STATE OF OHIO
DEPARTMENT OF TRANSPORTATION

CUY-90-16.28

INNERBELT CONTRACT GROUP 3A

CITY OF CLEVELAND

CUYAHOGA COUNTY

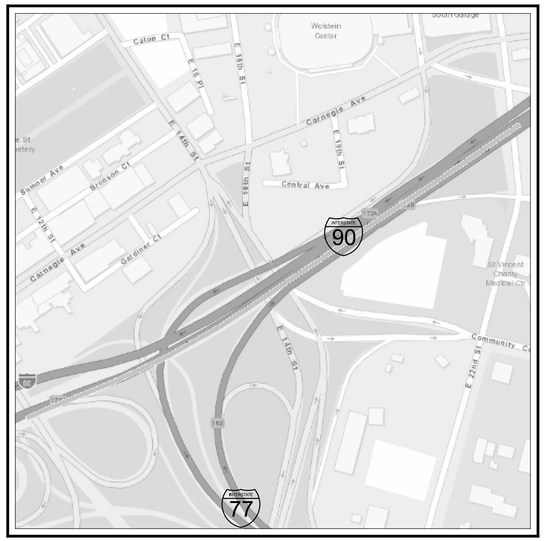

LOCATION MAP

LATITUDE: 41° 29' 40" LONGITUDE: -81° 40' 54"

PORTION TO BE IMPROVED
INTERSTATE HIGHWAY
FEDERAL ROUTES
STATE ROUTES
COUNTY & TOWNSHIP ROADS
OTHER ROADS

INDEX OF SHEETS:

SEE SHEET 2

DESIGN DESIGNATION

SEE SHEET 4

DESIGN EXCEPTIONS

SEE SHEET 4

ADA DESIGN WAIVERS

NONE REQUIRED

UNDERGROUND UTILITIES
Contact Two Working Days Before You Dig
OHIO811.org Before You Dig
OHIO811, 8-1-1, or 1-800-362-2764
(Non members must be called directly)

PLAN PREPARED BY:

Michael Baker INTERNATIONAL
HDR B&N burgessniple.com

STANDARD CONSTRUCTION DRAWINGS								CITY OF CLEVELAND STD. DRAWINGS		SUPPLEMENTAL SPECIFICATIONS		SPECIAL PROVISIONS
BP-1.1	7/28/00	MGS-1.1	1/17/25	HL-10.11	7/21/23	MT-95.41	7/21/23	TC-21.50	1/17/25	A-503	7/8/08	800-2023	7/18/25	AIR KNIFE EXCAVATION 6/16/22
BP-2.1	1/21/22	MGS-2.1	1/17/25	HL-10.12	7/21/23	MT-95.50	7/21/17	TC-22.20	1/17/14	A-605	7/8/08	805	7/16/10	
BP-2.2	1/15/21	MGS-3.1	1/19/18	HL-10.13	1/20/23	MT-95.60	4/19/19	TC-41.10	7/19/13	A-695	7/8/08	807	1/21/22	
BP-2.3	7/18/14	MGS-3.2	1/18/13	HL-10.31	7/15/22	MT-95.61	4/19/19	TC-41.20	10/18/13	MB-1C	7/8/08	809	7/21/23	CITY OF CLEVELAND CURB RAMPS 3/15/07
BP-2.4	7/19/13	MGS-4.2	1/17/25	HL-20.11	7/21/23	MT-95.70	7/21/23	TC-41.30	4/21/23	CONC-1	7/8/08	813	7/21/23	
BP-2.5	7/19/24	MGS-4.3	1/18/13	HL-20.13	1/17/25	MT-95.71	7/21/23	TC-41.40	10/18/13	ASPH-1	7/8/08	821	4/20/12	
BP-3.1	1/19/24	MGS-5.2	7/15/16	HL-20.14	4/17/20	MT-95.72	7/19/24	TC-41.41	7/19/19	BP-1	4/14/08	829	1/20/17	CLEVELAND PLANTING 8/22/24
BP-3.2	1/18/19	MGS-6.1	1/19/18	HL-20.21	1/17/25	MT-95.73	7/19/24	TC-41.50	10/18/13	PR-1	4/14/08	831	4/21/23	
BP-4.1	7/19/13			HL-30.11	7/21/23	MT-98.10	1/17/20	TC-42.10	10/18/13	CR-1	4/14/08	832	7/21/23	
BP-5.1	1/17/25	MH-1	7/15/22	HL-30.21	4/17/20	MT-98.11	1/17/20	TC-42.20	10/18/13	CD-1	4/14/08	836	1/19/18	CROSSHOLE SONIC LOGGING (CSL) 6/11/19
BP-6.1	7/19/13	MH-3	7/19/24	HL-30.22	1/17/25	MT-98.20	4/19/19	TC-51.11	1/15/16	146-ME	7/8/08	837	1/20/23	
BP-9.1	1/18/19			HL-30.31	1/17/25	MT-98.21	7/21/23	TC-51.12	1/15/16	MH-1	7/8/08	839	7/16/21	
		RM-1.1	1/20/23	HL-30.41	1/17/25	MT-98.22	1/17/20	TC-52.10	10/18/13	CB-1	7/8/08	840	7/21/23	5200: DEMONSTRATION SHAFT AND BI-DIRECTIONAL STATIC LOAD TESTING BRIDGE CUY-90-1696 3/25/25
CB-1	7/19/24	RM-3.1	7/20/18	HL-40.10	7/19/24	MT-98.28	1/17/20	TC-52.20	1/15/21			840	4/15/22	
CB-2-2A, 2B, 2C	7/19/24	RM-4.1	1/17/20	HL-40.20	1/17/25	MT-98.29	1/17/20	TC-61.10	4/21/23			846	4/17/15	
CB-2-3, 2-4	7/19/24	RM-4.3	1/17/25	HL-50.21	7/15/22	MT-98.30	7/16/21	TC-61.30	7/19/24			850	7/21/23	
CB-3	7/19/24	RM-4.4	7/19/24	HL-60.11	7/21/17	MT-99.20	4/19/19	TC-64.10	7/21/23			855	4/20/18	
CB-3A	7/19/24	RM-4.5	1/17/25	HL-60.12	7/21/23	MT-99.30	1/17/20	TC-65.10	1/17/14			863	10/21/22	
CB-6	7/19/24	RM-4.6	7/19/13	HL-60.21	7/20/18	MT-99.50	7/21/23	TC-65.11	1/17/25			866	4/21/17	5201: DEMONSTRATION SHAFT AND BI-DIRECTIONAL STATIC LOAD TESTING BRIDGE CUY-90-1587 3/25/25
CB-8	7/19/24	RM-5.1	7/18/14	HL-60.31	7/19/24	MT-99.60	7/19/24	TC-71.10	4/21/23			869	10/17/14	
						MT-100.00	1/19/24	TC-72.20	1/17/25			873	4/16/21	
DM-1.1	1/17/25	WQ-1.1	7/21/23	ITS-10.10	1/17/25	MT-101.60	1/17/25	TC-73.20	1/17/25			894	4/16/21	
DM-1.2	1/17/25	WQ-1.2	1/15/16	ITS-10.11	1/17/25	MT-101.70	7/19/24	TC-74.10	7/21/23			895	4/18/14	
DM-2.1	1/18/13			ITS-12.10	1/17/25	MT-101.75	7/21/23	TC-81.22	1/17/25			896	7/21/17	
DM-4.1	7/17/20	AS-1-15	1/20/23	ITS-12.11	1/17/25	MT-101.80	1/17/20	TC-83.10	1/17/20			899	1/20/23	HIGH-STRAIN DYNAMIC TESTING OF DRILLED SHAFTS 9/20/21
DM-4.2	7/20/12	AS-1-15	7/17/15	ITS-13.10	7/19/24	MT-101.90	7/17/20	TC-83.20	7/19/24			902	7/19/19	
DM-4.3	1/15/16	AS-2-15	7/21/23	ITS-14.10	1/17/25	MT-102.10	7/21/23	TC-84.20	1/19/24			903	7/20/12	
DM-4.4	1/15/16	AS-2-15	1/18/19	ITS-14.11	1/17/25	MT-103.10	1/21/22	TC-84.21	10/18/13			909	7/21/23	
		BR-2-15	7/19/24	ITS-14.20	1/17/25	MT-105.10	1/17/20	TC-85.10	1/19/24			913	4/16/21	LOW DENSITY CELLULAR CONCRETE FILL 4/3/23
F-1.1	7/19/13	EXJ-2-81	7/15/22	ITS-14.50	1/17/25	MT-110.10	7/19/13	TC-85.20	4/21/23			921	4/20/12	
F-3.1	7/19/13	EXJ-4-87	1/19/24	ITS-14.60	1/17/25	MT-120.00	7/19/24	TC-85.21	1/19/24			929	7/21/23	
F-3.3	7/19/13	GSD-1-19	1/15/21	ITS-15.10	1/17/25			TC-85.22	4/21/23			939	1/17/20	
		HW-2.1	7/15/22	ITS-18.00	7/16/21	TC-9.11	1/19/24					995	7/17/15	MODULAR EXPANSION JOINT 6/29/21
I-3B, 3B1	1/17/25	HW-2.2	7/20/18	ITS-50.10	7/15/22	TC-9.31	7/21/23					996	7/21/23	
I-3C, 3C1	1/17/25	PCB-91	7/17/20			TC-12.31	4/15/22							
I-3D	7/19/24	SBR-1-20	7/19/24	MT-95.30	7/19/19	TC-15.116	1/19/24							
		SBR-2-20	7/21/23	MT-95.31	7/19/19	TC-16.22	7/21/23							TREE PROTECTION 6/16/22
LA-1.1	10/15/10	SICD-2-14	1/15/21	MT-95.32	4/19/19	TC-21.11	7/16/21							
LA-1.2	1/17/25	VPF-1-90	7/21/23	MT-95.40	7/21/23	TC-21.21	1/20/23							

FEDERAL PROJECT NUMBER

E070 (586)

RAILROAD INVOLVEMENT

NONE

PROJECT DESCRIPTION

RECONSTRUCTION OF 0.73 MILES OF I.R. 90 BETWEEN EAST 9TH STREET AND PROSPECT AVENUE, REALIGNMENT AND RECONSTRUCTION OF SEVERAL RAMPS IN THE CENTRAL INTERCHANGE BETWEEN I.R. 90 AND I.R. 77, AND RECONSTRUCTION OF SEVERAL LOCAL STREETS.

EARTH DISTURBED AREAS

PROJECT EARTH DISTURBED AREA:	69.0 ACRES *
ESTIMATED CONTRACTOR EARTH DISTURBED AREA:	1.0 ACRES
NOTICE OF INTENT EARTH DISTURBED AREA:	70.0 ACRES

* 55.0 ACRES OF PROJECT EARTH DISTURBED AREA DRAINS TO CITY OF CLEVELAND COMBINED SEWERS.
THE TOTAL POST CONSTRUCTION BMP EDA IS 14.0 ACRES.

LIMITED ACCESS

THIS IMPROVEMENT IS ESPECIALLY DESIGNED FOR THROUGH TRAFFIC AND HAS BEEN DECLARED A LIMITED ACCESS HIGHWAY OR FREEWAY BY ACTION OF THE DIRECTOR IN ACCORDANCE WITH THE PROVISIONS OF SECTION 5511.02 OF THE OHIO REVISED CODE.

2023 SPECIFICATIONS

THE STANDARD SPECIFICATIONS OF THE STATE OF OHIO, DEPARTMENT OF TRANSPORTATION, INCLUDING SUPPLEMENTAL SPECIFICATIONS LISTED IN THE PLANS, CHANGES LISTED IN THE PROPOSAL, AND THE SUPPLEMENTAL SPECIFICATION 800 VERSION INDICATED ON THE PROPOSAL SHALL GOVERN THIS IMPROVEMENT.

I HEREBY APPROVE THESE PLANS AND DECLARE THAT THE MAKING OF THIS IMPROVEMENT WILL NOT REQUIRE THE CLOSING TO TRAFFIC OF THE HIGHWAY EXCEPT AS NOTED ON SHEETS 153 - 184 AND THAT PROVISIONS FOR THE MAINTENANCE AND SAFETY OF TRAFFIC WILL BE AS SET FORTH ON THE PLANS AND ESTIMATES.

John Picuri, P.E., P.S.
District 12 Deputy Director

Pamela Boratyn
Director, Department of Transportation

SIGNATURES AND SEALS

SEE SHEET 3

Preliminary Plans - For Reference Only

TITLE SHEET

DESIGN AGENCY
Michael Baker INTERNATIONAL

DESIGNER KJM
REVIEWER KGJ 05/22/24
PROJECT ID 82382
SHEET 1 TOTAL 2696

CUY-90-16.28 (CCG3A)
MODEL: Sheet PAPERSIZE: 34x22 (in.) DATE: 6/13/2025 TIME: 9:06:01 AM USER: Joseph.Hogan
pw:\\tnb-us-pw.bentley.com:tnb-us-pw-03\Documents\Cleveland_OH\01_Projects\ODOT\District12\82382\400-Engineering\Roadway\Sheets\82382_GT0001.dgn

INDEX OF SHEETS:

TITLE SHEET	1
SHEET INDEX	2
PLAN SIGNATURES & SEALS	3
DESIGN DESIGNATIONS &	
DESIGN EXCEPTIONS	4
SCHEMATIC PLAN	5 - 10
HORIZONTAL CURVE DATA	11 - 12
CENTERLINE DATA	13 - 15
TYPICAL SECTIONS:	
LEGEND	16
DETAILS	17
EXISTING TYPICAL SECTIONS	18 - 28
PROPOSED TYPICAL SECTIONS	29 - 72
GENERAL NOTES	73 - 80, 80A
MAINTENANCE OF TRAFFIC:	
NOTES AND SEQUENCE OF CONST.	81 - 93
MOT SUBSUMMARY	94 - 120
MOT DRAINAGE SUBSUMMARY	121 - 122
MOT SIGNING SUBSUMMARY	123 - 125
DETAILS	126 - 132
TYPICAL SECTIONS	133 - 152
DETOURS	153 - 184
TEMP. PAVEMENT & CROSSOVERS	185 - 282
PHASE 1 PLANS	283 - 293
PHASE 2 PLANS	294 - 314
PHASE 3 PLANS	315 - 326
PHASE 4 PLANS	327 - 345
PHASE 5 PLANS	346 - 357
PHASE 6 PLANS	358 - 369
PHASE 7 PLANS	370 - 378
PHASE 8 PLANS	379 - 391
PHASE 9 PLANS	392 - 402
GENERAL SUMMARY	403 - 415
SUBSUMMARIES:	
GENERAL NOTES	427 - 429
ROADWAY	430 - 435
ODOT DRAINAGE	436 - 443
LOCAL DRAINAGE	444 - 447
UNDERDRAIN	448 - 457
EROSION CONTROL	458 - 459
PAVEMENT	460 - 470
EARTHWORK	471
REMOVALS	472 - 489
PROJECT SITE PLAN	490
PLAN AND PROFILE:	
I.R. 90 EB	491 - 507
INTERIM I.R. 90 EB	508 - 514
I.R. 90 WB	515 - 533
INTERIM I.R. 90 WB	534 - 540
RAMP 4	541 - 543
RAMP A1	544 - 549
RAMP A2	550 - 565
RAMP A3	566 - 571
RAMP IB5	572 - 577
RAMP B6	578 - 589
RAMP B6A	590 - 593
RAMP IH4	594 - 599
RAMP IH5	600 - 605
RAMP H5	606 - 611
RAMP IH6	612 - 613
RAMP H6	614 - 617
RAMP IJ3	618 - 627
CARNEGIE AVE.	628 - 637
MIDTOWN CONNECTOR	638 - 643
CEDAR AVE.	644 - 645
PLAN AND PROFILE (CONT.):	
E. 14TH ST. NB CROSSOVER	646 - 647
INTERIM E. 14TH ST. NB	648 - 651
E. 14TH ST. NB	652 - 656
INTERIM E. 14TH ST. SB	657 - 662
E. 14TH ST. SB	663 - 666
E. 18TH ST.	667 - 670
CENTRAL AVE. CONNECTOR	671 - 672
E. 22ND ST.	673 - 678
REMOVAL PLANS	679 - 710
CROSS SECTIONS:	
CROSS SECTION LAYOUT PLAN	711
I.R. 90 EB	712 - 735
INTERIM I.R. 90 EB	736 - 749
I.R. 90 WB	750 - 774
INTERIM I.R. 90 WB	775 - 789
RAMP A1	790 - 798
RAMP A2	799 - 817
RAMP A3	818 - 832
RAMP IB5	833 - 841
RAMP B6	842 - 859
RAMP B6A	860 - 863
RAMP IH4	864 - 869
RAMP IH5 & RAMP H5	870 - 899
RAMP IH6 & RAMP H6	900 - 913
RAMP IJ3	914 - 931
CARNEGIE AVE.	932 - 946
MIDTOWN CONNECTOR	947 - 960
CEDAR AVE.	961 - 962
E. 14TH ST. NB CROSSOVER	963 - 967
INTERIM E. 14TH ST. NB &	
E. 14TH ST. NB	968 - 987
INTERIM E. 14TH ST. SB &	
E. 14TH ST. SB	988 - 1000
E. 18TH ST.	1001 - 1002
CENTRAL AVE. CONNECTOR	1003 - 1005
E. 22ND ST.	1006 - 1012
SUPERELEVATION TABLES	1013 - 1029
RAMP TERMINAL DETAILS	1030 - 1058
INTERSECTION DETAILS	1059 - 1072
DRIVE DETAILS	1073 - 1091
DRAINAGE PLAN	1092 - 1120
STORM SEWER PROFILES	1121 - 1158
DRAINAGE DETAILS	1159 - 1173
RETAINING WALLS:	
WALL AC	1174 - 1190
WALL AD	1191 - 1207
WALL AE	1208 - 1217
WALL AF	1218 - 1228
WALL AG	1229 - 1240
WALL AH	1241 - 1249
WALL AI	1250 - 1261
WALL AJ	1262 - 1269
WALL N	1270 - 1282
WALL S	1283 - 1295
WALL T	1296 - 1309
WALL Y	1310 - 1316
WALL Z	1317 - 1333
RAMP A3 BARRIER MOMENT SLABS	1334 - 1339
MEDIAN BARRIER WALL	1340 - 1353
RAMP A2 OVERHEAD SIGN TRUSS	
FOUNDATION	1354 - 1360
RAMP B6 OVERHEAD SIGN TRUSS	
FOUNDATION	1361 - 1364
COMBINED SEWER	1365 - 1370
WATER WORK	1371 - 1432
MISCELLANEOUS DETAILS	1432A, 1433 - 1444, 1444A, 1445 - 1448
SIGNING & PAVEMENT MARKING:	
NOTES	1449
PAVEMENT MARKING SUBSUMMARY	1450 - 1468
SIGNING SUBSUMMARY	1469 - 1485
SIGNING REMOVALS SUBSUMMARY	1486 - 1493
PLANS	1494 - 1582
SIGN ELEVATIONS	1583 - 1611
SIGN FABRICATION DETAILS	1612 - 1637
TRAFFIC SIGNALS	1638 - 1675
ITS / TRAFFIC SURVEILLANCE	1676, 1678 - 1681, 1683
LIGHTING:	
NOTES	1684 - 1687
LIGHTING COMBINED SUBSUMMARY	1688 - 1689
ODOT LIGHTING SUBSUMMAY	1692 - 1703
CPP LIGHTING SUBSUMMARY	1704 - 1714
ODOT LIGHTING PLAN	1715 - 1723
CPP LIGHTING PLAN	1724 - 1741
DETAILS	1742 - 1776
CLEVELAND PUBLIC POWER	1777 - 1796
LANDSCAPING:	
NOTES	1797 - 1804
SUBSUMMARIES	1805 - 1806
PLANS AND DETAILS	1807 - 1824
HARDSCAPING:	
NOTES	1825 - 1838
SUBSUMMARIES	1839
PLANS AND DETAILS	1840 - 1849
BRIDGE AESTHETICS	1850 - 1854
IRRIGATION	1855 - 1856
WALL AESTHETICS	1857 - 1868
STRUCTURES (OVER 20 FOOT SPAN):	
CUY-77-1587 (BRIDGE 9)	1869 - 2035
CUY-90-1653L (BRIDGE 10)	2036 - 2085
CUY-90-1653R (BRIDGE 11)	2086 - 2128
CUY-90-1652S (BRIDGE 12)	2129 - 2181
CUY-90-1678 (BRIDGE 13)	2182 - 2280
CUY-90-1696 (BRIDGE 14)	2281 - 2370
CUY-90-1640 (BRIDGE E5)	2371 - 2377
CUY-77-1593L (BRIDGE E6)	2378 - 2380
CUY-E14TH-0002SN (BRIDGE E10)	2381 - 2382
FENCE PLAN	2383 - 2386
GEOTECHNICAL PROFILE - ROADWAY	2387 - 2696
RIGHT-OF-WAY	
NOT USED	416 - 426, 1677, 1682, 1690 - 1691

Preliminary Plans - Not For Reference Only

SHEET INDEX

DESIGN AGENCY
Michael Baker INTERNATIONAL

DESIGNER KJM
REVIEWER KGJ 05/22/24
PROJECT ID 82382
SHEET 2 TOTAL 2696

CUY-90-16.28 (CCG3A)
MODEL: Sheet PAPERSIZE: 34x22 (in.) DATE: 6/12/2025 TIME: 2:07:25 PM USER: Joseph.Hogan
pw:\\mb-us-pw.bentley.com:mb-us-pw-03\Documents\Cleveland_OH\01_Projects\ODOT\District12\82382\400-Engineering\Roadway\Sheets\82382_IN0001.dgn

ENGINEER'S SEAL

ROADWAY, LANDSCAPING, MAINTENANCE OF TRAFFIC

STATE OF OHIO
DEREK J. JOHNSON
E-78938
REGISTERED PROFESSIONAL ENGINEER

Digitally signed by Derek J Johnson, PE
Date: 2025.06.17 11:33:11-04'00'

ROADWAY PLANS PREPARED BY MICHAEL BAKER INTERNATIONAL:
RAMP IH4
RAMP IH5
RAMP H5
RAMP IH6
RAMP H6
RAMP IJ3
CARNEGIE AVE.
MIDTOWN CONNECTOR
CEDAR AVE.
E. 14TH ST.
E. 18TH ST.
CENTRAL AVE. CONNECTOR
E. 22ND ST.

ENGINEER'S SEAL

STRUCTURES

STATE OF OHIO
SHANE WEISS
E-89423
REGISTERED PROFESSIONAL ENGINEER

Digitally signed by Shane Weiss
Date: 2025.06.17 15:17:22-04'00'

RETAINING WALL PLANS PREPARED BY MICHAEL BAKER INTERNATIONAL:
WALL AF
WALL AG
WALL AH
WALL AI
WALL AJ
WALL N
WALL S
WALL T
WALL Y
WALL Z

ENGINEER'S SEAL

DRAINAGE COMBINED SEWER

STATE OF OHIO
KATHERINE G. JOHNSON
E-72664
REGISTERED PROFESSIONAL ENGINEER

Digitally signed by Katherine G. Johnson
Date: 2025.06.17 15:56:12-04'00'

DRAINAGE AND COMBINED SEWER PLANS PREPARED BY MICHAEL BAKER INTERNATIONAL

ENGINEER'S SEAL

ROADWAY

STATE OF OHIO
STANLEY JOSEPH STODOLAK
E-57839
REGISTERED PROFESSIONAL ENGINEER

Digitally signed by S. Joseph Stodolak, PE
Date: 2025.06.17 14:29:01-04'00'

ROADWAY PLANS PREPARED BY BURGESS & NIPLE:
I.R. 90
RAMP 4
RAMP A3

ENGINEER'S SEAL

STRUCTURES

STATE OF OHIO
KIMBERLY ANN GUICE
E-72265
REGISTERED PROFESSIONAL ENGINEER

Digitally signed by Kimberly Guice
Date: 2025.06.17 15:04:27-04'00'

BRIDGE PLANS PREPARED BY MICHAEL BAKER INTERNATIONAL:
CUY-90-1678 (BRIDGE 13)
CUY-90-1696 (BRIDGE 14)

ENGINEER'S SEAL

WATER WORK LIGHTING

STATE OF OHIO
SEAN MILROY
E-66150
REGISTERED PROFESSIONAL ENGINEER

Digitally signed by Sean Milroy, P.E.
Date: 2025.06.17 13:35:04-04'00'

WATER WORK AND LIGHTING PLANS PREPARED BY MICHAEL BAKER INTERNATIONAL

ENGINEER'S SEAL

ROADWAY

STATE OF OHIO
THOMAS JAMES SCHOEN
E-82855
REGISTERED PROFESSIONAL ENGINEER

Digitally signed by Schoen, Thomas
Date: 2025.06.17 13:59:56-04'00'

ROADWAY PLANS PREPARED BY HDR:
RAMP A1
RAMP A2
RAMP IB5
RAMP B6
RAMP B6A

ENGINEER'S SEAL

STRUCTURES

STATE OF OHIO
JOANNE M. SHANER
E-67029
REGISTERED PROFESSIONAL ENGINEER

Digitally signed by Shaner, Joanne
Date: 2025.06.18 10:25:19-04'00'

BRIDGE / RETAINING WALL PLANS PREPARED BY HDR:
CUY-77-1587 (BRIDGE 9)
CUY-90-1652S (BRIDGE 12)
WALL AD

ENGINEER'S SEAL

CLEVELAND PUBLIC POWER

STATE OF OHIO
JORDAN C. STEELE
E-76138
REGISTERED PROFESSIONAL ENGINEER

Digitally signed by Jordan C. Steele
Date: 2025.06.18 13:17:47 -04'00'

CLEVELAND PUBLIC POWER PLANS PREPARED BY ADVANCED ENGINEERING CONSULTANTS

ENGINEER'S SEAL

TRAFFIC CONTROL

STATE OF OHIO
RYAN MICHAEL GILLESPIE
E-74312
REGISTERED PROFESSIONAL ENGINEER

Digitally signed by Ryan Gillespie
Date: 2025.06.17 23:15:20-04'00'

TRAFFIC CONTROL PLANS PREPARED BY MICHAEL BAKER INTERNATIONAL:
SIGNING & PAVEMENT MARKING - LOCAL STREETS
TRAFFIC SIGNALS
ITS / TRAFFIC SURVEILLANCE

ENGINEER'S SEAL

STRUCTURES

STATE OF OHIO
JEFFREY A. ACKERMAN
E-67745
REGISTERED PROFESSIONAL ENGINEER

Digitally signed by Jeffrey A. Ackerman
Date: 2025.06.17 14:51:38-04'00'

BRIDGE / RETAINING WALL PLANS PREPARED BY BURGESS & NIPLE:
CUY-90-1653L (BRIDGE 10)
CUY-90-1653R (BRIDGE 11)
CUY-90-1640 (BRIDGE E5)
CUY-77-1593L (BRIDGE E6)
CUY-E14TH-0002SN (BRIDGE E10)
WALL AC
WALL AE
RAMP A3 BARRIER MOMENT SLAB
MEDIAN BARRIER WALL
RAMP A2 OVERHEAD SIGN TRUSS FOUNDATION
RAMP B6 OVERHEAD SIGN TRUSS FOUNDATION

ENGINEER'S SEAL

TRAFFIC CONTROL

STATE OF OHIO
KEVIN E. HUTCHENS
E-67494
REGISTERED PROFESSIONAL ENGINEER

Digitally signed by Kevin E. Hutchens
Date: 2025.06.17 13:09:41-04'00'

TRAFFIC CONTROL PLANS PREPARED BY BURGESS & NIPLE:
SIGNING & PAVEMENT MARKING - INTERSTATE & RAMPS

Preliminary Plans - For Reference Only

PLAN SIGNATURES AND SEALS

DESIGN AGENCY
Michael Baker INTERNATIONAL

DESIGNER
JTH

REVIEWER
DJJ 08-20-24

PROJECT ID
82382

SHEET 3 | TOTAL 2696

CUY-90-16.28 (CCG3A)

MODEL: Sheet PAPERSIZE: 34x22 (in.) DATE: 3/28/2025 TIME: 7:08:43 AM USER: RohitBk
pw:\\mb-us-pw.bentley.com:mb-us-pw-03\Documents\Cleveland_OH\01_Projects\ODOT\District12\82382\400-Engineering\Roadway\Sheets\82382_GU001.dgn

DESIGN DESIGNATION

	I.R. 90	RAMP A1	RAMP A2	RAMP A3	RAMP IB5	RAMP B6	RAMP B6A	RAMP IH4	RAMP IH5/H5	RAMP IH6/H6	RAMP IJ3
CURRENT ADT (2015)	138,000	5,600	22,200	6,900	7,600	6,400	1,280	10,900	18,300	3,700	8,700
DESIGN YEAR ADT (2035)	148,000	6,000	23,500	7,800	7,800	7,500	1,500	11,300	19,200	3,800	8,100
DESIGN HOURLY VOLUME (AM)	12,740	200	1,770	390	890	710	140	1,600	1,790	600	570
DESIGN HOURLY VOLUME (PM)	13,840	880	2,460	1,020	520	640	120	440	1,660	80	990
DIRECTIONAL DISTRIBUTION	52%	100%	100%	100%	100%	100%	100%	100%	100%	100%	100%
TRUCKS (24 HOUR B&C)	9%	6%	4%	3%	3%	8%	8%	4%	6%	6%	6%
DESIGN SPEED	50/60 MPH	30 (MIN)/45 MPH	45 (MIN)/50 MPH	30 (MIN)/40/50 MPH	25 (MIN) MPH	30 (MIN)/45/50 MPH	30 (MIN) MPH	30 MPH (MIN)	40 (MIN)/45/50 MPH	30 (MIN)/45/50 MPH	30 (MIN)/45/50 MPH
LEGAL SPEED	50 MPH	VARIES	VARIES	VARIES	VARIES	VARIES	VARIES	VARIES	VARIES	VARIES	VARIES
DESIGN FUNCTIONAL CLASSIFICATION:	URBAN INTERSTATE	DIAMOND RAMP	DIRECTIONAL RAMP	DIRECTIONAL RAMP	LOOP RAMP	DIAMOND RAMP	DIAMOND RAMP	DIAMOND RAMP	DIRECTIONAL RAMP	DIAMOND RAMP	DIAMOND RAMP
NHS PROJECT	YES	YES	YES	YES	YES	YES	YES	YES	YES	YES	YES

DESIGN DESIGNATION

	CARNEGIE AVENUE	MIDTOWN CONNECTOR	CEDAR AVENUE	E 14TH STREET	E 18TH STREET	E 21ST STREET	E 22ND STREET	CENTRAL AVE CONNECTOR
CURRENT ADT (2015)	25,700	8,300	8,300	17,200	12,100	5,100	13,400	N/A (NEW ROAD)
DESIGN YEAR ADT (2035)	30,500	8,700	8,700	19,100	14,500	6,400	15,300	N/A (NEW ROAD)
DESIGN HOURLY VOLUME (AM)	2,650	630	630	1,590	1,410	160	1,550	N/A (NEW ROAD)
DESIGN HOURLY VOLUME (PM)	2,830	540	540	1,860	1,190	1,000	1,200	N/A (NEW ROAD)
DIRECTIONAL DISTRIBUTION	56%	75%	75%	53%	63%	100%	57%	N/A (NEW ROAD)
TRUCKS (24 HOUR B&C)	6%	8%	6%	3%	3%	7%	7%	N/A (NEW ROAD)
DESIGN SPEED	30/40 MPH	30 MPH	30 MPH	30 MPH	30 MPH	30 MPH	30 MPH	30 MPH
LEGAL SPEED	25/35 MPH	25 MPH	25 MPH	25 MPH	N/A	25 MPH	25 MPH	25 MPH
DESIGN FUNCTIONAL CLASSIFICATION:	URBAN ARTERIAL	URBAN COLLECTOR	URBAN COLLECTOR	URBAN COLLECTOR	URBAN ARTERIAL	URBAN COLLECTOR	URBAN COLLECTOR	LOCAL ROAD
NHS PROJECT	NO	NO	NO	NO	NO	NO	NO	NO

DESIGN EXCEPTIONS

DESIGN FEATURE	APPROVAL DATE	PAGE NUMBERS
SHOULDER WIDTH (RAMP A2 RIGHT SHOULDER)	06/08/2021	45
HORIZONTAL STOPPING SIGHT DISTANCE (RAMP A2)	06/08/2021	556 , 558 , 560 , 562
SHOULDER WIDTH (RAMP IH4 RIGHT SHOULDER)	09/28/2021	65
HORIZONTAL CURVE RADIUS (RAMP IH5)	09/07/2021	600 , 602 , 604 , 606
HORIZONTAL STOPPING SIGHT DISTANCE (RAMP A1)	05/11/2022	546 , 548
SHOULDER WIDTH (I.R. 90 EB MEDIAN SHOULDER)	05/11/2022	36 , 37
SHOULDER WIDTH (I.R. 90 WB MEDIAN SHOULDER)	10/10/2023	38

BENCHMARKS

PT#	NORTHING (GROUND)	EASTING (GROUND)	NORTHING (GRID)	EASTING (GRID)	ELEVATION	DESCRIPTION
BM 40	666008	2194485	665968	2194354	681.08	TOP OF "A" IN "AUTO" ON TOP OF FIRE STAND PIPE
BM 42	665631	2195959	665591	2195827	682.44	RAILROAD SPIKE
BM 43	665502	2196733	665462	2196601	679.84	CUT CROSS
BM 44	665737	2197340	665697	2197209	678.79	RAILROAD SPIKE
BM 45	665452	2198015	665412	2197884	679.35	RAILROAD SPIKE
BM 46	664565	2197774	664526	2197642	673.05	RAILROAD SPIKE
BM 47	664494	2196880	664454	2196749	664.08	RAILROAD SPIKE
BM 48	664874	2196172	664835	2196041	664.55	RAILROAD SPIKE
BM 49	665993	2196561	665954	2196430	678.19	RAILROAD SPIKE
BM 51	666305	2195052	666265	2194921	677.38	RAILROAD SPIKE
BM 54	668288	2194967	668248	2194836	672.54	CUT CROSS
BM 55	667191	2195669	667151	2195538	676.72	CUT CROSS
BM 56	667020	2196500	666980	2196369	676.54	CUT CROSS
BM 57	666516	2196669	666476	2196537	686.50	MAG NAIL SET
BM 58	666938	2194098	666898	2193967	672.27	CUT CROSS
BM 59	667530	2194073	667490	2193942	660.15	MAG NAIL SET
BM 61	667832	2193126	667792	2192995	674.03	RAILROAD SPIKE
BM 62	668320	2193736	668280	2193605	672.11	RAILROAD SPIKE
BM 64	668848	2195353	668808	2195221	671.25	RAILROAD SPIKE
BM 65	668904	2196154	668864	2196023	668.92	RAILROAD SPIKE
BM 66	667358	2192474	667318	2192343	671.90	CUT CROSS
BM 67	666725	2192973	666685	2192841	674.82	CUT CROSS
BM 68	666206	2193741	666166	2193610	678.92	CUT CROSS
BM 69	665828	2195197	665788	2195065	682.24	CUT CROSS
BM 70	666146	2195632	666106	2195501	677.38	CUT CROSS
BM 71	666627	2194624	666587	2194492	678.72	CUT CROSS
BM 72	667366	2194725	667326	2194594	674.06	CUT CROSS
BM 73	668616	2194466	668576	2194335	671.90	CUT CROSS

Preliminary Plans - For Reference Only

DESIGN DESIGNATIONS & DESIGN EXCEPTIONS

DESIGN AGENCY
Michael Baker INTERNATIONAL

DESIGNER KJM
REVIEWER KGJ 05/22/24
PROJECT ID 82382
SHEET 4 TOTAL 2696

CUY-90-16.28 (CCG3A)

MODEL: Sheet PAPERSIZE: 34x22 (in.) DATE: 3/28/2025 TIME: 7:08:48 AM USER: Rohit.Bk
pw:\\mb-us-pw.bentley.com:mb-us-pw-03\Documents\Cleveland_OH\01_Projects\ODOT\District12\82382\400-Engineering\Roadway\Sheets\82382_GB0001.dgn

Preliminary Plans - Not for Construction
For Reference Only

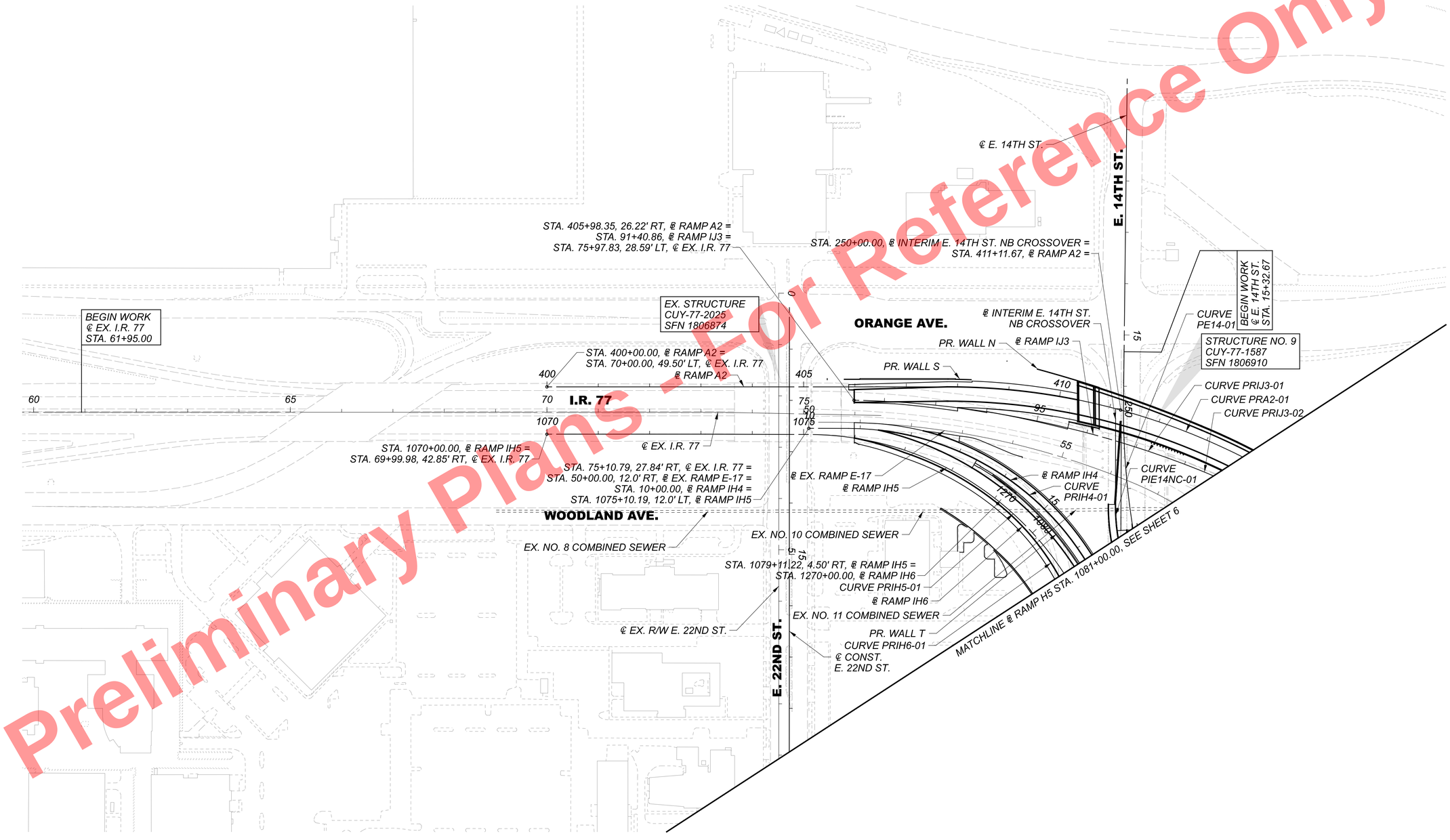

SCHEMATIC PLAN - CCG3A BUILD

CUY-90-16.28 (CCG3A)

MODEL: Sheet PAPERSIZE: 34x22 (in.) DATE: 3/28/2025 TIME: 7:10:11 AM USER: Rohit.Bk
pw:\\mb-us-pw.bentley.com:mb-us-pw-03\Documents\Cleveland_OH01_Projects\ODOTDistrict12\82382400-Engineering\Roadway\Sheets\82382_GB1001.dgn

DESIGN AGENCY
Michael Baker INTERNATIONAL

DESIGNER
KJM

REVIEWER
KGJ 05/22/24

PROJECT ID
82382

SHEET 5 | TOTAL 2696

Preliminary Plans
Not For Reference Only

HORIZONTAL SCALE IN FEET
0 50 100 200

SCHEMATIC PLAN - CCG3A BUILD

E. 9TH ST.
E. 14TH ST.
E. 18TH ST.
CARNEGIE AVE.
ONTARIO ST.
EX. RAMP E-10
COMMUNITY COLLEGE AVE.
E. 22ND ST.

STA. 41+77.71, ℄ EX. R/W E. 9TH ST = STA. 26+73.40, ℄ CONST. CARNEGIE AVE.
CURVE PCARN-02
℄ CONST. CARNEGIE AVE.
BEGIN WORK ℄ CONST. CARNEGIE AVE. STA. 35+56.00
STA. 60+94.05, ℄ E. 14TH ST. NB = STA. 39+14.79, ℄ CONST. CARNEGIE AVE.
STA. 40+76.26, ℄ E. 14TH ST. SB = STA. 39+05.29, ℄ CONST. CARNEGIE AVE.
END WORK ℄ E. 14TH ST NB STA. 61+67.54
℄ EX. R/W E. 14TH ST.
CURVE PE14S-02
℄ EX. R/W CARNEGIE AVE.
℄ E. 18TH ST.
CURVE PCARN-03
CURVE PE18-02
END WORK ℄ E. 18TH ST STA. 26+30.00
STA. 24+85.82, ℄ E. 18TH ST. = STA. 41+42.22, ℄ CONST. CARNEGIE AVE.
STA. 40+31.31, 36.0' LT, ℄ E. 14TH ST. SB = STA. 591+02.82, ℄ RAMP A3
STA. 209+31.15, 13.0' RT, ℄ INTERIM E. 14TH ST. SB = STA. 36+35.00 ℄ E. 14TH ST. SB
STA. 40+29.07, 34.05' RT, ℄ EX. R/W E. 9TH ST. = STA. 1721+00.00, ℄ RAMP IB5
E 070 (586)
BEGIN PROJECT ℄ I.R. 90 EB STA. 175+77.69 S.L.M. 16.30
STRUCTURE NO. 9 CUY-77-1587 SFN 1806910
STRUCTURE NO. 10 CUY-90-1653L SFN 1807901
STRUCTURE NO. 11 CUY-90-1653R SFN 1807804
STA. 176+28.83, 37.0' LT, ℄ I.R. 90 WB = STA. 576+28.68, ℄ RAMP A3
CURVE PI090W-01
CURVE PI090E-01
EX. STRUCTURE CUY-90-0010 SFN 1808893
CURVE PRA2-02
CURVE PI090W-02
CURVE PRA3-01
℄ RAMP A3
SPIRAL PRA3-01
℄ I.R. 90 WB
℄ E. 14TH ST. SB
CURVE PRA3-02
PR. 30" WATERLINE
℄ EX. R/W E. 18TH ST.
℄ CENTRAL AVE CONNECTOR
EX. NO. 7 COMBINED SEWER
CURVE PCENTC-01
℄ EX. R/W E. 19TH ST
CURVE PRA2-03
PR. WALL AD
℄ RAMP A1
CURVE PE18-01
CURVE PI090W-03
EX. 20" GAS
PR. WALL AC
EX. RAMP E-13
CURVE PRB6-02
CURVE PRH5-03
CURVE PRIB5-01
STA. 170+10.54, 24.00' RT, ℄ I.R. 90 EB = STA. 55+29.34, 14.95' RT, ℄ EX. I.R. 90 = STA. 1500+00.00, ℄ RAMP IB5 = STA. 1700+00.00, ℄ EX. RAMP B5
℄ EX. I.R. 90
℄ I.R. 90 EB
STA. 175+50.84, 12.00' RT, ℄ I.R. 90 EB = STA. 60+69.09, 1.95' RT, ℄ EX. I.R. 90 = STA. 1505+34.46, 31.82' LT, ℄ EX. RAMP B5 = STA. 1705+34.46, 31.82' LT, ℄ RAMP IB5 = STA. 1597+61.23, ℄ RAMP B6
℄ RAMP B6
SPIRAL PRIB5-01
℄ EX. RAMP B5
LANDSCAPED AREA
CURVE PRIB5-02
℄ RAMP IB5
SPIRAL PRIB5-02
END WORK ℄ RAMP IB5 STA. 1715+60.50
STA. 208+07.39, ℄ INTERIM E. 14TH ST. SB = STA. 112+29.62, ℄ RAMP IJ3
CURVE PI090E-02
CURVE PRIJ3-05
℄ E. 14TH ST. NB
CURVE PRB6-01
CURVE PRIJ3-03
CURVE PRIJ3-04
STRUCTURE NO. 12 CUY-90-1652S SFN 1807806
℄ RAMP B6A
CURVE PRB6A-01
PR. WALL Y
STA. 56+22.61, 12.0' RT, ℄ E. 14TH ST. NB = STA. 20+00.00, ℄ E. 18TH ST.
STA. 10+00.00, ℄ EX. R/W E. 14TH ST. = STA. 51+09.01, ℄ EX. R/W COMMUNITY COLLEGE AVE.
STA. 996+17.64, ℄ RAMP H5 = STA. 194+42.29, 32.59' RT, ℄ I.R. 90 EB
CURVE PE14N-01
STA. 305+52.54, 16.0' LT, ℄ INTERIM E. 14TH ST. NB = STA. 52+50.00, ℄ E. 14TH ST. NB
CURVE PI090E-03
℄ EX. R/W CENTRAL AVE.
CURVE PIE14S-02
CURVE PIE14N-02
℄ INTERIM E. 14TH ST. NB
℄ EX. RAMP E-17
PR. WALL AJ
CURVE PIE14N-03
PR. WALL T
℄ RAMP H5
℄ EX. R/W COMMUNITY COLLEGE AVE.
STA. 301+93.07, 21.0' RT, ℄ INTERIM E. 14TH ST. NB = STA. 20+20.05, ℄ RAMP IH4
CURVE PRIJ3-02
℄ INTERIM E. 14TH ST. SB
CURVE PRIH4-02
CURVE PIE14N-01
CURVE PIE14S-01
℄ E. 14TH ST.
CURVE PRH6-02
℄ RAMP H6
STA. 59+99.35, ℄ EX. R/W COMMUNITY COLLEGE AVE. = STA. 24+04.40, ℄ CONST. E. 22ND ST.
STA. 1085+39.27, 16.0' LT, ℄ RAMP IH5 = STA. 985+16.76, ℄ RAMP H5
CURVE PRIH6-02
STA. 1192+99.19, ℄ RAMP H6 = STA. 23+91.70, ℄ CONST. E. 22ND ST.
SUSPEND WORK ℄ CONST. E. 22ND ST. STA. 25+05.00
END WORK ℄ COMMUNITY COLLEGE AVE. STA. 62+54.00
CURVE PIE14NC-02
℄ INTERIM E. 14TH ST. NB CROSSOVER
CURVE PIE14NC-01
℄ RAMP IH5
℄ RAMP IH6
CURVE PRIH5-01
CURVE PRIH6-01
CURVE PRIH4-01
STA. 1274+83.98, ℄ RAMP IH6 = STA. 1183+59.15, ℄ RAMP H6
℄ CONST. E. 22ND ST.
℄ RAMP IH4
BEGIN WORK ℄ E. 22ND ST. STA. 22+00.00
℄ COMMUNITY COLLEGE AVE.
℄ EX. R/W E. 22ND ST.
STA. 199+54.63, 10.00' RT, ℄ INTERIM E. 14TH ST. SB = STA. 299+54.63, ℄ INTERIM E. 14TH ST. NB = STA. 254+33.81, ℄ INTERIM E. 14TH ST. NB CROSSOVER
CURVE PRA2-01
℄ RAMP A2
℄ EX. R/W E. 9TH ST.
EX. NO. 12 COMBINED SEWER
MATCHLINE ℄ I.R. 90 WB STA. 170+00.00, SEE BELOW
MATCHLINE ℄ I.R. 90 EB STA. 195+00.00, SEE SHEET 7
MATCHLINE ℄ RAMP IH5 STA. 1081+00.00, SEE SHEET 5

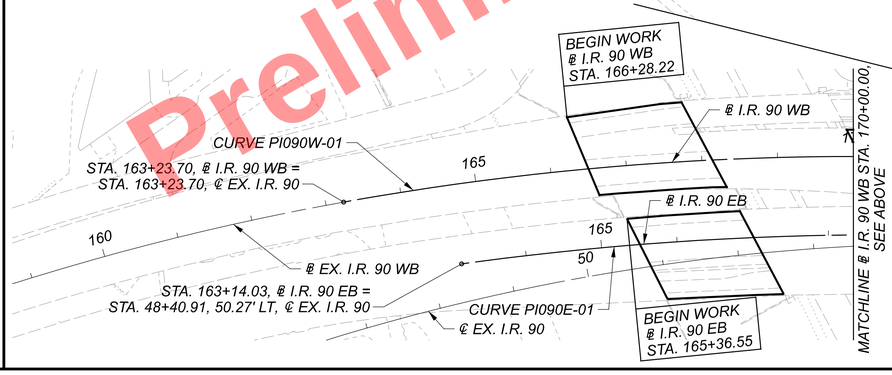

DESIGN AGENCY
Michael Baker INTERNATIONAL
DESIGNER KJM
REVIEWER KGJ 05/22/24
PROJECT ID 82382
SHEET 6 TOTAL 2696

CUY-90-16.28 (CCG3A)

MODEL: Untitled Sheet PAPERSIZE: 34x22 (in.) DATE: 3/28/2025 TIME: 7:10:23 AM USER: RohitBk
pw:\\mb-us-pw.bentley.com:mb-us-pw-03\Documents\Cleveland_OH01_Projects\ODOT\District12\82382400-Engineering\Roadway\Sheets\82382_GB1002.dgn
GB1002.dgn

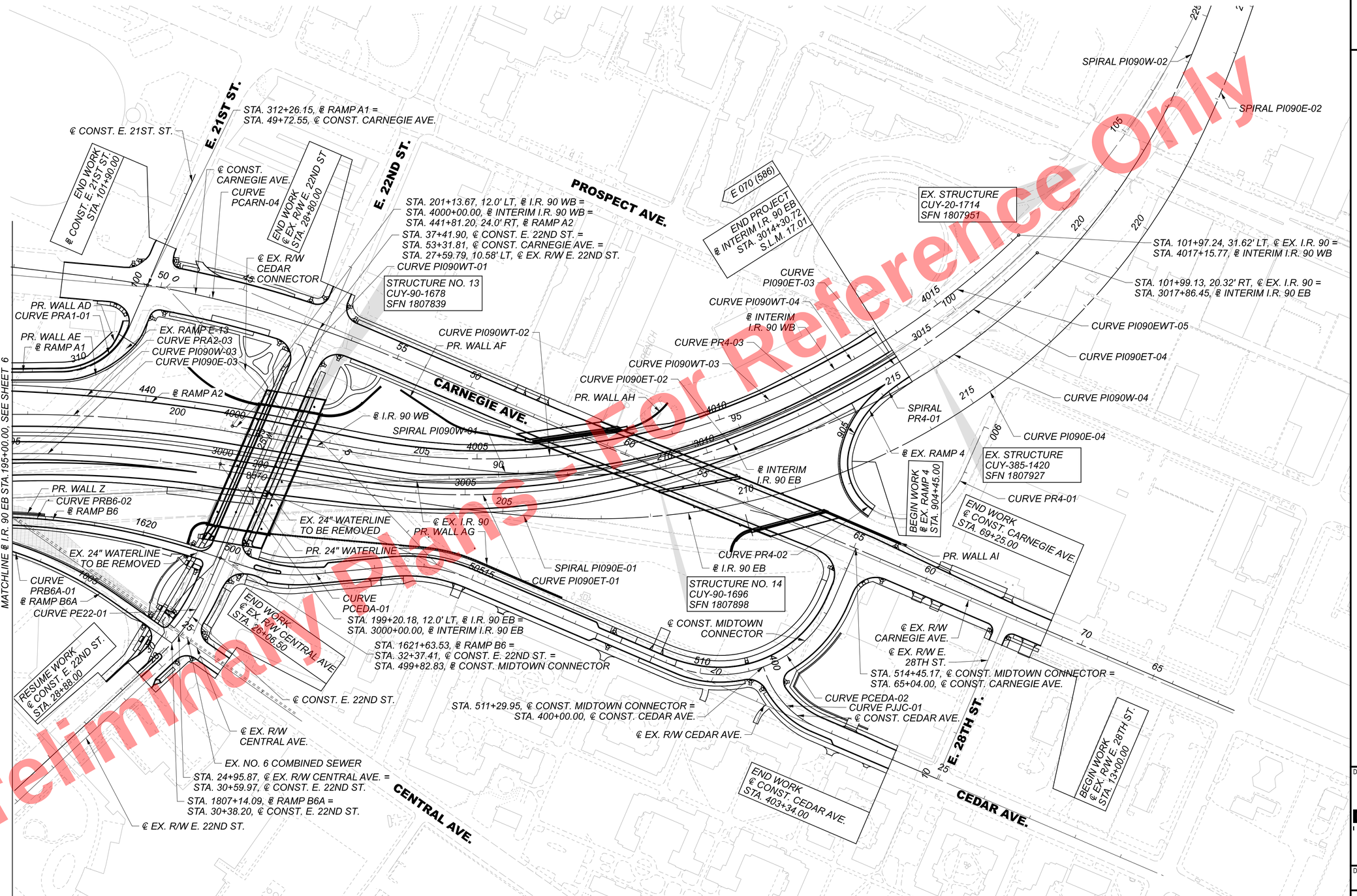

Preliminary Plans - For Reference Only

HORIZONTAL SCALE IN FEET
0 50 100 200

SCHEMATIC PLAN - CCG3A BUILD

CUY-90-16.28 (CCG3A)

MODEL: Sheet PAPERSIZE: 34x22 (in.) DATE: 3/28/2025 TIME: 7:10:32 AM USER: Rohit.Bk
pw:\\mb-us-pw.bentley.com:mb-us-pw-03\Documents\Cleveland_OH\01_Projects\ODOT\District12\82382\400-Engineering\Roadway\Sheets\82382_GB1003.dgn

DESIGN AGENCY
Michael Baker INTERNATIONAL

DESIGNER	KJM
REVIEWER	KGJ 05/22/24
PROJECT ID	82382
SHEET	7
TOTAL	2696

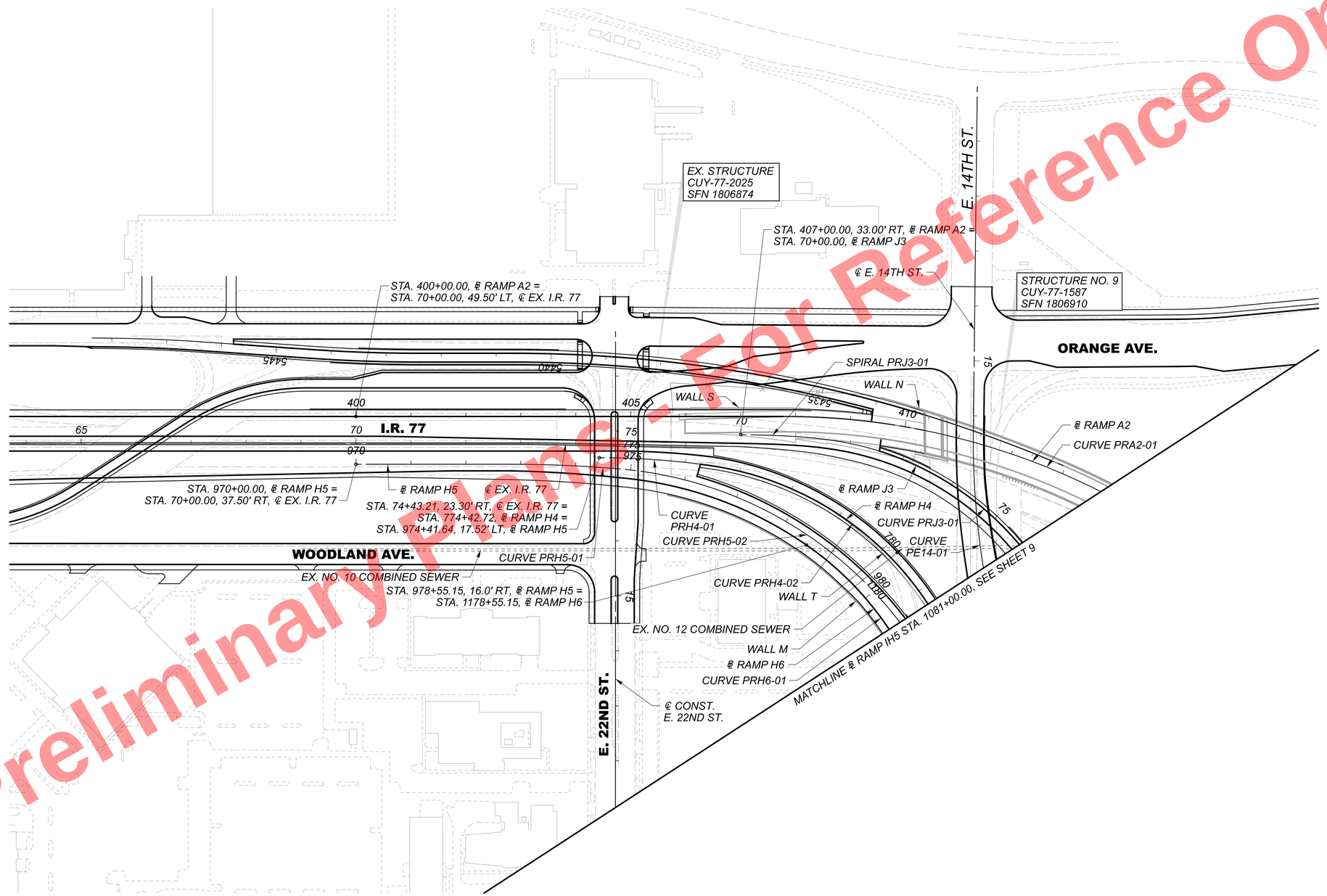

Preliminary Plans - For Reference Only

HORIZONTAL SCALE IN FEET
0 50 100 200

SCHEMATIC PLAN - FUTURE INNERBELT PROJECTS

CUY-90-16.28 (CCG3A)

MODEL: Sheet PAPERSIZE: 34x22 (in.) DATE: 3/28/2025 TIME: 7:10:41 AM USER: RohitLBk
pw:\\mb-us-pw.bentley.com:mb-us-pw-03\Documents\Cleveland_OH01_Projects\ODOT\District12\82382\400-Engineering\Roadway\Sheets\82382_GB1004.dgn

DESIGN AGENCY
Michael Baker INTERNATIONAL

DESIGNER
KJM

REVIEWER
KGJ 05/22/24

PROJECT ID
82382

SHEET 8 | TOTAL 2696

Preliminary Plans - For Reference Only

E. 9TH ST.
E. 14TH ST.
E. 18TH ST.
CARNEGIE AVE.
ONTARIO ST.
E. 22ND ST.
COMMUNITY COLLEGE AVE.
EX. RAMP E-17

STA. 60+94.05, ℄ E. 14TH ST. NB = STA. 39+14.79, ℄ CONST. CARNEGIE AVE.
STA. 40+76.26, ℄ E. 14TH ST. SB = STA. 39+05.29, ℄ CONST. CARNEGIE AVE.
STA. 40+31.31, 36.0' LT, ℄ E. 14TH ST. SB = STA. 591+02.82, ℄ RAMP A3
℄ CONST. CARNEGIE AVE.
CURVE PE14S-02
CURVE PCARN-03
CURVE PE18-02
CURVE PCARN-02
℄ E. 18TH ST.
STA. 24+85.82, ℄ E. 18TH ST. = STA. 41+42.22, ℄ CONST. CARNEGIE AVE.
EX. NO. 7 COMBINED SEWER
STRUCTURE NO. 9 CUY-77-1587 SFN 1806910
E. 14TH ST. SB FUTURE BUILD LIMIT STA. 35+86.24, ℄ E. 14TH ST. SB
℄ EX. R/W E. 19TH ST.
℄ CENTRAL AVE. CONNECTOR
CURVE PRA2-03
PR. WALL AD ℄ RAMP A1
℄ E. 14TH ST. SB
CURVE PRA3-02
PR. 30" WATERLINE
STRUCTURE NO. 10 CUY-90-1653L SFN 1807901
STRUCTURE NO. 11 CUY-90-1653R SFN 1807804
EX. STRUCTURE CUY-90-0010 SFN 1808893
CURVE PI090W-01
CURVE PI090E-01
CURVE PRA2-02
CURVE PI090W-02 ℄ RAMP A3
CURVE PRA3-01
SPIRAL PRA3-01
PR. WALL AC
℄ I.R. 90 WB
CURVE PE18-01
MATCHLINE ℄ I.R. 90 WB STA. 170+00.00, SEE BELOW
CURVE PRB5-01
STA. 169+92.64, 15.80' RT, ℄ I.R. 90 EB = STA. 55+11.67, 6.32' RT, ℄ EX. I.R. 90 = STA. 1500+00.00, ℄ RAMP B5
℄ I.R. 90 EB
STA. 34+84.13, 39.54' RT, ℄ EX. R/W E. 9TH ST. = STA. 1526+19.44, ℄ RAMP B5
CURVE PRB5-02
CURVE PI090E-02 ℄ RAMP B6
CURVE PRB6-01
EX. 20" GAS
75 PR.WALL Z
CURVE PRB6-02
℄ EX. I.R. 90
℄ RAMP B6A
CURVE PRB6A-01
CURVE PRH5-03
PR. WALL Y
℄ E. 14TH ST. NB
STA. 85+86.46, ℄ RAMP J3 = STA. 34+46.77, 13.0' LT, ℄ E. 14TH ST. SB
STA. 194+42.29, 32.59 RT, ℄ I.R. 90 EB = STA. 996+17.64, ℄ RAMP H5
CURVE PE14N-01
E. 14TH ST. NB FUTURE BUILD LIMIT STA. 52+50.00, ℄ E. 14TH ST. NB
CURVE PRB6-02
SPIRAL PRB5-01
LANDSCAPED AREA
STRUCTURE NO. 12 CUY-90-1652S SFN 1807806
CURVE PRB5-04
℄ RAMP B5
CURVE PE14S-01
CURVE PRJ3-02
PR. WALL AJ
℄ RAMP J3
CURVE PRJ3-01
℄ EX. R/W E. 9TH ST.
SPIRAL PRB5-02
EX. NO. 12 COMBINED SEWER
CURVE PRA2-01
℄ RAMP A2
CURVE PRB5-03
℄ RAMP H5
PR. WALL T
℄ RAMP H6
CURVE PRH6-02
STA. 24+16.97, ℄ E. 14TH ST. = STA. 50+00.00, 6.0' LT, E. 14TH ST. NB STA. 30+00.00, 5.0' RT, E. 14TH ST. SB
℄ E. 14TH ST
CURVE PRH4-03
℄ RAMP H4
CURVE PRH4-02
STA. 1192+99.19, ℄ RAMP H6 = STA. 23+91.70, ℄ CONST. E. 22ND ST
RAMP H5 FUTURE BUILD LIMIT STA. 984+38.43, ℄ RAMP H5
RAMP H6 FUTURE BUILD LIMIT STA. 1183+59.15, ℄ RAMP H6
CURVE PRH6-01
PR. WALL M
CURVE PRH5-02
STA. 784+49.88, ℄ RAMP H4 = STA. 983+83.24, 29.15' LT, ℄ RAMP H5
℄ CONST. E. 22ND ST
℄ EX. R/W COMMUNITY COLLEGE AVE.
MATCHLINE ℄ RAMP IH5 STA. 1081+00.00, SEE SHEET 8
MATCHLINE ℄ I.R. 90 EB STA. 195+00.00, SEE SHEET 10

STA. 163+23.70, ℄ I.R. 90 WB = STA. 163+23.70, ℄ EX. I.R. 90
℄ I.R. 90 WB
CURVE PI090W-01
℄ I.R. 90 EB
STA. 163+14.03, ℄ I.R. 90 EB = STA. 48+40.91, 50.27' LT, ℄ EX. I.R. 90
℄ EX. I.R. 90 EB
CURVE PI090E-01
MATCHLINE ℄ I.R. 90 WB STA. 170+00.00, SEE ABOVE

HORIZONTAL SCALE IN FEET
0 50 100 200

SCHEMATIC PLAN - FUTURE INNERBELT PROJECTS

DESIGN AGENCY
Michael Baker INTERNATIONAL
DESIGNER KJM
REVIEWER KGJ 05/22/24
PROJECT ID 82382
SHEET 9 TOTAL 2696

CUY-90-16.28 (CCG3A)

MODEL: Untitled Sheet PAPERSIZE: 34x22 (in.) DATE: 3/28/2025 TIME: 7:10:50 AM USER: RohitLBk
pw:\\mb-us-pw.bentley.com:mb-us-pw-03\Documents\Cleveland_OH\01_Projects\ODOT\District12\82382\400-Engineering\Roadway\Sheets\82382_GB1005.dgn

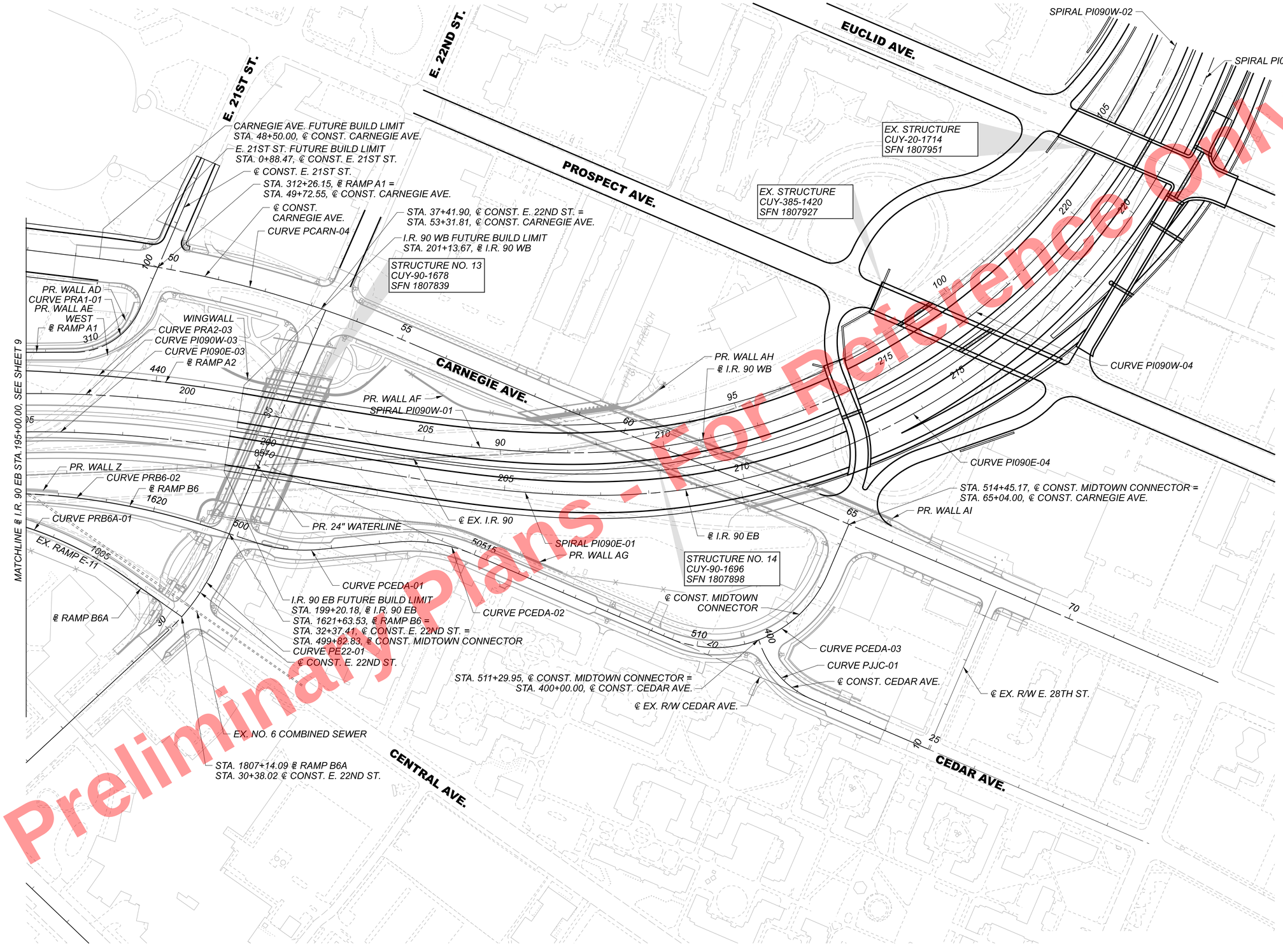

Preliminary Plans - Not for Reference Only

HORIZONTAL SCALE IN FEET
0 50 100 200

SCHEMATIC PLAN - FUTURE INNERBELT PROJECTS

DESIGN AGENCY
Michael Baker INTERNATIONAL

DESIGNER KJM
REVIEWER KGJ 05/22/24
PROJECT ID 82382
SHEET 10 TOTAL 2696

CUY-90-16.28 (CCG3A)

MODEL: Sheet PAPERSIZE: 34x22 (in.) DATE: 3/28/2025 TIME: 7:11:00 AM USER: Rohit.Bk
pw:\\mb-us-pw.bentley.com:mb-us-pw-03\Documents\Cleveland_OH\01_Projects\ODOT\District12\82382\400-Engineering\Roadway\Sheets\82382_GB1006.dgn

℄ INTERIM I.R. 90 EB

CURVE PI090ET-01
P.I. = Sta. 3005+92.95
Δ = 25°41'03" LT
Dc = 03°57'00"
R = 1,450.53'
T = 330.67'
L = 650.23'
E = 37.21'
emax = 0.052
V = 50 mph

CURVE PI090ET-02
P.I. = Sta. 3011+11.18
Δ = 11°52'39" LT
Dc = 03°00'00"
R = 1,909.86'
T = 198.67'
L = 395.92'
E = 10.31'
emax = 0.045
V = 50 mph

CURVE PI090ET-03
P.I. = Sta. 3013+87.85
Δ = 05°13'23" LT
Dc = 03°17'26"
R = 1,741.18'
T = 79.42'
L = 158.72'
E = 1.81'
emax = 0.047 *
V = 50 mph

CURVE PI090ET-04
P.I. = Sta. 3016+27.30
Δ = 11°09'29" LT
Dc = 03°29'41"
R = 1,639.54'
T = 160.15'
L = 319.29'
E = 7.80'
emax = 0.048
V = 50 MPH

NOTE: CURVE OCCURS BEYOND PROPOSED WORK LIMITS

℄ INTERIM I.R. 90 WB

CURVE PI090WT-01
P.I. = Sta. 4000+08.58
Δ = 00°23'03" RT
Dc = 02°14'22"
R = 2,558.48'
T = 8.58'
L = 17.15'
E = .01
emax = 0.038 **
V = 50 mph

CURVE PI090WT-02
P.I. = Sta. 4006+44.80
Δ = 29°30'01" LT
Dc = 03°52'30"
R = 1,478.60'
T = 389.29'
L = 761.30'
E = 50.39'
emax = 0.051
V = 50 mph

CURVE PI090WT-03
P.I. = Sta. 4011+01.10
Δ = 05°49'40" LT
Dc = 03°27'36"
R = 1,655.91'
T = 84.29'
L = 168.43'
E = 2.14'
emax = 0.048
V = 50 mph

CURVE PI090WT-04
P.I. = Sta. 4012+91.76
Δ = 08°03'06" LT
Dc = 03°47'08"
R = 1,513.56'
T = 106.52'
L = 212.70'
E = 3.74'
emax = 0.050
V = 50 mph

CURVE PI090WT-05
P.I. = Sta. 4015+57.32
Δ = 10°40'45" LT
Dc = 03°21'36"
R = 1,705.21'
T = 159.38'
L = 317.83'
E = 7.43'

NOTE: CURVE OCCURS BEYOND PROPOSED WORK LIMITS

℄ I.R. 90 EB

CURVE PI090E-01
P.I. = Sta. 169+30.01
Δ = 17°07'08" RT
Dc = 01°24'00"
R = 4,092.56'
T = 615.98'
L = 1,222.78'
E = 46.1'
emax = 0.035
V = 60 mph

CURVE PI090E-02
P.I. = Sta. 181+96.50
Δ = 15°51'10" LT
Dc = 02°10'00"
R = 2,644.42'
T = 368.19'
L = 731.67'
E = 25.51'
emax = 0.047
V = 60 mph

CURVE PI090E-03
P.I. = Sta. 195+79.88
Δ = 15°59'07" RT
Dc = 02°20'00"
R = 2,455.53'
T = 344.78'
L = 685.09'
E = 24.09'
emax = 0.049
V = 60 mph

SPIRAL PI090E-01
P.I. = Sta. 205+66.41
Ls = 555.00'
θs = 11°47'37"
LT = 370.82'
ST = 185.75'
x = 552.65'
y = 37.97'
k = 277.11'
p = 9.51'
C = 553.96'
Start = Sta. 201+95.58
End = Sta. 207+50.58
C.B. = N63°13'44"E
V = 60 mph

CURVE PI090E-04
P.I. = Sta. 215+02.02
Δ = 58°16'12" LT
Dc = 04°15'00"
R = 1,348.14'
T = 751.44'
L = 1,371.06'
E = 195.28'
emax = 0.060
V = 60 mph

SPIRAL PI090E-02
P.I. = Sta. 223+07.39
Ls = 555.00'
θs = 11°47'38"
LT = 370.82'
ST = 185.75'
x = 548.75'
y = 75.79'
k = 277.11'
p = 9.51'
C = 553.96'
Start = Sta. 221+21.64
End = Sta. 226+76.64
C.B. = N10°46'08"W
V = 60 mph

℄ I.R. 90 WB

CURVE PI090W-01
P.I. = Sta. 170+12.43
Δ = 20°26'46" RT
Dc = 01°30'01"
R = 3,819.00'
T = 688.73'
L = 1,362.81'
E = 61.61'
emax = 0.042
V = 60 mph

CURVE PI090W-02
P.I. = Sta. 183+70.18
Δ = 16°51'04" LT
Dc = 02°00'00"
R = 2,864.79'
T = 424.34'
L = 842.55'
E = 31.26'
emax = 0.045
V = 60 mph

CURVE PI090W-03
P.I. = Sta. 197+56.92
Δ = 16°09'43" RT
Dc = 02°15'00"
R = 2,546.48'
T = 361.55'
L = 718.3'
E = 25.54'
emax = 0.048
V = 60 mph

SPIRAL PI090W-01
P.I. = Sta. 206+76.49
Ls = 555.00'
θs = 11°47'37"
LT = 370.82'
ST = 185.75'
x = 552.65'
y = 37.97'
k = 277.11'
p = 9.51'
C = 553.96'
Start = Sta. 203+05.67
End = Sta. 208+60.67
C.B. = N63°24'20"E
V = 60 mph

CURVE PI090W-04
P.I. = Sta. 216+14.84
Δ = 58°26'48" LT
Dc = 04°15'00"
R = 1,348.14'
T = 754.17'
L = 1,375.21'
E = 196.61'
emax = 0.060
V = 60 mph

SPIRAL PI090W-02
P.I. = Sta. 224+21.63
Ls = 555.00'
θs = 11°47'38"
LT = 370.82'
ST = 185.75'
x = 548.75'
y = 75.79'
k = 277.11'
p = 9.51'
C = 553.96'
Start = Sta. 222+35.88
End = Sta. 227+90.88
C.B. = N10°46'08"W
V = 60 mph

℄ RAMP A1

CURVE PRA1-01
P.I. = Sta. 310+56.73
Δ = 66°35'38" LT
Dc = 38°11'50"
R = 150.00'
T = 98.52'
L = 174.34'
E = 29.46'
emax = 0.060
V = 25 mph

℄ RAMP A2

CURVE PRA2-01
P.I. = Sta. 413+02.39
Δ = 44°30'41" RT
Dc = 04°30'00"
R = 1,273.24'
T = 521.04'
L = 989.14'
E = 102.49'
emax = 0.049
V = 45 mph

CURVE PRA2-02
P.I. = Sta. 424+26.19
Δ = 88°25'03" RT
Dc = 08°30'00"
R = 674.07'
T = 655.7'
L = 1,040.21'
E = 266.31'
emax = 0.060
V = 45 mph

CURVE PRA2-03
P.I. = Sta. 438+79.71
Δ = 09°34'10" RT
Dc = 01°35'00"
R = 3,618.68'
T = 302.9'
L = 604.39'
E = 12.65'
emax = 0.048

℄ RAMP A3

SPIRAL PRA3-01
P.I. = Sta. 579+31.81
Ls = 200.00'
θs = 03°30'00"
LT = 133.36'
ST = 66.69'
x = 199.93'
y = 4.07'
k = 99.99'
p = 1.02'
C = 199.97'
Start = Sta. 577+98.45
End = Sta. 579+98.45
C.B. = N65°05'00"E

CURVE PRA3-01
P.I. = Sta. 580+77.01
Δ = 05°29'42" LT
Dc = 03°30'00"
R = 1,637.02'
T = 78.56'
L = 157.00'
E = 1.88'
emax = 0.048
V = 50 mph

CURVE PRA3-02
P.I. = Sta. 588+26.63
Δ = 88°45'09" LT
Dc = 24°45'00"
R = 231.50'
T = 226.51'
L = 358.60'
E = 92.38'
emax = 0.060
V = 30 mph

℄ RAMP IB5

CURVE PRIB5-01
P.I. = Sta. 1703+50.98
Δ = 15°21'03" RT
Dc = 02°12'00"
R = 2,604.35'
T = 350.98'
L = 697.76'
E = 23.54'
emax = 0.038
V = 50 mph

SPIRAL PRIB5-01
P.I. = Sta. 1707+98.87
Ls = 150.00'
θs = 26°03'45"
LT = 101.11'
ST = 51.01'
x = 146.93'
y = 22.41'
k = 74.49'
p = 5.64'
C = 148.63'
Start = Sta. 1706+97.76
End = Sta. 1708+47.76
C.B. = N83°40'53"E

CURVE PRIB5-02
P.I. = Sta. 1720+55.32
Δ = 195°33'01" RT
Dc = 34°45'00"
R = 164.88'
T = 1,207.55'
L = 562.73'
E = 1,053.88'
emax = 0.060
V = 25 mph

SPIRAL PRIB5-02
P.I. = Sta. 1714+61.51
Ls = 150.00'
θs = 26°03'45"
LT = 101.11'
ST = 51.01'
x = 141.83'
y = 44.42'
k = 74.49'
p = 5.64'
C = 148.63'
Start = Sta. 1714+10.50
End = Sta. 1715+60.50
C.B. = N45°59'16"W
emax = 0.060
V = 25 mph

℄ RAMP B6

CURVE PRB6-01
P.I. = Sta. 1605+84.05
Δ = 22°30'15" LT
Dc = 07°00'00"
R = 818.51'
T = 162.84'
L = 321.49'
E = 16.04'
emax = 0.058
V = 45 mph

CURVE PRB6-02
P.I. = Sta. 1618+11.29
Δ = 25°51'58" RT
Dc = 04°00'00"
R = 1,432.39'
T = 328.93'
L = 646.65'
E = 37.28'
emax = 0.028
V = 30 mph

℄ RAMP B6A

CURVE PRB6A-01
P.I. = Sta. 1802+97.78
Δ = 42°35'27" RT
Dc = 7°30'00"
R = 763.94'
T = 297.78'
L = 567.88'
E = 55.98'
emax = 0.040
V = 30 mph

℄ EX. RAMP 4

CURVE PR4-01
P.I. = Sta. 901+46.94
Δ = 28°07'01" RT
Dc = 32°00'00"
R = 179.05'
T = 44.84'
L = 87.87'
E = 5.53'
emax = MATCH EXISTING (NO ROADWAY WORK)
V = 20 mph

CURVE PR4-02
P.I. = Sta. 905+02.99
Δ = 140°30'49" RT
Dc = 51°00'00"
R = 112.34'
T = 313.02'
L = 275.52'
E = 220.23'
emax = MATCH EXISTING (0.059)
V = 20 mph

CURVE PR4-03
P.I. = Sta. 905+02.70
Δ = 22°02'57" RT
Dc = 30°00'00"
R = 190.99'
T = 37.21'
L = 73.5'
E = 3.59'
emax = MATCH EXISTING (0.033)
V = 20 mph

SPIRAL PR4-01
P.I. = Sta. 905+89.73
Ls = 150.00'
θs = 22°30'00"
LT = 100.82'
ST = 50.75'
x = 143.89'
y = 38.58'
k = 143.89'
p = 38.58'
C = 148.97'
Start = Sta. 905+38.99
End = Sta. 906+88.99
C.B. = N17°17'08"E

℄ RAMP IH4

CURVE PRIH4-01
P.I. = Sta. 15+38.01
Δ = 80°19'38" RT
Dc = 10°30'00" (NDC = 9°00'00")
R = 545.67' (NDC = 637.00')
T = 460.54'
L = 765.02'
E = 168.37'
emax = 0.054
V = 35 mph

CURVE PRIH4-02
P.I. = Sta. 19+95.29
Δ = 00°56'28" RT
Dc = 01°54'00"
R = 3,015.57'
T = 24.76'
L = 49.53'
E = .010'
emax = 0.020
V = 30 mph

℄ RAMP IH5

CURVE PRIH5-01
P.I. = Sta. 1080+20.78
Δ = 81°16'06" RT
Dc = 09°37'46" (NDC = 9°00'00")
R = 595.00' (NDC = 637.00')
T = 510.59'
L = 843.95'
E = 189.05'
emax = 0.058
V = 40 mph

℄ RAMP H5

CURVE PRH5-03
P.I. = Sta. 992+53.42
Δ = 48°11'11" RT
Dc = 06°30'00"
R = 881.47'
T = 394.18'
L = 741.33'
E = 84.12'
emax = 0.057
V = 45 mph

℄ RAMP IH6

CURVE PRIH6-01
P.I. = Sta. 1272+05.44
Δ = 46°23'19" RT
Dc = 11°57'00"
R = 479.46'
T = 205.44'
L = 388.19'
E = 42.16'
emax = 0.058
V = 35 mph

CURVE PRIH6-02
P.I. = Sta. 1184+72.89
Δ = 22°27'19" RT
Dc = 10°00'00"
R = 572.96'
T = 113.74'
L = 224.55'
E = 11.18'
emax = 0.053
V = 35 mph

℄ RAMP H6

CURVE PRH6-02
P.I. = Sta. 1189+12.52
Δ = 69°06'30" RT
Dc = 12°00'00"
R = 477.46'
T = 328.82'
L = 575.9'
E = 102.27'
emax = 0.057
V = 35 mph

℄ RAMP IJ3

CURVE PRIJ3-01
P.I. = Sta. 94+88.28
Δ = 20°37'12" RT
Dc = 03°00'00"
R = 1,909.86'
T = 347.42'
L = 687.33'
E = 31.34'
emax = 0.045
V = 50 mph

CURVE PRIJ3-02
P.I. = Sta. 100+12.53
Δ = 22°30'40" RT
Dc = 06°11'08"
R = 926.27'
T = 184.34'
L = 363.93'
E = 18.16'
emax = 0.037
V = 30 mph

CURVE PRIJ3-03
P.I. = Sta. 104+62.29
Δ = 94°38'42" RT
Dc = 23°00'00"
R = 249.11'
T = 270.17'
L = 411.5'
E = 118.38'
emax = 0.060
V = 30 mph

CURVE PRIJ3-04
P.I. = Sta. 109+39.13
Δ = 69°22'21" LT
Dc = 23°00'00"
R = 249.11'
T = 172.40'
L = 301.62'
E = 53.84'
emax = 0.060
V = 30 mph

CURVE PRIJ3-05
P.I. = Sta. 111+50.37
Δ = 25°48'24" LT
Dc = 16°00'08"
R = 358.05'
T = 82.03'
L = 161.27'
E = 9.28'
emax = 0.055
V = 30 mph

NOTES:

* emax = 0.051 WHEN MATCHING INTO EXISTING

** THEORETICAL emax. SEE SUPERELEVATION TABLE FOR ACHIEVED emax.

For Reference Only
Preliminary Plans Not For Construction

HORIZONTAL CURVE DATA

DESIGN AGENCY
Michael Baker INTERNATIONAL

DESIGNER KJM
REVIEWER KGJ 05/22/24
PROJECT ID 82382
SHEET 11 TOTAL 2696

CUY-90-16.28 (CCG3A)

MODEL: Sheet 1 PAPERSIZE: 34x22 (in.) DATE: 3/28/2025 TIME: 7:11:10 AM USER: Rohit.Bk
pw:\\mb-us-pw.bentley.com:mb-us-pw-03\Documents\Cleveland_OH01_Projects\ODOT\District12\82382400-Engineering\Roadway\Sheets\82382_GB2001.dgn

℄ CONST. CEDAR AVE.

CURVE PJJC-01
P.I. = Sta. 400+96.67
Δ = 46°16'18" LT
Dc = 29°00'00"
R = 197.57'
T = 84.42'
L = 159.56'
E = 17.28'
emax = 0.020
V = 25 mph

℄ CONST. CARNEGIE AVE.

CURVE PCARN-01
(NOT SHOWN)
P.I. = Sta. 12+70.80
Δ = 07°47'04" RT
Dc = 04°00'00"
R = 1,432.39'
T = 97.46'
L = 194.61'
E = 3.31'
emax = 0.020
V = 30 mph

CURVE PCARN-02
P.I. = Sta. 20+17.53
Δ = 03°09'08" LT
Dc = 00°34'23"
R = 10,000.00'
T = 275.15'
L = 550.16'
E = 3.78'
emax = 0.020
V = 30 mph

CURVE PCARN-03
P.I. = Sta. 38+03.24
Δ = 10°57'52" RT
Dc = 03°15'00"
R = 1,762.95'
T = 169.2'
L = 337.37'
E = 8.1'
emax = 0.020
V = 30 mph

CURVE PCARN-04
P.I. = Sta. 51+80.05
Δ = 16°18'44" RT
Dc = 02°30'00"
R = 2,291.83'
T = 328.47'
L = 652.49'
E = 23.42'
emax = 0.020
V = 30 mph

℄ MIDTOWN CONNECTOR

CURVE PCEDA-01
P.I. = Sta. 501+07.45
Δ = 23°50'47" RT
Dc = 17°30'00"
R = 327.40'
T = 69.13'
L = 136.26'
E = 7.22'
emax = NC
V = 30 mph

CURVE PCEDA-02
P.I. = Sta. 504+17.17
Δ = 28°38'45" RT
Dc = 17°30'00"
R = 327.40'
T = 83.59'
L = 163.69'
E = 10.50'
emax = NC
V = 30mph

CURVE PCEDA-03
P.I. = Sta. 511+89.61
Δ = 90°00'15" LT
Dc = 22°45'00"
R = 251.85'
T = 251.87'
L = 395.62'
E = 104.33'
emax = NC
V = 30 mph

℄ INTERIM E. 14TH ST. NB CROSSOVER

CURVE PIE14NC-01
P.I. = Sta. 252+47.68
Δ = 17°25'21" LT
Dc = 15°00'00"
R = 381.97'
T = 58.53'
L = 116.15'
E = 4.46'
emax = 0.020
V = 25 mph

CURVE PIE14NC-02
P.I. = Sta. 253+88.60
Δ = 13°37'43" RT
Dc = 15°00'00"
R = 381.97'
T = 45.64'
L = 90.86'
E = 2.72'
emax = 0.020
V = 25 mph

℄ INTERIM E. 14TH ST. SB

CURVE PIE14S-01
P.I. = Sta. 201+23.23
Δ = 04°52'17" LT
Dc = 10°29'37"
R = 546.00'
T = 23.23'
L = 46.42'
E = 0.49'
emax = 0.020
V = 25 mph

CURVE PIE14S-02
P.I. = Sta. 205+12.19
Δ = 37°45'18" LT
Dc = 08°00'08"
R = 716.00'
T = 244.83'
L = 471.81'
E = 40.70'
emax = 0.020
V = 25 mph

℄ INTERIM E. 14TH ST. NB

CURVE PIE14N-01
P.I. = Sta. 301+23.65
Δ = 04°52'17" LT
Dc = 10°18'18"
R = 556.00'
T = 23.65'
L = 47.27'
E = 0.50'
emax = 0.020
V = 25 mph

CURVE PIE14N-02
P.I. = Sta. 303+16.02
Δ = 03°51'04" LT
Dc = 10°54'49"
R = 525.00'
T = 17.65'
L = 35.29'
E = 0.30'
emax = 0.020
V = 25 mph

CURVE PIE14N-03
P.I. = Sta. 305+27.02
Δ = 5°55'57" LT
Dc = 11°36'39"
R = 493.46'
T = 25.57'
L = 51.09'
E = 0.66'
emax = 0.020
V = 25 mph

℄ E. 14TH ST. SB

CURVE PE14S-02
P.I. = Sta. 42+23.78
Δ = 03°12'46" LT
Dc = 02°00'00"
R = 2,864.79'
T = 80.34'
L = 160.64'
E = 1.13'
emax = 0.020
V = 30 mph

℄ E. 14TH ST. NB

CURVE PE14N-01
P.I. = Sta. 53+48.32
Δ = 41°09'46" LT
Dc = 12°00'00"
R = 477.46'
T = 179.29'
L = 343.02'
E = 32.55'
emax = 0.02
V = 30 mph

℄ E. 18TH ST.

CURVE PE18-01
P.I. = Sta. 21+08.75
Δ = 33°37'07" RT
Dc = 15°54'56"
R = 360.00'
T = 108.75'
L = 211.23'
E = 16.07'
emax = 0.020
V = 30 mph

CURVE PE18-02
P.I. = Sta. 24+94.95
Δ = 07°31'32" LT
Dc = 07°42'00"
R = 744.10'
T = 48.94'
L = 97.73'
E = 1.61'
emax = 0.020
V = 30 mph

℄ CONST. E. 22ND ST.

CURVE PE22-01
P.I. = Sta. 30+87.75
Δ = 23°42'46" LT
Dc = 13°00'00"
R = 440.74'
T = 92.53'
L = 182.41'
E = 9.61'
emax = 0.020
V = 30 mph

℄ CONST. CENTRAL AVE. CONNECTOR

CURVE PCENTC-01
P.I. = Sta. 602+27.88
Δ = 35°19'31" LT
Dc = 50°00'00"
R = 114.59'
T = 36.49'
L = 70.65'
E = 5.67'
emax = 0.020
V = 20 mph

℄ RAMP B5 (FUTURE BUILD)

CURVE PRB5-01
P.I. = Sta. 1502+67.34
Δ = 11°32'43" RT
Dc = 02°10'00"
R = 2,644.42'
T = 267.34'
L = 532.86'
E = 13.48'

CURVE PRB5-02
P.I. = Sta. 1506+50.49
Δ = 01°34'05" RT
Dc = 00°40'00"
R = 8,594.37'
T = 117.62'
L = 235.23'
E = .8'

SPIRAL PRB5-01
P.I. = Sta. 1510+39.92
Ls = 200.00'
θs = 17°30'00"
LT = 133.99'
ST = 67.26'
x = 198.14'
y = 20.23'
k = 99.69'
p = 5.07'
C = 199.17'
Start = Sta. 1509+05.93
End = Sta. 1511+05.93
C.B. = N78°36'35"E

CURVE PRB5-03
P.I. = Sta. 1520+18.95
Δ = 219°27'19" RT
Dc = 17°30'00"
R = 327.40'
T = 913.02'
L = 1,254.03'
E = 642.54'

SPIRAL PRB5-02
P.I. = Sta. 1524+10.21
Ls = 150.00'
θs = 13°07'30"
LT = 100.28'
ST = 50.25'
x = 147.91'
y = 22.77'
k = 147.91'
p = 22.77'
C = 149.65'
Start = Sta. 1523+59.96
End = Sta. 1525+09.96
C.B. = N41°30'43"W

CURVE PRB5-04
P.I. = Sta. 1526+14.70
Δ = 01°02'50" RT
Dc = 00°30'00"
R = 11,462.06'
T = 104.74'
L = 209.48'
E = .48'

℄ RAMP H4 (FUTURE BUILD)

CURVE PRH4-01
P.I. = Sta. 775+42.88
Δ = 08°00'00" RT
Dc = 04°00'00"
R = 1,432.39'
T = 100.16'
L = 200'
E = 3.5'
V = 30 mph

CURVE PRH4-02
P.I. = Sta. 780+12.79
Δ = 65°42'59" RT
Dc = 10°00'00"
R = 572.96'
T = 370.07'
L = 657.16'
E = 109.12'
V = 30 mph

CURVE PRH4-03
P.I. = Sta. 783+74.95
Δ = 06°00'00" RT
Dc = 04°00'00"
R = 1,432.39'
T = 75.07'
L = 150'
E = 1.97'
V = 30 mph

℄ RAMP H5 (FUTURE BUILD)

CURVE PRH5-01
P.I. = Sta. 973+83.24
Δ = 05°00'00" RT
Dc = 02°30'00"
R = 2,291.83'
T = 100.06'
L = 200.00'
E = 2.18'

CURVE PRH5-02
P.I. = Sta. 980+46.97
Δ = 76°25'13" RT
Dc = 08°00'00"
R = 716.20'
T = 563.8'
L = 955.25'
E = 195.29'

℄ RAMP H6 (FUTURE BUILD)

CURVE PRH6-01
P.I. = Sta. 1182+78.00
Δ = 72°51'20" RT
Dc = 10°00'00"
R = 572.96'
T = 422.85'
L = 728.56'
E = 139.14'
emax = 0.053
V = 35 mph

℄ RAMP J3 (FUTURE BUILD)

SPIRAL PRJ3-01
P.I. = Sta. 71+33.57
Ls = 200.00'
θs = 10°30'00"
LT = 133.57'
ST = 66.88'
x = 199.33'
y = 12.19'
k = 99.89'
p = 3.05'
C = 199.70'
Start = Sta. 70+00.00
End = Sta. 72+00.00
C.B. = N70°31'06"W

CURVE PRJ3-01
P.I. = Sta. 76+77.77
Δ = 82°24'31" RT
Dc = 10°30'00"
R = 545.67'
T = 477.77'
L = 784.84'
E = 179.6'

CURVE PRJ3-02
P.I. = Sta. 84+52.55
Δ = 50°23'21" LT
Dc = 17°30'00"
R = 327.40'
T = 154.03'
L = 287.94'
E = 34.42'

℄ E. 14TH ST. SB (FUTURE BUILD)

CURVE PE14S-01
P.I. = Sta. 32+71.61
Δ = 37°41'15" LT
Dc = 14°00'00"
R = 409.26'
T = 139.67'
L = 269.20'
E = 23.18'
V = 30 mph

℄ E. 14TH ST. (FUTURE BUILD)

CURVE PE14-01
P.I. = Sta. 17+47.21
Δ = 09°18'12" LT
Dc = 04°00'00"
R = 1,432.39'
T = 116.55'
L = 232.59'
E = 4.73'
V = 30 mph

Preliminary Plans For Reference Only

HORIZONTAL CURVE DATA

CUY-90-16.28 (CCG3A)
MODEL: Sheet 2 PAPERSIZE: 34x22 (in.) DATE: 3/28/2025 TIME: 7:11:11 AM USER: Rohit.Bk
pw:\\mb-us-pw.bentley.com:mb-us-pw-03\Documents\Cleveland_OH\01_Projects\ODOT\District12\82382400-Engineering\Roadway\Sheets\82382_GB2001.dgn

DESIGN AGENCY
Michael Baker INTERNATIONAL

DESIGNER
KJM

REVIEWER
KGJ 05/22/24

PROJECT ID
82382

SHEET 12 TOTAL 2696

CURVE	CONTROL POINT	NORTHING	EASTING	STATION	BEARING
BL INTERIM I.R. 90 EB					
	POB	668377.495	2194839.551	3000+00.00	
	PC	668479.305	2195081.261	3002+62.28	N67°9'32"E
PI090ET-01	PI	668607.664	2195386.003	3005+92.95	
	PCC	668855.419	2195605.004	3009+12.51	N41°28'29"E
PI090ET-02	PI	669004.274	2195736.582	3011+11.18	
	PCC	669177.024	2195834.706	3013+08.43	N29°35'49"E
PI090ET-03	PI	669246.078	2195873.930	3013+87.85	
	PCC	669318.416	2195906.704	3014+67.15	N24°22'27"E
PI090ET-04	PI	669464.295	2195972.798	3016+27.30	
	PT	669620.207	2196009.413	3017+86.45	N13°12'58"E
BL INTERIM I.R. 90 WB					
	PC	668455.473	2194819.359	4000+00.00	N67°20'07"E
PI090WT-01	PI	668458.777	2194827.273	4000+08.58	
	PT	668462.029	2194835.209	4000+17.15	N67°43'10"E
	PC	668552.403	2195055.778	4002+55.52	N67°43'10"E
PI090WT-02	PI	668699.998	2195415.999	4006+44.80	
	PCC	669005.840	2195656.840	4010+16.81	N38°13'09"E
PI090WT-03	PI	669072.059	2195708.985	4011+01.10	
	PCC	669143.230	2195754.136	4011+85.24	N32°23'30"E
PI090WT-04	PI	669233.180	2195811.202	4012+91.76	
	PCC	669330.236	2195855.106	4013+97.94	N24°20'24"E
PI090WT-05	PI	669475.448	2195920.794	4015+57.32	
	PT	669630.318	2195958.434	4017+15.77	N13°39'38"E
BL I.R. 90 EB					
	PC	666467.711	2191799.368	163+14.03	N49°54'26"E
PI090E-01	PI	666864.419	2192270.596	169+30.01	
	PT	667104.842	2192837.720	175+36.81	N67°01'35"E
	PC	667218.616	2193106.098	178+28.31	N67°01'35"E
PI090E-02	PI	667362.322	2193445.081	181+96.50	
	PT	667593.161	2193731.915	185+59.98	N51°10'25"E
	PC	668016.433	2194257.862	192+35.09	N51°10'25"E
PI090E-03	PI	668232.599	2194526.463	195+79.88	
	PT	668366.436	2194844.209	199+20.18	N67°09'32"E
	TS	668473.341	2195098.016	201+95.58	N67°09'32"E
SPIRAL PI090E-01	PI	668617.287	2195439.762	205+66.41	
	SC	668722.857	2195592.595	207+50.58	N55°21'54"E
PI090E-04	PI	669149.936	2196210.875	215+02.03	
	CS	669900.413	2196172.792	221+21.64	N02°54'18"E
SPIRAL PI090E-02	PI	670085.924	2196163.378	223+07.39	
	ST	670444.613	2196069.287	226+76.64	N14°41'55"W
	POT	672500.995	2195529.854	248+02.60	N14°41'55"W
BL I.R. 90 WB					
	PC	666453.640	2191624.133	163+23.70	N47°34'43"E
PI090W-01	PI	666918.241	2192132.555	170+12.43	
	PT	667175.970	2192771.245	176+86.51	N68°01'29"E
	PC	667273.014	2193011.735	179+45.84	N68°01'29"E
PI090W-02	PI	667431.806	2193405.245	183+70.18	
	PT	667697.852	2193735.827	187+88.40	N51°10'25"E
	PC	668078.400	2194208.685	193+95.37	N51°10'25"E
PI090W-03	PI	668305.080	2194490.352	197+56.92	
	PT	668444.399	2194823.983	201+13.67	N67°20'07"E
	TS	668518.384	2195001.156	203+05.67	
SPIRAL PI090W-01	PI	668661.276	2195343.344	206+76.49	
	SC	668766.375	2195496.502	208+60.67	N55°32'30"E
PI090W-04	PI	669193.089	2196118.341	216+14.84	
	CS	669946.286	2196080.120	222+35.88	N02°54'18"W
SPIRAL PI090W-02	PI	670131.797	2196070.706	224+21.63	
	ST	670490.486	2195976.614	227+90.88	N14°41'55"W
	POT	672476.522	2195455.635	248+44.11	N14°41'55"W

CURVE	CONTROL POINT	NORTHING	EASTING	STATION	BEARING
BL RAMP A1					
	POB	667843.423	2193663.077	300+00.00	
	PI	668038.565	2193953.799	303+50.14	N56°07'46"E
	PC	668362.897	2194468.150	309+58.21	N57°45'57"E
PRA1-01	PI	668415.446	2194551.486	310+56.73	
	PT	668512.799	2194536.366	311+32.55	N08°49'41"W
	POT	668605.281	2194522.003	312+26.15	N08°49'41"W
BL RAMP A2					
	POB	666095.129	2194930.590	400+00.00	
	PC	666295.208	2194175.297	407+81.34	N75°09'47"W
PRA2-01	PI	666428.633	2193671.626	413+02.39	
	PCC	666876.878	2193405.990	417+70.49	N30°39'06"W
PRA2-02	PI	667440.968	2193071.702	424+26.19	
	PT	667790.706	2193626.345	428+10.69	N57°45'57"E
	PC	668199.342	2194274.391	435+76.82	N57°45'57"E
PRA2-03	PI	668360.901	2194530.605	438+79.71	
	PT	668477.619	2194810.111	441+81.20	N67°20'07"E
BL RAMP A3					
	POB	667188.082	2192703.560	576+28.68	
	TS	667256.457	2192858.955	577+98.45	N66°15'00"E
SPIRAL PRA3-01	PI	667310.168	2192981.020	579+31.81	
	SC	667340.704	2193040.309	579+98.45	N62°45'00"E
PRA3-01	PI	667376.674	2193110.150	580+77.01	
	PT	667419.168	2193176.226	581+55.45	N57°15'18"E
	PC	667659.687	2193550.224	586+00.11	N57°15'18"E
PRA3-02	PI	667782.208	2193740.740	588+26.63	
	PT	667975.346	2193622.396	589+58.71	N31°29'52"W
	POT	668098.218	2193547.106	591+02.82	N31°29'52"W
BL RAMP B5 (FUTURE BUILD)					
	PC	666846.207	2192360.326	1500+00.00	N59°40'03"E
PRB5-01	PI	666981.217	2192591.067	1502+67.34	
	PCC	667067.315	2192844.161	1505+32.86	N71°12'46"E
PRB5-02	PI	667105.195	2192955.516	1506+50.49	
	PT	667140.014	2193067.866	1507+68.09	N72°46'51"E
	TS	667180.817	2193199.523	1509+05.93	
SPIRAL PRB5-01	SPI	667220.482	2193327.508	1510+39.92	
	SC	667220.152	2193394.772	1511+05.93	S89°43'09"E
	CS	666640.979	2193183.872	1523+59.96	N50°15'50"W
SPIRAL PRB5-02	SPI	666673.102	2193145.229	1524+10.21	
	SC	666753.040	2193084.687	1525+09.96	N37°08'20"W
PRB5-03	PI	666836.539	2193021.448	1526+14.70	
	PT	666921.180	2192959.746	1527+19.44	N36°05'30"W
BL RAMP B6					
	POB	667099.268	2192855.318	1597+61.23	
	PC	667294.636	2193485.708	1604+21.20	N72°46'51"E
PRB6-01	PI	667342.842	2193641.252	1605+84.05	
	PT	667446.911	2193766.500	1607+42.69	N50°16'37"E
	PC	667919.618	2194335.412	1614+82.36	N50°16'37"E
PRB6-02	PI	668129.831	2194588.408	1618+11.29	
	PT	668208.610	2194907.767	1621+29.01	N76°08'35"E
	POT	668216.875	2194941.275	1621+63.53	N76°08'35"E
BL RAMP B6A					
	PC	667850.685	2194277.487	1800+00.00	N50°16'37"E
PRB6A-01	PI	668040.989	2194506.521	1802+97.78	
	PT	668026.091	2194803.925	1805+67.88	S87°07'55"E
	POT	668018.78	2194949.953	1807+14.07	
BL RAMP H4 (FUTURE BUILD)					
	POB/PC	666280.996	2194521.836	774+42.72	N75°09'47"W
PRH4-01	PI	666306.645	2194425.013	775+42.88	
	PCC	666345.519	2194332.702	776+42.88	N67°09'47"W
PRH4-02	PI	666489.148	2193991.641	780+12.79	
	PCC	666859.099	2193982.298	782+99.88	N01°26'48"W
PRH4-03	PI	666934.144	2193980.403	783+74.95	
	PT	667008.976	2193986.362	784+49.88	N04°33'12"E

CURVE	CONTROL POINT	NORTHING	EASTING	STATION	BEARING
BL RAMP H5 (FUTURE BUILD)					
	POB	666179.229	2194952.868	970+00.00	
	PC	666251.742	2194679.134	972+83.18	N75°09'47"W
PRH5-01	PI	666277.365	2194582.407	973+83.24	
	PCC	666311.321	2194488.281	974+83.18	N70°09'47"W
PRH5-02	PI	666502.644	2193957.938	980+46.97	
	PT	667063.083	2194019.389	984+38.43	N06°15'27"E
	PC	667481.386	2194065.256	988+59.24	N06°15'27"E
PRH5-03	PI	667873.215	2194108.219	992+53.42	
	PT	668102.429	2194428.901	996+00.57	N54°26'38"E
BL RAMP H6 (FUTURE BUILD)					
	POB/PC	666531.161	2194198.133	1178+55.15	N40°24'18"W
PRH6-01	PI	666853.154	2193924.046	1182+78.00	
	PCC	667209.978	2194150.936	1185+83.71	N32°27'02"E
PRH6-02	PI	667487.453	2194327.370	1189+12.52	
	PT	667421.566	2194649.519	1191+59.61	S78°26'28"E
	POT	667393.597	2194786.270	1192+99.19	
BL RAMP IB5					
	PC	666848.174	2192379.833	1700+00.00	N59°39'30"E
PRIB5-01	PI	667025.475	2192682.743	1703+50.98	
	CS	667116.261	2193021.782	1706+97.76	N75°00'33"E
SPIRAL PRIB5-01	SPI	667142.414	2193119.447	1707+98.87	
	SC	667132.619	2193169.505	1708+47.76	S78°55'42"E
	CS	666823.408	2193063.958	1714+10.50	N63°22'41"W
SPIRAL PRIB5-02	SPI	666846.264	2193018.359	1714+61.51	
	ST	666926.674	2192957.068	1715+60.50	N37°18'56"W
PRIB5-02	PI	667039.061	2192871.404	1717+01.81	
	POT	667366.494	2192644.814	1721+00.00	N34°41'03"W
BL RAMP IH4					
	POB	666303.968	2194458.116	10+00.00	
	PC	666324.007	2194383.275	10+77.48	N75°00'39"W
PRIH4-01	PI	666443.117	2193938.409	15+38.01	
	PT	666901.672	2193981.078	18+42.50	N05°18'58"E
	PC	667029.149	2193992.940	19+70.52	N05°18'58"E
PRIH4-02	PI	667053.806	2193995.235	19+95.29	
	PT	667078.422	2193997.934	20+20.05	N06°15'26"E
BL RAMP IH5					
	POB	666184.398	2194954.262	1070+00.00	
	PI	666263.379	2194656.110	1073+08.43	N75°09'47"W
	PC	666315.560	2194461.220	1075+10.19	N75°00'39"W
PRIH5-01	PI	666447.617	2193968.000	1080+20.78	
	PT	666955.168	2194023.652	1083+54.14	N06°15'27"E
	POT	667139.197	2194043.831	1085+39.27	
BL RAMP IH6					
	PC	666539.955	2194139.778	1270+00.00	N36°23'37"W
PRIH6-01	PI	666705.328	2194017.884	1272+05.44	
	PT	666907.652	2194053.541	1273+88.19	N09°59'43"E
	POT	667001.991	2194070.167	1274+83.98	
BL RAMP IJ3					
	POB/PC	666273.689	2194358.906	91+40.86	N74°05'40"W
PRIJ3-01	PI	666368.901	2194024.782	94+88.28	
	PCC	666575.681	2193745.593	98+28.19	N53°28'28"W
PRIJ3-02	PI	666685.397	2193597.459	100+12.53	
	PCC	666843.468	2193502.618	101+92.12	N30°57'48"W
PRIJ3-03	PI	667075.141	2193363.616	104+62.29	
	PT	667194.924	2193605.785	106+03.62	
	PC	667267.239	2193751.985	107+66.73	N63°40'54"E
PRIJ3-04	PI	667343.676	2193906.520	109+39.13	
	PCC	667515.231	2193889.424	110+68.35	N05°41'27"W
PRIJ3-05	PI	667596.853	2193881.290	111+50.37	
	PT	667666.794	2193838.435	112+29.62	N31°29'51"W

Preliminary Plans - Not for Reference Only

CENTERLINE DATA
MAINLINE & SERVICE RAMPS

CUY-90-16.28 (CCG3A)

MODEL: Sheet PAPERSIZE: 34x22 (in.) DATE: 3/28/2025 TIME: 7:18:18 AM USER: RohlfBk
pw:\\mb-us-pw.bentley.com:mb-us-pw-03\Documents\Cleveland_OH\OI_Projects\ODOT\District2\82382\400-Engineering\Roadway\Sheets\82382_GB300Ldgn

DESIGN AGENCY
Michael Baker INTERNATIONAL

DESIGNER KJM
REVIEWER KGJ 05/22/24
PROJECT ID 82382
SHEET 13 TOTAL 2696

CURVE	CONTROL POINT	NORTHING	EASTING	STATION	BEARING
CL CONST. CARNEGIE AVE.					
	POB	666518.610	2191157.649	10+00.00	
	PC	666632.757	2191288.102	11+73.34	N48°48'51"E
PCARN-01	PI	666696.932	2191361.445	12+70.80	
	PT	666750.581	2191442.804	13+67.95	N56°35'55"E
	PI	666811.415	2191535.057	14+78.46	
	PC	666950.044	2191759.639	17+42.38	N58°18'50"E
PCARN-02	PI	667094.571	2191993.773	20+17.53	
	PT	667251.753	2192219.606	22+92.54	N55°09'42"E
	PC	668018.106	2193320.666	36+34.04	N55°09'42"E
PCARN-03	PI	668114.765	2193459.542	38+03.24	
	PT	668183.245	2193614.267	39+71.41	N66°07'34"E
	PI	668252.375	2193770.460	41+42.22	
	PC	668556.355	2194411.396	48+51.59	N64°37'34"E
PCARN-04	PI	668697.110	2194708.175	51+80.06	
	PT	668748.843	2195032.541	55+04.08	N80°56'18"E
	PI	668803.137	2195372.969	58+48.81	
	PI	668905.706	2195936.717	64+21.81	N79°41'18"E
	POT	669049.777	2196840.049	73+36.56	N80°56'18"E
CL MIDTOWN CONNECTOR					
	POT	668216.875	2194941.275	499+82.83	
	PC	668230.164	2194995.146	500+38.32	N76°08'35"E
CEDA-01	PI	668246.721	2195062.267	501+07.45	
	PT	668289.001	2195116.964	501+74.58	N52°17'48"E
	PC	668386.241	2195242.762	503+33.58	N52°17'48"E
CEDA-02	PI	668437.364	2195308.901	504+17.17	
	PT	668450.524	2195391.452	504+97.27	N80°56'33"E
	PC	668519.864	2195826.431	509+37.74	N80°56'33"E
CEDA-03	PI	668559.514	2196075.159	511+89.61	
	PT	668808.239	2196035.490	513+33.37	N09°03'42"W
	POT	668918.651	2196017.881	514+45.17	
CL CONST. CEDAR AVE.					
	POB	668616.255	2195987.351	400+00.00	
	PC	668608.845	2195997.109	400+12.25	S52°47'08"E
PJJC-01	PI	668557.789	2196064.338	400+96.67	
	PT	668571.079	2196147.702	401+71.81	N80°56'33"E
	POT	668612.145	2196405.318	404+32.68	
BL INTERIM E. 14TH ST. SB					
	POB	666646.986	2193887.559	197+50.00	
	PC	666990.405	2193955.113	201+00.00	N11°07'43"E
PIES14S-01	PI	667013.194	2193959.596	201+23.23	
	PT	667036.280	2193962.127	201+46.42	N06°15'26"E
	PC	667156.499	2193975.309	202+67.36	N06°15'26"E
PIES14S-02	PI	667399.868	2194001.993	205+12.19	
	PT	667608.622	2193874.079	207+39.17	N31°29'52"W
	POT	667772.316	2193773.777	209+31.15	N31°29'52"W
MATCHLINE					
BL E. 14TH ST. SB					
MATCHLINE					
PE14S-01	PI	667772.316	2193773.777	36+35.00	
	PC	668212.630	2193519.221	41+43.44	N31°29'52"W
PE14S-02	PI	668281.135	2193477.245	42+23.78	
	PT	668347.180	2193431.495	43+04.08	N34°42'38"W
	POT	668404.597	2193391.722	43+73.93	N34°42'38"W

CURVE	CONTROL POINT	NORTHING	EASTING	STATION	BEARING
BL INTERIM E. 14TH ST. NB					
	POB	666645.056	2193897.371	297+50.00	
	PC	666988.475	2193964.925	301+00.00	N11°07'43"E
PIE14N-01	PI	667011.681	2193969.490	301+23.65	
	PT	667035.191	2193972.068	301+47.27	N06°15'26"E
	PC	667185.387	2193988.536	302+98.37	N06°15'26"E
PIE14N-02	PI	667202.932	2193990.460	303+16.02	
	PT	667220.567	2193991.201	303+33.66	N02°24'22"E
	PC	667388.209	2193998.245	305+01.45	N02°24'22"E
PIE14N-03	PI	667413.756	2193999.318	305+27.02	
		667439.277	2193997.745	305+52.54	N03°31'35"W
MATCHLINE					
BL E. 14TH ST. NB					
MATCHLINE					
	PCC	667439.277	2193997.745	52+50.00	N03°31'35"W
PE14N-01	PI	667572.458	2193973.508	53+84.42	
	PT	667682.605	2193896.459	55+12.06	N34°58'24"W
	POT	668359.639	2193422.865	63+38.29	N34°58'24"W
BL INTERIM E. 14TH ST. NB CROSSOVER					
	POB	666420.041	2193870.463	250+00.00	
	PC	666602.817	2193919.172	251+89.16	N14°55'21"E
PIE14NC-01	PI	666659.369	2193934.243	252+47.68	
	PT	666717.840	2193931.690	253+05.31	N02°30'00"W
	PC	666755.453	2193930.048	253+42.95	N02°30'00"W
PIE14NC-02	PI	666801.054	2193928.057	253+88.60	
	PT	666845.840	2193936.867	254+33.81	N11°07'43"E
BL E. 18TH ST.					
	POB/PC	667780.073	2193842.923	20+00.00	N34°58'24"W
PE18-01	PI	667869.189	2193780.585	21+08.76	
	PT	667977.913	2193778.015	22+11.23	N01°21'16"W
	PC	668212.631	2193772.465	24+46.02	N01°21'16"W
PE18-02	PI	668261.554	2193771.308	24+94.95	
	PT	668309.905	2193763.754	25+43.75	N08°52'48"W
	POT	668978.949	2193659.223	32+20.91	N08°52'48"W
CL CONST. E. 22ND ST.					
	POB	666066.809	2194434.335	10+19.03	
	PC	667976.941	2194941.004	29+95.22	N14°51'21"E
PE22-01	PI	688066.376	2194964.727	30+87.75	
	PT	668157.800	2194950.480	31+77.62	N08°51'25"W
	POT	668715.345	2194863.600	37+41.90	N08°51'25"W
CENTRAL AVE. CONNECTOR					
	POB	668106.644	2193774.971	600+00.00	
	PC	668096.324	2193966.080	601+91.39	S86°54'32"E
PCENTC-01	PI	668094.356	2194002.515	602+27.88	
	PT	668113.819	2194033.380	602+62.04	N57°45'5"E
	POT	668200.908	2194171.493	604+25.32	
CL COMMUNITY COLLEGE AVE					
	POB	667416.349	2194792.305	60+00.00	S78°26'28"E
	POT	667005.307	2196802.060	80+51.36	S78°26'28"E
CL CENTRAL AVE					
	POB	668040.521	2194952.956	100+00.00	S87°08'09"E
	POT	668024.502	2195273.124	103+20.57	S87°08'09"E
CL INTERIM E. 14TH ST. (FUTURE BUILD)					
	POB	665804.715	2193684.145	10+01.14	
	PC	666411.365	2193852.305	16+30.66	N15°29'35"E
PE14-01	PI	666523.68	2193883.438	17+47.21	

Preliminary Plans - For Reference Only

CENTERLINE DATA
LOCAL ROADS

DESIGN AGENCY
Michael Baker INTERNATIONAL
DESIGNER KJM
REVIEWER KGJ 05/22/24
PROJECT ID 82382
SHEET 14 TOTAL 2696

CUY-90-16.28 (CCG3A)
MODEL: Sheet PAPERSIZE: 34x22 (in.) DATE: 3/28/2025 TIME: 7:11:24 AM USER: RohitBk
pw:\\mb-us-pw.bentley.com:mb-us-pw-03\Documents\Cleveland.OH\OL_Projects\0007\District2\82382\400-Engineering\Engineering\Roadway\Sheets\82382_GB3002.dgn

CURVE	CONTROL POINT	NORTHING	EASTING	STATION	BEARING
BL EX. RAMP 4					
	POB	669265.469	2196106.287	900+00.00	
	PC	669164.460	2196121.210	901+02.11	S08°24'14"E
PR4-01	PI	669120.105	2196127.762	901+46.94	
	PCC	669077.897	2196112.639	901+89.97	S19°42'47"W
PR4-02	PI	668783.220	2196007.053	905+02.99	
	PCC	669077.786	2195901.157	904+65.49	N19°46'24"W
PR4-03	PI	669112.801	2195888.570	905+02.70	
	CS	669149.981	2195890.047	905+38.99	N02°16'33"E
SPIRAL PR4-01	PI	669200.687	2195892.062	905+89.73	
	ST	669292.227	2195934.313	906+88.99	N24°46'33"E
BL EX. RAMP B5					
	PC	666848.174	2192379.833	1500+00.00	N59°39'30"E
	PI	667017.751	2192669.547	1503+35.69	
	CS	667108.319	2192992.793	1506+67.71	N74°20'53"E
	PI	667149.473	2193139.673	1508+20.24	
	SC	667127.631	2193213.835	1508+92.71	S73°35'22"E
	PI	667070.735	2193407.021	1510+94.10	
	PCC	666877.649	2193349.787	1512+08.85	S16°30'39"W
	PI	666727.360	2193305.238	1513+65.60	
	PT	666756.367	2193151.193	1514+63.86	N79°20'10"W
BL EX. RAMP E-17					
	POB	667663.400	2193430.120	200+00.00	
	PC	667549.599	2193309.226	201+66.03	S46°43'53"W
	PI	667470.615	2193225.318	202+81.27	
	PT	667363.655	2193268.198	203+68.31	S21°50'45"E
	PC	667091.032	2193377.493	206+62.02	S21°50'45"E
	PI	667000.675	2193413.717	207+59.37	
	PCC	666913.409	2193456.857	208+56.62	S26°18'21"E
	PI	666787.729	2193517.692	209+96.25	
	PT	666685.358	2193612.646	211+33.82	S42°50'50"E
CL EX. R/W CARNEGIE AVE					
	POB	667468.290	2192529.403	20+00.00	
	PI	668159.227	2193522.111	32+09.49	N55°09'42"E
	PI	668420.341	2194170.452	39+08.44	N68°03'48"E
	PI	668593.657	2194509.049	42+88.81	N62°53'37"E
	PI	668700.133	2194687.446	44+96.57	N59°10'09"E
	POT	669043.614	2196841.093	66+77.43	N80°56'18"E
CL EX. R/W CEDAR CONNECTOR					
	POB	668622.155	2194556.797	0+00.00	
	PI	668533.026	2194902.720	3+57.22	S75°33'06"E
	PI	668547.173	2194900.516	3+57.22	
	POT	668439.117	2195319.896	7+90.30	S75°33'06"E
CL EX. R/W CEDAR AVE					
	POB	668376.503	2194927.114	10+00.00	N80°56'33"E
	POT	668690.521	2196896.977	29+94.74	N80°56'33"E
CL EX. R/W CENTRAL AVE					
	POB	668115.270	2193458.955	10+00.00	S87°08'09"E
	PI	668039.184	2194979.683	25+22.63	
	POT	668025.324	2195256.706	28+00.00	S87°08'09"E
CL EX. R/W COMMUNITY COLLEGE AVE					
	POB	667634.905	2193929.151	51+09.01	S75°05'37"E
	PI	667400.675	2194809.052	60+19.55	
	POT	667100.147	2196278.460	75+19.38	S78°26'28"E

CURVE	CONTROL POINT	NORTHING	EASTING	STATION	BEARING
CL EX. R/W E. 9TH ST					
	POB	665459.945	2191638.262	11+54.79	
	PC	665561.763	2191819.870	13+62.99	N60°43'22"E
	PI	665701.449	2192069.020	16+48.63	
	PT	665734.884	2192352.692	19+26.87	N83°16'40"E
	PC	665751.436	2192493.121	20+68.27	N83°16'40"E
	PI	665798.278	2192890.546	24+68.44	
	PT	666192.991	2192956.442	27+54.78	N09°28'40"E
	PI	666434.864	2192996.821	30+00.00	
	PC	666505.778	2193009.674	30+72.07	N10°16'22"E
	PI	666722.839	2193049.014	32+92.67	
	PT	666904.211	2192923.446	34+90.38	N34°41'44"W
	POT	667792.494	2192308.468	45+70.77	N34°41'44"W
CL EX. R/W E. 14TH ST					
	POB	667634.905	2193929.151	10+00.00	
	POT	668539.147	2193302.776	21+00.00	N34°42'38"W
CL EX. R/W E. 18TH ST					
	POB	668098.366	2193796.804	2+00.00	
	POT	668493.572	2193735.058	6+00.00	N08°52'48"W
CL EX. R/W E. 19TH ST					
	POB	668078.660	2194190.682	2+00.00	
	POT	668407.688	2194139.034	5+33.06	N08°55'15"W
CL EX. R/W E. 21ST ST					
	POB	668057.312	2194617.356	2+00.00	
	POT	668847.767	2194494.141	10+00.00	N08°51'35"W
CL EX. R/W E. 22ND ST N					
	POB	668039.184	2194979.683	20+73.81	N08°51'29"W
	PI	668729.581	2194872.088	27+72.55	
	POT	668855.516	2194852.462	29+00.00	N08°51'29"W
CL EX. R/W E. 22ND ST S					
	POB	666034.466	2194447.493	0+00.00	
	PI	666440.698	2194554.895	4+20.19	N14°48'33"E
	PI	667400.675	2194809.052	14+13.24	N14°49'44"E
	POT	668039.266	2194978.044	20+73.81	N14°49'21"E
CL EX. R/W E. 28TH ST					
	POB	668612.145	2196405.318	10+00.00	
	POT	668965.204	2196349.454	13+57.45	N08°59'29"W

Preliminary Plans Not For Reference Only

CENTERLINE DATA
EXISTING

CUY-90-16.28 (CCG3A)
MODEL: Sheet PAPERSIZE: 34x22 (in.) DATE: 3/28/2025 TIME: 7:11:29 AM USER: RohlfBk
pw:\\mb-us-pw.bentley.com:mb-us-pw-03\Documents\Cleveland.OH\OI_Projects\ODOT\District2\82382\400-Engineering\Roadway\Sheets\82382_GB3003.dgn

DESIGN AGENCY
Michael Baker INTERNATIONAL

DESIGNER KJM
REVIEWER KGJ 05/22/24
PROJECT ID 82382
SHEET 15 TOTAL 2696

LEGEND:

EXISTING

- (A) ASPHALT PAVEMENT
- (B) CONCRETE PAVEMENT
- (C) BRICK PAVERS
- (D) AGGREGATE BASE
- (E) SANDSTONE
- (F) BALLAST

PROPOSED

1. ITEM 442 - 1-1/2" ASPHALT CONCRETE SURFACE COURSE, 12.5 MM, TYPE A (446), AS PER PLAN, PG76-22M
2. ITEM 441 - 1-1/4" ASPHALT CONCRETE SURFACE COURSE, TYPE 1, (448), AS PER PLAN, PG70-22M
3. ITEM 407 - NON-TRACKING TACK COAT
4. ITEM 442 - 1-3/4" ASPHALT CONCRETE INTERMEDIATE COURSE, 19 MM, TYPE A (446)
5. ITEM 441 - 1-3/4" ASPHALT CONCRETE INTERMEDIATE COURSE, TYPE 2, (448)
6. ITEM 452 - 10" NON-REINFORCED CONCRETE PAVEMENT, CLASS QC 1P
7. ITEM 302 - 9" ASPHALT CONCRETE BASE, PG64-22 (TWO 4.5" LIFTS)
8. ITEM 304 - 6" AGGREGATE BASE
9. ITEM 204 - SUBGRADE COMPACTION
10. ITEM 605 - 6" BASE PIPE UNDERDRAINS WITH GEOTEXTILE FABRIC
11. ITEM 609 - CURB, TYPE 6
12. ITEM 609 - CURB, TYPE 2-A
13. ITEM 609 - CURB, TYPE 4-A
14. ITEM 609 - CURB, TYPE 4-C
15. ITEM 622 - PORTABLE BARRIER, UNANCHORED, AS PER PLAN
16. ITEM 441 - 1-1/4" ASPHALT CONCRETE SURFACE COURSE, TYPE 1, (448), PG64-22
17. ITEM 452 - 8" NON-REINFORCED CONCRETE PAVEMENT, CLASS QC 1P
18. ITEM 304 - 8" AGGREGATE BASE
19. ITEM 608 - 6" CONCRETE WALK, AS PER PLAN
20. ITEM 606 - GUARDRAIL, TYPE MGS
21. ITEM 609 - CURB, TYPE 10-B
22. ITEM 622 - CONCRETE BARRIER, SINGLE SLOPE, TYPE C
23. ITEM 622 - CONCRETE BARRIER, SINGLE SLOPE, TYPE C, AS PER PLAN
24. ITEM 622 - CONCRETE BARRIER, SINGLE SLOPE, TYPE C1, AS PER PLAN
25. ITEM 622 - CONCRETE BARRIER, SINGLE SLOPE, TYPE D

EXISTING ROAD	EXISTING PAVEMENT THICKNESS			
	ASPHALT	CONCRETE	BRICK	AGGREGATE BASE
CARNEGIE AVENUE	3" ±	12" ±		6" ±
CEDAR AVENUE	3" ±	9" ±		6" ±
CENTRAL AVENUE	3" ±	9" ±		6" ±
COMMUNITY COLLEGE AVENUE	3.25" ±	9" ±		4" ±
E. 9TH STREET	3" ±	9" ±		6" ±
E. 14TH STREET	3" ±	8" ±	4" ±	4" ±
E. 18TH STREET	3" ±	8" ±		
E. 19TH STREET	3" ±	9" ±		
E. 22ND STREET	3" ±	9" ±		2" ±
RAMP B5		9" ±		6" ±
RAMP E-10	3" ±	9" ±		6" ±
RAMP E-11	3" ±	9" ±		6" ±
RAMP E-13	3" ±	9" ±		6" ±
RAMP E-17	3" ±	9" ±		6" ±
I-77	5" ±	9" ±		
I-90 (EAST LIMITS)		10" ±		6" ±
I-90 (WEST LIMITS)		10" ±		6" ±

26. ITEM 609 - CONCRETE MEDIAN
27. ITEM 659 - SEEDING AND MULCHING
28. ITEM 526 - REINFORCED CONCRETE APPROACH SLABS WITH QC/QA (T=17")
29. ITEM 605 - 6" SHALLOW PIPE UNDERDRAINS WITH GEOTEXTILE FABRIC
30. ITEM 202 - REMOVAL, MISC.: BURIED TRACK
31. ITEM 305 - 9" CONCRETE BASE, CLASS QC 1P, AS PER PLAN
32. ITEM 441 - 3" ASPHALT CONCRETE INTERMEDIATE COURSE, TYPE 1, (449), AS PER PLAN, PG64-22
33. ITEM 622 - CONCRETE BARRIER, SINGLE SLOPE, TYPE B1
34. ITEM 622 - CONCRETE BARRIER, SINGLE SLOPE, TYPE C1
35. ITEM 452 - 4" NON-REINFORCED CONCRETE PAVEMENT, CLASS QC 1P
36. ITEM 203 - EMBANKMENT, AS PER PLAN
37. ITEM 451 - 12" REINFORCED CONCRETE PAVEMENT, CLASS QC 1P, AS PER PLAN
38. ITEM 608 - WALKWAY MISC.: PAVERS OVER CONCRETE (SEE LANDSCAPING PLANS FOR TYPE)
39. ITEM 203 - ROADWAY, MISC.: REINFORCED TURF
40. ITEM SPECIAL - LOW DENSITY CELLULAR CONCRETE FILL, CLASS II
41. ITEM 254 - PAVEMENT PLANING, ASPHALT CONCRETE (3.25")
42. ITEM 204 - EXCAVATION OF SUBGRADE
43. ITEM 204 - GRANULAR MATERIAL, TYPE B
44. ITEM 204 - GEOTEXTILE FABRIC
45. ITEM 206 - CEMENT STABILIZED SUBGRADE, 12 INCHES DEEP
46. ITEM 441 - 1-1/4" ASPHALT CONCRETE SURFACE COURSE, TYPE 1, (449), (DRIVEWAYS)
47. ITEM 441 - 1-3/4" ASPHALT CONCRETE INTERMEDIATE COURSE, TYPE 2, (449), (DRIVEWAYS)
48. ITEM 526 - REINFORCED CONCRETE APPROACH SLABS WITH QC/QA (T-17"), AS PER PLAN
49. ITEM 204 - PROOF ROLLING
50. ITEM 301 - 6" ASPHALT CONCRETE BASE, PG64-22, (449)

Preliminary Plans - For Reference Only

TYPICAL SECTION LEGEND

CUY-90-16.28 (CCG3A)

MODEL: Legend PAPERSIZE: 34x22 (in.) DATE: 3/28/2025 TIME: 7:11:35 AM USER: RohitLBk
pw:\\mb-us-pw.bentley.com:mb-us-pw-03\Documents\Cleveland_OH\01_Projects\ODOT\District12\82382\400-Engineering\Roadway\Sheets\82382_GY0001.dgn

DESIGN AGENCY
Michael Baker INTERNATIONAL

DESIGNER KJM

REVIEWER KGJ 05/22/24

PROJECT ID 82382

SHEET 16 TOTAL 2696

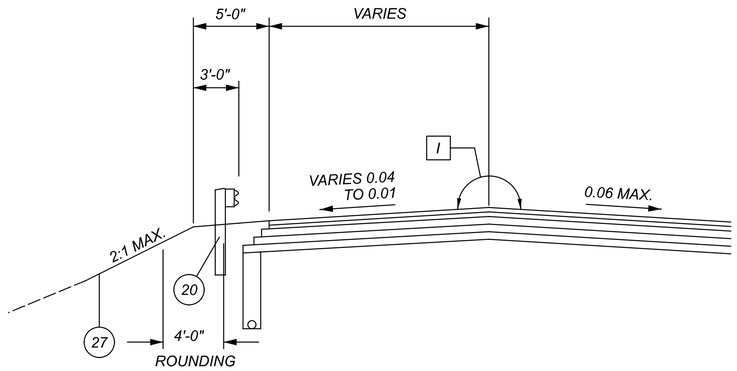

DETAIL 1 - UN-CURBED-HIGH SIDE OF SUPERELEVATED SECTION

I MAX. 0.07 GRADE BREAK

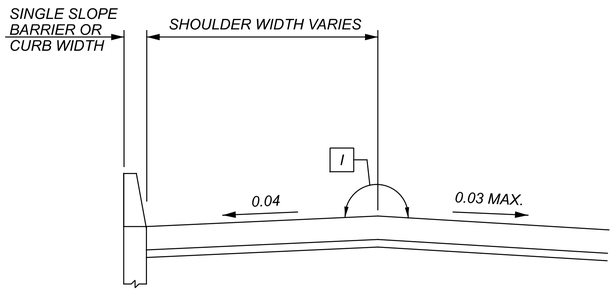

DETAIL 2 - CURBED-HIGH SIDE OF SUPERELEVATED SECTION

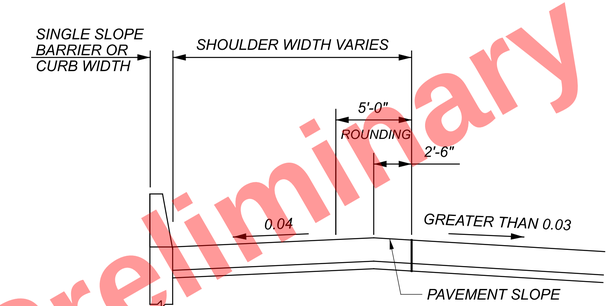

DETAIL 3 - CURBED-HIGH SIDE OF SUPERELEVATED SECTION FOR SHOULDER WIDTHS 8' GREATER

FOR LEGEND, SEE SHEET 16

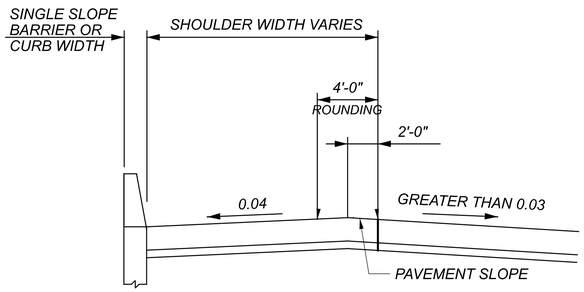

DETAIL 4 - CURBED-HIGH SIDE OF SUPERELEVATED SECTION FOR SHOULDER WIDTHS OF 4' TO 6'

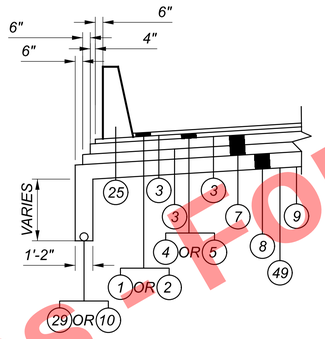

DETAIL 5 - TYPICAL ASPHALT PAVEMENT WITH BARRIER EDGE COURSE

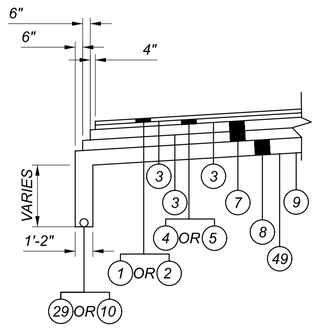

DETAIL 6 - TYPICAL ASPHALT PAVEMENT STEPPING WITHOUT BARRIER

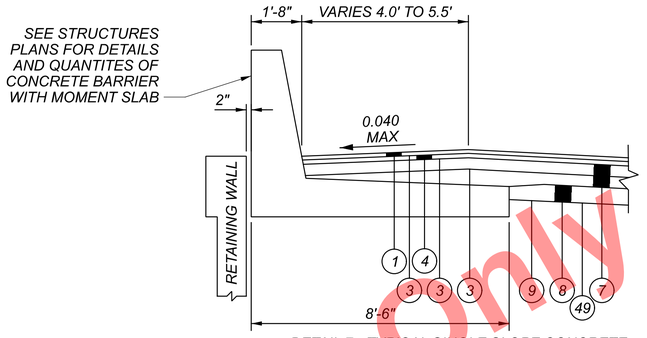

DETAIL 7 - TYPICAL SINGLE SLOPE CONCRETE BARRIER WITH MOMENT SLAB DETAIL ASPHALT PAVEMENT

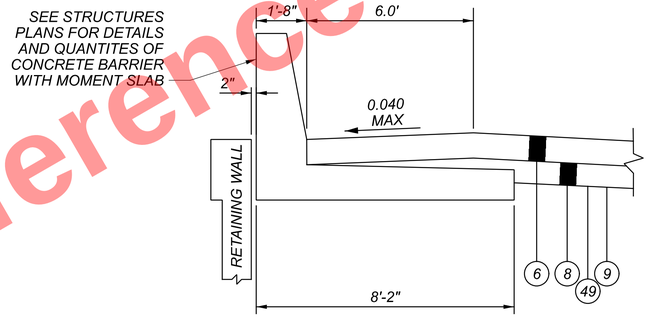

DETAIL 8 - TYPICAL SINGLE SLOPE CONCRETE BARRIER WITH MOMENT SLAB DETAIL CONCRETE PAVEMENT

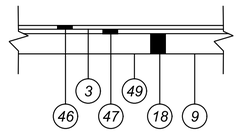

DETAIL 9 - TYPICAL ASPHALT PAVEMENT COMPOSITION FOR COMMERCIAL DRIVEWAYS

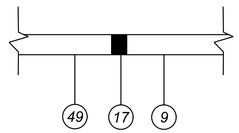

DETAIL 10 - TYPICAL CONCRETE PAVEMENT COMPOSITION FOR COMMERCIAL DRIVEWAYS AND DRIVE APRONS

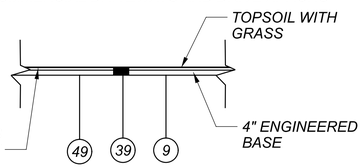

DETAIL 11 - TYPICAL PERMEABLE PAVEMENT COMPOSITION FOR DRIVEWAYS

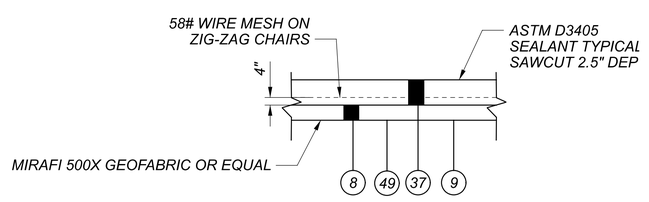

DETAIL 12 - TYPICAL BUS PAD

Preliminary Plans - For Reference Only

TYPICAL SECTION DETAILS

CUY-90-16.28 (CCG3A)

MODEL: Typical Details PAPERSIZE: 34x22 (in.) DATE: 3/28/2025 TIME: 7:11:36 AM USER: RohitBk
pw:\\mb-us-pw.bentley.com:mb-us-pw-03\Documents\Cleveland_OH\01_Projects\ODOT\District12\82382\400-Engineering\Roadway\Sheets\82382_GY0001.dgn

DESIGN AGENCY
Michael Baker INTERNATIONAL

DESIGNER KJM
REVIEWER KGJ 05/22/24
PROJECT ID 82382
SHEET 17 TOTAL 2696

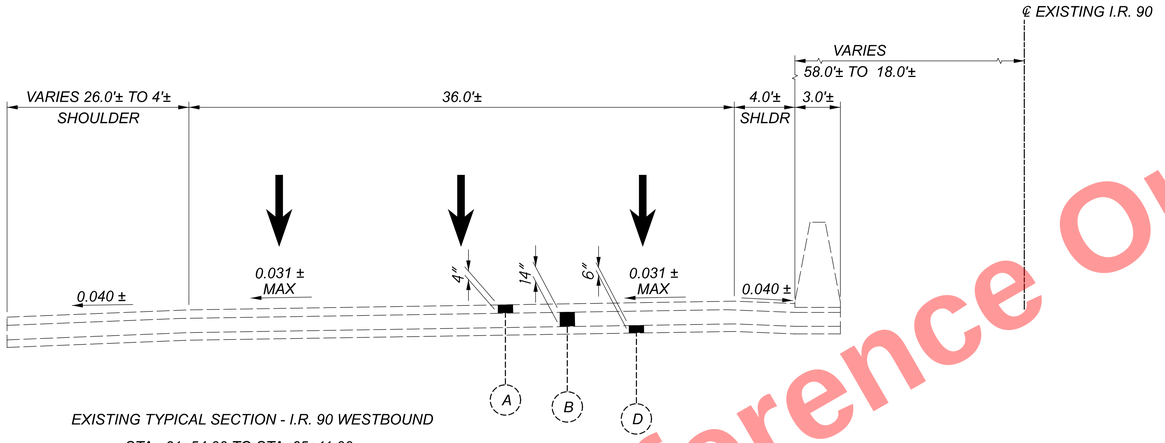

EXISTING TYPICAL SECTION - I.R. 90 WESTBOUND

STA. 61+54.00 TO STA. 65+11.00

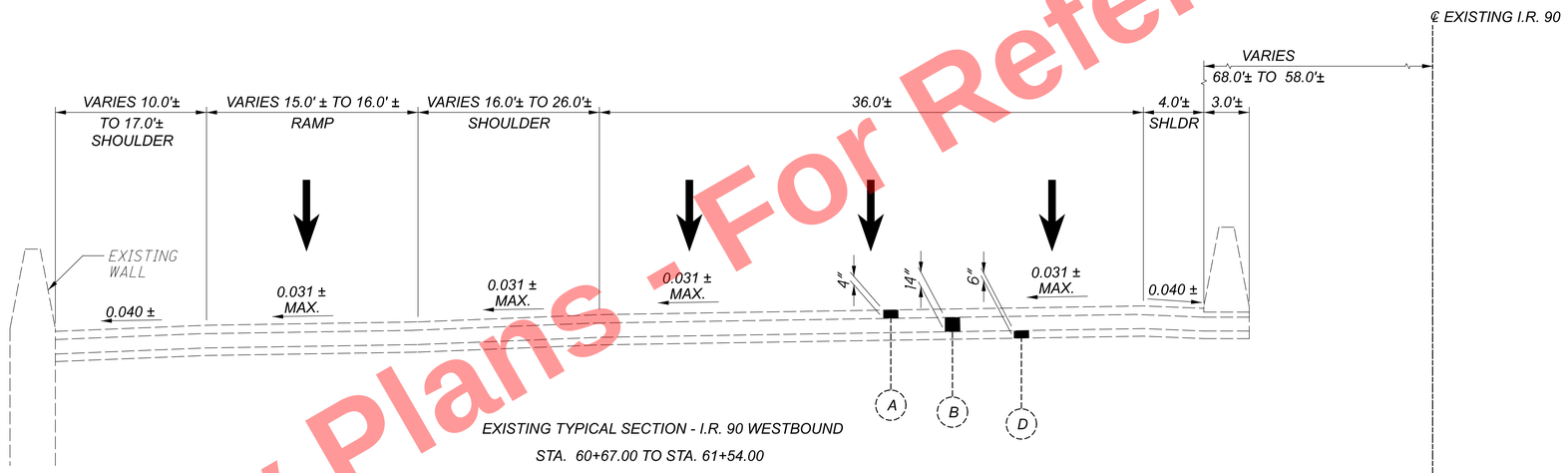

EXISTING TYPICAL SECTION - I.R. 90 WESTBOUND

STA. 60+67.00 TO STA. 61+54.00

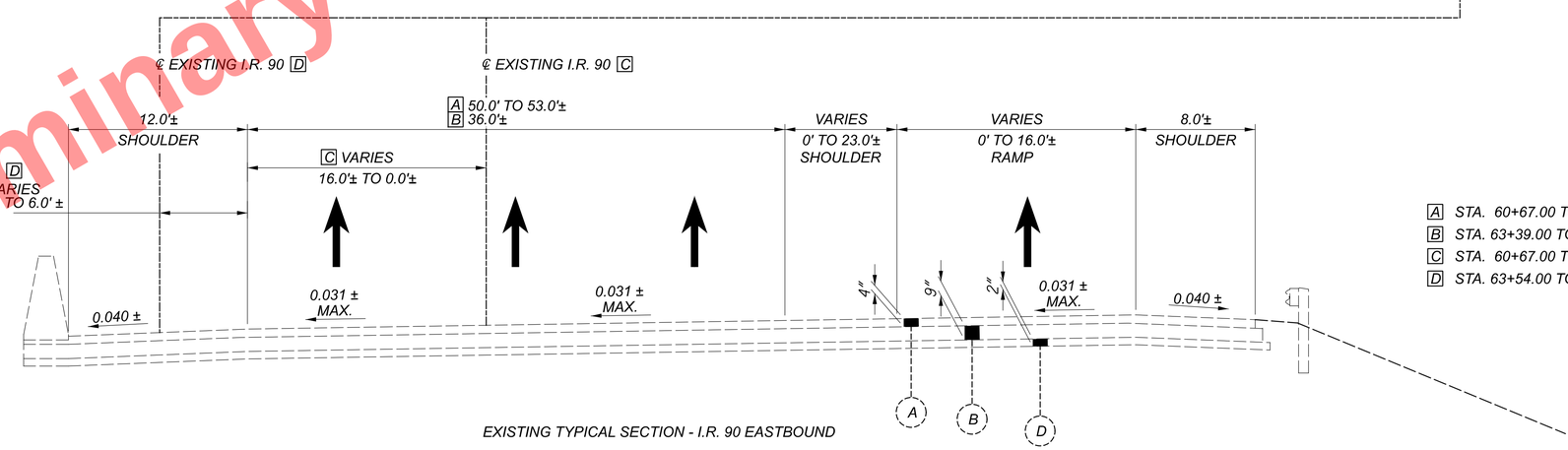

A STA. 60+67.00 TO STA. 63+39.00
B STA. 63+39.00 TO STA. 65+11.00
C STA. 60+67.00 TO STA. 63+54.00
D STA. 63+54.00 TO STA. 65+11.00

EXISTING TYPICAL SECTION - I.R. 90 EASTBOUND

STA. 60+67.00 TO STA. 65+11.00

FOR LEGEND AND EXISTING PAVEMENT THICKNESSES, SEE SHEET 16

Preliminary Plans - For Reference Only

CUY-90-16.28 (CCG3A)

MODEL: EX. I.R. 90 (I) PAPERSIZE: 34x22 (in.) DATE: 3/28/2025 TIME: 7:11:54 AM USER: Rohit.Bk
pw:\\mb-us-pw.bentley.com:mb-us-pw-03\Documents\Cleveland_OH\OI_Projects\ODOT\District12\82382\400-Engineering\Roadway\Sheets\82382_GY0002.dgn

EXISTING TYPICAL SECTIONS
I.R. 90

DESIGN AGENCY
B&N
burgessniple.com

DESIGNER
AJS

REVIEWER
MRT 05/01/24

PROJECT ID
82382

SHEET 18 TOTAL 2696

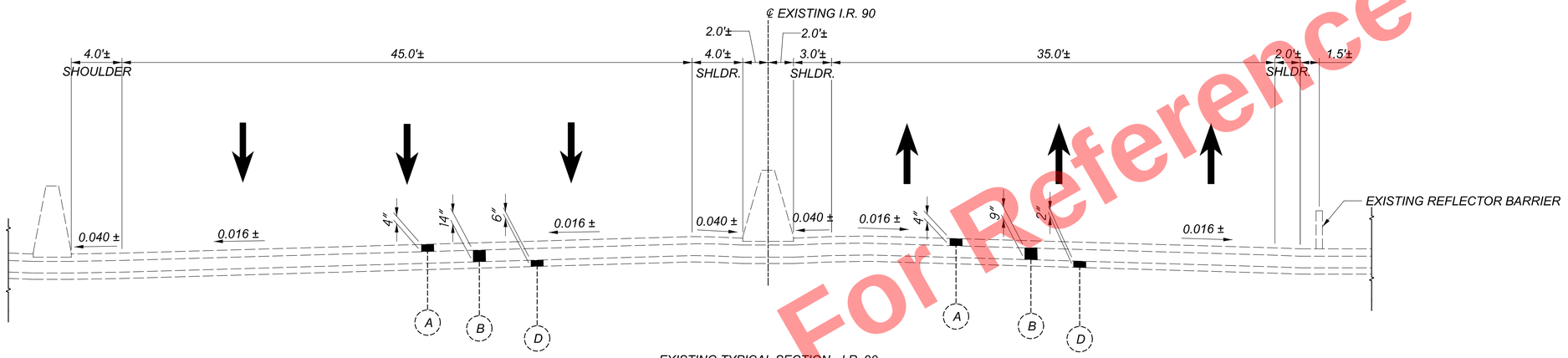

EXISTING TYPICAL SECTION - I.R. 90
STA. 73+95.00± TO STA. 80+50.00

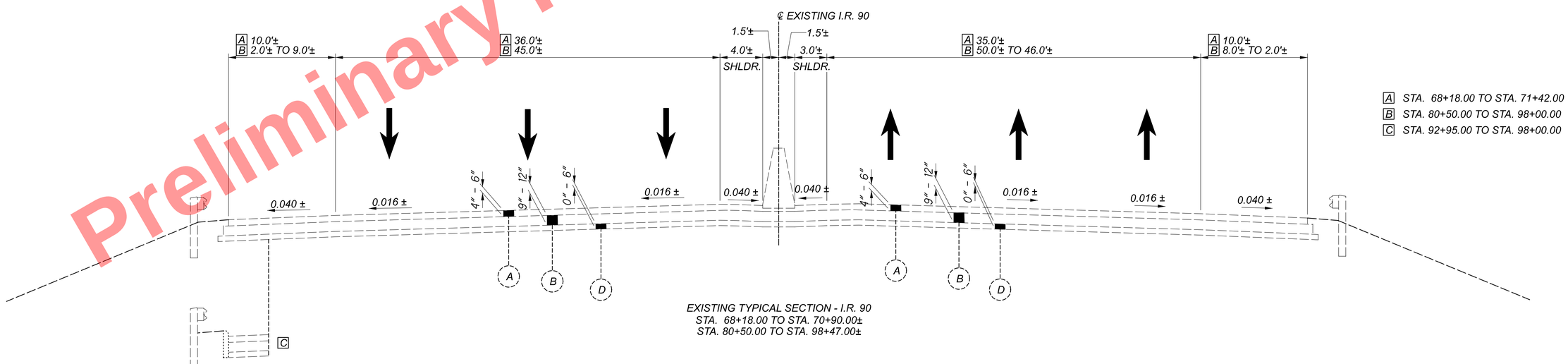

EXISTING TYPICAL SECTION - I.R. 90
STA. 68+18.00 TO STA. 70+90.00±
STA. 80+50.00 TO STA. 98+47.00±

FOR LEGEND AND EXISTING PAVEMENT THICKNESSES, SEE SHEET 16

Preliminary Plans - For Reference Only

EXISTING TYPICAL SECTIONS
I.R. 90

CUY-90-16.28 (CCG3A)

MODEL: EX. I.R. 90 (2) PAPERSIZE: 34x22 (In.) DATE: 3/28/2025 TIME: 7:41:55 AM USER: Rohit.BK
pw:\\mb-us-pw.bentley.com:mb-us-pw-03\Documents\Cleveland.OH\OI_Projects\ODOT\District2\82382\400-Engineering\Roadway\Sheets\82382_GY0002.dgn

DESIGN AGENCY
B&N
burgessniple.com

DESIGNER	AJS
REVIEWER	MRT 05/01/24
PROJECT ID	82382
SHEET	19
TOTAL	2696

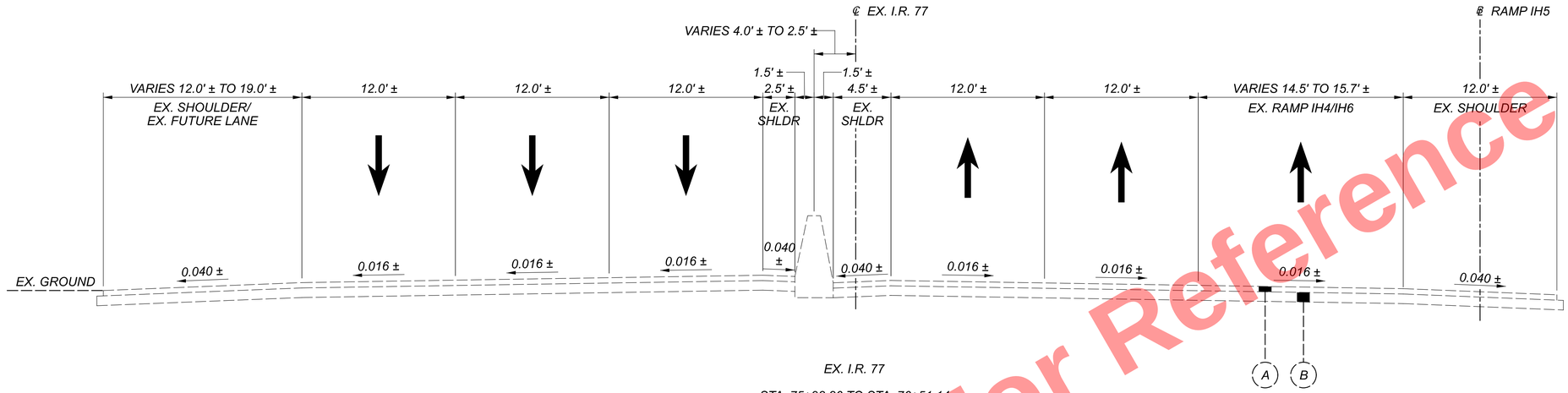

EX. I.R. 77

STA. 75+98.86 TO STA. 76+51.14

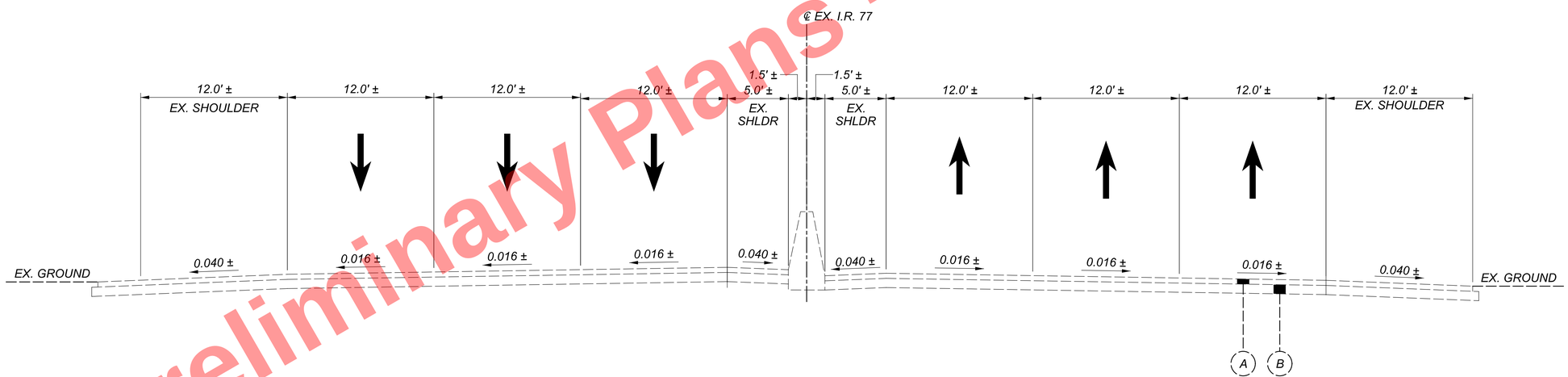

EX. I.R. 77

STA. 67+34.00 TO STA. 73+40.46

FOR LEGEND AND EXISTING PAVEMENT THICKNESSES, SEE SHEET 16

Preliminary Plans - For Reference Only

EXISTING TYPICAL SECTIONS
I.R. 77

CUY-90-16.28 (CCG3A)

MODEL: Ex. I.R. 77 PAPERSIZE: 34x22 (in.) DATE: 3/28/2025 TIME: 11:23 AM USER: Rohlf.Bk
pw:\\mb-us-pw.bentley.com:mb-us-pw-03\Documents\Cleveland.OH\Oil_Projects\ODOT\District2\82382\400-Engineering\Roadway\Sheets\82382_GY000i.dgn

DESIGN AGENCY
Michael Baker INTERNATIONAL

DESIGNER KJM
REVIEWER KGJ 05/22/24
PROJECT ID 82382
SHEET 20 TOTAL 2696

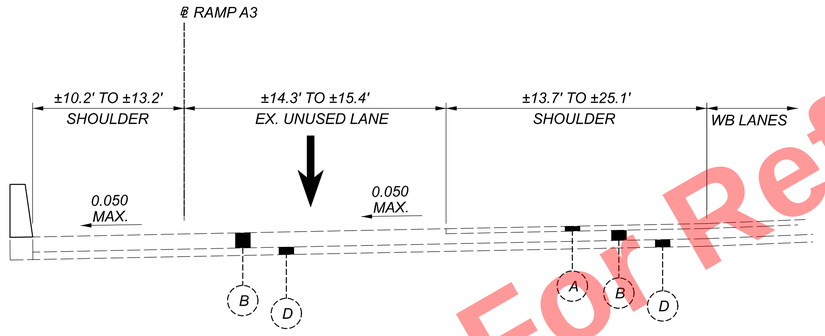

RAMP A3
STA. 577+01.94 TO STA. 578+17.27

EXISTING SUBBASE 6" - SEE EXISTING PLAN CUY-42-18.42

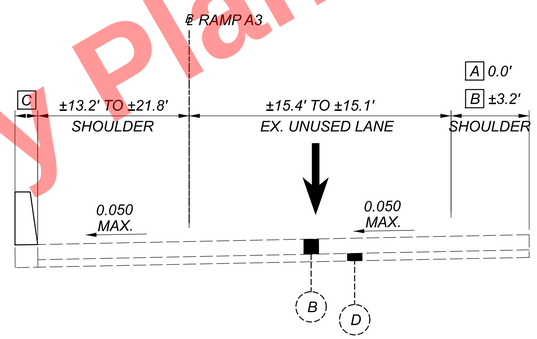

RAMP A3
STA. 578+17.27 TO STA. 581+93.35

EXISTING SUBBASE 6" - SEE EXISTING PLAN CUY-42-18.42

A STA. 578+15.52 TO STA. 578+59.37

B STA. 578+59.37 TO STA. 581+93.35

C WALL ENDS AT STA. 581+51.74

FOR LEGEND AND EXISTING PAVEMENT THICKNESSES, SEE SHEET 16

Preliminary Plans - For Reference Only

EXISTING TYPICAL SECTIONS
RAMP A3

DESIGN AGENCY
B&N
burgessniple.com

DESIGNER
AJS

REVIEWER
MRT 05/01/24

PROJECT ID
82382

SHEET 21 | TOTAL 2696

CUY-90-16.28 (CCG3A)

MODEL: EX. Ramp A3 PAPERSIZE: 34x22 (In.) DATE: 3/28/2025 TIME: 7:12:37 AM USER: RohT-Bk
pw:\\mb-us-pw.bentley.com:mb-us-pw-03\Documents\Cleveland.OH\OI_Projects\ODOT\District2\82382\400-Engineering\Roadway\Sheets\82382_GY0002.dgn

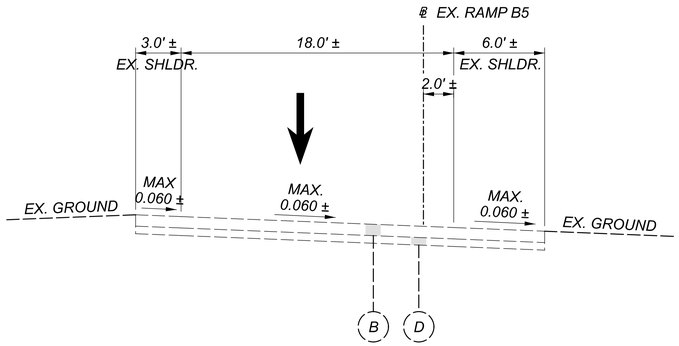

EX. RAMP B5

STA. 1508+00 TO STA. 1514+65

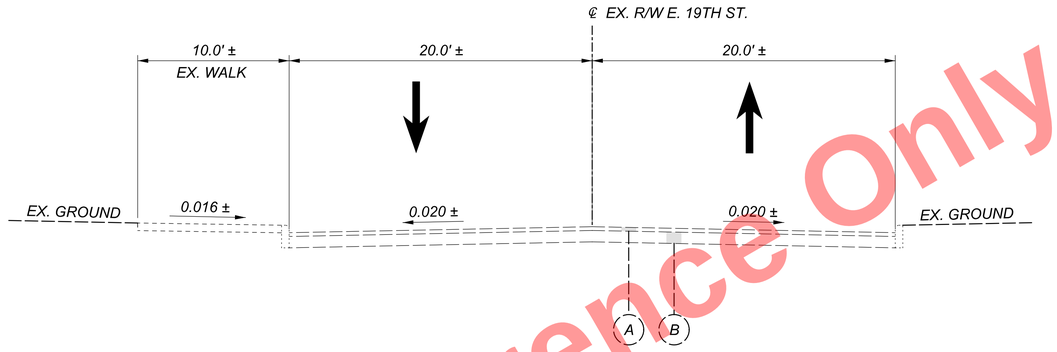

EX. E. 19TH ST.

STA. 2+00.00 TO STA. 3+29.17

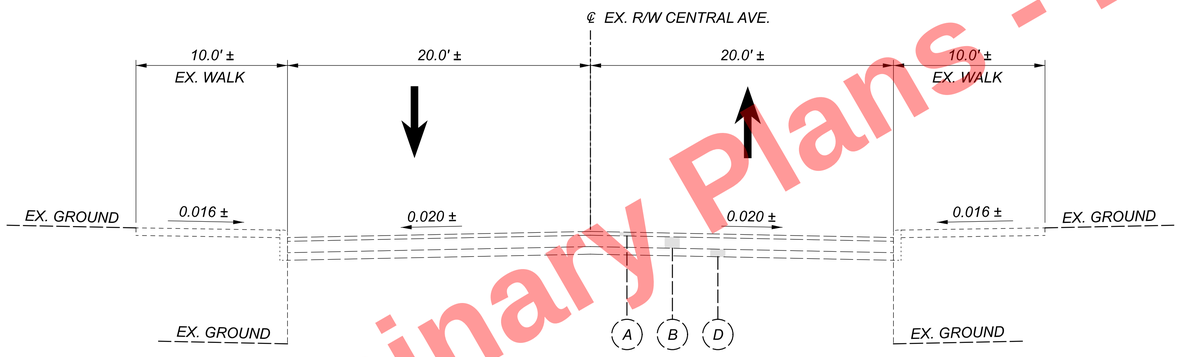

STA. 13+50.13 TO STA. 15+15.00

STA. 13+50.13 TO STA. 15+30.00

EX. CENTRAL AVE.

STA. 13+50.13 TO STA. 17+82.01

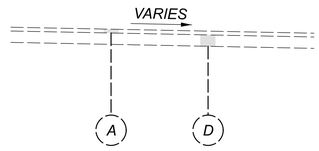

EX. PARKING LOT

PARCEL 309 AND 314

FOR LEGEND AND EXISTING PAVEMENT THICKNESSES, SEE SHEET 16

Preliminary Plans - For Reference Only

EXISTING TYPICAL SECTIONS
RAMP B5, CENTRAL AVE., E 19TH ST., & PARKING LOT

DESIGN AGENCY
HDR

DESIGNER TJS
REVIEWER VLE 06/17/22
PROJECT ID 82382
SHEET 22 TOTAL 2696

CUY-90-16.28 (CCG3A)

MODEL: Existing (1) PAPERSIZE: 34x22 (in.) DATE: 3/28/2025 TIME: 7:13:02 AM USER: Rohit.Bk
pw:\\mb-us-pw.bentley.com:mb-us-pw-03\Documents\Cleveland_OH\OiL_Projects\ODOT\District2\82382\400-Engineering\Roadway\Sheets\82382_GY0003.dgn

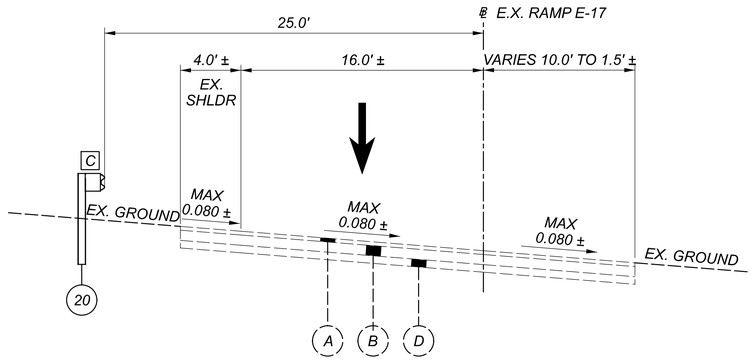

EX. RAMP E-17 (I-77NB TO ONTARIO ST.)

STA. 62+90.00 TO STA. 66+50.00

C INSTALL PR. GUARDRAIL FROM STA. 62+90.00 TO STA. 63+87.10

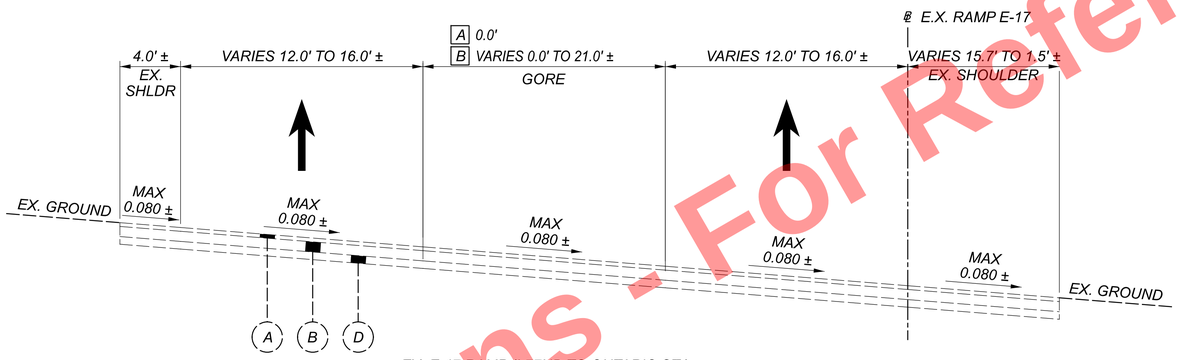

EX. E-17 RAMP (I-77NB TO ONTARIO ST.)

STA. 57+47.94 TO STA. 62+90.00

A STA. 57+47.94 TO STA. 62+13.44
B STA. 62+13.44 TO STA. 63+00.00

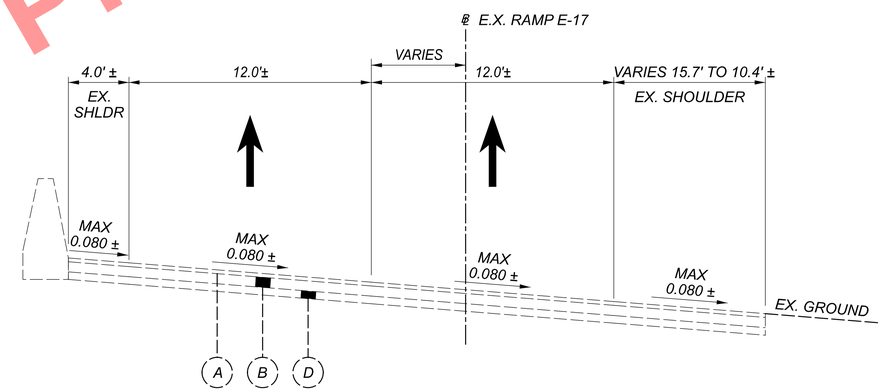

EX. E-17 RAMP (I-77NB TO ONTARIO ST.)

STA. 53+36.63 TO STA. 55+17.39

Preliminary Plans - For Reference Only

FOR LEGEND AND EXISTING PAVEMENT THICKNESSES, SEE SHEET 16

EXISTING TYPICAL SECTIONS
RAMP E-17

DESIGN AGENCY
Michael Baker INTERNATIONAL

DESIGNER KJM
REVIEWER KGJ 05/22/24
PROJECT ID 82382
SHEET 23 TOTAL 2696

CUY-90-16.28 (CCG3A)

MODEL: Ex. RAMP E-17 PAPERSIZE: 34x22 (in.) DATE: 3/28/2025 TIME: 7:35:07 AM USER: RohlfBk
pw:\\mb-us-pw.bentley.com:mb-us-pw-03\Documents\Cleveland_OH\OL_Projects\ODOT\District2\82382\400-Engineering\Roadway\Sheets\82382_GY000L.dgn

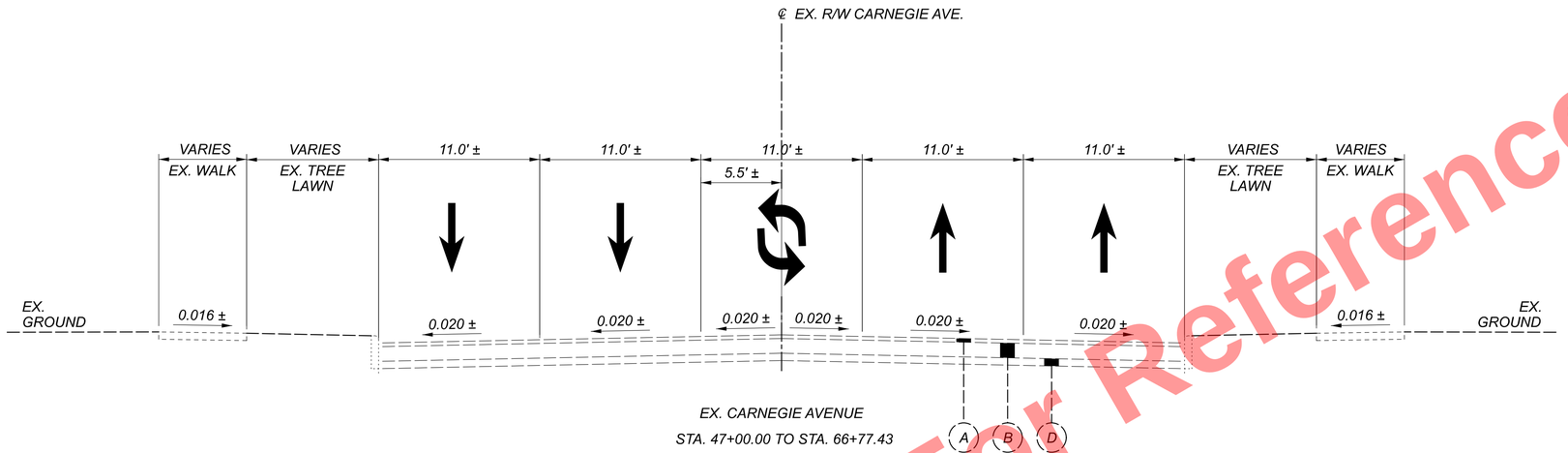

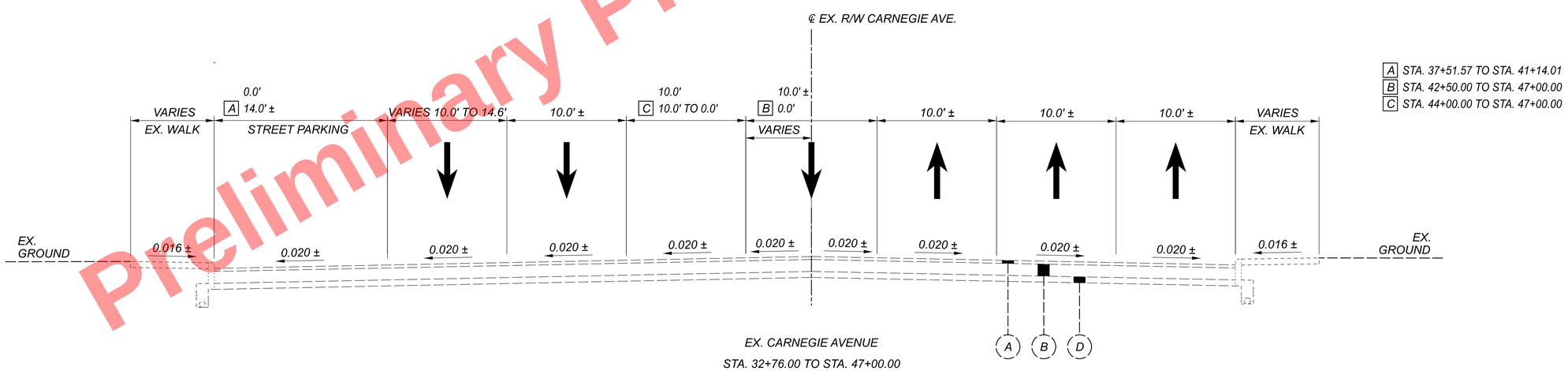

STATIONING FROM THE ALIGNMENT EX. ℄ R/W CARNEGIE AVE. WAS USED.
FOR LEGEND AND EXISTING PAVEMENT THICKNESSES, SEE SHEET 16

EXISTING TYPICAL SECTIONS
CARNEGIE AVE.

Preliminary Plans - For Reference Only

CUY-90-16.28 (CCG3A)

MODEL: EX. Carnegie Ave PAPERSIZE: 34x22 (in.) DATE: 3/28/2025 TIME: 7:35:08 AM USER: Rohit.Bk
pw:\\mb-us-pw.bentley.com:mb-us-pw-03\Documents\Cleveland.OH\01_Projects\ODOT\District2\82382\400-Engineering\Roadway\Sheets\82382_GY001.dgn

DESIGN AGENCY
Michael Baker INTERNATIONAL

DESIGNER	KJM
REVIEWER	KGJ 05/22/24
PROJECT ID	82382
SHEET	24
TOTAL	2696

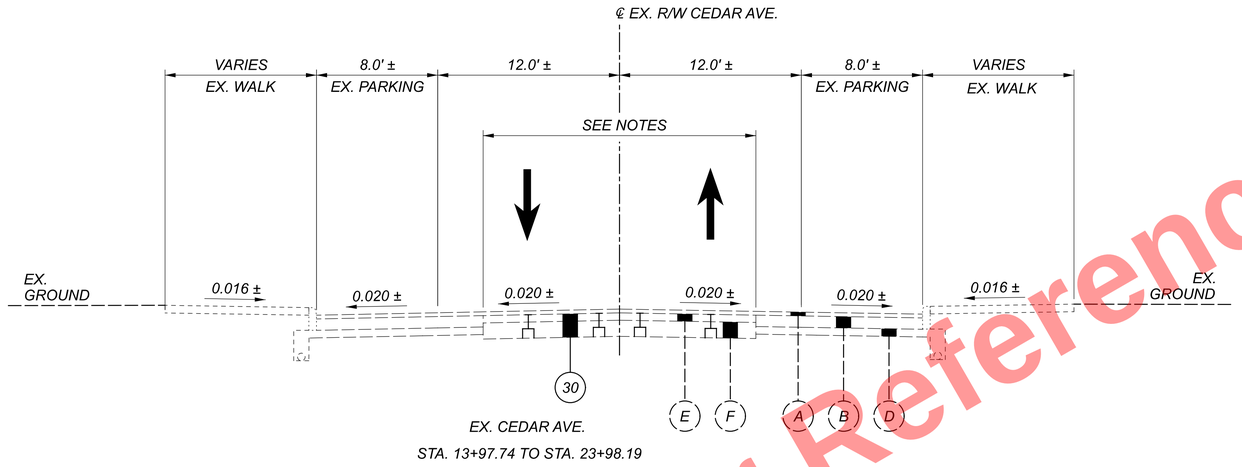

EX. CEDAR AVE.

STA. 13+97.74 TO STA. 23+98.19

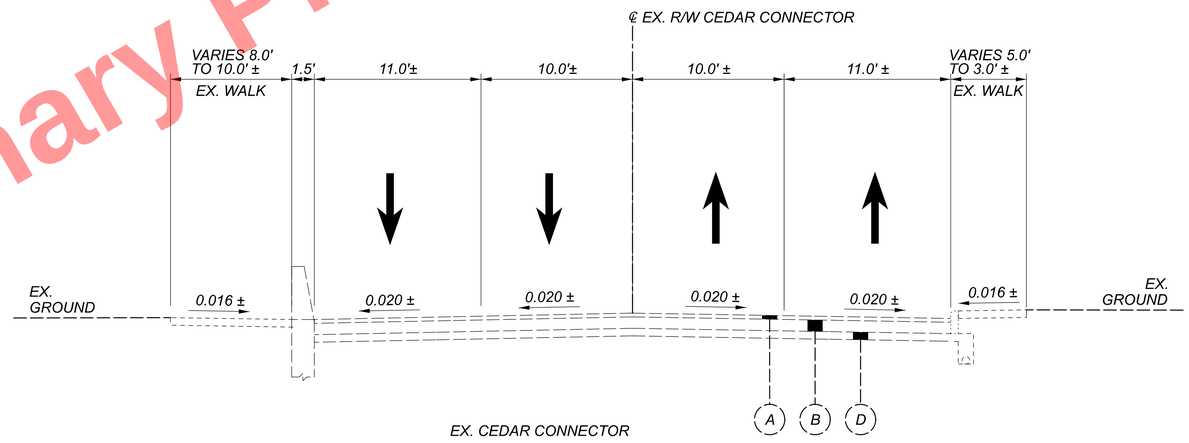

EX. CEDAR CONNECTOR

STA. 3+57.19 TO STA. 7+90.26

FOR LEGEND AND EXISTING PAVEMENT THICKNESSES, SEE SHEET 16

Preliminary Plans - For Reference Only

EXISTING TYPICAL SECTIONS
CEDAR AVE. & CEDAR CONNECTOR

DESIGN AGENCY
Michael Baker INTERNATIONAL

DESIGNER
KJM

REVIEWER
KGJ 05/22/24

PROJECT ID
82382

SHEET 25 TOTAL 2696

CUY-90-16.28 (CCG3A)

MODEL: Ex. Cedar Ave PAPERSIZE: 34x22 (in.) DATE: 3/28/2025 TIME: 7:13:08 AM USER: Rohit.Bk
pw:\\mb-us-pw.bentley.com:mb-us-pw-03\Documents\Cleveland_OH\01_Projects\ODOT\District2\82382\400-Engineering\Roadway\Sheets\82382_GY001.dgn

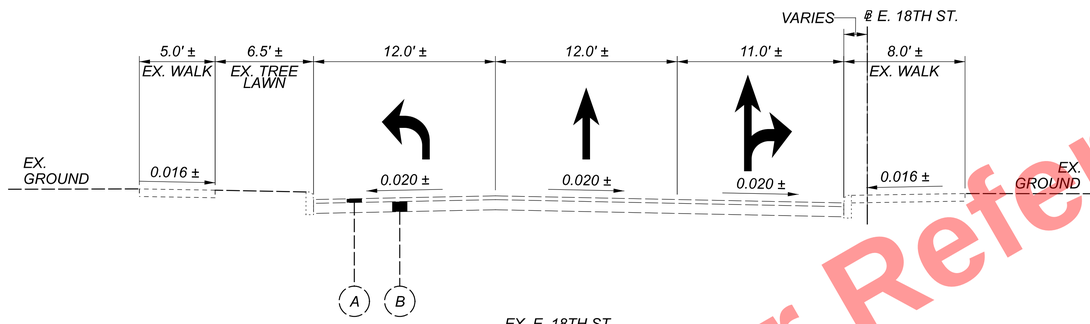

EX. E. 18TH ST.

STA. 21+79.52 TO STA. 24+62.35

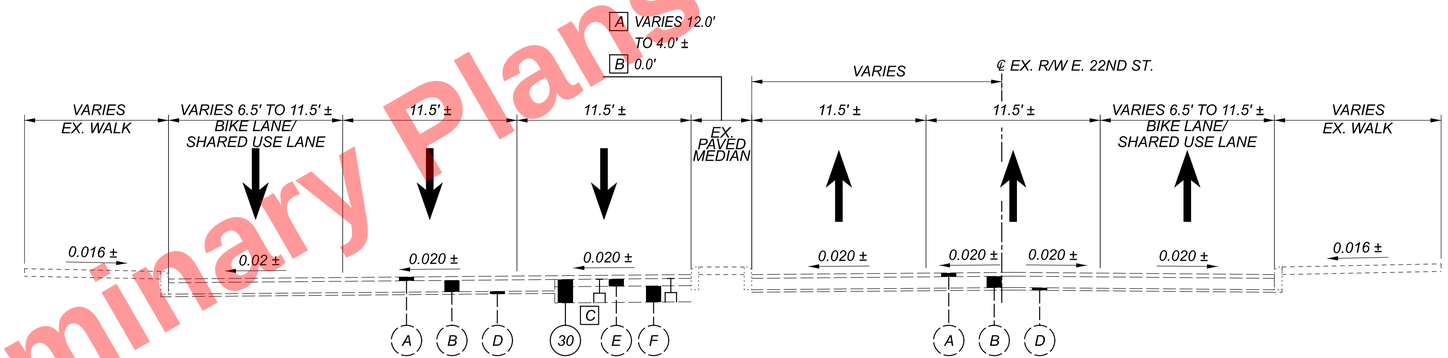

EX. E. 22ND ST.

STA. 18+96.89 TO STA. 23+52.42
STA. 24+78.67 TO STA. 27+72.55

A STA. 18+96.89 TO STA. 25+36.10
B STA. 25+36.10 TO STA. 27+72.55
C STA. 24+78.67 TO STA. 27+72.55

FOR LEGEND AND EXISTING PAVEMENT THICKNESSES, SEE SHEET 16

EXISTING TYPICAL SECTIONS
E. 18TH ST. & E. 22ND ST.

Preliminary Plans - For Reference Only

CUY-90-16.28 (CCG3A)

MODEL: Ex. E 18th Ex. E. 22nd PAPERSIZE: 34x22 (in.) DATE: 3/28/2025 TIME: 7:13:09 AM USER: Rohit.BK
pw:\\mb-us-pw.bentley.com:mb-us-pw-03\Documents\Cleveland.OH\OL_Projects\ODOT\District2\82382\400-Engineering\Roadway\Sheets\82382_GY000l.dgn

DESIGN AGENCY
Michael Baker INTERNATIONAL

DESIGNER KJM
REVIEWER KGJ 05/22/24
PROJECT ID 82382
SHEET 26 TOTAL 2696

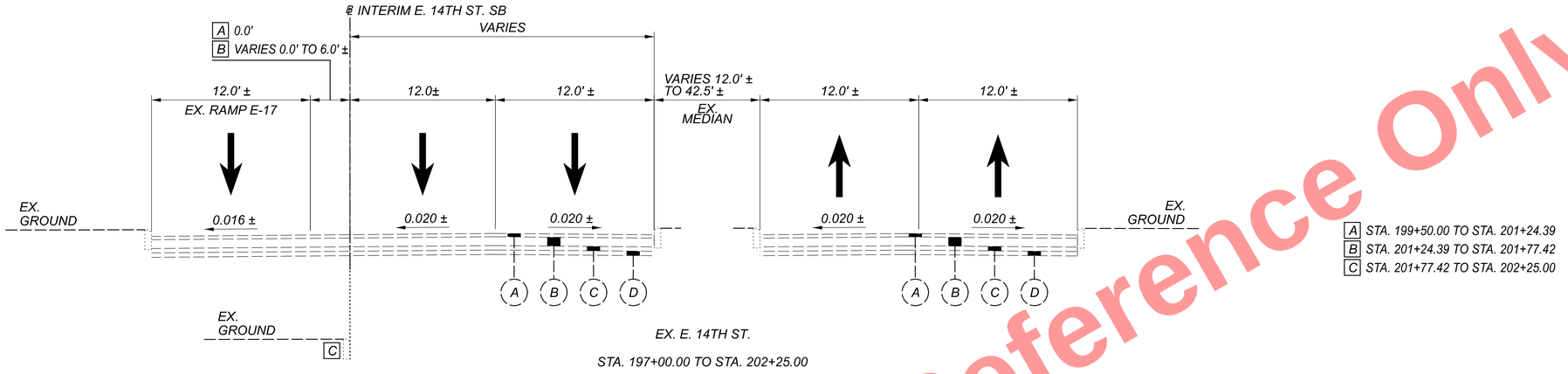

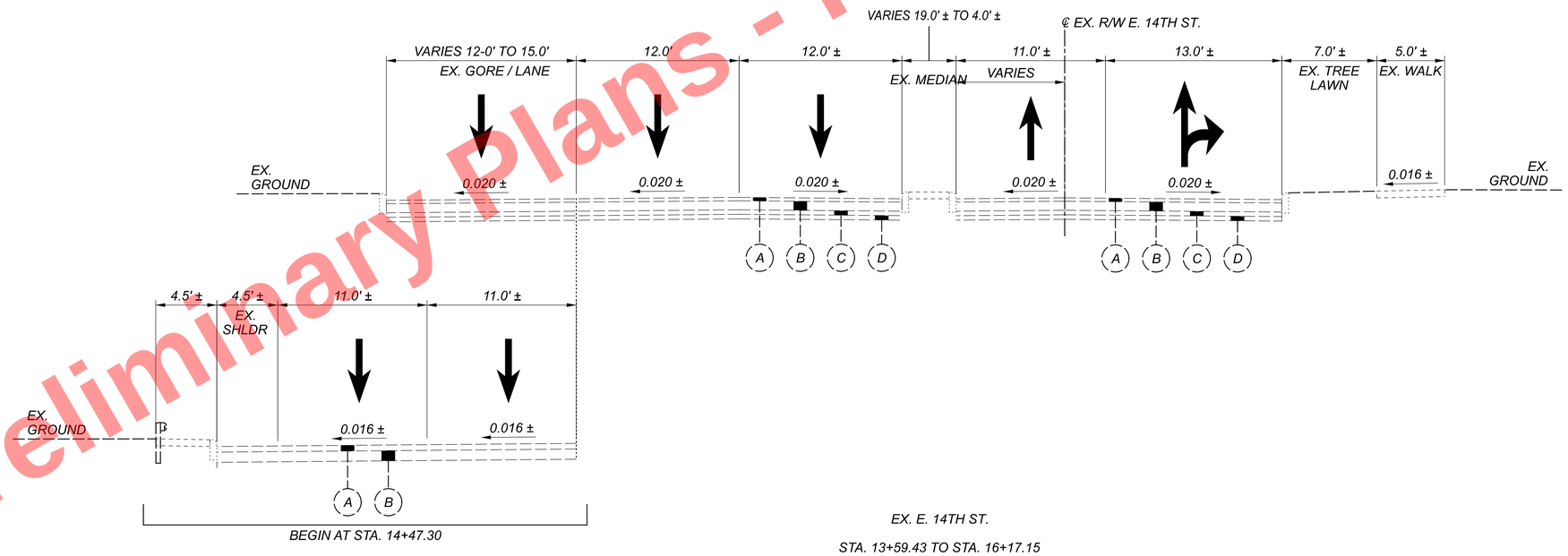

Preliminary Plans - For Reference Only

FOR LEGEND AND EXISTING PAVEMENT THICKNESSES, SEE SHEET 16

EXISTING TYPICAL SECTIONS
E. 14TH ST.

DESIGN AGENCY
Michael Baker INTERNATIONAL

DESIGNER KJM
REVIEWER KGJ 05/22/24
PROJECT ID 82382
SHEET 27 TOTAL 2696

CUY-90-16.28 (CCG3A)

MODEL: Ex. E. 14th St PAPERSIZE: 34x22 (in.) DATE: 3/28/2025 TIME: 7:31:10 AM USER: Rohit Bk
pw:\\mb-us-pw.bentley.com:mb-us-pw-03\Documents\Cleveland_OH\01_Projects\0007\District2\82382\400-Engineering\Roadway\Sheets\82382_GY0001.dgn

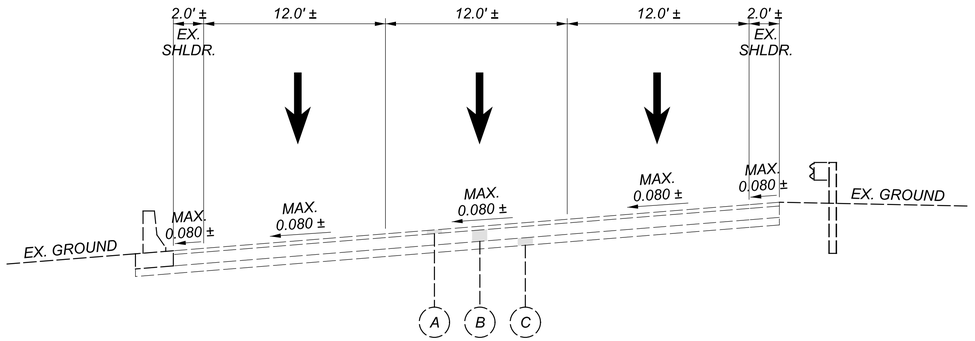

EX. RAMP E-10 (I.R. 90 WB TO I.R. 77 SB)

3 LANE SECTION

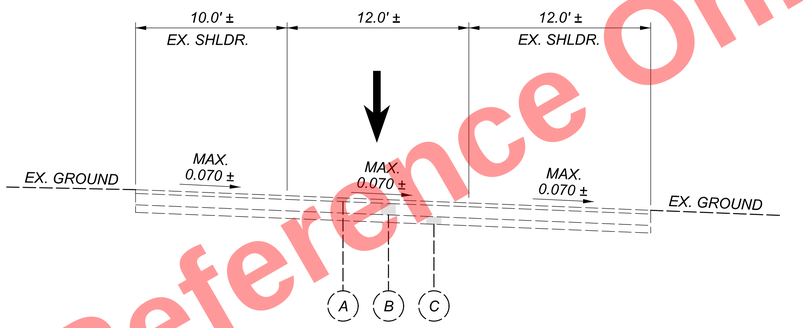

EX. RAMP E-13 (E. 21ST ST. TO I.R. 90 WB)

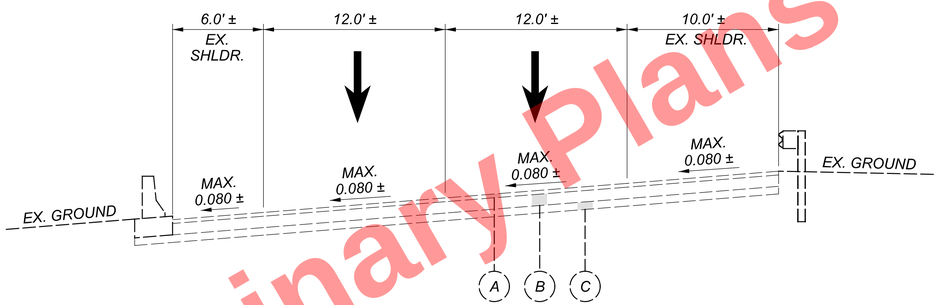

EX. RAMP E-10 (I.R. 90 WB TO I.R. 77 SB)

2 LANE SECTION

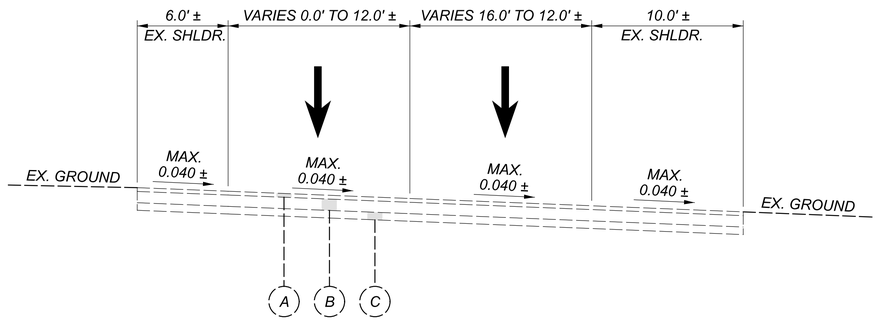

EX. RAMP E-11 (I.R. 90 EB TO E. 22ND ST.)

FOR LEGEND AND EXISTING PAVEMENT THICKNESSES, SEE SHEET 16

Preliminary Plans - For Reference Only

EXISTING TYPICAL SECTIONS
RAMP E-10, RAMP E-13, & RAMP E-11

DESIGN AGENCY

DESIGNER TJS

REVIEWER VLE 06/17/22

PROJECT ID 82382

SHEET 28 TOTAL 2696

CUY-90-16.28 (CCG3A)

MODEL: Existing (2) PAPERSIZE: 34x22 (in.) DATE: 3/28/2025 TIME: 7:35:15 AM USER: Rohit.Bk
pw:\\mb-us-pw.bentley.com:mb-us-pw-03\Documents\Cleveland_OH\OI_Projects\ODOT\District2\82382\400-Engineering\Roadway\Sheets\82382_GY0003.dgn

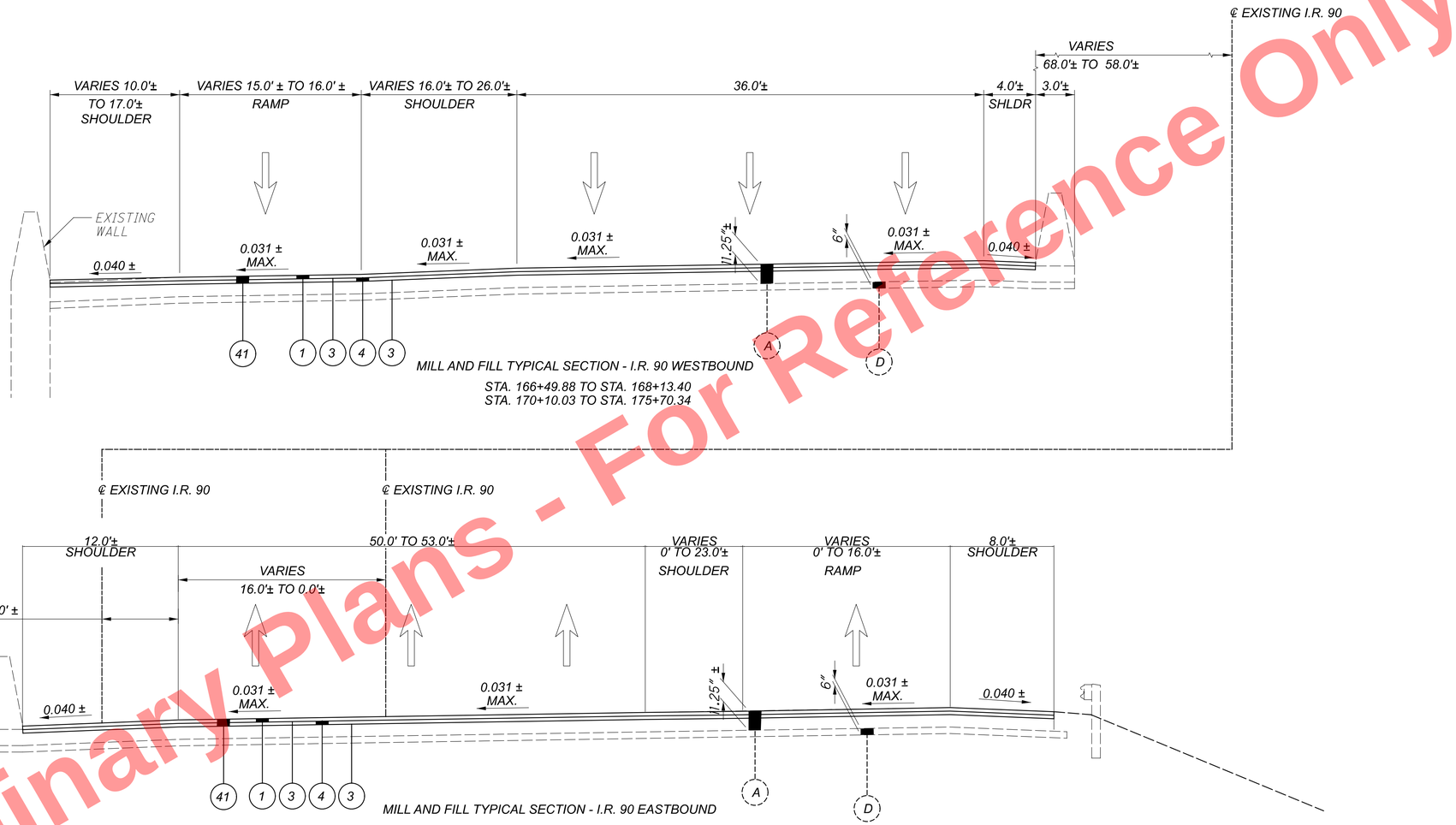

FOR LEGEND , SEE SHEET 16

Preliminary Plans - For Reference Only

PROPOSED TYPICAL SECTIONS
I.R. 90 MILL AND FILL

CUY-90-16.28 (CCG3A)

MODEL: I.R. 90 EB (0) PAPERSIZE: 34x22 (in.) DATE: 3/28/2025 TIME: 7:13:29 AM USER: RohitBk
pw:\\mb-us-pw.bentley.com:mb-us-pw-03\Documents\Cleveland.OH\01_Projects\000T\District2\82382\400-Engineering\Roadway\Sheets\82382_GY0002.dgn

DESIGN AGENCY
B&N
burgessniple.com

DESIGNER	AJS
REVIEWER	MRT 05/01/24
PROJECT ID	82382
SHEET	29
TOTAL	2696

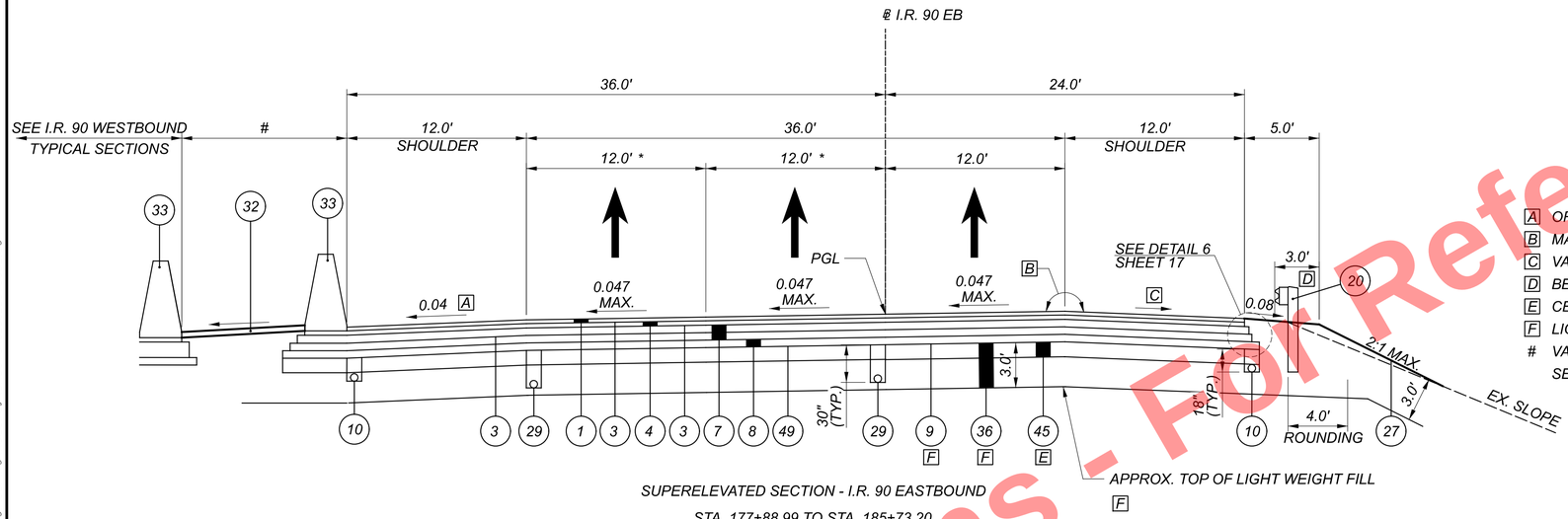

SUPERELEVATED SECTION - I.R. 90 EASTBOUND

STA. 177+88.99 TO STA. 185+73.20

A OR THE ADJACENT ROADWAY CROSS SLOPE, WHICHEVER IS GREATER

B MAX. 0.070 BREAK

C VARIES 0.04 TO 0.023

D BEGIN GUARDRAIL AT STA. 184+49.29

E CEMENT STABILIZED SUBGRADE STA. 177+88.99 TO STA. 179+92.58, STA. 183+10.17 TO STA. 185+73.20

F LIGHTWEIGHT FILL STA. 179+92.58 TO STA. 183+10.17

\# VARIES; 16.0'± TO 7.0'± (GRADE TO DRAIN FROM HIGH TO LOW SIDE)
SEE MEDIAN BARRIER DETAIL 1, SHEET 39

SLOPE FROM HIGH SIDE TO LOW SIDE FOR DRAINAGE - SEE CROSS SECTIONS

F MAX. 0.032 BREAK

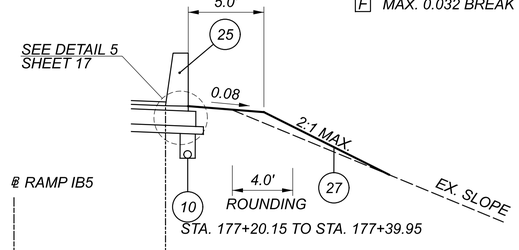

STA. 177+20.15 TO STA. 177+39.95

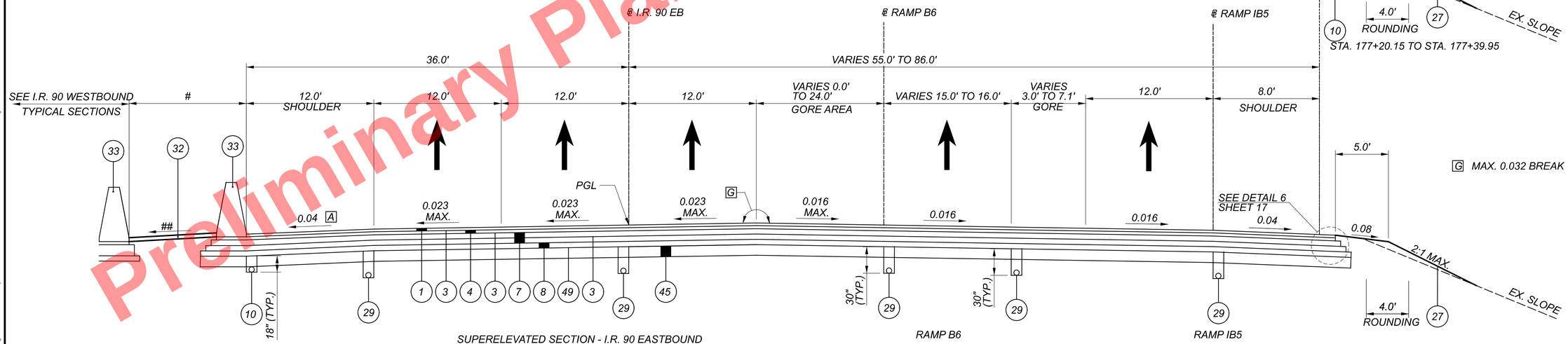

SUPERELEVATED SECTION - I.R. 90 EASTBOUND

STA. 175+77.69 TO STA. 177+88.99

RAMP B6

STA. 1597+91.41 TO STA. 1600+00.55

RAMP IB5

STA. 1705+73.82 TO STA. 1707+77.33

FOR LEGEND, SEE SHEET 16

Preliminary Plans - For Reference Only

PROPOSED TYPICAL SECTIONS
I.R. 90 EB

CUY-90-16.28 (CCG3A)

MODEL: I.R. 90 EB (I) PAPERSIZE: 34x22 (in.) DATE: 6/16/2025 TIME: 3:47:05 PM USER: sisson
pw:\\mb-us-pw.bentley.com:mb-us-pw-03\Documents\Cleveland_OH\OL_Projects\ODOT\District2\82382\400-Engineering\Roadway\Sheets\82382_GY0002.dgn

DESIGN AGENCY
B&N burgessniple.com

DESIGNER AJS
REVIEWER MRT 05/01/24
PROJECT ID 82382
SHEET 30 TOTAL 2696

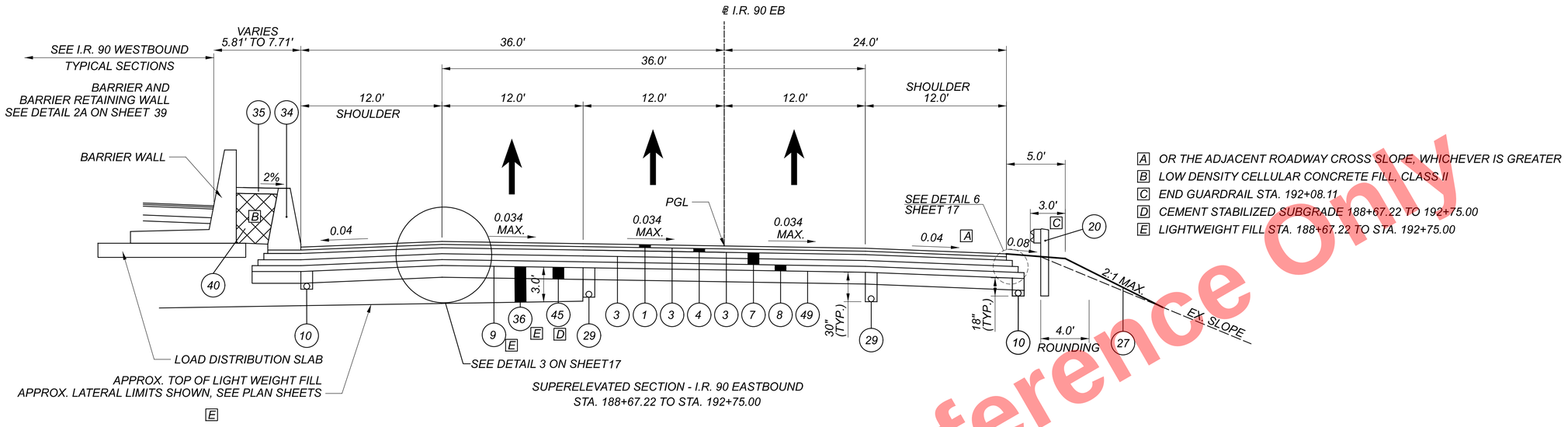

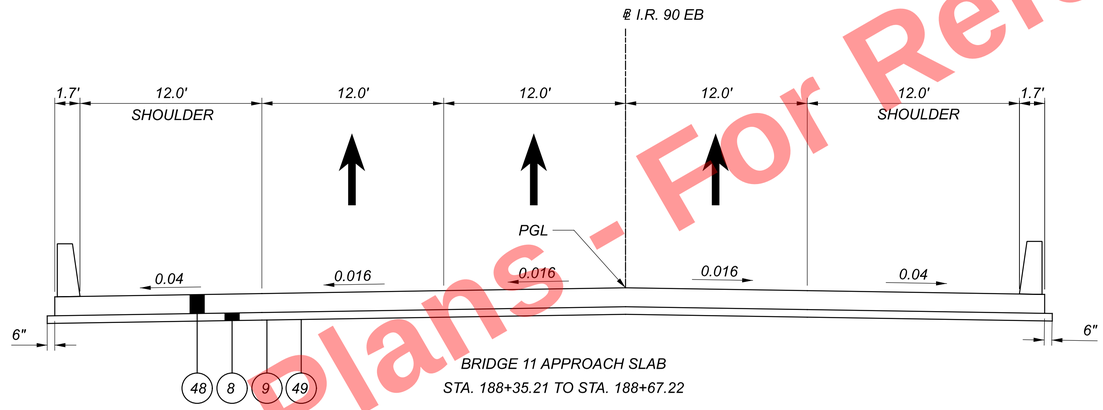

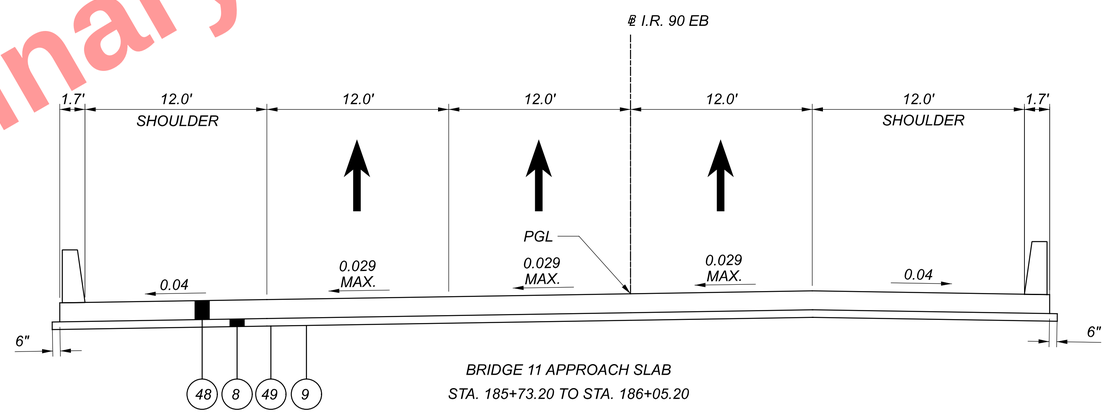

FOR LEGEND, SEE SHEET 16

NOTES:

DETAIL 3 - CURBED-HIGH SIDE OF SUPERELEVATED SECTION SEE SHEET 17

APPROACH SLAB TYPICAL SECTIONS INCLUDE SLEEPER SLABS

Preliminary Plans - Not For Reference Only

PROPOSED TYPICAL SECTIONS
I.R. 90 EB

DESIGN AGENCY
B&N
burgessniple.com

DESIGNER AJS
REVIEWER MRT 05/01/24
PROJECT ID 82382
SHEET 31 TOTAL 2696

CUY-90-16.28 (CCG3A)

MODEL: I.R. 90 EB (2) PAPERSIZE: 34x22 (in.) DATE: 6/6/2025 TIME: 3:47:07 PM USER: slsson
pw:\\mb-us-pw.bentley.com:mb-us-pw-03\Documents\Cleveland_OH\DL_Projects\ODOT\District2\82382\400-Engineering\Roadway\Sheets\82382_GY0002.dgn

Preliminary Plans - For Reference Only

[A] OR THE ADJACENT ROADWAY CROSS SLOPE, WHICHEVER IS GREATER
[B] BEGIN GUARDRAIL STA. 193+98.19
END GUARDRAIL STA. 198+95.00
GRADED SHOULDER STA. 192+44.14 TO STA. 193+98.19
CURBED SHOULDER STA. 193+98.19 TO STA. 199+20.18
[E] LOW DENSITY CELLULAR CONCRETE FILL, CLASS II
[F] STA. 198+20.82 TO STA. 198+95.00
[G] STA. 198+94.56 TO STA. 199+20.18
[H] CEMENT STABILIZED SUBGRADE 192+75.00 TO 199+20.18
[I] LIGHTWEIGHT FILL STA. 192+75.00 TO STA. 193+13.04

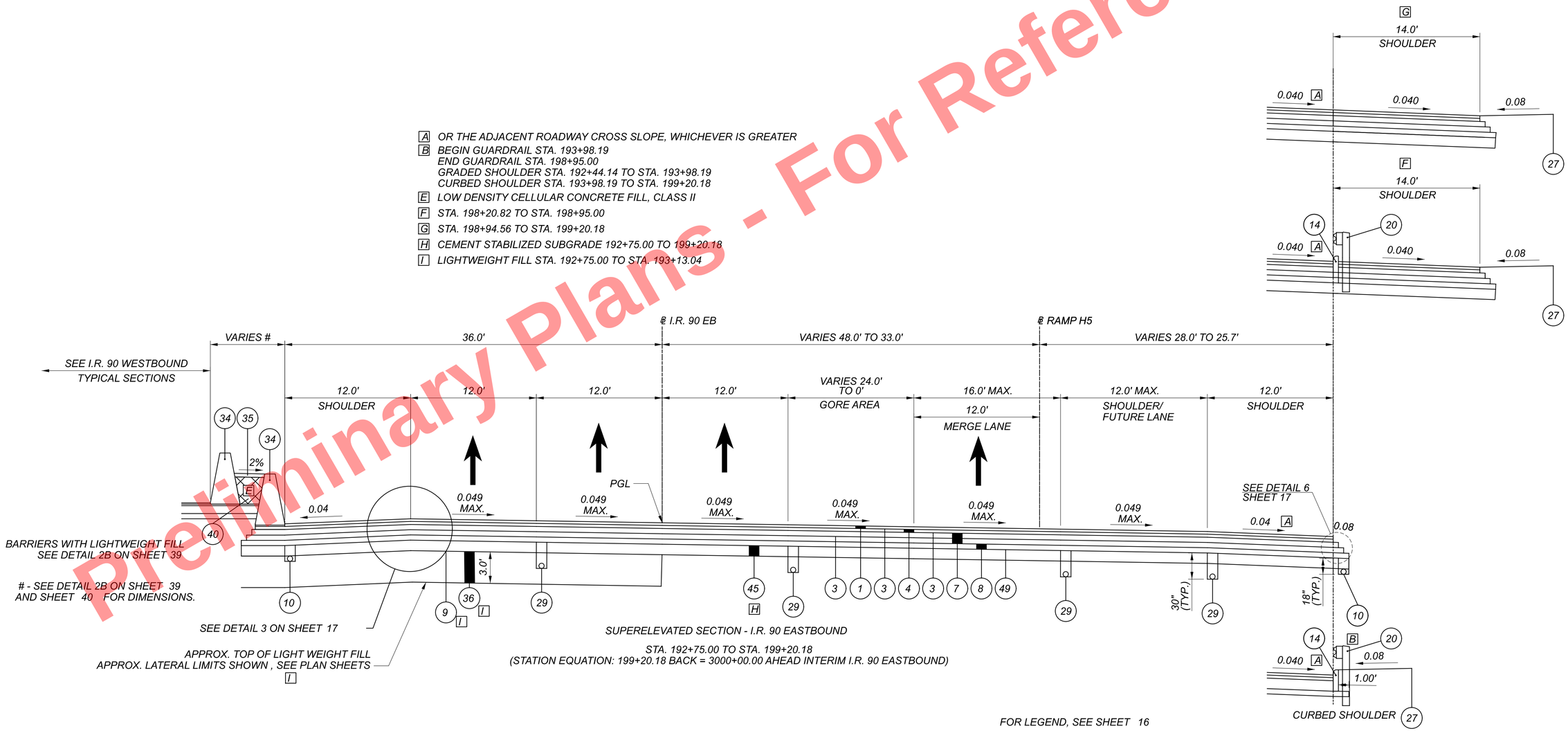

FOR LEGEND, SEE SHEET 16

PROPOSED TYPICAL SECTIONS
I.R. 90 EB

DESIGN AGENCY
B&N
burgessniple.com

DESIGNER AJS
REVIEWER MRT 05/01/24
PROJECT ID 82382
SHEET 32 TOTAL 2696

CUY-90-16.28 (CCG3A)

MODEL: I.R. 90 EB (3) PAPERSIZE: 34x22 (In.) DATE: 6/16/2025 TIME: 3:47:09 PM USER: sisson
pw:\\mb-us-pw.bentley.com:mb-us-pw-03\Documents\Cleveland.OH\OI_Projects\ODOT\District2\82382\400-Engineering\Roadway\Sheets\82382_GY0002.dgn

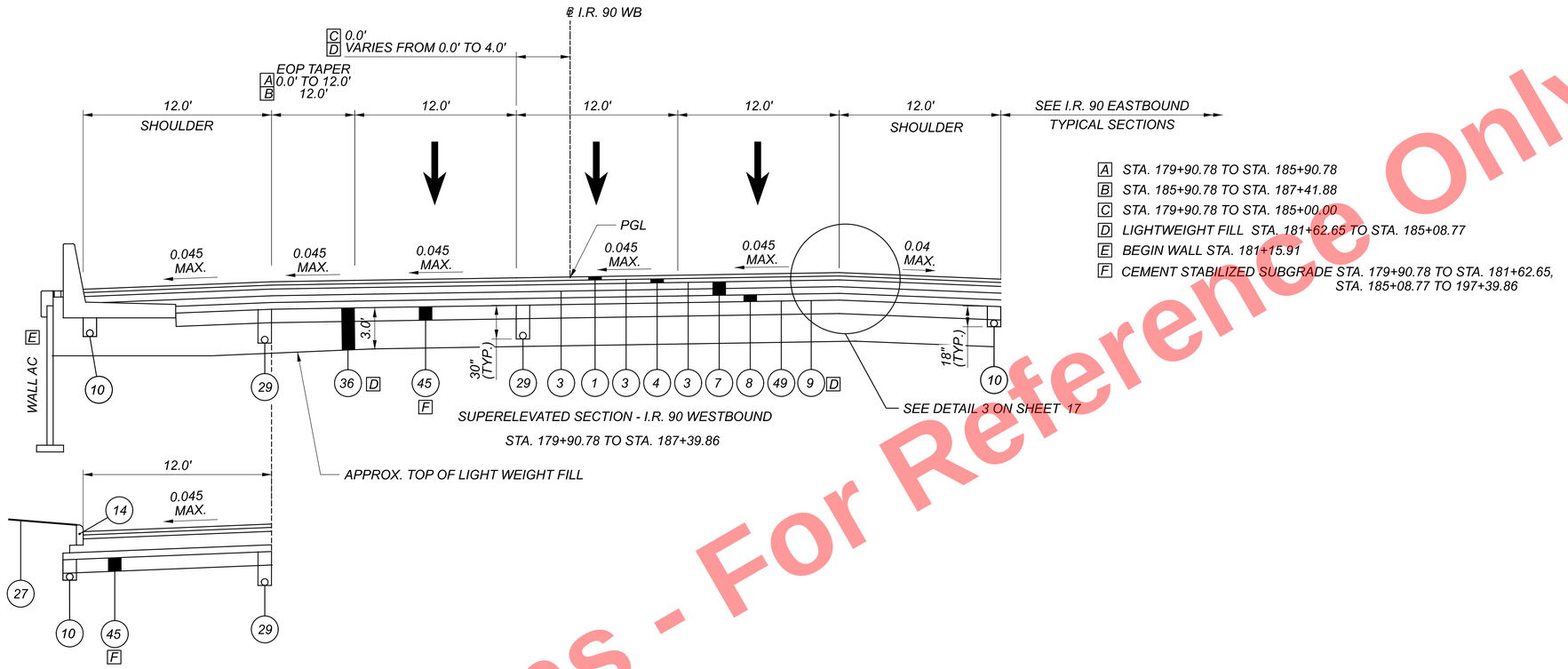

FOR LEGEND, SEE SHEET 16

Preliminary Plans - For Reference Only

PROPOSED TYPICAL SECTIONS
I.R. 90 WB

DESIGN AGENCY
B&N
burgessniple.com
DESIGNER AJS
REVIEWER MRT 05/01/24
PROJECT ID 82382
SHEET 33 TOTAL 2696

CUY-90-16.28 (CCG3A)
MODEL: I.R. 90 WB (I) PAPERSIZE: 34x22 (In.) DATE: 6/16/2025 TIME: 3:47:10 PM USER: slsson
pw:\\mb-us-pw.bentley.com:mb-us-pw-03\Documents\Cleveland_OH\OI_Projects\ODOT\District#12\82382\400-Engineering\Roadway\Sheets\82382_GY0002.dgn

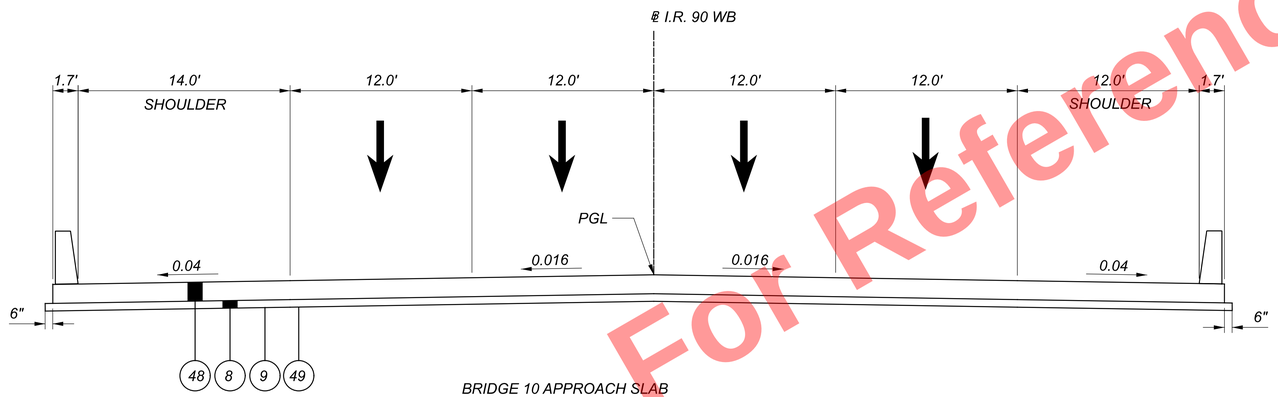

BRIDGE 10 APPROACH SLAB

STA. 190+01.87 TO STA. 190+33.87

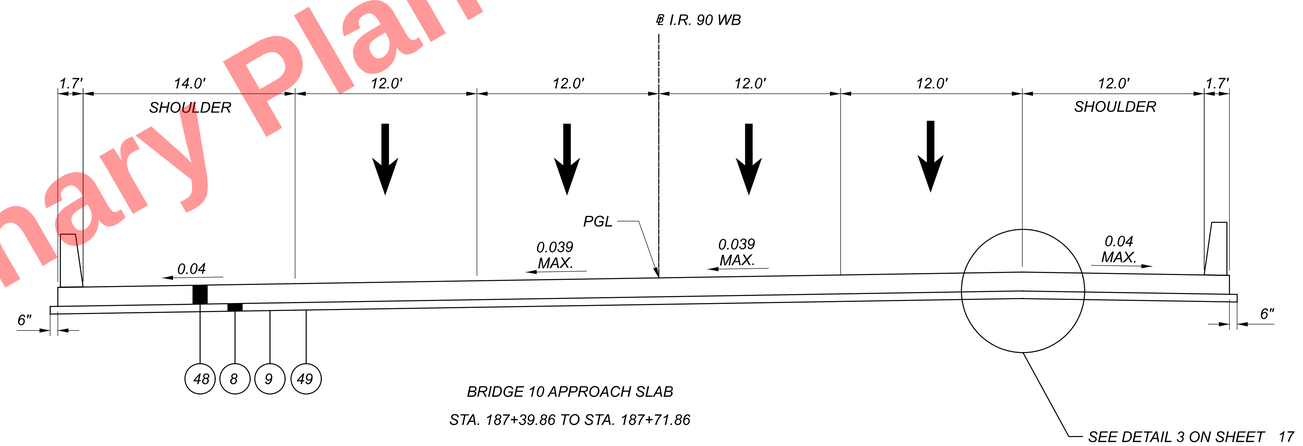

BRIDGE 10 APPROACH SLAB

STA. 187+39.86 TO STA. 187+71.86

Preliminary Plans - For Reference Only

NOTES:

FOR LEGEND, SEE SHEET 16

LANE CONFIGURATIONS SHOWN ARE ACCURATE AFTER CONSTRUCTION OF CONTRACT GROUP 5

APPROACH SLAB TYPICAL SECTIONS INCLUDE SLEEPER SLABS

PROPOSED TYPICAL SECTIONS I.R. 90 WB

DESIGN AGENCY

B&N burgessniple.com

DESIGNER	AJS
REVIEWER	MRT 05/01/24
PROJECT ID	82382
SHEET	34
TOTAL	2696

CUY-90-16.28 (CCG3A)

MODEL: I.R. 90 WB (2) PAPERSIZE: 34x22 (In.) DATE: 5/6/2025 TIME: 12:27:51 PM USER: sisson
pw:\\mb-us-pw.bentley.com:mb-us-pw-03\Documents\Cleveland.OHIO\Projects\ODOT\District2\82382\400-Engineering\Roadway\Sheets\82382_GY0002.dgn

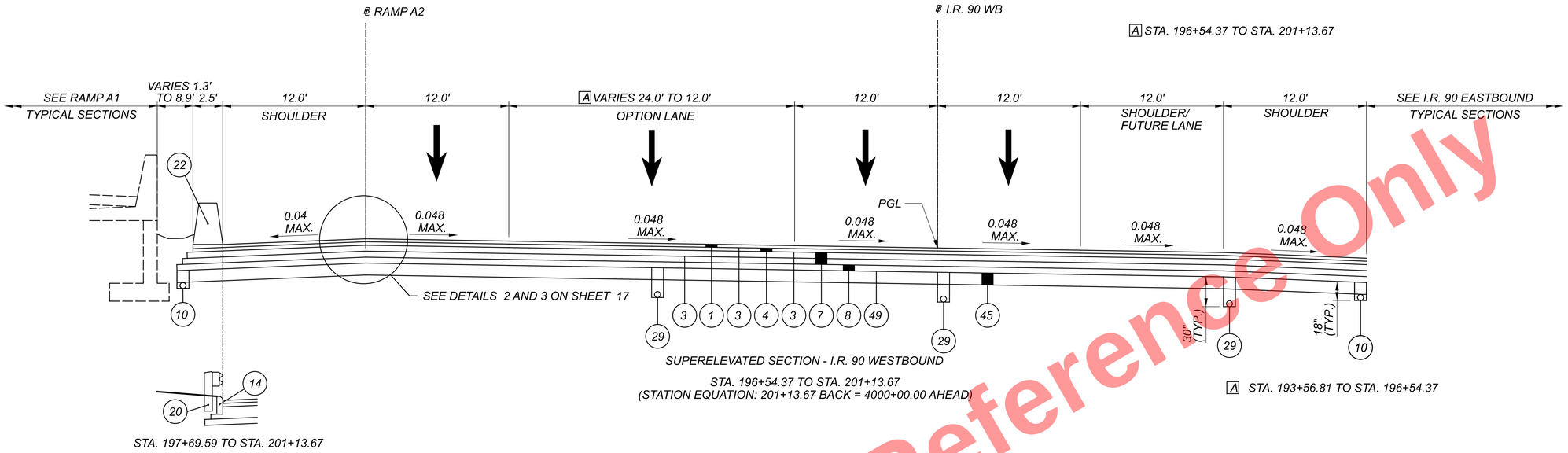

Preliminary Plans - For Reference Only

PROPOSED TYPICAL SECTIONS
I.R. 90 WB

CUY-90-16.28 (CCG3A)

MODEL: I.R. 90 WB (3) PAPERSIZE: 34x22 (in.) DATE: 6/16/2025 TIME: 3:50:06 PM USER: slsson
pw:\\mb-us-pw.bentley.commb-us-pw-03\Documents\Cleveland_OH\01_Projects\ODOT\District2\82382\400-Engineering\Roadway\Sheets\82382_GY0002.dgn

DESIGN AGENCY
B&N
burgessniple.com

DESIGNER
AJS

REVIEWER
MRT 05/01/24

PROJECT ID
82382

SHEET 35 | TOTAL 2696

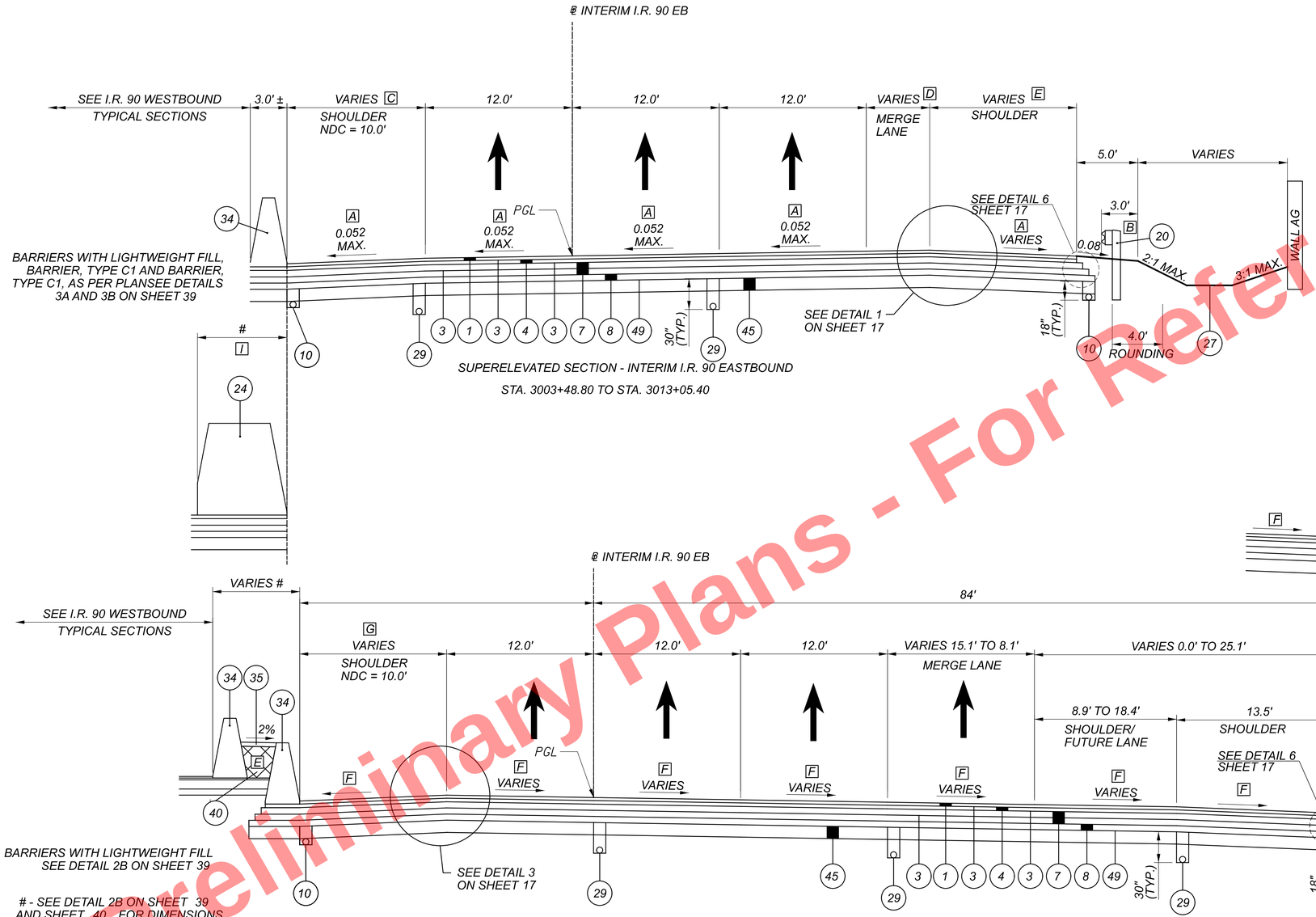

A SEE SUPERELEVATION TABLES FOR FULL SUPERELEVATION RATES AND TRANSITIONS

B GUARDRAIL - STA. 3006+69.07 TO STA. 3009+61.97

C VARIES 9.5' TO 9.3'
STA. 3003+48.80 TO STA. 3003+53.35
VARIES 9.3' TO 11.0'
STA. 3003+53.35 TO STA. 3004+50.00
11.0' STA. 3004+50.00 TO STA. 3008+00.00
VARIES 11.0' TO 6.5'
STA. 3008+00.00 TO STA. 3010+00.00

D VARIES 8.1' TO 0.0'
STA. 3003+48.80 TO STA. 3007+54.98

E 8.0' STA. 3003+48.80 TO STA. 3005+54.97
VARIES 8.0' TO 12.0' STA. 3005+54.97 TO STA. 3007+54.98
12.0' STA. 3007+54.98 TO STA. 3013+05.40

F SEE SUPERELEVATION TABLES FOR FULL SUPERELEVATION RATES AND TRANSITIONS

G 12.0' STA. 3000+00.00 TO STA. 3002+75.69
VARIES 12.0' TO 9.5' STA. 3002+75.69 TO STA. 3003+48.80

H STA. 3000+00.00 TO STA. 3000+78.14

I STA. 3003+73.50 TO STA. 3004+04.33, VARIES 5.81' TO 3.19'

FOR LEGEND, SEE SHEET 16

Preliminary Plans - For Reference Only

PROPOSED TYPICAL SECTIONS
INTERIM I.R. 90 EB

DESIGN AGENCY
B&N
burgessniple.com

DESIGNER AJS
REVIEWER MRT 05/01/24
PROJECT ID 82382
SHEET 36 TOTAL 2696

CUY-90-16.28 (CCG3A)

MODEL: I.R. 90 Interim EB (I) PAPERSIZE: 34x22 (in.) DATE: 3/28/2025 TIME: 11:35 AM USER: RohitBk
pw:\\mb-us-pw.bentley.com:mb-us-pw-03\Documents\Cleveland_OH\DL_Projects\ODOT\District2\82382\400-Engineering\Roadway\Sheets\82382_GY0002.dgn

Preliminary Plans - For Reference Only

MODEL: I.R. 90 Interim EB (2) PAPERSIZE: 34x22 (in.) DATE: 3/28/2025 TIME: 7:13:35 AM USER: Rohit.BK
pw:\\mb-us-pw.bentley.com:mb-us-pw-03\Documents\Cleveland.OH\DgnLibrary\Roadway\Sheets\82382_GY0002.dgn

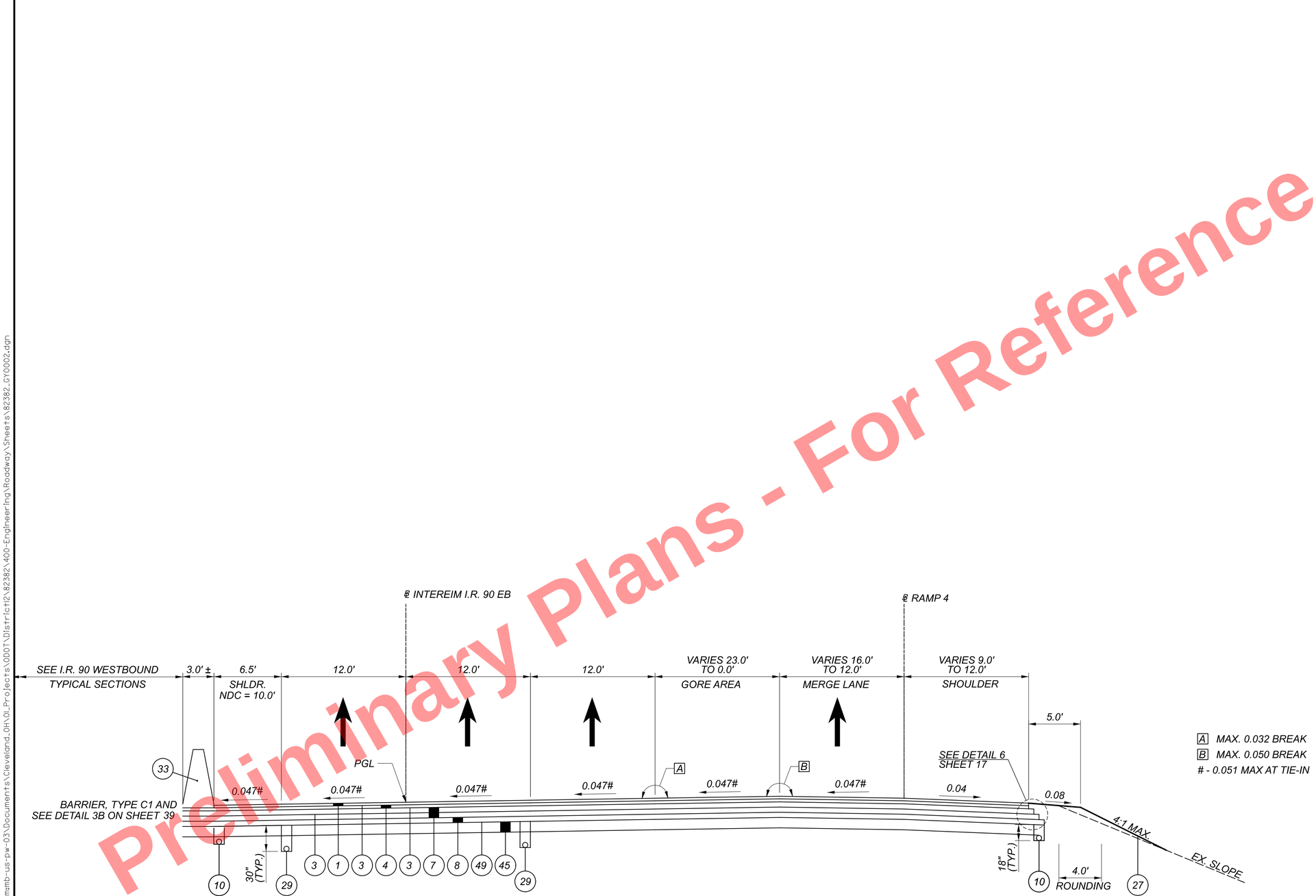

SUPERELEVATED SECTION - INTERIM I.R. 90 EASTBOUND

STA. 3013+05.40 TO STA. 3014+30.72

FOR LEGEND, SEE SHEET 16

LANE CONFIGURATIONS SHOWN ARE ACCURATE BEFORE CONSTRUCTION OF CONTRACT GROUP 5

PROPOSED TYPICAL SECTIONS
INTERIM I.R. 90 EB

CUY-90-16.28 (CCG3A)

DESIGN AGENCY
B&N
burgessniple.com

DESIGNER	AJS
REVIEWER	MRT 05/01/24
PROJECT ID	82382
SHEET	37
TOTAL	2696

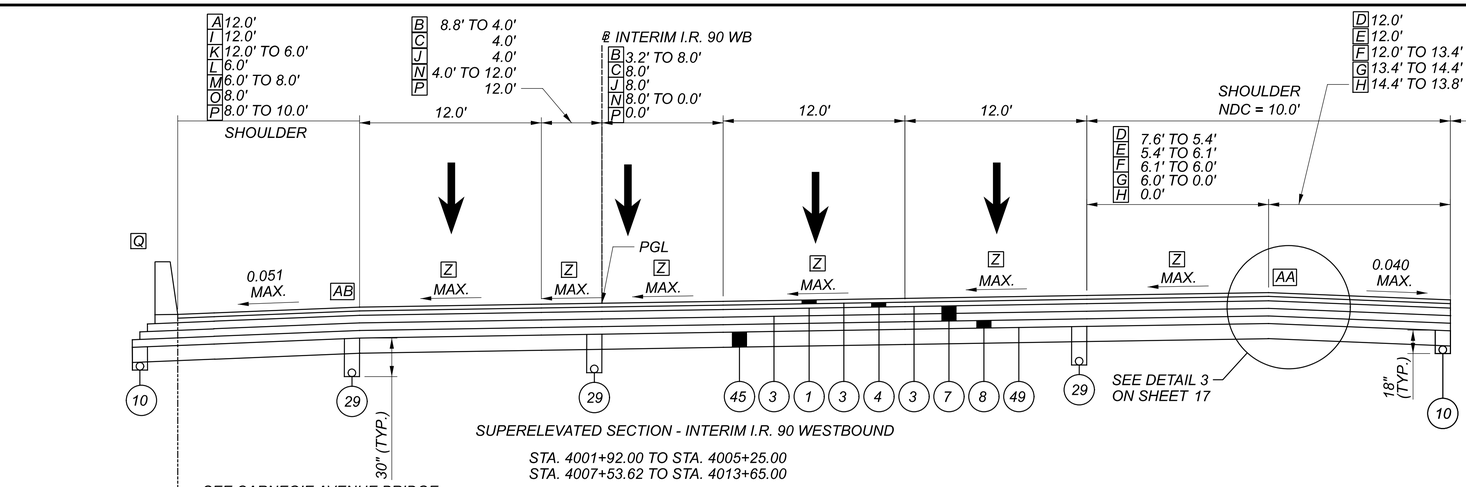

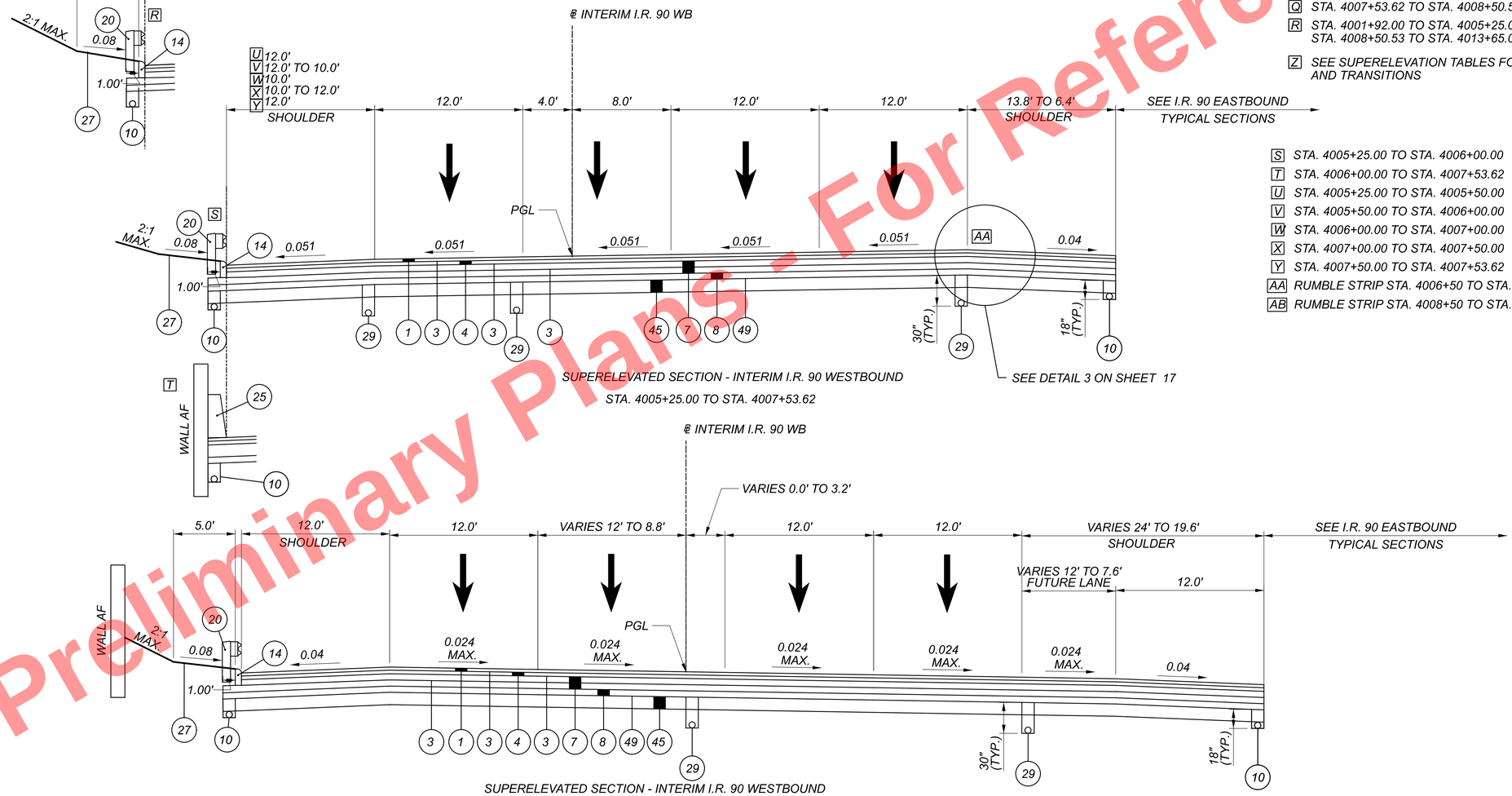

LANE CONFIGURATIONS SHOWN ARE ACCURATE BEFORE CONSTRUCTION OF CONTRACT GROUP 5

FOR LEGEND, SEE SHEET 16

Preliminary Plans - For Reference Only

PROPOSED TYPICAL SECTIONS INTERIM I.R. 90 WB

CUY-90-16.28 (CCG3A)

MODEL: I.R. 90 Interim WB (I) PAPERSIZE: 34x22 (in.) DATE: 3/28/2025 TIME: 7:15:36 AM USER: Rohit.BK
pw:\\mb-us-pw.bentley.com:mb-us-pw-03\Documents\Cleveland.OH\OI_Projects\ODOT\District2\82382\400-Engineering\Roadway\Sheets\82382_GY0002.dgn

DESIGN AGENCY	B&N burgessniple.com
DESIGNER	AJS
REVIEWER	MRT 05/01/24
PROJECT ID	82382
SHEET	38
TOTAL	2696

DETAIL 1*

TYPE B1 BARRIERS, GRADING BETWEEN
I.R. 90 EB STA. 175+77.69 TO 185+73.20

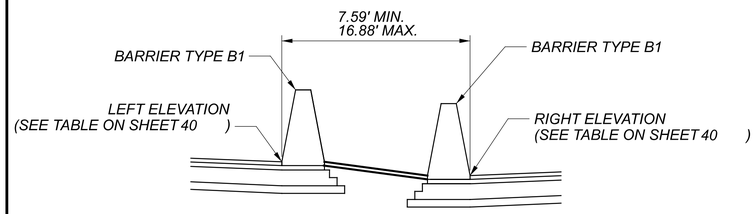

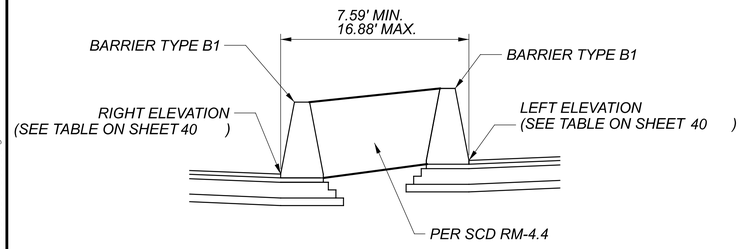

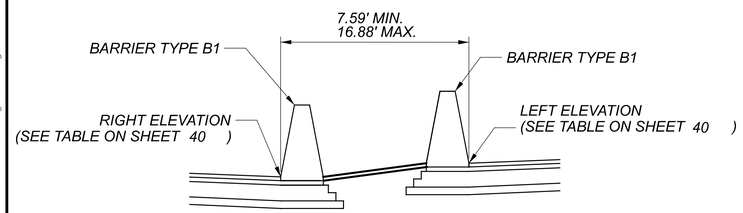

DETAIL 2A*

TYPE C1 BARRIER AND BARRIER RETAINING WALL, CAP AND FILL
I.R. 90 EB STA. 188+67.22 TO I.R. 90 EB STA. 192+75.00
[A] LOW DENSITY CELLULAR FILL, CLASS II
[B] 4" NON-REINFORCED CONCRETE PAVEMENT, CLASS QC1P

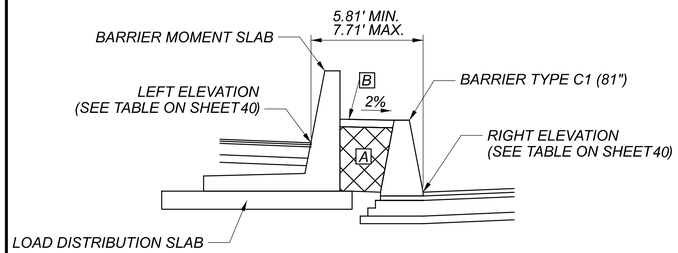

DETAIL 2B*

TYPE C1 BARRIERS WITH LIGHTWEIGHT FILL
I.R. 90 EB STA. 192+75.00 TO INTERIM I.R. 90 EB STA. 3003+75.14
[C] 4" NON-REINFORCED CONCRETE PAVEMENT, CLASS QC1P
[D] LOW DENSITY CELLULAR ONCRETE FILL, CLASS II

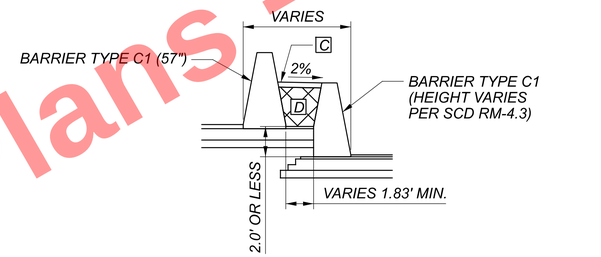

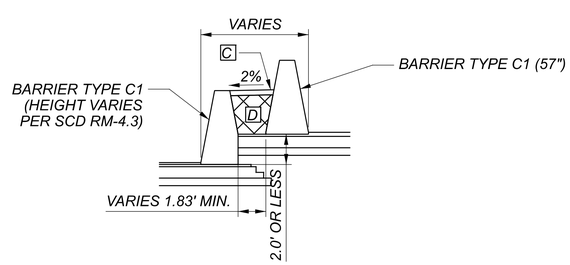

DETAIL 3A*

BARRIER, TYPE C1, AS PER PLAN
INTERIM I.R. 90 EB STA. 3003+73.50 TO 3004+04.33

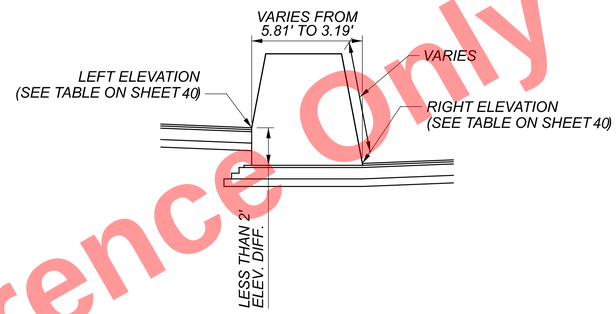

DETAIL 3B*

BARRIER, TYPE C1
INTERIM I.R. 90 EB STA. 3004+04.33 TO 3014+30.72

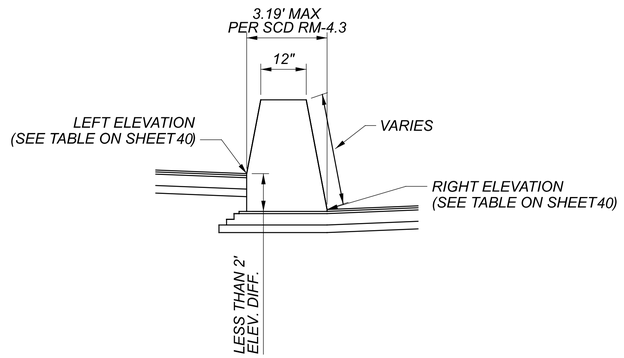

ITEM 622 - CONCRETE BARRIER, TYPE C1, AS PER PLAN

THIS ITEM SHALL MEET THE REQUIREMENTS OF ITEM 622 - CONCRETE BARRIER, TYPE C1, AS PER PLAN, EXCEPT THE SHAPE SHALL BE MODIFIED AS SHOWN IN THE PLAN DETAIL. ADDITIONALLY THE FIRST AND LAST TEN FEET OF THE BARRIER SHALL BE REINFORCED PER SCD RM-4.3, EXCEPT THE SHEAR STIRRUPS SHALL BE VARIED TO MATCH THE SECTION SHOWN IN THE DETAIL.

PAYMENT FOR ITEM 622 - CONCRETE BARRIER,TYPE C1, AS PER PLAN SHALL BE MADE AT THE UNIT PRICE BID, PER FOOT, AND SHALL INCLUDE ALL LABOR, EQUIPMENT, MATERIAL AND INCIDENTALS NECESSARY TO BUILD THIS ITEM AS NOTED ABOVE.

* SEE NEXT SHEET FOR MEDIAN BARRIER INFORMATION

PROPOSED TYPICAL SECTIONS
I.R. 90 MEDIAN BARRIER DETAILS

DESIGN AGENCY
B&N
burgessniple.com

DESIGNER AJS
REVIEWER MRT 05/17/24
PROJECT ID 82382
SHEET 39 TOTAL 2696

CUY-90-16.28 (CCG3A)

MODEL: I.R. 90 Barrier Detail Section PAPERSIZE: 34x22 (In.) DATE: 3/28/2025 TIME: 7:13:37 AM USER: RohlfBk
pw:\\mb-us-pw.bentley.com:mb-us-pw-03\Documents\Cleveland.OH\01_Projects\ODOT\District2\82382\400-Engineering\Roadway\Sheets\82382_GY0002.dgn

Preliminary Plans - For Reference Only

STATION	LEFT ELEVATION	RIGHT ELEVATION	ELEVATION DIFFERENCE (FT)	DETAIL USED
I.R. 90 EB STATIONING				
176+50.00	694.71	697.56	2.85	
176+75.00	694.56	697.41	2.85	
177+00.00	694.41	697.30	2.89	
177+25.00	694.26	697.24	2.98	
177+50.00	694.15	697.22	3.07	
177+75.00	694.10	697.25	3.15	
178+00.00	694.04	697.28	3.24	
178+25.00	693.96	697.31	3.35	
178+50.00	693.90	697.29	3.39	
178+75.00	693.85	697.24	3.39	
179+00.00	693.70	697.09	3.39	
179+25.00	693.58	696.96	3.38	
179+50.00	693.46	696.90	3.44	
179+75.00	693.34	696.79	3.45	
180+00.00	693.22	696.64	3.42	
180+25.00	693.09	696.46	3.37	
180+50.00	692.97	696.23	3.26	
180+75.00	692.85	695.96	3.11	
181+00.00	692.73	695.65	2.92	DETAIL 1
181+25.00	692.61	695.31	2.70	
181+50.00	692.49	694.98	2.49	
181+75.00	692.37	694.64	2.27	
182+00.00	692.25	694.30	2.05	
182+25.00	692.13	693.96	1.83	
182+50.00	692.01	693.62	1.61	
182+75.00	691.89	693.29	1.40	
183+00.00	691.76	692.95	1.19	
183+25.00	691.64	692.61	0.97	
183+50.00	691.52	692.27	0.75	
183+75.00	691.40	691.94	0.54	
184+00.00	691.28	691.60	0.32	
184+25.00	691.16	691.26	0.10	
184+50.00	691.04	690.92	-0.12	
184+75.00	690.92	690.58	-0.34	
185+00.00	690.80	690.38	-0.42	
185+25.00	690.67	690.12	-0.55	
185+50.00	690.54	689.81	-0.73	
185+75.00	690.29	689.46	-0.83	
STRUCTURE NO. 10 & 11				
188+75.00	684.70	681.81	-2.89	
189+00.00	684.10	680.95	-3.15	
189+25.00	683.46	680.07	-3.39	
189+50.00	682.78	679.20	-3.58	
189+75.00	682.05	678.32	-3.73	
190+00.00	681.29	677.56	-3.73	
190+25.00	680.49	676.79	-3.70	
190+50.00	679.64	676.03	-3.61	DETAIL 2A
190+75.00	678.77	675.27	-3.50	
191+00.00	677.89	674.51	-3.38	
191+25.00	677.02	673.74	-3.28	
191+50.00	676.14	672.98	-3.16	
191+75.00	675.15	672.24	-2.91	
192+00.00	674.09	671.56	-2.53	
192+25.00	673.10	670.87	-2.23	
192+50.00	672.10	670.12	-1.98	
192+75.00	671.08	669.37	-1.71	
193+00.00	670.05	668.62	-1.43	DETAIL 2B
193+25.00	669.05	667.85	-1.20	

STATION	LEFT ELEVATION	RIGHT ELEVATION	ELEVATION DIFFERENCE (FT)	DETAIL USED
193+50.00	668.15	666.98	-1.17	
193+75.00	667.24	666.10	-1.14	
194+00.00	666.34	665.23	-1.11	
194+25.00	665.44	664.35	-1.09	
194+50.00	664.53	663.48	-1.05	
194+75.00	663.63	662.60	-1.03	
195+00.00	662.73	661.73	-1.00	
195+25.00	661.82	660.86	-0.96	
195+50.00	660.92	659.98	-0.94	
195+75.00	660.02	659.10	-0.92	
196+00.00	659.11	658.23	-0.88	
196+25.00	658.21	657.35	-0.86	
196+50.00	657.31	656.48	-0.83	
196+75.00	656.41	655.60	-0.81	
197+00.00	655.50	654.73	-0.77	
197+25.00	654.60	653.85	-0.75	
197+50.00	653.71	653.00	-0.71	
197+75.00	652.93	652.19	-0.74	
198+00.00	652.14	651.43	-0.71	DETAIL 2B
198+25.00	651.30	650.64	-0.66	
198+50.00	650.50	649.88	-0.62	
198+75.00	649.67	649.17	-0.50	
199+00.00	648.85	648.50	-0.35	
BEGIN INTERIM I.R. 90 EB STATIONING				
3000+00.00	648.18	648.00	-0.18	
3000+25.00	647.44	647.41	-0.03	
3000+50.00	646.76	646.79	0.03	
3000+75.00	646.12	646.22	0.10	
3001+00.00	645.52	645.77	0.25	
3001+25.00	644.95	645.35	0.40	
3001+50.00	644.41	644.98	0.57	
3001+75.00	643.91	644.62	0.71	
3002+00.00	643.44	644.26	0.82	
3002+25.00	643.01	643.90	0.89	
3002+50.00	642.66	643.54	0.88	
3002+75.00	642.39	643.19	0.80	
3003+00.00	642.11	642.84	0.73	
3003+25.00	641.85	642.52	0.67	
3003+50.00	641.64	642.21	0.57	
3003+75.00	641.48	641.81	0.33	DETAIL 3A
3004+00.00	641.30	641.38	0.08	
3004+25.00	640.98	640.99	0.01	
3004+50.00	640.62	640.67	0.05	
3004+75.00	640.17	640.37	0.20	
3005+00.00	639.71	640.08	0.37	
3005+25.00	639.24	639.78	0.54	
3005+50.00	638.78	639.49	0.71	
3005+75.00	638.38	639.19	0.81	
3006+00.00	638.15	638.90	0.75	
3006+25.00	637.99	638.60	0.61	DETAIL 3B
3006+50.00	637.89	638.34	0.45	
3006+75.00	637.86	638.13	0.27	
3007+00.00	637.88	638.00	0.12	
3007+25.00	637.96	637.92	-0.04	
3007+50.00	638.10	637.91	-0.19	
3007+75.00	638.31	637.96	-0.35	
3008+00.00	638.58	638.07	-0.51	
3008+25.00	638.88	638.28	-0.60	

STATION	LEFT ELEVATION	RIGHT ELEVATION	ELEVATION DIFFERENCE (FT)	DETAIL USED
3008+50.00	639.25	638.54	-0.71	
3008+75.00	639.68	638.88	-0.80	
3009+00.00	640.17	639.37	-0.80	
3009+25.00	640.73	639.88	-0.85	
3009+50.00	641.35	640.39	-0.96	
3009+75.00	642.02	640.97	-1.05	
3010+00.00	642.76	641.62	-1.14	
3010+25.00	643.60	642.32	-1.28	
3010+50.00	644.40	643.03	-1.37	
3010+75.00	645.12	643.77	-1.35	
3011+00.00	645.84	644.50	-1.34	
3011+25.00	646.49	645.17	-1.32	DETAIL 3B
3011+50.00	647.07	645.77	-1.30	
3011+75.00	647.58	646.30	-1.28	
3012+00.00	648.02	646.75	-1.27	
3012+25.00	648.39	647.13	-1.26	
3012+50.00	648.73	647.43	-1.30	
3012+75.00	648.96	647.67	-1.29	
3013+00.00	649.11	647.75	-1.36	
3013+25.00	649.19	647.81	-1.38	
3013+50.00	649.20	647.82	-1.38	
3013+75.00	649.14	647.76	-1.38	
3014+00.00	649.02	647.63	-1.39	

NOTE:
SEE PREVIOUS SHEET FOR BARRIER DETAILS

Preliminary Plans - For Reference Only

PROPOSED TYPICAL SECTIONS
I.R. 90 MEDIAN BARRIER DETAILS

DESIGN AGENCY
B&N
burgessniple.com

DESIGNER
AJS

REVIEWER
MRT 05/17/24

PROJECT ID
82382

SHEET 40 | TOTAL 2696

CUY-90-16.28 (CCG3A)

MODEL: I.R. 90 Barrier Detail Table PAPERSIZE: 34x22 (in.) DATE: 3/28/2025 TIME: 7:35:38 AM USER: Rohit-Bk
pw:\\mb-us-pw.bentley.com:mb-us-pw-03\Documents\Cleveland_OH\01_Projects\ODOT\District2\82382\400-Engineering\Roadway\Sheets\82382_GY0002.dgn

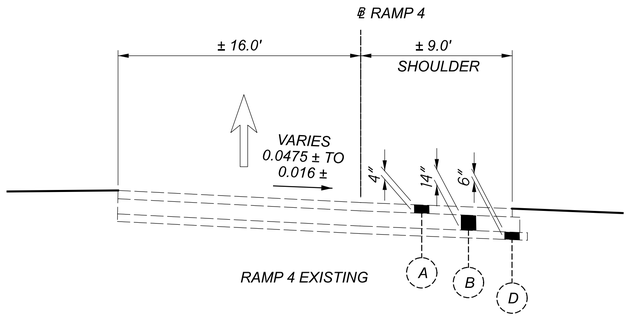

EXISTING SUBBASE 6" - SEE EXISTING PLAN CUY-42-18.77

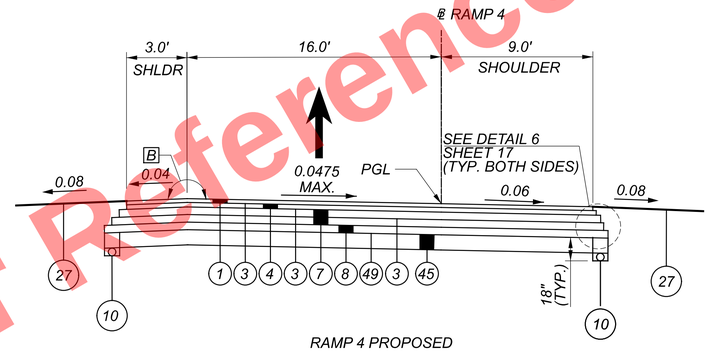

RAMP 4 PROPOSED
STA. 903+25.00 TO STA. 905+40.93

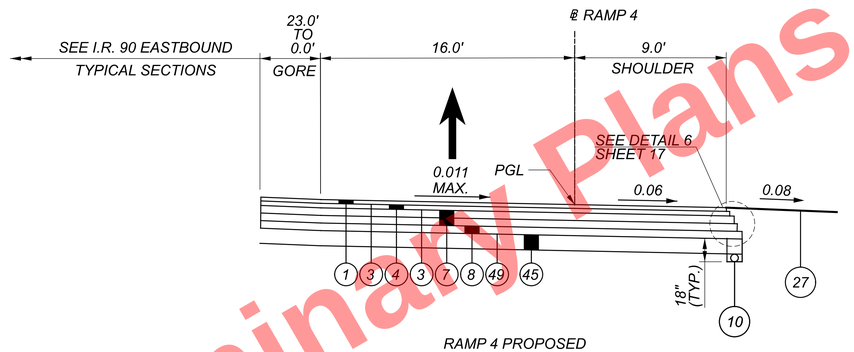

RAMP 4 PROPOSED
STA. 905+40.93 TO STA. 906+15.28

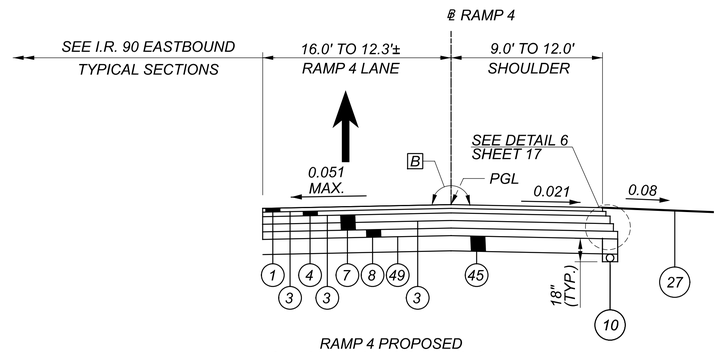

RAMP 4 PROPOSED
STA. 906+15.28 TO STA. 906+64.37

FOR LEGEND, SEE SHEET 16

Preliminary Plans - For Reference Only

EXISTING & PROPOSED TYPICAL SECTIONS
RAMP 4

CUY-90-16.28 (CCG3A)

MODEL: RAMP 4 PAPERSIZE: 34x22 (in.) DATE: 3/28/2025 TIME: 7:55:39 AM USER: RohlfBk
pw:\\mb-us-pw.bentley.com:mb-us-pw-03\Documents\Cleveland_OH\01_Projects\ODOT\District2\82382\400-Engineering\Roadway\Sheets\82382_GY0002.dgn

DESIGN AGENCY
B&N
burgessniple.com

DESIGNER
AJS
REVIEWER
MRT 05/01/24
PROJECT ID
82382
SHEET 41
TOTAL 2696

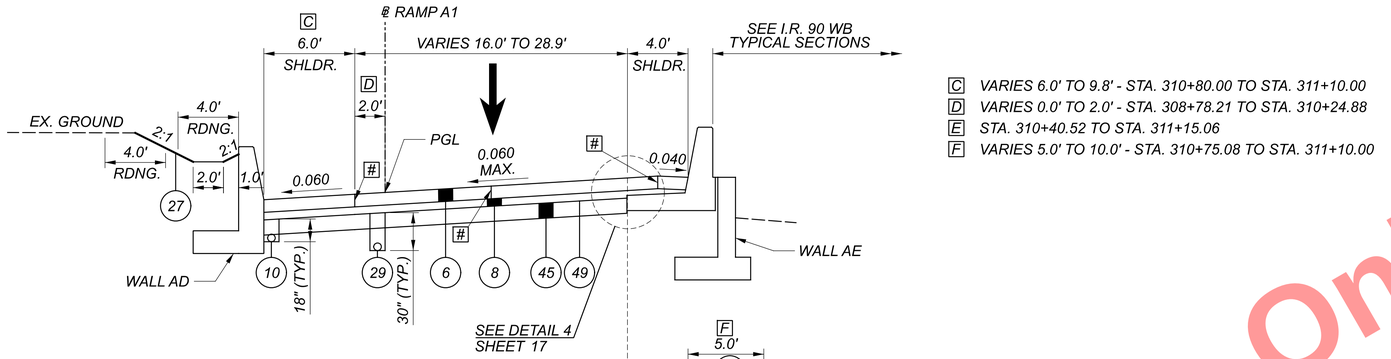

C VARIES 6.0' TO 9.8' - STA. 310+80.00 TO STA. 311+10.00
D VARIES 0.0' TO 2.0' - STA. 308+78.21 TO STA. 310+24.88
E STA. 310+40.52 TO STA. 311+15.06
F VARIES 5.0' TO 10.0' - STA. 310+75.08 TO STA. 311+10.00

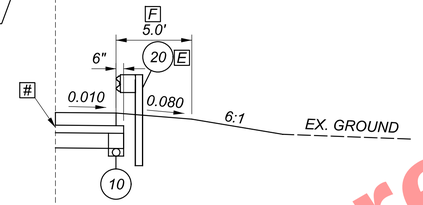

STA. 310+56.38 TO STA. 311+10.00

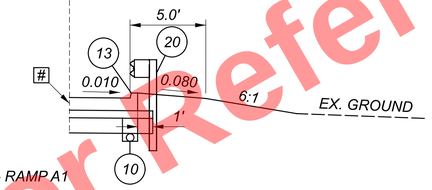

SUPERELEVATED SECTION - RAMP A1

STA. 308+78.21 TO STA. 311+10.00

STA. 310+40.52 TO STA. 310+56.38

A STA. 303+50.14 TO STA. 307+07.36
B STA. 307+07.36 TO 308+78.21
C VARIES 0.016 TO 0.040 - STA. 303+50.14 TO STA. 304+50.00

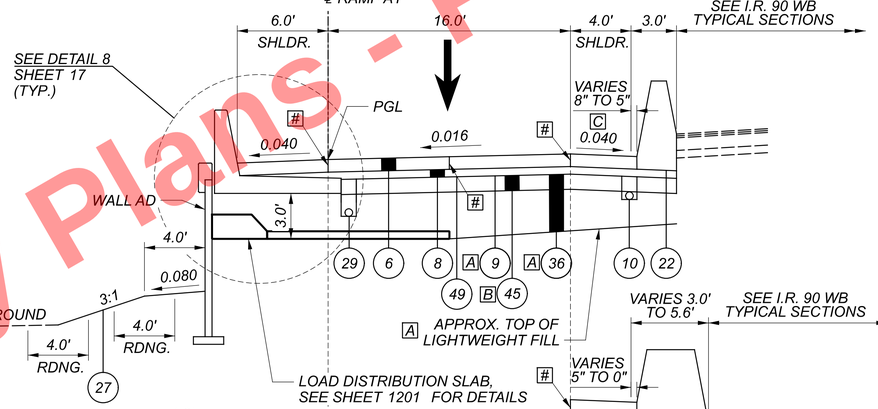

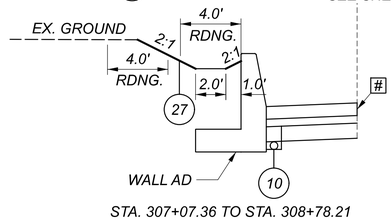

STA. 307+07.36 TO STA. 308+78.21

NORMAL SECTION - RAMP A1

STA. 303+50.14 TO STA. 308+78.21

STA. 308+45.00 TO STA. 308+78.21

LONGITUDINAL JOINT PER BP-2.1, SEE JOINT DETAILS ON SHEETS 1438 - 1439 FOR MORE INFORMATION

FOR LEGEND, SEE SHEET 16

Preliminary Plans - For Reference Only

PROPOSED TYPICAL SECTIONS
RAMP A1

DESIGN AGENCY
HDR

DESIGNER TJS
REVIEWER VLE 06/17/22
PROJECT ID 82382
SHEET 42 TOTAL 2696

CUY-90-16.28 (CCG3A)

MODEL: Ramp A1 (1) PAPERSIZE: 34x22 (in.) DATE: 6/16/2025 TIME: 5:58:00 PM USER: TSCHOEN
pw:\\mb-us-pw.bentley.com:mb-us-pw-03\Documents\Cleveland_OH\01_Projects\ODOT\District2\82382\400-Engineering\Roadway\Sheets\82382_GY0003.dgn

Preliminary Plans - For Reference Only

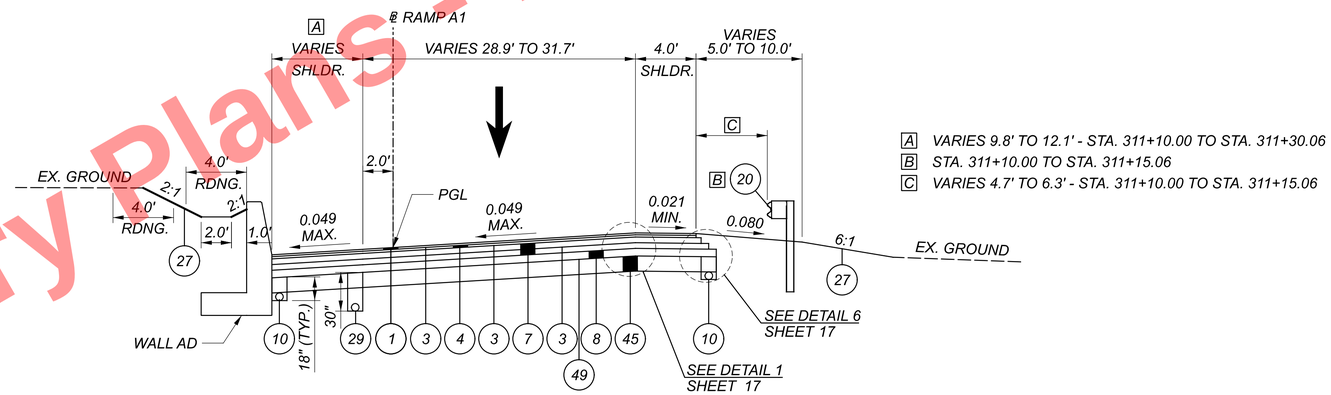

A VARIES 9.8' TO 12.1' - STA. 311+10.00 TO STA. 311+30.06
B STA. 311+10.00 TO STA. 311+15.06
C VARIES 4.7' TO 6.3' - STA. 311+10.00 TO STA. 311+15.06

SUPERELEVATED SECTION - RAMP A1

STA. 311+10.00 TO STA. 311+30.06

STA. 311+30.06 TO STA. 312+26.15
- SEE INTERSECTION DETAILS

FOR LEGEND, SEE SHEET 16

PROPOSED TYPICAL SECTIONS
RAMP A1

DESIGN AGENCY

DESIGNER TJS
REVIEWER VLE 06/17/22
PROJECT ID 82382
SHEET 43 TOTAL 2696

CUY-90-16.28 (CCG3A)

MODEL: Ramp A1(2) PAPERSIZE: 34x22 (in) DATE: 3/28/2025 TIME: 7:13:57 AM USER: Rohit.Bk
pw:\\mb-us-pw.bentley.com:mb-us-pw-03\Documents\Cleveland_OH\DL_Projects\ODOT\District2\82382\400-Engineering\Roadway\Sheets\8238 2_GY0003.dgn

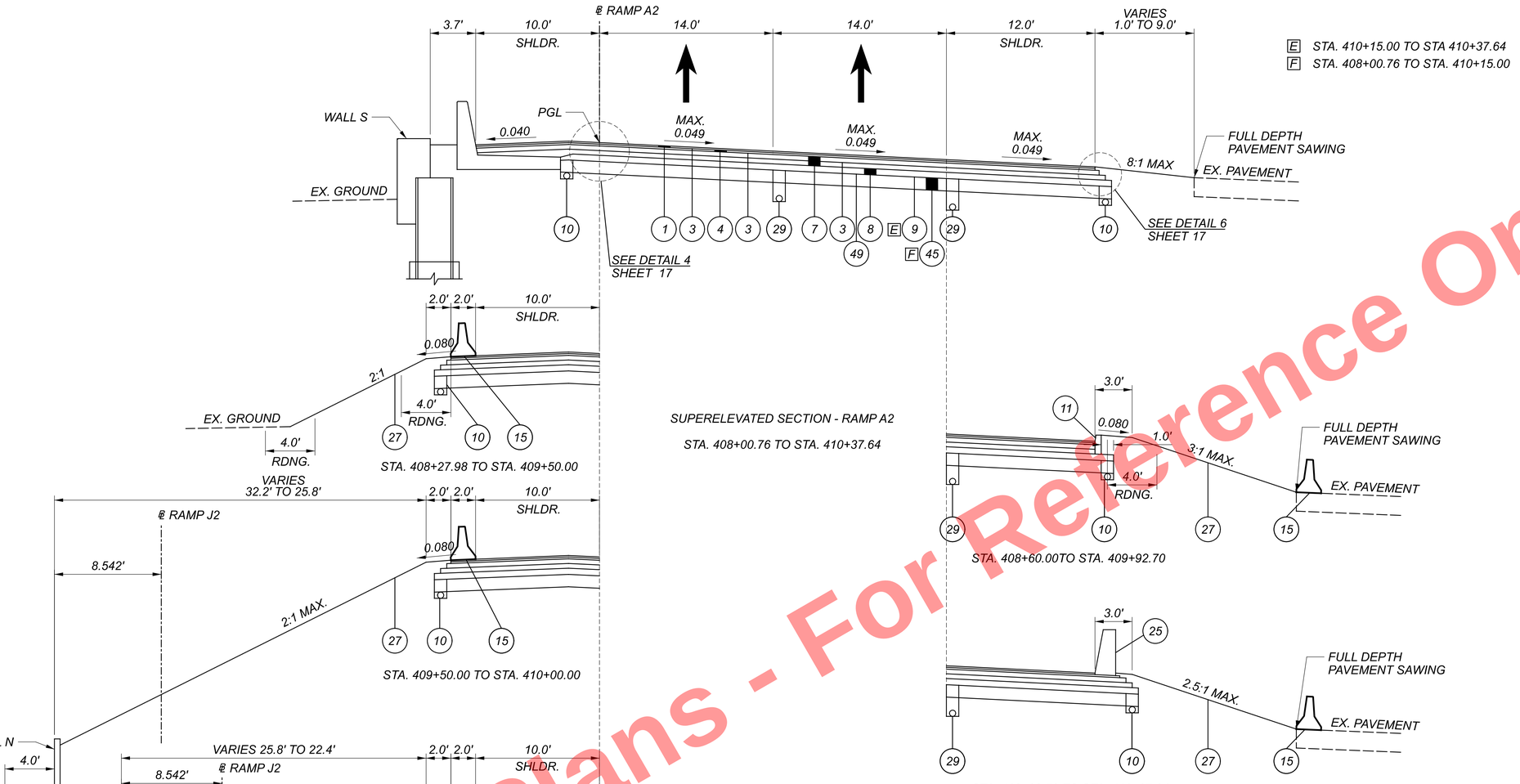

FOR LEGEND, SEE SHEET 16

Preliminary Plans - For Reference Only

PROPOSED TYPICAL SECTIONS
RAMP A2

CUY-90-16.28 (CCG3A)

MODEL: Ramp A2 (1) PAPERSIZE: 34x22 (in.) DATE: 3/28/2025 TIME: 7:13:57 AM USER: Rohit.Bk
pw:\\mb-us-pw.bentley.com:mb-us-pw-03\Documents\Cleveland.OH\01_Projects\ODOT\District2\82382\400-Engineering\Roadway\Sheets\82382_GY0003.dgn

DESIGN AGENCY

DESIGNER TJS
REVIEWER VLE 06/17/22
PROJECT ID 82382
SHEET 44 TOTAL 2696

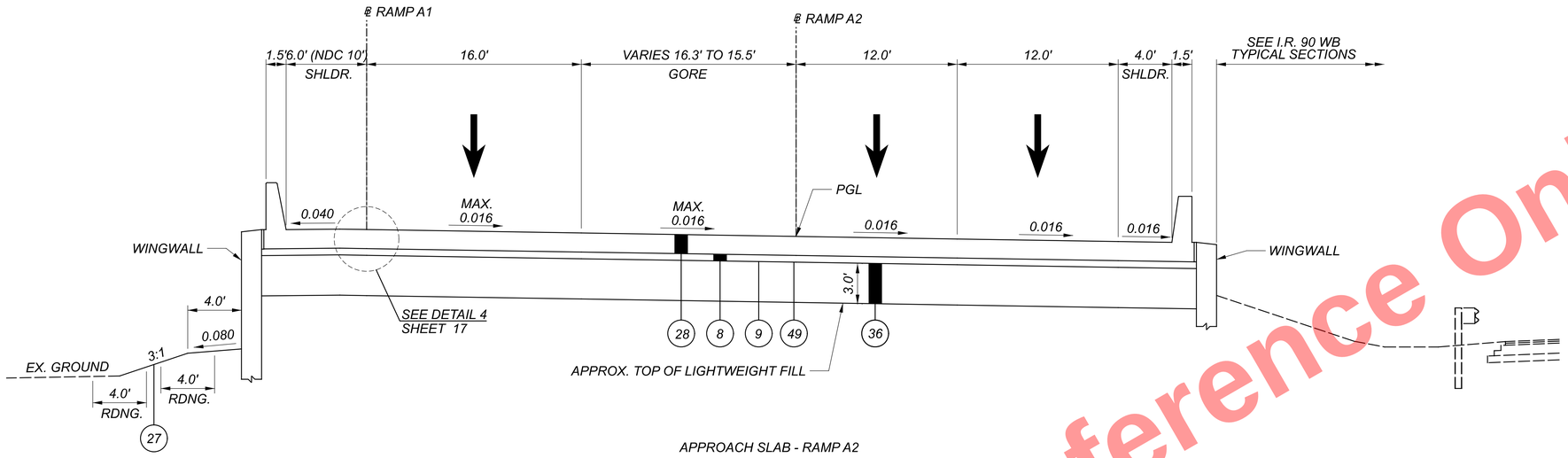

APPROACH SLAB - RAMP A2

STA. 430+96.75 TO STA. 431+26.75

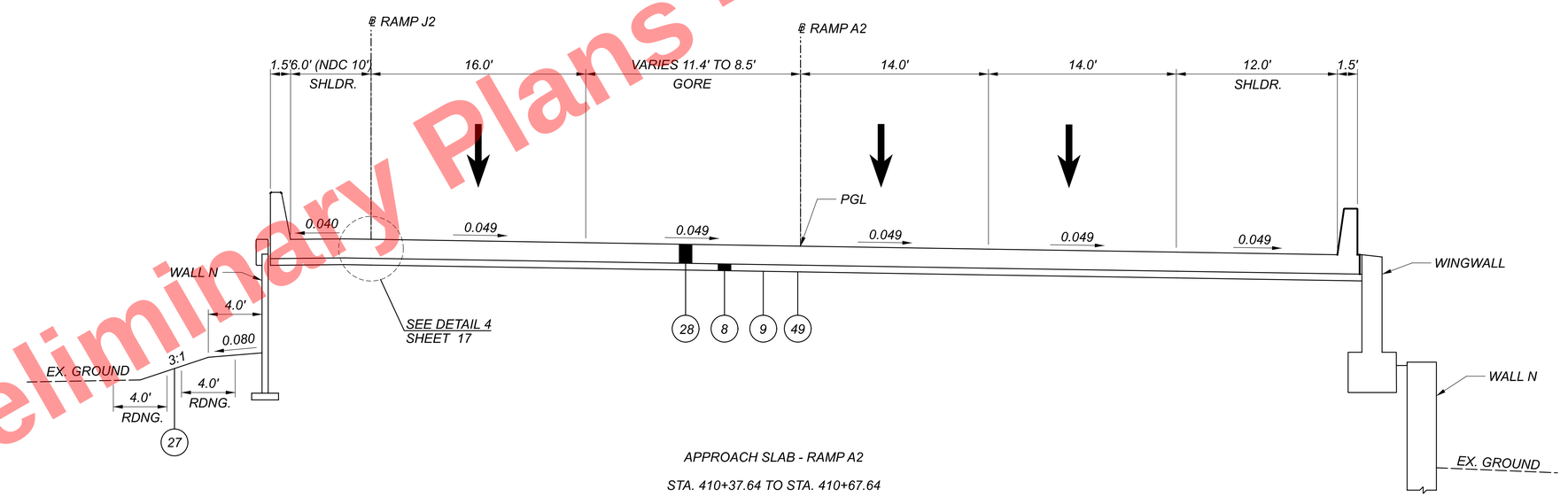

APPROACH SLAB - RAMP A2

STA. 410+37.64 TO STA. 410+67.64

FOR LEGEND, SEE SHEET 16

FOR APPROACH SLAB DETAILS, SEE SHEETS 2023 - 2025

PROPOSED TYPICAL SECTIONS
RAMP A2

DESIGN AGENCY

HDR

DESIGNER	TJS
REVIEWER	VLE 06/17/22
PROJECT ID	82382
SHEET	45
TOTAL	2696

CUY-90-16.28 (CCG3A)

MODEL: Ramp A2 (2) PAPERSIZE: 34x22 (in.) DATE: 5/15/2025 TIME: 11:04:08 AM USER: TSCHOEN
pw:\\mb-us-pw.bentley.com:mb-us-pw-03\Documents\Cleveland.OH\OI_Projects\ODOT\District2\82382\400-Engineering\Roadway\Sheets\82382_GY0003.dgn

Preliminary Plans - For Reference Only

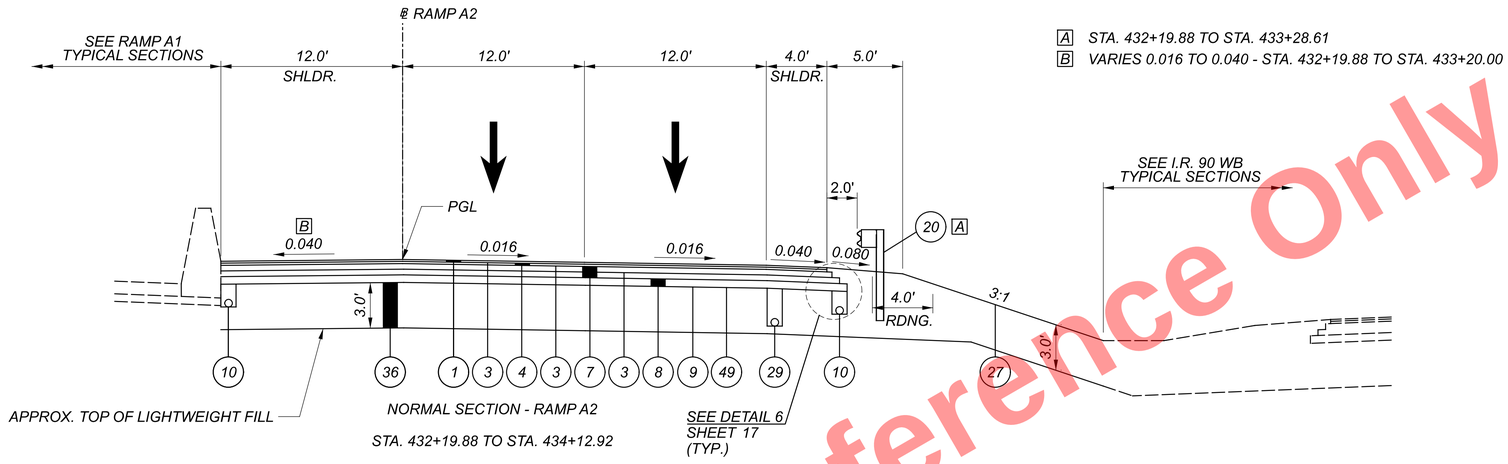

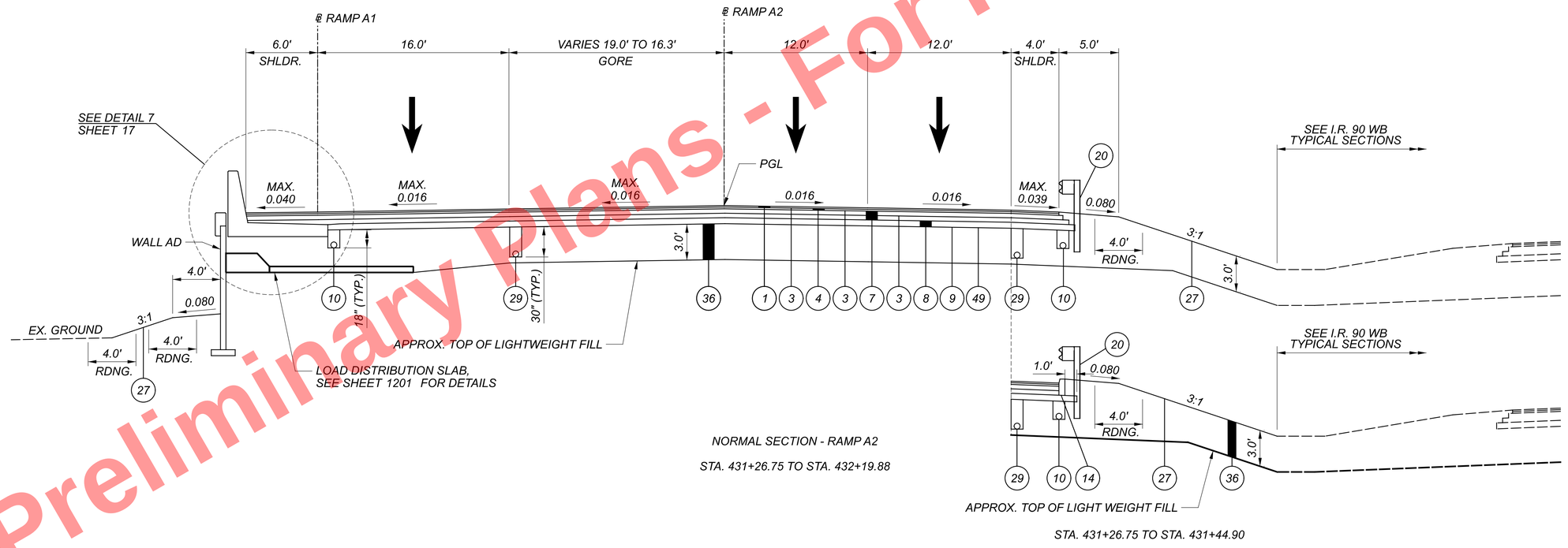

Preliminary Plans - For Reference Only

FOR LEGEND, SEE SHEET 16

PROPOSED TYPICAL SECTIONS
RAMP A2

DESIGN AGENCY
HDR

DESIGNER TJS
REVIEWER VLE 06/17/22
PROJECT ID 82382
SHEET 46 TOTAL 2696

CUY-90-16.28 (CCG3A)

MODEL: Ramp A2 (3) PAPERSIZE: 34x22 (in.) DATE: 3/28/2025 TIME: 7:35:58 AM USER: Rohit.Bk
pw:\\mb-us-pw.bentley.com:mb-us-pw-03\Documents\Cleveland_OH\DL_Projects\DOT\District2\82382\400-Engineering\Roadway\Sheets\82382_GY0003.dgn

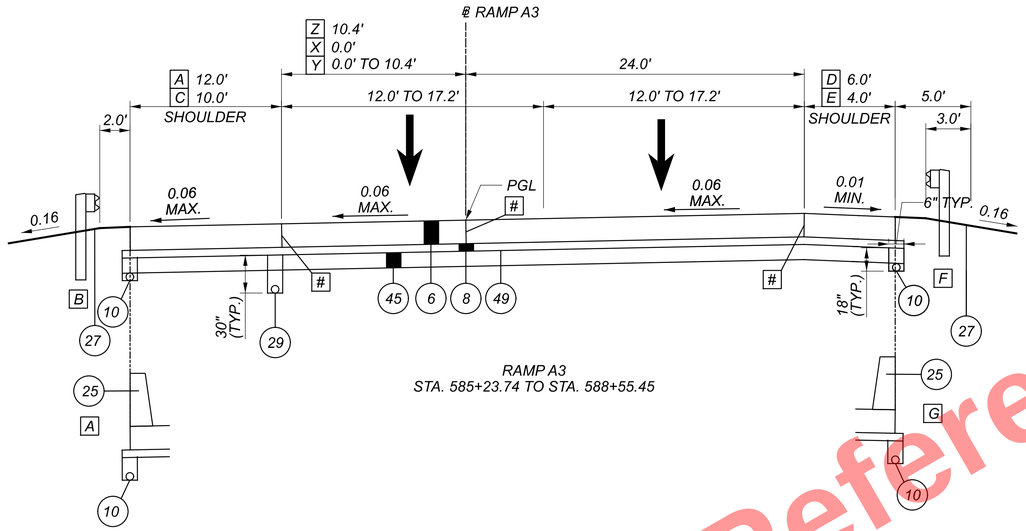

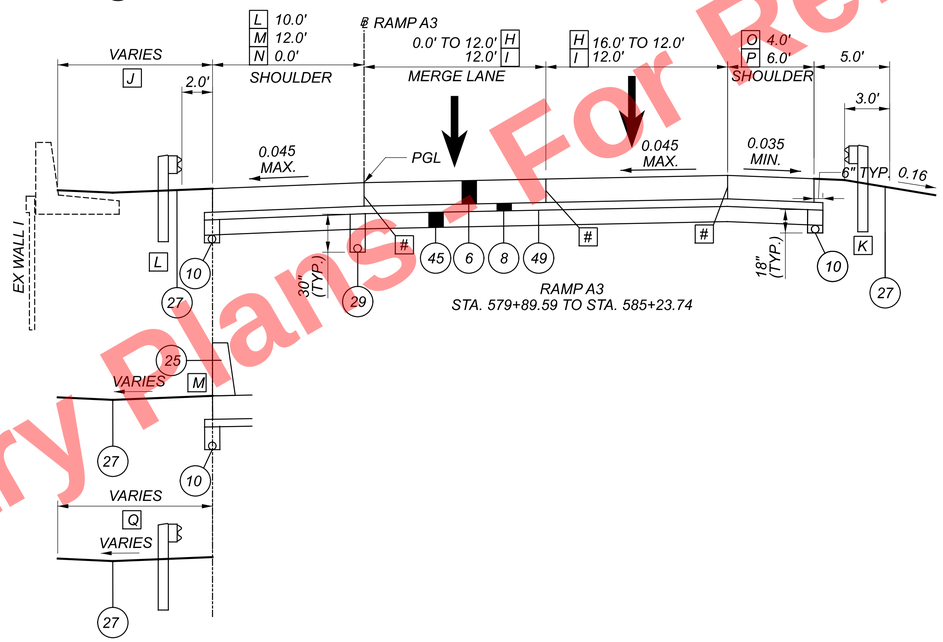

A STA. 585+23.74 TO STA. 586+40.48

B STA. 586+40.48 TO STA. 587+36.67

C STA. 586+40.48 TO STA. 588+54.52

D STA. 585+23.74 TO STA. 585+33.00

E STA. 585+33.00 TO STA. 585+54.52

F STA. 585+33.00 TO STA. 588+14.40

G STA. 588+14.40 TO STA. 588+55.45

X STA. 585+23.74 TO STA. 585+49.04

Y STA. 585+49.04 TO STA. 587+09.55

Z STA. 587+09.55 TO STA. 588+55.45

H STA. 579+89.59 TO STA. 583+89.59

I STA. 583+89.59 TO STA. 585+23.74

J STA. 579+89.59 TO STA. 581+52.23

K STA. 580+98.32 TO STA. 584+35.00

L STA. 579+89.59 TO STA. 584+05.00

M STA. 584+89.00 TO STA. 585+23.74

N STA. 584+05.00 TO STA. 585+23.74

O STA. 579+89.59 TO STA. 584+35.00

P STA. 584+35.00 TO STA. 585+23.74

Q STA. 581+52.23 TO STA. 584+89.00

LONGITUDINAL JOINT PER BP-2.1

FOR LEGEND, SEE SHEET 16

For Reference Only
Preliminary Plans - Not for Construction

PROPOSED TYPICAL SECTIONS
RAMP A3

DESIGN AGENCY
B&N
burgessniple.com

DESIGNER AJS
REVIEWER MRT 05/01/24
PROJECT ID 82382
SHEET 47 TOTAL 2696

CUY-90-16.28 (CCG3A)

MODEL: RAMP A3 PAPERSIZE: 34x22 (in.) DATE: 3/28/2025 TIME: 7:14:12 AM USER: Rohit.Bk
pw:\\mb-us-pw.bentley.commb-us-pw-03\Documents\Cleveland_OH\01_Projects\0007\District2\82382\400-Engineering\Roadway\Sheets\82382_GY0002.dgn

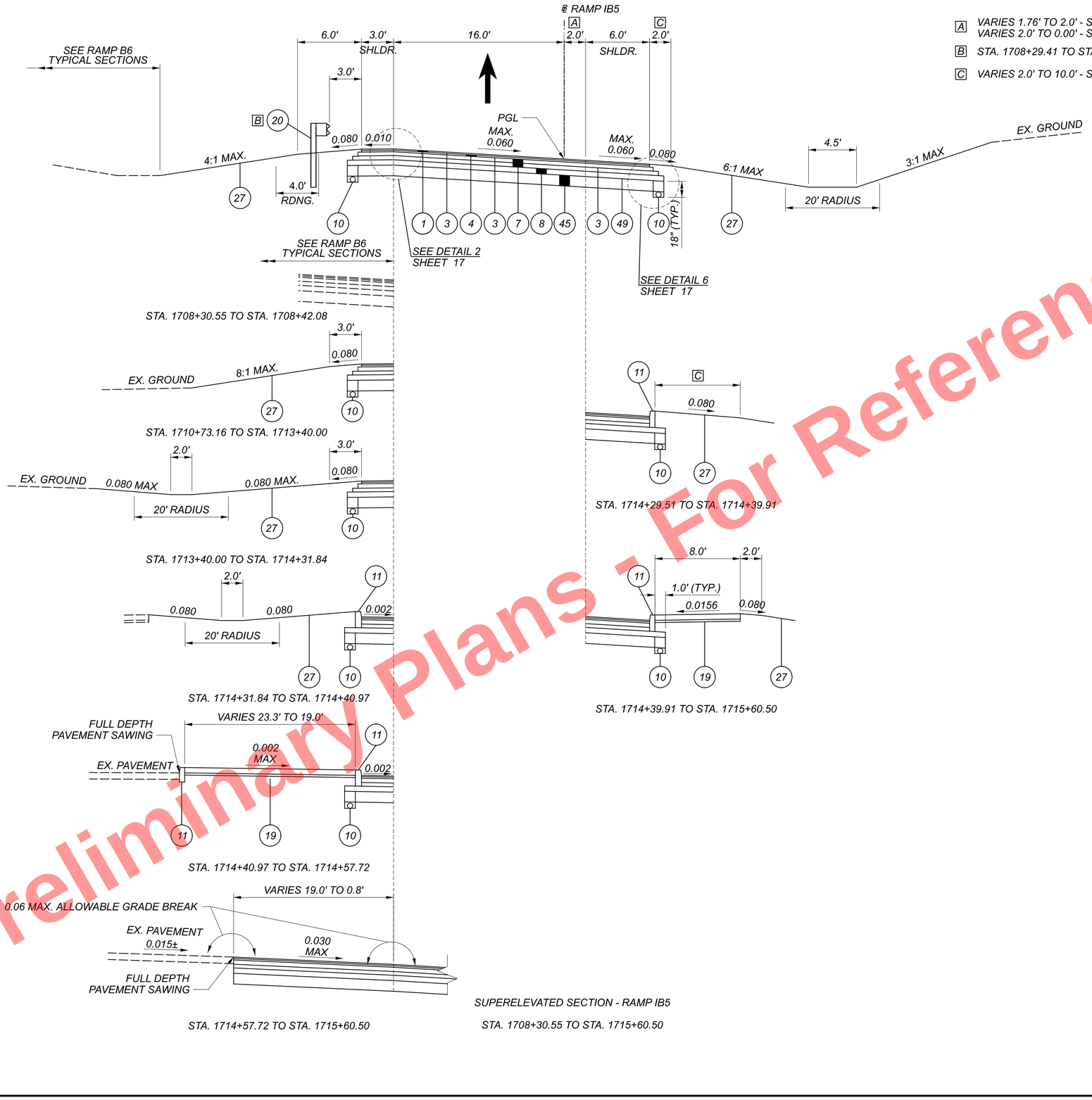

A VARIES 1.76' TO 2.0' - STA. 1708+29.41 TO STA. 1708+47.76
VARIES 2.0' TO 0.00' - STA. 1714+10.50 TO STA. 1715+60.50

B STA. 1708+29.41 TO STA. 1710+73.16

C VARIES 2.0' TO 10.0' - STA. 1713+50.00 TO STA. 1714+39.91

SUPERELEVATED SECTION - RAMP IB5

STA. 1708+30.55 TO STA. 1715+60.50

FOR LEGEND, SEE SHEET 16

Preliminary Plans - For Reference Only

PROPOSED TYPICAL SECTIONS
RAMP IB5

DESIGN AGENCY

DESIGNER TJS
REVIEWER VLE 06/17/22
PROJECT ID 82382
SHEET 48 TOTAL 2696

CUY-90-16.28 (CCG3A)

MODEL: Ramp IB5 (I) PAPERSIZE: 34x22 (in.) DATE: 3/28/2025 TIME: 7:14:38 AM USER: Rohit.Bk
pw:\\mb-us-pw.bentley.com:mb-us-pw-03\Documents\Cleveland_OH\01_Projects\ODOT\District2\82382\400-Engineering\Roadway\Sheets\82382_GY0003.dgn

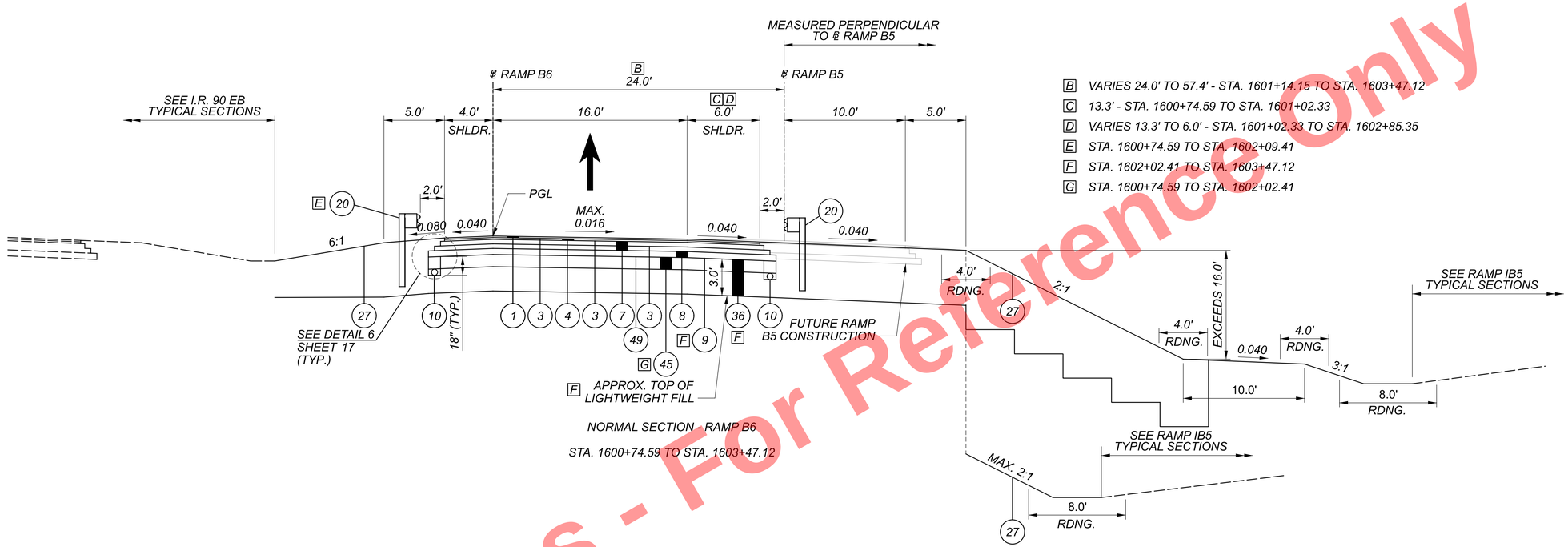

FOR LEGEND, SEE SHEET 16

Preliminary Plans - For Reference Only

PROPOSED TYPICAL SECTIONS RAMP B6

CUY-90-16.28 (CCG3A)
MODEL: Ramp B6 (I PAPERSIZE: 34x22 (In.) DATE: 6/6/2025 TIME: 5:58:04 PM USER: TSCHOEN
pw:\\mb-us-pw.bentley.com:mb-us-pw-03\Documents\Cleveland_OH\OI_Projects\ODOT\District2\82382\400-Engineering\Roadway\Sheets\82382_GY0003.dgn

DESIGN AGENCY

DESIGNER TJS

REVIEWER VLE 06/17/22

PROJECT ID 82382

SHEET 49 TOTAL 2696

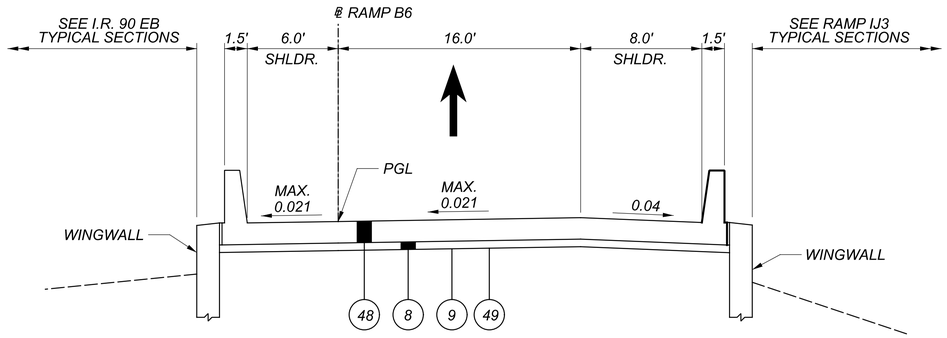

APPROACH SLAB - RAMP B6

STA. 1607+95.06 TO STA. 1608+25.06
OMIT STA. 1608+25.06 TO STA. 1613+43.25 (PR. BRIDGE)

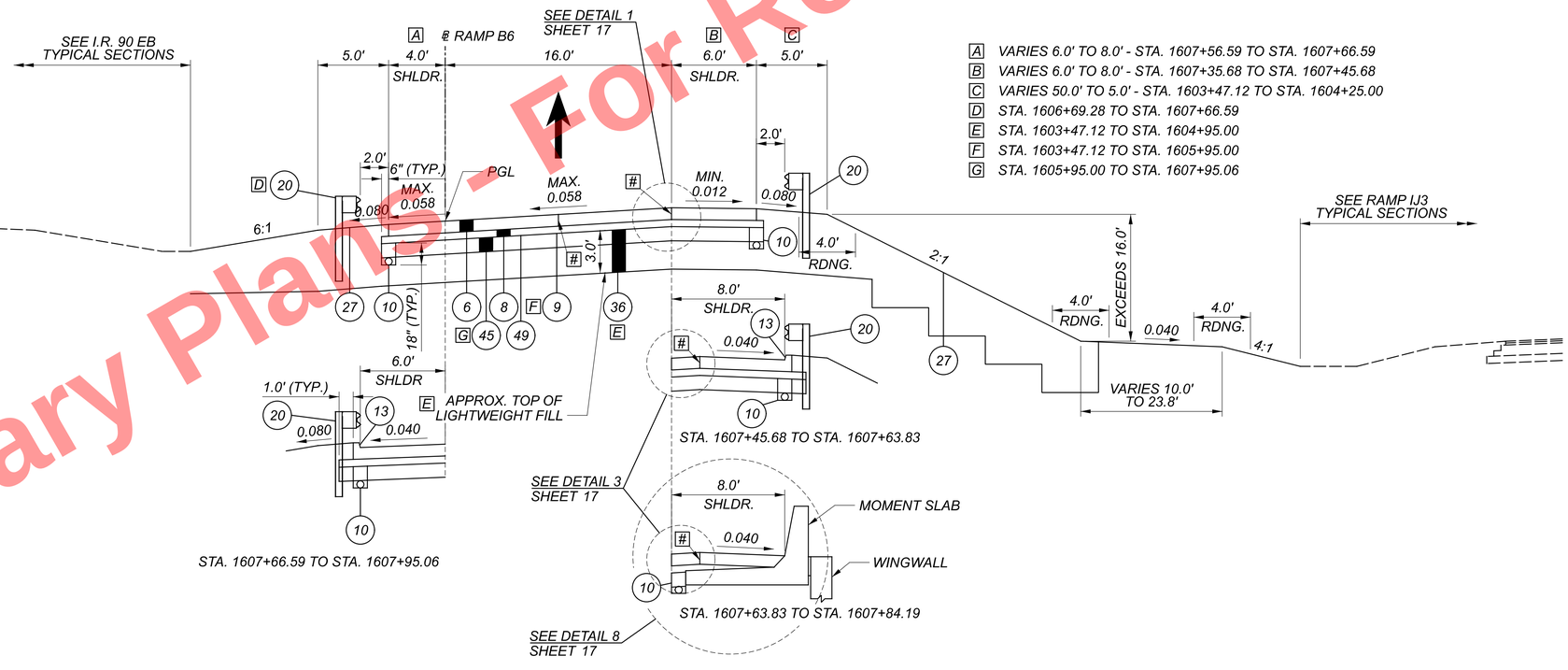

SUPERELEVATED SECTION - RAMP B6

STA. 1603+47.12 TO STA. 1607+95.06

- A VARIES 6.0' TO 8.0' - STA. 1607+56.59 TO STA. 1607+66.59
- B VARIES 6.0' TO 8.0' - STA. 1607+35.68 TO STA. 1607+45.68
- C VARIES 50.0' TO 5.0' - STA. 1603+47.12 TO STA. 1604+25.00
- D STA. 1606+69.28 TO STA. 1607+66.59
- E STA. 1603+47.12 TO STA. 1604+95.00
- F STA. 1603+47.12 TO STA. 1605+95.00
- G STA. 1605+95.00 TO STA. 1607+95.06

LONGITUDINAL JOINT PER BP-2.1

FOR LEGEND, SEE SHEET 16

FOR APPROACH SLAB DETAILS, SEE SHEET 2174

Preliminary Plans - For Reference Only

PROPOSED TYPICAL SECTIONS
RAMP B6

DESIGN AGENCY

DESIGNER TJS
REVIEWER VLE 06/17/22
PROJECT ID 82382
SHEET 50 TOTAL 2696

CUY-90-16.28 (CCG3A)

MODEL: Ramp B6 (2) PAPERSIZE: 34x22 (in.) DATE: 5/15/2025 TIME: 11:04:09 AM USER: TSCHOEN
pw:\\mb-us-pw.bentley.com:mb-us-pw-03\Documents\Cleveland_OH\01_Projects\ODOT\District 12\82382\400-Engineering\Roadway\Sheets\82382_GY0003.dgn

Preliminary Plans - For Reference Only

A VARIES 0.016 TO 0.040 - STA. 1613+75.53 TO STA. 1614+75.53

B 0.0' - STA. 1613+73.25 TO STA. 1613+93.75
VARIES 0.0' TO 1.2' - STA. 1613+93.75 TO STA. 1614+37.11

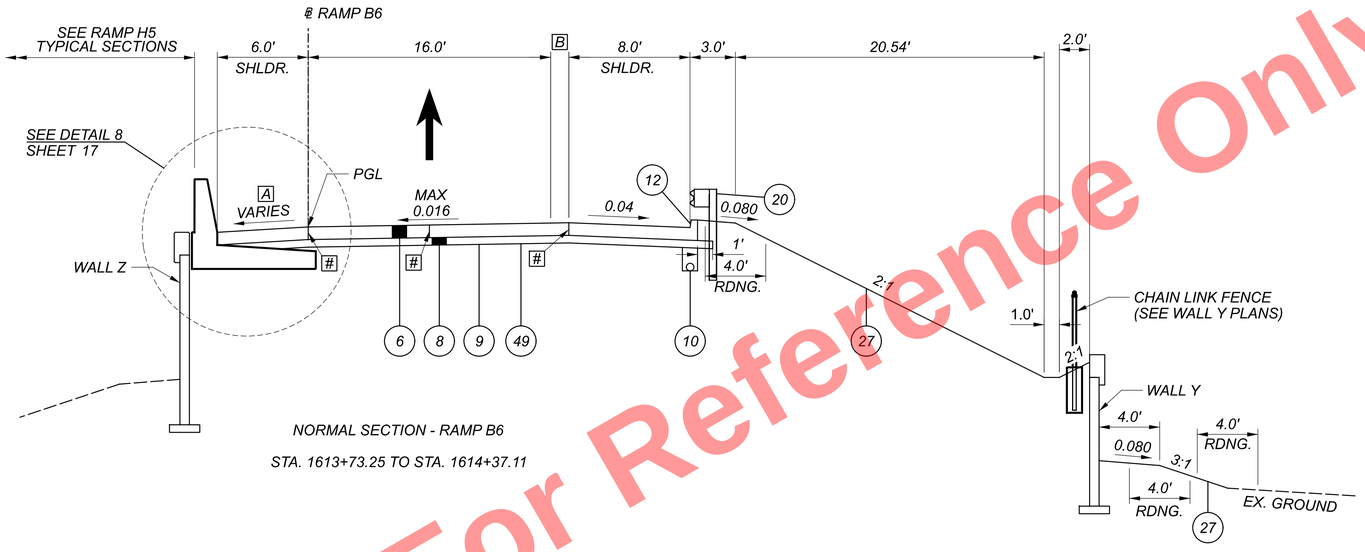

NORMAL SECTION - RAMP B6

STA. 1613+73.25 TO STA. 1614+37.11

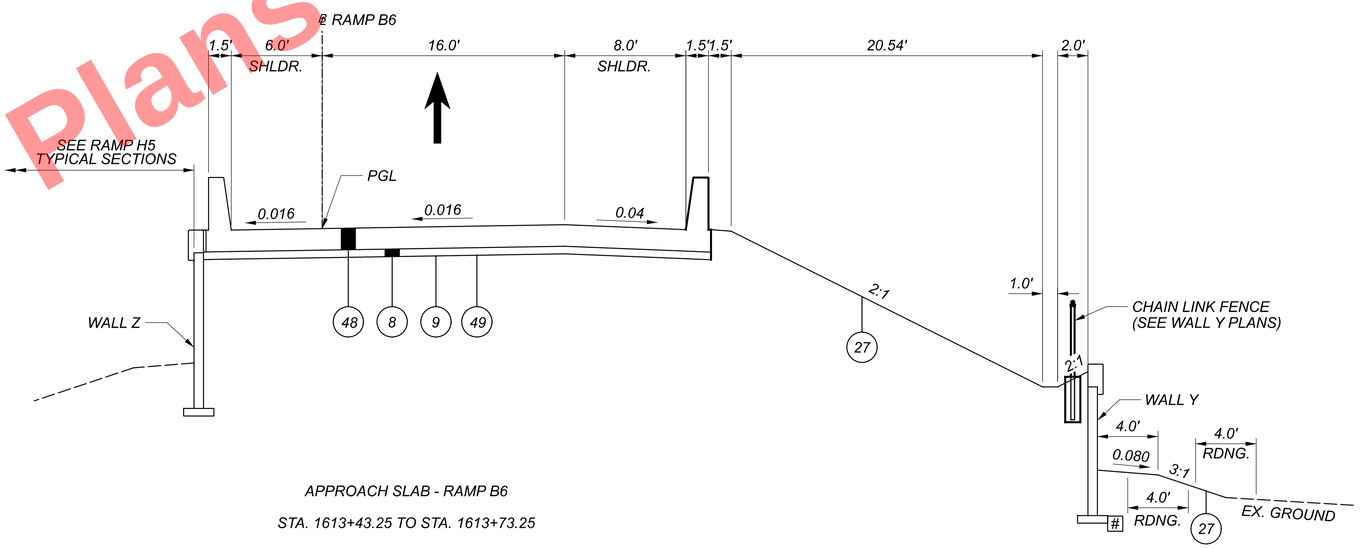

APPROACH SLAB - RAMP B6

STA. 1613+43.25 TO STA. 1613+73.25

LONGITUDINAL JOINT PER BP-2.1, SEE JOINT DETAILS ON SHEET 1440 FOR MORE INFORMATION

FOR LEGEND, SEE SHEET 16

FOR APPROACH SLAB DETAILS, SEE SHEET 2175

PROPOSED TYPICAL SECTIONS
RAMP B6

DESIGN AGENCY

DESIGNER TJS

REVIEWER VLE 06/17/22

PROJECT ID 82382

SHEET 51 TOTAL 2696

CUY-90-16.28 (CCG3A)

MODEL: Ramp B6 (3) PAPERSIZE: 34x22 (in.) DATE: 3/28/2025 TIME: 7:44:40 AM USER: Rohit.BK
pw:\\mb-us-pw.bentley.com:mb-us-pw-03\Documents\Cleveland.OH\OI_Projects\ODOT\District2\82382\400-Engineering\Roadway\Sheets\82382_GY0003.dgn

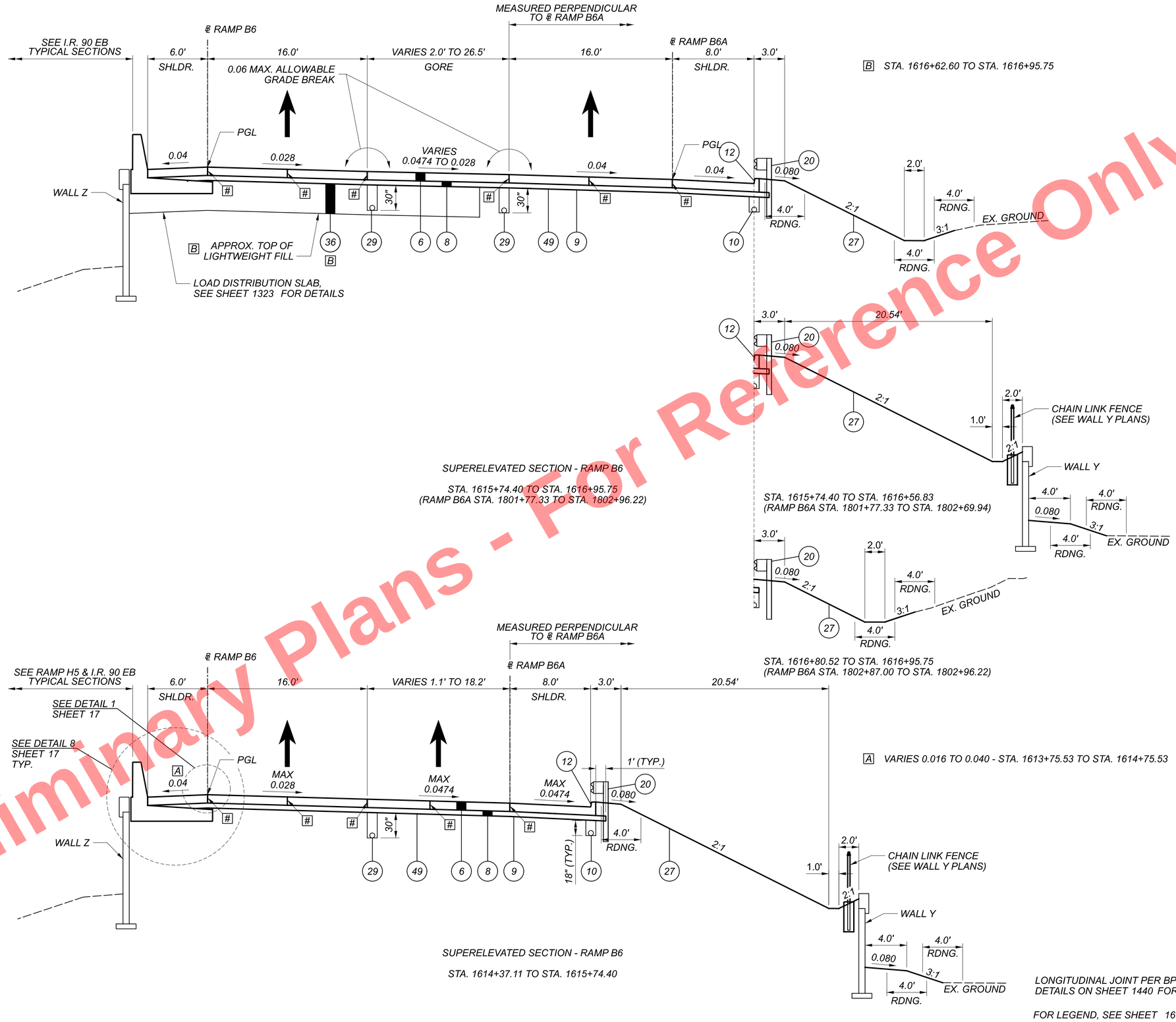

Preliminary Plans - Not For Reference Only

CUY-90-16.28 (CCG3A)

MODEL: Ramp B6 (4) PAPERSIZE: 34x22 (in) DATE: 3/28/2025 TIME: 7:14:40 AM USER: Rohit.Bk
pw:\\vmb-us-pw.bentley.com:vmb-us-pw-03\Documents\Cleveland_OH\01_Projects\000T\District2\82382\400-Engineering\Roadway\Sheets\82382_GY0003.dgn

PROPOSED TYPICAL SECTIONS RAMP B6

DESIGN AGENCY	HDR
DESIGNER	TJS
REVIEWER	VLE 06/17/22
PROJECT ID	82382
SHEET	52
TOTAL	2696

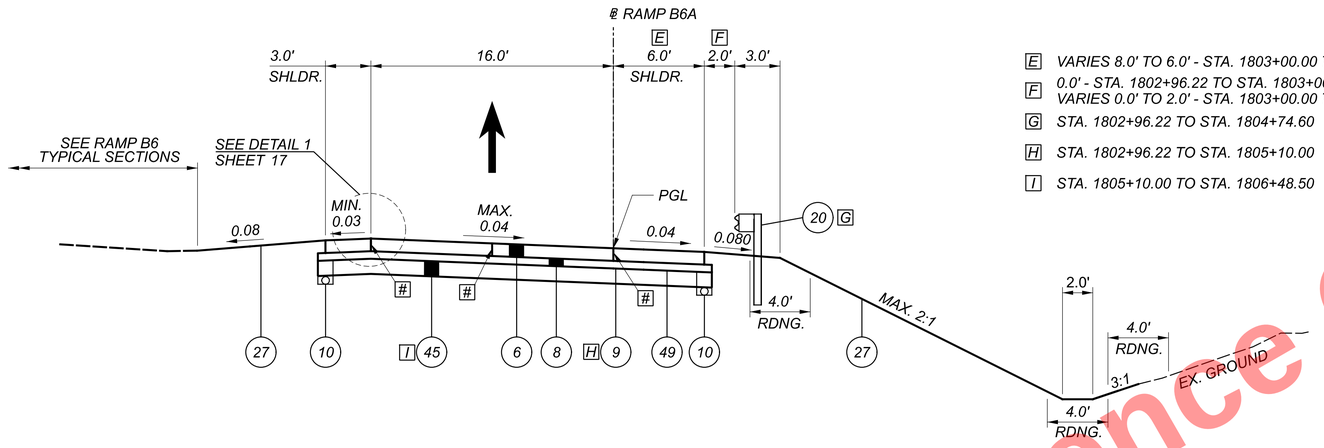

E VARIES 8.0' TO 6.0' - STA. 1803+00.00 TO STA. 1803+50.00
F 0.0' - STA. 1802+96.22 TO STA. 1803+00.00
VARIES 0.0' TO 2.0' - STA. 1803+00.00 TO STA. 1803+50.00
G STA. 1802+96.22 TO STA. 1804+74.60
H STA. 1802+96.22 TO STA. 1805+10.00
I STA. 1805+10.00 TO STA. 1806+48.50

SUPERELEVATED SECTION - RAMP B6A

STA. 1802+96.22 TO STA. 1806+48.50
OMIT STA. 1806+48.50 TO STA. 1807+14.09 (SEE INTERSECTION DETAIL SHEET).

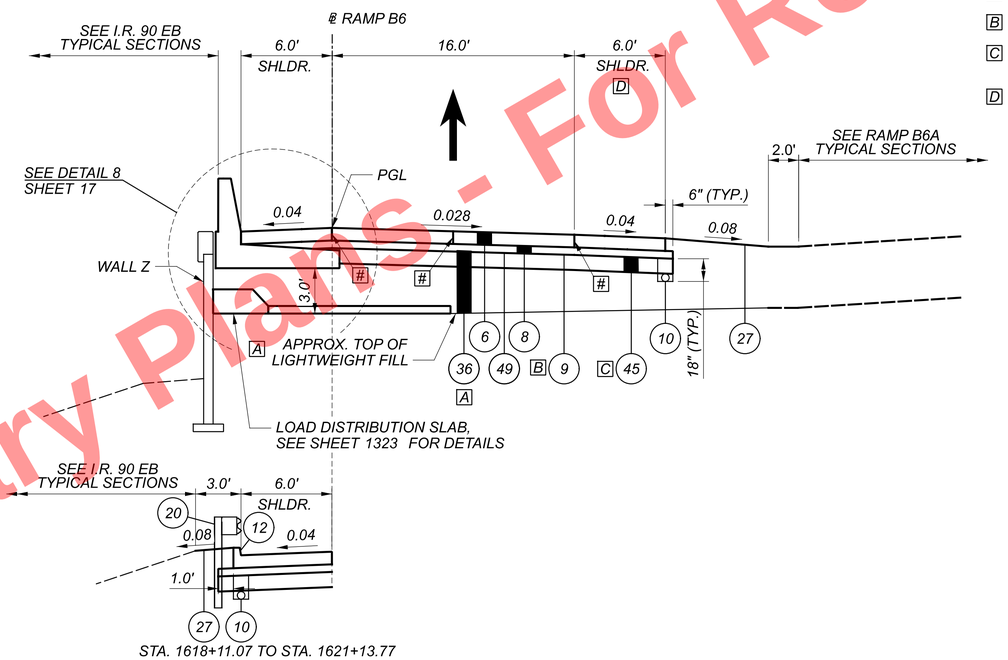

A STA. 1616+95.75 TO STA. 1618+06.46
B STA. 1616+95.75 TO STA. 1619+15.00
C STA. 1619+15.00 TO STA. 1621+13.77
D VARIES 6.0' TO 11.0' - STA. 1620+00.00 TO STA. 1620+25.00
11.0' - STA. 1620+25.00 TO STA. 1620+66.00
VARIES 6.0' TO 0.0' - STA. 1620+66.00 TO STA. 1620+90.00

STA. 1618+11.07 TO STA. 1621+13.77

SUPERELEVATED SECTION - RAMP B6

STA. 1616+95.75 TO STA. 1620+90.00
OMIT STA. 1620+90.00 TO STA. 1621+63.53 (SEE INTERSECTION DETAIL SHEET).

LONGITUDINAL JOINT PER BP-2.1, SEE JOINT DETAILS ON SHEET 1440 FOR MORE INFORMATION

FOR LEGEND, SEE SHEET 16

Preliminary Plans - Not For Reference Only

PROPOSED TYPICAL SECTIONS
RAMP B6 & RAMP B6A

DESIGN AGENCY
HDR

DESIGNER TJS
REVIEWER VLE 06/17/22
PROJECT ID 82382
SHEET 53 TOTAL 2696

CUY-90-16.28 (CCG3A)

MODEL: Ramp B6-B6A (S) PAPERSIZE: 34x22 (In.) DATE: 3/28/2025 TIME: 7:14:41 AM USER: Rohit+Bk
pw:\\mb-us-pw.bentley.com:mb-us-pw-03\Documents\Cleveland_OH\01_Projects\ODOT\District2\82382\400-Engineering\Roadway\Sheets\82382_GY0003.dgn

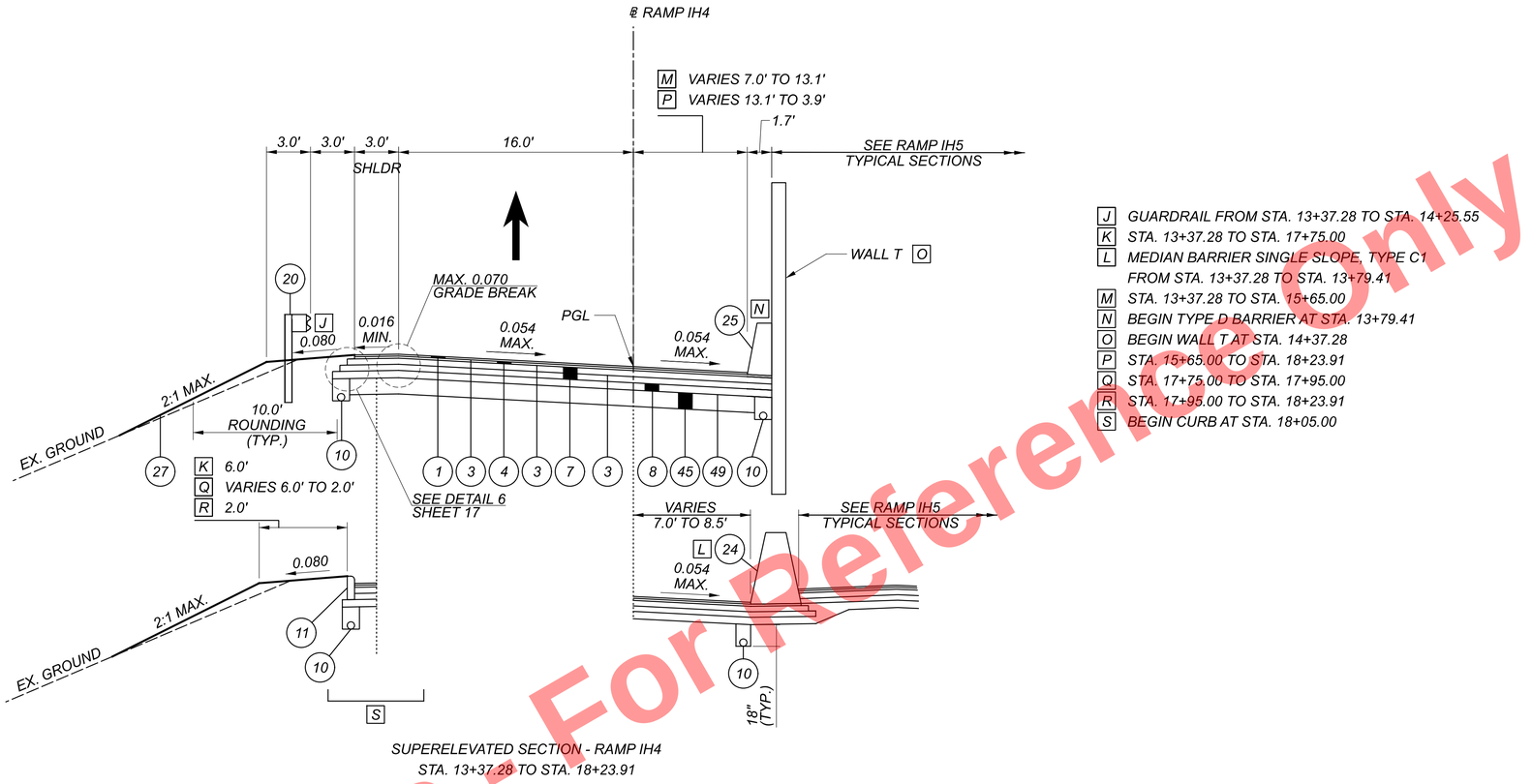

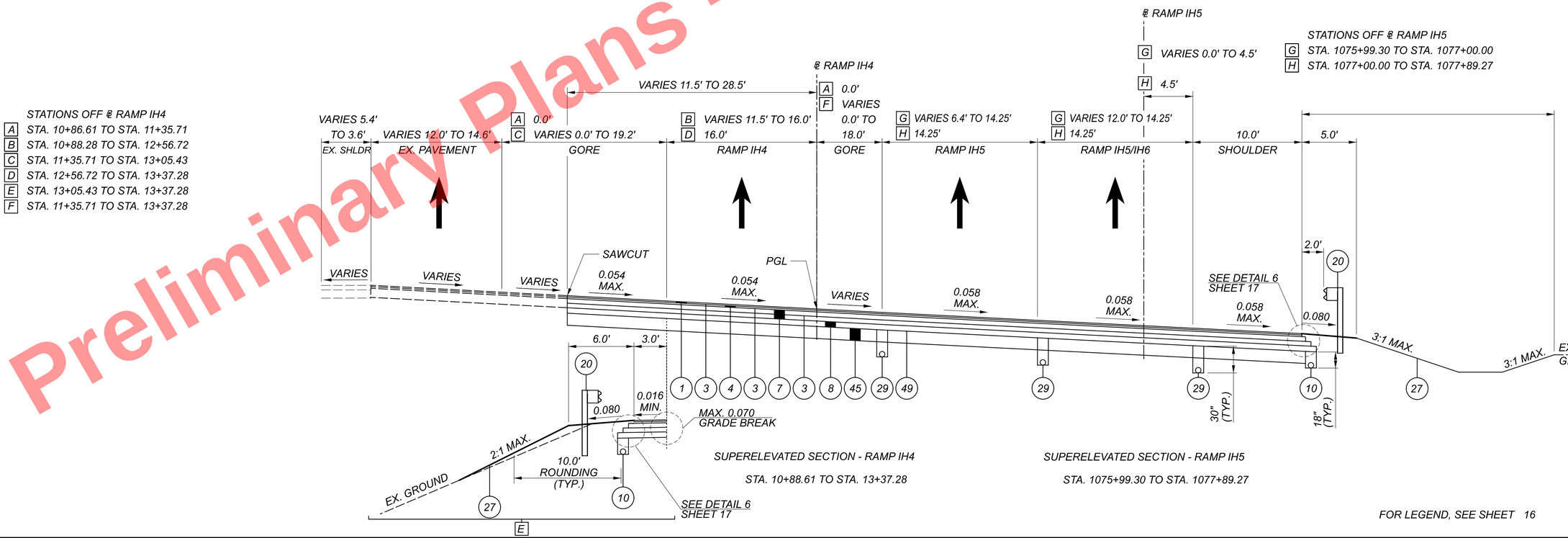

FOR LEGEND, SEE SHEET 16

Preliminary Plans - For Reference Only

PROPOSED TYPICAL SECTIONS
RAMP IH4 & RAMP IH5

CUY-90-16.28 (CCG3A)

MODEL: Ramp IH4 PAPERSIZE: 34x22 (in.) DATE: 3/28/2025 TIME: 7:44:47 AM USER: Rohit.Bk
pw:\\mb-us-pw.bentley.com:mb-us-pw-03\Documents\Cleveland_OH\01_Projects\0007\District2\82382\400-Engineering\Roadway\Sheets\82382_GY0001.dgn

DESIGN AGENCY
Michael Baker INTERNATIONAL

DESIGNER KJM
REVIEWER KGJ 05/22/24
PROJECT ID 82382
SHEET 54 TOTAL 2696

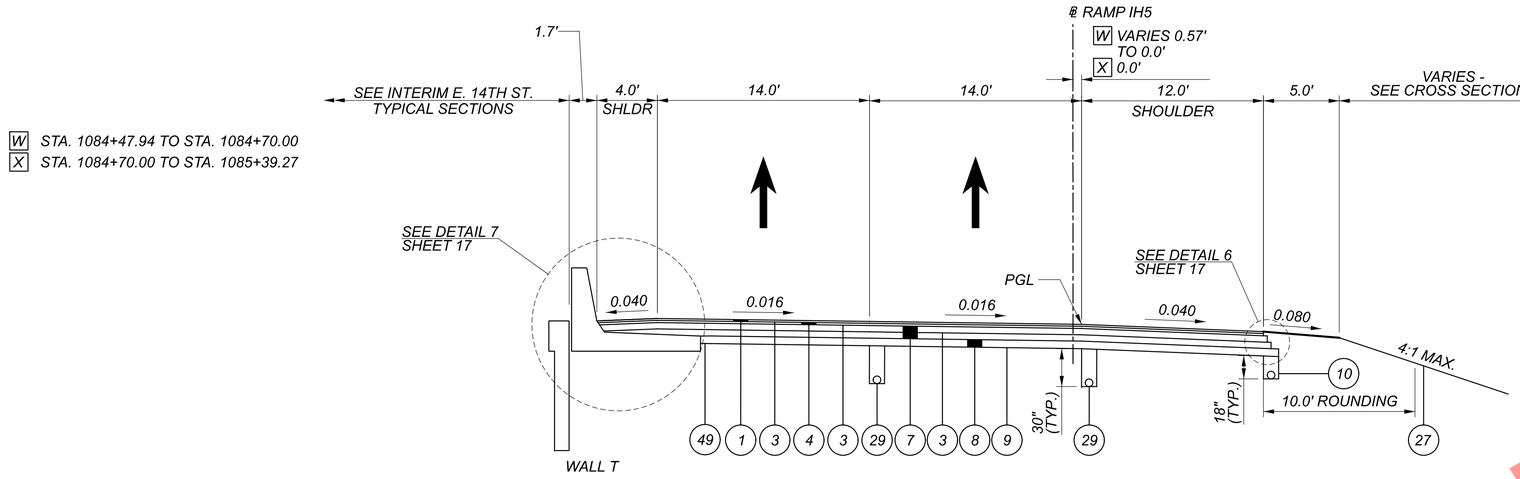

W STA. 1084+47.94 TO STA. 1084+70.00
X STA. 1084+70.00 TO STA. 1085+39.27

NORMAL SECTION - RAMP IH5

STA. 1084+47.94 TO STA. 1085+39.27

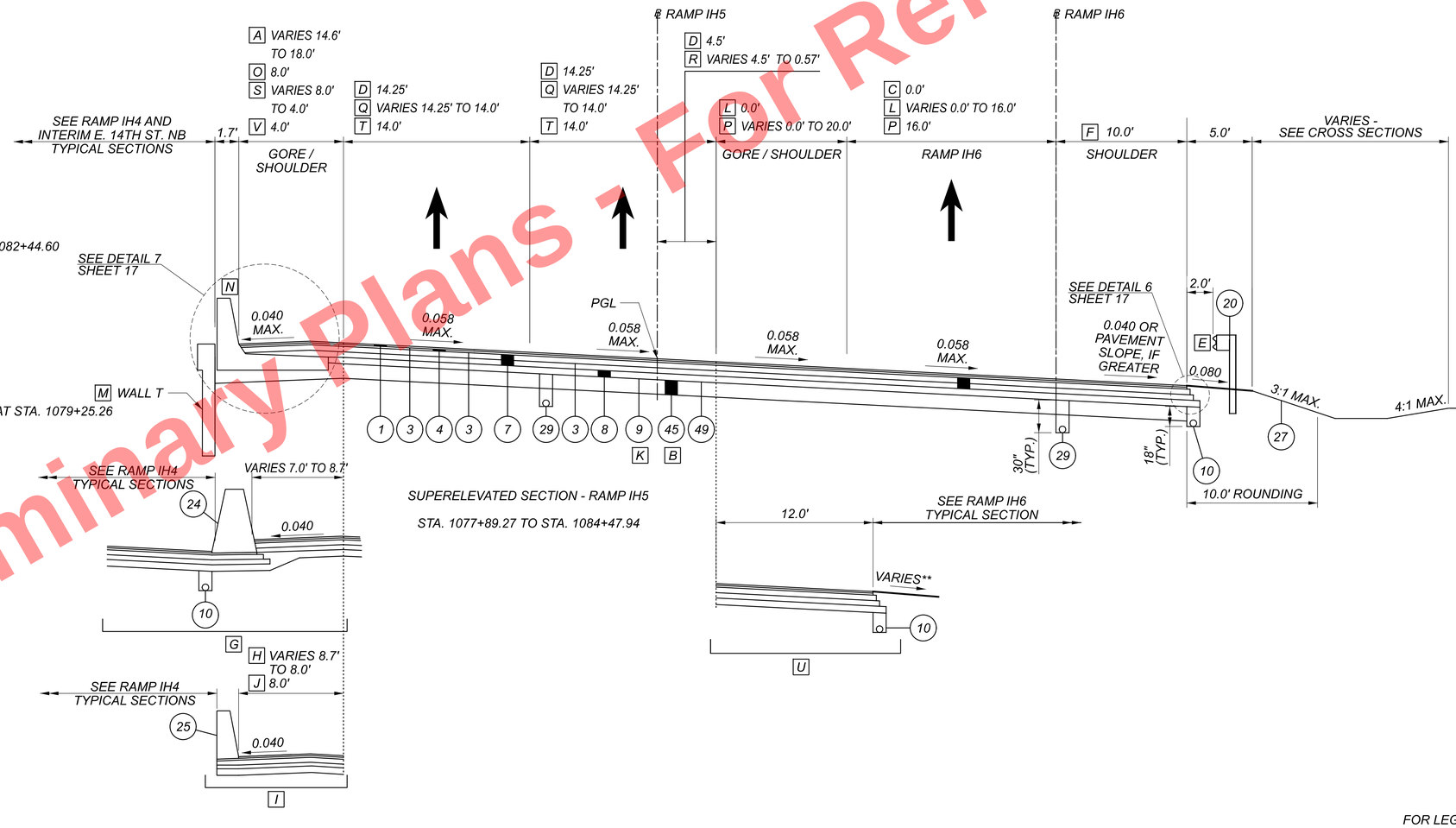

A STA. 1077+89.27 TO STA. 1078+31.57
B STA. 1077+89.27 TO STA. 1079+00.00
C STA. 1077+89.27 TO STA. 1079+11.22
D STA. 1077+89.27 TO STA. 1082+96.21
E GUARDRAIL STA. 1077+89.27 TO STA. 1082+44.60
F STA. 1077+89.27 TO STA. 1083+68.08
G STA. 1078+31.57 TO STA. 1078+71.28
H STA. 1078+71.28 TO STA. 1078+88.50
I STA. 1078+71.28 TO STA. 1079+25.26
J STA. 1078+88.50 TO STA. 1079+25.26
K STA. 1079+00.00 TO STA. 1084+47.94
L STA. 1079+11.22 TO STA. 1082+04.39
M BEGIN WALL T AT STA. 1079+25.26
N BEGIN BARRIER WITH MOMENT SLAB AT STA. 1079+25.26
O STA. 1079+25.26 TO STA. 1083+15.52
P STA. 1082+04.39 TO STA. 1083+68.08
Q STA. 1082+96.21 TO STA. 1083+15.52
R STA. 1082+96.21 TO STA. 1084+47.94
S STA. 1083+15.52 TO STA. 1084+13.98
T STA. 1083+15.52 TO STA. 1084+47.94
U STA. 1083+68.08 TO STA. 1084+47.94
V STA. 1084+13.98 TO STA. 1084+47.94

** SEE DETAIL 6, SHEET 16

FOR LEGEND, SEE SHEET 16

Preliminary Plans - For Reference Only

PROPOSED TYPICAL SECTIONS
RAMP IH5

DESIGN AGENCY
Michael Baker INTERNATIONAL
DESIGNER KJM
REVIEWER KGJ 05/22/24
PROJECT ID 82382
SHEET 55 TOTAL 2696

CUY-90-16.28 (CCG3A)

MODEL: Ramp H5 (I) PAPERSIZE: 34x22 (in.) DATE: 3/28/2025 TIME: 7:44:47 AM USER: Rohit-BK
pw:\\mb-us-pw.bentley.com:mb-us-pw-03\Documents\Cleveland_OH\DL_Projects\DOT\District2\82382\400-Engineering\Roadway\Sheets\8238_GY000l.dgn

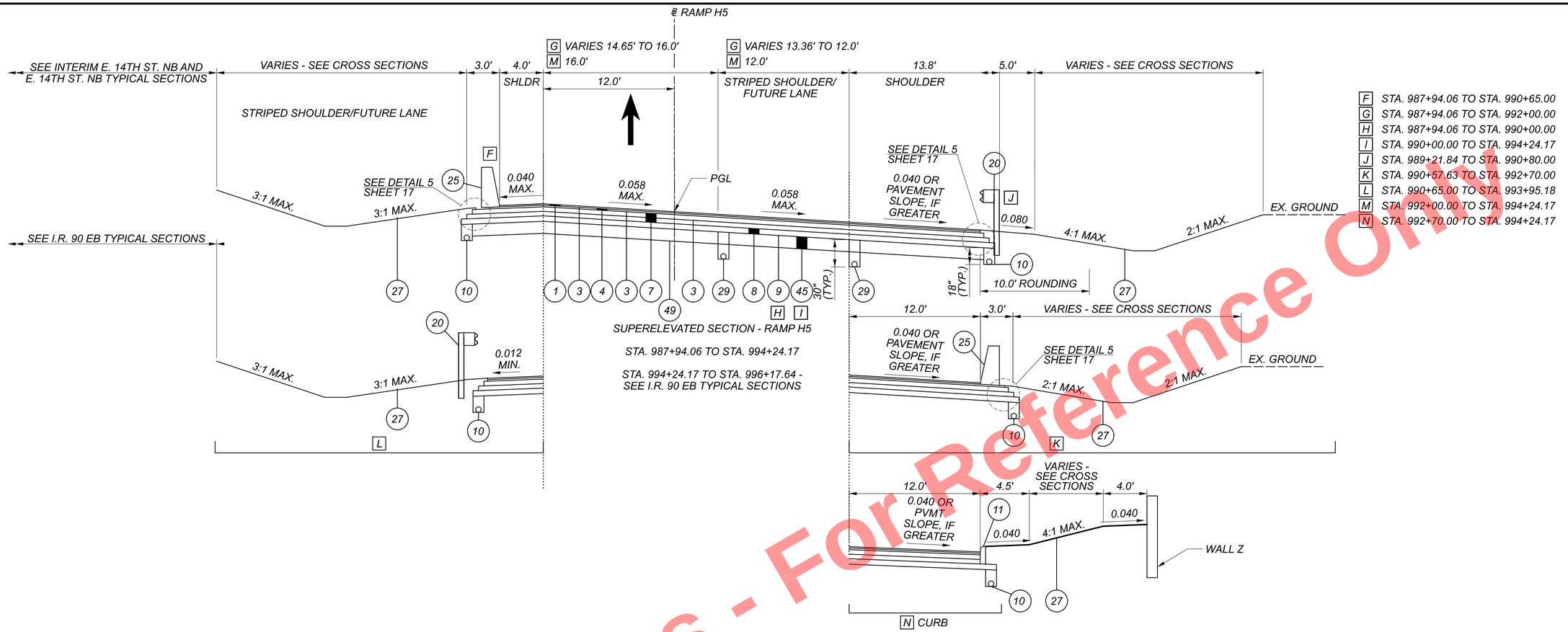

F STA. 987+94.06 TO STA. 990+65.00
G STA. 987+94.06 TO STA. 992+00.00
H STA. 987+94.06 TO STA. 990+00.00
I STA. 990+00.00 TO STA. 994+24.17
J STA. 989+21.84 TO STA. 990+80.00
K STA. 990+57.63 TO STA. 992+70.00
L STA. 990+65.00 TO STA. 993+95.18
M STA. 992+00.00 TO STA. 994+24.17
N STA. 992+70.00 TO STA. 994+24.17

A STA. 985+16.76 TO STA. 986+00.00
B STA. 986+00.00 TO STA. 987+94.06
C WALL T ENDS AT STA. 987+65.00
D CONCRETE BARRIER WITH MOMENT SLAB ENDS AT STA. 987+65.00
E STA. 987+65.00 TO STA. 987+94.06

Preliminary Plans - For Reference Only

PROPOSED TYPICAL SECTIONS RAMP H5

CUY-90-16.28 (CCG3A)

MODEL: Ramp H5 (2) PAPERSIZE: 34x22 (in.) DATE: 3/28/2025 TIME: 7:44:48 AM USER: RohitBk
pw:\\mb-us-pw.bentley.com\mb-us-pw-03\Documents\Cleveland.OH\OI_Projects\ODOT\District2\82382\400-Engineering\Roadway\Sheets\82382_GY000I.dgn

DESIGN AGENCY
Michael Baker INTERNATIONAL

DESIGNER	KJM
REVIEWER	KGJ 05/22/24
PROJECT ID	82382
SHEET	56
TOTAL	2696

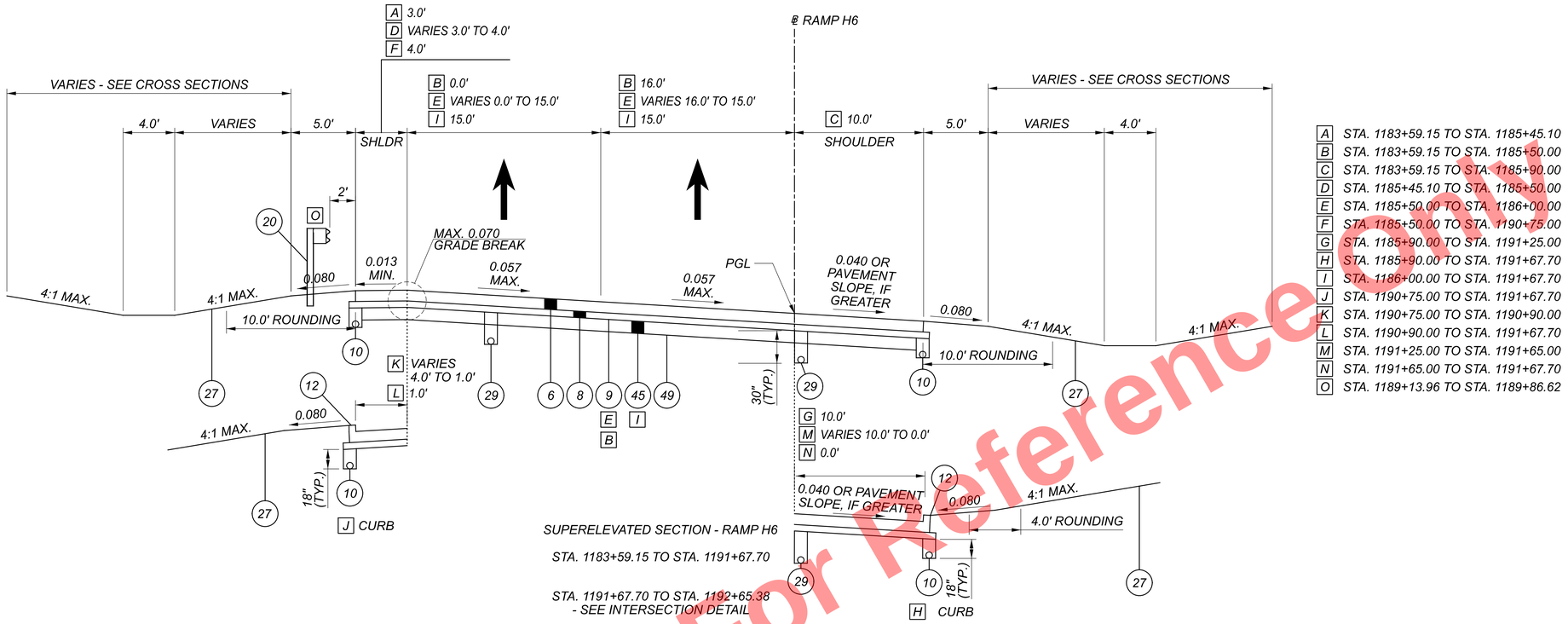

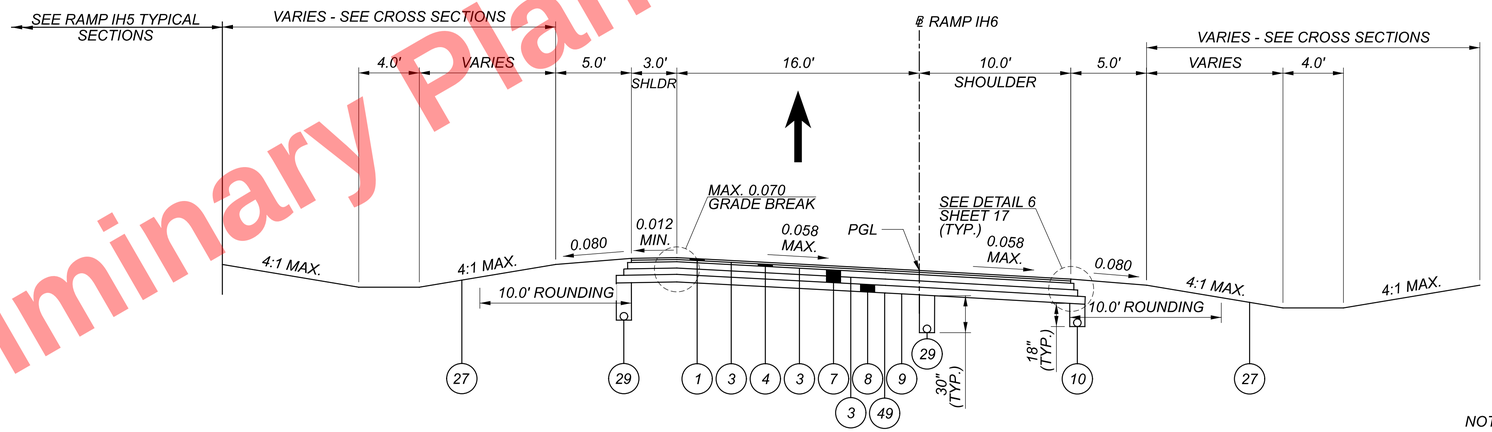

SUPERELEVATED SECTION - RAMP IH6

STA. 1274+45.18 TO STA. 1274+83.98

NOTES:

1. FOR RAMP IH6 TYPICAL SECTION DATA PRIOR TO STA. 1274+45.18, SEE RAMP IH5 TYPICAL SECTION.

2. STA. 1274+83.98 BK = END RAMP IH6
   = STA. 1183+59.15 AH = BEGIN RAMP H6

FOR LEGEND, SEE SHEET 16

Preliminary Plans - For Reference Only

PROPOSED TYPICAL SECTIONS
RAMPS IH6 & H6

DESIGN AGENCY
Michael Baker INTERNATIONAL

DESIGNER KJM
REVIEWER KGJ 05/22/24
PROJECT ID 82382
SHEET 57 TOTAL 2696

CUY-90-16.28 (CCG3A)

MODEL: Ramp H6 PAPERSIZE: 34x22 (in.) DATE: 3/28/2025 TIME: 7:44:49 AM USER: Rohit.Bk
pw:\\mb-us-pw.bentley.com:mb-us-pw-03\Documents\Cleveland.OH\01_Projects\ODOT\District2\82382\400-Engineering\Roadway\Sheets\82382_GY000l.dgn

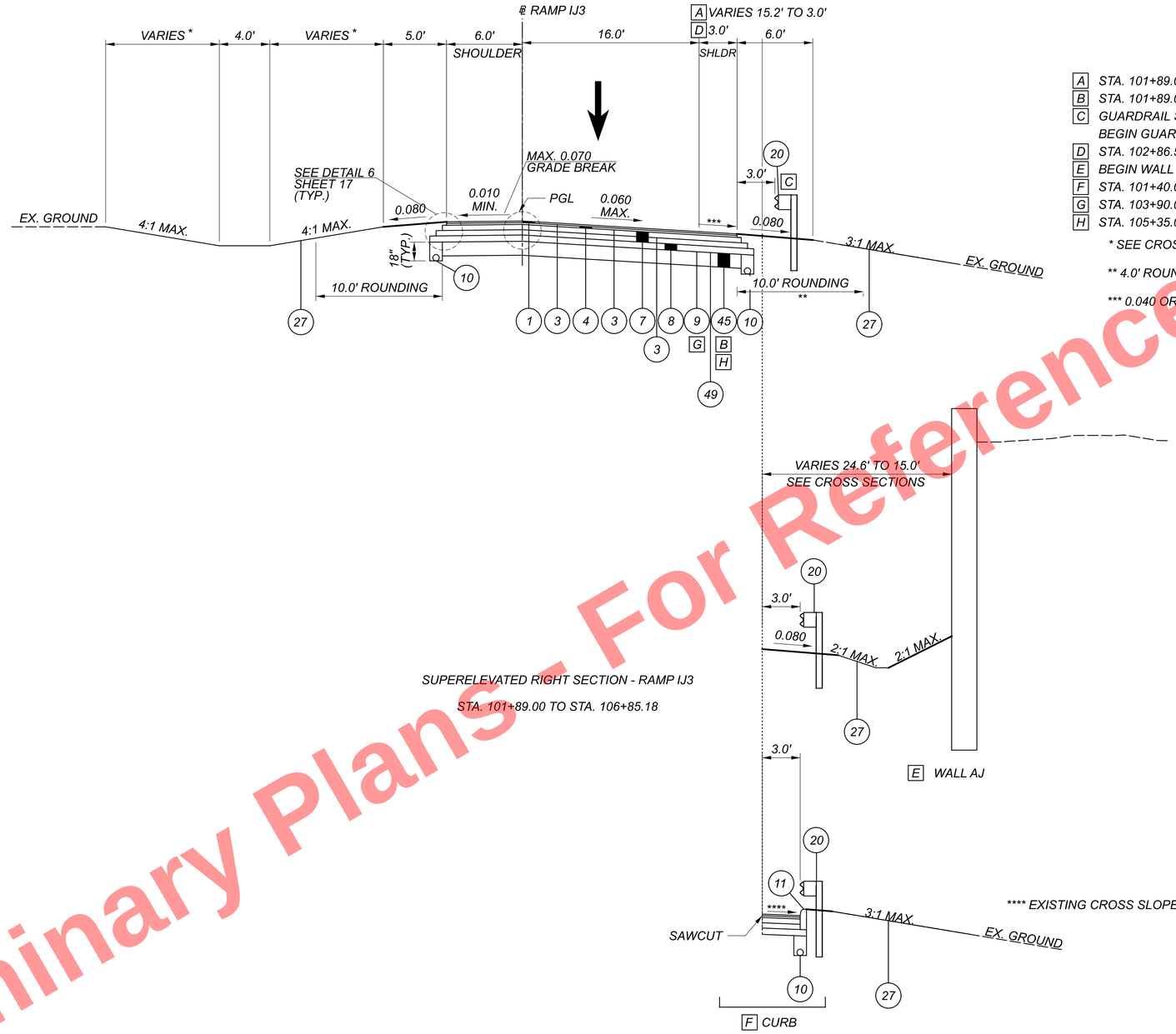

SUPERELEVATED RIGHT SECTION - RAMP IJ3

STA. 101+89.00 TO STA. 106+85.18

FOR LEGEND, SEE SHEET 16

Preliminary Plans - For Reference Only

PROPOSED TYPICAL SECTIONS
RAMP IJ3

CUY-90-16.28 (CCG3A)

MODEL: Ramp IJ3 (I) PAPERSIZE: 34x22 (in.) DATE: 3/28/2025 TIME: 7:14:50 AM USER: Rohit.BK
pw:\\mb-us-pw.bentley.com:mb-us-pw-03\Documents\Cleveland_OH\OiL_Projects\ODOT\District2\82382\400-Engineering\Roadway\Sheets\82382_GY000i.dgn

DESIGN AGENCY
Michael Baker INTERNATIONAL

DESIGNER KJM
REVIEWER KGJ 05/22/24
PROJECT ID 82382
SHEET 58 TOTAL 2696

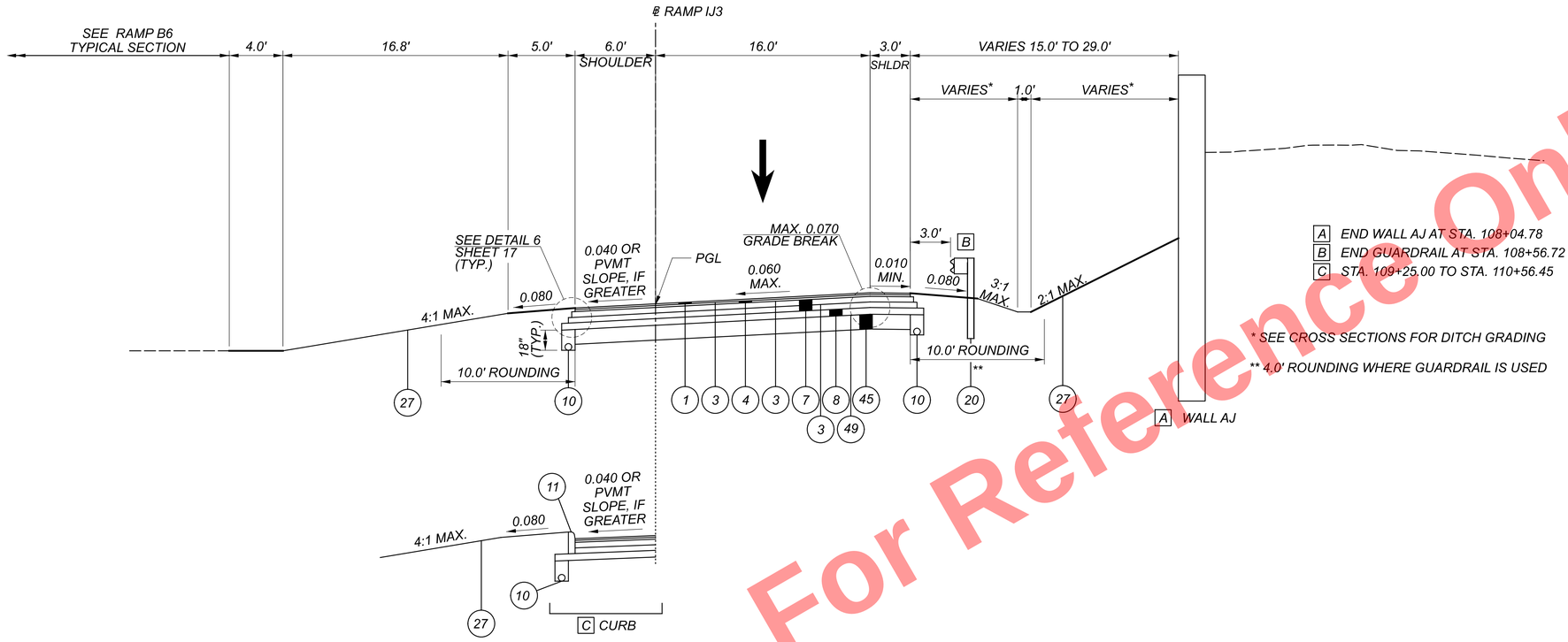

SUPERELEVATED LEFT SECTION - RAMP IJ3

STA. 106+85.18 TO STA. 110+56.45

FOR LEGEND, SEE SHEET 16

Preliminary Plans - For Reference Only

PROPOSED TYPICAL SECTIONS
RAMP IJ3

DESIGN AGENCY
Michael Baker INTERNATIONAL

DESIGNER KJM

REVIEWER KGJ 05/22/24

PROJECT ID 82382

SHEET 59 TOTAL 2696

CUY-90-16.28 (CCG3A)

MODEL: Ramp IJ3 (2) PAPERSIZE: 34x22 (in.) DATE: 3/28/2025 TIME: 7:45:15 AM USER: Rohit.Bk
pw:\\mb-us-pw.bentley.com:mb-us-pw-03\Documents\Cleveland.OH\OI_Projects\ODOT\District2\82382\400-Engineering\Roadway\Sheets\82382_GY000I.dgn

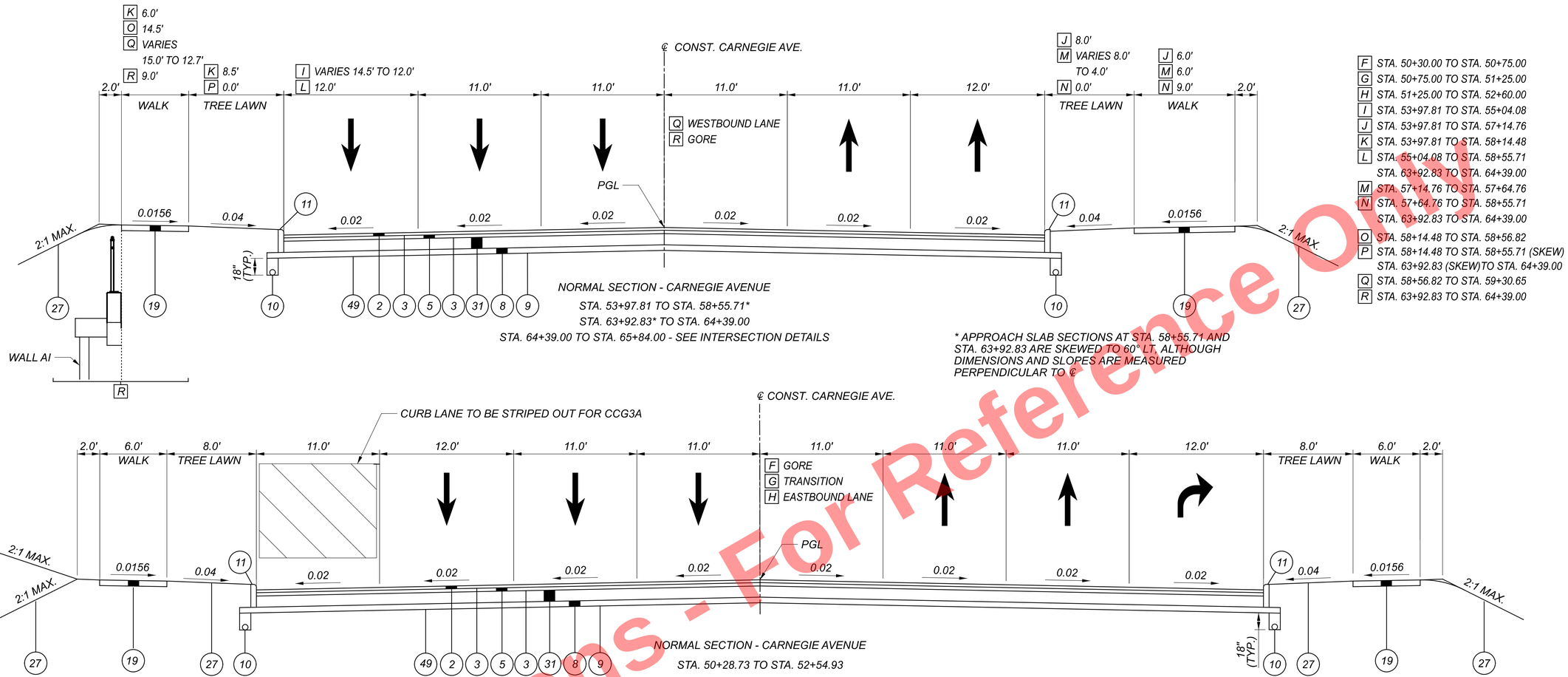

NORMAL SECTION - CARNEGIE AVENUE
STA. 53+97.81 TO STA. 58+55.71*
STA. 63+92.83* TO STA. 64+39.00
STA. 64+39.00 TO STA. 65+84.00 - SEE INTERSECTION DETAILS

* APPROACH SLAB SECTIONS AT STA. 58+55.71 AND STA. 63+92.83 ARE SKEWED TO 60° LT. ALTHOUGH DIMENSIONS AND SLOPES ARE MEASURED PERPENDICULAR TO ℄

F STA. 50+30.00 TO STA. 50+75.00
G STA. 50+75.00 TO STA. 51+25.00
H STA. 51+25.00 TO STA. 52+60.00
I STA. 53+97.81 TO STA. 55+04.08
J STA. 53+97.81 TO STA. 57+14.76
K STA. 53+97.81 TO STA. 58+14.48
L STA. 55+04.08 TO STA. 58+55.71
STA. 63+92.83 TO STA. 64+39.00
M STA. 57+14.76 TO STA. 57+64.76
N STA. 57+64.76 TO STA. 58+55.71
STA. 63+92.83 TO STA. 64+39.00
O STA. 58+14.48 TO STA. 58+56.82
P STA. 58+14.48 TO STA. 58+55.71 (SKEW)
STA. 63+92.83 (SKEW)TO STA. 64+39.00
Q STA. 58+56.82 TO STA. 59+30.65
R STA. 63+92.83 TO STA. 64+39.00

NORMAL SECTION - CARNEGIE AVENUE
STA. 50+28.73 TO STA. 52+54.93
STA. 52+54.93 TO STA. 53+97.81 - SEE INTERSECTION DETAILS

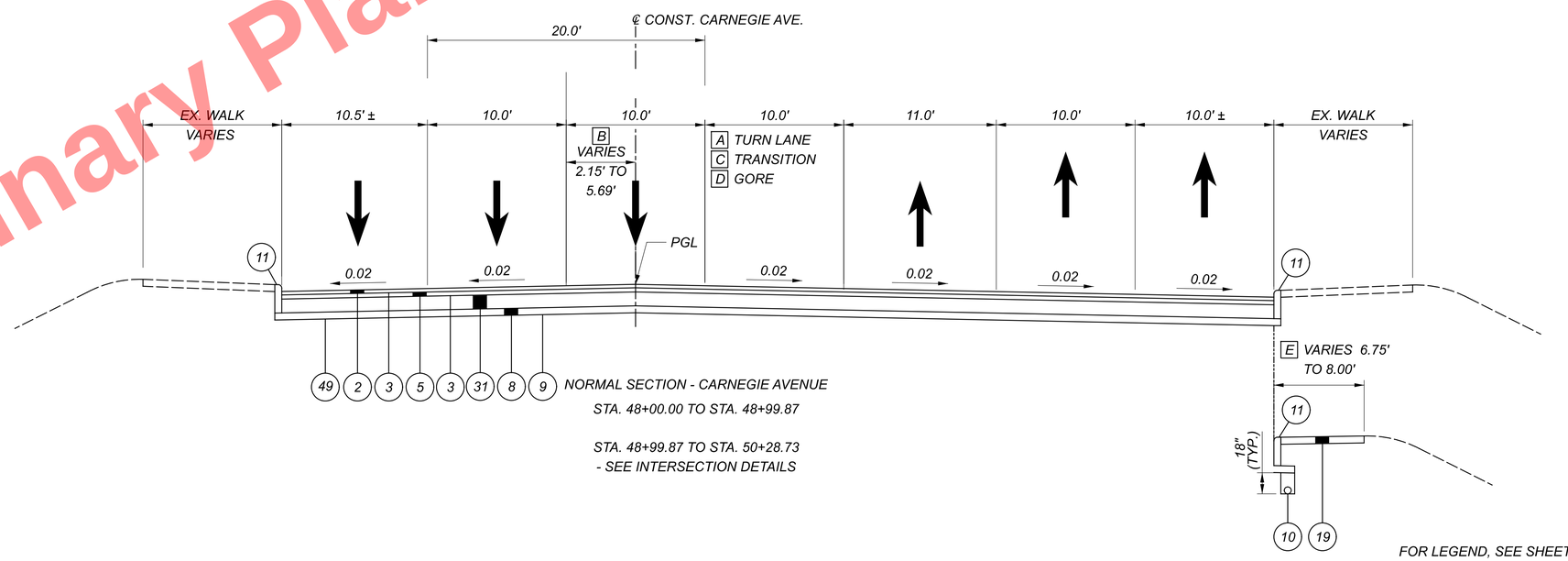

A STA. 48+00.00 TO STA. 48+28.00
B STA. 48+00.00 TO STA. 48+99.87
C STA. 48+28.00 TO STA. 48+78.00
D STA. 48+78.00 TO STA. 48+99.87
E STA. 48+91.74 TO STA. 48+99.87

NORMAL SECTION - CARNEGIE AVENUE
STA. 48+00.00 TO STA. 48+99.87

STA. 48+99.87 TO STA. 50+28.73
- SEE INTERSECTION DETAILS

FOR LEGEND, SEE SHEET 16

Preliminary Plans - For Reference Only

PROPOSED TYPICAL SECTIONS
CARNEGIE AVE.

CUY-90-16.28 (CCG3A)

MODEL: Carnegie Ave (I) PAPERSIZE: 34x22 (in.) DATE: 3/28/2025 TIME: 7:44:51 AM USER: Rohit.Bk
pw:\\mb-us-pw.bentley.com:mb-us-pw-03\Documents\Cleveland.OH\01_Projects\ODOT\District2\82382\400-Engineering\Roadway\Sheets\82382_GY000L.dgn

DESIGN AGENCY	Michael Baker INTERNATIONAL
DESIGNER	KJM
REVIEWER	KGJ 05/22/24
PROJECT ID	82382
SHEET	60
TOTAL	2696

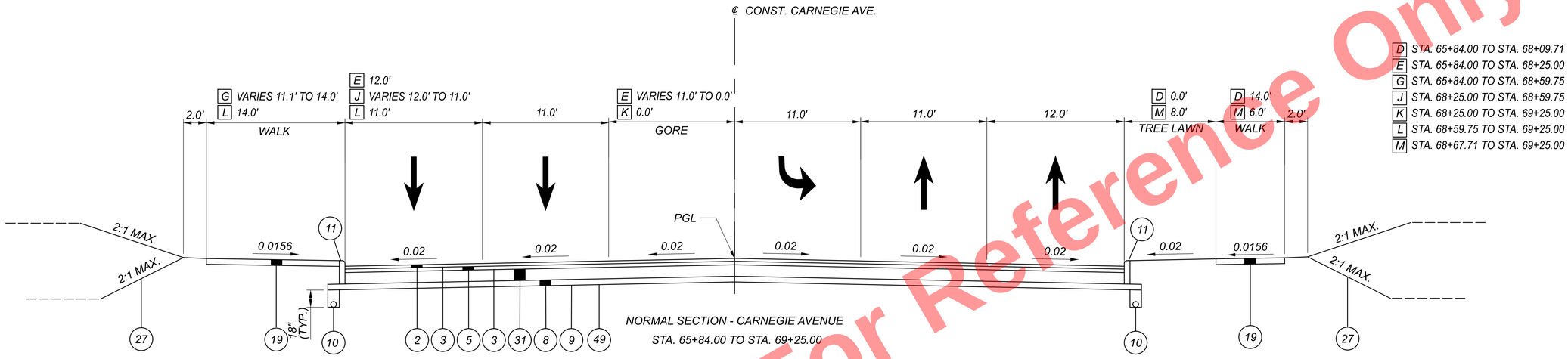

NORMAL SECTION - CARNEGIE AVENUE
STA. 65+84.00 TO STA. 69+25.00

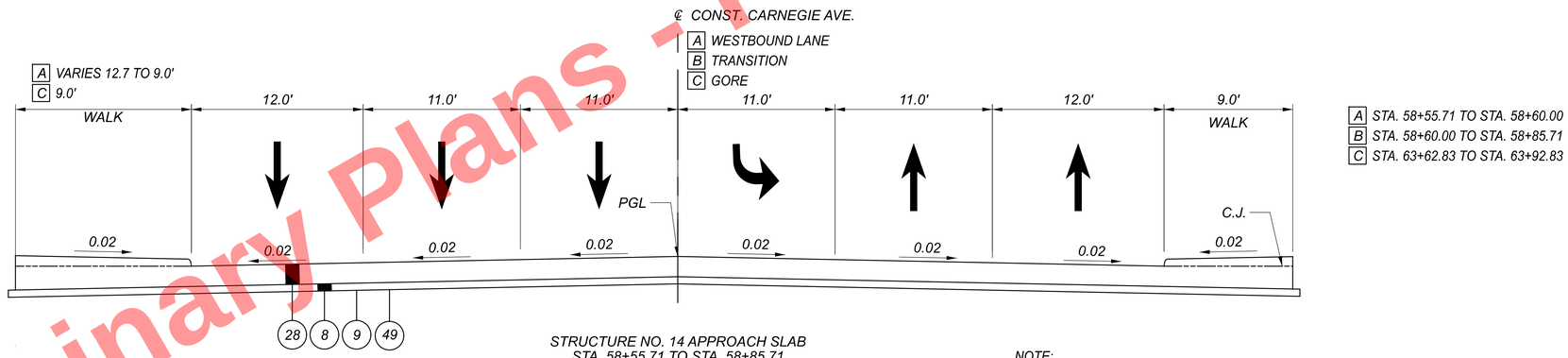

STRUCTURE NO. 14 APPROACH SLAB
STA. 58+55.71 TO STA. 58+85.71
STA. 63+62.83 TO STA. 63+92.83

NOTE:
THESE SECTIONS ARE SKEWED TO 60° LT, ALTHOUGH DIMENSIONS AND SLOPES SHOWN ARE MEASURED PERPENDICULAR TO ℄.

FOR LEGEND, SEE SHEET 16

Preliminary Plans - For Reference Only

PROPOSED TYPICAL SECTIONS
CARNEGIE AVE.

DESIGN AGENCY
Michael Baker INTERNATIONAL

DESIGNER KJM
REVIEWER KGJ 05/22/24
PROJECT ID 82382
SHEET 61 TOTAL 2696

CUY-90-16.28 (CCG3A)

MODEL: Carnegie Ave (2) PAPERSIZE: 34x22 (in.) DATE: 5/8/2025 TIME: 2:58:32 PM USER: MalaGallagher
pw:\\mb-us-pw.bentley.com:mb-us-pw-03\Documents\Cleveland_OH\DL_Projects\ODOT\District2\82382\400-Engineering\Roadway\Sheets\8238_GY000L.dgn

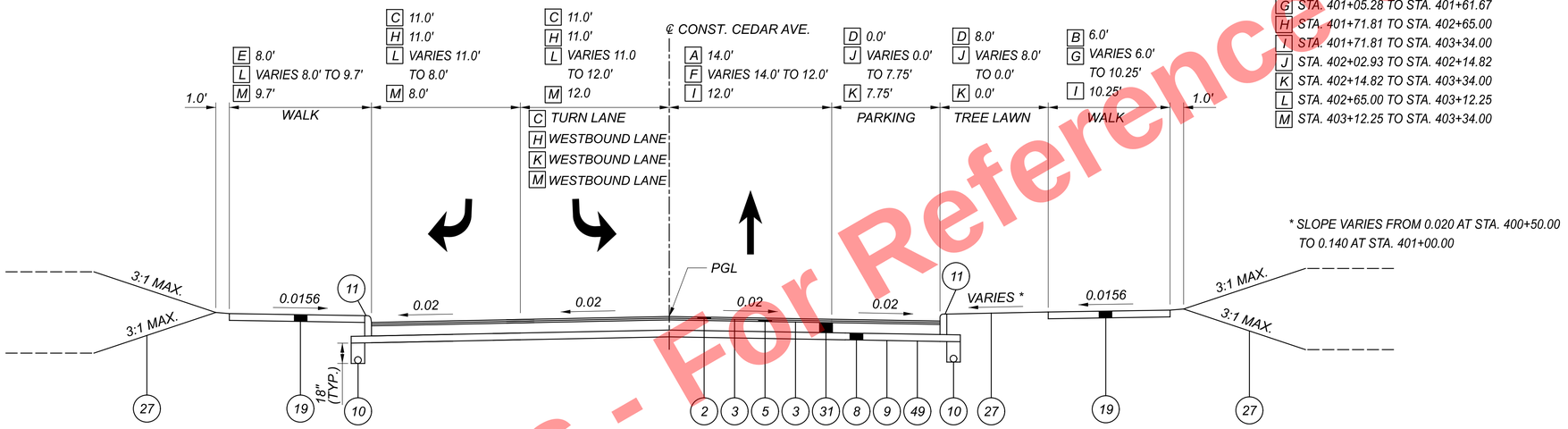

A STA. 400+63.09 TO STA. 401+02.16
B STA. 400+63.09 TO STA. 401+07.10
C STA. 400+63.09 TO STA. 401+71.81
D STA. 400+63.09 TO STA. 402+02.93
E STA. 400+63.09 TO STA. 402+65.00
F STA. 401+02.16 TO STA. 401+71.81
G STA. 401+05.28 TO STA. 401+61.67
H STA. 401+71.81 TO STA. 402+65.00
I STA. 401+71.81 TO STA. 403+34.00
J STA. 402+02.93 TO STA. 402+14.82
K STA. 402+14.82 TO STA. 403+34.00
L STA. 402+65.00 TO STA. 403+12.25
M STA. 403+12.25 TO STA. 403+34.00

* SLOPE VARIES FROM 0.020 AT STA. 400+50.00 TO 0.140 AT STA. 401+00.00

NORMAL SECTION - CEDAR AVE.

STA. 400+63.09 TO STA. 403+34.00

STA. 400+00.00 TO STA. 400+63.09 - SEE INTERSECTION DETAILS

FOR LEGEND, SEE SHEET 16

Preliminary Plans - For Reference Only

PROPOSED TYPICAL SECTIONS
CEDAR AVE.

CUY-90-16.28 (CCG3A)
MODEL: Cedar Ave (I) PAPERSIZE: 34x22 (in.) DATE: 3/28/2025 TIME: 7:44:52 AM USER: Rohit.Bk
pw:\\mb-us-pw.bentley.com:mb-us-pw-03\Documents\Cleveland_OH\OiL_Projects\ODOT\District#2\82382\400-Engineering\Roadway\Sheets\82382_GY000i.dgn

DESIGN AGENCY
Michael Baker INTERNATIONAL

DESIGNER KJM
REVIEWER KGJ 05/22/24
PROJECT ID 82382
SHEET 62 TOTAL 2696

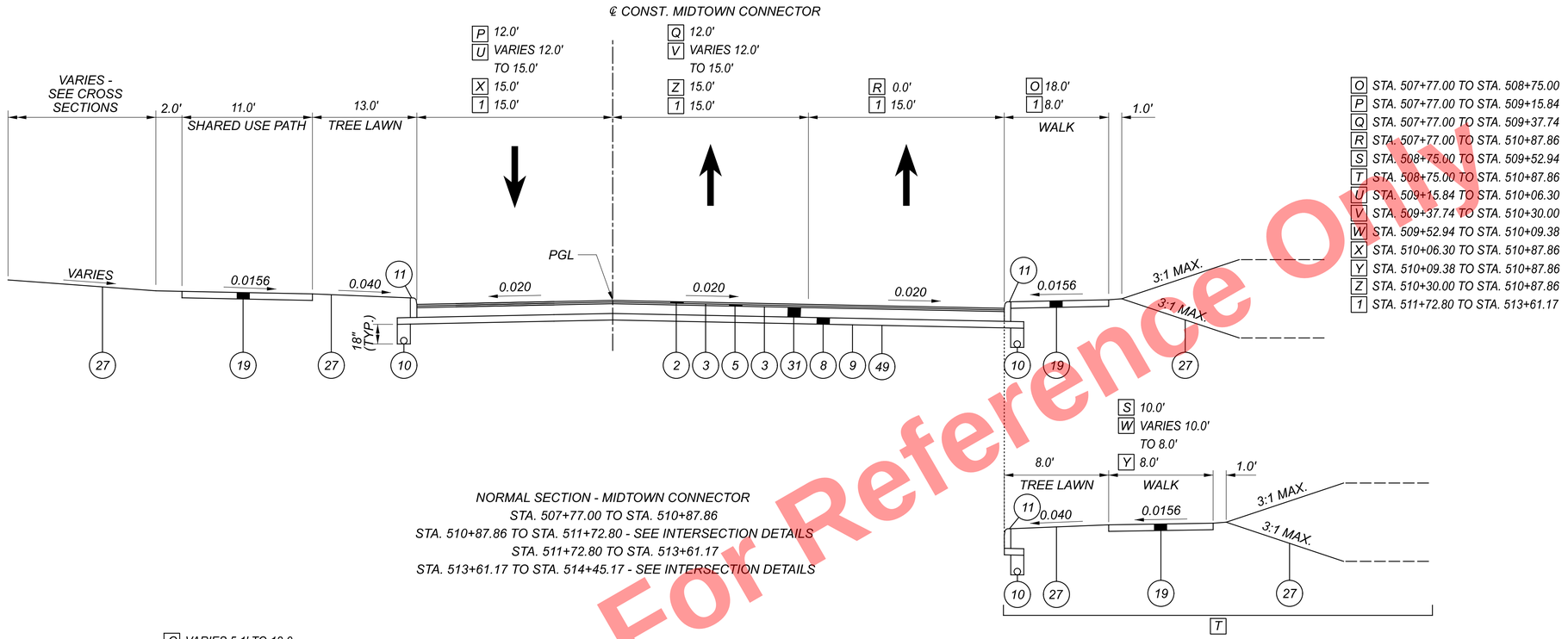

NORMAL SECTION - MIDTOWN CONNECTOR
STA. 507+77.00 TO STA. 510+87.86
STA. 510+87.86 TO STA. 511+72.80 - SEE INTERSECTION DETAILS
STA. 511+72.80 TO STA. 513+61.17
STA. 513+61.17 TO STA. 514+45.17 - SEE INTERSECTION DETAILS

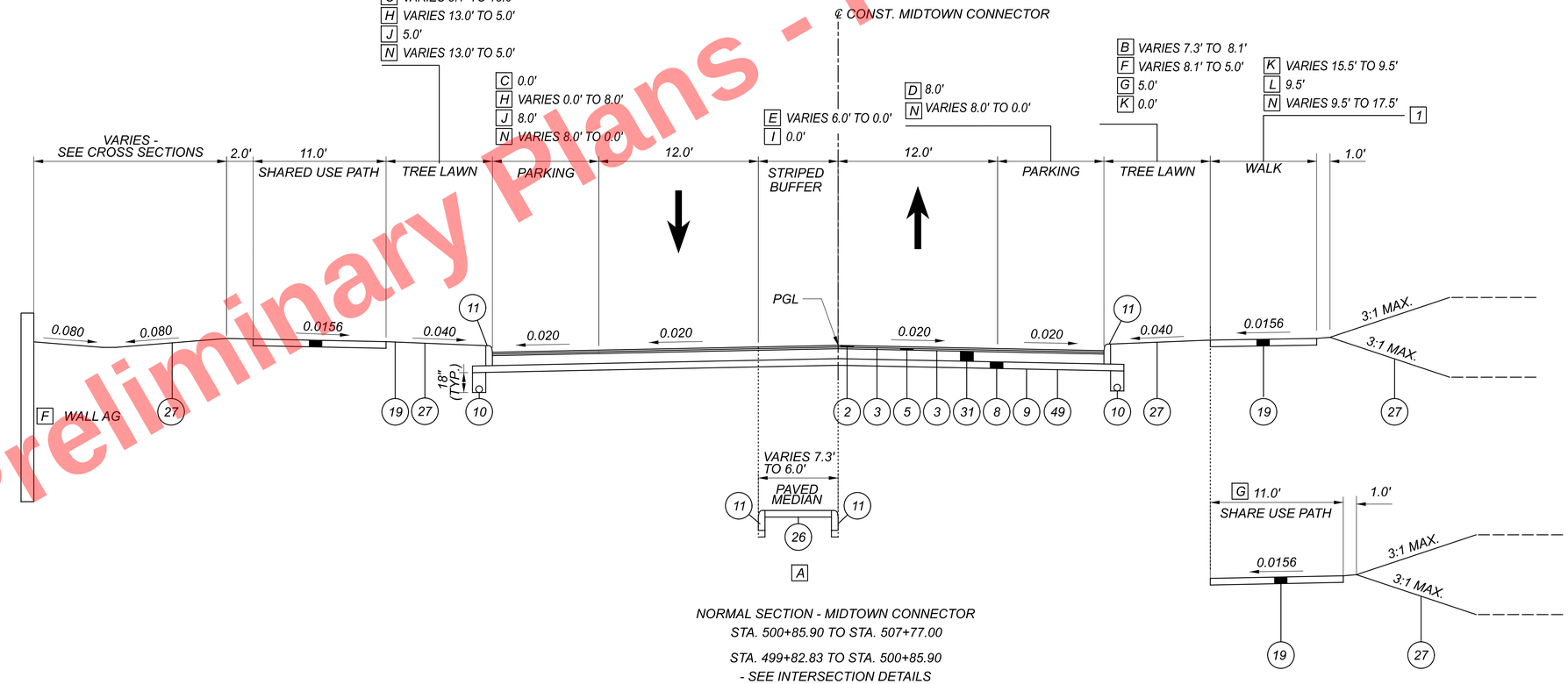

NORMAL SECTION - MIDTOWN CONNECTOR
STA. 500+85.90 TO STA. 507+77.00
STA. 499+82.83 TO STA. 500+85.90
- SEE INTERSECTION DETAILS

1 IN AREAS WHERE THERE IS NO TREE LAWN, THE SIDEWALK DIMENSION IN THE TYPICAL IS MEASURED FROM THE BACK OF CURB. PLAN VIEW DIMENSIONS ARE MEASURED FROM THE FACE OF CURB.

FOR LEGEND, SEE SHEET 16

Preliminary Plans - Not For Reference Only

PROPOSED TYPICAL SECTIONS
MIDTOWN CONNECTOR

DESIGN AGENCY
Michael Baker INTERNATIONAL

DESIGNER KJM
REVIEWER KGJ 05/22/24
PROJECT ID 82382
SHEET 63 TOTAL 2696

CUY-90-16.28 (CCG3A)

MODEL: Cedar Ave (2) PAPERSIZE: 34x22 (in.) DATE: 3/28/2025 TIME: 7:14:53 AM USER: RohfT-BK
pw:\\mb-us-pw.bentley.com\mb-us-pw-03\Documents\Cleveland_OH\DL_Projects\ODOT\District2\82382\400-Engineering\Roadway\Sheets\82382_GY000l.dgn

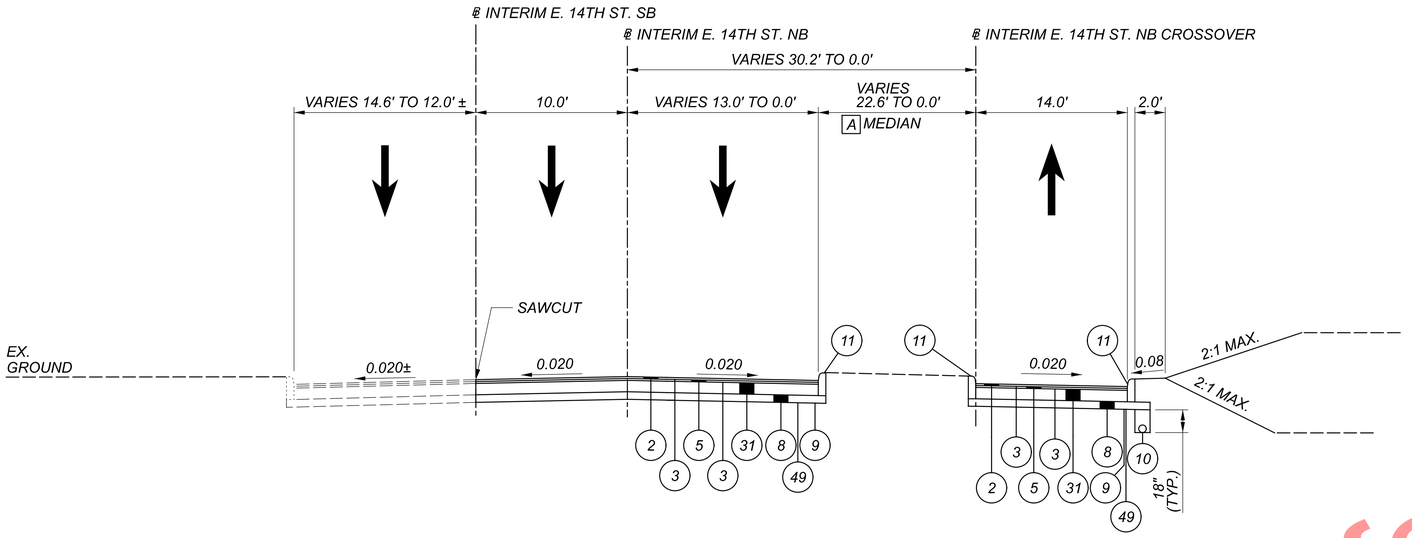

A MEDIAN ENDS AT STA. 253+08.40, ℄ INTERIM E. 14TH ST. NB CROSSOVER

NORMAL SECTION - INTERIM E. 14TH ST. SOUTHBOUND

STA. 197+61.50 TO STA. 199+54.63

NORMAL SECTION - INTERIM E. 14TH ST. NB CROSSOVER

STA. 251+86.50 TO STA. 254+33.81

NORMAL SECTION - INTERIM E. 14TH ST. NORTHBOUND

STA. 297+61.50 TO STA. 299+54.63

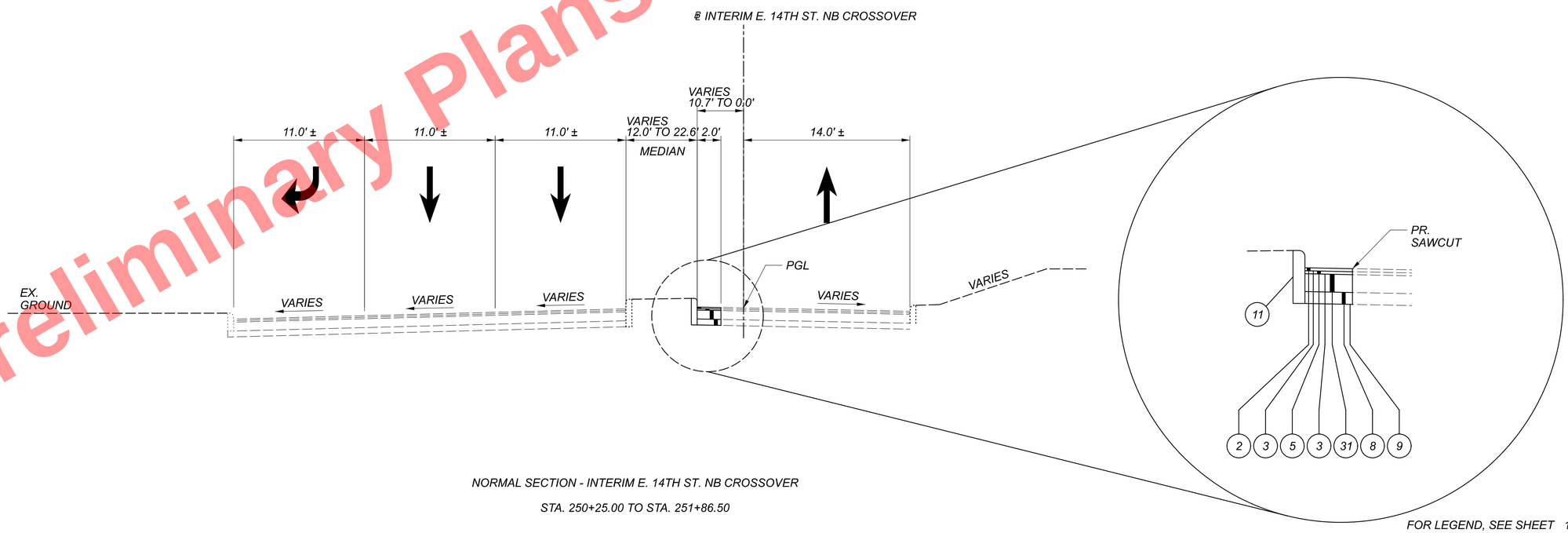

NORMAL SECTION - INTERIM E. 14TH ST. NB CROSSOVER

STA. 250+25.00 TO STA. 251+86.50

FOR LEGEND, SEE SHEET 16

Preliminary Plans - For Reference Only

PROPOSED TYPICAL SECTIONS
INTERIM E. 14TH ST. SB & NB AND NB CROSSOVER

CUY-90-16.28 (CCG3A)

MODEL: E 14th St (I) PAPERSIZE: 34x22 (in) DATE: 3/28/2025 TIME: 7:14:53 AM USER: Rohit.Bk
pw:\\mb-us-pw.bentley.com:mb-us-pw-03\Documents\Cleveland_OH\OiL_Projects\ODOT\District2\82382\400-Engineering\Roadway\Sheets\82382_GY000i.dgn

DESIGN AGENCY
Michael Baker INTERNATIONAL

DESIGNER KJM
REVIEWER KGJ 05/22/24
PROJECT ID 82382
SHEET 64 TOTAL 2696

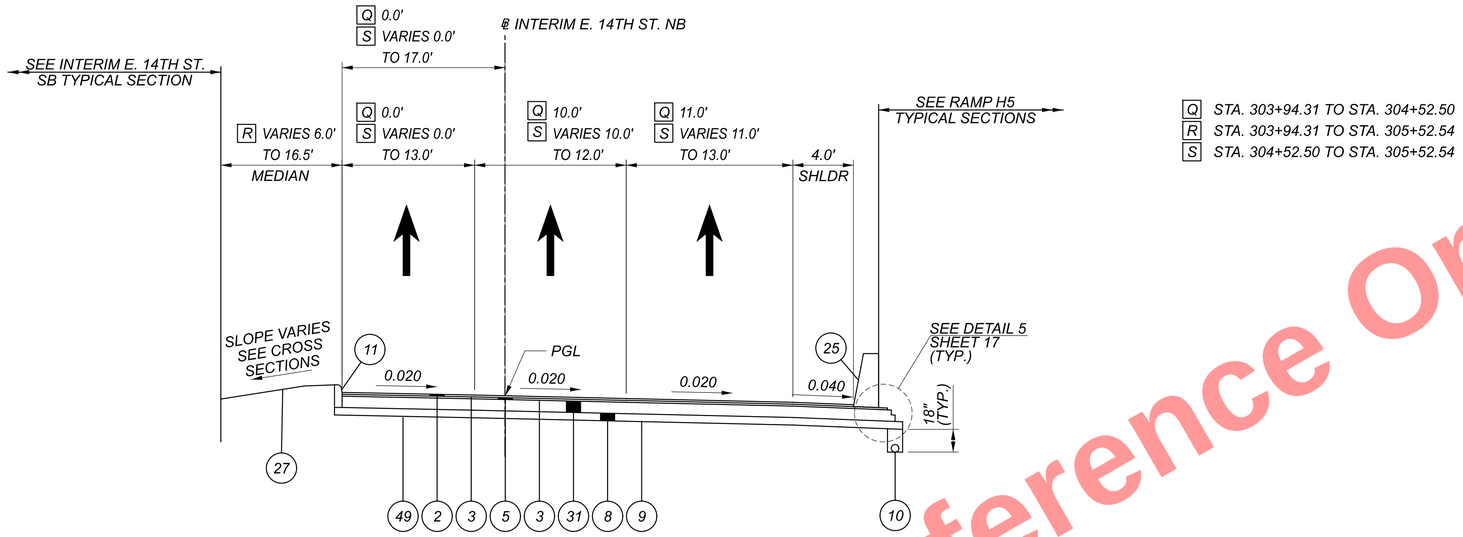

Q STA. 303+94.31 TO STA. 304+52.50
R STA. 303+94.31 TO STA. 305+52.54
S STA. 304+52.50 TO STA. 305+52.54

NORMAL SECTION - INTERIM E. 14TH ST. NB

STA. 303+94.31 TO STA. 305+52.54

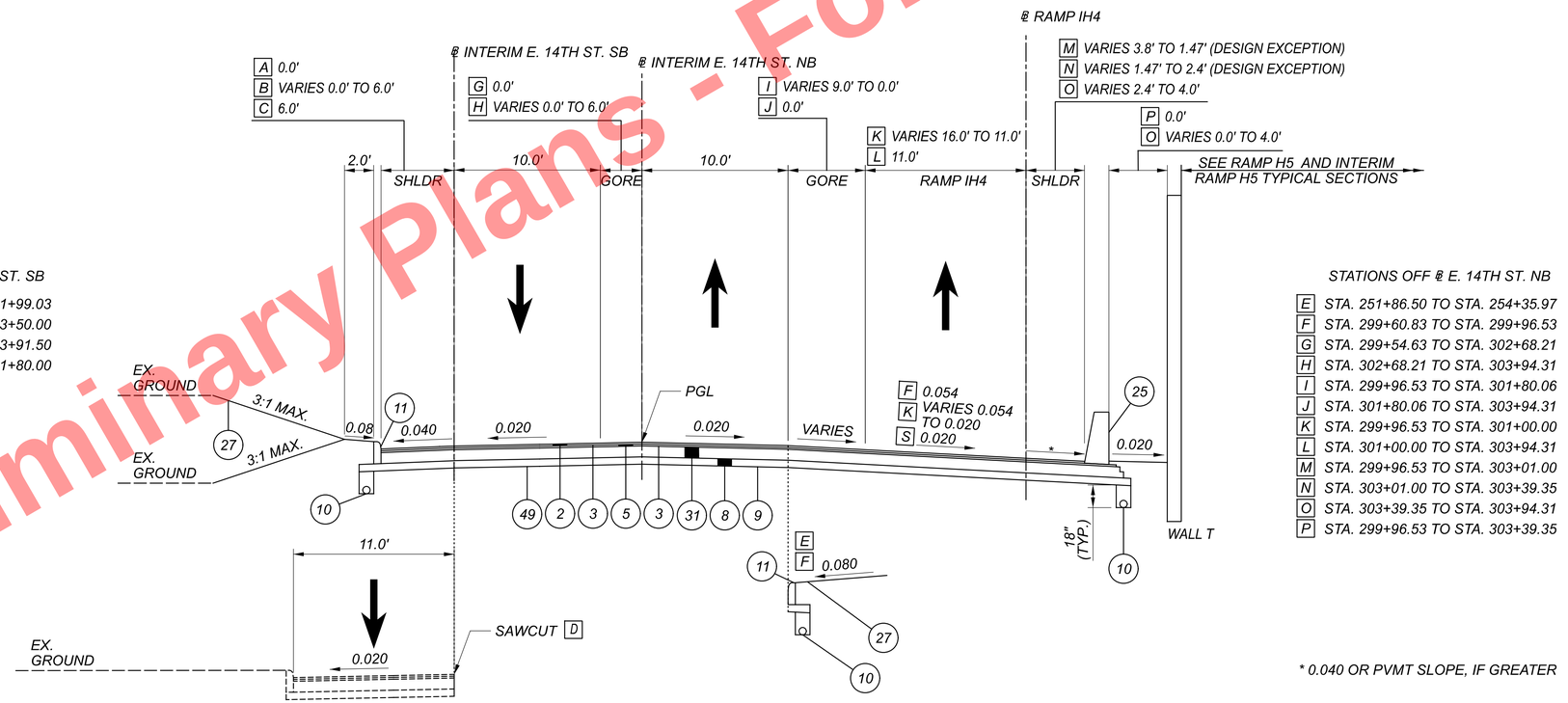

STATIONS OFF ℄ E. 14TH ST. SB

A STA. 199+54.63 TO STA. 201+99.03
B STA. 201+99.03 TO STA. 203+50.00
C STA. 203+50.00 TO STA. 203+91.50
D STA. 199+54.63 TO STA. 201+80.00

STATIONS OFF ℄ E. 14TH ST. NB

E STA. 251+86.50 TO STA. 254+35.97
F STA. 299+60.83 TO STA. 299+96.53
G STA. 299+54.63 TO STA. 302+68.21
H STA. 302+68.21 TO STA. 303+94.31
I STA. 299+96.53 TO STA. 301+80.06
J STA. 301+80.06 TO STA. 303+94.31
K STA. 299+96.53 TO STA. 301+00.00
L STA. 301+00.00 TO STA. 303+94.31
M STA. 299+96.53 TO STA. 303+01.00
N STA. 303+01.00 TO STA. 303+39.35
O STA. 303+39.35 TO STA. 303+94.31
P STA. 299+96.53 TO STA. 303+39.35

* 0.040 OR PVMT SLOPE, IF GREATER

NORMAL SECTION - INTERIM E. 14TH ST. SB

STA. 199+54.63 TO STA. 201+91.50

NORMAL SECTION - INTERIM E. 14TH ST. NB

STA. 299+54.63 TO STA. 303+94.31

FOR LEGEND, SEE SHEET 16

Preliminary Plans - For Reference Only

PROPOSED TYPICAL SECTIONS
INTERIM E. 14TH ST. SB & NB AND RAMP IH4

DESIGN AGENCY
Michael Baker INTERNATIONAL

DESIGNER KJM
REVIEWER KGJ 05/22/24
PROJECT ID 82382
SHEET 65 TOTAL 2696

CUY-90-16.28 (CCG3A)

MODEL: E 14th St (2) PAPERSIZE: 34x22 (in.) DATE: 3/28/2025 TIME: 7:14:54 AM USER: RohlfBk
pw:\\mb-us-pw.bentley.com:mb-us-pw-03\Documents\Cleveland.OH\Oi_Projects\ODOT\District2\82382\400-Engineering\Roadway\Sheets\82382_GY000i.dgn

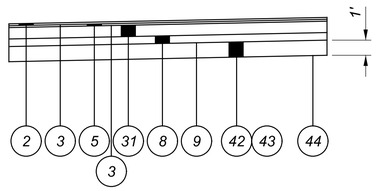

UNDERCUT DETAIL

INTERIM E. 14TH ST. SB
STA. 205+50.00 TO STA. 207+00.00

RAMP IJ3
STA. 110+56.45 TO STA. 111+25.00

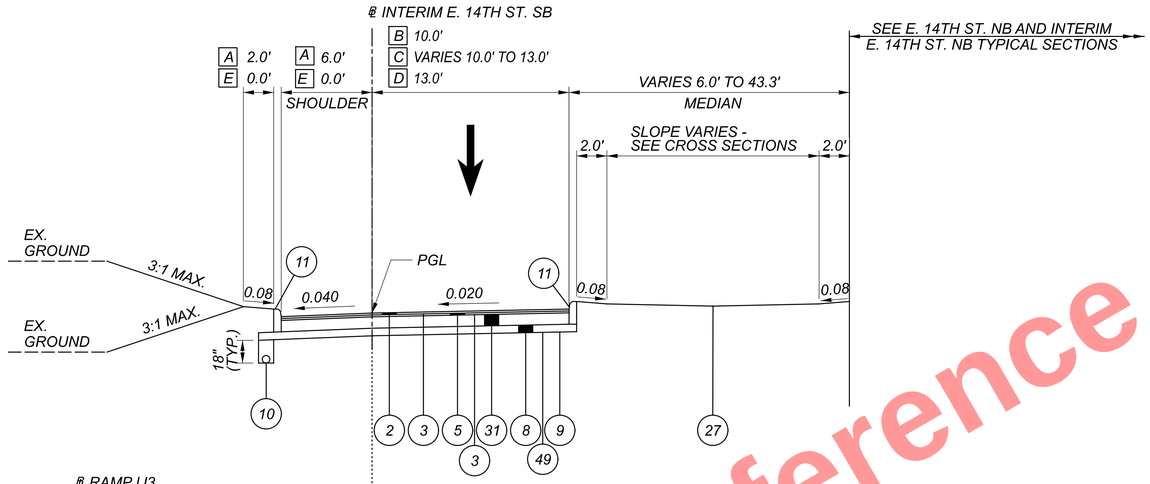

A STA. 203+91.50 TO STA. 206+29.98
B STA. 203+91.50 TO STA. 203+95.00
C STA. 203+95.00 TO STA. 204+76.00
D STA. 204+76.00 TO STA. 209+31.15
E STA. 206+29.98 TO STA. 209+31.15
L STA. 208+07.39 TO STA. 208+82.39
M STA. 208+82.39 TO STA. 209+31.15
F STA. 206+29.98 TO STA. 206+94.66
G STA. 206+94.66 TO STA. 209+31.15
J STA. 208+06.80 TO STA. 209+31.15

STATIONS OFF @ RAMP IJ3

K STA. 110+56.45 TO STA. 112+29.62
H STA. 110+56.45 TO STA. 111+20.03
I STA. 111+20.03 TO STA 112+29.62

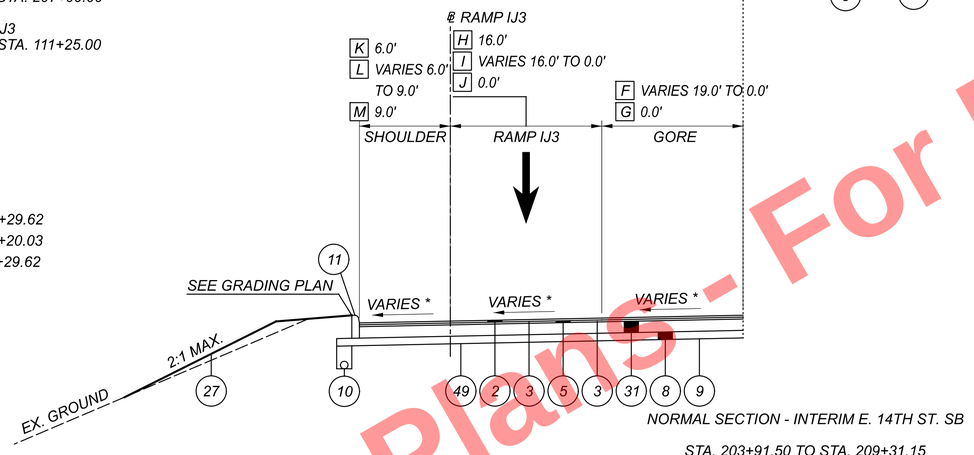

NORMAL SECTION - INTERIM E. 14TH ST. SB

STA. 203+91.50 TO STA. 209+31.15

SUPERELEVATED SECTION - RAMP IJ3

STA. 110+56.45 TO STA. 112+29.62

* SEE SUPERELEVATION TABLE, SHEET 813 FOR FULL SUPERELEVATION ROTATIONS

FOR LEGEND, SEE SHEET 16

Preliminary Plans - For Reference Only

PROPOSED TYPICAL SECTIONS
INTERIM E. 14TH ST. SB AND RAMP IJ3

DESIGN AGENCY
Michael Baker INTERNATIONAL

DESIGNER KJM
REVIEWER KGJ 05/22/24
PROJECT ID 82382
SHEET 66 TOTAL 2696

CUY-90-16.28 (CCG3A)

MODEL: E 14th St (3) PAPERSIZE: 34x22 (in) DATE: 3/28/2025 TIME: 7:14:55 AM USER: Rohit.Bk
pw:\\mb-us-pw.bentley.com:mb-us-pw-03\Documents\Cleveland_OH\01_Projects\ODOT\District2\82382\400-Engineering\Roadway\Sheets\82382_GY000I.dgn

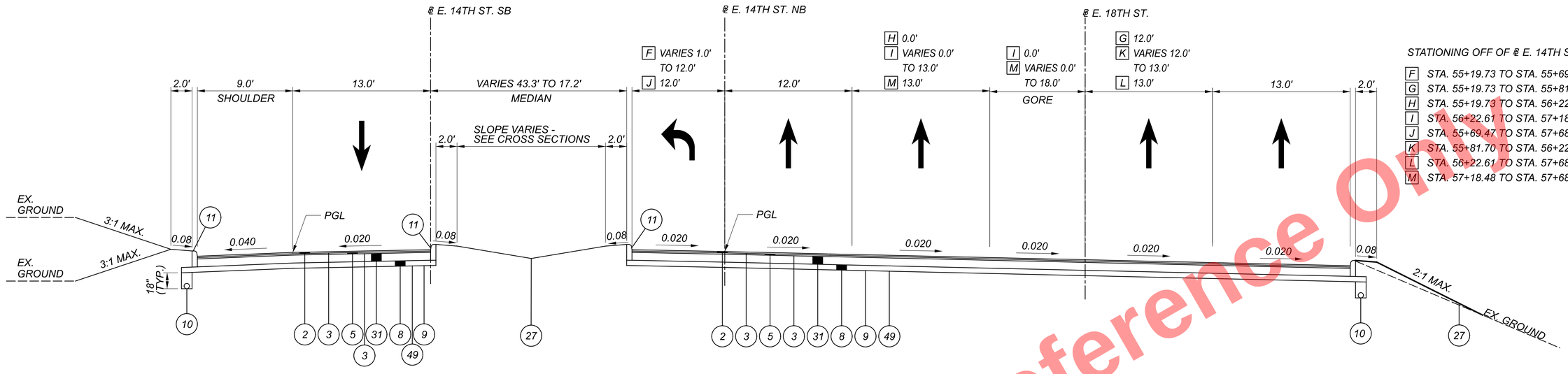

NORMAL SECTION - E. 14TH ST.
SOUTHBOUND
STA. 36+35.00 TO STA. 37+52.15

NORMAL SECTION - E. 14TH ST.
NORTHBOUND
STA. 55+19.73 TO STA. 57+68.76

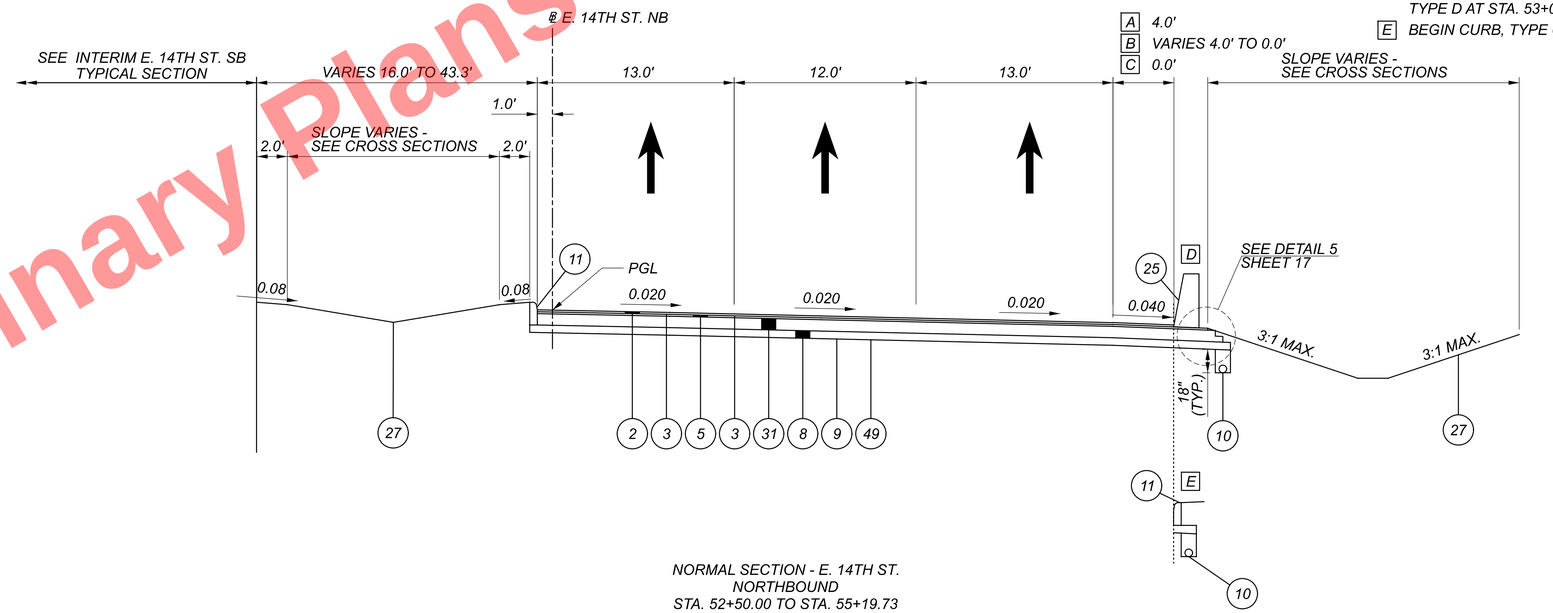

NORMAL SECTION - E. 14TH ST.
NORTHBOUND
STA. 52+50.00 TO STA. 55+19.73

A STA. 52+50.00 TO STA. 53+00.00
B STA. 53+00.00 TO STA. 54+00.00
C STA. 54+00.00 TO STA. 55+19.73
D END CONCRETE BARRIER, SINGLE SLOPE, TYPE D AT STA. 53+00.00
E BEGIN CURB, TYPE 6 AT STA. 53+00.00

FOR LEGEND, SEE SHEET 16

Preliminary Plans - Not For Reference Only

PROPOSED TYPICAL SECTIONS
E. 14TH ST. SB & NB AND E. 18TH ST.

DESIGN AGENCY
Michael Baker INTERNATIONAL

DESIGNER KJM
REVIEWER KGJ 05/22/24
PROJECT ID 82382
SHEET 67 TOTAL 2696

CUY-90-16.28 (CCG3A)

MODEL: E 14th St (3A) PAPERSIZE: 34x22 (in.) DATE: 3/28/2025 TIME: 7:14:55 AM USER: RohitBk
pw:\\mb-us-pw.bentley.com:mb-us-pw-03\Documents\Cleveland_OH\01_Projects\ODOT\District2\82382\400-Engineering\Roadway\Sheets\82382_GY001.dgn

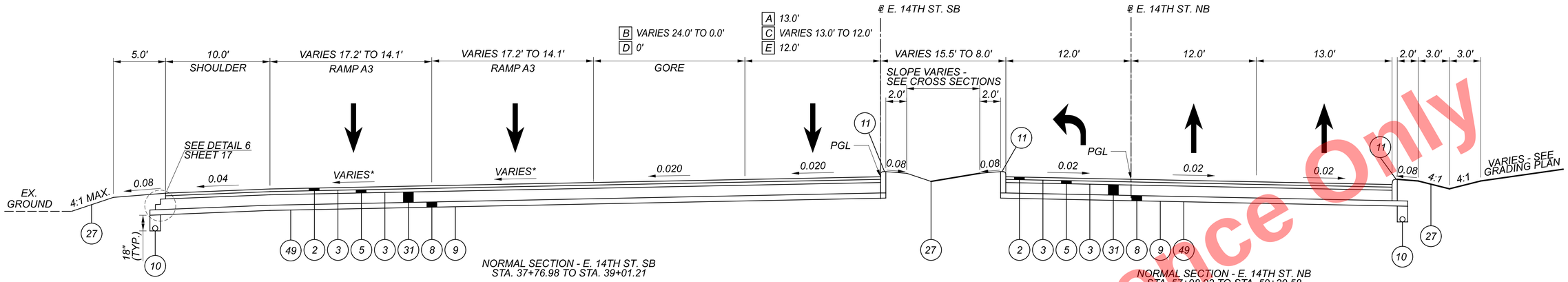

A STA. 37+76.98 TO STA. 38+31.96
B STA. 37+76.98 TO STA. 38+86.94
C STA. 38+31.96 TO STA. 39+86.94
D STA. 38+86.94 TO STA. 39+01.21
E STA. 38+86.94 TO STA. 39+10.21

* SEE SUPERELEVATION TABLES, SHEET 807 FOR RAMP A3 SUPERELEVATION DATA

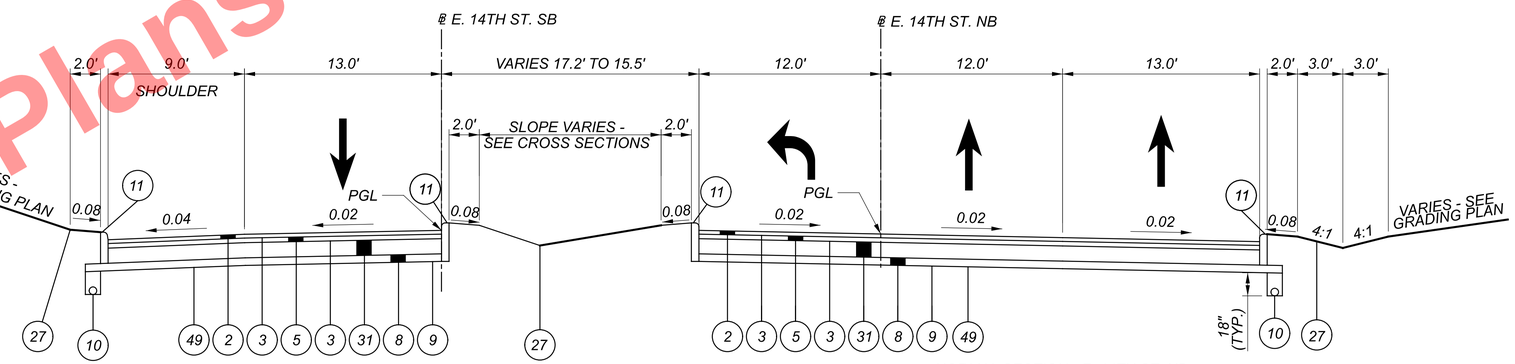

FOR LEGEND, SEE SHEET 16

Preliminary Plans - For Reference Only

PROPOSED TYPICAL SECTIONS
E. 14TH ST. SB & NB

DESIGN AGENCY
Michael Baker INTERNATIONAL

DESIGNER KJM
REVIEWER KGJ 05/22/24
PROJECT ID 82382
SHEET 68 TOTAL 2696

CUY-90-16.28 (CCG3A)

MODEL: E 14th St (4) PAPERSIZE: 34x22 (In.) DATE: 3/28/2025 TIME: 7:14:56 AM USER: RohlT.Bk
pw:\\mb-us-pw.bentley.com:mb-us-pw-03\Documents\Cleveland.OH\01_Projects\ODOT\District2\82382\400-Engineering\Roadway\Sheets\82382_GY000i.dgn

STATIONING FROM
℄ E. 14TH ST. SB ALIGNMENT

- A STA. 39+01.21 TO STA. 39+11.01
- B STA. 39+01.21 TO STA. 39+60.18
- C STA. 39+11.01 TO STA. 39+60.18
- D STA. 39+60.18 TO STA. 39+83.91

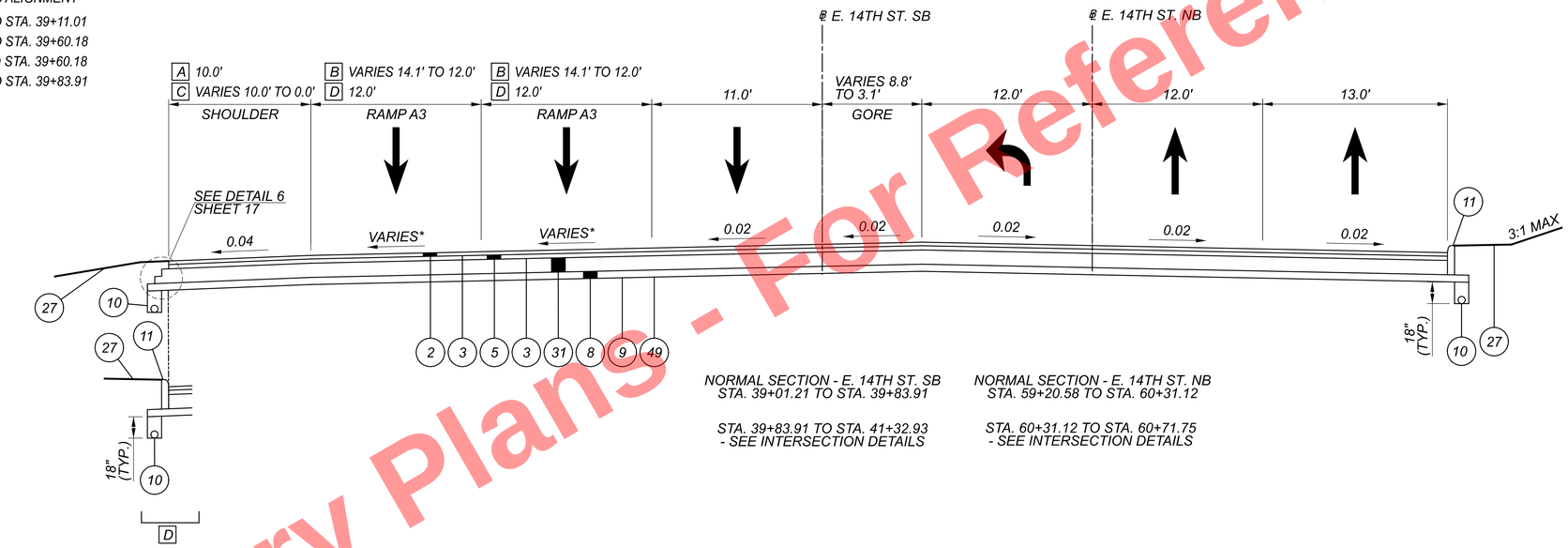

NORMAL SECTION - E. 14TH ST. SB
STA. 39+01.21 TO STA. 39+83.91

STA. 39+83.91 TO STA. 41+32.93
- SEE INTERSECTION DETAILS

NORMAL SECTION - E. 14TH ST. NB
STA. 59+20.58 TO STA. 60+31.12

STA. 60+31.12 TO STA. 60+71.75
- SEE INTERSECTION DETAILS

* SEE SUPERELEVATION TABLES, SHEET 807 FOR RAMP A3 SUPERELEVATION DATA

FOR LEGEND, SEE SHEET 16

Preliminary Plans - For Reference Only

PROPOSED TYPICAL SECTIONS
E. 14TH ST. SB & NB

CUY-90-16.28 (CCG3A)

MODEL: E 14th St (5) PAPERSIZE: 34x22 (In.) DATE: 3/28/2025 TIME: 7:4:56 AM USER: Rohit.Bk
pw:\\mb-us-pw.bentley.com:mb-us-pw-03\Documents\Cleveland_OH\01_Projects\ODOT\District2\82382\400-Engineering\Roadway\Sheets\82382_GY001.dgn

DESIGN AGENCY
Michael Baker INTERNATIONAL

DESIGNER KJM
REVIEWER KGJ 05/22/24
PROJECT ID 82382
SHEET 69 TOTAL 2696

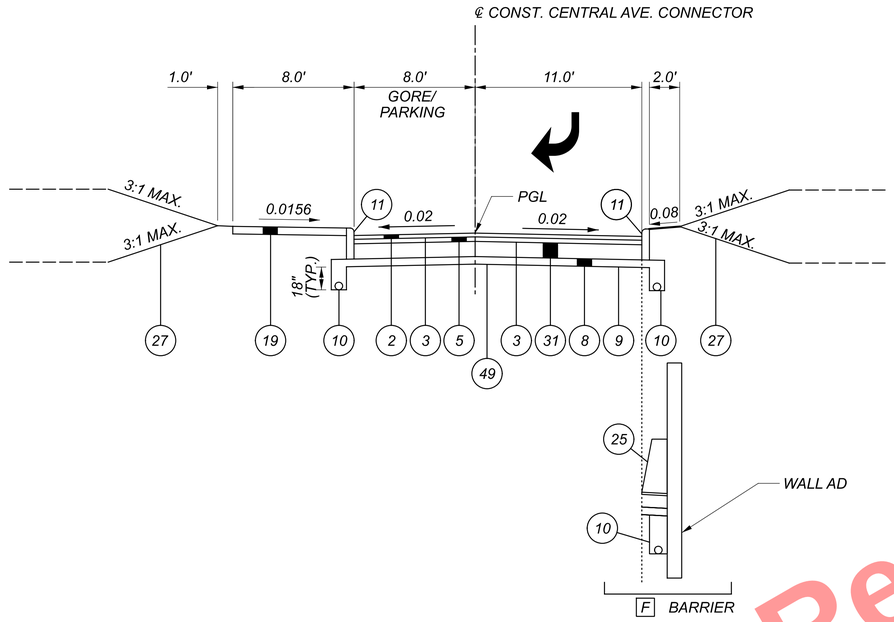

F STA. 602+00.00 TO STA. 603+62.08

NORMAL SECTION - CENTRAL AVENUE CONNECTOR
STA. 600+60.24 TO STA. 603+62.08

STA. 600+00.00 TO STA. 600+60.24
- SEE INTERSECTION DETAIL

STA. 603+62.08 TO STA. 604+25.32
- SEE INTERSECTION DETAIL

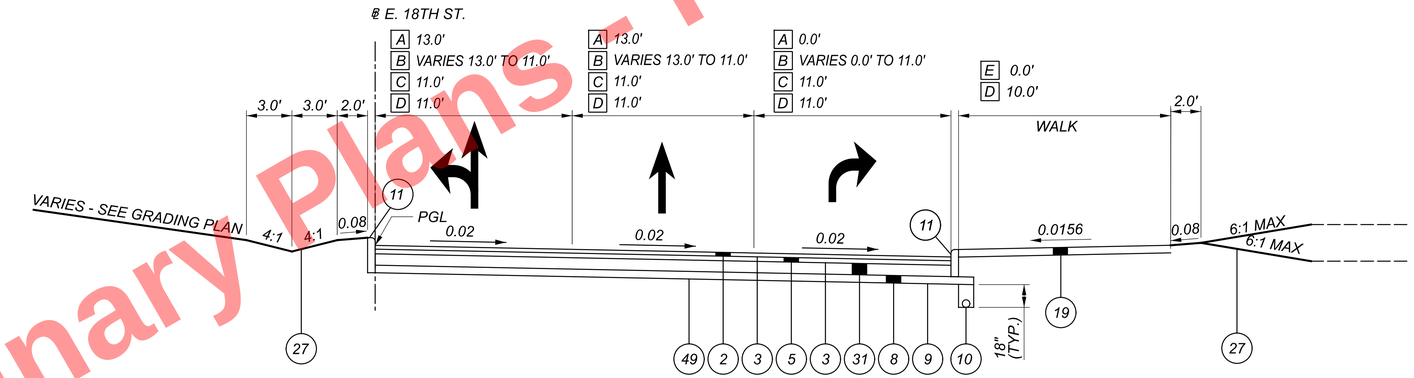

A STA. 21+50.49 TO STA. 22+00.00
B STA. 22+00.00 TO STA. 22+50.00
C STA. 22+50.00 TO STA. 23+21.00
D STA. 23+73.22 TO STA. 24+34.46
E STA. 21+50.49 TO STA. 23+21.00

NORMAL SECTION - E. 18TH STREET
STA. 21+50.49 TO STA. 23+21.00
STA. 23+73.22 TO STA. 24+34.46

STA. 20+00.00 TO STA. 21+50.49
- SEE INTERSECTION DETAIL

STA. 23+21.00 TO STA. 23+73.22
- SEE INTERSECTION DETAIL

STA. 24+34.46 TO STA. 24+62.35
- SEE INTERSECTION DETAIL

FOR LEGEND, SEE SHEET 16

Preliminary Plans - For Reference Only

PROPOSED TYPICAL SECTIONS
E. 18TH ST. AND CENTRAL AVE. CONNECTOR

DESIGN AGENCY
Michael Baker INTERNATIONAL

DESIGNER KJM
REVIEWER KGJ 05/22/24
PROJECT ID 82382
SHEET 70 TOTAL 2696

CUY-90-16.28 (CCG3A)

MODEL: E 18th St PAPERSIZE: 34x22 (in.) DATE: 3/28/2025 TIME: 7:14:57 AM USER: Rohit.Bk
pw:\\mb-us-pw.bentley.com:mb-us-pw-03\Documents\Cleveland_OH\DL_Projects\ODOT\District2\82382\400-Engineering\Roadway\Sheets\82382_GY000i.dgn

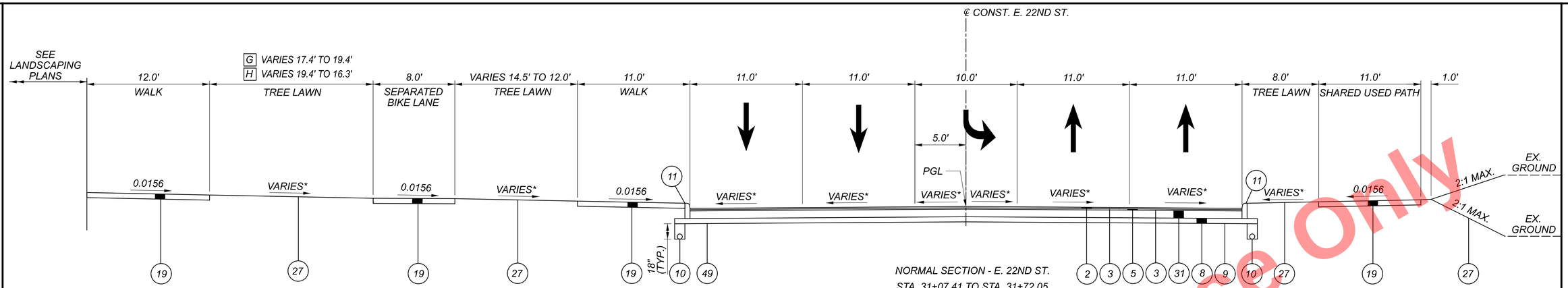

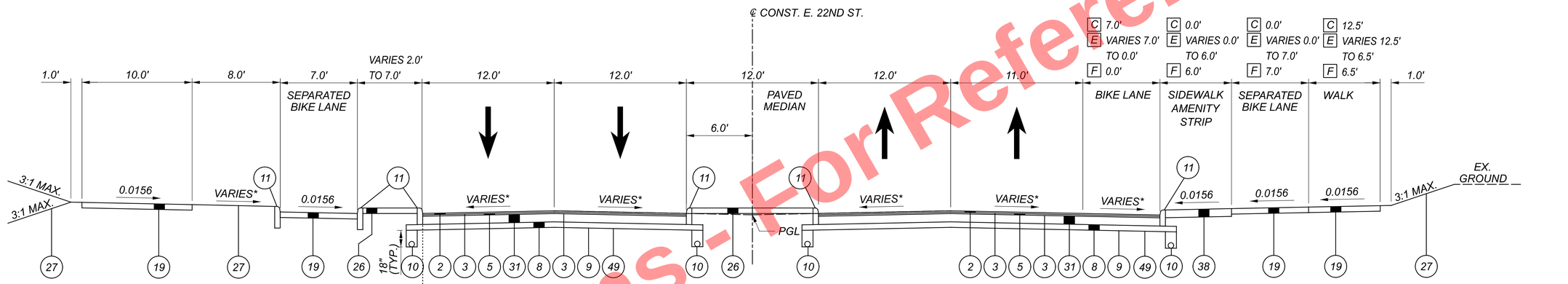

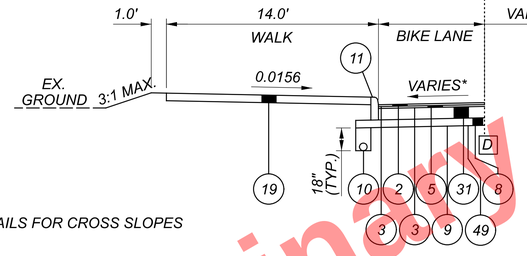

*SEE INTERSECTION DETAILS FOR CROSS SLOPES

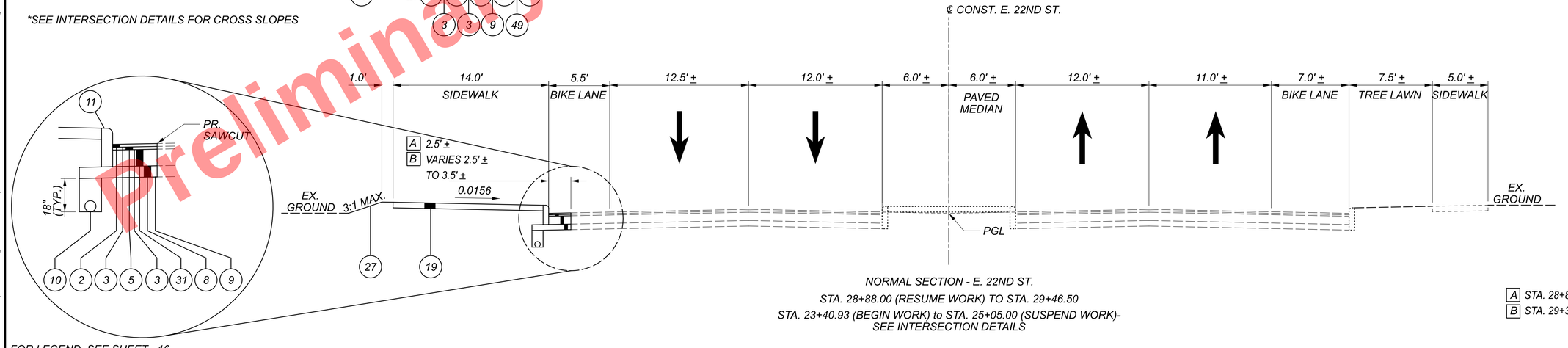

FOR LEGEND, SEE SHEET 16

Preliminary Plans - For Reference Only

PROPOSED TYPICAL SECTIONS
E. 22ND ST.

CUY-90-16.28 (CCG3A)

MODEL: E 22nd St PAPERSIZE: 34x22 (In.) DATE: 3/28/2025 TIME: 7:44:57 AM USER: RohlfBK
pw:\\mb-us-pw.bentley.com\mb-us-pw-03\Documents\Cleveland_OH\OiL_Projects\ODOT\District12\82382\400-Engineering\Roadway\Sheets\82382_GY000i.dgn

DESIGN AGENCY
Michael Baker INTERNATIONAL

DESIGNER KJM
REVIEWER KGJ 05/22/24
PROJECT ID 82382
SHEET 71 TOTAL 2696

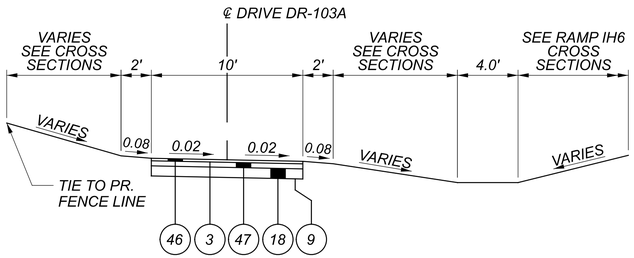

NORMAL SECTION - DR-103A

STA. 0+00.00 TO STA. 0+80.00 - SEE DRIVE DETAILS
STA. 0+80.00 TO STA. 4+48.28
STA. 4+48.28 TO STA. 4+74.03 - SEE DRIVE DETAILS

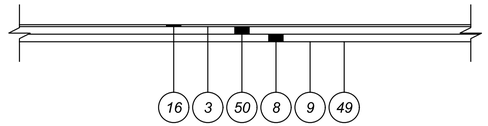

PARKING LOTS
FLEXIBLE PAVEMENT

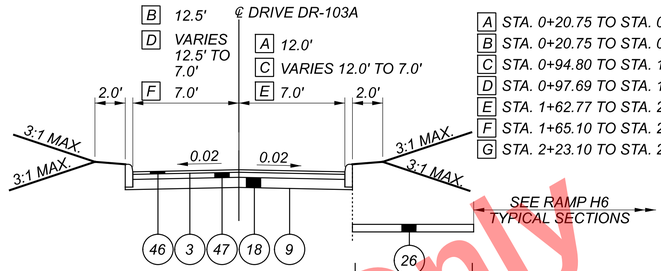

NORMAL SECTION - DR-104A

STA. 0+20.75 TO STA. 2+62.16
STA. 2+62.16 TO STA. 2+91.19 - SEE INTERSECTION DETAILS

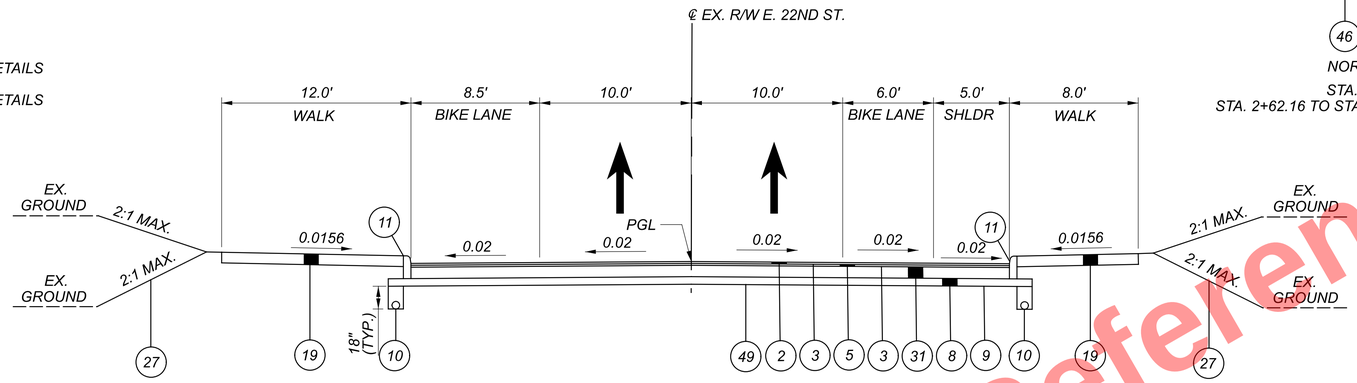

STA. 27+60.60 TO STA. 28+27.50 - SEE INTERSECTION DETAILS
NORMAL SECTION - E. 22ND ST.
STA. 28+27.50 TO STA. 28+50.00

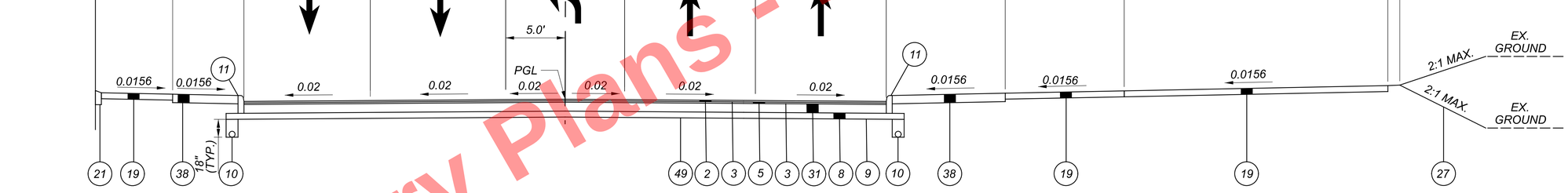

NORMAL SECTION - E. 22ND ST.
STA. 35+98.63 TO STA. 36+50.10
STA. 36+50.10 TO STA. 37+41.90 - SEE INTERSECTION DETAILS

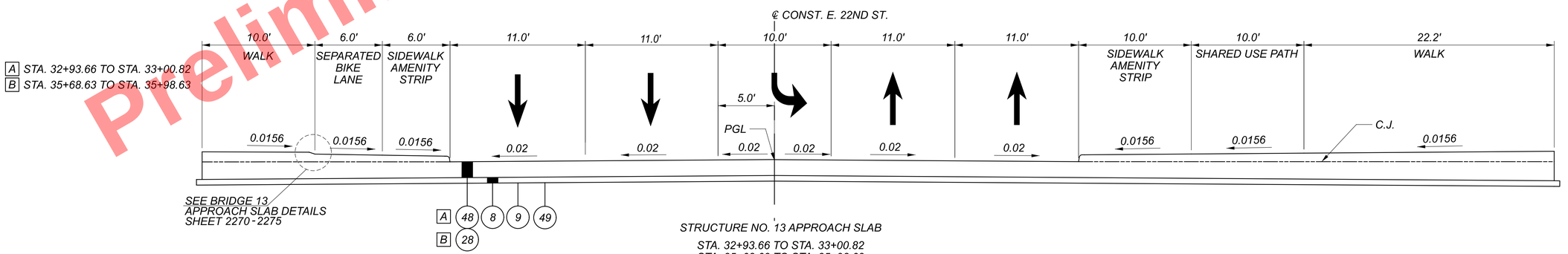

STRUCTURE NO. 13 APPROACH SLAB
STA. 32+93.66 TO STA. 33+00.82
STA. 35+68.63 TO STA. 35+98.63

FOR LEGEND, SEE SHEET 16

Preliminary Plans - For Reference Only

PROPOSED TYPICAL SECTIONS
E. 22ND ST. AND DRIVEWAYS

DESIGN AGENCY
Michael Baker INTERNATIONAL

DESIGNER KJM
REVIEWER KGJ 05/22/24
PROJECT ID 82382
SHEET 72 TOTAL 2696

CUY-90-16.28 (CCG3A)

MODEL: E 22nd St (D PAPERSIZE: 34x22 (In.) DATE: 5/8/2025 TIME: 10:25:1PM USER: Mala.Gallagher
pw:\\mb-us-pw.bentley.com:mb-us-pw-03\Documents\Cleveland_OH\01_Projects\0D0T\District2\82382\400-Engineering\Roadway\Sheets\82382_GY000l.dgn

GENERAL

UTILITIES

EXISTING UTILITIES ARE SHOWN IN ACCORDANCE WITH THE BEST INFORMATION AVAILABLE AND ARE FOR THE CONVENIENCE OF THE CONTRACTOR ONLY. THE CORRECTNESS AND COMPLETENESS OF THIS INFORMATION IS NOT GUARANTEED.

ALL UTILITY RELOCATIONS SHALL BE COORDINATED BETWEEN THE CONTRACTOR AND THE UTILITY OWNERS IN SUCH A WAY AS TO AVOID AND/OR MINIMIZE ANY INCONVENIENCE TO POTENTIALLY AFFECTED CUSTOMERS. ALL UTILITY RELOCATIONS NOT INCLUDED IN THIS CONTRACT SHALL BE PERFORMED BY THE AFFECTED UTILITY OWNER OR ITS CONTRACTOR AND WILL BE COMPLIANT WITH ODOT ROADWAY DESIGN STANDARDS. UPON THE CONTRACT AWARD, THE COORDINATION OF ALL NECESSARY RELOCATIONS WITH THE UTILITIES SHALL BECOME THE RESPONSIBILITY OF THE CONTRACTOR.

IT IS REQUIRED OF THE ODOT CONTRACTOR TO SCHEDULE A FIELD REVIEW A MINIMUM OF 2 WEEKS PRIOR TO EQUIPMENT INSTALLATION TO INSURE ALL UTILITIES ARE CLEAR AND ALL CURRENT LOCATIONS ARE KNOWN. IF ANY UTILITY ISSUES ARISE IT IS THE RESPONSIBILITY OF THE ODOT CONTRACTOR TO WORK OUT AN ACCEPTABLE SOLUTION WITH THE UTILITY AND ODOT TO KEEP THE PROJECT MOVING FORWARD.

LISTED BELOW ARE ALL UTILITIES LOCATED WITHIN THE PROJECT CONSTRUCTION LIMITS TOGETHER WITH THEIR RESPECTIVE OWNERS:

ELECTRIC
CLEVELAND PUBLIC POWER:
POWER DIVISION
ATTN: CHRISTOPHER HIRZEL
1300 LAKESIDE AVE., ROOM 152
CLEVELAND, OH 44114
(216) 664-3922, EXT. 76115
CHIRZEL@CPP.ORG

CLEVELAND PUBLIC POWER:
STREETLIGHTING DIVISION
ATTN: BRYAN SHEPHERD
1300 LAKESIDE AVE., ROOM 152
CLEVELAND, OH 44114
(216) 664-3922 EXT. 76183
BSHEPHERD@CPP.ORG

FIRST ENERGY (CEI) OVERHEAD
ATTN: JOHN ZASSICK
6896 MILLER RD.
BRECKSVILLE, OH 44141
(440) 546-8706
JMZASSICK@FIRSTENERGYCORP.COM

FIRST ENERGY (CEI) UNDERGROUND
ATTN: DAN CARMAN
6896 MILLER RD.
BRECKSVILLE, OH 44141
(440) 717-6846
DRCARMAN@FIRSTENERGYCORP.COM

FIRST ENERGY (CEI) TRANSMISSION
ATTN: MARY WALTON
76 SOUTH MAIN ST
AKRON, OH 44308
(321) 626-1079
MWALTON@FIRSTENERGYCORP.COM

GAS
ENBRIDGE (DOMINION)
ATTN: ELIZABETH PIPAK
320 SPRINGSIDE DR., SUITE 320
AKRON, OH 44333
(330) 592-4256
ELIZABETH.A.PIPAK@
DOMINIONENERGY.COM

SEWER
CITY OF CLEVELAND: DIVISON
OF WATER POLLUTION CONTROL
ATTN: ALAN SCHIELY
12302 KIRBY AVE.
CLEVELAND, OH 44108
(216) 664-3638
ASCHIELY@CLEVELANDWPC.COM

SEWER (CONT.)
NEORSD
ATTN: ROBERT STOERKEL
3900 EUCLID AVE.
CLEVELAND, OH 44115
(216) 881-6600 EXT. 6802
STOERKELR@NEORSD.ORG

STEAM
CORIX
ATTN: SCOTT TEMPLETON
1921 HAMILTON AVE.
CLEVELAND, OH 44114
(216) 218-7505
SCOTT.TEMPLETON@CORIX.COM

TELECOM
AT&T
ATTN: JAMES JANIS
13630 LORAIN AVE., 2ND FLOOR
CLEVELAND, OH 44111
(216) 534-7285
PJ8191@ATT.COM

BRIGHTSPEED (LUMEN/CENTURY LINK)
(LITEL TELECOMMUNICATIONS
CORPORATION/ BROADWING/
WIL-TEL COMMUNICATIONS)
ATTN: DOUG HOLLOWAY
4000 CHESTER AVE.
CLEVELAND, OH 44103
(216) 906-6284
DOUG.HOLLOWAY@LUMEN.COM
ATTN: ED NICHOLS
ED.NICHOLS@LUMEN.COM
ATTN: KENDALL WILLIAMS-ZETINA
100 S. CINCINNATI AVE, SUITE 1200
TULSA, OK 74103
(918) 547-0547
ATTN: SCOTT STONE
100 CENTURY LINK DR
MONROE, LA 71203
(318) 330-6722
SCOTT.STONE1@LUMEN.COM
ATTN: GEORGE MCELVAIN
(303) 992-9931
GEORGE.MCELVAIN@LUMEN.COM

CHARTER COMMUNICATIONS
ATTN: RICK PALENCAR
8179 DOW CIR.
STRONGSVILLE, OH 44136
(440) 343-6606
RICK.PALENCAR@CHARTER.COM

TELECOM (CONT.)
CROWN CASTLE
ATTN: JON TARNOWSKI
15565 NEO PKWY.
GARFIELD HTS, OH 44128
(614) 940-2462
JON.TARNOWSKI@CROWNCASTLE.COM

EVERSTREAM
ATTN: GIO REILLO
800 WEST ST. CLAIR AVE.
CLEVELAND, OH 44113
(216) 905-0780
GREILLO@EVERSTREAM.NET

VERIZON
ATTN: DAVID GROSS
12300 RIDGE RD.
NORTH ROYALTON, OH 44133
(216) 347-7661
DAVID.GROSS@VERIZON.COM

WESTERN RESERVE
ATTN: RYAN WIEGNER
3867 W. MARKET ST.
AKRON, OH 44333
(330) 343-7926
RYAN@WRCFIBER.COM

WINDSTREAM
ATTN: LEON TAYLOR
2165 STATE ROUTE 133 S
BLANCHESTER, OHIO 45107
(937) 725-5358
LEON.TAYLOR@WINDSTREAM.COM

UTILITY SYMBOL LEGEND

- UTILITY LINE ABANDONED
- UTILITY LINE REMOVED
- STRUCTURE REMOVED / ABANDONED
- ATG STORM MH
- ATG SANITARY MH
- ATG WATER MH
- ATG WATER METER
- ATG WATER SERVICE STOP
- ATG HYDRANT
- ATG TELECOM MH
- ATG GAS MH
- ATG GAS METER
- ATG GAS VALVE
- ATG GAS SERVICE STOP
- ATG ELECTRIC MH
- ATG ELECTRIC METER

TRAFFIC
ODOT D12 LIGHTING & TRAFFIC CONTROL
ATTN: JOHN BACON
5500 TRANSPORTATION BLVD.
GARFIELD HEIGHTS, OH 44125
(216) 408-8748
JOHN.BACON@DOT.OHIO.GOV

CITY OF CLEVELAND:
DIVISION OF TRAFFIC ENGINEERING
ATTN: ROB MAVEC
601 LAKESIDE AVE., ROOM 25
CLEVELAND, OH 44114
(216) 664-6135
RMAVEC@CLEVELANDOHIO.GOV

ODOT ITS - TRAFFIC
MONITORING SECTION
ATTN: BRYAN COMER
1606 WEST BROAD ST.
COLUMBUS, OH 43223
(614) 981-3028
BRYAN.COMER@DOT.OHIO.GOV

WATER
CITY OF CLEVELAND:
DIVISION OF WATER
ATTN: FRED ROBERTS, P.E.
1201 LAKESIDE AVE.
CLEVELAND, OH 44114
(216) 664-2444 EXT. 75590
FRED_ROBERTS@
CLEVELANDWATER.COM

ROUNDING

THE ROUNDING AT SLOPE BREAKPOINTS SHOWN ON THE TYPICAL SECTIONS APPLIES TO ALL CROSS-SECTIONS, EVEN THOUGH OTHERWISE SHOWN.

EXISTING PLANS

EXISTING PLANS MAY BE INSPECTED IN THE ODOT DISTRICT 12 OFFICE IN GARFIELD HEIGHTS, OH.

ABBREVIATIONS

AA = ANCHOR ASSEMBLY
ABND = ABANDONNED
ATG = ADJUST TO GRADE
ATGBO = ADJUST TO GRADE BY OTHERS
℄ = BASELINE
BM = BENCHMARK
BOC = BACK OF CURB
BTA = BRIDGE TERMINAL ASSEMBLY
CI = CURB INLET
CL = CLASS
℄ CONST. = CENTERLINE OF CONSTRUCTION
℄ = CENTERLINE
COC = CITY OF CLEVELAND
COMM = COMMERCIAL
CONST. LIMIT = CONSTRUCTION LIMITS
CS = COMBINED SEWER
CUY = CUYAHOGA COUNTY
CWD = CLEVELAND WATER DEPARTMENT
DI = DUCTILE IRON PIPE
DND = DO NOT DISTURB
EB = EASTBOUND
ELEC = ELECTRIC
EL = ELEVATION
ELEV = ELEVATION
EOP = EDGE OF PAVEMENT
EX = EXISTING
FOC = FACE OF CURB
FDO = FOR DIRECTION ONLY
FF = FINISHED FLOOR ELEVATION
FH = FIRE HYDRANT
FL = FLOW LINE
℄ = FLOW LINE
GR = GUARDRAIL
INV = INVERT
LON = LENGTH OF NEED
LT = LEFT
MH = MANHOLE
NB = NORTHBOUND
OHE = OVERHEAD ELECTRIC
PR = PROPOSED
R&R = REMOVE AND REERECT
RCHP = ROCK CHANNEL PROTECTION
RCP = REINFORCED CONCRETE PIPE
RES = RESIDENTIAL
RNS = ROUNDED END SECTION
RR = RAILROAD
RT = RIGHT
RTG = RECONSTRUCT TO GRADE
RW = RIGHT OF WAY
SAN = SANITARY SEWER
SB = SOUTHBOUND
SH = STANDARD HIGHWAY EASEMENT
STA = STATION
STM = STORM
TBA = TO BE ABANDONNED
TBR = TO BE REMOVED
TBRBO = TO BE REMOVED BY OTHERS
TBRL = TO BE RELOCATED
TBRLBO = TO BE RELOCATED BY OTHERS
TOC = TOP OF CURB
TC = TOP OF CASTING
TELE = TELEPHONE
TR = TO REMAIN
TYP = TYPICAL
UD = UNDERDRAIN
UNKN = UNKNOWN
UTIL = UTILITY
VCP = VITRIFIED CLAY PIPE
WB = WESTBOUND
WV = WATER VALVE

SURVEYING PARAMETERS

PRIMARY PROJECT CONTROL MONUMENTS GOVERN ALL POSITIONING ON ODOT PROJECTS. SEE SHEET 4 OF THE PLANS FOR A TABLE CONTAINING PROJECT CONTROL INFORMATION.

USE THE FOLLOWING PROJECT CONTROL, VERTICAL POSITIONING, AND HORIZONTAL POSITIONING PARAMETERS FOR ALL SURVEYING:

PROJECT CONTROL
POSITIONING METHOD: STATIC GPS/ODOT VRS RTK GPS / CONVENTIONAL
MONUMENT TYPE: MAG NAILS / IRON PINS

VERTICAL POSITIONING
ORTHOMETRIC HEIGHT DATUM: NAVD 88
GEOID: GEOID 12A

HORIZONTAL POSITIONING
REFERENCE FRAME: NAD83 (2011)
ELLIPSOID: GRS80
MAP PROJECTION: LAMBERT CONFORMAL CONIC
COORDINATE SYSTEM: OHIO STATE PLANE, NORTH ZONE (3401)
COMBINED SCALE FACTOR: 0.99994020409
ORIGIN OF COORDINATE SYSTEM: (0,0)

USE THE POSITIONING METHODS AND MONUMENT TYPE USED IN THE ORIGINAL SURVEY TO RESTORE ALL MONUMENTS RELATED TO PRIMARY PROJECT CONTROL THAT ARE DAMAGED OR DESTROYED BY CONSTRUCTION ACTIVITIES. RESTORE THE DAMAGED OR DESTROYED MONUMENTS IN ACCORDANCE WITH CMS 623.

UNITS ARE IN U.S. SURVEY FEET.

WORK LIMITS

THE WORK LIMITS SHOWN ON THESE PLANS ARE FOR PHYSICAL CONSTRUCTION ONLY. PROVIDE THE INSTALLATION AND OPERATION OF ALL WORK ZONE TRAFFIC CONTROL AND WORK ZONE TRAFFIC CONTROL DEVICES REQUIRED BY THESE PLANS WHETHER INSIDE OR OUTSIDE THESE WORK LIMITS.

PROTECTION OF RIGHT-OF-WAY LANDSCAPING

PRIOR TO BEGINNING WORK, THE CONTRACTOR, THE PROJECT ENGINEER, AND A REPRESENTATIVE OF THE MAINTAINING AGENCY WILL REVIEW AND RECORD ALL LANDSCAPING ITEMS WITHIN THE RIGHT-OF-WAY (BOTH WITHIN AND OUTSIDE THE CONSTRUCTION LIMITS). A RECORD OF THIS REVIEW WILL BE KEPT IN THE PROJECT ENGINEER'S FILES. PRIOR TO FINAL ACCEPTANCE, A FINAL REVIEW OF LANDSCAPING ITEMS WILL BE MADE.

CONSTRICT ALL ACTIVITIES, EQUIPMENT STORAGE, AND STAGING TO WITHIN THE CONSTRUCTION LIMITS. UNLESS OTHERWISE IDENTIFIED IN THE PLANS OR PROPOSAL, THE CONSTRUCTION LIMITS ARE IDENTIFIED AS 30 FEET FROM THE EDGE OF PAVEMENT.

SUBMIT A WRITTEN REQUEST TO THE PROJECT ENGINEER TO USE ANY AREA OUTSIDE THESE LIMITS. THE DOCUMENT SUBMITTED MUST CLEARLY IDENTIFY THE AREA AND EXPLAIN THE PROPOSED USE AND RESTORATION OF THE AREA. USE OF THESE AREAS FOR DISPOSAL OF WASTE MATERIAL AND CONSTRUCTION DEBRIS, EXCAVATION OF BORROW MATERIAL AND PLACEMENT OF PORTABLE PLANTS IS PROHIBITED. THE REQUEST MUST BE APPROVED, IN WRITING, BEFORE THE CONTRACTOR HAS PERMISSION TO USE THE AREA.

ANY ITEMS DAMAGED BEYOND THE CONSTRUCTION LIMITS, AS DEFINED ABOVE, WILL BE REPLACED IN KIND OR AS APPROVED BY THE PROJECT ENGINEER.

CLEARING AND GRUBBING

REMOVE ALL TREES AND STUMPS SPECIFICALLY MARKED FOR REMOVAL WITHIN THE CONSTRUCTION LIMITS UNDER THE LUMP SUM BID FOR **ITEM 201, CLEARING AND GRUBBING**. THE FOLLOWING IS AN APPROXIMATE ESTIMATE OF THE NUMBER OF TREES AND STUMPS TO BE REMOVED.

SIZES	NO. TREES	NO. STUMPS	TOTAL
18"	59	4	63
30"	6	0	6
48"	1	0	1

For Reference Only
Preliminary Plans - Not for Construction

DESIGN AGENCY
Michael Baker INTERNATIONAL
DESIGNER JTH
REVIEWER KGJ 05/10/24
PROJECT ID 82382
SHEET 73 TOTAL 2696

CUY-90-16.28 (CCG3A)
MODEL: Sheet-01 PAPERSIZE: 34x22 (in.) DATE: 6/9/2025 TIME: 12:53:28 PM USER: Julie.Ross
pw:\\mb-us-pw.bentley.com:mb-us-pw-03\Documents\Cleveland_OH01_Projects\ODOT\District12\82382\400-Engineering\Roadway\Sheets\82382_GN0001.dgn

GENERAL (CONT.)

BENCHING OF FOUNDATION SLOPES

ALTHOUGH CROSS-SECTIONS INDICATE SPECIFIC DIMENSIONS FOR PROPOSED BENCHING OF THE EMBANKMENT FOUNDATIONS IN CERTAIN AREAS, NO WAIVER OF THE SPECIFICATIONS IS INTENDED. BENCH ALL OTHER SLOPED EMBANKMENT AREAS AS SET FORTH IN 203.05. NO ADDITIONAL PAYMENT WILL BE MADE FOR BENCHING REQUIRED UNDER THE PROVISIONS OF 203.05.

MONUMENT ASSEMBLIES

CONSTRUCT MONUMENT ASSEMBLIES IN ACCORDANCE WITH THE DETAILS SHOWN ON THE STANDARD CONSTRUCTION DRAWINGS AND AT THE LOCATIONS SHOWN ON SHEET 16 / 66 OF THE R/W PLANS.

THE FOLLOWING QUANTITY HAS BEEN CARRIED TO THE GENERAL SUMMARY FOR THIS WORK:

ITEM 623 - PRIMARY PROJECT
CONTROL MONUMENT, TYPE B 45 EACH

AIRWAY/HIGHWAY CLEARANCE FOR AIRPORTS AND HELIPORTS

THIS PROJECT HAS BEEN IDENTIFIED AS BEING WITHIN THE INFLUENCE AREA OF A PUBLIC USE AIRPORT OR HELIPORT. NO TEMPORARY STRUCTURES OR CONSTRUCTION EQUIPMENT AT MAXIMUM OPERATING HEIGHT SHALL EXCEED A HEIGHT OF 100 FT. IF ANY TEMPORARY STRUCTURES OR CONSTRUCTION EQUIPMENT WILL EXCEED THIS HEIGHT, FURTHER COORDINATION WITH THE FEDERAL AVIATION ADMINISTRATION (FAA), AND THE ODOT OFFICE OF AVIATION, WILL BE NECESSARY PRIOR TO ERECTING SUCH TEMPORARY STRUCTURES OR OPERATING SUCH EQUIPMENT ON THE PROJECT. THE CONTRACTOR WILL BE REQUIRED TO FILE A NEW FORM 7460-1, ADVISING THE FAA THAT AN AERONAUTICAL STUDY IS BEING RESUBMITTED AND THAT AN ALTERATION TO THE ORIGINAL SUBMISSION IS REQUESTED. THE CONTRACT SHALL REFERENCE THE APPROPRIATE AERONATUTICAL STUDY NUMBER FROM THE FOLLOWING LIST:

OBJECT	STUDY NUMBER	STATUS
BRIDGE 9 CRANE	2024-AGL-11781-OE	WIP
BRIDGE 10 CRANE	2024-AGL-11782-OE	WIP
BRIDGE 11 CRANE	2024-AGL-11783-OE	WIP
BRIDGE 12 CRANE	2024-AGL-11784-OE	WIP
BRIDGE 13 CRANE	2024-AGL-11785-OE	WIP
BRIDGE 14 CRANE	2024-AGL-11786-OE	WIP
ODOT LIGHT TOWER CN1-1	2024-AGL-17499-OE	DNH
ODOT LIGHT TOWER CN1-2	2024-AGL-17498-OE	DNH
ODOT LIGHT TOWER CN1-5	2024-AGL-17492-OE	DNH
ODOT LIGHT TOWER CN1-6	2024-AGL-17491-OE	DNH
ODOT LIGHT TOWER CN1-7	2024-AGL-17505-OE	DNH
ODOT LIGHT TOWER CN2-1	2024-AGL-17493-OE	DNH
ODOT LIGHT TOWER CN2-2	2024-AGL-17494-OE	DNH
ODOT LIGHT TOWER CN3-1	2024-AGL-17495-OE	DNH
ODOT LIGHT TOWER CN3-2	2024-AGL-17496-OE	DNH
ODOT LIGHT TOWER CN3-3	2024-AGL-17497-OE	DNH
ODOT LIGHT TOWER CN3-4	2024-AGL-17504-OE	DNH
ODOT LIGHT TOWER CN3-6	2024-AGL-17503-OE	DNH
ODOT LIGHT TOWER CN4-1	2024-AGL-17504-OE	DNH
ODOT LIGHT TOWER CN4-2	2024-AGL-17501-OE	DNH
ODOT LIGHT TOWER CN4-4	2024-AGL-17500-OE	DNH
ODOT LIGHT TOWER CR1-1	2024-AGL-17490-OE	DNH
ODOT LIGHT TOWER CR1-2	2024-AGL-17487-OE	DNH
ODOT LIGHT TOWER CR1-3	2024-AGL-17489-OE	DNH
ODOT LIGHT TOWER CR1-7	2024-AGL-17506-OE	DNH
ODOT LIGHT TOWER CR1-8	2024-AGL-17488-OE	DNH

WIP = WORK IN PROGRESS
DNH = DETERMINATION OF NO HAZARD TO AIR NAVIGATION

AIRWAY/HIGHWAY CLEARANCE FOR AIRPORTS AND HELIPORTS

NOTIFY THE ODOT OFFICE OF AVIATION WHEN RESUBMITTING FAA FORM 7460-1. NO TEMPORARY STRUCTURES OR CONSTRUCTION EQUIPMENT SHALL EXCEED THE PERMISSIBLE HEIGHT, UNTIL A COPY OF THE FAA APPROVAL AND THE ODOT OFFICE OF AVIATION PERMIT HAS BEEN FURNISHED TO THE PROJECT ENGINEER.

FAA APPROVAL MAY TAKE UP TO 45 DAYS. ALL SUBMISSIONS SHALL BE DIRECTED TO THESE OFFICES:

FEDERAL AVIATION ADMINISTRATION
SOUTHWEST REGIONAL OFFICE
OBSTRUCTION EVALUATION GROUP
10101 HILLWOOD PARKWAY
FORT WORTH, TX 76177
FAX: (817) 222-5920
HTTP://CEAAA.FAA.GOV

OHIO DEPARTMENT OF TRANSPORTATION
OFFICE OF AVIATION
2829 WEST DUBLIN-GRANVILLE ROAD
COLUMBUS, OHIO 43235
OHIO.AIRPORT.PROTECTION@DOT.OHIO.GOV

THIS PROJECT HAS BEEN IDENTIFIED AS BEING WITHIN THE INFLUENCE AREA OF A PRIVATE-USE AIRPORT OR HELIPORT. NO TEMPORARY STRUCTURES OR CONSTRUCTION EQUIPMENT, AT MAXIMUM OPERATING HEIGHT, SHALL EXCEED A HEIGHT OF 100 FT. IF ANY TEMPORARY STRUCTURES OR CONSTRUCTION EQUIPMENT WILL EXCEED THIS HEIGHT, COORDINATION WITH THE AIRPORT OWNER AND THE ODOT OFFICE OF AVIATION WILL BE NECESSARY PRIOR TO ERECTING SUCH TEMPORARY STRUCTURES OR OPERATING SUCH EQUIPMENT ON THE PROJECT. FOR PRIVATE USE AIRPORTS OR HELIPORTS, COORDINATE WITH THE AIRPORT OWNER AND THE ODOT OFFICE OF AVIATION.

NO TEMPORARY STRUCTURES OR CONSTRUCTION EQUIPMENT SHALL EXCEED THE PERMISSIBLE HEIGHT, UNTIL COORDINATION IS MET AND DOCUMENTATION HAS BEEN FURNISHED TO THE PROJECT ENGINEER. IF COORDINATION IS NOT OBTAINED, THEN THE PROJECT ENGINEER WILL HAVE THE AUTHORITY TO PROVIDE RESTRICTIONS AS REQUIRED.

ST. VINCENT CHARITY HOSPITAL HELPIAD
2351 EAST 22ND STREET,
CLEVELAND, OHIO 44115
(216) 363-2691 EXT. 1

FENCE LENGTHS

THE LENGTHS OF FENCE SHOWN IN THE PLANS ARE HORIZONTAL DIMENSIONS. MEASUREMENTS OF THE FINAL QUANTITIES WILL BE IN ACCORDANCE WITH ITEM 607.

ITEM 204 - SUBGRADE COMPACTION AND PROOF ROLLING

CONSTRUCT THE SUBGRADE AS FOLLOWS AND IN THE FOLLOWING SEQUENCE:

1. SHAPE THE SUBGRADE TO WITHIN 0.2 FEET OF THE PLAN SUBGRADE ELEVATION.

2. EXCAVATE AND REPLACE UNSUITABLE SUBGRADE BEFORE PROOF ROLLING. THE EXCAVATION LIMITS ARE SHOWN AND LABELED ON THE CROSS SECTIONS AS UNSUITABLE SUBGRADE. UNSUITABLE SUBGRADE INCLUDES UNSUITABLE SOIL (A-4B, A-2-5, A-5, A-7-5, AND SOIL WITH A LIQUID LIMIT GREATER THAN 65) AND ANY COAL, SHALE, OR ROCK WHICH NEEDS TO BE REMOVED ACCORDING TO SECTION 204.05 OF THE CONSTRUCTION AND MATERIAL SPECIFICATIONS (C&MS).

   IF THERE IS UNSUITABLE SUBGRADE IN A SHALLOW FILL LOCATION, EXCAVATE AND REPLACE THE UNSUITABLE SUBGRADE BEFORE CONSTRUCTING THE SHALLOW FILL AND SHAPING THE SUBGRADE.

3. COMPACT THE SUBGRADE ACCORDING TO C&MS 204.03.

ITEM 204 - SUBGRADE COMPACTION AND PROOF ROLLING

4. APPROXIMATE LIMITS FOR EXCAVATION OF UNSTABLE SUBGRADE ARE SHOWN AND LABELED ON THE CROSS SECTIONS AS UNSTABLE SUBGRADE. THE ENGINEER WILL IDENTIFY THE ACTUAL LIMITS OF EXCAVATION FOR UNSTABLE SUBGRADE BASED ON THE PROOF ROLLING RESULTS AND VISUAL OBSERVATIONS.

   PROOF ROLL THE COMPACTED SUBGRADE ACCORDING TO C&MS 204.06.

5. EXCAVATE UNSTABLE SUBGRADE AS DIRECTED BY THE ENGINEER AND STABILIZE BY REPLACING WITH THE SPECIFIED MATERIALS ACCORDING TO C&MS 204.07. EXCAVATIONS WILL EXTEND 18 INCHES BEYOND THE EDGE OF THE SURFACE OF THE PAVEMENT, PAVED SHOULDERS, OR PAVED MEDIANS.

6. PROOF ROLL THE STABILIZED AREAS ACCORDING TO C&MS 204.06 TO VERIFY STABILITY.

7. FINE GRADE THE SUBGRADE TO THE SPECIFIED GRADE.

THE QUANTITIES FOR EXCAVATING THE UNSUITABLE SUBGRADE AND UNSTABLE SUBGRADE ARE BOTH PAID UNDER ITEM 204, EXCAVATION OF SUBGRADE.

ITEM 206 - CEMENT STABILIZED SUBGRADE

THE CEMENT STABILIZED SUBGRADE IS REQUIRED AS PART OF THE STRUCTURAL DESIGN OF THE PAVEMENT. ANY CHANGES TO THE STABILIZATION MAY REQUIRE ADDITIONAL PAVEMENT THICKNESS. CONTACT THE OFFICE OF PAVEMENT ENGINEERING PRIOR TO ANY NON-PERFORMANCE OR CHANGES TO THE CEMENT STABILIZED SUBGRADE.

COOPERATION BETWEEN CONTRACTORS

THE CONTRACTOR SHALL COOPERATE AND COORDINATE OPERATIONS WITH THE CONTRACTORS ON OTHER PROJECTS THAT MAY BE IN FORCE DURING THE LIFE OF THIS CONTRACT INCLUDING BUT NOT LIMITED TO:

CUY-490-0.00 (PID 107408)
CUY-77-11.11 (PID 21788)
CUY-77-11.21 (PID 105743)
CUY-77-15.46 (PID 119380)
CUY-90-19.77/VAR RAMPS (PID 119642)
CARNEGIE AVENUE REHABILITATION PHASE 3 - E 9TH TO E 55TH

NO WAIVER OF ANY PROVISIONS OF 105.08 OF THE CONSTRUCTION AND MATERIAL SPECIFICATIONS IS INTENDED.

CONTRACTORS EQUIPMENT AND OPERATION

ALL VEHICLES AND EQUIPMENT MUST BE EQUIPPED WITH AT LEAST ONE FLASHING, ROTATING, OR OSCILLATING AMBER LIGHT THAT IS VISIBLE IN ALL DIRECTIONS OF TRAFFIC FOR AT LEAST ONE QUARTER MILE, DAY OR NIGHT. THIS INCLUDES TRUCKS HAULING ASPHALT AND CONCRETE. UNLESS BEHIND CONCRETE BARRIER, THE CONTRACTOR'S EQUIPMENT SHALL BE OPERATED IN THE DIRECTION OF TRAFFIC ONLY.

INTERIM COMPLETION DATE

FOR THE CITY STREET NETWORK SHOWN BELOW (CARNEGIE, CEDAR, E 22ND AND MIDTOWN CONNECTOR), ALL WORK, INCLUDING LANDSCAPE, HARDSCAPE, AND BRIDGE AESTHETICS, SHALL BE COMPLETE BY OCTOBER 31, 2028. UPON ODOT'S FINAL ACCEPTANCE OF THIS AREA, THE 24 MONTH LANDSCAPE GUARANTEE PERIOD (PAID AS PART OF ITEM SPECIAL - CLEVELAND PLANTING) SHALL BEGIN.

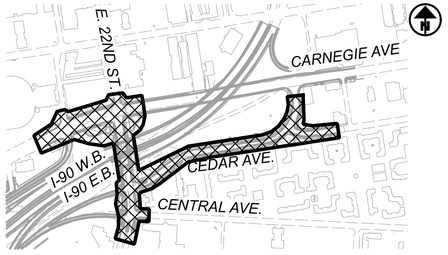

AREA WITH INTERIM COMPLETION DATE REQUIREMENTS

ROADWAY

CONNECTION BETWEEN EXISTING AND PROPOSED GUARDRAIL

WHEN IT IS NECESSARY TO SPLICE PROPOSED GUARDRAIL TO EXISTING GUARDRAIL, ONLY THE EXISTING GUARDRAIL SHALL BE CUT, DRILLED, OR PUNCHED. THE CONNECTION SHALL BE MADE USING A W-BEAM, BEAM SPLICE AS SHOWN IN AASHTO M 180-12, EXCEPT THE BEAM WASHERS ARE NOT TO BE USED. PAYMENT SHALL BE INCLUDED IN THE CONTRACT PRICE FOR THE RESPECTIVE GUARDRAIL ITEMS.

ITEM 202 - BRIDGE TERMINAL ASSEMBLY REMOVED, AS PER PLAN

THIS ITEM SHALL MEET ALL THE SPECIFICATIONS OF ITEM 202 EXCEPT THAT THE EXISTING BRIDGE TERMINAL ASSEMBLY TO BE REMOVED IS BARRIER DESIGN.

ITEM 202 - BUILDING DEMOLISHED (103-13-019 / 320-WL)

THIS ITEM SHALL CONSIST OF THE DEMOLITION OF THE PARKING LOT SECURITY BOOTH AND DECK ON PARCEL 103-13-019 / 320-WL.

ITEM 202 - BUILDING DEMOLISHED, AS PER PLAN (103-26-003 / 303)

SIGNIFICANT EXCAVATION IS PROPOSED ON SITE 103-26-003 / 303, LOCATION OF FORMER INDEPENDENT TOWEL BUILDING. BUILDING WAS DEMOLISHED IN ACCORDANCE WITH ODOT 202, AND FOUNDATIONS ARE LIKELY PRESENT BENEATH GROUND LEVEL FOR THE ENTIRE BUILDING FOOTPRINT. IN THE EVENT STRUCTURES ARE ENCOUNTERED, THE CONTRACTOR SHALL REMOVE ALL STRUCTURES WITHIN THE LIMITS OF EXCAVATION PER C&MS 202, PAID UNDER THIS LUMP SUM PAY ITEM.

ITEM 202 - BUILDING DEMOLISHED, AS PER PLAN
(103-26-003 / 303) LS

ITEM 202 - REMOVAL MISC: BILLBOARD
ITEM 202 - REMOVAL MISC: BOLLARD
ITEM 202 - REMOVAL MISC: DELINEATOR CURB
ITEM 202 - REMOVAL MISC: PORTABLE BARRIER
ITEM 202 - REMOVAL MISC: UTILITY POLE
ITEM 202 - REMOVAL MISC.: PAY BOX

REMOVE AND DISPOSE OF THESE ITEMS ACCORDING TO ITEM 202. BACKFILL ANY CAVITIES CREATED BY THE REMOVAL PER 202.02.

ITEM 202 - REMOVAL MISC: BURIED TRACK

IT IS ANTICIPATED THAT OLD STREETCAR TRACKS ARE BURIED UNDER THE EXISTING ASPHALT ON CEDAR AVENUE AND EAST 22ND STREET AND WILL REQUIRE REMOVAL AS PART OF THIS PROJECT. THE EXACT LOCATION, LIMITS, AND TYPE OF TRACK IS UNKNOWN.

THE UNIT PRICE PER FOOT FOR THIS ITEM SHALL INCLUDE THE REMOVAL AND DISPOSAL OF THE FULL DEPTH OF TRACK. PAYMENT WILL INCLUDE REMOVAL OF BRICK PAVERS, UNDERDRAINS, TIES AND ANGLES OR OTHER HARDWARE, RAIL, BALLAST AND THE BASE, COMPLETE.

ANY PART OF THE TRACK WHICH IS BELOW THE PROPOSED SUBGRADE SHALL BE REMOVED AND BACKFILLED PER CMS 202.02. ANY ADDITIONAL EXCAVATION OR EMBANKMENT REQUIRED BETWEEN THE BOTTOM OF THE TRACK BASE AND THE PROPOSED SUBGRADE WILL ALSO BE INCLUDED IN THE UNIT PRICE PER FOOT FOR THIS ITEM.

THE FOLLOWING CONTINGENCY ESTIMATED QUANTITIES HAVE BEEN CARRIED TO THE GENERAL SUMMARY TO BE USED AS DIRECTED BY THE ENGINEER. PAYMENT FOR ACTUALLY COMPETED AND ACCEPTED QUANTITIES SHALL BE MADE AT THE CONTRACT UNIT PRICE BID FOR:

ITEM 202 - REMOVAL MISC: BURIED TRACK 1,000 FT

For Reference Only
Preliminary Plans - Not for Construction

DESIGN AGENCY
Michael Baker INTERNATIONAL
DESIGNER JTH
REVIEWER KGJ 05/10/24
PROJECT ID 82382
SHEET 74 TOTAL 2696

CUY-90-16.28 (CCG3A)
MODEL: Sheet-02 PAPERSIZE: 34x22 (in.) DATE: 5/13/2025 TIME: 3:11:39 PM USER: Mala.Gallagher
pw:\\mb-us-pw.bentley.com:mb-us-pw-03\Documents\Cleveland_OH01_Projects\ODOT\District12\82382\400-Engineering\Roadway\Sheets\82382_GN0001.dgn

ROADWAY (CONT.)

ITEM 203 - EXCAVATION, AS PER PLAN

PREPARATION OF THE FOUNDATION FOR THE GEOFOAM BRIDGE APPROACH EMBANKMENTS SHALL BE PERFORMED IN ACCORDANCE WITH SECTION 10 OF THE RECOMMENDED EPS-BLOCK GEOFOAM STANDARD FOR LIGHTWEIGHT FILL IN ROADWAY EMBANKMENTS AND BRIDGE APPROACH FILLS ON SOFT GROUND IN NCHRP 529.

THE DEPARTMENT WILL MEASURE FOUNDATION EXCAVATION ACCORDING TO 203.09.

THE DEPARTMENT WILL PAY FOR THE ACCEPTED QUANTITY AT THE CONTRACT PER CUBIC YARD FOR ITEM 203 - EXCAVATION, AS PER PLAN

ITEM 203 - EMBANKMENT, AS PER PLAN

THE MATERIAL USED FOR THIS ITEM SHALL BE RESTRICTED TO NATURAL SOILS WITH CLASSIFICATIONS A-6-a, A-6-b OR A-7-6 TO PROVIDE A COHESIVE SOIL CAP FOR THE GEOFOAM.

ITEM 203 - ROADWAY, MISC.: REINFORCED TURF

THIS ITEM SHALL CONSIST OF FURNISHING AND INSTALLING REINFORCED TURF. THE REINFORCED TURF SHALL BE A PERMEABLE, PLANTABLE, AND FLEXIBLE PAVEMENT CAPABLE OF SUPPORTING AN H-20 LOADING. THE PRODUCT SHALL BE ONE OF THE FOLLOWING OR APPROVED EQUAL:

1. GEOBLOCK 5150
   MANUFACTURED BY:
   PRESTO GEOSYSTEMS
   670 N PERKINS ST. P.O. BOX 2399
   APPLETON, WI 54912-2399
   (800) 548-3424
   www.prestogeo.com
2. DRIVEABLE GRASS
   MANUFACTURED BY:
   SOIL RETENTION
   1265 CARLSBAD VILLAGE DRIVE, SUITE 100
   CARLSBAD, CA 92008
   (800) 346-7995
   www.soilretention.com
3. TUFFTRACK GRASS PAVER
   MANUFACTURED BY:
   NDS
   851 NORTH HARVARD AVENUE
   LINDSAY, CA 93247
   (888) 825-4716
   www.ndspro.com

THE COMPOSITION, DEPTH, AND PREPARATION OF TOPSOIL, POROUS PAVEMENT, ENGINEERED BASE, AND PREPARED SUBGRADE SHALL MEET MANUFACTURER SPECIFICATIONS. ALL COST FOR THIS ITEM OF WORK INCLUDING SUBGRADE PREPARATION, AND BASE MATERIAL, ALL LABOR, MATERIALS, EQUIPMENT, AND INCIDENTALS, PER MANUFACTURER REQUIREMENTS SHALL BE INCLUDED IN THE UNIT BID PRICE PER SY FOR: ITEM 203 - ROADWAY, MISC.: REINFORCED TURF.

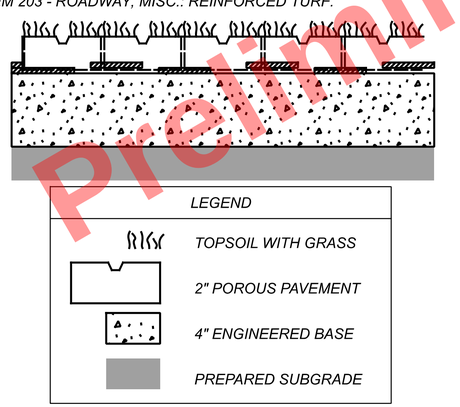

ITEM 203 - ROADWAY, MISC.: EPS GEOFOAM FILL

FURNISH EPS GEOFOAM BLOCKS PRODUCED BY A MANUFACTURER WITH A QUALITY CONTROL PROGRAM WHICH IS MONITORED AND CERTIFIED BY AN ACCREDITED, THIRD PARTY TESTING ORGANIZATION. SUBMIT TO THE ENGINEER THE FOLLOWING DOCUMENTS:

1. EPS GEOFOAM MANUFACTURERS PRODUCT LITERATURE AND TECH DATA INCLUDING PHYSICAL PROPERTIES IN COMPLIANCE WITH ASTM D 6817 TYPE SPECIFIED AND ASTM C 578 TYPE SPECIFIED.
2. SHOP DRAWINGS SHOWING BLOCK THICKNESS, WIDTH, LENGTH, AND LAYING PATTERN OR SCHEDULE.
3. A SIGNED/NOTARIZED CERTIFICATION FROM THE MANUFACTURER THAT THEIR EPS GEOFOAM MATERIAL MEETS THE PLAN REQUIREMENTS.
4. PRODUCT CERTIFICATE SHOWING EVIDENCE OF THIRD-PARTY QUALITY CONTROL.
5. SUMMARY OF TEST COMPLIANCE WITH SPECIFIED PERFORMANCE CHARACTERISTICS AND PHYSICAL PROPERTIES.

FURNISH EPS GEOFOAM CONFORMING TO ASTM D6817 TYPE EPS 29 GEOFOAM AND ASTM C-578 TYPE IX, RIGID CELLULARPOLYSTYRENE GEOFOAM ACCORDING TO THE GEOFOAM TYPE INDICATED IN THE PLANS AND THE TABLE BELOW.

ASTM TYPE	EPS-29
MINIMUM DENSITY, LB/CU.FT.	1.8
COMPRESSIVE RESISTANCE	
AT 1% STRAIN, PSI	10.9
AT 5% STRAIN, PSI	24.7
AT 10% STRAIN, PSI	29.0
FLEXURAL STRENGTH, PSI	50.0

ALL EPS GEOFOAM BLOCKS SHALL BE TREATED BY THE MANUFACTURER WITH A TESTED AND PROVEN TERMITE TREATMENT FOR BELOW GRADE APPLICATIONS. THE TREATMENT SHALL BE EPA REGISTERED, MEET REQUIREMENTS OF ICC ES AC239, AND BE RECOGNIZED IN AN ICC ES REPORT.

FURNISH BLOCKS THAT ARE SMOOTH AND FLAT ON ALL SURFACES AND HAVE A DIMENSIONAL TOLERANCE OF +/-0.5 PERCENT.

BEFORE SHIPPING TO THE SITE, ENSURE BLOCKS ARE SEASONED BY STORING THEM AT THE MANUFACTURER'S FACILITY FOR AT LEAST 72 HOURS AT NORMAL AMBIENT ROOM TEMPERATURE AFTER BEING RELEASED FROM THE MOLD. DURING SEASONING, ALLOW ADEQUATE SPACE BETWEEN THE BLOCKS TO ALLOW AIR CIRCULATION SO AS TO FOSTER THE OUTGASSING OF BLOWING AGENT AND TRAPPED CONDENSATE FROM WITHIN THE BLOCKS.

LABEL EACH BLOCK WITH THE MANUFACTURER'S NAME, ASTM EPS TYPE, THE DATE THE BLOCK WAS MOLDED, THE WEIGHT AND THE DENSITY OF THE BLOCK AS MEASURED AFTER SEASONING.

PORTIONS OF THE GEOFOAM FILL THAT ARE NOT BENEATH A CONCRETE DISTRIBUTION SLAB OR CONCRETE APPROACH SLAB MUST BE PROTECTED FROM HYDROCARBON SPILLS (E.G. DIESEL OR GASOLINE) BY COVERING THE GEOFOAM BLOCKS ON THE TOP AND SIDES WITH A GEOMEMBRANE. FURNISH A GEOMEMBRANE MANUFACTURED FROM A TRI-POLYMER MATERIAL CONSISTING OF POLYVINYL CHLORIDE, ETHYLENE INTERPOLYMER ALLOY, AND A POLYURETHANE OR A COMPARABLE POLYMER COMBINATION.

ITEM 203 - ROADWAY, MISC.: EPS GEOFOAM FILL (CONT.)

THE MATERIAL SHALL MEET THE FOLLOWING PHYSICAL AND CHEMICAL REQUIREMENTS:

- THICKNESS: MIN. 28 MILS (ATSM D 751)
- UNLEADED GASOLINE VAPOR MAXIMUM 0.40 TRANSMISSION RATE, OZ. PER SQUARE PER 24 HOURS (ASTM D 814)
- GRAB TENSILE STRENGTH: MIN. 600 LB BOTH MACHINE AND CROSS DIRECTION (1" GRIP 4' x 8' SAMPLE ASTM D 571)
- ELONGATION AT BREAK: 20% MIN. (ASTM D 571)
- TOUGHNESS: 14,000 LB. MIN. (GRAB TENSILE x PERCENT ELONGATION)
- PUNCTURE RESISTANCE: 800 LB. MIN. (ASTM D 751 BALL TIP)
- COLD CRACK: PASS -30° FAHRENHEIT (ASTM D 2136 1" MANDREL, 4 HR)
- FACTORY SEAMS: 2 INCH MIN. BONDED WIDTH
- SHEAR: 320 LB. MIN. (ASTM D 751)

A SIGNED/NOTARIZED CERTIFICATION OF COMPLIANCE SHALL BE FURNISHED BY THE MANUFACTURER STATING THE SELECTED GEOMEMBRANE HAS BEEN TESTED AND MEETS THE ABOVE REQUIREMENTS. JOINTS IN THE GEOMEMBRANE WRAP SHALL BE LAPPED A MINIMUM OF 18 INCHES. PLACE THE BEGINNING OF EACH NEW ROLL BENEATH THE END OF THE PREVIOUS ROLL TO PREVENT THE ADVANCING FILL FROM LIFTING THE GEOMEMBRANE. STAGGER END OVERLAPS AT LEAST 5 FEET FROM THE OTHER END OVERLAPS IN ADJACENT ROLLS.

CARE SHALL BE TAKEN TO PROTECT THE GEOFOAM BLOCKS FROM EXPOSURE TO GASOLINE, SOLVENT NAPHTHA, FUEL OIL, MINERAL OIL, TURPENTINE, OR ANY OTHER ORGANIC OR PETROLEUM BASED SOLVENT. THE BLOCKS SHALL ALSO BE PROTECTED FROM EXPOSURE TO ANY HEAT SOURCE WHICH WOULD REACH 175 DEGREES (F). GEOFOAM SHALL BE STORED ABOVE GROUND AND PROTECTED FROM MOISTURE AND SUNLIGHT PRIOR TO INSTALLATION.

DAMAGE TO GEOFOAM SHALL BE CORRECTED AS FOLLOWS:

- SLIGHT DAMAGE (< 0.12 CUBIC FEET) WITH NO LINEAR DIMENSION GREATER THAN 1 FOOT MAY BE LEFT IN PLACE AS IS.
- MODERATE DAMAGE (< 0.35 CUBIC FEET) WITH NO LINEAR DIMENSION GREATER THAN 1 FOOT SHALL BE FILLED IN WITH SAND.
- GEOFOAM BLOCKS WITH EXCESSIVE DAMAGE (I.E. EXCEEDING THE MODERATE CATEGORY) SHALL BE REPLACED WITH GEOFOAM BLOCKS WHICH MEET THE DAMAGE CRITERIA. GEOFOAM BLOCKS NOT MEETING THE CRITERIA MAY BE CUT TO ELIMINATE THE EXCESSIVE DAMAGE AND THE REMAINING UNDAMAGED PORTION OF THE BLOCK MAY BE USED WITHIN THE FILL, PROVIDED THE UNDAMAGED PORTION OF THE BLOCK MEETS ALL OTHER REQUIREMENTS.

PREPARE THE SURFACE ON WHICH THE FIRST LAYER OF BLOCKS WILL BE PLACED BY STRIPPING ALL VEGETATION AND GRADING SO THAT IT IS LEVEL WITHIN A TOLERANCE OF 1/2" OVER 10 FT DISTANCE. THE GEOFOAM FILL SHALL BE PLACED ON A GRANULAR BASE OF GRANULAR MATERIAL CONFORMING TO SIZE NO. 9 OF TABLE 703.01-1 OF THE CMS. THE GRANULAR BASE SHALL ALSO BE PLACED ALONG THE SIDES OF THE GEOFOAM FILL THAT ARE IN CONTACT WITH SOIL.

PROVIDE TIE DOWN STRAPS, SANDBAGS OR OTHER FLEXIBLE WEIGHTS TO PREVENT BLOCKS FROM BEING DISLODGED BY WIND. DO NOT STORE BLOCKS WHERE THERE IS A POTENTIAL FOR FLOODING.

SEE SHEETS 1433 FOR SITE PREPARATION, AREA OF APPLICATION, AND EMBANKMENT TO BE PLACED ON TOP OF THE GEOFOAM BLOCKS.

DESIGN

CONTRACTOR SHALL SUPPLY PROPERLY SCALED SHOP DRAWINGS INDCATING THE PROPOSED LOCATION AND LAYOUT OF EACH EPS BLOCK. IN ADDITION, THE DRAWINGS SHALL INDICATE THE PROPOSED LOCATION AND LAYOUT OF GEOFORM GRIPPER PLATES AND ALL ACCESSORY ITEMS TO BE USED. SUBMITTED PLANS SHALL INCLUDE, BUT NOT BE LIMITED TO, PLANS AND ELEVATION VIEWS WITH ENOUGH DETAIL TO CLEARLY DESCIBE THE PROPOSED INSTALLATION.

ITEM 203 - ROADWAY, MISC.: EPS GEOFOAM FILL (CONT.)

PLACEMENT

PLACE BLOCKS AS INDICATED ON THE PLANS AND SHOP DRAWINGS. ALL BLOCKS SHALL BE ACCURATELY FIT RELATIVE TO ADJACENT BLOCKS SO THAT ALL VERTICAL AND HORIZONTAL JOINTS BETWEEN BLOCKS ARE TIGHT. GAPS SHALL NOT EXCEED 1 INCH. AVOID CONTINUOUS VERTICAL JOINTS BY OFFSETTING AND ROTATING SUCCESSIVE LAYERS OF BLOCKS. EACH SUBSEQUENT LAYER OF BLOCKS SHALL BE ROTATED ON THE HORIZONTAL PLANE 90 DEGREES FROM THE DIRECTION OF PLACEMENT OF THE PREVIOUS LAYER. OFFSET BLOCKS AT LEAST 2 FEET BETWEEN LAYERS.

THE SURFACE OF EACH LAYER OF BLOCKS ON WHICH ANOTHER LAYER WILL BE PLACED MUST BE LEVEL TO WITHIN 0.5 INCH OVER ANY 10 FOOT INTERVAL. THE CORNER OR EDGE FORMED BY ANY TWO FACES OF A BLOCK SHALL BE PERPENDICULAR. THE DEVIATION OF ANY FACE OF THE BLOCK FROM A THEORETICAL PERPENDICULAR PLANE SHALL NOT EXCEED 1/8 INCH OVER A DISTANCE OF 20 INCHES. ANY ONE FACE OF A BLOCK SHALL NOT DEVIATE FROM A THEORETICAL PLANE BY MORE THAN 1/4 INCH WHEN MEASURED USING A STRAIGHTEDGE WITH A LENGTH OF 10 FEET.

CONSTRUCT THE SURFACE OF THE UPPERMOST LAYER OF BLOCKS TO THE GRADE SHOWN ON THE PLANS TO A TOLERANCE OF ZERO TO MINUS 2.5 INCHES OF THE INDICATED GRADE. THE LONGITUDINAL AXES OF THE UPPERMOST LAYER OF BLOCKS MUST BE PERPENDICULAR TO THE LONGITUDINAL AXIS OF THE ROAD ALIGNMENT.

A MINIMUM OF TWO LAYERS OF BLOCKS SHALL BE USED FOR LIGHTWEIGHT FILL BENEATH ROADWAYS.

CONNECTOR PLATES SHALL BE PLACED BETWEEN HORIZONTAL LAYERS OF BLOCK. A MINIMUM OF TWO CONNECTOR PLATES SHALL BE USED BETWEEN BLOCKS.

CONNECTORS SHALL BE GALVANIZED STEEL OR STAINLESS STEEL TWO SIDED MULTI-BARBED CONNECTORS. EACH CONNECTOR SHALL HAVE A LATERAL HOLDING STRENGTH OF AT LEAST 60 LBS. PROVIDE A SIGNED/NOTARIZED CERTIFICATION FROM THE MANUFACTURER THAT THE CONNECTOR PLATES MEET MATERIAL, DESIGN AND STRENGTH REQUIREMENTS OF THESE PLANS.

BLOCKS SHALL BE CUT USING A SAW OR HOT WIRE.

NO VEHICLE OR CONSTRUCTION EQUIPMENT SHALL TRAVERSE DIRECTLY ON THE EPS BLOCKS OR ON ANY SEPARATION MATERIAL PLACED BETWEEN THE EPS BLOCKS AND THE PAVEMENT SYSTEM. SOIL FOR THE PAVEMENT SYSTEM SHALL BE PUSHED ONTO THE EPS BLOCKS OR SEPARATION LAYER USING APPROPRIATE EQUIPMENT. A MINIMUM OF 12 INCHES OF FILL SHALL COVER THE TOP OF THE GEOFOAM BLOCK OR SEPARATION LAYER BEFORE COMPACTION COMMENCES. THE CONTRACTOR'S EQUIPMENT USED DURING COMPACTION SHALL NOT PLACE A PRESSURE GREATER THAN 18 PSI ON THE GEOFOAM BLOCKS AT ANY TIME DURING CONSTRUCTION. ANY DAMAGE TO THE GEOFOAM BLOCKS RESULTING FROM THE CONTRACTOR'S VEHICLES, EQUIPMENT, OR OPERATIONS SHALL BE REPLACED BY THE CONTRACTOR AT THEIR COST.

THE LIMITS OF THE LIGHTWEIGHT FILL (LWF) SHOWN IN THE CONTRACT DOCUMENTS AND PLANS IS FOR QUANTITATIVE PURPOSES ONLY. THE FINAL LWF CONFIGURATION IS THE RESPONSIBILITY OF THE CONTRACTOR BASED UPON THE FIELD CONDITIONS, THE CONTRACTOR-SUPPLIED SIZES AND INSTALLATION METHODS. THE CONTRATOR IS RESPONSIBLE FOR ALL DETAILED SHOP DRAWINGS NEEDED FOR CONSTRUCTION OF LWF AND PAYMENT WILL BE MADE PER THE CONTRACT DOCUMENTS AND DRAWINGS.

PAYMENT FOR THIS ITEM OF WORK SHALL BE PAID FOR BY THE UNIT PRICE BID PER CUBIC YARD OF ITEM 203 - ROADWAY, MISC.: EPS GEOFOAM FILL, WHICH PRICE AND PAYMENT INCLUDE ALL MATERIALS, SITE PREPARATION (EXCLUDING EXCAVATION), GRANULAR BASE, GEOMEMBRANE WRAP, TOOLS, EQUIPMENT, AND LABOR TO COMPLETE THIS ITEM OF WORK IN PLACE.

Preliminary Plans - For Reference Only

GENERAL NOTES - 3

DESIGN AGENCY
Michael Baker INTERNATIONAL

DESIGNER JTH
REVIEWER KGJ 05/10/24
PROJECT ID 82382
SHEET 75 TOTAL 2696

CUY-90-16.28 (CCG3A)

MODEL: Sheet-03 PAPERSIZE: 34x22 (in.) DATE: 3/28/2025 TIME: 7:15:09 AM USER: RohitBk
pw:\\mb-us-pw.bentley.com:mb-us-pw-03\Documents\Cleveland_OH\01_Projects\ODOT\District12\82382\400-Engineering\Roadway\Sheets\82382_GN0001.dgn

ROADWAY (CONT.)

SUBGRADE TREATMENT ON CITY STREETS

WHERE SOFT SUBGRADE IS ENTOUTERED, THE UNSTABLE MATERIAL SHALL BE EXCAVATED TO THE DEPTH REQUIRED BY THE ENGINEER, AND DISPOSED OF. THE UNDERCUT SUBGRADE SHALL BE REPLACED IN ACCORDANCE WITH ITEM 204. THE AREA SHALL BE PROOF ROLLED TO DETERMINE IF ADEQUATE STABILIZATION WAS ACHIEVED.

WHERE SOFT SUBGRADE IS DUE TO THE FAILURE, NEGLECT, OR ANY OTHER FAULT OF THE CONTRACTOR, THE UNSTABLE CONDITION SHALL BE CORRECTED AS OUTLINED ABOVE AT NO ADDITIONAL EXPENSE TO THE DEPARTMENT.

THE FOLLOWING ESTIMATED QUANTITIES ARE INCLUDED FOR USE AS DIRECTED BY THE ENGINEER TO REPAIR UNSUITABLE SUBGRADE FOUND BENEATH THE CITY STREETS.

ITEM 204 - EXCAVATION OF SUBGRADE	**3,100 CY**
ITEM 204 - GRANULAR MATERIAL, TYPE B	**3,100 CY**
ITEM 204 - GEOTEXTILE FABRIC	**9,300 SY**

ITEM 606 - MGS BRIDGE TERMINAL ASSEMBLY, TYPE 2, AS PER PLAN

THIS ITEM SHALL MEET ALL THE SPECIFICATIONS OF ITEM 606 EXCEPT THAT THE BRIDGE TERMINAL ASSEMBLY SHALL BE THRIE-BEAM PER SCD MGS-3.1. THE BRIDGE TERMINAL ASSEMBLY SHALL BE LOCATED AT END OF PROPOSED CONCRETE PARAPET PER SCD MGS-3.2. NESTED THRIE-BEAM SHALL CONNECT THE BRIDGE TERMINAL ASSEMBLY TO THE EXISTING THRIE-BEAM BRIDGE RAILING AT THE FIRST EXISTING POST AND SHALL BE INCIDENTAL TO THIS ITEM.

ITEM 606 - ANCHOR ASSEMBLY, MGS TYPE B (MASH 2016)

THIS ITEM SHALL CONSIST OF FURNISHING AND INSTALLING ANY OF THE MASH 2016 GUARDRAIL END TERMINALS FOR TYPE MGS GUARDRAIL AS LISTED ON ROADWAY ENGINEERING'S WEB PAGE UNDER ROADSIDE SAFETY DEVICES FOR APPROVED GUARDRAIL END TREATMENTS. INSTALLATION SHALL BE AT THE LOCATIONS SPECIFIED IN THE PLANS, IN ACCORDANCE WITH THE MANUFACTURER'S SPECIFICATIONS.

REFER TO THE MANUFACTURER'S INSTRUCTIONS REGARDING THE INSTALLATION OF, AND THE GRADING AROUND, THE FOUNDATION TUBES AND GROUND STRUT. THE TOP OF ANY FOUNDATION TUBE SHOULD BE LESS THAN 4 INCHES ABOVE THE GROUND. THE PLACEMENT OF THE FOUNDATION TUBES SHOULD BE AN APPROPRIATE DEPTH BELOW THE LEVEL LINE IN ORDER TO MAINTAIN THE FINISHED GUARDRAIL HEIGHT OF 31 INCHES FROM THE EDGE OF THE SHOULDER.

ON-SITE GRADING IS REQUIRED IF THE TOP OF THE FOUNDATION TUBES OR TOP OF THE GROUND STRUT DOES PROJECT MORE THAN 4 INCHES ABOVE THE GROUND LINE.

THE FACE OF THE TYPE B IMPACT HEAD SHALL BE COVERED WITH REBOUNDABLE RETROREFLECTIVE SHEETING, PER CMS 730.191.

PAYMENT FOR THE ABOVE WORK SHALL BE MADE AT THE UNIT PRICE BID FOR ITEM 606, ANCHOR ASSEMBLY, MGS TYPE B, EACH, AND SHALL INCLUDE ALL LABOR, TOOLS, EQUIPMENT AND MATERIALS NECESSARY TO CONSTRUCT A COMPLETE AND FUNCTIONAL ANCHOR ASSEMBLY SYSTEM, INCLUDING REFLECTIVE SHEETING AND ALL RELATED HARDWARE, GRADING, EMBANKMENT AND EXCAVATION NOT SEPARATELY SPECIFIED, AS REQUIRED BY THE MANUFACTURER.

ITEM 606 - ANCHOR ASSEMBLY, MGS TYPE E (MASH 2016)

THIS ITEM SHALL CONSIST OF FURNISHING AND INSTALLING ANY OF THE GUARDRAIL END TERMINALS FOR TYPE MGS GUARDRAIL AS LISTED ON ROADWAY ENGINEERING'S WEB PAGE UNDER ROADSIDE SAFETY DEVICES FOR APPROVED GUARDRAIL END TREATMENTS. INSTALLATION SHALL BE AT THE LOCATIONS SPECIFIED IN THE PLANS, IN ACCORDANCE WITH THE MANUFACTURER'S SPECIFICATIONS.

THE FACE OF THE TYPE E IMPACT HEAD SHALL BE COVERED WITH REBOUNDABLE RETROREFLECTIVE SHEETING, PER CMS 730.191.

REFER TO THE MANUFACTURER'S INSTRUCTIONS REGARDING THE INSTALLATION OF, AND THE GRADING AROUND THE FOUNDATION TUBES AND GROUND STRUT. THE TOP OF ANY FOUNDATION TUBE SHOULD BE LESS THAN 4 INCHES ABOVE THE GROUND. THE PLACEMENT OF THE FOUNDATION TUBES SHOULD BE AN APPROPRIATE DEPTH BELOW THE LEVEL LINE IN ORDER TO MAINTAIN THE FINISHED GUARDRAIL HEIGHT OF 31 INCHES FROM THE EDGE OF THE SHOULDER.

ON-SITE GRADING IS REQUIRED IF THE TOP OF THE FOUNDATION TUBES OR TOP OF THE GROUND STRUT DOES PROJECT MORE THAN 4 INCHES ABOVE THE GROUND LINE.

PAYMENT FOR THE ABOVE WORK SHALL BE MADE AT THE UNIT PRICE BID FOR ITEM 606, ANCHOR ASSEMBLY, MGS TYPE E, EACH, AND SHALL INCLUDE ALL LABOR, TOOLS, EQUIPMENT AND MATERIALS NECESSARY TO CONSTRUCT A COMPLETE AND FUNCTIONAL ANCHOR ASSEMBLY SYSTEM, INCLUDING ALL RELATED TRANSITIONS, REFLECTIVE SHEETING, HARDWARE, GRADING, EMBANKMENT AND EXCAVATION NOT SEPARATELY SPECIFIED, AS REQUIRED BY THE MANUFACTURER.

ITEM 606 - IMPACT ATTENUATOR, TYPE 2 (UNIDIRECTIONAL) (MASH 2016) (50 MPH, 69" WIDE)
ITEM 606 - IMPACT ATTENUATOR, TYPE 2 (UNIDIRECTIONAL) (MASH 2016) (50 MPH, 90" WIDE)

THIS ITEM SHALL CONSIST OF FURNISHING AND INSTALLING ANY OF THE MASH 2016 TYPE 2 IMPACT ATTENUATORS AS LISTED ON THE OFFICE OF ROADWAY ENGINEERING'S WEB PAGE (REFER TO THE POSTED SHOP DRAWINGS FOR THE MOST CURRENT APPROVED PRODUCT MODELS). WHEN BI-DIRECTIONAL DESIGNS ARE SPECIFIED, THE CONTRACTOR SHALL SUPPLY APPROPRIATE TRANSITIONS.

PAYMENT FOR THE ABOVE WORK SHALL BE MADE AT THE UNIT PRICE BID FOR ITEM 606, IMPACT ATTENUATOR, TYPE 2 (UNIDIRECTIONAL) (50 MPH, 69" WIDE), EACH, AND ITEM 606, IMPACT ATTENUATOR, TYPE 2 (UNIDIRECTIONAL) (50 MPH, 90" WIDE), EACH, AND SHALL INCLUDE ALL LABOR, TOOLS, EQUIPMENT AND MATERIALS NECESSARY TO CONSTRUCT A COMPLETE AND FUNCTIONAL IMPACT ATTENUATOR SYSTEM, INCLUDING ALL RELATED BACKUPS/BACKSTOPS, TRANSITIONS, HARDWARE AND GRADING, NOT SEPARATELY SPECIFIED, AS REQUIRED BY THE MANUFACTURER. INSTALLATION SHALL BE AT THE LOCATIONS SPECIFIED IN THE PLANS, IN ACCORDANCE WITH THE MANUFACTURER'S SPECIFICATIONS.

ITEM 608 - CURB RAMP, AS PER PLAN

ALL CURB RAMPS PROVIDED BY THE CONTRACTOR SHALL MEET ALL ADA REQUIREMENTS AND THE FOLLOWING:

TRUNCATED DOME TILES SHALL BE TINTED RED. CURB RAMPS SHALL CONFORM TO THE CITY OF CLEVELAND STANDARD CONSTRUCTION DRAWING CR-1. THICKNESS OF THE CURB RAMP WALK AND CONCRETE BASE BENEATH THE TRUNCATED DOMES SHALL BE A MINIMUM OF 8 INCHES. IN ADDITION, A 2 INCH COMPACTED SCREENING BED THAT MEETS THE REQUIREMENTS OF 703.10 (LIMITED TO CRUSHED STONE) SHALL BE FURNISHED AND PLACED BENEATH ALL CURB RAMP AREAS.

ITEM 608 - CURB RAMP, AS PER PLAN 2

ALL REQUIREMENTS OF ITEM 608 - CURB RAMP, AS PER PLAN SHALL APPLY EXCEPT THAT NO TRUNCATED DOME TILES SHALL BE INSTALLED WITH ITEM 608 - CURB RAMP, AS PER PLAN 2.

ITEM 608 - 6" CONCRETE WALK, AS PER PLAN

ALL SIDEWALKS SHALL CONFORM TO THE FOLLOWING:

PER 608.03(C), IT IS REQUIRED THAT 1/2" THICK EXPANSION JOINT MATERIAL (705.03) IS INSTALLED BETWEEN THE WALK AND THE BACK OF CURB AND INCH THICK FOR ANY OTHER FIXED OBJECT. IN ADDITION TO THE LOCATIONS SPECIFIED UNDER 608.03(C), TRANSVERSE EXPANSION JOINTS SHALL BE CONSTRUCTED AT INTERVALS OF NOT MORE THAN 25 TO 30 FEET UNLESS OTHERWISE DIRECTED. THE EXPANSION JOINT FILLER 705.03 SHALL BE PLACED AT THE TRANSVERSE EXPANSION JOINTS FOR THE FULL DEPTH/WIDTH OF THE CONCRETE WALK AND SHALL BE TRULY NORMAL TO GRADE. THE TOP 1/2 INCH OF THE EXPANSION JOINT PLACED BETWEEN THE WALK AND BACK OF CURB SHALL BE SEALED WITH 705.04 JOINT SEALER.

FINAL SURFACE FINISH OF WALKS SHALL BE IN ACCORDANCE WITH APPLICABLE MUNICIPAL STANDARDS/ORDINANCES. IN ADDITION, A 2 INCH COMPACTED SCREENING BED THAT MEETS THE REQUIREMENTS OF 703.10 (LIMITED TO CRUSHED STONE) SHALL BE FURNISHED AND PLACED BENEATH ALL SIDEWALK AREAS.

ITEM 618 - RUMBLE STRIPS, SHOULDER (ASPHALT CONCRETE)

THE FOLLOWING QUANTITIY FOR RUMBLE STRIPS, SHOULDER (ASPHALT CONCRETE) HAS BEEN CARRIED TO THE GENERAL SUMMARY TO BE CONSTRUCTED ALONG INTERIM I.R. 90 WESTBOUND FROM STA. 4006+50 RT. TO STA. 4013+65 RT. AND STA. 4008+50 LT. TO STA. 4013+65 LT.

ITEM 618 - RUMBLE STRIPS, SHOULDER (ASPHALT CONCRETE)	**0.23 MILE**

ITEM 622 - CONCRETE BARRIER, SINGLE SLOPE, TYPE C, AS PER PLAN

THIS ITEM SHALL MEET ALL THE SPECIFICATIONS OF ITEM 622 EXCEPT THAT THE CONCRETE BARRIER SHALL WIDEN FROM 31" (TOE TO TOE) AT RAMP A1 STA. 307+07.08 TO 67 3/8" (TOE TO TOE) AT RAMP A1 STA. 308+45.00 AS SHOWN BY THE TYPICAL SECTION ON SHEET 42 . CONCRETE BARRIER FACE SLOPE AND HEIGHT SHALL BE PER SCD RM-4.3.

ITEM 622 - CONCRETE BARRIER, END ANCHORAGE, REINFORCED, TYPE D, AS PER PLAN 2

THIS ITEM SHALL MEET ALL THE REQUIREMENTS OF ITEM 622, CONCRETE BARRIER, END ANCHORAGE, REINFORCED, TYPE D, EXCEPT THAT THE HEIGHT OF SHALL BE TAPERED OVER 20' TO TRANSISTION BETWEEN THE BARRIER TYPES. THE BARRIER END SECTIONS SHALL BE REINFORCED PER SCD RM-4.5, EXCEPT THAT THE SHEER STIRRUPS AND HORIZONTAL REBAR SHALL BE VARIED TO MATCH THE TRANSITION.

PAYMENT FOR ITEM 622, CONCRETE BARRIER, END ANCHORAGE, REINFORCED, TYPE D, AS PER PLAN 2, SHALL BE MADE AT THE UNIT PRICE BID, PER EACH, AND SHALL INCLUDE ALL LABOR, EQUIPMENT, MATERIALS AND INCIDNETALS TO BUILD THIS ITEM AS NOTED.

ITEM 622 - PORTABLE BARRIER, UNANCHORED, AS PER PLAN
ITEM 622 - PORTABLE BARRIER, ANCHORED, AS PER PLAN 2

THIS ITEM SHALL MEET ALL THE SPECIFICATIONS OF ITEM 622 EXCEPT THE PORTABLE BARRIER SHALL BE LEFT IN PLACE AFTER CONSTRUCTION AND BECOME PROPERTY OF THE DEPARTMENT. THE INDIVIDUAL BARRIER SECTIONS USED FOR THIS ITEM SHALL BE NEW AND SHALL NOT HAVE BEEN INSTALLED ELSEWHERE ON THIS PROJECT OR ANY OTHER PROJECT PRIOR TO INSTALLATION. SEE PLANS FOR LIMITS OF ANCHORED AND UNACHORED PORTABLE BARRIERS.

ITEM SPECIAL - LOW DENSITY CELLULAR CONCRETE FILL, CLASS II

THE ITEM SHALL MEET THE SPECIFICATIONS OF SPECIAL PROVISION - LOW DENSITY CELLULAR CONCRETE FILL.

ITEM 623 - MONUMENT, MISC.: CLEVELAND MONUMENT ASSEMBLY

ANY PERSON, CONTRACTOR, UTILITY, OR GOVERNMENTAL AGENCY, HEREIN REFERRED TO AS THE CONTRACTOR, DISTURBING, REMOVING AND/OR REPLACING PAVEMENT IN THE CITY OF CLEVELAND'S PUBLIC RIGHT-OF-WAY SHALL PROVIDE INFORMATION AS TO THE TYPE OF WORK AND THE LIMITS OF THE WORK TO THE CITY OF CLEVELAND CHIEF SURVEYOR THRU SURVEYOR WILL DETERMINE WHICH MONUMENTS, IF ANY WILL BE AFFECTED BY THE WORK.

WHERE NEW MONUMENT ASSEMBLIES ARE TO BE CONSTRUCTED, THE CONTRACTOR SHALL FURNISH THE FOLLOWING FOR EACH ASSEMBLY AS DETAILED ON THE CITY OF CLEVELAND'S MONUMENT BOX & ASSEMBLIES STANDARD CONSTRUCTION DRAWING MB-IC: ONE CLEVELAND MONUMENT BOX ASSEMBLY, ONE (I) ONE INCH DIAMETER EPOXY STEEL DEFORMED REINFORCING BAR THIRTY-SIX INCHES (36") LONG, FLAT ON TOP WITH A ROUND POINTED END.

ALL MONUMENTS EXISTING AND PROPOSED MUST BE REFERENCED PRIOR TO CONSTRUCTION. A MINIMUM OF 3-REF. POINTS PER MONUMENT MUST BE USED AND MUST BE LOCATED OUTSIDE OF THE CONSTRUCTION ZONE (WORK AREA). CARE AND PROTECTIVE MEASURES SHALL BE EMPLOYED BY THE CONTRACTOR TO PRESERVE EXISTING MONUMENTS. ALL MONUMENTS DISTURBED AND/OR DESTROYED SHALL BE RESET AS DETAILED ON THE CITY OF CLEVELAND'S MONUMENT BOX & ASSEMBLIES STANDARD CONSTRUCTION DRAWING MB-IC. THE SUITABLE EQUIPMENT FOR THE WORK REQUIRED BY THIS DETAIL SPECIFICATION.

ALL WORK SHALL BE DONE BY SAID COMPETENT PERSONNEL UNDER DIRECT SUPERVISION OF A PROFESSIONAL SURVEYOR, LICENSED AND REGISTERED TO PRACTICE IN THE STATE OF OHIO. SAID SURVEYOR AND COMPETENT PERSONNEL SHALL BE HIRED BY THE CONTRACTOR.

PRIOR TO BEGINNING ANY WORK, A COPY OF ALL SURVEY AND REFERENCE NOTES IS TO BE SENT THRU ODOT TO THE ATTENTION OF THE CHIEF SURVEYOR AT THE CITY OF CLEVELAND, DEPARTMENT OF THE MAYOR'S OFFICE OF CAPITAL PROJECTS (MOCAP), DIVISION OF ENGINEERING AND CONSTRUCTION, 601 LAKESIDE AVE. ROOM 518, CLEVELAND, OH 44114. (216) 664-3780.

MONUMENT ASSEMBLIES MAY BE FOUND WITHOUT MONUMENTATION INSIDE THE BOXES. IF THE CASTING OF THESE MONUMENTS IS REMOVED DURING CONSTRUCTION, THE CONTRACTOR IS REQUIRED TO CONTACT THE CITY OF CLEVELAND'S SURVEY DEPARTMENT AT (216) 664-2460 PRIOR TO REMOVAL. THE CITY OF CLEVELAND WISHES TO COORDINATE "EXPLORATION FOR LOST MONUMENTATION" WORK WITH THE CONTRACTOR FOR PRIOR TO A PROPOSED MONUMENT ASSEMBLY BEING RESET AT THESE LOCATIONS. IN THE EVENT THE CITY OF CLEVELAND'S EXPLORATION IS UNABLE TO FIND ANY REMAINING MONUMENTATION, THE CITY OF CLEVELAND WILL SET A NEW MONUMENT WITHIN EACH OF THESE MONUMENT ASSEMBLIES. QUESTIONS OR CONCERNS REGARDING THE CITY OF CLEVELAND'S REQUEST SHOULD BE DIRECTED TO THE SURVEY DEPARTMENT (NUMBER ABOVE).

THE CONTRACTOR SHALL REPLACE AT THEIR COST ANY MONUMENTS DISTURBED BY THE CONTRACTOR OUTSIDE THE CONSTRUCTION LIMITS. THE CONTRACTOR SHALL PERFORM ALL OTHER OPERATIONS NECESSARY TO COMPLETE THIS WORK ITEM SUCH AS PAVEMENT REMOVAL, EXCAVATION, SETTING THE BOX TO GRADE AND PAVEMENT REPLACEMENT. ALL WORK COMPLETED AND ACCEPTED SHALL BE PAID FOR BY THE UNIT PRICE BID FOR ITEM 623 - MONUMENT, MISC.: CLEVELAND MONUMENT ASSEMBLY.

THE FOLLOWING ESTIMATED CONTINGENCY QUANTITY HAS BEEN CARRIED TO THE GENERAL SUMMARY FOR THE WORK DESCRIBED ABOVE:

ITEM 623 - MONUMENT, MISC.: CLEVELAND MONUMENT ASSEMBLY	**60 EACH**

Preliminary Plans - For Reference Only

GENERAL NOTES - 4

DESIGN AGENCY
Michael Baker INTERNATIONAL

DESIGNER JTH
REVIEWER KGJ 05/10/24
PROJECT ID 82382
SHEET 76 TOTAL 2696

CUY-90-16.28 (CCG3A)
MODEL: Sheet-04 PAPERSIZE: 34x22 (in.) DATE: 3/28/2025 TIME: 7:15:11 AM USER: Rohit.Bk
pw:\\mb-us-pw.bentley.com:mb-us-pw-03\Documents\Cleveland_OH\01_Projects\ODOT\District12\82382\400-Engineering\Roadway\Sheets\82382_GN0001.dgn

ROADWAY (CONT.)

ITEM SPECIAL - UTILITY TEST HOLE

WHERE PLANS INDICATE OTHER UTILITIES ARE IN CLOSE PROXIMITY OF A NEW DRAINAGE STRUCTURE, SIGNAL POLE FOUNDATION / PEDESTAL, LIGHT POLE / TOWER FOUNDATION, AND/OR SIGN FOUNDATION, THE ENGINEER MAY DECIDE TO EXCAVATE TO CONFIRM THE STRUCTURE / FOUNDATION CAN BE PLACED WITHOUT INTERFERENCE. IF INTERFERENCE IS FOUND, THE STRUCTURE / FOUNDATION LOCATION OR TYPE IS TO BE REVISED, AS DIRECTED BY THE ENGINEER.

ONCE THE TEST HOLE IS COMPLETE, THE EXCAVATION SHALL BE BACKFILLED AND SURFACE RESTORED. NO PAYMENT FOR UTILITY TEST HOLE WILL BE GIVEN WITHOUT PRIOR APPROVAL FROM THE ENGINEER. PAYMENT FOR ALL LABOR, MATERIALS, EQUIPMENT AND OTHER INCIDENTALS, INCLUDING BACKFILL, COMPACTION AND SURFACE RESTORATION SHALL BE AT THE CONTRACT UNIT PRICE BID FOR ITEM SPECIAL - UTILITY TEST HOLE.

THE FOLLOWING QUANTITY HAS BEEN CARRIED TO THE GENERAL SUMMARY FOR USE AS DIRECTED BY THE ENGINEER:

ITEM SPECIAL - UTILITY TEST HOLE 40 EACH

ITEM SPECIAL - PERMITS

IN THE CITY OF CLEVELAND, ALL STREET PERMITS MUST BE OBTAINED FROM THE DIVISION OF ASSESSMENTS AND LICENSES PRIOR TO BEGINNING ANY WORK WITHIN THE CITY OF CLEVELAND RIGHT-OF-WAY. PERMITS INCLUDE BUT ARE NOT LIMITED TO STREET OPENING PERMIT, OVERLOAD PERMIT, OBSTRUCTION PERMIT AND/OR SIDEWALK PERMIT AND MAY BE OBTAINED THROUGH THE FOLLOWING CONTACT:

CITY OF CLEVELAND, DEPARTMENT OF FINANCE
DIVISION OF ASSESSMENTS AND LICENSES
601 LAKESIDE AVENUE, ROOM 122
CLEVELAND, OHIO 44114
PHONE: (216) 664-2174
E-MAIL: DALPERMITS@CITY.CLEVELAND.OH.US

ALL STREET OPENING REPAIRS, CURB REPAIRS, AND/OR SIDEWALK REPAIRS EITHER INCIDENTAL TO THE PROJECT OR PART OF THE PROJECT MUST BE PERFORMED IN ACCORDANCE TO CITY OF CLEVELAND STANDARDS. A COPY OF THE STANDARDS CAN BE OBTAINED ON-LINE UNDER THE "FORMS AND PUBLICATIONS" TAB OF THE OFFICE OF CAPITAL PROJECTS WEBSITE OR FROM THE DIVISION OF ENGINEERING AND CONSTRUCTION BY CALLING (216) 664-2381.

ALL STREET PERMITS, FEES, AND CHARGES SHALL BE THE RESPONSIBILITY OF THE CONTRACTOR AND THEIR ASSOCIATED COST SHALL BE INCLUDED IN THE CONTRACT UNIT PRICE BID FOR THIS ITEM. THE COST BELOW MAY NOT BE FULLY INCLUSIVE OF ALL PERMIT FEES REQUIRED TO BE PAID. NOTE THAT CLEVELAND WATER DEPARTMENT CHARGES ARE PAID UNDER A SEPARATE ITEM.

FOR BIDDING PURPOSES, FEES AND CHARGES WILL BE ESTIMATED BY THE CITY OF CLEVELAND DIVISION OF ENGINEERING AND CONSTRUCTION ON BEHALF OF THE DIVISION OF ASSESSMENTS AND LICENSES (DAL).

THE ASSIGNED RECORD NUMBER FOR THIS PROJECT IS STP25-00610. THE AWARDED CONTRACTOR SHALL CONTACT DAL AS DESCRIBED ABOVE, USING THE ASSIGNED STP NUMBER FOR REFERENCE. THE CONTRACTOR SHALL PROVIDE DAL WITH THEIR CERTIFICATE OF INSURANCE (COI) MEETING THE CITY OF CLEVELAND REQUIREMENTS. UPON SUBMITTAL OF THE COI AND RECEIPT OF PAYMENT, DAL WILL ISSUE THE PERMIT.

THE FOLLOWING QUANTITY HAS BEEN CARRIED TO THE GENERAL SUMMARY:

ITEM SPECIAL - PERMITS LS

ENVIRONMENTAL

ARCHAEOLOGICAL SITES / HISTORIC PROPERTIES ADJACENT TO RIGHT-OF-WAY

AS A RESULT OF A CULTURAL RESOURCE SURVEY, ARCHAEOLOGICALLY OR HISTORICALLY SENSITIVE AREAS HAVE BEEN IDENTIFIED ADJACENT TO THE PROPOSED RIGHTS-OF-WAY. THESE ARCHAEOLOGICALLY OR HISTORICALLY SENSITIVE AREAS HAVE BEEN DENOTED ON MAPPING THAT IS AVAILABLE FOR REVIEW AT THE STATE HISTORIC PRESERVATION OFFICE, (OHIO HISTORICAL SOCIETY, 800 EAST 17TH AVENUE, COLUMBUS, OHIO 43211-2474), ODOT'S OFFICE OF ENVIRONMENTAL SERVICES, AND THE DISTRICT 12 OFFICE (5500 E 98TH ST, GARFIELD HEIGHTS, OH 44125) THESE IDENTIFIED AREAS CANNOT BE USED FOR BORROW AREAS, WASTE, OR ANY OTHER PROJECT RELATED ACTIVITIES, SUCH AS TEMPORARY OFF-SITE STORAGE OR FIELD OFFICE PLACEMENT, PORTABLE PLANT LOCATIONS, ETC., UNLESS PRIOR APPROVAL IS OBTAINED, IN WRITING, FROM THE OHIO HISTORIC PRESERVATION OFFICE IN COLUMBUS.

CONSTRUCTION NOISE

NOISE SENSITIVE RECEPTORS (AS DEFINED IN THE NOISE TECHNICAL REPORT: PID 82382 CUY-90-16.28 CCG3A; 2/6/23) WILL ALSO BE SUBJECTED TO NOISE IMPACTS ASSOCIATED WITH THE CONSTRUCTION PHASE OF THE PROPOSED PROJECT. CONSTRUCTION NOISE WILL GENERATE TEMPORARY NOISE IMPACTS ON ADJACENT AND NEARBY PROPERTIES, PARTICULARLY THOSE IN RESIDENTIAL LAND USE. CONSTRUCTION NOISE WILL BE EMITTED INTERMITTENTLY BY A RANGE OF CONSTRUCTION EQUIPMENT AT VARYING LEVELS OF INTENSITY BASED ON THE TYPES OF OPERATIONS BEING PERFORMED AND THE NUMBER OF PIECES OF EQUIPMENT IN OPERATION AT ANY GIVEN TIME. DEPENDING ON PROJECT CIRCUMSTANCES, OPTIONS ARE AVAILABLE TO MINIMIZE THE TEMPORARY ADVERSE NOISE IMPACTS, INCLUDING THE PROPER MAINTENANCE OF EQUIPMENT, MOST NOTABLY ADEQUATE LUBRICATION, AND NON-LEAKING MUFFLERS, EQUIPMENT RESTRICTION MODIFICATIONS TO REDUCE NOISE EMISSIONS AND RESTRICT THE USE OF CERTAIN EQUIPMENT BY LOCATION AND TIME OF DAY, CONTROLLING NON-CONSTRUCTION TRAFFIC BY LIMITING HEAVY TRUCK MOVEMENTS ON RESIDENTIAL STREETS, MAXIMIZING THE DISTANCE BETWEEN EQUIPMENT AND RECEPTORS WHERE POSSIBLE AND, ENCLOSING OR SCREENING NOISY ACTIVITIES OR STATIONARY EQUIPMENT. THE CONTRACTOR WILL BE REQUIRED TO ADHERE TO ANY AND ALL FEDERAL, STATE, AND LOCAL NOISE CONTROLS OR ORDINANCES IN EFFECT WITHIN THE PROJECT LIMITS. IT WILL BE THE RESPONSIBILITY OF THE CONTRACTOR TO MONITOR CONSTRUCTION NOISE AND BE AWARE OF VIOLATIONS OF THE MAXIMUM ALLOWABLE NOISE LEVELS. CONSIDERATION OF CONSTRUCTION NOISE MINIMIZATION AND MITIGATION (AS NECESSARY) IS REQUIRED PURSUANT TO CFR772.19. ADDITIONAL INFORMATION ON CONSTRUCTION NOISE CAN BE ACCESSED IN THE FHWA CONSTRUCTION NOISE HANDBOOK (FHWA-HEP-06-015) AND THE ROADWAY CONSTRUCTION NOISE MODEL (RCNM) VERSION 2.0.

DURING CONSTRUCTION, THE PROJECT TEAM WILL BE BOTH PROACTIVE AND REACTIVE WITH RESPECT TO CONSTRUCTION NOISE. THIS WILL BE ACCOMPLISHED THROUGH:

<u>EQUIPMENT SELECTION</u>
OFTEN THERE IS A VARIETY OF EQUIPMENT AVAILABLE TO THE CONTRACTOR TO PERFORM A PARTICULAR TASK. WHERE NOISE SENSITIVE RECEPTORS ARE PRESENT, SPECIFIC CONSIDERATION WILL BE GIVEN TO THE SELECTION OF EQUIPMENT TO BE UTILIZED. THIS MAY INCLUDE: THE AGE OF THE EQUIPMENT AS NEWER EQUIPMENT TYPICALLY EMPLOYS NEW TECHNOLOGY WITH RESPECT TO EMISSIONS AND NOISE, IF SHIELDING OR ENGINE ENCLOSURES ARE STANDARD, SIZE APPROPRIATENESS AND POWER SOURCE (GAS/DIESEL, ELECTRIC/SOLAR, PNEUMATIC, HYDRAULIC).

<u>EQUIPMENT MAINTENANCE</u>
THE CONTRACTOR WILL HAVE AN ESTABLISHED MAINTENANCE PROGRAM FOR THEIR EQUIPMENT FLEET. THEY WILL ENSURE THAT NECESSARY MAINTENANCE/REPAIRS ARE PERFORMED BEFORE PUTTING EQUIPMENT INTO SERVICE.

CONSTRUCTION NOISE (CONT.)

<u>EQUIPMENT MAINTENANCE (CONT.)</u>
THEY WILL ALSO BE PULLED OUT OF SERVICE TO ADDRESS DEFICIENCIES IDENTIFIED DURING OPERATION. WHEN NOISE SENSITIVE RECEPTORS ARE PRESENT, SPECIFIC ATTENTION WILL BE GIVEN TO THE MUFFLER SYSTEMS ON ALL COMBUSTION ENGINES, AS THAT IS OFTEN A PRIMARY SOURCE OF CONSTRUCTION NOISE.

<u>STORAGE AND STAGING AREAS</u>
IDENTIFICATION OR ACQUISITION OF LOCATIONS/PROPERTIES THAT PROVIDE SEPARATION FROM SENSITIVE RECEPTORS.

<u>SCREENING / SHIELDING / BARRIERS</u>
HAVING SOMETHING BETWEEN THE SOURCE AND THE RECEPTOR IS AN EFFECTIVE MITIGATION TECHNIQUE AND CAN TAKE ON MANY FORMS. THE PROJECT TEAM WILL TAKE ADVANTAGE OF EXISTING FEATURES WHERE PRACTICAL TO MINIMIZE THE IMPACTS OF CONSTRUCTION NOISE ON RECEPTORS. THIS WILL INCLUDE BRIDGES, BERMS, RETAINING WALLS, BUILDINGS AND NOISE WALLS. ADDITIONALLY, TEMPORARY FEATURES ALREADY NECESSARY FOR PERFORMING THE WORK LIKE STOCKPILES AND TOOL TRAILERS CAN ALSO BE BY STRATEGICALLY UTILIZED TO ASSIST IN THIS EFFORT. LASTLY, IT MAY BE NECESSARY TO CONSTRUCT TEMPORARY FEATURES SUCH AS HAY BALES SPECIFICALLY FOR THIS PURPOSE.

<u>SCHEDULING OF WORK</u>
IF NOT DICTATED DURING DESIGN, THE CONTRACTOR WILL GIVE CONSIDERATION TO NOISE SENSITIVE RECEPTORS WHEN SCHEDULING WORK. THIS MAY INCLUDE: TIME OF DAY, DAY OF WEEK, NUMBER OF CONSECUTIVE HOURS/DAYS, SPECIAL EVENTS AND NUMBER OF CREWS. WITH A PROJECT OF THIS MAGNITUDE, THERE WILL ALSO BE OPPORTUNITIES TO SCHEDULE CONCURRENT OPERATIONS IN THE SAME TIMEFRAME TO REDUCE THE OVERALL DURATION OF EXPOSURE, WITH POTENTIALLY MINIMAL INCREASE IN INTENSITY.

<u>EDUCATION OF STAFF</u>
THE PROJECT STAFF WILL BE EDUCATED ON THE NOISE SENSITIVE RECEPTORS. THIS WILL INCLUDE NOT ONLY THEIR LOCATION, BUT ALSO THE TYPE (RESIDENT, SCHOOL, BUSINESS, ETC.), HOURS OF OPERATION AND ANY PRIOR CONCERNS COMMUNICATED.

<u>COMMUNICATION PLAN</u>
AS PART OF THE PROJECT'S OVERALL COMMUNICATION PLAN, THERE WILL BE A PROTOCOL ESTABLISHED TO NOTIFY THE PUBLIC, RECEIVE CONCERNS/COMPLAINTS AND PROVIDE RESPONSES AND/OR RESOLUTIONS. IT WILL CLEARLY PROVIDE CONTACT INFORMATION TO SUBMIT ELECTRONICALLY OR VIA PHONE. ALL NOISE RELATED COMPLAINTS WILL BE INVESTIGATED BY PROJECT PERSONNEL.

THE CITY OF CLEVELAND DEPARTMENT OF PUBLIC SAFETY APPROVED THE CONSTRUCTION NOISE VARIANCE REQUEST SUBMITTED FOR THIS PROJECT WITH THE FOLLOWING CONDITIONS:

THE WORK WILL BE PERFORMED AT THE APPROVED LOCATION (THE I-90/I-77 CENTRAL INTERCHANGE) ONLY AND WITHIN THE SPECIFIED TIME FRAME (APRIL 2026 THROUGH JUNE 2032) OUTLINED.

THE CITY OF CLEVELAND DEPARTMENT OF PUBLIC SAFETY AND COUNCILPERSON FOR THE RESPECTIVE WARDS SHALL BE NOTIFIED AT LEAST FORTY-EIGHT (48) HOURS IN ADVANCE OF ANY CHANGES RELATIVE TO THE DATES AND HOURS OF OPERATIONS AS REFERENCED IN THE APPROVAL LETTER.

THE CITY OF CLEVELAND DEPARTMENT OF PUBLIC SAFETY AND COUNCILPERSON FOR THE RESPECTIVE WARDS SHALL BE NOTIFIED AT LEAST FORTY-EIGHT (48) HOURS IN ADVANCE OF THE USE OF HEAVY EQUIPMENT OTHER THAN THOSE MENTIONED IN THE APPROAL LETTER.

THE CITY OF CLEVELAND DEPARTMENT OF PUBLIC SAFETY AND COUNCILPERSON FOR THE RESPECTIVE WARDS SHALL RECEIVE A SEVENTY-TWO (72) HOUR NOTICE ON THE SPECIFIC DATES/TIMES THIS PROJECT WILL BEGIN OUTSIDE.

ASBESTOS ABATEMENT BRIDGE DEMOLITION

A LICENSED ASBESTOS HAZARD EVALUATION SPECIALIST INSPECTED THE BRIDGE STRUCTURES SCHEDULED FOR DEMOLITION; THE ASBESTOS INSPECTION DETERMINED THAT ASBESTOS IS PRESENT AND REQUIRES ABATEMENT ON THE BRIDGE STRUCTURES LISTED BELOW. NO ASBESTOS WAS IDENTIFIED ON CEDAR AVENUE (CUY-90-1681 | SFN 1807862).

CARNEGIE AVENUE (CUY-90-1692 | SFN 1807897)
E. 22ND STREET (CUY-90-1676 | SFN 1807838)
E5 (CUY-90-1640 | SFN 1807773)
E6 (CUY-77-1593 | SFN 1806939)
E7 (CUY-77-1597L | SFN 1807919)
E8 (CUY-90-1651L | SFN 1807900)
E9 (CUY-90-1651R | SFN 1807803)
E10 (CUY-77-1575 SN | SFN 1806912)

THE DISTRICT ENVIRONMENTAL COORDINATOR OR PROJECT ENGINEER SHALL MAKE THE ASBESTOS INSPECTION REPORT AVAILABLE TO THE CONTRACTOR AT THE PRE-CONSTRUCTION MEETING AND THEY SHALL SUBMIT THE NOTIFICATION OF DEMOLITION & RENOVATION FORM AND APPLICABLE FEES 10 DAYS PRIOR TO CONSTRUCTION, WHICH CONTAINS THE QUANTITIES AND LOCATIONS OF THE ASBESTOS CONTAINING MATERIALS.

THE CONTRACTOR SHALL ENSURE THAT THE ABATEMENT, TRANSPORT, AND DISPOSAL OF ASBESTOS CONTAINING MATERIAL IS CONDUCTED IN ACCORDANCE WITH ALL FEDERAL, STATE, AND LOCAL REGULATIONS. THE CONTRACTOR SHALL ENSURE THAT ALL DOCUMENTATION RELATED TO THE ABATEMENT, TRANSPORT, AND DISPOSAL OF ASBESTOS CONTAINING MATERIALS IS SUBMITTED TO THE PROJECT ENGINEER OR DISTRICT ENVIRONMENTAL COORDINATOR FOR RECORD KEEPING WITHIN 2 WEEKS OF COMPLETION.

IT IS POSSIBLE THAT THERE MAY BE NON-VISIBLE OR PREVIOUSLY UNIDENTIFIED ACM ENCOUNTERED DURING CONSTRUCTION. ANY MATERIAL SUSPECTED OF CONTAINING ASBESTOS SHALL BE EVALUATED BY A CERTIFIED ASBESTOS EVALUATION SPECIALIST TO DETERMINE WHETHER THE MATERIAL ACTUALLY CONTAINS ASBESTOS. IF IT DOES, THEN THE ACM SHALL BE REMOVED AS DESCRIBED ABOVE.

<u>BASIS OF PAYMENT</u>
THE CONTRACTOR SHALL FURNISH ALL THE LABOR, EQUIPMENT, AND MATERIALS NECESSARY TO PROPERLY ABATE, TRANSPORT, AND DISPOSE OF ASBESTOS CONTAINING MATERIALS IN A LANDFILL LICENSED BY THE LOCAL HEALTH DEPARTMENT AND PERMITTED BY THE OHIO ENVIRONMENTAL PROTECTION AGENCY - DIVISION OF AIR POLLUTION CONTROL TO ACCEPT ASBESTOS CONTAINING MATERIAL. PAYMENT FOR THIS WORK SHALL BE MADE AT THE BID PRICE OF LUMP SUM.

THE FOLLOWING ESTIMATED QUANTITY HAS BEEN INCLUDED IN THE GENERAL SUMMARY FOR THE WORK NOTED ABOVE:

ITEM SPECIAL - WORK INVOLVING ASBESTOS CONTAINING MATERIALS (CARNEGIE AVENUE, CUY-90-1692, SFN 1807897) LS
ITEM SPECIAL - WORK INVOLVING ASBESTOS CONTAINING MATERIALS (E. 22ND STREET, CUY-90-1676, SFN 1807838) LS
ITEM SPECIAL - WORK INVOLVING ASBESTOS CONTAINING MATERIALS (E5, CUY-90-1640, SFN 1807773) LS
ITEM SPECIAL - WORK INVOLVING ASBESTOS CONTAINING MATERIALS (E6, CUY-77-1593, SFN 1806939) LS
ITEM SPECIAL - WORK INVOLVING ASBESTOS CONTAINING MATERIALS (E7, CUY-77-1597L, SFN 1807919) LS
ITEM SPECIAL - WORK INVOLVING ASBESTOS CONTAINING MATERIALS (E8, CUY-90-1651L, SFN 1807900) LS
ITEM SPECIAL - WORK INVOLVING ASBESTOS CONTAINING MATERIALS (E9, CUY-90-1651R, SFN 1807803) LS
ITEM SPECIAL - WORK INVOLVING ASBESTOS CONTAINING MATERIALS (E10, CUY-77-1575 SN, SFN 1806912) LS

Preliminary Plans - For Reference Only

DESIGN AGENCY
Michael Baker INTERNATIONAL
DESIGNER JTH
REVIEWER KGJ 05/10/24
PROJECT ID 82382
SHEET 77 TOTAL 2696

CUY-90-16.28 (CCG3A)
MODEL: Sheet-05 PAPERSIZE: 34x22 (in.) DATE: 5/15/2025 TIME: 9:44:28 AM USER: Mata.Gallagher
pw:\\mb-us-pw.bentley.com:mb-us-pw-03\Documents\Cleveland_OH\01_Projects\ODOT\District12\82382\400-Engineering\Roadway\Sheets\82382_GN0001.dgn

ENVIRONMENTAL (CONT.)

EROSION CONTROL COMPLIANCE

THE CONTRACTOR IS REQUIRED TO FOLLOW BEST MANAGEMENT PRACTICES FOR TEMPORARY SEDIMENT AND EROSION CONTROL DURING CONSTRUCTION IN ACCORDANCE WITH ODOT CONSTRUCTION AND MATERIAL SPECIFICATIONS (CMS) AND APPLICABLE SUPPLEMENTAL SPECIFICATIONS (SS). IN ADDITION TO THE CURRENT CMS, SS, PLAN NOTES AND SWPPP STIPULATIONS, THE REGULATIONS AND CONDITIONS OF THE NPDES PERMIT WILL REQUIRE CONTRACTOR'S FULL COMPLIANCE.

HISTORIC ARCHITECTURE SITES / SECTION 4(F) / SECTION 106 CONSULTATION

BASED UPON COORDINATION WITH THE OHIO HISTORIC PRESERVATION OFFICE, THE FOLLOWING COMMITMENTS ARE KNOWN FOR THE FOLLOWING PROPERTIES WHERE THERE IS "NO ADVERSE EFFECT".

WALKER WEEKS BUILDING - NO ADVERSE EFFECT, NO USE - MAINTAIN DESIGN TO NOT PERMANENTLY INCORPORATE PROPERTY WITHIN PROJECT; TEMPORARY RIGHT-OF-WAY FOR THE CONSTRUCTION OF RETAINING WALL AND SIDEWALKS.

PETROLEUM CONTAMINATED SOIL RM-006

ENVIRONMENTAL STUDIES INDICATED THAT PETROLEUM CONTAMINATED SOIL (PCS) MAY BE ENCOUNTERED DURING EXCAVATIONS WITHIN THE PROJECT LIMITS IN PARCEL 331 AT 2350 E. 22ND STREET FROM STA 24+50 TO STA 26+00 LEFT. ENVIRONMENTAL STUDIES ARE AVAILABLE AT ODOT DISTRICT 12. THE CONTRACTOR MUST DETERMINE APPROPRIATE PERSONAL PROTECTIVE EQUIPMENT FOR THOSE WHO CONDUCT WORK WITHIN THE LIMITS OF THE PCS.

ALL EXCAVATED PCS THAT CANNOT BE REUSED AS PROJECT FILL PER CMS 203.03(J)., SHALL BE MANAGED AND DISPOSED OF AT A LICENSED LANDFILL. THE ENGINEER MAY PERMIT THE CONTRACTOR TO DIRECT LOAD THE EXCAVATED PCS INTO TRUCKS FOR TRANSPORT AND DISPOSAL. AS AN ALTERNATE, THE ENGINEER MAY PERMIT THE CONTRACTOR TO TEMPORARILY STOCKPILE THE EXCAVATED PCS ON AN IMPERMEABLE MEMBRANE, IN AN AREA PROVIDED BY THE CONTRACTOR AND APPROVED BY THE ENGINEER. THE STOCKPILE SHOULD BE SURROUNDED BY STRAW BALES TO REDUCE RUNOFF. THE CONTRACTOR WILL PROVIDE COMPLETED LOG FORMS AND MANIFESTS FOR TRANSPORT AND DISPOSAL TO THE ENGINEER FOR SIGNATURE. THE CONTRACTOR IS RESPONSIBLE FOR ANY ADDITIONAL TESTING AND FEES THAT THE LANDFILL MAY REQUIRE FOR DISPOSAL.

IF EXCAVATIONS WITHIN THE PCS REQUIRE DEWATERING FOR CONSTRUCTION PURPOSES, THE CONTRACTOR SHALL DEWATER, CONTAINERIZE AND DISPOSE OF WATERS BY METHOD APPROVED BY THE ENGINEER. THE CONTRACTOR SHALL OBTAIN ALL THE NECESSARY PERMITS NEEDED TO STORE, TRANSPORT AND DISPOSE OF WATER IN ACCORDANCE WITH APPLICABLE LOCAL, STATE AND FEDERAL REGULATIONS. THE CONTRACTOR IS RESPONSIBLE FOR ANY ADDITIONAL TESTING AND FEES REQUIRED FOR DISPOSAL. ALL EXCAVATED AREAS SHALL BE BACKFILLED WITH SUITABLE MATERIAL IN ACCORDANCE WITH PROJECT PLANS, APPLICABLE ODOT SPECIFICATIONS OR AS DIRECTED BY THE ENGINEER. THE CONTRACTOR SHALL FURNISH ALL THE LABOR, EQUIPMENT AND MATERIALS NECESSARY TO PROPERLY MANAGE, STORE (IF NECESSARY), TEST FOR DISPOSAL, TRANSPORT AND DISPOSE OF REGULATED MATERIALS, INCLUDING ANY REQUIRED PERMITS OR FEES WITHIN THE IDENTIFIED LIMITS. PAYMENT FOR THIS WORK SHALL BE MADE AT THE CONTRACT PRICE BID. THE FOLLOWING ESTIMATED QUANTITY HAS BEEN INCLUDED IN THE GENERAL SUMMARY.

ITEM SPECIAL - WORK INVOLVING NON-REGULATED MATERIALS	**5 TON**
ITEM SPECIAL - WORK INVOLVING PETROLEUM CONTAMINATED SOIL	**50 TON**
ITEM SPECIAL - WORK INVOLVING NON-REGULATED WATER	**5,000 GAL**
ITEM SPECIAL - WORK INVOLVING REGULATED WATER	**2,000 GAL**

PETROLEUM CONTAMINATED SOIL RM-042

ENVIRONMENTAL STUDIES INDICATED THAT PETROLEUM CONTAMINATED SOIL (PCS) MAY BE ENCOUNTERED DURING EXCAVATIONS WITHIN THE PROJECT LIMITS IN PARCEL 303 AT 1802 CENTRAL AVENUE STA 13+25 TO STA 17+27 RIGHT. ENVIRONMENTAL STUDIES ARE AVAILABLE AT ODOT DISTRICT 12. THE CONTRACTOR MUST DETERMINE APPROPRIATE PERSONAL PROTECTIVE EQUIPMENT FOR THOSE WHO CONDUCT WORK WITHIN THE LIMITS OF THE PCS.

ALL EXCAVATED PCS THAT CANNOT BE REUSED AS PROJECT FILL PER CMS 203.03(J)., SHALL BE MANAGED AND DISPOSED OF AT A LICENSED LANDFILL. THE ENGINEER MAY PERMIT THE CONTRACTOR TO DIRECT LOAD THE EXCAVATED PCS INTO TRUCKS FOR TRANSPORT AND DISPOSAL. AS AN ALTERNATE, THE ENGINEER MAY PERMIT THE CONTRACTOR TO TEMPORARILY STOCKPILE THE EXCAVATED PCS ON AN IMPERMEABLE MEMBRANE, IN AN AREA PROVIDED BY THE CONTRACTOR AND APPROVED BY THE ENGINEER. THE STOCKPILE SHOULD BE SURROUNDED BY STRAW BALES TO REDUCE RUNOFF. THE CONTRACTOR WILL PROVIDE COMPLETED LOG FORMS AND MANIFESTS FOR TRANSPORT AND DISPOSAL TO THE ENGINEER FOR SIGNATURE. THE CONTRACTOR IS RESPONSIBLE FOR ANY ADDITIONAL TESTING AND FEES THAT THE LANDFILL MAY REQUIRE FOR DISPOSAL.

IF EXCAVATIONS WITHIN THE PCS REQUIRE DEWATERING FOR CONSTRUCTION PURPOSES, THE CONTRACTOR SHALL DEWATER, CONTAINERIZE AND DISPOSE OF WATERS BY METHOD APPROVED BY THE ENGINEER. THE CONTRACTOR SHALL OBTAIN ALL THE NECESSARY PERMITS NEEDED TO STORE, TRANSPORT AND DISPOSE OF WATER IN ACCORDANCE WITH APPLICABLE LOCAL, STATE AND FEDERAL REGULATIONS. THE CONTRACTOR IS RESPONSIBLE FOR ANY ADDITIONAL TESTING AND FEES REQUIRED FOR DISPOSAL. ALL EXCAVATED AREAS SHALL BE BACKFILLED WITH SUITABLE MATERIAL IN ACCORDANCE WITH PROJECT PLANS, APPLICABLE ODOT SPECIFICATIONS OR AS DIRECTED BY THE ENGINEER. THE CONTRACTOR SHALL FURNISH ALL THE LABOR, EQUIPMENT AND MATERIALS NECESSARY TO PROPERLY MANAGE, STORE (IF NECESSARY), TEST FOR DISPOSAL, TRANSPORT AND DISPOSE OF REGULATED MATERIALS, INCLUDING ANY REQUIRED PERMITS OR FEES WITHIN THE IDENTIFIED LIMITS. PAYMENT FOR THIS WORK SHALL BE MADE AT THE CONTRACT PRICE BID. THE FOLLOWING ESTIMATED QUANTITY HAS BEEN INCLUDED IN THE GENERAL SUMMARY.

ITEM SPECIAL - WORK INVOLVING NON-REGULATED MATERIALS	**750 TON**
ITEM SPECIAL - WORK INVOLVING PETROLEUM CONTAMINATED SOIL	**7,500 TON**
ITEM SPECIAL - WORK INVOLVING NON-REGULATED WATER	**100,000 GAL**
ITEM SPECIAL - WORK INVOLVING REGULATED WATER	**40,000 GAL**

PUBLIC NOTIFICATIONS

THE CONTRACTOR WILL ADVISE THE PROJECT ENGINEER A MINIMUM OF FOURTEEN (14) DAYS PRIOR TO THE FOLLOWING: THE START OF CONSTRUCTION ACTIVITIES, LANE CLOSURES, AND ROAD CLOSURES. THE PUBLIC INFORMATION OFFICE WILL, IN TURN, NOTIFY THE PUBLIC, THE LOCAL EMERGENCY SERVICES, AFFECTED SCHOOLS AND BUSINESSES, AND ANY OTHER IMPACTED LOCAL PUBLIC AGENCY OF ANY OF THE ABOVE MENTIONED ITEMS VIA MEDIA SOURCES.

ENDANGERED BAT HABITAT REMOVAL

THIS PROJECT IS LOCATED WITHIN THE KNOWN HABITAT RANGES OF THE FEDERALLY LISTED AND PROTECTED INDIANA BAT, AND NORTHERN LONG-EARED BAT. NO TREES SHALL BE REMOVED UNDER THIS PROJECT FROM APRIL 1 THROUGH SEPTEMBER 30.

ALL NECESSARY TREE REMOVAL SHALL OCCUR FROM OCTOBER 1 THROUGH MARCH 31. THIS REQUIREMENT IS NECESSARY TO AVOID AND MINIMIZE IMPACTS TO THESE SPECIES AS REQUIRED BY THE ENDANGERED SPECIES ACT (ESA). FOR THE PURPOSES OF THIS NOTE, A TREE IS DEFINED AS: A LIVE, DYING, OR DEAD WOODY PLANT, WITH A TRUNK 3 INCHES OR GREATER IN DIAMETER AT A HEIGHT OF 4.5 FEET ABOVE THE GROUND SURFACE, AND WITH A MINIMUM HEIGHT OF 13 FEET.

DRAINAGE

CLEVELAND WPC COORDINATION

THE CONTRACTOR SHOULD NOTIFY THE DIVISION OF WATER POLLUTION CONTROL (WPC) PRIOR TO START OF CONSTRUCTION OF ANY CITY OF CLEVELAND SEWERS. CALL THE ENGINEERING OFFICE AT (216) 664-2756 OR (216) 664-3638 TO COORDINATE THE SEWER WORK.

THE CONTRACTOR IS REQUIRED TO SUBMIT SEWER SHOP DRAWINGS TO WPC PRIOR TO ANY CITY SEWER INSTALLATION. THE DRAWINGS SHOULD INCLUDE THE SEWER PIPES, MANHOLES, CATCH BASINS AND OTHER SEWER APPURTENANCES.

ANY PROPOSED CITY OF CLEVELAND SEWERS SHOULD BE CONSTRUCTED IN ACCORDANCE TO THE PLANS AND SPECIFICATIONS APPROVED BY WPC. ANY DEVIATIONS FROM THE APPROVED PLANS OR SPECIFICATIONS REQUIRE A NEW PLAN SUBMITTAL REFLECTING THE CHANGES. UPON REVIEW OF THE REVISED ITEMS, WPC WILL RE-ISSUE A NEW APPROVAL WITHIN 30 CALENDAR DAYS OF RECEIPT OF THE PLAN OR SPECIFICATION CHANGE SUBMITTAL. IT IS STRICTLY PROHIBITED TO CONSTRUCT ANY CITY OF CLEVELAND SEWERS UNLESS THEY ARE APPROVED BY WPC.

UPON COMPLETION OF ANY CITY OF CLEVELAND SEWER INSTALLATION, THE CONTRACTOR IS REQUIRED TO SUBMIT A HARD COPY AND AN ELECTRONIC COPY OF AS-BUILT PLANS, AND A CCTV COPY OF THE NEW CITY SEWERS. WPC RESERVES THE RIGHT NOT TO APPROVE ANY SEWER THAT DOES NOT MEET THE CITY REQUIREMENTS.

ALL DISTURBED/DAMAGED SEWER CONNECTIONS SHOULD BE REPAIRED ACCORDING TO THE FOLLOWING CITY STANDARDS:

- USE VCP FOR ALL REPAIRED/RELOCATED SEWER CONNECTIONS.
- ALL REPAIRED/RELOCATED SEWER CONNECTIONS SHOULD BE LAID AT NO LESS THAN 1% GRADE.
- THE MINIMUM SIZE FOR A SEWER CONNECTION SHOULD BE 6".
- A MINIMUM COVER OF 3 FT IS REQUIRED FOR ALL PROPOSED SEWER CONNECTIONS.
- NO HORIZONTAL BENDS ARE ALLOWED FOR SEWER CONNECTIONS.
- USE A VCP WYE OR TEE FOR SEWER CONNECTIONS THAT TIE TO A VCP MAIN SEWER.
- USE A SADDLE FOR SEWER CONNECTIONS THAT TIE TO A BRICK OR RCP MAIN SEWER.
- IT IS PROHIBITED TO TIE THE SEWER CONNECTION TO THE BOTTOM, OR NEAR THE BOTTOM, OF THE CITY MAIN SEWER.

ITEM SPECIAL - FILL AND PLUG EXISTING CONDUIT

THIS ITEM SHALL CONSIST OF THE CONSTRUCTION OF BULKHEADS IN EXISTING CONDUIT WITH THE SPECIFIED DIAMETER AND FILLING THE AREA THUS SEALED OFF WITH ITEM 613, OR OTHER MATERIAL APPROVED BY THE ENGINEER.

BULKHEADS SHALL BE LOCATED AT THE LIMITS OF THE AREA TO BE FILLED AS INDICATED ON THE PLANS. THE BULKHEADS SHALL CONSIST OF BRICK OR CONCRETE MASONRY WITH A MINIMUM THICKNESS OF 12 INCHES.

THE FILL MATERIAL SHALL BE PUMPED INTO PLACE, OR PLACED BY OTHER MEANS APPROVED BY THE ENGINEER, SO THAT, AFTER SETTLEMENT, AT LEAST 90 PERCENT OF THE CROSS-SECTIONAL AREA OF THE CONDUIT, FOR ITS ENTIRE LENGTH, SHALL BE FILLED. THE LENGTH OF FILLED AND PLUGGED CONDUIT TO BE PAID FOR SHALL BE THE ACTUAL NUMBER OF FEET (MEASURED ALONG THE CENTERLINE OF EACH CONDUIT FROM OUTER FACE TO OUTER FACE OF BULKHEADS) FILLED AND PLUGGED AS DESCRIBED ABOVE.

IN LIEU OF FILLING AND PLUGGING THE EXISTING CONDUIT, THE PIPE MAY BE CRUSHED AND BACKFILLED IN ACCORDANCE WITH THE PROVISIONS OF 203, OR IT MAY BE REMOVED. THE LENGTH, MEASURED AS PROVIDED ABOVE, SHALL BE PAID FOR AT THE CONTRACT PRICE PER FOOT FOR ITEM SPECIAL - FILL AND PLUG EXISTING CONDUIT.

CROSSINGS AND CONNECTIONS TO EXISTING PIPES AND UTILITIES

WHERE PLANS PROVIDE FOR A PROPOSED CONDUIT TO BE CONNECTED TO, OR CROSS OVER OR UNDER AN EXISTING SEWER OR UNDERGROUND UTILITY, LOCATE THE EXISTING PIPES OR UTILITIES BOTH AS TO LINE AND GRADE BEFORE STARTING TO LAY THE PROPOSED CONDUIT.

IF IT IS DETERMINED THAT THE ELEVATION OF THE EXISTING CONDUIT, OR EXISTING APPURTENANCE TO BE CONNECTED, DIFFERS FROM THE PLAN ELEVATION OR RESULTS IN A CHANGE IN THE PLAN CONDUIT SLOPE, NOTIFY THE ENGINEER BEFORE STARTING CONSTRUCTION OF ANY PORTION OF THE PROPOSED CONDUIT WHICH WILL BE AFFECTED BY THE VARIANCE IN THE EXISTING ELEVATIONS.

IF IT IS DETERMINED THAT THE PROPOSED CONDUIT WILL INTERSECT AN EXISTING SEWER OR UNDERGROUND UTILITY IF CONSTRUCTED AS SHOWN ON THE PLAN, NOTIFY THE ENGINEER BEFORE STARTING CONSTRUCTION OF ANY PORTION OF THE PROPOSED CONDUIT WHICH WOULD BE AFFECTED BY THE INTERFERENCE WITH AN EXISTING FACILITY.

PAYMENT FOR ALL THE OPERATIONS DESCRIBED ABOVE IS INCLUDED IN THE CONTRACT PRICE FOR THE PERTINENT 611 CONDUIT ITEM.

ITEM 611 - CONDUIT BORED OR JACKED

WHERE IT IS SPECIFIED THAT A CONDUIT BE INSTALLED BY THE METHOD OF BORING OR JACKING, NO TRENCH EXCAVATION SHALL BE CLOSER THAN 30 FEET TO THE EDGE OF PAVEMENT. PROVIDE A STEEL CASING PIPE CONFORMING TO 748.06. JOINTS WITH A CIRCUMFERENCIAL FULLY PENETRATING B-U4B WELD THAT IS PERFORMED BY AN ODOT APPROVED FIELD WELDER OR MACHINED INTERLOCKING JOINTS ARE PERMITTED. THE INSTALLED CASING PIPE IS THE STORM WATER CONVEYANCE CARRIER UNLESS OTHERWISE SPECIFIED IN THE PLANS. HYDROSTATIC TESTING IS NOT REQUIRED FOR THE CASING PIPE.

REVIEW OF DRAINAGE FACILITIES

PRIOR TO THE START OF EACH PHASE OF WORK AND AGAIN BEFORE FINAL ACCEPTANCE, PERFORM AN INSPECTION WITH REPRESENTATIVES OF THE DEPARTMENT, CONTRACTOR AND LOCALS OF ALL EXISTING DRAINAGE FACILITIES THAT ARE TO REMAIN IN SERVICE WHICH MAY BE AFFECTED BY THE WORK. THE CONDITION OF THE EXISTING CONDUITS AND THEIR APPURTENANCES IS DETERMINED FROM FIELD OBSERVATIONS. RECORDS OF THE INSPECTION ARE MAINTAINED BY THE DEPARTMENT.

CONFIRM ALL EXISTING SEWERS INSPECTED INITIALLY BY THE ABOVE-MENTIONED PARTIES ARE MAINTAINED AND LEFT IN A CONDITION COMPARABLE TO THAT DETERMINED BY THE ORIGINAL INSPECTION. THE CONTRACTOR IS RESPONSIBLE TO CORRECT ANY CHANGE IN THE CONDITION RESULTING FROM THEIR OPERATIONS AS DIRECTED AND APPROVED BY THE ENGINEER.

PAYMENT FOR ALL OPERATIONS DESCRIBED ABOVE IS INCLUDED IN THE CONTRACT PRICE FOR THE PERTINENT 611 CONDUIT ITEMS.

MANHOLES, CATCH BASINS AND INLETS REMOVED OR ABANDONED

CAREFULLY REMOVE AND STORE ALL CASTINGS WITHIN CITY OF CLEVELAND RIGHT OF WAY FOR SALVAGE BY CITY OF CLEVELAND DIVISION OF WATER POLLUTION CONTROL FORCES.

CAREFULLY REMOVE AND STORE ALL CASTINGS WITHIN ODOT RIGHT OF WAY FOR SALVAGE BY ODOT FORCES.

PAYMENT FOR ALL OF THE ABOVE IS INCLUDED IN THE CONTRACT PRICE FOR THE PERTINENT 202 ITEM.

Preliminary Plans - For Review Only

CUY-90-16.28 (CCG3A)
MODEL: Sheet-06 PAPERSIZE: 34x22 (in.) DATE: 3/28/2025 TIME: 7:15:13 AM USER: Rohit.Bk
pw:\\mb-us-pw.bentley.com:mb-us-pw-03\Documents\Cleveland_OH01_Projects\ODOTDistrict12\82382\400-Engineering\Roadway\Sheets\82382_GN0001.dgn

DESIGN AGENCY
Michael Baker INTERNATIONAL
DESIGNER JTH
REVIEWER KGJ 05/10/24
PROJECT ID 82382
SHEET 78 TOTAL 2696

DRAINAGE (CONT.)

ITEM 605 - 6" SHALLOW PIPE UNDERDRAINS WITH GEOTEXTILE FABRIC, AS PER PLAN
ITEM 605 - 6" DEEP PIPE UNDERDRAINS WITH GEOTEXTILE FABRIC, AS PER PLAN

WHEN PERFORMING EXCAVATIONS BELOW THE WATER TABLE, PROVIDE UNDERDRAINS IN THE CUT SLOPES TO DRAIN GROUNDWATER THAT MAY BE ENCOUNTERED. INSTALL THE UNDERDRAIN IN A TRENCH AT THE HEAD OF THE PROPOSED EXCAVATION.

PIPE UNDERDRAIN SHALL BE PERFORATED CORRUGATED PLASTIC PIPE PER C&MS 707.31. PIPE UNDERDRAIN WITH PREFABRICATED FABRIC SLEEVES MAY BE USED WITH THE APPROVAL OF THE ENGINEER.

PLACE OBSERVATION WELL AND CLEANOUT AT GRADE BREAKS AND AT UNDERDRAIN OUTLET JUNCTIONS AS APPROVED AND DIRECTED BY THE ENGINEER. CONNECT THE OBSERVATION WELL AND CLEANOUT TO THE PERFORATED UNDERDRAIN WITH THE APPROPRIATE MANUFACTURED CONNECTIONS. EXTEND THE OBSERVATION WELL AND CLEANOUT 4 INCHES ABOVE THE SURFACE ELEVATION. CAP THE OBSERVATION WELL AND CLEANOUT WITH A THREADED SCREW CAP. CAP THE ENDS OF PERFORATED UNDERDRAIN PIPES NOT TERMINATING IN AN OBSERVATION WELL AND CLEANOUT OR CONNECTED TO OTHER CONDUITS.

PIPE UNDERDRAINS IN TRENCHES 50 INCHES OR SHALLOWER SHALL BE PAID FOR AT THE UNIT PRICE BID FOR ITEM 605 - 6" SHALLOW PIPE UNDERDRAIN, AS PER PLAN. PIPE UNDERDRAINS IN TRENCHES GREATER THAN 50 INCHES AND UP TO 96 INCHES IN DEPTH SHALL BE PAID FOR AT THE UNIT PRICE BID FOR ITEM 605 - 6" DEEP PIPE UNDERDRAIN, AS PER PLAN. THESE PRICES SHALL INCLUDE THE COST FOR MATERIALS, LABOR, EQUIPMENT, AND INCIDENTALS REQUIRED TO INSTALL THE UNDERDRAINS.

GROUNDWATER MANAGEMENT

THE CONTRACTOR IS RESPONSIBLE FOR THE STABILITY OF ALL EXCAVATED SLOPES. PERFORM ALL EXCAVATIONS IN ACCORDANCE WITH OSHA REQUIREMENTS.

AS PART OF THE CONTRACTOR'S MEANS AND METHODS, CONTRACTOR SHALL STABILIZE THE EXISTING SUBGRADE, DIRECT SURFACE RUNOFF AWAY FROM EXCAVATION, AND DEWATER EXCAVATIONS TO THE EXTENT NECESSARY FOR CONSTRUCTION. GROUNDWATER AND STORMWATER RUNOFF SHALL ALSO BE MANAGED BY THE CONTRACTOR, INCLUDING BUT NOT LIMITED TO THE SIGNIFICANT EXCAVATIONS FOR THE LOWERING OF I.R. 90 BETWEEN E. 22ND STREET AND CARNEGIE AVENUE AND CONSTRUCTION OF BRIDGE 13, BRIDGE 14, AND ADJACENT RETAINING WALLS.

GROUNDWATER LEVELS WERE RECORDED FOR 18 MONTHS (BETWEEN MARCH 2021 AND AUGUST 2022) USING VIBRATING WIRE PIEZOMETERS AT SIX LOCATIONS IN THE PROJECT AREA ALONG I.R. 90 WHERE EXCAVATIONS BELOW THE OBSERVED GROUNDWATER LEVEL ARE PROPOSED. SEE DATA IN TABLE TO THE RIGHT.

ADDITIONAL DETAILS OF THE GROUNDWATER LEVEL OBSERVATIONS IN THE PROJECT AREA CAN BE FOUND IN SUBGRADE EXPLORATION AND STRUCTURE FOUNDATION EXPLORATION REPORTS AVAILABLE FROM THE DISTRICT 12 PROJECT ENGINEER.

GROUNDWATER LEVELS FLUCTUATE SEASONALLY AS A FUNCTION OF PRECIPITATION AND OTHER HYDROLOGICAL FACTORS. THEREFORE, THERE MAY BE CONSIDERABLE CHANGE IN THE WATER TABLE OR THE PRESENCE OF WATER WHERE NOT PREVIOUSLY ENCOUNTERED.

THE FOLLOWING ESTIMATED QUANTITIES HAVE BEEN INCLUDED IN THE GENERAL SUMMARY FOR USE IN MANAGING GROUNDWATER INCLUDING PERCHED WATER AND FOR USE IN INTERCEPTING GROUNDWATER SEEPAGE AT CUT SLOPES AS DIRECTED BY THE ENGINEER:

ITEM 605 - 6" SHALLOW PIPE UNDERDRAINS WITH GEOTEXTILE FABRIC, AS PER PLAN	**3,700 FT**
ITEM 605 - 6" DEEP PIPE UNDERDRAINS WITH GEOTEXTILE FABRIC, AS PER PLAN	**5,200 FT**

PIEZOMETER ID	ADJACENT BORING ID	GROUNDWATER READINGS (FT)			SHEET REFERENCES	
		MAXIMUM ELEVATION	MINIMUM ELEVATION	AVERAGE ELEVATION	BORING LOGS	BORING PLANS
P-001	B-085-3-20	648.3	646.7	647.6	2528	2440, 2469, 2483
P-002	B-085-4-20	647.1	645.5	646.4	2529	2440, 2469, 2470, 2483, 2484
P-003	B-085-1-20	646.2	644.6	645.6	2523	2440, 2469, 2470, 2473, 2483
P-004	B-086-1-20	644.7	642.8	643.7	2530, 2531, 2532	2408, 2409, 2416, 2417, 2469, 2470, 2473, 2483
P-005	B-169-4-20	641.2	639.6	640.6	2648, 2649	2410, 2418, 2474, 2475, 2481, 2485, 2486
P-006	B-170-3-20	645.8	644.0	645.1	2663, 2664, 2665	2410, 2411, 2463, 2464, 2474, 2475, 2487, 2488

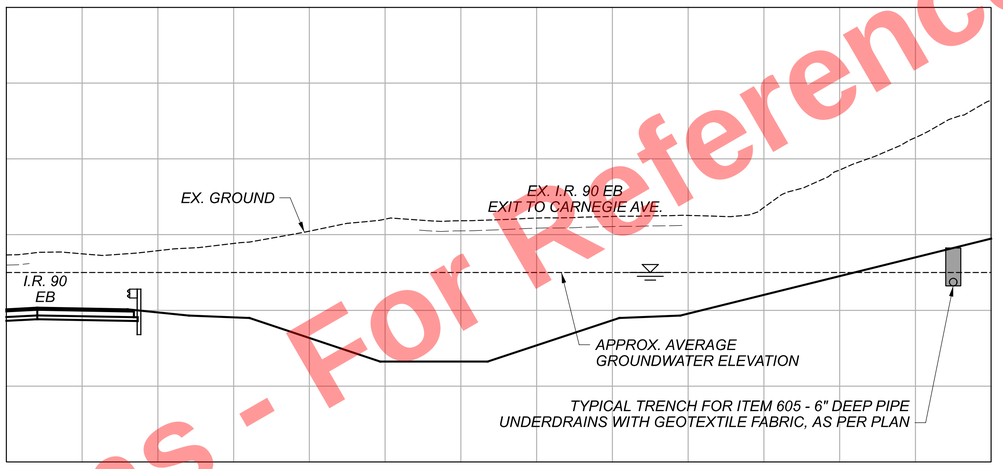

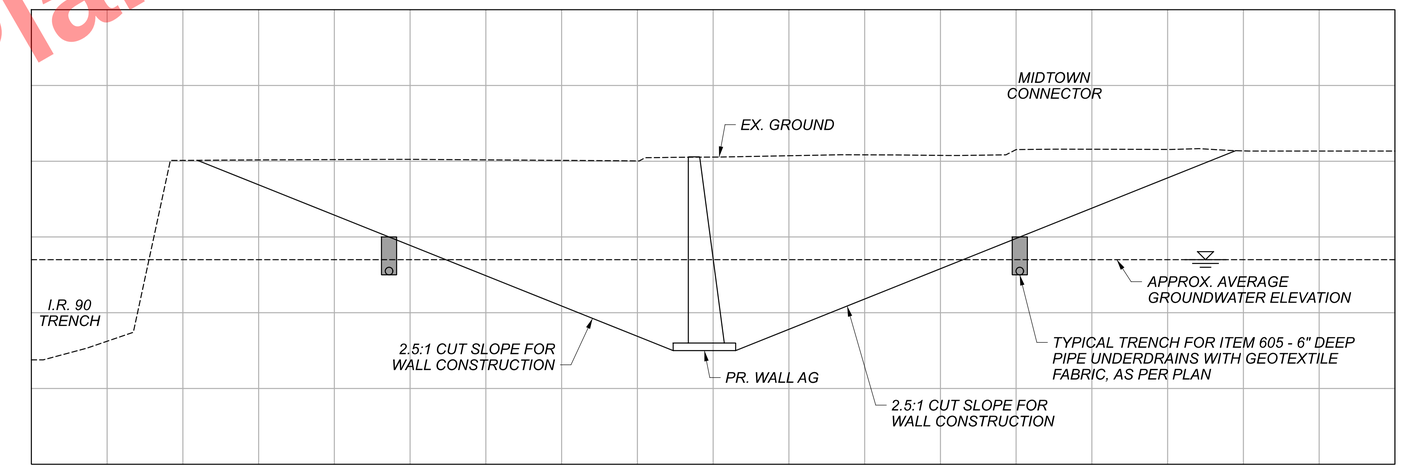

Preliminary Plans - Not For Reference Only

CUY-90-16.28 (CCG3A)
MODEL: Sheet-07 PAPERSIZE: 34x22 (in.) DATE: 3/28/2025 TIME: 7:15:14 AM USER: Rohit.Bk
pw:\\mb-us-pw.bentley.com:mb-us-pw-03\Documents\Cleveland_OH\01_Projects\ODOT\District12\82382\400-Engineering\Roadway\Sheets\82382_GN0001.dgn

DESIGN AGENCY
Michael Baker INTERNATIONAL

DESIGNER JTH
REVIEWER KGJ 05/10/24
PROJECT ID 82382
SHEET 79 TOTAL 2696

DRAINAGE (CONT.)

ITEM SPECIAL - MISCELLANEOUS METAL

EXISTING CASTINGS MAY PROVE TO BE UNSUITABLE FOR REUSE, AS DETERMINED BY THE ENGINEER. IT SHALL BE THE CONTRACTOR'S RESPONSIBILITY TO PROVIDE THE CASTINGS OF THE REQUIRED TYPE, SIZE AND STRENGTH (HEAVY OR LIGHT DUTY) FOR THE PARTICULAR STRUCTURE IN QUESTION. ALL MATERIAL SHALL MEET ITEM 611 OF THE SPECIFICATIONS AND SHALL HAVE THE PRIOR APPROVAL OF THE ENGINEER.

THE FOLLOWING ESTIMATED QUANTITY HAS BEEN CARRIED TO THE GENERAL SUMMARY FOR USE AS DIRECTED BY THE ENGINEER.

ITEM SPECIAL - MISCELLANEOUS METAL 10,000 LB

THE CONTRACTOR IS CAUTIONED TO USE EXTREME CARE IN THE REMOVAL, STORAGE AND REPLACEMENT OF ALL EXISTING CASTINGS. CASTINGS DAMAGED BY THE NEGLIGENCE OF THE CONTRACTOR, AS DETERMINED BY THE ENGINEER, SHALL BE REPLACED WITH THE PROPER NEW CASTINGS AT THE EXPENSE OF THE CONTRACTOR.

TEMPORARY DRAINAGE ITEMS

TEMPORARY DRAINAGE ITEMS LABELED ON THE MAINTENANCE OF TRAFFIC PLAN ARE ITEMIZED ON THE MOT PLANS AND CARRIED TO THE GENERAL SUMMARY.

POST CONSTRUCTION STORM WATER TREATMENT

THIS PLAN UTILIZES STRUCTURAL BEST MANAGEMENT PRACTICES (BMP'S) FOR POST CONSTRUCTION STORM WATER TREATMENT.

MANUFACTURED WATER QUALITY STRUCTURE

THIS PLAN UTILIZES MANUFACTURED WATER QUALITY STRUCTURES FOR WATER QUALITY TREATMENT. AREAS HAVE BEEN SHOWN IN THE PLANS FOR PLACEMENT OF AN OFF-LINE SYSTEM. PAYMENT FOR THESE DEVICES SHALL BE MADE AT THE CONTRACT UNIT PRICE FOR ITEM 895, MANUFACTURED WATER QUALITY STRUCTURE, TYPE 4.

EXTENDED DETENTION BASIN

THIS PLAN UTILIZES EXTENDED DETENTION BASIN(S) FOR FLOW RESTRICTION. DETENTION BASINS MAY BE USED AS SEDIMENT CONTROL DEVICES DURING CONSTRUCTION. FOLLOWING STABILIZATION OF THE TRIBUTARY AREA, FINAL GRADING OF THE DETENTION BASIN MUST MATCH THE PLANS. THE DETENTION BASIN OUTLET STRUCTURE FOR CONSTRUCTION SEDIMENT CONTROL MUST BE REMOVED AND THE OUTLET STRUCTURE MUST BE MADE TO MATCH THE DESIGN SHOWN IN THE PLANS.

ITEM SPECIAL - GAS VALVE BOX ADJUSTED TO GRADE

ADJUST GAS OR OTHER UTILITY VALVES, INCLUDING MONITORING WELLS, TO GRADE. COORDINATE WITH UTILITY OWNER PRIOR TO PERFORMING WORK. REPLACE DAMAGED CASTINGS IN KIND.

THIS ITEM IS PAID ON A UNIT PRICE BASIS AND INCLUDES ALL LABOR AND MATERIALS TO PERFORM THE WORK AS DESCRIBED.

SURFACE DRAINAGE CONTINGENCY

EVERY EFFORT HAS BEEN MADE TO PROVIDE FOR ADEQUATE CURB INLETS AND PIPE TO PROPERLY ACCOUNT FOR THE SURFACE DRAINAGE. IN THE EVENT THAT ISOLATED LOW AREAS DEVELOP DURING CONSTRUCTION OF THE PROJECT, THE FOLLOWING ESTIMATED QUANTITIES ARE PROVIDED TO BE USED AS DIRECTED BY THE ENGINEER:

ITEM 611 - 12" CONDUIT, TYPE B, 706.08 & 706.12	**2,000 FT**
ITEM 611 - 15" CONDUIT, TYPE B, 706.08 & 706.12	**200 FT**
ITEM 611 - CATCH BASIN, NO. 2-2B, AS PER PLAN	**4 EACH**
ITEM 611 - CATCH BASIN, NO. 3A, AS PER PLAN	**4 EACH**
ITEM 611 - MANHOLE, NO. 3, AS PER PLAN	**4 EACH**

PAVEMENT

CONTRACTION AND/OR EXPANSION JOINTS

ALTHOUGH SPECIFIC LOCATIONS OF CERTAIN CONTRACTION AND EXPANSION JOINTS HAVE BEEN DETAILED ON THIS PLAN, NO WAIVER OF THE SPECIFICATIONS IS INTENDED. IN ALL CASES, THE PROVISION OF EXPANSION JOINTS AT ALL MAJOR STRUCTURES INCLUDING THE MAXIMUM SPACING BETWEEN CONTRACTION JOINTS IS IN ACCORDANCE WITH STANDARD CONSTRUCTION DRAWING BP-2.2 AND THE SPECIFICATIONS.

CONTRACTION JOINTS IN CONCRETE PAVEMENT OR BASE WIDENING

WHERE NEW CONCRETE IS PLACED ADJACENT TO EXISTING CONCRETE, PROVIDE CONTRACTION JOINTS IN THE NEW CONCRETE TO FORM CONTINUOUS JOINTS WITH THOSE IN THE EXISTING CONCRETE.

THE MAXIMUM DISTANCE BETWEEN THE JOINTS IN THE NEW CONCRETE ARE IN ACCORDANCE WITH STANDARD CONSTRUCTION DRAWING BP-2.2, IF NECESSARY, ADDITIONAL JOINTS MAY BE PROVIDED IN THE NEW CONCRETE AT APPROXIMATELY EQUAL INTERVALS BETWEEN EXISTING JOINTS THAT EXCEED THE MAXIMUM SPACING.

PART-WIDTH CONSTRUCTION

BECAUSE OF THE NECESSITY TO BUILD THIS PROJECT UNDER TRAFFIC AND TO CONSTRUCT THE FULL PAVEMENT WIDTH IN STAGES, EXERCISE CARE TO PREVENT THE CONSTRUCTION OF A BUTT JOINT IN THE BASE COURSES. LAP LONGITUDINAL JOINTS AS SHOWN ON STANDARD CONSTRUCTION DRAWING BP-3.1. CONSTRUCT LONGITUDINAL JOINTS PER CMS 401.08(D).

MEDIAN AND/OR CURBING ON APPROACH SLABS

WITHIN THE LIMITS OF THE APPROACH SLAB, TRANSITION THE SHAPE OF THE MEDIAN AND/OR CURBING ON APPROACH SLABS FROM THE STANDARD SECTION ON THE APPROACHES TO THE SECTION USED ON THE BRIDGE.

ITEM 251 - PARTIAL DEPTH PAVEMENT REPAIR (442)

THE PLANS CALL FOR RESURFACING THE I.R. 90 PAVEMENT BETWEEN THE INNERBELT BRIDGES AND THE ONTARIO STREET BRIDGES AND BETWEEN THE ONTARIO STREET BRIDGES AND THE EAST 9TH STREET BRIDGES. QUANTITIES HAVE BEEN PROVIDED IN THE PAVEMENT SUBSUMMARY FOR THIS WORK.

THE FOLLOWING QUANTITY HAS BEEN INCLUDED IN THE GENERAL SUMMARY FOR USE AS DIRECTED BY THE ENGINEER TO REPAIR ANY PAVEMENT DEFICIENCIES IN THESE AREAS. SEE DETAIL BELOW FOR A TYPICAL PAVEMENT BUILDUP. THE QUANTITY IS BASED ON AN ASSUMED DEPTH OF FIVE (5) INCHES. FINAL DEPTH IS TO BE DETERMINED BY THE ENGINEER.

ITEM 251 - PARTIAL DEPTH PAVEMENT REPAIR (442) 180 CY

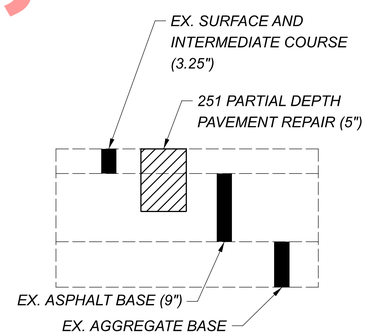

SEE FULL DETAIL ON SHEET 1432A

ITEM 251 - PARTIAL DEPTH PAVEMENT REPAIR (442), AS PER PLAN

ALL REQUIREMENTS OF C&MS 251 SHALL APPLY EXCEPT THE DOWEL BARS, DEFORMED BARS, AND TIEBARS SHALL BE INSTALLED PER THE DETAILS SHOWN ON CITY OF CLEVELAND SCD CONC 1.

ITEM 255 - FULL DEPTH PAVEMENT REMOVAL AND RIGID REPLACEMENT, TYPE 1, CLASS QC1, AS PER PLAN A
ITEM 255 - FULL DEPTH PAVEMENT REMOVAL AND RIGID REPLACEMENT, TYPE 1, CLASS QC1, AS PER PLAN B

THIS ITEM SHALL CONSIST OF REPLACING EXISTING PAVEMENT PER ITEM 255 AND THE NOTES BELOW AND DETAILS ON SHEET 1432A.

EXISTING CONCRETE PAVEMENT THICKNESS MAY VARY FROM THAT SHOWN ON THE TYPICAL SECTIONS BY PLUS TWO INCHES OR MINUS ONE INCH. NO ADJUSTMENT IN PAYMENT FOR THIS ITEM SHALL BE MADE PROVIDING THAT THE AVERAGE PAVEMENT THICKNESS IS WITHIN ONE INCH OF THE THICKNESS SHOWN ON THE TYPICAL SECTIONS. ADDITIONAL COMPENSATION SHALL BE MADE BY CHANGE ORDER FOR THE MATERIAL COST OF CONCRETE ONLY WHEN THE AVERAGE THICKNESS EXCEEDS THE ONE INCH MAXIMUM TOLERANCE ABOVE. THE VOLUME OF CONCRETE PAID FOR SHALL BE BASED UPON THE AMOUNT OF CONCRETE ADDITIONAL ABOVE THE ONE INCH TOLERANCE LIMIT.

THE CONTRACTOR SHALL SAW THROUGH THE REMAINING ASPHALT OVERLAY AFTER THE PAVEMENT PLANING OPERATION. THE CONTRACTOR SHALL REMOVE THE EXISTING OVERLAY AND RIGID PAVEMENT WITH CARE SO AS TO NOT DISTURB THE ADJACENT REMAINING CONCRETE PAVEMENT AND OVERLAY.

IF, AFTER REMOVAL OF THE RIGID PAVEMENT THE ENGINEER DETERMINES THAT THE SUBBASE OR SUBGRADE HAS FAILED OR IS PUMPING, THE ENGINEER WILL DIRECT THE CONTRACTOR TO EXCAVATE THE UNSUITABLE MATERIAL AND REPLACE IT WITH COMPACTED 304 AGGREGATE. QUANTITIES OF ITEM 203 - EXCAVATION AND ITEM 304 - AGGREGATE BASE HAVE BEEN PROVIDED TO REPAIR SAID FAILED SUBBASE OR SUBGRADE AREAS.

PAVEMENT REPAIR LESS THAN OR EQUAL TO TEN (10) FEET IN LENGTH SHALL BE PAID FOR UNDER "FULL DEPTH RIGID PAVEMENT REMOVAL AND REPLACEMENT, TYPE 1, CLASS QC1, AS PER PLAN, A". PAVEMENT REPAIRS GREATER THAN TEN (10) FEET IN LENGTH SHALL BE PAID FOR UNDER "FULL DEPTH RIGID PAVEMENT REMOVAL AND REPLACEMENT, TYPE 1, CLASS QC1, AS PER PLAN B".

ITEM	UNIT	DESCRIPTION
255	SY	FULL DEPTH RIGID PAVEMENT REMOVAL AND RIGID REPLACEMENT, TYPE 1, CLASS QC1, AS PER PLAN A
255	SY	FULL DEPTH RIGID PAVEMENT REMOVAL AND RIGID REPLACEMENT, TYPE 1, CLASS QC1, AS PER PLAN B
255	FT	FULL DEPTH PAVEMENT SAWING
203	CY	EXCAVATION
304	CY	AGGREGATE BASE

FOR ESTIMATED QUANTITIES, SEE SHEET 167

ITEM 255 - FULL DEPTH PAVEMENT REMOVAL AND RIGID REPLACEMENT, TYPE 1, CLASS QC1, AS PER PLAN C

ALL REQUIREMENTS OF C&MS 255 SHALL APPLY EXCEPT THE DOWEL BARS, DEFORMED BARS, AND TIEBARS SHALL BE INSTALLED PER THE DETAILS SHOWN ON CITY OF CLEVELAND SCD CONC 1.

IN ADDITION TO THE REQUIREMENTS ABOVE, APPLY THE OTHER REQUIREMENTS FOR ITEM 255 - FULL DEPTH PAVEMENT REMOVAL AND RIGID REPLACEMENT, TYPE 1, CLASS QC1, AS PER PLAN A AND B.

ITEM 305 - 9" CONCRETE BASE, CLASS QC 1P, AS PER PLAN
ITEM 451 - 12" REINFORCED CONCRETE PAVEMENT, CLASS QC 1P, AS PER PLAN
ITEM 452 - 10" NON-REINFORCED CONCRETE PAVEMENT, CLASS QC 1P, AS PER PLAN

ALL REQUIREMENTS OF C&MS 305, 451, AND 452 SHALL APPLY EXCEPT THE DOWEL BARS, DEFORMED BARS, AND TIEBARS SHALL BE INSTALLED PER THE DETAILS SHOWN ON CITY OF CLEVELAND SCD CONC 1.

ITEM 441 - ASPHALT CONCRETE SURFACE COURSE, TYPE 1, (448), AS PER PLAN, PG70-22M

THE COARSE VIRGIN AGGREGATE FOR THIS ITEM SHALL CONSIST OF A BLEND OF 60% MIN. AIR COOLED BLAST FURNACE SLAG (ACBFS) OR TRAP ROCK FROM ONTARIO WITH LIMESTONE COMPRISING THE REMAINING PERCENTAGE.

ITEM 441 - ASPHALT CONCRETE INTERMEDIATE COURSE, TYPE 1, (449), AS PER PLAN, PG64-22

PAVING BETWEEN THE MEDIAN BARRIERS SHALL BE COMPACTED USING EITHER HAND OR MECHANICAL METHODS. FINISHED SURFACES SHALL BE SMOOTH AND SLOPED TO DRAIN FROM THE HIGH SIDE BARRIER TO LOW SIDE BARRIER.

ITEM 442 - ASPHALT CONCRETE SURFACE COURSE, 12.5 MM, TYPE A (446), AS PER PLAN, PG76-22M

THE COARSE VIRGIN AGGREGATE FOR THIS ITEM SHALL BE LIMITED TO A BLEND OF AIR COOLED BLAST FURNACE SLAG (ACBFS) OR TRAP ROCK FROM ONTARIO AND LIMESTONE. THE CONTRACTOR SHALL USE A MINIMUM 60% OF ACBFS OR TRAP ROCK FROM ONTARIO WITH LIMESTONE COMPRISING THE REMAINING PERCENTAGE. AT LEAST 50% OF FINE VIRGIN AGGREGATE FOR THIS ITEM SHALL BE LIMITED TO ACBFS OR TRAP ROCK FROM ONTARIO.

TABLE 442.02-2 APPLIES EXCEPT NO. 4 SIEVE REQUIREMENTS ARE 52 TO 60 TOTAL PERCENT PASSING. FOR THE NO. 4 SIEVE DO NOT EXCEED 63 IN PRODUCTION.

WHEN ACBFS IS USED FOR A FRACTION OF THE COARSE AGGREGATE, PROVIDE A TOTAL ASPHALT BINDER CONTENT GREATER THAN OR EQUAL TO 6.2 PERCENT. IF ACBFS MAKES UP 100% OF THE COARSE AGGREGATE, APPLY THE BINDER CONTENT REQUIREMENTS OF C&MS 442.

ITEM SPECIAL - PRESSURE RELIEF JOINT, TYPE B

THIS ITEM SHALL MEET ALL THE SPECIFICATIONS OF ITEM 451. SEE SCD AS-2-15 AND SCD BP-2.4 FOR DETAILS.

CITY STREET CONTINGENCY

THE FOLLOWING ESTIMATED QUANTITIES ARE PROVIDE FOR USED AS DIRECTED BY THE ENGINEER FOR ANY UNANTICIPATED WORK ALONG CITY STREETS:

ITEM 452 - 10" NON-REINFORCED CONCRETE PAVEMENT, CLASS QC 1P, AS PER PLAN	**775 SY**
ITEM 608 - 6" CONCRETE WALK, AS PER PLAN	**4,500 SF**
ITEM 608 - CURB RAMP, AS PER PLAN	**475 SF**
ITEM 609 - CURB, TYPE 6	**750 FT**

Preliminary plans - Not for construction
For reference only

CUY-90-16.28 (CCG3A)
MODEL: Sheet-08 PAPERSIZE: 34x22 (in.) DATE: 5/13/2025 TIME: 3:13:16 PM USER: Mala.Gallagher
pw:\\mb-us-pw.bentley.com:mb-us-pw-03\Documents\Cleveland_OH\01_Projects\ODOT\District12\82382\400-Engineering\Roadway\Sheets\82382_GN0001.dgn
DESIGN AGENCY
Michael Baker INTERNATIONAL
DESIGNER JTH
REVIEWER KGJ 05/10/24
PROJECT ID 82382
SHEET 80 TOTAL 2696

INCIDENTALS

ITEM 619 - FIELD OFFICE, TYPE C, AS PER PLAN

ALL REQUIREMENTS OF C&MS 619 SHALL APPLY EXCEPT AS MODIFIED HEREIN:

THE FIELD OFFICE SHALL BE A SUITE TYPE OFFICE (NO TRAILER OR MODULAR OFFICE) WITH A MINIMUM OF 4,000 SQUARE FEET AT GROUND LEVEL WITH A MINIMUM CEILING HEIGHT OF EIGHT (8) FEET. PROVIDE TWO (2) OUTSIDE DOORS, LOCKABLE VANDAL-PROOF CYLINDER-TYPE DEADBOLTS, AND LOCKABLE WINDOWS. THE FLOOR SPACE WILL BE DIVIDED INTO TWO (2) RESTROOMS, ONE (1) GENERAL OFFICE AREA (MINIMUM 400 SQUARE FEET), NOT LESS THAN SEVEN (7) INDIVIDUAL OFFICES (MINIMUM 300 SQUARE FEET EACH) AS SEPARATE ENCLOSED ROOMS (NO CUBICLE DIVIDERS WILL BE ACCEPTED), ONE (1) KITCHEN SPACE INCLUDING SINK, REFRIGERATOR, AND MICROWAVE, AND ONE (1) CONFERENCE ROOM (MINIMUM 1000 SQUARE FEET).

FURNISH NEAT, SANITARY, ENCLOSED TOILET ACCOMMODATIONS CONNECTED TO AN EXISTING SANITARY SEWER LINE FOR THE USE OF THE OCCUPANTS OF THE FIELD OFFICE, MEETING APPLICABLE STATE AND LOCAL CODES AND ORDINANCES. FURNISH ASSOCIATED LAVATORY AND SANITARY SUPPLIES. POTABLE HOT AND COLD RUNNING WATER WILL BE PROVIDED IN THE RESTROOM FOR SANITARY PURPOSES.

FURNISH TRASH COLLECTION SERVICE/DUMPSTER.

FURNISH A PROFESSIONAL, BONDED, AND INSURED JANITORIAL SERVICE WITH A WEEKLY CLEANING OF THE ENTIRE OFFICE TO INCLUDE THE RESTROOM FACILITIES FOR THE DURATION OF THE PROJECT.

FURNISH BOTTLED DRINKING WATER SERVICES WITH A HOT AND COLD DISPENSER AND ASSOCIATED SUPPLIES.

FURNISH A BOX FOR STORING A NUCLEAR DENSITY GAUGE WITH REQUIREMENTS AS SET FORTH IN C&MS 619.02.

FURNISH AND MAINTAIN A BROADBAND INTERNET CONNECTION CAPABLE OF MINIMUM DOWNLOAD SPEEDS OF 1.0 GB/S. PROVIDE A WIRELESS ROUTER THAT SUPPORTS WI-FI STANDARD 802.11AX (WIFI 6) AND A MINIMUM WIRELESS DATA TRANSFER RATE OF 4000 MB/S. PROVIDE PRE-WIRED ETHERNET ACCESS FOR ALL INDIVIDUAL OFFICES AND THE CONFERENCE ROOM.

FURNISH TEN (10) DESK AND CHAIR SETS, THIRTY (30) STACKABLE CHAIRS, TWENTY (20) WORK TABLES (30" X 72") AND TWELVE (12) 24-QUART WASTE BASKETS WITH APPROPRIATELY SIZED TRASH BAGS.

FURNISH AND INSTALL TWO (2) WALL-MOUNTED 8' X 4' GLASS, MAGNETIC DRY ERASE BOARDS.

FURNISH ONE (1) NEW TELEVISION WITH THE FOLLOWING SPECIFICATIONS:

- *A) DIAGONAL SCREEN SIZE: 70" MINIMUM*
- *B) NATIVE RESOLUTION: 4K*
- *C) HDMI PORTS: 3*
- *D) ALL ACCESSORIES NECESSARY TO OPERATE*
- *E) ALL HARDWARE AND INSTALLATION NECESSARY TO HANG THE TELEVISION ON THE WALL IN THE CONFERENCE ROOM.*

THE FIELD OFFICE WILL BE APPROVED IN ADVANCE BY THE ENGINEER AND FULLY OPERATIONAL WITHIN THIRTY (30) DAYS AFTER THE SIGNING AND EXECUTION OF THE PROJECT OR PRIOR TO THE START OF ANY CONSTRUCTION WORK, WHICHEVER COMES FIRST.

THE DEPARTMENT WILL MEASURE FIELD OFFICE, TYPE C, AS PER PLAN BY THE NUMBER OF MONTHS THE OFFICE IS MAINTAINED. A PARTIAL MONTH AT THE END OF THE PROJECT WILL BE PAID AS A FULL MONTH.THE DEPARTMENT WILL PAY FOR ACCEPTED QUANTITIES AT THE CONTRACT PRICE PER MONTH OF ITEM 619 - FIELD OFFICE, TYPE C, AS PER PLAN.

THE FOLLOWING QUANTITY HAS BEEN CARRIED TO THE GENERAL SUMMARY FOR THIS WORK:

ITEM 619 - FIELD OFFICE, TYPE C, AS PER PLAN 72 MNTH

Preliminary Plans - For Reference Only

CUY-90-16.28 (CCG3A)
MODEL: Sheet-09 PAPERSIZE: 34x22 (in.) DATE: 5/13/2025 TIME: 3:14:21 PM USER: Mala.Gallagher
pw:\\mb-us-pw.bentley.com:mb-us-pw-03\Documents\Cleveland_OH\01_Projects\ODOT\District12\82382\400-Engineering\Roadway\Sheets\82382_GN0001.dgn

DESIGN AGENCY
Michael Baker INTERNATIONAL

DESIGNER JTH
REVIEWER KGJ 05/10/24
PROJECT ID 82382
SHEET 80A TOTAL 2696

MAINTENANCE OF TRAFFIC GENERAL NOTES

ITEM 614, MAINTAINING TRAFFIC

I.R. 77 & I.R. 90 - GENERAL
A MINIMUM OF 3 LANES OF TRAFFIC IN EACH DIRECTION ON INTERSTATE ROUTES 77 AND 90 SHALL BE MAINTAINED AT ALL TIMES BY USE OF THE EXISTING PAVEMENT, THE COMPLETED PAVEMENT, ITEM 615 PAVEMENT FOR MAINTAINING TRAFFIC AND ITEM 615 ROADS FOR MAINTAINING TRAFFIC. SEE BELOW FOR EXCEPTIONS TO THESE LANE REQUIREMENTS.

I.R. 77 / I.R. 90 INTERCHANGE RAMPS - GENERAL
THE INTERCHANGE RAMP FROM I.R. 90 WESTBOUND TO I.R. 77 SOUTHBOUND AND FROM I.R. 77 NORTHBOUND TO I.R. 90 EASTBOUND MUST BE MAINTAINED AT ALL TIMES BY USE OF THE EXISTING PAVEMENT, THE COMPLETED PAVEMENT, ITEM 615 PAVEMENT FOR MAINTAINING TRAFFIC, AND ITEM 615 ROADS FOR MAINTAINING TRAFFIC. SEE BELOW FOR EXCEPTIONS TO THESE LANE REQUIREMENTS.

E. 14TH ST. (BETWEEN COMMUNITY COLLEGE AVE. AND CARNEGIE AVE.) - PHASE 1
E. 14TH ST. MAY BE CLOSED BETWEEN COMMUNITY COLLEGE AVE. AND CARNEGIE AVE. FOR A PERIOD NOT TO EXCEED 90 CALENDAR DAYS (3 MONTHS) AND TRAFFIC MAY BE DETOURED AS SHOWN ON SHEET 153

E. 14TH ST. (BETWEEN ORANGE AVE. AND COMMUNITY COLLEGE AVE.) - PHASE 1
E. 14TH ST. MAY BE CLOSED BETWEEN ORANGE AVE. AND COMMUNITY COLLEGE AVE. FOR A PERIOD NOT TO EXCEED 150 CALENDAR DAYS (5 MONTHS) AND TRAFFIC MAY BE DETOURED AS SHOWN ON SHEET 153

COMMUNITY COLLEGE AVE. - PHASE 1
COMMUNITY COLLEGE AVE. MAY BE CLOSED BETWEEN E. 14TH ST. AND E. 22ND ST. FOR A PERIOD NOT TO EXCEED 90 CALENDAR DAYS (3 MONTHS) AND TRAFFIC MAY BE DETOURED AS SHOWN ON SHEET 153

I.R. 77 NORTHBOUND TO E. 14TH ST./E. 22ND ST. EXIT RAMP (EXIT 162B) - PHASE 1
I.R. 77 NORTHBOUND TO E. 14TH ST./E. 22ND ST. EXIT RAMP MAY BE CLOSED FOR A PERIOD NOT TO EXCEED 150 CALENDAR DAYS (5 MONTHS) AND TRAFFIC MAY BE DETOURED AS SHOWN ON SHEET 154

E. 22ND ST. - PHASE 1 THROUGH PHASE 2
E. 22ND ST. MAY BE CLOSED BETWEEN CARNEGIE AVE. AND CENTRAL AVE. FOR A PERIOD NOT TO EXCEED 365 CALENDAR DAYS (12 MONTHS) AND TRAFFIC MAY BE DETOURED AS SHOWN ON SHEET 155

CEDAR AVE. - PHASE 1 THROUGH PHASE 2
CEDAR AVE. MAY BE CLOSED TO THROUGH TRAFFIC BETWEEN E. 28TH ST. AND E. 22ND ST. FOR A PERIOD NOT TO EXCEED 365 CALENDAR DAYS (12 MONTHS) AND TRAFFIC MAY BE DETOURED AS SHOWN ON SHEET 155
LOCAL TRAFFIC SHALL BE MAINTAINED AT ALL TIMES ON CEDAR AVE. AS SHOWN IN PHASE 2 - CEDAR AVE. SUBPHASE A - C PLANS. (SHEETS 310 -314). CEDAR SUBPHASING NOT TO EXCEED 120 CALENDAR DAYS (4 MONTHS).

I.R. 90 EASTBOUND TO E. 9TH ST. EXIT RAMP (EXIT 172A) - PHASE 2
I.R. 90 EASTBOUND TO E. 9TH ST. EXIT RAMP MAY BE CLOSED FOR A PERIOD NOT TO EXCEED 120 CALENDAR DAYS (4 MONTHS) AND TRAFFIC MAY BE DETOURED AS SHOWN ON SHEET 157

CARNEGIE AVE. - PHASE 2 THROUGH PHASE 8
CARNEGIE AVE. MAY BE CLOSED BETWEEN E. 22ND ST. AND E. 28TH ST. FOR A PERIOD NOT TO EXCEED 1,200 CALENDAR DAYS (40 MONTHS) AND TRAFFIC MAY BE DETOURED AS SHOWN ON SHEET 158 DURING PHASE 2 THROUGH PHASE 4.
TRAFFIC MAY BE DETOURED AS SHOWN ON SHEET 165 DURING PHASE 5 THROUGH PHASE 8.

PROSPECT AVE. TO I.R. 90 EASTBOUND AND I.R. 90 WESTBOUND ENTRANCE RAMPS - PHASE 3 THROUGH PHASE 8
THE PROSPECT AVE. TO I.R. 90 EASTBOUND AND I.R. 90 WESTBOUND ENTRANCE RAMPS MAY BE CLOSED FOR A PERIOD NOT TO EXCEED 1,200 CALENDAR DAYS (40 MONTHS) AND TRAFFIC MAY BE DETOURED AS SHOWN ON SHEET 160

E. 14TH ST AND 21ST ST. TO I.R. 77 SOUTHBOUND ENTRANCE RAMPS - PHASE 3 AND PHASE 4
E. 14TH ST AND 21ST ST. TO I.R. 77 SOUTHBOUND ENTRANCE RAMPS MAY BE CLOSED FOR A PERIOD NOT TO EXCEED 420 CALENDAR DAYS (14 MONTHS) AND TRAFFIC MAY BE DETOURED AS SHOWN ON SHEET 159

E. 21ST ST, E. 22ND ST, & CENTRAL AVE - PHASE 4B
FULL CLOSURE OF E. 21ST ST IN PHASE 4B NOT TO EXCEED 30 CALENDAR DAYS (1 MONTH).
PARTIAL CLOSURE OF E. 22ND ST & CENTRAL AVE IN PHASE 4B NOT TO EXCEED 30 DAYS (1 MONTH).

ITEM 614, MAINTAINING TRAFFIC (CONTINUED)

I.R. 77 NORTHBOUND TO E. 22ND ST. EXIT RAMP (EXIT 163C) - PHASE 6
I.R. 77 NORTHBOUND TO E. 22ND ST. EXIT RAMP MAY BE CLOSED FOR A PERIOD NOT TO EXCEED 30 CALENDAR DAYS (1 MONTH) AND TRAFFIC MAY BE DETOURED AS SHOWN ON SHEET 166

I.R. 90 EASTBOUND TO E. 9TH ST. NORTHBOUND EXIT RAMP (EXIT 172A) - PHASE 8
I.R. 90 EASTBOUND TO E. 9TH ST. NORTHBOUND EXIT RAMP MAY BE CLOSED FOR A PERIOD NOT TO EXCEED 30 CALENDAR DAYS (1 MONTH) AND TRAFFIC MAY BE DETOURED AS SHOWN ON SHEET 167

I.R. 90 WEEKEND CLOSURES - PHASES 1, 2, 4, & 7
CLOSURES TO BE IMPLEMENTED USING LAW ENFORCEMENT, PORTABLE CHANGEABLE MESSAGE SIGNS, AND PUBLIC INFORMATION CAMPAIGNS. FOR MORE INFORMATION, SEE THE "I.R. 90 WEEKEND CLOSURES" NOTE ON SHEET 82

NO WORK SHALL BE PERFORMED AND ALL EXISTING LANES SHALL BE OPEN TO TRAFFIC DURING THE FOLLOWING DESIGNATED HOLIDAYS OR EVENTS:

CHRISTMAS (OBSERVED) — FOURTH OF JULY (OBSERVED)
NEW YEAR'S (OBSERVED) — LABOR DAY
MEMORIAL DAY — THANKSGIVING
GENERAL AND REGULAR ELECTION DAY

THE PERIOD OF TIME THAT THE LANES ARE TO BE OPEN DEPENDS ON THE DAY OF THE WEEK ON WHICH THE HOLIDAY OR EVENT FALLS. THE FOLLOWING SCHEDULE SHALL BE USED TO DETERMINE THIS PERIOD:

DAY OF HOLIDAY OR EVENT	TIME ALL LANES MUST BE OPEN TO TRAFFIC
SUNDAY	12:00 N FRIDAY THROUGH 6:00 AM MONDAY
MONDAY	12:00 N FRIDAY THROUGH 6:00 AM TUESDAY
TUESDAY	12:00 N MONDAY THROUGH 6:00 AM WEDNESDAY
TUESDAY (GEN/REG. ELECTION)	5:00 AM TUESDAY THROUGH 12:00 AM WEDNESDAY
WEDNESDAY	12:00 N TUESDAY THROUGH 6:00 AM THURSDAY
THURSDAY	12:00 N WEDNESDAY THROUGH 6:00 AM FRIDAY
THURSDAY (THANKSGIVING ONLY)	6:00 AM WEDNESDAY THROUGH 6:00 AM MONDAY
FRIDAY	12:00 N THURSDAY THROUGH 6:00 AM MONDAY
SATURDAY	12:00 N FRIDAY THROUGH 6:00 AM MONDAY

DURING THE SAME PERIODS, MAINTAIN PEDESTRIAN ACCESS IF PEDESTRIAN ACCESS WAS PRESENT PRIOR TO CONSTRUCTION.

SHOULD THE CONTRACTOR FAIL TO MEET ANY OF THESE REQUIREMENTS, THE CONTRACTOR SHALL BE ASSESSED A DISINCENTIVE AS SPECIFIED IN THE "LANE VALUE CONTRACT" TABLE ON SHEET 88

LENGTH AND DURATION OF LANE CLOSURES AND RESTRICTIONS SHALL BE AT THE APPROVAL OF THE ENGINEER. IT IS THE INTENT TO MINIMIZE THE IMPACT TO THE TRAVELING PUBLIC. LANE CLOSURES OR RESTRICTIONS OVER SEGMENTS OF THE PROJECT IN WHICH NO WORK IS ANTICIPATED WITHIN A REASONABLE TIME FRAME, AS DETERMINED BY THE ENGINEER, SHALL NOT BE PERMITTED. THE LEVEL OF UTILIZATION OF MAINTENANCE OF TRAFFIC DEVICES SHALL BE COMMENSURATE WITH THE WORK IN PROGRESS.

NOTICE OF CLOSURE SIGNS (W20-H13) SHALL BE ERECTED BY THE CONTRACTOR PRIOR TO THE SCHEDULED ROAD OR RAMP CLOSURE IN ACCORDANCE WITH THE NOTICE OF CLOSURE TIME TABLE BELOW. AT THE APPROVAL OF THE ENGINEER, PORTABLE CHANGEABLE MESSAGE SIGNS MAY BE USED IN LIEU OF THE STANDARD FLATSHEET SIGN FOR CLOSURE DURATIONS OF LESS THAN 1 WEEK.

THE SIGNS SHALL BE ERECTED ON THE RIGHT-HAND SIDE OF THE ROAD/RAMP FACING TRAFFIC. THEY SHALL BE PLACED SO AS NOT TO INTERFERE WITH THE VISIBILITY OF ANY OTHER TRAFFIC CONTROL SIGNS. ON ROADWAYS, THEY SHOULD BE ERECTED AT OR NEAR THE POINT OF CLOSURE. THE SIGNS MAY BE ERECTED ANYWHERE ON RAMPS AS LONG AS THEY ARE VISIBLE TO THE MOTORISTS USING THE RAMP. ON ENTRANCE RAMPS, THE SIGN SHALL BE ERECTED WELL IN ADVANCE OF THE MERGE AREA TO AVOID DISTRACTING MOTORISTS.

ITEM 614, MAINTAINING TRAFFIC (CONTINUED)

NOTICE OF CLOSURE SIGN TIME TABLE

ITEM	DURATION OF CLOSURE	SIGN DISPLAYED TO PUBLIC
RAMP & ROAD CLOSURES	>=2 WEEKS	14 CALENDAR DAYS PRIOR TO CLOSURE
	> 12 HOURS & < 2 WEEKS	7 CALENDAR DAYS PRIOR TO CLOSURE
	<= 12 HOURS	2 BUSINESS DAYS PRIOR TO CLOSURE

THE SIGN SHALL DISPLAY THE DATE OF THE CLOSURE IN MMM-DD FORMAT AND THE NUMBER OF DAYS OF THE CLOSURE. THE LAST LINE OF THE W20-H13 SIGN LISTS A PHONE NUMBER WHICH A MOTORIST MAY CALL FOR ADDITIONAL INFORMATION. THIS IS TO BE A SPECIFIC OFFICE WITHIN THE DISTRICT RATHER THAN THE GENERAL SWITCHBOARD NUMBER.

THE CONTRACTOR SHALL PROVIDE, ERECT AND MAINTAIN SIGNS AND SIGN SUPPORTS, AS DETAILED IN THE OHIO MANUAL OF UNIFORM TRAFFIC CONTROL DEVICES, AND TYPE III BARRICADES OF THE TYPE AND LOCATION AS SHOWN ON THE MAINTENANCE OF TRAFFIC PLANS AND DETOUR SHEETS.

ALL WORK AND TRAFFIC CONTROL DEVICES SHALL BE IN ACCORDANCE WITH C&MS 614 AND OTHER APPLICABLE PORTIONS OF THE SPECIFICATIONS, AS WELL AS THE OHIO MANUAL OF UNIFORM TRAFFIC CONTROL DEVICES. PAYMENT FOR ALL LABOR, EQUIPMENT AND MATERIALS SHALL BE INCLUDED IN THE LUMP SUM CONTRACT PRICE FOR ITEM 614, MAINTAINING TRAFFIC, UNLESS SEPARATELY ITEMIZED IN THE PLAN.

GREATER CLEVELAND REGIONAL TRANSIT AUTHORITY COORDINATION

THE APPROPRIATE GREATER CLEVELAND REGIONAL TRANSIT AUTHORITY (GCRTA) REPRESENTATIVE SHOULD BE INVITED TO THE PROJECTS PRE-CONSTRUCTION CONFERENCE.

IMMEDIATE/URGENT CONSTRUCTION 216-566-5135

OPERATIONS DIVISION - DIRECTOR OF SERVICE MANAGEMENT
JOEL FREILICH 216-356-3018 JFREILICH@GCRTA.ORG

THE PROJECT SPONSOR OR CONTRACTOR SHOULD CONTACT GCRTA AND PROVIDE A WRITTEN NOTIFICATION FOURTEEN (14) DAYS PRIOR TO ANY CONSTRUCTION THAT WILL AFFECT NEARBY BUS STOPS OR SERVICE.

THE CONTRACTOR SHALL NOTIFY GCRTA AT LEAST FIVE (5) BUSINESS DAYS IN ADVANCE OF ALL STREET CLOSURES AFFECTING TRANSIT OPERATIONS REGARDLESS OF THE DURATION OF CLOSURE.

THE CONTRACTOR SHALL WORK WITH GCRTA TO ESTABLISH AN APPROVED TEMPORARY BUS STOP LOCATION.

GCRTA WILL PROVIDE AND POST THE APPROPRIATE TEMPORARY BUS SIGNAGE.

THE CONTRACTOR SHALL NOTIFY GCRTA AT LEAST FIVE (5) BUSINESS DAYS IN ADVANCE OF CONSTRUCTION COMPLETION SO THAT PERMANENT BUS STOP SIGNS CAN BE RE-INSTALLED BY GCRTA.

THE CONTRACTOR SHALL NOT REMOVE ANY BUS STOP SIGNS WITHOUT PRIOR AUTHORIZATION FROM GCRTA.

CEDAR AVE. WILL BE CLOSED BETWEEN CARNEGIE AVE. AND E. 28TH ST. WHICH WILL IMPACT THE NO. 8 - CEDAR - BUCKEYE BUS ROUTE. FOR TEMPORARY BUS STOP LOCATIONS DURING PHASE 1 AND PHASE 2, SEE SHEET 155

E. 22ND ST. SOUTHBOUND BETWEEN CARNEGIE AVE. AND CEDAR AVE. WILL BE CLOSED TO BUSSES DURING PHASE 4 SUBPHASES A AND B. THE NO. 8 - CEDAR - BUCKEYE BUS EASTBOUND ROUTE WILL BE DETOURED VIA E. 14TH ST. TO COMMUNITY COLLEGE AVE. TO E. 22ND ST. TO CEDAR AVE.

NOTIFICATION

THE CONTRACTOR SHALL NOTIFY IN WRITING THE FOLLOWING AGENCIES AT LEAST TWO WEEKS PRIOR TO THE START OF CONSTRUCTION AND BEFORE IMPLEMENTING ANY SUBSTANTIAL CHANGE IN TRAFFIC PATTERN OR CLOSING ANY STREET TO TRAFFIC:

THE OHIO DEPARTMENT OF TRANSPORTATION - DISTRICT 12 - PUBLIC INFORMATION OFFICER (PIO)
CLEVELAND WATER POLLUTION CONTROL
THE CITY OF CLEVELAND DIVISION OF TRAFFIC ENGINEERING, DEPARTMENT OF PUBLIC WORKS, DEPARTMENT OF PUBLIC SAFETY, DEPARTMENT OF PUBLIC UTILITIES, AND BOARD OF EDUCATION
THE NORTHEAST OHIO REGIONAL SEWER DISTRICT

THE CONTRACTOR SHALL ALSO NOTIFY IN WRITING THE FOLLOWING ENTITIES AT LEAST TWO WEEKS PRIOR TO ANY ACCESS CHANGES:

ST. VINCENT CHARITY MEDICAL CENTER
OHIO FIRST CLASS CREDIT UNION
CLEVELAND STATE UNIVERSITY
CENTRAL CADILLAC
WALKER & WEEKS
CARPENTERS, LOCAL 435

SITE CONTROL

- PARCEL 309 (1910 CARNEGIE AVE.)

THE CONTRACTOR SHALL NOT ACCESS PARCEL 309 UNTIL AUTHORIZED BY THE ENGINEER (ASSUMED ACCESS WILL BE PERMITTED BY JULY 13, 2026). WORK IMPACTED BY THIS ACCESS RESTRICTION INCLUDES CONSTRUCTION OF PORTIONS OF WALL AD, CENTRAL AVE. CONNECTOR, AND RAMP A2 ROADWAYS.

- PARCEL 319 (2163 CEDAR AVE.)

THE CONTRACTOR SHALL NOT ACCESS PARCEL 319 UNTIL AUTHORIZED BY THE ENGINEER (ASSUMED ACCESS WILL BE PERMITTED BY MARCH 16, 2027). WORK IMPACTED BY THIS ACCESS RESTRICTION INCLUDES CONSTRUCTION OF PORTIONS OF WALL AG, BRIDGE 13, AND CEDAR AVE. / MIDTOWN CONNECTOR ROADWAYS.

PERMITTED LANE CLOSURE SCHEDULE (PLCS)

LANE CLOSURE(S) SHALL CONFORM TO THE PLCS. PUBLISHED PLCS INFORMATION CAN BE FOUND ON THE ODOT WEBSITE AT: HTTPS://WWW.TRANSPORTATION.OHIO.GOV/WPS/PORTAL/GOV/ODOT/WORKING/DATA-TOOLS/RESOURCES/PERMITTED-LANE-CLOSURE

THE MONTHLY PUBLISHED SCHEDULES REQUIRED TO BE USED, FOR EACH PLCS SEGMENT WITHIN THE PROJECT AREA, ARE THOSE THAT COMPRISE THE CONSECUTIVE 12-MONTH PERIOD BEGINNING 15 MONTHS PRIOR TO THE MONTH AND YEAR OF SALE AND ENDING 4 MONTHS PRIOR TO THE MONTH AND YEAR OF SALE. THESE SAME 12 MONTHS APPLY FOR THE LIFE OF THE PROJECT AND SHALL BE APPLIED TO EACH RESPECTIVE MONTH OF CONSTRUCTION (MONTH OF LANE CLOSURE(S) SHALL MATCH MONTH OF PLCS USED). LANE CLOSURE(S) IN PLACE FOR MULTIPLE MONTHS SHALL ALWAYS COMPLY WITH THE CURRENT RESPECTIVE MONTH.

MORE RESTRICTIVE CHANGES TO THE ALLOWABLE LANE CLOSURE HOURS ARE AT THE DISCRETION OF THE ENGINEER IN ORDER TO COMPLY WITH THE TRAFFIC MANAGEMENT IN WORK ZONES POLICY (21-008(P)) AND STANDARD PROCEDURE (123-001(SP)). DISINCENTIVES FOR VIOLATING THE PLCS SHALL BE DETERMINED BY THE ENGINEER IN ADVANCE OF ANY LANE CLOSURE.

LESS RESTRICTIVE CHANGES TO THE ALLOWABLE LANE CLOSURE HOURS ARE SUBJECT TO THE TRAFFIC MANAGEMENT IN WORK ZONES POLICY (21-008(P)) AND STANDARD PROCEDURE (123-001(SP)) AND SHALL NOT BE IMPLEMENTED UNTIL, AND UNLESS, APPROVED BY THE PROPER ODOT AUTHORITY.

EXISTING MOT EXCEPTIONS THAT HAVE ALREADY BEEN APPROVED IN ACCORDANCE TO THE TRAFFIC MANAGEMENT IN WORK ZONES POLICY AND STANDARD PROCEDURE ARE DETAILED IN THE APPROVED MAINTENANCE OF TRAFFIC (MOT) POLICY EXCEPTION(S) PLAN NOTE

ALLOWABLE LANE CLOSURE HOURS FOR FACILITIES NOT COVERED BY THE PLCS, IF ANY, SHALL BE AS SPECIFIED ELSEWHERE IN THE PLANS.

For Reference Only
Preliminary Plans - Not

MAINTENANCE OF TRAFFIC NOTES

DESIGN AGENCY
Michael Baker INTERNATIONAL

DESIGNER GSH
REVIEWER DJJ 05/22/24
PROJECT ID 82382
SHEET 81 TOTAL 2696

CUY-90-16.28 (CCG3A)
MODEL: Sheet PAPERSIZE: 34x22 (in.) DATE: 5/13/2025 TIME: 1:34:37 PM USER: Mala.Gallagher
pw:\\mb-us-pw.bentley.com:mb-us-pw-03\Documents\Cleveland_OH\01_Projects\ODOT\District12\82382\400-Engineering\MOT\Sheets\82382_MN0001.dgn

MAINTENANCE OF TRAFFIC GENERAL NOTES (CONTINUED)

I.R. 90 WEEKEND CLOSURES

CLOSURES OF I.R. 90 WILL BE PERMITTED FOR THE FOLLOWING OPERATIONS:

A. DURING PHASE 1 FOR THE DEMOLITION OF THE FOLLOWING BRIDGES:
- EX. E. 22ND ST. BRIDGE OVER I.R. 90
- EX. CEDAR AVE. BRIDGE OVER I.R. 90

B. DURING PHASE 2 FOR ERECTING STRUCTURAL STEEL FOR THE FOLLOWING BRIDGE:
- BRIDGE 13 (E. 22ND ST. BRIDGE OVER I.R. 90)

C. DURING PHASE 2 FOR THE DEMOLITION OF THE FOLLOWING BRIDGE:
- EX. CARNEGIE AVE. BRIDGE OVER I.R. 90

D. DURING PHASE 4 FOR ERECTING STRUCTURAL STEEL FOR THE FOLLOWING BRIDGE:
- BRIDGE 9 (I.R. 90 WB TO I.R. 77 SB INTERCHANGE RAMP)

E. DURING PHASE 7 FOR ERECTING STRUCTURAL STEEL FOR THE FOLLOWING BRIDGE:
- BRIDGE 14 (CARNEGIE AVE. BRIDGE OVER I.R. 90)

WEEKEND CLOSURES OF I.R. 90 SHALL BE PERMITTED FROM 8:00PM FRIDAY UNTIL 6:00AM MONDAY. A DISINCENTIVE WILL BE APPLIED PER PN127 FOR CLOSURES IN PLACE OUTSIDE OF THIS PERMITTED TIMEFRAME.

A MAXIMUM OF 20 WEEKEND CLOSURES ARE PERMITTED OVER THE LIFE OF THE PROJECT. THE ANTICIPATED NUMBER OF WEEKENDS NEEDED PER PHASE ARE SUMMARIZED IN THE SUPPLEMENTAL CLOSURE CHART.

CLOSURES ARE TO BE IMPLEMENTED WITH ASSISTANCE OF LAW ENFORCEMENT, PORTABLE CHANGEABLE MESSAGE SIGNS, QUEUE DETECTION, AND PUBLIC INFORMATION CAMPAIGNS. CLOSURES OF I.R. 90 SHALL NOT BE PERMITTED WHEN SPECIAL EVENTS THAT HAVE A SEATING CAPACITY OF 10,000 OR MORE ARE SCHEDULED IN THE DOWNTOWN CLEVELAND AREA.

THE CONTRACTOR SHALL COORDINATE ALL INTERSTATE CLOSURES WITH ODOT AND PROVIDE NOTIFICATION TO ALL ENTITIES LISTED IN THE "NOTIFICATIONS" NOTE. ALL INTERSTATE CLOSURES WILL REQUIRE A MINIMUM NOTICE OF 14-CALENDAR DAYS AND ARE SUBJECT TO THE APPROVAL OF THE ENGINEER.

PHASE	DIRECTION OF CLOSURE	BRIDGE NO.	BRIDGE NAME	CONSTRUCTION ACTIVITY	NUMBER OF OCCURANCES
1	EB	E11, E12	E. 22ND ST. & CEDAR AVE.	DEMOLITION	2
1	WB	E11, E12	E. 22ND ST. & CEDAR AVE.	DEMOLITION	2
2	EB & WB	13	E. 22ND ST.	ERECT STRUCTURAL STEEL	4
2	WB	E13	CARNEGIE AVE.	DEMOLITION	2
2	EB	E13	CARNEGIE AVE.	DEMOLITION	2
4	EB & WB	9	I.R. 90 WB TO I.R. 77 SB INTERCHANGE RAMP	ERECT STRUCTURAL STEEL	4
7	EB & WB	14	CARNEGIE AVE.	ERECT STRUCTURAL STEEL	4

NOTE 1 DEMOLITION OF E. 22ND ST. AND CEDAR AVE. BRIDGES OVER I.R. 90 TO BE PERFORMED CONCURRENTLY DURING WEEKEND CLOSURES

NOTE 2 CONCURRENT EB & WB CLOSURES ARE LIMITED TO THE NUMBER OF OCCURRENCES SHOWN IN THE TABLE

E. 14TH ST WEEKEND CLOSURES

AFTER CONSTRUCTION OF E. 14TH ST IN PHASE 1, ADDITIONAL CLOSURES OF E. 14TH ST WILL BE PERMITTED FOR THE FOLLOWING OPERATIONS.

A. FURING PHASE 4 FOR ERECTING STRUCTURAL STEEL FOR THE FOLLOWING BRIDGE:
- BRIDGE 9 (I.R. 90 WB TO I.R. 77 SB INTERCHANGE RAMP)

B. DURING PHASE 5 FOR THE DEMOLITION OF THE FOLLOWING BRIDGE:
- EX. I.R. 90 WB

C. DURING PHASE 5 FOR ERECTING STRUCTURAL STEEL FOR THE FOLLOWING BRIDGE:
- BRIDGE 10 (I.R. 90 WB)

D. DURING PHASE 7 FOR THE PARTIAL DEMOLITION OF THE FOLLOWING BRIDGE:
- EX. I.R. 90 EB

E. DURING PHASE 7 FOR ERECTING STRUCTURAL STEEL FOR THE FOLLOWING BRIDGE:
- BRIDGE 11 (I.R. 90 EB)

F. DURING PHASE 8 FOR DEMOLITION OF THE FOLLOWING BRIDGE:
- EX. I.R. 90 EB

WEEKEND CLOSURES OF E. 14TH ST SHALL BE PERMITTED FROM 8:00PM FRIDAY UNTIL 6:00AM MONDAY. A DISINCENTIVE WILL BE APPLIED PER PN127 FOR CLOSURES IN PLACE OUTSIDE OF THIS PERMITTED TIMEFRAME.

A MAXIMUM OF 12 WEEKEND CLOSURES ARE PERMITTED OVER THE LIFE OF THE PROJECT. THE ANTICIPATED NUMBER OF WEEKENDS NEEDED PER PHASE ARE SUMMARIZED IN THE SUPPLEMENTAL CLOSURE CHART.

PHASE	BRIDGE NO.	BRIDGE NAME	CONSTRUCTION ACTIVITY	NUMBER OF OCCURANCES
4	9	I.R. 90 WB TO I.R. 77 SB INTERCHANGE RAMP	ERECT STRUCTURAL STEEL	2
5	E7	EX. I.R. 90 WB	DEMOLITION	4
5	10	I.R. 90 WB	ERECT STRUCTURAL STEEL	
7	E8	EX. I.R. 90 EB	DEMOLITION	4
7	11	I.R. 90 EB	ERECT STRUCTURAL STEEL	
8	E8, E9	EX. I.R. 90 EB	DEMOLITION	2

Preliminary Plans - For Reference Only

CUY-90-16.28 (CCG3A)
MODEL: Sheet 12 PAPERSIZE: 34x22 (in.) DATE: 5/13/2025 TIME: 1:36:16 PM USER: Maia.Gallagher
pw:\\mb-us-pw.bentley.com:mb-us-pw-03\Documents\Cleveland_OH\01_Projects\ODOT\District12\82382\400-Engineering\MOT\Sheets\82382_MN0001.dgn

DESIGN AGENCY
Michael Baker INTERNATIONAL

DESIGNER GSH
REVIEWER DJJ 05/22/24
PROJECT ID 82382
SHEET 82 TOTAL 2696

MAINTENANCE OF TRAFFIC GENERAL NOTES (CONTINUED)

APPROVED MAINTENANCE OF TRAFFIC (MOT) POLICY EXCEPTION

PORTIONS OF THE MOT PLANS AS DESCRIBED BELOW HAVE APPROVED MOT EXCEPTION(S) PER TRAFFIC MANAGEMENT IN WORK ZONES POLICY (21-008(P)) AND STANDARD PROCEDURE (123-001(SP)).

APPROVED MOT EXCEPTION(S) INCLUDE:

20 WEEKEND CLOSURES ON I.R. 90

- EB AND WB SHALL NOT BE CLOSED AT THE SAME TIME EXCEPT FOR 4 WEEKENDS DURING PR. E. 22ND ST. BRIDGE STRUCTURAL STEEL ERECTION IN PHASE 2, 4 WEEKENDS DURING PR. BRIDGE 9 STRUCTURAL STEEL ERECTION IN PHASE 4, AND 4 WEEKENDS DURING PR. CARNEGIE AVE. BRIDGE STRUCTURAL STEEL ERECTION IN PHASE 7.

A MAINTENANCE OF TRAFFIC MEETING SHALL BE HELD A MINIMUM OF 30 CALENDAR DAYS PRIOR TO IMPLEMENTATION OF EACH APPROVED MOT EXCEPTION. THIS MEETING SHALL INCLUDE THE DISTRICT WORK ZONE TRAFFIC MANAGER AND ALL AGENCIES LISTED IN THE "NOTIFICATION" NOTE AS WELL AS THE CONTRACTOR, WORKSITE TRAFFIC SUPERVISOR (WTS) AND ANY SUBCONTRACTORS INVOLVED WITH TEMPORARY TRAFFIC CONTROL.

IN ADDITION TO ANY NOTIFICATIONS REQUIRED IN OTHER NOTES, THE CONTRACTOR SHALL NOTIFY THE PROJECT ENGINEER AT LEAST 14 BUSINESS DAYS IN ADVANCE OF IMPLEMENTATION OF THE APPROVED MOT EXCEPTION(S) REFERENCED ABOVE SO THAT THE PROJECT ENGINEER CAN SEND EMAIL NOTIFICATION TO THE OFFICE OF ROADWAY ENGINEERING, STATEWIDE TMC, DWZTM AND SPECIAL HAULING PERMITS AT LEAST 2 BUSINESS DAYS IN ADVANCE OF THE IMPLEMENTATION OF THE APPROVED MOT EXCEPTION(S) REFERENCED ABOVE. REFERENCE "EXCEPTION REQUEST APPROVAL DATED 01/22/2024 FOR PID 82382" IN THE NOTIFICATION AND OTHER CORRESPONDENCE.

ANY CHANGES TO THE MOT THAT IMPACT THE PREVIOUSLY APPROVED MOT EXCEPTION(S) LISTED ABOVE SHALL BE APPROVED IN WRITING BY THE MOT EXCEPTION COMMITTEE (MOTEC). IN THE EVENT THAT SUCH CHANGES ARE PROPOSED, THE REQUEST SHALL BE COORDINATED THROUGH THE DISTRICT WORK ZONE TRAFFIC MANAGER (DWZTM) A MINIMUM OF 30 CALENDAR DAYS PRIOR TO THE DESIRED IMPLEMENTATION DATE. IF THE DISTRICT AGREES WITH THE PROPOSED CHANGES THE DWZTM SHALL SEEK APPROVAL FROM THE MOTEC. IN THE EVENT THE PROPOSED CHANGES ARE APPROVED IN WRITING, THE CLOSURES ARE STILL SUBJECT TO NOTIFICATION REQUIREMENTS WITHIN THIS NOTE PRIOR TO IMPLEMENTATION.

ITEM 614, REPLACEMENT DRUM

DRUMS FURNISHED BY THE CONTRACTOR IN ACCORDANCE WITH THE REQUIREMENTS OF THE PLANS, SPECIFICATIONS AND PROPOSAL WHICH BECOME DAMAGED BY TRAFFIC FOR REASONS BEYOND THE CONTROL OF THE CONTRACTOR SHALL BE REPLACED IN KIND WHEN ORDERED BY THE ENGINEER. REPLACEMENT DRUMS SHALL BE NEW.

PAYMENT FOR THE NEW DRUMS SHALL BE INCLUDED IN THE LUMP SUM BID PRICE FOR ITEM 614, MAINTAINING TRAFFIC, AND SHALL INCLUDE THE COST OF REMOVING AND DISPOSING OF THE DAMAGED DRUM, AND PROVIDING THE NECESSARY REPLACEMENT DRUM IN ACCORDANCE WITH THE CONTRACT REQUIREMENTS FOR THE ORIGINAL DRUM.

DRUM REQUIREMENTS

IN ADDITION TO THE REQUIREMENTS OF THE PLANS, SPECIFICATION AND PROPOSAL, DRUMS FURNISHED BY THE CONTRACTOR SHALL BE NEW AND UNUSED AT THE TIME OF ARRIVAL ON THE PROJECT. ANY DRUMS BROUGHT ON THE PROJECT, WHICH HAVE PREVIOUSLY BEEN USED ELSEWHERE, WILL NOT BE ACCEPTED.

PAYMENT FOR DRUMS SHALL BE INCLUDED IN THE LUMP SUM CONTRACT PRICE FOR ITEM 614, MAINTAINING TRAFFIC.

ITEM 614, PORTABLE CHANGEABLE MESSAGE SIGNS, AS PER PLAN

THE CONTRACTOR SHALL FURNISH, INSTALL, MAINTAIN AND REMOVE, WHEN NO LONGER NEEDED, A CHANGEABLE MESSAGE SIGN. THE SIGN SHALL BE OF A TYPE SHOWN ON A LIST OF APPROVED PCMS UNITS AVAILABLE ON THE OFFICE OF MATERIALS MANAGEMENT WEB PAGE. THE LIST CONTAINS CLASS A AND B UNITS WITH MINIMUM LEGIBILITY DISTANCES OF 800 FEET AND 650 FEET, RESPECTIVELY.

EACH SIGN SHALL BE TRAILER-MOUNTED AND EQUIPPED WITH A FUNCTIONAL DIMMING MECHANISM, TO DIM THE SIGN DURING DARKNESS, AND A TAMPER AND VANDAL PROOF ENCLOSURE. EACH SIGN SHALL BE PROVIDED WITH APPROPRIATE TRAINING AND OPERATION INSTRUCTIONS TO ENABLE ON-SITE PERSONNEL TO OPERATE AND TROUBLESHOOT THE UNIT. THE SIGN SHALL ALSO BE CAPABLE OF BEING POWERED BY AN ELECTRICAL SERVICE DROP FROM A LOCAL UTILITY COMPANY. THE PCMS SHALL BE DELINEATED IN ACCORDANCE WITH C&MS 614.03.

RECOMMENDED LOCATIONS FOR PCMS DURING I.R. 90 EB & I.R. 90 WB FULL-WEEKEND CLOSURES ARE SHOWN ON THE I.R. 90 CLOSURE DETAIL SHEETS AND LISTED IN THE SEQUENCE OF CONSTRUCTION NOTES FOR EACH PHASE UNDER THE MAINTENANCE OF TRAFFIC HEADER.

PLACEMENT, OPERATION, MAINTENANCE AND ALL ACTIVATION OF THE SIGNS BY THE CONTRACTOR SHALL BE AS DIRECTED BY THE ENGINEER. THE PCMS SHALL BE LOCATED IN A HIGHLY VISIBLE POSITION YET PROTECTED FROM TRAFFIC. THE CONTRACTOR SHALL, AT THE DIRECTION OF THE ENGINEER, RELOCATE THE PCMS TO IMPROVE VISIBILITY OR ACCOMMODATE CHANGED CONDITIONS. WHEN NOT IN USE, THE PCMS SHALL BE TURNED OFF. ADDITIONALLY, WHEN NOT IN USE FOR EXTENDED PERIODS OF TIME, THE PCMS SHALL BE TURNED AWAY FROM ALL TRAFFIC.

THE ENGINEER SHALL BE PROVIDED ACCESS TO EACH SIGN UNIT AND SHALL BE PROVIDED WITH APPROPRIATE TRAINING AND OPERATION INSTRUCTIONS TO ENABLE ODOT PERSONNEL TO OPERATE AND TROUBLESHOOT THE UNIT, AND TO REVISE SIGN MESSAGES, IF NECESSARY.

ALL MESSAGES TO BE DISPLAYED ON THE SIGN WILL BE PROVIDED BY THE ENGINEER. A LIST OF ALL REQUIRED PRE-PROGRAMMED MESSAGES WILL BE GIVEN TO THE CONTRACTOR AT THE PROJECT PRECONSTRUCTION CONFERENCE. THE SIGN SHALL HAVE THE CAPABILITY TO STORE UP TO 99 MESSAGES. MESSAGE MEMORY OR PRE-PROGRAMMED DISPLAYS SHALL NOT BE LOST AS A RESULT OF POWER FAILURES TO THE ON-BOARD COMPUTER. THE SIGN LEGEND SHALL BE CAPABLE OF BEING CHANGED IN THE FIELD. THREE-LINE PRESENTATION FORMATS WITH UP TO SIX MESSAGE PHASES SHALL BE SUPPORTED. PCMS FORMAT SHALL PERMIT THE COMPLETE MESSAGE FOR EACH PHASE TO BE READ AT LEAST TWICE.

THE PCMS SHALL CONTAIN AN ACCURATE CLOCK AND PROGRAMMING LOGIC WHICH WILL ALLOW THE SIGN TO BE ACTIVATED, DEACTIVATED OR MESSAGES CHANGED AUTOMATICALLY AT DIFFERENT TIMES OF THE DAY FOR DIFFERENT DAYS OF THE WEEK.

THE PCMS UNIT SHALL BE MAINTAINED IN GOOD WORKING ORDER BY THE CONTRACTOR IN ACCORDANCE WITH THE PROVISIONS OF C&MS 614.07. THE CONTRACTOR SHALL, PRIOR TO ACTIVATING THE UNIT, MAKE ARRANGEMENTS, WITH AN AUTHORIZED SERVICE AGENT FOR THE PCMS, TO ASSURE PROMPT SERVICE IN THE EVENT OF FAILURE. ANY FAILURE SHALL NOT RESULT IN THE SIGN BEING OUT OF SERVICE FOR MORE THAN 12 HOURS, INCLUDING WEEKENDS. FAILURE TO COMPLY MAY RESULT IN AN ORDER TO STOP WORK AND OPEN ALL TRAFFIC LANES AND/OR IN THE DEPARTMENT TAKING APPROPRIATE ACTION TO SAFELY CONTROL TRAFFIC. THE ENTIRE COST TO CONTROL TRAFFIC, ACCRUED BY THE DEPARTMENT DUE TO THE CONTRACTOR'S NONCOMPLIANCE, WILL BE DEDUCTED FROM MONEYS DUE, OR TO BECOME DUE THE CONTRACTOR ON HIS CONTRACT.

THE CONTRACTOR SHALL BE RESPONSIBLE FOR 24-HOUR-PER-DAY OPERATION AND MAINTENANCE OF THESE SIGNS ON THE PROJECT FOR THE DURATION OF THE PHASES WHEN THE PLAN REQUIRES THEIR USE.

PAYMENT FOR THE ABOVE DESCRIBED ITEM SHALL BE AT THE CONTRACT UNIT PRICE. PAYMENT SHALL INCLUDE ALL LABOR, MATERIALS, EQUIPMENT, FUELS, LUBRICATING OILS, SOFTWARE, HARDWARE AND INCIDENTALS TO PERFORM THE ABOVE DESCRIBED WORK.

ITEM 614 - PORTABLE CHANGEABLE MESSAGE SIGN, AS PER PLAN 200 SNMT

(ASSUMING 32 PCMS SIGNS FOR 5 MONTHS AND ASSUMING 40 PCMS SIGNS FOR 1 MONTH)

WORK ZONE INCREASED PENALTIES SIGN (R11-H5A)

R11-H5A-48 SIGNS SHALL BE FURNISHED, ERECTED, AND MAINTAINED IN GOOD CONDITION AND/OR REPLACED AS NECESSARY AND SUBSEQUENTLY REMOVED BY THE CONTRACTOR. SIGNS SHALL BE MOUNTED AT THE APPROPRIATE OFFSETS AND ELEVATIONS AS PRESCRIBED BY THE OHIO MANUAL OF UNIFORM TRAFFIC CONTROL DEVICES. THEY SHALL BE MAINTAINED ON SUPPORTS MEETING CURRENT SAFETY CRITERIA.

THE SIGNS MAY BE ERECTED OR UNCOVERED NO MORE THAN FOUR HOURS BEFORE THE ACTUAL START OF WORK. THE SIGNS SHALL BE REMOVED OR COVERED NO LATER THAN FOUR HOURS FOLLOWING RESTORATION OF ALL LANES TO TRAFFIC WITH NO RESTRICTIONS, OR SOONER AS DIRECTED BY THE ENGINEER. TEMPORARY SIGN COVERING AND UNCOVERING DUE TO TEMPORARY LANE RESTORATIONS SHALL BE GUIDED BY THE FOUR-HOUR LIMITATIONS STATED ABOVE. SUCH LANE RESTORATIONS SHOULD BE EXPECTED TO REMAIN IN EFFECT FOR 30 OR MORE CONSECUTIVE CALENDAR DAYS, SUCH AS DURING WINTER SHUT-DOWNS.

THE SIGNS ON THE MAINLINE SHALL BE DUAL MOUNTED UNLESS NOT PHYSICALLY POSSIBLE. THE FIRST SIGN SHALL BE PLACED BETWEEN THE ROAD WORK AHEAD (W20-1) SIGN AND THE NEXT SIGN IN THE SEQUENCE. SIGNS SHALL BE ERECTED ON EACH ENTRANCE RAMP AND EVERY 2 MILES THROUGH THE CONSTRUCTION WORK LIMITS. SIGNS ON THE MAINLINE SHALL BE R11-H5A-48. SIGNS USED ON THE RAMPS SHALL BE R11-H5A-24. R11-H5A-24 SIGNS MAY BE USED IN THE MEDIAN IN LIEU OF R11-H5A-48 SIGNS IF IT IS NOT PHYSICALLY POSSIBLE TO PROVIDE R11-H5A-48 SIGNS IN THE MEDIAN.

THE R11-H5A-48 SIGNS SHALL BE MOUNTED ON 2 NO. 3 POSTS WHEN LOCATED WITHIN CLEAR ZONES.

THE CONTRACTOR MAY USE SIGNS AND SUPPORTS IN USED, BUT GOOD, CONDITION PROVIDED THE SIGNS MEET CURRENT ODOT SPECIFICATIONS.

WORK ZONE INCREASED PENALTIES SIGNS AND SUPPORTS WILL BE MEASURED AS THE NUMBER OF SIGN INSTALLATIONS, INCLUDING THE SIGN AND NECESSARY SUPPORTS. IF A SIGN AND SUPPORT COMBINATION IS REMOVED AND REERECTED AT ANOTHER LOCATION AS DIRECTED BY THE ENGINEER, IT SHALL BE CONSIDERED ANOTHER UNIT.

PAYMENT FOR ACCEPTED QUANTITIES, COMPLETE, IN PLACE WILL BE MADE AT THE CONTRACT UNIT PRICE. PAYMENT SHALL BE FULL COMPENSATION FOR ALL MATERIALS, LABOR, INCIDENTALS AND EQUIPMENT FOR FURNISHING, ERECTING, MAINTAINING, COVERING DURING SUSPENSION OF WORK, AND REMOVAL OF THE SIGN AND SUPPORT.

ITEM 614 - WORK ZONE INCREASED PENALTIES SIGN 62 EACH

EARTHWORK FOR MAINTAINING TRAFFIC

THE FOLLOWING QUANTITIES HAVE BEEN INCLUDED IN THE PLAN FOR INFORMATION ONLY.

EXCAVATION FOR MAINTAINING TRAFFIC 12,592 CY.
EMBANKMENT FOR MAINTAINING TRAFFIC 1,458 CY.

WHEN UNDERCUTS ARE NECESSARY FOR MAINLINE PAVEMENT OR EMBANKMENT CONSTRUCTION, EVALUATE THE NEED FOR TEMPORARY ROAD UNDERCUTS IF WITHIN A CLOSE PROXIMITY TO THE MAINLINE UNDERCUTS. A GEOTECHNICAL EVALUATION SHOULD BE CONSIDERED TO DETERMINE IF THE EXISTING SOIL CONDITIONS ARE ADEQUATE TO SUPPORT THE TEMPORARY ROAD. ADDITIONAL SOIL BORINGS ALONG THE TEMPORARY ROAD ARE NOT NORMALLY REQUIRED.

DUST CONTROL

THE CONTRACTOR SHALL FURNISH AND APPLY WATER FOR DUST CONTROL AS DIRECTED BY THE ENGINEER. THE FOLLOWING ESTIMATED QUANTITIES HAVE BEEN INCLUDED FOR DUST CONTROL PURPOSES:

ITEM 616 - WATER 2,285 MGAL

ITEM 616 - CALCIUM CHLORIDE 150 TON

OVERNIGHT TRENCH CLOSING

THE BASE WIDENING SHALL BE COMPLETED TO A DEPTH OF NO MORE THAN 18 INCHES BELOW THE EXISTING PAVEMENT BY THE END OF EACH WORK DAY. NO TRENCH SHALL BE LEFT OPEN OVERNIGHT EXCEPT FOR A SHORT LENGTH (25 FEET OR LESS) OF A WORK SECTION AT THE END OF THE TRENCH. IN CASE WORK MUST BE SUSPENDED BECAUSE OF INCLEMENT WEATHER OR OTHER REASONS, THE TRENCH FOR THE UNCOMPLETED BASE WIDENING SHALL BE BACKFILLED AT THE DIRECTION OF THE ENGINEER.

ADVANCE WORK ZONE INFORMATION

ADVANCE WORK ZONE INFORMATION SIGNS, AS USED IN THIS NOTE, ARE FIXED MESSAGE TYPES. THE SIGNS ARE TO BE LOCATED AT EXTREME DISTANCE FROM THE WORK AREA, AS SHOWN IN THE PLANS.

THE SIGNS SHALL BE BLACK ON ORANGE (INCLUDING A BLACK BORDER). THE LAYOUT SHALL BE IN CONFORMANCE WITH TEM CHAPTER 211.

WHEN REGULATORY INFORMATION IS PROVIDED, IT SHALL BE DISPLAYED SEPARATELY AS A STANDARD BLACK-ON-WHITE SIGN. MIXING OF BLACK-ON-WHITE REGULATORY INFORMATION ON A BLACK-ON-ORANGE INFORMATION SIGN IS PROHIBITED.

IF THE MOTORIST IS BEING DETOURED OR IF AN ALTERNATE ROUTE IS PROVIDED, THE ROUTE SHOULD BE SIGNED WITH ASSEMBLIES CONSISTING OF THE APPROPRIATE BLACK-ON-ORANGE DETOUR OR ALT MARKER WITH A STANDARD ROUTE MARKER AND ARROW PLATE. IF MORE TARGET VALUE IS DESIRED, THIS TRAIL BLAZER INFORMATION MAY BE SHOWN ON AN ORANGE PANEL (OMUTCD SECTION 2D.32).

ROUTE SIGN ASSEMBLIES SHALL BE SIZED ACCORDING TO THE TYPE OF ROAD ON WHICH THEY ARE LOCATED IN ACCORDANCE WITH THE OMUTCD.

SUPPORTS FOR SIGN INSTALLATIONS SHALL CONFORM TO ALL EXISTING STANDARDS FOR PERMANENT SIGNS. THESE SIGNS SHOULD NOT BE ATTACHED TO EXISTING SUPPORTS.

WHERE THE PLANS CALL FOR AN OVERLAY TO COVER A PORTION OF AN EXISTING SIGN, THE OVERLAY SHALL BE BLACK-ON-ORANGE. LETTER SIZES SHOULD BE THE SAME AS ON THE EXISTING SIGNS. WHEN LANE ARROWS ARE TO BE COVERED, A BLANK OVERLAY SHOULD BE PLACED OVER EACH OF THE AFFECTED ARROWS. WHEN A RAMP IS BEING CLOSED, RATHER THAN USING A BLANK OVERLAY TO COVER THE ENTIRE SIGN, THE LEGEND "EXIT CLOSED" (W20-H15) SHOULD BE USED ON A DIAGONAL OVERLAY (LOWER LEFT TO UPPER RIGHT) ON THE SIGN. THE SIZE OF LETTERING ON OVERLAYS AND THE SIZE OF THE OVERLAY ARE INDICATED IN THE PLANS. THE MINIMUM LETTER SIZE FOR THE DIAGONAL "EXIT CLOSED" (W20-H15) OVERLAY SHALL BE 12" C.

ALL ADVANCE WORK ZONE INFORMATION SIGN INSTALLATIONS LOCATED OUTSIDE OF THE PROJECT WORK LIMITS SHALL BE PAID FOR UNDER APPROPRIATE 630 ITEMS (SIGNS, SUPPORTS, CONCRETE, BREAKAWAY CONNECTION, OVERLAYS, REMOVALS, ETC.).

CONCRETE MEDIAN BARRIER REPLACEMENT

REMOVING, GRADING AND INSTALLING THE REPLACEMENT BARRIER IN A CONTINUOUS OPERATION SHALL BE LIMITED TO 500 LINEAR FEET AND SHALL AT ALL TIMES BE SUBJECT TO THE APPROVAL OF THE ENGINEER. THE ENGINEER SHALL BE SATISFIED THAT ALL INSTALLATIONS WILL AFFORD MAXIMUM PROTECTION FOR TRAFFIC.

THE FOLLOWING ESTIMATED QUANTITIES HAVE BEEN INCLUDED IN THE GENERAL SUMMARY FOR THE REMOVAL AND REPLACEMENT OF EXISTING MEDIAN BARRIER:

ITEM 202 - CONCRETE BARRIER REMOVED 1510 FT

ITEM 622 - CONCRETE BARRIER, SINGLE SLOPE, TYPE B1 500 FT

ITEM 622 - CONCRETE BARRIER, SINGLE SLOPE, TYPE D 1010 FT

PAYMENT FOR THE ABOVE ITEMS SHALL BE AT THE CONTRACT UNIT PRICE. PAYMENT SHALL INCLUDE ALL LABOR, MATERIALS, EQUIPMENT, HARDWARE, AND INCIDENTALS TO PERFORM THE ABOVE DESCRIBED WORK. IN ADDITION, RESTORING THE MEDIAN AND SHOULDER BACK TO THE EXISTING CONDITION SHALL BE INCIDENTAL TO THE ITEMS 622 ABOVE.

ITEM 614, REPLACEMENT SIGN

FLATSHEET SIGNS FURNISHED BY THE CONTRACTOR IN ACCORDANCE WITH THE REQUIREMENTS OF THE PLANS, SPECIFICATIONS AND PROPOSAL WHICH BECOME DAMAGED BY TRAFFIC FOR REASONS BEYOND THE CONTROL OF THE CONTRACTOR SHALL BE REPLACED IN KIND WHEN ORDERED BY THE ENGINEER. REPLACEMENT SIGNS SHALL BE NEW. OTHER MATERIALS MAY BE IN USED, BUT GOOD, CONDITION SUBJECT TO APPROVAL BY THE ENGINEER.

PAYMENT FOR THE NEW SIGNS SHALL BE MADE AT THE CONTRACT PRICE PER EACH FOR ITEM 614, REPLACEMENT SIGN, AND SHALL INCLUDE THE COST OF REMOVING AND DISPOSING OF DAMAGED SIGNS, HARDWARE AND SUPPORTS, AND PROVIDING THE NECESSARY REPLACEMENT HARDWARE, SUPPORTS, ETC.

AN ESTIMATED QUANTITY OF 26 EACH HAS BEEN PROVIDED IN THE GENERAL SUMMARY.

Preliminary Plans - For Reference Only

DESIGN AGENCY
Michael Baker INTERNATIONAL
DESIGNER GSH
REVIEWER DJJ 05/22/24
PROJECT ID 82382
SHEET 83 TOTAL 2696

CUY-90-16.28 (CCG3A)
MODEL: Sheet 2 PAPERSIZE: 34x22 (in.) DATE: 5/13/2025 TIME: 1:37:38 PM USER: Mala.Gallagher
pw:\\mb-us-pw.bentley.com:mb-us-pw-03\Documents\Cleveland_OH\01_Projects\ODOT\District12\82382\400-Engineering\MOT\Sheets\82382_MN0001.dgn

MAINTENANCE OF TRAFFIC SIGNAL/FLASHER INSTALLATION

THE CONTRACTOR SHALL BE RESPONSIBLE FOR MAINTAINING TRAFFIC SIGNAL/FLASHER INSTALLATIONS WITHIN THE PROJECT UNDER THE FOLLOWING CONDITIONS:

1. EXISTING SIGNAL/FLASHER INSTALLATIONS WHICH THE PLANS REQUIRE THE CONTRACTOR TO ADJUST, MODIFY, ADD ONTO OR REMOVE, OR WHICH THE CONTRACTOR ACTUALLY ADJUSTS, MODIFIES OR OTHERWISE DISTURBS. THE CONTRACTOR SHALL BE RESPONSIBLE FOR THE ENTIRE INSTALLATION (AT AN INTERSECTION) FROM THE TIME HIS OPERATIONS FIRST DISTURB THE INSTALLATION UNTIL THE INSTALLATION HAS BEEN SUBSEQUENTLY REMOVED OR MODIFIED AND THE WORK IS ACCEPTED.

2. NEW OR REUSED SIGNAL/FLASHER INSTALLATIONS OR DEVICES, INSTALLED BY THE CONTRACTOR. THE CONTRACTOR SHALL BE RESPONSIBLE FOR MAINTENANCE OF THESE FROM THE TIME OF INSTALLATION UNTIL THE WORK IS ACCEPTED.

THE CONTRACTOR SHALL CORRECT AS QUICKLY AS POSSIBLE ALL OUTAGES OR MALFUNCTIONS. HE SHALL PROVIDE THE MAINTAINING AGENCY AND THE ENGINEER SUCH ADDRESSES AND PHONE NUMBERS WHERE HIS MAINTENANCE FORCES CAN BE CONTACTED. THE CONTRACTOR SHALL PROVIDE ONE OR MORE PERSONS TO RECEIVE ALL CALLS AND DISPATCH THE NECESSARY MAINTENANCE FORCES TO CORRECT OUTAGES. SUCH A PERSON OR PERSONS MAY BE USED TO PERFORM OTHER DUTIES AS LONG AS PROMPT ATTENTION IS GIVEN TO THESE CALLS AND A PERSON IS READILY AVAILABLE CONTINUOUSLY 24 HOURS A DAY, 7 DAYS A WEEK. ALL LAMP OUTAGES, CABLE OUTAGES, ELECTRICAL FAILURES, EQUIPMENT MALFUNCTIONS AND MISALIGNED SIGNAL HEADS SHALL BE CORRECTED TO THE SATISFACTION OF THE ENGINEER WITH THE SIGNAL BACK TO SERVICE WITHIN FOUR HOURS AFTER THE CONTRACTOR HAS BEEN NOTIFIED OF THE OUTAGE.

IN THE EVENT NEW SIGNALS ARE DAMAGED PRIOR TO ACCEPTANCE, ALL DAMAGED EQUIPMENT EXCEPT POLES AND CONTROL EQUIPMENT SHALL BE REPLACED BY THE CONTRACTOR TO THE SATISFACTION OF THE ENGINEER WITH THE SIGNAL BACK IN SERVICE WITHIN 8 HOURS AFTER THE CONTRACTOR'S NOTIFICATION OF THE OUTAGE. THE CONTRACTOR SHALL ARRANGE FOR FULL TRAFFIC CONTROL UNTIL THE SIGNAL IS BACK IN OPERATION.

IF POLES AND/OR CONTROL EQUIPMENT ARE DAMAGED AND MUST BE REPLACED, THE CONTRACTOR SHALL MAKE TEMPORARY REPAIRS AS NECESSARY TO BRING THE SIGNAL BACK INTO FULL OPERATION WITHIN THE ALLOWED 8-HOUR PERIOD, AND SHALL MAKE PERMANENT REPAIRS OR REPLACEMENT AS SOON THEREAFTER AS POSSIBLE.

NONE OF THE ABOVE SHALL BE CONSTRUED AS COLLECTIVE OR CONSECUTIVE OUTAGE TIME PERIODS AT ANY ONE LOCATION. THAT IS, WHERE MORE THAN ONE OUTAGE OCCURS AT ANY ONE LOCATION THEN THE ALLOTTED TIME LIMIT SHALL BE FOR THE WORST SINGLE OUTAGE.

WHERE OUTAGES ARE THE DIRECT RESULT OF A VEHICLE CRASH THE RESPONSE OF THE CONTRACTOR SHALL BE AS OUTLINED ABOVE. THE CONTRACTOR SHALL BE RESPONSIBLE FOR COLLECTION OF ANY COMPENSATION FOR THIS WORK FROM THOSE PARTIES RESPONSIBLE FOR THE DAMAGE.

WHERE THE CONTRACTOR HAS FAILED TO, OR CANNOT RESPOND TO, AN OUTAGE OR SIGNAL EQUIPMENT MALFUNCTION, AT THESE LOCATIONS WITHIN HIS RESPONSIBILITY, WITHIN PERIODS AS SPECIFIED ABOVE, THE ENGINEER MAY INVOKE THE PROVISIONS OF SECTION 105.15 AND ANY SUBSEQUENT BILLINGS TO THE STATE OR THE CITY OF CLEVELAND FOR POLICE SERVICES AND MAINTENANCE SERVICES BY CITY FORCES SHALL BE DEDUCTED FROM MONIES DUE OR TO BECOME DUE THE CONTRACTOR IN ACCORDANCE WITH PROVISIONS OF SECTION 105.15.

THE CONTRACTOR SHALL PROVIDE THE MAINTENANCE SERVICE ENTIRELY WITH HIS FORCES OR HE MAY CHOOSE TO ENTER INTO A COOPERATIVE UNDERSTANDING WITH THE LOCAL MAINTAINING AGENCY TO PROVIDE THE MAINTENANCE. THE CONTRACTOR SHALL INFORM THE ENGINEER, IN WRITING, OF THE MAINTENANCE METHOD SELECTED.

THE CONTRACTOR SHALL BE RESPONSIBLE FOR ANY DAMAGE TO ANY TRAFFIC SIGNAL COMPONENTS REQUIRED TO BE HANDLED DURING THE RELOCATION OF POLES AND REVISIONS TO THE SIGNAL SYSTEM. WHEN A TRAFFIC SIGNAL MUST BE TAKEN OUT OF SERVICE BY THE CONTRACTOR, DUE TO CONST-RUCTION PROCEDURES, THIS OUTAGE SHALL NOT EXCEED THREE HOURS AND SHALL NOT INCLUDE THE HOURS OF 7:00 AM TO 9:00 AM, 12:00 NOON TO 1:00 PM, AND/OR 4:00 PM TO 7:00 PM.

MAINTENANCE OF TRAFFIC SIGNAL/FLASHER INSTALLATION (CONTINUED)

ANY SIGNALIZED INTERSECTION WHERE THE SIGNAL IS OUT OF SERVICE DUE TO CONSTRUCTION PROCEDURES, OR DUE TO AN OUTAGE OR MALFUNCTION OF EQUIPMENT AS DESCRIBED ABOVE, SHALL BE PROTECTED, BY THE CONTRACTOR, BY THE INSTALLATION OF TEMPORARY "STOP" SIGNS, EXCEPT FOR THE FOLLOWING INTERSECTIONS WHICH SHALL BE PROTECTED BY OFF-DUTY CITY OF CLEVELAND POLICE, HIRED BY THE CONTRACTOR:

1. CARNEGIE AVE. - E. 14TH ST.

2. CARNEGIE AVE. - E. 18TH ST.

3. CARNEGIE AVE. - E. 21ST ST.

4. CARNEGIE AVE. - E. 22ND ST.

5. CARNEGIE AVE. - MIDTOWN CONNECTOR

6. E. 22ND ST. - COMMUNITY COLLEGE AVE.

7. E. 22ND ST. - CENTRAL AVE.

8. E. 22ND ST. - CEDAR AVE.

ANY VEHICULAR TRAFFIC SIGNAL HEAD, EITHER NEW OR EXISTING WHICH WILL BE OUT OF OPERATION SHALL BE COVERED IN THE MANNER DESCRIBED IN 632.25.

THE CONTRACTOR SHALL MAINTAIN COMPLETE RECORDS OF MALFUNCTIONS INCLUDING:

1. TIME OF NOTIFICATION OF MALFUNCTION;

2. TIME OF WORK CREWS ARRIVAL TO CORRECT THE MALFUNCTION;

3. ACTIONS TAKEN TO CORRECT THE MALFUNCTION, INCLUDING A LIST OF PARTS REPAIRED OR REPLACED;

4. A DIAGNOSIS OF REASON FOR THE MALFUNCTION AND PROBABILITY OF REOCCURRENCE;

5. TIME OF COMPLETION OF THE REPAIR AND SYSTEM RESTORED TO FULL SERVICE.

A COPY OF THESE RECORDS SHALL BE PROVIDED TO THE ENGINEER WITHIN THREE (3) WORKING DAYS FOLLOWING COMPLETION OF EACH REPAIR.

ALL COSTS RESULTING FROM THE ABOVE REQUIREMENTS SHALL BE CONSIDERED TO BE INCLUDED IN THE LUMP SUM PRICE BID FOR ITEM 614, MAINTAINING TRAFFIC.

WORK ZONE EGRESS WARNING SYSTEM

THE CONTRACTOR SHALL FURNISH, INSTALL, AND MAINTAIN AN APPROVED WORK ZONE EGRESS WARNING SYSTEM (WZEWS) AS PER SUPPLEMENTAL SPECIFICATION 829.

THE PROBABLE INITIAL LOCATIONS OF THE WZEWS DEVICES ARE SHOWN IN PHASE 4 THROUGH PHASE 9 OF THE PLAN. IT IS EXPECTED THAT THESE LOCATIONS WILL VARY BASED ON PLANNED OR UNPLANNED PHASE AND TRAFFIC PATTERN CHANGES. PLACEMENT, OPERATION, AND MAINTENANCE AND ALL ACTIVATION OF THE DEVICES BY THE CONTRACTOR SHALL BE DIRECTED BY THE ENGINEER.

WZEWS SHALL BE USED IN ACCORDANCE WITH MT-103.10. THE FOLLOWING ESTIMATED QUANTITY HAS BEEN CARRIED TO THE GENERAL SUMMARY.

ITEM 829, WORK ZONE EGRESS WARNING SYSTEM 64 SMNT

TRENCH FOR WIDENING

TRENCH EXCAVATION FOR BASE WIDENING SHALL BE ONLY ON ONE SIDE OF THE PAVEMENT AT A TIME. THE OPEN TRENCH SHALL BE ADEQUATELY MAINTAINED AND PROTECTED WITH DRUMS OR BARRICADES AT ALL TIMES. PLACEMENT OF PROPOSED SUBBASE AND BASE MATERIAL SHALL FOLLOW AS CLOSELY AS POSSIBLE BEHIND EXCAVATION OPERATIONS. THE LENGTH OF WIDENING TRENCH WHICH IS OPEN AT ANY ONE TIME SHALL BE HELD TO A MINIMUM AND SHALL AT ALL TIMES BE SUBJECT TO APPROVAL OF THE ENGINEER.

WORK ZONE RAISED PAVEMENT MARKERS, AS PER PLAN

WORK ZONE RAISED PAVEMENT MARKERS, AS PER PLAN, AND THEIR INSTALLATION SHALL CONFORM TO C&MS 614 OR C&MS 621 AS SPECIFIED HEREIN.

RAISED PAVEMENT MARKERS IN USE DURING THE SNOW-PLOWING SEASON SHALL CONFORM TO 621.

RAISED PAVEMENT MARKERS IN USE DURING THE NON-SNOW-PLOW SEASON SHALL CONFORM TO EITHER 614 OR TO 621.

THE SNOW-PLOWING SEASON SHALL RUN FROM NOVEMBER 1ST THROUGH MARCH 31ST.

IF PROJECT DELAYS, NOT THE FAULT OF ODOT, CAUSE THE WORK TO EXTEND INTO THE SNOW-PLOWING SEASON, THE CONTRACTOR SHALL BE RESPONSIBLE FOR REPLACING WORK ZONE RAISED PAVEMENT MARKERS (WZRPMS) CONFORMING TO C&MS 614, WITH RAISED PAVEMENT MARKERS CONFORMING TO 621, AS DETERMINED BY THE ENGINEER, AT THE CONTRACTOR'S EXPENSE.

THIS ITEM SHALL INCLUDE PURCHASE, INSTALLATION AND REMOVAL OF WORK ZONE RAISED PAVEMENT MARKERS, INCLUDING FILLING OF ANY DEPRESSIONS CREATED IN THE PAVEMENT AS PER C&MS 621.08.

RESURFACING OF THE TRANSITION AREAS SHALL BE PERFORMED AT THE TIME THAT THE SURFACE COURSE IS BEING APPLIED TO THE ENTIRE PROJECT. PRIOR TO APPLICATION OF THE SURFACE COURSE ON THE PROJECT, THE EXISTING PAVEMENT WITHIN THE TRANSITION AREA SHALL BE REMOVED TO A DEPTH NECESSARY TO REACH THE LEVEL OF THE INTERMEDIATE COURSE OF THE PAVEMENT, AS DETERMINED BY THE ENGINEER.

THE FOLLOWING BID ITEMS SHOULD BE INCLUDED IN THE PLANS:

ITEM 254 - PAVEMENT PLANING, ASPHALT CONCRETE (1.5") 63,255 SY

ITEM 614 - WORK ZONE RAISED PAVEMENT MARKER, AS PER PLAN 3,895 EACH

PAYMENT FOR RESURFACING WITHIN THE TRANSITION AREA SHALL BE PAID FOR UNDER THE APPROPRIATE BID ITEMS FOR THE WORK REQUIRED, AS PROVIDED FOR IN THE PLANS.

ITEM 614, WORK ZONE IMPACT ATTENUATOR, 24" WIDE HAZARDS (UNIDIRECTIONAL)

THIS ITEM SHALL CONSIST OF FURNISHING AND INSTALLING A NON-GATING IMPACT ATTENUATOR. FURNISH AN IMPACT ATTENUATOR FROM THE OFFICE OF ROADWAY ENGINEERING'S APPROVED LIST FOR WORK ZONE IMPACT ATTENUATORS, FROM THE ROADWAY STANDARDS APPROVED PRODUCTS WEB PAGE.

INSTALLATION SHALL BE AT THE LOCATIONS SPECIFIED IN THE PLANS IN ACCORDANCE WITH THE MANUFACTURER'S SPECIFICATIONS.

THE CONTRACTOR SHALL REPAIR OR REPLACE A DAMAGED UNIT WITHIN 24 HOURS OF A DAMAGING IMPACT.

WHEN GATING IMPACT ATTENUATORS ARE DESIRED, THE CONTRACTOR SHALL SUBMIT DOCUMENTATION TO THE ENGINEER FOR ACCEPTANCE.

THE COST FOR THE ADDITIONAL BARRIER REQUIRED FOR A GATING IMPACT ATTENUATOR SHALL BE INCLUDED IN THE COST OF THE GATING IMPACT ATTENUATOR.

PAYMENT FOR THE ABOVE WORK SHALL BE MADE AT THE UNIT PRICE BID AND SHALL INCLUDE ALL LABOR, TOOLS, EQUIPMENT AND MATERIALS NECESSARY TO CONSTRUCT AND MAINTAIN A COMPLETE AND FUNCTIONAL IMPACT ATTENUATOR SYSTEM, INCLUDING ALL RELATED BACKUPS, TRANSITIONS, LEVELING PADS, HARDWARE AND GRADING, NOT SEPARATELY SPECIFIED, AS REQUIRED BY THE MANUFACTURER.

ITEM 615 - PAVEMENT FOR MAINTAINING TRAFFIC, CLASS A

UNLESS SPECIFIED OTHERWISE, ALL REFERENCES TO TEMPORARY PAVEMENT SHALL EQUATE TO CMS ITEM 615 - PAVEMENT FOR MAINTAINING TRAFFIC, CLASS A.

PLACEMENT OF ASPHALT CONCRETE

TWO-WAY TRAFFIC SHALL BE MAINTAINED AT ALL TIMES EXCEPT THAT ONE-WAY TRAFFIC WILL BE PERMITTED FOR MINIMUM PERIODS OF TIME CONSISTENT WITH THE REQUIREMENTS OF THE SPECIFICATIONS FOR PROTECTION OF COMPLETED ASPHALT CONCRETE COURSE.

ITEM 622, PORTABLE BARRIER, 50", AS PER PLAN

THIS WORK SHALL CONSIST OF FURNISHING, MAINTAINING, AND SUBSEQUENTLY REMOVING A 50-INCH PORTABLE BARRIER AT THE LOCATIONS SHOWN ON THE PLANS. FOR DETAILS, SEE SCD RM-4.1.

PORTABLE STEEL BARRIER IS AN APPROVED ALTERNATIVE TO PORTABLE CONCRETE BARRIER. FOR INFORMATION ON APPROVED VENDORS, SEE THE APPROVED PRODUCTS LIST MAINTAINED BY THE OFFICE OF ROADWAY ENGINEERING.

PORTABLE BARRIER, 32 INCHES HIGH WITH AN 18-INCH MINIMUM HEIGHT GLARE SCREEN MAY BE USED AT THE OPTION OF THE CONTRACTOR. THE GLARE SCREEN SHALL BE CONSTRUCTED USING ONE OF THE SCREENS PROVIDED ON THE APPROVED LIST, AVAILABLE ON THE OFFICE OF ROADWAY ENGINEERING WEBSITE.

PADDLE OR INTERMITTENT TYPE GLARE SCREENS SHALL BE DESIGNED USING A 20 DEGREE CUT-OFF ANGLE BASED ON TANGENT ALIGNMENT. THAT SPACING SHALL BE USED THROUGHOUT THE BARRIER LENGTH WITHOUT REGARD TO BARRIER CURVATURE.

THE GLARE SCREEN SYSTEM SHALL BE SECURELY FASTENED TO THE 32-INCH PORTABLE BARRIER USING THE HARDWARE AND PROCEDURES SPECIFIED BY THE MANUFACTURER.

FOR DIRECTIONS ON HOW TO INSTALL THE GLARE SCREEN AND THE BARRIER, SEE THE MANUFACTURER'S INSTRUCTIONS.

PAYMENT SHALL INCLUDE ALL LABOR, MATERIAL, AND EQUIPMENT NECESSARY TO PERFORM THE WORK AND SHALL BE PAID FOR AT THE CONTRACT PRICE PER FOOT FOR ITEM 622, PORTABLE BARRIER, 50", AS PER PLAN.

ITEM 622, PORTABLE BARRIER, ANCHORED, AS PER PLAN

WHEN NOTED ON THE PLANS, IN ADDITION TO THE PROVISIONS IN ITEM 622, PORTABLE BARRIER, 50", AS PER PLAN, CONTRACTOR SHALL ANCHOR PORTABLE BARRIER IN ACCORDANCE WITH SCD PCB-91. BARRIER MANUFACTURED BEFORE 01-01-2020 MAY CONTINUE TO BE USED UNTIL 12-31-2029, PROVIDED THE SECTION REMAINS IN CONFORMANCE WITH THE MOST CURRENT VERSION OF THE QUALITY STANDARD FOR TEMPORARY TRAFFIC CONTROL DEVICES AND ACCEPTABLE DELINEATION METHODS FOR VEHICLES.

PAYMENT SHALL INCLUDE ALL LABOR, MATERIAL, AND EQUIPMENT NECESSARY TO PERFORM THE WORK AND SHALL BE PAID FOR AT THE CONTRACT PRICE PER FOOT FOR ITEM 622, PORTABLE BARRIER, ANCHORED, AS PER PLAN.

FLOODLIGHTING

FLOODLIGHTING OF THE WORK SITE FOR OPERATIONS CONDUCTED DURING NIGHTTIME PERIODS SHALL BE ACCOMPLISHED SO THAT THE LIGHTS DO NOT CAUSE GLARE TO THE DRIVERS ON THE ROADWAY. TO ENSURE THE ADEQUACY OF THE FLOODLIGHT PLACEMENT, THE CONTRACTOR AND THE ENGINEER SHALL DRIVE THROUGH THE WORK SITE EACH NIGHT WHEN THE LIGHTING IS IN PLACE AND OPERATIVE PRIOR TO COMMENCING ANY WORK. IF GLARE IS DETECTED, THE LIGHT PLACEMENT AND SHIELDING SHALL BE ADJUSTED TO THE SATISFACTION OF THE ENGINEER BEFORE WORK PROCEEDS.

PAYMENT FOR ALL LABOR, EQUIPMENT AND MATERIALS SHALL BE INCLUDED IN THE LUMP SUM CONTRACT PRICE FOR ITEM 614, MAINTAINING TRAFFIC.

MAINTENANCE OF TRAFFIC PAVEMENT MARKINGS

ALL PAVEMENT MARKINGS ON I.R. 77 AND I.R. 90 AND ASSOCIATED RAMPS EXPECTED TO BE IN PLACE LONGER THAN 14 DAYS SHALL BE WET REFLECTIVE (WR), TYPE 807 (WR APPLIED BINDER) OR TYPE 873 (WR REMOVABLE TAPE).

TYPE 873 (WR REMOVABLE TAPE) SHALL BE USED WHEN MAINTENANCE OF TRAFFIC PAVEMENT MARKINGS ARE PLACED ON THE FINAL SURFACE COURSE.

ITEM 614 - WORK ZONE PAVEMENT MARKING, MISC.: SHARED LANE MARKING

ALL WORK ZONE PAVEMENT MARKING, MISC.: SHARED LANE MARKINGS SHALL BE TYPE 873 (WR REMOVABLE TAPE) AND SHOULD MATCH DIMENSIONS SHOWN ON FIGURE 9C-9 IN THE OMUTCD.

Preliminary Plans - For Reference Only

DESIGN AGENCY
Michael Baker INTERNATIONAL

DESIGNER GSH
REVIEWER DJJ 05/22/24
PROJECT ID 82382
SHEET 84 TOTAL 2696

CUY-90-16.28 (CCG3A)
MODEL: Sheet 3 PAPERSIZE: 34x22 (in.) DATE: 3/27/2025 TIME: 6:51:03 PM USER: Collin.Kwiatt
pw:\\mb-us-pw.bentley.com:mb-us-pw-03\Documents\Cleveland_OH\01_Projects\ODOT\District12\82382\400-Engineering\MOT\Sheets\82382_MN0001.dgn

MAINTENANCE OF TRAFFIC GENERAL NOTES (CONTINUED)

TEMPORARY MINIMUM VERTICAL CLEARANCE

THE TEMPORARY MINIMUM VERTICAL CLEARANCE OVER ROADWAYS AND SHOULDERS SHALL NOT BE LESS THAN 14'-6".

NOTIFICATION OF MINIMUM VERTICAL CLEARANCE REDUCTION

THE CONTRACTOR SHALL NOTIFY THE SPECIAL HAULING PERMITS SECTION OF THE OHIO DEPARTMENT OF TRANSPORTATION AT HAULING.PERMITS@DOT.OHIO.GOV AND THE ENGINEER OF ANY TEMPORARY REDUCTION OF VERTICAL CLEARANCE. THE NOTIFICATION SHALL BE GIVEN AT LEAST 14 DAYS PRIOR TO REDUCING THE VERTICAL CLEARANCE OF A BRIDGE AND SHALL INCLUDE THE FOLLOWING INFORMATION:

- STATE PROJECT NUMBER
- PID
- SFN
- BRIDGE NUMBER
- LOCATION MAP
- DIRECTION OF REDUCED VERTICAL CLEARANCE. FOR EXAMPLE:
    - BIDIRECTIONAL
    - CARDINAL (NORTH OF EAST)
    - NON-CARDINAL (SOUTH OR WEST)
- TEMPORARY VERTICAL CLEARANCE
- ESTIMATED / ACTUAL START AND END DATES OF THE REDUCTION
- CONTRACTOR'S CONTACT PERSON AND TELEPHONE NUMBER
- ANY OTHER INFORMATION REQUESTED BY THE SPECIAL HAULING PERMITS SECTION

THE CONTRACTOR SHALL INFORM THE SPECIAL HAULING PERMITS SECTION OF THE OHIO DEPARTMENT OF TRANSPORTATION AND THE ENGINEER WITHIN 14 DAYS AFTER RESTORING THE VERTICAL CLEARANCE OF A BRIDGE TO ITS ORIGINAL VERTICAL CLEARANCE.

THE ABOVE REQUIREMENTS SHALL BE CONSIDERED INCIDENTAL TO THE WORK THAT CAUSES THE REDUCTION IN THE VERTICAL CLEARANCE.

ITEM 614, WORK ZONE CROSSOVER LIGHTING SYSTEM

THIS WORK SHALL CONSIST OF FURNISHING, ERECTING, OPERATING, MAINTAINING AND REMOVING A WORK ZONE LIGHTING SYSTEM FOR A SINGLE CROSSOVER, OR OVERLAPPING A PAIR OF CROSSOVERS. THE SYSTEM SHALL BE AS SHOWN ON TRAFFIC SCD MT-100.00. THE CONTRACTOR SHALL ARRANGE FOR AND PAY FOR POWER. ALL MATERIALS AND CONSTRUCTION SHALL COMPLY WITH APPLICABLE PORTIONS OF 625 AND 725 EXCEPT: THE PERFORMANCE TEST OF 625.19F, AND CERTIFIED DRAWING REQUIREMENT OF 625.06, ARE WAIVED AND USED MATERIALS IN GOOD CONDITION ARE ACCEPTABLE.

POLES WHICH ARE NOT PROTECTED BY GUARDRAIL OR PORTABLE BARRIER SHALL BE LOCATED OUTSIDE THE CLEAR ZONE, AND SHOULD BE LOCATED AT LEAST 30 FEET (PREFERABLY 40 FEET) FROM THE EDGE OF PAVEMENT WHEN POSSIBLE. ADDITIONAL POLE LINES, CABLES AND APPURTENANCES NECESSARY TO FURNISH POWER TO THE LIGHTING SYSTEM SHALL BE INCLUDED IN THIS ITEM. SERVICE POLES SHALL BE POSITIONED WITH THE SAME CONSTRAINTS AS THE LIGHTING POLES AS A MINIMUM.

PAYMENT WILL BE MADE AT THE UNIT PRICE PER EACH FOR ITEM 614, WORK ZONE CROSSOVER LIGHTING SYSTEM THROUGHOUT ALL PHASES OF WORK WHEN THE CROSSOVER ROADWAYS ARE USED.

AN ESTIMATED QUANTITY OF 6 EACH HAS BEEN PROVIDED IN THE GENERAL SUMMARY.

DELINEATION OF PORTABLE AND PERMANENT BARRIER

BARRIER REFLECTORS AND OBJECT MARKERS SHALL BE INSTALLED ON ALL PORTABLE BARRIER (PB) USED FOR TRAFFIC CONTROL; AND, ON PERMANENT CONCRETE BARRIER (INCLUDING BRIDGE PARAPETS) LOCATED WITHIN 5 FEET OF THE EDGE OF THE ADJACENT TRAVEL LANE.

BARRIER REFLECTORS SHALL CONFORM TO C&MS 626, EXCEPT THAT THE SPACING SHALL BE AS PER TRAFFIC SCD MT-101.70. OBJECT MARKERS AND THEIR INSTALLATION SHALL CONFORM TO C&MS 614.03 AND SCD MT-101.70. WHEN THE PB CONTAINS GLARE SCREEN, ONE SET OF THREE VERTICAL STRIPES OF SHEETING SHALL BE CONSIDERED EQUIVALENT TO AN OBJECT MARKER, ONE WAY.

INCREASED BARRIER DELINEATION, AS SPECIFIED HEREIN, SHALL BE INSTALLED ON ALL PB AND PERMANENT CONCRETE BARRIER LOCATED WITHIN 5 FEET OF THE EDGE OF THE TRAVELED LANE UNDER EITHER OF THE FOLLOWING CONDITIONS: ALONG TAPERS AND TRANSITION AREAS; OR ALONG CURVES (OUTSIDE ONLY) WITH DEGREE OF CURVATURE GREATER THAN OR EQUAL TO 3 DEGREES.

THE INCREASED BARRIER DELINEATION SHALL CONSIST OF EITHER DELINEATION PANELS OR THE TRIPLE STACKING OF WORK ZONE BARRIER REFLECTORS.

DELINEATION PANELS SHALL CONSIST OF PANELS OF DELINEATION, APPROXIMATELY 34 INCHES LONG AND 6 INCHES WIDE AND SHALL BE "CRIMPED." PANELS SHALL BE INSTALLED AND SPACED PER TRAFFIC SCD MT-101.70.

TRIPLE-STACKED BARRIER REFLECTORS SHALL CONSIST OF ALIGNING THREE BARRIER REFLECTORS VERTICALLY, AT LOCATIONS WHERE A SINGLE BARRIER REFLECTOR WOULD BE OTHERWISE ATTACHED. THERE SHALL BE NO OPEN SPACE BETWEEN THE ADJACENT BARRIER REFLECTORS. THE TRIPLE-STACKED BARRIER REFLECTORS SHALL CONFORM TO C&MS 626, EXCEPT THAT THEY SHALL BE SPACED AND ALIGNED PER TRAFFIC SCD MT-101.70.

THE FOLLOWING ESTIMATED QUANTITIES HAVE BEEN INCLUDED IN THE PLANS AND CARRIED TO THE GENERAL SUMMARY:

ITEM 614, BARRIER REFLECTOR, TYPE 1 (ONE WAY)	1,256 EACH
ITEM 614, OBJECT MARKER, ONE WAY	1,113 EACH
ITEM 614, OBJECT MARKER, TWO WAY	42 EACH
ITEM 614, INCREASED BARRIER DELINEATION	10,555 FT

PAYMENT SHALL BE FULL COMPENSATION FOR ALL MATERIAL, LABOR, INCIDENTALS AND EQUIPMENT NECESSARY FOR FURNISHING, INSTALLING, MAINTAINING AND REMOVING EACH OF THE ABOVE ITEMS.

ALONG RUNS OF INCREASED BARRIER DELINEATION WHERE THIS ITEM IS PROVIDED, THE QUANTITY SHALL BE MEASURED AS THE ENTIRE LENGTH OF RUN OF THE INCREASED BARRIER DELINEATION, INCLUDING THE SPACES BETWEEN THE INDIVIDUAL DELINEATION PANELS OR STACKS OF BARRIER REFLECTORS.

ITEM 614, MAINTAINING TRAFFIC, MISC.: TEMPORARY TRAFFIC SIGNAL

THE CONTRACTOR SHALL INSTALL A TEMPORARY TRAFFIC SIGNAL AT THE INTERSECTION OF E. 14TH STREET & COMMUNITY COLLEGE AVENUE AS DETAILED ON SHEET 309 . THIS TEMPORARY TRAFFIC SIGNAL SHALL PROVIDE THE SIGNAL OPERATION AS INDICATED IN THE PLANS, NO CHANGES TO THE SIGNAL PHASING OR TIMINGS SHALL BE MADE WITHOUT THE APPROVAL OF THE PROJECT ENGINEER AND THE CITY OF CLEVELAND TRAFFIC ENGINEER.

ALL TEMPORARY SIGNAL POLE CALCULATIONS SHALL BE PERFORMED BY THE CONTRACTOR IN ORDER TO DETERMINE THE FINAL LOCATION, TYPE OF WOOD POLE TO BE USED, AND TO DETERMINE IF ADDITIONAL WOOD POLES AND SIGNAL SPANS ARE NECESSARY. THE NUMBER, LOCATION, VISIBILITY AND HEIGHT OF ALL TRAFFIC SIGNAL HEADS AND SIGNS SHALL BE IN ACCORDANCE WITH THE PROVISIONS OF THE OHIO MANUAL OF UNIFORM TRAFFIC CONTROL DEVICES (OMUTCD).

ALL LABOR AND MATERIALS FOR THE IMPLEMENTATION OF THE TEMPORARY SIGNAL PLAN AND NOTES, INCLUDING BUT NOT LIMITED TO THE TEMPORARY SUPPORT POLES, TEMPORARY VEHICULAR SIGNAL HEADS, TEMPORARY WIRING, TEMPORARY MESSENGER WIRE, TEMPORARY DETECTION, TEMPORARY CONTROLLER CABINET, POWER SERVICE, AND TEMPORARY SIGNS AND HANGER ASSEMBLIES, ETC. SHALL BE INCLUDED IN THE UNIT BID PRICE FOR EACH ITEM 614, MAINTAINING TRAFFIC, MISC.: TEMPORARY TRAFFIC SIGNAL. A QUANTITY OF 1 EACH HAS BEEN CARRIED TO THE GENERAL SUMMARY FOR THIS ITEM OF WORK AT THE INTERSECTION NOTED ABOVE.

TEMPORARY DRAINAGE ITEMS

TEMPORARY DRAINAGE ITEMS ARE LABELED ON THE MAINTENANCE OF TRAFFIC PLANS AND ARE CARRIED TO THE GENERAL SUMMARY. FOR TEMPORARY DRAINAGE DETAILS AND THE TEMPORARY INLET AND MANHOLE SCHEDULE, SEE SHEET 126

RUMBLE STRIP REMOVAL AND REPLACEMENT

ALL EXISTING RUMBLE STRIPS ON THE I.R. 77 AND I.R. 90 INSIDE AND OUTSIDE SHOULDERS THAT ARE IN CONFLICT WITH THE PROPOSED MOVEMENT OF TRAFFIC DURING MOT OPERATIONS SHALL BE REMOVED BY PAVEMENT PLANING. THE REMOVED RUMBLE STRIP AREAS SHALL BE FILLED WITH ASPHALT SURFACE COURSE. THE RUMBLE STRIP REMOVAL AND REPLACEMENT AREA SHALL BE 2.5 FEET WIDE AND 1.5 INCHES DEEP, CENTERED ON THE RUMBLE STRIP. THE PAVEMENT PLANING AND PLACEMENT OF ASPHALT CONCRETE SURFACE COURSE SHOULD BE COMPLETED IN THE SAME OPERATION. THE ESTIMATED REMOVAL AND REPLACEMENT LENGTH IS 5,510 FEET AND THE PHASE AND LOCATION FOR EACH RUMBLE STRIP REMOVAL AND REPLACEMENT ARE LISTED BELOW:

PHASE AND LOCATION:

PHASE 1 - I.R. 77 NB INSIDE SHOULDER, ℄ EX. I.R. 77 STA. 74+00 TO ℄ EX. RAMP E STA. 55+00, 610 LF

PHASE 2 - I.R. 77 NB OUTSIDE SHOULDER, ℄ EX. I.R. 77 STA. 71+00 TO STA. 76+00, 500 LF

PHASE 3 - I.R. 90 EB INSIDE SHOULDER, ℄ EX. I.R. 90 STA. 95+50 TO STA. 101+00, 550 LF

PHASE 4 - I.R. 90 WB INSIDE SHOULDER, ℄ EX. I.R. 90 STA. 110+50 TO STA. 114+50, 400 LF

PHASE 4 - I.R. 90 EB INSIDE SHOULDER, ℄ EX. I.R. 90 STA. 98+80 TO STA. 105+50, 670 LF

PHASE 4 - I.R. 90 EB OUTSIDE SHOULDER, ℄ EX. I.R. 90 STA. 101+00 TO STA. 109+00, 800 LF

PHASE 5 - I.R. 90 EB INSIDE SHOULDER, ℄ EX. I.R. 90 STA. 58+95 TO STA. 65+15, 620 LF

PHASE 5 - I.R. 90 WB OUTSIDE SHOULDER, ℄ EX. I.R. 90 STA. 98+40 TO STA. 102+50, 410 LF

PHASE 7 - I.R. 90 EB OUTSIDE SHOULDER, ℄ EX. I.R. 90 STA. 62+50 TO STA. 72+00, 950 LF

IMMEDIATELY FOLLOWING COMPLETION OF MOT OPERATIONS AND RESTORING THE TRAFFIC TO ITS ORIGINAL POSITION, NEW RUMBLE STRIPS SHALL BE INSTALLED AT THE LOCATION WHERE THE EXISTING RUMBLE STRIPS WERE REMOVED.

THE FOLLOWING ESTIMATED QUANTITIES HAVE BEEN CARRIED TO THE GENERAL SUMMARY:

ITEM 254 - PAVEMENT PLANING, ASPHALT CONCRETE (1.5")	1,531 SY
ITEM 407 - NON-TRACKING TACK COAT	123 GAL
ITEM 442 - ASPHALT CONCRETE SURFACE COURSE, 12.5 MM, TYPE A, (449), AS PER PLAN, PG70-22M, 1-1/2"	64 CY
ITEM 618 - RUMBLE STRIPS, SHOULDER (ASPHALT CONCRETE)	1.05 MILE

ITEM 442, ASPHALT CONCRETE SURFACE COURSE, 12.5 MM, TYPE A (449), AS PER PLAN, PG70-22M

THE COURSE AGGREGATE FOR THIS ITEM SHALL BE LIMITED TO A BLEND OF AIR COOLED BLAST FURNACE SLAG (ACBFS) AND LIMESTONE. THE CONTRACTOR SHALL USE A MINIMUM 50% ACBFS WITH LIMESTONE COMPRISING THE REMAINING PERCENTAGE.

IN ADDITION TO THE JOINT SEALING REQUIREMENTS SPECIFIED IN 401.17, THE CONTRACTOR SHALL SEAL THE PERIMETER OF ALL RUMBLE STRIP PAVEMENT REPLACEMENT AREAS. THE MATERIAL USED SHALL BE CERTIFIED 702.01 PG BINDER. THE WIDTH OF THE SEALER SHALL BE 2-3 INCHES.

PAYMENT FOR ALL LABOR, MATERIALS, AND EQUIPMENT REQUIRED TO PERFORM THE ABOVE WORK SHALL BE INCLUDED IN THE CONTRACT PRICE FOR THE ITEM 422 - ASPHALT CONCRETE SURFACE COURSE, 12.5MM, TYPE A (449), AS PER PLAN, PG70-22M.

MAINTENANCE OF TRAFFIC PAVEMENT MARKINGS CONTINGENCY

THE FOLLOWING QUANTITIES HAVE BEEN CARRIED TO THE GENERAL SUMMARY AND ARE TO BE USED TO REPLACE WORN PAVEMENT MARKINGS AT THE DIRECTION OF THE ENGINEER:

ITEM 614 - WORK ZONE LANE LINE, CLASS 1, 4"	0.50 MILE
ITEM 614 - WORK ZONE LANE LINE, CLASS 1, 6"	2.50 MILE
ITEM 614 - WORK ZONE CENTER LINE, CLASS 1	0.50 MILE
ITEM 614 - WORK ZONE EDGE LINE, CLASS 1, 4" (WHITE)	0.50 MILE
ITEM 614 - WORK ZONE EDGE LINE, CLASS 1, 6" (WHITE)	2.50 MILE
ITEM 614 - WORK ZONE EDGE LINE, CLASS 1, 4" (YELLOW)	0.50 MILE
ITEM 614 - WORK ZONE EDGE LINE, CLASS 1, 6" (YELLOW)	2.00 MILE
ITEM 614 - WORK ZONE CHANNELIZING LINE, CLASS 1, 8"	650 FT
ITEM 614 - WORK ZONE CHANNELIZING LINE, CLASS 1, 12"	8750 FT
ITEM 614 - WORK ZONE DOTTED LINE, CLASS 1 (WHITE)	3650 FT
ITEM 614 - WORK ZONE TRANSVERSE LINE, CLASS 1 (YELLOW)	150 FT
ITEM 614 - WORK ZONE STOP LINE, CLASS 1	175 FT
ITEM 614 - WORK ZONE CROSSWALK LINE, CLASS 1, 12"	175 FT
ITEM 614 - WORK ZONE ARROW, CLASS 1	25 EACH
ITEM 614 - WORK ZONE WORD ON PAVEMENT, 72", CLASS 1	1 EACH
ITEM 614 - WORK ZONE PAVEMENT MARKING MISC.: SHARED LANE MARKING	1 EACH

WORK ZONE QUEUE DETECTION WARNING SYSTEM

THE CONTRACTOR SHALL FURNISH, INSTALL, AND MAINTAIN AN APPROVED WORK ZONE QUEUE DETECTION WARNING SYSTEM (WZQDWS) AS PER SUPPLEMENTAL SPECIFICATION 896.

THE PROBABLE INITIAL LOCATIONS OF THE WZQDWS DEVICES ARE SHOWN ON SHEET 127 OF THE PLAN. IT IS EXPECTED THE LOCATIONS WILL VARY BASED ON PLANNED OR UNPLANNED PHASE AND TRAFFIC PATTERN CHANGES. PLACEMENT, OPERATION, MAINTENANCE AND ALL ACTIVATION OF THE DEVICES BY THE CONTRACTOR SHALL BE DIRECTED BY THE ENGINEER.

THE FOLLOWING TRAFFIC SENSOR THRESHOLDS AND PORTABLE CHANGEABLE MESSAGE SIGNS (PCMS) MESSAGES SHALL BE USED:

GREATER THAN OR EQUAL TO 50 MPH - USE FOUR CORNER FLASHING CAUTION MODE.

BETWEEN 50 MPH AND 25 MPH - TRAFFIC AHEAD XX MPH / SLOW DOWN.

BELOW OR EQUAL TO 25 MPH - TRAFFIC AHEAD XX MPH / PREPARE TO STOP

FOUR CORNER FLASHING CAUTION MODE SHALL CONSIST OF THE USE OF ONE ASTERISK IN EACH CORNER OF THE PCMS DISPLAY (4 TOTAL ASTERISKS).

XX SHALL BE ROUNDED UP TO THE NEAREST MULTIPLE OF 5 MPH MINUS 1. OCCUPANCY MAY BE DIRECTED TO BE USED BASED ON CERTAIN TRAFFIC CONDITIONS AND SCENARIOS. ODOT WILL DIRECT THE CONTRACTOR OF THE THRESHOLDS TO BE USED FOR THOSE AREAS WHERE OCCUPANCY IS DIRECTED TO BE USED.

THE FOLLOWING ESTIMATED QUANTITY HAS BEEN CARRIED TO THE GENERAL SUMMARY.

ITEM 896 - PORTABLE NON-INTRUSIVE TRAFFIC SENSOR, CLASS 1	648 SMNT
ASSUMING 9 SENSORS FOR 72 MONTHS	
ITEM 896 - PORTABLE CHANGEABLE MESSAGE SIGN	216 SMNT
ASSUMING 3 PCMS SIGNS FOR 72 MONTHS	

Preliminary Plans - For Reference Only

DESIGN AGENCY
Michael Baker INTERNATIONAL
DESIGNER GSH
REVIEWER DJJ 05/22/24
PROJECT ID 82382
SHEET 85 TOTAL 2696

CUY-90-16.28 (CCG3A)
MODEL: Sheet 4 PAPERSIZE: 34x22 (in.) DATE: 3/27/2025 TIME: 6:51:04 PM USER: Collin.Kwiatt
pw:\\mb-us-pw.bentley.com:mb-us-pw-03\Documents\Cleveland_OH\01_Projects\ODOT\District12\82382\400-Engineering\MOT\Sheets\82382_MN0001.dgn

MAINTENANCE OF TRAFFIC GENERAL NOTES (CONTINUED)

TRAFFIC INCIDENT MANAGEMENT (TIM) DURING MOT

OHIO TIM IS OHIO'S TRAFFIC INCIDENT MANAGEMENT PROGRAM WHICH IS COMMITTED TO MAINTAINING THE SAFE AND EFFECTIVE FLOW OF TRAFFIC DURING EMERGENCIES AS TO PREVENT FURTHER DAMAGE, INJURY OR UNDUE DELAY OF THE MOTORING PUBLIC. IN ADDITION TO COMPLYING WITH THE PROVISION OF OMUTCD CHAPTER 6I, CONTROL OF TRAFFIC THROUGH TRAFFIC INCIDENT MANAGEMENT AREAS, THE CONTRACTOR SHALL ACTIVELY PARTICIPATE IN TIM PLANNING AND IMPLEMENTATION AS OUTLINED BELOW.

1. SUPERINTENDENT SHALL IDENTIFY THE INDIVIDUAL PERSONS ON THE PROJECT WHO WILL, OR MAY NEED TO, PERFORM THE DUTIES HEREIN. AT A MINIMUM, INCLUDE THE SUPERINTENDENT, FOREMEN AND SUPERVISORS (OR EQUIVALENT) AS WELL AS THE WORKSITE TRAFFIC SUPERVISOR (WTS; IF APPLICABLE TO THE PROJECT). THESE INDIVIDUALLY IDENTIFIED PERSONS SHALL COLLECTIVELY BE KNOWN AS CONTRACTOR TRAFFIC INCIDENT MANAGEMENT (TIM) CONTACTS. NOTIFY THE PROJECT ENGINEER OF THE CONTRACTOR TIM CONTACTS (ALONG WITH CONTACT INFORMATION FOR EACH) AT OR BEFORE THE PRECONSTRUCTION MEETING.

2. SUPERINTENDENT SHALL NOTIFY THE ENGINEER IMMEDIATELY IF ANY CONTRACTOR TIM CONTACT IS ADDED, REMOVED OR THE CONTACT INFORMATION CHANGES OVER THE COURSE OF THE PROJECT.

3. PRIOR THE FIRST DAY OF WORK IN THE FIELD, EACH CONTRACTOR TIM CONTACT ON THE PROJECT SHALL HAVE ATTENDED AND SUCCESSFULLY COMPLETED OHIO TIM TRAINING PROVIDED BY THE DEPARTMENT OR DESIGNEE. TRAINING INFORMATION CAN BE FOUND AT WWW.OHIOTIM.COM.

4. SUPERINTENDENT, AT A MINIMUM, SHALL ATTEND AND ACTIVELY PARTICIPATE IN A DEPARTMENT SCHEDULED TIM MEETING BEFORE CONSTRUCTION WORK BEGINS AND BEFORE EACH PHASE CHANGE. THESE MEETINGS WILL RESULT IN A DEPARTMENT ISSUED PROJECT SPECIFIC TRAFFIC INCIDENT MANAGEMENT PLAN (TIMP). AT THE TIM MEETINGS THE ATTENDING CONTRACTOR TIM CONTACTS SHALL:

   A. COLLABORATE WITH ODOT AND SAFETY FORCES;

   B. SHARE PROJECT SPECIFIC DETAILS THAT IMPACT TIM RESPONDERS; AND

   C. RECOMMEND WAYS TO INCORPORATE NECESSARY EMERGENCY ACCESS AND OTHER TIM ELEMENTS FOR TIM RESPONDERS GIVEN PROJECT SPECIFIC WORK BEING COMPLETED AND PROJECT SPECIFIC PHASING.

5. CONTRACTOR TIM CONTACTS SHALL IMPLEMENT COMPONENTS OF THE RESULTING TIMP (SUCH AS APPROVED EMERGENCY INGRESS/EGRESS POINTS, ETC), AS DIRECTED BY THE ENGINEER IN ACCORDANCE WITH 109.05.

6. CONTRACTOR TIM CONTACTS SHALL PERFORM, AT A MINIMUM, THE FOLLOWING FUNCTIONS WHEN AN INCIDENT/CRASH OCCURS:

   A. IF OBSERVED OR PRESENT WHEN OCCURS, CALL 911 AND THEN NOTIFY THE TRAFFIC MANAGEMENT CENTER (TMC) TO PROVIDE THE FOLLOWING:

      I. LOCATION, INCLUDING MILEPOST NUMBER AND DIRECTION OF TRAVEL

      II. NUMBER AND TYPE OF VEHICLES INVOLVED, IF KNOWN

      III. ESTIMATED EXTENT OF DAMAGE OR INJURY, IF KNOWN

      IV. ESTIMATED NUMBER OF PATIENTS INVOLVED, IF KNOWN

      V. ANY POTENTIAL HAZARDOUS CONDITIONS, IF KNOWN

      VI. THE PLACARD NUMBER ON ANY HAZARDOUS MATERIALS PLACARD FROM A SAFE DISTANCE, IF APPLICABLE AND VISIBLE

TRAFFIC INCIDENT MANAGEMENT (TIM) DURING MOT (CONTINUED)

   B. FOLLOWING AN INCIDENT/CRASH:

      I. INITIATE TRAFFIC MANAGEMENT/PROVIDE TEMPORARY TRAFFIC CONTROL AS INDICATED IN THE TIMP, AS DIRECTED BY THE ENGINEER IN ACCORDANCE WITH 109.05.

      II. RECOMMEND ROADWAY REPAIR NEEDS.

      III. PROVIDE REPAIR RESOURCES AND INITIATE REPAIRS, AS DIRECTED BY THE ENGINEER IN ACCORDANCE WITH 109.05.

      IV. ATTEND AND PARTICIPATE IN AN AFTER ACTION REVIEW (AAR).

ALL COSTS, UNLESS OTHERWISE SPECIFIED, RESULTING FROM THE ABOVE REQUIREMENTS SHALL BE CONSIDERED TO BE INCLUDED IN THE LUMP SUM PRICE FOR ITEM 614, MAINTAINING TRAFFIC. FAILURE TO PERFORM THE REQUIREMENTS OF THIS PLAN NOTE WILL RESULT IN A DAILY FINE OF 2% OF ITEM 614, MAINTAINING TRAFFIC AND MAY RESULT IN ONE OR MORE CONTRACTOR TIM CONTACTS BEING REMOVED FROM THE LIST OF OHIO TIM TRAINED INDIVIDUALS (AT THE SOLE DISCRETION OF THE OHIO TIM EXECUTIVE COMMITTEE). IN THE EVENT AN INDIVIDUAL IS REMOVED FROM THE OHIO TIM TRAINED LIST, THE INDIVIDUAL WILL BE REMOVED FROM CONTRACTOR TIM CONTACT RESPONSIBILITIES ON ALL PROJECTS.

NOTIFICATION OF TRAFFIC RESTRICTIONS

THROUGHOUT THE DURATION OF THE PROJECT, THE CONTRACTOR SHALL NOTIFY THE PROJECT ENGINEER IN WRITING OF ALL TRAFFIC RESTRICTIONS AND UPCOMING MAINTENANCE OF TRAFFIC CHANGES. THE CONTRACTOR SHALL ENSURE THE WRITTEN NOTIFICATION IS SUBMITTED IN A TIMELY MANNER TO ALLOW THE PROJECT ENGINEER TO MEET THE REQUIRED TIME FRAMES SET FORTH IN THE TABLE BELOW TO INFORM THE SPECIAL HAULING PERMITS SECTION (HAULING.PERMITS@DOT.OHIO.GOV) AND THE DISTRICT PUBLIC INFORMATION OFFICE (PIO). THIS NOTIFICATION SHALL BE RECEIVED BY THE PROJECT ENGINEER PRIOR TO THE PHYSICAL SETUP OF ANY APPLICABLE SIGNS OR MESSAGE BOARDS.

INFORMATION SHOULD INCLUDE, BUT IS NOT LIMITED TO, ALL CONSTRUCTION ACTIVITIES THAT IMPACT OR INTERFERE WITH TRAFFIC AND SHALL LIST THE SPECIFIC LOCATION, TYPE OF WORK, ROAD STATUS, DATE AND TIME OF RESTRICTION, DURATION OF RESTRICTION, NUMBER OF LANES MAINTAINED, NUMBER OF LANES CLOSED, MINIMUM VERTICAL CLEARANCE, MINIMUM WIDTH OF DRIVABLE PAVEMENT, DETOUR ROUTES, IF APPLICABLE, AND ANY OTHER INFORMATION REQUESTED BY THE PROJECT ENGINEER.

NOTIFICATION OF TRAFFIC RESTRICTIONS TIME TABLE

ITEM	DURATION OF CLOSURE	NOTICE DUE TO PERMITS & PIO
RAMP & ROAD CLOSURES	>= 2 WEEKS	21 CALENDAR DAYS PRIOR TO CLOSURE
	> 12 HOURS & < 2 WEEKS	14 CALENDAR DAYS PRIOR TO CLOSURE
	<= 12 HOURS	4 BUSINESS DAYS PRIOR TO CLOSURE
LANE CLOSURES & RESTRICTIONS	>= 2 WEEKS	14 CALENDAR DAYS PRIOR TO CLOSURE
	< 2 WEEKS	5 BUSINESS DAYS PRIOR TO CLOSURE
START OF CONSTRUCTION & TRAFFIC PATTERN CHANGES	N/A	14 CALENDAR DAYS PRIOR TO IMPLEMENTATION

ANY UNFORESEEN CONDITIONS NOT SPECIFIED IN THE PLANS REQUIRING TRAFFIC RESTRICTIONS SHALL ALSO BE REPORTED TO THE PROJECT ENGINEER USING THE NOTIFICATION TIME TABLE.

THE PIO WILL, IN TURN, NOTIFY THE PUBLIC, THE LOCAL EMERGENCY SERVICES, AFFECTED SCHOOLS AND BUSINESSES, AND ANY OTHER IMPACTED LOCAL PUBLIC AGENCY OF ANY OF THE ABOVE-MENTIONED ITEMS VIA MEDIA SOURCES.

WORKSITE TRAFFIC SUPERVISOR

SUBJECT TO APPROVAL OF THE ENGINEER, THE CONTRACTOR SHALL EMPLOY AND IDENTIFY (SOMEONE OTHER THAN THE SUPERINTENDENT) A PREQUALIFIED WORKSITE TRAFFIC SUPERVISOR (WTS) BEFORE STARTING WORK IN THE FIELD. THE WTS SHALL BE TRAINED IN ACCORDANCE WITH CMS 614.03, SHALL HAVE SUCCESSFULLY COMPLETED ODOT ADMINISTERED WTS TESTING (AND RE-TESTING WHEN APPLICABLE) AND BE LISTED ON THE ODOT PREQUALIFIED WTS ROSTER. PREQUALIFICATION EXPIRES EVERY 5 YEARS. RE-TESTING SHALL BE SUCCESSFULLY REPEATED EVERY 5 YEARS TO REMAIN PREQUALIFIED.

IN ADDITION, THE DESIGNATED WTS SHALL BE SOLELY DEDICATED TO THE PROJECT AND IS NOT ALLOWED TO PERFORM DUTIES AT OTHER PROJECTS.

THE NAME OF THE PREQUALIFIED WTS AND RELATED 24-HOUR CONTACT INFORMATION SHALL BE PROVIDED TO THE ENGINEER AT THE PRECONSTRUCTION CONFERENCE. IF THE DESIGNATED WTS WILL NOT BE AVAILABLE FULL TIME (24/7), THE CONTRACTOR MAY DESIGNATE AN ALTERNATE (SECONDARY) WTS TO BE AVAILABLE WHEN THE PRIMARY IS OFF DUTY; HOWEVER THE PRIMARY WTS SHALL REMAIN THE POINT OF CONTACT AT ALL TIMES. ANY ALTERNATE (SECONDARY) WTS IS SUBJECT TO THE SAME TRAINING, PREQUALIFICATION AND OTHER REQUIREMENTS OUTLINED WITHIN THIS PLAN NOTE. AT ALL TIMES THE ENGINEER, OR ENGINEER'S REPRESENTATIVES, MUST BE INFORMED OF WHO THE PRIMARY WTS (AND SECONDARY WTS, IF APPLICABLE) IS AT THE CURRENT TIME.

THE WTS POSITION HAS THE PRIMARY RESPONSIBILITY OF IMPLEMENTING THE TRAFFIC MANAGEMENT PLAN (TMP), MONITORING THE SAFETY AND MOBILITY OF THE ENTIRE WORK ZONE, AND CORRECTING TEMPORARY TRAFFIC CONTROL (TTC) DEFICIENCIES FOR THE ENTIRE WORK ZONE. THE WTS, AND ALTERNATE WTS WHEN ON DUTY, SHALL HAVE SUFFICIENT AUTHORITY TO EFFECTIVELY CARRY OUT THE IDENTIFIED WTS RESPONSIBILITIES AND DUTIES. THE DUTIES OF THE WTS ARE AS FOLLOWS:

1. BE AVAILABLE ON A 24-HOUR PER DAY BASIS.

2. BE ON SITE FOR ALL EMERGENCY TTC NEEDS WITHIN ONE HOUR OF NOTIFICATION BY POLICE OR PROJECT STAFF, AND EFFECT CORRECTIVE MEASURES IMMEDIATELY ON EXISTING WORK ZONE TTC DEVICES.

3. ATTEND PRECONSTRUCTION MEETING AND ALL PROJECT MEETINGS WHERE TTC MANAGEMENT IS DISCUSSED.

4. BE AVAILABLE ON SITE FOR OTHER MEETINGS OR DISCUSSIONS WITH THE ENGINEER UPON REQUEST.

5. BE AWARE OF ALL EXISTING AND PROPOSED TTC OPERATIONS OF THE CONTRACTOR, SUBCONTRACTORS AND SUPPLIERS, AND ENSURE COORDINATION OCCURS BETWEEN THEM TO ELIMINATE CONFLICTING TEMPORARY AND/OR PERMANENT TRAFFIC CONTROL.

6. COORDINATE PROJECT ACTIVITIES WITH ALL LAW ENFORCEMENT OFFICERS (LEOS). THE WTS SHALL ALSO BE THE MAIN CONTACT PERSON WITH THE LEOS WHILE LEOS ARE ON THE PROJECT.

7. COORDINATE AND FACILITATE MEETINGS WITH ODOT PERSONNEL, LEOS AND OTHER APPLICABLE ENTITIES BEFORE EACH PLAN PHASE SWITCH TO DISCUSS THE WORK ZONE TTC FOR IMPLEMENTING THE PHASE SWITCH. SUBMIT A WRITTEN DETAIL OF MOT OPERATIONS AND SCHEDULE OF EVENTS TO IMPLEMENT THE SWITCH BETWEEN PHASE PLANS TO THE ENGINEER 5 CALENDAR DAYS PRIOR TO THIS MEETING.

8. BE PRESENT, ON SITE FOR, AND INVOLVED WITH, EACH TTC SET UP/TAKE DOWN AND EACH PHASE CHANGE IN ACCORDANCE WITH CMS 614.03.

9. ON A CONTINUAL BASIS ENSURE THAT THE TTC ZONE AND ALL RELATED DEVICES ARE INSTALLED, MAINTAINED AND REMOVED IN COMPLIANCE WITH THE CONTRACT DOCUMENTS.

10. ON A CONTINUAL BASIS FACILITATE CORRECTIVE ACTION(S) NECESSARY TO BRING DEFICIENT TTC ZONES AND ALL RELATED DEVICES INTO COMPLIANCE WITH CONTRACT DOCUMENTS IN THE TIMEFRAME DETERMINED BY THE ENGINEER.

WORKSITE TRAFFIC SUPERVISOR (CONTINUED)

11. INSPECT, EVALUATE, PROPOSE NECESSARY MODIFICATIONS TO, AND DOCUMENT THE EFFECTIVENESS OF, THE TTC DEVICES AND TRAFFIC OPERATIONS ON A DAILY BASIS (7 DAYS A WEEK). IN ADDITION, PERFORM ONE WEEKLY NIGHT INSPECTION OF THE WORK ZONE SETUP FOR DAYTIME WORK OPERATIONS; AND ONE DAYTIME INSPECTION PER WEEK FOR NIGHTTIME PROJECTS. THIS SHALL INCLUDE (BUT NOT BE LIMITED TO) DOCUMENTATION ON THE FOLLOWING PROJECT EVENTS:

   A. INITIAL TTC SETUP (DAY AND NIGHT REVIEW).

   B. DAILY TTC SETUP AND REMOVAL.

   C. WHEN CONSTRUCTION STAGING CAUSES A CHANGE IN THE TTC SETUP.

   D. CRASH OCCURRENCES WITHIN THE CONSTRUCTION AREA AND WITHIN THE INFLUENCE AREA(S) APPROACHING THE WORK ZONE.

   E. REMOVAL OF TTC DEVICES AT THE END OF A PHASE OR PROJECT.

   F. ALL OTHER EMERGENCY TTC NEEDS.

12. COMPLETE THE DEPARTMENT APPROVED (CA-D-8) WITHIN GOFORMZ AFTER EACH INSPECTION AS REQUIRED IN # 11 AND SUBMIT IT TO THE ENGINEER BY THE END OF THE WORKDAY IN WHICH THE INSPECTION OCCURRED. THE CA-D-8 INCLUDES A CHECKLIST OF ALL TTC MAINTENANCE ITEMS TO BE REVIEWED. CONTACT GOFORMZ.HELP@DOT.OHIO.GOV TO OBTAIN A USER ACCOUNT. ANY DEFICIENCIES OBSERVED SHALL BE NOTED ON THE CA-D-8, ALONG WITH RECOMMENDED OR COMPLETED CORRECTIVE ACTIONS AND THE DATES BY WHICH SUCH CORRECTIONS WERE, OR WILL BE, COMPLETED. A COPY OF THE CURRENT CA-D-8 DOCUMENT CAN BE FOUND ON THE OFFICE OF CONSTRUCTION ADMINISTRATION'S INSPECTION FORMS WEBSITE.

13. HAVE COPIES OF THE ODOT TEMPORARY TRAFFIC CONTROL MANUAL AND CONTRACT DOCUMENTS AVAILABLE AT ALL TIMES ON THE PROJECT.

THE DEPARTMENT WILL DEDUCT:

A. THE PRORATED DAILY AMOUNT OF ITEM 614 MAINTAINING TRAFFIC FOR ANY DAY IN WHICH THE WTS FAILS TO PERFORM THE DUTIES SET FORTH ABOVE. THE PRORATED DAILY AMOUNT WILL BE EQUAL TO THE ORIGINAL BID AMOUNT FOR ITEM 614 MAINTAINING TRAFFIC DIVIDED BY THE DIFFERENCE BETWEEN THE ORIGINAL COMPLETION DATE AND THE FIRST DAY OF WORK, IN CALENDAR DAYS.

B. 1% OF THE ORIGINAL BID AMOUNT FOR ITEM 614 MAINTAINING TRAFFIC FOR ANY DAY THAT A FAILURE TO PERFORM WTS DUTIES REOCCURS OR A TTC ISSUE IS IDENTIFIED IN THE FIELD AND IS NOT CORRECTED IN THE GIVEN TIMEFRAME PER THE ENGINEER. DEDUCTION B SHALL NOT APPLY TO SITUATIONS COVERED BY DEDUCTION C.

C. 1% OF THE ORIGINAL BID AMOUNT FOR ITEM 614 MAINTAINING TRAFFIC FOR ANY DAY THAT A LANE OR RAMP IS BLOCKED (FULLY OR PARTIALLY) WITHOUT TTC, AS DETERMINED BY THE ENGINEER. THIS DEDUCTION SHALL BE IN ADDITION TO ANY OTHER DISINCENTIVES ESTABLISHED FOR UNAUTHORIZED LANE USE.

FOR DAYS IN WHICH MORE THAN ONE DEDUCTION LISTED ABOVE OCCUR, THE HIGHEST DEDUCTION AMOUNT WILL APPLY.

IF THREE OR MORE TOTAL DAYS RESULT IN ISSUES DESCRIBED IN DEDUCTION B OR C ABOVE, THE PRIMARY WTS (AND ANY ALTERNATE WTS, IF APPLICABLE) SHALL BE IMMEDIATELY REMOVED FROM THE WORK IN ACCORDANCE WITH C&MS 108.05. UPON REMOVAL THE ENGINEER SHALL NOTIFY ODOT CENTRAL OFFICE (WTSPREQUALIFICATION@DOT.OHIO.GOV) TO REGISTER A REMOVAL AT THE PROJECT LEVEL AGAINST THE STATEWIDE PREQUALIFICATION FOR THE PRIMARY WTS (AND ALTERNATE WTS, IF APPLICABLE). ACCUMULATION OF THREE PROJECT LEVEL REMOVALS (FROM ANY PROJECTS STATEWIDE) SHALL CAUSE STATEWIDE DISQUALIFICATION FOR ANY FORMERLY PREQUALIFIED WTS. A WTS (AND ALTERNATE WTS, IF APPLICABLE) MAY BE IMMEDIATELY AND CONCURRENTLY REMOVED FROM THE WORK AT THE PROJECT LEVEL IN ACCORDANCE WITH C&MS 108.05 AND DISQUALIFIED STATEWIDE FROM THE ODOT PREQUALIFIED WTS ROSTER (REGARDLESS OF THE NUMBER OF PROJECT LEVEL REMOVALS), AS WELL AS BEING SUBJECT TO OTHER POTENTIAL CONSEQUENCES, IN CASES OF FALSIFIED, DISHONEST OR OTHERWISE UNETHICAL ACTIVITY OR DOCUMENTATION.

PAYMENT FOR THE ABOVE REQUIREMENTS, RESPONSIBILITIES AND DUTIES SHALL BE INCLUDED IN THE LUMP SUM PRICE BID FOR ITEM 614, MAINTAINING TRAFFIC.

Preliminary Plans - For Reference Only

MAINTENANCE OF TRAFFIC NOTES

DESIGN AGENCY
Michael Baker INTERNATIONAL

DESIGNER GSH
REVIEWER DJJ 05/22/24
PROJECT ID 82382
SHEET 86 TOTAL 2696

MODEL: Sheet 5 PAPERSIZE: 34x22 (in.) DATE: 3/27/2025 TIME: 6:51:05 PM USER: Collin.Kwiatt
pw:\\mb-us-pw.bentley.com:mb-us-pw-03\Documents\Cleveland_OH\01_Projects\ODOT\District12\82382\400-Engineering\MOT\Sheets\82382_MN0001.dgn

MAINTENANCE OF TRAFFIC GENERAL NOTES (CONTINUED)

ITEM 614, LAW ENFORCEMENT OFFICER (WITH PATROL CAR) FOR ASSISTANCE DURING CONSTRUCTION OPERATIONS

USE OF LAW ENFORCEMENT OFFICERS (LEOS) BY CONTRACTORS OTHER THAN THE USES SPECIFIED BELOW WILL NOT BE PERMITTED AT PROJECT COST. LEOS SHOULD NOT BE USED WHERE THE OMUTCD INTENDS THAT FLAGGERS BE USED.

IN ADDITION TO THE REQUIREMENTS OF C&MS 614 AND THE OMUTCD, A UNIFORMED LEO WITH AN OFFICIAL PATROL CAR (CAR WITH TOP-MOUNTED EMERGENCY FLASHING LIGHTS AND COMPLETE MARKINGS OF THE APPROPRIATE LAW ENFORCEMENT AGENCY) SHALL BE PROVIDED FOR THE FOLLOWING TRAFFIC CONTROL TASKS:

- DURING THE ENTIRE ADVANCE PREPARATION AND CLOSURE SEQUENCE WHERE COMPLETE BLOCKAGE OF TRAFFIC IS REQUIRED.
- DURING A TRAFFIC SIGNAL INSTALLATION WHEN IMPACTING THE NORMAL FUNCTION OF THE SIGNAL OR THE FLOW OF TRAFFIC, OR WHEN TRAFFIC NEEDS TO BE DIRECTED THROUGH AN ENERGIZED TRAFFIC SIGNAL CONTRARY TO THE SIGNAL DISPLAY (E.G., DIRECTING MOTORISTS THROUGH A RED LIGHT).

IN ADDITION TO THE REQUIREMENT OF C&MS 614 AND THE OMUTCD, A UNIFORMED LEO WITH AN OFFICIAL PATROL CAR (CAR WITH TOP-MOUNTED EMERGENCY FLASHING LIGHTS AND COMPLETE MARKINGS OF THE APPROPRIATE LAW ENFORCEMENT AGENCY) SHOULD BE PROVIDED FOR THE FOLLOWING TRAFFIC CONTROL TASKS AS APPROVED BY THE ENGINEER:

- FOR LANE CLOSURES: DURING INITIAL SET-UP PERIODS, TEAR DOWN PERIODS, SUBSTANTIAL SHIFTS OF A CLOSURE POINT OR WHEN NEW LANE CLOSURE ARRANGEMENTS ARE INITIATED FOR LONG-TERM LANE CLOSURES/SHIFTS (FOR THE FIRST AND LAST DAY OF MAJOR CHANGES IN TRAFFIC CONTROL SETUP).
- FOR OPERATIONS WITHOUT POSITIVE PROTECTION OCCURRING WITHIN 10 FEET OF AN OPEN TRAVELED LANE THAT MEET ALL OF THE FOLLOWING CRITERIA:
  - ON A MULTI-LANE DIVIDED INTERSTATE, OTHER FREEWAY OR EXPRESSWAY;
  - AND,
  - AN AUTHORIZED SPEED LIMIT OF 45 MPH OR GREATER THAT IS IN EFFECT AT THE TIME OF THE OPERATION;
  - AND,
  - AADT OF 50,000 (OR AADT OF 30,000 WITH 25% OR HIGHER PERCENT TRUCKS)

"WITHOUT POSITIVE PROTECTION" MEANS USE OF DRUMS, CONES, SHADOW VEHICLE, ETC, WITHOUT PROTECTION FROM PORTABLE BARRIER OR OTHER RIGID BARRIER ALONG THE WORK AREA. THIS PHRASE DOES NOT APPLY TO CASES WHERE POSITIVE PROTECTION IS REQUIRED. MOBILE OPERATIONS ARE REGARDED AS "WITHOUT POSITIVE PROTECTION". FOR WORK ZONES USING A COMBINATION OF BARRIER AND TEMPORARY TRAFFIC CONTROL DEVICES (CONES, DRUMS, ETC), THE DESIGNATION SHALL BE BASED UPON THE TYPE OF DEVICES USED IN THE AREA THAT WORKERS ARE LOCATED.

IF MULTIPLE ACTIVE LOCALIZED QUALIFYING WORK AREAS OCCUR WITHOUT POSITIVE PROTECTION, PER MAINLINE TRAFFIC DIRECTION, PROVIDE A UNIFORMED LEO AND OFFICIAL PATROL CAR IN ADVANCE OF:

- THE FIRST ACTIVE WORK AREA THAT DRIVERS WILL ENCOUNTER;
- OR
- THE ACTIVE WORK AREA LATERALLY CLOSE TO THE OPEN TRAVELED LANE;
- OR
- OTHER LOCATION AS APPROVED BY THE ENGINEER.

THE UNIFORMED LEO AND OFFICIAL PATROL CAR MAY RELOCATE AMONG THE LISTED LOCATIONS AS APPROPRIATE AS THE OPERATIONS PROCEED IN THE LOCALIZED QUALIFYING WORK AREAS.

IN GENERAL, LEOS SHOULD BE POSITIONED IN ADVANCE OF AND ON THE SAME SIDE AS THE LANE RESTRICTION (OR AT THE POINT OF ROAD CLOSURE), AND TO MANUALLY CONTROL TRAFFIC MOVEMENTS THROUGH SIGNALIZED INTERSECTIONS IN WORK ZONES.

LEOS SHOULD NOT FORGO THEIR TRAFFIC CONTROL RESPONSIBILITIES TO APPREHEND MOTORISTS FOR ROUTINE TRAFFIC VIOLATIONS. HOWEVER, IF A MOTORIST'S ACTIONS ARE CONSIDERED TO BE RECKLESS, THEN PURSUIT OF THE MOTORIST IS APPROPRIATE.

ITEM 614, LAW ENFORCEMENT OFFICER (WITH PATROL CAR) FOR ASSISTANCE DURING CONSTRUCTION OPERATIONS (CONTINUED)

THE LEOS WORK AT THE DIRECTION OF THE CONTRACTOR. THE CONTRACTOR IS RESPONSIBLE FOR SECURING THE SERVICES OF THE LEOS WITH THE APPROPRIATE AGENCIES AND COMMUNICATING THE INTENTIONS OF THE PLANS WITH RESPECT TO DUTIES OF THE LEOS. THE ENGINEER SHALL HAVE FINAL CONTROL OVER THE LEOS' DUTIES AND PLACEMENT, AND WILL RESOLVE ANY ISSUES THAT MAY ARISE BETWEEN THE TWO PARTIES.

ENSURE PROVIDED LEOS HAVE BEEN TRAINED APPROPRIATE TO THE JOB DECISIONS THEY ARE REQUIRED TO MAKE WHILE ON THE PROJECT, IN ACCORDANCE WITH C&MS 614.03.

THE LEO SHALL REPORT IN TO THE CONTRACTOR PRIOR TO THE START OF THE SHIFT, IN ORDER TO RECEIVE INSTRUCTIONS REGARDING SPECIFIC WORK ASSIGNMENTS DURING HIS/HER SHIFT. THE LEO IS EXPECTED TO STAY AT THE PROJECT SITE FOR THE ENTIRE DURATION OF HIS/HER SHIFT. THE LEO SHALL REPORT TO THE CONTRACTOR AT THE END OF HIS/HER SHIFT. SHOULD IT BE NECESSARY TO LEAVE THE PROJECT SITE, THE LEO SHALL NOTIFY THE ENGINEER. THE CONTRACTOR SHALL PROVIDE THE LEO WITH A TWO-WAY COMMUNICATION DEVICE THAT SHALL BE RETURNED TO THE CONTRACTOR AT THE END OF HIS/HER SHIFT.

LEOS (WITH PATROL CAR) REQUIRED BY THE TRAFFIC MAINTENANCE TASKS ABOVE SHALL BE PAID FOR ON A UNIT PRICE (HOURLY) BASIS UNDER ITEM 614, LAW ENFORCEMENT OFFICER (WITH PATROL CAR) FOR ASSISTANCE. THE FOLLOWING ESTIMATED QUANTITIES HAVE BEEN CARRIED TO THE GENERAL SUMMARY.

ITEM 614 - LAW ENFORCEMENT OFFICER WITH PATROL CAR FOR ASSISTANCE 5000 HOUR

THE HOURS PAID SHALL INCLUDE ANY MINIMUM SHOW-UP TIME REQUIRED BY THE LAW ENFORCEMENT AGENCY INVOLVED.

ANY ADDITIONAL COSTS (ADMINISTRATIVE OR OTHERWISE) INCURRED BY THE CONTRACTOR TO OBTAIN THE SERVICES OF A LEO ARE INCLUDED WITH THE BID UNIT PRICE FOR ITEM 614, LAW ENFORCEMENT OFFICER WITH PATROL CAR FOR ASSISTANCE.

ITEM 614, MAINTAINING TRAFFIC, MISC.: PARTIAL TEMPORARY TRAFFIC SIGNAL

THE CONTRACTOR SHALL MODIFY THE EXISTING TRAFFIC SIGNALS AT THE INTERSECTIONS OF CARNEGIE AVENUE AND E. 14TH STREET AS DETAILED ON SHEET 293, CARNEGIE AVENUE AND E. 18TH STREET AS DETAILED ON SHEET 293, AND CARNEGIE AVENUE AND E. 21ST STREET AS DETAILED ON SHEET 345. THESE PARTIAL TEMPORARY TRAFFIC SIGNALS SHALL MAINTAIN THE CURRENT SIGNAL OPERATION UTILIZING THE EXISTING CONTROLLER CABINET, EXCEPT WHEN NOTED OTHERWISE IN THE TEMPORARY SIGNALS NOTES ON SHEET 345. NO CHANGES TO THE SIGNAL PHASING OR TIMINGS SHALL BE MADE WITHOUT THE APPROVAL OF THE PROJECT ENGINEER AND THE CITY OF CLEVELAND TRAFFIC ENGINEER.

ALL TEMPORARY SIGNAL POLE CALCULATIONS SHALL BE PERFORMED BY THE CONTRACTOR IN ORDER TO DETERMINE THE FINAL LOCATION, TYPE OF WOOD POLE TO BE USED, AND TO DETERMINE IF ADDITIONAL WOOD POLES AND SIGNAL SPANS ARE NECESSARY INSTEAD OF REUSING EXISTING SIGNAL SUPPORT POLES. THE NUMBER, LOCATION, VISIBILITY AND HEIGHT OF ALL TRAFFIC SIGNAL HEADS AND SIGNS SHALL BE IN ACCORDANCE WITH THE PROVISIONS OF THE OHIO MANUAL OF UNIFORM TRAFFIC CONTROL DEVICES (OMUTCD). THE CONTRACTOR SHALL MAINTAIN PEDESTRIAN CROSSINGS THROUGHOUT CONSTRUCTION WHERE SHOWN IN THE MAINTENANCE OF TRAFFIC PLANS INCLUDING ANY TEMPORARY POLES OR PEDESTRIAN SIGNAL HEADS WHERE NEEDED.

ALL LABOR AND MATERIALS FOR THE TEMPORARY MAINTENANCE OF EXISTING TRAFFIC SIGNALS AND THE IMPLEMENTATION OF THE TEMPORARY SIGNAL PLAN AND NOTES, INCLUDING BUT NOT LIMITED TO THE TEMPORARY SUPPORT POLES, TEMPORARY VEHICULAR AND PEDESTRIAN SIGNAL HEADS, TEMPORARY WIRING, TEMPORARY MESSENGER WIRE, CABINET MODIFICATIONS, AND CONTROLLER PROGRAMMING ADJUSTMENTS, ETC. SHALL BE INCLUDED IN THE UNIT BID PRICE FOR EACH ITEM 614, MAINTAINING TRAFFIC, MISC.: PARTIAL TEMPORARY TRAFFIC SIGNAL. A QUANTITY OF 3 EACH HAS BEEN CARRIED TO THE GENERAL SUMMARY FOR THIS ITEM OF WORK AT THE INTERSECTIONS NOTED ABOVE.

ITEM 452 - NON-REINFORCED CONCRETE PAVEMENT, MISC.: SURCHARGE FOR CLASS MS CONCRETE

AT VARIOUS LOCATIONS ALONG THE CORRIDOR AND TIMES DURING CONSTRUCTION CIRCUMSTANCES MAY REQUIRE THE USE OF CLASS MS CONCRETE. THE USE OF MS CONCRETE SHALL BE AT THE DISCRETION AND DIRECTION OF THE ENGINEER AND THE SPECIFICATIONS OUTLINED IN THESE NOTES. THE FOLLOWING ESTIMATED QUANTITY HAS BEEN INCLUDED IN THE GENERAL SUMMARY FOR USE AS DIRECTED BY THE ENGINEER:

ITEM 452 - NON-REINFORCED CONCRETE PAVEMENT, MISC.: SURCHARGE FOR CLASS MS CONCRETE 1000 SY

RESURFACING OF WORK ZONES

THE CONTRACTOR SHALL RESURFACE THE ROADWAY PAVEMENT LISTED IN THE TABLE BELOW. THIS WORK SHALL OCCUR ONCE EACH LOCATION IS NO LONGER PART OF A WORK ZONE AND BEFORE FINAL PAVEMENT MARKINGS ARE PLACED ON THE ROADWAY. ADDITIONAL CONTINGENCY QUANTITIES FOR RESURFACING HAVE BEEN INCLUDED BELOW, TO BE USED AS DIRECTED BY THE ENGINEER.

SINGLE LANE CLOSURES SHALL BE IMPLEMENTED DURING OFF PEAK HOURS (SEE NOTE FOR DETAILS) AND HOLIDAY/SPECIAL EVENT RESTRICTIONS APPLY TO THE CLOSURES. ALL LANE CLOSURES SHOULD BE DONE IN ACCORDANCE WITH OHIO DEPARTMENT OF TRANSPORTATION STANDARDS AS DESCRIBED IN BOTH THE CMS AND STANDARD CONSTRUCTION DRAWINGS. AT THE END OF WORKDAY, TRAFFIC GRADE STEEL PLATES SHALL BE PLACED OVER ANY PORTION OF THE TRENCH NOT RESTORED BACK TO GRADE OR NOT RESTORED BACK TO A MANNER SUITABLE FOR TRAFFIC AND ALL LANES SHALL BE OPENED.

ROADWAY	ALIGNMENT	BEGIN STATION	END STATION	AREA (SF)	BUILD-UP
I.R. 77 NB	℄ EX. I.R. 77	55+30	73+65	92,630	ODOT
I.R. 77 SB	℄ EX. I.R. 77	73+00	73+65	3,470	ODOT
I.R. 90	℄ EX. I.R. 90	98+48	110+50	152,170	ODOT
RAMP E-17	℄ EX. RAMP E-17	50+64	68+23	48,490	ODOT
RAMP IJ3	℄ RAMP IJ3	91+41	101+89	27,350	ODOT
CARNEGIE AVE.	℄ CONST. CARNEGIE AVE.	35+50	48+00	93,990	CITY
CARNEGIE AVE.	℄ CONST. CARNEGIE AVE.	69+25	70+00	4,185	CITY
E. 14TH ST. NB	℄ E. 14TH ST.	15+33	18+27	6,930	CITY
E. 14TH ST. SB	℄ E. 14TH ST.	15+33	21+29	16,180	CITY
E. 14TH ST.	℄ EX. R/W E. 14TH ST.	16+92	18+35	8,575	CITY
E. 18TH ST.	℄ EX. R/W E. 18TH ST.	4+00	5+00	5,160	CITY
E. 19TH ST.	℄ EX. R/W E. 19TH ST.	3+87	4+95	4,620	CITY
E. 21ST ST.	℄ CONST. E. 21ST ST.	100+90	102+68	5,880	CITY
E. 22ND ST.	℄ CONST. E. 22ND ST.	22+25	29+47	49,390	CITY
E. 22ND ST.	℄ EX. R/W E. 22ND ST.	28+50	29+56	4,150	CITY
COMMUNITY COLLEGE AVE.	℄ COMMUNITY COLLEGE AVE.	60+39	62+09	10,710	CITY
CENTRAL AVE.	℄ EX. R/W CENTRAL AVE.	26+07	26+83	3,030	CITY
CEDAR AVE.	℄ EX. R/W CEDAR AVE.	23+98	27+50	14,050	CITY
CONTINGENCY RESURFACING	AS DIRECTED BY ENGINEER			180,000	ODOT
				120,000	CITY
			TOTAL	**504,110**	ODOT
				346,850	CITY

RESURFACING BUILD-UP - ODOT
ITEM 442 - 1-1/2" ASPHALT CONCRETE SURFACE COURSE, 12.5 MM, TYPE A (446), AS PER PLAN, PG76-22M
ITEM 407 - NON-TRACKING TACK COAT
ITEM 442 - 1-3/4" ASPHALT CONCRETE INTERMEDIATE COURSE, 19 MM, TYPE A (446)
ITEM 407 - NON-TRACKING TACK COAT
ITEM 251 - PARTIAL DEPTH PAVEMENT REPAIR (442) (5")
ITEM 254 - PAVEMENT PLANING, ASPHALT CONCRETE (3.25")
ITEM 255 - FULL DEPTH PAVEMENT REMOVAL AND RIGID REPLACEMENT, TYPE 1, CLASS QC1, AS PER PLAN A
ITEM 255 - FULL DEPTH PAVEMENT REMOVAL AND RIGID REPLACEMENT, TYPE 1, CLASS QC1, AS PER PLAN B

RESURFACING BUILD-UP - CITY
ITEM 441 - 1-1/4" ASPHALT CONCRETE SURFACE COURSE, TYPE 1, (448), AS PER PLAN, PG70-22M
ITEM 407 - NON-TRACKING TACK COAT
ITEM 441 - 1-3/4" ASPHALT CONCRETE INTERMEDIATE COURSE, TYPE 2, (448)
ITEM 407 - NON-TRACKING TACK COAT
ITEM 251 - PARTIAL DEPTH PAVEMENT REPAIR (442), AS PER PLAN (5")
ITEM 254 - PAVEMENT PLANING, ASPHALT CONCRETE (3")
ITEM 255 - FULL DEPTH PAVEMENT REMOVAL AND RIGID REPLACEMENT, TYPE 1, CLASS QC1, AS PER PLAN C

THE FOLLOWING QUANTITIES HAVE BEEN PROVIDED FOR USE AS DIRECTED BY THE ENGINEER TO RESURFACE AND REPAIR PAVEMENT THAT HAS BEEN USED FOR MAINTENANCE OF TRAFFIC:

ITEM 251 - PARTIAL DEPTH PAVEMENT REPAIR (442)	300 CY
ITEM 251 - PARTIAL DEPTH PAVEMENT REPAIR (442), AS PER PLAN	400 CY
ITEM 254 - PAVEMENT PLANING, ASPHALT CONCRETE (3")	38,540 SY
ITEM 254 - PAVEMENT PLANING, ASPHALT CONCRETE (3.25")	56,010 SY
ITEM 255 - FULL DEPTH PAVEMENT REMOVAL AND RIGID REPLACEMENT, TYPE 1, CLASS QC1, AS PER PLAN A	2,800 SY
ITEM 255 - FULL DEPTH PAVEMENT REMOVAL AND RIGID REPLACEMENT, TYPE 1, CLASS QC1, AS PER PLAN B	2,800 SY
ITEM 255 - FULL DEPTH PAVEMENT REMOVAL AND RIGID REPLACEMENT, TYPE 1, CLASS QC1, AS PER PLAN C	3,850 SY
ITEM 407 - NON-TRACKING TACK COAT	14,180 GAL
ITEM 441 - ASPHALT CONCRETE SURFACE COURSE, TYPE 1, (448), AS PER PLAN, PG70-22M	1,340 CY
ITEM 441 - ASPHALT CONCRETE INTERMEDIATE COURSE, TYPE 2, (448)	1,870 CY
ITEM 442 - ASPHALT CONCRETE SURFACE COURSE, 12.5 MM, TYPE A (446), AS PER PLAN, PG76-22M	2,330 CY
ITEM 442 - ASPHALT CONCRETE INTERMEDIATE COURSE, 19 MM, TYPE A (446)	2,720 CY

Preliminary - Not For Construction
For Reference Only

MAINTENANCE OF TRAFFIC NOTES

DESIGN AGENCY
Michael Baker INTERNATIONAL

DESIGNER GSH
REVIEWER DJJ 05/22/24
PROJECT ID 82382
SHEET 87 TOTAL 2696

MODEL: Sheet 6 PAPERSIZE: 34x22 (in.) DATE: 5/13/2025 TIME: 1:40:37 PM USER: Mala.Gallagher
pw:\\mb-us-pw.bentley.com:mb-us-pw-03\Documents\Cleveland_OH\01_Projects\ODOT\District12\82382\400-Engineering\MOT\Sheets\82382_MN0001.dgn

MAINTENANCE OF TRAFFIC GENERAL NOTES (CONTINUED)

LANE VALUE CONTRACT

THE CONTRACTOR SHALL BE ASSESSED DISINCENTIVES AS DESIGNATED IN THE LANE VALUE CONTRACT TABLE FOR EACH UNIT OF TIME THE DESCRIBED CRITICAL LANE/RAMP IS RESTRICTED FROM FULL USE BY THE TRAVELING PUBLIC OUTSIDE THE RESTRICTED TIME PERIOD. THE LANE VALUE CONTRACT TABLE IS LOCATED BELOW. THE DISINCENTIVES WILL BE ASSESSED FOR ALL RESTRICTIONS OF THE CRITICAL WORK.

CRITICAL WORK IS SHOWN IN THE CRITICAL WORK TABLE.

CRITICAL WORK IS DEFINED AS HAVING THE DESIGNATED SECTIONS OPEN TO UNRESTRICTED TRAFFIC AS SHOWN IN THE TABLE, OR THE ENTIRE PROJECT IF NOT OTHERWISE LISTED.

UNRESTRICTED TRAFFIC IS DEFINED AS ALL TRAFFIC LANES BEING AVAILABLE FOR USE WITH SPECIFIED STRIPING AND SAFETY FEATURES IN PLACE.

LANE VALUE CONTRACT TABLE

LOCATION	DIRECTION	LANES	1 LANE CLOSED	2 LANES CLOSED	DISICENTIVE AMOUNTS PER MINUTE PER LANE
I.R. 90					
I.R. 77 TO INNERBELT CURVE	EB/WB	4	8:00 AM MON TO 2:00 PM MON	7:00 PM MON TO 6:00 AM TUE	$365
			5:30 PM MON TO 7:00 AM TUE		
			8:00 AM TUE TO 2:00 PM TUE	7:00 PM TUE TO 6:00 AM WED	
			5:30 PM TUE TO 7:00 AM WED		
			8:00 AM WED TO 2:00 PM WED	7:30 PM WED TO 6:00 AM THU	
			5:30 PM WED TO 7:00 AM THU		
			8:00 AM THU TO 2:00 PM THU	7:30 PM THU TO 6:00 AM FRI	
			5:30 PM THU TO 7:00 AM FRI	8:00 PM FRI TO 9:30 AM SAT	
			8:00 AM FRI TO 2:00 PM FRI	7:30 PM SAT TO 10:30 AM SUN	
			5:30 PM FRI TO 7:00 AM MON	7:00 PM SUN TO 5:30 AM MON	
I.R. 77					
SR-422 UNDERPASS TO I.R. 90 EB	NB	2	10:00 AM MON TO 2:30 PM MON	NA	$295
			6:00 PM MON TO 6:00 AM TUE		
			10:00 AM TUE TO 2:30 PM TUE		
			6:00 PM TUE TO 6:00 AM WED		
			10:00 AM WED TO 2:30 PM WED		
			6:00 PM WED TO 6:00 AM THU		
			10:00 AM THU TO 2:30 PM THU		
			6:00 PM THU TO 6:00 AM FRI		
			10:00 AM FRI TO 2:30 PM FRI		
			6:00 PM FRI TO 3:30 PM SAT		
			6:00 PM SAT TO 6:00 AM MON		
I.R. 90 WB TO CROTON AVE UNDERPASS	SB	2	8:30 AM MON TO 1:00 PM MON	NA	$295
			6:30 PM MON TO 7:00 AM TUE		
			8:30 AM TUE TO 1:00 PM TUE		
			6:30 PM TUE TO 7:00 AM WED		
			8:30 AM WED TO 1:00 PM WED		
			6:30 PM WED TO 7:00 AM THU		
			8:30 AM THU TO 1:00 PM THU		
			6:30 PM THU TO 7:00 AM FRI		
			8:30 AM FRI TO 1:00 PM FRI		
			6:30 PM FRI TO 7:00 AM MON		

CRITICAL WORK TABLE

DESCRIPTION OF CRITICAL LANE/ RAMP TO BE MAINTAINED	PHASE	RESTRICTED TIME PERIOD	TIME UNIT	AADT	DISINCENTIVE $ PER TIME UNIT
I.R. 90 EB & WB (CONCURRENTLY) (BETWEEN E. 22ND ST. AND CARNEGIE AVE.)	2, 4, & 7	WEEKEND CLOSURES (8:00PM FRIDAY UNTIL 6:00AM MONDAY)	PER HOUR	138,000	$25,100.00
I.R. 90 WB (BETWEEN E. 22ND ST. AND CARNEGIE AVE.)	1, 2, & 7	WEEKEND CLOSURES (8:00PM FRIDAY UNTIL 6:00AM MONDAY)	PER HOUR	71,760	$13,052.00
I.R. 90 EB (BETWEEN E. 22ND ST. AND CARNEGIE AVE.)	1, 2, & 7	WEEKEND CLOSURES (8:00PM FRIDAY UNTIL 6:00AM MONDAY)	PER HOUR	66,240	$12,048.00
E. 14TH ST. (BETWEEN COMMUNITY COLLEGE AVE. AND CARNEGIE AVE.)	1	90 DAYS	PER HOUR	17,200	$625.00
E. 14TH ST. (BETWEEN ORANGE AVE. AND COMMUNITY COLLEGE AVE.)	1	150 DAYS	PER HOUR	17,200	$625.00
COMMUNITY COLLEGE AVE. (BETWEEN E. 14TH ST. AND E. 22ND ST.)	1	90 DAYS	PER HOUR	17,200	$625.00
I.R. 77 NB TO E. 14TH ST. / E. 22ND ST. EXIT RAMP (EXIT RAMP 162B)	1	150 DAYS	PER HOUR	5,215	$315.00
E. 22ND ST. (BETWEEN CARNEGIE AVE. AND CENTRAL AVE.)	1 & 2	365 DAYS	PER HOUR	13,400	$732.00
CEDAR AVE. (BETWEEN E. 28TH ST. AND E. 22ND ST.)	1 & 2	365 DAYS	PER HOUR	8,300	$732.00
I.R. 90 EB TO E. 9TH ST. EXIT RAMP (EXIT RAMP 172A)	2	120 DAYS	PER HOUR	10,357	$188.00
CARNEGIE AVE. (BETWEEN E. 22ND ST. AND E. 28TH ST.)	2 - 8	1,200 DAYS	PER HOUR	25,700	$535.00
PROSPECT AVE. TO I.R. 90 EB RAMP	3 - 8	1,200 DAYS	PER HOUR	3,392	$68.00
PROSPECT AVE. TO I.R. 90 WB ENTRANCE RAMP	3 - 8	1,200 DAYS	PER HOUR	7,308	$291.00
E. 21ST ST. TO I.R. 77 SB ENTRANCE RAMP	3 & 4	420 DAYS	PER HOUR	5,600	$606.00
I.R. 90 EB (BETWEEN E. 9TH ST. AND E. 14TH ST.)	1, 2, & 7	WEEKEND CLOSURES (8:00PM FRIDAY UNTIL 6:00AM MONDAY)	PER HOUR	66,240	$1,500.00
I.R. 90 WB (BETWEEN E. 9TH ST. AND E. 14TH ST.)	1, 2, & 7	WEEKEND CLOSURES (8:00PM FRIDAY UNTIL 6:00AM MONDAY)	PER HOUR	71,760	$3,251.00
E. 14TH ST. (BETWEEN COMMUNITY COLLEGE AVE. AND CARNEGIE AVE.)	4, 5, & 7	WEEKEND CLOSURES (8:00PM FRIDAY UNTIL 6:00AM MONDAY)	PER HOUR	17,200	$625.00
I.R. 77 NB TO E. 22ND ST. EXIT RAMP (EXIT RAMP 162B)	6	30 DAYS	PER HOUR	3,700	$57.00
I.R. 90 EB TO E. 9TH ST. NB EXIT RAMP (EXIT RAMP 172A)	8	30 DAYS	PER HOUR	7,600	$156.00

Preliminary Plans - For Reference Only

MAINTENANCE OF TRAFFIC NOTES

MODEL: Sheet 13 PAPERSIZE: 34x22 (in.) DATE: 3/27/2025 TIME: 6:51:06 PM USER: Collin.Kwiatt
pw:\\mb-us-pw.bentley.com:mb-us-pw-03\Documents\Cleveland_OH\01_Projects\ODOT\District12\82382\400-Engineering\MOT\Sheets\82382_MN0001.dgn

DESIGN AGENCY
Michael Baker INTERNATIONAL

DESIGNER GSH
REVIEWER DJJ 05/22/24
PROJECT ID 82382
SHEET 88 TOTAL 2696

SEQUENCE OF CONSTRUCTION

PRE PHASE 1

WORK TO BE COMPLETED THIS PHASE:

I.R. 77
-INSTALL SIGN TRUSS AND MEDIAN BARRIER (STA. 76+50.00 - ℄ EX. I.R. 77) NEAR I.R. 77 BRIDGE OVER E. 22ND ST. SEE SHEET288

MAINTENANCE OF TRAFFIC

I.R. 77
-CLOSE I.R. 77 NORTHBOUND AND SOUTHBOUND INSIDE LANE PER MT-95.40 DURING OFF PEAK HOURS LISTED IN THE LANE VALUE CONTRACT TABLE ON SHEET 88

PHASE 1

WORK TO BE COMPLETED THIS PHASE PRIOR TO THE E. 22ND ST. AND CEDAR AVE. BRIDGE REMOVALS:

PAVEMENT:

E. 14TH ST.
- BUILD E. 14TH ST. BETWEEN CARNEGIE AVE. AND COMMUNITY COLLEGE AVE. TEMPORARY CONNECTION. SEE SHEETS 289 TO 291 FOR WORK LIMITS.
- OMIT CONSTRUCTION OF E.14TH ST. ENTRANCE RAMP TO I.R. 90 AT CARNEGIE AVE. AND SOUTHWEST CORNER OF E. 14TH ST. AND CARNEGIE AVE. INTERSECTION.
- OMIT CONSTRUCTION OF FULL DEPTH PAVEMENT AND CURB ON E. 14TH ST. SOUTHBOUND AND NORTHBOUND PAVEMENT ADJACENT TO EXISTING I.R. 90 BRIDGE OVER E. 14TH ST. PIER.
- BUILD PAVEMENT FOR MAINTAINING TRAFFIC, CLASS A, AND SIDEWALK CONNECTIONS BETWEEN E. 14TH ST. AND COMMUNITY COLLEGE AVE. SEE SHEETS 289 TO 291 FOR DETAILS.

CARNEGIE AVE.
- BUILD OUTSIDE PAVEMENT WIDENING ON THE SOUTH SIDE BETWEEN E. 14TH ST. AND E. 18TH ST.

BRIDGES:

BRIDGE 9 (I.R. 90 WESTBOUND TO I.R. 77 SOUTHBOUND INTERCHANGE RAMP)
- BUILD PIER 10

UTILITIES:

- INSTALL 30" WATERLINE ALONG E. 14TH ST. BETWEEN CARNEGIE AVE. AND COMMUNITY COLLEGE AVE.
- TEMPORARILY RELOCATE CPP PRIOR TO REMOVAL OF EX. E. 22ND ST. BRIDGE OVER I.R. 90. SEE SHEET 1783 FOR DETAILS.
- ADDITIONAL UTILITIES ON E. 22ND ST. BRIDGE TO BE RELOCATED BY OTHERS PRIOR TO EX. BRIDGE E 11 DEMO.

SIGNALS:

- INSTALL TEMPORARY SIGNAL AT E. 14TH ST. & COMMUNITY COLLEGE AVE. FOR DETAILS, SEE SHEET 309

WORK TO BE COMPLETED THIS PHASE AFTER COMPLETION OF ABOVE WORK:

PAVEMENT:

I.R. 77 NORTHBOUND RAMPS
- CONSTRUCT PORTION OF RAMP IH4 DURING AN I.R. 90 WB WEEKEND CLOSURE. CLOSE RIGHT LANE PER MT-95.30. MAINTAIN ACCESS TO E. 14TH ST. SB EXIT RAMP. FOR DETAILS, SEE SHEET 178

BRIDGES:

EX. BRIDGE E11 (E. 22ND ST. OVER I.R. 90)
- REMOVE EXISTING BRIDGE DECK AND MEDIAN PIER.

EX. BRIDGE E12 (CEDAR AVE. OVER I.R. 90)
- REMOVE EXISTING BRIDGE DECK AND MEDIAN PIER.

PHASE 1 (CONTINUED)

WORK TO BE COMPLETED PRIOR TO PHASE 2:

I.R. 77 NORTHBOUND EXIT RAMPS
- BUILD ENTIRE RAMP IH4 FROM I.R. 77 NORTHBOUND TO E. 14TH ST. NORTHBOUND
- BUILD RAMP H5 FROM I.R. 77 NORTHBOUND TO STA. 988+50.00
- BUILD RAMP H6 FROM I.R. 77 NORTHBOUND TO STA. 1187+43.56

E. 14TH ST.
- BUILD E. 14TH ST. PAVEMENT BETWEEN ORANGE AVE. AND COMMUNITY COLLEGE AVE. TEMPORARY CONNECTION.

E. 19TH ST./ CENTRAL AVE.
- BUILD CONNECTION PAVEMENT BETWEEN E. 19TH ST. AND E. 18TH ST. NORTHBOUND STUB, SOUTH OF CARNEGIE AVE. LIMIT DRIVE CONSTRUCTION, PARKING LOT CURB, AND RESTORATION TO TWO WEEKS.

COMMUNITY COLLEGE AVE.
- BUILD PAVEMENT FOR MAINTAINING TRAFFIC, CLASS A, CONNECTIONS BETWEEN COMMUNITY COLLEGE AVE. AND RAMP H6. SEE SHEETS 195 TO 201 FOR DETAILS.

PRIVATE PROPERTIES:
- COMPLETE PARKING LOT RECONFIGURATION FOR 2554 E. 22ND ST. BUILDING.

BRIDGES:

- REMOVE EXISTING BRIDGE E10 (COMMUNITY COLLEGE AVE. BRIDGE OVER E. 14TH ST. NORTHBOUND)

RETAINING WALLS:

- BUILD WALL T
- BUILD WALL AD

UTILITIES:

- INSTALL CURED-IN-PLACE PIPE LINER IN THE WOODLAND AVE. SEWER DURING PHASE 1 PRIOR TO BEGINNING ANY WORK ON WALL T, AND BRIDGE 9 REAR ABUTMENT.
- INSTALL CURED-IN-PLACE PIPE LINER IN THE CENTRAL AVE. SEWER DURING PHASE 1 PRIOR TO BEGINNING WORK ON THE CENTRAL AVE. CONNECTION TO E. 19TH ST.
- INSTALL 12" WATER ON E. 18TH ST.
- INSTALL 12" WATER ON CENTRAL AVE.
- INSTALL HYDRANT ON E. 19TH ST.

WORK TO BE ONGOING THIS PHASE:

PAVEMENT:

I.R. 90 WESTBOUND / RAMP A2
- BUILD PORTIONS OF I.R. 90 WESTBOUND PAVEMENT AND LIGHTWEIGHT FILL BETWEEN BRIDGE 10 FORWARD ABUTMENT / BRIDGE 9 FORWARD ABUTMENT AND EXISTING I.R. 77 SOUTHBOUND ENTRANCE RAMP FROM E. 21ST ST.

BRIDGES:

BRIDGE 9 (I.R. 90 WESTBOUND TO I.R. 77 SOUTHBOUND INTERCHANGE RAMP)
- BUILD PIERS 1, 2, AND 3
- BUILD REAR AND FORWARD ABUTMENTS
- BUILD BRIDGE DECK BETWEEN REAR ABUTMENT AND PIER 3

RETAINING WALLS:

- BUILD WALL N

SIGNALS:

- BEGIN INSTALLING PROPOSED SIGNAL AT CARNEGIE AVE. & E. 14TH ST.
- BEGIN INSTALLING PROPOSED SIGNAL AT CARNEGIE AVE. & E. 18TH ST.

PHASE 1 (CONTINUED)

MAINTENANCE OF TRAFFIC:

I.R. 77 NORTHBOUND
- CONVERT RIGHT LANE OF I.R. 77 NORTHBOUND INTO EXIT ONLY LANE FOR EXIT RAMP 162A (I.R. 77 NORTHBOUND TO WOODLAND AVE.). MAINTAIN 2 THROUGH LANES ONTO I.R. 77 NORTHBOUND TO I.R. 90 EASTBOUND INTERCHANGE RAMP.

I.R. 77 NORTHBOUND EXIT RAMP TO COMMUNITY COLLEGE AVE. AND E. 14TH ST. NORTHBOUND
- CLOSE EXIT RAMPS PER MT-98.29 AND MT-101.60. DETOUR TRAFFIC AS SHOWN ON SHEET 154

I.R. 77 NORTHBOUND EXIT RAMP TO E. 14TH ST. SOUTHBOUND
- REMOVE CURB, COVER CATCH BASINS, AND PLACE TEMPORARY PAVEMENT ALONG E. 14TH ST. SOUTHBOUND PRIOR TO PHASE 1 TO MAINTAIN ONE LANE OF TRAFFIC TO E. 14TH ST. SOUTHBOUND AT ALL TIMES.

E. 14TH ST.
- CLOSE E. 14TH ST. PER MT-101.60 BETWEEN CARNEGIE AVE. AND ORANGE AVE. DETOUR TRAFFIC AS SHOWN ON SHEET 153
- CLOSE SIDEWALK AND DETOUR PEDESTRIAN TRAFFIC PER MT-110.10 AND AS SHOWN ON SHEET 168
- PRIOR TO REMOVAL OF EX. BRIDGE E11, RECONFIGURE PEDESTRIAN DETOUR AS SHOWN ON SHEET 169

E. 22ND ST.
- PRIOR TO THE EX. BRIDGE E11 DEMOLITION, CLOSE E. 22ND ST. PER MT-101.60 BETWEEN CARNEGIE AVE. AND CENTRAL AVE. DETOUR TRAFFIC AS SHOWN ON SHEET 155
- CLOSE SIDEWALK AND DETOUR PEDESTRIAN TRAFFIC PER MT. 110.10 AND AS SHOWN ON SHEET 169

COMMUNITY COLLEGE AVE.
- CLOSE COMMUNITY COLLEGE AVE. PER MT-101.60 BETWEEN E. 14TH ST. AND E. 22ND ST. DETOUR TRAFFIC AS SHOWN ON SHEET 153
- REMOVE DETOUR AT THE COMPLETION OF WORK PERFORMED PRIOR TO THE E. 22ND ST. AND CEDAR AVE. BRIDGE REMOVALS.

CARNEGIE AVE.
- RESTRICT EASTBOUND CURB LANE TO RIGHT TURN ONLY MOVEMENT WEST OF THE CARNEGIE AVE./ E. 14TH ST. INTERSECTION. REOPEN EASTBOUND CURB LANE EAST OF E. 18TH ST. DETOUR PEDESTRIANS FROM SOUTH SIDE OF CARNEGIE AVE. TO NORTH SIDE OF CARNEGIE AVE. PER MT-110.10, CROSSING CARNEGIE AVE. ON THE WEST END OF THE E. 14TH ST. INTERSECTION AND THE WEST END OF THE E. 19TH ST. INTERSECTION.

EX. BRIDGE E11 (E. 22ND ST. OVER I.R. 90) DEMO
EX. BRIDGE E12 (CEDAR AVE. OVER I.R. 90) DEMO
- DURING PERMITTED WEEKEND FULL CLOSURES OF I.R. 90 EB AND I.R. 90 WB FOR DEMOLITION OF EXISTING BRIDGES, SEE SHEET 171 FOR THE OVERALL REGIONAL DETOUR PLAN. I.R. 90 EB AND WB ARE NOT TO BE CLOSED CONCURRENTLY.

- FOR THE I.R. 90 EB WEEKEND CLOSURES, SEE THE FOLLOWING FOR PCMS LOCATIONS AND LANE CLOSURE DETAILS:
  - I.R. 90 / I.R. 77 INTERCHANGE - SHEET 178
  - I.R. 71 / I.R. 480 INTERCHANGE - SHEET 175
  - I.R. 480 / I.R. 77 INTERCHANGE - SHEET 179
  - I.R. 77 / I.R. 480 INTERCHANGE - SHEET 180
  - I.R. 90 / I.R. 490 / I.R. 71 INTERCHANGE - SHEET 176
  - I.R. 71 / S.R. 176 INTERCHANGE - SHEET 176
  - LOCAL DETOUR REROUTE - SHEET 172

- FOR THE I.R. 90 WB WEEKEND CLOSURES SEE THE FOLLOWING FOR PCMS LOCATIONS AND LANE CLOSURE DETAILS:
  - I.R. 90 / S.R. 2 (EAST) INTERCHANGE - SHEET 173
  - I.R. 90 / I.R. 271 INTERCHANGE - SHEET 173
  - I.R. 90 / S.R. 2 (WEST) INTERCHANGE - SHEET 174
  - I.R. 90 AT E. 22ND ST. AND CEDAR AVE. BRIDGES - SHEET 177
  - I.R. 480 / I.R. 77 INTERCHANGE - SHEET 179
  - LOCAL DETOUR REROUTE - SHEET 172

SIGNALS:

CARNEGIE AVE. & E. 14TH ST. SIGNAL MODIFICATIONS
CARNEGIE AVE. & E. 18TH ST. SIGNAL MODIFICATIONS
- FOR PHASE 1 CONFIGURATION NOTES AND DETAILS SEE SHEET 93

Preliminary Plans - For Reference Only

MAINTENANCE OF TRAFFIC NOTES

DESIGN AGENCY
Michael Baker INTERNATIONAL

DESIGNER GSH
REVIEWER DJJ 05/22/24
PROJECT ID 82382
SHEET 89 TOTAL 2696

CUY-90-16.28 (CCG3A)

MODEL: Sheet 7 PAPERSIZE: 34x22 (in.) DATE: 6/9/2025 TIME: 12:54:57 PM USER: Julie.Ross
pw:\\mb-us-pw.bentley.com:mb-us-pw-03\Documents\Cleveland_OH\01_Projects\ODOT\District12\82382\400-Engineering\MOT\Sheets\82382_MN0001.dgn

SEQUENCE OF CONSTRUCTION (CONTINUED)

PHASE 2

WORK TO BE COMPLETED THIS PHASE PRIOR TO THE CARNEGIE AVE. BRIDGE REMOVAL:

PAVEMENT:

I.R. 90 EASTBOUND EXIT RAMPS
- BUILD RAMP IB5 FROM I.R. 90 EB TO E. 9TH ST. NORTHBOUND

E. 22ND ST.
- BUILD PAVEMENT OF E. 22ND ST. BETWEEN CENTRAL AVE. AND CARNEGIE AVE. ADJACENT TO BOTH ABUTMENTS OF PR. BRIDGE 13

CEDAR AVE.
- BUILD CEDAR AVE. PAVEMENT BETWEEN E. 22ND ST. AND CARNEGIE AVE. IN THREE SUBPHASES. FOR SUBPHASING DETAILS SEE SHEETS 310 TO 314 .

BRIDGES:

EX. BRIDGE E11 (E. 22ND ST. OVER I.R. 90)
EX. BRIDGE E12 (CEDAR AVE. OVER I.R. 90)
- INSTALL TEMPORARY SHORING IN FRONT OF EXISTING BRIDGE E11 FORWARD ABUTMENT AND EXISTING BRIDGE E12 REAR ABUTMENT, NORTH OF I.R. 90 WB LANES. REMOVE WING WALLS, RETAINING WALL, AND ABUTMENTS, INCLUDING FOOTERS AND PORTIONS OF EXISTING PILES. ONCE ABUTMENT FOOTERS ARE REMOVED, REMOVE TEMPORARY SHORING AND PLACE 6' OF PAVEMENT FOR MAINTAINING TRAFFIC, CLASS A, ADJACENT TO OUTSIDE EDGE OF EXISTING I.R. 90 WB PAVEMENT.

BRIDGE 9 (I.R. 90 WESTBOUND TO I.R. 77 SOUTHBOUND INTERCHANGE RAMP)
- BUILD PIER 5

BRIDGE 13 (E. 22ND ST. BRIDGE OVER I.R. 90)
- BUILD REAR ABUTMENT, FORWARD ABUTMENT, AND PIER 1
- BUILD SUPERSTRUCTURE AFTER WORK DESCRIBED ABOVE IS COMPLETE.

RETAINING WALLS:

- BUILD WALL AF

UTILITIES:

- INSTALL WATERLINE, CPP ELECTRIC DUCT, GAS, AND TELECOM DUCT ALONG E. 22ND ST. FROM CENTRAL AVE. TO CARNEGIE AVE., UNDER BRIDGE 13 DECK.
- TEMPORARILY RELOCATE CPP PRIOR TO REMOVAL OF EX. CARNEGIE AVE. BRIDGE OVER I.R. 90. SEE SHEET 1784 FOR DETAILS.

SIGNALS:

- INSTALL PROPOSED SIGNAL AT E. 22ND ST. & CEDAR AVE.
- INSTALL PROPOSED SIGNAL AT E. 22ND ST. & CENTRAL AVE.

WORK TO BE COMPLETED THIS PHASE AFTER THE ABOVE WORK IS COMPLETED:

BRIDGES:

EX. BRIDGE E13 (CARNEGIE AVE. OVER I.R. 90)
- REMOVE EXISTING BRIDGE DECK AND MEDIAN PIER.

WORK TO BE COMPLETED PRIOR TO PHASE 3:

PAVEMENT:

I.R. 90 WESTBOUND
- REMOVE EXISTING MEDIAN BARRIER AND REPLACE WITH PCB PER MT-101.80, AND PLACE TEMPORARY PAVEMENT FOR PHASE 4 SINGLE I.R. 90 WESTBOUND CROSSOVER LANE EAST OF EUCLID AVE.

RETAINING WALLS:

- BUILD WALL AG

SIGNALS:

- FINISH INSTALLING PROPOSED SIGNAL AT CARNEGIE AVE. & E. 14TH ST.
- FINISH INSTALLING PROPOSED SIGNAL AT CARNEGIE AVE. & E. 18TH ST.

PHASE 2 (CONTINUED)

WORK TO BE ONGOING THIS PHASE:

PAVEMENT:

I.R. 90 WESTBOUND / RAMP A2
- BUILD PORTIONS OF I.R. 90 WESTBOUND PAVEMENT AND LIGHTWEIGHT FILL BETWEEN BRIDGE 10 FORWARD ABUTMENT / BRIDGE 9 FORWARD ABUTMENT AND EXISTING I.R. 77 SOUTHBOUND ENTRANCE RAMP FROM E. 21ST ST.

BRIDGES:

BRIDGE 9 (I.R. 90 WESTBOUND TO I.R. 77 SOUTHBOUND INTERCHANGE RAMP)
- BUILD PIERS 1, 2, 3, 4, 6, 8, AND 9
- BUILD REAR AND FORWARD ABUTMENTS
- BUILD BRIDGE DECK BETWEEN REAR ABUTMENT AND PIER 4

RETAINING WALLS:

- BUILD WALL N

PHASE 2 (CONTINUED)

MAINTENANCE OF TRAFFIC:

I.R. 77 NORTHBOUND
- MAINTAIN 3 LANES ON I.R. 77 NORTHBOUND WITH 1 LANE DESTINED FOR I.R. 90 EASTBOUND, E. 14TH ST. SOUTHBOUND, E. 14TH ST. NORTHBOUND AND A RAMP OPENING FOR E. 22ND ST./COMMUNITY COLLEGE AVE.

I.R. 90 EASTBOUND EXIT RAMP TO E. 9TH ST. NORTHBOUND
- CLOSE EXIT RAMP PER MT-98.29 AND MT-101.60. DETOUR TRAFFIC AS SHOWN ON SHEET 157

I.R. 77 SOUTHBOUND ENTRANCE RAMP FROM E. 14TH ST.
- CLOSE ENTRANCE RAMP PER MT-101.60. DETOUR TRAFFIC AS SHOWN ON SHEET 156

E. 22ND ST.
- TO REMAIN CLOSED FROM PREVIOUS PHASE. DETOUR TRAFFIC AS SHOWN ON SHEET 155
DETOUR PEDESTRIAN TRAFFIC AS SHOWN ON SHEET 169

E. 30TH ST.
- RESTORE PAVEMENT MARKINGS AND LANE CONFIGURATIONS TO ORIGINAL CONDITION AT THE E. 30TH ST. & CENTRAL AVE. INTERSECTION AND THE E. 30TH ST. & CEDAR AVE. INTERSECTION ONCE THE PR. E. 22ND ST. BRIDGE AND CEDAR AVE. SUBPHASING IN PHASE 2 IS COMPLETE AND OPEN TO TRAFFIC.

CEDAR AVE.
- TO REMAIN CLOSED FROM PREVIOUS PHASE. DETOUR TRAFFIC AS SHOWN ON SHEET 155
DETOUR PEDESTRIAN TRAFFIC AS SHOWN ON SHEET 169

CARNEGIE AVE.
- CLOSE CARNEGIE AVE. PER MT-101.60 BETWEEN E. 22ND ST. AND E. 30TH ST. DETOUR TRAFFIC AS SHOWN ON SHEET 158
- CLOSE SIDEWALK AND DETOUR PEDESTRIAN TRAFFIC PER MT-110.10 AND AS SHOWN ON SHEET 170

PR. BRIDGE 13 (E. 22ND ST. OVER I.R. 90) STEEL INSTALLATION
EX. BRIDGE E13 (CARNEGIE AVE. OVER I.R. 90) DEMO
- DURING PERMITTED WEEKEND FULL CLOSURES OF I.R. 90 EB AND I.R. 90 WB FOR PR. BRIDGE 13 STEEL INSTALLATION AND DEMOLITION OF EXISTING BRIDGE E13, SEE SHEET 171 FOR THE OVERALL REGIONAL DETOUR PLAN.

- FOR THE I.R. 90 EB WEEKEND CLOSURES, SEE THE FOLLOWING FOR PCMS LOCATIONS AND LANE CLOSURE DETAILS:
  - I.R. 90 / I.R. 77 INTERCHANGE - SHEET 178
  - I.R. 71 / I.R. 480 INTERCHANGE - SHEET 175
  - I.R. 480 / I.R. 77 INTERCHANGE - SHEET 179
  - I.R. 77 / I.R. 480 INTERCHANGE - SHEET 180
  - I.R. 90 / I.R. 490 / I.R. 71 INTERCHANGE - SHEET 176
  - I.R. 71 / S.R. 176 INTERCHANGE - SHEET 176
  - LOCAL DETOUR REROUTE - SHEET 172

- FOR THE I.R. 90 WB WEEKEND CLOSURES SEE THE FOLLOWING FOR PCMS LOCATIONS AND LANE CLOSURE DETAILS:
  - I.R. 90 / S.R. 2 (EAST) INTERCHANGE - SHEET 173
  - I.R. 90 / I.R. 271 INTERCHANGE - SHEET 173
  - I.R. 90 / S.R. 2 (WEST) INTERCHANGE - SHEET 174
  - I.R. 90 AT E. 22ND ST. AND CEDAR AVE. BRIDGES - SHEET 177
  - I.R. 480 / I.R. 77 INTERCHANGE - SHEET 179
  - LOCAL DETOUR REROUTE - SHEET 172

SIGNALS:

CARNEGIE AVE. & E. 14TH ST. SIGNAL MODIFICATIONS
CARNEGIE AVE. & E. 18TH ST. SIGNAL MODIFICATIONS
CARNEGIE AVE. & E. 22ND ST. SIGNAL MODIFICATIONS
E. 22ND ST. & CEDAR AVE. SIGNAL MODIFICATIONS
E. 22ND ST. & CENTRAL AVE. SIGNAL MODIFICATIONS
- FOR PHASE 2 CONFIGURATION NOTES AND DETAILS SEE SHEET 93

PHASE 3

WORK TO BE COMPLETED PRIOR TO PHASE 4:

PAVEMENT:

I.R. 90 EASTBOUND
- BUILD I.R. EASTBOUND PAVEMENT FOR MAINTAINING TRAFFIC, CLASS A, BETWEEN E. 22ND ST. AND END PROJECT LIMITS AFTER REMOVAL OF EXISTING CARNEGIE AVE. BRIDGE OVER I.R. 90 AND EXCAVATION. SEE SHEETS 202 TO 214 FOR DETAILS.

I.R. 77 SOUTHBOUND
- BUILD CONNECTION BETWEEN BRIDGE 9 REAR ABUTMENT AND I.R. 77 SOUTHBOUND END PROJECT TIE-IN LIMITS

BRIDGES:

BRIDGE 9 (I.R. 90 WESTBOUND TO I.R. 77 SOUTHBOUND INTERCHANGE RAMP)
- BUILD PIERS 1, 2, 3, 4, 6, 8, AND 9
- BUILD REAR ABUTMENT
- BUILD BRIDGE DECK BETWEEN REAR ABUTMENT AND PIER 4

EXISTING CARNEGIE AVE. BRIDGE OVER I.R. 90
- REMOVE EXISTING CARNEGIE AVE. FORWARD ABUTMENT AND WING WALLS. EXISTING REAR ABUTMENT AND WING WALLS TO REMAIN.

BRIDGE 14 (CARNEGIE AVE. BRIDGE OVER I.R. 90)
- BUILD FORWARD ABUTMENT

RETAINING WALLS:

- BUILD WALL AI
- BUILD WALL N
- BUILD WALL S

WORK TO BE ONGOING THIS PHASE:

PAVEMENT:

I.R. 90 WESTBOUND
- BUILD PORTIONS OF I.R. 90 WESTBOUND PAVEMENT AND LIGHTWEIGHT FILL FROM BRIDGE 9 FORWARD ABUTMENT TO UNDER BRIDGE 13
- BUILD I.R. 90 WESTBOUND TEMPORARY CROSSOVER PAVEMENT BETWEEN E. 14TH ST. AND E. 22ND ST.

I.R. 77 SOUTHBOUND ENTRANCE RAMPS
- BUILD I.R. 77 SOUTHBOUND ENTRANCE RAMP FROM E. 21ST ST.

BRIDGES:

BRIDGE 9 (I.R. 90 WESTBOUND TO I.R. 77 SOUTHBOUND INTERCHANGE RAMP)
- BUILD FORWARD ABUTMENT
- BUILD BRIDGE DECK SPANS 5, 6, 10, AND 11

MAINTENANCE OF TRAFFIC:

I.R. 77 SOUTHBOUND ENTRANCE RAMPS FROM E. 14TH ST.
- TO REMAIN CLOSED FROM PREVIOUS PHASE. DETOUR TRAFFIC AS SHOWN ON SHEET 159

I.R. 77 SOUTHBOUND ENTRANCE RAMPS FROM E. 21ST ST.
- CLOSE ENTRANCE RAMPS PER MT-101.60. DETOUR TRAFFIC AS SHOWN ON SHEET 159

I.R. 90 EASTBOUND ENTRANCE RAMP FROM PROSPECT AVE.
- CLOSE ENTRANCE RAMP PER MT-101.60. DETOUR TRAFFIC AS SHOWN ON SHEET 160

I.R. 90 EASTBOUND EXIT RAMP TO CARNEGIE AVE.
- CLOSE EXIT RAMP PER MT-98.29 AND MT-101.60. DETOUR TRAFFIC AS SHOWN ON SHEET 161

CARNEGIE AVE.
- TO REMAIN CLOSED FROM PREVIOUS PHASE. DETOUR TRAFFIC AS SHOWN ON SHEET 158
- DETOUR PEDESTRIAN TRAFFIC AS SHOWN ON SHEET 170

SIGNALS:

CARNEGIE AVE. & E. 21ST ST. SIGNAL MODIFICATIONS
- FOR PHASE 3 CONFIGURATION NOTES AND DETAILS SEE SHEET 93

Preliminary Plans - For Reference Only

MAINTENANCE OF TRAFFIC NOTES

DESIGN AGENCY
Michael Baker INTERNATIONAL

DESIGNER GSH
REVIEWER DJJ 05/22/24
PROJECT ID 82382
SHEET 90 TOTAL 2696

CUY-90-16.28 (CCG3A)

MODEL: Sheet 8 PAPERSIZE: 34x22 (in.) DATE: 3/27/2025 TIME: 6:51:07 PM USER: Collin.Kwiatt
pw:\\mb-us-pw.bentley.com:mb-us-pw-03\Documents\Cleveland_OH\01_Projects\ODOT\District12\82382\400-Engineering\MOT\Sheets\82382_MN0001.dgn

SEQUENCE OF CONSTRUCTION (CONTINUED)

PHASE 4

WORK TO BE COMPLETED PRIOR TO PHASE 5:

PAVEMENT:

I.R. 90 WESTBOUND
- REMOVE EXISTING I.R. 90 MEDIAN BARRIER AT CROSSOVER LOCATIONS AND INSTALL PAVEMENT FOR MAINTAINING TRAFFIC, CLASS A, ON EXISTING I.R. 90 EASTBOUND PAVEMENT ONCE I.R. 90 EASTBOUND LANES ARE UTILIZING TEMPORARY RUNAROUND PAVEMENT CONSTRUCTED IN PHASE 3. SHIFT I.R. 90 WESTBOUND TRAVEL LANES ONTO EXISTING I.R. 90 EASTBOUND PAVEMENT ONCE PAVEMENT FOR MAINTAINING TRAFFIC, CLASS A, INSTALLED. SEE SHEETS 226 TO 233 FOR DETAILS.
- BUILD I.R. 90 WESTBOUND PAVEMENT AND LIGHTWEIGHT FILL BETWEEN BRIDGE 10 APPROACH SLAB AND END PROJECT LIMITS
- BUILD I.R. 90 WESTBOUND TEMPORARY CROSSOVER PAVEMENT BETWEEN E. 14TH ST. AND E. 22ND ST. SEE SHEETS 234 TO 239 FOR DETAILS.
- BUILD I.R. 90 WESTBOUND TEMPORARY CROSSOVER PAVEMENT BETWEEN ONTARIO ST. AND E. 9TH ST. SEE SHEETS 240 TO 249 FOR DETAILS.

I.R. 77 SOUTHBOUND
- BUILD CONNECTION PAVEMENT AND LIGHTWEIGHT FILL BETWEEN BRIDGE 9 REAR ABUTMENT AND I.R. 77 SOUTHBOUND END TIE-IN LIMITS

I.R. 77 SOUTHBOUND ENTRANCE RAMPS
- BUILD I.R. 77 SOUTHBOUND ENTRANCE RAMP FROM E. 21ST ST.

CARNEGIE AVE.
- BUILD CARNEGIE AVE. PAVEMENT FROM STA. 48+00.00 TO PR. BRIDGE 14 REAR ABUTMENT. FOR SUBPHASING DETAILS OF CONSTRUCTION BETWEEN E. 21ST ST. AND E. 22ND ST., SEE SHEETS 339 TO 345

BRIDGES:

EXISTING BRIDGE E5 (I.R. 90 BRIDGE OVER I.R. 90 WESTBOUND TO I.R. 77 SOUTHBOUND INTERCHANGE RAMP)
- REMOVE PORTIONS OF BRIDGE DECK AND SUBSTRUCTURE. FOR DETAILS SEE SHEET 2371

EXISTING BRIDGE E6 (I.R. 90 WESTBOUND TO I.R. 77 SOUTHBOUND INTERCHANGE RAMP BRIDGE)
- REMOVE PORTIONS OF BRIDGE DECK AND SUBSTRUCTURE. FOR DETAILS SEE SHEET 2378

EXISTING CARNEGIE AVE. BRIDGE OVER I.R. 90
- REMOVE EXISTING REAR ABUTMENT AND WING WALLS.

BRIDGE 9 (I.R. 90 WESTBOUND TO I.R. 77 SOUTHBOUND INTERCHANGE RAMP)
- BUILD PIER 7
- BUILD UNIT 2 (SPANS 5-11) AND FINAL BRIDGE DECK

BRIDGE 14 (CARNEGIE AVE. BRIDGE OVER I.R. 90)
- BUILD REAR ABUTMENT. FOR REAR ABUTMENT STAGED CONSTRUCTION DETAILS SEE SHEET 2293

RETAINING WALLS:

- BUILD WALL AE
- BUILD WALL AH

WORK TO BE ONGOING THIS PHASE:

PAVEMENT:

I.R. 90 WESTBOUND ENTRANCE RAMPS
- BUILD I.R. 90 WESTBOUND ENTRANCE RAMP FROM E.14TH ST.

PHASE 4 (CONTINUED)

MAINTENANCE OF TRAFFIC:

BRIDGE 9 CONSTRUCTION
- CLOSE I.R.71/I.R. 90 FROM THE I.R.71/I.R. 490 INTERCHANGE TO THE I.R. 90/I.R. 77 INTERCHANGE FOR A MAXIMUM OF 4 WEEKENDS TO ERECT AND SET STEEL GIRDERS ON PR. BRIDGE 9. DETOUR TRAFFIC AS SHOWN ON SHEET 181

I.R. 77 SOUTHBOUND ENTRANCE RAMP FROM E. 21ST ST.
- TO REMAIN CLOSED FROM PREVIOUS PHASE. DETOUR TRAFFIC AS SHOWN ON SHEET 159

I.R. 77 SOUTHBOUND ENTRANCE RAMP FROM E. 14TH ST.
- TO REMAIN CLOSED FROM PREVIOUS PHASE. DETOUR TRAFFIC AS SHOWN ON SHEET 159

I.R. 90 EASTBOUND ENTRANCE RAMP FROM PROSPECT AVE.
- TO REMAIN CLOSED FROM PREVIOUS PHASE. DETOUR TRAFFIC AS SHOWN ON SHEET 160

I.R. 90 WESTBOUND ENTRANCE RAMP FROM PROSPECT AVE.
- CLOSE ENTRANCE RAMP PER MT-101.60. DETOUR TRAFFIC AS SHOWN ON SHEET 160

I.R. 90 EASTBOUND EXIT RAMP TO CARNEGIE AVE.
- TO REMAIN CLOSED FROM PREVIOUS PHASE. DETOUR TRAFFIC AS SHOWN ON SHEET 161

E. 14TH ST.
- CLOSE E. 14TH ST. PER MT-101.60 BETWEEN CARNEGIE AVE. AND ORANGE AVE. DURING BRIDGE 9 WEEKEND CLOSURES. DETOUR TRAFFIC AS SHOWN ON SHEET 153

CARNEGIE AVE.
- TO REMAIN CLOSED FROM PREVIOUS PHASE. DETOUR TRAFFIC AS SHOWN ON SHEET 158
- DETOUR PEDESTRIAN TRAFFIC AS SHOWN ON SHEET 170

CENTRAL AVE.
- LOCAL TRAFFIC ONLY BETWEEN E. 22ND ST. AND E. 30TH ST. TURNING MOVEMENTS RESTRICTED ON E. 22ND ST. NORTHBOUND AND CENTRAL AVE. WESTBOUND. DETOUR TRAFFIC AS SHOWN ON SHEET 162

BRIDGE 9 (I.R. 90 WESTBOUND TO I.R. 77 SOUTHBOUND INTERCHANGE RAMP) STEEL INSTALLATION
- DURING PERMITTED WEEKEND FULL CLOSURES OF I.R. 90 EB AND I.R. 90 WB FOR STEEL INSTALLATION, SEE SHEET 181 FOR THE OVERALL REGIONAL DETOUR PLAN.

- FOR THE I.R. 90 EB WEEKEND CLOSURES, SEE THE FOLLOWING FOR PCMS LOCATIONS AND LANE CLOSURE DETAILS:
  - I.R. 71 / I.R. 480 INTERCHANGE - SHEET 175
  - I.R. 90 / I.R. 490 / I.R. 71 INTERCHANGE - SHEET 176
  - I.R. 71 / S.R. 176 INTERCHANGE - SHEET 176

- FOR THE I.R. 90 WB WEEKEND CLOSURES SEE THE FOLLOWING FOR PCMS LOCATIONS AND LANE CLOSURE DETAILS:
  - I.R. 90 / I.R. 77 INTERCHANGE - SHEET 182
  - I.R. 90 / S.R. 2 (EAST) INTERCHANGE - SHEET 173
  - I.R. 90 / I.R. 271 INTERCHANGE - SHEET 173
  - I.R. 90 / S.R. 2 (WEST) INTERCHANGE - SHEET 174
  - I.R. 480 / I.R. 77 INTERCHANGE - SHEET 179

SIGNALS:

CARNEGIE AVE. & E. 14TH ST. SIGNAL MODIFICATIONS
CARNEGIE AVE. & E. 21ST ST. SIGNAL MODIFICATIONS
CARNEGIE AVE. & E. 22ND ST. SIGNAL MODIFICATIONS
- FOR PHASE 4 CONFIGURATION NOTES AND DETAILS SEE SHEET 93

PHASE 4 (CONTINUED)

PHASE 4 - SUBPHASE A (CARNEGIE AVE./E. 22ND ST., E. 22ND ST/CENTRAL AVE., AND CARNEGIE AVE./E. 21ST ST. INTERSECTIONS)

WORK TO BE COMPLETED PRIOR TO SUBPHASE 4B:

PAVEMENT:

- BUILD SOUTH SIDE OF CARNEGIE AVE. BETWEEN E. 21ST ST. AND E. 22ND ST.
- BUILD SOUTHWEST CURB RETURN OF E. 22ND ST. AND CARNEGIE AVE.
- BUILD E. 22ND ST. MEDIAN AND NORTHBOUND INSIDE LANE AT CENTRAL AVE.

PHASE 4 - SUBPHASE B (CARNEGIE AVE./E. 22ND ST., E. 22ND ST/CENTRAL AVE., AND CARNEGIE AVE./E. 21ST ST. INTERSECTIONS)

WORK TO BE COMPLETED PRIOR TO SUBPHASE 4C:

PAVEMENT:

- BUILD NORTH SIDE OF CARNEGIE AVE. BETWEEN E. 21ST ST. AND E. 22ND ST.
-BUILD SOUTHEAST QUADRANT OF E. 22ND ST. AND CENTRAL AVE.

SIGNALS:

- INSTALL PROPOSED SIGNAL AT CARNEGIE AVE. & E. 21ST ST.

MAINTENANCE OF TRAFFIC:

E. 21ST ST. AND 22ND ST. BICYCLE LANE
- CLOSE E. 21ST ST. AND 22ND ST. BICYCLE LANE AT PROSPECT AVE. AND DETOUR VEHICULAR AND BICYCLE TRAFFIC AS SHOWN ON SHEET 163

PHASE 4 - SUBPHASE C (CARNEGIE AVE./E. 22ND ST., E. 22ND ST/CENTRAL AVE., AND CARNEGIE AVE./E. 21ST ST. INTERSECTIONS)

WORK TO BE COMPLETED PRIOR TO PHASE 5:

PAVEMENT:

- BUILD NORTHEAST QUADRANT OF CARNEGIE AVE./E. 22ND ST. INTERSECTION
- BUILD SOUTHWEST CURB RETURN OF E. 22ND ST. AND CARNEGIE AVE.
-BUILD E. 22ND ST. SOUTHBOUND INSIDE LANE AT CENTRAL AVE.

SIGNALS:

- INSTALL PROPOSED SIGNAL AT CARNEGIE AVE. & E. 22ND ST.

PHASE 5

WORK TO BE COMPLETED PRIOR TO PHASE 6:

PAVEMENT:

I.R. 90 WESTBOUND
- BUILD PORTION OF I.R. 90 WESTBOUND PAVEMENT AND MEDIAN BARRIER BETWEEN CARNEGIE AVE. AND END PROJECT LIMITS.
- BUILD PORTIONS OF I.R. 90 WESTBOUND PAVEMENT, LIGHTWEIGHT FILL, AND MEDIAN BARRIER BETWEEN BEGIN PROJECT LIMITS AND BRIDGE 10 REAR ABUTMENT.

I.R. 90 WESTBOUND ENTRANCE RAMPS
- BUILD I.R. 90 WESTBOUND ENTRANCE RAMP FROM E.14TH ST.

BRIDGES:

- REMOVE REMAINING PORTION OF EXISTING BRIDGE E6 (I.R. 90 WESTBOUND TO I.R. 77 SOUTHBOUND INTERCHANGE RAMP BRIDGE)

EXISTING BRIDGE E7 (I.R. 90 WESTBOUND TO I.R. 77 SOUTHBOUND INTERCHANGE RAMP OVER E. 14TH ST.)
- REMOVE PORTION OF EXISTING BRIDGE E7. FOR DETAILS SEE SHEET 2044

- BUILD BRIDGE 10 (I.R. 90 WESTBOUND OVER E. 14TH ST.)

BRIDGE 11 (I.R. 90 EASTBOUND OVER E. 14TH ST.)
- BUILD PIER LEFT TWO (NORTHERN) FOOTINGS AND COLUMNS

RETAINING WALLS:

- BUILD WALL AC

MAINTENANCE OF TRAFFIC:

I.R. 77 SOUTHBOUND ENTRANCE RAMP FROM E. 14TH ST. CLOSED PERMANENTLY; FINAL CONDITION TRAFFIC TO USE I.R. 77 SOUTHBOUND ENTRANCE RAMP FROM E. 21ST ST.

I.R. 90 EASTBOUND ENTRANCE RAMP FROM PROSPECT AVE.
- TO REMAIN CLOSED FROM PREVIOUS PHASE. DETOUR TRAFFIC AS SHOWN ON SHEET 160

I.R. 90 WESTBOUND ENTRANCE RAMP FROM PROSPECT AVE.
- TO REMAIN CLOSED FROM PREVIOUS PHASE. DETOUR TRAFFIC AS SHOWN ON SHEET 160

I.R. 90 EASTBOUND EXIT RAMP TO CARNEGIE AVE.
- TO REMAIN CLOSED FROM PREVIOUS PHASE. DETOUR TRAFFIC AS SHOWN ON SHEET 161

E. 14TH ST.
- CLOSE E. 14TH ST. PER MT-101.60 BETWEEN CARNEGIE AVE. AND ORANGE AVE. DURING BRIDGE 10 WEEKEND CLOSURES. DETOUR TRAFFIC AS SHOWN ON SHEET 153

CARNEGIE AVE.
- TO REMAIN CLOSED FROM PREVIOUS PHASE. DETOUR TRAFFIC AS SHOWN ON SHEET 165
DETOUR PEDESTRIAN TRAFFIC AS SHOWN ON SHEET 170

Preliminary Plans - For Reference Only

MAINTENANCE OF TRAFFIC NOTES

DESIGN AGENCY
Michael Baker INTERNATIONAL

DESIGNER
GSH

REVIEWER
DJJ 05/22/24

PROJECT ID
82382

SHEET 91 TOTAL 2696

CUY-90-16.28 (CCG3A)

MODEL: Sheet 9 PAPERSIZE: 34x22 (in.) DATE: 3/27/2025 TIME: 6:51:08 PM USER: Collin.Kwiatt
pw:\\mb-us-pw.bentley.com:mb-us-pw-03\Documents\Cleveland_OH\01_Projects\ODOT\District12\82382400-Engineering\MOT\Sheets\82382_NN0001.dgn
pw:\\mb-us-pw.bentley.com:mb-us-pw-03\Documents\Cleveland_OH\01_Projects\ODOT\District12\82382400-Engineering\MOT\Sheets\82382_NN0001.dgn

SEQUENCE OF CONSTRUCTION (CONTINUED)

PHASE 6

WORK TO BE COMPLETED PRIOR TO PHASE 7:

PAVEMENT:

I.R. 90 MEDIAN
- RESTORE SHOULDERS AND MEDIAN BARRIER NORTH OF EUCLID AVE. AFTER REMOVAL OF I.R. 90 WB CROSSOVER LANE.

I.R. 90 WESTBOUND
- BUILD REMAINING PORTIONS OF I.R. 90 WESTBOUND PAVEMENT AND MEDIAN BARRIER BETWEEN BEGIN PROJECT LIMITS TO STA. 182+00 AND FROM STA. 200+30 TO END PROJECT LIMITS.

I.R. 90 EASTBOUND
- BUILD I.R. 90 EASTBOUND TEMPORARY CROSSOVER PAVEMENT BETWEEN E. 14TH ST. AND E. 22ND ST. SEE SHEETS 250 TO 262 FOR DETAILS.

I.R. 77 NORTHBOUND EXIT RAMP
- BUILD REMAINING PORTION OF RAMP H6 BETWEEN STA. 1187+43.56 TO E. 22ND ST. INTERSECTION (END PROJECT LIMITS)

E. 14TH ST./COMMUNITY COLLEGE AVE.
- REMOVE PAVEMENT FOR MAINTAINING TRAFFIC, CLASS A, CONNECTIONS BETWEEN E. 14TH ST. AND COMMUNITY COLLEGE AVE. AND BETWEEN COMMUNITY COLLEGE AVE. AND RAMP H6.
- BUILD COMMUNITY COLLEGE AVE. TURN-AROUND.

SIGNALS:

- INSTALL PROPOSED SIGNAL AT E. 22ND ST. & COMMUNITY COLLEGE AVE.

MAINTENANCE OF TRAFFIC:

I.R. 77 NORTHBOUND EXIT RAMP TO E. 22ND ST.
- CLOSE EXIT RAMP PER MT-98.29 AND MT-101.60. DETOUR TRAFFIC AS SHOWN ON SHEET 166

I.R. 90 EASTBOUND ENTRANCE RAMP FROM PROSPECT AVE.
- TO REMAIN CLOSED FROM PREVIOUS PHASE. DETOUR TRAFFIC AS SHOWN ON SHEET 160

I.R. 90 WESTBOUND ENTRANCE RAMP FROM PROSPECT AVE.
- TO REMAIN CLOSED FROM PREVIOUS PHASE. DETOUR TRAFFIC AS SHOWN ON SHEET 160

I.R. 90 EASTBOUND EXIT RAMP TO CARNEGIE AVE.
- TO REMAIN CLOSED FROM PREVIOUS PHASE. DETOUR TRAFFIC AS SHOWN ON SHEET 161

CARNEGIE AVE.
- TO REMAIN CLOSED FROM PREVIOUS PHASE. DETOUR TRAFFIC AS SHOWN ON SHEET 165
DETOUR PEDESTRIAN TRAFFIC AS SHOWN ON SHEET 170

PHASE 7

WORK TO BE COMPLETED PRIOR TO PHASE 8:

PAVEMENT:

I.R. 90 EASTBOUND
- BUILD PORTIONS OF I.R. 90 EASTBOUND PAVEMENT, LIGHTWEIGHT FILL, AND MEDIAN BARRIER BETWEEN BEGIN PROJECT LIMITS AND E. 22ND ST.

I.R. 90 WESTBOUND
- REMOVE I.R. 90 WESTBOUND TEMPORARY CROSSOVER PAVEMENT ON. I.R. 90 BETWEEN ONTARIO ST. AND E. 9TH ST. AND RESTORE MEDIAN BACK TO EXISTING CONDITION.

I.R. 77 NORTHBOUND EXIT RAMPS
- BUILD PORTIONS OF RAMP H5 BETWEEN STA. 988+50.00 TO STA. 990+40.00
- BUILD PAVEMENT FOR MAINTAINING TRAFFIC, CLASS A, CONNECTION BETWEEN RAMP H5 AND I.R. 90 EASTBOUND EXISTING PAVEMENT. SEE SHEETS 260 TO 263 FOR DETAILS.

BRIDGES:

EXISTING BRIDGE E8 (I.R. 90 AND INTERCHANGE RAMPS OVER E. 14TH ST.)
- REMOVE I.R. 90 WESTBOUND PORTION OF EXISTING BRIDGE E8. FOR DETAILS SEE SHEET 2043

EXISTING BRIDGE E5 (I.R. 90 BRIDGE OVER I.R. 90 WESTBOUND TO I.R. 77 SOUTHBOUND INTERCHANGE RAMP)
- REMOVE I.R. 90 WESTBOUND PORTION OF EXISTING BRIDGE E5. FOR DETAILS SEE SHEET 2371

- BUILD BRIDGE 11 (I.R. 90 EASTBOUND OVER E. 14TH ST.)

BRIDGE 14 (CARNEGIE AVE. OVER I.R. 90)
- BUILD PIER 1
- COMPLETE STEEL INSTALLATION USING I.R. 90 FULL WEEKEND CLOSURES

WORK TO BE ONGOING THIS PHASE:

PAVEMENT:

CARNEGIE AVE. (EAST OF I.R. 90)
- BUILD CARNEGIE AVE. PAVEMENT BETWEEN FORWARD ABUTMENT AND END PROJECT LIMITS. FOR SUBPHASING DETAILS SEE SHEETS 390 AND 391

MAINTENANCE OF TRAFFIC:

I.R. 90 EASTBOUND ENTRANCE RAMP FROM PROSPECT AVE.
- TO REMAIN CLOSED FROM PREVIOUS PHASE. DETOUR TRAFFIC AS SHOWN ON SHEET 160

I.R. 90 EASTBOUND EXIT RAMP TO CARNEGIE AVE.
- TO REMAIN CLOSED FROM PREVIOUS PHASE. DETOUR TRAFFIC AS SHOWN ON SHEET 161

E. 14TH ST.
- CLOSE E. 14TH ST. PER MT-101.60 BETWEEN CARNEGIE AVE. AND ORANGE AVE. DURING BRIDGE 11 WEEKEND CLOSURES. DETOUR TRAFFIC AS SHOWN ON SHEET 153

CARNEGIE AVE.
- TO REMAIN CLOSED FROM PREVIOUS PHASE. DETOUR TRAFFIC AS SHOWN ON SHEET 165
DETOUR PEDESTRIAN TRAFFIC AS SHOWN ON SHEET 170

PR. BRIDGE 14 (CARNEGIE AVE. OVER I.R. 90) STEEL INSTALLATION
- DURING PERMITTED WEEKEND FULL CLOSURES OF I.R. 90 EB AND I.R. 90 WB FOR PR. BRIDGE 14 STEEL INSTALLATION, SEE SHEET 171 FOR THE OVERALL REGIONAL DETOUR PLAN. I.R. 90 EB AND WB ARE NOT TO BE CLOSED CONCURRENTLY.

- FOR THE I.R. 90 EB WEEKEND CLOSURES, SEE THE FOLLOWING FOR PCMS LOCATIONS AND LANE CLOSURE DETAILS:
  - I.R. 90 / I.R. 77 INTERCHANGE - SHEET 183
  - I.R. 71 / I.R. 480 INTERCHANGE - SHEET 175
  - I.R. 480 / I.R. 77 INTERCHANGE - SHEET 179
  - I.R. 77 / I.R. 480 INTERCHANGE - SHEET 180
  - I.R. 90 / I.R. 490 / I.R. 71 INTERCHANGE - SHEET 176
  - I.R. 71 / S.R. 176 INTERCHANGE - SHEET 176
  - LOCAL DETOUR REROUTE - SHEET 184

- FOR THE I.R. 90 WB WEEKEND CLOSURES SEE THE FOLLOWING FOR PCMS LOCATIONS AND LANE CLOSURE DETAILS:
  - I.R. 90 / S.R. 2 (EAST) INTERCHANGE - SHEET 173
  - I.R. 90 / I.R. 271 INTERCHANGE - SHEET 173
  - I.R. 90 / S.R. 2 (WEST) INTERCHANGE - SHEET 174
  - I.R. 90 AT E. 22ND ST. AND CEDAR AVE. BRIDGES - SHEET 177
  - I.R. 480 / I.R. 77 INTERCHANGE - SHEET 179
  - LOCAL DETOUR REROUTE - SHEET 184

PHASE 8

WORK TO BE COMPLETED PRIOR TO PHASE 9:

PAVEMENT:

I.R. 90 EASTBOUND
- BUILD PORTIONS OF I.R. 90 EASTBOUND PAVEMENT AND LIGHTWEIGHT FILL BETWEEN BEGIN PROJECT LIMITS TO STA. 184+00 AND FROM STA. 192+45 TO STA. 198+74.

I.R. 77 NORTHBOUND
- BUILD I.R. 77 NORTHBOUND PAVEMENT BETWEEN BEGIN PROJECT LIMITS AND RAMP IH4 GORE.

I.R. 90 EASTBOUND ENTRANCE RAMPS
- BUILD I.R. 90 EASTBOUND ENTRANCE RAMP FROM PROSPECT AVE.

I.R. 90 EASTBOUND EXIT RAMPS
- BUILD RAMP B6 PAVEMENT AND LIGHTWEIGHT FILL FROM STA. 1600+00 TO STA. 1607+57

I.R. 77 NORTHBOUND EXIT RAMPS
- BUILD PORTIONS OF RAMP H5 BETWEEN STA. 990+40.00 AND PROPOSED I.R. 90 EASTBOUND PAVEMENT. OMIT 12' WIDE SECTION OF RAMP H5 BETWEEN THESE LIMITS TO MAINTAIN I.R. 77 NORTHBOUND TO I.R. 90 EASTBOUND INTERCHANGE RAMP AT ALL TIMES.

CARNEGIE AVE. (EAST OF I.R. 90)
- BUILD CARNEGIE AVE. PAVEMENT BETWEEN FORWARD ABUTMENT AND END PROJECT LIMITS. FOR SUBPHASING DETAILS SEE SHEETS 390 AND 391

PRIVATE PROPERTIES:

CENTRAL CADILLAC (2801 CARNEGIE AVE.) (PARCEL 346)
-LIMIT RECONSTRUCTION OF PARKING LOT (12 TOTAL PARKING STALLS) TO 6 TOTAL WEEKS. MAINTAIN 6 PARKING STALLS WITH ACCESS AT ALL TIMES. CONTRACTOR TO PROVIDE 14-DAY NOTICE TO CENTRAL CADILLAC OWNER PRIOR TO DRIVE CLOSURES, PARKING RESTRICTIONS, AND CHANGES IN PHASES IMPACTING PARCEL.

BRIDGES:

EXISTING BRIDGE E8/E9 (I.R. 90 AND INTERCHANGE RAMPS OVER E. 14TH ST.)
- REMOVE REMAINING PORTION OF EXISTING BRIDGE E8/E9. FOR DETAILS SEE SHEET 2093

EXISTING BRIDGE E5 (I.R. 90 BRIDGE OVER I.R. 90 WESTBOUND TO I.R. 77 SOUTHBOUND INTERCHANGE RAMP)
- REMOVE REMAINING PORTION OF EXISTING BRIDGE E5. FOR DETAILS SEE SHEET 2371

BRIDGE 12 (RAMP B6 BRIDGE OVER E. 14TH ST. AND RAMP H5)
- BUILD PIER 2
- BUILD REAR ABUTMENT

BRIDGE 14 (CARNEGIE AVE. BRIDGE OVER I.R. 90)
- COMPLETE BRIDGE DECK

UTILITIES:

- REMOVE TEMPORARY CPP OVERHEAD LINE AND POLES ADJACENT TO CARNEGIE AVE. ONCE THE PERMANENT UTILITY HAS BEEN INSTALLED ON THE CARNEGIE AVE. BRIDGE THIS PHASE.

SIGNALS:

- INSTALL PROPOSED SIGNAL AT CARNEGIE AVE. & MIDTOWN CONNECTOR

MAINTENANCE OF TRAFFIC:

I.R. 90 EASTBOUND ENTRANCE RAMP FROM PROSPECT AVE.
- TO REMAIN CLOSED FROM PREVIOUS PHASE. DETOUR TRAFFIC AS SHOWN ON SHEET 160

I.R. 90 EASTBOUND EXIT RAMP TO E. 9TH ST. NORTHBOUND
- CLOSE EXIT RAMP PER MT-98.29 AND MT-101.60 DURING CONSTRUCTION OF GORE AREA. DETOUR TRAFFIC AS SHOWN ON SHEET 167

I.R. 90 EASTBOUND EXIT RAMP TO CARNEGIE AVE.
- TO REMAIN CLOSED FROM PREVIOUS PHASE. DETOUR TRAFFIC AS SHOWN ON SHEET 161

CARNEGIE AVE.
- TO REMAIN CLOSED FROM PREVIOUS PHASE. DETOUR TRAFFIC AS SHOWN ON SHEET 165
DETOUR PEDESTRIAN TRAFFIC AS SHOWN ON SHEET 170

PHASE 9

WORK TO BE COMPLETED THIS PHASE:

PAVEMENT:

I.R. 90 EASTBOUND
- BUILD REMAINING PORTIONS OF I.R. 90 EASTBOUND PAVEMENT BETWEEN BEGIN AND END PROJECT LIMITS.

I.R. 77 NORTHBOUND EXIT RAMPS
- BUILD REMAINING 12' WIDE PORTION OF RAMP H5 THAT WAS OMITTED DURING PHASE 8 CONSTRUCTION.

I.R. 90 EASTBOUND EXIT RAMPS
- BUILD RAMP B6 PAVEMENT AND LIGHTWEIGHT FILL

I.R. 77 SOUTHBOUND ENTRANCE RAMPS
- BUILD RAMP IJ3 BETWEEN E. 14TH ST. SOUTHBOUND AND EXISTING I.R. 77 SOUTHBOUND.

BRIDGES:

- BUILD BRIDGE 12 (RAMP B6 BRIDGE OVER E. 14TH ST. AND RAMP H5)

RETAINING WALLS:

- BUILD WALL AJ
- BUILD WALL Y
- BUILD WALL Z

MAINTENANCE OF TRAFFIC:

I.R. 90 EASTBOUND EXIT RAMP TO CARNEGIE AVE.
- TO REMAIN CLOSED FROM PREVIOUS PHASE. DETOUR TRAFFIC AS SHOWN ON SHEET 161

Preliminary Plans - For Reference Only

MAINTENANCE OF TRAFFIC NOTES

DESIGN AGENCY
Michael Baker INTERNATIONAL

DESIGNER GSH
REVIEWER DJJ 05/22/24
PROJECT ID 82382
SHEET 92 TOTAL 2696

CUY-90-16.28 (CCG3A)
MODEL: Sheet 10 PAPERSIZE: 34x22 (in.) DATE: 3/27/2025 TIME: 6:51:09 PM USER: Collin.Kwiatt
pw:\\mb-us-pw.bentley.com:mb-us-pw-03\Documents\Cleveland_OH\01_Projects\ODOT\District12\82382\400-Engineering\MOT\Sheets\82382_MN0001.dgn

SEQUENCE OF CONSTRUCTION (CONTINUED)

TEMPORARY SIGNALS

PHASE 1

CARNEGIE AVENUE & E. 14TH STREET

UPON CLOSING THE NB APPROACH OF E. 14TH STREET AND ESTABLISHMENT OF THE PHASE 1 WORK AREA, CONTRACTOR SHALL PERFORM THE FOLLOWING:

- DISCONNECT THE LOOP DETECTOR INPUTS WITHIN THE CONTROLLER CABINET ASSOCIATED WITH THE NB APPROACH.

- COVER THE PEDESTRIAN SIGNAL HEADS FOR THE CROSSWALKS ON THE SOUTH AND EAST LEGS.

- REMOVE THE PUSHBUTTONS AND DISCONNECT THE INPUTS WITHIN THE CONTROLLER CABINET ASSOCIATED WITH THE CROSSWALK ON THE EAST LEG.

- INSTALL TWO (2) PEDESTRIAN SIGNAL HEADS ON THE NW AND SW CORNERS TO ACCOMMODATE THE TEMPORARY CROSSWALK ON THE WEST LEG AND MODIFY THE CONTROLLER PROGRAMMING TO PLACE PHASE 4 IN 'PED RECALL'.

TO FACILITATE THE REMOVAL OF THE EXISTING SIGNAL SUPPORT ON THE SE CORNER THAT WILL BE LOCATED WITHIN THE PHASE 1 WORK AREA, CONTRACTOR SHALL PERFORM THE FOLLOWING:

- INSTALL A TEMPORARY SPAN ON THE EAST LEG WITH THREE (3) VEHICULAR SIGNAL HEADS FOR THE EB APPROACH.

- INSTALL TWO (2) COVERED PEDESTRIAN SIGNAL HEADS ON THE SE CORNER FOR CROSSWALKS ON THE EAST LEG AND SOUTH LEG.

UPON REOPENING THE NB APPROACH OF E. 14TH STREET DURING PHASE 1, CONTRACTOR SHALL PERFORM THE FOLLOWING:

- MODIFY THE CONTROLLER PROGRAMMING TO PLACE PHASE 4 IN 'DUAL COORD' MODE TO ACCOUNT FOR THE LOSS OF THE NB LOOP DETECTORS.

- UNCOVER THE PEDESTRIAN SIGNAL HEADS FOR THE CROSSWALKS ON THE SOUTH AND EAST LEGS.

- REMOVE THE TWO (2) PEDESTRIAN SIGNAL HEADS FOR THE TEMPORARY CROSSWALK ON THE WEST LEG.

CONTRACTOR SHALL MAINTAIN THE EXISTING/TEMPORARY SIGNAL IN STOP-AND-GO OPERATION USING THE EXISTING SIGNAL TIMING PARAMETERS UNLESS DIRECTED OTHERWISE BY THE CITY OF CLEVELAND.

CARNEGIE AVENUE & E. 18TH STREET

UPON CLOSING THE NB APPROACH OF E. 18TH STREET AND ESTABLISHMENT OF THE PHASE 1 WORK AREA, CONTRACTOR SHALL PERFORM THE FOLLOWING:

- DISCONNECT THE LOOP DETECTOR INPUTS WITHIN THE CONTROLLER CABINET ASSOCIATED WITH THE NB APPROACH.

- COVER THE PEDESTRIAN SIGNAL HEADS FOR THE CROSSWALKS ON THE WEST, SOUTH, AND EAST LEGS.

- REMOVE THE PUSHBUTTONS AND DISCONNECT THE INPUTS WITHIN THE CONTROLLER CABINET ASSOCIATED WITH THE CROSSWALKS ON THE WEST AND EAST LEGS.

TO FACILITATE THE REMOVAL OF THE EXISTING SIGNAL SUPPORTS ON THE SW AND SE CORNERS THAT WILL BE LOCATED WITHIN THE PHASE 1 WORK AREA, CONTRACTOR SHALL PERFORM THE FOLLOWING:

- INSTALL A TEMPORARY SPAN ON THE SOUTH LEG WITH TWO (2) VEHICULAR SIGNAL HEADS FOR THE SB APPROACH AND A TEMPORARY SPAN ON THE EAST LEG WITH TWO (2) VEHICULAR SIGNAL HEADS FOR THE EB APPROACH.

- INSTALL TWO (2) COVERED PEDESTRIAN SIGNAL HEADS ON THE SW CORNER FOR CROSSWALKS ON THE WEST LEG AND SOUTH LEG AND TWO (2) COVERED PEDESTRIAN SIGNAL HEADS ON THE SE CORNER FOR CROSSWALKS ON THE SOUTH LEG AND EAST LEG.

UPON REOPENING THE NB APPROACH OF E. 18TH STREET DURING PHASE 1, CONTRACTOR SHALL PERFORM THE FOLLOWING:

- UNCOVER THE PEDESTRIAN SIGNAL HEADS FOR THE CROSSWALKS ON THE WEST, SOUTH AND EAST LEGS.

CARNEGIE AVENUE & E. 18TH STREET (CONTINUED)

CONTRACTOR SHALL MAINTAIN THE EXISTING SIGNAL IN STOP-AND-GO OPERATION USING THE EXISTING SIGNAL TIMING PARAMETERS UNLESS DIRECTED OTHERWISE BY THE CITY OF CLEVELAND.

E. 22ND STREET & COMMUNITY COLLEGE AVENUE

UPON CLOSING THE EB APPROACH OF COMMUNITY COLLEGE AVENUE AND ESTABLISHMENT OF THE PHASE 1 WORK AREA, CONTRACTOR SHALL PERFORM THE FOLLOWING:

- DISCONNECT THE LOOP DETECTOR INPUTS WITHIN THE CONTROLLER CABINET ASSOCIATED WITH THE EB APPROACH.

UPON REOPENING THE EB APPROACH OF COMMUNITY COLLEGE AVENUE DURING PHASE 1, CONTRACTOR SHALL PERFORM THE FOLLOWING:

- RECONNECT THE LOOP DETECTOR INPUTS WITHIN THE CONTROLLER CABINET ASSOCIATED WITH THE EB APPROACH.

- IF FOUND THAT THE PAVEMENT LOOPS HAVE BEEN DAMAGED DURING PHASE 1 OR ARE NO LONGER IN A LOCATION TO PROVIDE VEHICLE DETECTION, MODIFY THE CONTROLLER PROGRAMMING TO PLACE PHASE 4 AND PHASE 8 IN 'DUAL' COORD' MODE TO ACCOUNT FOR THE LOSS OF THE EB LOOP DETECTORS.

CONTRACTOR SHALL MAINTAIN THE EXISTING SIGNAL IN STOP-AND-GO OPERATION USING THE EXISTING SIGNAL TIMING PARAMETERS UNLESS DIRECTED OTHERWISE BY THE CITY OF CLEVELAND.

PHASE 2

CARNEGIE AVENUE & E. 14TH STREET

CONTRACTOR SHALL MAINTAIN THE EXISTING/TEMPORARY SIGNAL IN STOP-AND-GO OPERATION USING THE EXISTING SIGNAL TIMING PARAMETERS UNLESS DIRECTED OTHERWISE BY THE CITY OF CLEVELAND UNTIL THE NEW SIGNAL IS COMPLETED. THE COMPLETION OF THE NEW SIGNAL AND CHANGEOVER SHALL OCCUR PRIOR TO THE END OF PHASE 2, AT WHICH POINT IT SHALL BE PLACED IN STOP-AND-GO OPERATION.

CONTRACTOR SHALL COVER THE LEFTMOST 3-SECTION SIGNAL HEAD OF THE WB APPROACH IN CONJUNCTION WITH THE TEMPORARY CLOSURE OF THE LEFTMOST WB LEFT TURN LANE (THIS SHALL BE DONE FOR BOTH THE EXISTING SIGNAL AS WELL AS THE NEW SIGNAL FOLLOWING THE CHANGEOVER). CONTRACTOR SHALL UNCOVER THIS SIGNAL HEAD IN CONJUNCTION WITH THE REOPENING OF THE TURN LANE WHICH EXPECTED TO OCCUR PRIOR TO THE END OF PHASE 5.

CARNEGIE AVENUE & E. 18TH STREET

CONTRACTOR SHALL MAINTAIN THE EXISTING/TEMPORARY SIGNAL IN STOP-AND-GO OPERATION USING THE EXISTING SIGNAL TIMING PARAMETERS UNLESS DIRECTED OTHERWISE BY THE CITY OF CLEVELAND UNTIL THE NEW SIGNAL IS COMPLETED. THE COMPLETION OF THE NEW SIGNAL AND CHANGEOVER SHALL OCCUR PRIOR TO THE END OF PHASE 2, AT WHICH POINT IT SHALL BE PLACED IN STOP-AND-GO OPERATION.

CARNEGIE AVENUE & E. 22ND STREET

UPON CLOSING THE NB APPROACH OF E. 22ND STREET AND ESTABLISHMENT OF THE PHASE 2 WORK AREA, CONTRACTOR SHALL PERFORM THE FOLLOWING:

- DISCONNECT THE LOOP DETECTOR INPUTS WITHIN THE CONTROLLER CABINET ASSOCIATED WITH THE NB APPROACH AND WB LEFT TURN PHASE.

- MODIFY THE CONTROLLER PROGRAMMING TO DISABLE PHASE 1 TO REFLECT THE E. 22ND STREET CLOSURE AND RESTRICTION OF THE WB LEFT TURN MOVEMENT.

UPON REOPENING THE NB APPROACH OF E. 22ND STREET DURING PHASE 2, CONTRACTOR SHALL PERFORM THE FOLLOWING:

- RECONNECT THE LOOP DETECTOR INPUTS WITHIN THE CONTROLLER CABINET ASSOCIATED WITH THE NB APPROACH AND WB LEFT TURN PHASE.

- IF FOUND THAT PAVEMENT LOOPS HAVE BEEN DAMAGED DURING PHASE 2, MODIFY THE CONTROLLER PROGRAMMING TO PLACE PHASE 4 AND PHASE 8 IN 'DUAL COORD' MODE TO ACCOUNT FOR THE LOSS OF THE NB LOOP DETECTORS.

CONTRACTOR SHALL MAINTAIN THE EXISTING SIGNAL IN STOP-AND-GO OPERATION USING THE EXISTING SIGNAL TIMING PARAMETERS UNLESS DIRECTED OTHERWISE BY THE CITY OF CLEVELAND.

E. 22ND STREET & CEDAR AVENUE

CONTRACTOR SHALL COMPLETE THE INSTALLATION OF THE NEW SIGNAL PRIOR TO THE END OF PHASE 2 AND REOPENING OF E. 22ND STREET AND CEDAR AVENUE, AT WHICH POINT IT SHALL BE PLACED IN STOP-AND-GO OPERATION.

E. 22ND STREET & CENTRAL AVENUE

UPON CLOSING THE SB APPROACH OF E. 22ND STREET AND ESTABLISHMENT OF THE PHASE 2 WORK AREA, CONTRACTOR SHALL PERFORM THE FOLLOWING:

- REMOVE THE PEDESTRIAN SIGNAL HEADS FOR THE CROSSWALKS ON THE NORTH, WEST, SOUTH AND EAST LEGS.

- REMOVE THE PUSHBUTTONS AND DISCONNECT THE INPUTS WITHIN THE CONTROLLER CABINET ASSOCIATED WITH THE CROSSWALKS ON THE NORTH AND SOUTH LEGS.

- MODIFY THE CONTROLLER PROGRAMMING TO PLACE THE SIGNAL IN ALL-RED FLASH.

CONTRACTOR SHALL MAINTAIN THE EXISTING SIGNAL IN ALL-RED FLASH UNLESS DIRECTED OTHERWISE BY THE CITY OF CLEVELAND UNTIL THE NEW SIGNAL IS COMPLETED. THE COMPLETION OF THE NEW SIGNAL AND CHANGEOVER SHALL OCCUR PRIOR TO THE END OF PHASE 2 AND REOPENING OF E. 22ND STREET. THE NEW SIGNAL SHALL ALSO OPERATE IN ALL-RED FLASH UNTIL E. 22ND STREET IS REOPENED, AT WHICH POINT IT SHALL BE PLACED IN STOP-AND-GO OPERATION.

CONTRACTOR SHALL INSTALL PEDESTALS PS-2, PS-3 AND PS-5 IN TEMPORARY LOCATIONS RELATIVE TO THE EXISTING CURB RAMPS UNTIL THEY CAN BE RELOCATED TO THEIR PERMANENT LOCATIONS. PS-2 AND PS-3 ARE TO BE RELOCATED DURING PHASE 8 WHILE PS-5 IS TO BE RELOCATED DURING PHASE 4.

E. 14TH STREET & COMMUNITY COLLEGE AVENUE

CONTRACTOR SHALL INSTALL A TEMPORARY SIGNAL PRIOR TO THE FULL OPENING OF THE E. 14TH STREET & COMMUNITY COLLEGE AVENUE INTERSECTION. THE TEMPORARY SIGNAL SHALL BE REMOVED UPON REMOVAL OF THE ROADWAY CONNECTION BETWEEN E. 14TH STREET AND COMMUNITY COLLEGE AVENUE WHICH IS EXPECTED TO OCCUR DURING PHASE 6.

PHASE 3

CARNEGIE AVENUE & E. 21ST STREET

UPON CLOSING THE I-77 SB ENTRANCE RAMP AND ESTABLISHMENT OF THE PHASE 3 WORK AREA, CONTRACTOR SHALL PERFORM THE FOLLOWING:

- REMOVE THE EXISTING 5-SECTION SIGNAL HEAD FOR THE WB APPROACH.

- DISCONNECT THE LOOP DETECTOR INPUTS WITHIN THE CONTROLLER CABINET ASSOCIATED WITH THE WB LEFT TURN PHASE.

- REMOVE THE PEDESTRIAN SIGNAL HEADS FOR THE CROSSWALKS ON THE WEST AND SOUTH LEGS.

- REMOVE THE PUSHBUTTONS AND DISCONNECT THE INPUTS WITHIN THE CONTROLLER CABINET ASSOCIATED WITH THE CROSSWALK ON THE WEST LEG.

- MODIFY THE CONTROLLER PROGRAMMING TO DISABLE PHASE 3 TO REFLECT THE RAMP CLOSURE AND RESTRICTION OF THE WB LEFT TURN MOVEMENT.

CONTRACTOR SHALL MAINTAIN THE EXISTING SIGNAL IN STOP-AND-GO OPERATION USING THE EXISTING SIGNAL TIMING PARAMETERS UNLESS DIRECTED OTHERWISE BY THE CITY OF CLEVELAND UNTIL THE NEW SIGNAL IS COMPLETED.

PHASE 4

CARNEGIE AVENUE & E. 14TH STREET

CONTRACTOR SHALL MODIFY THE CONTROLLER PROGRAMMING TO DISABLE PHASE 7 IN CONJUNCTION WITH THE TEMPORARY CLOSURE OF THE CENTER SOUTHBOUND LANE AND CONVERSION OF THE ADJACENT LEFT TURN TO PERMIT THRU MOVEMENTS. THE CONTRACTOR SHALL REENABLE PHASE 7 UPON RETURNING TO THE PREVIOUS LANE CONFIGURATION.

CARNEGIE AVENUE & E. 21ST STREET

UPON ESTABLISHMENT OF THE PHASE 4A WORK AREA AND THE ASSOCIATED LANE SHIFT, CONTRACTOR SHALL PERFORM THE FOLLOWING:

- RELOCATE THE TWO (2) VEHICULAR SIGNAL HEADS FOR THE WB APPROACH TO ALIGN WITH THE SINGLE APPROACH LANE.

- INSTALL A TEMPORARY SPAN ON THE EAST LEG WITH TWO (2) VEHICULAR SIGNAL HEADS FOR THE EB APPROACH.

- REMOVE THE EXISTING VEHICULAR SIGNAL HEADS ON THE MAST ARM FOR THE EB APPROACH.

UPON CLOSING E. 21ST STREET AND ESTABLISHMENT OF THE PHASE 4B WORK AREA, CONTRACTOR SHALL DEENERGIZE THE EXISTING/TEMPORARY SIGNAL FOR REMOVAL AND PERFORM THE INSTALLATION OF THE NEW SIGNAL. THE COMPLETION OF THE NEW SIGNAL AND CHANGEOVER SHALL OCCUR PRIOR TO THE END OF PHASE 4B AND REOPENING OF E. 21ST STREET, AT WHICH POINT IT SHALL BE PLACED IN STOP-AND-GO OPERATION.

CONTRACTOR SHALL MODIFY THE CONTROLLER PROGRAMMING TO DISABLE PHASE 1 TO REFLECT THE ONGOING RAMP CLOSURE AND RESTRICTION OF THE WB LEFT TURN MOVEMENT, AND REENABLE PHASE 1 UPON REOPENING THE I-77 SB ENTRANCE RAMP.

CARNEGIE AVENUE & E. 22ND STREET

UPON ESTABLISHMENT OF THE PHASE 4A WORK AREA AND THE ASSOCIATED LANE SHIFT, CONTRACTOR SHALL PLACE THE EXISTING SIGNAL IN ALL-RED FLASH.

CONTRACTOR SHALL MAINTAIN THE EXISTING SIGNAL IN ALL-RED FLASH THROUGH PHASE 4C UNLESS DIRECTED OTHERWISE BY THE CITY OF CLEVELAND UNTIL THE NEW SIGNAL IS COMPLETED. THE COMPLETION OF THE NEW SIGNAL AND CHANGEOVER SHALL OCCUR PRIOR TO THE END OF PHASE 4C. THE NEW SIGNAL SHALL ALSO OPERATE IN ALL-RED FLASH UNTIL THE IMPLEMENTATION OF THE PHASE 4C OR PERMANENT LANE CONFIGURATION, AT WHICH POINT IT SHALL BE PLACED IN STOP-AND-GO OPERATION.

PHASE 6

E. 22ND STREET & COMMUNITY COLLEGE AVENUE

UPON CLOSING THE EB APPROACH OF COMMUNITY COLLEGE AVENUE AND ESTABLISHMENT OF THE PHASE 6 WORK AREA, CONTRACTOR SHALL PERFORM THE FOLLOWING:

- DISCONNECT THE LOOP DETECTOR INPUTS WITHIN THE CONTROLLER CABINET ASSOCIATED WITH THE EB APPROACH.

- MODIFY THE CONTROLLER PROGRAMMING TO PLACE PHASE 4 AND PHASE 8 IN 'DUAL COORD' MODE TO ACCOUNT FOR THE LOSS OF THE EB LOOP DETECTORS UNTIL THE RADAR DETECTION HAS BEEN INSTALLED.

Preliminary Plans - For Reference Only

MAINTENANCE OF TRAFFIC NOTES

DESIGN AGENCY
Michael Baker INTERNATIONAL

DESIGNER GSH
REVIEWER DJJ 05/22/24
PROJECT ID 82382
SHEET 93 TOTAL 2696

CUY-90-16.28 (CCG3A)
MODEL: Sheet 11 PAPERSIZE: 34x22 (in.) DATE: 3/27/2025 TIME: 6:51:09 PM USER: Collin.Kwiatt
pw:\\mb-us-pw.bentley.com:mb-us-pw-03\Documents\Cleveland_OH\01_Projects\ODOT\District12\82382\400-Engineering\MOT\Sheets\82382_MN0001.dgn

MAINTENANCE OF TRAFFIC SUBSUMMARY - 1

REF NO.	SHEET NO.	STATION FROM	STATION TO	SIDE	PHASE	COLOR	MARKING REMOVED	608 TEMPORARY ASPHALT CONCRETE WALK SF	614 WORK ZONE IMPACT ATTENUATOR, 24" WIDE HAZARDS, (UNIDIRECTIONAL) EACH	614 WORK ZONE LANE LINE, CLASS I, 4" MILE	614 WORK ZONE LANE LINE, CLASS I, 6" MILE	614 WORK ZONE CENTER LINE, CLASS I MILE	614 WORK ZONE EDGE LINE, CLASS I, 4" MILE	614 WORK ZONE EDGE LINE, CLASS I, 6" MILE	614 WORK ZONE CHANNELIZING LINE, CLASS I, 8" FT	614 WORK ZONE CHANNELIZING LINE, CLASS I, 12" FT	614 WORK ZONE DOTTED LINE, CLASS I FT	614 WORK ZONE TRANSVERSE/DIAGONAL LINE, CLASS I FT	614 WORK ZONE STOP LINE, CLASS I FT	614 WORK ZONE CROSSWALK LINE, CLASS I, 12" FT	614 WORK ZONE ARROW, CLASS I EACH	614 WORK ZONE WORD ON PAVEMENT, 72", CLASS I EACH	614 WORK ZONE PAVEMENT MARKING, MISC.: SHARED LANE MARKING EACH	615 PAVEMENT FOR MAINTAINING TRAFFIC, CLASS A SY	622 PORTABLE BARRIER, 50", AS PER PLAN FT	622 DUAL PORTABLE BARRIER TRANSITION/TERMINATION EACH	622 PORTABLE BARRIER, ANCHORED, AS PER PLAN FT	642 REMOVAL OF PAVEMENT MARKING FT	642 REMOVAL OF PAVEMENT MARKING EACH	644 EDGE LINE, 6" MILE	644 LANE LINE, 4" MILE	644 LANE LINE, 6" MILE	644 CENTER LINE MILE	644 CHANNELIZING LINE, 8" FT	644 CHANNELIZING LINE, 12" FT	644 CHEVRON MARKING FT	644 LANE ARROW EACH	644 DOTTED LINE, 4" FT	644 DOTTED LINE, 6" FT			
		I.R. 77																																								
DL-1	284	33+02.98	38+88.31	RT	1	WHITE											589																									
	284	33+02.98	68+06.44	RT	1		LL																																			
CH-1	284	38+88.31	40+07.94	RT	1	WHITE										122																									
CH-2	284	38+88.31	41+90.03	RT	1	WHITE										306																									
EW-1	284	41+90.03	60+50.00	RT	1	WHITE								0.36																											
	284	42+46.30	66+31.88	RT	1		EW																																			
	286	56+50.11	76+50.00	RT	1		LL																																			
LL-1	286	56+50.12	74+10.70	RT	1	WHITE					0.33																														
CH-3	286	60+50.00	62+00.00	RT	1	WHITE										150																									
	286	61+95.28	66+31.88	RT	1		DL																																			
DL-2	286	62+00.00	74+00.00	RT	1	WHITE											1199																									
EW-2	287	66+99.98	76+51.14	RT	1	WHITE								0.18																											
PB-1	287	72+34.00	76+51.00	RT	1				1																					416												
EY-1	287	74+10.34	76+51.14	RT	1	YELLOW								0.05																											
CH-4	287	74+10.70	76+51.14	RT	1	WHITE										241																									
		ORANGE AVE.																																								
EW-3	287	400+67.63	405+28.09	LT	1	WHITE							0.09																												
		EX. RAMP E-17																																								
	288	51+39.45	54+98.20	CL/LT	1		LL																																			
EY-2	288	51+39.97	54+97.82	LT	1	YELLOW								0.07																											
PB-2	288	51+40.00	54+75.00	RT	1																									334											
CH-5	288	51+40.40	54+98.20	LT	1	WHITE										359																									
EW-4	288	51+40.85	54+98.26	RT	1	WHITE								0.07																											
	288	53+31.84	53+34.22	RT	1		CH																																			
		INTERIM E. 14TH ST. SB																																								
EY-3	288	197+50.00	200+09.21	LT	1	YELLOW							0.05																											
EW-5	288	197+64.34	200+09.21	LT	1	WHITE							0.05																											
	288	197+64.34	202+52.18	LT	1																									273											
		FUTURE BUILD E. 14TH																																								
LL-2	288	16+47.07	18+09.67	LT	1	WHITE				0.03																															
DL-3	288	17+12.59	18+31.64	LT	1	WHITE											118																									
EY-4	288	18+31.64	18+70.06	LT	1	YELLOW							0.01																												
		ORANGE AVE.																																								
	288	400+10.69		RT	1		LA																																			
	288	400+10.91		RT	1		LA																																			
	288	400+11.21		RT	1		LA																																			
	288	400+11.42		RT	1		LA																																			
	288	400+11.46		RT	1		LA																																			
	288	400+23.86		RT	1		LA																																			
	288	400+24.03		RT	1		LA																																			
	288	400+24.03		RT	1		LA																																			
	288	400+67.63	403+16.78	LT	1		CH																																			
	288	400+93.68		LT	1		LA																																			
	288	401+90.07		LT	1		LA																																			
	288	402+90.16		LT	1		LA																																			
TOTALS CARRIED TO SHEET 120								-	1	0.03	0.33	-	0.20	0.73	-	1178	1906	-	-	-	-	-	-	273	750	-	-	9418	11	-	-	-	-	-	-	-	-	-	-			

Preliminary Plans - For Reference Only

DESIGN AGENCY
Michael Baker INTERNATIONAL

DESIGNER
CRK

REVIEWER
GSH 05/22/24

PROJECT ID
82382

SHEET 94 TOTAL 2696

CUY-90-16.28 (CCG3A)

MODEL: Sheet-01 PAPERSIZE: 34x22 (in.) DATE: 3/27/2025 TIME: 6:51:15 PM USER: Collin.Kwiatt
pw:\\mb-us-pw.bentley.com:mb-us-pw-03\Documents\Cleveland_OH01_Projects\ODOT\District12\82382400-Engineering\MOT\Sheets\82382_MS001.dgn

MAINTENANCE OF TRAFFIC SUBSUMMARY - 2

REF NO.	SHEET NO.	STATION FROM	STATION TO	SIDE	PHASE	COLOR	MARKING REMOVED	608 TEMPORARY ASPHALT CONCRETE WALK SF	614 WORK ZONE IMPACT ATTENUATOR, 24" WIDE HAZARDS, (UNIDIRECTIONAL) EACH	614 WORK ZONE LANE LINE, CLASS I, 4" MILE	614 WORK ZONE LANE LINE, CLASS I, 6" MILE	614 WORK ZONE CENTER LINE, CLASS I MILE	614 WORK ZONE EDGE LINE, CLASS I, 4" MILE	614 WORK ZONE EDGE LINE, CLASS I, 6" MILE	614 WORK ZONE CHANNELIZING LINE, CLASS I, 8" FT	614 WORK ZONE CHANNELIZING LINE, CLASS I, 12" FT	614 WORK ZONE DOTTED LINE, CLASS I FT	614 WORK ZONE TRANSVERSE/DIAGONAL LINE, CLASS I FT	614 WORK ZONE STOP LINE, CLASS I FT	614 WORK ZONE CROSSWALK LINE, CLASS I, 12" FT	614 WORK ZONE ARROW, CLASS I EACH	614 WORK ZONE WORD ON PAVEMENT, 72", CLASS I EACH	614 WORK ZONE PAVEMENT MARKING, MISC.: SHARED LANE MARKING EACH	615 PAVEMENT FOR MAINTAINING TRAFFIC, CLASS A SY	622 PORTABLE BARRIER, 50", AS PER PLAN FT	622 DUAL PORTABLE BARRIER TRANSITION/TERMINATION EACH	622 PORTABLE BARRIER, ANCHORED, AS PER PLAN FT	642 REMOVAL OF PAVEMENT MARKING FT	642 REMOVAL OF PAVEMENT MARKING EACH	644 EDGE LINE, 6" MILE	644 LANE LINE, 4" MILE	644 LANE LINE, 6" MILE	644 CENTER LINE MILE	644 CHANNELIZING LINE, 8" FT	644 CHANNELIZING LINE, 12" FT	644 CHEVRON MARKING FT	644 LANE ARROW EACH	644 DOTTED LINE, 4" FT	644 DOTTED LINE, 6" FT			
		EX. RAMP E-17																																								
	289	64+71.10	66+65.35	RT/LT	1		EW																																			
EW-6	289	64+71.10	68+23.32	RT	1	WHITE								0.07																												
	289	64+72.43	66+78.36	LT	1		EY																																				
EY-5	289	64+72.43	68+23.32	LT	1	YELLOW								0.07																												
		E. 14TH ST. NB XOVER																																								
	289	10+16.86	12+41.16	LT/RT	1																						746															
	289	12+60.22	13+40.97	LT/RT	1																						129															
		E. 14TH ST. NB																																								
	289	55+50.00	56+79.00	LT	1																						104															
		INTERIM E. 14TH ST. SB																																								
PB-3	289	200+50.00	202+74.00	LT	1																							224														
	289	207+32.62	209+27.00	LT	1																						118															
	289	207+80.02	208+90.00	RT	1																						104															
		COMMUNITY COLLEGE AVE.																																								
	289	54+82.70	59+26.12	RT/LT	1																						1358															
		RAMP H6																																								
	290	1188+86.38	1190+74.93	LT/RT	1		LL																																			
	290	1191+52.25	1192+31.43	LT	1		CH																																			
	290	1191+84.28		LT	1		LA																																			
	290	1191+86.32		LT	1		LA																																			
	290	1192+14.85		LT	1		LA																																			
	290	1192+15.37		LT	1		LA																																			
	290	1192+46.89	1192+92.02	LT/RT	1		DL																																			
		COMMUNITY COLLEGE AVE.																																								
CH-6	290	60+66.07	61+36.34	LT	1	WHITE									70																											
	290	60+66.30	61+87.93	LT	1		CH																																			
LA-1	290	60+75.64		LT	1	WHITE																1																				
LA-2	290	61+26.32		LT	1	WHITE																1																				
		EX. CARNEGIE AVE																																								
CH-7	291	28+87.09	31+66.00	RT	1	WHITE									280																											
LA-3	291	29+02.74		RT	1	WHITE																1																				
LA-4	291	29+52.74		RT	1	WHITE																1																				
LA-5	291	30+02.74		RT	1	WHITE																1																				
LA-6	291	30+52.74		RT	1	WHITE																1																				
LA-7	291	31+02.75		RT	1	WHITE																1																				
LA-8	291	31+52.75		RT	1	WHITE																1																				
EW-7	291	32+27.45	34+01.93	RT	1	WHITE							0.03																													
LL-3	291	32+90.02	34+01.56	RT	1	WHITE			0.02																																
SL-1	291	34+01.19	34+01.93	RT	1	WHITE													22																						
		E. 14TH ST. NB																																								
	291	53+12.60	58+95.39	RT	1			2994																																		
		E. 14TH ST. SB																																								
EY-6	291	38+46.66	40+59.43	LT	1	YELLOW							0.04																												
EW-8	291	38+54.21	40+07.49	LT	1	WHITE							0.03																												
LL-4	291	38+65.07	40+25.72	LT	1	WHITE			0.03																																
TOTALS CARRIED TO SHEET 120								2994	-	0.05	-	-	0.10	0.14	350	-	-	-	22	-	8	-	-	2559	224	-	-	888	4	-	-	-	-	-	-	-	-	-	-			

Preliminary Plans - Not For Reference Only

CUY-90-16.28 (CCG3A)

MODEL: Sheet-02 PAPERSIZE: 34x22 (in.) DATE: 3/27/2025 TIME: 6:51:17 PM USER: Collin.Kwiatt
pw:\\mb-us-pw.bentley.com:mb-us-pw-03\Documents\Cleveland_OH01_Projects\ODOT\District12\82382400-Engineering\MOT\Sheets\82382_MS001.dgn

DESIGN AGENCY
Michael Baker INTERNATIONAL

DESIGNER CRK

REVIEWER GSH 05/22/24

PROJECT ID 82382

SHEET 95 TOTAL 2696

REF NO.	SHEET NO.	STATION FROM	STATION TO	SIDE	PHASE	COLOR	MARKING REMOVED	608 TEMPORARY ASPHALT CONCRETE WALK SF	614 WORK ZONE IMPACT ATTENUATOR, 24" WIDE HAZARDS, (UNIDIRECTIONAL) EACH	614 WORK ZONE LANE LINE, CLASS I, 4" MILE	614 WORK ZONE LANE LINE, CLASS I, 6" MILE	614 WORK ZONE CENTER LINE, CLASS I MILE	614 WORK ZONE EDGE LINE, CLASS I, 4" MILE	614 WORK ZONE EDGE LINE, CLASS I, 6" MILE	614 WORK ZONE CHANNELIZING LINE, CLASS I, 8" FT	614 WORK ZONE CHANNELIZING LINE, CLASS I, 12" FT	614 WORK ZONE DOTTED LINE, CLASS I FT	614 WORK ZONE TRANSVERSE/DIAGONAL LINE, CLASS I FT	614 WORK ZONE STOP LINE, CLASS I FT	614 WORK ZONE CROSSWALK LINE, CLASS I, 12" FT	614 WORK ZONE ARROW, CLASS I EACH	614 WORK ZONE WORD ON PAVEMENT, 72", CLASS I EACH	614 WORK ZONE PAVEMENT MARKING, MISC.: SHARED LANE MARKING EACH	615 PAVEMENT FOR MAINTAINING TRAFFIC, CLASS A SY	622 PORTABLE BARRIER, 50", AS PER PLAN FT	622 DUAL PORTABLE BARRIER TRANSITION/TERMINATION EACH	622 PORTABLE BARRIER, ANCHORED, AS PER PLAN FT	642 REMOVAL OF PAVEMENT MARKING FT	642 REMOVAL OF PAVEMENT MARKING EACH	644 EDGE LINE, 6" MILE	644 LANE LINE, 4" MILE	644 LANE LINE, 6" MILE	644 CENTER LINE MILE	644 CHANNELIZING LINE, 8" FT	644 CHANNELIZING LINE, 12" FT	644 CHEVRON MARKING FT	644 LANE ARROW EACH	644 DOTTED LINE, 4" FT	644 DOTTED LINE, 6" FT			
		E. 14TH ST. SB (CONT.)																																									
DL-4	291	40+25.72	40+88.01	LT/RT	1	WHITE											131																										
XW-1	291	40+35.73	41+32.12	LT	1	WHITE														96																							
XW-2	291	40+44.05	41+31.51	LT	1	WHITE														87																							
		EX. CARNEGIE AVE																																									
EW-9	292	35+43.68	36+53.24	RT	1	WHITE							0.02																														
LL-5	292	35+43.89	37+60.41	RT	1	WHITE				0.04																																	
CL-1	292	35+45.55	37+87.44	LT/RT	1	YELLOW						0.05																																
CL-2	292	35+54.04	37+55.45	LT	1	YELLOW						0.04																																
LL-6	292	36+53.56	37+86.70	RT	1	WHITE				0.03																																	
		I.R. 77																																								
LL-7	295	33+02.98	64+07.00	RT	2	WHITE																													0.59								
CH-8	295	40+07.61	42+46.30	RT	2	WHITE																																244					
EW-10	295	42+46.30	60+68.27	RT	2	WHITE																												0.35									
LL-8	296	49+99.81	61+95.29	RT	2	WHITE																													0.23								
EY-7	296	50+06.83	74+10.38	RT	2	YELLOW																												0.46									
CH-9	297	60+68.27	61+95.28	RT	2	WHITE																																127					
DL-5	297	61+95.28	66+31.88	RT	2	WHITE																																					437
LL-9	297	61+95.28	76+51.14	RT	2	WHITE					0.28																																
LL-10	297	64+07.08	69+99.98	RT	2	WHITE					0.11																																
EW-11	298	66+35.99	76+51.14	RT	2	WHITE								0.19																												
		RAMP A2																																									
	298	403+00.00	422+04.10	RT	2		DL																											1810									
EY-8	298	404+10.21	410+26.98	RT	2	YELLOW								0.11																												
		RAMP IH4																																									
CH-10	298	10+67.11	13+50.00	RT	2	WHITE											280																										
		RAMP H5																																									
LL-11	298	1070+00.00	1076+88.45	LT	2	WHITE					0.13																																
DL-6	298	1071+00.02	1075+49.15	LT	2	WHITE												450																									
CH-11	298	1075+49.15	1078+30.00	LT	2	WHITE											285																										
		RAMP IH4																																									
CH-12	299	11+73.69	13+50.00	LT	2	WHITE											180																										
EY-9	299	13+50.00	14+50.00	LT	2	YELLOW								0.02																												
EW-12	299	13+50.00	14+50.00	RT/CL	2	WHITE								0.02																												
		RAMP H5																																									
EW-13	299	1076+52.76	1084+05.75	RT	2	WHITE								0.14																												
EY-10	299	1078+30.00	1084+05.75	LT/RT	2	YELLOW								0.11																												
		EX. RAMP E-17																																									
LL-12	299	51+40.56	54+98.23	LT	2	WHITE					0.07																																
CH-13	299	51+86.98	53+00.00	RT	2	WHITE											112																										
EW-14	299	53+00.00	54+98.65	RT	2	WHITE								0.04																												
		FUTURE BUILD E. 14TH																																									
LA-9	299	11+77.63	11+77.63	RT	2	WHITE																												1									
LA-10	299	12+25.91	12+25.91	RT	2	WHITE																												1									
LA-11	299	12+76.86	12+76.86	RT	2	WHITE																												1									
LA-12	299	12+77.54	12+77.54	RT	2	WHITE																												1									
LA-13	299	13+23.94	13+23.94	RT	2	WHITE																												1									
TOTALS CARRIED TO SHEET 120								-	-	0.07	0.59	0.09	0.02	0.63	-	857	581	-	-	183	-	-	-	-	-	-	-	1810	-	0.81	-	0.82	-	-	371	-	5	-	437			

Preliminary Plans - Not For Reference Only

MAINTENANCE OF TRAFFIC SUBSUMMARY - 3

DESIGN AGENCY
Michael Baker INTERNATIONAL

DESIGNER CRK

REVIEWER GSH 05/22/24

PROJECT ID 82382

SHEET 96 TOTAL 2696

CUY-90-16.28 (CCG3A)

MODEL: Sheet-03 PAPERSIZE: 34x22 (in.) DATE: 3/27/2025 TIME: 6:51:20 PM USER: Collin.Kwiatt
pw:\\mb-us-pw.bentley.com:mb-us-pw-03\Documents\Cleveland_OH01_Projects\ODOT\District12\82382400-Engineering\MOT\Sheets\82382_MS001.dgn

REF NO.	SHEET NO.	STATION FROM	STATION TO	SIDE	PHASE	COLOR	MARKING REMOVED	608 TEMPORARY ASPHALT CONCRETE WALK SF	614 WORK ZONE IMPACT ATTENUATOR, 24" WIDE HAZARDS, (UNIDIRECTIONAL) EACH	614 WORK ZONE LANE LINE, CLASS I, 4" MILE	614 WORK ZONE LANE LINE, CLASS I, 6" MILE	614 WORK ZONE CENTER LINE, CLASS I MILE	614 WORK ZONE EDGE LINE, CLASS I, 4" MILE	614 WORK ZONE EDGE LINE, CLASS I, 6" MILE	614 WORK ZONE CHANNELIZING LINE, CLASS I, 8" FT	614 WORK ZONE CHANNELIZING LINE, CLASS I, 12" FT	614 WORK ZONE DOTTED LINE, CLASS I FT	614 WORK ZONE TRANSVERSE/DIAGONAL LINE, CLASS I FT	614 WORK ZONE STOP LINE, CLASS I FT	614 WORK ZONE CROSSWALK LINE, CLASS I, 12" FT	614 WORK ZONE ARROW, CLASS I EACH	614 WORK ZONE WORD ON PAVEMENT, 72", CLASS I EACH	614 WORK ZONE PAVEMENT MARKING, MISC.: SHARED LANE MARKING EACH	615 PAVEMENT FOR MAINTAINING TRAFFIC, CLASS A SY	622 PORTABLE BARRIER, 50", AS PER PLAN FT	622 DUAL PORTABLE BARRIER TRANSITION/TERMINATION EACH	622 PORTABLE BARRIER, ANCHORED, AS PER PLAN FT	642 REMOVAL OF PAVEMENT MARKING FT	642 REMOVAL OF PAVEMENT MARKING EACH	644 EDGE LINE, 6" MILE	644 LANE LINE, 4" MILE	644 LANE LINE, 6" MILE	644 CENTER LINE MILE	644 CHANNELIZING LINE, 8" FT	644 CHANNELIZING LINE, 12" FT	644 CHEVRON MARKING FT	644 LANE ARROW EACH	644 DOTTED LINE, 4" FT	644 DOTTED LINE, 6" FT			
		FUTURE BUILD E. 14TH (CONT.)																																									
LA-14	299	13+25.53	13+25.53	RT	2	WHITE																																1					
LA-15	299	13+73.94	13+73.94	RT	2	WHITE																																1					
LA-16	299	13+74.04	13+74.04	RT	2	WHITE																																1					
	299	15+27.35	18+14.15	RT	2		LL																													290								
	299	15+32.72	15+78.45	LT	2		CH																													317								
	299	15+32.74	15+33.29	LT/RT	2		SL																													32								
	299	15+32.92	17+07.09	LT	2		CH																													173								
	299	15+33.11	15+96.13	LT	2		CH																													63								
	299	15+58.29	15+82.08	LT	2		XW																													35								
	299	15+63.97		LT	2		LA																														1								
	299	15+64.37		LT	2		LA																														1								
	299	15+64.65		LT	2		LA																														1								
	299	15+66.95	15+90.10	LT	2		XW																													35								
	299	15+85.10	15+95.94	LT	2		SL																													17								
EW-15	299	15+95.94	21+29.04	LT/RT	2	WHITE																															0.10							
	299	16+02.76		LT	2		LA																														1								
	299	16+88.70		LT	2		LA																														1								
	299	16+89.96		LT	2		LA																														1								
	299	16+90.85		LT	2		LA																														1								
	299	18+11.17	19+50.30	LT	2		CH																													140								
	299	18+30.38	18+80.54	LT	2		LL																													50								
		ORANGE AVE.																																										
CH-14	299	400+67.63	403+16.78	LT	2	WHITE																																			249				
LA-17	299	400+93.68	400+93.68	LT	2	WHITE																																1					
LA-18	299	401+90.07	401+90.07	LT	2	WHITE																																1					
LA-19	299	402+90.16	402+90.16	LT	2	WHITE																																1					
		E. 9TH ST.																																										
	300	30+82.86	35+89.24	RT	2		LL																													521								
EW-16	300	30+90.49	35+89.23	RT	2	WHITE								0.10																													
	300	33+58.57	36+50.47	RT	2		CH																													430								
		RAMP H6																																										
EY-11	301	1183+58.14	1189+11.94	LT	2	YELLOW								0.11																													
EW-17	301	1183+59.15	1192+23.60	CL/LT	2	WHITE								0.18																													
LA-20	301	1188+12.52		LT	2	WHITE															1																						
WP-1	301	1188+59.59		LT	2	WHITE																1																					
LA-21	301	1188+96.15		LT	2	WHITE															1																						
SL-2	301	1189+06.08	1189+20.23	LT	2	WHITE														19																						
DL-7	301	1190+43.81	1191+48.66	LT	2	WHITE											118																									
LA-22	301	1190+52.26		LT	2	WHITE															1																						
LA-23	301	1190+56.83		LT	2	WHITE															1																						
CH-15	301	1191+48.66	1192+23.37	LT	2	WHITE										75																										
LA-24	301	1191+80.41		LT	2	WHITE															1																						
LA-25	301	1191+80.63		LT	2	WHITE															1																						
		INTERIM E. 14TH ST. SB																																										
CL-3	301	202+67.75	203+92.15	RT	2	YELLOW						0.02																																
TOTALS CARRIED TO SHEET 120								-	-	-	-	0.02	-	0.39	-	75	118	-	19	-	6	1	-	-	-	-	-	2103	7	-	0.10	-	-	249	-	-	6	-	-			

Preliminary Plans - For Reference Only

MAINTENANCE OF TRAFFIC SUBSUMMARY - 4

CUY-90-16.28 (CCG3A)

MODEL: Sheet-04 PAPERSIZE: 34x22 (in.) DATE: 3/27/2025 TIME: 6:51:23 PM USER: Collin.Kwiatt
pw:\\mb-us-pw.bentley.com:mb-us-pw-03\Documents\Cleveland_OH01_Projects\ODOT\District12\82382400-Engineering\MOT\Sheets\82382_MS001.dgn

DESIGN AGENCY
Michael Baker INTERNATIONAL

DESIGNER
CRK

REVIEWER
GSH 05/22/24

PROJECT ID
82382

SHEET 97 | TOTAL 2696

MAINTENANCE OF TRAFFIC SUBSUMMARY - 5

REF NO.	SHEET NO.	STATION FROM	STATION TO	SIDE	PHASE	COLOR	MARKING REMOVED	608 TEMPORARY ASPHALT CONCRETE WALK SF	614 WORK ZONE IMPACT ATTENUATOR, 24" WIDE HAZARDS, (UNIDIRECTIONAL) EACH	614 WORK ZONE LANE LINE, CLASS I, 4" MILE	614 WORK ZONE LANE LINE, CLASS I, 6" MILE	614 WORK ZONE CENTER LINE, CLASS I MILE	614 WORK ZONE EDGE LINE, CLASS I, 4" MILE	614 WORK ZONE EDGE LINE, CLASS I, 6" MILE	614 WORK ZONE CHANNELIZING LINE, CLASS I, 8" FT	614 WORK ZONE CHANNELIZING LINE, CLASS I, 12" FT	614 WORK ZONE DOTTED LINE, CLASS I FT	614 WORK ZONE TRANSVERSE/DIAGONAL LINE, CLASS I FT	614 WORK ZONE STOP LINE, CLASS I FT	614 WORK ZONE CROSSWALK LINE, CLASS I, 12" FT	614 WORK ZONE ARROW, CLASS I EACH	614 WORK ZONE WORD ON PAVEMENT, 72", CLASS I EACH	614 WORK ZONE PAVEMENT MARKING, MISC.: SHARED LANE MARKING EACH	615 PAVEMENT FOR MAINTAINING TRAFFIC, CLASS A SY	622 PORTABLE BARRIER, 50", AS PER PLAN FT	622 DUAL PORTABLE BARRIER TRANSITION/TERMINATION EACH	622 PORTABLE BARRIER, ANCHORED, AS PER PLAN FT	642 REMOVAL OF PAVEMENT MARKING FT	642 REMOVAL OF PAVEMENT MARKING EACH	644 EDGE LINE, 6" MILE	644 LANE LINE, 4" MILE	644 LANE LINE, 6" MILE	644 CENTER LINE MILE	644 CHANNELIZING LINE, 8" FT	644 CHANNELIZING LINE, 12" FT	644 CHEVRON MARKING FT	644 LANE ARROW EACH	644 DOTTED LINE, 4" FT	644 DOTTED LINE, 6" FT			
		EX. COMMUNITY COLLEGE AVE.																																								
EW-18	301	52+07.95	59+22.07	RT/LT	2	WHITE							0.14																													
CL-4	301	52+10.38	59+20.87	RT/LT	2	YELLOW						0.14																														
EW-19	301	52+12.80	55+76.43	RT	2	WHITE							0.07																												
CL-5	301	57+36.93	59+20.87	LT/RT	2	YELLOW						0.04																														
TY-1	301	57+58.97	59+21.90	LT	2	YELLOW											231																								
SL-3	301	59+21.90	59+23.78	LT/RT	2	WHITE												24																							
		I.R. 90																																						
EW-20	302	51+99.91	58+99.89	RT	2	WHITE								0.13																										
	302	52+00.00	58+89.34	LT/RT	2		LL																									690									
	302	52+00.00	62+99.63	LT/RT	2		EW																									1097									
DL-8	302	52+00.61	58+99.89	LT/RT	2	WHITE											699																							
PB-4	302	60+47.63	64+60.07	RT	2				1																			415													
LL-13	303	67+50.07	90+23.29	RT	2	WHITE					0.43																														
	303	67+50.07	90+23.29	RT	2		LL																									2275									
LL-14	303	67+50.12	90+23.29	RT	2	WHITE					0.43																														
	303	67+50.12	90+23.29	RT	2		LL																									2276									
	303	67+50.17	73+95.57	RT	2		EW																									649									
EW-21	303	67+50.17	75+30.00	RT	2	WHITE								0.15																										
EY-12	303	69+87.76	75+30.00	RT	2	YELLOW								0.11																										
		EX. RAMP E-17																																						
EY-13	303	64+69.21	66+41.07	LT	2	YELLOW																															0.04			
EW-22	303	64+71.10	68+23.32	RT/CL	2	WHITE																															0.07			
		I.R. 90																																						
PB-5	304	71+42.19	75+30.00	RT	2				1																			388													
DL-9	304	73+63.01	77+74.42	RT	2	WHITE											411																							
	304	73+95.57	80+50.39	RT	2		CH																									1186									
CH-16	304	75+30.00	78+00.00	RT	2	WHITE											270																							
CH-17	304	75+30.00	78+00.00	RT	2	WHITE											270																							
CH-18	304	76+60.00	92+40.00	LT	2	WHITE											1576																							
CH-19	304	76+60.00	92+40.00	LT	2	WHITE											1578																							
	304	77+20.52	78+63.29	RT	2		DL																									143									
CH-20	304	77+74.42	79+60.00	RT	2	WHITE											186																							
DL-10	304	78+00.00	83+50.00	RT	2	WHITE												550																							
EW-23	304	79+60.00	89+19.31	RT	2	WHITE								0.18																										
EY-14	304	79+60.00	92+40.00	LT	2	YELLOW								0.24																										
EW-24	304	79+60.00	95+50.00	LT	2	WHITE								0.30																										
	304	79+65.60	88+08.32	RT	2		EW																									843									
	304	80+50.39	92+28.02	RT	2		LL																									658									
	304	80+80.84	82+81.28	RT	2		LL																									234									
		RAMP B6A																																						
CH-21	304	1800+97.57	1802+82.93	LT	2	WHITE											188																							
EY-15	304	1802+82.93	1804+87.68	LT	2	YELLOW								0.04																										
		E. 14TH ST. NB																																						
SL-4	304	53+42.08	53+43.49	LT/RT	2	WHITE												38																							
SL-5	304	53+74.83	53+88.16	LT	2	WHITE												14																							
TOTALS CARRIED TO SHEET 120								-	2	-	0.86	0.18	0.21	1.15	-	4068	1660	231	76	-	-	-	-	-	803	-	-	10051	-	0.11	-	-	-	-	-	-	-	-	-			

Preliminary Plans - For Reference Only

CUY-90-16.28 (CCG3A)

MODEL: Sheet-05 PAPERSIZE: 34x22 (in.) DATE: 3/27/2025 TIME: 6:51:25 PM USER: Collin.Kwiatt
pw:\\mb-us-pw.bentley.com:mb-us-pw-03\Documents\Cleveland_OH01_Projects\ODOT\District12\82382400-Engineering\MOT\Sheets\82382_MS001.dgn

DESIGN AGENCY
Michael Baker INTERNATIONAL

DESIGNER CRK

REVIEWER GSH 05/22/24

PROJECT ID 82382

SHEET 98 TOTAL 2696

REF NO.	SHEET NO.	STATION FROM	STATION TO	SIDE	PHASE	COLOR	MARKING REMOVED	608 TEMPORARY ASPHALT CONCRETE WALK SF	614 WORK ZONE IMPACT ATTENUATOR, 24" WIDE HAZARDS, (UNIDIRECTIONAL) EACH	614 WORK ZONE LANE LINE, CLASS I, 4" MILE	614 WORK ZONE LANE LINE, CLASS I, 6" MILE	614 WORK ZONE CENTER LINE, CLASS I MILE	614 WORK ZONE EDGE LINE, CLASS I, 4" MILE	614 WORK ZONE EDGE LINE, CLASS I, 6" MILE	614 WORK ZONE CHANNELIZING LINE, CLASS I, 8" FT	614 WORK ZONE CHANNELIZING LINE, CLASS I, 12" FT	614 WORK ZONE DOTTED LINE, CLASS I FT	614 WORK ZONE TRANSVERSE/DIAGONAL LINE, CLASS I FT	614 WORK ZONE STOP LINE, CLASS I FT	614 WORK ZONE CROSSWALK LINE, CLASS I, 12" FT	614 WORK ZONE ARROW, CLASS I EACH	614 WORK ZONE WORD ON PAVEMENT, 72", CLASS I EACH	614 WORK ZONE PAVEMENT MARKING, MISC.: SHARED LANE MARKING EACH	615 PAVEMENT FOR MAINTAINING TRAFFIC, CLASS A SY	622 PORTABLE BARRIER, 50", AS PER PLAN FT	622 DUAL PORTABLE BARRIER TRANSITION/TERMINATION EACH	622 PORTABLE BARRIER, ANCHORED, AS PER PLAN FT	642 REMOVAL OF PAVEMENT MARKING FT	642 REMOVAL OF PAVEMENT MARKING EACH	644 EDGE LINE, 6" MILE	644 LANE LINE, 4" MILE	644 LANE LINE, 6" MILE	644 CENTER LINE MILE	644 CHANNELIZING LINE, 8" FT	644 CHANNELIZING LINE, 12" FT	644 CHEVRON MARKING FT	644 LANE ARROW EACH	644 DOTTED LINE, 4" FT	644 DOTTED LINE, 6" FT			
		E. 14TH ST. NB (CONT.)																																								
EW-25	304	55+50.00	56+79.29	LT	2	WHITE							0.02																													
CH-22	304	55+79.44	57+29.23	CL	2	WHITE									150																											
LA-26	304	56+15.00		LT	2	WHITE															1																					
		INTERIM E. 14TH ST. SB																																								
EY-16	304	203+53.78	207+15.19	RT	2	YELLOW							0.07																													
EW-26	304	206+60.77	207+20.01	RT	2	WHITE							0.01																													
CH-23	304	207+20.01	208+51.89	RT	2	WHITE									132																											
		E. 14TH ST. SB																																								
EW-27	304	33+31.15	40+05.90	LT	2	WHITE							0.13																													
EY-17	304	33+74.03	40+05.58	RT/CL	2	YELLOW							0.12																													
		COMMUNITY COLLEGE AVE.																																								
SL-6	304	52+07.95	52+10.49	RT	2	WHITE													12																							
		I.R. 90																																								
	305	79+58.39	82+87.86	RT	2		EY																																			
PB-6	305	81+45.00	90+70.34	LT	2				1																						645		280									
PB-7	305	81+48.01	89+91.60	RT	2				1																						848											
	305	81+76.00		RT	2		LA																																		
	305	82+00.00	90+00.00	LT	2																								364													
PB-8	305	82+00.00	90+00.00	RT	2																										800											
	305	82+00.00	90+00.03	RT	2																								397													
	305	82+32.16		RT	2		LA																																		
	305	82+84.38		RT	2		LA																																		
	305	84+50.03	87+30.02	LT	2																								186													
EY-18	305	86+50.00	90+23.29	RT	2	YELLOW								0.07																											
	305	86+50.00	90+23.29	RT	2		EY																																			
DL-11	305	87+60.55	88+85.00	RT	2	WHITE											124																									
	305	88+08.32	89+32.56	RT	2		DL																																		
PB-9	305	88+09.99	90+23.29	RT	2				1																						214											
CH-24	305	88+85.00	90+30.19	RT	2	WHITE										146																									
CH-25	305	88+85.00	91+41.04	RT	2	WHITE										269																									
DL-12	305	89+00.00	92+40.00	LT	2	WHITE											334																									
	305	89+32.56	90+16.52	RT	2		CH																																		
	305	90+16.52	97+24.63	RT	2		EW																																			
EW-28	305	90+30.19	97+24.69	RT	2	WHITE								0.13																											
		RAMP B6A																																								
LA-27	305	1806+43.31		LT	2	WHITE															1																					
		EX. CENTRAL AVE.																																								
CL-6	305				2	YELLOW						0.02																														
		EX. E. 22ND ST. S																																								
DL-13	305	17+74.48	20+24.48	LT	2	WHITE											250																									
EW-29	305	17+74.76	20+24.48	LT	2	WHITE							0.05																													
LA-28	305	19+71.66		RT	2	WHITE															1																					
LA-29	305	20+21.66		RT	2	WHITE															1																					
SL-7	305	20+72.79		RT	2	WHITE													4																							
TOTALS CARRIED TO SHEET 120								-	3	-	-	0.02	0.40	0.20	282	415	708	-	16	-	4	-	-	947	2507	-	280	1888	3	-	-	-	-	-	-	-	-	-	-			

Preliminary Plans - For Reference Only

MAINTENANCE OF TRAFFIC SUBSUMMARY - 6

DESIGN AGENCY
Michael Baker INTERNATIONAL

DESIGNER
CRK

REVIEWER
GSH 05/22/24

PROJECT ID
82382

SHEET 99 TOTAL 2696

CUY-90-16.28 (CCG3A)

MODEL: Sheet-06 PAPERSIZE: 34x22 (in.) DATE: 3/27/2025 TIME: 6:51:28 PM USER: Collin.Kwiatt
pw:\\mb-us-pw.bentley.com:mb-us-pw-03\Documents\Cleveland_OH01_Projects\ODOT\District12\82382400-Engineering\MOT\Sheets\82382_MS001.dgn

REF NO.	SHEET NO.	STATION FROM	STATION TO	SIDE	PHASE	COLOR	MARKING REMOVED	608 TEMPORARY ASPHALT CONCRETE WALK SF	614 WORK ZONE IMPACT ATTENUATOR, 24" WIDE HAZARDS, (UNIDIRECTIONAL) EACH	614 WORK ZONE LANE LINE, CLASS I, 4" MILE	614 WORK ZONE LANE LINE, CLASS I, 6" MILE	614 WORK ZONE CENTER LINE, CLASS I MILE	614 WORK ZONE EDGE LINE, CLASS I, 4" MILE	614 WORK ZONE EDGE LINE, CLASS I, 6" MILE	614 WORK ZONE CHANNELIZING LINE, CLASS I, 8" FT	614 WORK ZONE CHANNELIZING LINE, CLASS I, 12" FT	614 WORK ZONE DOTTED LINE, CLASS I FT	614 WORK ZONE TRANSVERSE/DIAGONAL LINE, CLASS I FT	614 WORK ZONE STOP LINE, CLASS I FT	614 WORK ZONE CROSSWALK LINE, CLASS I, 12" FT	614 WORK ZONE ARROW, CLASS I EACH	614 WORK ZONE WORD ON PAVEMENT, 72", CLASS I EACH	614 WORK ZONE PAVEMENT MARKING, MISC.: SHARED LANE MARKING EACH	615 PAVEMENT FOR MAINTAINING TRAFFIC, CLASS A SY	622 PORTABLE BARRIER, 50", AS PER PLAN FT	622 DUAL PORTABLE BARRIER TRANSITION/TERMINATION EACH	622 PORTABLE BARRIER, ANCHORED, AS PER PLAN FT	642 REMOVAL OF PAVEMENT MARKING FT	642 REMOVAL OF PAVEMENT MARKING EACH	644 EDGE LINE, 6" MILE	644 LANE LINE, 4" MILE	644 LANE LINE, 6" MILE	644 CENTER LINE MILE	644 CHANNELIZING LINE, 8" FT	644 CHANNELIZING LINE, 12" FT	644 CHEVRON MARKING FT	644 LANE ARROW EACH	644 DOTTED LINE, 4" FT	644 DOTTED LINE, 6" FT			
		I.R. 90																																							
	306	92+28.02	97+24.63	RT	2		DL																					510													
		EX. CARNEGIE AVE																																								
LL-15	306	28+85.22	31+55.21	RT	2	WHITE				0.05																																
	307	28+84.57	31+69.74	RT/LT	2		CL																					287													
	307	28+84.98	29+78.94	LT	2		CH																					94													
	307	28+85.22	30+43.61	LT	2		LL																					389													
CL-7	307	28+85.22	30+79.95	RT/LT	2	YELLOW						0.04																															
LL-16	307	28+85.22	31+56.25	RT	2	WHITE				0.05																																
	307	28+85.22	32+68.85	LT	2		LL																					158													
	307	28+86.79	31+66.10	RT	2		LL																					279													
	307	28+87.09	31+65.43	RT	2		LL																					278													
	307	28+96.41		CL	2		LA																						1												
	307	29+67.90		RT	2		LA																						1												
	307	29+73.20	30+96.87	RT/LT	2		CL																					126													
CH-26	307	30+42.40	30+80.89	RT/LT	2	WHITE									39																										
CH-27	307	30+42.40	31+57.29	RT	2	WHITE									115																										
	307	30+81.27		LT	2		LA																						1												
	307	31+28.14		LT	2		LA																						1												
SL-8	307	31+54.22	31+57.29	RT	2	WHITE													33																						
	307	31+60.77		LT	2		LA																						1												
	307	31+65.69	31+69.85	RT/LT	2		SL																					61													
XW-3	307	31+66.88	32+86.04	RT	2	WHITE														84																						
	307	31+67.71	31+68.31	RT/LT	2		CH																					238													
	307	31+69.12	32+32.94	RT	2		XW																					53													
	307	31+78.01	32+34.11	RT	2		XW																					43													
	307	31+80.68	31+91.55	RT	2		EW																					39													
XW-4	307	31+83.14	32+86.11	RT	2	WHITE														78																						
	307	32+01.98	32+59.25	LT	2		XW																					66													
	307	32+06.06	32+55.14	LT	2		XW																					60													
	307	32+09.49		LT	2		LA																						1												
	307	32+09.49		LT	2		LA																						1												
	307	32+09.49		LT	2		LA																						1												
	307	32+09.49	32+22.53	LT/RT	2		DL																					84													
	307	32+22.53	32+70.53	RT/LT	2		DL																					77													
	307	32+25.09	32+28.45	RT	2		LL																					18													
	307	32+68.21	32+75.87	LT/RT	2		XW																					72													
	307	32+80.25	32+87.04	LT/RT	2		XW																					71													
	307	32+87.60	32+89.52	LT/RT	2		SL																					41													
	307	32+88.81	33+67.96	LT	2		CH																					79													
	307	32+89.17	33+69.11	LT	2		CH																					80													
	307	32+89.52	34+03.78	RT	2		CL																					114													
	307	32+94.88		RT	2		LA																						1												
	307	32+95.52		LT	2		LA																						1												
	307	33+35.63		LT	2		LA																						1												
	307	33+36.00		RT	2		LA																						1												
	307	33+67.96	34+25.48	LT	2		DL																					58													
	307	33+69.11	34+21.43	LT	2		DL																					52													
TOTALS CARRIED TO SHEET 120								-	-	0.10	-	0.04	-	-	154	-	-	-	33	162	-	-	-	-	-	-	-	3427	12	-	-	-	-	-	-	-	-	-	-			

Preliminary Plans - For Reference Only

MAINTENANCE OF TRAFFIC SUBSUMMARY - 7

DESIGN AGENCY
Michael Baker INTERNATIONAL

DESIGNER
CRK

REVIEWER
GSH 05/22/24

PROJECT ID
82382

SHEET 100 TOTAL 2696

CUY-90-16.28 (CCG3A)

MODEL: Sheet-07 PAPERSIZE: 34x22 (in.) DATE: 3/27/2025 TIME: 6:51:30 PM USER: Collin.Kwiatt
pw:\\mb-us-pw.bentley.com:mb-us-pw-03\Documents\Cleveland_OH01_Projects\ODOT\District12\82382400-Engineering\MOT\Sheets\82382_MS001.dgn

REF NO.	SHEET NO.	STATION FROM	STATION TO	SIDE	PHASE	COLOR	MARKING REMOVED	608 TEMPORARY ASPHALT CONCRETE WALK SF	614 WORK ZONE IMPACT ATTENUATOR, 24" WIDE HAZARDS, (UNIDIRECTIONAL) EACH	614 WORK ZONE LANE LINE, CLASS I, 4" MILE	614 WORK ZONE LANE LINE, CLASS I, 6" MILE	614 WORK ZONE CENTER LINE, CLASS I MILE	614 WORK ZONE EDGE LINE, CLASS I, 4" MILE	614 WORK ZONE EDGE LINE, CLASS I, 6" MILE	614 WORK ZONE CHANNELIZING LINE, CLASS I, 8" FT	614 WORK ZONE CHANNELIZING LINE, CLASS I, 12" FT	614 WORK ZONE DOTTED LINE, CLASS I FT	614 WORK ZONE TRANSVERSE/DIAGONAL LINE, CLASS I FT	614 WORK ZONE STOP LINE, CLASS I FT	614 WORK ZONE CROSSWALK LINE, CLASS I, 12" FT	614 WORK ZONE ARROW, CLASS I EACH	614 WORK ZONE WORD ON PAVEMENT, 72", CLASS I EACH	614 WORK ZONE PAVEMENT MARKING, MISC.: SHARED LANE MARKING EACH	615 PAVEMENT FOR MAINTAINING TRAFFIC, CLASS A SY	622 PORTABLE BARRIER, 50", AS PER PLAN FT	622 DUAL PORTABLE BARRIER TRANSITION/TERMINATION EACH	622 PORTABLE BARRIER, ANCHORED, AS PER PLAN FT	642 REMOVAL OF PAVEMENT MARKING FT	642 REMOVAL OF PAVEMENT MARKING EACH	644 EDGE LINE, 6" MILE	644 LANE LINE, 4" MILE	644 LANE LINE, 6" MILE	644 CENTER LINE MILE	644 CHANNELIZING LINE, 8" FT	644 CHANNELIZING LINE, 12" FT	644 CHEVRON MARKING FT	644 LANE ARROW EACH	644 DOTTED LINE, 4" FT	644 DOTTED LINE, 6" FT			
		EX. CARNEGIE AVE (CONT.)																																								
	307	33+75.92		RT	2		LA																					1													
	307	33+76.11		LT	2		LA																					1													
	307	34+00.91	34+03.78	RT	2		SL																					30													
	307	34+06.41	34+36.29	RT/LT	2		XW																					76													
	307	34+19.08	34+49.63	RT/LT	2		XW																					80													
	307	34+58.86	35+26.12	LT	2		XW																					68													
	307	34+66.33	35+21.41	LT	2		XW																					55													
	307	34+70.08	34+93.03	LT	2		SL																					24													
	307	34+82.13	34+98.70	LT	2		CH																					73													
	307	34+90.33	35+33.59	RT/LT	2		XW																					82													
	307	35+03.65	35+44.30	RT/LT	2		XW																					76													
	307	35+15.19	38+14.26	RT	2		LL																					299													
	307	35+44.59	35+48.74	RT/LT	2		SL																					42													
	307	35+44.59	38+14.92	RT	2		CL																					270													
	307	35+46.13	37+41.63	LT	2		DL																					196													
	307	35+47.31	38+18.24	LT	2		DL																					271													
	307	35+49.24	38+19.66	LT	2		LL																					270													
	307	35+55.71	38+13.73	RT	2		LL																					258													
	307	35+74.28		CL	2		LA																						1													
	307	36+45.59		RT	2		LA																						1													
	307	36+95.03	38+17.79	RT/LT	2		CL																					124													
	307	38+14.92	38+15.15	RT	2		SL																					33													
	307	38+20.41	38+20.48	LT/RT	2		XW																					91													
	307	38+32.23	38+89.58	LT/RT	2		XW																					151													
	307	38+33.27	38+83.02	RT	2		XW																					50													
	307	38+33.69	38+52.37	RT	2		CL																					82													
	307	38+52.37	38+80.99	RT	2		XW																					29													
		E. 14TH ST. SB																																							
LA-30	307	41+91.43		LT	2	WHITE																1																			
LA-31	307	42+20.10		LT	2	WHITE																1																			
LA-32	307	42+48.38		LT	2	WHITE																1																			
		E. 21ST ST.																																							
LA-33	308				2	WHITE																1																			
LA-34	308	100+76.07		RT	2	WHITE																1																			
LA-35	308	101+28.69		RT	2	WHITE																1																			
LA-36	308	101+90.16		RT	2	WHITE																1																			
		MIDTOWN CONNECTOR																																							
	310	507+64.85	510+11.63	LT	2A																					189															
		EX. CEDAR AVE																																							
CL-8	310	14+70.00	24+64.19	RT	2A	YELLOW						0.19																													
EW-30	310	14+70.20	24+64.20	CL	2A	WHITE							0.19																												
CH-28	310	25+25.00	27+50.00	LT	2A	WHITE									225																										
CH-29	310	25+25.00	27+50.00	LT	2A	WHITE									225																										
CL-9	310	25+25.00	27+50.00	RT/LT	2A	YELLOW						0.04																													
LA-37	310	25+27.50		LT	2A	WHITE																1																			
TOTALS CARRIED TO SHEET 120								-	-	-	-	0.23	0.19	-	450	-	-	-	-	-	8	-	-	189	-	-	-	2730	4	-	-	-	-	-	-	-	-	-	-			

Preliminary Plans - For Reference Only

MAINTENANCE OF TRAFFIC SUBSUMMARY - 8

DESIGN AGENCY
Michael Baker INTERNATIONAL

DESIGNER CRK

REVIEWER GSH 05/22/24

PROJECT ID 82382

SHEET 101 TOTAL 2696

CUY-90-16.28 (CCG3A)

MODEL: Sheet-08 PAPERSIZE: 34x22 (in.) DATE: 3/27/2025 TIME: 6:51:33 PM USER: Collin.Kwiatt
pw:\\mb-us-pw.bentley.com:mb-us-pw-03\Documents\Cleveland_OH01_Projects\ODOT\District12\82382400-Engineering\MOT\Sheets\82382_MS001.dgn

MAINTENANCE OF TRAFFIC SUBSUMMARY - 9

REF NO.	SHEET NO.	STATION FROM	STATION TO	SIDE	PHASE	COLOR	MARKING REMOVED	608 TEMPORARY ASPHALT CONCRETE WALK SF	614 WORK ZONE IMPACT ATTENUATOR, 24" WIDE HAZARDS, (UNIDIRECTIONAL) EACH	614 WORK ZONE LANE LINE, CLASS I, 4" MILE	614 WORK ZONE LANE LINE, CLASS I, 6" MILE	614 WORK ZONE CENTER LINE, CLASS I MILE	614 WORK ZONE EDGE LINE, CLASS I, 4" MILE	614 WORK ZONE EDGE LINE, CLASS I, 6" MILE	614 WORK ZONE CHANNELIZING LINE, CLASS I, 8" FT	614 WORK ZONE CHANNELIZING LINE, CLASS I, 12" FT	614 WORK ZONE DOTTED LINE, CLASS I FT	614 WORK ZONE TRANSVERSE/DIAGONAL LINE, CLASS I FT	614 WORK ZONE STOP LINE, CLASS I FT	614 WORK ZONE CROSSWALK LINE, CLASS I, 12" FT	614 WORK ZONE ARROW, CLASS I EACH	614 WORK ZONE WORD ON PAVEMENT, 72", CLASS I EACH	614 WORK ZONE PAVEMENT MARKING, MISC.: SHARED LANE MARKING EACH	615 PAVEMENT FOR MAINTAINING TRAFFIC, CLASS A SY	622 PORTABLE BARRIER, 50", AS PER PLAN FT	622 DUAL PORTABLE BARRIER TRANSITION/TERMINATION EACH	622 PORTABLE BARRIER, ANCHORED, AS PER PLAN FT	642 REMOVAL OF PAVEMENT MARKING FT	642 REMOVAL OF PAVEMENT MARKING EACH	644 EDGE LINE, 6" MILE	644 LANE LINE, 4" MILE	644 LANE LINE, 6" MILE	644 CENTER LINE MILE	644 CHANNELIZING LINE, 8" FT	644 CHANNELIZING LINE, 12" FT	644 CHEVRON MARKING FT	644 LANE ARROW EACH	644 DOTTED LINE, 4" FT	644 DOTTED LINE, 6" FT
		MIDTOWN CONNECTOR																																				
EW-31	311	507+64.85	510+11.65	LT	2B	WHITE							0.05																									
		CEDAR AVE.																																				
SL-9	311	400+57.29	400+60.06	CL/LT	2B	WHITE													11																		
CL-10	311	400+57.29	403+95.81	CL	2B	YELLOW						0.06																										
CH-30	311	400+60.00	402+00.00	LT	2B	WHITE									134																						
		EX. CEDAR AVE																																				
EY-19	311	14+70.20	19+77.85	RT	2B	YELLOW							0.14																								
EY-20	311	14+72.20	19+10.67	LT	2B	YELLOW							0.09																								
LL-17	311	22+50.00	24+60.00	RT	2B	WHITE				0.04																											
EW-32	312	22+64.19	24+60.00	LT	2B	WHITE							0.04																								
	312	23+98.19	24+67.35	RT/LT	2B		CL																								69						
CH-31	312	25+25.00	26+25.00	LT	2B	WHITE									100																						
CL-11	312	25+25.00	27+50.00	LT	2B	YELLOW						0.04																									
LL-18	312	25+25.00	27+50.00	RT	2B	WHITE				0.04																											
	312	25+27.94	27+50.00	RT	2B		LL																								222						
		EX. CARNEGIE AVE																																				
	313	58+18.16	58+86.14	RT	2C																								141								
		MIDTOWN CONNECTOR																																				
CL-12	313	504+59.85	510+87.86	LT/CL	2C	YELLOW						0.12																									
EW-33	313	504+60.08	510+13.23	RT	2C	WHITE							0.11																								
		CEDAR AVE.																																				
CL-13	313	400+63.09	403+34.00	LT	2C	YELLOW						0.05																									
		EX. CEDAR AVE																																				
	314	24+65.50	24+70.53	RT/LT	2C		XW																								39						
	314	24+78.63	24+84.38	RT/LT	2C		DL																								46						
CL-14	314	25+25.00	27+50.00	LT	2C	YELLOW						0.04																									
CL-15	314	25+25.00	29+51.29	LT	2C	YELLOW						0.08																									
CL-16	314	25+25.23	27+50.00	LT	2C	YELLOW																													0.04		
	314	25+25.23	27+50.07	LT	2C		CL																								225						
LL-19	314	25+27.94	27+50.00	RT	2C	WHITE																										0.04				
LL-20	314	25+38.26	27+50.13	LT	2C	WHITE																										0.04				
	314	25+38.26	29+51.72	LT	2C		LL																								413						
TY-2	314	25+40.00	29+51.23	LT	2C	YELLOW												350																		
		I.R. 77																																				
PB-10	316	72+96.00	76+51.00	LT	3																							315		43						
DL-14	316	73+69.87	75+94.78	LT	3	WHITE											225																			
EY-21	316	73+70.16	76+51.14	LT	3	YELLOW								0.05																							
CH-32	316	73+70.33	76+51.14	LT	3	WHITE										281																				
EW-34	316	75+94.78	76+51.14	LT	3	WHITE								0.01																							
		RAMP A2																																				
EW-35	317	406+51.61	418+74.60	RT	3	WHITE								0.22																							
PB-11	317	406+51.67	411+04.81	RT	3				1																			312		142						
		EX. RAMP E-17																																				
CH-33	317	51+39.17	54+14.21	LT	3	WHITE										281																				
EY-22	317	51+39.60	52+76.88	LT	3	YELLOW								0.03																							
TOTALS CARRIED TO SHEET 120								-	1	0.08	-	0.39	0.43	0.31	234	562	225	350	11	-	-	-	-	141	627	-	185	1014	-	-	0.08	-	0.04	-	-	-	-	-	-	-

Preliminary Plans - For Reference Only

CUY-90-16.28 (CCG3A)
MODEL: Sheet-09 PAPERSIZE: 34x22 (in.) DATE: 3/27/2025 TIME: 6:51:35 PM USER: Collin.Kwiatt
pw:\\mb-us-pw.bentley.com:mb-us-pw-03\Documents\Cleveland_OH\01_Projects\ODOT\District12\82382\400-Engineering\MOT\Sheets\82382_MS001.dgn

DESIGN AGENCY
Michael Baker INTERNATIONAL

DESIGNER CRK
REVIEWER GSH 05/22/24
PROJECT ID 82382
SHEET 102 TOTAL 2696

REF NO.	SHEET NO.	STATION FROM	STATION TO	SIDE	PHASE	COLOR	MARKING REMOVED	608 TEMPORARY ASPHALT CONCRETE WALK SF	614 WORK ZONE IMPACT ATTENUATOR, 24" WIDE HAZARDS, (UNIDIRECTIONAL) EACH	614 WORK ZONE LANE LINE, CLASS I, 4" MILE	614 WORK ZONE LANE LINE, CLASS I, 6" MILE	614 WORK ZONE CENTER LINE, CLASS I MILE	614 WORK ZONE EDGE LINE, CLASS I, 4" MILE	614 WORK ZONE EDGE LINE, CLASS I, 6" MILE	614 WORK ZONE CHANNELIZING LINE, CLASS I, 8" FT	614 WORK ZONE CHANNELIZING LINE, CLASS I, 12" FT	614 WORK ZONE DOTTED LINE, CLASS I FT	614 WORK ZONE TRANSVERSE/DIAGONAL LINE, CLASS I FT	614 WORK ZONE STOP LINE, CLASS I FT	614 WORK ZONE CROSSWALK LINE, CLASS I, 12" FT	614 WORK ZONE ARROW, CLASS I EACH	614 WORK ZONE WORD ON PAVEMENT, 72", CLASS I EACH	614 WORK ZONE PAVEMENT MARKING, MISC.: SHARED LANE MARKING EACH	615 PAVEMENT FOR MAINTAINING TRAFFIC, CLASS A SY	622 PORTABLE BARRIER, 50", AS PER PLAN FT	622 DUAL PORTABLE BARRIER TRANSITION/TERMINATION EACH	622 PORTABLE BARRIER, ANCHORED, AS PER PLAN FT	642 REMOVAL OF PAVEMENT MARKING FT	642 REMOVAL OF PAVEMENT MARKING EACH	644 EDGE LINE, 6" MILE	644 LANE LINE, 4" MILE	644 LANE LINE, 6" MILE	644 CENTER LINE MILE	644 CHANNELIZING LINE, 8" FT	644 CHANNELIZING LINE, 12" FT	644 CHEVRON MARKING FT	644 LANE ARROW EACH	644 DOTTED LINE, 4" FT	644 DOTTED LINE, 6" FT			
		E. 9TH ST.																																									
LL-21	318	30+85.85	35+89.24	RT	3	WHITE																										0.10										
		I.R. 90																																								
EW-36	319	51+91.69	63+01.08	RT	3	WHITE								0.21																												
DL-15	319	52+10.87	58+99.89	LT/RT	3	WHITE											689																										
		RAMP IB5																																								
CH-34	320	1706+26.21	1707+70.98	LT	3	WHITE										147																										
		I.R. 90																																								
	322	83+06.98	99+07.73	RT	3																								7052														
EW-37	322	87+60.55	90+30.19	RT	3	WHITE								0.05																												
PB-12	322	87+60.55	102+00.00	RT	3																									1475												
		EX. CENTRAL AVE.																																								
CL-17	322	25+63.29	26+82.86	RT	3	YELLOW						0.02																														
CH-35	322	25+63.43	26+11.23	LT	3	WHITE									48																										
LA-38	322	25+66.62		RT	3	WHITE																1																				
LA-39	322	25+66.66		LT	3	WHITE																1																				
		E. 22ND ST.																																								
LL-22	322	27+33.25	30+14.80	RT	3	WHITE				0.05																																
SL-10	322	30+58.53	30+80.75	RT	3	WHITE													26																						
SL-11	322	31+02.45	31+03.77	LT/RT	3	WHITE													33																						
LL-23	322	31+02.92	31+85.75	LT	3	WHITE				0.02																																
CH-36	322	31+03.36	31+85.75	LT	3	WHITE									82																										
CL-18	322	31+03.75	31+85.75	RT	3	YELLOW						0.02																														
LL-24	322	31+04.15	31+85.75	RT	3	WHITE				0.02																																
LA-40	322	31+11.99		CL	3	WHITE																1																				
LA-41	322	31+61.93		CL	3	WHITE																1																				
SL-12	322	31+85.75	31+85.75	LT	3	WHITE													23																						
SL-13	322	32+84.68	32+91.78	LT/RT	3	WHITE													33																						
LL-25	322	32+87.08	36+90.57	LT	3	WHITE				0.08																																
CH-37	322	32+89.48	34+40.00	LT	3	WHITE									151																										
CL-19	322	32+91.67	36+90.57	RT/LT	3	YELLOW						0.08																														
LL-26	322	32+93.66	36+64.53	RT	3	WHITE				0.07																																
LA-42	322	33+03.44		CL	3	WHITE																1																				
LA-43	322	33+54.89		CL	3	WHITE																1																				
LA-44	322	34+06.38		CL	3	WHITE																1																				
CH-38	322	35+05.99	36+90.42	RT	3	WHITE									181																										
LA-45	322	35+50.00		CL	3	WHITE																1																				
LA-46	322	36+00.00		CL	3	WHITE																1																				
LA-47	322	36+50.00		CL	3	WHITE																1																				
SL-14	322	36+90.06	36+90.58	RT/LT	3	WHITE													35																						
DL-16	322	36+90.25	37+10.25	RT	3	WHITE											20																								
DL-17	322	36+90.42	37+10.67	RT	3	WHITE											20																								
		EX. E. 22ND ST. N																																								
DL-18	322	27+39.72	28+12.89	RT	3	WHITE											73																								
DL-19	322	27+40.10	28+11.99	LT	3	WHITE											72																								
TOTALS CARRIED TO SHEET 120								-	-	0.24	-	0.12	-	0.26	462	147	874	-	150	-	10	-	-	7052	1475	-	-	-	-	-	0.10	-	-	-	-	-	-	-	-			

Preliminary Plans - For Reference Only

MAINTENANCE OF TRAFFIC SUBSUMMARY - 10

CUY-90-16.28 (CCG3A)

MODEL: Sheet-10 PAPERSIZE: 34x22 (in.) DATE: 3/27/2025 TIME: 6:51:38 PM USER: Collin.Kwiatt
pw:\\mb-us-pw.bentley.com:mb-us-pw-03\Documents\Cleveland_OH\01_Projects\ODOT\District12\82382400-Engineering\MOT\Sheets\82382_MS001.dgn

DESIGN AGENCY
Michael Baker INTERNATIONAL

DESIGNER CRK
REVIEWER GSH 05/22/24
PROJECT ID 82382
SHEET 103 TOTAL 2696

REF NO.	SHEET NO.	STATION FROM	STATION TO	SIDE	PHASE	COLOR	MARKING REMOVED	608 TEMPORARY ASPHALT CONCRETE WALK SF	614 WORK ZONE IMPACT ATTENUATOR, 24" WIDE HAZARDS, (UNIDIRECTIONAL) EACH	614 WORK ZONE LANE LINE, CLASS I, 4" MILE	614 WORK ZONE LANE LINE, CLASS I, 6" MILE	614 WORK ZONE CENTER LINE, CLASS I MILE	614 WORK ZONE EDGE LINE, CLASS I, 4" MILE	614 WORK ZONE EDGE LINE, CLASS I, 6" MILE	614 WORK ZONE CHANNELIZING LINE, CLASS I, 8" FT	614 WORK ZONE CHANNELIZING LINE, CLASS I, 12" FT	614 WORK ZONE DOTTED LINE, CLASS I FT	614 WORK ZONE TRANSVERSE/DIAGONAL LINE, CLASS I FT	614 WORK ZONE STOP LINE, CLASS I FT	614 WORK ZONE CROSSWALK LINE, CLASS I, 12" FT	614 WORK ZONE ARROW, CLASS I EACH	614 WORK ZONE WORD ON PAVEMENT, 72", CLASS I EACH	614 WORK ZONE PAVEMENT MARKING, MISC.: SHARED LANE MARKING EACH	615 PAVEMENT FOR MAINTAINING TRAFFIC, CLASS A SY	622 PORTABLE BARRIER, 50", AS PER PLAN FT	622 DUAL PORTABLE BARRIER TRANSITION/TERMINATION EACH	622 PORTABLE BARRIER, ANCHORED, AS PER PLAN FT	642 REMOVAL OF PAVEMENT MARKING FT	642 REMOVAL OF PAVEMENT MARKING EACH	644 EDGE LINE, 6" MILE	644 LANE LINE, 4" MILE	644 LANE LINE, 6" MILE	644 CENTER LINE MILE	644 CHANNELIZING LINE, 8" FT	644 CHANNELIZING LINE, 12" FT	644 CHEVRON MARKING FT	644 LANE ARROW EACH	644 DOTTED LINE, 4" FT	644 DOTTED LINE, 6" FT			
		I.R. 90																																							
EW-38	323	95+50.00	99+50.00	RT	3	WHITE								0.08																											
EY-23	323	95+50.00	101+00.00	RT	3	WHITE								0.10																											
	323	95+50.00	101+00.00	RT	3		EY																							553											
LL-27	323	95+50.00	101+00.00	RT	3	WHITE					0.11																														
	323	95+50.00	101+00.00	RT	3		LL																							557											
LL-28	323	95+50.00	101+00.00	RT	3	WHITE					0.11																														
	323	95+50.00	101+00.00	RT	3		LL																							561											
	323	99+00.86	99+67.96	RT	3		DL																							69											
DL-20	323	99+50.00	101+00.00	RT	3	WHITE											154																							
	323	99+99.77	101+00.00	RT	3		EW																							104											
		EX. CARNEGIE AVE																																						
PB-13	323	51+80.00	51+80.00	LT/RT	3																								80											
PB-14	323	58+03.28	58+03.28	LT/RT	3																								84											
		PROSPECT AVE.																																						
CL-20	323				3	YELLOW						0.01																													
CL-21	323				3	YELLOW						0.05																													
		I.R. 90																																						
PB-15	324	105+50.00	110+50.00	CL	3																								500											
	324	105+50.00	110+50.00	RT	3																						824												
		EX. CARNEGIE AVE																																						
DL-21	325	39+15.78	41+72.43	RT	3	WHITE											257																							
EW-39	325	39+22.65	46+29.07	RT	3	WHITE							0.13																											
		E. 21ST ST.																																						
LA-48	325				3	WHITE																1																		
LA-49	325	100+74.18		RT	3	WHITE																1																		
LA-50	325	101+26.52		RT	3	WHITE																1																		
LA-51	325	101+88.67		RT	3	WHITE																1																		
		EX. CARNEGIE AVE																																						
LA-52	326				3	WHITE																1																		
LA-53	326				3	WHITE																1																		
LA-54	326				3	WHITE																1																		
		RAMP A2																																						
PB-16	328	403+81.42	412+53.03	RT	4				1																				854											
EW-40	328	405+00.34	431+33.26	RT	4	WHITE								0.46																										
	328	405+00.39	431+33.26	RT	4		LL																							2442											
		I.R. 90																																						
	330	38+78.66	70+00.00	LT	4		EW																							3222											
	330	47+13.12	70+00.00	LT	4		EY																							2334											
	330	47+14.24	70+00.00	LT	4		LL																							2336											
	330	47+15.34	70+00.00	LT	4		LL																							2338											
CH-39	330	48+53.11	59+58.18	LT	4	WHITE										1116																								
	330	48+53.11	64+74.79	LT/RT	4		LL																							1635											
CH-40	330	48+64.43	59+59.01	RT	4	WHITE										1101																								
	330	48+64.43	64+74.65	LT/RT	4		LL																							1620											
	330	51+28.89	64+74.94	LT/RT	4		EY																							1357											
EY-24	330	51+34.72	64+74.94	LT/RT	4	YELLOW								0.26																										
TOTALS CARRIED TO SHEET 120								-	1	-	0.22	0.06	0.13	0.90	-	2217	411	-	-	-	7	-	-	824	1518	-	-	19128	-	-	-	-	-	-	-	-	-	-	-	-

Preliminary Plans - Not For Reference Only

MAINTENANCE OF TRAFFIC SUBSUMMARY - 11

CUY-90-16.28 (CCG3A)

MODEL: Sheet-11 PAPERSIZE: 34x22 (in.) DATE: 3/27/2025 TIME: 6:51:40 PM USER: Collin.Kwiatt
pw:\\mb-us-pw.bentley.com:mb-us-pw-03\Documents\Cleveland_OH101_Projects\ODOT\District12\82382\400-Engineering\MOT\Sheets\82382_MS001.dgn

DESIGN AGENCY
Michael Baker INTERNATIONAL

DESIGNER CRK
REVIEWER GSH 05/22/24
PROJECT ID 82382
SHEET 104 TOTAL 2696

REF NO.	SHEET NO.	STATION FROM	STATION TO	SIDE	PHASE	COLOR	MARKING REMOVED	608 TEMPORARY ASPHALT CONCRETE WALK SF	614 WORK ZONE IMPACT ATTENUATOR, 24" WIDE HAZARDS, (UNIDIRECTIONAL) EACH	614 WORK ZONE LANE LINE, CLASS I, 4" MILE	614 WORK ZONE LANE LINE, CLASS I, 6" MILE	614 WORK ZONE CENTER LINE, CLASS I MILE	614 WORK ZONE EDGE LINE, CLASS I, 4" MILE	614 WORK ZONE EDGE LINE, CLASS I, 6" MILE	614 WORK ZONE CHANNELIZING LINE, CLASS I, 8" FT	614 WORK ZONE CHANNELIZING LINE, CLASS I, 12" FT	614 WORK ZONE DOTTED LINE, CLASS I FT	614 WORK ZONE TRANSVERSE/DIAGONAL LINE, CLASS I FT	614 WORK ZONE STOP LINE, CLASS I FT	614 WORK ZONE CROSSWALK LINE, CLASS I, 12" FT	614 WORK ZONE ARROW, CLASS I EACH	614 WORK ZONE WORD ON PAVEMENT, 72", CLASS I EACH	614 WORK ZONE PAVEMENT MARKING, MISC.: SHARED LANE MARKING EACH	615 PAVEMENT FOR MAINTAINING TRAFFIC, CLASS A SY	622 PORTABLE BARRIER, 50", AS PER PLAN FT	622 DUAL PORTABLE BARRIER TRANSITION/TERMINATION EACH	622 PORTABLE BARRIER, ANCHORED, AS PER PLAN FT	642 REMOVAL OF PAVEMENT MARKING FT	642 REMOVAL OF PAVEMENT MARKING EACH	644 EDGE LINE, 6" MILE	644 LANE LINE, 4" MILE	644 LANE LINE, 6" MILE	644 CENTER LINE MILE	644 CHANNELIZING LINE, 8" FT	644 CHANNELIZING LINE, 12" FT	644 CHEVRON MARKING FT	644 LANE ARROW EACH	644 DOTTED LINE, 4" FT	644 DOTTED LINE, 6" FT			
		I.R. 90 (CONT.)																																								
DL-22	330	51+72.65	61+68.72	LT/RT	4	WHITE											995																									
EW-41	330	52+24.90	61+96.98	RT	4	WHITE								0.18																												
PB-17	330	53+53.00	66+00.00	LT/CL	4				1																			1255														
	330	58+89.34	61+65.69	RT	4		CH																					276														
LL-29	330	59+58.18	64+74.15	LT/RT	4	WHITE					0.10																																
LL-30	330	59+59.01	64+74.64	RT	4	WHITE					0.10																																
		I.R. 90 WB																																								
CH-41	330	164+36.68	173+50.00	RT	4	WHITE										910																										
CH-42	330	164+37.69	173+50.00	RT/LT	4	WHITE										912																										
EY-25	330	167+37.57	186+41.87	RT	4	YELLOW								0.36																												
EW-42	330	167+37.76	186+43.54	LT/RT	4	WHITE								0.36																												
PB-18	330	168+31.00	183+14.00	RT	4																							1493														
LL-31	330	173+50.00	186+42.41	RT	4	WHITE					0.25																																
LL-32	330	173+50.00	186+42.96	LT/RT	4	WHITE					0.25																																
		I.R. 90 WB CROSSOVER																																								
	330	100+25.00	105+32.58	CL	4																						1189															
		I.R. 90																																								
	331	61+67.21	65+10.94	LT	4																						393															
CH-43	331	61+68.72	63+00.00	RT	4	WHITE									131																										
CH-44	331	61+68.72	63+20.51	RT	4	WHITE										154																										
PB-19	331	61+90.00	69+90.00	LT	4				1																			464		337												
EW-43	331	63+00.00	64+74.50	RT	4	WHITE								0.03																												
	331	63+03.63	64+74.50	RT	4		CH																																			
		RAMP A2																																								
PB-20	331	420+88.00	424+73.06	RT	4				1																			205		139												
		I.R. 90																																								
DL-23	332	75+55.41	77+49.99	LT	4	WHITE											195																										
	332	75+62.54	92+40.25	LT	4		DL																																			
	332	76+10.63	93+45.45	LT	4		EW																																			
PB-21	332	77+00.00	102+42.00	LT	4				2																			2443														
	332	77+18.09	77+65.70	LT	4		EY																																			
EW-44	332	77+49.99	102+54.13	LT	4	WHITE								0.47																												
	332	79+58.39	79+65.60	RT	4		CH																																			
PB-22	332	80+90.00	99+04.00	RT	4				1																			1878														
PB-23	332	80+90.00	100+15.00	RT	4				1																			1969														
	332	80+98.29	92+40.00	LT	4		LL																																			
	332	80+98.30	92+40.00	LT	4		LL																																			
LL-33	332	80+98.30	94+23.77	LT/RT	4	WHITE					0.25																																
	332	80+98.31	92+40.00	LT	4		EY																																			
EY-26	332	80+98.31	114+49.99	LT	4	YELLOW								0.64																												
	332	80+98.32	86+50.00	RT	4		EY																																			
LL-34	332	80+99.95	110+50.00	RT	4	WHITE					0.57																																
		I.R. 90 WB																																								
	332	194+15.90	200+15.07	RT	4																						1906															
TOTALS CARRIED TO SHEET 120								-	7	-	1.52	-	-	2.04	131	1976	1190	-	-	-	-	-	-	3488	9707	-	476	8341	-	-	-	-	-	-	-	-	-	-			

Preliminary Plans - Not For Reference Only

MAINTENANCE OF TRAFFIC SUBSUMMARY - 12

DESIGN AGENCY
Michael Baker INTERNATIONAL

DESIGNER
CRK

REVIEWER
GSH 05/22/24

PROJECT ID
82382

SHEET 105 TOTAL 2696

CUY-90-16.28 (CCG3A)

MODEL: Sheet-12 PAPERSIZE: 34x22 (in.) DATE: 3/27/2025 TIME: 6:51:43 PM USER: Collin.Kwiatt
pw:\\mb-us-pw.bentley.com:mb-us-pw-03\Documents\Cleveland_Oh\01_Projects\ODOT\District12\82382\400-Engineering\MOT\Sheets\82382_MS001.dgn

REF NO.	SHEET NO.	STATION FROM	STATION TO	SIDE	PHASE	COLOR	MARKING REMOVED	608 TEMPORARY ASPHALT CONCRETE WALK SF	614 WORK ZONE IMPACT ATTENUATOR, 24" WIDE HAZARDS, (UNIDIRECTIONAL) EACH	614 WORK ZONE LANE LINE, CLASS I, 4" MILE	614 WORK ZONE LANE LINE, CLASS I, 6" MILE	614 WORK ZONE CENTER LINE, CLASS I MILE	614 WORK ZONE EDGE LINE, CLASS I, 4" MILE	614 WORK ZONE EDGE LINE, CLASS I, 6" MILE	614 WORK ZONE CHANNELIZING LINE, CLASS I, 8" FT	614 WORK ZONE CHANNELIZING LINE, CLASS I, 12" FT	614 WORK ZONE DOTTED LINE, CLASS I FT	614 WORK ZONE TRANSVERSE/DIAGONAL LINE, CLASS I FT	614 WORK ZONE STOP LINE, CLASS I FT	614 WORK ZONE CROSSWALK LINE, CLASS I, 12" FT	614 WORK ZONE ARROW, CLASS I EACH	614 WORK ZONE WORD ON PAVEMENT, 72", CLASS I EACH	614 WORK ZONE PAVEMENT MARKING, MISC.: SHARED LANE MARKING EACH	615 PAVEMENT FOR MAINTAINING TRAFFIC, CLASS A SY	622 PORTABLE BARRIER, 50", AS PER PLAN FT	622 DUAL PORTABLE BARRIER TRANSITION/TERMINATION EACH	622 PORTABLE BARRIER, ANCHORED, AS PER PLAN FT	642 REMOVAL OF PAVEMENT MARKING FT	642 REMOVAL OF PAVEMENT MARKING EACH	644 EDGE LINE, 6" MILE	644 LANE LINE, 4" MILE	644 LANE LINE, 6" MILE	644 CENTER LINE MILE	644 CHANNELIZING LINE, 8" FT	644 CHANNELIZING LINE, 12" FT	644 CHEVRON MARKING FT	644 LANE ARROW EACH	644 DOTTED LINE, 4" FT	644 DOTTED LINE, 6" FT			
		I.R. 90																																							
LL-35	333	80+98.29	94+24.01	LT/RT	4	WHITE					0.25																														
LL-36	333	80+99.97	110+50.00	RT	4	WHITE					0.57																														
EW-45	333	80+99.99	108+28.48	RT	4	WHITE								0.54																										
DL-24	333	81+00.00	83+44.71	RT	4	WHITE											245																							
EY-27	333	81+00.00	110+50.00	RT	4	YELLOW								0.57																										
	333	81+29.00	90+13.00	LT/RT	4																					3404														
PB-24	333	82+00.00	110+50.00	CL	4																						2891													
	333	90+23.29	95+50.00	RT	4		EY																						529											
	333	90+23.29	95+50.00	RT	4		LL																						533											
	333	90+23.29	95+50.00	RT	4		LL																						537											
		E. 22ND ST.																																						
	333	29+08.59	30+22.44	LT	4		EW																						112											
	333	29+22.80	30+22.64	LT	4		LL																						99											
	333	30+13.96	30+14.62	RT	4		SL																						14											
	333	30+21.56	30+24.68	LT/CL	4		XW																						38											
	333	30+26.00	30+26.78	RT	4		XW																						14											
	333	30+34.32	30+35.59	LT	4		XW																						31											
	333	30+35.35	30+75.87	LT	4		DL																						38											
	333	30+35.85	30+75.18	LT	4		DL																						38											
	333	30+36.64	30+37.22	RT	4		XW																						18											
	333	30+44.46	30+65.53	RT	4		XW																						24											
	333	30+45.68	30+65.94	RT	4		XW																						23											
	333	30+56.81	30+60.16	LT	4		DL																						29											
		I.R. 90																																						
CH-45	334	94+22.77	97+34.27	RT	4	WHITE										319																							
CH-46	334	94+23.01	108+82.49	RT/LT	4	WHITE										1451																							
CH-47	334	94+28.50	96+16.39	RT	4	WHITE										192																							
	334	94+60.07	99+78.07	RT	4																					2138														
	334	96+14.61	108+82.49	LT	4		LL																						1244											
	334	96+14.82	114+24.58	LT	4		LL																						1794											
	334	96+15.02	114+50.21	LT	4		EY																						1829											
PB-25	334	96+16.00	98+40.00	RT	4																						230													
EW-46	334	96+16.39	108+83.65	RT/LT	4	WHITE								0.24																										
EY-28	334	97+34.27	108+82.83	RT/LT	4	YELLOW								0.22																										
	334	98+39.35	99+46.75	LT	4		EW																						104											
	334	98+39.37	100+05.05	LT	4		DL																						162											
	334	99+36.88	100+08.67	LT	4		CH																						70											
	334	99+66.74	107+19.57	RT	4		DL																						532											
	334	100+08.67	102+47.49	LT	4		EW																						232											
	334	101+00.00	106+64.89	RT	4		LL																						572											
	334	101+00.00	106+65.05	RT	4		LL																						576											
		EX. CARNEGIE AVE																																						
	334	55+88.44		LT	4		LA																							1										
	334	56+78.30		LT	4		LA																							1										
	334	57+35.44		LT	4		LA																							1										
	334	57+85.26		LT	4		LA																							1										
	334	60+31.62		LT	4		LA																							1										
TOTALS CARRIED TO SHEET 120								-	-	-	0.82	-	-	1.57	-	1962	245	-	-	-	-	-	-	5542	3121	-	-	9192	5	-	-	-	-	-	-	-	-	-	-			

Preliminary Plans - For Reference Only

MAINTENANCE OF TRAFFIC SUBSUMMARY - 13

CUY-90-16.28 (CCG3A)

MODEL: Sheet-13 PAPERSIZE: 34x22 (in.) DATE: 3/27/2025 TIME: 6:51:46 PM USER: Collin.Kwiatt
pw:\\mb-us-pw.bentley.com:mb-us-pw-03\Documents\Cleveland_OH\01_Projects\ODOT\District12\82382\400-Engineering\MOT\Sheets\82382_MS001.dgn

DESIGN AGENCY
Michael Baker INTERNATIONAL

DESIGNER CRK
REVIEWER GSH 05/22/24
PROJECT ID 82382
SHEET 106 TOTAL 2696

REF NO.	SHEET NO.	STATION FROM	STATION TO	SIDE	PHASE	COLOR	MARKING REMOVED	608 TEMPORARY ASPHALT CONCRETE WALK SF	614 WORK ZONE IMPACT ATTENUATOR, 24" WIDE HAZARDS, (UNIDIRECTIONAL) EACH	614 WORK ZONE LANE LINE, CLASS I, 4" MILE	614 WORK ZONE LANE LINE, CLASS I, 6" MILE	614 WORK ZONE CENTER LINE, CLASS I MILE	614 WORK ZONE EDGE LINE, CLASS I, 4" MILE	614 WORK ZONE EDGE LINE, CLASS I, 6" MILE	614 WORK ZONE CHANNELIZING LINE, CLASS I, 8" FT	614 WORK ZONE CHANNELIZING LINE, CLASS I, 12" FT	614 WORK ZONE DOTTED LINE, CLASS I FT	614 WORK ZONE TRANSVERSE/DIAGONAL LINE, CLASS I FT	614 WORK ZONE STOP LINE, CLASS I FT	614 WORK ZONE CROSSWALK LINE, CLASS I, 12" FT	614 WORK ZONE ARROW, CLASS I EACH	614 WORK ZONE WORD ON PAVEMENT, 72", CLASS I EACH	614 WORK ZONE PAVEMENT MARKING, MISC.: SHARED LANE MARKING EACH	615 PAVEMENT FOR MAINTAINING TRAFFIC, CLASS A SY	622 PORTABLE BARRIER, 50", AS PER PLAN FT	622 DUAL PORTABLE BARRIER TRANSITION/TERMINATION EACH	622 PORTABLE BARRIER, ANCHORED, AS PER PLAN FT	642 REMOVAL OF PAVEMENT MARKING FT	642 REMOVAL OF PAVEMENT MARKING EACH	644 EDGE LINE, 6" MILE	644 LANE LINE, 4" MILE	644 LANE LINE, 6" MILE	644 CENTER LINE MILE	644 CHANNELIZING LINE, 8" FT	644 CHANNELIZING LINE, 12" FT	644 CHEVRON MARKING FT	644 LANE ARROW EACH	644 DOTTED LINE, 4" FT	644 DOTTED LINE, 6" FT			
		PROSPECT AVE.																																								
LL-37	334				4	WHITE				0.10																																
	334				4		CH																																			
	334				4		EW																																			
		I.R. 90																																							
	335	101+00.00	107+15.99	RT	4		EW																																		
	335	101+00.00	110+50.00	RT	4		EY																																			
	335	102+47.49	103+37.38	LT	4		CH																																			
CH-48	335	102+54.13	104+44.11	LT	4	WHITE										186																									
CH-49	335	103+21.18	104+44.11	LT	4	WHITE										121																									
	335	103+37.38	108+80.00	LT	4		LL																																			
DL-25	335	104+00.00	106+60.00	RT	4	WHITE											274																								
DL-26	335	104+44.11	108+80.00	LT	4	WHITE											428																								
	335	104+85.07	107+20.97	RT	4		CH																																			
PB-26	335	105+50.00	108+80.00	LT	4				1																																	
	335	106+49.85	110+49.74	RT	4		EW																																			
CH-50	335	106+58.99	108+42.09	RT	4	WHITE										238																									
CH-51	335	106+58.99	108+82.99	RT	4	WHITE										231																									
CH-52	335	108+80.00	124+50.00	LT	4	WHITE										1566																									
EW-47	335	108+82.99	110+50.00	RT	4	WHITE								0.03																											
CH-53	335	108+83.65	114+24.58	LT	4	WHITE										540																									
		CARNEGIE AVE.																																							
	337	33+62.37	34+96.49	RT	4		LL																																			
CH-54	337	33+62.37	34+97.37	RT	4	WHITE									135																									
		EX. CARNEGIE AVE																																							
LA-55	337	27+13.06		RT	4	WHITE																1																			
LA-56	337	27+63.06		RT	4	WHITE																1																			
LA-57	337	28+13.06		RT	4	WHITE																1																			
EW-48	337	28+85.22	31+55.44	RT	4	WHITE							0.05																												
LL-38	337	28+85.22	31+56.39	RT	4	WHITE				0.05																															
CL-22	337	29+70.72	30+79.95	RT/LT	4	YELLOW						0.02																														
CH-55	337	30+54.74	30+80.89	RT/LT	4	WHITE									27																									
CH-56	337	30+54.74	31+57.33	RT	4	WHITE									103																									
SL-15	337	31+55.44	31+57.33	RT	4	WHITE													20																					
	337	32+09.49		LT	4		LA																																		
	337	32+09.49		LT	4		LA																																		
	337	32+09.89		LT	4		LA																																		
		E. 14TH ST. SB																																							
EW-49	337	35+55.09	40+03.79	LT	4	WHITE							0.09																											
PB-27	337	37+67.00	40+00.00	LT	4				1																																	
EY-29	337	38+31.77	40+03.34	LT/RT	4	YELLOW							0.03																												
LA-58	337	41+87.70		LT	4	WHITE																1																			
LA-59	337	42+16.11		LT	4	WHITE																1																			
LA-60	337	42+43.84		LT	4	WHITE																1																			
		CARNEGIE AVE.																																							
SL-16	339	45+74.75	45+75.00	LT/RT	4A	WHITE													20																					
TOTALS CARRIED TO SHEET 120								-	2	0.15	-	0.02	0.17	0.03	265	2882	702	-	40	-	6	-	-	-	566	-	-	3953	3	-	-	-	-	-	-	-	-	-	-			

Preliminary Plans - For Reference Only

MAINTENANCE OF TRAFFIC SUBSUMMARY - 14

CUY-90-16.28 (CCG3A)

MODEL: Sheet-14 PAPERSIZE: 34x22 (in.) DATE: 3/27/2025 TIME: 6:51:48 PM USER: Collin.Kwiatt
pw:\\mb-us-pw.bentley.com:mb-us-pw-03\Documents\Cleveland_OH\01_Projects\ODOT\District12\82382\400-Engineering\MOT\Sheets\82382_MS001.dgn

DESIGN AGENCY
Michael Baker INTERNATIONAL

DESIGNER CRK
REVIEWER GSH 05/22/24
PROJECT ID 82382
SHEET 107 TOTAL 2696

REF NO.	SHEET NO.	STATION FROM	STATION TO	SIDE	PHASE	COLOR	MARKING REMOVED	608 TEMPORARY ASPHALT CONCRETE WALK SF	614 WORK ZONE IMPACT ATTENUATOR, 24" WIDE HAZARDS, (UNIDIRECTIONAL) EACH	614 WORK ZONE LANE LINE, CLASS I, 4" MILE	614 WORK ZONE LANE LINE, CLASS I, 6" MILE	614 WORK ZONE CENTER LINE, CLASS I MILE	614 WORK ZONE EDGE LINE, CLASS I, 4" MILE	614 WORK ZONE EDGE LINE, CLASS I, 6" MILE	614 WORK ZONE CHANNELIZING LINE, CLASS I, 8" FT	614 WORK ZONE CHANNELIZING LINE, CLASS I, 12" FT	614 WORK ZONE DOTTED LINE, CLASS I FT	614 WORK ZONE TRANSVERSE/DIAGONAL LINE, CLASS I FT	614 WORK ZONE STOP LINE, CLASS I FT	614 WORK ZONE CROSSWALK LINE, CLASS I, 12" FT	614 WORK ZONE ARROW, CLASS I EACH	614 WORK ZONE WORD ON PAVEMENT, 72", CLASS I EACH	614 WORK ZONE PAVEMENT MARKING, MISC.: SHARED LANE MARKING EACH	615 PAVEMENT FOR MAINTAINING TRAFFIC, CLASS A SY	622 PORTABLE BARRIER, 50", AS PER PLAN FT	622 DUAL PORTABLE BARRIER TRANSITION/TERMINATION EACH	622 PORTABLE BARRIER, ANCHORED, AS PER PLAN FT	642 REMOVAL OF PAVEMENT MARKING FT	642 REMOVAL OF PAVEMENT MARKING EACH	644 EDGE LINE, 6" MILE	644 LANE LINE, 4" MILE	644 LANE LINE, 6" MILE	644 CENTER LINE MILE	644 CHANNELIZING LINE, 8" FT	644 CHANNELIZING LINE, 12" FT	644 CHEVRON MARKING FT	644 LANE ARROW EACH	644 DOTTED LINE, 4" FT	644 DOTTED LINE, 6" FT			
		CARNEGIE AVE. (CONT.)																																								
EW-50	339	45+74.75	49+09.15	LT	4A	WHITE							0.06																												
LL-39	339	45+74.87	46+49.87	LT	4A	WHITE				0.01																															
CL-23	339	45+75.00	47+99.36	RT/LT	4A	YELLOW						0.04																														
CL-24	339	45+75.00	49+09.15	RT/LT	4A	YELLOW						0.06																														
EW-51	339	45+75.00	49+09.15	RT/LT	4A	WHITE							0.06																												
SL-17	339	49+09.15	49+09.15	LT	4A	WHITE												10																							
SL-18	339	50+39.05	50+39.05	LT	4A	WHITE												11																							
EW-52	339	50+39.05	53+15.27	LT	4A	WHITE							0.05																												
CL-25	339	50+39.05	53+30.02	LT	4A	YELLOW						0.06																														
EW-53	339	50+39.05	53+30.02	LT	4A	WHITE							0.06																												
LA-61	339	53+25.00		LT	4A	WHITE															1																				
SL-19	339	53+30.02	53+30.02	LT	4A	WHITE												13																							
SL-20	339	53+48.25	53+60.13	RT	4A	WHITE												12																							
		EX. CARNEGIE AVE																																						
LA-62	339	36+00.00		RT	4A	WHITE															1																				
LA-63	339	36+50.00		RT	4A	WHITE															1																				
LA-64	339	37+00.00		RT	4A	WHITE															1																				
LA-65	339	37+50.00		RT	4A	WHITE															1																				
LA-66	339	38+00.00		RT	4A	WHITE															1																				
DL-27	339	38+14.37	39+06.16	LT	4A	WHITE											92																							
DL-28	339	38+14.89	39+08.28	RT	4A	WHITE											94																							
	339	38+50.35	42+50.25	LT	4A		LL																											399								
	339	38+64.36	42+56.33	LT	4A		LL																											390								
	339	39+15.63	41+32.22	RT	4A		LL																											217								
	339	39+17.07	41+32.50	RT	4A		LL																											215								
	339	39+28.14	42+08.66	LT	4A		CH																											281								
	339	39+28.26	41+32.80	RT	4A		CL																											205								
	339	39+55.16		LT	4A		LA																												1							
	339	39+85.59		LT	4A		LA																												1							
	339	41+48.07	42+28.52	RT	4A		LL																											80								
	339	41+48.27		RT	4A		LA																												1							
	339	42+00.02	42+55.17	RT/LT	4A		CL																											56								
	339	42+54.87	42+67.17	RT/LT	4A		XL																											39								
	339	42+66.36	42+79.51	RT/LT	4A		XL																											42								
	339	42+87.03	43+58.35	LT	4A		XL																											69								
	339	43+00.60	43+56.30	LT	4A		XL																											56								
	339	43+29.22	43+40.26	LT	4A		CL																											29								
	339	43+39.39	43+49.75	LT/RT	4A		DL																											53								
	339	43+39.71	43+42.90	LT	4A		CH																											9								
	339	43+40.21		LT	4A		LA																												1							
	339	43+49.73		LT	4A		LA																												1							
	339	43+53.38		LT	4A		LA																												1							
	339	43+60.93		LT	4A		LA																												1							
	339	43+62.89	43+85.60	LT	4A		CH																											58								
	339	43+69.50		LT	4A		LA																												1							
	339	43+73.07	43+95.50	LT	4A		CH																											59								
	339	43+76.85	44+02.20	LT/RT	4A		SL																											45								
TOTALS CARRIED TO SHEET 120								-	-	0.01	-	0.16	0.23	-	-	-	186	-	46	-	6	-	-	-	-	-	-	2302	8	-	-	-	-	-	-	-	-	-	-			

Preliminary Plans - For Reference Only

MAINTENANCE OF TRAFFIC SUBSUMMARY - 15

DESIGN AGENCY
Michael Baker INTERNATIONAL

DESIGNER CRK

REVIEWER GSH 05/22/24

PROJECT ID 82382

SHEET 108 TOTAL 2696

CUY-90-16.28 (CCG3A)

MODEL: Sheet-15 PAPERSIZE: 34x22 (in.) DATE: 3/27/2025 TIME: 6:51:51 PM USER: Collin.Kwiatt
pw:\\mb-us-pw.bentley.com:mb-us-pw-03\Documents\Cleveland_OH\01_Projects\ODOT\District12\82382\400-Engineering\MOT\Sheets\82382_MS001.dgn

REF NO.	SHEET NO.	STATION FROM	STATION TO	SIDE	PHASE	COLOR	MARKING REMOVED	608 TEMPORARY ASPHALT CONCRETE WALK SF	614 WORK ZONE IMPACT ATTENUATOR, 24" WIDE HAZARDS, (UNIDIRECTIONAL) EACH	614 WORK ZONE LANE LINE, CLASS I, 4" MILE	614 WORK ZONE LANE LINE, CLASS I, 6" MILE	614 WORK ZONE CENTER LINE, CLASS I MILE	614 WORK ZONE EDGE LINE, CLASS I, 4" MILE	614 WORK ZONE EDGE LINE, CLASS I, 6" MILE	614 WORK ZONE CHANNELIZING LINE, CLASS I, 8" FT	614 WORK ZONE CHANNELIZING LINE, CLASS I, 12" FT	614 WORK ZONE DOTTED LINE, CLASS I FT	614 WORK ZONE TRANSVERSE/DIAGONAL LINE, CLASS I FT	614 WORK ZONE STOP LINE, CLASS I FT	614 WORK ZONE CROSSWALK LINE, CLASS I, 12" FT	614 WORK ZONE ARROW, CLASS I EACH	614 WORK ZONE WORD ON PAVEMENT, 72", CLASS I EACH	614 WORK ZONE PAVEMENT MARKING, MISC.: SHARED LANE MARKING EACH	615 PAVEMENT FOR MAINTAINING TRAFFIC, CLASS A SY	622 PORTABLE BARRIER, 50", AS PER PLAN FT	622 DUAL PORTABLE BARRIER TRANSITION/TERMINATION EACH	622 PORTABLE BARRIER, ANCHORED, AS PER PLAN FT	642 REMOVAL OF PAVEMENT MARKING FT	642 REMOVAL OF PAVEMENT MARKING EACH	644 EDGE LINE, 6" MILE	644 LANE LINE, 4" MILE	644 LANE LINE, 6" MILE	644 CENTER LINE MILE	644 CHANNELIZING LINE, 8" FT	644 CHANNELIZING LINE, 12" FT	644 CHEVRON MARKING FT	644 LANE ARROW EACH	644 DOTTED LINE, 4" FT	644 DOTTED LINE, 6" FT			
		EX. CARNEGIE AVE (CONT.)																																							
	339	43+85.62	46+29.73	LT	4A		LL																				250													
	339	43+93.81	46+15.71	LT	4A		DL																				223													
	339	44+01.81	46+29.12	RT/LT	4A		CL																				226													
	339	44+04.96		LT	4A		LA																					1												
	339	44+14.93	46+28.98	RT	4A		LL																				208													
	339	44+54.73		LT	4A		LA																					1												
	339	44+59.30	46+18.68	RT	4A		LL																				149													
	339	45+08.09		RT	4A		LA																					1												
	339	45+57.05		RT	4A		LA																					1												
	339	46+07.74		RT	4A		LA																					1												
	339	46+28.83	46+29.13	RT/LT	4A		SL																				21													
	339	46+36.07	46+38.61	RT/LT	4A		XL																				44													
	339	46+45.56	46+47.63	RT/LT	4A		XL																				45													
	339	46+58.77	47+09.17	LT	4A		XL																				51													
	339	46+64.39	47+04.85	LT	4A		XL																				41													
	339	46+65.16	46+72.83	LT	4A		SL																				8													
	339	46+71.00	46+72.45	RT/LT	4A		DL																				70													
	339	46+72.22	46+73.69	LT	4A		CL																				101													
	339	46+81.98	46+83.56	RT/LT	4A		DL																				72													
	339	46+83.45	46+85.37	LT	4A		LL																				117													
	339	46+92.55	46+93.90	RT/LT	4A		DL																				73													
	339	46+93.97	46+96.35	LT	4A		EW																				124													
	339	47+00.01	47+00.39	LT	4A		LL																				17													
CH-57	339	47+42.72	48+42.72	LT	4A	WHITE									100																									
LA-67	339	47+56.49		LT	4A	WHITE															1																			
		E. 22ND ST.																																						
EW-54	339	31+02.46	31+95.73	LT	4A	WHITE							0.02																											
EY-30	339	31+02.48	31+75.37	LT	4A	YELLOW							0.01																											
EY-31	339	31+34.38	31+74.11	RT	4A	YELLOW							0.01																											
SL-21	339	31+73.34	31+74.11	RT	4A	WHITE													13																					
DL-29	339	31+74.11	32+93.66	RT	4A	WHITE											120																							
DL-30	339	31+75.37	32+93.66	LT	4A	WHITE											118																							
EW-55	339	32+76.56	37+25.00	LT/RT	4A	WHITE							0.09																											
SL-22	339	32+93.66	32+94.04	LT	4A	WHITE													12																					
CL-26	339	32+93.66	36+50.00	RT	4A	YELLOW						0.07																											
CL-27	339	32+93.66	37+25.00	LT/RT	4A	YELLOW						0.08																											
EW-56	339	36+50.00	37+25.00	RT	4A	WHITE							0.01																											
	339	36+65.00	36+88.85	RT	4A		LL																				24													
	339	36+65.00	36+89.86	RT	4A		CH																				25													
	339	36+65.00	36+90.54	LT	4A		CL																				26													
	339	36+65.00	37+03.69	LT	4A		LL																				39													
	339	36+77.12		RT	4A		LA																					1												
	339	36+90.06	36+90.54	RT/LT	4A		SL																				32													
	339	36+91.33	37+10.07	LT	4A		DL																				19													
	339	36+91.45	37+09.28	RT	4A		DL																				18													
	339	36+91.55	37+10.04	RT	4A		DL																				18													
	339	37+09.44	37+10.83	RT	4A		XL																				36													
TOTALS CARRIED TO SHEET 120								-	-	-	-	0.15	0.14	-	100	-	238	-	25	-	1	-	-	-	-	-	-	2077	6	-	-	-	-	-	-	-	-	-	-			

Preliminary Plans - For Reference Only

MAINTENANCE OF TRAFFIC SUBSUMMARY - 16

DESIGN AGENCY
Michael Baker INTERNATIONAL

DESIGNER CRK
REVIEWER GSH 05/22/24
PROJECT ID 82382
SHEET 109 TOTAL 2696

CUY-90-16.28 (CCG3A)

MODEL: Sheet-16 PAPERSIZE: 34x22 (in.) DATE: 3/27/2025 TIME: 6:51:53 PM USER: Collin.Kwiatt
pw:\\mb-us-pw.bentley.com:mb-us-pw-03\Documents\Cleveland_OH\01_Projects\ODOT\District12\82382400-Engineering\MOT\Sheets\82382_MS001.dgn

REF NO.	SHEET NO.	STATION FROM	STATION TO	SIDE	PHASE	COLOR	MARKING REMOVED	608 TEMPORARY ASPHALT CONCRETE WALK SF	614 WORK ZONE IMPACT ATTENUATOR, 24" WIDE HAZARDS, (UNIDIRECTIONAL) EACH	614 WORK ZONE LANE LINE, CLASS I, 4" MILE	614 WORK ZONE LANE LINE, CLASS I, 6" MILE	614 WORK ZONE CENTER LINE, CLASS I MILE	614 WORK ZONE EDGE LINE, CLASS I, 4" MILE	614 WORK ZONE EDGE LINE, CLASS I, 6" MILE	614 WORK ZONE CHANNELIZING LINE, CLASS I, 8" FT	614 WORK ZONE CHANNELIZING LINE, CLASS I, 12" FT	614 WORK ZONE DOTTED LINE, CLASS I FT	614 WORK ZONE TRANSVERSE/DIAGONAL LINE, CLASS I FT	614 WORK ZONE STOP LINE, CLASS I FT	614 WORK ZONE CROSSWALK LINE, CLASS I, 12" FT	614 WORK ZONE ARROW, CLASS I EACH	614 WORK ZONE WORD ON PAVEMENT, 72", CLASS I EACH	614 WORK ZONE PAVEMENT MARKING, MISC.: SHARED LANE MARKING EACH	615 PAVEMENT FOR MAINTAINING TRAFFIC, CLASS A SY	622 PORTABLE BARRIER, 50", AS PER PLAN FT	622 DUAL PORTABLE BARRIER TRANSITION/TERMINATION EACH	622 PORTABLE BARRIER, ANCHORED, AS PER PLAN FT	642 REMOVAL OF PAVEMENT MARKING FT	642 REMOVAL OF PAVEMENT MARKING EACH	644 EDGE LINE, 6" MILE	644 LANE LINE, 4" MILE	644 LANE LINE, 6" MILE	644 CENTER LINE MILE	644 CHANNELIZING LINE, 8" FT	644 CHANNELIZING LINE, 12" FT	644 CHEVRON MARKING FT	644 LANE ARROW EACH	644 DOTTED LINE, 4" FT	644 DOTTED LINE, 6" FT			
		E. 22ND ST. (CONT.)																																								
	339	37+20.73	37+22.33	RT	4A		XL																				47														
		CENTRAL AVE.																																									
SL-23	340	100+64.13	100+64.13	LT	4A	WHITE													12																								
CL-28	340	100+64.13	101+86.99	LT/RT	4A	YELLOW						0.02																																
LA-68	340	100+74.02		LT	4A	WHITE															1																						
		E. 22ND ST.																																									
CH-58	340	21+69.38	22+16.63	RT	4A	WHITE									49																											
DL-31	340	22+58.31	23+38.34	RT	4A	WHITE											80																									
	340	24+62.29	24+65.44	RT/LT	4A		XL																				76														
	340	24+73.40	24+76.81	RT/LT	4A		XL																				75														
	340	24+73.87	30+14.15	RT	4A		EW																				542														
DL-32	340	24+82.43	25+80.53	RT	4A	WHITE											98																									
	340	24+82.43	29+46.50	RT	4A		LL																				464														
LA-69	340	24+93.42		RT	4A	WHITE															1																						
LA-70	340	25+43.52		RT	4A	WHITE															1																						
CH-59	340	25+80.53	26+28.42	RT	4A	WHITE									49																											
LA-71	340	25+93.62		RT	4A	WHITE															1																						
	340	26+28.42	26+78.81	RT	4A		CH																				50														
EY-32	340	27+47.14	30+64.34	RT	4A	YELLOW							0.06																													
EY-33	340	29+46.33	30+58.86	LT	4A	YELLOW							0.02																													
SL-24	340	30+16.68	30+16.70	RT	4A	WHITE													11																						
EW-57	340	30+24.06	30+46.10	LT	4A	WHITE							0.01																													
DL-33	340	30+46.10	30+75.22	LT	4A	WHITE											28																									
LA-72	340	30+49.09		LT	4A	WHITE															1																						
DL-34	340	30+58.86	31+02.48	LT	4A	WHITE											42																									
	340	30+60.77	30+61.42	RT	4A		CL																				14														
DL-35	340	30+67.62	31+34.38	RT	4A	WHITE											71																									
	340	30+70.15	30+70.31	RT	4A		CH																				5														
SL-25	340	31+02.46	31+02.48	LT	4A	WHITE													11																						
		CARNEGIE AVE.																																									
DL-36	341	44+84.83	45+96.01	LT/RT	4B	WHITE											111																									
DL-37	341	44+85.55	45+96.01	LT	4B	WHITE											111																									
DL-38	341	44+86.33	45+96.01	LT	4B	WHITE											110																									
CL-29	341	45+95.38	53+03.76	RT	4B	YELLOW						0.13																														
LL-40	341	45+95.69	52+00.00	RT	4B	WHITE				0.13																															
SL-26	341	45+96.00	45+96.01	RT/LT	4B	WHITE													44																						
CL-30	341	45+96.00	48+00.00	RT	4B	YELLOW						0.04																														
EW-58	341	45+96.01	53+18.99	LT/RT	4B	WHITE							0.14																													
CH-60	341	45+96.19	46+50.00	RT	4B	WHITE									54																										
LL-41	341	45+96.39	46+50.00	RT	4B	WHITE				0.01																															
LL-42	341	45+96.58	46+50.00	LT	4B	WHITE				0.01																															
LA-73	341	46+00.17		RT	4B	WHITE															1																						
DL-39	341	46+50.00	48+00.47	RT	4B	WHITE											150																									
LA-74	341	46+50.17		RT	4B	WHITE															1																						
LA-75	341	47+00.20		RT	4B	WHITE															1																						
EW-59	341	48+01.48	53+03.46	RT	4B	WHITE							0.09																													
TOTALS CARRIED TO SHEET 120								-	-	0.15	-	0.19	0.32	-	152	-	801	-	78	-	8	-	-	-	-	-	-	1273	-	-	-	-	-	-	-	-	-	-	-	-	-

Preliminary Plans - For Reference Only

MAINTENANCE OF TRAFFIC SUBSUMMARY - 17

DESIGN AGENCY
Michael Baker INTERNATIONAL

DESIGNER CRK

REVIEWER GSH 05/22/24

PROJECT ID 82382

SHEET 110 TOTAL 2696

CUY-90-16.28 (CCG3A)

MODEL: Sheet-17 PAPERSIZE: 34x22 (in.) DATE: 3/27/2025 TIME: 6:51:56 PM USER: Collin.Kwiatt
pw:\\mb-us-pw.bentley.com:mb-us-pw-03\Documents\Cleveland_OH\01_Projects\ODOT\District12\82382\400-Engineering\MOT\Sheets\82382_MS001.dgn

REF NO.	SHEET NO.	STATION FROM	STATION TO	SIDE	PHASE	COLOR	MARKING REMOVED	608 TEMPORARY ASPHALT CONCRETE WALK SF	614 WORK ZONE IMPACT ATTENUATOR, 24" WIDE HAZARDS, (UNIDIRECTIONAL) EACH	614 WORK ZONE LANE LINE, CLASS I, 4" MILE	614 WORK ZONE LANE LINE, CLASS I, 6" MILE	614 WORK ZONE CENTER LINE, CLASS I MILE	614 WORK ZONE EDGE LINE, CLASS I, 4" MILE	614 WORK ZONE EDGE LINE, CLASS I, 6" MILE	614 WORK ZONE CHANNELIZING LINE, CLASS I, 8" FT	614 WORK ZONE CHANNELIZING LINE, CLASS I, 12" FT	614 WORK ZONE DOTTED LINE, CLASS I FT	614 WORK ZONE TRANSVERSE/DIAGONAL LINE, CLASS I FT	614 WORK ZONE STOP LINE, CLASS I FT	614 WORK ZONE CROSSWALK LINE, CLASS I, 12" FT	614 WORK ZONE ARROW, CLASS I EACH	614 WORK ZONE WORD ON PAVEMENT, 72", CLASS I EACH	614 WORK ZONE PAVEMENT MARKING, MISC.: SHARED LANE MARKING EACH	615 PAVEMENT FOR MAINTAINING TRAFFIC, CLASS A SY	622 PORTABLE BARRIER, 50", AS PER PLAN FT	622 DUAL PORTABLE BARRIER TRANSITION/TERMINATION EACH	622 PORTABLE BARRIER, ANCHORED, AS PER PLAN FT	642 REMOVAL OF PAVEMENT MARKING FT	642 REMOVAL OF PAVEMENT MARKING EACH	644 EDGE LINE, 6" MILE	644 LANE LINE, 4" MILE	644 LANE LINE, 6" MILE	644 CENTER LINE MILE	644 CHANNELIZING LINE, 8" FT	644 CHANNELIZING LINE, 12" FT	644 CHEVRON MARKING FT	644 LANE ARROW EACH	644 DOTTED LINE, 4" FT	644 DOTTED LINE, 6" FT			
		CARNEGIE AVE. (CONT.)																																								
CH-61	341	52+00.00	53+04.00	RT	4B	WHITE									104																											
LA-76	341	52+42.48		RT	4B	WHITE															1																					
LA-77	341	52+42.51		RT	4B	WHITE															1																					
LA-78	341	52+93.36		RT	4B	WHITE															1																					
LA-79	341	52+93.37		RT	4B	WHITE															1																					
		EX. CARNEGIE AVE																																								
EW-60	341	36+00.00	38+10.30	RT	4B	WHITE							0.04																													
	341	47+18.20	47+29.93	LT/RT	4B		XW																										63									
	341	47+27.20	47+38.88	LT/RT	4B		XW																										58									
		E. 22ND ST.																																								
LL-43	341	31+02.48	31+97.00	LT	4B	WHITE				0.02																																
CL-31	341	31+02.50	31+74.74	LT/RT	4B	YELLOW						0.01																															
LL-44	341	31+02.52	31+73.75	RT	4B	WHITE				0.01																																
SL-27	341	31+73.55	31+74.66	RT	4B	WHITE													25																							
EW-61	341	31+97.00	32+94.00	LT	4B	WHITE							0.01																													
DL-40	341	32+11.75	32+93.66	LT	4B	WHITE											82																									
EW-62	341	32+77.72	36+89.85	LT	4B	WHITE							0.08																													
SL-28	341	32+93.66	32+93.66	LT/RT	4B	WHITE													22																							
EW-63	341	32+96.66	36+49.65	RT	4B	WHITE							0.06																													
CL-32	341	32+96.66	36+50.00	RT	4B	YELLOW						0.07																														
LL-45	341	32+96.66	36+50.38	LT/RT	4B	WHITE				0.07																																
SL-29	341	36+49.82	36+49.91	RT	4B	WHITE													12																							
DL-41	341	36+50.00	37+43.58	RT	4B	WHITE											82																									
XW-5	341	36+76.33	37+02.37	LT/RT	4B	WHITE														74																						
XW-6	341	36+85.08	37+20.73	LT/RT	4B	WHITE														101																						
SL-30	341	36+97.67	37+18.11	LT	4B	WHITE													21																							
		EX. E. 22ND ST. N																																								
EY-34	341	27+61.47	28+51.76	RT	4B	YELLOW							0.02																													
EW-64	341	28+28.97	29+48.60	RT	4B	WHITE							0.02																													
LL-46	341	28+51.76	29+47.43	RT	4B	WHITE				0.02																																
		E. 22ND ST.																																								
LA-80	342	22+88.39		RT	4B	WHITE															1																					
LA-81	342	23+38.37		RT	4B	WHITE															1																					
EW-65	342	29+46.50	30+63.96	RT	4B	WHITE							0.02																													
SL-31	342	29+99.94	30+00.07	RT	4B	WHITE													12																							
LA-82	342	30+76.00		RT	4B	WHITE															1																					
SL-32	342	31+02.32	31+02.46	LT	4B	WHITE													24																							
LA-83	342	31+15.97		RT	4B	WHITE															1																					
LA-84	342	31+64.25		RT	4B	WHITE															1																					
		CARNEGIE AVE.																																								
EW-66	343	45+75.00	49+02.74	RT	4C	WHITE							0.06																													
EW-67	343	50+33.24	52+51.39	RT	4C	WHITE							0.04																													
LA-85	343	51+40.89		RT	4C	WHITE															1																					
LA-86	343	51+50.48		RT	4C	WHITE															1																					
LA-87	343	51+91.53		RT	4C	WHITE															1																					
LA-88	343	52+00.39		RT	4C	WHITE															1																					
TOTALS CARRIED TO SHEET 120								-	-	0.12	-	0.08	0.35	-	104	-	164	-	116	175	13	-	-	-	-	-	-	121	-	-	-	-	-	-	-	-	-	-	-	-	-

Preliminary Plans - For Reference Only

MAINTENANCE OF TRAFFIC SUBSUMMARY - 18

CUY-90-16.28 (CCG3A)

MODEL: Sheet-18 PAPERSIZE: 34x22 (in.) DATE: 3/27/2025 TIME: 6:51:58 PM USER: Collin.Kwiatt
pw:\\mb-us-pw.bentley.com:mb-us-pw-03\Documents\Cleveland_OH\01_Projects\ODOT\District12\82382\400-Engineering\MOT\Sheets\82382_MS001.dgn

DESIGN AGENCY
Michael Baker INTERNATIONAL

DESIGNER CRK

REVIEWER GSH 05/22/24

PROJECT ID 82382

SHEET 111 TOTAL 2696

MAINTENANCE OF TRAFFIC SUBSUMMARY - 19

REF NO.	SHEET NO.	STATION FROM	STATION TO	SIDE	PHASE	COLOR	MARKING REMOVED	608 TEMPORARY ASPHALT CONCRETE WALK SF	614 WORK ZONE IMPACT ATTENUATOR, 24" WIDE HAZARDS, (UNIDIRECTIONAL) EACH	614 WORK ZONE LANE LINE, CLASS I, 4" MILE	614 WORK ZONE LANE LINE, CLASS I, 6" MILE	614 WORK ZONE CENTER LINE, CLASS I MILE	614 WORK ZONE EDGE LINE, CLASS I, 4" MILE	614 WORK ZONE EDGE LINE, CLASS I, 6" MILE	614 WORK ZONE CHANNELIZING LINE, CLASS I, 8" FT	614 WORK ZONE CHANNELIZING LINE, CLASS I, 12" FT	614 WORK ZONE DOTTED LINE, CLASS I FT	614 WORK ZONE TRANSVERSE/DIAGONAL LINE, CLASS I FT	614 WORK ZONE STOP LINE, CLASS I FT	614 WORK ZONE CROSSWALK LINE, CLASS I, 12" FT	614 WORK ZONE ARROW, CLASS I EACH	614 WORK ZONE WORD ON PAVEMENT, 72", CLASS I EACH	614 WORK ZONE PAVEMENT MARKING, MISC.: SHARED LANE MARKING EACH	615 PAVEMENT FOR MAINTAINING TRAFFIC, CLASS A SY	622 PORTABLE BARRIER, 50", AS PER PLAN FT	622 DUAL PORTABLE BARRIER TRANSITION/TERMINATION EACH	622 PORTABLE BARRIER, ANCHORED, AS PER PLAN FT	642 REMOVAL OF PAVEMENT MARKING FT	642 REMOVAL OF PAVEMENT MARKING EACH	644 EDGE LINE, 6" MILE	644 LANE LINE, 4" MILE	644 LANE LINE, 6" MILE	644 CENTER LINE MILE	644 CHANNELIZING LINE, 8" FT	644 CHANNELIZING LINE, 12" FT	644 CHEVRON MARKING FT	644 LANE ARROW EACH	644 DOTTED LINE, 4" FT	644 DOTTED LINE, 6" FT			
		CARNEGIE AVE. (CONT.)																																								
LA-89	343	52+42.15		RT	4C	WHITE															1																					
LA-90	343	52+50.55		RT	4C	WHITE															1																					
SL-33	343	53+31.13	53+37.29	LT	4C	WHITE													6																						
		E. 21ST ST.																																							
LA-91	343	100+88.33		RT	4C	WHITE															1																					
		E. 22ND ST.																																							
SL-34	343	31+02.45	31+03.36	LT	4C	WHITE													22																					
LL-47	343	31+02.92	31+85.75	LT	4C	WHITE				0.02																															
CL-33	343	31+03.36	31+85.75	LT	4C	YELLOW						0.02																													
CL-34	343	31+03.75	31+85.75	RT	4C	YELLOW						0.02																													
LL-48	343	31+04.15	31+85.75	RT	4C	WHITE				0.02																															
LA-92	343	31+64.78		LT	4C	WHITE															1																					
SL-35	343	31+85.75	31+85.75	RT	4C	WHITE													23																					
CL-35	343	32+93.24	36+62.83	RT/LT	4C	YELLOW						0.07																													
EW-68	343	32+93.71	36+63.08	RT/LT	4C	WHITE							0.07																												
SL-36	343	32+94.00	32+94.00	LT	4C	WHITE													12																					
CL-36	343	32+94.00	36+50.00	LT	4C	YELLOW						0.07																													
SL-37	343	36+62.83	36+63.08	LT	4C	WHITE													11																					
		EX. E. 22ND ST. N																																							
DL-42	343	26+80.72	28+50.00	LT	4C	WHITE											170																						
DL-43	343	26+80.97	28+50.00	LT	4C	WHITE											170																						
EW-69	343	28+50.00	29+56.19	LT/RT	4C	WHITE							0.02																											
CL-37	343	28+50.09	28+86.66	LT	4C	YELLOW						0.01																													
		CENTRAL AVE.																																							
LA-93	344	100+74.02		LT	4C	WHITE															1																					
		E. 22ND ST.																																							
DL-44	344	22+58.31	23+48.31	RT	4C	WHITE																																		90		
EW-70	344	24+73.87	27+20.00	RT	4C	WHITE																														0.05					
LL-49	344	24+82.43	28+88.00	RT	4C	WHITE																														0.08					
DL-45	344	29+22.41	29+83.38	LT	4C	WHITE											61																						
EY-35	344	29+22.80	30+65.07	LT	4C	YELLOW							0.03																											
EW-71	344	29+83.38	30+80.02	LT	4C	WHITE							0.02																											
LA-94	344	31+10.19		LT	4C	WHITE															1																					
LA-95	344	31+15.91		RT	4C	WHITE															1																					
		I.R. 90																																							
PB-28	349	56+25.63	64+28.33	LT	5				1																	809															
		I.R. 90 EB																																							
EY-36	349	165+44.87	181+01.16	LT/RT	5	YELLOW								0.30																										
EW-72	349	168+81.02	179+10.61	LT	5	WHITE								0.20																										
		I.R. 90 WB																																							
CH-62	349	167+03.61	170+48.51	RT	5	WHITE										344																								
EY-37	349	167+03.70	178+33.92	RT	5	YELLOW								0.11																										
CH-63	349	167+37.69	172+31.28	RT	5	WHITE										492																								
LL-50	349	172+31.28	178+35.29	LT/RT	5	WHITE					0.11																													
EW-73	349	172+31.28	182+76.14	LT/RT	5	WHITE								0.20																										
TOTALS CARRIED TO SHEET 120								-	1	0.04	0.11	0.19	0.14	0.81	-	836	401	-	74	-	7	-	-	-	809	-	-	-	-	-	0.13	-	-	-	-	-	-	90			

Preliminary Plans - For Reference Only

CUY-90-16.28 (CCG3A)

MODEL: Sheet-19 PAPERSIZE: 34x22 (in.) DATE: 3/27/2025 TIME: 6:52:01 PM USER: Collin.Kwiatt
pw:\\mb-us-pw.bentley.com:mb-us-pw-03\Documents\Cleveland_OH\01_Projects\ODOT\District12\82382\400-Engineering\MOT\Sheets\82382_MS001.dgn

DESIGN AGENCY
Michael Baker INTERNATIONAL

DESIGNER CRK
REVIEWER GSH 05/22/24
PROJECT ID 82382
SHEET 112 TOTAL 2696

REF NO.	SHEET NO.	STATION FROM	STATION TO	SIDE	PHASE	COLOR	MARKING REMOVED	608 TEMPORARY ASPHALT CONCRETE WALK SF	614 WORK ZONE IMPACT ATTENUATOR, 24" WIDE HAZARDS, (UNIDIRECTIONAL) EACH	614 WORK ZONE LANE LINE, CLASS I, 4" MILE	614 WORK ZONE LANE LINE, CLASS I, 6" MILE	614 WORK ZONE CENTER LINE, CLASS I MILE	614 WORK ZONE EDGE LINE, CLASS I, 4" MILE	614 WORK ZONE EDGE LINE, CLASS I, 6" MILE	614 WORK ZONE CHANNELIZING LINE, CLASS I, 8" FT	614 WORK ZONE CHANNELIZING LINE, CLASS I, 12" FT	614 WORK ZONE DOTTED LINE, CLASS I FT	614 WORK ZONE TRANSVERSE/DIAGONAL LINE, CLASS I FT	614 WORK ZONE STOP LINE, CLASS I FT	614 WORK ZONE CROSSWALK LINE, CLASS I, 12" FT	614 WORK ZONE ARROW, CLASS I EACH	614 WORK ZONE WORD ON PAVEMENT, 72", CLASS I EACH	614 WORK ZONE PAVEMENT MARKING, MISC.: SHARED LANE MARKING EACH	615 PAVEMENT FOR MAINTAINING TRAFFIC, CLASS A SY	622 PORTABLE BARRIER, 50", AS PER PLAN FT	622 DUAL PORTABLE BARRIER TRANSITION/TERMINATION EACH	622 PORTABLE BARRIER, ANCHORED, AS PER PLAN FT	642 REMOVAL OF PAVEMENT MARKING FT	642 REMOVAL OF PAVEMENT MARKING EACH	644 EDGE LINE, 6" MILE	644 LANE LINE, 4" MILE	644 LANE LINE, 6" MILE	644 CENTER LINE MILE	644 CHANNELIZING LINE, 8" FT	644 CHANNELIZING LINE, 12" FT	644 CHEVRON MARKING FT	644 LANE ARROW EACH	644 DOTTED LINE, 4" FT	644 DOTTED LINE, 6" FT			
		I.R. 90 WB (CONT.)																																								
PB-29	349	176+00.00	182+76.00	LT/RT	5																				586		109															
		I.R. 90 WB CROSSOVER																																								
PB-30	349	100+25.00	107+86.00	RT	5																				759																	
		I.R. 90																																								
EY-38	350	63+28.11	64+30.97	LT	5	YELLOW								0.02																												
LL-51	350	63+29.70	66+19.95	LT	5	WHITE				0.05																																
PB-31	350	64+08.88	64+18.94	LT	5				1																10																	
CH-64	350	64+29.16	66+20.20	LT	5	WHITE										190																										
CH-65	350	64+30.97	66+19.79	LT	5	WHITE										188																										
PB-32	350	68+50.00	84+01.00	LT	5				1																1259	1	298															
	351	72+85.34	73+95.52	LT	5		CH																						445													
EW-74	351	72+85.42	84+77.04	LT	5	WHITE								0.23																												
	351	72+97.26	80+98.29	LT	5		LL																						801													
CH-66	351	72+97.26	88+49.92	LT	5	WHITE										1564																										
CH-67	351	72+97.31	77+84.22	LT	5	WHITE										488																										
	351	72+97.31	80+98.30	LT	5		LL																						801													
CH-68	351	75+97.31	77+84.18	LT	5	WHITE										187																										
PB-33	351	77+84.00	98+35.00	LT/RT	5				1																2072																	
PB-34	351	77+84.00	102+95.00	LT	5				2																2410																	
EW-75	351	77+84.18	96+16.47	LT/RT	5	WHITE								0.35																												
EY-39	351	77+84.22	108+82.83	LT	5	YELLOW								0.58																												
		RAMP A2																																								
PB-35	351	433+62.92	441+14.08	RT	5				1																586																	
		E. 14TH ST. SB																																								
CH-69	351	33+58.49	34+19.00	LT	5	WHITE									59																										
EY-40	351	33+74.17	36+55.09	RT/LT	5	YELLOW						0.06																														
DL-46	351	34+23.84	35+23.87	LT	5	WHITE											100																									
PB-36	351	34+73.87	36+99.27	LT	5				1																227																	
		I.R. 90																																								
LL-52	352	88+49.91	108+83.27	LT	5	WHITE				0.38																																
		I.R. 90 WB																																								
EW-76	352	198+78.23	201+28.00	LT	5	WHITE								0.05																												
EW-77	352	201+13.67	219+54.88	LT	5	WHITE								0.33																												
CH-70	352	201+28.00	203+29.08	LT	5	WHITE										204																										
CH-71	352	201+28.00	203+29.08	LT	5	WHITE										204																										
DL-47	352	203+29.08	205+08.00	LT	5	WHITE											173																										
		E. 22ND ST.																																								
XW-7	352	30+12.31	30+21.56	RT/LT	5	WHITE																		68																		
XW-8	352	30+22.88	30+34.32	RT/LT	5	WHITE																		69																		
BL-1	352	31+45.39		LT	5	WHITE																						1														
BL-2	352	33+39.84		LT	5	WHITE																						1														
BL-3	352	34+89.30		LT	5	WHITE																						1														
BL-4	352	36+43.25		LT	5	WHITE																						1														
TOTALS CARRIED TO SHEET 120								-	7	-	0.43	-	0.06	1.56	59	3025	273	-	-	137	-	-	4	-	7909	1	407	2047	-	-	-	-	-	-	-	-	-	-	-	-	-

Preliminary Plans - For Reference Only

MAINTENANCE OF TRAFFIC SUBSUMMARY - 20

DESIGN AGENCY
Michael Baker INTERNATIONAL

DESIGNER CRK

REVIEWER GSH 05/22/24

PROJECT ID 82382

SHEET 113 TOTAL 2696

CUY-90-16.28 (CCG3A)

MODEL: Sheet-20 PAPERSIZE: 34x22 (in.) DATE: 3/27/2025 TIME: 6:52:04 PM USER: Collin.Kwiatt
pw:\\mb-us-pw.bentley.com:mb-us-pw-03\Documents\Cleveland_OH\01_Projects\ODOT\District12\82382400-Engineering\MOT\Sheets\82382_MS001.dgn

MAINTENANCE OF TRAFFIC SUBSUMMARY - 21

REF NO.	SHEET NO.	STATION FROM	STATION TO	SIDE	PHASE	COLOR	MARKING REMOVED	608 TEMPORARY ASPHALT CONCRETE WALK SF	614 WORK ZONE IMPACT ATTENUATOR, 24" WIDE HAZARDS, (UNIDIRECTIONAL) EACH	614 WORK ZONE LANE LINE, CLASS I, 4" MILE	614 WORK ZONE LANE LINE, CLASS I, 6" MILE	614 WORK ZONE CENTER LINE, CLASS I MILE	614 WORK ZONE EDGE LINE, CLASS I, 4" MILE	614 WORK ZONE EDGE LINE, CLASS I, 6" MILE	614 WORK ZONE CHANNELIZING LINE, CLASS I, 8" FT	614 WORK ZONE CHANNELIZING LINE, CLASS I, 12" FT	614 WORK ZONE DOTTED LINE, CLASS I FT	614 WORK ZONE TRANSVERSE/DIAGONAL LINE, CLASS I FT	614 WORK ZONE STOP LINE, CLASS I FT	614 WORK ZONE CROSSWALK LINE, CLASS I, 12" FT	614 WORK ZONE ARROW, CLASS I EACH	614 WORK ZONE WORD ON PAVEMENT, 72", CLASS I EACH	614 WORK ZONE PAVEMENT MARKING, MISC.: SHARED LANE MARKING EACH	615 PAVEMENT FOR MAINTAINING TRAFFIC, CLASS A SY	622 PORTABLE BARRIER, 50", AS PER PLAN FT	622 DUAL PORTABLE BARRIER TRANSITION/TERMINATION EACH	622 PORTABLE BARRIER, ANCHORED, AS PER PLAN FT	642 REMOVAL OF PAVEMENT MARKING FT	642 REMOVAL OF PAVEMENT MARKING EACH	644 EDGE LINE, 6" MILE	644 LANE LINE, 4" MILE	644 LANE LINE, 6" MILE	644 CENTER LINE MILE	644 CHANNELIZING LINE, 8" FT	644 CHANNELIZING LINE, 12" FT	644 CHEVRON MARKING FT	644 LANE ARROW EACH	644 DOTTED LINE, 4" FT	644 DOTTED LINE, 6" FT			
		I.R. 90																																								
CH-72	354	102+50.00	103+35.00	LT	5	WHITE										85																									
DL-48	354	103+35.00	108+83.76	LT	5	WHITE											531																									
		CARNEGIE AVE.																																								
LL-53	355	33+62.37	34+97.37	RT	5	WHITE																													0.03								
		E. 14TH ST. SB																																								
EW-78	355	39+60.00	40+42.80	LT	5	WHITE							0.02																													
		CARNEGIE AVE.																																								
PB-37	357	58+39.00	58+39.00	LT	5																							68														
		I.R. 77																																								
EW-79	359	71+00.00	75+80.00	RT	6	WHITE								0.09																											
		COMMUNITY COLLEGE AVE.																					1																			
LA-96	361	60+75.64		LT	6	WHITE																	1																			
LA-97	361	61+26.32		LT	6	WHITE																																					
		I.R. 90 WB																																								
LL-54	362	167+37.70	205+97.16	LT	6	WHITE					0.73																															
CH-73	362	167+37.76	179+90.38	LT	6	WHITE										1257																									
CH-74	362	169+02.71	173+20.65	RT	6	WHITE										417																									
EY-41	362	173+20.65	201+25.90	RT/LT	6	YELLOW								0.53																											
PB-38	362	173+20.77	200+15.16	RT	6				2																		2597	1													
CH-75	362	177+38.84	179+90.63	LT	6	WHITE										251																									
		I.R. 90																																								
EY-42	363	68+50.00	76+48.68	LT	6	YELLOW								0.15																											
	363	70+00.00	72+85.34	LT	6		EW																												295							
	363	70+00.00	72+97.26	LT	6		LL																												297							
	363	70+00.00	72+97.31	LT	6		LL																												297							
	363	70+00.00	80+98.31	LT	6		EY																												1098							
		I.R. 90 EB																																								
PB-39	363	179+09.78	198+36.03	LT	6																						1943														
		I.R. 90 WB																																								
EW-80	363	179+90.38	193+56.81	LT	6	WHITE							0.26																												
EW-81	363	180+90.91	201+26.45	RT	6	WHITE								0.39																											
		I.R. 90																																								
	364	75+97.54	87+76.81	LT/RT	6																					4473															
PB-40	364	76+20.36	77+86.80	LT	6																						213														
		I.R. 90 WB																																								
CH-76	364	193+56.81	196+54.38	LT	6	WHITE										300																									
DL-49	364	196+54.38	202+37.52	LT	6	WHITE											588																									
		E. 14TH ST. SB																																								
EW-82	364	36+50.00	38+46.57	LT	6	WHITE								0.04																											
EY-43	364	36+50.00	39+01.21	LT/CL	6	YELLOW								0.05																											
		I.R. 90																																								
EY-44	365	84+70.82	103+37.26	LT	6	YELLOW								0.35																											
TOTALS CARRIED TO SHEET 120								-	2	-	0.73	-	0.28	1.60	-	2310	1119	-	-	-	2	-	-	4473	4821	1	-	1987	-	-	0.03	-	-	-	-	-	-	-	-			

Preliminary Plans - Not For Reference Only

CUY-90-16.28 (CCG3A)

MODEL: Sheet-21 PAPERSIZE: 34x22 (in.) DATE: 3/27/2025 TIME: 6:52:06 PM USER: Collin.Kwiatt
pw:\\mb-us-pw.bentley.com:mb-us-pw-03\Documents\Cleveland_Oh!01_Projects\ODOT\District12\82382\400-Engineering\MOT\Sheets\82382_MS001.dgn

DESIGN AGENCY
Michael Baker INTERNATIONAL

DESIGNER CRK

REVIEWER GSH 05/22/24

PROJECT ID 82382

SHEET 114 TOTAL 2696

REF NO.	SHEET NO.	STATION FROM	STATION TO	SIDE	PHASE	COLOR	MARKING REMOVED	608 TEMPORARY ASPHALT CONCRETE WALK SF	614 WORK ZONE IMPACT ATTENUATOR, 24" WIDE HAZARDS, (UNIDIRECTIONAL) EACH	614 WORK ZONE LANE LINE, CLASS I, 4" MILE	614 WORK ZONE LANE LINE, CLASS I, 6" MILE	614 WORK ZONE CENTER LINE, CLASS I MILE	614 WORK ZONE EDGE LINE, CLASS I, 4" MILE	614 WORK ZONE EDGE LINE, CLASS I, 6" MILE	614 WORK ZONE CHANNELIZING LINE, CLASS I, 8" FT	614 WORK ZONE CHANNELIZING LINE, CLASS I, 12" FT	614 WORK ZONE DOTTED LINE, CLASS I FT	614 WORK ZONE TRANSVERSE/DIAGONAL LINE, CLASS I FT	614 WORK ZONE STOP LINE, CLASS I FT	614 WORK ZONE CROSSWALK LINE, CLASS I, 12" FT	614 WORK ZONE ARROW, CLASS I EACH	614 WORK ZONE WORD ON PAVEMENT, 72", CLASS I EACH	614 WORK ZONE PAVEMENT MARKING, MISC.: SHARED LANE MARKING EACH	615 PAVEMENT FOR MAINTAINING TRAFFIC, CLASS A SY	622 PORTABLE BARRIER, 50", AS PER PLAN FT	622 DUAL PORTABLE BARRIER TRANSITION/TERMINATION EACH	622 PORTABLE BARRIER, ANCHORED, AS PER PLAN FT	642 REMOVAL OF PAVEMENT MARKING FT	642 REMOVAL OF PAVEMENT MARKING EACH	644 EDGE LINE, 6" MILE	644 LANE LINE, 4" MILE	644 LANE LINE, 6" MILE	644 CENTER LINE MILE	644 CHANNELIZING LINE, 8" FT	644 CHANNELIZING LINE, 12" FT	644 CHEVRON MARKING FT	644 LANE ARROW EACH	644 DOTTED LINE, 4" FT	644 DOTTED LINE, 6" FT			
		I.R. 90 WB																																								
CH-77	365	201+25.90	214+73.16	LT	6	WHITE										1310																									
CH-78	365	201+26.45	204+36.05	RT/LT	6	WHITE										310																									
PB-41	365	201+27.90	210+80.05	RT/LT	6				1																1277																
		I.R. 90																																								
LL-55	366	97+95.95	103+29.97	LT	6	WHITE					0.10																														
PB-42	367	102+82.80	111+75.72	RT	6				1																904																
EY-45	367	103+37.26	114+50.21	LT	6	YELLOW																										0.21									
DL-50	367	103+37.30	108+82.14	LT	6	WHITE																																			530
LL-56	367	103+37.36	108+82.49	LT	6	WHITE																												0.10							
LL-57	367	103+37.42	124+49.97	LT	6	WHITE																												0.40							
PB-43	367	104+20.48	111+75.75	LT	6				1																751																
PB-44	367	105+50.00	110+50.00	LT/RT	6																				500																
		E. 22ND ST.																																								
	371	21+70.83	22+15.41	RT/LT	7		CL																						46												
	371	21+86.15	23+48.89	LT	7		CL																						163												
	371	22+16.63	23+48.70	RT	7		CH																						132												
	371	22+30.79		RT	7		LA																							1											
	371	22+60.03	23+48.31	RT	7		EW																						88												
	371	22+90.98		RT	7		LA																							1											
	371	23+37.52		RT	7		LA																							1											
	371	23+44.26	23+66.20	LT/RT	7		XW																						78												
	371	23+48.18	23+48.90	RT/LT	7		SL																						42												
	371	23+54.38	23+77.98	LT/RT	7		XW																						87												
	371	23+68.73	24+42.78	LT	7		XW																						74												
	371	23+72.90	24+42.23	LT	7		XW																						69												
		COMMUNITY COLLEGE AVE.																																								
	371	60+42.51	60+51.68	RT/LT	7		XW																						66												
	371	60+51.85	60+60.59	RT/LT	7		XW																						63												
	371	60+53.31	62+09.00	RT	7		EW																						156												
	371	60+53.50	62+09.00	RT	7		EW																						156												
	371	60+66.12	60+66.16	LT	7		CH																						141												
	371	60+75.93		RT	7		LA																							1											
	371	61+26.68		RT	7		LA																							1											
		I.R. 90																																								
EW-83	372	56+57.56	63+01.08	RT	7	WHITE								0.12																										
DL-51	372	56+58.15	62+08.11	RT	7	WHITE											549																								
CH-79	372	56+58.65	65+19.39	RT	7	WHITE										863																									
CH-80	372	56+58.95	65+19.26	LT/RT	7	WHITE										863																									
EY-46	372	56+59.24	101+68.00	LT/RT	7	YELLOW								0.85																										
PB-45	372	56+59.33	87+76.74	LT/RT	7																				2549		581														
		I.R. 90 WB																																								
EY-47	372	167+37.57	203+68.20	RT	7	YELLOW								0.69																										
CH-81	372	167+37.69	183+76.60	RT/LT	7	WHITE										1638																									
CH-82	372	167+37.73	183+77.54	LT	7	WHITE										1639																									
CH-83	372	167+37.76	173+75.01	LT	7	WHITE										639																									
PB-46	372	168+31.26	203+25.86	RT	7				2																3390																
TOTALS CARRIED TO SHEET 120								-	5	-	0.10	-	-	1.66	-	7262	549	-	-	-	-	-	-	-	9371	-	581	1361	5	0.21	-	0.50	-	-	-	-	-	-	530			

Preliminary Plans - For Reference Only

MAINTENANCE OF TRAFFIC SUBSUMMARY - 22

CUY-90-16.28 (CCG3A)

MODEL: Sheet-22 PAPERSIZE: 34x22 (in.) DATE: 3/27/2025 TIME: 6:52:09 PM USER: Collin.Kwiatt
pw:\\mb-us-pw.bentley.com:mb-us-pw-03\Documents\Cleveland_OH\01_Projects\ODOT\District12\82382\400-Engineering\MOT\Sheets\82382_MS001.dgn

DESIGN AGENCY
Michael Baker INTERNATIONAL

DESIGNER CRK

REVIEWER GSH 05/22/24

PROJECT ID 82382

SHEET 115 TOTAL 2696

REF NO.	SHEET NO.	STATION FROM	STATION TO	SIDE	PHASE	COLOR	MARKING REMOVED	608 TEMPORARY ASPHALT CONCRETE WALK SF	614 WORK ZONE IMPACT ATTENUATOR, 24" WIDE HAZARDS, (UNIDIRECTIONAL) EACH	614 WORK ZONE LANE LINE, CLASS I, 4" MILE	614 WORK ZONE LANE LINE, CLASS I, 6" MILE	614 WORK ZONE CENTER LINE, CLASS I MILE	614 WORK ZONE EDGE LINE, CLASS I, 4" MILE	614 WORK ZONE EDGE LINE, CLASS I, 6" MILE	614 WORK ZONE CHANNELIZING LINE, CLASS I, 8" FT	614 WORK ZONE CHANNELIZING LINE, CLASS I, 12" FT	614 WORK ZONE DOTTED LINE, CLASS I FT	614 WORK ZONE TRANSVERSE/DIAGONAL LINE, CLASS I FT	614 WORK ZONE STOP LINE, CLASS I FT	614 WORK ZONE CROSSWALK LINE, CLASS I, 12" FT	614 WORK ZONE ARROW, CLASS I EACH	614 WORK ZONE WORD ON PAVEMENT, 72", CLASS I EACH	614 WORK ZONE PAVEMENT MARKING, MISC.: SHARED LANE MARKING EACH	615 PAVEMENT FOR MAINTAINING TRAFFIC, CLASS A SY	622 PORTABLE BARRIER, 50", AS PER PLAN FT	622 DUAL PORTABLE BARRIER TRANSITION/TERMINATION EACH	622 PORTABLE BARRIER, ANCHORED, AS PER PLAN FT	642 REMOVAL OF PAVEMENT MARKING FT	642 REMOVAL OF PAVEMENT MARKING EACH	644 EDGE LINE, 6" MILE	644 LANE LINE, 4" MILE	644 LANE LINE, 6" MILE	644 CENTER LINE MILE	644 CHANNELIZING LINE, 8" FT	644 CHANNELIZING LINE, 12" FT	644 CHEVRON MARKING FT	644 LANE ARROW EACH	644 DOTTED LINE, 4" FT	644 DOTTED LINE, 6" FT			
		I.R. 90 WB (CONT.)																																								
EW-84	372	173+75.01	196+54.37	LT	7	WHITE								0.43																												
		I.R. 90																																								
CH-84	373	62+08.11	63+24.09	RT	7	WHITE										116																										
CH-85	373	62+17.06	63+05.11	RT	7	WHITE										89																										
EW-85	373	63+24.09	71+72.11	RT	7	WHITE								0.16																												
	373	64+74.50	67+50.17	RT	7		EW																											279									
	373	64+74.65	67+50.12	RT	7		LL																											278									
	373	64+74.79	67+50.07	RT	7		LL																											277									
	373	64+74.94	80+98.32	RT	7		EY																											1624									
LL-58	373	65+19.26	101+71.07	RT	7	WHITE					0.70																															
LL-59	373	65+19.40	101+72.56	RT	7	WHITE					0.70																															
EW-86	373	69+38.85	100+96.42	RT	7	WHITE								0.61																												
EY-48	373	69+42.09	71+42.47	RT	7	YELLOW								0.04																												
		I.R. 90 WB																																								
LL-60	373	183+76.02	192+80.43	LT	7	WHITE					0.17																															
LL-61	373	183+77.54	192+80.43	LT	7	WHITE					0.17																															
		I.R. 90																																								
CH-86	374	71+42.47	73+01.73	RT	7	WHITE										161																										
PB-47	374	71+57.17	101+25.00	RT	7																										2890		125									
CH-87	374	71+72.11	73+01.73	RT	7	WHITE										130																										
DL-52	374	73+01.73	78+81.57	RT	7	WHITE											582																										
		I.R. 90 EB																																								
	374	193+90.36	203+56.32	RT	7																									2928													
		I.R. 90 WB																																								
CH-88	374	192+80.43	203+68.51	LT/RT	7	WHITE										1089																										
CH-89	374	192+80.43	203+68.82	LT	7	WHITE										1092																										
		TEMPORARY RAMP H5																																								
	374	106+21.72	111+66.94	CL	7																									1717													
		E. 14TH ST. SB																																								
PB-48	374	33+33.20	35+23.87	LT	7																										190											
EY-49	374	34+23.84	35+23.87	LT	7	YELLOW							0.02																												
PB-49	374	35+06.46	37+06.23	RT	7																										202											
		I.R. 90																																								
DL-53	376	98+39.45	99+36.91	LT	7	WHITE																																			95		
LL-62	376	98+39.50	103+37.62	LT	7	WHITE																																0.09				
LL-63	376	98+39.56	103+37.50	LT	7	WHITE																																0.09				
EY-50	376	98+39.61	103+37.39	LT	7	YELLOW																															0.09					
CH-90	376	99+36.91	103+37.74	LT	7	WHITE																																	390			
DL-54	376	99+50.23	102+42.81	RT	7	WHITE																																			300		
EW-87	376	100+50.00	106+56.56	RT	7	WHITE																															0.12					
		PROSPECT AVE.																																								
CH-91	376				7	WHITE																																		268				
DL-55	376				7	WHITE																																			257		
LA-98	376				7	WHITE																																				1		
TOTALS CARRIED TO SHEET 120								-	-	-	1.74	-	0.02	1.24	-	2677	582	-	-	-	-	-	-	4645	3282	-	125	2458	-	0.21	-	0.18	-	268	390	-	1	257	395			

Preliminary Plans - Not For Reference Only

MAINTENANCE OF TRAFFIC SUBSUMMARY - 23

DESIGN AGENCY
Michael Baker INTERNATIONAL

DESIGNER CRK

REVIEWER GSH 05/22/24

PROJECT ID 82382

SHEET 116 TOTAL 2696

CUY-90-16.28 (CCG3A)

MODEL: Sheet-23 PAPERSIZE: 34x22 (in.) DATE: 3/27/2025 TIME: 6:52:11 PM USER: Collin.Kwiatt
pw:\\mb-us-pw.bentley.com:mb-us-pw-03\Documents\Cleveland_Oh!01_Projects\ODOT\District12\82382\400-Engineering\MOT\Sheets\82382_MS001.dgn

REF NO.	SHEET NO.	STATION FROM	STATION TO	SIDE	PHASE	COLOR	MARKING REMOVED	608 TEMPORARY ASPHALT CONCRETE WALK	614 WORK ZONE IMPACT ATTENUATOR, 24" WIDE HAZARDS, (UNIDIRECTIONAL)	614 WORK ZONE LANE LINE, CLASS I, 4"	614 WORK ZONE LANE LINE, CLASS I, 6"	614 WORK ZONE CENTER LINE, CLASS I	614 WORK ZONE EDGE LINE, CLASS I, 4"	614 WORK ZONE EDGE LINE, CLASS I, 6"	614 WORK ZONE CHANNELIZING LINE, CLASS I, 8"	614 WORK ZONE CHANNELIZING LINE, CLASS I, 12"	614 WORK ZONE DOTTED LINE, CLASS I	614 WORK ZONE TRANSVERSE/DIAGONAL LINE, CLASS I	614 WORK ZONE STOP LINE, CLASS I	614 WORK ZONE CROSSWALK LINE, CLASS I, 12"	614 WORK ZONE ARROW, CLASS I	614 WORK ZONE WORD ON PAVEMENT, 72", CLASS I	614 WORK ZONE PAVEMENT MARKING, MISC.: SHARED LANE MARKING	615 PAVEMENT FOR MAINTAINING TRAFFIC, CLASS A	622 PORTABLE BARRIER, 50", AS PER PLAN	622 DUAL PORTABLE BARRIER TRANSITION/TERMINATION	622 PORTABLE BARRIER, ANCHORED, AS PER PLAN	642 REMOVAL OF PAVEMENT MARKING	642 REMOVAL OF PAVEMENT MARKING	644 EDGE LINE, 6"	644 LANE LINE, 4"	644 LANE LINE, 6"	644 CENTER LINE	644 CHANNELIZING LINE, 8"	644 CHANNELIZING LINE, 12"	644 CHEVRON MARKING	644 LANE ARROW	644 DOTTED LINE, 4"	644 DOTTED LINE, 6"			
		FROM	TO					SF	EACH	MILE	MILE	MILE	MILE	MILE	FT	FT	FT	FT	FT	FT	EACH	EACH	EACH	SY	FT	EACH	FT	FT	EACH	FT	FT	EACH	FT	FT			
		PROSPECT AVE. (CONT.)																																							
LA-99	376				7	WHITE																															1				
LA-100	376				7	WHITE																															1				
LA-101	376				7	WHITE																															1				
LA-102	376				7	WHITE																															1				
		I.R. 90																																							
EY-51	377	101+68.37	110+50.00	RT	7	YELLOW																												0.17							
LL-64	377	101+71.07	110+49.91	RT	7	WHITE																													0.17						
LL-65	377	101+72.56	110+49.83	RT	7	WHITE																													0.17						
DL-56	377	102+42.81	104+85.07	RT	7	WHITE																																			249
CH-92	377	104+85.07	107+20.97	RT	7	WHITE																																242			
CH-93	377	105+77.19	107+19.57	RT	7	WHITE																																150			
CV-1	377	106+21.42	107+12.46	RT	7	WHITE																																	74			
EW-88	377	107+20.97	110+49.74	RT	7	WHITE																												0.06							
		I.R. 77																																							
EW-89	380	66+70.95	75+11.00	RT	8	WHITE																												0.16							
	380	68+06.44	76+30.79	RT	8		DL																										824									
		RAMP A2																																							
	380	403+00.00	416+85.48	RT	8		EY																										1327									
	380	404+10.21	425+04.23	RT	8		EY																										1682									
		RAMP IH4																																							
PB-50	381	12+61.87	14+37.63	LT	8				1																			182	1												
		RAMP H5																																							
EW-90	381	982+79.00	996+17.64	LT/RT	8	WHITE								0.25																											
CH-94	381	1080+07.00	1082+04.00	LT	8	WHITE										294																									
CH-95	381	1080+07.00	1082+96.00	LT	8	WHITE										199																									
		EX. RAMP E-17																																							
PB-51	381	52+67.79	55+05.51	RT	8																							238													
	381	53+34.80	64+04.66	RT/LT	8		EW																										1072									
	381	54+98.20	58+73.48	LT	8		LL																										382									
	381	58+73.48	62+13.44	LT	8		DL																										348									
PB-52	381	60+50.00	63+00.00	LT	8				1																			268													
		I.R. 90																																							
LL-66	383	48+53.11	54+69.96	LT	8	WHITE																													0.12						
LL-67	383	48+64.43	54+69.60	LT	8	WHITE																													0.12						
EW-91	383	51+25.52	54+68.98	LT/RT	8	WHITE																												0.06							
DL-57	383	51+26.37	54+69.24	LT/RT	8	WHITE																																			344
EY-52	383	51+28.88	54+70.31	LT	8	YELLOW																												0.07							
DL-58	383	54+69.24	57+18.97	RT	8	WHITE											249																								
		I.R. 90 EB																																							
EW-92	383	166+00.00	201+79.37	RT	8	WHITE								0.68																											
PB-53	383	166+00.08	201+70.18	RT	8				1																			3567													
EY-53	383	169+50.00	203+80.26	LT	8	YELLOW								0.65																											
LL-68	383	169+50.00	203+81.80	LT	8	WHITE				0.65																															
LL-69	383	169+50.00	203+83.32	CL/LT	8	WHITE				0.65																															
TOTALS CARRIED TO SHEET 120								-	3	-	1.30	-	-	1.58	-	493	249	-	-	-	-	-	-	-	4255	1	-	5635	-	0.52	-	0.58	-	-	392	74	4	-	593			

Preliminary Plans - For Reference Only

MAINTENANCE OF TRAFFIC SUBSUMMARY - 24

CUY-90-16.28 (CCG3A)

MODEL: Sheet-24 PAPERSIZE: 34x22 (in.) DATE: 3/27/2025 TIME: 6:52:14 PM USER: Collin.Kwiatt
pw:\\mb-us-pw.bentley.com:mb-us-pw-03\Documents\Cleveland_OH\01_Projects\ODOT\District12\82382\400-Engineering\MOT\Sheets\82382_MS001.dgn

DESIGN AGENCY
Michael Baker INTERNATIONAL

DESIGNER CRK
REVIEWER GSH 05/22/24
PROJECT ID 82382
SHEET 117 TOTAL 2696

REF NO.	SHEET NO.	STATION FROM	STATION TO	SIDE	PHASE	COLOR	MARKING REMOVED	608 TEMPORARY ASPHALT CONCRETE WALK SF	614 WORK ZONE IMPACT ATTENUATOR, 24" WIDE HAZARDS, (UNIDIRECTIONAL) EACH	614 WORK ZONE LANE LINE, CLASS I, 4" MILE	614 WORK ZONE LANE LINE, CLASS I, 6" MILE	614 WORK ZONE CENTER LINE, CLASS I MILE	614 WORK ZONE EDGE LINE, CLASS I, 4" MILE	614 WORK ZONE EDGE LINE, CLASS I, 6" MILE	614 WORK ZONE CHANNELIZING LINE, CLASS I, 8" FT	614 WORK ZONE CHANNELIZING LINE, CLASS I, 12" FT	614 WORK ZONE DOTTED LINE, CLASS I FT	614 WORK ZONE TRANSVERSE/DIAGONAL LINE, CLASS I FT	614 WORK ZONE STOP LINE, CLASS I FT	614 WORK ZONE CROSSWALK LINE, CLASS I, 12" FT	614 WORK ZONE ARROW, CLASS I EACH	614 WORK ZONE WORD ON PAVEMENT, 72", CLASS I EACH	614 WORK ZONE PAVEMENT MARKING, MISC.: SHARED LANE MARKING EACH	615 PAVEMENT FOR MAINTAINING TRAFFIC, CLASS A SY	622 PORTABLE BARRIER, 50", AS PER PLAN FT	622 DUAL PORTABLE BARRIER TRANSITION/TERMINATION EACH	622 PORTABLE BARRIER, ANCHORED, AS PER PLAN FT	642 REMOVAL OF PAVEMENT MARKING FT	642 REMOVAL OF PAVEMENT MARKING EACH	644 EDGE LINE, 6" MILE	644 LANE LINE, 4" MILE	644 LANE LINE, 6" MILE	644 CENTER LINE MILE	644 CHANNELIZING LINE, 8" FT	644 CHANNELIZING LINE, 12" FT	644 CHEVRON MARKING FT	644 LANE ARROW EACH	644 DOTTED LINE, 4" FT	644 DOTTED LINE, 6" FT
		EX. RAMP E-17																																				
	384	62+13.44	63+08.91	RT/LT	8		CH																				115										
	384	62+13.44	63+19.87	LT	8		CH																				117										
	384	63+08.91	64+21.10	LT	8		EW																				260										
		I.R. 90																																				
EY-54	385	71+93.12	86+75.33	RT	8	YELLOW								0.30																								
PB-54	385	73+03.94	86+75.31	RT	8				2																	1314												
PB-55	385	73+46.42	94+23.21	RT	8				1																	2127												
EW-93	385	79+63.07	94+23.14	RT	8	WHITE								0.28																								
		RAMP B6A																																				
	385	1801+03.40	1806+39.14	RT	8		EW																				553										
		INTERIM E. 14TH ST. SB																																				
EW-94	385	206+30.00	208+07.39	CL	8	WHITE								0.03																								
		I.R. 90																																				
CH-96	386	86+75.33	88+93.00	RT	8	WHITE										205																						
CH-97	386	86+89.51	88+93.36	RT	8	WHITE										206																						
DL-59	386	88+93.00	94+23.14	RT	8	WHITE											542																					
		EX. I.R. 90																																				
EY-55	386	78+93.12	86+75.00	RT	8	YELLOW								0.15																								
		TEMPORARY RAMP H5																																				
EY-56	386	103+69.22	111+75.00	LT	8	YELLOW								0.15																								
		E. 22ND ST.																																				
DL-60	386	30+45.23	31+03.50	RT/LT	8	WHITE											97																					
		EX. CARNEGIE AVE																																				
CH-98	390				8A	WHITE									121																							
LA-103	390				8A	WHITE																1																
LA-104	390				8A	WHITE																1																
LA-105	390				8A	WHITE																1																
	390	58+44.84	62+66.70	RT	8A		LL																				422										
	390	60+24.96	60+25.14	RT	8A		SL																				22										
	390	60+82.45	60+82.61	RT	8A		XL																				22										
	390	60+91.53	60+91.66	RT	8A		XL																				22										
	390	62+65.81	63+40.39	RT	8A		CL																				75										
	390	62+65.81	63+40.87	LT	8A		CL																				75										
	390	62+75.44		LT	8A		LA																						1								
	390	63+01.52		LT	8A		LA																						1								
		E. 28TH ST.																																				
LA-106	390	12+19.99		RT	8A	WHITE																1																
LA-107	390	12+69.99		RT	8A	WHITE																1																
LA-108	390	13+19.99		RT	8A	WHITE																1																
		EX. CARNEGIE AVE																																				
PB-56	391	57+95.00	57+95.00	LT/RT	8B																					70												
CL-38	391	58+00.00	62+65.81	LT	8B	YELLOW							0.09																								
TOTALS CARRIED TO SHEET 120								-	3	-	-	0.09	-	0.91	121	411	639	-	-	-	6	-	-	-	3511	-	-	1683	2	-	-	-	-	-	-	-	-	-

Preliminary Plans - Not For Reference Only

MAINTENANCE OF TRAFFIC SUBSUMMARY - 25

CUY-90-16.28 (CCG3A)

MODEL: Sheet-25 PAPERSIZE: 34x22 (in.) DATE: 3/27/2025 TIME: 6:52:17 PM USER: Collin.Kwiatt
pw:\\mb-us-pw.bentley.com:mb-us-pw-03\Documents\Cleveland_OH\01_Projects\ODOT\District12\82382\400-Engineering\MOT\Sheets\82382_MS001.dgn

DESIGN AGENCY
Michael Baker INTERNATIONAL

DESIGNER CRK

REVIEWER GSH 05/22/24

PROJECT ID 82382

SHEET 118 TOTAL 2696

MAINTENANCE OF TRAFFIC SUBSUMMARY - 26

REF NO.	SHEET NO.	STATION FROM	STATION TO	SIDE	PHASE	COLOR	MARKING REMOVED	608 TEMPORARY ASPHALT CONCRETE WALK SF	614 WORK ZONE IMPACT ATTENUATOR, 24" WIDE HAZARDS, (UNIDIRECTIONAL) EACH	614 WORK ZONE LANE LINE, CLASS I, 4" MILE	614 WORK ZONE LANE LINE, CLASS I, 6" MILE	614 WORK ZONE CENTER LINE, CLASS I MILE	614 WORK ZONE EDGE LINE, CLASS I, 4" MILE	614 WORK ZONE EDGE LINE, CLASS I, 6" MILE	614 WORK ZONE CHANNELIZING LINE, CLASS I, 8" FT	614 WORK ZONE CHANNELIZING LINE, CLASS I, 12" FT	614 WORK ZONE DOTTED LINE, CLASS I FT	614 WORK ZONE TRANSVERSE/DIAGONAL LINE, CLASS I FT	614 WORK ZONE STOP LINE, CLASS I FT	614 WORK ZONE CROSSWALK LINE, CLASS I, 12" FT	614 WORK ZONE ARROW, CLASS I EACH	614 WORK ZONE WORD ON PAVEMENT, 72", CLASS I EACH	614 WORK ZONE PAVEMENT MARKING, MISC.: SHARED LANE MARKING EACH	615 PAVEMENT FOR MAINTAINING TRAFFIC, CLASS A SY	622 PORTABLE BARRIER, 50", AS PER PLAN FT	622 DUAL PORTABLE BARRIER TRANSITION/TERMINATION EACH	622 PORTABLE BARRIER, ANCHORED, AS PER PLAN FT	642 REMOVAL OF PAVEMENT MARKING FT	642 REMOVAL OF PAVEMENT MARKING EACH	644 EDGE LINE, 6" MILE	644 LANE LINE, 4" MILE	644 LANE LINE, 6" MILE	644 CENTER LINE MILE	644 CHANNELIZING LINE, 8" FT	644 CHANNELIZING LINE, 12" FT	644 CHEVRON MARKING FT	644 LANE ARROW EACH	644 DOTTED LINE, 4" FT	644 DOTTED LINE, 6" FT			
		EX. RAMP E-17																																								
PB-57	393	60+39.36	63+50.71	LT	9				1																336																	
		RAMP H5																																								
PB-58	394	986+75.00	996+17.64	RT/LT	9				1																959																	
		I.R. 90																																								
	395	42+28.96	47+48.44	LT	9		EY																						537													
	395	42+29.03	47+55.64	LT	9		EW																						546													
		I.R. 90 EB																																								
CH-99	395	169+50.00	176+00.00	RT	9	WHITE										649																										
CH-100	397	194+00.00	196+75.00	LT	9	WHITE										275																										
CH-101	397	194+00.00	196+77.71	RT/LT	9	WHITE										278																										
EW-95	397	194+42.07	201+78.82	RT	9	WHITE								0.14																												
PB-59	397	194+42.15	206+94.43	RT/LT	9				1																1118																	
		RAMP H5																																								
EW-96	397	987+22.56	996+17.64	RT/LT	9	WHITE								0.17																												
EY-57	397	994+24.16	995+76.54	LT	9	YELLOW								0.03																												
		I.R. 90 EB																																								
DL-61	398	196+75.00	202+50.00	LT/RT	9	WHITE											575																										
		INTERIM I.R. 90 EB																																								
EW-97	398	3002+58.64	3010+00.00	RT	9	WHITE								0.14																												
		I.R. 90 WB																																								
EW-98	399	213+84.41	217+41.93	RT/LT	9	WHITE								0.07																												
CH-102	399	214+02.10	215+28.58	RT/LT	9	WHITE										131																										
DL-62	399	215+30.21	216+51.63	LT	9	WHITE											119																										
		EX. CARNEGIE AVE																																								
LL-70	401				9	WHITE																													0.02							
		I.R. 90																																								
EY-58	402	98+47.18	101+71.58	RT	9	YELLOW																														0.06						
LL-71	402	98+47.36	101+71.39	RT	9	WHITE																																0.06				
LL-72	402	98+47.54	101+71.21	RT	9	WHITE																																0.06				
DL-63	402	98+47.73	102+41.27	RT	9	WHITE																																			404		
EW-99	402	98+47.91	100+50.00	RT	9	WHITE																														0.04						
TOTALS CARRIED TO SHEET 120								-	3	-	-	-	-	0.55	-	1333	694	-	-	-	-	-	-	-	2413	-	-	1083	-	0.10	0.02	0.12	-	-	-	-	-	-	404			

Preliminary Plans - For Reference Only

CUY-90-16.28 (CCG3A)

MODEL: Sheet-26 PAPERSIZE: 34x22 (in.) DATE: 3/27/2025 TIME: 6:52:19 PM USER: Collin.Kwiatt
pw:\\mb-us-pw.bentley.com:mb-us-pw-03\Documents\Cleveland_OH\01_Projects\ODOT\District12\82382\400-Engineering\MOT\Sheets\82382_MS001.dgn

DESIGN AGENCY
Michael Baker INTERNATIONAL

DESIGNER CRK
REVIEWER GSH 05/22/24
PROJECT ID 82382
SHEET 119 TOTAL 2696

MAINTENANCE OF TRAFFIC SUBSUMMARY - 27

REF NO.	SHEET NO.	STATION FROM	STATION TO	SIDE	PHASE	COLOR	MARKING REMOVED	608 TEMPORARY ASPHALT CONCRETE WALK SF	614 WORK ZONE IMPACT ATTENUATOR, 24" WIDE HAZARDS, (UNIDIRECTIONAL) EACH	614 WORK ZONE LANE LINE, CLASS I, 4" MILE	614 WORK ZONE LANE LINE, CLASS I, 6" MILE	614 WORK ZONE CENTER LINE, CLASS I MILE	614 WORK ZONE EDGE LINE, CLASS I, 4" MILE	614 WORK ZONE EDGE LINE, CLASS I, 6" MILE	614 WORK ZONE CHANNELIZING LINE, CLASS I, 8" FT	614 WORK ZONE CHANNELIZING LINE, CLASS I, 12" FT	614 WORK ZONE DOTTED LINE, CLASS I FT	614 WORK ZONE TRANSVERSE/DIAGONAL LINE, CLASS I FT	614 WORK ZONE STOP LINE, CLASS I FT	614 WORK ZONE CROSSWALK LINE, CLASS I, 12" FT	614 WORK ZONE ARROW, CLASS I EACH	614 WORK ZONE WORD ON PAVEMENT, 72", CLASS I EACH	614 WORK ZONE PAVEMENT MARKING, MISC.: SHARED LANE MARKING EACH	615 PAVEMENT FOR MAINTAINING TRAFFIC, CLASS A SY	622 PORTABLE BARRIER, 50", AS PER PLAN FT	622 DUAL PORTABLE BARRIER TRANSITION/TERMINATION EACH	622 PORTABLE BARRIER, ANCHORED, AS PER PLAN FT	642 REMOVAL OF PAVEMENT MARKING FT	642 REMOVAL OF PAVEMENT MARKING EACH	644 EDGE LINE, 6" MILE	644 LANE LINE, 4" MILE	644 LANE LINE, 6" MILE	644 CENTER LINE MILE	644 CHANNELIZING LINE, 8" FT	644 CHANNELIZING LINE, 12" FT	644 CHEVRON MARKING FT	644 LANE ARROW EACH	644 DOTTED LINE, 4" FT	644 DOTTED LINE, 6" FT			
TOTALS FROM THIS SHEET								-	-	-	-	-	-	-	-	-	-	-	-	-	-	-	-	-	-	-	-	-	-	-	-	-	-	-	-	-	-	-	-	-	-	-	-	-
TOTALS FROM SHEET	94							-	1	0.03	0.33	-	0.20	0.73	-	1178	1906	-	-	-	-	-	-	273	750	-	-	9418	11	-	-	-	-	-	-	-	-	-	-	-	-	-	-	-	-	-
TOTALS FROM SHEET	95							2994	-	0.05	-	-	0.10	0.14	350	-	-	-	22	-	8	-	-	2559	224	-	-	888	4	-	-	-	-	-	-	-	-	-	-	-	-	-	-	-	-	-
TOTALS FROM SHEET	96							-	-	0.07	0.59	0.09	0.02	0.63	-	857	581	-	-	183	-	-	-	-	-	-	-	1810	-	0.81	-	0.82	-	-	371	-	5	-	437							
TOTALS FROM SHEET	97							-	-	-	-	-	0.02	-	0.39	-	75	118	-	19	-	6	1	-	-	-	-	2103	7	-	0.10	-	-	249	-	-	6	-	-							
TOTALS FROM SHEET	98							-	2	-	0.86	0.18	0.21	1.15	-	4068	1660	231	76	-	-	-	-	-	-	803	-	-	10051	-	0.11	-	-	-	-	-	-	-	-	-	-	-	-	-	-	-	-
TOTALS FROM SHEET	99							-	3	-	-	0.02	0.40	0.20	282	415	708	-	16	-	4	-	-	947	2507	-	280	1888	3	-	-	-	-	-	-	-	-	-	-	-	-	-	-	-	-	-
TOTALS FROM SHEET	100							-	-	0.10	-	0.04	-	-	154	-	-	-	33	162	-	-	-	-	-	-	-	3427	12	-	-	-	-	-	-	-	-	-	-	-	-	-	-	-	-	-
TOTALS FROM SHEET	101							-	-	-	-	0.23	0.19	-	450	-	-	-	-	-	8	-	-	189	-	-	-	2730	4	-	-	-	-	-	-	-	-	-	-	-	-	-	-	-	-	-
TOTALS FROM SHEET	102							-	1	0.08	-	0.39	0.43	0.31	234	562	225	350	11	-	-	-	-	141	627	-	185	1014	-	-	0.08	-	0.04	-	-	-	-	-	-	-	-	-	-	-	-
TOTALS FROM SHEET	103							-	-	0.24	-	0.12	-	0.26	462	147	874	-	150	-	10	-	-	7052	1475	-	-	-	-	-	0.10	-	-	-	-	-	-	-	-	-	-	-	-	-	-	-
TOTALS FROM SHEET	104							-	1	-	0.22	0.06	0.13	0.90	-	2217	411	-	-	-	7	-	-	824	1518	-	-	19128	-	-	-	-	-	-	-	-	-	-	-	-	-	-	-	-	-	-
TOTALS FROM SHEET	105							-	7	-	1.52	-	-	2.04	131	1976	1190	-	-	-	-	-	-	3488	9707	-	476	8341	-	-	-	-	-	-	-	-	-	-	-	-	-	-	-	-	-	-
TOTALS FROM SHEET	106							-	-	-	0.82	-	-	1.57	-	1962	245	-	-	-	-	-	-	5542	3121	-	-	9192	5	-	-	-	-	-	-	-	-	-	-	-	-	-	-	-	-	-
TOTALS FROM SHEET	107							-	2	0.15	-	0.02	0.17	0.03	265	2882	702	-	40	-	6	-	-	-	566	-	-	3953	3	-	-	-	-	-	-	-	-	-	-	-	-	-	-	-	-	-
TOTALS FROM SHEET	108							-	-	0.01	-	0.16	0.23	-	-	-	186	-	46	-	6	-	-	-	-	-	-	2302	8	-	-	-	-	-	-	-	-	-	-	-	-	-	-	-	-	-
TOTALS FROM SHEET	109							-	-	-	-	0.15	0.14	-	100	-	238	-	25	-	1	-	-	-	-	-	-	2077	6	-	-	-	-	-	-	-	-	-	-	-	-	-	-	-	-	-
TOTALS FROM SHEET	110							-	-	0.15	-	0.19	0.32	-	152	-	801	-	78	-	8	-	-	-	-	-	-	1273	-	-	-	-	-	-	-	-	-	-	-	-	-	-	-	-	-	-
TOTALS FROM SHEET	111							-	-	0.12	-	0.08	0.35	-	104	-	164	-	116	175	13	-	-	-	-	-	-	121	-	-	-	-	-	-	-	-	-	-	-	-	-	-	-	-	-	-
TOTALS FROM SHEET	112							-	1	0.04	0.11	0.19	0.14	0.81	-	836	401	-	74	-	7	-	-	-	809	-	-	-	-	-	0.13	-	-	-	-	-	-	-	-	90							
TOTALS FROM SHEET	113							-	7	-	0.43	-	0.06	1.56	59	3025	273	-	-	137	-	-	4	-	7909	1	407	2047	-	-	-	-	-	-	-	-	-	-	-	-	-	-	-	-	-	-	-
TOTALS FROM SHEET	114							-	2	-	0.73	-	0.28	1.60	-	2310	1119	-	-	-	2	-	-	4473	4821	1	-	1987	-	-	0.03	-	-	-	-	-	-	-	-	-	-	-	-	-	-	-
TOTALS FROM SHEET	115							-	5	-	0.10	-	-	1.66	-	7262	549	-	-	-	-	-	-	-	9371	-	581	1361	5	0.21	-	0.50	-	-	-	-	-	-	-	530							
TOTALS FROM SHEET	116							-	-	-	1.74	-	0.02	1.24	-	2677	582	-	-	-	-	-	-	4645	3282	-	125	2458	-	0.21	-	0.18	-	268	390	-	1	257	395							
TOTALS FROM SHEET	117							-	3	-	1.30	-	-	1.58	-	493	249	-	-	-	-	-	-	-	4255	1	-	5635	-	0.52	-	0.58	-	-	392	74	4	-	593							
TOTALS FROM SHEET	118							-	3	-	-	0.09	-	0.91	121	411	639	-	-	-	6	-	-	-	3511	-	-	1683	2	-	-	-	-	-	-	-	-	-	-	-	-	-	-	-	-	-
TOTALS FROM SHEET	119							-	3	-	-	-	-	0.55	-	1333	694	-	-	-	-	-	-	-	2413	-	-	1083	-	0.10	0.02	0.12	-	-	-	-	-	-	404							
TOTALS CARRIED TO GENERAL SUMMARY								2994	41	1.04	8.75	2.03	3.39	18.26	2864	34686	14515	581	706	657	92	1	4	30133	57669	3	2054	95970	70	1.96	0.46	2.20	0.04	517	1153	74	16	257	2449							

Preliminary Plans - For Reference Only

CUY-90-16.28 (CCG3A)

MODEL: Sheet-27 PAPERSIZE: 34x22 (in.) DATE: 3/27/2025 TIME: 6:52:22 PM USER: Collin.Kwiatt
pw:\\mb-us-pw.bentley.com:mb-us-pw-03\Documents\Cleveland_OH\01_Projects\ODOT\District12\82382\400-Engineering\MOT\Sheets\82382_MS001.dgn

DESIGN AGENCY
Michael Baker INTERNATIONAL

DESIGNER CRK
REVIEWER GSH 05/22/24
PROJECT ID 82382
SHEET 120 TOTAL 2696

REF NO.	SHEET NO.	STATION FROM	STATION TO	SIDE	PHASE	611 12" CONDUIT, TYPE B	611 24" CONDUIT, TYPE B	611 CATCH BASIN, NO. 6	611 CATCH BASIN, NO. 2-2B	611 MANHOLE, NO. 3	839 TRENCH DRAIN, TYPE A WITH STANDARD GRATE
						FT	FT	EACH	EACH	EACH	FT
		INTERIM E. 14TH ST. SB									
D-1.1	289	198+72.33	198+89.03	LT	1	17			1		
D-1.2	289	199+57.66	199+62.85	LT	1	6			1		
D-1.3	289	200+91.72	200+94.93	LT	1	7			1		
		COMMUNITY COLLEGE AVE.									
	289	52+04.35	52+69.29	RT	1	65					
		TEMPORARY RAMP H6									
D-1.4	290	10+22.00	10+70.58	LT/RT	1	100			1		
		INTERIM E. 14TH ST. SB									
D-1.5	291	208+65.06	208+65.14	LT	1	7			1		
		I.R. 90									
	305	84+19.79	84+51.28	LT	2	34					
D-2.1	305	84+51.28	85+90.17	LT	2	140				1	
D-2.2	305	85+90.17	88+53.33	LT	2	263				1	
D-2.3	305	88+53.33		LT	2					1	
		RAMP A2									
D-3.1	321	437+91.00	440+01.55	RT	3	204			1		
		I.R. 90									
	322	84+41.51	84+51.28	LT	3	25					
		RAMP A2									
D-3.2	322	440+01.55	441+67.45	RT	3	161			1		
		I.R. 90 TEMPORARY RUNAROUND									
D-3.4	322	7+76.74	8+00.50	RT/LT	3	58			1		
D-3.5	322	8+00.50		LT	3				1		
D-3.6	323	16+49.90	16+57.63	RT	3	12			1		
D-3.7	323	18+07.60	18+07.91	RT	3	10			1		
		I.R. 90									
D-3.8	324	105+51.83	106+09.87	RT	3	58		1		488	
		I.R. 90 WB									
D-4.1	330	170+95.70	173+87.98	RT	4	289			1		
		I.R. 90									
	333	85+90.17	88+57.71	LT	4	269					
D-4.2	333	88+57.71	88+61.81	LT	4	68				1	
	333	90+10.87	91+08.44	RT	4	98					
D-4.3	334	91+08.44	91+19.31	RT/LT	4	64				1	
	334	93+70.31	94+45.51	RT	4	76					
D-4.4	334	94+45.51	95+69.36	RT/LT	4	141				1	
D-4.5	334	97+22.26	97+40.81	LT	4	47				1	
		I.R. 90 WB									
D-5.1	350	185+57.55	187+91.39	RT	5	237				1	
D-5.2	351	187+91.39		RT	5					1	
		E. 14TH ST. SB									
	351	35+35.41	36+41.31	LT	5	108					
TOTALS CARRIED TO SHEET 122						2564	-	1	12	9	488

Preliminary Plans - For Reference Only

CUY-90-16.28 (CCG3A)

MODEL: Sheet-01 PAPERSIZE: 34x22 (in.) DATE: 3/27/2025 TIME: 6:52:30 PM USER: Collin.Kwiatt
pw:\\mb-us-pw.bentley.com:mb-us-pw-03\Documents\Cleveland_OH\01_Projects\ODOT\District12\82382\400-Engineering\MOT\Sheets\82382_MS201.dgn

MAINTENANCE OF TRAFFIC DRAINAGE SUBSUMMARY - 1

DESIGN AGENCY
Michael Baker INTERNATIONAL

DESIGNER
CRK

REVIEWER
GSH 05/22/24

PROJECT ID
82382

SHEET 121 | TOTAL 2696

REF NO.	SHEET NO.	STATION FROM	STATION TO	SIDE	PHASE	611 12" CONDUIT, TYPE B FT	611 24" CONDUIT, TYPE B FT	611 CATCH BASIN, NO. 6 EACH	611 CATCH BASIN, NO. 2-2B EACH	611 MANHOLE, NO. 3 EACH	839 TRENCH DRAIN, TYPE A WITH STANDARD GRATE FT
		I.R. 90									
D-5.3	353	97+06.71	97+16.66	RT	5	16				1	
		I.R. 90 TEMPORARY RUNAROUND									
	365	3+48.62	4+53.58	LT	6	105					
D-6.1	365	4+53.50	7+57.30	LT	6	303				1	
	365	7+57.30	7+57.50	LT	6	57					
D-6.2	365	7+57.30	8+00.50	LT	6	43				1	
	365	8+00.50	10+20.41	LT	6	218					
		I.R. 90									
	366	94+93.10	95+00.33	RT	6	16					
		I.R. 90 TEMPORARY RUNAROUND									
D-6.3	366	16+30.94		LT	6					1	
		I.R. 90 EB									
D-7.1	373	185+32.72	186+38.10	RT	7	106				1	
	374	186+31.66	186+38.10	LT/RT	7	58					
D-7.2	374	186+38.10		RT	7					1	
		TEMPORARY RAMP H5									
D-7.3	374	106+69.28	107+12.11	RT/LT	7	47			1		
	374	107+12.34	107+14.01	LT	7	34					
D-7.4	374	108+32.48	108+32.52	LT	7	12			1		
		I.R. 90									
	375	85+51.43	85+94.61	RT	7		45				
TOTALS FROM THIS SHEET						1015	45	-	2	6	-
TOTALS FROM SHEET 121						2564	-	1	12	9	488
TOTALS CARRIED TO GENERAL SUMMARY						3579	45	1	14	15	488

Preliminary Plans - For Reference Only

MAINTENANCE OF TRAFFIC DRAINAGE SUBSUMMARY - 2

CUY-90-16.28 (CCG3A)

MODEL: Sheet-02 PAPERSIZE: 34x22 (in.) DATE: 3/27/2025 TIME: 6:52:30 PM USER: Collin.Kwiatt
pw:\\mb-us-pw.bentley.com:mb-us-pw-03\Documents\Cleveland_OH\01_Projects\ODOT\District12\82382\400-Engineering\MOT\Sheets\82382_MS201.dgn

DESIGN AGENCY
Michael Baker INTERNATIONAL

DESIGNER CRK

REVIEWER GSH 05/22/24

PROJECT ID 82382

SHEET 122 TOTAL 2696

REF NO.	SHEET NO.	STATION FROM	STATION TO	SIDE	PHASE	SIZE	630 GROUND MOUNTED STRUCTURAL BEAM SUPPORT, W10X22	630 ONE WAY SUPPORT, NO. 3 POST	630 SIGN ATTACHMENT ASSEMBLY	630 SIGN, FLAT SHEET	630 SIGN, OVERHEAD EXTRUSHEET	630 SIGN, TEMPORARY OVERLAY	630 GROUND MOUNTED STRUCTURAL BEAM SUPPORT FOUNDATION	630 REMOVAL OF GROUND MOUNTED SIGN AND DISPOSAL	630 REMOVAL OF GROUND MOUNTED STRUCTURAL BEAM SUPPORT AND DISPOSAL	630 REMOVAL OF OVERHEAD MOUNTED SIGN AND STORAGE	630 REMOVAL OF OVERHEAD MOUNTED SIGN AND REERECTION	630 REMOVAL OF OVERHEAD MOUNTED SIGN AND DISPOSAL	630 REMOVAL OF TEMPORARY OVERLAY SIGN AND DISPOSAL	630 REMOVAL OF TEMPORARY OVERLAY SIGN AND STORAGE
						FT	FT	FT	EACH	SF	SF	SF	EACH	EACH	EACH	EACH	EACH	EACH	EACH	EACH
		RAMP A3																		
MS-1	156	590+01.88		LT	2	6 X 1.25						7.5							1	
		E. 14TH ST.																		
MS-2	156	20+48.87		LT	2	6 X 1.25						7.5							1	
		I.R. 90																		
MS-3	157				2	8 X 1.25						10.0								1
MS-4	157				2	11 X 4			1		44.0					1				
MS-5	157	28+49.40		LT	2	11 X 4			1		44.0					1				
MS-6	157	28+49.40		LT	2	8 X 1.25						10.0								1
MS-7	157	46+17.55		LT	2	11 X 4			1		44.0					1				
MS-8	157	46+19.57		LT	2	8 X 1.25						10.0								1
		E. 30TH ST.																		
MS-9	160				4	6 X 1.25						7.5							1	
MS-10	160				4	6 X 1.25						7.5							1	
		PROSPECT AVE.																		
MS-11	160				4	6 X 1.25						7.5							1	
MS-12	160				3	6 X 1.25						7.5							1	
		I.R. 77																		
MS-13	164	40+11.00		RT	4	10 X 3			1		30.0							1		
MS-14	164	56+66.00		RT	4	10 X 3			1		30.0							1		
MS-15	164	67+71.00		RT	4	10 X 3			1		30.0							1		
MS-16	164	76+51.00		RT	4	10 X 3			1		30.0							1		
		RAMP H6																		
MS-17	164	1182+17.00		LT	4	10 X 3			1		30.0							1		
		EX. CENTRAL AVE.																		
MS-18	164	22+65.50		RT	4	10 X 1						10.0							1	
MS-18	164	22+65.50		RT	4	4 X 0.667						2.0							1	
		I.R. 77																		
MS-19	166	40+11.00		RT	6	11 X 1.5						16.5							1	
MS-20	166	40+11.00		RT	6	11 X 3			1		33.0							1		
MS-21	166	56+66.00		RT	6	11 X 1.5						16.5							1	
MS-22	166	56+66.00		RT	6	11 X 3			1		33.0							1		
MS-23	166	67+71.00		RT	6	11 X 1.5						16.5							1	
MS-24	166	76+51.00		RT	6	11 X 3			1		33.0							1		
MS-25	166	76+51.00		RT	6	8 X 1.25						10.0							1	
		I.R. 90																		
MS-26	167				8	8 X 1.25						10.0							1	
MS-27	167				8	11 X 4			1		44.0							1		
MS-28	167	28+49.40		RT	8	8 X 1.25						10.0							1	
MS-29	167	28+49.40		RT	8	11 X 4			1		44.0							1		
MS-30	167	46+17.55		RT	8	11 X 4			1		44.0							1		
MS-31	167	46+19.57		RT	8	8 X 1.25						10.0							1	
		I.R. 77																		
MS-32	284	31+48.61		RT	1	11 X 4			1		44.0							1		
TOTALS CARRIED TO SHEET 125							-	-	15	-	557.0	176.5	-	-	-	3	-	12	15	3

Preliminary Plans - For Reference Only

MAINTENANCE OF TRAFFIC SIGNING SUBSUMMARY - 1

CUY-90-16.28 (CCG3A)

MODEL: Sheet-01 PAPERSIZE: 34x22 (in.) DATE: 3/27/2025 TIME: 6:52:35 PM USER: Collin.Kwiatt
pw:\\mb-us-pw.bentley.com:mb-us-pw-03\Documents\Cleveland_OH\01_Projects\ODOT\District12\82382\400-Engineering\MOT\Sheets\82382_MS101.dgn

DESIGN AGENCY
Michael Baker INTERNATIONAL

DESIGNER CRK

REVIEWER GSH 05/22/24

PROJECT ID 82382

SHEET 123 | TOTAL 2696

REF NO.	SHEET NO.	STATION FROM	STATION TO	SIDE	PHASE	SIZE	630 GROUND MOUNTED STRUCTURAL BEAM SUPPORT, W10X22	630 ONE WAY SUPPORT, NO. 3 POST	630 SIGN ATTACHMENT ASSEMBLY	630 SIGN, FLAT SHEET	630 SIGN, OVERHEAD EXTRUSHEET	630 SIGN, TEMPORARY OVERLAY	630 GROUND MOUNTED STRUCTURAL BEAM SUPPORT FOUNDATION	630 REMOVAL OF GROUND MOUNTED SIGN AND DISPOSAL	630 REMOVAL OF GROUND MOUNTED STRUCTURAL BEAM SUPPORT AND DISPOSAL	630 REMOVAL OF OVERHEAD MOUNTED SIGN AND STORAGE	630 REMOVAL OF OVERHEAD MOUNTED SIGN AND REERECTION	630 REMOVAL OF OVERHEAD MOUNTED SIGN AND DISPOSAL	630 REMOVAL OF TEMPORARY OVERLAY SIGN AND DISPOSAL	630 REMOVAL OF TEMPORARY OVERLAY SIGN AND STORAGE
						FT	FT	FT	EACH	SF	SF	SF	EACH	EACH	EACH	EACH	EACH	EACH	EACH	EACH
		I.R. 77 (CONT.)																		
MS-32	284	31+48.64		RT	1	18 X 3						54.0							1	
MS-33	284	40+11.00		RT	1	8 X 1.25						10.0							1	
MS-34	284	40+11.00		RT	1	18 X 3			1		54.0							1		
MS-34	284	40+11.00		RT	1	2.5 X 2.5						6.3							1	
MS-34	284	40+11.00		RT	1	11 X 4			1		44.0							1		
MS-35	286	56+66.00		RT	1	8 X 1.25						10.0							1	
MS-36	287	67+71.00		RT	1	8 X 1.25						10.0							1	
MS-37	288	76+51.00		RT	1	8 X 1.25						10.0					3			
MS-38	299	76+51.00		RT	2	10 X 3						30.0							1	
MS-39	299	76+51.00		RT	2	5 X 1.5						7.5							1	
		I.R. 90																		
MS-40	302	52+00.00		RT	2	11 X 4			1		44.0					1				
MS-41	302	57+98.00		RT	2	11 X 4			1		44.0					1				
MS-42	303	62+23.78		RT	2	8 X 1.25						10.0								1
MS-43	304	76+50.00		RT	2	3 X 2						6.0					1			
MS-44	305	87+48.46		LT	2	11 X 3						33.0								
MS-45	306	96+42.72		LT	2	11 X 3						33.0								
		RAMP A2																		
MS-46	317	416+76.00		RT	3	18 X 3						54.0								
		I.R. 90																		
MS-47	319	54+71.00		LT	3	17 X 1.25						21.0								
MS-48	320	62+29.20		RT	3	8 X 1.25						10.0								
MS-49	320	70+01.40		RT	3	17 X 1.25						21.0								
MS-50	321	76+50.00		RT	3	8 X 1.25						10.0								
MS-51	321	76+50.00		RT	3	13 X 3			1		39.0									
		PROSPECT AVE.																		
MS-52	323				3	6 X 1.25						7.5							1	
MS-52	323				3	6 X 1.25						7.5							1	
		I.R. 90																		
MS-53	324	104+22.52		RT	3	13 X 3			1		39.0							1		
MS-54	333	83+71.85		LT	4	11 X 11	48.6			121.0			2	1	2					
MS-54	333	83+71.85		LT	4	10 X 2.5		12.5		25.0										
MS-55	333	87+63.72		LT	4	3 X 3						9.0							1	
MS-55	333	87+63.72		LT	4	14 X 3						42.0							1	
		PROSPECT AVE.																		
MS-56	334				4	6 X 1.25						7.5							1	
MS-57	334				4	6 X 1.25						7.5							1	
MS-56	334				4	6 X 1.25						7.5							1	
		E. 14TH ST. SB																		
MS-58	369	38+84.44		LT	6	13 X 6.5						84.5							1	
		I.R. 90																		
MS-59	373	62+47.00		LT	7	13 X 3			1		39.0							1		
		I.R. 77																		
MS-60	381	76+51.00		RT	8												1			
MS-61	381	76+51.00		RT	8	19 X 3						57.0							1	
TOTALS CARRIED TO SHEET 125							48.6	12.5	7	146.0	303.0	565.8	2	1	2	2	5	4	16	1

Preliminary Plans - Not For Reference Only

MAINTENANCE OF TRAFFIC SIGNING SUBSUMMARY - 2

CUY-90-16.28 (CCG3A)

MODEL: Sheet-02 PAPERSIZE: 34x22 (in.) DATE: 3/27/2025 TIME: 6:52:35 PM USER: Collin.Kwiatt
pw:\\mb-us-pw.bentley.com:mb-us-pw-03\Documents\Cleveland_OH101_Projects\ODOT\District12\82382400-Engineering\MOT\Sheets\82382_MS101.dgn

DESIGN AGENCY
Michael Baker INTERNATIONAL

DESIGNER CRK

REVIEWER GSH 05/22/24

PROJECT ID 82382

SHEET 124 TOTAL 2696

REF NO.	SHEET NO.	STATION FROM	STATION TO	SIDE	PHASE	SIZE	630 GROUND MOUNTED STRUCTURAL BEAM SUPPORT, W10X22	630 ONE WAY SUPPORT, NO. 3 POST	630 SIGN ATTACHMENT ASSEMBLY	630 SIGN, FLAT SHEET	630 SIGN, OVERHEAD EXTRUSHEET	630 SIGN, TEMPORARY OVERLAY	630 GROUND MOUNTED STRUCTURAL BEAM SUPPORT FOUNDATION	630 REMOVAL OF GROUND MOUNTED SIGN AND DISPOSAL	630 REMOVAL OF GROUND MOUNTED STRUCTURAL BEAM SUPPORT AND DISPOSAL	630 REMOVAL OF OVERHEAD MOUNTED SIGN AND STORAGE	630 REMOVAL OF OVERHEAD MOUNTED SIGN AND REERECTION	630 REMOVAL OF OVERHEAD MOUNTED SIGN AND DISPOSAL	630 REMOVAL OF TEMPORARY OVERLAY SIGN AND DISPOSAL	630 REMOVAL OF TEMPORARY OVERLAY SIGN AND STORAGE
						FT	FT	FT	EACH	SF	SF	SF	EACH	EACH	EACH	EACH	EACH	EACH	EACH	EACH
		I.R. 77 (CONT.)																		
MS-62	381	76+51.00		RT	8	10 X 2.9						29.0							1	
		I.R. 90																		
MS-63	383	52+00.00		RT	8	11 X 4			1		44.0							1		
MS-64	383	57+98.00		RT	8	11 X 4			1		44.0							1		
MS-65	384	62+43.50		RT	8	8 X 1.25						10.0							1	
MS-66	387	91+85.00		RT	8	13 X 3			1		39.0							1		
MS-67	397	78+22.28		LT	9	13 X 3			1		39.0							1		
		TOTALS FROM THIS SHEET					-	-	4	-	166.0	39.0	-	-	-	-	-	4	2	-
		TOTALS FROM SHEET 123					-	-	15	-	557.0	176.5	-	-	-	3	-	12	15	3
		TOTALS FROM SHEET 124					48.6	12.5	7	146.0	303.0	565.8	2	1	2	2	5	4	16	1
		TOTALS CARRIED TO GENERAL SUMMARY					48.6	12.5	26	146.0	1026.0	781.3	2	1	2	5	5	20	33	4

Preliminary Plans - Not For Reference Only

MAINTENANCE OF TRAFFIC SIGNING SUBSUMMARY - 3

DESIGN AGENCY
Michael Baker INTERNATIONAL

DESIGNER CRK

REVIEWER GSH 05/22/24

PROJECT ID 82382

SHEET 125 TOTAL 2696

CUY-90-16.28 (CCG3A)

MODEL: Sheet-03 PAPERSIZE: 34x22 (in.) DATE: 3/27/2025 TIME: 6:52:36 PM USER: Collin.Kwiatt
pw:\\mb-us-pw.bentley.com:mb-us-pw-03\Documents\Cleveland_OH101_Projects\ODOT\District12\82382400-Engineering\MOT\Sheets\82382_MS101.dgn

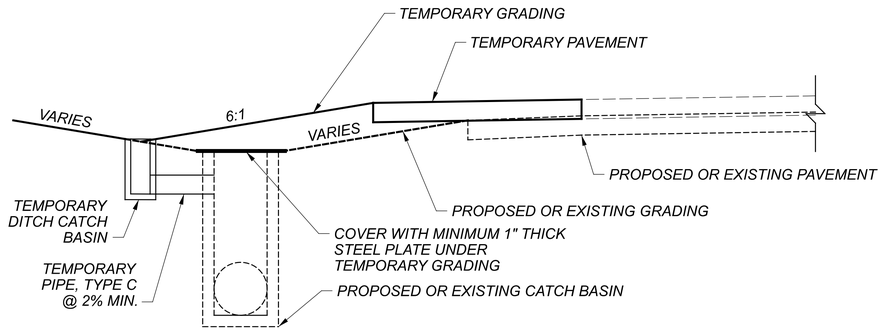

TEMPORARY DITCH CATCH BASIN
DETAIL 1
(NOT TO SCALE)

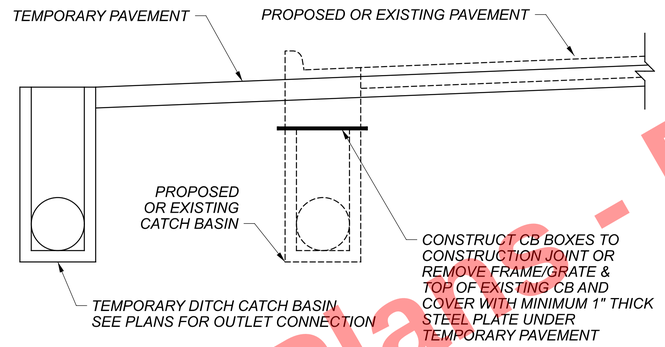

TEMPORARY DITCH CATCH BASIN
DETAIL 2
(NOT TO SCALE)

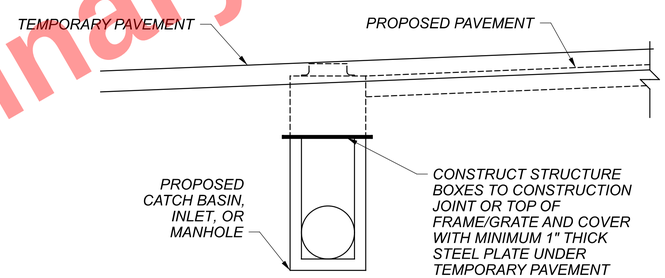

TEMPORARY STRUCTURE COVER
DETAIL 3
(NOT TO SCALE)

TEMPORARY INLET SCHEDULE

PHASE	SHEET	DETAIL	ALIGNMENT	STATION	SIDE	REFERENCE
1	289	2	INTERIM E. 14TH ST. SB	198+72	LT	D-1.1
1	289	2	INTERIM E. 14TH ST. SB	199+58	LT	D-1.2
1	289	2	INTERIM E. 14TH ST. SB	200+91	LT	D-1.3
1	290	N/A	RAMP H6 TEMPORARY PAVEMENT	10+70	RT	D-1.4
1	291	2	INTERIM E. 14TH ST. SB	208+65	LT	D-1.5
3	321	N/A	RAMP A2	437+90	RT	D-3.1
3	322	N/A	RAMP A2	440+00	RT	D-3.2
3	322	N/A	I.R. 90 TEMPORARY RUNAROUND	7+77	RT	D-3.4
3	322	N/A	I.R. 90 TEMPORARY RUNAROUND	8+00	LT	D-3.5
3	323	1	I.R. 90 TEMPORARY RUNAROUND	16+50	RT	D-3.6
3	323	1	I.R. 90 TEMPORARY RUNAROUND	18+08	RT	D-3.7
4	330	1	I.R. 90 WB	173+88	RT	D-4.1
7	374	1	TEMPORARY RAMP H5	106+69	RT	D-7.3
7	374	1	TEMPORARY RAMP H5	108+33	LT	D-7.4

TEMPORARY CB-6

PHASE	SHEET	ALIGNMENT	STATION	SIDE	REFERENCE
3	324	EX. I.R. 90	105+51	RT	D-3.8

TEMPORARY MANHOLE SCHEDULE

PHASE	SHEET	ALIGNMENT	STATION	SIDE	REFERENCE
2	305	EX. I.R. 90	84+51	LT	D-2.1
2	305	EX. I.R. 90	85+90	LT	D-2.2
2	305	EX. I.R. 90	88+53	LT	D-2.3
4	333	EX. I.R. 90	88+58	LT	D-4.2
4	334	EX. I.R. 90	91+08	RT	D-4.3
4	334	EX. I.R. 90	94+45	RT	D-4.4
4	334	EX. I.R. 90	97+41	LT	D-4.5
5	350	I.R. 90 WB	185+58	RT	D-5.1
5	351	I.R. 90 WB	187+91	RT	D-5.2
5	353	EX. I.R. 90	97+17	RT	D-5.3
6	365	I.R. 90 TEMPORARY RUNAROUND	4+54	LT	D-6.1
6	365	I.R. 90 TEMPORARY RUNAROUND	7+57	LT	D-6.2
6	365	I.R. 90 TEMPORARY RUNAROUND	16+31	LT	D-6.3
7	373	I.R. 90 EB	185+33	RT	D-7.1
7	374	I.R. 90 EB	186+38	RT	D-7.2

PROPOSED INSTALLATION OUT OF PHASE

PHASE	SHEET	ALIGNMENT	STATION	SIDE	NOTE
1	291	RAMP A3	585+55	LT	JACK AND BORE PROP 66" TO D-600
2	300 & 303	RAMP IB5	1710+85	LT	D-410A TO D-411 TO EXISTING
3	322	EX. I.R. 90	84+20	LT	EXISTING TO D-211 TO D-220 TO TEMP MH
6	365	I.R. 90 EB	199+00	RT	D-211 TO D-217 TO TEMP MH
7	374	RAMP H5	991+75	RT	D-530 TO DETENTION BASIN
7	375	I.R. 90 EB	200+50	RT	D-217 TO D-218 TO TEMP OUTLET

TEMPORARY STRUCTURE COVER

PHASE	SHEET	DETAIL	ALIGNMENT	STATION	SIDE	REFERENCE
1	289	3	E. 14TH ST NB	53+50	RT	D-634
1	289	3	E. 14TH ST NB	53+85	RT	D-635
1	289	3	INTERIM E. 14TH ST SB	208+25	LT	D-616
1	291	3	INTERIM E. 14TH ST SB	209+01	LT	D-610

Preliminary Plans - For Reference Only

MAINTENANCE OF TRAFFIC
TEMPORARY DRAINAGE DETAILS

DESIGN AGENCY
Michael Baker INTERNATIONAL

DESIGNER CRK
REVIEWER KGJ 05/22/24
PROJECT ID 82382
SHEET 126 TOTAL 2696

CUY-90-16.28 (CCG3A)

MODEL: Sheet PAPERSIZE: 34x22 (in.) DATE: 3/27/2025 TIME: 6:52:40 PM USER: Collin.Kwiatt
pw:\\mb-us-pw.bentley.com:mb-us-pw-03\Documents\Cleveland_OH\01_Projects\000T\District2\82382\400-Engineering\MOT\Sheets\82382_MM000i.dgn

MAINTENANCE OF TRAFFIC LEGEND:

- ■ *CLASS 1 NON-INTRUSIVE TRAFFIC SENSOR (CL1TS)*
- ⊢⊣ *PORTABLE CHANGEABLE MESSAGE SIGN (PCMS)*

FOR ADDITIONAL INFORMATION REFER TO MOT NOTES SHEET 85

PCMS FOR IR 90 WB WORK ZONE QUEUE DETECTION WARNING SYSTEM

CL1TS FOR IR 90 WB WORK ZONE QUEUE DETECTION WARNING SYSTEM LOCATED ON SOUTH MARGINAL BRIDGE

SUPERIOR AVENUE

CL1TS FOR IR 90 WB WORK ZONE QUEUE DETECTION WARNING SYSTEM LOCATED ON SUPERIOR AVENUE BRIDGE

CHESTER AVENUE

EUCLID AVENUE

CL1TS FOR IR 90 WB WORK ZONE QUEUE DETECTION WARNING SYSTEM LOCATED ON EUCLID AVENUE BRIDGE

CARNEGIE AVENUE

CL1TS FOR IR 90 EB AND IR 77 NB WORK ZONE QUEUE DETECTION WARNING SYSTEM LOCATED ON SIGN TRUSS BEFORE EXIT 163B

CL1TS FOR IR 77 NB WORK ZONE QUEUE DETECTION WARNING SYSTEM LOCATED ON CAMERA TOWER BEFORE EXIT 162B/E22ND BRIGE

CL1TS FOR IR 90 EB WORK ZONE QUEUE DETECTION WARNING SYSTEM LOCATED ON SIGN TRUSS NEAR LIGHT POLE D3-9

CL1TS FOR IR 77 NB WORK ZONE QUEUE DETECTION WARNING SYSTEM LOCATED ON LIGHT TOWER ORG 21

CL1TS FOR IR 90 EB WORK ZONE QUEUE DETECTION WARNING SYSTEM LOCATED ON SIGN TRUSS NEAR LIGHT POLE W2-26

CUYAHOGA RIVER

PCMS FOR IR 77 NB WORK ZONE QUEUE DETECTION WARNING SYSTEM LOCATED UPSTREAM OF IR 490/ IR 77 NB INTERCHANGE

PCMS FOR IR 90 EB WORK ZONE QUEUE DETECTION WARNING SYSTEM LOCATED UPSTREAM OF IR 490/ IR 90 EB INTERCHANGE

Preliminary Plans - For Reference Only

HORIZONTAL SCALE IN FEET
0 400 800 1600

WORK ZONE QUEUE DETECTION WARNING SYSTEM
ALL PHASES
I.R. 90 EB, I.R. 90 WB, I.R. 77 NB

DESIGN AGENCY
Michael Baker INTERNATIONAL

DESIGNER CRK
REVIEWER GSH 05/22/24
PROJECT ID 82382
SHEET 127 TOTAL 2696

CUY-90-16.28 (CCG3A)

MODEL: WZQDWS Sheet PAPERSIZE: 34x22 (in.) DATE: 3/27/2025 TIME: 6:52:45 PM USER: Collin.Kwiat
pw:\\mb-us-pw.bentley.com:mb-us-pw-03\Documents\Cleveland_OH\DLProjects\ODOT\District2\82382\400-Engineering\MOT\Sheets\82382_MMI001.dgn

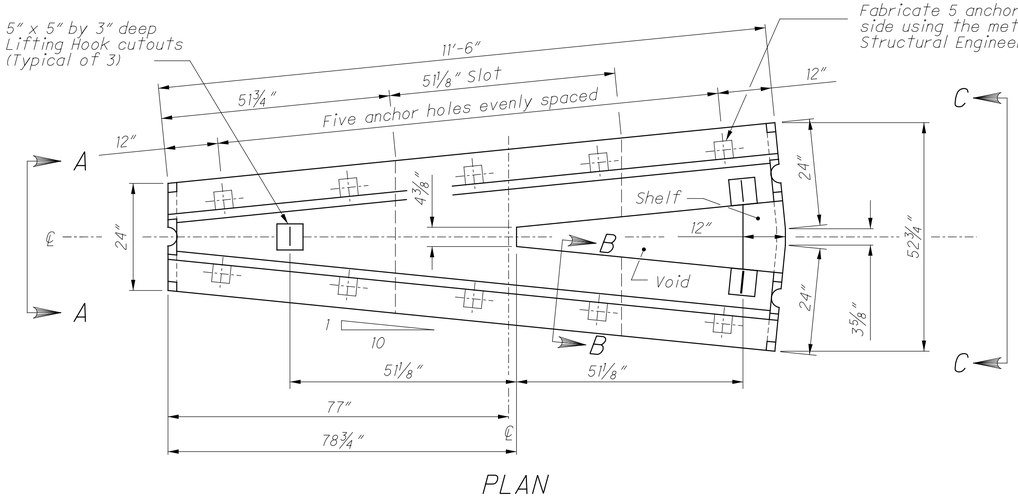

PLAN

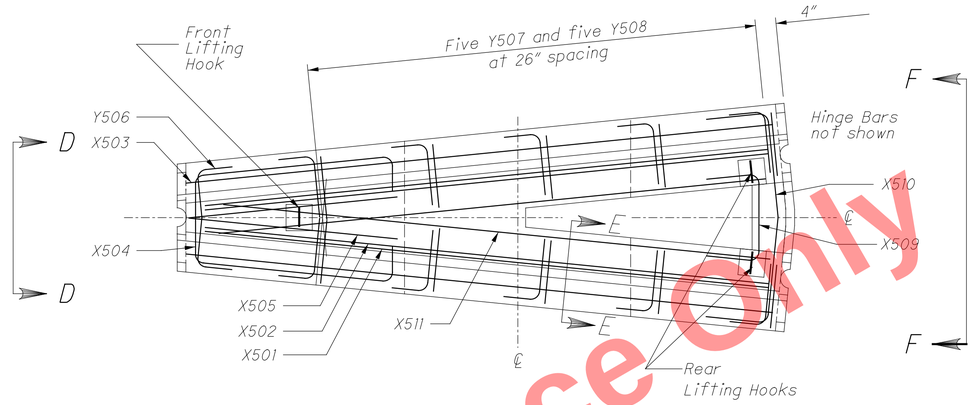

REINFORCING PLAN VIEW

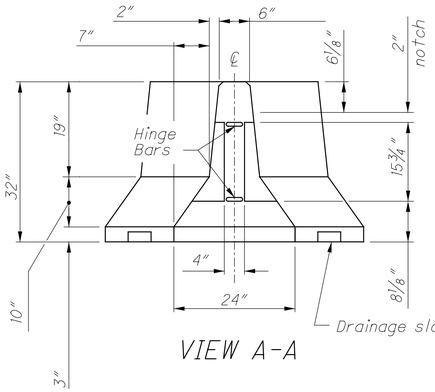

VIEW A-A

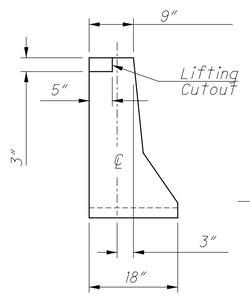

SECTION B-B

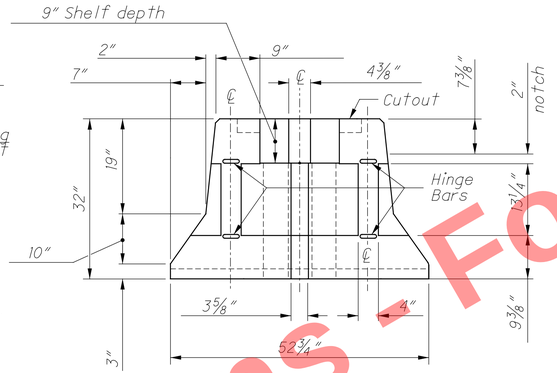

VIEW C-C

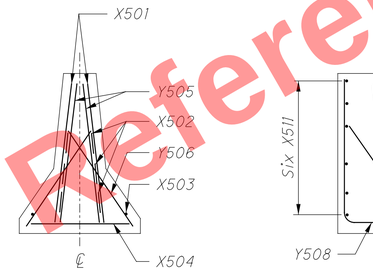

VIEW D-D

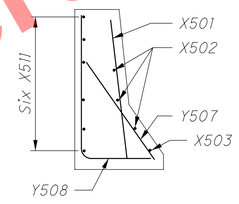

SECTION E-E

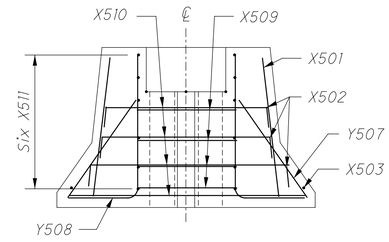

VIEW F-F

REINFORCING DETAILS

NOTES

GENERAL: This barrier segment is an alternative method to split one run of portable concrete barrier into dual runs. Attach directly to ODOT's 32" PCB; however, other approved barrier shapes may be connected to this segment by the use of an appropriate transition unit. Attach atleast one standard PCB segment in between this "Y" and an Impact Attenuator. Its field application is shown in MOT plans and on MT standard drawings. Do not use this barrier in an unanchored configuration next to bridge deck edges or similiar dropoffs, anchor according to method shown on PCBDD or other approved method.

BARRIER DETAILS: Use **SCD RM-4.2** for details not shown here, including the geometry of this pin and loop segment matches in every way the design of the end connections shown on the HINGED CONNECTION and JOINT CONNECTION Details (the alternate J-J Hooks connection design is permitted). Additionally, barrier edges may be radiused or chamfered as per the LEGEND Note, barrier is to be permanently marked as mentioned in the MARKINGS Note, and delineate as per the REFLECTORIZATION Note.

MATERIAL SPECIFICATIONS: The minimum design strength of the concrete is 4,000 psi and meets the requirements of CMS 499. For reinforcing steel, use ASTM A615 Grade 60 black steel and provide 2" min. rebar cover. Material specifications for the Hinge and Reinforcing Bars, as well as the Connecting Hardware may be found on SCD RM-4.2. For additional material specifications not shown here, see **SCD RM-4.2** and CMS 622.

HANDLING: The fabricator is responsible for the design of a lifting system for handling segments. As a minimum, use three lifting points at the locations suggested in the Plan views, and design with a lifting factor of safety of 4. Any protrusions from the lifting hook design is not to affect the crash worthiness of the barrier. The calculations shall be signed, sealed and dated by a Registered Engineer and include these calculations with the Manufacturing Drawings required by Supplement 1073.12. Refer to Part 5 of the PCI Handbook. Approximate segment weight is 8,500 lbs [3850 kg].

PAYMENT: Payment will be made under **Item 622 - Dual Portable Barrier Transition/Termination, Each,** and will include all forms, materials and labor to cast and install this segment.

ALTERNATE METHOD: Contractors may choose to use the concrete "Y" connector in lieu of a Wide Impact Attenuator. The Wide Impact Attenuator unit will be a Type 2 or 3 Impact Attenuator or equivalent as approved by the Engineer.

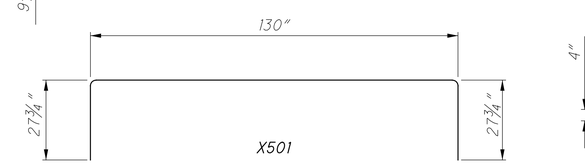

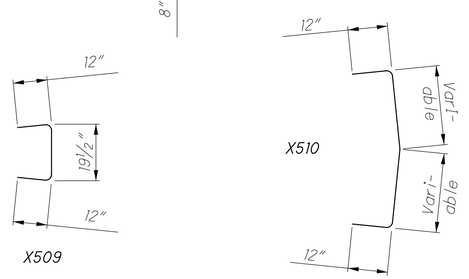

BENDING DIAGRAMS

REINFORCING BAR LIST

BAR	LENGTH	SHAPE	QUANT.
X501	185.5"	Bent	2
X502	138"	Bent	6
X503	130"	Str.	2
X504	124.5"	Bent	1
X505	82.25"	Bent	2
Y506	30"	Bent	2
Y507	32"	Bent	10
Y508	42.5"	Bent	10
X509	43.5"	Bent	4
X510	Varies	Bent	4
X511	124"	Str.	12

For Reference Only
Preliminary Plans - Not for Construction

OFFICE OF ROADWAY ENGINEERING

REVISION DATE
10-20-2023

ODOT PLAN INSERT SHEET
PCB "Y" CONNECTOR SEGMENT

THIS DRAWING REPLACES Y BARRIER PLAN INSERT SHEET DATED 04-16-2010

DESIGN AGENCY

DESIGNER
CRK

REVIEWER
GSH 05/22/24

PROJECT ID
82382

SUBSET 1 | TOTAL 1

SHEET 128 | TOTAL 2696

CUY-90-16.28 (CCG3A)

MODEL: Sheet PAPERSIZE: 34x22 (in.) DATE: 3/27/2025 TIME: 6:52:50 PM USER: Collin.Kwiatt
pw:\\mb-us-pw.bentley.com:mb-us-pw-03\Documents\Cleveland_OH\01_Projects\ODOT\District12\82382\400-Engineering\MOT\Sheets\82382_MM2002.dgn

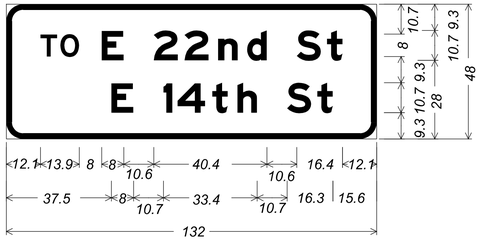

6.0" Radius, 2.0" Border, Black on Orange;
"TO", E 2K; "E 22nd St", E Mod 2K;
"E 14th St", E Mod 2K;
Table of widths and spaces

| | | |

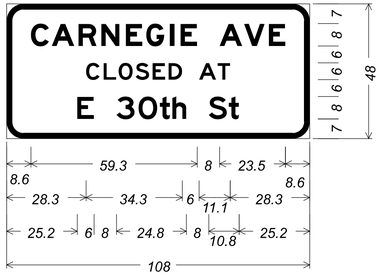

6.0" Radius, 2.0" Border, Black on Orange;
"CARNEGIE AVE", E 2K;
"CLOSED", E 2K; "AT", E 2K;
"E 30th St", E 2K;
Table of widths and spaces

| | | |

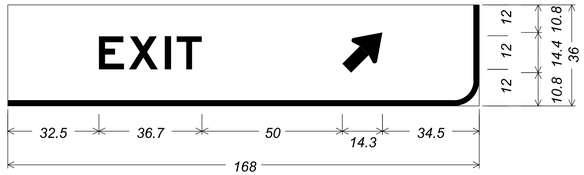

9.0" Radius, 2.0" Border, Black on Orange;
"EXIT", E 2K;
Standard Custom Type B Arrow 18.0" X 12.1" 45° Black;
Table of widths and spaces

32.5	E 9.0	1.7	X 10.4	2.4	I 2.2	2.0	T 9.0	50.0	↗ 14.3	34.5

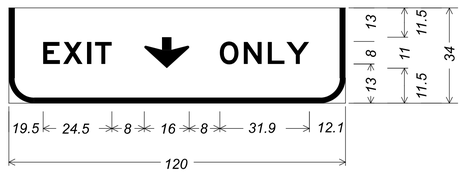

9.0" Radius, 2.0" Border, Black on Orange;
"EXIT", E 2K;
Down Arrow C-4 - 11.0" 270°;
"ONLY", E 2K;
Table of widths and spaces

19.5	E 6.0	1.1	X 7.0	1.6	I 1.4	1.4	T 6.0
	8.0	↓ 16.0					
8.0	O 6.7	1.8	N 6.5	2.1	L 6.0	0.6	Y 8.2	12.1

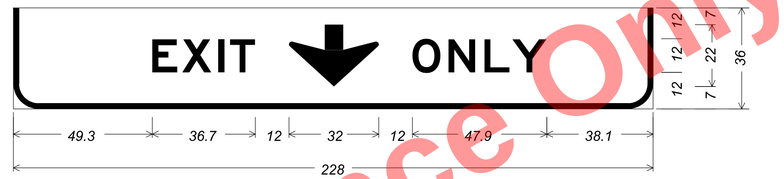

9.0" Radius, 2.0" Border, Black on Orange;
"EXIT", E 2K; Down Arrow C-1 - 22.0" 270°; "ONLY", E 2K;
Table of widths and spaces

49.3	E 9.0	1.7	X 10.4	2.4	I 2.2	2.0	T 9.0	12.0	↓ 32.0
	O 12.0	10.1	2.8	N 9.7	3.1	L 9.0	1.0	Y 12.2	38.1

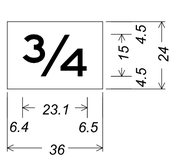

No border, White on Green;
"3/4", E 2K;
Table of widths and spaces

6.4	3/4 23.1	6.5

Preliminary Plans - For Reference Only

TEMPORARY GUIDE SIGN FABRICATION DETAILS 3

DESIGN AGENCY
Michael Baker INTERNATIONAL

DESIGNER
CRK

REVIEWER
GSH 05/22/24

PROJECT ID
82382

SHEET 131 | TOTAL 2696

CUY-90-16.28 (CCG3A)

MODEL: Sheet3 PAPERSIZE: 34x22 (in.) DATE: 3/27/2025 TIME: 6:53:00 PM USER: Collin.Kwiatt
pw:\\mb-us-pw.bentley.com:mb-us-pw-03\Documents\Cleveland_OH\01_Projects\ODOT\District12\82382400-Engineering\MOT\EngData\MOT_Sign Fabs\82382_MM1000.dgn

LOOKING WESTBOUND

℄ EX. I.R. 90

ELEV. 652.99
ELEV. 653.13
ELEV. 653.31
ELEV. 653.50
ELEV. 653.85
ELEV. 653.74
ELEV. 653.64
ELEV. 653.37

6.0' | 11' LANE | 11' LANE | 11' LANE | 12.6' | 11' LANE | 11' LANE | 11' LANE | 13' WORK ZONE EGRESS | 2'

STA. 83+71.85, 54.3' LT
W10 X 22 BEAMS
LT. BEAM = 24.23'
RT. BEAM = 24.40'

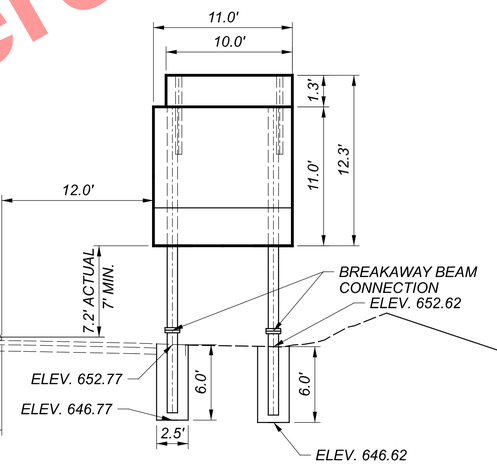

MAINTENANCE OF TRAFFIC - PHASE 4
TEMPORARY SIGN ELEVATION VIEW

Preliminary Plans - For Reference Only

DESIGN AGENCY
Michael Baker INTERNATIONAL

DESIGNER
CRK

REVIEWER
GSH 05/22/24

PROJECT ID
82382

SHEET 132 | TOTAL 2696

CUY-90-16.28

MODEL: Sheet4 PAPERSIZE: 34x22 (in.) DATE: 3/27/2025 TIME: 6:53:01 PM USER: Collin.Kwiat
pw:\\mb-us-pw.bentley.com:mb-us-pw-03\Documents\Cleveland_OH\01_Projects\000T\Dist12\82382\400-Engineering\MOT\Engineering\MOT\EngData\MOT_Sign Fabs\82382_MM000.dgn

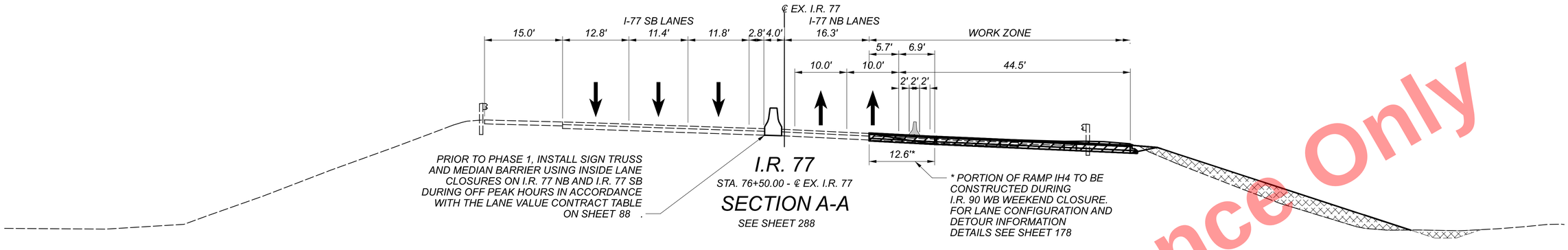

I.R. 77

STA. 76+50.00 - ℄ EX. I.R. 77

SECTION A-A

SEE SHEET 288

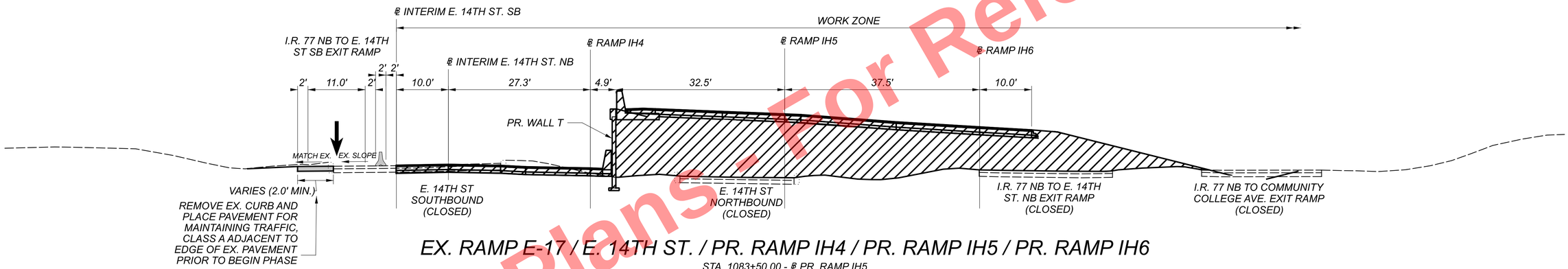

EX. RAMP E-17 / E. 14TH ST. / PR. RAMP IH4 / PR. RAMP IH5 / PR. RAMP IH6

STA. 1083+50.00 - ℄ PR. RAMP IH5

SECTION B-B

SEE SHEET 289

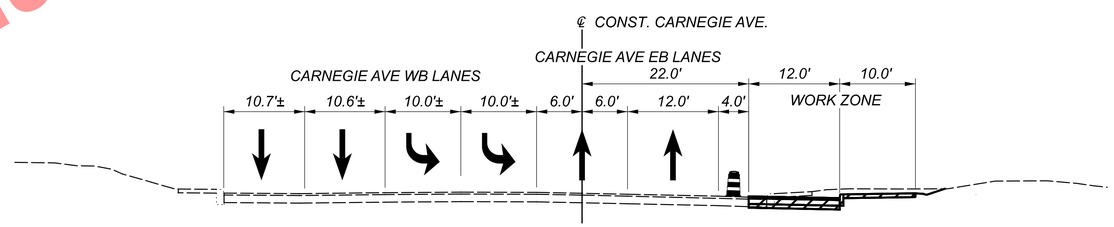

CARNEGIE AVE.

STA. 33+50.00 - ℄ EX. R/W CARNEGIE AVE.

SECTION C-C

SEE SHEET 291

MAINTENANCE OF TRAFFIC TYPICAL SECTIONS LEGEND

- AREA OF CONSTRUCTION DURING THIS PHASE
- EXISTING BRIDGE OR TEMPORARY PAVEMENT REMOVAL
- EXCAVATION
- TEMPORARY PAVEMENT CONSTRUCTED THIS PHASE
- PAVEMENT FOR MAINTAINING TRAFFIC, CLASS A
- PORTABLE BARRIER (PB)
- DRUMS

Preliminary Plans - For Reference Only

MAINTENANCE OF TRAFFIC - PHASE 1
TYPICAL SECTIONS

CUY-90-16.28 (CCG3A)

MODEL: TypicalSections Sheet | PAPERSIZE: 34x22 (in.) DATE: 3/27/2025 TIME: 6:54:33 PM USER: Collin.Kwiat
pw:\\mb-us-pw.bentley.com:mb-us-pw-03\Documents\Cleveland_OH\01_Projects\ODOT\District2\82382\400-Engineering\MOT\Sheets\82382_MY100l.dgn

DESIGN AGENCY
Michael Baker INTERNATIONAL

DESIGNER CRK
REVIEWER GSH 05/22/24
PROJECT ID 82382
SHEET 133 TOTAL 2696

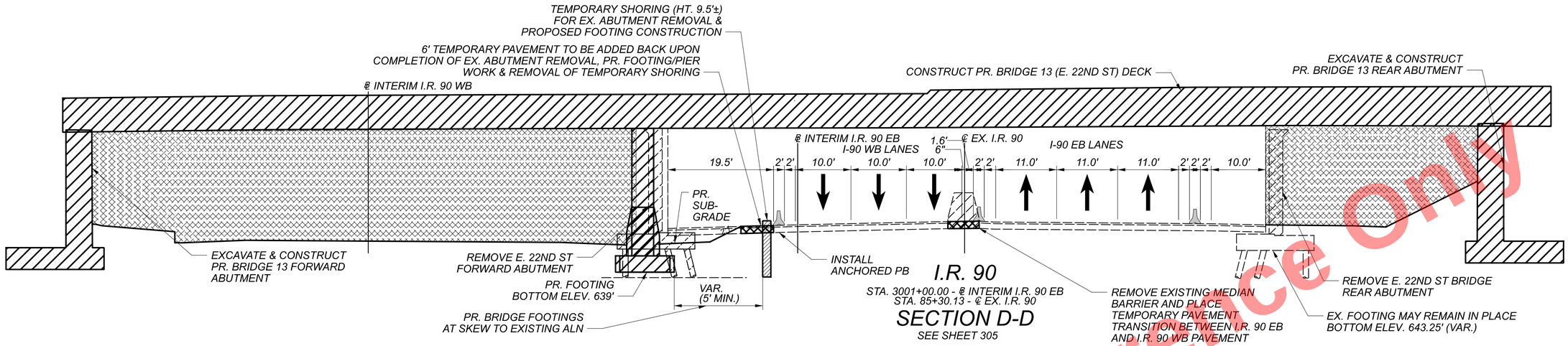

I.R. 90

STA. 3001+00.00 - ℄ INTERIM I.R. 90 EB
STA. 85+30.13 - ℄ EX. I.R. 90

SECTION D-D

SEE SHEET 305

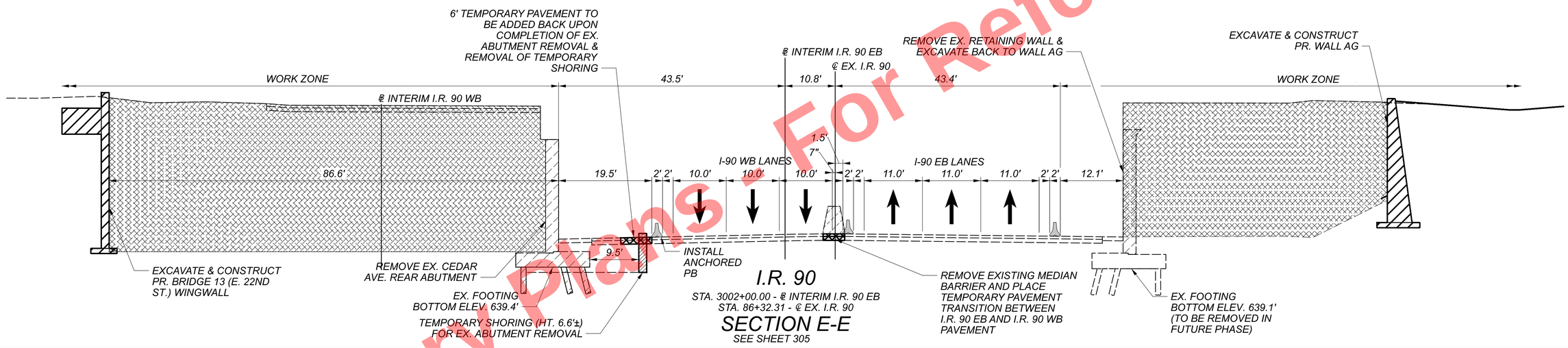

I.R. 90

STA. 3002+00.00 - ℄ INTERIM I.R. 90 EB
STA. 86+32.31 - ℄ EX. I.R. 90

SECTION E-E

SEE SHEET 305

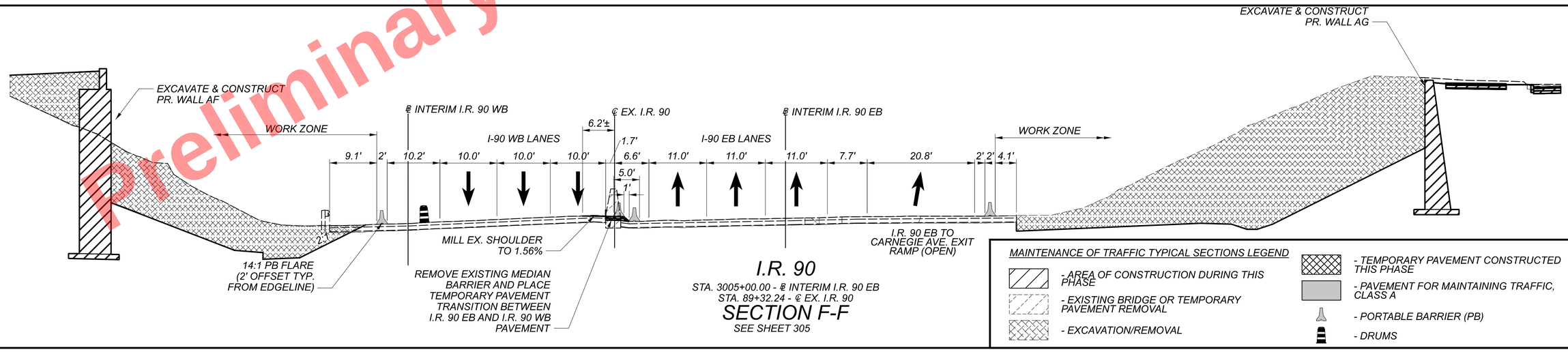

I.R. 90

STA. 3005+00.00 - ℄ INTERIM I.R. 90 EB
STA. 89+32.24 - ℄ EX. I.R. 90

SECTION F-F

SEE SHEET 305

MAINTENANCE OF TRAFFIC TYPICAL SECTIONS LEGEND

- AREA OF CONSTRUCTION DURING THIS PHASE
- EXISTING BRIDGE OR TEMPORARY PAVEMENT REMOVAL
- EXCAVATION/REMOVAL
- TEMPORARY PAVEMENT CONSTRUCTED THIS PHASE
- PAVEMENT FOR MAINTAINING TRAFFIC, CLASS A
- PORTABLE BARRIER (PB)
- DRUMS

Preliminary Plans - For Reference Only

MAINTENANCE OF TRAFFIC - PHASE 2
TYPICAL SECTIONS

DESIGN AGENCY
Michael Baker INTERNATIONAL

DESIGNER CRK
REVIEWER GSH 05/22/24
PROJECT ID 82382
SHEET 134 TOTAL 2696

CUY-90-16.28 (CCG3A)

MODEL: 2 PAPERSIZE: 34x22 (In.) DATE: 3/27/2025 TIME: 6:55:20 PM USER: Colin.Kwiatt
pw:\\mb-us-pw.bentley.com:mb-us-pw-03\Documents\Cleveland_OH\01_Projects\000T\District2\82382\400-Engineering\MOT\Sheets\82382_MY200l.dgn

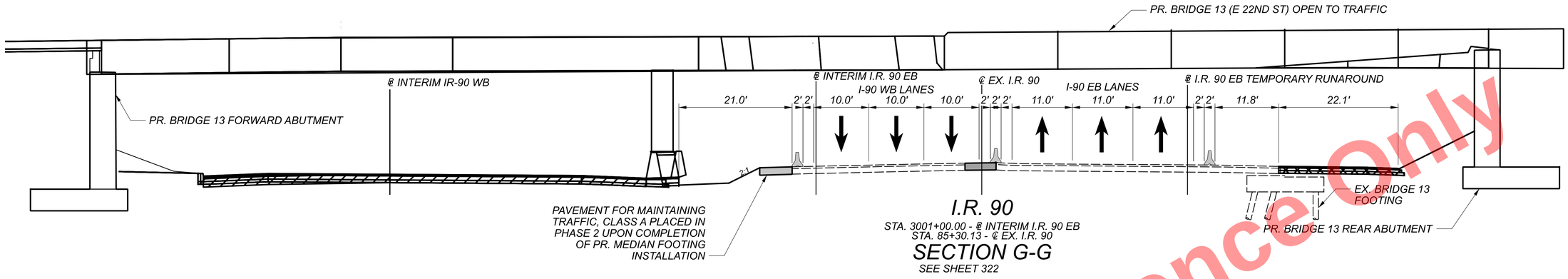

I.R. 90

STA. 3001+00.00 - ℄ INTERIM I.R. 90 EB
STA. 85+30.13 - ℄ EX. I.R. 90

SECTION G-G

SEE SHEET 322

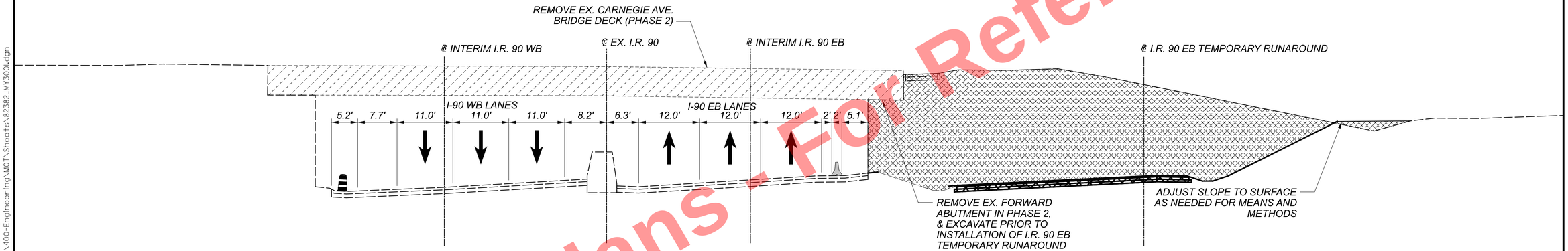

I.R. 90

STA. 3009+00.00 - ℄ INTERIM I.R. 90 EB
STA. 93+23.41 - ℄ EX. I.R. 90

SECTION H-H

SEE SHEET 323

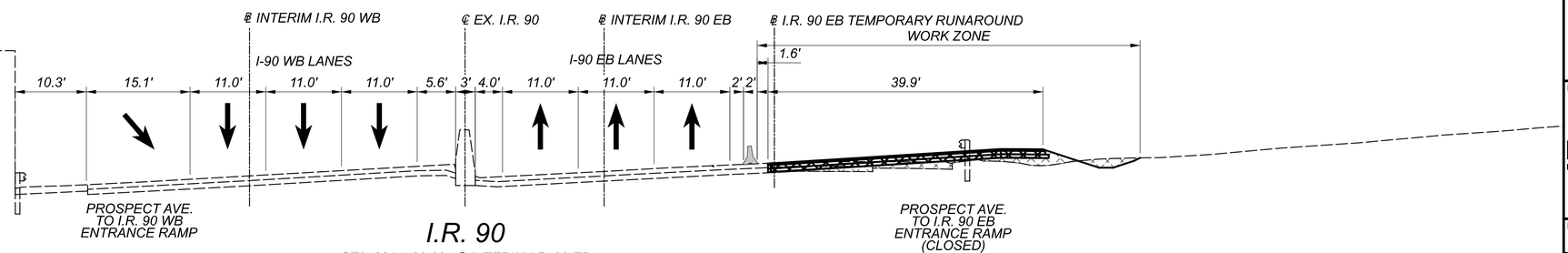

I.R. 90

STA. 3014+00.00 - ℄ INTERIM I.R. 90 EB
STA. 98+17.40 - ℄ EX. I.R. 90

SECTION I-I

SEE SHEET 323

MAINTENANCE OF TRAFFIC TYPICAL SECTIONS LEGEND

- AREA OF CONSTRUCTION DURING THIS PHASE
- EXISTING BRIDGE OR TEMPORARY PAVEMENT REMOVAL
- EXCAVATION
- TEMPORARY PAVEMENT CONSTRUCTED THIS PHASE
- PAVEMENT FOR MAINTAINING TRAFFIC, CLASS A
- PORTABLE BARRIER (PB)
- DRUMS

Preliminary Plans - For Reference Only

MAINTENANCE OF TRAFFIC - PHASE 3
TYPICAL SECTIONS

DESIGN AGENCY
Michael Baker INTERNATIONAL

DESIGNER CRK
REVIEWER GSH 05/22/24
PROJECT ID 82382
SHEET 135 TOTAL 2696

CUY-90-16.28 (CCG3A)

MODEL: Phase 3 TypicalSections PAPERSIZE: 34x22 (in.) DATE: 3/27/2025 TIME: 6:55:50 PM USER: Collin.Kwiatt
pw:\\mb-us-pw.bentley.com:mb-us-pw-03\Documents\Cleveland_OH\01_Projects\ODOT\District#12\82382\400-Engineering\MOT\Sheets\82382_MY300i.dgn

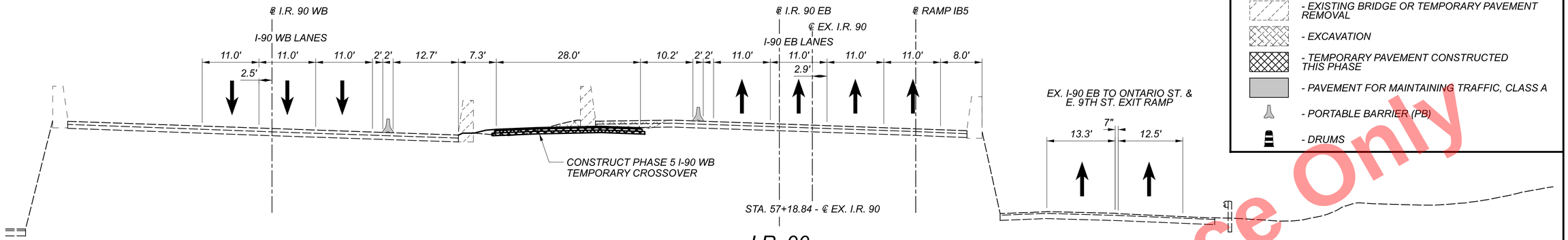

I.R. 90

STA. 172+00.00 - ℄ I.R. 90 EB

SECTION J-J

SEE SHEET 330

MAINTENANCE OF TRAFFIC TYPICAL SECTIONS LEGEND

- AREA OF CONSTRUCTION DURING THIS PHASE
- EXISTING BRIDGE OR TEMPORARY PAVEMENT REMOVAL
- EXCAVATION
- TEMPORARY PAVEMENT CONSTRUCTED THIS PHASE
- PAVEMENT FOR MAINTAINING TRAFFIC, CLASS A
- PORTABLE BARRIER (PB)
- DRUMS

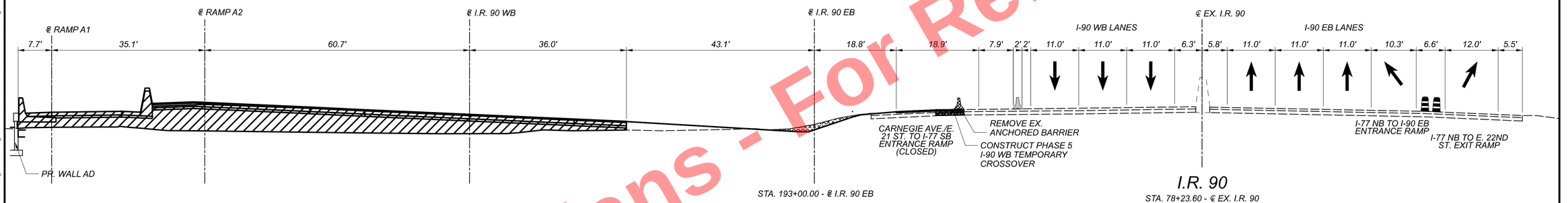

I.R. 90

STA. 193+00.00 - ℄ I.R. 90 EB

STA. 78+23.60 - ℄ EX. I.R. 90

SECTION K-K

SEE SHEET 332

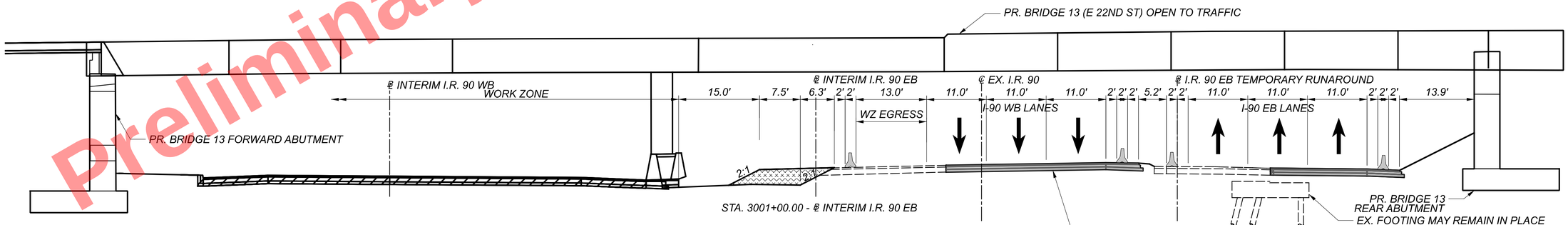

STA. 3001+00.00 - ℄ INTERIM I.R. 90 EB

I.R. 90

STA. 85+30.13 - ℄ EX. I.R. 90

SECTION L-L

SEE SHEET 333

REMOVE EX. MEDIAN BARRIER AND INSTALL TEMPORARY PAVEMENT WEDGING ON EXISTING I.R. 90 EB PAVEMENT ONCE I.R. 90 EB LANES ARE SHIFTED TO TEMPORARY RUNAROUND. SHIFT I.R. 90 WB TRAVEL LANES ONTO EXISTING I.R. 90 EB ONCE TEMPORARY PAVEMENT IS INSTALLED. FOR DETAILS, SEE SHEET 202

Preliminary Plans - For Reference Only

MAINTENANCE OF TRAFFIC - PHASE 4
TYPICAL SECTIONS

CUY-90-16.28

MODEL: Design PAPERSIZE: 34x22 (In.) DATE: 3/27/2025 TIME: 6:56:10 PM USER: Collin.Kwiat
pw:\\mb-us-pw.bentley.com:mb-us-pw-03\Documents\Cleveland_OH\01_Projects\ODOT\District2\82382\400-Engineering\Engineering\MOT\Sheets\82382_MY400i.dgn

DESIGN AGENCY
Michael Baker INTERNATIONAL
DESIGNER CEO
REVIEWER GSH 05/22/24
PROJECT ID 82382
SHEET 136 TOTAL 2696

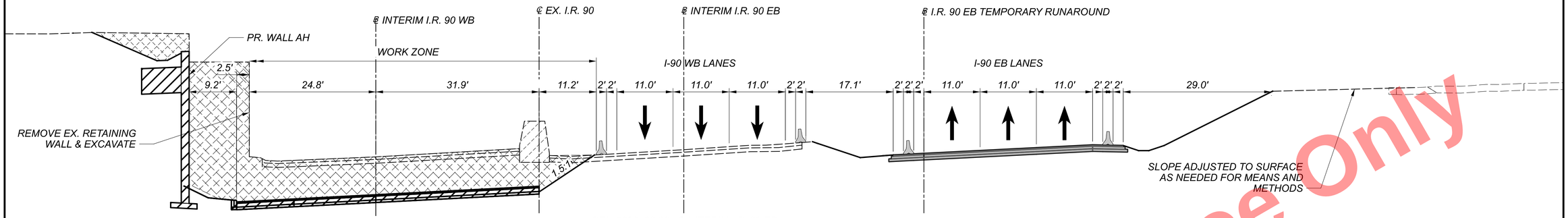

I.R. 90

STA. 93+23.41 - ℄ EX. I.R. 90

SECTION M-M

SEE SHEET 334

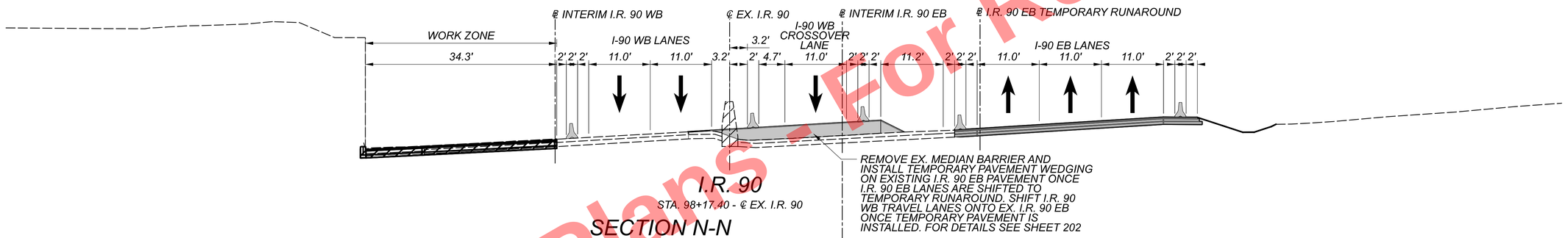

I.R. 90

STA. 98+17.40 - ℄ EX. I.R. 90

SECTION N-N

SEE SHEET 334

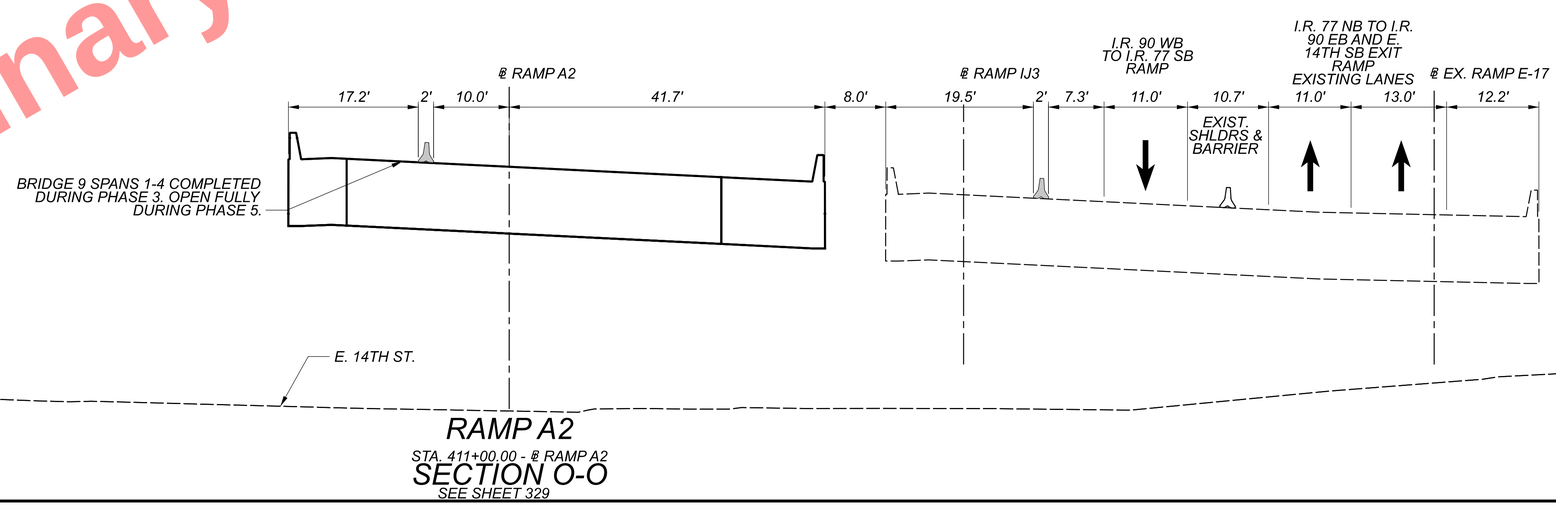

RAMP A2

STA. 411+00.00 - ℄ RAMP A2

SECTION O-O

SEE SHEET 329

MAINTENANCE OF TRAFFIC TYPICAL SECTIONS LEGEND

- AREA OF CONSTRUCTION DURING THIS PHASE
- EXISTING BRIDGE OR TEMPORARY PAVEMENT REMOVAL
- EXCAVATION
- TEMPORARY PAVEMENT CONSTRUCTED THIS PHASE
- PAVEMENT FOR MAINTAINING TRAFFIC, CLASS A
- PORTABLE BARRIER (PB)
- DRUMS

Preliminary Plans - For Reference Only

MAINTENANCE OF TRAFFIC - PHASE 4
TYPICAL SECTIONS

CUY-90-16.28

MODEL: Design PAPERSIZE: 34x22 (in.) DATE: 3/27/2025 TIME: 6:56:45 PM USER: CollinKwiatt
pw:\\mb-us-pw.bentley.com:mb-us-pw-03\Documents\Cleveland_OH\01_Projects\000TVDistrict2\82382\400-Engineering\MOT\Sheets\82382_MY4002.dgn

DESIGN AGENCY
Michael Baker INTERNATIONAL

DESIGNER CEO
REVIEWER GSH 05/22/24
PROJECT ID 82382
SHEET 137 TOTAL 2696

MAINTENANCE OF TRAFFIC TYPICAL SECTIONS LEGEND

- AREA OF CONSTRUCTION DURING THIS PHASE
- EXISTING BRIDGE OR TEMPORARY PAVEMENT REMOVAL
- EXCAVATION
- TEMPORARY PAVEMENT CONSTRUCTED THIS PHASE
- ITEM 203 - ROADWAY MISC.: EPS GEOFOAM FILL
- PAVEMENT FOR MAINTAINING TRAFFIC, CLASS A
- PORTABLE BARRIER (PB)
- DRUMS

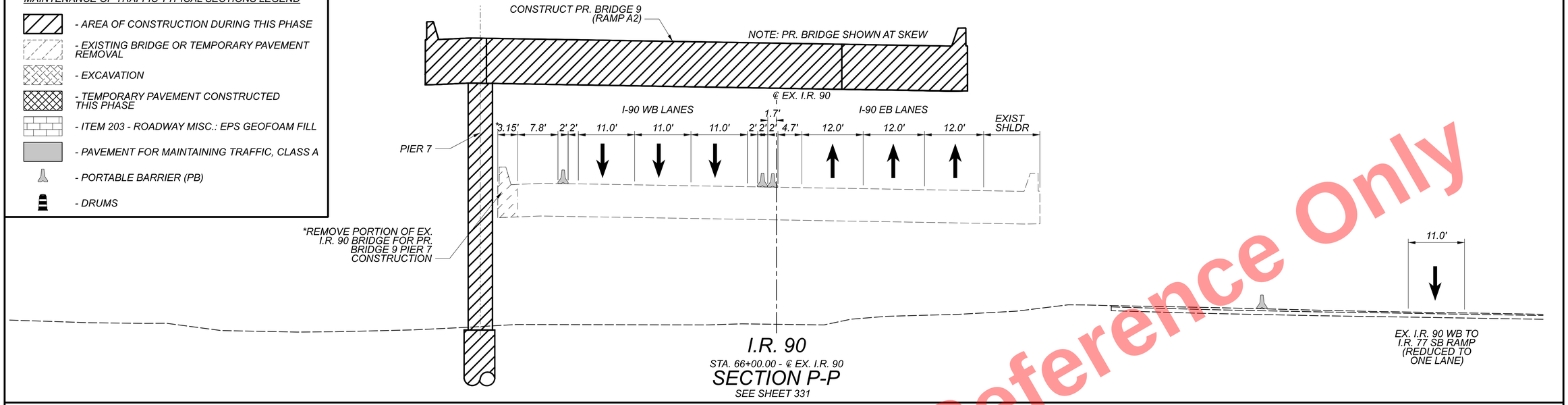

I.R. 90

STA. 66+00.00 - ℄ EX. I.R. 90

SECTION P-P

SEE SHEET 331

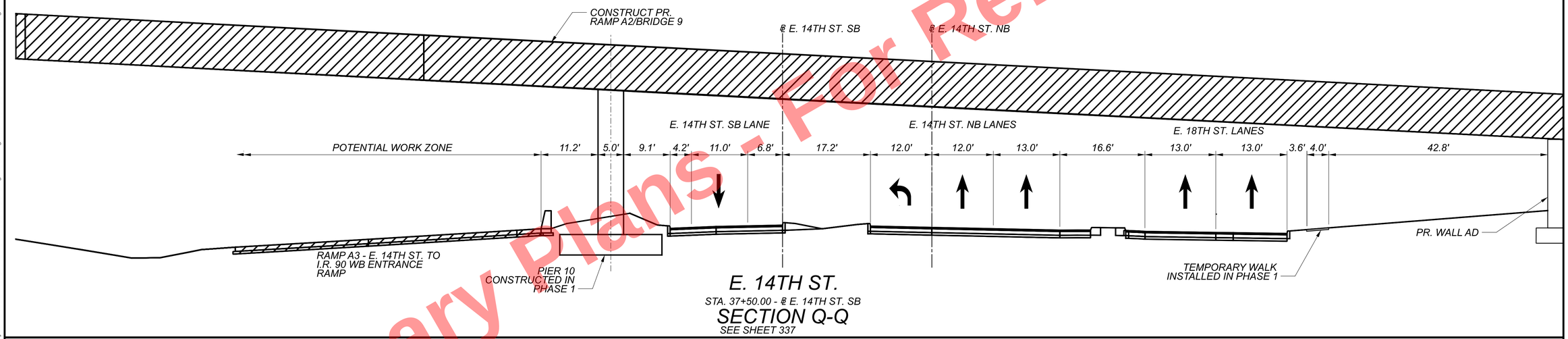

E. 14TH ST.

STA. 37+50.00 - ℄ E. 14TH ST. SB

SECTION Q-Q

SEE SHEET 337

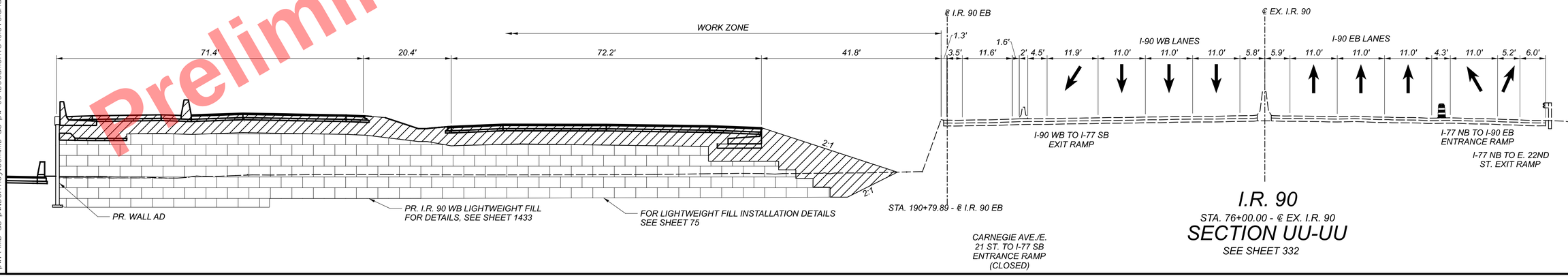

I.R. 90

STA. 76+00.00 - ℄ EX. I.R. 90

SECTION UU-UU

SEE SHEET 332

Preliminary Plans - For Reference Only

MAINTENANCE OF TRAFFIC - PHASE 4
TYPICAL SECTIONS

DESIGN AGENCY
Michael Baker INTERNATIONAL

DESIGNER CEO
REVIEWER GSH 05/22/24
PROJECT ID 82382
SHEET 138 TOTAL 2696

CUY-90-16.28

MODEL: Design PAPERSIZE: 34x22 (in.) DATE: 3/27/2025 TIME: 6:57:04 PM USER: Collin.Kwiatt
pw:\\mb-us-pw.bentley.com:mb-us-pw-03\Documents\Cleveland.OH\OI_Projects\ODOT\District2\82382\400-Engineering\MOT\Sheets\82382_MY4003.dgn

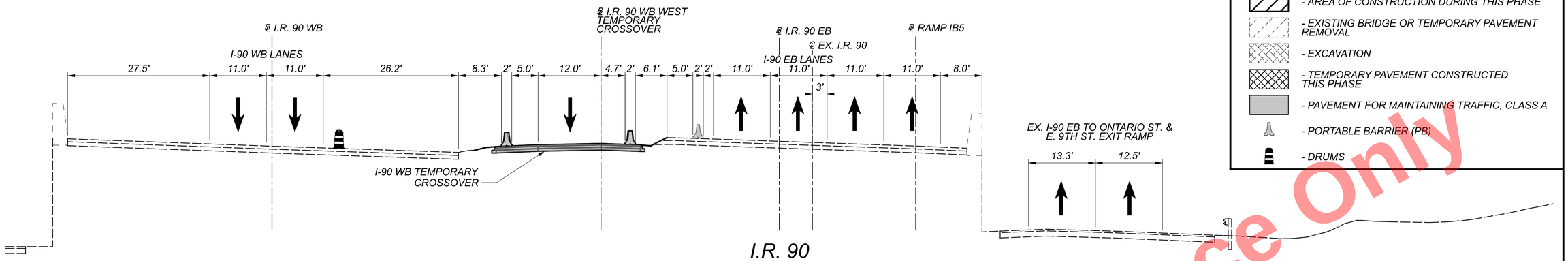

I.R. 90

STA. 172+00.00 - ℄ I.R. 90 EB
STA. 57+18.84 - ℄ EX. I.R. 90

SECTION R-R

SEE SHEET 349

MAINTENANCE OF TRAFFIC TYPICAL SECTIONS LEGEND

- AREA OF CONSTRUCTION DURING THIS PHASE
- EXISTING BRIDGE OR TEMPORARY PAVEMENT REMOVAL
- EXCAVATION
- TEMPORARY PAVEMENT CONSTRUCTED THIS PHASE
- PAVEMENT FOR MAINTAINING TRAFFIC, CLASS A
- PORTABLE BARRIER (PB)
- DRUMS

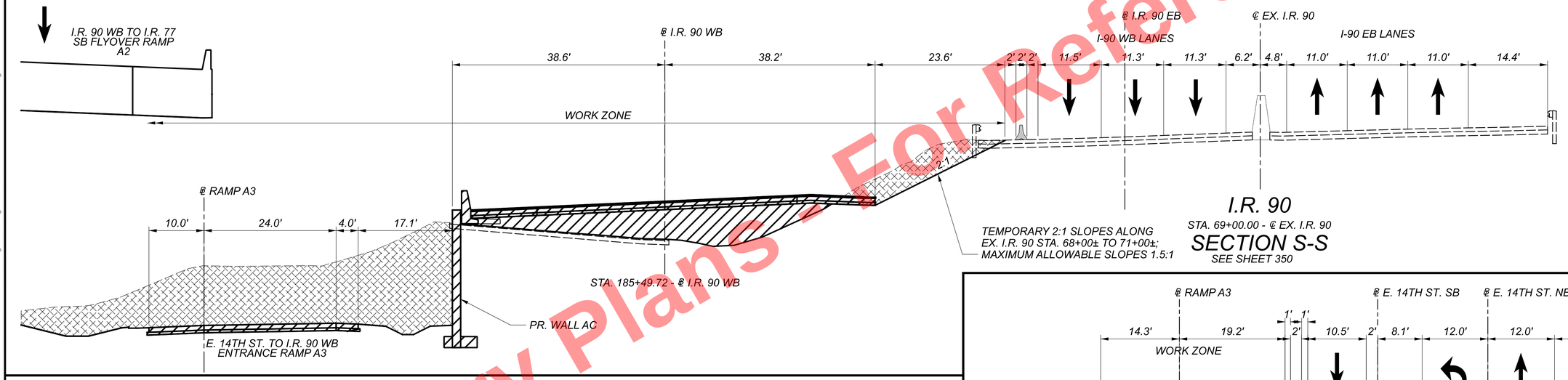

I.R. 90

STA. 69+00.00 - ℄ EX. I.R. 90

SECTION S-S

SEE SHEET 350

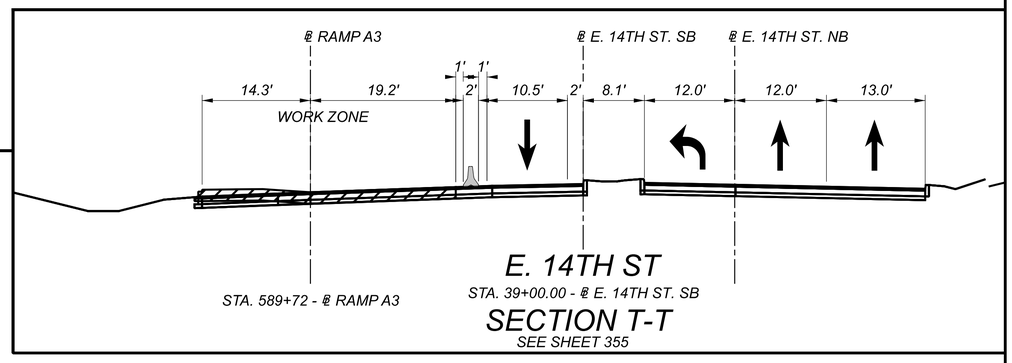

E. 14TH ST

STA. 39+00.00 - ℄ E. 14TH ST. SB

SECTION T-T

SEE SHEET 355

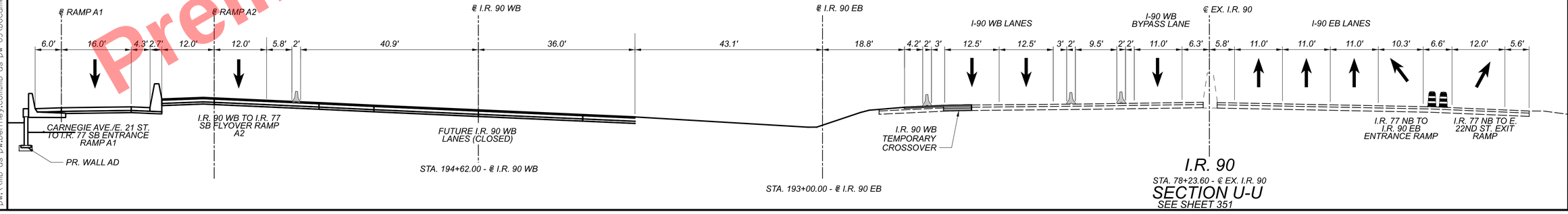

I.R. 90

STA. 78+23.60 - ℄ EX. I.R. 90

SECTION U-U

SEE SHEET 351

For Reference Only
Preliminary Plans - Not for Construction

MAINTENANCE OF TRAFFIC - PHASE 5
TYPICAL SECTIONS

CUY-90-16.28

MODEL: Design PAPERSIZE: 34x22 (in.) DATE: 3/27/2025 TIME: 6:57:27 PM USER: Collin.Kwiatt
pw:\\mb-us-pw.bentley.com:mb-us-pw-03\Documents\Cleveland_OH\01_Projects\ODOT\District2\82382\400-Engineering\MOT\Sheets\82382_MT500i.dgn

DESIGN AGENCY
Michael Baker INTERNATIONAL
DESIGNER CEO
REVIEWER GSH 05/22/24
PROJECT ID 82382
SHEET 139 TOTAL 2696

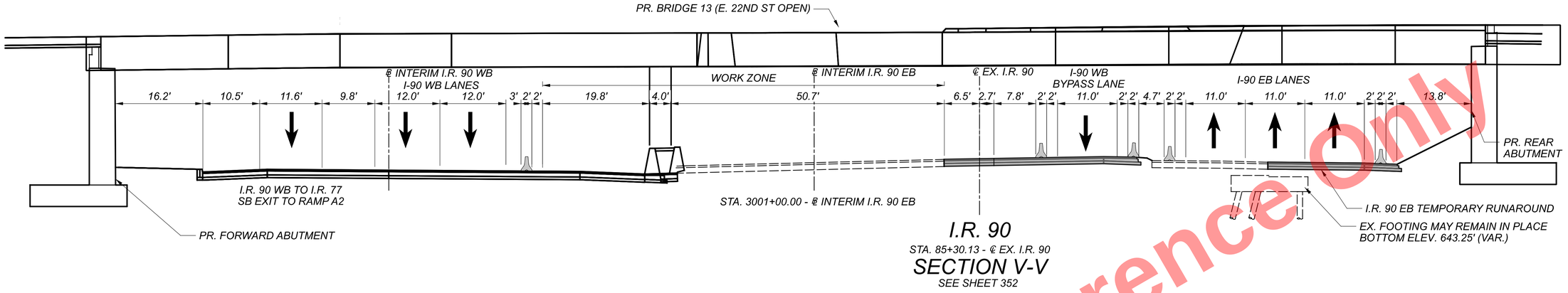

I.R. 90
STA. 85+30.13 - ℄ EX. I.R. 90
SECTION V-V
SEE SHEET 352

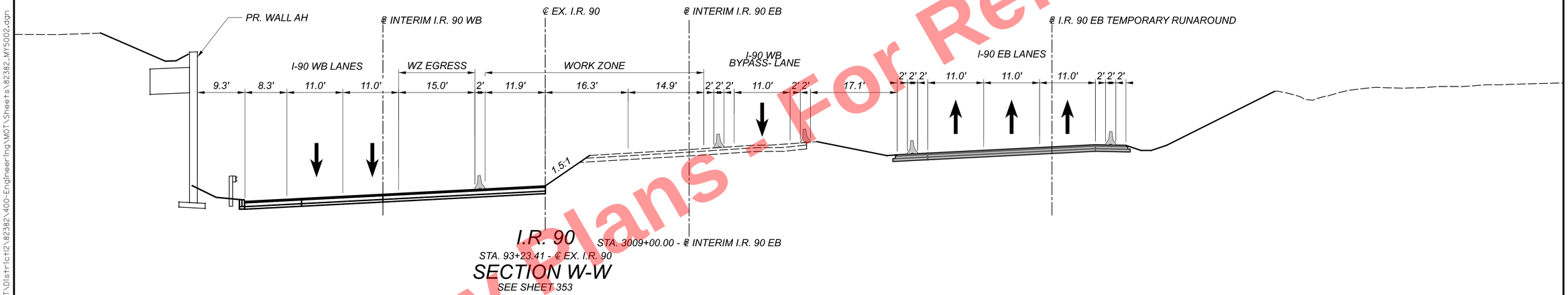

I.R. 90
STA. 93+23.41 - ℄ EX. I.R. 90
STA. 3009+00.00 - ℄ INTERIM I.R. 90 EB
SECTION W-W
SEE SHEET 353

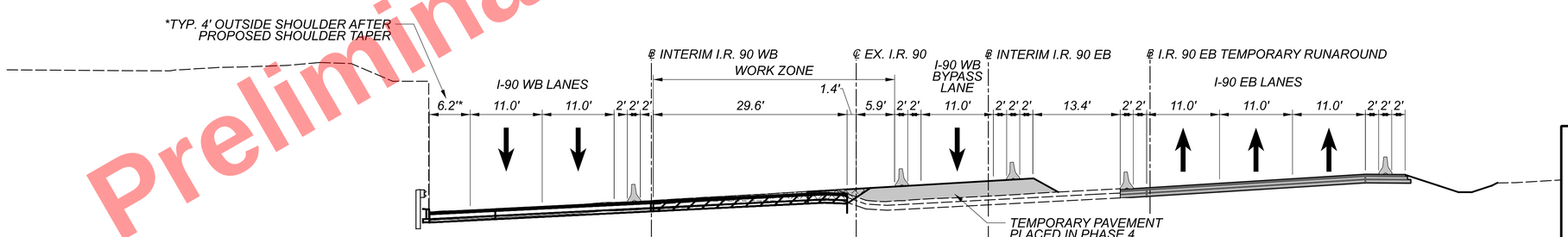

I.R. 90
STA. 98+17.40 - ℄ EX. I.R. 90
SECTION X-X
SEE SHEET 353
STA. 3014+00.00 - ℄ INTERIM I.R. 90 EB

MAINTENANCE OF TRAFFIC TYPICAL SECTIONS LEGEND

- AREA OF CONSTRUCTION DURING THIS PHASE
- EXISTING BRIDGE OR TEMPORARY PAVEMENT REMOVAL
- EXCAVATION
- TEMPORARY PAVEMENT CONSTRUCTED THIS PHASE
- PAVEMENT FOR MAINTAINING TRAFFIC, CLASS A
- PORTABLE BARRIER (PB)
- DRUMS

MAINTENANCE OF TRAFFIC - PHASE 5
TYPICAL SECTIONS

DESIGN AGENCY
Michael Baker INTERNATIONAL
DESIGNER CEO
REVIEWER GSH 05/22/24
PROJECT ID 82382
SHEET 140 TOTAL 2696

CUY-90-16.28

MODEL: Design PAPERSIZE: 34x22 (In.) DATE: 3/27/2025 TIME: 6:57:55 PM USER: Collin.Kwiatt
pw:\\mb-us-pw.bentley.com:mb-us-pw-03\Documents\Cleveland.OH\Oil_Projects\ODOT\District2\82382\400-Engineering\MOT\Sheets\82382_MY5002.dgn

Preliminary Plans - For Reference Only

MAINTENANCE OF TRAFFIC TYPICAL SECTIONS LEGEND

- AREA OF CONSTRUCTION DURING THIS PHASE
- EXISTING BRIDGE OR TEMPORARY PAVEMENT REMOVAL
- EXCAVATION
- TEMPORARY PAVEMENT CONSTRUCTED THIS PHASE
- PAVEMENT FOR MAINTAINING TRAFFIC, CLASS A
- PORTABLE BARRIER (PB)
- DRUMS

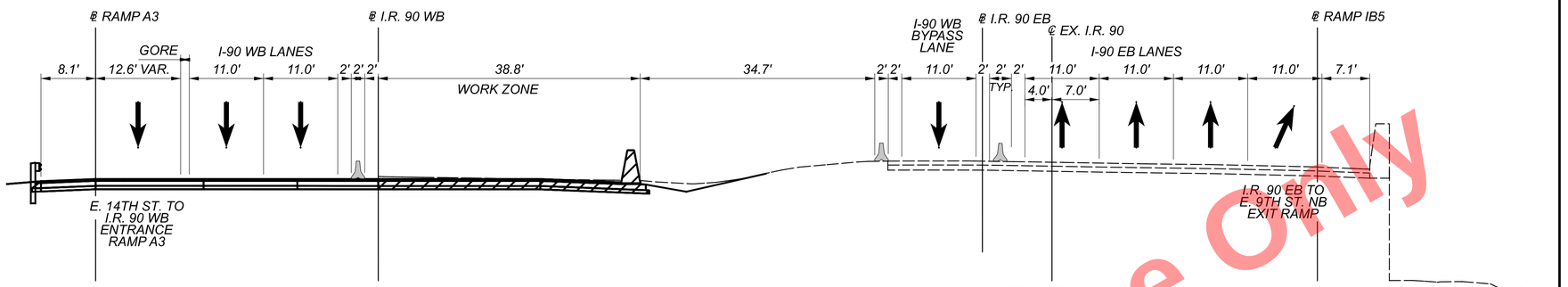

I.R. 90

STA. 178+00.00 - ℄ I.R. 90 WB

SECTION Y-Y

SEE SHEET 363

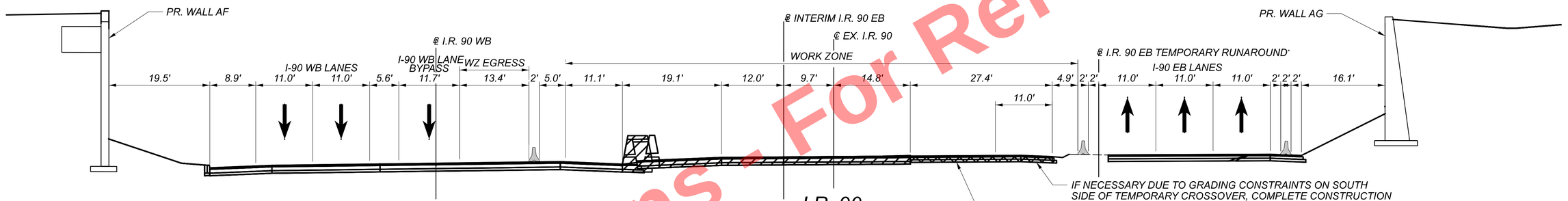

I.R. 90

STA. 86+32.31 - ℄ EX. I.R. 90
STA. 3002+00.00 - ℄ INTERIM I.R. 90 EB

SECTION Z-Z

SEE SHEET 365

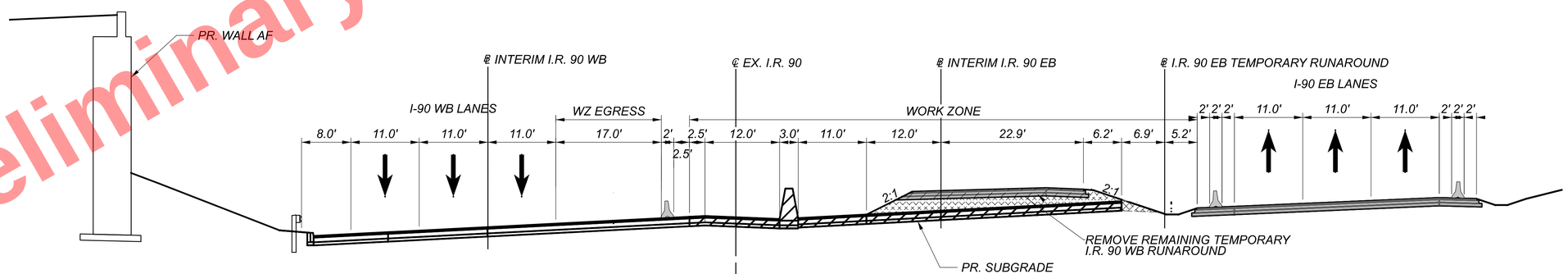

I.R. 90

STA. 3005+00.00 - ℄ INTERIM I.R. 90 EB
STA. 89+32.24 - ℄ EX. I.R. 90

SECTION AA-AA

SEE SHEET 365

Preliminary Plans - For Reference Only

MAINTENANCE OF TRAFFIC - PHASE 6
TYPICAL SECTIONS

DESIGN AGENCY
Michael Baker INTERNATIONAL

DESIGNER CRK
REVIEWER GSH 05/22/24
PROJECT ID 82382
SHEET 141 TOTAL 2696

CUY-90-16.28 (CCG3A)
MODEL: MY600I PAPERSIZE: 34x22 (In) DATE: 3/27/2025 TIME: 6:58:22 PM USER: Collin.Kwiatt
pw:\\mb-us-pw.bentley.com:mb-us-pw-03\Documents\Cleveland_OH\01_Projects\ODOT\District12\82382\400-Engineering\MOT\Sheets\82382_MY600I.dgn

Preliminary Plans - For Reference Only

MAINTENANCE OF TRAFFIC TYPICAL SECTIONS LEGEND

- AREA OF CONSTRUCTION DURING THIS PHASE
- EXISTING BRIDGE OR TEMPORARY PAVEMENT REMOVAL
- EXCAVATION
- TEMPORARY PAVEMENT CONSTRUCTED THIS PHASE
- PAVEMENT FOR MAINTAINING TRAFFIC, CLASS A
- PORTABLE BARRIER (PB)
- DRUMS

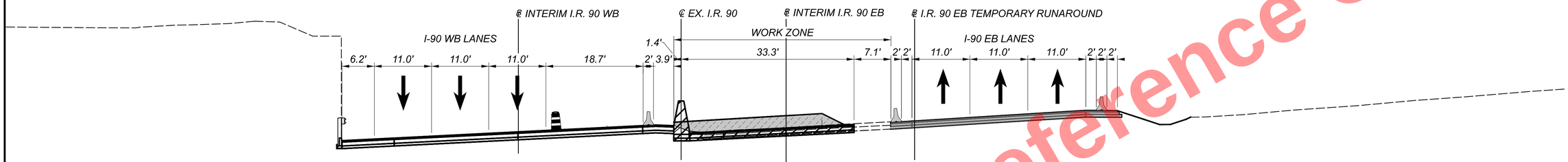

I.R. 90

STA. 98+17.40 - ℄ EX. I.R. 90

STA. 3014+00.00 - ℄ INTERIM I.R. 90 EB

SECTION BB1-BB1

SEE SHEET 366

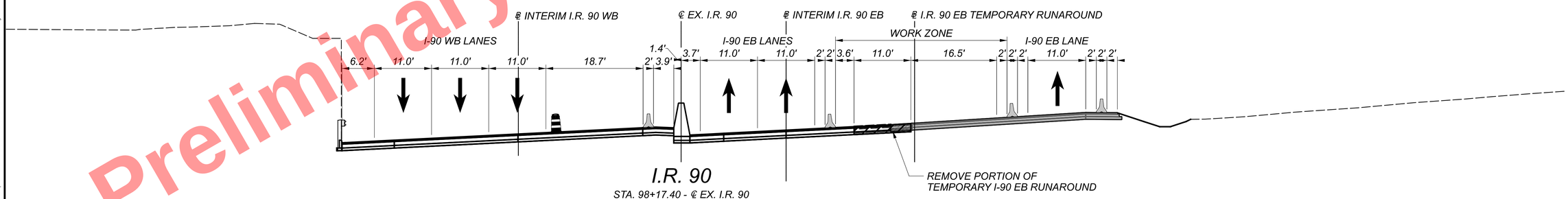

I.R. 90

STA. 98+17.40 - ℄ EX. I.R. 90

STA. 3014+00.00 - ℄ INTERIM I.R. 90 EB

SECTION BB2-BB2

SEE SHEET 366

NOTES:

1) COMPLETE CONSTRUCTION OF OUTSIDE LANE IN CONJUCTION WITH CONSTRUCTION OF PHASE 6 IR-90 EB WORKZONE AT STA. 3013+63, 13.4' RT TO STA. 3014+31, 13.4' RT. SHIFT TWO IR-90 EB LANES TO PHASE 7 TRAFFIC FLOW AND KEEP THE OUTSIDE LANE IN PHASE 6 TRAFFIC FLOW.

MAINTENANCE OF TRAFFIC - PHASE 6
TYPICAL SECTIONS

DESIGN AGENCY
Michael Baker INTERNATIONAL

DESIGNER CRK
REVIEWER GSH 05/22/24
PROJECT ID 82382
SHEET 142 TOTAL 2696

CUY-90-16.28 (CCG3A)

MODEL: MY6002 PAPERSIZE: 34x22 (in.) DATE: 3/27/2025 TIME: 6:58:36 PM USER: Colin.Kwiatt
pw:\\mb-us-pw.bentley.com:mb-us-pw-03\Documents\Cleveland.OH\OiL_Projects\ODOT\District2\82382\400-Engineering\MOT\Sheets\82382_MY600i.dgn

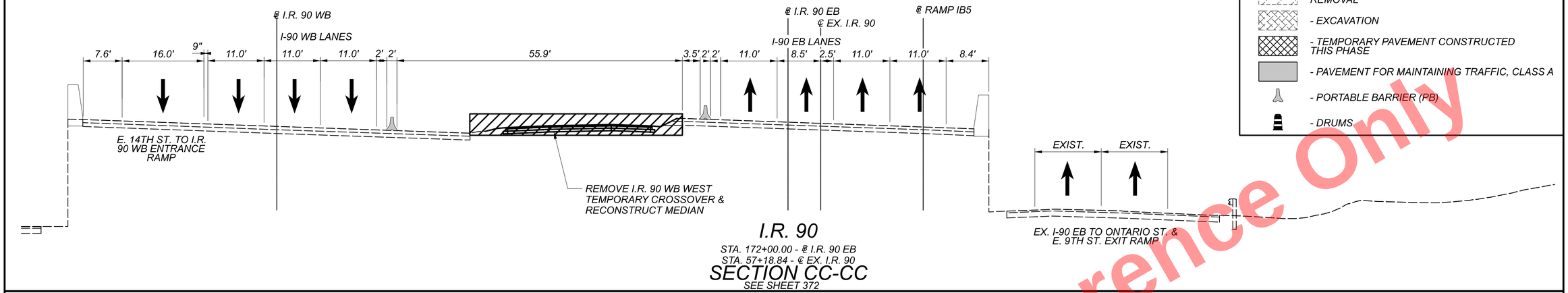

I.R. 90
STA. 172+00.00 - ℄ I.R. 90 EB
STA. 57+18.84 - ℄ EX. I.R. 90
SECTION CC-CC
SEE SHEET 372

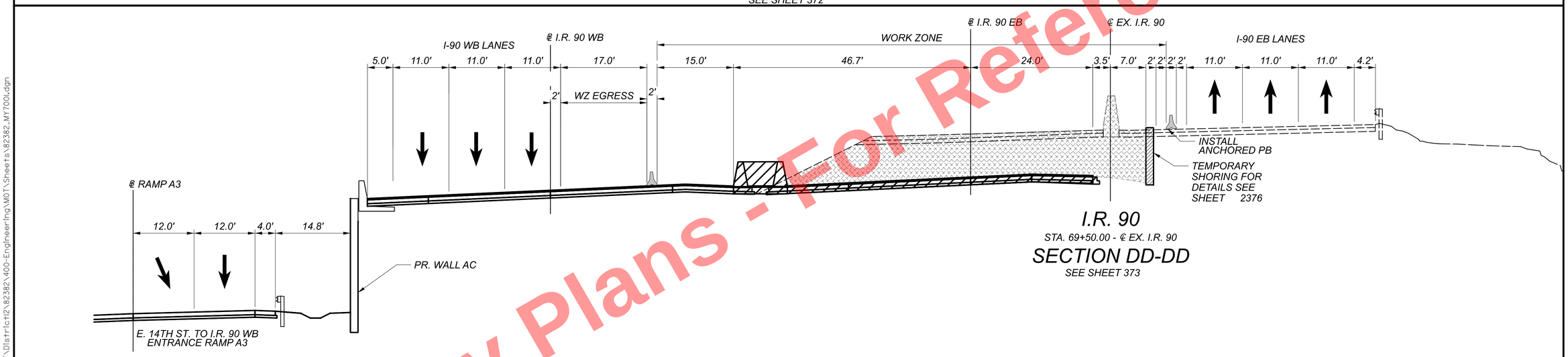

I.R. 90
STA. 69+50.00 - ℄ EX. I.R. 90
SECTION DD-DD
SEE SHEET 373

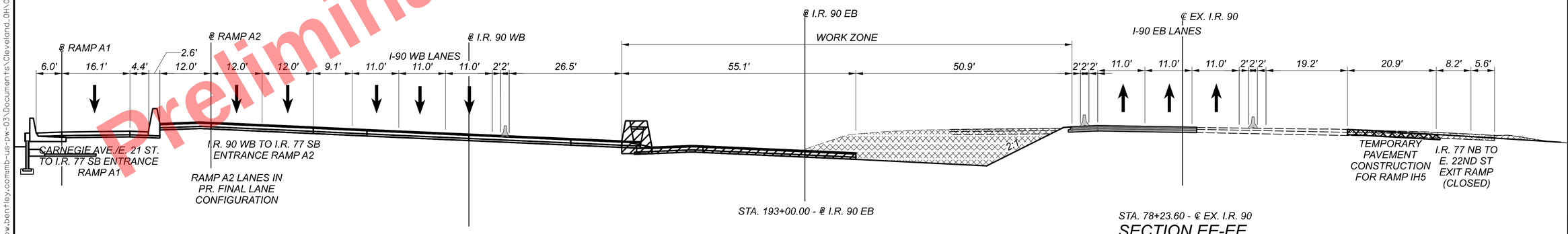

STA. 193+00.00 - ℄ I.R. 90 EB
STA. 78+23.60 - ℄ EX. I.R. 90
SECTION EE-EE
SEE SHEET 374

Preliminary Plans - For Reference Only

MAINTENANCE OF TRAFFIC - PHASE 7
TYPICAL SECTIONS

DESIGN AGENCY
Michael Baker INTERNATIONAL
DESIGNER CRK
REVIEWER GSH 05/22/24
PROJECT ID 82382
SHEET 143 TOTAL 2696

CUY-90-16.28 (CCG3A)

MODEL: MY700 PAPERSIZE: 34x22 (in.) DATE: 3/27/2025 TIME: 6:58:53 PM USER: Collin.Kwiatt
pw:\\mb-us-pw.bentley.com:mb-us-pw-03\Documents\Cleveland.OH\OI_Projects\000T\District2\82382\400-Engineering\M0T\Sheets\82382_MY700i.dgn

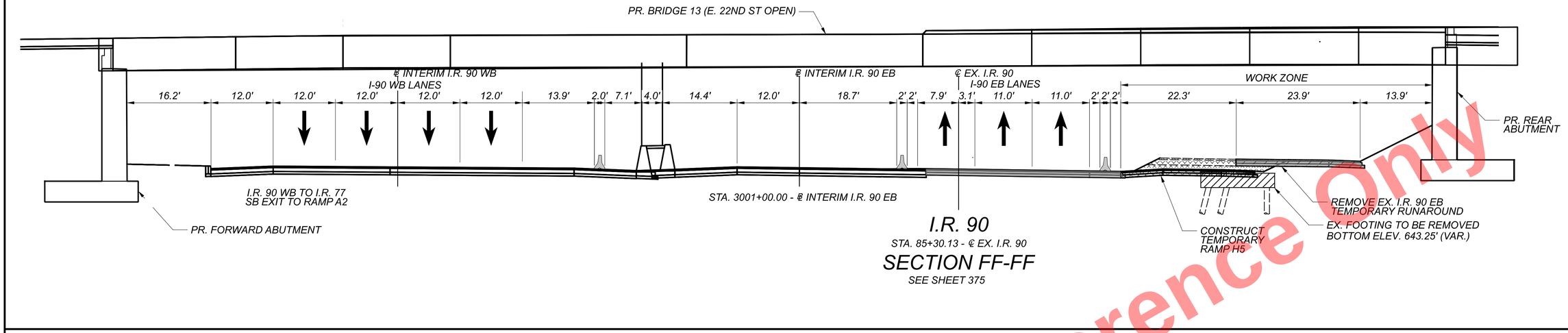

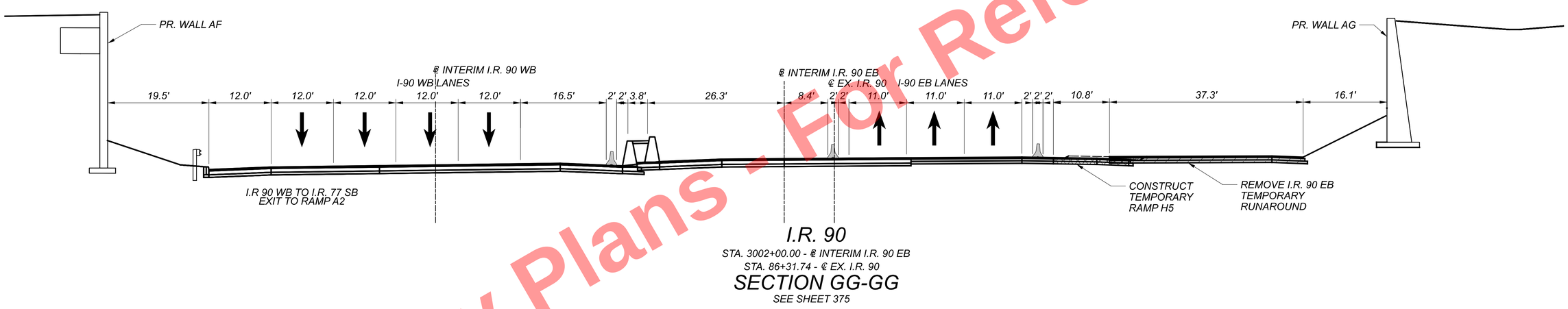

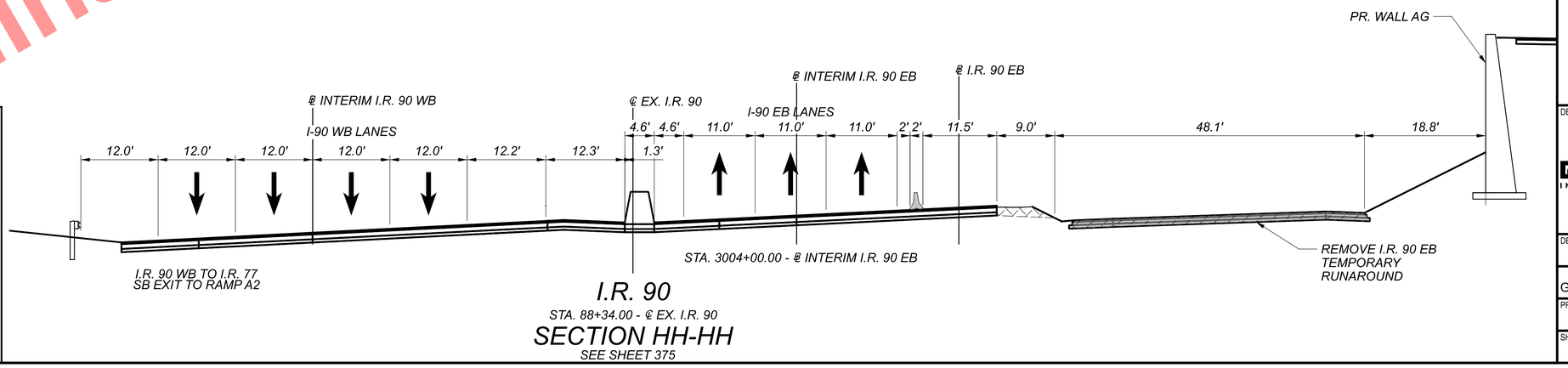

MAINTENANCE OF TRAFFIC TYPICAL SECTIONS LEGEND

- AREA OF CONSTRUCTION DURING THIS PHASE
- EXISTING BRIDGE OR TEMPORARY PAVEMENT REMOVAL
- EXCAVATION
- TEMPORARY PAVEMENT CONSTRUCTED THIS PHASE
- PAVEMENT FOR MAINTAINING TRAFFIC, CLASS A
- PORTABLE BARRIER (PB)
- DRUMS

Preliminary Plans - For Reference Only

MAINTENANCE OF TRAFFIC - PHASE 7
TYPICAL SECTIONS

DESIGN AGENCY
Michael Baker INTERNATIONAL

DESIGNER CRK
REVIEWER GSH 05/22/24
PROJECT ID 82382
SHEET 144 TOTAL 2696

CUY-90-16.28 (CCG3A)

MODEL: MY7002 PAPERSIZE: 34x22 (in.) DATE: 3/27/2025 TIME: 6:59:25 PM USER: Collin.Kwiatt
pw:\\mb-us-pw.bentley.com:mb-us-pw-03\Documents\Cleveland.OH\OI_Projects\0007\District2\82382\400-Engineering\MOT\Sheets\82382_MY7002.dgn

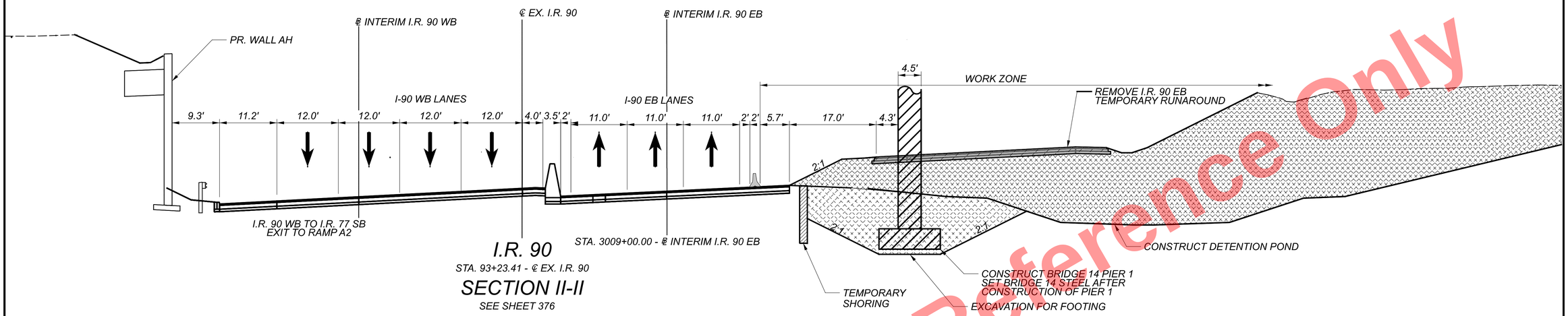

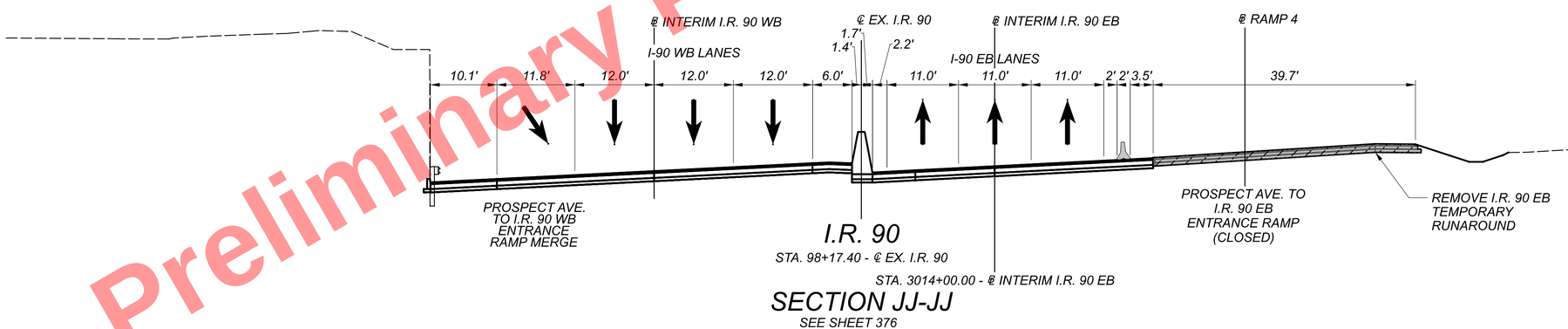

MAINTENANCE OF TRAFFIC - PHASE 7
TYPICAL SECTIONS

MAINTENANCE OF TRAFFIC TYPICAL SECTIONS LEGEND

- AREA OF CONSTRUCTION DURING THIS PHASE
- EXISTING BRIDGE OR TEMPORARY PAVEMENT REMOVAL
- EXCAVATION
- TEMPORARY PAVEMENT CONSTRUCTED THIS PHASE
- PAVEMENT FOR MAINTAINING TRAFFIC, CLASS A
- PORTABLE BARRIER (PB)
- DRUMS

DESIGN AGENCY
Michael Baker INTERNATIONAL

DESIGNER CRK
REVIEWER GSH 05/22/24
PROJECT ID 82382
SHEET 145 TOTAL 2696

Preliminary Plans - For Reference Only

CUY-90-16.28 (CCG3A)
MODEL: MY7003 PAPERSIZE: 34x22 (in.) DATE: 3/27/2025 TIME: 6:59:39 PM USER: Collin.Kwiatt
pw:\\mb-us-pw.bentley.com:mb-us-pw-03\Documents\Cleveland_OH\01_Projects\000T\District2\82382\400-Engineering\MOT\Sheets\82382_MY7002.dgn

MAINTENANCE OF TRAFFIC - PHASE 8
TYPICAL SECTIONS

MAINTENANCE OF TRAFFIC TYPICAL SECTIONS LEGEND

- AREA OF CONSTRUCTION DURING THIS PHASE
- EXISTING BRIDGE OR TEMPORARY PAVEMENT REMOVAL
- EXCAVATION
- TEMPORARY PAVEMENT CONSTRUCTED THIS PHASE
- PAVEMENT FOR MAINTAINING TRAFFIC, CLASS A
- PORTABLE BARRIER (PB)
- DRUMS

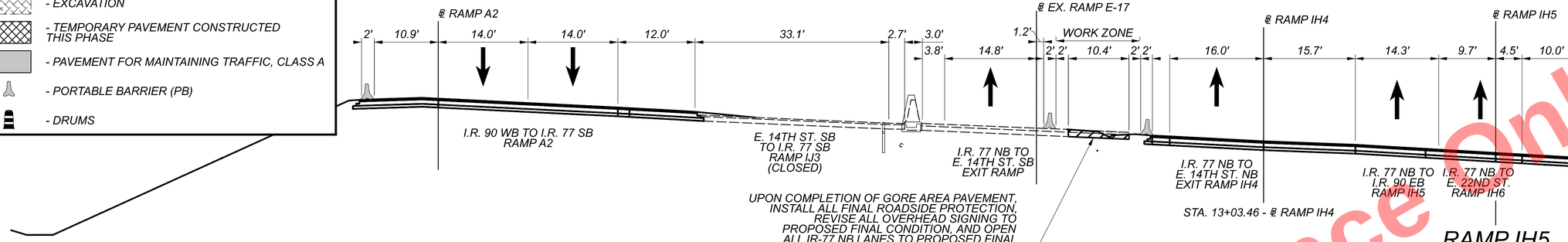

RAMP IH5

STA. 1078+00 - ℄ RAMP IH5

SECTION KK-KK

SEE SHEET 381

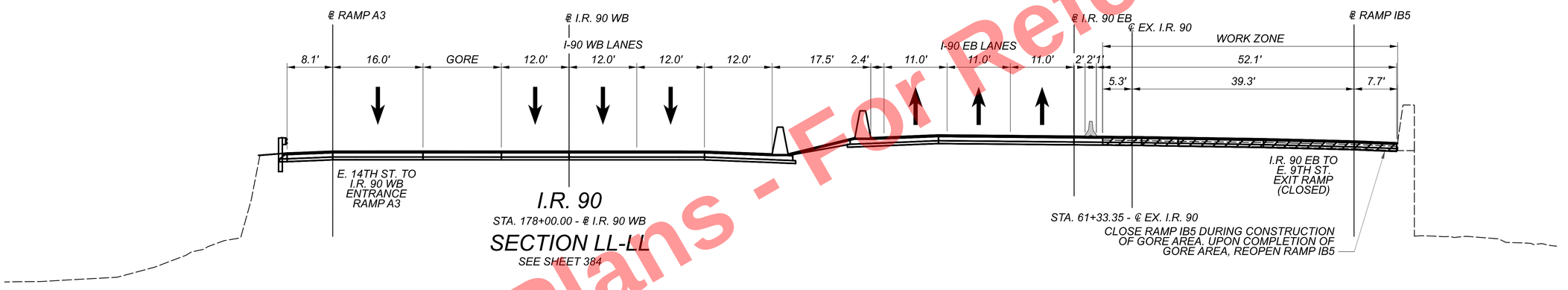

I.R. 90

STA. 178+00.00 - ℄ I.R. 90 WB

SECTION LL-LL

SEE SHEET 384

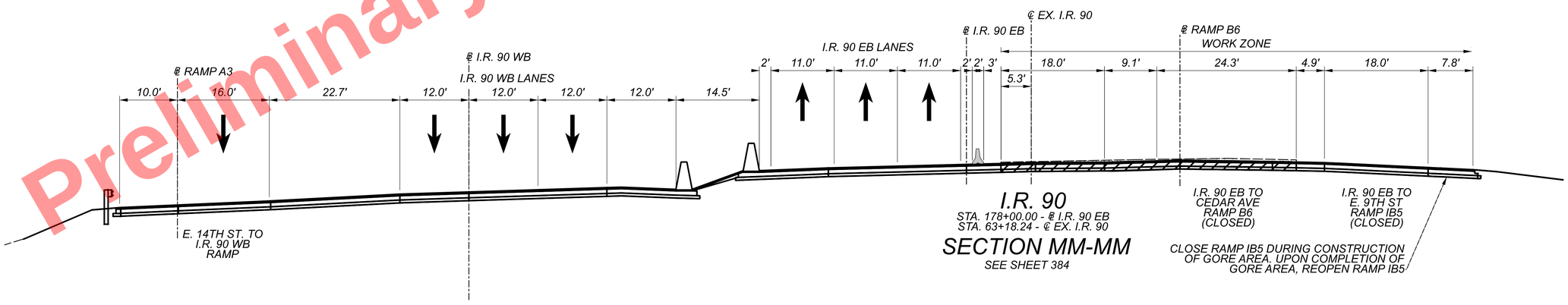

I.R. 90

STA. 178+00.00 - ℄ I.R. 90 EB
STA. 63+18.24 - ℄ EX. I.R. 90

SECTION MM-MM

SEE SHEET 384

Preliminary Plans - Not For Reference Only

DESIGN AGENCY
Michael Baker INTERNATIONAL

DESIGNER CRK
REVIEWER GSH 05/22/24
PROJECT ID 82382
SHEET 146 TOTAL 2696

CUY-90-16.28 (CCG3A)

MODEL: MY800I PAPERSIZE: 34x22 (In.) DATE: 3/27/2025 TIME: 6:59:56 PM USER: Collin.Kwiatt
pw:\\mb-us-pw.bentley.com:mb-us-pw-03\Documents\Cleveland.OH.OI_Projects\ODOT\District2\82382\400-Engineering\MOT\Sheets\82382_MY800I.dgn

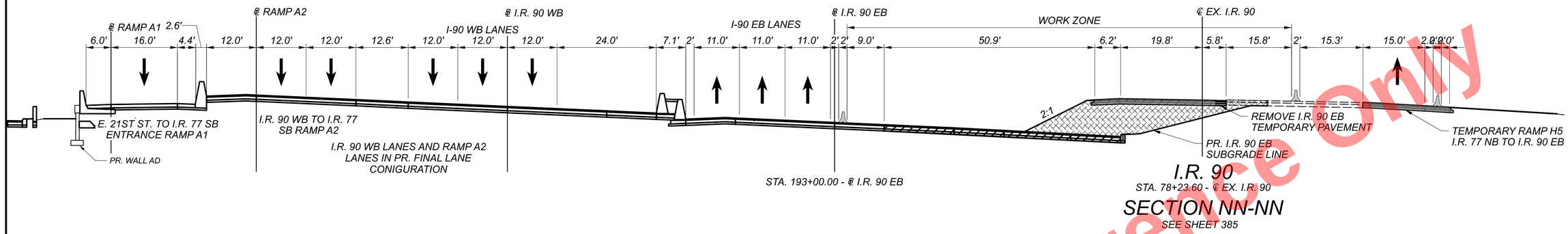

I.R. 90

STA. 78+23.60 - ℄ EX. I.R. 90

SECTION NN-NN

SEE SHEET 385

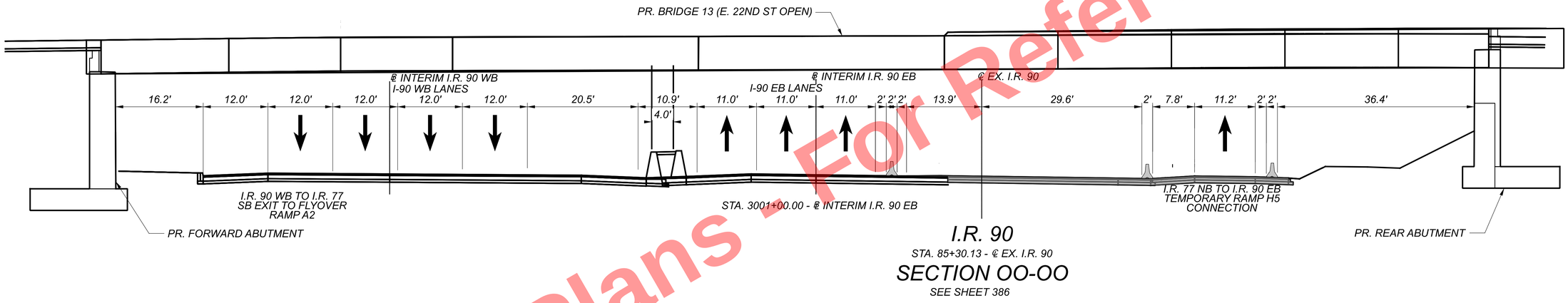

I.R. 90

STA. 85+30.13 - ℄ EX. I.R. 90

SECTION OO-OO

SEE SHEET 386

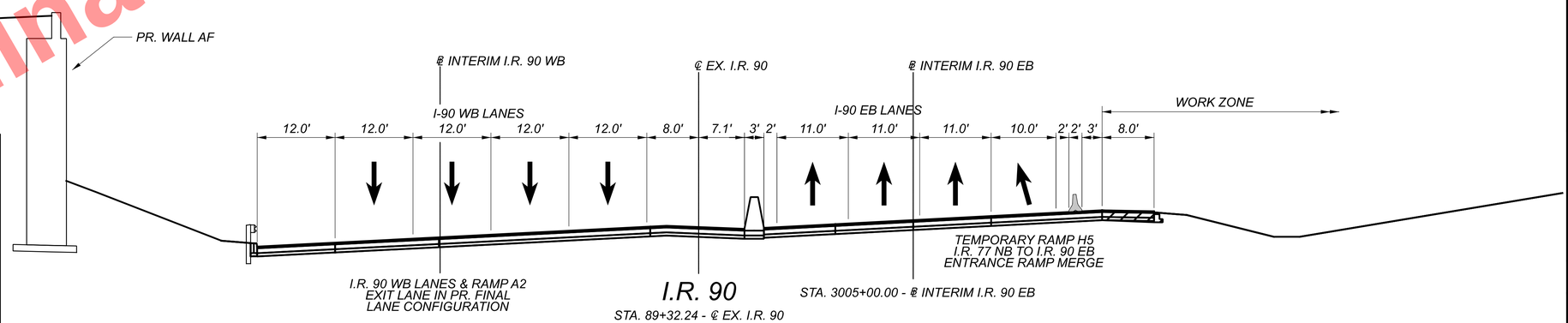

I.R. 90

STA. 89+32.24 - ℄ EX. I.R. 90

SECTION PP-PP

SEE SHEET 386

MAINTENANCE OF TRAFFIC TYPICAL SECTIONS LEGEND

- AREA OF CONSTRUCTION DURING THIS PHASE
- EXISTING BRIDGE OR TEMPORARY PAVEMENT REMOVAL
- EXCAVATION
- TEMPORARY PAVEMENT CONSTRUCTED THIS PHASE
- PAVEMENT FOR MAINTAINING TRAFFIC, CLASS A
- PORTABLE BARRIER (PB)
- DRUMS

Preliminary Plans - For Reference Only

MAINTENANCE OF TRAFFIC - PHASE 8
TYPICAL SECTIONS

DESIGN AGENCY
Michael Baker INTERNATIONAL

DESIGNER CRK
REVIEWER GSH 05/22/24
PROJECT ID 82382
SHEET 147 TOTAL 2696

CUY-90-16.28 (CCG3A)

MODEL: MY8002 PAPERSIZE: 34x22 (in.) DATE: 3/27/2025 TIME: 7:00:25 PM USER: Collin.Kwiatt
pw:\\mb-us-pw.bentley.com:mb-us-pw-03\Documents\Cleveland.OH\OiL_Projects\ODOT\District2\82382\400-Engineering\MOT\Sheets\82382_MY8002.dgn

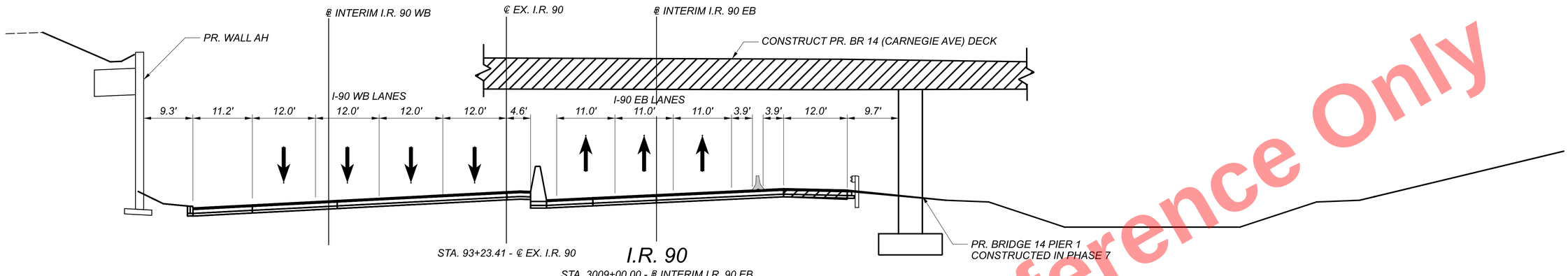

I.R. 90

STA. 3009+00.00 - ℄ INTERIM I.R. 90 EB

SECTION QQ-QQ

SEE SHEET 387

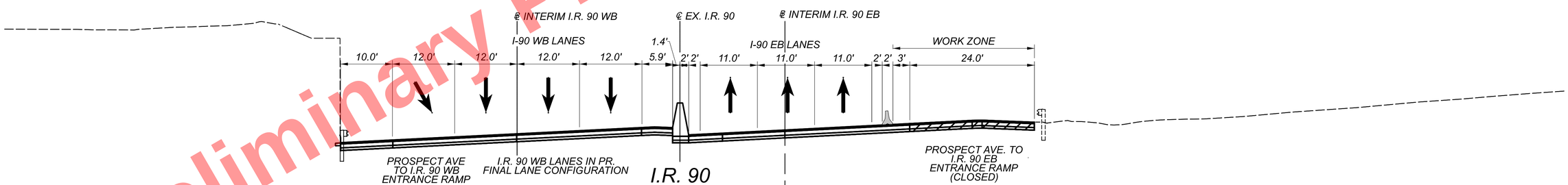

I.R. 90

STA. 98+17.40 - ℄ EX. I.R. 90

STA. 3014+00.00 - ℄ INTERIM I.R. 90 EB

SECTION RR-RR

SEE SHEET 387

MAINTENANCE OF TRAFFIC TYPICAL SECTIONS LEGEND

- AREA OF CONSTRUCTION DURING THIS PHASE
- EXISTING BRIDGE OR TEMPORARY PAVEMENT REMOVAL
- EXCAVATION
- TEMPORARY PAVEMENT CONSTRUCTED THIS PHASE
- PAVEMENT FOR MAINTAINING TRAFFIC, CLASS A
- PORTABLE BARRIER (PB)
- DRUMS

Preliminary Plans - For Reference Only

MAINTENANCE OF TRAFFIC - PHASE 8
TYPICAL SECTIONS

DESIGN AGENCY
Michael Baker INTERNATIONAL

DESIGNER CRK
REVIEWER GSH 05/22/24
PROJECT ID 82382
SHEET 148 TOTAL 2696

CUY-90-16.28 (CCG3A)
MODEL: MY8003 PAPERSIZE: 34x22 (In.) DATE: 3/27/2025 TIME: 7:00:41 PM USER: CollinKWatt
pw:\\mb-us-pw.bentley.com:mb-us-pw-03\Documents\Cleveland_OH\01_Projects\ODOT\District2\82382\400-Engineering\MOT\Sheets\82382_MY8002.dgn

Preliminary Plans - For Reference Only

MAINTENANCE OF TRAFFIC TYPICAL SECTIONS LEGEND

- AREA OF CONSTRUCTION DURING THIS PHASE
- EXISTING BRIDGE OR TEMPORARY PAVEMENT REMOVAL
- EXCAVATION
- TEMPORARY PAVEMENT CONSTRUCTED THIS PHASE
- PAVEMENT FOR MAINTAINING TRAFFIC, CLASS A
- PORTABLE BARRIER (PB)
- DRUMS

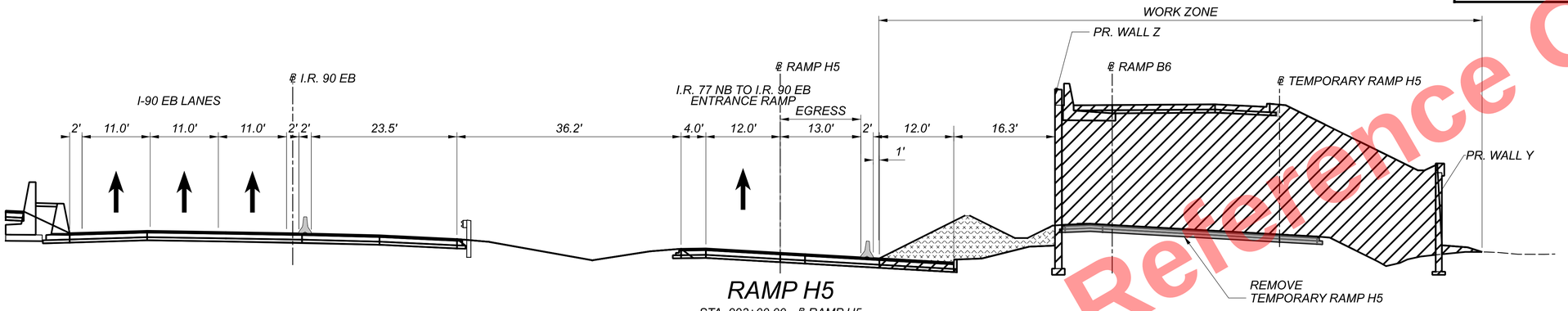

RAMP H5

STA. 993+00.00 - ℄ RAMP H5

SECTION SS-SS

SEE SHEET 397

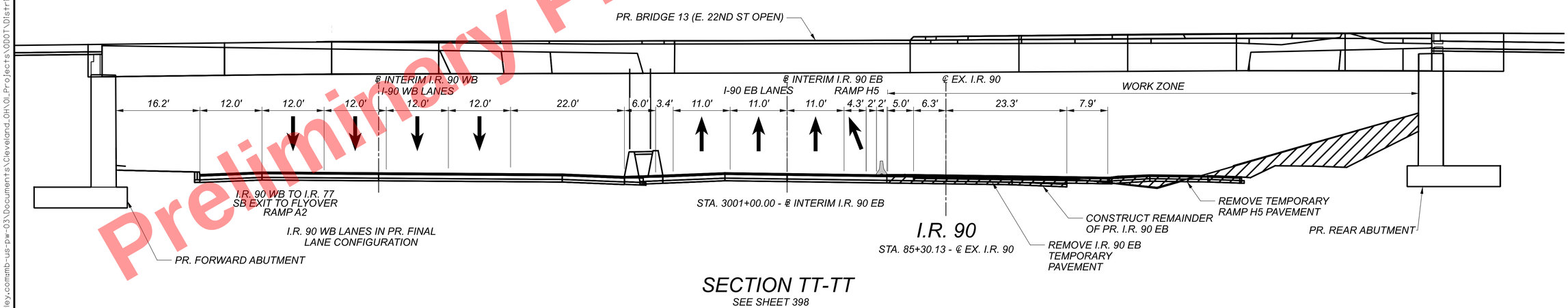

SECTION TT-TT

SEE SHEET 398

MAINTENANCE OF TRAFFIC - PHASE 9
TYPICAL SECTIONS

DESIGN AGENCY
Michael Baker INTERNATIONAL

DESIGNER CEO
REVIEWER GSH 05/22/24
PROJECT ID 82382
SHEET 149 TOTAL 2696

CUY-90-16.28

MODEL: Design PAPERSIZE: 34x22 (In.) DATE: 3/27/2025 TIME: 7:0:06 PM USER: CollinKwiat
pw:\\mb-us-pw.bentley.com:mb-us-pw-03\Documents\Cleveland.OH\01_Projects\ODOT\District2\82382\400-Engineering\M

Preliminary Plans - For Reference Only

MAINTENANCE OF TRAFFIC TYPICAL SECTIONS LEGEND

- AREA OF CONSTRUCTION DURING THIS PHASE
- EXISTING BRIDGE OR TEMPORARY PAVEMENT REMOVAL
- ITEM 203 - ROADWAY MISC.: EPS GEOFOAM FILL
- ITEM 203 - EMBANKMENT, AS PER PLAN
- TEMPORARY PAVEMENT CONSTRUCTED THIS PHASE
- PORTABLE BARRIER (PB)

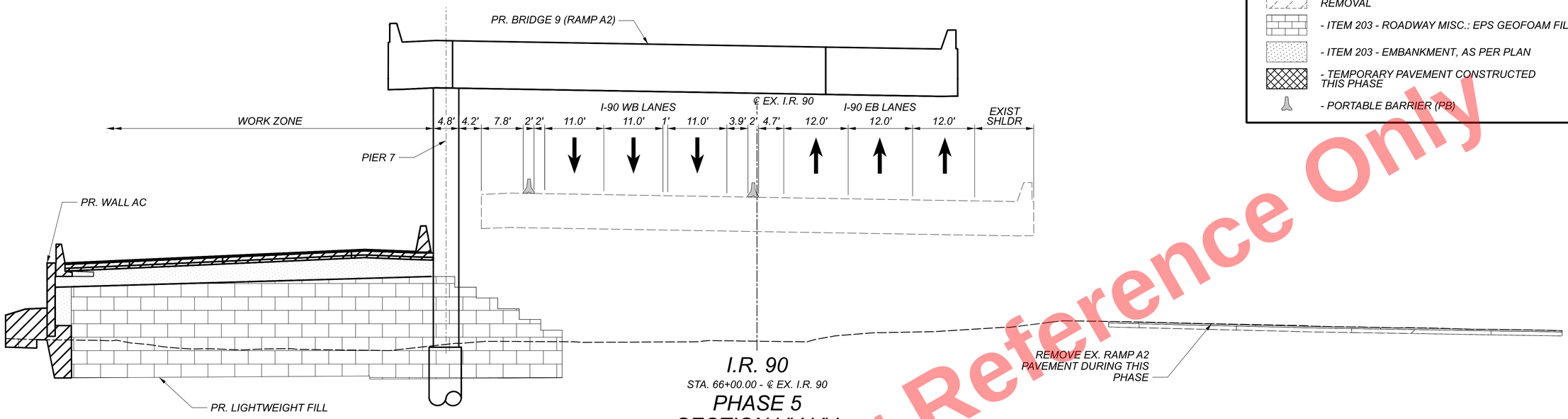

I.R. 90

STA. 66+00.00 - ℄ EX. I.R. 90

PHASE 5
SECTION VV-VV

SEE SHEET 350

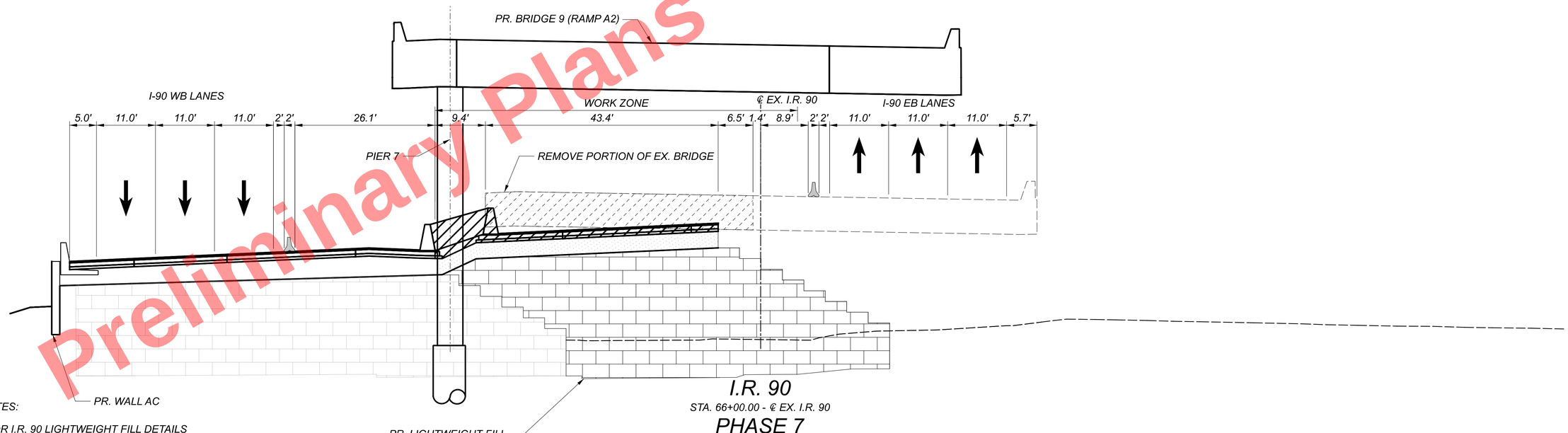

I.R. 90

STA. 66+00.00 - ℄ EX. I.R. 90

PHASE 7
SECTION WW-WW

SEE SHEET 373

NOTES:

- FOR I.R. 90 LIGHTWEIGHT FILL DETAILS SEE SHEET 1433
- PR. BRIDGE 9 SHOWN AT SKEW
- REFER TO ROADWAY, MISC.: EPS GEOFOAM FILL GENERAL NOTE ON SHEET 75 FOR INSTALLATION REQUIRMENTS

MAINTENANCE OF TRAFFIC - VARIOUS PHASES
LIGHTWEIGHT FILL TYPICAL SECTIONS

DESIGN AGENCY
Michael Baker INTERNATIONAL

DESIGNER CRK
REVIEWER GSH 05/22/24
PROJECT ID 82382
SHEET 150 TOTAL 2696

CUY-90-16.28 (CCG3A)

MODEL: Untitled Sheet PAPERSIZE: 34x22 (in.) DATE: 3/27/2025 TIME: 7:06:25 PM USER: Collin.Kwiatt
pw:\\mb-us-pw.bentley.com:mb-us-pw-03\Documents\Cleveland_OHIO_Projects\D0DOT\District2\82382\400-Engineering\MOT\Sheets\82382_MOT1001.dgn

MAINTENANCE OF TRAFFIC TYPICAL SECTIONS LEGEND

- AREA OF CONSTRUCTION DURING THIS PHASE
- EXISTING BRIDGE OR TEMPORARY PAVEMENT REMOVAL
- ITEM 203 - ROADWAY MISC.: EPS GEOFOAM FILL
- ITEM 203 - EMBANKMENT, AS PER PLAN
- TEMPORARY PAVEMENT CONSTRUCTED THIS PHASE
- PORTABLE BARRIER (PB)

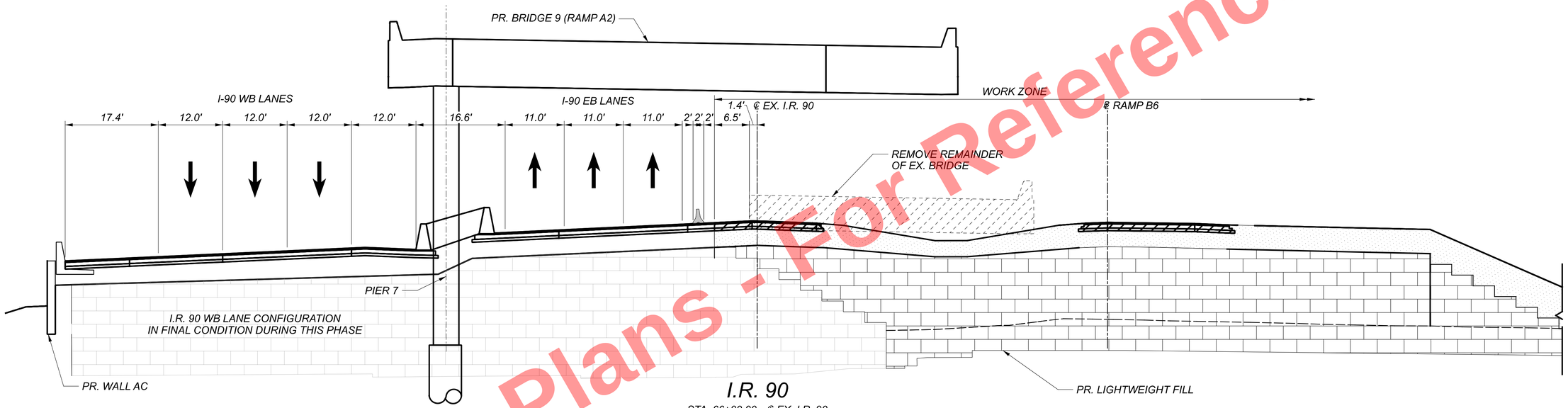

I.R. 90

STA. 66+00.00 - ℄ EX. I.R. 90

PHASE 8

SECTION XX-XX

SEE SHEET 384

Preliminary Plans - For Reference Only

NOTES:

- FOR I.R. 90 LIGHTWEIGHT FILL DETAILS SEE SHEET 1433
- PR. BRIDGE 9 SHOWN AT SKEW
- REFER TO ROADWAY, MISC.: EPS GEOFOAM FILL GENERAL NOTE ON SHEET 75 FOR INSTALLATION REQUIRMENTS

MAINTENANCE OF TRAFFIC - VARIOUS PHASES
LIGHTWEIGHT FILL TYPICAL SECTIONS

DESIGN AGENCY
Michael Baker INTERNATIONAL

DESIGNER CRK
REVIEWER GSH 05/22/24
PROJECT ID 82382
SHEET 151 TOTAL 2696

CUY-90-16.28 (CCG3A)

MODEL: Unified Sheet PAPERSIZE: 34x22 (in.) DATE: 3/27/2025 TIME: 7:01:40 PM USER: Collin.Kwiat
pw:\\mb-us-pw.bentley.com:mb-us-pw-03\Documents\Cleveland_OH\01_Projects\ODOT\District 12\82382\400-Engineering\MOT\Sheets\82382_MOT0002.dgn

Preliminary Plans - For Reference Only

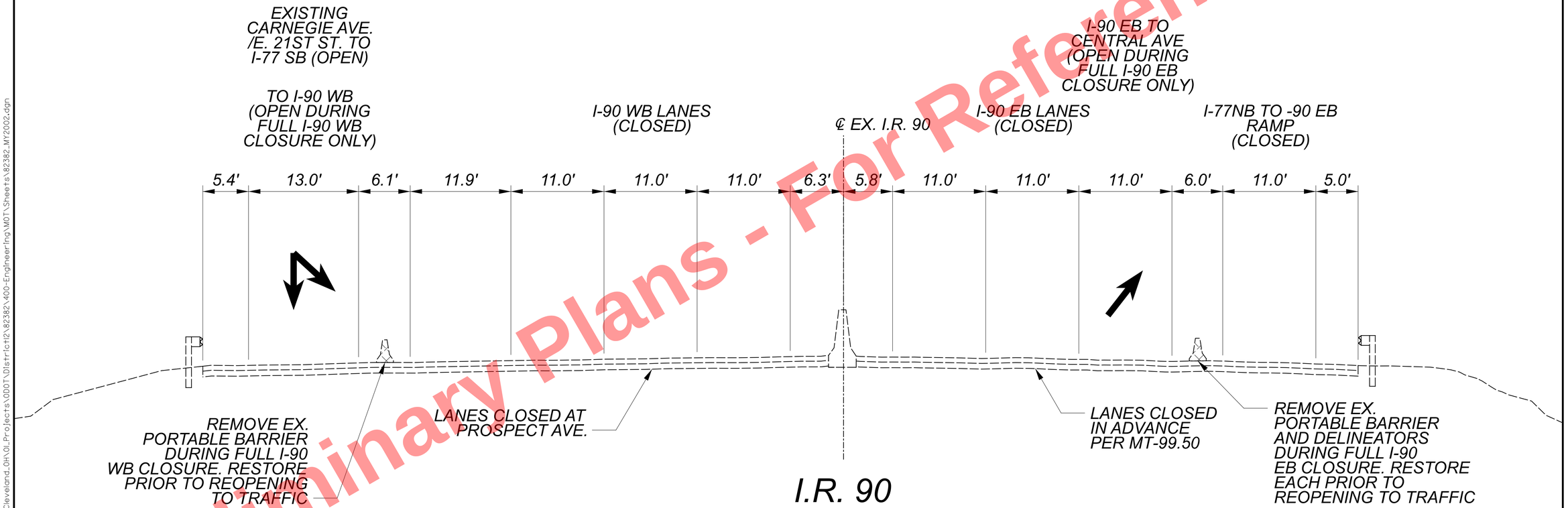

I.R. 90

STA. 76+00.00 - ℄ EX. I.R. 90

SEE SHEET 172

NOTE: I.R. 90 WB AND I.R. 90 EB NOT TO BE CLOSED CONCURRENTLY

MAINTENANCE OF TRAFFIC - PHASE 1 & 2

I-90 EB AND WB WEEKEND CLOSURES AT E. 22ND STREET AND CEDAR AVENUE TYPICAL SECTION

DESIGN AGENCY

Michael Baker INTERNATIONAL

DESIGNER	CRK
REVIEWER	GSH 05/22/24
PROJECT ID	82382
SHEET	152
TOTAL	2696

CUY-90-16.28 (CCG3A)

MODEL: Sheet PAPERSIZE: 34x22 (in.) DATE: 3/27/2025 TIME: 7:06:52 PM USER: Collin.Kwiatt
pw:\\mb-us-pw.bentley.com:mb-us-pw-03\Documents\Cleveland.OH\OI_Projects\ODOT\District2\82382\400-Engineering\MOT\Sheets\82382_MY2002.dgn

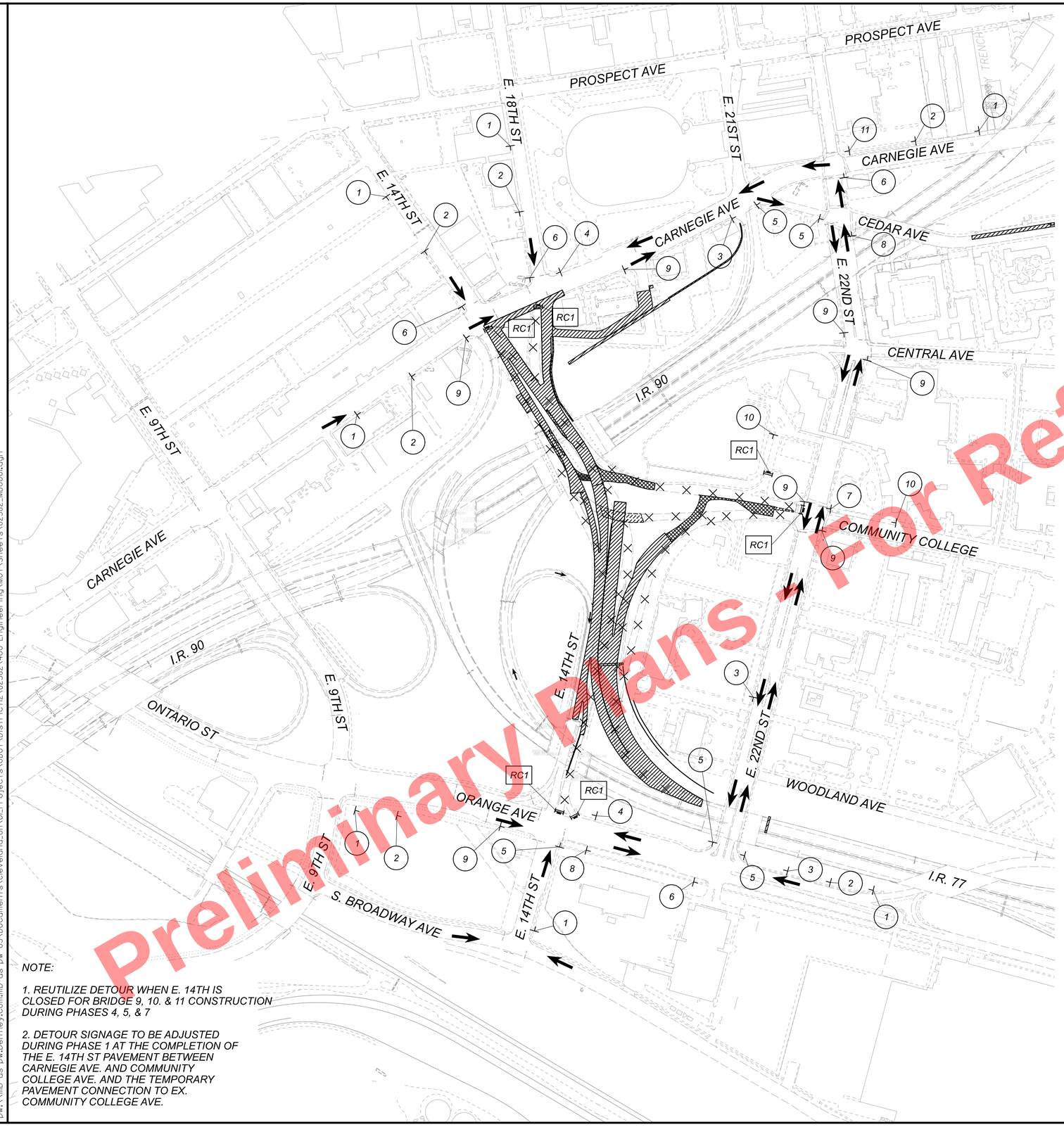

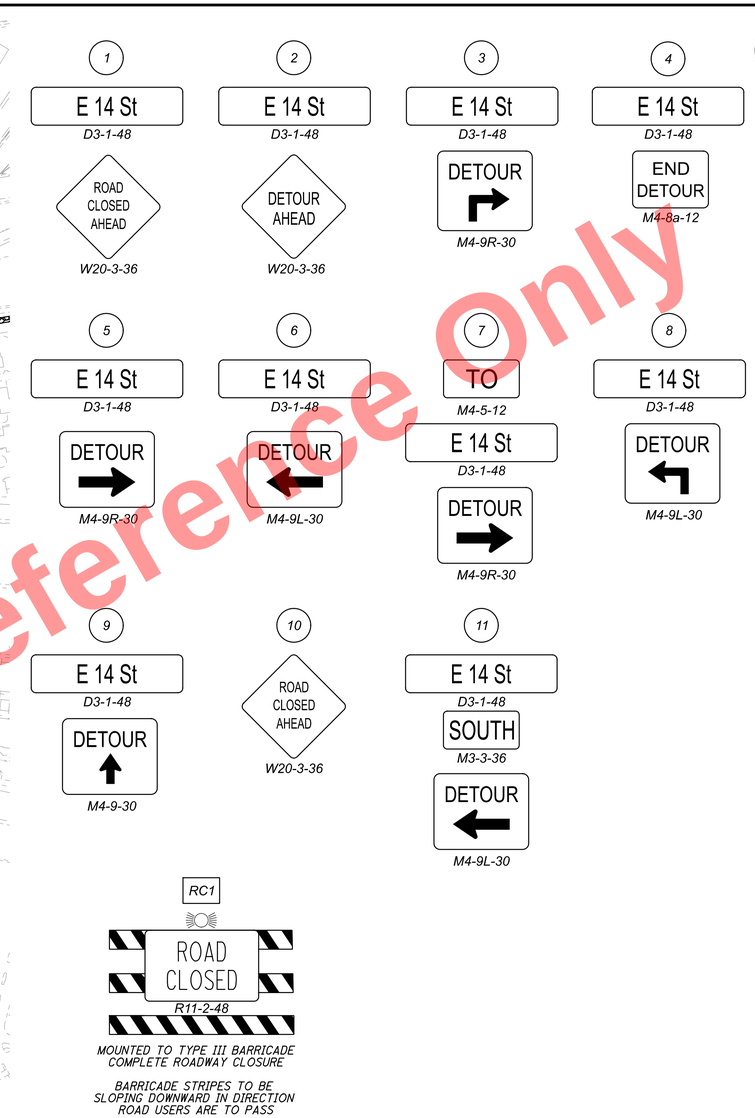

MAINTENANCE OF TRAFFIC LEGEND:

- AREA OF CONSTRUCTION TO BE COMPLETED DURING CLOSURE
- TEMPORARY PAVEMENT
- DETOUR ROUTE DIRECTION OF TRAVEL
- ××× ROAD CLOSED

NOTE:

1. REUTILIZE DETOUR WHEN E. 14TH IS CLOSED FOR BRIDGE 9, 10. & 11 CONSTRUCTION DURING PHASES 4, 5, & 7

2. DETOUR SIGNAGE TO BE ADJUSTED DURING PHASE 1 AT THE COMPLETION OF THE E. 14TH ST PAVEMENT BETWEEN CARNEGIE AVE. AND COMMUNITY COLLEGE AVE. AND THE TEMPORARY PAVEMENT CONNECTION TO EX. COMMUNITY COLLEGE AVE.

Preliminary Plans - For Reference Only

HORIZONTAL SCALE IN FEET
0 100 200 400

DETOUR PLAN
PHASE 1, 4, 5, & 7 - E. 14TH ST.

DESIGN AGENCY
Michael Baker INTERNATIONAL

DESIGNER CRK
REVIEWER GSH 05/22/24
PROJECT ID 82382
SHEET 153 TOTAL 2696

CUY-90-16.28 (CCG3A)

MODEL: E 14TH Detour Sheet PAPERSIZE: 34x22 (in.) DATE: 3/27/2025 TIME: 7:01:59 PM USER: Collin.Kwiatt
pw:\\mb-us-pw.bentley.com:mb-us-pw-03\Documents\Cleveland_OH\01_Projects\ODOT\District12\82382\400-Engineering\MOT\Sheets\82382_MD0001.dgn

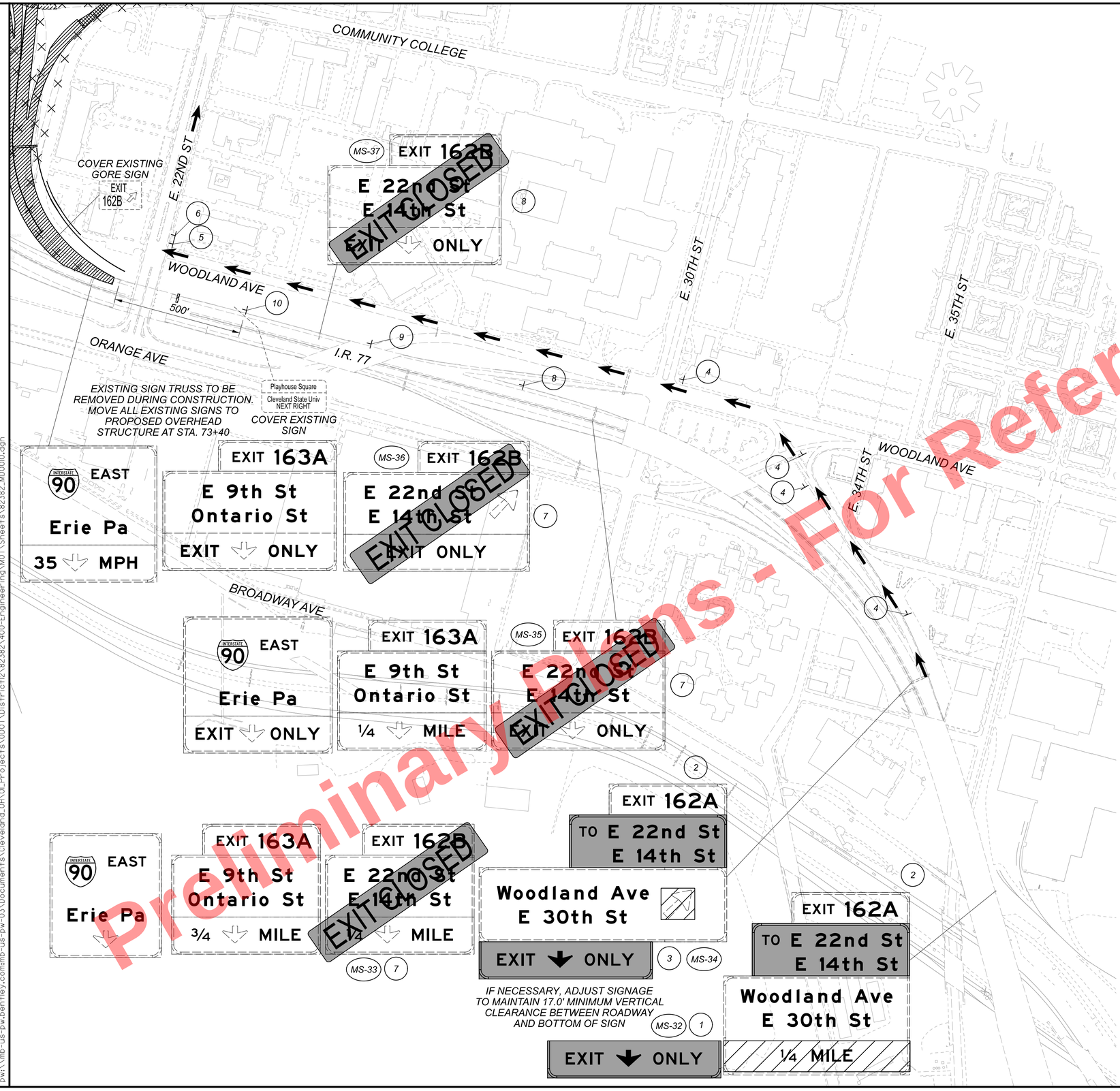

1 EXIT ONLY
BLACK-ON-ORANGE OVERLAY; COVER "1/4 MILE"

2 TO E 22nd St E 14th St
BLACK-ON-ORANGE; ATTACH PANEL TO EXISTING OVERHEAD

3 EXIT ONLY
BLACK-ON-ORANGE; ATTACH PANEL TO BOTTOM OF EXISTING OVERHEAD

FOR SIGN SIZING DETAILS, SEE SHEET 129

4 E 22 St (D3-1-48) / E 14 St (D3-1-48) / DETOUR (M4-9-30)

5 E 22 St (D3-1-48) / END DETOUR (M4-8a-12)

6 E 14 St (D3-1-48) / DETOUR (M4-9R-30)

7 EXIT CLOSED
W20-H15-96
BLACK-ON-ORANGE OVERLAY

8 ROAD WORK AHEAD
W20-1-48

9 EXIT CLOSED AHEAD
E5-H2c-48

10 EXIT CLOSED
E5-2a-48

MAINTENANCE OF TRAFFIC LEGEND:

- AREA OF CONSTRUCTION TO BE COMPLETED DURING CLOSURE
- DETOUR ROUTE DIRECTION OF TRAVEL
- XXX ROAD CLOSED

Preliminary Plans - For Reference Only

HORIZONTAL SCALE IN FEET
0 100 200 400

DETOUR PLAN
PHASE 1 -I.R. 77 NORTHBOUND TO E. 14TH ST./E. 22ND ST. EXIT RAMP (EXIT 162B)

DESIGN AGENCY
Michael Baker INTERNATIONAL

DESIGNER CRK
REVIEWER GSH 05/22/24
PROJECT ID 82382
SHEET 154 TOTAL 2696

CUY-90-16.28 (CCG3A)

MODEL: E I4TH Detour Sheet PAPERSIZE: 34x22 (in.) DATE: 3/27/2025 TIME: 7:02:07 PM USER: Collin.Kwiatt
pw:\\mb-us-pw.bentley.com:mb-us-pw-03\Documents\Cleveland_OH\DiI_Projects\DOT\District2\82382\400-Engineering\MOT\Sheets\82382_MD0010.dgn

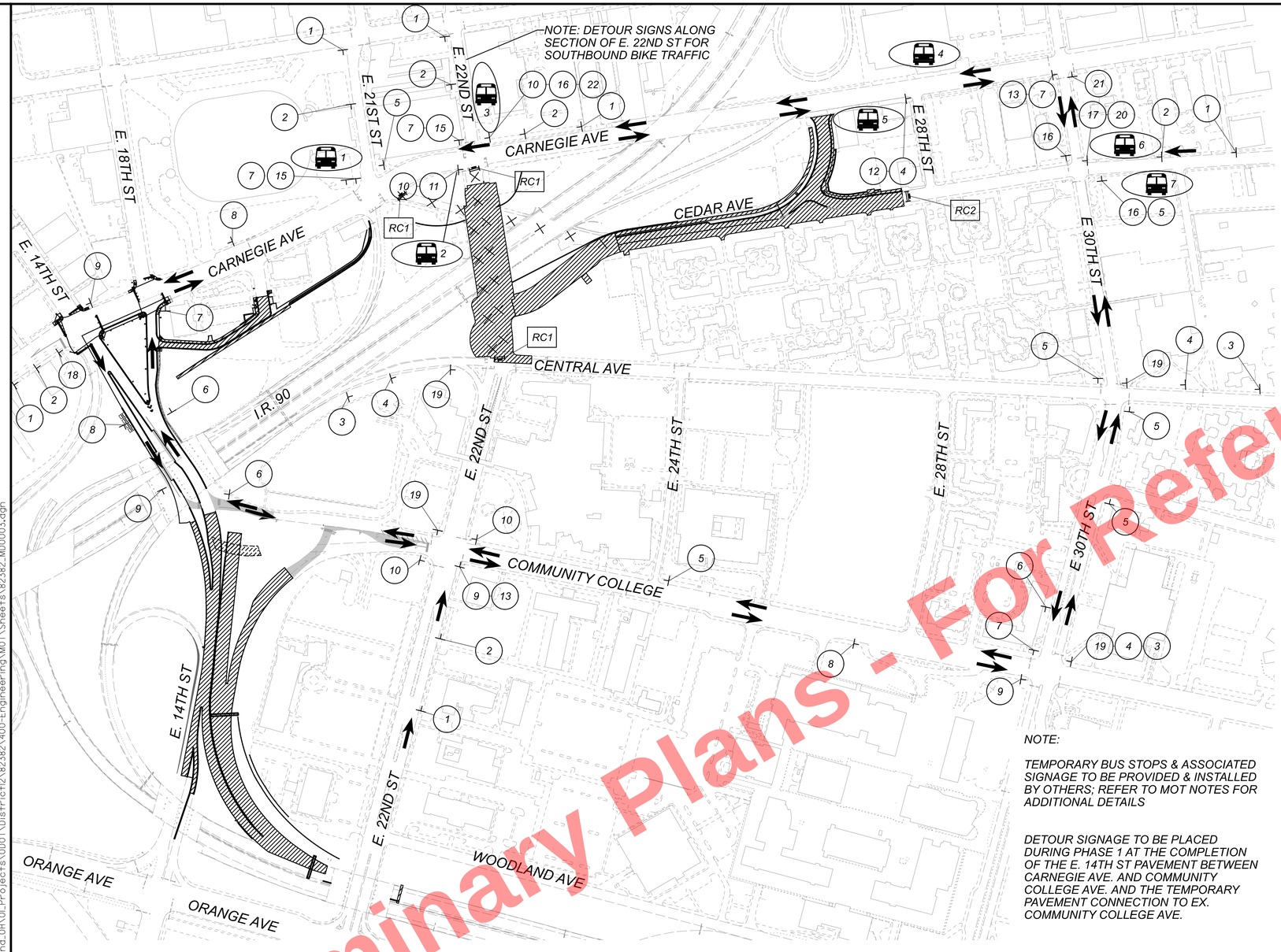

Preliminary Plans - For Reference Only

NOTE:

TEMPORARY BUS STOPS & ASSOCIATED SIGNAGE TO BE PROVIDED & INSTALLED BY OTHERS; REFER TO MOT NOTES FOR ADDITIONAL DETAILS

DETOUR SIGNAGE TO BE PLACED DURING PHASE 1 AT THE COMPLETION OF THE E. 14TH ST PAVEMENT BETWEEN CARNEGIE AVE. AND COMMUNITY COLLEGE AVE. AND THE TEMPORARY PAVEMENT CONNECTION TO EX. COMMUNITY COLLEGE AVE.

NO. 8 CENTRAL AVE BUS RE-ROUTE:

TEMPORARY STOP:	"NO STOPPING" BUS STOP ZONE LENGTH:
1	70'
2	150'
3	70'
4	70'
5	70'
6	80'
7	80'

MAINTENANCE OF TRAFFIC LEGEND:

- AREA OF CONSTRUCTION TO BE COMPLETED DURING CLOSURE
- PAVEMENT FOR MAINTAINING TRAFFIC CLASS A
- DETOUR ROUTE DIRECTION OF TRAVEL
- ROAD CLOSED
- TEMPORARY BUS STOP

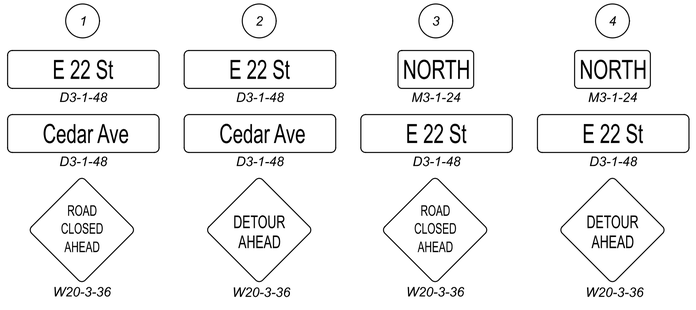

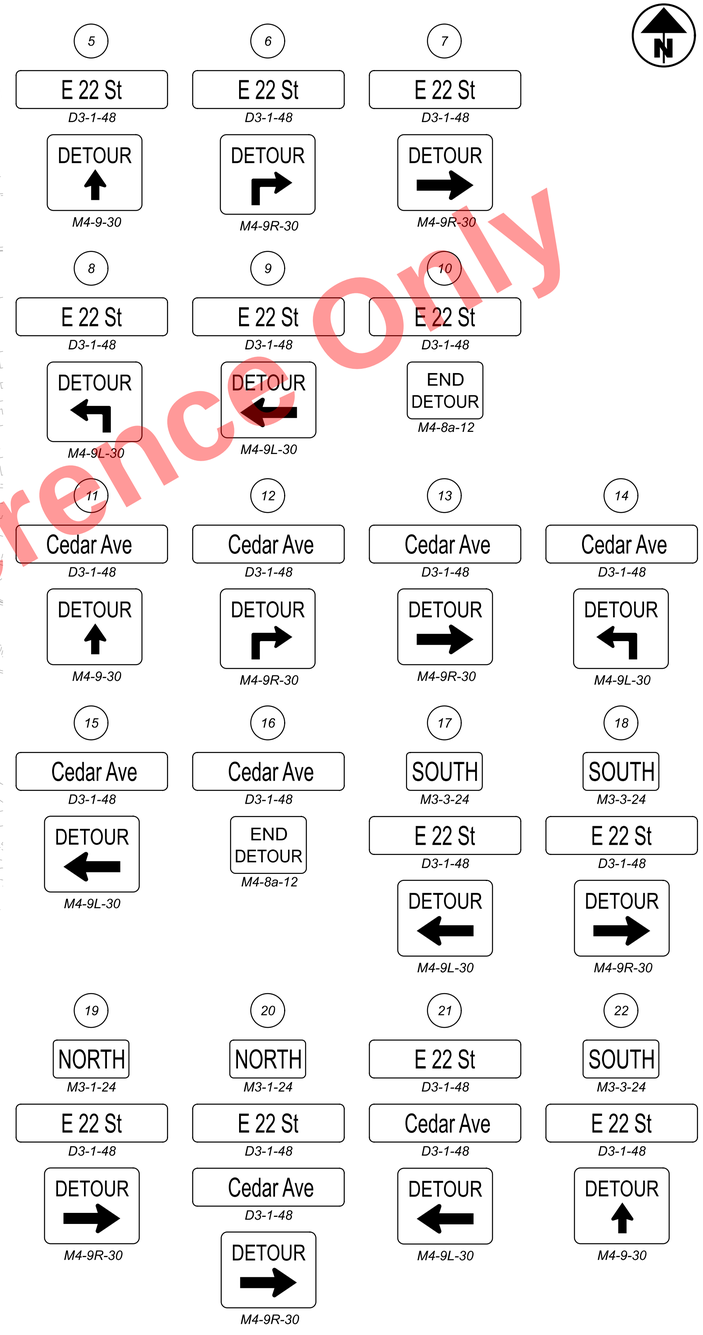

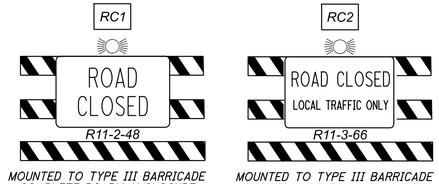

MOUNTED TO TYPE III BARRICADE COMPLETE ROADWAY CLOSURE

MOUNTED TO TYPE III BARRICADE PARTIAL ROADWAY CLOSURE

BARRICADE STRIPES TO BE SLOPING DOWNWARD IN DIRECTION ROAD USERS ARE TO PASS

HORIZONTAL SCALE IN FEET
0 100 200 400

DETOUR PLAN
PHASE 1 & 2 - E. 22ND ST. & CEDAR AVE.

DESIGN AGENCY
Michael Baker INTERNATIONAL

DESIGNER CRK
REVIEWER GSH 05/22/24
PROJECT ID 82382
SHEET 155 TOTAL 2696

CUY-90-16.28 (CCG3A)

MODEL: DETOUR PLAN E 22ND - PHASE 2 PAPERSIZE: 34x22 (ln.) DATE: 3/27/2025 TIME: 7:02:15 PM USER: Collin.Kwiat
pw:\\mb-us-pw.bentley.com:mb-us-pw-03\Documents\Cleveland_OH\OL_Projects\ODOT\Distrtc12\82382\400-Engineering\MOT\Sheets\82382_MD0003.dgn

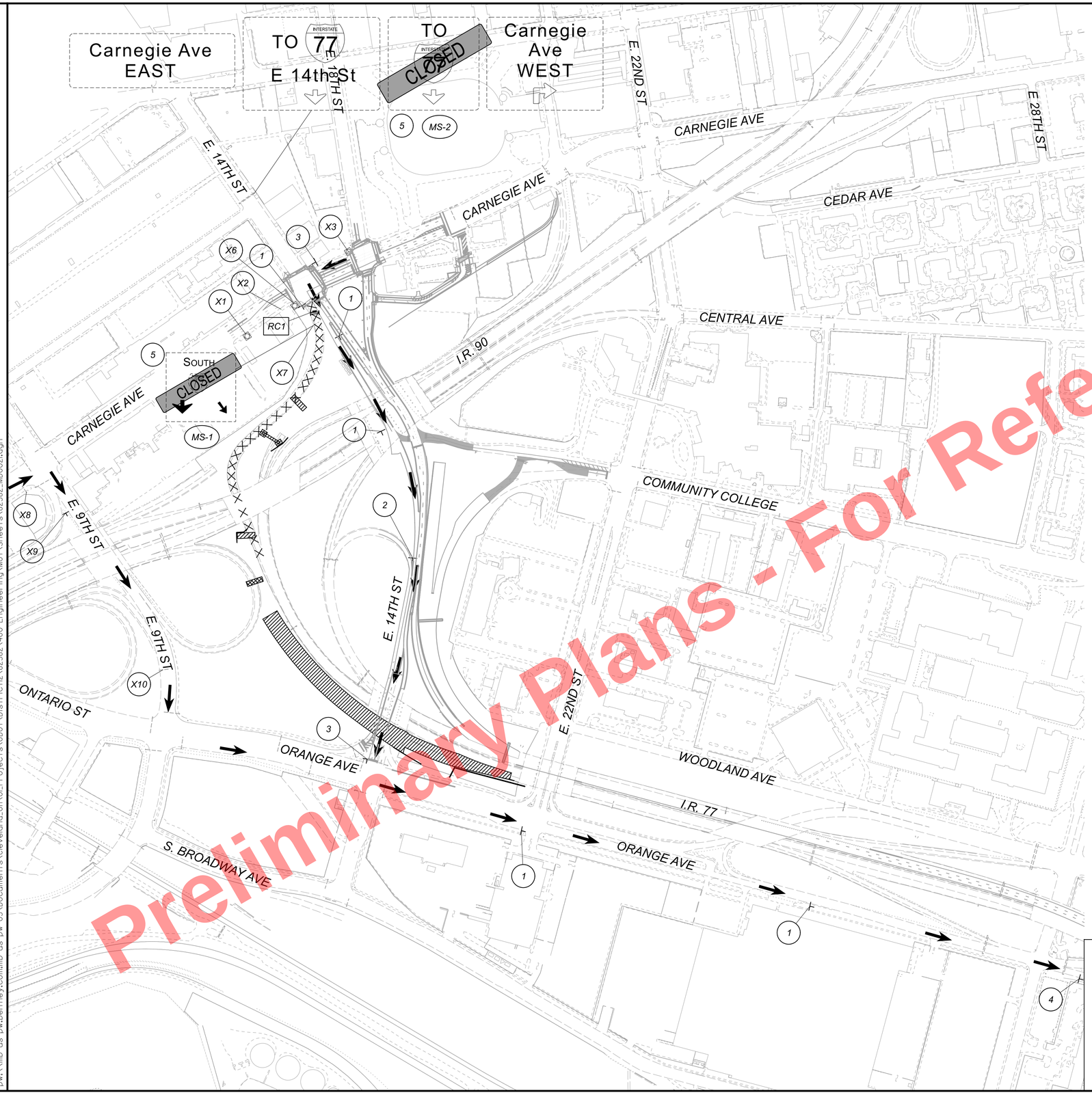

Preliminary Plans - For Reference Only

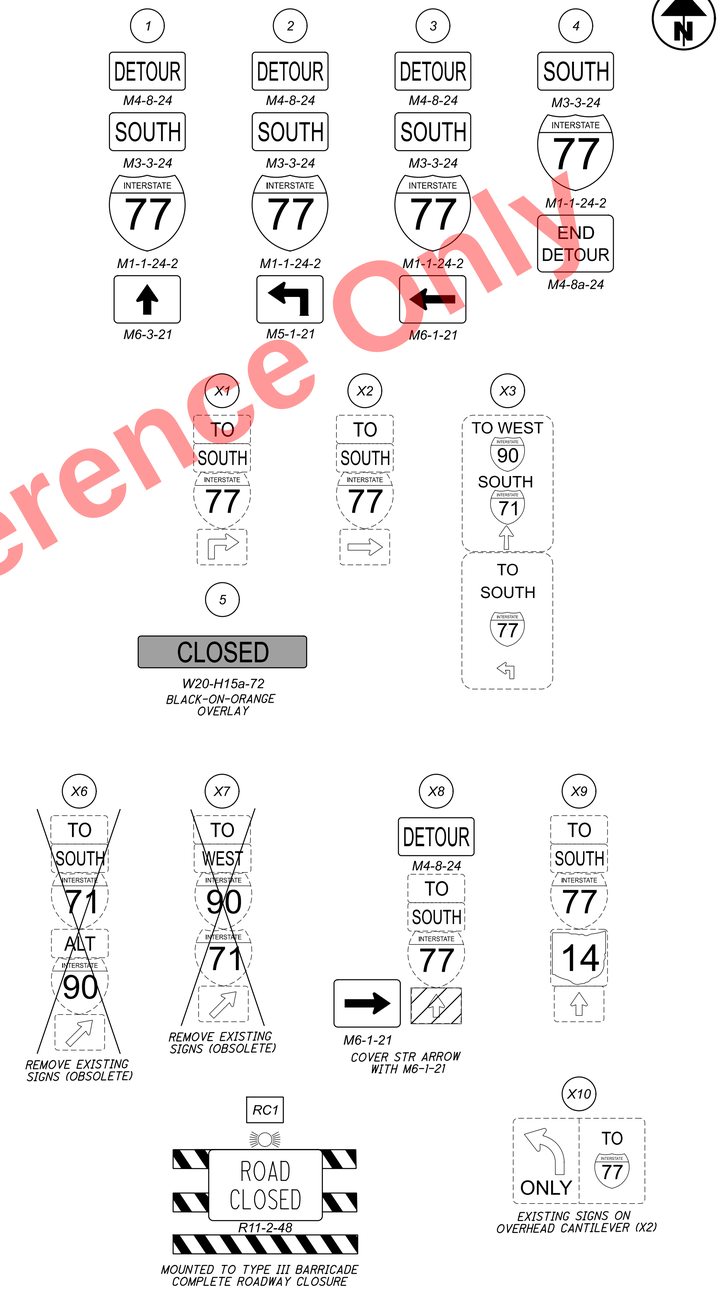

MAINTENANCE OF TRAFFIC LEGEND:

- AREA OF CONSTRUCTION TO BE COMPLETED DURING CLOSURE
- PAVEMENT FOR MAINTAINING TRAFFIC, CLASS A
- DETOUR ROUTE DIRECTION OF TRAVEL
- XXX ROAD CLOSED

NOTES:

ALL DETOUR SIGNS BUT SHIELD TO BE BLACK LETTER ON ORANGE.

ANY EXISTING I-77 SB SIGNING NOT SHOWN AT E. 14TH ST & CARNEGIE AVE INTERSECTION, E. 9TH ST, ONTARIO ST, & ORANGE AVE TO REMAIN IN PLACE.

HORIZONTAL SCALE IN FEET
0 100 200 400

DETOUR PLAN
PHASE 2 - E. 14TH ST. TO I.R. 77 SOUTHBOUND ENTRANCE RAMP

CUY-90-16.28 (CCG3A)

MODEL: DETOUR PLAN I-77 S - PHASE 2 PAPERSIZE: 34x22 (in) DATE: 3/27/2025 TIME: 7:02:24 PM USER: Collin.Kwiatt
pw:\\mb-us-pw.bentley.com:mb-us-pw-03\Documents\Cleveland_OH\01_Projects\00DT\District2\82382\400-Engineering\MOT\Sheets\82382_MD002L.dgn

DESIGN AGENCY	Michael Baker INTERNATIONAL
DESIGNER	CRK
REVIEWER	GSH 05/22/24
PROJECT ID	82382
SHEET	156
TOTAL	2696

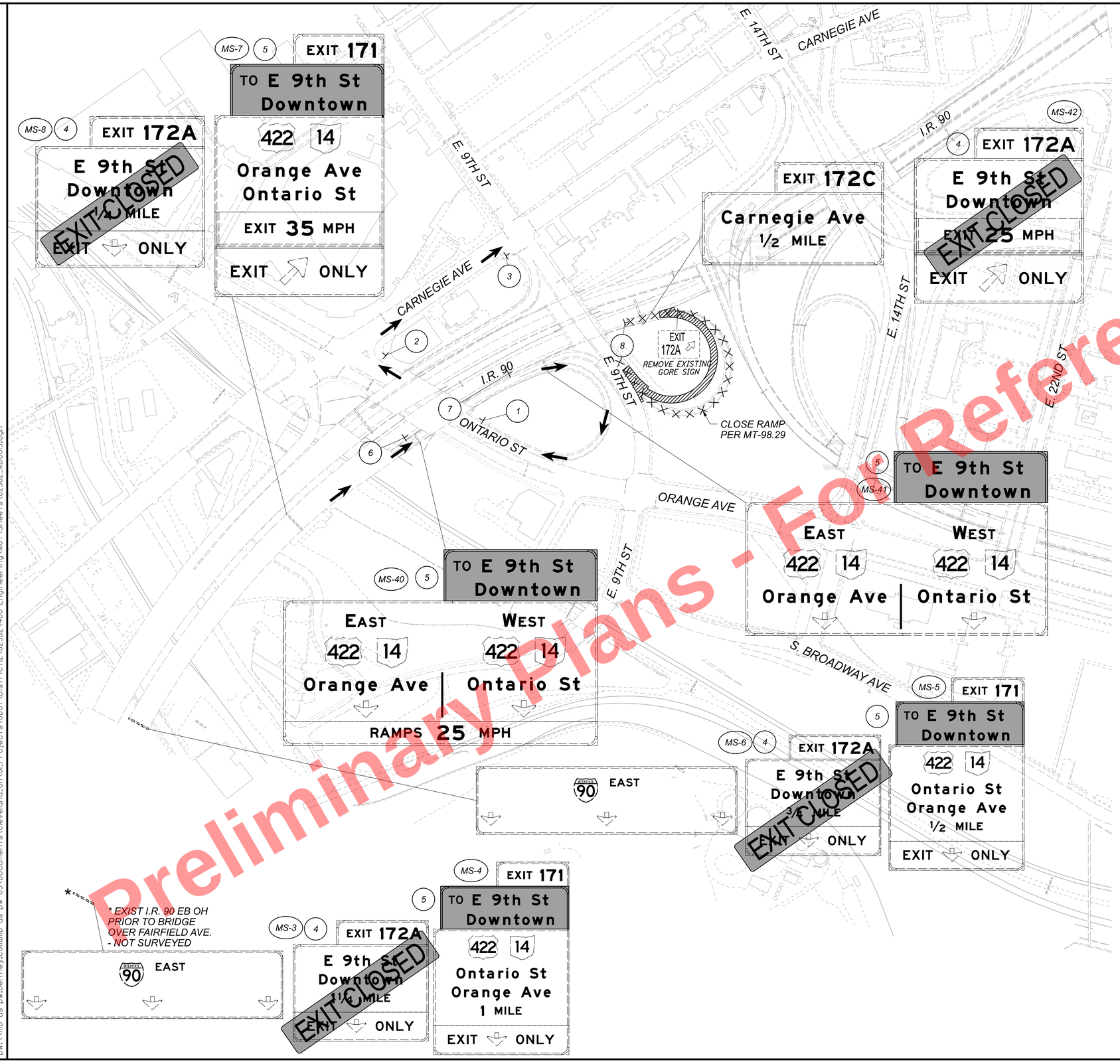

1 E 9 St D3-1-48 DETOUR M4-9R-30

2 E 9 St D3-1-48 DETOUR M4-9R-30

3 E 9 St D3-1-48 END DETOUR M4-8a-12

4 EXIT CLOSED W20-H15-96 BLACK-ON-ORANGE OVERLAY

5 TO E 9th St Downtown BLACK-ON-ORANGE; ATTACH PANEL TO EXISTING OVERHEAD

FOR TEMPORARY PANEL SIZING DETAILS, SEE SHEET 129

6 ROAD WORK AHEAD W20-1-48

7 EXIT CLOSED AHEAD E5-H2c-48

8 EXIT CLOSED E5-2a-48

MAINTENANCE OF TRAFFIC LEGEND:

- AREA OF CONSTRUCTION TO BE COMPLETED DURING CLOSURE
- DETOUR ROUTE DIRECTION OF TRAVEL
- XXX ROAD CLOSED

HORIZONTAL SCALE IN FEET 0 100 200 400

DETOUR PLAN
PHASE 2 - I.R. 90 EASTBOUND E. 9TH ST. NORTHBOUND EXIT RAMP (EXIT 172A)

Preliminary Plans - Not For Reference Only

CUY-90-16.28 (CCG3A)

MODEL: E I4TH Detour Sheet PAPERSIZE: 34x22 (in.) DATE: 3/27/2025 TIME: 7:02:33 PM USER: Collin.Kwiatt
pw:\\mb-us-pw.bentley.com:mb-us-pw-03\Documents\Cleveland_OH\01_Projects\DOT\District2\82382\400-Engineering\MOT\Sheets\82382_MD0013.dgn

DESIGN AGENCY
Michael Baker INTERNATIONAL

DESIGNER CRK
REVIEWER GSH 05/22/24
PROJECT ID 82382
SHEET 157 TOTAL 2696

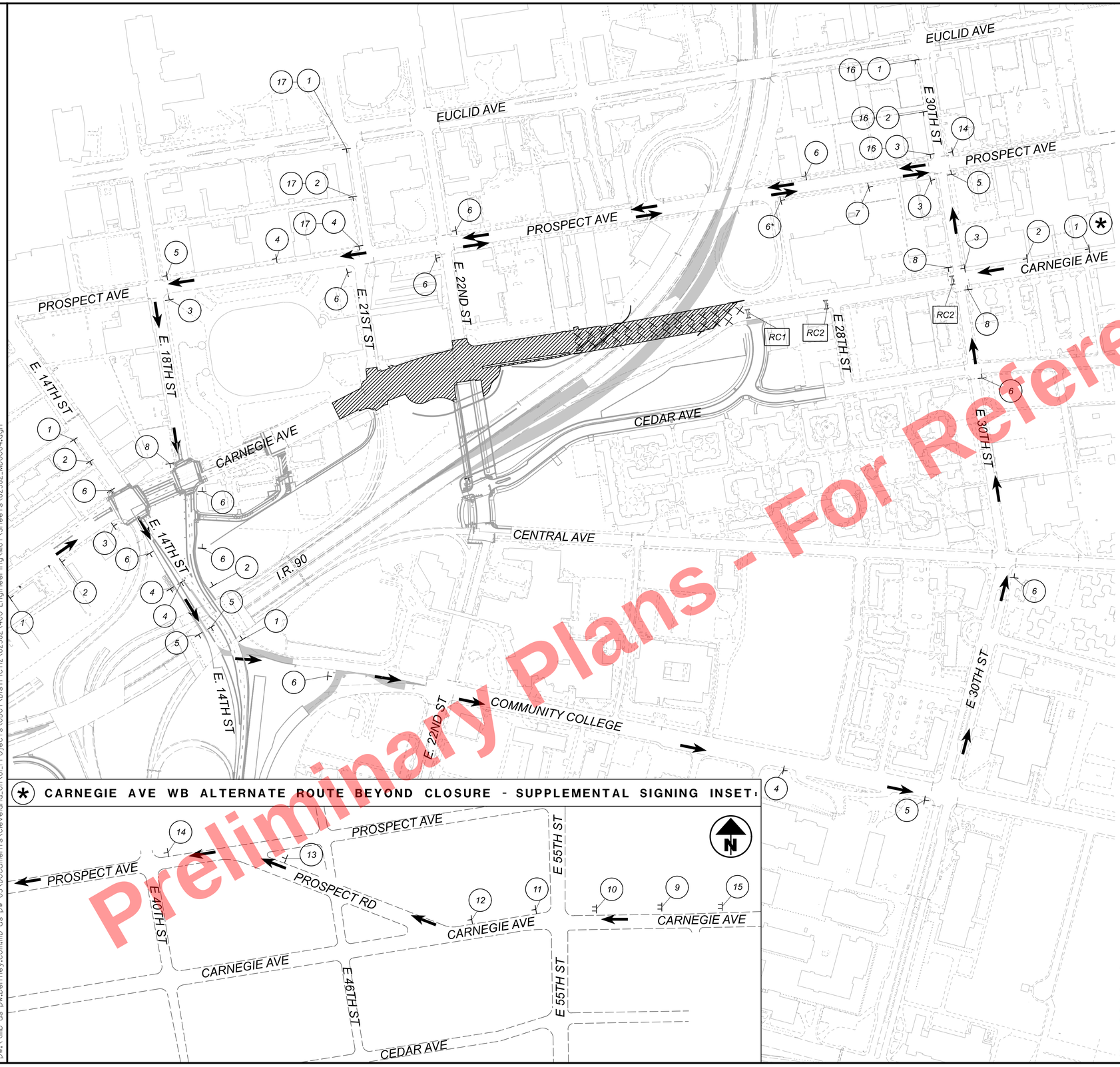

Preliminary Plans - For Reference Only

* CARNEGIE AVE WB ALTERNATE ROUTE BEYOND CLOSURE - SUPPLEMENTAL SIGNING INSET:

1 — Carnegie Ave — D3-1-48 — ROAD CLOSED AHEAD — W20-3-36

2 — Carnegie Ave — D3-1-48 — DETOUR AHEAD — W20-3-36

3 — Carnegie Ave — D3-1-48 — DETOUR → — M4-9R-30

4 — Carnegie Ave — D3-1-48 — DETOUR ← — M4-9L-30

5 — Carnegie Ave — D3-1-48 — DETOUR ← — M4-9L-30

6 — Carnegie Ave — D3-1-48 — DETOUR ↑ — M4-9-30

7 — Carnegie Ave — D3-1-48 — DETOUR → — M4-9R-30

8 — Carnegie Ave — D3-1-48 — END DETOUR — M4-8a-30

9* — CARNEGIE AVE CLOSED AT E 30th St — SPECIAL SIGN DESIGN BLACK-ON-ORANGE

10* — CARNEGIE AVE ALT ROUTE USE PROSPECT AVE — SPECIAL SIGN DESIGN BLACK-ON-ORANGE

11 — Carnegie Ave — D3-1-48 — ALT — M4-1a-30 → — M5-1-30

12 — Carnegie Ave — D3-1-48 — ALT — M4-1a-30 → — M6-1-12

13 — Carnegie Ave — D3-1-48 — ALT — M4-1a-30 ← — M6-1-12

14 — Carnegie Ave — D3-1-48 — ALT — M4-1a-30 ↑ — M6-3-12

15 — BRIDGE OUT 1.0 MILES AHEAD LOCAL TRAFFIC ONLY — R11-3b-60

RC1 — ROAD CLOSED — R11-2-48 — MOUNTED TO TYPE III BARRICADE COMPLETE ROADWAY CLOSURE

RC2 — ROAD CLOSED LOCAL TRAFFIC ONLY — R11-3-66 — MOUNTED TO TYPE III BARRICADE PARTIAL ROADWAY CLOSURE

BARRICADE STRIPES TO BE SLOPING DOWNWARD IN DIRECTION ROAD USERS ARE TO PASS

16 — WEST — M3-4-24

17 — EAST — M3-2-24

NOTES:

DETOUR TO BEGIN IN PHASE 2 AFTER OPENING OF E. 22ND ST. BRIDGE AND PRIOR TO CARNEGIE AVE. BRIDGE DEMO

* FOR SPECIAL SIGN DESIGN DETAILS, SEE SHEET 130

MAINTENANCE OF TRAFFIC LEGEND:

- AREA OF CONSTRUCTION TO BE COMPLETED DURING CLOSURE
- PAVEMENT FOR MAINTAINING TRAFFIC, CLASS A
- DETOUR ROUTE DIRECTION OF TRAVEL
- XXX ROAD CLOSED

HORIZONTAL SCALE IN FEET: 0, 100, 200, 400

DETOUR PLAN
PHASES 2-4 - CARNEGIE AVE.

DESIGN AGENCY: Michael Baker INTERNATIONAL

DESIGNER: CRK

REVIEWER: GSH 05/22/24

PROJECT ID: 82382

SHEET 158 TOTAL 2696

CUY-90-16.28 (CCG3A)

MODEL: DETOUR PLAN CARNEGIE - PHASE 3 PAPERSIZE: 34x22 (in.) DATE: 3/27/2025 TIME: 7:02:41 PM USER: CollinsKwatt
pw:\\mb-us-pw.bentley.com:mb-us-pw-03\Documents\Cleveland_OH\DOT_Projects\ODOT\District2\82382\400-Engineering\MOT\Sheets\82382_MD0004.dgn

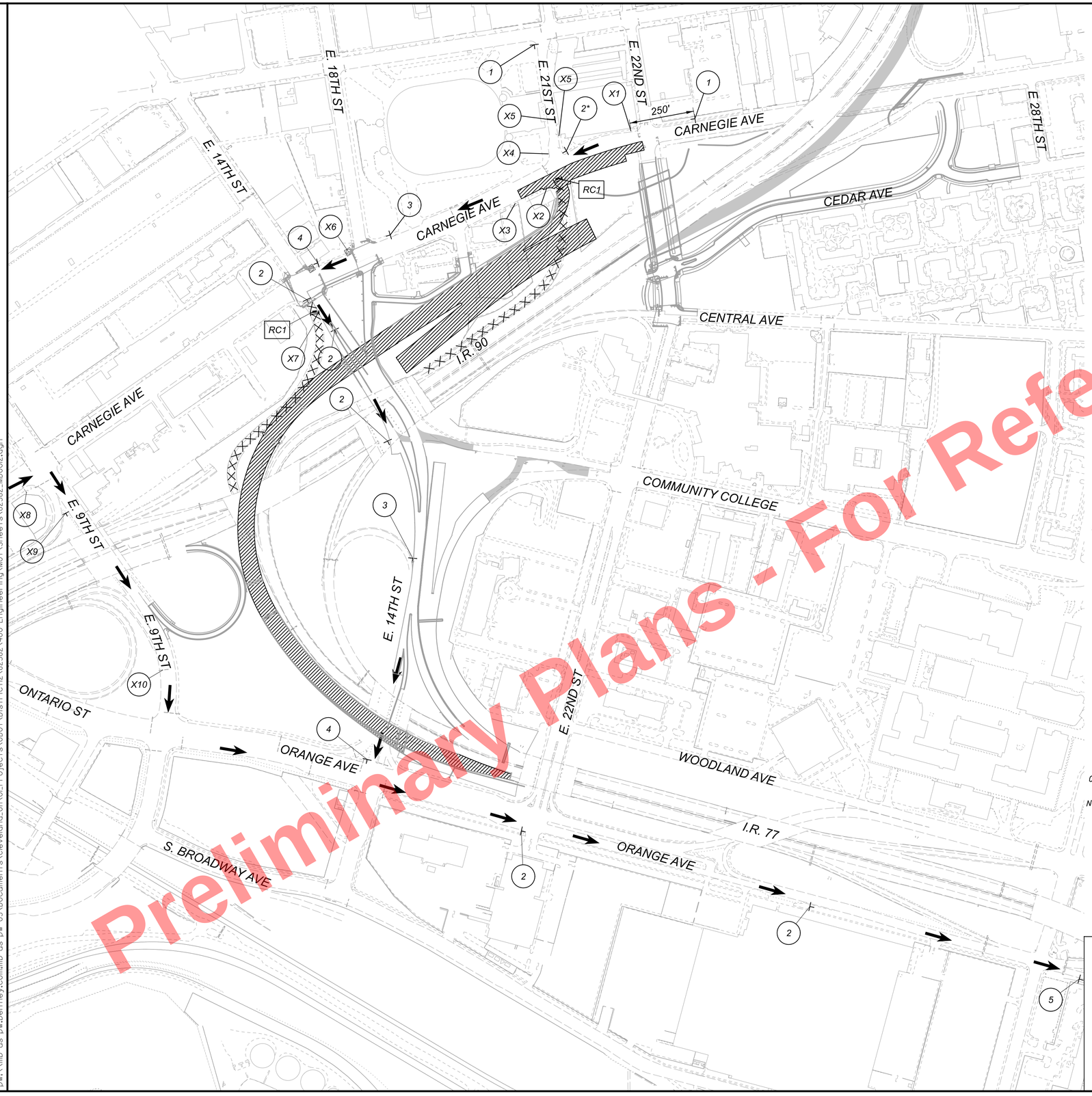

Preliminary Plans - Not For Reference Only

1
SOUTH
M3-3-24
INTERSTATE 77
M1-1-24-2
RAMP CLOSED AHEAD
E5-H2f-36

2
DETOUR
M4-8-24
SOUTH
M3-3-24
INTERSTATE 77
M1-1-24-2
M6-3-21
2* R3-2-36 "NO LEFT" ADDED ABOVE ASSEMBLY

3
DETOUR
M4-8-24
SOUTH
M3-3-24
INTERSTATE 77
M1-1-24-2
M5-1-21

4
DETOUR
M4-8-24
SOUTH
M3-3-24
INTERSTATE 77
M1-1-24-2
M6-1-21

5
SOUTH
M3-3-24
INTERSTATE 77
M1-1-24-2
END DETOUR
M4-8a-24

X1
TO EAST INTERSTATE 90
DETOUR
M4-8-24
SOUTH INTERSTATE 77
M6-3-21
COVER LT AHEAD ARROW WITH M6-3-21

X2
R3-1-36
SOUTH INTERSTATE 77
RAMP CLOSED
E5-H2e-36
SOUTH INTERSTATE 77
RAMP CLOSED
E5-H2e-36
ADD R3-1-36 TO EB DIRECTION, COVER RT/LT ARROWS WITH E5-H2a-36 BLACK-ON-ORANGE

X3
TO SOUTH INTERSTATE 77
RAMP CLOSED AHEAD
E5-H2f-36
COVER "TO" AND COVER RT AHEAD ARROW WITH E5-H2f-36 BLACK-ON-ORANGE

X4
DETOUR
M4-8-24
SOUTH INTERSTATE 77
M6-1-21
COVER RT/LT ARROWS WITH M6-1-21

X5
DETOUR
M4-8-24
SOUTH INTERSTATE 77
ONLY ONLY
M5-1-21
COVER STR ARROW WITH M5-1-21
NOTE: LANE DESIGNATION SIGN ADDRESSED IN DETAIL SHEETS

X6
TO WEST INTERSTATE 90
SOUTH INTERSTATE 71
TO SOUTH INTERSTATE 77

X7
SOUTH
CLOSED
CLOSED
W20-H15a-72 BLACK-ON-ORANGE OVERLAY
MS-1

X8
DETOUR
M4-8-24
TO SOUTH INTERSTATE 77
M6-1-21
COVER STR ARROW WITH M6-1-21

X9
TO SOUTH INTERSTATE 77
14

X10
ONLY
TO INTERSTATE 77
EXISTING SIGNS ON OVERHEAD CANTILEVER (X2)

RC1
ROAD CLOSED
R11-2-48
MOUNTED TO TYPE III BARRICADE COMPLETE ROADWAY CLOSURE

MAINTENANCE OF TRAFFIC LEGEND:

- AREA OF CONSTRUCTION TO BE COMPLETED DURING CLOSURE
- PAVEMENT FOR MAINTAINING TRAFFIC, CLASS A
- DETOUR ROUTE DIRECTION OF TRAVEL
- XXX ROAD CLOSED

NOTES:

ALL DETOUR SIGNS BUT SHIELD TO BE BLACK LETTER ON ORANGE.

ANY EXISTING I-77 SB SIGNING NOT SHOWN AT E. 14TH ST & CARNEGIE AVE INTERSECTION, E. 9TH ST, ONTARIO ST, & ORANGE AVE TO REMAIN IN PLACE.

DETOUR TO BEGIN IN PHASE 2 IF BRIDGE 9 PIERS 6, 8, OR 9 ARE UNDER CONSTRUCTION IN THAT PHASE.

E. 21ST AND E. 14TH ST. RAMP MUST BE OPEN DURING FULL WEEKEND CLOSURES FOR THE CARNEGIE AVE. BRIDGE DEMOLITION.

HORIZONTAL SCALE IN FEET
0 100 200 400

DETOUR PLAN
PHASE 3-4 - E. 14TH ST. & E. 21ST ST. TO I.R. 77 SOUTHBOUND ENTRANCE RAMPS

DESIGN AGENCY
Michael Baker INTERNATIONAL

DESIGNER CRK
REVIEWER GSH 05/22/24
PROJECT ID 82382
SHEET 159 TOTAL 2696

CUY-90-16.28 (CCG3A)

MODEL: DETOUR PLAN I-77 S - PHASE 2 PAPERSIZE: 34x22 (in.) DATE: 3/27/2025 TIME: 1:02:49 PM USER: Collin.Kwiat
pw:\\mb-us-pw.bentley.com:mb-us-pw-03\Documents\Cleveland_OH\01_Projects\ODOT\District2\82382\400-Engineering\MOT\Sheets\82382_MD002l2.dgn

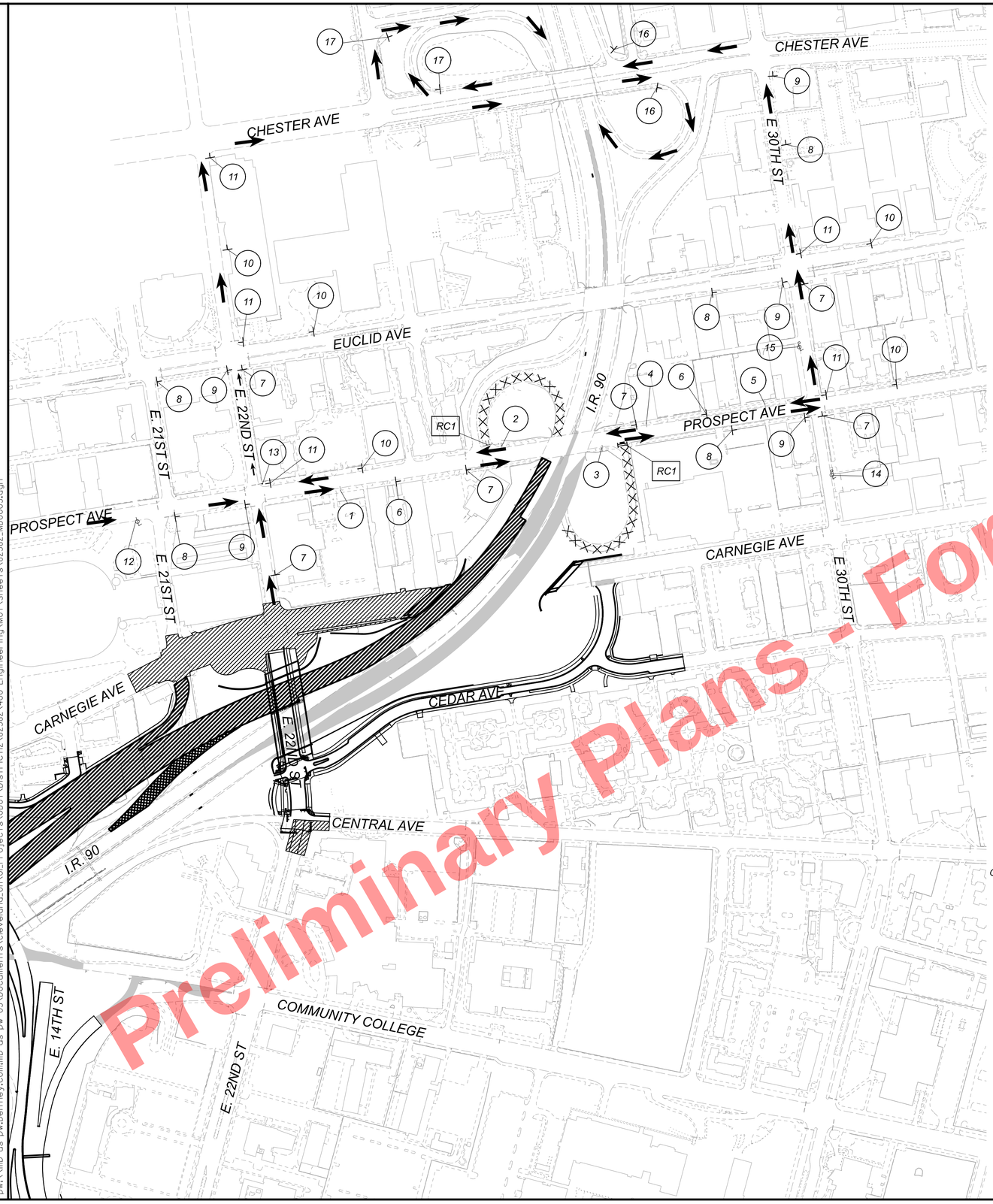

Preliminary Plans - For Reference Only

1 MS-11



PLACE "CLOSED" W20-H15A OVERLAY DIAGONALLY ACROSS EXISTING OVERHEAD

CLOSED

W20-H15a-72

2 MS-56



BACK SIDE FRONT SIDE

PLACE "CLOSED" W20-H15A OVERLAY DIAGONALLY ACROSS EXISTING OVERHEAD

CLOSED

W20-H15a-72

3 MS-52



FRONT SIDE BACK SIDE

PLACE "CLOSED" W20-H15A OVERLAY DIAGONALLY ACROSS EXISTING OVERHEAD

CLOSED

W20-H15a-72

4 MS-57



PLACE "CLOSED" W20-H15A OVERLAY DIAGONALLY ACROSS EXISTING OVERHEAD

CLOSED

W20-H15a-72

5 MS-12



PLACE "CLOSED" W20-H15A OVERLAY DIAGONALLY ACROSS EXISTING OVERHEAD

CLOSED

W20-H15a-72

6



E5-H2f-48

7



M4-8-24 M4-5-12 M1-1-24-2



M6-3-21

8



M4-8-24 M4-5-12 M1-1-24-2



M5-1-21

9



M4-8-24 M4-5-12 M1-1-24-2



M6-1-21

10



M4-8-24 M4-5-12 M1-1-24-2



M5-1-21

11



M4-8-24 M4-5-12 M1-1-24-2



M6-1-21

12

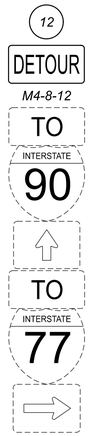

M4-8-12

ADD M4-8-12 TO EXISTING SIGN

13



M4-8-12

M6-3-12

ADD M4-8-12 TO EXISTING SIGN & COVER RT ARROW WITH M6-3-12

14 MS-9

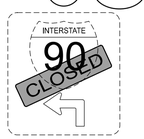

PLACE "CLOSED" W20-H15A OVERLAY DIAGONALLY ACROSS EXISTING SIGN

CLOSED

W20-H15a-72

15 MS-10

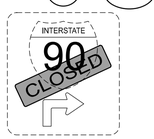

PLACE "CLOSED" W20-H15A OVERLAY DIAGONALLY ACROSS EXISTING SIGN

CLOSED

W20-H15a-72

16



M3-2-24 M1-1-24-2 M4-8a-12

17



M3-4-24 M1-1-24-2 M4-8a-12

RC1



R11-2-48

MOUNTED TO TYPE III BARRICADE COMPLETE ROADWAY CLOSURE

NOTE:

EXISTING OVERHEADS FOR I-90 ALONG CHESTER AVE NOT SHOWN

I.R. 90 WESTBOUND ENTRANCE RAMP FROM PROSPECT AVE. TO OPEN DURING PHASE 7.
I.R. 90 EASTBOUND ENTRANCE RAMP FROM PROSPECT AVE. TO OPEN DURING PHASE 9.

MAINTENANCE OF TRAFFIC LEGEND:

- AREA OF CONSTRUCTION TO BE COMPLETED DURING CLOSURE
- PAVEMENT FOR MAINTAINING TRAFFIC, CLASS A
- DETOUR ROUTE DIRECTION OF TRAVEL
- XXX ROAD CLOSED

HORIZONTAL SCALE IN FEET
0 100 200 400

DETOUR PLAN
PHASES 3-8 - PROSPECT AVE. TO I.R. 90 WESTBOUND AND I.R. 90 EASTBOUND ENTRANCE RAMPS

DESIGN AGENCY
Michael Baker INTERNATIONAL

DESIGNER CRK
REVIEWER GSH 05/22/24
PROJECT ID 82382
SHEET 160 TOTAL 2696

CUY-90-16.28 (CCG3A)

MODEL: E 14TH Detour Sheet PAPERSIZE: 34x22 (in.) DATE: 3/27/2025 TIME: 7:02:57 PM USER: Collin.Kwiatt
pw:\\mb-us-pw.bentley.com:mb-us-pw-03\Documents\Cleveland_OH\OI_Projects\ODOT\District#12\82382\400-Engineering\MOT\Sheets\82382_MD0005.dgn

Preliminary Plans - For Reference Only

MAINTENANCE OF TRAFFIC LEGEND:

- AREA OF CONSTRUCTION TO BE COMPLETED DURING CLOSURE
- PAVEMENT FOR MAINTAINING TRAFFIC, CLASS A (INSTALLED IN PHASE 3)
- DETOUR ROUTE DIRECTION OF TRAVEL
- XXX ROAD CLOSED

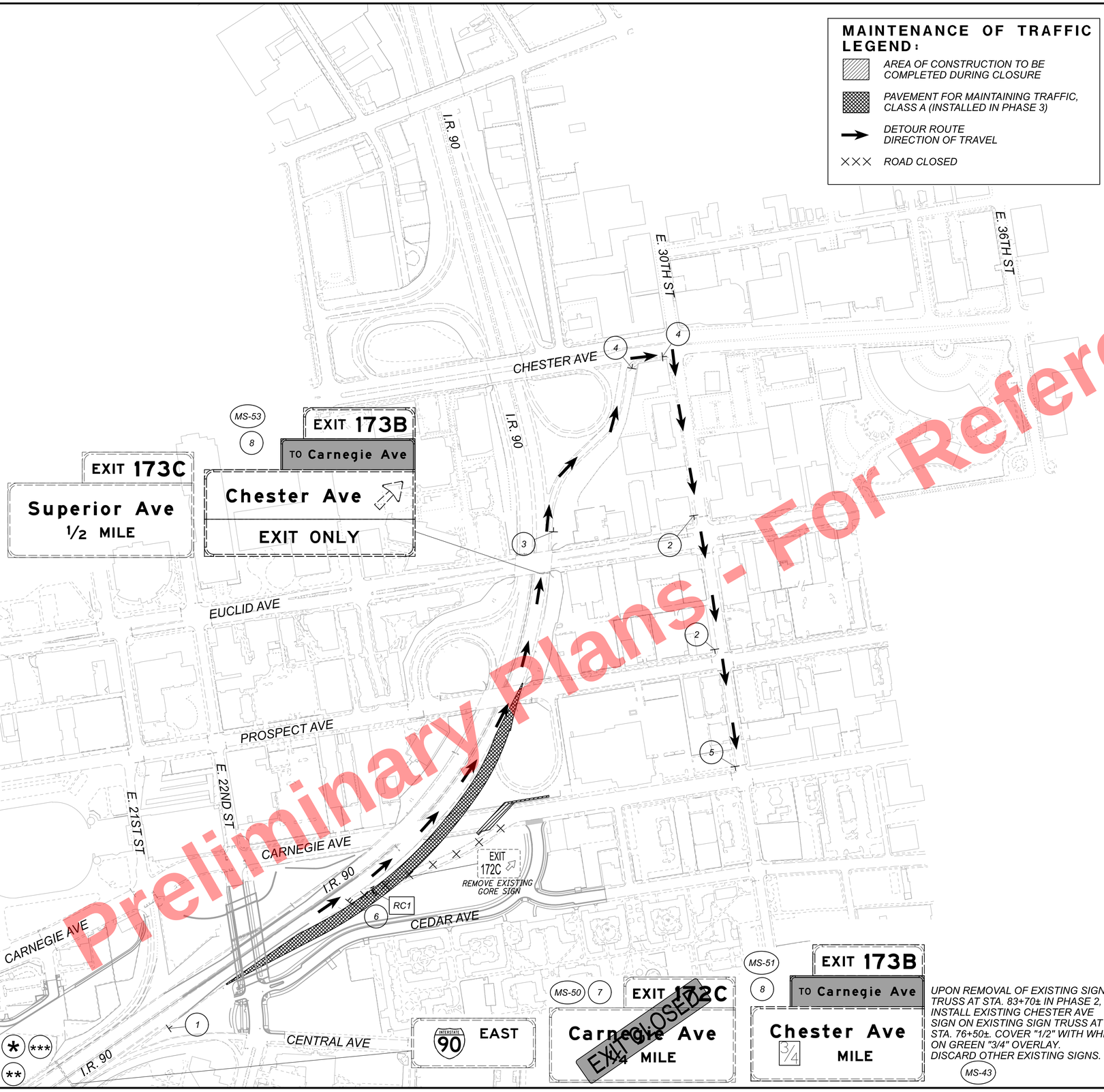

UPON REMOVAL OF EXISTING SIGN TRUSS AT STA. 83+70± IN PHASE 2, INSTALL EXISTING CHESTER AVE SIGN ON EXISTING SIGN TRUSS AT STA. 76+50±. COVER "1/2" WITH WHITE ON GREEN "3/4" OVERLAY. DISCARD OTHER EXISTING SIGNS.

1 — Carnegie Ave (D3-1-48) / DETOUR AHEAD (W20-3-36)

2 — Carnegie Ave (D3-1-48) / DETOUR (M4-9-30)

3 — Carnegie Ave (D3-1-48) / DETOUR (M4-8-30) / (M6-2-30)

4 — Carnegie Ave (D3-1-48) / DETOUR (M4-9R-30)

5 — Carnegie Ave (D3-1-48) / END DETOUR (M4-8a-30)

6 — EXIT CLOSED (E5-2a-48)

7 — EXIT CLOSED (W20-H15-96) BLACK-ON-ORANGE OVERLAY

8 — TO Carnegie Ave — BLACK-ON-ORANGE; ATTACH PANEL TO EXISTING OVERHEAD

FOR TEMPORARY PANEL DETAILS, SEE SHEET 129.

RC1 — ROAD CLOSED (R11-2-48) — MOUNTED TO TYPE III BARRICADE COMPLETE ROADWAY CLOSURE

(*) NOT SHOWN ON SHEET - EXIST I.R. 90 EB CANTILEVER AT ℄ EX. I.R. 90 STA. 70+00±)

MS-49

Carnegie Ave	3/8
Chester Ave	1
Superior Ave	1 1/2

"CARNEGIE 3/8" COVERED WITH GREEN OVERLAY

(**) NOT SHOWN ON SHEET - EXIST I.R. 90 EB OH AT E. 9TH ST. EXIT (℄ EX. I.R. 90 STA. 62+30±)

MS-48 — EXIT 172C — Carnegie Ave 1/4 MILE — EXIT CLOSED

EXIT 172A — E 9th St Downtown — EXIT 25 MPH — EXIT ONLY

(***) NOT SHOWN ON SHEET - EXIST I.R. 90 EB CANTILEVER AT ℄ EX. I.R. 90 STA. 54+75±)

MS-47

Carnegie Ave	3/4
Chester Ave	1 1/2
Superior Ave	2

"CARNEGIE 3/4" COVERED WITH GREEN OVERLAY

HORIZONTAL SCALE IN FEET
0 100 200 400

DETOUR PLAN
PHASES 3-9 - I.R. 90 EB CARNEGIE AVE. EXIT (#172C)

CUY-90-16.28 (CCG3A)

MODEL: DETOUR PLAN E 22ND - PHASE 2 PAPERSIZE: 34x22 (in.) DATE: 3/27/2025 TIME: 7:03:08 PM USER: Collin.Kwiatt
pw:\\mb-us-pw.bentley.com:mb-us-pw-03\Documents\Cleveland_OH\01_Projects\ODOT\District 12\82382 400-Engineering\MOT\Sheets\82382_MD001ii.dgn

DESIGN AGENCY	Michael Baker INTERNATIONAL
DESIGNER	CRK
REVIEWER	GSH 05/22/24
PROJECT ID	82382
SHEET	161
TOTAL	2696

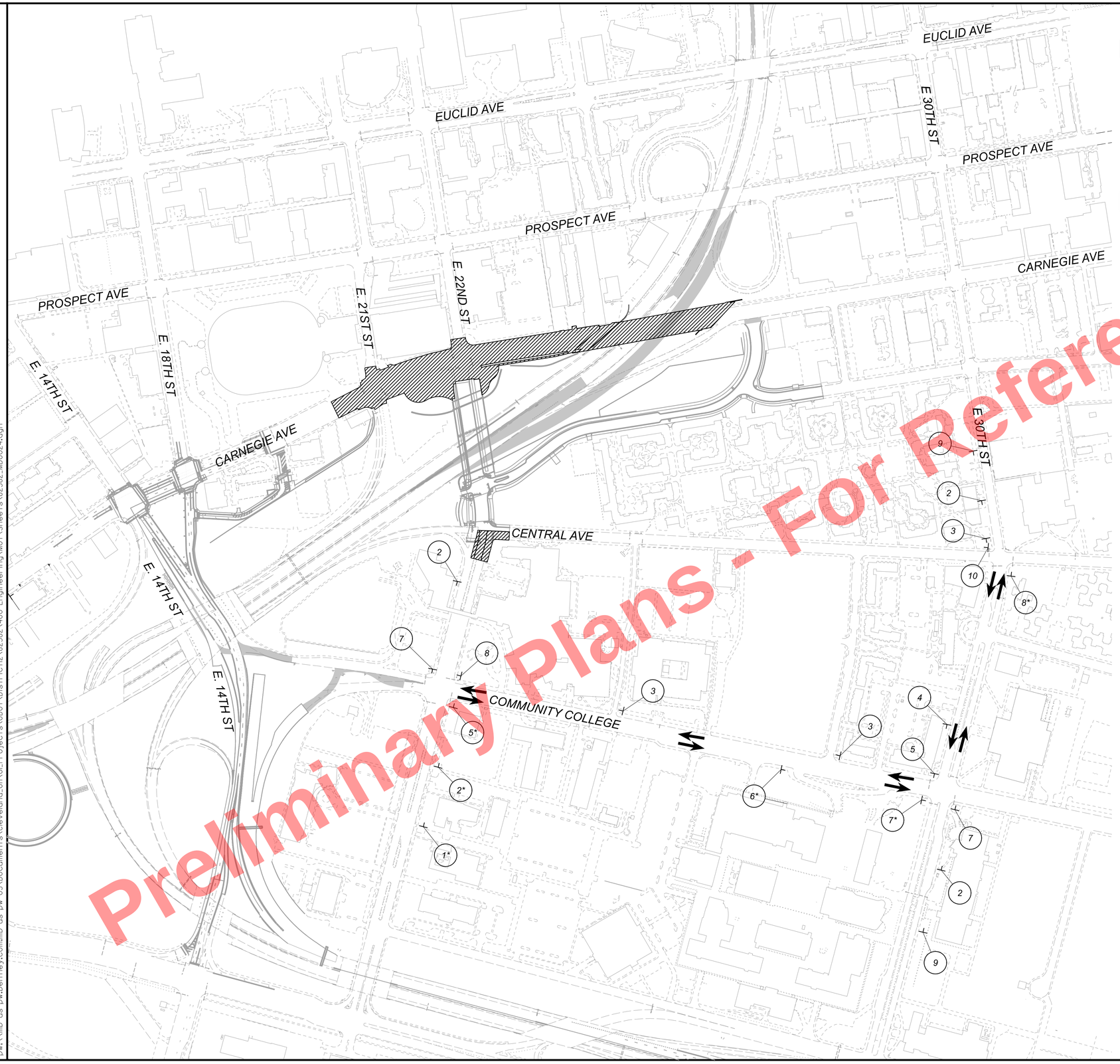

Preliminary Plans - For Reference Only

1 — Central Ave — D3-1-48 — ROAD CLOSED AHEAD — W20-3-36

2 — Central Ave — D3-1-48 — DETOUR AHEAD — W20-3-36

3 — Central Ave — D3-1-48 — DETOUR — M4-9-30

4 — Central Ave — D3-1-48 — DETOUR — M4-9R-30

5 — Central Ave — D3-1-48 — DETOUR — M4-9R-30

6 — Central Ave — D3-1-48 — DETOUR — M4-9L-30

7 — Central Ave — D3-1-48 — DETOUR — M4-9L-30

8 — Central Ave — D3-1-48 — END DETOUR — M4-8a-30

9 — Central Ave — D3-1-48 — ROAD CLOSED LOCAL TRAFFIC ONLY — R11-3-66 — WEST — M3-4-24

10 — ROAD CLOSED LOCAL TRAFFIC ONLY — R11-3-66 — DETOUR — M4-9L-30

HORIZONTAL SCALE IN FEET
0 100 200 400

DETOUR PLAN
PHASE 4 - E. 22ND ST AND CENTRAL AVE

* DETOUR SIGNS ONLY PLACED IN PHASE 4 SUBPHASE 4B

DETOUR CONCURRENT WITH PHASE 2-4 CARNEGIE AVE CLOSURE DETOUR. FOR DETAILS SEE SHEET 158

MAINTENANCE OF TRAFFIC LEGEND:

- AREA OF CONSTRUCTION TO BE COMPLETED DURING CLOSURE
- PAVEMENT FOR MAINTAINING TRAFFIC, CLASS A
- DETOUR ROUTE DIRECTION OF TRAVEL
- XXX ROAD CLOSED

DESIGN AGENCY
Michael Baker INTERNATIONAL

DESIGNER CRK
REVIEWER GSH 05/22/24
PROJECT ID 82382
SHEET 162 TOTAL 2696

CUY-90-16.28 (CCG3A)

MODEL: DETOUR PLAN CENTRAL - PHASE 4 PAPERSIZE: 34x22 (in.) DATE: 3/27/2025 TIME: 7:03:17 PM USER: Collin.Kwiatt
pw:\\mb-us-pw.bentley.com:mb-us-pw-03\Documents\Cleveland_OH\01_Projects\ODOT\District2\82382\400-Engineering\MOT\Sheets\82382_MD0024.dgn

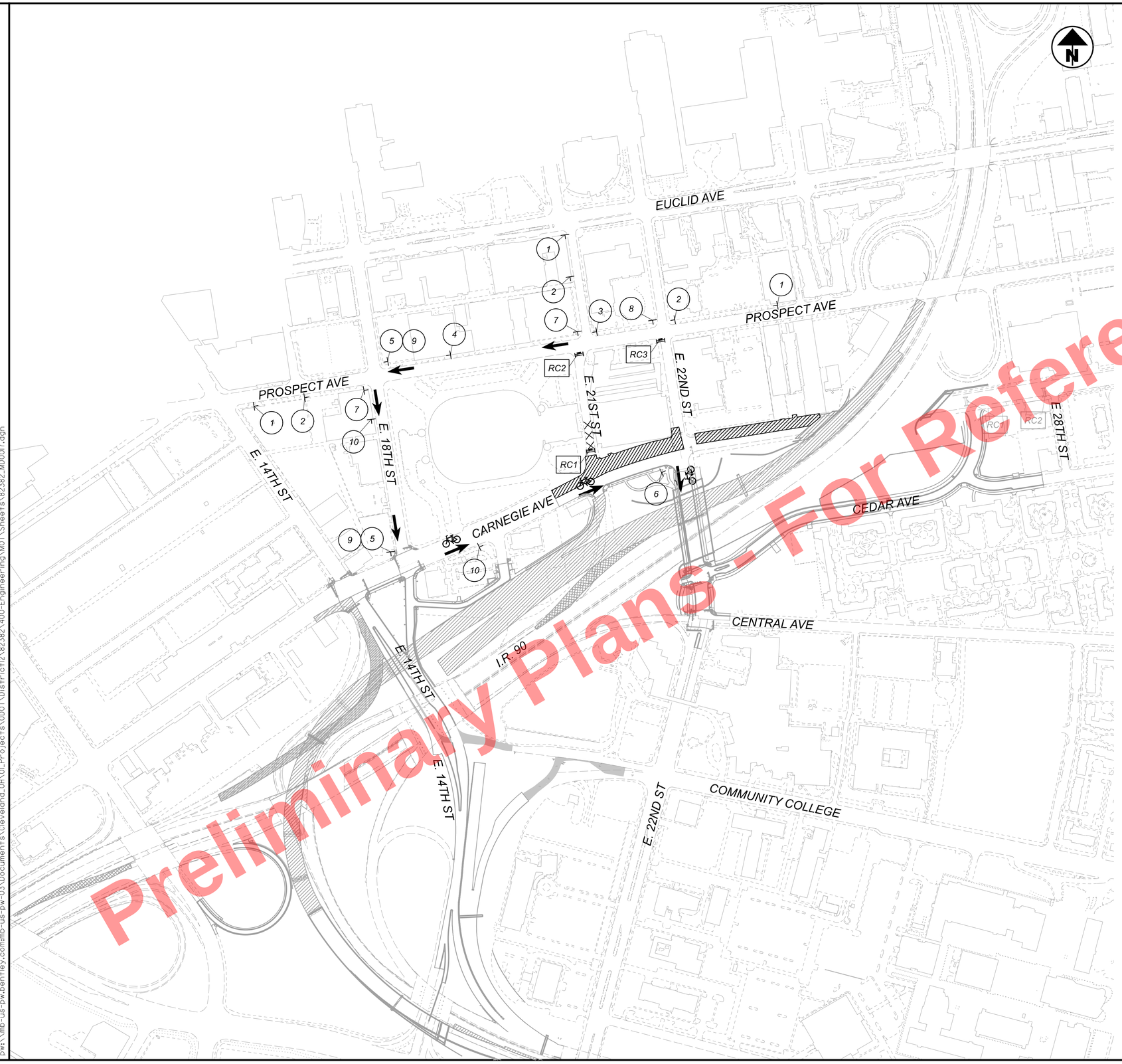

Preliminary Plans - For Reference Only

1 — E 21 St — D3-1-48
ROAD CLOSED AHEAD — W20-3-36

2 — E 21 St — D3-1-48
DETOUR AHEAD — W20-3-36

3 — E 21 St — D3-1-48
DETOUR — M4-9-30

4 — E 21 St — D3-1-48
DETOUR — M4-9L-30

5 — E 21 St — D3-1-48
DETOUR — M4-9L-30

6 — E 21 St — D3-1-48
END DETOUR — M4-8a-30

7 — E 21 St — D3-1-48
DETOUR — M4-9R-30

8 — E 22 St — D3-1-48
DETOUR — M4-9c-30

9 — E 22 St — D3-1-48
DETOUR — M4-9c-30

10
W11-1-36 BLACK-ON-ORANGE

RC1
ROAD CLOSED — R11-2-48
MOUNTED TO TYPE III BARRICADE
COMPLETE ROADWAY CLOSURE

SHARE THE ROAD — W16-1P-24 BLACK-ON-ORANGE

BARRICADE STRIPES TO BE SLOPING DOWNWARD IN DIRECTION ROAD USERS ARE TO PASS

RC2
ROAD CLOSED LOCAL TRAFFIC ONLY — R11-3-66
MOUNTED TO TYPE III BARRICADE
PARTIAL ROADWAY CLOSURE

RC3
DETOUR — R11-2-48
MOUNTED TO TYPE III BARRICADE
COMPLETE BIKE LANE CLOSURE

MAINTENANCE OF TRAFFIC LEGEND:

- AREA OF CONSTRUCTION TO BE COMPLETED DURING CLOSURE
- PAVEMENT FOR MAINTAINING TRAFFIC, CLASS A
- DETOUR ROUTE DIRECTION OF TRAVEL
- BIKE DETOUR ROUTE ONLY
- XXX ROAD CLOSED

HORIZONTAL SCALE IN FEET
0 100 200 400

DETOUR PLAN
PHASE 4B - E. 21ST ST. AT CARNEGIE AVE. AND E. 22ND ST.

CUY-90-16.28 (CCG3A)

DESIGN AGENCY
Michael Baker INTERNATIONAL

DESIGNER CRK
REVIEWER GSH 05/22/24
PROJECT ID 82382
SHEET 163 TOTAL 2696

MODEL: DETOUR PLAN CARNEGIE - PHASE 3 PAPERSIZE: 34x22 (in.) DATE: 3/27/2025 TIME: 7:03:28 PM USER: Collin.Kwiatt
pw:\\mb-us-pw.bentley.com:mb-us-pw-03\Documents\Cleveland_OH\DL_Projects\ODOT\District2\82382\400-Engineering\MOT\Sheets\82382_MD001f.dgn

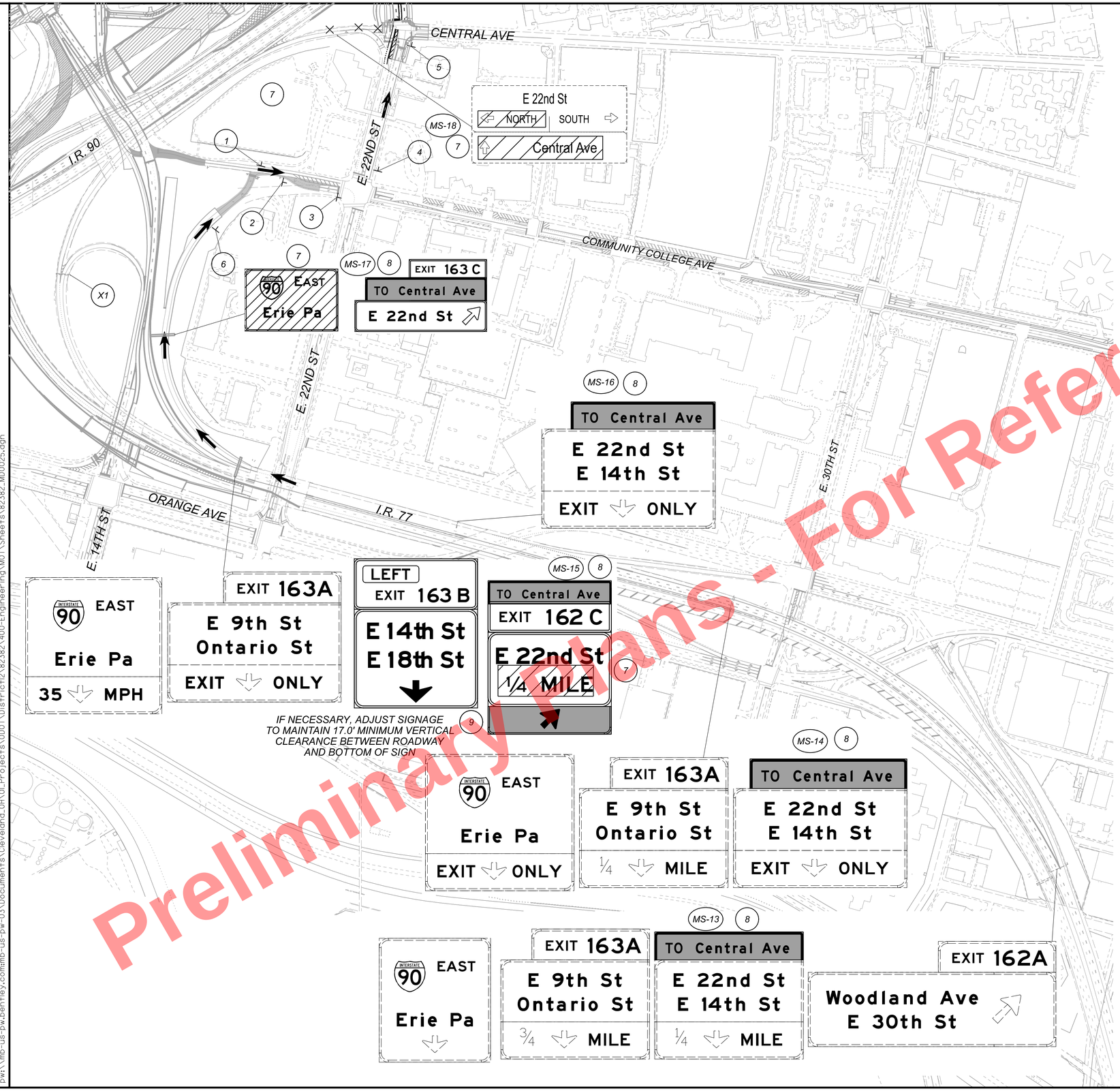

Preliminary Plans - For Reference Only

1 CENTRAL AVE D3-1-48 DETOUR M4-9R-30

2 CENTRAL AVE D3-1-48 DETOUR M4-9L-30

3 CENTRAL AVE D3-1-48 DETOUR M4-9L-30

4 CENTRAL AVE D3-1-48 DETOUR M4-9-30

5 CENTRAL AVE D3-1-48 END DETOUR M4-8a-30

6 CENTRAL AVE D3-1-48 DETOUR M4-9R-30

7 *COVER "NORTH/ARROW" AND "CENTRAL AVE/ARROW" WITH GREEN OVERLAY "1/4" MILE TO REMAIN COVERED WITH GREEN OVERLAY*

8 TO Central Ave

BLACK-ON-ORANGE; ATTACH PANEL TO EXISTING OVERHEAD

FOR TEMPORARY PANEL DETAILS, SEE SHEET 129

9 *DIAGONAL "UP" ARROW OVERLAY TO REMAIN*

FOR PANEL DETAILS, SEE SHEET 130

X1 EAST Erie Pa | EXIT 163 B E 22nd St NEXT RIGHT | EXIT 163 A E 9th St Ontario St EXIT ONLY

EXISTING OVERHEAD TO REMAIN AS SHOWN

DETOUR CONCURRENT WITH PHASE 4 E. 22ND AND CENTRAL DETOUR. FOR DETAILS SEE SHEET 162

MAINTENANCE OF TRAFFIC LEGEND:

- *AREA OF CONSTRUCTION TO BE COMPLETED DURING CLOSURE*
- *PAVEMENT FOR MAINTAINING TRAFFIC, CLASS A*
- *DETOUR ROUTE DIRECTION OF TRAVEL*
- XXX *ROAD CLOSED*

HORIZONTAL SCALE IN FEET 0 100 200 400

DETOUR PLAN
PHASE 4C - I.R. 77 NB TO E.22ND ST AND CENTRAL AVE (EXIT 163B)

DESIGN AGENCY Michael Baker INTERNATIONAL

DESIGNER CRK

REVIEWER GSH 05/22/24

PROJECT ID 82382

SHEET 164 TOTAL 2696

CUY-90-16.28 (CCG3A)

MODEL: Sheet PAPERSIZE: 34x22 (in.) DATE: 3/27/2025 TIME: 1:03:38 PM USER: Collin.Kwiat
pw:\\mb-us-pw.bentley.com:mb-us-pw-03\Documents\Cleveland_OH\OI_Projects\ODOT\Dist1\c12.82382\400-Engineering\MOT\Sheets\82382_MD0025.dgn

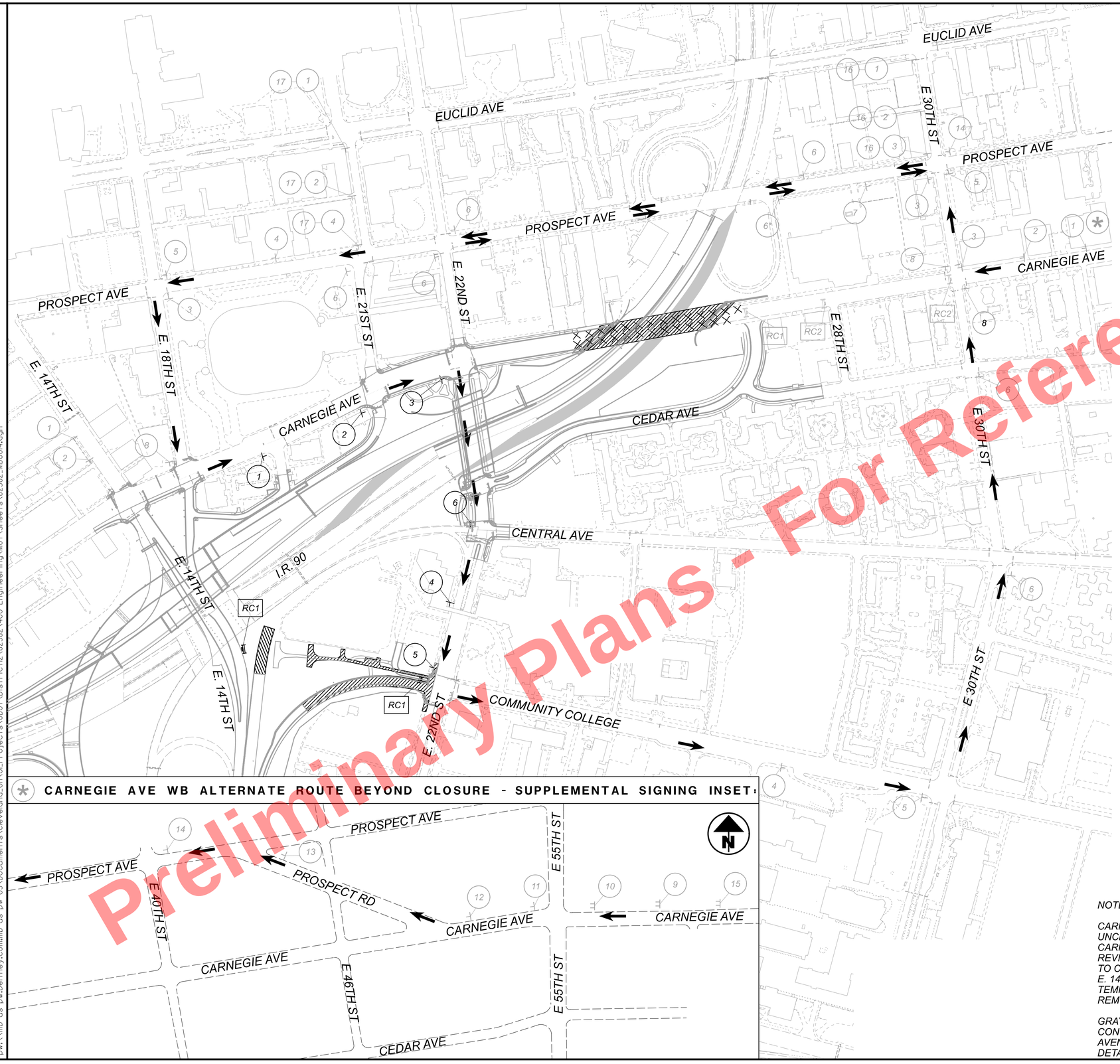

CARNEGIE AVE WB ALTERNATE ROUTE BEYOND CLOSURE - SUPPLEMENTAL SIGNING INSET:

1 — Carnegie Ave — D3-1-48 — ROAD CLOSED AHEAD — W20-3-36

2 — Carnegie Ave — D3-1-48 — DETOUR AHEAD — W20-3-36

3 — Carnegie Ave — D3-1-48 — DETOUR — M4-9R-30

4 — Carnegie Ave — D3-1-48 — DETOUR — M4-9L-30

5 — Carnegie Ave — D3-1-48 — DETOUR — M4-9L-30

6 — Carnegie Ave — D3-1-48 — DETOUR — M4-9-30

7 — Carnegie Ave — D3-1-48 — DETOUR — M4-9R-30

8 — Carnegie Ave — D3-1-48 — END DETOUR — M4-8a-30

9 — CARNEGIE AVE CLOSED AT E 30th St — SPECIAL SIGN DESIGN BLACK-ON-ORANGE

10 — CARNEGIE AVE ALT ROUTE USE PROSPECT AVE — SPECIAL SIGN DESIGN BLACK-ON-ORANGE

11 — Carnegie Ave — D3-1-48 — ALT — M4-1a-30 — M5-1-30

12 — Carnegie Ave — D3-1-48 — ALT — M4-1a-30 — M6-1-12

13 — Carnegie Ave — D3-1-48 — ALT — M4-1a-30 — M6-1-12

14 — Carnegie Ave — D3-1-48 — ALT — M4-1a-30 — M6-3-12

15 — BRIDGE OUT 1.0 MILES AHEAD LOCAL TRAFFIC ONLY — R11-3b-60

RC1 — ROAD CLOSED — R11-2-48 — MOUNTED TO TYPE III BARRICADE COMPLETE ROADWAY CLOSURE

RC2 — ROAD CLOSED LOCAL TRAFFIC ONLY — R11-3-66 — MOUNTED TO TYPE III BARRICADE PARTIAL ROADWAY CLOSURE

BARRICADE STRIPES TO BE SLOPING DOWNWARD IN DIRECTION ROAD USERS ARE TO PASS

18 — WEST — M3-4-24

19 — EAST — M3-2-24

NOTES:

CARNEGIE AVE. WB DETOUR UNCHANGED (SEE SHEET 158)
CARNEGIE AVE. EB DETOUR REVISED TO USE E. 22ND ST. TO COMMUNITY COLLEGE; E. 14TH ST./COMMUNITY COLLEGE TEMPORARY CONNECTION REMOVED DURING PHASE 6

GRAYSCALE BALLOONS DENOTE CONCURRENT EARLIER CARNEGIE AVENUE DETOUR PHASES. FOR DETAILS, SEE SHEET 158

MAINTENANCE OF TRAFFIC LEGEND:

- *AREA OF CONSTRUCTION TO BE COMPLETED DURING CLOSURE*
- *PAVEMENT FOR MAINTAINING TRAFFIC, CLASS A*
- *DETOUR ROUTE DIRECTION OF TRAVEL*
- XXX *ROAD CLOSED*

HORIZONTAL SCALE IN FEET: 0 100 200 400

DETOUR PLAN
PHASES 5-8 - CARNEGIE AVE.

DESIGN AGENCY: Michael Baker INTERNATIONAL

DESIGNER: CRK
REVIEWER: GSH 05/22/24
PROJECT ID: 82382
SHEET: 165 TOTAL: 2696

Preliminary Plans - Not For Reference Only

CUY-90-16.28 (CCG3A)

MODEL: DETOUR PLAN CARNEGIE - PHASE 3 PAPERSIZE: 34x22 (in.) DATE: 3/27/2025 TIME: 7:03:48 PM USER: Colin.Kwiatt
pw:\\mb-us-pw.bentley.commb-us-pw-03\Documents\Cleveland_OH\01_Projects\ODOT\District2\82382\400-Engineering\MOT\Sheets\82382_MD0014.dgn

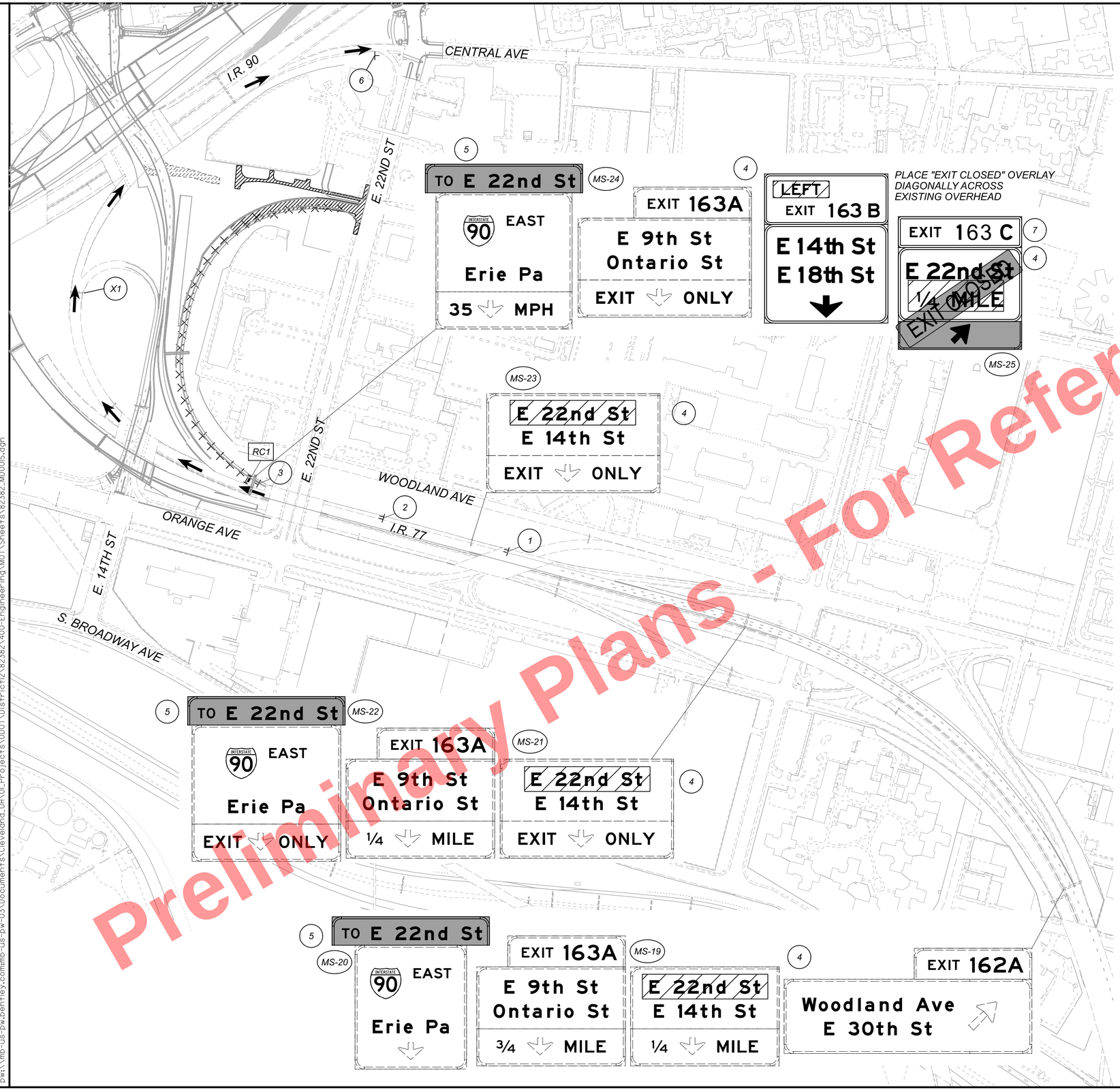

PLACE "EXIT CLOSED" OVERLAY DIAGONALLY ACROSS EXISTING OVERHEAD

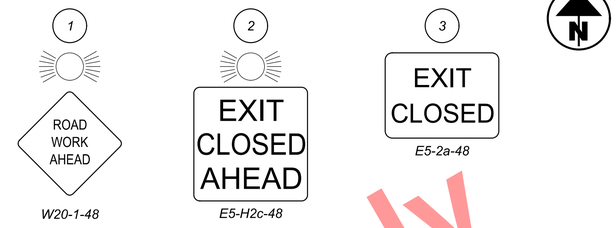

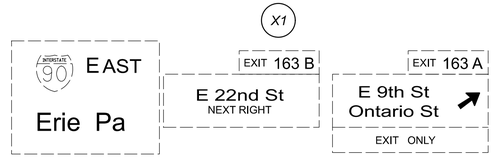

EXISTING OVERHEAD TO REMAIN AS SHOWN



MOUNTED TO TYPE III BARRICADE
COMPLETE ROADWAY CLOSURE

MAINTENANCE OF TRAFFIC LEGEND:

- AREA OF CONSTRUCTION TO BE COMPLETED DURING CLOSURE
- PAVEMENT FOR MAINTAINING TRAFFIC, CLASS A
- DETOUR ROUTE DIRECTION OF TRAVEL
- XXX ROAD CLOSED

Preliminary Plans - For Reference Only

HORIZONTAL SCALE IN FEET
0 100 200 400

DETOUR PLAN
PHASE 6 - I.R. 77 NORTHBOUND TO E. 22ND ST. EXIT RAMP (EXIT 163C)

DESIGN AGENCY
Michael Baker INTERNATIONAL

DESIGNER	CRK
REVIEWER	GSH 05/22/24
PROJECT ID	82382
SHEET	166
TOTAL	2696

CUY-90-16.28 (CCG3A)

MODEL: E_14TH Detour Sheet PAPERSIZE: 34x22 (in.) DATE: 3/27/2025 TIME: 7:03:59 PM USER: Collin.Kwiatt
pw:\\vmb-us-pw.bentley.com:mb-us-pw-03\Documents\Cleveland_OH\01_Projects\DOT\District2\82382\400-Engineering\MOT\Sheets\82382_MD0015.dgn

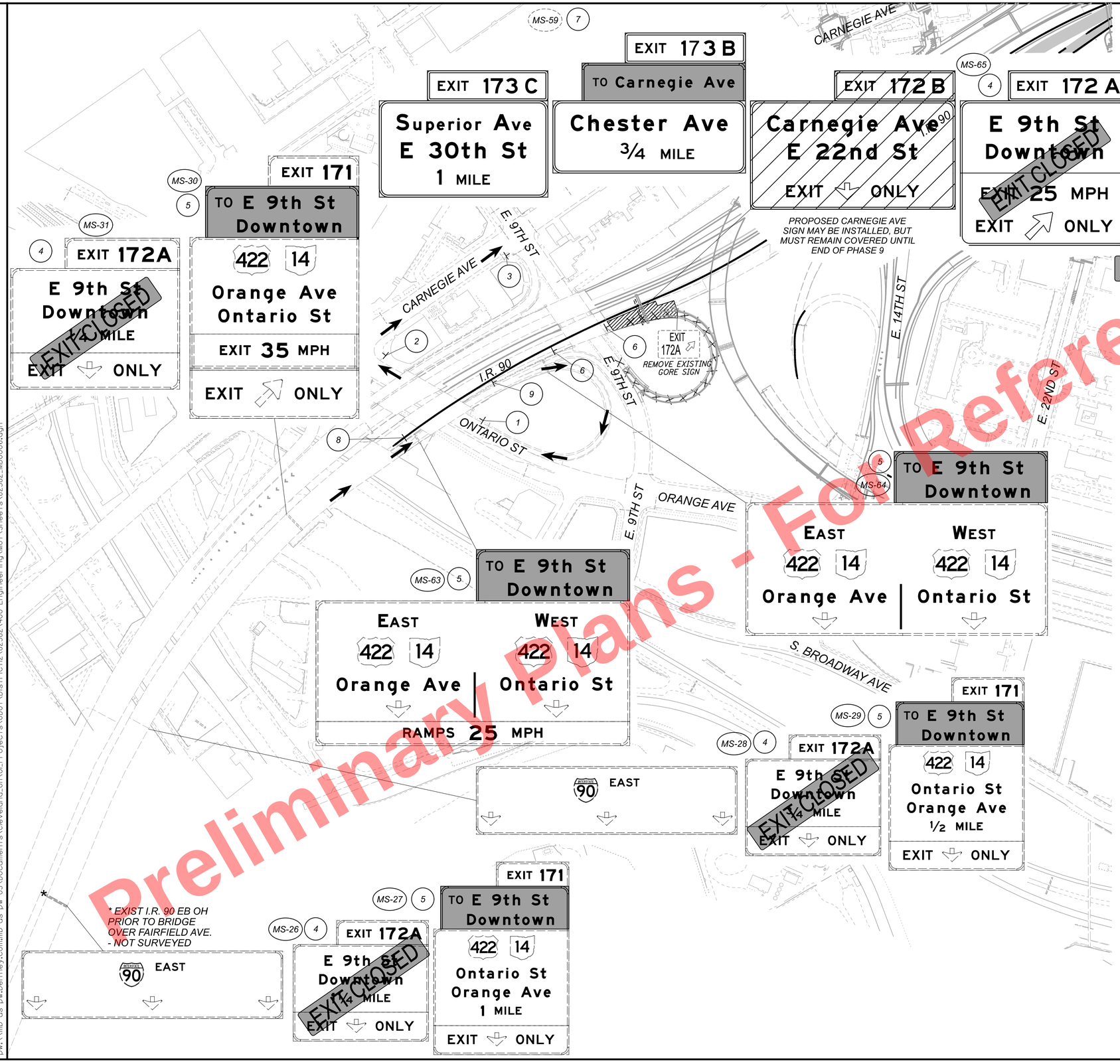

Preliminary Plans - For Reference Only

NOTE:

SHORT-TERM DURATION CLOSURE OF EXIT 172A E. 9TH ST:
UPON COMPLETION OF GORE AREA, REMOVE "EXIT CLOSED" OVERLAYS, RE-OPEN TO TRAFFIC AND CONTINUE OTHER PHASE 8 CONSTRUCTION

MAINTENANCE OF TRAFFIC LEGEND:

- *AREA OF CONSTRUCTION TO BE COMPLETED DURING CLOSURE*
- *PAVEMENT FOR MAINTAINING TRAFFIC, CLASS A*
- *DETOUR ROUTE DIRECTION OF TRAVEL*
- XXX *ROAD CLOSED*

DETOUR PLAN
PHASE 8 - I.R. 90 EASTBOUND TO E. 9TH ST. NORTHBOUND EXIT RAMP (EXIT 172A)

CUY-90-16.28 (CCG3A)

MODEL: I-90 EB E 9TH ST EXIT RAMP DETOUR - PHASE 10 PAPERSIZE: 34x22 (in.) DATE: 3/27/2025 TIME: 1:04:10 PM USER: Collin.Kwiatt
pw:\\mb-us-pw.bentley.commb-us-pw-03\Documents\Cleveland_OH\01_Projects\000T\Distrlct2\82382\400-Engineering\MOT\Sheets\82382_MD0006.dgn

DESIGN AGENCY
Michael Baker INTERNATIONAL

DESIGNER	CRK
REVIEWER	GSH 05/22/24
PROJECT ID	82382
SHEET	167
TOTAL	2696

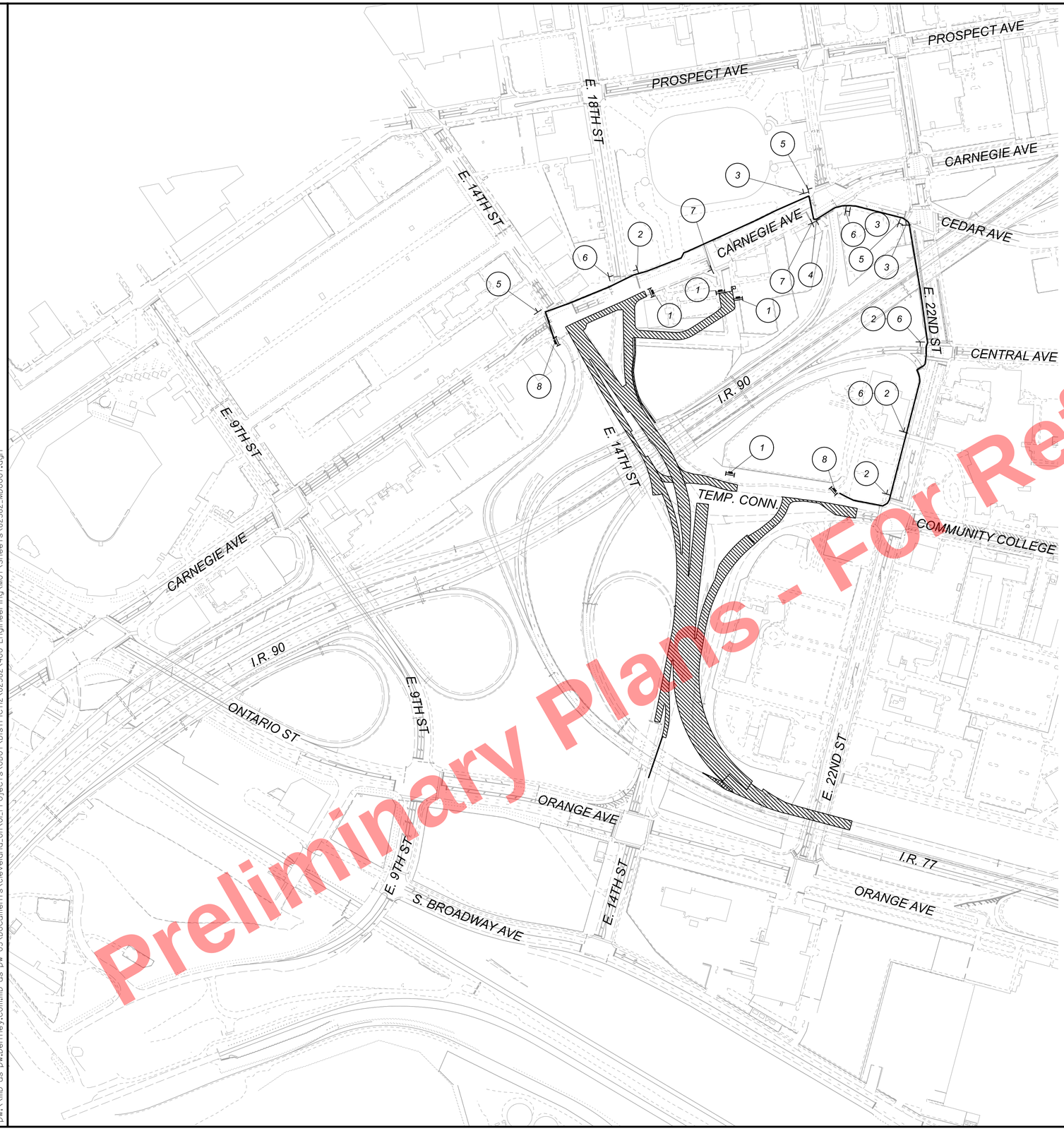

1 — SIDEWALK CLOSED — *R9-9-24* — *MOUNT TO TYPE 1 BARRICADE WITH ADA COMPLIANT MODIFICATIONS*

2 — E 14 St — *D3-1-30* — DETOUR — *M4-9b-30*

3 — E 14 St — *D3-1-30* — DETOUR — *M4-9b-30*

4 — Comm. College — *D3-1-30* — DETOUR — *M4-9b-30*

5 — Comm. College — *D3-1-30* — DETOUR — *M4-9b-30*

6 — Comm. College — *D3-1-30* — DETOUR — *M4-9b-30*

7 — SIDEWALK CLOSED AHEAD / CROSS HERE — *R9-11-24*

8 — SIDEWALK CLOSED / CROSS HERE — *R9-11a-24* — *MOUNT TO TYPE 1 BARRICADE WITH ADA COMPLIANT MODIFICATIONS*

MAINTENANCE OF TRAFFIC LEGEND:

- *AREA OF CONSTRUCTION DURING DETOUR*
- *PEDESTRIAN DETOUR ROUTE*
- *TYPE 1 BARRICADE WITH ADA COMPLIANT MODIFICATIONS*

HORIZONTAL SCALE IN FEET
0 100 200 400

PEDESTRIAN DETOUR PLAN
PHASE 1 - E. 14TH ST.

DESIGN AGENCY
Michael Baker INTERNATIONAL

DESIGNER: CRK
REVIEWER: GSH 05/22/24
PROJECT ID: 82382
SHEET: 168 TOTAL: 2696

Preliminary Plans - Not For Reference Only

CUY-90-16.28 (CCG3A)

MODEL: E 14TH Detour Sheet PAPERSIZE: 34x22 (in.) DATE: 3/27/2025 TIME: 7:04:22 PM USER: Collin.Kwiatt
pw:\\mb-us-pw.bentley.commb-us-pw-03\Documents\Cleveland_OH\OL_Projects\ODOT\District12\82382\400-Engineering\MOT\Sheets\82382_MD0007.dgn

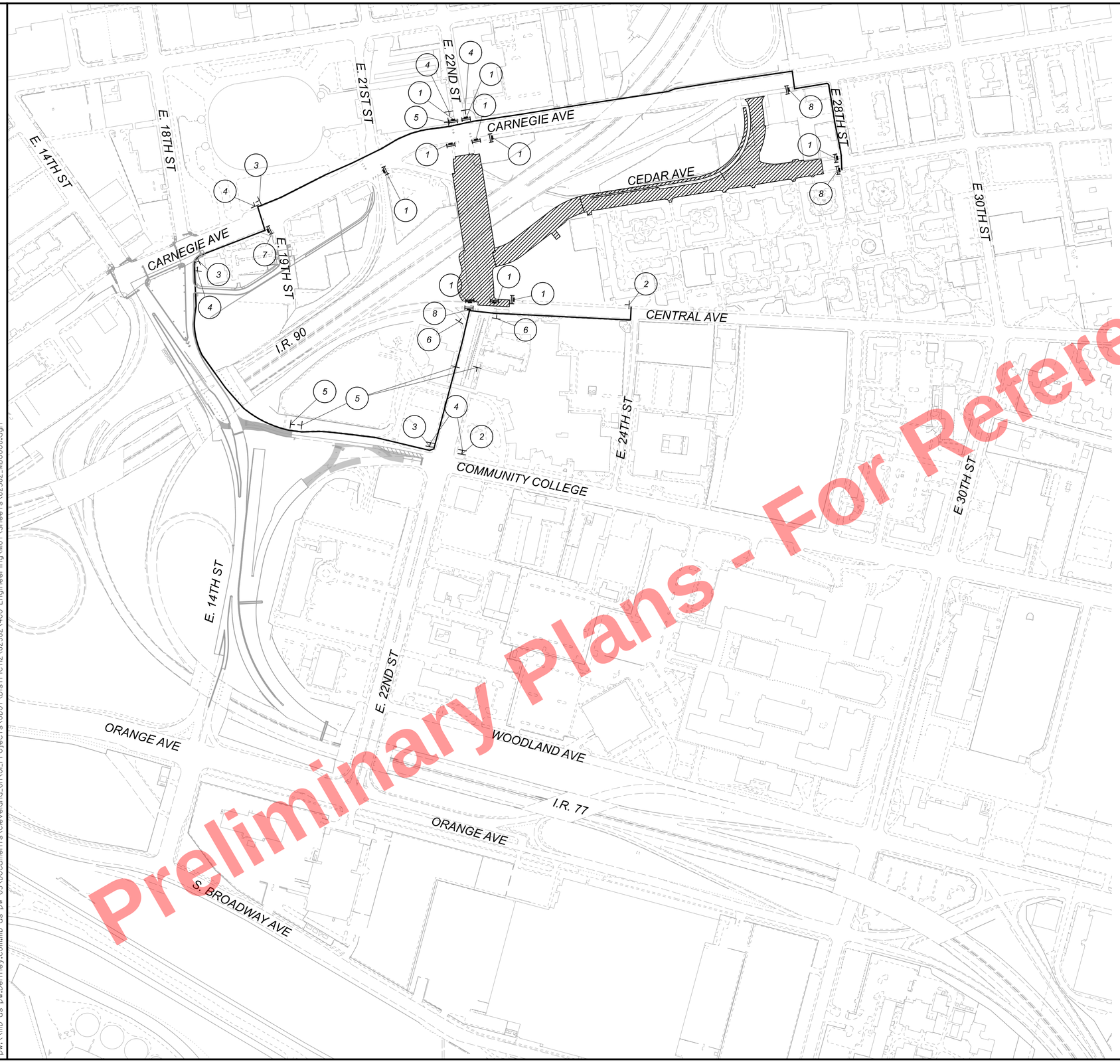

Preliminary Plans - Not For Reference Only

1 — SIDEWALK CLOSED — R9-9-24 — MOUNT TO TYPE 1 BARRICADE WITH ADA COMPLIANT MODIFICATIONS

2 — E 22 St — D3-1-30 — SIDEWALK CLOSED AHEAD, CROSS HERE — R9-11-24

3 — E 22 St — D3-1-30 — DETOUR — M4-9b-30

4 — E 22 St — D3-1-30 — DETOUR — M4-9b-30

5 — E 22 St — D3-1-30 — DETOUR — M4-9b-30

6 — SIDEWALK CLOSED AHEAD — R9-H9a-30

7 — SIDEWALK CLOSED AHEAD, CROSS HERE — R9-11-24 — MOUNT TO TYPE 1 BARRICADE WITH ADA COMPLIANT MODIFICATIONS

8 — SIDEWALK CLOSED AHEAD, CROSS HERE — R9-11-24 — MOUNT TO TYPE 1 BARRICADE WITH ADA COMPLIANT MODIFICATIONS

STAGE PEDESTRIAN DETOUR PRIOR TO REMOVAL OF E. 22ND ST BRIDGE OVER I.R. 90 IN PHASE 1

LEGEND:

- *AREA OF CONSTRUCTION DURING DETOUR*
- *PEDESTRIAN DETOUR ROUTE*
- *TYPE 1 BARRICADE WITH ADA COMPLIANT MODIFICATIONS*

HORIZONTAL SCALE IN FEET
0 100 200 400

PEDESTRIAN DETOUR PLAN
PHASE 2 - E. 22ND ST. & CEDAR AVE.

DESIGN AGENCY
Michael Baker INTERNATIONAL

DESIGNER CRK
REVIEWER GSH 05/22/24
PROJECT ID 82382
SHEET 169 TOTAL 2696

CUY-90-16.28 (CCG3A)

MODEL: DETOUR PLAN E 22ND - PHASE 2 PAPERSIZE: 34x22 (in.) DATE: 3/27/2025 TIME: 7:04:32 PM USER: Collin.Kwiatt
pw:\\mb-us-pw.bentley.commb-us-pw-03\Documents\Cleveland_OH\01_Projects\000T\Distrct2\82382\400-Engineering\MOT\Sheets\82382_MD0008.dgn



Preliminary Plans - Not For Reference Only

1 — SIDEWALK CLOSED — R9-9-24
MOUNT TO TYPE I BARRICADE WITH ADA COMPLIANT MODIFICATIONS

2 — Carnegie Ave — D3-1-30 — SIDEWALK CLOSED AHEAD, CROSS HERE — R9-11-24

3 — Carnegie Ave — D3-1-30 — SIDEWALK CLOSED AHEAD, CROSS HERE — R9-11-24

4 — Carnegie Ave — D3-1-30 — DETOUR — M4-9b-30

5 — Carnegie Ave — D3-1-30 — DETOUR — M4-9b-30

6 — Carnegie Ave — D3-1-30 — DETOUR — M4-9b-30

7 — SIDEWALK CLOSED AHEAD — R9-H9a-30

HORIZONTAL SCALE IN FEET
0 100 200 400

MAINTENANCE OF TRAFFIC LEGEND:

- AREA OF CONSTRUCTION DURING DETOUR
- PEDESTRIAN DETOUR ROUTE
- PHASE 4B PEDESTRIAN DETOUR ROUTE (SEE NOTES BELOW)
- TYPE 1 BARRICADE WITH ADA COMPLIANT MODIFICATIONS

NOTES:

NOT ALL SIDEWALK CLOSURES SIGNS & DEVICES SHOWN ON DETOUR SHEET. ADDITIONAL SIGNS & DEVICES ARE SHOWN ON APPLICABLE PHASE DETAIL SHEETS AND ADJUSTED ACCORDINGLY.

PEDESTRIAN DETOUR ROUTE TO BE ADJUSTED FOR PHASE 4B. PHASE 4B ROUTE AND SIGNS SHOWN IN DASHED LINESTYLE.

PEDESTRIAN DETOUR PLAN PHASES 2-8 - CARNEGIE AVE.

CUY-90-16.28 (CCG3A)

MODEL: DETOUR PLAN CARNEGIE - PHASE 3 PAPERSIZE: 34x22 (in.) DATE: 3/27/2025 TIME: 7:04:41 PM USER: Collin.Kwiatt
pw:\\vmb-us-pw.bentley.commb-us-pw-03\Documents\Cleveland_OH\01_Projects\ODOT\District2\82382\400-Engineering\MOT\Sheets\82382_MD0009.dgn

DESIGN AGENCY
Michael Baker INTERNATIONAL

DESIGNER CRK
REVIEWER GSH 05/22/24
PROJECT ID 82382
SHEET 170 TOTAL 2696

REGIONAL I.R. 90 THRU-TRAFFIC DETOUR ROUTE:

EASTBOUND - EXIT 170B I.R. 71/SR 176 SOUTH TO I.R. 480 EAST TO I.R. 271 NORTH

WESTBOUND - EXIT 188 I.R. 271 SOUTH TO I.R. 480 WEST TO EXIT 17A SR 176 NORTH TO I.R. 90 WEST

CLOSURE TO BE IMPLEMENTED USING LAW ENFORCEMENT, PORTABLE CHANGEABLE MESSAGE SIGNS, FLAT SHEET SIGNS AND PUBLIC INFORMATION CAMPAIGNS

I.R. 90 EB AND WB ARE NOT TO BE CLOSED CONCURRENTLY.

DURING PHASE 1 AND PHASE 2, FLAT SHEET SIGNS TO REMAIN IN PLACE AND BE COVERED WHEN NOT IN USE PER ODOT CMS 614.07. REINSTALL FLAT SHEET SIGNS IN PHASE 7 FOR CARNEGIE AVE. BRIDGE STEEL INSTALLATION FULL WEEKEND CLOSURES.

APPROPRIATE PERMANENT OVERHEAD CHANGEABLE MESSAGE SIGNS TO BE ADJUSTED FOR I.R. 90 CLOSURES

MAINTENANCE OF TRAFFIC LEGEND:

- DETOUR ROUTE DIRECTION OF TRAVEL
- ALT. ROUTE
- ROAD CLOSED
- LAW ENFORCEMENT
- PORTABLE CHANGEABLE MESSAGE SIGN (PCMS)

PCMS: I-90 CLOSED AT DWTN LOCAL TRAFFIC ONLY

PCMS: I-90 WB DETOUR FOLLOW E. 55TH ST

FOR DETAILS SEE SHEET 174 .

LAKE ERIE

I.R. 90 WEEKEND CLOSURES FOR PROPOSED BRIDGE WORK AT E. 22ND ST, CEDAR AVE. & CARNEGIE AVE. FOR DETAILS SEE SHEET 177 .

ALT. ROUTE I.R. 490 & E. 55TH ST

FOR DETAILS, SEE SHEET 178 .

CARNEGIE AVE

WOODLAND AVE

PCMS: I-90 WB DETOUR FOLLOW I-490 WB

FOR DETAILS, SEE SHEET 180

I.R. 90 EB BEGIN DETOUR & I.R. 90 WB END DETOUR

FOR DETAILS, SEE SHEET 176

FOR DETAILS SEE SHEET 175

PCMS: I-90 WB DETOUR FOLLOW I-480 WB

CUYAHOGA RIVER

PCMS: I-90 WB DETOUR FOLLOW SR-176 NB

PCMS: I-90 CLOSED AT DWTN LOCAL TRAFFIC ONLY

PCMS: I-90 EB DETOUR FOLLOW I-480 EB

I.R. 77 NB TO I.R. 90 EB DETOUR POINT. FOR DETAILS SEE SHEET 179

PCMS: I-90 WB DETOUR FOLLOW I-480 WB

PCMS: I-90 EB DETOUR FOLLOW I-271 NB

FOR DETAILS SEE SHEET 173

I.R. 90 WB BEGIN DETOUR & I.R. 90 EB END DETOUR FOR DETAILS SEE SHEET 173

1 — I 90 CLOSED AT EAST 22ND STREET — D3-2-48

2 — I 90 CLOSED AT PROSPECT AVENUE — D3-2-48

3 — I 77/ I 90 CLOSED AT EAST 14TH STREET — D3-2-48

HORIZONTAL SCALE IN FEET 0 400 800 1600

REGIONAL DETOUR PLAN - VARIOUS PHASES
I.R. 90 WEEKEND CLOSURES
E. 22ND ST./CEDAR AVE. AND CARNEGIE AVE. BRIDGE DEMO & STEEL INSTALLATION

DESIGN AGENCY: Michael Baker INTERNATIONAL

DESIGNER: CRK

REVIEWER: GSH 05/22/24

PROJECT ID: 82382

SHEET 171 TOTAL 2696

CUY-90-16.28 (CCG3A)

Preliminary Plans - For Reference Only

MODEL: IR 90 RegionalDetour Detour Sheet PAPERSIZE: 34x22 (in.) DATE: 3/27/2025 TIME: 7:07:45 PM USER: CollinsKwlatt
pw:\\mb-us-pw.bentley.com:mb-us-pw-03\Documents\Cleveland_OH\01_Projects\0001\District2\82382\400-Engineering\MOT\Sheets\82382_MD0022.dgn

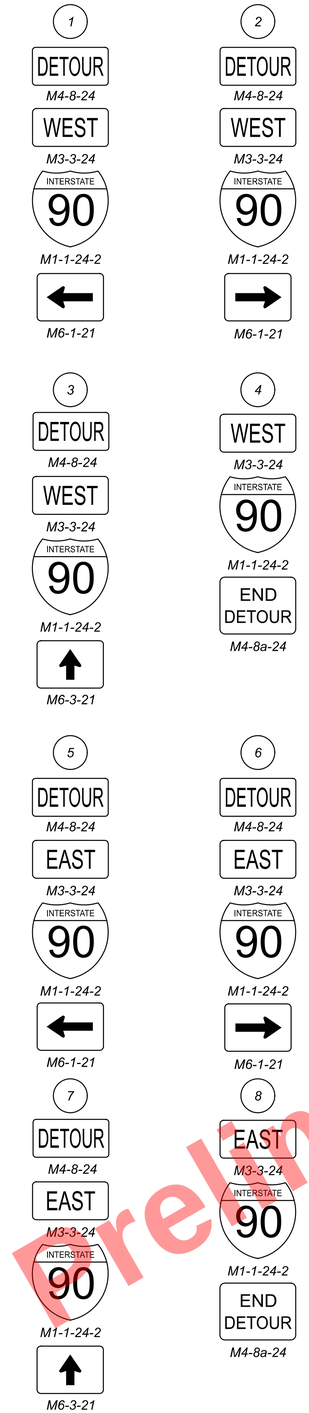

MAINTENANCE OF TRAFFIC LEGEND:

- AREA OF CONSTRUCTION TO BE COMPLETED DURING CLOSURE
- DETOUR ROUTE DIRECTION OF TRAVEL
- XXX ROAD CLOSED

NOTES:

1. I.R. 90 WB AND I.R. 90 EB NOT TO BE CLOSED CONCURRENTLY
2. FOR CLOSURE DETAILS, SEE SHEETS 177 & 178

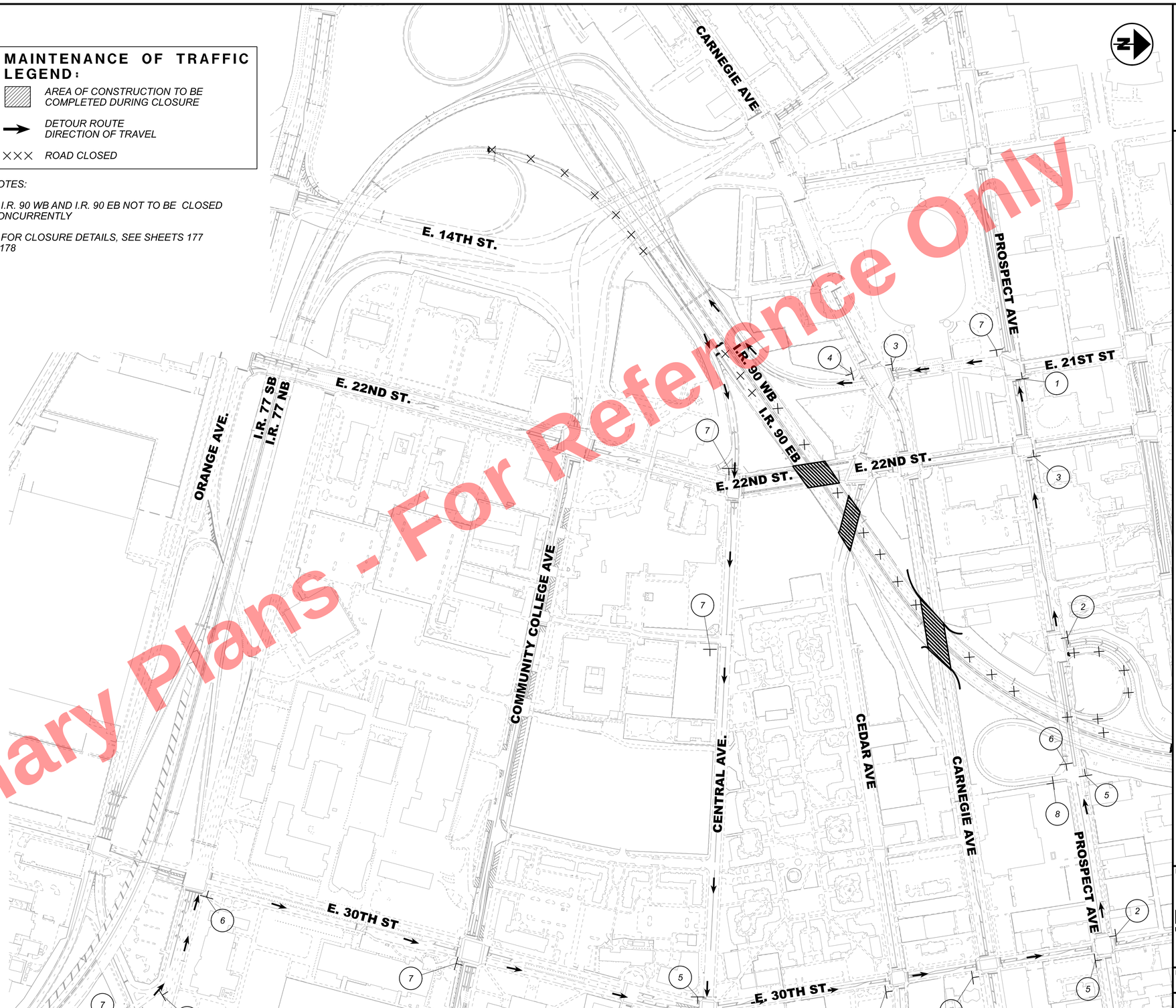

Preliminary Plans - For Reference Only

HORIZONTAL SCALE IN FEET
0 100 200 300

MAINTENANCE OF TRAFFIC - I.R. 90 CLOSURE DETOUR - PHASE 1 AND 2
E. 22ND ST./CEDAR AVE. BRIDGE DEMO & INSTALLATION AND CARNEGIE AVE. BRIDGE DEMO

DESIGN AGENCY
Michael Baker INTERNATIONAL

DESIGNER CRK
REVIEWER GSH 05/22/24
PROJECT ID 82382
SHEET 172 TOTAL 2696

CUY-90-16.28 (CCG3A)

MODEL: Sheet PAPERSIZE: 34x22 (in.) DATE: 3/27/2025 TIME: 7:07:55 PM USER: Collin.Kwiatt
pw:\\vmb-us-pw.bentley.commb-us-pw-03\Documents\Cleveland_OH\01_Projects\ODOT\District2\82382\400-Engineering\MOT\Sheets\82382_MD0026.dgn



Preliminary Plans - For Reference Only

CUY-90-16.28 (CCG3A)

MODEL: Sheet PAPERSIZE: 34x22 (in.) DATE: 3/27/2025 TIME: 7:08:07 PM USER: Collin.Kwiatt
pw:\\mb-us-pw.bentley.com:mb-us-pw-03\Documents\Cleveland_OH\01_Projects\00DOT\District2\82382\400-Engineering\MOT\Sheets\82382_MD1001.dgn

HORIZONTAL SCALE IN FEET
0 375 750 1500

MAINTENANCE OF TRAFFIC - I.R. 90 CLOSURE DETAIL - VARIOUS PHASES
E. 22ND ST./CEDAR AVE. AND CARNEGIE AVE BRIDGE DEMO & STEEL INSTALLATION AND BRIDGE 9 STEEL INSTALLATION

DESIGN AGENCY
Michael Baker INTERNATIONAL

DESIGNER CRK
REVIEWER GSH 05/22/24
PROJECT ID 82382
SHEET 173 TOTAL 2696

*NOTE: I-90 EB AND WB NOT TO BE CLOSED CONCURRENTLY

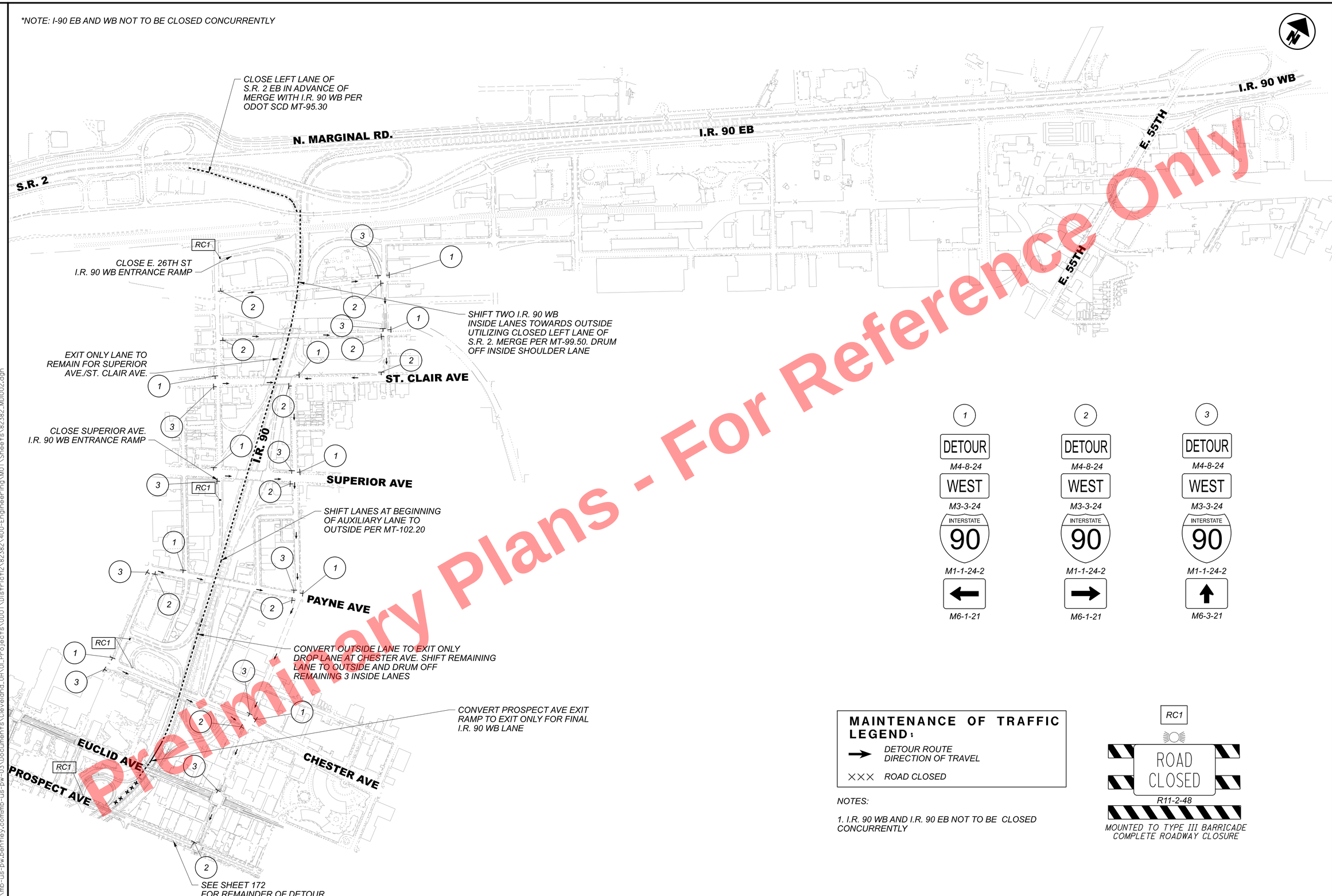

Preliminary Plans - For Reference Only

HORIZONTAL SCALE IN FEET
0 200 400 800

1 2 3

DETOUR M4-8-24
WEST M3-3-24
INTERSTATE 90 M1-1-24-2
M6-1-21 (←) M6-1-21 (→) M6-3-21 (↑)

MAINTENANCE OF TRAFFIC LEGEND:

→ DETOUR ROUTE DIRECTION OF TRAVEL

XXX ROAD CLOSED

NOTES:

1. I.R. 90 WB AND I.R. 90 EB NOT TO BE CLOSED CONCURRENTLY

RC1

ROAD CLOSED
R11-2-48

MOUNTED TO TYPE III BARRICADE COMPLETE ROADWAY CLOSURE

MAINTENANCE OF TRAFFIC - I.R. 90 CLOSURE DETAIL - VARIOUS PHASES
E. 22ND ST/CEDAR AVE. AND CARNEGIE AVE. BRIDGE DEMO & STEEL INSTALLATION AND BRIDGE 9 STEEL INSTALLATION

DESIGN AGENCY
Michael Baker INTERNATIONAL

DESIGNER CRK
REVIEWER GSH 05/22/24
PROJECT ID 82382
SHEET 174 TOTAL 2696

CUY-90-16.28 (CCG3A)

MODEL: Sheet PAPERSIZE: 34x22 (in.) DATE: 3/27/2025 TIME: 7:15:59 PM USER: Collin.Kwiatt
pw:\\mb-us-pw.bentley.com\mb-us-pw-03\Documents\Cleveland_OH\01_Projects\ODOT\District2\82382\400-Engineering\MOT\Sheets\82382_MDI002.dgn

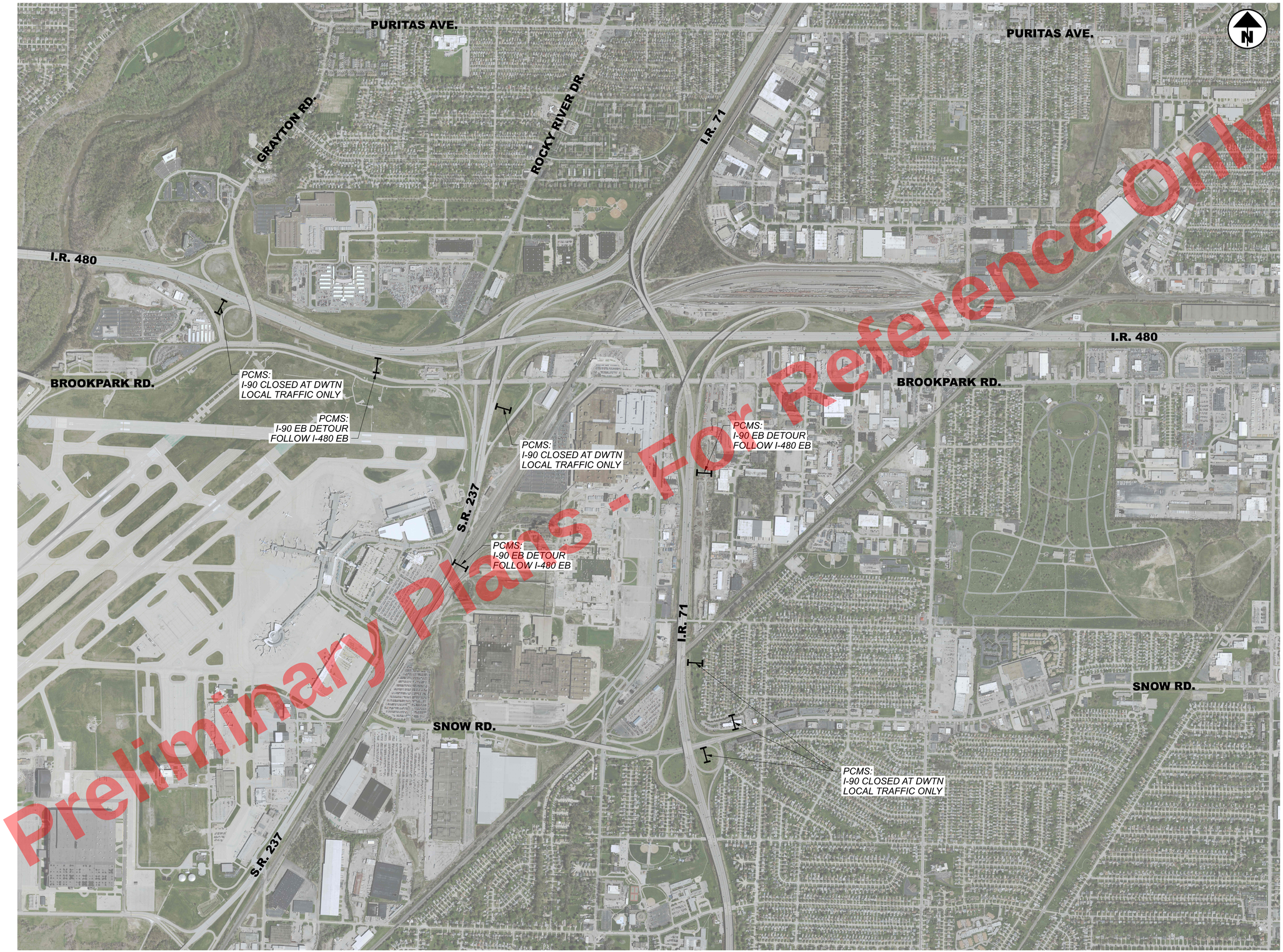

Preliminary Plans - For Reference Only

HORIZONTAL SCALE IN FEET
0 375 750 1500

MAINTENANCE OF TRAFFIC - I.R. 90 CLOSURE DETAIL - VARIOUS PHASES
E. 22ND ST./CEDAR AVE. AND CARNEGIE AVE. BRIDGE DEMO & STEEL INSTALLATION AND BRIDGE 9 STEEL INSTALLATION

DESIGN AGENCY
Michael Baker INTERNATIONAL

DESIGNER CRK
REVIEWER GSH 05/22/24
PROJECT ID 82382
SHEET 175 TOTAL 2696

CUY-90-16.28 (CCG3A)

MODEL: Sheet PAPERSIZE: 34x22 (ln) DATE: 3/27/2025 TIME: 7:16:12 PM USER: CollinKwiatt
pw:\\mb-us-pw.bentley.com:mb-us-pw-03\Documents\Cleveland_OH\01_Projects\000T\District2\82382\400-Engineering\MOT\Sheets\82382_MDI005.dgn

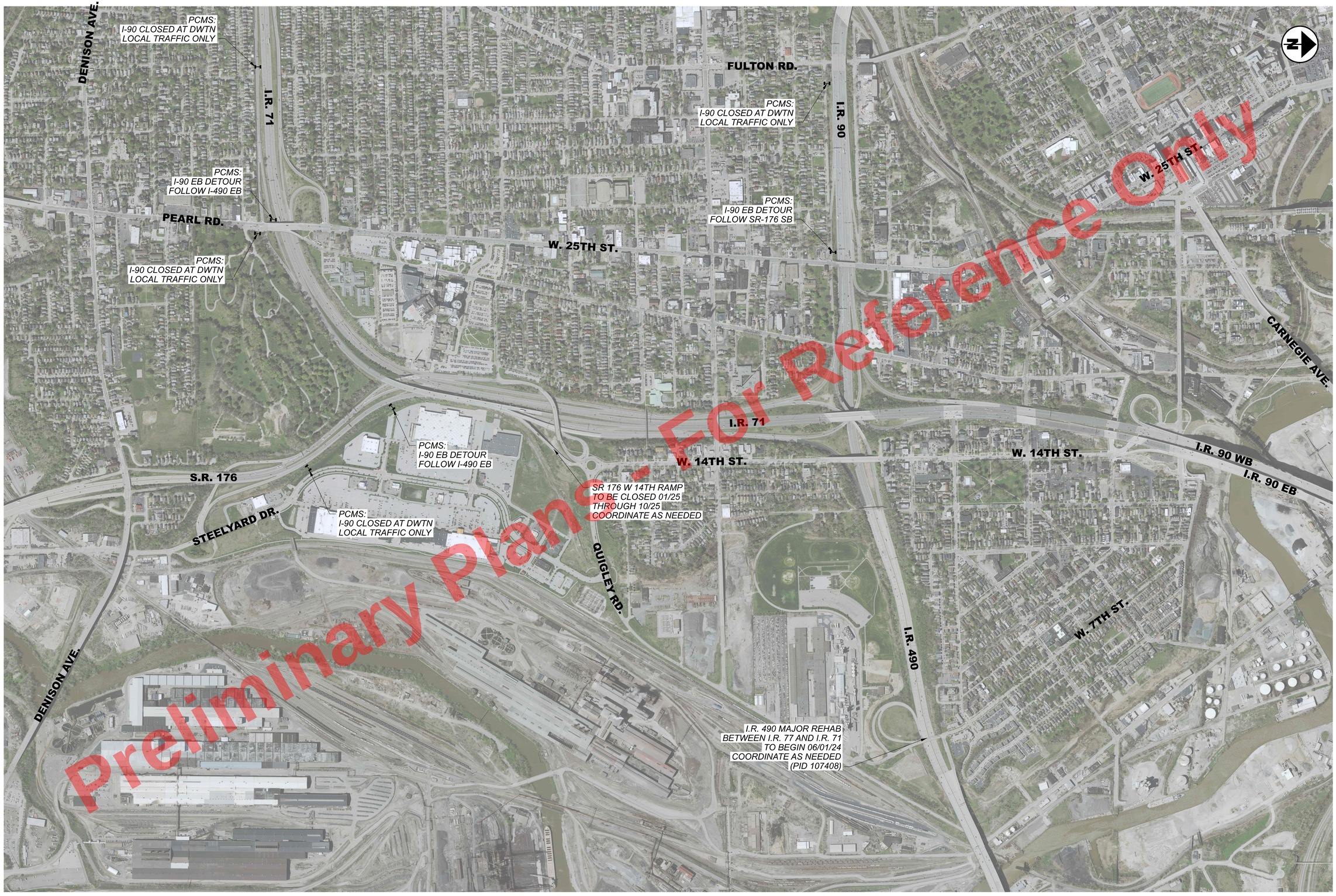

HORIZONTAL SCALE IN FEET
0 250 500 1000

MAINTENANCE OF TRAFFIC - I.R. 90 CLOSURE DETAIL - VARIOUS PHASES
E. 22ND ST./CEDAR AVE. AND CARNEGIE AVE. BRIDGE DEMO & STEEL INSTALLATION AND BRIDGE 9 STEEL INSTALLATION

CUY-90-16.28 (CCG3A)

DESIGN AGENCY
Michael Baker INTERNATIONAL

DESIGNER CRK
REVIEWER GSH 05/22/24
PROJECT ID 82382
SHEET 176 TOTAL 2696

MODEL: Sheet PAPERSIZE: 34x22 (in.) DATE: 3/27/2025 TIME: 7:29:30 PM USER: CollinKWatt
pw:\\mb-us-pw.bentley.com:mb-us-pw-03\Documents\Cleveland_OHIO_Projects\ODOT\District2\82382\400-Engineering\MOT\Sheets\82382_MDI008.dgn

PROSPECT AVE.

EUCLID AVE.

E. 22ND ST.

PROSPECT AVE.

CARNEGIE AVE.

I.R. 90 WB

I.R. 90 EB

E. 22ND ST.

CENTRAL AVE.

FOR I.R. 90 WB LOCAL DETOUR
SEE SHEET 172

FOR I.R. 90 EB LOCAL DETOUR
SEE SHEET 172

RC1

RC1

RC1

SHIFT LANE OF I.R. 90 WB
IN ADVANCE OF PROSPECT AVE
EXIT RAMP PER ODOT
CD MT-99.50

I.R. 90 WB

I.R. 90 EB

CHESTER AVE.

I.R. 90 WB

I.R. 90 EB

EUCLID AVE.

RC1

ROAD
CLOSED

R11-2-48

MOUNTED TO TYPE III BARRICADE
COMPLETE ROADWAY CLOSURE

NOTE: I.R. 90 EB AND WB NOT TO BE CLOSED CONCURRENTLY

Preliminary Plans - For Reference Only

HORIZONTAL
SCALE IN FEET
0 100 200 400

MAINTENANCE OF TRAFFIC - I.R. 90 CLOSURE DETAILS - VARIOUS PHASES
E. 22ND ST./CEDAR AVE. AND CARNEGIE AVE. BRIDGE DEMO & STEEL INSTALLATION

CUY-90-16.28 (CCG3A)

MODEL: Sheet PAPERSIZE: 34x22 (in.) DATE: 3/27/2025 TIME: 7:55:21PM USER: Collin.Kwiat
pw:\\mb-us-pw.bentley.com:mb-us-pw-03\Documents\Cleveland_OH\01_Projects\0DOT\District2\82382\400-Engineering\MOT\Sheets\82382_MDI003.dgn

DESIGN AGENCY
Michael Baker INTERNATIONAL

DESIGNER CRK
REVIEWER GSH 05/22/24
PROJECT ID 82382
SHEET 177 TOTAL 2696

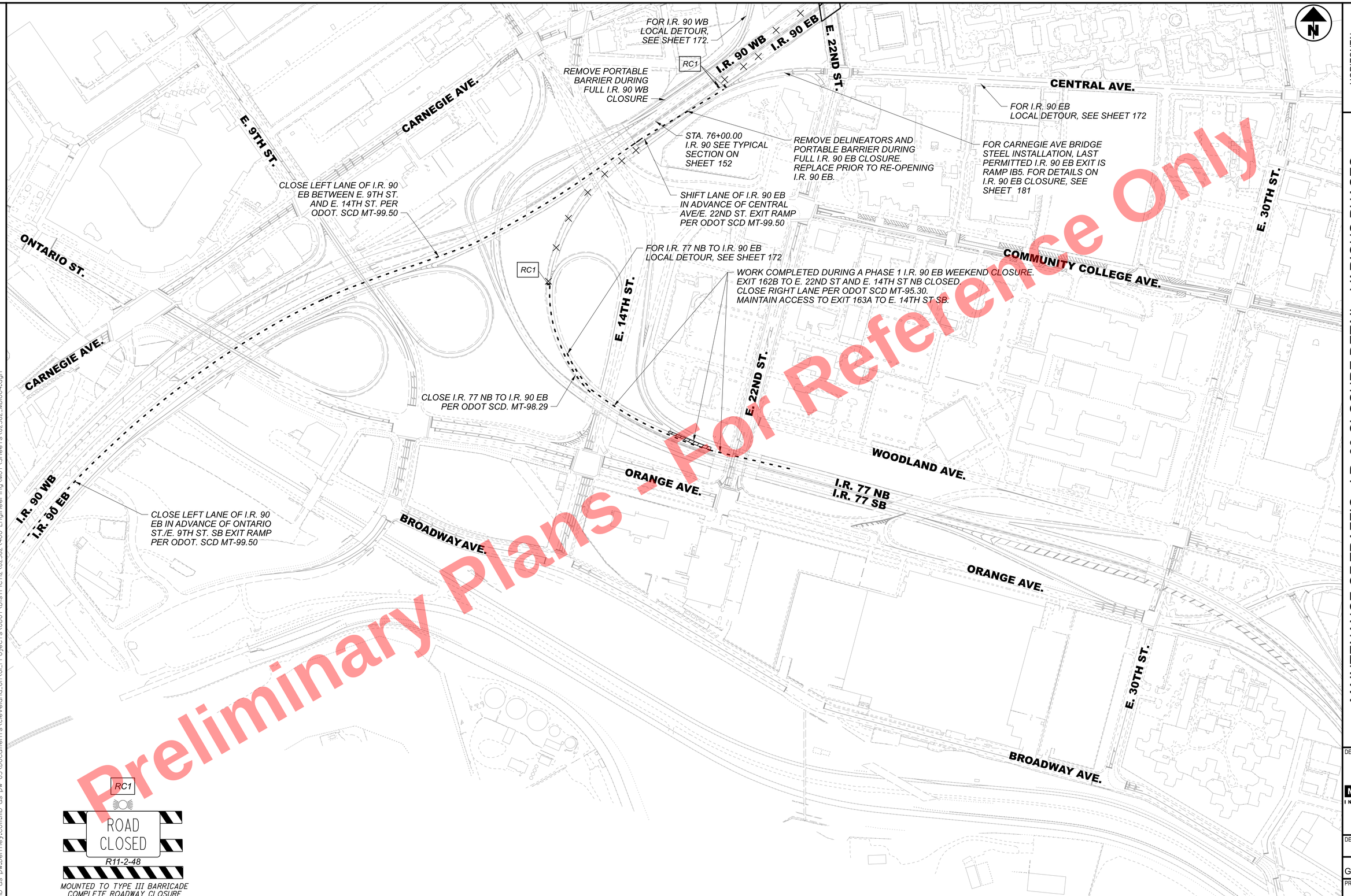

Preliminary Plans - For Reference Only

*NOTE: I.R. 90 EB AND WB NOT TO BE CLOSED CONCURRENTLY

HORIZONTAL SCALE IN FEET
0 100 200 400

MAINTENANCE OF TRAFFIC - I.R. 90 CLOSURE DETAIL - VARIOUS PHASES
E. 22ND ST./CEDAR AVE. BRIDGE DEMO & STEEL INSTALLATION AND CARNEGIE AVE. BRIDGE DEMO

DESIGN AGENCY
Michael Baker INTERNATIONAL

DESIGNER
CRK

REVIEWER
GSH 05/22/24

PROJECT ID
82382

SHEET 178 TOTAL 2696

CUY-90-16.28 (CCG3A)

MODEL: Sheet PAPERSIZE: 34x22 (in.) DATE: 3/27/2025 TIME: 7:55:30 PM USER: Collin.Kwiatt
pw:\\mb-us-pw.bentley.com:mb-us-pw-03\Documents\Cleveland_OH\OI_Projects\ODOT\District12\82382\400-Engineering\MOT\Sheets\82382_MDI004.dgn



Preliminary Plans - For Reference Only

HORIZONTAL SCALE IN FEET
0 250 500 1000

MAINTENANCE OF TRAFFIC - I.R. 90 CLOSURE DETAIL - VARIOUS PHASES
E. 22ND ST./CEDAR AVE. AND CARNEGIE AVE. BRIDGE DEMO & STEEL INSTALLATION

CUY-90-16.28 (CCG3A)

MODEL: Sheet PAPERSIZE: 34x22 (In.) DATE: 3/27/2025 TIME: 7:55:44 PM USER: Collin.Kwiatt
pw:\\mb-us-pw.bentley.commb-us-pw-03\Documents\Cleveland_OH\01_Projects\ODOT\District2\82382\400-Engineering\MOT\Sheets\82382_MDI006.dgn

DESIGN AGENCY
Michael Baker INTERNATIONAL

DESIGNER CRK
REVIEWER GSH 05/22/24
PROJECT ID 82382
SHEET 179 TOTAL 2696

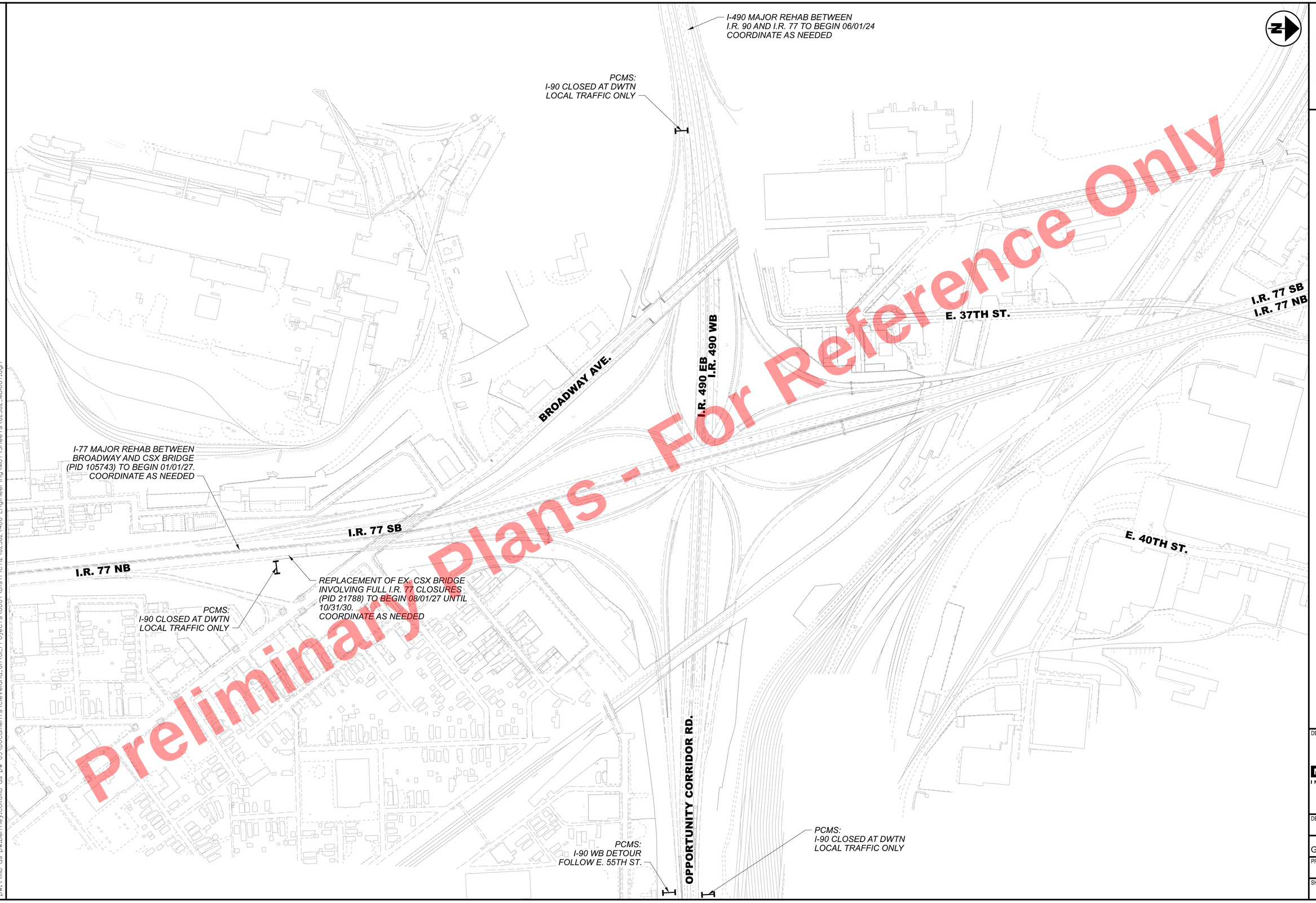

Preliminary Plans - For Reference Only

MAINTENANCE OF TRAFFIC - I.R. 90 CLOSURE DETAIL - VARIOUS PHASES
E. 22ND ST./CEDAR AVE. AND CARNEGIE AVE. BRIDGE DEMO & STEEL INSTALLATION

CUY-90-16.28 (CCG3A)

MODEL: Sheet PAPERSIZE: 34x22 (in.) DATE: 5/9/2025 TIME: 10:46:59 AM USER: Mala.Gallagher
pw:\\mb-us-pw.bentley.com:mb-us-pw-03\Documents\Cleveland_OH\01_Projects\0DOT\District2\82382\400-Engineering\MOT\Sheets\82382_MDI007.dgn

DESIGN AGENCY
Michael Baker INTERNATIONAL

DESIGNER CRK
REVIEWER GSH 05/22/24
PROJECT ID 82382
SHEET 180 TOTAL 2696

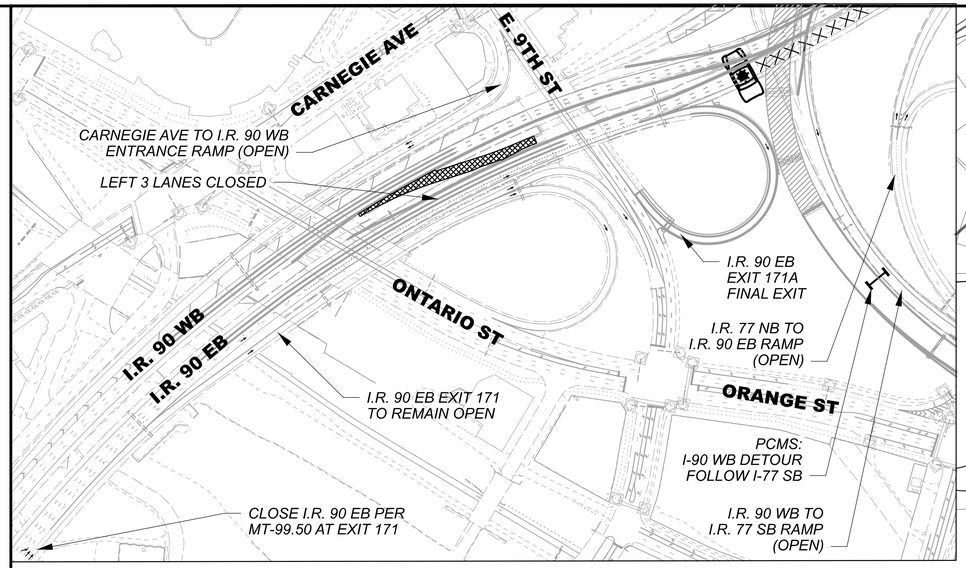

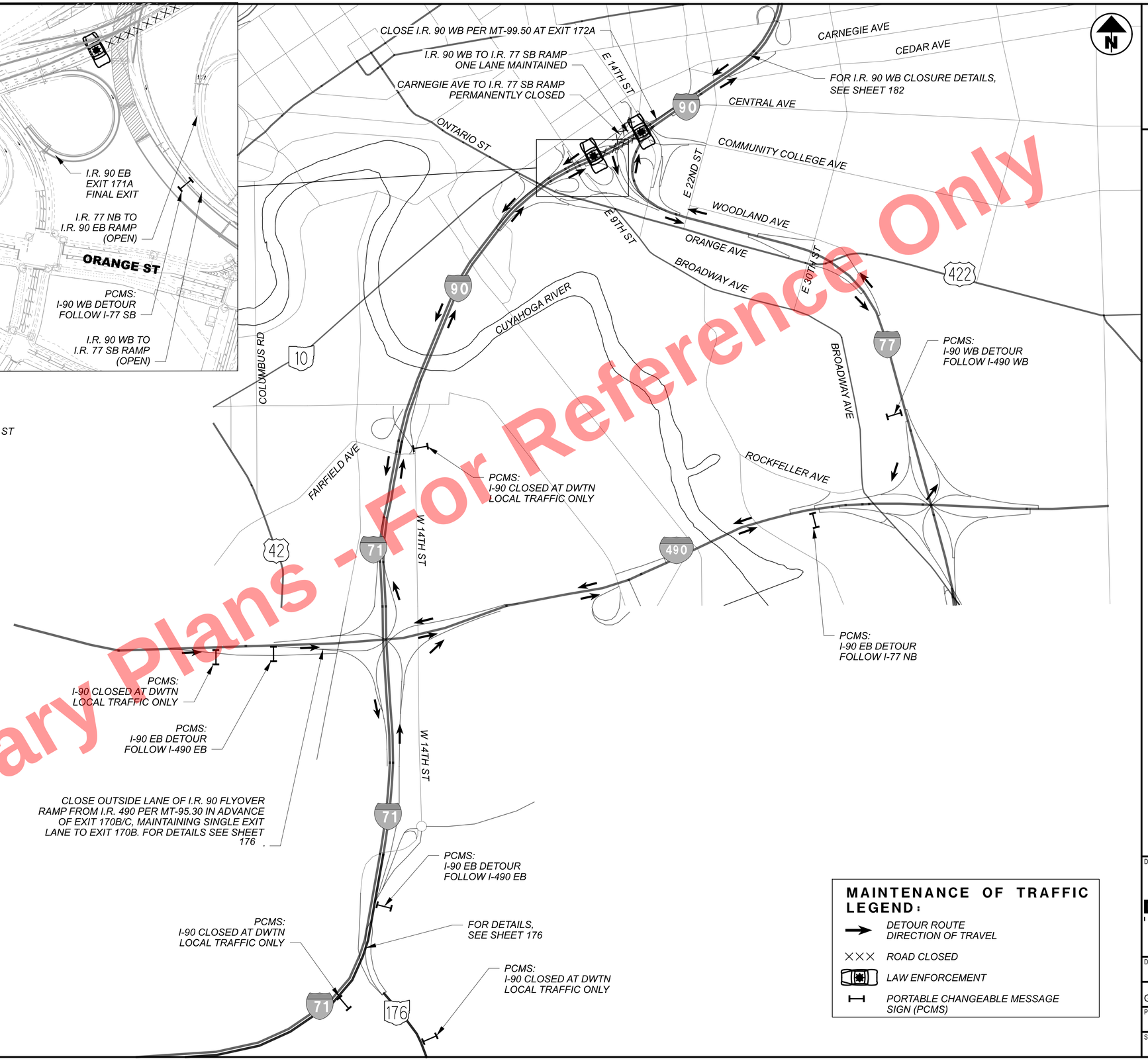

4 WEEKEND CLOSURES OF I.R. 90 EB & WB BETWEEN E. 9TH ST & E. 14TH ST REQUIRED FOR CONSTRUCTION OF PR. BRIDGE 9 (I.R. 90 WB TO I.R. 77 SB ENTRANCE RAMP) OVER EXISTING I.R. 90 LANES.

DETOUR ROUTE TO USE I.R. 77 & I.R. 490.

CLOSURE TO BE IMPLEMENTED USING LAW ENFORCEMENT, PORTABLE CHANGEABLE MESSAGE SIGNS, AND PUBLIC INFORMATION CAMPAIGNS

I.R. 90 EB AND WB NOT TO BE CLOSED CONCURRENTLY.

FOR ADDITIONAL DETAILS, SEE SHEETS 173 - 176 , 178 , & 182

MAINTENANCE OF TRAFFIC LEGEND:

- DETOUR ROUTE DIRECTION OF TRAVEL
- XXX ROAD CLOSED
- LAW ENFORCEMENT
- PORTABLE CHANGEABLE MESSAGE SIGN (PCMS)

HORIZONTAL SCALE IN FEET: 0, 400, 800, 1600

REGIONAL DETOUR PLAN - PHASE 4
I.R. 90 WEEKEND CLOSURES
BRIDGE 9 STEEL INSTALLATION

DESIGN AGENCY: Michael Baker INTERNATIONAL

DESIGNER: CRK

REVIEWER: GSH 05/22/24

PROJECT ID: 82382

SHEET: 181 TOTAL: 2696

CUY-90-16.28 (CCG3A)

MODEL: E 14TH Detour Sheet PAPERSIZE: 34x22 (in.) DATE: 3/27/2025 TIME: 8:21:22 PM USER: Collin.Kwiatt
pw:\\mb-us-pw.bentley.com:mb-us-pw-03\Documents\Cleveland.OH\OiL_Projects\ODOT\District2\82382\400-Engineering\M0T\Sheets\82382_MD0018.dgn

Preliminary Plans - For Reference Only

FOR I.R. 90 WB RAMP CLOSURE DETAILS, SEE SHEET 174

E. 14TH ST.

PROSPECT AVE.

E. 18TH ST.

EUCLID AVE.

E. 22ND ST.

CHESTER AVE.

I.R. 90 WB

I.R. 90 EB

CARNEGIE AVE.

EUCLID AVE.

RC1

I.R. 90 WB

I.R. 90 EB

RC1

SHIFT LANE OF I-90 WB IN ADVANCE OF I-77 SB EXIT RAMP PER ODOT SCD MT-99.50

PROSPECT AVE.

CEDAR AVE.

CARNEGIE AVE.

PCMS:
I-90 WB DETOUR
FOLLOW I-77 SB

E. 14TH ST.

COMMUNITY COLLEGE AVE.

CENTRAL AVE.

E. 22ND ST.

ORANGE AVE.

I.R. 77 NB

I.R. 77 SB

For Reference Only
Preliminary Plans

RC1

ROAD CLOSED

R11-2-48

MOUNTED TO TYPE III BARRICADE
COMPLETE ROADWAY CLOSURE

HORIZONTAL SCALE IN FEET
0 75 150 300

MAINTENANCE OF TRAFFIC - I.R. 90 CLOSURE DETAIL - PHASE 4
BRIDGE 9 STEEL INSTALLATION

DESIGN AGENCY
Michael Baker INTERNATIONAL

DESIGNER CRK

REVIEWER GSH 05/22/24

PROJECT ID 82382

SHEET 182 TOTAL 2696

CUY-90-16.28 (CCG3A)

MODEL: I-90 WB Closure - PHASE 4 PAPERSIZE: 34x22 (in.) DATE: 3/27/2025 TIME: 8:21:31 PM USER: CollinKWatt
pw:\\mb-us-pw.bentley.com:mb-us-pw-03\Documents\Cleveland_OH\01_Projects\ODOT\District2\82382\400-Engineering\MOT\Sheets\82382_MD0023.dgn

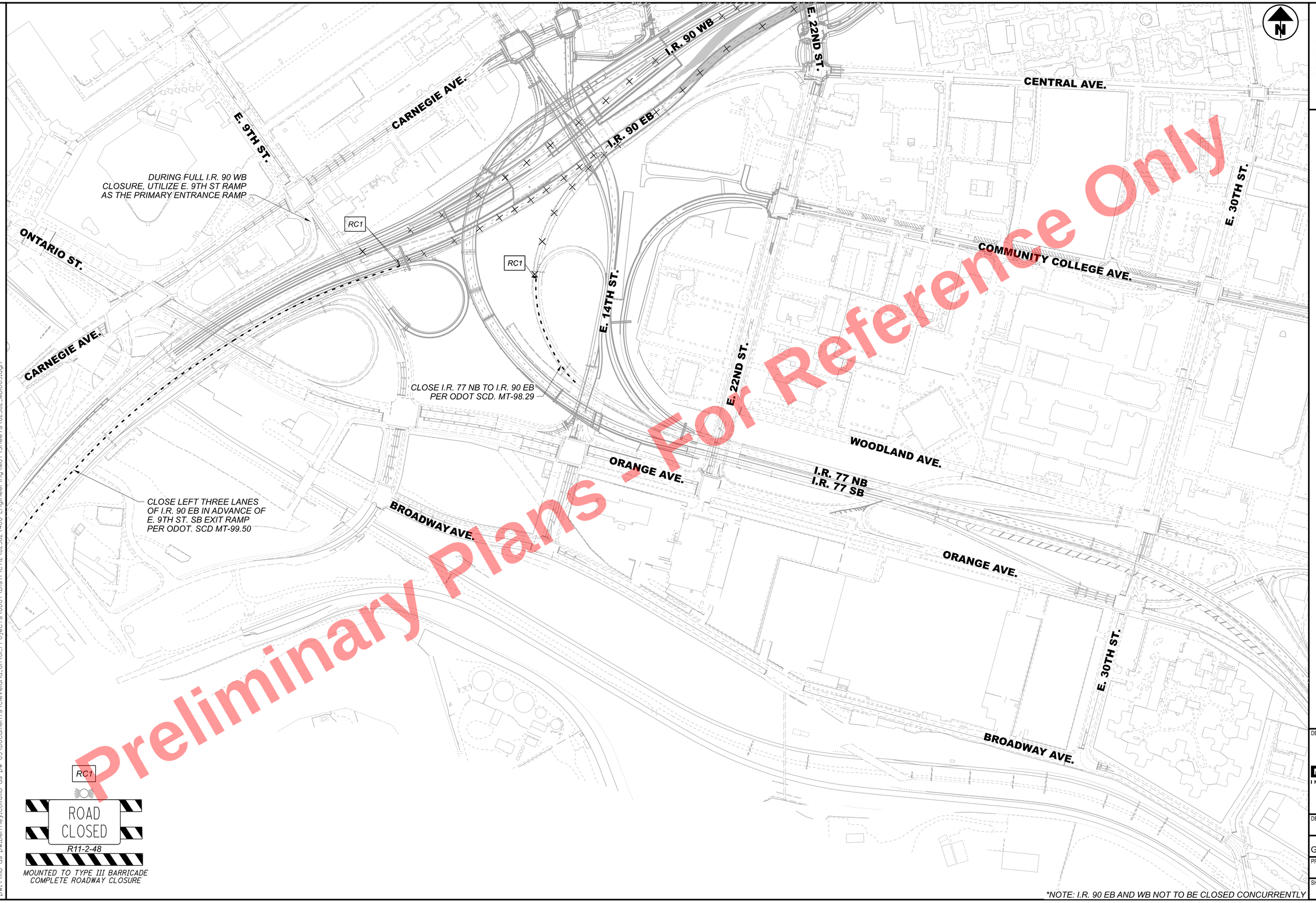

Preliminary Plans - For Reference Only

HORIZONTAL SCALE IN FEET
0 100 200 400

MAINTENANCE OF TRAFFIC - I.R. 90 CLOSURE DETAIL - PHASE 7
CARNEGIE BRIDGE DECK INSTALLATION

DESIGN AGENCY
Michael Baker INTERNATIONAL

DESIGNER CRK
REVIEWER GSH 05/22/24
PROJECT ID 82382
SHEET 183 TOTAL 2696

CUY-90-16.28 (CCG3A)

MODEL: Untitled Sheet PAPERSIZE: 34x22 (in.) DATE: 3/27/2025 TIME: 8:26:41PM USER: Collin.Kwiatt
pw:\\mb-us-pw.bentley.com:mb-us-pw-03\Documents\Cleveland.OH\OI_Projects\ODOT\District2\82382\400-Engineering\MOT\Sheets\82382_MDI009.dgn

NOTES:

1. FOR CLOSURE DETAILS, SEE SHEETS 286 & 292

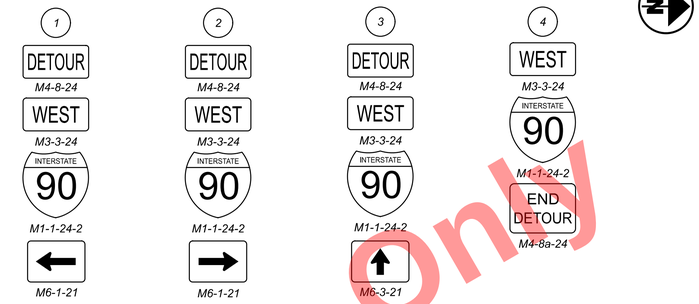

MAINTENANCE OF TRAFFIC LEGEND:

- AREA OF CONSTRUCTION TO BE COMPLETED DURING CLOSURE
- DETOUR ROUTE DIRECTION OF TRAVEL
- XXX ROAD CLOSED

Preliminary Plans - Not For Reference Only

HORIZONTAL SCALE IN FEET
0 125 250 500

MAINTENANCE OF TRAFFIC - I.R. 90 CLOSURE DETOUR - PHASE 7
E. 22ND ST./CEDAR AVE. BRIDGE DEMO & INSTALLATION

DESIGN AGENCY
Michael Baker INTERNATIONAL

DESIGNER CRK
REVIEWER GSH 05/22/24
PROJECT ID 82382
SHEET 184 TOTAL 2696

CUY-90-16.28 (CCG3A)

MODEL: Sheet PAPERSIZE: 34x22 (in.) DATE: 3/27/2025 TIME: 8:25:51 PM USER: Collin.Kwiat
pw:\\mb-us-pw.bentley.com:mb-us-pw-03\Documents\Cleveland_OH\01_Projects\ODOT\District2\82382\400-Engineering\MOT\Sheets\82382_MD0027.dgn

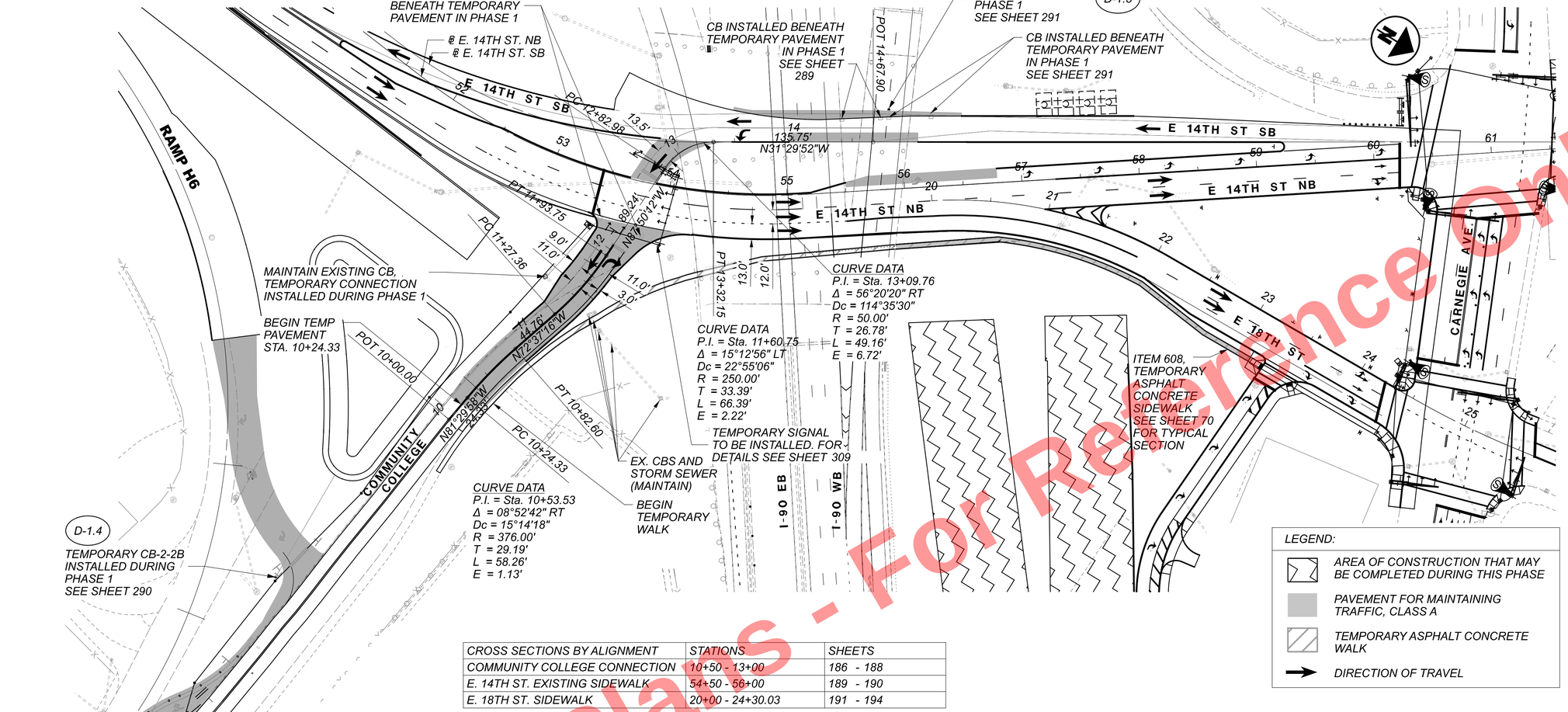

CROSS SECTIONS BY ALIGNMENT	STATIONS	SHEETS
COMMUNITY COLLEGE CONNECTION	10+50 - 13+00	186 - 188
E. 14TH ST. EXISTING SIDEWALK	54+50 - 56+00	189 - 190
E. 18TH ST. SIDEWALK	20+00 - 24+30.03	191 - 194

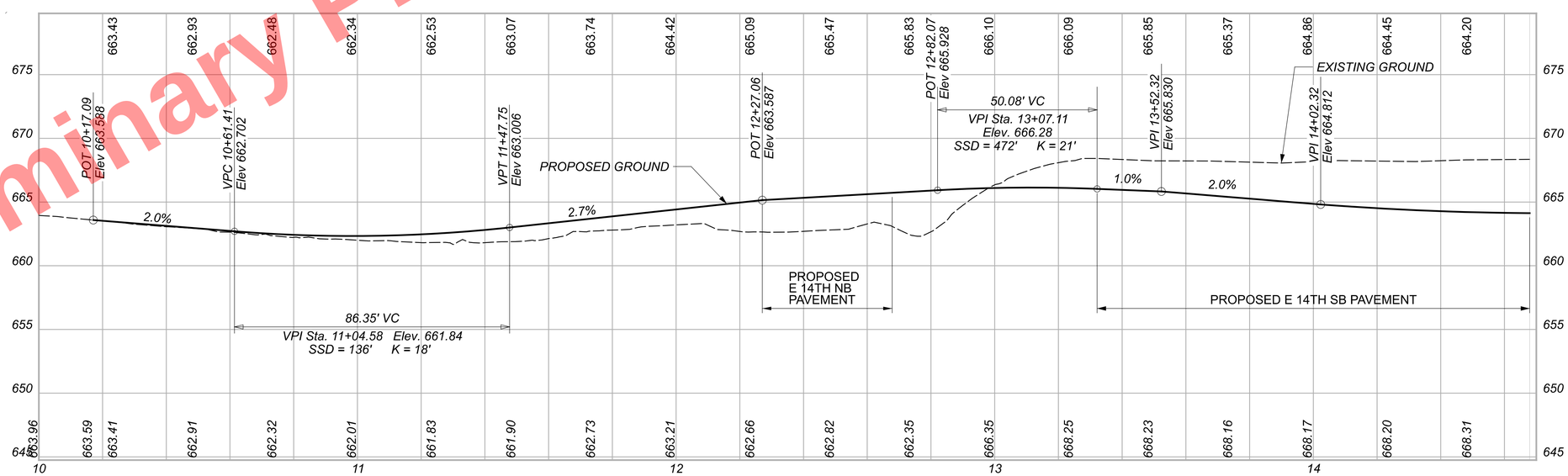

Preliminary Plans - For Reference Only

HORIZONTAL SCALE IN FEET
0 25 50 100

MAINTENANCE OF TRAFFIC - PHASE 2
PLAN & PROFILE - TEMPORARY E. 14TH ST. TO COMMUNITY COLLEGE BLVD.

DESIGN AGENCY
Michael Baker INTERNATIONAL

DESIGNER CRK
REVIEWER GSH 05/22/24
PROJECT ID 82382
SHEET 185 TOTAL 2696

CUY-90-16.28 (CCG3A)

MODEL: CLX_1 - Profile [Sheet] PAPERSIZE: 34x22 (in) DATE: 3/27/2025 TIME: 8:23:48 PM USER: Collin.Kwiatt
pw:\\mb-us-pw.bentley.commb-us-pw-03\Documents\Cleveland_OH\01_Projects\0007\District2\82382\400-Engineering\MOT\Sheets\82382_MP200.dgn

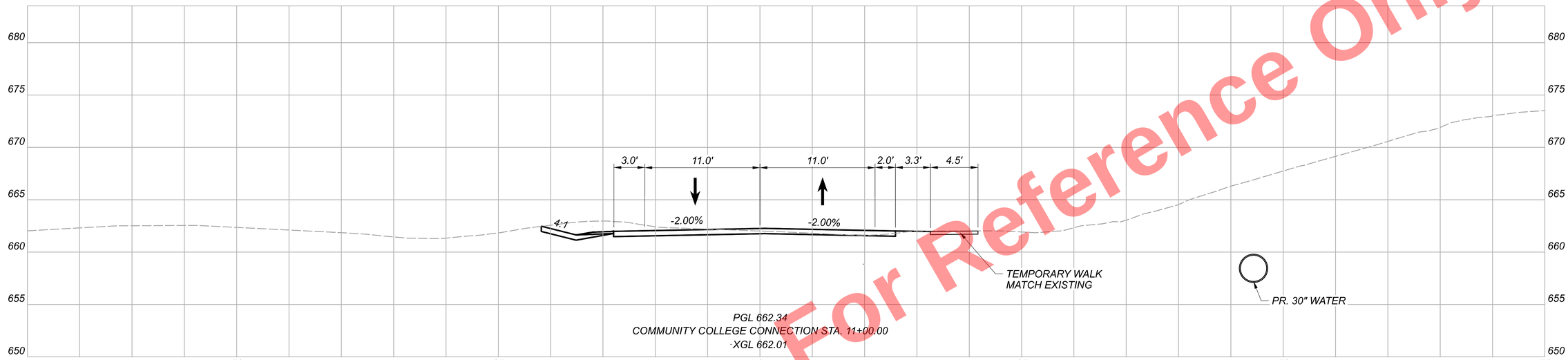

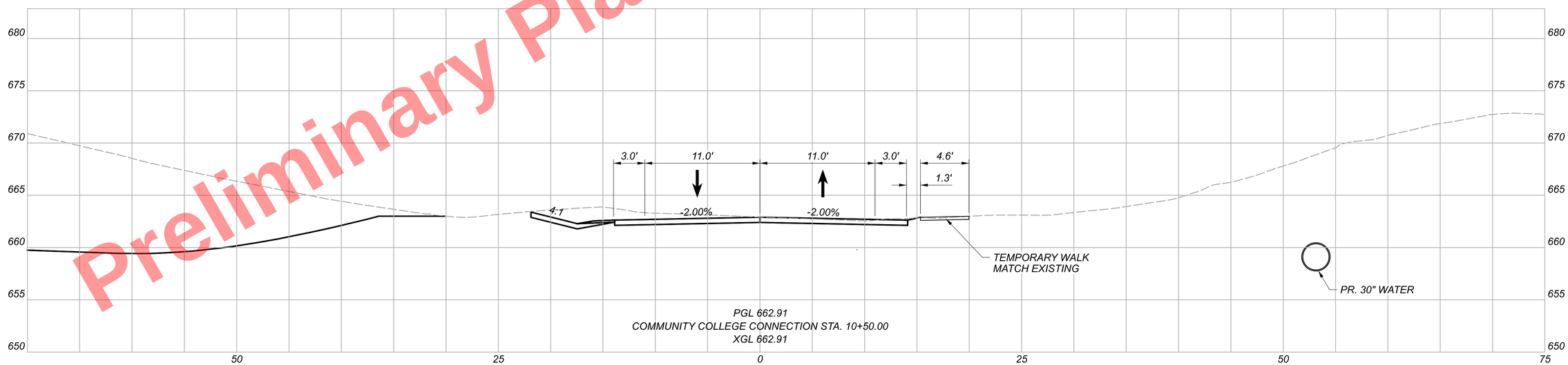

Preliminary Plans - Not For Reference Only

MAINTENANCE OF TRAFFIC - PHASE 2
CROSS SECTIONS - E. 14TH ST. AND COMMUNITY COLLEGE BLVD.

DESIGN AGENCY
Michael Baker INTERNATIONAL

DESIGNER MZG
REVIEWER LJS 05/22/24
PROJECT ID 82382
SHEET 186 TOTAL 2696

CUY-90-16.28 (CCG3A)

MODEL: CLX_1- 10+50.00 [Sheet] PAPERSIZE: 34x22 (in.) DATE: 6/9/2025 TIME: 12:55:41 PM USER: Julie.Ross
pw:\\mb-us-pw.bentley.com:mb-us-pw-03\Documents\Cleveland_OH\01_Projects\ODOT\District2\82382\400-Engineering\MOT\Sheets\82382_XM001.dgn

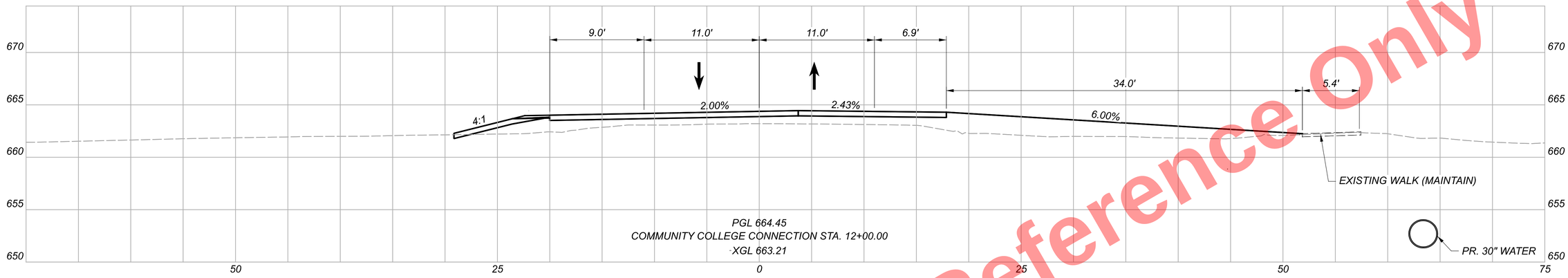

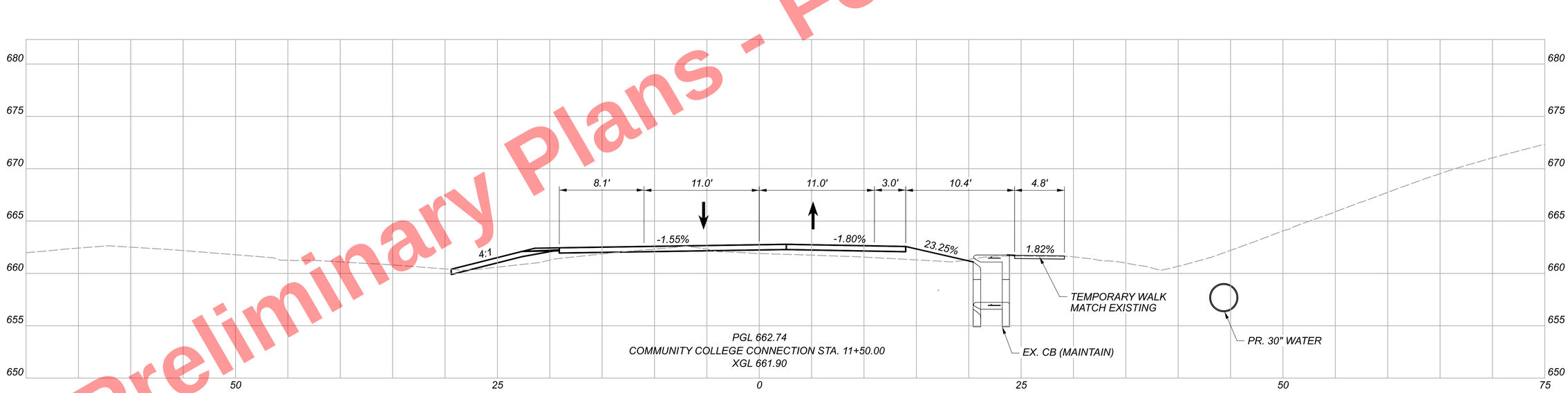

Preliminary Plans - For Reference Only

MAINTENANCE OF TRAFFIC - PHASE 2
CROSS SECTIONS - E. 14TH ST. AND COMMUNITY COLLEGE BLVD.

DESIGN AGENCY
Michael Baker INTERNATIONAL

DESIGNER MZG
REVIEWER LJS 05/22/24
PROJECT ID 82382
SHEET 187 TOTAL 2696

CUY-90-16.28 (CCG3A)

MODEL: CLX_1- 11+50.00 [Sheet] PAPERSIZE: 34x22 (in) DATE: 6/9/2025 TIME: 12:55:55 PM USER: Julie.Ross
pw:\\mb-us-pw.bentley.com:mb-us-pw-03\Documents\Cleveland_OH\01_Projects\ODOT\District2\82382\400-Engineering\MOT\Sheets\82382_XM001.dgn

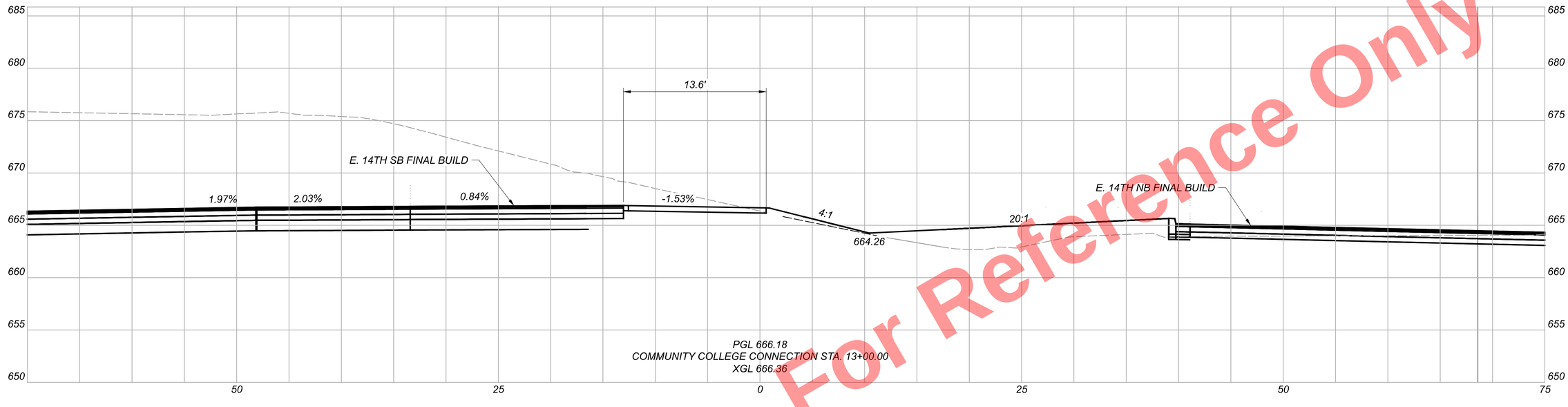

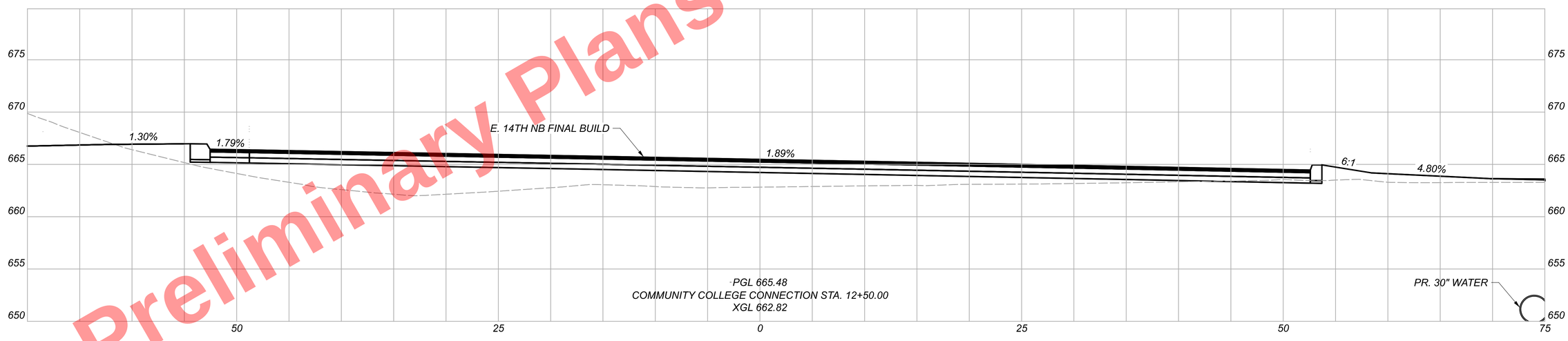

Preliminary Plans - For Reference Only

MAINTENANCE OF TRAFFIC - PHASE 2
CROSS SECTIONS - E. 14TH ST. AND COMMUNITY COLLEGE BLVD.

DESIGN AGENCY
Michael Baker INTERNATIONAL

DESIGNER MZG
REVIEWER LJS 05/22/24
PROJECT ID 82382
SHEET 188 TOTAL 2696

CUY-90-16.28 (CCG3A)

MODEL: CLX_1- I3+00.00 (Sheet) PAPERSIZE: 34x22 (In.) DATE: 3/27/2025 TIME: 8:24:42 PM USER: CollinKwiatt
pw:\\mb-us-pw.bentley.com:mb-us-pw-03\Documents\Cleveland_OH\01_Projects\0007\01str1ct12\82382\400-Engineering\MOT\Sheets\82382_XM001.dgn

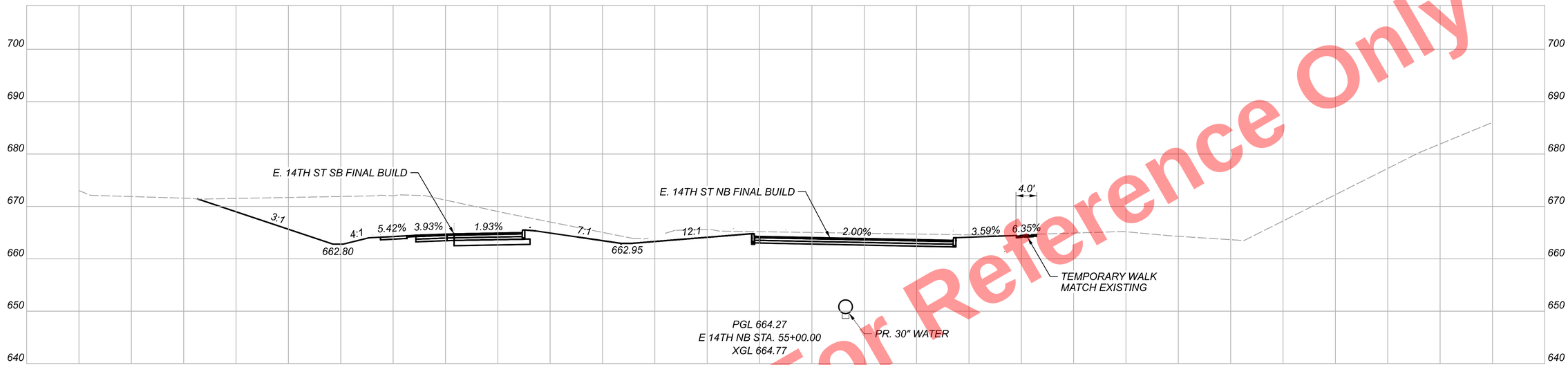

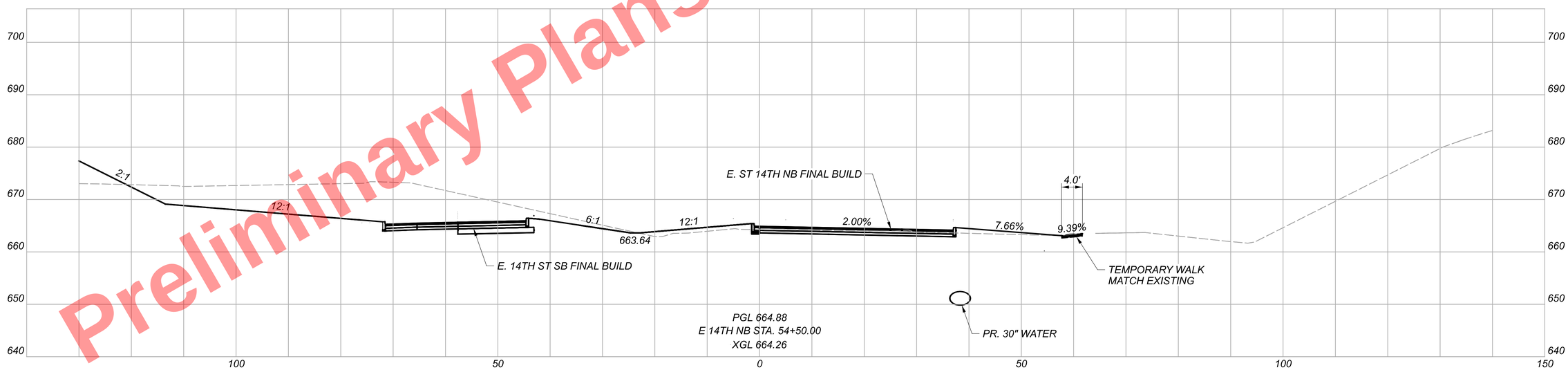

Preliminary Plans - For Reference Only

MAINTENANCE OF TRAFFIC - PHASE 2
CROSS SECTIONS - E 14TH ST. SIDEWALK

CUY-90-16.28 (CCG3A)

MODEL: E. 14th NB FinalBuild - 54+50.00 (Sheet) PAPERSIZE: 34x22 (in.) DATE: 6/10/2025 TIME: 9:51:54 AM USER: Julie.Ross
pw:\\mb-us-pw.bentley.com:mb-us-pw-03\Documents\Cleveland_OH\01_Projects\0007\District2\82382\400-Engineering\MOT\Sheets\82382_XM001.dgn

DESIGN AGENCY
Michael Baker INTERNATIONAL

DESIGNER MZG
REVIEWER LJS 05/22/24
PROJECT ID 82382
SHEET 189 TOTAL 2696

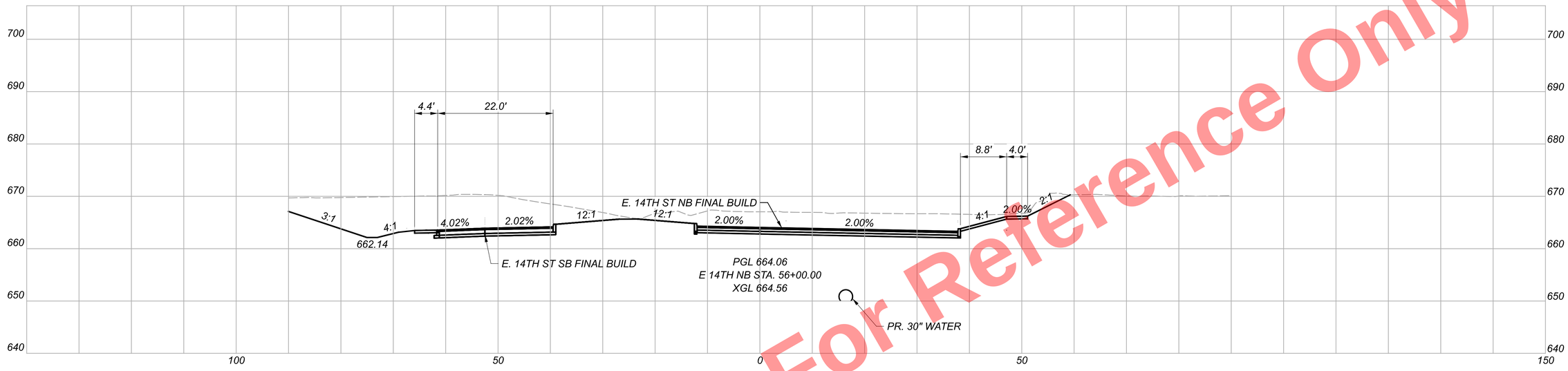

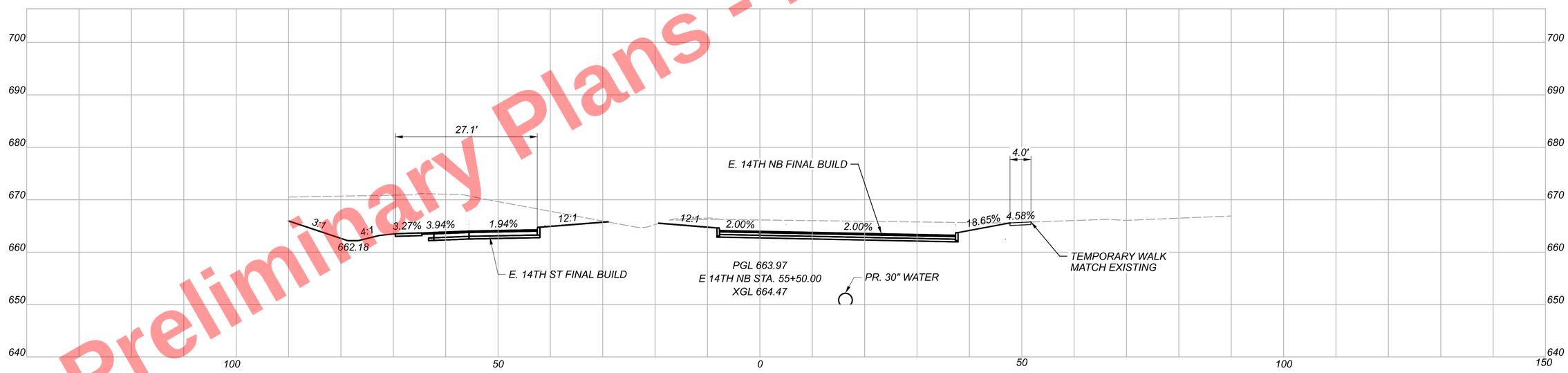

Preliminary Plans - Not For Reference Only

MAINTENANCE OF TRAFFIC - PHASE 2
CROSS SECTIONS - E 14TH ST. SIDEWALK

CUY-90-16.28 (CCG3A)

MODEL: E. 14th NB FinalBuild - 55+50.00 (Sheet) PAPERSIZE: 34x22 (in.) DATE: 6/9/2025 TIME: 12:56:10 PM USER: Julie.Ross
pw:\\mb-us-pw.bentley.com:mb-us-pw-03\Documents\Cleveland_OH\01_Projects\000T\District2\82382\400-Engineering\MOT\Sheets\82382_XM001.dgn

DESIGN AGENCY
Michael Baker INTERNATIONAL

DESIGNER MZG
REVIEWER LJS 05/22/24
PROJECT ID 82382
SHEET 190 TOTAL 2696

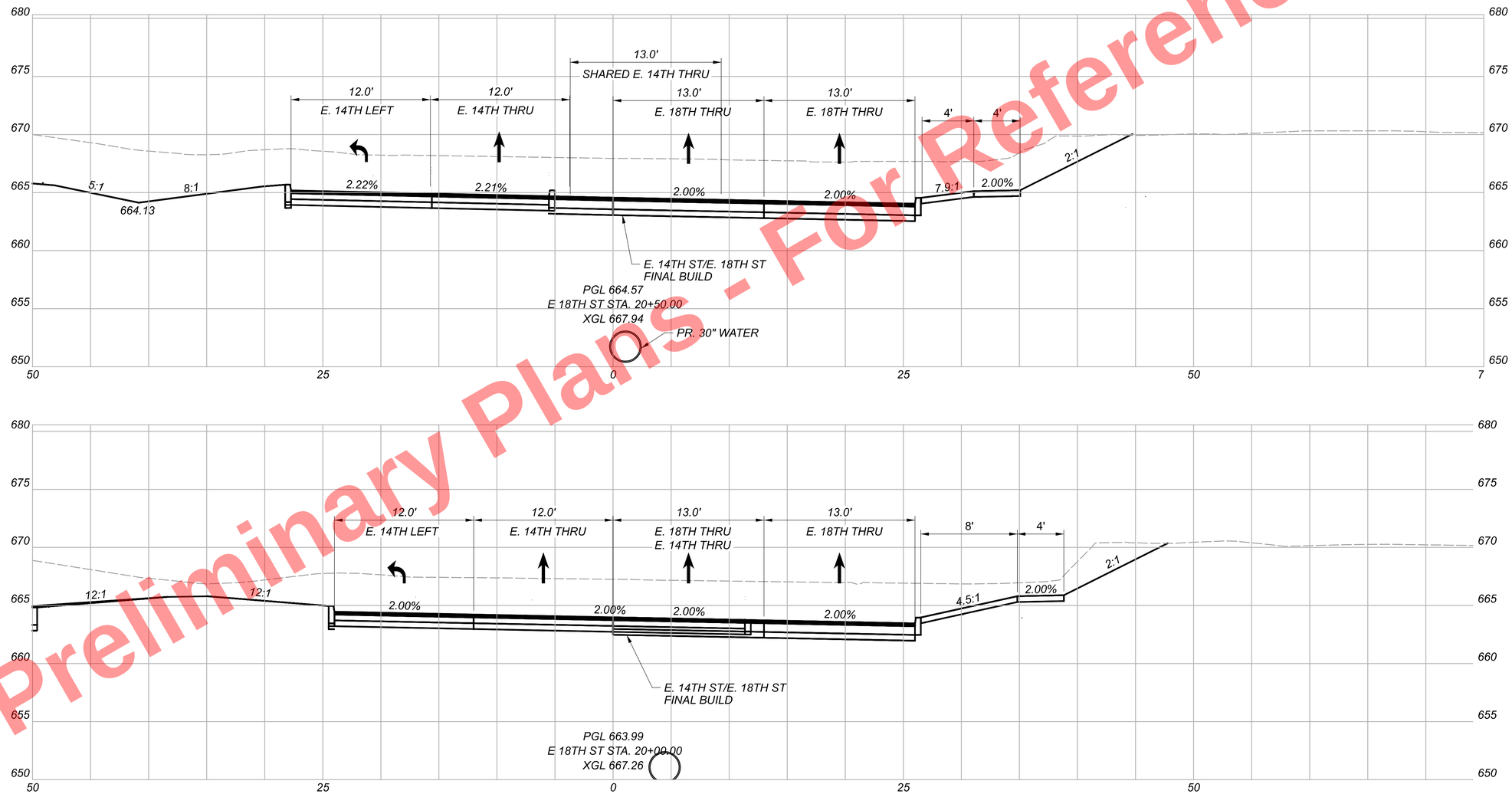

Preliminary Plans - For Reference Only

MAINTENANCE OF TRAFFIC - PHASE 2
CROSS SECTIONS - E. 18TH ST SIDEWALK

CUY-90-16.28 (CCG3A)

DESIGN AGENCY
Michael Baker INTERNATIONAL

DESIGNER MZG
REVIEWER LJS 05/22/24
PROJECT ID 82382
SHEET 191 TOTAL 2696

MODEL: BL E. 18TH ST. - 20+00.00 [Sheet] PAPERSIZE: 34x22 (in) DATE: 6/9/2025 TIME: 12:56:16 PM USER: Julie.Ross
pw:\\mb-us-pw.bentley.com:mb-us-pw-03\Documents\Cleveland_OH\01_Projects\ODOT\District2\82382\400-Engineering\MOT\Sheets\82382_XM001.dgn

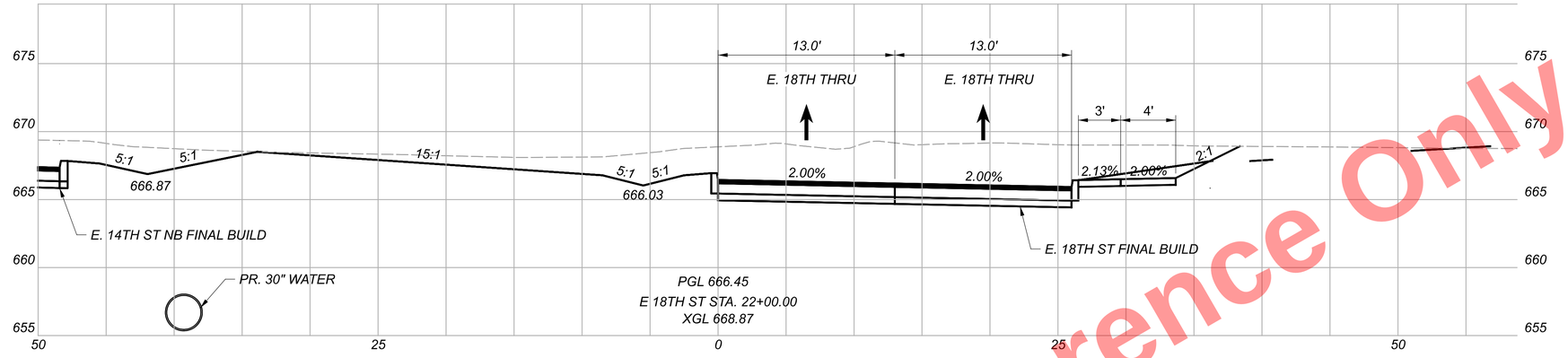

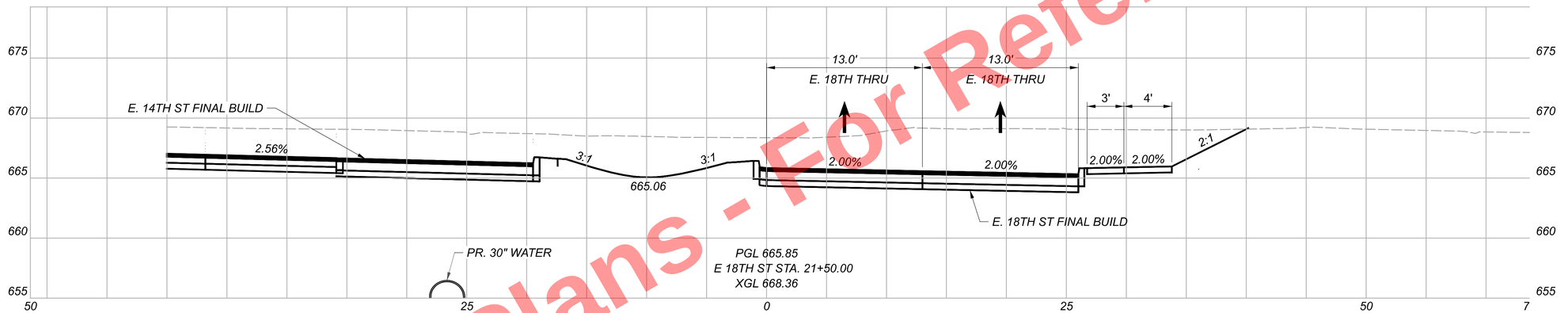

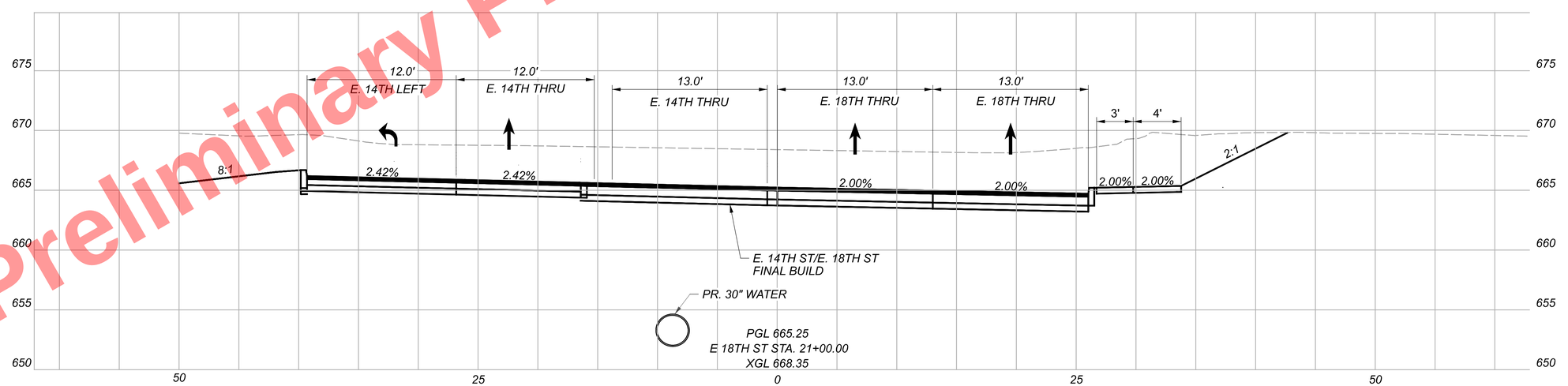

Preliminary Plans - For Reference Only

MAINTENANCE OF TRAFFIC - PHASE 2
CROSS SECTIONS - E. 18TH ST SIDEWALK

DESIGN AGENCY
Michael Baker INTERNATIONAL

DESIGNER MZG
REVIEWER LJS 05/22/24
PROJECT ID 82382
SHEET 192 TOTAL 2696

CUY-90-16.28 (CCG3A)

MODEL: BL E. 18TH ST. - 2+00.00 [Sheet] PAPERSIZE: 34x22 (in.) DATE: 6/11/2025 TIME: 11:46:21 AM USER: Julie.Ross
pw:\\mb-us-pw.bentley.com:mb-us-pw-03\Documents\Cleveland.OH\01_Projects\ODOT\District12\82382\400-Engineering\MOT\Sheets\82382_XM001.dgn

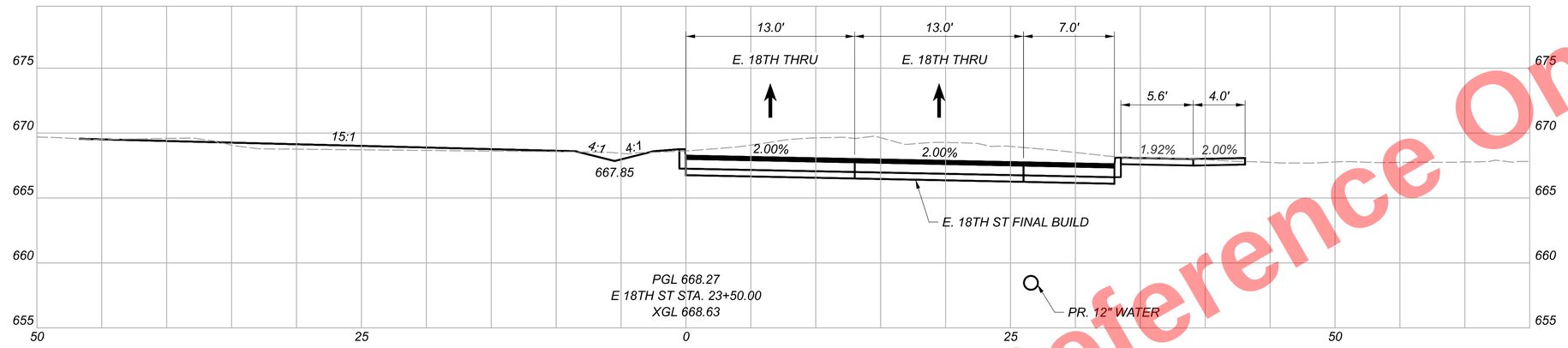

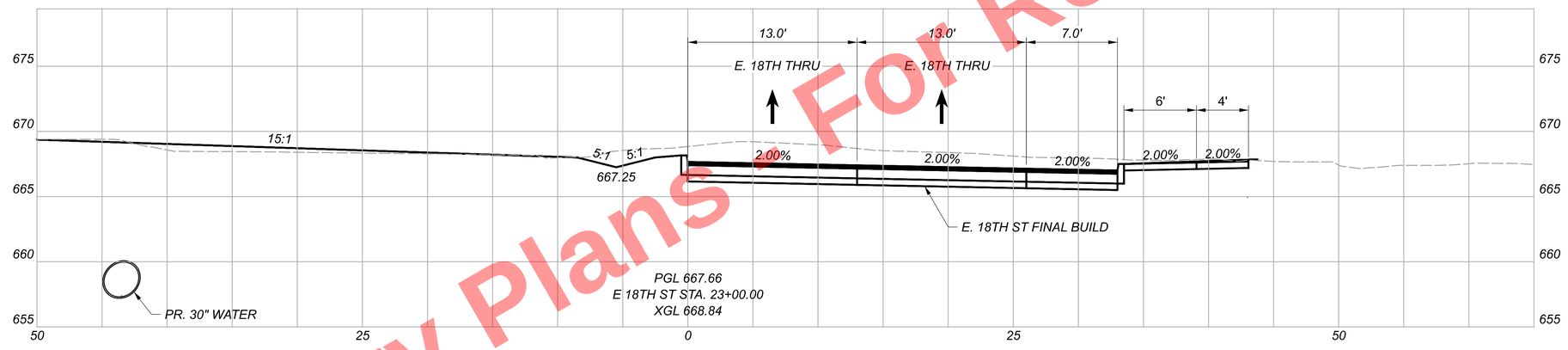

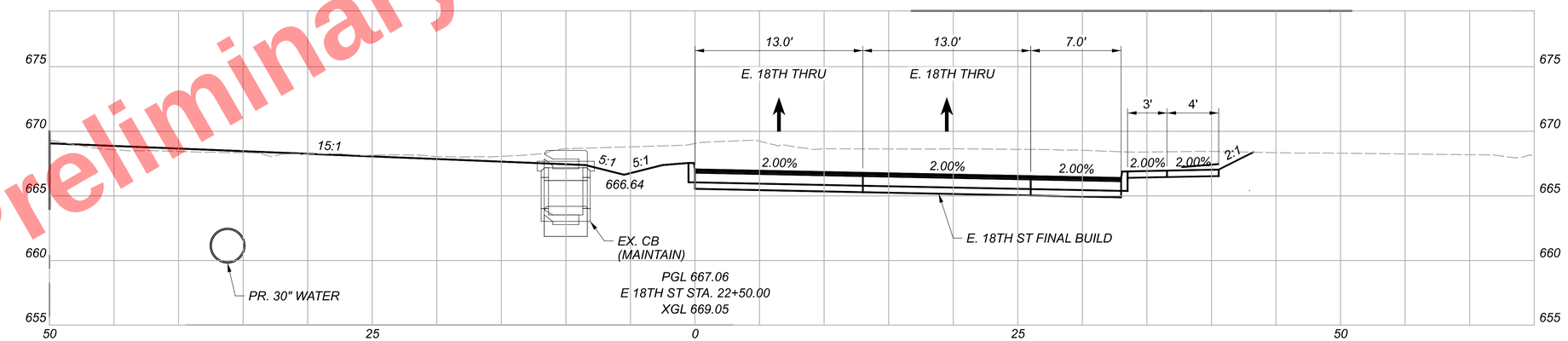

Preliminary Plans - For Reference Only

MAINTENANCE OF TRAFFIC - PHASE 2
CROSS SECTIONS - E. 18TH ST SIDEWALK

DESIGN AGENCY
Michael Baker INTERNATIONAL

DESIGNER MZG
REVIEWER LJS 05/22/24
PROJECT ID 82382
SHEET 193 TOTAL 2696

CUY-90-16.28 (CCG3A)

MODEL: BL_E_18TH ST_-_22+50.00 [Sheet] PAPERSIZE: 34x22 (in.) DATE: 6/9/2025 TIME: 12:56:30 PM USER: Julie.Ross
pw:\\mb-us-pw.bentley.com:mb-us-pw-03\Documents\Cleveland_OH\Oil_Projects\ODOT\District2\82382\400-Engineering\MOT\Sheets\82382_XM001.dgn

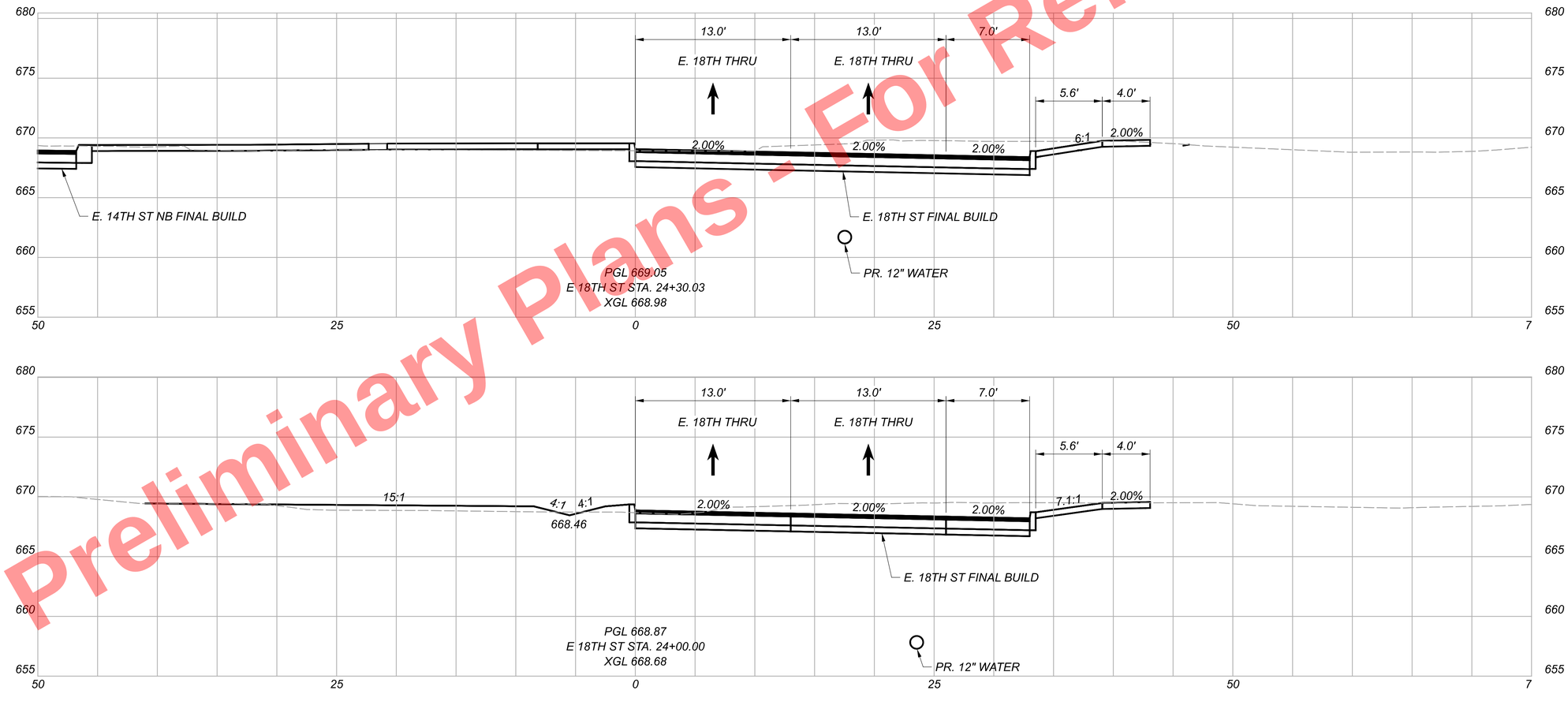

Preliminary Plans - For Reference Only

MAINTENANCE OF TRAFFIC - PHASE 2
CROSS SECTIONS - E. 18TH ST SIDEWALK

CUY-90-16.28 (CCG3A)

MODEL: BL E.18TH ST. - 24+00.00 [Sheet] PAPERSIZE: 34x22 (in.) DATE: 3/27/2025 TIME: 8:25:43 PM USER: Collin.Kwiat
pw:\\mb-us-pw.bentley.commb-us-pw-03\Documents\Cleveland_OH\OL_Projects\ODOT\District12\82382\400-Engineering\MOT\Sheets\82382_XM001.dgn

DESIGN AGENCY
Michael Baker INTERNATIONAL

DESIGNER
MZG

REVIEWER
LJS 05/22/24

PROJECT ID
82382

SHEET 194 | TOTAL 2696

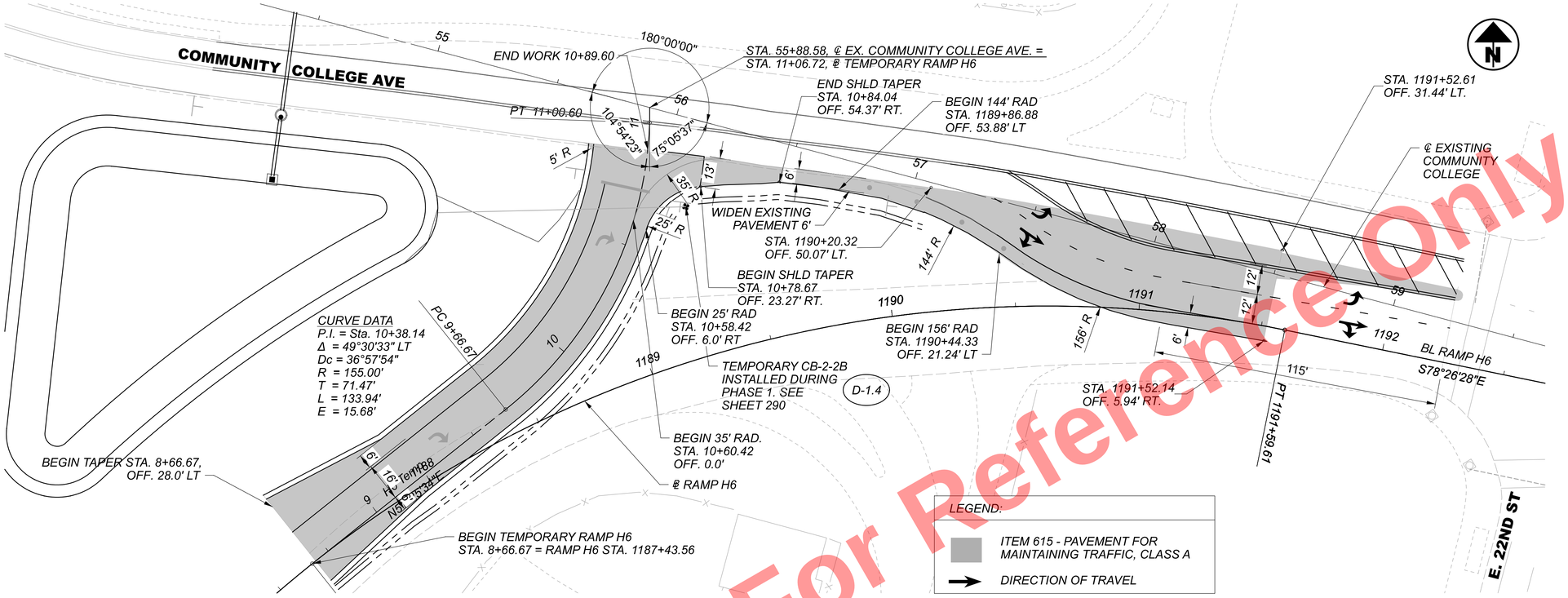

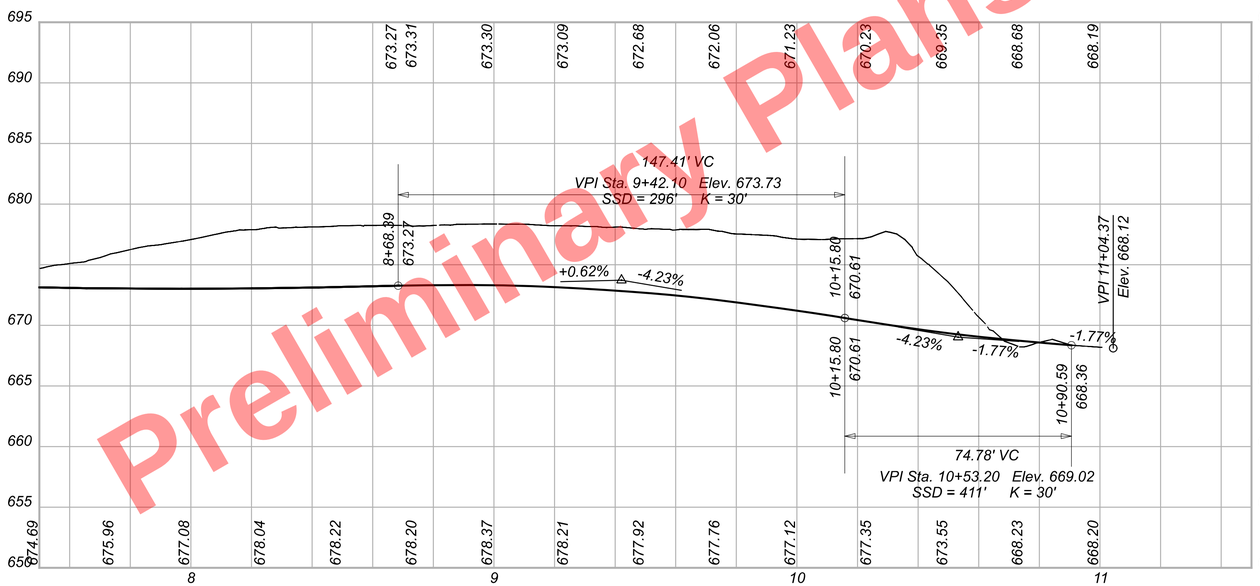

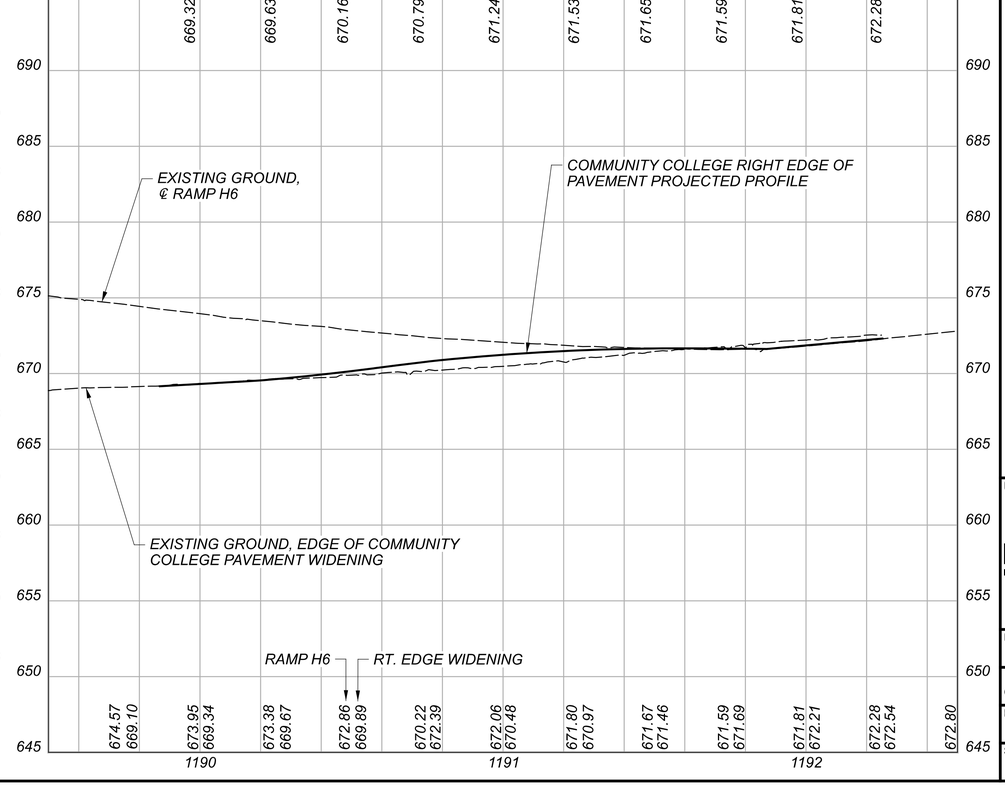

Preliminary Plans - For Reference Only

HORIZONTAL SCALE IN FEET
0 12.5 25 50

MAINTENANCE OF TRAFFIC - PHASE 2
PLAN AND PROFILE - RAMP H6 TEMPORARY PAVEMENT

DESIGN AGENCY
Michael Baker INTERNATIONAL

DESIGNER CRK
REVIEWER GSH 05/22/24
PROJECT ID 82382
SHEET 195 TOTAL 2696

CUY-90-16.28 (CCG3A)

MODEL: H6 Temp - Plan and Profile [Sheet] PAPERSIZE: 34x22 (in) DATE: 3/27/2025 TIME: 8:26:07 PM USER: Collin.Kwiatt
pw:\\mb-us-pw.bentley.com\mb-us-pw-03\Documents\Cleveland_OH\01_Projects\0007\District2\82382\400-Engineering\MOT\Sheets\82382_MP20L.dgn

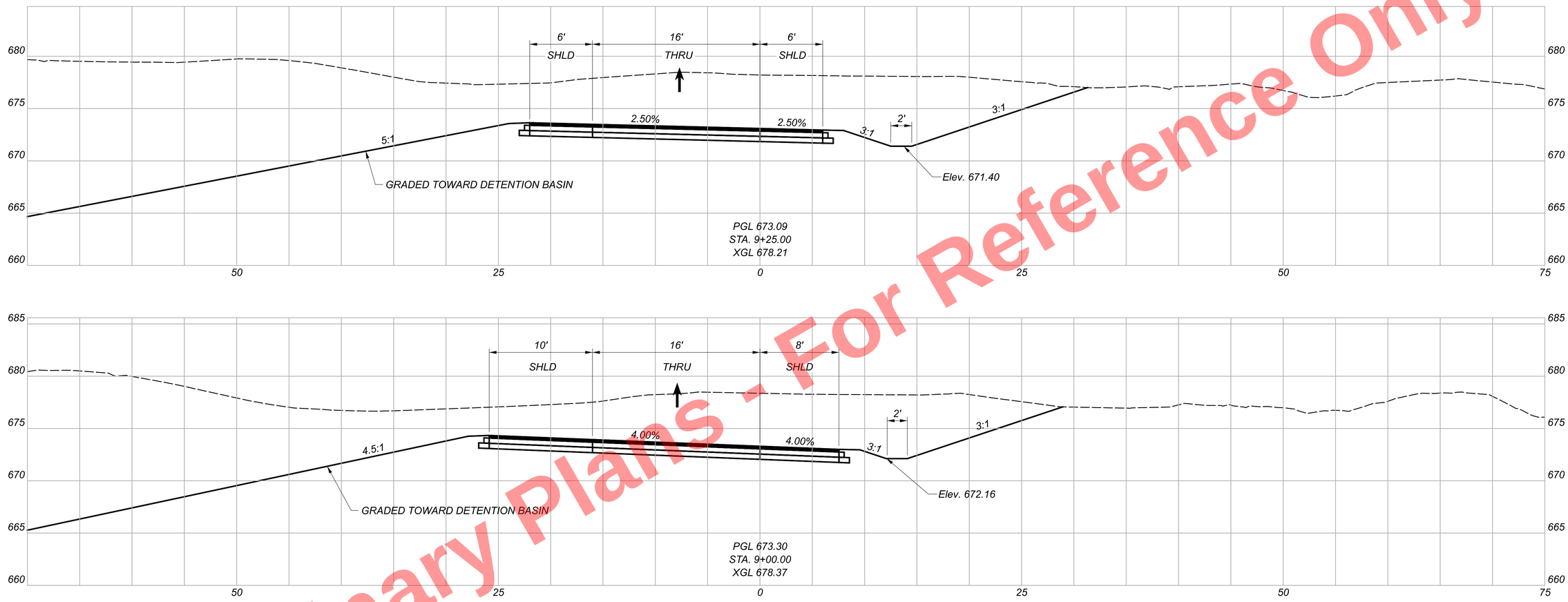

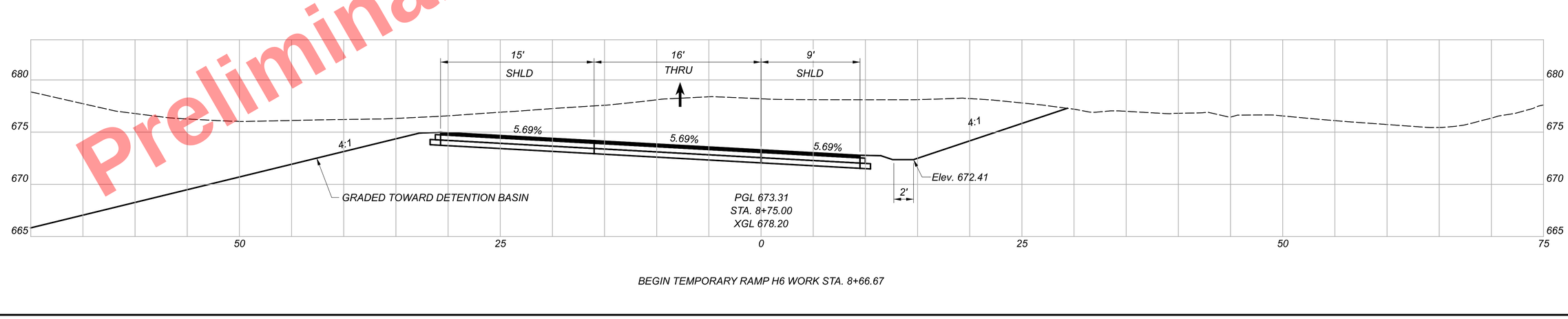

BEGIN TEMPORARY RAMP H6 WORK STA. 8+66.67

Preliminary Plans - Not For Reference Only

MAINTENANCE OF TRAFFIC - PHASE 2
CROSS SECTIONS - RAMP H6 TEMPORARY PAVEMENT

CUY-90-16.28 (CCG3A)

MODEL: H6 Temp - 8+75.00 [Sheet] PAPERSIZE: 34x22 (in.) DATE: 3/27/2025 TIME: 8:26:22 PM USER: CollinsKwiatt
pw:\\mb-us-pw.bentley.com:mb-us-pw-03\Documents\Cleveland_OH\01_Projects\DOT\District2\82382\400-Engineering\MOT\Sheets\82382_XM002.dgn

DESIGN AGENCY
Michael Baker INTERNATIONAL

DESIGNER MZG
REVIEWER LJS 05/22/24
PROJECT ID 82382
SHEET 196 TOTAL 2696

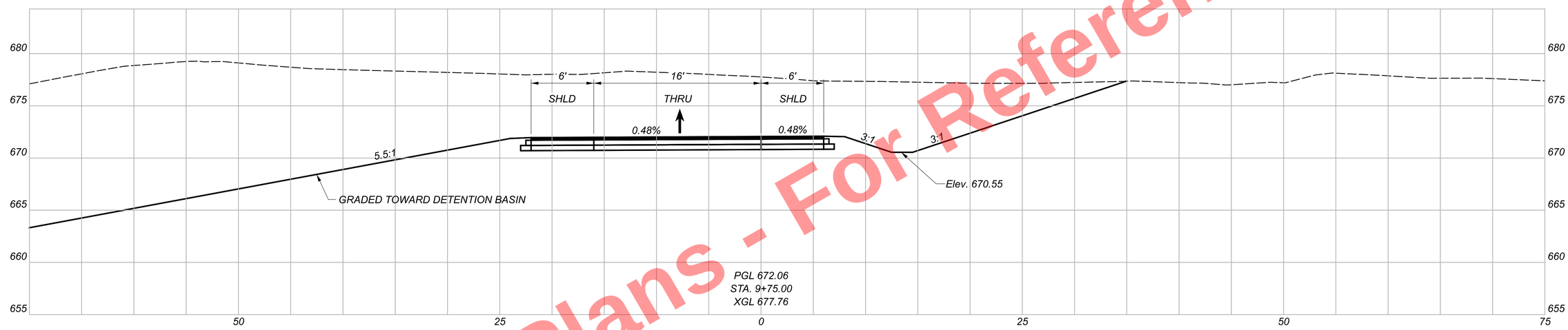

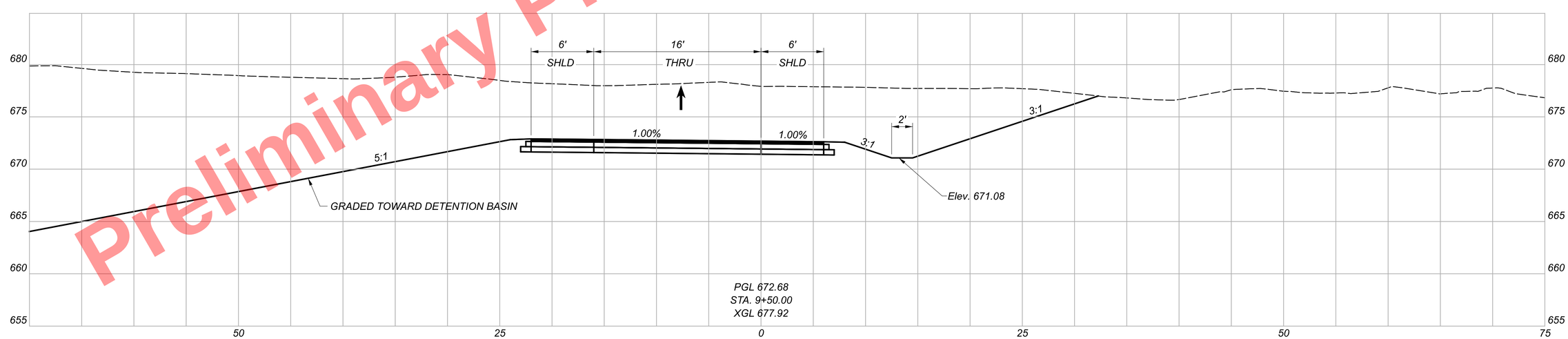

Preliminary Plans - For Reference Only

MAINTENANCE OF TRAFFIC - PHASE 2
CROSS SECTIONS - RAMP H6 TEMPORARY PAVEMENT

DESIGN AGENCY
Michael Baker INTERNATIONAL

DESIGNER
MZG

REVIEWER
LJS 05/22/24

PROJECT ID
82382

SHEET 197 TOTAL 2696

CUY-90-16.28 (CCG3A)

MODEL: H6 Temp - 9+50.00 [Sheet] PAPERSIZE: 34x22 (in.) DATE: 3/27/2025 TIME: 8:26:28 PM USER: Collin.Kwiatt
pw:\\mb-us-pw.bentley.com:mb-us-pw-03\Documents\Cleveland_OH\OI_Projects\ODOT\District2\82382\400-Engineering\MOT\Sheets\82382_XM002.dgn

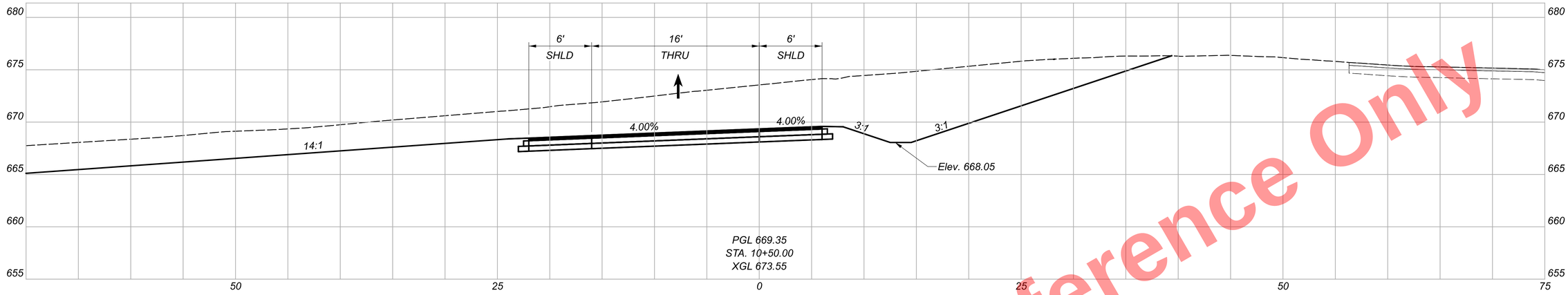

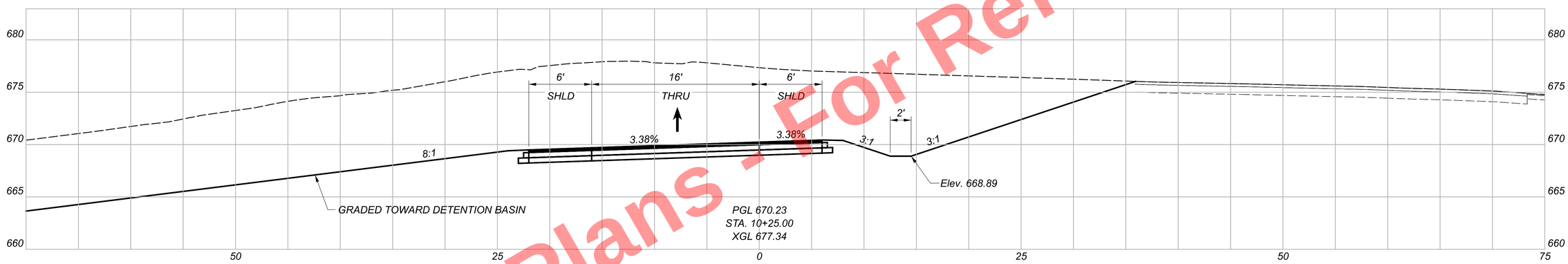

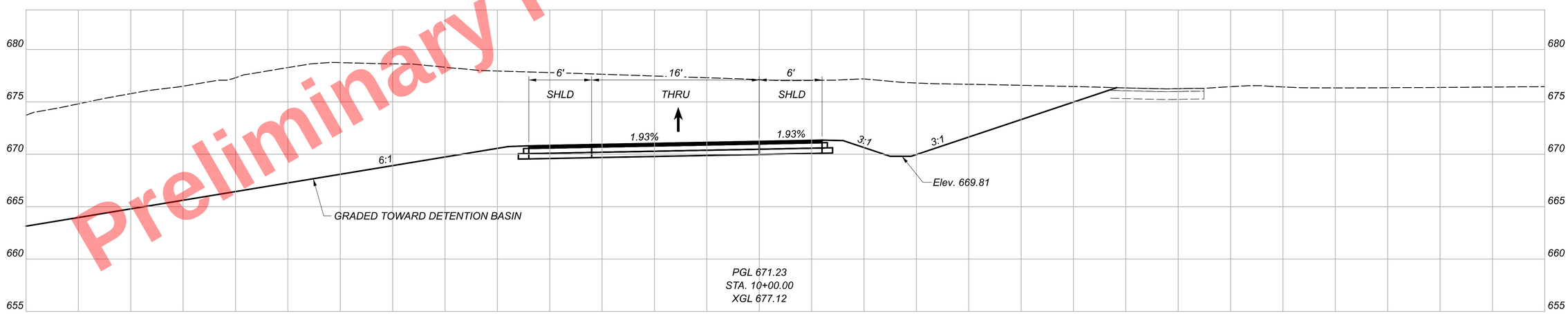

Preliminary Plans - For Reference Only

MAINTENANCE OF TRAFFIC - PHASE 2
CROSS SECTIONS - RAMP H6 TEMPORARY PAVEMENT

CUY-90-16.28 (CCG3A)

MODEL: H6 Temp - 10+00.00 [Sheet] PAPERSIZE: 34x22 (in) DATE: 3/27/2025 TIME: 8:26:32 PM USER: Collin.Kwiatt
pw:\\mb-us-pw.bentley.com:mb-us-pw-03\Documents\Cleveland.OH\OiL_Projects\ODOT\District2\82382\400-Engineering\MOT\Sheets\82382_XM002.dgn

DESIGN AGENCY
Michael Baker INTERNATIONAL

DESIGNER	
MZG	
REVIEWER	
LJS	05/22/24
PROJECT ID	
82382	
SHEET	TOTAL
198	2696

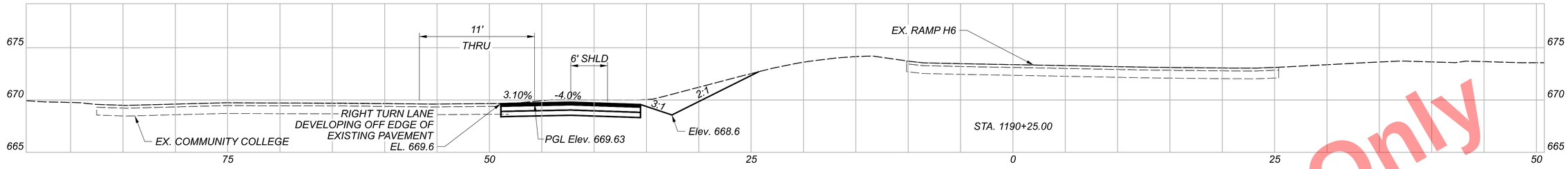

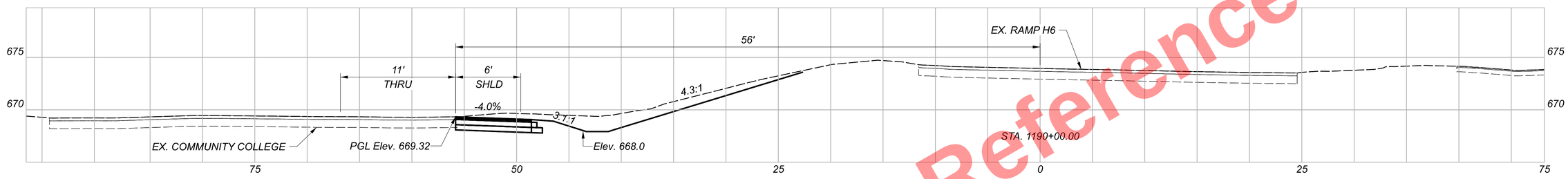

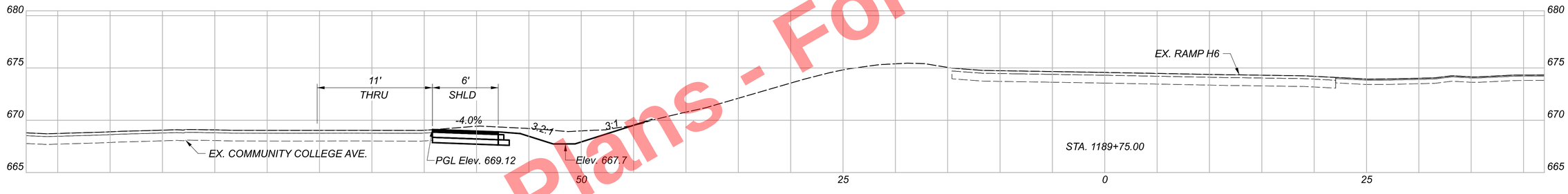

BEGIN WIDENING WORK RAMP H6 STA. 1189+66.12

END TEMPORARY RAMP H6 WORK STA. 10+89.60

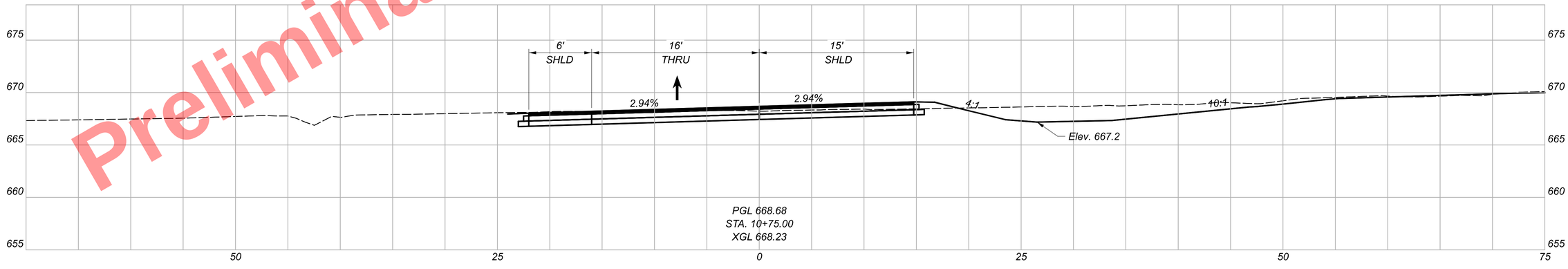

Preliminary Plans - For Reference Only

MAINTENANCE OF TRAFFIC - PHASE 2
CROSS SECTIONS - RAMP H6 TEMPORARY PAVEMENT

CUY-90-16.28 (CCG3A)

MODEL: H6 Temp - 10+75.00 [Sheet] PAPERSIZE: 34x22 (in) DATE: 3/27/2025 TIME: 8:26:42 PM USER: Collin.Kwiatt
pw:\\mb-us-pw.bentley.com:mb-us-pw-03\Documents\Cleveland_OH\OL_Projects\ODOT\District 12\82382\400-Engineering\MOT\Sheets\82382_XM002.dgn

DESIGN AGENCY
Michael Baker INTERNATIONAL

DESIGNER MZG
REVIEWER LJS 05/22/24
PROJECT ID 82382
SHEET 199 TOTAL 2696

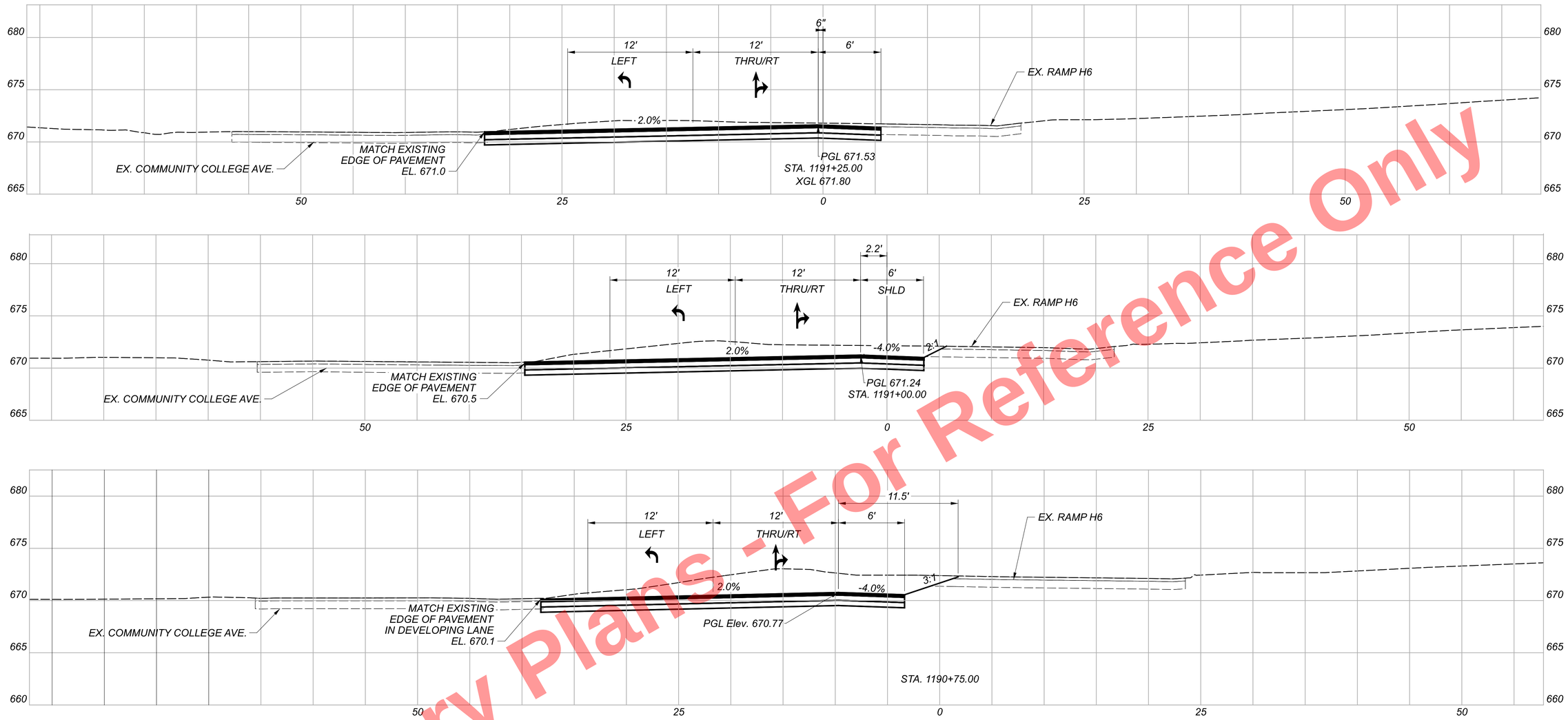

Preliminary Plans - For Reference Only

MAINTENANCE OF TRAFFIC - PHASE 2
CROSS SECTIONS - COMMUNITY COLLEGE AVE. WIDENING

CUY-90-16.28 (CCG3A)

MODEL: BL RAMP H6 - 1190+50.00 (Sheet) PAPERSIZE: 34x22 (in) DATE: 3/27/2025 TIME: 8:26:59 PM USER: Collin.Kwiatt
pw:\\mb-us-pw.bentley.com:mb-us-pw-03\Documents\Cleveland_OH\01_Projects\ODOT\District12\82382\400-Engineering\MOT\Sheets\82382_XM002.dgn

DESIGN AGENCY
Michael Baker INTERNATIONAL

DESIGNER MZG
REVIEWER LJS 05/22/24
PROJECT ID 82382
SHEET 200 TOTAL 2696

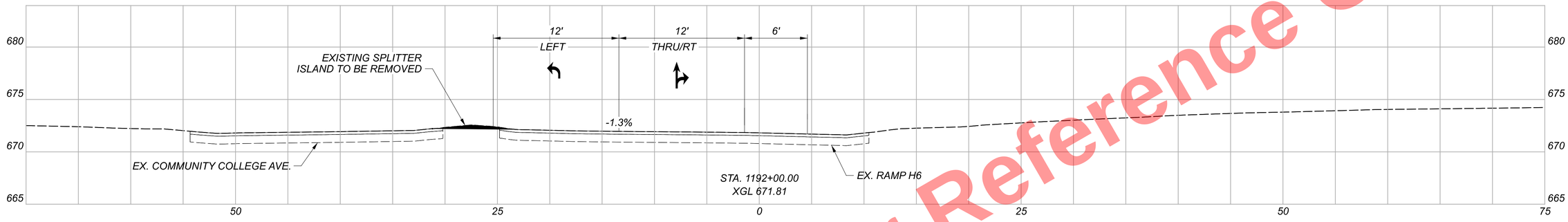

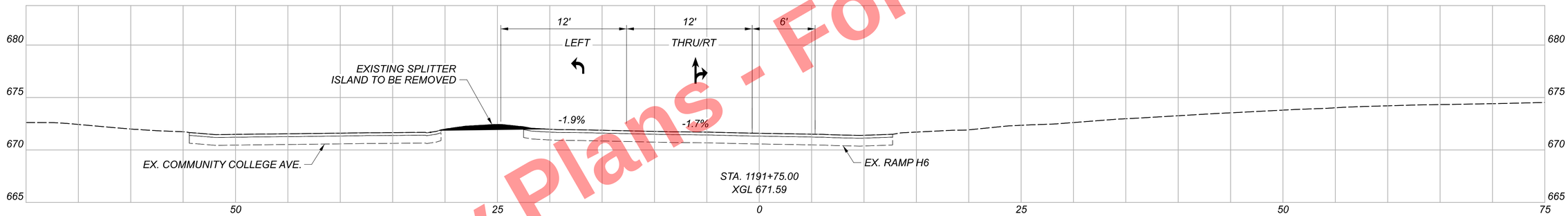

END WIDENING WORK STA. 1191+52.14

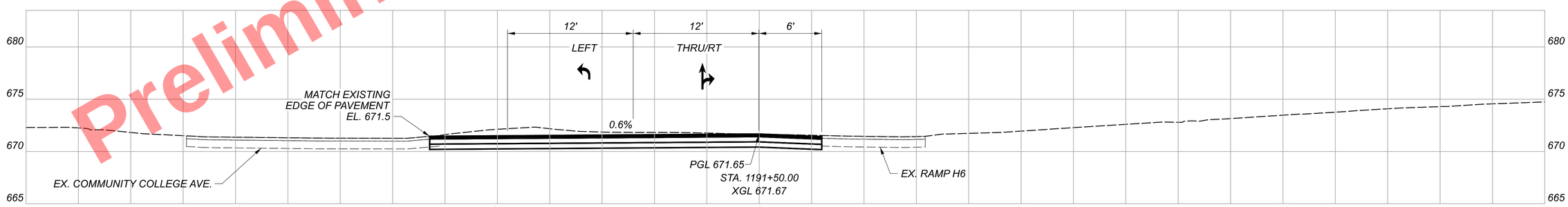

Preliminary Plans - For Reference Only

MAINTENANCE OF TRAFFIC - PHASE 2
CROSS SECTIONS - COMMUNITY COLLEGE AVE. WIDENING

DESIGN AGENCY
Michael Baker INTERNATIONAL

DESIGNER MZG
REVIEWER LJS 05/22/24
PROJECT ID 82382
SHEET 201 TOTAL 2696

CUY-90-16.28 (CCG3A)

MODEL: BL RAMP H6 - 1191+50.00 [Sheet] PAPERSIZE: 34x22 (in.) DATE: 3/27/2025 TIME: 8:27:03 PM USER: Collin.Kwiatt
pw:\\mb-us-pw.bentley.com:mb-us-pw-03\Documents\Cleveland_OH\01_Projects\ODOT\District2\82382\400-Engineering\MOT\Sheets\82382_XM002.dgn

MODEL: CLP_Phase 4 - Plan 2 [Sheet] PAPERSIZE: 34x22 (in.) DATE: 3/27/2025 TIME: 8:27:16 PM USER: Collin.Kwiatt
pw:\\mb-us-pw.bentley.com:mb-us-pw-03\Documents\Cleveland_OH\OI_Projects\ODOT\District12\82382\400-Engineering\MOT\Sheets\82382_MP400.dgn

Preliminary Plans - For Reference Only

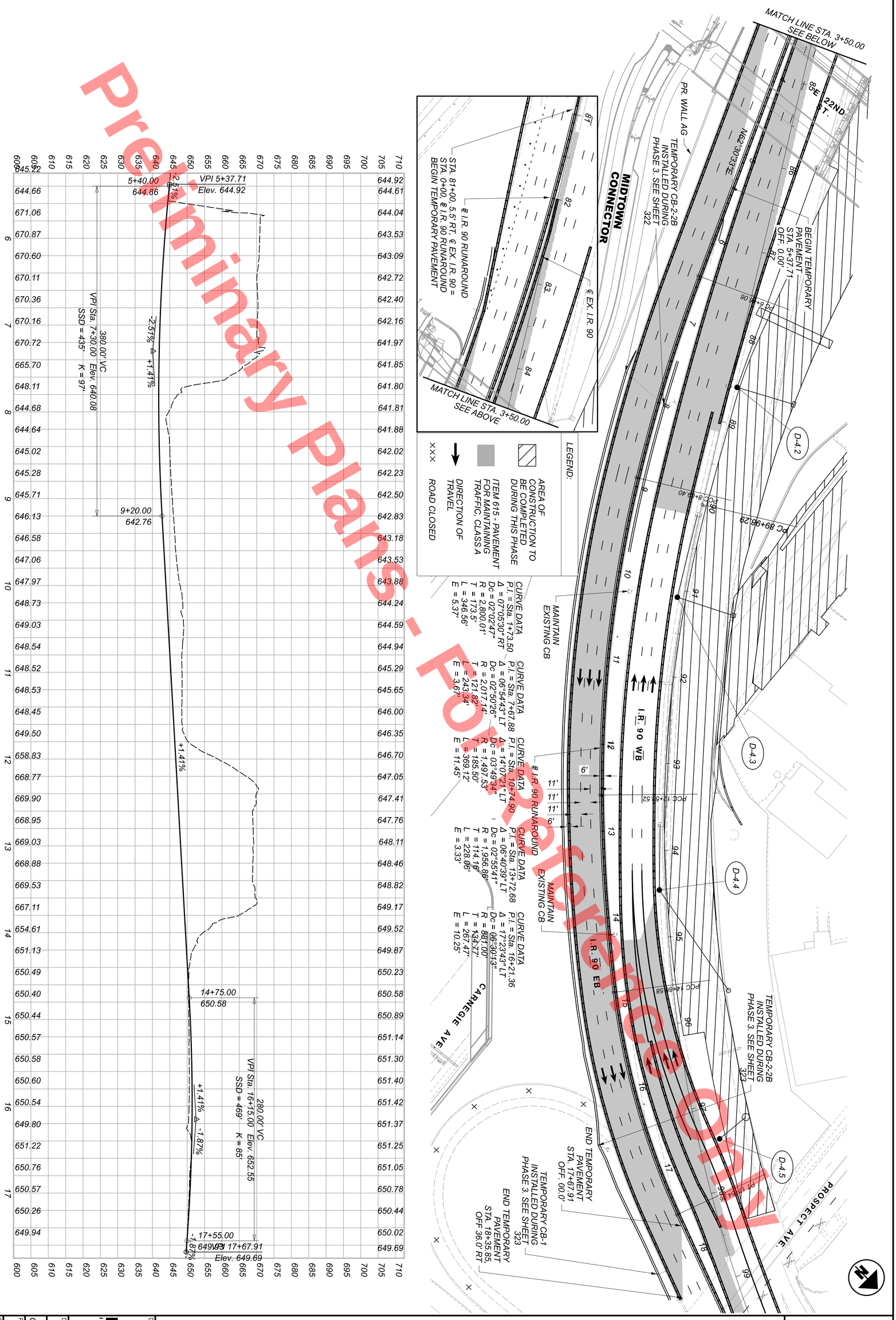

DESIGN AGENCY	Michael Baker INTERNATIONAL
DESIGNER	CRK
REVIEWER	GSH 05/22/24
PROJECT ID	82382
SHEET	202
TOTAL	2696

MAINTENANCE OF TRAFFIC - PHASE 4
PLAN & PROFILE - I.R. 90 EASTBOUND TEMPORARY RUNAROUND

HORIZONTAL SCALE IN FEET
0 25 50 100

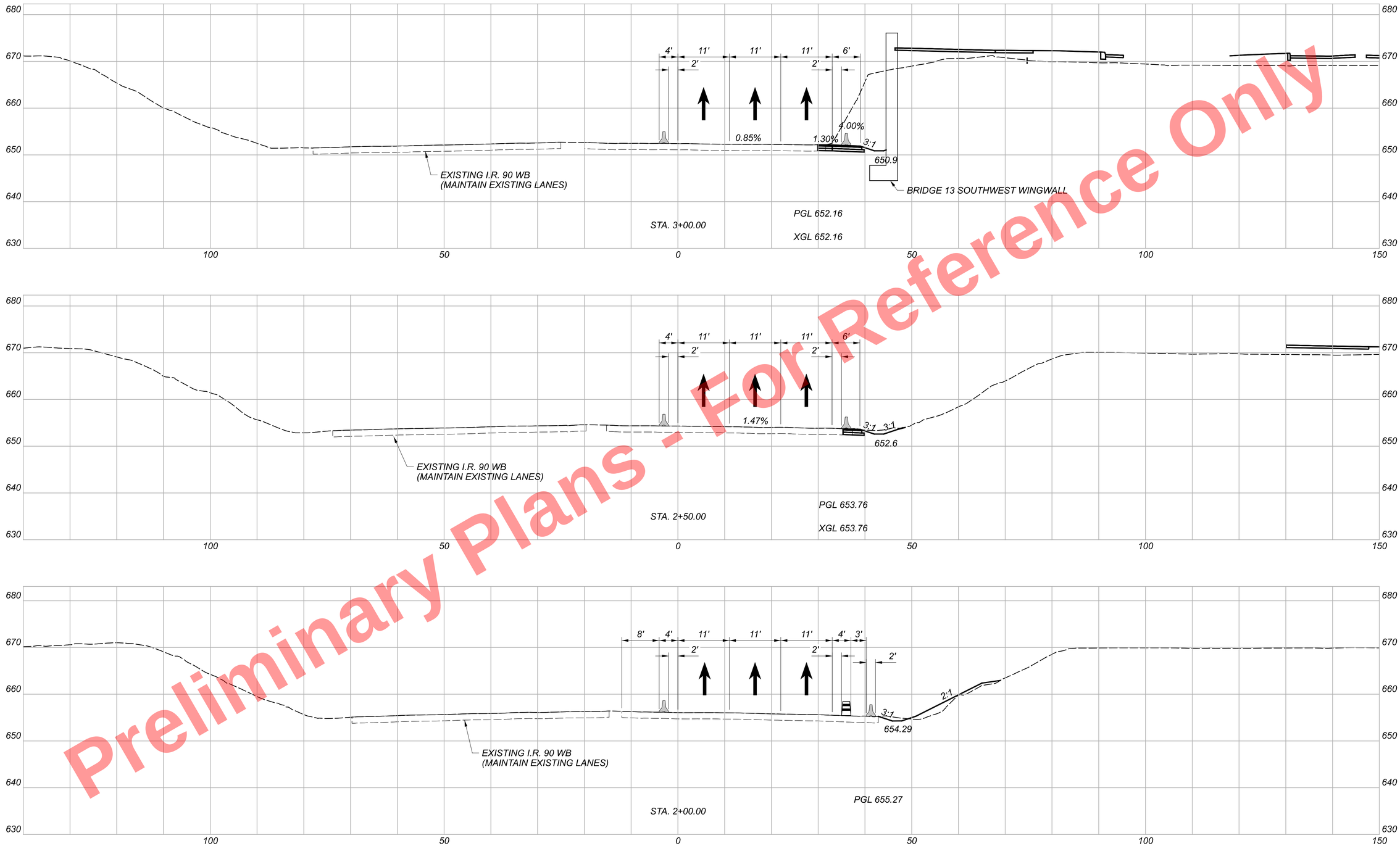

Preliminary Plans - For Reference Only

CUY-90-16.28 (CCG3A)

MODEL: CLP_Phase 4 - 2+00.00 [Sheet] PAPERSIZE: 34x22 (in.) DATE: 3/27/2025 TIME: 8:27:27 PM USER: Collin.Kwiatt
pw:\\mb-us-pw.bentley.com:mb-us-pw-03\Documents\Cleveland_OH\01_Projects\ODOT\District12\82382\400-Engineering\MOT\Sheets\82382_XM004C.dgn

MAINTENANCE OF TRAFFIC - PHASE 4
CROSS SECTIONS - I.R. 90 EASTBOUND TEMPORARY RUNAROUND

DESIGN AGENCY
Michael Baker INTERNATIONAL

DESIGNER MZG
REVIEWER LJS 05/22/24
PROJECT ID 82382
SHEET 203 TOTAL 2696

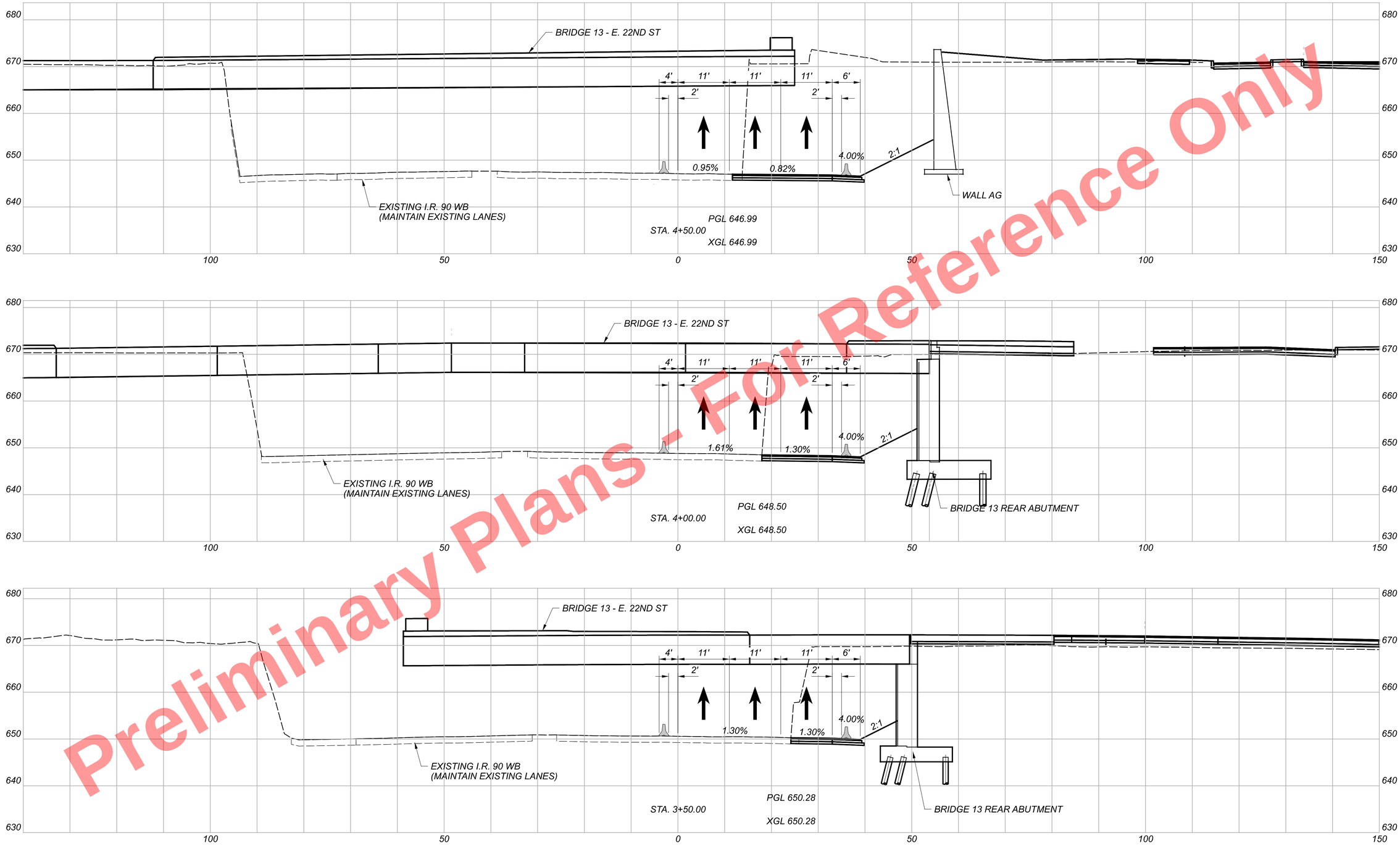

Preliminary Plans - For Reference Only

MAINTENANCE OF TRAFFIC - PHASE 4
CROSS SECTIONS - I.R. 90 EASTBOUND TEMPORARY RUNAROUND

CUY-90-16.28 (CCG3A)

MODEL: CLP_Phase 4 - 3+50.00 (Sheet) PAPERSIZE: 34x22 (in.) DATE: 3/27/2025 TIME: 8:27:35 PM USER: CollinKwiatkowski
pw:\\mb-us-pw.bentley.com:mb-us-pw-03\Documents\Cleveland_OH\01_Projects\ODOT\District2\82382\400-Engineering\MOT\Sheets\82382_XM004C.dgn

DESIGN AGENCY
Michael Baker INTERNATIONAL

DESIGNER MZG
REVIEWER LJS 05/22/24
PROJECT ID 82382
SHEET 204 TOTAL 2696

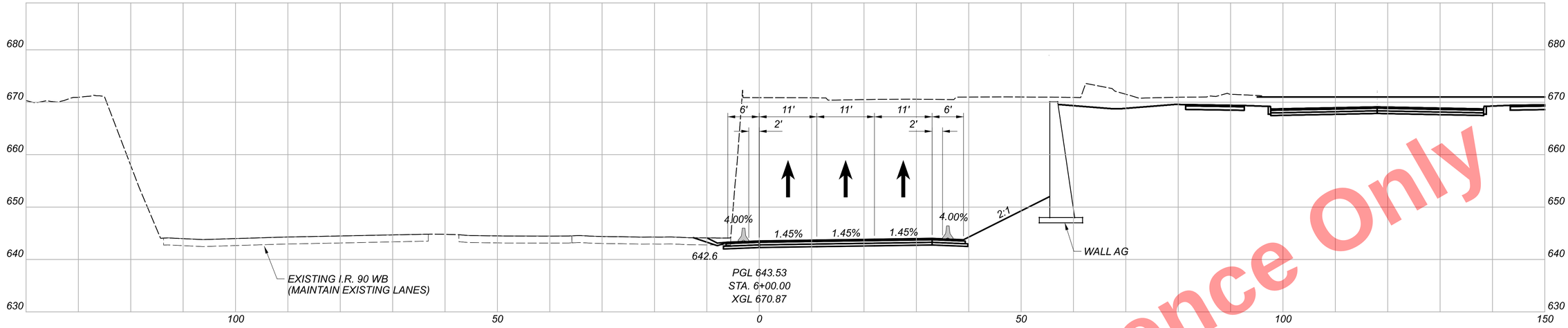

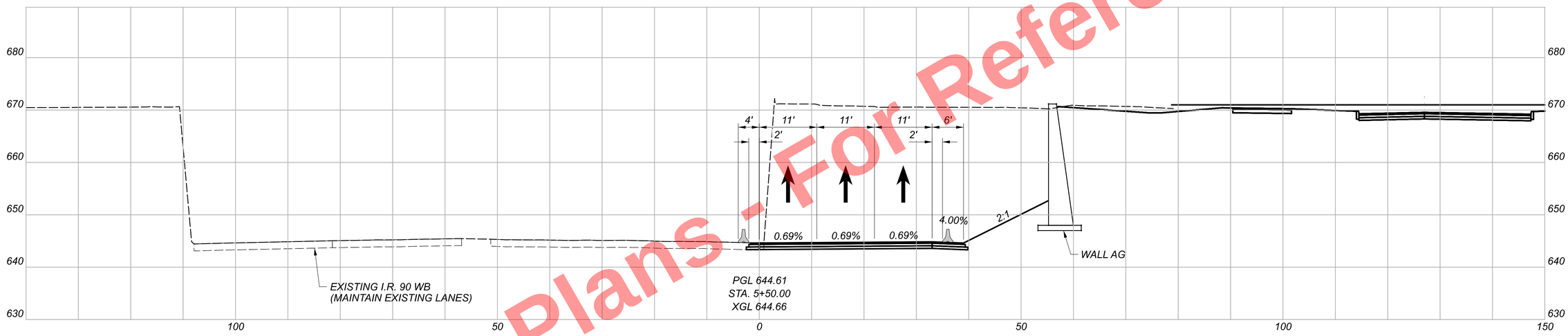

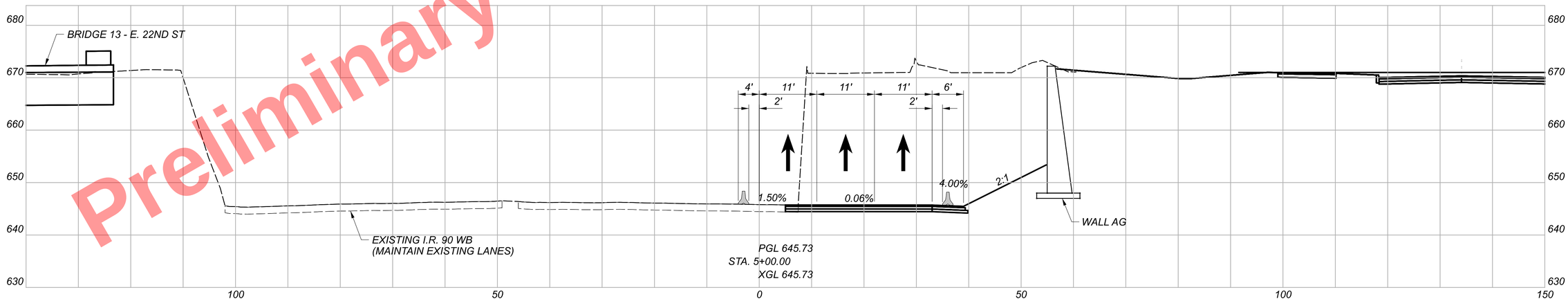

Preliminary Plans - For Reference Only

CUY-90-16.28 (CCG3A)

MAINTENANCE OF TRAFFIC - PHASE 4
CROSS SECTIONS - I.R. 90 EASTBOUND TEMPORARY RUNAROUND

DESIGN AGENCY
Michael Baker INTERNATIONAL

DESIGNER
MZG

REVIEWER
LJS 05/22/24

PROJECT ID
82382

SHEET 205 | TOTAL 2696

MODEL: CLP_Phase 4 - 5+00.00 [Sheet] PAPERSIZE: 34x22 (In.) DATE: 3/27/2025 TIME: 8:27:42 PM USER: Collin.Kwiatt
pw:\\mb-us-pw.bentley.com:mb-us-pw-03\Documents\Cleveland_OH\OL_Projects\ODOT\District 12\82382\400-Engineering\MOT\Sheets\82382_XM004C.dgn

Preliminary Plans - For Reference Only

MAINTENANCE OF TRAFFIC - PHASE 4
CROSS SECTIONS - I.R. 90 EASTBOUND TEMPORARY RUNAROUND

CUY-90-16.28 (CCG3A)

MODEL: CLP_Phase 4 - 6+50.00 (Sheet) PAPERSIZE: 34x22 (In.) DATE: 3/27/2025 TIME: 8:27:48 PM USER: Collin.Kwiatt
pw:\\mb-us-pw.bentley.com:mb-us-pw-03\Documents\Cleveland_OH\01_Projects\ODOT\District2\82382\400-Engineering\MOT\Sheets\82382_XM004C.dgn

DESIGN AGENCY
Michael Baker INTERNATIONAL

DESIGNER MZG
REVIEWER LJS 05/22/24
PROJECT ID 82382
SHEET 206 TOTAL 2696

Preliminary Plans - Not For Construction

For Reference Only

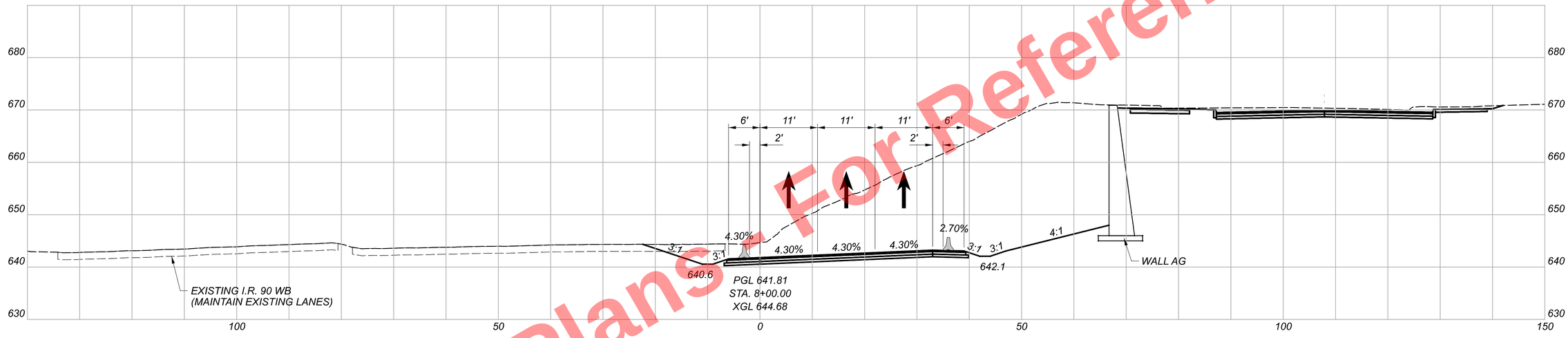

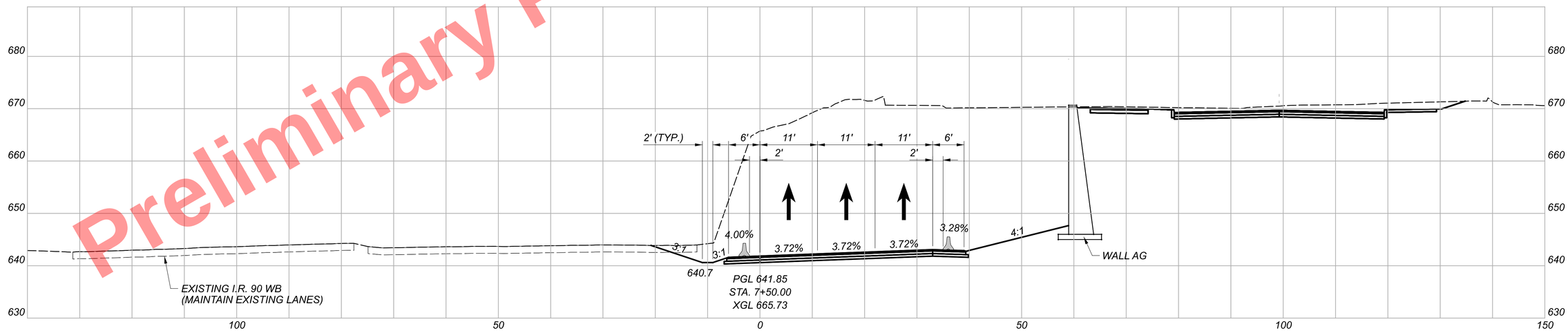

CUY-90-16.28 (CCG3A)

MODEL: CLP_Phase 4 - 7+50.00 (Sheet) PAPERSIZE: 34x22 (in.) DATE: 3/27/2025 TIME: 8:27:54 PM USER: CollinKwiatt
pw:\\mb-us-pw.bentley.com:mb-us-pw-03\Documents\Cleveland_OH\01_Projects\ODOT\District2\82382\400-Engineering\MOT\Sheets\82382_XM004C.dgn

MAINTENANCE OF TRAFFIC - PHASE 4
CROSS SECTIONS - I.R. 90 EASTBOUND TEMPORARY RUNAROUND

DESIGN AGENCY
Michael Baker INTERNATIONAL

DESIGNER
MZG

REVIEWER
LJS 05/22/24

PROJECT ID
82382

SHEET 207 | TOTAL 2696

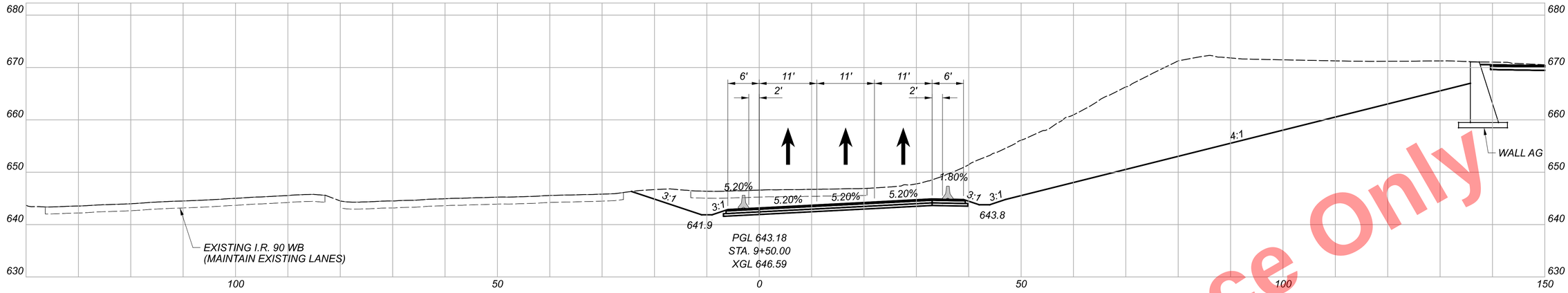

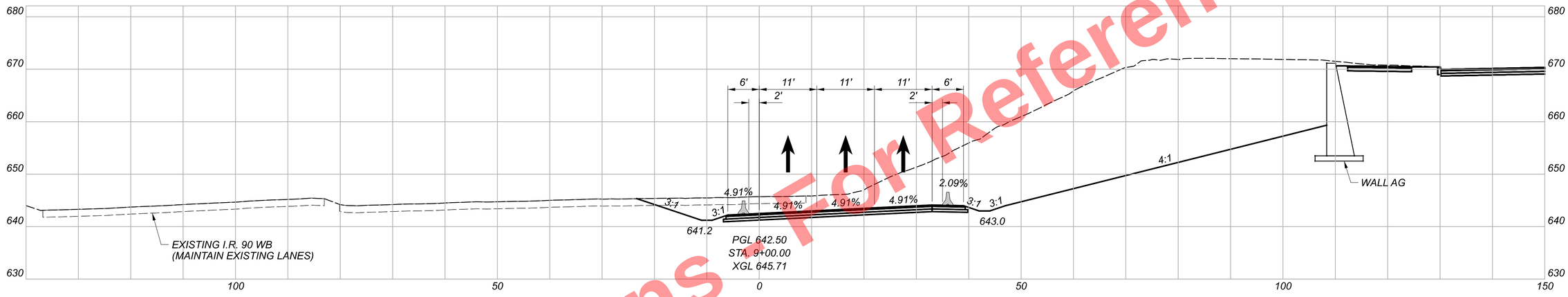

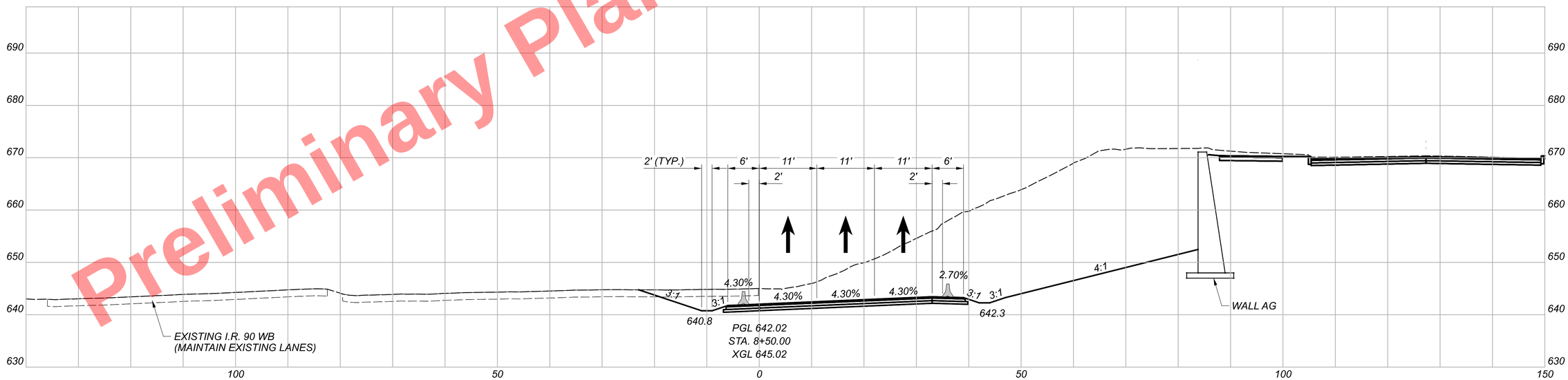

Preliminary Plans Not For Reference Only

MAINTENANCE OF TRAFFIC - PHASE 4
CROSS SECTIONS - I.R. 90 EASTBOUND TEMPORARY RUNAROUND

CUY-90-16.28 (CCG3A)

MODEL: CLP_Phase 4 - 8+50.00 [Sheet] PAPERSIZE: 34x22 (in.) DATE: 3/27/2025 TIME: 8:27:59 PM USER: CollinLkwiat
pw:\\mb-us-pw.bentley.com:mb-us-pw-03\Documents\Cleveland_OH\Oil_Projects\000T\District2\82382\400-Engineering\MOT\Sheets\82382_XM004C.dgn

DESIGN AGENCY
Michael Baker INTERNATIONAL

DESIGNER MZG
REVIEWER LJS 05/22/24
PROJECT ID 82382
SHEET 208 TOTAL 2696

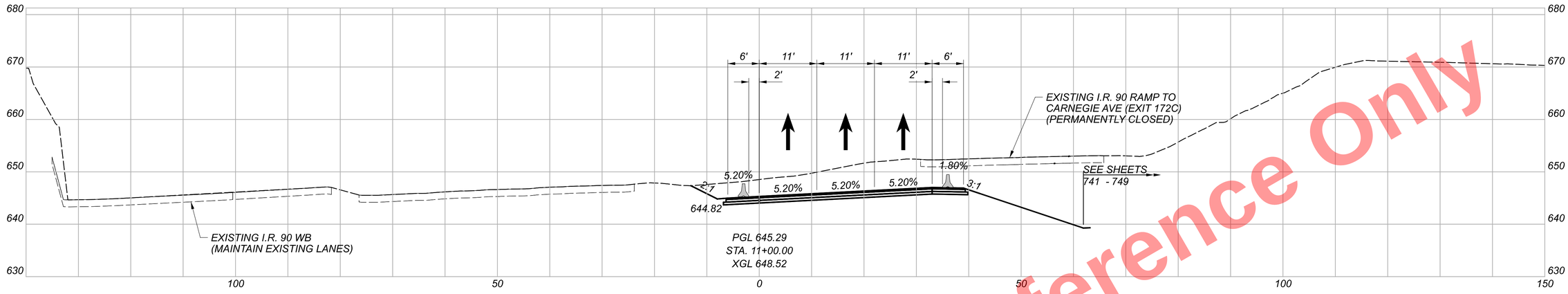

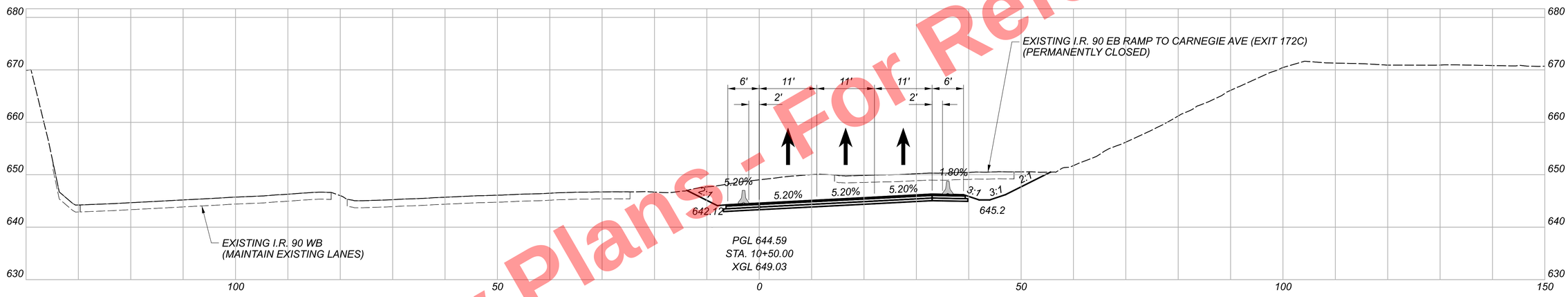

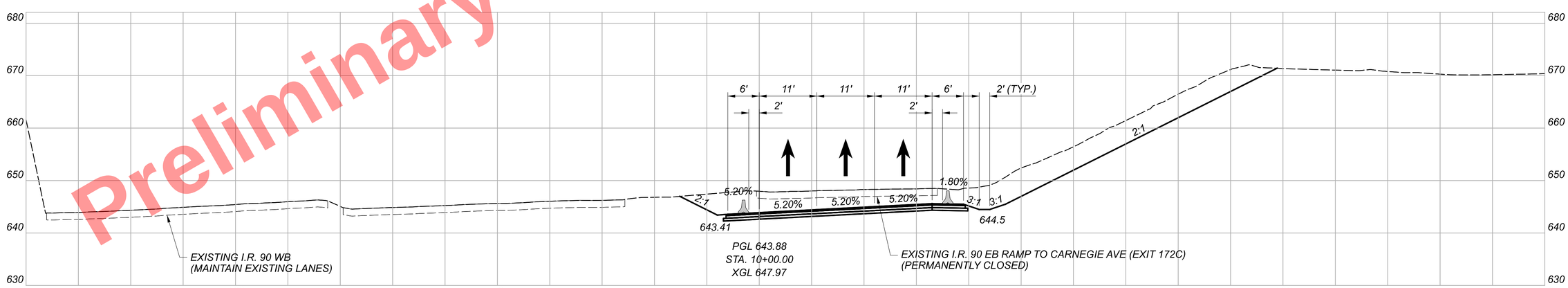

Preliminary Plans - For Reference Only

MAINTENANCE OF TRAFFIC - PHASE 4
CROSS SECTIONS - I.R. 90 EASTBOUND TEMPORARY RUNAROUND

CUY-90-16.28 (CCG3A)

DESIGN AGENCY
Michael Baker INTERNATIONAL

DESIGNER MZG
REVIEWER LJS 05/22/24
PROJECT ID 82382
SHEET 209 TOTAL 2696

MODEL: CLP_Phase 4 - 10+00.00 [Sheet] PAPERSIZE: 34x22 (in.) DATE: 3/27/2025 TIME: 8:28:06 PM USER: Collin.Kwiat
pw:\\mb-us-pw.bentley.com:mb-us-pw-03\Documents\Cleveland_OHIO\Projects\DOOT\District2\82382\400-Engineering\MOT\Sheets\82382_XM004C.dgn

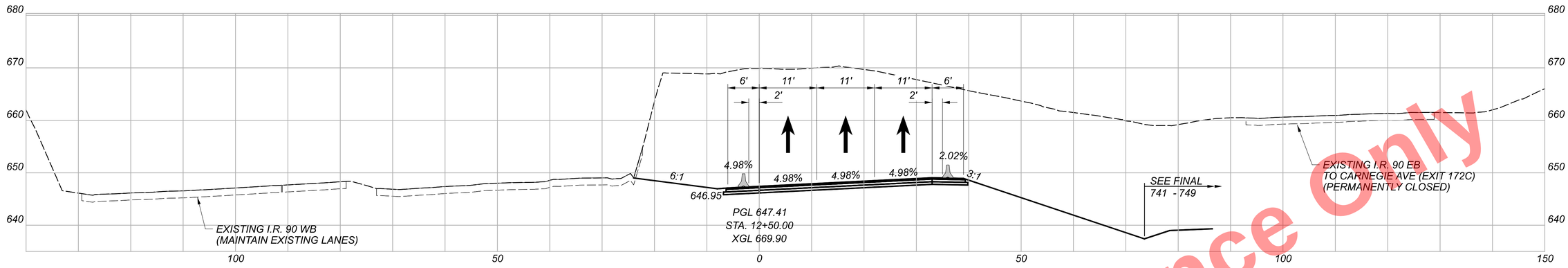

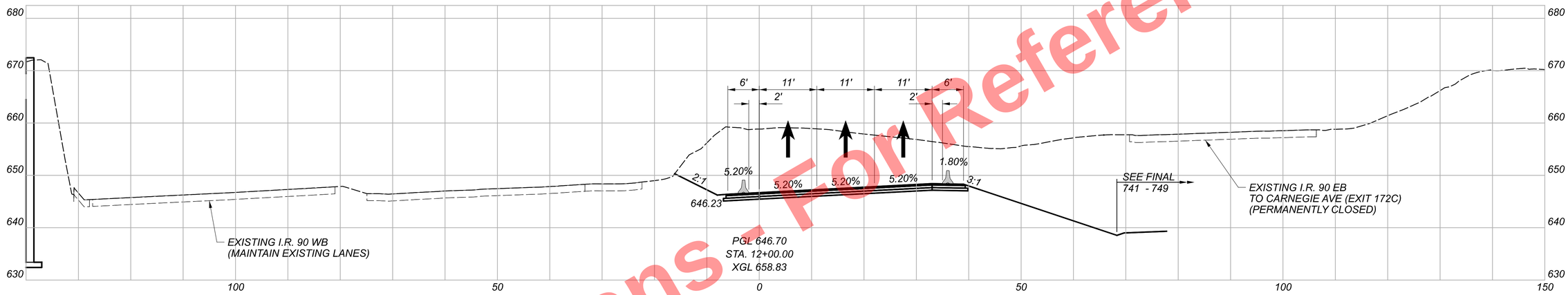

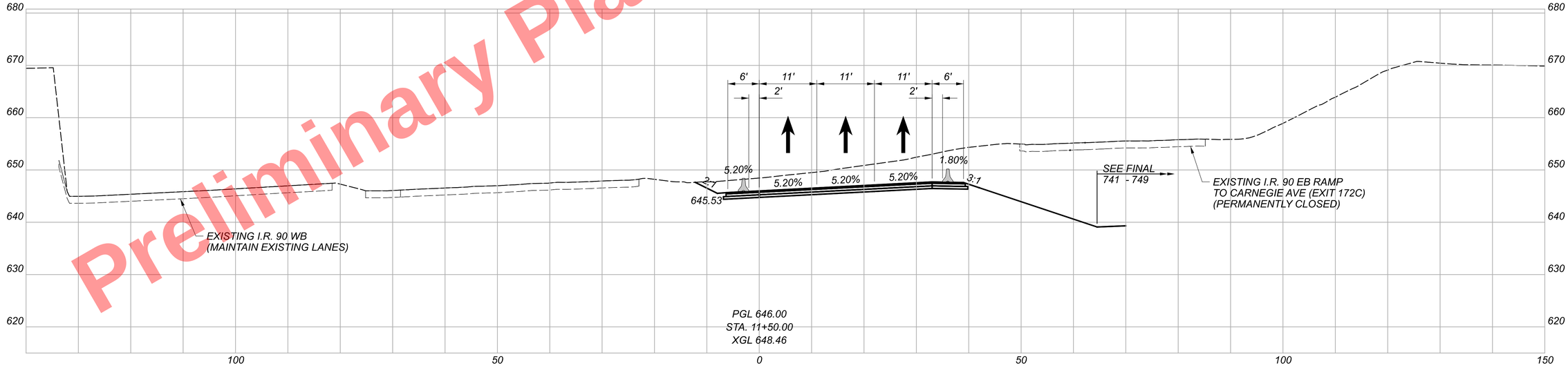

Preliminary Plans - For Reference Only

MAINTENANCE OF TRAFFIC - PHASE 4
CROSS SECTIONS - I.R. 90 EASTBOUND TEMPORARY RUNAROUND

CUY-90-16.28 (CCG3A)

MODEL: CLP_Phase 4 - I1+50.00 [Sheet] PAPERSIZE: 34x22 (in) DATE: 3/27/2025 TIME: 8:28:12 PM USER: Collin.Kwiatt
pw:\\mb-us-pw.bentley.com:mb-us-pw-03\Documents\Cleveland_OH\01_Projects\ODOT\District 12\82382\400-Engineering\M0T\Sheets\82382_XM004C.dgn

DESIGN AGENCY
Michael Baker INTERNATIONAL

DESIGNER MZG
REVIEWER LJS 05/22/24
PROJECT ID 82382
SHEET 210 TOTAL 2696

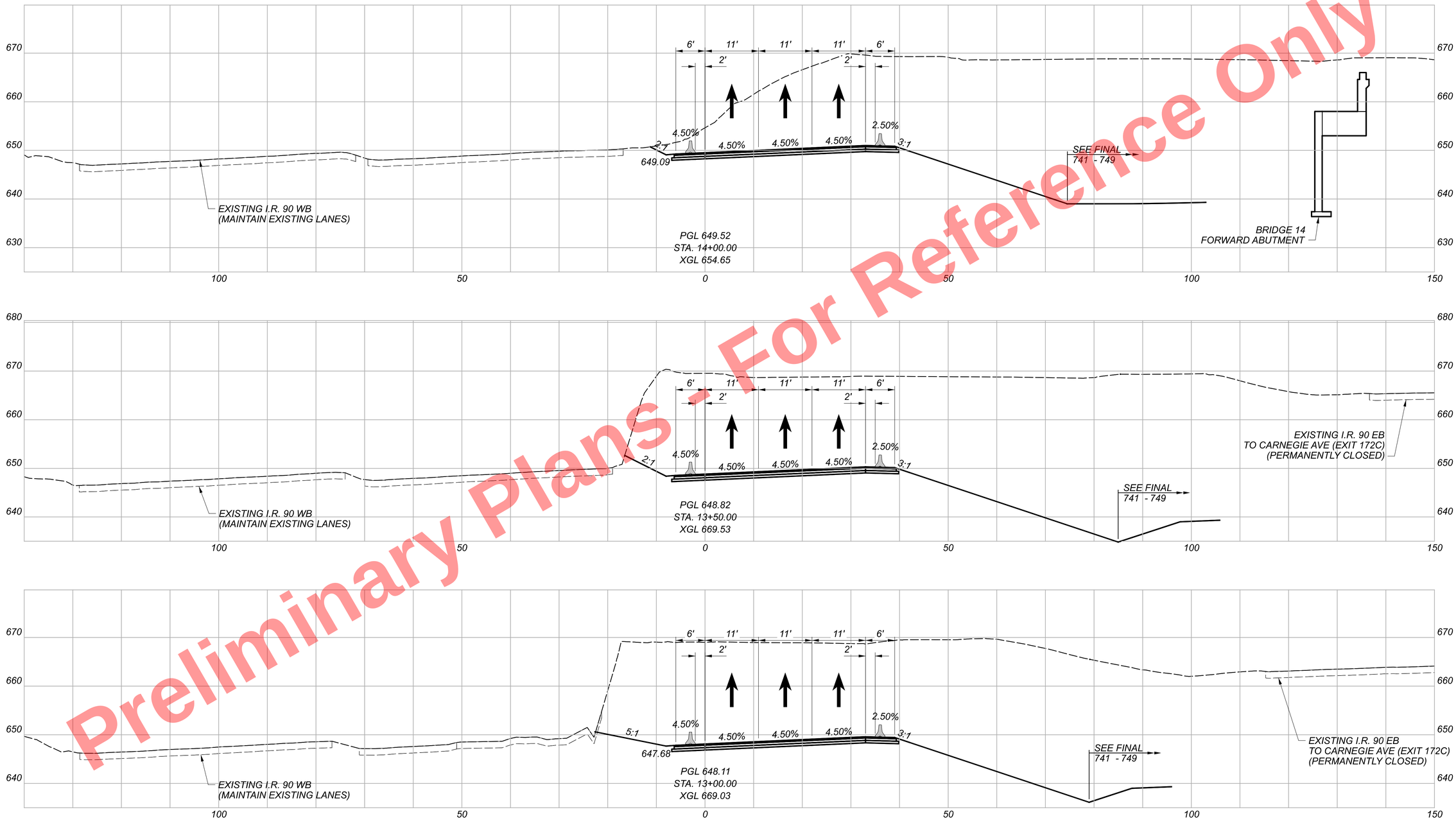

Preliminary Plans - For Reference Only

CUY-90-16.28 (CCG3A)

MODEL: CLP_Phase 4 - 13+00.00 [Sheet] PAPERSIZE: 34x22 (in.) DATE: 3/27/2025 TIME: 8:28:19 PM USER: Collin.Kwiatt
pw:\\mb-us-pw.bentley.com:mb-us-pw-03\Documents\Cleveland_OH\01_Projects\ODOT\District2\82382\400-Engineering\MOT\Sheets\82382_XM004C.dgn

MAINTENANCE OF TRAFFIC - PHASE 4
CROSS SECTIONS - I.R. 90 EASTBOUND TEMPORARY RUNAROUND

DESIGN AGENCY
Michael Baker INTERNATIONAL

DESIGNER
MZG

REVIEWER
LJS 05/22/24

PROJECT ID
82382

SHEET 211 | TOTAL 2696

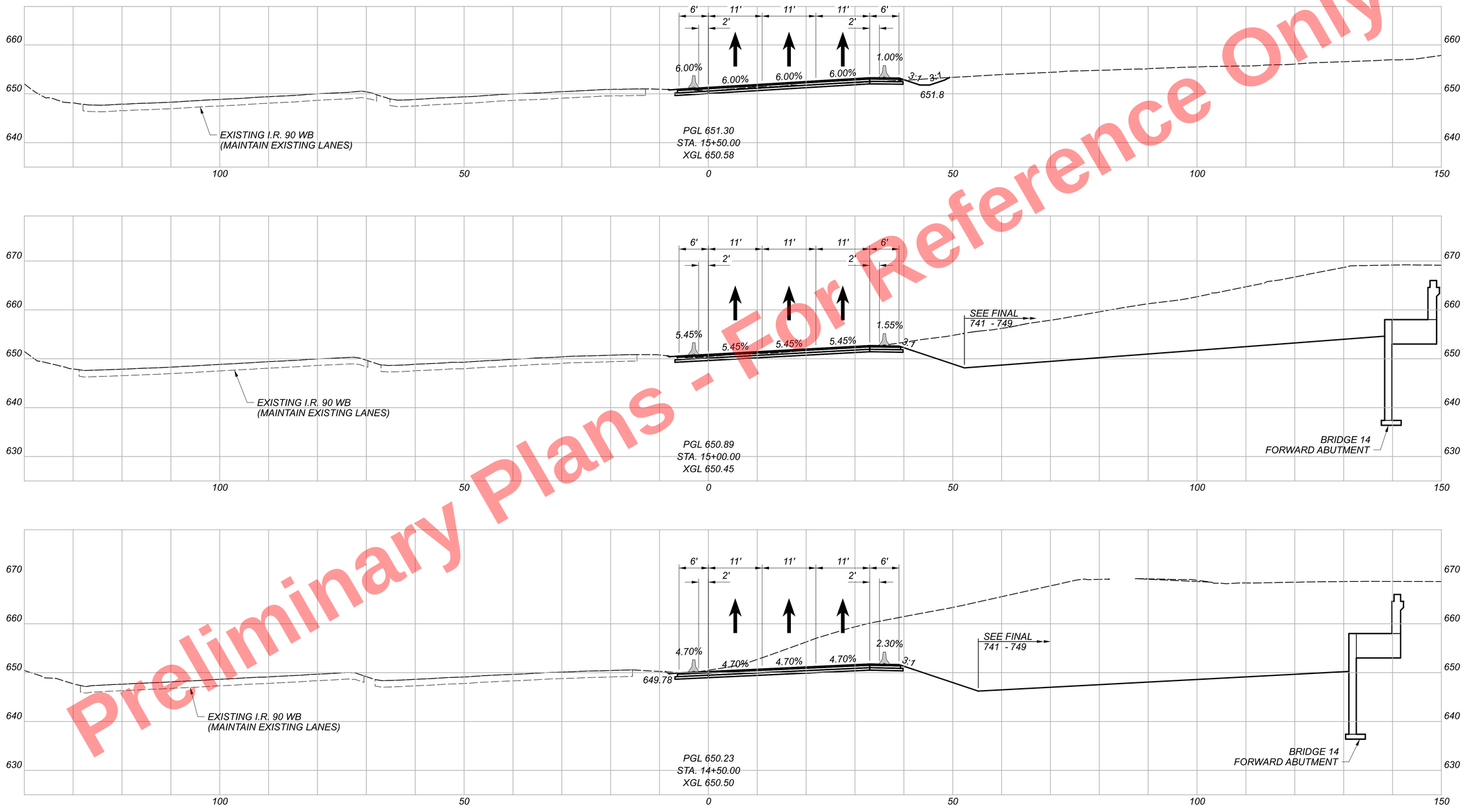

Preliminary Plans - For Reference Only

MAINTENANCE OF TRAFFIC - PHASE 4

CROSS SECTIONS - I.R. 90 EASTBOUND TEMPORARY RUNAROUND

CUY-90-16.28 (CCG3A)

MODEL: CLP_Phase 4 - 14+50.00 [Sheet] PAPERSIZE: 34x22 (In.) DATE: 3/27/2025 TIME: 8:28:27 PM USER: Collin.Kwiatt
pw:\\mb-us-pw.bentley.com:mb-us-pw-03\Documents\Cleveland.OH\OI_Projects\ODOT\District2\82382\400-Engineering\MOT\Sheets\82382_XM004C.dgn

DESIGN AGENCY

Michael Baker INTERNATIONAL

DESIGNER MZG

REVIEWER LJS 05/22/24

PROJECT ID 82382

SHEET 212 TOTAL 2696

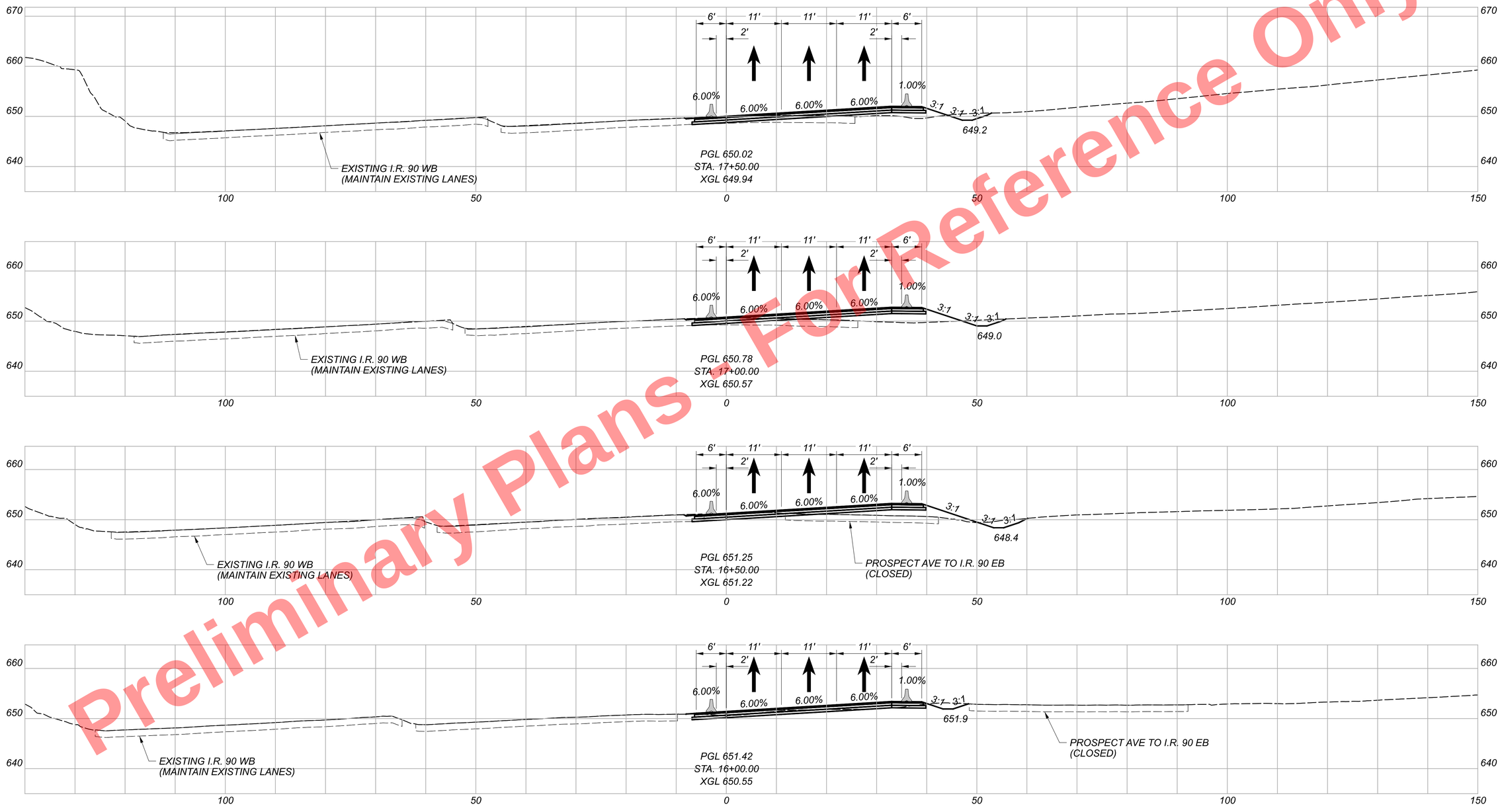

Preliminary Plans - For Reference Only

MAINTENANCE OF TRAFFIC - PHASE 4
CROSS SECTIONS - I.R. 90 EASTBOUND TEMPORARY RUNAROUND

CUY-90-16.28 (CCG3A)

MODEL: CLP_Phase 4 - 16+00.00 [Sheet] PAPERSIZE: 34x22 (in.) DATE: 3/27/2025 TIME: 8:28:33 PM USER: Collin.Kwiatt
pw:\\mb-us-pw.bentley.com:mb-us-pw-03\Documents\Cleveland_OH\OL_Projects\ODOT\District#12\82382\400-Engineering\MOT\Sheets\82382_XM004C.dgn

DESIGN AGENCY
Michael Baker INTERNATIONAL

DESIGNER MZG
REVIEWER LJS 05/22/24
PROJECT ID 82382
SHEET 213 TOTAL 2696

Preliminary Plans - For Reference Only

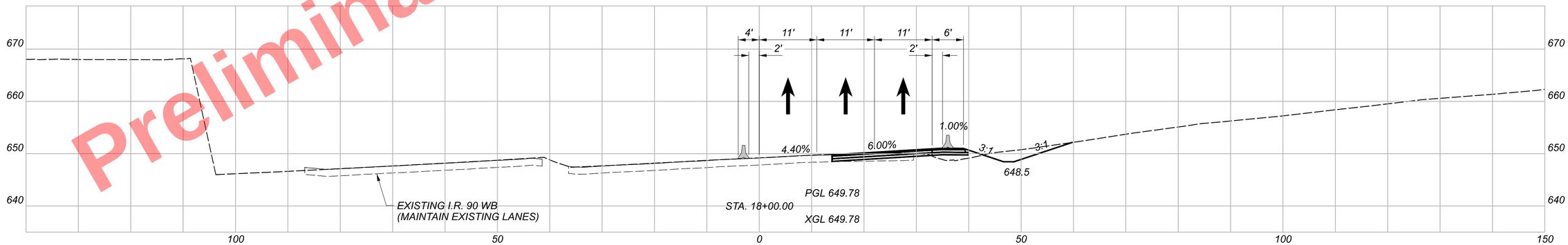

MAINTENANCE OF TRAFFIC - PHASE 4
CROSS SECTIONS - I.R. 90 EASTBOUND TEMPORARY RUNAROUND

DESIGN AGENCY
Michael Baker INTERNATIONAL

DESIGNER MZG
REVIEWER LJS 05/22/24
PROJECT ID 82382
SHEET 214 TOTAL 2696

CUY-90-16.28 (CCG3A)

MODEL: CLP_Phase 4 - I8+00.00 [Sheet] PAPERSIZE: 34x22 (In.) DATE: 3/27/2025 TIME: 8:28:36 PM USER: Collin.Kwiatt
pw:\\mb-us-pw.bentley.com:mb-us-pw-03\Documents\Cleveland_OH\OI_Projects\ODOT\District2\82382\400-Engineering\MOT\Sheets\82382_XM004C.dgn

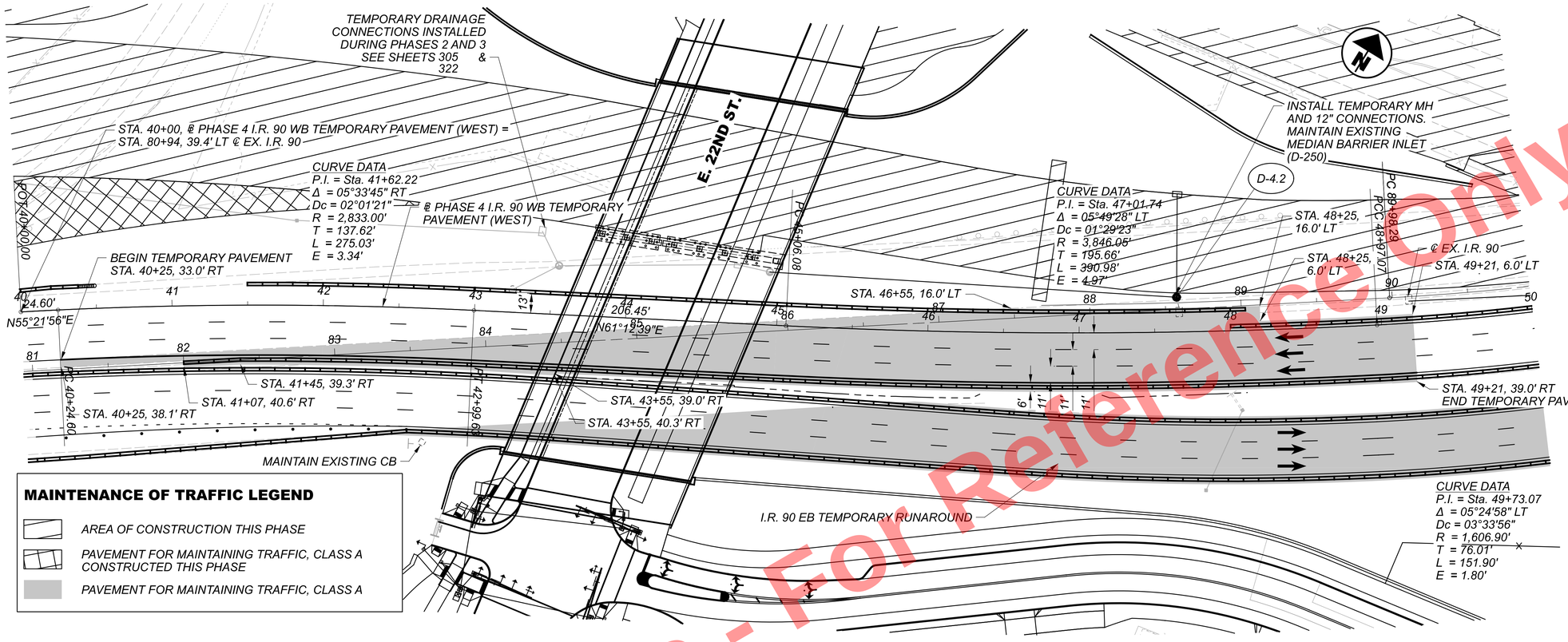

Preliminary Plans - For Reference Only

HORIZONTAL SCALE IN FEET
0 20 40 80

MAINTENANCE OF TRAFFIC - PHASE 4
PLAN & PROFILE - I.R. 90 WB TEMPORARY WEDGING (WEST)

CUY-90-16.28 (CCG3A)

MODEL: CLP_1 - Plan 1(Sheet) PAPERSIZE: 34x22 (in.) DATE: 3/27/2025 TIME: 8:28:49 PM USER: Collin.Kwiat
pw:\\mb-us-pw.bentley.com:mb-us-pw-03\Documents\Cleveland.OHIO_Projects\ODOT\District2\82382\400-Engineering\MOT\Sheets\82382_MP402.dgn

DESIGN AGENCY	Michael Baker INTERNATIONAL
DESIGNER	CRK
REVIEWER	GSH 05/22/24
PROJECT ID	82382
SHEET	215
TOTAL	2696

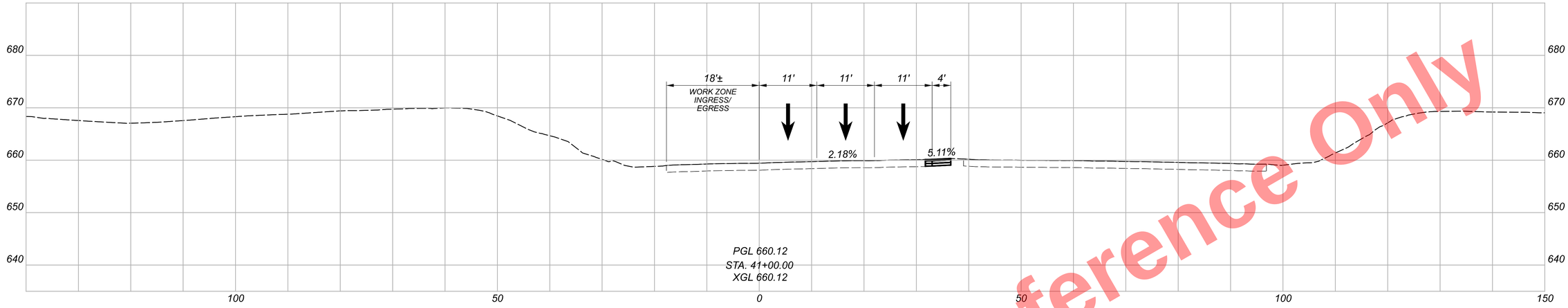

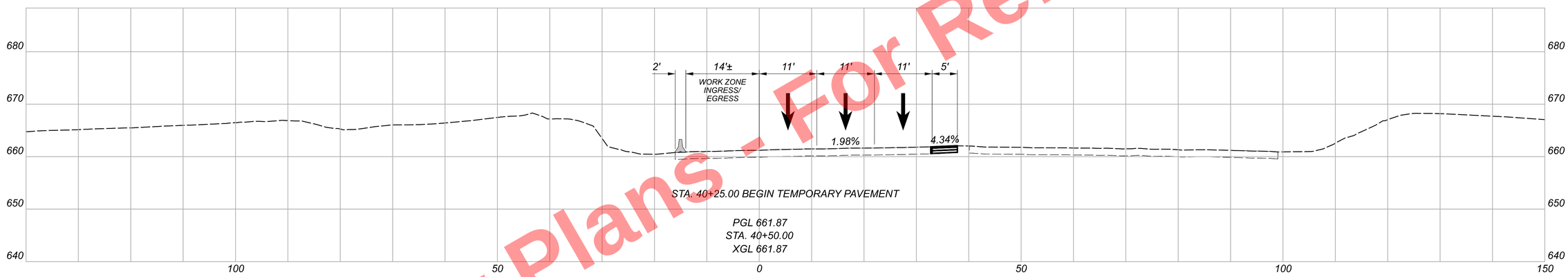

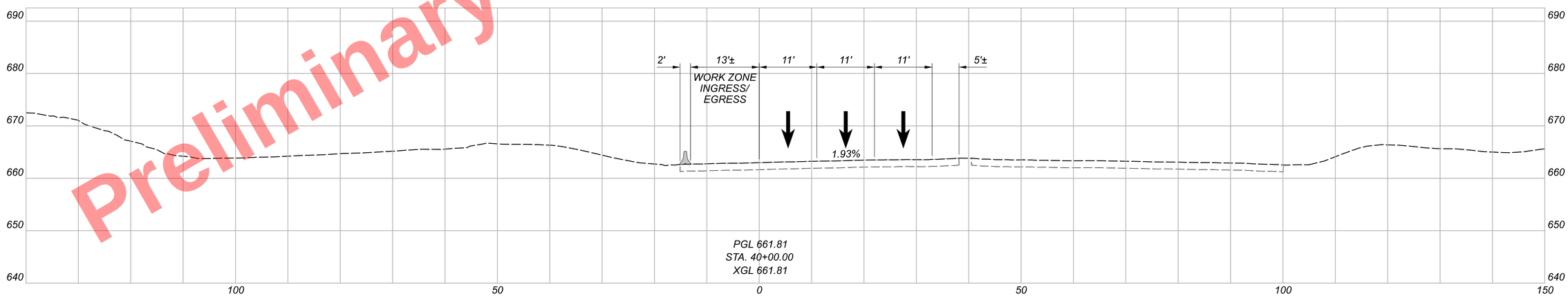

Preliminary Plans - For Reference Only

CUY-90-16.28 (CCG3A)

MODEL: Sheet-01 PAPERSIZE: 34x22 (in) DATE: 3/27/2025 TIME: 8:29:00 PM USER: Collin.Kwiatt
pw:\\mb-us-pw.bentley.com:mb-us-pw-03\Documents\Cleveland_OH\01_Projects\00DOT\District#12\82382\400-Engineering\MOT\Sheets\82382_XM004BW.dgn

MAINTENANCE OF TRAFFIC - PHASE 4
CROSS SECTIONS - I.R. 90 WB TEMPORARY WEDGING (WEST)

DESIGN AGENCY
Michael Baker INTERNATIONAL

DESIGNER
MZG

REVIEWER
LJS 05/22/24

PROJECT ID
82382

SHEET 216 | TOTAL 2696

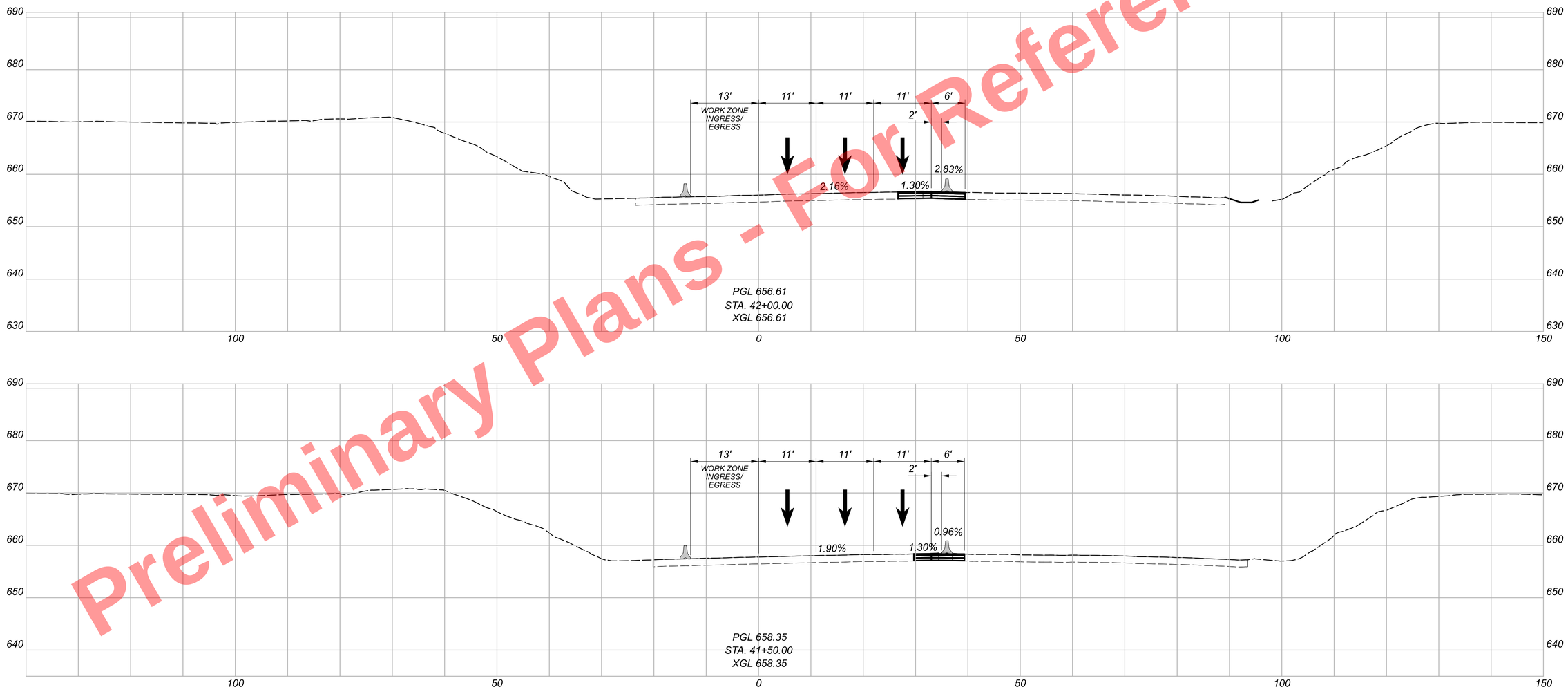

Preliminary Plans - For Reference Only

MAINTENANCE OF TRAFFIC - PHASE 4
CROSS SECTIONS - I.R. 90 WB TEMPORARY WEDGING (WEST)

DESIGN AGENCY
Michael Baker INTERNATIONAL

DESIGNER MZG
REVIEWER LJS 05/22/24
PROJECT ID 82382
SHEET 217 TOTAL 2696

CUY-90-16.28 (CCG3A)

MODEL: Sheet-02 PAPERSIZE: 34x22 (in.) DATE: 3/27/2025 TIME: 8:29:04 PM USER: Collin.Kwiatt
pw:\\mb-us-pw.bentley.com:mb-us-pw-03\Documents\Cleveland_OH\01_Projects\ODOT\District2\82382\400-Engineering\MOT\Sheets\82382_XM004BW.dgn

Preliminary Plans - For Reference Only

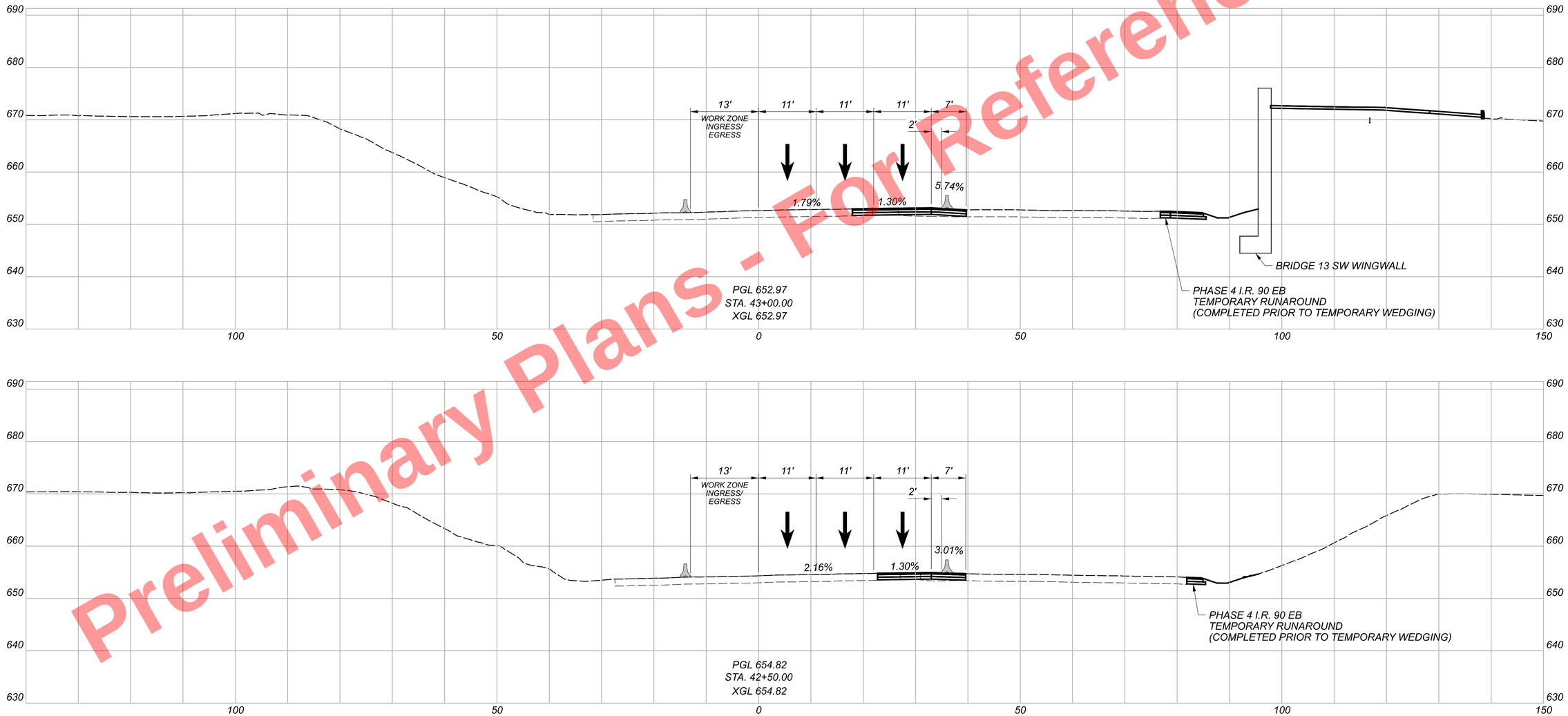

MAINTENANCE OF TRAFFIC - PHASE 4
CROSS SECTIONS - I.R. 90 WB TEMPORARY WEDGING (WEST)

CUY-90-16.28 (CCG3A)

MODEL: Sheet-03 PAPERSIZE: 34x22 (in.) DATE: 3/27/2025 TIME: 8:29:08 PM USER: CollinKwiatt
pw:\\mb-us-pw.bentley.com:mb-us-pw-03\Documents\Cleveland_OH\01_Projects\ODOT\District2\82382\400-Engineering\MOT\Sheets\82382_XM004BW.dgn

DESIGN AGENCY
Michael Baker INTERNATIONAL

DESIGNER
MZG

REVIEWER
LJS 05/22/24

PROJECT ID
82382

SHEET 218 | TOTAL 2696

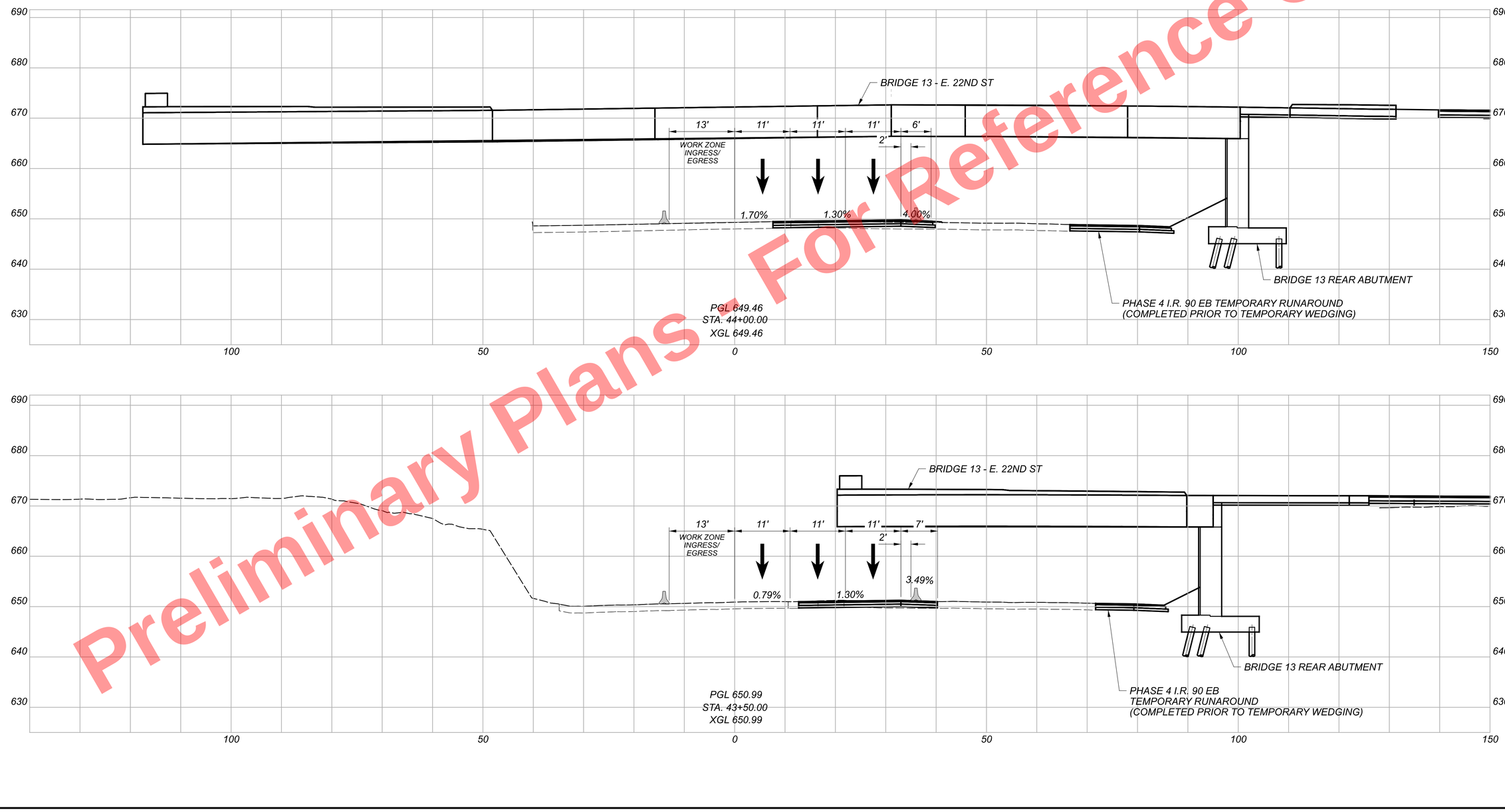

Preliminary Plans - For Reference Only

CUY-90-16.28 (CCG3A)

MODEL: Sheet-04 PAPERSIZE: 34x22 (in.) DATE: 3/27/2025 TIME: 8:29:12 PM USER: Collin.Kwiat
pw:\\mb-us-pw.bentley.com:mb-us-pw-03\Documents\Cleveland_OH\OH_Projects\ODOT\Districts\12\82382\400-Engineering\MOT\Sheets\82382_XM004BW.dgn

MAINTENANCE OF TRAFFIC - PHASE 4
CROSS SECTIONS - I.R. 90 WB TEMPORARY WEDGING (WEST)

DESIGN AGENCY
Michael Baker INTERNATIONAL

DESIGNER MZG
REVIEWER LJS 05/22/24
PROJECT ID 82382
SHEET 219 TOTAL 2696

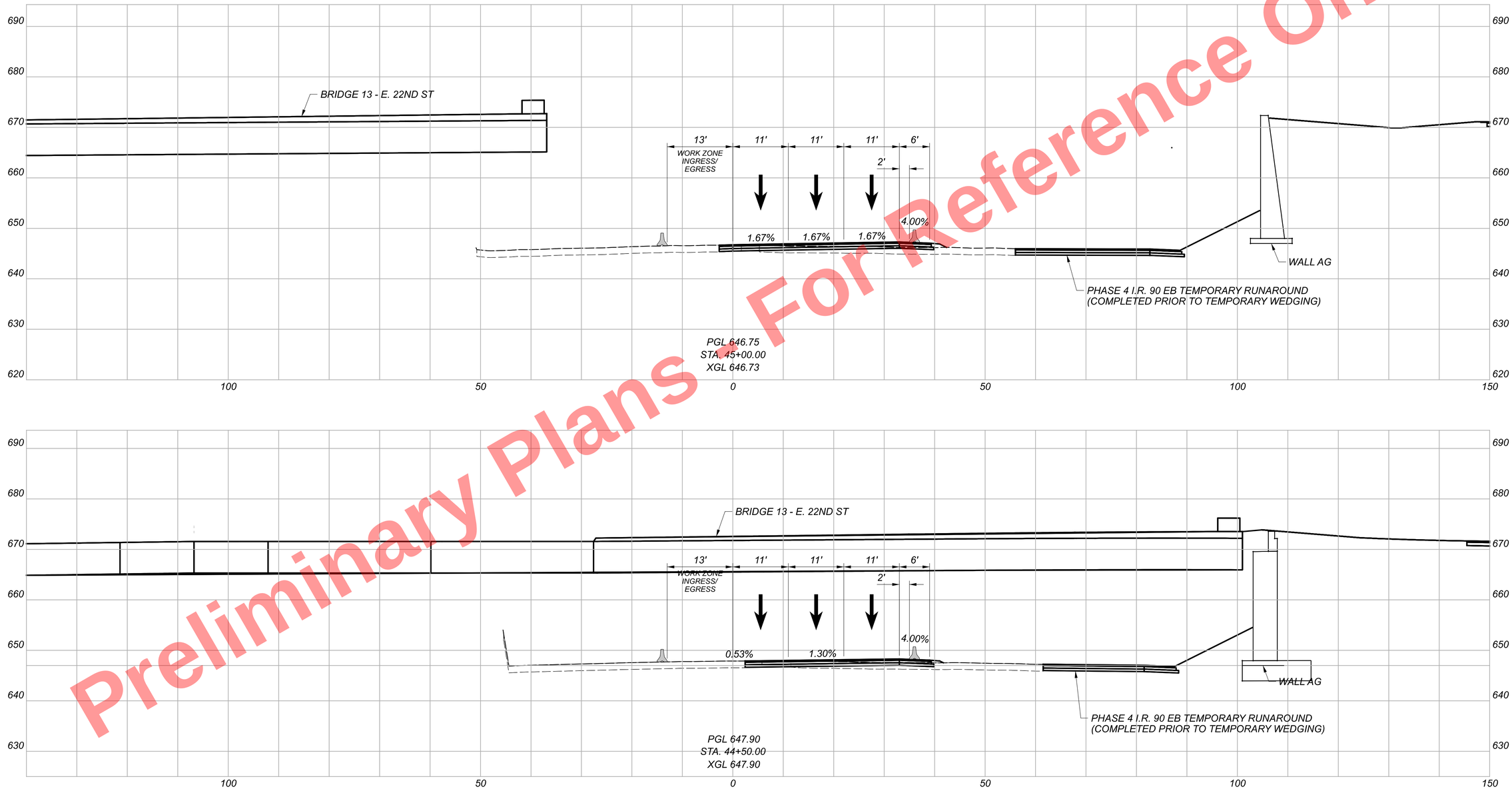

Preliminary Plans - Not For Reference Only

MAINTENANCE OF TRAFFIC - PHASE 4
CROSS SECTIONS - I.R. 90 WB TEMPORARY WEDGING (WEST)

CUY-90-16.28 (CCG3A)

MODEL: Sheet-05 PAPERSIZE: 34x22 (In.) DATE: 3/27/2025 TIME: 8:29:16 PM USER: Collin.Kwiatt
pw:\\mb-us-pw.benhley.commb-us-pw-03\Documents\Cleveland_OH\01_Projects\00DOT\District#12\82382\400-Engineering\M0T\Sheets\82382_XM004BW.dgn

DESIGN AGENCY
Michael Baker INTERNATIONAL

DESIGNER	MZG
REVIEWER	LJS 05/22/24
PROJECT ID	82382
SHEET	220
TOTAL	2696

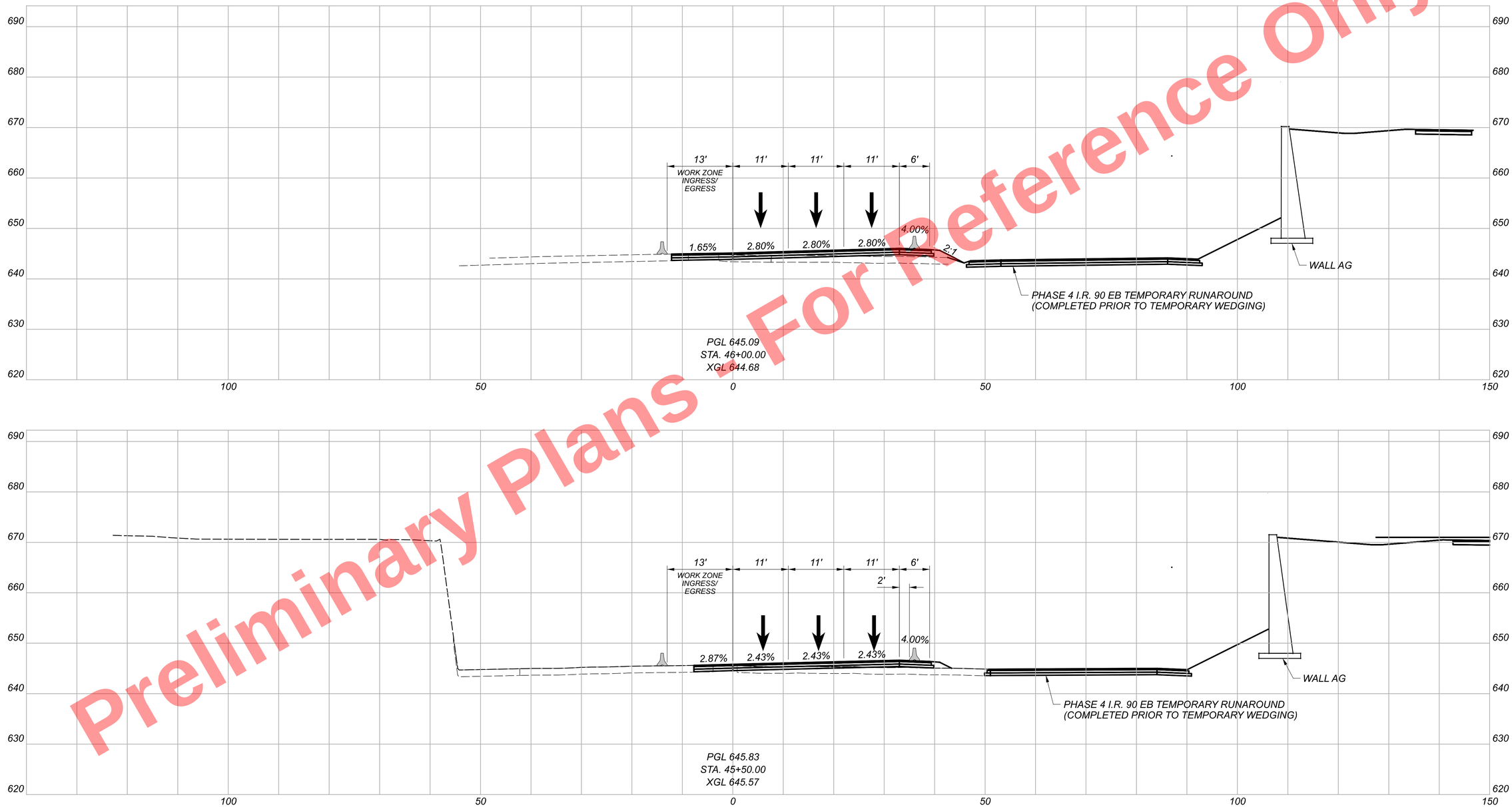

Preliminary Plans - Not For Construction
For Reference Only

CUY-90-16.28 (CCG3A)

MODEL: Sheet-06 PAPERSIZE: 34x22 (ln.) DATE: 3/27/2025 TIME: 8:29:21 PM USER: CollinKwiatt
pw:\\mb-us-pw.bentley.com:mb-us-pw-03\Documents\Cleveland_OH\OiL_Projects\ODOT\District#12\82382\400-Engineering\MOT\Sheets\82382_XM004BW.dgn

MAINTENANCE OF TRAFFIC - PHASE 4
CROSS SECTIONS - I.R. 90 WB TEMPORARY WEDGING (WEST)

DESIGN AGENCY
Michael Baker INTERNATIONAL

DESIGNER	MZG
REVIEWER	LJS 05/22/24
PROJECT ID	82382
SHEET	221
TOTAL	2696

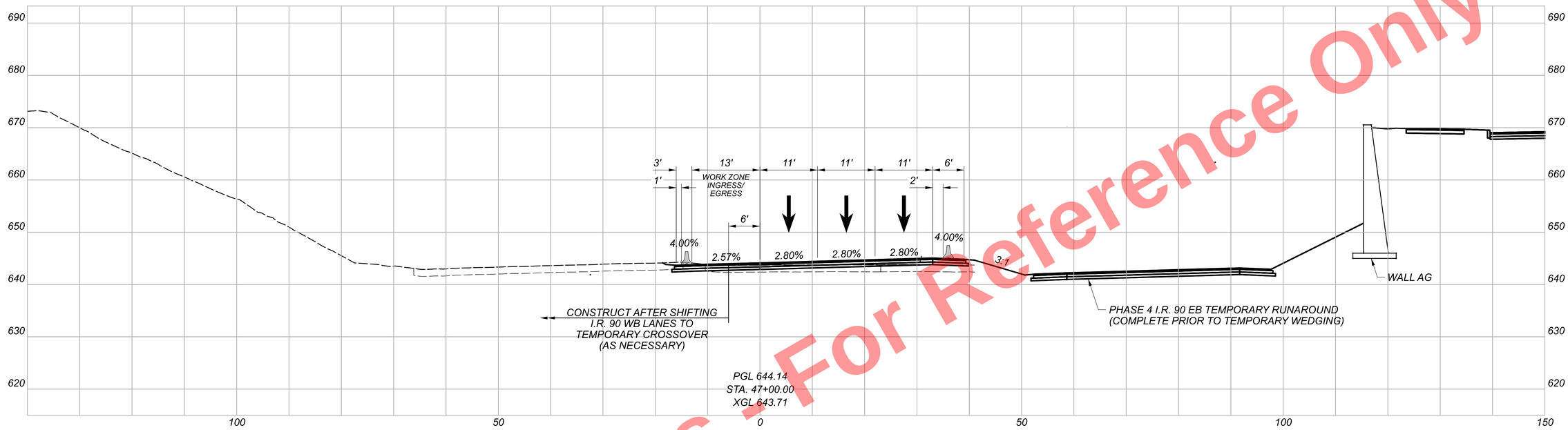

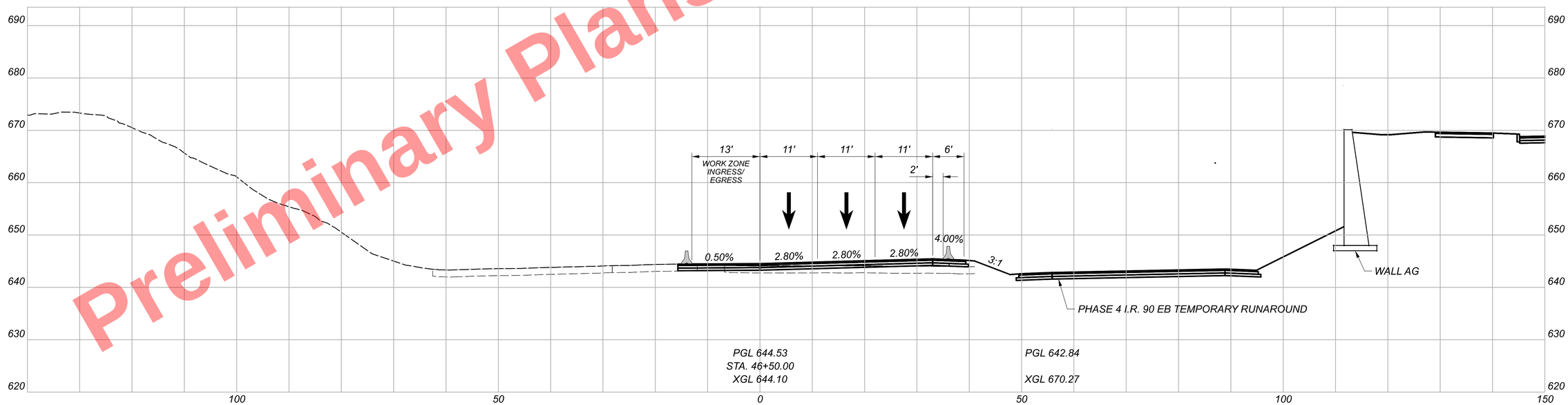

Preliminary Plans - For Reference Only

MAINTENANCE OF TRAFFIC - PHASE 4
CROSS SECTIONS - I.R. 90 WB TEMPORARY WEDGING (WEST)

DESIGN AGENCY
Michael Baker INTERNATIONAL

DESIGNER MZG
REVIEWER LJS 05/22/24
PROJECT ID 82382
SHEET 222 TOTAL 2696

CUY-90-16.28 (CCG3A)

MODEL: Sheet-07 PAPERSIZE: 34x22 (In.) DATE: 3/27/2025 TIME: 8:29:32 PM USER: Colin.Kwiatt
pw:\\mb-us-pw.bentley.com:mb-us-pw-03\Documents\Cleveland_OH\OI_Projects\ODOT\District#12\82382\400-Engineering\MOT\Sheets\82382_XM004BW.dgn

Preliminary Plans - For Reference Only

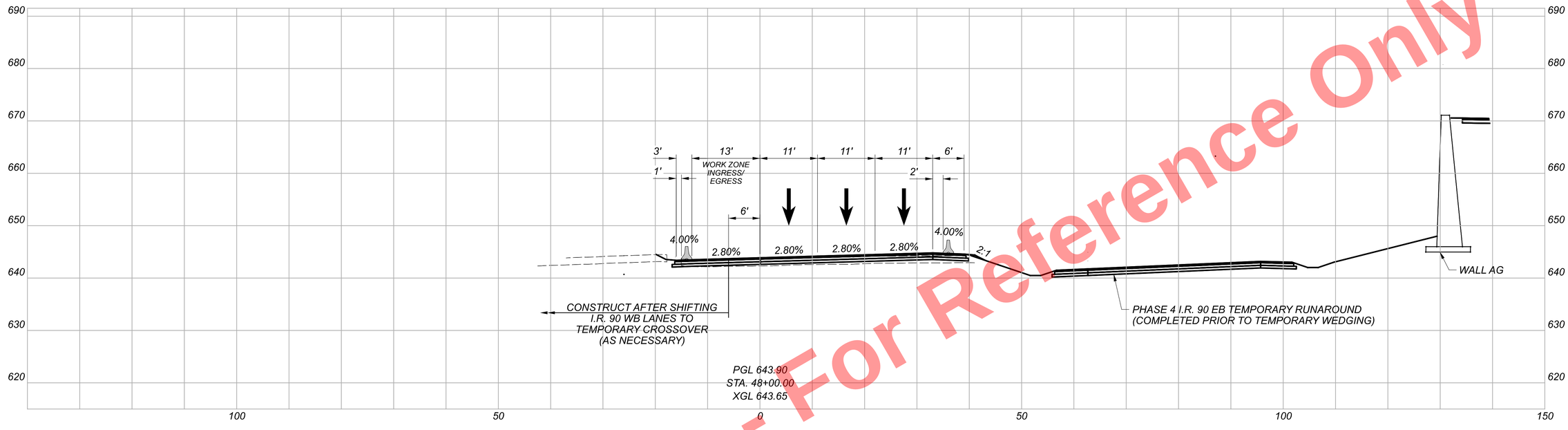

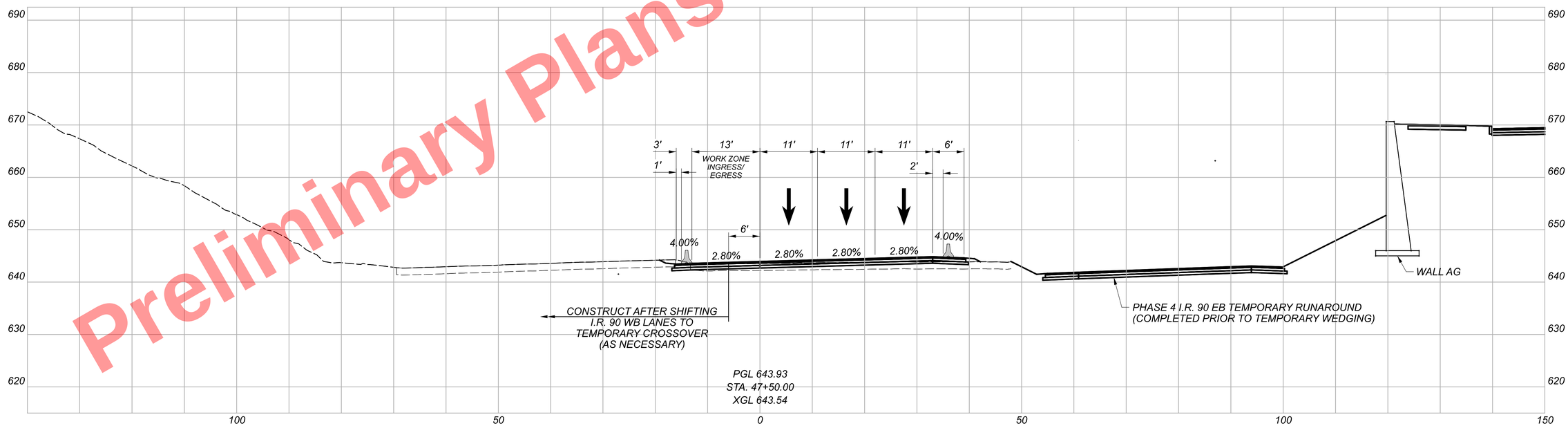

MAINTENANCE OF TRAFFIC - PHASE 4
CROSS SECTIONS - I.R. 90 WB TEMPORARY WEDGING (WEST)

CUY-90-16.28 (CCG3A)

MODEL: Sheet-08 PAPERSIZE: 34x22 (In.) DATE: 3/27/2025 TIME: 8:29:36 PM USER: Collin.Kwiatt
pw:\\mb-us-pw.bentley.com\mb-us-pw-03\Documents\Cleveland_OHIO\Projects\ODOT\District2\82382\400-Engineering\MOT\Sheets\82382_XM004BW.dgn

DESIGN AGENCY
Michael Baker INTERNATIONAL

DESIGNER	MZG
REVIEWER	LJS 05/22/24
PROJECT ID	82382
SHEET	223
TOTAL	2696

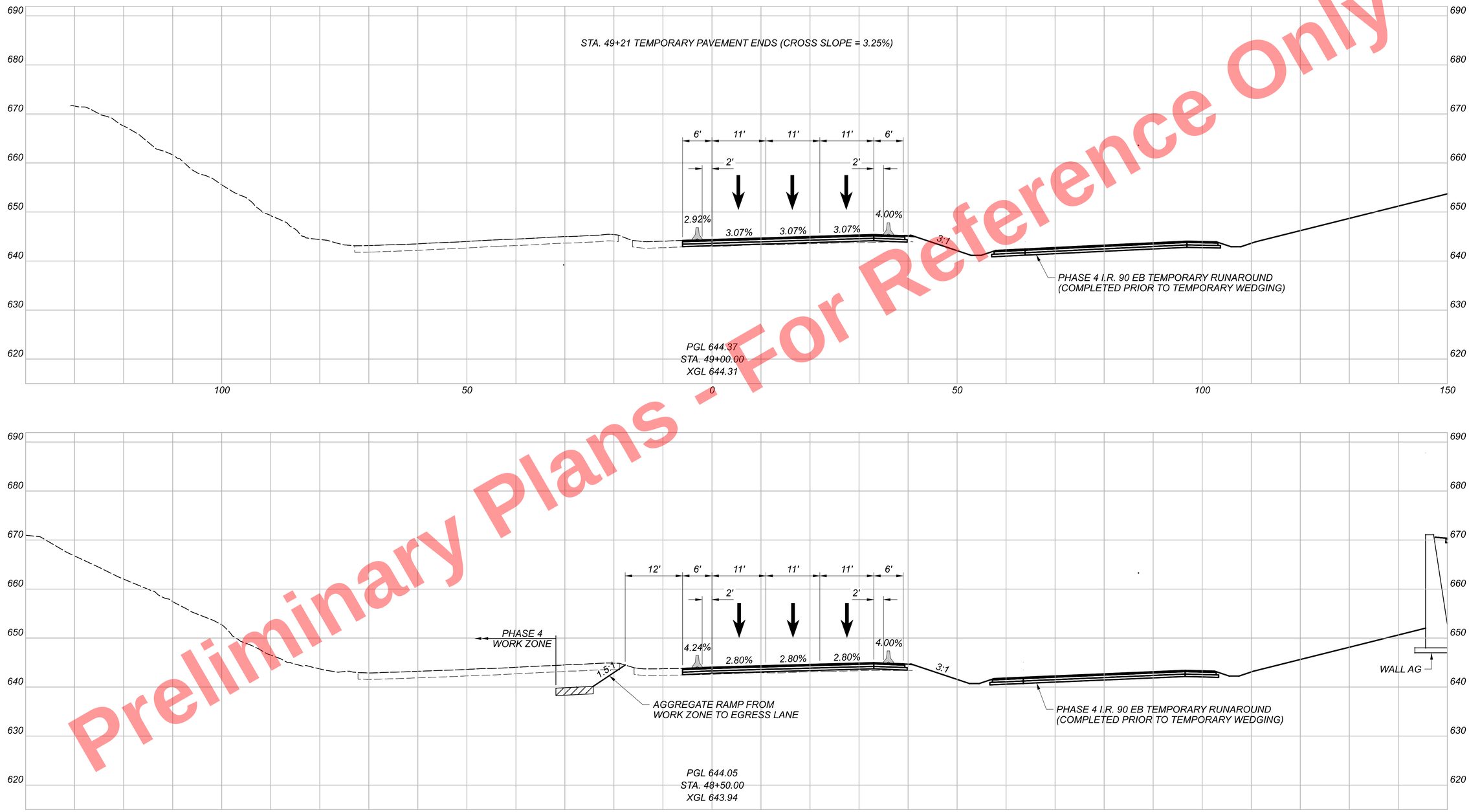

Preliminary Plans - For Reference Only

MAINTENANCE OF TRAFFIC - PHASE 4
CROSS SECTIONS - I.R. 90 WB TEMPORARY WEDGING (WEST)

CUY-90-16.28 (CCG3A)

MODEL: Sheet-09 PAPERSIZE: 34x22 (in.) DATE: 3/27/2025 TIME: 8:29:47 PM USER: Collin.Kwiat
pw:\\mb-us-pw.bentley.com:mb-us-pw-03\Documents\Cleveland_OH\Oil_Projects\ODOT\District2\82382\400-Engineering\MOT\Sheets\82382_XM004BW.dgn

DESIGN AGENCY
Michael Baker INTERNATIONAL

DESIGNER MZG
REVIEWER LJS 05/22/24
PROJECT ID 82382
SHEET 224 TOTAL 2696

Preliminary Plans - For Reference Only

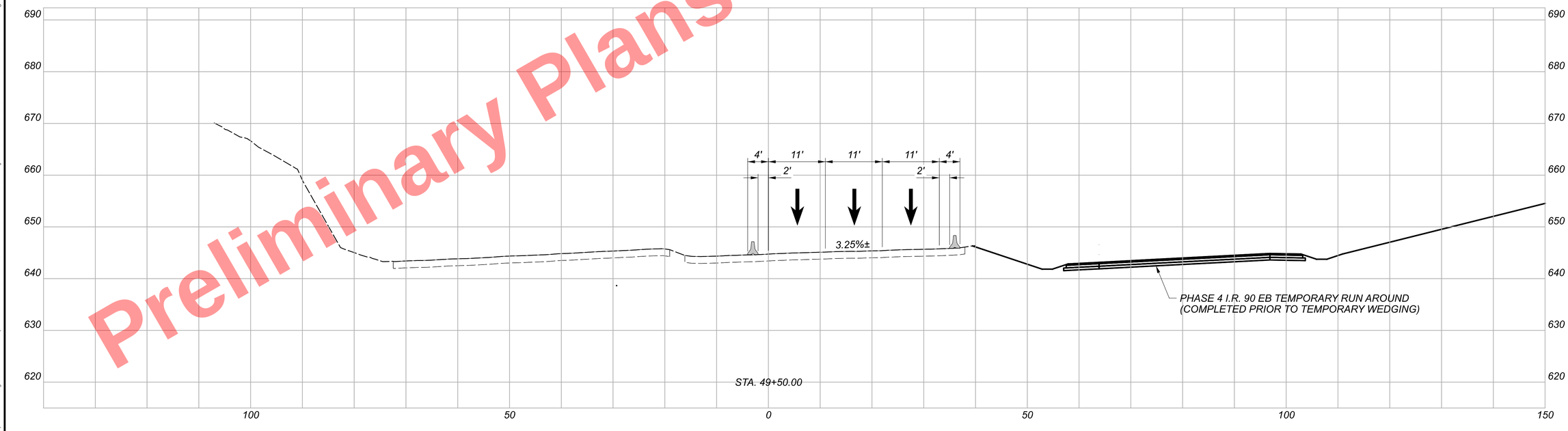

MAINTENANCE OF TRAFFIC - PHASE 4
CROSS SECTIONS - I.R. 90 WB TEMPORARY WEDGING (WEST)

DESIGN AGENCY
Michael Baker INTERNATIONAL

DESIGNER MZG
REVIEWER LJS 05/22/24
PROJECT ID 82382
SHEET 225 TOTAL 2696

CUY-90-16.28 (CCG3A)

MODEL: Sheet-10 PAPERSIZE: 34x22 (in.) DATE: 3/27/2025 TIME: 8:29:51 PM USER: Collin.Kwiatt
pw:\\mb-us-pw.bentley.com:mb-us-pw-03\Documents\Cleveland_OH\OI_Projects\ODOT\District2\82382\400-Engineering\M0T\Sheets\82382_XM004BW.dgn

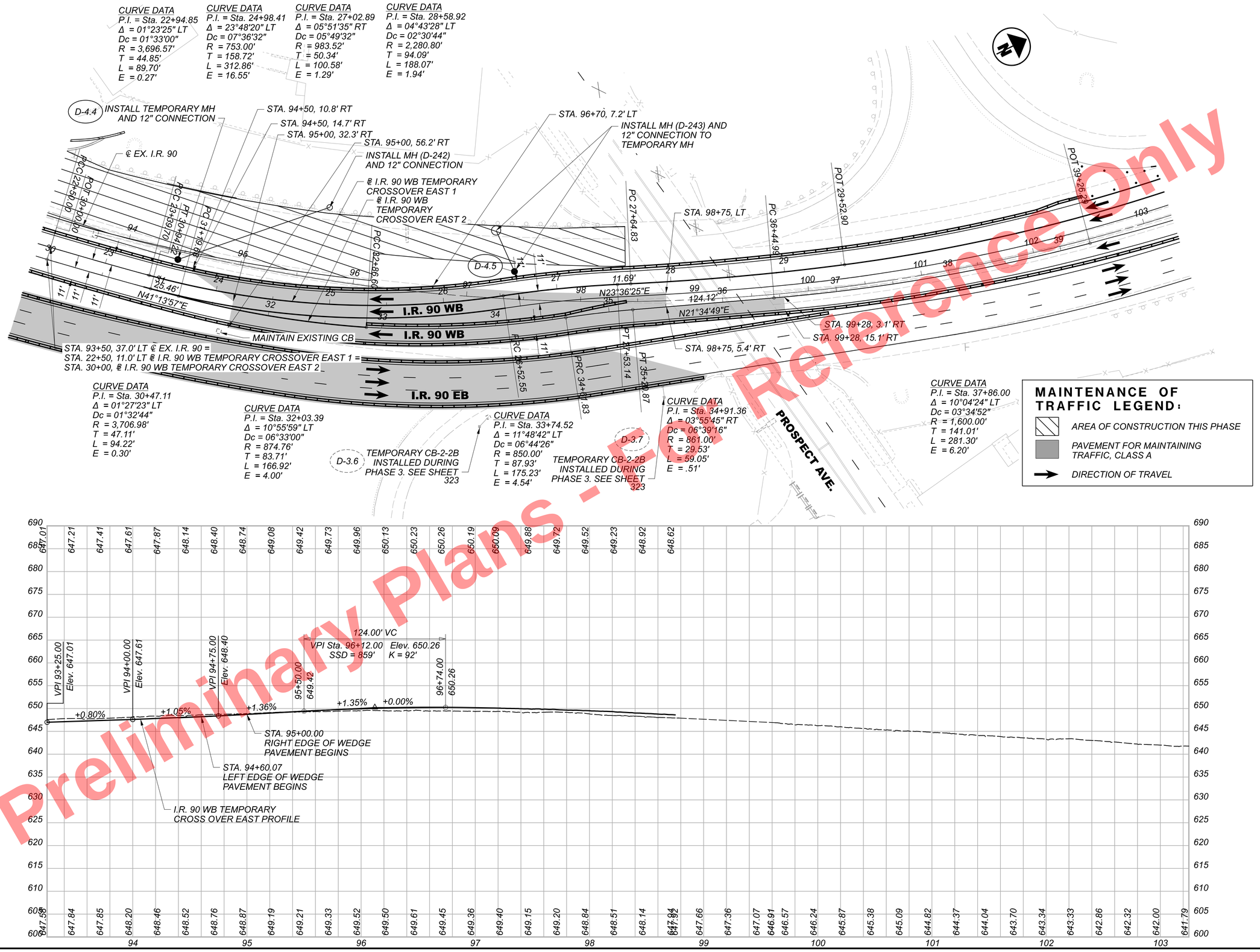

HORIZONTAL SCALE IN FEET
0 20 40 50

MAINTENANCE OF TRAFFIC - PHASE 4
PLAN & PROFILE - I.R. 90 WB TEMPORARY WEDGING (EAST)

CUY-90-16.28 (CCG3A)

DESIGN AGENCY
Michael Baker INTERNATIONAL

DESIGNER CRK
REVIEWER GSH 05/22/24
PROJECT ID 82382
SHEET 226 TOTAL 2696

MODEL: Sheet-01 PAPERSIZE: 34x22 (In.) DATE: 3/27/2025 TIME: 8:30:04 PM USER: Collin.Kwiatt
pw:\\mb-us-pw.bentley.com:mb-us-pw-03\Documents\Cleveland_OH\01_Projects\0007\District2\82382\400-Engineering\MOT\Sheets\82382_MP401.dgn

Preliminary Plans - For Reference Only

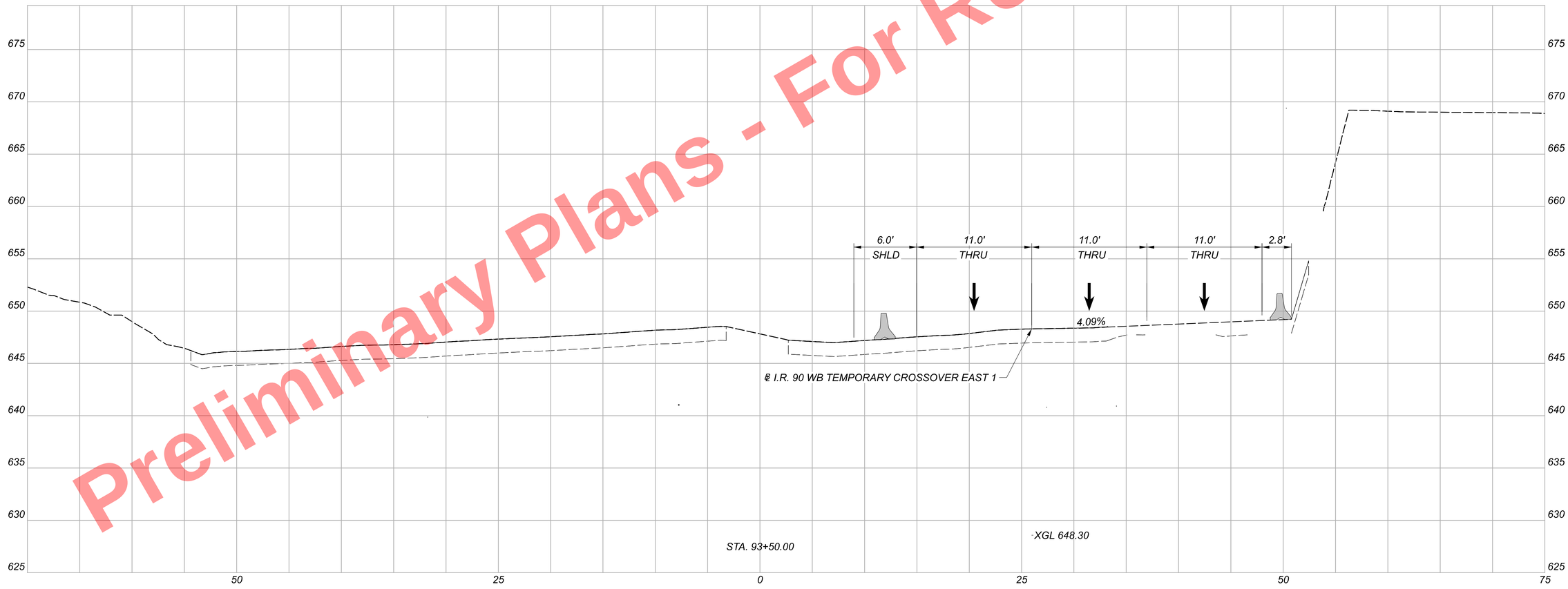

CUY-90-16.28 (CCG3A)

MODEL: BLX190 - 93+50.00 [Sheet] PAPERSIZE: 34x22 (in.) DATE: 3/27/2025 TIME: 8:30:18 PM USER: Collin.Kwiatt
pw:\\mb-us-pw.bentley.com:mb-us-pw-03\Documents\Cleveland_OH\OI_Projects\00DOT\District#12\82382\400-Engineering\M0T\Sheets\82382_XM004B.dgn

MAINTENANCE OF TRAFFIC - PHASE 4
CROSS SECTIONS - I.R. 90 WB TEMPORARY PAVEMENT (EAST)

DESIGN AGENCY
Michael Baker INTERNATIONAL

DESIGNER	MZG
REVIEWER	LJS 05/22/24
PROJECT ID	82382
SHEET	227
TOTAL	2696

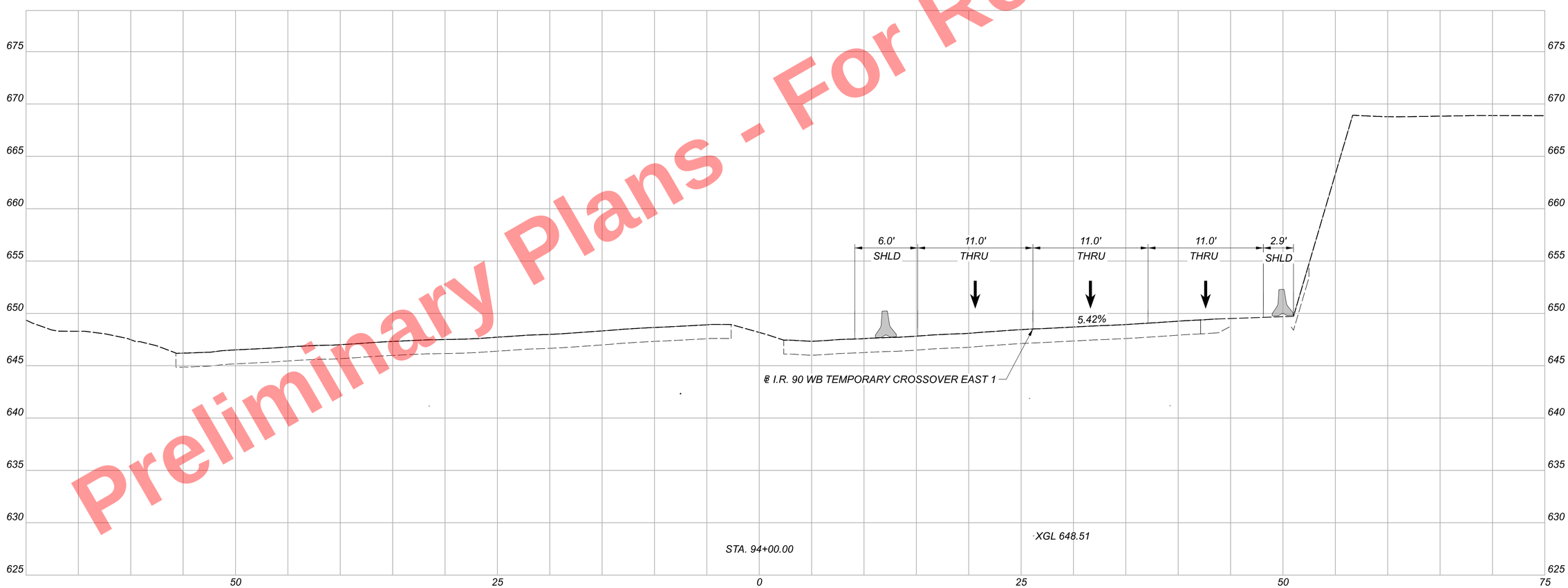

Preliminary Plans - For Reference Only

MAINTENANCE OF TRAFFIC - PHASE 4
CROSS SECTIONS - I.R. 90 WB TEMPORARY PAVEMENT (EAST)

DESIGN AGENCY
Michael Baker INTERNATIONAL

DESIGNER
MZG

REVIEWER
LJS 05/22/24

PROJECT ID
82382

SHEET 228 TOTAL 2696

CUY-90-16.28 (CCG3A)

MODEL: BLXI90 - 94+00.00 [Sheet] PAPERSIZE: 34x22 (in.) DATE: 3/27/2025 TIME: 8:30:25 PM USER: Collin.Kwiatt
pw:\\mb-us-pw.bentley.com:mb-us-pw-03\Documents\Cleveland_OH\OI_Projects\ODOT\District2\82382\400-Engineering\MOT\Sheets\82382_XM004B.dgn

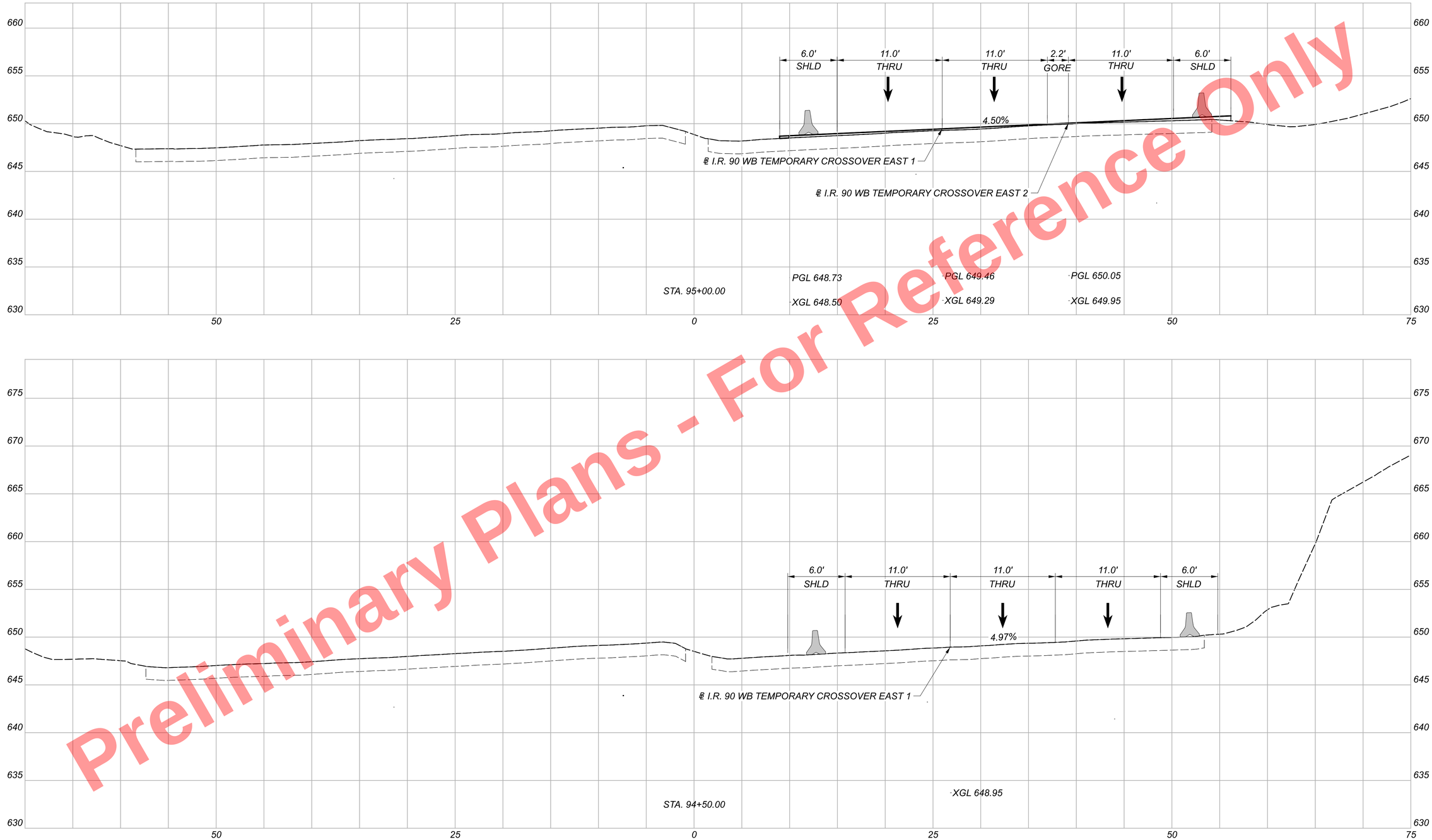

Preliminary Plans - For Reference Only

CUY-90-16.28 (CCG3A)

MODEL: BLX190 - 94+50.00 [Sheet] PAPERSIZE: 34x22 (in.) DATE: 3/27/2025 TIME: 8:30:27 PM USER: CollinKwiatt
pw:\\mb-us-pw.bentley.com:mb-us-pw-03\Documents\Cleveland_OHNOI_Projects\0007\District2\82382\400-Engineering\MOT\Sheets\82382_XM004B.dgn

MAINTENANCE OF TRAFFIC - PHASE 4
CROSS SECTIONS - I.R. 90 WB TEMPORARY PAVEMENT (EAST)

DESIGN AGENCY
Michael Baker INTERNATIONAL

DESIGNER MZG
REVIEWER LJS 05/22/24
PROJECT ID 82382
SHEET 229 TOTAL 2696

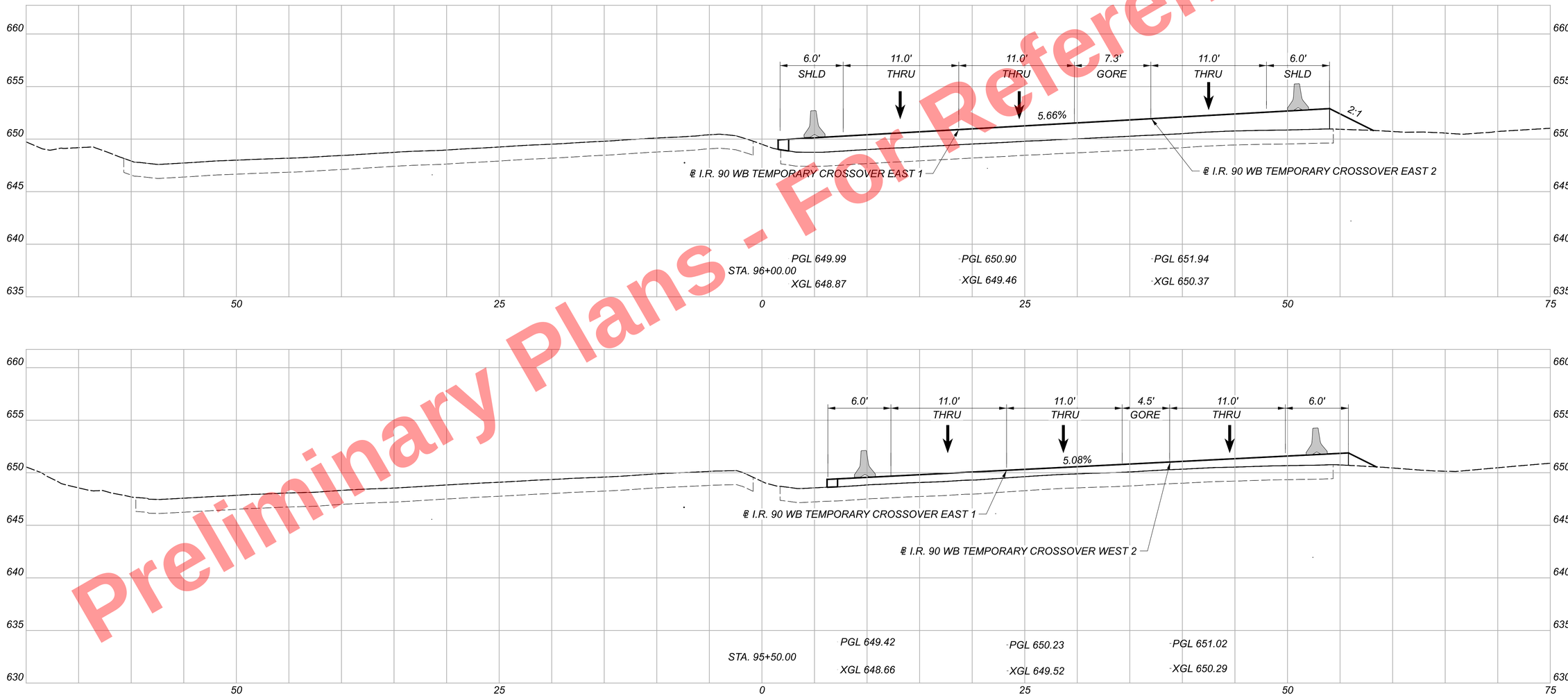

Preliminary Plans - For Reference Only

MAINTENANCE OF TRAFFIC - PHASE 4
CROSS SECTIONS - I.R. 90 WB TEMPORARY PAVEMENT (EAST)

CUY-90-16.28 (CCG3A)

MODEL: BLX190 - 95+50.00 [Sheet] PAPERSIZE: 34x22 (in) DATE: 3/27/2025 TIME: 8:30:30 PM USER: CollinKwiatt
pw:\\mb-us-pw.bentley.com\mb-us-pw-03\Documents\Cleveland_OH\01_Projects\00DOT\District2\82382\400-Engineering\MOT\Sheets\82382_XM004B.dgn

DESIGN AGENCY
Michael Baker INTERNATIONAL

DESIGNER	MZG
REVIEWER	LJS 05/22/24
PROJECT ID	82382
SHEET	230
TOTAL	2696

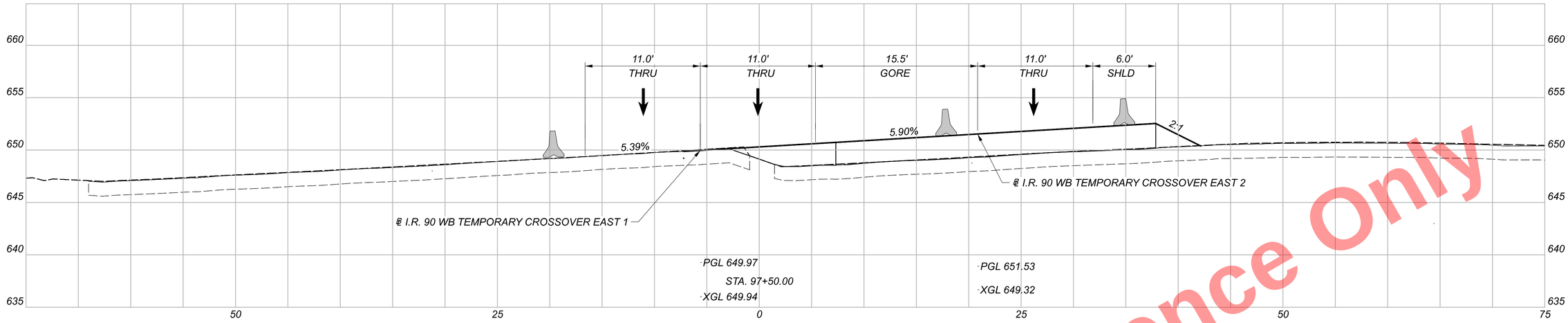

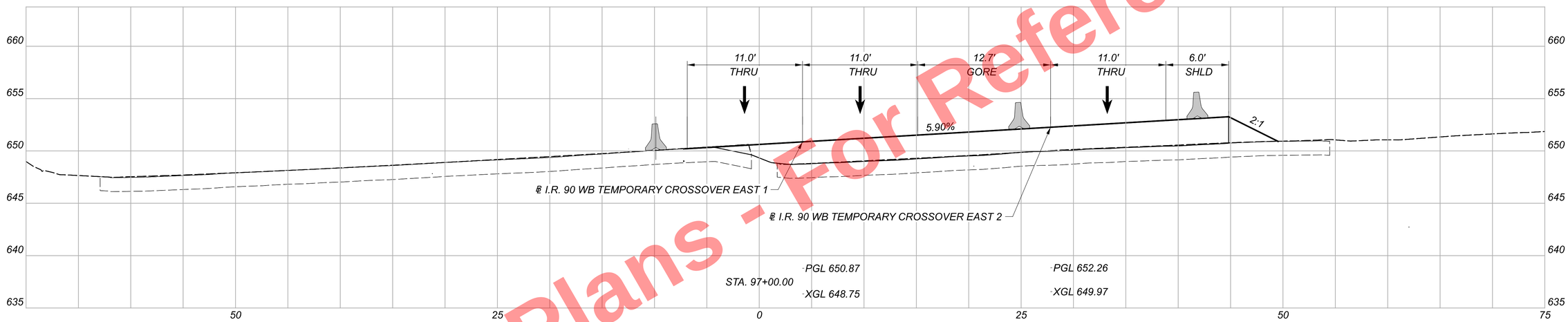

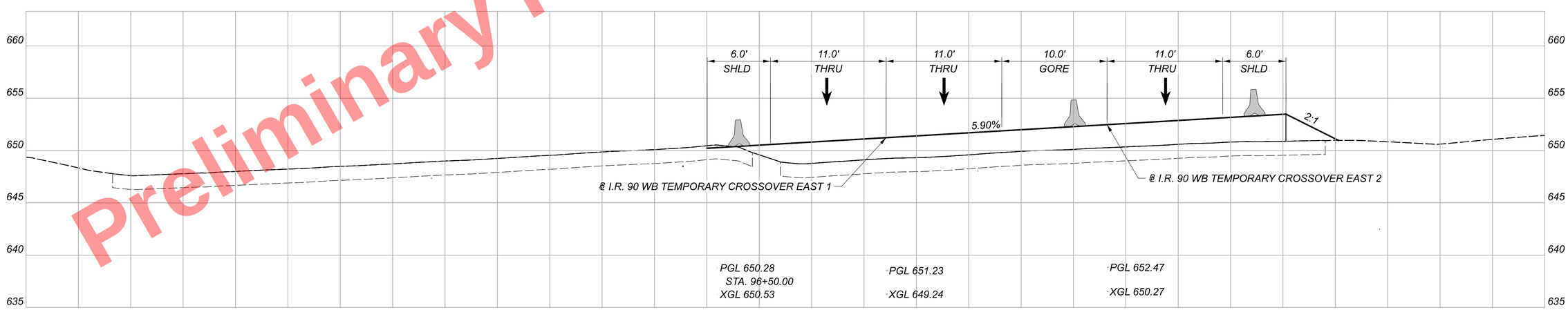

Preliminary Plans - For Reference Only

MAINTENANCE OF TRAFFIC - PHASE 4
CROSS SECTIONS - I.R. 90 WB TEMPORARY PAVEMENT (EAST)

CUY-90-16.28 (CCG3A)

MODEL: BLX190 - 96+50.00 (Sheet) PAPERSIZE: 34x22 (in.) DATE: 3/27/2025 TIME: 8:30:33 PM USER: Collin.Kwiatt
pw:\\mb-us-pw.bentley.com:mb-us-pw-03\Documents\Cleveland_OH\OL_Projects\ODOT\District2\82382\400-Engineering\MOT\Sheets\82382_XM004B.dgn

DESIGN AGENCY
Michael Baker INTERNATIONAL

DESIGNER	MZG
REVIEWER	LJS 05/22/24
PROJECT ID	82382
SHEET	231
TOTAL	2696

Preliminary Plans - Not For Reference Only

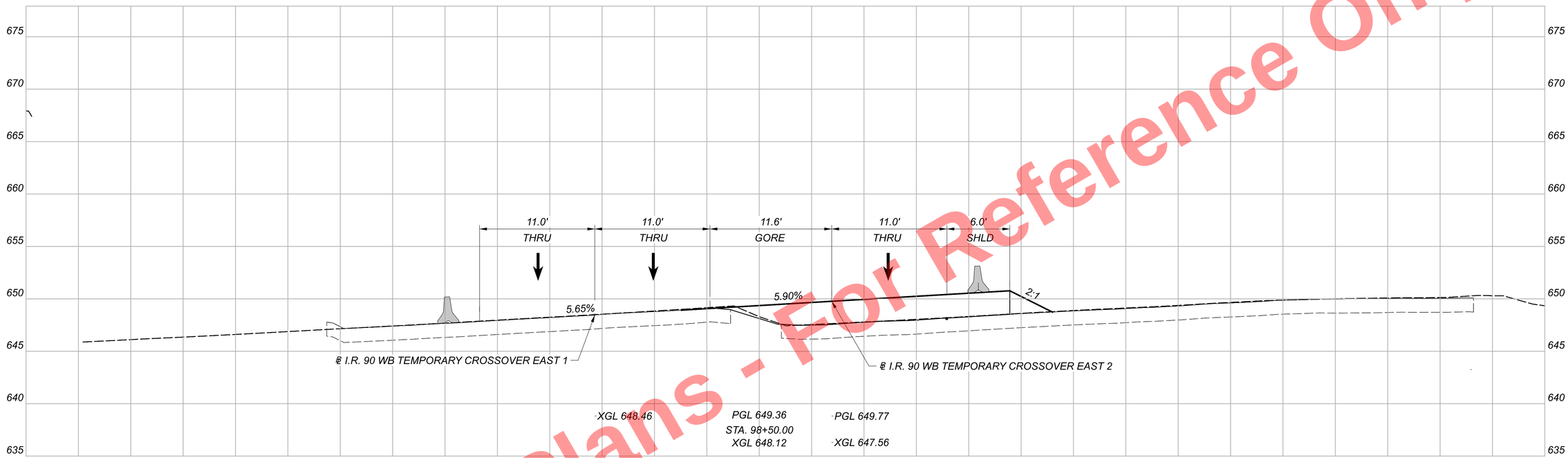

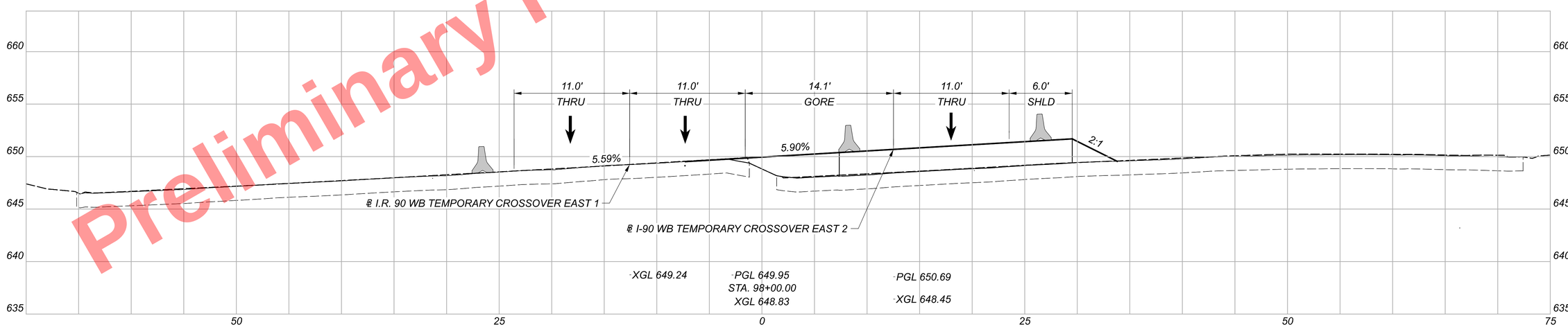

MAINTENANCE OF TRAFFIC - PHASE 4
CROSS SECTIONS - I.R. 90 WB TEMPORARY PAVEMENT (EAST)

CUY-90-16.28 (CCG3A)

MODEL: BLX90 - 98+00.00 [Sheet] PAPERSIZE: 34x22 (in.) DATE: 3/27/2025 TIME: 8:30:36 PM USER: Collin.Kwiat
pw:\\mb-us-pw.bentley.com:mb-us-pw-03\Documents\Cleveland_OH\01_Projects\00DOT\District2\82382\400-Engineering\MOT\Sheets\82382_XM004B.dgn

DESIGN AGENCY
Michael Baker INTERNATIONAL

DESIGNER MZG
REVIEWER LJS 05/22/24
PROJECT ID 82382
SHEET 232 TOTAL 2696

Preliminary Plans - For Reference Only

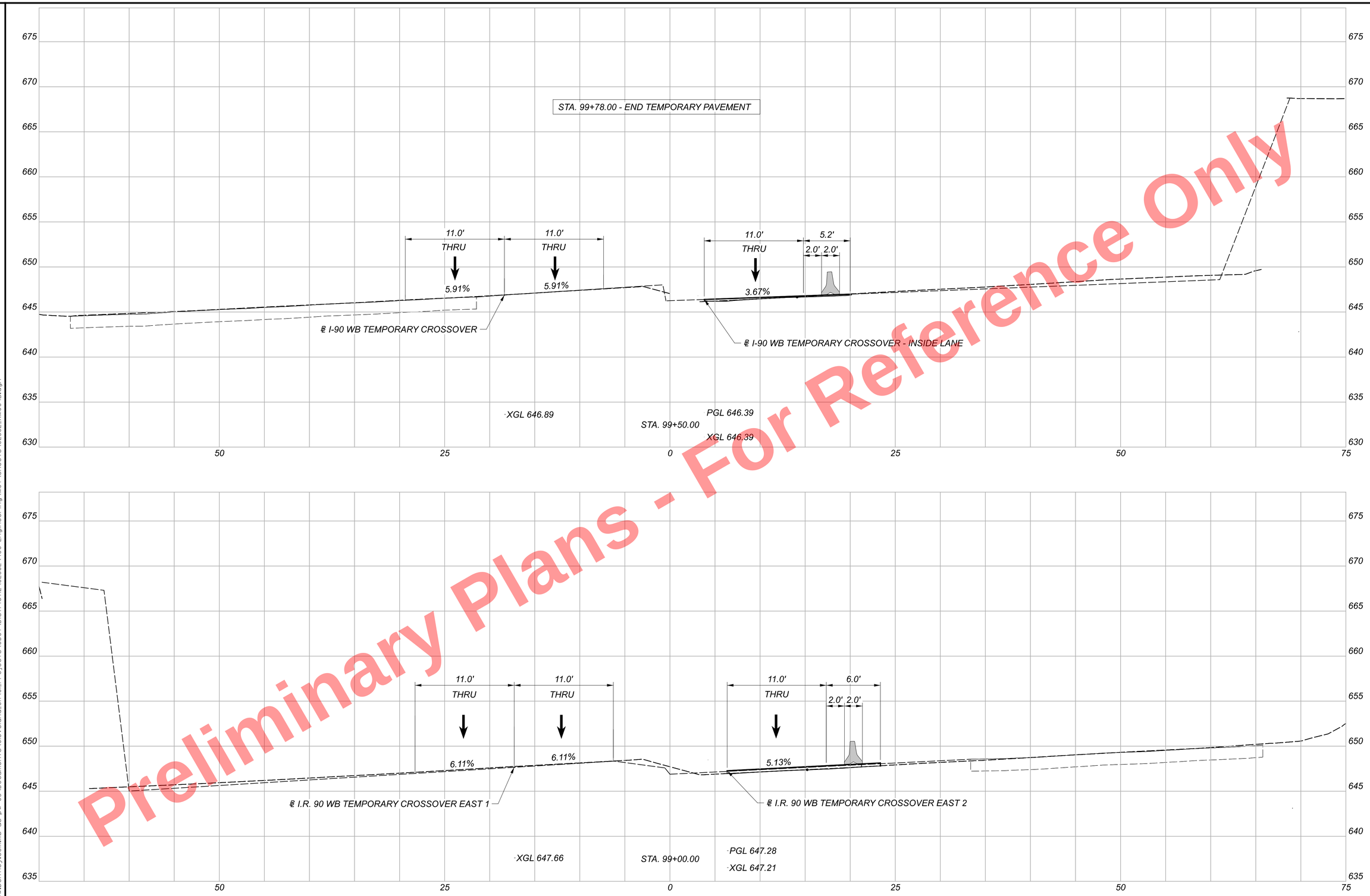

MODEL: BLX190 - 99+00.00 [Sheet] PAPERSIZE: 34x22 (in) DATE: 3/27/2025 TIME: 8:30:39 PM USER: Collin.Kwiatt
pw:\\mb-us-pw.bentley.com:mb-us-pw-03\Documents\Cleveland_OH\01_Projects\0001\District2\82382\400-Engineering\MOT\Sheets\82382_XM004B.dgn

CUY-90-16.28 (CCG3A)

MAINTENANCE OF TRAFFIC - PHASE 4
CROSS SECTIONS - I.R. 90 WB TEMPORARY PAVEMENT (EAST)

DESIGN AGENCY
Michael Baker INTERNATIONAL

DESIGNER	MZG
REVIEWER	LJS 05/22/24
PROJECT ID	82382
SHEET	233
TOTAL	2696

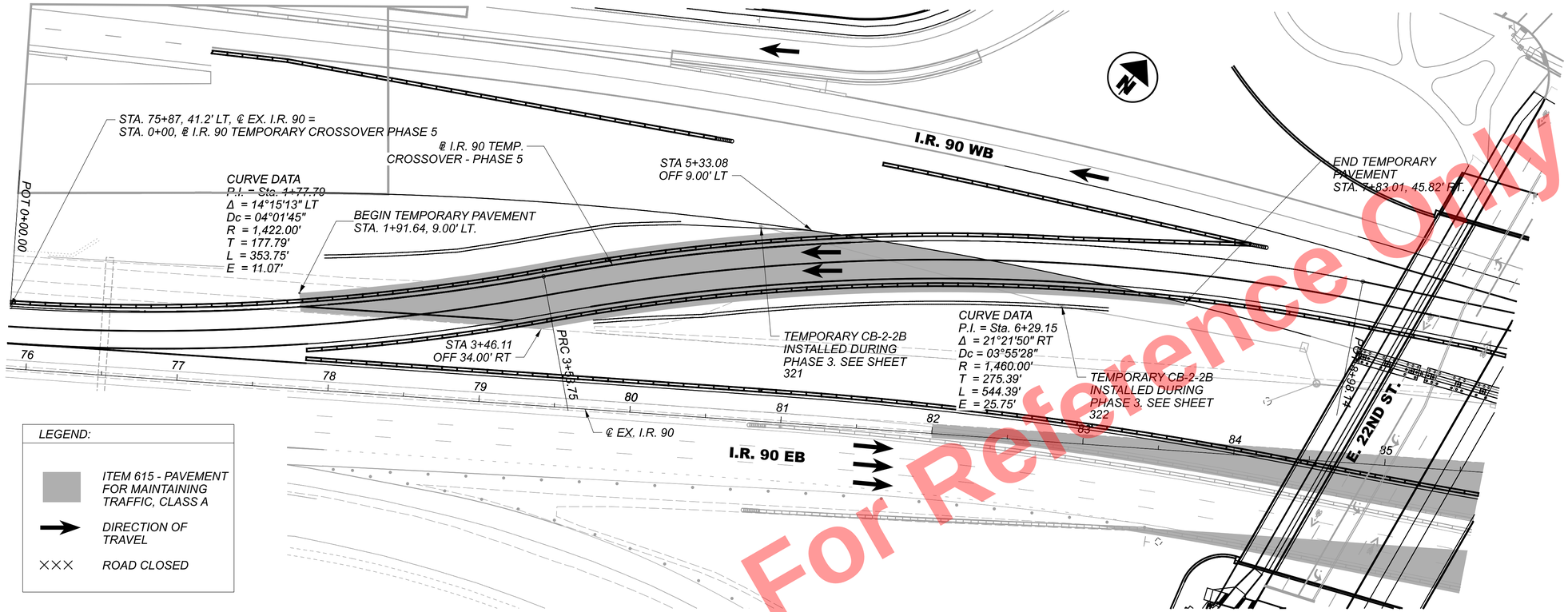

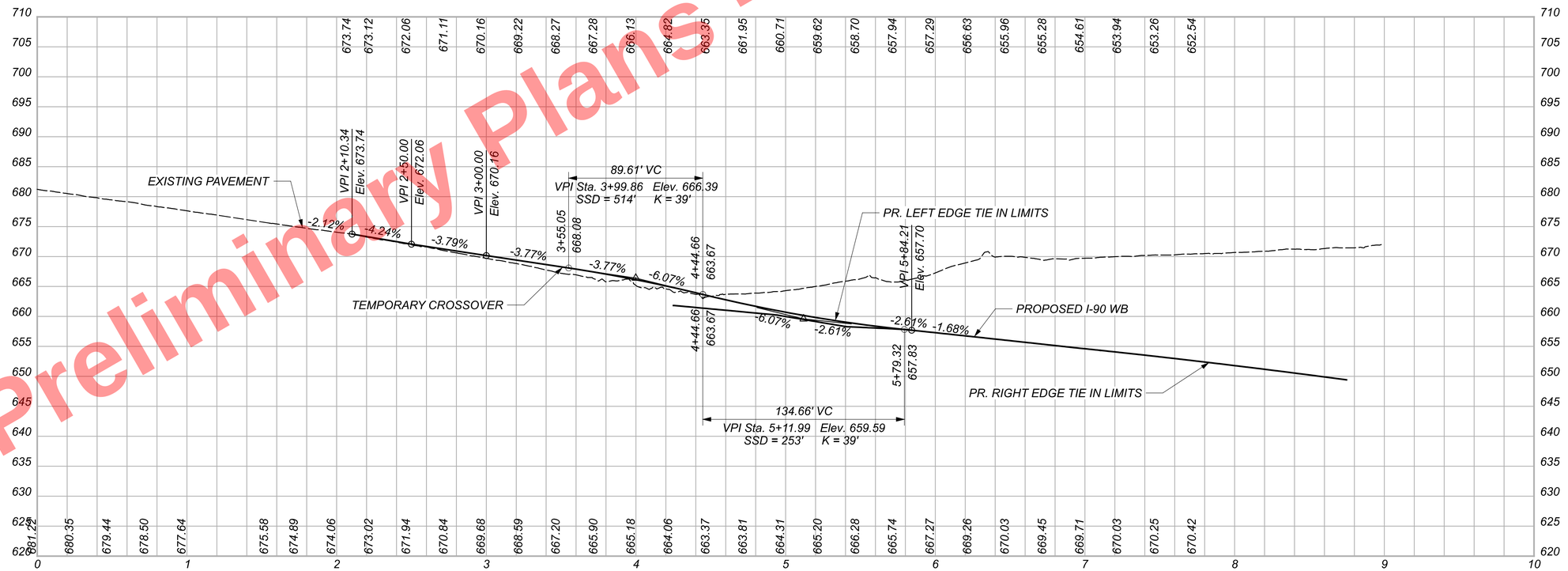

Preliminary Plans - For Reference Only

HORIZONTAL SCALE IN FEET
0 10 20 40

MAINTENANCE OF TRAFFIC - PHASE 5
PLAN & PROFILE - I.R. 90 WB EAST TEMPORARY CROSSOVER

DESIGN AGENCY
Michael Baker INTERNATIONAL

DESIGNER CRK
REVIEWER GSH 05/22/24
PROJECT ID 82382
SHEET 234 TOTAL 2696

CUY-90-16.28 (CCG3A)

MODEL: CLP_1 - Plan Profile [Sheet] PAPERSIZE: 34x22 (in) DATE: 3/27/2025 TIME: 8:32:18 PM USER: Collin.Kwiatt
pw:\\mb-us-pw.bentley.com:mb-us-pw-03\Documents\Cleveland_OH\OL_Projects\ODOT\District2\82382\400-Engineering\MOT\Sheets\82382_MP500.dgn

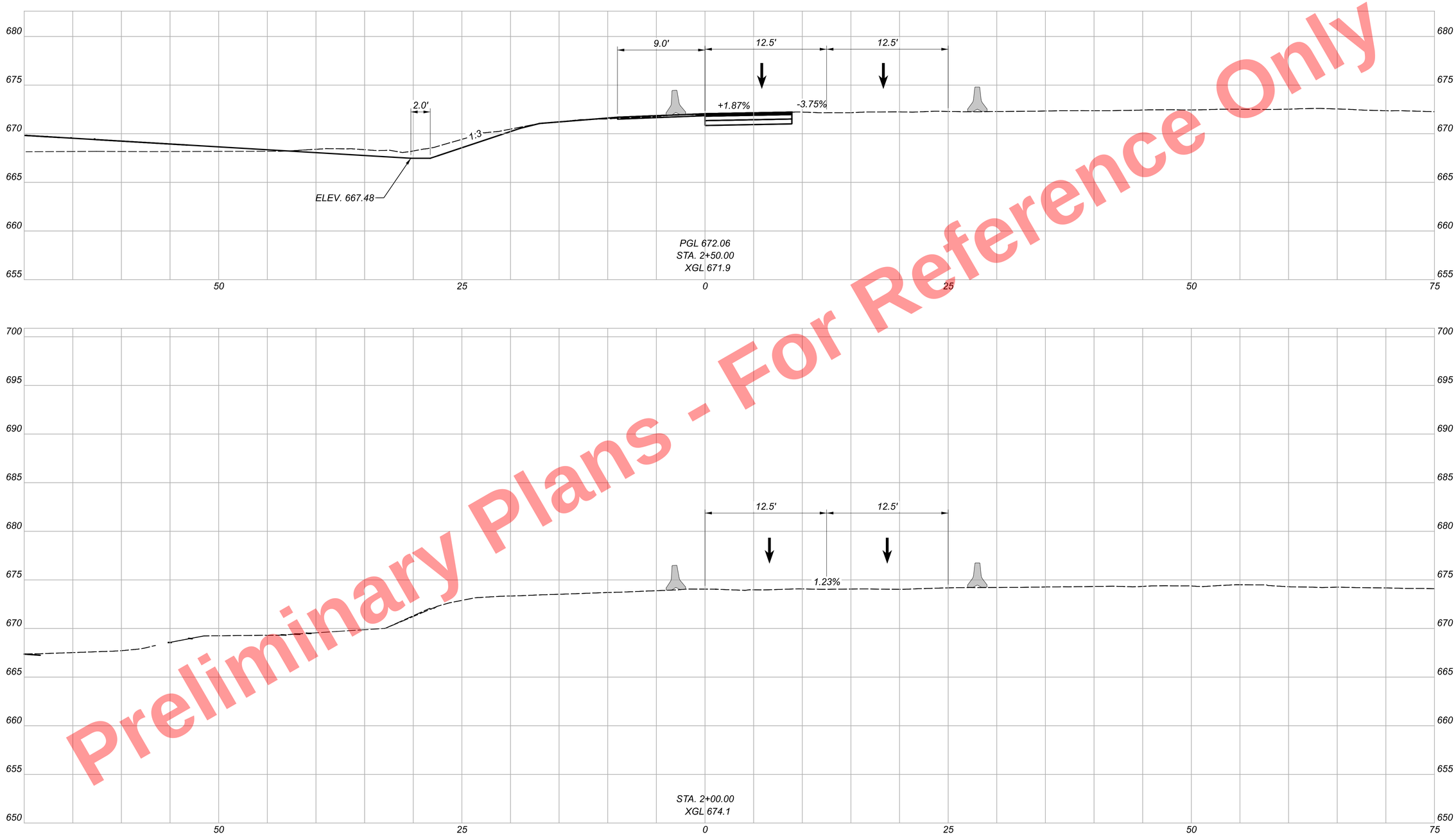

Preliminary Plans - Not For Reference Only

CUY-90-16.28 (CCG3A)

MODEL: Crossover2 - 2+00.00 (Sheet) PAPERSIZE: 34x22 (in.) DATE: 3/27/2025 TIME: 8:33:15 PM USER: Collin.Kwiatt
pw:\\mb-us-pw.bentley.com:mb-us-pw-03\Documents\Cleveland_OH\OI_Projects\ODOT\District#12_82382\400-Engineering\MOT\Sheets\82382_XM005.dgn

MAINTENANCE OF TRAFFIC - PHASE 5
CROSS SECTIONS - I.R. 90 WB EAST TEMPORARY CROSSOVER

DESIGN AGENCY
Michael Baker INTERNATIONAL

DESIGNER	MZG
REVIEWER	LJS 05/22/24
PROJECT ID	82382
SHEET	235
TOTAL	2696

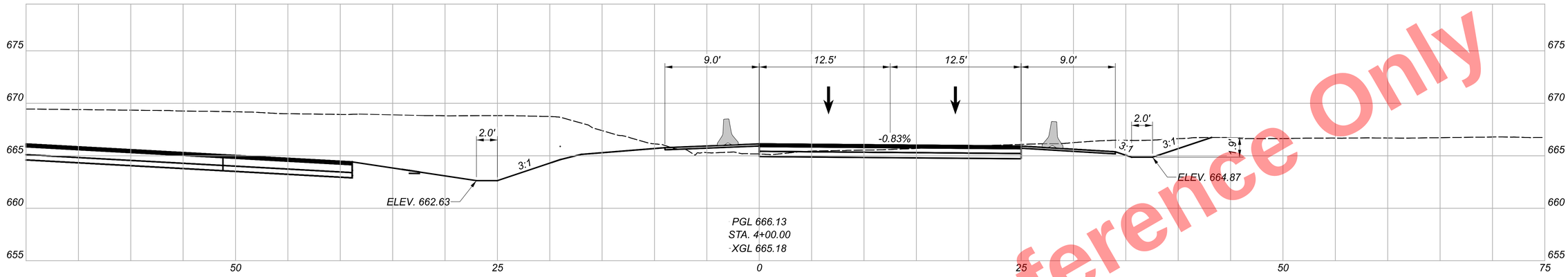

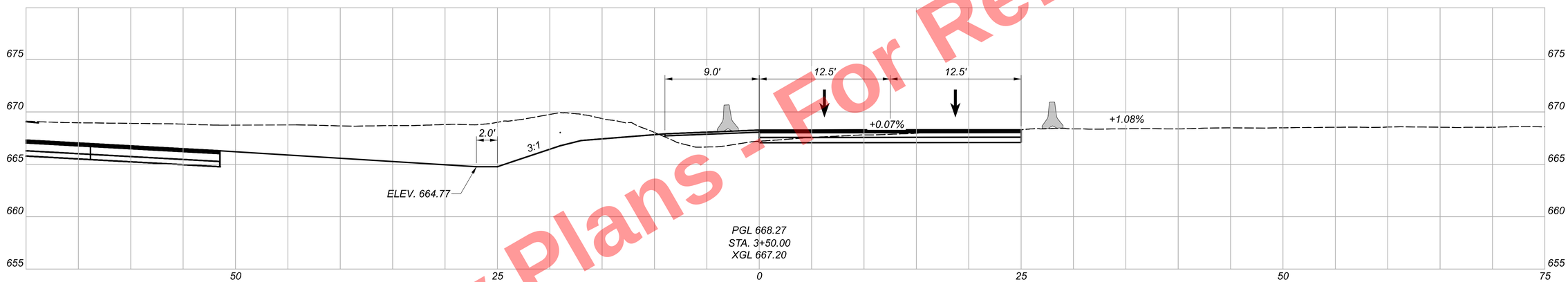

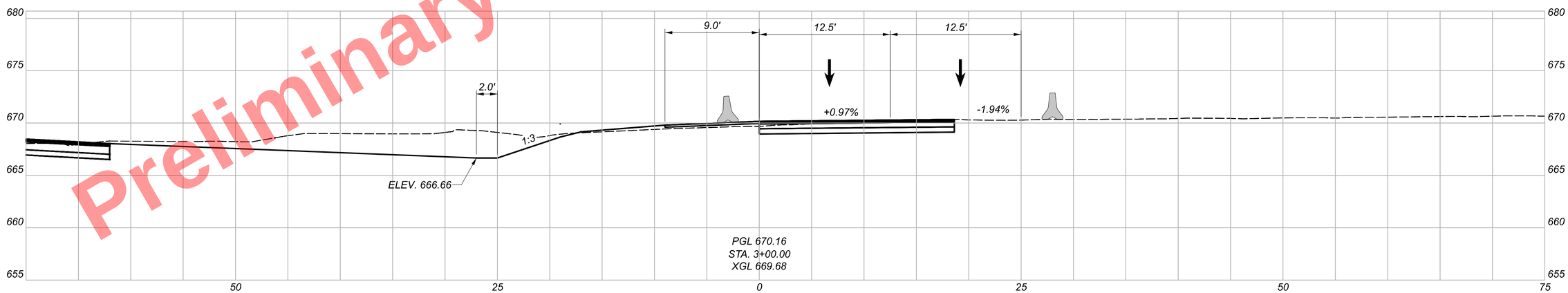

Preliminary Plans - For Reference Only

MAINTENANCE OF TRAFFIC - PHASE 5
CROSS SECTIONS - I.R. 90 WB EAST TEMPORARY CROSSOVER

DESIGN AGENCY
Michael Baker INTERNATIONAL

DESIGNER
MZG

REVIEWER
LJS 05/22/24

PROJECT ID
82382

SHEET 236 TOTAL 2696

CUY-90-16.28 (CCG3A)

MODEL: Crossover2 - 3+00.00 [Sheet] PAPERSIZE: 34x22 (In.) DATE: 3/27/2025 TIME: 8:33:21 PM USER: CollinKwiatt
pw:\\mb-us-pw.bentley.com:mb-us-pw-03\Documents\Cleveland_OH\01_Projects\ODOT\District2\82382\400-Engineering\MOT\Sheets\82382_XM005.dgn

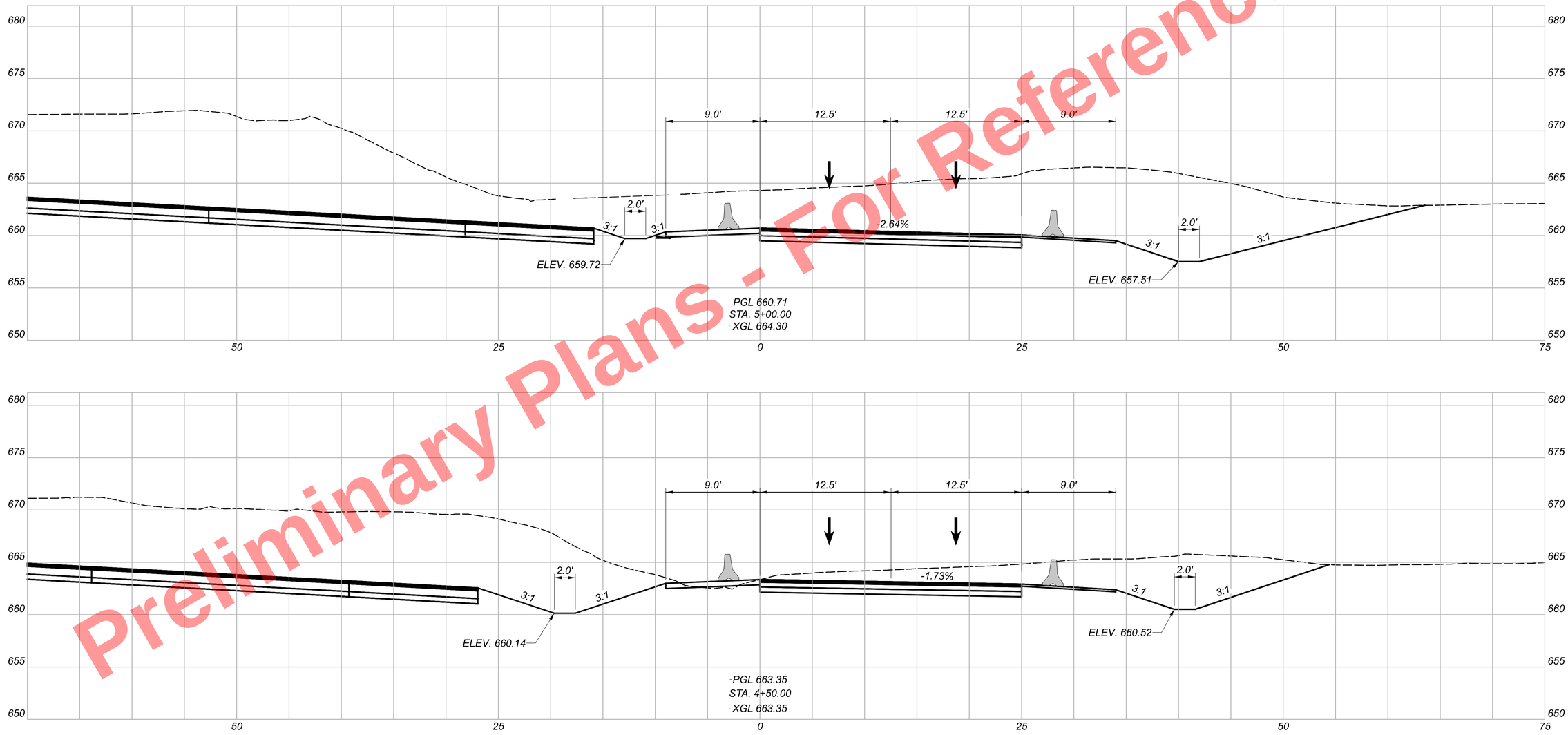

Preliminary Plans - For Reference Only

CUY-90-16.28 (CCG3A)

MODEL: Crossover2 - 4+50.00 [Sheet] PAPERSIZE: 34x22 (in) DATE: 3/27/2025 TIME: 8:33:28 PM USER: Collin.Kwiatt
pw:\\mb-us-pw.bentley.com:mb-us-pw-03\Documents\Cleveland_OH\OI_Projects\ODOT\District2\82382\400-Engineering\MOT\Sheets\82382_XM005.dgn

MAINTENANCE OF TRAFFIC - PHASE 5
CROSS SECTIONS - I.R. 90 WB EAST TEMPORARY CROSSOVER

DESIGN AGENCY
Michael Baker INTERNATIONAL

DESIGNER MZG
REVIEWER LJS 05/22/24
PROJECT ID 82382
SHEET 237 TOTAL 2696

Preliminary Plans For Reference Only

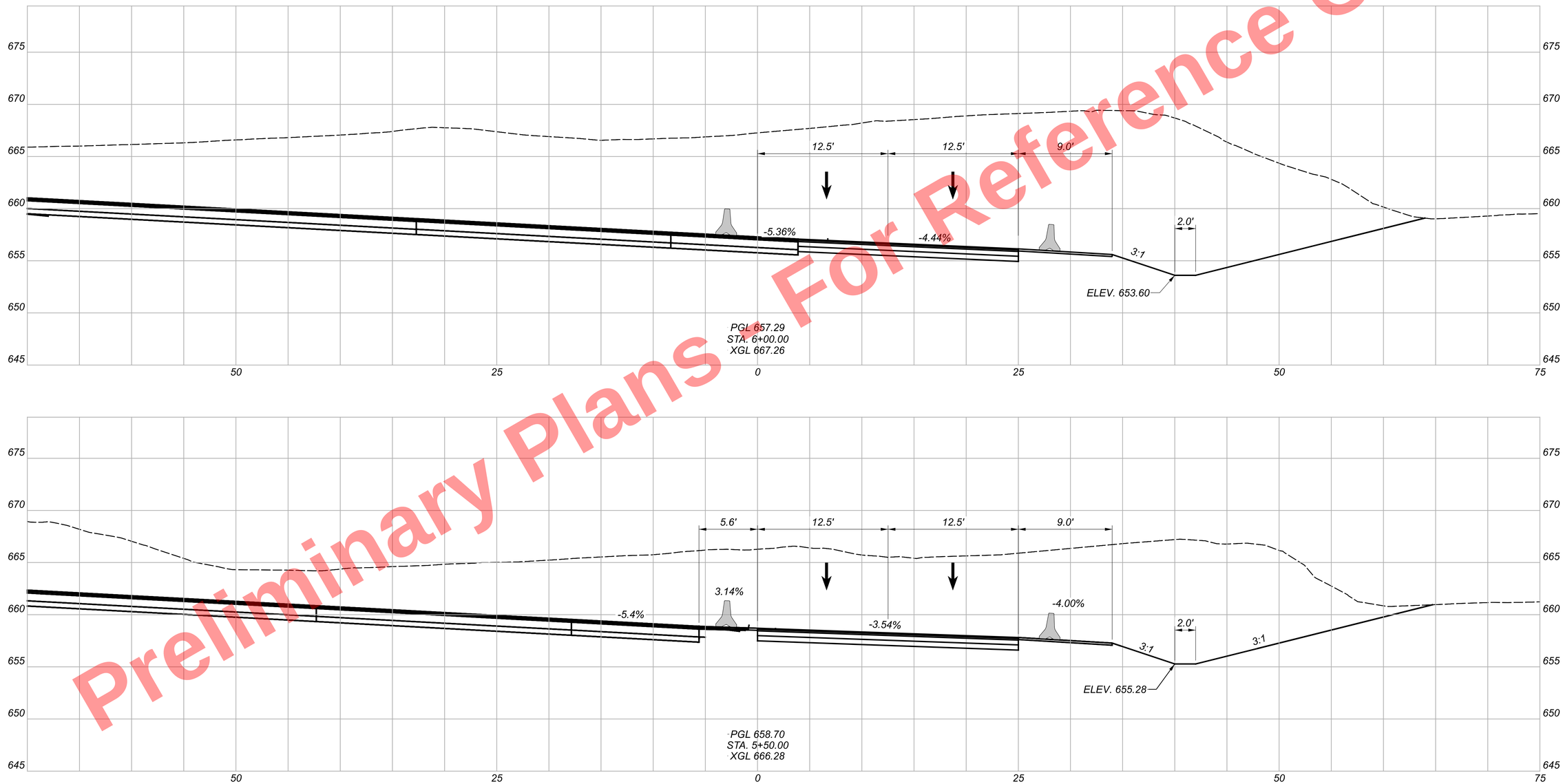

MAINTENANCE OF TRAFFIC - PHASE 5
CROSS SECTIONS - I.R. 90 WB EAST TEMPORARY CROSSOVER

CUY-90-16.28 (CCG3A)

MODEL: Crossover2 - 5+50.00 [Sheet] PAPERSIZE: 34x22 (In.) DATE: 3/27/2025 TIME: 8:33:46 PM USER: Collin.Kwiatt
pw:\\mb-us-pw.bentley.commb-us-pw-03\Documents\Cleveland_OH\01_Projects\ODOT\District2\82382\400-Engineering\MOT\Sheets\82382_XM005.dgn

DESIGN AGENCY
Michael Baker INTERNATIONAL

DESIGNER MZG
REVIEWER LJS 05/22/24
PROJECT ID 82382
SHEET 238 TOTAL 2696

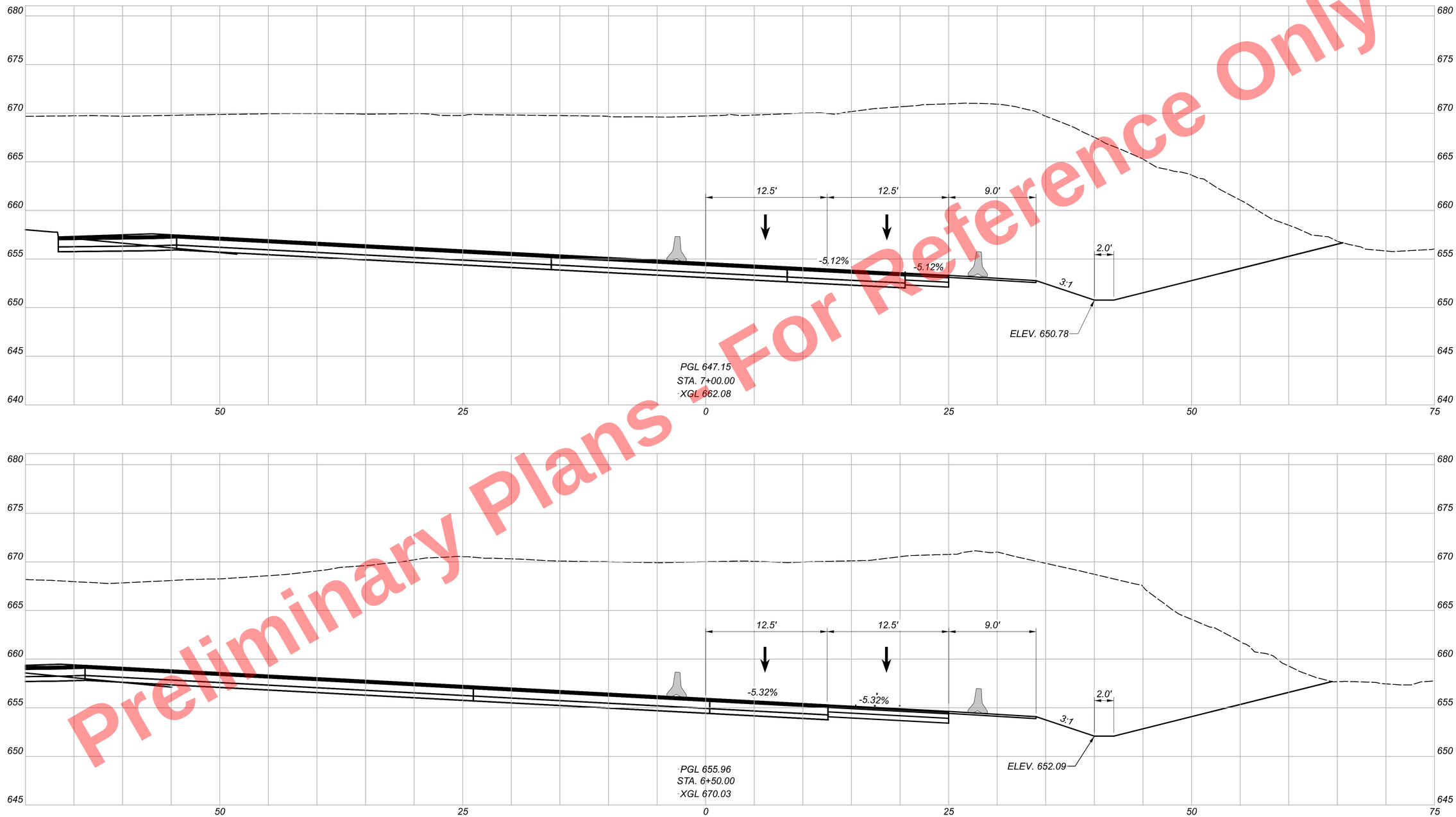

Preliminary Plans - For Reference Only

CUY-90-16.28 (CCG3A)

MODEL: Crossover2 - 6+50.00 [Sheet] PAPERSIZE: 34x22 (in.) DATE: 3/27/2025 TIME: 8:33:50 PM USER: Collin.Kwiatt
pw:\\mb-us-pw.bentley.com:mb-us-pw-03\Documents\Cleveland_OH\OI_Projects\ODOT\District2\82382\400-Engineering\MOT\Sheets\82382_XM005.dgn

MAINTENANCE OF TRAFFIC - PHASE 5
CROSS SECTIONS - I.R. 90 WB EAST TEMPORARY CROSSOVER

DESIGN AGENCY
Michael Baker INTERNATIONAL

DESIGNER MZG
REVIEWER LJS 05/22/24
PROJECT ID 82382
SHEET 239 TOTAL 2696

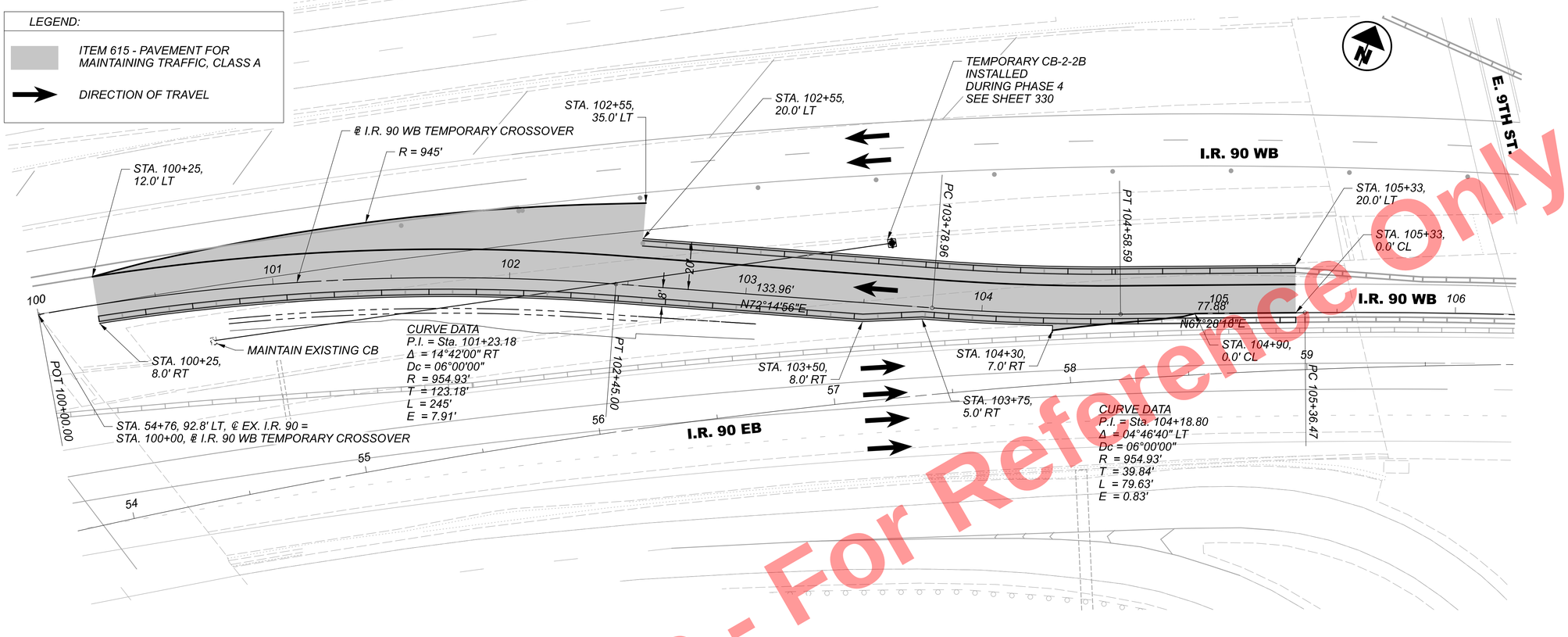

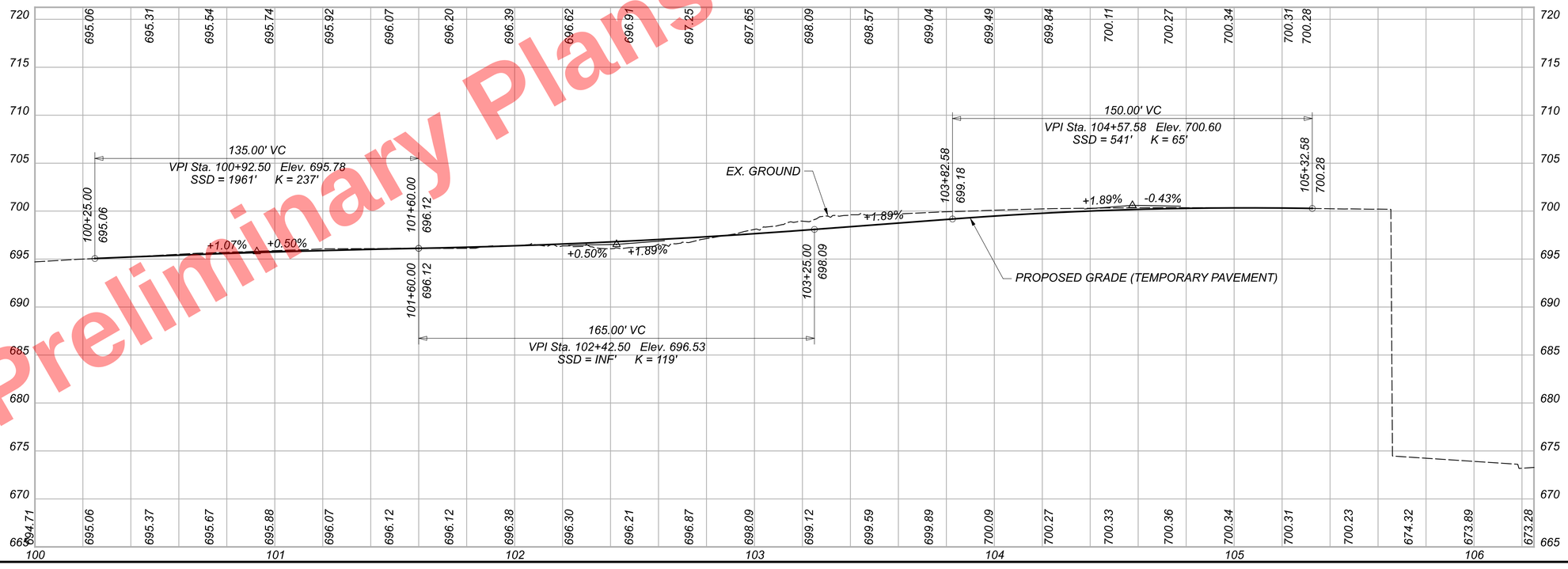

Preliminary Plans - For Reference Only

HORIZONTAL SCALE IN FEET
0 12.5 25 50

MAINTENANCE OF TRAFFIC - PHASE 5
PLAN & PROFILE - I.R. 90 WB WEST TEMPORARY CROSSOVER

DESIGN AGENCY
Michael Baker INTERNATIONAL

DESIGNER CRK
REVIEWER GSH 05/22/24
PROJECT ID 82382
SHEET 240 TOTAL 2696

CUY-90-16.28 (CCG3A)

MODEL: MP5l0 (Sheet) PAPERSIZE: 34x22 (In.) DATE: 3/27/2025 TIME: 8:34:05 PM USER: Collin.Kwiat
pw:\\mb-us-pw.bentley.com:mb-us-pw-03\Documents\Cleveland_OH\0i_Projects\000T\District2\82382\400-Engineering\MOT\Sheets\82382_MP5l0.dgn

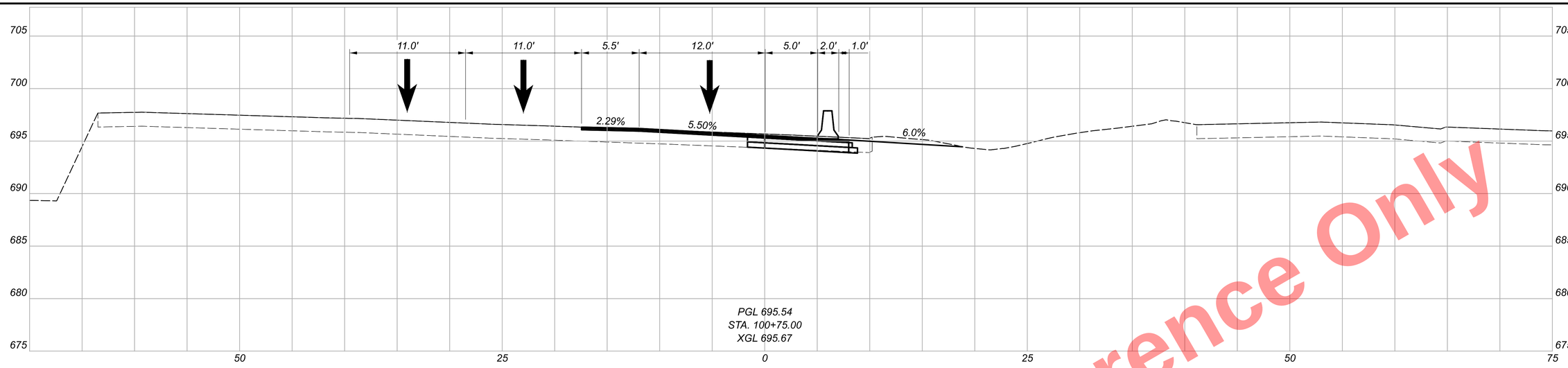

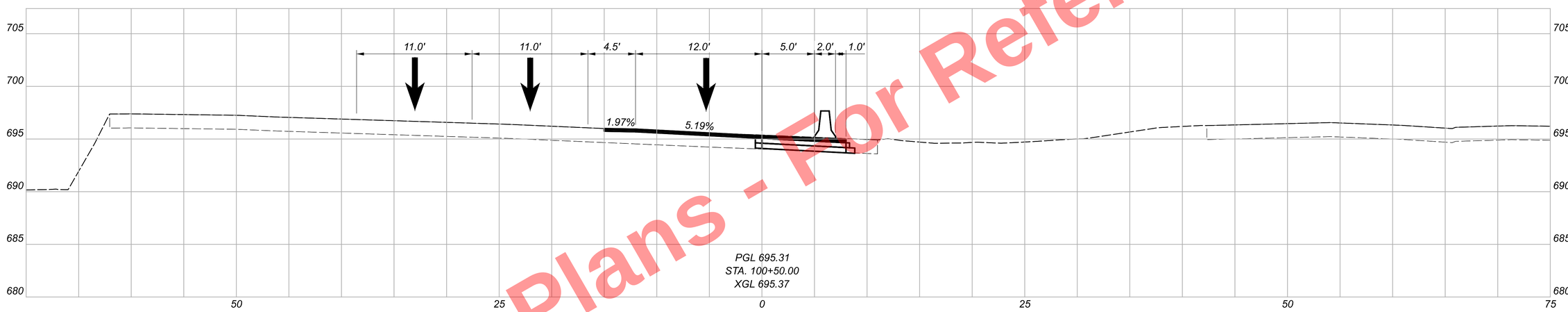

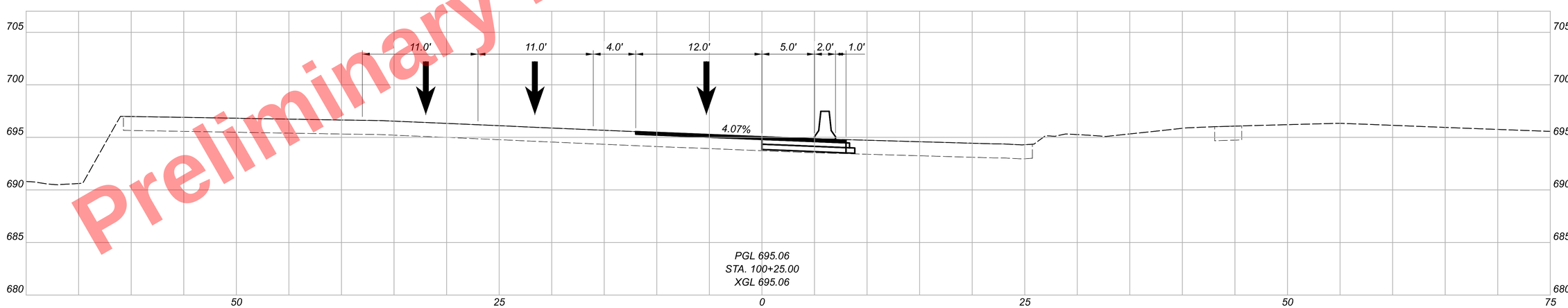

Preliminary Plans - For Reference Only

MAINTENANCE OF TRAFFIC - PHASE 5
CROSS SECTIONS - I.R. 90 WB WEST TEMPORARY CROSSOVER

DESIGN AGENCY
Michael Baker INTERNATIONAL

DESIGNER MZG
REVIEWER LJS 05/22/24
PROJECT ID 82382
SHEET 241 TOTAL 2696

CUY-90-16.28 (CCG3A)

MODEL: Phase 5 I-90 Crossover - 100+25.00 [Sheet] PAPERSIZE: 34x22 (in.) DATE: 3/27/2025 TIME: 8:34:3 PM USER: Collin.Kwiatt
pw:\\mb-us-pw.bentley.com:mb-us-pw-03\Documents\Cleveland_OH\01_Projects\000T\District2\82382\400-Engineering\MOT\Sheets\82382_XM005A.dgn

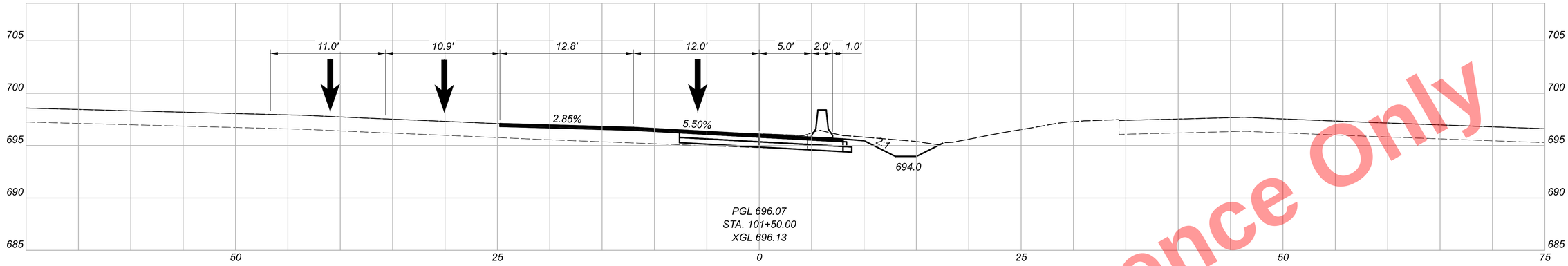

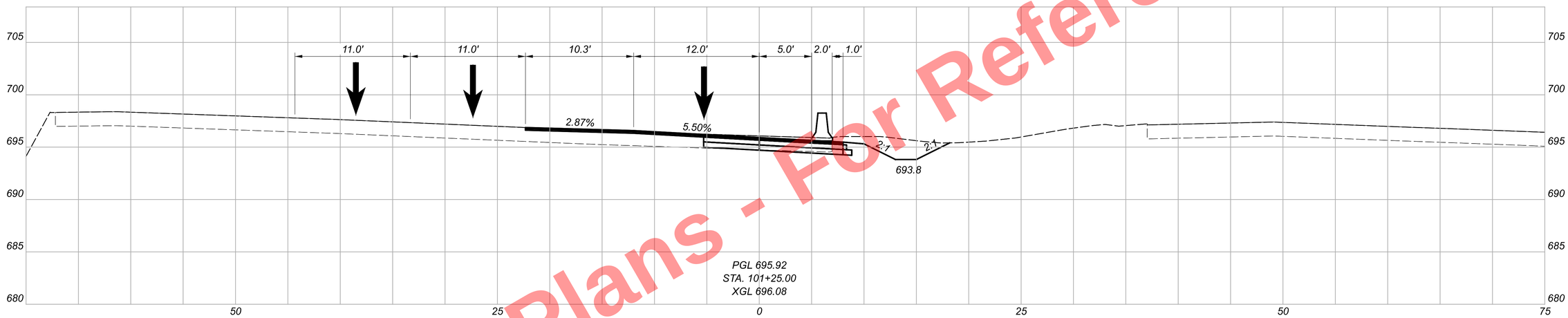

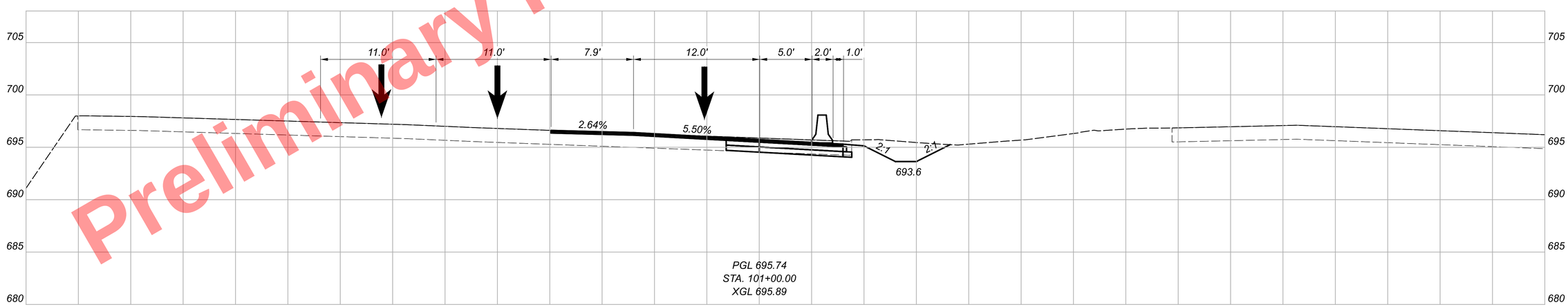

Preliminary Plans - For Reference Only

MAINTENANCE OF TRAFFIC - PHASE 5
CROSS SECTIONS - I.R. 90 WB WEST TEMPORARY CROSSOVER

CUY-90-16.28 (CCG3A)

MODEL: Phase 5 I-90 Crossover - 101+00.00 [Sheet] PAPERSIZE: 34x22 (in.) DATE: 3/27/2025 TIME: 8:34:15 PM USER: Collin.Kwiatt
pw:\\mb-us-pw.bentley.com:mb-us-pw-03\Documents\Cleveland.OH\OI_Projects\ODOT\District2\82382\400-Engineering\MOT\Sheets\82382_XM005A.dgn

DESIGN AGENCY
Michael Baker INTERNATIONAL

DESIGNER MZG
REVIEWER LJS 05/22/24
PROJECT ID 82382
SHEET 242 TOTAL 2696

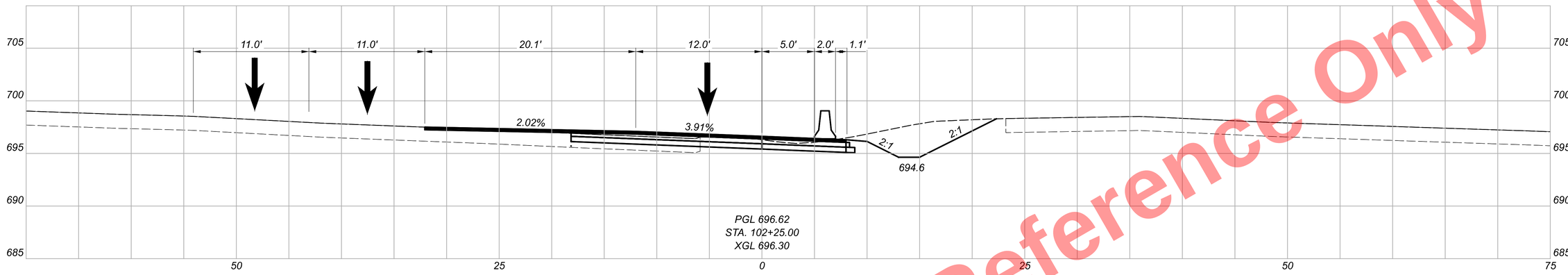

PGL 696.62
STA. 102+25.00
XGL 696.30

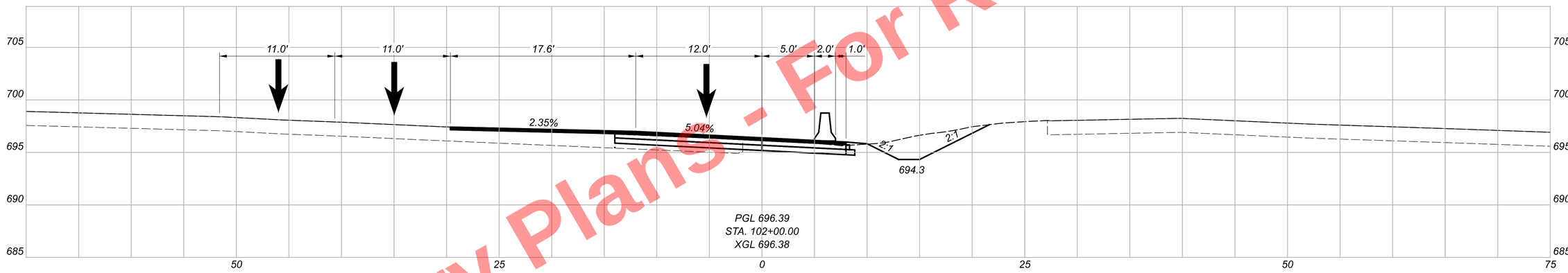

PGL 696.39
STA. 102+00.00
XGL 696.38

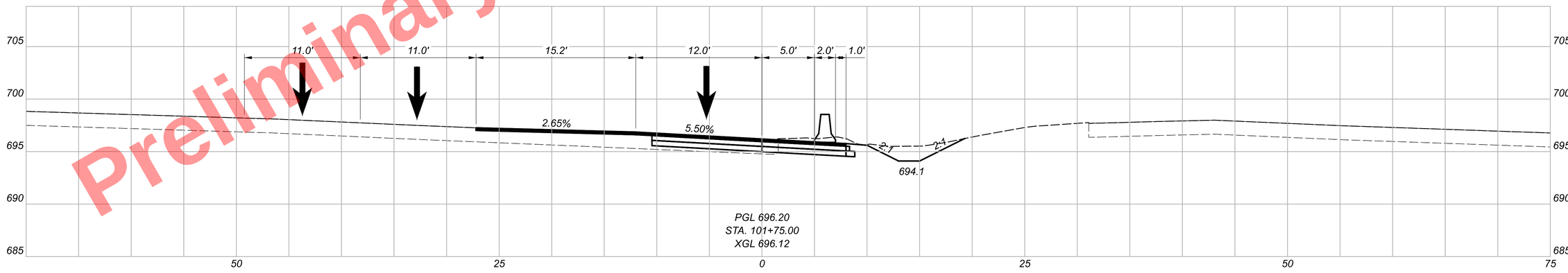

PGL 696.20
STA. 101+75.00
XGL 696.12

Preliminary Plans - For Reference Only

MAINTENANCE OF TRAFFIC - PHASE 5
CROSS SECTIONS - I.R. 90 WB WEST TEMPORARY CROSSOVER

DESIGN AGENCY
Michael Baker INTERNATIONAL

DESIGNER MZG
REVIEWER LJS 05/22/24
PROJECT ID 82382
SHEET 243 TOTAL 2696

CUY-90-16.28 (CCG3A)

MODEL: Phase 5 I-90 Crossover - I01+75.00 [Sheet] PAPERSIZE: 34x22 (in.) DATE: 3/27/2025 TIME: 8:34:17 PM USER: Collin.Kwiatt
pw:\\mb-us-pw.bentley.com:mb-us-pw-03\Documents\Cleveland_OH\01_Projects\ODOT\District 2\82382\400-Engineering\MOT\

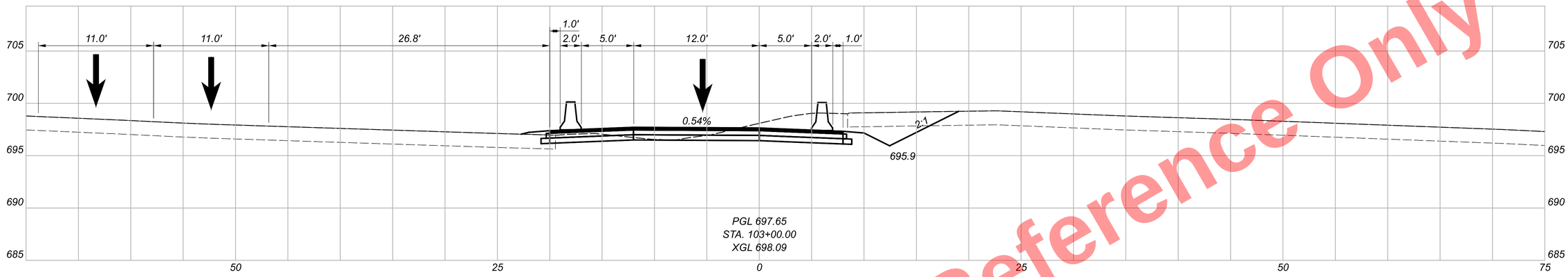

PGL 697.65
STA. 103+00.00
XGL 698.09

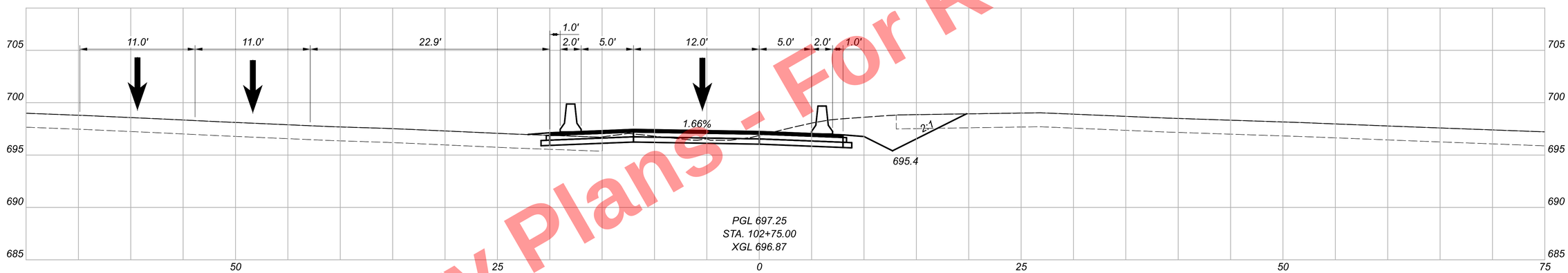

PGL 697.25
STA. 102+75.00
XGL 696.87

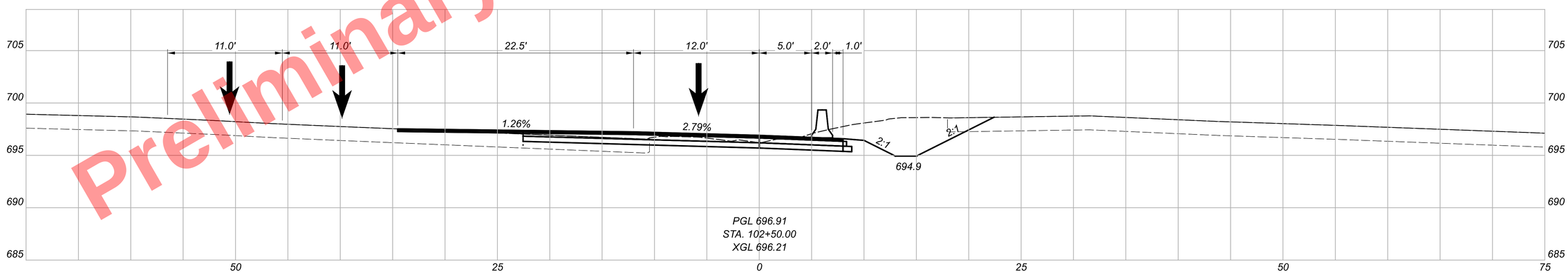

PGL 696.91
STA. 102+50.00
XGL 696.21

Preliminary Plans - Not For Reference Only

MAINTENANCE OF TRAFFIC - PHASE 5
CROSS SECTIONS - I.R. 90 WB WEST TEMPORARY CROSSOVER

DESIGN AGENCY
Michael Baker INTERNATIONAL

DESIGNER MZG
REVIEWER LJS 05/22/24
PROJECT ID 82382
SHEET 244 TOTAL 2696

CUY-90-16.28 (CCG3A)

MODEL: Phase 5 I-90 Crossover - 102+50.00 [Sheet] PAPERSIZE: 34x22 (in.) DATE: 3/27/2025 TIME: 8:34:25 PM USER: CollinKwiatt
pw:\\mb-us-pw.bentley.com:mb-us-pw-03\Documents\Cleveland_OH\01_Projects\000T\District2\82382\400-Engineering\MOT\Sheets\82382_XM005A.dgn

For Reference Only
Preliminary Plans - Not for Construction

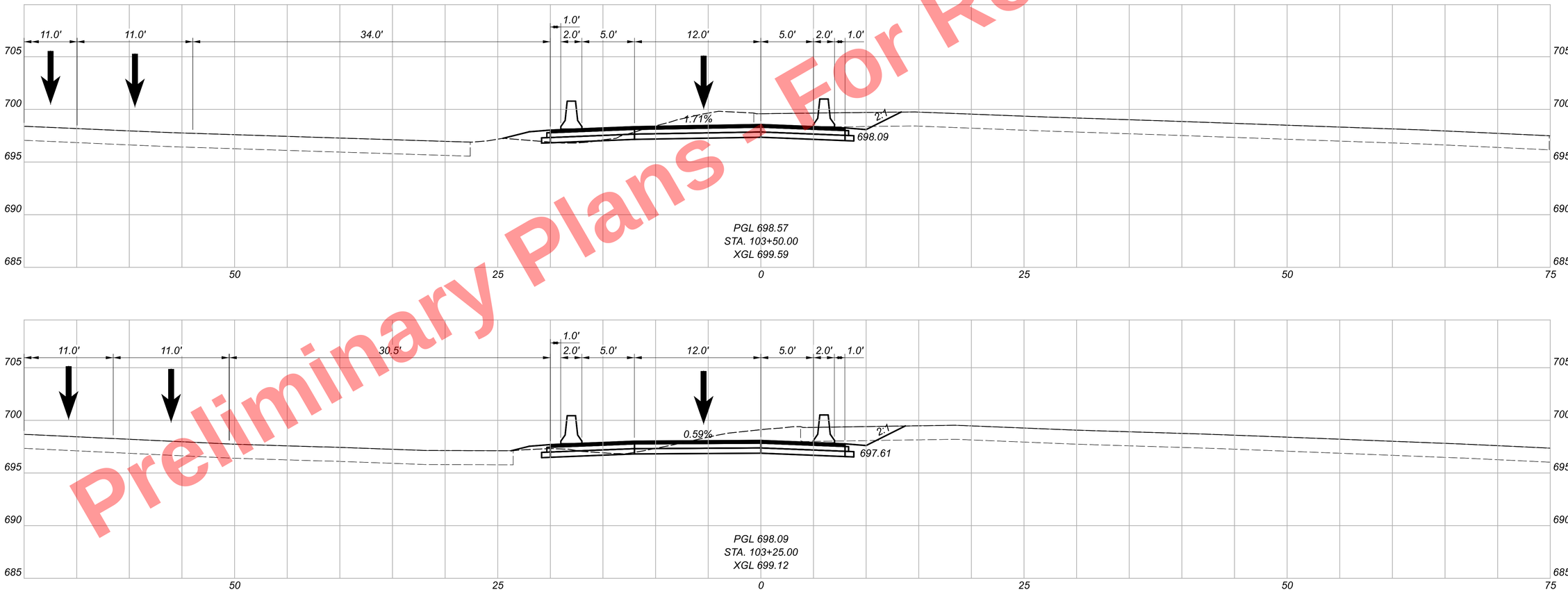

CUY-90-16.28 (CCG3A)

MODEL: Phase 5 I-90 Crossover - 103+25.00 [Sheet] PAPERSIZE: 34x22 (in.) DATE: 3/27/2025 TIME: 8:34:33 PM USER: Collin.Kwiatt
pw:\\mb-us-pw.bentley.commb-us-pw-03\Documents\Cleveland_OHIO_Projects\ODOT\District2\82382\400-Engineering\MOT\Sheets\82382_XM005A.dgn

MAINTENANCE OF TRAFFIC - PHASE 5
CROSS SECTIONS - I.R. 90 WB WEST TEMPORARY CROSSOVER

DESIGN AGENCY
Michael Baker INTERNATIONAL

DESIGNER MZG
REVIEWER LJS 05/22/24
PROJECT ID 82382
SHEET 245 TOTAL 2696

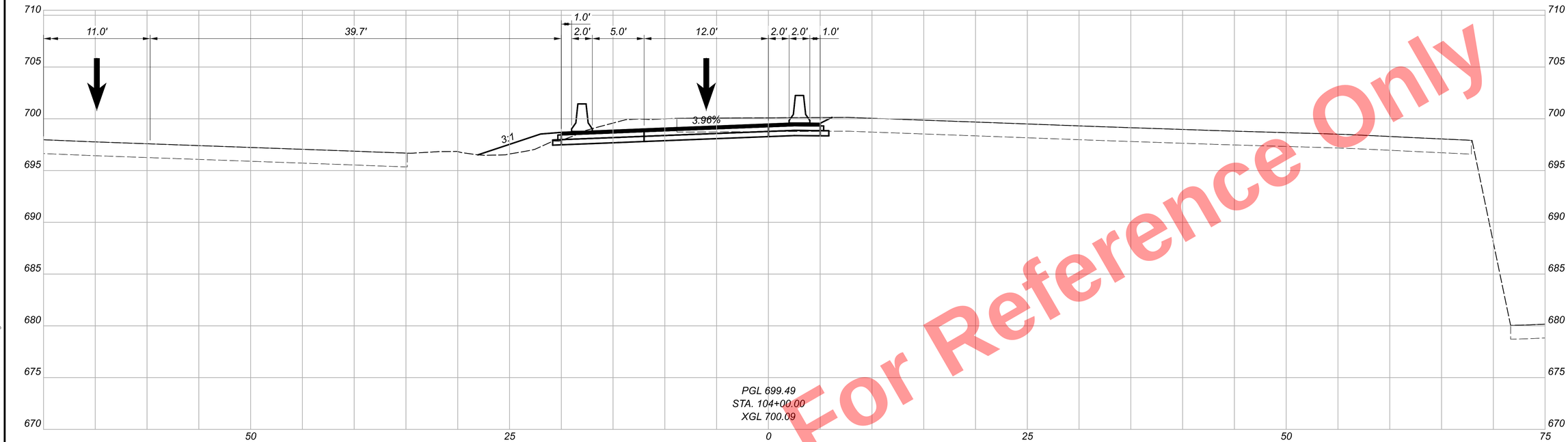

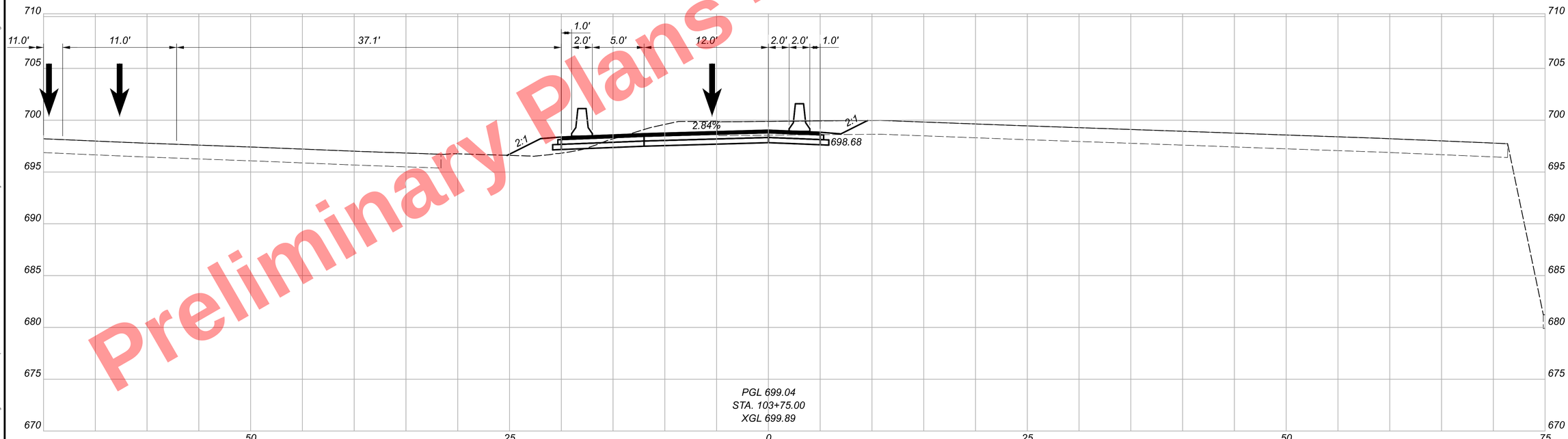

Preliminary Plans - Not For Reference Only

MAINTENANCE OF TRAFFIC - PHASE 5

CROSS SECTIONS - I.R. 90 WB WEST TEMPORARY CROSSOVER

DESIGN AGENCY

Michael Baker INTERNATIONAL

DESIGNER MZG

REVIEWER LJS 05/22/24

PROJECT ID 82382

SHEET 246 TOTAL 2696

CUY-90-16.28 (CCG3A)

MODEL: Phase 5 I-90 Crossover - 103+75.00 [Sheet] PAPERSIZE: 34x22 (In.) DATE: 3/27/2025 TIME: 8:34:40 PM USER: Collin.Kwiatt
pw:\\mb-us-pw.bentley.com:mb-us-pw-03\Documents\Cleveland_OH\01_Projects\00DOT\District#12\82382\400-Engineering\MOT\Sheets\82382_XM005A.dgn

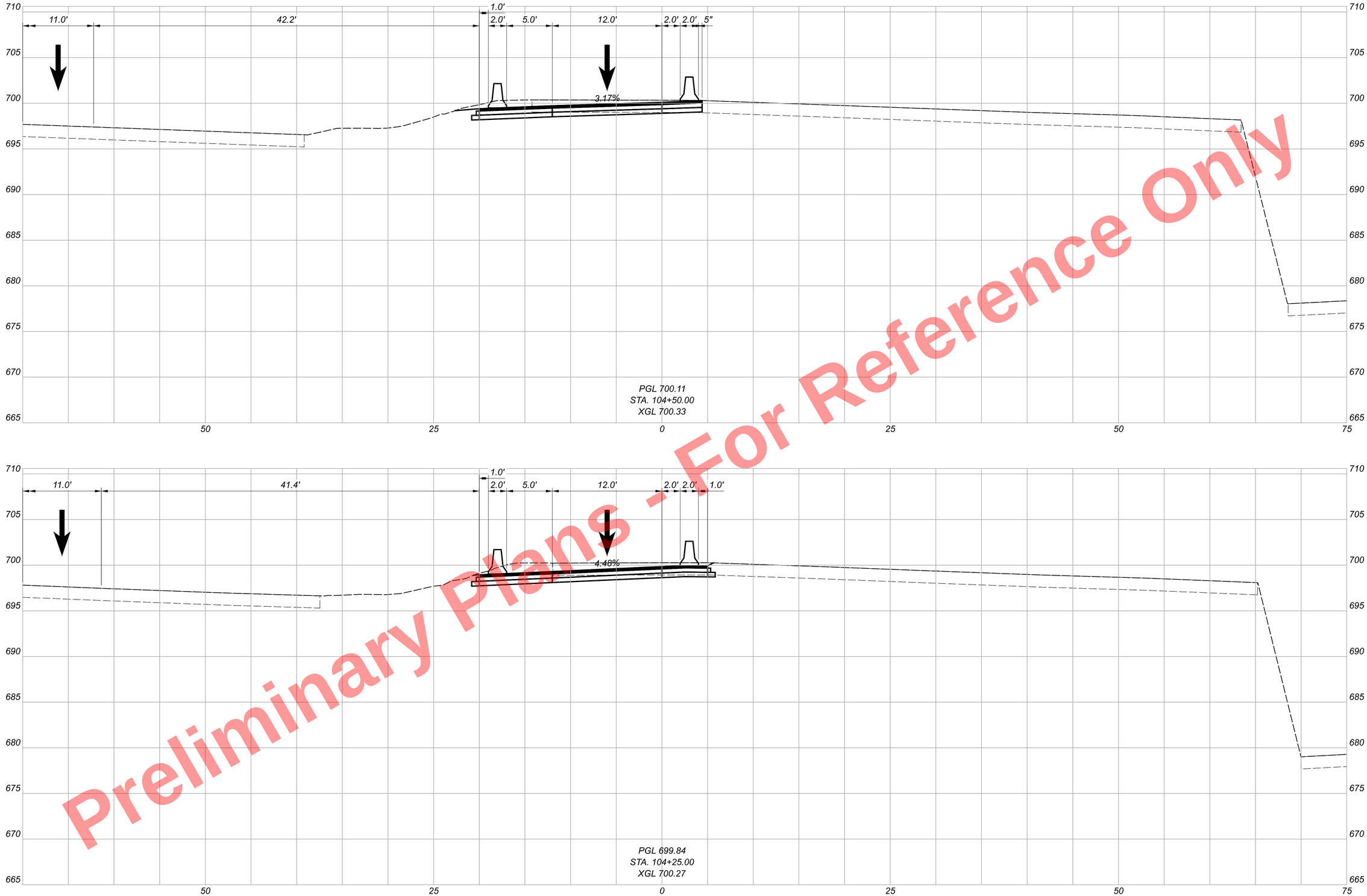

Preliminary Plans - Not For Reference Only

CUY-90-16.28 (CCG3A)

MODEL: Phase 5 I-90 Crossover - 104+25.00 [Sheet] PAPERSIZE: 34x22 (In.) DATE: 3/27/2025 TIME: 8:34:48 PM USER: Collin.Kwiatt
pw:\\mb-us-pw.benhley.com:mb-us-pw-03\Documents\Cleveland_OH\Oil_Projects\ODOT\District#12\82382\400-Engineering\MOT\Sheets\82382_XM005A.dgn

MAINTENANCE OF TRAFFIC - PHASE 5

CROSS SECTIONS - I.R. 90 WB WEST TEMPORARY CROSSOVER

DESIGN AGENCY

Michael Baker INTERNATIONAL

DESIGNER	MZG
REVIEWER	LJS 05/22/24
PROJECT ID	82382
SHEET	247
TOTAL	2696

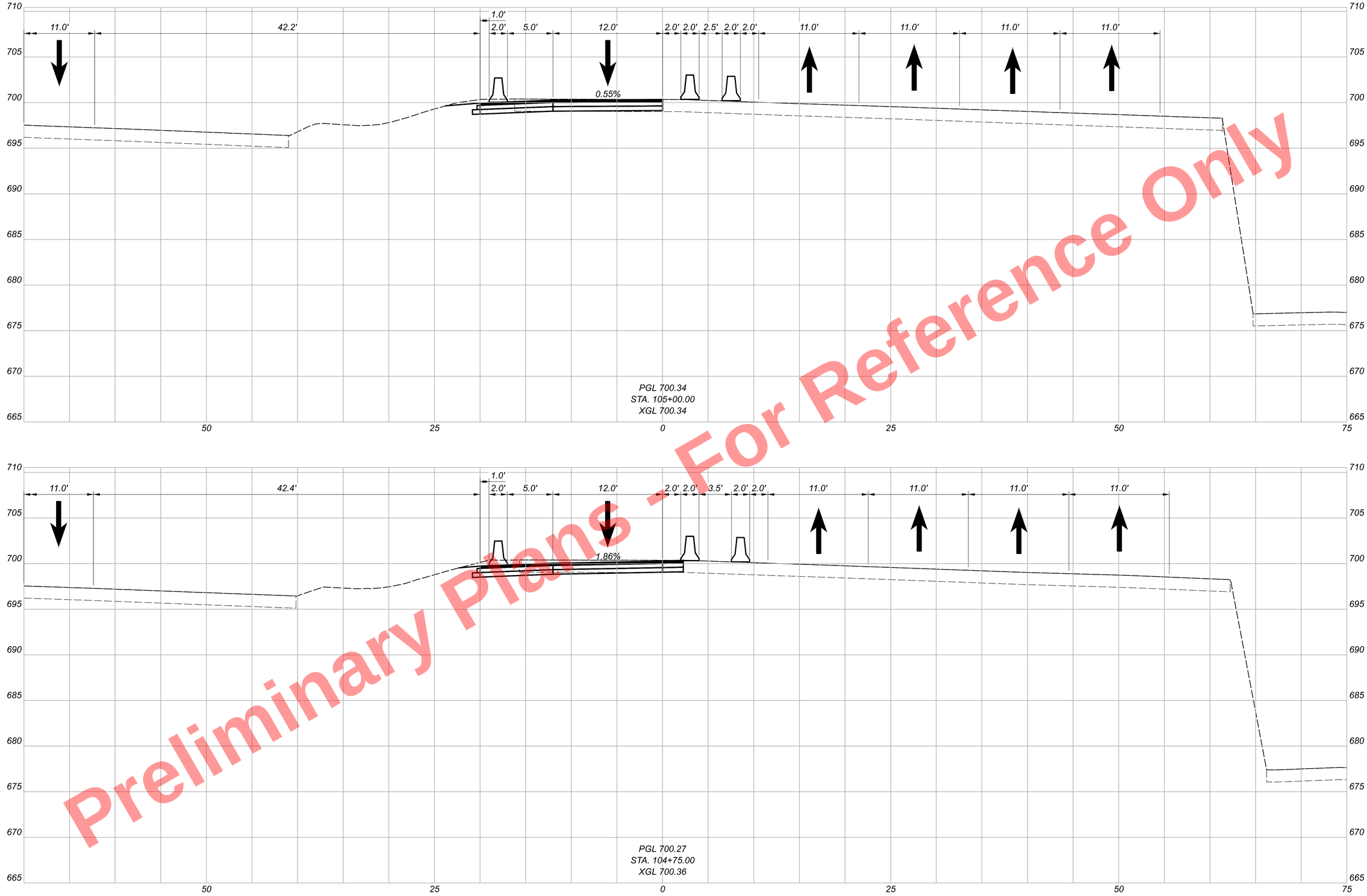

Preliminary Plans - For Reference Only

MAINTENANCE OF TRAFFIC - PHASE 5

CROSS SECTIONS - I.R. 90 WB WEST TEMPORARY CROSSOVER

CUY-90-16.28 (CCG3A)

MODEL: Phase 5 I-90 Crossover - 104+75.00 [Sheet] PAPERSIZE: 34x22 (in) DATE: 3/27/2025 TIME: 8:34:55 PM USER: Collin.Kwiatt
pw:\\mb-us-pw.bentley.com:mb-us-pw-03\Documents\Cleveland_OH_OL_Projects\ODOT\District 12\82382\400-Engineering\MOT\Sheets\82382_XM005A.dgn

DESIGN AGENCY

Michael Baker INTERNATIONAL

DESIGNER	
MZG	
REVIEWER	
LJS	05/22/24
PROJECT ID	
82382	
SHEET	TOTAL
248	2696



Preliminary Plans - For Reference Only

MAINTENANCE OF TRAFFIC - PHASE 5

CROSS SECTIONS - I.R. 90 WB WEST TEMPORARY CROSSOVER

DESIGN AGENCY

Michael Baker INTERNATIONAL

DESIGNER MZG

REVIEWER LJS 05/22/24

PROJECT ID 82382

SHEET 249 TOTAL 2696

CUY-90-16.28 (CCG3A)

MODEL: Phase 5 I-90 Crossover - 105+25.00 [Sheet] PAPERSIZE: 34x22 (in.) DATE: 3/27/2025 TIME: 8:35:00 PM USER: Collin.Kwiatt
pw:\\mb-us-pw.bentley.com:mb-us-pw-03\Documents\Cleveland_OH\OI_Projects\ODOT\District12\82382\400-Engineering\MOT\Sheets\82382_XM005A.dgn

MAINTENANCE OF TRAFFIC - PHASE 7
PLAN & PROFILE - I.R. 90 EB TEMPORARY CROSSOVER

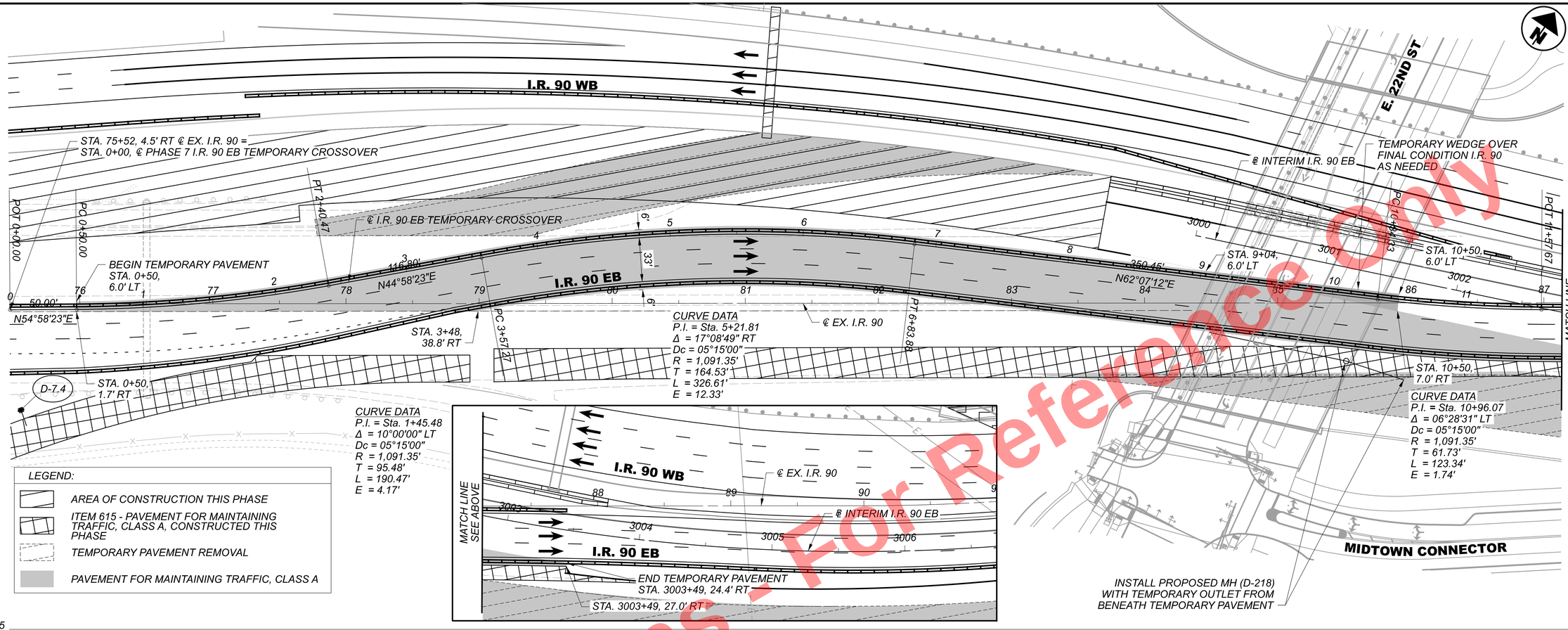

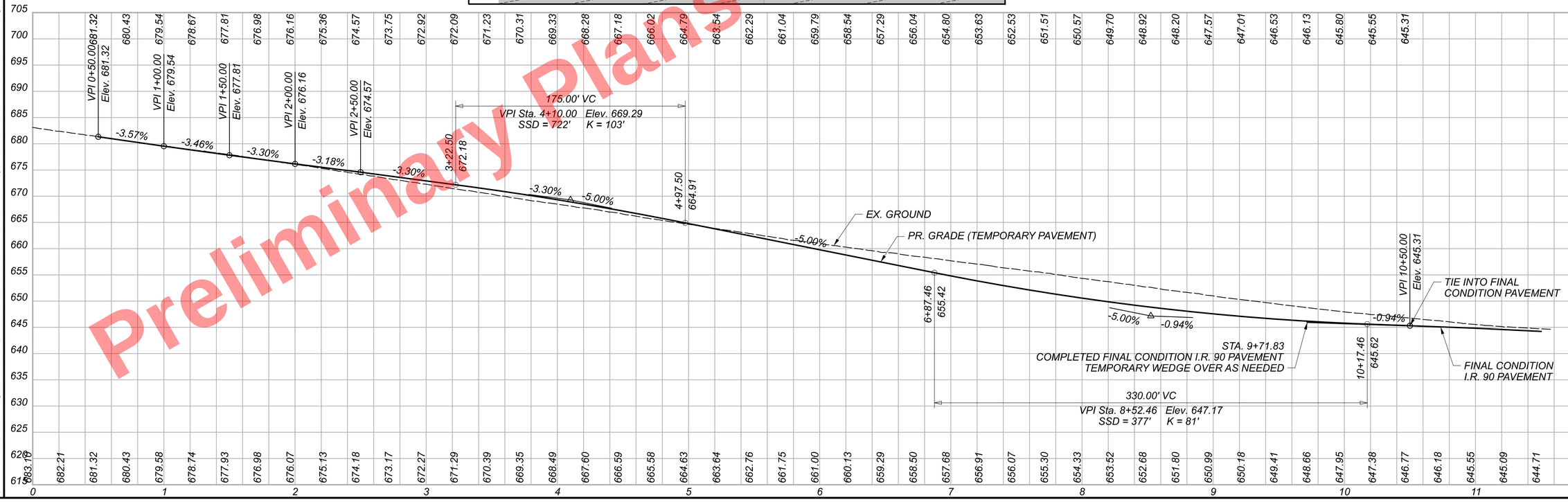

HORIZONTAL SCALE IN FEET
0 10 20 40

DESIGN AGENCY
Michael Baker INTERNATIONAL

DESIGNER CRK
REVIEWER GSH 05/22/24
PROJECT ID 82382
SHEET 250 TOTAL 2696

CUY-90-16.28 (CCG3A)

MODEL: Sheet-01 PAPERSIZE: 34x22 (in.) DATE: 3/27/2025 TIME: 8:35:12 PM USER: Collin.Kwiatt
pw:\\mb-us-pw.bentley.com:mb-us-pw-03\Documents\Cleveland_OH\01_Projects\DOT\District2\82382\400-Engineering\MOT\Sheets\82382_MP700.dgn

Preliminary Plans - Not For Reference Only

Preliminary Plans - For Reference Only

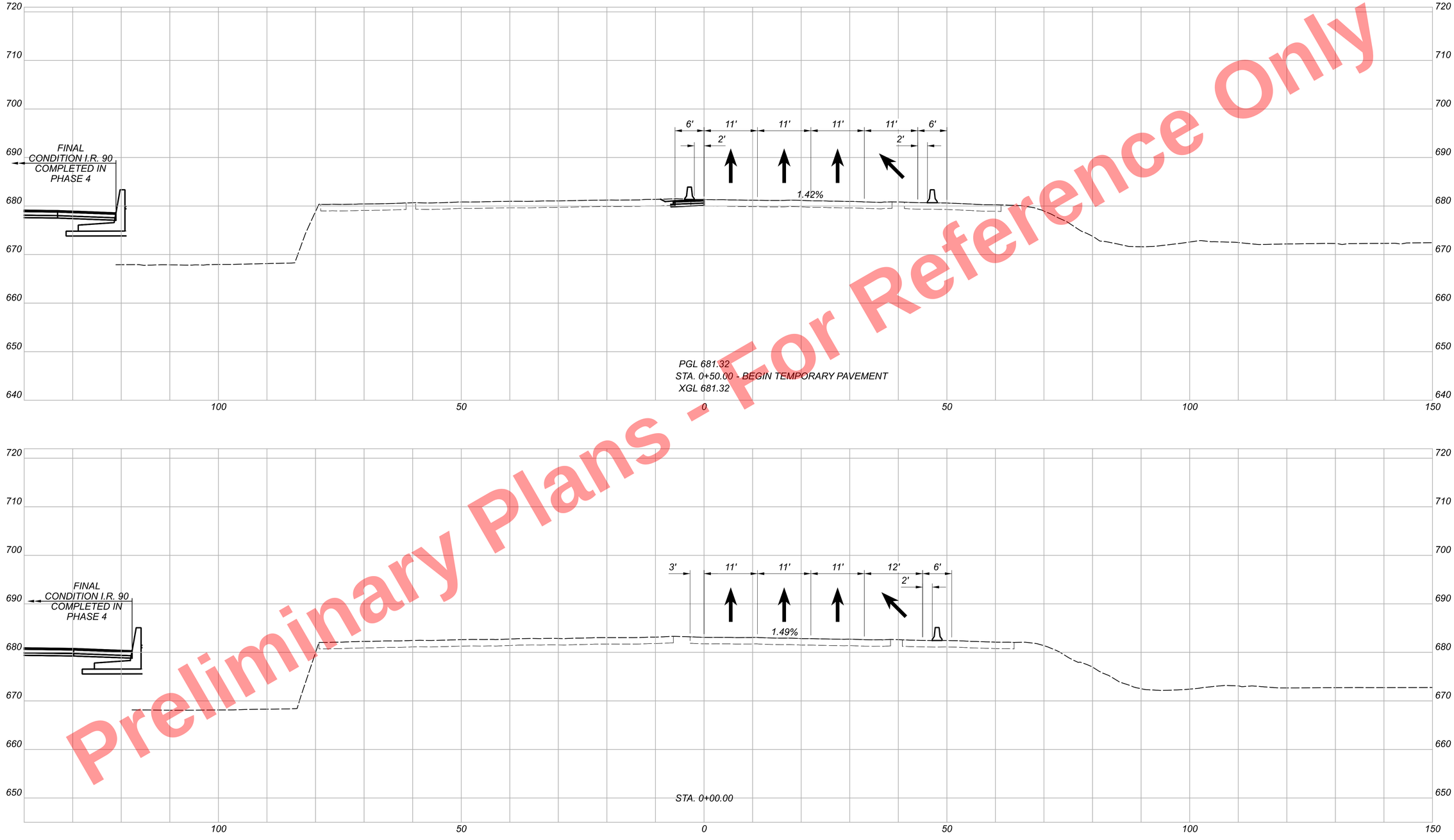

MAINTENANCE OF TRAFFIC - PHASE 7
CROSS SECTIONS - I.R. 90 EASTBOUND TEMPORARY CROSSOVER

CUY-90-16.28 (CCG3A)

MODEL: CLP_9 - 0+00.00 [Sheet] PAPERSIZE: 34x22 (in) DATE: 3/28/2025 TIME: 2:48:07 PM USER: Joseph.Hogan
pw:\\mb-us-pw.bentley.commb-us-pw-03\Documents\Cleveland_OH\01_Projects\000T\District2\82382\400-Engineering\MOT\Sheets\82382_XM007A.dgn

DESIGN AGENCY
Michael Baker INTERNATIONAL

DESIGNER
MZG

REVIEWER
LJS 05/22/24

PROJECT ID
82382

SHEET 251 | TOTAL 2696

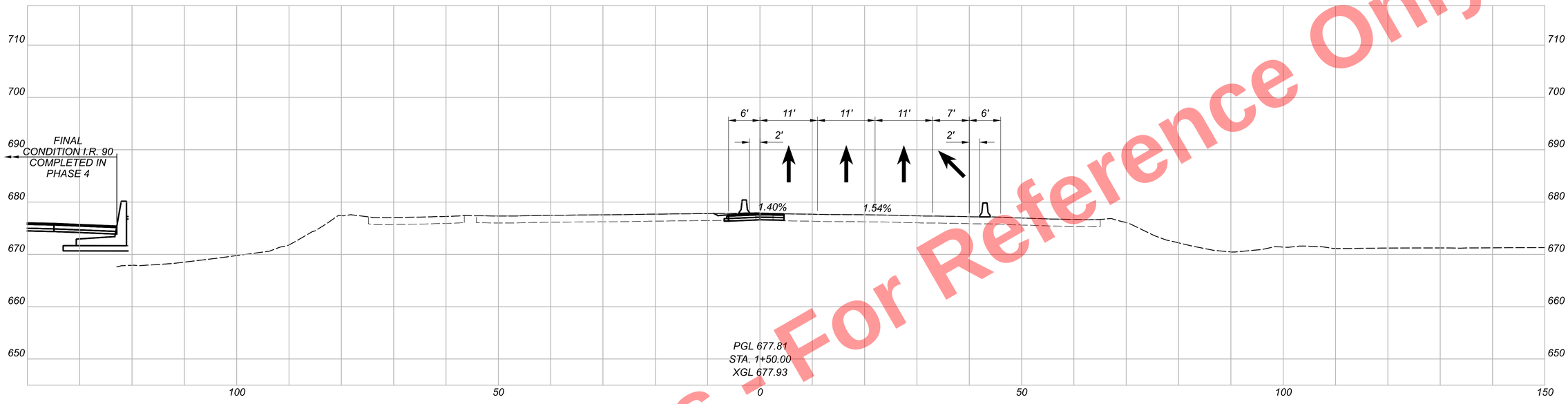

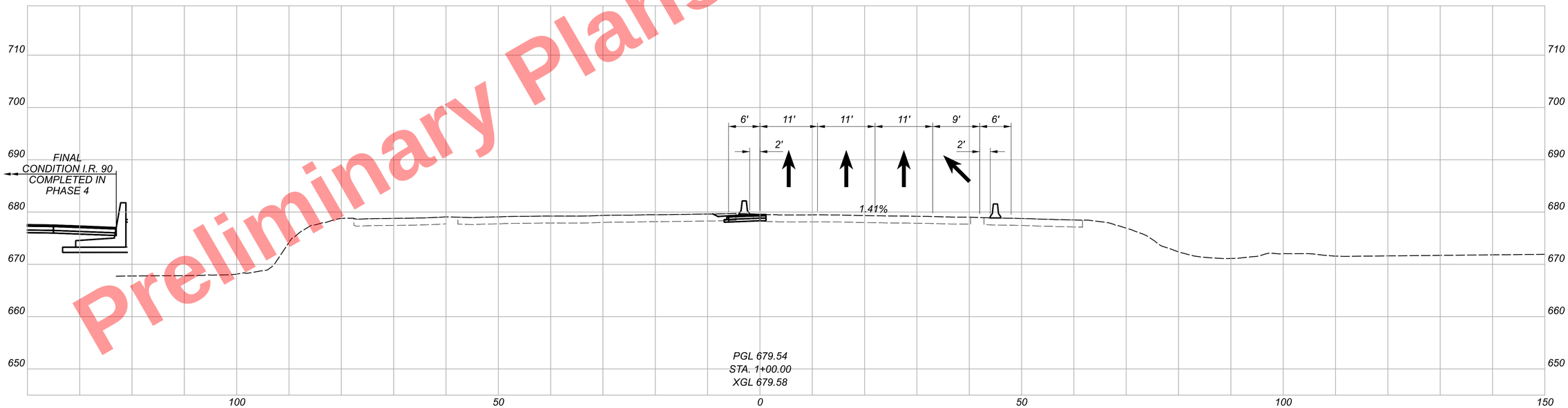

Preliminary Plans - For Reference Only

MAINTENANCE OF TRAFFIC - PHASE 7

CROSS SECTIONS - I.R. 90 EASTBOUND TEMPORARY CROSSOVER

CUY-90-16.28 (CCG3A)

MODEL: CLP_9 - 1+00.00 [Sheet] PAPERSIZE: 34x22 (in) DATE: 3/28/2025 TIME: 2:48:14 PM USER: Joseph.Hogan
pw:\\mb-us-pw.bentley.com:mb-us-pw-03\Documents\Cleveland_OH\OiL_Projects\ODOT\District2\82382\400-Engineering\MOT\Sheets\82382_XM007A.dgn

DESIGN AGENCY

Michael Baker INTERNATIONAL

DESIGNER MZG

REVIEWER LJS 05/22/24

PROJECT ID 82382

SHEET 252 TOTAL 2696

Preliminary Plans - For Reference Only

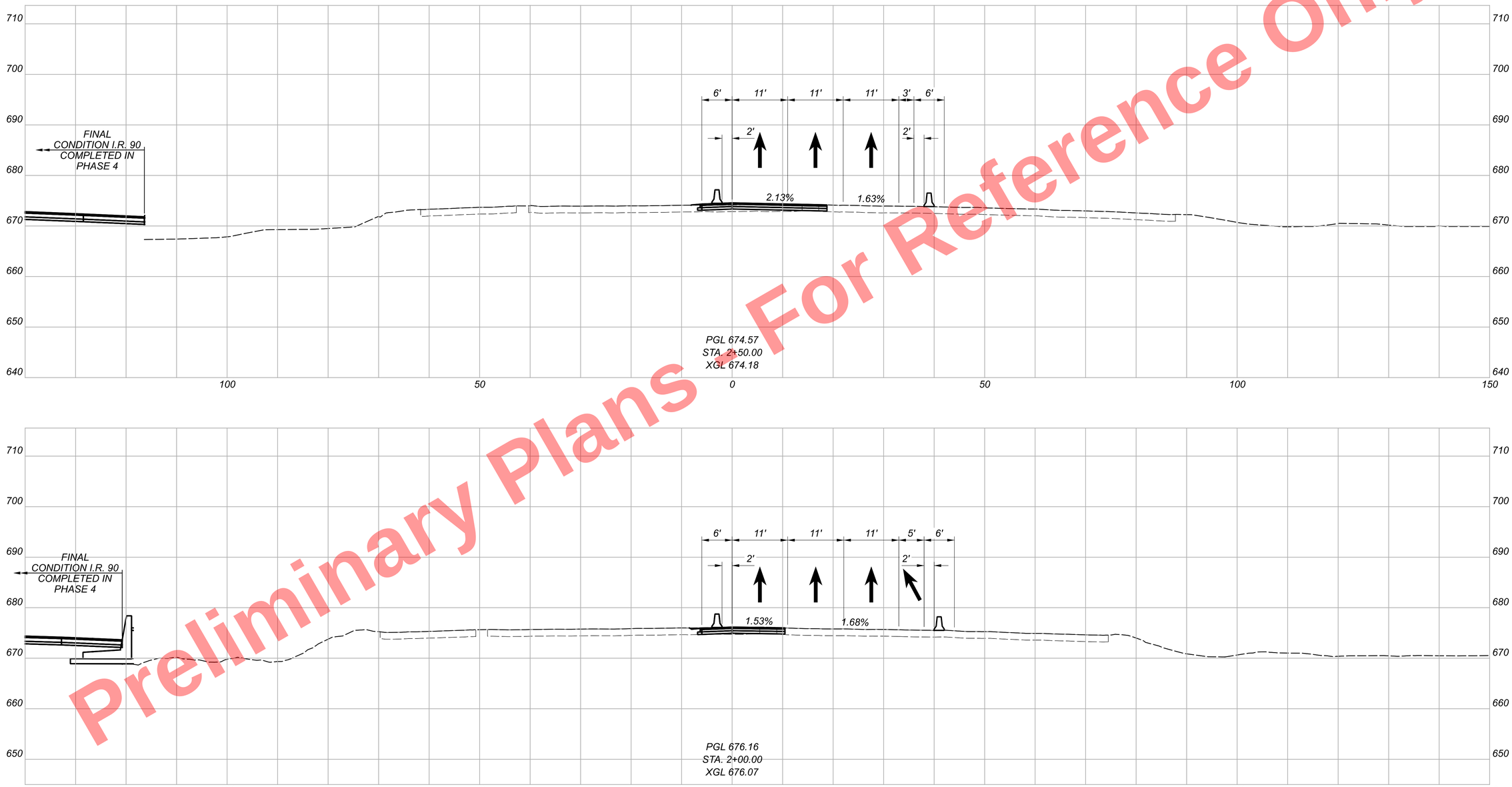

MAINTENANCE OF TRAFFIC - PHASE 7
CROSS SECTIONS - I.R. 90 EASTBOUND TEMPORARY CROSSOVER

CUY-90-16.28 (CCG3A)

DESIGN AGENCY
Michael Baker INTERNATIONAL

DESIGNER	MZG
REVIEWER	LJS 05/22/24
PROJECT ID	82382
SHEET	253
TOTAL	2696

MODEL: CLP_9 - 2+00.00 [Sheet] PAPERSIZE: 34x22 (in.) DATE: 3/28/2025 TIME: 2:48:6 PM USER: Joseph.Hogan
pw:\\mb-us-pw.bentley.com:mb-us-pw-03\Documents\Cleveland_OH\01_Projects\000T\District2\82382\400-Engineering\MOT\Sheets\82382_XM007A.dgn

Preliminary Plans - For Reference Only

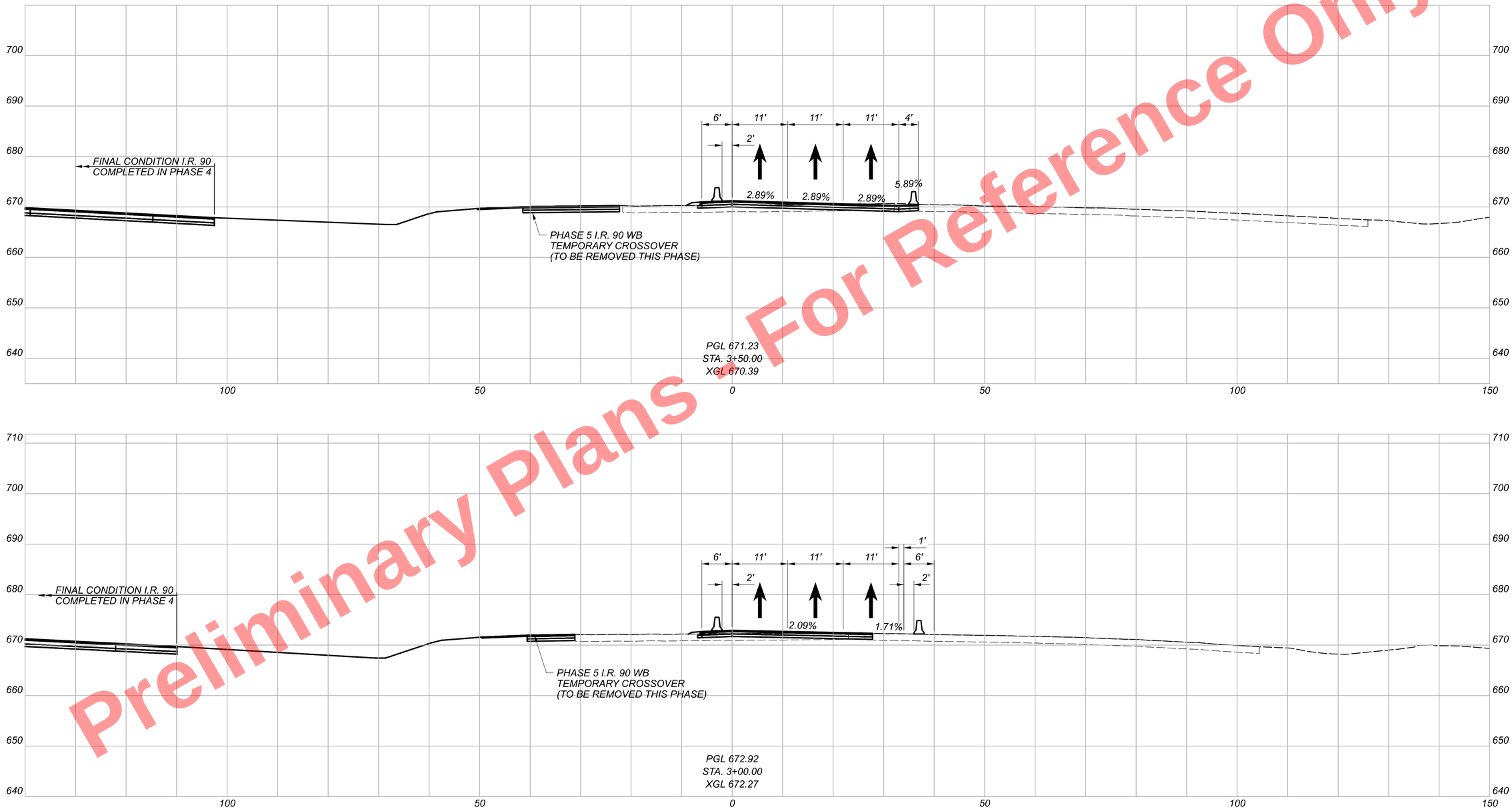

CUY-90-16.28 (CCG3A)

MODEL: CLP_9 - 3+00.00 [Sheet] PAPERSIZE: 34x22 (in.) DATE: 3/28/2025 TIME: 2:48:19 PM USER: Joseph.Hogan
pw:\\mb-us-pw.bentley.com:mb-us-pw-03\Documents\Cleveland_OHIO\Projects\ODOT\District2\82382\400-Engineering\MOT\Sheets\82382_XM007A.dgn

MAINTENANCE OF TRAFFIC - PHASE 7
CROSS SECTIONS - I.R. 90 EASTBOUND TEMPORARY CROSSOVER

DESIGN AGENCY
Michael Baker INTERNATIONAL

DESIGNER	MZG
REVIEWER	LJS 05/22/24
PROJECT ID	82382
SHEET	254
TOTAL	2696

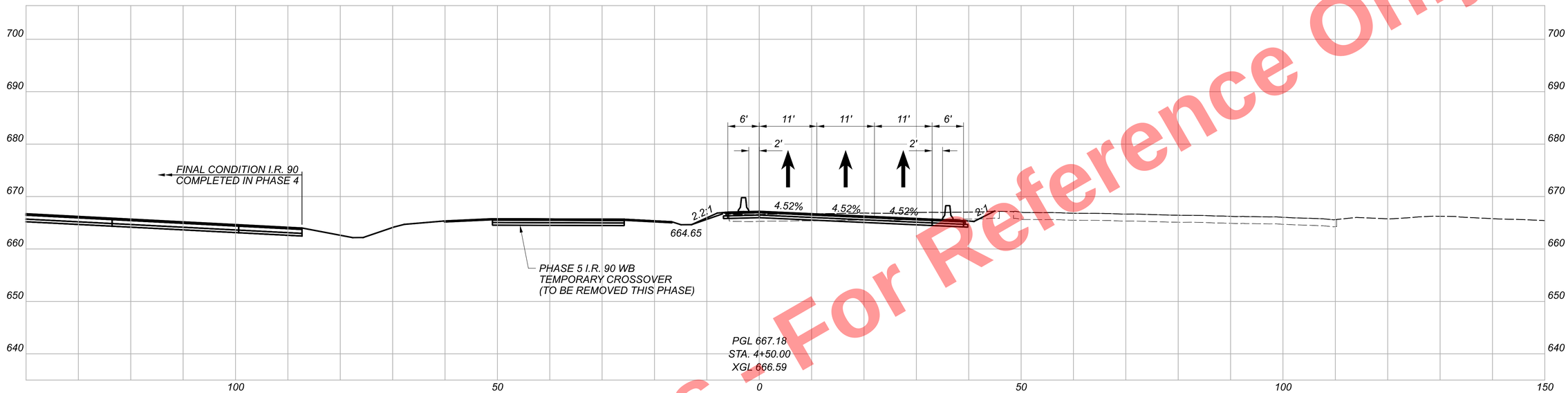

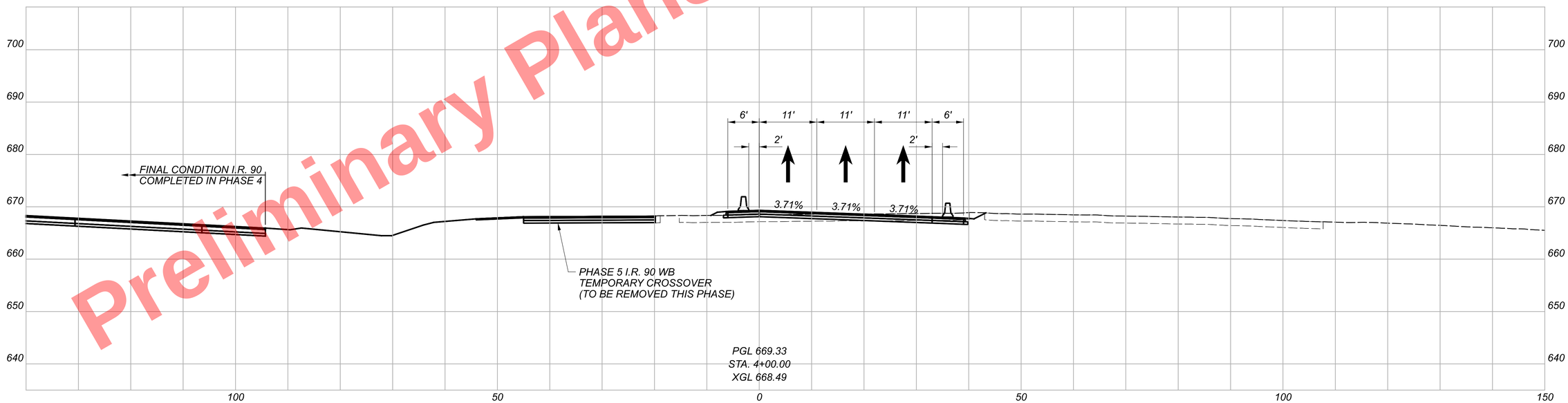

Preliminary Plans - For Reference Only

MAINTENANCE OF TRAFFIC - PHASE 7
CROSS SECTIONS - I.R. 90 EASTBOUND TEMPORARY CROSSOVER

DESIGN AGENCY
Michael Baker INTERNATIONAL

DESIGNER
MZG

REVIEWER
LJS 05/22/24

PROJECT ID
82382

SHEET 255 TOTAL 2696

CUY-90-16.28 (CCG3A)

MODEL: CLP_9 - 4+00.00 [Sheet] PAPERSIZE: 34x22 (in.) DATE: 3/28/2025 TIME: 2:48:21 PM USER: Joseph.Hogan
pw:\\mb-us-pw.bentley.com:mb-us-pw-03\Documents\Cleveland_OH\01_Projects\ODOT\District12\82382\400-Engineering\MOT\Sheets\82382_XM007A.dgn

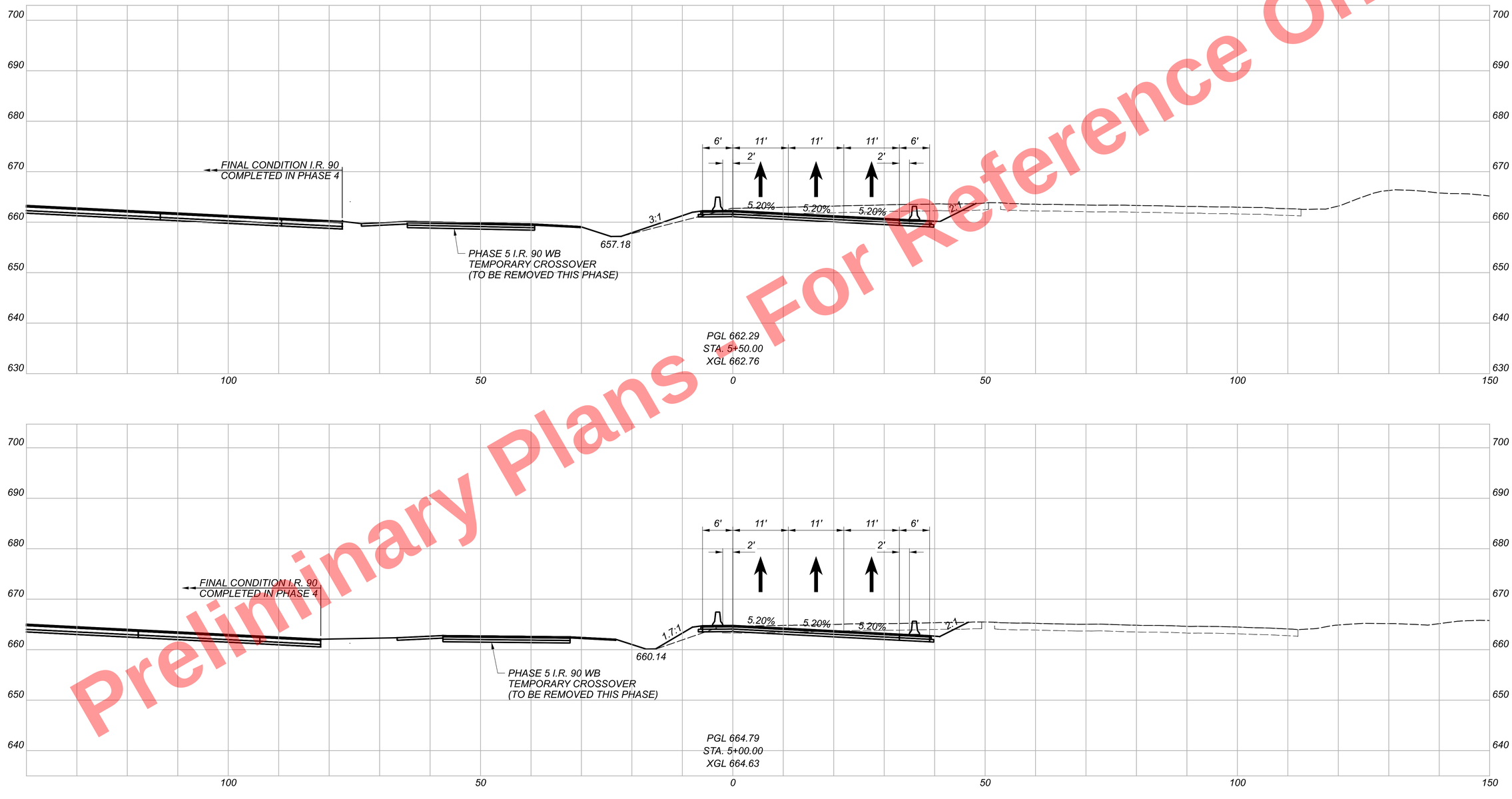

Preliminary Plans For Reference Only

MAINTENANCE OF TRAFFIC - PHASE 7
CROSS SECTIONS - I.R. 90 EASTBOUND TEMPORARY CROSSOVER

CUY-90-16.28 (CCG3A)

MODEL: CLP_9 - 5+00.00 [Sheet] PAPERSIZE: 34x22 (in.) DATE: 3/28/2025 TIME: 2:48:24 PM USER: Joseph.Hogan
pw:\\mb-us-pw.bentley.com:mb-us-pw-03\Documents\Cleveland_OH\01_Projects\ODOT\District2\82382\400-Engineering\MOT\Sheets\82382_XM007A.dgn

DESIGN AGENCY
Michael Baker INTERNATIONAL

DESIGNER
MZG

REVIEWER
LJS 05/22/24

PROJECT ID
82382

SHEET 256 | TOTAL 2696

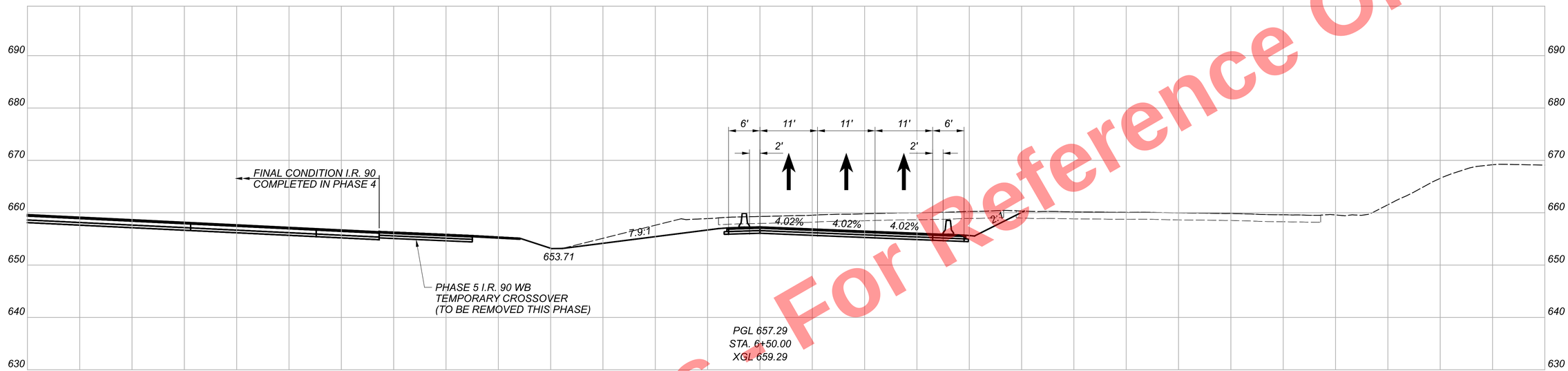

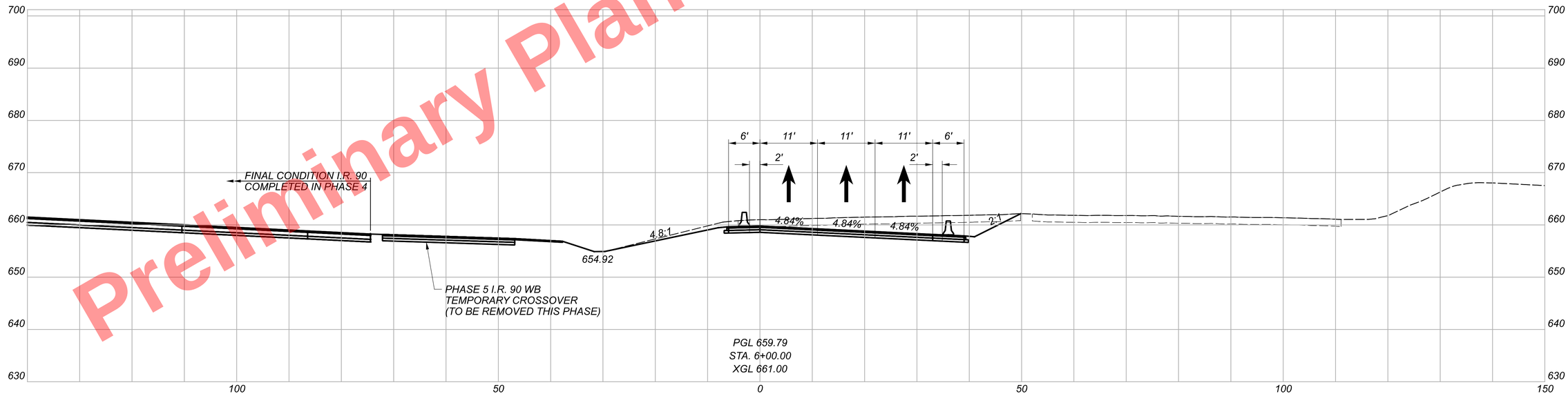

Preliminary Plans For Reference Only

MAINTENANCE OF TRAFFIC - PHASE 7
CROSS SECTIONS - I.R. 90 EASTBOUND TEMPORARY CROSSOVER

CUY-90-16.28 (CCG3A)

MODEL: CLP_9 - 6+00.00 [Sheet] PAPERSIZE: 34x22 (in.) DATE: 3/28/2025 TIME: 2:48:26 PM USER: Joseph.Hogan
pw:\\mb-us-pw.bentley.com:mb-us-pw-03\Documents\Cleveland.OH\01_Projects\0007\District#2\82382\400-Engineering\M0T\Sheets\82382_XM007A.dgn

DESIGN AGENCY
Michael Baker INTERNATIONAL

DESIGNER	MZG
REVIEWER	LJS 05/22/24
PROJECT ID	82382
SHEET	257
TOTAL	2696

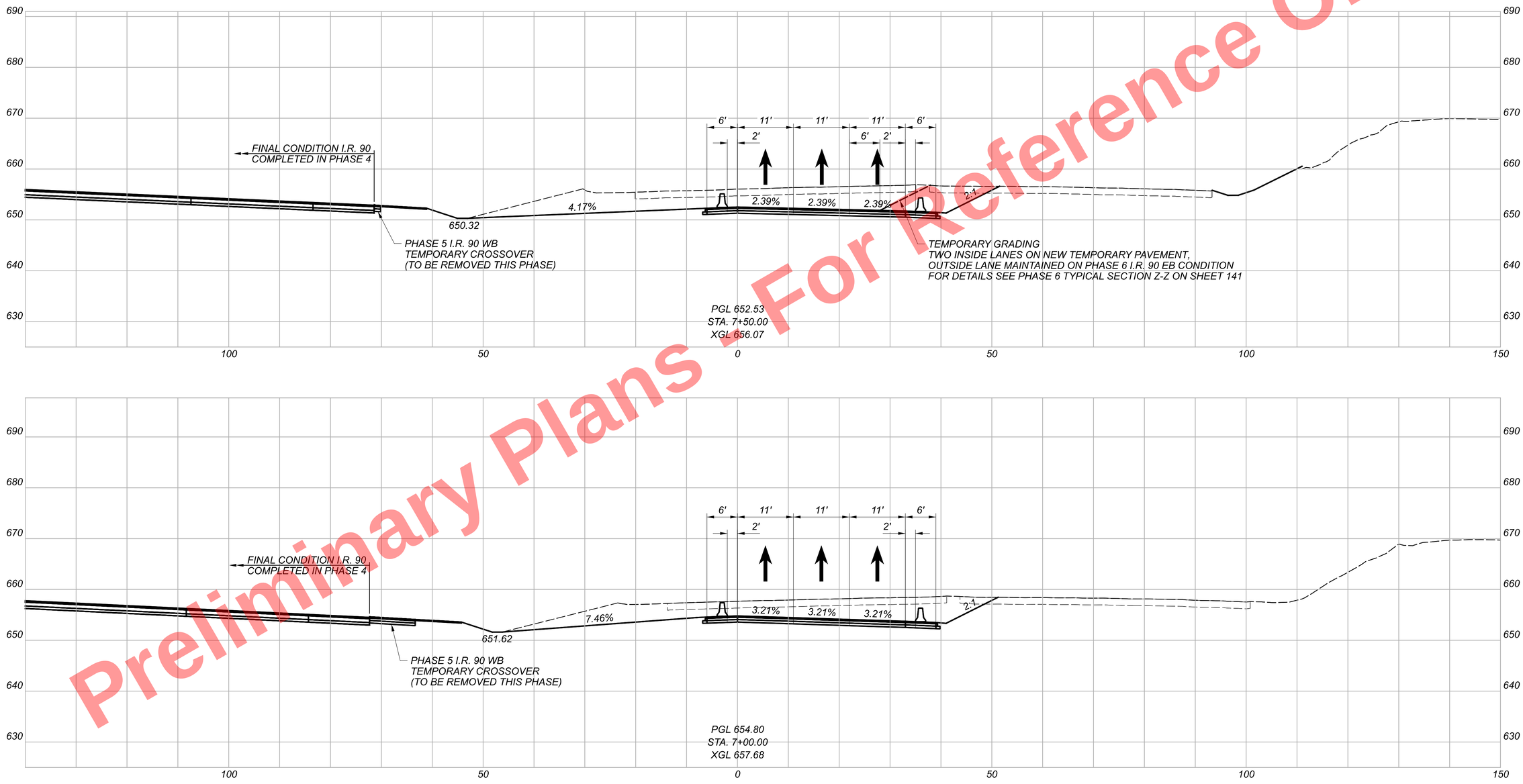

Preliminary Plans - For Reference Only

MAINTENANCE OF TRAFFIC - PHASE 7
CROSS SECTIONS - I.R. 90 EASTBOUND TEMPORARY CROSSOVER

CUY-90-16.28 (CCG3A)

MODEL: CLP_9 - 7+00.00 (Sheet) PAPERSIZE: 34x22 (In.) DATE: 3/28/2025 TIME: 2:48:28 PM USER: Joseph.Hogan
pw:\\mb-us-pw.bentley.com:mb-us-pw-03\Documents\Cleveland_OH\OL_Projects\ODOT\District12\82382\400-Engineering\M0T\Sheets\82382_XM007A.dgn

DESIGN AGENCY
Michael Baker INTERNATIONAL

DESIGNER MZG
REVIEWER LJS 05/22/24
PROJECT ID 82382
SHEET 258 TOTAL 2696

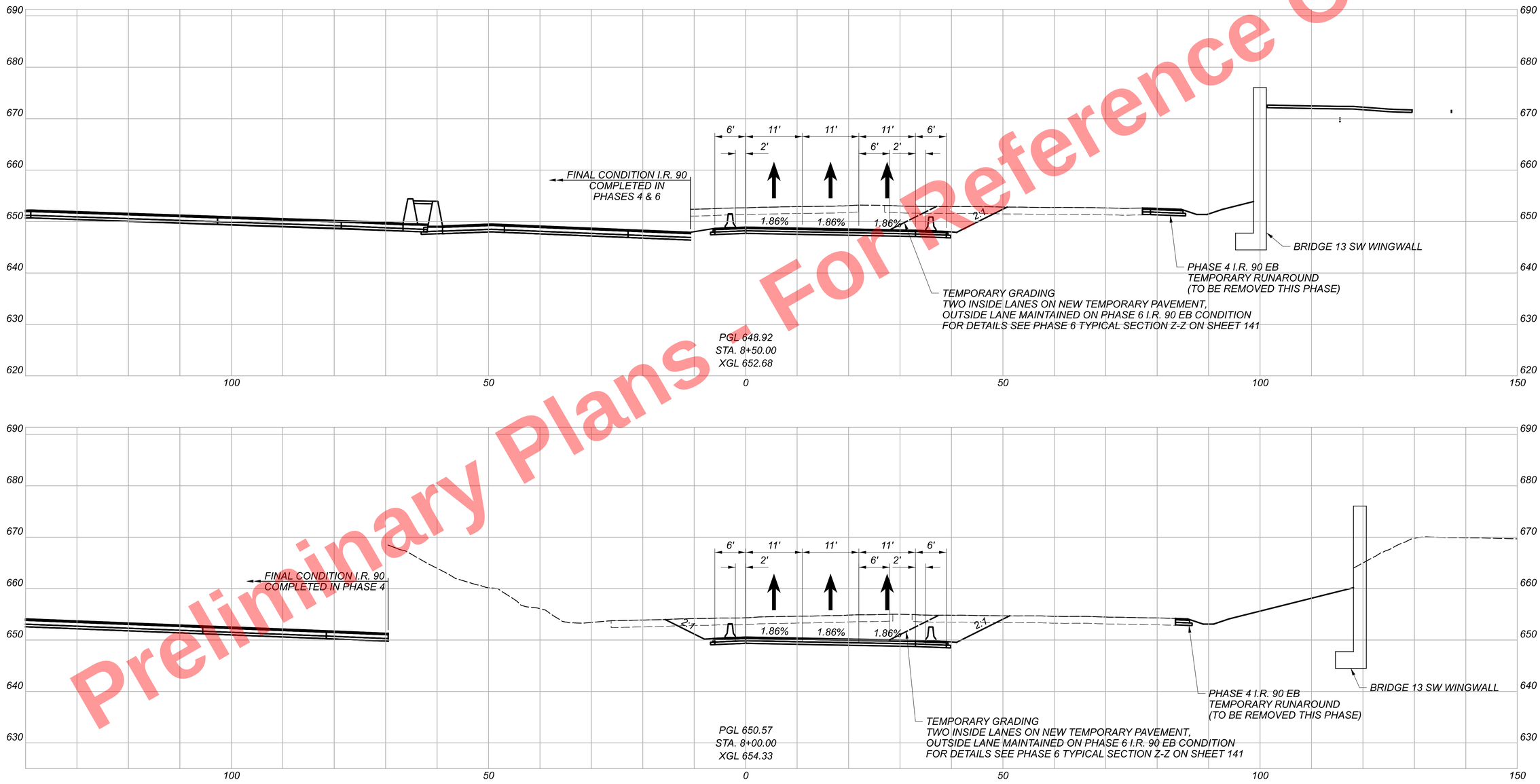

Preliminary Plans - For Reference Only

MAINTENANCE OF TRAFFIC - PHASE 7
CROSS SECTIONS - I.R. 90 EASTBOUND TEMPORARY CROSSOVER

CUY-90-16.28 (CCG3A)

MODEL: CLP_9 - 8+00.00 (Sheet) PAPERSIZE: 34x22 (in.) DATE: 3/28/2025 TIME: 2:48:31 PM USER: Joseph.Hogan
pw:\\mb-us-pw.bentley.com:mb-us-pw-03\Documents\Cleveland_OH\OI_Projects\0007\District2\82382\400-Engineering\MOT

DESIGN AGENCY
Michael Baker INTERNATIONAL

DESIGNER MZG
REVIEWER LJS 05/22/24
PROJECT ID 82382
SHEET 259 TOTAL 2696

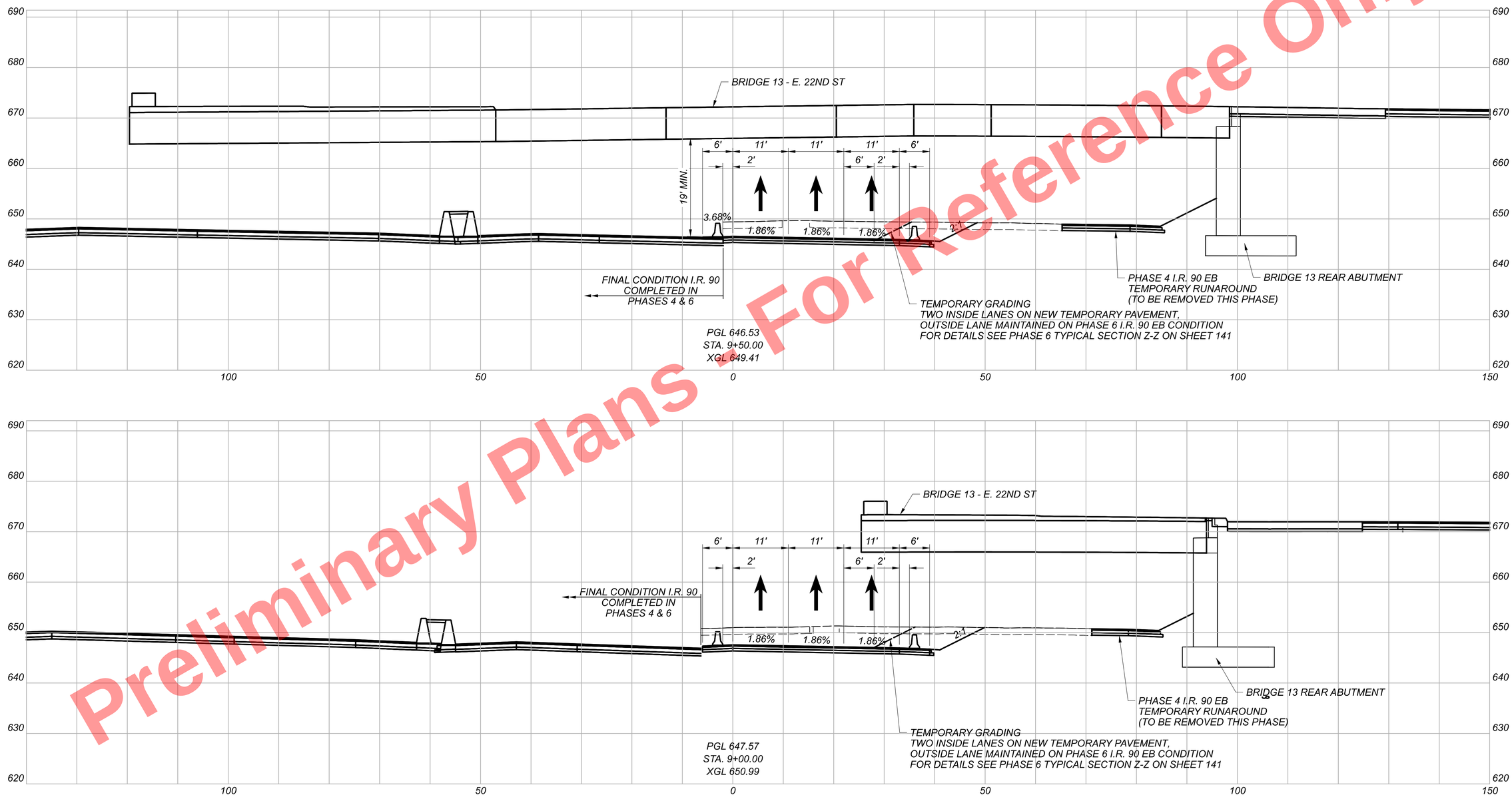

Preliminary Plans - For Reference Only

MAINTENANCE OF TRAFFIC - PHASE 7
CROSS SECTIONS - I.R. 90 EASTBOUND TEMPORARY CROSSOVER

CUY-90-16.28 (CCG3A)

MODEL: CLP_9 - 9+00.00 [Sheet] PAPERSIZE: 34x22 (in.) DATE: 3/28/2025 TIME: 2:48:34 PM USER: Joseph.Hogan
pw:\\mb-us-pw.bentley.com:mb-us-pw-03\Documents\Cleveland_OH\01_Projects\ODOT\District12\82382\400-Engineering\M0T\Sheets\82382_XM007A.dgn

DESIGN AGENCY
Michael Baker INTERNATIONAL

DESIGNER MZG
REVIEWER LJS 05/22/24
PROJECT ID 82382
SHEET 260 TOTAL 2696

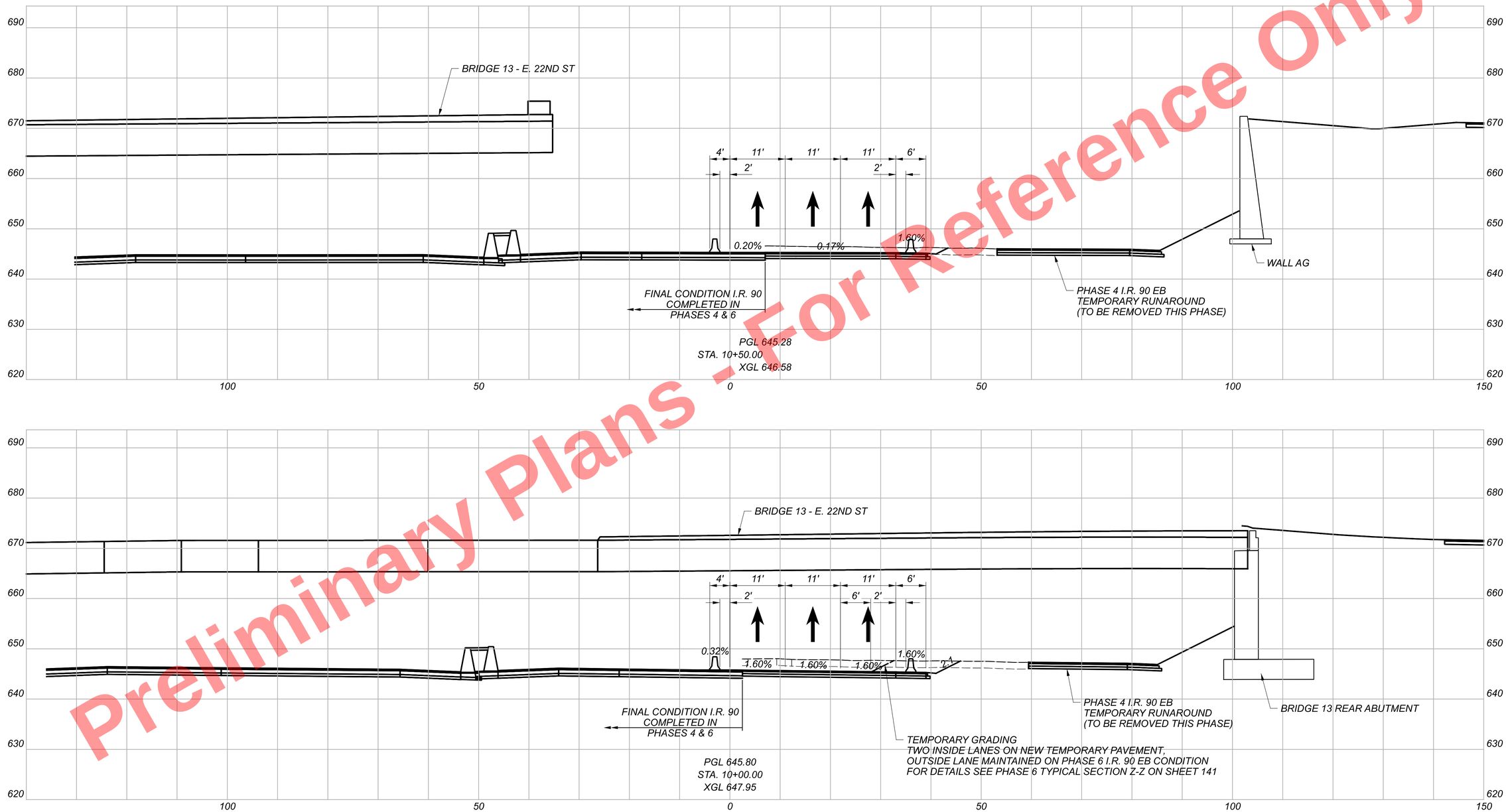

Preliminary Plans - For Reference Only

MAINTENANCE OF TRAFFIC - PHASE 7
CROSS SECTIONS - I.R. 90 EASTBOUND TEMPORARY CROSSOVER

CUY-90-16.28 (CCG3A)

MODEL: CLP_9 - 10+00.00 [Sheet] PAPERSIZE: 34x22 (in.) DATE: 3/28/2025 TIME: 2:48:37 PM USER: Joseph.Hogan
pw:\\mb-us-pw.bentley.com:mb-us-pw-03\Documents\Cleveland_OH\01_Projects\ODOT\District2\82382\400-Engineering\MOT\Sheets\82382_XM007A.dgn

DESIGN AGENCY
Michael Baker INTERNATIONAL

DESIGNER	MZG
REVIEWER	LJS 05/22/24
PROJECT ID	82382
SHEET	261
TOTAL	2696

℄ INTERIM I.R. 90 EB STA. 3003+49 TEMPORARY PAVEMENT ENDS

℄ I.R. 90 EB TEMPORARY PAVEMENT WEST STA. 11+50.00 TO
℄ INTERIM I.R. 90 EB STA. 3003+49
MATCH PROPOSED TEMPORARY PAVEMENT CROSS SLOPE
TO CONSTRUCTED FINAL CONDITION I.R. 90 PAVEMENT

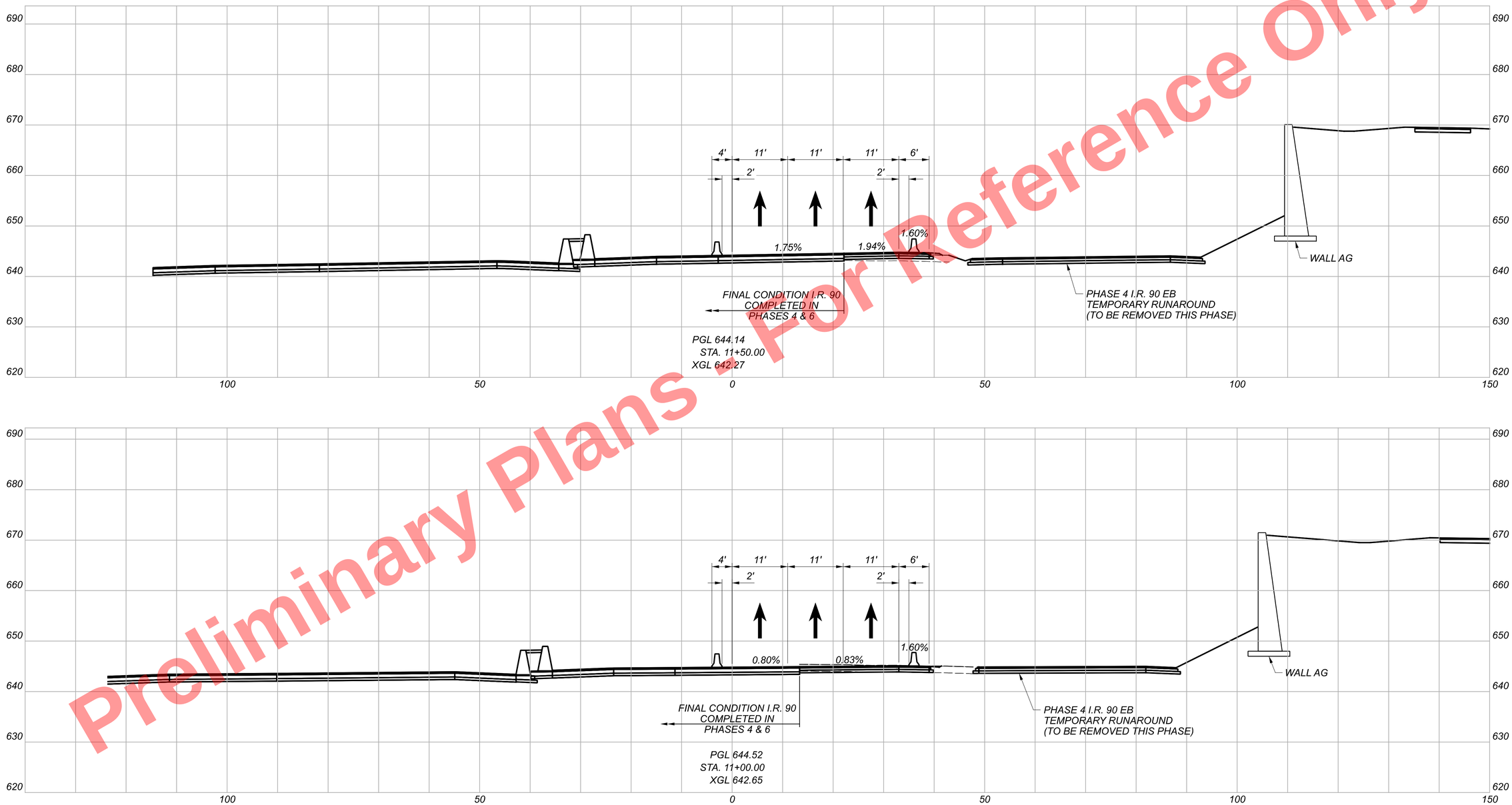

Preliminary Plans - For Reference Only

MAINTENANCE OF TRAFFIC - PHASE 7
CROSS SECTIONS - I.R. 90 EASTBOUND TEMPORARY CROSSOVER

DESIGN AGENCY
Michael Baker INTERNATIONAL

DESIGNER MZG
REVIEWER LJS 05/22/24
PROJECT ID 82382
SHEET 262 TOTAL 2696

CUY-90-16.28 (CCG3A)

MODEL: CLP_9 - 11+00.00 [Sheet] PAPERSIZE: 34x22 (In.) DATE: 3/28/2025 TIME: 2:48:40 PM USER: Joseph.Hogan
pw:\\mb-us-pw.bentley.com:mb-us-pw-03\Documents\Cleveland_OH\01_Projects\00DT\District#12\82382\400-Engineering\MOT\Sheets\82382_XM007A.dgn

LEGEND

AREA OF CONSTRUCTION TO BE COMPLETED DURING THIS PHASE

TEMPORARY PAVEMENT OR BRIDGE TO BE REMOVED

ITEM 615 - PAVEMENT FOR MAINTAINING TRAFFIC, CLASS A

DIRECTION OF TRAVEL

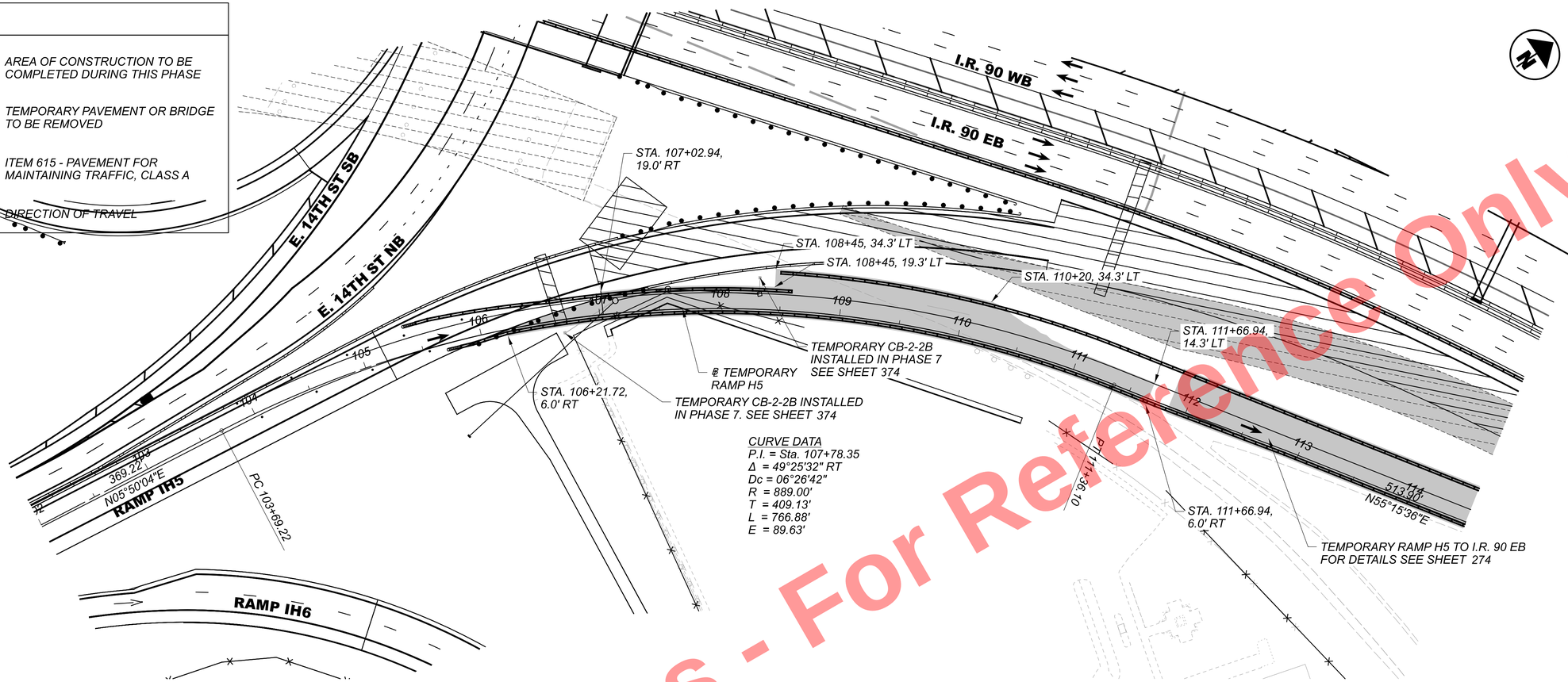

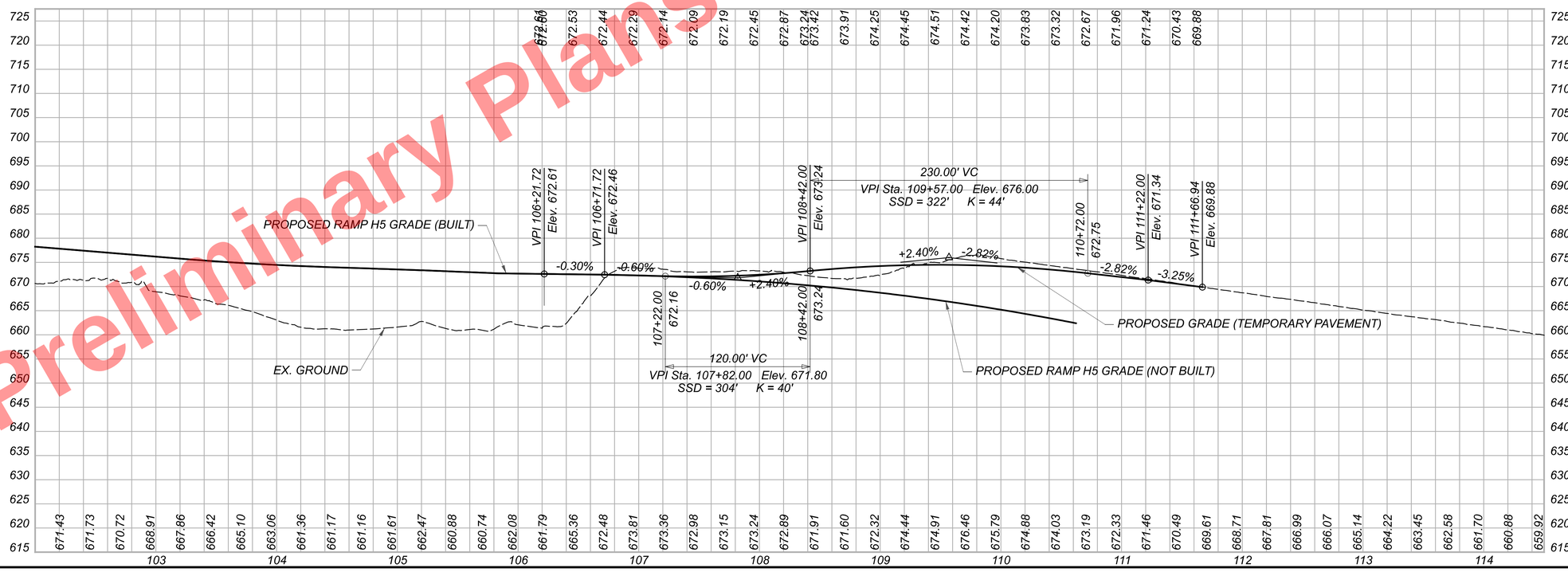

Preliminary Plans - For Reference Only

HORIZONTAL SCALE IN FEET
0 25 50 100

MAINTENANCE OF TRAFFIC - PHASE 8
PLAN & PROFILE - RAMP H5 TEMPORARY I.R. 90 EB CONNECTION

DESIGN AGENCY
Michael Baker INTERNATIONAL

DESIGNER CRK
REVIEWER GSH 05/22/24
PROJECT ID 82382
SHEET 263 TOTAL 2696

CUY-90-16.28 (CCG3A)

MODEL: MP700 (Sheet) PAPERSIZE: 34x22 (in) DATE: 3/27/2025 TIME: 8:36:49 PM USER: Collin.Kwiatt
pw:\\mb-us-pw.bentley.com:mb-us-pw-03\Documents\Cleveland_OH\OI_Projects\ODOT\District#2\82382\400-Engineering\MOT\Sheets\82382_MP900.dgn



Preliminary Plans - For Reference Only

MAINTENANCE OF TRAFFIC - PHASE 8
CROSS SECTIONS - RAMP H5 TEMPORARY I.R. 90 EB CONNECTION

CUY-90-16.28 (CCG3A)

MODEL: CLP_6 - 106+25.00 [Sheet] PAPERSIZE: 34x22 (in.) DATE: 3/27/2025 TIME: 8:37:04 PM USER: Collin.Kwiatt
pw:\\mb-us-pw.bentley.com:mb-us-pw-03\Documents\Cleveland_OH\01_Projects\000TODistrict2\82382\400-Engineering\MOT\Sheets\82382_XM007.dgn

DESIGN AGENCY
Michael Baker INTERNATIONAL

DESIGNER
MZG

REVIEWER
LJS 05/22/24

PROJECT ID
82382

Sheet Totals		
Seeding	Cut	Fill
.	.	.

SHEET 264 TOTAL 2696



Preliminary Plans - Not For Reference Only

MAINTENANCE OF TRAFFIC - PHASE 8
CROSS SECTIONS - RAMP H5 TEMPORARY I.R. 90 EB CONNECTION

DESIGN AGENCY
Michael Baker INTERNATIONAL

DESIGNER MZG
REVIEWER LJS 05/22/24
PROJECT ID 82382

Sheet Totals		
Seeding	Cut	Fill
-	-	-

SHEET 265 TOTAL 2696

CUY-90-16.28 (CCG3A)

MODEL: CLP_6 - 106+75.00 (Sheet) PAPERSIZE: 34x22 (in.) DATE: 3/27/2025 TIME: 8:37:13 PM USER: Collin.Kwiatt
pw:\\mb-us-pw.bentley.com:mb-us-pw-03\Documents\Cleveland_OH\OL_Projects\ODOT\Distrtc#12\82382\400-Engineering\MOT\Sheets\82382_XM007.dgn

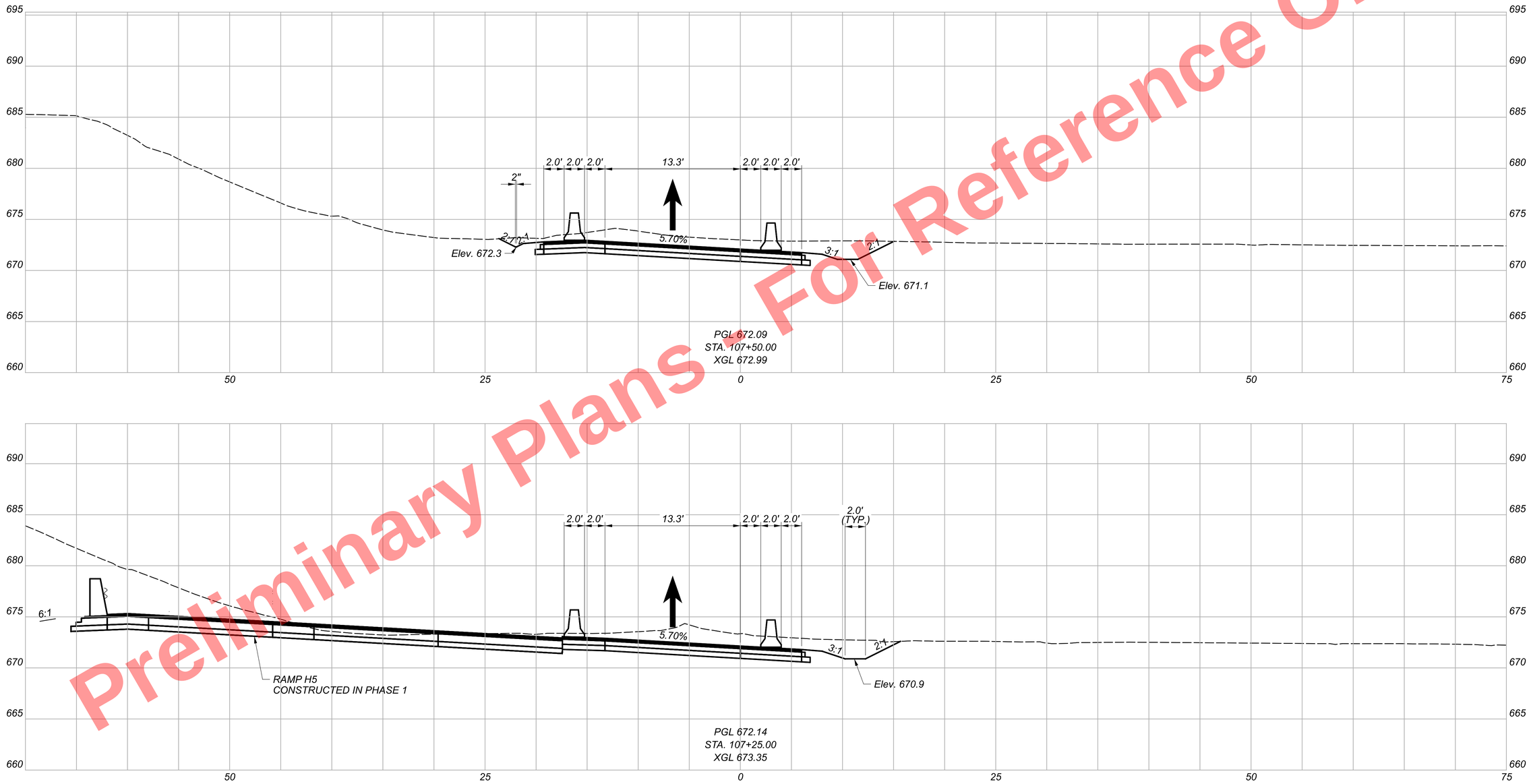

Preliminary Plans - Not For Reference Only

MAINTENANCE OF TRAFFIC - PHASE 8
CROSS SECTIONS - RAMP H5 TEMPORARY I.R. 90 EB CONNECTION

DESIGN AGENCY
Michael Baker INTERNATIONAL

DESIGNER MZG
REVIEWER LJS 05/22/24
PROJECT ID 82382

Sheet Totals		
Seeding	Cut	Fill
.	.	.

SHEET 266 TOTAL 2696

CUY-90-16.28 (CCG3A)

MODEL: CLP_6 - 107+25.00 [Sheet] PAPERSIZE: 34x22 (In.) DATE: 3/27/2025 TIME: 8:37:22 PM USER: Collin.Kwiat
pw:\\mb-us-pw.bentley.commb-us-pw-03\Documents\Cleveland_OH\01_Projects\000TVDistrict2\82382\400-Engineering\MOT\Sheets\82382_XM007.dgn

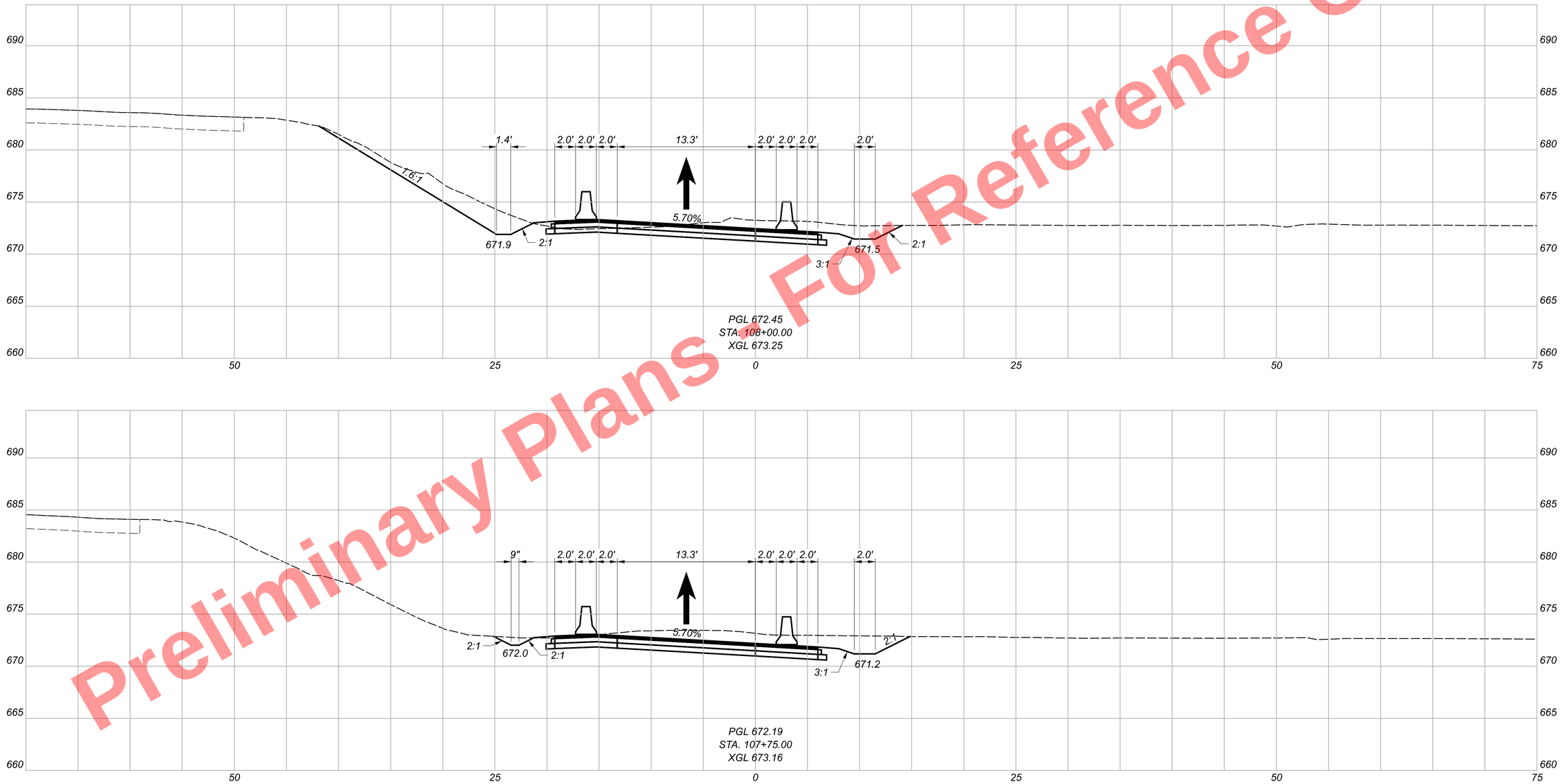

Preliminary Plans - For Reference Only

CUY-90-16.28 (CCG3A)

MAINTENANCE OF TRAFFIC - PHASE 8
CROSS SECTIONS - RAMP H5 TEMPORARY I.R. 90 EB CONNECTION

DESIGN AGENCY
Michael Baker INTERNATIONAL

DESIGNER MZG
REVIEWER LJS 05/22/24
PROJECT ID 82382

Sheet Totals		
Seeding	Cut	Fill
.	.	.

SHEET 267 TOTAL 2696

MODEL: CLP_6 - 107+75.00 [Sheet] PAPERSIZE: 34x22 (In.) DATE: 3/27/2025 TIME: 8:37:31PM USER: CollnsKwiatt
pw:\\mb-us-pw.bentley.com:mb-us-pw-03\Documents\Cleveland_OHIO\Projects\ODOT\District2\82382\400-Engineering\MOT\Sheets\82382_XM007.dgn

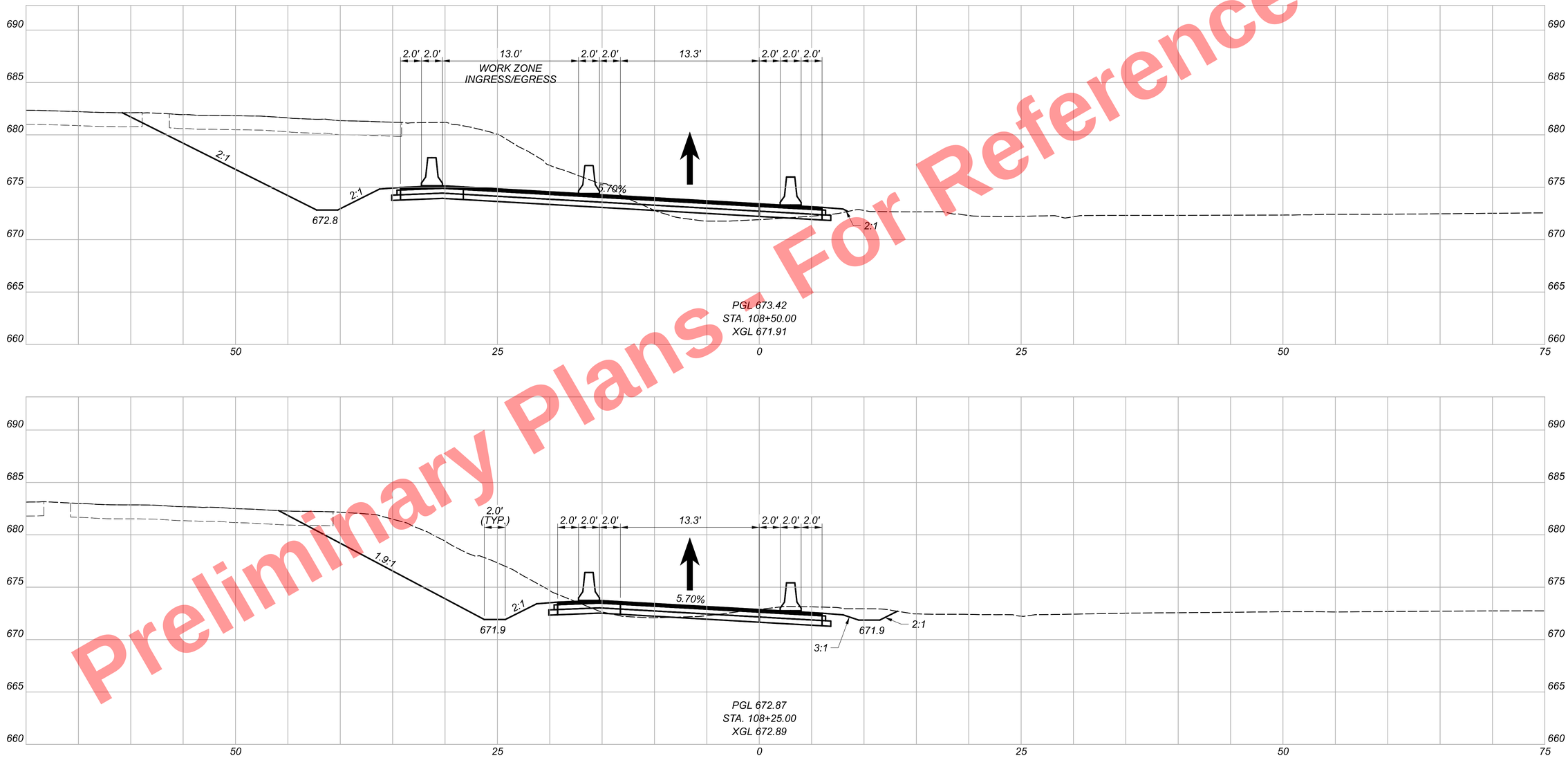

Preliminary Plans - Not For Reference Only

CUY-90-16.28 (CCG3A)

MAINTENANCE OF TRAFFIC - PHASE 8
CROSS SECTIONS - RAMP H5 TEMPORARY I.R. 90 EB CONNECTION

DESIGN AGENCY
Michael Baker INTERNATIONAL

DESIGNER MZG
REVIEWER LJS 05/22/24
PROJECT ID 82382

Sheet Totals		
Seeding	Cut	Fill
-	-	-

SHEET 268 TOTAL 2696

MODEL: CLP-6 - 108+25.00 (Sheet) PAPERSIZE: 34x22 (In.) DATE: 3/27/2025 TIME: 8:37:40 PM USER: Collin.Kwiat
pw:\\mb-us-pw.bentley.com:mb-us-pw-03\Documents\Cleveland_OH\OL_Projects\ODOT\District 12\82382\400-Engineering\MOT\Sheets\82382_XM007.dgn

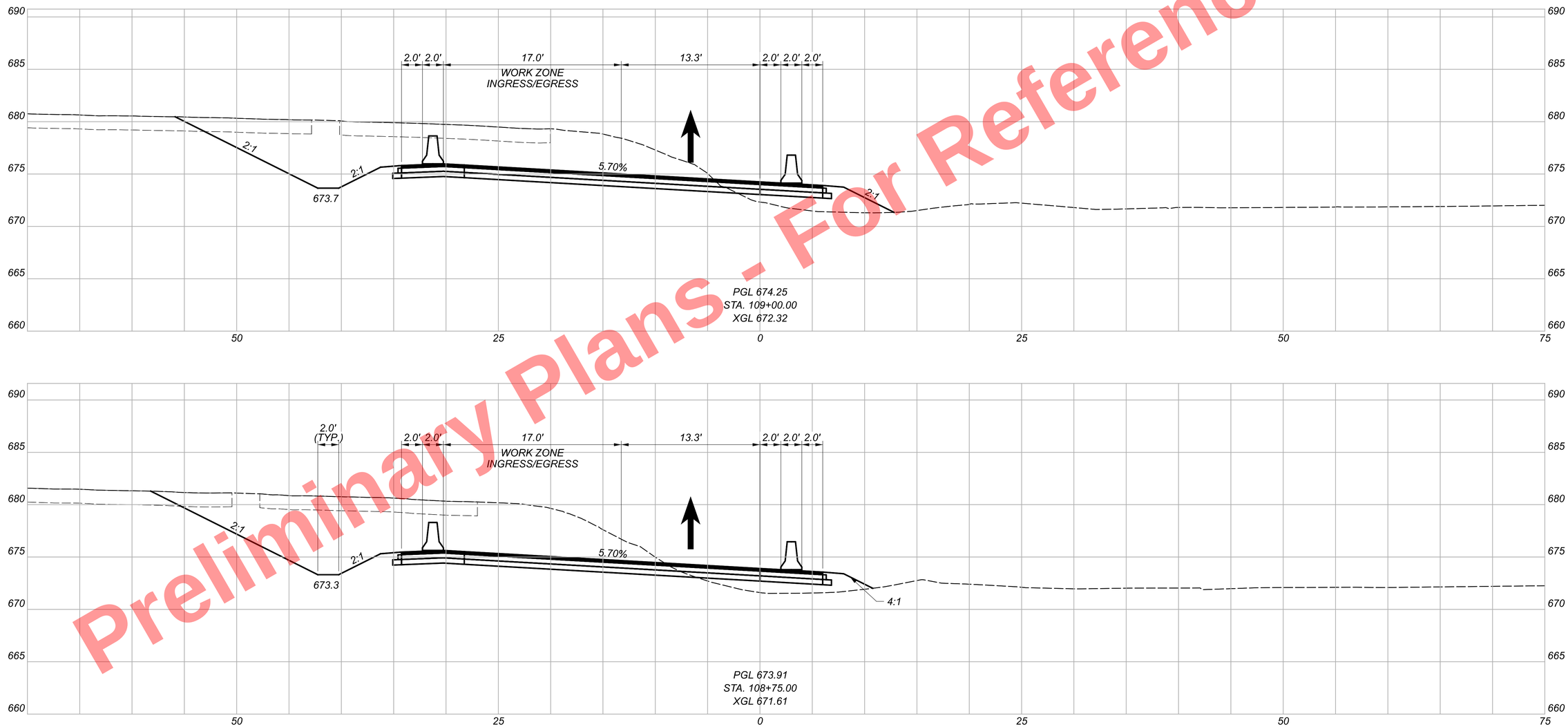

Preliminary Plans - For Reference Only

MAINTENANCE OF TRAFFIC - PHASE 8
CROSS SECTIONS - RAMP H5 TEMPORARY I.R. 90 EB CONNECTION

DESIGN AGENCY
Michael Baker INTERNATIONAL

DESIGNER MZG
REVIEWER LJS 05/22/24
PROJECT ID 82382

Sheet Totals		
Seeding	Cut	Fill
-	-	-

SHEET 269 TOTAL 2696

CUY-90-16.28 (CCG3A)

MODEL: CLP_6 - I08+75.00 [Sheet] PAPERSIZE: 34x22 (In.) DATE: 3/27/2025 TIME: 8:37:49 PM USER: Collin.Kwiatt
pw:\\mb-us-pw.bentley.com:mb-us-pw-03\Documents\Cleveland_OH\01_Projects\ODOT\District2\82382\400-Engineering\MOT\Sheets\82382_XM007.dgn

Preliminary Plans - For Reference Only

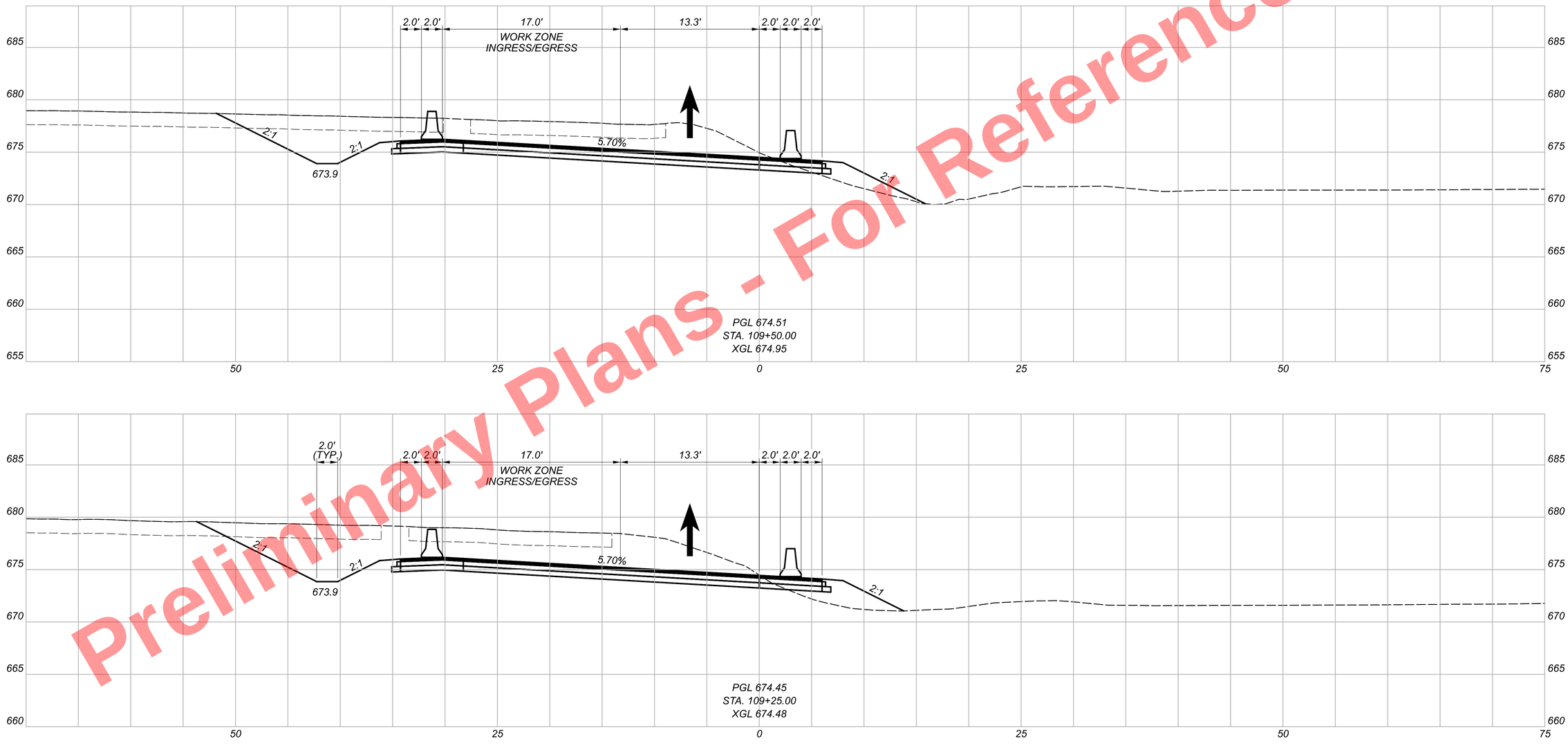

MAINTENANCE OF TRAFFIC - PHASE 8

CROSS SECTIONS - RAMP H5 TEMPORARY I.R. 90 EB CONNECTION

DESIGN AGENCY

Michael Baker INTERNATIONAL

DESIGNER MZG

REVIEWER LJS 05/22/24

PROJECT ID 82382

Sheet Totals		
Seeding	Cut	Fill
.	.	.

SHEET 270 TOTAL 2696

CUY-90-16.28 (CCG3A)

MODEL: CLP_6 - 109+25.00 [Sheet] PAPERSIZE: 34x22 (in.) DATE: 3/27/2025 TIME: 8:37:59 PM USER: Collin.Kwiatt
pw:\\mb-us-pw.bentley.commb-us-pw-03\Documents\Cleveland_OH\01_Projects\000TYDistrict2\82382\400-Engineering\MOT\Sheets\82382_XM007.dgn

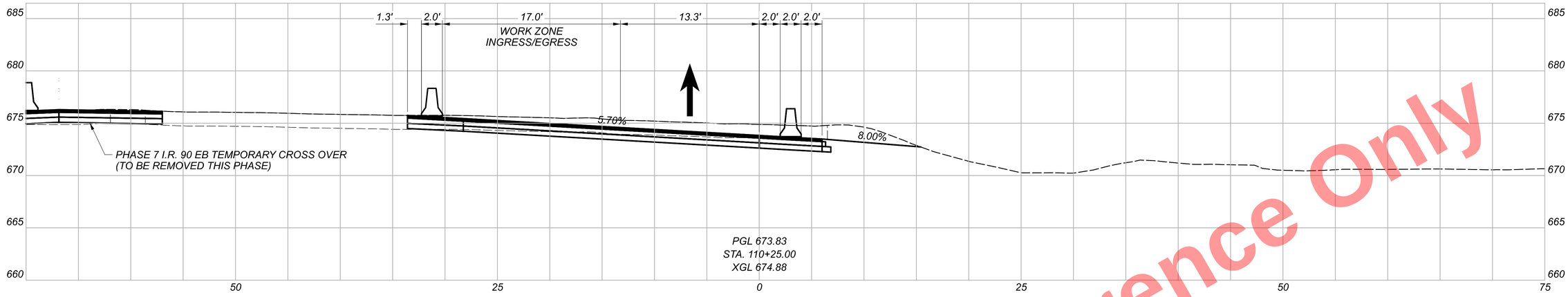

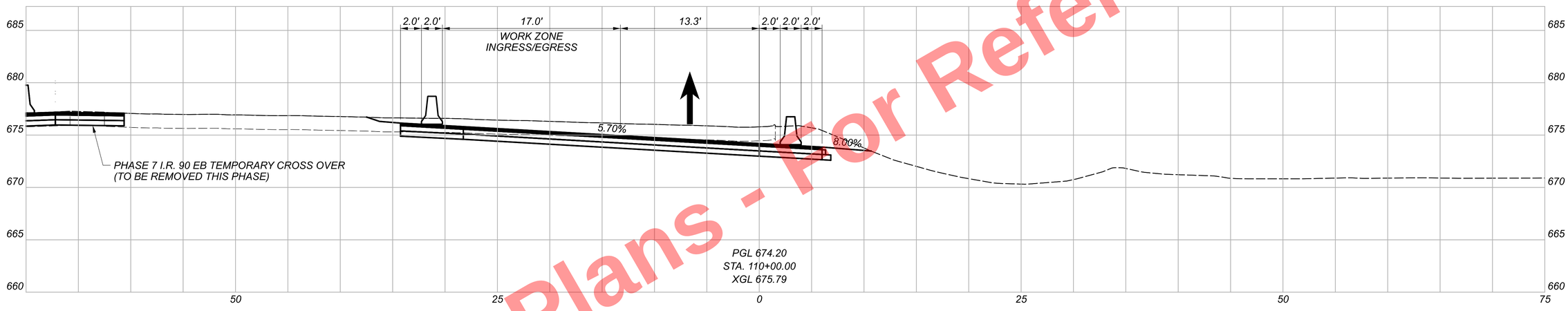

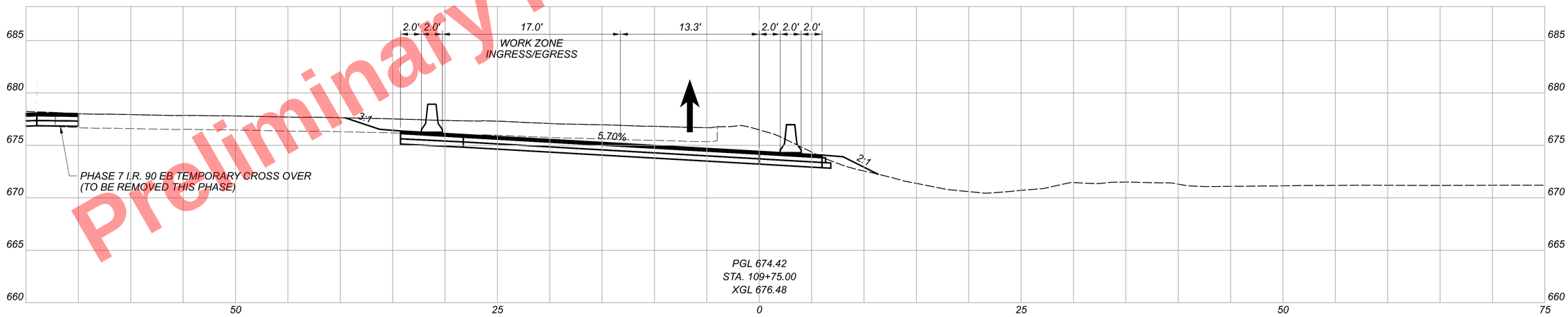

Preliminary Plans - For Reference Only

MAINTENANCE OF TRAFFIC - PHASE 8
CROSS SECTIONS - RAMP H5 TEMPORARY I.R. 90 EB CONNECTION

DESIGN AGENCY
Michael Baker INTERNATIONAL

DESIGNER MZG
REVIEWER LJS 05/22/24
PROJECT ID 82382

Sheet Totals		
Seeding	Cut	Fill
-	-	-

SHEET 271 TOTAL 2696

CUY-90-16.28 (CCG3A)

MODEL: CLP_6 - I09+75.00 (Sheet) PAPERSIZE: 34x22 (in.) DATE: 3/27/2025 TIME: 8:38:06 PM USER: Collin.Kwiatt
pw:\\mb-us-pw.bentley.com:mb-us-pw-03\Documents\Cleveland_OH\OL_Projects\ODOT\District2\82382\400-Engineering\MOT\Sheets\82382_XM007.dgn

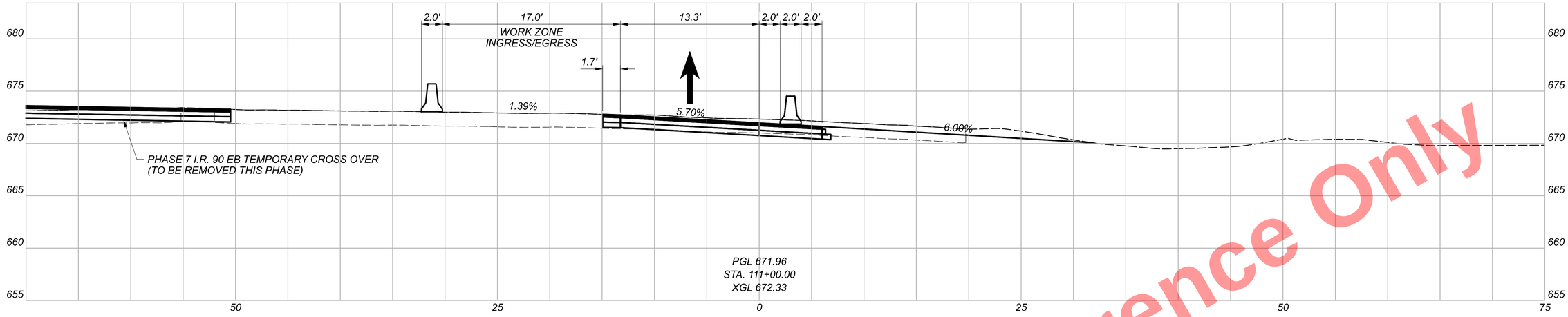

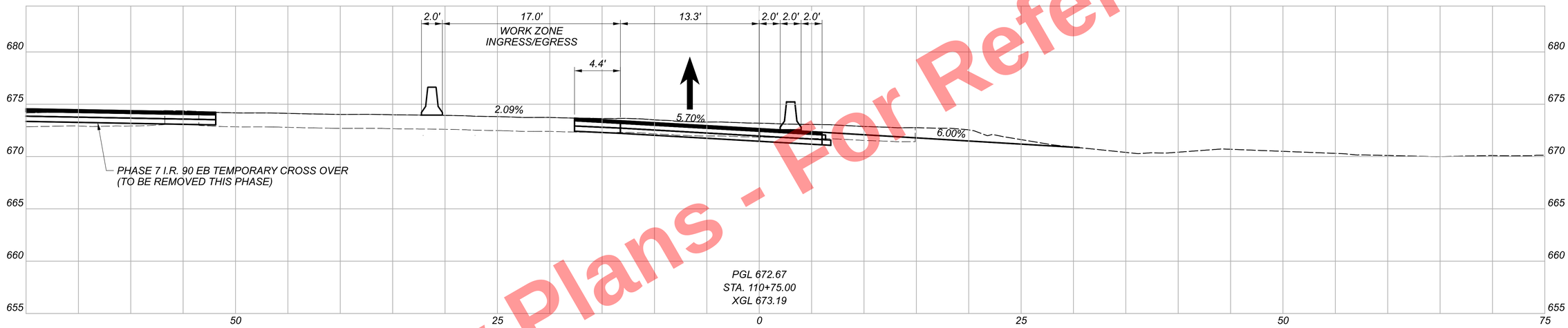

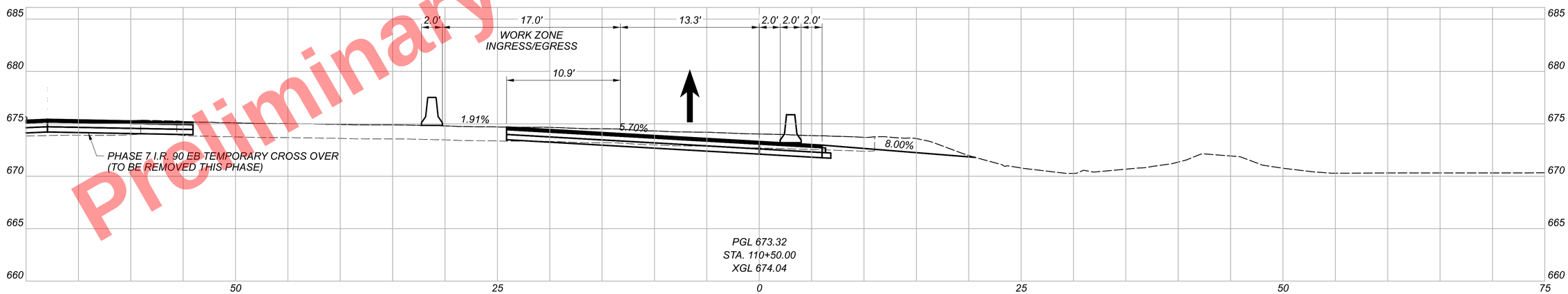

Preliminary Plans - For Reference Only

MAINTENANCE OF TRAFFIC - PHASE 8
CROSS SECTIONS - RAMP H5 TEMPORARY I.R. 90 EB CONNECTION

DESIGN AGENCY
Michael Baker INTERNATIONAL

DESIGNER MZG
REVIEWER LJS 05/22/24
PROJECT ID 82382

Sheet Totals		
Seeding	Cut	Fill
-	-	-

SHEET 272 TOTAL 2696

CUY-90-16.28 (CCG3A)

MODEL: CLP_6 - 110+50.00 [Sheet] PAPERSIZE: 34x22 (in.) DATE: 3/27/2025 TIME: 8:38:16 PM USER: Collin.Kwiat
pw:\\mb-us-pw.bentley.com:mb-us-pw-03\Documents\Cleveland.OH\OI_Projects\ODOT\District2\82382\400-Engineering\MOT\Sheets\82382_XM007.dgn

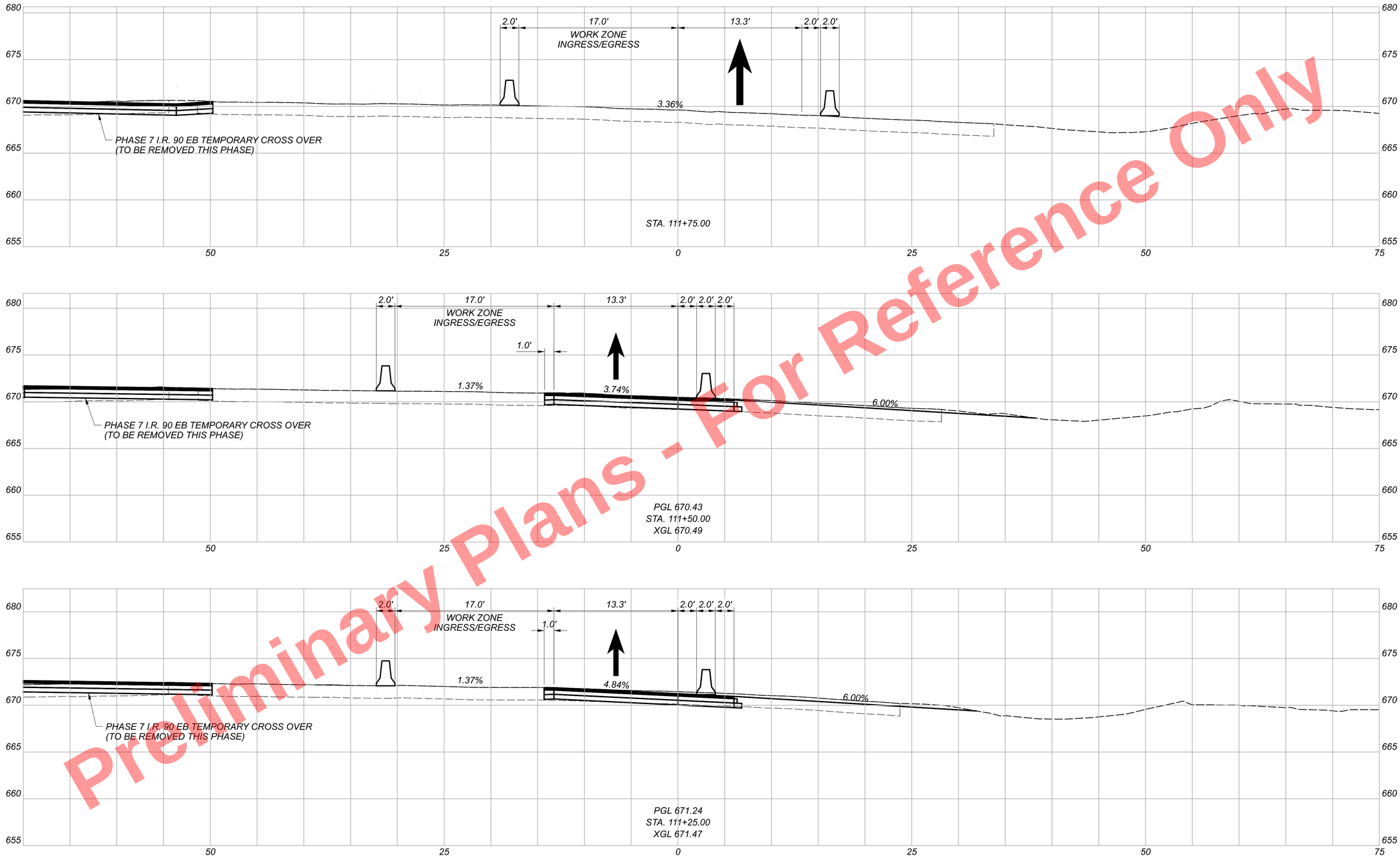

Preliminary Plans - For Reference Only

MAINTENANCE OF TRAFFIC - PHASE 8
CROSS SECTIONS - RAMP H5 TEMPORARY I.R. 90 EB CONNECTION

DESIGN AGENCY
Michael Baker INTERNATIONAL

DESIGNER MZG
REVIEWER LJS 05/22/24
PROJECT ID 82382
SHEET 273 TOTAL 2696

CUY-90-16.28 (CCG3A)

MODEL: CLP_6 - Ill+25.00 [Sheet] PAPERSIZE: 34x22 (in.) DATE: 3/27/2025 TIME: 8:38:25 PM USER: Collin.Kwiatt
pw:\\mb-us-pw.bentley.com:mb-us-pw-03\Documents\Cleveland_OH\Oil_Projects\00DT\District#2\82382\400-Engineering\MOT\Sheets\82382_XM007.dgn



Preliminary Plans - For Reference Only

HORIZONTAL SCALE IN FEET
0 20 40 80

MAINTENANCE OF TRAFFIC - PHASE 8 TEMPORARY RAMP H5 TO I.R. 90 EB

CUY-90-16.28 (CCG3A)

DESIGN AGENCY
Michael Baker INTERNATIONAL

DESIGNER CRK
REVIEWER GSH 05/22/24
PROJECT ID 82382
SHEET 274 TOTAL 2696

MODEL: Sheet-01 PAPERSIZE: 34x22 (In.) DATE: 3/27/2025 TIME: 8:38:43 PM USER: Collin.Kwiatt
pw:\\mb-us-pw.bentley.com:mb-us-pw-03\Documents\Cleveland.OH\01_Projects\ODOT\District2\82382\400-Engineering\MOT\Sheets\82382_MP810.dgn

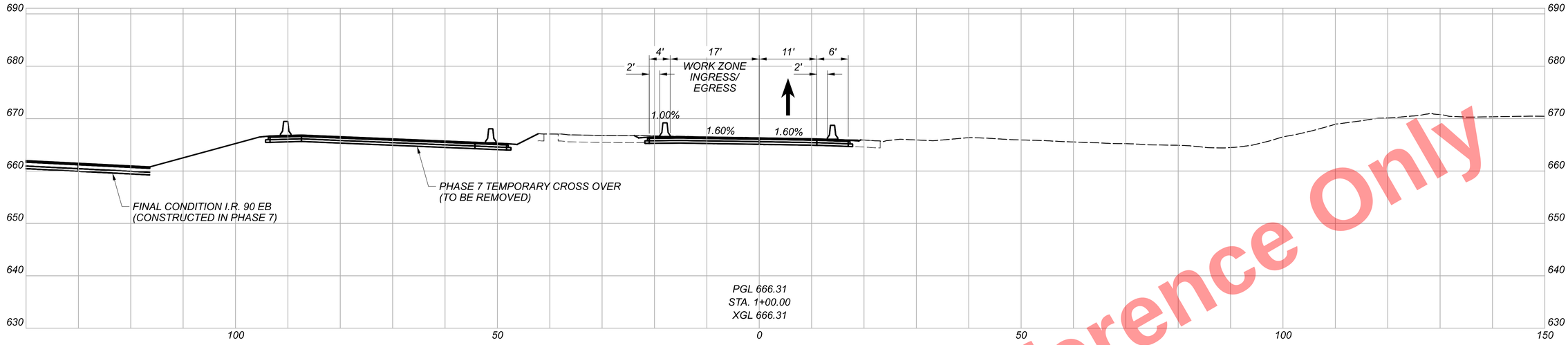

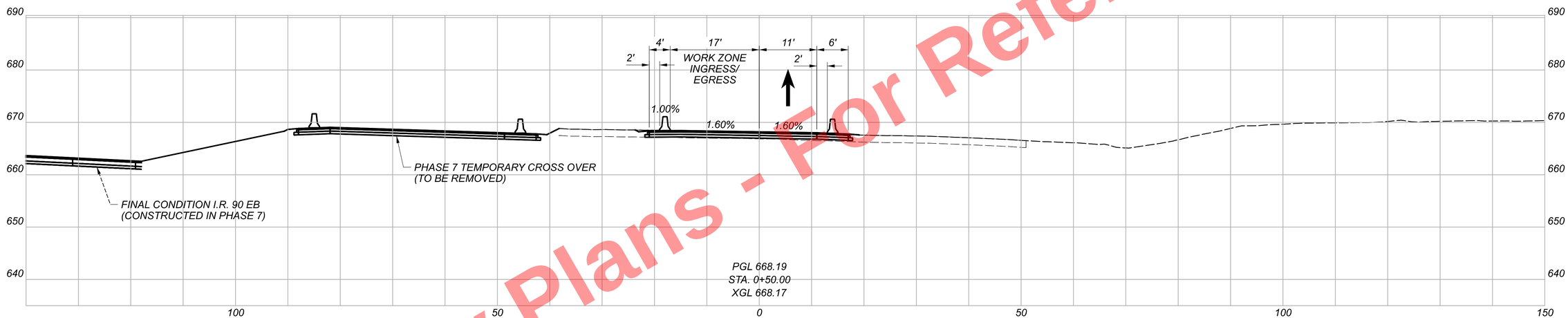

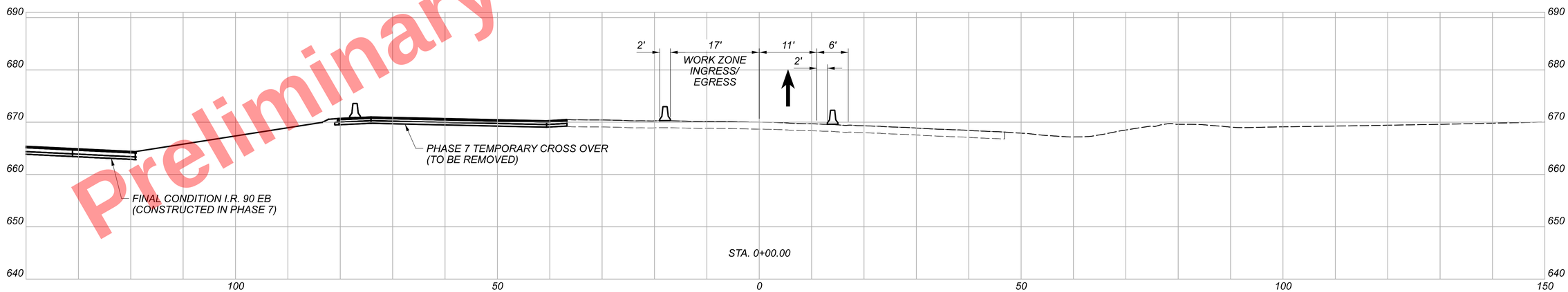

Preliminary Plans - For Reference Only

MAINTENANCE OF TRAFFIC - PHASE 8
CROSS SECTIONS - TEMPORARY RAMP H5 TO I.R. 90 EB

DESIGN AGENCY
Michael Baker INTERNATIONAL

DESIGNER MZG
REVIEWER GSH 05/22/24
PROJECT ID 82382
SHEET 275 TOTAL 2696

CUY-90-16.28 (CCG3A)

MODEL: CLP_1 - 0+00.00 [Sheet] PAPERSIZE: 34x22 (in.) DATE: 3/28/2025 TIME: 2:53:09 PM USER: Joseph.Hogan
pw:\\mb-us-pw.bentley.com:mb-us-pw-03\Documents\Cleveland_OHIO\Projects\ODOT\District2\82382\400-Engineering\MOT\Sheets\82382_XM008.dgn

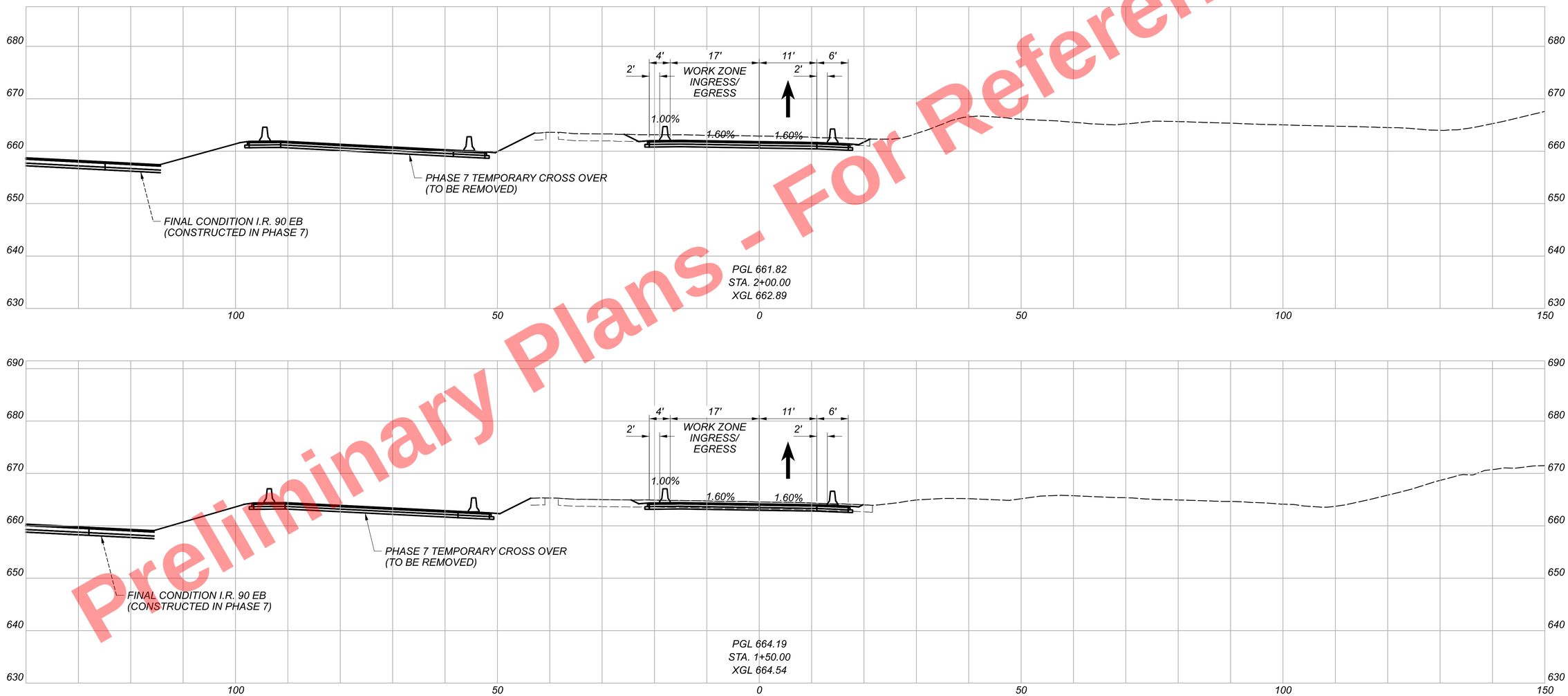

Preliminary Plans - For Reference Only

MAINTENANCE OF TRAFFIC - PHASE 8
CROSS SECTIONS - TEMPORARY RAMP H5 TO I.R. 90 EB

DESIGN AGENCY
Michael Baker INTERNATIONAL

DESIGNER MZG
REVIEWER GSH 05/22/24
PROJECT ID 82382
SHEET 276 TOTAL 2696

CUY-90-16.28 (CCG3A)

MODEL: CLP_I - 1+50.00 [Sheet] PAPERSIZE: 34x22 (In.) DATE: 3/28/2025 TIME: 2:50:36 PM USER: Joseph.Hogan
pw:\\mb-us-pw.bentley.com:mb-us-pw-03\Documents\Cleveland.OH\OI_Projects\ODOT\District2\82382\400-Engineering\MOT\Sheets\82382_XM008.dgn

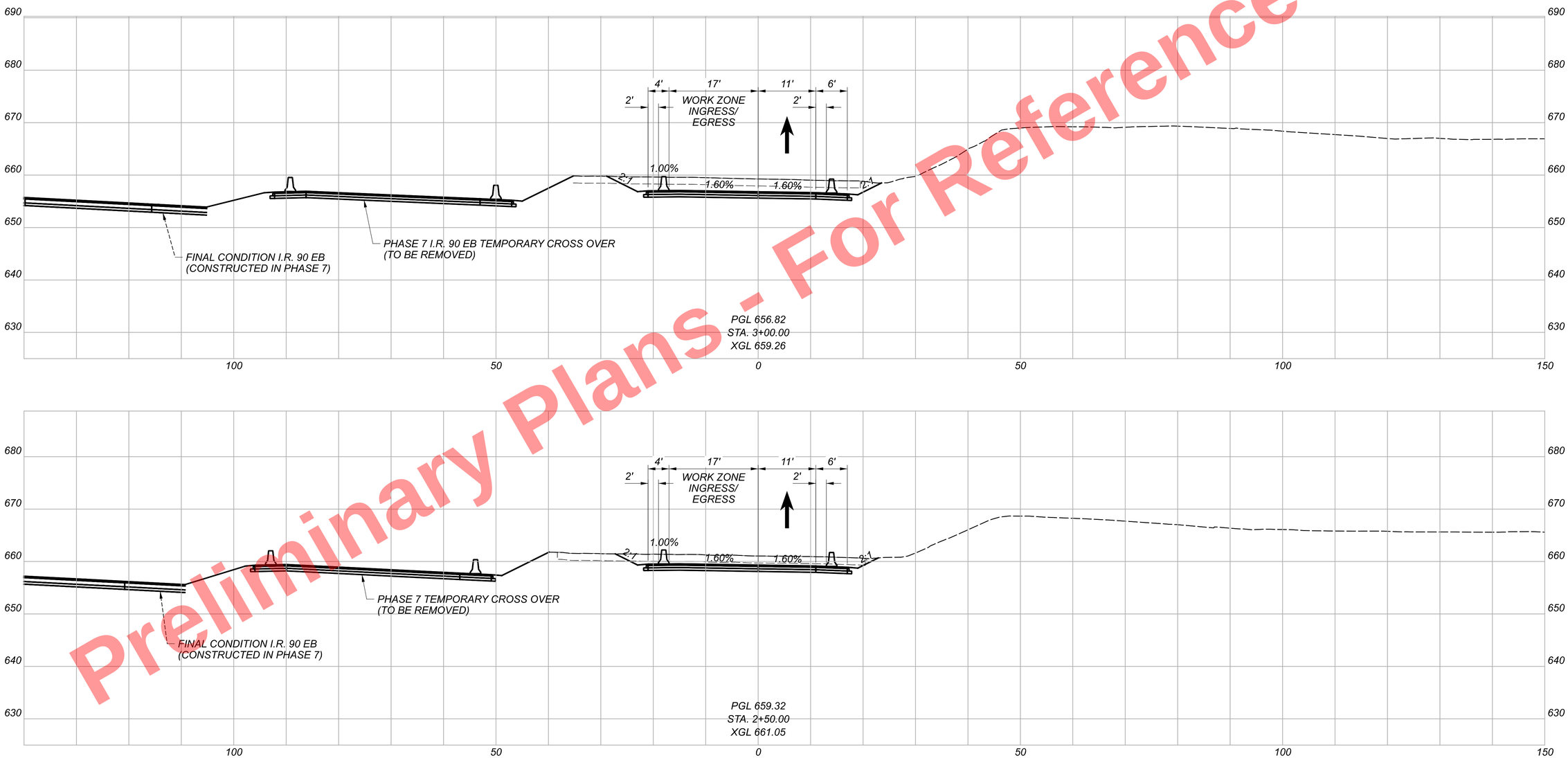

Preliminary Plans - For Reference Only

MAINTENANCE OF TRAFFIC - PHASE 8
CROSS SECTIONS - TEMPORARY RAMP H5 TO I.R. 90 EB

CUY-90-16.28 (CCG3A)

MODEL: CLP_1 - 2+50.00 [Sheet] PAPERSIZE: 34x22 (in.) DATE: 3/28/2025 TIME: 2:50:39 PM USER: Joseph.Hogan
pw:\\mb-us-pw.bentley.com:mb-us-pw-03\Documents\Cleveland.OH\01_Projects\0007\District2\82382\400-Engineering\MT

DESIGN AGENCY
Michael Baker INTERNATIONAL

DESIGNER	MZG
REVIEWER	GSH 05/22/24
PROJECT ID	82382
SHEET	277
TOTAL	2696

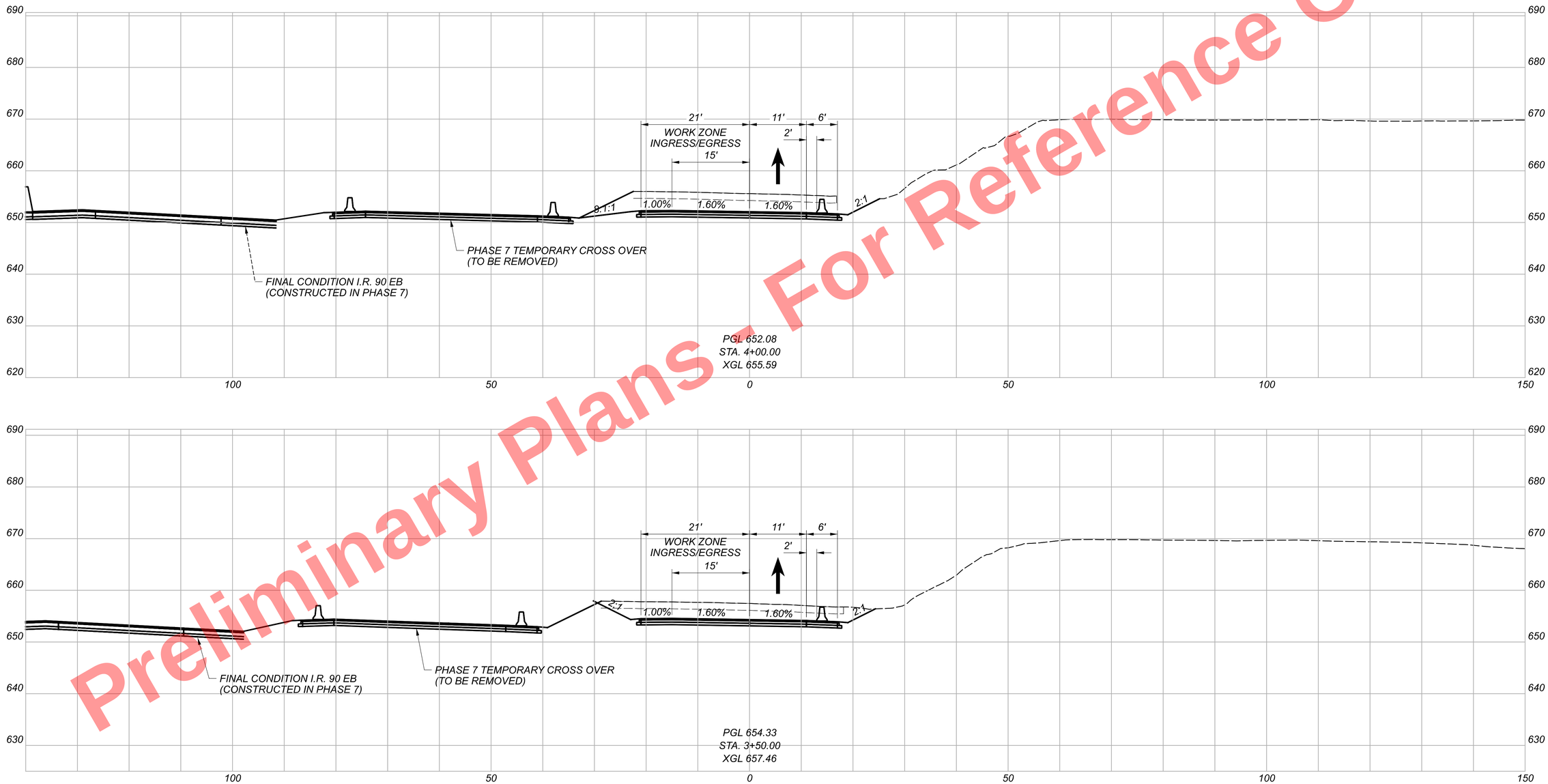

Preliminary Plans - For Reference Only

MAINTENANCE OF TRAFFIC - PHASE 8
CROSS SECTIONS - TEMPORARY RAMP H5 TO I.R. 90 EB

CUY-90-16.28 (CCG3A)

MODEL: CLP_I - 3+50.00 [Sheet] PAPERSIZE: 34x22 (In.) DATE: 3/28/2025 TIME: 2:50:41 PM USER: Joseph.Hogan
pw:\\mb-us-pw.bentley.com:mb-us-pw-03\Documents\Cleveland.OH\OI_Projects\ODOT\District2\82382\400-Engineering\MOT\Sheets\82382_XM008.dgn

DESIGN AGENCY
Michael Baker INTERNATIONAL

DESIGNER
MZG

REVIEWER
GSH 05/22/24

PROJECT ID
82382

SHEET 278 | TOTAL 2696

Preliminary Plans For Reference Only

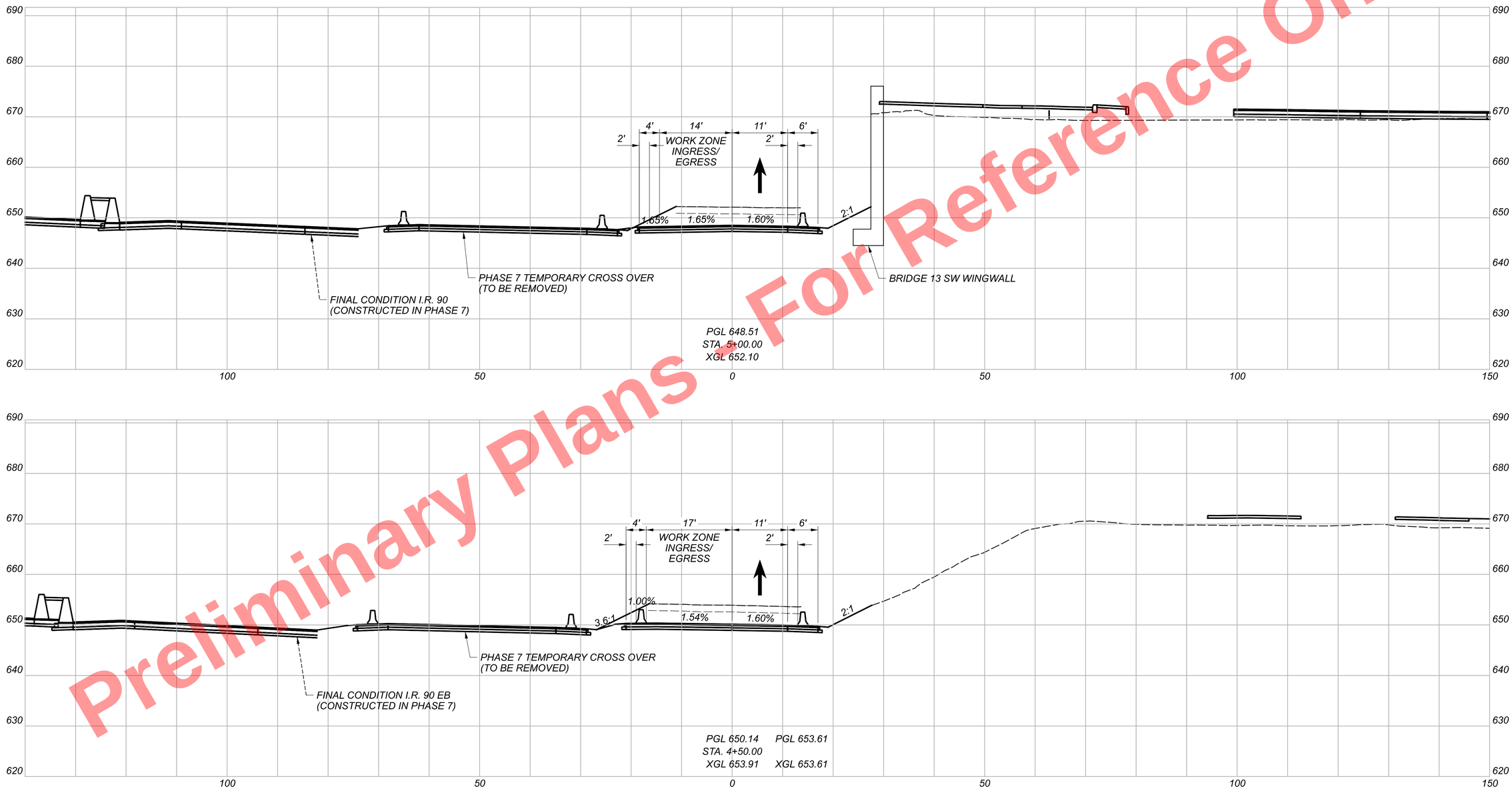

MAINTENANCE OF TRAFFIC - PHASE 8
CROSS SECTIONS - TEMPORARY RAMP H5 TO I.R. 90 EB

CUY-90-16.28 (CCG3A)

MODEL: CLP_1 - 4+50.00 (Sheet) PAPERSIZE: 34x22 (in.) DATE: 3/28/2025 TIME: 2:50:44 PM USER: Joseph.Hogan
pw:\\mb-us-pw.bentley.com:mb-us-pw-03\Documents\Cleveland.OH\OiL_Projects\ODOT\District2\82382\400-Engineering\MOT\Sheets\82382_XM008.dgn

DESIGN AGENCY
Michael Baker INTERNATIONAL

DESIGNER MZG
REVIEWER GSH 05/22/24
PROJECT ID 82382
SHEET 279 TOTAL 2696

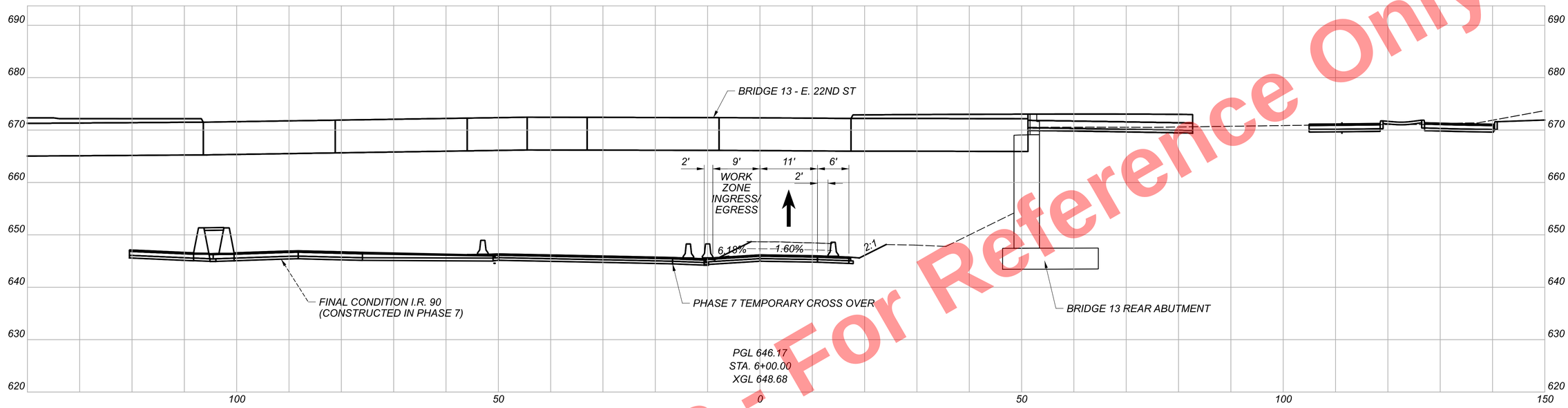

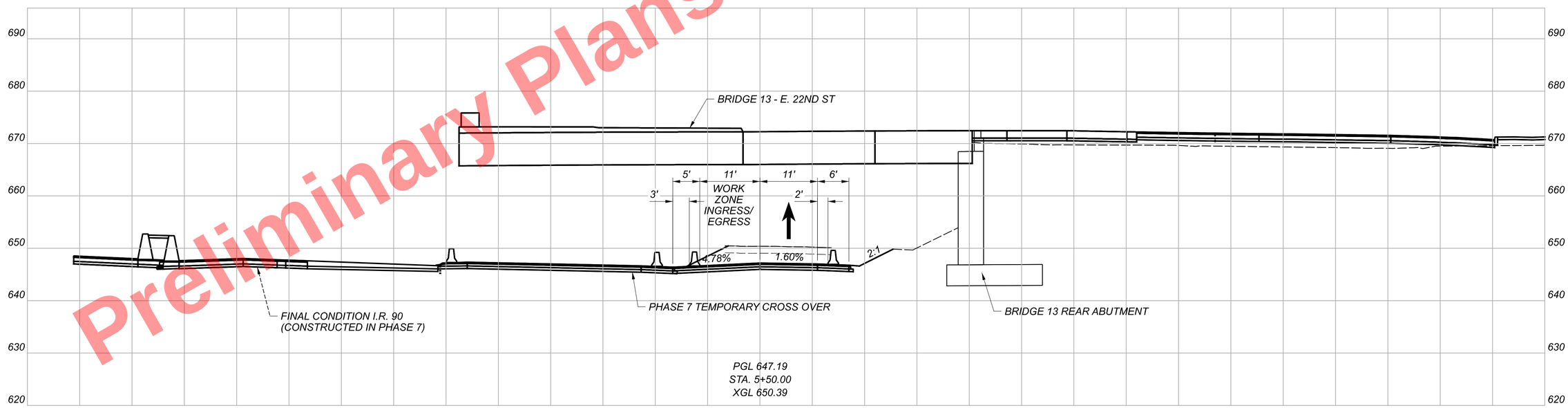

Preliminary Plans - For Reference Only

MAINTENANCE OF TRAFFIC - PHASE 8
CROSS SECTIONS - TEMPORARY RAMP H5 TO I.R. 90 EB

CUY-90-16.28 (CCG3A)

MODEL: CLP_1 - 5+50.00 (Sheet) PAPERSIZE: 34x22 (in.) DATE: 3/28/2025 TIME: 2:50:47 PM USER: Joseph.Hogan
pw:\\mb-us-pw.bentley.com:mb-us-pw-03\Documents\Cleveland.OH\01_Projects\0DOT\District2\82382\400-Engineering\M0T\Sheets\82382_XM008.dgn

DESIGN AGENCY
Michael Baker INTERNATIONAL

DESIGNER MZG
REVIEWER GSH 05/22/24
PROJECT ID 82382
SHEET 280 TOTAL 2696

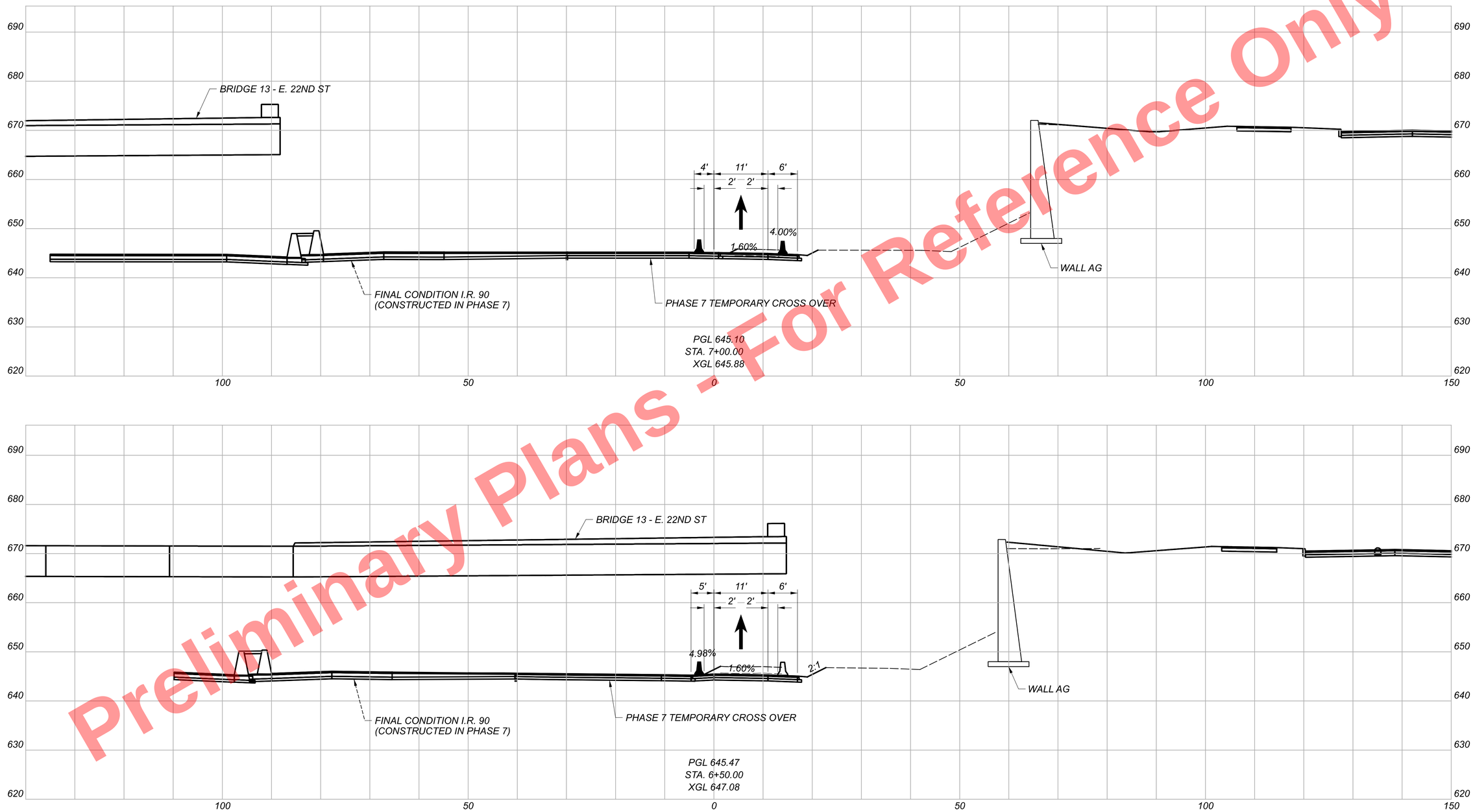

Preliminary Plans - For Reference Only

MAINTENANCE OF TRAFFIC - PHASE 8
CROSS SECTIONS - TEMPORARY RAMP H5 TO I.R. 90 EB

CUY-90-16.28 (CCG3A)

MODEL: CLP_1 - 6+50.00 [Sheet] PAPERSIZE: 34x22 (In.) DATE: 3/28/2025 TIME: 2:50:49 PM USER: Joseph.Hogan
pw:\\mb-us-pw.bentley.com:mb-us-pw-03\Documents\Cleveland.OH\01_Projects\00DOT\District2\82382\400-Engineering\MOT\Sheets\82382_XM008.dgn

DESIGN AGENCY
Michael Baker INTERNATIONAL

DESIGNER	MZG
REVIEWER	GSH 05/22/24
PROJECT ID	82382
SHEET	281
TOTAL	2696

Preliminary Plans - For Reference Only

STA. 9+55 END TEMPORARY PAVEMENT

STA. 7+50 TO STA. 9+55 MATCH TEMPORARY PAVEMENT CROSS SLOPE TO ADJACENT CONSTRUCTED PAVEMENT
(PHASE 7 I.R. 90 EB TEMPORARY CROSSOVER OR FINAL CONDITION I.R. 90 EB)

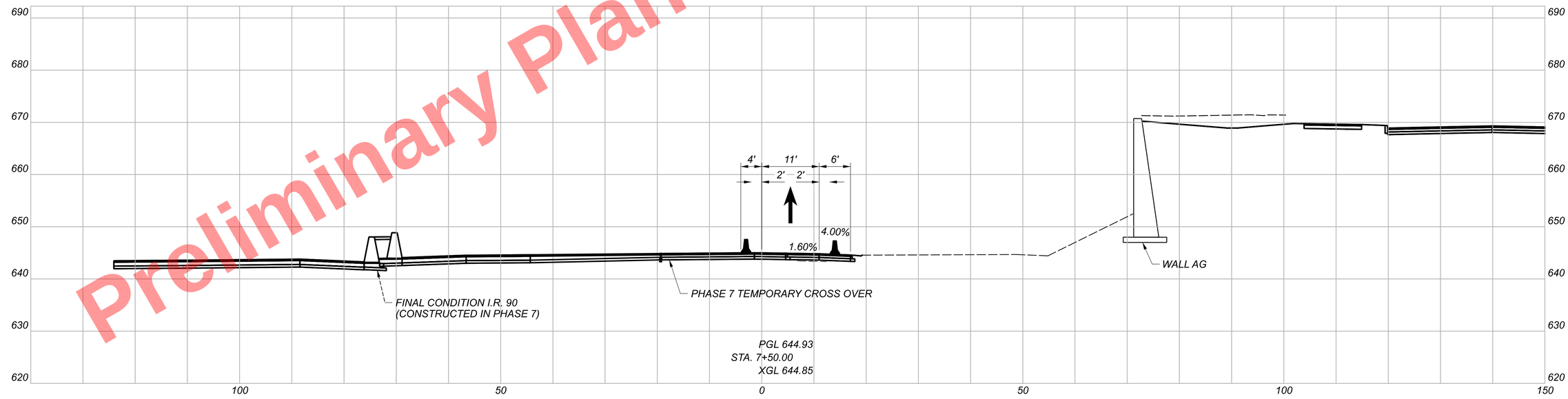

MAINTENANCE OF TRAFFIC - PHASE 8
CROSS SECTIONS - TEMPORARY RAMP H5 TO I.R. 90 EB

DESIGN AGENCY
Michael Baker INTERNATIONAL

DESIGNER MZG
REVIEWER GSH 05/22/24
PROJECT ID 82382
SHEET 282 TOTAL 2696

CUY-90-16.28 (CCG3A)

MODEL: CLP_I - 7+50.00 [Sheet] PAPERSIZE: 34x22 (In.) DATE: 3/28/2025 TIME: 2:50:52 PM USER: Joseph.Hogan
pw:\\mb-us-pw.bentley.com:mb-us-pw-03\Documents\Cleveland.OH\OI_Projects\ODOT\District2\82382\400-Engineering\MOT\Sheets\82382_XM008.dgn

LEGEND

- AREA OF CONSTRUCTION ONGOING DURING THIS PHASE
- AREA OF CONSTRUCTION TO BE COMPLETED BY END OF PHASE
- TEMPORARY PAVEMENT CONSTRUCTED IN THIS PHASE
- EXISTING BRIDGE OR TEMPORARY PAVEMENT REMOVAL
- AREA OF CONSTRUCTION TO BE COMPLETED PRIOR TO E. 22ND ST. BRIDGE DEMOLITION

I.R. 90
ONTARIO ST
E. 9TH ST
SHEET 291
E. 14TH ST
SHEET 288
SHEET 289
SHEET 287
SHEET 292
E. 18TH ST
BROADWAY AVE
ORANGE AVE
SHEET 286
SHEET 290
E. 21ST ST
E. 22ND ST
I.R. 90
INSTALL TEMPORARY CPP CROSSING PRIOR TO DECK REMOVAL OF CEDAR AVE BRIDGE. SEE SHEET 1784
REMOVE CEDAR AVE DECK & MEDIAN PIER DURING FULL WEEKEND CLOSURES
SHEET 285
SHEET 284
I.R. 77
WOODLAND AVE
COMMUNITY COLLEGE AVE
CENTRAL AVE
CEDAR AVE
CARNEGIE AVE
PROSPECT AVE
EUCLID AVE
CHESTER AVE
PAYNE AVE
E. 30TH ST

Preliminary Plans - For Reference Only

HORIZONTAL SCALE IN FEET
0 150 300 600

MAINTENANCE OF TRAFFIC - PHASE 1 PLAN SHEET KEY

CUY-90-16.28 (CCG3A)

MODEL: Sheet PAPERSIZE: 34x22 (in.) DATE: 3/27/2025 TIME: 8:46:09 PM USER: Collin.Kwiat
pw:\\mb-us-pw.bentley.com:mb-us-pw-03\Documents\Cleveland_OH\01_Projects\000T\District2\82382\400-Engineering\MOT\Sheets\82382_MBI000.dgn

DESIGN AGENCY
Michael Baker INTERNATIONAL

DESIGNER CRK
REVIEWER GSH 05/22/24
PROJECT ID 82382
SHEET 283 TOTAL 2696

* - ALL EXISTING LANES OPEN AND EXISTING PAVEMENT MARKINGS UTILIZED ON THIS SHEET UNLESS NOTED OTHERWISE.

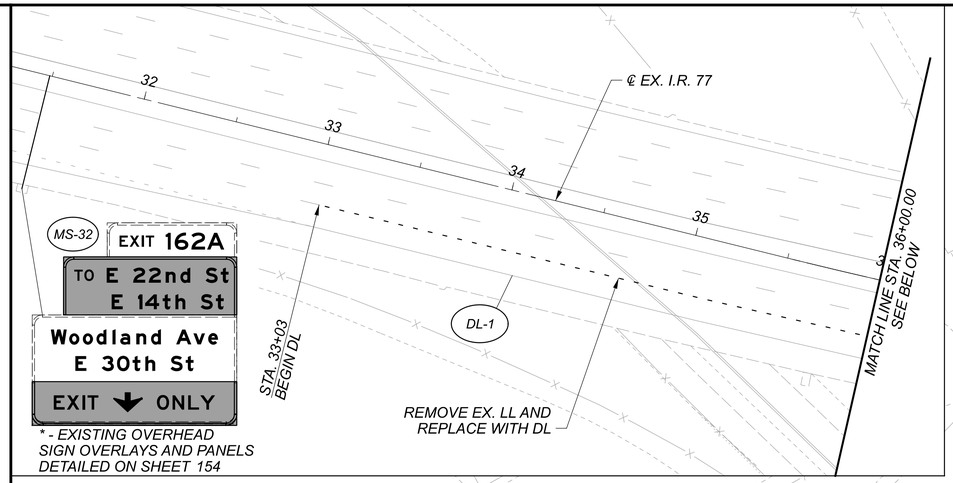

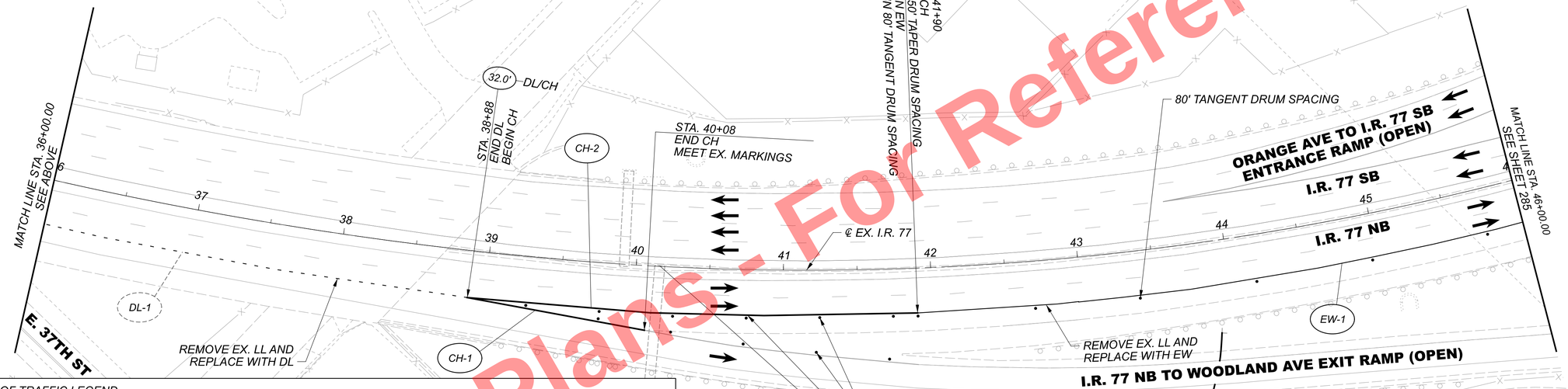

Preliminary Plans - For Reference Only

MAINTENANCE OF TRAFFIC LEGEND

- AREA OF CONSTRUCTION ONGOING IN THIS PHASE
- AREA OF CONSTRUCTION TO BE COMPLETED BY END OF PHASE
- AREA OF CONSTRUCTION TO BE COMPLETED PRIOR TO E. 22ND ST. BRIDGE DEMOLITION
- TEMPORARY PAVEMENT CONSTRUCTED THIS PHASE
- PAVEMENT FOR MAINTAINING TRAFFIC, CLASS A
- EXISTING BRIDGE OR TEMPORARY PAVEMENT REMOVAL TO BE COMPLETED BY END OF PHASE
- DRUMS SPACED AS NOTED, OR AS SHOWN ON REFERENCE STANDARD CONSTRUCTION DRAWINGS
- (17.5') OFFSET RIGHT FROM CENTERLINE, BASELINE OR EX. EDGE AS NOTED
- (-17.5') OFFSET LEFT FROM CENTERLINE, BASELINE OR EX. EDGE AS NOTED
- (EW) WORK ZONE EDGE LINE (WHITE), CLASS I
- (EY) WORK ZONE EDGE LINE (YELLOW), CLASS I
- (MS) TEMPORARY SIGN
- (CH) WORK ZONE CHANNELIZING LINE (WHITE), CLASS I
- (DL) WORK ZONE DOTTED LINE (WHITE), CLASS I
- (LL) WORK ZONE LANE LINE, CLASS I
- (CL) WORK ZONE CENTER LINE (DOUBLE SOLID), CLASS I
- (XW) WORK ZONE CROSS WALK LINE, CLASS I
- (SL) WORK ZONE STOP LINE, CLASS I
- (LA) WORK ZONE LANE ARROW, CLASS I
- (PB) ITEM 622, PORTABLE BARRIER (PB), 50", AS PER PLAN^
- IMPACT ATTENUATOR

* - STATION AND OFFSET INFORMATION PROVIDED BASED ON ALIGNMENT OF ROADWAY BEING DETAILED, UNLESS NOTED OTHERWISE.

^ - ITEM 622, PORTABLE BARRIER, ANCHORED, AS PER PLAN TO BE USED WHERE INDICATED IN THE PLANS

HORIZONTAL SCALE IN FEET
0 20 40 80

MAINTENANCE OF TRAFFIC - PHASE 1
I.R. 77 - BEGIN TO STA. 46+00.00

DESIGN AGENCY
Michael Baker INTERNATIONAL

DESIGNER CRK
REVIEWER GSH 05/22/24
PROJECT ID 82382
SHEET 284 TOTAL 2696

CUY-90-16.28 (CCG3A)

MODEL: MPI00I PAPERSIZE: 34x22 (in.) DATE: 3/27/2025 TIME: 8:46:22 PM USER: Collin.Kwiat
pw:\\mb-us-pw.bentley.com\mb-us-pw-03\Documents\Cleveland_OH\OI_Projects\0007\District2\82382\400-Engineering\MOT\Sheets\82382_MPI00I.dgn

* - ALL EXISTING LANES OPEN AND EXISTING PAVEMENT MARKINGS UTILIZED ON THIS SHEET UNLESS NOTED OTHERWISE.

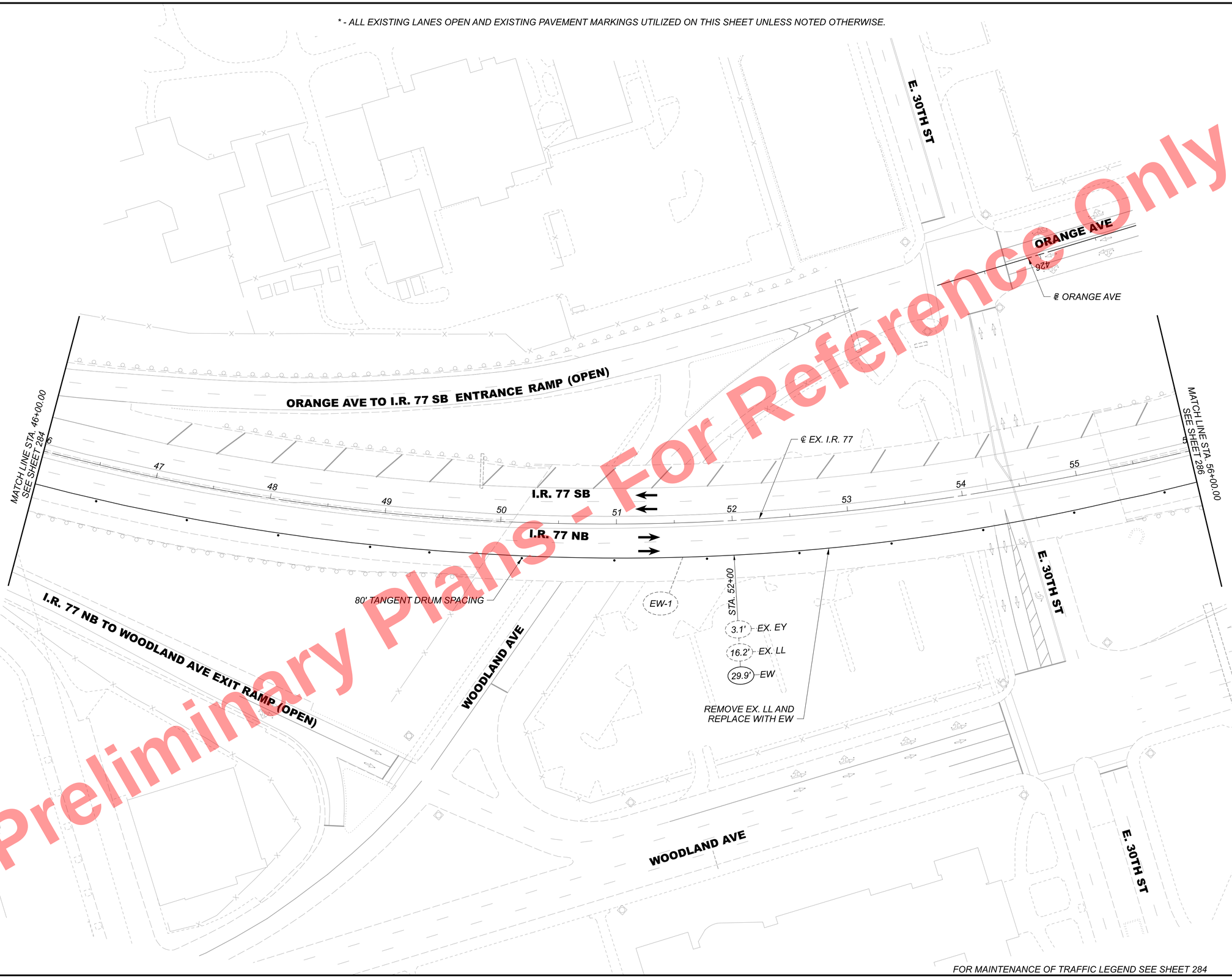

Preliminary Plans - For Reference Only

FOR MAINTENANCE OF TRAFFIC LEGEND SEE SHEET 284

HORIZONTAL SCALE IN FEET
0 20 40 80

MAINTENANCE OF TRAFFIC - PHASE 1
I.R. 77 - STA. 46+00.00 TO STA. 56+00.00

DESIGN AGENCY
Michael Baker INTERNATIONAL

DESIGNER CRK
REVIEWER GSH 05/22/24
PROJECT ID 82382
SHEET 285 TOTAL 2696

CUY-90-16.28 (CCG3A)

MODEL: MPI002 PAPERSIZE: 34x22 (in.) DATE: 3/27/2025 TIME: 8:46:31PM USER: Collin.Kwiatt
pw:\\mb-us-pw.bentley.com:mb-us-pw-03\Documents\Cleveland.OH\DgnLibrary\MOT\Sheets\82382_MPI002.dgn
pw:\\mb-us-pw.bentley.com:mb-us-pw-03\Documents\Cleveland.OH\DgnLibrary\MOT\Sheets\82382_MPI002.dgn

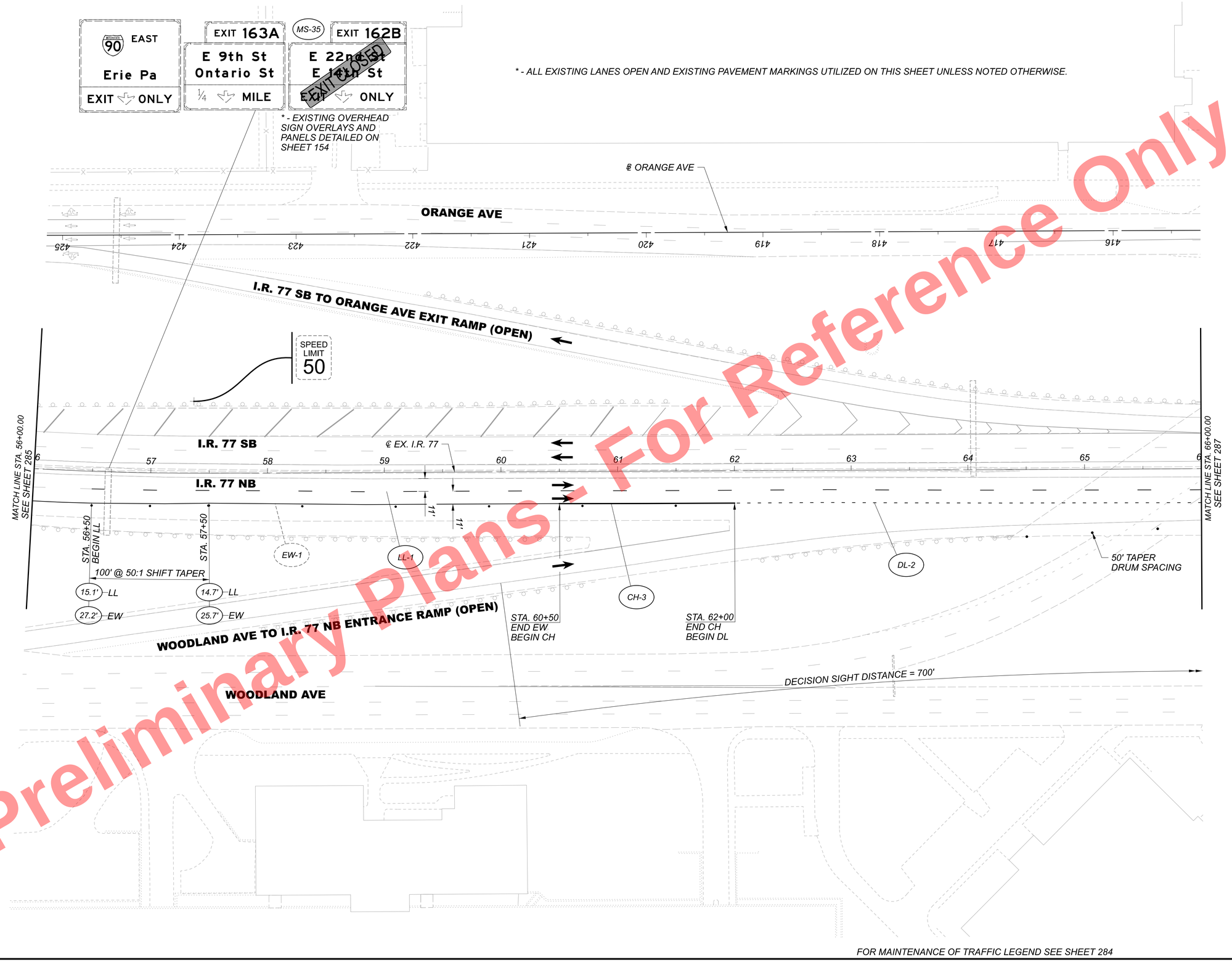

Preliminary Plans - For Reference Only

HORIZONTAL SCALE IN FEET
0 20 40 80

MAINTENANCE OF TRAFFIC - PHASE 1
I.R. 77 - STA. 56+00.00 TO STA. 66+00.00

DESIGN AGENCY
Michael Baker INTERNATIONAL

DESIGNER
CRK

REVIEWER
GSH 05/22/24

PROJECT ID
82382

SHEET 286 TOTAL 2696

CUY-90-16.28 (CCG3A)

MODEL: MPI003 PAPERSIZE: 34x22 (in.) DATE: 3/27/2025 TIME: 8:46:40 PM USER: CollinKwiatt
pw:\\mb-us-pw.bentley.commb-us-pw-03\Documents\Cleveland_OH\01_Projects\000T\District2\82382\400-Engineering\MOT\Sheets\82382_MPI003.dgn

Preliminary Plans - For Reference Only

* - ALL EXISTING LANES OPEN AND EXISTING PAVEMENT MARKING UTILIZED ON THIS SHEET UNLESS NOTED OTHERWISE.

ONLY ONLY ONLY ONLY

R3-H8DM-54

TEMPORARY SIGN PLACED FOR PHASE 1

REMOVE EXISTING SIGN FOR PHASE 1

STA. 405+28
BEGIN EW
BEGIN DRUMS

℄ ORANGE AVE

415 414 413 412 411 410 409 408 407 406

EW-3

ORANGE AVE

WOODLAND AVE

℄ RAMP A2

400 401 402 403 404 405

I.R. 77 SB

I.R. 77 NB

℄ EX. I.R. 77

66 67 68 69 70 71 72 73 74 75

50
10

1070 1071 1072 1073 1074 1075

MATCH LINE STA. 66+00.00
SEE SHEET 286

MATCH LINE STA. 76+00.00, ℄ EX. I.R. 77
MATCH LINE STA. 406+02.00, ℄ RAMP A2
SEE SHEET 288

STA. 67+00
BEGIN EW

LL-1

DL-2

EW-2

50' TAPER DRUM SPACING
@ RAMP IH5

ATTACH IMPACT ATTENUATOR TO END

STA. 72+34
BEGIN PB
14:1 FLARE

PB-1

STA. 74+00
BEGIN REMOVAL
& RESURFACING OF
RUMBLE STRIPS

PLACE SIGNAGE
FOR RAMP CLOSURE
PER MT-98.29

STA. 74+10
END LL
BEGIN CH
BEGIN EY

E. 22ND ST

STA. 75+10
END PB
14:1 FLARE

EY-1

CH-4

100' LANE SHIFT @ 66:1 &
NARROW LANES TO 10'

74+00 END DL

5.6' EY
16.6' LL/CH
26.3' EW
26.7' EW

2.4' EY
12.4' CH
22.4' EW

DECISION SIGHT
DISTANCE = 700'

700' @ 50:1 MERGING TAPER PER MT-95.40

WOODLAND AVE.

18.3' LL
29.3' DL
42.3' EW

MS-36

EXIT 162B
E 22nd St
E 14th St
EXIT ONLY
EXIT CLOSED

* - EXISTING OVERHEAD SIGN
OVERLAYS AND PANELS
DETAILED ON SHEET 154

FOR MAINTENANCE OF TRAFFIC LEGEND SEE SHEET 284

HORIZONTAL
SCALE IN FEET
0 20 40 80

MAINTENANCE OF TRAFFIC - PHASE 1
I.R. 77 - STA. 66+00.00 TO STA. 76+00.00

DESIGN AGENCY
Michael Baker INTERNATIONAL

DESIGNER CRK
REVIEWER GSH 05/22/24
PROJECT ID 82382
SHEET 287 TOTAL 2696

CUY-90-16.28 (CCG3A)

MODEL: MPI004 PAPERSIZE: 34x22 (In.) DATE: 3/27/2025 TIME: 8:46:49 PM USER: Collin.Kwiatt
pw:\\mb-us-pw.bentley.com\mb-us-pw-03\Documents\Cleveland_OHOi_Projects\0007\District2\82382\400-Engineering\MOT\Sheets\82382_MPI004.dgn

NOTES

1. ALL EXISTING LANES OPEN AND EXISTING PAVEMENT MARKINGS UTILIZED ON THIS SHEET UNLESS NOTED OTHERWISE.

2. CONSTRUCT MEDIAN BARRIER AND PR. TRUSS DURING OFF PEAK HOURS. CLOSE LEFT LANE OF I.R. 77 NB PER MT-95.30 AS NEEDED

MATCHLINE SEE BELOW

REMOVE EXISTING SIGN FOR PHASE 1

REMOVE EXISTING SIGN FOR PHASE 1

REMOVE EXISTING SIGN FOR PHASE 1

TEMPORARY SIGN PLACED FOR PHASE 1
R3-H8DM-54

REMOVE EXISTING SIGN FOR PHASE 1

TEMPORARY SIGN PLACED FOR PHASE 1
R3-5R-54

℄ ORANGE AVE

E. 14TH ST.

STA. 10+70
BEGIN DRUMS

35' TANGENT DRUM SPACING

℄ EX. ONTARIO ST

STA. 13+52
END DRUMS

ORANGE AVE.

MATCHLINE STA. 16+50.00
SEE SHEET 305

EW-3

35' TANGENT DRUM SPACING

TYPE 3 BARRICADE PER MT-101.60

℄ EX. I.R. 77

CH-4

EY-1

A

PRIOR TO PHASE 1, INSTALL SIGN TRUSS AND MEDIAN BARRIER USING INSIDE LANE CLOSURES ON I.R. 77 NB AND I.R. 77 SB DURING OFF PEAK HOURS IN ACCORDANCE WITH THE LANE VALUE CONTRACT TABLE ON SHEET 88

STA. 400+65
BEGIN EW
BEGIN DRUMS

PR. WALL N

℄ EX. RAMP E-17

STA. 16+47
BEGIN LL

COVER EXISTING OVERHEAD SIGN FOR PHASE 1

E. 14TH ST.

STA. 11+12
CLOSE MIDDLE TWO LANES OF E. 14TH ST NB

TEMPORARY SIGN PLACED FOR PHASE 1
R3-5R-54

REMOVE EXISTING SIGN FOR PHASE 1

MATCHLINE SEE ABOVE

BEGIN CONSTRUCTION OF BRIDGE 9 UNIT 1 (SPANS 1-3)

LL-2

STA. 17+13
BEGIN DL

I.R. 90 WB TO I.R. 77 SB RAMP (OPEN)

℄ RAMP A2

EXIT 162A
Woodland Ave
E 30th St
EXIT ONLY

℄ EX. RAMP A3

SPEED LIMIT 50

EY-2

CH-5

PB-2

STA. 54+75
END PB

STA. 53+50
BEGIN 14:1 FLARE

150' SHIFT TAPER: R=1600'

STA. 55+00
END EY
END CH
END EW
MEET EX.

STA. 55+00
END REMOVAL & RESURFACING OF RUMBLE STRIPS

STA. 17+79
END DRUMS

STA. 18+10
END LL

STA. 18+32
BEGIN EY
END DL

℄ FUTURE BUILD E. 14TH

℄ INTERIM E. 14TH ST NB

DL-3

EY-4

STA. 18+70
℄ FUTURE BUILD E. 14TH

END TEMPORARY PAVEMENT ℄ INTERIM E. 14TH ST SB
BEGIN EW
STA. 18+85

TEMPORARY PAVEMENT PLACED PRIOR TO PHASE 1 (MIN. = 2.0')

EW-5

℄ INTERIM E. 14TH ST SB

EY-3

I.R. 77 NB TO I.R. 90 EB RAMP (OPEN)

MATCHLINE ℄ EX. RAMP E-17 STA. 59+22.00 SEE SHEET 289

MATCHLINE ℄ INTERIM E. 14TH ST NB, STA. 298+70.00
℄ INTERIM E. 14TH ST SB, STA. 198+70.00
SEE SHEET 289

MATCHLINE ℄ RAMP IH4 STA. 17+00.00 SEE SHEET 289

MATCHLINE ℄ EX. I.R. 77, STA. 76+00.00
MATCHLINE ℄ RAMP A2, STA. 406+02.00
SEE SHEET 287

EW-2

SECTION VIEW SEE SHEET 133 A

PB-1

SEE NOTE 2

℄ RAMP H5

END WORK ZONE ℄ RAMP IH4
STA. 12+90, 19.0' LT

EW-4

PB
STA 76+51 BK (I.R. 77)
STA 51+40 AH (RAMP E-17)

RECONFIGURE 2554 E. 22ND ST. PARKING LOT THIS PHASE SEE SHEET 1447

CONSTRUCT PORTION OF RAMP IH4 DURING AN I.R. 90 WB WEEKEND CLOSURE. CLOSE RIGHT LANE PER MT-95.30. MAINTAIN ACCESS TO E. 14TH ST SB. FOR DETAILS SEE SHEET 178 .

℄ RAMP IH6

MS-37

EAST 90
Erie Pa
35 MPH

EXIT 163A
E 9th St
Ontario St
EXIT ONLY

EXIT 162B
E 22nd St
E 14th St
EXIT CLOSED
EXIT ONLY

INSTALL PR. OVERHEAD SIGN STRUCTURE & MOVE ALL EXISTING SIGNS TO NEW STRUCTURE PRIOR TO REMOVING EXISTING STRUCTURE

* - EXISTING OVERHEAD SIGN OVERLAYS AND PANELS DETAILED ON SHEET 154

℄ RAMP IH4

PR. WALL T

FOR MAINTENANCE OF TRAFFIC LEGEND SEE SHEET 284

For Reference Only
Preliminary Plans - Not

HORIZONTAL SCALE IN FEET
0 20 40 80

MAINTENANCE OF TRAFFIC - PHASE 1
I.R. 77 - STA. 76+00.00 TO END / RAMP A2 - STA. 406+02.00 TO STA. 417+75.00

DESIGN AGENCY
Michael Baker INTERNATIONAL

DESIGNER CRK
REVIEWER GSH 05/22/24
PROJECT ID 82382
SHEET 288 TOTAL 2696

CUY-90-16.28 (CCG3A)

MODEL: MPI005 PAPERSIZE: 34x22 (in.) DATE: 3/27/2025 TIME: 8:46:58 PM USER: CollinLKwiatt
pw:\\mb-us-pw.bentley.com\mb-us-pw-03\Documents\Cleveland_OH\01_Projects\0007\District2\82382\400-Engineering\MOT\Sheets\82382_MPI005.dgn

* - ALL EXISTING LANES OPEN AND EXISTING PAVEMENT MARKINGS UTILIZED ON THIS SHEET UNLESS NOTED OTHERWISE.

MATCHLINE @ EX. RAMP E-17 59+22.00
SEE SHEET 288

REMOVE CURB, REMOVE FRAME AND GRATE OF EXISTING CATCH BASINS AND COVER WITH STEEL PLATE BEFORE COVERING WITH TEMPORARY PAVEMENT. TEMPORARY PAVEMENT (MIN. WIDTH = 2.0') PLACED PRIOR TO PHASE 1. REPLACE CURB AND RECONSTRUCT EX. CBS TO GRADE AT THE CONCLUSION OF PHASE 1.

@ EX. RAMP E-17

I.R. 77 NB TO E.14TH ST SB EXIT RAMP (OPEN)

I.R. 77 NB TO I.R. 90 EB RAMP (OPEN)

@ EX. I.R. 90

I.R. 90 EB

I.R. 90 WB

INSTALL TEMPORARY CB-2-2B. OUTLET TO EXISTING CB WITH 12" CONDUIT.

D-1.1

-14.0' EW
-3.0' EY
-1.0' DRUMS

105.0' LANE SHIFT @ 35:1

@ INTERIM E. 14TH ST. SB STA. 199+45

D-1.2

EW-5

EY-3

@ INTERIM E. 14TH ST NB STA. 298+70.00
@ INTERIM E. 14TH ST NB STA. 198+70.00
SEE SHEET 288

INSTALL TEMPORARY CB-2-2B. OUTLET TO EXISTING CB WITH 12" CONDUIT.

-17.0' EW
-6.0' EY
-3.0' DRUMS

@ INTERIM E. 14TH ST. SB STA. 200+50 END DRUMS BEGIN PB

D-1.3

PB-3

@ EX. RAMP E-17 STA. 66+87

6.1' EW
-4.9' EY
-7.9' PB

1.8' EW
-15.2' EY

@ EX. RAMP E-17 STA. 64+71
MEET EX. MARKINGS
END EW
END EY

EW-6

146' R

EY-5

100' TANGENT SECTION

158' R

BEGIN TEMPORARY PAVEMENT STA. 65+62, RT (2.0' MIN)

@ FUTURE BUILD E. 14TH

@ INTERIM E. 14TH ST SB

END PB STA. 202+74

@ INTERIM E. 14TH ST NB

@ E. 14TH ST NB

CONSTRUCT TEMP COVER OF PR. CB (D-616)

OMIT CURB AND PROPOSED PAVEMENT CONSTRUCTION. PLACE TEMPORARY PAVEMENT.

COMPLETE PORTION OF E. 14TH ST & TEMPORARY CONNECTION TO COMMUNITY COLLEGE AVE PRIOR TO E. 22ND ST. BRIDGE DEMOLITION

STA. 207+80, 5.0' RT
STA. 207+33, 16.7' LT

@ INTERIM E. 14TH ST SB STA. 206+25 BEGIN WORK TO BE COMPLETED PRIOR TO E. 22ND ST. BRIDGE DEMOLITION

MATCHLINE @ E 14TH ST NB, STA. 55+75.00
MATCHLINE @ INTERIM E 14TH ST SB, STA. 208+51.00
SEE SHEET 291

MATCHLINE @ RAMP IH4 STA. 17+00.00
SEE SHEET 288

@ RAMP IH4

SECTION VIEW SEE SHEET 133

@ INTERIM E. 14TH ST NB STA. 55+50, 4.0' LT

CONSTRUCT TEMP COVER OF PROP CB (D-634 & D-635)

@ RAMP IH5

@ RAMP IH6

PR. WALL T

@ RAMP H5

INSTALL TEMPORARY CB-2-2B. OUTLET TO EXISTING CB WITH 12" CONDUIT.

EAST
90
Erie Pa
EXIT 163 C
E 22nd St

INSTALL PR. OVERHEAD STRUCTURE & SIGNS; REFER TO SIGNING PLAN FOR FINAL SIGN DESIGNS - 90 EAST SIGN TO REMAIN COVERED UNTIL PHASE 8 OR INSTALL AT A LATER DATE PRIOR TO PHASE 8 TRAFFIC SWITCH AS DIRECTED BY THE ENGINEER

TEMPORARY SIGNAL TO BE INSTALLED DURING THIS TIME, BUT WILL NOT BE ACTIVE UNTIL BEGINNING OF PHASE 2. INTERSECTION TO BE STOP CONTROLLED BETWEEN E. 22ND ST. BRIDGE CLOSURE AND END OF PHASE 1
FOR SIGNAL DETAILS, SEE SHEET 309

FOR BRIDGE E10 REMOVAL DETAILS, SEE SHEET 2381
STA. 988+50.00
END PHASE 1 RAMP H5 CONSTRUCTION
@ E. 14TH ST NB STA. 53+45
BEGIN WORK TO BE COMPLETED PRIOR TO E. 22ND ST. BRIDGE DEMOLITION

INSTALL 30" WATER LINE SEE SHEETS 1402 & 1403 FOR DETAILS

EX. WALK (MAINTAIN)

@ RAMP H6

MAINTAIN EXISTING CB. OUTLET TO PROPOSED CB (D-634) WITH 12" CONDUIT.

@ TEMPORARY CROSSOVER COMMUNITY COLLEGE AVE TO E. 14TH ST. SEE SHEET 185 FOR DETAILS.

END CONSTRUCTION OF RAMP H6 IN PHASE 1/BEGIN TEMPORARY PAVEMENT AT STA. 1187+43.56

MATCHLINE @ RAMP H6 STA. 1188+00.00
SEE SHEET 290

FOR MAINTENANCE OF TRAFFIC LEGEND SEE SHEET 284

Preliminary Plans - For Reference Only

HORIZONTAL SCALE IN FEET
0 20 40 80

MAINTENANCE OF TRAFFIC - PHASE 1
INTERIM E. 14TH ST SB - STA. 198+70.00 TO STA. 208+51.00

DESIGN AGENCY
Michael Baker INTERNATIONAL

DESIGNER CRK
REVIEWER GSH 05/22/24
PROJECT ID 82382
SHEET 289 TOTAL 2696

CUY-90-16.28 (CCG3A)

MODEL: MPI006 PAPERSIZE: 34x22 (in.) DATE: 6/10/2025 TIME: 11:04:53 AM USER: Mata.Gallagher
pw:\\mb-us-pw.bentley.com:mb-us-pw-03\Documents\Cleveland_OH\01_Projects\0001\District2\82382\400-Engineering\MOT\Sheets\82382_MPI006.dgn

NOTES:

1. FOR TEMPORARY SIGNAL NOTES SEE SHEET 93

* - ALL EXISTING LANES OPEN AND EXISTING PAVEMENT MARKINGS UTILIZED ON THIS SHEET UNLESS NOTED OTHERWISE.

E. 22ND ST.

CONSTRUCT PORTIONS OF 30" WATERLINE IN INTERSECTION DURING OFF PEAK HOURS AND USE STEEL PLATING FOR TEMPORARY MAINTENANCE

INSTALL 30" WATERLINE SEE SHEETS 1403 & 1404 FOR DETAILS

TEMPORARY PAVEMENT FOR DETAILS SEE SHEET 195

ONLY

R3-5R-30
TEMPORARY SIGN PLACED FOR PHASE 1

-17.4' CH

STA. 60+66 BEGIN DRUMS BEGIN CH

LA-1

-17.7' CH

LA-2

CH-6

STA. 61+36 END CH

50'

55 56 57 58 59 60 61 62 63 64 65 66

COMMUNITY COLLEGE AVE TO E. 14TH ST NB (CLOSED)

11

1191 1192 1190 1189

D-1.4

STA. 1192+29
PLACE TYPE 3 BARRICADE PER MT-101.60

℄ RAMP H6

35' DRUM SPACING

℄ COMMUNITY COLLEGE

COMMUNITY COLLEGE AVE.

END TEMPORARY PAVEMENT TYING TO EXISTING COMM. COLLEGE AVE. FOR DETAILS SEE SHEET 195

INSTALL TEMPORARY CB-2-2B. OUTLET TO PROPOSED DETENTION BASIN WITH 12" CONDUIT.

℄ RAMP H6 TEMPORARY PAVEMENT

MATCHLINE ℄ RAMP H6 STA. 1188+00.00 SEE SHEET 289

83

R3-2-24
TEMPORARY SIGN PLACED FOR PHASE 1

E. 14TH ST

REMOVE EXISTING SIGN FOR PHASE 1

E. 22ND ST.

FOR MAINTENANCE OF TRAFFIC LEGEND SEE SHEET 284

Preliminary Plans - For Reference Only

HORIZONTAL SCALE IN FEET
0 20 40 80

MAINTENANCE OF TRAFFIC - PHASE 1
RAMP H6 - STA. 1188+00.00 TO END

DESIGN AGENCY
Michael Baker INTERNATIONAL

DESIGNER CRK
REVIEWER GSH 05/22/24
PROJECT ID 82382
SHEET 290 TOTAL 2696

CUY-90-16.28 (CCG3A)

MODEL: MPI007 PAPERSIZE: 34x22 (in.) DATE: 6/9/2025 TIME: 3:50:52 PM USER: Julie.Ross
pw:\\mb-us-pw.bentley.com:mb-us-pw-03\Documents\Cleveland_OH\01_Projects\ODOT\District2\82382\400-Engineering\MOT\Sheets\82382_MPI007.dgn

NOTES:

1. ALL EXISTING LANES OPEN AND EXISTING PAVEMENT MARKINGS UTILIZED ON THIS SHEET UNLESS NOTED OTHERWISE.

2. INSTALL SIGNAL CONDUITS CROSSING EX. CARNEGIE AVE, EX. E. 18TH ST AND EX. E. 14TH ST DURING OFF PEAK HOURS AND USE STEEL PLATING FOR TEMPORARY MAINTENANCE.

3. FOR TEMPORARY SIGNAL DETAILS AT INTERSECTIONS OF CARNEGIE AVE & E. 14TH ST AND CARNEGIE AVE & E. 18TH ST SEE SHEET 293 FOR TEMPORARY SIGNAL NOTES SEE SHEET 93

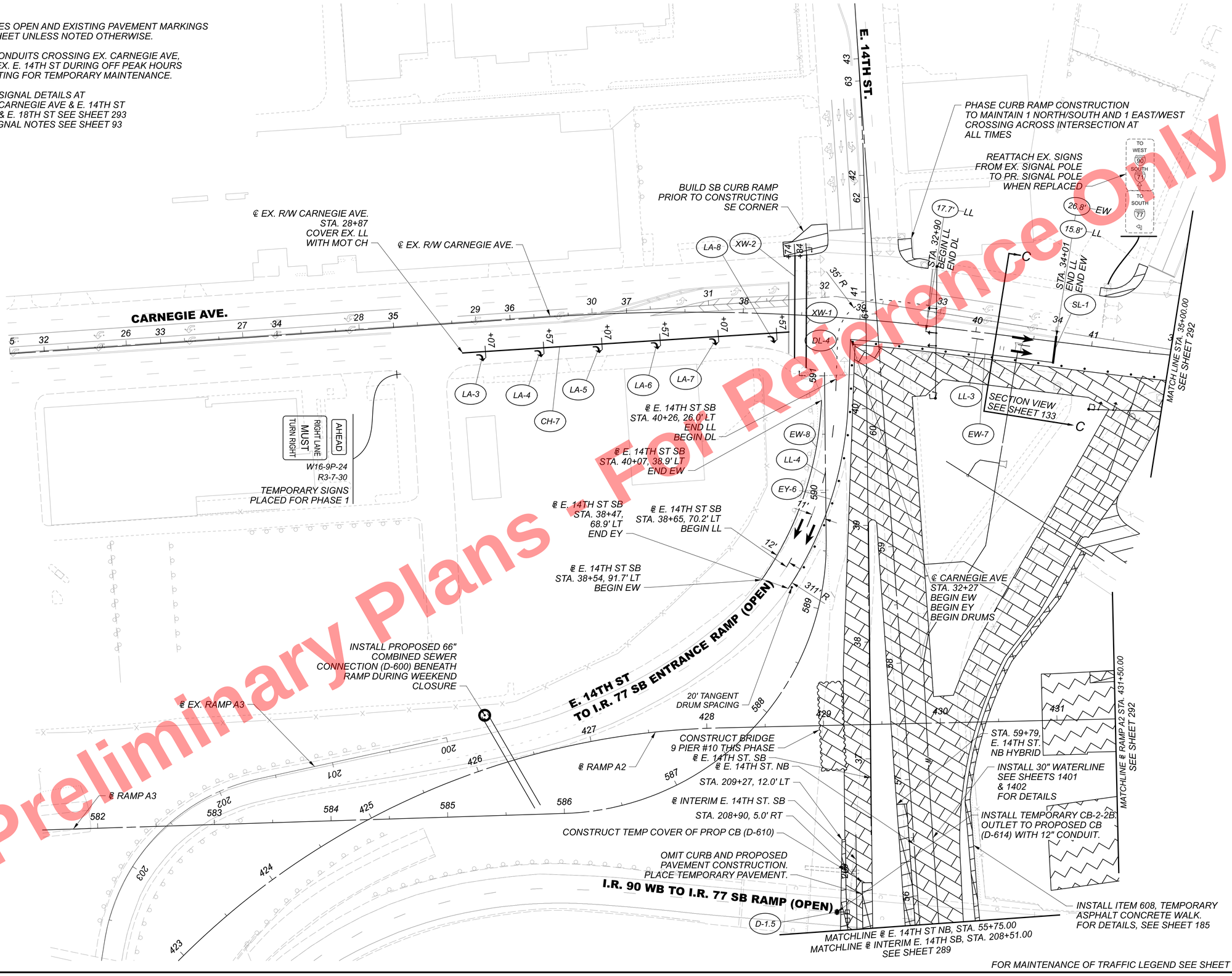

Preliminary Plans
For Reference Only

FOR MAINTENANCE OF TRAFFIC LEGEND SEE SHEET 284

HORIZONTAL SCALE IN FEET
0 20 40 80

MAINTENANCE OF TRAFFIC - PHASE 1
CARNEGIE AVE - BEGIN TO STA. 35+00.00

DESIGN AGENCY
Michael Baker INTERNATIONAL

DESIGNER CRK
REVIEWER GSH 05/22/24
PROJECT ID 82382
SHEET 291 TOTAL 2696

CUY-90-16.28 (CCG3A)

MODEL: MPI008 PAPERSIZE: 34x22 (in.) DATE: 6/9/2025 TIME: 12:58:46 PM USER: Julie.Ross
pw:\\mb-us-pw.bentley.com:mb-us-pw-03\Documents\Cleveland_OH\01_Projects\ODOT\District2\82382\400-Engineering\MOT\Sheets\82382_MPI008.dgn

NOTES:

1. ALL EXISTING LANES OPEN AND EXISTING PAVEMENT MARKINGS UTILIZED ON THIS SHEET UNLESS NOTED OTHERWISE.

2. INSTALL SIGNAL CONDUITS CROSSING EX. CARNEGIE AVE AND EX. E. 18TH ST DURING OFF PEAK HOURS AND USE STEEL PLATING FOR TEMPORARY MAINTENANCE

3. FOR TEMPORARY SIGNAL DETAILS AT INTERSECTION OF CARNEGIE AVE AND E. 18TH ST SEE SHEET 293. FOR TEMPORARY SIGNAL NOTES SEE SHEET 93

5. MAINTAIN DRIVEWAY ACCESS ONTO CARNEGIE AVE. AT ALL TIMES.

6. FOR CARNEGIE AVE. SIGNING AND LANE CONFIGURATIONS PRIOR TO E. 22ND STREET AND CEDAR AVE. BRIDGE DEMOLITION SEE SHEET 308

7. THE CONTRACTOR SHALL NOT ACCESS PARCEL 309 UNTIL JULY 13, 2026, UNLESS AUTHORIZED BY THE ENGINEER. WORK IMPACTED BY THIS ACCESS RESTRICTION INCLUDES CONSTRUCTION OF WALL AD, CENTRAL AVENUE CONNECTOR, AND RAMP A2.

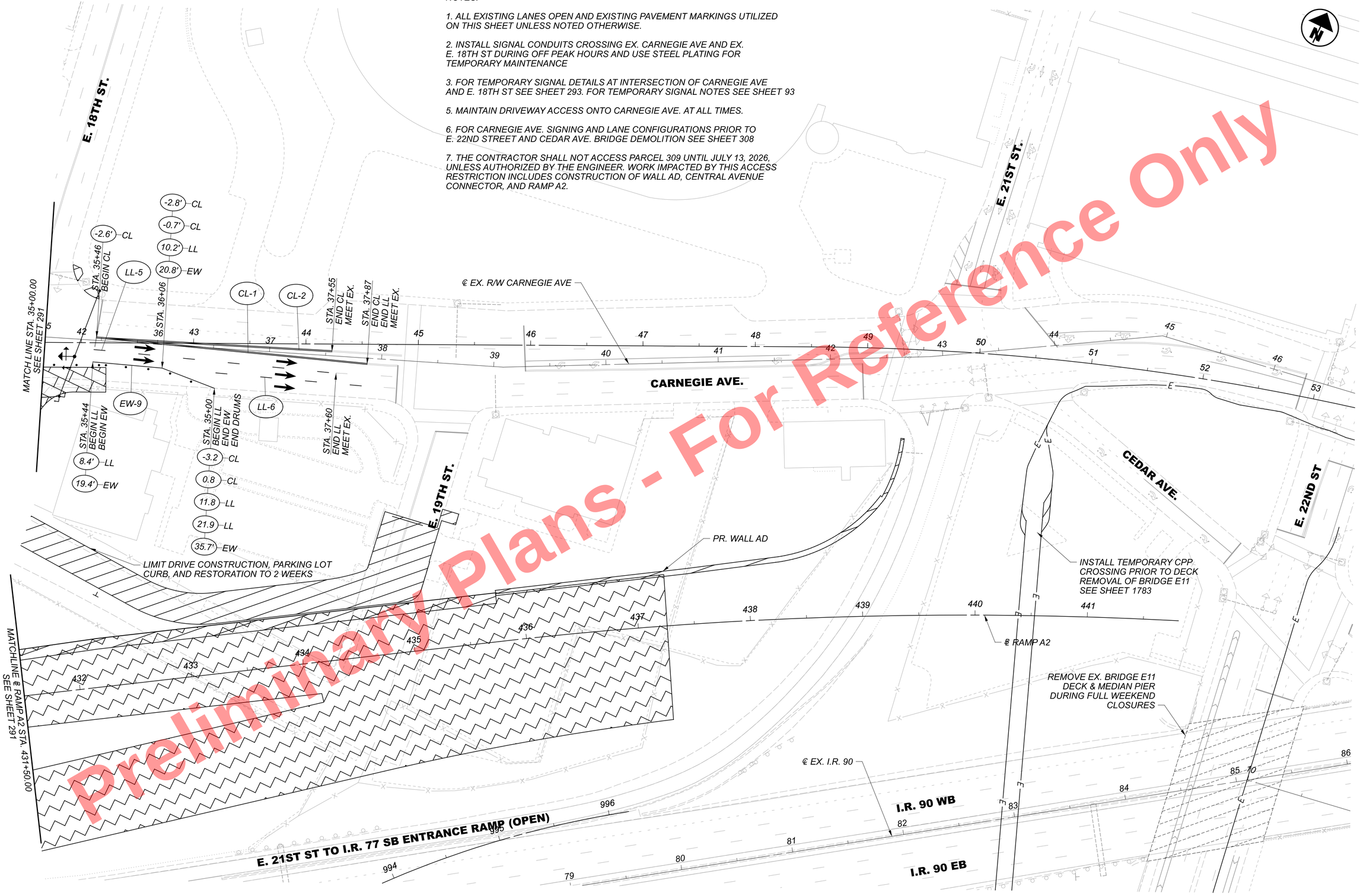

Preliminary Plans - For Reference Only

FOR MAINTENANCE OF TRAFFIC LEGEND SEE SHEET 284

HORIZONTAL SCALE IN FEET
0 20 40 80

MAINTENANCE OF TRAFFIC - PHASE 1
CARNEGIE AVE - STA. 35+00.00 TO END

DESIGN AGENCY
Michael Baker INTERNATIONAL

DESIGNER
CRK

REVIEWER
GSH 05/22/24

PROJECT ID
82382

SHEET 292 TOTAL 2696

CUY-90-16.28 (CCG3A)

MODEL: MPI009 PAPERSIZE: 34x22 (In.) DATE: 3/27/2025 TIME: 8:48:12 PM USER: Collin.Kwiat
pw:\\mb-us-pw.bentley.com:mb-us-pw-03\Documents\Cleveland_OH\OI_Projects\ODOT\District2\82382\400-Engineering\MOT\Sheets\82382_MPI009.dgn

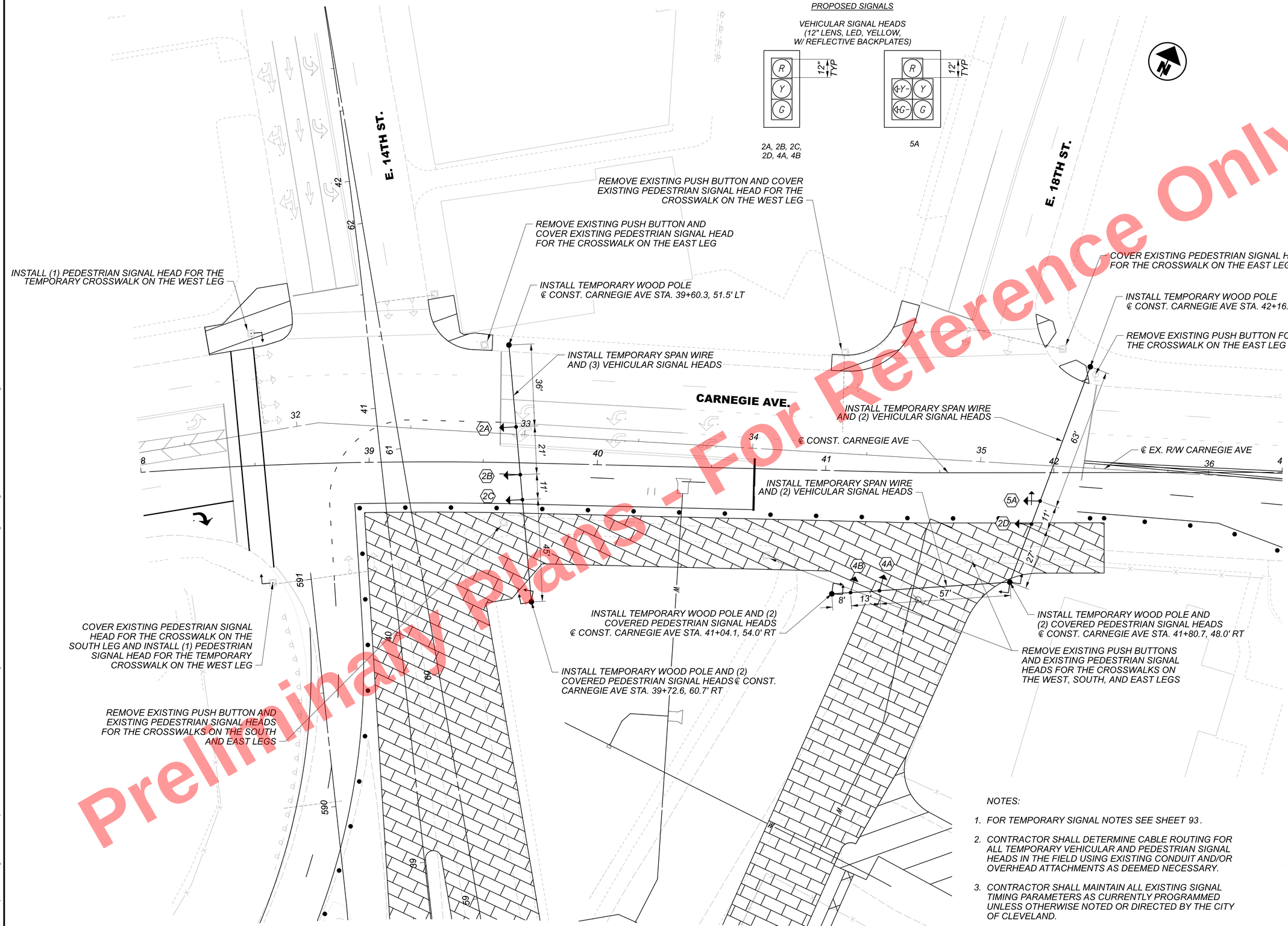

NOTES:

1. FOR TEMPORARY SIGNAL NOTES SEE SHEET 93.
2. CONTRACTOR SHALL DETERMINE CABLE ROUTING FOR ALL TEMPORARY VEHICULAR AND PEDESTRIAN SIGNAL HEADS IN THE FIELD USING EXISTING CONDUIT AND/OR OVERHEAD ATTACHMENTS AS DEEMED NECESSARY.
3. CONTRACTOR SHALL MAINTAIN ALL EXISTING SIGNAL TIMING PARAMETERS AS CURRENTLY PROGRAMMED UNLESS OTHERWISE NOTED OR DIRECTED BY THE CITY OF CLEVELAND.

Preliminary plans - For Reference Only

HORIZONTAL SCALE IN FEET
0 10 20 40

MAINTENANCE OF TRAFFIC - PHASE 1
CARNEGIE AVE. & E. 14TH ST. / CARNEGIE AVE. & E. 18TH ST. TEMOPRARY SIGNALS

DESIGN AGENCY
Michael Baker INTERNATIONAL

DESIGNER CRK
REVIEWER GSH 05/22/24
PROJECT ID 82382
SHEET 293 TOTAL 2696

CUY-90-16.28 (CCG3A)

MODEL: 82382_MPII01 - Plan | PAPERSIZE: 34x22 (in.) DATE: 6/9/2025 TIME: 12:59:10 PM USER: Julie.Ross
pw:\\mb-us-pw.bentley.com:mb-us-pw-03\Documents\Cleveland_OH\01_Projects\0DOT\District2\82382\400-Engineering\MOT\Sheets\82382_MPII01.dgn

LEGEND

- AREA OF CONSTRUCTION ONGOING IN THIS PHASE
- AREA OF CONSTRUCTION TO BE COMPLETED BY END OF PHASE
- AREA OF CONSTRUCTION TO BE COMPLETED WITHIN FOUR MONTHS OF E. 9TH EXIT RAMP CLOSURE
- EXISTING BRIDGE OR TEMPORARY PAVEMENT REMOVAL
- AREA OF CONSTRUCTION TO BE COMPLETED PRIOR TO CARNEGIE AVE. BRIDGE DEMOLITION



Preliminary Plans - Not For Reference Only

HORIZONTAL SCALE IN FEET
0 150 300 600

MAINTENANCE OF TRAFFIC - PHASE 2 PLAN SHEET KEY

CUY-90-16.28 (CCG3A)

MODEL: Sheet PAPERSIZE: 34x22 (in.) DATE: 3/27/2025 TIME: 8:48:51 PM USER: Collin.Kwiatt
pw:\\mb-us-pw.bentley.commb-us-pw-03.Documents\Cleveland_OH\OL_Projects\ODOT\Districts\12\82382\400-Engineering\MOT\Sheets\82382_MB2000.dgn

DESIGN AGENCY
Michael Baker INTERNATIONAL

DESIGNER CRK
REVIEWER GSH 05/22/24
PROJECT ID 82382
SHEET 294 TOTAL 2696

Preliminary Plans - For Reference Only

* - ALL EXISTING LANES OPEN AND EXISTING PAVEMENT MARKINGS UTILIZED ON THIS SHEET UNLESS NOTED OTHERWISE.

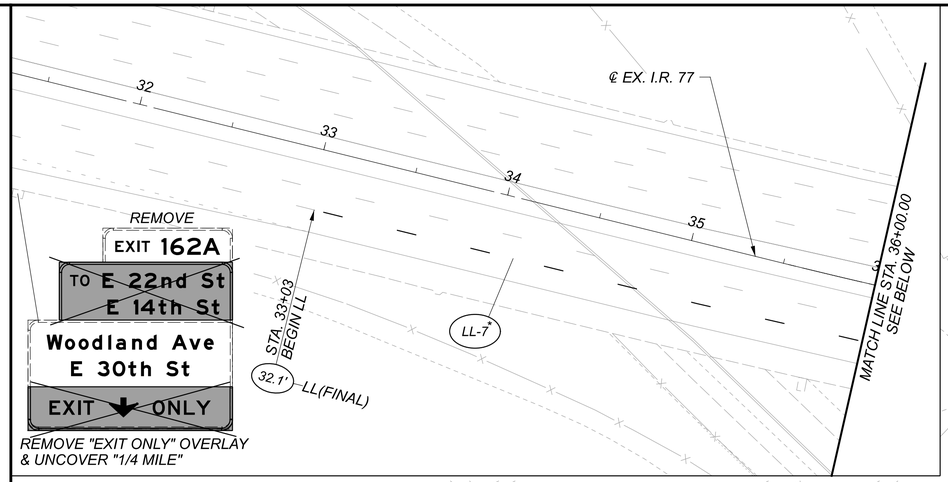

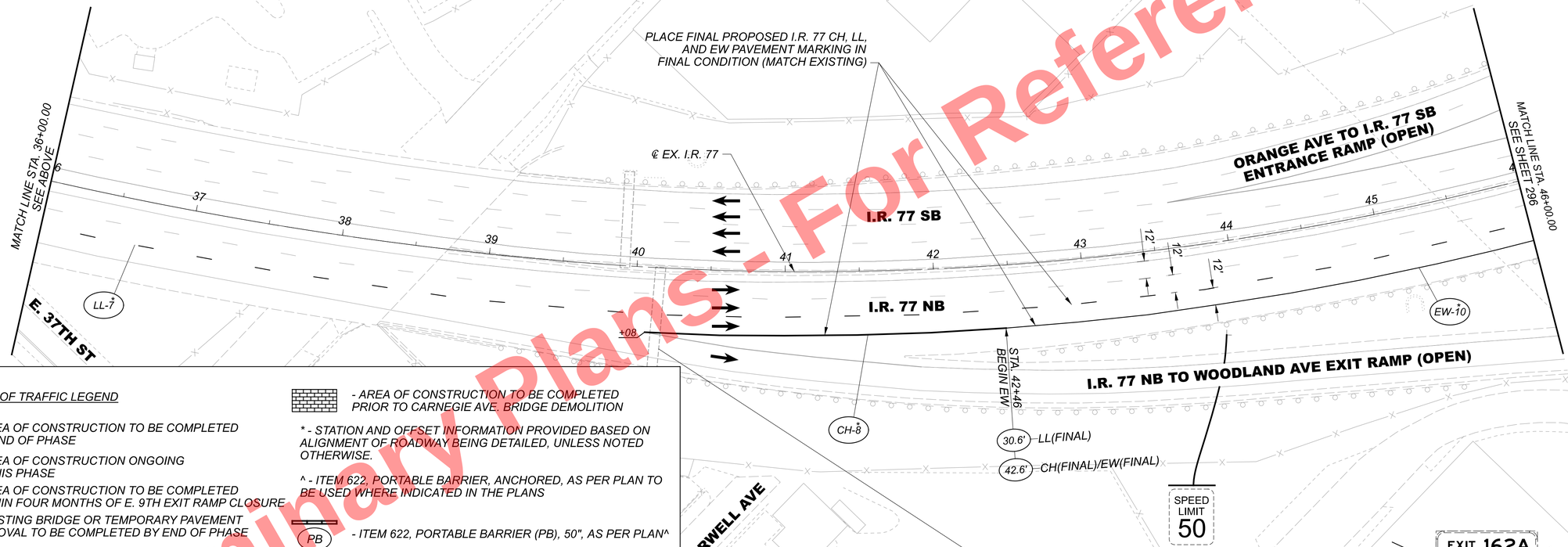

MAINTENANCE OF TRAFFIC LEGEND

- - AREA OF CONSTRUCTION TO BE COMPLETED BY END OF PHASE
- - AREA OF CONSTRUCTION ONGOING IN THIS PHASE
- - AREA OF CONSTRUCTION TO BE COMPLETED WITHIN FOUR MONTHS OF E. 9TH EXIT RAMP CLOSURE
- - EXISTING BRIDGE OR TEMPORARY PAVEMENT REMOVAL TO BE COMPLETED BY END OF PHASE
- - PAVEMENT FOR MAINTAINING TRAFFIC, CLASS A
- - DRUMS SPACED AS NOTED, OR AS SHOWN ON REFERENCE STANDARD CONSTRUCTION DRAWINGS
- 17.5' - OFFSET RIGHT FROM CENTERLINE, BASELINE OR EX. EDGE AS NOTED
- -17.5' - OFFSET LEFT FROM CENTERLINE, BASELINE OR EX. EDGE AS NOTED
- EW - WORK ZONE EDGE LINE (WHITE), CLASS I
- EY - WORK ZONE EDGE LINE (YELLOW), CLASS I
- MS - TEMPORARY SIGN
- CH - WORK ZONE CHANNELIZING LINE (WHITE), CLASS I
- DL - WORK ZONE DOTTED LINE (WHITE), CLASS I
- * - FINAL CONDITION PAVEMENT MARKING (SEE MAINTENANCE OF TRAFFIC SUBSUMMARY FOR SPECIFIC PAY ITEM)
- - AREA OF CONSTRUCTION TO BE COMPLETED PRIOR TO CARNEGIE AVE. BRIDGE DEMOLITION

* - STATION AND OFFSET INFORMATION PROVIDED BASED ON ALIGNMENT OF ROADWAY BEING DETAILED, UNLESS NOTED OTHERWISE.

^ - ITEM 622, PORTABLE BARRIER, ANCHORED, AS PER PLAN TO BE USED WHERE INDICATED IN THE PLANS

- PB - ITEM 622, PORTABLE BARRIER (PB), 50", AS PER PLAN^
- - IMPACT ATTENUATOR
- TY - WORK ZONE TRANSVERSE/DIAGONAL LINE, CLASS I
- WP - WORK ZONE WORD ON PAVEMENT, CLASS I
- LL - WORK ZONE LANE LINE, CLASS I
- CL - WORK ZONE CENTER LINE (DOUBLE SOLID), CLASS I
- XW - WORK ZONE CROSS WALK LINE, CLASS I
- SL - WORK ZONE STOP LINE, CLASS I
- LA - WORK ZONE LANE ARROW, CLASS I

HORIZONTAL SCALE IN FEET
0 20 40 80

MAINTENANCE OF TRAFFIC - PHASE 2
I.R. 77 - BEGIN TO STA. 46+00.00

DESIGN AGENCY
Michael Baker INTERNATIONAL

DESIGNER CRK
REVIEWER GSH 05/22/24
PROJECT ID 82382
SHEET 295 TOTAL 2696

CUY-90-16.28 (CCG3A)

MODEL: MP2001 PAPERSIZE: 34x22 (in.) DATE: 3/27/2025 TIME: 8:49:10 PM USER: Collin.Kwiat
pw:\\mb-us-pw.bentley.com:mb-us-pw-03\Documents\Cleveland_OH\OL_Projects\ODOT\Dist#c#2\82382\400-Engineering\MOT\Sheets\82382_MP200l.dgn

* - ALL EXISTING LANES OPEN AND EXISTING PAVEMENT MARKINGS UTILIZED ON THIS SHEET UNLESS NOTED OTHERWISE.

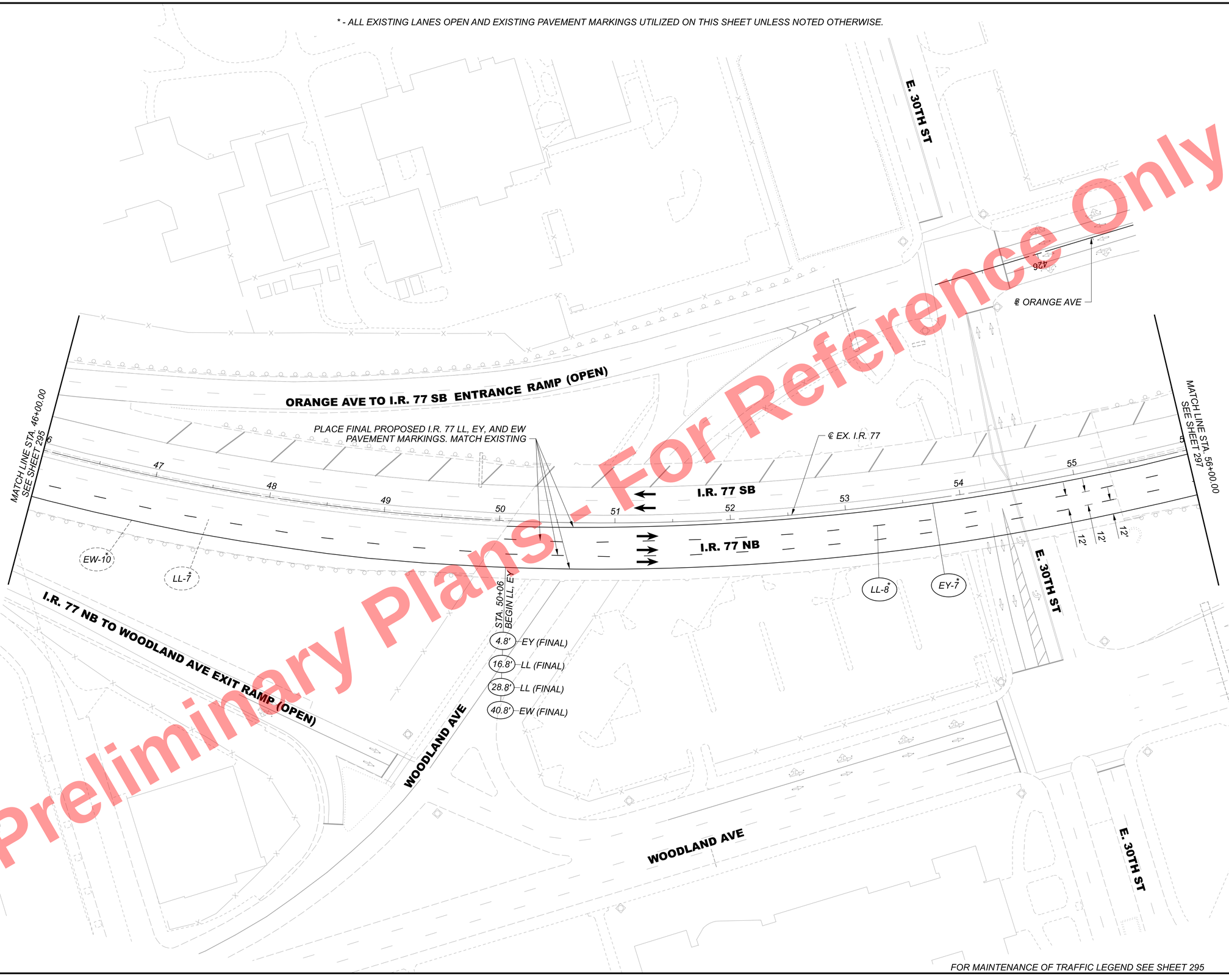

Preliminary Plans - For Reference Only

FOR MAINTENANCE OF TRAFFIC LEGEND SEE SHEET 295

HORIZONTAL SCALE IN FEET
0 20 40 80

MAINTENANCE OF TRAFFIC - PHASE 2
I.R. 77 - STA. 46+00.00 TO STA. 56+00.00

DESIGN AGENCY
Michael Baker INTERNATIONAL

DESIGNER CRK
REVIEWER GSH 05/22/24
PROJECT ID 82382
SHEET 296 TOTAL 2696

CUY-90-16.28 (CCG3A)

MODEL: MP2002 PAPERSIZE: 34x22 (in.) DATE: 3/27/2025 TIME: 8:49:20 PM USER: Collin.Kwiatt
pw:\\mb-us-pw.bentley.com:mb-us-pw-03\Documents\Cleveland_OH\OI_Projects\ODOT\District2\82382\400-Engineering\

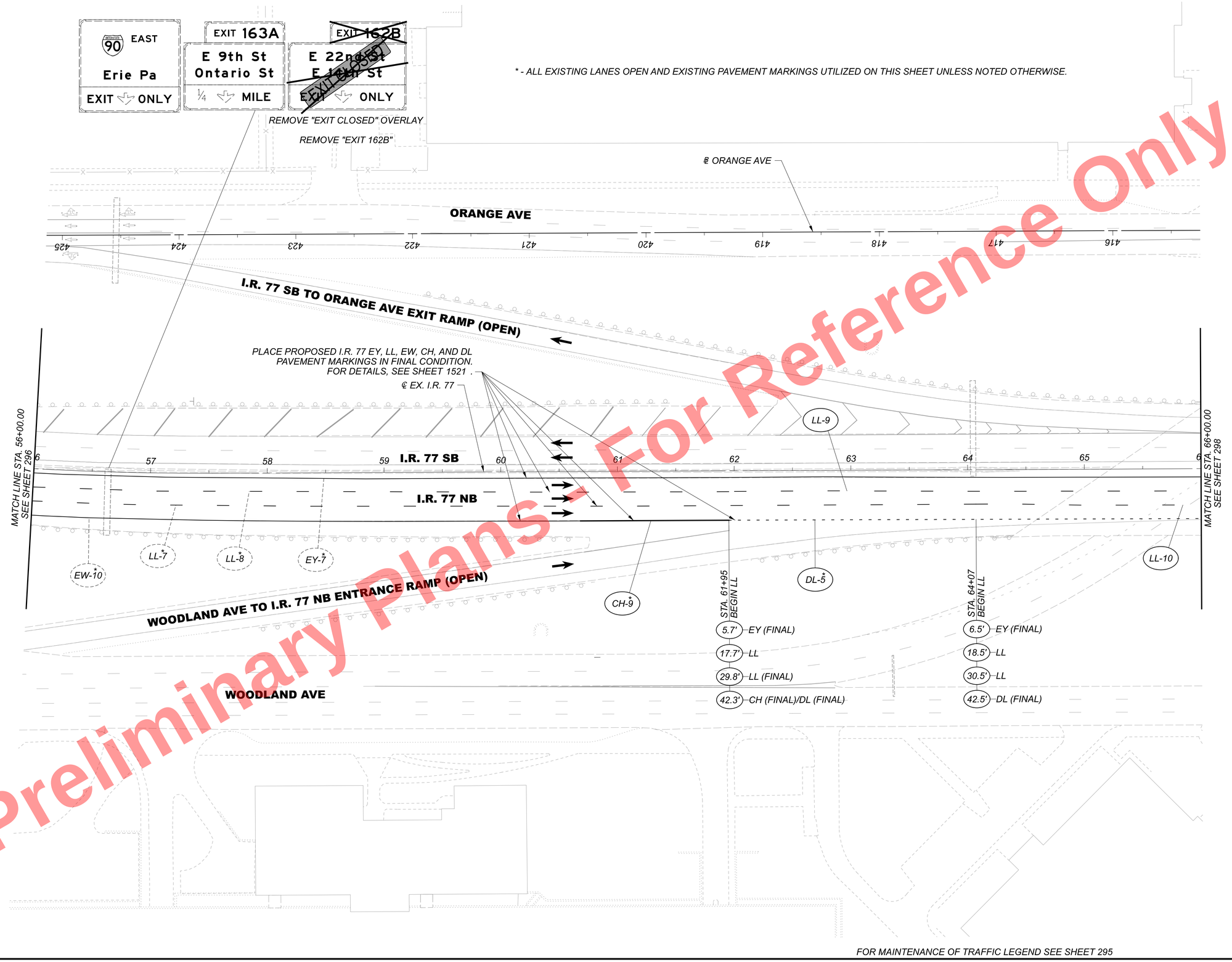

Preliminary Plans - Not For Reference Only

FOR MAINTENANCE OF TRAFFIC LEGEND SEE SHEET 295

HORIZONTAL SCALE IN FEET
0 20 40 80

MAINTENANCE OF TRAFFIC - PHASE 2
I.R. 77 - STA. 56+00.00 TO STA. 66+00.00

DESIGN AGENCY
Michael Baker INTERNATIONAL

DESIGNER
CRK

REVIEWER
GSH 05/22/24

PROJECT ID
82382

SHEET 297 TOTAL 2696

CUY-90-16.28 (CCG3A)

MODEL: MP2003 PAPERSIZE: 34x22 (in.) DATE: 3/27/2025 TIME: 8:49:33 PM USER: CollinKWiatt
pw:\\mb-us-pw.bentley.com:mb-us-pw-03\Documents\Cleveland_OH\01_Projects\000T\District2\82382\400-Engineering\MOT\Sheets\82382_MP2003.dgn

NOTES:

1. ALL EXISTING LANES OPEN AND EXISTING PAVEMENT MARKINGS UTILIZED ON THIS SHEET UNLESS NOTED OTHERWISE.

2. FOR EXISTING MAINTENANCE OF TRAFFIC PAVEMENT MARKINGS AND BARRIER DETAILS, SEE SHEET 287

3. 200' OUTSIDE LANE WIDENING 12' TO 16' (RAMP IH5)

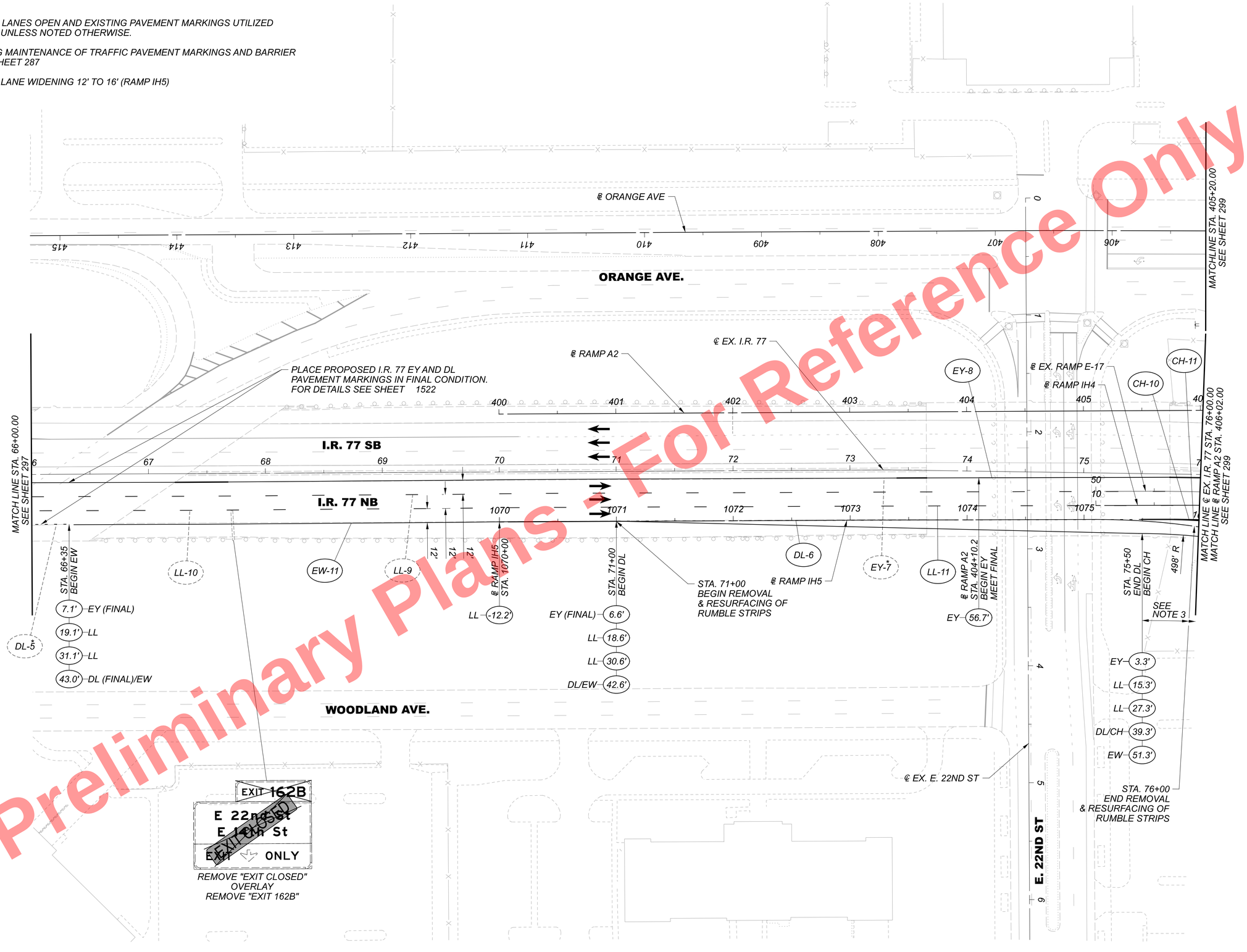

Preliminary Plans - For Reference Only

FOR MAINTENANCE OF TRAFFIC LEGEND SEE SHEET 295

HORIZONTAL SCALE IN FEET
0 20 40 80

MAINTENANCE OF TRAFFIC - PHASE 2
I.R. 77 - STA. 66+00.00 TO STA. 76+00.00

DESIGN AGENCY
Michael Baker INTERNATIONAL

DESIGNER CRK
REVIEWER GSH 05/22/24
PROJECT ID 82382
SHEET 298 TOTAL 2696

CUY-90-16.28 (CCG3A)

MODEL: MP2004 PAPERSIZE: 34x22 (in.) DATE: 3/27/2025 TIME: 8:49:42 PM USER: CollinKwiatt
pw:\\mb-us-pw.bentley.com\mb-us-pw-03\Documents\Cleveland_OH\01_Projects\00OT\District2\82382\400-Engineering\MOT\Sheets\82382_MP2004.dgn

Preliminary Plans - For Reference Only

MATCHLINE. SEE BELOW

℄ ORANGE AVE

ALL ORANGE AVE PAVEMENT MARKINGS PLACED IN FINAL CONDITION

℄ EX. ONTARIO ST.

ORANGE AVE.

MATCH LINE STA. 405+20.00 SEE SHEET 298

MATCHLINE STA. 15+50.00 SEE SHEET 289

-24.0' EY
-12.0' LL
0.0' LL
12.0' CH

-12.8' EY
-0.8' LL
11.2' LL/CH

℄ RAMP IH4 STA. 11+05

EX. RAMP E-17 STA. 51+75 END LL BEGIN CH

STA. 403+17 END CH

LA-19

EX. RAMP E-17 STA. 53+00 END CH BEGIN EW

LA-18

CH-14

LA-17

STA. 400+68 BEGIN CH

E. 14TH ST.

LL-12

EY-8

PR. WALL N

EW-15

CONTINUE CONSTRUCTION ON BRIDGE 9 UNIT 1 (SPANS 1-3). BEGIN CONSTRUCTION OF SPAN 4.

** E. 14TH ST LANE ARROWS PLACED IN FINAL CONDITION

LA-9
LA-10
LA-11
LA-12
LA-13
LA-14
LA-15
LA-16

E. 14TH ST.

MATCHLINE. SEE ABOVE

345' RAMP IH4 WIDENING 12' TO 16'

MATCH LINE ℄ EX. I.R. 77 STA. 76+00.00
MATCH LINE ℄ RAMP A2 STA. 406+02.00
SEE SHEET 298

℄ EX. I.R. 77

2511' R

2033' R

1077

498' R

557' R

475' R

590' R

1078

1079

1270

479' R

1271

1081

1272

1082

1273

1083

EY-8
LL-9
LL-11
CH-11
CH-13
CH-12
CH-10
EW-14
EW-12
EY-9
EW-11
EW-13
EY-10
EW-22

STA. 14+50 SEE NOTE 2

STA. 54+98 END ALL PR. MEET EX.

℄ RAMP IH4 END CH END CH BEGIN EY BEGIN EW

℄ RAMP IH5 STA. 10+30 END CH BEGIN EY

℄ RAMP IH6

℄ RAMP IH5

℄ RAMP A2

I.R. 77 NB TO I.R. 90 EB RAMP (OPEN)

I.R. 90 WB TO I.R. 77 SB RAMP (OPEN)

℄ INTERIM E. 14TH ST NB

℄ INTERIM E. 14TH ST SB

I.R. 77 NB TO E. 14TH ST NB EXIT RAMP (OPEN)

EXIT 162A
Woodland Ave
E 30th St
EXIT ONLY

℄ EX. RAMP A3

℄ EX. RAMP E-17

END CONSTRUCTION OF BRIDGE 9 (RAMP A2) AT PIER 4 (STA. 417+70) INSTALL PROPOSED 18" CONDUITS BEFORE BEGINNING CONSTRUCTION OF BRIDGE 9 PIER 4

SPEED LIMIT 50

MATCHLINE ℄ RAMP A2 STA. 418+00.00 SEE SHEET 303

MATCHLINE ℄ EX. RAMP E-17 STA. 208+35.00 SEE SHEET 303

MATCHLINE ℄ RAMP E-17 STA. 61+88.00 SEE SHEET 303

MATCHLINE ℄ RAMP IH6 STA. 1274+00.00 SEE SHEET 301

MATCHLINE ℄ INTERIM E. 14TH ST SB STA. 200+34.00 SEE SHEET 301

-11.5' CH/EY
4.5' EW
MS-39

-14.4' CH/EY
1.3' CH/EW
MS-38

"LEFT" COVERED WITH GREEN OVERLAY

EAST
Erie Pa
35 MPH

EXIT 163A
E 9th St
Ontario St
EXIT ONLY

LEFT EXIT 163 B
E 14th St
E 18th St
EXIT ONLY

EXIT 163 C
E 22nd St
1/4 MILE

REMOVE EX. E. 22ND ST/ E. 14TH ST SIGN AND INSTALL PR. E. 14TH/E. 18TH AND E. 22ND ST SIGNS. FOR PR. SIGN DETAILS SEE FINAL CONDITION SIGNING PLAN SHEETS.

OVERLAY "1/4 MILE" WITH BLACK-ON-ORANGE PANEL WITH DIAGONAL ARROW. FOR DETAILS, SEE SHEET 130

I.R. 77 NB TO COMMUNITY COLLEGE AVE EXIT RAMP (OPEN)

EXIT 163 C E 22nd St

EXIT Erie PA EAST

NOTES:

1. ALL EXISTING LANES OPEN AND EXISTING MARKINGS UTILIZED UNLESS NOTED OTHERWISE.

2. PLACE RAMP IH4 PAVEMENT MARKINGS PAST STA. 14+50 AND E. 14TH ST. PAVEMENT MARKINGS IN FINAL CONDITION LOCATION. SEE PAVEMENT MARKING PLANS SHEET 1550

3. REPLACE EXISTING SIGNS REMOVED IN PHASE 1 OR INSTALL NEW PROPOSED SIGNS AS PER THE SIGNING PLANS.

FOR MAINTENANCE OF TRAFFIC LEGEND SEE SHEET 295

HORIZONTAL SCALE IN FEET
0 20 40 80

MAINTENANCE OF TRAFFIC - PHASE 2
I.R. 77 - STA. 76+00.00 TO END / RAMP A2 - STA. 406+2.00 TO STA. 418+00.00

DESIGN AGENCY
Michael Baker INTERNATIONAL

DESIGNER CRK
REVIEWER GSH 05/22/24
PROJECT ID 82382
SHEET 299 TOTAL 2696

CUY-90-16.28 (CCG3A)

MODEL: MP2005 PAPERSIZE: 34x22 (in.) DATE: 3/27/2025 TIME: 8:49:53 PM USER: collin.kwiatt
pw:\\mb-us-pw.bentley.com:mb-us-pw-03\Documents\Cleveland_OH\OI_Projects\OOT\District2\82382\400-Engineering\MOT\Sheets\82382_MP2005.dgn

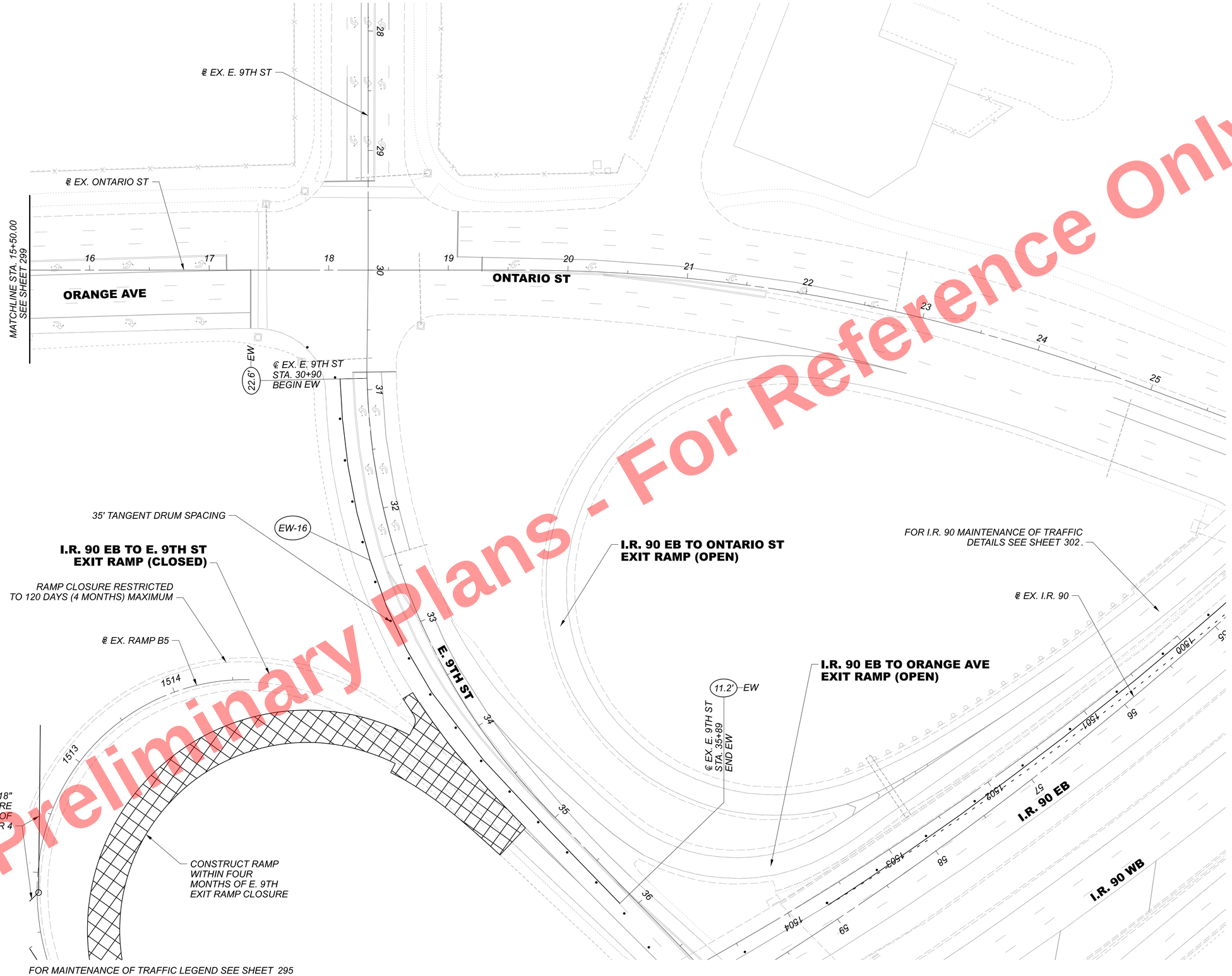

Preliminary Plans - Not For Reference Only

HORIZONTAL SCALE IN FEET
0 20 40 80

MAINTENANCE OF TRAFFIC - PHASE 2
ONTARIO ST - STA. 15+50.00 TO END

DESIGN AGENCY
Michael Baker INTERNATIONAL

DESIGNER CRK
REVIEWER GSH 05/22/24
PROJECT ID 82382
SHEET 300 TOTAL 2696

CUY-90-16.28 (CCG3A)

MODEL: MP2006 PAPERSIZE: 34x22 (in) DATE: 3/27/2025 TIME: 8:50:02 PM USER: CollinKwiatt
pw:\\mb-us-pw.bentley.com:mb-us-pw-03\Documents\Cleveland_OH\OiL_Projects\ODOT\Districts\12\82382\400-Engineering\MOT\Sheets\82382_MP2006.dgn

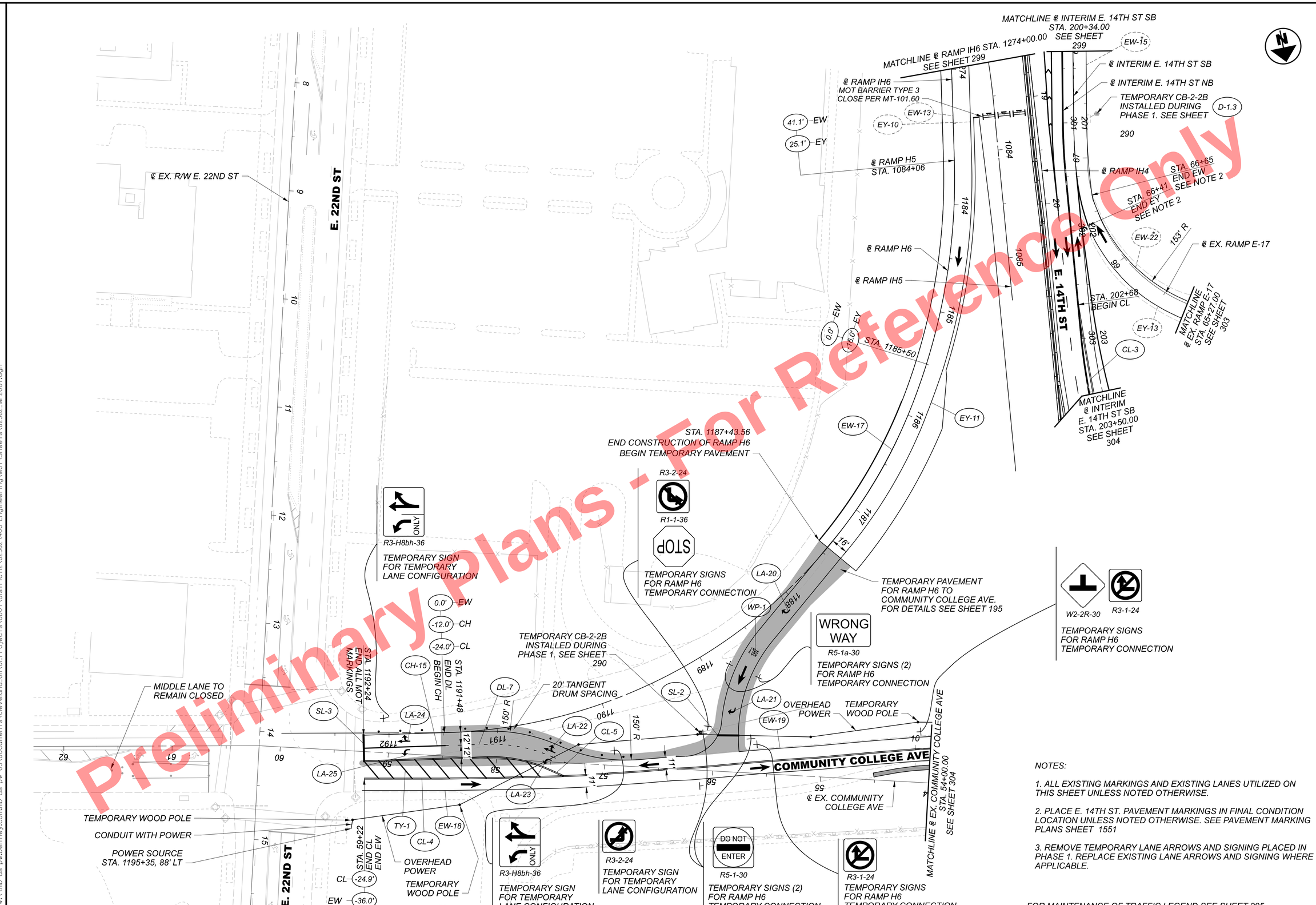

Preliminary Plans - For Reference Only

NOTES:

1. ALL EXISTING MARKINGS AND EXISTING LANES UTILIZED ON THIS SHEET UNLESS NOTED OTHERWISE.

2. PLACE E. 14TH ST. PAVEMENT MARKINGS IN FINAL CONDITION LOCATION UNLESS NOTED OTHERWISE. SEE PAVEMENT MARKING PLANS SHEET 1551

3. REMOVE TEMPORARY LANE ARROWS AND SIGNING PLACED IN PHASE 1. REPLACE EXISTING LANE ARROWS AND SIGNING WHERE APPLICABLE.

FOR MAINTENANCE OF TRAFFIC LEGEND SEE SHEET 295

HORIZONTAL SCALE IN FEET 0 20 40 80

MAINTENANCE OF TRAFFIC - PHASE 2
RAMP IH6 - STA. 1274+00.00 TO END

DESIGN AGENCY: Michael Baker INTERNATIONAL

DESIGNER: CRK

REVIEWER: GSH 05/22/24

PROJECT ID: 82382

SHEET 301 TOTAL 2696

CUY-90-16.28 (CCG3A)

MODEL: MP2007 PAPERSIZE: 34x22 (in.) DATE: 3/27/2025 TIME: 8:50:11 PM USER: Collin.Kwiatt
pw:\\mb-us-pw.bentley.com:mb-us-pw-03\Documents\Cleveland_OH\OI_Projects\ODOT\District12\82382\400-Engineering\MOT\Sheets\82382_MP2007.dgn

CARNEGIE AVE

E. 9TH ST. TO I.R. 90 WB ENTRANCE RAMP (OPEN)

I.R. 90 WB

I.R. 90 EB

I.R. 90 EB TO ONTARIO ST/E 9TH ST SB EXIT RAMP (OPEN)

℄ EX. E. 9TH ST

E. 9TH ST

℄ EX. I.R. 90

℄ EX. RAMP B5

50' TANGENT DRUM SPACING

℄ EX. I.R. 90 STA. 52+00.00
BEGIN DL
BEGIN EW
BEGIN DRUMS

℄ EX. I.R. 90 STA. 59+00.00
END DL
END EW

MATCH LINE STA. 61+00.00
SEE SHEET 303

IMPACT ATTENUATOR

BEGIN PB STA. 60+48

PB-4

EW-16

EW-20

DL-8

CLOSE NB RIGHT LANE PER MT-95.40
700' @ 60:1 MERGING TAPER

ONTARIO ST

℄ EX. ONTARIO ST

-10.1' DL

1.5' EW

14.2' DW/EW

MS-40

TO E 9th St Downtown

EAST	WEST
422 14	422 14
Orange Ave	Ontario St

RAMPS 25 MPH

* - EXISTING OVERHEAD SIGN OVERLAYS AND PANELS DETAILED ON SHEET 157

MS-41

TO E 9th St Downtown

EAST	WEST
422 14	422 14
Orange Ave	Ontario St

* - EXISTING OVERHEAD SIGN OVERLAYS AND PANELS DETAILED ON SHEET 157

FOR MAINTENANCE OF TRAFFIC LEGEND SEE SHEET 295

Preliminary Plans - For Reference Only

HORIZONTAL SCALE IN FEET
0 20 40 80

MAINTENANCE OF TRAFFIC - PHASE 2
I.R. 90 - BEGIN TO STA. 61+00.00

DESIGN AGENCY
Michael Baker INTERNATIONAL

DESIGNER CRK
REVIEWER GSH 05/22/24
PROJECT ID 82382
SHEET 302 TOTAL 2696

CUY-90-16.28 (CCG3A)

MODEL: MP2008 PAPERSIZE: 34x22 (in.) DATE: 3/27/2025 TIME: 8:50:23 PM USER: Collin.Kwiat
pw:\\mb-us-pw.bentley.com:mb-us-pw-03\Documents\Cleveland.OH\OI_Projects\ODOT\District2\82382\400-Engineering\MOT\Sheets\82382_MP2008.dgn

*- ALL EXISTING LANES OPEN AND EXISTING PAVEMENT MARKINGS UTILIZED ON THIS SHEET UNLESS NOTED OTHERWISE

E. 14TH ST. TO I.R. 77 SB ENTRANCE RAMP (PERMANENTLY CLOSED)

℄ EX. RAMP A3

BEGIN CONSTRUCTION ON BRIDGE 9 PIER 9

BEGIN CONSTRUCTION ON BRIDGE 9 PIER 8

BEGIN CONSTRUCTION ON BRIDGE 9 PIER 6

BEGIN CONSTRUCTION ON BRIDGE 9 PIER 5

I.R. 90 WB

I.R. 90 EB

℄ EX. I.R. 90

MATCH LINE STA. 61+00.00 SEE SHEET 302

MATCH LINE STA. 71+00.00 SEE SHEET 304

℄ EX. RAMP B5

PB-4

STA. 63+73 BEGIN INCREASED DELINEATION

END PB WITH INCREASED DELINEATION STA. 64+60

CONSTRUCT RAMP IB5 WITHIN FOUR MONTHS OF E. 9TH EXIT RAMP CLOSURE AND REOPEN RAMP PRIOR TO E. 22ND ST BRIDGE CONSTRUCTION FULL WEEKEND I.R. 90 EB CLOSURES

℄ RAMP A2

EXIT 172C

Carnegie Ave

½ MILE

EXIT 172A

E 9th St Downtown

EXIT ~~25~~ MPH

EXIT ONLY

EXIT CLOSED

MS-42

* - EXISTING OVERHEAD SIGN OVERLAYS AND PANELS DETAILED ON SHEET 157

I.R. 90 EB TO E. 9TH ST NB EXIT RAMP (CLOSED)

RAMP CLOSURE RESTRICTED TO 120 DAYS (4 MONTH) MAXIMUM

INSTALL PROPOSED 18" CONDUITS BEFORE BEGINNING OF CONSTRUCTION OF BRIDGE 9 PIER 4

I.R. 90 WB TO I.R. 77 SB RAMP (OPEN)

I.R. 90 EB TO I.R. 77 NB RAMP (OPEN)

I.R. 77 NB TO E. 14TH ST SB EXIT RAMP (OPEN)

℄ EX. RAMP E-17

MATCHLINE ℄ RAMP A2 STA. 418+00.00 SEE SHEET 299

MATCHLINE ℄ EX. RAMP A3 STA. 208+35.00 SEE SHEET 299

MATCHLINE ℄ EX. RAMP E-17 STA. 61+88.00 SEE SHEET 299

MATCHLINE ℄ EX. RAMP E-17 STA. 65+27.00 SEE SHEET 301

STA. 67+50 BEGIN LL (2) BEGIN EW

STA. 68+75

STA. 69+88 BEGIN EY

125' SHIFT TAPER @ 54:1

MEET EX. MARKINGS

16.7' LL

28.7' LL

40.1' EW

15.8' LL

26.8' LL

37.8' EW

EW-21

LL-13

LL-14

EY-12

EW-22

EY-13

850' R

167' R

STA. 64+68 BEGIN EW BEGIN EY

PLACE PROPOSED EX. RAMP E-17 EY AND EW PAVEMENT MARKINGS IN FINAL CONDITION FOR DETAILS SEE SHEET 1540

FOR MAINTENANCE OF TRAFFIC LEGEND SEE SHEET 295

Preliminary Plans - For Reference Only

HORIZONTAL SCALE IN FEET 0 20 40 80

MAINTENANCE OF TRAFFIC - PHASE 2
I.R. 90 - STA. 61+00.00 TO STA. 71+00.00

DESIGN AGENCY
Michael Baker INTERNATIONAL

DESIGNER CRK
REVIEWER GSH 05/22/24
PROJECT ID 82382
SHEET 303 TOTAL 2696

CUY-90-16.28 (CCG3A)

MODEL: MP2009 PAPERSIZE: 34x22 (in.) DATE: 3/27/2025 TIME: 8:50:33 PM USER: CollinLKWiatt
pw:\\vmb-us-pw.bentley.com:mb-us-pw-03\Documents\Cleveland_OH\01_Projects\000T\District2\82382\400-Engineering\MOT\Sheets\82382_MP2009.dgn

Preliminary Plans - For Reference Only

HORIZONTAL SCALE IN FEET
0 20 40 80

MAINTENANCE OF TRAFFIC - PHASE 2
I.R. 90 - STA. 71+00.00 TO STA. 81+00.00

E. 14TH ST SB
E. 14TH ST NB
E. 18TH ST
STA. 38+00 SEE SHEET 307
℄ E. 14TH ST. NB
℄ RAMP A2
EW-27
EW -21.3'
EY -9.3'
STA. 36+61 END EW MEET PR. CURB
STA. 36+55
EY-17
STA. 208+85, 5.0' RT END TEMP. PAVEMENT SEE NOTE 4
TEMPORARY CB-2-2B INSTALLED DURING PHASE 1. SEE SHEET 289
I.R. 90 WB TO I.R. 77 SB RAMP (OPEN)
EW-25
CH-22
LA-26
STA. 57+29 END CH (MEET PROPOSED FINAL CONDITION)
PLACE LA, EW, AND CH IN FINAL CONDITION LOCATION USING MOT CLASS I PAINT
STA. 208+80, 5.0' RT BEGIN TEMP. PAVEMENT SEE NOTE 4
END CONSTRUCTION AT BRIDGE 10 FORWARD ABUTMENT.
-11.0' EW
1.0' CW
13.0' EY
STA. 208+52 END CH
CH-23
STA, 35+32 BEGIN EW MEET PR. CURB
PR. WALL AD
-39.4' EW
-28.4' CH
-17.4' CH
-6.4' EY
440' @ 50:1 SHIFT TAPER
E. 21ST ST TO I.R. 77 SB ENTRANCE RAMP (OPEN)
25' TANGENT DRUM SPACING
STA. 76+60, BEGIN CH (2) STRIPE OVER LL IN ADVANCE OF LANE SHIFT PER MT-99.30
STA. 79+60 BEGIN REMOVAL AND RESURFACING OF RUMBLING STRIPS
STA. 79+60 BEGIN EW BEGIN EY
CH-18
CH-19
EW-24
EY-14
I.R. 90 WB
℄ EX. I.R. 90
I.R. 90 EB
MATCH LINE STA. 71+00.00 SEE SHEET 303
MATCH LINE STA. 81+00.00 SEE SHEET 305
IMPACT ATTENUATOR
STA. 71+42 BEGIN PB
850' R
I.R. 77 NB TO I.R. 90 EB RAMP (OPEN)
EW-26
SL-5
STA. 207+20 END EW BEGIN CH
STA. 206+30 BEGIN EW
SL-4
STA. 12+74 BEGIN EY BEGIN EW
SEE NOTE 3
SL-6
BEGIN DL
STA. 12+04 END EW END CL END EW
EY-12
PB-5
DL-9
LL-13
EW-21
73+00
73+63
75+30
LL-14
95'
DECISION SIGHT DISTANCE = 500' (SCD = 930')
CH-16
CH-17
SEE NOTE 6
REMOVE EXISTING PORTABLE CONCRETE BARRIER
END EW END EY END PB BEGIN CH (2)
167' @ 45:1 LANE TAPER
270' @ 45:1 LANE SHIFT
STA. 77+75 END DL BEGIN CH (2)
CH-20
CH-21
25' TAPER DRUM SPACING
DL-10
651' R
EW-23
STA. 79+60 END CH (2) BEGIN EY
25' TANGENT DRUM SPACING
EY-15
I.R. 77 NB TO E. 22ND ST EXIT RAMP (OPEN)
STA. 78+00 END CH(2) BEGIN DL
550' @ 50:1 MERGE TAPER
16.8' LL
27.8' LL
38.8' DL
49.6' CH
52.7' CH
℄ TEMPORARY CROSSOVER COMMUNITY COLLEGE AVE TO E. 14TH ST. FOR DETAILS, SEE SHEET 185
EW-18
EW-19
CL-4
MAINTAIN EXISTING CB
MATCHLINE ℄ EX. COMMUNITY COLLEGE AVE STA. 54+00.00 SEE SHEET 301
LL 16.8'
LL 27.8'
38.8' EW/CH
41.7' PB
EY/CH 44.7'
DL 55.7'
EY-16
℄ E. 14TH ST. SB
℄ INTERIM E. 14TH ST. NB
STA. 203+92 END CL
STA. 203+54 BEGIN EY
MATCHLINE ℄ INTERIM E. 14TH ST. SB STA. 203+50.00 SEE SHEET 301
CL-3
EXIT 172C
Carnegie Ave
1/4 MILE
90 EAST
MS-43
EXIT 173B
Chester Ave
3/4 MILE

* - EXISTING OVERHEAD SIGN OVERLAYS AND PANELS DETAILED ON SHEET 161

UPON REMOVAL OF TRUSS AT STA. 83+75, REERECT EX. CHESTER AVE SIGN COVER "½"WITH "¾" OVERLAY. FOR OVERLAY DETAILS, SEE SHEET 131

NOTES:

1. ALL EXISTING LANES OPEN AND EXISTING PAVEMENT MARKINGS UTILIZED ON THIS SHEET UNLESS NOTED OTHERWISE.
2. PLACE E. 14TH ST NB AND E. 18TH ST PAVEMENT MARKINGS IN FINAL CONDITION LOCATION UNLESS NOTED OTHERWISE. SEE PAVEMENT MARKING PLANS SHEETS 1552 & 1553
3. OMIT LANE LINES ON E. 14TH ST NB STA. 53+50.00 TO STA. 54+35.00
4. TEMPORARY PAVEMENT ALONG E. 14TH MEDIAN NEEDED FOR FUTURE REMOVAL OF EX. BRIDGE PIERS IN PHASE 5 & PHASE 7.
5. FOR TEMPORARY SIGNAL DETAILS AT INTERSECTION OF E. 14TH ST AND COMMUNITY COLLEGE AVE SEE SHEET 309 . FOR TEMPORARY SIGNAL NOTES SEE SHEET93 .
6. FOR STAGING DETAILS AND INFORMATION WITHIN THIS AREA DURING THE E. 22ND STREET BRIDGE CONSTRUCTION FULL I.R. 90 EB WEEKEND CLOSURES, SEE SHEET 178 .

FOR MAINTENANCE OF TRAFFIC LEGEND SEE SHEET 295

DESIGN AGENCY
Michael Baker INTERNATIONAL
DESIGNER CRK
REVIEWER GSH 05/22/24
PROJECT ID 82382
SHEET 304 TOTAL 2696

CUY-90-16.28 (CCG3A)

MODEL: MP2010 PAPERSIZE: 34x22 (in.) DATE: 3/27/2025 TIME: 8:50:43 PM USER: Collin.Kwiatt
pw:\\mb-us-pw.bentley.com:mb-us-pw-03\Documents\Cleveland_OH\DL_Projects\ODOT\District2\82382\400-Engineering\MOT\Sheets\82382_MP2010.dgn

NOTES:

1. ALL EXISTING LANES OPEN AND EXISTING PAVEMENT MARKINGS UTILIZED ON THIS SHEET UNLESS NOTED OTHERWISE.

2. REFER TO SEQUENCE OF CONSTRUCTION NOTES FOR ORDER OF OPERATIONS FOR INSTALLING WALL AE, WALL AF, WALL AG, AND REMOVAL OF RETAINING WALLS.

3. FOR STAGING DETAILS AND INFORMATION WITHIN THIS AREA DURING THE E. 22ND ST BRIDGE CONSTRUCTION FULL I.R. 90 EB AND WB WEEKEND CLOSURES, SEE SHEETS 177 & 178

4. INSTALL SIGNAL CONDUITS CROSSING E. 22ND ST, CENTRAL AVE AND EXIT RAMP DURING OFF PEAK HOURS AND USE STEEL PLATING FOR TEMPORARY MAINTENANCE.

5. FOR TEMPORARY SIGNAL NOTES SEE SHEET 93

6. THE CONTRACTOR SHALL NOT ACCESS PARCEL 319 UNTIL MARCH 15, 2027, UNLESS AUTHORIZED BY THE ENGINEER. WORK IMPACTED BY THIS ACCESS RESTRICTION INCLUDES CONSTRUCTION OF PORTIONS OF WALL AG, BRIDGE 13, AND CEDAR AVE./MIDTOWN CONNECTOR ROADWAYS.

FOR MAINTENANCE OF TRAFFIC LEGEND SEE SHEET 295

HORIZONTAL SCALE IN FEET
0 20 40 80

E. 21ST ST TO I.R. 77 SB ENTRANCE RAMP (OPEN)

INSTALL TEMPORARY SHORING FOR EX. ABUTMENT REMOVAL & PR. BR13 FOOTINGS. CUT HOLES IN SHORING THAT COINCIDE WITH DRAINAGE SLOT BENEATH PORTABLE BARRIER AT 10-15' SPACING TO ALLOW FOR POSITIVE DRAINAGE AWAY FROM THE DRIVING LANES. UPON COMPLETION OF PR. FOOTINGS & PIER WORK, PLACE TEMPORARY PAVEMENT (6' WIDTH) AND RE-OPEN TO 11' LANES.

℄ EX. E. 21ST ST

℄ RAMP A2

SEE SHEET 308 FOR CARNEGIE AVE MAINTENANCE OF TRAFFIC PAVEMENT MARKINGS.

COVER "EXIT ONLY"/DOWN ARROW WITH BLACK-ON-ORANGE "EXIT"/DIAGONAL ARROW OVERLAY FOR OVERLAY DETAILS, SEE SHEET 131

℄ EX. R/W CARNEGIE AVE.

CARNEGIE AVE

EXIT 172A SOUTH AKRON 77 EXIT

MS-44

EW -30.4' CH -20.4' CH -10.4' EY -0.4'

-30.7' EW -20.7' CH -10.7' CH -0.7' EY

PR. WALL AF

440' @ 50:1 SHIFT TAPER

REMOVE TEMPORARY CPP OVERHEAD LINES AND POLES AFTER PERMANENT CPP INSTALLED ON E. 22ND ST BRIDGE

D-2.1

INSTALL TEMPORARY MH, AND 12" CONDUIT

280' ANCHORED PB ALONG TEMPORARY SHORING

INSTALL TEMPORARY MH, AND 12" CONDUIT CONNECT TO PR. CB (D-220)

D-2.2

REMOVE EXISTING RETAINING WALL

PR. BRIDGE 13

STA. 84+50 BEGIN ANCHORED PB

STA. 84+00 END PB @ 14:1 FLARE

STA. 87+30 END ANCHORED PB

STA. 88+00 BEGIN 14:1 PB FLARE

STA. 89+00 BEGIN DL

INSTALL TEMPORARY CPP CROSSING IN ADVANCE OF CARNEGIE AVE. BRIDGE DEMOLITION

END PB STA. 90+00 PER MT-101.80

END PB STA. 90+70 ATTACH IMPACT ATTENUATOR TO END 50' TAPER DRUM SPACING

END PB STA. 90+23

MATCH LINE STA. 91+00.00 SEE SHEET 306

EW-24 PB-6 EY-14 PB-8 CH-19 CH-18 PB-9 DL-12

50' TANGENT DRUM SPACING ℄ EX. I.R. 90

STA. 81+45 BEGIN PB

MATCH LINE STA. 81+00.00 SEE SHEET 304

D-2.3 INSTALL TEMPORARY MH, AND 12" CONDUIT

I.R. 90 WB

82 83 84 85 86 87 88 89 90

ATTACH IMPACT ATTENUATOR TO END

BEGIN PB STA 88+10

I.R. 90 EB

STA. 82+00 BEGIN PB - PER. MT-101.80

CH-24 CH-25 EW-28

STA. 90+31 END CH BEGIN EW

SET PR. BRIDGE 13 BEAMS USING FULL WEEKEND CLOSURES SEE NOTE 3

EW-23

SECTION VIEW D SEE SHEET 134

SECTION VIEW E SEE SHEET 134

SECTION VIEW F SEE SHEET 134

LL-13 LL-14 EY-18 DL-11

STA. 89+18 END EW

STA. 89+92 END PB 5:1 FLARE

I.R. 90 EB TO CARNEGIE AVE EXIT RAMP (OPEN)

DL-10 EY-15 PB-7

STA. 81+48 BEGIN PB @ 14:1 FLARE ATTACH IMPACT ATTENUATOR TO END 50' TAPER DRUM SPACING

550' @ 50:1 MERGE TAPER

SPEED LIMIT 50

STA. 83+50 END DL END DRUMS END PB FLARE

REMOVE EXISTING RETAINING WALL

INSTALL WATERLINE FOR DETAILS SEE SHEETS 1411 & 1412

PR. WALL AG

STA. 86+50 BEGIN EY

STA. 87+61 BEGIN 5:1 PB FLARE BEGIN DL

150' @ 50:1 LANE SHIFT

140' - 11' LANES BACK TO EX. 12' LANES

STA. 88+85 END DL BEGIN CH (2)

STA. 90+23 END EY END LL (2) MEET EX.

END EY MEET EX. MARKINGS

I.R. 77 TO E. 22ND ST EXIT RAMP (OPEN)

STOP R1-1-30 TEMPORARY SIGNS (2) PLACED FOR PHASE 2

LL 16.7' LL 27.7' DL/EW 38.2' PB 41.7'

2.3' PB 5.3' EY 16.3' LL 27.3' LL 38.3' EW 41.3' PB

2.3' PB 8.3' EY 19.3' LL 30.3' LL 41.3' DL 47.3' EW 50.5' PB

7.5' EY 18.5' LL 29.5' LL 40.5' DL/CH 61.9' EW 64.9' PB

4.9' EY 16.9' LL 28.9' LL CH 40.9' CH 66.5'

CEDAR AVE

R3-2-30 TEMPORARY SIGN PLACED FOR PHASE 2

CONSTRUCT PORTIONS OF WATERLINE IN INTERSECTION DURING OFF PEAK HOURS AND USE STEEL PLATING FOR TEMPORARY MAINTENANCE

END EW

REMOVE EX. TRUSS PRIOR TO INSTALLING TEMPORARY PAVEMENT IN MEDIAN

FOR CONSTRUCTION OF CEDAR AVE SEE SHEETS 310 -314

MATCHLINE STA. 19+50.00 SEE LEFT

CLOSE LANE PER MT-95.31

STA. 17+75 BEGIN DL BEGIN EW BEGIN DRUMS

E. 22ND ST

EW-29 DL-13

R3-2-30 TEMPORARY SIGN PLACED FOR PHASE 2

DL-13 EW-29

MATCHLINE STA. 19+50.00 SEE RIGHT

BEGIN CL

LA-29 LA-28

STA. 20+25 END DL END EW END DRUMS

SL-7 CL-6

ONLY R3-5L-30 TEMPORARY PLACEMENT FOR PHASE 2

REMOVE EXISTING SIGN

COVER EXISTING SIGN FOR PHASE 2

ONLY R3-5L-30 TEMPORARY PLACEMENT FOR PHASE 2

MS-43 EXIT 173B Chester Ave ½ MILE

RIGHT LANE ENDS ¼ MILE

EXIT 172C Carnegie Ave

UPON REMOVAL OF TRUSS RELOCATE CHESTER AVE SIGN TO TRUSS AT STA. 76+50

ONLY R3-5R-30 TEMPORARY SIGN PLACED FOR PHASE 2

℄ EX. E. 22ND ST

END CL MEET EX.

CENTRAL AVE

Preliminary Plans - For Reference Only

MAINTENANCE OF TRAFFIC - PHASE 2
I.R. 90 - STA. 81+00.00 TO STA. 91+00.00

DESIGN AGENCY
Michael Baker INTERNATIONAL

DESIGNER CRK
REVIEWER GSH 05/22/24
PROJECT ID 82382
SHEET 305 TOTAL 2696

CUY-90-16.28 (CCG3A)

MODEL: MP20II PAPERSIZE: 34x22 (in.) DATE: 3/27/2025 TIME: 8:50:54 PM USER: CollinKwlat
pw:\\mb-us-pw.bentley.com\mb-us-pw-03\Documents\Cleveland.OH\DI_Projects\000T\District2\82382\400-Engineering\MOT\Sheets\82382_MP20II.dgn

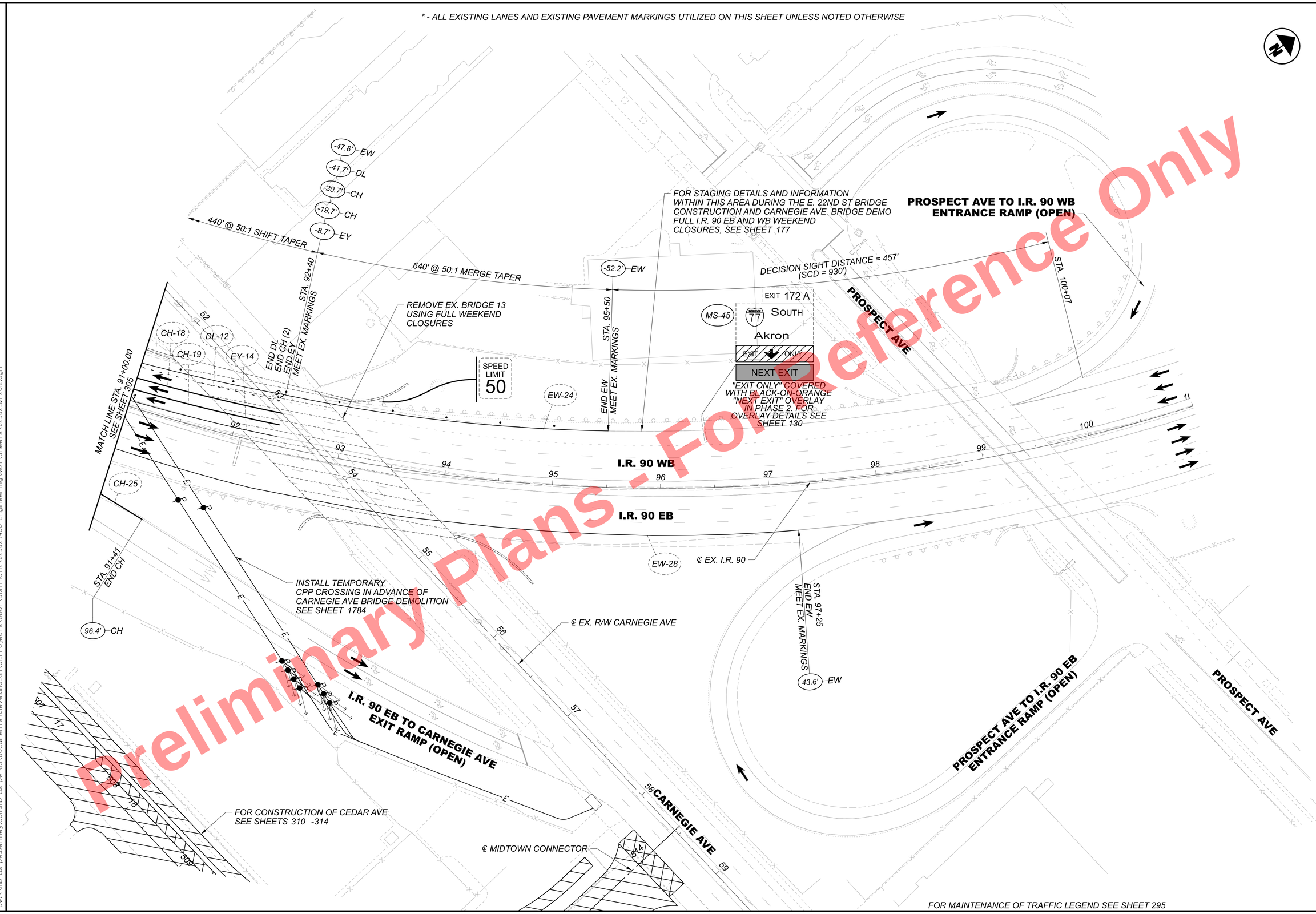

Preliminary Plans - For Reference Only

HORIZONTAL SCALE IN FEET
0 20 40 80

MAINTENANCE OF TRAFFIC - PHASE 2
I.R. 90 - STA. 91+00.00 TO END

DESIGN AGENCY
Michael Baker INTERNATIONAL

DESIGNER
CRK

REVIEWER
GSH 05/22/24

PROJECT ID
82382

SHEET 306 TOTAL 2696

CUY-90-16.28 (CCG3A)

MODEL: MP2012 PAPERSIZE: 34x22 (in.) DATE: 3/27/2025 TIME: 8:51:14 PM USER: Collin.Kwiatt
pw:\\mb-us-pw.bentley.com:mb-us-pw-03\Documents\Cleveland_OH\OI_Projects\ODOT\District12\82382\400-Engineering\MOT\Sheets\82382_MP2012.dgn

NOTES:

1. ALL EXISTING LANES OPEN AND EXISTING PAVEMENT MARKINGS UTILIZED ON THIS SHEET UNLESS NOTED OTHERWISE.

2. PLACE CARNEGIE AVE (STA. 28+85 TO STA. 35+50) AND ALL E. 14TH ST NB AND E. 18TH ST PAVEMENT MARKINGS IN FINAL CONDITION LOCATION UNLESS NOTED OTHERWISE. SEE PAVEMENT MARKING PLAN SHEETS 1542 , 1543 & 1553

3. FOR TEMPORARY SIGNAL NOTES SEE SHEET 93

4. REMOVE EXISTING SIGN IN PHASE 1 PRIOR TO I.R. 77 SB ENTRANCE RAMP CLOSURE

5. TEMPORARY SIGN PLACED IN PHASE 1 PRIOR TO I.R. 77 SB ENTRANCE RAMP CLOSURE

MS-2
Carnegie Ave WEST
CLOSED
TO 77
E 14th St
Carnegie Ave EAST
INSTALL BLACK-ON-ORANGE "CLOSED" OVERLAY AS SHOWN ON EXISTING OVERHEAD SIGNS

R3-5R-48
ONLY
SEE NOTE 4
SEE NOTE 5
LA-32
REMOVE EX. RIGHT-THROUGH LA AND PLACE RIGHT ONLY LA
E. 14TH ST
-14.4' CL
-3.4' CH
4.6' CH
STA. 30+80 END CL END CH MEET FINAL PROPOSED CONDITIONS
9.9' CH
20.8' LL
31.8' LL
STA. 31+56 END ALL PR. MOT MARKINGS
LA-31
LA-30
℄ EX. R/W CARNEGIE AVE
CARNEGIE AVE WB LANE LINES PLACED IN FINAL CONDITION LOCATION BUT WORK ZONE CLASS I STILL USED
CH-26
CH-27
CL-7
CLOSE LEFT TURN LANE WITH 25' TANGENT DRUM SPACING
CLOSE LEFT TURN LANE WITH 25' TANGENT DRUM SPACING
CARNEGIE AVE
FOR E. 14TH ST TO I.R. 77 SB DETOUR SEE SHEET 156
MATCH LINE STA. 39+00.00 SEE SHEET 308
SL-8
XW-3
XW-4
℄ E. 14TH ST SB STA. 40+06 END EW END EY
STA. 30+42 BEGIN CH (2)
4.3' CH
15.8' LL
26.3' LL
STA. 28+85 BEGIN CL BEGIN LL (2)
5.3' CL
15.8' LL
26.3' LL
LL-15
LL-16
TYPE 3 BARRIER CLOSE ROAD PER MT-101.60
℄ E. 14TH ST. NB
E. 18TH ST
E. 19TH ST
EY-17
EW-27
PR. BRIDGE 9 PIER 9
E. 14TH ST TO I.R. 77 SB ENTRANCE RAMP (CLOSED)
STA. 38+00 SEE SHEET 304
℄ EX. RAMP A3
℄ RAMP A2
℄ E. 14TH ST. SB
FOR MAINTENANCE OF TRAFFIC LEGEND SEE SHEET 295

Preliminary Plans - For Reference Only

HORIZONTAL SCALE IN FEET
0 20 40 80

MAINTENANCE OF TRAFFIC - PHASE 2
CARNEGIE AVE - BEGIN TO STA. 39+00.00

DESIGN AGENCY
Michael Baker INTERNATIONAL

DESIGNER CRK
REVIEWER GSH 05/22/24
PROJECT ID 82382
SHEET 307 TOTAL 2696

CUY-90-16.28 (CCG3A)

MODEL: MP2013 PAPERSIZE: 34x22 (in.) DATE: 3/27/2025 TIME: 8:51:26 PM USER: Colin.Kwiatt
pw:\\vmb-us-pw.bentley.com\vmb-us-pw-03\Documents\Cleveland_OH\01_Projects\ODOT\District2\82382\400-Engineering\MOT\Sheets\82382_MP2013.dgn

NOTES:

1. ALL EXISTING LANES OPEN AND EXISTING PAVEMENT MARKINGS UTILIZED ON THIS SHEET UNLESS NOTED OTHERWISE

2. REMOVE EXISTING SIGN IN PHASE 1 PRIOR TO E. 22ND ST/ CEDAR AVE CLOSURE

3. TEMPORARY SIGN PLACED IN PHASE 1 PRIOR TO E. 22ND ST/ CEDAR AVE CLOSURE

4. FOR TEMPORARY SIGNAL NOTES SEE SHEET 93 .

SEE NOTE 3
R3-8b-48

SEE NOTE 2

SEE NOTE 2 & 3
R3-8b-48

SEE NOTE 3
R3-H8ca-48

SEE NOTE 2

SEE NOTE 3
R3-H8bk-36

E. 21ST ST

E. 22ND ST

LA-33

LA-36

LA-35

LA-34

℄ EX. R/W CARNEGIE AVE

CARNEGIE AVE

MATCH LINE STA. 39+00.00
SEE SHEET 307

STA. 48+00
SEE SHEET 311

E. 21ST ST TO I.R. 77 SB
ENTRANCE RAMP (OPEN)

PERMANENTLY
REMOVE EXISTING
SIGN
SEE NOTE 2

TYPE 3 BARRIER
CLOSE ROAD PER
MT-101.60

TYPE 3 BARRIER
CLOSE ROAD PER
MT-101.60

CLOSE LEFT
TURN LANE
PER MT-98.30

PR. WALL AF

℄ RAMP A2

REMOVE BRIDGES E11 & E12
ABUTMENTS AND EX.
RETAINING WALLS

PR. BRIDGE 13

INSTALL TEMP MANHOLES AND
12" CONDUITS TO CONNECT
EXISTING STORM IMPACTED
BY SHORING.

℄ EX. I.R. 90

I.R. 90 WB

I.R. 90 EB

FOR I.R 90 MAINTENANCE OF TRAFFIC
PAVEMENT MARKINGS SEE SHEET 305

FOR MAINTENANCE OF TRAFFIC LEGEND SEE SHEET 295

Preliminary Plans - For Reference Only

HORIZONTAL
SCALE IN FEET
0 20 40 80

MAINTENANCE OF TRAFFIC - PHASE 2
CARNEGIE AVE - STA. 39+00.00 TO 50+00.00

DESIGN AGENCY
Michael Baker INTERNATIONAL

DESIGNER
CRK

REVIEWER
GSH 05/22/24

PROJECT ID
82382

SHEET 308 TOTAL 2696

CUY-90-16.28 (CCG3A)

MODEL: MP2014 PAPERSIZE: 34x22 (in.) DATE: 3/27/2025 TIME: 8:51:36 PM USER: Collin.Kwiatt
pw:\\mb-us-pw.bentley.com:mb-us-pw-03\Documents\Cleveland_OH\OI_Projects\ODOT\District2\82382\400-Engineering\MOT\Sheets\82382_MP2014.dgn

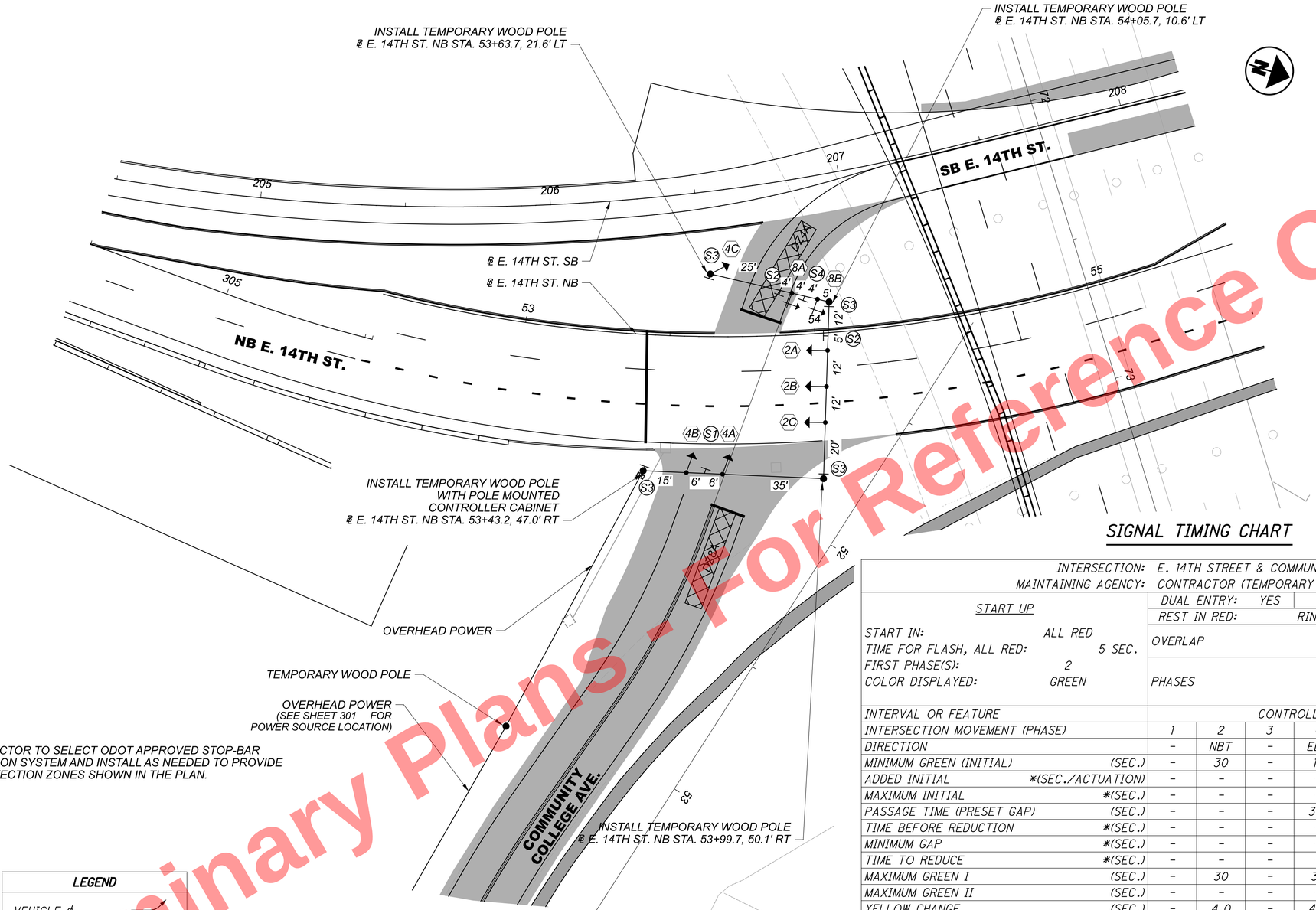

NOTES:
1. CONTRACTOR TO SELECT ODOT APPROVED STOP-BAR DETECTION SYSTEM AND INSTALL AS NEEDED TO PROVIDE THE DETECTION ZONES SHOWN IN THE PLAN.

LEGEND

VEHICLE ϕ

PERMITTED ϕ

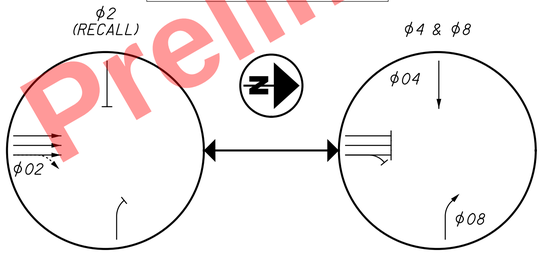

PROPOSED SIGNALS

VEHICULAR SIGNAL HEADS
(12" LENS, LED, YELLOW,
W/ REFLECTIVE BACKPLATES)

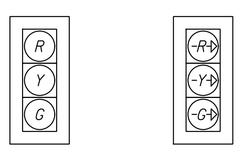

2A, 2B, 2C
4A, 4B, 4C

8A, 8B

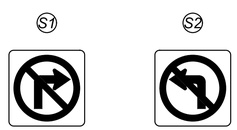

R3-1-36 R3-2-36

R9-3-24 R3-27-36

SIGNAL TIMING CHART

INTERSECTION: E. 14TH STREET & COMMUNITY COLLEGE AVENUE
MAINTAINING AGENCY: CONTRACTOR (TEMPORARY SIGNAL)

START UP								
START IN: ALL RED	DUAL ENTRY: YES		PHASES:		4, 8			
TIME FOR FLASH, ALL RED: 5 SEC.	REST IN RED:		RING 1	–		RING 2	–	
FIRST PHASE(S): 2	OVERLAP				A	B	C	D
COLOR DISPLAYED: GREEN	PHASES				–	–	–	–

INTERVAL OR FEATURE		CONTROLLER MOVEMENT NO.							
INTERSECTION MOVEMENT (PHASE)		1	2	3	4	5	6	7	8
DIRECTION		–	NBT	–	EBT	–	–	–	WBR
MINIMUM GREEN (INITIAL)	(SEC.)	–	30	–	10	–	–	–	10
ADDED INITIAL	*(SEC./ACTUATION)	–	–	–	–	–	–	–	–
MAXIMUM INITIAL	*(SEC.)	–	–	–	–	–	–	–	–
PASSAGE TIME (PRESET GAP)	(SEC.)	–	–	–	3.0	–	–	–	3.0
TIME BEFORE REDUCTION	*(SEC.)	–	–	–	–	–	–	–	–
MINIMUM GAP	*(SEC.)	–	–	–	–	–	–	–	–
TIME TO REDUCE	*(SEC.)	–	–	–	–	–	–	–	–
MAXIMUM GREEN I	(SEC.)	–	30	–	30	–	–	–	30
MAXIMUM GREEN II	(SEC.)	–	–	–	–	–	–	–	–
YELLOW CHANGE	(SEC.)	–	4.0	–	4.0	–	–	–	4.0
ALL RED CLEARANCE	(SEC.)	–	2.0	–	2.0	–	–	–	2.0
DELAYED GREEN (LPI) #	(SEC.)	–	–	–	–	–	–	–	–
WALK	(SEC.)	–	–	–	–	–	–	–	–
FLASHING YELLOW ARROW DELAY °		–	–	–	–	–	–	–	–
PEDESTRIAN CLEARANCE	(SEC.)	–	–	–	–	–	–	–	–
RECALL	MAXIMUM (ON/OFF)	–	OFF	–	OFF	–	–	–	OFF
	MINIMUM (ON/OFF)	–	ON	–	OFF	–	–	–	OFF
	PEDESTRIAN (ON/OFF)	–	–	–	–	–	–	–	–
MEMORY	(ON/OFF)	–	–	–	–	–	–	–	–

*VOLUME DENSITY CONTROLS

Preliminary Plans - For Reference Only

HORIZONTAL SCALE IN FEET
0 10 20 40

MAINTENANCE OF TRAFFIC - PHASE 2
E. 14TH ST. & COMMUNITY COLLEGE AVE. TEMPORARY SIGNAL

DESIGN AGENCY
Michael Baker INTERNATIONAL

DESIGNER CRK
REVIEWER GSH 05/22/24
PROJECT ID 82382
SHEET 309 TOTAL 2696

CUY-90-16.28 (CCG3A)

MODEL: Sheet PAPERSIZE: 34x22 (in.) DATE: 3/27/2025 TIME: 8:51:53 PM USER: Collin.Kwiatt
pw:\\mb-us-pw.bentley.com:mb-us-pw-03\Documents\Cleveland.OH\OI_Projects\ODOT\District2\82382\400-Engineering\MOT\Sheets\82382_MP202Ldgn

FOR MAINTENANCE OF TRAFFIC LEGEND SEE SHEET 295

℄ EX. R/W CARNEGIE AVE

CARNEGIE AVE

REMOVE EX. BRIDGE 13 USING FULL WEEKEND CLOSURES

FOR I.R. 90 MAINTENANCE OF TRAFFIC DETAILS, SEE SHEETS 305 & 306

I.R. 90 WB

I.R. 90 EB

I.R. 90 EB TO CARNEGIE AVE EXIT RAMP (OPEN)

℄ MIDTOWN CONNECTOR STA. 513+93 END CONSTRUCTION

℄ MIDTOWN CONNECTOR STA. 513+61 END CONSTRUCTION

℄ MIDTOWN CONNECTOR

℄ CONST. CEDAR AVE STA. 403+34 END CONSTRUCTION AT PROJECT LIMITS

℄ CONST. CEDAR AVE

℄ CONST. CEDAR AVE STA. 400+85

TEMPORARY SIGN PLACED FOR SUBPHASE A

R9-11aL-24 SIDEWALK CLOSED CROSS HERE

CL 10.0'

EW 0.0'

STA. 24+64 END EW END CL

E. 28TH ST

TEMPORARY CPP CROSSING INSTALLED IN PHASE 1 PRIOR TO DECK REMOVAL OF BRIDGE E12. FOR DETAILS, SEE SHEET 1784

STA. 504+58, 36.0' LT BEGIN CONSTRUCTION

STA. 504+97 BEGIN CONSTRUCTION

STA. 507+65 OMIT TREELAWN AND BEGIN TEMPORARY PAVEMENT

CL-8

EW-30

℄ MIDTOWN CONNECTOR STA. 510+33, 15.5' RT

STA. 510+12 END TEMPORARY PAVEMENT

℄ MIDTOWN CONNECTOR STA. 509+83

CEDAR AVE

MATCH LINE SEE BELOW

REMOVE EXISTING PARKING RESTRICTION SIGNAGE ALONG CEDAR AVE AND PLACED NO PARKING LEFT ARROW AND NO PARKING RIGHT ARROW SIGNS BETWEEN WORK LIMITS

℄ EX. R/W CEDAR AVE

35' TANGENT DRUM SPACING PLACE DRUMS AT 2' OFFSET FROM ℄ EX. R/W CEDAR AVE

TYPE 3 BARRICADE SEE DETAIL 1 ON SHEET 314.

STA. 14+70 BEGIN EW BEGIN CL

0.0' EW

10.0' CL

5' DRUM SPACING

WORK COMPLETED AS PART OF PHASE 2

R3-5R-30 ONLY

TEMPORARY SIGN PLACED IN SUBPHASE A THROUGH SUBPHASE B

R3-7R-30 RIGHT LANE MUST TURN RIGHT

TEMPORARY SIGN PLACED IN SUBPHASE A THROUGH SUBPHASE B

R11-3-66 ROAD CLOSED LOCAL TRAFFIC ONLY

TEMPORARY SIGN PLACED IN SUBPHASE A THROUGH SUBPHASE C

E. 28TH ST

PLACE CH OVER EX. LL

LA-37

CH-29

CH-28

MATCH LINE SEE ABOVE

CEDAR AVE

CL-9

℄ EX. R/W CEDAR AVE

STA. 25+25 BEGIN CH (2) BEGIN CL

35' TAPER DRUM SPACING

225' LANE SHIFT @ 22:1

STA. 27+50 END CH (2) END CL MEET EXISTING

-9.9' CH

0.0' CH

10.0' CL

-9.8' CH

0.0' CL

Preliminary Plans - For Reference Only

HORIZONTAL SCALE IN FEET 0 20 40 80

MAINTENANCE OF TRAFFIC - PHASE 2 - CEDAR SUBPHASE A
CEDAR AVE - BEGIN TO END

DESIGN AGENCY Michael Baker INTERNATIONAL

DESIGNER CRK

REVIEWER GSH 05/22/24

PROJECT ID 82382

SHEET 310 TOTAL 2696

CUY-90-16.28 (CCG3A)

MODEL: 82382_MPI02 PAPERSIZE: 34x22 (in.) DATE: 3/27/2025 TIME: 8:52:04 PM USER: Collin.Kwiatt
pw:\\mb-us-pw.bentley.com:mb-us-pw-03\Documents\Cleveland.OH\DI_Projects\ODOT\District2\82382\400-Engineering\MOT\Sheets\82382_MPI02.dgn

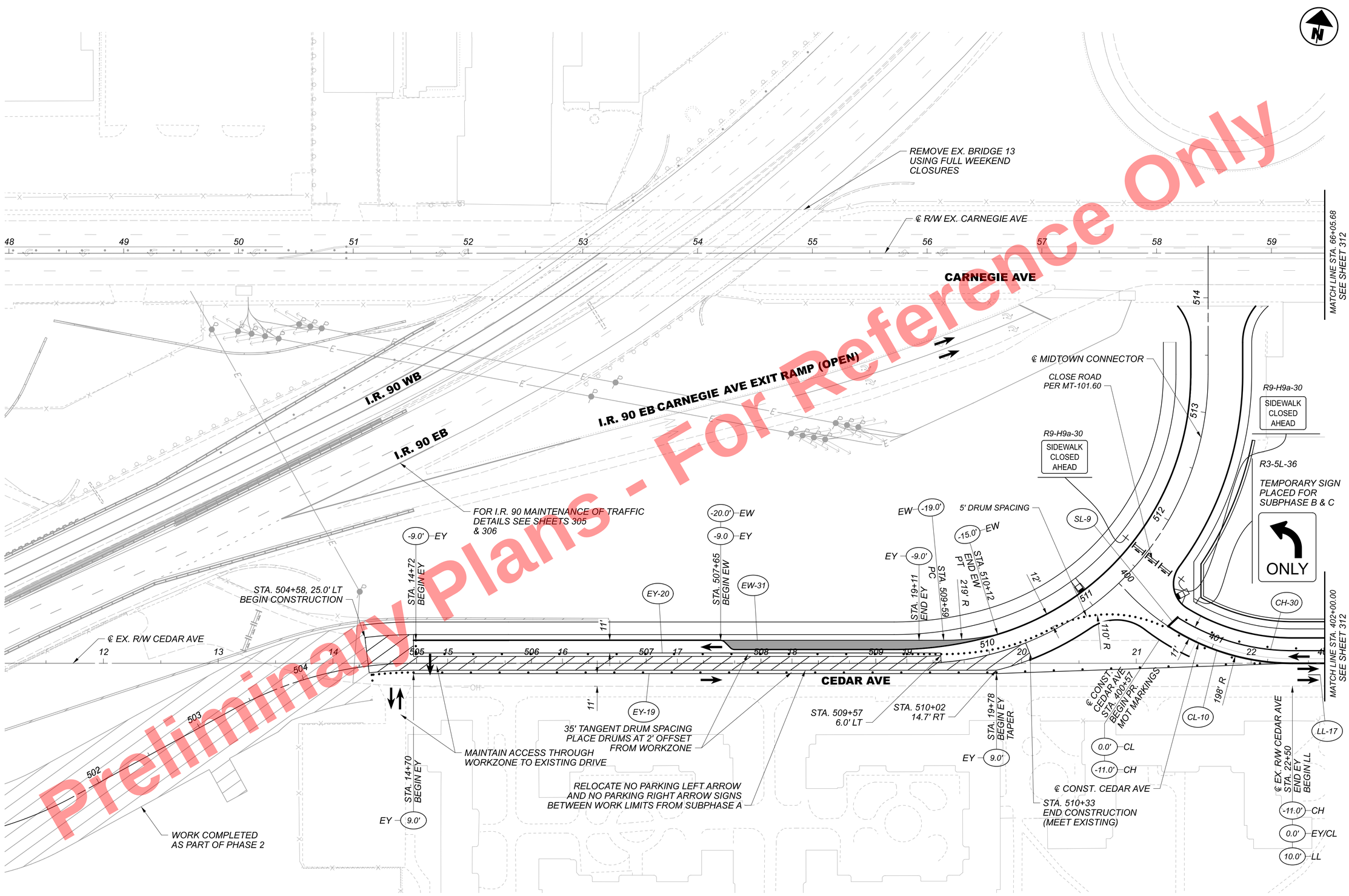

Preliminary Plans - For Reference Only

HORIZONTAL SCALE IN FEET 0 20 40 80

MAINTENANCE OF TRAFFIC - PHASE 2 - CEDAR SUBPHASE B
CEDAR AVE - BEGIN TO STA. 402+00.00

DESIGN AGENCY: Michael Baker INTERNATIONAL

DESIGNER: CRK

REVIEWER: GSH 05/22/24

PROJECT ID: 82382

SHEET 311 TOTAL 2696

CUY-90-16.28 (CCG3A)

MODEL: MPIII01 PAPERSIZE: 34x22 (in.) DATE: 3/27/2025 TIME: 8:52:13 PM USER: Collin.Kwiatt
pw:\\mb-us-pw.bentley.com:mb-us-pw-03\Documents\Cleveland_OH\01_Projects\ODOT\District12\82382\400-Engineering\MOT\Sheets\82382_MPIII01.dgn

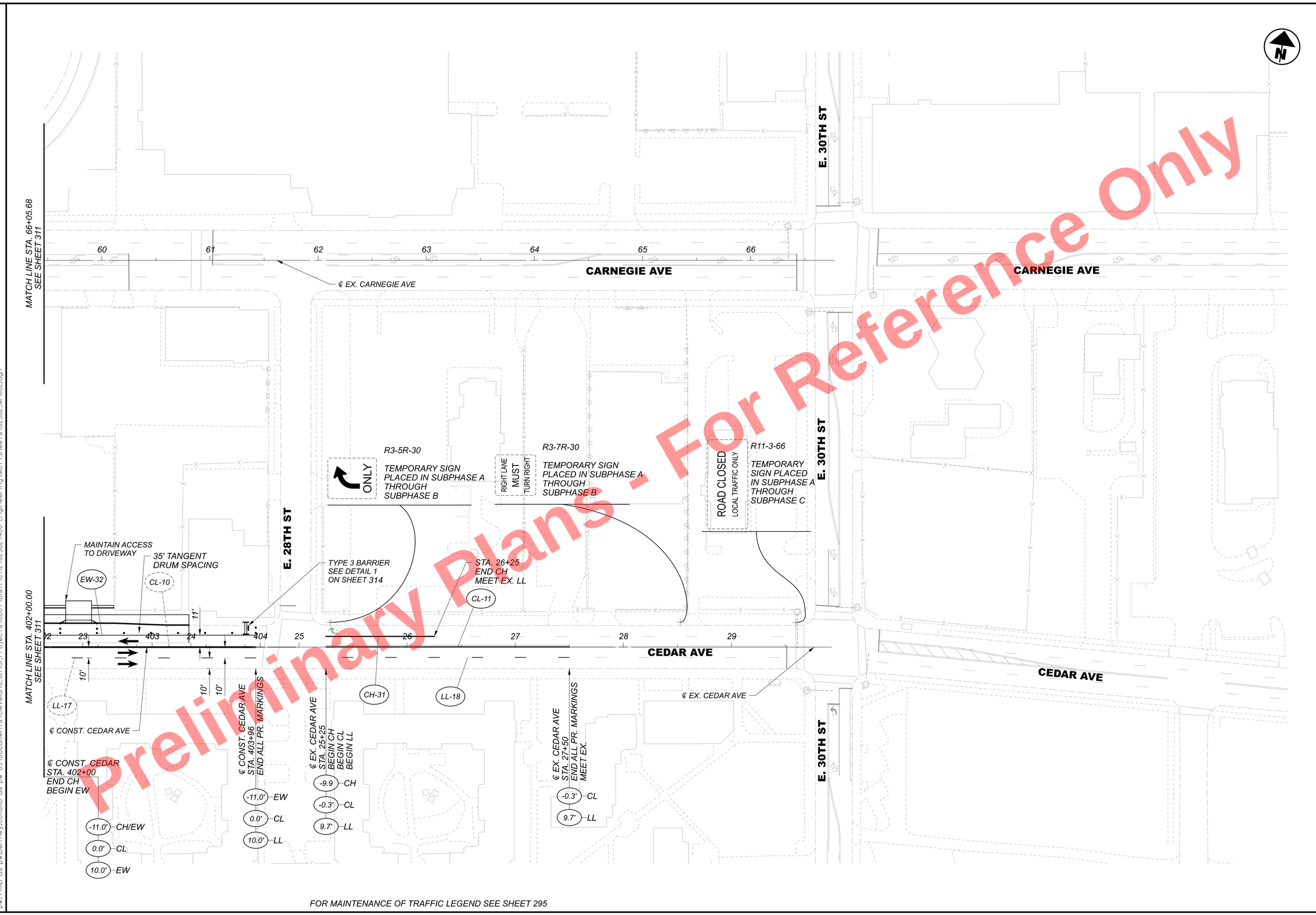

Preliminary Plans - For Reference Only

FOR MAINTENANCE OF TRAFFIC LEGEND SEE SHEET 295

HORIZONTAL SCALE IN FEET
0 20 40 80

MAINTENANCE OF TRAFFIC - PHASE 2 - CEDAR SUBPHASE B
CEDAR AVE - STA. 402+00.00 TO END

DESIGN AGENCY
Michael Baker INTERNATIONAL

DESIGNER
CRK

REVIEWER
GSH 05/22/24

PROJECT ID
82382

SHEET 312 TOTAL 2696

CUY-90-16.28 (CCG3A)

MODEL: MPIII02 PAPERSIZE: 34x22 (in.) DATE: 3/27/2025 TIME: 8:52:28 PM USER: Collin.Kwiatt
pw:\\mb-us-pw.bentley.com:mb-us-pw-03\Documents\Cleveland_OH\OI_Projects\ODOT\District12\82382\400-Engineering\MOT\Sheets\82382_MPIII02.dgn

Preliminary Plans - For Reference Only

MAINTENANCE OF TRAFFIC - PHASE 2 - CEDAR SUBPHASE C
CEDAR AVE - BEGIN TO STA. 402+00.00

HORIZONTAL SCALE IN FEET
0 20 40 80

CARNEGIE AVE
STA. 50+00
SEE SHEET 308
℄ EX. R/W CARNEGIE AVE
REMOVE EX. BRIDGE 13 USING FULL WEEKEND CLOSURES
℄ R/W EX. CARNEGIE AVE
CARNEGIE AVE
MATCH LINE STA. 59+46.49
SEE SHEET 314
CLOSE ROAD PER MT-101.60
CONSTRUCT TEMPORARY PAVEMENT NEEDED TO TIE INTO EX. CARNEGIE
I.R. 90 WB
I.R. 90 EB
I.R. 90 EB TO CARNEGIE AVE EXIT RAMP (OPEN)
℄ MIDTOWN CONNECTOR
CLOSE ROAD PER MT-101.60
R9-H9a-30
SIDEWALK CLOSED AHEAD
R9-H9a-30
SIDEWALK CLOSED AHEAD
FOR I.R. 90 MAINTENANCE OF TRAFFIC DETAILS SEE SHEETS 305 & 306
-7.0' CL
3.0' EW
STA. 504+60 BEGIN CL BEGIN EW
-3.5' CL
STA. 509+81 PC
0.0' CL
STA. 510+20 PT
120' R
0.0' CL
STA. 510+88 END CL
-8.5' CL
℄ CONST. CEDAR AVE STA. 400+63 BEGIN CL
189' R
CL-13
CL-12
CEDAR AVE
℄ EX. R/W CEDAR AVE
STA. 504+58, 6.0' RT BEGIN CONSTRUCTION
MAINTAIN ACCESS THROUGH WORKZONE TO EXISTING DRIVE
WORK COMPLETED AS PART OF PHASE 2
35' TANGENT DRUM SPACING PLACE DRUMS AT 2' OFFSET FROM WORKZONE
RELOCATE NO PARKING LEFT ARROW AND NO PARKING RIGHT ARROW SIGNS BETWEEN WORK LIMITS FROM SUBPHASE B
STA. 508+02 46.0' RT
EW-33
STA. 508+12 46.0' RT
STA. 510+13 END EW
14.9' EW
℄ CONST. CEDAR AVE 5' DRUM SPACING
STA. 21+10 41.0' RT
STA. 21+20 41.0' RT
STA. 20+05 41.0' RT
STA. 19+93 41.0' RT
STA. 401+18 5.5' RT
STA. 401+18 13.9' RT
17' TANGENT DRUM SPACING
R3-5L-36
ONLY
TEMPORARY SIGN PLACED FOR SUBPHASE B & C
MATCH LINE STA. 402+00.00
SEE SHEET 314

FOR MAINTENANCE OF TRAFFIC LEGEND SEE SHEET 295

DESIGN AGENCY
Michael Baker INTERNATIONAL

DESIGNER	CRK
REVIEWER	GSH 05/22/24
PROJECT ID	82382
SHEET	313
TOTAL	2696

CUY-90-16.28 (CCG3A)

MODEL: MPII20I PAPERSIZE: 34x22 (in.) DATE: 3/27/2025 TIME: 8:52:37 PM USER: Collin.Kwiat
pw:\\mb-us-pw.bentley.com\mb-us-pw-03\Documents\Cleveland_OHIO\Projects\OOOT\District2\82382\400-Engineering\MOT\Sheets\82382_MPII20I.dgn

Preliminary Plans - For Reference Only

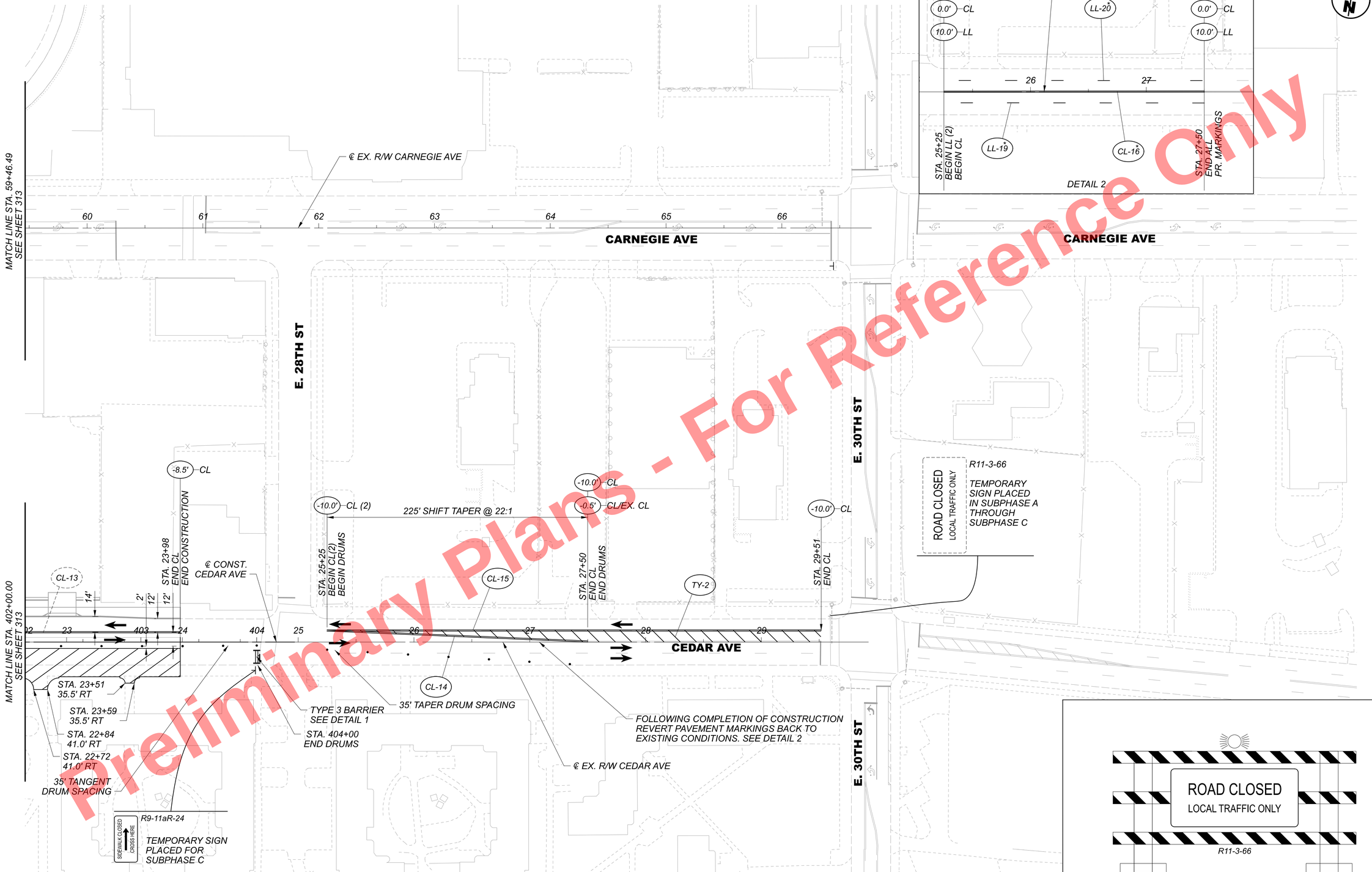

FOR MAINTENANCE OF TRAFFIC LEGEND SEE SHEET 295

ROAD CLOSED
LOCAL TRAFFIC ONLY
R11-3-66

TYPE 3 BARRICADE
DETAIL 1

HORIZONTAL
SCALE IN FEET
0 20 40 80

MAINTENANCE OF TRAFFIC - PHASE 2 - CEDAR SUBPHASE C
CEDAR AVE - STA. 402+00.00 TO END

CUY-90-16.28 (CCG3A)

DESIGN AGENCY
Michael Baker INTERNATIONAL

DESIGNER CRK
REVIEWER GSH 05/22/24
PROJECT ID 82382
SHEET 314 TOTAL 2696

MODEL: MPII202 PAPERSIZE: 34x22 (In.) DATE: 3/27/2025 TIME: 8:52:49 PM USER: Collin.Kwiatt
pw:\\mb-us-pw.bentley.com\mb-us-pw-03\Documents\Cleveland_0H10_Projects\0DOT\District2\82382\400-Engineering\MOT\Sheets\82382_MPII202.dgn

LEGEND

AREA OF CONSTRUCTION TO BE COMPLETED BY END OF PHASE

TEMPORARY PAVEMENT CONSTRUCTED THIS PHASE

AREA OF CONSTRUCTION ONGOING IN THIS PHASE

DETAILS LOCATED IN PRIOR PHASE

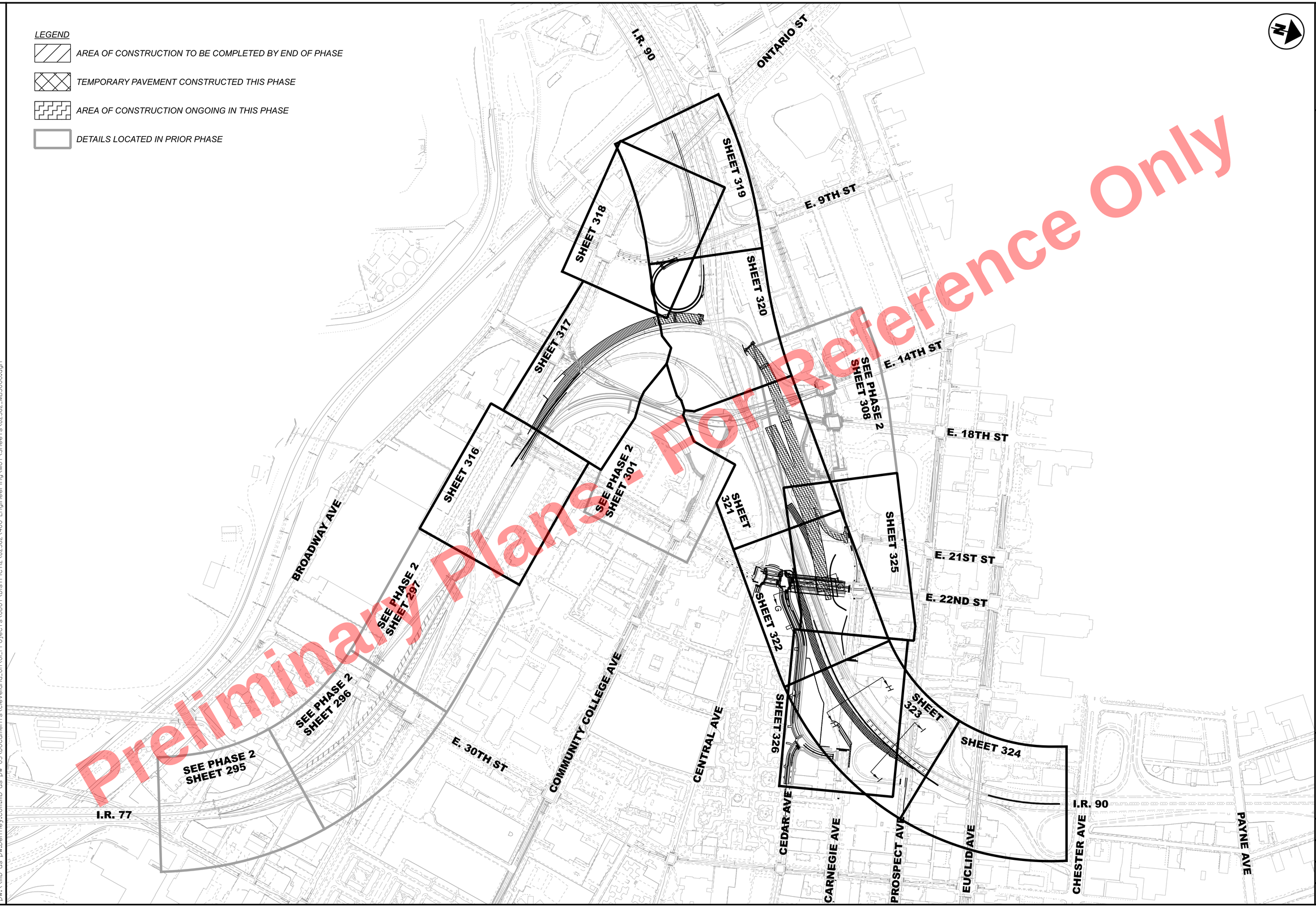

Preliminary Plans - Not for Construction
For Reference Only

HORIZONTAL SCALE IN FEET
0 150 300 600

MAINTENANCE OF TRAFFIC - PHASE 3
PLAN SHEET KEY

DESIGN AGENCY
Michael Baker INTERNATIONAL

DESIGNER CRK
REVIEWER GSH 05/22/24
PROJECT ID 82382
SHEET 315 TOTAL 2696

CUY-90-16.28 (CCG3A)

MODEL: Sheet PAPERSIZE: 34x22 (in) DATE: 3/27/2025 TIME: 8:52:58 PM USER: Collin.Kwiatt
pw:\\mb-us-pw.bentley.com:mb-us-pw-03\Documents\Cleveland_OH\01_Projects\ODOT\District2\82382\400-Engineering\MOT\Sheets\82382_MB3000.dgn

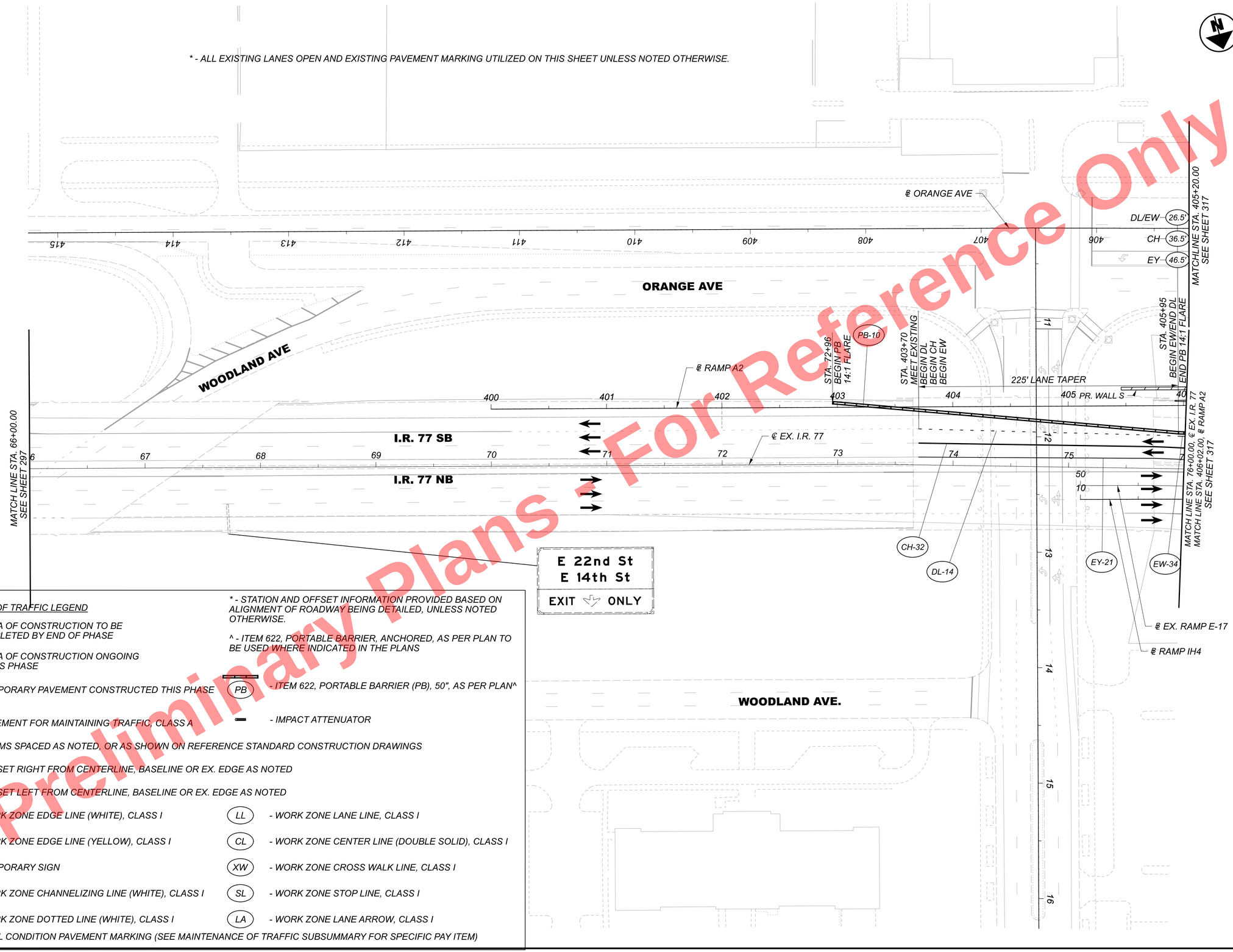

Preliminary Plans - For Reference Only

MAINTENANCE OF TRAFFIC LEGEND

- AREA OF CONSTRUCTION TO BE COMPLETED BY END OF PHASE
- AREA OF CONSTRUCTION ONGOING IN THIS PHASE
- TEMPORARY PAVEMENT CONSTRUCTED THIS PHASE
- PAVEMENT FOR MAINTAINING TRAFFIC, CLASS A
- DRUMS SPACED AS NOTED, OR AS SHOWN ON REFERENCE STANDARD CONSTRUCTION DRAWINGS
- 17.5' - OFFSET RIGHT FROM CENTERLINE, BASELINE OR EX. EDGE AS NOTED
- -17.5' - OFFSET LEFT FROM CENTERLINE, BASELINE OR EX. EDGE AS NOTED
- EW - WORK ZONE EDGE LINE (WHITE), CLASS I
- EY - WORK ZONE EDGE LINE (YELLOW), CLASS I
- MS - TEMPORARY SIGN
- CH - WORK ZONE CHANNELIZING LINE (WHITE), CLASS I
- DL - WORK ZONE DOTTED LINE (WHITE), CLASS I
- LL - WORK ZONE LANE LINE, CLASS I
- CL - WORK ZONE CENTER LINE (DOUBLE SOLID), CLASS I
- XW - WORK ZONE CROSS WALK LINE, CLASS I
- SL - WORK ZONE STOP LINE, CLASS I
- LA - WORK ZONE LANE ARROW, CLASS I
- * - FINAL CONDITION PAVEMENT MARKING (SEE MAINTENANCE OF TRAFFIC SUBSUMMARY FOR SPECIFIC PAY ITEM)

* - STATION AND OFFSET INFORMATION PROVIDED BASED ON ALIGNMENT OF ROADWAY BEING DETAILED, UNLESS NOTED OTHERWISE.

^ - ITEM 622, PORTABLE BARRIER, ANCHORED, AS PER PLAN TO BE USED WHERE INDICATED IN THE PLANS

- PB - ITEM 622, PORTABLE BARRIER (PB), 50", AS PER PLAN^
- IMPACT ATTENUATOR

HORIZONTAL SCALE IN FEET 0 20 40 80

MAINTENANCE OF TRAFFIC - PHASE 3
I.R. 77 - STA. 66+00.00 TO STA. 76+00.00

DESIGN AGENCY: Michael Baker INTERNATIONAL

DESIGNER: CRK

REVIEWER: GSH 05/22/24

PROJECT ID: 82382

SHEET 316 TOTAL 2696

CUY-90-16.28 (CCG3A)

MODEL: Sheet PAPERSIZE: 34x22 (in.) DATE: 3/27/2025 TIME: 8:53:12 PM USER: Collin.Kwiatt
pw:\\mb-us-pw.bentley.com:mb-us-pw-03\Documents\Cleveland_OH\OL_Projects\ODOT\District2\82382\400-Engineering\MOT\Sheets\82382_MP3004.dgn

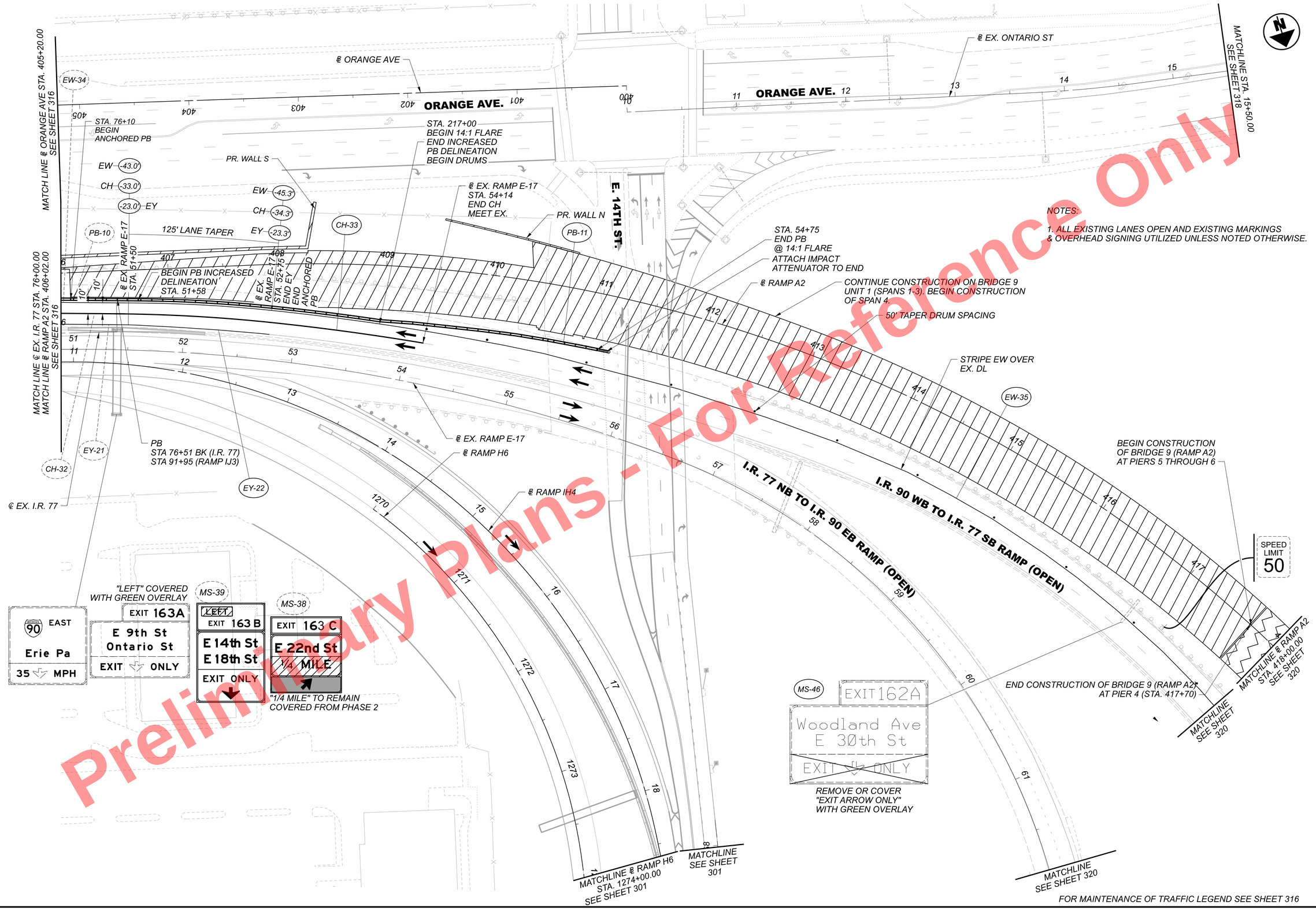

Preliminary Plans - For Reference Only

FOR MAINTENANCE OF TRAFFIC LEGEND SEE SHEET 316

HORIZONTAL SCALE IN FEET 0 20 40 80

MAINTENANCE OF TRAFFIC - PHASE 3

I.R. 77 - STA. 76+00.00 TO END / RAMP A2 STA. 406+02.00 TO STA. 418+00.00

DESIGN AGENCY: Michael Baker INTERNATIONAL

DESIGNER: CRK

REVIEWER: GSH 05/22/24

PROJECT ID: 82382

SHEET 317 TOTAL 2696

CUY-90-16.28 (CCG3A)

MODEL: MP3005 PAPERSIZE: 34x22 (in.) DATE: 3/27/2025 TIME: 8:53:22 PM USER: Collin.Kwiatt
pw:\\mb-us-pw.bentley.com:mb-us-pw-03\Documents\Cleveland_OH\OI_Projects\ODOT\District12\82382\400-Engineering\MOT\Sheets\82382_MP3005.dgn

NOTES:

1. ALL EXISTING LANES OPEN AND EXISTING PAVEMENT MARKINGS UTILIZED ON THIS SHEET UNLESS NOTED OTHERWISE.

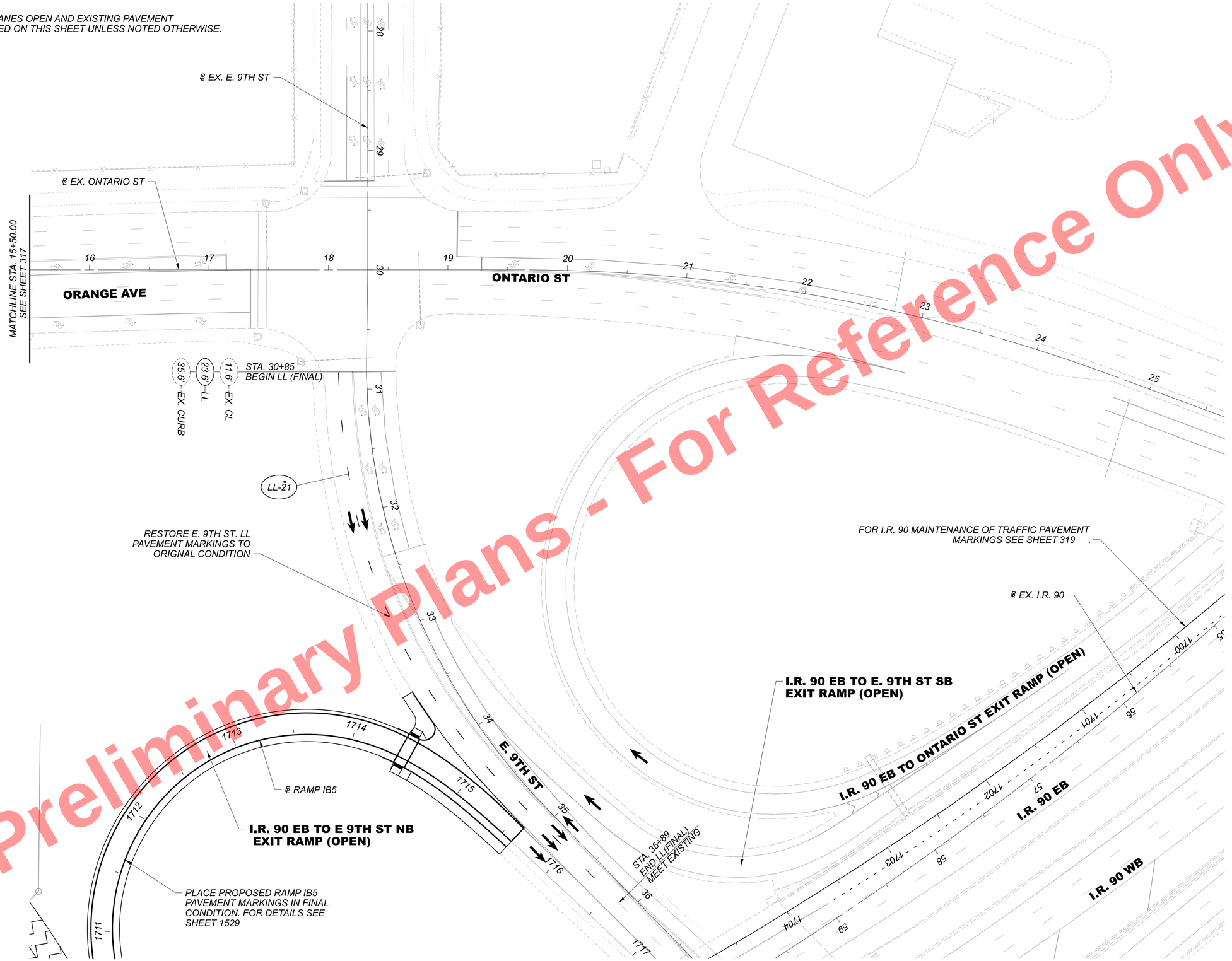

FOR MAINTENANCE OF TRAFFIC LEGEND SEE SHEET 316

Preliminary Plans - For Reference Only

HORIZONTAL SCALE IN FEET
0 20 40 80

MAINTENANCE OF TRAFFIC - PHASE 3
ONTARIO ST - STA. 15+50.00 TO END

DESIGN AGENCY
Michael Baker INTERNATIONAL

DESIGNER CRK
REVIEWER GSH 05/22/24
PROJECT ID 82382
SHEET 318 TOTAL 2696

CUY-90-16.28 (CCG3A)

MODEL: MP3006 PAPERSIZE: 34x22 (in.) DATE: 3/27/2025 TIME: 8:53:31 PM USER: Collin.Kwiatt
pw:\\mb-us-pw.bentley.com:mb-us-pw-03\Documents\Cleveland_OH\01_Projects\ODOT\District2\82382\400-Engineering\MOT\Sheets\82382_MP3006.dgn

CARNEGIE AVE

* - ALL EXISTING LANES OPEN AND EXISTING PAVEMENT MARKINGS UTILIZED ON THIS SHEET UNLESS NOTED OTHERWISE

E. 9TH ST TO I.R. 90 WB ENTRANCE RAMP (OPEN)

I.R. 90 WB

I.R. 90 EB

I.R. 90 EB TO ONTARIO ST/E 9TH ST SB EXIT RAMP (OPEN)

E. 9TH ST

ONTARIO ST

℄ EX. E. 9TH ST

℄ RAMP IB5

℄ EX. I.R. 90

℄ EX. ONTARIO ST

EW-36

DL-15

STA. 51+92
MEET EXISTING
BEGIN EW
BEGIN DL

-9.5' DL

1.0' EW

REMOVE
TO E 9th St
Downtown

EAST	WEST
422 14	422 14
Orange Ave	Ontario St

RAMPS 25 MPH

Carnegie Ave	3/4
Chester Ave	1½
Superior Ave	2

MS-47

COVER "CARNEGIE 3/4" WITH GREEN OVERLAY

STA. 59+00
END DL
MEET EXISTING

14.7' DL

26.5' EW

REMOVE
TO E 9th St
Downtown

EAST	WEST
422 14	422 14
Orange Ave	Ontario St

MATCH LINE STA. 61+00.00
SEE SHEET 320

FOR E. 9TH ST PAVEMENT MARKINGS DETAILS, SEE SHEET 318

FOR MAINTENANCE OF TRAFFIC LEGEND SEE SHEET 316

Preliminary Plans - For Reference Only

HORIZONTAL SCALE IN FEET
0 20 40 80

MAINTENANCE OF TRAFFIC - PHASE 3
I.R. 90 - BEGIN TO STA. 61+00.00

DESIGN AGENCY
Michael Baker INTERNATIONAL

DESIGNER CRK
REVIEWER GSH 05/22/24
PROJECT ID 82382
SHEET 319 TOTAL 2696

CUY-90-16.28 (CCG3A)

MODEL: MP3008 PAPERSIZE: 34x22 (in.) DATE: 3/27/2025 TIME: 8:53:41 PM USER: Collin.Kwiatt
pw:\\mb-us-pw.bentley.com:mb-us-pw-03\Documents\Cleveland.OH\OI_Projects\ODOT\District2\82382\400-Engineering\MOT\Sheets\82382_MP3008.dgn

NOTES:

1. ALL EXISTING LANES OPEN AND EXISTING PAVEMENT MARKINGS UTILIZED ON THIS SHEET UNLESS NOTED OTHERWISE

2. PLACE PROPOSED PAVEMENT MARKINGS ON RAMP IB5 IN FINAL CONDITIONS. SEE PAVEMENT MARKING PLAN SHEET 1529

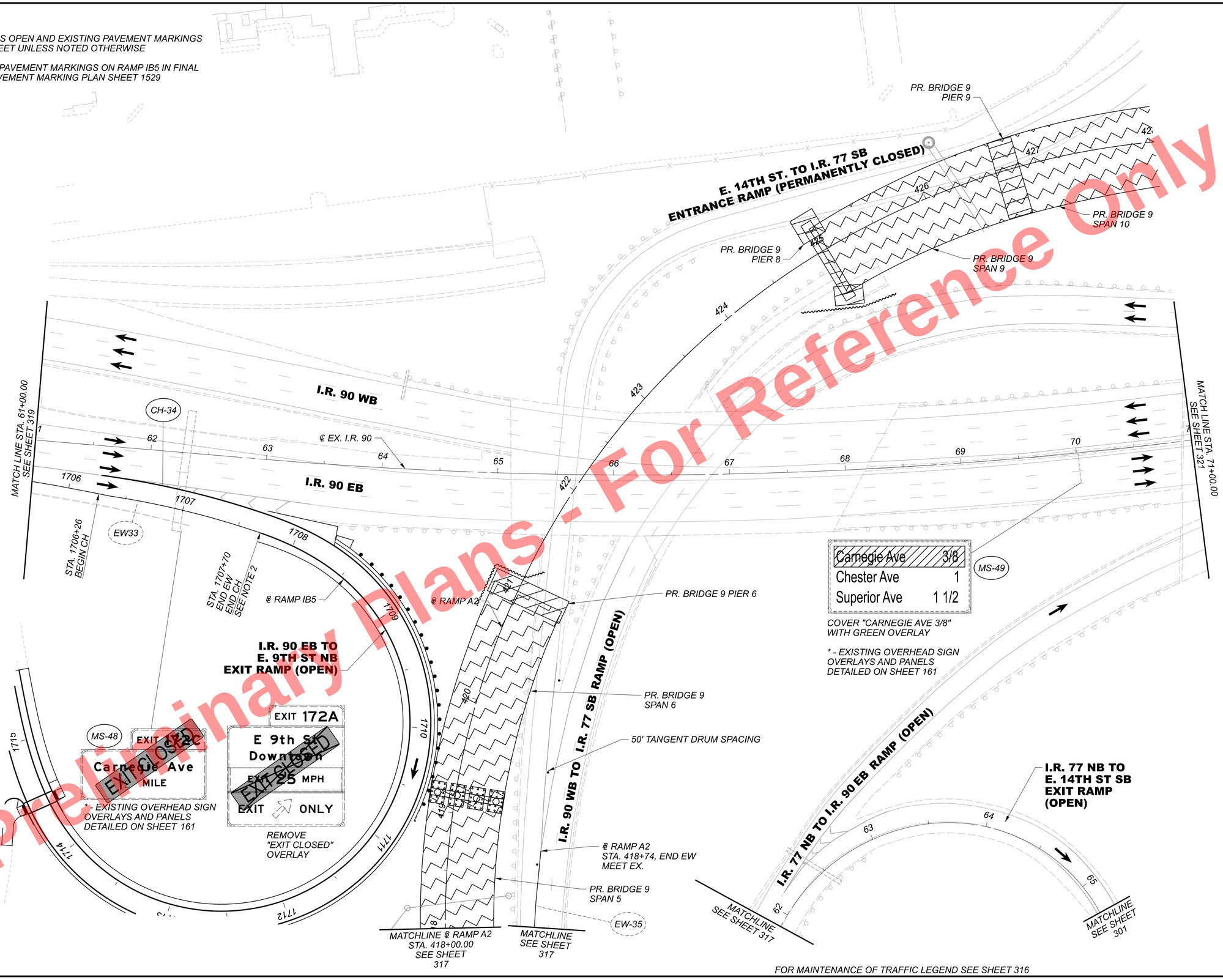

Preliminary Plans - For Reference Only

FOR MAINTENANCE OF TRAFFIC LEGEND SEE SHEET 316

HORIZONTAL SCALE IN FEET
0 20 40 80

MAINTENANCE OF TRAFFIC - PHASE 3
I.R. 90 - STA. 61+00.00 TO STA. 71+00.00

DESIGN AGENCY
Michael Baker INTERNATIONAL

DESIGNER CRK
REVIEWER GSH 05/22/24
PROJECT ID 82382
SHEET 320 TOTAL 2696

CUY-90-16.28 (CCG3A)

MODEL: MP3009 PAPERSIZE: 34x22 (in.) DATE: 3/27/2025 TIME: 8:53:50 PM USER: Collin.Kwiatt
pw:\\vmb-us-pw.bentley.com:vmb-us-pw-03\Documents\Cleveland_OH\01_Projects\ODOT\District 2\82382\400-Engineering\MOT\Sheets\82382_MP3009.dgn

Preliminary Plans - For Reference Only

E. 18TH ST

CENTRAL AVE

E. 19TH ST

E. 14TH ST NB

℄ RAMP A2

PR. BRIDGE 9
SPAN 10

PR. BRIDGE 9
SPAN 11

END CONSTRUCTION AT
BRIDGE 10 FORWARD
ABUTMENT.

D-3.1

INSTALL TEMPORARY CB-2-2B
OUTLET TO TEMPORARY CB-2-2B
WITH 12" CONDUIT.

I.R. 90 WB TO
I.R. 77 SB
RAMP (OPEN)

E. 21ST ST TO I.R. 77 SB
ENTRANCE RAMP (CLOSED)

TEMPORARY PAVEMENT FOR
I.R. 90 WB WEST CROSSOVER
FOR DETAILS SEE SHEET 234

℄ EX. I.R. 90

I.R. 90 WB

I.R. 90 EB

MATCH LINE STA. 71+00.00
SEE SHEET 320

MATCH LINE STA. 81+00.00
SEE SHEET 322

I.R. 77 NB TO E. 22ND
ST EXIT RAMP (OPEN)

I.R. 77 NB TO
I.R. 90 EB
RAMP (OPEN)

MS-50

MS-51

EXIT 173B
TO Carnegie Ave

EXIT 173C CLOSED

EAST
90

Carnegie Ave
MILE

Chester Ave
3/4
MILE

MS-43

* - EXISTING OVERHEAD SIGN
OVERLAYS AND PANELS
DETAILED ON SHEET 161

℄ TEMPORARY CROSSOVER
COMMUNITY COLLEGE AVE
TO E. 14TH ST. FOR DETAILS,
SEE SHEET 185

E. 14TH ST SB

E. 14TH ST NB

MATCHLINE ℄ EX. COMMUNITY
COLLEGE AVE STA. 54+00.00
SEE SHEET 301

MATCHLINE
STA. 203+50.00
SEE SHEET
301

NOTES:

1. ALL EXISTING LANES OPEN AND EXISTING PAVEMENT MARKINGS UTILIZED ON THIS SHEET UNLESS NOTED OTHERWISE.

FOR MAINTENANCE OF TRAFFIC LEGEND SEE SHEET 316

HORIZONTAL
SCALE IN FEET
0 20 40 80

MAINTENANCE OF TRAFFIC - PHASE 3
I.R. 90 - STA. 71+00.00 TO STA. 81+00.00

DESIGN AGENCY
Michael Baker INTERNATIONAL

DESIGNER
CRK

REVIEWER
GSH 05/22/24

PROJECT ID
82382

SHEET 321 TOTAL 2696

CUY-90-16.28 (CCG3A)

MODEL: MP3010 PAPERSIZE: 34x22 (in.) DATE: 3/27/2025 TIME: 8:54:01PM USER: CollinKwiat
pw:\\mb-us-pw.bentley.com:mb-us-pw-03\Documents\Cleveland_OH\01_Projects\000T\District2\82382\400-Engineering\MOT\Sheets\82382_MP3010.dgn

Preliminary Plans - For Reference Only

MAINTENANCE OF TRAFFIC - PHASE 3
I.R. 90 - STA. 81+00.00 TO STA. 91+00.00

HORIZONTAL SCALE IN FEET
0 20 40 80

E. 21ST ST TO I.R. 77 SB ENTRANCE RAMP (CLOSED)

I.R. 77 NB TO E. 22ND ST EXIT RAMP (OPEN)

I.R. 90 WB

I.R. 90 EB

CARNEGIE AVE

CEDAR AVE

E. 22ND ST

PR. WALL AD

PR. WALL AF

PR. WALL AG

℄ RAMP A2

℄ EX. I.R. 90

℄ EX. CENTRAL AVE

℄ CONST. E. 22ND ST

℄ EX. R/W CARNEGIE AVE

℄ I.R. 90 TEMPORARY RUNAROUND

END DL (2) MEET EX. CROSSWALK

SEE SHEET 308 FOR CARNEGIE AVE MAINTENANCE OF TRAFFIC PAVEMENT MARKINGS

"EXIT"/DIAGONAL ARROW OVERLAY TO REMAIN

STA. 36+90 END LL (2) END CH END CL BEGIN DL (2)

STA. 35+08 BEGIN CH

STA. 34+40 END CH

STA. 32+87 BEGIN CH BEGIN CL BEGIN LL (2)

STA. 87+61± BEGIN EW BEGIN PB W/ INCREASED DELINEATION (MEET EX. PB)

STA. 90+30 END EW MEET EX. 10

INSTALL TEMPORARY CB-2-2B. OUTLET TO MEDIAN INLET (D-211) WITH 12" CONDUIT.

INSTALL TEMPORARY 12" OUTLET FROM MEDIAN INLET (D-211) TO TEMP MH (D-2.1)

TEMPORARY PAVEMENT FOR I.R. 90 WB WEST CROSSOVER FOR DETAILS SEE SHEET 234

PLACE E. 22ND ST MARKINGS IN PR. FINAL CONDITION USING MOT CLASS 1 PAINT

STRUCTURE NO. 13 CUY-90-1678

SEE SHEET 305 FOR EX. I.R. 90 MOT MARKINGS

MAINTAIN EX. CB

CLOSE ROAD PER MT-101.60 STA. 31+85 END LL (2) END CL END CH

SECTION VIEW SEE SHEET 135

PLACE EW. OVER EX. DL, CH9

INSTALL TWO TEMPORARY CB-2-2B WITH 12" CONNECTION AND DIRECT OUTLET TO EX. 12"

EX. 12" STORM CONNECT TO TEMPORARY CB-2-2B (D-3.5)

PAVEMENT FOR TEMPORARY RUNAROUND FOR DETAILS SEE SHEET 202

INSTALL PS-2 IN TEMPORARY LOCATION RELATIVE TO CURB RAMP

INSTALL PS-3 IN TEMPORARY LOCATION RELATIVE TO CURB RAMP

INSTALL PS-5 IN TEMPORARY LOCATION RELATIVE TO CURB RAMP

℄ EX. CENTRAL AVE. STA. 25+63 END CL END CH

STA. 30+15 END LL

STA. 31+00 BEGIN ALL PR MOT PAVEMENT MARKINGS

℄ EX. CENTRAL AVE STA. 26+11 BEGIN CH

℄ EX. CENTRAL AVE. STA. 26+82 BEGIN CL

SPEED LIMIT 50

R3-16a-24 LANE ENDS

MATCH LINE STA. 81+00.00 SEE SHEET 321

MATCH LINE STA. 91+00.00 SEE SHEET 323

MATCHLINE STA. 29+50.00 SEE RIGHT

MATCHLINE STA. 29+50.00 SEE LEFT

STA. 27+33 BEGIN LL

D-3.2 D-3.4 D-3.5

CH-35 CH-36 CH-37 CH-38

CL-17 CL-18 CL-19

DL-16 DL-17 DL-18 DL-19

EW-37

LA-38 LA-39 LA-40 LA-41 LA-42 LA-43 LA-44 LA-45 LA-46 LA-47

LL-22 LL-23 LL-24 LL-25 LL-26

MS-44

PB-12

SL-10 SL-11 SL-12 SL-13 SL-14

-16.0' LL -5.0' CL 5.0' CH 16.0' LL

-16.0' LL -5.0' CH 5.0' CL 16.0' LL

NOTES:

1. ALL EXISTING LANES OPEN AND EXISTING PAVEMENT MARKINGS UTILIZED ON THIS SHEET UNLESS NOTED OTHERWISE.

2. UNCOVER EXISTING SIGNS ALONG E. 22ND ST & CENTRAL AVE COVERED IN PHASE 2

3. PLACE E. 22ND ST AND PAVEMENT MARKINGS IN FINAL CONDITION USING CLASS 1 MOT PAINT UNLESS NOTED OTHERWISE. SEE PAVEMENT MARKING PLAN SHEET 1555

4. FOR TEMPORARY SIGNAL NOTES SEE SHEET 93

FOR MAINTENANCE OF TRAFFIC LEGEND SEE SHEET 316

CUY-90-16.28 (CCG3A)

DESIGN AGENCY
Michael Baker INTERNATIONAL

DESIGNER CRK
REVIEWER GSH 05/22/24
PROJECT ID 82382
SHEET 322 TOTAL 2696

MODEL: MP30ll PAPERSIZE: 34x22 (in.) DATE: 3/27/2025 TIME: 8:54:ll PM USER: Collin.Kwiatt
pw:\\mb-us-pw.bentley.com:mb-us-pw-03\Documents\Cleveland_OH\OL_Projects\ODOT\Distrlct2\82382\400-Engineering\MOT\Sheets\82382_MP30ll.dgn

* - ALL EXISTING LANES AND EXISTING PAVEMENT MARKINGS UTILIZED ON THIS SHEET UNLESS NOTED OTHERWISE

HORIZONTAL SCALE IN FEET
0 20 40 80

MAINTENANCE OF TRAFFIC - PHASE 3
I.R. 90 - STA. 91+00.00 TO STA. 101+00.00

PROSPECT AVE TO I.R. 90 WB ENTRANCE RAMP (OPEN)

PROSPECT AVE

STA. 51+80 38.6' RT BEGIN PB

STA. 51+80 41.3' LT END PB

PB-13

MATCH LINE STA. 91+00.00 SEE SHEET 322

MAINTAIN EX. CB

PB-12

I.R. 90 EB TO CARNEGIE AVE EXIT RAMP (PERMANENTLY CLOSED)

SPEED LIMIT 50

LEFT LANE CLOSED PER MT-95.40 ONLY DURING MEDIAN CONSTRUCTION AT STATION 105+50

EXIT 172 A
SOUTH
Akron
EXIT ONLY
NEXT EXIT
MS-45

"EXIT ONLY" TO REMAIN COVERED WITH BLACK-ON-ORANGE "EXIT" OVERLAY

I.R. 90 WB

I.R. 90 EB

℄ EX. I.R. 90

1509' R

1369' R

STA. 99+50 END EW BEGIN DL BEGIN 14:1 PB FLARE

MATCH LINE STA. 101+00.00 SEE SHEET 324

STA. 95+50 BEGIN EY BEGIN (2) EW BEGIN LL

STA. 95+50 BEGIN REMOVAL & RESURFACING RUMBLE STRIPS

LL-27

EW-38

LL-28

EY-23

250' SHIFT TAPER @ 50:1

STA. 98+00

STA. 98+50

7.4 EY
19.4' LL
31.4' LL
43.4' EW

INSTALL TEMPORARY CB-2-2B. OUTLET TO EXISTING CB WITH 12" CONDUIT.

D-3.6

REMOVE FRAME AND GRATE OF EXISTING CATCH BASIN AND COVER WITH STEEL PLATE BEFORE COVERING WITH TEMPORARY PAVEMENT.

EY 5.5'
LL 16.5'
LL 27.5'
EW 38.5'

SECTION VIEW SEE SHEET 135

5.8' EY
16.8' LL
27.8' LL
38.8' EW

INSTALL TEMPORARY CB-2-2B OUTLET TO EX. CB WITH 12" CONDUIT

REMOVE FRAME AND GRATE OF EXISTING CATCH BASIN AND COVER WITH STEEL BEFORE COVERING WITH TEMPORARY PAVEMENT

250' SHIFT TAPER @ 50:1

STA. 101+00 END REMOVAL & RESURFACING RUMBLE STRIPS

STA. 101+00 END MARKINGS MEET EX.

DL-20

D-3.7

CL-20

CLOSE RAMP & LEFT TURN LANE PER MT-98.30

EY 7.8'
LL 19.8'
LL 31.8'
EW 43.8'

WEST TO 90 KEEP RIGHT

@ I.R. 90 TEMPORARY RUNAROUND

SECTION VIEW SEE SHEET 135

PAVEMENT FOR TEMPORARY RUNAROUND FOR DETAILS SEE SHEET 202

CEDAR AVE

PR. BRIDGE 14 EAST ABUTMENT AND WINGWALL

STA. 58+03 41.3' LT END PB

PB-14

CARNEGIE AVE

STA. 58+03 42.6' RT BEGIN PB

PR. WALL AI

PROSPECT AVE TO I.R. 90 EB ENTRANCE RAMP (CLOSED)

CL-21

MS-52

EAST TO 90 CLOSED

EAST TO 90 CLOSED

FRONT SIDE

BACK SIDE

* EXISTING OVERHEAD SIGN OVERLAYS AND PANELS DETAILED ON SHEET 160

FOR MAINTENANCE OF TRAFFIC LEGEND SEE SHEET 316

Preliminary Plans - For Reference Only

CUY-90-16.28 (CCG3A)

MODEL: MP3012 PAPERSIZE: 34x22 (in.) DATE: 3/27/2025 TIME: 8:54:21PM USER: Collin.Kwiat
pw:\\mb-us-pw.bentley.com:mb-us-pw-03\Documents\Cleveland_OHIO_Projects\ODOT\District2\82382\400-Engineering\MOT\Sheets\82382_MP3012.dgn

DESIGN AGENCY
Michael Baker INTERNATIONAL

DESIGNER CRK
REVIEWER GSH 05/22/24
PROJECT ID 82382
SHEET 323 TOTAL 2696

Preliminary Plans - For Reference Only

I.R. 90 WB TO PROSPECT AVE
EXIT RAMP (OPEN)

EUCLID AVE

LEFT LANE CLOSED PER MT-101.80
DURING MEDIAN CONSTRUCTION ONLY

MATCH LINE STA. 101+00.00
SEE SHEET 323

REMOVE EXISTING BARRIER AND
PLACE TEMPORARY PAVEMENT.
FOLLOWING REMOVAL OF THE WALL AND
INSTALLATION OF THE TEMPORARY PAVEMENT, PLACE
500 FT OF PCB PER MT-101.80. COMPLETE ENTIRETY WORK
DURING PHASE 2 FULL I.R. 90 CLOSURE.
QUANITITIES INCLUDE PCB AND TEMPORARY PAVEMENT.

℄ EX. I.R. 90

END STA. 110+50

PB-15

BEGIN STA. 105+50

I.R. 90 WB

I.R. 90 EB

101 102 103 104 105 106 107 108 109 110

PB-12

SPEED LIMIT 50

STA. 102+00
END PB W/
INCREASED
DELINEATION

INSTALL ITEM 839 - TRENCH DRAIN,
TYPE A WITH STANDARD GRATE.
OUTLET TO TEMPORARY CB-6.

REMOVE FRAME AND GRATE
OF EXISTING CATCH BASIN
AND COVER WITH STEEL PLATE
BEFORE COVERING WITH
TEMPORARY PAVEMENT.

INSTALL ITEM 839 - TRENCH DRAIN,
TYPE A WITH STANDARD GRATE.
OUTLET TO TEMPORARY CB-6.

REMOVE FRAME AND GRATE
OF EXISTING CATCH BASIN
AND COVER WITH STEEL PLATE
BEFORE COVERING WITH
TEMPORARY PAVEMENT.

INSTALL ITEM 839 - TRENCH DRAIN,
TYPE A WITH STANDARD GRATE.
OUTLET TO TEMPORARY CB-6.

INSTALL TEMPORARY CB-6.
OUTLET TO EXISTING CB
WITH 12" CONDUIT.

D-3.8

CHESTER AVE TO I.R. 90 EB
ENTRANCE RAMP (OPEN)

I.R. 90 EB TO CHESTER AVE
EXIT RAMP (OPEN)

MS-53

EXIT 173B
TO Carnegie Ave

EXIT 173C
Superior Ave
½ MILE

Chester Ave
EXIT ONLY

* EXISTING OVERHEAD SIGN
OVERLAYS AND PANELS
DETAILED ON SHEET 161

CL-22

FOR MAINTENANCE OF TRAFFIC LEGEND SEE SHEET 316

HORIZONTAL
SCALE IN FEET
0 20 40 80

MAINTENANCE OF TRAFFIC - PHASE 3
I.R. 90 - STA. 101+00.00 TO END

DESIGN AGENCY
Michael Baker INTERNATIONAL

DESIGNER
CRK

REVIEWER
GSH 05/22/24

PROJECT ID
82382

SHEET 324 | TOTAL 2696

CUY-90-16.28 (CCG3A)

MODEL: MP3013 PAPERSIZE: 34x22 (in.) DATE: 3/27/2025 TIME: 8:54:32 PM USER: Collin.Kwiatt
pw:\\vmb-us-pw.bentley.com:mb-us-pw-03\Documents\Cleveland_OH\01_Projects\ODOT\District2\82382\400-Engineering\MOT\Sheets\82382_MP3013.dgn

NOTES:

1. ALL EXISTING LANES OPEN AND EXISTING PAVEMENT MARKINGS UTILIZED ON THIS SHEET UNLESS NOTED OTHERWISE

2. REMOVE OR REVISE EXISTING SIGN FOR PHASE 3 PRIOR TO E. 21ST ST ENTRANCE RAMP TO I-77 CLOSURE, SEE SHEET 159 FOR ASSOCIATED DETOUR SIGNING

3. TEMPORARY SIGN PLACED FOR PHASE 3 PRIOR TO E. 21ST ST ENTRANCE RAMP TO I-77 CLOSURE

4. TEMPORARY SIGN FOR E. 22ND ST BIKE LANE TO REMAIN THROUGH PHASE 9 COMPLETION OF E. 22ND ST PR. BIKE LANE

5. FOR TEMPORARY SIGNAL NOTES SEE SHEET 93

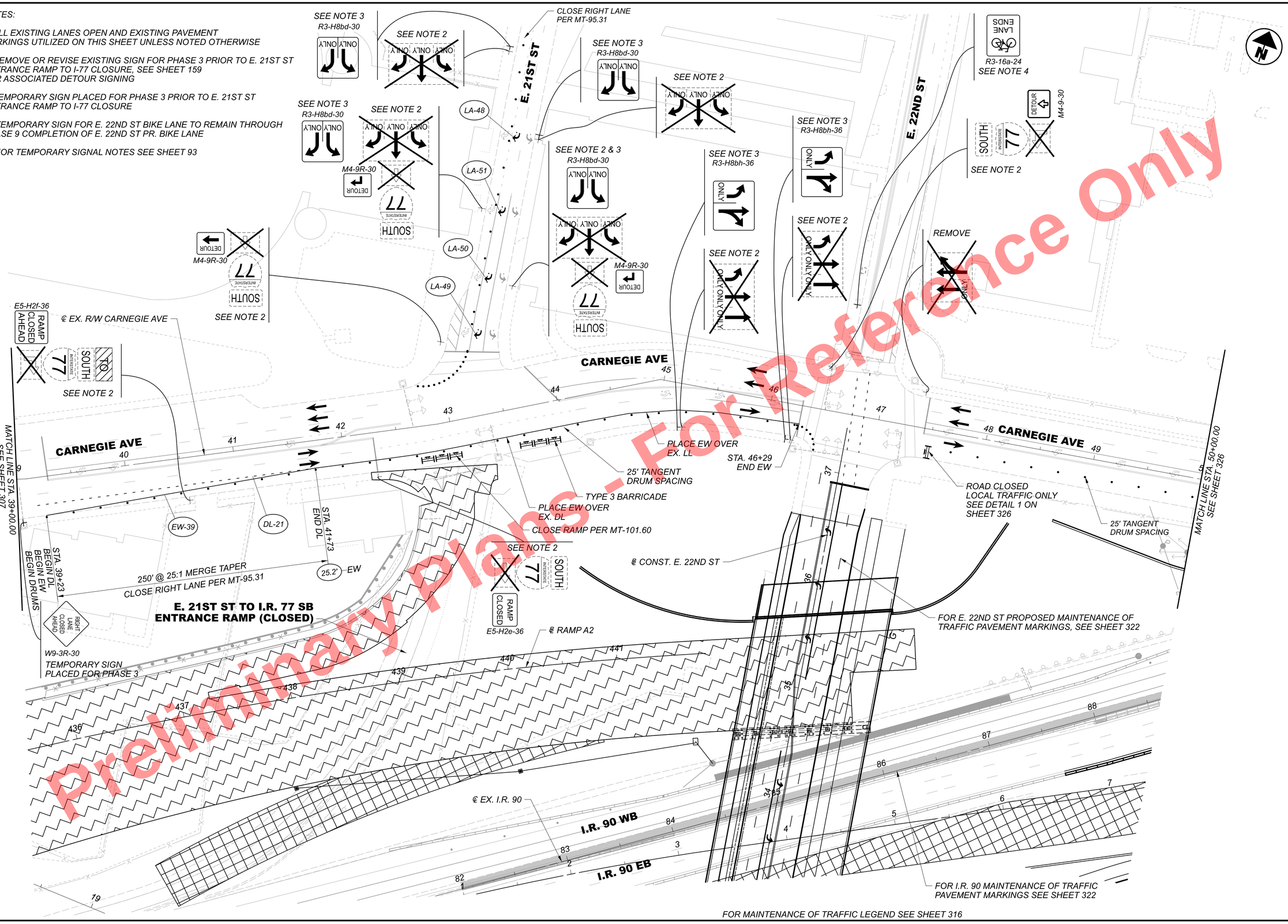

Preliminary Plans - For Reference Only

HORIZONTAL SCALE IN FEET
0 20 40 80

MAINTENANCE OF TRAFFIC - PHASE 3
CARNEGIE AVE - STA. 39+00.00 TO STA. 50+00.00

DESIGN AGENCY
Michael Baker INTERNATIONAL

DESIGNER CRK
REVIEWER GSH 05/22/24
PROJECT ID 82382
SHEET 325 TOTAL 2696

CUY-90-16.28 (CCG3A)

MODEL: MP305 PAPERSIZE: 34x22 (In.) DATE: 3/27/2025 TIME: 8:54:41 PM USER: Collin.Kwiatt
pw:\\mb-us-pw.bentley.com:mb-us-pw-03\Documents\Cleveland_OH\OI_Projects\ODOT\District12\82382\400-Engineering\MOT\Sheets\82382_MP305.dgn

PLACE TYPE 3 BARRICADE.
ROAD CLOSED
LOCAL TRAFFIC ONLY
SEE DETAIL 1

℄ EX. R/W CARNEGIE AVE

MATCH LINE STA. 61+00.00
SEE BELOW

62 63 64 65 66

CARNEGIE AVE

E. 28TH ST

PLACE TYPE 3 BARRICADE.
ROAD CLOSED
LOCAL TRAFFIC ONLY
SEE DETAIL 1

E. 30TH ST

ONLY ONLY ONLY
R3-8b-48

RIGHT LANE
MUST
TURN RIGHT
R3-7-30

BRIDGE OUT
0.25 MILES AHEAD
LOCAL TRAFFIC ONLY
R11-3b-60

SPEED
LIMIT
35

LA-53 LA-54 LA-52

CARNEGIE AVE

E. 30TH ST

N

HORIZONTAL
SCALE IN FEET
0 20 40 80

FOR I.R. 90 MAINTENANCE OF TRAFFIC PAVEMENT
MARKINGS ON THIS SHEET, SEE SHEET 323

25' TANGENT
DRUM SPACING

℄ EX. R/W CARNEGIE AVE

CLOSE CARNEGIE AVE
PER MT-101.60

I.R. 90 WB

I.R. 90 EB

PR. BRIDGE 14 FORWARD
ABUTMENT AND WINGWALL

PR. WALL AI

CLOSE ROAD PER MT-101.60

MATCH LINE STA. 50+00.00
SEE SHEET 325

50 51 52 53 54 55 56 57 58 59 60 61

MATCH LINE STA. 61+00.00
SEE ABOVE

PB-13

STA. 51+80
BEGIN PB

PB-14

CARNEGIE AVE

STOP
R1-1-18
TEMPORARY SIGN TO
REMAIN IN PLACE UNTIL
PR. CARNEGIE SIGNAL
IS INSTALLED IN PHASE 8

REMOVE PORTIONS OF CARNEGIE AVE.
ROADWAY BETWEEN EXISTING AND
PROPOSED FORWARD ABUTMENTS AND
EXCAVATE TO CONSTRUCT TEMPORARY
RUNAROUND

CLOSE LEFT TURN LANE
WITH 25' TANGENT DRUM
SPACING

CEDAR AVE

ROAD CLOSED
LOCAL TRAFFIC ONLY
R11-3-66

TYPE 3 BARRICADE
DETAIL 1

NOTES:

1. ALL EXISTING LANES OPEN AND EXISTING PAVEMENT MARKINGS UTILIZED ON THIS SHEET UNLESS NOTED OTHERWISE.

FOR MAINTENANCE OF TRAFFIC LEGEND SEE SHEET 316

Preliminary Plans - For Reference Only

MAINTENANCE OF TRAFFIC - PHASE 3
CARNEGIE AVE - STA. 50+00.00 TO END

DESIGN AGENCY
Michael Baker INTERNATIONAL

DESIGNER CRK
REVIEWER GSH 05/22/24
PROJECT ID 82382
SHEET 326 TOTAL 2696

CUY-90-16.28 (CCG3A)

MODEL: MP3016 PAPERSIZE: 34x22 (in.) DATE: 3/27/2025 TIME: 8:54:52 PM USER: Collin.Kwiatt
pw:\\mb-us-pw.bentley.com:mb-us-pw-03\Documents\Cleveland.OH\01_Projects\000T\District2\82382\400-Engineering\MOT\Sheets\82382_MP3016.dgn

LEGEND

AREA OF CONSTRUCTION TO BE COMPLETED BY END OF PHASE

AREA OF CONSTRUCTION ONGOING DURING THIS PHASE

TEMPORARY PAVEMENT CONSTRUCTED THIS PHASE

EXISTING BRIDGE OR TEMPORARY PAVEMENT REMOVAL COMPLETED BY END OF PHASE

DETAILS LOCATED IN PRIOR PHASE

I.R. 90
ONTARIO ST
E. 9TH ST
SHEET 330
SHEET 331
SEE PHASE 3 SHEET 318
SHEET 329
SHEET 328
SEE PHASE 2 SHEET 301
SHEET 332
SHEET 337
E. 14TH ST
E. 18TH ST
SEE CARNEGIE SUBPHASES SHEETS 339 TO 343
E. 21ST ST
E. 22ND ST
SHEET 333
SHEET 338
SHEET 334
BROADWAY AVE
SEE PHASE 2 SHEET 297
SEE PHASE 2 SHEET 296
SEE PHASE 2 SHEET 295
I.R. 77
COMMUNITY COLLEGE AVE
CENTRAL AVE
CEDAR AVE
CARNEGIE AVE
PROSPECT AVE
EUCLID AVE
CHESTER AVE
SHEET 335
SHEET 336
I.R. 90
PAYNE AVE
E. 30TH ST

Preliminary Plans - For Reference Only

HORIZONTAL SCALE IN FEET
0 150 300 600

MAINTENANCE OF TRAFFIC - PHASE 4 SHEET PLAN KEY

DESIGN AGENCY
Michael Baker INTERNATIONAL

DESIGNER CRK
REVIEWER GSH 05/22/24
PROJECT ID 82382
SHEET 327 TOTAL 2696

CUY-90-16.28 (CCG3A)

MODEL: Sheet PAPERSIZE: 34x22 (in.) DATE: 3/27/2025 TIME: 8:55:04 PM USER: Collin.Kwiatt
pw:\\mb-us-pw.bentley.com:mb-us-pw-03\Documents\Cleveland.OH\OI_Projects\OOOT\District2\82382\400-Engineering\MOT\Sheets\82382_MB4000.dgn

NOTES:

1. ALL EXISTING LANES OPEN AND EXISTING PAVEMENT MARKINGS UTILIZED ON THIS SHEET UNLESS NOTED OTHERWISE.

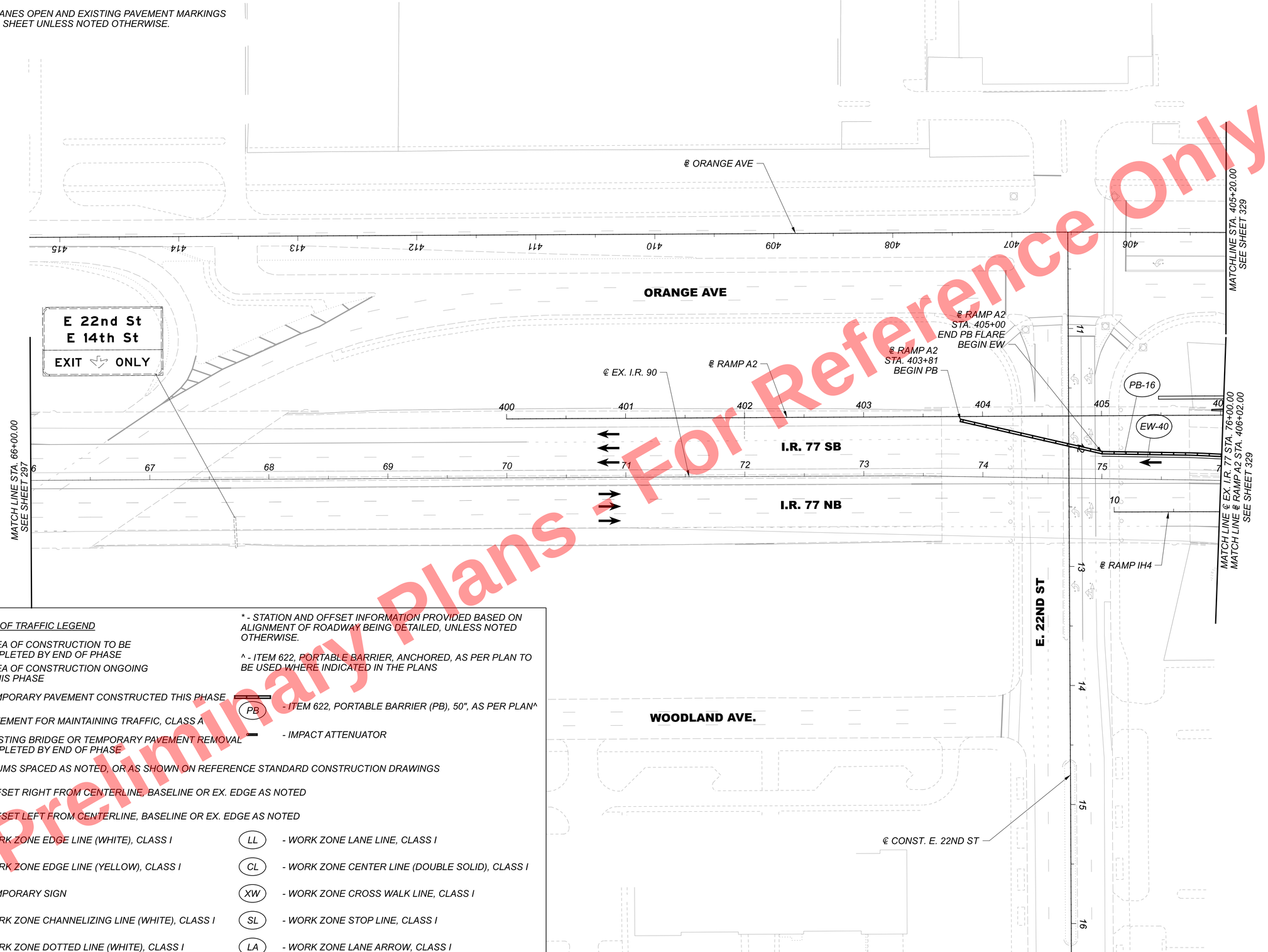

Preliminary Plans - For Reference Only

MAINTENANCE OF TRAFFIC LEGEND

- AREA OF CONSTRUCTION TO BE COMPLETED BY END OF PHASE
- AREA OF CONSTRUCTION ONGOING IN THIS PHASE
- TEMPORARY PAVEMENT CONSTRUCTED THIS PHASE
- PAVEMENT FOR MAINTAINING TRAFFIC, CLASS A
- EXISTING BRIDGE OR TEMPORARY PAVEMENT REMOVAL COMPLETED BY END OF PHASE
- DRUMS SPACED AS NOTED, OR AS SHOWN ON REFERENCE STANDARD CONSTRUCTION DRAWINGS
- (17.5') OFFSET RIGHT FROM CENTERLINE, BASELINE OR EX. EDGE AS NOTED
- (-17.5') OFFSET LEFT FROM CENTERLINE, BASELINE OR EX. EDGE AS NOTED
- (EW) WORK ZONE EDGE LINE (WHITE), CLASS I
- (EY) WORK ZONE EDGE LINE (YELLOW), CLASS I
- (MS) TEMPORARY SIGN
- (CH) WORK ZONE CHANNELIZING LINE (WHITE), CLASS I
- (DL) WORK ZONE DOTTED LINE (WHITE), CLASS I
- (LL) WORK ZONE LANE LINE, CLASS I
- (CL) WORK ZONE CENTER LINE (DOUBLE SOLID), CLASS I
- (XW) WORK ZONE CROSS WALK LINE, CLASS I
- (SL) WORK ZONE STOP LINE, CLASS I
- (LA) WORK ZONE LANE ARROW, CLASS I
- * FINAL CONDITION PAVEMENT MARKING (SEE MAINTENANCE OF TRAFFIC SUBSUMMARY FOR SPECIFIC PAY ITEM)
- (PB) ITEM 622, PORTABLE BARRIER (PB), 50", AS PER PLAN^
- IMPACT ATTENUATOR

* - STATION AND OFFSET INFORMATION PROVIDED BASED ON ALIGNMENT OF ROADWAY BEING DETAILED, UNLESS NOTED OTHERWISE.

^ - ITEM 622, PORTABLE BARRIER, ANCHORED, AS PER PLAN TO BE USED WHERE INDICATED IN THE PLANS

HORIZONTAL SCALE IN FEET
0 20 40 80

MAINTENANCE OF TRAFFIC - PHASE 4
I.R. 77 - STA. 66+00.00 TO STA. 76+00.00

DESIGN AGENCY
Michael Baker INTERNATIONAL

DESIGNER CRK
REVIEWER GSH 05/22/24
PROJECT ID 82382
SHEET 328 TOTAL 2696

CUY-90-16.28 (CCG3A)

MODEL: MP4004 PAPERSIZE: 34x22 (in.) DATE: 3/27/2025 TIME: 8:55:18 PM USER: Collin.Kwiat
pw:\\mb-us-pw.bentley.com:mb-us-pw-03\Documents\Cleveland.OH\OI_Projects\ODOT\District2\82382\400-Engineering\MOT\Sheets\82382_MP4004.dgn

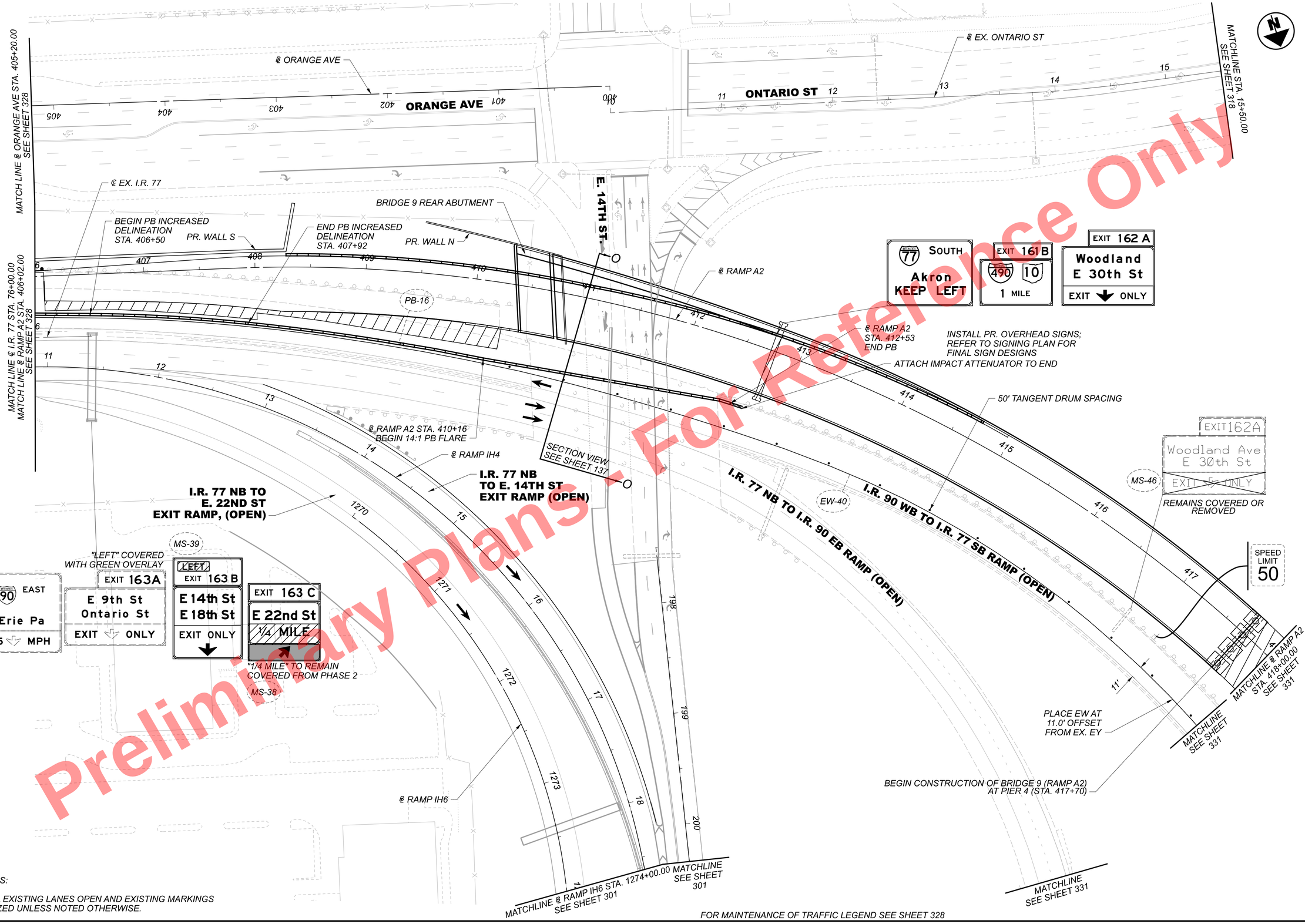

Preliminary Plans - For Reference Only

NOTES:

1. ALL EXISTING LANES OPEN AND EXISTING MARKINGS UTILIZED UNLESS NOTED OTHERWISE.

FOR MAINTENANCE OF TRAFFIC LEGEND SEE SHEET 328

HORIZONTAL SCALE IN FEET 0 20 40 80

MAINTENANCE OF TRAFFIC - PHASE 4

I.R. 77 - STA. 76+00.00 TO END / RAMP A2 - STA. 406+02.00 TO STA. 418+00.00

DESIGN AGENCY: Michael Baker INTERNATIONAL

DESIGNER: CRK

REVIEWER: GSH 05/22/24

PROJECT ID: 82382

SHEET 329 TOTAL 2696

CUY-90-16.28 (CCG3A)

MODEL: MP4005 PAPERSIZE: 34x22 (in.) DATE: 3/27/2025 TIME: 8:55:27 PM USER: Collin.Kwiatt
pw:\\mb-us-pw.bentley.com:mb-us-pw-03\Documents\Cleveland_OH\OI_Projects\ODOT\District2\82382\400-Engineering\MOT\Sheets\82382_MP4005.dgn

NOTES:

1. ALL EXISTING LANES OPEN AND EXISTING PAVEMENT MARKINGS UTILIZED ON THIS SHEET UNLESS NOTED OTHERWISE

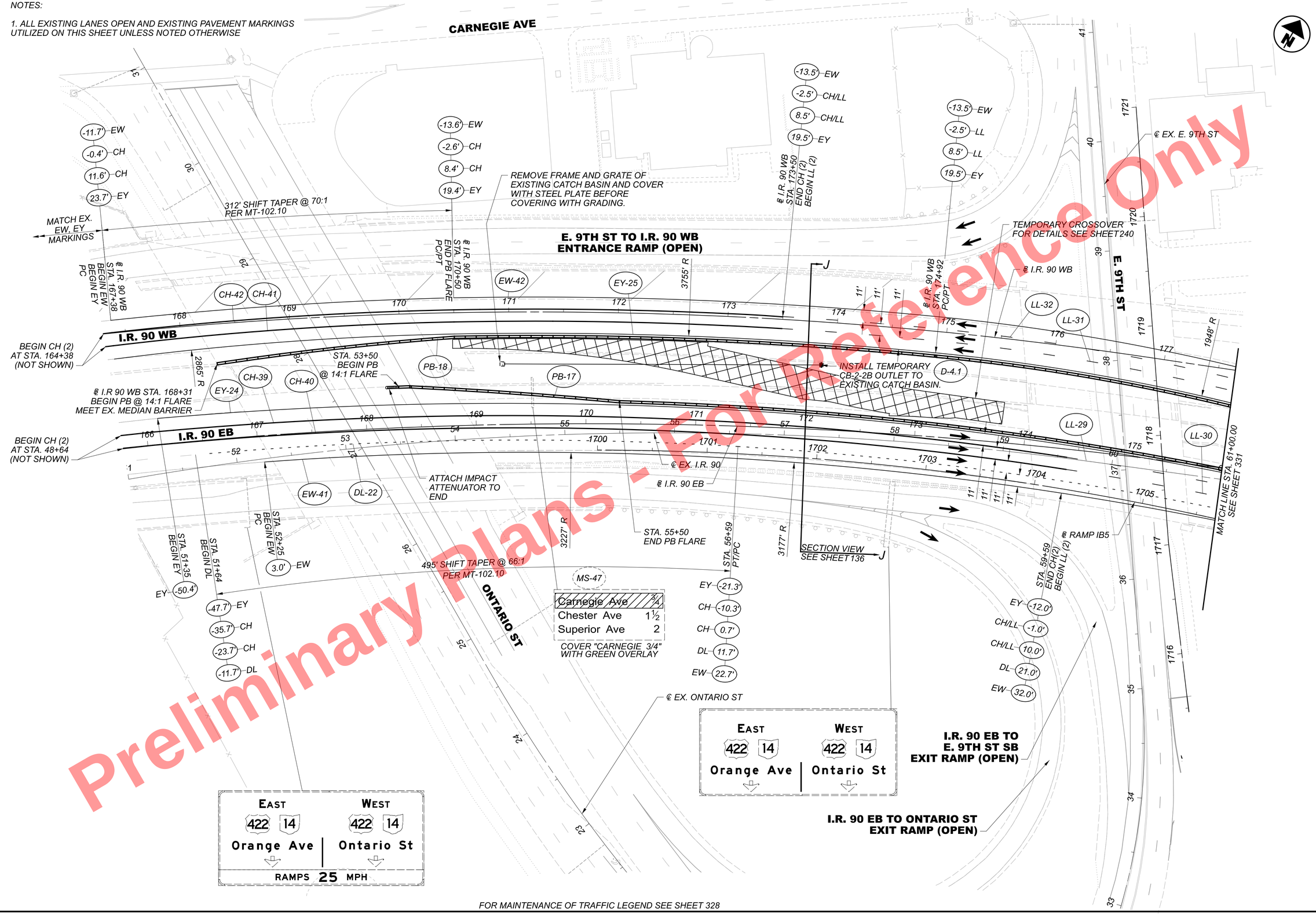

FOR MAINTENANCE OF TRAFFIC LEGEND SEE SHEET 328

Preliminary Plans - For Reference Only

HORIZONTAL SCALE IN FEET 0 20 40 80

MAINTENANCE OF TRAFFIC - PHASE 4
I.R. 90 - BEGIN TO STA. 61+00.00

DESIGN AGENCY: Michael Baker INTERNATIONAL

DESIGNER: CRK

REVIEWER: GSH 05/22/24

PROJECT ID: 82382

SHEET 330 TOTAL 2696

CUY-90-16.28 (CCG3A)

MODEL: MP4008 PAPERSIZE: 34x22 (in.) DATE: 3/27/2025 TIME: 8:55:36 PM USER: Collin.Kwiatt
pw:\\mb-us-pw.bentley.com:mb-us-pw-03\Documents\Cleveland_OH\OI_Projects\ODOT\District2\82382\400-Engineering\MOT\Sheets\82382_MP4008.dgn

Preliminary Plans - Not For Reference Only

E. 14TH ST TO I.R. 77 SB ENTRANCE RAMP (PERMANENTLY CLOSED)

REMOVE EXISTING BARRIER, PLACE TEMPORARY PAVEMENT WIDENED OFF EXISTING SHOULDER PRIOR TO PHASE 4. TEMPORARY PAVEMENT ALONG I.R. 90 EB NEEDED FOR PHASE 5. MATCH EXSITING CROSS SLOPES ON TEMPORARY PAVEMENT AND GRADE TO DRAIN TO EXSITING DITCH.

INSTALL PR. OVERHEAD SIGNS; REFER TO SIGNING PLAN FOR FINAL SIGN DESIGNS

CONSTRUCT BIRDGE 9 UNIT 2 (SPANS 5-11)

STA. 61+90 BEGIN PB @ 14:1 FLARE

STA. 61+73 PT

STA. 61+67 BEGIN REMOVAL OF EX. BARRIER BEGIN TEMPORARY PAVEMENT. PT

STA. 65+10± BEGIN REMOVAL OF EX. MEDIAN BARRIER

STA. 64+26 END 14:1 FLARE

BEGIN PB INCREASED DELINEATION ℄ I.R. 90 WB STA. 180+92

℄ I.R. 90 WB

STA. 63+28 BEGIN REMOVAL OF EX. BARRIER

337' OF ANCHORED PB ON EXISTING BRIDGE DECK

50' TANGENT DRUM SPACING

℄ RAMP A2 STA. 424+73 END PB

106' TANGENT SECTION

EXISTING BRIDGE E5 REMOVAL. FOR DETAILS SEE SHEET 2371

STA. 63+96, 23.23' LT

STA. 64+31 PC

STA. 65+10±

STA. 69+81 END PB FLARE

STA. 69+91 END PB ATTACH IMPACT ATTENUATOR TO END

STA. 68+50 BEGIN 14:1 PB FLARE PT

MATCH LINE STA. 61+00.00 SEE SHEET 330

MATCH LINE STA. 71+00.00 SEE SHEET 332

℄ EX. I.R. 90

STA. 63+96, 19.25' LT

STA. 61+71 PT/PC BEGIN PB INCREASED DELINEATION

STA. 63+00 END CH BEGIN EW PC/PT

℄ RAMP IB5 STA. 1707+86 END CH

175' LANE TAPER @ 50:1 (WIDEN FROM 11'-12')

END PB INCREASED DELINEATION STA. 63+00

STA. 64+75 END PR. MARKINGS MEET EX. PT

END PB INCREASED DELINEATION ℄ RAMP A2 STA. 423+94

STA. 66+34 PT/PC

SECTION VIEW SEE SHEET 138

℄ RAMP A2 STA. 421+88 END PB FLARE END DRUMS BEGIN ANCHORED PB W/ INCREASED DELINEATION

STA. 66+60± (℄ I.R. 90 WB STA. 183+14) END PB W/ INCREASED DELINEATION END REMOVAL OF EX. MEDIAN BARRIER PER MT-101.08

EXISTING BRIDGE E6 REMOVAL. FOR DETAILS SEE SHEET 2378

℄ RAMP A2 STA. 420+88 BEGIN PB @ 14:1 FLARE

STA. 70+00 END PR. MARKINGS

STA. 68+50 END 14:1 FLARE

150' LANE TAPER @ 50:1

I.R. 90 WB

I.R. 90 EB

I.R. 90 WB TO I.R. 77 SB RAMP (OPEN)

I.R. 77 NB TO I.R. 90 EB RAMP (OPEN)

I.R. 90 EB TO E. 9TH ST NB EXIT RAMP (OPEN)

I.R. 77 NB TO E. 14TH ST SB EXIT RAMP (OPEN)

50' TANGENT DRUM SPACING

PLACE EW AT CONSTANT 11' OFFSET FROM EX. EY

EXIT 172A — E 9th St Downtown — EXIT 25 MPH — EXIT ONLY

EXIT 172B — Carnegie Ave — MILE — EXIT CLOSED

* - EXISTING OVERHEAD SIGN OVERLAYS AND PANELS DETAILED ON SHEET 161

EXIT 162 A — Woodland E 30th St — RIGHT LANE ENDS MERGE LEFT

77 SOUTH Akron

-42.0' PB
-39.0' EW
-28.0' LL
-17.0' LL
-6.0' EY

MS-49 — Carnegie Ave 3/8 — Chester Ave 1 — Superior Ave 1½ — COVER "CARNEGIE 3/8" WITH GREEN OVERLAY

MATCHLINE @ RAMP A2 STA. 418+00.00 SEE SHEET 329

MATCHLINE SEE SHEET 329

MATCHLINE SEE SHEET 329

MATCHLINE SEE SHEET 301

FOR MAINTENANCE OF TRAFFIC LEGEND SEE SHEET 328

HORIZONTAL SCALE IN FEET 0 20 40 80

MAINTENANCE OF TRAFFIC - PHASE 4
I.R. 90 - STA. 61+00.00 TO STA. 71+00.00

DESIGN AGENCY: Michael Baker INTERNATIONAL

DESIGNER: CRK

REVIEWER: GSH 05/22/24

PROJECT ID: 82382

SHEET: 331 TOTAL: 2696

CUY-90-16.28 (CCG3A)

MODEL: MP4009 PAPERSIZE: 34x22 (in.) DATE: 3/27/2025 TIME: 8:55:47 PM USER: Collin.Kwiat
pw:\\mb-us-pw.bentley.com:mb-us-pw-03\Documents\Cleveland.OH\OI_Projects\ODOT\District2\82382\400-Engineering\MOT\Sheets\82382_MP4009.dgn

E. 14TH ST TO I.R. 77 SB ENTRANCE RAMP (CLOSED)

E. 21ST ST TO I.R. 77 SB ENTRANCE RAMP (CLOSED)

PB-27 EY-29 @ E. 14TH ST SB

E. 18TH ST CENTRAL AVE E. 19TH ST

PR. LIGHTWEIGHT FILL

TEMPORARY CB-2-2B INSTALLED DURING PHASE 3. SEE SHEET 321

PR. WALL AE PR. WALL AD

UU K

NOTE 2 @ INTERIM E. 14TH ST ST STA. 36+55

EW-49

END CONSTRUCTION AT BRIDGE 10 FORWARD ABUTMENT @ RAMP A2

E. 14TH ST NB

I.R. 90 WB TO I.R. 77 SB RAMP (OPEN)

PLACE EW AT CONSTANT 11' OFFSET FROM EX. EY

EW-40

STA. 75+95 END EW (MEET EX. CH)

STA. 75+55 BEGIN DL

DL-23

STA. 77+00 BEGIN PB

STA. 77+50 END DL BEGIN EW

-53.8' PB -42.4' PB -39.4' DL/EW

EW-44 PB-21 @ I.R. 90 WB

TEMPORARY PAVEMENT FOR I.R. 90 WB WEST CROSSOVER. FOR DETAILS SEE SHEET 234

-42.5' PB -39.5' EW -28.5' LL -17.5' LL -6.5' EY -2.7' PB

STA. 80+98 BEGIN LL (2) BEGIN EY PC

LL-35 EY-26 LL-33

@ INTERIM E. 14TH ST SB STA. 208+51, 12.0' LT. BEGIN EW

STA. 78+45 BEGIN WORK ZONE EGRESS PER MT-103.10

¢ EX. I.R. 90

I.R. 90 WB

I.R. 90 EB

MATCH LINE STA. 71+00.00 SEE SHEET 331

MATCH LINE STA. 81+00.00 SEE SHEET 333

PB-23 PB-22 STA. 80+90 BEGIN PB (2)

SECTION VIEW SEE SHEET 138 UU

SECTION VIEW SEE SHEET 136 K

I.R. 77 NB TO E. 22ND ST EXIT RAMP (OPEN)

MS-50 MS-51 MS-43

EXIT 173A EAST 90 Carnegie Ave MILE

EXIT 173B TO Carnegie Ave Chester Ave 3/4 MILE

EXIT CLOSED

* - EXISTING OVERHEAD SIGN OVERLAYS AND PANELS DETAILED ON SHEET 161

I.R. 77 NB TO I.R. 90 EB RAMP (OPEN)

@ INTERIM E. 14TH ST SB

E. 14TH ST SB

E. 14TH ST NB

¢ TEMPORARY CROSSOVER COMMUNITY COLLEGE AVE TO E. 14TH ST. FOR DETAILS, SEE SHEET 185

MATCHLINE ¢ EX. COMMUNITY COLLEGE AVE STA. 54+00.00 SEE SHEET 301

MATCHLINE SEE SHEET 301

NOTES:

1. ALL EXISTING LANES OPEN AND EXISTING PAVEMENT MARKINGS UTILIZED ON THIS SHEET UNLESS NOTED OTHERWISE.

2. SEE SHEET 337 FOR E. 14TH NORTH MARKINGS

FOR MAINTENANCE OF TRAFFIC LEGEND SEE SHEET 328

Preliminary Plans - For Reference Only

HORIZONTAL SCALE IN FEET 0 20 40 80

MAINTENANCE OF TRAFFIC - PHASE 4
I.R. 90 - STA. 71+00.00 TO STA. 81+00.00

DESIGN AGENCY Michael Baker INTERNATIONAL

DESIGNER CRK

REVIEWER GSH 05/22/24

PROJECT ID 82382

SHEET 332 TOTAL 2696

CUY-90-16.28 (CCG3A)

MODEL: MP4010 PAPERSIZE: 34x22 (in.) DATE: 3/27/2025 TIME: 8:55:57 PM USER: Collin.Kwiatt
pw:\\mb-us-pw.bentley.com:mb-us-pw-03\Documents\Cleveland_OH\01_Projects\000TYDistrict2\82382\400-Engineering\MOT\Sheets\82382_MP4010.dgn

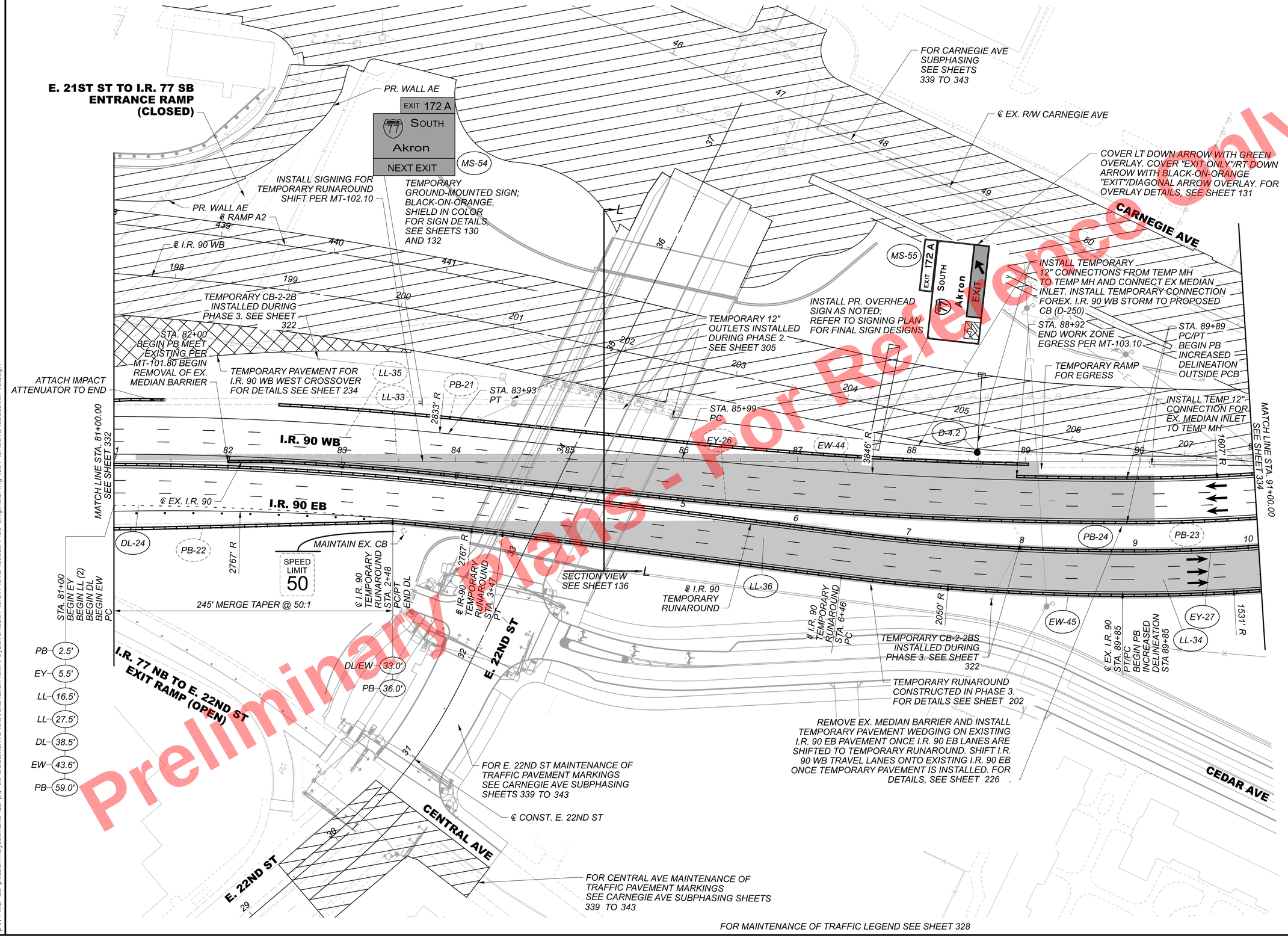

HORIZONTAL SCALE IN FEET
0 20 40 80

MAINTENANCE OF TRAFFIC - PHASE 4
I.R. 90 - STA. 81+00.00 TO STA. 91+00.00

DESIGN AGENCY
Michael Baker INTERNATIONAL

DESIGNER CRK
REVIEWER GSH 05/22/24
PROJECT ID 82382
SHEET 333 TOTAL 2696

CUY-90-16.28 (CCG3A)

MODEL: MP40ll PAPERSIZE: 34x22 (in.) DATE: 3/27/2025 TIME: 8:56:08 PM USER: Collin.Kwiatt
pw:\\vmb-us-pw.bentley.com:mb-us-pw-03\Documents\Cleveland_OH\01_Projects\000T\District2\82382\400-Engineering\MOT\Sheets\82382_MP40ll.dgn

Preliminary Plans - For Reference Only

WEST TO 90 77 CLOSED — BACK SIDE
WEST TO 90 77 CLOSED — FRONT SIDE
MS-56
* EXISTING OVERHEAD SIGN OVERLAYS AND PANELS DETAILED ON SHEET 160

PROSPECT AVE

CLOSE RAMP PER MT-101.60

REMOVE EX. CH & EX. DL AND PLACE MOT LL

END CONSTRUCTION AT PROJECT LIMITS STA. 98+31, PT

END PB INCREASED DELINEATION STA. 98+40

END REMOVAL OF EX. MEDIAN BARRIER END PB W/ INCREASED DELINEATION MEET EX. PER MT-101.80

INSTALL TEMPORARY CONNECTION OF EXISTING STORM TO PROPOSED STORM (D-243)

STA. 97+29 BEGIN PB INCREASED DELINEATION

STA. 97+35, 8.3' RT END CH BEGIN EY PC/PT

CH-46 D-4.5 EY-28

SPEED LIMIT 45

PROSPECT AVE TO I.R. 90 WB ENTRANCE RAMP (CLOSED)

REMOVE EX. RT TURN ARROWS & CONVERT INTO 2 THRU LANES

-26.5' EW
-15.5' CH
-4.5' EY
7.5' EW
18.5' EY

INSTALL SIGNING FOR TEMPORARY CROSSOVER SHIFT PER MT-95.73

-31.1' EW
-19.1' CH
-7.1' EY
3.2' EW
14.2' EY

880' LANE SHIFT @ 66:1

158' LANE TAPER @75:1

1600' R

STA. 100+00

EW-46

MATCH LINE STA. 101+00.00 SEE SHEET 335

REMOVE EXISTING CANTILEVER ARM AND SIGNAGE PRIOR TO OPENING SHIFTED I.R. 90 WB LANES

INSTALL TEMPORARY MH & 12" CONNECTION FOR EXISTING I.R. 90 WB STORM TO PROPOSED BARRIER INLET (D-234)

INSTALL TEMPORARY CONNECTION OF EXISTING STORM TO PROPOSED STORM (D-242)

PR. WALL AH

PR. BRIDGE 14 REAR ABUTMENT

12.5' PB
15.5' EW
26.5' LL/CH
37.5' LL/CH
48.5' EY
51.5' PB

EXIT 172 A
77 SOUTH
Akron
EXIT ONLY
NEXT EXIT

MS-45

"EXIT ONLY" COVERED WITH BLACK-ON-ORANGE "NEXT EXIT" OVERLAY IN PHASE 2

SPEED LIMIT 50

STA. 93+36 PC/PT

MATCH LINE STA. 91+00.00 SEE SHEET 333

D-4.3 EW-44 LL-35 PB-21 1607' R

STA. 94+23 END LL (2) BEGIN CH (3) PC/PT

3686' R 742' R

PB-25

STA. 98+42 PT/PC

995' R

MAINTAIN EX. CB

I.R. 90 WB

PB-23 LL-33 LL-36 LL-34 1531' R EY-26 PB-22

@ I.R 90 TEMPORARY RUNAROUND

@ I.R. 90 TEMPORARY RUNAROUND STA. 12+59 PT/PC

1990' R

@ I.R. 90 TEMPORARY RUNAROUND STA. 14+87 PT/PC

875' R CH-47

@ I.R. 90 TEMPORARY RUNAROUND STA. 14+87 PT/PC

EY-27

STA. 96+16 END CH BEGIN EW BEGIN PB W/ INCREASED DELINEATION PT/PC

CH/EW 36.0'

D-4.4

850' R

914' R EW-45

STA. 97+87 PT/PC

TEMPORARY CB-2-2B INSTALLED DURING PHASE 3 SEE SHEET 323

STA. 97+90 END PB INCREASED DELINEATION

SECTION VIEW SEE SHEET 137

SECTION VIEW SEE SHEET 137

@ I.R. 90 TEMPORARY RUNAROUND PT STA. 17+54

850' R PT

STA. 98+46 PT

STA. 98+19 END PB INCREASED DELINEATION

TEMPORARY CB-2-2B INSTALLED DURING PHASE 3 SEE SHEET 323

STA. 98+80 BEGIN REMOVAL & RESURFACING RUMBLE STRIPS

STA. 99+04 END PB

STA. 99+69 PC

STA. 99+69 BEGIN PB INCREASED DELINEATION

STA. 100+15 END PB

I.R. 90 EB

PB-24

LL-37 MS-57

WEST TO 90 KEEP RIGHT CLOSED

PROSPECT AVE

PROSPECT AVE TO I.R. 90 EB ENTRANCE RAMP (CLOSED)

MS-52

EAST TO 90 CLOSED — FRONT SIDE
EAST TO 90 CLOSED — BACK SIDE
* EXISTING OVERHEAD SIGN OVERLAYS AND PANELS DETAILED ON SHEET 160

REMOVE EX. MEDIAN BARRIER AND INSTALL TEMPORARY PAVEMENT WEDGING ON EXISTING I.R. 90 EB PAVEMENT ONCE I.R. 90 EB LANES ARE SHIFTED TO TEMPORARY RUNAROUND. SHIFT I.R. 90 WB TRAVEL LANES ONTO EX. I.R. 90 EB ONCE TEMPORARY PAVEMENT IS INSTALLED. FOR DETAILS SEE SHEET 226

CEDAR AVE

CARNEGIE AVE

FOR MAINTENANCE OF TRAFFIC LEGEND SEE SHEET 328

HORIZONTAL SCALE IN FEET
0 20 40 80

MAINTENANCE OF TRAFFIC - PHASE 4
I.R. 90 - STA. 91+00.00 TO STA. 101+00.00

DESIGN AGENCY
Michael Baker INTERNATIONAL

DESIGNER CRK
REVIEWER GSH 05/22/24
PROJECT ID 82382
SHEET 334 TOTAL 2696

CUY-90-16.28 (CCG3A)

MODEL: MP401l2 PAPERSIZE: 34x22 (in.) DATE: 3/27/2025 TIME: 8:56:19 PM USER: Collin.Kwiatt
pw:\\mb-us-pw.bentley.com:mb-us-pw-03\Documents\Cleveland_OH\01_Projects\000T\District2\82382\400-Engineering\MOT\Sheets\82382_MP401l2.dgn

Preliminary Plans - For Reference Only

I.R. 90 WB TO PROSPECT AVE EXIT RAMP (OPEN)

EUCLID AVE

ATTACH IMPACT ATTENUATOR TO END

STA. 102+42 END PB W/ INCREASED DELINEATION

STA. 105+50 END REMOVAL & RESURFACING RUMBLE STRIPS; BEGIN PB W/ INCREASED DELINEATION PER MT-101.80; BEGIN REMOVAL OF EX. MEDIAN BARRIER

STA. 110+50 BEGIN REMOVAL & RESURFACING RUMBLE STRIPS; END PB W/ INCREASED DELINEATION PER MT-101.80 END REMOVAL OF EX. MEDIAN BARRIER

880' LANE SHIFT @ 66:1

STA. 104+44 OFFSET 34.85' LT END CH (2) BEGIN DL

TEMPORARY CB-6 INSTALLED DURING PHASE 3. SEE SHEET 324

INSTALL SIGNING FOR TEMPORARY CROSSOVER SHIFT PER MT-95.73

ATTACH IMPACT ATTENUATOR TO END

REMOVE EX. LL AND PLACE CH

STA. 108+85 END PB INCREASED DELINEATION

MATCH LINE STA. 101+00.00 SEE SHEET 334

MATCH LINE STA. 111+00.00 SEE SHEET 336

I.R. 90 WB

I.R. 90 EB

STA. 101+00 BEGIN REMOVAL & RESURFACING RUMBLE STRIPS

SPEED LIMIT 50

STA. 102+50 PT

STA. 102+70 PC

STA. 102+54 END EW BEGIN CH

STA. 103+21 BEGIN CH MEET EX.

STA. 104+00 BEGIN DL

STA. 105+00 PC/PT

STA. 106+60 OFFSET 52.8' RT END DL BEGIN CH (2)

STA. 108+80 END CH BEGIN EW

STA. 108+80 END DL END CH END PB W/ INCREASED DELINEATION END EW END EY

STA. 109+00 END REMOVAL & RESURFACING RUMBLE STRIPS

STA. 110+50 END PR. EB MARKINGS MEET EX.

TRENCH DRAIN, INSTALLED DURING PHASE 3 (TYP)

150' SHIFT TAPER @ 50:1

END EW END CH MEET EX.

EXIT 173C
Superior Ave
½ MILE

EXIT 173B
TO Carnegie Ave
Chester Ave
EXIT ONLY

* EXISTING OVERHEAD SIGN OVERLAYS AND PANELS DETAILED ON SHEET 161

I.R 90 EB TO CHESTER AVE EXIT RAMP (OPEN)

CHESTER AVE EB TO I.R. 90 EB ENTRANCE RAMP (OPEN)

FOR MAINTENANCE OF TRAFFIC LEGEND SEE SHEET 328

HORIZONTAL SCALE IN FEET
0 20 40 80

MAINTENANCE OF TRAFFIC - PHASE 4
I.R. 90 - STA. 101+00.00 TO STA. 111+00.00

CUY-90-16.28 (CCG3A)

MODEL: MP401 PAPERSIZE: 34x22 (in.) DATE: 3/27/2025 TIME: 8:56:29 PM USER: CollinKwiatt
pw:\\mb-us-pw.bentley.com:mb-us-pw-03\Documents\Cleveland_OH\01_Projects\00DT\District2\82382\400-Engineering\MOT\Sheets\82382_MP401_3.dgn

DESIGN AGENCY
Michael Baker INTERNATIONAL

DESIGNER CRK
REVIEWER GSH 05/22/24
PROJECT ID 82382
SHEET 335 TOTAL 2696

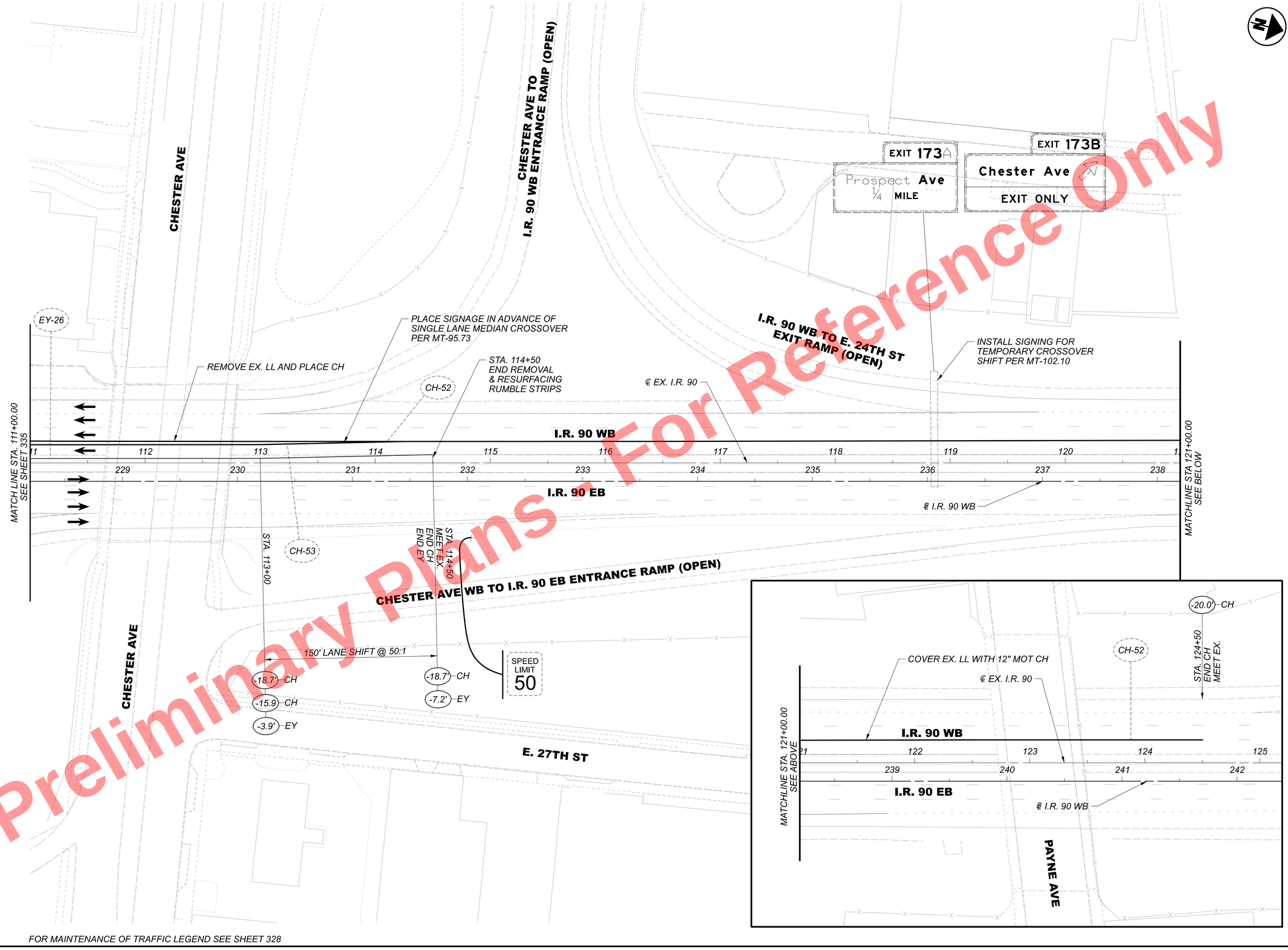

Preliminary Plans - For Reference Only

FOR MAINTENANCE OF TRAFFIC LEGEND SEE SHEET 328

HORIZONTAL SCALE IN FEET 0 20 40 80

MAINTENANCE OF TRAFFIC - PHASE 4
I.R. 90 - STA. 111+00.00 TO END

DESIGN AGENCY
Michael Baker INTERNATIONAL

DESIGNER CRK
REVIEWER GSH 05/22/24
PROJECT ID 82382
SHEET 336 TOTAL 2696

CUY-90-16.28 (CCG3A)

MODEL: MP4014 PAPERSIZE: 34x22 (in.) DATE: 3/27/2025 TIME: 8:56:39 PM USER: Collin.Kwiatt
pw:\\mb-us-pw.bentley.com:mb-us-pw-03\Documents\Cleveland_OH\OI_Projects\ODOT\District12\82382\400-Engineering\MOT\Sheets\82382_MP4014.dgn

NOTES:

1. ALL EXISTING LANES OPEN AND EXISTING PAVEMENT MARKINGS UTILIZED ON THIS SHEET UNLESS NOTED OTHERWISE.
2. SEE SHEET 332 FOR E. 14TH ST SOUTH MOT MARKINGS
3. FOR TEMPORARY SIGNAL NOTES SEE SHEET 93

FOR MAINTENANCE OF TRAFFIC LEGEND SEE SHEET 328

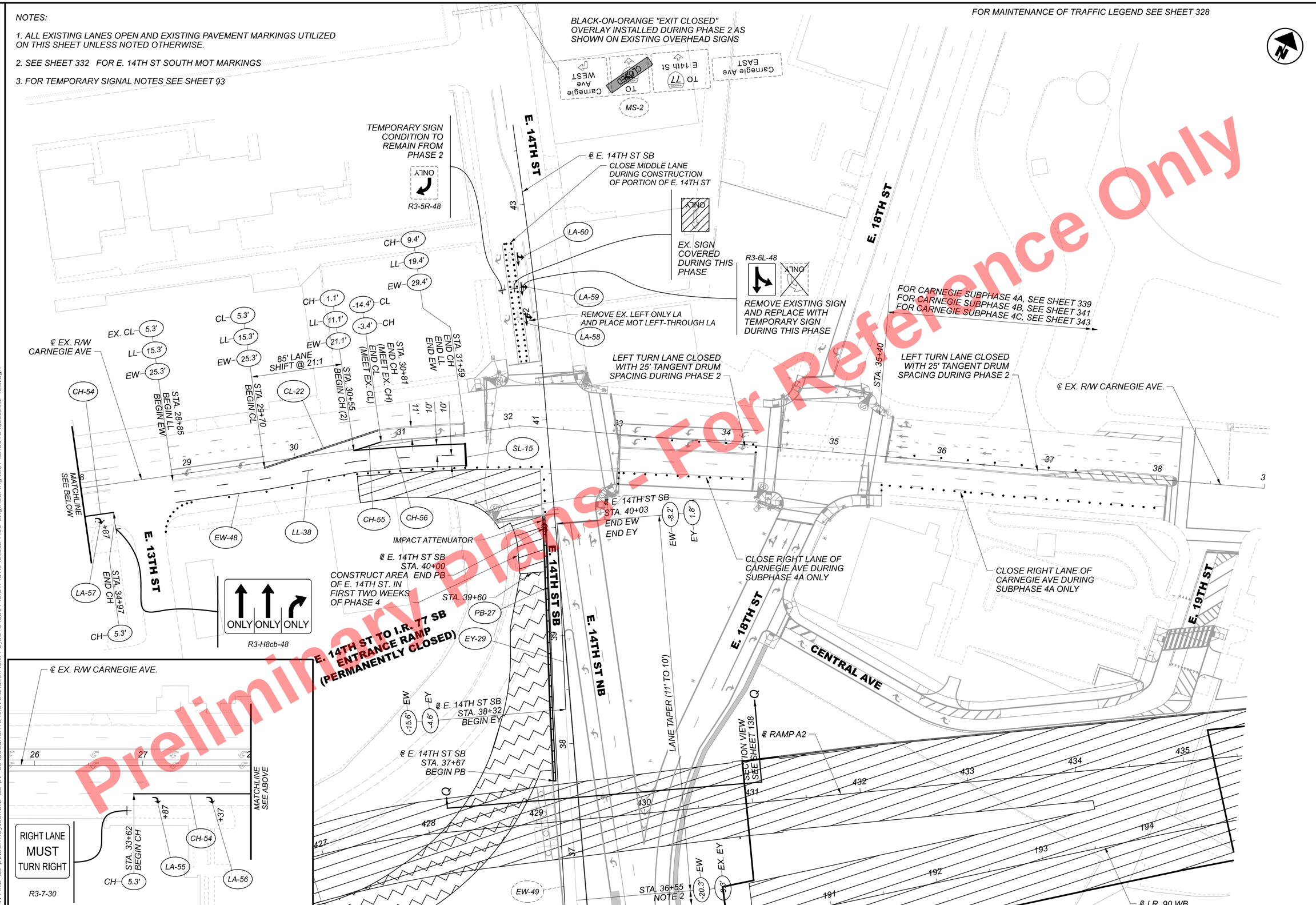

Preliminary Plans - For Reference Only

HORIZONTAL SCALE IN FEET 0 20 40 80

MAINTENANCE OF TRAFFIC - PHASE 4
CARNEGIE AVE - BEGIN TO STA. 39+00.00

DESIGN AGENCY: Michael Baker INTERNATIONAL

DESIGNER: CRK

REVIEWER: GSH 05/22/24

PROJECT ID: 82382

SHEET 337 TOTAL 2696

CUY-90-16.28 (CCG3A)

MODEL: MP4015 PAPERSIZE: 34x22 (in.) DATE: 3/27/2025 TIME: 8:56:50 PM USER: Collin.Kwiatt
pw:\\mb-us-pw.bentley.com:mb-us-pw-03\Documents\Cleveland_OH\OI_Projects\ODOT\District12\82382\400-Engineering\MOT\Sheets\82382_MP4015.dgn

Preliminary Plans - For Reference Only

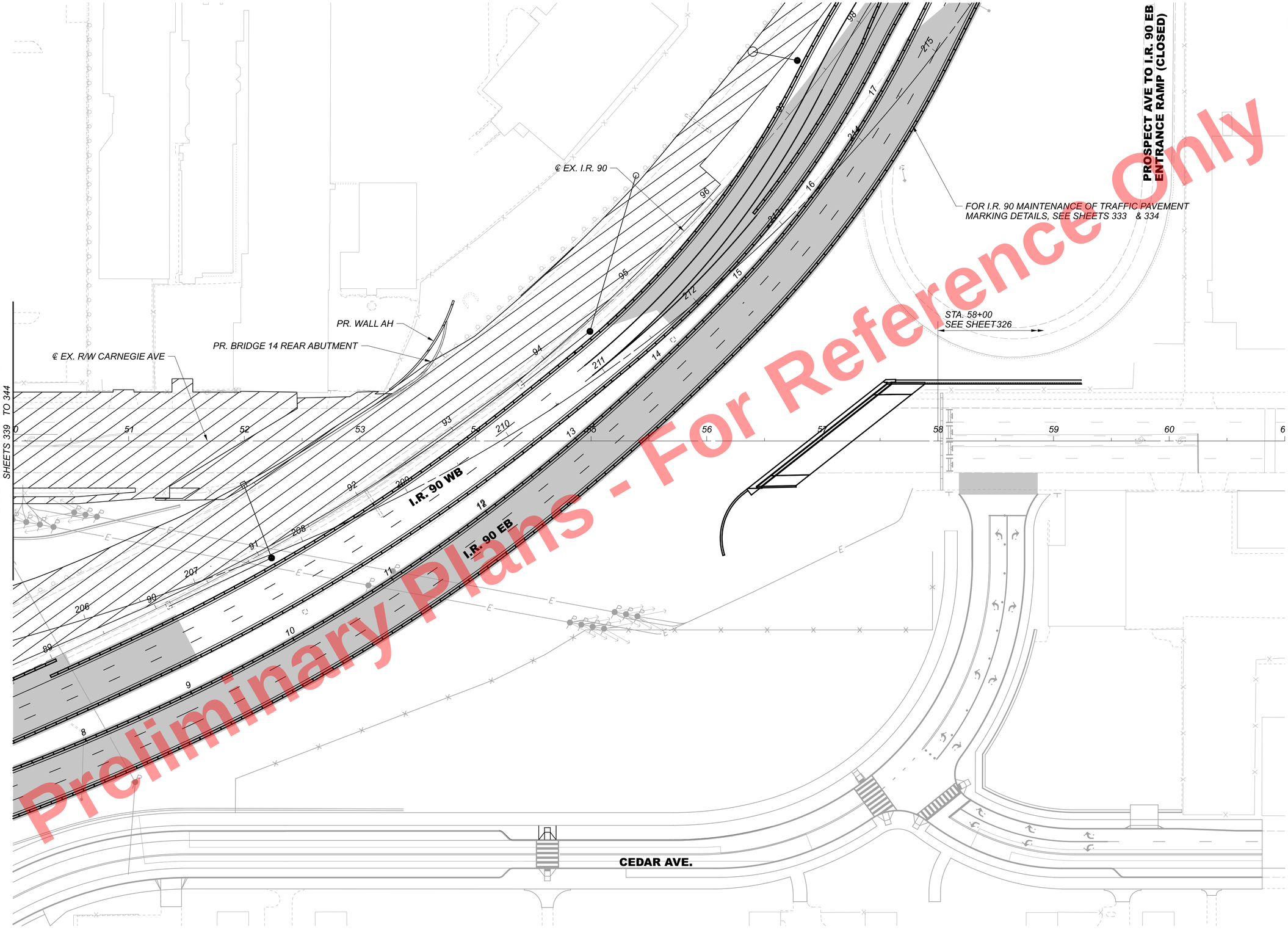

FOR MAINTENANCE OF TRAFFIC LEGEND SEE SHEET 328

HORIZONTAL SCALE IN FEET
0 20 40 80

MAINTENANCE OF TRAFFIC - PHASE 4
CARNEGIE AVE - STA. 50+00.00 TO STA. 61+00.00

DESIGN AGENCY
Michael Baker INTERNATIONAL

DESIGNER CRK
REVIEWER GSH 05/22/24
PROJECT ID 82382
SHEET 338 TOTAL 2696

CUY-90-16.28 (CCG3A)

MODEL: MP401? PAPERSIZE: 34x22 (In.) DATE: 3/27/2025 TIME: 8:57:00 PM USER: Collin.Kwiatt
pw:\\mb-us-pw.bentley.com:mb-us-pw-03\Documents\Cleveland_OH\01_Projects\DOT\District2\82382\400-Engineering\MOT\Sheets\82382_MP401?.dgn

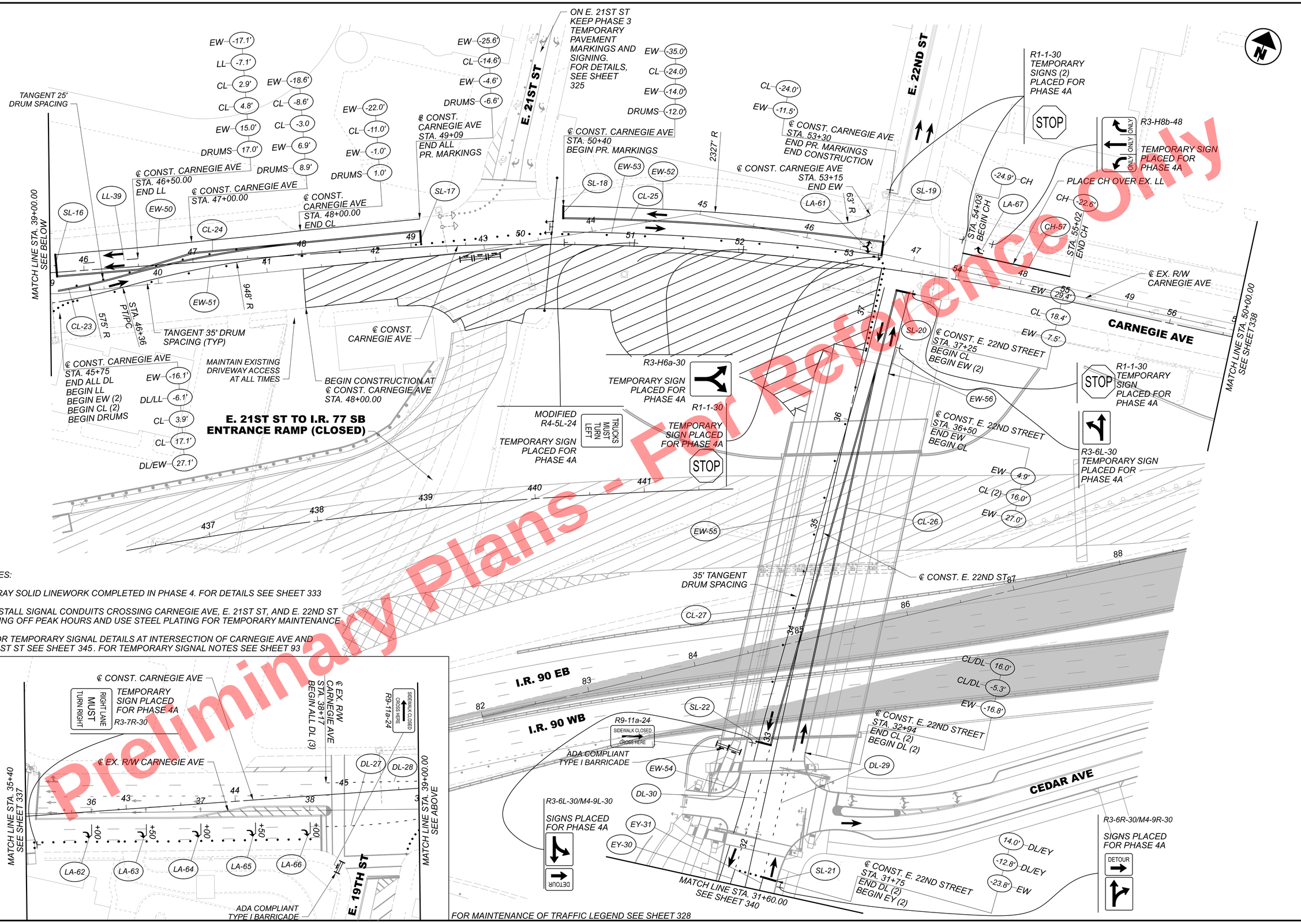

NOTES:

1. GRAY SOLID LINEWORK COMPLETED IN PHASE 4. FOR DETAILS SEE SHEET 333

2. INSTALL SIGNAL CONDUITS CROSSING CARNEGIE AVE, E. 21ST ST, AND E. 22ND ST DURING OFF PEAK HOURS AND USE STEEL PLATING FOR TEMPORARY MAINTENANCE.

3. FOR TEMPORARY SIGNAL DETAILS AT INTERSECTION OF CARNEGIE AVE AND E. 21ST ST SEE SHEET 345. FOR TEMPORARY SIGNAL NOTES SEE SHEET 93

FOR MAINTENANCE OF TRAFFIC LEGEND SEE SHEET 328

Preliminary Plans - Not For Reference Only

MAINTENANCE OF TRAFFIC - PHASE 4A
CARNEGIE AVE AT E. 21ST ST & E. 22ND ST

DESIGN AGENCY	Michael Baker INTERNATIONAL
DESIGNER	CRK
REVIEWER	GSH 05/22/24
PROJECT ID	82382
SHEET	339
TOTAL	2696

CUY-90-16.28 (CCG3A)

MODEL: MP410 PAPERSIZE: 34x22 (in.) DATE: 3/27/2025 TIME: 8:57:10 PM USER: CollinKwiatt
pw:\\mb-us-pw.bentley.commb-us-pw-03\Documents\Cleveland_OH\01_Projects\0DOT\District2\82382\400-Engineering\MOT\Sheets\82382_MP410i.dgn

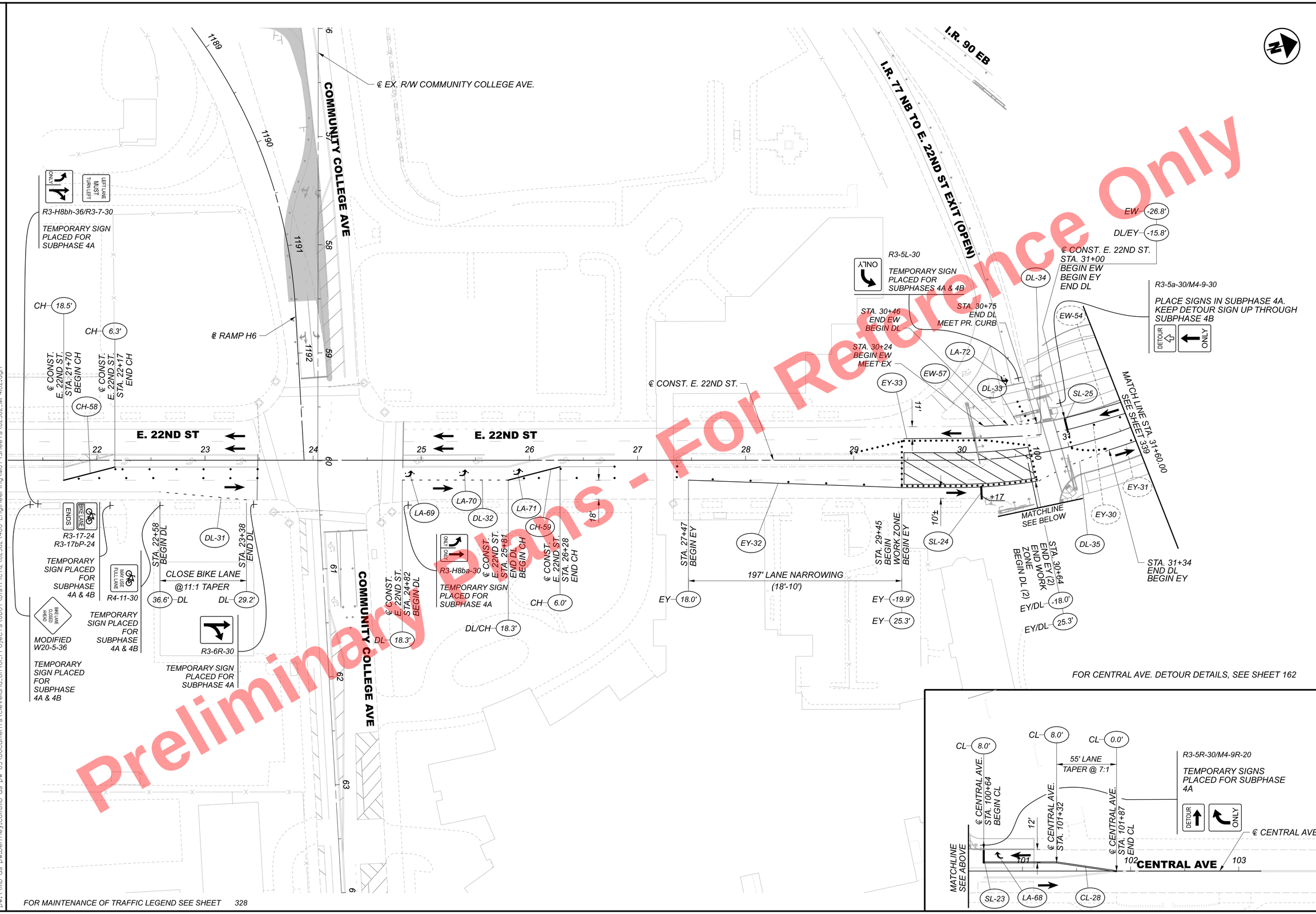

Preliminary Plans - For Reference Only

HORIZONTAL SCALE IN FEET 0 20 40 80

MAINTENANCE OF TRAFFIC - PHASE 4A
E. 22ND ST - STA. 21+50.00 TO STA. 31+60.00

DESIGN AGENCY: Michael Baker INTERNATIONAL

DESIGNER: CRK

REVIEWER: GSH 05/22/24

PROJECT ID: 82382

SHEET 340 TOTAL 2696

CUY-90-16.28 (CCG3A)

MODEL: 82382_MP4102 PAPERSIZE: 34x22 (in.) DATE: 3/27/2025 TIME: 8:57:19 PM USER: Collin.Kwiatt
pw:\\mb-us-pw.bentley.com:mb-us-pw-03\Documents\Cleveland_OH\OI_Projects\ODOT\District12\82382\400-Engineering\MOT\Sheets\82382_MP4102.dgn

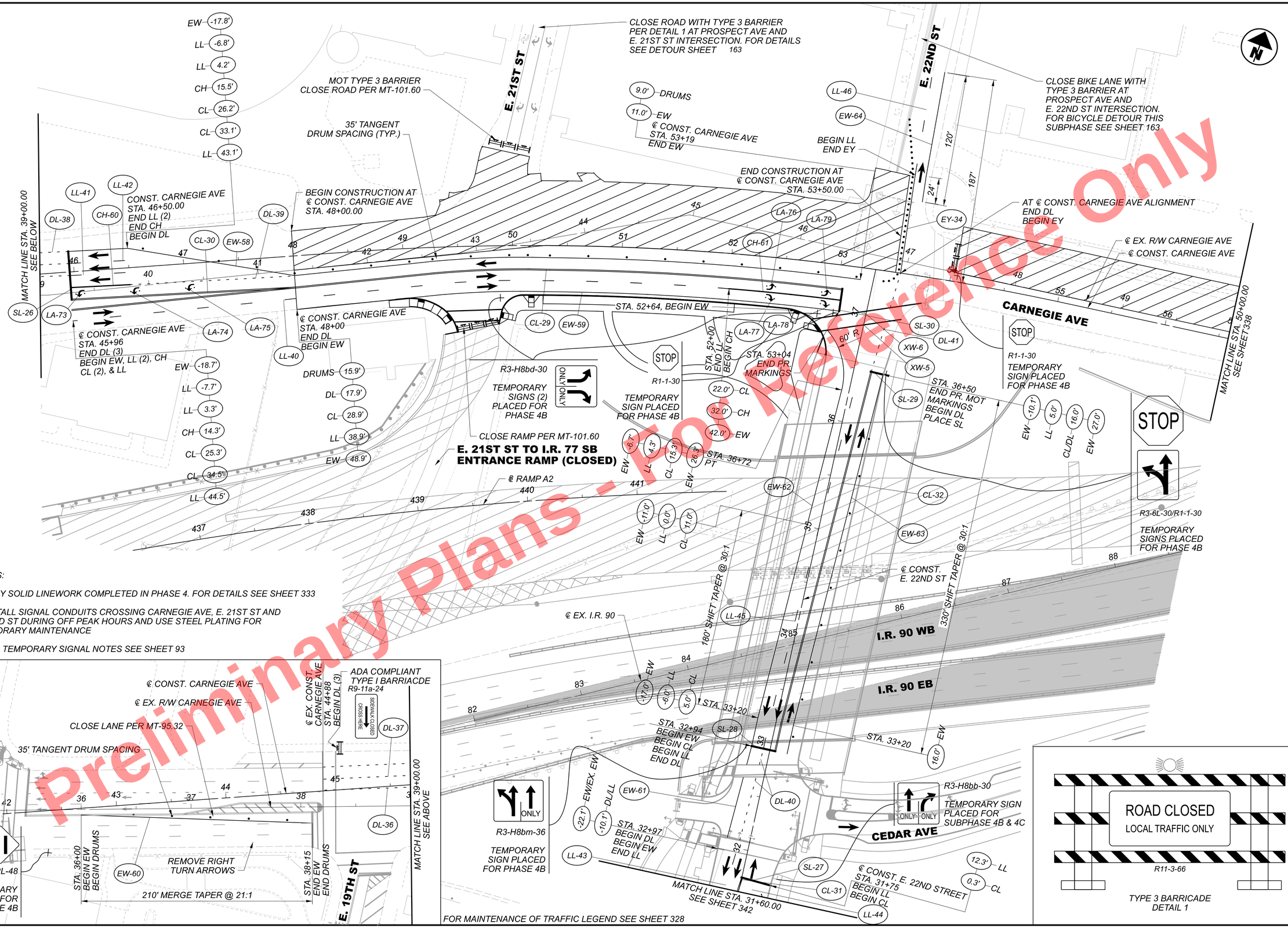

NOTES:

1. GRAY SOLID LINEWORK COMPLETED IN PHASE 4. FOR DETAILS SEE SHEET 333
2. INSTALL SIGNAL CONDUITS CROSSING CARNEGIE AVE, E. 21ST ST AND E. 22ND ST DURING OFF PEAK HOURS AND USE STEEL PLATING FOR TEMPORARY MAINTENANCE
3. FOR TEMPORARY SIGNAL NOTES SEE SHEET 93

Preliminary Plans - For Reference Only

HORIZONTAL SCALE IN FEET 0 20 40 80

MAINTENANCE OF TRAFFIC - PHASE 4B
CARNEGIE AVE AT E. 21ST ST & E. 22ND ST

DESIGN AGENCY: Michael Baker INTERNATIONAL

DESIGNER: CRK

REVIEWER: GSH 05/22/24

PROJECT ID: 82382

SHEET: 341 TOTAL: 2696

CUY-90-16.28 (CCG3A)

MODEL: MP4102 PAPERSIZE: 34x22 (in.) DATE: 3/27/2025 TIME: 8:57:30 PM USER: Collin.Kwiatt
pw:\\mb-us-pw.bentley.com:mb-us-pw-03\Documents\Cleveland_OH\OI_Projects\ODOT\District2\82382\400-Engineering\MOT\Sheets\82382_MP4201.dgn

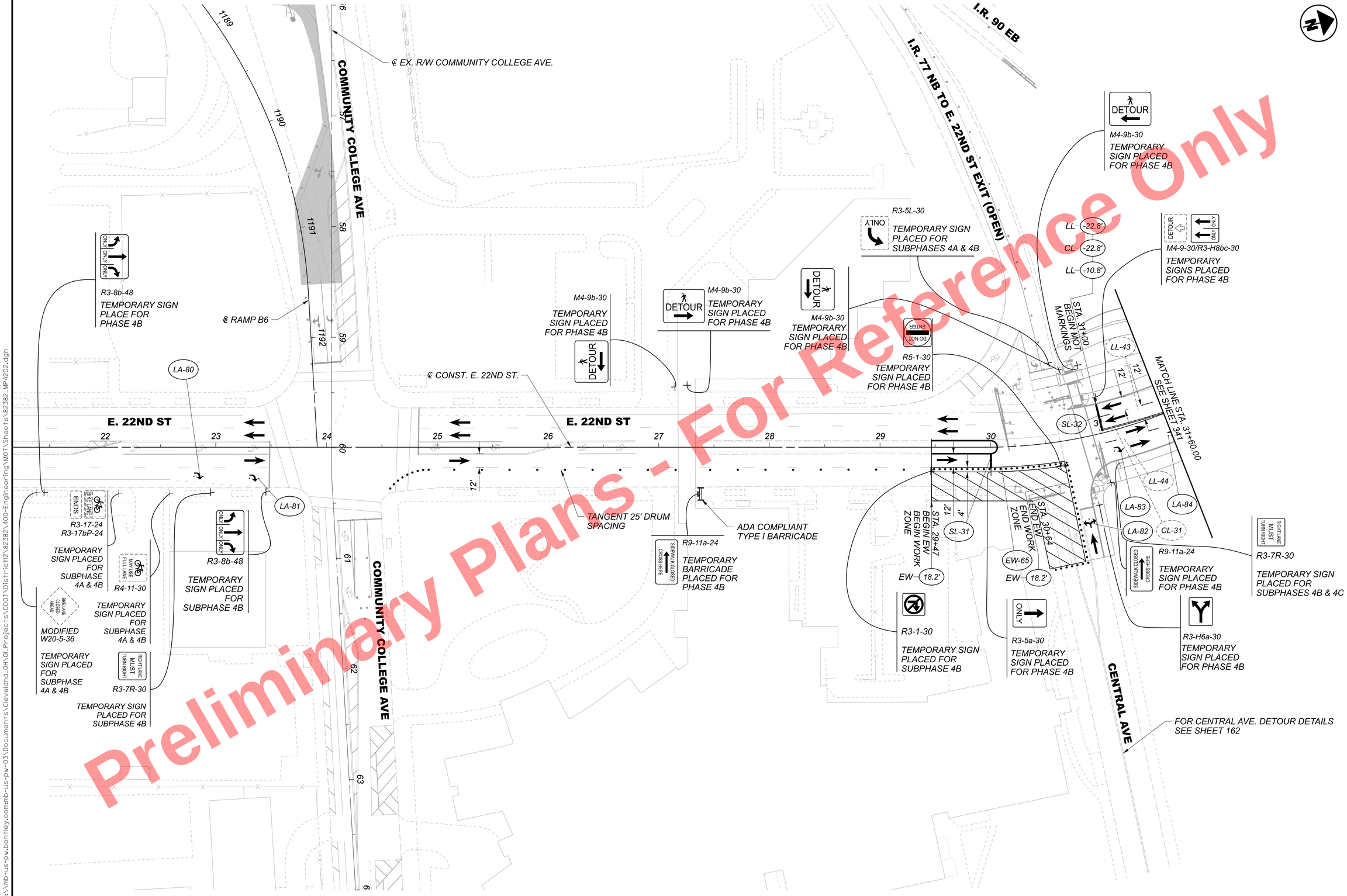

FOR MAINTENANCE OF TRAFFIC LEGEND SEE SHEET 328

Preliminary Plans - For Reference Only

HORIZONTAL SCALE IN FEET 0 20 40 80

MAINTENANCE OF TRAFFIC - PHASE 4B
E. 22ND ST. - STA. 21+50.00 TO STA. 31+60.00

DESIGN AGENCY: Michael Baker INTERNATIONAL

DESIGNER: CRK

REVIEWER: GSH 05/22/24

PROJECT ID: 82382

SHEET 342 TOTAL 2696

CUY-90-16.28 (CCG3A)

MODEL: 82382_MP4202 PAPERSIZE: 34x22 (in.) DATE: 3/27/2025 TIME: 8:57:40 PM USER: Collin.Kwiatt
pw:\\mb-us-pw.bentley.com:mb-us-pw-03\Documents\Cleveland_OH\OI_Projects\ODOT\District12\82382\400-Engineering\MOT\Sheets\82382_MP4202.dgn

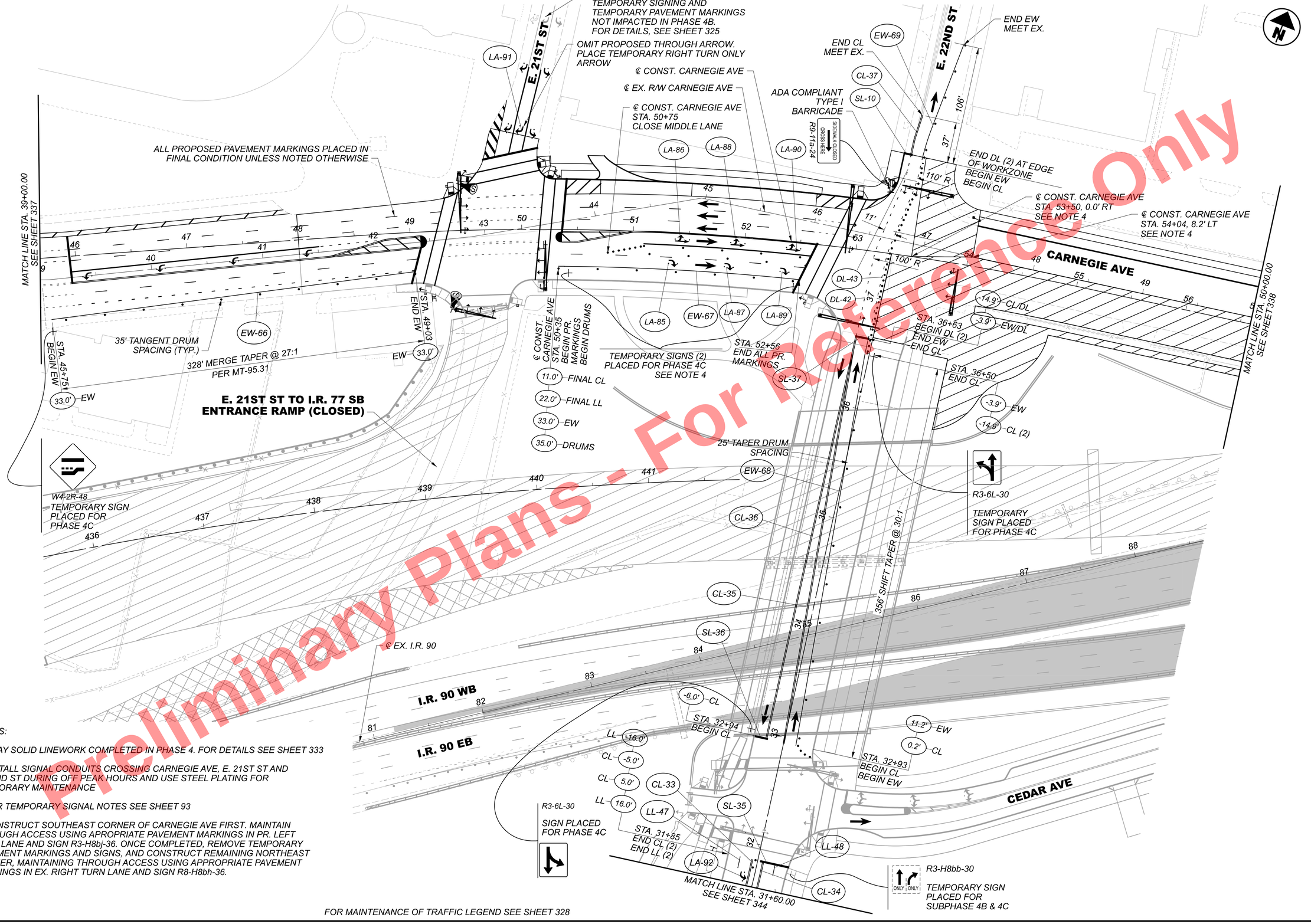

NOTES:

1. GRAY SOLID LINEWORK COMPLETED IN PHASE 4. FOR DETAILS SEE SHEET 333

2. INSTALL SIGNAL CONDUITS CROSSING CARNEGIE AVE, E. 21ST ST AND E. 22ND ST DURING OFF PEAK HOURS AND USE STEEL PLATING FOR TEMPORARY MAINTENANCE

3. FOR TEMPORARY SIGNAL NOTES SEE SHEET 93

4. CONSTRUCT SOUTHEAST CORNER OF CARNEGIE AVE FIRST. MAINTAIN THROUGH ACCESS USING APROPRIATE PAVEMENT MARKINGS IN PR. LEFT TURN LANE AND SIGN R3-H8bj-36. ONCE COMPLETED, REMOVE TEMPORARY PAVEMENT MARKINGS AND SIGNS, AND CONSTRUCT REMAINING NORTHEAST CORNER, MAINTAINING THROUGH ACCESS USING APPROPRIATE PAVEMENT MARKINGS IN EX. RIGHT TURN LANE AND SIGN R8-H8bh-36.

Preliminary Plans - For Reference Only

HORIZONTAL SCALE IN FEET
0 20 40 80

MAINTENANCE OF TRAFFIC - PHASE 4C
CARNEGIE AVE AT E. 21ST ST & E. 22ND ST

DESIGN AGENCY
Michael Baker INTERNATIONAL

DESIGNER CRK
REVIEWER GSH 05/22/24
PROJECT ID 82382
SHEET 343 TOTAL 2696

CUY-90-16.28 (CCG3A)

MODEL: MP4i03 PAPERSIZE: 34x22 (ln.) DATE: 3/27/2025 TIME: 8:57:50 PM USER: Collin.Kwiatt
pw:\\mb-us-pw.bentley.com:mb-us-pw-03\Documents\Cleveland_OH\01_Projects\000T\District2\82382\400-Engineering\MOT\Sheets\82382_MP430i.dgn

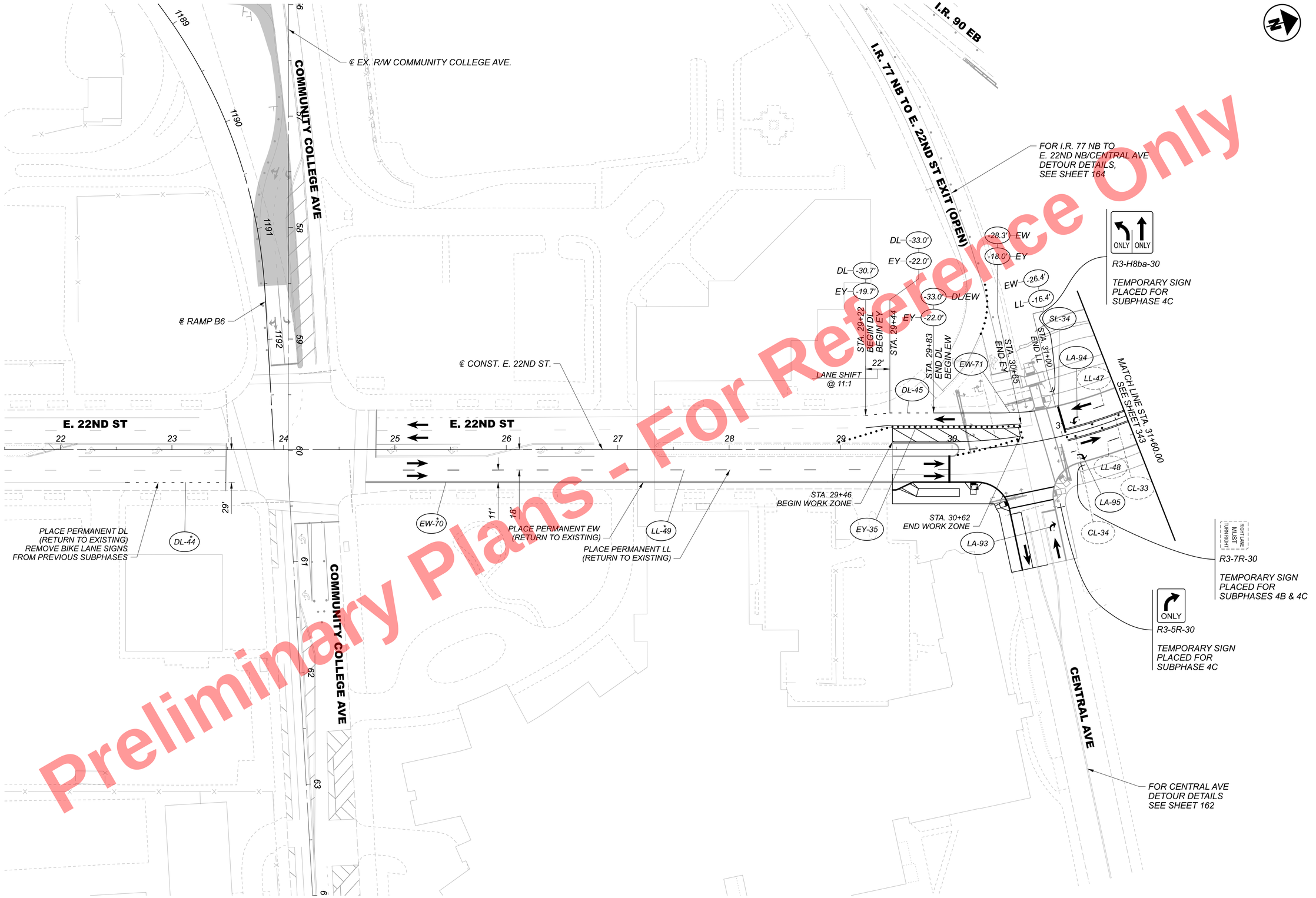

Preliminary Plans - For Reference Only

HORIZONTAL SCALE IN FEET
0 20 40 80

MAINTENANCE OF TRAFFIC - PHASE 4C
E. 22ND ST. - STA. 21+50.00 TO STA. 31+60.00

DESIGN AGENCY
Michael Baker INTERNATIONAL

DESIGNER CRK
REVIEWER GSH 05/22/24
PROJECT ID 82382
SHEET 344 TOTAL 2696

CUY-90-16.28 (CCG3A)

MODEL: 82382_MP4302 PAPERSIZE: 34x22 (in.) DATE: 3/27/2025 TIME: 8:58:02 PM USER: Collin.kwiatt
pw:\\mb-us-pw.bentley.com:mb-us-pw-03\Documents\Cleveland.OH\Oil_Projects\ODOT\District2\82382\400-Engineering\MOT\Sheets\82382_MP4302.dgn

PROPOSED SIGNALS

VEHICULAR SIGNAL HEADS
(12" LENS, LED, YELLOW,
W/ REFLECTIVE BACKPLATES)

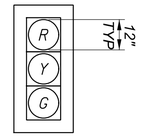

2A, 2B

PROPOSED SIGNS



R3-2-36

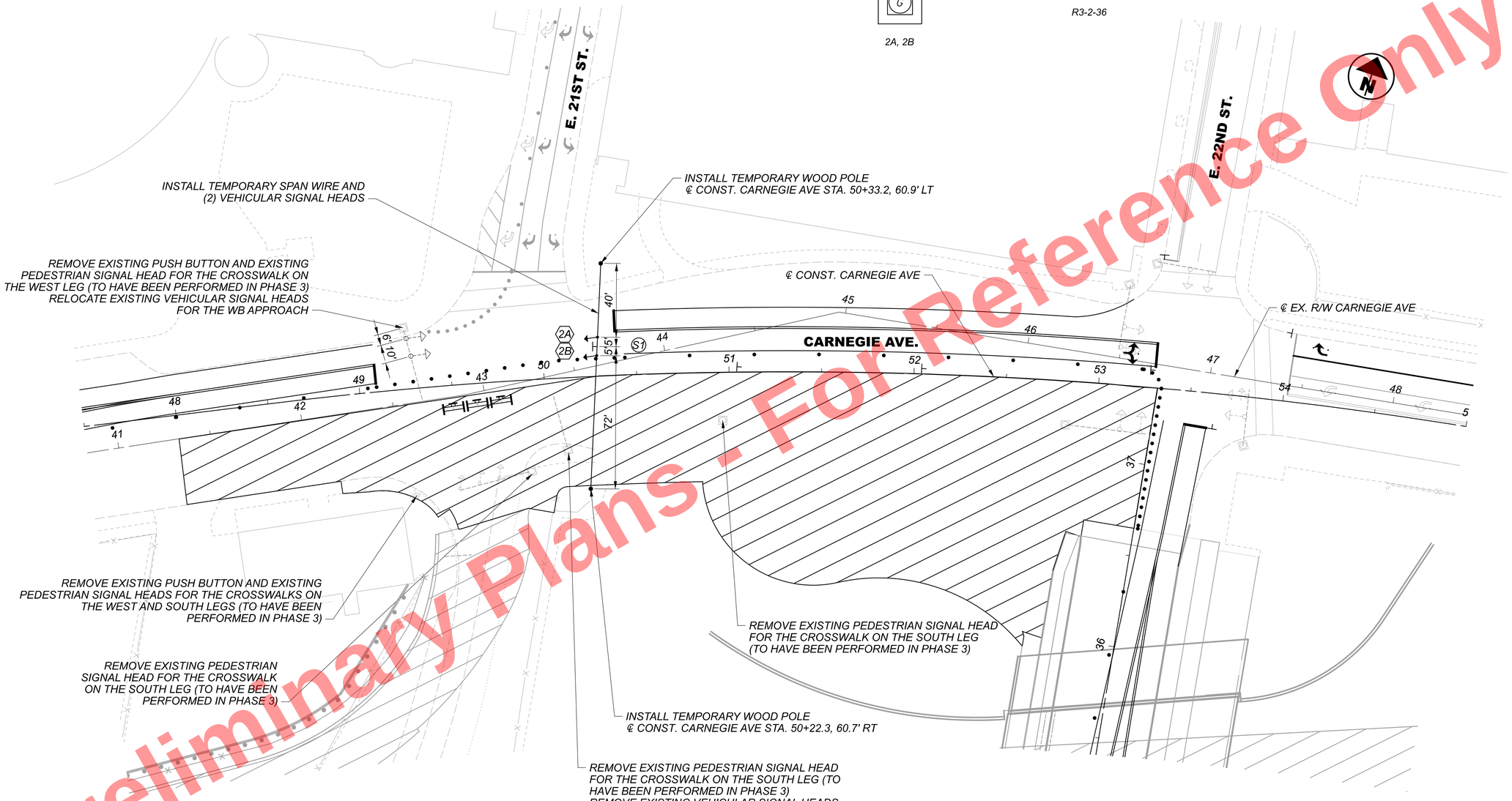

NOTES:

1. FOR TEMPORARY SIGNAL NOTES SEE SHEET 93.
2. CONTRACTOR SHALL DETERMINE CABLE ROUTING FOR ALL TEMPORARY VEHICULAR AND PEDESTRIAN SIGNAL HEADS IN THE FIELD USING EXISTING CONDUIT AND/OR OVERHEAD ATTACHMENTS AS DEEMED NECESSARY.
3. CONTRACTOR SHALL MAINTAIN ALL EXISTING SIGNAL TIMING PARAMETERS AS CURRENTLY PROGRAMMED UNLESS OTHERWISE NOTED OR DIRECTED BY THE CITY OF CLEVELAND.

Preliminary Plans - For Reference Only

HORIZONTAL SCALE IN FEET
0 15 20 60

MAINTENANCE OF TRAFFIC - PHASE 4A
CARNEGIE AVE. & E. 21ST ST. TEMPORARY SIGNAL

CUY-90-16.28 (CCG3A)

MODEL: CL_CARNEGIE AVE. - Plan (1) PAPERSIZE: 34x22 (in.) DATE: 3/27/2025 TIME: 8:58:13 PM USER: Collin.Kwiatt
pw:\\vmb-us-pw.bentley.com:vmb-us-pw-03\Documents\Cleveland_OH_OL_Projects\ODOT_District2\82382\400-Engineering\MOT\Sheets\82382_MP440l.dgn

DESIGN AGENCY
Michael Baker INTERNATIONAL

DESIGNER CRK
REVIEWER GSH 05/22/24
PROJECT ID 82382
SHEET 345 TOTAL 2696

LEGEND

AREA OF CONSTRUCTION TO BE COMPLETED BY END OF PHASE

TEMPORARY PAVEMENT CONSTRUCTED THIS PHASE

EXISTING BRIDGE OR TEMPORARY PAVEMENT REMOVAL COMPLETED BY END OF PHASE

DETAILS LOCATED IN PRIOR PHASE

I.R. 90
ONTARIO ST
E. 9TH ST
E. 14TH ST
E. 18TH ST
E. 21ST ST
E. 22ND ST
E. 30TH ST
BROADWAY AVE
COMMUNITY COLLEGE AVE
CENTRAL AVE
CEDAR AVE
CARNEGIE AVE
PROSPECT AVE
EUCLID AVE
CHESTER AVE
PAYNE AVE
I.R. 77

SHEET 347
SHEET 348
SHEET 349
SHEET 350
SHEET 351
SHEET 352
SHEET 353
SHEET 354
SHEET 355
SHEET 356
SHEET 357

SEE PHASE 3 SHEET 318
SEE PHASE 2 SHEET 301
SEE PHASE 2 SHEET 297
SEE PHASE 2 SHEET 296
SEE PHASE 2 SHEET 295
SEE PHASE 4 SHEET 336

Preliminary Plans - For Reference Only

HORIZONTAL SCALE IN FEET
0 150 300 600

MAINTENANCE OF TRAFFIC - PHASE 5 SHEET PLAN KEY

CUY-90-16.28 (CCG3A)

MODEL: Sheet PAPERSIZE: 34x22 (in.) DATE: 3/27/2025 TIME: 8:58:23 PM USER: CollinsKwiatt
pw:\\mb-us-pw.bentley.com:mb-us-pw-03\Documents\Cleveland_OHIO_Projects\ODOT\District2\82382\400-Engineering\MOT\Sheets\82382_MB5000.dgn

DESIGN AGENCY
Michael Baker INTERNATIONAL

DESIGNER CRK
REVIEWER GSH 05/22/24
PROJECT ID 82382
SHEET 346 TOTAL 2696

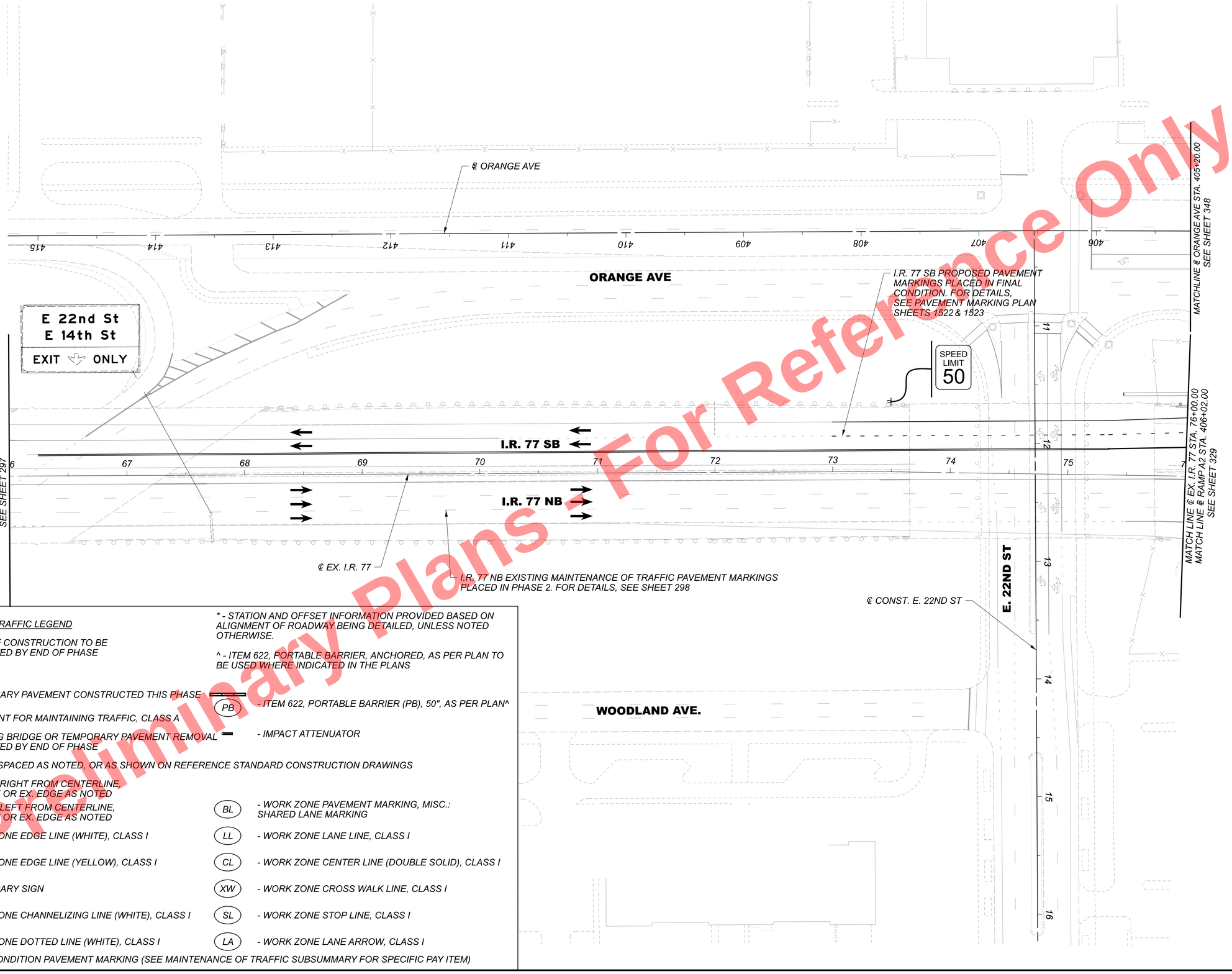

MAINTENANCE OF TRAFFIC LEGEND

- *AREA OF CONSTRUCTION TO BE COMPLETED BY END OF PHASE*
- *TEMPORARY PAVEMENT CONSTRUCTED THIS PHASE*
- *PAVEMENT FOR MAINTAINING TRAFFIC, CLASS A*
- *EXISTING BRIDGE OR TEMPORARY PAVEMENT REMOVAL COMPLETED BY END OF PHASE*
- • • • *DRUMS SPACED AS NOTED, OR AS SHOWN ON REFERENCE STANDARD CONSTRUCTION DRAWINGS*
- (17.5') *OFFSET RIGHT FROM CENTERLINE, BASELINE OR EX. EDGE AS NOTED*
- (-17.5') *OFFSET LEFT FROM CENTERLINE, BASELINE OR EX. EDGE AS NOTED*
- (EW) *WORK ZONE EDGE LINE (WHITE), CLASS I*
- (EY) *WORK ZONE EDGE LINE (YELLOW), CLASS I*
- (MS) *TEMPORARY SIGN*
- (CH) *WORK ZONE CHANNELIZING LINE (WHITE), CLASS I*
- (DL) *WORK ZONE DOTTED LINE (WHITE), CLASS I*
- (*) *FINAL CONDITION PAVEMENT MARKING (SEE MAINTENANCE OF TRAFFIC SUBSUMMARY FOR SPECIFIC PAY ITEM)*
- (PB) *ITEM 622, PORTABLE BARRIER (PB), 50", AS PER PLAN^*
- *IMPACT ATTENUATOR*
- (BL) *WORK ZONE PAVEMENT MARKING, MISC.: SHARED LANE MARKING*
- (LL) *WORK ZONE LANE LINE, CLASS I*
- (CL) *WORK ZONE CENTER LINE (DOUBLE SOLID), CLASS I*
- (XW) *WORK ZONE CROSS WALK LINE, CLASS I*
- (SL) *WORK ZONE STOP LINE, CLASS I*
- (LA) *WORK ZONE LANE ARROW, CLASS I*

* - *STATION AND OFFSET INFORMATION PROVIDED BASED ON ALIGNMENT OF ROADWAY BEING DETAILED, UNLESS NOTED OTHERWISE.*

^ - *ITEM 622, PORTABLE BARRIER, ANCHORED, AS PER PLAN TO BE USED WHERE INDICATED IN THE PLANS*

For Preliminary Plans Not For Reference Only

HORIZONTAL SCALE IN FEET
0 20 40 80

MAINTENANCE OF TRAFFIC - PHASE 5
I.R. 77 STA. 66+00.00 TO STA. 76+00.00

DESIGN AGENCY
Michael Baker INTERNATIONAL

DESIGNER CRK
REVIEWER GSH 05/22/24
PROJECT ID 82382
SHEET 347 TOTAL 2696

CUY-90-16.28 (CCG3A)

MODEL: MP5004 PAPERSIZE: 34x22 (In.) DATE: 3/27/2025 TIME: 8:58:37 PM USER: Collin.Kwiat
pw:\\mb-us-pw.bentley.com:mb-us-pw-03\Documents\Cleveland.OH\01_Projects\0007\District2\82382\400-Engineering\MOT\Sheets\82382_MP5004.dgn

NOTES:

1. ALL EXISTING LANES OPEN AND EXISTING PAVEMENT MARKINGS UTILIZED ON THIS SHEET UNLESS NOTED OTHERWISE.

MATCH LINE ℄ ORANGE AVE STA. 405+20.00
SEE SHEET 347

MATCH LINE ℄ I.R. 77 STA. 76+00.00
MATCH LINE ℄ RAMP A2 STA. 406+02.00
SEE SHEET 328

℄ ORANGE AVE

ORANGE AVE.

℄ EX. ONTARIO ST

MATCHLINE ℄ EX. ONTARIO ST STA. 15+50.00
SEE SHEET 318

E. 14TH ST.

PLACE RAMP A2 PROPOSED PAVEMENT MARKINGS IN FINAL CONDITION. FOR DETAILS SEE PAVEMENT MARKING PLAN SHEETS 1523 TO 1526

I.R. 77 NB TO E. 22ND ST EXIT RAMP, RAMP IH6 (OPEN)

I.R. 77 NB TO E. 14TH ST NB EXIT RAMP, RAMP IH4 (OPEN)

I.R. 77 NB TO I.R. 90 EB RAMP (OPEN)

I.R. 90 WB TO I.R. 77 SB RAMP (OPEN)

"LEFT" COVERED WITH GREEN OVERLAY

MS-39

MS-38

"1/4 MILE" TO REMAIN COVERED FROM PHASE 2

℄ RAMP IH6

℄ INTERIM E. 14TH ST SB

℄ RAMP A2
STA. 416+85
57.1' RT
BEGIN REMOVAL OF
EX. PAVEMENT

MATCHLINE
SEE SHEET
350

MATCHLINE ℄ RAMP IH6 STA. 1274+00.00
SEE SHEET 301

MATCHLINE ℄ INTERIM E. 14TH ST SB
SEE SHEET 301

MATCHLINE
SEE SHEET 350

FOR MAINTENANCE OF TRAFFIC LEGEND SEE SHEET 347

Preliminary Plans - For Reference Only

HORIZONTAL SCALE IN FEET
0 20 40 80

MAINTENANCE OF TRAFFIC - PHASE 5
I.R. 77 - STA. 76+00.00 TO END

DESIGN AGENCY
Michael Baker INTERNATIONAL

DESIGNER CRK
REVIEWER GSH 05/22/24
PROJECT ID 82382
SHEET 348 TOTAL 2696

CUY-90-16.28 (CCG3A)

MODEL: MP5005 PAPERSIZE: 34x22 (in.) DATE: 3/27/2025 TIME: 8:58:47 PM USER: Collin.Kwiatt
pw:\\mb-us-pw.bentley.com:mb-us-pw-03\Documents\Cleveland_OH\DL_Projects\DOT\District2\82382\400-Engineering\MOT\Sheets\82382_MP5005.dgn

NOTES:

1. ALL EXISTING LANES OPEN AND EXISTING PAVEMENT MARKINGS UTILIZED ON THIS SHEET UNLESS NOTED OTHERWISE

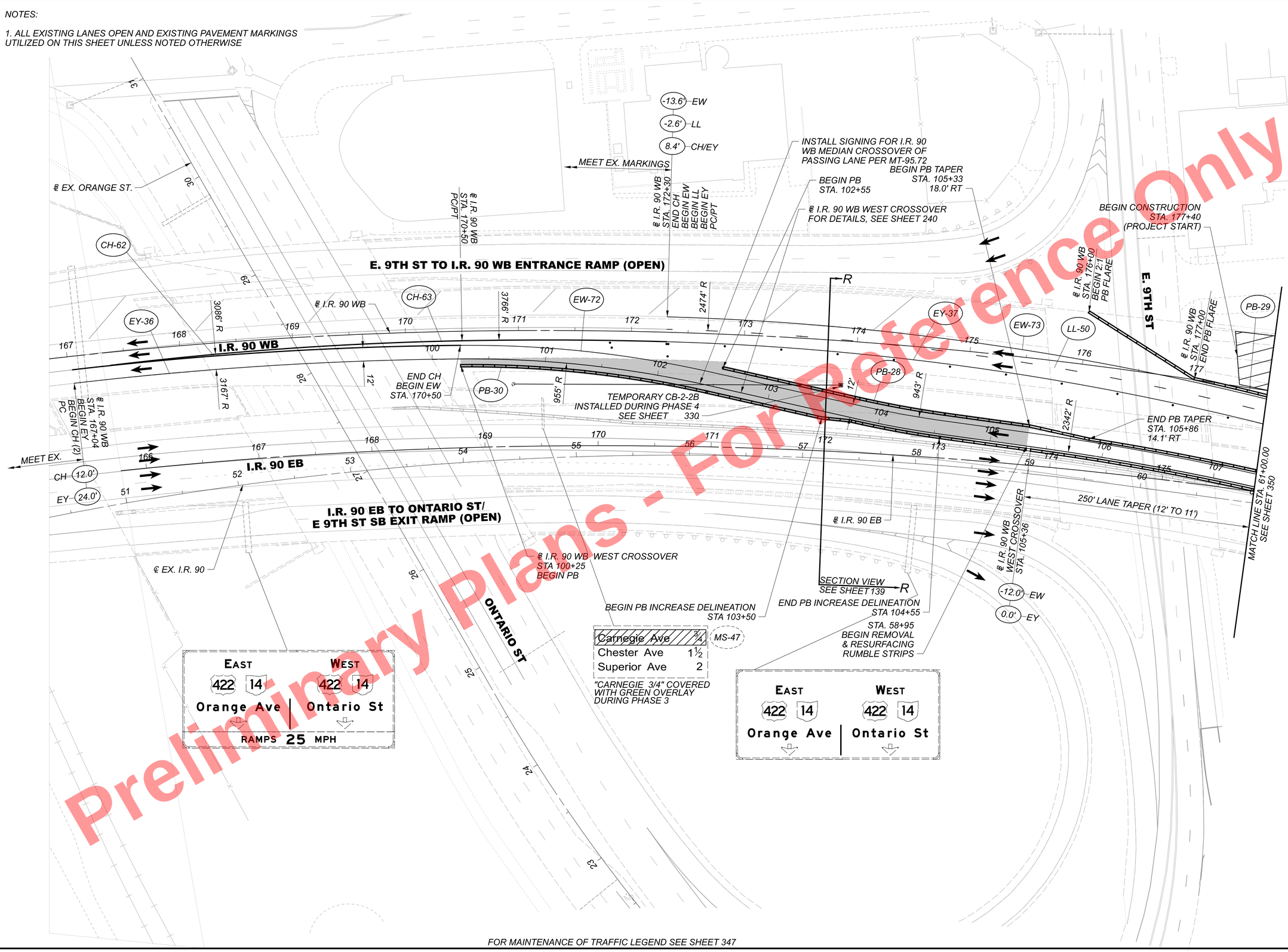

Preliminary Plans - For Reference Only

FOR MAINTENANCE OF TRAFFIC LEGEND SEE SHEET 347

HORIZONTAL SCALE IN FEET
0 20 40 80

MAINTENANCE OF TRAFFIC - PHASE 5
I.R. 90 - STA. BEGIN TO STA. 61+00.00

DESIGN AGENCY
Michael Baker INTERNATIONAL

DESIGNER CRK
REVIEWER GSH 05/22/24
PROJECT ID 82382
SHEET 349 TOTAL 2696

CUY-90-16.28 (CCG3A)

MODEL: MP5008 PAPERSIZE: 34x22 (In.) DATE: 3/27/2025 TIME: 8:58:58 PM USER: CollinKwiatt
pw:\\vmb-us-pw.bentley.commb-us-pw-03\Documents\Cleveland_OHIO\Projects\ODOT\District2\82382\400-Engineering\MOT\Sheets\82382_MP5008.dgn

NOTES:

1. ALL EXISTING LANES OPEN AND EXISTING PAVEMENT MARKINGS UTILIZED ON THIS SHEET UNLESS NOTED OTHERWISE.

2. FOR MAINTENANCE OF TRAFFIC LEGEND SEE SHEET 347

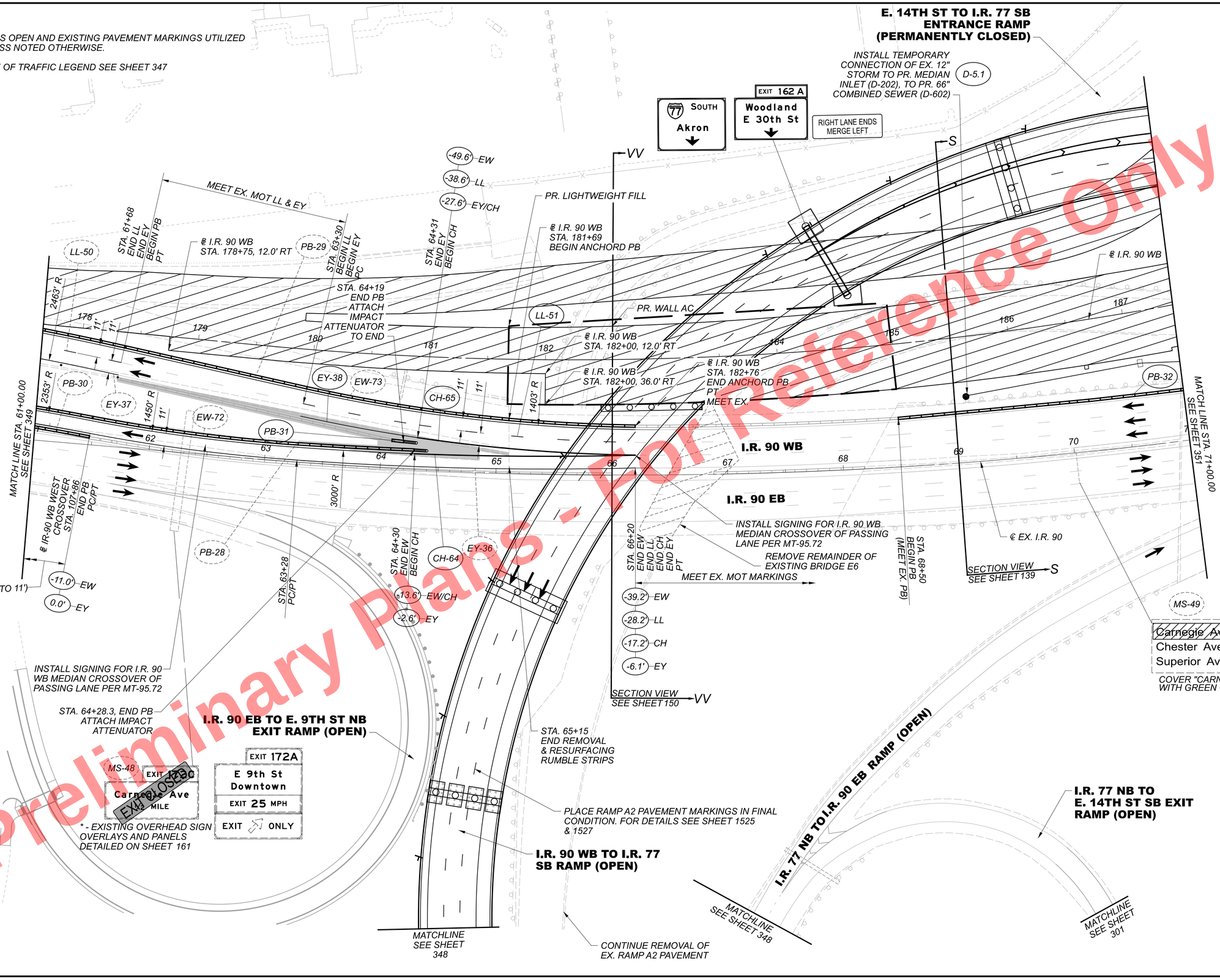

Preliminary Plans - For Reference Only

HORIZONTAL SCALE IN FEET
0 20 40 80

MAINTENANCE OF TRAFFIC - PHASE 5
I.R. 90 - STA. 61+00.00 TO STA. 71+00.00

DESIGN AGENCY	Michael Baker INTERNATIONAL
DESIGNER	CRK
REVIEWER	GSH 05/22/24
PROJECT ID	82382
SHEET	350
TOTAL	2696

CUY-90-16.28 (CCG3A)

MODEL: MP5009 PAPERSIZE: 34x22 (in.) DATE: 3/27/2025 TIME: 8:59:10 PM USER: Collin.Kwiatt
pw:\\vmb-us-pw.bentley.com:vmb-us-pw-03\Documents\Cleveland_OH\01_Projects\ODOT\District 12\82382\400-Engineering\MOT\Sheets\82382_MP5009.dgn

Preliminary Plans - Not For Reference Only

E. 14TH ST TO I.R. 77 SB ENTRANCE RAMP (PERMANENTLY CLOSED)

@ E. 14TH ST SB

E. 14TH ST NB

E. 18TH ST

CENTRAL AVE

E. 19TH ST

PLACE RAMP A1 AND RAMP A2 PAVEMENT MARKINGS IN FINAL CONDITION. FOR DETAILS SEE PAVEMENT MARKING PLAN SHEETS 1527 , 1514 & 1515

EXIT 170 B — SOUTH — Columbus 1½ MILES — WEST — EXIT 172A — SOUTH — Akron — EXIT ONLY

REMOVE EXIT 172A SIGN

298' OF ANCHORED PB

E. 21ST ST TO I.R. 77 SB ENTRANCE RAMP (OPEN)

I.R. 90 WB TO I.R. 77 SB RAMP (OPEN)

STA. 70+98

STA. 36+55 END EY (MEET EX. EY) BEGIN PB INCREASED DELINEATION

STA. 37+00 END PB

PB-36

PR. BRIDGE 10

STA. 73+96

STA. 193+58 BEGIN PB BEGIN WORK ZONE EGRESS

ATTACH IMPACT ATTENUATOR TO END

PB-35

@ E. 14 ST. SB STA. 209+31 BK STA. 36+35 AH

EY-40

STA. 208+50 TOE OF BARRIER @ 1.0' OFFSET

STA. 209+00 BEGIN 9:1 PB FLARE

@ I.R. 90 WB

-41.2' EW

-29.2' CH

-17.2' CH

INSTALL TEMP. CONNECTION OF EX. 12" STORM TO PR MEDIAN INLET (D-202), TO PR. 66" COMBINED SEWER (D-602)

REMOVE EXISTING BRIDGE E7. FOR DETAILS, SEE SHEET 2044

PR. LIGHTWEIGHT FILL INSTALLED IN PHASE 4

COVER EX. LL WITH CH

TEMPORARY PAVEMENT FOR CROSSOVER. FOR DETAILS SEE SHEET 234

STA. 79+37 BEGIN PB INCREASED DELINEATION PC

TEMPORARY CB-2-2B INSTALLED DURING PHASE 3. SEE SHEET 321

D-5.1

EX. EW

DL/EY

11.0'

0.0'

STA. 208+20 END DL

PB-32

-42.4' PB

-43.4' PB

@ I.R. 90 WB EAST CROSSOVER

360' LANE WIDENING (EX. TO 12.5')

STA. 72+97 BEGIN EW BEGIN CH (2) (MEET EX. MARKINGS)

EW-74

STA. 75+00

STA. 75+50

STA. 75+80

PB-34

CH-66

EY-39

EW-75

PB-33

1435' R

I.R. 90 WB

I.R. 90 EB

MATCH LINE STA. 71+00.00 SEE SHEET 350

100' LANE TAPER @ 100:1

STA. 207+70, 11.0' RT

BEGIN PB INCREASED DELINEATION

1469' R

END PB INCREASED DELINEATION STA. 79+44

MATCH LINE STA. 81+00.00 SEE SHEET 352

CH/DL

EY

1.0'

12.0'

STA. 207+20 BEGIN DL END CH PT

DL-46

207

51' R

STA. 207+70 BEGIN PB W/ INCREASED DELINEATION

REMOVE TEMPORARY PAVEMENT AS NECESSARY TO REMOVE EXISTING BRIDGE PIERS. AND CONSTRUCT BRIDGE 10 PIER AND BRIDGE 11 PIER LEFT TWO (NORTHERN) FOOTINGS AND COLUMNS

STA. 75+97 BEGIN CH PC

CH-67

CH-68

STA. 77+84 END CH (2) BEGIN EY BEGIN EW BEGIN PB (2)

@ EX. I.R. 90

I.R. 77 NB TO E. 22ND ST EXIT RAMP (OPEN)

I.R. 77 NB TO I.R. 90 EB RAMP (OPEN)

CH-69

STA. 206+56 BEGIN CH

206

@ TEMPORARY CROSSOVER COMMUNITY COLLEGE AVE STA. 12+72 BEGIN EY

-16.8' CH

CH/EW

-17.3

SECTION VIEW SEE SHEET 139

MS-50

EXIT 173A

EXIT CLOSED

EAST — 90 — MILE

EXIT 173B — TO Carnegie Ave — Chester Ave — ¾ MILE

MS-51

MS-43

* - EXISTING OVERHEAD SIGN OVERLAYS AND PANELS DETAILED ON SHEET 161

@ TEMPORARY CROSSOVER COMMUNITY COLLEGE AVE TO E. 14TH ST. FOR DETAILS SEE SHEET 185

@ INTERIM E. 14TH ST SB

E. 14TH ST SB

E. 14TH ST NB

205

204

MATCHLINE @ INTERIM E. 14TH ST SB STA. 203+50.00 SEE SHEET 301

MATCHLINE @ EX. COMMUNITY COLLEGE AVE SEE SHEET 301

NOTES:

1. ALL EXISTING LANES OPEN AND EXISTING PAVEMENT MARKINGS UTILIZED ON THIS SHEET UNLESS NOTED OTHERWISE.

2. FOR EXISTING MAINTENANCE OF TRAFFIC PAVEMENT MARKINGS ON THIS SHEET, SEE SHEET 332

FOR MAINTENANCE OF TRAFFIC LEGEND SEE SHEET 347

HORIZONTAL SCALE IN FEET 0 20 40 80

MAINTENANCE OF TRAFFIC - PHASE 5
I.R. 90 - STA. 71+00.00 TO STA. 81+00.00

CUY-90-16.28 (CCG3A)

DESIGN AGENCY
Michael Baker INTERNATIONAL

DESIGNER CRK
REVIEWER GSH 05/22/24
PROJECT ID 82382
SHEET 351 TOTAL 2696

MODEL: MP5010 PAPERSIZE: 34x22 (in.) DATE: 3/27/2025 TIME: 8:59:20 PM USER: CollinKWiatt
pw:\\mb-us-pw.bentley.com\mb-us-pw-03\Documents\Cleveland_OHIO\Projects\0DOT\District2\82382\400-Engineering\MOT\Sheets\82382_MP5010.dgn

E. 21ST ST. TO I.R. 77 SB ENTRANCE RAMP (OPEN)

RAMP A1 AND RAMP A2 PAVEMENT MARKINGS PLACED IN FINAL CONDITION UNLESS NOTED OTHERWISE. FOR DETAILS SEE SHEET 1520

℄ I.R. 90 WB STA. 198+78 BEGIN EW (MEET PROPOSED FINAL CONDITION CH)

STA. 201+14 BEGIN EW MEET PR. MARKINGS

END PCB "Y" CONNECTOR SEGMENT W/ IMPACT ATTENUATOR

STA. 198+00 END WORK ZONE EGRESS

I.R. 90 WB TO I.R. 77 SB RAMP (OPEN)

℄ I.R. 90 WB STA. 199+33 BEGIN 14:1 PB FLARE

I.R. 90 WB

TEMPORARY CB-2-2B INSTALLED DURING PHASE 3. SEE SHEET 322

℄ EX. I.R. 90 STA. 84+01 END PB

END PB W/ INCREASED DELINEATION 134' LT

℄ I.R. 90 WB EAST CROSSOVER FOR DETAILS SEE SHEET 234

I.R. 90 EB

MATCH LINE STA. 81+00.00 SEE SHEET 351

PLACE PB TOE OF BARRIER AT 2' OFFSET FROM EW

PLACE EW OVER MOT LL IN PHASE 4

MAINTAIN EX. CB

EXIT 172 A SOUTH 77 Akron NEXT EXIT

SPEED LIMIT 50

REMOVE TEMPORARY SIGN INSTALLED IN PHASE 4

I.R. 77 NB TO E. 22ND ST EXIT RAMP (OPEN)

℄ CONST. E. 22ND ST

E. 22ND ST

CENTRAL AVE

SECTION VIEW SEE SHEET140

FOR EXISTING I.R. 90 EB PAVEMENT MARKINGS SEE PHASE 4 SHEET 333

℄ I.R. 90 TEMPORARY RUNAROUND

E. 22ND ST AND CENTRAL AVE PAVEMENT MARKINGS PLACED IN FINAL CONDITION FOR DETAILS SEE PAVEMENT MARKING PLAN SHEETS 1554 - 1556

CARNEGIE AVE. PAVEMENT MARKINGS PLACED IN FINAL CONDITION. FOR DETAILS SEE SHEET 1546

GREEN OVERLAY AND "EXIT/DIAGONAL" ARROW OVERLAY TO REMAIN

℄ CONST. CARNEGIE AVE

EXIT 172 A SOUTH 77 Akron EXIT

RELOCATE PR. SIGN TO FINAL LOCATION DURING THIS PHASE

CARNEGIE AVE

380' LANE TAPER (12.5' TO 11.0')

179' MERGE TAPER @ 16:1

INSTALL SIGNING FOR I.R. 90 WB TEMPORARY CROSSOVER SHIFT PER MT-95.72

℄ I.R. 90 WB STA. 203+29 END CH(2) BEGIN DL

℄ I.R. 90 WB STA. 205+08 END DL END CH BGIN LL

℄ I.R. 90 WB STA. 206+38 PC/PT

STA. 85+55 BEGIN WORK ZONE EGRESS PER MT-103.10

℄ EX. I.R. 90

EW-75 ATTACH IMPACT ATTENUATOR TO END

MATCH LINE STA. 91+00.00 SEE SHEET 353

CEDAR AVE

FOR MAINTENANCE OF TRAFFIC LEGEND SEE SHEET 347

Preliminary Plans - For Reference Only

HORIZONTAL SCALE IN FEET 0 20 40 80

MAINTENANCE OF TRAFFIC - PHASE 5
I.R. 90 - STA. 81+00.00 TO STA. 91+00.00

DESIGN AGENCY
Michael Baker INTERNATIONAL

DESIGNER CRK
REVIEWER GSH 05/22/24
PROJECT ID 82382
SHEET 352 TOTAL 2696

CUY-90-16.28 (CCG3A)

MODEL: MP50ll PAPERSIZE: 34x22 (in.) DATE: 3/27/2025 TIME: 8:59:34 PM USER: Collin.Kwiatt
pw:\\mb-us-pw.bentley.com:mb-us-pw-03\Documents\Cleveland_OH\OI_Projects\ODOT\District2\82382\400-Engineering\MOT\Sheets\82382_MP50ll.dgn

Preliminary Plans - For Reference Only

HORIZONTAL SCALE IN FEET
0 20 40 80

MAINTENANCE OF TRAFFIC - PHASE 5
I.R. 90 - STA. 91+00.00 TO STA. 101+00.00

MS-56
WEST 90 CLOSED 77
BACK SIDE
WEST 90 CLOSED 77
FRONT SIDE
* EXISTING OVERHEAD SIGN OVERLAYS AND PANELS DETAILED ON SHEET 160

FOR CARNEGIE AVE MAINTENANCE OF TRAFFIC CONDITIONS, SEE SHEET 357

PROSPECT AVE TO I.R. 90 WB ENTRANCE RAMP (CLOSED)

STA. 98+40 BEGIN REMOVAL & RESURFACING RUMBLE STRIPS

STA. 98+50 BEGIN 30:1 PB FLARE

CONTINUE REMOVAL & RESURFACING RUMBLE STRIPS

"NEXT EXIT" OVERLAY TO REMAIN
MS-45
EXIT 172 A
77 SOUTH
Akron
NEXT EXIT

STA. 96+04 END WORK ZONE EGRESS PER MT-103.10

PROSPECT AVE

380' LANE TAPER (11' TO 12')

SPEED LIMIT 50

PB-37

EW -49.7' LL -38.7' EY -27.7'

℄ EX. I.R. 90 STA. 93+65 PC/PT

EW -52.1' LL -41.1' EY -30.1'

EW -53.6' LL -42.6' EY -31.6'

EW -55.9' LL -44.9' EY -33.9'

EW -54.6' LL -43.6' EY -32.6'

℄ EX. I.R. 90 STA. 99+45 PC/PT

EW-77

1459' R

℄ EX. I.R. 90 STA. 94+83 PC/PT

1634' R

℄ EX. I.R. 90 STA. 95+48 PC/PT

978' R

℄ EX. I.R. 90 STA. 96+15 PC/PT

3278' R

1293' R

LL-52

EY-39

MATCH LINE STA. 91+00.00 SEE SHEET 352

MATCH LINE STA. 101+00.00 SEE SHEET 354

I.R. 90 WB

I.R. 90 WB

I.R. 90 EB

PB-33

EW-75

℄ EX. I.R. 90

PB-34

TEMPORARY DRAINAGE CONNECTION INSTALLED DURING PHASE 4. SEE SHEET 333.

PLACE PB AT 2' OFFSET FROM TOE OF BARRIER TO EDGE LINE

REMOVE EX. LL AND PLACE EW AT 11' OFFSET FROM EX. EY

℄ I.R. 90 TEMPORARY RUNAROUND

SECTION VIEW SEE SHEET 140 W

MAINTAIN EX. CB

℄ I.R. 90 WB

℄ I.R. 90 WB STA. 210+91 END EW (MEET EX. MOT EW)

INSTALL TEMPORARY MANHOLE WITH 12" PIPE TO CONNECT TO EX. STORM TO PR. STORM

D-5.3

TEMPORARY CB-2-2B INSTALLED DURING PHASE 3. SEE SHEET 323

SECTION VIEW SEE SHEET 140 X

℄ EX. I.R. 90 STA. 98+35 END PB (MEET EXISTING MEDIAN BARRIER)

TEMPORARY CB-2-2B INSTALLED DURING PHASE 3. SEE SHEET 323

ATTACH IMPACT ATTENUATOR TO END

MS-57
WEST 90 CLOSED 77
FRONT SIDE
* EXISTING OVERHEAD SIGN OVERLAYS AND PANELS DETAILED ON SHEET 160

PROSPECT AVE TO I.R. 90 EB ENTRANCE RAMP (CLOSED)

MS-52
EAST 90 CLOSED 77
FRONT SIDE
EAST 90 CLOSED 77
BACK SIDE
* EXISTING OVERHEAD SIGN OVERLAYS AND PANELS DETAILED ON SHEET 160

℄ CONST. CARNEGIE AVE

℄ EX. R/W CARNEGIE AVE

FOR MAINTENANCE OF TRAFFIC LEGEND SEE SHEET 347

CUY-90-16.28 (CCG3A)

MODEL: MPS0l2 PAPERSIZE: 34x22 (in.) DATE: 3/27/2025 TIME: 8:59:47 PM USER: CollinKWatt
pw:\\mb-us-pw.bentley.com\mb-us-pw-03\Documents\Cleveland_OH\01_Projects\000T\District2\82382\400-Engineering\MOT\Sheets\82382_MP50l2.dgn

DESIGN AGENCY
Michael Baker INTERNATIONAL

DESIGNER CRK
REVIEWER GSH 05/22/24
PROJECT ID 82382
SHEET 353 TOTAL 2696

Preliminary Plans - For Reference Only

I.R. 90 WB TO PROSPECT AVE
EXIT RAMP (OPEN)

EUCLID AVE

STA. 102+50
END REMOVAL
& RESURFACING
RUMBLE STRIPS

-43.7 CH/DL
-31.7 LL
-19.7 EY

390' LANE TAPER (11' TO 12')

1293' R

EY-39
EW-77
PB-34
CH-72

STA. 102+50
END EW
BEGIN CH

℄ EX. I.R. 90
STA. 103+35
END CH
BEGIN DL
PT

1311' R

DL-48
LL-52

TEMPORARY CB-6 INSTALLED DURING PHASE 3
SEE SHEET 324

STA. 108+83
END ALL PR. MOT MARKINGS
MEET EX. MARKINGS

1201' R

12'
12'
12'

MATCH LINE STA. 101+00.00
SEE SHEET 353

MATCH LINE STA. 111+00.00
SEE SHEET 336

4017

102
103
104
105
106
107
108
109
110
218
219
220
221
222
223
224
225
226
227
228

I.R. 90 WB
I.R. 90 EB

STA. 102+85
END 30:1 PB FLARE

STA. 102+95
END PB
ATTACH IMPACT ATTENUATOR TO END

℄ EX. I.R. 90

℄ I.R. 90 WB

TRENCH DRAIN,
INSTALLED DURING
PHASE 3 (TYP)

SPEED
LIMIT
50

MS-53

EXIT 173B
TO Carnegie Ave

EXIT 173C
Superior Ave
½
MILE

Chester Ave
EXIT ONLY

* EXISTING OVERHEAD SIGN
OVERLAYS AND PANELS
DETAILED ON SHEET 161

I.R. 90 EB TO CHESTER AVE
EXIT RAMP (OPEN)

CHESTER AVE EB TO I.R. 90 EB
ENTRANCE RAMP (OPEN)

FOR MAINTENANCE OF TRAFFIC LEGEND SEE SHEET 347

HORIZONTAL
SCALE IN FEET
0 20 40 80

MAINTENANCE OF TRAFFIC - PHASE 5
I.R. 90 - STA. 101+00.00 TO STA. 111+00.00

DESIGN AGENCY
Michael Baker INTERNATIONAL

DESIGNER
CRK

REVIEWER
GSH 05/22/24

PROJECT ID
82382

SHEET 354 TOTAL 2696

CUY-90-16.28 (CCG3A)

MODEL: MP5013 PAPERSIZE: 34x22 (in.) DATE: 3/27/2025 TIME: 8:59:58 PM USER: Collin.Kwiatt
pw:\\mb-us-pw.bentley.com:mb-us-pw-03\Documents\Cleveland_OH\DL_Projects\ODOT\District2\82382\400-Engineering\MOT\Sheets\82382_MP5013.dgn

NOTES:

1. PR. SIGNS REFERENCING I.R. 90 AND I.R. 77 TO REMAIN COVERED UNTIL THE OPENING OF RAMP A3

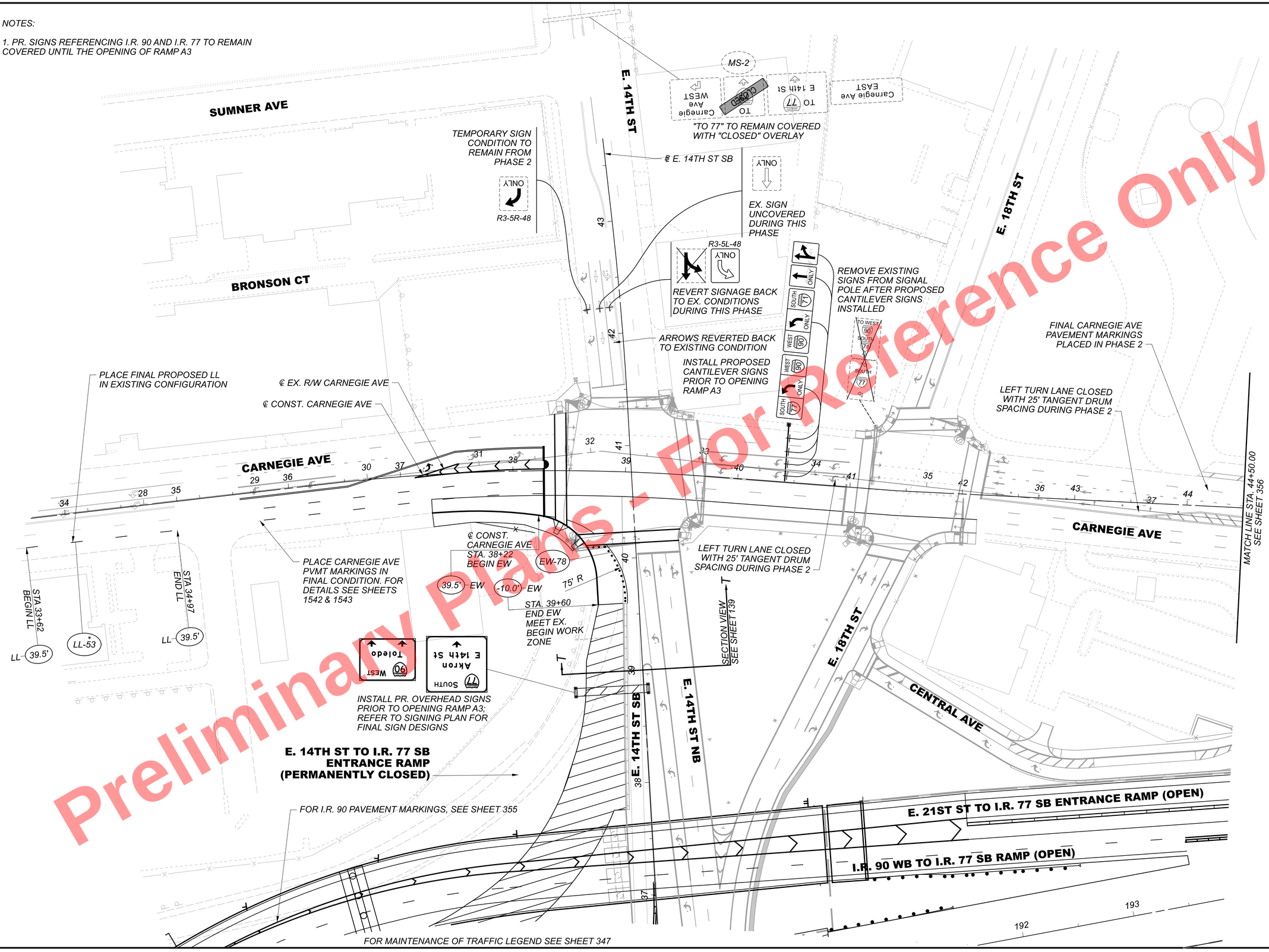

Preliminary Plans - For Reference Only

HORIZONTAL SCALE IN FEET
0 20 40 80

MAINTENANCE OF TRAFFIC - PHASE 5
CARNEGIE AVE - BEGIN TO STA. 44+50.00

CUY-90-16.28 (CCG3A)

MODEL: MP5015 PAPERSIZE: 34x22 (in.) DATE: 3/27/2025 TIME: 9:00:08 PM USER: Collin.Kwiatt
pw:\\mb-us-pw.bentley.com:mb-us-pw-03\Documents\Cleveland_OH\01_Projects\ODOT\District2\82382\400-Engineering\MOT\Sheets\82382_MP5015.dgn

DESIGN AGENCY
Michael Baker INTERNATIONAL

DESIGNER CRK
REVIEWER GSH 05/22/24
PROJECT ID 82382
SHEET 355 TOTAL 2696

Preliminary Plans - For Reference Only

PLACE ALL CARNEGIE AVE PAVEMENT MARKINGS IN FINAL CONDITION. FOR DETAILS, SEE PAVEMENT MARKING PLAN SHEETS 1544 TO 1546

℄ CONST. CARNEGIE AVE

℄ EX. R/W CARNEGIE AVE

MATCH LINE STA. 44+60.00 SEE SHEET 355

CARNEGIE AVE

E. 21ST ST

PLACE E. 21ST AND E. 22ND ST PAVEMENT MARKINGS IN FINAL CONDITION UNLESS NOTED OTHERWISE. FOR DETAILS, SEE SHEETS 1545 & 1546

E. 22ND ST

MATCH LINE STA. 54+50.00 SEE SHEET 357

FOR E. 22ND ST AND I.R. 90 MAINTENANCE TRAFFIC PAVEMENT MARKING DETAILS, SEE SHEET 352

E. 21ST ST TO I.R. 77 SB ENTRANCE RAMP (OPEN)

I.R. 90 WB TO I.R. 77 SB RAMP (OPEN)

℄ I.R. 90 WB

I.R. 90 WB

℄ EX. I.R. 90

I.R. 90 WB

I.R. 90 EB

FOR MAINTENANCE OF TRAFFIC LEGEND SEE SHEET 347

HORIZONTAL SCALE IN FEET
0 20 40 80

MAINTENANCE OF TRAFFIC - PHASE 5
CARNEGIE AVE - STA. 44+50.00 TO STA. 54+50.00

DESIGN AGENCY
Michael Baker INTERNATIONAL

DESIGNER CRK
REVIEWER GSH 05/22/24
PROJECT ID 82382
SHEET 356 TOTAL 2696

CUY-90-16.28 (CCG3A)

MODEL: MPS016 PAPERSIZE: 34x22 (in.) DATE: 3/27/2025 TIME: 9:00:21PM USER: Colin.Kwiatt
pw:\\mb-us-pw.bentley.com:mb-us-pw-03\Documents\Cleveland_OH\01_Projects\ODOT\District2\82382\400-Engineering\MOT\Sheets\82382_MP5016.dgn

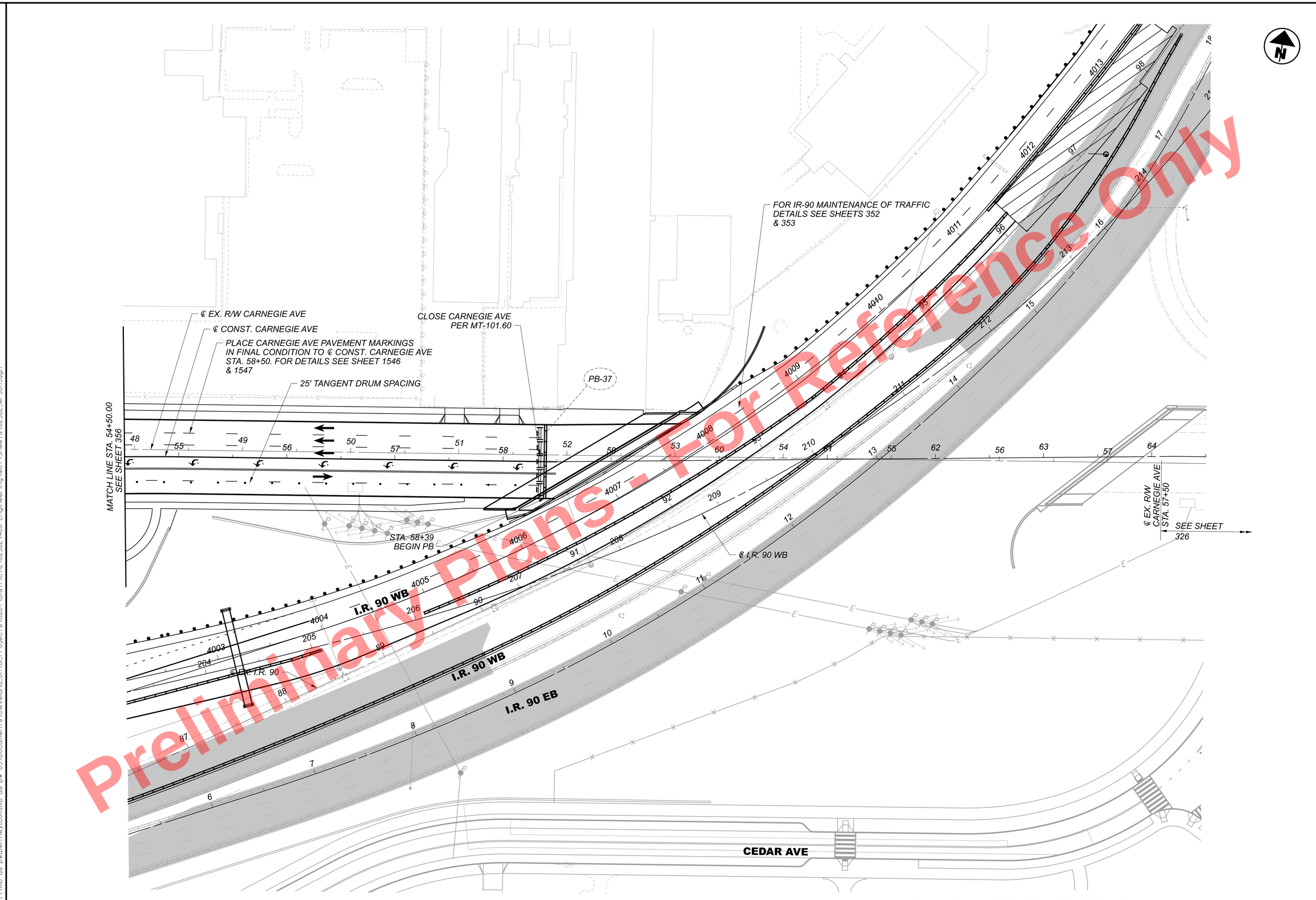

Preliminary Plans - For Reference Only

FOR MAINTENANCE OF TRAFFIC LEGEND SEE SHEET 347

HORIZONTAL SCALE IN FEET
0 20 40 80

MAINTENANCE OF TRAFFIC - PHASE 5
CARNEGIE AVE - STA. 54+50.00 TO STA. 64+50.00

DESIGN AGENCY
Michael Baker INTERNATIONAL

DESIGNER
CRK

REVIEWER
GSH 05/22/24

PROJECT ID
82382

SHEET 357 TOTAL 2696

CUY-90-16.28 (CCG3A)

MODEL: MP5017 PAPERSIZE: 34x22 (in.) DATE: 3/27/2025 TIME: 9:00:31 PM USER: Collin.Kwiatt
pw:\\mb-us-pw.bentley.com:mb-us-pw-03\Documents\Cleveland_OH\OI_Projects\ODOT\District2\82382\400-Engineering\MOT\Sheets\82382_MP5017.dgn

LEGEND

AREA OF CONSTRUCTION TO BE COMPLETED BY END OF PHASE

TEMPORARY PAVEMENT CONSTRUCTED THIS PHASE

EXISTING BRIDGE OR TEMPORARY PAVEMENT REMOVAL TO BE COMPLETED BY END OF PHASE

DETAILS LOCATED IN PRIOR PHASE

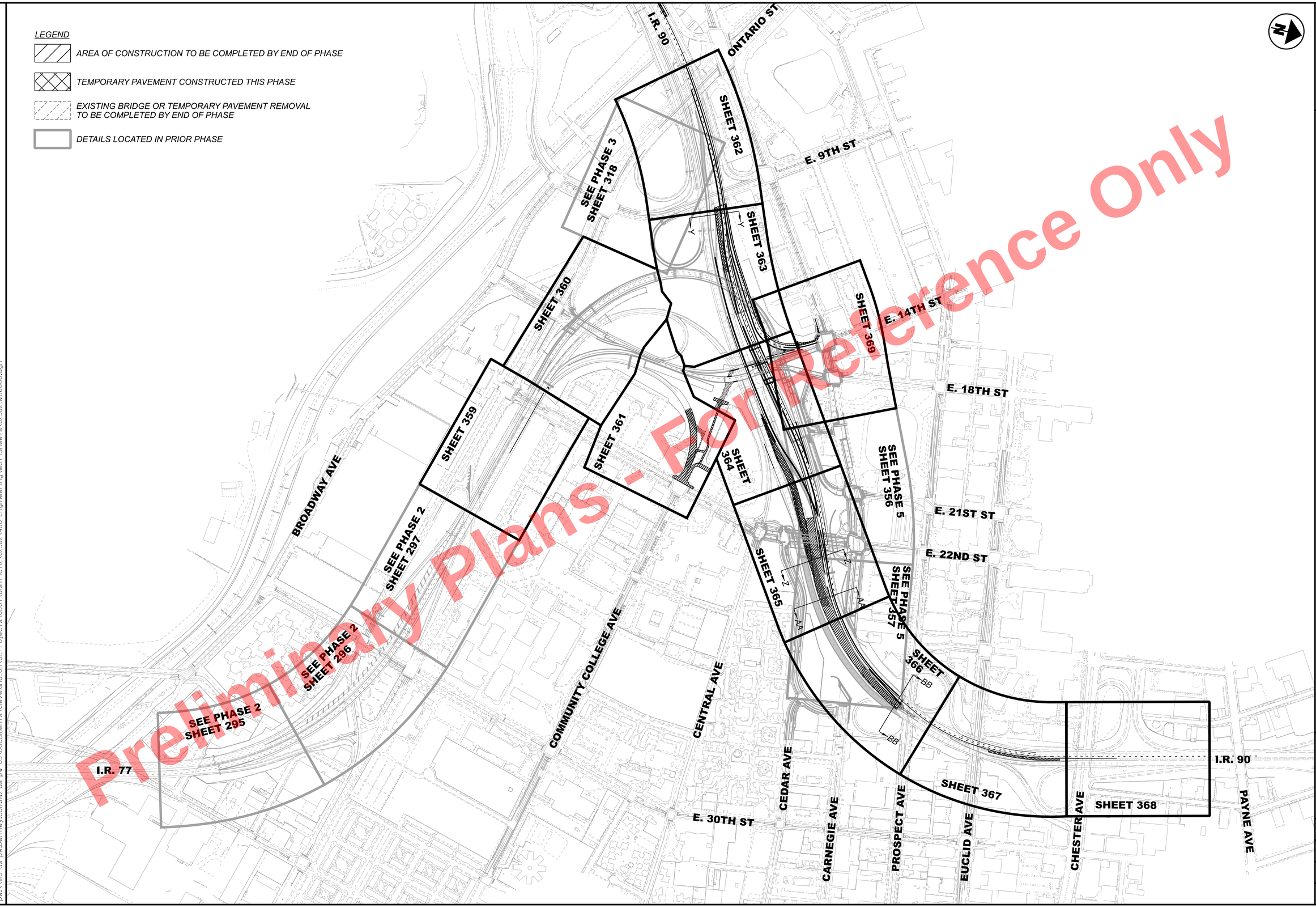

Preliminary Plans - For Reference Only

HORIZONTAL SCALE IN FEET
0 150 300 600

MAINTENANCE OF TRAFFIC - PHASE 6 SHEET PLAN KEY

DESIGN AGENCY
Michael Baker INTERNATIONAL

DESIGNER CRK
REVIEWER GSH 05/22/24
PROJECT ID 82382
SHEET 358 TOTAL 2696

CUY-90-16.28 (CCG3A)

MODEL: Sheet PAPERSIZE: 34x22 (in.) DATE: 3/27/2025 TIME: 9:02:24 PM USER: Collin.Kwiat
pw:\\mb-us-pw.bentley.com:mb-us-pw-03\Documents\Cleveland_OH_OL_Projects\ODOT\District12_82382\400-Engineering\MOT\Sheets\82382_MB6000.dgn

Preliminary Plans - For Reference Only

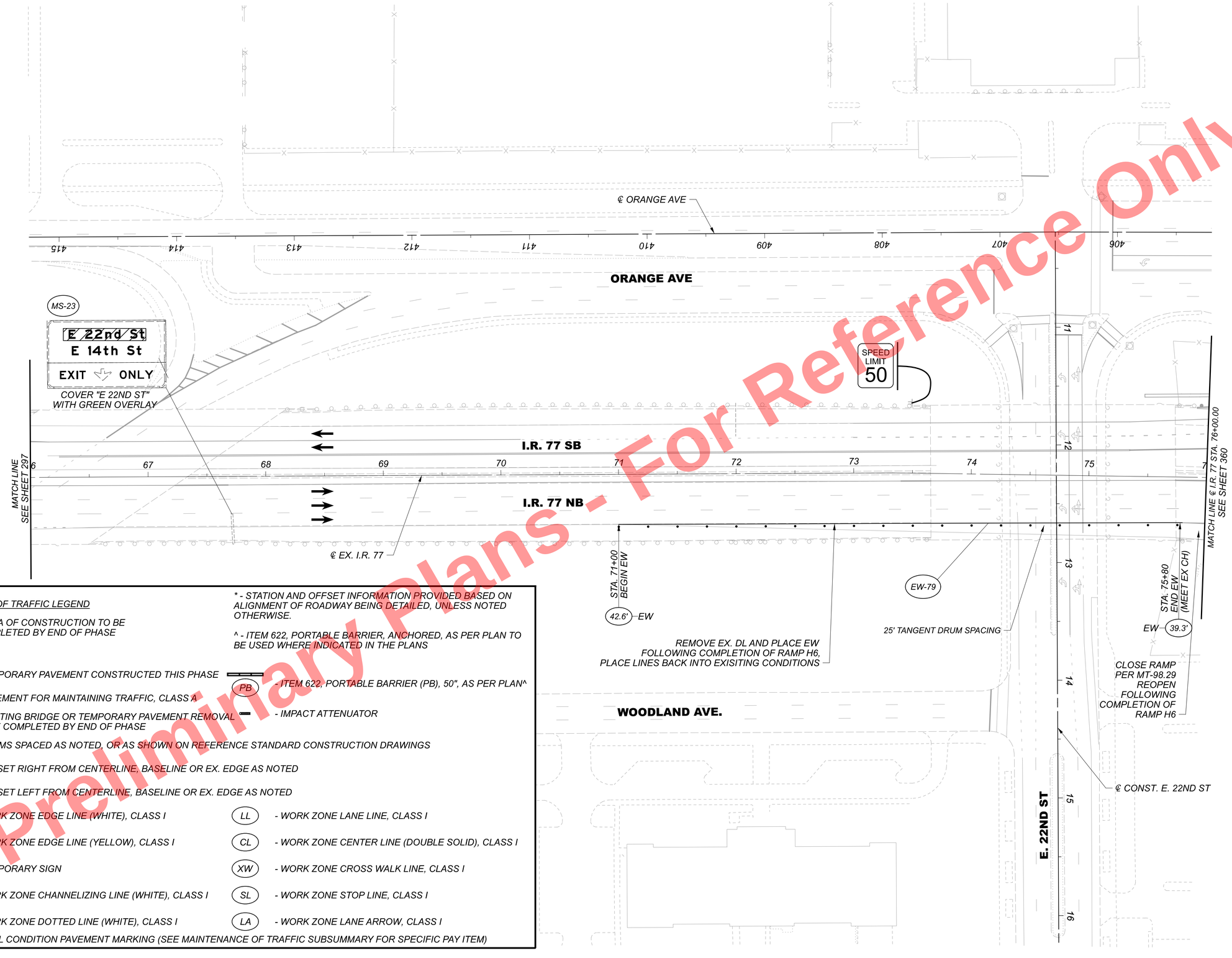

MAINTENANCE OF TRAFFIC LEGEND

- AREA OF CONSTRUCTION TO BE COMPLETED BY END OF PHASE
- TEMPORARY PAVEMENT CONSTRUCTED THIS PHASE
- PAVEMENT FOR MAINTAINING TRAFFIC, CLASS A
- EXISTING BRIDGE OR TEMPORARY PAVEMENT REMOVAL TO BE COMPLETED BY END OF PHASE
- DRUMS SPACED AS NOTED, OR AS SHOWN ON REFERENCE STANDARD CONSTRUCTION DRAWINGS
- 17.5' - OFFSET RIGHT FROM CENTERLINE, BASELINE OR EX. EDGE AS NOTED
- -17.5' - OFFSET LEFT FROM CENTERLINE, BASELINE OR EX. EDGE AS NOTED
- EW - WORK ZONE EDGE LINE (WHITE), CLASS I
- EY - WORK ZONE EDGE LINE (YELLOW), CLASS I
- MS - TEMPORARY SIGN
- CH - WORK ZONE CHANNELIZING LINE (WHITE), CLASS I
- DL - WORK ZONE DOTTED LINE (WHITE), CLASS I
- * - FINAL CONDITION PAVEMENT MARKING (SEE MAINTENANCE OF TRAFFIC SUBSUMMARY FOR SPECIFIC PAY ITEM)
- PB - ITEM 622, PORTABLE BARRIER (PB), 50", AS PER PLAN^
- IMPACT ATTENUATOR
- LL - WORK ZONE LANE LINE, CLASS I
- CL - WORK ZONE CENTER LINE (DOUBLE SOLID), CLASS I
- XW - WORK ZONE CROSS WALK LINE, CLASS I
- SL - WORK ZONE STOP LINE, CLASS I
- LA - WORK ZONE LANE ARROW, CLASS I

* - STATION AND OFFSET INFORMATION PROVIDED BASED ON ALIGNMENT OF ROADWAY BEING DETAILED, UNLESS NOTED OTHERWISE.

^ - ITEM 622, PORTABLE BARRIER, ANCHORED, AS PER PLAN TO BE USED WHERE INDICATED IN THE PLANS

HORIZONTAL SCALE IN FEET
0 20 40 80

MAINTENANCE OF TRAFFIC - PHASE 6
STA. 66+00.00 TO STA. 76+00.00

DESIGN AGENCY
Michael Baker INTERNATIONAL

DESIGNER CRK
REVIEWER GSH 05/22/24
PROJECT ID 82382
SHEET 359 TOTAL 2696

CUY-90-16.28 (CCG3A)

MODEL: MP7004 PAPERSIZE: 34x22 (in.) DATE: 3/27/2025 TIME: 9:02:40 PM USER: CollinsKwiatt
pw:\\mb-us-pw.bentley.com:mb-us-pw-03\Documents\Cleveland_OH\DL_Projects\DOT\District2\82382\400-Engineering\MOT\Sheets\82382_MP6004.dgn

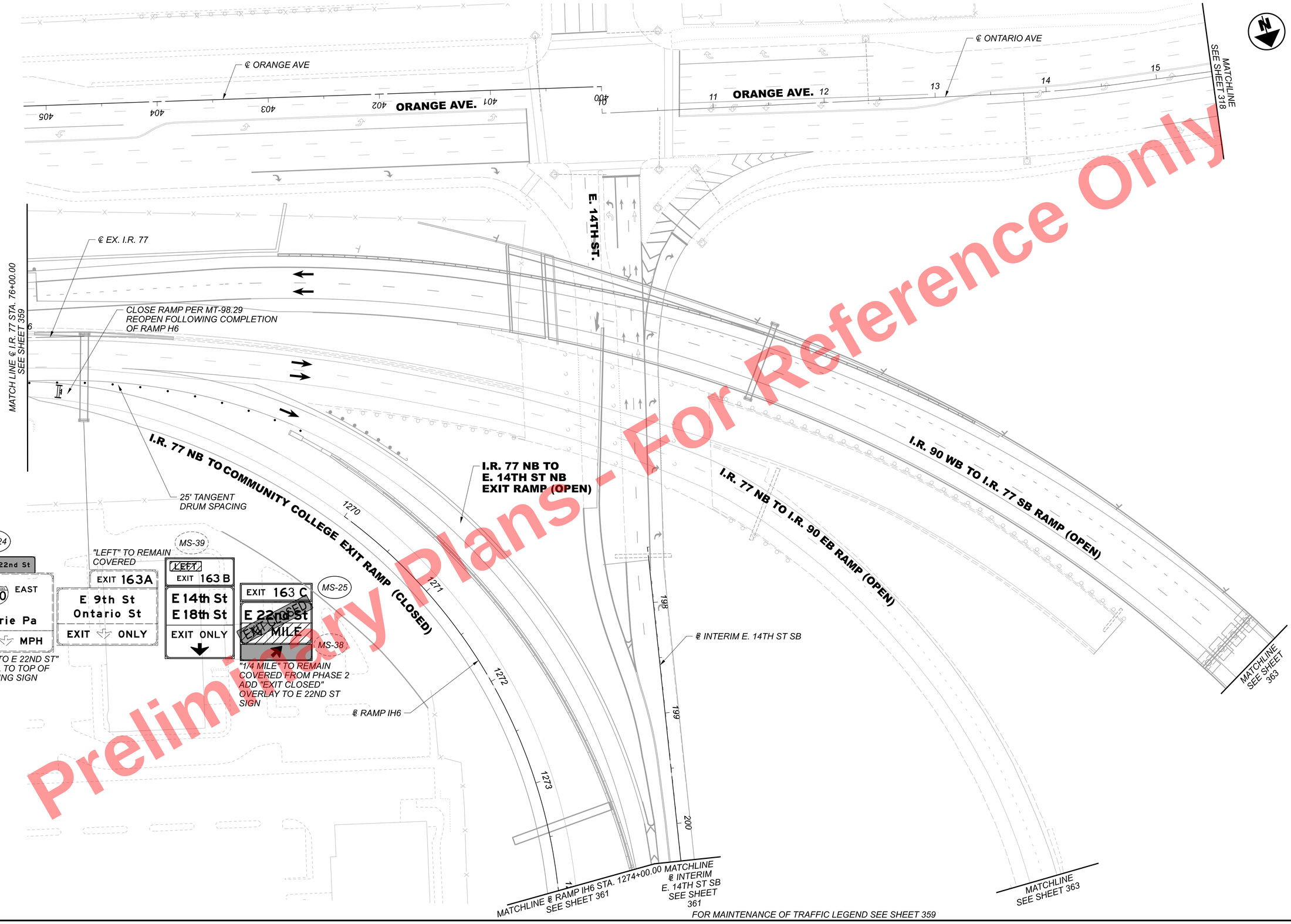

Preliminary Plans - For Reference Only

HORIZONTAL SCALE IN FEET 0 20 40 80

MAINTENANCE OF TRAFFIC - PHASE 6

I.R. 77 - STA. 76+00.00 TO END / RAMP IH6 - BEGIN TO STA. 1274+00.00

DESIGN AGENCY

Michael Baker INTERNATIONAL

DESIGNER CRK

REVIEWER GSH 05/22/24

PROJECT ID 82382

SHEET 360 TOTAL 2696

CUY-90-16.28 (CCG3A)

MODEL: MP7005 PAPERSIZE: 34x22 (in.) DATE: 3/27/2025 TIME: 9:02:51PM USER: Collin.Kwiatt
pw:\\mb-us-pw.bentley.com:mb-us-pw-03\Documents\Cleveland_OH\OI_Projects\ODOT\District12\82382\400-Engineering\MOT\Sheets\82382_MP6005.dgn

NOTES:

1. FOR TEMPORARY SIGNAL NOTES SEE SHEET 93

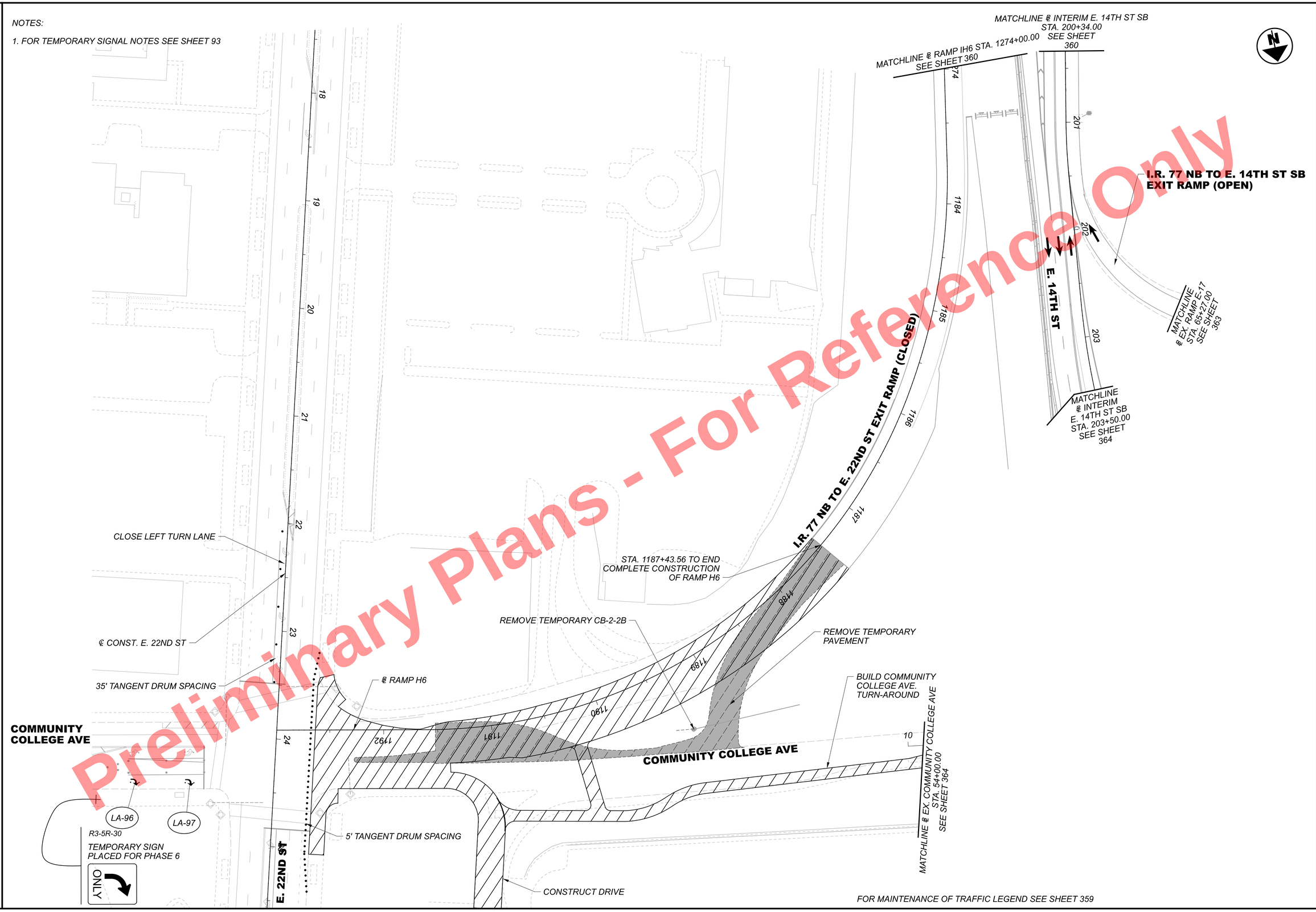

FOR MAINTENANCE OF TRAFFIC LEGEND SEE SHEET 359

Preliminary Plans - For Reference Only

HORIZONTAL SCALE IN FEET
0 20 40 80

MAINTENANCE OF TRAFFIC - PHASE 6
RAMP H6 - STA. 1274+00.00 TO END

DESIGN AGENCY
Michael Baker INTERNATIONAL

DESIGNER CRK
REVIEWER GSH 05/22/24
PROJECT ID 82382
SHEET 361 TOTAL 2696

CUY-90-16.28 (CCG3A)
MODEL: MP6007 PAPERSIZE: 34x22 (In.) DATE: 3/27/2025 TIME: 9:03:04 PM USER: Collin.Kwiatt
pw:\\mb-us-pw.bentley.com:mb-us-pw-03\Documents\Cleveland_OH\01_Projects\00DOT\District2\82382\400-Engineering\MOT\Sheets\82382_MP6007.dgn

NOTES:

1. ALL EXISTING LANES OPEN AND EXISTING PAVEMENT MARKINGS UTILIZED ON THIS SHEET UNLESS NOTED OTHERWISE.

2. ALL PROPOSED FINAL CONDITION PAVEMENT MARKINGS UPSTATION OF ℄ I.R. 90 WB STA. 167+38 PLACED FOR THIS PHASE. FOR DETAILS SEE SHEETS 1495 - 1499

-12.0' CH
-0.3' LL/CH
11.7' CH
MEET FINAL CONDITION EW & LL, AND EX. MARKINGS SEE NOTE 2
582' LANE TAPER (EX. TO 11')
30
℄ I.R. 90 WB STA. 167+38 BEGIN CH BEGIN LL
CH-73
11.5' CH
℄ I.R. 90 WB STA. 169+03 BEGIN CH
SIGNING INSTALLED IN PHASE 5 FOR I.R. 90 WB MEDIAN CROSSOVER OF PASSING LANE PER MT-95.72
-17.7' CH
-6.7' LL
4.3' CH/EY
℄ I.R. 90 WB STA. 173+20 END CH BEGIN EY BEGIN PB
PLACE PROPOSED EW IN FINAL CONDITION
-40.0' FINAL CONDITION EW
-28.0' CH (2)
-17.0' LL
-6.0' EY
E. 9TH ST TO I.R. 90 WB ENTRANCE RAMP (OPEN)
E. 9TH ST
LL-54
℄ I.R. 90 WB STA. 177+39 BEGIN CH
CH-75
I.R. 90 WB
I.R. 90 EB
℄ I.R. 90 WB
CH-74
PB-38
EY-41
3143' R
6020' R
℄ I.R. 90 WB WEST CROSSOVER
BEGIN CONSTRUCTION STA. 177+40 (PROJECT START)
℄ EX. IR-90
MATCH LINE STA. 61+00.00 SEE SHEET 363
I.R. 90 EB TO ONTARIO ST/ E 9TH ST SB EXIT RAMP (OPEN)
ONTARIO ST
I.R. 90 WB CROSSOVER PLACED IN PHASE 5. FOR PAVEMENT MARKINGS SEE SHEET 349 FOR MORE DETAILS SEE SHEET 240

EAST	WEST
422 14	422 14
Orange Ave	Ontario St

RAMPS 25 MPH

Carnegie Ave	¾
Chester Ave	1½
Superior Ave	2

MS-47

"CARNEGIE 3/4" COVERED WITH GREEN OVERLAY DURING PHASE 2

EAST	WEST
422 14	422 14
Orange Ave	Ontario St

FOR MAINTENANCE OF TRAFFIC LEGEND SEE SHEET 359

Preliminary Plans - For Reference Only

HORIZONTAL SCALE IN FEET
0 20 40 80

MAINTENANCE OF TRAFFIC - PHASE 6
I.R. 90 - BEGIN TO STA. 61+00.00

DESIGN AGENCY
Michael Baker INTERNATIONAL

DESIGNER CRK
REVIEWER GSH 05/22/24
PROJECT ID 82382
SHEET 362 TOTAL 2696

CUY-90-16.28 (CCG3A)

MODEL: MP6008 PAPERSIZE: 34x22 (in.) DATE: 3/27/2025 TIME: 9:03:17 PM USER: Collin.Kwiatt
pw:\\mb-us-pw.bentley.com:mb-us-pw-03\Documents\Cleveland_OH\01_Projects\000TYDistrict2\82382\400-Engineering\MOT\Sheets\82382_MP6008.dgn

NOTES:

1. ALL EXISTING LANES OPEN AND EXISTING PAVEMENT MARKINGS UTILIZED ON THIS SHEET UNLESS NOTED OTHERWISE.

3. FOR MAINTENANCE OF TRAFFIC LEGEND SEE SHEET 359

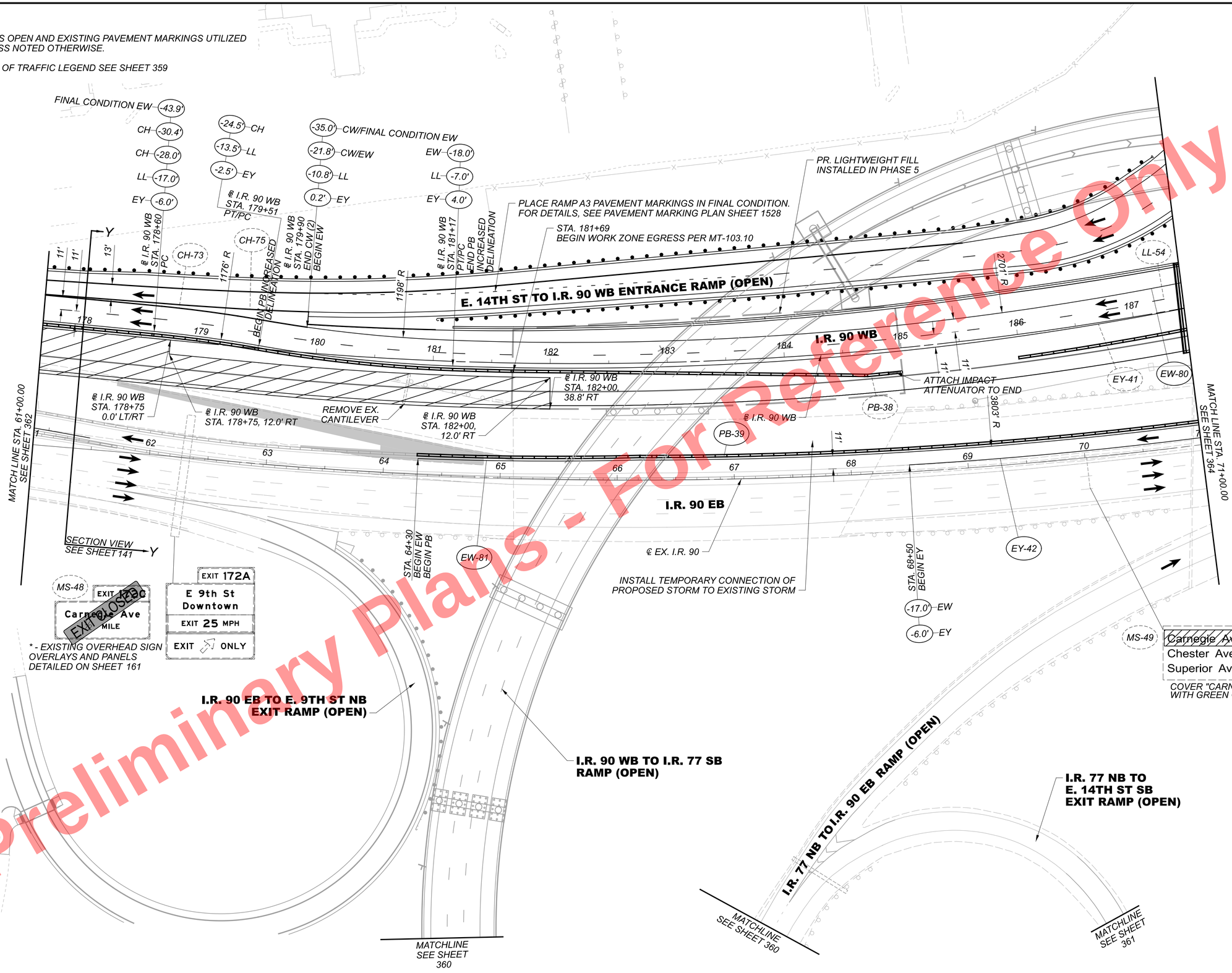

Preliminary Plans - For Reference Only

HORIZONTAL SCALE IN FEET
0 20 40 80

MAINTENANCE OF TRAFFIC - PHASE 6
I.R. 90 - STA. 61+00.00 TO STA. 71+00.00

DESIGN AGENCY	Michael Baker INTERNATIONAL
DESIGNER	CRK
REVIEWER	GSH 05/22/24
PROJECT ID	82382
SHEET	363
TOTAL	2696

CUY-90-16.28 (CCG3A)

MODEL: MP6009 PAPERSIZE: 34x22 (in.) DATE: 3/27/2025 TIME: 9:03:29 PM USER: Collin.Kwiat
pw:\\mb-us-pw.bentley.com:mb-us-pw-03\Documents\Cleveland_OH\01_Projects\ODOT\District 12\82382\400-Engineering\MOT\Sheets\82382_MP6009.dgn

Preliminary Plans - For Reference Only

E. 14TH ST TO I.R. 90 WB ENTRANCE RAMP (OPEN)

@ E. 14TH ST SB STA. 38+50

NOTE 3

E. 14TH ST NB

E. 18TH ST

CENTRAL AVE

E. 19TH ST

PLACE CH IN FINAL CONDITION. FOR DETAILS SEE SHEET 1500

-22.6' DL
-11.6' LL
-0.6' EY

@ I.R. 90 WB STA. 196+55 END CH BEGIN DL

DL-49

PLACE RAMP A3 PROPOSED PAVEMENT MARKINGS IN FINAL CONDITION. FOR DETAILS SEE SHEETS 1528

E. 21ST ST TO I.R. 77 SB ENTRANCE RAMP (OPEN)

STA. 192+47 END WORK ZONE EGRESS PER MT-103.10

I.R. 90 WB TO I.R. 77 SB RAMP (OPEN)

EW-82

-20.5' EW
-9.5' EY

@ E. 14TH ST SB STA. 36+50 BEGIN EW BEGIN EY

@ E. 14TH ST SB

LL-54

EW-80

CH-76

I.R. 90 WB

@ I.R. 90 WB STA. 187+55 PT

270' R

EW -22.0'
LL -11.0'
EY 0.0'

PB-39

EW-81

EY-42

EY-41

PR. LIGHTWEIGHT FILL INSTALLED IN PHASE 4

@ I.R. 90 WB

@ IR-90 WB STA. 193+57 END EW BEGIN CH

SEE NOTE 2

STA. 76+00

STA. 76+50 END EY MEET EX. MOT EW

PB-40

-22.0' EW/CH
-11.0' LL
0.0' EY

@ I.R. 90 WB EAST CROSSOVER

PB-38

BEGIN PB INCREASED DELINEATION STA. 79+39

@ IR-90 WB STA. 195+60 PC

2546' R

3027' R

REMOVE EX. MOT LL AND PLACE EW AND PB (OFFSET 3')

STA.80+91 24.0' LT

STA.80+91 13.0' LT

11351' R

3803' R

@ EX. I.R. 90

I.R. 90 EB

STA. 75+97 1.8' LT
STA. 75+97 6.3' RT

STA. 77+87 END PB (MEET EX. MOT PB)

STA. 79+00 5.6' RT

STA. 79+46 2.0' LT

PAVEMENT FOR TEMPORARY PHASE 7 LANE SHIFT. FOR DETAILS SEE SHEET 250

MATCH LINE STA. 71+00.00 SEE SHEET 363

MATCH LINE STA. 81+00.00 SEE SHEET 365

STA. 76+20± BEGIN PB (MEET EX. MEDIAN BARRIER & PLACE TANGENT TO END OF EX. PB PLACED IN PHASE 5)

I.R. 77 NB TO E. 22ND ST EXIT RAMP (OPEN)

USE A TEMPORARY SINGLE LANE CLOSURE DURING OFF PEAK HOURS TO CONSTRUCT PORTION OF TEMPORARY CROSSOVER ADJACENT TO ACTIVE LANES

I.R. 77 NB TO I.R. 90 EB RAMP (OPEN)

REMOVE TEMPORARY CROSSOVER COMMUNITY COLLEGE AVE TO E. 14TH ST AND INSTALL OMITTED CURB ALONG E. 14TH ST

CONSTRUCT COMMUNITY COLLEGE AVE TURNAROUND

@ INTERIM E. 14TH ST SB

SEE NOTE 4

E. 14TH ST SB

E. 14TH ST NB

MATCHLINE @ EX. COMMUNITY COLLEGE AVE SEE SHEET 361

PLACE ALL PROPOSED E. 14TH ST SB PAVEMENT MARKINGS IN FINAL CONDITION. FOR DETAILS, SEE PAVEMENT MARKING PLAN SHEET 1552 & 1553

MATCHLINE @ INTERIM E. 14TH ST SB STA. 203+50.00 SEE SHEET 361

* - EXISTING OVERHEAD SIGN OVERLAYS AND PANELS DETAILED ON SHEET 161

MS-50

EXIT 173C CLOSED

EXIT 173B
TO Carnegie Ave
Chester Ave 3/4 MILE

MS-51

MS-43

90 EAST

Carnegie Ave MILE

IF NECESSARY DUE TO GRADING CONSTRAINTS ON SOUTH SIDE OF TEMPORARY CROSSOVER, COMPLETE CONSTRUCTION OF OUTSIDE LANE IN CONJUCTION WITH CONSTRUCTION OF PHASE 6 I.R. 90 EB WORKZONE AT STA. 3013+63, 13.4' RT TO STA. 3014+31, 13.4' RT. SHIFT TWO I.R. 90 EB LANES TO PHASE 7 TRAFFIC FLOW AND KEEP THE OUTSIDE LANE IN PHASE 6 TRAFFIC FLOW.

NOTES:

1. ALL EXISTING LANES OPEN AND EXISTING PAVEMENT MARKINGS UTILIZED ON THIS SHEET UNLESS NOTED OTHERWISE.

2. 50' LANE TAPER TO LANE WIDTH IN PHASE 5 (APPROX. 11.5'). WIDEN PB OFFSET FROM 2' TO 3'.

3. SEE SHEET 369 FOR E. 14TH ST. MARKINGS

4. AFTER REMOVAL OF EXISTING BRIDGE PIERS AND REMOVAL OF TEMPORARY CROSSOVER, REMOVE TEMPORARY PAVEMENT ALONG THE MEDIAN SIDE OF E. 14TH ST SB AND CONSTRUCT ALL PREVIOUSLY OMITTED PROPOSED E. 14TH ST FINAL CONDITION PAVEMENT AND CURB. ALSO PLACE OMITTED PROPOSED LANE LINES ON E. 14TH ST NB.

FOR MAINTENANCE OF TRAFFIC LEGEND SEE SHEET 359

HORIZONTAL SCALE IN FEET
0 20 40 80

MAINTENANCE OF TRAFFIC - PHASE 6
I.R. 90 - STA. 71+00.00 TO STA. 81+00.00

DESIGN AGENCY
Michael Baker INTERNATIONAL

DESIGNER CRK
REVIEWER GSH 05/22/24
PROJECT ID 82382
SHEET 364 TOTAL 2696

CUY-90-16.28 (CCG3A)
MODEL: MP6010 PAPERSIZE: 34x22 (in.) DATE: 3/27/2025 TIME: 9:03:40 PM USER: CollinKWatt
pw:\\mb-us-pw.bentley.com:mb-us-pw-03\Documents\Cleveland_OHIO_Projects\000TYDistrict2\82382\400-Engineering\MOT\Sheets\82382_MP6010.dgn

E. 21ST ST TO I.R. 77 SB ENTRANCE RAMP (OPEN)

I.R. 90 WB TO I.R. 77 SB RAMP (OPEN)

STA. 201+28 BEGIN WORK ZONE EGRESS PER MT-103.10

DL -33.6'
LL -22.6'
CH -11.6'

℄ I.R. 90 WB STA. 198+90 BEGIN 14:1 PB FLARE

DL-49

PB-38

11.0'

11.0'

℄ I.R. 90 WB STA. 200+15 4.2' RT END PCB "Y" CONNECTOR SEGMENT W/ IMPACT ATTENUATOR

℄ I.R. 90 WB STA. 201+25 END EW END EY BEGIN CH

EY-41

198

199

200

201

202

℄ I.R. 90 WB STA. 199+00 BEGIN 14:1 PB FLARE END PB INCREASED DELINEATION

℄ I.R. 90 WB

3027.0' R

I.R. 90 WB

EW-81

REMOVE EX. MOT LL AND PLACE EW AND PB (OFFSET 3')

12.5'

PB-39

℄ I.R. 90 WB STA. 200+30 BEGIN CONSTRUCTION OF IR-90 EB

℄ I.R. 90 WB STA. 201+25 END EW BEGIN CH BEGIN EY BEGIN PB

6400.0' R

MATCH LINE STA. 81+00.00 SEE SHEET 364

℄ EX. I.R. 90

I.R. 90 EB

END PB INCREASED DELINEATION STA. 82+50

322' LANE TAPER (12.5' TO 11')

STA. 86+08 29.0' RT

STA. 86+07 40.0' RT

℄ INTERIM I.R. 90 WB STA. 4001+24 END DL PT

3027.0' R

CH-77

INSTALL SIGNING FOR I.R. 90 WB MEDIAN CROSSOVER OF PASSING LANE PER MT-95.72

℄ INTERIM I.R. 90 WB ATTACH IMPACT ATTENUATOR TO END

LL-54

PB-41

AA

CH-78

℄ I.R. 90 WB STA. 204+47

11.0'

EY-44

D-6.2

℄ I.R. 90 WB STA. 206+00 END LL (MEET EX. MOT LL)

11.0'

11.0'

11.0'

MATCH LINE STA. 91+00.00 SEE SHEET 366

-24.0' DL/EX. MOT EW
-13.0' LL
-2.0' CH

FOR CARNEGIE AVE PAVEMENT MARKING DETAILS, SEE SHEET 356

GREEN OVERLAY AND "EXIT"/DIAGONAL ARROW OVERLAY TO REMAIN

MS-55

EXIT 172 A SOUTH Akron EXIT

℄ CONST. CARNEGIE AVE

℄ EX. R/W CARNGIE AVE

CARNEGIE AVE

PLACE LL AND EY AT 11' OFFSETS

IF NECESSARY DUE TO GRADING CONSTRAINTS ON SOUTH SIDE OF TEMPORARY CROSSOVER, COMPLETE CONSTRUCTION OF OUTSIDE LANE IN CONJUCTION WITH CONSTRUCTION OF PHASE 6 I.R. 90 EB WORKZONE AT STA. 3013+63, 13.4' RT TO STA. 3014+31, 13.4' RT. SHIFT TWO I.R. 90 EB LANES TO PHASE 7 TRAFFIC FLOW AND KEEP THE OUTSIDE LANE IN PHASE 6 TRAFFIC FLOW.

SPEED LIMIT 50

I.R. 77 NB TO E. 22ND ST EXIT RAMP (OPEN)

E. 22ND ST

CENTRAL AVE

E. 22ND ST

D-6.1

SECTION VIEW Z SEE SHEET 141

INSTALL TEMP MH CONNECT PR. STORM (D-220) TO TEMP CONNECTION TO PR. STORM (D-217) ON NORTH SIDE OF I.R. 90 EB

REMOVE TEMPORARY I.R. 90 WB PAVEMENT WEDGING FROM PHASE 4

CONSTRUCT PR. DRAINAGE FROM D-211 TO D-217 BUT NOT THE MANUFACTURED WATER QUALITY STRUCTURE

INSTALL TEMP MH TO CONNECT PR. STORM TO TEMP CONNECTION TO PR. STORM ON NORTH SIDE OF I.R. 90 EB (D-250)

PAVEMENT FOR TEMPORARY PHASE 7 LANE SHIFT. FOR DETAILS SEE SHEET 250

CONSTRUCT PORTION OF I.R. 90 EB BETWEEN PHASE 6 AND PHASE 7 AFTER SHIFTING TWO LANES

℄ I.R. 90 TEMPORARY RUNAROUND

SECTION VIEW AA SEE SHEET 141

-43.0' EX. MOT EW
-32.0' LL/EX. MOT LL
-21.0' CH
-10.0' EY

INSTALL TEMP 12" PIPE TO CONNECT EX. DITCH CB TO TEMP CB-2-2B

CEDAR AVE

FOR MAINTENANCE OF TRAFFIC LEGEND SEE SHEET 359

Preliminary Plans - Not For Construction

For Reference Only

HORIZONTAL SCALE IN FEET
0 20 40 80

MAINTENANCE OF TRAFFIC - PHASE 6
I.R. 90 - STA. 81+00.00 TO STA. 91+00.00

DESIGN AGENCY
Michael Baker INTERNATIONAL

DESIGNER CRK
REVIEWER GSH 05/22/24
PROJECT ID 82382
SHEET 365 TOTAL 2696

CUY-90-16.28 (CCG3A)

MODEL: MP60II PAPERSIZE: 34x22 (in.) DATE: 3/27/2025 TIME: 9:03:51 PM USER: Colin.Kwiatt
pw:\\mb-us-pw.bentley.com:mb-us-pw-03\Documents\Cleveland.OH\OI_Projects\000T\District2\82382\400-Engineering\MOT\Sheets\82382_MP60II.dgn

Preliminary Plans - For Reference Only

HORIZONTAL SCALE IN FEET
0 20 40 80

MAINTENANCE OF TRAFFIC - PHASE 6
I.R. 90 - STA. 91+00.00 TO STA. 101+00.00

FOR CARNEGIE AVE MAINTENANCE OF TRAFFIC CONDITIONS, SEE SHEET 357

MATCH LINE STA. 91+00.00 SEE SHEET 365

MATCH LINE STA. 101+00.00 SEE SHEET 367

SPEED LIMIT 50

PROSPECT AVE TO I.R. 90 WB ENTRANCE RAMP (CLOSED)

REMOVE REMAINING I.R. 90 WB TEMPORARY PAVEMENT WEDGING FROM PHASE 4

MS-56

WEST 90 77 CLOSED

BACK SIDE FRONT SIDE

* EXISTING OVERHEAD SIGN OVERLAYS AND PANELS DETAILED ON SHEET 160

MS-45 EXIT 172 A SOUTH 77 Akron NEXT EXIT

"NEXT EXIT" OVERLAY TO REMAIN

50' TANGENT DRUM SPACING
STA. 95+18
END WORK ZONE
EGRESS PER MT-103.10

PLACE CH AND EY AT 11' OFFSET

PB-41

EY-44

CH-77

STA. 97+96 END CH BEGIN LL

CH/LL -37.3'

EY -26.3'

LL -32.6'

EY -21.6'

390' LANE TAPER (11' TO 12')

LL-55

PROSPECT AVE

BB1 BB2

℄ EX. I.R. 90 STA. 99+45

1327' R

3311' R

I.R. 90 WB

I.R. 90 EB

℄ I.R. 90 WB

STA. 94+16 END PB

STA. 97+81 33.7' RT

STA. 98+48 33.6' RT

STA. 98+48 44.2' RT

STA. 98+47 END PB PER MT-101.80

SECTION VIEW BB1 BB2 SEE SHEET 142

MS-57

WEST 90 77 CLOSED KEEP RIGHT

* EXISTING OVERHEAD SIGN OVERLAYS AND PANELS DETAILED ON SHEET 160

MAINTAIN EX. CB CONNECT TO TEMP MH

℄ I.R. 90 TEMPORARY RUNAROUND

MAINTAIN EX. CB CONNECT TO PR. 18" STORM (TO D-249)

MAINTAIN EX. STORM WITH TEMP MH CONNECT TO PR. 24" STORM (D-241)

D-6.3

STA. 97+81 44.2' RT

MS-52

EAST 90 77 CLOSED

FRONT SIDE BACK SIDE

* EXISTING OVERHEAD SIGN OVERLAYS AND PANELS DETAILED ON SHEET 160

CONSTRUCT PORTION OF I.R. 90 EB BETWEEN PHASE 6 AND PHASE 7 AFTER SHIFTING TWO LANES. SEE NOTE 1

LEFT LANE CLOSED PER MT-95.40 ONLY DURING MEDIAN CONSTRUCTION AT STATION 105+50

PROSPECT AVE TO I.R. 90 EB ENTRANCE RAMP (CLOSED)

℄ CONST. CARNEGIE AVE

℄ EX. R/W CARNEGIE AVE

NOTES:

1) COMPLETE CONSTRUCTION OF OUTSIDE LANE IN CONJUNCTION WITH CONSTRUCTION OF PHASE 6 I.R. 90 EB WORKZONE AT STA. 97+81, 44.2' RT TO STA. 98+48, 44.2' RT. SHIFT TWO I.R. 90 EB LANES TO PHASE 7 TRAFFIC FLOW AND KEEP OUTSIDE LANE IN PHASE 6 TRAFFIC FLOW

FOR MAINTENANCE OF TRAFFIC LEGEND SEE SHEET 359

DESIGN AGENCY
Michael Baker INTERNATIONAL

DESIGNER CRK
REVIEWER GSH 05/22/24
PROJECT ID 82382
SHEET 366 TOTAL 2696

CUY-90-16.28 (CCG3A)

MODEL: MP60l2 PAPERSIZE: 34x22 (In.) DATE: 3/27/2025 TIME: 9:04:07 PM USER: Collin.Kwiatt
pw:\\mb-us-pw.bentley.com:mb-us-pw-03\Documents\Cleveland_OH\01_Projects\DOT\District2\82382\400-Engineering\MOT\Sheets\82382_MP60l2.dgn

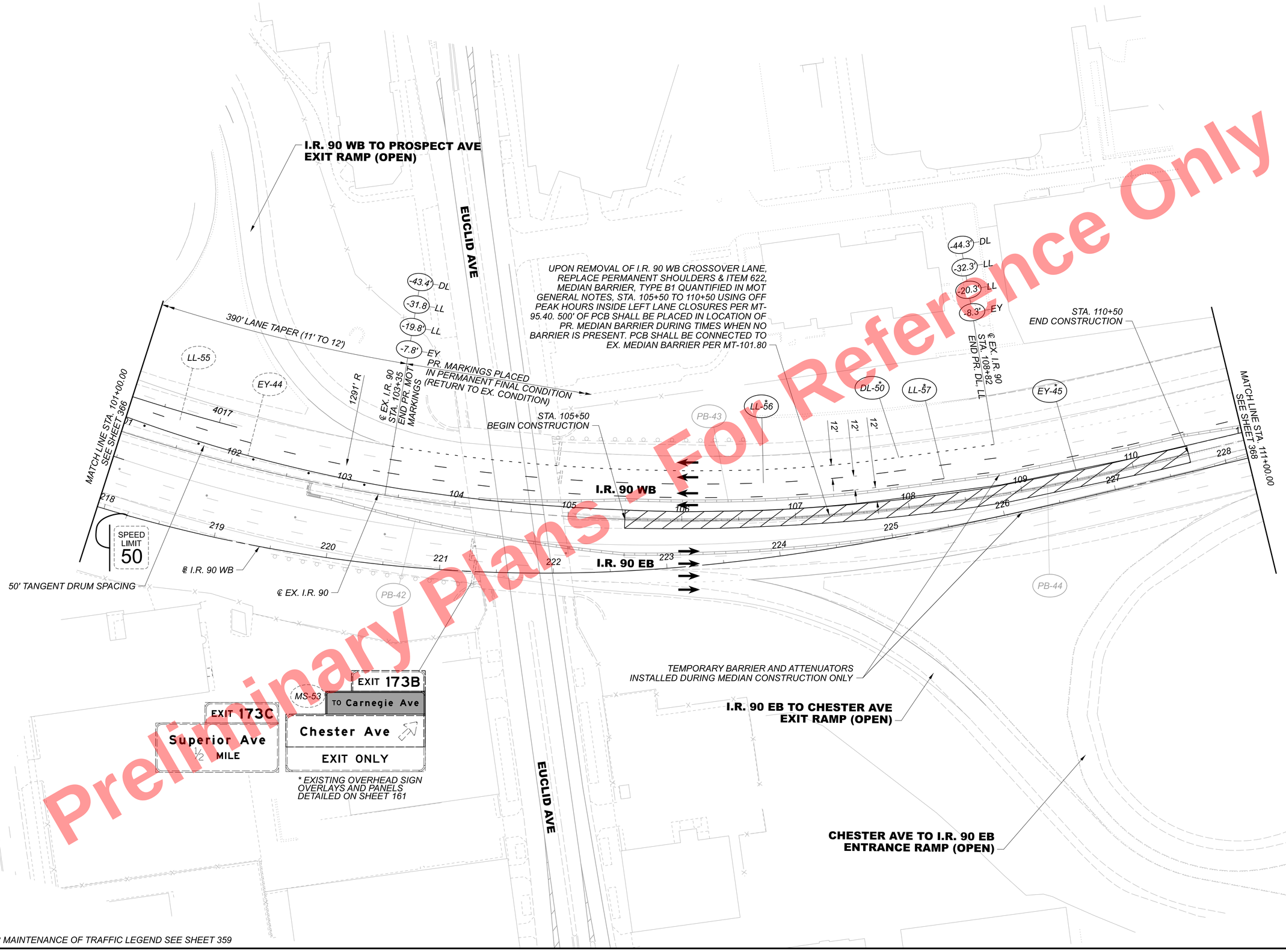

Preliminary Plans - For Reference Only

FOR MAINTENANCE OF TRAFFIC LEGEND SEE SHEET 359

HORIZONTAL SCALE IN FEET
0 20 40 80

MAINTENANCE OF TRAFFIC - PHASE 6
I.R. 90 - STA. 101+00.00 TO STA. 111+00.00

DESIGN AGENCY
Michael Baker INTERNATIONAL

DESIGNER
CRK

REVIEWER
GSH 05/22/24

PROJECT ID
82382

SHEET 367 TOTAL 2696

CUY-90-16.28 (CCG3A)

MODEL: MP6013 PAPERSIZE: 34x22 (in.) DATE: 3/27/2025 TIME: 9:04:17 PM USER: Collin.Kwiatt
pw:\\mb-us-pw.bentley.com:mb-us-pw-03\Documents\Cleveland_OH\OI_Projects\ODOT\District12\82382\400-Engineering\MOT\Sheets\82382_MP6013.dgn

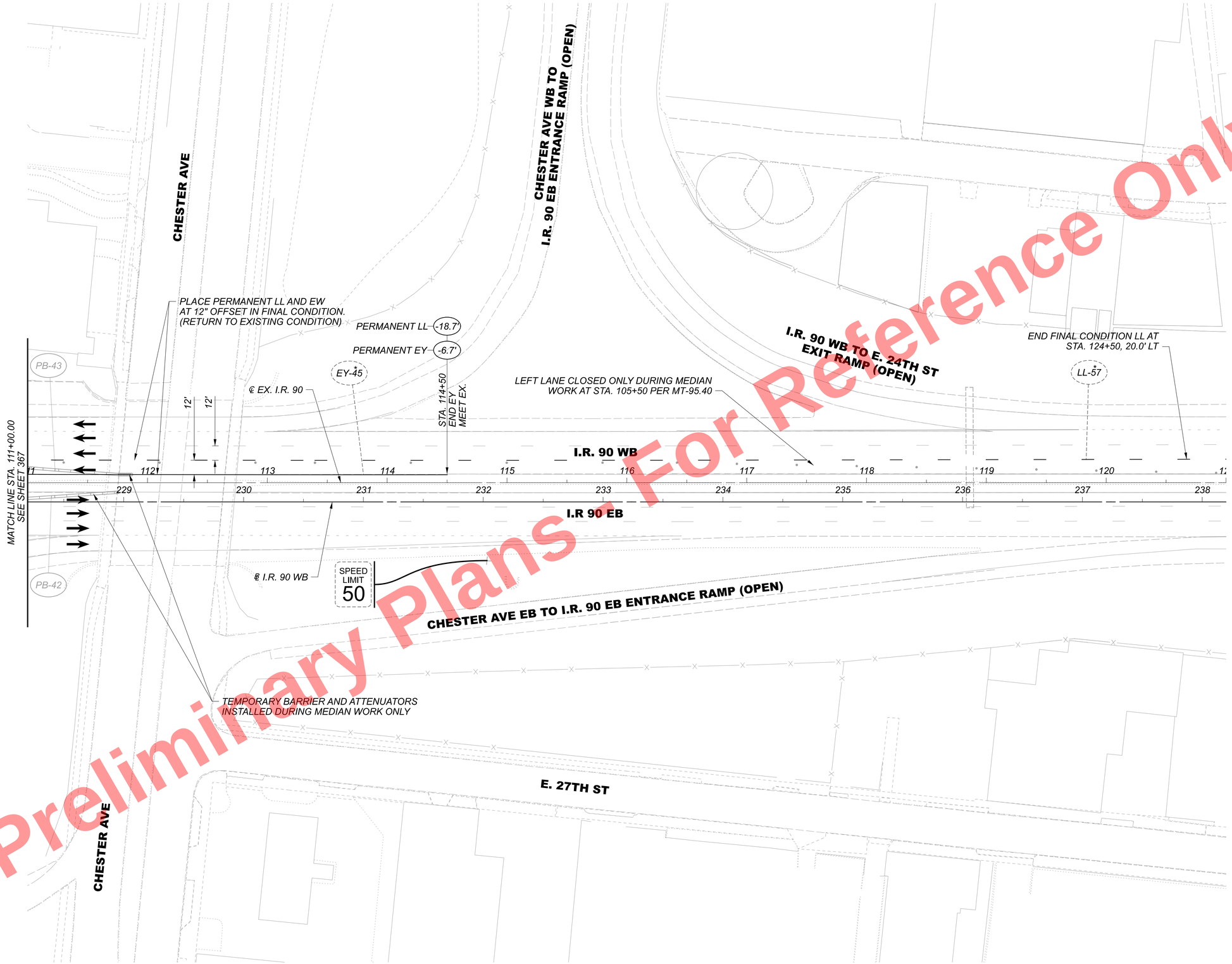

Preliminary Plans
For Reference Only

FOR MAINTENANCE OF TRAFFIC LEGEND SEE SHEET 359

HORIZONTAL SCALE IN FEET
0 20 40 80

MAINTENANCE OF TRAFFIC - PHASE 6
I.R. 90 - STA. 111+00.00 TO END

DESIGN AGENCY
Michael Baker INTERNATIONAL

DESIGNER CRK
REVIEWER GSH 05/22/24
PROJECT ID 82382
SHEET 368 TOTAL 2696

CUY-90-16.28 (CCG3A)

MODEL: MP6014 PAPERSIZE: 34x22 (in.) DATE: 3/27/2025 TIME: 9:04:27 PM USER: Collin.Kwiatt
pw:\\mb-us-pw.bentley.com:mb-us-pw-03\Documents\Cleveland_OH\01_Projects\ODOT\District2\82382\400-Engineering\MOT\Sheets\82382_MP6014.dgn

FOR MAINTENANCE OF TRAFFIC LEGEND SEE SHEET 359

REMOVE EX. SIGNING, AND INSTALL PR. SIGNING PRIOR TO THIS PHASE (AFTER COMPLETION OF RAMP A3)

REMOVE EX. MOT RIGHT ONLY LA AND PLACE PERMANENT RIGHT-THROUGH LA. RETURN TO EXISTING CONDITION. RETURN OVERHEAD LANE CONTROL SIGN TO EXISTING

R3-6R-48

PLACE REMAINING PROPOSED CARNEGIE AVE PAVEMENT MARKINGS IN FINAL CONDITION. FOR DETAILS, SEE SHEET 1542

INSTALL PR. SIGNING PRIOR TO THIS PHASE (AFTER COMPLETION OF RAMP A3)

"77", "SOUTH", "AKRON" TO REMAIN COVERED UNTIL AFTER PHASE 9

MS-58

PLACE PROPOSED RAMP A3 PAVEMENT MARKINGS IN FINAL CONDITION. FOR DETAILS, SEE SHEET 1528

EW-82

EY-43

℄ E. 14TH ST SB STA. 39+00 END EY

℄ E. 14TH ST SB STA. 38+47 END EW

℄ E. 14TH ST SB STA. 38+50

SEE SHEET 364

℄ CONST. CARNEGIE AVE

℄ EX. R/W CARNEGIE AVE

E. 14TH ST

E. 18TH ST

CARNEGIE AVE

CENTRAL AVE

E. 14TH ST TO I.R. 90 WB RAMP (OPEN)

E. 14TH ST SB

E. 14TH ST NB

E. 21ST ST TO I.R. 77 SB RAMP (OPEN)

I.R. 90 WB TO I.R. 77 SB RAMP (OPEN)

℄ I.R. 90 WB

℄ E. 14TH ST. SB

MATCH LINE STA. 44+50.00 SEE SHEET 356

Preliminary Plans - For Reference Only

HORIZONTAL SCALE IN FEET
0 20 40 80

MAINTENANCE OF TRAFFIC - PHASE 6
CARNEGIE AVE - BEGIN TO STA. 44+50.00

DESIGN AGENCY
Michael Baker INTERNATIONAL

DESIGNER CRK
REVIEWER GSH 05/22/24
PROJECT ID 82382
SHEET 369 TOTAL 2696

CUY-90-16.28 (CCG3A)

MODEL: MP6015 PAPERSIZE: 34x22 (In.) DATE: 3/27/2025 TIME: 9:04:40 PM USER: Collin.Kwiatt
pw:\\mb-us-pw.bentley.com:mb-us-pw-03\Documents\Cleveland_OH\01_Projects\ODOT\District2\82382\400-Engineering\MOT\Sheets\82382_MP6015.dgn

LEGEND

- AREA OF CONSTRUCTION TO BE COMPLETED BY END OF PHASE
- AREA OF CONSTRUCTION ONGOING IN THIS PHASE
- TEMPORARY PAVEMENT CONSTRUCTED THIS PHASE
- EXISTING BRIDGE OR TEMPORARY PAVEMENT REMOVAL TO BE COMPLETED BY END OH PHASE
- DETAILS LOCATED IN PRIOR PHASE

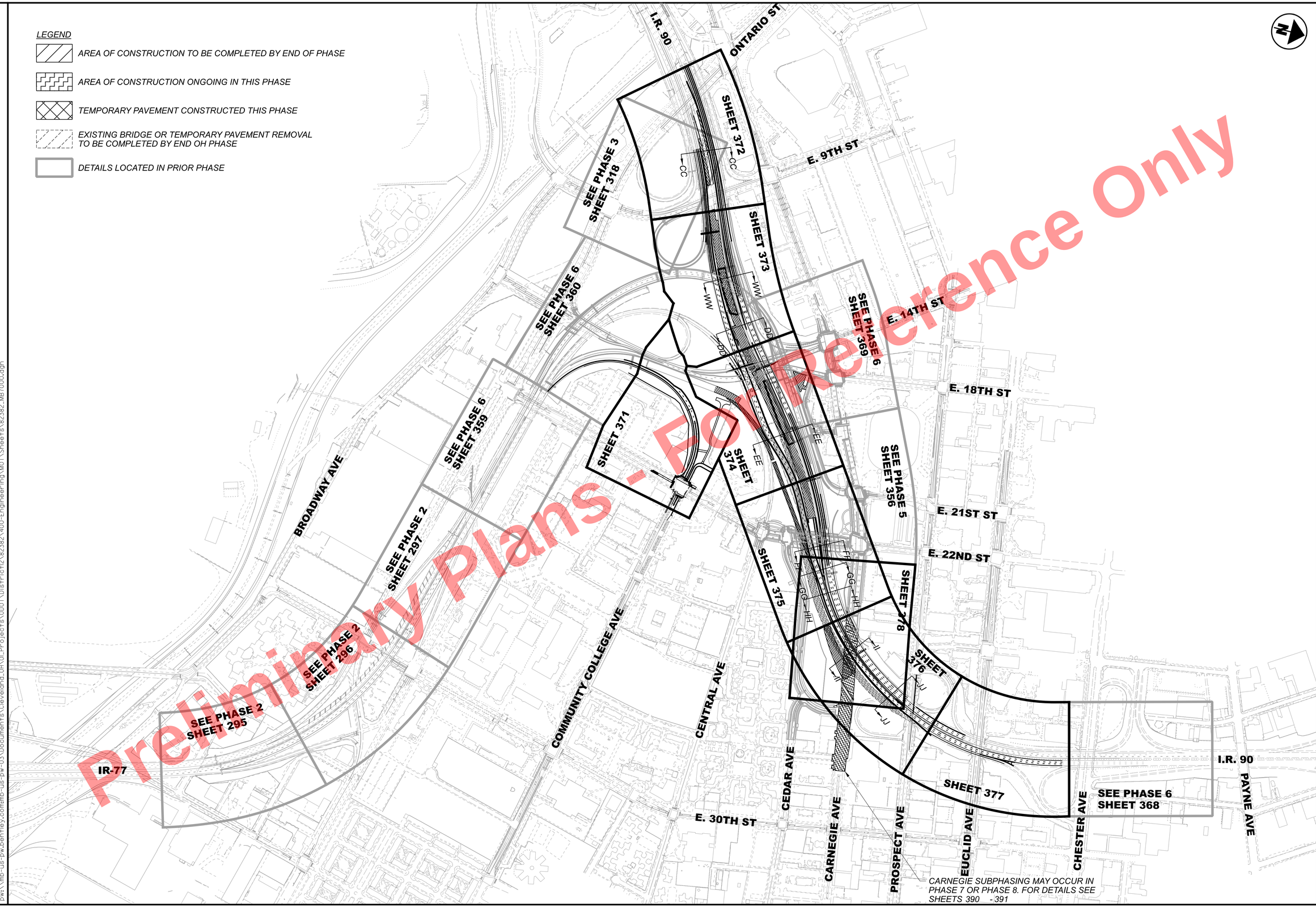

CARNEGIE SUBPHASING MAY OCCUR IN PHASE 7 OR PHASE 8. FOR DETAILS SEE SHEETS 390 - 391

Preliminary Plans - For Reference Only

HORIZONTAL SCALE IN FEET
0 150 300 600

MAINTENANCE OF TRAFFIC - PHASE 7 SHEET PLAN KEY

DESIGN AGENCY
Michael Baker INTERNATIONAL

DESIGNER CRK
REVIEWER GSH 05/22/24
PROJECT ID 82382
SHEET 370 TOTAL 2696

CUY-90-16.28 (CCG3A)

MODEL: Sheet PAPERSIZE: 34x22 (in.) DATE: 3/27/2025 TIME: 9:04:51 PM USER: Collin.Kwiatt
pw:\\mb-us-pw.bentley.commb-us-pw-03\Documents\Cleveland_OH_OL_Projects\ODOT\District12_82382\400-Engineering\MOT\Sheets\82382_MBT000.dgn

MAINTENANCE OF TRAFFIC LEGEND

- AREA OF CONSTRUCTION TO BE COMPLETED BY END OF PHASE
- AREA OF CONSTRUCTION ONGOING IN THIS PHASE
- TEMPORARY PAVEMENT CONSTRUCTED THIS PHASE
- PAVEMENT FOR MAINTAINING TRAFFIC, CLASS A
- EXISTING BRIDGE OR TEMPORARY PAVEMENT REMOVAL TO BE COMPLETED BY END OF PHASE
- DRUMS SPACED AS NOTED, OR AS SHOWN ON REFERENCE STANDARD CONSTRUCTION DRAWINGS
- (17.5') OFFSET RIGHT FROM CENTERLINE, BASELINE OR EX. EDGE AS NOTED
- (-17.5') OFFSET LEFT FROM CENTERLINE, BASELINE OR EX. EDGE AS NOTED
- (EW) WORK ZONE EDGE LINE (WHITE), CLASS I
- (EY) WORK ZONE EDGE LINE (YELLOW), CLASS I
- (MS) TEMPORARY SIGN
- (CH) WORK ZONE CHANNELIZING LINE (WHITE), CLASS I
- (DL) WORK ZONE DOTTED LINE (WHITE), CLASS I
- (*) FINAL CONDITION PAVEMENT MARKING (SEE MAINTENANCE OF TRAFFIC SUBSUMMARY FOR SPECIFIC PAY ITEM)

* - STATION AND OFFSET INFORMATION PROVIDED BASED ON ALIGNMENT OF ROADWAY BEING DETAILED, UNLESS NOTED OTHERWISE.

^ - ITEM 622, PORTABLE BARRIER, ANCHORED, AS PER PLAN TO BE USED WHERE INDICATED IN THE PLANS

- (PB) ITEM 622, PORTABLE BARRIER (PB), 50", AS PER PLAN^
- IMPACT ATTENUATOR
- (CV) CHEVRON MARKING
- (LL) WORK ZONE LANE LINE, CLASS I
- (CL) WORK ZONE CENTER LINE (DOUBLE SOLID), CLASS I
- (XW) WORK ZONE CROSS WALK LINE, CLASS I
- (SL) WORK ZONE STOP LINE, CLASS I
- (LA) WORK ZONE LANE ARROW, CLASS I

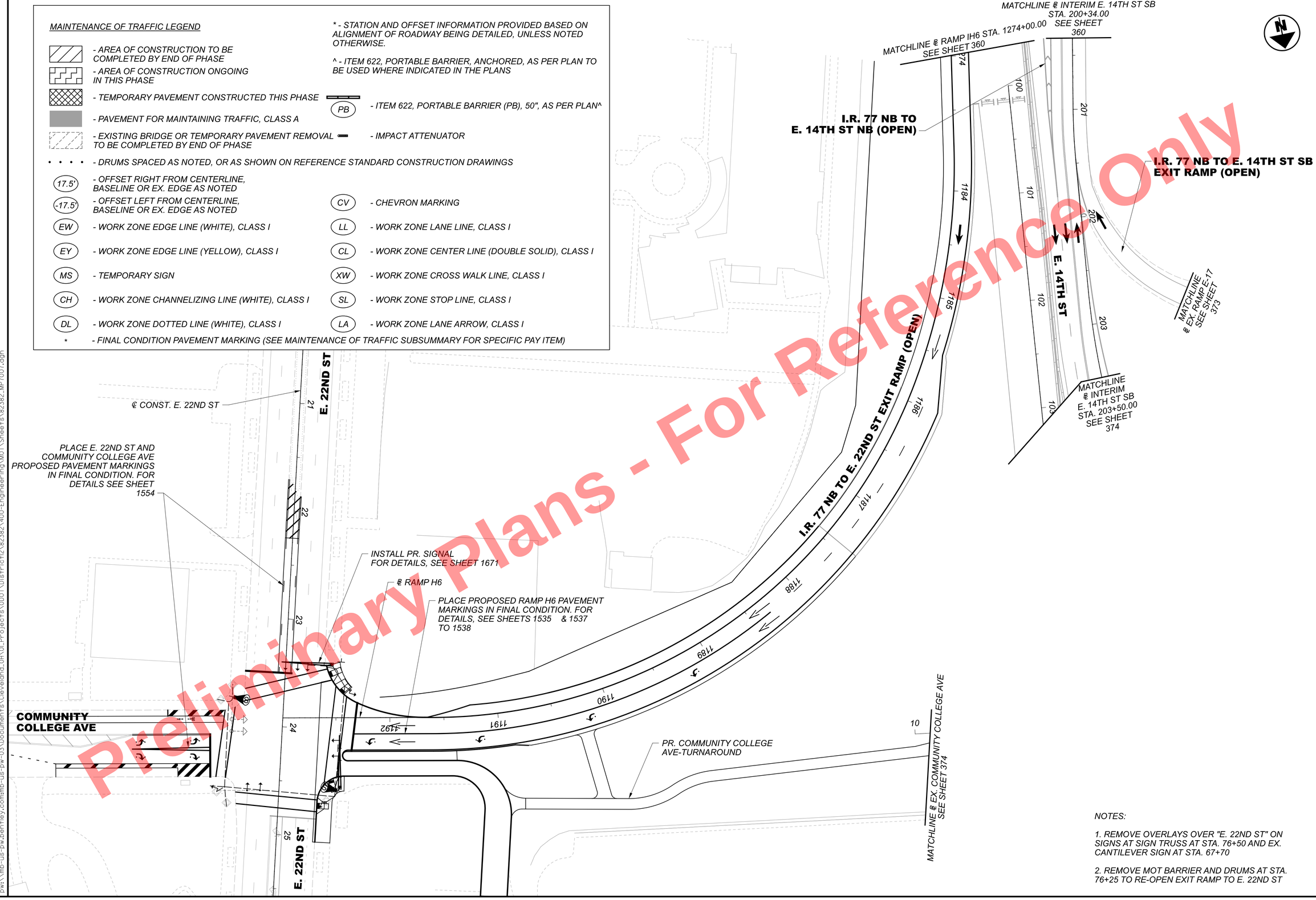

Preliminary Plans - For Reference Only

NOTES:

1. REMOVE OVERLAYS OVER "E. 22ND ST" ON SIGNS AT SIGN TRUSS AT STA. 76+50 AND EX. CANTILEVER SIGN AT STA. 67+70

2. REMOVE MOT BARRIER AND DRUMS AT STA. 76+25 TO RE-OPEN EXIT RAMP TO E. 22ND ST

HORIZONTAL SCALE IN FEET: 0, 20, 40, 80

MAINTENANCE OF TRAFFIC - PHASE 7
RAMP H6 - STA. 1274+00.00 TO END

DESIGN AGENCY: Michael Baker INTERNATIONAL

DESIGNER: CRK

REVIEWER: GSH 05/22/24

PROJECT ID: 82382

SHEET: 371 TOTAL: 2696

CUY-90-16.28 (CCG3A)

MODEL: MP7007 PAPERSIZE: 34x22 (in.) DATE: 3/27/2025 TIME: 9:05:06 PM USER: Collin.Kwiatt
pw:\\mb-us-pw.bentley.com:mb-us-pw-03\Documents\Cleveland_OH\01_Projects\ODOT\District2\82382\400-Engineering\MOT\

REMOVE TEMPORARY CROSSOVER PAVEMENT AND CONSTRUCT PERMANENT SHOULDER AND MEDIAN BARRIER USING ITEM 622, CONCRETE BARRIER, SINGLE SLOPE, TYPE D, QUANTIFIED IN THE MAINTENANCE OF TRAFFIC NOTES
MAINTAIN TRAFFIC PER MT-95.40

℄ I.R. 90 WB STA. 172+80
PLACE CH IN FINAL CONDITION

E. 9TH ST

E. 9TH ST TO I.R. 90 WB ENTRANCE RAMP (OPEN)

312' LANE SHIFT TAPER @ 75:1

MEET EX.

℄ I.R. 90 WB STA. 167+38 BEGIN CH (3) BEGIN EY

℄ I.R. 90 WB STA. 170+50 END PB FLARE

℄ I.R. 90 WB STA. 173+75 END CH BEGIN EW PC

CC

400' LANE SHIFT @ 45:1

STA. 176+28 PT

STA. 176+75

3416' R

I.R. 90 WB

I.R. 90 EB

PB-46

℄ I.R. 90 WB

℄ I.R. 90 EB

STA. 168+30 BEGIN PB @ 14:1 FLARE

2281' R

3'

BEGIN CONSTRUCTION
℄ I.R. 90 WB STA. 175+77
(PROJECT START)

36.0' LT

5.0' LT

PB-45

EY-46

℄ EX. I.R. 90

I.R. 90 EB TO ONTARIO ST/
E 9TH ST SB EXIT RAMP (OPEN)

ONTARIO ST

Carnegie Ave	¼
Chester Ave	1½
Superior Ave	2

REMOVE EXISTING CANTILEVER AND SIGN

STA. 56+59 BEGIN PR. MARKINGS BEGIN PB PC

SECTION VIEW SEE SHEET 143

℄ I.R. 90 WB STA. 173+00 PC/PT

163' LANE TAPER (11.0' TO 10.0')

2650' R

℄ I.R. 90 WB STA. 174+63 PC/PT

STA+60+00

29291' R

STA+60+50

MATCH LINE STA. 61+00.00
SEE SHEET 373

EAST		WEST	
422	14	422	14
Orange Ave		Ontario St	
RAMPS 25 MPH			

EAST		WEST	
422	14	422	14
Orange Ave		Ontario St	

-13.6' CH
-2.6' CH
8.4' CH
19.4' EY

-11.7' CH
-0.4' CH
11.6' CH
23.7' EY

-13.6' CH/EW
-2.6' CH
8.4' CH
19.4' EY

-12.4' EW
-1.4' CH
9.6' CH
20.6' EY

-12.0' EW
-1.0' CH
10.0' CH
21.0' EY

-21.3' EY
-10.3' CH
0.7' CH
11.7' DL
22.7' EW

-9.3' EY
1.7' CH
12.7' CH
23.7' DL
34.7' EW

1.2' EY
11.2' CH
21.2' CH
31.2' DL
41.2' EW

9.8' PB

6.0' PB

CH-83 CH-82 CH-81 CH-80 CH-79 DL-51 EW-83 EW-84 EY-47

FOR MAINTENANCE OF TRAFFIC LEGEND SEE SHEET 371

Preliminary Plans - For Reference Only

HORIZONTAL SCALE IN FEET
0 20 40 80

MAINTENANCE OF TRAFFIC - PHASE 7
I.R. 90 - BEGIN TO STA. 61+00.00

DESIGN AGENCY
Michael Baker INTERNATIONAL

DESIGNER CRK
REVIEWER GSH 05/22/24
PROJECT ID 82382
SHEET 372 TOTAL 2696

CUY-90-16.28 (CCG3A)

MODEL: MP7008 PAPERSIZE: 34x22 (in.) DATE: 3/27/2025 TIME: 9:05:17 PM USER: Collin.Kwiatt
pw:\\mb-us-pw.bentley.com:mb-us-pw-03\Documents\Cleveland_OH\01_Projects\000T\District2\82382\400-Engineering\MOT\Sheets\82382_MP7008.dgn

Preliminary Plans - For Reference Only

REMOVE EXISTING SIGN TRUSS

EXIT 172A

Carnegie Ave MILE

E 9th St Downtown EXIT 25 MPH ONLY

EXIT 172A

-20.7' EW
-9.7' CH
1.3' CH
12.3' EY

℄ I.R. 90 WB

STA. 180+76 PC

PLACE EW AT 5' OFFSET FROM PR. SHOULDER

EXTEND CH 300' PAST TAPER PER MT-99.30

-26.7' EW
-15.7' CH/LL
-4.7' CH/LL
6.3' EY

STA. 183+78 END CH (2) BEGIN LL (2)

-31.0' EW
-20.0' LL
-9.0' LL
2.0' EY

STA. 185+91 PC/PT

ATTACH IMPACT ATTENUATOR TO END

PR. WALL AC

400' LANE SHIFT @ 45:1

℄ I.R. 90 EB
STA. 176+50, 50.0' LT

℄ I.R. 90 EB
STA. 176+50, 36.0' LT

EW-84 CH-82 CH-81 PB-46

WW

DD

2834' R

E. 14TH ST TO I.R. 90 WB ENTRANCE RAMP (OPEN)

LL-61

I.R. 90 WB

EY-47 STA. 184+00, 24.0' RT

2871' R

LL-60

INSTALL TEMP MH TO CONNECT PR. STORM TO PR. 66" COMBINED SEWER

D-7.1

STA. 183+21 BEGIN WORK ZONE EGRESS PER MT-103.10

PR. LIGHTWEIGHT FILL

STA. 179+92, 5.0' RT

PR. LIGHTWEIGHT FILL INSTALLED IN PHASE 5

STA. 184+00, 5.0' RT

BEGIN ANCHORD PB STA. 68+16

I.R. 90 EB

MATCH LINE STA. 61+00.00 SEE SHEET 372

MATCH LINE STA. 71+00.00 SEE SHEET 374

EW-83 DL-51 PB -0.9' 42.3' EW

STA. 61+50 BEGIN RUMBLE STRIPS

STA. 61+74 EW PC

525' R

STA. 62+08 END DL BEGIN CH (2)

STA. 62+84 EW PT

450' R

STA. 63+00 END EW END CH MEET FINAL MARKINGS

STA. 63+24 END CH BEGIN EW PC/PT

CH-84 CH-85 CH-79 CH-80 PB-45

STA. 65+19 END CH (2) BEGIN LL (2) PT/PC

6555' R

EW-85 EY-46 LL-59 LL-58

STA. 67+89 PC/PT

14.2' EY
25.2' LL
36.2' LL
47.2' EW

SECTION VIEW SEE SHEET 150

WW

℄ I.R. 90 EB
℄ EX. I.R. 90

REMOVE WESTBOUND PORTION OF EXISTING BRIDGE E5. FOR DETAILS, SEE SHEET 2371

DL/CH (2) 34.0'
EW 45.1'

STA. 62+50 BEGIN REMOVAL & RESURFACING RUMBLE STRIPS

195' LANE TAPER (10.0' TO 11.0')

9.3' EY
19.3' CH
29.3' CH
39.3' CH/EW

13.5' EY
24.5' CH/LL
35.5' CH/LL
46.5' EW

I.R. 90 EB TO E. 9TH ST NB EXIT RAMP (OPEN)

I.R. 90 WB TO I.R. 77 SB RAMP (OPEN)

MS-59

Superior Ave E 30th St 1¼ MILES EXIT 173C

OPTION TO INSTALL "SUPERIOR AVE" SIGN DURING THIS PHASE

INSTALL PR. "CHESTER AVE" PRIOR TO REMOVING EXISTING SIGN OR INSTALL TEMPORARY GROUND-MOUNTED SIGNS AS INTERIM. INCLUDE "TO CARNEGIE AVE" TEMP SIGN OVERLAY

Chester Ave ¾ MILE To Carnegie Ave EXIT 173B

OPTION TO INSTALL "CARNEGIE AVE" SIGN BUT MUST REMAIN COVERED UNTIL COMPLETION OF PHASE 9

Carnegie Ave E 22nd St EXIT 172B

INSTALL PR. "E 9TH ST" PRIOR TO REMOVING EXISTING SIGN OR INSTALL TEMPORARY GROUND-MOUNTED SIGNS AS INTERIM

E 9th St Downtown EXIT 25 MPH ONLY EXIT 172A

INSTALL PR. OVERHEAD TRUSS AND SIGNS AS NOTED OR AS DIRECTED BY THE ENGINEER; REFER TO SIGNING PLAN FOR FINAL SIGN DESIGNS

MATCHLINE SEE SHEET 360

I.R. 77 NB TO I.R. 90 EB RAMP (OPEN)

MATCHLINE SEE SHEET 360

MATCHLINE SEE SHEET 371

I.R. 77 NB TO E. 14TH ST SB EXIT RAMP (OPEN)

STA. 69+42 BEGIN EY

SECTION VIEW SEE SHEET 143

DD

EY 15.0'
LL 26.0'
LL 37.0'
EW 48.0'

EW-86

STA. 69+38 BEGIN EW

EY-48

REMOVE EXISTING CANTILEVER AND SIGN

Carnegie Ave ⅜
Chester Ave 1
Superior Ave 1½

INSTALL TEMPORARY SHORING. FOR DETAILS SEE SHEET 2376

3078' R

STA. 70+16 PT/PC

1871' R

826' R

886' R

FOR MAINTENANCE OF TRAFFIC LEGEND SEE SHEET 371

HORIZONTAL SCALE IN FEET
0 20 40 80

MAINTENANCE OF TRAFFIC - PHASE 7
I.R. 90 - STA. 61+00.00 TO STA. 71+00.00

DESIGN AGENCY
Michael Baker INTERNATIONAL

DESIGNER CRK
REVIEWER GSH 05/22/24
PROJECT ID 82382
SHEET 373 TOTAL 2696

CUY-90-16.28 (CCG3A)

MODEL: MP7009 PAPERSIZE: 34x22 (in.) DATE: 3/27/2025 TIME: 9:05:27 PM USER: Collin.Kwiat
pw:\\mb-us-pw.bentley.commb-us-pw-03\Documents\Cleveland_OHIO\Projects\0007\District2\82382\400-Engineering\MOT\Sheets\82382_MP7009.dgn

E. 14TH ST TO I.R. 90 WB ENTRANCE RAMP (OPEN)

E. 14TH ST NB

REMOVE TEMPORARY WALK

E. 18TH ST

CENTRAL AVE

INSTALL PR. PARKING LOT

EW -31.0'
LL/CH -20.0'
LL/CH -9.0'
EY 2.0'

E. 19TH ST

STA. 192+87
END LL (2)
BEGIN CH (2)

PR. LIGHTWEIGHT FILL INSTALLED IN PHASE 4

550' LANE WIDENING (11' TO 12')

STA. 196+54
END EW
MEET PR. CH

EE

E. 21ST ST TO I.R. 77 SB ENTRANCE RAMP (OPEN)

I.R. 90 WB TO I.R. 77 SB RAMP (OPEN)

REMOVE TEMPORARY PAVEMENT AND INSTALL OMITTED LEFT TURN LANE.

END PB
STA. 37+06

℄ E. 14TH ST SB
STA. 208+20
END PB
END EW
(MEET EX. PB & EX. EW)

EW-84

PB-49

REMOVE WESTBOUND PORTION OF EXISTING BRIDGE E8. FOR DETAILS, SEE SHEET 2043

LL-61

LL-60

I.R. 90 WB

STA. 193+70
END WORK ZONE EGRESS
PER MT-103.10

CH-89

CH-88

EY-47

PB-46

STA. 192+45, 12.0' RT
℄ I.R. 90 EB

REMOVE TEMPORARY PAVEMENT FROM PHASE 5 I.R. 90 WB CROSSOVER

PR. LIGHTWEIGHT FILL

PLACE TOE OF PB AT 1' OFFSET FROM WORK ZONE AND REMOVE EX. MOT CH.

STA. 192+45, 24.0' RT
℄ I.R. 90 EB
TEMPORARY RUNAROUND

LL-59

PB-45

LL-58

BEGIN PB
STA. 35+06

EY-49

CH-87

STA. 73+96
℄ EX. I.R. 90
END ANCHORED PB
MEET EX. MEDIAN BARRIER

EY-46

STA. 75+98
BEGIN REMOVAL OF
EX. MEDIAN BARRIER

EW-85

STA. 71+70
PT/PC
END EW
BEGIN CH

D-7.2

MATCH LINE STA. 71+00.00
SEE SHEET 373

INSTALL TEMP MH TO CONNECT PR. STORM TO PR. 66" COMBINED SEWER (D-602)

EY-48

I.R. 77 NB TO I.R. 90 EB RAMP (OPEN)

I.R. 90 EB BEGIN PB INCREASED DELINEATION STA. 75+98

DL-52

EW-86

PLACE PB TOE AT 2' OFFSET FROM EW

MATCH LINE STA. 81+00.00
SEE SHEET 375

STA. 73+34
PT
MAINTAIN EX. CB
CONNECT
TO PR. MH
(D-531)

PB-47

CONSTRUCT BRIDGE 11

CONSTRUCT PROP CB OUTLET TO DETENTION BASIN

END PB INCREASED DELINEATION STA. 77+95

SPEED LIMIT 45

℄ I.R. 90 EB TEMPORARY RUNAROUND STA. 3+31

BEGIN PB INCREASED DELINEATION STA. 79+01

CH-86

STA. 73+02
BEGIN DL
END CH (2)
END PB FLARE

DECISION SIGHT DISTANCE = 321 (SCD = 930')

D-7.4

INSTALL TEMP CB-2-2B. CONNECT TO PR. CB (D-530)

I.R. 77 NB TO E. 22ND ST EXIT RAMP (CLOSED PERMANENTLY)

SECTION VIEW
SEE SHEET 143

EE

EY 0.0'
LL 11.0'
LL 22.0'
EW/DL 33.0'

STA. 71+42
END EY
BEGIN CH

PLACE PB TOE OF BARRIER AT 1' OFFSET

STA. 71+57
BEGIN 4:1 PB FLARE

PLACE EY 11' OFFSET FROM EX. EW

STA. 72+00
END REMOVAL & RESURFACING RUMBLE STRIPS

SEE NOTE 1

℄ E. 14TH ST SB
STA. 207+20
BEGIN EW

BEGIN PB
STA. 206+36

PB-48

BEGIN 575' MERGE TAPER @ 35:1

TEMPORARY PAVEMENT FOR PHASE 8 TEMPORARY RAMP H5 CONNECTION TO I.R. 90 EB. FOR DETAILS, SEE SHEET 263

EY 5.4'
LL 16.4'
LL 27.4'
CH(2)/DL 38.4'
EW 54.4'

INSTALL TEMP CB-2-2B, CONNECT TO PR. MH (D-531)

D-7.3

CONSTRUCT PR. CB AND MH TO CONSTRUCTION JOINT. COVER WITH STEEL PLATE UNDER TEMP PAVEMENT

℄ TEMPORARY RAMP H5
STA. 107+01
ENDCONSTRUCTION

E. 14TH ST SB

E. 14TH ST NB

MATCHLINE ℄ EX. COMMUNITY COLLEGE AVE
SEE SHEET 371

EXIT 173
EAST
90
Carnegie Ave
MILE
EXIT CLOSED

EXIT 173B
TO Carnegie Ave
Chester Ave
¾
MILE

REMOVE EXISTING SIGN TRUSS

℄ TEMPORARY RAMP H5
STA. 105+18
BEGIN CONSTRUCTION

℄ TEMPORARY RAMP H5

MATCHLINE SEE SHEET 371

NOTES:

1. OMIT PROPOSED FINAL CONDITION DOTTED LINE BETWEEN INTERIM E. 14TH ST SB STA. 207+20 TO STA. 208+20 AND PLACE MOT EW.

FOR MAINTENANCE OF TRAFFIC LEGEND SEE SHEET 371

For Reference Only
Preliminary Plans - Not for Construction

HORIZONTAL SCALE IN FEET
0 20 40 80

MAINTENANCE OF TRAFFIC - PHASE 7
I.R. 90 - STA. 71+00.00 TO STA. 81+00.00

DESIGN AGENCY
Michael Baker INTERNATIONAL

DESIGNER CRK
REVIEWER GSH 05/22/24
PROJECT ID 82382
SHEET 374 TOTAL 2696

CUY-90-16.28 (CCG3A)

MODEL: MP70i0 PAPERSIZE: 34x22 (in.) DATE: 3/27/2025 TIME: 9:05:39 PM USER: Collin.Kwiatt
pw:\\mb-us-pw.bentley.commb-us-pw-03\Documents\Cleveland_OH\OL_Projects\ODOT\District12\82382\400-Engineering\MOT\Sheets\82382_MP70l0.dgn

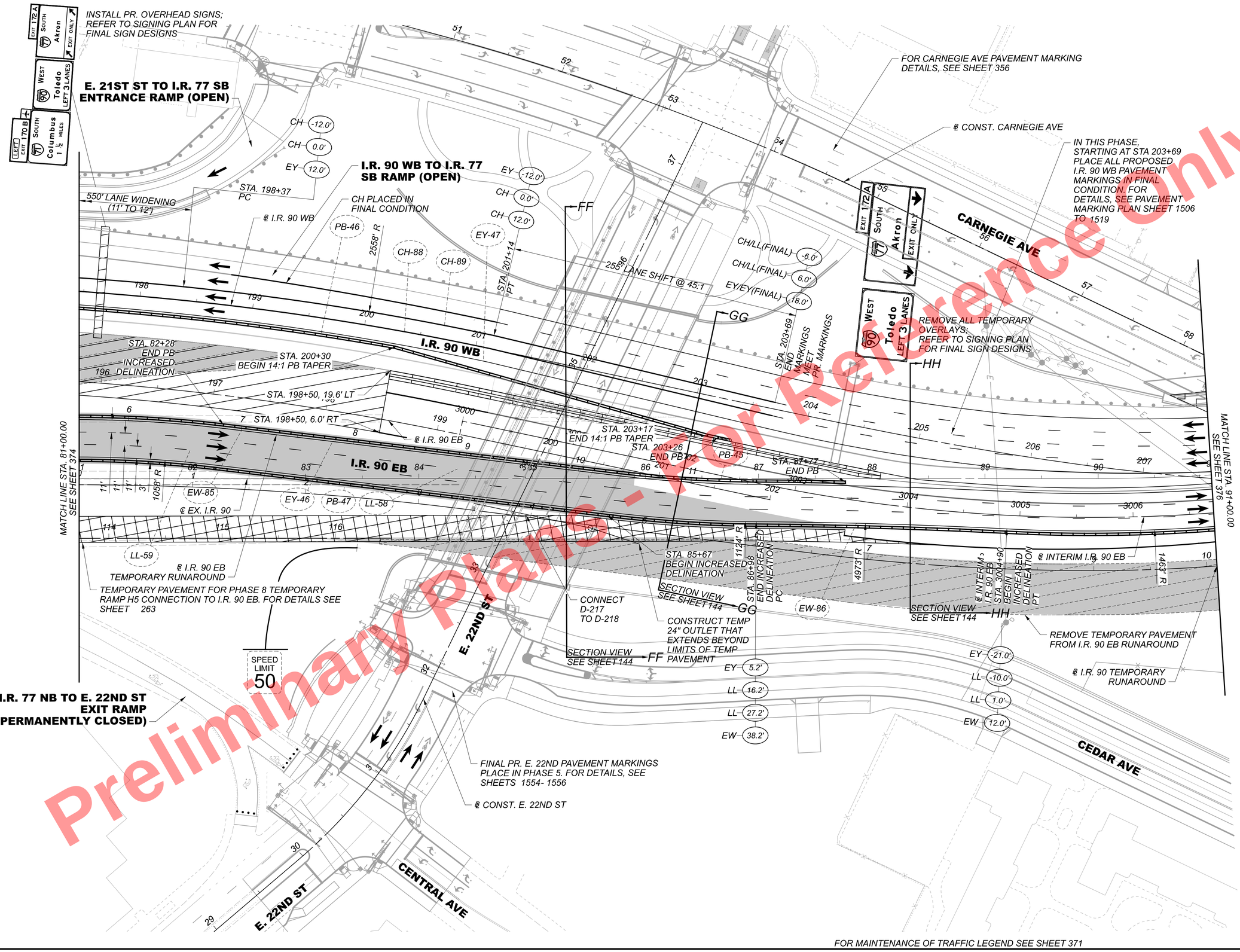

Preliminary Plans - For Reference Only

FOR MAINTENANCE OF TRAFFIC LEGEND SEE SHEET 371

HORIZONTAL SCALE IN FEET 0 20 40 80

MAINTENANCE OF TRAFFIC - PHASE 7
I.R. 90 - STA. 81+00.00 TO STA. 91+00.00

DESIGN AGENCY: Michael Baker INTERNATIONAL

DESIGNER: CRK

REVIEWER: GSH 05/22/24

PROJECT ID: 82382

SHEET 375 TOTAL 2696

CUY-90-16.28 (CCG3A)

MODEL: MP70II PAPERSIZE: 34x22 (in.) DATE: 3/27/2025 TIME: 9:05:52 PM USER: Collin.Kwiatt
pw:\\mb-us-pw.bentley.com:mb-us-pw-03\Documents\Cleveland_OH\OI_Projects\ODOT\District2\82382\400-Engineering\MOT\Sheets\82382_MP70II.dgn

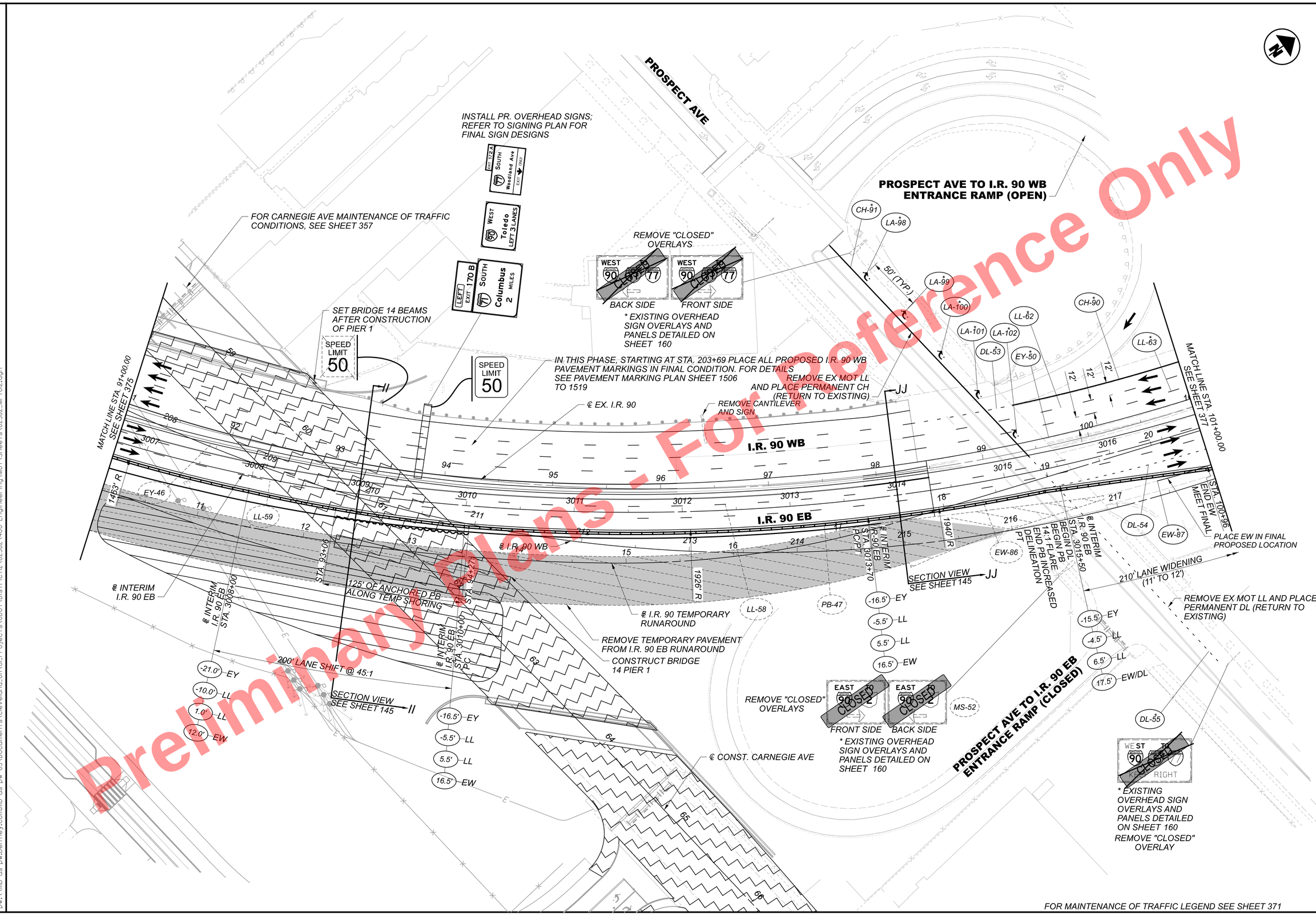

FOR MAINTENANCE OF TRAFFIC LEGEND SEE SHEET 371

Preliminary Plans - For Reference Only

HORIZONTAL SCALE IN FEET 0 20 40 80

MAINTENANCE OF TRAFFIC - PHASE 7
I.R. 90 - STA. 91+00.00 TO STA. 101+00.00

DESIGN AGENCY: Michael Baker INTERNATIONAL

DESIGNER: CRK

REVIEWER: GSH 05/22/24

PROJECT ID: 82382

SHEET 376 TOTAL 2696

CUY-90-16.28 (CCG3A)

MODEL: MP7012 PAPERSIZE: 34x22 (in.) DATE: 3/27/2025 TIME: 9:06:03 PM USER: Collin.Kwiatt
pw:\\mb-us-pw.bentley.com:mb-us-pw-03\Documents\Cleveland_OH\OI_Projects\ODOT\District12\82382\400-Engineering\MOT\Sheets\82382_MP7012.dgn

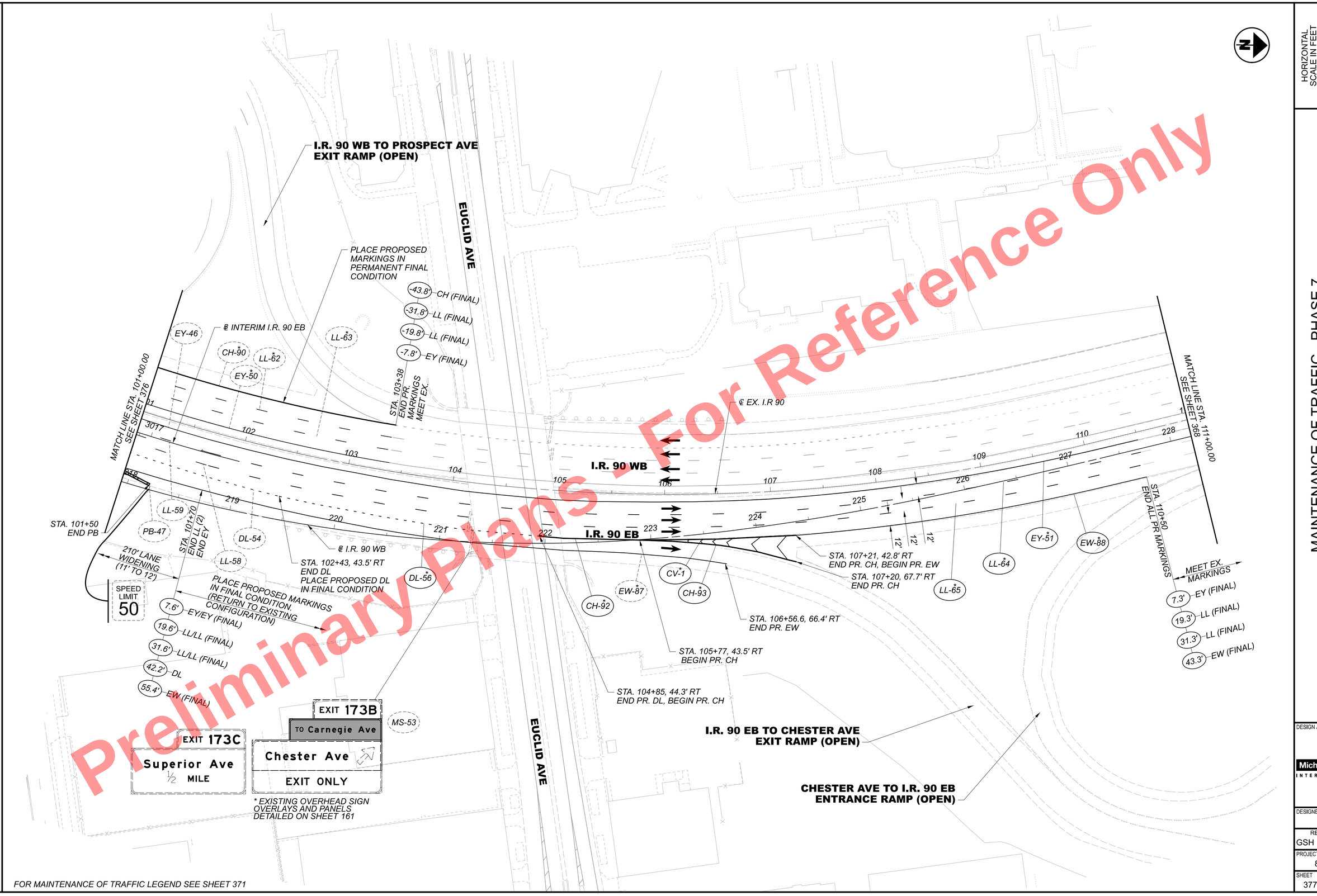

Preliminary Plans - For Reference Only

HORIZONTAL SCALE IN FEET
0 20 40 80

MAINTENANCE OF TRAFFIC - PHASE 7
I.R. 90 - STA. 101+00.00 TO STA. 111+00.00

CUY-90-16.28 (CCG3A)

MODEL: MP7OI3 PAPERSIZE: 34x22 (In.) DATE: 3/27/2025 TIME: 9:06:14 PM USER: CollinsKW1
pw:\\mb-us-pw.bentley.com\mb-us-pw-03\Documents\Cleveland_OH\OI_Projects\0DOT\District2\82382\400-Engineering\MOT\Sheets\82382_MP7OI3.dgn

DESIGN AGENCY
Michael Baker INTERNATIONAL

DESIGNER	CRK
REVIEWER	GSH 05/22/24
PROJECT ID	82382
SHEET	377
TOTAL	2696

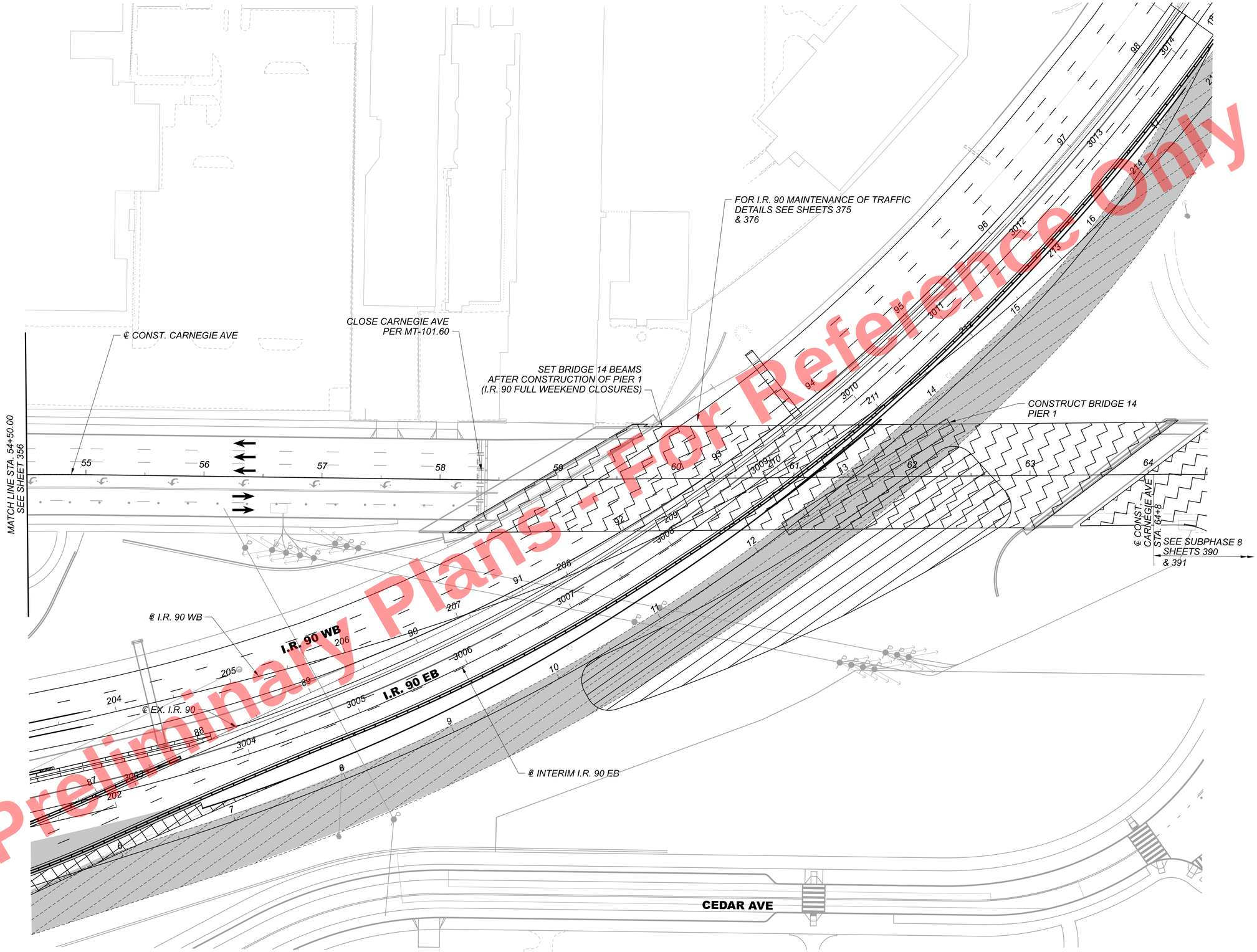

Preliminary Plans - For Reference Only

FOR MAINTENANCE OF TRAFFIC LEGEND SEE SHEET 371

HORIZONTAL SCALE IN FEET
0 20 40 80

MAINTENANCE OF TRAFFIC - PHASE 7
CARNEGIE AVE - STA. 54+50.00 TO STA. 64+50.00

DESIGN AGENCY
Michael Baker INTERNATIONAL

DESIGNER CRK
REVIEWER GSH 05/22/24
PROJECT ID 82382
SHEET 378 TOTAL 2696

CUY-90-16.28 (CCG3A)

MODEL: 82382_MP701I PAPERSIZE: 34x22 (in.) DATE: 3/27/2025 TIME: 9:06:25 PM USER: CollinsKwiatt
pw:\\mb-us-pw.bentley.com:mb-us-pw-03\Documents\Cleveland.OH\01_Projects\ODOT\District2\82382\400-Engineering\MOT\Sheets\82382_MP701I.dgn

MAINTENANCE OF TRAFFIC - PHASE 8
SHEET PLAN KEY

LEGEND

- AREA OF CONSTRUCTION TO BE COMPLETED BY END OF PHASE
- TEMPORARY PAVEMENT CONSTRUCTED THIS PHASE
- EXISTING BRIDGE OR TEMPORARY PAVEMENT REMOVAL COMPLETED BY END OF PHASE
- DETAILS LOCATED IN PRIOR PHASE

HORIZONTAL SCALE IN FEET
0 150 300 600

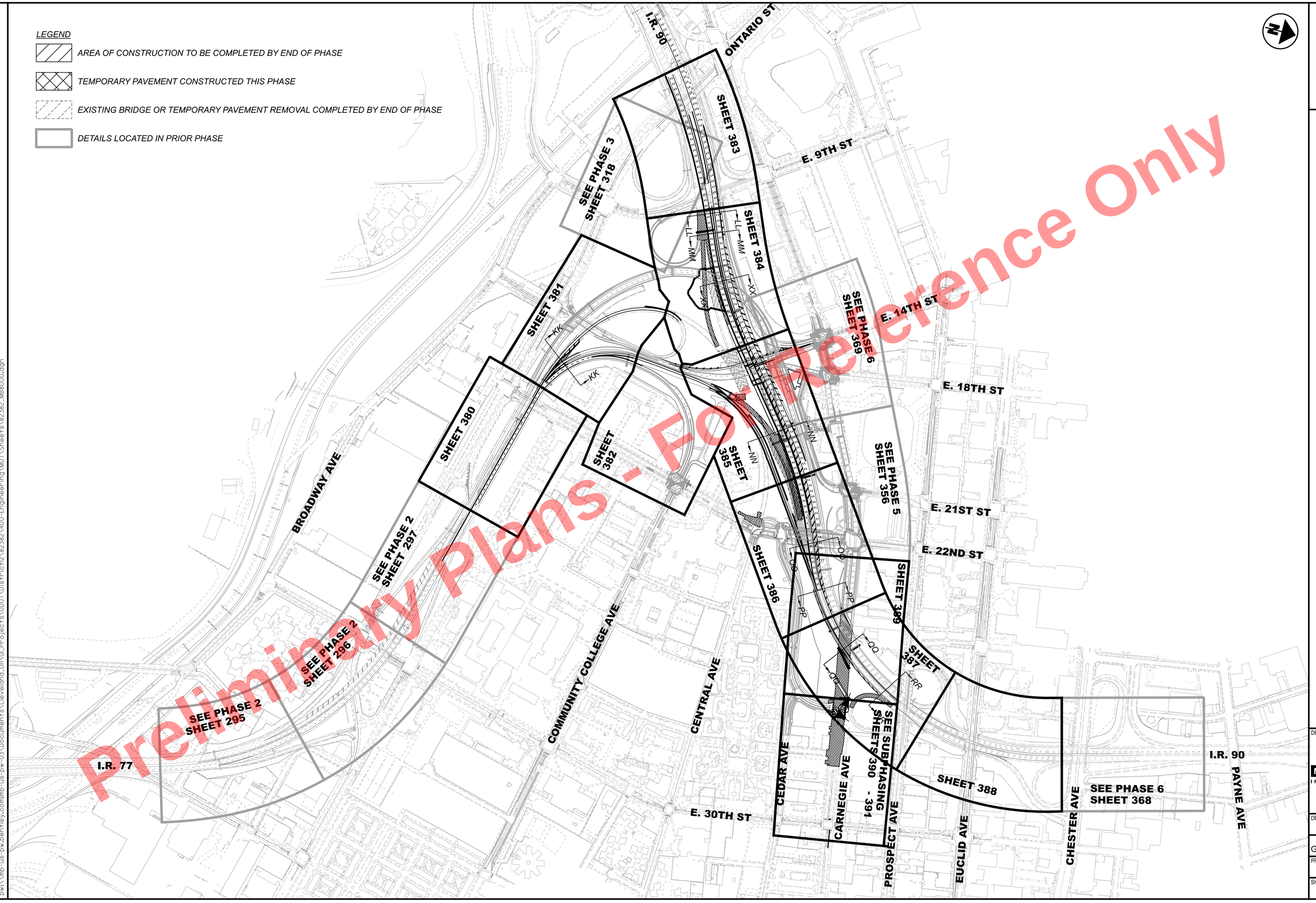

Preliminary Plans - For Reference Only

DESIGN AGENCY
Michael Baker INTERNATIONAL

DESIGNER	CRK
REVIEWER	GSH 05/22/24
PROJECT ID	82382
SHEET	379
TOTAL	2696

CUY-90-16.28 (CCG3A)

MODEL: Sheet PAPERSIZE: 34x22 (in.) DATE: 3/27/2025 TIME: 9:06:34 PM USER: CollinsKwlott
pw:\\mb-us-pw.bentley.com:mb-us-pw-03\Documents\Cleveland.OH\01_Projects\ODOT\District2\82382\400-Engineering\MOT\Sheets\82382_MB8000.dgn

Preliminary Plans - For Reference Only

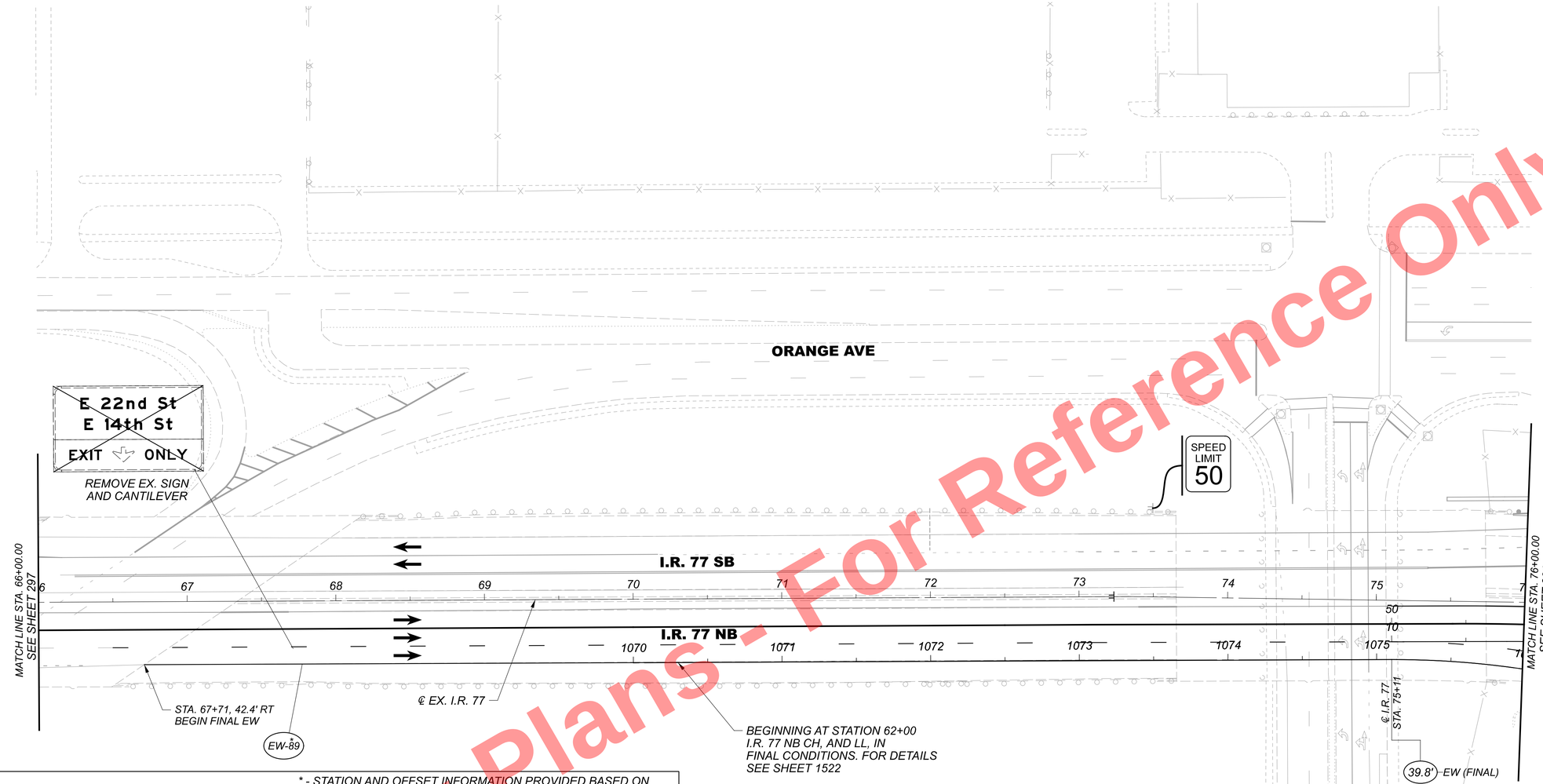

HORIZONTAL SCALE IN FEET
0 20 40 80

MAINTENANCE OF TRAFFIC - PHASE 8
I.R. 77 - STA. 66+00.00 TO STA. 76+00.00

MAINTENANCE OF TRAFFIC LEGEND

- AREA OF CONSTRUCTION TO BE COMPLETED BY END OF PHASE
- TEMPORARY PAVEMENT CONSTRUCTED THIS PHASE
- PAVEMENT FOR MAINTAINING TRAFFIC, CLASS A
- EXISTING BRIDGE OR TEMPORARY PAVEMENT REMOVAL COMPLETED BY END OF PHASE
- DRUMS SPACED AS NOTED, OR AS SHOWN ON REFERENCE STANDARD CONSTRUCTION DRAWINGS
- (17.5') OFFSET RIGHT FROM CENTERLINE, BASELINE OR EX. EDGE AS NOTED
- (-17.5') OFFSET LEFT FROM CENTERLINE, BASELINE OR EX. EDGE AS NOTED
- (EW) WORK ZONE EDGE LINE (WHITE), CLASS I
- (EY) WORK ZONE EDGE LINE (YELLOW), CLASS I
- (MS) TEMPORARY SIGN
- (CH) WORK ZONE CHANNELIZING LINE (WHITE), CLASS I
- (DL) WORK ZONE DOTTED LINE (WHITE), CLASS I
- (*) FINAL CONDITION PAVEMENT MARKING (SEE MAINTENANCE OF TRAFFIC SUBSUMMARY FOR SPECIFIC PAY ITEM)
- (PB) ITEM 622, PORTABLE BARRIER (PB), 50", AS PER PLAN^
- IMPACT ATTENUATOR
- (LL) WORK ZONE LANE LINE, CLASS I
- (CL) WORK ZONE CENTER LINE (DOUBLE SOLID), CLASS I
- (XW) WORK ZONE CROSS WALK LINE, CLASS I
- (SL) WORK ZONE STOP LINE, CLASS I
- (LA) WORK ZONE LANE ARROW, CLASS I

* - STATION AND OFFSET INFORMATION PROVIDED BASED ON ALIGNMENT OF ROADWAY BEING DETAILED, UNLESS NOTED OTHERWISE.

^ - ITEM 622, PORTABLE BARRIER, ANCHORED, AS PER PLAN TO BE USED WHERE INDICATED IN THE PLANS

DESIGN AGENCY
Michael Baker INTERNATIONAL

DESIGNER CRK
REVIEWER GSH 05/22/24
PROJECT ID 82382
SHEET 380 TOTAL 2696

CUY-90-16.28 (CCG3A)

MODEL: MP8004 PAPERSIZE: 34x22 (in.) DATE: 3/27/2025 TIME: 9:06:50 PM USER: CollinKWatt
pw:\\mb-us-pw.bentley.com:mb-us-pw-03\Documents\Cleveland_OH\01_Projects\00DOT\District2\82382\400-Engineering\MOT\Sheets\82382_MP8004.dgn

ORANGE AVE.

ORANGE AVE.

MATCHLINE SEE SHEET 318

E. 14TH ST.

PLACE PROPOSED PAVEMENT MARKINGS AT I.R. 77 NB & ALL NB RAMPS IN FINAL CONDITION FOR DETAILS SEE SHEETS 1521 & 1534

ATTACH IMPACT ATTENUATOR AT CONVERGENCE OF PBS

℄ EX. I.R. 77

MATCH LINE ℄ I.R. 77 STA. 76+00.00 SEE SHEET 380

KK

UPON COMPLETION OF GORE AREA PAVEMENT, INSTALL ALL FINAL ROADSIDE PROTECTION, REVISE ALL OVERHEAD SIGNING TO PROPOSED FINAL CONDITION AND OPEN ALL I.R. 77 NB LANES TO PROPOSED FINAL CONDITION PAVEMENT MARKINGS.

℄ RAMP IH4 STA. 12+62 BEGIN PB (2)

PB-51

℄ EX. RAMP E-17 STA. 55+06 END PB

PB-50

CONSTRUCT REMAINDER OF GORE

ENTIRE PB TO HAVE INCREASED DELINEATION

℄ RAMP IH4 STA. 14+38 END PB

℄ RAMP IH4

I.R. 90 WB TO I.R. 77 SB RAMP (OPEN)

I.R. 77 NB TO E. 14TH SB EXIT (OPEN)

℄ EX. RAMP E-17

SECTION VIEW SEE SHEET 146

MS-60 REMOVE AND RELOCATE "EXIT 163B" SIGN TO FINAL LOCATION

REMOVE EX. RELOCATED SIGNS INSTALL REMAINING PR. SIGNS

LEFT EXIT 163 A
E 9th St
Ontario St
EXIT ONLY

LEFT EXIT 163 B
E 14th St
E 18th St
EXIT ONLY

EAST 90
Erie Pa
EXIT ONLY

EXIT 163 C
E 22nd St
1/4 MILE
EXIT ONLY

*- PROPOSED OVERHEAD PANELS DETAILED ON SHEET 1522

MS-61 "DOWN ARROWS (2)" COVERED WITH GREEN OVERLAY. ATTACH "EXIT ONLY" SIGN. SEE SHEET 131 FOR DETAILS

"1/4" MILE TO REMAIN COVERED ATTACH "EXIT ONLY" SIGN SEE SHEET 131 FOR DETAILS

MS-62

CH-94

CH-95

-9.8' CH

℄ RAMP H5 STA. 1080+07 BEGIN CH (2) MEET FINAL

℄ RAMP H5

℄ RAMP IH6

-9.8' CH

4.5' CH/CH (FINAL)

℄ RAMP H5 STA. 1082+04 END CH MEET FINAL

I.R. 77 NB TO E.22ND ST EXIT RAMP

EAST 90 Erie Pa

EXIT 163 C E 22nd St

CH/EW

-9.8'

℄ RAMP H5 STA. 1082+96 END CH BEGIN EW

MATCHLINE ℄ RAMP IH6 STA. 1274+00.00 SEE SHEET 382

MATCHLINE ℄ INTERIM E. 14TH ST SB SEE SHEET 382

℄ INTERIM E. 14TH ST SB

I.R. 77 NB TO E. 14TH ST NB EXIT RAMP (OPEN)

I.R. 77 NB TO I.R. 90 EB RAMP (OPEN)

EW-90

ATTACH IMPACT ATTENUATOR

℄ EX. RAMP E-17 STA. 60+50 BEGIN PB 14:1 FLARE WITH INCREASED DELINEATION

PB-52

℄ EX. RAMP E-17 STA. 61+50 END PB FLARE

PLACE PB TOE AT 2' OFFSET FROM PR. EY

16'

3'

MATCHLINE SEE SHEET 384

MATCHLINE SEE SHEET 384

FOR MAINTENANCE OF TRAFFIC LEGEND SEE SHEET 380

Preliminary Plans - For Reference Only

HORIZONTAL SCALE IN FEET
0 20 40 80

MAINTENANCE OF TRAFFIC - PHASE 8
I.R. 77 - STA. 76+00.00 TO END / RAMP H6 - BEGIN TO STA. 1274+00.00

DESIGN AGENCY
Michael Baker INTERNATIONAL

DESIGNER CRK
REVIEWER GSH 05/22/24
PROJECT ID 82382
SHEET 381 TOTAL 2696

CUY-90-16.28 (CCG3A)

MODEL: MP8005 PAPERSIZE: 34x22 (in.) DATE: 3/27/2025 TIME: 9:07:03 PM USER: Collin.Kwiat
pw:\\mb-us-pw.bentley.com\mb-us-pw-03\Documents\Cleveland_OH\01_Projects\00DT\District2\82382\400-Engineering\MOT\Sheets\82382_MP8005.dgn

Preliminary Plans - For Reference Only

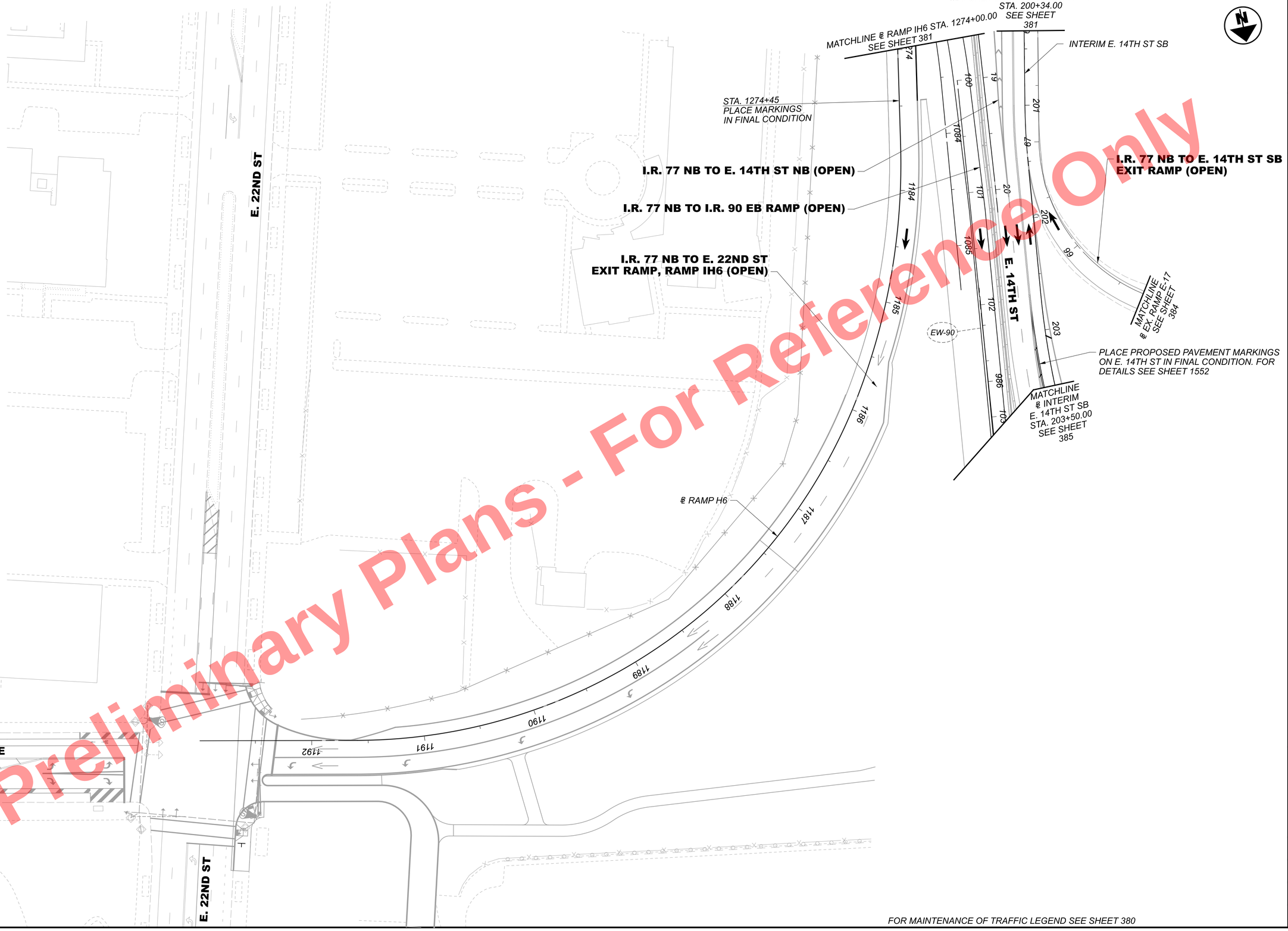

FOR MAINTENANCE OF TRAFFIC LEGEND SEE SHEET 380

HORIZONTAL SCALE IN FEET
0 20 40 80

MAINTENANCE OF TRAFFIC - PHASE 8
RAMP H6 - STA. 1274+00.00 TO END

DESIGN AGENCY
Michael Baker INTERNATIONAL

DESIGNER	CRK
REVIEWER	GSH 05/22/24
PROJECT ID	82382
SHEET	382
TOTAL	2696

CUY-90-16.28 (CCG3A)

MODEL: MP8007 PAPERSIZE: 34x22 (in.) DATE: 3/27/2025 TIME: 9:07:14 PM USER: Collin.Kwiatt
pw:\\mb-us-pw.bentley.com:mb-us-pw-03\Documents\Cleveland.OH\OI_Projects\ODOT\District2\82382\400-Engineering\MOT\Sheets\82382_MP8007.dgn

PLACE PROPOSED MARKINGS IN FINAL CONDITION

℄ I.R. 90 WB STA. 163+24

℄ I.R. 90 WB

163 164 165 166 167

I.R. 90 WB

MATCH LINE SEE BELOW

FOR I.R. 90 WB FINAL CONDITION PAVEMENT MARKING DETAILS, SEE SHEETS 1508 - 1511

E. 9TH ST

E. 9TH ST TO I.R. 90 WB ENTRANCE RAMP (OPEN)

PLACE PROPOSED MARKINGS IN FINAL CONDITION

℄ IR-90 WB STA. 176+85

℄ I.R. 90 WB

MATCH LINE SEE ABOVE

168 169 170 171 172 173 174 175 176 177

I.R. 90 WB

EY-52*

STA. 54+70

509' R

768' SHIFT TAPER @ 64:1
NARROW LANES (12'-11')

LL-66* LL-67*

12' 12' 12' 12'

STA. 48+53, PLACE PR. LL MARKINGS IN FINAL CONDITION (RETURN TO EX. CONDITION)

166 167 168 169 170 171 172 173 174 175

I.R. 90 EB

53 54 55 56 57 58 59 60

52

DL-57*

I.R. 90 EB TO ONTARIO ST/
E 9TH ST SB EXIT RAMP (OPEN)

ATTACH ATTENUATOR

STA. 51+20 PC BEGIN EW BEGIN PB

EW-91*

PLACE PROPOSED MARKINGS IN FINAL CONDITION (RETURN TO EXISTING CONFIGURATION)

STA. 54+70 BEGIN EY BEGIN LL (2) BEGIN DL

EW-92

℄ EX. I.R. 90

DL-58 PB-53

5335' R

℄ I.R. 90 EB

5347' R

EY-53 PB-53 LL-68 LL-69

STA. 60+47 BEGIN 50:1 PB FLARE

-4.6' PB

MATCH LINE STA. 61+00.00 SEE SHEET 384

STA. 60+97 BEGIN CONSTRUCTION END PB FLARE

PB -7.3'

-50.6' EY (FINAL)
-38.6' LL (FINAL)
-26.6' LL (FINAL)
-14.7' DL (FINAL)
-3.2' EW/EW (FINAL)

-34.7' EY (FINAL)/EY
-22.7' LL (FINAL)/LL
-10.7' LL (FINAL)/LL
1.3' DL (FINAL)/DL
6.3' EW
13.4' EW (FINAL)

600' MERGE TAPER @ 45:1
CLOSE RIGHT LANE PER MT-95.40

STA. 57+19 PC/PT END DL

-31.9' EY
-19.9' LL
-8.1' LL
3.8' EW/DL

MS-63

TO E 9th St Downtown

EAST	WEST
422 14	422 14
Orange Ave	Ontario St

RAMPS 25 MPH

FOR ADVANCED OVERHEAD DETOUR SIGNING SEE DETOUR PLAN SHEET 167

ONTARIO ST

MS-64

TO E 9th St Downtown

EAST	WEST
422 14	422 14
Orange Ave	Ontario St

FOR MAINTENANCE OF TRAFFIC LEGEND SEE SHEET 380

Preliminary Plans - For Reference Only

HORIZONTAL SCALE IN FEET
0 20 40 80

MAINTENANCE OF TRAFFIC - PHASE 8
I.R. 90 - BEGIN TO STA. 61+00.00

DESIGN AGENCY
Michael Baker INTERNATIONAL

DESIGNER CRK
REVIEWER GSH 05/22/24
PROJECT ID 82382
SHEET 383 TOTAL 2696

CUY-90-16.28 (CCG3A)

MODEL: MP8008 PAPERSIZE: 34x22 (in.) DATE: 3/27/2025 TIME: 9:07:27 PM USER: Collin.Kwiatt
pw:\\mb-us-pw.bentley.com:mb-us-pw-03\Documents\Cleveland_OH\DL_Projects\DOT\District12\82382\400-Engineering\MOT\Sheets\82382_MP8008.dgn

Preliminary Plans - For Reference Only

EXIT 173 C
Superior Ave
E 30th St
1 1/4 MILES

EXIT 173 B
TO Carnegie Ave
Chester Ave
3/4 MILE
MS-59

EXIT 172 B
Carnegie Ave
E 22nd St
EXIT ONLY

CARNEGIE AVE SIGN TO REMAIN COVERED DURING THIS PHASE

MS-65
EXIT 172 A
E 9th St
Downtown
EXIT CLOSED
EXIT 25 MPH
EXIT ONLY

REMOVE "EXIT CLOSED" OVERLAY FOLLOWING COMPLETION OF RAMP IB5 CONSTRUCTION

PR. LIGHTWEIGHT FILL INSTALLED IN PHASE 5

PR. LIGHTWEIGHT FILL INSTALLED IN PHASE 7

E. 14TH ST TO I.R. 90 WB ENTRANCE RAMP (OPEN)

I.R. 90 WB

I.R. 90 EB

℄ I.R. 90 WB

℄ I.R. 90 EB STA. 177+05

768' SHIFT TAPER @ 64:1
NARROW LANES (12'-11')

-45.0' EY
-34.0' LL
-23.0' LL
-12.0' EW

11' 11' 11' 11'

MATCH LINE STA. 61+00.00
SEE SHEET 383

MATCH LINE STA. 71+00.00
SEE SHEET 385

STA. 76+81 PT

5347' R

STA. 62+00 BEGIN 50:1 PB FLARES

STA. 62+36 PT

STA. 62+49 END 50:1 PB FLARE

2643' R

STA. 63+47 PC

-9.7' PB

-9.0' PB

LL-68

LL-69

EW-92

EY-53

PB-53

℄ EX. I.R. 90 EB STA. 184+00 END CONSTRUCTION (MEET EXISTING)

℄ EX. I.R. 90

℄ I.R. 90 EB

REMOVE REMAINDER OR EXISTING BRIDGE E5. FOR DETAILS, SEE SHEET 2371

PR. LIGHTWEIGHT FILL

SECTION VIEW SEE SHEET 146 → MM

SECTION VIEW SEE SHEET 151 → XX

SECTION VIEW SEE SHEET 146 → LL

CLOSE RAMP IB5 DURING CONSTRUCTION OF GORE AREA (℄ I.R. 90 EB STA. 175+75 TO STA. 178+50). UPON COMPLETION OF GORE AREA, REMOVE ADVANCED LANE CLOSURE AND RESTRIPE RIGHT LANE FOR E. 9TH ST NB EXIT LANE, PLACE OVERHEAD SIGNING ON TRUSS AND IN ADVANCE OF EXIT FOR REVISED LANE CONDITION, REOPEN RAMP IB5.

I.R. 90 EB TO E. 9TH ST NB EXIT RAMP (TEMPORARILY CLOSED, SEE NOTE ABOVE)

I.R. 90 WB TO I.R. 77 SB EXIT RAMP (OPEN)

MATCHLINE SEE SHEET 381

℄ RAMP B6 STA. 1607+57 END CONSTRUCTION OF RAMP B6

REMOVE REMAINDER OF EXISTING BRIDGE E9. FOR DETAILS, SEE SHEET 2093 .

EX. RAMP E-17 STA. 63+00 END PB WITH INCREASED DELINEATION

I.R. 77 NB TO E. 14TH ST SB EXIT RAMP (OPEN)

PB-52

185' R

PLACE PB TOE AT 2' OFFSET FROM PR. EY

℄ EX. RAMP E-17

MATCHLINE SEE SHEET 381

MATCHLINE SEE SHEET 382

FOR MAINTENANCE OF TRAFFIC LEGEND SEE SHEET 380

HORIZONTAL SCALE IN FEET
0 20 40 80

MAINTENANCE OF TRAFFIC - PHASE 8
I.R. 90 - STA. 61+00.00 TO STA. 71+00.00

DESIGN AGENCY
Michael Baker INTERNATIONAL

DESIGNER CRK
REVIEWER GSH 05/22/24
PROJECT ID 82382
SHEET 384 TOTAL 2696

CUY-90-16.28 (CCG3A)

MODEL: MP8009 PAPERSIZE: 34x22 (in.) DATE: 3/27/2025 TIME: 9:07:39 PM USER: Collin.Kwiatt
pw:\\mb-us-pw.bentley.com:mb-us-pw-03\Documents\Cleveland_OH\OI_Projects\0007\District12\82382\400-Engineering\MOT\Sheets\82382_MP8009.dgn

Preliminary Plans - For Reference Only

E. 14TH ST TO I.R. 90 WB ENTRANCE RAMP (OPEN)

E. 14TH ST NB

E. 18TH ST

CENTRAL AVE

E. 19TH ST

PLACE E. 14TH ST PROPOSED PAVEMENT MARKINGS IN FINAL CONDITION UNLESS NOTED OTHERWISE. FOR DETAILS SEE SHEETS 1552 - 1553

PR. LIGHTWEIGHT FILL INSTALLED IN PHASE 4

E. 21ST ST TO I.R. 77 SB ENTRANCE RAMP (OPEN)

I.R. 90 WB TO I.R. 77 SB RAMP (OPEN)

ON THIS SHEET, PROPOSED EY, LL, & EW PLACED AT CONSTANT NOTED OFFSET FROM PROPOSED MEDIAN BARRIER.

REMOVE REMAINING TEMPORARY PAVEMENT ALONG E. 14TH SB

I.R. 90 WB

I.R. 90 EB

℄ I.R. 90 WB

℄ I.R. 90 EB

PR. LIGHTWEIGHT FILL INSTALLED IN PHASE 7

STA. 92+35 PC

2457' R

℄ INTERIM E. 14TH ST SB STA. 208+06 END EW MEET FINAL EW

MATCH LINE STA. 71+00.00 SEE SHEET 384

MATCH LINE STA. 81+00.00 SEE SHEET 386

℄ EX. I.R. 90

STA. 108+59 BEGIN WORK ZONE EGRESS PER MT-103.10

REMOVE TEMPORARY PAVEMENT FROM PHASE 7 I.R. 90 EB TEMPORARY RUNAROUND

CONSTRUCT BRIDGE 12 PIER 2

REMOVE REMAINDER OF EXISTING BRIDGE E8/E9. FOR DETAILS, SEE SHEET 2093

℄ TEMPORARY RAMP H5 FOR DETAILS SEE SHEET 263

888' R

13.25'

115' LANE TAPER @ 50:1

℄ TEMPORARY RAMP H5 STA. 111+74 END INCREASED DELINEATION

℄ TEMPORARY RAMP H5 STA. 112+89

SPEED LIMIT 45

SECTION VIEW SEE SHEET 147

I.R. 77 NB TO I.R. 90 EB TEMPORARY RAMP (OPEN)

INSTALL TEMPORARY CB-2-2B. OUTLET TO PROPOSED CB-2-2B (D-530) WITH 12" CONDUIT.

CONSTRUCT CB BOXES (D-530) AND MANHOLES (D-530A & D-531) TO CONSTRUCTION JOINT AND COVER WITH STEEL PLATE UNDER TEMPORARY PAVEMENT.

TEMPORARY CB-2-2B. INSTALLED IN PHASE 7 SEE SHEET 374

℄ INTERIM E. 14TH ST SB STA. 206+30 BEGIN EW MEET FINAL EW

ATTACH IMPACT ATTENUATOR TO END

℄ RAMP H5

℄ TEMPORARY RAMP H5 STA. 106+60 END PB FLARE

℄ TEMPORARY RAMP H5 STA. 106+98

℄ TEMPORARY RAMP H5 STA. 105+60 BEGIN PB WITH INCREASED DELINEATION @ 14:1 FLARE

E. 14TH ST SB

E. 14TH ST NB

SPEED LIMIT 30

247' LANE TAPER (14' TO 13.25')

℄ TEMPORARY RAMP H5 STA. 103+91 BEGIN EY

INSTALL PROPOSED RAMP H5 STORM

I.R. 77 NB TO E. 22ND ST EXIT RAMP (PERMANENTLY CLOSED)

MATCHLINE SEE SHEET 382

FOR MAINTENANCE OF TRAFFIC LEGEND SEE SHEET 380

HORIZONTAL SCALE IN FEET 0 20 40 80

MAINTENANCE OF TRAFFIC - PHASE 8
I.R. 90 - STA. 71+00.00 TO STA. 81+00.00

DESIGN AGENCY: Michael Baker INTERNATIONAL

DESIGNER: CRK

REVIEWER: GSH 05/22/24

PROJECT ID: 82382

SHEET 385 TOTAL 2696

CUY-90-16.28 (CCG3A)

MODEL: MP80I0 PAPERSIZE: 34x22 (ln.) DATE: 3/27/2025 TIME: 9:07:52 PM USER: Collin.Kwiatt
pw:\\mb-us-pw.bentley.com:mb-us-pw-03\Documents\Cleveland_OH\01_Projects\ODOT\District2\82382\400-Engineering\MOT\Sheets\82382_MP80I0.dgn

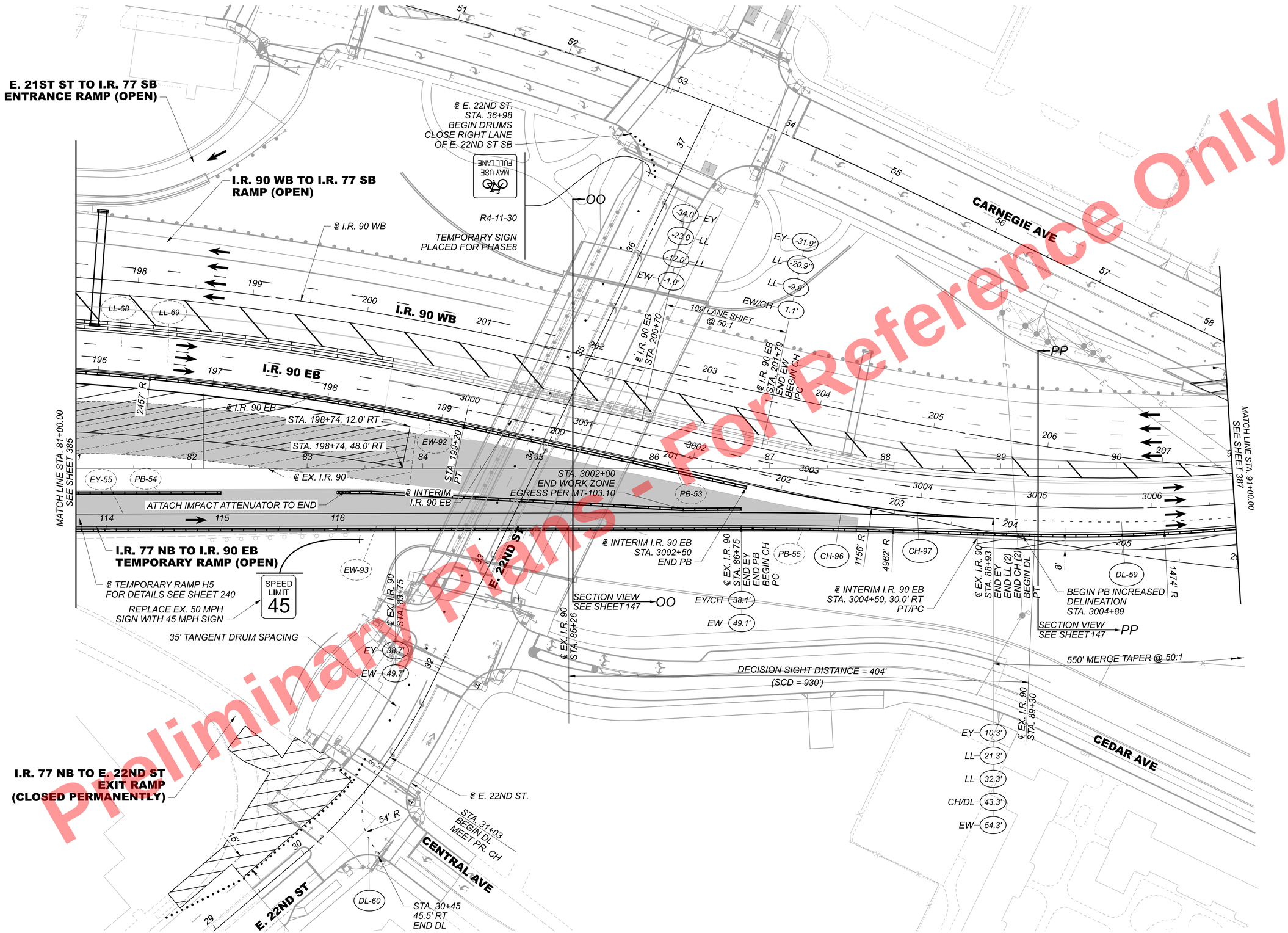

Preliminary Plans - For Reference Only

FOR MAINTENANCE OF TRAFFIC LEGEND SEE SHEET 380

HORIZONTAL SCALE IN FEET 0 20 40 80

MAINTENANCE OF TRAFFIC - PHASE 8
I.R. 90 - STA. 81+00.00 TO STA. 91+00.00

DESIGN AGENCY
Michael Baker INTERNATIONAL

DESIGNER CRK
REVIEWER GSH 05/22/24
PROJECT ID 82382
SHEET 386 TOTAL 2696

CUY-90-16.28 (CCG3A)

MODEL: MP80II PAPERSIZE: 34x22 (in.) DATE: 3/27/2025 TIME: 9:08:05 PM USER: Collin.Kwiatt
pw:\\mb-us-pw.bentley.com:mb-us-pw-03\Documents\Cleveland_OH\OI_Projects\ODOT\District12\82382\400-Engineering\MOT\Sheets\82382_MP80II.dgn

Preliminary Plans - For Reference Only

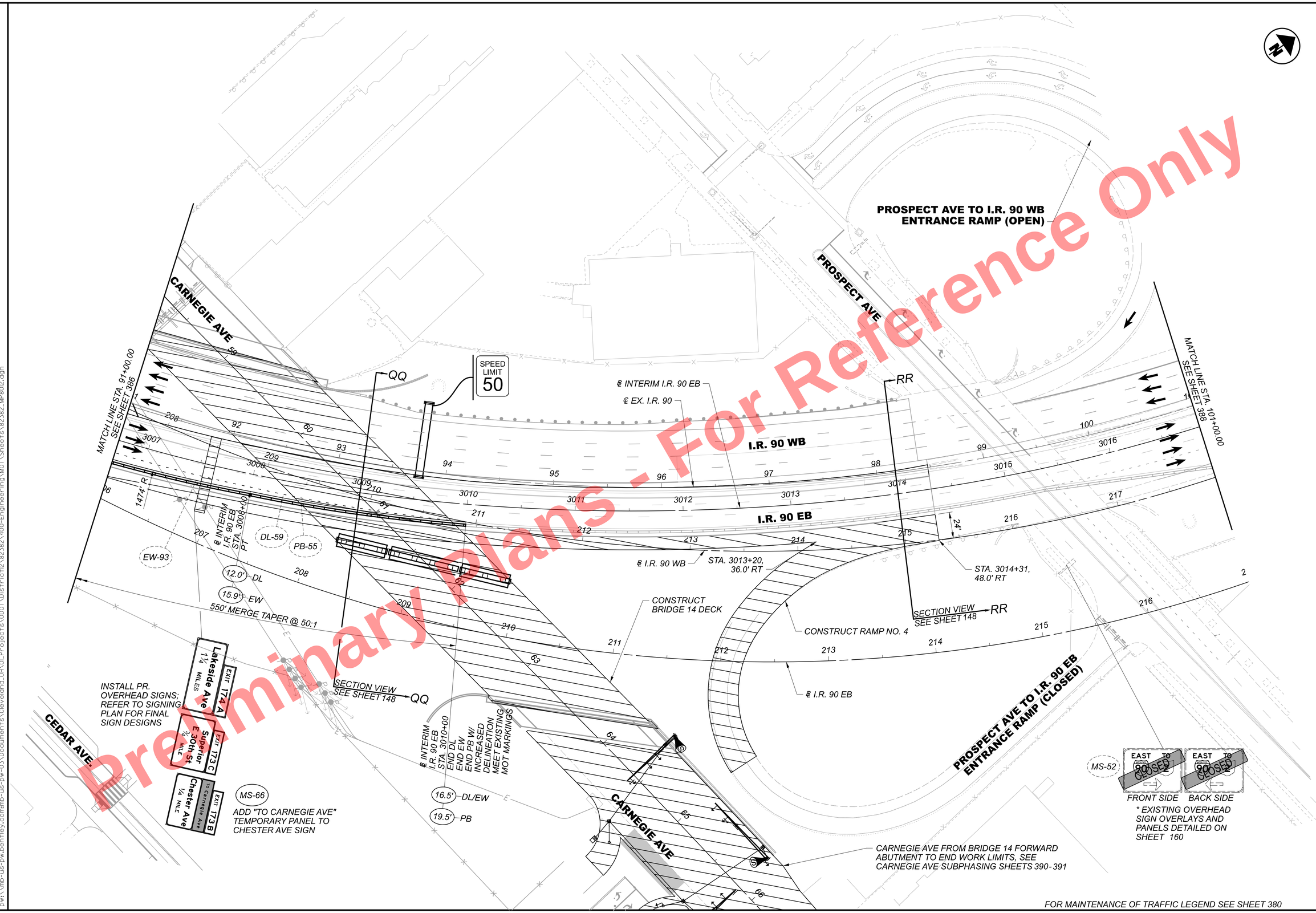

HORIZONTAL SCALE IN FEET
0 20 40 80

MAINTENANCE OF TRAFFIC - PHASE 8
I.R. 90 - STA. 91+00.00 TO STA. 101+00.00

CUY-90-16.28 (CCG3A)

DESIGN AGENCY
Michael Baker INTERNATIONAL

DESIGNER CRK
REVIEWER GSH 05/22/24
PROJECT ID 82382
SHEET 387 TOTAL 2696

MODEL: MP80l2 PAPERSIZE: 34x22 (in.) DATE: 3/27/2025 TIME: 9:08:16 PM USER: CollinKwiatt
pw:\\mb-us-pw.bentley.com:mb-us-pw-03\Documents\Cleveland.OH\01_Projects\000T\District2\82382\400-Engineering\MOT\Sheets\82382_MP80l2.dgn

Preliminary Plans - For Reference Only

I.R. 90 WB TO PROSPECT AVE
EXIT RAMP (OPEN)

EUCLID AVE

℄ INTERIM I.R. 90 EB

MATCH LINE STA. 101+00.00
SEE SHEET 387

℄ EX. I.R. 90

I.R. 90 WB

I.R. 90 EB

MATCH LINE STA. 111+00.00
SEE SHEET 368

℄ I.R. 90 WB

℄ I.R. 90 EB

SPEED LIMIT 50

EXIT 173B
TO Carnegie Ave
MS-53

EXIT 173C
Superior Ave
½ MILE

Chester Ave
EXIT ONLY

* EXISTING OVERHEAD SIGN OVERLAYS AND PANELS DETAILED ON SHEET 161

I.R. 90 EB TO CHESTER AVE
EXIT RAMP (OPEN)

CHESTER AVE TO I.R. 90 EB
ENTRANCE RAMP (OPEN)

FOR MAINTENANCE OF TRAFFIC LEGEND SEE SHEET 380

HORIZONTAL SCALE IN FEET
0 20 40 80

MAINTENANCE OF TRAFFIC - PHASE 8
I.R. 90 - STA. 101+00.00 TO STA. 111+00.00

CUY-90-16.28 (CCG3A)

MODEL: MP80I3 PAPERSIZE: 34x22 (In.) DATE: 3/27/2025 TIME: 9:08:28 PM USER: Collin.Kwiat
pw:\\mb-us-pw.bentley.com:mb-us-pw-03\Documents\Cleveland_OH\OIL_Projects\ODOT\District2\82382\400-Engineering\MOT\Sheets\82382_MP80I3.dgn

DESIGN AGENCY
Michael Baker INTERNATIONAL

DESIGNER
CRK

REVIEWER
GSH 05/22/24

PROJECT ID
82382

SHEET 388 | TOTAL 2696

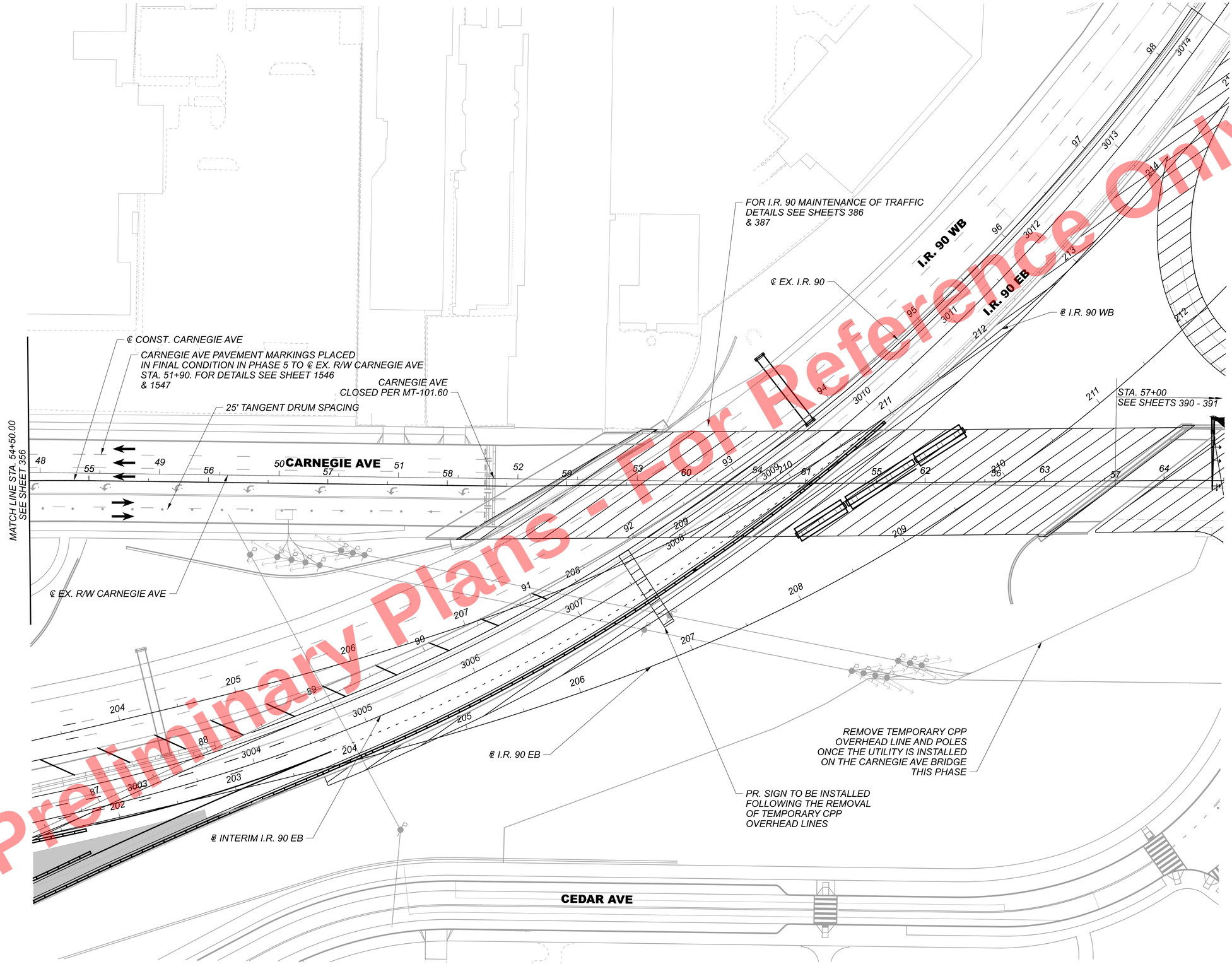

Preliminary Plans - For Reference Only

HORIZONTAL SCALE IN FEET
0 20 40 80

MAINTENANCE OF TRAFFIC - PHASE 8
CARNEGIE AVE - STA. 54+50.00 TO STA. 64+50.00

CUY-90-16.28 (CCG3A)

MODEL: 82382_MP8017 PAPERSIZE: 34x22 (in.) DATE: 3/27/2025 TIME: 9:08:39 PM USER: CollinKwiatt
pw:\\mb-us-pw.bentley.com:mb-us-pw-03\Documents\Cleveland.OH\01_Projects\ODOT\District2\82382\400-Engineering\MOT\Sheets\82382_MP8017.dgn

DESIGN AGENCY
Michael Baker INTERNATIONAL

DESIGNER	CRK
REVIEWER	GSH 05/22/24
PROJECT ID	82382
SHEET	389
TOTAL	2696

Preliminary Plans - For Reference Only

I.R. 90 WB
98
I.R. 90 EB
℄ EX. I.R. 90
FOR I.R. 90 MAINTENANCE TRAFFIC PAVEMENT MARKINGS DETAIL, SEE SHEET387
LIMIT RECONSTRUCTION OF PARKING LOT (12 TOTAL PARKING STALLS) TO 6 TOTAL WEEKS. MAINTAIN 6 PARKING STALLS WITH DRIVEWAY ACCESS AT ALL TIMES. COORDINATE CONSTRUCTION WITH CENTRAL CADILLAC OWNER PRIOR TO BEGINNING CONSTRUCTION.
MATCHLINE SEE BELOW
110'
10'
43'
32'
CARNEGIE AVE
LA-103
CH-98
LA-104
LA-105
PLACE CH OVER EX. LL
STA. 57+94
49.3' LT
℄ CARNEGIE AVE
STA. 60+14
56.3' LT
STA. 61+77
51.3' LT
STA. 62+65
END CONSTRUCTION
MAINTAIN DRIVEWAY ACCESS AT ALL TIMES
CLOSE ROAD PER MT-101.60
SIDEWALK CLOSED AHEAD CROSS HERE
R9-11-24
TEMPORARY SIGN PLACED FOR SUBPHASE 8A
E. 30TH ST
TYPE 3 BARRIER SEE DETAIL 1
MATCHLINE SEE ABOVE
58
59
60
61
62
63
64
65
66
STA. 513+34
0.00' RT
20'
CARNEGIE AVE
CARNEGIE AVE
STA. 64+55
BEGIN DRUMS
35' TANGENT DRUM SPACING
STA. 57+00
38.1' RT
514
LA-108
50' (TYP.)
R3-5R-30
ONLY
TEMPORARY SIGN PLACED FOR SUBPHASE 8A
LA-107
LA-106
STA. 513+61
39.0' LT
STA. 513+96
0.00' RT
513
35' TANGENT DRUM SPACING
E. 30TH ST
℄ MIDTOWN CONNECTOR
STA. 511+57
BEGIN DRUMS
ADA COMPLIANT TYPE I BARRIACDE
R9-11a-24
SIDEWALK CLOSED CROSS HERE
512
511
400
TYPE 3 BARRIER SEE DETAIL 1
RIGHT LANE MUST TURN RIGHT
R3-7-30
TEMPORARY SIGN PLACED FOR SUBPHASE 8A
E. 28TH ST
401
21
22
402
23
403
24
404
25
26
27
℄ EX. R/W CEDAR AVE
CEDAR AVE
CEDAR AVE
℄ CONST. CEDAR AVE
FOR MAINTENANCE OF TRAFFIC LEGEND SEE SHEET380

ROAD CLOSED
LOCAL TRAFFIC ONLY
R11-3-66
TYPE 3 BARRICADE DETAIL 1

HORIZONTAL SCALE IN FEET
0 20 40 80

MAINTENANCE OF TRAFFIC - CARNEGIE SUBPHASE 8A
CARNEGIE AVE - STA. 57+00.00 TO END

DESIGN AGENCY
Michael Baker INTERNATIONAL
DESIGNER CRK
REVIEWER GSH 05/22/24
PROJECT ID 82382
SHEET 390 TOTAL 2696

CUY-90-16.28 (CCG3A)

MODEL: 82382_MP801 PAPERSIZE: 34x22 (in) DATE: 3/27/2025 TIME: 9:08:50 PM USER: Collin.Kwiatt
pw:\\mb-us-pw.bentley.com:mb-us-pw-03\Documents\Cleveland_OH\01_Projects\0007\District2\82382\400-Engineering\MOT\Sheets\82382_MP801.dgn

Preliminary Plans - For Reference Only

SEE DETOUR SHEETS FOR CARNEGIE AVE ROAD CLOSURES DURING PHASES WHEN SUBPHASING WORK MAY OCCUR.

FOR VEHICULAR DETOURS:

PHASE 3-6 - SEE SHEET 158
PHASE 7-9 - SEE SHEET 165

FOR PEDESTRIAN DETOURS:

PHASE 3-9 - SEE SHEET 170

I.R. 90 WB
I.R. 90 EB
98
℄ EX. I.R. 90
FOR I.R. 90 MAINTENANCE TRAFFIC PAVEMENT MARKINGS DETAIL, SEE SHEET387
TEMPORARY SIGN PLACED FOR SUBPHASE 8B
ONE WAY
R6-1R-36
TEMPORARY SIGN PLACED FOR SUBPHASE 8B
DO NOT ENTER
R5-1-30
℄ CARNEGIE AVE
-16.0' CL/DRUMS
STA. 58+00, 23.8' LT BEGIN CL
CLOSE ROAD PER MT-101.60
TYPE 3 BARRIER ROAD CLOSED
CL-38
24'
12'
16'
5'
℄ CARNEGIE AVE STA. 62+66 END CL BEGIN DRUMS
STA. 62+66 END CONSTRUCTION
-5.5' DRUMS
℄ CARNEGIE AVE STA. 64+61 END DRUMS
E. 30TH ST
59
60
61
62
63
64
65
66
CARNEGIE AVE
PB-56
514
STA. 62+55 35.8' RT
STA. 60+39 54.8' RT
STA. 513+61 38.0' RT
END ONE WAY
R6-7-24
TEMPORARY SIGN PLACED FOR SUBPHASE 8B
CONTRACTOR TO MAINTAIN ACCESS TO ONE DRIVE AT ALL TIME.
STA. 59+99 54.8' RT
STA. 62+55 59.3' RT
STA. 62+42 59.3' RT
CLOSE ROAD PER MT-101.60
STA. 61+80 57.5' RT
SIDEWALK CLOSED USE OTHER SIDE TO CROSS HERE
R9-11-24
TEMPORARY SIGN PLACED FOR SUBPHASE 8B
STA. 58+45 BEGIN CONSTRUCTION
℄ MIDTOWN CONNECTOR
513
TEMPORARY SIGN PLACED FOR SUBPHASE 8B
BEGIN ONE WAY
R6-6-24
512
35' TANGENT DRUM SPACING
36' R
400
401
402
403
404
E. 28TH ST
R5-H2c-24
NO THROUGH TRAFFIC
TEMPORARY SIGN PLACED FOR CARNEGIE SUBPHASE 8B
℄ EX. R/W CEDAR AVE
21
22
23
24
25
26
27
28
29
CEDAR AVE
℄ CONST. CEDAR AVE

FOR MAINTENANCE OF TRAFFIC LEGEND SEE SHEET380

HORIZONTAL SCALE IN FEET
0 20 40 80

MAINTENANCE OF TRAFFIC - CARNEGIE SUBPHASE 8B
CARNEGIE AVE - STA. 57+00.00 TO END

CUY-90-16.28 (CCG3A)

MODEL: 82382_MP8102 PAPERSIZE: 34x22 (in.) DATE: 3/27/2025 TIME: 9:09:00 PM USER: Colin.Kwiatt
pw:\\mb-us-pw.bentley.com:mb-us-pw-03\Documents\Cleveland_OH\01_Projects\ODOT\District2\82382\400-Engineering\MOT\Sheets\82382_MP8102.dgn

DESIGN AGENCY	Michael Baker INTERNATIONAL
DESIGNER	CRK
REVIEWER	GSH 05/22/24
PROJECT ID	82382
SHEET	391
TOTAL	2696

LEGEND

AREA OF CONSTRUCTION TO BE COMPLETED BY END OF PHASE

EXISTING BRIDGE OR TEMPORARY PAVEMENT REMOVAL COMPLETED BY END OF PHASE

DETAILS LOCATED IN PRIOR PHASE

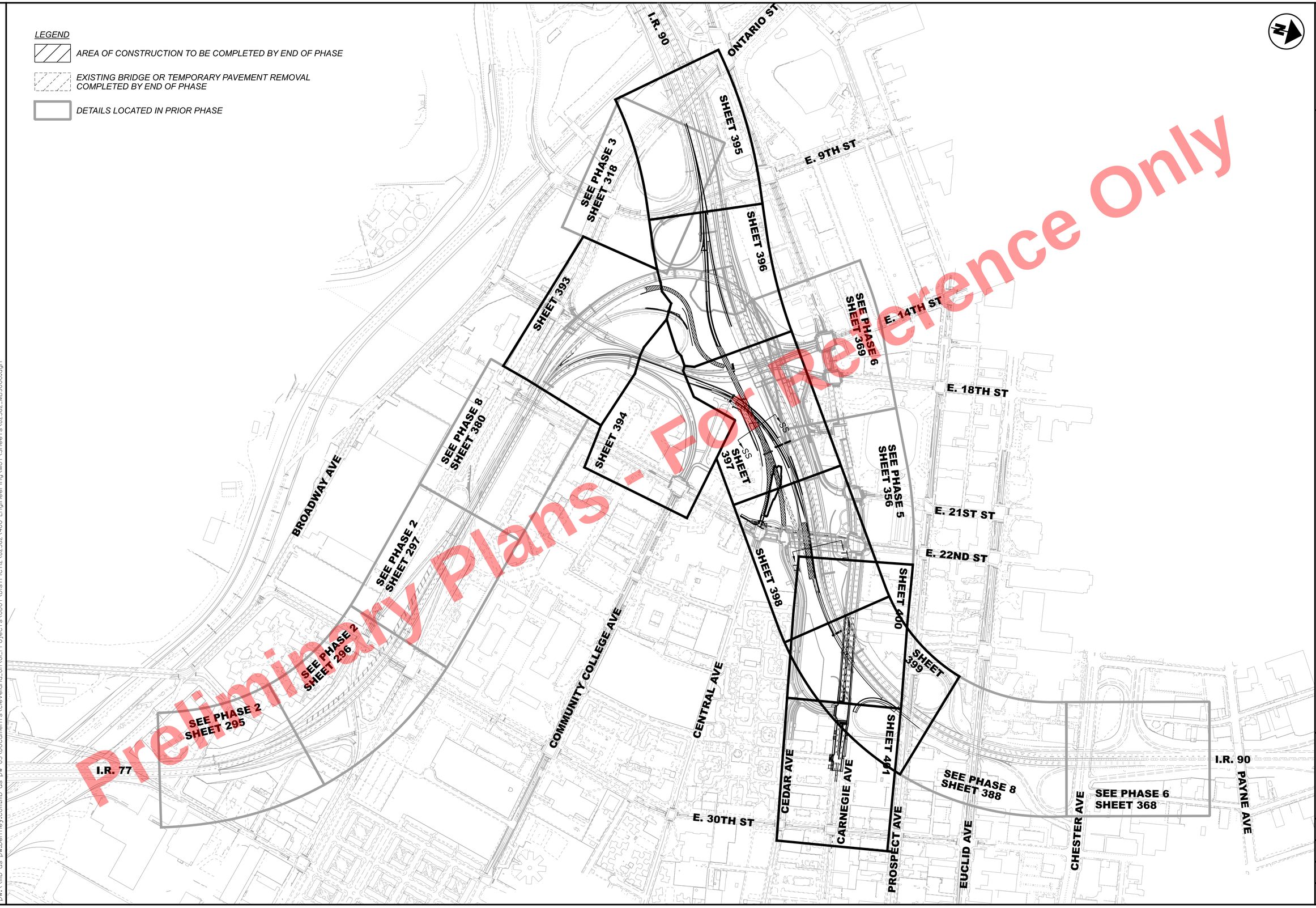

Preliminary Plans - For Reference Only

HORIZONTAL SCALE IN FEET
0 150 300 600

MAINTENANCE OF TRAFFIC - PHASE 9 SHEET PLAN KEY

DESIGN AGENCY
Michael Baker INTERNATIONAL

DESIGNER CRK
REVIEWER GSH 05/22/24
PROJECT ID 82382
SHEET 392 TOTAL 2696

CUY-90-16.28 (CCG3A)

MODEL: Sheet PAPERSIZE: 34x22 (in.) DATE: 3/27/2025 TIME: 9:09:18 PM USER: Collin.Kwiatt
pw:\\mb-us-pw.bentley.commb-us-pw-03\Documents\Cleveland_OH\OL_Projects\ODOT\District12\82382\400-Engineering\M0T\Sheets\82382_MB9000.dgn

Preliminary Plans - For Reference Only

ORANGE AVE.

ORANGE AVE.

E. 14TH ST.

MATCHLINE ℄ EX. ONTARIO ST
SEE SHEET 318

MATCH LINE STA. 75+50.00
SEE SHEET 380

℄ EX. I.R. 77

℄ EX. RAMP E-17

℄ RAMP IH5

℄ RAMP IH4

℄ RAMP IH6

℄ INTERIM E. 14TH ST SB

I.R. 90 WB TO I.R. 77 SB RAMP (OPEN)

I.R. 77 NB TO E. 14TH ST SB RAMP (OPEN)

I.R. 77 NB TO E. 22ND ST EXIT RAMP (OPEN)

I.R. 77 NB TO I.R. 90 EB (OPEN)

I.R. 77 NB TO E. 14TH ST NB EXIT RAMP (OPEN)

ATTACH IMPACT ATTENUATOR

STA. 101+89
BEGIN CONSTRUCTION
OF RAMP IJ3

℄ EX. RAMP E-17
STA. 60+39
BEGIN PB 21:1 FLARE
W/ INCREASED DELINEATION

℄ RAMP IJ3

PB-57

℄ EX. RAMP E-17
STA. 61+75
END PB FLARE

FINAL PR. SIGNS IN PLACE
AND UNCOVERED

MATCHLINE
SEE SHEET
396

MATCH LINE
SEE SHEET
396

MATCHLINE
SEE SHEET 396

MATCHLINE ℄ RAMP IH6 STA. 1274+00.00
SEE SHEET 394

MATCHLINE
℄ INTERIM
E. 14TH ST SB
SEE SHEET
394

LEFT
EXIT 163 A
E 9th St
Ontario St
EXIT ONLY

LEFT
EXIT 163 B
E 14th St
E 18th St
EXIT ONLY

EAST
90
Erie Pa
EXIT ONLY

EXIT 163 C
E 22nd St
¼ MILE
EXIT ONLY

*- PROPOSED OVERHEAD PANELS DETAILED ON SHEET 1522

MS-61

MS-62

MAINTAIN GREEN OVERLAY COVERING "DOWN ARROWS (2)" AND "¼ MILE" UNTIL 2ND LANE TO I.R. 90 IS OPEN. WHEN 2ND LANE TO I.R. 90 IS OPEN REMOVE "EXIT ONLY" SIGNS (2) AND OVERLAYS

HORIZONTAL SCALE IN FEET
0 20 40 80

MAINTENANCE OF TRAFFIC - PHASE 9
I.R. 77 - STA. 75+50.00 TO END / RAMP IH6 - BEGIN TO STA. 1274+00.00

MAINTENANCE OF TRAFFIC LEGEND

- AREA OF CONSTRUCTION TO BE COMPLETED BY END OF PHASE
- PAVEMENT FOR MAINTAINING TRAFFIC, CLASS A
- EXISTING BRIDGE OR TEMPORARY PAVEMENT REMOVAL TO BE COMPLETED BY END OF PHASE
- DRUMS SPACED AS NOTED, OR AS SHOWN ON REFERENCE STANDARD CONSTRUCTION DRAWINGS
- (17.5') OFFSET RIGHT FROM CENTERLINE, BASELINE OR EX. EDGE AS NOTED
- (-17.5') OFFSET LEFT FROM CENTERLINE, BASELINE OR EX. EDGE AS NOTED
- (EW) WORK ZONE EDGE LINE (WHITE), CLASS I
- (EY) WORK ZONE EDGE LINE (YELLOW), CLASS I
- (MS) TEMPORARY SIGN
- (CH) WORK ZONE CHANNELIZING LINE (WHITE), CLASS I
- (DL) WORK ZONE DOTTED LINE, CLASS I
- * FINAL CONDITION PAVEMENT MARKING (SEE MAINTENANCE OF TRAFFIC SUBSUMMARY FOR SPECIFIC PAY ITEM)
- (PB) ITEM 622, PORTABLE BARRIER (PB), 50", AS PER PLAN^
- IMPACT ATTENUATOR
- (LL) WORK ZONE LANE LINE, CLASS I
- (CL) WORK ZONE CENTER LINE (DOUBLE SOLID), CLASS I
- (XW) WORK ZONE CROSS WALK LINE, CLASS I
- (SL) WORK ZONE STOP LINE, CLASS I
- (LA) WORK ZONE LANE ARROW, CLASS I

- STATION AND OFFSET INFORMATION PROVIDED BASED ON ALIGNMENT OF ROADWAY BEING DETAILED, UNLESS NOTED OTHERWISE.

^ - ITEM 622, PORTABLE BARRIER, ANCHORED, AS PER PLAN TO BE USED WHERE INDICATED IN THE PLANS

DESIGN AGENCY	Michael Baker INTERNATIONAL
DESIGNER	CRK
REVIEWER	GSH 05/22/24
PROJECT ID	82382
SHEET	393
TOTAL	2696

CUY-90-16.28 (CCG3A)

MODEL: MP9005 PAPERSIZE: 34x22 (in.) DATE: 3/27/2025 TIME: 9:09:33 PM USER: Collin.Kwiatt
pw:\\mb-us-pw.bentley.com:mb-us-pw-03\Documents\Cleveland_OH\01_Projects\00OT\D1str1ct12\82382\400-Engineering\MOT\Sheets\82382_MP9005.dgn

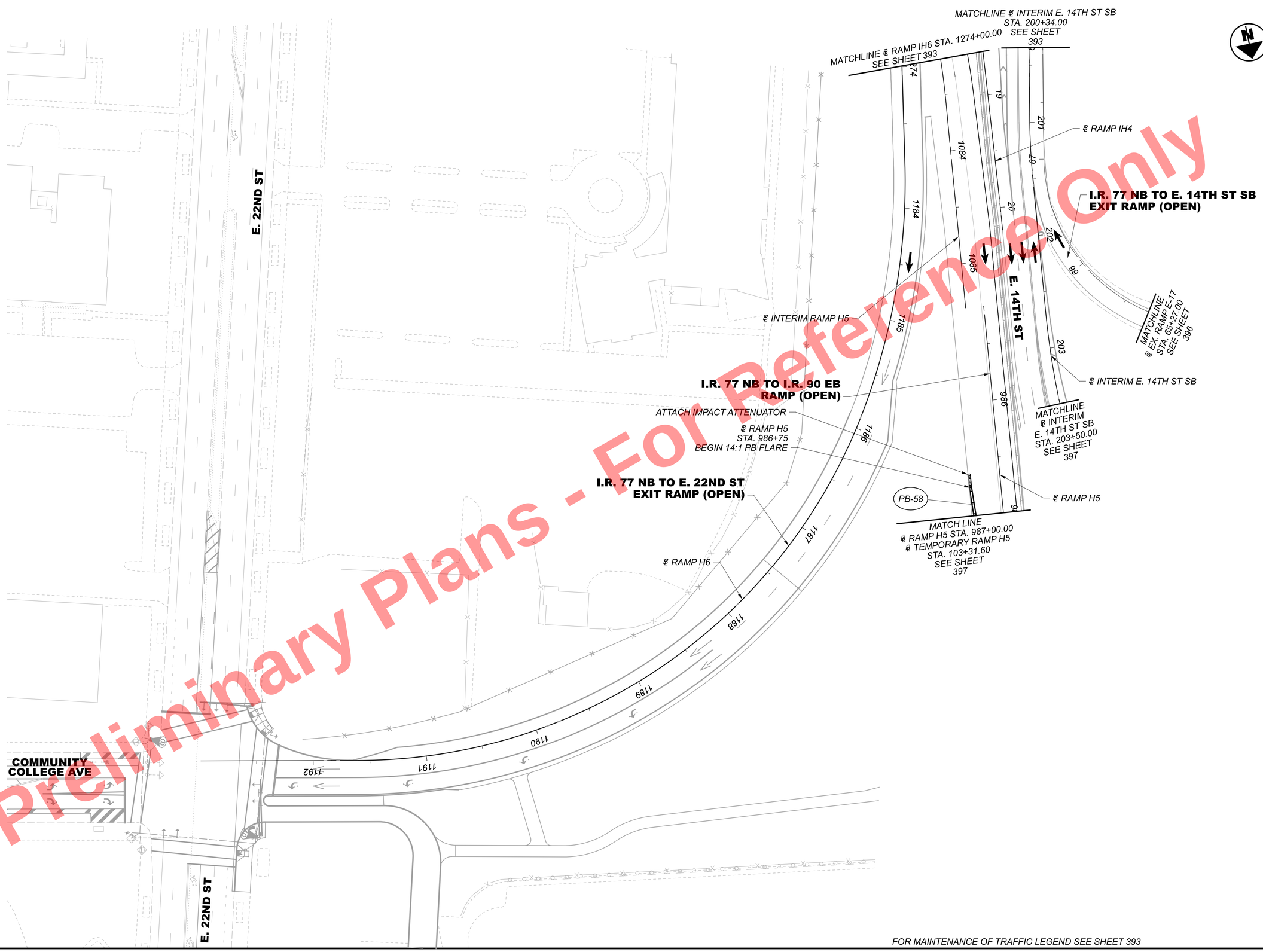

Preliminary Plans - For Reference Only

FOR MAINTENANCE OF TRAFFIC LEGEND SEE SHEET 393

HORIZONTAL SCALE IN FEET
0 20 40 80

MAINTENANCE OF TRAFFIC - PHASE 9
RAMP H6 - STA. 1274+00.00 TO END

DESIGN AGENCY
Michael Baker INTERNATIONAL

DESIGNER
CRK

REVIEWER
GSH 05/22/24

PROJECT ID
82382

SHEET 394 | TOTAL 2696

CUY-90-16.28 (CCG3A)

MODEL: MP9007 PAPERSIZE: 34x22 (in.) DATE: 3/27/2025 TIME: 9:09:46 PM USER: Collin.Kwiatt
pw:\\mb-us-pw.bentley.com:mb-us-pw-03\Documents\Cleveland.OH\OI_Projects\ODOT\District2\82382\400-Engineering\MOT\Sheets\82382_MP9007.dgn

Preliminary Plans - For Reference Only

E. 9TH ST TO I.R. 90 WB
ENTRANCE RAMP (OPEN)

E. 9TH ST

I.R. 90 WB

℄ I.R. 90 EB

℄ EX. I.R. 90

CH-99

PLACE FINAL CH AND EW

25' TAPER DRUM
SPACING

I.R. 90 EB

166 167 168 169 170 171 172 173 174 175
1 52 53 54 55 56 57 58 59 60

I.R. 90 EB TO E. 9TH ST NB EXIT RAMP (OPEN)

MATCH LINE STA. 61+00.00
SEE SHEET 396

I.R. 90 EB TO ONTARIO ST/
E 9TH ST SB EXIT RAMP (OPEN)

℄ I.R. 90 EB
STA. 169+50
BEGIN CH
BEGIN CH (FINAL)
BEGIN EW (FINAL)
(MEET EX.)

650' SHIFT TAPER @ 55:1

12.0' CH/CH (FINAL)

24.1' EW (FINAL)

ONTARIO ST

EAST		WEST	
422	14	422	14
Orange Ave		Ontario St	

RAMPS 25 MPH

EAST		WEST	
422	14	422	14
Orange Ave		Ontario St	

FOR MAINTENANCE OF TRAFFIC LEGEND SEE SHEET 393

HORIZONTAL
SCALE IN FEET
0 20 40 80

MAINTENANCE OF TRAFFIC - PHASE 9
I.R. 90 - BEGIN TO STA. 61+00.00

DESIGN AGENCY
Michael Baker INTERNATIONAL

DESIGNER
CRK

REVIEWER
GSH 05/22/24

PROJECT ID
82382

SHEET 395 TOTAL 2696

CUY-90-16.28 (CCG3A)

MODEL: MP9008 PAPERSIZE: 34x22 (in.) DATE: 3/27/2025 TIME: 9:09:57 PM USER: Collin.Kwiatt
pw:\\mb-us-pw.bentley.com:mb-us-pw-03\Documents\Cleveland_OH\DL_Projects\000T\Distrct2\82382\400-Engineering\MOT\Sheets\82382_MP9008.dgn

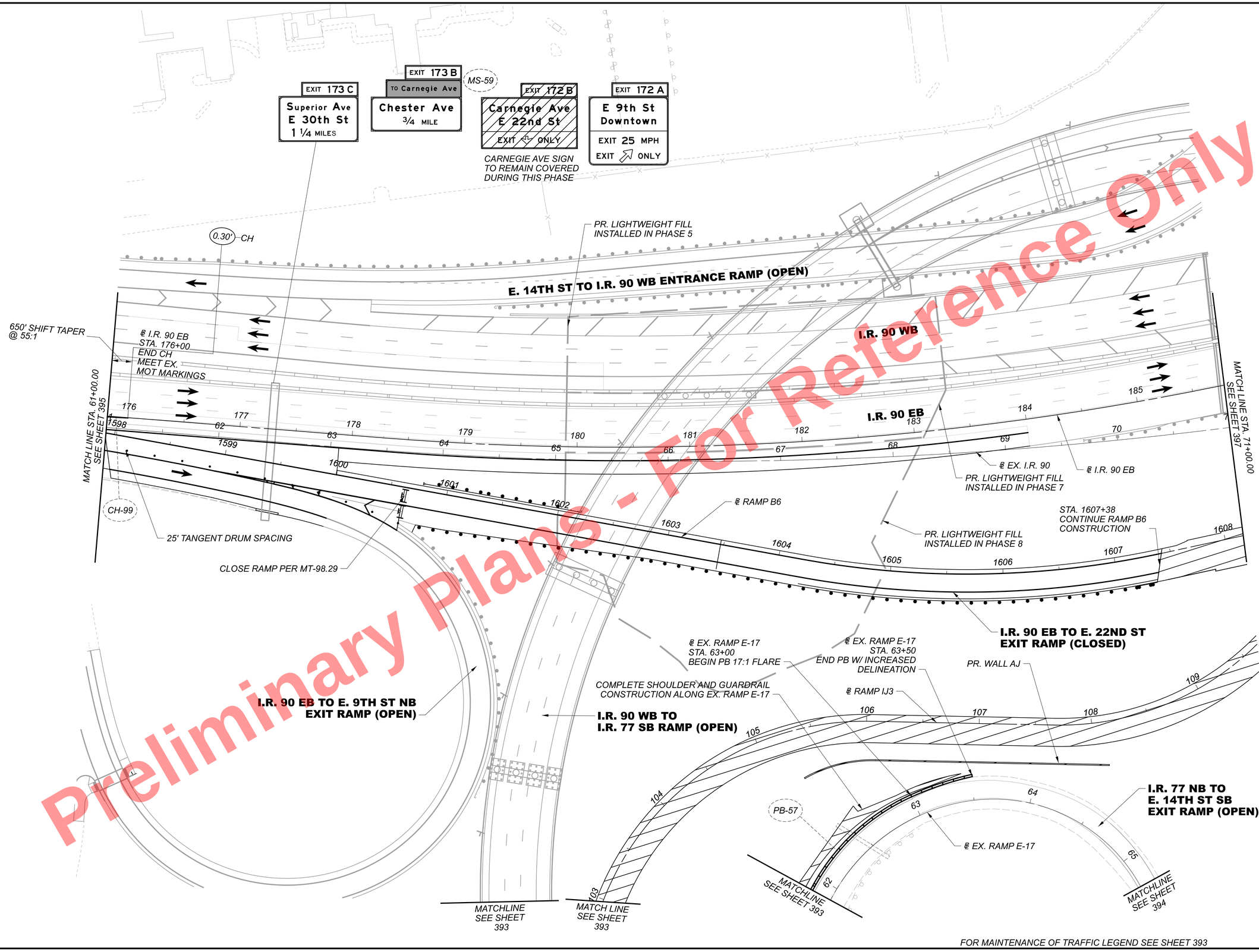

Preliminary Plans - For Reference Only

FOR MAINTENANCE OF TRAFFIC LEGEND SEE SHEET 393

HORIZONTAL SCALE IN FEET
0 20 40 80

MAINTENANCE OF TRAFFIC - PHASE 9
I.R. 90 - STA. 61+00.00 TO STA. 71+00.00

DESIGN AGENCY
Michael Baker INTERNATIONAL

DESIGNER CRK
REVIEWER GSH 05/22/24
PROJECT ID 82382
SHEET 396 TOTAL 2696

CUY-90-16.28 (CCG3A)

MODEL: MP9009 PAPERSIZE: 34x22 (in.) DATE: 3/27/2025 TIME: 9:06:08 PM USER: Collin.Kwiat
pw:\\mb-us-pw.bentley.com:mb-us-pw-03\Documents\Cleveland.OH\OI_Projects\ODOT\District2\82382\400-Engineering\MOT\Sheets\82382_MP9009.dgn

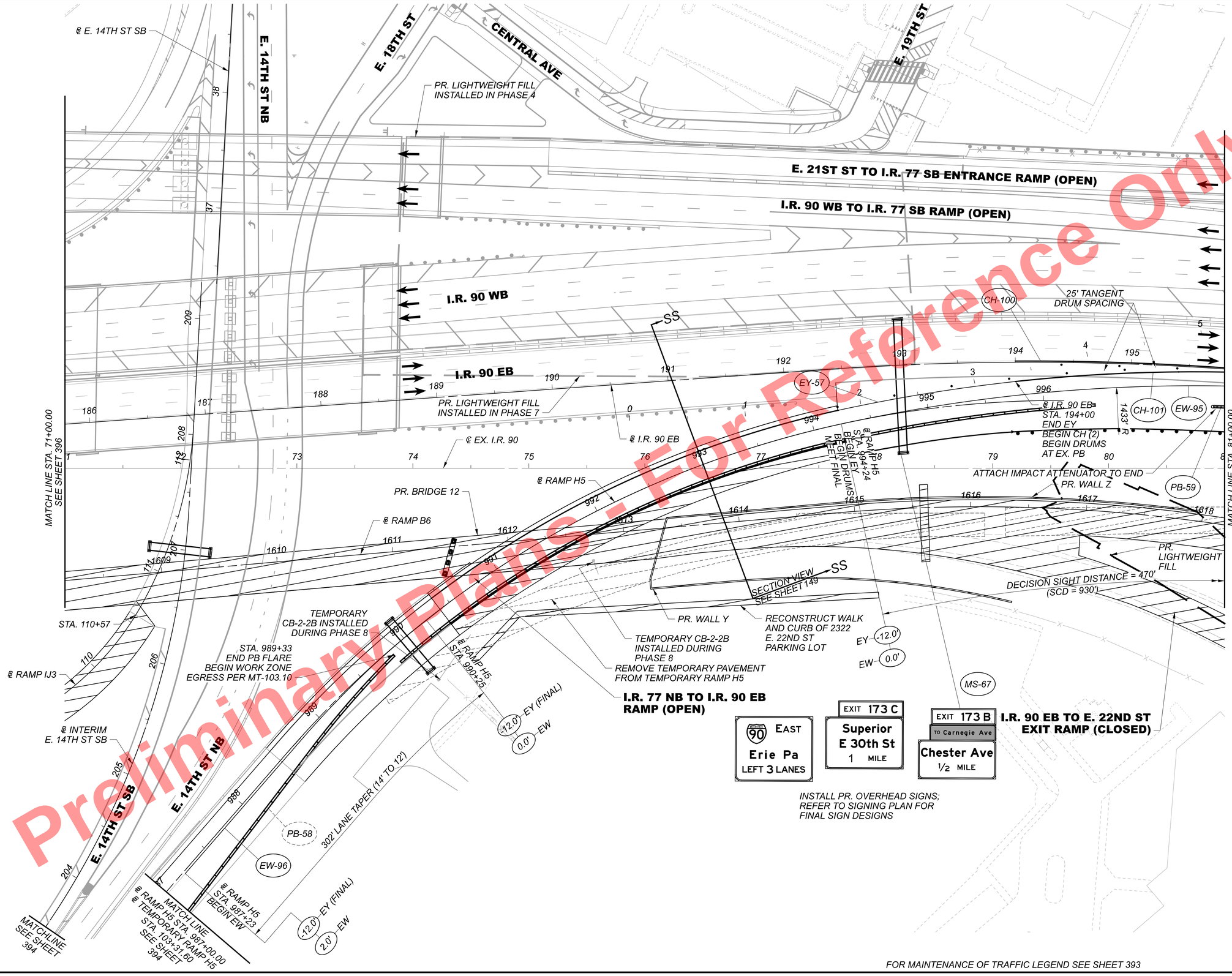

Preliminary Plans - Not For Reference Only

HORIZONTAL SCALE IN FEET
0 20 40 80

MAINTENANCE OF TRAFFIC - PHASE 9
I.R. 90 - STA. 71+00.00 TO STA. 81+00.00

DESIGN AGENCY
Michael Baker INTERNATIONAL

DESIGNER CRK
REVIEWER GSH 05/22/24
PROJECT ID 82382
SHEET 397 TOTAL 2696

CUY-90-16.28 (CCG3A)

MODEL: MP90iO PAPERSIZE: 34x22 (in.) DATE: 3/27/2025 TIME: 9:10:22 PM USER: Collin.Kwiatt
pw:\\mb-us-pw.bentley.com:mb-us-pw-03\Documents\Cleveland_OH\OI_Projects\ODOT\District2\82382\400-Engineering\MOT\Sheets\82382_MP90iO.dgn

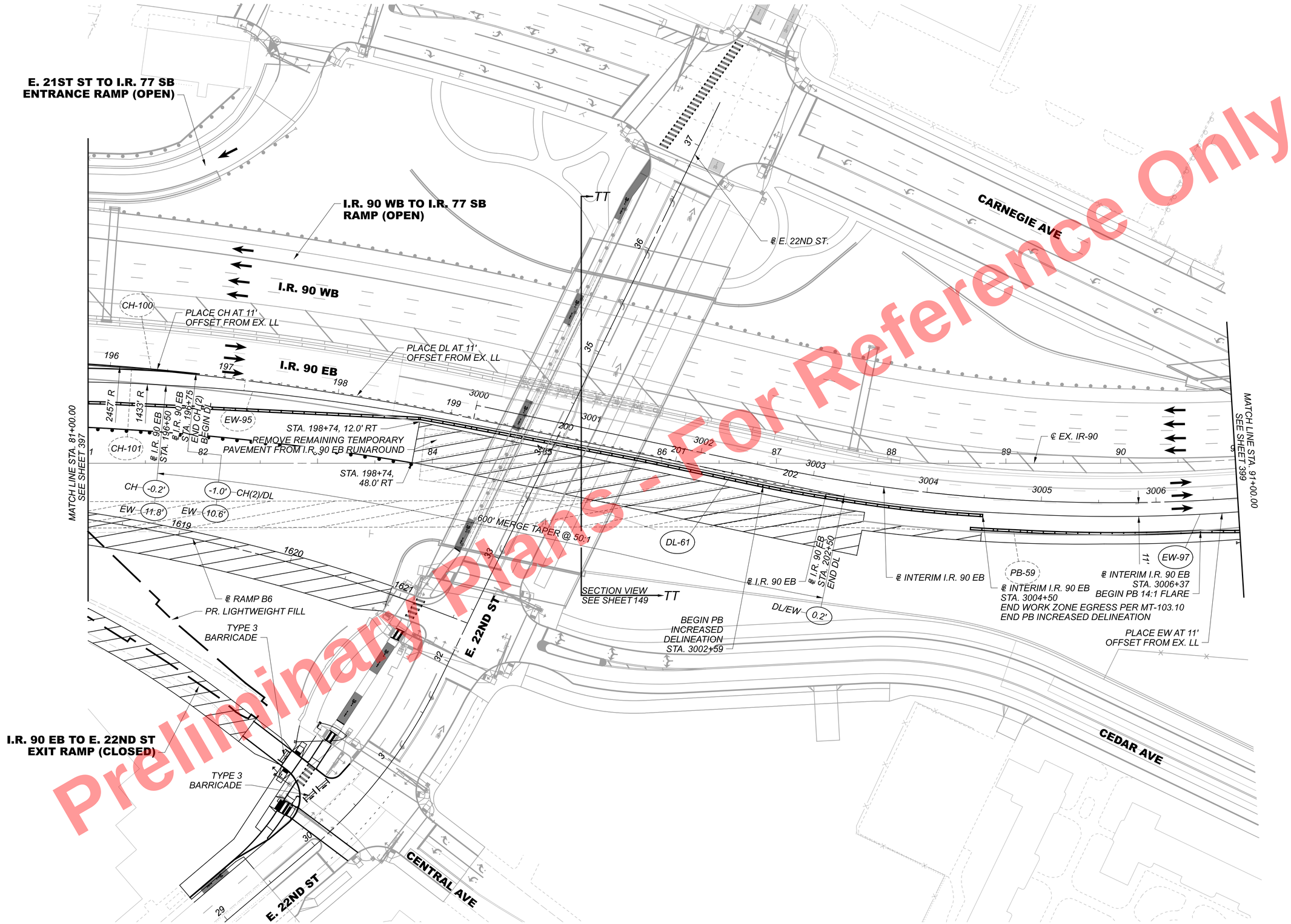

Preliminary Plans - For Reference Only

FOR MAINTENANCE OF TRAFFIC LEGEND SEE SHEET 393

HORIZONTAL SCALE IN FEET 0 20 40 80

MAINTENANCE OF TRAFFIC - PHASE 9
I.R. 90 - STA. 81+00.00 TO STA. 91+00.00

DESIGN AGENCY
Michael Baker INTERNATIONAL

DESIGNER CRK
REVIEWER GSH 05/22/24
PROJECT ID 82382
SHEET 398 TOTAL 2696

CUY-90-16.28 (CCG3A)

MODEL: MP90II PAPERSIZE: 34x22 (in.) DATE: 3/27/2025 TIME: 9:10:40 PM USER: Collin.Kwiatt
pw:\\mb-us-pw.bentley.com:mb-us-pw-03\Documents\Cleveland_OH\01_Projects\ODOT\District12\82382\400-Engineering\MOT\Sheets\82382_MP90II.dgn

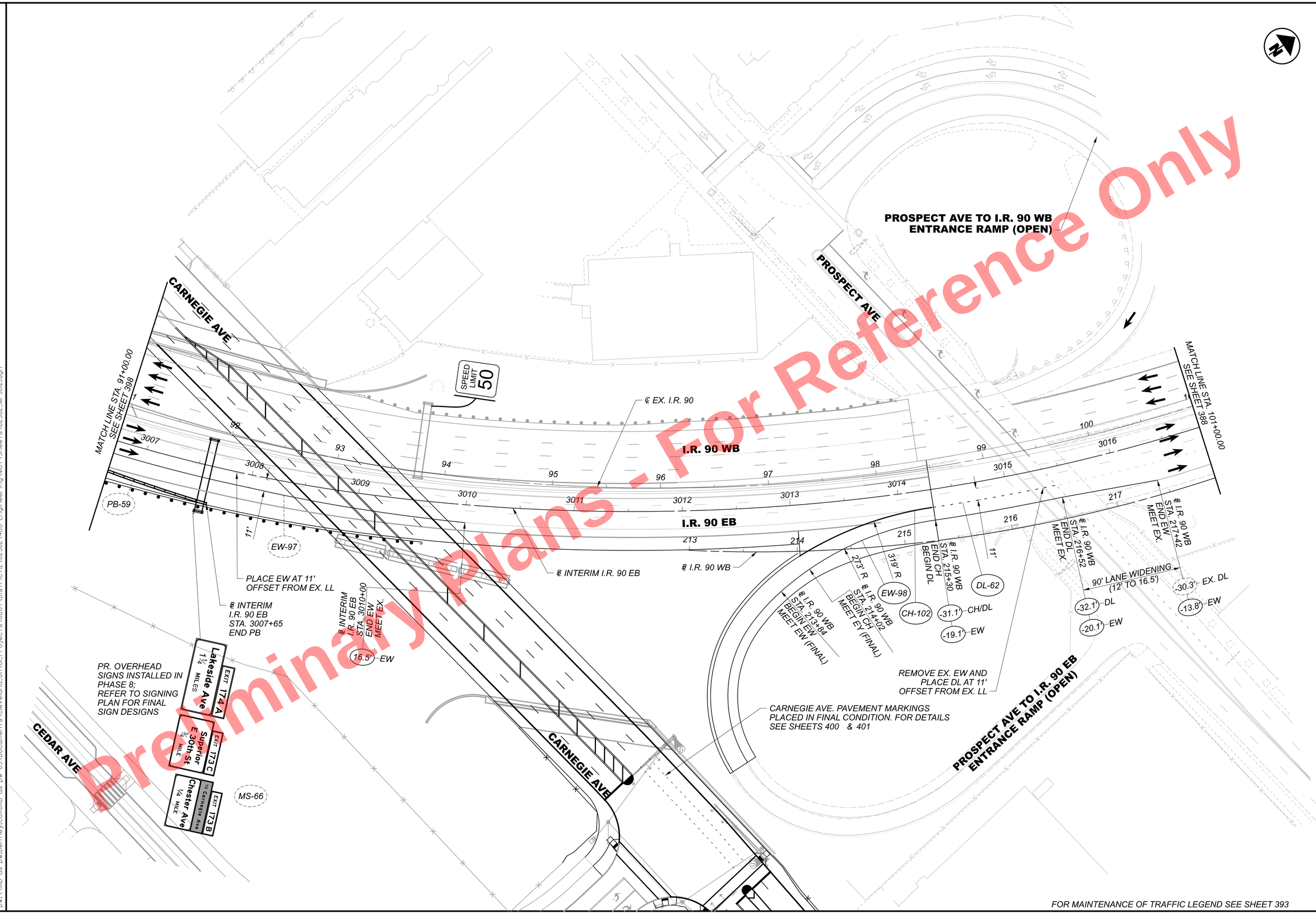

Preliminary Plans - For Reference Only

HORIZONTAL SCALE IN FEET
0 20 40 80

MAINTENANCE OF TRAFFIC - PHASE 9
I.R. 90 - STA. 91+00.00 TO STA. 101+00.00

DESIGN AGENCY
Michael Baker INTERNATIONAL

DESIGNER
CRK

REVIEWER
GSH 05/22/24

PROJECT ID
82382

SHEET 399 TOTAL 2696

CUY-90-16.28 (CCG3A)

MODEL: MP901 PAPERSIZE: 34x22 (in.) DATE: 3/27/2025 TIME: 9:10:52 PM USER: Collin.Kwiatt
pw:\\mb-us-pw.bentley.com:mb-us-pw-03\Documents\Cleveland_OHIO_Projects\ODOT\District2\82382\400-Engineering\MOT\Sheets\82382_MP902.dgn

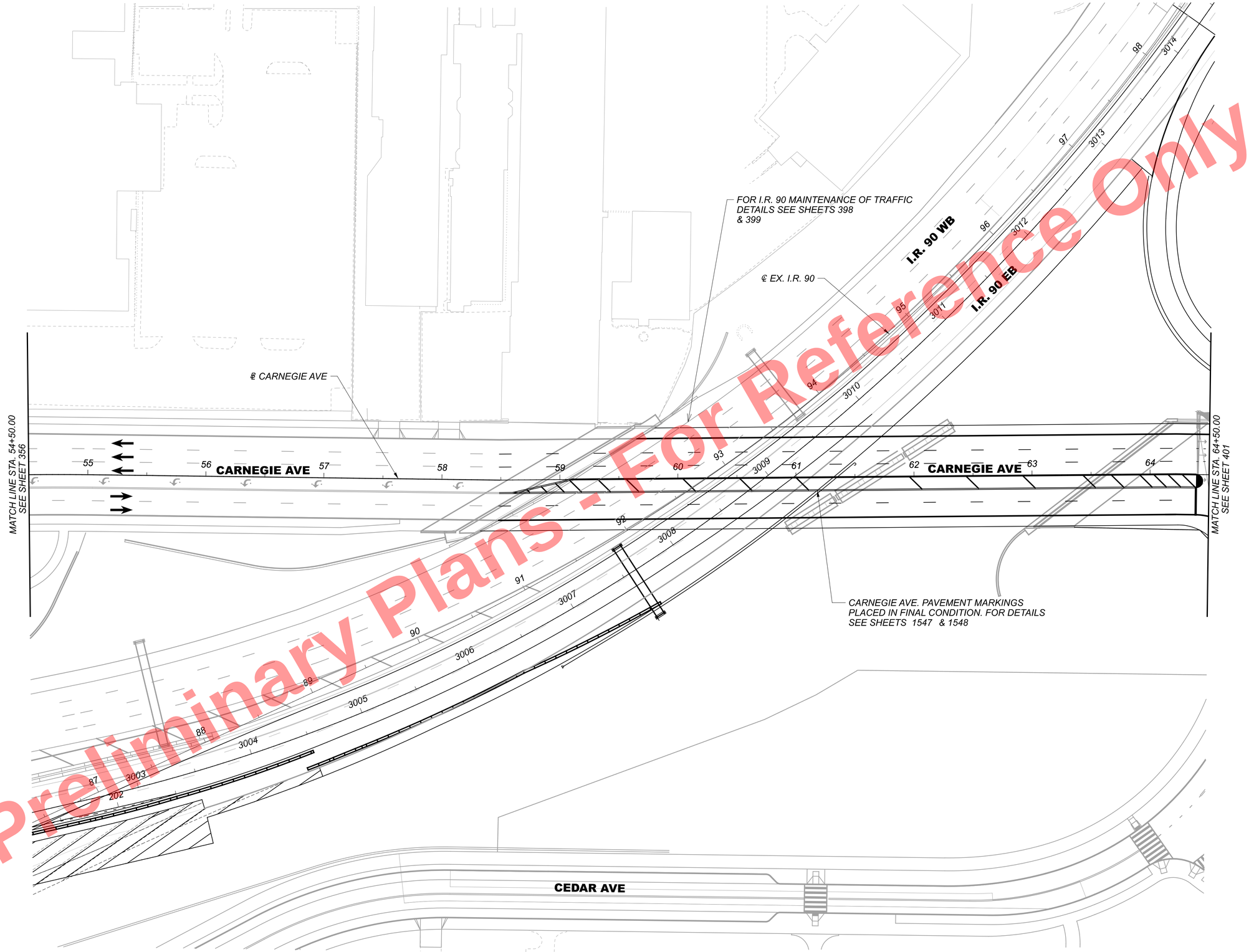

FOR MAINTENANCE OF TRAFFIC LEGEND SEE SHEET 393

Preliminary Plans - For Reference Only

HORIZONTAL SCALE IN FEET
0 20 40 80

MAINTENANCE OF TRAFFIC - PHASE 9
CARNEGIE AVE - STA. 54+50.00 TO STA. 64+00.00

DESIGN AGENCY
Michael Baker INTERNATIONAL

DESIGNER	REVIEWER	PROJECT ID	SHEET	TOTAL
CRK	GSH 05/22/24	82382	400	2696

CUY-90-16.28 (CCG3A)

MODEL: 82382_MP9017 PAPERSIZE: 34x22 (in) DATE: 3/27/2025 TIME: 9:11:07 PM USER: Collin.Kwiatt
pw:\\mb-us-pw.bentley.com:mb-us-pw-03\Documents\Cleveland.OH\01_Projects\000T\District2\82382\400-Engineering\MOT\Sheets\82382_MP9017.dgn

Preliminary Plans - For Reference Only

PROSPECT AVE TO
I.R. 90 EB ENTRANCE
RAMP (OPEN)

FOR I.R. 90 MAINTENANCE OF TRAFFIC
DETAILS SEE SHEET 399

E. 30TH ST

℄ CARNEGIE AVE

LL-70

121'

MATCH LINE STA. 64+50.00
SEE SHEET 400

65 66 67 68 69 70 71 72 73

CARNEGIE AVE

CARNEGIE AVE

MIDTOWN CONNECTOR

PLACE PERMANENT LL IN
FINAL CONDITION (RETURN TO
EXISITING CONDITION)

CARNEGIE AVE. PAVEMENT MARKINGS
PLACED IN FINAL CONDITION. FOR DETAILS
SEE SHEETS 1548 & 1549

E. 28TH ST

E. 30TH ST

CEDAR AVE

CEDAR AVE

FOR MAINTENANCE OF TRAFFIC LEGEND SEE SHEET 393

HORIZONTAL
SCALE IN FEET
0 20 40 80

MAINTENANCE OF TRAFFIC - PHASE 9
CARNEGIE AVE - STA. 64+50.00 TO END

DESIGN AGENCY
Michael Baker INTERNATIONAL

DESIGNER CRK
REVIEWER GSH 05/22/24
PROJECT ID 82382
SHEET 401 TOTAL 2696

CUY-90-16.28 (CCG3A)

MODEL: 82382_MP9018 PAPERSIZE: 34x22 (in) DATE: 3/27/2025 TIME: 9:18:18 PM USER: CollinKwiatt
pw:\\mb-us-pw.bentley.com:mb-us-pw-03\Documents\Cleveland.OH\OI_Projects\ODOT\District2.82382\400-Engineering\MOT\Sheets\82382_MP9018.dgn

Preliminary Plans - For Reference Only

PROSPECT AVE.

I.R. 90 WB TO PROSPECT AVE EXIT RAMP (OPEN)

EUCLID AVE.

PROSPECT AVE TO I.R. 90 WB ENTRANCE RAMP (OPEN)

I.R. 90 WB

I.R. 90 EB

I.R. 90 EB PAVEMENT MARKINGS PLACED INTO FINAL CONDITION FOLLOWING COMPLETION OF CONSTRUCTION. FOR DETAILS SEE SHEETS 1504-1505

CARNEGIE AVE.

STA. 98+47

EY-58*

EW-99*

LL-71*

STA. 100+50 END PR. EW MEET EX.

LL-72*

STA. 101+71 END PR. LL (2), EY MEET EX.

DL-63*

STA. 102+41 END PR. DL MEET EX.

43.5' DL

56.1' EW

PLACE FINAL PROPOSED MARKINGS IN EXISTING CONFIGURATION

8.2' EY
20.2' LL
32.2' LL
44.2' DL
56.4' EW

7.7' EY
19.7' LL
31.7' LL
43.7' DL

PROSPECT AVE TO I.R. 90 EB ENTRANCE RAMP (OPEN)

PROSPECT AVE.

FOR MAINTENANCE OF TRAFFIC LEGEND SEE SHEET 393

HORIZONTAL SCALE IN FEET
0 20 40 80

MAINTENANCE OF TRAFFIC - POST PHASE 9
I.R. 90 - STA. 94+00.00 TO STA. 104+00.00

CUY-90-16.28 (CCG3A)

MODEL: Sheet PAPERSIZE: 34x22 (in) DATE: 3/27/2025 TIME: 9:11:30 PM USER: Collin.Kwiat
pw:\\mb-us-pw.bentley.com:mb-us-pw-03\Documents\Cleveland_OH\01_Projects\ODOT\District2\82382\400-Engineering\MOT\Sheets\82382_MP9020.dgn

DESIGN AGENCY
Michael Baker INTERNATIONAL

DESIGNER CRK
REVIEWER GSH 05/22/24
PROJECT ID 82382
SHEET 402 TOTAL 2696

SHEET NUMBER														PARTICIPATION			ALT (X)	ITEM	ITEM EXT.	GRAND TOTAL	UNIT	DESCRIPTION	SEE SHEET
427	435	470	471	489	1399									01/IMS /04	02/IMS /10	03/IMS /08							
																						ROADWAY	
LS														LS				201	11000	LS		CLEARING AND GRUBBING	
				133744										133744				202	23000	133744	SY	PAVEMENT REMOVED	
				101667										101667				202	30000	101667	SF	WALK REMOVED	
				509										509				202	30600	509	SY	CONCRETE MEDIAN REMOVED	
1510				4595										6105				202	30700	6105	FT	CONCRETE BARRIER REMOVED	
				714										714				202	30800	714	SY	TRAFFIC ISLAND REMOVED	
				23863										23863				202	32000	23863	FT	CURB REMOVED	
				7065										7065				202	35100	7065	FT	PIPE REMOVED, 24" DIAMETER AND UNDER	
				609										609				202	35200	609	FT	PIPE REMOVED, OVER 24" DIAMETER	
				6379										6379				202	38000	6379	FT	GUARDRAIL REMOVED	
				1										1				202	42000	1	EACH	ANCHOR ASSEMBLY REMOVED, TYPE A	
				2										2				202	42010	2	EACH	ANCHOR ASSEMBLY REMOVED, TYPE E	
				7										7				202	42040	7	EACH	ANCHOR ASSEMBLY REMOVED, TYPE T	
				2										2				202	42050	2	EACH	ANCHOR ASSEMBLY REMOVED, TYPE B	
				6										6				202	47000	6	EACH	BRIDGE TERMINAL ASSEMBLY REMOVED	
				1										1				202	47001	1	EACH	BRIDGE TERMINAL ASSEMBLY REMOVED, AS PER PLAN	74
				2										2				202	47800	2	EACH	IMPACT ATTENUATOR REMOVED	
				15										15				202	58000	15	EACH	MANHOLE REMOVED	78
				63										63				202	58100	63	EACH	CATCH BASIN REMOVED	78
				21										21				202	58200	21	EACH	INLET REMOVED	78
				11										11				202	58400	11	EACH	INLET ABANDONED	78
				21										21				202	58500	21	EACH	CATCH BASIN ABANDONED	78
				9										9				202	58700	9	EACH	MANHOLE ABANDONED	78
				2317										2317				SPECIAL	202E70000	2317	FT	FILL AND PLUG EXISTING CONDUIT (12" AND UNDER)	78
				1186										1186				SPECIAL	202E70000	1186	FT	FILL AND PLUG EXISTING CONDUIT (15")	78
				510										510				SPECIAL	202E70000	510	FT	FILL AND PLUG EXISTING CONDUIT (18")	78
				51										51				SPECIAL	202E70000	51	FT	FILL AND PLUG EXISTING CONDUIT (21")	78
				255										255				SPECIAL	202E70000	255	FT	FILL AND PLUG EXISTING CONDUIT (24")	78
				334										334				SPECIAL	202E70000	334	FT	FILL AND PLUG EXISTING CONDUIT (27")	78
				48										48				SPECIAL	202E70000	48	FT	FILL AND PLUG EXISTING CONDUIT (30")	78
				361										361				SPECIAL	202E70000	361	FT	FILL AND PLUG EXISTING CONDUIT (36")	78
				475										475				SPECIAL	202E70000	475	FT	FILL AND PLUG EXISTING CONDUIT (66")	78
				349										349				SPECIAL	202E70000	349	FT	FILL AND PLUG EXISTING CONDUIT (NO. 8 BR)	78
				10915										10915				202	75000	10915	FT	FENCE REMOVED	
				13										13				202	75250	13	EACH	GATE REMOVED	
				26										26				202	98100	26	EACH	REMOVAL MISC.: BOLLARD	74
				2										2				202	98100	2	EACH	REMOVAL MISC.: BILLBOARD	74
				1										1				202	98100	1	EACH	REMOVAL MISC.: PAY BOX	74
				1										1				202	98100	1	EACH	REMOVAL MISC.: UTILITY POLE	74
1000														1000				202	98200	1000	FT	REMOVAL MISC.: BURIED TRACK	74
				266										266				202	98200	266	FT	REMOVAL MISC.: DELINEATOR CURB	74
				264										264				202	98200	264	FT	REMOVAL MISC.: PORTABLE BARRIER	74
			345447											345447				203	10000	345447	CY	EXCAVATION	
			34789											34789				203	10001	34789	CY	EXCAVATION, AS PER PLAN	75
			86656											86656				203	20000	86656	CY	EMBANKMENT	
			27322											27322				203	20001	27322	CY	EMBANKMENT, AS PER PLAN	75
			99839											99839				203	98000	99839	CY	ROADWAY, MISC.: EPS GEOFOAM FILL	75
		110			84									194				203	98100	194	SY	ROADWAY, MISC.: REINFORCED TURF	75
		69568												69568				204	10000	69568	SY	SUBGRADE COMPACTION	74
3100			272											3372				204	13000	3372	CY	EXCAVATION OF SUBGRADE	
3100			272											3372				204	30010	3372	CY	GRANULAR MATERIAL, TYPE B	
		76												76				204	45000	76	HOUR	PROOF ROLLING	74
9300		498												9798				204	50000	9798	SY	GEOTEXTILE FABRIC	
		1847												1847				206	10500	1847	TON	CEMENT	
		75313												75313				206	11000	75313	SY	CURING COAT	
		75601												75601				206	15010	75601	SY	CEMENT STABILIZED SUBGRADE, 12 INCHES DEEP	74
														LS				206	30000	LS		MIXTURE DESIGN FOR CHEMICALLY STABILIZED SOILS	
	8772.2													8772.2				606	15050	8772.2	FT	GUARDRAIL, TYPE MGS	
	5													5				606	26050	5	EACH	ANCHOR ASSEMBLY, MGS TYPE B (MASH 2016)	76

Preliminary Plans - For Reference Only

GENERAL SUMMARY - 1

CUY-90-16.28 (CCG3A)

MODEL: Sheet-01 PAPERSIZE: 34x22 (in.) DATE: 6/16/2025 TIME: 6:34:36 PM USER: Mata.Gallagher
pw:\\mb-us-pw.bentley.com:mb-us-pw-03\Documents\Cleveland_OH\01_Projects\ODOT\District12\82382\400-Engineering\Roadway\Sheets\82382_GG001.dgn
82382_GG001.dgn

DESIGN AGENCY
Michael Baker INTERNATIONAL

DESIGNER KJM

REVIEWER KGJ 05/22/24

PROJECT ID 82382

SHEET 403 TOTAL 2696

SHEET NUMBER														PARTICIPATION			ALT (X)	ITEM	ITEM EXT.	GRAND TOTAL	UNIT	DESCRIPTION	SEE SHEET
120	427	428	429	435	459	470	1806	1839						01/IMS /04	02/IMS /10	03/IMS /08							
																						ROADWAY (CONT.)	
				10										10				606	26150	10	EACH	ANCHOR ASSEMBLY, MGS TYPE E (MASH 2016)	76
				15										15				606	26550	15	EACH	ANCHOR ASSEMBLY, MGS TYPE T	
				13										13				606	35002	13	EACH	MGS BRIDGE TERMINAL ASSEMBLY, TYPE 1	
				9										9				606	35102	9	EACH	MGS BRIDGE TERMINAL ASSEMBLY, TYPE 2	
				1										1				606	35103	1	EACH	MGS BRIDGE TERMINAL ASSEMBLY, TYPE 2, AS PER PLAN	76
				1										1				606	60022	1	EACH	IMPACT ATTENUATOR, TYPE 2 (UNIDIRECTIONAL) (MASH 2016) (50 MPH, 69" WIDE)	76
				3										3				606	60022	3	EACH	IMPACT ATTENUATOR, TYPE 2 (UNIDIRECTIONAL) (MASH 2016) (50 MPH, 90" WIDE)	76
				4477										4477				607	23000	4477	FT	FENCE, TYPE CLT	
				415										415				607	35000	415	FT	FENCE REMOVED AND REBUILT	
				2										2				607	61200	2	EACH	GATE, TYPE CLT	
	4500					82139		6097						92736				608	13001	92736	SF	6" CONCRETE WALK, AS PER PLAN	76
2994														2994				608	21200	2994	SF	TEMPORARY ASPHALT CONCRETE WALK	
	475					8627								9102				608	52001	9102	SF	CURB RAMP, AS PER PLAN	76
						935								935				608	52001	935	SF	CURB RAMP, AS PER PLAN 2	76
		500		1660										2160				622	10100	2160	FT	CONCRETE BARRIER, SINGLE SLOPE, TYPE B1	
				307										307				622	10120	307	FT	CONCRETE BARRIER, SINGLE SLOPE, TYPE C	
				108										108				622	10121	108	FT	CONCRETE BARRIER, SINGLE SLOPE, TYPE C, AS PER PLAN	76
				3366										3366				622	10140	3366	FT	CONCRETE BARRIER, SINGLE SLOPE, TYPE C1	
				31										31				622	10141	31	FT	CONCRETE BARRIER, SINGLE SLOPE, TYPE C1, AS PER PLAN	39
		1010		2072										3082				622	10160	3082	FT	CONCRETE BARRIER, SINGLE SLOPE, TYPE D	
				2										2				622	10200	2	EACH	BARRIER TRANSITION	
				1										1				622	24841	1	EACH	CONCRETE BARRIER END SECTION, TYPE B, AS PER PLAN	1434
				2										2				622	25000	2	EACH	CONCRETE BARRIER END SECTION, TYPE D	
				1										1				622	25004	1	EACH	CONCRETE BARRIER, END ANCHORAGE, REINFORCED, TYPE B	
				17										17				622	25006	17	EACH	CONCRETE BARRIER, END ANCHORAGE, REINFORCED, TYPE B1	
				3										3				622	25008	3	EACH	CONCRETE BARRIER, END ANCHORAGE, REINFORCED, TYPE C	
				1										1				622	25009	1	EACH	CONCRETE BARRIER, END ANCHORAGE, REINFORCED, TYPE C, AS PER PLAN	1435
				27										27				622	25014	27	EACH	CONCRETE BARRIER, END ANCHORAGE, REINFORCED, TYPE C1	
				30										30				622	25050	30	EACH	CONCRETE BARRIER, END ANCHORAGE, REINFORCED, TYPE D	
				2										2				622	25051	2	EACH	CONCRETE BARRIER, END ANCHORAGE, REINFORCED, TYPE D, AS PER PLAN	1436
				1										1				622	25051	1	EACH	CONCRETE BARRIER, END ANCHORAGE, REINFORCED, TYPE D, AS PER PLAN 2	76
		45												45				623	12010	45	EACH	PRIMARY PROJECT CONTROL MONUMENT, TYPE B	
		60												60				623	40900	60	EACH	MONUMENT, MISC.: CLEVELAND MONUMENT ASSEMBLY	76
			40											40				SPECIAL	690E98000	40	EACH	UTILITY TEST HOLE	77
			LS											LS				SPECIAL	690E98400	LS		PERMITS	77
						321								321				SPECIAL	690E98700	321	CY	LOW DENSITY CELLULAR CONCRETE FILL, CLASS II	76
																						EROSION CONTROL	
					14									14				601	21050	14	SY	TIED CONCRETE BLOCK MAT WITH TYPE 1 UNDERLAYMENT	
					234									234				601	21060	234	SY	TIED CONCRETE BLOCK MAT WITH TYPE 2 UNDERLAYMENT	
					642									642				601	32200	642	CY	ROCK CHANNEL PROTECTION, TYPE C WITH FILTER	
							2283							2283				601	32301	2283	CY	ROCK CHANNEL PROTECTION, TYPE D WITH FILTER, AS PER PLAN	1798
					104									104				601	37501	104	FT	PAVED GUTTER, TYPE 1-2, AS PER PLAN	1163
		10												10				659	00100	10	EACH	SOIL ANALYSIS TEST	
		15613												15613				659	00301	15613	CY	TOPSOIL, AS PER PLAN	1804
							37446							37446				659	00501	37446	SY	SEEDING AND MULCHING, CLASS 1, AS PER PLAN	1797
							62566							62566				659	00511	62566	SY	SEEDING AND MULCHING, CLASS 2, AS PER PLAN	1797
							38510							38510				659	00581	38510	SY	SEEDING AND MULCHING, CLASS 5B, AS PER PLAN	1797
		7033												7033				659	14000	7033	SY	REPAIR SEEDING AND MULCHING	
		7033												7033				659	15000	7033	SY	INTER-SEEDING	
		19.62												19.62				659	20000	19.62	TON	COMMERCIAL FERTILIZER	
		29.06												29.06				659	31000	29.06	ACRE	LIME	
		779												779				659	35000	779	MGAL	WATER	
		316												316				659	40000	316	MSF	MOWING	
					19901									19901				670	00500	19901	SY	SLOPE EROSION PROTECTION	
					1262									1262				670	00720	1262	SY	DITCH EROSION PROTECTION MAT, TYPE B	
														LS				832	15000	LS		STORM WATER POLLUTION PREVENTION PLAN	
														LS				832	15002	LS		STORM WATER POLLUTION PREVENTION INSPECTIONS	
														LS				832	15010	LS		STORM WATER POLLUTION PREVENTION INSPECTION SOFTWARE	

Preliminary Plans - For Reference Only

CUY-90-16.28 (CCG3A)
MODEL: Sheet-02 PAPERSIZE: 34x22 (in.) DATE: 6/16/2025 TIME: 6:34:38 PM USER: Mata.Gallagher
pw:\\mb-us-pw.bentley.com:mb-us-pw-03\Documents\Cleveland_OH\01_Projects\ODOT\District12\82382\400-Engineering\Roadway\Sheets\82382_GG001.dgn
GG001.dgn

DESIGN AGENCY
Michael Baker INTERNATIONAL

DESIGNER KJM
REVIEWER KGJ 05/22/24
PROJECT ID 82382
SHEET 404 TOTAL 2696

SHEET NUMBER														PARTICIPATION			ALT (X)	ITEM	ITEM EXT.	GRAND TOTAL	UNIT	DESCRIPTION	SEE SHEET
122	427	428	429	442	447	457	459							01/IMS /04	02/IMS /10	03/IMS /08							
																						EROSION CONTROL (CONT.)	
														2400000				832	30000	2400000	EACH	EROSION CONTROL	
							31							31				836	10000	31	SY	SEEDING AND EROSION CONTROL WITH TURF REINFORCING MAT, TYPE 1	
																						ENVIRONMENTAL/REMEDIATION	
		755												755				SPECIAL	690E65000	755	TON	WORK INVOLVING NON-REGULATED MATERIALS	78
			7550											7550				SPECIAL	690E65016	7550	TON	WORK INVOLVING PETROLEUM CONTAMINATED SOIL	78
			105000											105000				SPECIAL	690E65022	105000	GAL	WORK INVOLVING NON-REGULATED WATER	78
			42000											42000				SPECIAL	690E65024	42000	GAL	WORK INVOLVING REGULATED WATER	78
			LS											LS				SPECIAL	690E98400	LS		WORK INVOLVING ASBESTOS CONTAINING MATERIALS (CARNEGIE AVENUE, CUY-90-1692, SFN 1807897)	77
			LS											LS				SPECIAL	690E98400	LS		WORK INVOLVING ASBESTOS CONTAINING MATERIALS (E. 22ND STREET, CUY-90-1676, SFN 1807838)	77
			LS											LS				SPECIAL	690E98400	LS		WORK INVOLVING ASBESTOS CONTAINING MATERIALS (E5, CUY-90-1640, SFN 1807773)	77
			LS											LS				SPECIAL	690E98400	LS		WORK INVOLVING ASBESTOS CONTAINING MATERIALS (E6, CUY-77-1593, SFN 1806939)	77
			LS											LS				SPECIAL	690E98400	LS		WORK INVOLVING ASBESTOS CONTAINING MATERIALS (E7, CUY-77-1597L, SFN 1807919)	77
			LS											LS				SPECIAL	690E98400	LS		WORK INVOLVING ASBESTOS CONTAINING MATERIALS (E8, CUY-90-1651L, SFN 1807900)	77
			LS											LS				SPECIAL	690E98400	LS		WORK INVOLVING ASBESTOS CONTAINING MATERIALS (E9, CUY-90-1651R, SFN 1807803)	77
			LS											LS				SPECIAL	690E98400	LS		WORK INVOLVING ASBESTOS CONTAINING MATERIALS (E10, CUY-E14TH-0002SN, SFN 1806912)	77
																						DRAINAGE	
				8.5										8.5				602	20000	8.5	CY	CONCRETE MASONRY	
						25609								25609				605	11110	25609	FT	6" SHALLOW PIPE UNDERDRAINS WITH GEOTEXTILE FABRIC	
	3700													3700				605	11111	3700	FT	6" SHALLOW PIPE UNDERDRAINS WITH GEOTEXTILE FABRIC, AS PER PLAN	79
	5200													5200				605	12211	5200	FT	6" DEEP PIPE UNDERDRAINS WITH GEOTEXTILE FABRIC, AS PER PLAN	79
						2236								2236				605	13300	2236	FT	6" UNCLASSIFIED PIPE UNDERDRAINS	
						40888								40888				605	14020	40888	FT	6" BASE PIPE UNDERDRAINS WITH GEOTEXTILE FABRIC	
						3620								3620				611	01500	3620	FT	6" CONDUIT, TYPE F	
3579														3579				611	04400	3579	FT	12" CONDUIT, TYPE B	
	2000				3431									5431				611	04400	5431	FT	12" CONDUIT, TYPE B, 706.08 & 706.12	
					270									270				611	04400	270	FT	12" CONDUIT, TYPE B, 748.01	
				5										5				611	04600	5	FT	12" CONDUIT, TYPE C	
					150									150				611	04600	150	FT	12" CONDUIT, TYPE C, 706.08 & 706.12	
				46										46				611	04900	46	FT	12" CONDUIT, TYPE D	
				2913										2913				611	05900	2913	FT	15" CONDUIT, TYPE B	
	200				982									1182				611	05900	1182	FT	15" CONDUIT, TYPE B, 706.08 & 706.12	
				193										193				611	05900	193	FT	15" CONDUIT, TYPE B, 706.02, CLASS V	
				774										774				611	05901	774	FT	15" CONDUIT, TYPE B, AS PER PLAN	1163
				2566										2566				611	06100	2566	FT	15" CONDUIT, TYPE C	
					145									145				611	06100	145	FT	15" CONDUIT, TYPE C, 706.08 & 706.12	
				51										51				611	06101	51	FT	15" CONDUIT, TYPE C, AS PER PLAN	1163
				134										134				611	06700	134	FT	15" CONDUIT, TYPE F, 707.05 TYPE C, 707.21, OR 707.33	
				742										742				611	07400	742	FT	18" CONDUIT, TYPE B	
				19										19				611	07400	19	FT	18" CONDUIT, TYPE B, 707.35	
				228										228				611	07600	228	FT	18" CONDUIT, TYPE C	
				138										138				611	08200	138	FT	18" CONDUIT, TYPE F, 707.05 TYPE C, 707.21, OR 707.33	
				484	5									489				611	08900	489	FT	21" CONDUIT, TYPE B	
45				466										511				611	10400	511	FT	24" CONDUIT, TYPE B	
					5									5				611	10400	5	FT	24" CONDUIT, TYPE B, 706.08 & 706.12	
				225										225				611	10400	225	FT	24" CONDUIT, TYPE B, 706.02, CLASS V	
				257										257				611	10600	257	FT	24" CONDUIT, TYPE C	
				65										65				611	11900	65	FT	27" CONDUIT, TYPE B	
				147										147				611	13400	147	FT	30" CONDUIT, TYPE B	
				197										197				611	13600	197	FT	30" CONDUIT, TYPE C	
					716									716				611	25200	716	FT	66" CONDUIT, TYPE B, 706.02 & 706.11	
					246									246				611	25400	246	FT	66" CONDUIT, TYPE C, 706.02 & 706.11	
				472										472				611	52902	472	FT	34" X 53" CONDUIT, TYPE B, 706.04	
				90										90				611	96600	90	FT	CONDUIT, BORED OR JACKED, 15" TYPE B	78
				7										7				611	98150	7	EACH	CATCH BASIN, NO. 3	
					33									33				611	98151	33	EACH	CATCH BASIN, NO. 3, AS PER PLAN	1169
				10										10				611	98180	10	EACH	CATCH BASIN, NO. 3A	
	4				37									41				611	98181	41	EACH	CATCH BASIN, NO. 3A, AS PER PLAN	1168
1				5										6				611	98370	6	EACH	CATCH BASIN, NO. 6	

Preliminary Plans - For Reference Only

CUY-90-16.28 (CCG3A)
MODEL: Sheet-03 PAPERSIZE: 34x22 (in.) DATE: 6/16/2025 TIME: 6:34:40 PM USER: Mata.Gallagher
pw:\\mb-us-pw.bentley.com:mb-us-pw-03\Documents\Cleveland_OH\01_Projects\ODOT\District12\82382\400-Engineering\Roadway\Sheets\82382_GG001.dgn
DESIGN AGENCY
Michael Baker INTERNATIONAL
DESIGNER KJM
REVIEWER KGJ 05/22/24
PROJECT ID 82382
SHEET 405 TOTAL 2696

SHEET NUMBER														PARTICIPATION			ALT (X)	ITEM	ITEM EXT.	GRAND TOTAL	UNIT	DESCRIPTION	SEE SHEET
122	427	435	442	443	447	457	470	1399						01/IMS /04	02/IMS /10	03/IMS /08							
																						DRAINAGE (CONT.)	
			3											3				611	98371	3	EACH	CATCH BASIN, NO. 6, AS PER PLAN	1166
			2		1									3				611	98371	3	EACH	CATCH BASIN, NO. 6, AS PER PLAN 2	1163
			1											1				611	98371	1	EACH	CATCH BASIN, NO. 6, AS PER PLAN 3	1172
			8											8				611	98410	8	EACH	CATCH BASIN, NO. 8	
				2	1									3				611	98411	3	EACH	CATCH BASIN, NO. 8, AS PER PLAN 2	1163
				1										1				611	98450	1	EACH	CATCH BASIN, NO. 2-2A	
					1									1				611	98451	1	EACH	CATCH BASIN, NO. 2-2A, AS PER PLAN 2	1163
14				7										21				611	98470	21	EACH	CATCH BASIN, NO. 2-2B	
	4				5									9				611	98471	9	EACH	CATCH BASIN, NO. 2-2B, AS PER PLAN	1171
				1	4									5				611	98471	5	EACH	CATCH BASIN, NO. 2-2B, AS PER PLAN 2	1163
				6										6				611	98504	6	EACH	CATCH BASIN, NO. 2-2C	
				2										2				611	98511	2	EACH	CATCH BASIN, NO. 2-3, AS PER PLAN 2	1163
					2									2				611	98630	2	EACH	CATCH BASIN ADJUSTED TO GRADE	
					1									1				611	98634	1	EACH	CATCH BASIN RECONSTRUCTED TO GRADE	
				8										8				611	99100	8	EACH	INLET, NO. 3 FOR SINGLE SLOPE BARRIER, TYPE B1	
				1										1				611	99104	1	EACH	INLET, NO. 3 FOR SINGLE SLOPE BARRIER, TYPE C	
				4										4				611	99110	4	EACH	INLET, NO. 3 FOR SINGLE SLOPE BARRIER, TYPE C1	
				5										5				611	99111	5	EACH	INLET, NO. 3 FOR SINGLE SLOPE BARRIER, TYPE C1, AS PER PLAN	1173
				9										9				611	99114	9	EACH	INLET, NO. 3 FOR SINGLE SLOPE BARRIER, TYPE D	
				3										3				611	99115	3	EACH	INLET, NO. 3 FOR SINGLE SLOPE BARRIER, TYPE D, AS PER PLAN	1164
				1										1				611	99115	1	EACH	INLET, NO. 3 FOR SINGLE SLOPE BARRIER, TYPE D, AS PER PLAN 2	1163
15				22										37				611	99574	37	EACH	MANHOLE, NO. 3	
	4				27									31				611	99575	31	EACH	MANHOLE, NO. 3, AS PER PLAN	1170
				5	4									9				611	99575	9	EACH	MANHOLE, NO. 3, AS PER PLAN 2	1163
				5										5				611	99575	5	EACH	MANHOLE, NO. 3, AS PER PLAN 3	1163
				1										1				611	99586	1	EACH	MANHOLE, NO. 3 WITH 108" BASE I.D. AND 12" WEIR	
		73		3	16									92				611	99654	92	EACH	MANHOLE ADJUSTED TO GRADE	
								2						2				611	99655	2	EACH	MANHOLE ADJUSTED TO GRADE, AS PER PLAN, WATER MANHOLE	1384
				1	2									3				611	99660	3	EACH	MANHOLE RECONSTRUCTED TO GRADE	
					2									2				611	99661	2	EACH	MANHOLE RECONSTRUCTED TO GRADE, AS PER PLAN	1163
				2	1									3				611	99661	3	EACH	MANHOLE RECONSTRUCTED TO GRADE, AS PER PLAN 2	1163
		23												23				SPECIAL	611E99700	23	EACH	GAS VALVE BOX ADJUSTED TO GRADE	80
						7								7				611	99710	7	EACH	PRECAST REINFORCED CONCRETE OUTLET	
	10000													10000				SPECIAL	611E99820	10000	LB	MISCELLANEOUS METAL	80
				3										3				611	99900	3	EACH	DRAINAGE STRUCTURE, MISC.: FLOW RESTRICTOR OUTLET	1161
488				501										989				839	29000	989	FT	TRENCH DRAIN, TYPE A WITH STANDARD GRATE	
				1										1				895	10040	1	EACH	MANUFACTURED WATER QUALITY STRUCTURE, TYPE 4	79
					459									459				899	10001	459	FT	CURED-IN-PLACE PIPE LINER, AS PER PLAN, NO. 6 EGG-SHAPED	1365
					656									656				899	10001	656	FT	CURED-IN-PLACE PIPE LINER, AS PER PLAN, NO. 7 EGG-SHAPED	1365
					413									413				899	10001	413	FT	CURED-IN-PLACE PIPE LINER, AS PER PLAN, NO. 10 EGG-SHAPED	1365
					270									270				899	10001	270	FT	CURED-IN-PLACE PIPE LINER, AS PER PLAN, NO. 11 EGG-SHAPED	1365
					595									595				899	10001	595	FT	CURED-IN-PLACE PIPE LINER, AS PER PLAN, NO. 12 EGG-SHAPED	1365
																						PAVEMENT	
	480													480				251	01030	480	CY	PARTIAL DEPTH PAVEMENT REPAIR (442)	80
	400													400				251	01031	400	CY	PARTIAL DEPTH PAVEMENT REPAIR (442), AS PER PLAN	80
								1000						1000				252	01500	1000	FT	FULL DEPTH PAVEMENT SAWING	
	64786													64786				254	01000	64786	SY	PAVEMENT PLANING, ASPHALT CONCRETE (1.5")	
	38540													38540				254	01000	38540	SY	PAVEMENT PLANING, ASPHALT CONCRETE (3")	
	56010							15080						71090				254	01000	71090	SY	PAVEMENT PLANING, ASPHALT CONCRETE (3.25")	
	2800													2800				255	11001	2800	SY	FULL DEPTH PAVEMENT REMOVAL AND RIGID REPLACEMENT, TYPE 1, CLASS QC1, AS PER PLAN A	80
	2800													2800				255	11001	2800	SY	FULL DEPTH PAVEMENT REMOVAL AND RIGID REPLACEMENT, TYPE 1, CLASS QC1, AS PER PLAN B	80
	3850													3850				255	11001	3850	SY	FULL DEPTH PAVEMENT REMOVAL AND RIGID REPLACEMENT, TYPE 1, CLASS QC1, AS PER PLAN C	80
								54						54				301	56000	54	CY	ASPHALT CONCRETE BASE, PG64-22, (449)	
								26792						26792				302	56000	26792	CY	ASPHALT CONCRETE BASE, PG64-22, (449)	
								24105						24105				304	20000	24105	CY	AGGREGATE BASE	
								36530						36530				305	13011	36530	SY	9" CONCRETE BASE, CLASS QC 1P, AS PER PLAN	80
	14303							31348						45651				407	20000	45651	GAL	NON-TRACKING TACK COAT	
								13						13				441	50000	13	CY	ASPHALT CONCRETE SURFACE COURSE, TYPE 1, (448), PG64-22	

Preliminary Plans - For Reference Only

CUY-90-16.28 (CCG3A)
MODEL: Sheet-04 PAPERSIZE: 34x22 (in.) DATE: 6/16/2025 TIME: 6:34:42 PM USER: Mata.Gallagher
pw:\\mb-us-pw.bentley.com:mb-us-pw-03\Documents\Cleveland_OH\01_Projects\ODOT\District12\82382\400-Engineering\Roadway\Sheets\82382_GG001.dgn
GG001.dgn

DESIGN AGENCY
Michael Baker INTERNATIONAL

DESIGNER KJM
REVIEWER KGJ 05/22/24
PROJECT ID 82382
SHEET 406 TOTAL 2696

SHEET NUMBER														PARTICIPATION			ALT (X)	ITEM	ITEM EXT.	GRAND TOTAL	UNIT	DESCRIPTION	SEE SHEET
427	428	443	470	1399	1839									01/IMS /04	02/IMS /10	03/IMS /08							
																						PAVEMENT (CONT.)	
1340			1262											2602				441	50101	2602	CY	ASPHALT CONCRETE SURFACE COURSE, TYPE 1, (448), AS PER PLAN, PG70-22M	80
1870			1773											3643				441	50300	3643	CY	ASPHALT CONCRETE INTERMEDIATE COURSE, TYPE 2, (448)	
			76											76				441	70201	76	CY	ASPHALT CONCRETE INTERMEDIATE COURSE, TYPE 1, (449), AS PER PLAN, PG64-22	80
			40											40				441	70500	40	CY	ASPHALT CONCRETE SURFACE COURSE, TYPE 1, (449), (DRIVEWAYS)	
			55											55				441	70700	55	CY	ASPHALT CONCRETE INTERMEDIATE COURSE, TYPE 2, (449), (DRIVEWAYS)	
			7043											7043				442	00100	7043	CY	ANTI-SEGREGATION EQUIPMENT	
2330			3971											6301				442	10001	6301	CY	ASPHALT CONCRETE SURFACE COURSE, 12.5 MM, TYPE A (446), AS PER PLAN, PG76-22M	80
2720			4756											7476				442	10100	7476	CY	ASPHALT CONCRETE INTERMEDIATE COURSE, 19 MM, TYPE A (446)	
64														64				442	22101	64	CY	ASPHALT CONCRETE SURFACE COURSE, 12.5 MM, TYPE A (449), AS PER PLAN, PG70-22M	85
			685											685				451	16011	685	SY	12" REINFORCED CONCRETE PAVEMENT, CLASS QC 1P, AS PER PLAN	80
					676									676				451	20000	676	SY	REINFORCED CONCRETE PAVEMENT, MISC.: INTEGRALLY COLORED CONCRETE CROSSWALK	1825
			61.00											61.00				SPECIAL	451E31000	61.00	FT	PRESSURE RELIEF JOINT, TYPE B	80
			337											337				452	09010	337	SY	4" NON-REINFORCED CONCRETE PAVEMENT, CLASS QC 1P	
			1231											1231				452	12010	1231	SY	8" NON-REINFORCED CONCRETE PAVEMENT, CLASS QC 1P	
			15514											15514				452	14010	15514	SY	10" NON-REINFORCED CONCRETE PAVEMENT, CLASS QC 1P	
775														775				452	14011	775	SY	10" NON-REINFORCED CONCRETE PAVEMENT, CLASS QC 1P, AS PER PLAN	80
1000														1000				452	19200	1000	SY	NON-REINFORCED CONCRETE PAVEMENT, MISC.: SURCHARGE FOR CLASS MS CONCRETE	87
			51											51				609	12000	51	FT	COMBINATION CURB AND GUTTER, TYPE 2	
			2587											2587				609	14000	2587	FT	CURB, TYPE 2-A	
			67											67				609	24000	67	FT	CURB, TYPE 4-A	
			1766											1766				609	24510	1766	FT	CURB, TYPE 4-C	
750			14012											14762				609	26000	14762	FT	CURB, TYPE 6	
			46											46				609	33200	46	FT	CURB, TYPE 10-B	
			366											366				609	72000	366	SY	CONCRETE MEDIAN	
	1.28													1.28				618	40600	1.28	MILE	RUMBLE STRIPS, SHOULDER (ASPHALT CONCRETE)	76
																						WATER WORK	
				3666										3666				202	98200	3666	FT	REMOVAL MISC.: WATER MAIN REMOVED 24" AND UNDER	1376
				476										476				202	98200	476	FT	REMOVAL MISC.: WATER MAIN REMOVED OVER 24"	1376
		71												71				638	06713	71	FT	30" STEEL PIPE ENCASEMENT, OPEN CUT, AS PER PLAN	1163
				15										15				638	10701	15	EACH	FIRE HYDRANT REMOVED AND DISPOSED OF, AS PER PLAN	1376
				49										49				638	10801	49	EACH	VALVE BOX ADJUSTED TO GRADE, AS PER PLAN	1384
				1										1				638	11201	1	EACH	METER, SETTING, STOP AND CHAMBER, AS PER PLAN (CLEVELAND WATER)	1428
				909										909				SPECIAL	638E20172	909	FT	12" WATER MAIN DIP CLASS 52 BOLTLESS RESTRAINED JOINTS AND FITTINGS (CLEVELAND WATER)	1376
				427										427				SPECIAL	638E20174	427	FT	12" WATER MAIN DIP CLASS 52 PUSH ON JOINTS AND FITTINGS (CLEVELAND WATER)	1376
				289										289				SPECIAL	638E20292	289	FT	24" WATER MAIN DIP CLASS 52 BOLTLESS RESTRAINED JOINTS AND FITTINGS (CLEVELAND WATER)	1378
				252										252				SPECIAL	638E20294	252	FT	24" WATER MAIN DIP CLASS 52 PUSH ON JOINTS AND FITTINGS (CLEVELAND WATER)	1378
				291										291				SPECIAL	638E20336	291	FT	30" WATER MAIN DIP CLASS 52 BOLTLESS RESTRAINED JOINTS AND FITTINGS (CLEVELAND WATER)	1378
				1225										1225				SPECIAL	638E20338	1225	FT	30" WATER MAIN DIP CLASS 52 PUSH ON JOINTS AND FITTINGS (CLEVELAND WATER)	1378
				40										40				SPECIAL	638E20480	40	FT	48" STEEL PIPE ENCASEMENT, BORED OR JACKED (CLEVELAND WATER)	1385
				2										2				SPECIAL	638E20580	2	EACH	10" CUTTING IN SLEEVE (CLEVELAND WATER)	1383
				5										5				SPECIAL	638E20586	5	EACH	12" GATE VALVE WITH VALVE BOX (CLEVELAND WATER)	1381
				4										4				SPECIAL	638E20596	4	EACH	12" CUTTING IN SLEEVE (CLEVELAND WATER)	1383
				3										3				SPECIAL	638E20598	3	EACH	12" CUTTING IN SLEEVE, VALVE WITH VALVE BOX (CLEVELAND WATER)	1383
				3										3				SPECIAL	638E20746	3	EACH	2" AIR RELEASE VALVE WITH VALVE BOX (CLEVELAND WATER)	1383
				14										14				SPECIAL	638E20750	14	EACH	6" FIRE HYDRANT, COMPLETE (CLEVELAND WATER)	1383
				1										1				SPECIAL	638E20762	1	EACH	FIRE HYDRANT SERVICE LINE EXTENDED AND ADJUSTED TO GRADE (CLEVELAND WATER)	1419
				177										177				SPECIAL	638E20770	177	FT	1" COPPER WATER SERVICE LINE (CLEVELAND WATER)	1384
				587										587				SPECIAL	638E20794	587	FT	REMOVE WATER SERVICE CONNECTION (CLEVELAND WATER)	1376
				10										10				SPECIAL	638E20842	10	FT	EXTEND 1-1/2" COPPER WATER SERVICE CONNECTION (CLEVELAND WATER)	1418
				31										31				SPECIAL	638E20844	31	FT	INSTALL 1-1/2" COPPER WATER SERVICE CONNECTION (CLEVELAND WATER)	1384
				4										4				SPECIAL	638E20894	4	EACH	1" CORPORATION STOP (CLEVELAND WATER)	1384
				2										2				SPECIAL	638E20896	2	EACH	1-1/2" CORPORATION STOP (CLEVELAND WATER)	1384
				1										1				SPECIAL	638E21002	1	EACH	INSTALL 1" METER SETTING, COMPLETE (CLEVELAND WATER)	1384
				3										3				638	98000	3	EACH	WATER WORK, MISC.: 12" EXPANSION VALVE (BRIDGE)	1378
				2										2				638	98000	2	EACH	WATER WORK, MISC.: 24" EXPANSION VALVE (BRIDGE)	1380
				3										3				638	98000	3	EACH	WATER WORK, MISC.: 24" VALVE ASSEMBLY COMPLETE (CLEVELAND WATER)	1381
				1										1				638	98000	1	EACH	WATER WORK, MISC.: 30" CUTTING IN SLEEVE (CLEVELAND WATER)	1380
				2										2				638	98000	2	EACH	WATER WORK, MISC.: 30" VALVE ASSEMBLY COMPLETE (CLEVELAND WATER)	1381
	300000													300000				638	98000	300000	EACH	WATER WORK, MISC.: CLEVELAND WATER DEPARTMENT CHARGES	1374

Preliminary Plans - For Reference Only

GENERAL SUMMARY - 5

CUY-90-16.28 (CCG3A)

MODEL: Sheet-05 PAPERSIZE: 34x22 (in.) DATE: 6/16/2025 TIME: 6:34:43 PM USER: Mata.Gallagher
pw:\\mb-us-pw.bentley.com:mb-us-pw-03\Documents\Cleveland_OH\01_Projects\ODOT\District12\82382\400-Engineering\Roadway\Sheets\82382_GG001.dgn
GG001.dgn

DESIGN AGENCY
Michael Baker INTERNATIONAL

DESIGNER KJM

REVIEWER KGJ 05/22/24

PROJECT ID 82382

SHEET 407 TOTAL 2696

SHEET NUMBER														PARTICIPATION			ALT (X)	ITEM	ITEM EXT.	GRAND TOTAL	UNIT	DESCRIPTION	SEE SHEET
1399	1400	1688	1689											01/IMS /04	02/IMS /10	03/IMS /08							
																						WATER WORK (CONT.)	
3														3				638	98000	3	EACH	WATER WORK, MISC.: CONCRETE PIER	1426
2														2				638	98000	2	EACH	WATER WORK, MISC.: SLEEVE FOR ABUTMENT WALL - 12" DIP LINE (CLEVELAND WATER)	1429
2														2				638	98000	2	EACH	WATER WORK, MISC.: SLEEVE FOR ABUTMENT WALL - 24" STEEL LINE (CLEVELAND WATER)	1429
2														2				638	98000	2	EACH	WATER WORK, MISC.: STEEL TO DIP TRANSITION (CLEVELAND WATER)	1429
507														507				638	98600	507	FT	WATER WORK, MISC.: 12" INSULATION FOR BRIDGE (CLEVELAND WATER)	1381
	354													354				638	98600	354	FT	WATER WORK, MISC.: 24" INSULATION FOR BRIDGE (CLEVELAND WATER)	1381
	354													354				638	98600	354	FT	WATER WORK, MISC.:, 24" POLYURETHANE COATED CEMENT LINED STEEL	1380
																						LIGHTING	
		2												2				202	75704	2	EACH	REMOVAL OF EXISTING CONTROL CENTER AND FOUNDATION	
		2												2				202	75800	2	EACH	DISCONNECT EXISTING CIRCUIT	
		12	154											166				625	00450	166	EACH	CONNECTION, FUSED PULL APART	
			77											77				625	00460	77	EACH	CONNECTION, UNFUSED PULL APART	
		15												15				625	00470	15	EACH	CONNECTION, UNFUSED BOLTED	
		123	84											207				625	00480	207	EACH	CONNECTION, UNFUSED PERMANENT	
		4												4				625	10494	4	EACH	LIGHT POLE, LOW MAST, ALM50	
		2												2				625	10494	2	EACH	LIGHT POLE, LOW MAST, ATLM50	
			44											44				625	10500	44	EACH	LIGHT POLE, MISC.: 15' ROUND TAPERED FIBERGLASS STREETLIGHT	1686
			33											33				625	10500	33	EACH	LIGHT POLE, MISC.: 30' ROUND TAPERED FIBERGLASS STREETLIGHT	1686
			32											32				625	10614	32	EACH	LIGHT POLE ANCHOR BOLTS ON STRUCTURE	
		1												1				625	11000	1	EACH	LIGHT TOWER, BB80	
		2												2				625	11200	2	EACH	LIGHT TOWER, BB100	
		1												1				625	11300	1	EACH	LIGHT TOWER, BB110	
		2												2				625	12000	2	EACH	LIGHT TOWER, BBB80	
		8												8				625	12200	8	EACH	LIGHT TOWER, BBB100	
		1												1				625	12400	1	EACH	LIGHT TOWER, BBB120	
		2												2				625	12410	2	EACH	LIGHT TOWER, BBB130	
		1												1				625	13100	1	EACH	LIGHT TOWER, BBBB90	
		2												2				625	13200	2	EACH	LIGHT TOWER, BBBB100	
		1												1				625	13500	1	EACH	LIGHT TOWER, MISC.: TOWER LIGHTING RING WITH 4 LUMINAIRE MOUNTS	1685
			58											58				625	14000	58	EACH	LIGHT POLE FOUNDATION, 24" X 6' DEEP	
		2												2				625	14200	2	EACH	LIGHT POLE FOUNDATION, 24" X 10' DEEP	
		4												4				625	14307	4	EACH	MEDIAN LIGHT POLE FOUNDATION, 10' DEEP, AS PER PLAN	1685
		2												2				625	15000	2	EACH	LIGHT TOWER FOUNDATION, 36" X 15' DEEP	
		10												10				625	15100	10	EACH	LIGHT TOWER FOUNDATION, 36" X 20' DEEP	
		4												4				625	15200	4	EACH	LIGHT TOWER FOUNDATION, 36" X 25' DEEP	
		1												1				625	15400	1	EACH	LIGHT TOWER FOUNDATION, 42" X 25' DEEP	
		1												1				625	15700	1	EACH	LIGHT TOWER FOUNDATION, MISC.: 42" X 20' DEEP	1685
		2												2				625	15700	2	EACH	LIGHT TOWER FOUNDATION, MISC.: 48" X 25' DEEP	1685
		30556	16375											46931				625	23200	46931	FT	NO. 4 AWG 2400 VOLT DISTRIBUTION CABLE	
			49071											49071				625	23304	49071	FT	NO. 8 AWG 600 VOLT DISTRIBUTION CABLE	
			159											159				625	23308	159	FT	DISTRIBUTION CABLE, MISC.: NO. 4 / 0 AWG 2400 VOLT DISTRIBUTION CABLE	1686
		900												900				625	23400	900	FT	NO. 10 AWG POLE AND BRACKET CABLE	
			4950											4950				625	23410	4950	FT	NO. 12 AWG POLE AND BRACKET CABLE	
		7444												7444				625	24320	7444	FT	1-1/2" DUCT CABLE WITH THREE NO. 4 AWG 2400 VOLT CABLES	
			1796											1796				625	25012	1796	FT	CONDUIT, 3/4", 725.051	
		1304	1123											2427				625	25300	2427	FT	CONDUIT, 1-1/2", 725.04	
		116												116				625	25404	116	FT	CONDUIT, 2-1/2", 725.04	
			8541											8541				625	25408	8541	FT	CONDUIT, 2", 725.051	
		712												712				625	25504	712	FT	CONDUIT, 3", 725.051	
			43											43				625	25802	43	FT	CONDUIT, CONCRETE ENCASED, 2", 725.051	
			132											132				625	25803	132	FT	CONDUIT, CONCRETE ENCASED, AS PER PLAN (2-2" CONDUIT, 725.051)	1686
			1974											1974				625	25803	1974	FT	CONDUIT, CONCRETE ENCASED, AS PER PLAN (4-2" CONDUIT, 725.051)	1686
		3876												3876				625	25902	3876	FT	CONDUIT, JACKED OR DRILLED, 725.04, 3"	
			63											63				625	26253	63	EACH	LUMINAIRE, CONVENTIONAL, SOLID STATE (LED), AS PER PLAN (CPP LED COBRA HEAD)	1686
		63												63				625	26263	63	EACH	LUMINAIRE, HIGH MAST, SOLID STATE (LED), AS PER PLAN (480V)	1685
		6												6				625	26273	6	EACH	LUMINAIRE, LOW MAST, SOLID STATE (LED), AS PER PLAN (480V)	1685
		23												23				625	27503	23	EACH	LUMINAIRE, UNDERPASS, SOLID STATE (LED), AS PER PLAN (480V)	1685
		1												1				625	27503	1	EACH	LUMINAIRE, UNDERPASS, SOLID STATE (LED), AS PER PLAN (480V, CROSS FRAME MOUNTED)	1685

Preliminary Plans - For Reference Only

CUY-90-16.28 (CCG3A)
MODEL: Sheet-06 PAPERSIZE: 34x22 (in.) DATE: 6/16/2025 TIME: 6:34:45 PM USER: Mata.Gallagher
pw:\\mb-us-pw.bentley.com:mb-us-pw-03\Documents\Cleveland_OH\01_Projects\ODOT\District12\82382\400-Engineering\Roadway\Sheets\82382_GG001.dgn
82382_GG001.dgn

DESIGN AGENCY
Michael Baker INTERNATIONAL

DESIGNER	REVIEWER	PROJECT ID	SHEET	TOTAL
KJM	KGJ 05/22/24	82382	408	2696

SHEET NUMBER															PARTICIPATION			ALT (X)	ITEM	ITEM EXT.	GRAND TOTAL	UNIT	DESCRIPTION	SEE SHEET
1688	1689	1782													01/IMS /04	02/IMS /10	03/IMS /08							
																							LIGHTING (CONT.)	
	17														17				625	27503	17	EACH	LUMINAIRE, UNDERPASS, SOLID STATE (LED), AS PER PLAN (CPP LED WALLPACK)	1686
	51														51				625	27551	51	EACH	LUMINAIRE, DECORATIVE, AS PER PLAN (15' POLES)	1686
	33														33				625	27551	33	EACH	LUMINAIRE, DECORATIVE, AS PER PLAN (30' POLES)	1686
5990	4691														10681				625	29000	10681	FT	TRENCH	
	8														8				625	29900	8	EACH	JUNCTION BOX	
4															4				625	29930	4	EACH	MEDIAN JUNCTION BOX	
26															26				625	30700	26	EACH	PULL BOX, 725.08, 18"	
8	4														12				625	30706	12	EACH	PULL BOX, 725.08, 24"	
4															4				625	30731	4	EACH	PULL BOX, 725.08, 48", TYPE 1, AS PER PLAN	1685
	10														10				625	31510	10	EACH	PULL BOX REMOVED	
17															17				625	31511	17	EACH	PULL BOX REMOVED, AS PER PLAN	1685
	13														13				625	31600	13	EACH	PULL BOX, MISC.: 6" X 6" PULL BOX	1687
	87														87				625	31600	87	EACH	PULL BOX, MISC.: 13" X 24" PULL BOX	1687
1															1				625	31600	1	EACH	PULL BOX, MISC.: 18" PULL BOX ADJUSTED TO GRADE	1685
46	113														159				625	32000	159	EACH	GROUND ROD	
6															6				625	33000	6	EACH	STRUCTURE GROUNDING SYSTEM	
2	3														5				625	34001	5	EACH	POWER SERVICE, AS PER PLAN	1684
2															2				625	34450	2	EACH	CONTROL CENTER CABINET, COMPLETE	
	1														1				625	34451	1	EACH	CONTROL CENTER CABINET, COMPLETE, AS PER PLAN	1687
5990	4691														10681				625	36010	10681	FT	UNDERGROUND WARNING/MARKING TAPE	
11	7														18				625	37101	18	EACH	SERVICE TO UNDERPASS LIGHTING, AS PER PLAN	1684
LS															LS				SPECIAL	625E40000	LS		MAINTAIN EXISTING LIGHTING	1684
20															20				SPECIAL	625E40010	20	EACH	REPLACEMENT OF EXISTING LIGHTING UNIT	1684
21															21				625	75350	21	EACH	LIGHT TOWER REMOVED	
	96														96				625	75400	96	EACH	LIGHT POLE REMOVED	
	20														20				625	75500	20	EACH	LIGHT POLE FOUNDATION REMOVED	
	10														10				625	75506	10	EACH	LUMINAIRE REMOVED	
2															2				625	75510	2	EACH	POWER SERVICE REMOVED	
21															21				625	75540	21	EACH	LIGHT TOWER FOUNDATION REMOVED	
	10														10				625	75801	10	EACH	DISCONNECT CIRCUIT, AS PER PLAN	1687
1															1				625	98000	1	EACH	LIGHTING, MISC.: RELOCATE EX. CONTROL CENTER	1685
7	19														26				625	98000	26	EACH	LIGHTING, MISC.: TEST NEW CIRCUIT	1684
	1503														1503				632	69300	1503	FT	POWER CABLE, 3 CONDUCTOR, NO. 4 AWG	
	53														53				632	89300	53	EACH	WOOD POLE	
																							ELECTRICAL	
		13704													13704				625	23308	13704	FT	DISTRIBUTION CABLE, MISC.: 500KCMIL 15KV CU WITH CONCENTRIC NEUTRAL	1778
		5311													5311				625	23308	5311	FT	DISTRIBUTION CABLE, MISC.: 556KCMIL 15KV SPACER CABLE WITH 0052 AWA MESSENGER	1778
		6528													6528				625	25721	6528	FT	CONDUIT, AS PER PLAN, 5", 725.04	1787
		272													272				625	25803	272	FT	CONDUIT, CONCRETE ENCASED, AS PER PLAN (2-5" CONDUIT, 725.051)	1777
		368													368				625	25803	368	FT	CONDUIT, CONCRETE ENCASED, AS PER PLAN (5-5" CONDUIT, 725.051)	1777
		391													391				625	25803	391	FT	CONDUIT, CONCRETE ENCASED, AS PER PLAN (7-5" CONDUIT, 725.051)	1777
		652													652				625	25803	652	FT	CONDUIT, CONCRETE ENCASED, AS PER PLAN (9-5" CONDUIT, 725.051)	1777
		8325													8325				625	25911	8325	FT	CONDUIT CLEANED AND CABLES REMOVED, AS PER PLAN	1787
		30													30				625	32001	30	EACH	GROUND ROD, AS PER PLAN	1779
		196													196				625	98000	196	EACH	LIGHTING, MISC.: 15KV IN-LINE SPLICE	1777
		12													12				625	98000	12	EACH	LIGHTING, MISC.: 24" SPACER CABLE TANGENT BRACKET	1779
		1													1				625	98000	1	EACH	LIGHTING, MISC.: DEAD-END ASSEMBLY	1779
		1													1				625	98000	1	EACH	LIGHTING, MISC.: DOUBLE DEAD-END ASSEMBLY	1779
		4													4				625	98000	4	EACH	LIGHTING, MISC.: JOINT-USE CONDUIT RISER	1779
		18													18				625	98000	18	EACH	LIGHTING, MISC.: JOINT-USE MESSENGER ASSEMBLY	1779
		24													24				625	98000	24	EACH	LIGHTING, MISC.: PRIMARY CONDUIT RISER	1779
		24													24				625	98000	24	EACH	LIGHTING, MISC.: SPACER CABLE DEADEND ASSEMBLY	1779
		26													26				625	98000	26	EACH	LIGHTING, MISC.: SPACER CABLE TO SPACER CABLE DOUBLE DEADEND ASSEMBLY	1779
		1													1				625	98000	1	EACH	LIGHTING, MISC.: TWO-WAY BUCK	1779
		1538													1538				632	69350	1538	FT	POWER CABLE, MISC.: NO. 2 / 0 AWG CU 15KV OPEN WIRE	1778
		1													1				632	89300	1	EACH	WOOD POLE (40' CLASS III)	
		1													1				632	89300	1	EACH	WOOD POLE (45' CLASS III)	
		17													17				632	89300	17	EACH	WOOD POLE (50' CLASS III)	
		4													4				632	89300	4	EACH	WOOD POLE (55' CLASS II)	

Preliminary Plans - For Reference Only

CUY-90-16.28 (CCG3A)
MODEL: Sheet-07 PAPERSIZE: 34x22 (in.) DATE: 6/16/2025 TIME: 6:34:47 PM USER: Mata.Gallagher
pw:\\mb-us-pw.bentley.com:mb-us-pw-03\Documents\Cleveland_OH\01_Projects\ODOT\District12\82382\400-Engineering\Roadway\Sheets\82382_GG001.dgn
DESIGN AGENCY
Michael Baker INTERNATIONAL
DESIGNER KJM
REVIEWER KGJ 05/22/24
PROJECT ID 82382
SHEET 409 TOTAL 2696

SHEET NUMBER														PARTICIPATION			ALT (X)	ITEM	ITEM EXT.	GRAND TOTAL	UNIT	DESCRIPTION	SEE SHEET
125	1455	1485	1678	1782										01/IMS /04	02/IMS /10	03/IMS /08							
																						ELECTRICAL (CONT.)	
				3										3				632	89300	3	EACH	WOOD POLE (55' CLASS III)	
				2										2				632	89300	2	EACH	WOOD POLE (70' CLASS H3)	
				2										2				632	89300	2	EACH	WOOD POLE (80' CLASS H6)	
				67										67				632	89401	67	EACH	DOWN GUY, AS PER PLAN	1779
																						TRAFFIC SURVEILLANCE	
			61											61				625	25408	61	FT	CONDUIT, 2", 725.051	
			8108											8108				625	25410	8108	FT	CONDUIT, 2", 725.052	
			32											32				625	25504	32	FT	CONDUIT, 3", 725.051	
			984											984				625	25908	984	FT	CONDUIT, JACKED OR DRILLED, 725.052, 2"	
			989											989				625	29000	989	FT	TRENCH	
			1											1				625	30700	1	EACH	PULL BOX, 725.08, 18"	
			3											3				625	32000	3	EACH	GROUND ROD	
			989											989				625	36010	989	FT	UNDERGROUND WARNING/MARKING TAPE	
			70											70				632	68300	70	FT	POWER CABLE, 3 CONDUCTOR, NO. 6 AWG	
			500											500				632	69300	500	FT	POWER CABLE, 3 CONDUCTOR, NO. 4 AWG	
			1											1				632	70001	1	EACH	POWER SERVICE, AS PER PLAN 3	1676
			2											2				633	67100	2	EACH	CABINET FOUNDATION	
			1											1				633	67201	1	EACH	CONTROLLER WORK PAD, AS PER PLAN	1676
			8											8				809	00530	8	EACH	ITS JUNCTION BOX, 17x24x6 INCHES	
			9											9				809	02000	9	EACH	32" ITS PULL BOX WITH PAD AND STANDARD LID ASSEMBLY, TYPE 2	
			12128											12128				809	23100	12128	FT	MICRO-DUCT INNERDUCT, 14 / 10	
			1											1				809	60000	1	EACH	CCTV IP-CAMERA SYSTEM, PTZ	
			2											2				809	60070	2	EACH	CCTV IP-CAMERA SYSTEM, WRONG WAY DETECTION	
			1											1				809	61090	1	EACH	CCTV LOWERING UNIT	
			350											350				809	64550	350	FT	ETHERNET CABLE, OUTDOOR-RATED	
			2											2				809	65000	2	EACH	ITS CABINET - GROUND MOUNTED	
			4											4				809	65990	4	EACH	ITS DEVICE, MISC.: REMOVAL OF EXISTING POLE-MOUNTED ITS CABINET	1676
			1											1				809	65990	1	EACH	ITS DEVICE, MISC.: REMOVAL OF EXISTING CCTV AND LOWERING UNIT	1676
			1											1				809	65990	1	EACH	ITS DEVICE, MISC.: REMOVAL OF EXISTING CCTV POLE	1676
			LS											LS				809	70000	LS		MAINTAINING ITS DURING CONSTRUCTION	
																						TRAFFIC SURVEILLANCE ALTERNATES	
				1										1			X	809	61040	1	EACH	CCTV POLE, 70' TALL, CONCRETE (ALTERNATE 1)	
				1										1			X	809	61040	1	EACH	CCTV POLE, 70' TALL, STEEL (ALTERNATE 2)	
																						TRAFFIC CONTROL	
	44													44				620	00500	44	EACH	DELINEATOR, POST GROUND MOUNTED	
	946													946				621	00100	946	EACH	RPM	
		32												32				625	32000	32	EACH	GROUND ROD	
	38													38				626	00102	38	EACH	BARRIER REFLECTOR, TYPE 1 (BI-DIRECTIONAL)	
	166													166				626	00102	166	EACH	BARRIER REFLECTOR, TYPE 1 (ONE-WAY)	
	14													14				626	00110	14	EACH	BARRIER REFLECTOR, TYPE 2 (BI-DIRECTIONAL)	
	103													103				626	00110	103	EACH	BARRIER REFLECTOR, TYPE 2 (ONE-WAY)	
		2037.3												2037.3				630	02100	2037.3	FT	GROUND MOUNTED SUPPORT, NO. 2 POST	
		2479.6												2479.6				630	03100	2479.6	FT	GROUND MOUNTED SUPPORT, NO. 3 POST	
		491.0												491.0				630	04101	491.0	FT	GROUND MOUNTED SUPPORT, NO. 4 POST, AS PER PLAN	1449
		386.4												386.4				630	06400	386.4	FT	GROUND MOUNTED STRUCTURAL BEAM SUPPORT, S4X7.7	
		34.0												34.0				630	06500	34.0	FT	GROUND MOUNTED STRUCTURAL BEAM SUPPORT, W6X9	
		40.0												40.0				630	07000	40.0	FT	GROUND MOUNTED STRUCTURAL BEAM SUPPORT, W8X18	
48.6		54.8												103.4				630	07500	103.4	FT	GROUND MOUNTED STRUCTURAL BEAM SUPPORT, W10X22	
		176.2												176.2				630	07600	176.2	FT	GROUND MOUNTED STRUCTURAL BEAM SUPPORT, W10X12	
		1.0												1.0				630	08002	1.0	FT	ONE WAY SUPPORT, NO. 2 POST	
12.5														12.5				630	08004	12.5	FT	ONE WAY SUPPORT, NO. 3 POST	
		36.1												36.1				630	08100	36.1	FT	ONE WAY SUPPORT, NO. 4 POST	
		148												148				630	08600	148	EACH	SIGN POST REFLECTOR	
		2												2				630	09000	2	EACH	BREAKAWAY STRUCTURAL BEAM CONNECTION	
		4												4				630	72340	4	EACH	OVERHEAD SIGN SUPPORT, TYPE TC-12.31, DESIGN 12	
		6												6				630	72410	6	EACH	OVERHEAD SIGN SUPPORT, TYPE TC-15.116, DESIGN 1	
		6												6				630	72420	6	EACH	OVERHEAD SIGN SUPPORT, TYPE TC-15.116, DESIGN 2	
		1												1				630	72430	1	EACH	OVERHEAD SIGN SUPPORT, TYPE TC-15.116, DESIGN 3	
		1												1				630	72550	1	EACH	OVERHEAD SIGN SUPPORT, TYPE TC-16.22, DESIGN 13	

Preliminary Plans - For Reference Only

CUY-90-16.28 (CCG3A)
MODEL: Sheet-08 PAPERSIZE: 34x22 (in.) DATE: 6/16/2025 TIME: 6:34:49 PM USER: Mata.Gallagher
pw:\\mb-us-pw.bentley.com:mb-us-pw-03\Documents\Cleveland_OH\01_Projects\ODOT\District12\82382\400-Engineering\Roadway\Sheets\82382_GG001.dgn
pw:\\mb-us-pw.bentley.com:mb-us-pw-03\Documents\Cleveland_OH\01_Projects\ODOT\District12\82382\400-Engineering\Roadway\Sheets\82382_GG001.dgn

DESIGN AGENCY
Michael Baker INTERNATIONAL
DESIGNER KJM
REVIEWER KGJ 05/22/24
PROJECT ID 82382
SHEET 410 TOTAL 2696

SHEET NUMBER														PARTICIPATION			ALT (X)	ITEM	ITEM EXT.	GRAND TOTAL	UNIT	DESCRIPTION	SEE SHEET
120	125	1455	1468	1485	1493									01/IMS /04	02/IMS /10	03/IMS /08							
																						TRAFFIC CONTROL (CONT.)	
	26			61										87				630	75000	87	EACH	SIGN ATTACHMENT ASSEMBLY	
				2										2				630	79100	2	EACH	SIGN HANGER ASSEMBLY, MAST ARM	
				112										112				630	79500	112	EACH	SIGN SUPPORT ASSEMBLY, POLE MOUNTED	
				18										18				630	79604	18	EACH	SIGN SUPPORT ASSEMBLY, BRIDGE MOUNTED, TYPE 2	
	146.0			4044.7										4190.7				630	80100	4190.7	SF	SIGN, FLAT SHEET	
				899.5										899.5				630	80200	899.5	SF	SIGN, GROUND MOUNTED EXTRUSHEET	
	1026.0			7235.5										8261.5				630	80224	8261.5	SF	SIGN, OVERHEAD EXTRUSHEET	
	781.3													781.3				630	80300	781.3	SF	SIGN, TEMPORARY OVERLAY	
				6										6				630	80501	6	EACH	SIGN, DOUBLE FACED, STREET NAME, AS PER PLAN	1449
				5										5				630	84010	5	EACH	CONCRETE BARRIER MEDIAN OVERHEAD SIGN SUPPORT FOUNDATION, TYPE TC-21.50	
	2			4										6				630	84500	6	EACH	GROUND MOUNTED STRUCTURAL BEAM SUPPORT FOUNDATION	
				27										27				630	84510	27	EACH	RIGID OVERHEAD SIGN SUPPORT FOUNDATION	
	1				229									230				630	84900	230	EACH	REMOVAL OF GROUND MOUNTED SIGN AND DISPOSAL	
					5									5				630	85000	5	EACH	REMOVAL OF GROUND MOUNTED SIGN AND STORAGE	
					2									2				630	85100	2	EACH	REMOVAL OF GROUND MOUNTED SIGN AND REERECTION	
					14									14				630	85400	14	EACH	REMOVAL OF GROUND MOUNTED MAJOR SIGN AND DISPOSAL	
					198									198				630	86002	198	EACH	REMOVAL OF GROUND MOUNTED POST SUPPORT AND DISPOSAL	
					2									2				630	86010	2	EACH	REMOVAL OF GROUND MOUNTED POST SUPPORT AND REERECTION	
	2				28									30				630	86102	30	EACH	REMOVAL OF GROUND MOUNTED STRUCTURAL BEAM SUPPORT AND DISPOSAL	
					1									1				630	86270	1	EACH	REMOVAL OF GROUND MOUNTED PIPE SUPPORT AND STORAGE	
	5													5				630	87000	5	EACH	REMOVAL OF OVERHEAD MOUNTED SIGN AND STORAGE	
	5													5				630	87100	5	EACH	REMOVAL OF OVERHEAD MOUNTED SIGN AND REERECTION	
	20				69									89				630	87400	89	EACH	REMOVAL OF OVERHEAD MOUNTED SIGN AND DISPOSAL	
					248									248				630	87500	248	EACH	REMOVAL OF POLE MOUNTED SIGN AND DISPOSAL	
					1									1				630	87510	1	EACH	REMOVAL OF POLE MOUNTED SIGN AND STORAGE	
					3									3				630	87520	3	EACH	REMOVAL OF POLE MOUNTED SIGN AND REERECTION	
					18									18				630	89702	18	EACH	REMOVAL OF OVERHEAD SIGN SUPPORT AND DISPOSAL	
					1									1				630	89804	1	EACH	REMOVAL OF OVERHEAD SIGN SUPPORT AND DISPOSAL, TYPE TC-15.115	
	33													33				630	89894	33	EACH	REMOVAL OF TEMPORARY OVERLAY SIGN AND DISPOSAL	
	4													4				630	89898	4	EACH	REMOVAL OF TEMPORARY OVERLAY SIGN AND STORAGE	
95970														95970				642	30000	95970	FT	REMOVAL OF PAVEMENT MARKING	
70														70				642	30020	70	EACH	REMOVAL OF PAVEMENT MARKING	
				1.33										1.33				644	00100	1.33	MILE	EDGE LINE, 4"	
1.96		7.62												9.58				644	00104	9.58	MILE	EDGE LINE, 6"	
0.46				2.04										2.50				644	00200	2.50	MILE	LANE LINE, 4"	
2.20		3.69												5.89				644	00204	5.89	MILE	LANE LINE, 6"	
0.04		0.17		1.56										1.77				644	00300	1.77	MILE	CENTER LINE	
517				5365										5882				644	00400	5882	FT	CHANNELIZING LINE, 8"	
1153		9020												10173				644	00404	10173	FT	CHANNELIZING LINE, 12"	
				1161										1161				644	00500	1161	FT	STOP LINE	
		53		4348										4401				644	00620	4401	FT	CROSSWALK LINE, 12"	
				1219										1219				644	00621	1219	FT	CROSSWALK LINE, 12", AS PER PLAN	1449
		2687		1466										4153				644	00700	4153	FT	TRANSVERSE/DIAGONAL LINE	
74		1026		473										1573				644	00720	1573	FT	CHEVRON MARKING	
				581										581				644	00900	581	SF	ISLAND MARKING	
				2960										2960				644	01200	2960	FT	PARKING LOT STALL MARKING	
16		10		136										162				644	01300	162	EACH	LANE ARROW	
				2										2				644	01350	2	EACH	LANE REDUCTION ARROW	
		11												11				644	01360	11	EACH	WRONG WAY ARROW	
				2										2				644	01370	2	EACH	TWO WAY LEFT TURN ARROW	
257				3053										3310				644	01500	3310	FT	DOTTED LINE, 4"	
2449		2420												4869				644	01510	4869	FT	DOTTED LINE, 6"	
				1448										1448				644	01514	1448	FT	DOTTED LINE, 8"	
		1365												1365				644	01520	1365	FT	DOTTED LINE, 12"	
				6										6				644	01630	6	EACH	BIKE LANE SYMBOL MARKING	
				4										4				644	19000	4	EACH	SHARED LANE MARKING	
				38										38				644	50300	38	FT	PAVEMENT MARKING, MISC.: BIKE LANE CROSSWALK	1449
				1034										1034				644	60000	1034	SF	GREEN COLORED PAVEMENT FOR BIKE LANES	
				0.14										0.14				646	10000	0.14	MILE	EDGE LINE, 4"	

Preliminary Plans - For Reference Only

GENERAL SUMMARY - 9

CUY-90-16.28 (CCG3A)

MODEL: Sheet-09 PAPERSIZE: 34x22 (in.) DATE: 6/16/2025 TIME: 6:34:50 PM USER: Mata.Gallagher
pw:\\mb-us-pw.bentley.com:mb-us-pw-03\Documents\Cleveland_OH\01_Projects\ODOT\District12\82382\400-Engineering\Roadway\Sheets\82382_GG001.dgn

DESIGN AGENCY
Michael Baker INTERNATIONAL

DESIGNER KJM

REVIEWER KGJ 05/22/24

PROJECT ID 82382

SHEET 411 TOTAL 2696

SHEET NUMBER															PARTICIPATION			ALT (X)	ITEM	ITEM EXT.	GRAND TOTAL	UNIT	DESCRIPTION	SEE SHEET
1455	1468	1642													01/IMS /04	02/IMS /10	03/IMS /08							
																							TRAFFIC CONTROL (CONT.)	
1.90															1.90				646	10010	1.90	MILE	EDGE LINE, 6"	
	0.42														0.42				646	10100	0.42	MILE	LANE LINE, 4"	
1.48															1.48				646	10110	1.48	MILE	LANE LINE, 6"	
	0.35														0.35				646	10200	0.35	MILE	CENTER LINE	
	241														241				646	10300	241	FT	CHANNELIZING LINE, 8"	
3018															3018				646	10310	3018	FT	CHANNELIZING LINE, 12"	
	33														33				646	10400	33	FT	STOP LINE	
	56														56				646	10510	56	FT	CROSSWALK LINE, 12"	
310	188														498				646	10600	498	FT	TRANSVERSE/DIAGONAL LINE	
222															222				646	10620	222	FT	CHEVRON MARKING	
	5														5				646	20300	5	EACH	LANE ARROW	
2687															2687				646	20504	2687	FT	DOTTED LINE, 6"	
	4														4				646	20600	4	EACH	BIKE LANE SYMBOL MARKING	
	2														2				646	20650	2	EACH	SHARED LANE MARKING	
	876														876				646	60100	876	SF	GREEN COLORED PAVEMENT FOR BIKE LANES	
																							TRAFFIC SIGNALS	
		4													4				625	00480	4	EACH	CONNECTION, UNFUSED PERMANENT	
		756													756				625	25408	756	FT	CONDUIT, 2", 725.051	
		448													448				625	25504	448	FT	CONDUIT, 3", 725.051	
		152													152				625	25604	152	FT	CONDUIT, 4", 725.051	
		4010													4010				625	25802	4010	FT	CONDUIT, CONCRETE ENCASED, 4", 725.051	
		675													675				625	25910	675	FT	CONDUIT CLEANED AND CABLES REMOVED	
		2824													2824				625	29000	2824	FT	TRENCH	
		447													447				625	29400	447	FT	TRENCH IN PAVED AREA	
		12													12				625	30510	12	EACH	PULL BOX, 725.06, SIZE 4	
		28													28				625	30530	28	EACH	PULL BOX, 725.06, SIZE 18	
		65													65				625	32000	65	EACH	GROUND ROD	
		3271													3271				625	36011	3271	FT	UNDERGROUND WARNING/MARKING TAPE, AS PER PLAN	1638
		58													58				630	79101	58	EACH	SIGN HANGER ASSEMBLY, MAST ARM, AS PER PLAN	1638
		4													4				630	79500	4	EACH	SIGN SUPPORT ASSEMBLY, POLE MOUNTED	
		254.0													254.0				630	80100	254.0	SF	SIGN, FLAT SHEET	
		30													30				630	80511	30	EACH	SIGN, STREET NAME, AS PER PLAN	1638
		4													4				632	04000	4	EACH	VEHICULAR SIGNAL HEAD, MISC.: (LED), 3-SECTION, 8" LENS, 1-WAY, POLYCARBONATE, YELLOW (BICYCLE)	1640
		87													87				632	05006	87	EACH	VEHICULAR SIGNAL HEAD, (LED), 3-SECTION, 12" LENS, 1-WAY, POLYCARBONATE, YELLOW	
		12													12				632	05086	12	EACH	VEHICULAR SIGNAL HEAD, (LED), 5-SECTION, 12" LENS, 1-WAY, POLYCARBONATE, YELLOW	
		56													56				632	20731	56	EACH	PEDESTRIAN SIGNAL HEAD (LED), TYPE D2, COUNTDOWN, AS PER PLAN	1640
		62													62				632	20750	62	EACH	ACCESSIBLE PEDESTRIAN PUSHBUTTON	
		103													103				632	25000	103	EACH	COVERING OF VEHICULAR SIGNAL HEAD	
		56													56				632	25010	56	EACH	COVERING OF PEDESTRIAN SIGNAL HEAD	
		8775													8775				632	40300	8775	FT	SIGNAL CABLE, 3 CONDUCTOR, NO. 14 AWG	
		8775													8775				632	40500	8775	FT	SIGNAL CABLE, 5 CONDUCTOR, NO. 14 AWG	
		10250													10250				632	40700	10250	FT	SIGNAL CABLE, 7 CONDUCTOR, NO. 14 AWG	
		30													30				632	64010	30	EACH	SIGNAL SUPPORT FOUNDATION	
		28													28				632	64020	28	EACH	PEDESTAL FOUNDATION	
		8													8				632	64950	8	EACH	TEST HOLE PERFORMED	
		450													450				632	68200	450	FT	POWER CABLE, 2 CONDUCTOR, NO. 6 AWG	
		450													450				632	69200	450	FT	POWER CABLE, 2 CONDUCTOR, NO. 4 AWG	
		7													7				632	70001	7	EACH	POWER SERVICE, AS PER PLAN 2	1639
		9													9				632	70200	9	EACH	CONDUIT RISER, 1" DIAMETER	
		10													10				632	72111	10	EACH	SIGNAL SUPPORT, TYPE TC-81.22, DESIGN 4, AS PER PLAN	1640
		8													8				632	72131	8	EACH	SIGNAL SUPPORT, TYPE TC-81.22, DESIGN 12, AS PER PLAN	1640
		8													8				632	72141	8	EACH	SIGNAL SUPPORT, TYPE TC-81.22, DESIGN 13, AS PER PLAN	1640
		2													2				632	72151	2	EACH	SIGNAL SUPPORT, TYPE TC-81.22, DESIGN 14, AS PER PLAN	1640
		2													2				632	86121	2	EACH	STRAIN POLE, TYPE TC-81.11, DESIGN 8, AS PER PLAN	1640
		14													14				632	89901	14	EACH	PEDESTAL, 8', TRANSFORMER BASE, AS PER PLAN	1640
		14													14				632	90010	14	EACH	PEDESTAL, MISC.: PEDESTAL 15', TRANSFORMER BASE	1640
		8													8				632	90101	8	EACH	REMOVAL OF TRAFFIC SIGNAL INSTALLATION, AS PER PLAN	1638
		7													7				633	65511	7	EACH	CABINET, TYPE TS-2, AS PER PLAN	1641
		7													7				633	67100	7	EACH	CABINET FOUNDATION	

Preliminary Plans - For Reference Only

CUY-90-16.28 (CCG3A)
MODEL: Sheet-10 PAPERSIZE: 34x22 (in.) DATE: 6/16/2025 TIME: 6:34:52 PM USER: Mata.Gallagher
pw:\\mb-us-pw.bentley.com:mb-us-pw-03\Documents\Cleveland_OH\01_Projects\ODOT\District12\82382\400-Engineering\Roadway\Sheets\82382_GG001.dgn
DESIGN AGENCY
Michael Baker INTERNATIONAL
DESIGNER KJM
REVIEWER KGJ 05/22/24
PROJECT ID 82382
SHEET 412 TOTAL 2696

SHEET NUMBER														PARTICIPATION			ALT (X)	ITEM	ITEM EXT.	GRAND TOTAL	UNIT	DESCRIPTION	SEE SHEET
429	1642	1806	1839											01/IMS /04	02/IMS /10	03/IMS /08							
																						TRAFFIC SIGNALS (CONT.)	
	6													6				633	67200	6	EACH	CONTROLLER WORK PAD	
	7													7				809	69123	7	EACH	ATC CONTROLLER, AS PER PLAN	1641
																						TRAFFIC SIGNALS ALTERNATES	
	7													7			X	633	45001	7	EACH	GPS (GLOBAL POSITIONING SYSTEM) CLOCK ASSEMBLY, AS PER PLAN (GENERIC) (ALTERNATE 1)	1641
	7													7			X	633	45001	7	EACH	GPS (GLOBAL POSITIONING SYSTEM) CLOCK ASSEMBLY, AS PER PLAN (ELTEC) (ALTERNATE 2)	1641
	20													20			X	809	69101	20	EACH	STOP LINE RADAR DETECTION, AS PER PLAN (GENERIC) (ALTERNATE 1)	1638
	20													20			X	809	69101	20	EACH	STOP LINE RADAR DETECTION, AS PER PLAN (ITERIS) (ALTERNATE 2)	1638
																						LANDSCAPING	
			75											75				511	53010	75	CY	CLASS QC1 CONCRETE, MISC.: GATEWAY MONUMENT SIGN	1827
			LS											LS				607	98200	LS		FENCE, MISC.: BRIDGE 13 SCREEN WALL PANELS	1832-1835
			LS											LS				607	98200	LS		FENCE, MISC.: GATEWAY MONUMENT SIGN SCREEN WALL PANELS	1832
			961											961				608	98000	961	SF	WALKWAY, MISC.: PAVERS OVER CONCRETE (BRICK 1)	1825
			743											743				608	98000	743	SF	WALKWAY, MISC.: PAVERS OVER CONCRETE (BRICK 2)	1825
			110											110				608	98000	110	SF	WALKWAY, MISC.: PAVERS OVER CONCRETE (BRICK 3)	1825
			1847											1847				608	98000	1847	SF	WALKWAY, MISC.: PAVERS OVER CONCRETE (BRICK 4)	1825
		243												243				661	00501	243	CY	MULCH, AS PER PLAN	1804
		48400												48400				661	31000	48400	GAL	LANDSCAPE WATERING	
		9												9				661	40100	9	EACH	DECIDUOUS TREE, 2-1/2" CALIPER, AMERICAN SYCAMORE (POC)	
		5												5				661	40100	5	EACH	DECIDUOUS TREE, 2-1/2" CALIPER, BUR OAK (QMA)	
		7												7				661	40100	7	EACH	DECIDUOUS TREE, 2-1/2" CALIPER, CHINESE ELM (ULM)	
		15												15				661	40100	15	EACH	DECIDUOUS TREE, 2-1/2" CALIPER, CHINKAPIN OAK (QMU)	
		11												11				661	40100	11	EACH	DECIDUOUS TREE, 2-1/2" CALIPER, GREEN VASE ZELKOVA (ZSE)	
		18												18				661	40100	18	EACH	DECIDUOUS TREE, 2-1/2" CALIPER, KENTUCKY COFFEETREE (GDI)	
		1												1				661	40100	1	EACH	DECIDUOUS TREE, 2-1/2" CALIPER, LITTLELEAF LINDEN (TCO)	
		19												19				661	40100	19	EACH	DECIDUOUS TREE, 2-1/2" CALIPER, OHIO BUCKEYE (AGL)	
		18												18				661	40100	18	EACH	DECIDUOUS TREE, 2-1/2" CALIPER, SCARLET OAK (QCO)	
		12												12				661	40100	12	EACH	DECIDUOUS TREE, 2-1/2" CALIPER, SOMERSET RED MAPLE (ARS)	
		10												10				661	40100	10	EACH	DECIDUOUS TREE, 2-1/2" CALIPER, THORNLESS HONEYLOCUST (GTR)	
		6												6				661	50160	6	EACH	EVERGREEN TREE, 8' HEIGHT, AMERICAN HOLLY (IOK)	
		26												26				661	50160	26	EACH	EVERGREEN TREE, 8' HEIGHT, AMERICAN HOLLY (IOP)	
		72												72				661	50160	72	EACH	EVERGREEN TREE, 8' HEIGHT, EASTERN REDCEDAR (JVI)	
		58												58				661	50160	58	EACH	EVERGREEN TREE, 8' HEIGHT, PITCH PINE (PRI)	
		53												53				661	99900	53	EACH	PLANTING, MISC.: FLOWERING TREE, 2-1/2" CALIPER, CRABAPPLE SP. (MAL)	1824
		128												128				661	99900	128	EACH	PLANTING, MISC.: FLOWERING TREE, 2-1/2" CALIPER, EASTERN REDBUD (CCN)	1824
		43												43				661	99900	43	EACH	PLANTING, MISC.: FLOWERING TREE, 2-1/2" CALIPER, FLOWERING DOGWOOD (CFL)	1824
		90												90				661	99900	90	EACH	PLANTING, MISC.: FLOWERING TREE, 2-1/2" CALIPER, GREEN HAWTHORN (CVI)	1824
		33												33				661	99900	33	EACH	PLANTING, MISC.: FLOWERING TREE, 2-1/2" CALIPER, IVORY SILK JAPANESE TREE LILAC (SRE)	1824
		36												36				661	99900	36	EACH	PLANTING, MISC.: FLOWERING TREE, 2-1/2" CALIPER, KWANZAN FLOWERING CHERRY (PSE)	1824
		88												88				661	99900	88	EACH	PLANTING, MISC.: FLOWERING TREE, 6-8' HEIGHT, AUTUMN BRILLIANCE SERVICEBERRY (ACA)	1824
		14												14				661	99900	14	EACH	PLANTING, MISC.: FLOWERING TREE, 6-8' HEIGHT, COMMON WITCH HAZEL (HVI)	1824
		196												196				661	99900	196	EACH	PLANTING, MISC.: SHRUB, 3 GALLON, SHORE JUNIPER (JCB)	1824
			9											9				SPECIAL	680E14550	9	EACH	TRASH RECEPTACLE	1826
			1											1				SPECIAL	680E43100	1	EACH	COMPLETE IRRIGATION SYSTEM	1836
2														2				SPECIAL	690E98000	2	EACH	BRICK 1 PAVER MOCK UP	1826
2														2				SPECIAL	690E98000	2	EACH	BRICK 2 PAVER MOCK UP	1826
2														2				SPECIAL	690E98000	2	EACH	BRICK 3 PAVER MOCK UP	1826
2														2				SPECIAL	690E98000	2	EACH	BRICK 4 PAVER MOCK UP	1826
1														1				SPECIAL	690E98000	1	EACH	BRIDGE 13 ARCHITECTURAL CONCRETE MIX MOCK UP	1829
1														1				SPECIAL	690E98000	1	EACH	BRIDGE 13 PLANTER MOCK UP	1831
1														1				SPECIAL	690E98000	1	EACH	BRIDGE 13 SCREEN WALL MOCK UP	1833
1														1				SPECIAL	690E98000	1	EACH	GATEWAY MONUMENT SIGN ARCHITECTURAL CONCRETE MIX MOCK UP	1829
1														1				SPECIAL	690E98000	1	EACH	GATEWAY MONUMENT SIGN SCREEN WALL MOCK UP	1833
			21											21				SPECIAL	690E98000	21	EACH	GATEWAY SIGN ALUMINUM LETTERS	1827
2														2				SPECIAL	690E98000	2	EACH	INTEGRALLY COLORED CONCRETE CROSSWALK MOCK UP	1825
			24											24				SPECIAL	690E98000	24	EACH	PARK BENCH	1826
			159											159				SPECIAL	690E98000	159	EACH	SCREEN WALL COVER PLATE	1826
			70											70				SPECIAL	690E98000	70	EACH	SKATE GUARD	1826
9														9				SPECIAL	690E98000	9	EACH	TREE PROTECTION	1798

Preliminary Plans - For Reference Only

CUY-90-16.28 (CCG3A)
MODEL: Sheet-11 PAPERSIZE: 34x22 (in.) DATE: 6/16/2025 TIME: 6:34:54 PM USER: Mala.Gallagher
pw:\\mb-us-pw.bentley.com:mb-us-pw-03\Documents\Cleveland_OH\01_Projects\ODOT\District12\82382\400-Engineering\Roadway\Sheets\82382_GG001.dgn
82382_GG001.dgn

DESIGN AGENCY
Michael Baker INTERNATIONAL

DESIGNER KJM
REVIEWER KGJ 05/22/24
PROJECT ID 82382
SHEET 413 TOTAL 2696

SHEET NUMBER														PARTICIPATION			ALT (X)	ITEM	ITEM EXT.	GRAND TOTAL	UNIT	DESCRIPTION	SEE SHEET
120	427	428	429	435	489	1839								01/IMS /04	02/IMS /10	03/IMS /08							
																						LANDSCAPING (CONT.)	
			320											320				SPECIAL	690E98100	320	FT	AIR KNIFE EXCAVATION	1798
						1118								1118				SPECIAL	690E98100	1118	FT	METAL EDGING	1826
			LS											LS				SPECIAL	690E98400	LS		CLEVELAND PLANTING	1804
						LS								LS				SPECIAL	690E98400	LS		PLANTER WATERPROOFING SYSTEM	1830
						29								29				SPECIAL	690E98700	29	CY	PLANTING SOIL FOR BRIDGE 13 PARAPET PLANTERS	1799
						174								174				SPECIAL	690E98700	174	CY	PLANTING SOIL FOR BRIDGE 13 TREE PLANTERS	1799
																						RETAINING WALLS	
																						RETAINING WALL AC ESTIMATED QUANTITIES	1178
																						RETAINING WALL AD ESTIMATED QUANTITIES	1195
																						RETAINING WALL AE ESTIMATED QUANTITIES	1210
																						RETAINING WALL AF ESTIMATED QUANTITIES	1221
																						RETAINING WALL AG ESTIMATED QUANTITIES	1233
																						RETAINING WALL AH ESTIMATED QUANTITIES	1244
																						RETAINING WALL AI ESTIMATED QUANTITIES	1253
																						RETAINING WALL AJ ESTIMATED QUANTITIES	1265
																						RETAINING WALL N ESTIMATED QUANTITIES	1274
																						RETAINING WALL S ESTIMATED QUANTITIES	1286
																						RETAINING WALL T ESTIMATED QUANTITIES	1303
																						RETAINING WALL Y ESTIMATED QUANTITIES	1313
																						RETAINING WALL Z ESTIMATED QUANTITIES	1322
																						RAMP A3 BARRIER MOMENT SLAB ESTIMATED QUANTITIES	1335
																						MEDIAN BARRIER MOMENT SLAB ESTIMATED QUANTITIES	1342
																						RAMP A2 OVERHEAD SIGN TRUSS ESTIMATED QUANTITIES	1356
																						RAMP B6 OVERHEAD SIGN TRUSS ESTIMATED QUANTITIES	1362
					LS									LS				202	11000	LS		STRUCTURE REMOVED	
					LS									LS				202	11200	LS		PORTIONS OF STRUCTURE REMOVED	
																						BUILDING DEMOLITION	
					LS									LS				202	56000	LS		BUILDING DEMOLISHED (103-13-019 / 320-WL)	74
	LS													LS				202	56001	LS		BUILDING DEMOLISHED, AS PER PLAN (103-26-003 / 303)	74
																						STRUCTURE OVER 20 FOOT SPAN	
																						STRUCTURE CUY-77-1587 (SFN-1806910 | BRIDGE 9) ESTIMATED QUANTITIES	1884
																						STRUCTURE CUY-90-1653L (SFN-1807901 | BRIDGE 10) ESTIMATED QUANTITIES	2041
																						STRUCTURE CUY-90-1653R (SFN-1807804 | BRIDGE 11) ESTIMATED QUANTITIES	2090
																						STRUCTURE CUY-90-1652S (SFN-1807806 | BRIDGE 12) ESTIMATED QUANTITIES	2134
																						STRUCTURE CUY-90-1678 (SFN-1807839 | BRIDGE 13) ESTIMATED QUANTITIES	2188-2189
																						STRUCTURE CUY-90-1696 (SFN-1807898 | BRIDGE 14) ESTIMATED QUANTITIES	2291-2292
																						STRUCTURE CUY-90-1640 (SFN-1807773 | BRIDGE E5) ESTIMATED QUANTITIES	2371
																						STRUCTURE CUY-77-1593L (SFN-1806939 | BRIDGE E6) ESTIMATED QUANTITIES	2378
																						STRUCTURE CUY-E14th-0002SN (SFN-1806912 | BRIDGE E10) ESTIMATED QUANTITIES	2381
																						MAINTENANCE OF TRAFFIC	
	5000													5000				614	11110	5000	HOUR	LAW ENFORCEMENT OFFICER WITH PATROL CAR FOR ASSISTANCE	87
	10555													10555				614	11630	10555	FT	INCREASED BARRIER DELINEATION	85
41					2									43				614	12380	43	EACH	WORK ZONE IMPACT ATTENUATOR, 24" WIDE HAZARDS, (UNIDIRECTIONAL)	84
														LS				614	12420	LS		DETOUR SIGNING	
	62													62				614	12484	62	EACH	WORK ZONE INCREASED PENALTIES SIGN	83
	26													26				614	12500	26	EACH	REPLACEMENT SIGN	83
	6													6				614	12756	6	EACH	WORK ZONE CROSSOVER LIGHTING SYSTEM	85
		3895												3895				614	12801	3895	EACH	WORK ZONE RAISED PAVEMENT MARKER, AS PER PLAN	84
		1256												1256				614	13310	1256	EACH	BARRIER REFLECTOR, TYPE 1 (ONE WAY)	85
		1113												1113				614	13350	1113	EACH	OBJECT MARKER, ONE WAY	85
		42												42				614	13360	42	EACH	OBJECT MARKER, TWO WAY	85
		3												3				614	18000	3	EACH	MAINTAINING TRAFFIC, MISC.: PARTIAL TEMPORARY TRAFFIC SIGNAL	87
		1												1				614	18000	1	EACH	MAINTAINING TRAFFIC, MISC.: TEMPORARY TRAFFIC SIGNAL	85
		200												200				614	18601	200	SNMT	PORTABLE CHANGEABLE MESSAGE SIGN, AS PER PLAN	83
1.04		0.50												1.54				614	20000	1.54	MILE	WORK ZONE LANE LINE, CLASS I, 4"	
8.75		2.50												11.25				614	20010	11.25	MILE	WORK ZONE LANE LINE, CLASS I, 6"	
2.03		0.50												2.53				614	21000	2.53	MILE	WORK ZONE CENTER LINE, CLASS I	
3.39		1.00												4.39				614	22000	4.39	MILE	WORK ZONE EDGE LINE, CLASS I, 4"	

Preliminary Plans - For Reference Only

CUY-90-16.28 (CCG3A)
MODEL: Sheet-12 PAPERSIZE: 34x22 (in.) DATE: 6/16/2025 TIME: 6:34:55 PM USER: Mata.Gallagher
pw:\\mb-us-pw.bentley.com:mb-us-pw-03\Documents\Cleveland_OH\01_Projects\ODOT\District12\82382\400-Engineering\Roadway\Sheets\82382_GG001.dgn
DESIGN AGENCY
Michael Baker INTERNATIONAL
DESIGNER KJM
REVIEWER KGJ 05/22/24
PROJECT ID 82382
SHEET 414 TOTAL 2696

SHEET NUMBER														PARTICIPATION			ALT (X)	ITEM	ITEM EXT.	GRAND TOTAL	UNIT	DESCRIPTION	SEE SHEET
120	428	429	435											01/IMS /04	02/IMS /10	03/IMS /08							
																						MAINTENANCE OF TRAFFIC (CONT.)	
18.26	4.50													22.76				614	22010	22.76	MILE	WORK ZONE EDGE LINE, CLASS I, 6"	
2864	650													3514				614	23000	3514	FT	WORK ZONE CHANNELIZING LINE, CLASS I, 8"	
34686	8750													43436				614	23010	43436	FT	WORK ZONE CHANNELIZING LINE, CLASS I, 12"	
14515	3650													18165				614	24000	18165	FT	WORK ZONE DOTTED LINE, CLASS I	
581	150													731				614	25000	731	FT	WORK ZONE TRANSVERSE/DIAGONAL LINE, CLASS I	
706	175													881				614	26000	881	FT	WORK ZONE STOP LINE, CLASS I	
657	175													832				614	27010	832	FT	WORK ZONE CROSSWALK LINE, CLASS I, 12"	
92	25													117				614	30000	117	EACH	WORK ZONE ARROW, CLASS I	
1	1													2				614	31000	2	EACH	WORK ZONE WORD ON PAVEMENT, 72", CLASS I	
4	1													5				614	98200	5	EACH	WORK ZONE PAVEMENT MARKING, MISC.: SHARED LANE MARKING	84
														LS				615	10000	LS		ROADS FOR MAINTAINING TRAFFIC	
30133														30133				615	20000	30133	SY	PAVEMENT FOR MAINTAINING TRAFFIC, CLASS A	84
	2285													2285				616	10000	2285	MGAL	WATER	
	150													150				616	20000	150	TON	CALCIUM CHLORIDE	
57669														57669				622	41011	57669	FT	PORTABLE BARRIER, 50", AS PER PLAN	84
3														3				622	41060	3	EACH	DUAL PORTABLE BARRIER TRANSITION/TERMINATION	
			1150											1150				622	41101	1150	FT	PORTABLE BARRIER, UNANCHORED, AS PER PLAN	76
2054														2054				622	41111	2054	FT	PORTABLE BARRIER, ANCHORED, AS PER PLAN	84
			190											190				622	41111	190	FT	PORTABLE BARRIER, ANCHORED, AS PER PLAN 2	76
		64												64				829	00100	64	SNMT	WORK ZONE EGRESS WARNING SYSTEM	84
		648												648				896	00010	648	SNMT	PORTABLE NON-INTRUSIVE TRAFFIC SENSOR, CLASS I	
		216												216				896	00020	216	SNMT	PORTABLE CHANGEABLE MESSAGE SIGN	
																						INCIDENTALS	
														LS				108	10000	LS		CPM PROGRESS SCHEDULE	
														21000				SPECIAL	111E10100	21000	EACH	DEPARTMENTS SHARE FACILITATED PARTNERING COSTS	PN 111
														LS				614	11000	LS		MAINTAINING TRAFFIC	81
	72													72				619	16021	72	MNTH	FIELD OFFICE, TYPE C, AS PER PLAN	80A
														LS				623	10000	LS		CONSTRUCTION LAYOUT STAKES AND SURVEYING	
														LS				624	10000	LS		MOBILIZATION	

Preliminary Plans - For Reference Only

GENERAL SUMMARY - 13

CUY-90-16.28 (CCG3A)

MODEL: Sheet-13 PAPERSIZE: 34x22 (in.) DATE: 6/16/2025 TIME: 6:34:57 PM USER: Mala.Gallagher
pw:\\mb-us-pw.bentley.com:mb-us-pw-03\Documents\Cleveland_OH\01_Projects\ODOT\District12\82382\400-Engineering\Roadway\Sheets\82382_GG001.dgn

DESIGN AGENCY
Michael Baker INTERNATIONAL

DESIGNER KJM

REVIEWER KGJ 05/22/24

PROJECT ID 82382

SHEET 415 TOTAL 2696

SHEET NO.	201	202	202	202	204	204	204	251	251	254	254	254	255	255	255	407	441	441	442	442	442	452	452	605	605	608	608	609	611	611	611	611	611	614	614	614	614	614
	CLEARING AND GRUBBING	CONCRETE BARRIER REMOVED	BUILDING DEMOLISHED, AS PER PLAN (103-26-003 / 303)	REMOVAL MISC.: BURIED TRACK	EXCAVATION OF SUBGRADE	GRANULAR MATERIAL, TYPE B	GEOTEXTILE FABRIC	PARTIAL DEPTH PAVEMENT REPAIR (442)	PARTIAL DEPTH PAVEMENT REPAIR (442), AS PER PLAN	PAVEMENT PLANING, ASPHALT CONCRETE (1.5")	PAVEMENT PLANING, ASPHALT CONCRETE (3")	PAVEMENT PLANING, ASPHALT CONCRETE (3.25")	FULL DEPTH PAVEMENT REMOVAL AND RIGID REPLACEMENT, TYPE 1, CLASS QC1, AS PER PLAN A	FULL DEPTH PAVEMENT REMOVAL AND RIGID REPLACEMENT, TYPE 1, CLASS QC1, AS PER PLAN B	FULL DEPTH PAVEMENT REMOVAL AND RIGID REPLACEMENT, TYPE 1, CLASS QC1, AS PER PLAN C	NON-TRACKING TACK COAT	ASPHALT CONCRETE SURFACE COURSE, TYPE 1, (448), AS PER PLAN, PG70-22M	ASPHALT CONCRETE INTERMEDIATE COURSE, TYPE 2, (448)	ASPHALT CONCRETE SURFACE COURSE, 12.5 MM, TYPE A (446), AS PER PLAN, PG76-22M	ASPHALT CONCRETE INTERMEDIATE COURSE, 19 MM, TYPE A (446)	ASPHALT CONCRETE SURFACE COURSE, 12.5 MM, TYPE A (449), AS PER PLAN, PG70-22M	10" NON-REINFORCED CONCRETE PAVEMENT, CLASS QC 1P, AS PER PLAN	NON-REINFORCED CONCRETE PAVEMENT, MISC.: SURCHARGE FOR CLASS MS CONCRETE	6" SHALLOW PIPE UNDERDRAINS WITH GEOTEXTILE FABRIC, AS PER PLAN	6" DEEP PIPE UNDERDRAINS WITH GEOTEXTILE FABRIC, AS PER PLAN	6" CONCRETE WALK, AS PER PLAN	CURB RAMP, AS PER PLAN	CURB, TYPE 6	12" CONDUIT, TYPE B, 706.08 & 706.12	15" CONDUIT, TYPE B, 706.08 & 706.12	CATCH BASIN, NO. 3A, AS PER PLAN	CATCH BASIN, NO. 2-2B, AS PER PLAN	MANHOLE, NO. 3, AS PER PLAN	SPECIAL - MISCELLANEOUS METAL	LAW ENFORCEMENT OFFICER WITH PATROL CAR FOR ASSISTANCE	INCREASED BARRIER DELINEATION	WORK ZONE INCREASED PENALTIES SIGN	REPLACEMENT SIGN	WORK ZONE CROSSOVER LIGHTING SYSTEM
	LS	FT	LS	FT	CY	CY	SY	CY	CY	SY	SY	SY	SY	SY	SY	GAL	CY	CY	CY	CY	CY	SY	SY	FT	FT	SF	SF	FT	FT	FT	EACH	EACH	EACH	LB	HOUR	FT	EACH	EACH	EACH
73	LS																																					
74			LS	1000																																		
76					3100	3100	9300																																
77																																						
78																																						
79																								3700	5200													
80								180														775				4500	475	750	2000	200	4	4	4	10000				
83		1510								63255																										62	26	
84										1531						123					64																	6
85																																			10555			
87								300	400		38540	56010	2800	2800	3850	14180	1340	1870	2330	2720			1000												5000				
1371																																						
1798																																						
1804																																						
1825																																						
1826																																						
1829																																						
1831																																						
1833																																						
TOTALS CARRIED TO GENERAL SUMMARY	LS	1510	LS	1000	3100	3100	9300	480	400	64786	38540	56010	2800	2800	3850	14303	1340	1870	2330	2720	64	775	1000	3700	5200	4500	475	750	2000	200	4	4	4	10000	5000	10555	62	26	6

Preliminary Plans - Not For Reference Only

GENERAL NOTES SUBSUMMARY - 1

DESIGN AGENCY
Michael Baker INTERNATIONAL

DESIGNER
KJM

REVIEWER
KGJ 05/22/24

PROJECT ID
82382

SHEET 427 TOTAL 2696

CUY-90-16.28 (CCG3A)

MODEL: Sheet-01 PAPERSIZE: 34x22 (in.) DATE: 5/16/2025 TIME: 11:14:29 AM USER: Joseph.Hogan
pw:\\mb-us-pw.bentley.com:mb-us-pw-03\Documents\Cleveland_OH01_Projects\ODOTDistrict12\82382400-Engineering\Roadway\Sheets\82382_GS801.dgn

SHEET NO.	614	614	614	614	614	614	614	614	614	614	614	614	614	614	614	614	614	614	614	614	616	616	618	619	622	622	623	623	638	659	659	659	659	659	659	659	659	690
	WORK ZONE RAISED PAVEMENT MARKER, AS PER PLAN	BARRIER REFLECTOR, TYPE 1 (ONE WAY)	OBJECT MARKER, ONE WAY	OBJECT MARKER, TWO WAY	MAINTAINING TRAFFIC, MISC.: PARTIAL TEMPORARY TRAFFIC SIGNAL	MAINTAINING TRAFFIC, MISC.: TEMPORARY TRAFFIC SIGNAL	PORTABLE CHANGEABLE MESSAGE SIGN, AS PER PLAN	WORK ZONE LANE LINE, CLASS I, 4"	WORK ZONE LANE LINE, CLASS I, 6"	WORK ZONE CENTER LINE, CLASS I	WORK ZONE EDGE LINE, CLASS I, 4"	WORK ZONE EDGE LINE, CLASS I, 6"	WORK ZONE CHANNELIZING LINE, CLASS I, 8"	WORK ZONE CHANNELIZING LINE, CLASS I, 12"	WORK ZONE DOTTED LINE, CLASS I	WORK ZONE TRANSVERSE/DIAGONAL LINE, CLASS I	WORK ZONE STOP LINE, CLASS I	WORK ZONE CROSSWALK LINE, CLASS I, 12"	WORK ZONE ARROW, CLASS I	WORD ON PAVEMENT, 72", CLASS I	WORK ZONE PAVEMENT MARKING, MISC.: SHARED LANE MARKING	WATER	CALCIUM CHLORIDE	RUMBLE STRIPS, SHOULDER (ASPHALT CONCRETE)	FIELD OFFICE, TYPE C, AS PER PLAN	CONCRETE BARRIER, SINGLE SLOPE, TYPE B1	CONCRETE BARRIER, SINGLE SLOPE, TYPE D	PRIMARY PROJECT CONTROL MONUMENT, TYPE B	MONUMENT, MISC.: CLEVELAND MONUMENT ASSEMBLY	WATER WORK, MISC.: CLEVELAND WATER DEPARTMENT CHARGES	SOIL ANALYSIS TEST	TOPSOIL, AS PER PLAN	REPAIR SEEDING AND MULCHING	INTER-SEEDING	COMMERCIAL FERTILIZER	LIME	WATER	MOWING	SPECIAL - WORK INVOLVING NON-REGULATED MATERIALS
	EACH	EACH	EACH	EACH	EACH	EACH	SNMT	MILE	MILE	MILE	MILE	MILE	FT	FT	FT	FT	FT	FT	EACH	EACH	EACH	MGAL	TON	MILE	MNTH	FT	FT	EACH	EACH	EACH	EACH	CY	SY	SY	TON	ACRE	MGAL	MSF	TON
73																																						
74																											45											
76																							0.23					60										
77																																						
78																																						755
79																																						
80																								72														
83							200															2285	150			500	1010											
84	3895																																					
85		1256	1113	42		1		0.50	2.50	0.50	1.00	4.50	650	8750	3650	150	175	175	25	1	1			1.05														
87					3																																	
1371																													300000									
1798																														10	15613	7033	7033	19.62	29.06	779	316	
1804																																						
1825																																						
1826																																						
1829																																						
1831																																						
1833																																						

SHEET NO.	690 SPECIAL - WORK INVOLVING PETROLEUM CONTAMINATED SOIL TON	690 SPECIAL - WORK INVOLVING NON-REGULATED WATER GAL	690 SPECIAL - WORK INVOLVING REGULATED WATER GAL	690 SPECIAL - BRICK 1 PAVER MOCK UP EACH	690 SPECIAL - BRICK 2 PAVER MOCK UP EACH	690 SPECIAL - BRICK 3 PAVER MOCK UP EACH	690 SPECIAL - BRICK 4 PAVER MOCK UP EACH	690 SPECIAL - BRIDGE 13 ARCHITECTURAL CONCRETE MIX MOCK UP EACH	690 SPECIAL - BRIDGE 13 PLANTER MOCK UP EACH	690 SPECIAL - BRIDGE 13 SCREEN WALL MOCK UP EACH	690 SPECIAL - GATEWAY MONUMENT SIGN ARCHITECTURAL CONCRETE MIX MOCK UP EACH	690 SPECIAL - GATEWAY MONUMENT SIGN SCREEN WALL MOCK UP EACH	690 SPECIAL - INTEGRALLY COLORED CONCRETE CROSSWALK MOCK UP EACH	690 SPECIAL - TREE PROTECTION EACH	690 SPECIAL - UTILITY TEST HOLE EACH	690 SPECIAL - AIR KNIFE EXCAVATION FT	690 SPECIAL - CLEVELAND PLANTING LS	690 SPECIAL - PERMITS LS	690 SPECIAL - WORK INVOLVING ASBESTOS CONTAINING MATERIALS (CARNEGIE AVENUE, CUY-90-1692, SFN 1807897) LS	690 SPECIAL - WORK INVOLVING ASBESTOS CONTAINING MATERIALS (E. 22ND STREET, CUY-90-1676, SFN 1807838) LS	690 SPECIAL - WORK INVOLVING ASBESTOS CONTAINING MATERIALS (E5, CUY-90-1640, SFN 1807773) LS	690 SPECIAL - WORK INVOLVING ASBESTOS CONTAINING MATERIALS (E6, CUY-77-1593, SFN 1806939) LS	690 SPECIAL - WORK INVOLVING ASBESTOS CONTAINING MATERIALS (E7, CUY-77-1597L, SFN 1807919) LS	690 SPECIAL - WORK INVOLVING ASBESTOS CONTAINING MATERIALS (E8, CUY-90-1651L, SFN 1807900) LS	690 SPECIAL - WORK INVOLVING ASBESTOS CONTAINING MATERIALS (E9, CUY-90-1651R, SFN 1807803) LS	690 SPECIAL - WORK INVOLVING ASBESTOS CONTAINING MATERIALS (E10, CUY-E14TH-0002SN, SFN 1806912) LS	829 WORK ZONE EGRESS WARNING SYSTEM SNMT	896 PORTABLE NON-INTRUSIVE TRAFFIC SENSOR, CLASS I SNMT	896 PORTABLE CHANGEABLE MESSAGE SIGN SNMT
73																													
74																													
76																													
77															40			LS	LS	LS	LS	LS	LS	LS	LS				
78	7550	105000	42000																										
79																													
80																													
83																													
84																										64			
85																											648	216	
87																													
1371																													
1798														9		320													
1804																	LS												
1825													2																
1826				2	2	2	2																						
1829								1			1																		
1831									1																				
1833										1		1																	
TOTALS CARRIED TO GENERAL SUMMARY	7550	105000	42000	2	2	2	2	1	1	1	1	1	2	9	40	320	LS	LS	LS	LS	LS	LS	LS	LS	LS	64	648	216	

Preliminary Plans - For Reference Only

GENERAL NOTES SUBSUMMARY - 3

CUY-90-16.28 (CCG3A)
MODEL: Sheet-21 PAPERSIZE: 34x22 (in.) DATE: 5/16/2025 TIME: 11:14:30 AM USER: Joseph.Hogan
pw:\\mb-us-pw.bentley.com:mb-us-pw-03\Documents\Cleveland_OH\01_Projects\ODOT\District12\82382\400-Engineering\Roadway\Sheets\82382_GS801.dgn

DESIGN AGENCY
Michael Baker INTERNATIONAL

DESIGNER KJM
REVIEWER KGJ 05/22/24
PROJECT ID 82382
SHEET 429 TOTAL 2696

REF NO.	SHEET NO.	STATION FROM	STATION TO	SIDE	AREA	606 GUARDRAIL, TYPE MGS	606 ANCHOR ASSEMBLY, MGS TYPE B (MASH 2016)	606 ANCHOR ASSEMBLY, MGS TYPE E (MASH 2016)	606 ANCHOR ASSEMBLY, MGS TYPE T	606 MGS BRIDGE TERMINAL ASSEMBLY, TYPE 1	606 MGS BRIDGE TERMINAL ASSEMBLY, TYPE 2	606 MGS BRIDGE TERMINAL ASSEMBLY, TYPE 2, AS PER PLAN	606 IMPACT ATTENUATOR, TYPE 2 (UNIDIRECTIONAL) (MASH 2016) (50 MPH, 69" WIDE)	606 IMPACT ATTENUATOR, TYPE 2 (UNIDIRECTIONAL) (MASH 2016) (50 MPH, 90" WIDE)	607 FENCE, TYPE CLT	607 FENCE REMOVED AND REBUILT	607 GATE, TYPE CLT	611 MANHOLE ADJUSTED TO GRADE	611 SPECIAL - GAS VALVE BOX ADJUSTED TO GRADE	614 WORK ZONE IMPACT ATTENUATOR, 24" WIDE HAZARDS, (UNIDIRECTIONAL)	622 CONCRETE BARRIER, SINGLE SLOPE, TYPE B1	622 CONCRETE BARRIER, SINGLE SLOPE, TYPE C	622 CONCRETE BARRIER, SINGLE SLOPE, TYPE C, AS PER PLAN	622 CONCRETE BARRIER, SINGLE SLOPE, TYPE C1	622 CONCRETE BARRIER, SINGLE SLOPE, TYPE C1, AS PER PLAN	622 CONCRETE BARRIER, SINGLE SLOPE, TYPE D	622 BARRIER TRANSITION	622 CONCRETE BARRIER END SECTION, TYPE B, AS PER PLAN	622 CONCRETE BARRIER END SECTION, TYPE D	622 CONCRETE BARRIER, END ANCHORAGE, REINFORCED, TYPE B	622 CONCRETE BARRIER, END ANCHORAGE, REINFORCED, TYPE B1	622 CONCRETE BARRIER, END ANCHORAGE, REINFORCED, TYPE C	622 CONCRETE BARRIER, END ANCHORAGE, REINFORCED, TYPE C, AS PER PLAN	622 CONCRETE BARRIER, END ANCHORAGE, REINFORCED, TYPE C1	622 CONCRETE BARRIER, END ANCHORAGE, REINFORCED, TYPE D	622 CONCRETE BARRIER, END ANCHORAGE, REINFORCED, TYPE D, AS PER PLAN	622 CONCRETE BARRIER, END ANCHORAGE, REINFORCED, TYPE D, AS PER PLAN 2	622 PORTABLE BARRIER, UNANCHORED, AS PER PLAN	622 PORTABLE BARRIER, ANCHORED, AS PER PLAN 2			
					SF	FT	EACH	EACH	EACH	EACH	EACH	EACH	EACH	EACH	FT	FT	EACH	EACH	EACH	EACH	FT	FT	FT	FT	FT	FT	EACH	EACH	EACH	EACH	EACH	EACH	EACH	EACH	EACH	EACH	EACH	FT	FT			
		I.R. 90 EB																																								
BR-1	493	175+70.08	185+76.36	LT																	672													14								
		RAMP IB5																																								
BR-2	493	1707+08.49	1707+28.66	RT																																		2					
		I.R. 90 EB																																								
GR-1	497	178+11.34	185+73.10	RT		750.0		1		1																																
GR-2	499	188+58.11	192+08.19	RT		350.0			1		1																															
BR-3	499	188+70.99	199+20.18	LT																				907										6								
GR-3	501	192+81.76	198+94.56	RT		550.0		1	1																																	
		INTERIM I.R. 90 EB																																								
BR-4	508	3000+00.00	3003+73.50	LT																				306										4								
BR-5	508	3003+73.50	3004+04.33	LT																						31																
BR-6	508	3004+04.33	3014+30.72	LT																				1026										13								
GR-4	508	3004+33.61	3009+63.05	RT		475.0		1	1																																	
		I.R. 90 WB																																								
BR-7	517	177+48.54	187+36.73	RT																	988													3								
GR-5	523	190+30.01	191+41.90	LT		37.5		1		1																																
BR-8	523	194+04.14	201+13.67	RT																				710																		
BR-9	523	196+54.82	197+69.59	LT																								115										1		1			
GR-6	525	197+69.59	201+13.67	LT		325.0				1																																
		INTERIM I.R. 90 WB																																								
BR-10	534	4000+00.00	4003+56.62	RT																				357										4								
GR-7	534	4000+00.00	4005+71.67	LT		575.0					1																															
BR-11	536	4005+71.67	4008+49.67	LT																								278										7					
GR-8	536	4008+49.67	4013+51.81	LT		375.0		1		1																																
		RAMP A1																																								
BR-12	544	303+50.00	307+07.00	RT																					307									2								
BR-13	546	307+07.00	308+45.00	RT																						108								1	1							
GR-9	548	310+41.00	311+15.00	RT		12.5		1		1																																
		RAMP A2																																								
GR-10	552	405+88.00		LT								1																														
PB-1	554	408+28.00	410+33.00	LT																									1												190		
BR-14	554	408+93.00	410+44.00	RT																																			2				
PB-2	554	410+33.00	414+95.00	LT																1																				440			
GR-11	562	431+27.00	433+29.00	RT		125.0		1		1																																
		RAMP A3																																								
GR-12	566	577+30.22	584+05.00	LT		650.0				1	1																															
GR-13	566	580+98.32	584+35.00	RT		325.0			1		1																															
BR-15	568	584+89.00	586+40.48	LT																								151										2					
GR-14	568	585+33.00	588+14.40	RT		262.5				1	1																															
GR-15	570	586+40.47	587+36.67	LT		25.0	1			1																																
BR-16	570	588+14.40	588+57.15	RT																								43										2					
		RAMP IB5																																								
GR-16	572	1708+42.00	1710+73.00	LT		250.0			1																																	
		RAMP B6																																								
GR-17	580	1600+00.00	1602+09.00	LT		175.0			1				1																													
TOTALS CARRIED TO SHEET 435						5262.5	1	7	6	9	5	1	1	-	-	-	-	-	-	1	1660	307	108	3306	31	587	1	-	-	-	17	3	1	27	14	2	1	440	190			

Preliminary Plans - For Reference Only

ROADWAY SUBSUMMARY - 1

DESIGN AGENCY
Michael Baker INTERNATIONAL

DESIGNER KJM
REVIEWER KGJ 05/22/24
PROJECT ID 82382
SHEET 430 TOTAL 2696

CUY-90-16.28 (CCG3A)

MODEL: Sheet-01 PAPERSIZE: 34x22 (in.) DATE: 3/27/2025 TIME: 8:58:06 PM USER: Alexandria.Summers
pw:\\mb-us-pw.bentley.com:mb-us-pw-03\Documents\Cleveland_OH\01_Projects\ODOT\District12\82382\400-Engineering\Roadway\Sheets\82382_GS001.dgn

REF NO.	SHEET NO.	STATION FROM	STATION TO	SIDE	AREA	606 GUARDRAIL, TYPE MGS	606 ANCHOR ASSEMBLY, MGS TYPE B (MASH 2016)	606 ANCHOR ASSEMBLY, MGS TYPE E (MASH 2016)	606 ANCHOR ASSEMBLY, MGS TYPE T	606 MGS BRIDGE TERMINAL ASSEMBLY, TYPE 1	606 MGS BRIDGE TERMINAL ASSEMBLY, TYPE 2	606 MGS BRIDGE TERMINAL ASSEMBLY, TYPE 2, AS PER PLAN	606 IMPACT ATTENUATOR, TYPE 2 (UNIDIRECTIONAL) (MASH 2016) (50 MPH, 69" WIDE)	606 IMPACT ATTENUATOR, TYPE 2 (UNIDIRECTIONAL) (MASH 2016) (50 MPH, 90" WIDE)	607 FENCE, TYPE CLT	607 FENCE REMOVED AND REBUILT	607 GATE, TYPE CLT	611 MANHOLE ADJUSTED TO GRADE	611 SPECIAL - GAS VALVE BOX ADJUSTED TO GRADE	614 WORK ZONE IMPACT ATTENUATOR, 24" WIDE HAZARDS, (UNIDIRECTIONAL)	622 CONCRETE BARRIER, SINGLE SLOPE, TYPE B1	622 CONCRETE BARRIER, SINGLE SLOPE, TYPE C	622 CONCRETE BARRIER, SINGLE SLOPE, TYPE C, AS PER PLAN	622 CONCRETE BARRIER, SINGLE SLOPE, TYPE C1	622 CONCRETE BARRIER, SINGLE SLOPE, TYPE C1, AS PER PLAN	622 CONCRETE BARRIER, SINGLE SLOPE, TYPE D	622 BARRIER TRANSITION	622 CONCRETE BARRIER END SECTION, TYPE B, AS PER PLAN	622 CONCRETE BARRIER END SECTION, TYPE D	622 CONCRETE BARRIER, END ANCHORAGE, REINFORCED, TYPE B	622 CONCRETE BARRIER, END ANCHORAGE, REINFORCED, TYPE B1	622 CONCRETE BARRIER, END ANCHORAGE, REINFORCED, TYPE C	622 CONCRETE BARRIER, END ANCHORAGE, REINFORCED, TYPE C, AS PER PLAN	622 CONCRETE BARRIER, END ANCHORAGE, REINFORCED, TYPE C1	622 CONCRETE BARRIER, END ANCHORAGE, REINFORCED, TYPE D	622 CONCRETE BARRIER, END ANCHORAGE, REINFORCED, TYPE D, AS PER PLAN	622 CONCRETE BARRIER, END ANCHORAGE, REINFORCED, TYPE D, AS PER PLAN 2	622 PORTABLE BARRIER, UNANCHORED, AS PER PLAN	622 PORTABLE BARRIER, ANCHORED, AS PER PLAN 2			
					SF	FT	EACH	EACH	EACH	EACH	EACH	EACH	EACH	EACH	FT	FT	EACH	EACH	EACH	EACH	EACH	FT	FT	FT	FT	FT	FT	EACH	EACH	EACH	EACH	EACH	EACH	EACH	EACH	EACH	EACH	EACH	FT	FT			
		RAMP B6 (CONT.)																																								
GR-18	580	1600+62.00	1607+64.00	RT		675.0				1				1																												
GR-19	582	1606+69.00	1607+97.00	LT		50.0	1			1																																
GR-20	584	1613+65.00	1616+90.00	RT		325.0					1																																
U-1	584	1614+70.96		RT														1																										
GR-21	586	1618+11.00	1620+00.00	LT		200.0					1																																
GR-22	588	1620+00.00	1620+84.00	LT		71.7			1																																		
		RAMP B6A																																								
U-2	590	1801+10.46		RT														1																										
GR-23	590	1802+96.00	1804+75.00	RT		175.0			1																																		
		RAMP IH4																																								
GR-24	594	13+05.43	14+37.57	LT		125.0			1																																		
BR-17	594	13+48.87	13+79.41	RT										1																1														
BR-18	594	13+79.41	20+20.05	RT																								482										6					
		EX. RAMP E-17																																								
PB-3	594	50+95.68	51+35.20	LT																																						40		
BR-19	594	51+45.08	52+19.19	LT																						60			1			1										
		RAMP IH5																																								
GR-25	600	1075+86.54	1082+84.58	RT		662.5			1		1																																
BR-20	602	1078+71.27	1079+25.26	LT																								27										2					
		EX. RAMP E-17																																								
GR-26	602	53+13.05	54+25.28	RT		112.4								1																												
		RAMP H5																																								
BR-21	608	987+65.00	990+65.00	LT																								190				1						4					
GR-27	608	989+21.86	990+80.00	RT		75.6		1		1																																
GR-28	608	990+65.00	993+95.18	LT		325.0			1		1																																
BR-22	608	990+80.00	992+70.00	RT																								155				1						1					
		RAMP H6																																								
U-3	616	1189+10.02		LT														1																										
U-4	616	1189+12.30		LT														1																										
GR-29	616	1189+13.96	1189+86.62	LT		12.5		1	1																																		
U-5	616	1189+51.01		LT														1																										
U-6	616	1190+18.89		RT														1																										
U-7	616	1191+31.56		LT															1																										
U-8	616	1192+01.15		LT														1																										
U-9	616	1192+03.78		LT														1																										
U-10	616	1192+46.99		RT														1																										
U-11	616	1192+58.11		RT														1																										
U-12	616	1192+58.28		RT														1																										
U-13	616	1192+66.98		LT														1																										
U-14	616	1192+68.63		LT														1																										
		RAMP IJ3																																								
PB-4	618	94+01.00	100+93.00	LT/RT																1																						670		
GR-30	622	101+40.00	102+35.85	RT		25.0	1			1																																
GR-31	624	106+01.41	108+56.72	RT		212.5	1		1																																	
TOTALS CARRIED TO SHEET 435						3047.2	3	2	7	4	4	-	-	3	-	-	-	13	1	1	-	-	-	60	-	854	1	1	2	1	-	-	-	-	13	-	-	710	-			

Preliminary Plans - For Reference Only

ROADWAY SUBSUMMARY - 2

DESIGN AGENCY
Michael Baker INTERNATIONAL

DESIGNER KJM
REVIEWER KGJ 05/22/24
PROJECT ID 82382
SHEET 431 TOTAL 2696

CUY-90-16.28 (CCG3A)

MODEL: Sheet-02 PAPERSIZE: 34x22 (in.) DATE: 3/27/2025 TIME: 8:58:07 PM USER: Alexandria.Summers
pw:\\mb-us-pw.bentley.com:mb-us-pw-03\Documents\Cleveland_OH\01_Projects\ODOT\District12\82382\400-Engineering\Roadway\Sheets\82382_GS001.dgn

REF NO.	SHEET NO.	STATION FROM	STATION TO	SIDE	AREA	606 GUARDRAIL, TYPE MGS	606 ANCHOR ASSEMBLY, MGS TYPE B (MASH 2016)	606 ANCHOR ASSEMBLY, MGS TYPE E (MASH 2016)	606 ANCHOR ASSEMBLY, MGS TYPE T	606 MGS BRIDGE TERMINAL ASSEMBLY, TYPE 1	606 MGS BRIDGE TERMINAL ASSEMBLY, TYPE 2	606 MGS BRIDGE TERMINAL ASSEMBLY, TYPE 2, AS PER PLAN	606 IMPACT ATTENUATOR, TYPE 2 (UNIDIRECTIONAL) (MASH 2016) (50 MPH, 69" WIDE)	606 IMPACT ATTENUATOR, TYPE 2 (UNIDIRECTIONAL) (MASH 2016) (50 MPH, 90" WIDE)	607 FENCE, TYPE CLT	607 FENCE REMOVED AND REBUILT	607 GATE, TYPE CLT	611 MANHOLE ADJUSTED TO GRADE	611 SPECIAL - GAS VALVE BOX ADJUSTED TO GRADE	614 WORK ZONE IMPACT ATTENUATOR, 24" WIDE HAZARDS, (UNIDIRECTIONAL)	622 CONCRETE BARRIER, SINGLE SLOPE, TYPE B1	622 CONCRETE BARRIER, SINGLE SLOPE, TYPE C	622 CONCRETE BARRIER, SINGLE SLOPE, TYPE C, AS PER PLAN	622 CONCRETE BARRIER, SINGLE SLOPE, TYPE C1	622 CONCRETE BARRIER, SINGLE SLOPE, TYPE C1, AS PER PLAN	622 CONCRETE BARRIER, SINGLE SLOPE, TYPE D	622 BARRIER TRANSITION	622 CONCRETE BARRIER END SECTION, TYPE B, AS PER PLAN	622 CONCRETE BARRIER END SECTION, TYPE D	622 CONCRETE BARRIER, END ANCHORAGE, REINFORCED, TYPE B	622 CONCRETE BARRIER, END ANCHORAGE, REINFORCED, TYPE B1	622 CONCRETE BARRIER, END ANCHORAGE, REINFORCED, TYPE C	622 CONCRETE BARRIER, END ANCHORAGE, REINFORCED, TYPE C, AS PER PLAN	622 CONCRETE BARRIER, END ANCHORAGE, REINFORCED, TYPE C1	622 CONCRETE BARRIER, END ANCHORAGE, REINFORCED, TYPE D	622 CONCRETE BARRIER, END ANCHORAGE, REINFORCED, TYPE D, AS PER PLAN	622 CONCRETE BARRIER, END ANCHORAGE, REINFORCED, TYPE D, AS PER PLAN 2	622 PORTABLE BARRIER, UNANCHORED, AS PER PLAN	622 PORTABLE BARRIER, ANCHORED, AS PER PLAN 2			
					SF	FT	EACH	EACH	EACH	EACH	EACH	EACH	EACH	EACH	FT	FT	EACH	EACH	EACH	EACH	EACH	FT	FT	FT	FT	FT	FT	EACH	EACH	EACH	EACH	EACH	EACH	EACH	EACH	EACH	EACH	EACH	FT	FT			
		EX. RAMP E-17																																								
GR-32	624	62+57.30	63+98.59	LT		112.5	1		1																																	
		CARNEGIE AVE.																																								
U-15	628	49+45.22		LT														1																									
U-16	628	49+74.26		LT															1																									
U-17	628	49+76.79		LT														1																									
U-18	628	50+07.09		LT														1																									
U-19	628	50+96.32		RT														1																									
U-20	630	53+06.56		LT															1																									
U-21	630	53+19.50		LT														1																									
U-22	630	53+22.42		LT															1																									
U-23	630	53+58.01		RT														1																									
U-24	630	53+64.81		LT														1																									
U-25	630	53+67.93		RT														1																									
U-26	630	53+74.25		LT															1																									
U-27	630	54+58.03		RT														1																									
U-28	630	54+62.18		RT														1																									
U-29	630	55+61.98		LT														1																									
U-30	630	55+83.92		RT														1																									
U-31	632	56+63.96		RT														1																									
U-32	632	57+41.90		RT														1																									
U-33	632	57+43.09		LT														1																									
U-34	632	57+63.10		LT														1																									
U-35	632	58+74.87		LT														1																									
U-36	634	64+33.73		RT														1																									
U-37	634	65+07.45		RT														1																									
U-38	634	65+30.80		LT														1																									
U-39	634	65+66.53		RT															1																									
U-40	636	66+40.73		RT														1																									
U-41	636	66+81.28		LT														1																									
U-42	636	68+28.56		RT														1																									
U-43	636	68+30.13		LT														1																									
U-44	636	68+71.71		RT														1																									
		MIDTOWN CONNECTOR																																								
U-45	638	504+92.39		RT														1																									
U-46	640	505+49.80		RT															1																									
U-47	640	506+04.19		RT														1																									
U-48	640	507+59.23		LT															1																									
U-49	640	508+85.56		RT														1																									
U-50	640	508+95.86		LT															1																									
U-51	640	509+74.15		RT															1																									
U-52	642	510+02.80		RT															1																									
U-53	642	510+15.95		RT															1																									
U-54	642	510+90.52		RT															1																									
		CEDAR AVE.																																								
U-55	644	400+62.23		RT														1																									
U-56	644	400+89.21		RT														1																									
U-57	644	402+29.80		RT															1																									
TOTALS CARRIED TO SHEET 435						112.5	1	-	1	-	-	-	-	-	-	-	-	-	30	13	-	-	-	-	-	-	-	-	-	-	-	-	-	-	-	-	-	-	-	-			

Preliminary Plans - For Reference Only

ROADWAY SUBSUMMARY - 3

DESIGN AGENCY
Michael Baker INTERNATIONAL

DESIGNER KJM

REVIEWER KGJ 05/22/24

PROJECT ID 82382

SHEET 432 TOTAL 2696

CUY-90-16.28 (CCG3A)

MODEL: Sheet-03 PAPERSIZE: 34x22 (in.) DATE: 3/27/2025 TIME: 8:58:07 PM USER: Alexandria.Summers
pw:\\mb-us-pw.bentley.com:mb-us-pw-03\Documents\Cleveland_OH\01_Projects\ODOT\District12\82382\400-Engineering\Roadway\Sheets\82382_GS001.dgn

REF NO.	SHEET NO.	STATION FROM	STATION TO	SIDE	AREA	606 GUARDRAIL, TYPE MGS	606 ANCHOR ASSEMBLY, MGS TYPE B (MASH 2016)	606 ANCHOR ASSEMBLY, MGS TYPE E (MASH 2016)	606 ANCHOR ASSEMBLY, MGS TYPE T	606 MGS BRIDGE TERMINAL ASSEMBLY, TYPE 1	606 MGS BRIDGE TERMINAL ASSEMBLY, TYPE 2	606 MGS BRIDGE TERMINAL ASSEMBLY, TYPE 2, AS PER PLAN	606 IMPACT ATTENUATOR, TYPE 2 (UNIDIRECTIONAL) (MASH 2016) (50 MPH, 69" WIDE)	606 IMPACT ATTENUATOR, TYPE 2 (UNIDIRECTIONAL) (MASH 2016) (50 MPH, 90" WIDE)	607 FENCE, TYPE CLT	607 FENCE REMOVED AND REBUILT	607 GATE, TYPE CLT	611 MANHOLE ADJUSTED TO GRADE	611 SPECIAL - GAS VALVE BOX ADJUSTED TO GRADE	614 WORK ZONE IMPACT ATTENUATOR, 24" WIDE HAZARDS, (UNIDIRECTIONAL)	622 CONCRETE BARRIER, SINGLE SLOPE, TYPE B1	622 CONCRETE BARRIER, SINGLE SLOPE, TYPE C	622 CONCRETE BARRIER, SINGLE SLOPE, TYPE C, AS PER PLAN	622 CONCRETE BARRIER, SINGLE SLOPE, TYPE C1	622 CONCRETE BARRIER, SINGLE SLOPE, TYPE C1, AS PER PLAN	622 CONCRETE BARRIER, SINGLE SLOPE, TYPE D	622 BARRIER TRANSITION	622 CONCRETE BARRIER END SECTION, TYPE B, AS PER PLAN	622 CONCRETE BARRIER END SECTION, TYPE D	622 CONCRETE BARRIER, END ANCHORAGE, REINFORCED, TYPE B	622 CONCRETE BARRIER, END ANCHORAGE, REINFORCED, TYPE B1	622 CONCRETE BARRIER, END ANCHORAGE, REINFORCED, TYPE C	622 CONCRETE BARRIER, END ANCHORAGE, REINFORCED, TYPE C, AS PER PLAN	622 CONCRETE BARRIER, END ANCHORAGE, REINFORCED, TYPE C1	622 CONCRETE BARRIER, END ANCHORAGE, REINFORCED, TYPE D	622 CONCRETE BARRIER, END ANCHORAGE, REINFORCED, TYPE D, AS PER PLAN	622 CONCRETE BARRIER, END ANCHORAGE, REINFORCED, TYPE D, AS PER PLAN 2	622 PORTABLE BARRIER, UNANCHORED, AS PER PLAN	622 PORTABLE BARRIER, ANCHORED, AS PER PLAN 2			
					SF	FT	EACH	EACH	EACH	EACH	EACH	EACH	EACH	EACH	FT	FT	EACH	EACH	EACH	EACH	FT	FT	FT	FT	FT	FT	EACH	EACH	EACH	EACH	EACH	EACH	EACH	EACH	EACH	EACH	EACH	EACH	FT	FT			
		CEDAR AVE. (CONT.)																																								
U-58	644	402+64.10		LT															1																								
		INTERIM E. 14TH ST. NB																																								
BR-23	650	301+93.16	305+52.54	RT																																							
		E. 14TH ST. NB																																								
BR-24	652	52+50.00	53+00.00	RT																																							
U-59	652	53+97.09		RT														1																								
U-60	654	58+57.86		LT														1																								
U-61	654	58+59.54		RT														1																								
U-62	654	58+62.27		RT														1																								
U-63	654	59+61.04		RT														1																								
U-64	654	59+97.46		RT														1																								
U-65	656	60+35.91		RT														1																								
U-66	656	60+38.74		RT														1																								
U-67	656	60+53.19		RT														1																								
		E. 14TH ST. SB																																								
U-68	663	37+92.95		LT														1																								
U-69	665	40+38.10		LT															1																								
U-70	665	40+42.95		LT														1																								
U-71	665	40+43.86		LT															1																								
U-72	665	40+50.33		LT														1																								
U-73	665	40+63.00		LT														1																								
		E. 18TH ST.																																								
U-74	667	21+12.99		RT														1																								
U-75	667	21+88.76		LT														1																								
U-76	667	21+91.57		LT														1																								
U-77	667	23+53.96		LT														1																								
U-78	669	24+07.03		RT															1																								
U-79	669	24+42.23		LT														1																								
U-80	669	24+42.87		LT														1																								
U-81	669	24+48.65		RT														1																								
U-82	669	24+77.28		RT														1																								
U-83	669	24+78.01		RT														1																								
		CENTRAL AVE. CONNECTOR																																								
BR-25	671	602+00.00	604+25.32	RT																																							
		EX. E. 19TH ST.																																								
BR-26	671	3+13.18	3+30.26	RT																																							
		E. 22ND ST.																																								
U-84	673	29+01.04		LT														1																								
U-85	673	30+86.89		RT															1																								
U-86	673	30+89.47		RT														1																								
U-87	673	31+36.51		RT														1																								
U-88	673	31+58.37		LT														1																								
		RAMP B6A																																								
U-89	675	1806+43.01		RT														1																								
U-90	675	1806+72.70		RT														1																								
TOTALS CARRIED TO SHEET 435						-	-	-	-	-	-	-	-	-	-	-	-	28	5	-	-	-	-	-	-	631	-	-	-	-	-	-	-	3	-	-	-	-			

Preliminary Plans - For Reference Only

ROADWAY SUBSUMMARY - 4

DESIGN AGENCY
Michael Baker INTERNATIONAL

DESIGNER KJM

REVIEWER KGJ 05/22/24

PROJECT ID 82382

SHEET 433 TOTAL 2696

CUY-90-16.28 (CCG3A)

MODEL: Sheet-04 PAPERSIZE: 34x22 (in.) DATE: 3/27/2025 TIME: 8:58:08 PM USER: Alexandria.Summers
pw:\\mb-us-pw.bentley.com:mb-us-pw-03\Documents\Cleveland_OH\01_Projects\ODOT\District12\82382\400-Engineering\Roadway\Sheets\82382_GS001.dgn

REF NO.	SHEET NO.	STATION FROM	STATION TO	SIDE	AREA	606 GUARDRAIL, TYPE MGS	606 ANCHOR ASSEMBLY, MGS TYPE B (MASH 2016)	606 ANCHOR ASSEMBLY, MGS TYPE E (MASH 2016)	606 ANCHOR ASSEMBLY, MGS TYPE T	606 MGS BRIDGE TERMINAL ASSEMBLY, TYPE 1	606 MGS BRIDGE TERMINAL ASSEMBLY, TYPE 2	606 MGS BRIDGE TERMINAL ASSEMBLY, TYPE 2, AS PER PLAN	606 IMPACT ATTENUATOR, TYPE 2 (UNIDIRECTIONAL) (MASH 2016) (50 MPH, 69" WIDE)	606 IMPACT ATTENUATOR, TYPE 2 (UNIDIRECTIONAL) (MASH 2016) (50 MPH, 90" WIDE)	607 FENCE, TYPE CLT	607 FENCE REMOVED AND REBUILT	607 GATE, TYPE CLT	611 MANHOLE ADJUSTED TO GRADE	611 SPECIAL - GAS VALVE BOX ADJUSTED TO GRADE	614 WORK ZONE IMPACT ATTENUATOR, 24" WIDE HAZARDS, (UNIDIRECTIONAL)	622 CONCRETE BARRIER, SINGLE SLOPE, TYPE B1	622 CONCRETE BARRIER, SINGLE SLOPE, TYPE C	622 CONCRETE BARRIER, SINGLE SLOPE, TYPE C, AS PER PLAN	622 CONCRETE BARRIER, SINGLE SLOPE, TYPE C1	622 CONCRETE BARRIER, SINGLE SLOPE, TYPE C1, AS PER PLAN	622 CONCRETE BARRIER, SINGLE SLOPE, TYPE D	622 BARRIER TRANSITION	622 CONCRETE BARRIER END SECTION, TYPE B, AS PER PLAN	622 CONCRETE BARRIER END SECTION, TYPE D	622 CONCRETE BARRIER, END ANCHORAGE, REINFORCED, TYPE B	622 CONCRETE BARRIER, END ANCHORAGE, REINFORCED, TYPE B1	622 CONCRETE BARRIER, END ANCHORAGE, REINFORCED, TYPE C	622 CONCRETE BARRIER, END ANCHORAGE, REINFORCED, TYPE C, AS PER PLAN	622 CONCRETE BARRIER, END ANCHORAGE, REINFORCED, TYPE C1	622 CONCRETE BARRIER, END ANCHORAGE, REINFORCED, TYPE D	622 CONCRETE BARRIER, END ANCHORAGE, REINFORCED, TYPE D, AS PER PLAN	622 CONCRETE BARRIER, END ANCHORAGE, REINFORCED, TYPE D, AS PER PLAN 2	622 PORTABLE BARRIER, UNANCHORED, AS PER PLAN	622 PORTABLE BARRIER, ANCHORED, AS PER PLAN 2			
					SF	FT	EACH	EACH	EACH	EACH	EACH	EACH	EACH	EACH	FT	FT	EACH	EACH	EACH	EACH	FT	FT	FT	FT	FT	FT	EACH	EACH	EACH	EACH	EACH	EACH	EACH	EACH	EACH	EACH	EACH	EACH	FT	FT			
		RAMP B6A (CONT.)																																								
U-91	675	1806+80.20		LT														1																									
		E. 22ND ST.																																								
U-92	675	32+48.30		LT															1																									
U-93	675	36+56.74		RT															1																									
U-94	675	36+68.68		RT														1																									
U-95	677	37+19.78		LT															1																									
U-96	677	37+22.15		LT															1																									
		RAMP A1																																								
GR-33	1448	307+08.71	311+05.80	LT		350.0		1	1																																	
		RAMP A2																																								
F-1	2383	405+73.15	405+76.93	LT												55																											
F-2	2383	405+73.15	409+49.67	LT											24	360																											
		RAMP IH5																																								
F-3	2383	1077+51.87	1081+07.92	RT											314																											
		RAMP H6																																								
F-4	2383	1180+78.54	1181+67.90	RT											85																											
F-5	2383	1181+67.90	1186+72.94	RT											460																											
F-6	2383	1186+72.94	1190+64.00	RT											363																											
		COMMUNITY COLLEGE AVE.																																								
F-7	2383	53+21.18	57+82.49	LT											464																											
		RAMP A3																																								
F-8	2384	581+47.83	581+52.14	LT											48																											
		RAMP H5																																								
F-9	2384	990+06.35	992+11.77	RT											204																											
		CARNEGIE AVE.																																								
F-10	2384	37+64.13	38+18.84	RT											54																											
		CENTRAL AVE. CONNECTOR																																								
F-11	2384	600+40.65	601+84.36	LT											401		1																											
		RAMP A1																																								
F-12	2385	307+10.06	311+14.00	LT											391																											
F-13	2385	310+40.58	311+40.00	RT											123																											
		RAMP B6A																																								
F-14	2385	1801+51.01	1802+18.10	RT											64																											
F-15	2385	1802+69.94	1806+46.85	RT											365																											
		CARNEGIE AVE.																																								
F-16	2385	49+95.24	50+86.04	RT											99																											
F-17	2385	54+92.17	54+98.82	RT											20																											
		CENTRAL AVE. CONNECTOR																																								
F-18	2385	603+37.39	604+00.10	LT											63																											
		CARNEGIE AVE.																																								
F-19	2386	59+52.23	60+14.53	LT											120																											
TOTALS CARRIED TO SHEET 435						350.0	-	1	1	-	-	-	-	-	3662	415	1	2	4	-	-	-	-	-	-	-	-	-	-	-	-	-	-	-	-	-	-	-	-			

Preliminary Plans - For Reference Only

ROADWAY SUBSUMMARY - 5

DESIGN AGENCY
Michael Baker INTERNATIONAL

DESIGNER KJM
REVIEWER KGJ 05/22/24
PROJECT ID 82382
SHEET 434 TOTAL 2696

CUY-90-16.28 (CCG3A)

MODEL: Sheet-05 PAPERSIZE: 34x22 (in.) DATE: 3/27/2025 TIME: 8:58:09 PM USER: Alexandria.Summers
pw:\\mb-us-pw.bentley.com:mb-us-pw-03\Documents\Cleveland_OH\01_Projects\ODOT\District12\82382\400-Engineering\Roadway\Sheets\82382_GS001.dgn

REF NO.	SHEET NO.	STATION FROM	STATION TO	SIDE	AREA	606 GUARDRAIL, TYPE MGS	606 ANCHOR ASSEMBLY, MGS TYPE B (MASH 2016)	606 ANCHOR ASSEMBLY, MGS TYPE E (MASH 2016)	606 ANCHOR ASSEMBLY, MGS TYPE T	606 MGS BRIDGE TERMINAL ASSEMBLY, TYPE 1	606 MGS BRIDGE TERMINAL ASSEMBLY, TYPE 2	606 MGS BRIDGE TERMINAL ASSEMBLY, TYPE 2, AS PER PLAN	606 IMPACT ATTENUATOR, TYPE 2 (UNIDIRECTIONAL) (MASH 2016) (50 MPH, 69" WIDE)	606 IMPACT ATTENUATOR, TYPE 2 (UNIDIRECTIONAL) (MASH 2016) (50 MPH, 90" WIDE)	607 FENCE, TYPE CLT	607 FENCE REMOVED AND REBUILT	607 GATE, TYPE CLT	611 MANHOLE ADJUSTED TO GRADE	611 SPECIAL - GAS VALVE BOX ADJUSTED TO GRADE	614 WORK ZONE IMPACT ATTENUATOR, 24" WIDE HAZARDS, (UNIDIRECTIONAL)	622 CONCRETE BARRIER, SINGLE SLOPE, TYPE B1	622 CONCRETE BARRIER, SINGLE SLOPE, TYPE C	622 CONCRETE BARRIER, SINGLE SLOPE, TYPE C, AS PER PLAN	622 CONCRETE BARRIER, SINGLE SLOPE, TYPE C1	622 CONCRETE BARRIER, SINGLE SLOPE, TYPE C1, AS PER PLAN	622 CONCRETE BARRIER, SINGLE SLOPE, TYPE D	622 BARRIER TRANSITION	622 CONCRETE BARRIER END SECTION, TYPE B, AS PER PLAN	622 CONCRETE BARRIER END SECTION, TYPE D	622 CONCRETE BARRIER, END ANCHORAGE, REINFORCED, TYPE B	622 CONCRETE BARRIER, END ANCHORAGE, REINFORCED, TYPE B1	622 CONCRETE BARRIER, END ANCHORAGE, REINFORCED, TYPE C	622 CONCRETE BARRIER, END ANCHORAGE, REINFORCED, TYPE C, AS PER PLAN	622 CONCRETE BARRIER, END ANCHORAGE, REINFORCED, TYPE C1	622 CONCRETE BARRIER, END ANCHORAGE, REINFORCED, TYPE D	622 CONCRETE BARRIER, END ANCHORAGE, REINFORCED, TYPE D, AS PER PLAN	622 CONCRETE BARRIER, END ANCHORAGE, REINFORCED, TYPE D, AS PER PLAN 2	622 PORTABLE BARRIER, UNANCHORED, AS PER PLAN	622 PORTABLE BARRIER, ANCHORED, AS PER PLAN 2			
					SF	FT	EACH	EACH	EACH	EACH	EACH	EACH	EACH	EACH	EACH	FT	FT	EACH	EACH	EACH	EACH	FT	FT	FT	FT	FT	FT	EACH	EACH	EACH	EACH	EACH	EACH	EACH	EACH	EACH	EACH	EACH	FT	FT			
		CARNEGIE AVE. (CONT.)																																								
F-20	2386	63+35.49	64+42.65	RT											106																												
F-21	2386	65+83.43	66+71.01	LT											100																												
		MIDTOWN CONNECTOR																																								
F-22	2386	506+82.32	513+98.17	LT											609		1																										
TOTALS FROM THIS SHEET					-	-	-	-	-	-	-	-	-	-	815	-	1	-	-	-	-	-	-	-	-	-	-	-	-	-	-	-	-	-	-	-	-	-	-	-	-	-
TOTALS FROM SHEET 430					5262.5	1	7	6	9	5	1	1	-	-	-	-	-	1	1660	307	108	3306	31	587	1	-	-	-	17	3	1	27	14	2	1	440	190			
TOTALS FROM SHEET 431					3047.2	3	2	7	4	4	-	-	3	-	-	-	13	1	1	-	-	-	60	-	854	1	1	2	1	-	-	-	-	13	-	-	710	-			
TOTALS FROM SHEET 432					112.5	1	-	1	-	-	-	-	-	-	-	-	30	13	-	-	-	-	-	-	-	-	-	-	-	-	-	-	-	-	-	-	-	-			
TOTALS FROM SHEET 433					-	-	-	-	-	-	-	-	-	-	-	-	28	5	-	-	-	-	-	-	631	-	-	-	-	-	-	-	-	3	-	-	-	-			
TOTALS FROM SHEET 434					350.0	-	1	1	-	-	-	-	-	-	3662	415	1	2	4	-	-	-	-	-	-	-	-	-	-	-	-	-	-	-	-	-	-	-			
TOTALS CARRIED TO GENERAL SUMMARY					8772.2	5	10	15	13	9	1	1	3	4477	415	2	73	23	2	1660	307	108	3366	31	2072	2	1	2	1	17	3	1	27	30	2	1	1150	190			

Preliminary Plans - Not for Reference Only

ROADWAY SUBSUMMARY - 6

CUY-90-16.28 (CCG3A)

MODEL: Sheet-06 PAPERSIZE: 34x22 (in.) DATE: 3/27/2025 TIME: 8:58:10 PM USER: Alexandria.Summers
pw:\\mb-us-pw.bentley.com:mb-us-pw-03\Documents\Cleveland_OH\01_Projects\ODOT\District12\82382\400-Engineering\Roadway\Sheets\82382_GS001.dgn

DESIGN AGENCY
Michael Baker INTERNATIONAL

DESIGNER KJM
REVIEWER KGJ 05/22/24
PROJECT ID 82382
SHEET 435 TOTAL 2696

REF NO.	SHEET NO.	STATION FROM		STATION TO		SIDE	CFN	602 CONCRETE MASONRY CY	611 12" CONDUIT, TYPE C FT	611 12" CONDUIT, TYPE D FT	611 15" CONDUIT, TYPE B FT	611 15" CONDUIT, TYPE B, 706.02, CLASS V FT	611 15" CONDUIT, TYPE B, AS PER PLAN FT	611 15" CONDUIT, TYPE C FT	611 15" CONDUIT, TYPE C, AS PER PLAN FT	611 15" CONDUIT, TYPE F, 707.05 TYPE C, 707.21, OR 707.33 FT	611 18" CONDUIT, TYPE B FT	611 18" CONDUIT, TYPE B, 707.35 FT	611 18" CONDUIT, TYPE C FT	611 18" CONDUIT, TYPE F, 707.05 TYPE C, 707.21, OR 707.33 FT	611 21" CONDUIT, TYPE B FT	611 24" CONDUIT, TYPE B FT	611 24" CONDUIT, TYPE B, 706.02, CLASS V FT	611 24" CONDUIT, TYPE C FT	611 27" CONDUIT, TYPE B FT	611 30" CONDUIT, TYPE B FT	611 30" CONDUIT, TYPE C FT	611 34" X 53" CONDUIT, TYPE B, 706.04 FT	611 CONDUIT, BORED OR JACKED, 15" TYPE B FT	611 CATCH BASIN, NO. 3 EACH	611 CATCH BASIN, NO. 3A EACH	611 CATCH BASIN, NO. 6 EACH	611 CATCH BASIN, NO. 6, AS PER PLAN EACH	611 CATCH BASIN, NO. 6, AS PER PLAN 2 EACH	611 CATCH BASIN, NO. 6, AS PER PLAN 3 EACH	611 CATCH BASIN, NO. 8 EACH
D-190	1093	I.R. 90 EB	176+10.00	I.R. 90 EB	176+85.00	LT	1996126				75																								
D-191	1093	I.R. 90 EB	176+85.00	I.R. 90 EB	177+70.00	LT	1996139				85																								
D-194	1093	I.R. 90 EB	177+70.00	I.R. 90 EB	177+62.25	LT	1996141											19																
D-193	1094	I.R. 90 EB	180+59.49	RAMP IB5	1709+20.73	LT	1996154	0.3					208																			1			
D-202C	1094	I.R. 90 EB	182+00.00	I.R. 90 EB	184+00.00	LT	1996148						197																						
D-202B	1094	I.R. 90 EB	184+00.00	I.R. 90 EB	185+46.73	LT	1996155				145																								
D-638	1094	RAMP A3	581+93.16	RAMP A3	582+79.64	LT										96																		1
D-670	1094	RAMP A3	582+79.64	RAMP A3	582+80.33	LT								11																				
D-605	1094	RAMP A3	584+25.00	RAMP A3	582+79.64	RT/LT	1996156				176																								
D-203	1095	I.R. 90 EB	185+25.00	I.R. 90 EB	186+49.48	RT														138														
D-202	1095	I.R. 90 EB	185+46.73	I.R. 90 EB	185+25.00	LT/RT	1996186										102																		
D-264A	1095	I.R. 90 EB	189+25.00	I.R. 90 WB	191+34.27	LT	1996187						99																						
D-201	1095	I.R. 90 WB	187+07.78	I.R. 90 EB	185+46.73	RT/LT	1996185				12																								
D-200	1095	I.R. 90 WB	187+07.78	I.R. 90 WB	187+07.78	LT/RT	1996184				69																								
D-261	1095	I.R. 90 WB	190+47.00	I.R. 90 WB	191+34.00	LT	1996183						89																			1			
D-266	1095	I.R. 90 WB	191+34.00	I.R. 90 WB	191+85.00	LT										51																		
D-643	1095	RAMP A1	302+10.99	E. 18TH ST.	21+03.02	RT								31																				
D-642	1095	RAMP A1	302+12.63	E. 18TH ST.	21+03.02	LT/RT								75																				
D-639	1095	RAMP A2	429+03.12	E. 14TH ST. SB	36+85.93	RT/LT								16																				
D-640	1095	RAMP A2	429+12.47	E. 14TH ST. SB	36+85.93	RT/LT								16																				
D-607	1095	RAMP A3	586+74.21	RAMP A3	585+77.14	RT/LT	1996169				114																								
D-608	1095	RAMP A3	587+32.53	RAMP A3	586+74.21	LT/RT	1996170				94																								
D-636	1095	RAMP H5	990+85.00	E. 14TH ST. NB	54+33.59	LT/RT								126																				1
D-641	1095	E. 14TH ST. SB	36+85.93	E. 14TH ST. SB	34+41.31	LT								49																				
D-644	1095	E. 18TH ST.	21+03.02	E. 14TH ST. SB	36+85.93	RT/LT					147																								
D-271A	1096	I.R. 90 EB	193+52.00	I.R. 90 WB	195+15.00	LT/RT	1996194				11																								
D-290	1096	I.R. 90 EB	194+52.58			RT																													
D-262	1096	I.R. 90 WB	191+85.00	I.R. 90 WB	193+57.00	LT	1996192						173																						
D-263	1096	I.R. 90 WB	193+57.00	I.R. 90 WB	193+57.48	LT	1996193						8																				1		
D-271	1096	I.R. 90 WB	195+15.00	I.R. 90 WB	195+19.00	RT/LT	1996199										63																		
D-274	1096	I.R. 90 WB	195+19.00	I.R. 90 WB	193+57.00	LT	1996197										164																	1	
D-272	1096	RAMP A2	435+67.00	I.R. 90 WB	195+19.00	LT	1996198				41																								
D-464	1096	RAMP B6A	1802+75.00	RAMP B6A	1803+00.00	RT		0.3								38																1			
D-530	1096	RAMP H5	991+75.00	RAMP H5	990+96.57	RT								77																				
D-281	1096	RAMP H5	995+08.00	I.R. 90 EB	193+29.00	LT/RT	1996200				17																						1		
D-270	1096	RAMP H5	995+27.00	RAMP H5	995+08.00	RT/LT	1996196				49																					1			
D-269	1096	RAMP H5	995+62.00	RAMP H5	995+27.00	RT	1996195				34																					1			
D-282	1097	I.R. 90 EB	194+97.00	I.R. 90 EB	195+00.00	RT	1996300				47																						1		
D-214	1097	I.R. 90 EB	195+00.00	I.R. 90 EB	197+50.00	RT								244																				
D-215	1097	I.R. 90 EB	197+50.00	I.R. 90 EB	198+80.00	RT	1996310				127																								
D-212	1097	I.R. 90 EB	198+80.00	I.R. 90 EB	198+80.00	RT	1996303																10									1			
TOTALS CARRIED TO SHEET 442								0.6	-	-	1243	-	774	645	51	134	329	19	-	138	-	10	-	-	-	-	-	-	-	3	1	3	-	2	1	2

Preliminary Plans - Not For Reference Only

ODOT DRAINAGE SUBSUMMARY - 1L

CUY-90-16.28 (CCG3A)

MODEL: Sheet-01 PAPERSIZE: 34x22 (in.) DATE: 3/27/2025 TIME: 8:58:14 PM USER: Alexandria.Summers
pw:\\mb-us-pw.bentley.com:mb-us-pw-03\Documents\Cleveland_OH01_Projects\ODOT\District12\82382\400-Engineering\Drainage\Sheets\82382_DS001.dgn

DESIGN AGENCY
Michael Baker INTERNATIONAL

DESIGNER MJB

REVIEWER KGJ 05/22/24

PROJECT ID 82382

SHEET 436 TOTAL 2696

REF NO.	SHEET NO.	STATION FROM		STATION TO		SIDE	CFN	611 CATCH BASIN, NO. 8, AS PER PLAN 2 EACH	611 CATCH BASIN, NO. 2-2A EACH	611 CATCH BASIN, NO. 2-2B EACH	611 CATCH BASIN, NO. 2-2B, AS PER PLAN 2 EACH	611 CATCH BASIN, NO. 2-2C EACH	611 CATCH BASIN, NO. 2-3, AS PER PLAN 2 EACH	611 INLET, NO. 3 FOR SINGLE SLOPE BARRIER, TYPE B1 EACH	611 INLET, NO. 3 FOR SINGLE SLOPE BARRIER, TYPE C EACH	611 INLET, NO. 3 FOR SINGLE SLOPE BARRIER, TYPE C1 EACH	611 INLET, NO. 3 FOR SINGLE SLOPE BARRIER, TYPE C1, AS PER PLAN EACH	611 INLET, NO. 3 FOR SINGLE SLOPE BARRIER, TYPE D EACH	611 INLET, NO. 3 FOR SINGLE SLOPE BARRIER, TYPE D, AS PER PLAN EACH	611 INLET, NO. 3 FOR SINGLE SLOPE BARRIER, TYPE D, AS PER PLAN 2 EACH	611 MANHOLE, NO. 3 EACH	611 MANHOLE, NO. 3, AS PER PLAN 2 EACH	611 MANHOLE, NO. 3, AS PER PLAN 3 EACH	611 MANHOLE, NO. 3 WITH 108" BASE I.D. AND 12" WEIR EACH	611 MANHOLE ADJUSTED TO GRADE EACH	611 MANHOLE RECONSTRUCTED TO GRADE EACH	611 MANHOLE RECONSTRUCTED TO GRADE, AS PER PLAN 2 EACH	611 DRAINAGE STRUCTURE, MISC.: FLOW RESTRICTOR OUTLET EACH	638 30" STEEL PIPE ENCASEMENT, OPEN CUT, AS PER PLAN FT	839 TRENCH DRAIN, TYPE A WITH STANDARD GRATE FT	895 MANUFACTURED WATER QUALITY STRUCTURE, TYPE 4 EACH
D-190	1093	I.R. 90 EB	176+10.00	I.R. 90 EB	176+85.00	LT	1996126							1																
D-191	1093	I.R. 90 EB	176+85.00	I.R. 90 EB	177+70.00	LT	1996139							1																
D-194	1093	I.R. 90 EB	177+70.00	I.R. 90 EB	177+62.25	LT	1996141							1																
D-193	1094	I.R. 90 EB	180+59.49	RAMP IB5	1709+20.73	LT	1996154																							
D-202C	1094	I.R. 90 EB	182+00.00	I.R. 90 EB	184+00.00	LT	1996148							1																
D-202B	1094	I.R. 90 EB	184+00.00	I.R. 90 EB	185+46.73	LT	1996155							1																
D-638	1094	RAMP A3	581+93.16	RAMP A3	582+79.64	LT																								
D-670	1094	RAMP A3	582+79.64	RAMP A3	582+80.33	LT														1										
D-605	1094	RAMP A3	584+25.00	RAMP A3	582+79.64	RT/LT	1996156			1																				
D-203	1095	I.R. 90 EB	185+25.00	I.R. 90 EB	186+49.48	RT		1																						
D-202	1095	I.R. 90 EB	185+46.73	I.R. 90 EB	185+25.00	LT/RT	1996186							1																
D-264A	1095	I.R. 90 EB	189+25.00	I.R. 90 WB	191+34.27	LT	1996187										1													
D-201	1095	I.R. 90 WB	187+07.78	I.R. 90 EB	185+46.73	RT/LT	1996185							1																
D-200	1095	I.R. 90 WB	187+07.78	I.R. 90 WB	187+07.78	LT/RT	1996184											1												
D-261	1095	I.R. 90 WB	190+47.00	I.R. 90 WB	191+34.00	LT	1996183																							
D-266	1095	I.R. 90 WB	191+34.00	I.R. 90 WB	191+85.00	LT														1										
D-643	1095	RAMP A1	302+10.99	E. 18TH ST.	21+03.02	RT						1																		
D-642	1095	RAMP A1	302+12.63	E. 18TH ST.	21+03.02	LT/RT						1																		
D-639	1095	RAMP A2	429+03.12	E. 14TH ST. SB	36+85.93	RT/LT						1																		
D-640	1095	RAMP A2	429+12.47	E. 14TH ST. SB	36+85.93	RT/LT						1																		
D-607	1095	RAMP A3	586+74.21	RAMP A3	585+77.14	RT/LT	1996169				1																			
D-608	1095	RAMP A3	587+32.53	RAMP A3	586+74.21	LT/RT	1996170			1																				
D-636	1095	RAMP H5	990+85.00	E. 14TH ST. NB	54+33.59	LT/RT																								
D-641	1095	E. 14TH ST. SB	36+85.93	E. 14TH ST. SB	34+41.31	LT															1									
D-644	1095	E. 18TH ST.	21+03.02	E. 14TH ST. SB	36+85.93	RT/LT														1										
D-271A	1096	I.R. 90 EB	193+52.00	I.R. 90 WB	195+15.00	LT/RT	1996194										1													
D-290	1096	I.R. 90 EB	194+52.58			RT																		1						
D-262	1096	I.R. 90 WB	191+85.00	I.R. 90 WB	193+57.00	LT	1996192						1																	
D-263	1096	I.R. 90 WB	193+57.00	I.R. 90 WB	193+57.48	LT	1996193																							
D-271	1096	I.R. 90 WB	195+15.00	I.R. 90 WB	195+19.00	RT/LT	1996199										1													
D-274	1096	I.R. 90 WB	195+19.00	I.R. 90 WB	193+57.00	LT	1996197																						162	
D-272	1096	RAMP A2	435+67.00	I.R. 90 WB	195+19.00	LT	1996198											1												
D-464	1096	RAMP B6A	1802+75.00	RAMP B6A	1803+00.00	RT																								
D-530	1096	RAMP H5	991+75.00	RAMP H5	990+96.57	RT			1																					
D-281	1096	RAMP H5	995+08.00	I.R. 90 EB	193+29.00	LT/RT	1996200																						84	
D-270	1096	RAMP H5	995+27.00	RAMP H5	995+08.00	RT/LT	1996196																							
D-269	1096	RAMP H5	995+62.00	RAMP H5	995+27.00	RT	1996195																							
D-282	1097	I.R. 90 EB	194+97.00	I.R. 90 EB	195+00.00	RT	1996300																						167	
D-214	1097	I.R. 90 EB	195+00.00	I.R. 90 EB	197+50.00	RT														1										
D-215	1097	I.R. 90 EB	197+50.00	I.R. 90 EB	198+80.00	RT	1996310													1										
D-212	1097	I.R. 90 EB	198+80.00	I.R. 90 EB	198+80.00	RT	1996303																							
TOTALS CARRIED TO SHEET 443								1	1	2	1	4	1	7	-	-	3	2	-	-	4	2	-	-	-	1	-	-	-	413	-

Preliminary Plans - For Reference Only

ODOT DRAINAGE SUBSUMMARY - 1R

DESIGN AGENCY
Michael Baker INTERNATIONAL

DESIGNER MJB
REVIEWER KGJ 05/22/24
PROJECT ID 82382
SHEET 437 TOTAL 2696

CUY-90-16.28 (CCG3A)

MODEL: Sheet01 PAPERSIZE: 34x22 (in.) DATE: 3/27/2025 TIME: 8:58:18 PM USER: Alexandria.Summers
pw:\\mb-us-pw.bentley.com:mb-us-pw-03\Documents\Cleveland_OH01_Projects\ODOT\District12\82382\400-Engineering\Drainage\Sheets\82382_DS051.dgn

REF NO.	SHEET NO.	STATION FROM		STATION TO		SIDE	CFN	602 CONCRETE MASONRY CY	611 12" CONDUIT, TYPE C FT	611 12" CONDUIT, TYPE D FT	611 15" CONDUIT, TYPE B FT	611 15" CONDUIT, TYPE B, 706.02, CLASS V FT	611 15" CONDUIT, TYPE B, AS PER PLAN FT	611 15" CONDUIT, TYPE C FT	611 15" CONDUIT, TYPE C, AS PER PLAN FT	611 15" CONDUIT, TYPE F, 707.05 TYPE C, 707.21, OR 707.33 FT	611 18" CONDUIT, TYPE B FT	611 18" CONDUIT, TYPE B, 707.35 FT	611 18" CONDUIT, TYPE C FT	611 18" CONDUIT, TYPE F, 707.05 TYPE C, 707.21, OR 707.33 FT	611 21" CONDUIT, TYPE B FT	611 24" CONDUIT, TYPE B FT	611 24" CONDUIT, TYPE B, 706.02, CLASS V FT	611 24" CONDUIT, TYPE C FT	611 27" CONDUIT, TYPE B FT	611 30" CONDUIT, TYPE B FT	611 30" CONDUIT, TYPE C FT	611 34" X 53" CONDUIT, TYPE B, 706.04 FT	611 CONDUIT, BORED OR JACKED, 15" TYPE B FT	611 CATCH BASIN, NO. 3 EACH	611 CATCH BASIN, NO. 3A EACH	611 CATCH BASIN, NO. 6 EACH	611 CATCH BASIN, NO. 6, AS PER PLAN EACH	611 CATCH BASIN, NO. 6, AS PER PLAN 2 EACH	611 CATCH BASIN, NO. 6, AS PER PLAN 3 EACH	611 CATCH BASIN, NO. 8 EACH
D-213	1097	I.R. 90 EB	198+80.00	I.R. 90 EB	199+05.00	RT	1996304															24														
D-216	1097	I.R. 90 EB	199+05.00	INTERIM I.R. 90 EB	3000+25.00	RT	1996305															80														
D-211	1097	I.R. 90 EB	199+18.00	I.R. 90 EB	198+80.00	LT/RT	1996309										91																		
D-219	1097	INTERIM I.R. 90 EB	3000+20.00	INTERIM I.R. 90 EB	3000+25.00	RT								47																						
D-217	1097	INTERIM I.R. 90 EB	3000+25.00	INTERIM I.R. 90 EB	3001+29.82	RT	1996311															105														
D-210	1097	I.R. 90 WB	201+00.00	I.R. 90 EB	199+18.00	RT/LT	1996302				11																									
D-209	1097	I.R. 90 WB	201+00.00	I.R. 90 WB	201+00.00	LT/RT	1996308				82																							1			
D-460	1097	RAMP B6	1620+36.08	RAMP B6A	1806+14.32	LT	1996301				86																							1			
D-295	1097	RAMP B6A	1803+85.86	RAMP B6A		RT																														
D-463	1097	RAMP B6A	1803+99.98	RAMP B6A	1803+85.86	RT								14																						
D-461	1097	RAMP B6A	1805+73.59	RAMP B6A	1806+14.32	LT								49																						1
D-220	1098	INTERIM I.R. 90 EB	3001+29.00	INTERIM I.R. 90 EB	3001+29.82	LT/RT	1996306				91																									
D-218	1098	INTERIM I.R. 90 EB	3001+29.82	INTERIM I.R. 90 EB	3001+75.00	RT		0.4																	46										
D-230	1098	INTERIM I.R. 90 WB	4000+72.00	INTERIM I.R. 90 WB	4001+25.00	LT								54																						
D-231	1098	INTERIM I.R. 90 WB	4001+25.00	INTERIM I.R. 90 WB	4003+00.00	LT								174																						
D-251	1098	INTERIM I.R. 90 WB	4003+00.00	INTERIM I.R. 90 WB	4004+00.00	LT								98																						
D-250	1098	INTERIM I.R. 90 WB	4004+00.00	INTERIM I.R. 90 WB	4004+00.00	LT								9																				1		
D-232	1098	INTERIM I.R. 90 WB	4004+00.00	INTERIM I.R. 90 WB	4005+97.00	LT						193																								
D-236	1099	INTERIM I.R. 90 EB	3005+97.00	INTERIM I.R. 90 EB	3006+29.00	LT	1996338				32																									
D-237	1099	INTERIM I.R. 90 EB	3006+29.00	INTERIM I.R. 90 EB	3007+42.00	LT	1996339				111																									
D-238	1099	INTERIM I.R. 90 EB	3007+42.00	INTERIM I.R. 90 EB	3008+50.00	LT	1996348										62																		
D-239	1099	INTERIM I.R. 90 EB	3008+50.00	INTERIM I.R. 90 EB	3011+00.00	LT	1996340															292														
DO-1	1099	INTERIM I.R. 90 EB	3010+42.00	INTERIM I.R. 90 EB	3012+72.13	RT		1.3						248																						
DO-2	1099	INTERIM I.R. 90 EB	3010+43.00	INTERIM I.R. 90 EB	3011+00.00	RT/LT	1996349										120																		
D-233	1099	INTERIM I.R. 90 WB	4005+97.00	INTERIM I.R. 90 WB	4006+58.00	LT	1996346																	60												
D-234	1099	INTERIM I.R. 90 WB	4006+58.00	INTERIM I.R. 90 WB	4007+26.00	LT	1996336																	66												
D-235	1099	INTERIM I.R. 90 WB	4007+26.00	INTERIM I.R. 90 WB	4008+25.00	LT	1996337																	99												
D-246	1099	INTERIM I.R. 90 WB	4008+25.00	INTERIM I.R. 90 WB	4009+00.00	LT	1996347															75														
D-240	1099	INTERIM I.R. 90 WB	4009+00.00	INTERIM I.R. 90 WB	4009+00.00	LT								10																					1	
D-248	1099	INTERIM I.R. 90 WB	4009+00.00	INTERIM I.R. 90 WB	4009+25.00	LT																										25				
D-252	1099	INTERIM I.R. 90 WB	4009+25.00	INTERIM I.R. 90 WB	4011+00.00	LT																										172				
D-242A	1100	EX. I.R. 90	102+08.44			LT																														
D-249	1100	INTERIM I.R. 90 EB	3011+00.00	INTERIM I.R. 90 EB	3012+88.00	LT	1996353															187														
D-245	1100	INTERIM I.R. 90 EB	3012+72.13	INTERIM I.R. 90 EB	3012+88.00	RT/LT	1996355		5														61													
D-241	1100	INTERIM I.R. 90 EB	3012+88.00	INTERIM I.R. 90 WB	4012+50.00	LT	1996354																			65										
D-242	1100	INTERIM I.R. 90 WB	4011+00.00	INTERIM I.R. 90 WB	4012+50.00	LT	1996350																				147									
D-243	1100	INTERIM I.R. 90 WB	4012+50.00	INTERIM I.R. 90 WB	4015+46.28	LT	1996351																					292								
D-244A	1100	INTERIM I.R. 90 WB	4015+45.19	INTERIM I.R. 90 WB	4015+46.28	LT	1996356				16																									
D-244	1100	INTERIM I.R. 90 WB	4015+46.28	EX. I.R. 90	102+08.44	LT	1996352																					180								
D-306	1103	RAMP A1	307+25.00	RAMP A1	306+67.00	LT								58																						
D-305	1103	RAMP A1	307+25.00	RAMP A1	307+25.00	LT	1996374				10																									
D-304	1103	RAMP A1	308+33.50	RAMP A1	307+25.00	LT	1996373				109																								1		
D-303	1103	RAMP A1	308+78.00	RAMP A1	308+90.00	RT/LT	1996375				27																									
TOTALS CARRIED TO SHEET 442								1.7	5	-	575	193	-	761	-	-	273	-	-	-	479	345	225	46	65	147	197	472	-	2	2	1	1	-	-	1

Preliminary Plans - Not For Reference Only

ODOT DRAINAGE SUBSUMMARY - 2L

CUY-90-16.28 (CCG3A)

MODEL: Sheet-02 PAPERSIZE: 34x22 (in.) DATE: 3/27/2025 TIME: 8:58:22 PM USER: Alexandria.Summers
pw:\\mb-us-pw.bentley.com:mb-us-pw-03\Documents\Cleveland_OH01_Projects\ODOT\District12\82382\400-Engineering\Drainage\Sheets\82382_DS001.dgn

DESIGN AGENCY
Michael Baker INTERNATIONAL

DESIGNER MJB
REVIEWER KGJ 05/22/24
PROJECT ID 82382
SHEET 438 TOTAL 2696

REF NO.	SHEET NO.	STATION FROM		STATION TO		SIDE	CFN	611 CATCH BASIN, NO. 8, AS PER PLAN 2 EACH	611 CATCH BASIN, NO. 2-2A EACH	611 CATCH BASIN, NO. 2-2B EACH	611 CATCH BASIN, NO. 2-2B, AS PER PLAN 2 EACH	611 CATCH BASIN, NO. 2-2C EACH	611 CATCH BASIN, NO. 2-3, AS PER PLAN 2 EACH	611 INLET, NO. 3 FOR SINGLE SLOPE BARRIER, TYPE B1 EACH	611 INLET, NO. 3 FOR SINGLE SLOPE BARRIER, TYPE C EACH	611 INLET, NO. 3 FOR SINGLE SLOPE BARRIER, TYPE C1 EACH	611 INLET, NO. 3 FOR SINGLE SLOPE BARRIER, TYPE C1, AS PER PLAN EACH	611 INLET, NO. 3 FOR SINGLE SLOPE BARRIER, TYPE D EACH	611 INLET, NO. 3 FOR SINGLE SLOPE BARRIER, TYPE D, AS PER PLAN EACH	611 INLET, NO. 3 FOR SINGLE SLOPE BARRIER, TYPE D, AS PER PLAN 2 EACH	611 MANHOLE, NO. 3 EACH	611 MANHOLE, NO. 3, AS PER PLAN 2 EACH	611 MANHOLE, NO. 3, AS PER PLAN 3 EACH	611 MANHOLE, NO. 3 WITH 108" BASE I.D. AND 12" WEIR EACH	611 MANHOLE ADJUSTED TO GRADE EACH	611 MANHOLE RECONSTRUCTED TO GRADE EACH	611 MANHOLE RECONSTRUCTED TO GRADE, AS PER PLAN 2 EACH	611 DRAINAGE STRUCTURE, MISC.: FLOW RESTRICTOR OUTLET EACH	638 30" STEEL PIPE ENCASEMENT, OPEN CUT, AS PER PLAN FT	839 TRENCH DRAIN, TYPE A WITH STANDARD GRATE FT	895 MANUFACTURED WATER QUALITY STRUCTURE, TYPE 4 EACH
D-213	1097	I.R. 90 EB	198+80.00	I.R. 90 EB	199+05.00	RT	1996304													1										
D-216	1097	I.R. 90 EB	199+05.00	INTERIM I.R. 90 EB	3000+25.00	RT	1996305																1							1
D-211	1097	I.R. 90 EB	199+18.00	I.R. 90 EB	198+80.00	LT/RT	1996309										1													
D-219	1097	INTERIM I.R. 90 EB	3000+20.00	INTERIM I.R. 90 EB	3000+25.00	RT				1																				
D-217	1097	INTERIM I.R. 90 EB	3000+25.00	INTERIM I.R. 90 EB	3001+29.82	RT	1996311													1										
D-210	1097	I.R. 90 WB	201+00.00	I.R. 90 EB	199+18.00	RT/LT	1996302										1													
D-209	1097	I.R. 90 WB	201+00.00	I.R. 90 WB	201+00.00	LT/RT	1996308																							
D-460	1097	RAMP B6	1620+36.08	RAMP B6A	1806+14.32	LT	1996301																							
D-295	1097	RAMP B6A	1803+85.86	RAMP B6A		RT																		1						
D-463	1097	RAMP B6A	1803+99.98	RAMP B6A	1803+85.86	RT		1																						
D-461	1097	RAMP B6A	1805+73.59	RAMP B6A	1806+14.32	LT																								
D-220	1098	INTERIM I.R. 90 EB	3001+29.00	INTERIM I.R. 90 EB	3001+29.82	LT/RT	1996306																							
D-218	1098	INTERIM I.R. 90 EB	3001+29.82	INTERIM I.R. 90 EB	3001+75.00	RT														1										
D-230	1098	INTERIM I.R. 90 WB	4000+72.00	INTERIM I.R. 90 WB	4001+25.00	LT				1																				
D-231	1098	INTERIM I.R. 90 WB	4001+25.00	INTERIM I.R. 90 WB	4003+00.00	LT				1																				
D-251	1098	INTERIM I.R. 90 WB	4003+00.00	INTERIM I.R. 90 WB	4004+00.00	LT														1										
D-250	1098	INTERIM I.R. 90 WB	4004+00.00	INTERIM I.R. 90 WB	4004+00.00	LT																								
D-232	1098	INTERIM I.R. 90 WB	4004+00.00	INTERIM I.R. 90 WB	4005+97.00	LT														1										
D-236	1099	INTERIM I.R. 90 EB	3005+97.00	INTERIM I.R. 90 EB	3006+29.00	LT	1996338							1																
D-237	1099	INTERIM I.R. 90 EB	3006+29.00	INTERIM I.R. 90 EB	3007+42.00	LT	1996339									1														
D-238	1099	INTERIM I.R. 90 EB	3007+42.00	INTERIM I.R. 90 EB	3008+50.00	LT	1996348									1														
D-239	1099	INTERIM I.R. 90 EB	3008+50.00	INTERIM I.R. 90 EB	3011+00.00	LT	1996340									1														
DO-1	1099	INTERIM I.R. 90 EB	3010+42.00	INTERIM I.R. 90 EB	3012+72.13	RT																						1		
DO-2	1099	INTERIM I.R. 90 EB	3010+43.00	INTERIM I.R. 90 EB	3011+00.00	RT/LT	1996349																					1		
D-233	1099	INTERIM I.R. 90 WB	4005+97.00	INTERIM I.R. 90 WB	4006+58.00	LT	1996346								1															
D-234	1099	INTERIM I.R. 90 WB	4006+58.00	INTERIM I.R. 90 WB	4007+26.00	LT	1996336											1												
D-235	1099	INTERIM I.R. 90 WB	4007+26.00	INTERIM I.R. 90 WB	4008+25.00	LT	1996337											1												
D-246	1099	INTERIM I.R. 90 WB	4008+25.00	INTERIM I.R. 90 WB	4009+00.00	LT	1996347															1								
D-240	1099	INTERIM I.R. 90 WB	4009+00.00	INTERIM I.R. 90 WB	4009+00.00	LT																								
D-248	1099	INTERIM I.R. 90 WB	4009+00.00	INTERIM I.R. 90 WB	4009+25.00	LT														1										
D-252	1099	INTERIM I.R. 90 WB	4009+25.00	INTERIM I.R. 90 WB	4011+00.00	LT														1										
D-242A	1100	EX. I.R. 90	102+08.44			LT																			1					
D-249	1100	INTERIM I.R. 90 EB	3011+00.00	INTERIM I.R. 90 EB	3012+88.00	LT	1996353															1								
D-245	1100	INTERIM I.R. 90 EB	3012+72.13	INTERIM I.R. 90 EB	3012+88.00	RT/LT	1996355													1										
D-241	1100	INTERIM I.R. 90 EB	3012+88.00	INTERIM I.R. 90 WB	4012+50.00	LT	1996354									1														
D-242	1100	INTERIM I.R. 90 WB	4011+00.00	INTERIM I.R. 90 WB	4012+50.00	LT	1996350													1										
D-243	1100	INTERIM I.R. 90 WB	4012+50.00	INTERIM I.R. 90 WB	4015+46.28	LT	1996351															1								
D-244A	1100	INTERIM I.R. 90 WB	4015+45.19	INTERIM I.R. 90 WB	4015+46.28	LT	1996356																							
D-244	1100	INTERIM I.R. 90 WB	4015+46.28	EX. I.R. 90	102+08.44	LT	1996352															1								
D-306	1103	RAMP A1	307+25.00	RAMP A1	306+67.00	LT						1																		
D-305	1103	RAMP A1	307+25.00	RAMP A1	307+25.00	LT	1996374															1							10	
D-304	1103	RAMP A1	308+33.50	RAMP A1	307+25.00	LT	1996373																							
D-303	1103	RAMP A1	308+78.00	RAMP A1	308+90.00	RT/LT	1996375											1												
TOTALS CARRIED TO SHEET 443								1	-	3	-	-	1	1	1	4	2	2	1	-	9	-	5	1	1	-	1	2	10	-	1

Preliminary Plans - Not For Reference Only

ODOT DRAINAGE SUBSUMMARY - 2R

DESIGN AGENCY
Michael Baker INTERNATIONAL

DESIGNER MJB

REVIEWER KGJ 05/22/24

PROJECT ID 82382

SHEET 439 TOTAL 2696

CUY-90-16.28 (CCG3A)

MODEL: Sheet-02 PAPERSIZE: 34x22 (in.) DATE: 3/27/2025 TIME: 8:58:26 PM USER: Alexandria.Summers
pw:\\mb-us-pw.bentley.com:mb-us-pw-03\Documents\Cleveland_OH\01_Projects\ODOT\District12\82382\400-Engineering\Drainage\Sheets\82382_DS051.dgn

REF NO.	SHEET NO.	STATION FROM		STATION TO		SIDE	CFN	602 CONCRETE MASONRY CY	611 12" CONDUIT, TYPE C FT	611 12" CONDUIT, TYPE D FT	611 15" CONDUIT, TYPE B FT	611 15" CONDUIT, TYPE B, 706.02, CLASS V FT	611 15" CONDUIT, TYPE B, AS PER PLAN FT	611 15" CONDUIT, TYPE C FT	611 15" CONDUIT, TYPE C, AS PER PLAN FT	611 15" CONDUIT, TYPE F, 707.05 TYPE C, 707.21, OR 707.33 FT	611 18" CONDUIT, TYPE B FT	611 18" CONDUIT, TYPE B, 707.35 FT	611 18" CONDUIT, TYPE C FT	611 18" CONDUIT, TYPE F, 707.05 TYPE C, 707.21, OR 707.33 FT	611 21" CONDUIT, TYPE B FT	611 24" CONDUIT, TYPE B FT	611 24" CONDUIT, TYPE B, 706.02, CLASS V FT	611 24" CONDUIT, TYPE C FT	611 27" CONDUIT, TYPE B FT	611 30" CONDUIT, TYPE B FT	611 30" CONDUIT, TYPE C FT	611 34" X 53" CONDUIT, TYPE B, 706.04 FT	611 CONDUIT, BORED OR JACKED, 15" TYPE B FT	611 CATCH BASIN, NO. 3 EACH	611 CATCH BASIN, NO. 3A EACH	611 CATCH BASIN, NO. 6 EACH	611 CATCH BASIN, NO. 6, AS PER PLAN EACH	611 CATCH BASIN, NO. 6, AS PER PLAN 2 EACH	611 CATCH BASIN, NO. 6, AS PER PLAN 3 EACH	611 CATCH BASIN, NO. 8 EACH
D-301	1103	RAMP A1	308+90.00	RAMP A1	308+33.50	LT	1996367				57										5															1	
D-300	1103	RAMP A1	309+50.00	RAMP A1	308+90.00	LT	1996366				60																								1		
D-411A	1106	RAMP A2	417+81.84	RAMP A2	418+17.00	LT								41																						
D-411B	1106	RAMP A2	417+82.70	RAMP A2	417+81.84	RT/LT								51																						
D-411	1106	RAMP A2	418+17.00	RAMP A2	417+18.25	LT													140																	
D-420	1106	RAMP IB5	1713+91.00	RAMP IB5	1714+46.00	RT								47																						1
D-421	1106	RAMP IB5	1714+46.00			RT																														
D-422	1106	RAMP IB5	1714+60.57	RAMP IB5	1714+46.00	RT								23																				1		
D-410A	1106	RAMP IJ3	103+10.42	RAMP A2	418+17.00	LT													88																	
D-410	1107	RAMP IJ3	104+00.00	RAMP IJ3	103+10.42	RT/LT	1996369										140																			1
D-409	1107	RAMP IJ3	105+25.09	RAMP IJ3	104+00.00	LT/RT	1996368				163																									1
D-204	1108	RAMP B6	1607+77.91	I.R. 90 EB	185+25.00	LT/RT								65																				1		
D-509	1108	RAMP H5	987+00.00	RAMP H5	986+99.40	LT/RT	1996442	0.3			88																									
D-510	1108	RAMP H5	987+90.92	RAMP H5	988+54.86	LT	1996443				64																									
D-511	1108	RAMP H5	988+54.86	RAMP H5	988+53.22	LT/RT	1996444	1.0			101																									
D-531	1108	RAMP H5	990+50.00	RAMP H5	988+84.15	RT		0.9						167																						
D-530A	1108	RAMP H5	990+96.57	RAMP H5	990+50.00	RT								45																						
DO-3	1108	RAMP H6	1188+07.37	RAMP H6	1188+19.75	LT		1.3						26																						
D-633	1108	RAMP IJ3	109+23.00	E. 14TH ST. SB	205+73.93	LT	1996440				104																									1
D-748	1110	RAMP H6	1190+05.00	RAMP H6	1190+45.00	LT				46																										
D-516	1110	RAMP H6	1190+78.00	RAMP H6	1190+79.00	RT								8																				1		
D-517	1110	RAMP H6	1190+79.00	RAMP H6	1188+53.52	RT								214																						
D-741	1110	RAMP H6	1191+02.35			LT																														
D-515	1110	RAMP H6	1191+23.00	RAMP H6	1190+79.00	RT								43																						
D-514	1110	RAMP H6	1191+23.00	RAMP H6	1191+23.00	RT								8																						
D-513	1110	RAMP H6	1191+78.00	RAMP H6	1191+23.00	RT								58																				1		
D-512	1110	RAMP H6	1192+20.14	RAMP H6	1191+78.00	RT	1996458				43																									
D-408	1111	RAMP IJ3	101+83.35	RAMP IJ3	102+24.00	RT		0.3						66																				1		
D-316	1112	RAMP A2	410+18.52	RAMP IJ3	95+20.44	RT/LT	1996462				33																									
D-315	1112	RAMP A2	410+18.75	RAMP A2	410+18.52	LT/RT	1996460				72																									
D-324	1112	RAMP A2	410+74.89	RAMP A2	410+90.00	LT/RT								42																						
D-325	1112	RAMP A2	410+89.18	RAMP A2	410+90.00	RT								18																						
D-326	1112	RAMP A2	410+90.00	RAMP A2	410+98.20	RT								9																						
D-321	1112	RAMP IJ3	95+20.44	RAMP IJ3	95+25.00	LT/RT	1996453																										90				
D-322	1112	RAMP IJ3	95+25.00	RAMP IJ3	96+45.40	RT								119																						
D-320	1113	RAMP A2	408+00.00	RAMP A2	408+72.00	RT	1996465				71																								1		
D-318	1113	RAMP A2	408+72.00	RAMP IJ3	95+20.44	RT/LT								110																				1		
D-742	1113	RAMP H5	978+89.90			RT																														
D-503	1114	RAMP IH4	17+61.02			LT																														
D-502	1114	RAMP IH4	17+61.06	RAMP IH4	17+61.02	RT/LT	1996471				27																									
D-501	1114	RAMP IH4	18+18.84	RAMP IH4	17+61.06	RT	1996475				58																									
D-500	1114	RAMP IH4	18+49.11	RAMP IH4	18+18.84	RT	1996474				31																									
TOTALS CARRIED TO SHEET 442								3.8	-	46	972	-	-	1160	-	-	140	-	228	-	5	-	-	-	-	-	-	-	90	1	7	1	2	-	-	4

Preliminary Plans - Not For Reference Only

ODOT DRAINAGE SUBSUMMARY - 3L

DESIGN AGENCY
Michael Baker INTERNATIONAL

DESIGNER MJB

REVIEWER KGJ 05/22/24

PROJECT ID 82382

SHEET 440 TOTAL 2696

CUY-90-16.28 (CCG3A)

MODEL: Sheet-03 PAPERSIZE: 34x22 (in.) DATE: 3/27/2025 TIME: 8:58:29 PM USER: Alexandria.Summers
pw:\\mb-us-pw.bentley.com:mb-us-pw-03\Documents\Cleveland_OH01_Projects\ODOT\District12\82382\400-Engineering\Drainage\Sheets\82382_DS001.dgn

REF NO.	SHEET NO.	STATION FROM		STATION TO		SIDE	CFN	611 CATCH BASIN, NO. 8, AS PER PLAN 2 EACH	611 CATCH BASIN, NO. 2-2A EACH	611 CATCH BASIN, NO. 2-2B EACH	611 CATCH BASIN, NO. 2-2B, AS PER PLAN 2 EACH	611 CATCH BASIN, NO. 2-2C EACH	611 CATCH BASIN, NO. 2-3, AS PER PLAN 2 EACH	611 INLET, NO. 3 FOR SINGLE SLOPE BARRIER, TYPE B1 EACH	611 INLET, NO. 3 FOR SINGLE SLOPE BARRIER, TYPE C EACH	611 INLET, NO. 3 FOR SINGLE SLOPE BARRIER, TYPE C1 EACH	611 INLET, NO. 3 FOR SINGLE SLOPE BARRIER, TYPE C1, AS PER PLAN EACH	611 INLET, NO. 3 FOR SINGLE SLOPE BARRIER, TYPE D EACH	611 INLET, NO. 3 FOR SINGLE SLOPE BARRIER, TYPE D, AS PER PLAN EACH	611 INLET, NO. 3 FOR SINGLE SLOPE BARRIER, TYPE D, AS PER PLAN 2 EACH	611 MANHOLE, NO. 3 EACH	611 MANHOLE, NO. 3, AS PER PLAN 2 EACH	611 MANHOLE, NO. 3, AS PER PLAN 3 EACH	611 MANHOLE, NO. 3 WITH 108" BASE I.D. AND 12" WEIR EACH	611 MANHOLE ADJUSTED TO GRADE EACH	611 MANHOLE RECONSTRUCTED TO GRADE EACH	611 MANHOLE RECONSTRUCTED TO GRADE, AS PER PLAN 2 EACH	611 DRAINAGE STRUCTURE, MISC.: FLOW RESTRICTOR OUTLET EACH	638 30" STEEL PIPE ENCASEMENT, OPEN CUT, AS PER PLAN FT	839 TRENCH DRAIN, TYPE A WITH STANDARD GRATE FT	895 MANUFACTURED WATER QUALITY STRUCTURE, TYPE 4 EACH
D-301	1103	RAMP A1	308+90.00	RAMP A1	308+33.50	LT	1996367																							
D-300	1103	RAMP A1	309+50.00	RAMP A1	308+90.00	LT	1996366																							
D-411A	1106	RAMP A2	417+81.84	RAMP A2	418+17.00	LT				1																				
D-411B	1106	RAMP A2	417+82.70	RAMP A2	417+81.84	RT/LT				1																				
D-411	1106	RAMP A2	418+17.00	RAMP A2	417+18.25	LT															1									
D-420	1106	RAMP IB5	1713+91.00	RAMP IB5	1714+46.00	RT																								
D-421	1106	RAMP IB5	1714+46.00			RT															1									
D-422	1106	RAMP IB5	1714+60.57	RAMP IB5	1714+46.00	RT																								
D-410A	1106	RAMP IJ3	103+10.42	RAMP A2	418+17.00	LT														1										
D-410	1107	RAMP IJ3	104+00.00	RAMP IJ3	103+10.42	RT/LT	1996369																							
D-409	1107	RAMP IJ3	105+25.09	RAMP IJ3	104+00.00	LT/RT	1996368																							
D-204	1108	RAMP B6	1607+77.91	I.R. 90 EB	185+25.00	LT/RT																								
D-509	1108	RAMP H5	987+00.00	RAMP H5	986+99.40	LT/RT	1996442												1									24		
D-510	1108	RAMP H5	987+90.92	RAMP H5	988+54.86	LT	1996443											1												
D-511	1108	RAMP H5	988+54.86	RAMP H5	988+53.22	LT/RT	1996444											1												
D-531	1108	RAMP H5	990+50.00	RAMP H5	988+84.15	RT															1									
D-530A	1108	RAMP H5	990+96.57	RAMP H5	990+50.00	RT															1									
DO-3	1108	RAMP H6	1188+07.37	RAMP H6	1188+19.75	LT																					1			
D-633	1108	RAMP IJ3	109+23.00	E. 14TH ST. SB	205+73.93	LT	1996440																							
D-748	1110	RAMP H6	1190+05.00	RAMP H6	1190+45.00	LT																								
D-516	1110	RAMP H6	1190+78.00	RAMP H6	1190+79.00	RT																								
D-517	1110	RAMP H6	1190+79.00	RAMP H6	1188+53.52	RT															1									
D-741	1110	RAMP H6	1191+02.35			LT																				1				
D-515	1110	RAMP H6	1191+23.00	RAMP H6	1190+79.00	RT															1									
D-514	1110	RAMP H6	1191+23.00	RAMP H6	1191+23.00	RT																								
D-513	1110	RAMP H6	1191+78.00	RAMP H6	1191+23.00	RT																								
D-512	1110	RAMP H6	1192+20.14	RAMP H6	1191+78.00	RT	1996458																							
D-408	1111	RAMP IJ3	101+83.35	RAMP IJ3	102+24.00	RT																								
D-316	1112	RAMP A2	410+18.52	RAMP IJ3	95+20.44	RT/LT	1996462											1												
D-315	1112	RAMP A2	410+18.75	RAMP A2	410+18.52	LT/RT	1996460												1									37		
D-324	1112	RAMP A2	410+74.89	RAMP A2	410+90.00	LT/RT					1																			
D-325	1112	RAMP A2	410+89.18	RAMP A2	410+90.00	RT					1																			
D-326	1112	RAMP A2	410+90.00	RAMP A2	410+98.20	RT																1								
D-321	1112	RAMP IJ3	95+20.44	RAMP IJ3	95+25.00	LT/RT	1996453														1									
D-322	1112	RAMP IJ3	95+25.00	RAMP IJ3	96+45.40	RT															1									
D-320	1113	RAMP A2	408+00.00	RAMP A2	408+72.00	RT	1996465																						88	
D-318	1113	RAMP A2	408+72.00	RAMP IJ3	95+20.44	RT/LT																								
D-742	1113	RAMP H5	978+89.90			RT																	1							
D-503	1114	RAMP IH4	17+61.02			LT																	1							
D-502	1114	RAMP IH4	17+61.06	RAMP IH4	17+61.02	RT/LT	1996471													1										
D-501	1114	RAMP IH4	18+18.84	RAMP IH4	17+61.06	RT	1996475											1												
D-500	1114	RAMP IH4	18+49.11	RAMP IH4	18+18.84	RT	1996474											1												
TOTALS CARRIED TO SHEET 443								-	-	2	-	2	-	-	-	-	-	5	2	1	7	3	-	-	2	-	1	1	61	88	-

Preliminary Plans - Not For Reference Only

ODOT DRAINAGE SUBSUMMARY - 3R

DESIGN AGENCY
Michael Baker INTERNATIONAL

DESIGNER MJB

REVIEWER KGJ 05/22/24

PROJECT ID 82382

SHEET 441 TOTAL 2696

CUY-90-16.28 (CCG3A)

MODEL: Sheet-03 PAPERSIZE: 34x22 (in.) DATE: 3/27/2025 TIME: 8:58:33 PM USER: Alexandria.Summers
pw:\\mb-us-pw.bentley.com:mb-us-pw-03\Documents\Cleveland_OH101_Projects\ODOT\District12\82382\400-Engineering\Drainage\Sheets\82382_DS051.dgn

REF NO.	SHEET NO.	STATION FROM		STATION TO		SIDE	CFN	602 CONCRETE MASONRY	611 12" CONDUIT, TYPE C	611 12" CONDUIT, TYPE D	611 15" CONDUIT, TYPE B	611 15" CONDUIT, TYPE B, 706.02, CLASS V	611 15" CONDUIT, TYPE B, AS PER PLAN	611 15" CONDUIT, TYPE C	611 15" CONDUIT, TYPE C, AS PER PLAN	611 15" CONDUIT, TYPE F, 707.05 TYPE C, 707.21, OR 707.33	611 18" CONDUIT, TYPE B	611 18" CONDUIT, TYPE B, 707.35	611 18" CONDUIT, TYPE C	611 18" CONDUIT, TYPE F, 707.05 TYPE C, 707.21, OR 707.33	611 21" CONDUIT, TYPE B	611 24" CONDUIT, TYPE B	611 24" CONDUIT, TYPE B, 706.02, CLASS V	611 24" CONDUIT, TYPE C	611 27" CONDUIT, TYPE B	611 30" CONDUIT, TYPE B	611 30" CONDUIT, TYPE C	611 34" X 53" CONDUIT, TYPE B, 706.04	611 CONDUIT, BORED OR JACKED, 15" TYPE B	611 CATCH BASIN, NO. 3	611 CATCH BASIN, NO. 3A	611 CATCH BASIN, NO. 6	611 CATCH BASIN, NO. 6, AS PER PLAN	611 CATCH BASIN, NO. 6, AS PER PLAN 2	611 CATCH BASIN, NO. 6, AS PER PLAN 3	611 CATCH BASIN, NO. 8
								CY	FT	FT	FT	FT	FT	FT	FT	FT	FT	FT	FT	FT	FT	FT	FT	FT	FT	FT	FT	FT	FT	EACH	EACH	EACH	EACH	EACH	EACH	EACH
D-506	1114	RAMP H6	1184+60.07	RAMP H6	1186+71.87	RT																			199											1
D-507	1115	RAMP H6	1186+71.87	RAMP H6	1186+72.37	RT																			12											
D-508	1115	RAMP H6	1186+72.37	RAMP H6	1187+03.34	RT/LT	1996472	1.3															111								1						
D-518	1115	RAMP H6	1188+53.52	RAMP H6	1188+16.70	RT/LT	1996473	1.1			123																											
		TOTALS FROM THIS SHEET						2.4	-	-	123	-	-	-	-	-	-	-	-	-	-	111	-	211	-	-	-	-	-	1	-	-	-	-	-	1
		TOTALS FROM SHEET	436					0.6	-	-	1243	-	774	645	51	134	329	19	-	138	-	10	-	-	-	-	-	-	3	1	3	-	2	1	2
		TOTALS FROM SHEET	438					1.7	5	-	575	193	-	761	-	-	273	-	-	-	479	345	225	46	65	147	197	472	-	2	2	1	1	-	-	1
		TOTALS FROM SHEET	440					3.8	-	46	972	-	-	1160	-	-	140	-	228	-	5	-	-	-	-	-	-	-	90	1	7	1	2	-	-	4
		TOTALS CARRIED TO GENERAL SUMMARY						8.5	5	46	2913	193	774	2566	51	134	742	19	228	138	484	466	225	257	65	147	197	472	90	7	10	5	3	2	1	8

Preliminary Plans - For Reference Only

ODOT DRAINAGE SUBSUMMARY - 4L

DESIGN AGENCY
Michael Baker INTERNATIONAL

DESIGNER MJB
REVIEWER KGJ 05/22/24
PROJECT ID 82382
SHEET 442 TOTAL 2696

CUY-90-16.28 (CCG3A)

MODEL: Sheet-04 PAPERSIZE: 34x22 (in.) DATE: 3/27/2025 TIME: 8:58:37 PM USER: Alexandria.Summers
pw:\\mb-us-pw.bentley.com:mb-us-pw-03\Documents\Cleveland_OH01_Projects\ODOT\District12\82382\400-Engineering\Drainage\Sheets\82382_DS001.dgn

REF NO.	SHEET NO.	STATION FROM		STATION TO		SIDE	CFN	611 CATCH BASIN, NO. 8, AS PER PLAN 2 EACH	611 CATCH BASIN, NO. 2-2A EACH	611 CATCH BASIN, NO. 2-2B EACH	611 CATCH BASIN, NO. 2-2B, AS PER PLAN 2 EACH	611 CATCH BASIN, NO. 2-2C EACH	611 CATCH BASIN, NO. 2-3, AS PER PLAN 2 EACH	611 INLET, NO. 3 FOR SINGLE SLOPE BARRIER, TYPE B1 EACH	611 INLET, NO. 3 FOR SINGLE SLOPE BARRIER, TYPE C EACH	611 INLET, NO. 3 FOR SINGLE SLOPE BARRIER, TYPE C1 EACH	611 INLET, NO. 3 FOR SINGLE SLOPE BARRIER, TYPE C1, AS PER PLAN EACH	611 INLET, NO. 3 FOR SINGLE SLOPE BARRIER, TYPE D EACH	611 INLET, NO. 3 FOR SINGLE SLOPE BARRIER, TYPE D, AS PER PLAN EACH	611 INLET, NO. 3 FOR SINGLE SLOPE BARRIER, TYPE D, AS PER PLAN 2 EACH	611 MANHOLE, NO. 3 EACH	611 MANHOLE, NO. 3, AS PER PLAN 2 EACH	611 MANHOLE, NO. 3, AS PER PLAN 3 EACH	611 MANHOLE, NO. 3 WITH 108" BASE I.D. AND 12" WEIR EACH	611 MANHOLE ADJUSTED TO GRADE EACH	611 MANHOLE RECONSTRUCTED TO GRADE EACH	611 MANHOLE RECONSTRUCTED TO GRADE, AS PER PLAN 2 EACH	611 DRAINAGE STRUCTURE, MISC.: FLOW RESTRICTOR OUTLET EACH	638 30" STEEL PIPE ENCASEMENT, OPEN CUT, AS PER PLAN FT	839 TRENCH DRAIN, TYPE A WITH STANDARD GRATE FT	895 MANUFACTURED WATER QUALITY STRUCTURE, TYPE 4 EACH
D-506	1114	RAMP H6	1184+60.07	RAMP H6	1186+71.87	RT																								
D-507	1115	RAMP H6	1186+71.87	RAMP H6	1186+72.37	RT														1										
D-508	1115	RAMP H6	1186+72.37	RAMP H6	1187+03.34	RT/LT	1996472																							
D-518	1115	RAMP H6	1188+53.52	RAMP H6	1188+16.70	RT/LT	1996473													1										
							TOTALS FROM THIS SHEET	-	-	-	-	-	-	-	-	-	-	-	-	2	-	-	-	-	-	-	-	-	-	-
							TOTALS FROM SHEET 437	1	1	2	1	4	1	7	-	-	3	2	-	-	4	2	-	-	-	1	-	-	-	413	-
							TOTALS FROM SHEET 439	1	-	3	-	-	1	1	1	4	2	2	1	-	9	-	5	1	1	-	1	2	10	-	1
							TOTALS FROM SHEET 441	-	-	2	-	2	-	-	-	-	-	5	2	1	7	3	-	-	2	-	1	1	61	88	-
							TOTALS CARRIED TO GENERAL SUMMARY	2	1	7	1	6	2	8	1	4	5	9	3	1	22	5	5	1	3	1	2	3	71	501	1

Preliminary Plans - For Reference Only

ODOT DRAINAGE SUBSUMMARY - 4R

DESIGN AGENCY
Michael Baker INTERNATIONAL

DESIGNER MJB

REVIEWER KGJ 05/22/24

PROJECT ID 82382

SHEET 443 TOTAL 2696

CUY-90-16.28 (CCG3A)

MODEL: Sheet-04 PAPERSIZE: 34x22 (in.) DATE: 3/27/2025 TIME: 8:58:41 PM USER: Alexandria.Summers
pw:\\mb-us-pw.bentley.com:mb-us-pw-03\Documents\Cleveland_OH01_Projects\ODOT\District12\82382\400-Engineering\Drainage\Sheets\82382_DS051.dgn

REF NO.	SHEET NO.	STATION FROM		STATION TO		SIDE	CFN	611 12" CONDUIT, TYPE B, 706.08 & 706.12 FT	611 12" CONDUIT, TYPE B, 748.01 FT	611 12" CONDUIT, TYPE C, 706.08 & 706.12 FT	611 15" CONDUIT, TYPE B, 706.08 & 706.12 FT	611 15" CONDUIT, TYPE C, 706.08 & 706.12 FT	611 21" CONDUIT, TYPE B FT	611 24" CONDUIT, TYPE B, 706.08 & 706.12 FT	611 66" CONDUIT, TYPE B, 706.02 & 706.11 FT	611 66" CONDUIT, TYPE C, 706.02 & 706.11 FT	611 CATCH BASIN, NO. 3, AS PER PLAN EACH	611 CATCH BASIN, NO. 3A, AS PER PLAN EACH	611 CATCH BASIN, NO. 6, AS PER PLAN 2 EACH	611 CATCH BASIN, NO. 8, AS PER PLAN 2 EACH	611 CATCH BASIN, NO. 2-2A, AS PER PLAN 2 EACH	611 CATCH BASIN, NO. 2-2B, AS PER PLAN EACH	611 CATCH BASIN, NO. 2-2B, AS PER PLAN 2 EACH	611 CATCH BASIN ADJUSTED TO GRADE EACH	611 CATCH BASIN RECONSTRUCTED TO GRADE EACH	611 MANHOLE, NO. 3, AS PER PLAN EACH	611 MANHOLE, NO. 3, AS PER PLAN 2 EACH	611 MANHOLE ADJUSTED TO GRADE EACH	611 MANHOLE RECONSTRUCTED TO GRADE EACH	611 MANHOLE RECONSTRUCTED TO GRADE, AS PER PLAN EACH	611 MANHOLE RECONSTRUCTED TO GRADE, AS PER PLAN 2 EACH	899 CURED-IN-PLACE PIPE LINER, AS PER PLAN, NO. 6 EGG-SHAPED FT	899 CURED-IN-PLACE PIPE LINER, AS PER PLAN, NO. 7 EGG-SHAPED FT	899 CURED-IN-PLACE PIPE LINER, AS PER PLAN, NO. 10 EGG-SHAPED FT	899 CURED-IN-PLACE PIPE LINER, AS PER PLAN, NO. 11 EGG-SHAPED FT	899 CURED-IN-PLACE PIPE LINER, AS PER PLAN, NO. 12 EGG-SHAPED FT	
D-600	1094	RAMP A3	585+34.70			LT																					1										
D-601	1094	RAMP A3	585+77.14	RAMP A3	585+34.70	LT	1996167								90												1										
D-628	1095	E. 14TH ST. NB	54+74.78	E. 14TH ST. NB	55+12.06	RT		41											1																		
D-629	1095	E. 14TH ST. NB	54+94.00	E. 14TH ST. NB	55+12.20	LT/RT		36														1															
D-627	1095	E. 14TH ST. NB	55+12.06	E. 14TH ST. NB	55+12.20	RT		32											1																		
D-626	1095	E. 14TH ST. NB	55+12.20	E. 14TH ST. NB	56+15.10	RT		103																			1										
D-624	1095	E. 14TH ST. NB	55+63.53	E. 14TH ST. NB	56+15.10	RT		61										1																			
D-623	1095	E. 14TH ST. NB	56+15.10	E. 14TH ST. NB	56+15.10	RT		32											1																		
D-622	1095	E. 14TH ST. NB	56+15.10	E. 14TH ST. NB	57+00.00	RT					85																1										
D-621	1095	E. 14TH ST. NB	57+00.00	E. 14TH ST. NB	57+00.00	RT		41											1																		
D-620	1095	E. 14TH ST. NB	57+00.00	E. 14TH ST. SB	36+57.73	RT/LT					53																1										
D-711	1095	E. 14TH ST. NB	57+58.70			RT																						1									
D-710	1095	E. 14TH ST. NB	57+67.45	E. 14TH ST. NB	57+58.70	RT			30										1																		
D-401	1095	E. 14TH ST. NB	57+78.00	E. 14TH ST. NB	57+67.45	RT				13													1														
D-616	1095	INTERIM E. 14TH ST. SB	208+25.00	INTERIM E. 14TH ST. SB	208+65.00	LT/RT		43											1																		
D-614	1095	INTERIM E. 14TH ST. SB	208+65.00	INTERIM E. 14TH ST. SB	208+65.00	LT/RT		15										1																			
D-613	1095	INTERIM E. 14TH ST. SB	208+65.00	E. 14TH ST. SB	36+57.73	RT/LT		89																			1										
D-610	1095	INTERIM E. 14TH ST. SB	209+01.00	E. 14TH ST. SB	36+41.31	LT				47									1																		
D-602	1095	E. 14TH ST. SB	36+41.31	RAMP A3	585+77.14	LT	1996168								235												1										
D-612	1095	E. 14TH ST. SB	36+46.94	E. 14TH ST. SB	36+57.73	RT/LT		20																1													
D-611	1095	E. 14TH ST. SB	36+57.73	E. 14TH ST. SB	36+41.31	LT					49																1										
D-280	1096	I.R. 90 EB	193+29.00			RT																										1					
D-290	1096	I.R. 90 EB	194+52.58			RT																							1								
D-265	1096	I.R. 90 WB	193+57.00			LT																								1							
D-291	1097	RAMP B6	1617+74.70			RT																								1							
D-462	1097	RAMP B6A	1806+14.32	E. 22ND ST.	31+06.00	LT/RT					121																	1									
D-730	1098	CARNEGIE AVE.	57+00.00	CARNEGIE AVE.	57+05.00	RT		23										1																			
D-739	1098	CARNEGIE AVE.	57+05.00			RT																					1										
D-731	1098	CARNEGIE AVE.	57+30.00	CARNEGIE AVE.	57+05.00	RT		34										1																			
D-750	1098	MIDTOWN CONNECTOR	502+50.00	MIDTOWN CONNECTOR	502+50.60	LT				29													1														
D-780	1098	MIDTOWN CONNECTOR	502+50.00	MIDTOWN CONNECTOR	504+00.00	CL/LT		153																			1										
D-782	1098	MIDTOWN CONNECTOR	502+50.60	MIDTOWN CONNECTOR	502+50.00	LT/CL		20										1																			
D-752	1098	MIDTOWN CONNECTOR	502+50.60	MIDTOWN CONNECTOR	502+50.00	RT/CL		20										1																			
D-781	1098	MIDTOWN CONNECTOR	504+00.00			LT					5																1										
D-733	1099	CARNEGIE AVE.	57+30.00	CARNEGIE AVE.	57+42.24	LT/RT		47										1																			
D-732	1099	CARNEGIE AVE.	57+42.24			RT																						1									
D-736	1099	CARNEGIE AVE.	57+85.00	CARNEGIE AVE.	57+90.05	LT/RT		47										1																			
D-734	1099	CARNEGIE AVE.	57+85.00	CARNEGIE AVE.	57+90.05	RT		23										1																			
D-735	1099	CARNEGIE AVE.	57+90.05			RT																					1										
D-737	1099	CARNEGIE AVE.	58+35.00	CARNEGIE AVE.	57+90.05	LT/RT		65										1																			
D-738	1099	CARNEGIE AVE.	58+89.00	CARNEGIE AVE.	58+35.00	LT		54										1																			
D-700	1101	CARNEGIE AVE.	37+61.19	CARNEGIE AVE.	37+61.12	RT		7											1																		
D-400	1102	CARNEGIE AVE.	40+90.00	CARNEGIE AVE.	40+91.00	RT				15													1														
D-707	1102	CARNEGIE AVE.	40+91.00	CARNEGIE AVE.	40+93.55	RT		8											1																		
TOTALS CARRIED TO SHEET 447								1014	30	104	313	-	-	-	325	-	11	9	-	-	1	3	1	-	-	12	1	2	1	2	1	-	-	-	-	-	

Preliminary Plans - Not For Reference Only

LOCAL DRAINAGE SUBSUMMARY - 1

CUY-90-16.28 (CCG3A)

MODEL: Sheet-01 PAPERSIZE: 34x22 (in.) DATE: 6/12/2025 TIME: 3:09:00 PM USER: Joseph.Hogan
pw:\\mb-us-pw.bentley.com:mb-us-pw-03\Documents\Cleveland_OH01_Projects\ODOT\District12\82382\400-Engineering\Drainage\Sheets\82382_DS101.dgn

DESIGN AGENCY
Michael Baker INTERNATIONAL

DESIGNER MJB

REVIEWER KGJ 05/22/24

PROJECT ID 82382

SHEET 444 TOTAL 2696

LOCAL DRAINAGE SUBSUMMARY - 2

REF NO.	SHEET NO.	STATION FROM		STATION TO		SIDE	CFN	611 12" CONDUIT, TYPE B, 706.08 & 706.12	611 12" CONDUIT, TYPE B, 748.01	611 12" CONDUIT, TYPE C, 706.08 & 706.12	611 15" CONDUIT, TYPE B, 706.08 & 706.12	611 15" CONDUIT, TYPE C, 706.08 & 706.12	611 21" CONDUIT, TYPE B	611 24" CONDUIT, TYPE B, 706.08 & 706.12	611 66" CONDUIT, TYPE B, 706.02 & 706.11	611 66" CONDUIT, TYPE C, 706.02 & 706.11	611 CATCH BASIN, NO. 3, AS PER PLAN	611 CATCH BASIN, NO. 3A, AS PER PLAN	611 CATCH BASIN, NO. 6, AS PER PLAN 2	611 CATCH BASIN, NO. 8, AS PER PLAN 2	611 CATCH BASIN, NO. 2-2A, AS PER PLAN 2	611 CATCH BASIN, NO. 2-2B, AS PER PLAN	611 CATCH BASIN, NO. 2-2B, AS PER PLAN 2	611 CATCH BASIN ADJUSTED TO GRADE	611 CATCH BASIN RECONSTRUCTED TO GRADE	611 MANHOLE, NO. 3, AS PER PLAN	611 MANHOLE, NO. 3, AS PER PLAN 2	611 MANHOLE ADJUSTED TO GRADE	611 MANHOLE RECONSTRUCTED TO GRADE	611 MANHOLE RECONSTRUCTED TO GRADE, AS PER PLAN	611 MANHOLE RECONSTRUCTED TO GRADE, AS PER PLAN 2	899 CURED-IN-PLACE PIPE LINER, AS PER PLAN, NO. 6 EGG-SHAPED	899 CURED-IN-PLACE PIPE LINER, AS PER PLAN, NO. 7 EGG-SHAPED	899 CURED-IN-PLACE PIPE LINER, AS PER PLAN, NO. 10 EGG-SHAPED	899 CURED-IN-PLACE PIPE LINER, AS PER PLAN, NO. 11 EGG-SHAPED	899 CURED-IN-PLACE PIPE LINER, AS PER PLAN, NO. 12 EGG-SHAPED	
								FT	FT	FT	FT	FT	FT	FT	FT	FT	EACH	EACH	EACH	EACH	EACH	EACH	EACH	EACH	EACH	EACH	EACH	EACH	EACH	EACH	EACH	FT	FT	FT	FT	FT	
D-703	1102	E. 14TH ST. NB	59+00.00	E. 14TH ST. NB	59+86.61	RT		89										1																			
D-701A	1102	E. 14TH ST. NB	59+86.61	E. 14TH ST. NB	60+48.95	RT		63																		1											
D-740	1102	E. 14TH ST. NB	60+48.95			RT																					1										
D-701	1102	E. 14TH ST. SB	39+65.20	E. 14TH ST. NB	59+86.61	LT/RT		59										1																			
D-708	1102	E. 18TH ST.	23+00.00	CENTRAL AVE. CONNECTOR	600+58.32	RT			38									1																			
D-705	1102	E. 18TH ST.	23+67.73	E. 18TH ST.	23+84.75	RT			27									1																			
D-704	1102	E. 18TH ST.	23+84.75			RT																					1										
D-706	1102	E. 18TH ST.	24+24.97	E. 18TH ST.	23+84.75	RT		46										1																			
D-709	1102	CENTRAL AVE. CONNECTOR	600+58.32			RT																				1										
D-702	1102	CENTRAL AVE. CONNECTOR	601+00.52	CENTRAL AVE. CONNECTOR	600+58.32	LT/RT		45									1																			
D-712	1102	CENTRAL AVE. CONNECTOR	601+00.52	CENTRAL AVE. CONNECTOR	600+58.32	RT		43									1																			
D-717	1102	CENTRAL AVE. CONNECTOR	601+79.03			LT																							1							
D-311	1103	RAMP A1	306+18.83	RAMP A1	306+30.44	LT		25										1																			
D-310	1103	RAMP A1	306+30.44	RAMP A1	306+32.37	LT							5													1										
D-309	1103	RAMP A1	306+49.63	RAMP A1	306+30.44	LT		21										1																			
D-307	1103	RAMP A1	306+67.00	RAMP A1	306+30.44	LT					50																1										
D-314	1103	RAMP A1	307+00.00	RAMP A1	306+67.00	LT						37						1																			
D-302	1103	RAMP A1	309+00.00	RAMP A1	307+00.00	LT		200										1																			
D-313	1104	CARNEGIE AVE.	48+95.00	CARNEGIE AVE.	49+86.11	RT			101								1																			
D-330	1104	CARNEGIE AVE.	49+86.11			RT																							1							
D-313A	1104	CARNEGIE AVE.	49+97.62	CARNEGIE AVE.	49+86.11	RT			49									1																			
D-714	1104	CARNEGIE AVE.	51+60.68			LT																							1							
D-771	1104	CARNEGIE AVE.	52+33.00	CARNEGIE AVE.	52+33.14	LT				19												1														
D-713	1104	CARNEGIE AVE.	52+33.14	CARNEGIE AVE.	51+60.68	LT		75									1																			
D-715	1104	CARNEGIE AVE.	52+45.14	CARNEGIE AVE.	52+81.82	RT		37									1																			
D-783	1104	CARNEGIE AVE.	52+81.82	E. 22ND ST.	36+29.47	RT/LT		61																		1										
D-728	1104	E. 22ND ST.	36+29.47	E. 22ND ST.	36+29.47	LT/RT		38									1																			
D-727	1104	E. 22ND ST.	36+29.47	E. 22ND ST.	36+29.47	RT		17									1																			
D-720	1104	E. 22ND ST.	36+29.47			RT																				1										
D-716	1105	CARNEGIE AVE.	53+78.43			RT																							1							
D-726	1105	CARNEGIE AVE.	54+38.53	CARNEGIE AVE.	53+78.43	RT		65									1																			
D-729	1105	CARNEGIE AVE.	54+45.63	CARNEGIE AVE.	53+78.43	LT/RT		80									1																			
D-724	1105	E. 22ND ST.	27+80.99			RT																							1							
D-723	1105	E. 22ND ST.	28+40.00	E. 22ND ST.	27+80.99	LT/RT		63										1																			
D-551	1108	RAMP H5	988+84.24	E. 14TH ST. NB	53+36.24	RT/LT	1996438								159											1										
D-550A	1108	RAMP H6	1188+19.75	COMMUNITY COLLEGE AVE.	54+40.18	LT						42															1										
D-604	1108	E. 14TH ST. NB	53+36.24	INTERIM E. 14TH ST. SB	206+90.46	LT	1996439								92											1										
D-634	1108	E. 14TH ST. NB	53+50.00	E. 14TH ST. NB	53+36.24	RT/LT					48							1																		
D-630	1108	E. 14TH ST. NB	53+60.00	E. 14TH ST. NB	53+36.24	LT						27										1														
D-635	1108	E. 14TH ST. NB	53+85.00	E. 14TH ST. NB	53+50.00	RT						39											1													
D-636A	1108	E. 14TH ST. NB	54+33.59	E. 14TH ST. NB	53+36.24	RT/LT					111																1									
D-603	1108	INTERIM E. 14TH ST. SB	206+90.46	E. 14TH ST. SB	36+41.31	LT										246										1										
TOTALS CARRIED TO SHEET 447								1027	215	19	209	145	5	-	251	246	9	12	-	-	-	2	1	-	-	8	3	6	1	-	-	-	-	-	-	-	

Preliminary Plans - Not For Reference Only

CUY-90-16.28 (CCG3A)
MODEL: Sheet-02 PAPERSIZE: 34x22 (in.) DATE: 6/12/2025 TIME: 3:09:16 PM USER: Joseph.Hogan
pw:\\mb-us-pw.bentley.com:mb-us-pw-03\Documents\Cleveland_OH101_Projects\ODOT\District12\82382\400-Engineering\Drainage\Sheets\82382_DS101.dgn

DESIGN AGENCY
Michael Baker INTERNATIONAL

DESIGNER MJB
REVIEWER KGJ 05/22/24
PROJECT ID 82382
SHEET 445 TOTAL 2696

REF NO.	SHEET NO.	STATION FROM		STATION TO		SIDE	CFN	611 12" CONDUIT, TYPE B, 706.08 & 706.12 FT	611 12" CONDUIT, TYPE B, 748.01 FT	611 12" CONDUIT, TYPE C, 706.08 & 706.12 FT	611 15" CONDUIT, TYPE B, 706.08 & 706.12 FT	611 15" CONDUIT, TYPE C, 706.08 & 706.12 FT	611 21" CONDUIT, TYPE B FT	611 24" CONDUIT, TYPE B, 706.08 & 706.12 FT	611 66" CONDUIT, TYPE B, 706.02 & 706.11 FT	611 66" CONDUIT, TYPE C, 706.02 & 706.11 FT	611 CATCH BASIN, NO. 3, AS PER PLAN EACH	611 CATCH BASIN, NO. 3A, AS PER PLAN EACH	611 CATCH BASIN, NO. 6, AS PER PLAN 2 EACH	611 CATCH BASIN, NO. 8, AS PER PLAN 2 EACH	611 CATCH BASIN, NO. 2-2A, AS PER PLAN 2 EACH	611 CATCH BASIN, NO. 2-2B, AS PER PLAN EACH	611 CATCH BASIN, NO. 2-2B, AS PER PLAN 2 EACH	611 CATCH BASIN ADJUSTED TO GRADE EACH	611 CATCH BASIN RECONSTRUCTED TO GRADE EACH	611 MANHOLE, NO. 3, AS PER PLAN EACH	611 MANHOLE, NO. 3, AS PER PLAN 2 EACH	611 MANHOLE ADJUSTED TO GRADE EACH	611 MANHOLE RECONSTRUCTED TO GRADE EACH	611 MANHOLE RECONSTRUCTED TO GRADE, AS PER PLAN EACH	611 MANHOLE RECONSTRUCTED TO GRADE, AS PER PLAN 2 EACH	899 CURED-IN-PLACE PIPE LINER, AS PER PLAN, NO. 6 EGG-SHAPED FT	899 CURED-IN-PLACE PIPE LINER, AS PER PLAN, NO. 7 EGG-SHAPED FT	899 CURED-IN-PLACE PIPE LINER, AS PER PLAN, NO. 10 EGG-SHAPED FT	899 CURED-IN-PLACE PIPE LINER, AS PER PLAN, NO. 11 EGG-SHAPED FT	899 CURED-IN-PLACE PIPE LINER, AS PER PLAN, NO. 12 EGG-SHAPED FT	
D-632	1108	E. 14TH ST. SB	205+73.93	E. 14TH ST. NB	53+36.24	LT					80								1																		
D-631	1108	E. 14TH ST. SB	206+25.00	E. 14TH ST. NB	53+36.24	LT					46									1																		
D-550	1108	COMMUNITY COLLEGE AVE.	54+40.18	RAMP H5	988+84.24	LT/RT									140																								
D-405	1109	CENTRAL AVE.	25+72.00	E. 22ND ST.	30+64.59	RT/LT		89											1																		
D-406	1109	CENTRAL AVE.	25+80.00	CENTRAL AVE.	25+72.00	LT/RT		41											1																		
D-906	1109	E. 22ND ST.	28+96.00	E. 22ND ST.	29+27.84	RT		46												1																	
D-907	1109	E. 22ND ST.	29+14.00	E. 22ND ST.	29+17.34	LT		5											1																		
D-904	1109	E. 22ND ST.	29+92.69	E. 22ND ST.	30+13.00	RT		21											1																		
D-902	1109	E. 22ND ST.	29+97.05	E. 22ND ST.	30+23.00	LT			25									1																		
D-905	1109	E. 22ND ST.	29+98.78	E. 22ND ST.	30+26.37	RT		31										1																		
D-903	1109	E. 22ND ST.	30+03.57	E. 22ND ST.	30+13.00	LT/RT		16											1																		
D-909	1109	E. 22ND ST.	30+13.00	E. 22ND ST.	30+16.53	RT		5															1														
D-908	1109	E. 22ND ST.	30+23.00	E. 22ND ST.	30+27.98	LT		5															1														
D-293	1109	E. 22ND ST.	30+26.37			RT																			1												
D-292	1109	E. 22ND ST.	30+64.59			LT																			1												
D-901	1109	E. 22ND ST.	30+99.20			RT		14											1																		
D-900	1109	E. 22ND ST.	31+00.00	E. 22ND ST.	31+06.00	LT/RT		45											1																		
D-294	1109	E. 22ND ST.	31+06.00			RT																			1												
D-412	1111	RAMP IB5	1712+10.02			LT																	1														
D-327	1112	RAMP A2	409+73.48	RAMP A2	409+89.06	LT				22												1															
D-328	1112	RAMP A2	409+89.06	RAMP A2	409+93.75	LT				5												1															
D-323	1112	RAMP IJ3	96+45.40	E. 14TH ST. NB XOVER	251+96.37	RT/LT					69												1														
D-651	1114	E. 14TH ST. NB XOVER	253+16.81	E. 14TH ST. NB XOVER	251+96.37	RT/LT					123							1																			
D-650	1114	INTERIM E. 14TH ST. NB	254+18.32	INTERIM E. 14TH ST. NB	254+15.59	RT					10							1																			
D-652	1114	INTERIM E. 14TH ST. SB	200+93.06	RAMP IH4	17+61.02	LT		169											1																		
D-751	1116	CARNEGIE AVE.	63+72.00	CARNEGIE AVE.	64+43.91	RT		72										1																			
D-753	1116	CARNEGIE AVE.	64+15.00	CARNEGIE AVE.	64+49.98	LT		36											1																		
D-754	1116	CARNEGIE AVE.	64+43.91			RT								5									1														
D-755	1116	CARNEGIE AVE.	64+44.13	CARNEGIE AVE.	64+43.91	RT		10										1																			
D-756	1116	CARNEGIE AVE.	64+49.98	CARNEGIE AVE.	64+43.91	LT/RT		59										1																			
D-757	1116	CARNEGIE AVE.	65+10.00	CARNEGIE AVE.	65+11.87	LT/RT		59											1																		
D-821	1116	CARNEGIE AVE.	65+11.87			RT																			1												
D-760	1116	CARNEGIE AVE.	65+88.07	CARNEGIE AVE.	65+11.87	RT		77										1																			
D-758	1116	CARNEGIE AVE.	65+95.43	CARNEGIE AVE.	65+11.87	LT/RT		101										1																			
D-822	1116	MIDTOWN CONNECTOR	512+25.00	MIDTOWN CONNECTOR	513+00.00	LT/RT		78											1																		
D-812	1116	MIDTOWN CONNECTOR	512+99.00	MIDTOWN CONNECTOR	513+00.00	LT/RT		25										1																			
D-814	1116	MIDTOWN CONNECTOR	512+99.00	MIDTOWN CONNECTOR	513+00.00	RT		20										1																			
D-813	1116	MIDTOWN CONNECTOR	513+00.00	CARNEGIE AVE.	65+11.87	RT		122															1														
D-770	1117	E. 28TH ST.	13+05.22			LT																		1													
D-773	1117	E. 28TH ST.	13+07.99			RT																			1												
D-772	1117	E. 28TH ST.	13+29.74			RT																		1													
TOTALS CARRIED TO SHEET 447								1146	25	27	328	-	-	5	140	-	11	12	1	1	-	-	2	2	1	6	-	5	-	-	-	-	-	-	-	-	-

Preliminary Plans - Not For Reference Only

LOCAL DRAINAGE SUBSUMMARY - 3

CUY-90-16.28 (CCG3A)

MODEL: Sheet-03 PAPERSIZE: 34x22 (in.) DATE: 6/12/2025 TIME: 3:09:44 PM USER: Joseph.Hogan
pw:\\mb-us-pw.bentley.com:mb-us-pw-03\Documents\Cleveland_OH101_Projects\ODOT\District12\82382\400-Engineering\Drainage\Sheets\82382_DS101.dgn

DESIGN AGENCY
Michael Baker INTERNATIONAL

DESIGNER MJB
REVIEWER KGJ 05/22/24
PROJECT ID 82382
SHEET 446 TOTAL 2696

REF NO.	SHEET NO.	STATION FROM		STATION TO		SIDE	CFN	611 12" CONDUIT, TYPE B, 706.08 & 706.12	611 12" CONDUIT, TYPE B, 748.01	611 12" CONDUIT, TYPE C, 706.08 & 706.12	611 15" CONDUIT, TYPE B, 706.08 & 706.12	611 15" CONDUIT, TYPE C, 706.08 & 706.12	611 21" CONDUIT, TYPE B	611 24" CONDUIT, TYPE B, 706.08 & 706.12	611 66" CONDUIT, TYPE B, 706.02 & 706.11	611 66" CONDUIT, TYPE C, 706.02 & 706.11	611 CATCH BASIN, NO. 3, AS PER PLAN	611 CATCH BASIN, NO. 3A, AS PER PLAN	611 CATCH BASIN, NO. 6, AS PER PLAN 2	611 CATCH BASIN, NO. 8, AS PER PLAN 2	611 CATCH BASIN, NO. 2-2A, AS PER PLAN 2	611 CATCH BASIN, NO. 2-2B, AS PER PLAN	611 CATCH BASIN, NO. 2-2B, AS PER PLAN 2	611 CATCH BASIN ADJUSTED TO GRADE	611 CATCH BASIN RECONSTRUCTED TO GRADE	611 MANHOLE, NO. 3, AS PER PLAN	611 MANHOLE, NO. 3, AS PER PLAN 2	611 MANHOLE ADJUSTED TO GRADE	611 MANHOLE RECONSTRUCTED TO GRADE	611 MANHOLE RECONSTRUCTED TO GRADE, AS PER PLAN	611 MANHOLE RECONSTRUCTED TO GRADE, AS PER PLAN 2	899 CURED-IN-PLACE PIPE LINER, AS PER PLAN, NO. 6 EGG-SHAPED	899 CURED-IN-PLACE PIPE LINER, AS PER PLAN, NO. 7 EGG-SHAPED	899 CURED-IN-PLACE PIPE LINER, AS PER PLAN, NO. 10 EGG-SHAPED	899 CURED-IN-PLACE PIPE LINER, AS PER PLAN, NO. 11 EGG-SHAPED	899 CURED-IN-PLACE PIPE LINER, AS PER PLAN, NO. 12 EGG-SHAPED	
								FT	FT	FT	FT	FT	FT	FT	FT	FT	EACH	EACH	EACH	EACH	EACH	EACH	EACH	EACH	EACH	EACH	EACH	EACH	EACH	EACH	EACH	FT	FT	FT	FT	FT	
D-811	1118	MIDTOWN CONNECTOR	507+62.56	MIDTOWN CONNECTOR	508+21.07	RT		62										1																			
D-810	1118	MIDTOWN CONNECTOR	507+63.21	MIDTOWN CONNECTOR	508+21.07	LT/RT		62										1																			
D-820	1119	MIDTOWN CONNECTOR	508+21.07			RT																				1										
D-823	1119	MIDTOWN CONNECTOR	509+99.64	MIDTOWN CONNECTOR	510+51.28	RT		58										1																			
D-824	1119	MIDTOWN CONNECTOR	510+51.28			RT																				1										
D-816	1119	CEDAR AVE.	400+67.59	CEDAR AVE.	400+80.05	RT/CL		19									1																			
D-815	1119	CEDAR AVE.	400+75.46	CEDAR AVE.	400+80.05	LT/CL		23									1																			
D-817	1119	CEDAR AVE.	400+80.05	CEDAR AVE.	402+12.96	CL/RT					132															1										
D-819	1119	CEDAR AVE.	402+12.96			RT																				1										
D-818	1119	CEDAR AVE.	402+16.24	CEDAR AVE.	402+12.96	RT		20										1																			
CS-1	1366	RAMP A2	414+35.48	RAMP IB5	1712+10.02	RT/LT																														354	
CS-2	1366	E. 14TH ST. NB XOVER	251+96.37	RAMP A2	414+35.48	LT/RT																														241	
CS-3	1367	RAMP H5	978+89.90	E. 14TH ST. NB XOVER	251+96.37	RT/LT																												270			
CS-4	1367	E. 22ND ST.	14+15.87	RAMP H5	978+89.90	RT																													413		
CS-5	1368	I.R. 90 EB	193+29.00	I.R. 90 WB	193+57.00	RT/LT																											176			
CS-6	1368	I.R. 90 EB	194+52.58	I.R. 90 EB	193+29.00	RT																											154			
CS-7	1368	I.R. 90 WB	193+57.00	CENTRAL AVE. CONNECTOR	600+58.32	LT/RT																											326			
CS-8	1368	RAMP B6	1617+74.40	I.R. 90 EB	194+52.58	RT																										101				
CS-9	1368	E. 22ND ST.	30+64.87	RAMP B6	1617+74.70	LT/RT																										358				
				TOTALS FROM THIS SHEET				244	-	-	132	-	-	-	-	-	2	4	-	-	-	-	-	-	-	1	-	3	-	-	-	459	656	413	270	595	
				TOTALS FROM SHEET	444			1014	30	104	313	-	-	-	325	-	11	9	-	-	1	3	1	-	-	12	1	2	1	2	1	-	-	-	-	-	
				TOTALS FROM SHEET	445			1027	215	19	209	145	5	-	251	246	9	12	-	-	-	2	1	-	-	8	3	6	1	-	-	-	-	-	-	-	
				TOTALS FROM SHEET	446			1146	25	27	328	-	-	5	140	-	11	12	1	1	-	-	2	2	1	6	-	5	-	-	-	-	-	-	-	-	
		TOTALS CARRIED TO GENERAL SUMMARY						3431	270	150	982	145	5	5	716	246	33	37	1	1	1	5	4	2	1	27	4	16	2	2	1	459	656	413	270	595	

Preliminary Plans - For Reference Only

LOCAL DRAINAGE SUBSUMMARY - 4

DESIGN AGENCY
Michael Baker INTERNATIONAL

DESIGNER MJB
REVIEWER KGJ 05/22/24
PROJECT ID 82382
SHEET 447 TOTAL 2696

CUY-90-16.28 (CCG3A)

MODEL: Sheet-04 PAPERSIZE: 34x22 (in.) DATE: 6/12/2025 TIME: 3:09:55 PM USER: Joseph.Hogan
pw:\\mb-us-pw.bentley.com:mb-us-pw-03\Documents\Cleveland_OH101_Projects\ODOT\District12\82382\400-Engineering\Drainage\Sheets\82382_DS101.dgn

REF NO.	SHEET NO.	STATION FROM	STATION TO	SIDE	OUTLET ELEV.	605 6" SHALLOW PIPE UNDERDRAINS WITH GEOTEXTILE FABRIC	605 6" UNCLASSIFIED PIPE UNDERDRAINS	605 6" BASE PIPE UNDERDRAINS WITH GEOTEXTILE FABRIC	611 6" CONDUIT, TYPE F	611 PRECAST REINFORCED CONCRETE OUTLET	BENDS AND BRANCHES FOR INFORMATION ONLY 6" X 22.5° BEND	6" X 45° BEND	6" X 90° BEND	6" X 6" WYE	6" X 6" TEE	6" X 6" CROSS
		FROM	TO			FT	FT	FT	FT	EACH	EACH	EACH	EACH	EACH	EACH	EACH
		I.R. 90 EB														
UD-1	1093	175+70.29	176+08.50	LT	694.70			28	10							
UD-2	1093	175+72.40	176+10.00	LT	N/A	38									1	
UD-3	1093	175+77.47	176+10.00	LT	693.78	33			32				1			
UD-4	1093	176+12.00	176+84.62	LT	693.55	73			32						1	
UD-5	1093	176+12.00	176+84.89	LT	N/A	73										1
UD-6	1093	176+14.17	176+83.50	LT	694.20			59	10							
UD-7	1093	176+84.62	177+68.03	LT	N/A	83										
UD-8	1093	176+84.89	177+68.01	LT	N/A	83										
UD-9	1093	176+87.17	177+65.83	LT	694.20			69	10							
UD-10	1093	177+70.01	179+00.00	LT	N/A	129									1	
UD-11	1093	177+70.03	179+00.00	LT	693.81	130			32				1			
UD-12	1093	177+71.50	179+00.00	LT	694.06			118	10							
UD-13	1093	177+88.99	179+00.00	RT	N/A			112	6				1		1	
UD-14	1093	179+00.00	181+98.48	LT	691.17			285	10							
UD-15	1093	179+00.00	182+00.00	LT	N/A	297									1	
UD-16	1093	179+00.00	182+00.00	LT	690.72	300			32				1			
UD-17	1093	179+00.00	185+23.79	RT	687.31			630	21	1					1	
		I.R. 90 WB														
UD-18	1093	177+37.41	187+07.11	LT	N/A	965										1
UD-19	1093	177+40.14	187+07.11	LT	684.52	967			32						1	
UD-20	1093	177+48.32	182+33.74	RT	690.51			479	10				1			
UD-21	1093	179+90.78	187+06.26	LT	684.98			698	10							
		RAMP A3														
UD-22	1093	577+30.03	581+92.88	LT	N/A			461	10		1	1	1			
UD-23	1093	577+31.59	581+92.68	LT	N/A	461									1	
UD-24	1093	577+35.87	581+92.16	RT	680.66			460	50				1			
		RAMP IB5														
UD-25	1093	1705+74.29	1707+08.02	RT	N/A	134										1
UD-26	1093	1707+08.02	1707+60.02	RT	N/A	52										
UD-27	1093	1707+08.45	1707+69.85	RT	N/A			50	10							
UD-28	1093	1707+69.85	1714+60.40	RT	670.52			645	10							
UD-29	1093	1708+29.42	1714+59.91	LT	670.52			694	28				1			
		RAMP B6														
UD-30	1093	1597+91.72	1599+35.47	RT	N/A	144									1	
UD-31	1093	1597+95.55	1599+35.47	RT	N/A	140									1	
UD-32	1093	1599+35.47	1600+85.78	LT	693.78		150		52				1			
UD-33	1093	1599+35.47	1600+85.80	RT	N/A		150								1	
UD-34	1093	1600+62.66	1606+12.85	RT	692.45			556	10	1					1	
UD-35	1093	1600+85.78	1606+12.85	LT	691.25			526	19	1					1	
		I.R. 90 EB														
UD-36	1094	182+02.00	183+99.89	LT	688.02	198			32				1			
UD-37	1094	182+02.02	183+99.97	LT	N/A	196									1	
UD-38	1094	182+03.68	183+98.48	LT	688.37			182	10							
UD-39	1094	184+01.89	185+46.73	LT	685.80	145			32						1	
UD-40	1094	184+01.99	185+46.73	LT	N/A	143										1
UD-41	1094	184+04.92	185+45.21	LT	686.67			128	10							
TOTALS CARRIED TO SHEET 457						4784	300	6180	530	3	-	1	10	1	15	4

Preliminary Plans - Not For Reference Only

CUY-90-16.28 (CCG3A)

MODEL: Sheet-01 PAPERSIZE: 34x22 (in.) DATE: 3/27/2025 TIME: 8:58:51 PM USER: Alexandria.Summers
pw:\\mb-us-pw.bentley.com:mb-us-pw-03\Documents\Cleveland_Off\01_Projects\ODOT\District12\82382\400-Engineering\Drainage\Sheets\82382_DS201.dgn

UNDERDRAIN SUBSUMMARY - 1

DESIGN AGENCY
Michael Baker INTERNATIONAL

DESIGNER JAR
REVIEWER KGJ 05/22/24
PROJECT ID 82382
SHEET 448 TOTAL 2696

REF NO.	SHEET NO.	STATION FROM	STATION TO	SIDE	OUTLET ELEV.	605 6" SHALLOW PIPE UNDERDRAINS WITH GEOTEXTILE FABRIC	605 6" UNCLASSIFIED PIPE UNDERDRAINS	605 6" BASE PIPE UNDERDRAINS WITH GEOTEXTILE FABRIC	611 6" CONDUIT, TYPE F	611 PRECAST REINFORCED CONCRETE OUTLET	BENDS AND BRANCHES FOR INFORMATION ONLY 6" X 22.5° BEND	6" X 45° BEND	6" X 90° BEND	6" X 6" WYE	6" X 6" TEE	6" X 6" CROSS
		FROM	TO			FT	FT	FT	FT	EACH	EACH	EACH	EACH	EACH	EACH	EACH
		I.R. 90 WB														
UD-42	1094	182+39.34	187+06.30	RT	687.37			463	10							
		RAMP A3														
UD-43	1094	581+94.59	585+76.96	RT	662.50			382	31				1			
UD-44	1094	581+95.11	585+76.74	LT	663.16			373	10				1			
UD-45	1094	581+95.11	585+76.96	LT	N/A	372			10						1	
UD-46	1094	585+78.26	587+34.33	RT	659.38			173	61						1	
UD-47	1094	585+88.81	587+33.27	LT	N/A	140										1
UD-48	1094	585+89.07	587+32.95	LT	N/A			134	10			1		1	1	
UD-49	1094	585+89.07	587+33.71	RT	N/A	147										1
		RAMP B6														
UD-50	1094	1606+12.85	1607+75.42	LT	N/A			162								
		I.R. 90 EB														
UD-51	1095	185+23.79	185+71.01	RT	N/A		48									
UD-52	1095	185+46.73	185+73.27	LT	N/A		27									
UD-53	1095	185+46.73	185+75.37	LT	N/A		29									
UD-54	1095	185+48.25	185+76.26	LT	686.67		18		10							
UD-55	1095	188+65.65	193+28.92	RT	662.79			453	10							
UD-56	1095	188+66.70	193+28.85	RT	663.08	462			7				1			
UD-57	1095	188+66.70	193+28.97	LT	663.14	463			15				1			
UD-58	1095	188+70.90	189+23.50	LT	676.94			43	10							
UD-59	1095	189+29.58	193+50.52	LT	663.82			413	10							
		I.R. 90 WB														
UD-60	1095	187+07.11	187+39.93	LT	N/A		33									
UD-61	1095	187+07.11	187+41.63	LT	N/A		34									
UD-62	1095	187+09.26	187+37.42	RT	687.37		19		10							
UD-63	1095	187+09.30	187+41.78	LT	684.98		22		10							
UD-64	1095	190+30.81	195+12.80	RT	665.15			470	10							
UD-65	1095	190+31.69	195+14.99	RT	N/A	482									1	
UD-66	1095	190+36.06	191+84.73	LT	675.35	149			20						1	
UD-67	1095	190+49.79	191+84.73	LT	N/A			135								1
		RAMP A1														
UD-68	1095	302+58.31	308+78.00	RT	665.35			617	10			1	2			
UD-69	1095	302+58.98	307+25.00	LT	666.99	456			10							
		RAMP A2														
UD-70	1095	431+28.56	435+64.83	LT	669.35			426	10							
UD-71	1095	431+28.75	434+14.52	RT	673.50			277	10			1		1		
UD-72	1095	431+28.75	435+77.81	RT	666.53	440			10			1		1		
		RAMP A3														
UD-73	1095	587+32.95	590+31.88	LT	N/A			281								
UD-74	1095	587+33.27	589+81.95	LT	N/A	239										
UD-75	1095	587+33.71	589+81.95	RT	N/A	252										
UD-76	1095	587+34.33	588+55.45	RT	N/A			136								
		E. 14TH ST. NB														
UD-77	1095	54+36.37	54+74.78	RT	660.70			32	10							
UD-78	1095	54+78.24	55+12.06	RT	660.30			27	10							
TOTALS CARRIED TO SHEET 457						3602	230	4997	314	-	-	4	6	3	5	3

Preliminary Plans - For Reference Only

UNDERDRAIN SUBSUMMARY - 2

CUY-90-16.28 (CCG3A)

MODEL: Sheet-02 PAPERSIZE: 34x22 (in.) DATE: 3/27/2025 TIME: 8:58:53 PM USER: Alexandria.Summers
pw:\\mb-us-pw.bentley.com:mb-us-pw-03\Documents\Cleveland_OH01_Projects\ODOTDistrict12\82382400-Engineering\Drainage\Sheets\82382_DS201.dgn

DESIGN AGENCY
Michael Baker INTERNATIONAL

DESIGNER JAR

REVIEWER KGJ 05/22/24

PROJECT ID 82382

SHEET 449 TOTAL 2696

REF NO.	SHEET NO.	STATION FROM	STATION TO	SIDE	OUTLET ELEV.	605 6" SHALLOW PIPE UNDERDRAINS WITH GEOTEXTILE FABRIC	605 6" UNCLASSIFIED PIPE UNDERDRAINS	605 6" BASE PIPE UNDERDRAINS WITH GEOTEXTILE FABRIC	611 6" CONDUIT, TYPE F	611 PRECAST REINFORCED CONCRETE OUTLET	BENDS AND BRANCHES FOR INFORMATION ONLY 6" X 22.5° BEND	6" X 45° BEND	6" X 90° BEND	6" X 6" WYE	6" X 6" TEE	6" X 6" CROSS
		FT	FT			FT	FT	FT	FT	EACH	EACH	EACH	EACH	EACH	EACH	EACH
		E. 14TH ST. NB (CONT.)														
UD-79	1095	55+15.80	55+56.55	RT	660.05			31	10							
UD-80	1095	55+63.53	56+11.30	RT	660.05			38	10							
UD-81	1095	56+15.10	56+95.99	RT	660.24			72	10							
UD-82	1095	57+67.45	58+96.25	RT	663.00			119	10							
		INTERIM E. 14TH ST. SB														
UD-83	1095	37+76.98	209+01.00	LT	660.93			162	10							
UD-84	1095	206+97.30	208+25.00	LT	660.84			118	10							
UD-85	1095	208+28.68	208+58.01	LT	660.70			20	10							
UD-86	1095	208+65.00	208+97.25	LT	660.70			23	10							
		E. 18TH ST.														
UD-87	1095	20+84.18	22+97.25	RT	661.40			194	10							
		I.R. 90 EB														
UD-88	1096	193+30.09	198+80.15	RT	N/A	547									1	
UD-89	1096	193+30.25	198+80.25	LT	642.81	552			57				1			
UD-90	1096	193+55.64	199+16.77	LT	645.02			559	10							
UD-91	1096	193+87.03	198+80.11	RT	N/A	489									1	
UD-92	1096	193+88.15	198+80.05	RT	N/A	484									1	
UD-93	1096	193+90.82	198+80.01	RT	643.30			469	10							
		I.R. 90 WB														
UD-94	1096	191+84.73	192+24.87	LT	N/A		40									
UD-95	1096	191+85.97	193+57.48	LT	673.50			162	10			1				
UD-96	1096	192+24.87	195+14.96	RT	664.55	290			33				1			
UD-97	1096	193+56.81	195+18.83	LT	666.53	155			10			1				
UD-98	1096	195+16.37	200+99.32	LT	644.59	588			56				1			
UD-99	1096	195+16.96	200+99.61	RT	N/A	582									1	
UD-100	1096	195+17.01	200+99.90	RT	N/A	577									1	
UD-101	1096	195+19.22	200+98.48	RT	645.22			561	10							
		RAMP A2														
UD-102	1096	435+79.16	441+65.58	LT	643.10			580	10							
		RAMP B6														
UD-103	1096	1613+64.51	1616+68.46	RT	678.76			291	10							
UD-104	1096	1613+69.92	1620+63.08	RT	N/A	687									1	
UD-105	1096	1613+75.43	1620+60.05	LT	668.47			677	10							
UD-106	1096	1616+95.75	1620+63.08	RT	667.70			361	27						1	
		RAMP B6A														
UD-107	1096	1801+54.76	1802+75.24	RT	678.02	120			8				1			
UD-108	1096	1802+77.13	1805+73.59	RT	N/A	296										1
UD-109	1096	1802+78.80	1805+73.59	RT	665.13			292	70						1	
UD-110	1096	1802+95.51	1805+73.59	LT	N/A			285								1
		RAMP H5														
UD-111	1096	990+53.57	995+07.26	LT	662.79			453	10		2	1				
UD-112	1096	990+53.57	995+27.21	RT	659.14	472			25				1			
UD-113	1096	990+53.57	995+27.21	RT	N/A	465									1	
UD-114	1096	990+53.57	995+27.21	RT	659.58			471	10			1				
UD-115	1096	995+27.23	995+61.73	RT	658.50			24	10			1				
TOTALS CARRIED TO SHEET 457						6304	40	5962	476	-	2	5	5	-	9	2

Preliminary Plans - For Reference Only

UNDERDRAIN SUBSUMMARY - 3

CUY-90-16.28 (CCG3A)
MODEL: Sheet-03 PAPERSIZE: 34x22 (in.) DATE: 3/27/2025 TIME: 8:58:54 PM USER: Alexandria.Summers
pw:\\mb-us-pw.bentley.com:mb-us-pw-03\Documents\Cleveland_OH01_Projects\ODOT\District12\82382400-Engineering\Drainage\Sheets\82382_DS201.dgn

DESIGN AGENCY
Michael Baker INTERNATIONAL
DESIGNER JAR
REVIEWER KGJ 05/22/24
PROJECT ID 82382
SHEET 450 TOTAL 2696

REF NO.	SHEET NO.	STATION FROM	STATION TO	SIDE	OUTLET ELEV.	605 6" SHALLOW PIPE UNDERDRAINS WITH GEOTEXTILE FABRIC FT	605 6" UNCLASSIFIED PIPE UNDERDRAINS FT	605 6" BASE PIPE UNDERDRAINS WITH GEOTEXTILE FABRIC FT	611 6" CONDUIT, TYPE F FT	611 PRECAST REINFORCED CONCRETE OUTLET EACH	BENDS AND BRANCHES FOR INFORMATION ONLY 6" X 22.5° BEND EACH	6" X 45° BEND EACH	6" X 90° BEND EACH	6" X 6" WYE EACH	6" X 6" TEE EACH	6" X 6" CROSS EACH
		RAMP H5 (CONT.)														
UD-116	1096	995+29.22	995+60.99	RT	658.07	32			25				1			
UD-117	1096	995+29.25	995+61.40	RT	N/A	32									1	
		I.R. 90 EB														
UD-118	1097	198+81.70	202+70.38	RT	640.00	389			29	1			1			
UD-119	1097	198+81.70	202+70.88	RT	N/A	389									1	
UD-120	1097	198+81.70	205+21.41	LT	635.37	640			34				1			
UD-121	1097	198+83.28	202+71.28	RT	N/A			388	10			1	1	1		
		INTERIM I.R. 90 EB														
UD-122	1097	3000+01.21	3005+95.48	LT	635.89			579	10							
		I.R. 90 WB														
UD-123	1097	201+01.67	205+13.85	LT	N/A	412			65						1	
UD-124	1097	201+03.25	205+16.26	RT	634.51	414							1			
UD-125	1097	201+03.25	206+88.00	RT	635.89			579	10			1				
UD-126	1097	201+03.68	205+08.93	LT	635.01			394	10							
		RAMP B6														
UD-127	1097	1620+63.08	1621+24.02	RT	N/A			61			2					
UD-128	1097	1620+66.11	1621+37.21	LT	668.47			70	10							
		MIDTOWN CONNECTOR														
UD-129	1097	500+20.62	502+48.85	LT	665.94			218	10			2				
		E. 22ND ST.														
UD-130	1097	31+01.07	32+31.56	RT	666.40			156	10							
UD-131	1097	31+01.87	32+17.03	LT	666.52			106	10							
		INTERIM I.R. 90 EB														
UD-132	1098	3003+48.80	3005+97.49	LT	N/A	246									1	
UD-133	1098	3003+50.88	3007+43.72	RT	636.64			403	23	1					1	
		INTERIM I.R. 90 WB														
UD-134	1098	4001+02.31	4004+00.01	LT	N/A	296									1	
UD-135	1098	4004+02.33	4005+96.76	LT	N/A	194									1	
UD-136	1098	4004+03.60	4005+96.78	RT	632.40	198			56				1			
UD-137	1098	4004+04.94	4005+96.75	LT	N/A	190									1	
UD-138	1098	4004+05.15	4005+95.58	LT	632.99			177	10							
		CARNEGIE AVE.														
UD-139	1098	55+70.34	56+93.21	RT	667.19			113	10							
UD-140	1098	57+05.04	57+30.00	RT	667.07			15	10							
		MIDTOWN CONNECTOR														
UD-141	1098	500+61.70	502+48.85	RT	665.94			185	10			1				
UD-142	1098	502+59.35	505+40.68	LT	665.93			282	10							
UD-143	1098	502+59.35	505+40.68	RT	665.93			261	10							
UD-144	1098	505+40.68	507+61.45	LT	666.49			211	10							
		INTERIM I.R. 90 EB														
UD-145	1099	3005+99.49	3006+29.28	LT	N/A	30									1	
UD-146	1099	3006+00.47	3006+30.15	RT	634.99	30			33				1			
UD-147	1099	3006+00.48	3006+27.48	LT	635.53			17	10							
UD-148	1099	3006+31.30	3007+42.69	LT	N/A	110										1
UD-149	1099	3006+31.99	3007+43.24	RT	634.89	112			33						1	
TOTALS CARRIED TO SHEET 457						3714	-	4215	458	2	2	5	7	1	10	1

Preliminary Plans - For Reference Only

UNDERDRAIN SUBSUMMARY - 4

CUY-90-16.28 (CCG3A)

MODEL: Sheet-04 PAPERSIZE: 34x22 (in.) DATE: 3/27/2025 TIME: 8:58:55 PM USER: Alexandria.Summers
pw:\\mb-us-pw.bentley.com:mb-us-pw-03\Documents\Cleveland_OH01_Projects\ODOT\District12\82382400-Engineering\Drainage\Sheets\82382_DS201.dgn

DESIGN AGENCY
Michael Baker INTERNATIONAL

DESIGNER JAR

REVIEWER KGJ 05/22/24

PROJECT ID 82382

SHEET 451 TOTAL 2696

REF NO.	SHEET NO.	STATION FROM	STATION TO	SIDE	OUTLET ELEV.	605 6" SHALLOW PIPE UNDERDRAINS WITH GEOTEXTILE FABRIC	605 6" UNCLASSIFIED PIPE UNDERDRAINS	605 6" BASE PIPE UNDERDRAINS WITH GEOTEXTILE FABRIC	611 6" CONDUIT, TYPE F	611 PRECAST REINFORCED CONCRETE OUTLET	BENDS AND BRANCHES FOR INFORMATION ONLY 6" X 22.5° BEND	6" X 45° BEND	6" X 90° BEND	6" X 6" WYE	6" X 6" TEE	6" X 6" CROSS
		FROM	TO			FT	FT	FT	FT	EACH	EACH	EACH	EACH	EACH	EACH	EACH
		INTERIM I.R. 90 EB (CONT.)														
UD-150	1099	3006+32.87	3007+40.48	LT	635.82			96	10							
UD-151	1099	3007+42.69	3008+03.63	LT	N/A	60										
UD-152	1099	3007+43.24	3008+03.00	RT	N/A	60										
UD-153	1099	3007+43.52	3008+00.77	LT	635.82			46	10							
UD-154	1099	3007+43.72	3012+70.17	RT	N/A			538								
UD-155	1099	3008+05.00	3012+86.06	LT	N/A	478									1	
UD-156	1099	3008+05.00	3012+86.06	RT	634.55	485			32				1			
UD-157	1099	3008+06.53	3012+85.17	LT	635.09			464	10							
		INTERIM I.R. 90 WB														
UD-158	1099	4005+69.49	4005+98.66	RT	635.53			21	10			1				
UD-159	1099	4005+97.00	4006+57.72	LT	632.99			50	10							
UD-160	1099	4005+98.74	4006+58.26	RT	632.23	61			56						1	
UD-161	1099	4005+99.99	4007+06.35	RT	635.82			100	10			1				
UD-162	1099	4006+00.00	4006+58.26	LT	N/A	58										1
UD-163	1099	4006+00.00	4006+58.26	LT	N/A	58										1
UD-164	1099	4006+57.72	4007+24.62	LT	632.99			56	10							
UD-165	1099	4006+58.26	4007+22.92	LT	N/A	64										
UD-166	1099	4006+58.26	4007+22.92	LT	N/A	65										
UD-167	1099	4006+58.26	4007+22.92	RT	N/A	66										
UD-168	1099	4007+10.56	4007+68.14	RT	635.82			50	10			1				
UD-169	1099	4007+24.88	4013+65.00	RT	632.47		652		57				1			
UD-170	1099	4007+24.94	4008+98.04	LT	N/A	173									1	
UD-171	1099	4007+24.98	4008+97.77	LT	N/A	171									1	
UD-172	1099	4007+25.17	4008+96.39	LT	633.02			159	10							
UD-173	1099	4007+69.73	4012+31.98	RT	636.41			464	10			1				
UD-174	1099	4009+00.01	4012+47.38	LT	N/A	343									1	
UD-175	1099	4009+00.04	4012+47.77	LT	635.35	348			19				1			
UD-176	1099	4009+01.75	4012+47.26	LT	636.10			330	10							
		CARNEGIE AVE.														
UD-177	1099	55+70.34	57+30.00	LT	667.07			150	10							
UD-178	1099	57+40.36	57+78.00	LT	667.34			28	10							
UD-179	1099	57+40.52	57+78.00	RT	666.85			28	10							
UD-180	1099	57+90.06	58+28.00	LT	666.65			38								
UD-181	1099	58+40.06	58+87.25	LT	666.46			47								
		INTERIM I.R. 90 EB														
UD-182	1100	3012+72.13	3013+80.79	RT	646.02		112		5				1			
UD-183	1100	3012+88.01	3014+30.70	LT	N/A		142								1	
UD-184	1100	3012+88.04	3014+30.69	RT	643.95		144		29				1			
UD-185	1100	3012+89.51	3014+30.67	LT	644.71		130		10							
		INTERIM I.R. 90 WB														
UD-186	1100	4012+36.22	4013+72.87	RT	646.36		130		10			1				
UD-187	1100	4012+49.97	4013+65.00	LT	N/A		103		10							
UD-188	1100	4012+50.00	4013+64.98	LT	N/A		113									
UD-189	1100	4012+50.08	4013+65.00	LT	642.61		115		34				1			
		RAMP 4														
UD-190	1100	904+45.00	905+16.21	LT	647.94			80	18						1	
UD-191	1100	904+45.00	906+63.94	RT	644.90			209								
TOTALS CARRIED TO SHEET 457						2490	1641	2954	420	-	-	5	6	-	7	2

Preliminary Plans - For Reference Only

UNDERDRAIN SUBSUMMARY - 5

CUY-90-16.28 (CCG3A)

MODEL: Sheet-05 PAPERSIZE: 34x22 (in.) DATE: 3/27/2025 TIME: 8:58:56 PM USER: Alexandria.Summers
pw:\\mb-us-pw.bentley.com:mb-us-pw-03\Documents\Cleveland_OH01_Projects\ODOT\District12\82382\400-Engineering\Drainage\Sheets\82382_DS201.dgn

DESIGN AGENCY
Michael Baker INTERNATIONAL

DESIGNER JAR

REVIEWER KGJ 05/22/24

PROJECT ID 82382

SHEET 452 TOTAL 2696

REF NO.	SHEET NO.	STATION FROM	STATION TO	SIDE	OUTLET ELEV.	605 6" SHALLOW PIPE UNDERDRAINS WITH GEOTEXTILE FABRIC	605 6" UNCLASSIFIED PIPE UNDERDRAINS	605 6" BASE PIPE UNDERDRAINS WITH GEOTEXTILE FABRIC	611 6" CONDUIT, TYPE F	611 PRECAST REINFORCED CONCRETE OUTLET	BENDS AND BRANCHES FOR INFORMATION ONLY: 6" X 22.5° BEND	6" X 45° BEND	6" X 90° BEND	6" X 6" WYE	6" X 6" TEE	6" X 6" CROSS
						FT	FT	FT	FT	EACH	EACH	EACH	EACH	EACH	EACH	EACH
		RAMP 4 (CONT.)														
UD-192	1100	905+16.21	905+38.99	LT	N/A		25									
		CARNEGIE AVE.														
UD-193	1101	37+26.23	37+61.19	RT	668.14			25	10							
UD-194	1101	37+64.98	38+78.31	RT	666.24			146	10							
UD-195	1102	39+71.07	40+91.00	RT	665.66			110	10							
UD-196	1102	40+91.00	41+22.16	RT	665.66			30	10							
		E. 14TH ST. NB														
UD-197	1102	59+00.00	60+49.27	RT	661.09			154	10							
		E. 18TH ST.														
UD-198	1102	23+00.00	23+24.49	RT	663.83			17	10							
UD-199	1102	23+67.73	24+21.23	RT	664.44			44	10							
UD-200	1102	24+24.97	24+79.06	RT	665.19			70	10							
		CENTRAL AVE. CONNECTOR														
UD-201	1102	600+33.91	601+00.52	LT	663.34			64	10							
UD-202	1102	600+39.36	601+00.52	RT	663.28			51	10							
UD-203	1102	601+07.52	604+20.87	LT	663.34			315	10							
		E. 19TH ST.														
UD-204	1102	3+46.24	601+07.52	RT	663.26			358	10							
		RAMP A1														
UD-205	1103	307+28.79	308+33.50	LT	665.32	97			10				1			
UD-206	1103	308+35.50	308+90.06	LT	665.12	47			10						1	
UD-207	1103	308+78.00	311+37.62	RT	665.35			285	10		1		2			
UD-208	1103	308+90.06	309+48.06	LT	N/A	50			8							
UD-209	1103	308+92.17	309+46.00	LT	665.12			44	10							
UD-210	1103	309+50.06	311+30.06	LT	665.32	169			10				1			
UD-211	1103	309+52.17	311+40.17	LT	665.32			169	10							
		E. 19TH ST.														
UD-212	1103	3+50.00	4+04.00	RT	665.21			44	10							
UD-213	1103	3+65.00	3+87.00	LT	665.36			12	10							
		RAMP A1														
UD-214	1104	311+37.62	311+84.53	RT	668.38			38	10							
		CARNEGIE AVE.														
UD-215	1104	48+94.99	49+46.26	RT	667.80			55	10							
UD-216	1104	49+97.62	50+59.14	RT	668.38			50	10							
UD-217	1104	50+19.86	52+33.14	LT	667.85			209	10							
UD-218	1104	50+59.17	52+38.00	RT	668.23			165	10							
UD-219	1104	52+40.00	52+90.53	LT	667.85			42	10							
UD-220	1104	52+46.93	52+75.80	RT	668.29			19	10							
UD-221	1104	52+90.53	53+30.27	LT	667.53			53	10							
		E. 22ND ST.														
UD-222	1104	35+95.87	36+20.72	LT	667.43			15	10							
UD-223	1104	36+09.63	36+20.72	RT	667.43				11							
UD-224	1104	36+31.22	36+85.42	LT	667.43			53	10							
UD-225	1104	36+31.22	37+03.56	RT	667.43			68	10							
TOTALS CARRIED TO SHEET 457						363	25	2705	329	-	-	1	4	-	1	-

Preliminary Plans - For Reference Only

UNDERDRAIN SUBSUMMARY - 6

CUY-90-16.28 (CCG3A)

MODEL: Sheet-06 PAPERSIZE: 34x22 (in.) DATE: 3/27/2025 TIME: 8:58:57 PM USER: Alexandria.Summers
pw:\\mb-us-pw.bentley.com:mb-us-pw-03\Documents\Cleveland_OH101_Projects\ODOT\District12\82382\400-Engineering\Drainage\Sheets\82382_DS201.dgn

DESIGN AGENCY: Michael Baker INTERNATIONAL

DESIGNER: JAR

REVIEWER: KGJ 05/22/24

PROJECT ID: 82382

SHEET: 453 TOTAL: 2696

REF NO.	SHEET NO.	STATION FROM	STATION TO	SIDE	OUTLET ELEV.	605 6" SHALLOW PIPE UNDERDRAINS WITH GEOTEXTILE FABRIC	605 6" UNCLASSIFIED PIPE UNDERDRAINS	605 6" BASE PIPE UNDERDRAINS WITH GEOTEXTILE FABRIC	611 6" CONDUIT, TYPE F	611 PRECAST REINFORCED CONCRETE OUTLET	BENDS AND BRANCHES FOR INFORMATION ONLY 6" X 22.5° BEND	6" X 45° BEND	6" X 90° BEND	6" X 6" WYE	6" X 6" TEE	6" X 6" CROSS
		FROM	TO			FT	FT	FT	FT	EACH	EACH	EACH	EACH	EACH	EACH	EACH
		CARNEGIE AVE.														
UD-226	1105	53+75.77	54+36.75	RT	667.46			51	10							
UD-227	1105	53+76.01	54+45.63	LT	667.29			64	10							
UD-228	1105	54+45.63	55+70.34	RT	667.45			114	10							
UD-229	1105	54+52.53	55+70.34	LT	667.30			109	10							
		RAMP IB5														
UD-230	1106	1714+60.76	1715+39.96	RT	670.52			68	10							
		RAMP IJ3														
UD-231	1106	101+89.00	111+06.38	LT	664.41			910	10							
		RAMP B6														
UD-232	1107	1606+12.85	1607+63.83	RT	N/A			155								
		RAMP IJ3														
UD-233	1107	101+87.29	110+56.34	RT	663.82			857	10				1			
		RAMP B6														
UD-234	1108	1607+79.66	1607+94.91	LT	695.50			5	10							
		RAMP H5														
UD-235	1108	982+55.98	988+55.29	RT	N/A	597										1
UD-236	1108	982+57.73	988+55.56	LT/RT	668.79			599	45	1					1	
UD-237	1108	983+41.86	988+55.07	RT	N/A			510					1	1	1	
UD-238	1108	984+57.52	986+98.62	LT	671.98			232	10			1				
UD-239	1108	987+00.18	987+89.43	LT	671.01			80	10			1				
UD-240	1108	987+90.92	988+53.36	LT	671.23			53	10			1				
UD-241	1108	988+55.07	990+53.57	RT	N/A			192								
UD-242	1108	988+55.29	990+53.57	RT	N/A	195										
UD-243	1108	988+55.56	990+53.57	RT	N/A	197										
UD-244	1108	988+56.36	990+53.57	LT	671.23			192	10			1				
		E. 14TH ST. NB														
UD-245	1108	53+50.00	304+00.00	RT	662.20			255	10							
UD-246	1108	53+53.50	54+31.85	RT	661.35			75	10							
		INTERIM E. 14TH ST. SB														
UD-247	1108	201+99.51	206+25.00	LT	663.92			412	10							
		RAMP B6A														
UD-248	1109	1805+73.59	1806+17.95	RT	N/A	44										
UD-249	1109	1805+73.59	1806+77.50	RT	N/A			122								
UD-250	1109	1805+73.59	1806+88.80	LT	N/A			149								
		E. 22ND ST.														
UD-251	1109	28+88.00	29+12.25	LT	666.20			12	10							
UD-252	1109	29+17.16	29+88.19	LT	665.92			62	10							
UD-253	1109	29+46.50	29+90.94	RT	666.02			34	10							
UD-254	1109	29+46.50	29+91.32	RT	666.04			36	10							
UD-255	1109	29+46.50	30+01.79	LT	666.02			45	10							
UD-256	1109	30+00.42	30+20.66	RT	666.04			12	10							
		RAMP H6														
UD-257	1110	1188+48.39	1190+76.18	RT	668.55			213	10							
TOTALS CARRIED TO SHEET 457						1033	-	5618	265	1	-	4	2	1	2	1

Preliminary Plans - For Reference Only

UNDERDRAIN SUBSUMMARY - 7

CUY-90-16.28 (CCG3A)

MODEL: Sheet-07 PAPERSIZE: 34x22 (in.) DATE: 3/27/2025 TIME: 8:58:58 PM USER: Alexandria.Summers
pw:\\mb-us-pw.bentley.com:mb-us-pw-03\Documents\Cleveland_OH01_Projects\ODOT\District12\82382400-Engineering\Drainage\Sheets\82382_DS201.dgn

DESIGN AGENCY
Michael Baker INTERNATIONAL

DESIGNER JAR

REVIEWER KGJ 05/22/24

PROJECT ID 82382

SHEET 454 TOTAL 2696

REF NO.	SHEET NO.	STATION FROM	STATION TO	SIDE	OUTLET ELEV.	605 6" SHALLOW PIPE UNDERDRAINS WITH GEOTEXTILE FABRIC	605 6" UNCLASSIFIED PIPE UNDERDRAINS	605 6" BASE PIPE UNDERDRAINS WITH GEOTEXTILE FABRIC	611 6" CONDUIT, TYPE F	611 PRECAST REINFORCED CONCRETE OUTLET	BENDS AND BRANCHES FOR INFORMATION ONLY: 6" X 22.5° BEND	6" X 45° BEND	6" X 90° BEND	6" X 6" WYE	6" X 6" TEE	6" X 6" CROSS
		FROM	TO			FT	FT	FT	FT	EACH	EACH	EACH	EACH	EACH	EACH	EACH
		RAMP H6 (CONT.)														
UD-258	1110	1188+48.39	1190+77.90	LT	667.87			247	43				1			
UD-259	1110	1188+48.39	1190+77.90	LT	N/A	241									1	
UD-260	1110	1188+48.39	1190+77.90	RT	N/A	229									1	
UD-261	1110	1190+79.76	1191+22.76	LT	667.67			47	41						1	
UD-262	1110	1190+79.81	1191+22.67	LT	N/A	45										1
UD-263	1110	1190+79.90	1191+22.43	RT	N/A	42										1
UD-264	1110	1190+81.81	1191+19.22	RT	668.14			27	10							
UD-265	1110	1191+22.43	1191+58.68	RT	N/A	36										
UD-266	1110	1191+22.67	1191+76.00	LT	N/A	55										
UD-267	1110	1191+22.76	1191+76.00	LT	N/A			56								
UD-268	1110	1191+25.45	1191+72.88	RT	668.14			38	10			1				
UD-269	1110	1191+78.00	1192+40.07	LT	668.38			62	31				1			
UD-270	1110	1191+78.00	1192+40.07	LT	N/A	62									1	
UD-271	1110	1191+79.75	1192+16.20	RT	668.97			27	10							
UD-272	1110	1191+79.78	1192+40.07	RT	668.97	50			10							
UD-273	1110	1192+21.37	1192+57.72	RT	669.28			45	10							
		RAMP IJ3														
UD-274	1111	101+39.99	101+83.03	RT	680.54			32	10							
		RAMP A2														
UD-275	1112	408+72.00	410+16.00	LT	694.66			145	48				1			
UD-276	1112	408+72.00	410+16.66	RT	N/A	141									1	
UD-277	1112	408+72.00	410+16.68	RT	N/A	143									1	
UD-278	1112	408+73.37	410+14.43	RT	694.86			127	10							
UD-279	1112	410+18.70	410+36.66	RT	N/A	18									1	
UD-280	1112	410+18.70	410+39.65	RT	N/A	10			10						1	
UD-281	1112	410+18.75	410+31.67	LT	697.26			13	46				1			
UD-282	1112	410+20.06	410+41.84	RT	698.51			11	10							
		RAMP IH4														
UD-283	1112	10+88.48	17+59.58	LT/RT	667.89			653	10							
UD-284	1112	12+90.62	17+59.10	LT	669.94			476	10							
		RAMP IH5														
UD-285	1112	1075+97.28	1082+78.38	LT	677.55			692	68	1			1			
UD-286	1112	1075+99.49	1082+76.66	RT	N/A	667									1	
UD-287	1112	1076+00.83	1082+76.18	RT	N/A			655							1	
		E. 14TH ST. NB XOVER														
UD-288	1112	250+32.69	253+16.81	LT	N/A			284							1	
UD-289	1112	251+86.50	253+16.81	RT	668.74			125	10							
		E. 14TH ST. NB														
UD-290	1112	297+61.44	298+38.52	RT	668.74			77	16				1			
		RAMP A2														
UD-291	1113	405+88.00	407+99.32	RT/LT	N/A			211	38							
UD-292	1113	406+10.00	407+99.32	RT	N/A	189										
UD-293	1113	406+10.00	407+99.32	RT	N/A	189										
UD-294	1113	407+99.32	408+68.36	LT	692.47			76					2		1	
UD-295	1113	407+99.32	408+68.36	RT	N/A	68										1
TOTALS CARRIED TO SHEET 457						2185	-	4126	451	1	-	1	8	-	12	3

Preliminary Plans - For Reference Only

UNDERDRAIN SUBSUMMARY - 8

DESIGN AGENCY: Michael Baker INTERNATIONAL

DESIGNER: JAR

REVIEWER: KGJ 05/22/24

PROJECT ID: 82382

SHEET 455 TOTAL 2696

CUY-90-16.28 (CCG3A)

MODEL: Sheet-08 PAPERSIZE: 34x22 (in.) DATE: 3/27/2025 TIME: 8:59:00 PM USER: Alexandria.Summers
pw:\\mb-us-pw.bentley.com:mb-us-pw-03\Documents\Cleveland_OH01_Projects\ODOTDistrict12\82382400-Engineering\Drainage\Sheets\82382_DS201.dgn

REF NO.	SHEET NO.	STATION FROM	STATION TO	SIDE	OUTLET ELEV.	605 6" SHALLOW PIPE UNDERDRAINS WITH GEOTEXTILE FABRIC	605 6" UNCLASSIFIED PIPE UNDERDRAINS	605 6" BASE PIPE UNDERDRAINS WITH GEOTEXTILE FABRIC	611 6" CONDUIT, TYPE F	611 PRECAST REINFORCED CONCRETE OUTLET	BENDS AND BRANCHES FOR INFORMATION ONLY 6" X 22.5° BEND	6" X 45° BEND	6" X 90° BEND	6" X 6" WYE	6" X 6" TEE	6" X 6" CROSS
		FROM	TO			FT	FT	FT	FT	EACH	EACH	EACH	EACH	EACH	EACH	EACH
		RAMP A2 (CONT.)														
UD-296	1113	407+99.32	408+68.36	RT	N/A	67										1
UD-297	1113	408+00.00	408+68.36	RT	694.75			56	10							
		RAMP IH4														
UD-298	1114	17+65.27	18+18.83	LT		56			22				1			
UD-299	1114	17+65.29	18+17.38	RT	667.98			42	10							
UD-300	1114	18+20.40	18+45.00	RT	667.98			15	10							
		RAMP IH5														
UD-301	1114	1081+36.93	1082+77.31	RT	N/A	139									1	
		RAMP H5														
UD-302	1114	982+88.32	984+57.53	LT	667.98			166	10							
		RAMP H6														
UD-303	1114	1182+36.90	1186+69.23	LT/RT	669.59			415	10							
UD-304	1114	1182+38.49	1186+72.37	LT/RT	N/A	435										1
UD-305	1114	1183+21.71	1186+72.37	LT	669.08			369	45						1	
		E. 14TH ST. NB XOVER														
UD-306	1114	253+23.81	253+42.95	RT	668.74			9	10							
UD-307	1114	253+42.95	254+18.32	RT	668.69			63	10							
		E. 14TH ST. NB														
UD-308	1114	299+46.66	299+96.76	RT	668.69			40	10							
		RAMP H6														
UD-309	1115	1186+00.00	1186+72.37	LT	N/A	76										1
UD-310	1115	1186+72.37	1188+48.39	LT	N/A			189								
UD-311	1115	1186+72.37	1188+48.39	LT	N/A	185										
UD-312	1115	1186+72.37	1188+48.39	RT	N/A	176										
UD-313	1115	1186+75.46	1188+48.39	RT	669.59			159	10							
		CARNEGIE AVE.														
UD-314	1116	63+75.44	64+36.82	RT	664.19			51	10							
UD-315	1116	64+60.73	65+10.00	LT	664.73			40	10							
UD-316	1116	65+13.76	65+95.43	LT	664.72			72	10							
UD-317	1116	65+95.08	67+24.26	RT	664.68			119	10							
UD-318	1116	66+02.43	67+23.81	LT	664.72			112	10							
		MIDTOWN CONNECTOR														
UD-319	1116	507+66.00	512+23.13	LT	664.68			432	10							
UD-320	1116	511+69.09	512+92.64	RT	664.04			129	10							
UD-321	1116	512+29.00	512+92.00	LT	664.04			49	10							
UD-322	1116	512+99.00	513+43.34	RT	664.04			39	10							
UD-323	1116	512+99.00	513+61.17	LT	664.04			50	10							
UD-324	1116	513+43.34	514+11.17	RT	664.68			88	10							
UD-325	1116	513+61.17	514+10.91	LT	664.19			61	10							
		CARNEGIE AVE.														
UD-326	1117	67+23.81	69+25.00	LT	N/A			201								
UD-327	1117	67+24.26	68+24.70	RT	664.71			106	10							
UD-328	1117	68+55.52	68+68.85	RT	664.69			6	10							
TOTALS CARRIED TO SHEET 457						1134	-	3078	297	-	-	-	1	-	2	3

Preliminary Plans - For Reference Only

UNDERDRAIN SUBSUMMARY - 9

DESIGN AGENCY
Michael Baker INTERNATIONAL

DESIGNER JAR

REVIEWER KGJ 05/22/24

PROJECT ID 82382

SHEET 456 TOTAL 2696

CUY-90-16.28 (CCG3A)

MODEL: Sheet-09 PAPERSIZE: 34x22 (in.) DATE: 3/27/2025 TIME: 8:59:01 PM USER: Alexandria.Summers
pw:\\mb-us-pw.bentley.com:mb-us-pw-03\Documents\Cleveland_OH01_Projects\ODOT\District12\82382\400-Engineering\Drainage\Sheets\82382_DS201.dgn

REF NO.	SHEET NO.	STATION FROM	STATION TO	SIDE	OUTLET ELEV.	605 6" SHALLOW PIPE UNDERDRAINS WITH GEOTEXTILE FABRIC	605 6" UNCLASSIFIED PIPE UNDERDRAINS	605 6" BASE PIPE UNDERDRAINS WITH GEOTEXTILE FABRIC	611 6" CONDUIT, TYPE F	611 PRECAST REINFORCED CONCRETE OUTLET	BENDS AND BRANCHES FOR INFORMATION ONLY 6" X 22.5° BEND	6" X 45° BEND	6" X 90° BEND	6" X 6" WYE	6" X 6" TEE	6" X 6" CROSS
		FROM	TO			FT	FT	FT	FT	EACH	EACH	EACH	EACH	EACH	EACH	EACH
		E. 28TH ST.														
UD-329	1117	13+07.98	13+20.52	RT	664.72			3	10							
		MIDTOWN CONNECTOR														
UD-330	1118	505+40.68	507+60.82	RT	666.49			210	10							
UD-331	1118	507+66.23	509+97.97	RT	665.62			228	10							
UD-332	1119	510+03.12	511+23.91	RT	663.63			149	10							
		CEDAR AVE.														
UD-333	1119	400+33.04	400+67.59	LT	663.46			29	10							
UD-334	1119	400+67.59	402+12.14	RT	663.62			145	10							
UD-335	1119	400+75.46	403+34.00	LT	663.50			237	10							
UD-336	1119	402+16.24	402+77.91	RT	665.08			52	10							
TOTALS FROM THIS SHEET						-	-	1053	80	-	-	-	-	-	-	-
TOTALS FROM SHEET	448					4784	300	6180	530	3	-	1	10	1	15	4
TOTALS FROM SHEET	449					3602	230	4997	314	-	-	4	6	3	5	3
TOTALS FROM SHEET	450					6304	40	5962	476	-	2	5	5	-	9	2
TOTALS FROM SHEET	451					3714	-	4215	458	2	2	5	7	1	10	1
TOTALS FROM SHEET	452					2490	1641	2954	420	-	-	5	6	-	7	2
TOTALS FROM SHEET	453					363	25	2705	329	-	-	1	4	-	1	-
TOTALS FROM SHEET	454					1033	-	5618	265	1	-	4	2	1	2	1
TOTALS FROM SHEET	455					2185	-	4126	451	1	-	1	8	-	12	3
TOTALS FROM SHEET	456					1134	-	3078	297	-	-	-	1	-	2	3
TOTALS CARRIED TO GENERAL SUMMARY						25609	2236	40888	3620	7	4	26	49	6	63	19

Preliminary Plans - For Reference Only

UNDERDRAIN SUBSUMMARY - 10

CUY-90-16.28 (CCG3A)

MODEL: Sheet-10 PAPERSIZE: 34x22 (in.) DATE: 3/27/2025 TIME: 8:59:02 PM USER: Alexandria.Summers
pw:\\mb-us-pw.bentley.com:mb-us-pw-03\Documents\Cleveland_OH\01_Projects\ODOT\District12\82382\400-Engineering\Drainage\Sheets\82382_DS201.dgn

DESIGN AGENCY
Michael Baker INTERNATIONAL

DESIGNER JAR

REVIEWER KGJ 05/22/24

PROJECT ID 82382

SHEET 457 TOTAL 2696

REF NO.	SHEET NO.	STATION FROM	STATION TO	SIDE	AREA	601 TIED CONCRETE BLOCK MAT WITH TYPE 1 UNDERLAYMENT	601 TIED CONCRETE BLOCK MAT WITH TYPE 2 UNDERLAYMENT	601 ROCK CHANNEL PROTECTION, TYPE C WITH FILTER	601 PAVED GUTTER, TYPE 1-2, AS PER PLAN	670 SLOPE EROSION PROTECTION	670 DITCH EROSION PROTECTION MAT, TYPE B	836 SEEDING AND EROSION CONTROL WITH TURF REINFORCING MAT, TYPE 1
					SF	SY	SY	CY	FT	SY	SY	SY
		RAMP A3										
EC-1	1093	579+71.17	581+91.79	LT	1777						197	
		RAMP IB5										
EC-2	1093	1708+63.08	1710+06.51	LT	2005						223	
		RAMP B6										
EC-3	1094	1606+10.79	1606+14.95	LT	16	2						
		I.R. 90 EB										
EC-4	1095	185+21.71	185+25.65	RT	16	2						
EC-5	1095	189+00.00	189+05.50	RT	431		48					
		I.R. 90 WB										
EC-6	1095	190+48.41	190+72.00	LT	125		14					
EC-7	1095	190+86.75	190+95.57	LT	160		18					
		RAMP B6A										
EC-8	1096	1800+49.75	1804+00.00	RT	1343						149	
		INTERIM I.R. 90 EB										
EC-9	1098	3001+74.88	3001+82.06	RT	28			2				
EC-10	1098	3003+46.87	3003+50.73	RT	16	2						
EC-11	1099	3006+92.93	3007+22.77	RT	221			12				
EC-12	1099	3007+42.29	3007+46.20	RT	16	2						
EC-13	1099	3008+20.11	3009+25.36	RT	501		56					
EC-14	1099	3008+92.99	3008+98.96	RT	60			3				
EC-15	1099	3008+93.75	3010+57.60	RT	10097			561				
EC-16	1099	3010+08.98	3010+16.31	RT	84			5				
		RAMP A2										
EC-17	1103	437+14.30	438+17.45	LT					104			
		RAMP IB5										
EC-18	1106	1710+00.00	1713+95.24	RT	2460						273	
		RAMP IJ3										
EC-19	1107	101+84.98	101+93.45	RT	50						6	
EC-20	1107	101+89.10	102+02.78	RT	401		45					
EC-21	1107	102+01.65	104+00.00	RT	1007						112	
EC-22	1107	102+21.40	102+33.38	RT	24			1				
EC-23	1107	104+13.94	104+54.60	LT	380						42	
EC-24	1107	107+32.16	107+35.85	LT	16	2						
		RAMP H5										
EC-25	1108	984+77.49	987+45.68	RT	2035						226	
EC-26	1108	987+42.68	987+73.51	RT	179			10				
EC-27	1108	987+59.57	987+67.94	RT	27			1				
EC-28	1108	988+50.86	988+54.98	RT	26			1				
EC-29	1108	988+51.25	988+58.29	RT	27			1				
EC-30	1108	988+52.59	988+56.66	RT	16	2						
EC-31	1108	988+75.11	988+84.82	RT	28			2				
EC-32	1108	988+78.54	988+95.34	RT	202			11				
TOTALS CARRIED TO SHEET 459						12	181	610	104	-	1228	-

Preliminary Plans - Not For Reference Only

EROSION CONTROL SUBSUMMARY - 1

CUY-90-16.28 (CCG3A)

MODEL: Sheet-01 PAPERSIZE: 34x22 (in.) DATE: 3/27/2025 TIME: 8:59:07 PM USER: Alexandria.Summers
pw:\\mb-us-pw.bentley.com:mb-us-pw-03\Documents\Cleveland_OH101_Projects\ODOT\District12\82382\400-Engineering\Drainage\Sheets\82382_DS301.dgn

DESIGN AGENCY
Michael Baker INTERNATIONAL

DESIGNER MJB

REVIEWER KGJ 05/22/24

PROJECT ID 82382

SHEET 458 TOTAL 2696

REF NO.	SHEET NO.	STATION FROM	STATION TO	SIDE	AREA	601 TIED CONCRETE BLOCK MAT WITH TYPE 1 UNDERLAYMENT	601 TIED CONCRETE BLOCK MAT WITH TYPE 2 UNDERLAYMENT	601 ROCK CHANNEL PROTECTION, TYPE C WITH FILTER	601 PAVED GUTTER, TYPE 1-2, AS PER PLAN	670 SLOPE EROSION PROTECTION	670 DITCH EROSION PROTECTION MAT, TYPE B	836 SEEDING AND EROSION CONTROL WITH TURF REINFORCING MAT, TYPE 1
					SF	SY	SY	CY	FT	SY	SY	SY
		RAMP IJ3										
EC-33	1108	108+96.00	109+44.14	LT	478		53					
		RAMP IH4										
EC-34	1112	13+84.00	14+50.00	LT	279							31
EC-35	1113	13+10.00	13+84.00	LT	310						34	
		RAMP H6										
EC-36	1114	1182+31.15	1182+35.58	RT	16	2						
		INTERIM I.R. 90 EB										
EC-37	1116	3010+35.93	3010+43.98	RT	76			4				
EC-38	1116	3010+54.33	3011+47.69	RT	509			28				
		I.R. 90 EB										
EC-39	1162	185+63.65	186+38.51	RT	5479					609		
		INTERIM I.R. 90 EB										
EC-40	1162	3001+23.83	3003+50.00	RT	13920					1547		
EC-41	1162	3006+92.43	3010+09.72	RT	17542					1949		
		I.R. 90 WB										
EC-42	1162	190+92.73	193+00.00	LT	2881					320		
EC-43	1162	197+69.79	201+59.65	LT	17822					1980		
		INTERIM I.R. 90 WB										
EC-44	1162	4001+66.99	4005+99.08	LT	18573					2064		
EC-45	1162	4008+22.27	4013+51.75	LT	16348					1816		
		RAMP A2										
EC-46	1162	407+81.97	410+71.56	LT	7818					869		
EC-47	1162	420+01.50	420+65.44	RT	1730					192		
		RAMP A3										
EC-48	1162	587+00.00	587+67.90	RT	2341					260		
		RAMP IB5										
EC-49	1162	1708+30.54	1715+60.50	RT	14384					1598		
EC-50	1162	1708+63.00	1709+29.89	LT	1254					139		
		RAMP B6										
EC-51	1162	1602+59.62	1607+40.41	RT	20512					2279		
EC-52	1162	1613+19.94	1618+95.57	RT	12236					1360		
		RAMP IH4										
EC-53	1162	13+10.77	14+50.00	LT	1055					117		
		RAMP H5										
EC-54	1162	987+41.96	989+10.80	RT	17294					1922		
		RAMP IJ3										
EC-55	1162	103+70.64	105+31.35	RT	1053					117		
EC-56	1162	108+09.65	109+42.99	RT	1935					215		
EC-57	1162	109+11.29	110+25.76	LT	4934					548		
TOTALS FROM THIS SHEET						2	53	32	-	19901	34	31
TOTALS FROM SHEET 458						12	181	610	104	-	1228	-
TOTALS CARRIED TO GENERAL SUMMARY						14	234	642	104	19901	1262	31

Preliminary Plans - Not For Reference Only

EROSION CONTROL SUBSUMMARY - 2

CUY-90-16.28 (CCG3A)

MODEL: Sheet-02 PAPERSIZE: 34x22 (in.) DATE: 3/27/2025 TIME: 8:59:08 PM USER: Alexandria.Summers
pw:\\mb-us-pw.bentley.com:mb-us-pw-03\Documents\Cleveland_OH\01_Projects\ODOT\District12\82382\400-Engineering\Drainage\Sheets\82382_DS301.dgn

DESIGN AGENCY
Michael Baker INTERNATIONAL

DESIGNER MJB
REVIEWER KGJ 05/22/24
PROJECT ID 82382
SHEET 459 TOTAL 2696

REF NO.	SHEET NO.	STATION FROM	STATION TO	SIDE	AREA	203 ROADWAY, MISC.: REINFORCED TURF	204 SUBGRADE COMPACTION	204 PROOF ROLLING	204 GEOTEXTILE FABRIC	206 CEMENT	206 CURING COAT	206 CEMENT STABILIZED SUBGRADE, 12 INCHES DEEP	252 FULL DEPTH PAVEMENT SAWING	254 PAVEMENT PLANING, ASPHALT CONCRETE (3.25")	301 ASPHALT CONCRETE BASE, PG64-22, (449)	302 ASPHALT CONCRETE BASE, PG64-22, (449)	304 AGGREGATE BASE	305 9" CONCRETE BASE, CLASS QC 1P, AS PER PLAN	407 NON-TRACKING TACK COAT	441 ASPHALT CONCRETE SURFACE COURSE, TYPE 1, (448), PG64-22	441 ASPHALT CONCRETE SURFACE COURSE, TYPE 1, (448), AS PER PLAN, PG70-22M	441 ASPHALT CONCRETE INTERMEDIATE COURSE, TYPE 2, (448)	441 ASPHALT CONCRETE INTERMEDIATE COURSE, TYPE 1, (449), AS PER PLAN, PG64-22	441 ASPHALT CONCRETE SURFACE COURSE, TYPE 1, (449), (DRIVEWAYS)	441 ASPHALT CONCRETE INTERMEDIATE COURSE, TYPE 2, (449), (DRIVEWAYS)	442 ANTI-SEGREGATION EQUIPMENT	442 ASPHALT CONCRETE SURFACE COURSE, 12.5 MM, TYPE A (446), AS PER PLAN, PG76-22M	442 ASPHALT CONCRETE INTERMEDIATE COURSE, 19 MM, TYPE A (446)	451 12" REINFORCED CONCRETE PAVEMENT, CLASS QC 1P, AS PER PLAN	451 SPECIAL - PRESSURE RELIEF JOINT, TYPE B	452 4" NON-REINFORCED CONCRETE PAVEMENT, CLASS QC 1P	452 8" NON-REINFORCED CONCRETE PAVEMENT, CLASS QC 1P	452 10" NON-REINFORCED CONCRETE PAVEMENT, CLASS QC 1P	608 6" CONCRETE WALK, AS PER PLAN	608 CURB RAMP, AS PER PLAN	608 CURB RAMP, AS PER PLAN 2	609 COMBINATION CURB AND GUTTER, TYPE 2	609 CURB, TYPE 2-A	609 CURB, TYPE 4-A	609 CURB, TYPE 4-C	609 CURB, TYPE 6	609 CURB, TYPE 10-B	609 CONCRETE MEDIAN	690 SPECIAL - LOW DENSITY CELLULAR CONCRETE FILL, CLASS II
					SF	SY	SY	HOUR	SY	TON	SY	SY	FT	SY	CY	CY	CY	SY	GAL	CY	CY	CY	CY	CY	CY	CY	CY	SY	FT	SY	SY	SY	SF	SF	SF	FT	FT	FT	FT	FT	FT	SY	CY
		I.R. 90 EB																																									
	491	165+50.83	167+01.44	CL	16795									1866					317									78	91														
	492	168+98.23	174+05.85	CL	37751									4195					713									175	204														
	493	175+70.08	185+75.20	LT	8173																		76																				
	493	175+77.69	177+88.99	CL	21417			1		65	2521	2521	93			622	420		409								219	99	120														
	493	177+88.99	185+73.20	CL	47098		2465	1		87	3376	3376				1405	959		922								486	218	268														
C-1	497	185+54.75	185+73.10	RT																																		18				
C-2	499	188+63.11	188+99.11	RT																																		36				
	499	188+67.22	192+44.14	CL	22588		1372	1		38	1464	1464				678	460		445								234	105	130														
	499	188+70.99	192+75.00	LT																											337											
	499	188+70.99	192+75.00	LT																																						321
	499	192+44.14	199+20.18	CL	61721		308	2		180	6956	6956				1795	1218		1182								633	286	347														
C-3	501	192+50.85	198+94.56	RT																																		18	644			
	503	198+20.82	199+20.18	RT	1365			1		4	166	166				40	28		26								14	6	7														
		INTERIM I.R. 90 EB																																								
	508	3000+00.00	3000+77.30	RT	1087			1		3	132	132	76			31	22		20								11	5	6														
	508	3000+00.00	3013+05.40	CL	80864			3		253	9762	9762				4335	1627		5617								837	374	463														
	512	3013+05.40	3014+30.64	CL	9256			1		29	1117	1117				274	186		180								95	43	52														
		I.R. 90 WB																																								
	515	166+28.22	168+31.36	CL	17884									1987					338									83	97														
	516	169+91.26	175+77.54	CL	63291									7032					1195									293	342														
	517	177+40.36	179+90.78	CL	22592			1		69	2677	2677	86			659	446		433								231	105	127														
	517	179+90.78	181+00.68	CL	6728			1		21	816	816				199	136		131								69	31	38														
C-4	519	179+90.78	181+00.68	LT																																		110				
	519	181+00.68	187+39.86	CL	43649		2503	1		69	2677	2677				1282	879		844								449	202	247														
C-5	523	190+30.01	190+48.41	LT																																		18				
	523	190+33.87	193+56.81	CL	23251		2976									651	466		429								233	108	126														
	523	193+56.81	196+54.37	CL	31704		1536	1		56	2152	2152				916	620		603								324	147	177														
	525	196+54.37	201+13.67	CL	40546			2		125	4840	4840				1189	807		783								415	188	227														
C-6	525	197+69.59	201+13.67	LT																																		344				
		INTERIM I.R. 90 WB																																								
	534	4000+00.00	4003+89.06	CL	31162			1		96	3723	3723	58			912	620		600								320	144	176														
C-7	534	4000+00.00	4005+71.67	LT																																		600				
	534	4003+89.06	4013+65.00	CL	63797			2		186	7180	7180				1772	1197		1170								640	295	345														
C-8	536	4008+49.67	4013+51.81	LT																																		502				
		RAMP 4																																								
	541	903+30.00	905+39.52	CL	6092			1		19	739	739	28			176	123		119								56	24	33														
		RAMP A1																																								
	544	303+50.00	311+10.00	CL	20742		1151			34	1317	1317					411																				2305						
	546	307+88.00	308+45.00	RT	297					1	42	42				10	7		5										2														
C-9	548	310+41.00	310+56.00	RT																																				19			
	548	311+10.00	311+91.00	CL	3506					11	417	417				99	70		72								30	17	19														
C-10	548	311+40.00	311+55.00	LT																																					24			
CR-1	548	311+49.00	311+63.00	LT	106																																			106				
C-11	548	311+50.00	311+60.00	RT																																					10			
SW-1	548	311+56.00	311+65.00	LT	55																																				55				
SW-2	548	311+57.00	311+65.00	LT	27																																				27				
TOTALS CARRIED TO SHEET 470						-	12311	21	-	1346	52074	52074	341	15080	-	17045	10702	-	16553	-	-	-	76	-	-	5296	3026	3644	-	-	337	-	2305	82	106	-	-	-	19	1646	678	-	-	321

Preliminary Plans - For Reference Only

PAVEMENT SUBSUMMARY - 1

CUY-90-16.28 (CCG3A)

MODEL: Sheet-01 PAPERSIZE: 34x22 (in.) DATE: 6/16/2025 TIME: 6:41:56 PM USER: Mala.Gallagher
pw:\\mb-us-pw.bentley.com:mb-us-pw-03\Documents\Cleveland_OH\01_Projects\ODOT\District12\82382\400-Engineering\Roadway\Sheets\82382_GS101.dgn

DESIGN AGENCY
Michael Baker INTERNATIONAL

DESIGNER KJM

REVIEWER KGJ 05/22/24

PROJECT ID 82382

SHEET 460 TOTAL 2696

| REF NO. | SHEET NO. | STATION FROM | STATION TO | SIDE | AREA | 203 ROADWAY, MISC.: REINFORCED TURF | 204 SUBGRADE COMPACTION | 204 PROOF ROLLING | 204 GEOTEXTILE FABRIC | 206 CEMENT | 206 CURING COAT | 206 CEMENT STABILIZED SUBGRADE, 12 INCHES DEEP | 252 FULL DEPTH PAVEMENT SAWING | 254 PAVEMENT PLANING, ASPHALT CONCRETE (3.25") | 301 ASPHALT CONCRETE BASE, PG64-22, (449) | 302 ASPHALT CONCRETE BASE, PG64-22, (449) | 304 AGGREGATE BASE | 305 9" CONCRETE BASE, CLASS QC 1P, AS PER PLAN | 407 NON-TRACKING TACK COAT | 441 ASPHALT CONCRETE SURFACE COURSE, TYPE 1, (448), PG64-22 | 441 ASPHALT CONCRETE SURFACE COURSE, TYPE 1, (448), AS PER PLAN, PG70-22M | 441 ASPHALT CONCRETE INTERMEDIATE COURSE, TYPE 2, (448) | 441 ASPHALT CONCRETE INTERMEDIATE COURSE, TYPE 1, (449), AS PER PLAN, PG64-22 | 441 ASPHALT CONCRETE SURFACE COURSE, TYPE 1, (449), (DRIVEWAYS) | 441 ASPHALT CONCRETE INTERMEDIATE COURSE, TYPE 2, (449), (DRIVEWAYS) | 442 ANTI-SEGREGATION EQUIPMENT | 442 ASPHALT CONCRETE SURFACE COURSE, 12.5 MM, TYPE A (446), AS PER PLAN, PG76-22M | 442 ASPHALT CONCRETE INTERMEDIATE COURSE, 19 MM, TYPE A (446) | 451 12" REINFORCED CONCRETE PAVEMENT, CLASS QC 1P, AS PER PLAN | 451 SPECIAL - PRESSURE RELIEF JOINT, TYPE B | 452 4" NON-REINFORCED CONCRETE PAVEMENT, CLASS QC 1P | 452 8" NON-REINFORCED CONCRETE PAVEMENT, CLASS QC 1P | 452 10" NON-REINFORCED CONCRETE PAVEMENT, CLASS QC 1P | 608 6" CONCRETE WALK, AS PER PLAN | 608 CURB RAMP, AS PER PLAN | 608 CURB RAMP, AS PER PLAN 2 | 609 COMBINATION CURB AND GUTTER, TYPE 2 | 609 CURB, TYPE 2-A | 609 CURB, TYPE 4-A | 609 CURB, TYPE 4-C | 609 CURB, TYPE 6 | 609 CURB, TYPE 10-B | 609 CONCRETE MEDIAN | 690 SPECIAL - LOW DENSITY CELLULAR CONCRETE FILL, CLASS II |
|---|---|---

PAVEMENT SUBSUMMARY - 3

| REF NO. | SHEET NO. | STATION FROM | STATION TO | SIDE | AREA | 203 ROADWAY, MISC.: REINFORCED TURF | 204 SUBGRADE COMPACTION | 204 PROOF ROLLING | 204 GEOTEXTILE FABRIC | 206 CEMENT | 206 CURING COAT | 206 CEMENT STABILIZED SUBGRADE, 12 INCHES DEEP | 252 FULL DEPTH PAVEMENT SAWING | 254 PAVEMENT PLANING, ASPHALT CONCRETE (3.25") | 301 ASPHALT CONCRETE BASE, PG64-22, (449) | 302 ASPHALT CONCRETE BASE, PG64-22, (449) | 304 AGGREGATE BASE | 305 9" CONCRETE BASE, CLASS QC 1P, AS PER PLAN | 407 NON-TRACKING TACK COAT | 441 ASPHALT CONCRETE SURFACE COURSE, TYPE 1, (448), PG64-22 | 441 ASPHALT CONCRETE SURFACE COURSE, TYPE 1, (448), AS PER PLAN, PG70-22M | 441 ASPHALT CONCRETE INTERMEDIATE COURSE, TYPE 2, (448) | 441 ASPHALT CONCRETE INTERMEDIATE COURSE, TYPE 1, (449), AS PER PLAN, PG64-22 | 441 ASPHALT CONCRETE SURFACE COURSE, TYPE 1, (449), (DRIVEWAYS) | 441 ASPHALT CONCRETE INTERMEDIATE COURSE, TYPE 2, (449), (DRIVEWAYS) | 442 ANTI-SEGREGATION EQUIPMENT | 442 ASPHALT CONCRETE SURFACE COURSE, 12.5 MM, TYPE A (446), AS PER PLAN, PG76-22M | 442 ASPHALT CONCRETE INTERMEDIATE COURSE, 19 MM, TYPE A (446) | 451 12" REINFORCED CONCRETE PAVEMENT, CLASS QC 1P, AS PER PLAN | 451 SPECIAL - PRESSURE RELIEF JOINT, TYPE B | 452 4" NON-REINFORCED CONCRETE PAVEMENT, CLASS QC 1P | 452 8" NON-REINFORCED CONCRETE PAVEMENT, CLASS QC 1P | 452 10" NON-REINFORCED CONCRETE PAVEMENT, CLASS QC 1P | 608 6" CONCRETE WALK, AS PER PLAN | 608 CURB RAMP, AS PER PLAN | 608 CURB RAMP, AS PER PLAN 2 | 609 COMBINATION CURB AND GUTTER, TYPE 2 | 609 CURB, TYPE 2-A | 609 CURB, TYPE 4-A | 609 CURB, TYPE 4-C | 609 CURB, TYPE 6 | 609 CURB, TYPE 10-B | 609 CONCRETE MEDIAN | 690 SPECIAL - LOW DENSITY CELLULAR CONCRETE FILL, CLASS II |
|---|---|---

PAVEMENT SUBSUMMARY - 4

| REF NO. | SHEET NO. | STATION FROM | STATION TO | SIDE | AREA | 203 ROADWAY, MISC.: REINFORCED TURF | 204 SUBGRADE COMPACTION | 204 PROOF ROLLING | 204 GEOTEXTILE FABRIC | 206 CEMENT | 206 CURING COAT | 206 CEMENT STABILIZED SUBGRADE, 12 INCHES DEEP | 252 FULL DEPTH PAVEMENT SAWING | 254 PAVEMENT PLANING, ASPHALT CONCRETE (3.25") | 301 ASPHALT CONCRETE BASE, PG64-22, (449) | 302 ASPHALT CONCRETE BASE, PG64-22, (449) | 304 AGGREGATE BASE | 305 9" CONCRETE BASE, CLASS QC 1P, AS PER PLAN | 407 NON-TRACKING TACK COAT | 441 ASPHALT CONCRETE SURFACE COURSE, TYPE 1, (448), PG64-22 | 441 ASPHALT CONCRETE SURFACE COURSE, TYPE 1, (448), AS PER PLAN, PG70-22M | 441 ASPHALT CONCRETE INTERMEDIATE COURSE, TYPE 2, (448) | 441 ASPHALT CONCRETE INTERMEDIATE COURSE, TYPE 1, (449), AS PER PLAN, PG64-22 | 441 ASPHALT CONCRETE SURFACE COURSE, TYPE 1, (449), (DRIVEWAYS) | 441 ASPHALT CONCRETE INTERMEDIATE COURSE, TYPE 2, (449), (DRIVEWAYS) | 442 ANTI-SEGREGATION EQUIPMENT | 442 ASPHALT CONCRETE SURFACE COURSE, 12.5 MM, TYPE A (446), AS PER PLAN, PG76-22M | 442 ASPHALT CONCRETE INTERMEDIATE COURSE, 19 MM, TYPE A (446) | 451 12" REINFORCED CONCRETE PAVEMENT, CLASS QC 1P, AS PER PLAN | 451 SPECIAL - PRESSURE RELIEF JOINT, TYPE B | 452 4" NON-REINFORCED CONCRETE PAVEMENT, CLASS QC 1P | 452 8" NON-REINFORCED CONCRETE PAVEMENT, CLASS QC 1P | 452 10" NON-REINFORCED CONCRETE PAVEMENT, CLASS QC 1P | 608 6" CONCRETE WALK, AS PER PLAN | 608 CURB RAMP, AS PER PLAN | 608 CURB RAMP, AS PER PLAN 2 | 609 COMBINATION CURB AND GUTTER, TYPE 2 | 609 CURB, TYPE 2-A | 609 CURB, TYPE 4-A | 609 CURB, TYPE 4-C | 609 CURB, TYPE 6 | 609 CURB, TYPE 10-B | 609 CONCRETE MEDIAN | 690 SPECIAL - LOW DENSITY CELLULAR CONCRETE FILL, CLASS II |
|---|---|---

| REF NO. | SHEET NO. | STATION FROM | STATION TO | SIDE | AREA | 203 ROADWAY, MISC.: REINFORCED TURF | 204 SUBGRADE COMPACTION | 204 PROOF ROLLING | 204 GEOTEXTILE FABRIC | 206 CEMENT | 206 CURING COAT | 206 CEMENT STABILIZED SUBGRADE, 12 INCHES DEEP | 252 FULL DEPTH PAVEMENT SAWING | 254 PAVEMENT PLANING, ASPHALT CONCRETE (3.25") | 301 ASPHALT CONCRETE BASE, PG64-22, (449) | 302 ASPHALT CONCRETE BASE, PG64-22, (449) | 304 AGGREGATE BASE | 305 9" CONCRETE BASE, CLASS QC 1P, AS PER PLAN | 407 NON-TRACKING TACK COAT | 441 ASPHALT CONCRETE SURFACE COURSE, TYPE 1, (448), PG64-22 | 441 ASPHALT CONCRETE SURFACE COURSE, TYPE 1, (448), AS PER PLAN, PG70-22M | 441 ASPHALT CONCRETE INTERMEDIATE COURSE, TYPE 2, (448) | 441 ASPHALT CONCRETE INTERMEDIATE COURSE, TYPE 1, (449), AS PER PLAN, PG64-22 | 441 ASPHALT CONCRETE SURFACE COURSE, TYPE 1, (449), (DRIVEWAYS) | 441 ASPHALT CONCRETE INTERMEDIATE COURSE, TYPE 2, (449), (DRIVEWAYS) | 442 ANTI-SEGREGATION EQUIPMENT | 442 ASPHALT CONCRETE SURFACE COURSE, 12.5 MM, TYPE A (446), AS PER PLAN, PG76-22M | 442 ASPHALT CONCRETE INTERMEDIATE COURSE, 19 MM, TYPE A (446) | 451 12" REINFORCED CONCRETE PAVEMENT, CLASS QC 1P, AS PER PLAN | 451 SPECIAL - PRESSURE RELIEF JOINT, TYPE B | 452 4" NON-REINFORCED CONCRETE PAVEMENT, CLASS QC 1P | 452 8" NON-REINFORCED CONCRETE PAVEMENT, CLASS QC 1P | 452 10" NON-REINFORCED CONCRETE PAVEMENT, CLASS QC 1P | 608 6" CONCRETE WALK, AS PER PLAN | 608 CURB RAMP, AS PER PLAN | 608 CURB RAMP, AS PER PLAN 2 | 609 COMBINATION CURB AND GUTTER, TYPE 2 | 609 CURB, TYPE 2-A | 609 CURB, TYPE 4-A | 609 CURB, TYPE 4-C | 609 CURB, TYPE 6 | 609 CURB, TYPE 10-B | 609 CONCRETE MEDIAN | 690 SPECIAL - LOW DENSITY CELLULAR CONCRETE FILL, CLASS II |
|---|---|---

| REF NO. | SHEET NO. | STATION FROM | STATION TO | SIDE | AREA | 203 ROADWAY, MISC.: REINFORCED TURF | 204 SUBGRADE COMPACTION | 204 PROOF ROLLING | 204 GEOTEXTILE FABRIC | 206 CEMENT | 206 CURING COAT | 206 CEMENT STABILIZED SUBGRADE, 12 INCHES DEEP | 252 FULL DEPTH PAVEMENT SAWING | 254 PAVEMENT PLANING, ASPHALT CONCRETE (3.25") | 301 ASPHALT CONCRETE BASE, PG64-22, (449) | 302 ASPHALT CONCRETE BASE, PG64-22, (449) | 304 AGGREGATE BASE | 305 9" CONCRETE BASE, CLASS QC 1P, AS PER PLAN | 407 NON-TRACKING TACK COAT | 441 ASPHALT CONCRETE SURFACE COURSE, TYPE 1, (448), PG64-22 | 441 ASPHALT CONCRETE SURFACE COURSE, TYPE 1, (448), AS PER PLAN, PG70-22M | 441 ASPHALT CONCRETE INTERMEDIATE COURSE, TYPE 2, (448) | 441 ASPHALT CONCRETE INTERMEDIATE COURSE, TYPE 1, (449), AS PER PLAN, PG64-22 | 441 ASPHALT CONCRETE SURFACE COURSE, TYPE 1, (449), (DRIVEWAYS) | 441 ASPHALT CONCRETE INTERMEDIATE COURSE, TYPE 2, (449), (DRIVEWAYS) | 442 ANTI-SEGREGATION EQUIPMENT | 442 ASPHALT CONCRETE SURFACE COURSE, 12.5 MM, TYPE A (446), AS PER PLAN, PG76-22M | 442 ASPHALT CONCRETE INTERMEDIATE COURSE, 19 MM, TYPE A (446) | 451 12" REINFORCED CONCRETE PAVEMENT, CLASS QC 1P, AS PER PLAN | 451 SPECIAL - PRESSURE RELIEF JOINT, TYPE B | 452 4" NON-REINFORCED CONCRETE PAVEMENT, CLASS QC 1P | 452 8" NON-REINFORCED CONCRETE PAVEMENT, CLASS QC 1P | 452 10" NON-REINFORCED CONCRETE PAVEMENT, CLASS QC 1P | 608 6" CONCRETE WALK, AS PER PLAN | 608 CURB RAMP, AS PER PLAN | 608 CURB RAMP, AS PER PLAN 2 | 609 COMBINATION CURB AND GUTTER, TYPE 2 | 609 CURB, TYPE 2-A | 609 CURB, TYPE 4-A | 609 CURB, TYPE 4-C | 609 CURB, TYPE 6 | 609 CURB, TYPE 10-B | 609 CONCRETE MEDIAN | 690 SPECIAL - LOW DENSITY CELLULAR CONCRETE FILL, CLASS II |
|---|---|---

| REF NO. | SHEET NO. | STATION FROM | STATION TO | SIDE | AREA | 203 ROADWAY, MISC.: REINFORCED TURF | 204 SUBGRADE COMPACTION | 204 PROOF ROLLING | 204 GEOTEXTILE FABRIC | 206 CEMENT | 206 CURING COAT | 206 CEMENT STABILIZED SUBGRADE, 12 INCHES DEEP | 252 FULL DEPTH PAVEMENT SAWING | 254 PAVEMENT PLANING, ASPHALT CONCRETE (3.25") | 301 ASPHALT CONCRETE BASE, PG64-22, (449) | 302 ASPHALT CONCRETE BASE, PG64-22, (449) | 304 AGGREGATE BASE | 305 9" CONCRETE BASE, CLASS QC 1P, AS PER PLAN | 407 NON-TRACKING TACK COAT | 441 ASPHALT CONCRETE SURFACE COURSE, TYPE 1, (448), PG64-22 | 441 ASPHALT CONCRETE SURFACE COURSE, TYPE 1, (448), AS PER PLAN, PG70-22M | 441 ASPHALT CONCRETE INTERMEDIATE COURSE, TYPE 2, (448) | 441 ASPHALT CONCRETE INTERMEDIATE COURSE, TYPE 1, (449), AS PER PLAN, PG64-22 | 441 ASPHALT CONCRETE SURFACE COURSE, TYPE 1, (449), (DRIVEWAYS) | 441 ASPHALT CONCRETE INTERMEDIATE COURSE, TYPE 2, (449), (DRIVEWAYS) | 442 ANTI-SEGREGATION EQUIPMENT | 442 ASPHALT CONCRETE SURFACE COURSE, 12.5 MM, TYPE A (446), AS PER PLAN, PG76-22M | 442 ASPHALT CONCRETE INTERMEDIATE COURSE, 19 MM, TYPE A (446) | 451 12" REINFORCED CONCRETE PAVEMENT, CLASS QC 1P, AS PER PLAN | 451 SPECIAL - PRESSURE RELIEF JOINT, TYPE B | 452 4" NON-REINFORCED CONCRETE PAVEMENT, CLASS QC 1P | 452 8" NON-REINFORCED CONCRETE PAVEMENT, CLASS QC 1P | 452 10" NON-REINFORCED CONCRETE PAVEMENT, CLASS QC 1P | 608 6" CONCRETE WALK, AS PER PLAN | 608 CURB RAMP, AS PER PLAN | 608 CURB RAMP, AS PER PLAN 2 | 609 COMBINATION CURB AND GUTTER, TYPE 2 | 609 CURB, TYPE 2-A | 609 CURB, TYPE 4-A | 609 CURB, TYPE 4-C | 609 CURB, TYPE 6 | 609 CURB, TYPE 10-B | 609 CONCRETE MEDIAN | 690 SPECIAL - LOW DENSITY CELLULAR CONCRETE FILL, CLASS II |
|---|---|---

| REF NO. | SHEET NO. | STATION FROM | STATION TO | SIDE | AREA | 203 ROADWAY, MISC.: REINFORCED TURF | 204 SUBGRADE COMPACTION | 204 PROOF ROLLING | 204 GEOTEXTILE FABRIC | 206 CEMENT | 206 CURING COAT | 206 CEMENT STABILIZED SUBGRADE, 12 INCHES DEEP | 252 FULL DEPTH PAVEMENT SAWING | 254 PAVEMENT PLANING, ASPHALT CONCRETE (3.25") | 301 ASPHALT CONCRETE BASE, PG64-22, (449) | 302 ASPHALT CONCRETE BASE, PG64-22, (449) | 304 AGGREGATE BASE | 305 9" CONCRETE BASE, CLASS QC 1P, AS PER PLAN | 407 NON-TRACKING TACK COAT | 441 ASPHALT CONCRETE SURFACE COURSE, TYPE 1, (448), PG64-22 | 441 ASPHALT CONCRETE SURFACE COURSE, TYPE 1, (448), AS PER PLAN, PG70-22M | 441 ASPHALT CONCRETE INTERMEDIATE COURSE, TYPE 2, (448) | 441 ASPHALT CONCRETE INTERMEDIATE COURSE, TYPE 1, (449), AS PER PLAN, PG64-22 | 441 ASPHALT CONCRETE SURFACE COURSE, TYPE 1, (449), (DRIVEWAYS) | 441 ASPHALT CONCRETE INTERMEDIATE COURSE, TYPE 2, (449), (DRIVEWAYS) | 442 ANTI-SEGREGATION EQUIPMENT | 442 ASPHALT CONCRETE SURFACE COURSE, 12.5 MM, TYPE A (446), AS PER PLAN, PG76-22M | 442 ASPHALT CONCRETE INTERMEDIATE COURSE, 19 MM, TYPE A (446) | 451 12" REINFORCED CONCRETE PAVEMENT, CLASS QC 1P, AS PER PLAN | 451 SPECIAL - PRESSURE RELIEF JOINT, TYPE B | 452 4" NON-REINFORCED CONCRETE PAVEMENT, CLASS QC 1P | 452 8" NON-REINFORCED CONCRETE PAVEMENT, CLASS QC 1P | 452 10" NON-REINFORCED CONCRETE PAVEMENT, CLASS QC 1P | 608 6" CONCRETE WALK, AS PER PLAN | 608 CURB RAMP, AS PER PLAN | 608 CURB RAMP, AS PER PLAN 2 | 609 COMBINATION CURB AND GUTTER, TYPE 2 | 609 CURB, TYPE 2-A | 609 CURB, TYPE 4-A | 609 CURB, TYPE 4-C | 609 CURB, TYPE 6 | 609 CURB, TYPE 10-B | 609 CONCRETE MEDIAN | 690 SPECIAL - LOW DENSITY CELLULAR CONCRETE FILL, CLASS II |
|---|---|---

| REF NO. | SHEET NO. | STATION FROM | STATION TO | SIDE | AREA | 203 ROADWAY, MISC.: REINFORCED TURF | 204 SUBGRADE COMPACTION | 204 PROOF ROLLING | 204 GEOTEXTILE FABRIC | 206 CEMENT | 206 CURING COAT | 206 CEMENT STABILIZED SUBGRADE, 12 INCHES DEEP | 252 FULL DEPTH PAVEMENT SAWING | 254 PAVEMENT PLANING, ASPHALT CONCRETE (3.25") | 301 ASPHALT CONCRETE BASE, PG64-22, (449) | 302 ASPHALT CONCRETE BASE, PG64-22, (449) | 304 AGGREGATE BASE | 305 9" CONCRETE BASE, CLASS QC 1P, AS PER PLAN | 407 NON-TRACKING TACK COAT | 441 ASPHALT CONCRETE SURFACE COURSE, TYPE 1, (448), PG64-22 | 441 ASPHALT CONCRETE SURFACE COURSE, TYPE 1, (448), AS PER PLAN, PG70-22M | 441 ASPHALT CONCRETE INTERMEDIATE COURSE, TYPE 2, (448) | 441 ASPHALT CONCRETE INTERMEDIATE COURSE, TYPE 1, (449), AS PER PLAN, PG64-22 | 441 ASPHALT CONCRETE SURFACE COURSE, TYPE 1, (449), (DRIVEWAYS) | 441 ASPHALT CONCRETE INTERMEDIATE COURSE, TYPE 2, (449), (DRIVEWAYS) | 442 ANTI-SEGREGATION EQUIPMENT | 442 ASPHALT CONCRETE SURFACE COURSE, 12.5 MM, TYPE A (446), AS PER PLAN, PG76-22M | 442 ASPHALT CONCRETE INTERMEDIATE COURSE, 19 MM, TYPE A (446) | 451 12" REINFORCED CONCRETE PAVEMENT, CLASS QC 1P, AS PER PLAN | 451 SPECIAL - PRESSURE RELIEF JOINT, TYPE B | 452 4" NON-REINFORCED CONCRETE PAVEMENT, CLASS QC 1P | 452 8" NON-REINFORCED CONCRETE PAVEMENT, CLASS QC 1P | 452 10" NON-REINFORCED CONCRETE PAVEMENT, CLASS QC 1P | 608 6" CONCRETE WALK, AS PER PLAN | 608 CURB RAMP, AS PER PLAN | 608 CURB RAMP, AS PER PLAN 2 | 609 COMBINATION CURB AND GUTTER, TYPE 2 | 609 CURB, TYPE 2-A | 609 CURB, TYPE 4-A | 609 CURB, TYPE 4-C | 609 CURB, TYPE 6 | 609 CURB, TYPE 10-B | 609 CONCRETE MEDIAN | 690 SPECIAL - LOW DENSITY CELLULAR CONCRETE FILL, CLASS II |
|---|---|---

PAVEMENT SUBSUMMARY - 10

| REF NO. | SHEET NO. | STATION FROM | STATION TO | SIDE | AREA | 203 ROADWAY, MISC.: REINFORCED TURF | 204 SUBGRADE COMPACTION | 204 PROOF ROLLING | 204 GEOTEXTILE FABRIC | 206 CEMENT | 206 CURING COAT | 206 CEMENT STABILIZED SUBGRADE, 12 INCHES DEEP | 252 FULL DEPTH PAVEMENT SAWING | 254 PAVEMENT PLANING, ASPHALT CONCRETE (3.25") | 301 ASPHALT CONCRETE BASE, PG64-22, (449) | 302 ASPHALT CONCRETE BASE, PG64-22, (449) | 304 AGGREGATE BASE | 305 9" CONCRETE BASE, CLASS QC 1P, AS PER PLAN | 407 NON-TRACKING TACK COAT | 441 ASPHALT CONCRETE SURFACE COURSE, TYPE 1, (448), PG64-22 | 441 ASPHALT CONCRETE SURFACE COURSE, TYPE 1, (448), AS PER PLAN, PG70-22M | 441 ASPHALT CONCRETE INTERMEDIATE COURSE, TYPE 2, (448) | 441 ASPHALT CONCRETE INTERMEDIATE COURSE, TYPE 1, (449), AS PER PLAN, PG64-22 | 441 ASPHALT CONCRETE SURFACE COURSE, TYPE 1, (449), (DRIVEWAYS) | 441 ASPHALT CONCRETE INTERMEDIATE COURSE, TYPE 2, (449), (DRIVEWAYS) | 442 ANTI-SEGREGATION EQUIPMENT | 442 ASPHALT CONCRETE SURFACE COURSE, 12.5 MM, TYPE A (446), AS PER PLAN, PG76-22M | 442 ASPHALT CONCRETE INTERMEDIATE COURSE, 19 MM, TYPE A (446) | 451 12" REINFORCED CONCRETE PAVEMENT, CLASS QC 1P, AS PER PLAN | 451 SPECIAL - PRESSURE RELIEF JOINT, TYPE B | 452 4" NON-REINFORCED CONCRETE PAVEMENT, CLASS QC 1P | 452 8" NON-REINFORCED CONCRETE PAVEMENT, CLASS QC 1P | 452 10" NON-REINFORCED CONCRETE PAVEMENT, CLASS QC 1P | 608 6" CONCRETE WALK, AS PER PLAN | 608 CURB RAMP, AS PER PLAN | 608 CURB RAMP, AS PER PLAN 2 | 609 COMBINATION CURB AND GUTTER, TYPE 2 | 609 CURB, TYPE 2-A | 609 CURB, TYPE 4-A | 609 CURB, TYPE 4-C | 609 CURB, TYPE 6 | 609 CURB, TYPE 10-B | 609 CONCRETE MEDIAN | 690 SPECIAL - LOW DENSITY CELLULAR CONCRETE FILL, CLASS II |
|---|---|---

| REF NO. | SHEET NO. | STATION FROM | STATION TO | SIDE | AREA | 203 ROADWAY, MISC.: REINFORCED TURF | 204 SUBGRADE COMPACTION | 204 PROOF ROLLING | 204 GEOTEXTILE FABRIC | 206 CEMENT | 206 CURING COAT | 206 CEMENT STABILIZED SUBGRADE, 12 INCHES DEEP | 252 FULL DEPTH PAVEMENT SAWING | 254 PAVEMENT PLANING, ASPHALT CONCRETE (3.25") | 301 ASPHALT CONCRETE BASE, PG64-22, (449) | 302 ASPHALT CONCRETE BASE, PG64-22, (449) | 304 AGGREGATE BASE | 305 9" CONCRETE BASE, CLASS QC 1P, AS PER PLAN | 407 NON-TRACKING TACK COAT | 441 ASPHALT CONCRETE SURFACE COURSE, TYPE 1, (448), PG64-22 | 441 ASPHALT CONCRETE SURFACE COURSE, TYPE 1, (448), AS PER PLAN, PG70-22M | 441 ASPHALT CONCRETE INTERMEDIATE COURSE, TYPE 2, (448) | 441 ASPHALT CONCRETE INTERMEDIATE COURSE, TYPE 1, (449), AS PER PLAN, PG64-22 | 441 ASPHALT CONCRETE SURFACE COURSE, TYPE 1, (449), (DRIVEWAYS) | 441 ASPHALT CONCRETE INTERMEDIATE COURSE, TYPE 2, (449), (DRIVEWAYS) | 442 ANTI-SEGREGATION EQUIPMENT | 442 ASPHALT CONCRETE SURFACE COURSE, 12.5 MM, TYPE A (446), AS PER PLAN, PG76-22M | 442 ASPHALT CONCRETE INTERMEDIATE COURSE, 19 MM, TYPE A (446) | 451 12" REINFORCED CONCRETE PAVEMENT, CLASS QC 1P, AS PER PLAN | 451 SPECIAL - PRESSURE RELIEF JOINT, TYPE B | 452 4" NON-REINFORCED CONCRETE PAVEMENT, CLASS QC 1P | 452 8" NON-REINFORCED CONCRETE PAVEMENT, CLASS QC 1P | 452 10" NON-REINFORCED CONCRETE PAVEMENT, CLASS QC 1P | 608 6" CONCRETE WALK, AS PER PLAN | 608 CURB RAMP, AS PER PLAN | 608 CURB RAMP, AS PER PLAN 2 | 609 COMBINATION CURB AND GUTTER, TYPE 2 | 609 CURB, TYPE 2-A | 609 CURB, TYPE 4-A | 609 CURB, TYPE 4-C | 609 CURB, TYPE 6 | 609 CURB, TYPE 10-B | 609 CONCRETE MEDIAN | 690 SPECIAL - LOW DENSITY CELLULAR CONCRETE FILL, CLASS II |
|---|---|---

SHEET NO.	ROADWAY	203 EXCAVATION CY	203 EXCAVATION, AS PER PLAN CY	203 EMBANKMENT CY	203 EMBANKMENT, AS PER PLAN CY	203 ROADWAY, MISC.; EPS GEOFOAM FILL CY	204 EXCAVATION OF SUBGRADE CY	204 GRANULAR MATERIAL, TYPE B CY
	CROSS SECTIONS							
735	I.R. 90 EB	39424	10270	5339	8421	30694		
749	INTERIM I.R. 90 EB	94415		149				
774	I.R. 90 WB	29143	11473	4954	8204	22458		
789	INTERIM I.R. 90 WB	51749						
798	RAMP A1	944	1863	418	1185	3805		
817	RAMP A2	2166	3895	4658	2402	13586		
832	RAMP A3	13750		2066				
841	RAMP IB5	9480		1316				
859	RAMP B6	13089	6516	15337	6298	28133		
863	RAMP B6A	25	772	3612	812	1163		
869	RAMP IH4	3674		298				
899	RAMP IH5/H5	11307		28593				
913	RAMP IH6/H6	5947		5793				
931	RAMP IJ3	13559		3300				
946	CARNEGIE AVE.	2221		1083				
960	MIDTOWN CONNECTOR	4279		289				
962	CEDAR AVE.	397		39				
967	E. 14TH ST. NB XOVER	67		61				
987	E. 14TH ST. NB	8493		1485				
1000	E. 14TH ST. SB	11280		174			272	272
1002	E. 18TH ST.	833		240				
1005	CENTRAL AVE. CONNECTOR	297		13				
1012	E. 22ND ST.	228		574				
	SUPPLEMENTAL AREAS							
OFFICE CALCS	CARNEGIE AVE. & E. 22ND ST.	280		1494				
OFFICE CALCS	E. 22ND ST. & MIDTOWN CONNECTOR	52		50				
OFFICE CALCS	MIDTOWN CONNECTOR & CEDAR AVE.	832		9				
OFFICE CALCS	MIDTOWN CONNECTOR & CARNEGIE AVE.	499						
OFFICE CALCS	CENTRAL AVE. CONNECTOR & E. 18TH ST.	95		7				
OFFICE CALCS	CENTRAL AVE. CONNECTOR & E. 19TH ST.	197		1				
OFFICE CALCS	WALL AG GRADING	14893		1751				
OFFICE CALCS	WALL AF GRADING	13		1030				
OFFICE CALCS	WALL AH GRADING	132						
OFFICE CALCS	E. 22ND ST. & RAMP B6	21		35				
OFFICE CALCS	E. 22ND ST. & RAMP B6A	65		71				
OFFICE CALCS	COMMERCIAL DRIVEWAYS	144		13				
OFFICE CALCS	DETENTIONS BASIN ACCESS DRIVE	977		940				
OFFICE CALCS	RAMP H5 DETENTION BASIN	8822						
OFFICE CALCS	E. 18TH ST. & E. 14TH ST. & CARNEGIE AVE.	693		43				
OFFICE CALCS	E. 22ND ST. & RAMP H6	30						
OFFICE CALCS	I.R. 90 EB & RAMP H5	420						
OFFICE CALCS	RAMP IH4 & E. 14TH ST.	126						
OFFICE CALCS	CARNEGIE AVE. & RAMP A1	22		58				
OFFICE CALCS	RAMP A3 & E. 14TH SB	367						
OFFICE CALCS	E. 14TH ST. TO BRIDGE 10 & 11 ABUTMENTS			1363				
TOTALS CARRIED TO GENERAL SUMMARY		345447	34789	86656	27322	99839	272	272

Preliminary Plans - For Reference Only

EARTHWORK SUBSUMMARY - 1

CUY-90-16.28 (CCG3A)

MODEL: Sheet-01 PAPERSIZE: 34x22 (in.) DATE: 5/23/2025 TIME: 3:26:04 PM USER: Joseph.Hogan
pw:\\mb-us-pw.bentley.com:mb-us-pw-03\Documents\Cleveland_OH\01_Projects\ODOT\District12\82382\400-Engineering\Roadway\Sheets\82382_GS701.dgn

DESIGN AGENCY
Michael Baker INTERNATIONAL

DESIGNER KJM

REVIEWER KGJ 05/22/24

PROJECT ID 82382

SHEET 471 TOTAL 2696

REF NO.	SHEET NO.	STATION FROM	STATION TO	SIDE	AREA	202 STRUCTURE REMOVED	202 PORTIONS OF STRUCTURE REMOVED	202 PAVEMENT REMOVED	202 WALK REMOVED	202 CONCRETE MEDIAN REMOVED	202 CONCRETE BARRIER REMOVED	202 TRAFFIC ISLAND REMOVED	202 CURB REMOVED	202 PIPE REMOVED, 24" DIAMETER AND UNDER	202 PIPE REMOVED, OVER 24" DIAMETER	202 GUARDRAIL REMOVED	202 ANCHOR ASSEMBLY REMOVED, TYPE A	202 ANCHOR ASSEMBLY REMOVED, TYPE E	202 ANCHOR ASSEMBLY REMOVED, TYPE T	202 ANCHOR ASSEMBLY REMOVED, TYPE B	202 BRIDGE TERMINAL ASSEMBLY REMOVED	202 BRIDGE TERMINAL ASSEMBLY REMOVED, AS PER PLAN	202 IMPACT ATTENUATOR REMOVED	202 BUILDING DEMOLISHED (103-13-019 / 320-WL)	202 MANHOLE REMOVED	202 CATCH BASIN REMOVED	202 INLET REMOVED	202 INLET ABANDONED	202 CATCH BASIN ABANDONED	202 MANHOLE ABANDONED	202 SPECIAL - FILL AND PLUG EXISTING CONDUIT (12" AND UNDER)	202 SPECIAL - FILL AND PLUG EXISTING CONDUIT (15")	202 SPECIAL - FILL AND PLUG EXISTING CONDUIT (18")	202 SPECIAL - FILL AND PLUG EXISTING CONDUIT (21")	202 SPECIAL - FILL AND PLUG EXISTING CONDUIT (24")	202 SPECIAL - FILL AND PLUG EXISTING CONDUIT (27")	202 SPECIAL - FILL AND PLUG EXISTING CONDUIT (30")	202 SPECIAL - FILL AND PLUG EXISTING CONDUIT (36")	202 SPECIAL - FILL AND PLUG EXISTING CONDUIT (66")	202 SPECIAL - FILL AND PLUG EXISTING CONDUIT (NO. 8 BR)	202 FENCE REMOVED	202 GATE REMOVED	202 REMOVAL MISC.: BOLLARD	202 REMOVAL MISC.: BILLBOARD	202 REMOVAL MISC.: PAY BOX	202 REMOVAL MISC.: UTILITY POLE	202 REMOVAL MISC.: DELINEATOR CURB	202 REMOVAL MISC.: PORTABLE BARRIER		
					SF	LS	LS	SY	SF	SY	FT	SY	FT	FT	FT	FT	EACH	EACH	EACH	EACH	EACH	EACH	EACH	LS	EACH	EACH	EACH	EACH	EACH	EACH	FT	FT	FT	FT	FT	FT	FT	FT	FT	FT	FT	EACH	EACH	EACH	EACH	EACH	EACH	FT	FT		
		I.R. 90																																																		
PR-1	680	60+65.01	64+84.06	LT	25256			2806																																												
PR-2	680	60+88.03	64+85.46	LT	28679			3187																																												
R-1	680	63+39.19	64+92.12	RT												153																																			
R-2	680	64+03.45	64+86.95	LT												84																																			
RC-1	680	64+76.03	64+90.71	LT									15																																						
RC-2	680	64+76.32	64+92.00	RT									16																																						
		RAMP A3																																																	
PR-3	680	578+57.69	581+86.23	LT	12700			1411																																												
		I.R. 90																																																	
PR-4	681	65+82.27	66+36.81	RT	2182			242																																												
PR-5	681	66+81.03	70+83.72	LT	20817			2313																																												
R-3	681	68+08.96	70+66.98	RT												258																																			
PR-6	681	68+09.16	70+66.90	RT	24013			2668																																												
R-4	681	68+72.07	70+79.28	LT												207																																			
RC-3	681	68+72.18	68+92.18	LT									20																																						
		RAMP A2																																																	
R-5	681	420+94.47	421+87.53	RT												93																																			
R-6	681	423+44.21	425+11.04	RT												167																																			
R-7	681	424+65.86	428+07.53	RT												302																																			
		EX. RAMP A3																																																
R-8	681	200+57.15	203+89.55	RT												332																																			
PR-7	681	200+93.01	205+51.42	RT	15657			1740																																											
R-9	681	201+88.16	205+70.08	LT												382																																			
RC-4	681	203+71.50	203+89.55	RT									18																																						
		I.R. 90																																																	
PR-8	682	70+00.00	70+75.09	RT	3272			364																																											
R-10	682	73+95.57	76+88.23	RT							293																																								
R-11	682	73+95.70	84+38.26	CL							1043																																								
R-12	682	74+12.69	76+42.27	LT			LS																																												
RC-5	682	74+13.00	74+31.32	RT									18																																						
R-13	682	74+13.16	77+97.58	RT												384																																			
R-14	682	74+19.25	80+81.54	RT																																													739					
PR-9	682	74+21.44	98+47.75	CL	316145			35127																																												
WR-1	682	74+78.81	77+33.38	RT	1206				134																																												
		E. 14TH ST. NB																																																	
PR-10	682	53+05.44	57+45.67	RT/LT	25883			2876																																												
WR-2	682	53+44.97	57+45.48	RT	8525				8525																																											
R-15	682	55+80.04	57+45.17	RT		LS																																													
R-16	682	55+80.04	57+45.17	RT																																												205					
		E. 14TH ST. SB																																																	
PR-11	682	32+71.86	37+25.52	CL/LT	17375			1931																																												
R-17	682	205+67.86	205+86.87	CL/LT												51																																			
R-18	682	205+76.13	206+75.67	RT/LT												75																																			
		I.R. 90																																																	
R-19	683	75+80.47	76+70.22	LT																																											227					
TOTALS CARRIED TO SHEET 489						LS	LS	54665	8659	-	1336	-	87	-	-	2488	-	-	-	-	-	-	-	-	-	-	-	-	-	-	-	-	-	-	-	-	-	-	-	-	-	1171	-	-	-	-	-	-	-		

Preliminary Plans - For Reference Only

REMOVALS SUBSUMMARY - 1

CUY-90-16.28 (CCG3A)

MODEL: Sheet-01 PAPERSIZE: 34x22 (in.) DATE: 3/27/2025 TIME: 8:59:34 PM USER: Alexandria.Summers
pw:\\mb-us-pw.bentley.com:mb-us-pw-03\Documents\Cleveland_OH\01_Projects\ODOT\District12\82382\400-Engineering\Roadway\Sheets\82382_GS901.dgn

DESIGN AGENCY
Michael Baker INTERNATIONAL

DESIGNER KJM

REVIEWER KGJ 05/22/24

PROJECT ID 82382

SHEET 472 TOTAL 2696

REF NO.	SHEET NO.	STATION FROM	STATION TO	SIDE	AREA	202 STRUCTURE REMOVED	202 PORTIONS OF STRUCTURE REMOVED	202 PAVEMENT REMOVED	202 WALK REMOVED	202 CONCRETE MEDIAN REMOVED	202 CONCRETE BARRIER REMOVED	202 TRAFFIC ISLAND REMOVED	202 CURB REMOVED	202 PIPE REMOVED, 24" DIAMETER AND UNDER	202 PIPE REMOVED, OVER 24" DIAMETER	202 GUARDRAIL REMOVED	202 ANCHOR ASSEMBLY REMOVED, TYPE A	202 ANCHOR ASSEMBLY REMOVED, TYPE E	202 ANCHOR ASSEMBLY REMOVED, TYPE T	202 ANCHOR ASSEMBLY REMOVED, TYPE B	202 BRIDGE TERMINAL ASSEMBLY REMOVED	202 BRIDGE TERMINAL ASSEMBLY REMOVED, AS PER PLAN	202 IMPACT ATTENUATOR REMOVED	202 BUILDING DEMOLISHED (103-13-019 / 320-WL)	202 MANHOLE REMOVED	202 CATCH BASIN REMOVED	202 INLET REMOVED	202 INLET ABANDONED	202 CATCH BASIN ABANDONED	202 MANHOLE ABANDONED	202 SPECIAL - FILL AND PLUG EXISTING CONDUIT (12" AND UNDER)	202 SPECIAL - FILL AND PLUG EXISTING CONDUIT (15")	202 SPECIAL - FILL AND PLUG EXISTING CONDUIT (18")	202 SPECIAL - FILL AND PLUG EXISTING CONDUIT (21")	202 SPECIAL - FILL AND PLUG EXISTING CONDUIT (24")	202 SPECIAL - FILL AND PLUG EXISTING CONDUIT (27")	202 SPECIAL - FILL AND PLUG EXISTING CONDUIT (30")	202 SPECIAL - FILL AND PLUG EXISTING CONDUIT (36")	202 SPECIAL - FILL AND PLUG EXISTING CONDUIT (66")	202 SPECIAL - FILL AND PLUG EXISTING CONDUIT (NO. 8 BR)	202 FENCE REMOVED	202 GATE REMOVED	202 REMOVAL MISC.: BOLLARD	202 REMOVAL MISC.: BILLBOARD	202 REMOVAL MISC.: PAY BOX	202 REMOVAL MISC.: UTILITY POLE	202 REMOVAL MISC.: DELINEATOR CURB	202 REMOVAL MISC.: PORTABLE BARRIER		
					SF	LS	LS	SY	SF	SY	FT	SY	FT	FT	FT	FT	EACH	EACH	EACH	EACH	EACH	EACH	EACH	LS	EACH	EACH	EACH	EACH	EACH	EACH	FT	FT	FT	FT	FT	FT	FT	FT	FT	FT	FT	EACH	EACH	EACH	EACH	EACH	EACH	FT	FT		
		I.R. 90 (CONT.)																																															
R-20	683	75+94.28	79+70.38	LT							376																																						
R-21	683	76+09.27	77+46.68	LT												137																																	
R-22	683	76+36.95	79+82.06	LT																																													
R-23	683	76+88.11	79+54.44	RT																																												266		
R-24	684	82+01.87	84+63.00	LT																																													
R-25	684	82+08.91	84+10.31	RT												201																																	
R-26	684	83+41.06	84+10.08	RT																																													
R-27	685	85+42.26	86+81.64	CL							139																																						
R-28	685	85+68.89	86+33.96	LT																																													
R-29	685	86+92.16	91+19.21	LT																																													
R-30	685	87+12.97	89+65.53	LT												253																																	
R-31	685	87+60.49	92+18.52	CL							458																																						
R-32	685	88+12.94	95+32.02	RT																																													
RC-6	686	91+39.72	95+13.26	RT									440																																				
R-33	686	91+66.77	92+95.15	RT												128																																	
R-34	686	92+29.42	92+66.88	LT																																													
R-35	686	92+66.88	98+30.08	LT																																													
R-36	686	92+78.05	98+26.18	LT												548																																	
RC-7	686	92+93.58	98+25.48	LT									532																																				
R-37	686	93+01.77	94+70.56	RT																																													
R-38	686	93+47.95	98+47.71	CL							500																																						
R-39	687	97+87.01	98+48.31	RT												61																																	
		RAMP 4																																															
PR-12	687	903+30.00	905+48.83	CL	6076			675																																								
		RAMP IB5																																															
PR-13	688	1709+02.70	1715+60.50	CL	24534			2726																																								
R-40	688	1709+03.15	1711+13.22	LT												276			1																													
RC-8	688	1714+10.37	1715+60.50	LT/RT									153																																			
WR-3	688	1714+16.15	1715+60.50	RT	1159				1159																																							
RC-9	688	1714+16.65	1714+39.34	LT									50																																			
WR-4	688	1714+23.46	1714+38.90	LT	232				232																																							
		RAMP IJ3																																															
R-41	689	104+57.75	108+21.19	RT/LT							382																																						
PR-14	689	104+57.75	108+42.15	RT/LT	9326			1037																																								
R-42	689	106+68.65	108+43.23	RT/LT												138			1																													
		EX. RAMP A3																																															
R-43	689	205+40.19	209+57.47	LT							415																																						
PR-15	689	205+40.19	209+57.47	CL	18135			2015																																								
R-44	689	205+45.98	205+70.34	LT												13			1																													
PR-16	689	205+47.55	206+19.64	CL	1853			206																																								
R-45	689	205+47.76	205+70.08	LT												10			1																													
R-46	689	205+51.43	205+94.31	RT							43																																						
R-47	689	205+92.27	209+53.68	RT												363						1																										
		EX. RAMP E-17																																														
R-48	689	61+07.73	61+79.00	LT												13				1	1																												
TOTALS CARRIED TO SHEET 489						-	-	6659	1391	-	2313	-	1175	-	-	2141	-	1	3	1	2	-	1	-	-	-	-	-	-	-	-	-	-	-	-	-	-	-	-	-	3212	-	-	-	-	-	266	-		

Preliminary Plans - For Reference Only

REMOVALS SUBSUMMARY - 2

DESIGN AGENCY
Michael Baker INTERNATIONAL

DESIGNER KJM

REVIEWER KGJ 05/22/24

PROJECT ID 82382

SHEET 473 TOTAL 2696

CUY-90-16.28 (CCG3A)

MODEL: Sheet-02 PAPERSIZE: 34x22 (in.) DATE: 3/27/2025 TIME: 8:59:36 PM USER: Alexandria.Summers
pw:\\mb-us-pw.bentley.com:mb-us-pw-03\Documents\Cleveland_OH\01_Projects\ODOT\District12\82382\400-Engineering\Roadway\Sheets\82382_GS901.dgn

REF NO.	SHEET NO.	STATION FROM	STATION TO	SIDE	AREA	202 STRUCTURE REMOVED	202 PORTIONS OF STRUCTURE REMOVED	202 PAVEMENT REMOVED	202 WALK REMOVED	202 CONCRETE MEDIAN REMOVED	202 CONCRETE BARRIER REMOVED	202 TRAFFIC ISLAND REMOVED	202 CURB REMOVED	202 PIPE REMOVED, 24" DIAMETER AND UNDER	202 PIPE REMOVED, OVER 24" DIAMETER	202 GUARDRAIL REMOVED	202 ANCHOR ASSEMBLY REMOVED, TYPE A	202 ANCHOR ASSEMBLY REMOVED, TYPE E	202 ANCHOR ASSEMBLY REMOVED, TYPE T	202 ANCHOR ASSEMBLY REMOVED, TYPE B	202 BRIDGE TERMINAL ASSEMBLY REMOVED	202 BRIDGE TERMINAL ASSEMBLY REMOVED, AS PER PLAN	202 IMPACT ATTENUATOR REMOVED	202 BUILDING DEMOLISHED (103-13-019 / 320-WL)	202 MANHOLE REMOVED	202 CATCH BASIN REMOVED	202 INLET REMOVED	202 INLET ABANDONED	202 CATCH BASIN ABANDONED	202 MANHOLE ABANDONED	202 SPECIAL - FILL AND PLUG EXISTING CONDUIT (12" AND UNDER)	202 SPECIAL - FILL AND PLUG EXISTING CONDUIT (15")	202 SPECIAL - FILL AND PLUG EXISTING CONDUIT (18")	202 SPECIAL - FILL AND PLUG EXISTING CONDUIT (21")	202 SPECIAL - FILL AND PLUG EXISTING CONDUIT (24")	202 SPECIAL - FILL AND PLUG EXISTING CONDUIT (27")	202 SPECIAL - FILL AND PLUG EXISTING CONDUIT (30")	202 SPECIAL - FILL AND PLUG EXISTING CONDUIT (36")	202 SPECIAL - FILL AND PLUG EXISTING CONDUIT (66")	202 SPECIAL - FILL AND PLUG EXISTING CONDUIT (NO. 8 BR)	202 FENCE REMOVED	202 GATE REMOVED	202 REMOVAL MISC.: BOLLARD	202 REMOVAL MISC.: BILLBOARD	202 REMOVAL MISC.: PAY BOX	202 REMOVAL MISC.: UTILITY POLE	202 REMOVAL MISC.: DELINEATOR CURB	202 REMOVAL MISC.: PORTABLE BARRIER		
					SF	LS	LS	SY	SF	SY	FT	SY	FT	FT	FT	FT	EACH	EACH	EACH	EACH	EACH	EACH	EACH	LS	EACH	EACH	EACH	EACH	EACH	EACH	FT	FT	FT	FT	FT	FT	FT	FT	FT	FT	FT	EACH	EACH	EACH	EACH	EACH	EACH	FT	FT		
		EX. RAMP E-17 (CONT.)																																																
R-49	689	61+85.11	62+94.24	RT												36		1	1																																
R-50	689	62+94.98	63+14.39	LT	171					19																																								
		RAMP IH4																																																
R-51	690	14+82.32	17+92.29	LT/RT												291			1																																
PR-17	690	299+52.58	300+52.59	RT	2377			264																																										
		RAMP H5																																																
R-52	690	979+94.01	981+14.46	LT/RT												126			1																																
		RAMP IH6																																																
RC-10	690	1181+18.65	1882+58.96	RT									139																																					
RC-11	690	1270+55.44	1273+98.94	LT/RT									366																																					
PR-18	690	1270+55.44	1273+99.09	LT/RT	13761			1529																																										
		RAMP H6																																																
PR-19	690	1182+22.99	1182+65.44	RT						33																																								
RC-12	690	1182+23.33	1182+68.01	RT									88																																					
		E. 14TH ST. NB XOVER																																																
RC-13	690	251+29.10	254+32.46	LT/RT									400																																					
PR-20	690	251+29.11	254+32.46	LT/RT	6457			717																																										
		INTERIM E. 14TH ST. NB																																																
PR-21	690	297+61.50	300+55.37	CL	6598			733																																										
		E. 14TH ST. NB																																																
RC-14	690	297+61.50	300+51.03	RT									343																																					
RC-15	690	298+81.86	300+54.55	RT									173																																					
		RAMP A2																																																
R-53	691	409+56.19	410+42.35	LT																																														
		RAMP IJ3																																																
R-54	691	95+00.84	95+69.25	LT												70																																		
PR-22	691	95+07.87	95+61.49	CL	2075			231																																										
R-55	691	95+08.08	95+55.67	LT							49																																							
		E. 14TH ST. NB XOVER																																																
PR-23	691	250+25.02	250+65.86	LT	569			63																																										
RC-16	691	250+25.02	250+65.86	LT									104																																					
		RAMP A2																																																
R-56	692	405+73.72	405+87.24	LT/RT							14																																							
R-57	692	405+73.75	409+66.05	LT/RT												366						1																												
R-58	692	405+76.92	408+09.06	LT																																														
		RAMP IH4																																																
R-59	692	10+63.76	10+76.76	RT							13																																							
R-60	692	10+63.84	13+63.97	RT												262						1																												
PR-24	692	10+88.61	13+94.92	CL	13673			1519																																										
R-61	692	13+29.97	13+47.96	LT																			1																											
R-62	692	13+47.96	14+16.56	LT												66																																		
RC-17	692	13+56.76	141+47.70	LT									60																																					
TOTALS CARRIED TO SHEET 489						-	-	5056	-	52	76	-	1673	-	-	1217	-	1	3	-	2	-	1	-	-	-	-	-	-	-	-	-	-	-	-	-	-	-	-	628	1	-	-	-	-	-	-		

Preliminary Plans - For Reference Only

REMOVALS SUBSUMMARY - 3

CUY-90-16.28 (CCG3A)

MODEL: Sheet-03 PAPERSIZE: 34x22 (in.) DATE: 3/27/2025 TIME: 8:59:38 PM USER: Alexandria.Summers
pw:\\mb-us-pw.bentley.com:mb-us-pw-03\Documents\Cleveland_OH\01_Projects\ODOT\District12\82382\400-Engineering\Roadway\Sheets\82382_GS901.dgn

DESIGN AGENCY
Michael Baker INTERNATIONAL

DESIGNER KJM

REVIEWER KGJ 05/22/24

PROJECT ID 82382

SHEET 474 TOTAL 2696

REMOVALS SUBSUMMARY - 4

REF NO.	SHEET NO.	STATION FROM	STATION TO	SIDE	AREA	202 STRUCTURE REMOVED	202 PORTIONS OF STRUCTURE REMOVED	202 PAVEMENT REMOVED	202 WALK REMOVED	202 CONCRETE MEDIAN REMOVED	202 CONCRETE BARRIER REMOVED	202 TRAFFIC ISLAND REMOVED	202 CURB REMOVED	202 PIPE REMOVED, 24" DIAMETER AND UNDER	202 PIPE REMOVED, OVER 24" DIAMETER	202 GUARDRAIL REMOVED	202 ANCHOR ASSEMBLY REMOVED, TYPE A	202 ANCHOR ASSEMBLY REMOVED, TYPE E	202 ANCHOR ASSEMBLY REMOVED, TYPE T	202 ANCHOR ASSEMBLY REMOVED, TYPE B	202 BRIDGE TERMINAL ASSEMBLY REMOVED	202 BRIDGE TERMINAL ASSEMBLY REMOVED, AS PER PLAN	202 IMPACT ATTENUATOR REMOVED	202 BUILDING DEMOLISHED (103-13-019 / 320-WL)	202 MANHOLE REMOVED	202 CATCH BASIN REMOVED	202 INLET REMOVED	202 INLET ABANDONED	202 CATCH BASIN ABANDONED	202 MANHOLE ABANDONED	202 SPECIAL - FILL AND PLUG EXISTING CONDUIT (12" AND UNDER)	202 SPECIAL - FILL AND PLUG EXISTING CONDUIT (15")	202 SPECIAL - FILL AND PLUG EXISTING CONDUIT (18")	202 SPECIAL - FILL AND PLUG EXISTING CONDUIT (21")	202 SPECIAL - FILL AND PLUG EXISTING CONDUIT (24")	202 SPECIAL - FILL AND PLUG EXISTING CONDUIT (27")	202 SPECIAL - FILL AND PLUG EXISTING CONDUIT (30")	202 SPECIAL - FILL AND PLUG EXISTING CONDUIT (36")	202 SPECIAL - FILL AND PLUG EXISTING CONDUIT (66")	202 SPECIAL - FILL AND PLUG EXISTING CONDUIT (NO. 8 BR)	202 FENCE REMOVED	202 GATE REMOVED	202 REMOVAL MISC.: BOLLARD	202 REMOVAL MISC.: BILLBOARD	202 REMOVAL MISC.: PAY BOX	202 REMOVAL MISC.: UTILITY POLE	202 REMOVAL MISC.: DELINEATOR CURB	202 REMOVAL MISC.: PORTABLE BARRIER		
					SF	LS	LS	SY	SF	SY	FT	SY	FT	FT	FT	FT	EACH	EACH	EACH	EACH	EACH	EACH	EACH	LS	EACH	EACH	EACH	EACH	EACH	EACH	FT	FT	FT	FT	FT	FT	FT	FT	FT	FT	FT	EACH	EACH	EACH	EACH	EACH	EACH	FT	FT		
		RAMP IJ3																																																		
PR-25	692	91+52.52	95+07.87	CL	11517			1280																																												
		EX. RAMP E-17																																																	
R-63	692	53+59.63	54+62.78	RT												65																																				
		RAMP IH4																																																	
PR-26	693	13+94.92	14+90.99	CL	3264			363																																												
RC-18	693	14+14.70	14+84.82	LT									72																																						
R-64	693	14+16.56	14+82.32	LT												68																																				
		RAMP IH5																																																	
R-65	693	1078+57.45	1080+10.11	LT												160																																				
		RAMP H5																																																	
R-66	693	977+48.20	981+25.87	RT																																															
RC-19	693	978+10.65	980+74.29	RT									291																																						
PR-27	693	978+10.65	980+74.29	RT	7717			857																																												
		RAMP H6																																																	
RC-20	693	1178+63.69	1179+04.48	RT									169																																						
RC-21	693	1179+33.65	1180+06.53	RT									143																																						
		RAMP H5																																																	
PR-28	694	983+02.44	987+06.26	RT	11617			1291																																											
RC-22	694	983+10.24	987+06.26	LT/RT									403																																						
		RAMP H6																																																	
RC-23	694	1182+58.96	1187+01.56	RT									403																																						
PR-29	694	1182+58.96	1187+01.56	RT	9521			1058																																											
PR-30	694	1182+65.44	1183+19.52	RT	626					70																																									
RC-24	694	1182+65.44	1186+88.04	RT									403																																						
RC-25	694	1182+68.01	1186+43.20	RT/LT									407																																						
PR-31	694	1182+73.40	1185+25.09	CL/LT	6885			765																																											
RC-26	694	1182+74.47	1185+25.35	LT									261																																						
RC-27	694	1182+82.50	1185+25.35	LT									259																																						
PR-32	694	1184+45.30	1185+25.28	LT	252					28																																									
		INTERIM E. 14TH ST. SB																																																	
RC-28	694	200+54.55	204+66.61	RT									423																																						
PR-33	694	200+56.02	204+66.65	CL	10395			1155																																											
RC-29	694	201+78.20	204+80.35	CL/LT									308																																						
		E. 14TH ST. SB																																																
R-67	694	31+34.50	31+64.71	RT												23			1																																
		E. 22ND ST.																																																
RC-30	694	29+46.50	30+21.05	LT/RT									154																																						
		RAMP H5																																																	
RC-31	695	987+00.61	988+94.16	RT/LT									219																																						
PR-34	695	987+00.61	988+94.16	RT/LT	7168			796																																											
RC-32	695	987+06.26	988+71.43	RT/LT									188																																						
R-68	695	987+84.56	987+87.09	RT							16																																							
R-69	695	988+12.41	988+14.63	RT							16																																							
TOTALS CARRIED TO SHEET 489						-	-	7565	-	98	32	-	4103	-	-	316	-	-	1	-	-	-	-	-	-	-	-	-	-	-	-	-	-	-	-	-	-	-	-	-	395	-	-	-	-	-	-	-		

Preliminary Plans - For Reference Only

DESIGN AGENCY
Michael Baker INTERNATIONAL

DESIGNER KJM
REVIEWER KGJ 05/22/24
PROJECT ID 82382
SHEET 475 TOTAL 2696

CUY-90-16.28 (CCG3A)

MODEL: Sheet-04 PAPERSIZE: 34x22 (in.) DATE: 3/27/2025 TIME: 8:59:40 PM USER: Alexandria.Summers
pw:\\mb-us-pw.bentley.com:mb-us-pw-03\Documents\Cleveland_OH\01_Projects\ODOT\District12\82382\400-Engineering\Roadway\Sheets\82382_GS901.dgn

REMOVALS SUBSUMMARY - 5

| REF NO. | SHEET NO. | STATION FROM | STATION TO | SIDE | AREA | 202 STRUCTURE REMOVED | 202 PORTIONS OF STRUCTURE REMOVED | 202 PAVEMENT REMOVED | 202 WALK REMOVED | 202 CONCRETE MEDIAN REMOVED | 202 CONCRETE BARRIER REMOVED | 202 TRAFFIC ISLAND REMOVED | 202 CURB REMOVED | 202 PIPE REMOVED, 24" DIAMETER AND UNDER | 202 PIPE REMOVED, OVER 24" DIAMETER | 202 GUARDRAIL REMOVED | 202 ANCHOR ASSEMBLY REMOVED, TYPE A | 202 ANCHOR ASSEMBLY REMOVED, TYPE E | 202 ANCHOR ASSEMBLY REMOVED, TYPE T | 202 ANCHOR ASSEMBLY REMOVED, TYPE B | 202 BRIDGE TERMINAL ASSEMBLY REMOVED | 202 BRIDGE TERMINAL ASSEMBLY REMOVED, AS PER PLAN | 202 IMPACT ATTENUATOR REMOVED | 202 BUILDING DEMOLISHED (103-13-019 / 320-WL) | 202 MANHOLE REMOVED | 202 CATCH BASIN REMOVED | 202 INLET REMOVED | 202 INLET ABANDONED | 202 CATCH BASIN ABANDONED | 202 MANHOLE ABANDONED | 202 SPECIAL - FILL AND PLUG EXISTING CONDUIT (12" AND UNDER) | 202 SPECIAL - FILL AND PLUG EXISTING CONDUIT (15") | 202 SPECIAL - FILL AND PLUG EXISTING CONDUIT (18") | 202 SPECIAL - FILL AND PLUG EXISTING CONDUIT (21") | 202 SPECIAL - FILL AND PLUG EXISTING CONDUIT (24") | 202 SPECIAL - FILL AND PLUG EXISTING CONDUIT (27") | 202 SPECIAL - FILL AND PLUG EXISTING CONDUIT (30") | 202 SPECIAL - FILL AND PLUG EXISTING CONDUIT (36") | 202 SPECIAL - FILL AND PLUG EXISTING CONDUIT (66") | 202 SPECIAL - FILL AND PLUG EXISTING CONDUIT (NO. 8 BR) | 202 FENCE REMOVED | 202 GATE REMOVED | 202 REMOVAL MISC.: BOLLARD | 202 REMOVAL MISC.: BILLBOARD | 202 REMOVAL MISC.: PAY BOX | 202 REMOVAL MISC.: UTILITY POLE | 202 REMOVAL MISC.: DELINEATOR CURB | 202 REMOVAL MISC.: PORTABLE BARRIER | | |
|---|---|---

REMOVALS SUBSUMMARY - 6

REF NO.	SHEET NO.	STATION FROM	STATION TO	SIDE	AREA	202 STRUCTURE REMOVED	202 PORTIONS OF STRUCTURE REMOVED	202 PAVEMENT REMOVED	202 WALK REMOVED	202 CONCRETE MEDIAN REMOVED	202 CONCRETE BARRIER REMOVED	202 TRAFFIC ISLAND REMOVED	202 CURB REMOVED	202 PIPE REMOVED, 24" DIAMETER AND UNDER	202 PIPE REMOVED, OVER 24" DIAMETER	202 GUARDRAIL REMOVED	202 ANCHOR ASSEMBLY REMOVED, TYPE A	202 ANCHOR ASSEMBLY REMOVED, TYPE E	202 ANCHOR ASSEMBLY REMOVED, TYPE T	202 ANCHOR ASSEMBLY REMOVED, TYPE B	202 BRIDGE TERMINAL ASSEMBLY REMOVED	202 BRIDGE TERMINAL ASSEMBLY REMOVED, AS PER PLAN	202 IMPACT ATTENUATOR REMOVED	202 BUILDING DEMOLISHED (103-13-019 / 320-WL)	202 MANHOLE REMOVED	202 CATCH BASIN REMOVED	202 INLET REMOVED	202 INLET ABANDONED	202 CATCH BASIN ABANDONED	202 MANHOLE ABANDONED	202 SPECIAL - FILL AND PLUG EXISTING CONDUIT (12" AND UNDER)	202 SPECIAL - FILL AND PLUG EXISTING CONDUIT (15")	202 SPECIAL - FILL AND PLUG EXISTING CONDUIT (18")	202 SPECIAL - FILL AND PLUG EXISTING CONDUIT (21")	202 SPECIAL - FILL AND PLUG EXISTING CONDUIT (24")	202 SPECIAL - FILL AND PLUG EXISTING CONDUIT (27")	202 SPECIAL - FILL AND PLUG EXISTING CONDUIT (30")	202 SPECIAL - FILL AND PLUG EXISTING CONDUIT (36")	202 SPECIAL - FILL AND PLUG EXISTING CONDUIT (66")	202 SPECIAL - FILL AND PLUG EXISTING CONDUIT (NO. 8 BR)	202 FENCE REMOVED	202 GATE REMOVED	202 REMOVAL MISC.: BOLLARD	202 REMOVAL MISC.: BILLBOARD	202 REMOVAL MISC.: PAY BOX	202 REMOVAL MISC.: UTILITY POLE	202 REMOVAL MISC.: DELINEATOR CURB	202 REMOVAL MISC.: PORTABLE BARRIER		
					SF	LS	LS	SY	SF	SY	FT	SY	FT	FT	FT	FT	EACH	EACH	EACH	EACH	EACH	EACH	EACH	LS	EACH	EACH	EACH	EACH	EACH	EACH	FT	FT	FT	FT	FT	FT	FT	FT	FT	FT	FT	EACH	EACH	EACH	EACH	EACH	EACH	FT	FT		
		EX. COMMUNITY COLLEGE AVE.																																																	
WR-6	696	55+09.33	57+82.69	LT	2286				2286																																										
RC-53	696	55+09.34	57+82.63	LT									347																																						
PR-45	696	55+09.34	59+65.59	CL/LT	15126			1681																																											
PR-46	696	57+29.16	58+35.94	LT	3461			385																																											
PR-47	696	57+55.05	58+03.22	LT	714							714																																							
RC-54	696	58+07.35	59+63.47	LT									303																																						
R-76	696	58+09.73	58+10.88	LT/RT																																											2					
WR-7	696	58+19.10	59+63.47	LT	1894				1894																																										
PR-48	696	58+26.95	59+26.12	CL/LT	693					77																																										
		RAMP A2																																																	
PR-49	697	424+88.65	428+78.64	LT	14630			1626																																											
		RAMP A3																																																
RC-55	697	589+06.97	589+69.87	LT									59																																						
		CARNEGIE AVE.																																																
PR-50	697	37+26.23	38+32.61	RT	966			107																																										
RC-56	697	37+26.23	38+32.61	RT									105																																						
WR-8	697	37+26.23	38+33.98	RT	1404				1404																																										
		RAMP A3																																																
R-77	698	589+75.27	590+86.82	RT/LT												89	1																																		
		CARNEGIE AVE.																																																
PR-51	698	38+31.48	42+21.99	RT	2908			323																																										
WR-9	698	38+32.61	38+53.80	RT	212				212																																										
WR-10	698	38+34.25	38+49.46	LT	93				93																																										
WR-11	698	38+56.85	38+68.26	LT	90				90																																										
RC-57	698	39+25.86	39+53.17	LT									39																																						
WR-12	698	39+25.86	39+53.36	LT	307				307																																										
RC-58	698	41+01.39	41+39.41	LT									54																																						
WR-13	698	41+01.39	41+39.41	LT	333				333																																										
WR-14	698	41+92.24	42+01.04	LT	72				72																																										
RC-59	698	41+92.24	42+15.34	LT									41																																						
WR-15	698	42+02.34	42+15.54	LT	72				72																																										
		E. 14TH ST. NB																																																
PR-52	698	56+95.62	60+62.09	CL	12226			1358																																										
RC-60	698	56+95.67	60+50.56	LT									360																																						
RC-61	698	58+13.56	60+63.96	RT									659																																						
WR-16	698	58+13.56	60+63.96	RT	3282				3282																																										
PR-53	698	58+81.75	60+51.90	LT	822					91																																									
		E. 14TH ST. SB																																																
RC-62	698	36+73.22	38+79.72	LT									211																																						
PR-54	698	36+73.22	40+48.07	LT	15032			1670																																										
RC-63	698	36+75.19	40+31.37	LT/RT									357																																						
RC-64	698	38+98.37	40+49.66	LT									168																																						
		E. 18TH ST.																																																
RC-65	698	20+79.10	24+82.55	RT									457																																						
WR-17	698	20+79.10	24+82.55	RT	3175				3175																																										
TOTALS CARRIED TO SHEET 489						-	-	7150	13220	168	-	714	3160	-	-	89	1	-	-	-	-	-	-	-	-	-	-	-	-	-	-	-	-	-	-	-	-	-	-	-	-	-	2	-	-	-	-	-		

Preliminary Plans - For Reference Only

CUY-90-16.28 (CCG3A)
MODEL: Sheet-06 PAPERSIZE: 34x22 (in.) DATE: 3/27/2025 TIME: 8:59:44 PM USER: Alexandria.Summers
pw:\\mb-us-pw.bentley.com:mb-us-pw-03\Documents\Cleveland_OH\01_Projects\ODOT\District12\82382\400-Engineering\Roadway\Sheets\82382_GS901.dgn

DESIGN AGENCY
Michael Baker INTERNATIONAL

DESIGNER KJM
REVIEWER KGJ 05/22/24
PROJECT ID 82382
SHEET 477 TOTAL 2696

REF NO.	SHEET NO.	STATION FROM	STATION TO	SIDE	AREA	202 STRUCTURE REMOVED	202 PORTIONS OF STRUCTURE REMOVED	202 PAVEMENT REMOVED	202 WALK REMOVED	202 CONCRETE MEDIAN REMOVED	202 CONCRETE BARRIER REMOVED	202 TRAFFIC ISLAND REMOVED	202 CURB REMOVED	202 PIPE REMOVED, 24" DIAMETER AND UNDER	202 PIPE REMOVED, OVER 24" DIAMETER	202 GUARDRAIL REMOVED	202 ANCHOR ASSEMBLY REMOVED, TYPE A	202 ANCHOR ASSEMBLY REMOVED, TYPE E	202 ANCHOR ASSEMBLY REMOVED, TYPE T	202 ANCHOR ASSEMBLY REMOVED, TYPE B	202 BRIDGE TERMINAL ASSEMBLY REMOVED	202 BRIDGE TERMINAL ASSEMBLY REMOVED, AS PER PLAN	202 IMPACT ATTENUATOR REMOVED	202 BUILDING DEMOLISHED (103-13-019 / 320-WL)	202 MANHOLE REMOVED	202 CATCH BASIN REMOVED	202 INLET REMOVED	202 INLET ABANDONED	202 CATCH BASIN ABANDONED	202 MANHOLE ABANDONED	202 SPECIAL - FILL AND PLUG EXISTING CONDUIT (12" AND UNDER)	202 SPECIAL - FILL AND PLUG EXISTING CONDUIT (15")	202 SPECIAL - FILL AND PLUG EXISTING CONDUIT (18")	202 SPECIAL - FILL AND PLUG EXISTING CONDUIT (21")	202 SPECIAL - FILL AND PLUG EXISTING CONDUIT (24")	202 SPECIAL - FILL AND PLUG EXISTING CONDUIT (27")	202 SPECIAL - FILL AND PLUG EXISTING CONDUIT (30")	202 SPECIAL - FILL AND PLUG EXISTING CONDUIT (36")	202 SPECIAL - FILL AND PLUG EXISTING CONDUIT (66")	202 SPECIAL - FILL AND PLUG EXISTING CONDUIT (NO. 8 BR)	202 FENCE REMOVED	202 GATE REMOVED	202 REMOVAL MISC.: BOLLARD	202 REMOVAL MISC.: BILLBOARD	202 REMOVAL MISC.: PAY BOX	202 REMOVAL MISC.: UTILITY POLE	202 REMOVAL MISC.: DELINEATOR CURB	202 REMOVAL MISC.: PORTABLE BARRIER		
					SF	LS	LS	SY	SF	SY	FT	SY	FT	FT	FT	FT	EACH	EACH	EACH	EACH	EACH	EACH	EACH	LS	EACH	EACH	EACH	EACH	EACH	EACH	FT	FT	FT	FT	FT	FT	FT	FT	FT	FT	FT	EACH	EACH	EACH	EACH	EACH	EACH	FT	FT		
		E. 18TH ST. (CONT.)																																																
R-78	698	20+81.39	22+86.59	RT																																						368								
R-79	698	21+20.09	21+91.84	RT																																							8							
PR-55	698	21+79.52	24+64.22	LT/RT	10033			1115																																										
R-80	698	22+93.69	23+62.11	RT																																								8							
R-81	698	23+53.15	24+82.27	RT																																						289								
		CENTRAL AVE. CONNECTOR																																																
PR-56	698	600+33.98	601+64.61	CL	5127			570																																											
		EX. CENTRAL AVE.																																																
R-82	699	14+80.49	16+92.07	RT																																						212								
PR-57	699	14+80.49	17+84.15	CL	11986			1332																																										
RC-66	699	15+15.01	15+21.90	LT									25																																					
PR-58	699	15+15.01	15+43.51	LT	333			37																																										
WR-18	699	15+29.49	16+85.99	RT	1612				1612																																										
RC-67	699	15+30.07	16+85.63	RT									156																																					
RC-68	699	15+30.93	15+43.51	LT									31																																					
PR-59	699	15+43.22	15+70.44	LT	263			30																																										
RC-69	699	15+43.51	16+91.03	LT									148																																					
R-83	699	15+48.87	15+69.41	LT																																						1								
WR-19	699	15+68.78	17+03.95	LT	1453				1453																																										
R-84	699	15+69.41	16+91.45	LT																																						139								
PR-60	699	16+85.63	17+33.19	RT	472			53																																										
R-85	699	16+92.07	17+06.88	RT																																							1							
R-86	699	17+06.88	17+27.16	RT																																						21								
RC-70	699	17+33.16	17+47.70	RT									15																																					
WR-20	699	17+33.19	17+47.97	RT	142				142																																										
R-87	699	17+53.18	17+54.81	LT/RT																																							1							
R-88	699	17+54.81	17+58.91	RT																																						39								
R-89	699	17+65.53	17+91.41	LT																																						26								
		EX. E. 19TH ST.																																																	
R-90	699	2+02.32	3+57.65	RT																																						174								
PR-61	699	2+15.32	4+04.00	CL	6753			751																																										
PR-62	699	2+22.97	3+49.01	RT	2684			299																																										
RC-71	699	2+22.97	3+58.65	RT									163																																					
RC-72	699	2+27.93	3+87.00	LT									170																																					
RC-73	699	2+33.82	3+55.64	RT									122																																					
PR-63	699	2+57.30	2+81.57	LT	262			30																																										
R-91	699	2+57.89	2+80.17	LT																																							1							
R-92	699	2+80.17	3+05.51	LT																																						75								
WR-21	699	2+98.62	3+33.53	LT	337				337																																										
RC-74	699	3+17.66	3+34.59	LT									69																																					
PR-64	699	3+18.83	3+36.63	LT	511			57																																										
PR-65	699	3+26.19	3+60.42	LT	382			43																																										
WR-22	699	3+40.03	3+58.65	RT	223				223																																										
RC-75	699	3+53.87	3+61.00	LT									23																																					
WR-23	699	3+54.44	3+87.00	LT	322				322																																										
PR-66	699	3+55.64	3+84.90	RT	318			36																																										
WR-24	699	3+81.63	4+04.00	RT	281				281																																										
TOTALS CARRIED TO SHEET 489						-	-	4353	4370	-	-	-	922	-	-	-	-	-	-	-	-	-	-	-	-	-	-	-	-	-	-	-	-	-	-	-	-	-	-	-	-	1343	4	16	-	-	-	-	-		

Preliminary Plans - For Reference Only

REMOVALS SUBSUMMARY - 7

DESIGN AGENCY
Michael Baker INTERNATIONAL

DESIGNER KJM

REVIEWER KGJ 05/22/24

PROJECT ID 82382

SHEET 478 TOTAL 2696

CUY-90-16.28 (CCG3A)

MODEL: Sheet-07 PAPERSIZE: 34x22 (in.) DATE: 3/27/2025 TIME: 8:59:46 PM USER: Alexandria.Summers
pw:\\mb-us-pw.bentley.com:mb-us-pw-03\Documents\Cleveland_OH\01_Projects\ODOT\District12\82382\400-Engineering\Roadway\Sheets\82382_GS901.dgn

REF NO.	SHEET NO.	STATION FROM	STATION TO	SIDE	AREA	202 STRUCTURE REMOVED	202 PORTIONS OF STRUCTURE REMOVED	202 PAVEMENT REMOVED	202 WALK REMOVED	202 CONCRETE MEDIAN REMOVED	202 CONCRETE BARRIER REMOVED	202 TRAFFIC ISLAND REMOVED	202 CURB REMOVED	202 PIPE REMOVED, 24" DIAMETER AND UNDER	202 PIPE REMOVED, OVER 24" DIAMETER	202 GUARDRAIL REMOVED	202 ANCHOR ASSEMBLY REMOVED, TYPE A	202 ANCHOR ASSEMBLY REMOVED, TYPE E	202 ANCHOR ASSEMBLY REMOVED, TYPE T	202 ANCHOR ASSEMBLY REMOVED, TYPE B	202 BRIDGE TERMINAL ASSEMBLY REMOVED	202 BRIDGE TERMINAL ASSEMBLY REMOVED, AS PER PLAN	202 IMPACT ATTENUATOR REMOVED	202 BUILDING DEMOLISHED (103-13-019 / 320-WL)	202 MANHOLE REMOVED	202 CATCH BASIN REMOVED	202 INLET REMOVED	202 INLET ABANDONED	202 CATCH BASIN ABANDONED	202 MANHOLE ABANDONED	202 SPECIAL - FILL AND PLUG EXISTING CONDUIT (12" AND UNDER)	202 SPECIAL - FILL AND PLUG EXISTING CONDUIT (15")	202 SPECIAL - FILL AND PLUG EXISTING CONDUIT (18")	202 SPECIAL - FILL AND PLUG EXISTING CONDUIT (21")	202 SPECIAL - FILL AND PLUG EXISTING CONDUIT (24")	202 SPECIAL - FILL AND PLUG EXISTING CONDUIT (27")	202 SPECIAL - FILL AND PLUG EXISTING CONDUIT (30")	202 SPECIAL - FILL AND PLUG EXISTING CONDUIT (36")	202 SPECIAL - FILL AND PLUG EXISTING CONDUIT (66")	202 SPECIAL - FILL AND PLUG EXISTING CONDUIT (NO. 8 BR)	202 FENCE REMOVED	202 GATE REMOVED	202 REMOVAL MISC.: BOLLARD	202 REMOVAL MISC.: BILLBOARD	202 REMOVAL MISC.: PAY BOX	202 REMOVAL MISC.: UTILITY POLE	202 REMOVAL MISC.: DELINEATOR CURB	202 REMOVAL MISC.: PORTABLE BARRIER		
					SF	LS	LS	SY	SF	SY	FT	SY	FT	FT	FT	FT	EACH	EACH	EACH	EACH	EACH	EACH	EACH	LS	EACH	EACH	EACH	EACH	EACH	EACH	FT	FT	FT	FT	FT	FT	FT	FT	FT	FT	FT	EACH	EACH	EACH	EACH	EACH	EACH	FT	FT		
		EX. E. 19TH ST. (CONT.)																																																	
RC-76	699	3+84.90	4+04.00	RT									20																																						
		I.R. 90 EB																																																	
R-93	700	192+85.46	194+92.34	LT																																															
RC-77	700	192+87.10	195+54.61	LT									478																																						
R-94	700	194+54.38	195+41.76	RT							91																																								
R-95	700	194+91.64	196+69.09	LT																																														
R-96	700	195+42.17	195+96.85	RT/LT																1		1																													
R-97	700	196+80.20	198+05.81	LT																																														
RC-78	700	197+14.54	198+07.12	LT									98																																						
		RAMP A2																																																	
PR-67	700	435+09.58	437+48.34	CL	20282			2254																																											
PR-68	700	437+24.33	439+05.69	CL	10077			1120																																										
PR-69	700	439+42.76	440+80.38	CL	14021			1558																																										
RC-79	700	440+27.70	440+47.41	LT									31																																						
		EX. E. 21ST ST.																																																
PR-70	700	2+79.91	6+06.50	CL	12914			1435																																										
R-98	700	2+87.93	4+96.04	LT																																															
RC-80	700	4+46.13	6+06.58	RT									177																																						
RC-81	700	4+96.04	6+06.50	LT/RT									112																																						
		RAMP A1																																																	
R-99	701	310+64.93	311+13.99	LT																																														
PR-71	701	310+75.00	311+84.40	CL	4145			461																																										
R-100	701	310+90.30	311+75.66	RT																																														
PR-72	701	310+91.42	311+82.32	RT	8747			972																																										
		RAMP A3																																																	
RC-82	701	310+85.75	311+98.59	RT									129																																						
		CARNEGIE AVE.																																																
RC-83	701	47+97.58	48+91.44	RT									91																																						
RC-84	701	48+00.00	49+73.83	LT									214																																						
PR-73	701	48+00.00	51+29.67	CL	29468			3274																																										
WR-25	701	48+84.82	49+25.22	RT	248				248																																										
WR-26	701	49+86.27	51+15.55	RT	898				898																																										
RC-85	701	50+04.72	51+15.63	RT									119																																						
RC-86	701	50+13.53	51+39.17	LT									165																																						
WR-27	701	50+13.89	50+66.21	LT	696				696																																										
PR-74	701	50+58.25	51+01.66	LT	307			34																																										
RC-87	701	50+58.36	50+66.21	LT									21																																						
RC-88	701	50+72.00	51+01.88	LT									34																																						
WR-28	701	50+81.35	51+40.22	LT	346				346																																										
RC-89	701	50+85.18	51+27.75	RT									94																																						
WR-29	701	50+85.23	51+27.73	RT	306				306																																										
PR-75	701	310+60.53	311+12.37	LT	336			37																																										
WR-30	702	51+26.62	53+00.64	RT	2188				2188																																										
RC-90	702	51+27.75	53+01.36	RT									483																																						
PR-76	702	51+29.46	56+31.35	CL	31539			3504																																										
RC-91	702	51+39.00	53+30.91	LT									231																																						
TOTALS CARRIED TO SHEET 489						-	-	14649	4682	-	91	-	2497	-	-	-	-	-	-	1	-	1	-	-	-	-	-	-	-	-	-	-	-	-	-	-	-	-	-	-	1134	-	-	-	-	-	-	264		

Preliminary Plans - For Reference Only

REMOVALS SUBSUMMARY - 8

CUY-90-16.28 (CCG3A)

MODEL: Sheet-08 PAPERSIZE: 34x22 (in.) DATE: 3/27/2025 TIME: 8:59:47 PM USER: Alexandria.Summers
pw:\\mb-us-pw.bentley.com:mb-us-pw-03\Documents\Cleveland_OH\01_Projects\ODOT\District12\82382\400-Engineering\Roadway\Sheets\82382_GS901.dgn

DESIGN AGENCY
Michael Baker INTERNATIONAL

DESIGNER KJM

REVIEWER KGJ 05/22/24

PROJECT ID 82382

SHEET 479 TOTAL 2696

| REF NO. | SHEET NO. | STATION FROM | STATION TO | SIDE | AREA | 202 STRUCTURE REMOVED | 202 PORTIONS OF STRUCTURE REMOVED | 202 PAVEMENT REMOVED | 202 WALK REMOVED | 202 CONCRETE MEDIAN REMOVED | 202 CONCRETE BARRIER REMOVED | 202 TRAFFIC ISLAND REMOVED | 202 CURB REMOVED | 202 PIPE REMOVED, 24" DIAMETER AND UNDER | 202 PIPE REMOVED, OVER 24" DIAMETER | 202 GUARDRAIL REMOVED | 202 ANCHOR ASSEMBLY REMOVED, TYPE A | 202 ANCHOR ASSEMBLY REMOVED, TYPE E | 202 ANCHOR ASSEMBLY REMOVED, TYPE T | 202 ANCHOR ASSEMBLY REMOVED, TYPE B | 202 BRIDGE TERMINAL ASSEMBLY REMOVED | 202 BRIDGE TERMINAL ASSEMBLY REMOVED, AS PER PLAN | 202 IMPACT ATTENUATOR REMOVED | 202 BUILDING DEMOLISHED (103-13-019 / 320-WL) | 202 MANHOLE REMOVED | 202 CATCH BASIN REMOVED | 202 INLET REMOVED | 202 INLET ABANDONED | 202 CATCH BASIN ABANDONED | 202 MANHOLE ABANDONED | 202 SPECIAL - FILL AND PLUG EXISTING CONDUIT (12" AND UNDER) | 202 SPECIAL - FILL AND PLUG EXISTING CONDUIT (15") | 202 SPECIAL - FILL AND PLUG EXISTING CONDUIT (18") | 202 SPECIAL - FILL AND PLUG EXISTING CONDUIT (21") | 202 SPECIAL - FILL AND PLUG EXISTING CONDUIT (24") | 202 SPECIAL - FILL AND PLUG EXISTING CONDUIT (27") | 202 SPECIAL - FILL AND PLUG EXISTING CONDUIT (30") | 202 SPECIAL - FILL AND PLUG EXISTING CONDUIT (36") | 202 SPECIAL - FILL AND PLUG EXISTING CONDUIT (66") | 202 SPECIAL - FILL AND PLUG EXISTING CONDUIT (NO. 8 BR) | 202 FENCE REMOVED | 202 GATE REMOVED | 202 REMOVAL MISC.: BOLLARD | 202 REMOVAL MISC.: BILLBOARD | 202 REMOVAL MISC.: PAY BOX | 202 REMOVAL MISC.: UTILITY POLE | 202 REMOVAL MISC.: DELINEATOR CURB | 202 REMOVAL MISC.: PORTABLE BARRIER | | |
|---|---|---

| REF NO. | SHEET NO. | STATION FROM | STATION TO | SIDE | AREA | 202 STRUCTURE REMOVED | 202 PORTIONS OF STRUCTURE REMOVED | 202 PAVEMENT REMOVED | 202 WALK REMOVED | 202 CONCRETE MEDIAN REMOVED | 202 CONCRETE BARRIER REMOVED | 202 TRAFFIC ISLAND REMOVED | 202 CURB REMOVED | 202 PIPE REMOVED, 24" DIAMETER AND UNDER | 202 PIPE REMOVED, OVER 24" DIAMETER | 202 GUARDRAIL REMOVED | 202 ANCHOR ASSEMBLY REMOVED, TYPE A | 202 ANCHOR ASSEMBLY REMOVED, TYPE E | 202 ANCHOR ASSEMBLY REMOVED, TYPE T | 202 ANCHOR ASSEMBLY REMOVED, TYPE B | 202 BRIDGE TERMINAL ASSEMBLY REMOVED | 202 BRIDGE TERMINAL ASSEMBLY REMOVED, AS PER PLAN | 202 IMPACT ATTENUATOR REMOVED | 202 BUILDING DEMOLISHED (103-13-019 / 320-WL) | 202 MANHOLE REMOVED | 202 CATCH BASIN REMOVED | 202 INLET REMOVED | 202 INLET ABANDONED | 202 CATCH BASIN ABANDONED | 202 MANHOLE ABANDONED | 202 SPECIAL - FILL AND PLUG EXISTING CONDUIT (12" AND UNDER) | 202 SPECIAL - FILL AND PLUG EXISTING CONDUIT (15") | 202 SPECIAL - FILL AND PLUG EXISTING CONDUIT (18") | 202 SPECIAL - FILL AND PLUG EXISTING CONDUIT (21") | 202 SPECIAL - FILL AND PLUG EXISTING CONDUIT (24") | 202 SPECIAL - FILL AND PLUG EXISTING CONDUIT (27") | 202 SPECIAL - FILL AND PLUG EXISTING CONDUIT (30") | 202 SPECIAL - FILL AND PLUG EXISTING CONDUIT (36") | 202 SPECIAL - FILL AND PLUG EXISTING CONDUIT (66") | 202 SPECIAL - FILL AND PLUG EXISTING CONDUIT (NO. 8 BR) | 202 FENCE REMOVED | 202 GATE REMOVED | 202 REMOVAL MISC.: BOLLARD | 202 REMOVAL MISC.: BILLBOARD | 202 REMOVAL MISC.: PAY BOX | 202 REMOVAL MISC.: UTILITY POLE | 202 REMOVAL MISC.: DELINEATOR CURB | 202 REMOVAL MISC.: PORTABLE BARRIER | | |
|---|---|---

REF NO.	SHEET NO.	STATION FROM	STATION TO	SIDE	AREA	202 STRUCTURE REMOVED	202 PORTIONS OF STRUCTURE REMOVED	202 PAVEMENT REMOVED	202 WALK REMOVED	202 CONCRETE MEDIAN REMOVED	202 CONCRETE BARRIER REMOVED	202 TRAFFIC ISLAND REMOVED	202 CURB REMOVED	202 PIPE REMOVED, 24" DIAMETER AND UNDER	202 PIPE REMOVED, OVER 24" DIAMETER	202 GUARDRAIL REMOVED	202 ANCHOR ASSEMBLY REMOVED, TYPE A	202 ANCHOR ASSEMBLY REMOVED, TYPE E	202 ANCHOR ASSEMBLY REMOVED, TYPE T	202 ANCHOR ASSEMBLY REMOVED, TYPE B	202 BRIDGE TERMINAL ASSEMBLY REMOVED	202 BRIDGE TERMINAL ASSEMBLY REMOVED, AS PER PLAN	202 IMPACT ATTENUATOR REMOVED	202 BUILDING DEMOLISHED (103-13-019 / 320-WL)	202 MANHOLE REMOVED	202 CATCH BASIN REMOVED	202 INLET REMOVED	202 INLET ABANDONED	202 CATCH BASIN ABANDONED	202 MANHOLE ABANDONED	202 SPECIAL - FILL AND PLUG EXISTING CONDUIT (12" AND UNDER)	202 SPECIAL - FILL AND PLUG EXISTING CONDUIT (15")	202 SPECIAL - FILL AND PLUG EXISTING CONDUIT (18")	202 SPECIAL - FILL AND PLUG EXISTING CONDUIT (21")	202 SPECIAL - FILL AND PLUG EXISTING CONDUIT (24")	202 SPECIAL - FILL AND PLUG EXISTING CONDUIT (27")	202 SPECIAL - FILL AND PLUG EXISTING CONDUIT (30")	202 SPECIAL - FILL AND PLUG EXISTING CONDUIT (36")	202 SPECIAL - FILL AND PLUG EXISTING CONDUIT (66")	202 SPECIAL - FILL AND PLUG EXISTING CONDUIT (NO. 8 BR)	202 FENCE REMOVED	202 GATE REMOVED	202 REMOVAL MISC.: BOLLARD	202 REMOVAL MISC.: BILLBOARD	202 REMOVAL MISC.: PAY BOX	202 REMOVAL MISC.: UTILITY POLE	202 REMOVAL MISC.: DELINEATOR CURB	202 REMOVAL MISC.: PORTABLE BARRIER		
					SF	LS	LS	SY	SF	SY	FT	SY	FT	FT	FT	FT	EACH	EACH	EACH	EACH	EACH	EACH	EACH	LS	EACH	EACH	EACH	EACH	EACH	EACH	FT	FT	FT	FT	FT	FT	FT	FT	FT	FT	FT	EACH	EACH	EACH	EACH	EACH	EACH	FT	FT		
		EX. CEDAR AVE (CONT.)																																																	
PR-103	706	12+30.32	12+90.00	LT	1602			178																																											
		EX. CEDAR AVE. CONNECTOR																																																	
WR-61	706	2+80.59	3+28.42	RT	196				196																																										
R-118	706	4+89.12	5+04.61	LT							15																																								
		E. 22ND ST.																																																	
WR-62	706	31+31.64	33+06.80	LT	1026				1026																																										
RC-106	706	31+32.74	33+06.79	LT									170																																						
PR-104	706	31+32.75	33+24.19	LT	6181			687																																											
PR-105	706	31+36.38	33+26.29	LT	818					91																																									
PR-106	706	31+37.29	33+44.02	CL	6989			777																																										
RC-107	706	31+40.00	33+44.02	RT									207																																						
WR-63	706	31+40.00	33+47.41	RT	2266				2266																																										
R-119	706	31+40.96	33+25.45	RT																																															
R-120	706	31+40.96	33+65.74	RT							322																																								
RC-108	706	31+69.29	35+14.35	RT									100																																						
R-121	706	32+66.20	33+02.66	LT							36																																								
PR-107	706	34+29.72	35+36.99	LT	8286			921																																										
R-122	706	34+30.51	34+51.56	LT							21																																								
WR-64	706	34+30.69	35+37.09	LT	673				673																																										
RC-109	706	34+34.43	35+37.12	LT									103																																						
PR-108	706	34+34.43	35+37.30	LT/CL	9422			1047																																											
PR-109	706	34+51.04	35+18.20	LT	278					31																																									
R-123	706	34+73.64	35+37.11	LT																																														
		MIDTOWN CONNECTOR																																																	
WR-65	707	503+16.65	503+80.37	LT	822				822																																										
R-124	707	503+17.22	503+66.54	LT/RT							55																																								
RC-110	707	503+39.38	508+17.07	LT/RT									505																																						
PR-110	707	503+56.36	504+05.63	RT/LT	945			105																																										
R-125	707	503+56.36	504+45.91	RT																																														
WR-66	707	503+57.24	506+92.33	LT	3906				3906																																										
RC-111	707	503+57.82	508+17.02	LT									507																																						
R-126	707	503+66.54	503+67.30	RT																																														
R-127	707	503+79.29	503+90.38	RT																																														
R-128	707	503+79.31	503+90.38	RT							25																																								
WR-67	707	503+91.33	504+69.99	RT	435				435																																										
PR-111	707	504+64.79	504+95.26	RT	508			56																																										
RC-112	707	504+68.97	504+70.30	RT									15																																						
RC-113	707	504+89.35	504+89.98	RT									15																																						
WR-68	707	504+90.06	508+17.07	RT	3528				3528																																										
R-129	707	505+37.60	508+17.07	LT																																														
PR-112	707	505+38.54	508+17.07	LT	20149			2239																																										
PR-113	707	506+83.33	507+18.88	LT	551			61																																										
RC-114	707	506+83.70	506+92.38	LT									17																																						
R-130	707	507+02.18	507+02.18	LT																																														
RC-115	707	507+11.33	507+18.96	LT									18																																						
WR-69	707	507+11.45	508+17.00	LT	1161				1161																																										
TOTALS CARRIED TO SHEET 489						-	-	6071	14013	122	474	-	1657	-	-	-	-	-	-	-	-	-	-	-	-	-	-	-	-	-	-	-	-	-	-	-	-	-	-	-	-	662	3	-	-	1	-	-	-		

Preliminary Plans - For Reference Only

REMOVALS SUBSUMMARY - 11

DESIGN AGENCY
Michael Baker INTERNATIONAL

DESIGNER KJM

REVIEWER KGJ 05/22/24

PROJECT ID 82382

SHEET 482 | TOTAL 2696

CUY-90-16.28 (CCG3A)

MODEL: Sheet-11 PAPERSIZE: 34x22 (in.) DATE: 3/27/2025 TIME: 8:59:53 PM USER: Alexandria.Summers
pw:\\mb-us-pw.bentley.com:mb-us-pw-03\Documents\Cleveland_OH\01_Projects\ODOT\District12\82382\400-Engineering\Roadway\Sheets\82382_GS901.dgn

| REF NO. | SHEET NO. | STATION FROM | STATION TO | SIDE | AREA | 202 STRUCTURE REMOVED | 202 PORTIONS OF STRUCTURE REMOVED | 202 PAVEMENT REMOVED | 202 WALK REMOVED | 202 CONCRETE MEDIAN REMOVED | 202 CONCRETE BARRIER REMOVED | 202 TRAFFIC ISLAND REMOVED | 202 CURB REMOVED | 202 PIPE REMOVED, 24" DIAMETER AND UNDER | 202 PIPE REMOVED, OVER 24" DIAMETER | 202 GUARDRAIL REMOVED | 202 ANCHOR ASSEMBLY REMOVED, TYPE A | 202 ANCHOR ASSEMBLY REMOVED, TYPE E | 202 ANCHOR ASSEMBLY REMOVED, TYPE T | 202 ANCHOR ASSEMBLY REMOVED, TYPE B | 202 BRIDGE TERMINAL ASSEMBLY REMOVED | 202 BRIDGE TERMINAL ASSEMBLY REMOVED, AS PER PLAN | 202 IMPACT ATTENUATOR REMOVED | 202 BUILDING DEMOLISHED (103-13-019 / 320-WL) | 202 MANHOLE REMOVED | 202 CATCH BASIN REMOVED | 202 INLET REMOVED | 202 INLET ABANDONED | 202 CATCH BASIN ABANDONED | 202 MANHOLE ABANDONED | 202 SPECIAL - FILL AND PLUG EXISTING CONDUIT (12" AND UNDER) | 202 SPECIAL - FILL AND PLUG EXISTING CONDUIT (15") | 202 SPECIAL - FILL AND PLUG EXISTING CONDUIT (18") | 202 SPECIAL - FILL AND PLUG EXISTING CONDUIT (21") | 202 SPECIAL - FILL AND PLUG EXISTING CONDUIT (24") | 202 SPECIAL - FILL AND PLUG EXISTING CONDUIT (27") | 202 SPECIAL - FILL AND PLUG EXISTING CONDUIT (30") | 202 SPECIAL - FILL AND PLUG EXISTING CONDUIT (36") | 202 SPECIAL - FILL AND PLUG EXISTING CONDUIT (66") | 202 SPECIAL - FILL AND PLUG EXISTING CONDUIT (NO. 8 BR) | 202 FENCE REMOVED | 202 GATE REMOVED | 202 REMOVAL MISC.: BOLLARD | 202 REMOVAL MISC.: BILLBOARD | 202 REMOVAL MISC.: PAY BOX | 202 REMOVAL MISC.: UTILITY POLE | 202 REMOVAL MISC.: DELINEATOR CURB | 202 REMOVAL MISC.: PORTABLE BARRIER | | |
|---|---|---

REF NO.	SHEET NO.	STATION FROM	STATION TO	SIDE	AREA	202 STRUCTURE REMOVED	202 PORTIONS OF STRUCTURE REMOVED	202 PAVEMENT REMOVED	202 WALK REMOVED	202 CONCRETE MEDIAN REMOVED	202 CONCRETE BARRIER REMOVED	202 TRAFFIC ISLAND REMOVED	202 CURB REMOVED	202 PIPE REMOVED, 24" DIAMETER AND UNDER	202 PIPE REMOVED, OVER 24" DIAMETER	202 GUARDRAIL REMOVED	202 ANCHOR ASSEMBLY REMOVED, TYPE A	202 ANCHOR ASSEMBLY REMOVED, TYPE E	202 ANCHOR ASSEMBLY REMOVED, TYPE T	202 ANCHOR ASSEMBLY REMOVED, TYPE B	202 BRIDGE TERMINAL ASSEMBLY REMOVED	202 BRIDGE TERMINAL ASSEMBLY REMOVED, AS PER PLAN	202 IMPACT ATTENUATOR REMOVED	202 BUILDING DEMOLISHED (103-13-019 / 320-WL)	202 MANHOLE REMOVED	202 CATCH BASIN REMOVED	202 INLET REMOVED	202 INLET ABANDONED	202 CATCH BASIN ABANDONED	202 MANHOLE ABANDONED	202 SPECIAL - FILL AND PLUG EXISTING CONDUIT (12" AND UNDER)	202 SPECIAL - FILL AND PLUG EXISTING CONDUIT (15")	202 SPECIAL - FILL AND PLUG EXISTING CONDUIT (18")	202 SPECIAL - FILL AND PLUG EXISTING CONDUIT (21")	202 SPECIAL - FILL AND PLUG EXISTING CONDUIT (24")	202 SPECIAL - FILL AND PLUG EXISTING CONDUIT (27")	202 SPECIAL - FILL AND PLUG EXISTING CONDUIT (30")	202 SPECIAL - FILL AND PLUG EXISTING CONDUIT (36")	202 SPECIAL - FILL AND PLUG EXISTING CONDUIT (66")	202 SPECIAL - FILL AND PLUG EXISTING CONDUIT (NO. 8 BR)	202 FENCE REMOVED	202 GATE REMOVED	202 REMOVAL MISC.: BOLLARD	202 REMOVAL MISC.: BILLBOARD	202 REMOVAL MISC.: PAY BOX	202 REMOVAL MISC.: UTILITY POLE	202 REMOVAL MISC.: DELINEATOR CURB	202 REMOVAL MISC.: PORTABLE BARRIER		
					SF	LS	LS	SY	SF	SY	FT	SY	FT	FT	FT	FT	EACH	EACH	EACH	EACH	EACH	EACH	EACH	EACH	LS	EACH	EACH	EACH	EACH	EACH	EACH	FT	FT	FT	FT	FT	FT	FT	FT	FT	FT	FT	EACH	EACH	EACH	EACH	EACH	EACH	FT	FT		
		E. 22ND ST. (CONT.)																																																			
WR-79	710	31+32.72	31+32.72	LT	707				707																																												
		I.R. 90 EB																																																		
R-140	1093	176+34.83	177+64.86	LT										131												1																											
R-141	1093	177+62.58	177+64.86	LT										6												1																											
		I.R. 90 WB																																																		
R-142	1093	181+38.95	181+57.60	RT/LT										45												1																											
		I.R. 90 EB																																																		
R-143	1094	181+86.47	182+10.71	LT																								1			36																					
R-144	1094	182+10.71	182+50.41	LT																								1			43																					
R-145	1094	182+47.80	182+50.41	RT/LT																								1			219																					
R-146	1094	182+50.41	183+63.59	LT																										1	111																					
R-147	1094	183+63.59	184+30.83	LT/RT										119													1																											
R-148	1094	184+30.83	185+32.86	RT										100													1																											
		I.R. 90 WB																																																		
R-149	1094	181+20.05	182+81.82	LT																										1																					
R-150	1094	182+03.79	182+81.82	LT																										1		78																			
R-151	1094	182+81.82	182+83.01	LT/RT																													58																		
R-152	1094	184+91.54	185+29.54	LT/RT										66													1																											
		RAMP A2																																																		
R-153	1094	418+29.87	420+72.62	RT																											1	228																			
		RAMP A3																																																		
R-154	1094	581+25.63	581+77.78	LT										58												1																											
R-155	1094	582+78.90	582+82.76	LT										47												1																											
R-156	1094	585+34.70	588+30.96	LT/RT																											1																			275		
		RAMP B6																																																	
R-157	1094	1602+24.76	1602+47.19	RT																												1	23																			
R-158	1094	1602+47.19	1603+27.81	RT																									1			89																			
		RAMP A3																																																		
R-159	1095	587+75.49	588+30.96	RT										62												1																											
R-160	1095	587+77.46	588+10.00	RT										51													1																										
R-161	1095	588+10.00	588+30.96	RT										53													1																										
		E. 14TH ST. NB																																																	
R-162	1095	54+67.16	57+79.44	LT											148																1																			200		
R-163	1095	57+58.70	58+18.66	RT																									1		59																				
R-164	1095	58+18.66	58+40.79	RT																											18																				
R-165	1095	58+18.66	58+58.51	RT																									1		73																				
R-166	1095	58+18.66	60+48.84	RT																											221																				
		I.R. 90 EB																																																	
R-167	1096	193+28.80	195+11.49	RT/LT										185												1																											
		I.R. 90 WB																																																		
R-168	1096	193+48.81	193+71.05	RT/LT										34																																							
R-169	1096	193+69.58	193+76.63	RT/LT										20												1																											
R-170	1096	193+73.71	193+96.35	RT										34																																							
R-171	1096	193+93.27	194+14.80	RT										32																																							
TOTALS CARRIED TO SHEET 489						-	-	-	707	-	-	-	-	1043	148	-	-	-	-	-	-	-	-	-	-	8	5	6	4	3	901	297	58	-	194	-	-	-	475	-	-	-	-	-	-	-	-	-		

Preliminary Plans - For Reference Only

REMOVALS SUBSUMMARY - 13

DESIGN AGENCY
Michael Baker INTERNATIONAL

DESIGNER KJM
REVIEWER KGJ 05/22/24
PROJECT ID 82382
SHEET 484 TOTAL 2696

CUY-90-16.28 (CCG3A)

MODEL: Sheet-13 PAPERSIZE: 34x22 (in.) DATE: 3/27/2025 TIME: 8:59:57 PM USER: Alexandria.Summers
pw:\\mb-us-pw.bentley.com:mb-us-pw-03\Documents\Cleveland_OH\01_Projects\ODOT\District12\82382\400-Engineering\Roadway\Sheets\82382_GS901.dgn

REF NO.	SHEET NO.	STATION FROM	STATION TO	SIDE	AREA	202 STRUCTURE REMOVED	202 PORTIONS OF STRUCTURE REMOVED	202 PAVEMENT REMOVED	202 WALK REMOVED	202 CONCRETE MEDIAN REMOVED	202 CONCRETE BARRIER REMOVED	202 TRAFFIC ISLAND REMOVED	202 CURB REMOVED	202 PIPE REMOVED, 24" DIAMETER AND UNDER	202 PIPE REMOVED, OVER 24" DIAMETER	202 GUARDRAIL REMOVED	202 ANCHOR ASSEMBLY REMOVED, TYPE A	202 ANCHOR ASSEMBLY REMOVED, TYPE E	202 ANCHOR ASSEMBLY REMOVED, TYPE T	202 ANCHOR ASSEMBLY REMOVED, TYPE B	202 BRIDGE TERMINAL ASSEMBLY REMOVED	202 BRIDGE TERMINAL ASSEMBLY REMOVED, AS PER PLAN	202 IMPACT ATTENUATOR REMOVED	202 BUILDING DEMOLISHED (103-13-019 / 320-WL)	202 MANHOLE REMOVED	202 CATCH BASIN REMOVED	202 INLET REMOVED	202 INLET ABANDONED	202 CATCH BASIN ABANDONED	202 MANHOLE ABANDONED	202 SPECIAL - FILL AND PLUG EXISTING CONDUIT (12" AND UNDER)	202 SPECIAL - FILL AND PLUG EXISTING CONDUIT (15")	202 SPECIAL - FILL AND PLUG EXISTING CONDUIT (18")	202 SPECIAL - FILL AND PLUG EXISTING CONDUIT (21")	202 SPECIAL - FILL AND PLUG EXISTING CONDUIT (24")	202 SPECIAL - FILL AND PLUG EXISTING CONDUIT (27")	202 SPECIAL - FILL AND PLUG EXISTING CONDUIT (30")	202 SPECIAL - FILL AND PLUG EXISTING CONDUIT (36")	202 SPECIAL - FILL AND PLUG EXISTING CONDUIT (66")	202 SPECIAL - FILL AND PLUG EXISTING CONDUIT (NO. 8 BR)	202 FENCE REMOVED	202 GATE REMOVED	REMOVAL MISC.: BOLLARD	REMOVAL MISC.: BILLBOARD	REMOVAL MISC.: PAY BOX	REMOVAL MISC.: UTILITY POLE	REMOVAL MISC.: DELINEATOR CURB	REMOVAL MISC.: PORTABLE BARRIER		
					SF	LS	LS	SY	SF	SY	FT	SY	FT	FT	FT	FT	EACH	EACH	EACH	EACH	EACH	EACH	EACH	LS	EACH	EACH	EACH	EACH	EACH	EACH	FT	FT	FT	FT	FT	FT	FT	FT	FT	FT	FT	EACH	EACH	EACH	EACH	EACH	EACH	FT	FT		
		I.R. 90 WB (CONT.)																																																
R-172	1096	194+01.70	194+21.58	LT										25												1																								
R-173	1096	194+14.59	194+35.74	RT/LT										32																																				
R-174	1096	194+20.01	194+39.24	RT										28																																				
R-175	1096	194+27.88	194+53.37	LT										38												1																								
R-176	1096	194+45.87	194+69.72	RT										36																																				
		RAMP A2																																																
R-177	1096	432+85.45	433+06.41	LT										36																																				
R-178	1096	433+04.32	433+23.03	RT/LT										34																																				
R-179	1096	433+31.95	433+52.00	RT/LT										35																																				
R-180	1096	433+41.06	433+61.57	RT										35																																				
R-181	1096	433+43.32	433+63.38	LT										34																																				
R-182	1096	433+50.61	433+70.88	RT										35																																				
R-183	1096	433+73.56	433+93.22	RT/LT										34																																				
R-184	1096	433+75.57	433+95.40	RT										34																																				
R-185	1096	433+98.07	434+17.41	RT/LT										33																																				
R-186	1096	434+18.43	434+30.98	RT										14												1																								
R-187	1096	434+43.73	434+58.81	RT										18												1																								
R-188	1096	434+58.81	434+76.89	RT										19												1																								
R-189	1096	434+58.81	434+99.59	RT/LT										104																																				
		RAMP B6																																																
R-190	1096	1616+82.54	1616+88.00	RT/LT																																													
		RAMP B6A																																																
R-191	1096	1800+07.38	1802+89.52	RT										268														1																								
R-192	1096	1802+89.52	1803+85.86	RT																																													
		I.R. 90 EB																																																
R-193	1097	195+11.49	196+19.00	LT										109														1																								
R-194	1097	198+57.78	199+04.60	RT										118														1																								
R-195	1097	198+98.70	199+04.60	LT/RT										24																																				
R-196	1097	199+04.60	200+90.77	RT/LT										190												1																								
		RAMP B6																																																
R-197	1097	1617+74.71	1618+00.83	RT										34																																				
		RAMP B6A																																																
R-198	1097	1803+89.26	1804+13.16	RT																																													
		E. 22ND ST.																																																
R-199	1097	31+06.00	32+89.55	RT										183												1																								
		INTERIM I.R. 90 WB																																															
R-200	1098	4001+59.50	4003+96.68	RT										244												1																								
R-201	1098	4003+93.03	4003+96.68	LT/RT										29														1																								
R-202	1098	4003+96.68	4004+06.31	RT										38															1																							
R-203	1098	4003+96.68	4006+46.78	RT										252												1																								
R-204	1098	4004+06.31	4004+54.60	RT										87														1																								
		MIDTOWN CONNECTOR																																															
R-205	1098	502+96.61	503+53.08	LT										60														1																								
R-206	1098	502+96.61	503+99.91	LT										120												1																								
R-207	1098	503+53.08	503+81.09	LT										43														1																								
TOTALS CARRIED TO SHEET 489						-	-	-	-	-	-	-	-	2423	-	-	-	-	-	-	-	-	-	-	6	12	1	-	3	1	128	-	-	51	-	-	-	-	-	-	-	-	-	-	-	-	-	-		

Preliminary Plans - For Reference Only

REMOVALS SUBSUMMARY - 14

DESIGN AGENCY
Michael Baker INTERNATIONAL

DESIGNER KJM

REVIEWER KGJ 05/22/24

PROJECT ID 82382

SHEET 485 TOTAL 2696

CUY-90-16.28 (CCG3A)

MODEL: Sheet-14 PAPERSIZE: 34x22 (in.) DATE: 3/27/2025 TIME: 8:59:59 PM USER: Alexandria.Summers
pw:\\mb-us-pw.bentley.com:mb-us-pw-03\Documents\Cleveland_OH\01_Projects\ODOT\District12\82382\400-Engineering\Roadway\Sheets\82382_GS901.dgn

REMOVALS SUBSUMMARY - 15

| REF NO. | SHEET NO. | STATION FROM | STATION TO | SIDE | AREA | 202 STRUCTURE REMOVED | 202 PORTIONS OF STRUCTURE REMOVED | 202 PAVEMENT REMOVED | 202 WALK REMOVED | 202 CONCRETE MEDIAN REMOVED | 202 CONCRETE BARRIER REMOVED | 202 TRAFFIC ISLAND REMOVED | 202 CURB REMOVED | 202 PIPE REMOVED, 24" DIAMETER AND UNDER | 202 PIPE REMOVED, OVER 24" DIAMETER | 202 GUARDRAIL REMOVED | 202 ANCHOR ASSEMBLY REMOVED, TYPE A | 202 ANCHOR ASSEMBLY REMOVED, TYPE E | 202 ANCHOR ASSEMBLY REMOVED, TYPE T | 202 ANCHOR ASSEMBLY REMOVED, TYPE B | 202 BRIDGE TERMINAL ASSEMBLY REMOVED | 202 BRIDGE TERMINAL ASSEMBLY REMOVED, AS PER PLAN | 202 IMPACT ATTENUATOR REMOVED | 202 BUILDING DEMOLISHED (103-13-019 / 320-WL) | 202 MANHOLE REMOVED | 202 CATCH BASIN REMOVED | 202 INLET REMOVED | 202 INLET ABANDONED | 202 CATCH BASIN ABANDONED | 202 MANHOLE ABANDONED | 202 SPECIAL - FILL AND PLUG EXISTING CONDUIT (12" AND UNDER) | 202 SPECIAL - FILL AND PLUG EXISTING CONDUIT (15") | 202 SPECIAL - FILL AND PLUG EXISTING CONDUIT (18") | 202 SPECIAL - FILL AND PLUG EXISTING CONDUIT (21") | 202 SPECIAL - FILL AND PLUG EXISTING CONDUIT (24") | 202 SPECIAL - FILL AND PLUG EXISTING CONDUIT (27") | 202 SPECIAL - FILL AND PLUG EXISTING CONDUIT (30") | 202 SPECIAL - FILL AND PLUG EXISTING CONDUIT (36") | 202 SPECIAL - FILL AND PLUG EXISTING CONDUIT (66") | 202 SPECIAL - FILL AND PLUG EXISTING CONDUIT (NO. 8 BR) | 202 FENCE REMOVED | 202 GATE REMOVED | 202 REMOVAL MISC.: BOLLARD | 202 REMOVAL MISC.: BILLBOARD | 202 REMOVAL MISC.: PAY BOX | 202 REMOVAL MISC.: UTILITY POLE | 202 REMOVAL MISC.: DELINEATOR CURB | 202 REMOVAL MISC.: PORTABLE BARRIER | | |
|---|---|---

REMOVALS SUBSUMMARY - 16

REF NO.	SHEET NO.	STATION FROM	STATION TO	SIDE	AREA	202 STRUCTURE REMOVED	202 PORTIONS OF STRUCTURE REMOVED	202 PAVEMENT REMOVED	202 WALK REMOVED	202 CONCRETE MEDIAN REMOVED	202 CONCRETE BARRIER REMOVED	202 TRAFFIC ISLAND REMOVED	202 CURB REMOVED	202 PIPE REMOVED, 24" DIAMETER AND UNDER	202 PIPE REMOVED, OVER 24" DIAMETER	202 GUARDRAIL REMOVED	202 ANCHOR ASSEMBLY REMOVED, TYPE A	202 ANCHOR ASSEMBLY REMOVED, TYPE E	202 ANCHOR ASSEMBLY REMOVED, TYPE T	202 ANCHOR ASSEMBLY REMOVED, TYPE B	202 BRIDGE TERMINAL ASSEMBLY REMOVED	202 BRIDGE TERMINAL ASSEMBLY REMOVED, AS PER PLAN	202 IMPACT ATTENUATOR REMOVED	202 BUILDING DEMOLISHED (103-13-019 / 320-WL)	202 MANHOLE REMOVED	202 CATCH BASIN REMOVED	202 INLET REMOVED	202 INLET ABANDONED	202 CATCH BASIN ABANDONED	202 MANHOLE ABANDONED	202 SPECIAL - FILL AND PLUG EXISTING CONDUIT (12" AND UNDER)	202 SPECIAL - FILL AND PLUG EXISTING CONDUIT (15")	202 SPECIAL - FILL AND PLUG EXISTING CONDUIT (18")	202 SPECIAL - FILL AND PLUG EXISTING CONDUIT (21")	202 SPECIAL - FILL AND PLUG EXISTING CONDUIT (24")	202 SPECIAL - FILL AND PLUG EXISTING CONDUIT (27")	202 SPECIAL - FILL AND PLUG EXISTING CONDUIT (30")	202 SPECIAL - FILL AND PLUG EXISTING CONDUIT (36")	202 SPECIAL - FILL AND PLUG EXISTING CONDUIT (66")	202 SPECIAL - FILL AND PLUG EXISTING CONDUIT (NO. 8 BR)	202 FENCE REMOVED	202 GATE REMOVED	202 REMOVAL MISC.: BOLLARD	202 REMOVAL MISC.: BILLBOARD	202 REMOVAL MISC.: PAY BOX	202 REMOVAL MISC.: UTILITY POLE	202 REMOVAL MISC.: DELINEATOR CURB	202 REMOVAL MISC.: PORTABLE BARRIER		
					SF	LS	LS	SY	SF	SY	FT	SY	FT	FT	FT	FT	EACH	EACH	EACH	EACH	EACH	EACH	EACH	LS	EACH	EACH	EACH	EACH	EACH	EACH	FT	FT	FT	FT	FT	FT	FT	FT	FT	FT	FT	EACH	EACH	EACH	EACH	EACH	EACH	FT	FT		
		E. 18TH ST. (CONT.)																																																		
R-248	1102	23+71.09	23+84.75	RT										16																																						
R-249	1102	23+84.75	23+93.59	RT/LT										15																																						
		CENTRAL AVE. CONNECTOR																																																		
R-250	1102	601+52.81	601+54.71	RT																												35																				
R-251	1102	601+57.93	601+59.64	RT										9												1																										
R-252	1102	601+85.44	601+85.82	RT																											37																				
R-253	1102	601+94.65	601+95.62	RT										34																																						
R-254	1102	602+43.68	602+59.65	RT/LT										34																																						
		RAMP A1																																																		
R-255	1104	310+66.67	310+99.37	RT										56												1																										
R-256	1104	310+99.37	311+49.19	RT										68												1																										
R-257	1104	311+49.19	312+15.14	RT																						1					69																				
		CARNEGIE AVE.																																																		
R-258	1104	50+07.91	50+26.69	RT																						1					15																				
R-259	1104	50+09.89	50+26.69	LT/RT																					1						30																				
R-260	1104	50+26.69	50+88.46	RT																						1					58																				
R-261	1104	52+84.88	52+91.44	LT/RT																						1					29																				
R-262	1104	52+84.88	52+95.32	LT																						1					29																				
R-263	1104	52+84.88	53+01.33	LT/RT																						1					47																				
R-264	1105	54+47.90	54+49.10	RT/LT										64																																						
R-265	1105	56+03.31	56+03.49	RT										7												1																										
		RAMP A2																																																		
R-266	1106	417+18.25	418+29.87	LT/RT																						1						211																				
		RAMP IB5																																																		
R-267	1106	1714+32.94	1714+46.14	LT/RT										33												1																										
		RAMP IJ3																																																		
R-268	1106	103+02.61	103+10.42	RT/LT																								1			52																				
R-269	1106	103+10.42	104+12.98	LT/RT																									1			121																			
R-270	1107	104+12.98	104+26.12	RT																									1			18																			
R-271	1107	104+26.12	104+51.62	RT																										1		28																			
R-272	1107	104+51.62	106+02.94	RT/LT																									1			203																			
		RAMP H5																																																		
R-273	1108	987+21.06	987+31.27	RT																											60																				
R-274	1108	987+21.06	987+97.52	RT/LT																									1			72																				
R-275	1108	987+97.52	988+53.32	LT																								1					74																			
R-276	1108	989+09.46	989+65.89	RT										46																																						
R-277	1108	989+11.33	989+11.58	LT																									1			13																				
R-278	1108	989+11.33	989+61.62	LT																								1					49																				
R-279	1108	989+51.44	989+65.89	RT										50																																						
R-280	1108	989+61.62	989+76.52	LT																									1			13																				
R-281	1108	989+68.90	989+74.69	RT/LT																																															
R-282	1108	989+76.52	990+53.86	LT																									1			75																				
R-283	1108	990+53.86	990+74.64	LT										39												1																										
R-284	1108	990+74.64	990+79.94	LT										7												1																										
TOTALS CARRIED TO SHEET 489						-	-	-	-	-	-	-	-	478	-	-	-	-	-	-	-	-	-	-	1	14	1	2	7	1	461	741	136	-	-	-	-	-	-	258	-	-	-	-	-	-	-	-		

Preliminary Plans - For Reference Only

MODEL: Sheet-16 PAPERSIZE: 34x22 (in.) DATE: 3/27/2025 TIME: 9:00:03 PM USER: Alexandria.Summers
pw:\\mb-us-pw.bentley.com:mb-us-pw-03\Documents\Cleveland_OH\01_Projects\ODOT\District12\82382\400-Engineering\Roadway\Sheets\82382_GS901.dgn

CUY-90-16.28 (CCG3A)

DESIGN AGENCY
Michael Baker INTERNATIONAL

DESIGNER KJM

REVIEWER KGJ 05/22/24

PROJECT ID 82382

SHEET 487 TOTAL 2696

REMOVALS SUBSUMMARY - 17

| REF NO. | SHEET NO. | STATION FROM | STATION TO | SIDE | AREA | 202 STRUCTURE REMOVED | 202 PORTIONS OF STRUCTURE REMOVED | 202 PAVEMENT REMOVED | 202 WALK REMOVED | 202 CONCRETE MEDIAN REMOVED | 202 CONCRETE BARRIER REMOVED | 202 TRAFFIC ISLAND REMOVED | 202 CURB REMOVED | 202 PIPE REMOVED, 24" DIAMETER AND UNDER | 202 PIPE REMOVED, OVER 24" DIAMETER | 202 GUARDRAIL REMOVED | 202 ANCHOR ASSEMBLY REMOVED, TYPE A | 202 ANCHOR ASSEMBLY REMOVED, TYPE E | 202 ANCHOR ASSEMBLY REMOVED, TYPE T | 202 ANCHOR ASSEMBLY REMOVED, TYPE B | 202 BRIDGE TERMINAL ASSEMBLY REMOVED | 202 BRIDGE TERMINAL ASSEMBLY REMOVED, AS PER PLAN | 202 IMPACT ATTENUATOR REMOVED | 202 BUILDING DEMOLISHED (103-13-019 / 320-WL) | 202 MANHOLE REMOVED | 202 CATCH BASIN REMOVED | 202 INLET REMOVED | 202 INLET ABANDONED | 202 CATCH BASIN ABANDONED | 202 MANHOLE ABANDONED | 202 SPECIAL - FILL AND PLUG EXISTING CONDUIT (12" AND UNDER) | 202 SPECIAL - FILL AND PLUG EXISTING CONDUIT (15") | 202 SPECIAL - FILL AND PLUG EXISTING CONDUIT (18") | 202 SPECIAL - FILL AND PLUG EXISTING CONDUIT (21") | 202 SPECIAL - FILL AND PLUG EXISTING CONDUIT (24") | 202 SPECIAL - FILL AND PLUG EXISTING CONDUIT (27") | 202 SPECIAL - FILL AND PLUG EXISTING CONDUIT (30") | 202 SPECIAL - FILL AND PLUG EXISTING CONDUIT (36") | 202 SPECIAL - FILL AND PLUG EXISTING CONDUIT (66") | 202 SPECIAL - FILL AND PLUG EXISTING CONDUIT (NO. 8 BR) | 202 FENCE REMOVED | 202 GATE REMOVED | REMOVAL MISC.: BOLLARD | REMOVAL MISC.: BILLBOARD | REMOVAL MISC.: PAY BOX | REMOVAL MISC.: UTILITY POLE | REMOVAL MISC.: DELINEATOR CURB | REMOVAL MISC.: PORTABLE BARRIER | | |
|---|---|---

REMOVALS SUBSUMMARY - 18

| REF NO. | SHEET NO. | STATION FROM | STATION TO | SIDE | AREA | 202 STRUCTURE REMOVED | 202 PORTIONS OF STRUCTURE REMOVED | 202 PAVEMENT REMOVED | 202 WALK REMOVED | 202 CONCRETE MEDIAN REMOVED | 202 CONCRETE BARRIER REMOVED | 202 TRAFFIC ISLAND REMOVED | 202 CURB REMOVED | 202 PIPE REMOVED, 24" DIAMETER AND UNDER | 202 PIPE REMOVED, OVER 24" DIAMETER | 202 GUARDRAIL REMOVED | 202 ANCHOR ASSEMBLY REMOVED, TYPE A | 202 ANCHOR ASSEMBLY REMOVED, TYPE E | 202 ANCHOR ASSEMBLY REMOVED, TYPE T | 202 ANCHOR ASSEMBLY REMOVED, TYPE B | 202 BRIDGE TERMINAL ASSEMBLY REMOVED | 202 BRIDGE TERMINAL ASSEMBLY REMOVED, AS PER PLAN | 202 IMPACT ATTENUATOR REMOVED | 202 BUILDING DEMOLISHED (103-13-019 / 320-WL) | 202 MANHOLE REMOVED | 202 CATCH BASIN REMOVED | 202 INLET REMOVED | 202 INLET ABANDONED | 202 CATCH BASIN ABANDONED | 202 MANHOLE ABANDONED | 202 SPECIAL - FILL AND PLUG EXISTING CONDUIT (12" AND UNDER) | 202 SPECIAL - FILL AND PLUG EXISTING CONDUIT (15") | 202 SPECIAL - FILL AND PLUG EXISTING CONDUIT (18") | 202 SPECIAL - FILL AND PLUG EXISTING CONDUIT (21") | 202 SPECIAL - FILL AND PLUG EXISTING CONDUIT (24") | 202 SPECIAL - FILL AND PLUG EXISTING CONDUIT (27") | 202 SPECIAL - FILL AND PLUG EXISTING CONDUIT (30") | 202 SPECIAL - FILL AND PLUG EXISTING CONDUIT (36") | 202 SPECIAL - FILL AND PLUG EXISTING CONDUIT (66") | 202 SPECIAL - FILL AND PLUG EXISTING CONDUIT (NO. 8 BR) | 202 FENCE REMOVED | 202 GATE REMOVED | 202 REMOVAL MISC.: BOLLARD | 202 REMOVAL MISC.: BILLBOARD | 202 REMOVAL MISC.: PAY BOX | 202 REMOVAL MISC.: UTILITY POLE | 202 REMOVAL MISC.: DELINEATOR CURB | 202 REMOVAL MISC.: PORTABLE BARRIER | | |
|---|---|---

PROJECT DESCRIPTION

RECONSTRUCTION OF 0.73 MILES OF I.R. 90 BETWEEN EAST 9TH STREET AND PROSPECT AVENUE, REALIGNMENT AND RECONSTRUCTION OF SEVERAL RAMPS IN THE CENTRAL INTERCHANGE BETWEEN I.R. 90 AND I.R. 77, AND RECONSTRUCTION OF SEVERAL LOCAL STREETS.

PROJECT DATA	
TOTAL AREA (RIGHT-OF-WAY)---------- 85.80 AC	RUNOFF COEFFICIENT FOR PRE-CONSTRUCTION SITE---------- 0.76
PROJECT EARTH DISTURBED AREA---------- 69.00 AC*	RUNOFF COEFFICIENT FOR POST CONSTRUCTION SITE---------- 0.73
ESTIMATED CONTRACTOR EARTH DISTURBED AREA---------- 1.00 AC	IMMEDIATE RECEIVING WATERS---------- LAKE ERIE
NOTICE OF INTENT EARTH DISTURBED AREA---------- 70.00 AC	SURFACE WATER LOCATIONS---------- N/A
IMPERVIOUS (PAVED) AREA FOR PRE-CONSTRUCTION SITE----- 45.62 AC	USGS MAP---------- CLEVELAND SOUTH QUADRANGLE
IMPERVIOUS (PAVED) AREA FOR POST CONSTRUCTION SITE---- 42.84 AC	PROJECT LOCATION---- LATITUDE: 41° 29' 40" LONGITUDE: -81° 40' 54"

** THE PROJECT HAS AN EDA OF 69 ACRES, AND 55 ACRES DRAINS TO THE CITY OF CLEVELAND COMBINED SEWERS WHICH OUTLET TO NEORSD FACILITIES AND ARE TREATED AT THEIR WASTEWATER TREATMENT PLANTS. A MANUFACTURED SYSTEM, TYPE 4 TREATS 22% OF THE REMAINING PROJECT EDA OF 14 ACRES. THAT 14 ACRE YIELDS A TREATMENT REQUIREMENT OF 3.08 ACRES.*

PROJECT POST CONSTRUCTION BMPS			
BMP TYPE	EASTING/NORTHING	LATITUDE/LONGITUDE	EDA TREATMENT CREDIT
MANUFACTURED WATER QUALITY SYSTEM (TYPE 4)	2194853.083' / 668307.189'	41° 29' 53" / -81° 40' 25"	3.60 AC
		TREATMENT PROVIDED	3.60 AC
		TREATMENT REQUIRED	3.08 AC

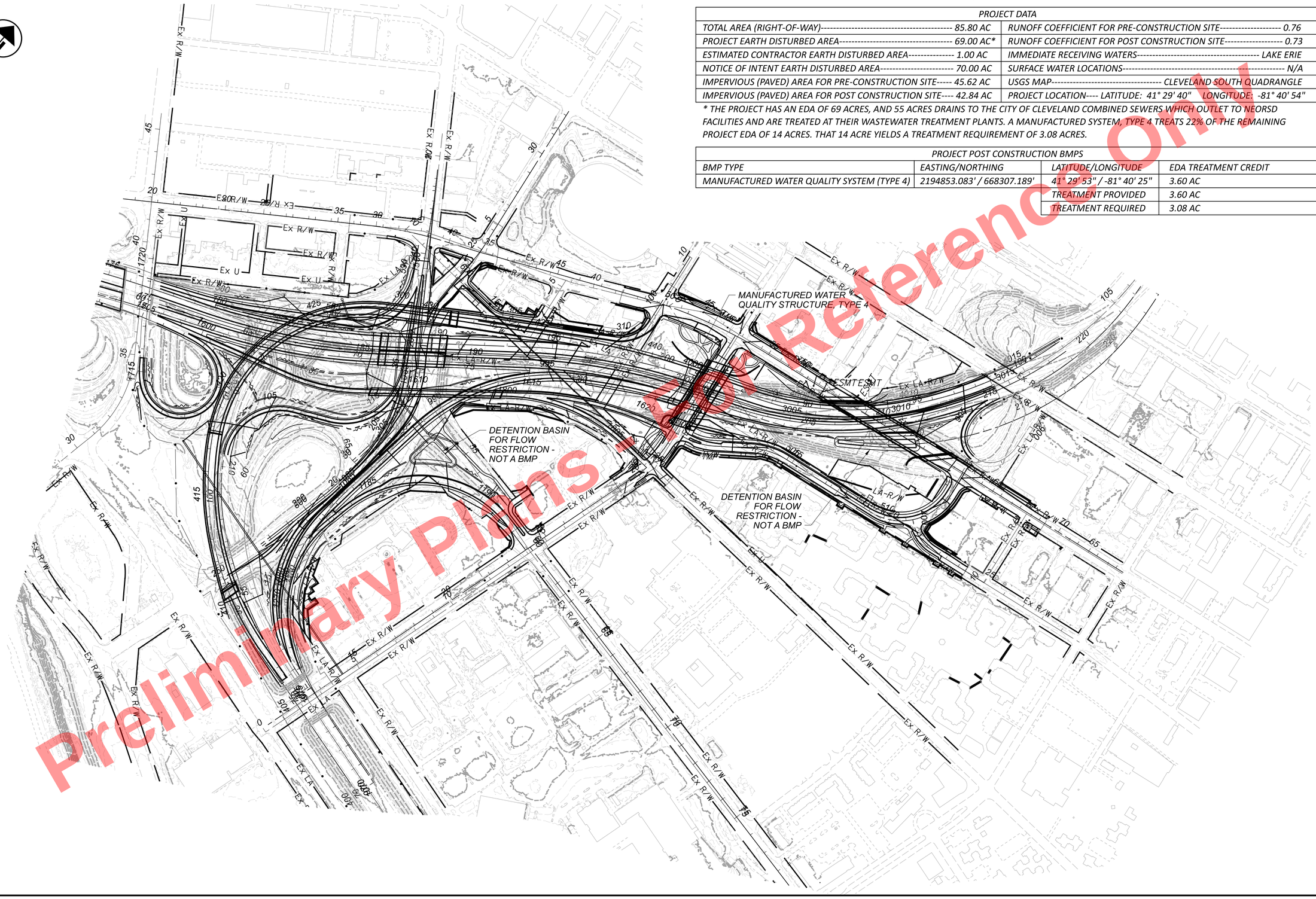

Preliminary Plans - Not for Construction
Reference Only

HORIZONTAL SCALE IN FEET
0 100 200 400

PROJECT SITE PLAN

DESIGN AGENCY
Michael Baker INTERNATIONAL

DESIGNER JLD
REVIEWER KGJ 05/22/24
PROJECT ID 82382
SHEET 490 TOTAL 2696

CUY-90-16.28

MODEL: 82382_DE1001 PAPERSIZE: 34x22 (in.) DATE: 6/11/2025 TIME: 1:50:54 PM USER: Julie.Ross
pw:\\mb-us-pw.bentley.com:mb-us-pw-03\Documents\Cleveland_OH\01_Projects\ODOT\District12\82382\400-Engineering\Drainage\Sheets\82382_DE1001.dgn

CROSS REFERENCES	
SHEET	DESCRIPTION
73	UTILITY SYMBOL LEGEND
18 - 19	EX. TYPICAL SECTIONS
29	PR. TYPICAL SECTIONS
430 - 489	SUBSUMMARIES
679 - 710	REMOVAL PLAN
1092 - 1723	LIGHTING PLAN

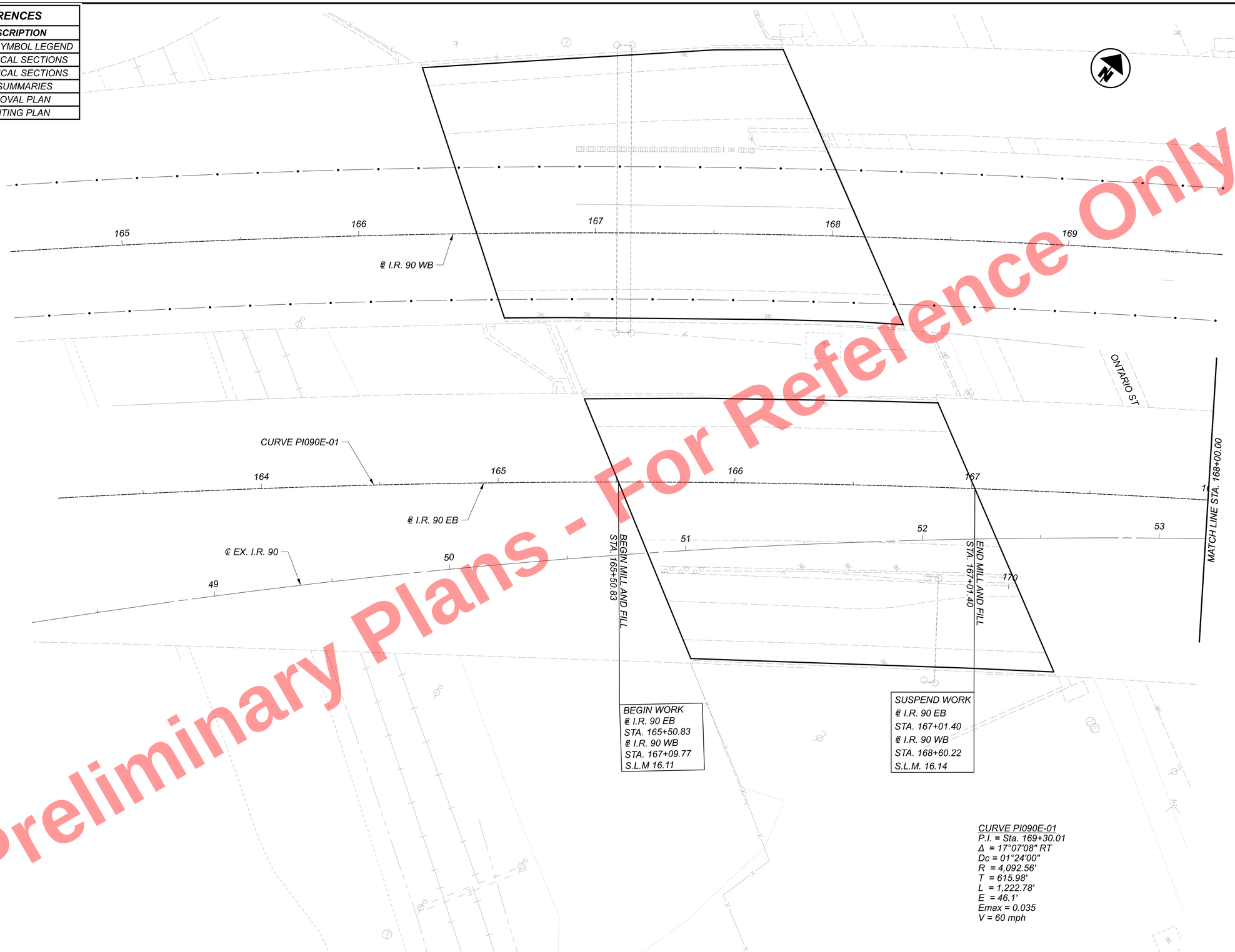

Preliminary Plans - For Reference Only

HORIZONTAL SCALE IN FEET
0 10 20 40

PLAN - I.R. 90 EB
STA. 163+00.00 TO STA. 168+00.00

CUY-90-16.28 (CCG3A)

MODEL: 82382_GP2101 PAPERSIZE: 34x22 (in.) DATE: 3/27/2025 TIME: 9:37:12 PM USER: AlexandriaSummers
pw:\\vmb-us-pw.bentley.commb-us-pw-03\Documents\Cleveland_OH30\Projects\000T\District2\82382\400-Engineering\Roadway\Sheets\82382_GP2101.dgn

DESIGN AGENCY
B&N
burgessniple.com

DESIGNER	
AJS	
REVIEWER	
MRT	05/01/24
PROJECT ID	
82382	
SHEET	TOTAL
491	2696

CROSS REFERENCES	
SHEET	DESCRIPTION
73	UTILITY SYMBOL LEGEND
18 - 19	EX. TYPICAL SECTIONS
29	PR. TYPICAL SECTIONS
430 - 489	SUBSUMMARIES
679 - 710	REMOVAL PLAN
1716 - 1723	LIGHTING PLAN

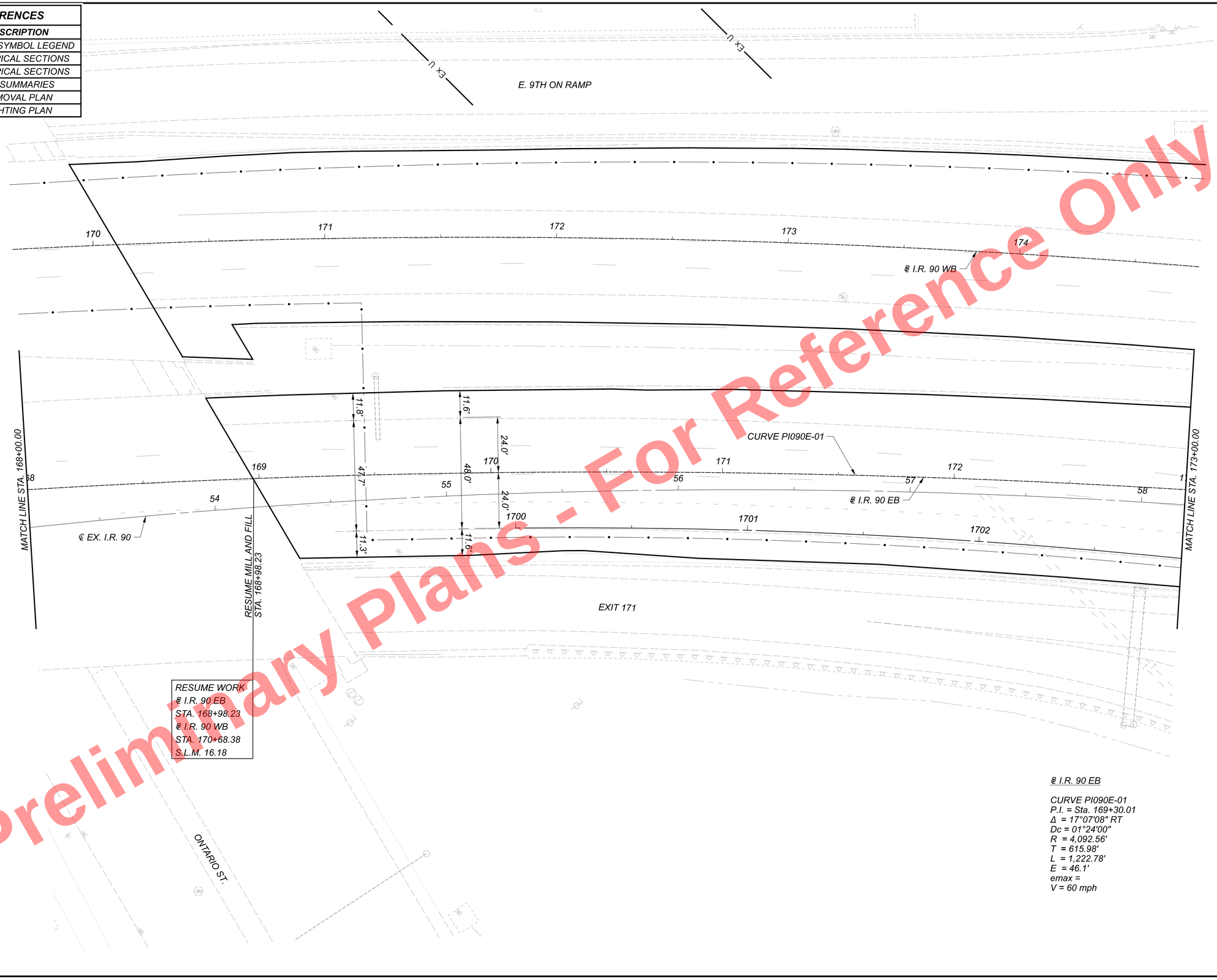

℄ I.R. 90 EB

CURVE PI090E-01
P.I. = Sta. 169+30.01
Δ = 17°07'08" RT
Dc = 01°24'00"
R = 4,092.56'
T = 615.98'
L = 1,222.78'
E = 46.1'
emax =
V = 60 mph

Preliminary Plans - For Reference Only

HORIZONTAL SCALE IN FEET
0 10 20 40

PLAN - I.R. 90 EB
STA. 168+00.00 TO STA. 173+00.00

DESIGN AGENCY
B&N
burgessniple.com

DESIGNER AJS
REVIEWER MRT 05/01/24
PROJECT ID 82382
SHEET 492 TOTAL 2696

CUY-90-16.28 (CCG3A)

MODEL: 82382_GP2102 PAPERSIZE: 34x22 (in) DATE: 3/27/2025 TIME: 9:37:23 PM USER: AlexandriaSummers
pw:\\mb-us-pw.bentley.com:mb-us-pw-03\Documents\Cleveland.OH\DgnProjects\ODOT\District2\82382\400-Engineering\Roadway\Sheets\82382_GP2102.dgn

CROSS REFERENCES	
SHEET	DESCRIPTION
73	UTILITY SYMBOL LEGEND
18 - 19	EX. TYPICAL SECTIONS
29 - 30	PR. TYPICAL SECTIONS
430 - 489	SUBSUMMARIES
679 - 710	REMOVAL PLAN
712 - 735	CROSS SECTIONS
1013	SUPERELEVATION TABLES
1030 - 1039	RAMP TERMINAL DETAILS
1092 - 1120	DRAINAGE PLANS
1716 - 1723	LIGHTING PLAN

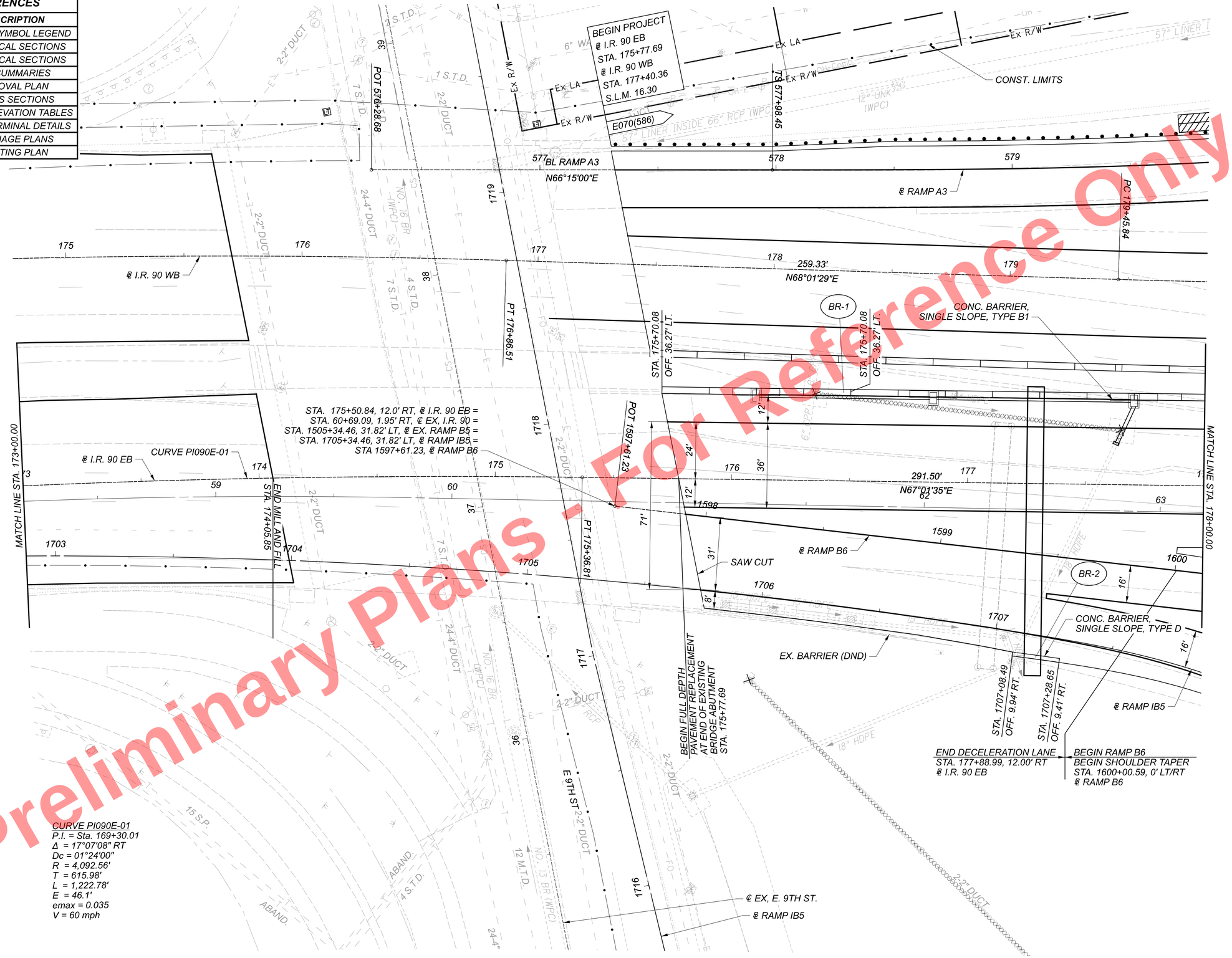

Preliminary Plans - For Reference Only

HORIZONTAL SCALE IN FEET
0 10 20 40

PLAN - I.R. 90 EB
STA. 173+00.00 TO STA. 178+00.00

CUY-90-16.28 (CCG3A)

MODEL: 82382_GP2I03 PAPERSIZE: 34x22 (In.) DATE: 3/27/2025 TIME: 9:37:37 PM USER: Alexandria.Summers
pw:\\mb-us-pw.bentley.com\mb-us-pw-03\Documents\Cleveland_OHIO_Projects\ODOT\District2\82382\400-Engineering\Roadway\Sheets\82382_GP2I03.dgn

DESIGN AGENCY
B&N
burgessniple.com

DESIGNER	AJS
REVIEWER	MRT 05/01/24
PROJECT ID	82382
SHEET	493
TOTAL	2696

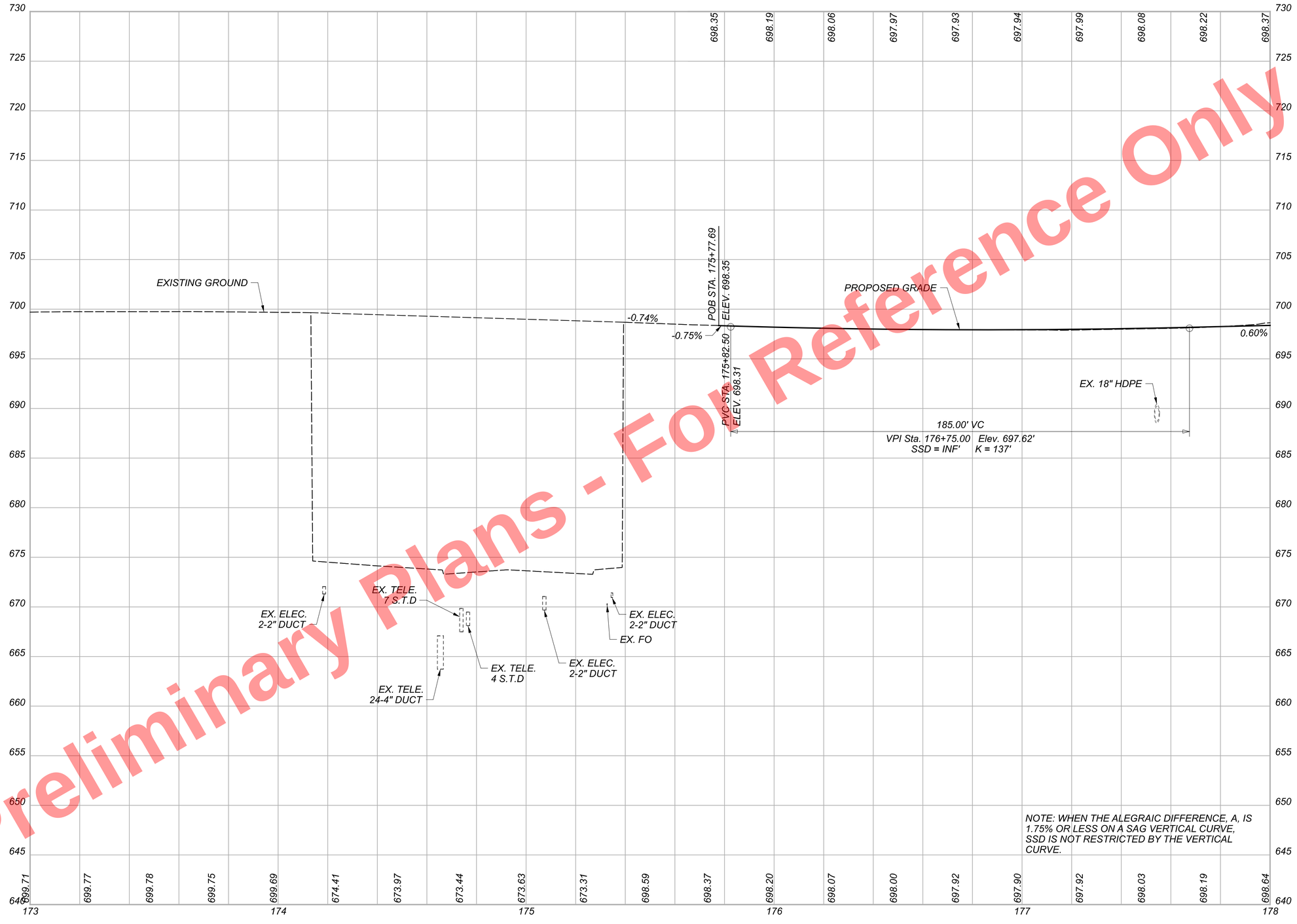

Preliminary Plans - For Reference Only

PROFILE - I.R. 90 EB
STA. 173+00.00 TO STA. 178+00.00

CUY-90-16.28 (CCG3A)

MODEL: BL_I.R. 90 EB-2 - 82382_GF210 PAPERSIZE: 34x22 (In.) DATE: 3/27/2025 TIME: 9:37:56 PM USER: Alexandria.Summers
pw:\\mb-us-pw.bentley.com\mb-us-pw-03\Documents\Cleveland_0H\01_Projects\0007\District2\82382\400-Engineering\Roadway\Sheets\82382_GF210l.dgn

DESIGN AGENCY
B&N
burgessniple.com

DESIGNER
AJS

REVIEWER
MRT 05/01/24

PROJECT ID
82382

SHEET 494 TOTAL 2696

CROSS REFERENCES	
SHEET	DESCRIPTION
73	UTILITY SYMBOL LEGEND
18 - 19	EX. TYPICAL SECTIONS
30	PR. TYPICAL SECTIONS
430 - 489	SUBSUMMARIES
679 - 710	REMOVAL PLAN
712 - 735	CROSS SECTIONS
1013	SUPERELEVATION TABLES
1030 - 1039	RAMP TERMINAL DETAILS
1092 - 1120	DRAINAGE PLANS
1716 - 1723	LIGHTING PLAN
1807 - 1817	LANDSCAPING
1869 - 1873	CUY-77-1587 (BRIDGE 9)
2383 - 2386	FENCE PLAN

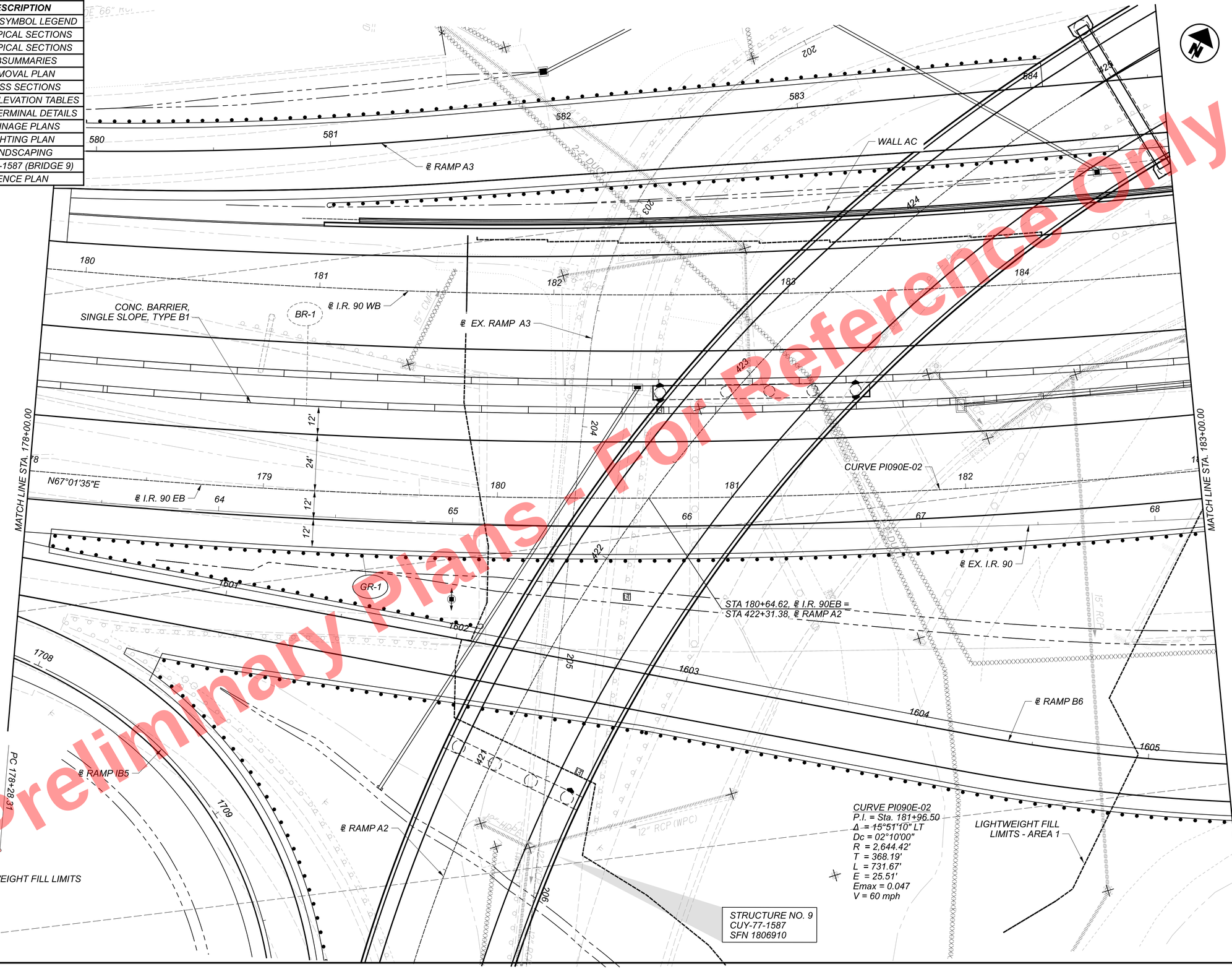

Preliminary Plans - For Reference Only

HORIZONTAL SCALE IN FEET
0 10 20 40

PLAN - I.R. 90 EB
STA. 178+00.00 TO STA. 183+00.00

DESIGN AGENCY
B&N
burgessniple.com

DESIGNER
AJS

REVIEWER
MRT 05/01/24

PROJECT ID
82382

SHEET 495 TOTAL 2696

CUY-90-16.28 (CCG3A)

MODEL: 82382_GP2104 PAPERSIZE: 34x22 (in.) DATE: 3/27/2025 TIME: 9:38:10 PM USER: Alexandria.Summers
pw:\\mb-us-pw.bentley.com:mb-us-pw-03\Documents\Cleveland_OH\01_Projects\ODOT\District12\82382\400-Engineering\Roadway\Sheets\82382_GP2104.dgn

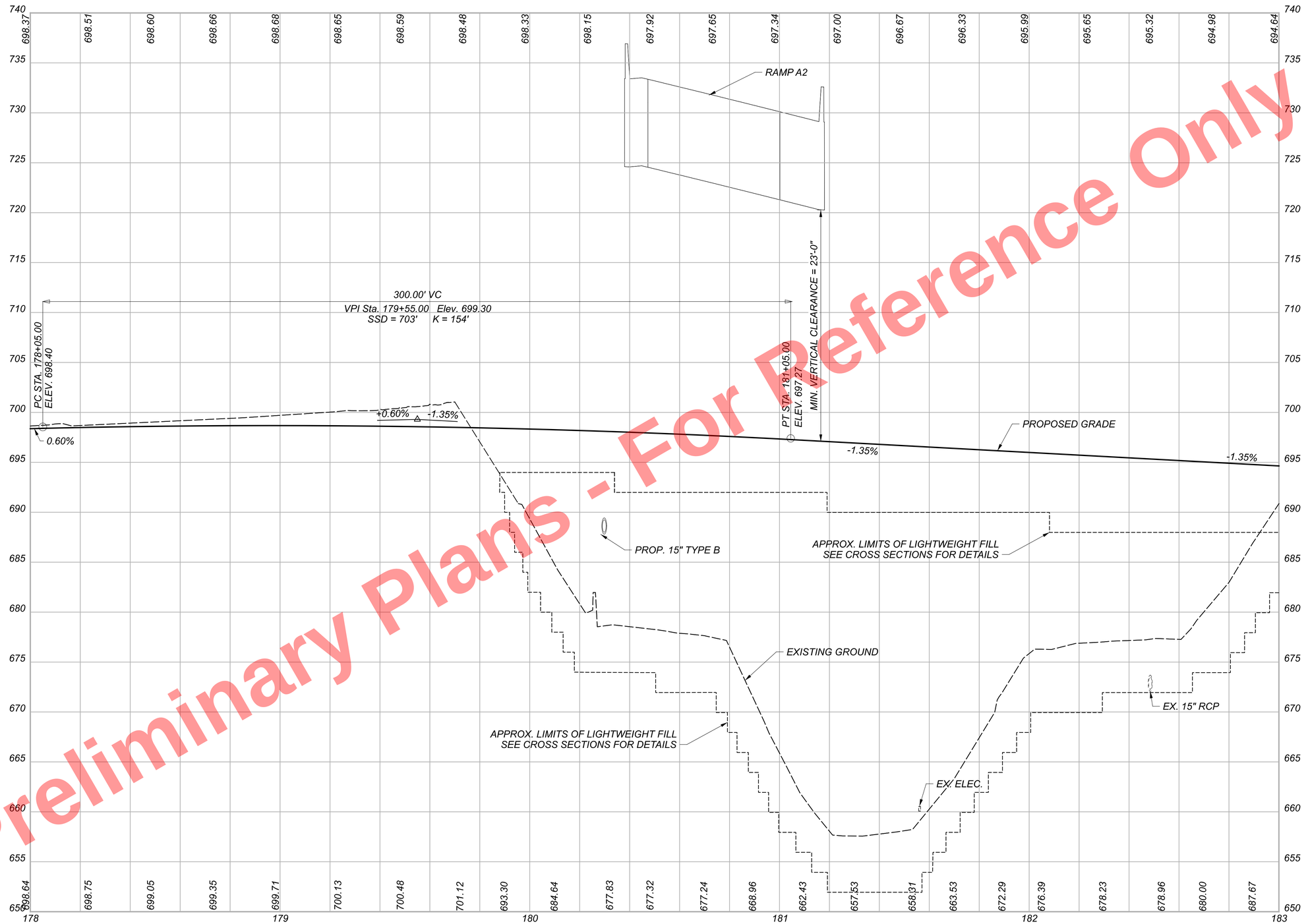

Preliminary Plans - Not For Reference Only

PROFILE - I.R. 90 EB
STA. 178+00.00 TO 183+00.00

CUY-90-16.28 (CCG3A)

MODEL: BL I.R. 90 EB-2 - 82382_GF2102 PAPERSIZE: 34x22 (in.) DATE: 3/27/2025 TIME: 9:38:28 PM USER: Alexandria.Summers
pw:\\mb-us-pw.bentley.com:mb-us-pw-03\Documents\Cleveland_OH\DL_Projects\ODOT\District2\82382\400-Engineering\Roadway\Sheets\8238_GF2102.dgn

DESIGN AGENCY
B&N
burgessniple.com

DESIGNER AJS
REVIEWER MRT 05/01/24
PROJECT ID 82382
SHEET 496 TOTAL 2696

CROSS REFERENCES	
SHEET	DESCRIPTION
73	UTILITY SYMBOL LEGEND
18 - 19	EX. TYPICAL SECTIONS
30 - 31	PR. TYPICAL SECTIONS
430 - 489	SUBSUMMARIES
679 - 710	REMOVAL PLAN
712 - 735	CROSS SECTIONS
1013	SUPERELEVATION TABLES
1030 - 1039	RAMP TERMINAL DETAILS
1092 - 1120	DRAINAGE PLANS
1402	WATER WORK
1716 - 1723	LIGHTING PLAN
1807 - 1817	LANDSCAPING
2036	CUY-90-1653L (BRIDGE 10)
2086	CUY-90-1653R (BRIDGE 11)
2383 - 2386	FENCE PLAN

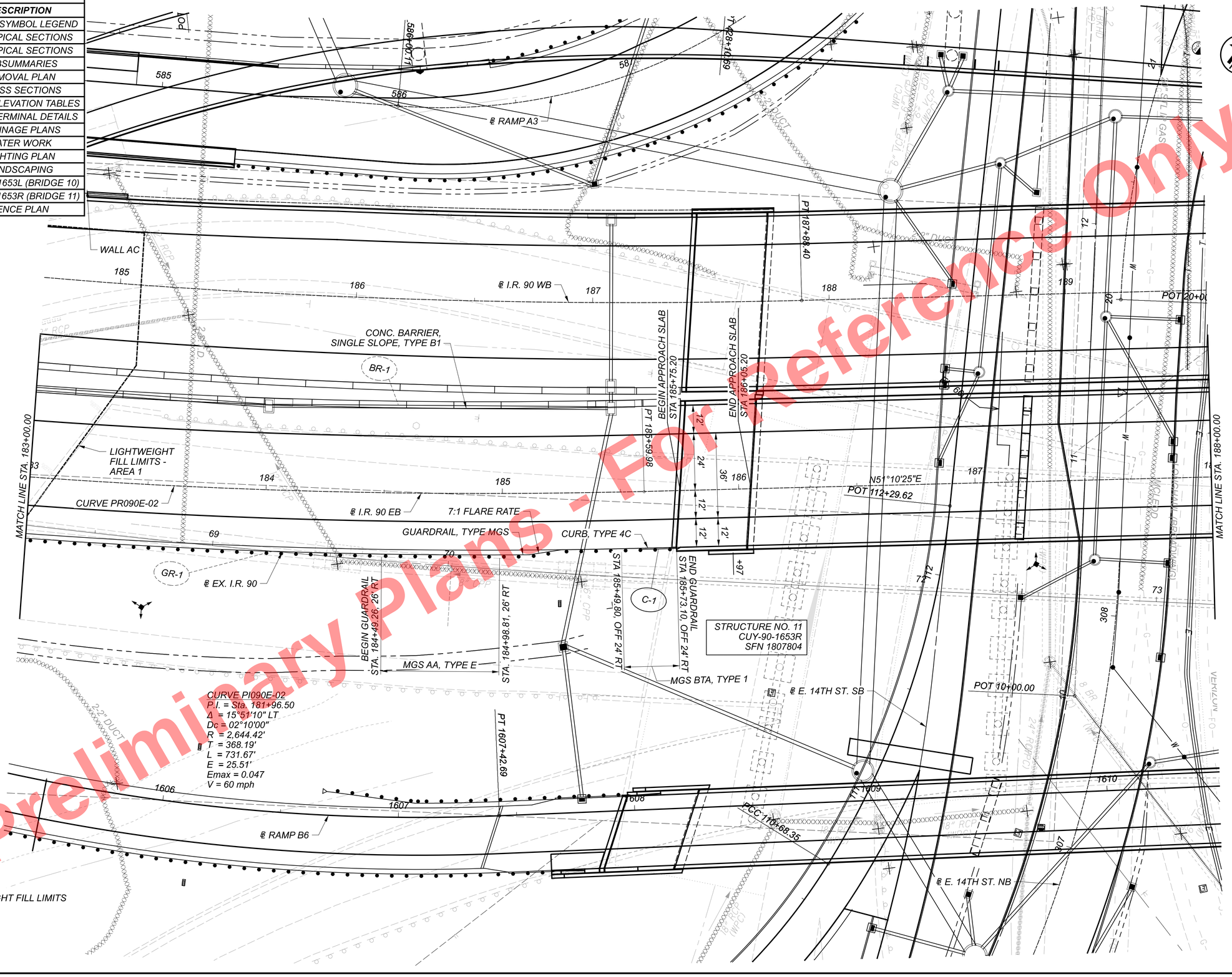

Preliminary Plans - For Reference Only

HORIZONTAL SCALE IN FEET
0 10 20 40

PLAN - I.R. 90 EB
STA. 183+00.00 TO STA. 188+00.00

CUY-90-16.28 (CCG3A)

DESIGN AGENCY
B&N
burgessniple.com

DESIGNER AJS
REVIEWER MRT 05/01/24
PROJECT ID 82382
SHEET 497 TOTAL 2696

MODEL: 82382_GP2105 PAPERSIZE: 34x22 (in.) DATE: 3/27/2025 TIME: 9:38:45 PM USER: Alexandria.Summers
pw:\\mb-us-pw.bentley.commb-us-pw-03\Documents\Cleveland_OHIO\Projects\0007\District2\82382\400-Engineering\Roadway\Sheets\82382_GP2105.dgn

Preliminary Plans - For Reference Only

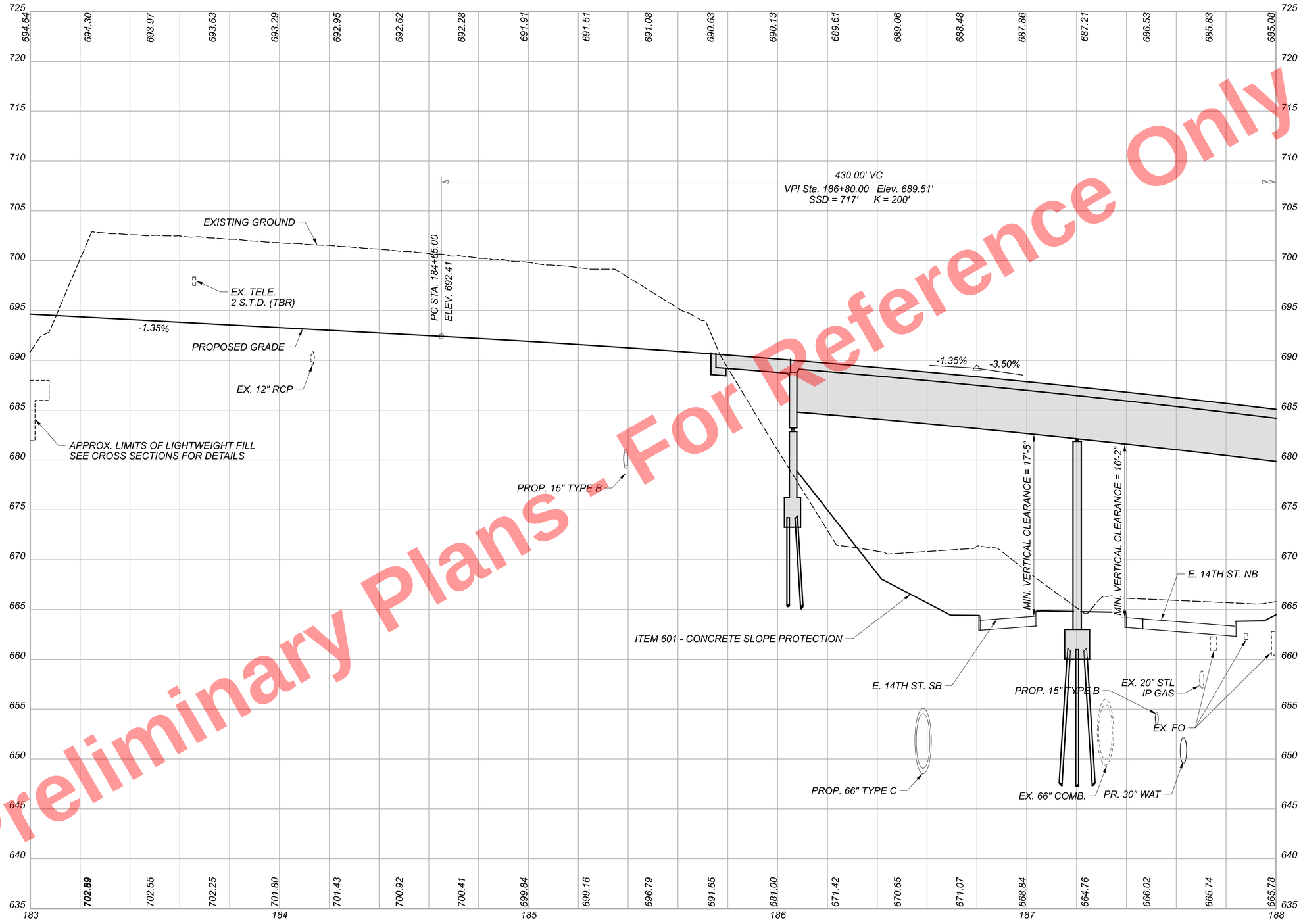

PROFILE - I.R. 90 EB
STA. 183+00.00 TO STA. 188+00.00

DESIGN AGENCY
B&N
burgessniple.com

DESIGNER
AJS

REVIEWER
MRT 05/01/24

PROJECT ID
82382

SHEET 498 | TOTAL 2696

CUY-90-16.28 (CCG3A)

MODEL: BL I.R. 90 EB-2 - 82382_GF2103 PAPERSIZE: 34x22 (in) DATE: 3/27/2025 TIME: 9:39:03 PM USER: Alexandria.Summers
pw:\\mb-us-pw.bentley.com:mb-us-pw-03\Documents\Cleveland.OH\OI_Projects\ODOT\District#2\82382\400-Engineering\Roadway\Sheets\82382_GF2103.dgn

CROSS REFERENCES	
SHEET	DESCRIPTION
73	UTILITY SYMBOL LEGEND
18 - 19	EX. TYPICAL SECTIONS
31 - 32	PR. TYPICAL SECTIONS
430 - 489	SUBSUMMARIES
679 - 710	REMOVAL PLAN
712 - 735	CROSS SECTIONS
1013	SUPERELEVATION TABLES
1030 - 1039	RAMP TERMINAL DETAILS
1092 - 1120	DRAINAGE PLANS
1368	COMBINED SEWER
1716 - 1723	LIGHTING PLAN
1807 - 1817	LANDSCAPING
2036	CUY-90-1653L (BRIDGE 10)
2086	CUY-90-1653R (BRIDGE 11)
2383 - 2386	FENCE PLAN

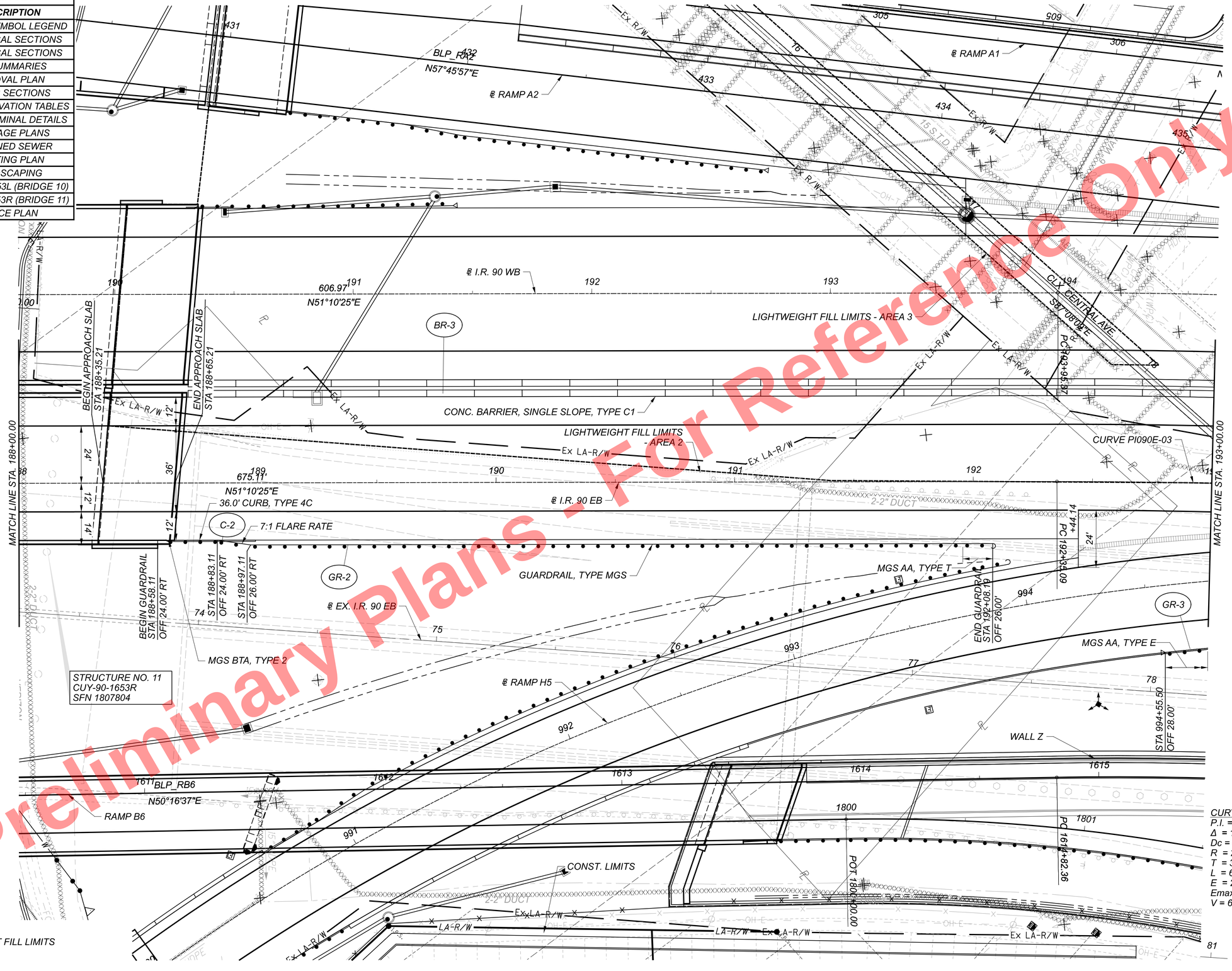

Preliminary Plans - Not for Reference Only

HORIZONTAL SCALE IN FEET
0 10 20 40

PLAN - I.R. 90 EB
STA. 188+00.00 TO STA. 193+00.00

DESIGN AGENCY
B&N
burgessniple.com

DESIGNER
AJS

REVIEWER
MRT 05/01/24

PROJECT ID
82382

SHEET 499 TOTAL 2696

CUY-90-16.28 (CCG3A)

MODEL: 82382_GP2106 PAPERSIZE: 34x22 (in.) DATE: 3/27/2025 TIME: 9:39:16 PM USER: Alexandria.Summers
pw:\\mb-us-pw.bentley.com:mb-us-pw-03\Documents\Cleveland_OH\01_Projects\000T\District2\82382\400-Engineering\Roadway\Sheets\82382_GP2106.dgn

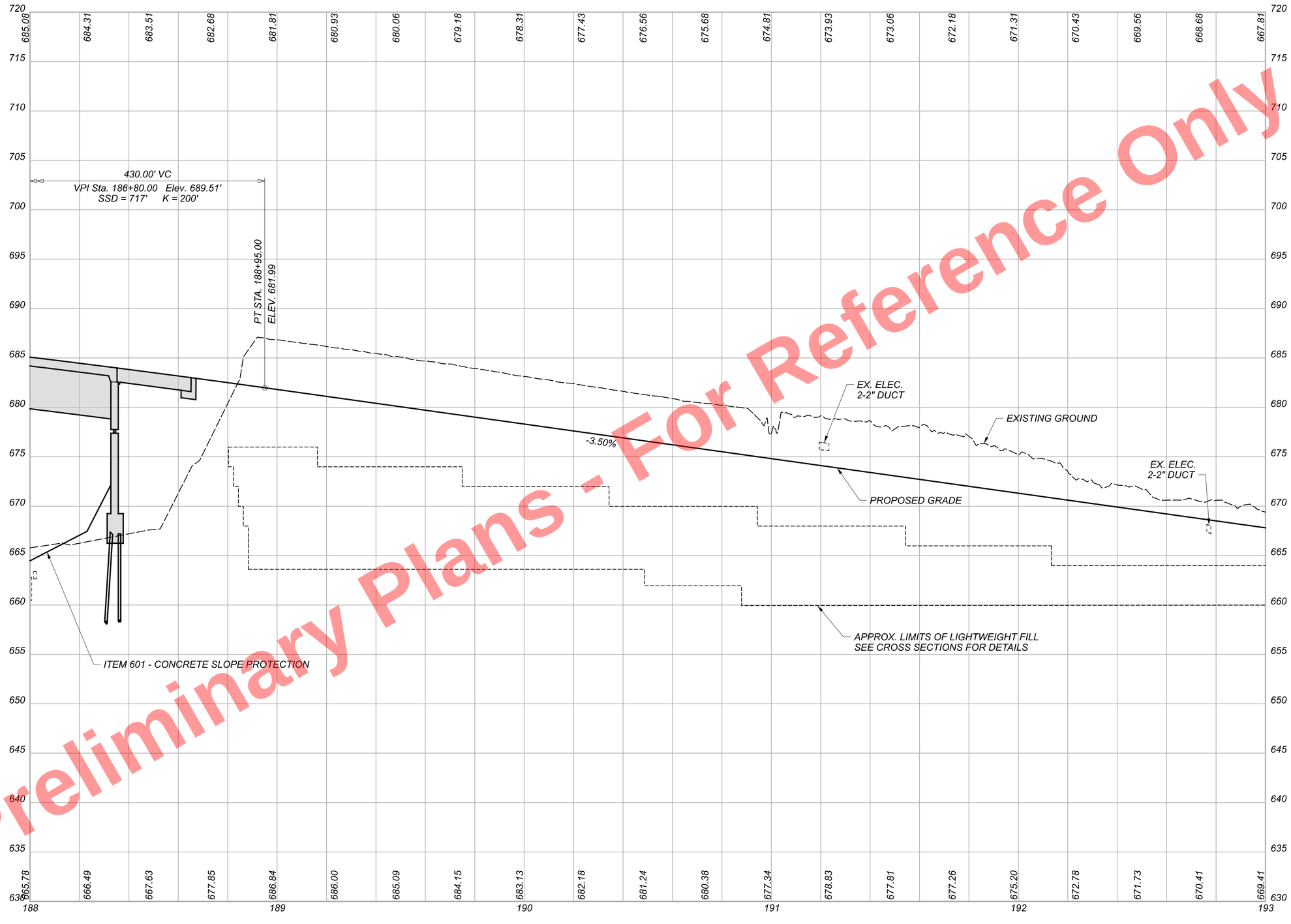

Preliminary Plans - Not For Reference Only

PROFILE - I.R. 90 EB
STA. 188+00.00 TO STA. 193+00.00

CUY-90-16.28 (CCG3A)

MODEL: BL I.R. 90 EB-2 - 82382_GF2104 PAPERSIZE: 34x22 (In.) DATE: 3/27/2025 TIME: 9:39:34 PM USER: Alexandria.Summers
pw:\\mb-us-pw.bentley.com:mb-us-pw-03\Documents\Cleveland_OH\01_Projects\ODOT\District2\82382\400-Engineering\Roadway\Sheets\82382_GF2104.dgn

DESIGN AGENCY
B&N
burgessniple.com

DESIGNER
AJS

REVIEWER
MRT 05/01/24

PROJECT ID
82382

SHEET 500 | TOTAL 2696

CROSS REFERENCES	
SHEET	DESCRIPTION
73	UTILITY SYMBOL LEGEND
18 - 19	EX. TYPICAL SECTIONS
32	PR. TYPICAL SECTIONS
430 - 489	SUBSUMMARIES
679 - 710	REMOVAL PLAN
712 - 735	CROSS SECTIONS
1013	SUPERELEVATION TABLES
1030 - 1039	RAMP TERMINAL DETAILS
1092 - 1120	DRAINAGE PLANS
1317	WALL Z
1368	COMBINED SEWER
1716 - 1723	LIGHTING PLAN
1783	CPP DUCT BANK
1807 - 1817	LANDSCAPING
2383 - 2386	FENCE PLAN

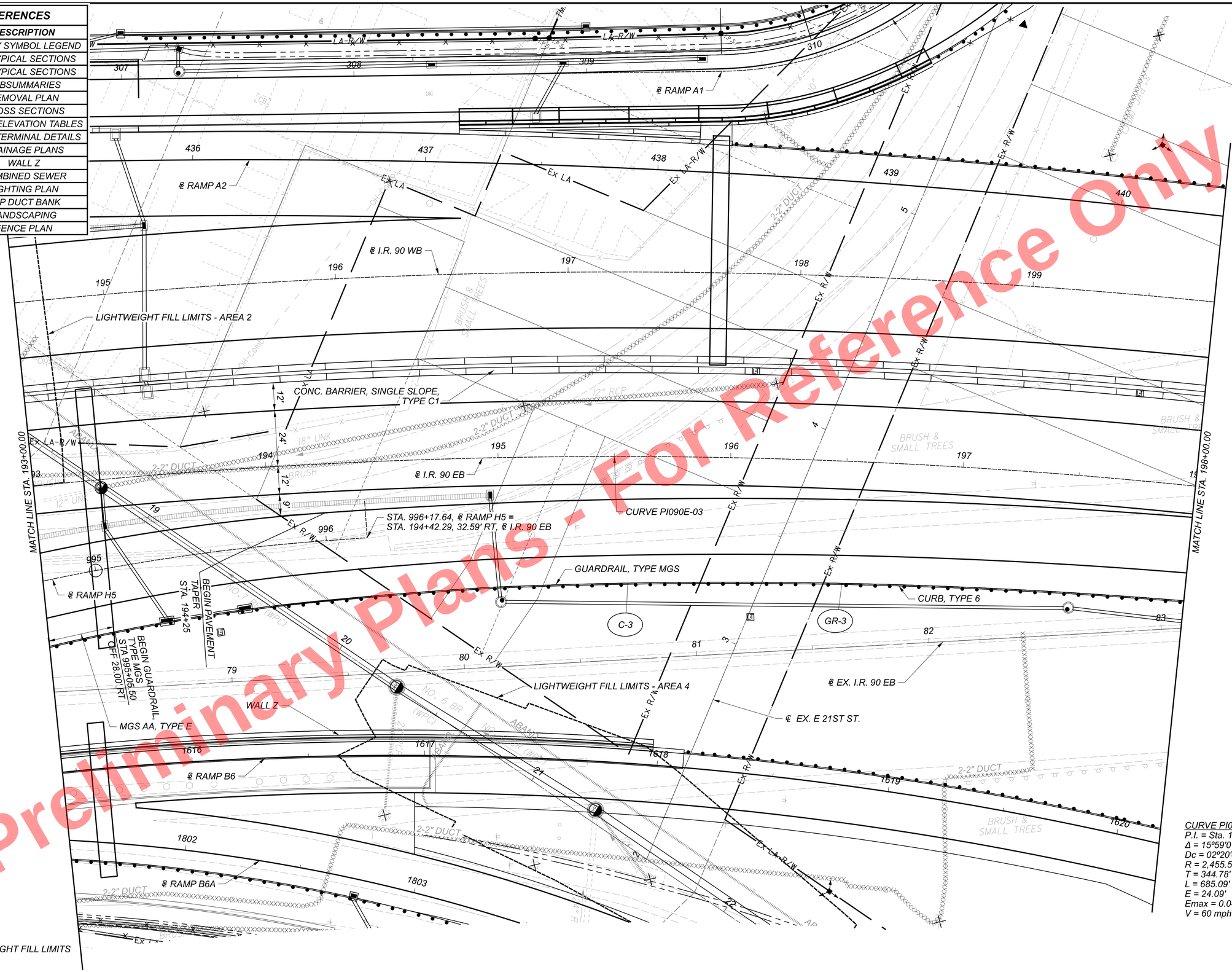

LEGEND

-------- LIGHTWEIGHT FILL LIMITS

CURVE PI090E-03
P.I. = Sta. 195+79.88
Δ = 15º59'07" RT
Dc = 02º20'00"
R = 2,455.53'
T = 344.78'
L = 685.09'
E = 24.09'
Emax = 0.049
V = 60 mph

Preliminary Plans - For Reference Only

HORIZONTAL SCALE IN FEET
0 10 20 40

PLAN - I.R. 90 EB
STA. 193+00.00 TO STA. 198+00.00

DESIGN AGENCY
B&N
burgessniple.com

DESIGNER AJS
REVIEWER MRT 05/01/24
PROJECT ID 82382
SHEET 501 TOTAL 2696

CUY-90-16.28 (CCG3A)

MODEL: 82382_GP2107 PAPERSIZE: 34x22 (in.) DATE: 3/27/2025 TIME: 9:39:47 PM USER: AlexandriaSummers
pw:\\mb-us-pw.bentley.com:mb-us-pw-03\Documents\Cleveland_OH\01_Projects\000T\District2\82382\400-Engineering\Roadway\Sheets\82382_GP2107.dgn

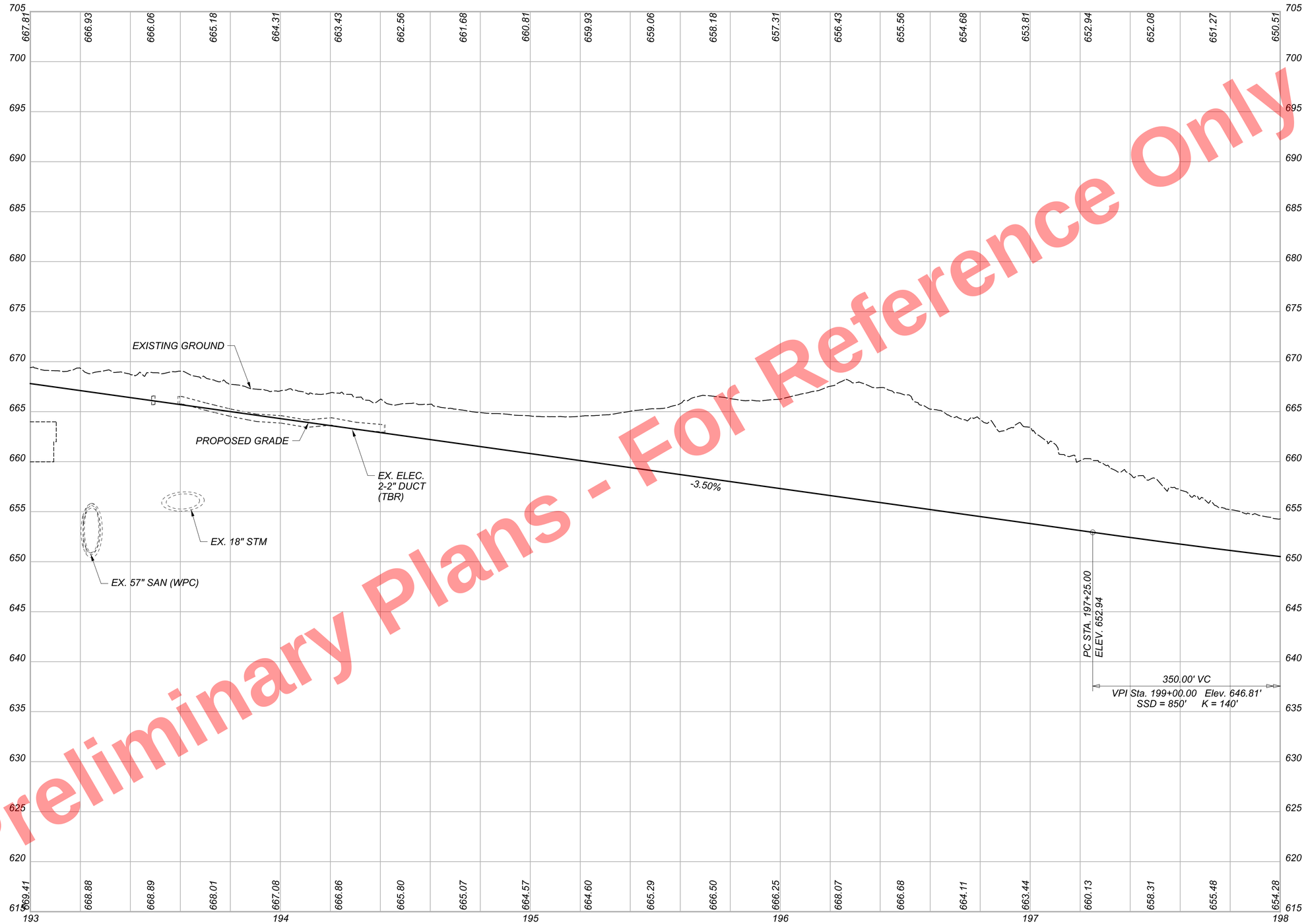

Preliminary Plans - For Reference Only

PROFILE - I.R. 90 EB
STA. 193+00.00 TO STA. 198+00.00

CUY-90-16.28 (CCG3A)

MODEL: BL I.R. 90 EB-2 - 82382_GF2105 PAPERSIZE: 34x22 (in.) DATE: 3/27/2025 TIME: 9:40:07 PM USER: Alexandria.Summers
pw:\\mb-us-pw.bentley.com:mb-us-pw-03\Documents\Cleveland_OH\OI_Projects\ODOT\District12\82382\400-Engineering\Roadway\Sheets\82382_GF2105.dgn

DESIGN AGENCY
B&N
burgessniple.com

DESIGNER
AJS

REVIEWER
MRT 05/01/24

PROJECT ID
82382

SHEET 502 TOTAL 2696

CROSS REFERENCES	
SHEET	DESCRIPTION
73	UTILITY SYMBOL LEGEND
18 - 19	EX. TYPICAL SECTIONS
32	PR. TYPICAL SECTIONS
430 - 489	SUBSUMMARIES
679 - 710	REMOVAL PLAN
712 - 735	CROSS SECTIONS
1013	SUPERELEVATION TABLES
1030 - 1039	RAMP TERMINAL DETAILS
1092 - 1120	DRAINAGE PLANS
1229 - 1230	WALL AG
1409	WATER WORK
1716 - 1723	LIGHTING PLAN
1783 & 1787	CPP DUCT BANK
1807 - 1817	LANDSCAPING
2182	CUY-90-1678 (BRIDGE 13)
2383 - 2386	FENCE PLAN

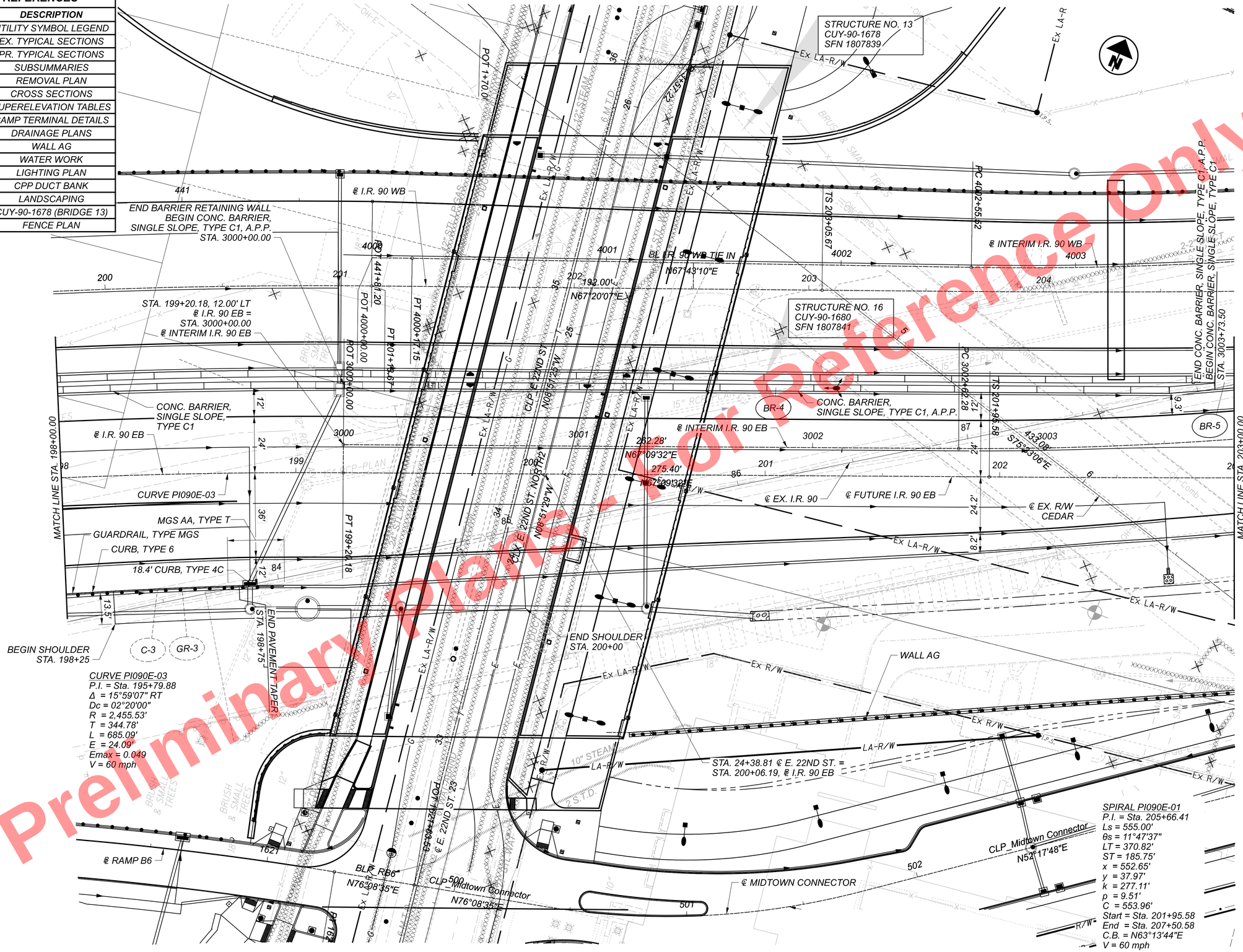

HORIZONTAL SCALE IN FEET
0 10 20 40

PLAN - I.R. 90 EB
STA. 198+00.00 TO STA. 203+00.00

CUY-90-16.28 (CCG3A)

MODEL: 82382_GP2108 PAPERSIZE: 34x22 (in.) DATE: 3/27/2025 TIME: 9:40:21PM USER: Alexandria.Summers
pw:\\mb-us-pw.bentley.com\mb-us-pw-03\Documents\Cleveland_OH\01_Projects\000T\District2\82382\400-Engineering\Roadway\Sheets\82382_GP2108.dgn

DESIGN AGENCY
B&N
burgessniple.com

DESIGNER	AJS
REVIEWER	MRT 05/01/24
PROJECT ID	82382
SHEET	503
TOTAL	2696

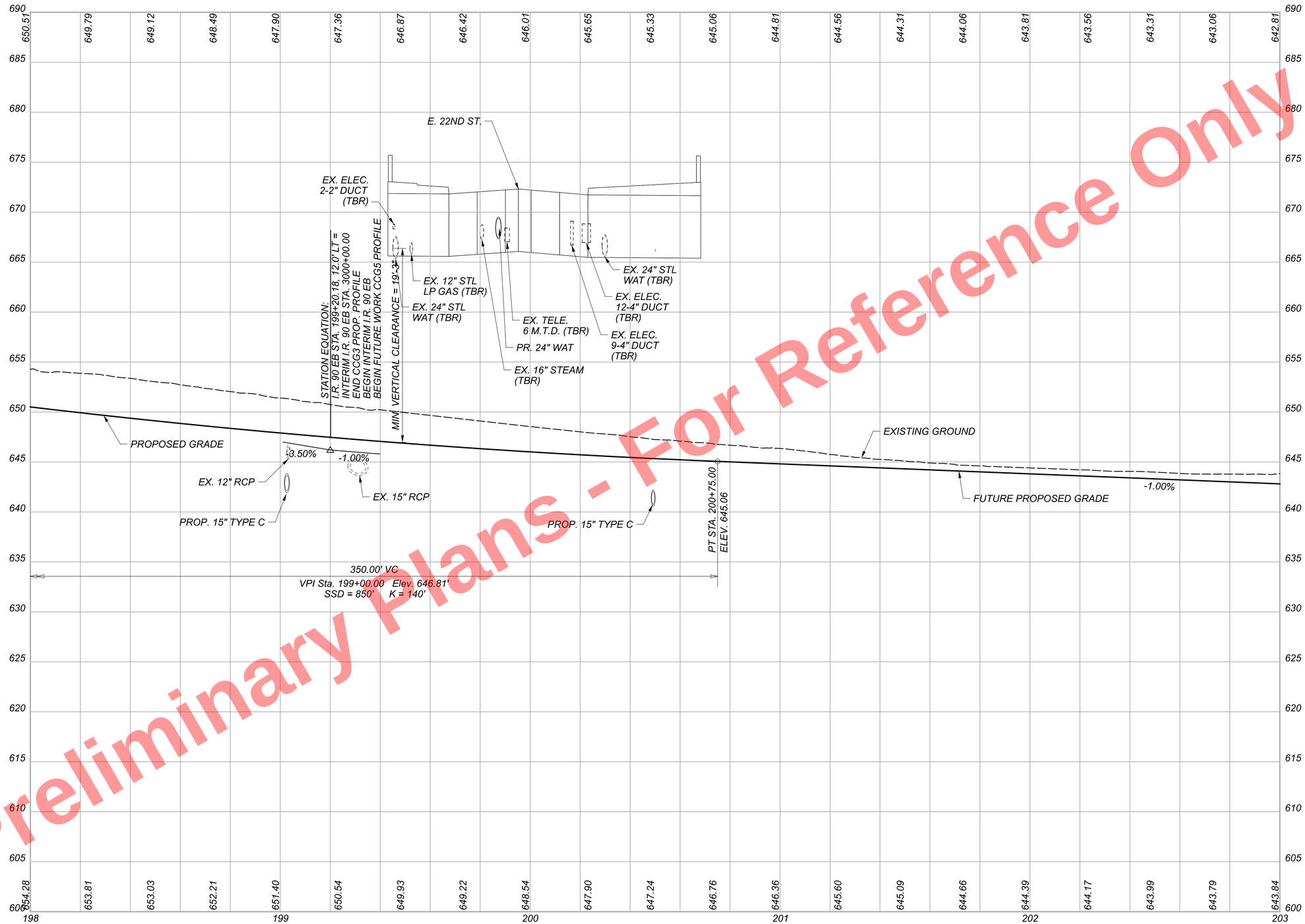

Preliminary Plans - For Reference Only

CUY-90-16.28 (CCG3A)

MODEL: BL I.R. 90 EB-2 - 82382_GF2106 PAPERSIZE: 34x22 (in.) DATE: 3/27/2025 TIME: 9:40:39 PM USER: Alexandria.Summers
pw:\\mb-us-pw.bentley.com:mb-us-pw-03\Documents\Cleveland_OH\01_Projects\ODOT\District2\82382\400-Engineering\Roadway\Sheets\82382_GF2106.dgn
us.bentleycolorado.net:CONNECT-Alexandria.Summers

PROFILE - I.R. 90 EB (PROPOSED AND FUTURE)
STA. 198+00.00 TO STA. 203+00.00

DESIGN AGENCY
B&N
burgessniple.com

DESIGNER
AJS

REVIEWER
MRT 05/01/24

PROJECT ID
82382

SHEET 504 | TOTAL 2696

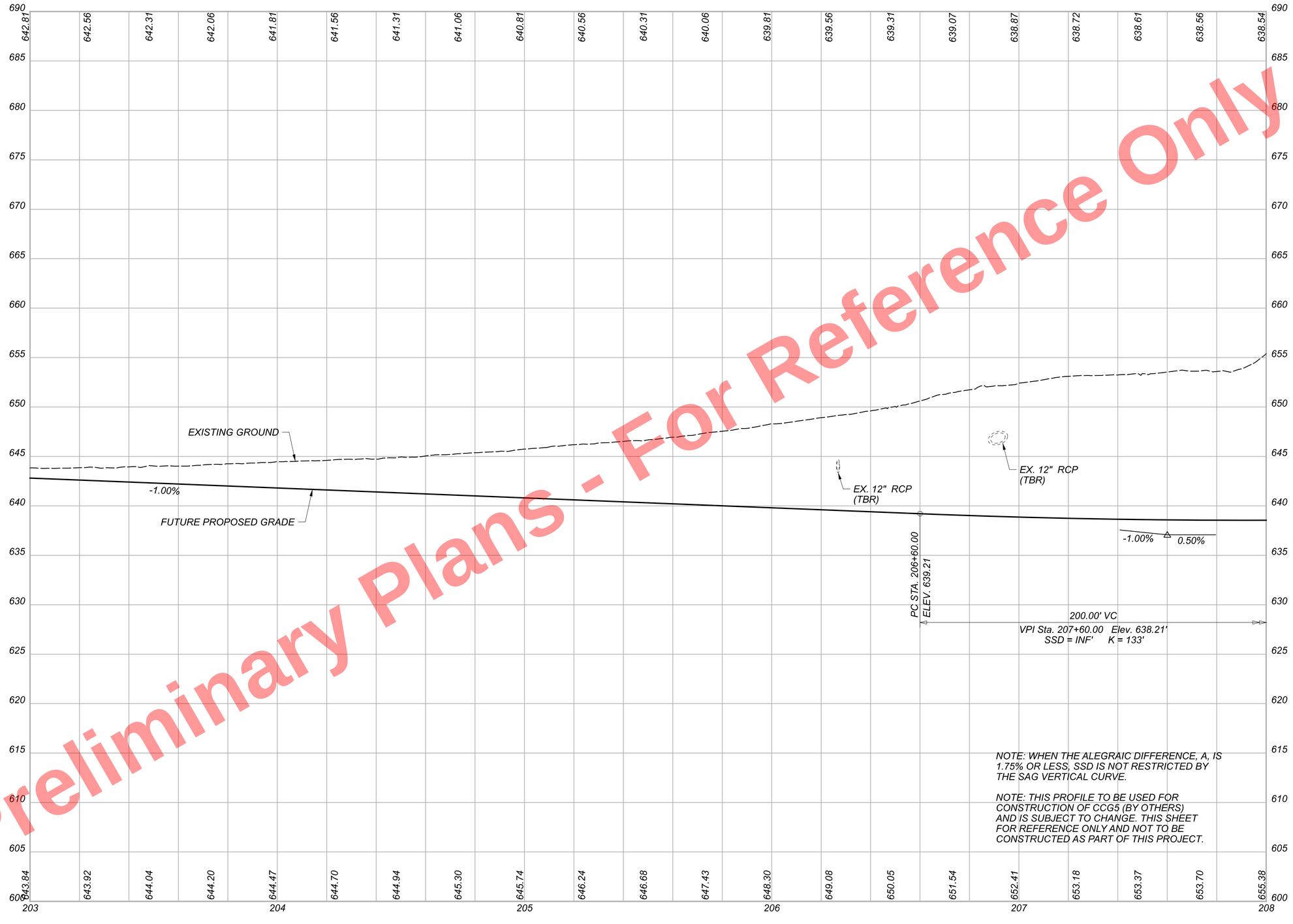

NOTE: WHEN THE ALEGRAIC DIFFERENCE, A, IS 1.75% OR LESS, SSD IS NOT RESTRICTED BY THE SAG VERTICAL CURVE.

NOTE: THIS PROFILE TO BE USED FOR CONSTRUCTION OF CCG5 (BY OTHERS) AND IS SUBJECT TO CHANGE. THIS SHEET FOR REFERENCE ONLY AND NOT TO BE CONSTRUCTED AS PART OF THIS PROJECT.

Preliminary Plans - For Reference Only

PROFILE - I.R. 90 EB (FUTURE)
STA. 203+00.00 TO STA. 208+00.00

CUY-90-16.28 (CCG3A)

MODEL: BL I.R. 90 EB-2 - 82382_GF2I07 PAPERSIZE: 34x22 (in.) DATE: 3/27/2025 TIME: 9:40:46 PM USER: Alexandria.Summers
pw:\\mb-us-pw.bentley.com:mb-us-pw-03\Documents\Cleveland_OH\OI_Projects\ODOT\District12\82382\400-Engineering\Roadway\Sheets\82382_GF2I07.dgn

DESIGN AGENCY
B&N
burgessniple.com

DESIGNER
AJS

REVIEWER
MRT 05/01/24

PROJECT ID
82382

SHEET 505 TOTAL 2696

Preliminary Plans - For Reference Only

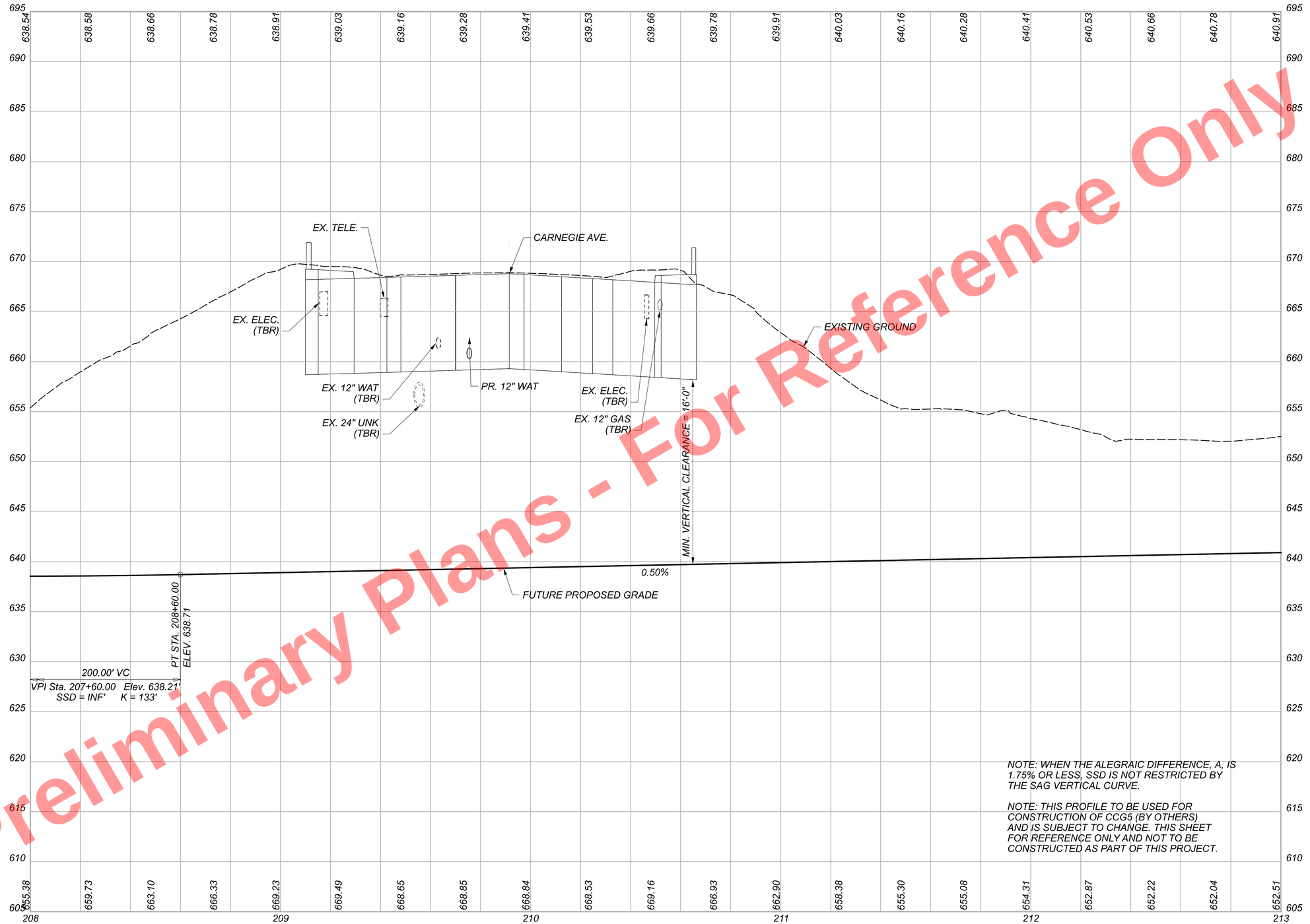

NOTE: WHEN THE ALEGRAIC DIFFERENCE, A, IS 1.75% OR LESS, SSD IS NOT RESTRICTED BY THE SAG VERTICAL CURVE.

NOTE: THIS PROFILE TO BE USED FOR CONSTRUCTION OF CCG5 (BY OTHERS) AND IS SUBJECT TO CHANGE. THIS SHEET FOR REFERENCE ONLY AND NOT TO BE CONSTRUCTED AS PART OF THIS PROJECT.

PROFILE - I.R. 90 EB (FUTURE)
STA. 208+00.00 TO STA. 213+00.00

CUY-90-16.28 (CCG3A)

MODEL: BL I.R. 90 EB-2 - 82382_GF2108 PAPERSIZE: 34x22 (in.) DATE: 3/27/2025 TIME: 9:40:51PM USER: Alexandria.Summers
pw:\\mb-us-pw.bentley.commb-us-pw-03\Documents\Cleveland_OH\01_Projects\000T\District2\82382\400-Engineering\Roadway\Sheets\82382_GF2108.dgn

DESIGN AGENCY
B&N
burgessniple.com

DESIGNER
AJS

REVIEWER
MRT 05/01/24

PROJECT ID
82382

SHEET 506 TOTAL 2696

Preliminary Plans - For Reference Only

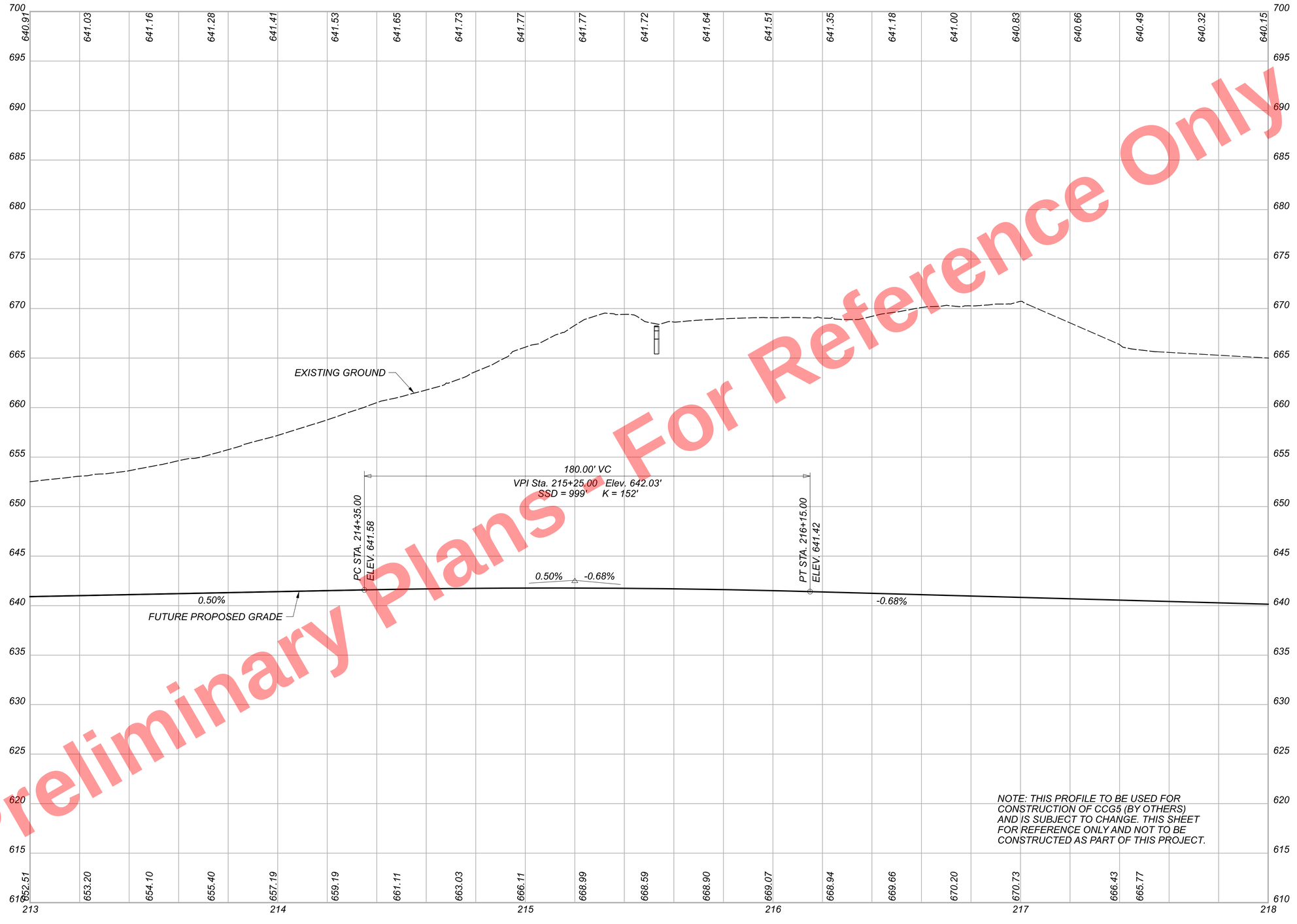

NOTE: THIS PROFILE TO BE USED FOR CONSTRUCTION OF CCG5 (BY OTHERS) AND IS SUBJECT TO CHANGE. THIS SHEET FOR REFERENCE ONLY AND NOT TO BE CONSTRUCTED AS PART OF THIS PROJECT.

CUY-90-16.28 (CCG3A)

MODEL: BL I.R. 90 EB-2 - 82382_GF2109 PAPERSIZE: 34x22 (in.) DATE: 3/27/2025 TIME: 9:40:56 PM USER: Alexandria.Summers
pw:\\mb-us-pw.bentley.com:mb-us-pw-03\Documents\Cleveland_OH\01_Projects\ODOT\District2\82382\400-Engineering\Roadway\Sheets\82382_GF2109.dgn

PROFILE - I.R. 90 EB (FUTURE)
STA. 213+00.00 TO STA. 218+00.00

DESIGN AGENCY
B&N
burgessniple.com

DESIGNER
AJS

REVIEWER
MRT 05/01/24

PROJECT ID
82382

SHEET 507 | TOTAL 2696

CROSS REFERENCES	
SHEET	DESCRIPTION
73	UTILITY SYMBOL LEGEND
19	EX. TYPICAL SECTIONS
36	PR. TYPICAL SECTIONS
430 - 489	SUBSUMMARIES
679 - 710	REMOVAL PLAN
736 - 749	CROSS SECTIONS
1014 - 1015	SUPERELEVATION TABLES
1030 - 1039	RAMP TERMINAL DETAILS
1092 - 1120	DRAINAGE PLANS
1229 - 1230	WALL AG
1409	WATER WORK
1716 - 1723	LIGHTING PLAN
1784 - 1787	CPP DUCT BANK
1807 - 1817	LANDSCAPING
2182	CUY-90-1678 (BRIDGE 13)
2383 - 2386	FENCE PLAN

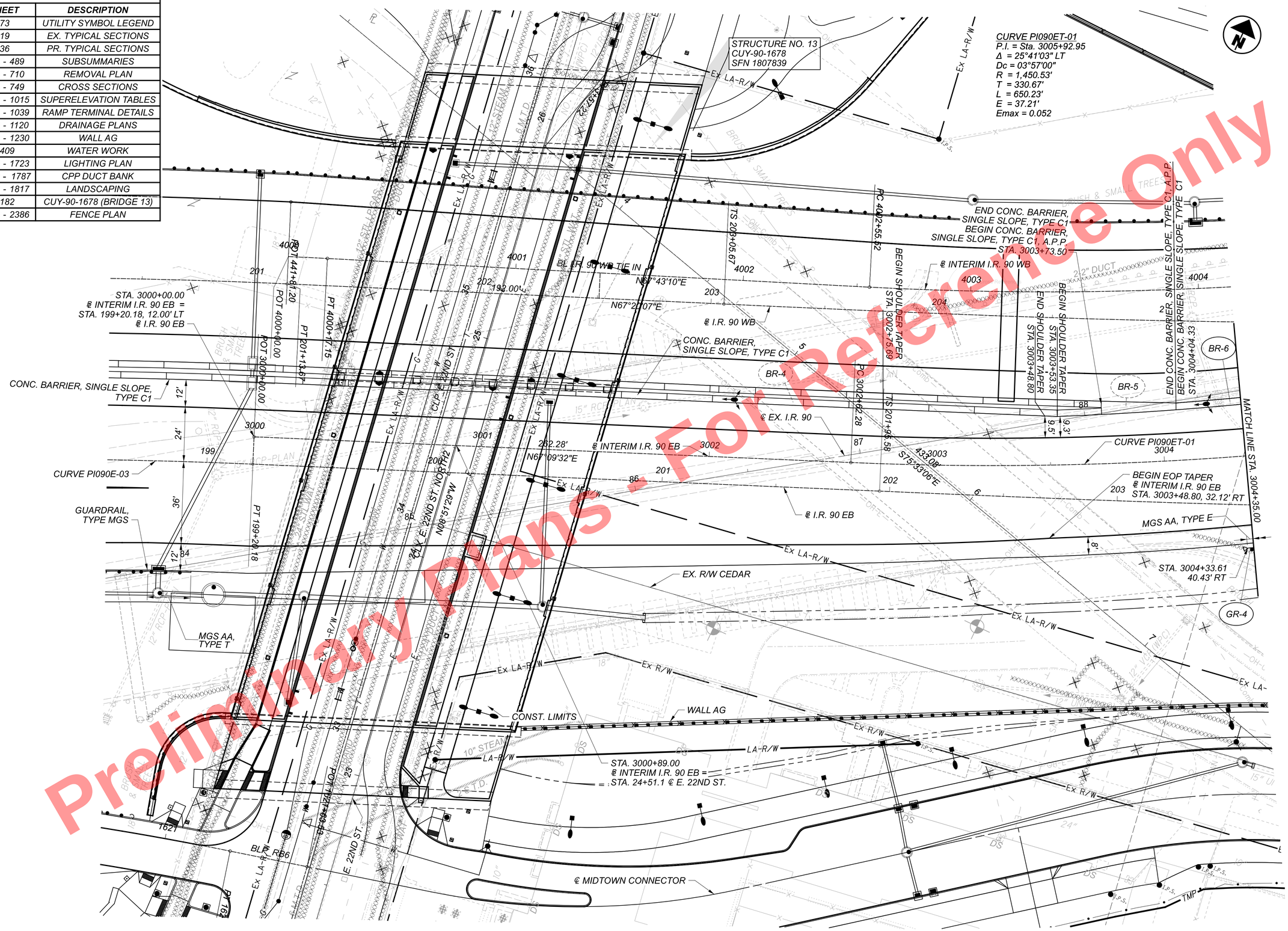

Preliminary Plans - For Reference Only

HORIZONTAL SCALE IN FEET
0 10 20 40

PLAN - INTERIM I.R. 90 EB
STA. 3000+00.00 TO STA. 3004+35.00

DESIGN AGENCY
B&N
burgessniple.com

DESIGNER	AJS
REVIEWER	MRT 5-1-24
PROJECT ID	82382
SHEET	508
TOTAL	2696

CUY-90-16.28 (CCG3A)

MODEL: 82382_GP230I PAPERSIZE: 34x22 (in.) DATE: 3/27/2025 TIME: 9:41:08 PM USER: Alexandria.Summers
pw:\\vmb-us-pw.bentley.com:mb-us-pw-03\Documents\Cleveland_OH\01_Projects\000T\District2\82382\400-Engineering\Roadway\Sheets\82382_GP230I.dgn

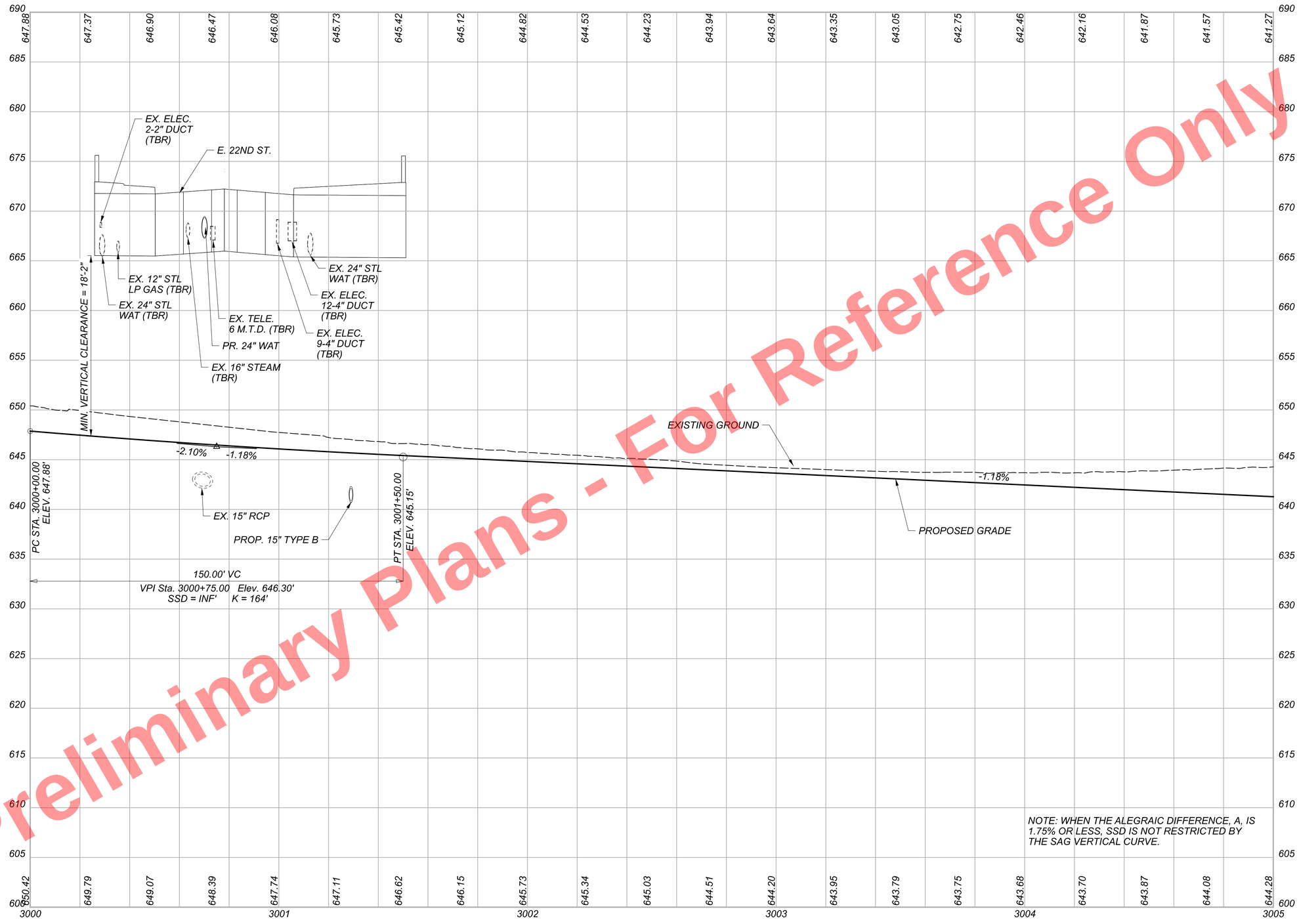

Preliminary Plans - For Reference Only

PROFILE - INTERIM I.R. 90 EB
STA. 3000+00.00 TO STA. 3005+00.00

CUY-90-16.28 (CCG3A)

MODEL: 82382_GF2301 PAPERSIZE: 34x22 (in.) DATE: 3/27/2025 TIME: 9:41:27 PM USER: AlexandriaSummers
pw:\\mb-us-pw.bentley.com:mb-us-pw-03\Documents\Cleveland_OH\DL_Projects\ODOT\District2\82382\400-Engineering\Roadway\Sheets\82382_GF2301.dgn

DESIGN AGENCY
B&N
burgessniple.com

DESIGNER	AJS
REVIEWER	MRT 05/01/24
PROJECT ID	82382
SHEET	509
TOTAL	2696

CROSS REFERENCES	
SHEET	DESCRIPTION
73	UTILITY SYMBOL LEGEND
19	EX. TYPICAL SECTIONS
36	PR. TYPICAL SECTIONS
430 - 489	SUBSUMMARIES
679 - 710	REMOVAL PLAN
736 - 749	CROSS SECTIONS
1014 - 1015	SUPERELEVATION TABLES
1030 - 1039	RAMP TERMINAL DETAILS
1092 - 1120	DRAINAGE PLANS
1229 - 1230	WALL AG
1411 - 1412	WATER WORK
1716 - 1723	LIGHTING PLAN
1784 & 1788	CPP DUCT BANK
1807 - 1817	LANDSCAPING
2281 - 2282	CUY-90-1696 (BRIDGE 14)
2383 - 2386	FENCE PLAN

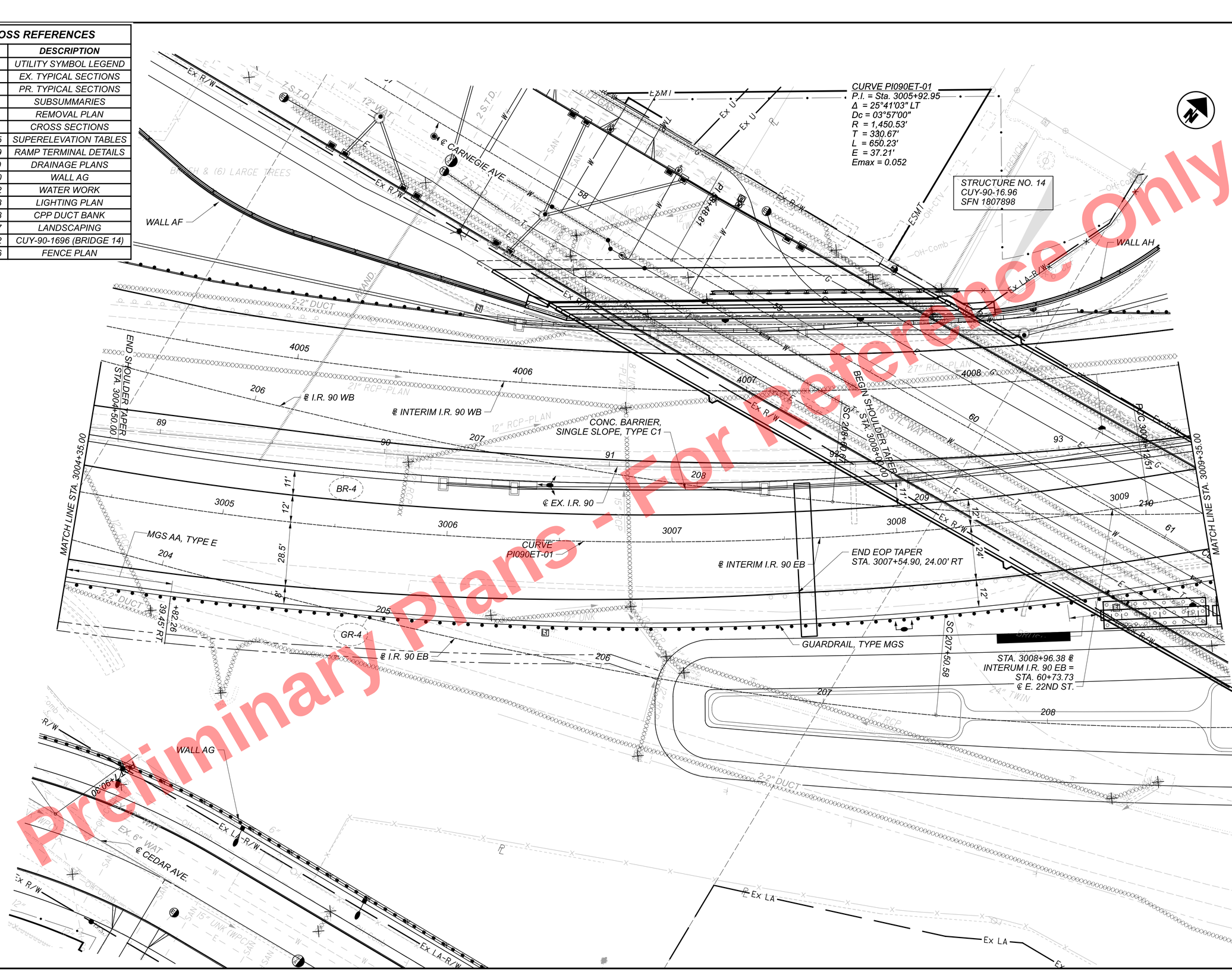

HORIZONTAL SCALE IN FEET
0 10 20 40

PLAN - INTERIM I.R. 90 EB
STA. 3004+35.00 TO STA. 3009+35.00

DESIGN AGENCY	B&N burgessniple.com
DESIGNER	AJS
REVIEWER	MRT 05/01/24
PROJECT ID	82382
SHEET	510
TOTAL	2696

CUY-90-16.28 (CCG3A)

MODEL: 82382_GP2302 PAPERSIZE: 34x22 (in.) DATE: 3/27/2025 TIME: 9:41:41PM USER: Alexandria.Summers
pw:\\mb-us-pw.bentley.commb-us-pw-03\Documents\Cleveland_OHIO_Projects\0007\District2\82382\400-Engineering\Roadway\Sheets\82382_GP2302.dgn

Preliminary Plans - For Reference Only

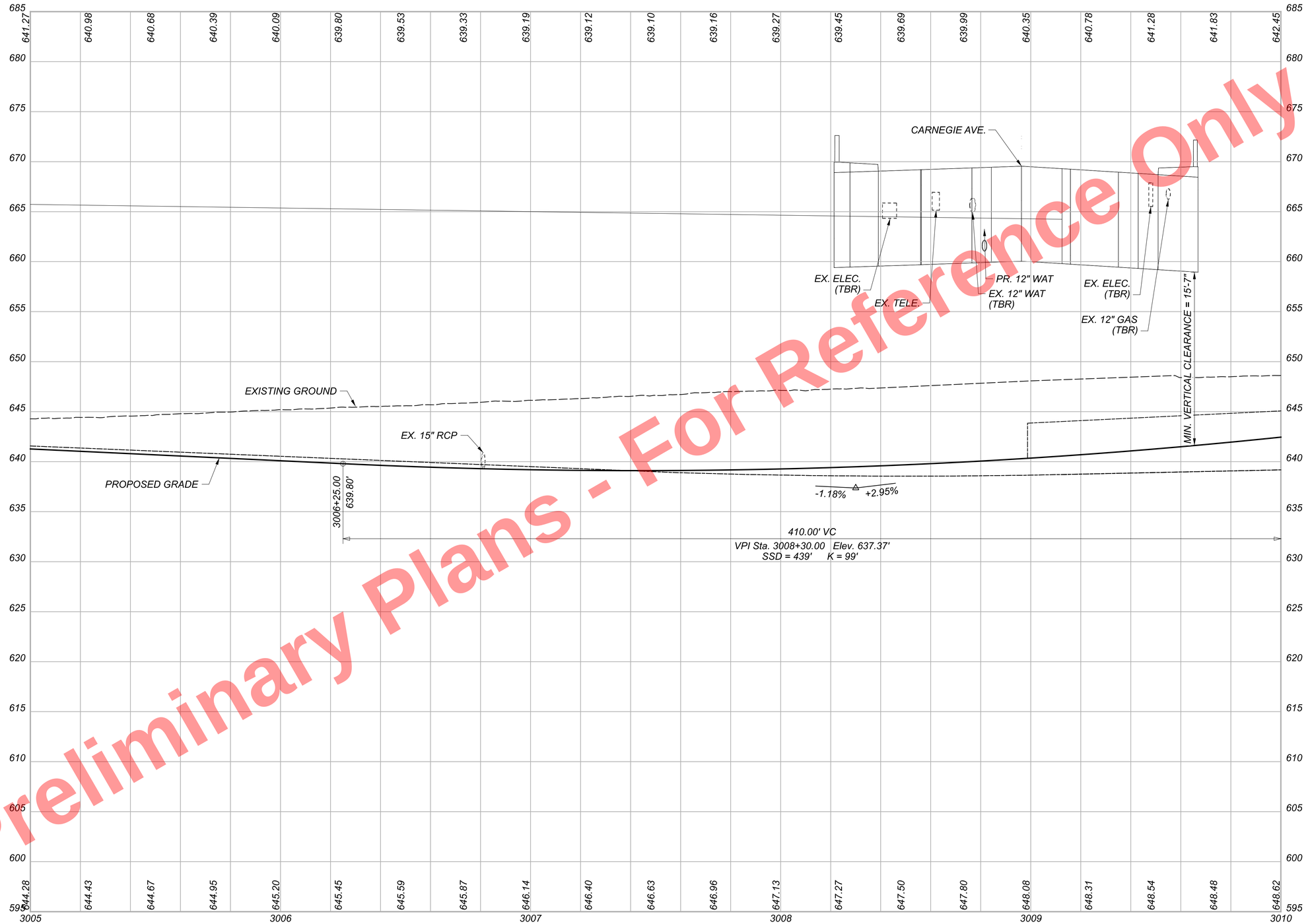

PROFILE - INTERIM I.R. 90 EB
STA. 3005+00.00 TO STA. 3010+00.00

CUY-90-16.28 (CCG3A)

MODEL: 82382_GF2302 PAPERSIZE: 34x22 (in.) DATE: 3/27/2025 TIME: 9:4:58 PM USER: Alexandria.Summers
pw:\\mb-us-pw.bentley.com:mb-us-pw-03\Documents\Cleveland_OH\OiL_Projects\ODOT\District#2\82382\400-Engineering\Roadway\Sheets\82382_GF2302.dgn

DESIGN AGENCY
B&N
burgessniple.com

DESIGNER
AJS

REVIEWER
MRT 05/01/24

PROJECT ID
82382

SHEET 511 TOTAL 2696

CROSS REFERENCES	
SHEET	DESCRIPTION
73	UTILITY SYMBOL LEGEND
19	EX. TYPICAL SECTIONS
36 - 37	PR. TYPICAL SECTIONS
430 - 489	SUBSUMMARIES
679 - 710	REMOVAL PLAN
736 - 749	CROSS SECTIONS
1014 - 1015	SUPERELEVATION TABLES
1030 - 1039	RAMP TERMINAL DETAILS
1092 - 1120	DRAINAGE PLANS
1411 - 1412	WATER WORK
1716 - 1723	LIGHTING PLAN
1788	CPP DUCT BANK
1807 - 1817	LANDSCAPING
2281 - 2282	CUY-90-1696 (BRIDGE 14)
2383 - 2386	FENCE PLAN

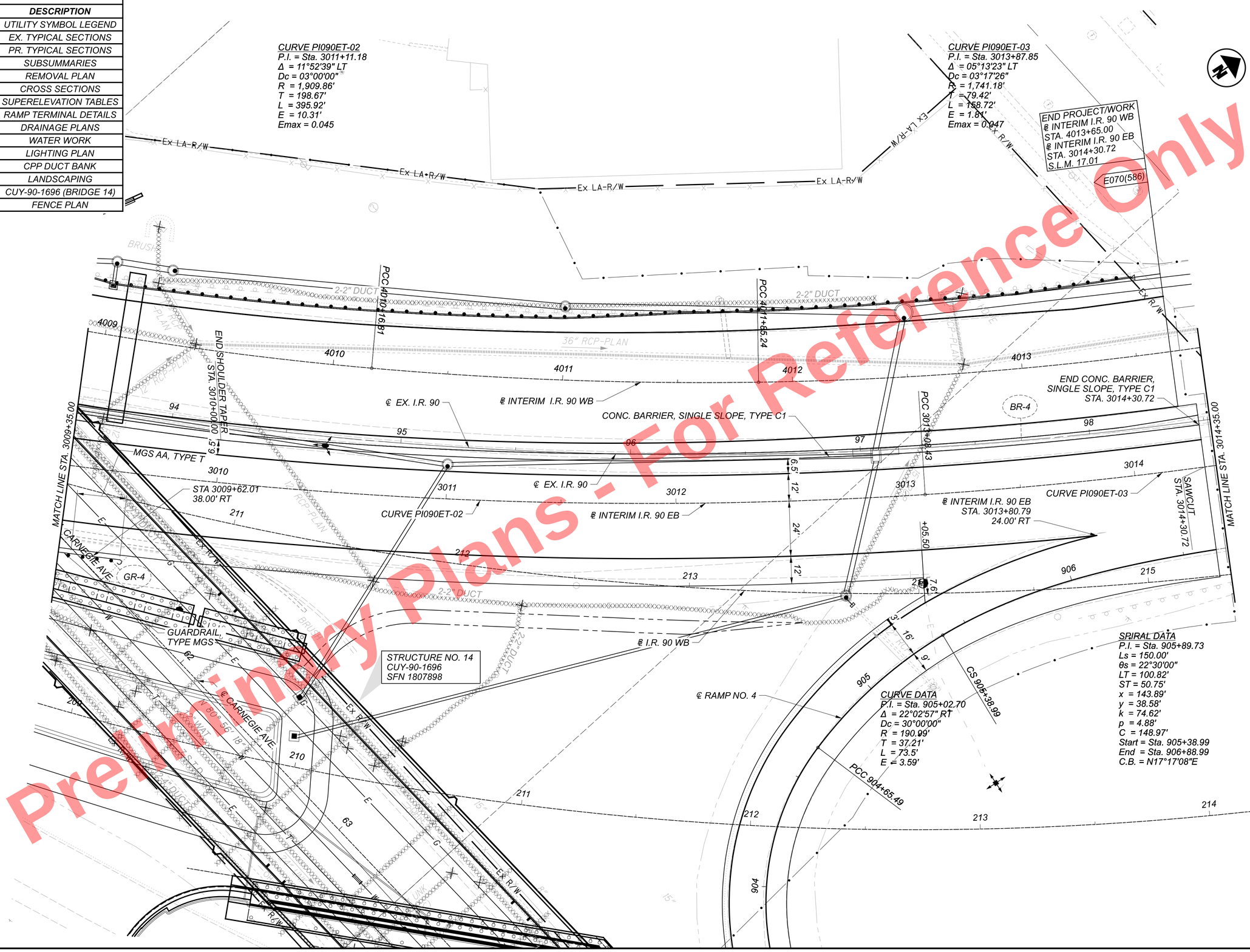

Preliminary Plans - For Reference Only

PLAN - INTERIM I.R. 90 EB
STA. 3009+35.00 TO STA. 3014+35.00

CUY-90-16.28 (CCG3A)

DESIGN AGENCY
B&N
burgessniple.com

DESIGNER	AJS
REVIEWER	MRT 5-1-24
PROJECT ID	82382
SHEET	512
TOTAL	2696

MODEL: 82382_GP2303 PAPERSIZE: 34x22 (in.) DATE: 3/27/2025 TIME: 9:42:11 PM USER: Alexandria.Summers
pw:\\vmb-us-pw.bentley.com\mb-us-pw-03\Documents\Cleveland_OH\01_Projects\ODOT\District2\82382\400-Engineering\Roadway\Sheets\82382_GP2303.dgn

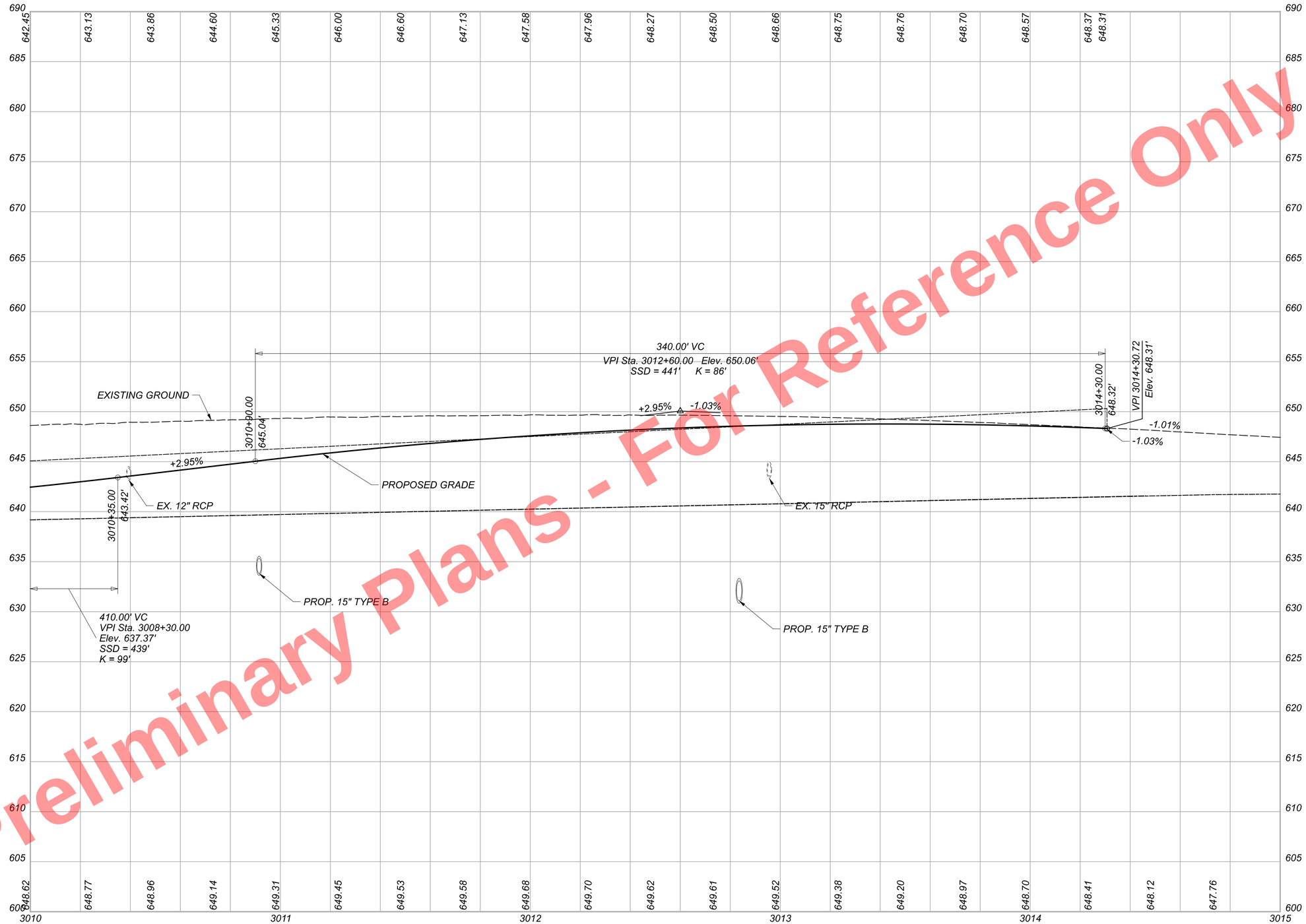

Preliminary Plans - For Reference Only

PROFILE - INTERIM I.R. 90 EB
STA. 3010+00.00 TO 3015+00.00

CUY-90-16.28 (CCG3A)

MODEL: 82382_GF2303 PAPERSIZE: 34x22 (in) DATE: 3/27/2025 TIME: 9:42:29 PM USER: AlexandriaSummers
pw:\\vmb-us-pw.bentley.com:vmb-us-pw-03\Documents\Cleveland_OH\01_Projects\ODOT\District2\82382\400-Engineering\Roadway\Sheets\82382_GF2303.dgn

DESIGN AGENCY
B&N
burgessniple.com

DESIGNER AJS
REVIEWER MRT 05/01/24
PROJECT ID 82382
SHEET 513 TOTAL 2696

CROSS REFERENCES	
SHEET	DESCRIPTION
73	UTILITY SYMBOL LEGEND
19	EX. TYPICAL SECTIONS
37	PR. TYPICAL SECTIONS
430 - 489	SUBSUMMARIES
679 - 710	REMOVAL PLAN
736 - 749	CROSS SECTIONS
1014 - 1015	SUPERELEVATION TABLES
1030 - 1039	RAMP TERMINAL DETAILS
1092 - 1120	DRAINAGE PLANS
1716 - 1723	LIGHTING PLAN
1807 - 1817	LANDSCAPING
2383 - 2386	FENCE PLAN

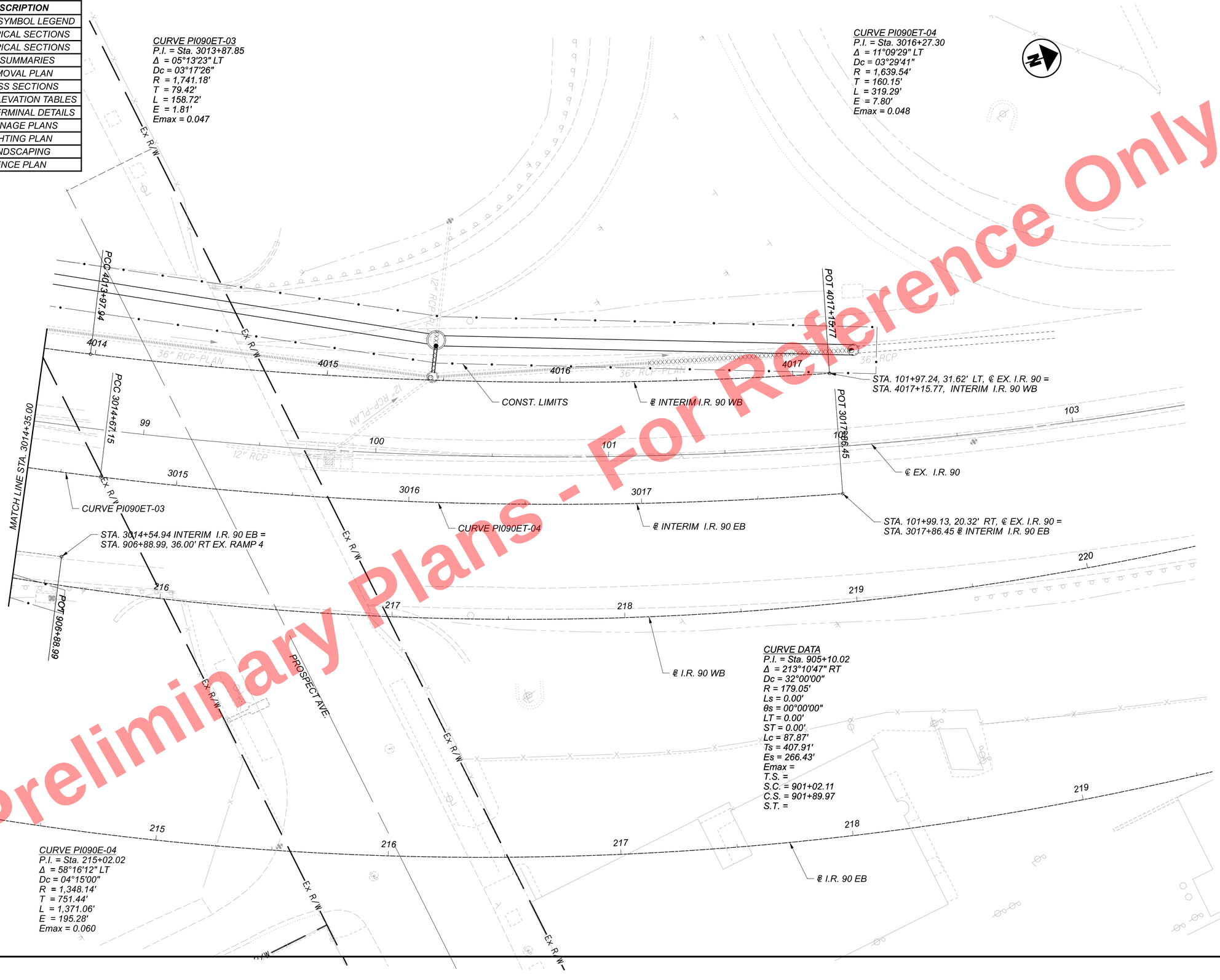

Preliminary Plans - For Reference Only

HORIZONTAL SCALE IN FEET
0 10 20 40

PLAN - INTERIM I.R. 90 EB
STA. 3014+35.00 TO STA. 3017+86.45

DESIGN AGENCY
B&N
burgessniple.com

DESIGNER AJS
REVIEWER MRT 5/1/24
PROJECT ID 82382
SHEET 514 TOTAL 2696

CUY-90-16.28 (CCG3A)

MODEL: 82382_GP2304 PAPERSIZE: 34x22 (in.) DATE: 3/27/2025 TIME: 9:42:44 PM USER: AlexandriaSummers
pw:\\mb-us-pw.bentley.com:mb-us-pw-03\Documents\Cleveland_OH\OL_Projects\ODOT\District12\82382\400-Engineering\Roadway\Sheets\82382_GP2304.dgn

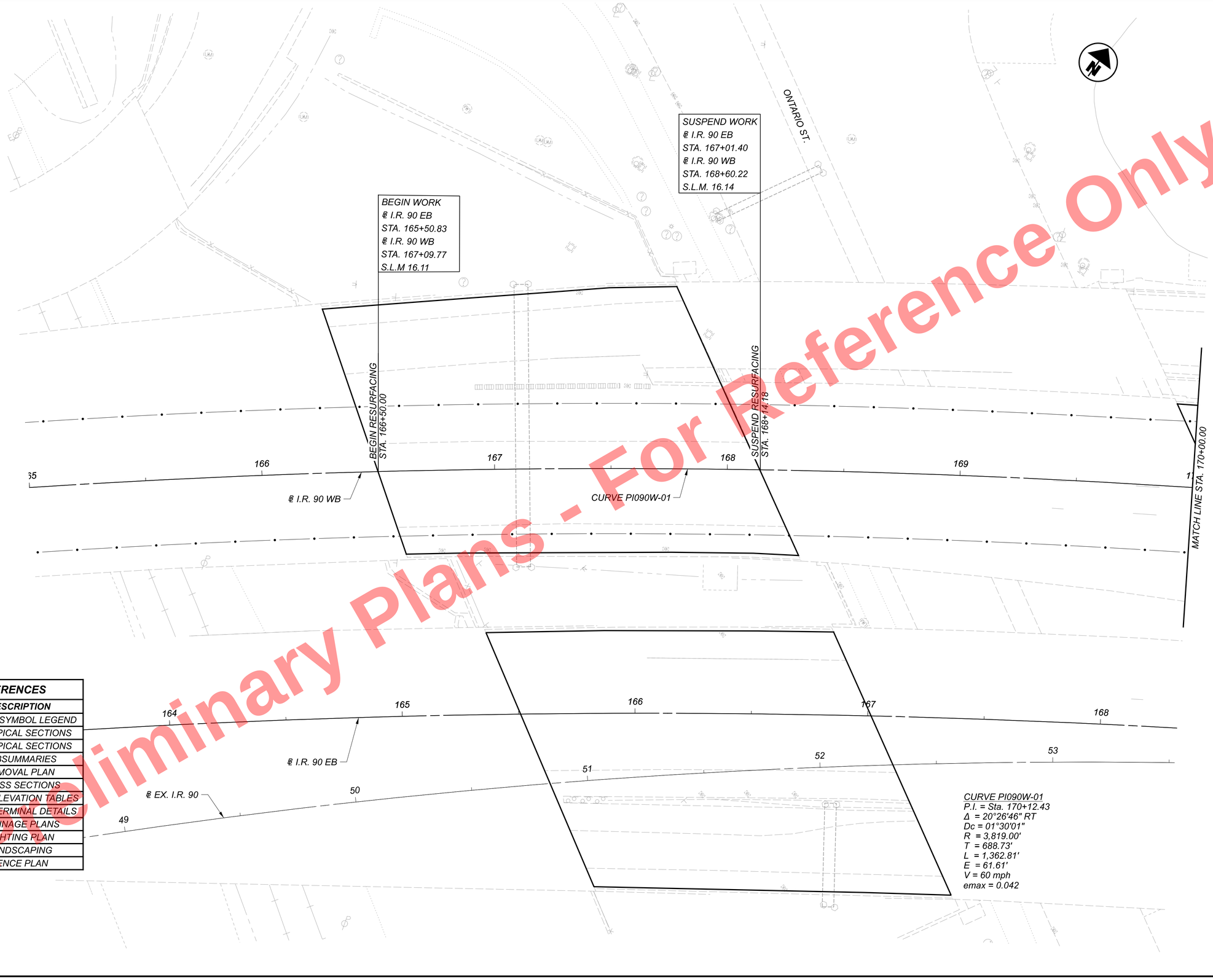

CROSS REFERENCES	
SHEET	**DESCRIPTION**
73	UTILITY SYMBOL LEGEND
18 - 19	EX. TYPICAL SECTIONS
29	PR. TYPICAL SECTIONS
430 - 489	SUBSUMMARIES
679 - 710	REMOVAL PLAN
750 - 774	CROSS SECTIONS
1017 - 1018	SUPERELEVATION TABLES
1040 - 1047	RAMP TERMINAL DETAILS
1092 - 1120	DRAINAGE PLANS
1716 - 1723	LIGHTING PLAN
1807 - 1817	LANDSCAPING
2383 - 2386	FENCE PLAN

Preliminary Plans - For Reference Only

HORIZONTAL SCALE IN FEET
0 10 20 40

PLAN - I.R. 90 WB
STA. 165+00.00 TO STA. 170+00.00

DESIGN AGENCY
B&N
burgessniple.com

DESIGNER
AJS

REVIEWER
MRT 05/01/24

PROJECT ID
82382

SHEET 515 | TOTAL 2696

CUY-90-16.28 (CCG3A)

MODEL: 82382_GP220I PAPERSIZE: 34x22 (in.) DATE: 3/27/2025 TIME: 9:42:56 PM USER: AlexandriaSummers
pw:\\mb-us-pw.bentley.com:mb-us-pw-03\Documents\Cleveland_OHOi_Projects\0007\District2\82382\400-Engineering\Roadway\Sheets\82382_GP220i.dgn

CROSS REFERENCES	
SHEET	DESCRIPTION
73	UTILITY SYMBOL LEGEND
18 - 19	EX. TYPICAL SECTIONS
29	PR. TYPICAL SECTIONS
430 - 489	SUBSUMMARIES
679 - 710	REMOVAL PLAN
750 - 774	CROSS SECTIONS
1017 - 1018	SUPERELEVATION TABLES
1040 - 1047	RAMP TERMINAL DETAILS
1092 - 1120	DRAINAGE PLANS
1716 - 1723	LIGHTING PLAN
1807 - 1817	LANDSCAPING
2383 - 2386	FENCE PLAN

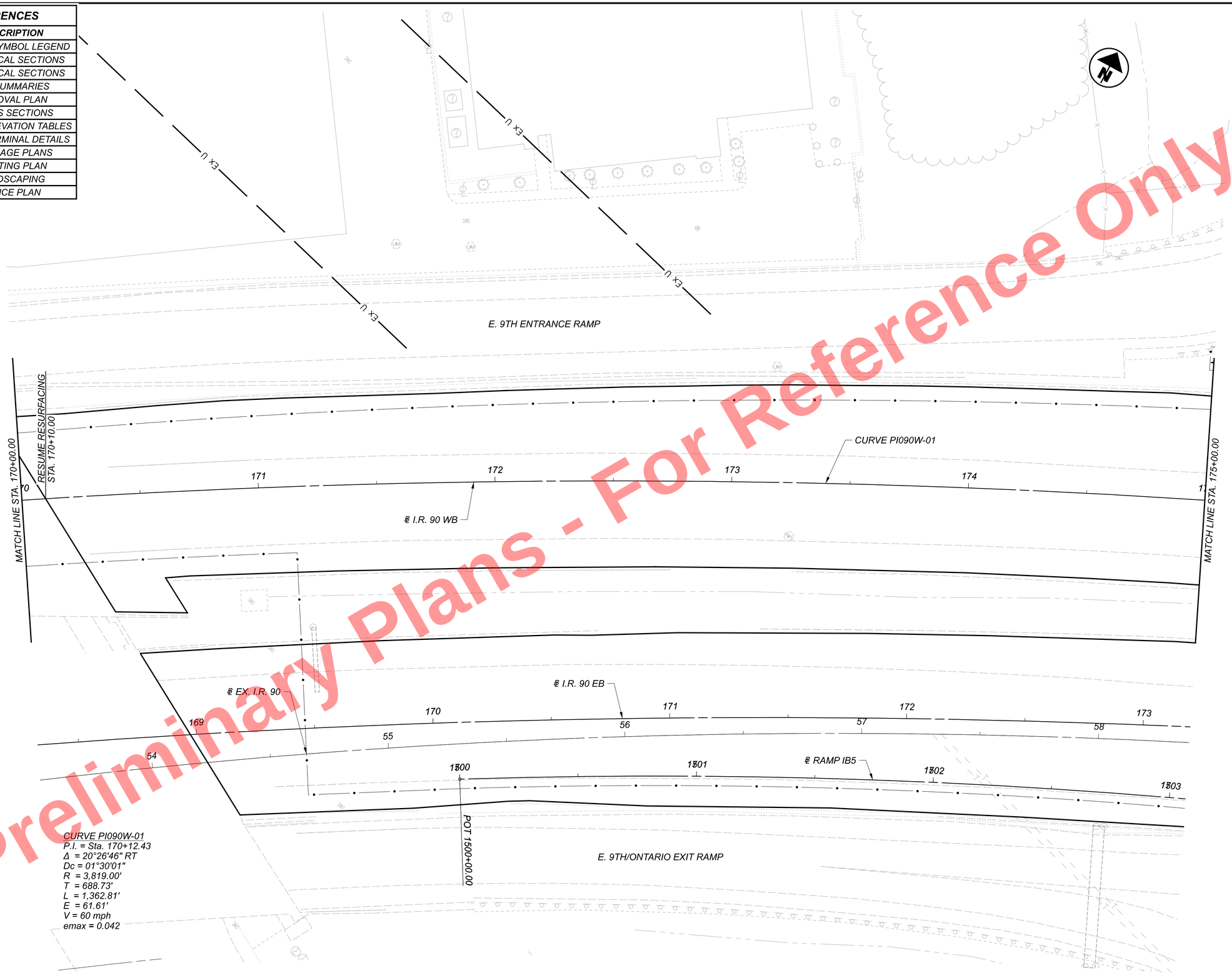

Preliminary Plans - For Reference Only

HORIZONTAL SCALE IN FEET
0 10 20 40

PLAN - I.R. 90 WB
STA. 170+00.00 TO STA. 175+00.00

CUY-90-16.28 (CCG3A)

MODEL: 82382_GP2202 PAPERSIZE: 34x22 (in.) DATE: 3/27/2025 TIME: 9:43:07 PM USER: Alexandria.Summers
pw:\\vmb-us-pw.bentley.com:vmb-us-pw-03\Documents\Cleveland_OHIO\Projects\ODOT\District2\82382\400-Engineering\Roadway\Sheets\82382_GP2202.dgn

DESIGN AGENCY
B&N
burgessniple.com

DESIGNER	
AJS	
REVIEWER	
MRT	05/01/24
PROJECT ID	
82382	
SHEET	TOTAL
516	2696

CROSS REFERENCES	
SHEET	DESCRIPTION
73	UTILITY SYMBOL LEGEND
18 - 19	EX. TYPICAL SECTIONS
29 & 33	PR. TYPICAL SECTIONS
430 - 489	SUBSUMMARIES
679 - 710	REMOVAL PLAN
750 - 774	CROSS SECTIONS
1017 - 1018	SUPERELEVATION TABLES
1040 - 1047	RAMP TERMINAL DETAILS
1092 - 1120	DRAINAGE PLANS
1716 - 1723	LIGHTING PLAN
1807 - 1817	LANDSCAPING
2383 - 2386	FENCE PLAN

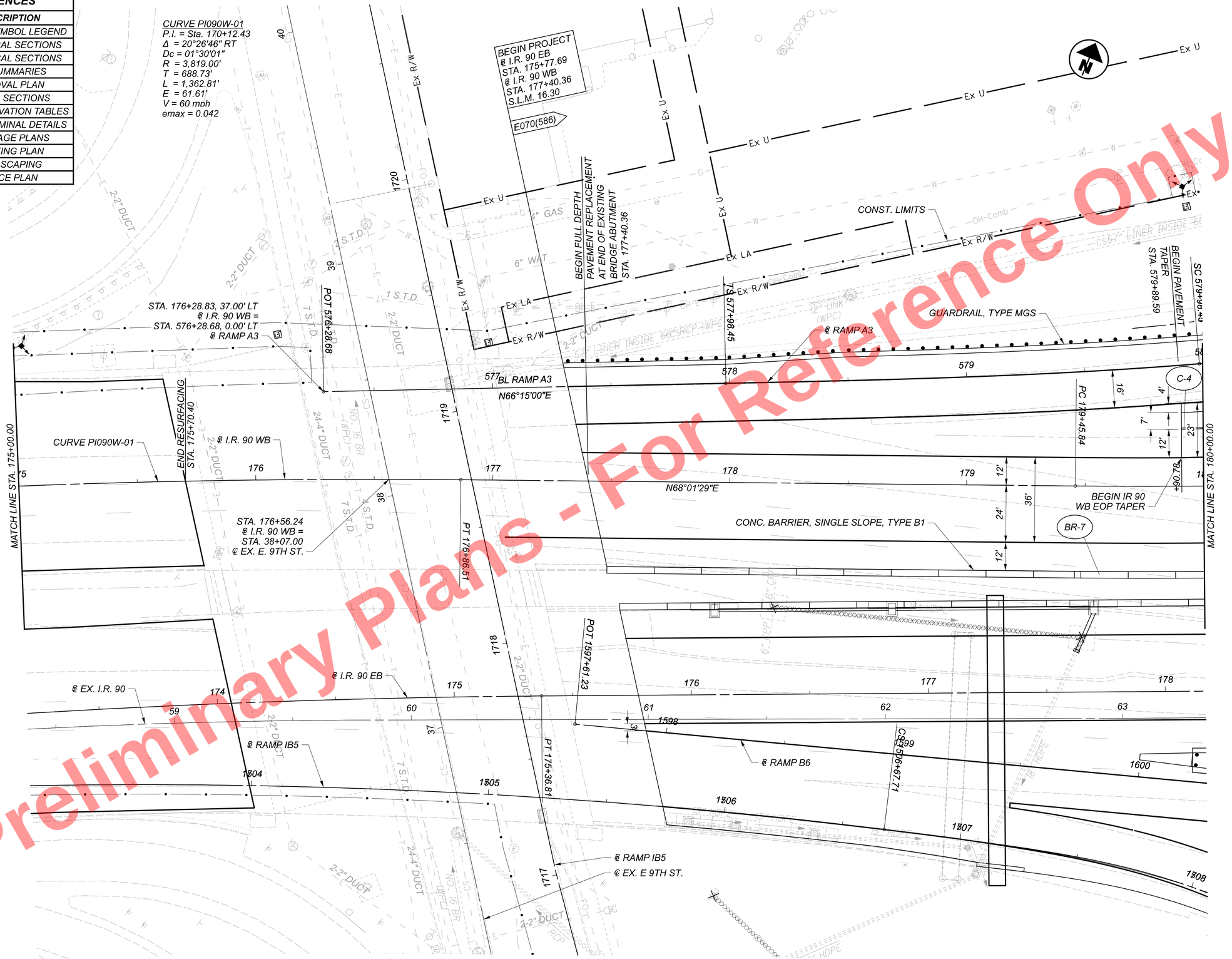

Preliminary Plans - For Reference Only

HORIZONTAL SCALE IN FEET
0 10 20 40

PLAN - I.R. 90 WB
STA. 175+00.00 TO STA. 180+00.00

DESIGN AGENCY
B&N
burgessniple.com

DESIGNER	AJS
REVIEWER	MRT 05/01/24
PROJECT ID	82382
SHEET	517
TOTAL	2696

CUY-90-16.28 (CCG3A)

MODEL: 82382_GP2203 PAPERSIZE: 34x22 (in.) DATE: 3/27/2025 TIME: 9:43:19 PM USER: AlexandriaSummers
pw:\\mb-us-pw.bentley.com\mb-us-pw-03\Documents\Cleveland_OH\01_Projects\000T\District2\82382\400-Engineering\Roadway\Sheets\82382_GP2203.dgn

Preliminary Plans - For Reference Only

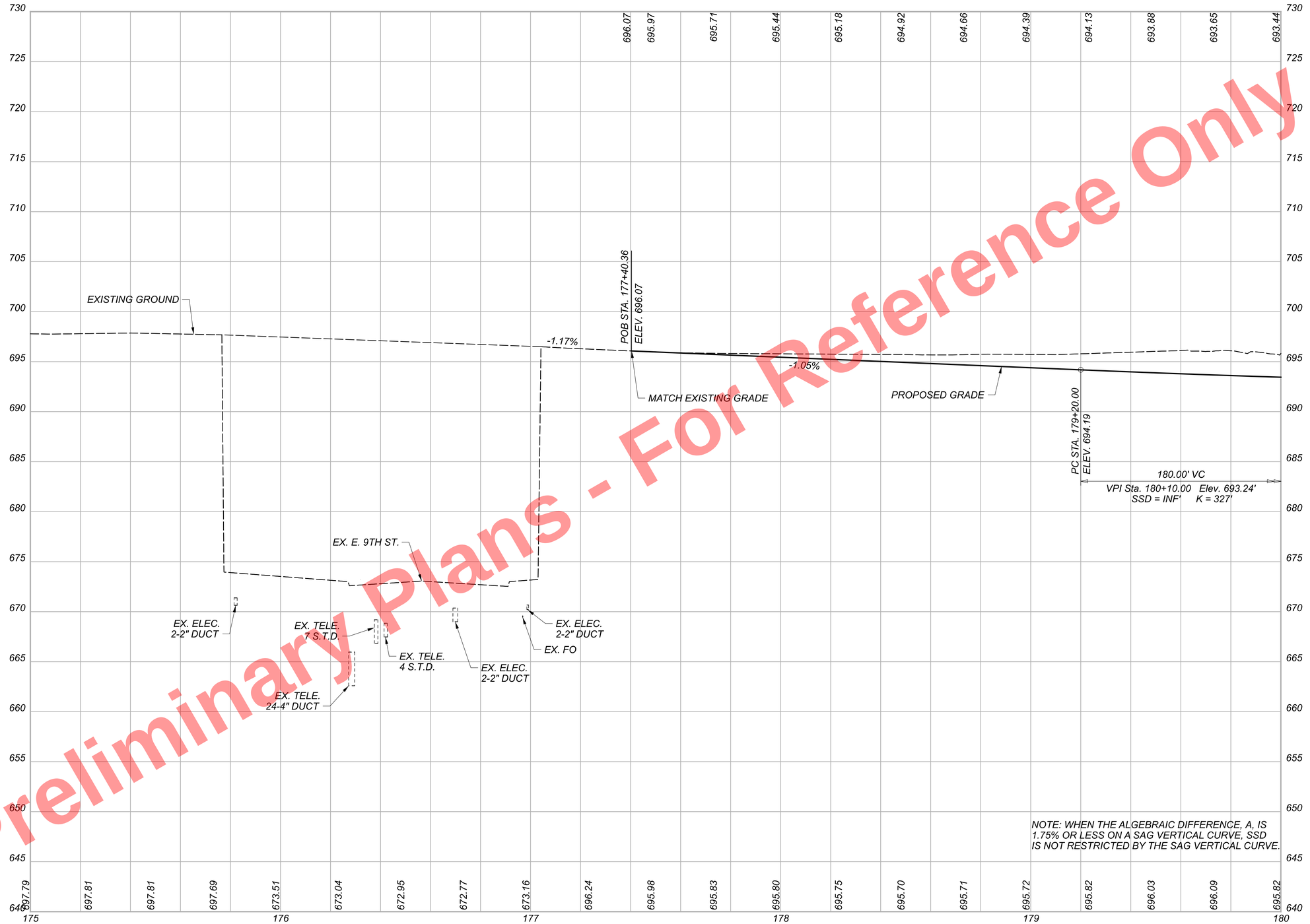

PROFILE - I.R. 90 WB
STA. 175+00.00 TO STA. 180+00.00

CUY-90-16.28 (CCG3A)

MODEL: GF220I PAPERSIZE: 34x22 (in.) DATE: 3/27/2025 TIME: 9:43:41PM USER: AlexandriaSummers
pw:\\vmb-us-pw.bentley.commb-us-pw-03\Documents\Cleveland_OHIO\Projects\ODOT\District2\82382\400-Engineering\Roadway\Sheets\8238_GF220I.dgn

DESIGN AGENCY
B&N
burgessniple.com

DESIGNER
AJS

REVIEWER
MRT 05/01/24

PROJECT ID
82382

SHEET 518 TOTAL 2696

CROSS REFERENCES	
SHEET	**DESCRIPTION**
73	UTILITY SYMBOL LEGEND
18 - 19	EX. TYPICAL SECTIONS
33	PR. TYPICAL SECTIONS
430 - 489	SUBSUMMARIES
679 - 710	REMOVAL PLAN
750 - 774	CROSS SECTIONS
1017 - 1018	SUPERELEVATION TABLES
1040 - 1047	RAMP TERMINAL DETAILS
1092 - 1120	DRAINAGE PLANS
1174 - 1175	WALL AC
1716 - 1723	LIGHTING PLAN
1807 - 1817	LANDSCAPING
1869 - 1873	CUY-77-1587 (BRIDGE 9)
2383 - 2386	FENCE PLAN

LEGEND

--------- LIGHTWEIGHT FILL LIMITS

CURVE PI090W-02
P.I. = Sta. 183+70.18
Δ = 16°51'04" LT
Dc = 02°00'00"
R = 2,864.79'
T = 424.34'
L = 842.55'
E = 31.26'
Emax = 0.045
V = 60 mph

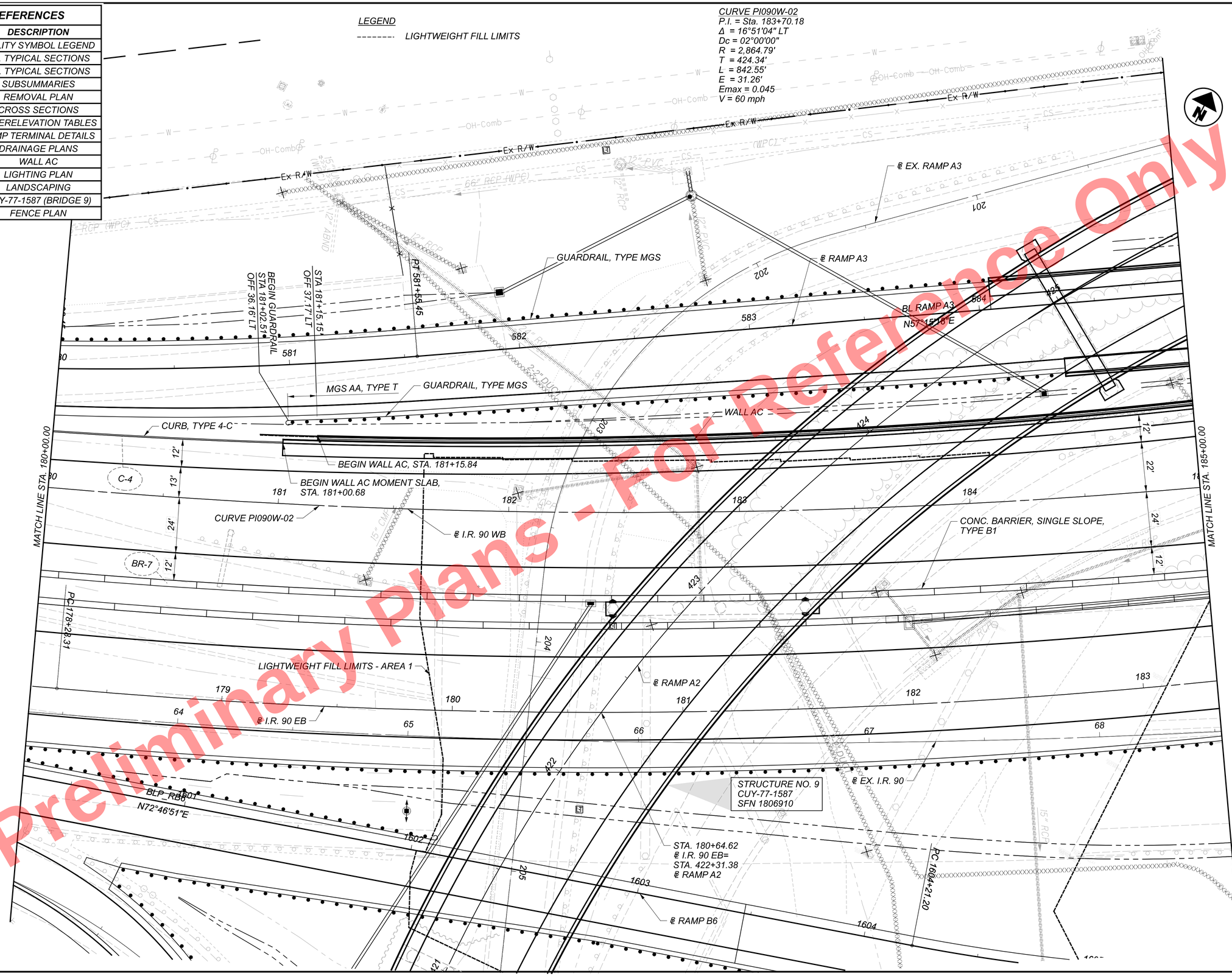

Preliminary Plans - For Reference Only

HORIZONTAL SCALE IN FEET
0 10 20 40

PLAN - I.R. 90 WB
STA. 180+00.00 TO STA. 185+00.00

DESIGN AGENCY
B&N
burgessniple.com

DESIGNER AJS
REVIEWER MRT 05/01/24
PROJECT ID 82382
SHEET 519 TOTAL 2696

CUY-90-16.28 (CCG3A)

MODEL: 82382_GP2204 PAPERSIZE: 34x22 (in.) DATE: 3/27/2025 TIME: 9:43:54 PM USER: Alexandria.Summers
pw:\\mb-us-pw.bentley.com:mb-us-pw-03\Documents\Cleveland.OH\OI_Projects\000T\District2\82382\400-Engineering\Roadway\Sheets\82382_GP2204.dgn

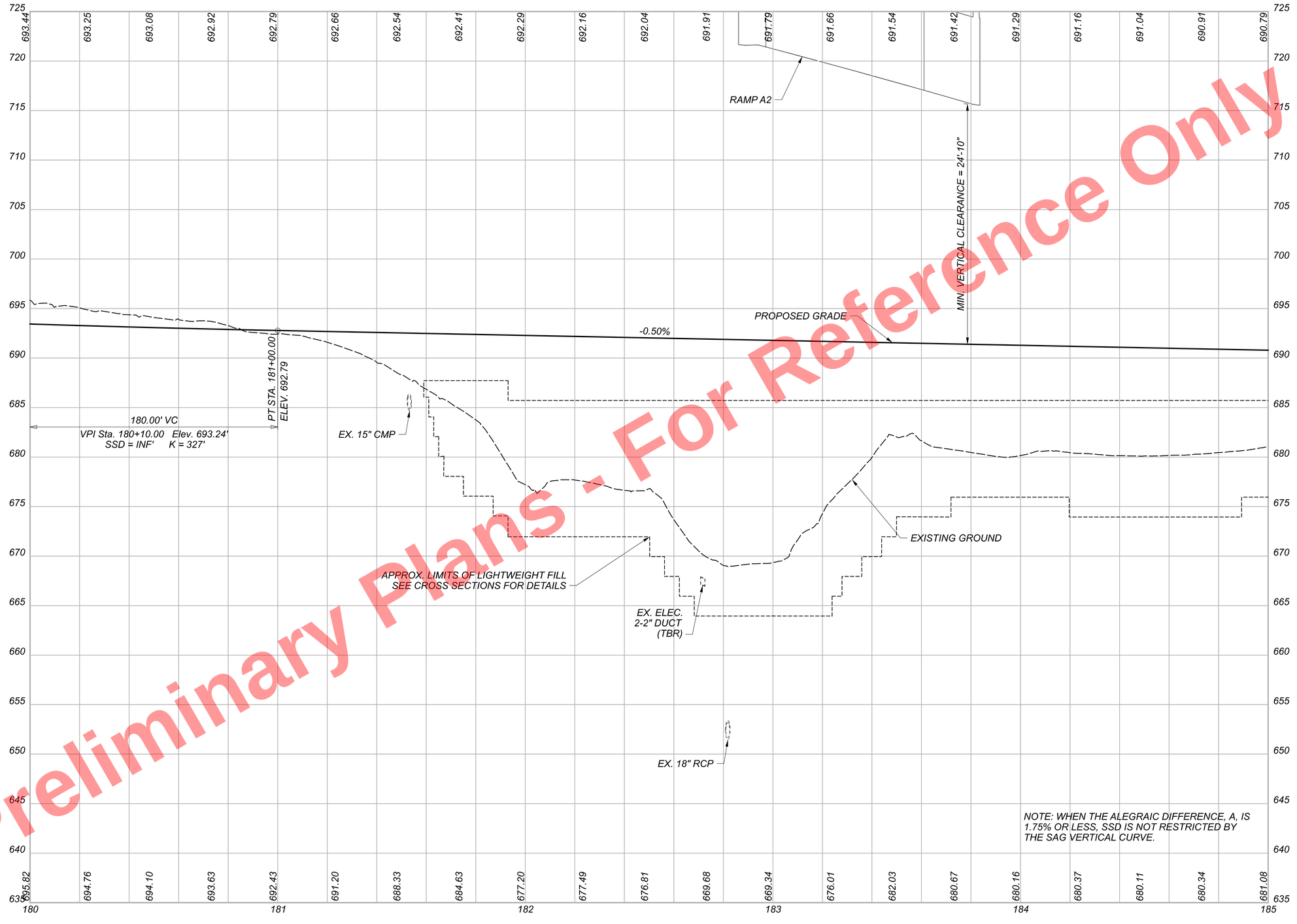

Preliminary Plans - For Reference Only

PROFILE - I.R. 90 WB
STA. 180+00.00 TO STA. 185+00.00

CUY-90-16.28 (CCG3A)

MODEL: GF2202 PAPERSIZE: 34x22 (in.) DATE: 3/27/2025 TIME: 9:44:10 PM USER: Alexandria.Summers
pw:\\mb-us-pw.bentley.commb-us-pw-03\Documents\Cleveland_OH\01_Projects\D00T\District2\82382\400-Engineering\Roadway\Sheets\82382_GF2202.dgn

DESIGN AGENCY
B&N
burgessniple.com

DESIGNER
AJS

REVIEWER
MRT 05/01/24

PROJECT ID
82382

SHEET 520 | TOTAL 2696

CROSS REFERENCES	
SHEET	DESCRIPTION
73	UTILITY SYMBOL LEGEND
18 - 19	EX. TYPICAL SECTIONS
33 - 34	PR. TYPICAL SECTIONS
430 - 489	SUBSUMMARIES
679 - 710	REMOVAL PLAN
750 - 774	CROSS SECTIONS
1017 - 1018	SUPERELEVATION TABLES
1040 - 1047	RAMP TERMINAL DETAILS
1092 - 1120	DRAINAGE PLANS
1174 - 1175	WALL AC
1402	WATER WORK
1716 - 1723	LIGHTING PLAN
1807 - 1817	LANDSCAPING
2036	CUY-90-1653L (BRIDGE 10)
2086	CUY-90-1653R (BRIDGE 11)
2383 - 2386	FENCE PLAN

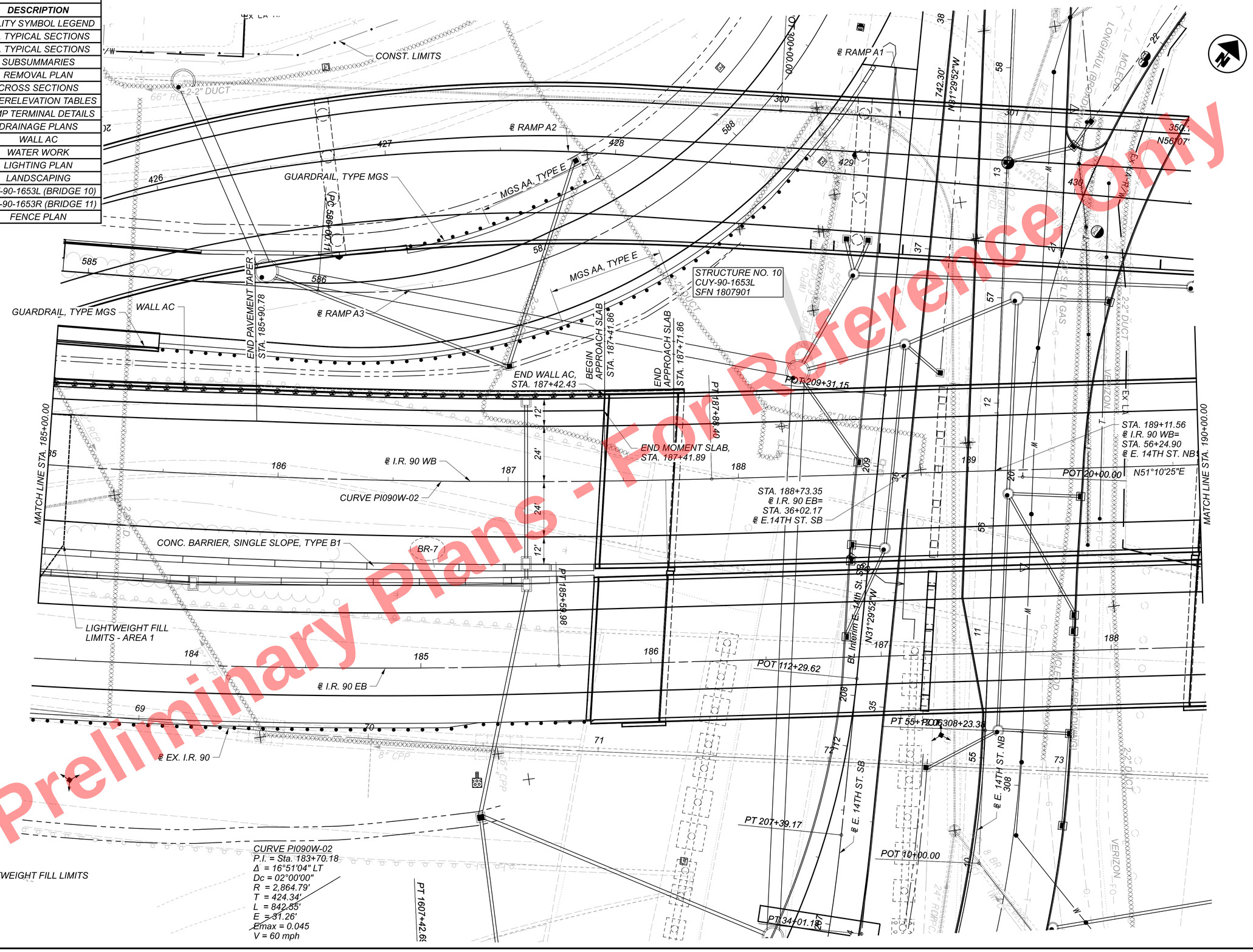

Preliminary Plans - For Reference Only

HORIZONTAL SCALE IN FEET
0 10 20 40

PLAN - I.R. 90 WB
STA. 185+00.00 TO STA. 190+00.00

DESIGN AGENCY
B&N
burgessniple.com

DESIGNER AJS
REVIEWER MRT 05/01/24
PROJECT ID 82382
SHEET 521 TOTAL 2696

CUY-90-16.28 (CCG3A)

MODEL: 82382_GP2205 PAPERSIZE: 34x22 (in.) DATE: 6/9/2025 TIME: 2:59:49 PM USER: Julie.Ross
pw:\\mb-us-pw.bentley.com\mb-us-pw-03\Documents\Cleveland_OH\01_Projects\ODOT_District2\82382\400-Engineering\Roadway\Sheets\82382_GP2205.dgn

Preliminary Plans - For Reference Only

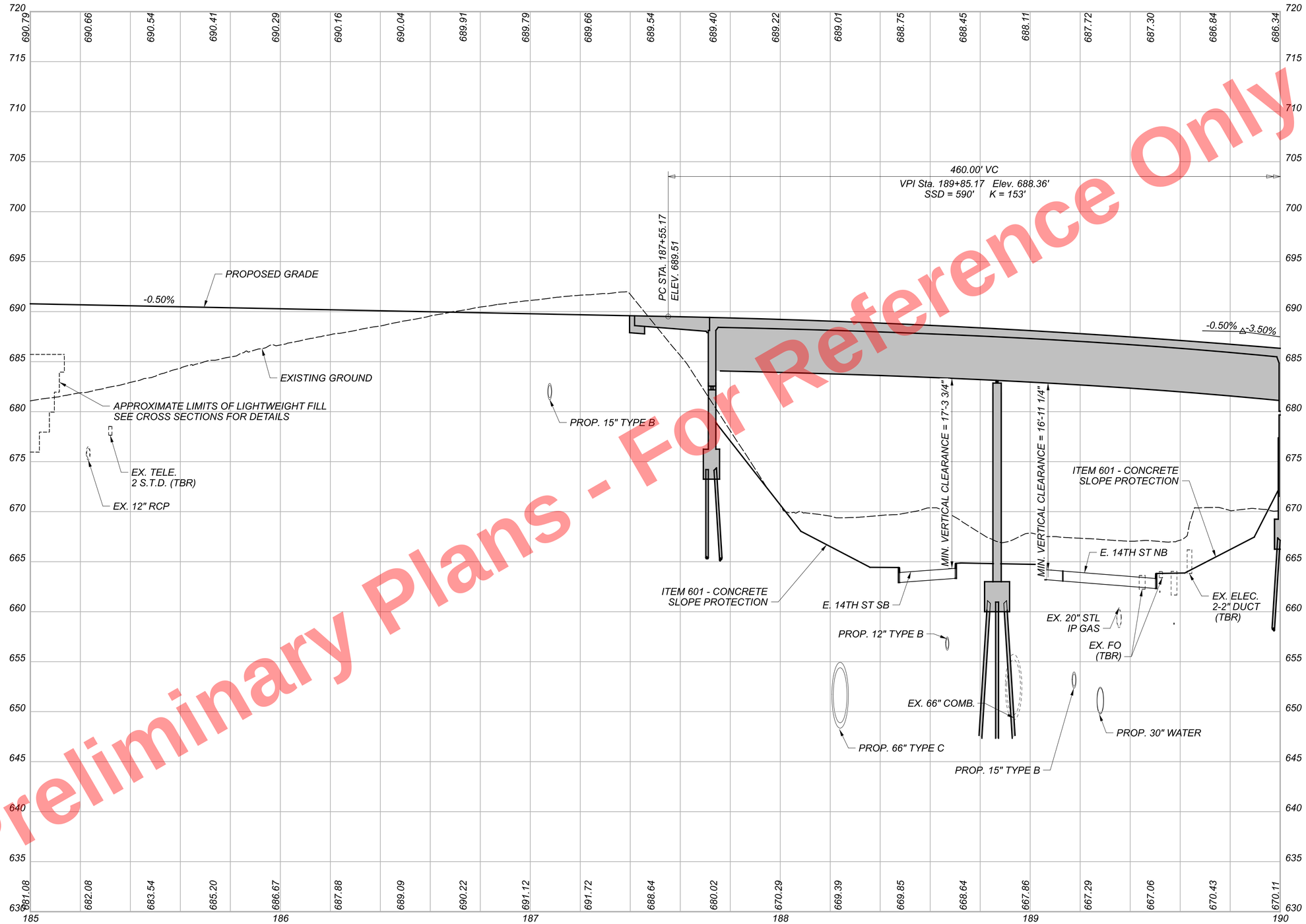

PROFILE - I.R. 90 WB
STA. 185+00.00 TO STA. 190+00.00

CUY-90-16.28 (CCG3A)

MODEL: GF2203 PAPERSIZE: 34x22 (in.) DATE: 3/27/2025 TIME: 9:44:42 PM USER: Alexandria.Summers
pw:\\vmb-us-pw.bentley.commb-us-pw-03\Documents\Cleveland_OH\01_Projects\000T\District2\82382\400-Engineering\Roadway\Sheets\8382_GF2203.dgn

DESIGN AGENCY
B&N
burgessniple.com

DESIGNER
AJS

REVIEWER
MRT 05/01/24

PROJECT ID
82382

SHEET 522 | TOTAL 2696

CROSS REFERENCES	
SHEET	DESCRIPTION
73	UTILITY SYMBOL LEGEND
18 - 19	EX. TYPICAL SECTIONS
34 - 35	PR. TYPICAL SECTIONS
430 - 489	SUBSUMMARIES
679 - 710	REMOVAL PLAN
750 - 774	CROSS SECTIONS
1017 - 1018	SUPERELEVATION TABLES
1040 - 1047	RAMP TERMINAL DETAILS
1092 - 1120	DRAINAGE PLANS
1368	COMBINED SEWER
1716 - 1723	LIGHTING PLAN
1807 - 1817	LANDSCAPING
2036	CUY-90-1653L (BRIDGE 10)
2086	CUY-90-1653R (BRIDGE 11)
2383 - 2386	FENCE PLAN

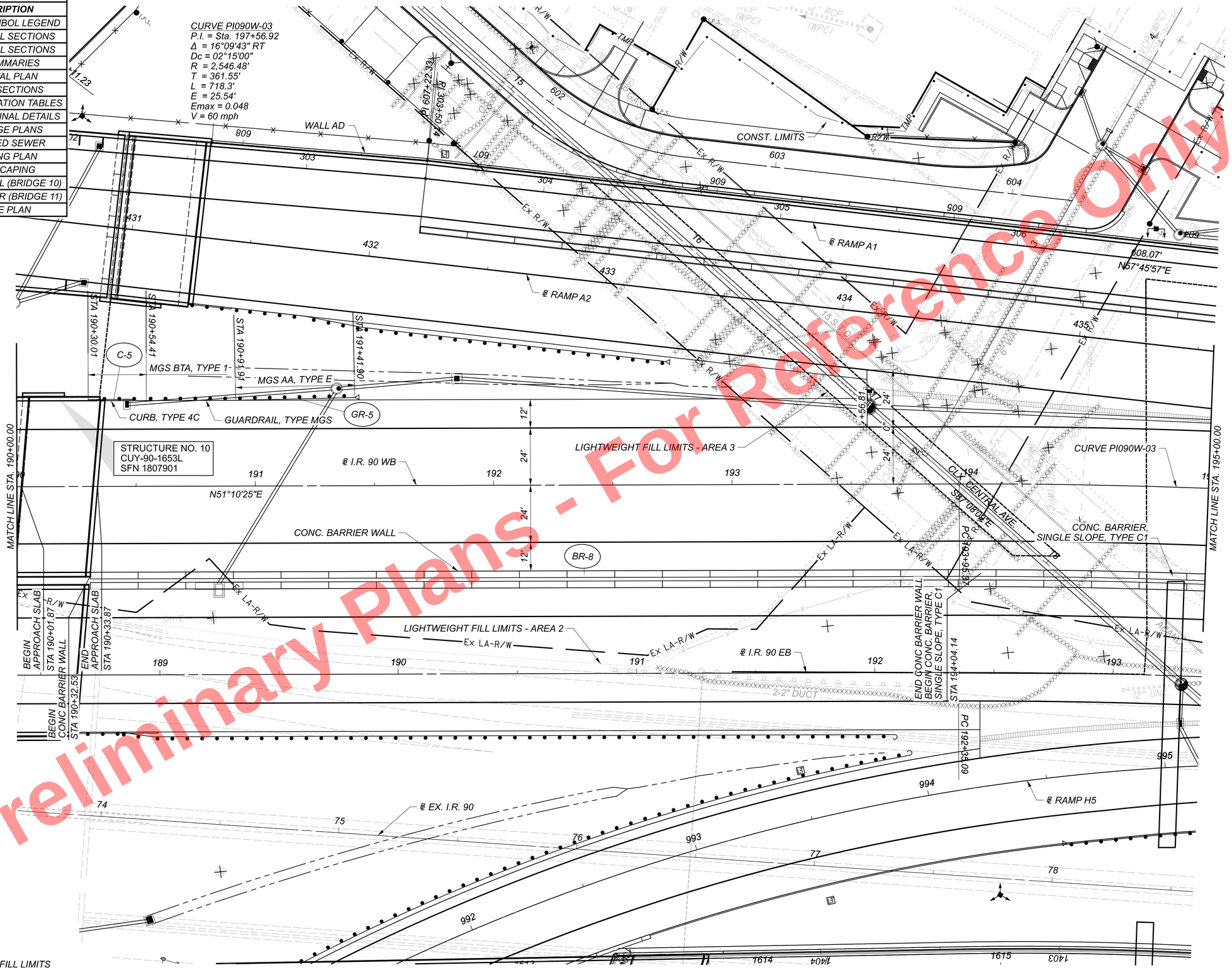

LEGEND

LIGHTWEIGHT FILL LIMITS

Preliminary Plans - For Reference Only

HORIZONTAL SCALE IN FEET 0 10 20 40

PLAN - I.R. 90 WB
STA. 190+00.00 TO STA. 195+00.00

DESIGN AGENCY
B&N burgessniple.com

DESIGNER AJS
REVIEWER MRT 05/01/24
PROJECT ID 82382
SHEET 523 TOTAL 2696

CUY-90-16.28 (CCG3A)

MODEL: 82382_GP2206 PAPERSIZE: 34x22 (in.) DATE: 6/9/2025 TIME: 1:00:13 PM USER: Julie.Ross
pw:\\mb-us-pw.bentley.com:mb-us-pw-03\Documents\Cleveland_OH\OI_Projects\ODOT\District12\82382\400-Engineering\Roadway\Sheets\82382_GP2206.dgn

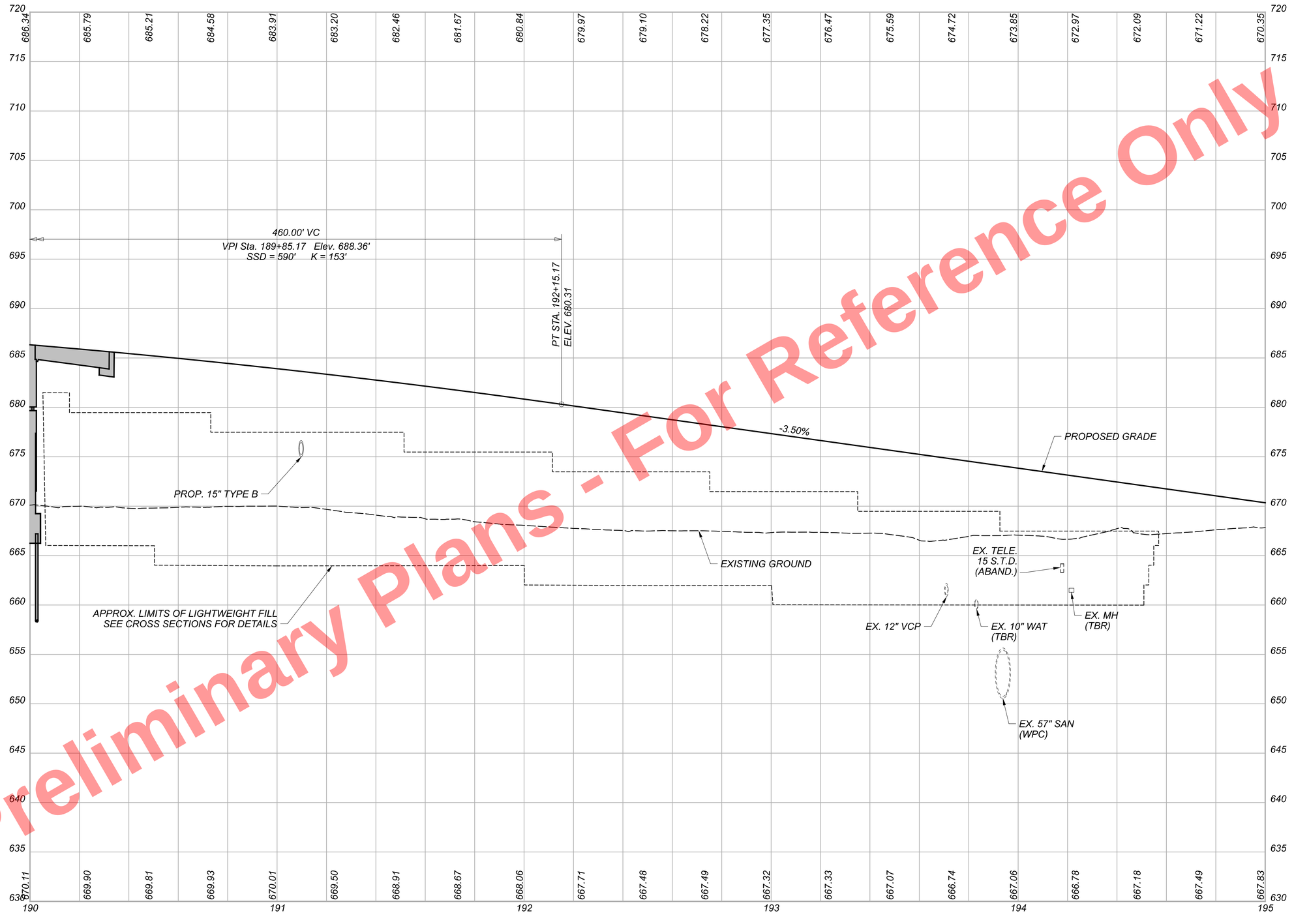

Preliminary Plans - For Reference Only

PROFILE - I.R. 90 WB
STA. 190+00.00 TO STA. 195+00.00

CUY-90-16.28 (CCG3A)

MODEL: GF2204 PAPERSIZE: 34x22 (in.) DATE: 3/27/2025 TIME: 9:45:12 PM USER: AlexandriaSummers
pw:\\mb-us-pw.bentley.com\mb-us-pw-03\Documents\Cleveland_OH\01_Projects\ODOT\District2\82382\400-Engineering\Roadway\Sheets\82382_GF2204.dgn

DESIGN AGENCY
B&N
burgessniple.com

DESIGNER
AJS

REVIEWER
MRT 05/01/24

PROJECT ID
82382

SHEET 524 | TOTAL 2696

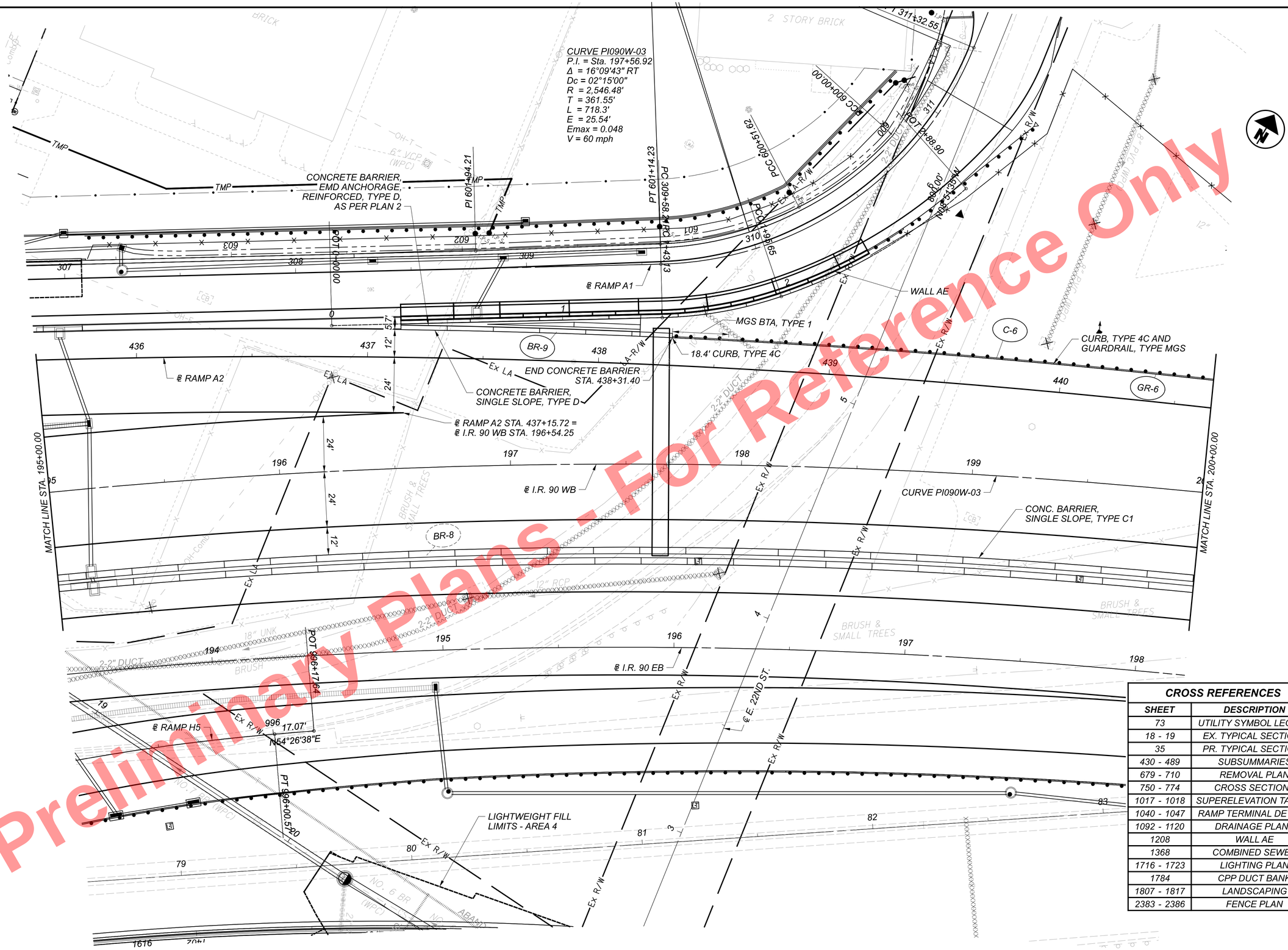

Preliminary Plans - For Reference Only

LEGEND

-------- LIGHTWEIGHT FILL LIMITS

CROSS REFERENCES	
SHEET	DESCRIPTION
73	UTILITY SYMBOL LEGEND
18 - 19	EX. TYPICAL SECTIONS
35	PR. TYPICAL SECTIONS
430 - 489	SUBSUMMARIES
679 - 710	REMOVAL PLAN
750 - 774	CROSS SECTIONS
1017 - 1018	SUPERELEVATION TABLES
1040 - 1047	RAMP TERMINAL DETAILS
1092 - 1120	DRAINAGE PLANS
1208	WALL AE
1368	COMBINED SEWER
1716 - 1723	LIGHTING PLAN
1784	CPP DUCT BANK
1807 - 1817	LANDSCAPING
2383 - 2386	FENCE PLAN

HORIZONTAL SCALE IN FEET 0 10 20 40

PLAN - I.R. 90 WB
STA. 195+00.00 TO STA. 200+00.00

DESIGN AGENCY
B&N
burgessniple.com

DESIGNER AJS
REVIEWER MRT 5/1/24
PROJECT ID 82382
SHEET 525 TOTAL 2696

CUY-90-16.28 (CCG3A)

MODEL: 82382_GP2207 PAPERSIZE: 34x22 (in.) DATE: 3/27/2025 TIME: 9:45:23 PM USER: Alexandria.Summers
pw:\\mb-us-pw.bentley.com:mb-us-pw-03\Documents\Cleveland_OH\01_Projects\ODOT\District12\82382\400-Engineering\Roadway\Sheets\82382_GP2207.dgn

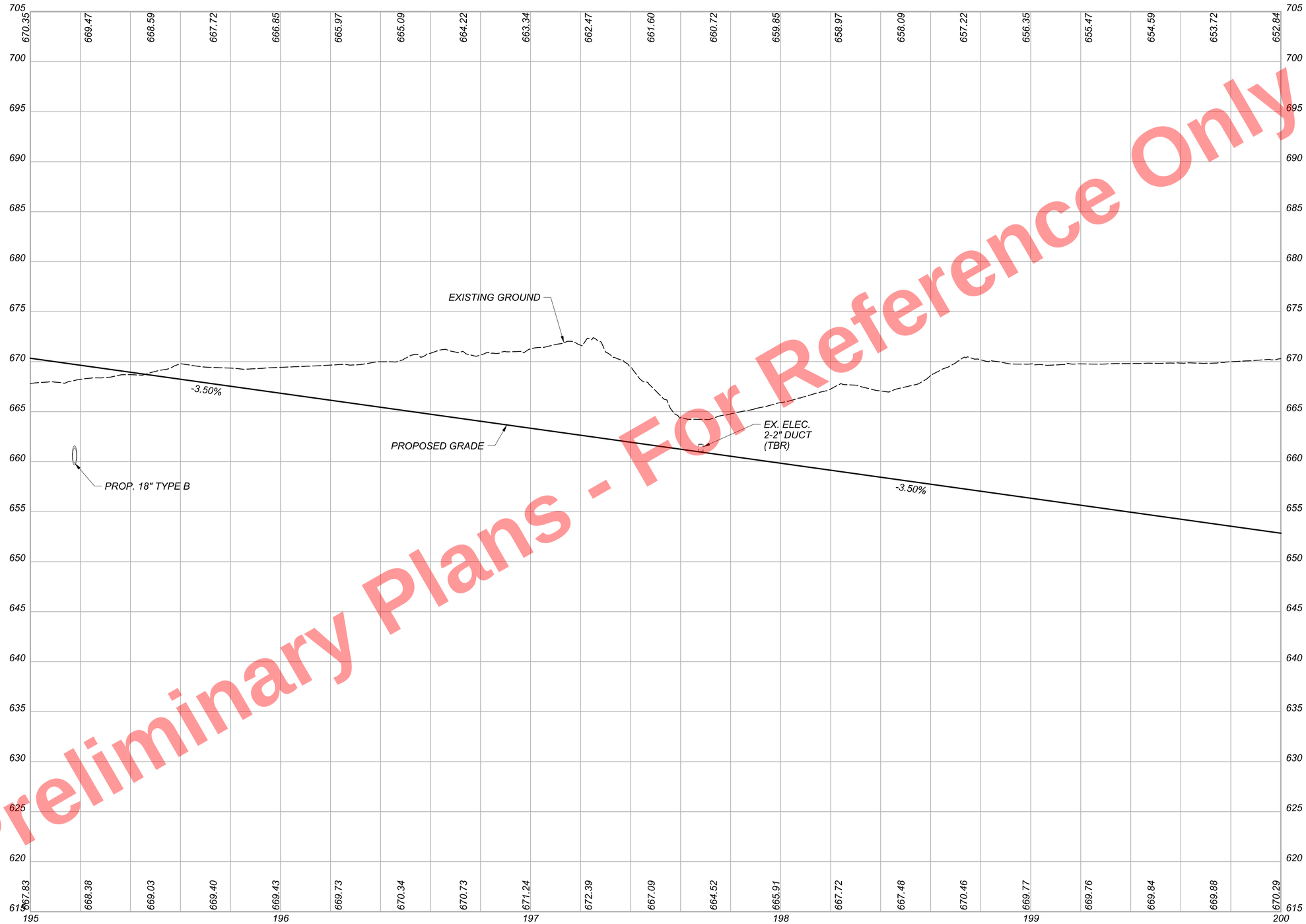

Preliminary Plans - Not For Reference Only

PROFILE - I.R. 90 WB
STA. 195+00.00 TO STA. 200+00.00

CUY-90-16.28 (CCG3A)

MODEL: GF2205 PAPERSIZE: 34x22 (in.) DATE: 3/27/2025 TIME: 9:45:44 PM USER: AlexandriaSummers
pw:\\mb-us-pw.bentley.com:mb-us-pw-03\Documents\Cleveland_OH\OL_Projects\ODOT\District 12\82382\400-Engineering\Roadway\Sheets\82382_GF2205.dgn

DESIGN AGENCY
B&N
burgessniple.com

DESIGNER
AJS

REVIEWER
MRT 05/01/24

PROJECT ID
82382

SHEET 526 | TOTAL 2696

CURVE PI090W-03
P.I. = Sta. 197+56.92
Δ = 16°09'43" RT
Dc = 02°15'00"
R = 2,546.48'
T = 361.55'
L = 718.3'
E = 25.54'
Emax = 0.048
V = 60 mph

SPIRAL PI090W-01
P.I. = Sta. 206+76.49
Ls = 555.00'
θs = 11°47'37"
LT = 370.82'
ST = 185.75'
x = 552.65'
y = 37.97'
k = 277.11'
p = 9.51'
C = 553.96'
Start = Sta. 203+05.67
End = Sta. 208+60.67
C.B. = N63°24'20"E
V = 60 mph

BRIDGE 13 WINGWALL
BEGIN TAPER STA. 201+13.67
STA. 201+13.67, 36.00' LT ℄ I.R. 90 WB = STA. 441+81.20, 0.00' LT ℄ RAMP A2
CURB, TYPE 4C AND GUARDRAIL, TYPE MGS
60:1 TAPER RATE
STA. 201+13.67, 12.00' LT I.R. 90 WB = STA. 4000+00.00, 0.00' LT INTERIM I.R. 90 WB
℄ I.R. 90 WB
CURVE PI090W-03
MATCH LINE STA. 200+00.00
POT 4000+00.00
PT 4000+17.15
PT 201+13.67
POT 3000+00.00
PT 199+20.18
℄ CONST. E. 22ND ST.
Ex L A
Ex L A-R/W
Ex R/W
Ex LA-R/W
12" STEAM
12" STEAM CPP
6" CPP
12" CPP
12" STEAM CPP
12" STEAM CPP
12" STEAM

Preliminary Plans - For Reference Only

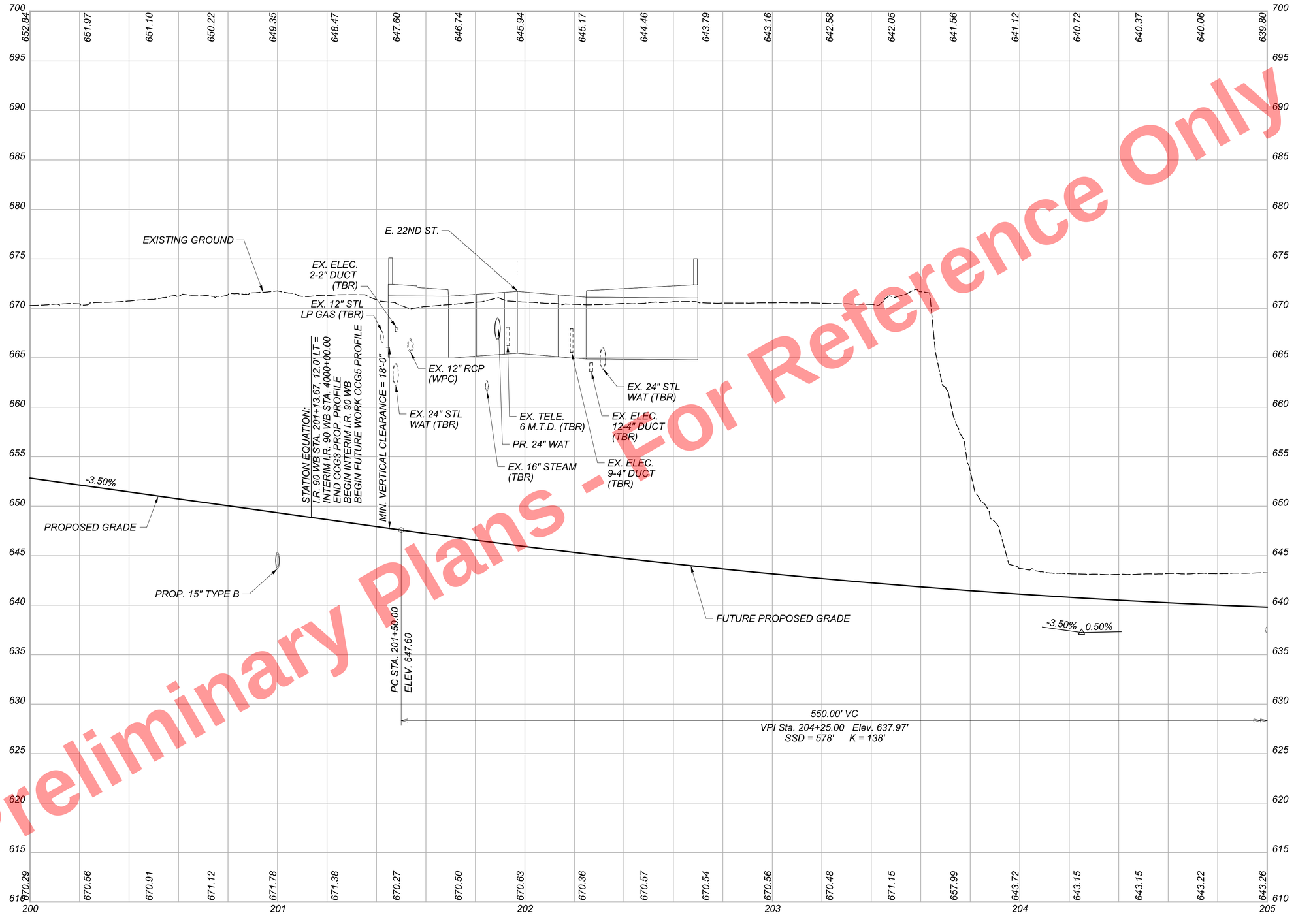

PROFILE - I.R. 90 WB (PROPOSED AND FUTURE)
STA. 200+00.00 TO STA. 205+00.00

CUY-90-16.28 (CCG3A)

MODEL: GF2206 PAPERSIZE: 34x22 (In.) DATE: 3/27/2025 TIME: 9:46:14 PM USER: AlexandriaSummers
pw:\\mb-us-pw.bentley.com:mb-us-pw-03\Documents\Cleveland_OHIO\Projects\ODOT\District2\82382\400-Engineering\Roadway\Sheets\8238_GF2206.dgn

DESIGN AGENCY
B&N
burgessniple.com

DESIGNER
AJS

REVIEWER
MRT 05/01/24

PROJECT ID
82382

SHEET 528 | TOTAL 2696

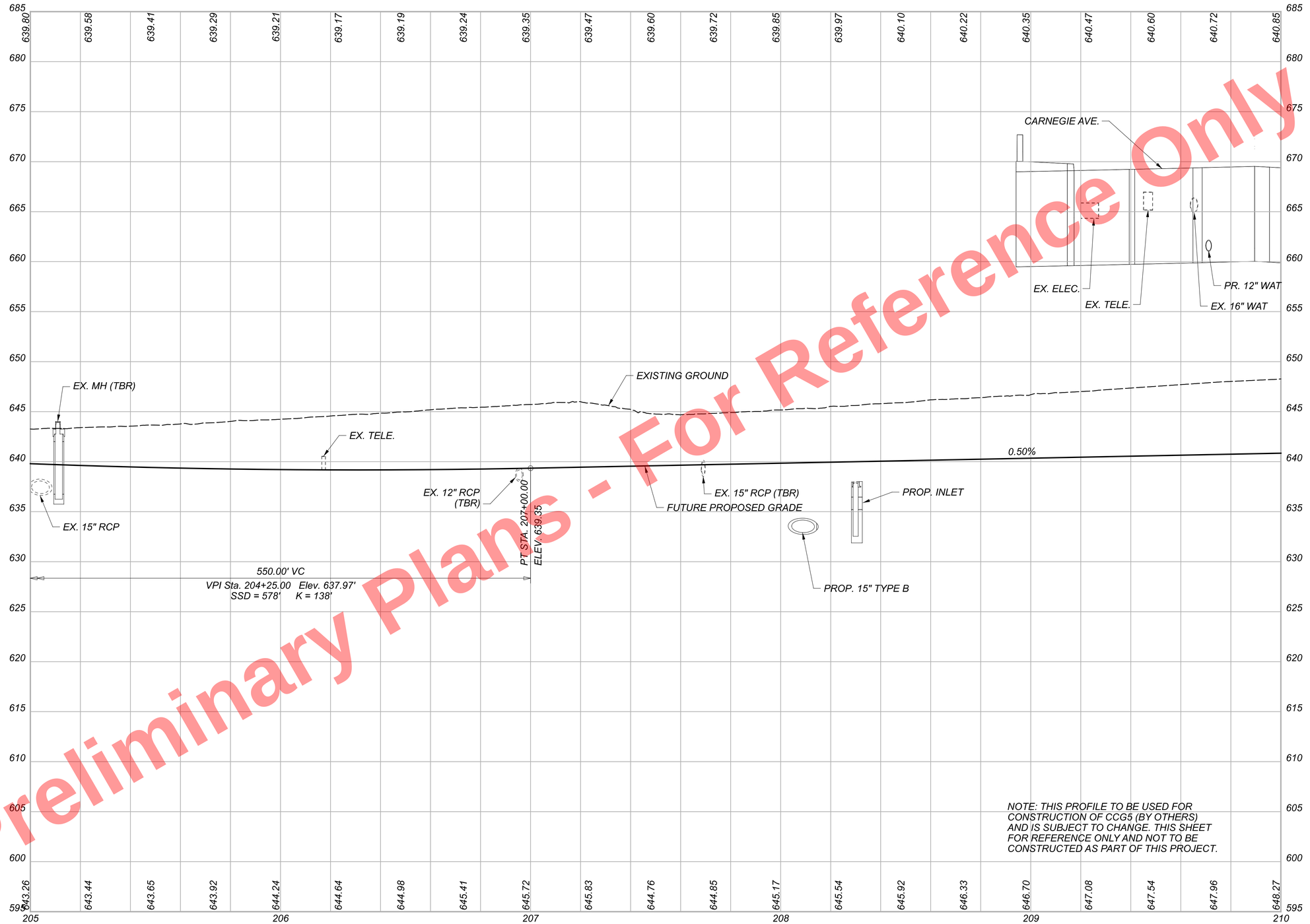

Preliminary Plans - For Reference Only

PROFILE - I.R. 90 WB (FUTURE)
STA. 205+00.00 TO STA. 210+00.00

CUY-90-16.28 (CCG3A)

MODEL: GF2207 PAPERSIZE: 34x22 (in.) DATE: 3/27/2025 TIME: 9:46:19 PM USER: Alexandria.Summers
pw:\\mb-us-pw.bentley.com:mb-us-pw-03\Documents\Cleveland_OH\OI_Projects\ODOT\District12\82382\400-Engineering\Roadway\Sheets\82382_GF2207.dgn

DESIGN AGENCY
B&N
burgessniple.com

DESIGNER
AJS

REVIEWER
MRT 05/01/24

PROJECT ID
82382

SHEET 529 TOTAL 2696

Preliminary Plans - Not For Reference Only

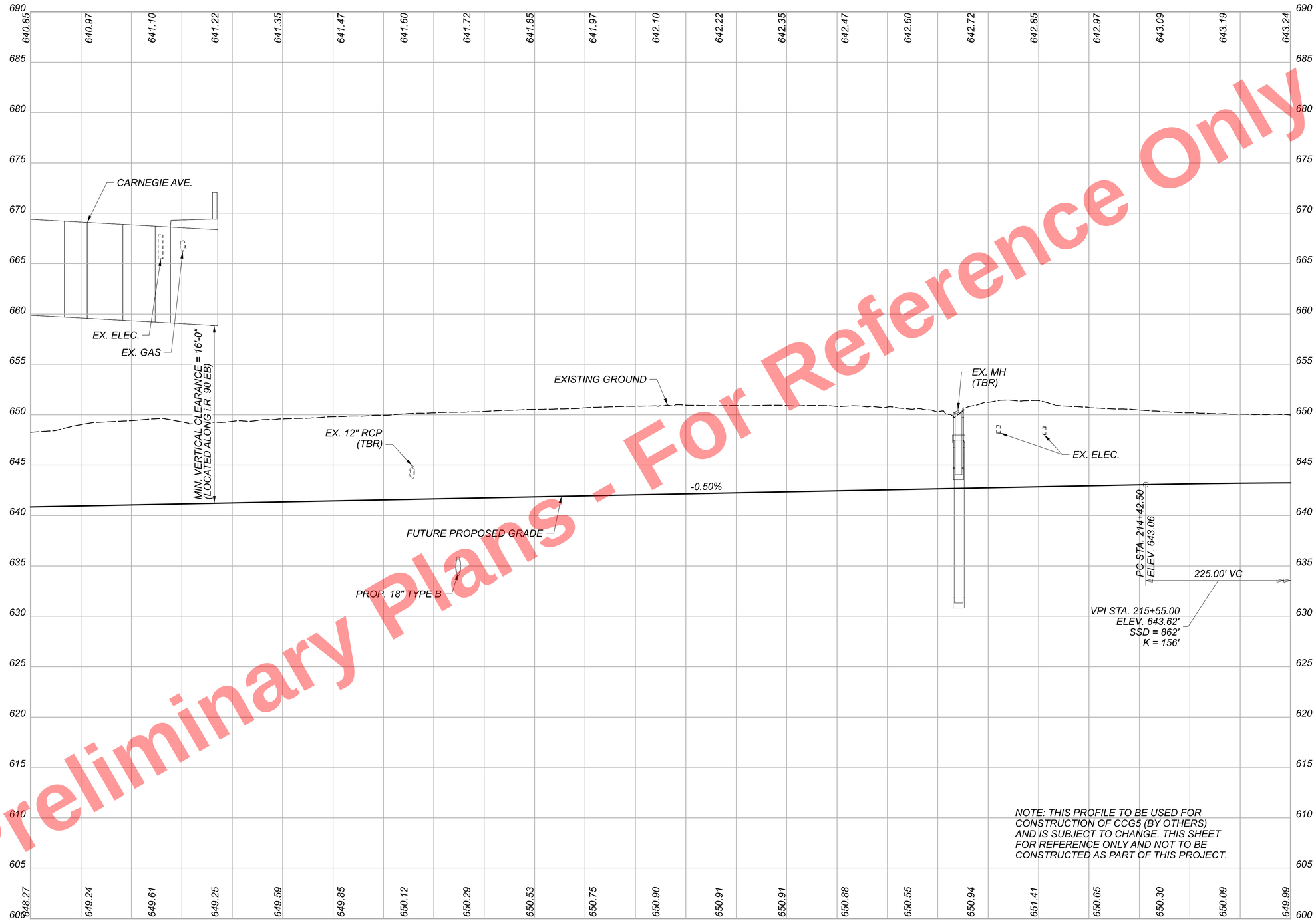

PROFILE - I.R. 90 WB (FUTURE)
STA. 210+00.00 TO STA. 215+00.00

DESIGN AGENCY
B&N
burgessniple.com

DESIGNER	AJS
REVIEWER	MRT 05/01/24
PROJECT ID	82382
SHEET	530
TOTAL	2696

CUY-90-16.28 (CCG3A)

MODEL: GF2208 PAPERSIZE: 34x22 (in.) DATE: 3/27/2025 TIME: 9:46:25 PM USER: AlexandriaSummers
pw:\\mb-us-pw.bentley.com:mb-us-pw-03\Documents\Cleveland.OHIO_Projects\ODOT\District2\82382\400-Engineering\Roadway\Sheets\82382_GF2208.dgn

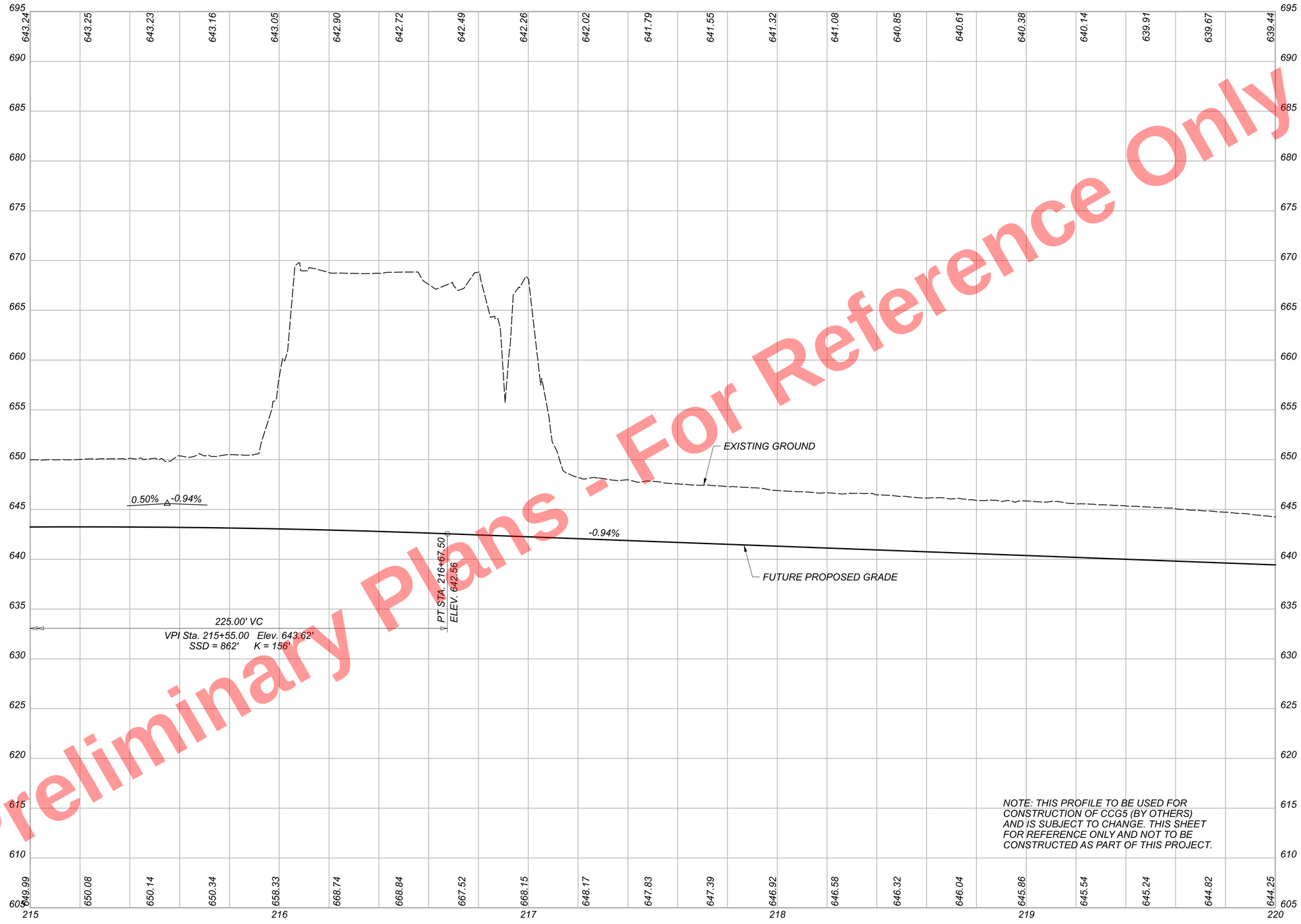

Preliminary Plans - For Reference Only

PROFILE - I.R. 90 WB (FUTURE)
STA. 215+00.00 TO STA. 220+00.00

CUY-90-16.28 (CCG3A)

MODEL: GF2209 PAPERSIZE: 34x22 (in.) DATE: 3/27/2025 TIME: 9:46:31PM USER: Alexandria.Summers
pw:\\mb-us-pw.bentley.com:mb-us-pw-03\Documents\Cleveland_OH\OI_Projects\ODOT\District12\82382\400-Engineering\Roadway\Sheets\82382_GF2209.dgn

DESIGN AGENCY
B&N
burgessniple.com

DESIGNER
AJS

REVIEWER
MRT 05/01/24

PROJECT ID
82382

SHEET 531 TOTAL 2696

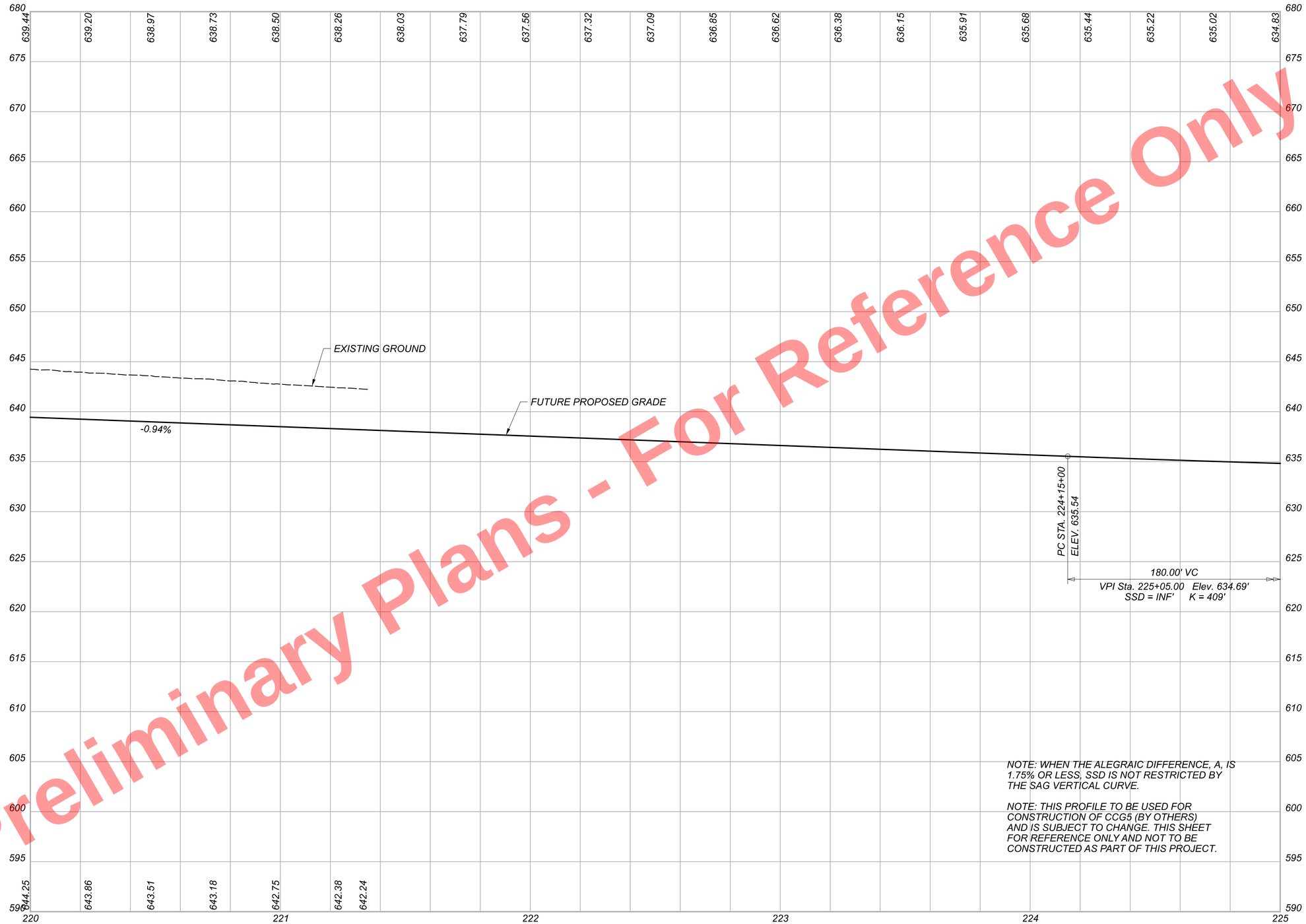

NOTE: WHEN THE ALEGRAIC DIFFERENCE, A, IS 1.75% OR LESS, SSD IS NOT RESTRICTED BY THE SAG VERTICAL CURVE.

NOTE: THIS PROFILE TO BE USED FOR CONSTRUCTION OF CCG5 (BY OTHERS) AND IS SUBJECT TO CHANGE. THIS SHEET FOR REFERENCE ONLY AND NOT TO BE CONSTRUCTED AS PART OF THIS PROJECT.

Preliminary Plans - For Reference Only

PROFILE - I.R. 90 WB (FUTURE)
STA. 220+00.00 TO STA. 225+00.00

CUY-90-16.28 (CCG3A)

MODEL: GF2210 PAPERSIZE: 34x22 (in.) DATE: 3/27/2025 TIME: 9:46:37 PM USER: Alexandria.Summers
pw:\\mb-us-pw.bentley.com:mb-us-pw-03\Documents\Cleveland_OH\01_Projects\ODOT\District12\82382\400-Engineering\Roadway\Sheets\82382_GF2210.dgn

DESIGN AGENCY
B&N
burgessniple.com

DESIGNER
AJS

REVIEWER
MRT 05/01/24

PROJECT ID
82382

SHEET 532 TOTAL 2696

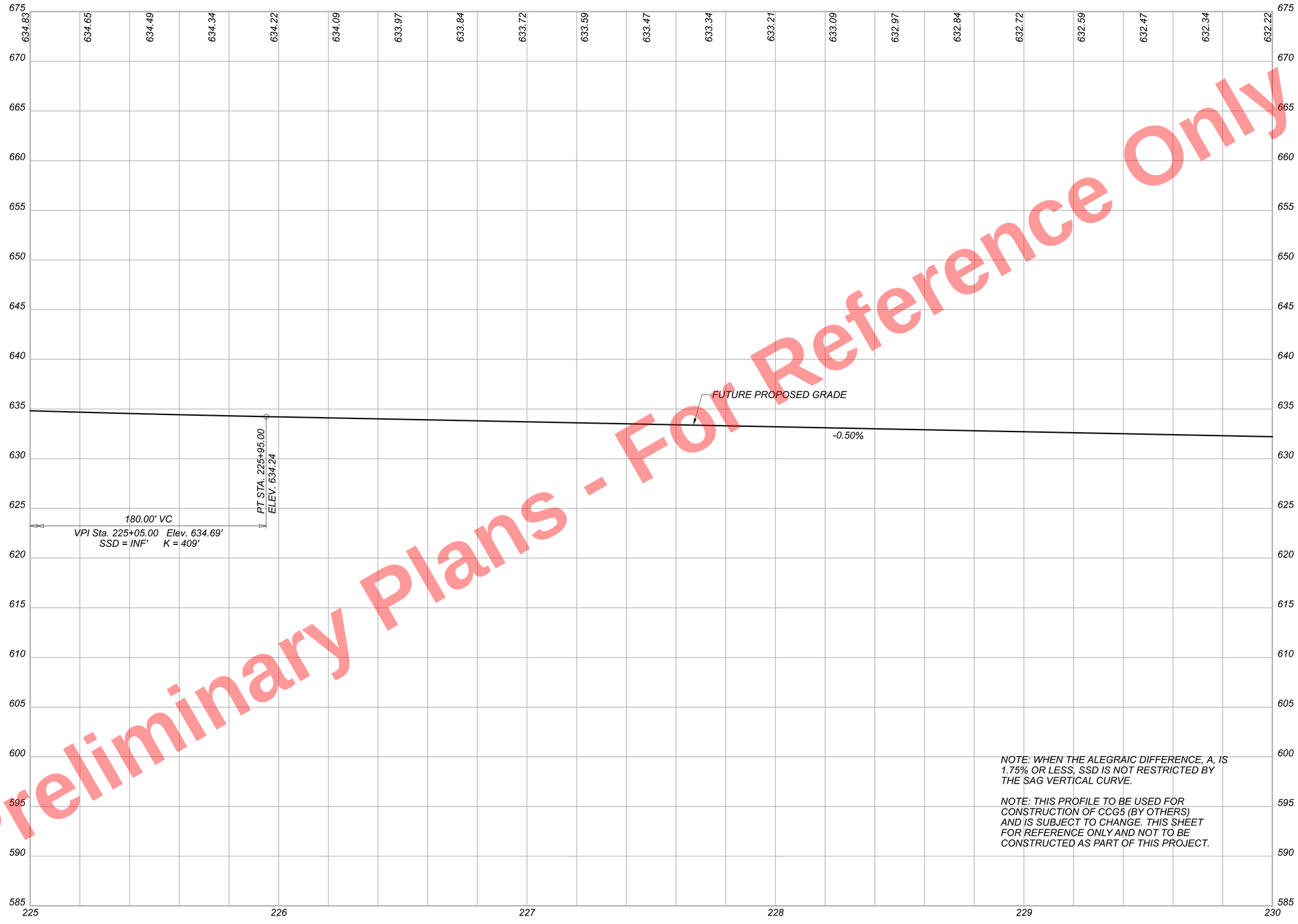

Preliminary Plans - For Reference Only

PROFILE - I.R. 90 WB (FUTURE)
STA. 225+00.00 TO STA. 230+00.00

CUY-90-16.28 (CCG3A)

MODEL: GF22ll PAPERSIZE: 34x22 (in.) DATE: 3/27/2025 TIME: 9:46:43 PM USER: AlexandriaSummers
pw:\\mb-us-pw.bentley.com:mb-us-pw-03\Documents\Cleveland_OH\DL_Projects\ODOT\District2\82382\400-Engineering\Roadway\Sheets\82382_GF22ll.dgn

DESIGN AGENCY
B&N
burgessniple.com

DESIGNER
AJS

REVIEWER
MRT 05/01/24

PROJECT ID
82382

SHEET 533 | TOTAL 2696

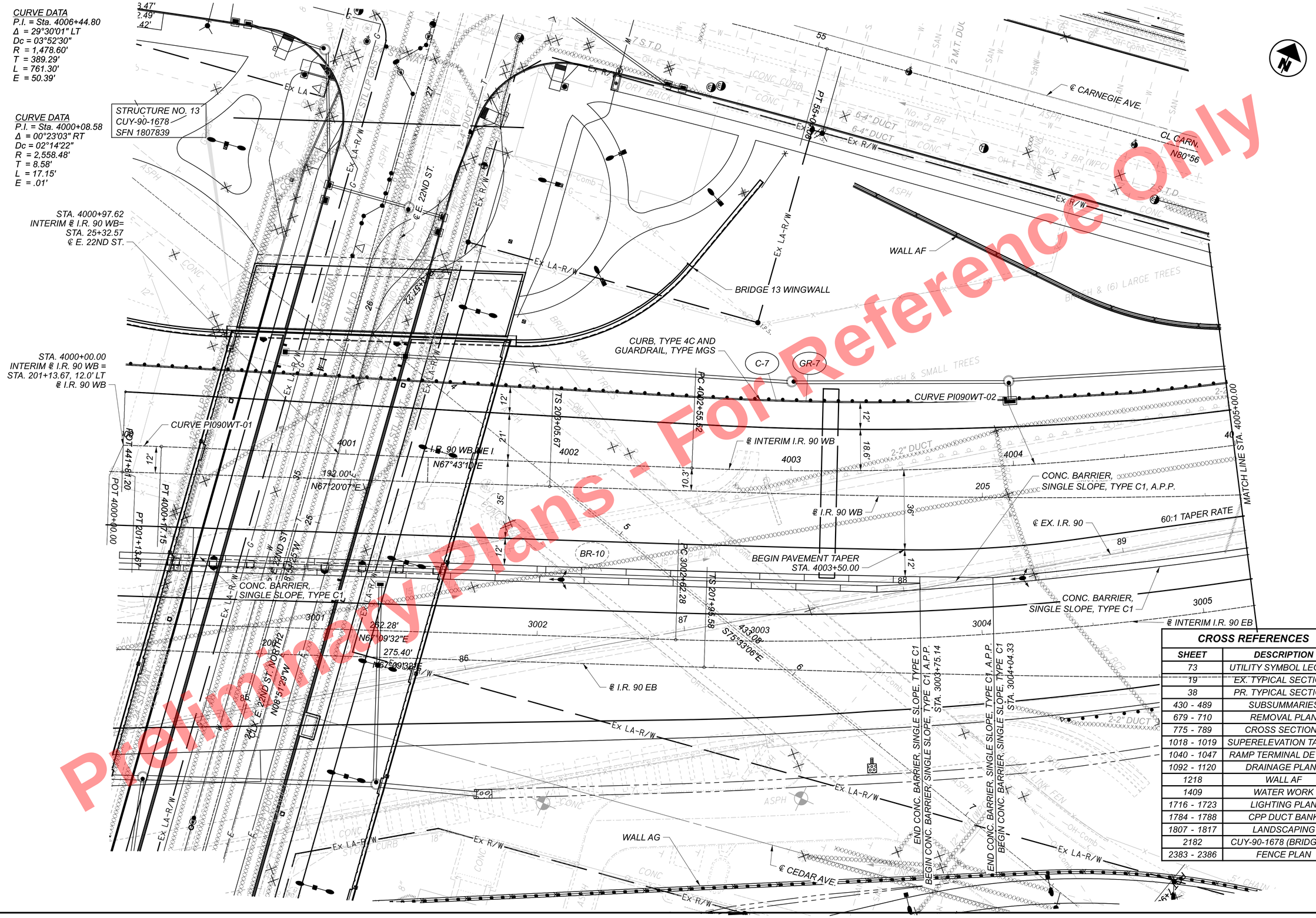

CROSS REFERENCES	
SHEET	DESCRIPTION
73	UTILITY SYMBOL LEGEND
19	EX. TYPICAL SECTIONS
38	PR. TYPICAL SECTIONS
430 - 489	SUBSUMMARIES
679 - 710	REMOVAL PLAN
775 - 789	CROSS SECTIONS
1018 - 1019	SUPERELEVATION TABLES
1040 - 1047	RAMP TERMINAL DETAILS
1092 - 1120	DRAINAGE PLANS
1218	WALL AF
1409	WATER WORK
1716 - 1723	LIGHTING PLAN
1784 - 1788	CPP DUCT BANK
1807 - 1817	LANDSCAPING
2182	CUY-90-1678 (BRIDGE 13)
2383 - 2386	FENCE PLAN

HORIZONTAL SCALE IN FEET
0 10 20 40

PLAN - INTERIM I.R. 90 WB
STA. 4000+00.00 TO STA. 4005+00.00

DESIGN AGENCY
B&N
burgessniple.com

DESIGNER
AJS

REVIEWER
MRT 05/01/24

PROJECT ID
82382

SHEET 534 TOTAL 2696

CUY-90-16.28 (CCG3A)

MODEL: 82382_GP240I PAPERSIZE: 34x22 (in.) DATE: 3/27/2025 TIME: 9:46:55 PM USER: Alexandria.Summers
pw:\\mb-us-pw.bentley.com:mb-us-pw-03\Documents\Cleveland_OH\OI_Projects\ODOT\District12\82382\400-Engineering\Roadway\Sheets\82382_GP240I.dgn

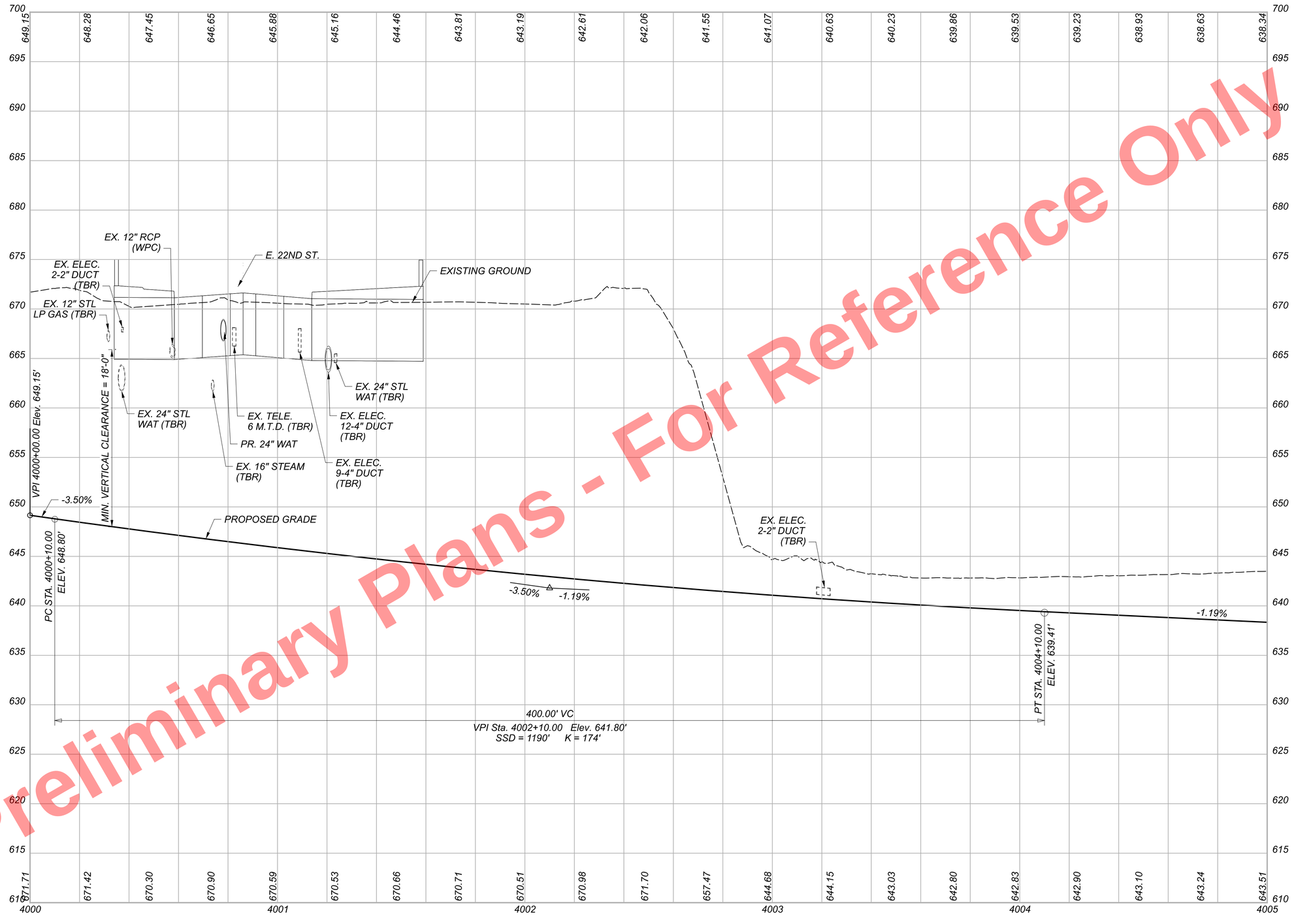

Preliminary Plans - For Reference Only

CUY-90-16.28 (CCG3A)

PROFILE - INTERIM I.R. 90 WB
STA. 4000+00.00 TO STA. 4005+00.00

DESIGN AGENCY
B&N
burgessniple.com

DESIGNER
AJS

REVIEWER
MRT 05/01/24

PROJECT ID
82382

SHEET 535 | TOTAL 2696

MODEL: 82382_GF240I PAPERSIZE: 34x22 (In.) DATE: 3/27/2025 TIME: 9:47:22 PM USER: Alexandria.Summers
pw:\\mb-us-pw.bentley.com:mb-us-pw-03\Documents\Cleveland_OH\01_Projects\ODOT\District2\82382\400-Engineering\Roadway\Sheets\82382_GF240I.dgn

CROSS REFERENCES	
SHEET	DESCRIPTION
73	UTILITY SYMBOL LEGEND
19	EX. TYPICAL SECTIONS
38	PR. TYPICAL SECTIONS
430 - 489	SUBSUMMARIES
679 - 710	REMOVAL PLAN
775 - 789	CROSS SECTIONS
1018 - 1019	SUPERELEVATION TABLES
1040 - 1047	RAMP TERMINAL DETAILS
1092 - 1120	DRAINAGE PLANS
1218	WALL AF
1241	WALL AH
1411 - 1412	WATER WORK
1716 - 1723	LIGHTING PLAN
1784 & 1788	CPP DUCT BANK
1807 - 1817	LANDSCAPING
2281 - 2282	CUY-90-1696 (BRIDGE 14)
2383 - 2386	FENCE PLAN

HORIZONTAL SCALE IN FEET
0 10 20 40

CURVE DATA
P.I. = Sta. 4006+44.80
Δ = 29°30'01" LT
Dc = 03°52'30"
R = 1,478.60'
T = 389.29'
L = 761.30'
E = 50.39'

STA. 4007+67.48
℄ INTERIM I.R. 90 WB
STA. 59+64.55
℄ CARNEGIE AVE.

EGIE AVE.
18"E
12" WTR
℄ CARNEGIE AVE.
CURB, TYPE 4C AND GUARDRAIL, TYPE MGS
WALL AF
BEGIN CONCRETE BARRIER, SINGLE SLOPE, TYPE D
STA. 4005+71.79, 24.00' LT
PI 8+48.81
BEGIN SHOULDER TAPER
STA. 4007+53.62
END SHOULDER TAPER
STA. 4007+53.62
ESMT
Ex R/W
Ex U
Ex G
Ex T
Ex W
Ex F
Ex OH-Comb
Ex SAN
Ex ASPH
Ex CONC
Ex GR-T
Ex C-T
Ex C-8
Ex GR-8
Ex BRUSH
Ex LA R/W
MGS BTA, TYPE 1
END CONCRETE BARRIER, SINGLE SLOPE, TYPE D
BEGIN GUARDRAIL, TYPE MGS
STA. 4008+49.67, 24.00' LT
WALL AH
END SHOULDER TAPER
STA. 4008+99.67, 18.00' LT
GUARDRAIL, TYPE MGS AND CURB TYPE 4C
MATCH LINE STA. 4005+00.00
MATCH LINE STA. 4010+00.00
MGS BTA, TYPE 2
℄ I.R. 90 WB
℄ INTERIM I.R. 90 WB
60:1 TAPER RATE 91
CONCRETE BARRIER, SINGLE SLOPE, TYPE C1
℄ INTERIM I.R. 90 EB
END SHOULDER TAPER
STA. 4008+50.53
CURVE
PI090WT-02
SC 208+00.69
RC 3008+25.51
CL CARNEGIE AVE.
N79°44'18"E
MGS AA, TYPE T
STRUCTURE NO. 14
CUY-90-1696
SFN 1807898
SC 207+50.58
℄ I.R. 90 EB
℄ I.R. 90 WB
205
90
93
94
60
3006
3007
3008
3009
3010
4006
4007
4008
4009
210
32'
16'
11.6'
10'
12'
9'
30.2'
4.5'
21" RCP-PLAN
12" RCP-PLAN
27" RCP-PLAN
24" TWIN
2-2" DUCT
16" STL WAT
8" STL WAT
6" STL WAT
2 ST. CONC
5 STORY BRICK
#2341
FF=670.37
FF=670.92
FF=670.86

Preliminary Plans - For Reference Only

PLAN - INTERIM I.R. 90 WB
STA. 4005+00.00 TO STA. 4010+00.00

DESIGN AGENCY
B&N
burgessniple.com

DESIGNER	AJS
REVIEWER	MRT 05/01/24
PROJECT ID	82382
SHEET	536
TOTAL	2696

CUY-90-16.28 (CCG3A)

MODEL: 82382_GP2402 PAPERSIZE: 34x22 (in.) DATE: 3/27/2025 TIME: 9:47:37 PM USER: Alexandria.Summers
pw:\\mb-us-pw.bentley.com\mb-us-pw-03\Documents\Cleveland_OH\01_Projects\000T\District2\82382\400-Engineering\Roadway\Sheets\82382_GP2402.dgn

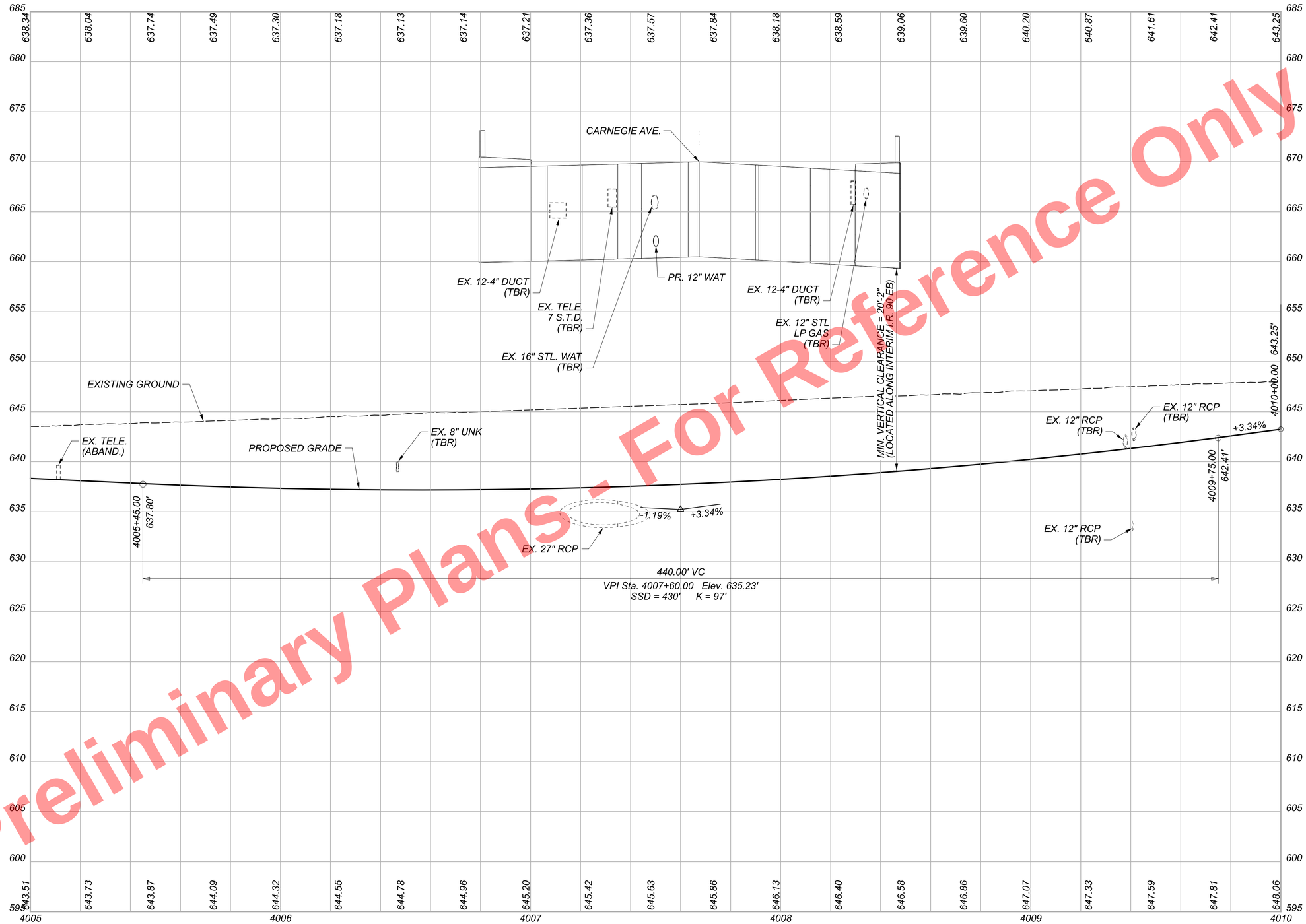

Preliminary Plans - For Reference Only

PROFILE - INTERIM I.R. 90 WB
STA. 4005+00.00 TO STA. 4010+00.00

DESIGN AGENCY
B&N
burgessniple.com

DESIGNER	AJS
REVIEWER	MRT 05/01/24
PROJECT ID	82382
SHEET	537
TOTAL	2696

CUY-90-16.28 (CCG3A)

MODEL: 82382_GF2402 PAPERSIZE: 34x22 (in.) DATE: 3/27/2025 TIME: 9:47:59 PM USER: Alexandria.Summers
pw:\\mb-us-pw.bentley.com\mb-us-pw-03\Documents\Cleveland_OH\01_Projects\000T\District2\82382\400-Engineering\Roadway\Sheets\82382_GF2402.dgn

CROSS REFERENCES	
SHEET	DESCRIPTION
73	UTILITY SYMBOL LEGEND
19	EX. TYPICAL SECTIONS
38	PR. TYPICAL SECTIONS
430 - 489	SUBSUMMARIES
679 - 710	REMOVAL PLAN
775 - 789	CROSS SECTIONS
1018 - 1019	SUPERELEVATION TABLES
1040 - 1047	RAMP TERMINAL DETAILS
1092 - 1120	DRAINAGE PLANS
1716 - 1723	LIGHTING PLAN
1807 - 1817	LANDSCAPING
2383 - 2386	FENCE PLAN

HORIZONTAL SCALE IN FEET
0 10 20 40

CURVE PI090WT-03
P.I. = Sta. 4011+01.10
Δ = 05°49'40" LT
Dc = 03°27'36"
R = 1,655.91'
T = 84.29'
L = 168.43'
E = 2.14'

CURVE PI090WT-04
P.I. = Sta. 4012+91.76
Δ = 08°03'06" LT
Dc = 03°47'08"
R = 1,513.56'
T = 106.52'
L = 212.70'
E = 3.74'

CURVE PI090WT-05
P.I. - Sta. 4015+57.32
Δ = 10°40'45" LT
Dc = 03°21'36"
R = 1,705.21'
T = 159.38'
L = 317.83'
E = 7.43'

E070(586)
END PROJECT/WORK
@ INTERIM I.R. 90 WB
STA. 4013+65.00
@ INTERIM I.R. 90 EB
STA. 3014+30.72
S.L.M. 17.01

Ex R/W
Ex LA-R/W
BEGIN SHOULDER TAPER STA. 4010+99.39
END SHOULDER TAPER STA. 4011+49.39
BEGIN SHOULDER TAPER STA. 4013+01.07
END FULL-DEPTH PAVEMENT REPLACEMENT
END SHOULDER TAPER STA. 4013+65.00
PROSPECT AVE
CURB, TYPE 4C AND GUARDRAIL, TYPE MGS
GR-8
C-8
2-2" DUCT
PCC 4010+16.91
PCC 4011+85.24
PCC 4013+97.94
36" RCP-PLAN
MGS AA, TYPE E
MATCH LINE STA. 4010+00.00
MATCH LINE STA. 4015+00.00
℄ INTERIM I.R 90 WB
CURVE PI090WT-03
END TAPER
STA. 4011+50.00
CONC. BARRIER, SINGLE SLOPE, TYPE C1
CURVE PI090WT-04
END CONC. BARRIER, SINGLE SLOPE, TYPE C1
STA. 3014+30.72
CURVE PI090WT-05
℄ EX. I.R 90
12" RCP
PCC 3013+08.43
PCC 3014+67.15
℄ INTERIM I.R 90 EB
℄ I.R 90 WB
STA. 215+55.62, 12.38' LT
℄ I.R. 90 WB =
STA. 906+88.99, 0.00' RT
℄ RAMP NO. 4
POT 906+88.99
CS 905+38.99
PCC 904+65.49
℄ I.R 90 EB

Preliminary Plans - For Reference Only

PLAN - INTERIM I.R. 90 WB
STA. 4010+00.00 TO STA. 4015+00.00

CUY-90-16.28 (CCG3A)

MODEL: 82382_GP2403 PAPERSIZE: 34x22 (in.) DATE: 3/27/2025 TIME: 9:48:12 PM USER: Alexandria.Summers
pw:\\mb-us-pw.bentley.com:mb-us-pw-03\Documents\Cleveland_OH\DiLProjects\ODOT\District2\82382\400-Engineering\Roadway\Sheets\82382_GP2403.dgn

DESIGN AGENCY
B&N
burgessniple.com

DESIGNER	AJS
REVIEWER	MRT 05/01/24
PROJECT ID	82382
SHEET	538
TOTAL	2696

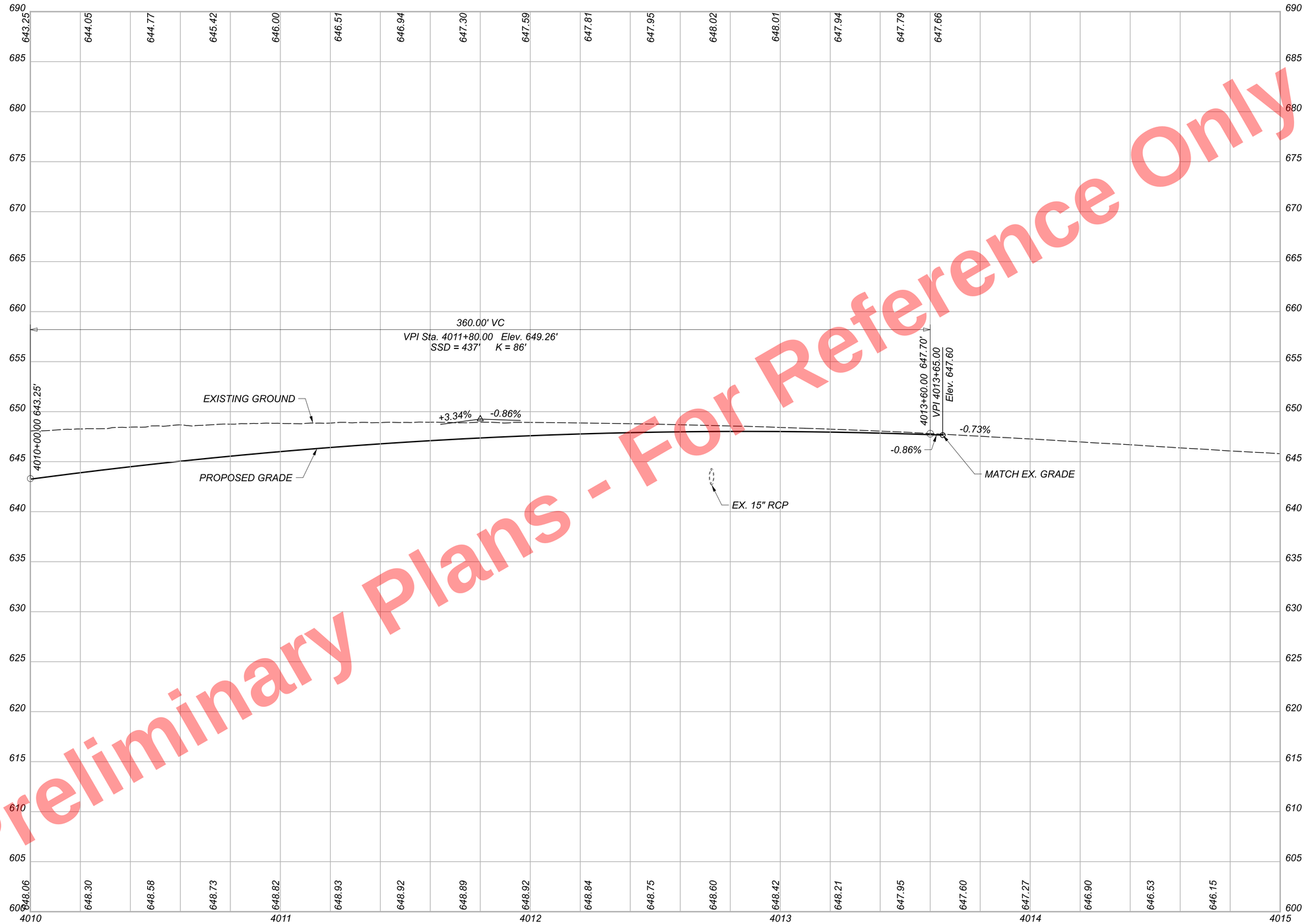

Preliminary Plans - For Reference Only

PROFILE - INTERIM I.R. 90 WB
STA. 4010+00.00 TO STA. 4015+00.00

DESIGN AGENCY
B&N
burgessniple.com

DESIGNER
AJS

REVIEWER
MRT 05/01/24

PROJECT ID
82382

SHEET 539 | TOTAL 2696

CUY-90-16.28 (CCG3A)

MODEL: 82382_GF2403 PAPERSIZE: 34x22 (in.) DATE: 3/27/2025 TIME: 9:48:37 PM USER: Alexandria.Summers
pw:\\mb-us-pw.bentley.com\mb-us-pw-03\Documents\Cleveland_OH\01_Projects\000T\District2\82382\400-Engineering\Roadway\Sheets\82382_GF2403.dgn

CROSS REFERENCES	
SHEET	DESCRIPTION
73	UTILITY SYMBOL LEGEND
19	EX. TYPICAL SECTIONS
38	PR. TYPICAL SECTIONS
430 - 489	SUBSUMMARIES
679 - 710	REMOVAL PLAN
775 - 789	CROSS SECTIONS
1018 - 1019	SUPERELEVATION TABLES
1040 - 1047	RAMP TERMINAL DETAILS
1092 - 1120	DRAINAGE PLANS
1716 - 1723	LIGHTING PLAN
1807 - 1817	LANDSCAPING
2383 - 2386	FENCE PLAN

HORIZONTAL SCALE IN FEET
0 10 20 40

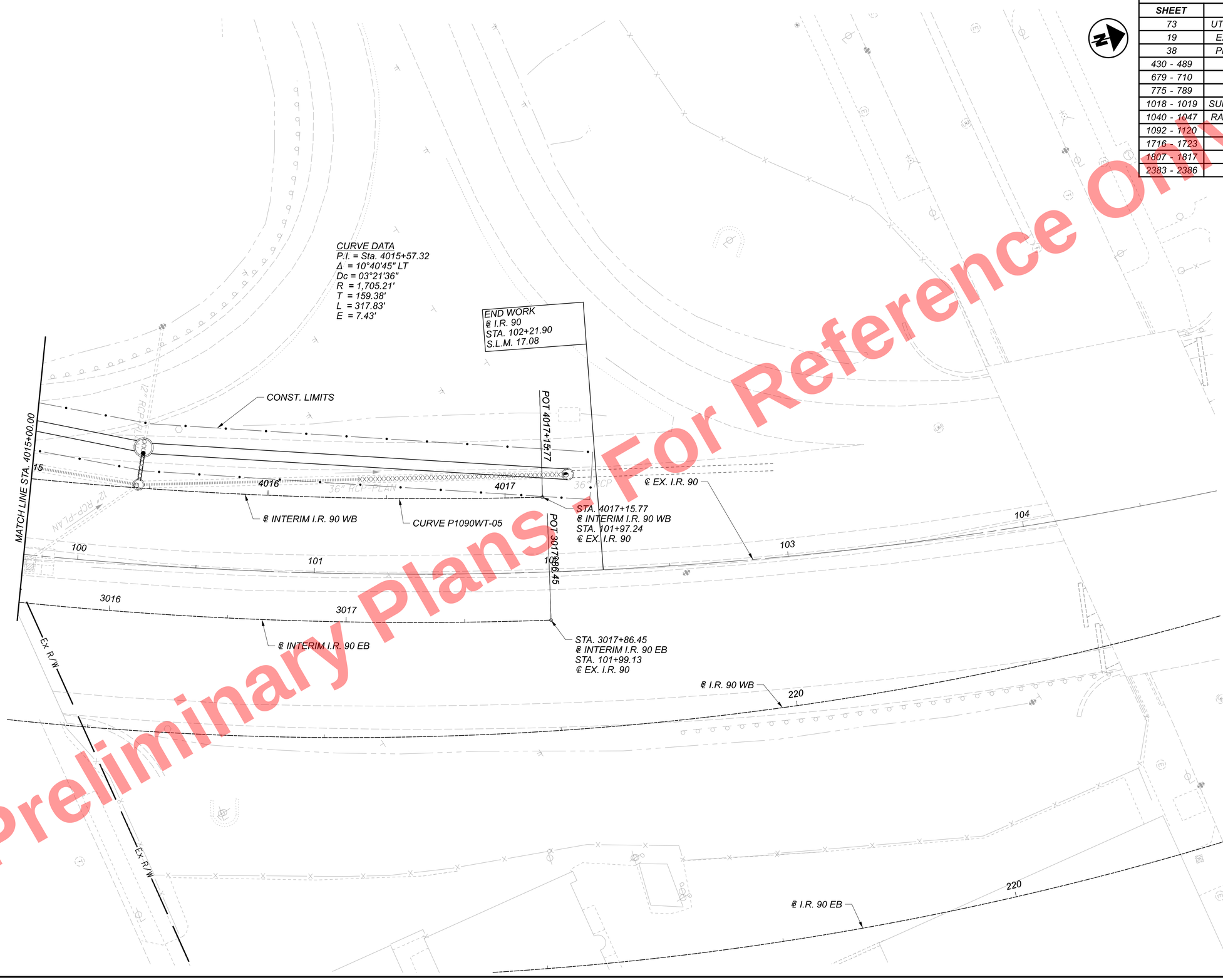

Preliminary Plans - For Reference Only

PLAN - INTERIM I.R. 90 WB
STA. 4015+00.00 TO STA. 4017+15.77

DESIGN AGENCY
B&N
burgessniple.com

DESIGNER
AJS

REVIEWER
MRT 5/1/24

PROJECT ID
82382

SHEET 540 TOTAL 2696

CUY-90-16.28 (CCG3A)

MODEL: 82382_GP2404 PAPERSIZE: 34x22 (in.) DATE: 3/27/2025 TIME: 9:48:54 PM USER: Alexandria.Summers
pw:\\mb-us-pw.bentley.com:mb-us-pw-03\Documents\Cleveland_OH\01_Projects\ODOT\District12\82382\400-Engineering\Roadway\Sheets\82382_GP2404.dgn

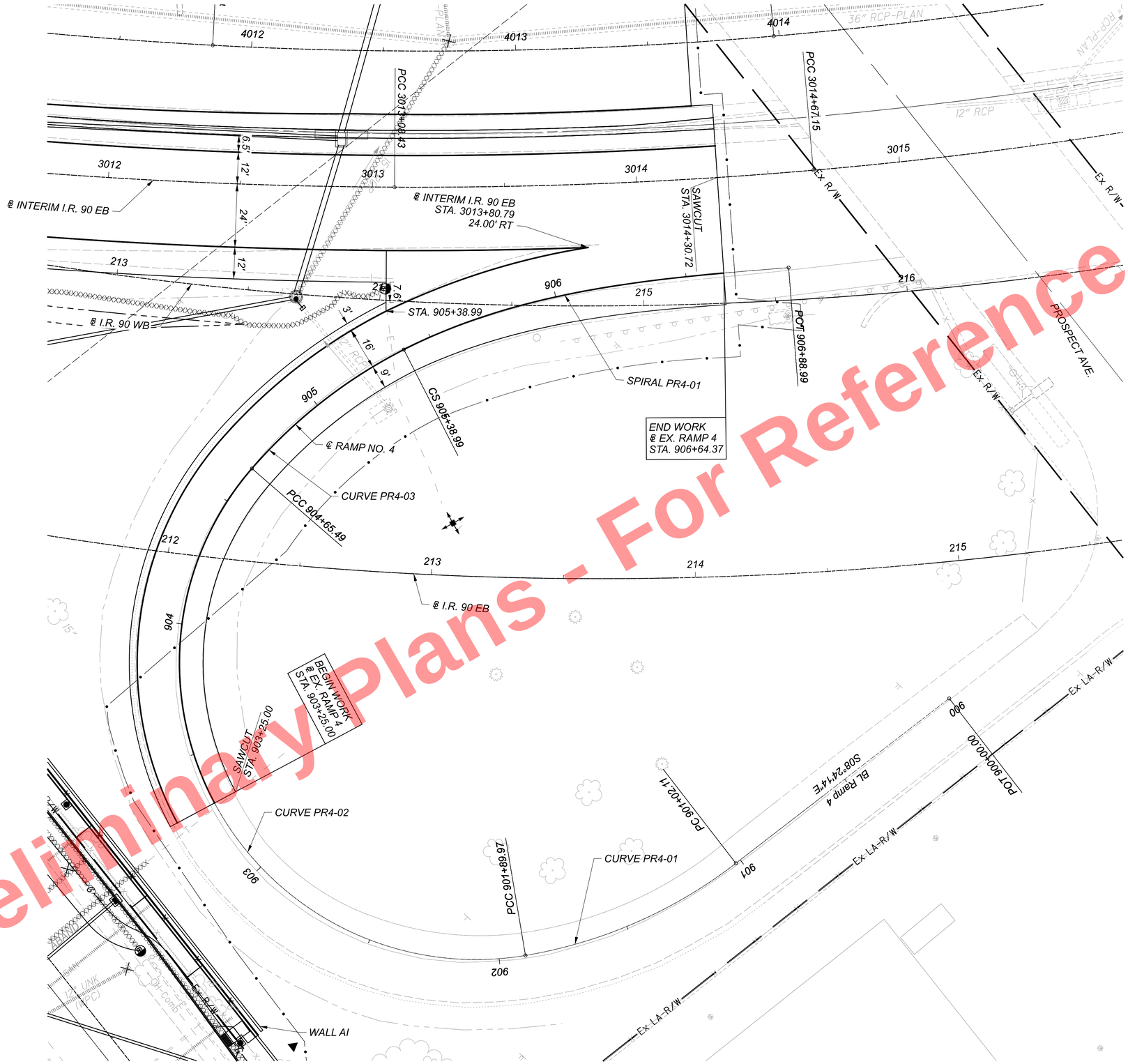

SPIRAL PR4-01
P.I. = Sta. 905+89.73
Ls = 150.00'
θs = 22°30'00"
LT = 100.82'
ST = 50.75'
x = 143.89'
y = 38.58'
k = 74.62'
p = 4.88'
C = 148.97'
Start = Sta. 905+38.99
End = Sta. 906+88.99
C.B. = N17°17'08"E

CURVE PR4-03
P.I. = Sta. 905+02.70
Δ = 22°02'57" RT
Dc = 30°00'00"
R = 190.99'
T = 37.21'
L = 73.5'
E = 3.59'
e_{max} = MATCH EXISTING (0.059)
V = 20 mph

CURVE PR4-02
P.I. = Sta. 905+02.99
Δ = 140°30'49" RT
Dc = 51°00'00"
R = 112.34'
T = 313.02'
L = 275.52'
E = 220.23'
e_{max} = MATCH EXISTING (0.033)
V = 20 mph

CURVE PR4-01
P.I. = Sta. 901+46.94
Δ = 28°07'01" RT
Dc = 32°00'00"
R = 179.05'
T = 44.84'
L = 87.87'
E = 5.53'
e_{max} = MATCH EXISTING (NO ROADWAY WORK)
V = 20 MPH

HORIZONTAL SCALE IN FEET
0 10 20 40

CROSS REFERENCES	
SHEET	**DESCRIPTION**
73	UTILITY SYMBOL LEGEND
41	EX. TYPICAL SECTIONS
41	PR. TYPICAL SECTIONS
430 - 489	SUBSUMMARIES
679 - 710	REMOVAL PLAN
1039	RAMP TERMINAL DETAILS
1092 - 1120	DRAINAGE PLANS
1250	WALL AI
1716 - 1723	LIGHTING PLAN
1807 - 1817	LANDSCAPING
2281 - 2282	CUY-90-1696 (BRIDGE 14)
2383 - 2386	FENCE PLAN

PLAN - RAMP 4 BEGIN TO END

DESIGN AGENCY
B&N
burgessniple.com

DESIGNER AJS
REVIEWER MRT 5/1/24
PROJECT ID 82382
SHEET 541 TOTAL 2696

CUY-90-16.28 (CCG3A)

MODEL: BL Ramp 4 - Ramp 4 -I PAPERSIZE: 34x22 (In.) DATE: 3/27/2025 TIME: 9:49:08 PM USER: Alexandria.Summers
pw:\\mb-us-pw.bentley.com:mb-us-pw-03\Documents\Cleveland.OH\OI_Projects\000T\District2\82382\400-Engineering\Roadway\Sheets\82382_GP850i.dgn

Preliminary Plans - For Reference Only

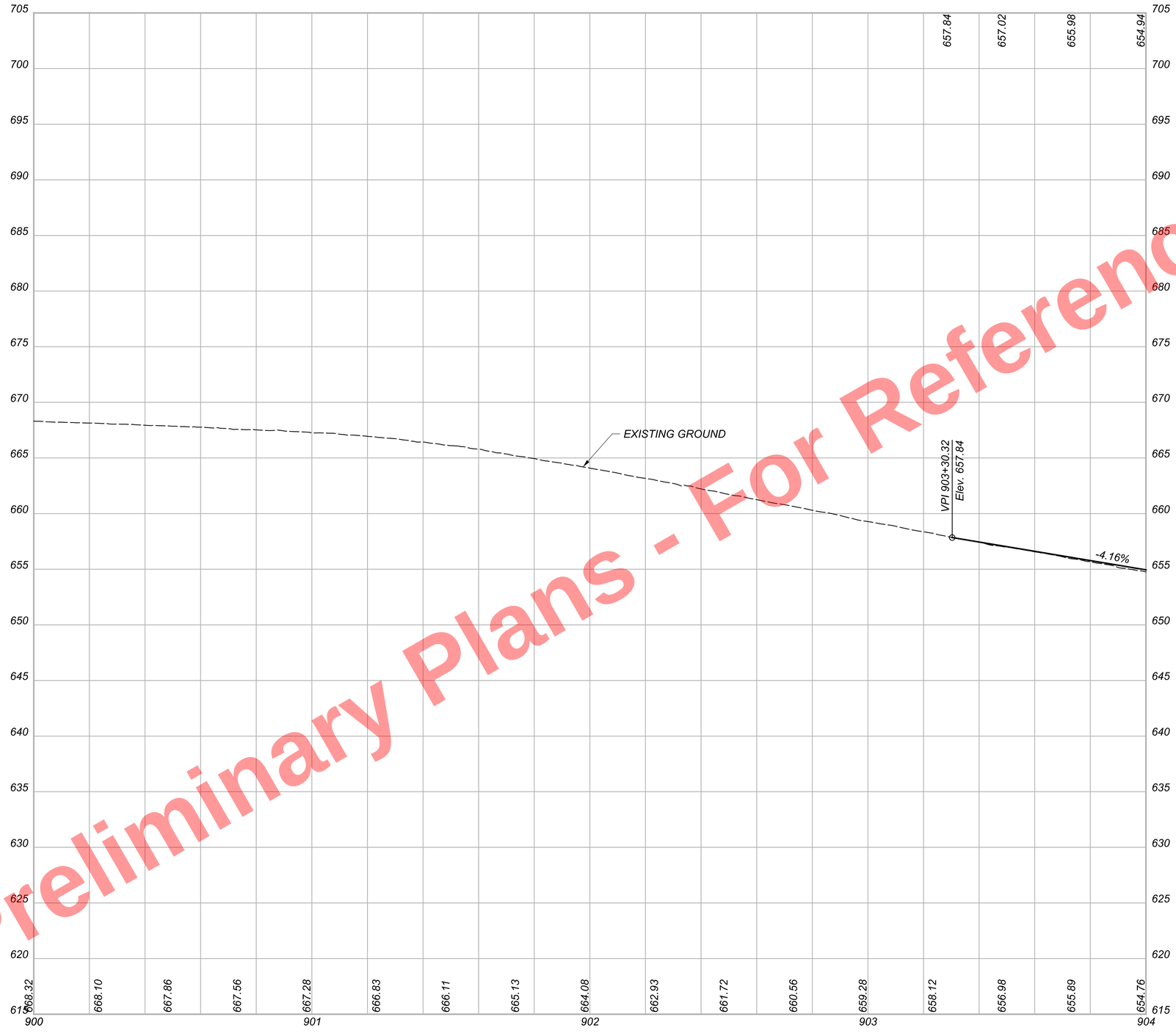

Preliminary Plans - Not For Reference Only

CUY-90-16.28 (CCG3A)

MODEL: BL RAMP 4 - Profile | PAPERSIZE: 34x22 (In.) DATE: 3/27/2025 TIME: 9:49:32 PM USER: Alexandria.Summers
pw:\\mb-us-pw.bentley.com:mb-us-pw-03\Documents\Cleveland_OH\OI_Projects\ODOT\District2\82382\400-Engineering\Roadway\Sheets\82382_GF850I.dgn

PROFILE - RAMP 4
STA. 900+00.00 TO STA. 904+00.00

DESIGN AGENCY
B&N
burgessniple.com

DESIGNER
AJS

REVIEWER
MRT 5/1/24

PROJECT ID
82382

SHEET 542 | TOTAL 2696

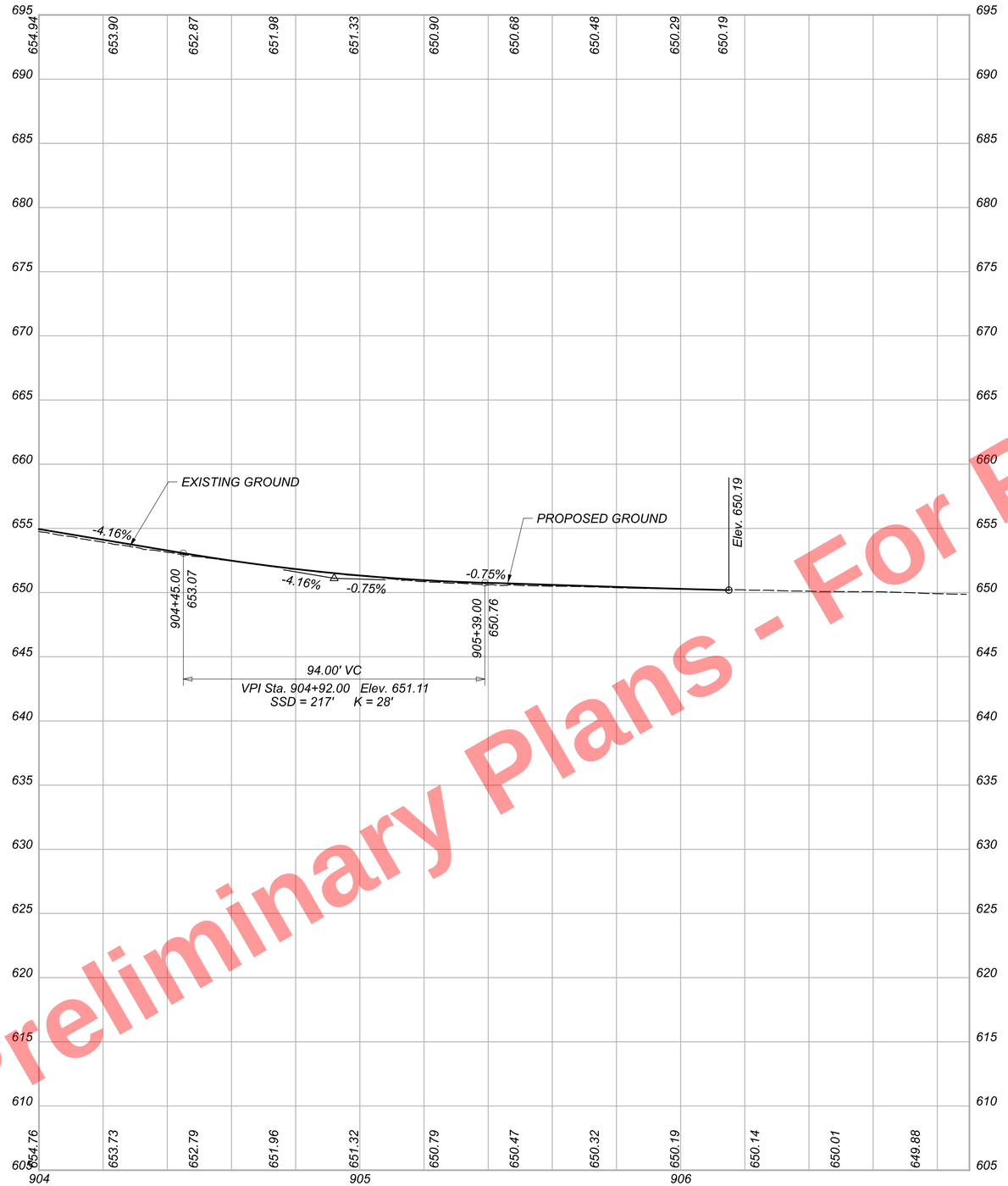

Preliminary Plans - For Reference Only

PROFILE - RAMP 4
STA. 904+00.00 TO END

CUY-90-16.28 (CCG3A)

MODEL: BL RAMP 4 - Profile 2 PAPERSIZE: 34x22 (in.) DATE: 3/27/2025 TIME: 9:49:37 PM USER: Alexandria.Summers
pw:\\mb-us-pw.bentley.com:mb-us-pw-03\Documents\Cleveland.OH\01_Projects\ODOT\District2\82382\400-Engineering\Roadway\Sheets\82382_GF8502.dgn

DESIGN AGENCY
B&N
burgessniple.com

DESIGNER
AJS

REVIEWER
MRT 5/1/24

PROJECT ID
82382

SHEET 543 | TOTAL 2696

CROSS REFERENCES	
SHEET	DESCRIPTION
73	UTILITY SYMBOL LEGEND
28	EX. TYPICAL SECTIONS
42 - 43	PR. TYPICAL SECTIONS
430 - 489	SUBSUMMARIES
679 - 710	REMOVAL PLAN
790 - 798	CROSS SECTIONS
1020	SUPERELEVATION TABLES
1050	RAMP TERMINAL DETAILS
1092 - 1120	DRAINAGE PLANS
1191 - 1192	WALL AD
1368	COMBINED SEWER
1716 - 1723	LIGHTING PLAN
1807 - 1817	LANDSCAPING
2383 - 2386	FENCE PLAN



Preliminary Plans - For Reference Only

HORIZONTAL SCALE IN FEET
0 10 20 40

PLAN - RAMP A1
STA. 300+00.00 TO STA. 305+00.00

DESIGN AGENCY

DESIGNER BMV
REVIEWER TJS 04/30/24
PROJECT ID 82382
SHEET 544 TOTAL 2696

CUY-90-16.28 (CCG3A)

MODEL: 82382_GP3101 PAPERSIZE: 34x22 (in.) DATE: 6/9/2025 TIME: 1:00:33 PM USER: Julie.Ross
pw:\\vmb-us-pw.bentley.com\vmb-us-pw-03\Documents\Cleveland_OH\01_Projects\000T\District2\82382\400-Engineering\Roadway\Sheets\82382_GP3101.dgn

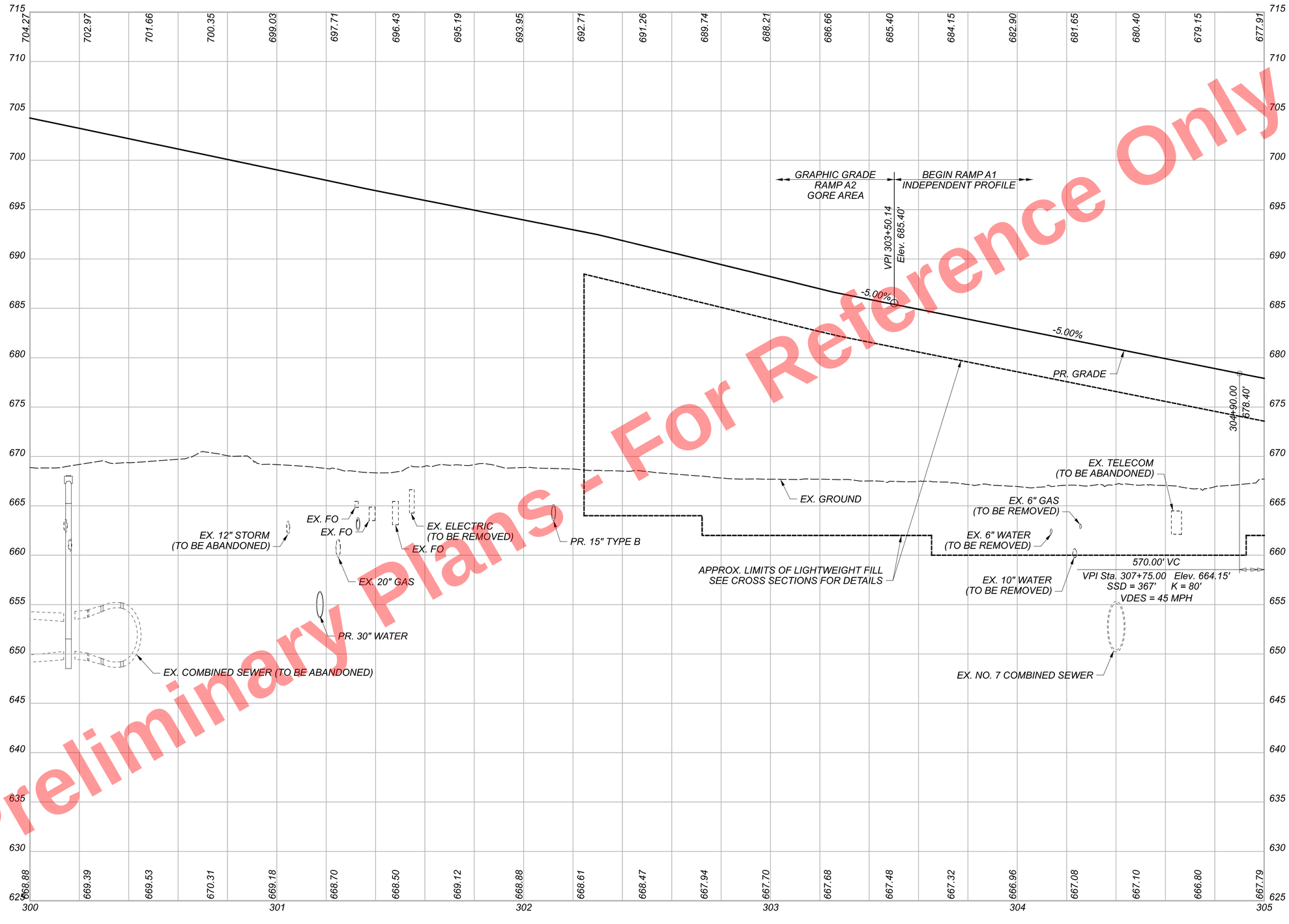

Preliminary Plans - For Reference Only

PROFILE - RAMP A1
STA. 300+00.00 TO STA. 305+00.00

CUY-90-16.28 (CCG3A)

MODEL: 82382_GF301 PAPERSIZE: 34x22 (In.) DATE: 3/27/2025 TIME: 9:50:16 PM USER: Alexandria.Summers
pw:\\mb-us-pw.bentley.com\mb-us-pw-03\Documents\Cleveland_OH\01_Projects\ODOT\District2\82382\400-Engineering\Roadway\Sheets\82382_GF301.dgn

DESIGN AGENCY

HDR

DESIGNER	BMV
REVIEWER	TJS 04/30/24
PROJECT ID	82382
SHEET	545
TOTAL	2696

CROSS REFERENCES	
SHEET	**DESCRIPTION**
73	UTILITY SYMBOL LEGEND
28	EX. TYPICAL SECTIONS
42 - 43	PR. TYPICAL SECTIONS
430 - 489	SUBSUMMARIES
679 - 710	REMOVAL PLAN
790 - 798	CROSS SECTIONS
1020	SUPERELEVATION TABLES
1092 - 1120	DRAINAGE PLANS
1191 - 1192	WALL AD
1208	WALL AE
1368	COMBINED SEWER
1716 - 1723	LIGHTING PLAN
1807 - 1817	LANDSCAPING
2383 - 2386	FENCE PLAN

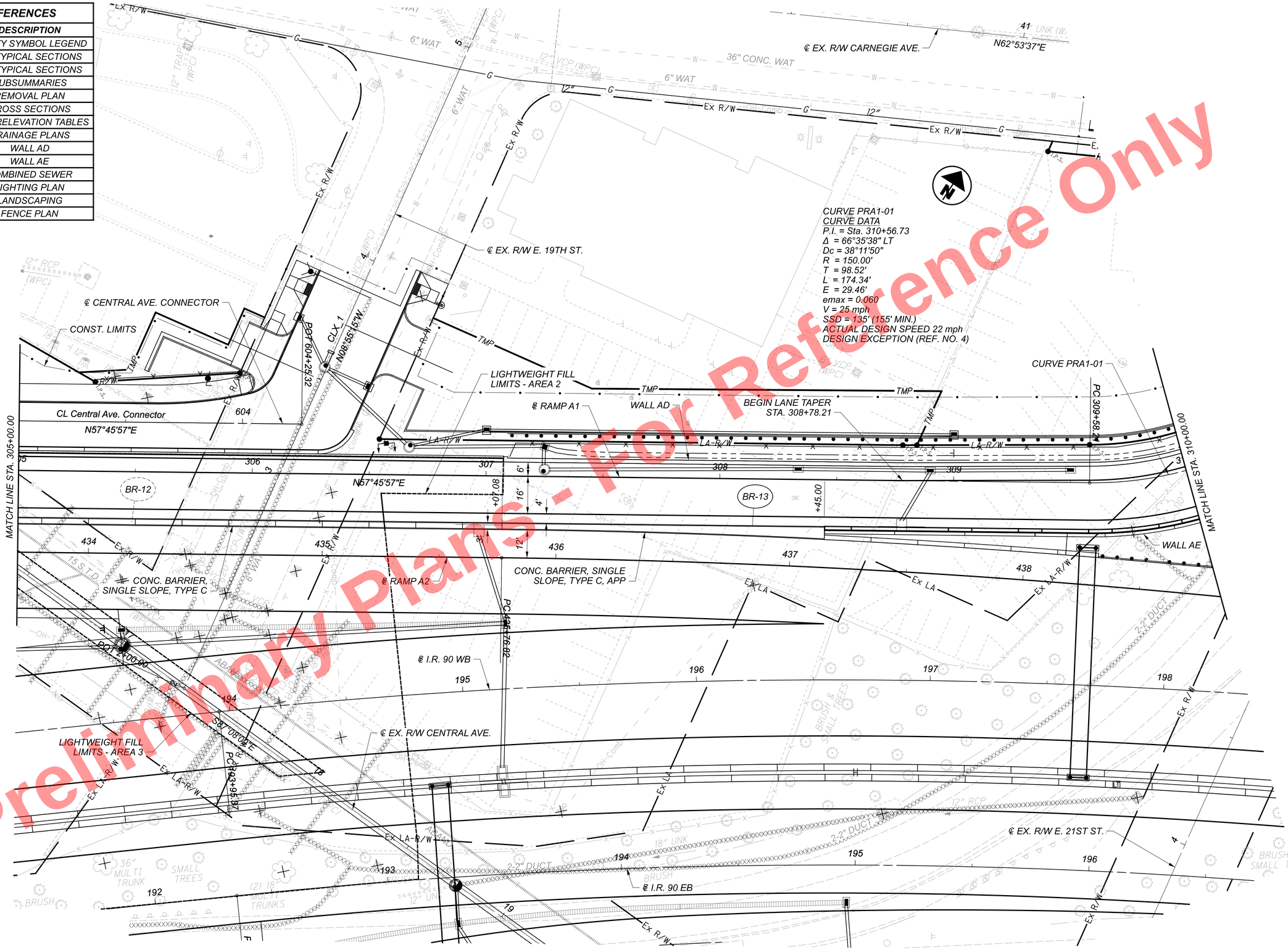

Preliminary Plans - For Reference Only

HORIZONTAL SCALE IN FEET
0 10 20 40

PLAN - RAMP A1
STA. 305+00.00 TO STA. 310+00.00

DESIGN AGENCY

HDR

DESIGNER	BMV
REVIEWER	TJS 04/30/24
PROJECT ID	82382
SHEET	546
TOTAL	2696

CUY-90-16.28 (CCG3A)

MODEL: 82382_GP3102 PAPERSIZE: 34x22 (In.) DATE: 3/27/2025 TIME: 9:50:28 PM USER: Alexandria.Summers
pw:\\mb-us-pw.bentley.com:mb-us-pw-03\Documents\Cleveland_OH\01_Projects\0007\District2\82382\400-Engineering\Roadway\Sheets\82382_GP3102.dgn

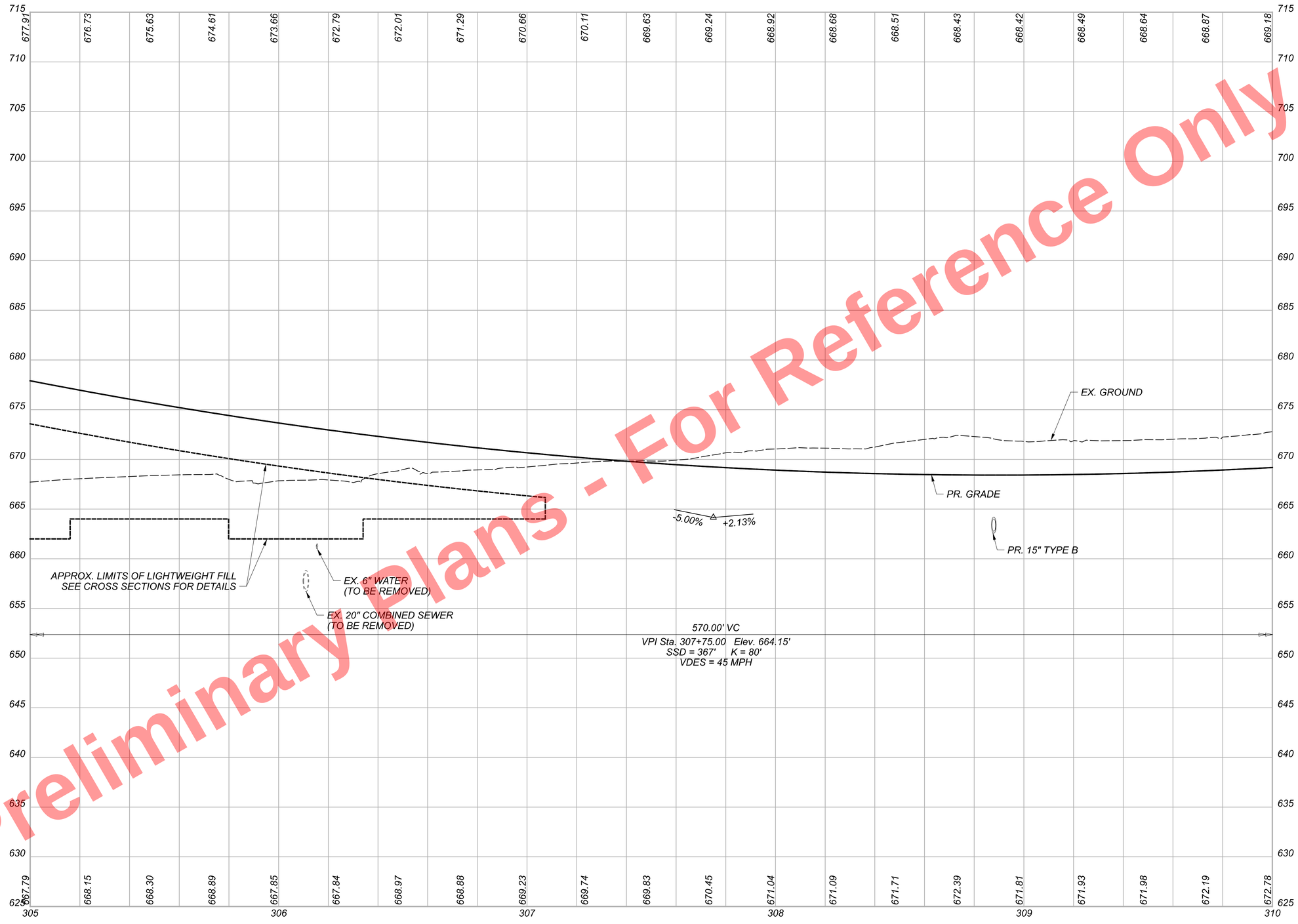

Preliminary Plans - For Reference Only

PROFILE - RAMP A1
STA. 305+00.00 TO STA. 310+00.00

DESIGN AGENCY
HDR

DESIGNER
BMV

REVIEWER
TJS 04/30/24

PROJECT ID
82382

SHEET 547 TOTAL 2696

CUY-90-16.28 (CCG3A)

MODEL: 82382_GF3I02 PAPERSIZE: 34x22 (in.) DATE: 3/27/2025 TIME: 9:50:45 PM USER: Alexandria.Summers
pw:\\mb-us-pw.bentley.com:mb-us-pw-03\Documents\Cleveland_OH\OI_Projects\ODOT\District12\82382\400-Engineering\Roadway\Sheets\82382_GF3I02.dgn

CROSS REFERENCES	
SHEET	DESCRIPTION
73	UTILITY SYMBOL LEGEND
28	EX. TYPICAL SECTIONS
42 - 43	PR. TYPICAL SECTIONS
430 - 489	SUBSUMMARIES
679 - 710	REMOVAL PLAN
790 - 798	CROSS SECTIONS
1020	SUPERELEVATION TABLES
1063	INTERSECTION DETAIL
1092 - 1120	DRAINAGE PLANS
1191 - 1192	WALL AD
1208	WALL AE
1651	TRAFFIC SIGNAL PLAN
1716 - 1723	LIGHTING PLAN
1807 - 1817	LANDSCAPING
2383 - 2386	FENCE PLAN

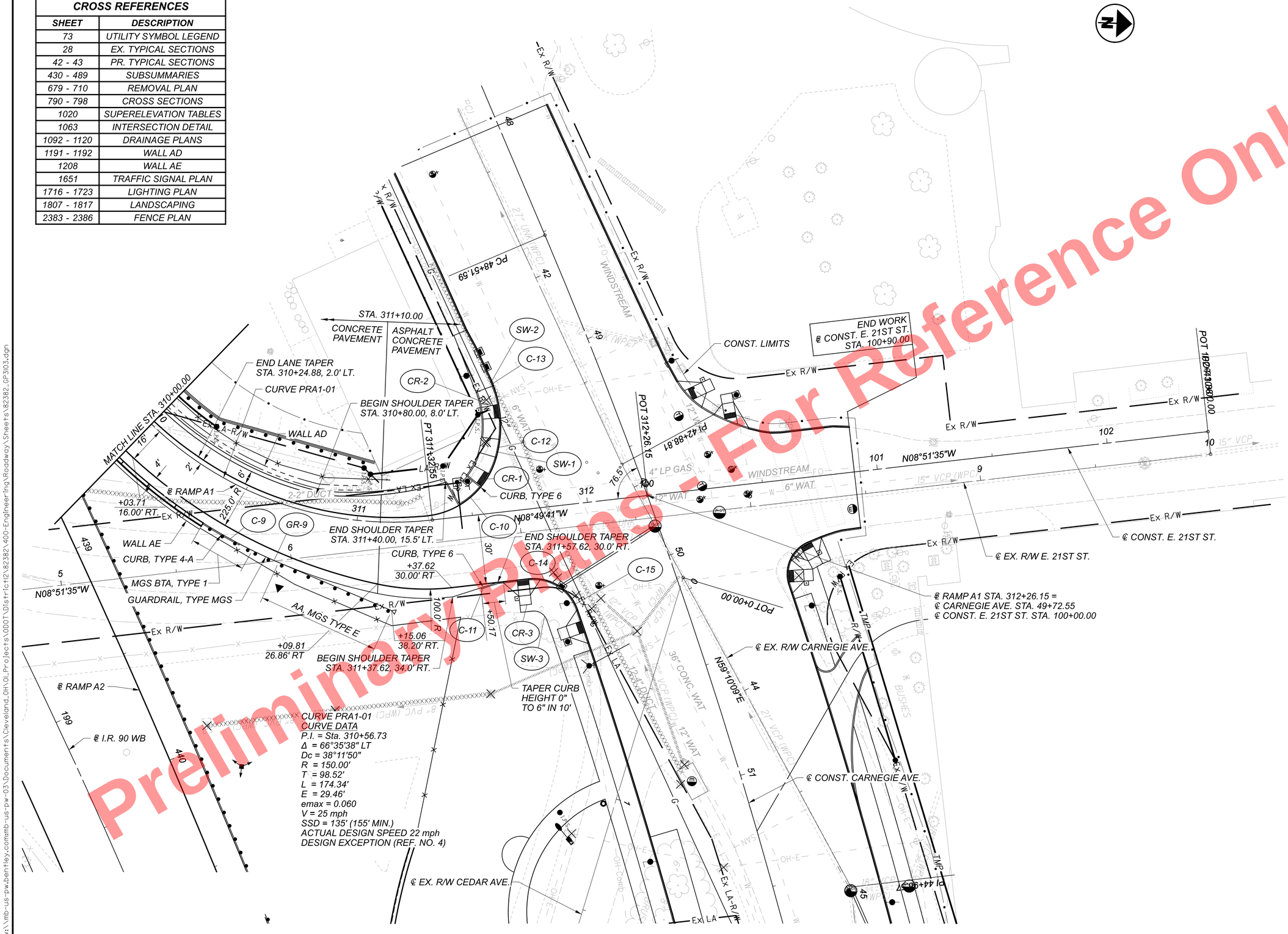

Preliminary Plans - For Reference Only

HORIZONTAL SCALE IN FEET
0 10 20 40

PLAN - RAMP A1
STA. 310+00.00 TO END

DESIGN AGENCY
HDR

DESIGNER
BMV

REVIEWER
TJS 04/30/24

PROJECT ID
82382

SHEET 548 TOTAL 2696

CUY-90-16.28 (CCG3A)

MODEL: 82382_GP3103 PAPERSIZE: 34x22 (in.) DATE: 3/27/2025 TIME: 9:50:56 PM USER: Alexandria.Summers
pw:\\mb-us-pw.bentley.com:mb-us-pw-03\Documents\Cleveland.OH\OI_Projects\000T\District2\82382\400-Engineering\Roadway\Sheets\82382_GP3103.dgn

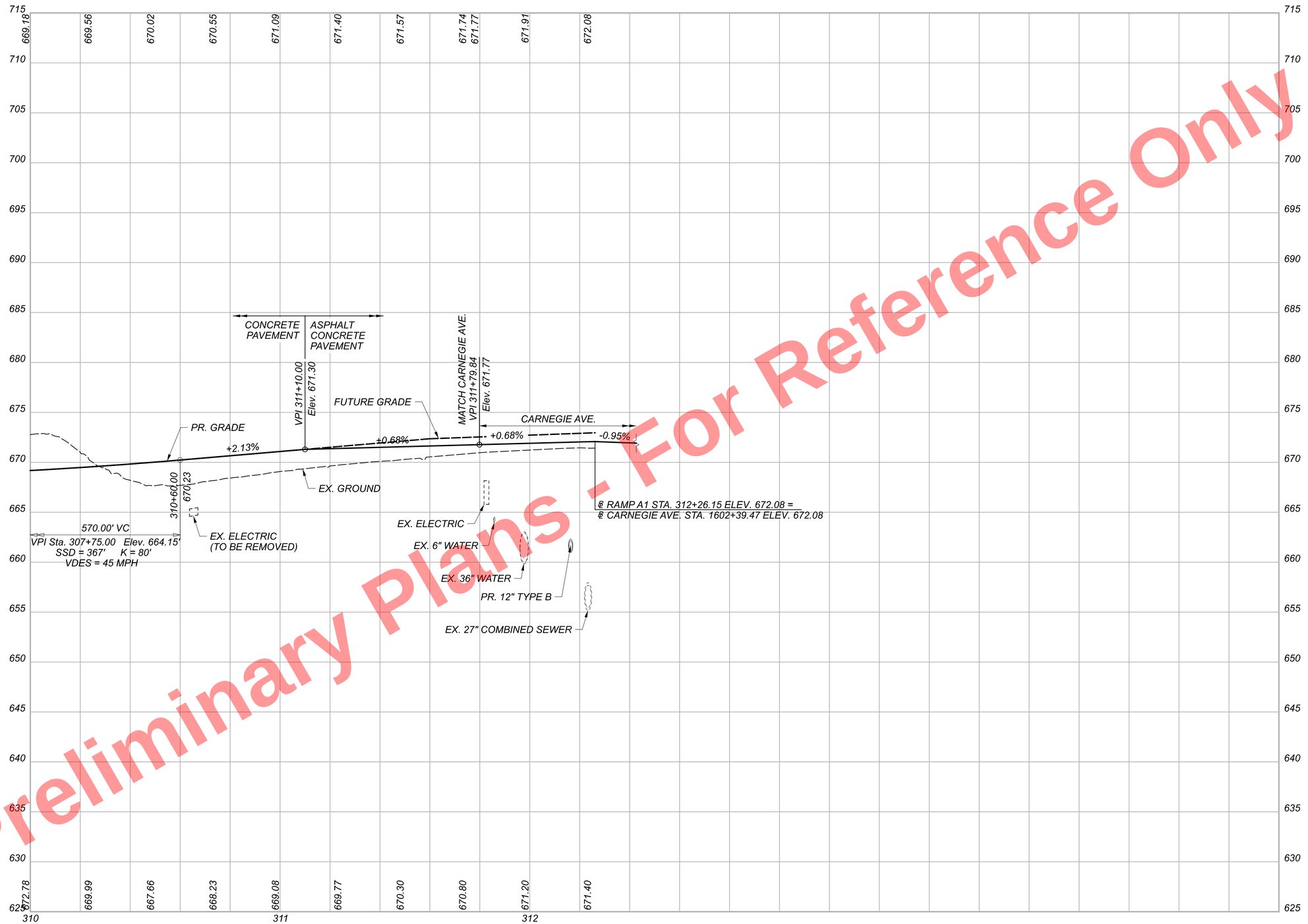

Preliminary Plans - For Reference Only

PROFILE - RAMP A1
STA. 310+00.00 TO END

CUY-90-16.28 (CCG3A)

MODEL: 82382_GF3103 PAPERSIZE: 34x22 (in.) DATE: 3/27/2025 TIME: 9:5:14 PM USER: Alexandria.Summers
pw:\\mb-us-pw.bentley.com:mb-us-pw-03\Documents\Cleveland.OH\01_Projects\ODOT\District2\82382\400-Engineering\Roadway\Sheets\82382_GF3103.dgn

DESIGN AGENCY

DESIGNER BMV

REVIEWER TJS 04/30/24

PROJECT ID 82382

SHEET 549 TOTAL 2696

CROSS REFERENCES	
SHEET	DESCRIPTION
73	UTILITY SYMBOL LEGEND
28	EX. TYPICAL SECTIONS
44 - 46	PR. TYPICAL SECTIONS
430 - 489	SUBSUMMARIES
679 - 710	REMOVAL PLAN
799 - 817	CROSS SECTIONS
1021	SUPERELEVATION TABLES
1092 - 1120	DRAINAGE PLANS
1716 - 1723	LIGHTING PLAN
1807 - 1817	LANDSCAPING
2383 - 2386	FENCE PLAN

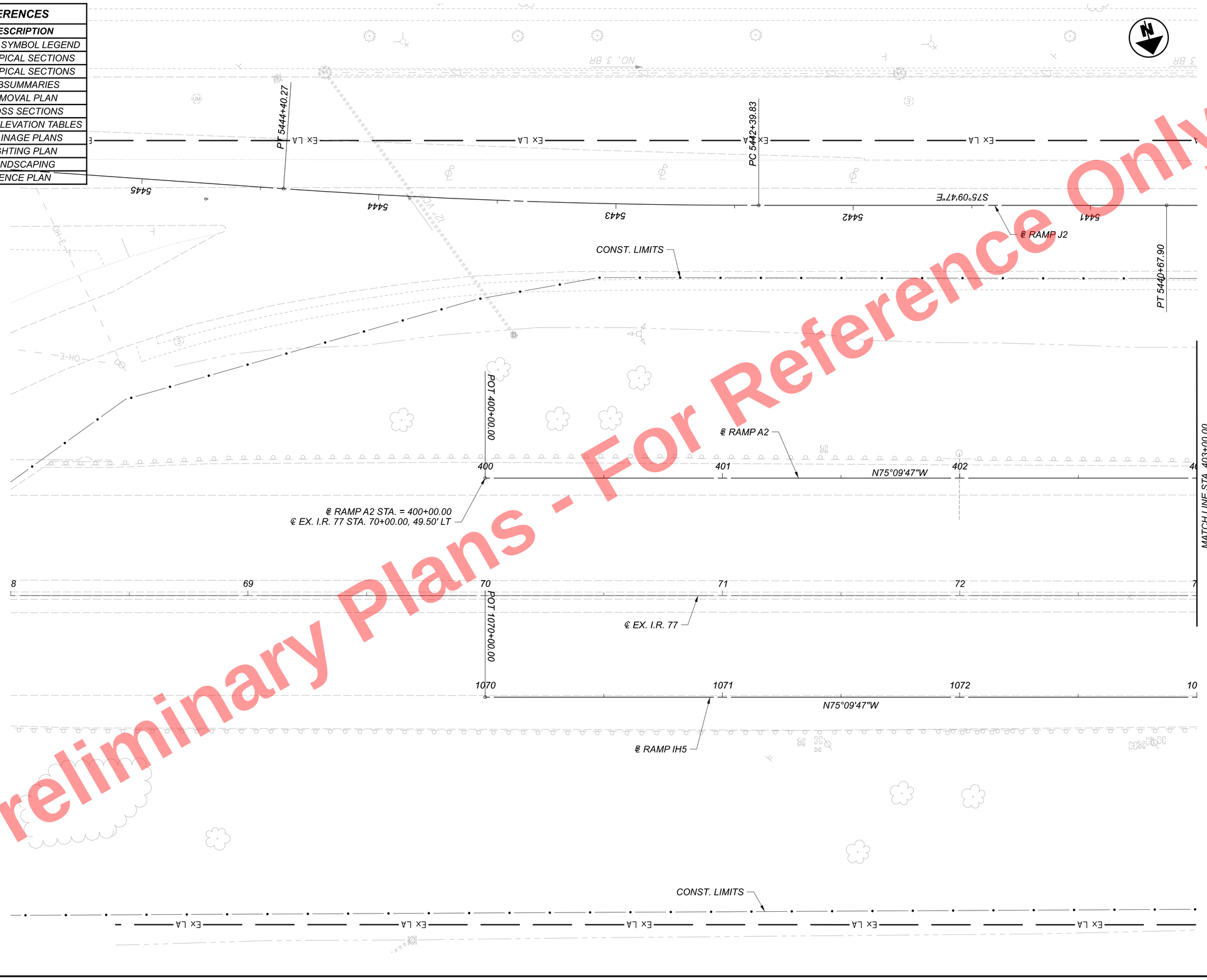

Preliminary Plans - For Reference Only

HORIZONTAL SCALE IN FEET
0 10 20 40

PLAN - RAMP A2
STA. 400+00.00 TO STA. 403+00.00

DESIGN AGENCY

DESIGNER BMV
REVIEWER TJS 04/30/24
PROJECT ID 82382
SHEET 550 TOTAL 2696

CUY-90-16.28 (CCG3A)

MODEL: 82382_GP320I PAPERSIZE: 34x22 (in.) DATE: 3/27/2025 TIME: 9:51:26 PM USER: Alexandria.Summers
pw:\\mb-us-pw.bentley.com:mb-us-pw-03\Documents\Cleveland_OHIO_Projects\ODOT\District2\82382400-Engineering\Roadway\Sheets\82382_GP320I.dgn

Preliminary Plans - For Reference Only

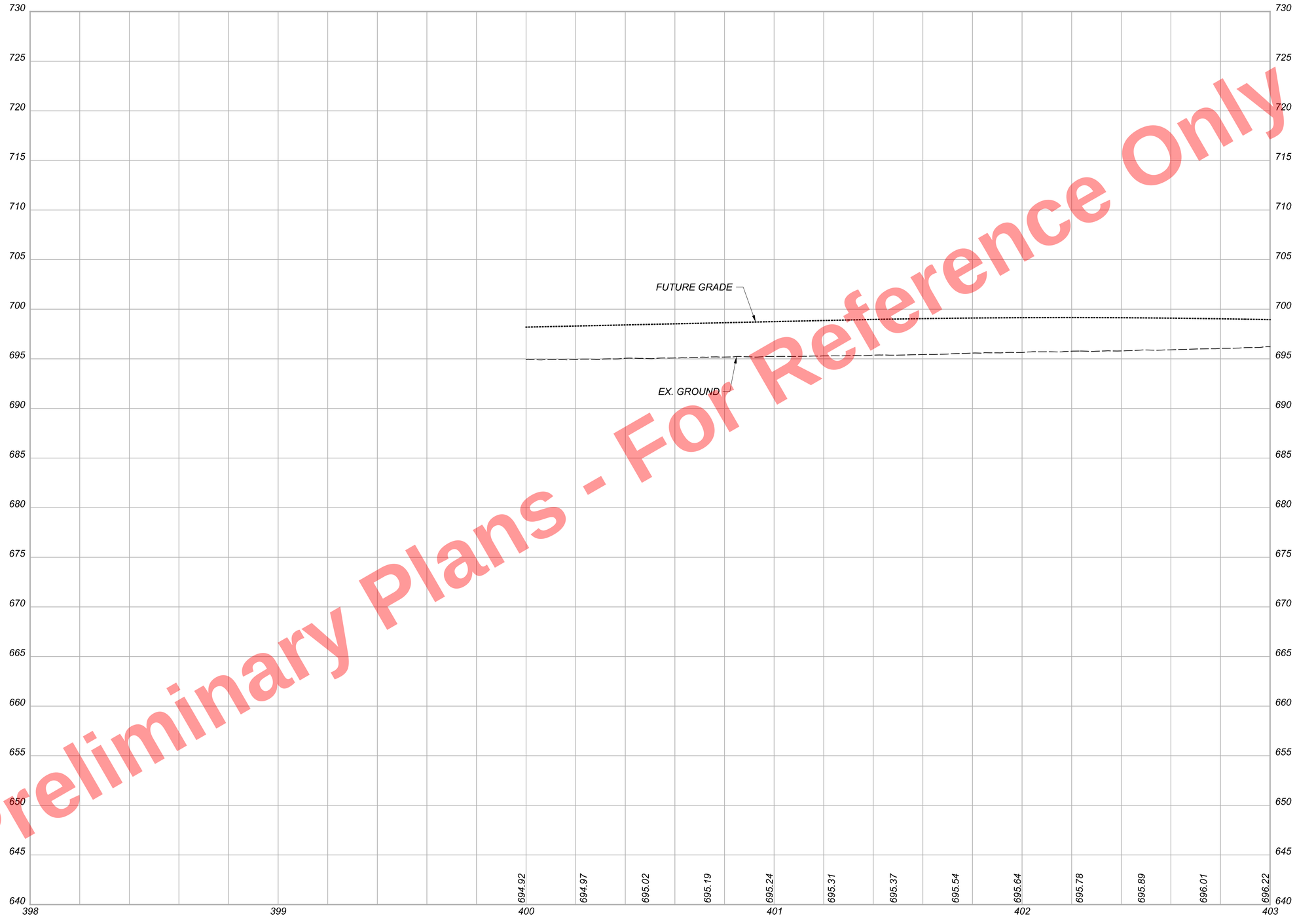

PROFILE - RAMP A2

STA. 400+00.00 TO STA. 403+00.00

CUY-90-16.28 (CCG3A)

MODEL: 82382_GF320I PAPERSIZE: 34x22 (in.) DATE: 3/27/2025 TIME: 9:51:45 PM USER: Alexandria.Summers
pw:\\mb-us-pw.bentley.commb-us-pw-03\Documents\Cleveland_OH\01_Projects\ODOT\District2\82382\400-Engineering\Roadway\Sheets\82382_GF320I.dgn

DESIGN AGENCY

HDR

DESIGNER	BMV
REVIEWER	TJS 04/30/24
PROJECT ID	82382
SHEET	551
TOTAL	2696

CROSS REFERENCES	
SHEET	DESCRIPTION
73	UTILITY SYMBOL LEGEND
28	EX. TYPICAL SECTIONS
44 - 46	PR. TYPICAL SECTIONS
430 - 489	SUBSUMMARIES
679 - 710	REMOVAL PLAN
679 - 710	CROSS SECTIONS
799 - 817	SUPERELEVATION TABLES
1048 - 1049	RAMP TERMINAL DETAILS
1092 - 1120	DRAINAGE PLANS
1270	WALL N
1283	WALL S
1716 - 1723	LIGHTING PLAN
1807 - 1817	LANDSCAPING
2383 - 2386	FENCE PLAN

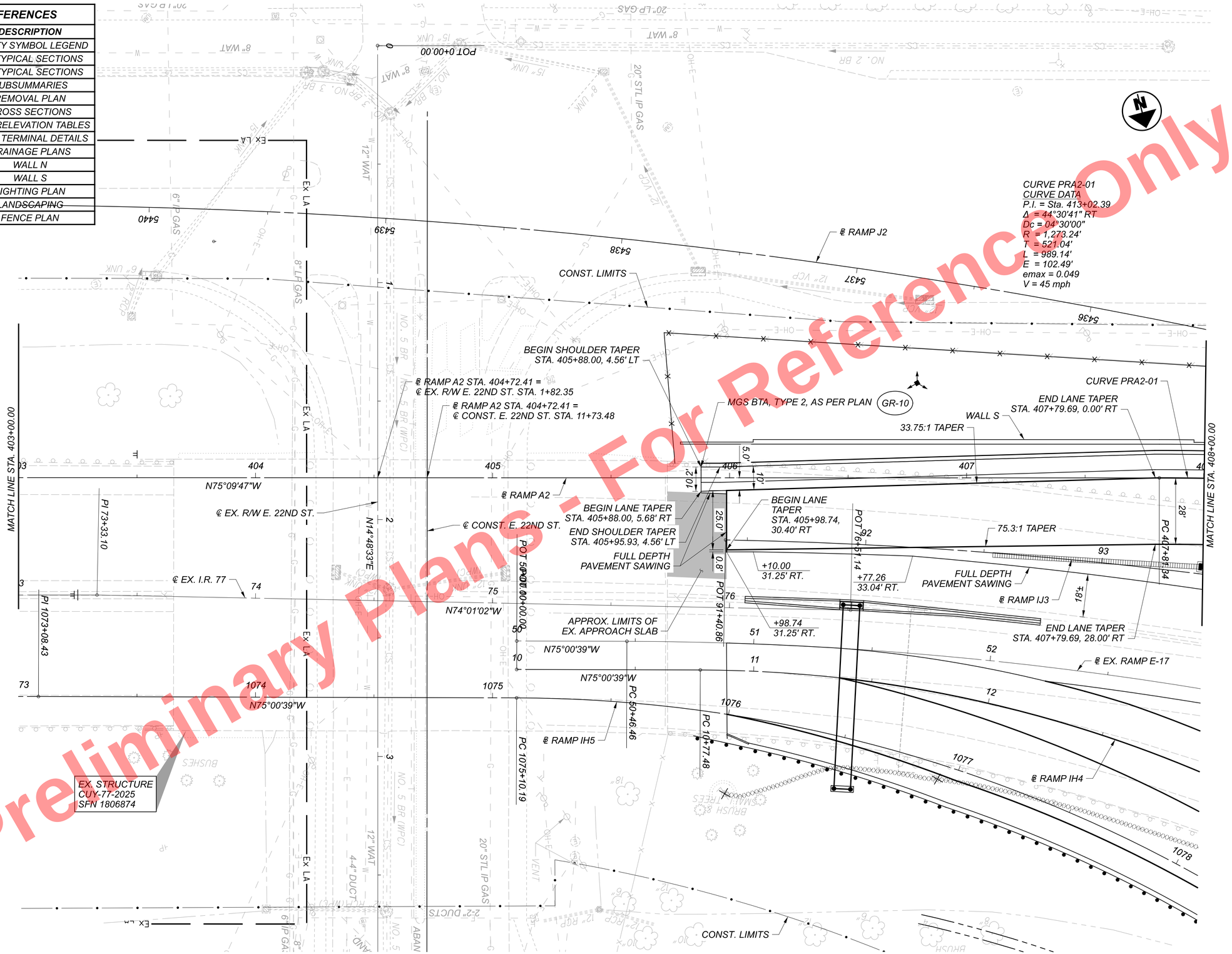

Preliminary Plans - For Reference Only

HORIZONTAL
SCALE IN FEET
0 10 20 40

PLAN - RAMP A2
STA. 403+00.00 TO STA. 408+00.00

CUY-90-16.28 (CCG3A)

MODEL: 82382_GP3202 PAPERSIZE: 34x22 (in.) DATE: 3/27/2025 TIME: 9:51:57 PM USER: AlexandriaSummers
pw:\\mb-us-pw.bentley.commb-us-pw-03\Documents\Cleveland_OH\01_Projects\ODOT_District2\82382\400-Engineering\Roadway\Sheets\82382_GP3202.dgn

DESIGN AGENCY

DESIGNER BMV
REVIEWER TJS 04/30/24
PROJECT ID 82382
SHEET 552 TOTAL 2696

Preliminary Plans - For Reference Only

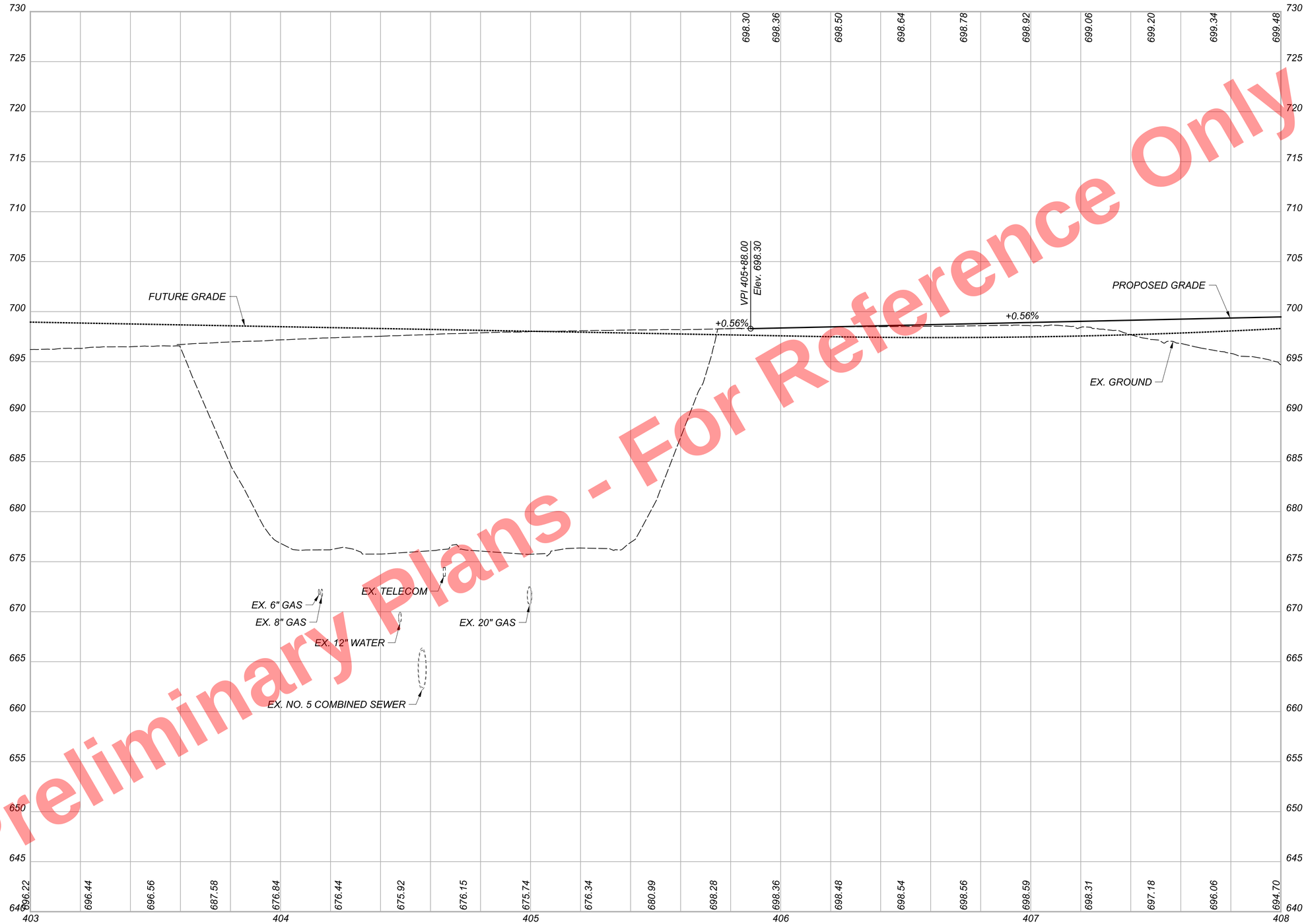

PROFILE - RAMP A2
STA. 403+00.00 TO STA. 408+00.00

DESIGN AGENCY

DESIGNER BMV
REVIEWER TJS 04/30/24
PROJECT ID 82382
SHEET 553 TOTAL 2696

CUY-90-16.28 (CCG3A)

MODEL: 82382_GF3202 PAPERSIZE: 34x22 (in.) DATE: 3/27/2025 TIME: 9:52:17 PM USER: AlexandriaSummers
pw:\\mb-us-pw.bentley.commb-us-pw-03\Documents\Cleveland_OH\01_Projects\000T\District2\82382\400-Engineering\Roadway\Sheets\82382_GF3202.dgn

CROSS REFERENCES	
SHEET	DESCRIPTION
73	UTILITY SYMBOL LEGEND
28	EX. TYPICAL SECTIONS
44 - 46	PR. TYPICAL SECTIONS
430 - 489	SUBSUMMARIES
679 - 710	REMOVAL PLAN
679 - 710	CROSS SECTIONS
799 - 817	SUPERELEVATION TABLES
1048 - 1049	RAMP TERMINAL DETAILS
1092 - 1120	DRAINAGE PLANS
1270	WALL N
1283	WALL S
1366 - 1367	COMBINED SEWER
1716 - 1723	LIGHTING PLAN
1807 - 1817	LANDSCAPING
1869 - 1873	CUY-77-1587 (BRIDGE 9)
2383 - 2386	FENCE PLAN

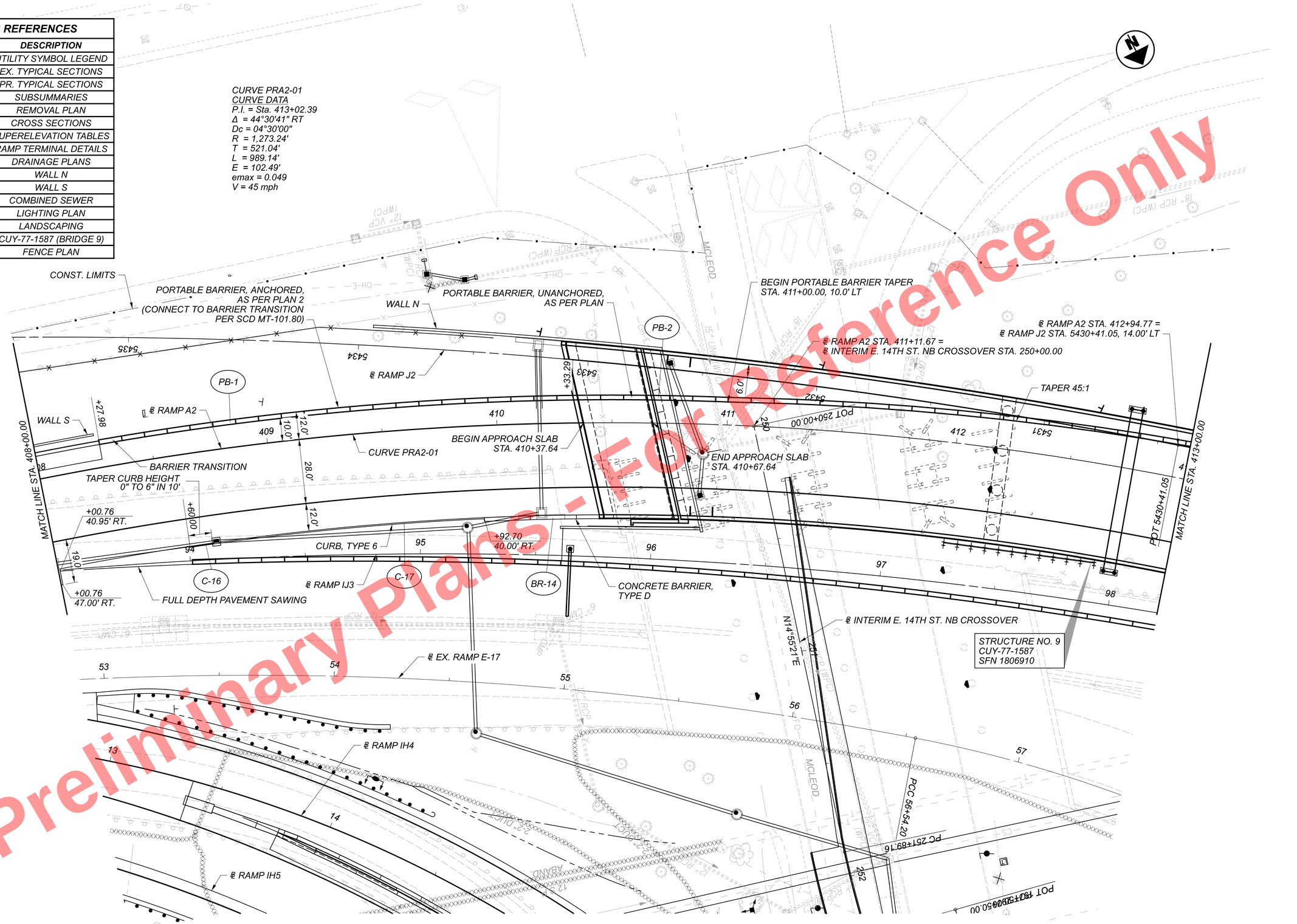

Preliminary Plans - For Reference Only

HORIZONTAL SCALE IN FEET
0 10 20 40

PLAN - RAMP A2
STA. 408+00.00 TO STA. 413+00.00

DESIGN AGENCY
HDR

DESIGNER
BMV

REVIEWER
TJS 04/30/24

PROJECT ID
82382

SHEET 554 TOTAL 2696

CUY-90-16.28 (CCG3A)

MODEL: 82382_GP3203 PAPERSIZE: 34x22 (in.) DATE: 3/27/2025 TIME: 9:52:28 PM USER: Alexandria.Summers
pw:\\mb-us-pw.bentley.com:mb-us-pw-03\Documents\Cleveland_OH\OI_Projects\ODOT\District12\82382\400-Engineering\Roadway\Sheets\82382_GP3203.dgn

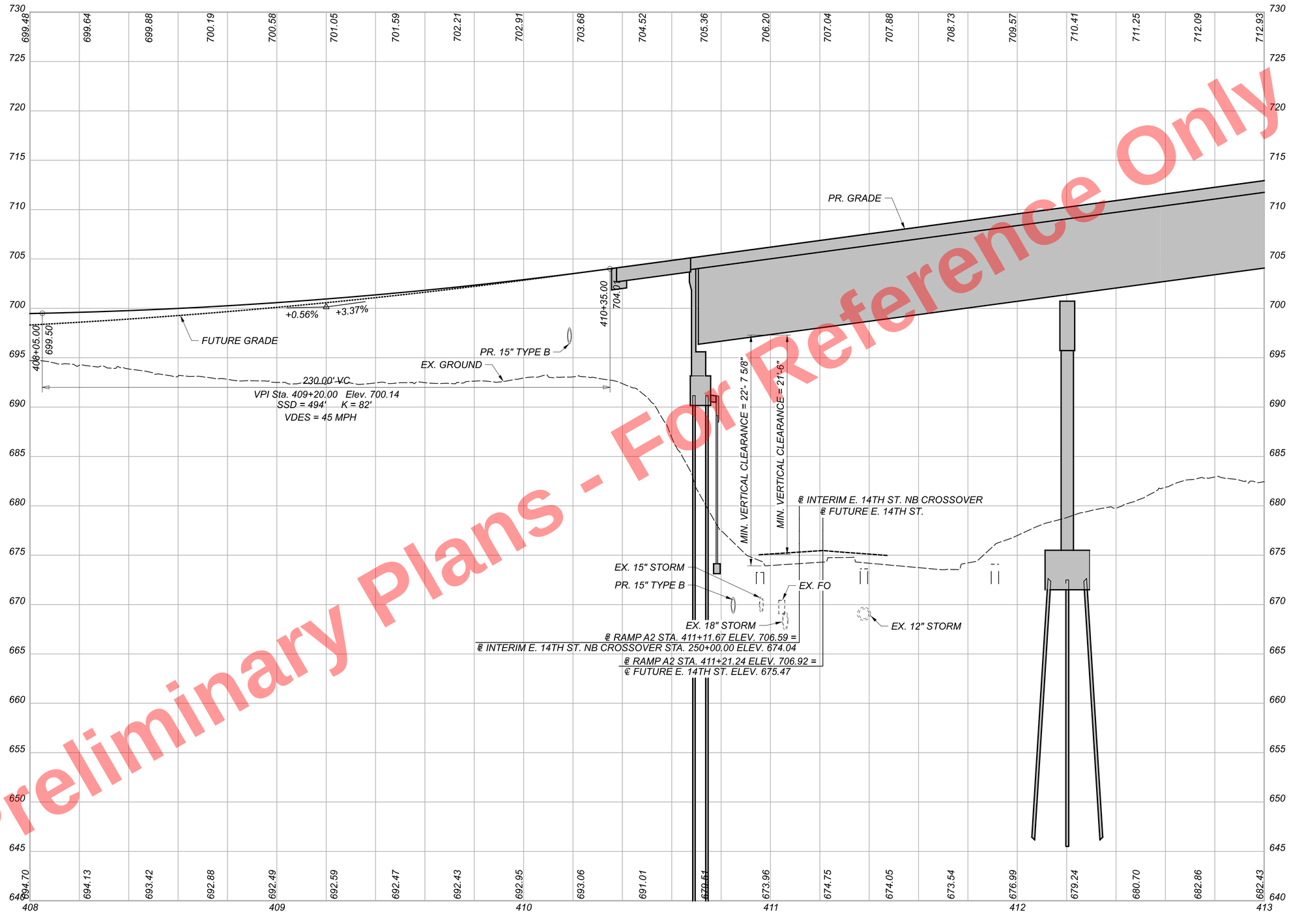

Preliminary Plans - For Reference Only

PROFILE - RAMP A2
STA. 408+00.00 TO STA. 413+00.00

DESIGN AGENCY

DESIGNER
BMV

REVIEWER
TJS 04/30/24

PROJECT ID
82382

SHEET 555 TOTAL 2696

CUY-90-16.28 (CCG3A)

MODEL: 82382_GF3203 PAPERSIZE: 34x22 (ln) DATE: 3/27/2025 TIME: 9:52:50 PM USER: Alexandria.Summers
pw:\\mb-us-pw.bentley.com:mb-us-pw-03\Documents\Cleveland_OH\01_Projects\ODOT\District2\82382\400-Engineering\Roadway\Sheets\82382_GF3203.dgn

CROSS REFERENCES	
SHEET	DESCRIPTION
73	UTILITY SYMBOL LEGEND
28	EX. TYPICAL SECTIONS
44 - 46	PR. TYPICAL SECTIONS
430 - 489	SUBSUMMARIES
679 - 710	REMOVAL PLAN
679 - 710	CROSS SECTIONS
799 - 817	SUPERELEVATION TABLES
1092 - 1120	DRAINAGE PLANS
1366 - 1367	COMBINED SEWER
1716 - 1723	LIGHTING PLAN
1807 - 1817	LANDSCAPING
1869 - 1873	CUY-77-1587 (BRIDGE 9)
2383 - 2386	FENCE PLAN

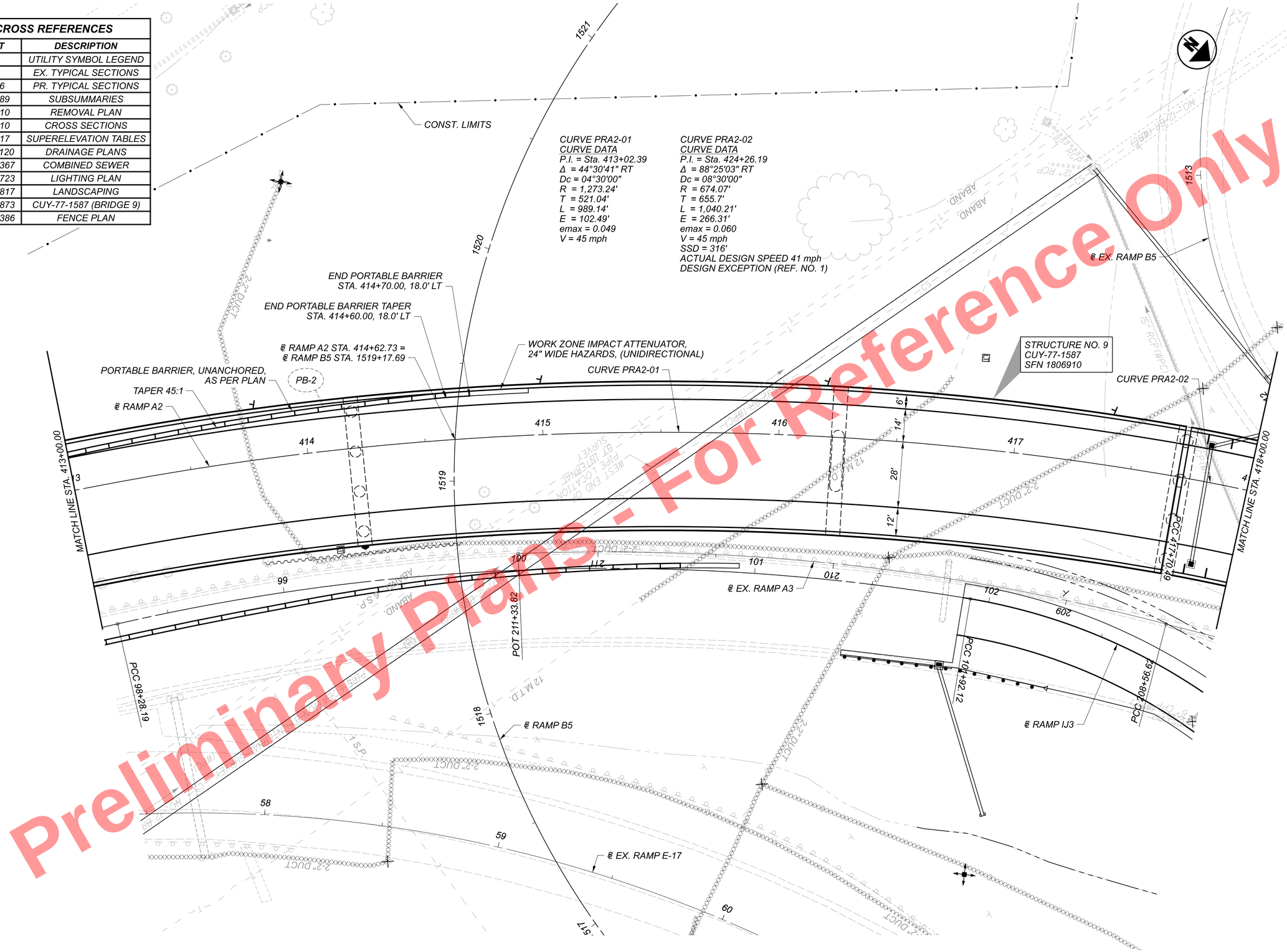

Preliminary Plans - For Reference Only

HORIZONTAL SCALE IN FEET
0 10 20 40

PLAN - RAMP A2
STA. 413+00.00 TO STA. 418+00.00

DESIGN AGENCY
HDR

DESIGNER BMV
REVIEWER TJS 04/30/24
PROJECT ID 82382
SHEET 556 TOTAL 2696

CUY-90-16.28 (CCG3A)

MODEL: 82382_GP3204 PAPERSIZE: 34x22 (in.) DATE: 3/27/2025 TIME: 9:53:01 PM USER: Alexandria.Summers
pw:\\vmb-us-pw.bentley.com:vmb-us-pw-03\Documents\Cleveland_OH\01_Projects\000T\District2\82382\400-Engineering\Roadway\Sheets\82382_GP3204.dgn

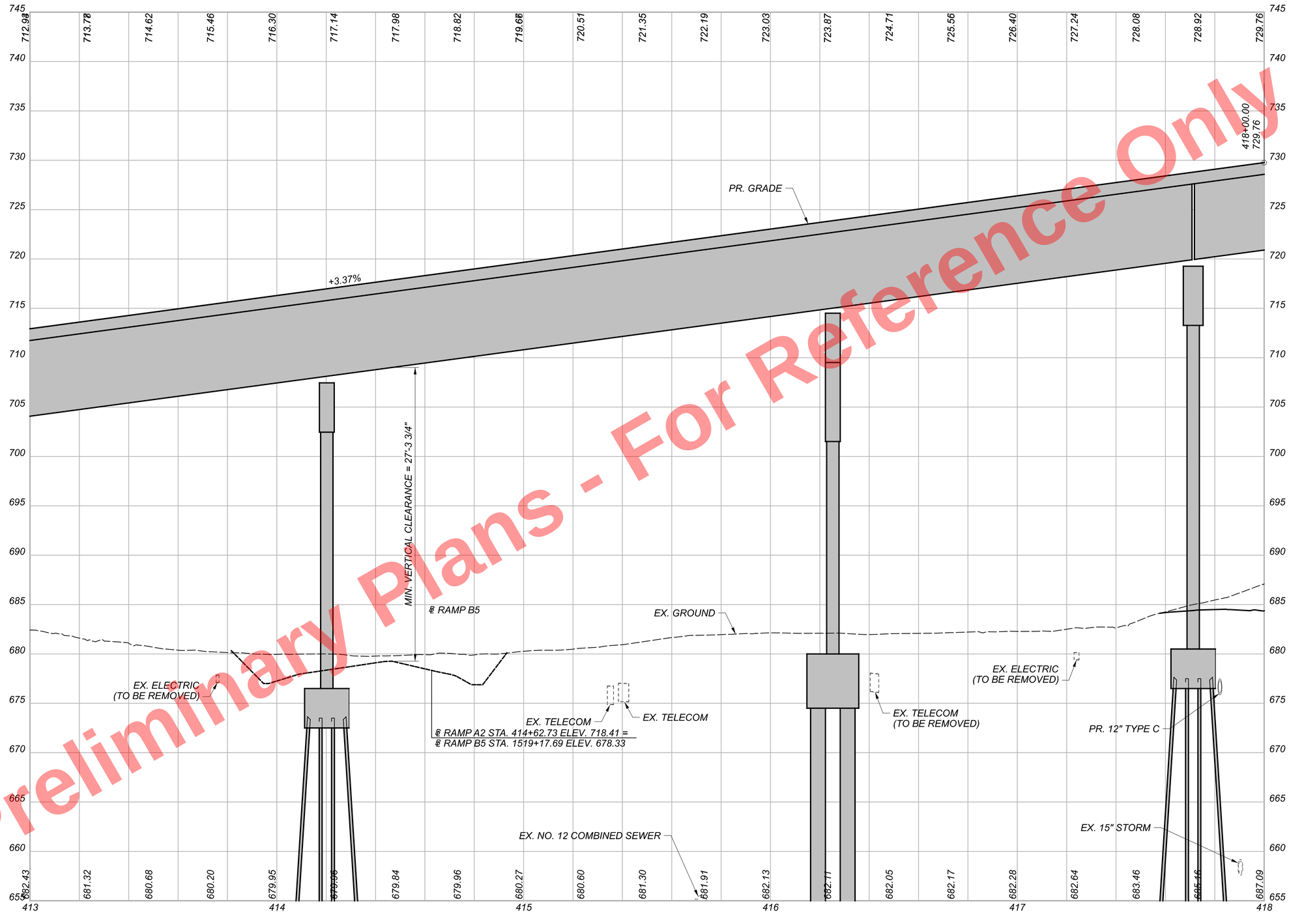

Preliminary Plans - For Reference Only

PROFILE - RAMP A2
STA. 413+00.00 TO STA. 418+00.00

DESIGN AGENCY

DESIGNER
BMV

REVIEWER
TJS 04/30/24

PROJECT ID
82382

SHEET 557 | TOTAL 2696

CUY-90-16.28 (CCG3A)

MODEL: 82382_GF3204 PAPERSIZE: 34x22 (In.) DATE: 3/27/2025 TIME: 9:53:21PM USER: Alexandria.Summers
pw:\\mb-us-pw.bentley.com:mb-us-pw-03\Documents\Cleveland_OH\DOL_Projects\ODOT\District2\82382\400-Engineering\Roadway\Sheets\82382_GF3204.dgn

CROSS REFERENCES	
SHEET	DESCRIPTION
73	UTILITY SYMBOL LEGEND
28	EX. TYPICAL SECTIONS
44 - 46	PR. TYPICAL SECTIONS
430 - 489	SUBSUMMARIES
679 - 710	REMOVAL PLAN
679 - 710	CROSS SECTIONS
799 - 817	SUPERELEVATION TABLES
1092 - 1120	DRAINAGE PLANS
1716 - 1723	LIGHTING PLAN
1807 - 1817	LANDSCAPING
1869 - 1873	CUY-77-1587 (BRIDGE 9)
2383 - 2386	FENCE PLAN

CURVE PRA2-02
CURVE DATA
P.I. = Sta. 424+26.19
Δ = 88°25'03" RT
Dc = 08°30'00"
R = 674.07'
T = 655.7'
L = 1,040.21'
E = 266.31'
emax = 0.060
V = 45 mph
SSD = 316'
ACTUAL DESIGN SPEED 41 mph
DESIGN EXCEPTION (REF. NO. 1)

SC 1708+47.76
TS 1509+06.93
SC 1511+06.93
PC 1604+21.20
N72°46'51"E
℄ RAMP IB5
CURVE PRA2-02
℄ RAMP A2
℄ EX. RAMP B5
℄ EX. RAMP A3
℄ RAMP IJ3
℄ RAMP B5
℄ RAMP B6
℄ I.R. 90 WB
℄ EX. I.R. 90
℄ I.R. 90 EB
℄ RAMP A2 STA. 421+21.99 =
℄ RAMP B5 STA. 1510+22.43
℄ RAMP A2 STA. 421+51.51 =
℄ RAMP B6 STA. 1602+39.47
℄ RAMP A2 STA. 422+16.03 =
℄ EX. I.R. 90 STA. 65+74.88
℄ RAMP A2 STA. 422+31.38 ELEV. =
℄ I.R. 90 EB STA. 180+64.62 ELEV.
MATCH LINE STA. 418+00.00
MATCH LINE STA. 423+00.00
STRUCTURE NO. 9
CUY-77-1587
SFN 1806910
LIGHTWEIGHT FILL
LIMITS - AREA 1
12" RCP (PC)
15" RCP
24" RCP
28'
74'
12'

For Reference Only
Preliminary Plans

HORIZONTAL
SCALE IN FEET
0 10 20 40

PLAN - RAMP A2
STA. 418+00.00 TO STA. 423+00.00

DESIGN AGENCY
HDR

DESIGNER
BMV
REVIEWER
TJS 04/30/24
PROJECT ID
82382
SHEET 558 TOTAL 2696

CUY-90-16.28 (CCG3A)

MODEL: 82382_GP3205 PAPERSIZE: 34x22 (in.) DATE: 3/27/2025 TIME: 9:53:32 PM USER: Alexandria.Summers
pw:\\vmb-us-pw.bentley.com:vmb-us-pw-03\Documents\Cleveland_OH\01_Projects\ODOT\District2\82382\400-Engineering\Roadway\Sheets\82382_GP3205.dgn

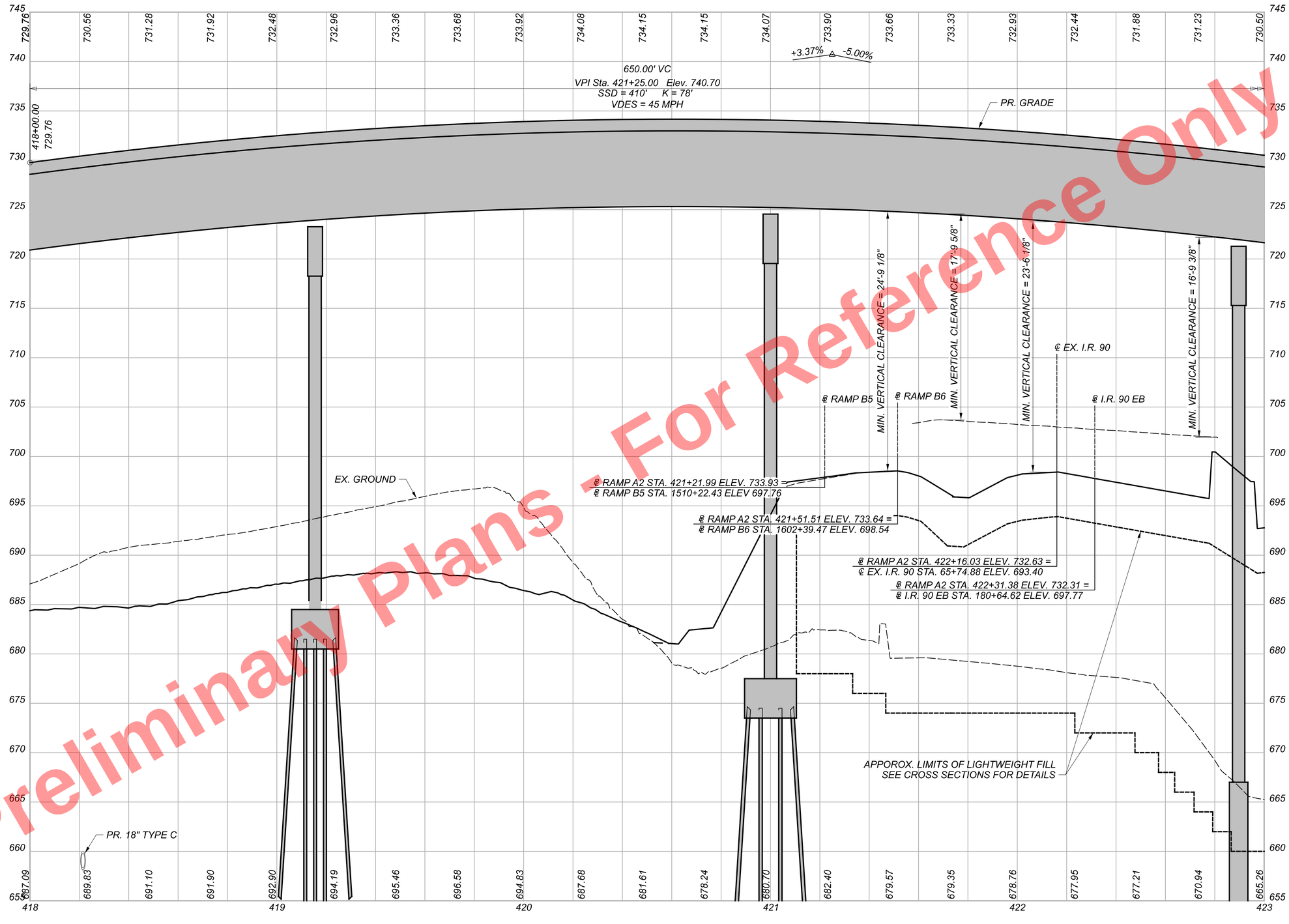

Preliminary Plans - For Reference Only

PROFILE - RAMP A2
STA. 418+00.00 TO STA. 423+00.00

DESIGN AGENCY

HDR

DESIGNER	BMV
REVIEWER	TJS 04/30/24
PROJECT ID	82382
SHEET	559
TOTAL	2696

CUY-90-16.28 (CCG3A)

MODEL: 82382_GF3205 PAPERSIZE: 34x22 (In.) DATE: 3/27/2025 TIME: 9:53:53 PM USER: Alexandria.Summers
pw:\\mb-us-pw.bentley.com\mb-us-pw-03\Documents\Cleveland_OH\DL_Projects\ODOT\District2\82382\400-Engineering\Roadway\Sheets\82382_GF3205.dgn

CROSS REFERENCES	
SHEET	DESCRIPTION
73	UTILITY SYMBOL LEGEND
28	EX. TYPICAL SECTIONS
44 - 46	PR. TYPICAL SECTIONS
430 - 489	SUBSUMMARIES
679 - 710	REMOVAL PLAN
679 - 710	CROSS SECTIONS
799 - 817	SUPERELEVATION TABLES
1092 - 1120	DRAINAGE PLANS
1716 - 1723	LIGHTING PLAN
1807 - 1817	LANDSCAPING
1869 - 1873	CUY-77-1587 (BRIDGE 9)
2383 - 2386	FENCE PLAN

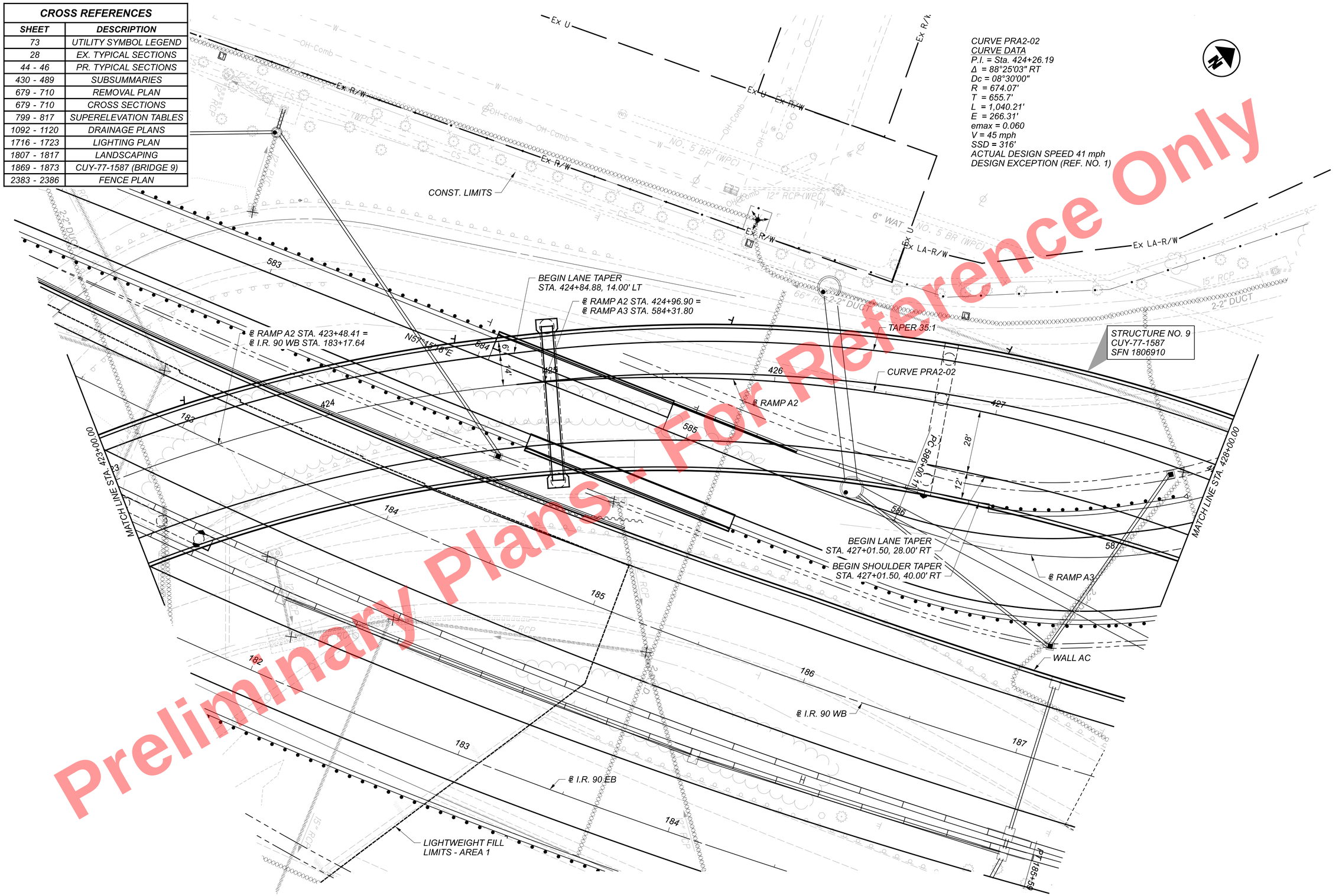

Preliminary Plans - Not For Reference Only

HORIZONTAL SCALE IN FEET
0 10 20 40

PLAN - RAMP A2
STA. 423+00.00 TO STA. 428+00.00

DESIGN AGENCY

DESIGNER BMV
REVIEWER TJS 04/30/24
PROJECT ID 82382
SHEET 560 TOTAL 2696

CUY-90-16.28 (CCG3A)

MODEL: 82382_GP3206 PAPERSIZE: 34x22 (in.) DATE: 3/27/2025 TIME: 9:54:04 PM USER: Alexandria.Summers
pw:\\mb-us-pw.bentley.com\mb-us-pw-03\Documents\Cleveland_OHIO_Projects\ODOT\District2\82382\400-Engineering\Roadway\Sheets\82382_GP3206.dgn

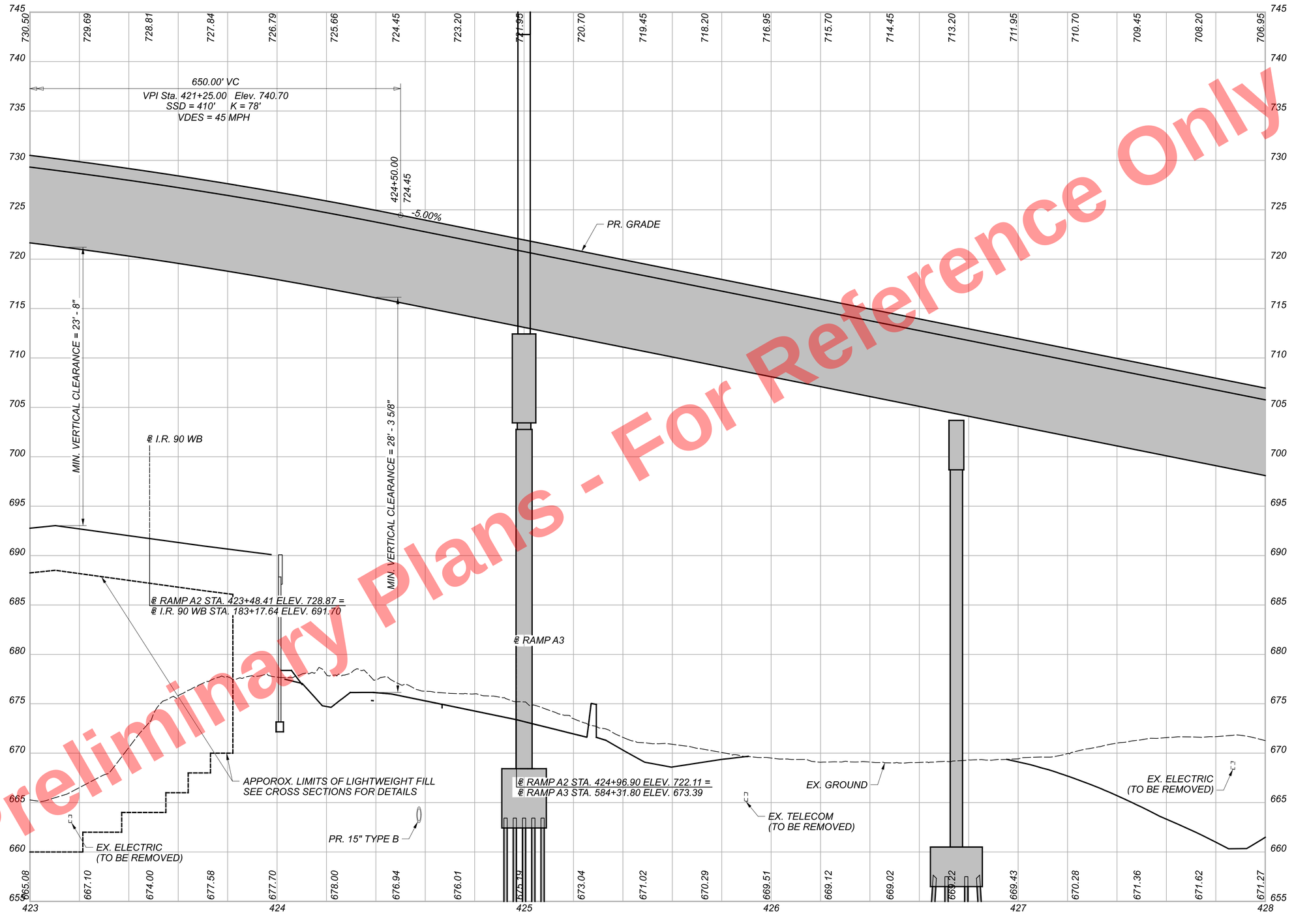

Preliminary Plans - For Reference Only

PROFILE - RAMP A2
STA. 423+00.00 TO STA. 428+00.00

CUY-90-16.28 (CCG3A)

MODEL: 82382_GF3206 PAPERSIZE: 34x22 (in.) DATE: 3/27/2025 TIME: 9:54:24 PM USER: Alexandria.Summers
pw:\\mb-us-pw.bentley.com:mb-us-pw-03\Documents\Cleveland_OH\DOT_Projects\ODOT\District2\82382\400-Engineering\Roadway\Sheets\82382_GF3206.dgn

DESIGN AGENCY

DESIGNER
BMV

REVIEWER
TJS 04/30/24

PROJECT ID
82382

SHEET 561 | TOTAL 2696

CROSS REFERENCES	
SHEET	DESCRIPTION
73	UTILITY SYMBOL LEGEND
28	EX. TYPICAL SECTIONS
44 - 46	PR. TYPICAL SECTIONS
430 - 489	SUBSUMMARIES
679 - 710	REMOVAL PLAN
679 - 710	CROSS SECTIONS
799 - 817	SUPERELEVATION TABLES
1050	RAMP TERMINAL DETAILS
1092 - 1120	DRAINAGE PLANS
1191 - 1192	WALL AD
1368	COMBINED SEWER
1716 - 1723	LIGHTING PLAN
1807 - 1817	LANDSCAPING
1869 - 1873	CUY-77-1587 (BRIDGE 9)
2383 - 2386	FENCE PLAN

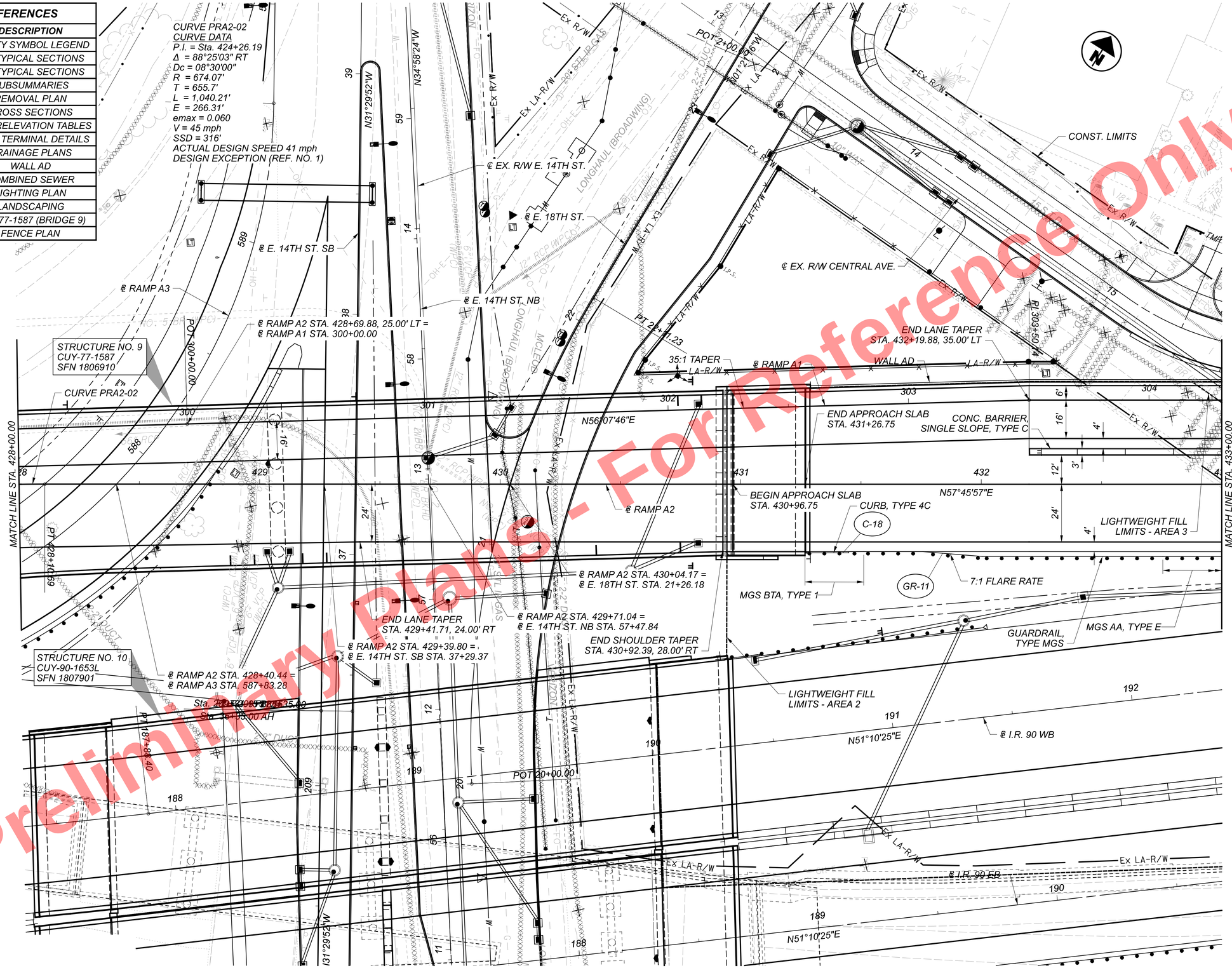

Preliminary Plans - For Reference Only

HORIZONTAL SCALE IN FEET
0 10 20 40

PLAN - RAMP A2
STA. 428+00.00 TO STA. 433+00.00

DESIGN AGENCY
HDR

DESIGNER	BMV
REVIEWER	TJS 04/30/24
PROJECT ID	82382
SHEET	562
TOTAL	2696

CUY-90-16.28 (CCG3A)

MODEL: 82382_GP3207 PAPERSIZE: 34x22 (in.) DATE: 6/9/2025 TIME: 1:00:55 PM USER: Julie.Ross
pw:\\vmb-us-pw.bentley.com:vmb-us-pw-03\Documents\Cleveland_OH\01_Projects\000T\District2\82382\400-Engineering\Roadway\Sheets\82382_GP3207.dgn

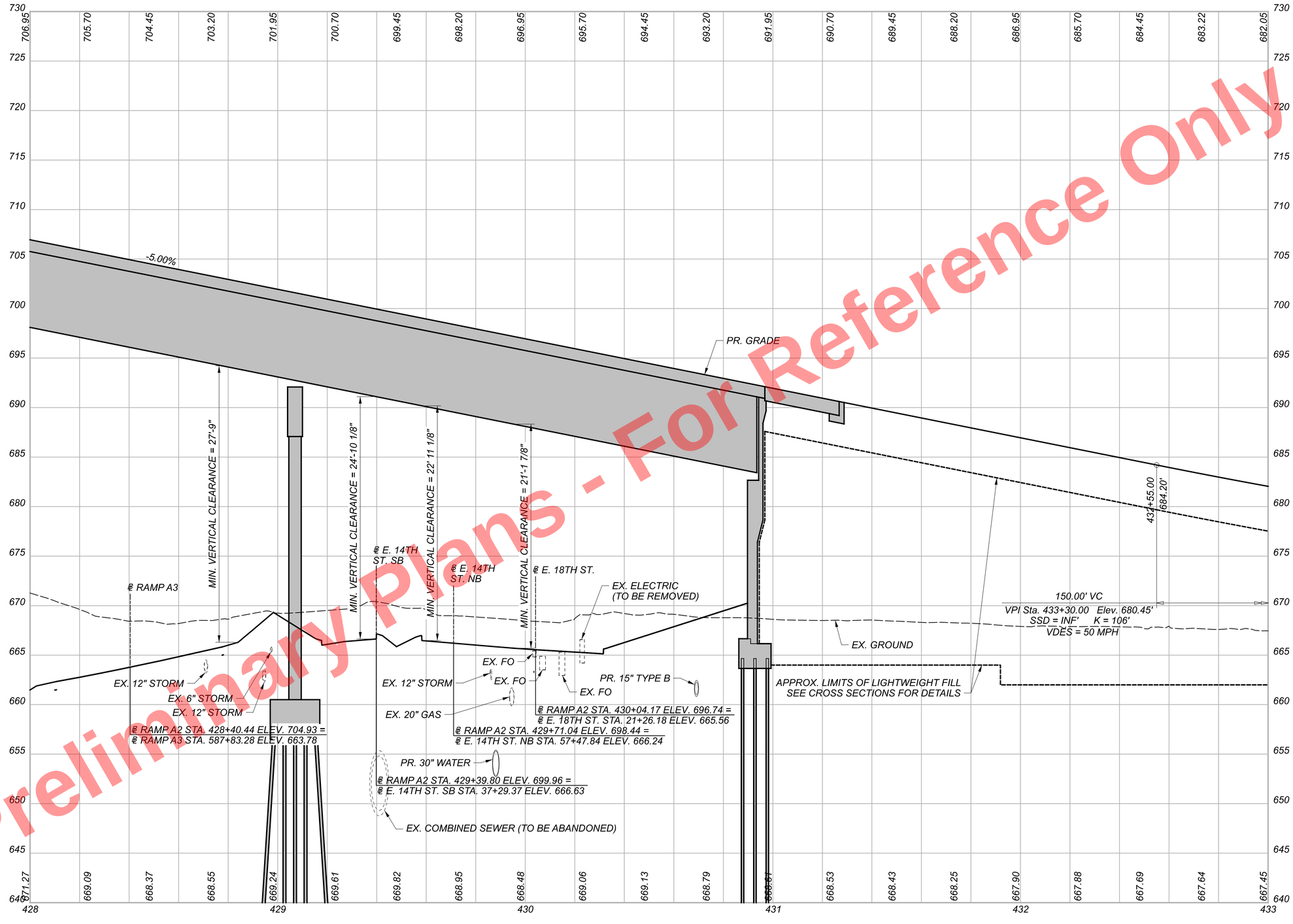

Preliminary Plans - For Reference Only

PROFILE - RAMP A2
STA. 428+00.00 TO STA. 433+00.00

DESIGN AGENCY
HDR

DESIGNER
BMV

REVIEWER
TJS 04/30/24

PROJECT ID
82382

SHEET 563 TOTAL 2696

CUY-90-16.28 (CCG3A)

MODEL: 82382_GF3207 PAPERSIZE: 34x22 (in.) DATE: 3/27/2025 TIME: 9:54:57 PM USER: Alexandria.Summers
pw:\\mb-us-pw.bentley.com:mb-us-pw-03\Documents\Cleveland_OH\OI_Projects\ODOT\District12\82382\400-Engineering\Roadway\Sheets\82382_GF3207.dgn

CROSS REFERENCES	
SHEET	**DESCRIPTION**
73	UTILITY SYMBOL LEGEND
28	EX. TYPICAL SECTIONS
44 - 46	PR. TYPICAL SECTIONS
430 - 489	SUBSUMMARIES
679 - 710	REMOVAL PLAN
679 - 710	CROSS SECTIONS
799 - 817	SUPERELEVATION TABLES
1040 - 1045	RAMP TERMINAL DETAILS
1092 - 1120	DRAINAGE PLANS
1368	COMBINED SEWER
1716 - 1723	LIGHTING PLAN
1807 - 1817	LANDSCAPING
2383 - 2386	FENCE PLAN

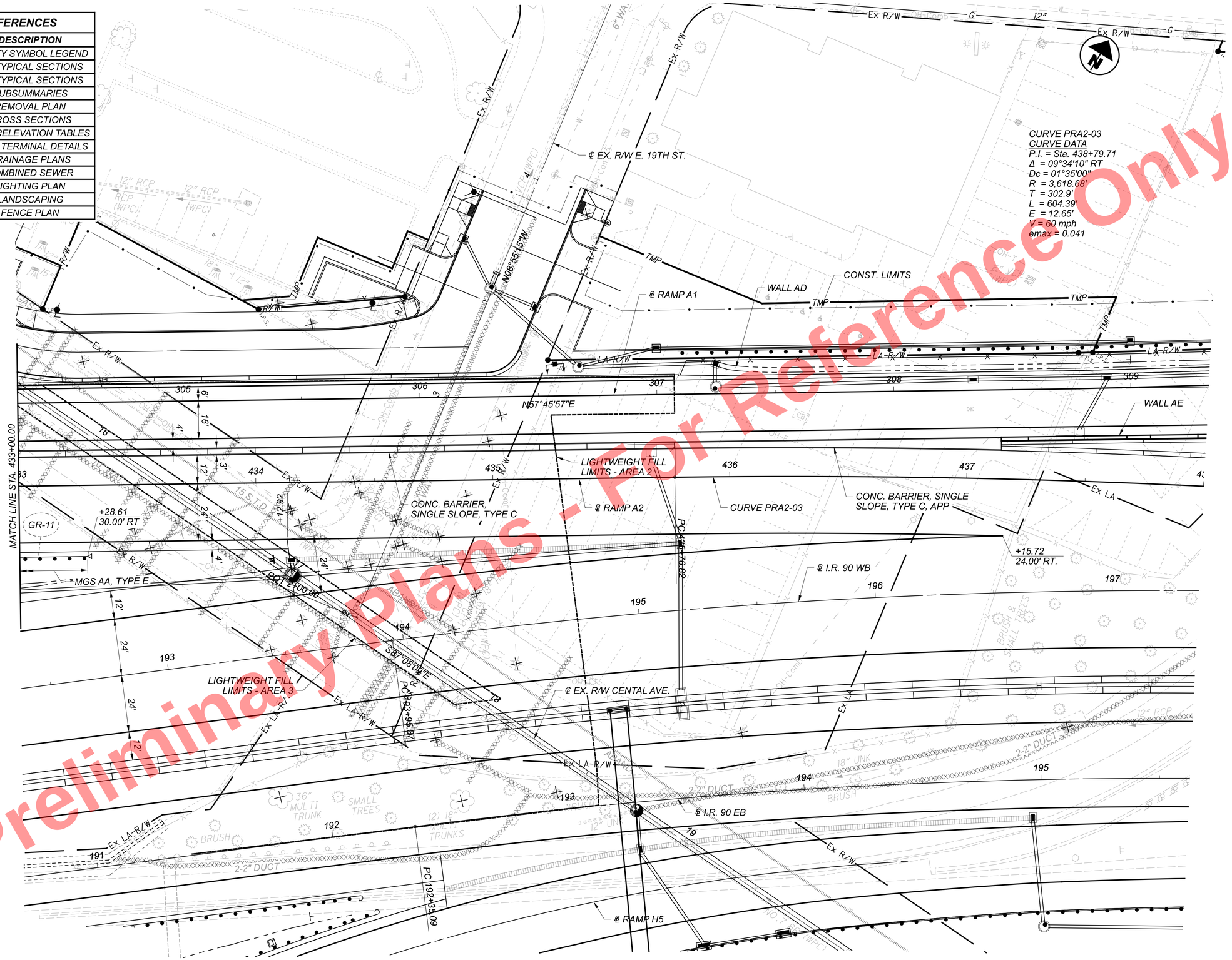

Preliminary Plans - For Reference Only

HORIZONTAL SCALE IN FEET
0 10 20 40

PLAN - RAMP A2
STA. 433+00.00 TO STA. 438+00.00

DESIGN AGENCY

DESIGNER	BMV
REVIEWER	TJS 04/30/24
PROJECT ID	82382
SHEET	564
TOTAL	2696

CUY-90-16.28 (CCG3A)

MODEL: 82382_GP3208 PAPERSIZE: 34x22 (in.) DATE: 3/27/2025 TIME: 9:55:08 PM USER: Alexandria.Summers
pw:\\mb-us-pw.bentley.com:mb-us-pw-03\Documents\Cleveland.OH\01_Projects\ODOT\District2\82382\400-Engineering\Roadway\Sheets\82382_GP3208.dgn

Preliminary Plans - For Reference Only

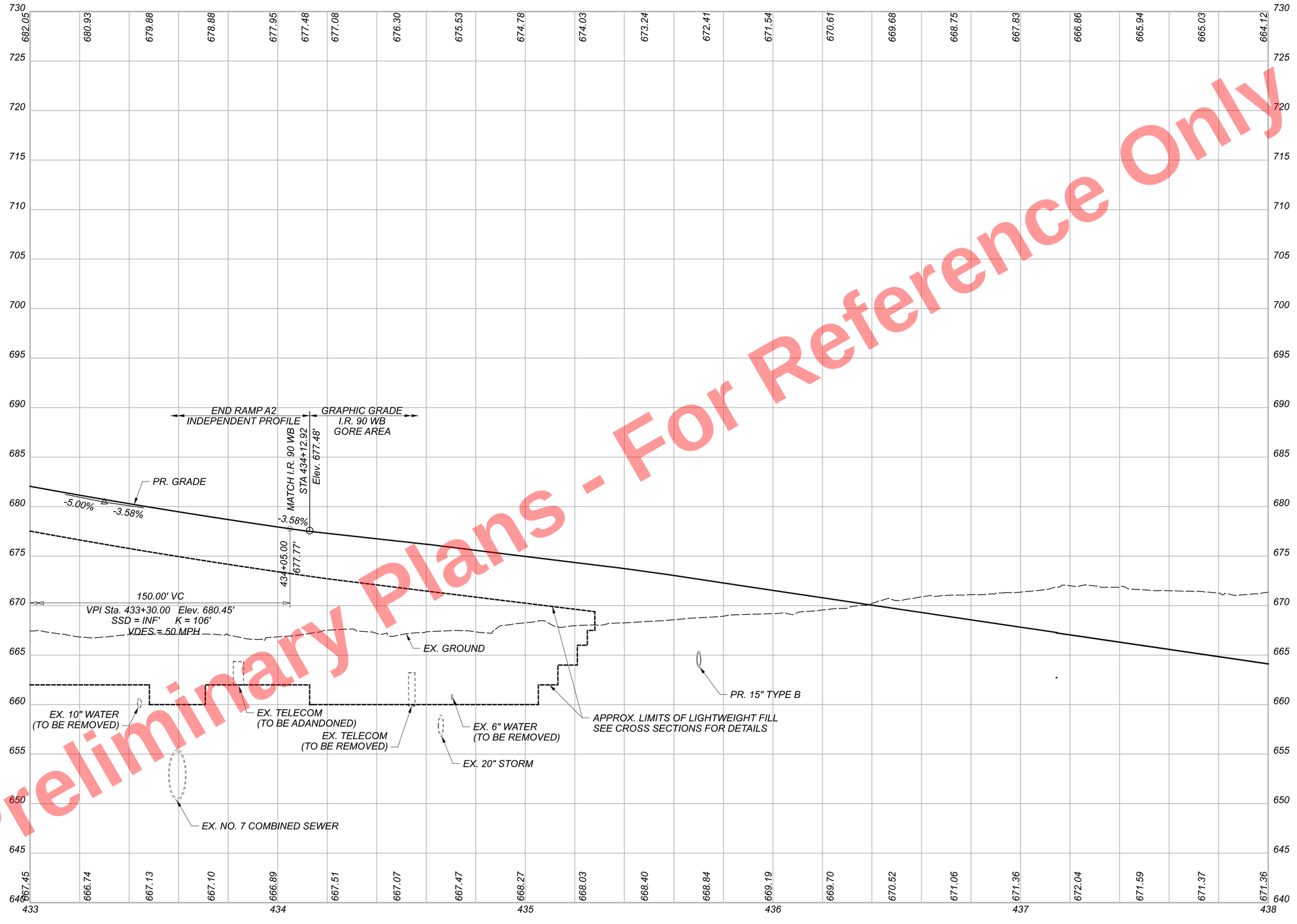

PROFILE - RAMP A2
STA. 433+00.00 TO STA. 438+00.00

CUY-90-16.28 (CCG3A)

MODEL: 82382_GF3208 PAPERSIZE: 34x22 (in.) DATE: 3/27/2025 TIME: 9:55:30 PM USER: Alexandria.Summers
pw:\\mb-us-pw.bentley.com:mb-us-pw-03\Documents\Cleveland_OH\01_Projects\ODOT\District2\82382\400-Engineering\Roadway\Sheets\82382_GF3208.dgn

DESIGN AGENCY

DESIGNER
BMV

REVIEWER
TJS 04/30/24

PROJECT ID
82382

SHEET 565 | TOTAL 2696

CROSS REFERENCES	
SHEET	DESCRIPTION
73	UTILITY SYMBOL LEGEND
21	EX. TYPICAL SECTIONS
47	PR. TYPICAL SECTIONS
430 - 489	SUBSUMMARIES
679 - 710	REMOVAL PLAN
818 - 832	CROSS SECTIONS
1022	SUPERELEVATION TABLES
1046 - 1047	RAMP TERMINAL DETAILS
1092 - 1120	DRAINAGE PLANS
1716 - 1723	LIGHTING PLAN
1807 - 1817	LANDSCAPING
2383 - 2386	FENCE PLAN

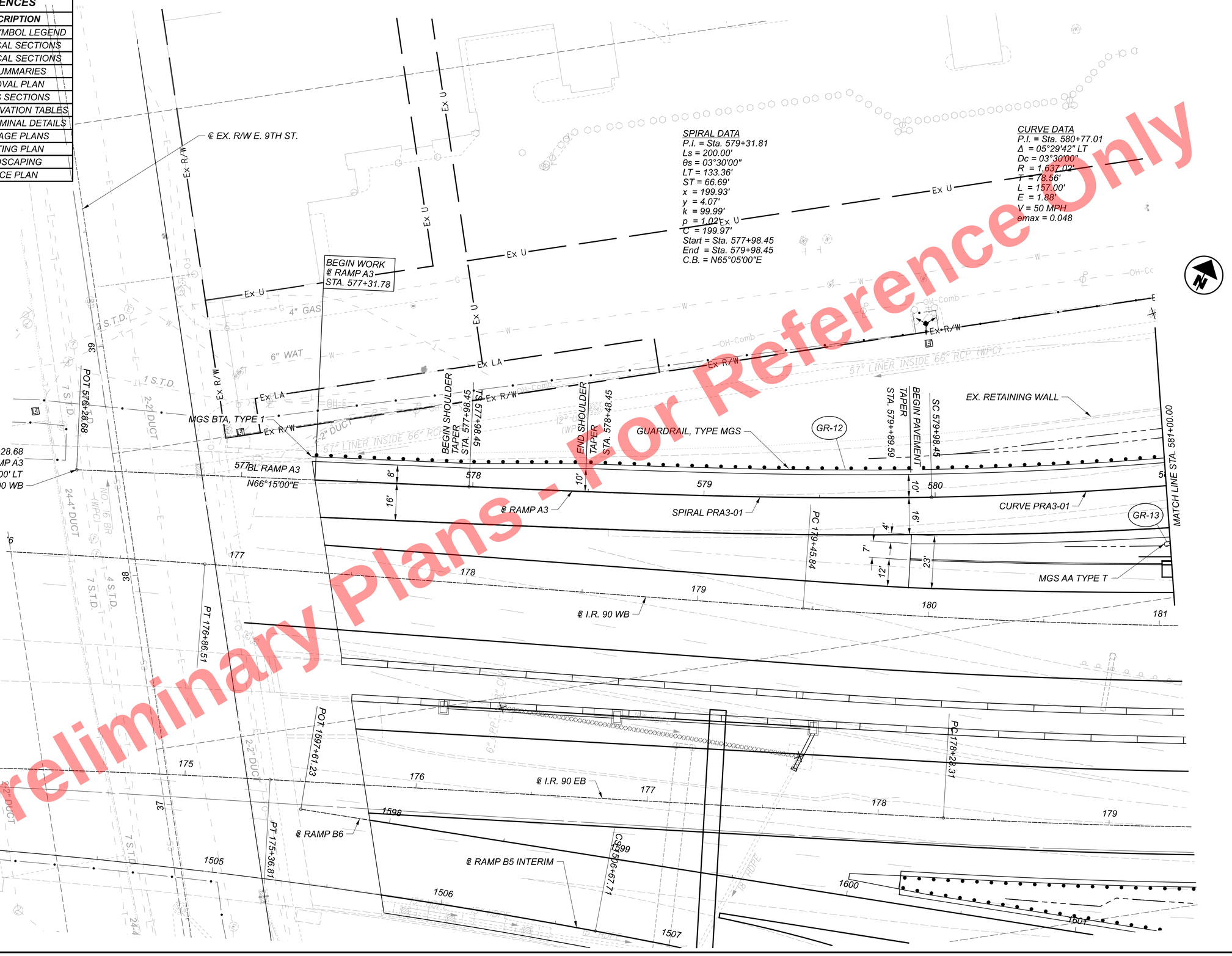

Preliminary Plans - For Reference Only

HORIZONTAL SCALE IN FEET
0 10 20 40

PLAN - RAMP A3
STA. 576+28.68 TO STA. 581+00.00

DESIGN AGENCY
B&N burgessniple.com

DESIGNER AJS
REVIEWER MRT 5/1/24
PROJECT ID 82382
SHEET 566 TOTAL 2696

CUY-90-16.28 (CCG3A)

MODEL: 82382_GP330I PAPERSIZE: 34x22 (in.) DATE: 3/27/2025 TIME: 9:55:43 PM USER: Alexandria.Summers
pw:\\mb-us-pw.bentley.com:mb-us-pw-03\Documents\Cleveland_OH\DL_Projects\ODOT\District2\82382\400-Engineering\R

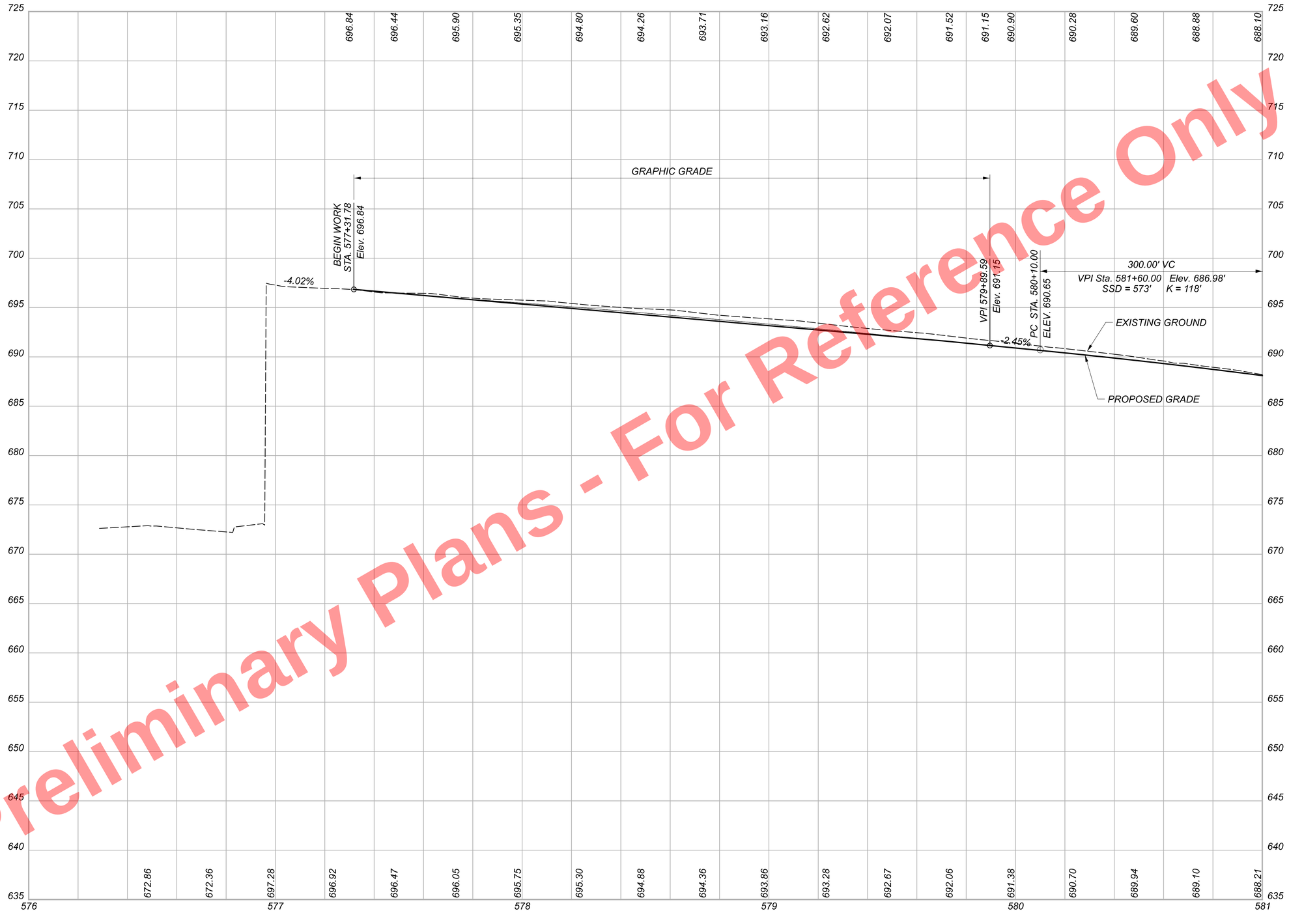

Preliminary Plans - For Reference Only

PROFILE - RAMP A3
STA. 576+00.00 TO STA. 581+00.00

DESIGN AGENCY
B&N
burgessniple.com

DESIGNER
AJS

REVIEWER
MRT 5/1/24

PROJECT ID
82382

SHEET 567 TOTAL 2696

CUY-90-16.28 (CCG3A)

MODEL: 82382_GF330I PAPERSIZE: 34x22 (In.) DATE: 3/27/2025 TIME: 9:56:11 PM USER: Alexandria.Summers
pw:\\mb-us-pw.bentley.com:mb-us-pw-03\Documents\Cleveland_OH\OiL_Projects\ODOT\District12\82382\400-Engineering\Roadway\Sheets\82382_GF330I.dgn

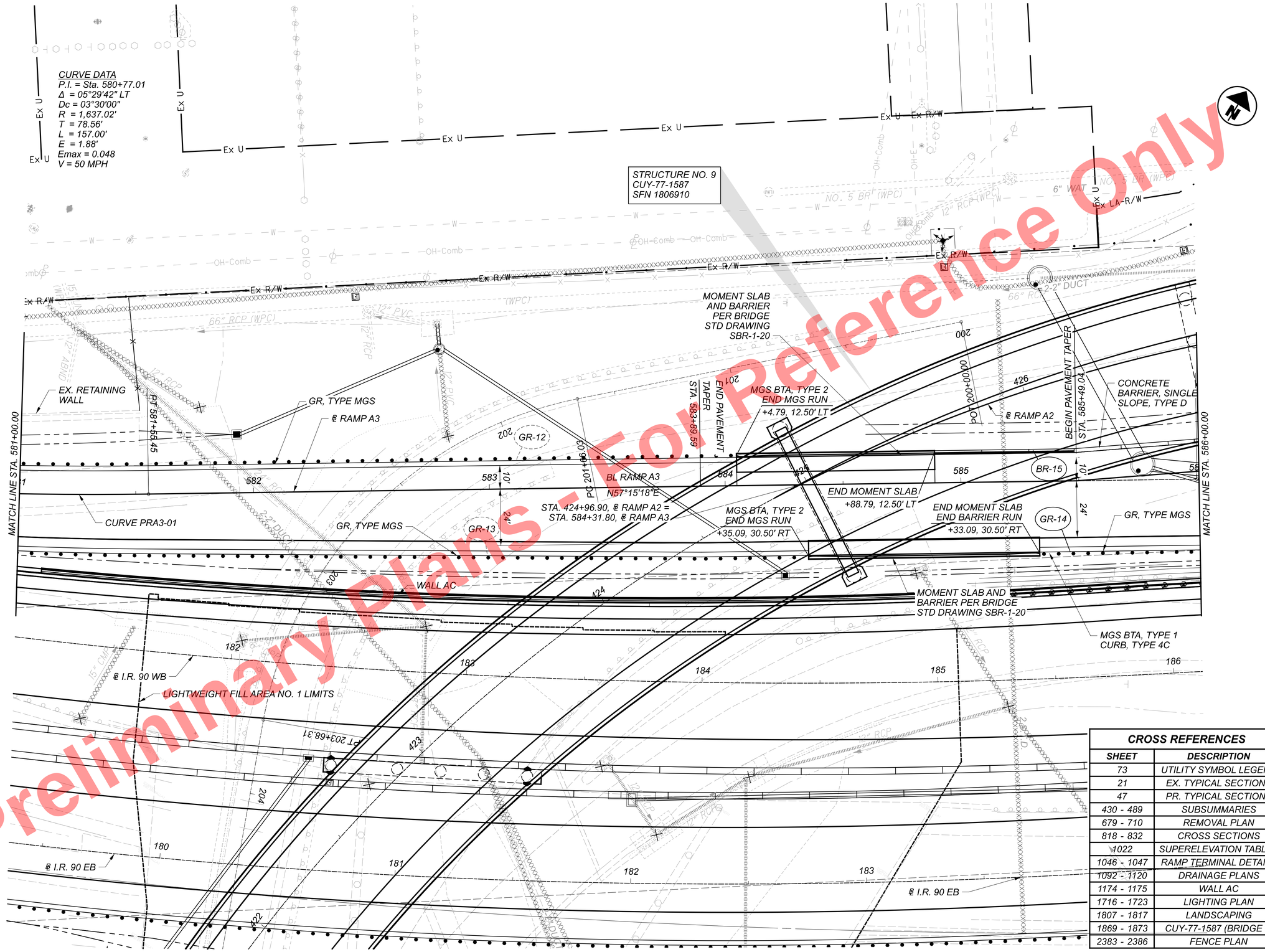

CROSS REFERENCES	
SHEET	**DESCRIPTION**
73	UTILITY SYMBOL LEGEND
21	EX. TYPICAL SECTIONS
47	PR. TYPICAL SECTIONS
430 - 489	SUBSUMMARIES
679 - 710	REMOVAL PLAN
818 - 832	CROSS SECTIONS
1022	SUPERELEVATION TABLES
1046 - 1047	RAMP TERMINAL DETAILS
1092 - 1120	DRAINAGE PLANS
1174 - 1175	WALL AC
1716 - 1723	LIGHTING PLAN
1807 - 1817	LANDSCAPING
1869 - 1873	CUY-77-1587 (BRIDGE 9)
2383 - 2386	FENCE PLAN

HORIZONTAL SCALE IN FEET
0 10 20 40

PLAN - RAMP A3
STA. 581+00.00 TO STA. 586+00.00

CUY-90-16.28 (CCG3A)

MODEL: 82382_GP3302 PAPERSIZE: 34x22 (in.) DATE: 3/27/2025 TIME: 9:56:30 PM USER: Alexandria.Summers
pw:\\vmb-us-pw.bentley.com:vmb-us-pw-03\Documents\Cleveland_OH\01_Projects\ODOT\District 12\82382\400-Engineering\Roadway\Sheets\82382_GP3302.dgn

DESIGN AGENCY
B&N
burgessniple.com

DESIGNER AJS
REVIEWER MRT 5/1/24
PROJECT ID 82382
SHEET 568 TOTAL 2696

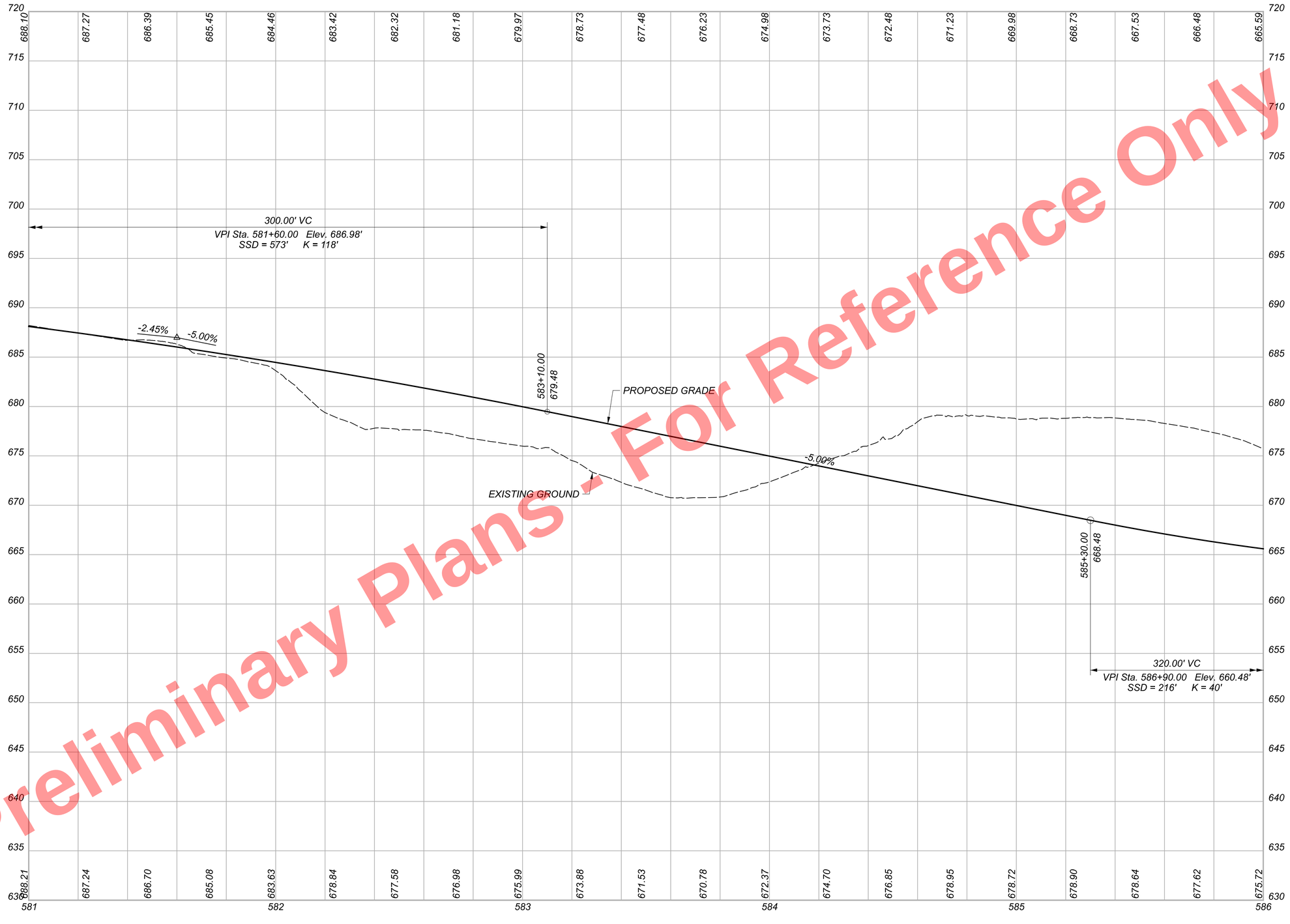

Preliminary Plans - For Reference Only

PROFILE - RAMP A3
STA. 581+00.00 TO STA. 586+00.00

CUY-90-16.28 (CCG3A)

MODEL: 82382_GF3302 PAPERSIZE: 34x22 (in.) DATE: 3/27/2025 TIME: 9:56:53 PM USER: AlexandriaSummers
pw:\\mb-us-pw.bentley.com:mb-us-pw-03\Documents\Cleveland_OH\OiL Projects\ODOT\District 12\82382\400-Engineering\Roadway\Sheets\82382_GF3302.dgn

DESIGN AGENCY
B&N
burgessniple.com

DESIGNER AJS
REVIEWER MRT 5/1/24
PROJECT ID 82382
SHEET 569 TOTAL 2696

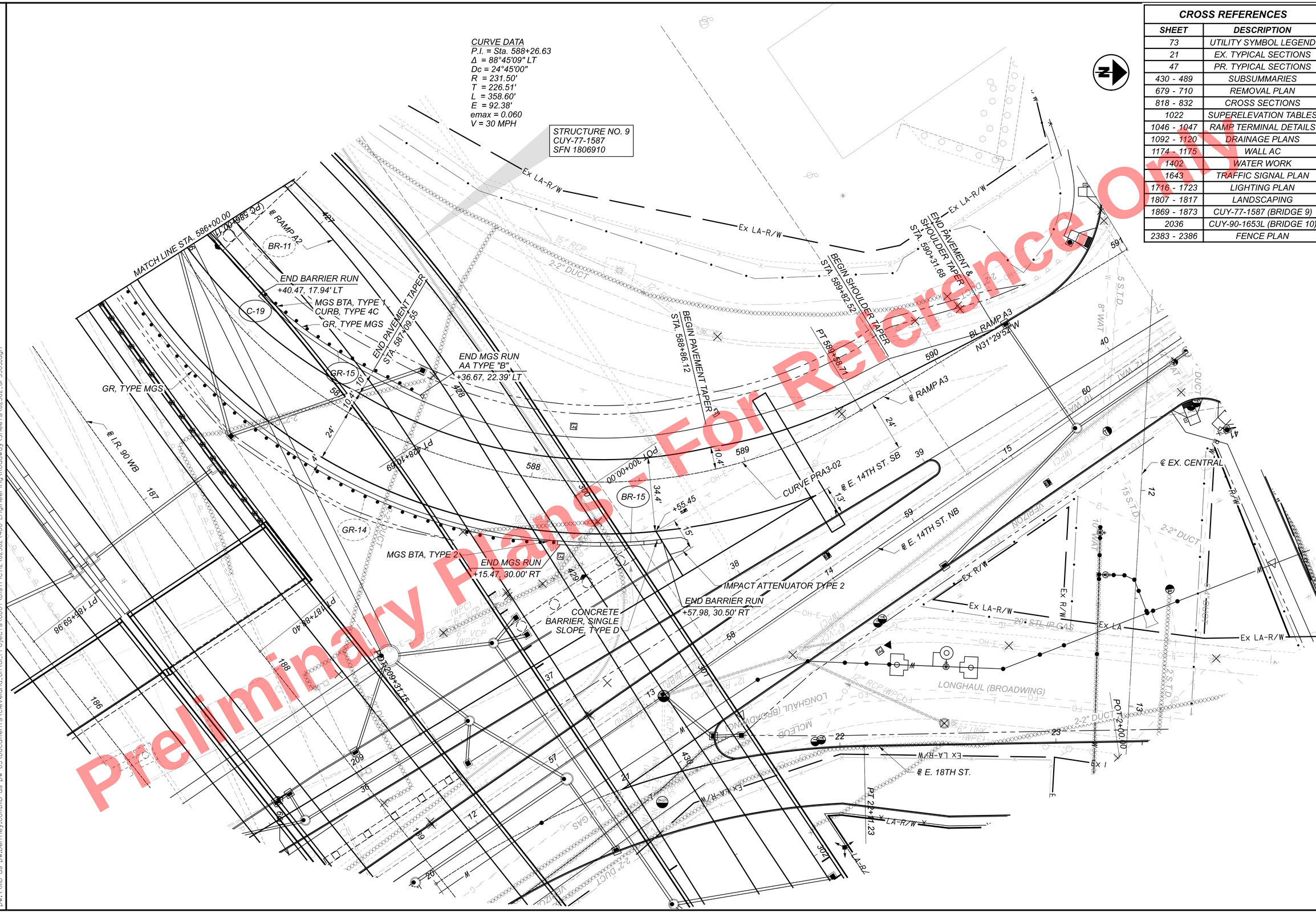

CROSS REFERENCES	
SHEET	DESCRIPTION
73	UTILITY SYMBOL LEGEND
21	EX. TYPICAL SECTIONS
47	PR. TYPICAL SECTIONS
430 - 489	SUBSUMMARIES
679 - 710	REMOVAL PLAN
818 - 832	CROSS SECTIONS
1022	SUPERELEVATION TABLES
1046 - 1047	RAMP TERMINAL DETAILS
1092 - 1120	DRAINAGE PLANS
1174 - 1175	WALL AC
1402	WATER WORK
1643	TRAFFIC SIGNAL PLAN
1716 - 1723	LIGHTING PLAN
1807 - 1817	LANDSCAPING
1869 - 1873	CUY-77-1587 (BRIDGE 9)
2036	CUY-90-1653L (BRIDGE 10)
2383 - 2386	FENCE PLAN

HORIZONTAL SCALE IN FEET
0 10 20 40

PLAN - RAMP A3
STA. 586+00.00 TO END

DESIGN AGENCY
B&N
burgessniple.com

DESIGNER
AJS

REVIEWER
MRT 5/1/24

PROJECT ID
82382

SHEET 570 TOTAL 2696

CUY-90-16.28 (CCG3A)

MODEL: 82382_GP3303 PAPERSIZE: 34x22 (in.) DATE: 6/9/2025 TIME: 1:01:18 PM USER: Julie.Ross
pw:\\mb-us-pw.bentley.com:mb-us-pw-03\Documents\Cleveland_OH\OI_Projects\ODOT\District12\82382\400-Engineering\Roadway\Sheets\82382_GP3303.dgn

CUY-90-16.28 (CCG3A)

MODEL: 82382_GF3303 PAPERSIZE: 34x22 (in.) DATE: 3/27/2025 TIME: 9:57:39 PM USER: Alexandria.Summers
pw:\\mb-us-pw.bentley.com:mb-us-pw-03\Documents\Cleveland_OH\OI_Projects\ODOT\District12\82382\400-Engineering\Roadway\Sheets\82382_GF3303.dgn

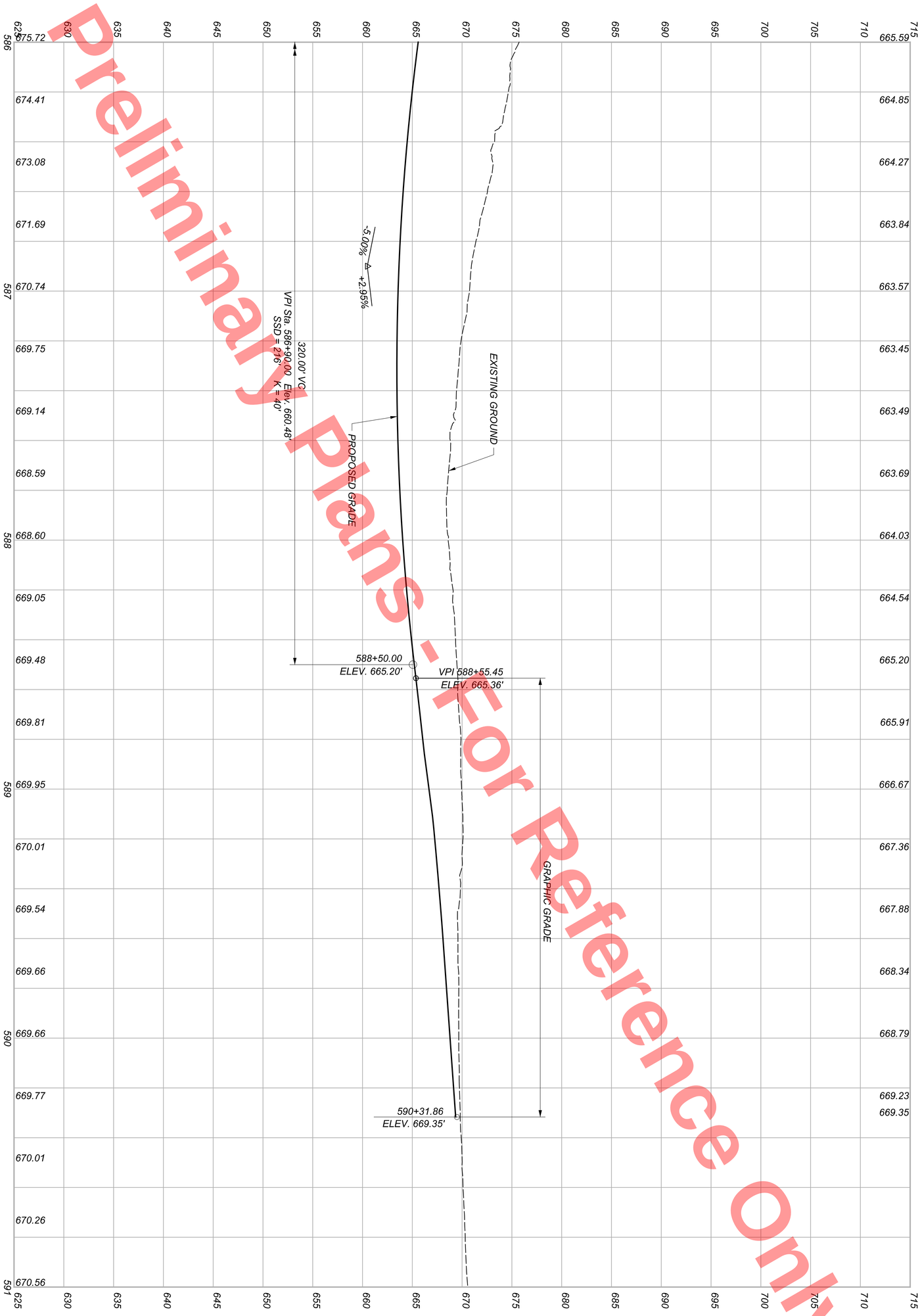

Preliminary Plans - For Reference Only

DESIGN AGENCY	B&N burgessniple.com
DESIGNER	AJS
REVIEWER	MRT 5/1/24
PROJECT ID	82382
SHEET	571
TOTAL	2696

PROFILE - RAMP A3
STA. 586+00.00 TO END

CROSS REFERENCES	
SHEET	DESCRIPTION
73	UTILITY SYMBOL LEGEND
22	EX. TYPICAL SECTIONS
48	PR. TYPICAL SECTIONS
430 - 489	SUBSUMMARIES
679 - 710	REMOVAL PLAN
833 - 841	CROSS SECTIONS
1023	SUPERELEVATION TABLES
1031	RAMP TERMINAL DETAILS
1092 - 1120	DRAINAGE PLANS
1716 - 1723	LIGHTING PLAN
1807 - 1817	LANDSCAPING
2383 - 2386	FENCE PLAN

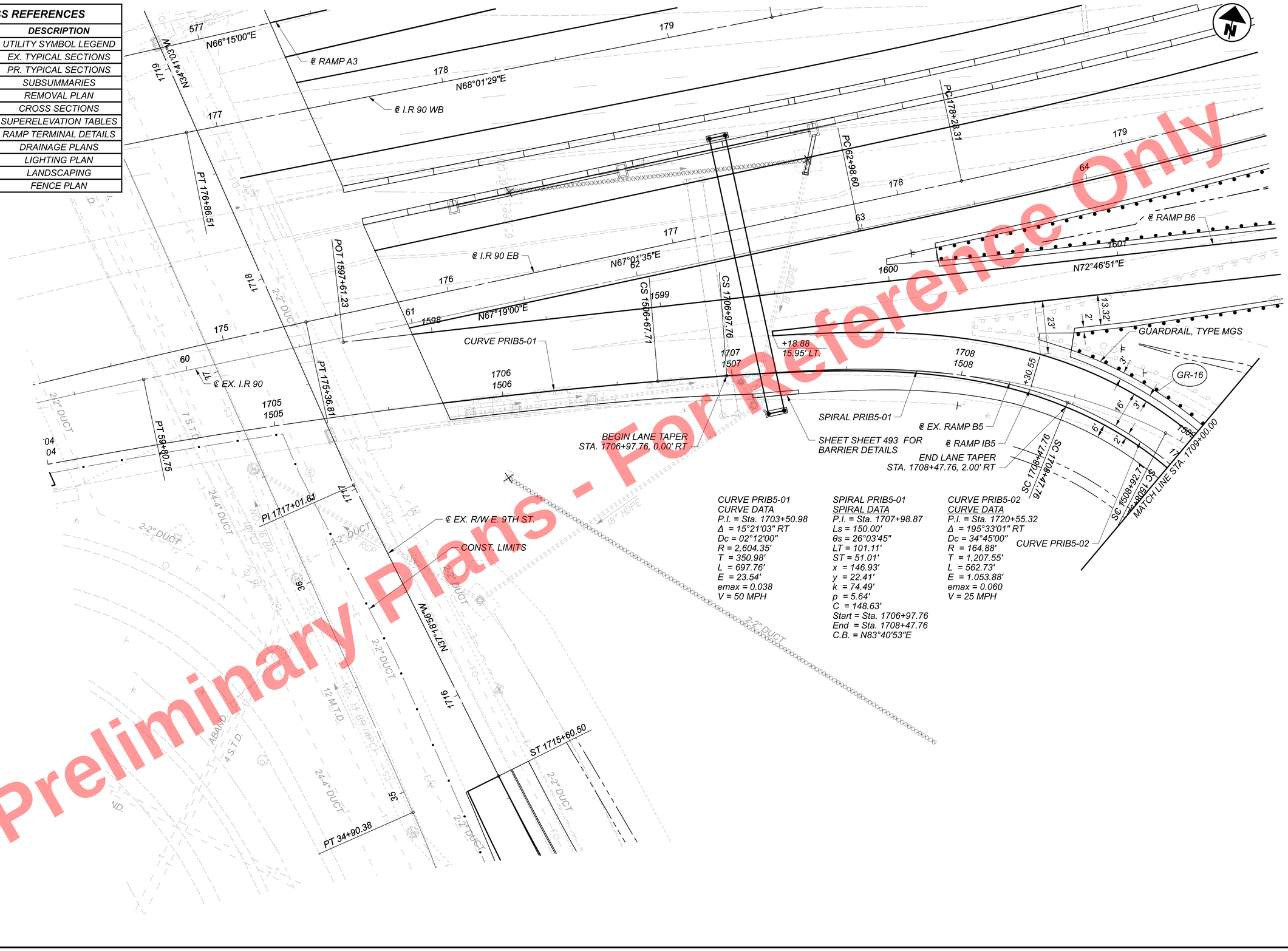

Preliminary Plans - For Reference Only

HORIZONTAL SCALE IN FEET
0 10 20 40

PLAN - RAMP IB5
BEGIN TO STA. 1709+00.00

DESIGN AGENCY

DESIGNER BMV
REVIEWER TJS 04/30/24
PROJECT ID 82382
SHEET 572 TOTAL 2696

CUY-90-16.28 (CCG3A)

MODEL: 82382_GP450I PAPERSIZE: 34x22 (in.) DATE: 3/27/2025 TIME: 9:57:58 PM USER: Alexandria.Summers
pw:\\mb-us-pw.bentley.com:mb-us-pw-03\Documents\Cleveland_OH\01_Projects\ODOT\District2\82382\400-Engineering\Roadway\Sheets\82382_GP450I.dgn

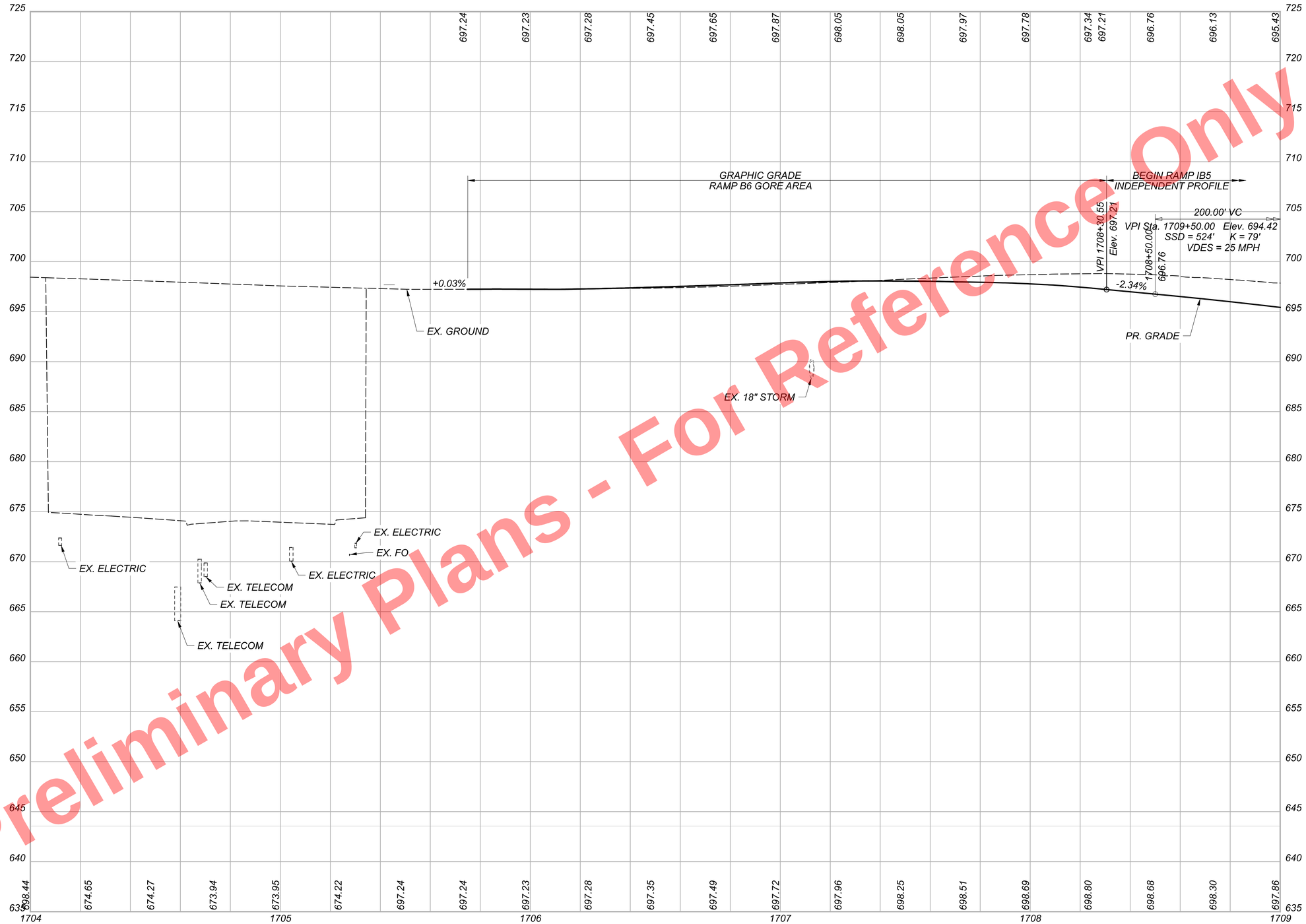

Preliminary Plans - For Reference Only

PROFILE - RAMP IB5
BEGIN TO STA. 1709+00.00

CUY-90-16.28 (CCG3A)

MODEL: 82382_GF450I PAPERSIZE: 34x22 (in.) DATE: 3/27/2025 TIME: 9:58:14 PM USER: Alexandria.Summers
pw:\\mb-us-pw.bentley.com:mb-us-pw-03\Documents\Cleveland.OH\OI_Projects\ODOT\District2\82382\400-Engineering\Roadway\Sheets\82382_GF450I.dgn

DESIGN AGENCY

DESIGNER BMV

REVIEWER TJS 04/30/24

PROJECT ID 82382

SHEET 573 TOTAL 2696

CROSS REFERENCES	
SHEET	DESCRIPTION
73	UTILITY SYMBOL LEGEND
22	EX. TYPICAL SECTIONS
48	PR. TYPICAL SECTIONS
430 - 489	SUBSUMMARIES
679 - 710	REMOVAL PLAN
833 - 841	CROSS SECTIONS
1023	SUPERELEVATION TABLES
1092 - 1120	DRAINAGE PLANS
1366 - 1367	COMBINED SEWER
1716 - 1723	LIGHTING PLAN
1807 - 1817	LANDSCAPING
2383 - 2386	FENCE PLAN

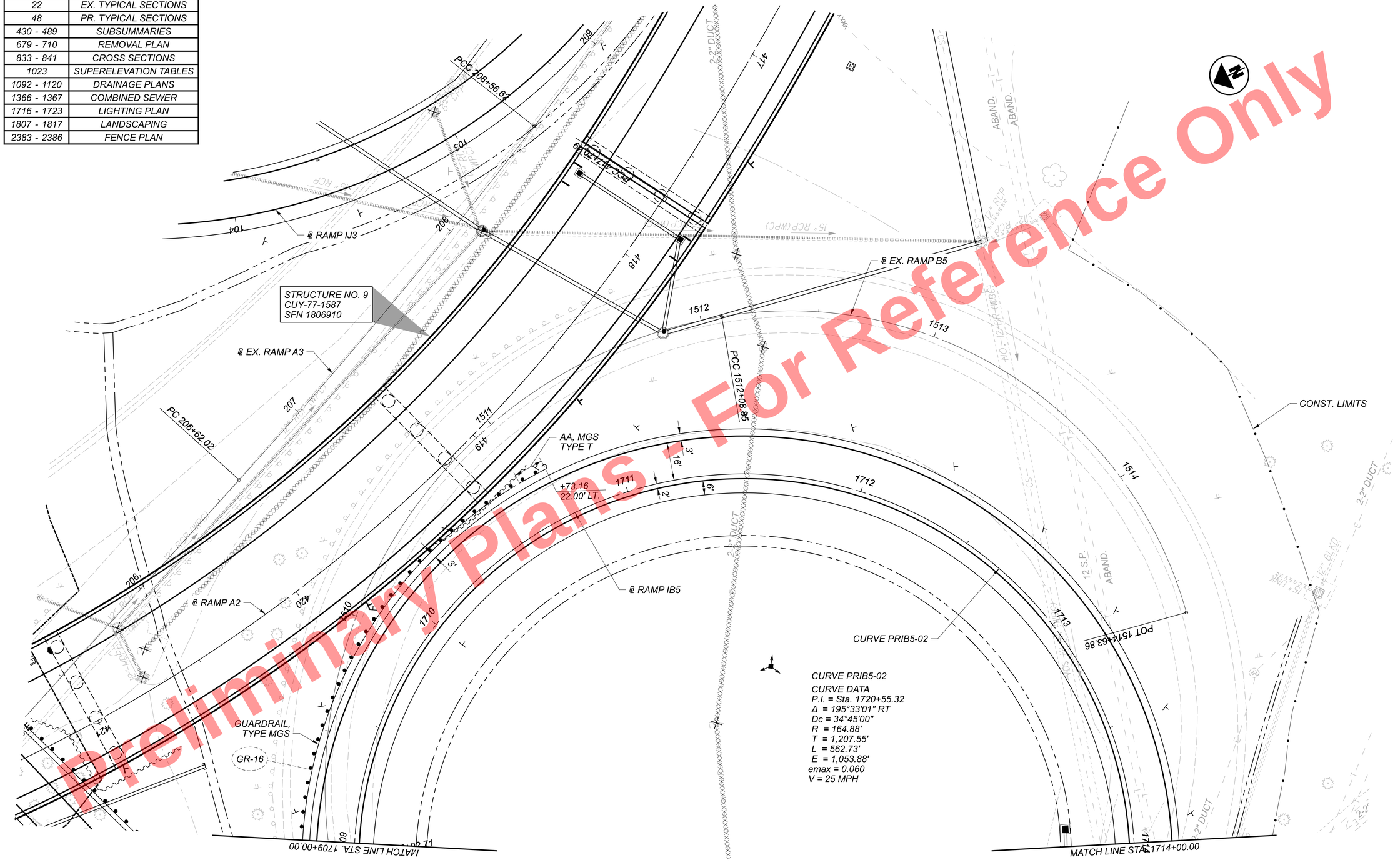

CURVE PRIB5-02

CURVE DATA
P.I. = Sta. 1720+55.32
Δ = 195°33'01" RT
Dc = 34°45'00"
R = 164.88'
T = 1,207.55'
L = 562.73'
E = 1,053.88'
emax = 0.060
V = 25 MPH

For Reference Only
Preliminary Plans - Not for Construction

HORIZONTAL SCALE IN FEET
0 10 20 40

PLAN - RAMP IB5
STA. 1709+00.00 TO STA. 1714+00.00

DESIGN AGENCY
HDR

DESIGNER BMV
REVIEWER TJS 04/30/24
PROJECT ID 82382
SHEET 574 TOTAL 2696

CUY-90-16.28 (CCG3A)

MODEL: 82382_GP4502 PAPERSIZE: 34x22 (In) DATE: 3/27/2025 TIME: 9:58:25 PM USER: Alexandria.Summers
pw:\\mb-us-pw.bentley.com:mb-us-pw-03\Documents\Cleveland_OH\01_Projects\0007\01&tr1c1t2\82382\400-Engineering\Roadway\Sheets\82382_GP4502.dgn

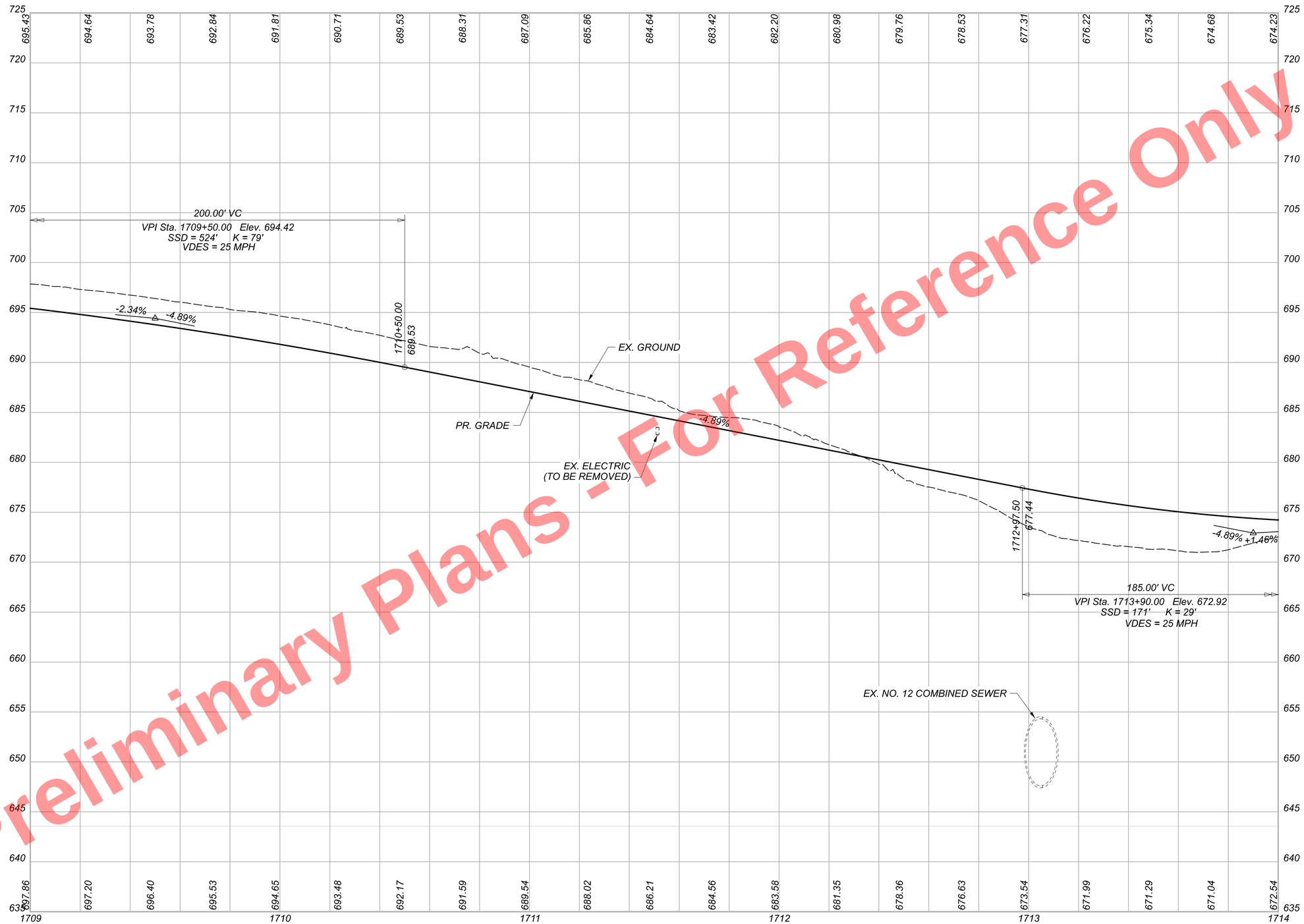

Preliminary Plans - Not For Reference Only

CUY-90-16.28 (CCG3A)

MODEL: 82382_GF4502 PAPERSIZE: 34x22 (in.) DATE: 3/27/2025 TIME: 9:58:41 PM USER: Alexandria.Summers
pw:\\mb-us-pw.bentley.com:mb-us-pw-03\Documents\Cleveland_OH\01_Projects\0DOT\District2\82382\400-Engineering\Roadway\Sheets\82382_GF4502.dgn

PROFILE - RAMP IB5
STA. 1709+00.00 TO STA. 1714+00.00

DESIGN AGENCY

DESIGNER BMV
REVIEWER TJS 04/30/24
PROJECT ID 82382
SHEET 575 TOTAL 2696

CROSS REFERENCES	
SHEET	DESCRIPTION
73	UTILITY SYMBOL LEGEND
22	EX. TYPICAL SECTIONS
48	PR. TYPICAL SECTIONS
430 - 489	SUBSUMMARIES
679 - 710	REMOVAL PLAN
833 - 841	CROSS SECTIONS
1023	SUPERELEVATION TABLES
1052	RAMP TERMINAL DETAILS
1092 - 1120	DRAINAGE PLANS
1716 - 1723	LIGHTING PLAN
1807 - 1817	LANDSCAPING
2383 - 2386	FENCE PLAN

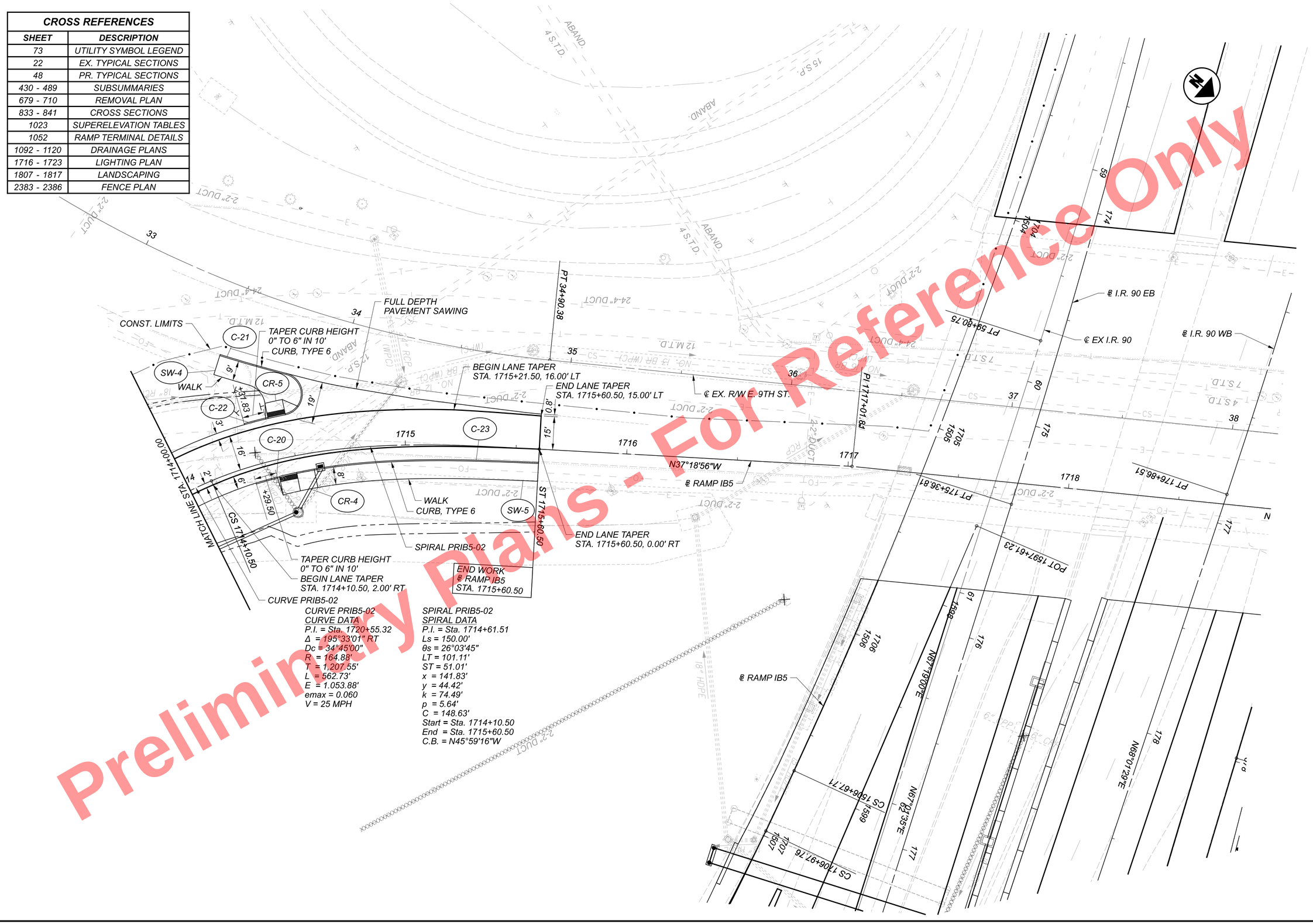

Preliminary Plans - For Reference Only

HORIZONTAL SCALE IN FEET
0 10 20 40

PLAN - RAMP IB5
STA. 1714+00.00 TO END

CUY-90-16.28 (CCG3A)

MODEL: 83382_GP4503 PAPERSIZE: 34x22 (in.) DATE: 3/27/2025 TIME: 9:58:52 PM USER: Alexandria.Summers
pw:\\mb-us-pw.bentley.com:mb-us-pw-03\Documents\Cleveland_OH\OI_Projects\ODOT\District2\82382\400-Engineering\Roadway\Sheets\82382_GP4503.dgn

DESIGN AGENCY	HDR
DESIGNER	BMV
REVIEWER	TJS 04/30/24
PROJECT ID	82382
SHEET	576
TOTAL	2696

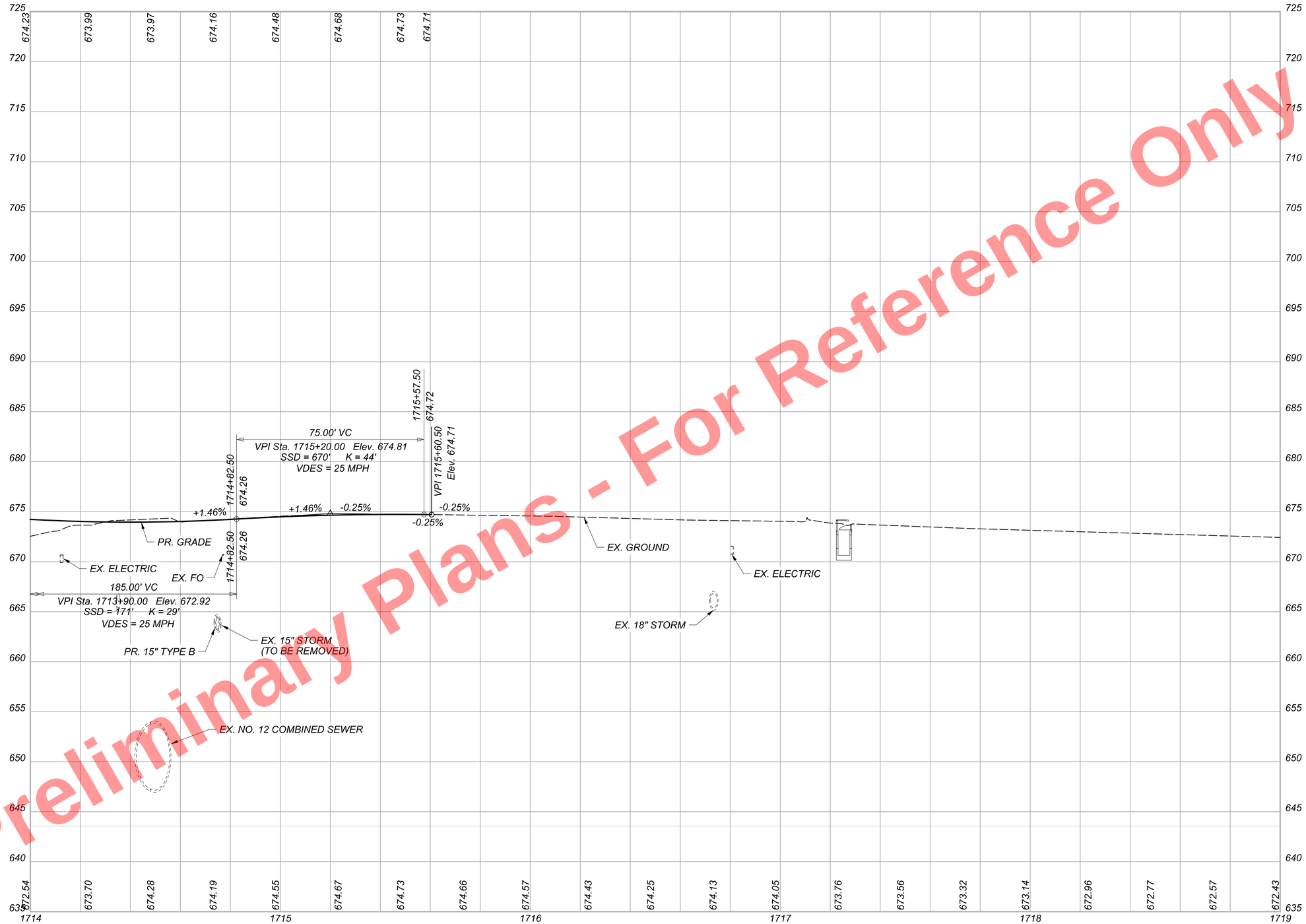

Preliminary Plans - For Reference Only

PROFILE - RAMP IB5
STA. 1714+00.00 TO END

CUY-90-16.28 (CCG3A)

MODEL: 82382_GF4503 PAPERSIZE: 34x22 (in.) DATE: 3/27/2025 TIME: 9:59:07 PM USER: Alexandria.Summers
pw:\\mb-us-pw.bentley.com:mb-us-pw-03\Documents\Cleveland.OH\OiL_Projects\ODOT\District2\82382\400-Engineering\Roadway\Sheets\82382_GF4503.dgn

DESIGN AGENCY
HDR

DESIGNER	BMV
REVIEWER	TJS 04/30/24
PROJECT ID	82382
SHEET	577
TOTAL	2696

CROSS REFERENCES	
SHEET	DESCRIPTION
73	UTILITY SYMBOL LEGEND
28	EX. TYPICAL SECTIONS
49 - 53	PR. TYPICAL SECTIONS
430 - 489	SUBSUMMARIES
679 - 710	REMOVAL PLAN
842 - 858	CROSS SECTIONS
1024	SUPERELEVATION TABLES
1031	RAMP TERMINAL DETAILS
1092 - 1120	DRAINAGE PLANS
1716 - 1723	LIGHTING PLAN
1807 - 1817	LANDSCAPING
2383 - 2386	FENCE PLAN

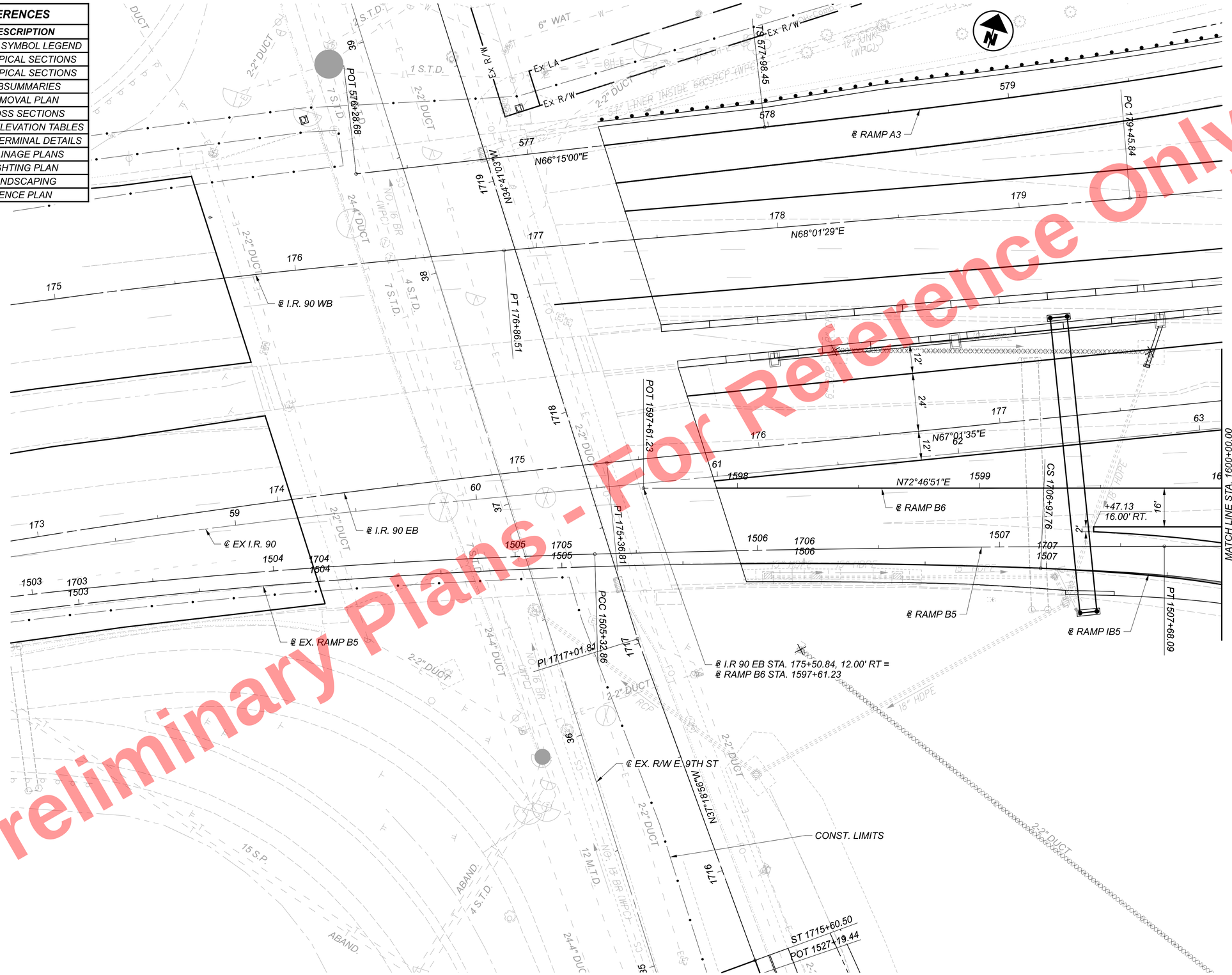

Preliminary Plans - Not For Reference Only

HORIZONTAL SCALE IN FEET
0 10 20 40

PLAN - RAMP B6
BEGIN TO STA. 1600+00.00

CUY-90-16.28 (CCG3A)

MODEL: 82382_GP460I PAPERSIZE: 34x22 (in.) DATE: 3/27/2025 TIME: 9:59:20 PM USER: Alexandria.Summers
pw:\\mb-us-pw.bentley.com\mb-us-pw-03\Documents\Cleveland_OH\01_Projects\ODOT\District2\82382\400-Engineering\Roadway\Sheets\82382_GP460I.dgn

DESIGN AGENCY

DESIGNER BMV
REVIEWER TJS 04/30/24
PROJECT ID 82382
SHEET 578 TOTAL 2696

Preliminary Plans - For Reference Only



PROFILE - RAMP B6
BEGIN TO STA. 1600+00.00

CUY-90-16.28 (CCG3A)

MODEL: 82382_GF460I PAPERSIZE: 34x22 (in.) DATE: 3/27/2025 TIME: 9:59:40 PM USER: Alexandria.Summers
pw:\\mb-us-pw.bentley.com:mb-us-pw-03\Documents\Cleveland_OH\01_Projects\ODOT\District2\82382\400-Engineering\Roadway\Sheets\82382_GF460I.dgn

DESIGN AGENCY

DESIGNER BMV
REVIEWER TJS 04/30/24
PROJECT ID 82382
SHEET 579 TOTAL 2696

CROSS REFERENCES	
SHEET	DESCRIPTION
73	UTILITY SYMBOL LEGEND
28	EX. TYPICAL SECTIONS
49 - 53	PR. TYPICAL SECTIONS
430 - 489	SUBSUMMARIES
679 - 710	REMOVAL PLAN
842 - 858	CROSS SECTIONS
1024	SUPERELEVATION TABLES
1031	RAMP TERMINAL DETAILS
1092 - 1120	DRAINAGE PLANS
1716 - 1723	LIGHTING PLAN
1807 - 1817	LANDSCAPING
2383 - 2386	FENCE PLAN

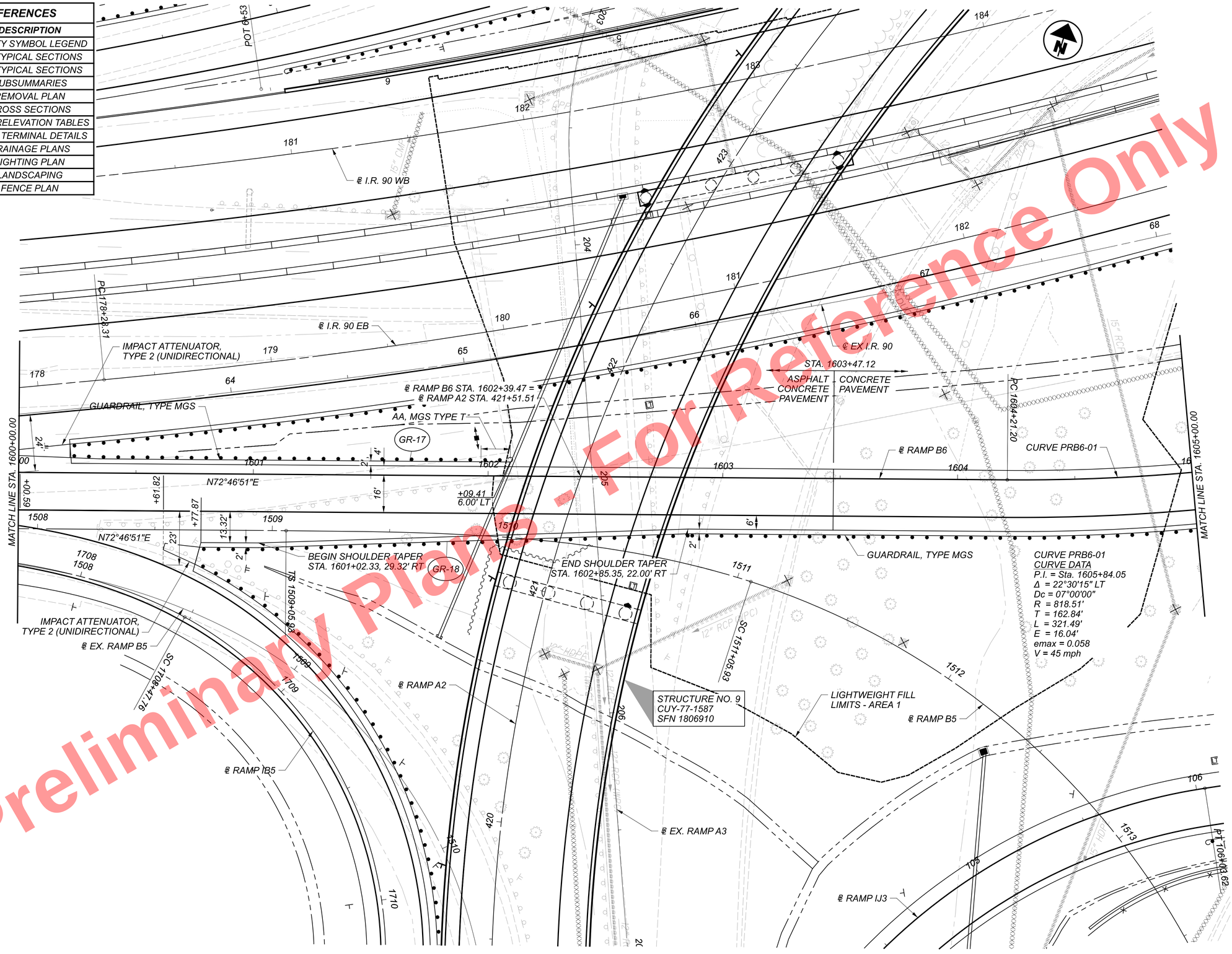

Preliminary Plans - For Reference Only

HORIZONTAL SCALE IN FEET
0 10 20 40

PLAN - RAMP B6
STA. 1600+00.00 TO STA. 1605+00.00

DESIGN AGENCY
HDR

DESIGNER
BMV

REVIEWER
TJS 04/30/24

PROJECT ID
82382

SHEET 580 TOTAL 2696

CUY-90-16.28 (CCG3A)

MODEL: 82382_GP4602 PAPERSIZE: 34x22 (in.) DATE: 3/27/2025 TIME: 9:59:51 PM USER: Alexandria.Summers
pw:\\mb-us-pw.bentley.com:mb-us-pw-03\Documents\Cleveland_OH\OI_Projects\ODOT\District12\82382\400-Engineering\Roadway\Sheets\82382_GP4602.dgn

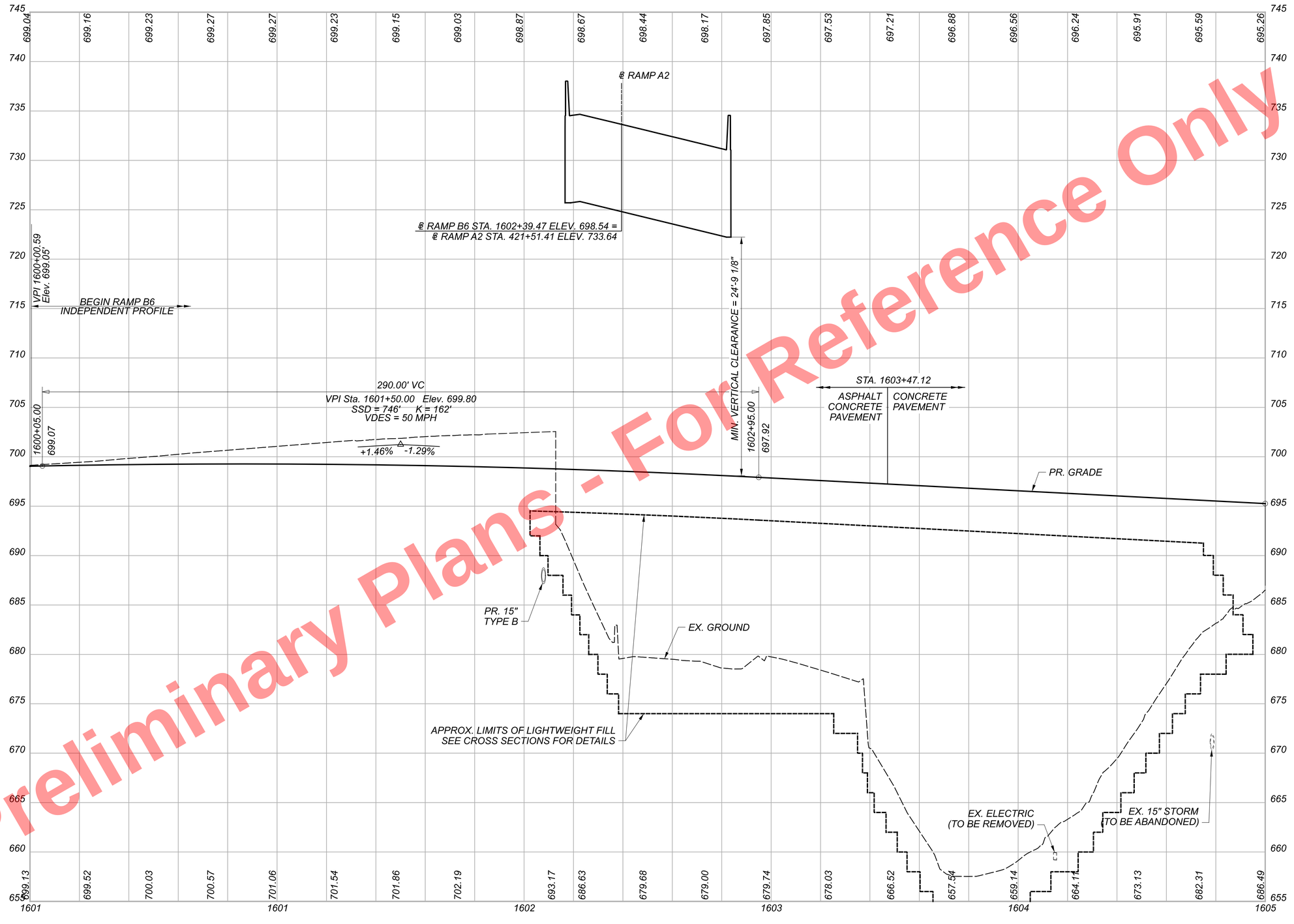

Preliminary Plans - For Reference Only

PROFILE - RAMP B6
STA. 1600+00.00 TO STA. 1605+00.00

CUY-90-16.28 (CCG3A)

MODEL: 82382_GF4602 PAPERSIZE: 34x22 (in.) DATE: 3/27/2025 TIME: 10:00:08 PM USER: Alexandria.Summers
pw:\\mb-us-pw.bentley.com:mb-us-pw-03\Documents\Cleveland_OH\01_Projects\ODOT\District2\82382\400-Engineering\Roadway\Sheets\82382_GF4602.dgn

DESIGN AGENCY
HDR

DESIGNER
BMV

REVIEWER
TJS 04/30/24

PROJECT ID
82382

SHEET 581 | TOTAL 2696

CROSS REFERENCES	
SHEET	DESCRIPTION
73	UTILITY SYMBOL LEGEND
28	EX. TYPICAL SECTIONS
49 - 53	PR. TYPICAL SECTIONS
430 - 489	SUBSUMMARIES
679 - 710	REMOVAL PLAN
842 - 858	CROSS SECTIONS
1024	SUPERELEVATION TABLES
1092 - 1120	DRAINAGE PLANS
1716 - 1723	LIGHTING PLAN
1807 - 1817	LANDSCAPING
2129 2130	CUY-90-1652S (BRIDGE 12)
2383 - 2386	FENCE PLAN

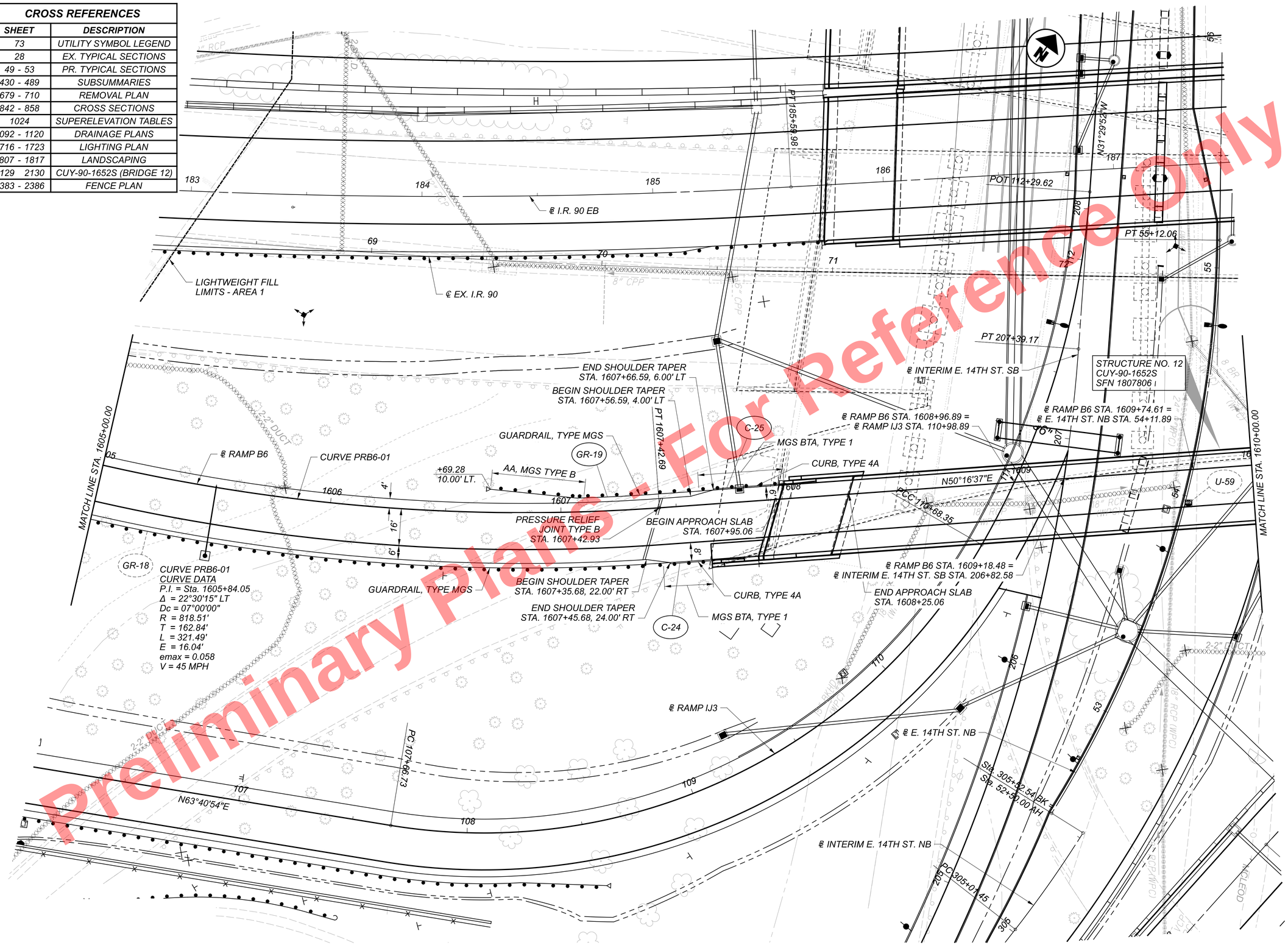
HORIZONTAL SCALE IN FEET
0 10 20 40
PLAN - RAMP B6
STA. 1605+00.00 TO STA. 1610+00.00
MATCH LINE STA. 1605+00.00
MATCH LINE STA. 1610+00.00
℄ RAMP B6
CURVE PRB6-01
GR-18
GR-19
CURVE PRB6-01
CURVE DATA
P.I. = Sta. 1605+84.05
Δ = 22°30'15" LT
Dc = 07°00'00"
R = 818.51'
T = 162.84'
L = 321.49'
E = 16.04'
emax = 0.058
V = 45 MPH
+69.28
10.00' LT.
AA, MGS TYPE B
GUARDRAIL, TYPE MGS
PRESSURE RELIEF JOINT TYPE B
STA. 1607+42.93
BEGIN SHOULDER TAPER
STA. 1607+56.59, 4.00' LT
END SHOULDER TAPER
STA. 1607+66.59, 6.00' LT
BEGIN APPROACH SLAB
STA. 1607+95.06
END APPROACH SLAB
STA. 1608+25.06
BEGIN SHOULDER TAPER
STA. 1607+35.68, 22.00' RT
END SHOULDER TAPER
STA. 1607+45.68, 24.00' RT
GUARDRAIL, TYPE MGS
CURB, TYPE 4A
MGS BTA, TYPE 1
C-25
C-24
PT 1607+42.69
PC 1607+73.73
PT 1185+59.98
POT 112+29.62
PT 55+12.06
PT 207+39.17
PCC 108+88.35
℄ I.R. 90 EB
℄ EX. I.R. 90
LIGHTWEIGHT FILL LIMITS - AREA 1
℄ INTERIM E. 14TH ST. SB
℄ RAMP B6 STA. 1608+96.89 = ℄ RAMP IJ3 STA. 110+98.89
℄ RAMP B6 STA. 1609+74.61 = ℄ E. 14TH ST. NB STA. 54+11.89
℄ RAMP B6 STA. 1609+18.48 = ℄ INTERIM E. 14TH ST. SB STA. 206+82.58
STRUCTURE NO. 12
CUY-90-1652S
SFN 1807806
℄ RAMP IJ3
℄ E. 14TH ST. NB
℄ INTERIM E. 14TH ST. NB
STA. 305+02.54 BK
SIA. 52+30.00 AH
PC 305+01.45
N31°29'52"W
N50°16'37"E
N63°40'54"E
183
184
185
186
187
69
70
71
72
55
56
53
54
206
207
208
209
210
105
106
107
108
109
110
1605+00.00
1606
1607
1608
1609
2-2" DUCT
8" CPP
8" RCP
8" BR
6" RCP
6" CPP
6" PVC
6" CMP
6" DIP
6" CI
6" WOOD
6" CONC
6" PCP
6" IMPD
6" CLAY
6" PVCP
6" CONCP
6" CONCRCP
6" CONCPCP
6" CONCPVCP
6" CONCPCMP
6" CONCPDIP
6" CONCPCI
6" CONCPWOOD
6" CONCPCONC
6" CONCPPCP
6" CONCPIMPD
6" CONCPCLAY
6" CONCPPVCP
6" CONCPCONCP
6" CONCPCONCRCP
6" CONCPCONCPCP
6" CONCPCONCPVCP
6" CONCPCONCPCMP
6" CONCPCONCPDIP
6" CONCPCONCPCI
6" CONCPCONCPWOOD
6" CONCPCONCPCONC
6" CONCPCONCPPCP
6" CONCPCONCPIMPD
6" CONCPCONCPCLAY
6" CONCPCONCPPVCP
6" CONCPCONCPCONCP
6" CONCPCONCPCONCRCP
6" CONCPCONCPCONCPCP
6" CONCPCONCPCONCPVCP
6" CONCPCONCPCONCPCMP
6" CONCPCONCPCONCPDIP
6" CONCPCONCPCONCPCI
6" CONCPCONCPCONCPWOOD
6" CONCPCONCPCONCPCONC
6" CONCPCONCPCONCPPCP
6" CONCPCONCPCONCPIMPD
6" CONCPCONCPCONCPCLAY
6" CONCPCONCPCONCPPVCP
6" CONCPCONCPCONCPCONCP
6" CONCPCONCPCONCPCONCRCP
6" CONCPCONCPCONCPCONCPCP
6" CONCPCONCPCONCPCONCPVCP
6" CONCPCONCPCONCPCONCPCMP
6" CONCPCONCPCONCPCONCPDIP
6" CONCPCONCPCONCPCONCPCI
6" CONCPCONCPCONCPCONCPWOOD
6" CONCPCONCPCONCPCONCPCONC
6" CONCPCONCPCONCPCONCPPCP
6" CONCPCONCPCONCPCONCPIMPD
6" CONCPCONCPCONCPCONCPCLAY
6" CONCPCONCPCONCPCONCPPVCP
6" CONCPCONCPCONCPCONCPCONCP
6" CONCPCONCPCONCPCONCPCONCRCP
6" CONCPCONCPCONCPCONCPCONCPCP
6" CONCPCONCPCONCPCONCPCONCPVCP
6" CONCPCONCPCONCPCONCPCONCPCMP
6" CONCPCONCPCONCPCONCPCONCPDIP
6" CONCPCONCPCONCPCONCPCONCPCI
6" CONCPCONCPCONCPCONCPCONCPWOOD
6" CONCPCONCPCONCPCONCPCONCPCONC
6" CONCPCONCPCONCPCONCPCONCPPCP
6" CONCPCONCPCONCPCONCPCONCPIMPD
6" CONCPCONCPCONCPCONCPCONCPCLAY
6" CONCPCONCPCONCPCONCPCONCPPVCP
6" CONCPCONCPCONCPCONCPCONCPCONCP
6" CONCPCONCPCONCPCONCPCONCPCONCRCP
6" CONCPCONCPCONCPCONCPCONCPCONCPCP
6" CONCPCONCPCONCPCONCPCONCPCONCPVCP
6" CONCPCONCPCONCPCONCPCONCPCONCPCMP
6" CONCPCONCPCONCPCONCPCONCPCONCPDIP
6" CONCPCONCPCONCPCONCPCONCPCONCPCI
6" CONCPCONCPCONCPCONCPCONCPCONCPWOOD
6" CONCPCONCPCONCPCONCPCONCPCONCPCONC
6" CONCPCONCPCONCPCONCPCONCPCONCPPCP
6" CONCPCONCPCONCPCONCPCONCPCONCPIMPD
6" CONCPCONCPCONCPCONCPCONCPCONCPCLAY
6" CONCPCONCPCONCPCONCPCONCPCONCPPVCP
6" CONCPCONCPCONCPCONCPCONCPCONCPCONCP
6" CONCPCONCPCONCPCONCPCONCPCONCPCONCRCP
6" CONCPCONCPCONCPCONCPCONCPCONCPCONCPCP
6" CONCPCONCPCONCPCONCPCONCPCONCPCONCPVCP
6" CONCPCONCPCONCPCONCPCONCPCONCPCONCPCMP
6" CONCPCONCPCONCPCONCPCONCPCONCPCONCPDIP
6" CONCPCONCPCONCPCONCPCONCPCONCPCONCPCI
6" CONCPCONCPCONCPCONCPCONCPCONCPCONCPWOOD
6" CONCPCONCPCONCPCONCPCONCPCONCPCONCPCONC
6" CONCPCONCPCONCPCONCPCONCPCONCPCONCPPCP
6" CONCPCONCPCONCPCONCPCONCPCONCPCONCPIMPD
6" CONCPCONCPCONCPCONCPCONCPCONCPCONCPCLAY
6" CONCPCONCPCONCPCONCPCONCPCONCPCONCPPVCP
6" CONCPCONCPCONCPCONCPCONCPCONCPCONCPCONCP
6" CONCPCONCPCONCPCONCPCONCPCONCPCONCPCONCRCP
6" CONCPCONCPCONCPCONCPCONCPCONCPCONCPCONCPCP
6" CONCPCONCPCONCPCONCPCONCPCONCPCONCPCONCPVCP
6" CONCPCONCPCONCPCONCPCONCPCONCPCONCPCONCPCMP
6" CONCPCONCPCONCPCONCPCONCPCONCPCONCPCONCPDIP
6" CONCPCONCPCONCPCONCPCONCPCONCPCONCPCONCPCI
6" CONCPCONCPCONCPCONCPCONCPCONCPCONCPCONCPWOOD
6" CONCPCONCPCONCPCONCPCONCPCONCPCONCPCONCPCONC
6" CONCPCONCPCONCPCONCPCONCPCONCPCONCPCONCPPCP
6" CONCPCONCPCONCPCONCPCONCPCONCPCONCPCONCPIMPD
6" CONCPCONCPCONCPCONCPCONCPCONCPCONCPCONCPCLAY
6" CONCPCONCPCONCPCONCPCONCPCONCPCONCPCONCPPVCP
6" CONCPCONCPCONCPCONCPCONCPCONCPCONCPCONCPCONCP
6" CONCPCONCPCONCPCONCPCONCPCONCPCONCPCONCPCONCRCP
6" CONCPCONCPCONCPCONCPCONCPCONCPCONCPCONCPCONCPCP
6" CONCPCONCPCONCPCONCPCONCPCONCPCONCPCONCPCONCPVCP
6" CONCPCONCPCONCPCONCPCONCPCONCPCONCPCONCPCONCPCMP
6" CONCPCONCPCONCPCONCPCONCPCONCPCONCPCONCPCONCPDIP
6" CONCPCONCPCONCPCONCPCONCPCONCPCONCPCONCPCONCPCI
6" CONCPCONCPCONCPCONCPCONCPCONCPCONCPCONCPCONCPWOOD
6" CONCPCONCPCONCPCONCPCONCPCONCPCONCPCONCPCONCPCONC
6" CONCPCONCPCONCPCONCPCONCPCONCPCONCPCONCPCONCPPCP
6" CONCPCONCPCONCPCONCPCONCPCONCPCONCPCONCPCONCPIMPD
6" CONCPCONCPCONCPCONCPCONCPCONCPCONCPCONCPCONCPCLAY
6" CONCPCONCPCONCPCONCPCONCPCONCPCONCPCONCPCONCPPVCP
6" CONCPCONCPCONCPCONCPCONCPCONCPCONCPCONCPCONCPCONCP
6" CONCPCONCPCONCPCONCPCONCPCONCPCONCPCONCPCONCPCONCRCP
6" CONCPCONCPCONCPCONCPCONCPCONCPCONCPCONCPCONCPCONCPCP
6" CONCPCONCPCONCPCONCPCONCPCONCPCONCPCONCPCONCPCONCPVCP
6" CONCPCONCPCONCPCONCPCONCPCONCPCONCPCONCPCONCPCONCPCMP
6" CONCPCONCPCONCPCONCPCONCPCONCPCONCPCONCPCONCPCONCPDIP
6" CONCPCONCPCONCPCONCPCONCPCONCPCONCPCONCPCONCPCONCPCI
6" CONCPCONCPCONCPCONCPCONCPCONCPCONCPCONCPCONCPCONCPWOOD
6" CONCPCONCPCONCPCONCPCONCPCONCPCONCPCONCPCONCPCONCPCONC
6" CONCPCONCPCONCPCONCPCONCPCONCPCONCPCONCPCONCPCONCPPCP
6" CONCPCONCPCONCPCONCPCONCPCONCPCONCPCONCPCONCPCONCPIMPD
6" CONCPCONCPCONCPCONCPCONCPCONCPCONCPCONCPCONCPCONCPCLAY
6" CONCPCONCPCONCPCONCPCONCPCONCPCONCPCONCPCONCPCONCPPVCP
6" CONCPCONCPCONCPCONCPCONCPCONCPCONCPCONCPCONCPCONCPCONCP
6" CONCPCONCPCONCPCONCPCONCPCONCPCONCPCONCPCONCPCONCPCONCRCP
6" CONCPCONCPCONCPCONCPCONCPCONCPCONCPCONCPCONCPCONCPCONCPCP
6" CONCPCONCPCONCPCONCPCONCPCONCPCONCPCONCPCONCPCONCPCONCPVCP
6" CONCPCONCPCONCPCONCPCONCPCONCPCONCPCONCPCONCPCONCPCONCPCMP
6" CONCPCONCPCONCPCONCPCONCPCONCPCONCPCONCPCONCPCONCPCONCPDIP
6" CONCPCONCPCONCPCONCPCONCPCONCPCONCPCONCPCONCPCONCPCONCPCI
6" CONCPCONCPCONCPCONCPCONCPCONCPCONCPCONCPCONCPCONCPCONCPWOOD
6" CONCPCONCPCONCPCONCPCONCPCONCPCONCPCONCPCONCPCONCPCONCPCONC
6" CONCPCONCPCONCPCONCPCONCPCONCPCONCPCONCPCONCPCONCPCONCPPCP
6" CONCPCONCPCONCPCONCPCONCPCONCPCONCPCONCPCONCPCONCPCONCPIMPD
6" CONCPCONCPCONCPCONCPCONCPCONCPCONCPCONCPCONCPCONCPCONCPCLAY
6" CONCPCONCPCONCPCONCPCONCPCONCPCONCPCONCPCONCPCONCPCONCPPVCP
6" CONCPCONCPCONCPCONCPCONCPCONCPCONCPCONCPCONCPCONCPCONCPCONCP
6" CONCPCONCPCONCPCONCPCONCPCONCPCONCPCONCPCONCPCONCPCONCPCONCRCP
6" CONCPCONCPCONCPCONCPCONCPCONCPCONCPCONCPCONCPCONCPCONCPCONCPCP
6" CONCPCONCPCONCPCONCPCONCPCONCPCONCPCONCPCONCPCONCPCONCPCONCPVCP
6" CONCPCONCPCONCPCONCPCONCPCONCPCONCPCONCPCONCPCONCPCONCPCONCPCMP
6" CONCPCONCPCONCPCONCPCONCPCONCPCONCPCONCPCONCPCONCPCONCPCONCPDIP
6" CONCPCONCPCONCPCONCPCONCPCONCPCONCPCONCPCONCPCONCPCONCPCONCPCI
6" CONCPCONCPCONCPCONCPCONCPCONCPCONCPCONCPCONCPCONCPCONCPCONCPWOOD
6" CONCPCONCPCONCPCONCPCONCPCONCPCONCPCONCPCONCPCONCPCONCPCONCPCONC
6" CONCPCONCPCONCPCONCPCONCPCONCPCONCPCONCPCONCPCONCPCONCPCONCPPCP
6" CONCPCONCPCONCPCONCPCONCPCONCPCONCPCONCPCONCPCONCPCONCPCONCPIMPD
6" CONCPCONCPCONCPCONCPCONCPCONCPCONCPCONCPCONCPCONCPCONCPCONCPCLAY
6" CONCPCONCPCONCPCONCPCONCPCONCPCONCPCONCPCONCPCONCPCONCPCONCPPVCP
6" CONCPCONCPCONCPCONCPCONCPCONCPCONCPCONCPCONCPCONCPCONCPCONCPCONCP
6" CONCPCONCPCONCPCONCPCONCPCONCPCONCPCONCPCONCPCONCPCONCPCONCPCONCRCP
6" CONCPCONCPCONCPCONCPCONCPCONCPCONCPCONCPCONCPCONCPCONCPCONCPCONCPCP
6" CONCPCONCPCONCPCONCPCONCPCONCPCONCPCONCPCONCPCONCPCONCPCONCPCONCPVCP
6" CONCPCONCPCONCPCONCPCONCPCONCPCONCPCONCPCONCPCONCPCONCPCONCPCONCPCMP
6" CONCPCONCPCONCPCONCPCONCPCONCPCONCPCONCPCONCPCONCPCONCPCONCPCONCPDIP
6" CONCPCONCPCONCPCONCPCONCPCONCPCONCPCONCPCONCPCONCPCONCPCONCPCONCPCI
6" CONCPCONCPCONCPCONCPCONCPCONCPCONCPCONCPCONCPCONCPCONCPCONCPCONCPWOOD
6" CONCPCONCPCONCPCONCPCONCPCONCPCONCPCONCPCONCPCONCPCONCPCONCPCONCPCONC
6" CONCPCONCPCONCPCONCPCONCPCONCPCONCPCONCPCONCPCONCPCONCPCONCPCONCPPCP
6" CONCPCONCPCONCPCONCPCONCPCONCPCONCPCONCPCONCPCONCPCONCPCONCPCONCPIMPD
6" CONCPCONCPCONCPCONCPCONCPCONCPCONCPCONCPCONCPCONCPCONCPCONCPCONCPCLAY
6" CONCPCONCPCONCPCONCPCONCPCONCPCONCPCONCPCONCPCONCPCONCPCONCPCONCPPVCP
6" CONCPCONCPCONCPCONCPCONCPCONCPCONCPCONCPCONCPCONCPCONCPCONCPCONCPCONCP
6" CONCPCONCPCONCPCONCPCONCPCONCPCONCPCONCPCONCPCONCPCONCPCONCPCONCPCONCRCP
6" CONCPCONCPCONCPCONCPCONCPCONCPCONCPCONCPCONCPCONCPCONCPCONCPCONCPCONCPCP
6" CONCPCONCPCONCPCONCPCONCPCONCPCONCPCONCPCONCPCONCPCONCPCONCPCONCPCONCPVCP
6" CONCPCONCPCONCPCONCPCONCPCONCPCONCPCONCPCONCPCONCPCONCPCONCPCONCPCONCPCMP
6" CONCPCONCPCONCPCONCPCONCPCONCPCONCPCONCPCONCPCONCPCONCPCONCPCONCPCONCPDIP
6" CONCPCONCPCONCPCONCPCONCPCONCPCONCPCONCPCONCPCONCPCONCPCONCPCONCPCONCPCI
6" CONCPCONCPCONCPCONCPCONCPCONCPCONCPCONCPCONCPCONCPCONCPCONCPCONCPCONCPWOOD
6" CONCPCONCPCONCPCONCPCONCPCONCPCONCPCONCPCONCPCONCPCONCPCONCPCONCPCONCPCONC
6" CONCPCONCPCONCPCONCPCONCPCONCPCONCPCONCPCONCPCONCPCONCPCONCPCONCPCONCPPCP
6" CONCPCONCPCONCPCONCPCONCPCONCPCONCPCONCPCONCPCONCPCONCPCONCPCONCPCONCPIMPD
6" CONCPCONCPCONCPCONCPCONCPCONCPCONCPCONCPCONCPCONCPCONCPCONCPCONCPCONCPCLAY
6" CONCPCONCPCONCPCONCPCONCPCONCPCONCPCONCPCONCPCONCPCONCPCONCPCONCPCONCPPVCP
6" CONCPCONCPCONCPCONCPCONCPCONCPCONCPCONCPCONCPCONCPCONCPCONCPCONCPCONCPCONCP
6" CONCPCONCPCONCPCONCPCONCPCONCPCONCPCONCPCONCPCONCPCONCPCONCPCONCPCONCPCONCRCP
6" CONCPCONCPCONCPCONCPCONCPCONCPCONCPCONCPCONCPCONCPCONCPCONCPCONCPCONCPCONCPCP
6" CONCPCONCPCONCPCONCPCONCPCONCPCONCPCONCPCONCPCONCPCONCPCONCPCONCPCONCPCONCPVCP
6" CONCPCONCPCONCPCONCPCONCPCONCPCONCPCONCPCONCPCONCPCONCPCONCPCONCPCONCPCONCPCMP
6" CONCPCONCPCONCPCONCPCONCPCONCPCONCPCONCPCONCPCONCPCONCPCONCPCONCPCONCPCONCPDIP
6" CONCPCONCPCONCPCONCPCONCPCONCPCONCPCONCPCONCPCONCPCONCPCONCPCONCPCONCPCONCPCI
6" CONCPCONCPCONCPCONCPCONCPCONCPCONCPCONCPCONCPCONCPCONCPCONCPCONCPCONCPCONCPWOOD
6" CONCPCONCPCONCPCONCPCONCPCONCPCONCPCONCPCONCPCONCPCONCPCONCPCONCPCONCPCONCPCONC
6" CONCPCONCPCONCPCONCPCONCPCONCPCONCPCONCPCONCPCONCPCONCPCONCPCONCPCONCPCONCPPCP
6" CONCPCONCPCONCPCONCPCONCPCONCPCONCPCONCPCONCPCONCPCONCPCONCPCONCPCONCPCONCPIMPD
6" CONCPCONCPCONCPCONCPCONCPCONCPCONCPCONCPCONCPCONCPCONCPCONCPCONCPCONCPCONCPCLAY
6" CONCPCONCPCONCPCONCPCONCPCONCPCONCPCONCPCONCPCONCPCONCPCONCPCONCPCONCPCONCPPVCP
6" CONCPCONCPCONCPCONCPCONCPCONCPCONCPCONCPCONCPCONCPCONCPCONCPCONCPCONCPCONCPCONCP
6" CONCPCONCPCONCPCONCPCONCPCONCPCONCPCONCPCONCPCONCPCONCPCONCPCONCPCONCPCONCPCONCRCP
6" CONCPCONCPCONCPCONCPCONCPCONCPCONCPCONCPCONCPCONCPCONCPCONCPCONCPCONCPCONCPCONCPCP
6" CONCPCONCPCONCPCONCPCONCPCONCPCONCPCONCPCONCPCONCPCONCPCONCPCONCPCONCPCONCPCONCPVCP
6" CONCPCONCPCONCPCONCPCONCPCONCPCONCPCONCPCONCPCONCPCONCPCONCPCONCPCONCPCONCPCONCPCMP
6" CONCPCONCPCONCPCONCPCONCPCONCPCONCPCONCPCONCPCONCPCONCPCONCPCONCPCONCPCONCPCONCPDIP
6" CONCPCONCPCONCPCONCPCONCPCONCPCONCPCONCPCONCPCONCPCONCPCONCPCONCPCONCPCONCPCONCPCI
6" CONCPCONCPCONCPCONCPCONCPCONCPCONCPCONCPCONCPCONCPCONCPCONCPCONCPCONCPCONCPCONCPWOOD
6" CONCPCONCPCONCPCONCPCONCPCONCPCONCPCONCPCONCPCONCPCONCPCONCPCONCPCONCPCONCPCONCPCONC
6" CONCPCONCPCONCPCONCPCONCPCONCPCONCPCONCPCONCPCONCPCONCPCONCPCONCPCONCPCONCPCONCPPCP
6" CONCPCONCPCONCPCONCPCONCPCONCPCONCPCONCPCONCPCONCPCONCPCONCPCONCPCONCPCONCPCONCPIMPD
6" CONCPCONCPCONCPCONCPCONCPCONCPCONCPCONCPCONCPCONCPCONCPCONCPCONCPCONCPCONCPCONCPCLAY
6" CONCPCONCPCONCPCONCPCONCPCONCPCONCPCONCPCONCPCONCPCONCPCONCPCONCPCONCPCONCPCONCPPVCP
6" CONCPCONCPCONCPCONCPCONCPCONCPCONCPCONCPCONCPCONCPCONCPCONCPCONCPCONCPCONCPCONCPCONCP
6" CONCPCONCPCONCPCONCPCONCPCONCPCONCPCONCPCONCPCONCPCONCPCONCPCONCPCONCPCONCPCONCPCONCRCP
6" CONCPCONCPCONCPCONCPCONCPCONCPCONCPCONCPCONCPCONCPCONCPCONCPCONCPCONCPCONCPCONCPCONCPCP
6" CONCPCONCPCONCPCONCPCONCPCONCPCONCPCONCPCONCPCONCPCONCPCONCPCONCPCONCPCONCPCONCPCONCPVCP
6" CONCPCONCPCONCPCONCPCONCPCONCPCONCPCONCPCONCPCONCPCONCPCONCPCONCPCONCPCONCPCONCPCONCPCMP
6" CONCPCONCPCONCPCONCPCONCPCONCPCONCPCONCPCONCPCONCPCONCPCONCPCONCPCONCPCONCPCONCPCONCPDIP
6" CONCPCONCPCONCPCONCPCONCPCONCPCONCPCONCPCONCPCONCPCONCPCONCPCONCPCONCPCONCPCONCPCONCPCI
6" CONCPCONCPCONCPCONCPCONCPCONCPCONCPCONCPCONCPCONCPCONCPCONCPCONCPCONCPCONCPCONCPCONCPWOOD
6" CONCPCONCPCONCPCONCPCONCPCONCPCONCPCONCPCONCPCONCPCONCPCONCPCONCPCONCPCONCPCONCPCONCPCONC
6" CONCPCONCPCONCPCONCPCONCPCONCPCONCPCONCPCONCPCONCPCONCPCONCPCONCPCONCPCONCPCONCPCONCPPCP
6" CONCPCONCPCONCPCONCPCONCPCONCPCONCPCONCPCONCPCONCPCONCPCONCPCONCPCONCPCONCPCONCPCONCPIMPD
6" CONCPCONCPCONCPCONCPCONCPCONCPCONCPCONCPCONCPCONCPCONCPCONCPCONCPCONCPCONCPCONCPCONCPCLAY
6" CONCPCONCPCONCPCONCPCONCPCONCPCONCPCONCPCONCPCONCPCONCPCONCPCONCPCONCPCONCPCONCPCONCPPVCP
6" CONCPCONCPCONCPCONCPCONCPCONCPCONCPCONCPCONCPCONCPCONCPCONCPCONCPCONCPCONCPCONCPCONCPCONCP
6" CONCPCONCPCONCPCONCPCONCPCONCPCONCPCONCPCONCPCONCPCONCPCONCPCONCPCONCPCONCPCONCPCONCPCONCRCP
6" CONCPCONCPCONCPCONCPCONCPCONCPCONCPCONCPCONCPCONCPCONCPCONCPCONCPCONCPCONCPCONCPCONCPCONCPCP
6" CONCPCONCPCONCPCONCPCONCPCONCPCONCPCONCPCONCPCONCPCONCPCONCPCONCPCONCPCONCPCONCPCONCPCONCPVCP
6" CONCPCONCPCONCPCONCPCONCPCONCPCONCPCONCPCONCPCONCPCONCPCONCPCONCPCONCPCONCPCONCPCONCPCONCPCMP
6" CONCPCONCPCONCPCONCPCONCPCONCPCONCPCONCPCONCPCONCPCONCPCONCPCONCPCONCPCONCPCONCPCONCPCONCPDIP
6" CONCPCONCPCONCPCONCPCONCPCONCPCONCPCONCPCONCPCONCPCONCPCONCPCONCPCONCPCONCPCONCPCONCPCONCPCI
6" CONCPCONCPCONCPCONCPCONCPCONCPCONCPCONCPCONCPCONCPCONCPCONCPCONCPCONCPCONCPCONCPCONCPCONCPWOOD
6" CONCPCONCPCONCPCONCPCONCPCONCPCONCPCONCPCONCPCONCPCONCPCONCPCONCPCONCPCONCPCONCPCONCPCONCPCONC
6" CONCPCONCPCONCPCONCPCONCPCONCPCONCPCONCPCONCPCONCPCONCPCONCPCONCPCONCPCONCPCONCPCONCPCONCPPCP
6" CONCPCONCPCONCPCONCPCONCPCONCPCONCPCONCPCONCPCONCPCONCPCONCPCONCPCONCPCONCPCONCPCONCPCONCPIMPD
6" CONCPCONCPCONCPCONCPCONCPCONCPCONCPCONCPCONCPCONCPCONCPCONCPCONCPCONCPCONCPCONCPCONCPCONCPCLAY
6" CONCPCONCPCONCPCONCPCONCPCONCPCONCPCONCPCONCPCONCPCONCPCONCPCONCPCONCPCONCPCONCPCONCPCONCPPVCP
6" CONCPCONCPCONCPCONCPCONCPCONCPCONCPCONCPCONCPCONCPCONCPCONCPCONCPCONCPCONCPCONCPCONCPCONCPCONCP
6" CONCPCONCPCONCPCONCPCONCPCONCPCONCPCONCPCONCPCONCPCONCPCONCPCONCPCONCPCONCPCONCPCONCPCONCPCONCRCP
6" CONCPCONCPCONCPCONCPCONCPCONCPCONCPCONCPCONCPCONCPCONCPCONCPCONCPCONCPCONCPCONCPCONCPCONCPCONCPCP
6" CONCPCONCPCONCPCONCPCONCPCONCPCONCPCONCPCONCPCONCPCONCPCONCPCONCPCONCPCONCPCONCPCONCPCONCPCONCPVCP
6" CONCPCONCPCONCPCONCPCONCPCONCPCONCPCONCPCONCPCONCPCONCPCONCPCONCPCONCPCONCPCONCPCONCPCONCPCONCPCMP
6" CONCPCONCPCONCPCONCPCONCPCONCPCONCPCONCPCONCPCONCPCONCPCONCPCONCPCONCPCONCPCONCPCONCPCONCPCONCPDIP
6" CONCPCONCPCONCPCONCPCONCPCONCPCONCPCONCPCONCPCONCPCONCPCONCPCONCPCONCPCONCPCONCPCONCPCONCPCONCPCI
6" CONCPCONCPCONCPCONCPCONCPCONCPCONCPCONCPCONCPCONCPCONCPCONCPCONCPCONCPCONCPCONCPCONCPCONCPCONCPWOOD
6" CONCPCONCPCONCPCONCPCONCPCONCPCONCPCONCPCONCPCONCPCONCPCONCPCONCPCONCPCONCPCONCPCONCPCONCPCONCPCONC
6" CONCPCONCPCONCPCONCPCONCPCONCPCONCPCONCPCONCPCONCPCONCPCONCPCONCPCONCPCONCPCONCPCONCPCONCPCONCPPCP
6" CONCPCONCPCONCPCONCPCONCPCONCPCONCPCONCPCONCPCONCPCONCPCONCPCONCPCONCPCONCPCONCPCONCPCONCPCONCPIMPD
6" CONCPCONCPCONCPCONCPCONCPCONCPCONCPCONCPCONCPCONCPCONCPCONCPCONCPCONCPCONCPCONCPCONCPCONCPCONCPCLAY
6" CONCPCONCPCONCPCONCPCONCPCONCPCONCPCONCPCONCPCONCPCONCPCONCPCONCPCONCPCONCPCONCPCONCPCONCPCONCPPVCP
6" CONCPCONCPCONCPCONCPCONCPCONCPCONCPCONCPCONCPCONCPCONCPCONCPCONCPCONCPCONCPCONCPCONCPCONCPCONCPCONCP
6" CONCPCONCPCONCPCONCPCONCPCONCPCONCPCONCPCONCPCONCPCONCPCONCPCONCPCONCPCONCPCONCPCONCPCONCPCONCPCONCRCP
6" CONCPCONCPCONCPCONCPCONCPCONCPCONCPCONCPCONCPCONCPCONCPCONCPCONCPCONCPCONCPCONCPCONCPCONCPCONCPCONCPCP
6" CONCPCONCPCONCPCONCPCONCPCONCPCONCPCONCPCONCPCONCPCONCPCONCPCONCPCONCPCONCPCONCPCONCPCONCPCONCPCONCPVCP
6" CONCPCONCPCONCPCONCPCONCPCONCPCONCPCONCPCONCPCONCPCONCPCONCPCONCPCONCPCONCPCONCPCONCPCONCPCONCPCONCPCMP
6" CONCPCONCPCONCPCONCPCONCPCONCPCONCPCONCPCONCPCONCPCONCPCONCPCONCPCONCPCONCPCONCPCONCPCONCPCONCPCONCPDIP
6" CONCPCONCPCONCPCONCPCONCPCONCPCONCPCONCPCONCPCONCPCONCPCONCPCONCPCONCPCONCPCONCPCONCPCONCPCONCPCONCPCI
6" CONCPCONCPCONCPCONCPCONCPCONCPCONCPCONCPCONCPCONCPCONCPCONCPCONCPCONCPCONCPCONCPCONCPCONCPCONCPCONCPWOOD
6" CONCPCONCPCONCPCONCPCONCPCONCPCONCPCONCPCONCPCONCPCONCPCONCPCONCPCONCPCONCPCONCPCONCPCONCPCONCPCONCPCONC
6" CONCPCONCPCONCPCONCPCONCPCONCPCONCPCONCPCONCPCONCPCONCPCONCPCONCPCONCPCONCPCONCPCONCPCONCPCONCPCONCPPCP
6" CONCPCONCPCONCPCONCPCONCPCONCPCONCPCONCPCONCPCONCPCONCPCONCPCONCPCONCPCONCPCONCPCONCPCONCPCONCPCONCPIMPD
6" CONCPCONCPCONCPCONCPCONCPCONCPCONCPCONCPCONCPCONCPCONCPCONCPCONCPCONCPCONCPCONCPCONCPCONCPCONCPCONCPCLAY
6" CONCPCONCPCONCPCONCPCONCPCONCPCONCPCONCPCONCPCONCPCONCPCONCPCONCPCONCPCONCPCONCPCONCPCONCPCONCPCONCPPVCP
6" CONCPCONCPCONCPCONCPCONCPCONCPCONCPCONCPCONCPCONCPCONCPCONCPCONCPCONCPCONCPCONCPCONCPCONCPCONCPCONCPCONCP
6" CONCPCONCPCONCPCONCPCONCPCONCPCONCPCONCPCONCPCONCPCONCPCONCPCONCPCONCPCONCPCONCPCONCPCONCPCONCPCONCPCONCRCP
6" CONCPCONCPCONCPCONCPCONCPCONCPCONCPCONCPCONCPCONCPCONCPCONCPCONCPCONCPCONCPCONCPCONCPCONCPCONCPCONCPCONCPCP
6" CONCPCONCPCONCPCONCPCONCPCONCPCONCPCONCPCONCPCONCPCONCPCONCPCONCPCONCPCONCPCONCPCONCPCONCPCONCPCONCPCONCPVCP
6" CONCPCONCPCONCPCONCPCONCPCONCPCONCPCONCPCONCPCONCPCONCPCONCPCONCPCONCPCONCPCONCPCONCPCONCPCONCPCONCPCONCPCMP
6" CONCPCONCPCONCPCONCPCONCPCONCPCONCPCONCPCONCPCONCPCONCPCONCPCONCPCONCPCONCPCONCPCONCPCONCPCONCPCONCPCONCPDIP
6" CONCPCONCPCONCPCONCPCONCPCONCPCONCPCONCPCONCPCONCPCONCPCONCPCONCPCONCPCONCPCONCPCONCPCONCPCONCPCONCPCONCPCI
6" CONCPCONCPCONCPCONCPCONCPCONCPCONCPCONCPCONCPCONCPCONCPCONCPCONCPCONCPCONCPCONCPCONCPCONCPCONCPCONCPCONCPWOOD
6" CONCPCONCPCONCPCONCPCONCPCONCPCONCPCONCPCONCPCONCPCONCPCONCPCONCPCONCPCONCPCONCPCONCPCONCPCONCPCONCPCONCPCONC
6" CONCPCONCPCONCPCONCPCONCPCONCPCONCPCONCPCONCPCONCPCONCPCONCPCONCPCONCPCONCPCONCPCONCPCONCPCONCPCONCPCONCPPCP
6" CONCPCONCPCONCPCONCPCONCPCONCPCONCPCONCPCONCPCONCPCONCPCONCPCONCPCONCPCONCPCONCPCONCPCONCPCONCPCONCPCONCPIMPD
6" CONCPCONCPCONCPCONCPCONCPCONCPCONCPCONCPCONCPCONCPCONCPCONCPCONCPCONCPCONCPCONCPCONCPCONCPCONCPCONCPCONCPCLAY
6" CONCPCONCPCONCPCONCPCONCPCONCPCONCPCONCPCONCPCONCPCONCPCONCPCONCPCONCPCONCPCONCPCONCPCONCPCONCPCONCPCONCPPVCP
6" CONCPCONCPCONCPCONCPCONCPCONCPCONCPCONCPCONCPCONCPCONCPCONCPCONCPCONCPCONCPCONCPCONCPCONCPCONCPCONCPCONCPCONCP
6" CONCPCONCPCONCPCONCPCONCPCONCPCONCPCONCPCONCPCONCPCONCPCONCPCONCPCONCPCONCPCONCPCONCPCONCPCONCPCONCPCONCPCONCRCP
6" CONCPCONCPCONCPCONCPCONCPCONCPCONCPCONCPCONCPCONCPCONCPCONCPCONCPCONCPCONCPCONCPCONCPCONCPCONCPCONCPCONCPCONCPCP
6" CONCPCONCPCONCPCONCPCONCPCONCPCONCPCONCPCONCPCONCPCONCPCONCPCONCPCONCPCONCPCONCPCONCPCONCPCONCPCONCPCONCPCONCPVCP
6" CONCPCONCPCONCPCONCPCONCPCONCPCONCPCONCPCONCPCONCPCONCPCONCPCONCPCONCPCONCPCONCPCONCPCONCPCONCPCONCPCONCPCONCPCMP
6" CONCPCONCPCONCPCONCPCONCPCONCPCONCPCONCPCONCPCONCPCONCPCONCPCONCPCONCPCONCPCONCPCONCPCONCPCONCPCONCPCONCPCONCPDIP
6" CONCPCONCPCONCPCONCPCONCPCONCPCONCPCONCPCONCPCONCPCONCPCONCPCONCPCONCPCONCPCONCPCONCPCONCPCONCPCONCPCONCPCONCPCI
6" CONCPCONCPCONCPCONCPCONCPCONCPCONCPCONCPCONCPCONCPCONCPCONCPCONCPCONCPCONCPCONCPCONCPCONCPCONCPCONCPCONCPCONCPWOOD
6" CONCPCONCPCONCPCONCPCONCPCONCPCONCPCONCPCONCPCONCPCONCPCONCPCONCPCONCPCONCPCONCPCONCPCONCPCONCPCONCPCONCPCONCPCONC
6" CONCPCONCPCONCPCONCPCONCPCONCPCONCPCONCPCONCPCONC

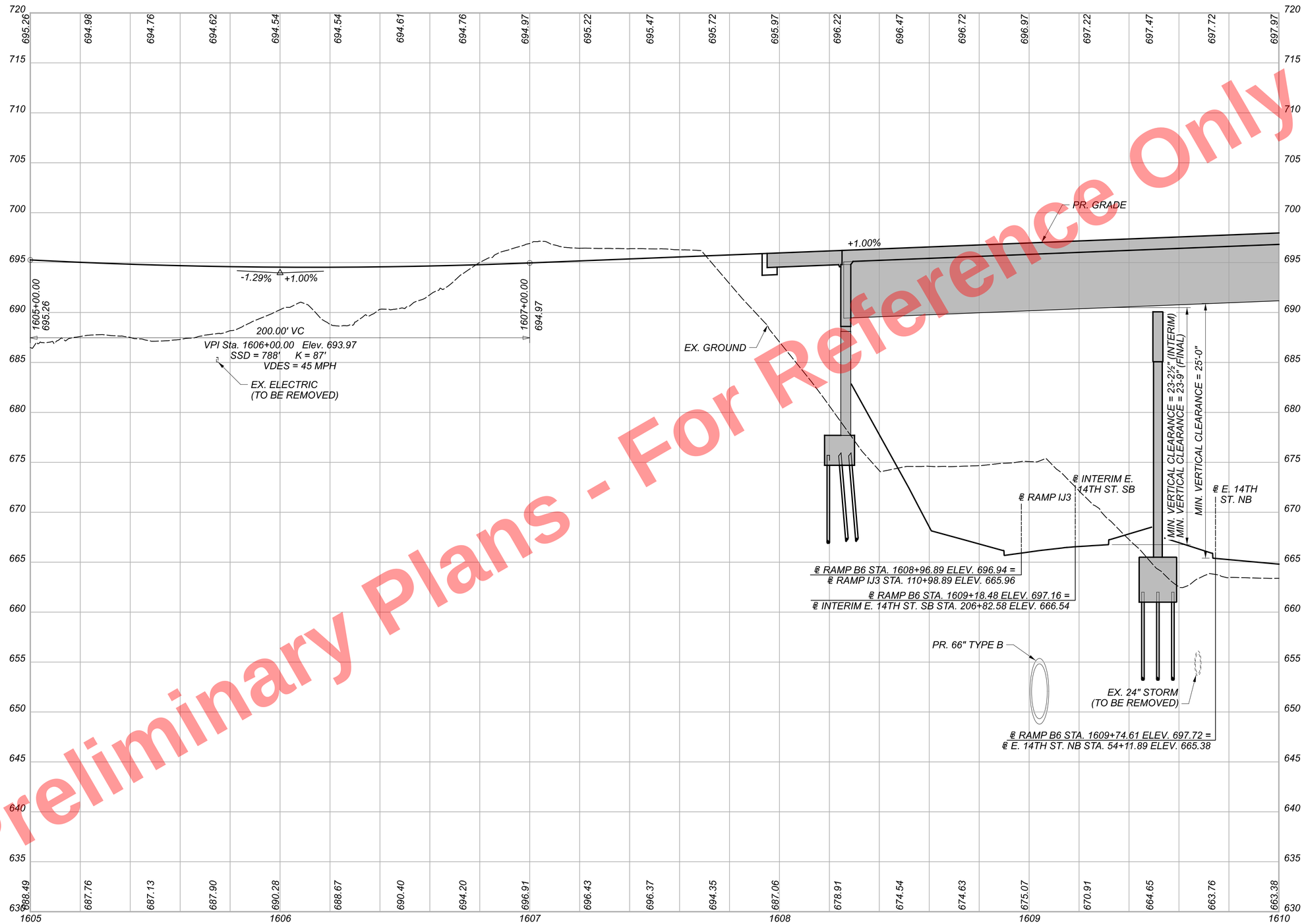

Preliminary Plans - For Reference Only

PROFILE - RAMP B6
STA. 1605+00.00 TO STA. 1610+00.00

DESIGN AGENCY
HDR

DESIGNER
BMV

REVIEWER
TJS 04/30/24

PROJECT ID
82382

SHEET 583 TOTAL 2696

CUY-90-16.28 (CCG3A)

MODEL: 82382_GF4603 PAPERSIZE: 34x22 (in.) DATE: 3/27/2025 TIME: 10:00:36 PM USER: Alexandria.Summers
pw:\\mb-us-pw.bentley.com:mb-us-pw-03\Documents\Cleveland_OH\OI_Projects\ODOT\District12\82382\400-Engineering\Roadway\Sheets\82382_GF4603.dgn

CROSS REFERENCES	
SHEET	DESCRIPTION
73	UTILITY SYMBOL LEGEND
28	EX. TYPICAL SECTIONS
49 - 53	PR. TYPICAL SECTIONS
430 - 489	SUBSUMMARIES
679 - 710	REMOVAL PLAN
842 - 858	CROSS SECTIONS
1024	SUPERELEVATION TABLES
1092 - 1120	DRAINAGE PLANS
1310	WALL Y
1317 - 1318	WALL Z
1716 1723	LIGHTING PLAN
1807 1817	LANDSCAPING
2129 2130	CUY-90-1652S (BRIDGE 12)
2383 - 2386	FENCE PLAN

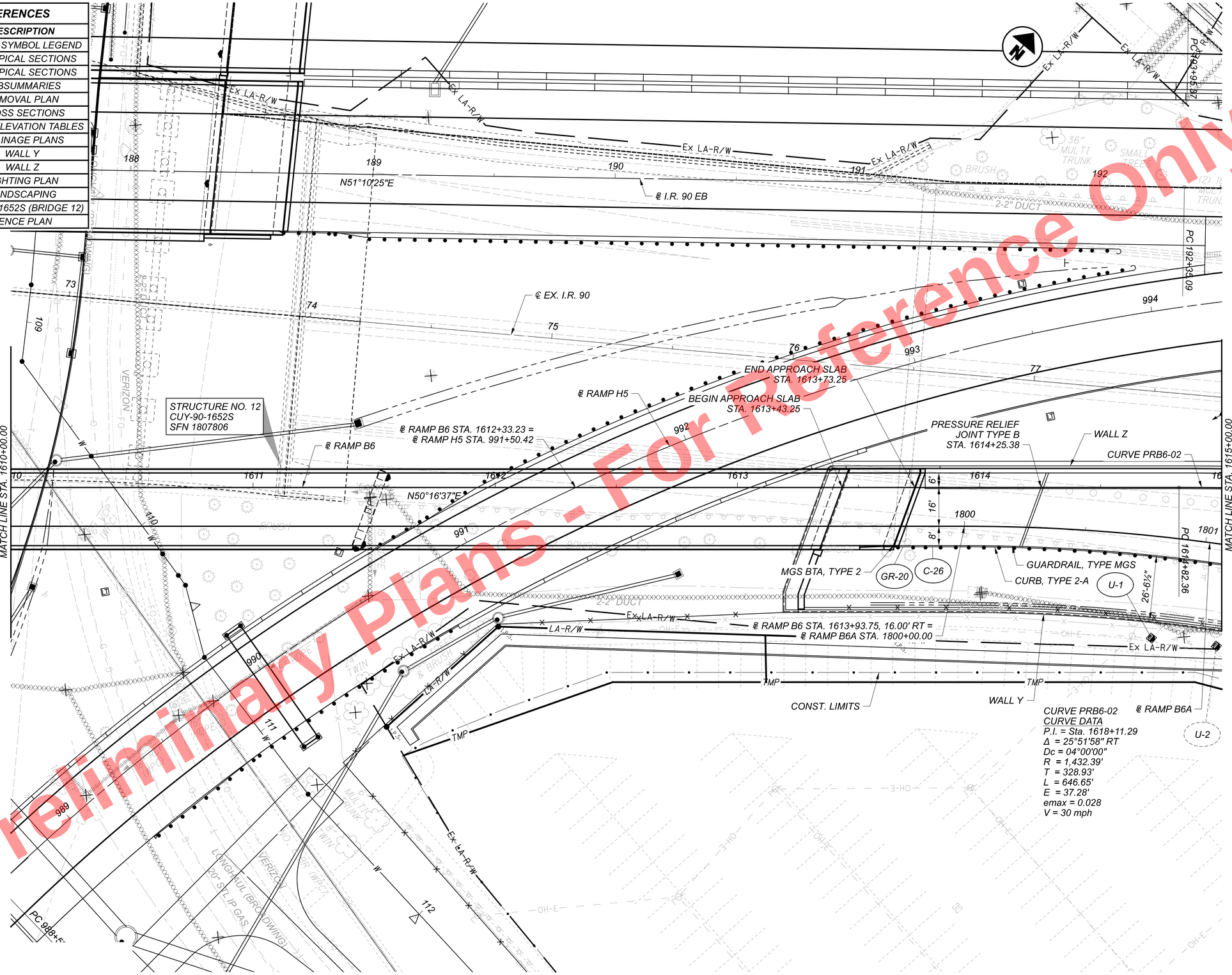

Preliminary Plans - For Reference Only

HORIZONTAL SCALE IN FEET
0 10 20 40

PLAN - RAMP B6
STA. 1610+00.00 TO STA. 1615+00.00

DESIGN AGENCY

DESIGNER BMV
REVIEWER TJS 04/30/24
PROJECT ID 82382
SHEET 584 TOTAL 2696

CUY-90-16.28 (CCG3A)

MODEL: 82382_GP4604 PAPERSIZE: 34x22 (in.) DATE: 6/9/2025 TIME: 10:42 PM USER: Julie.Ross
pw:\\mb-us-pw.bentley.com:mb-us-pw-03\Documents\Cleveland_OH\01_Projects\ODOT\District2\82382\400-Engineering\Roadway\Sheets\82382_GP4604.dgn

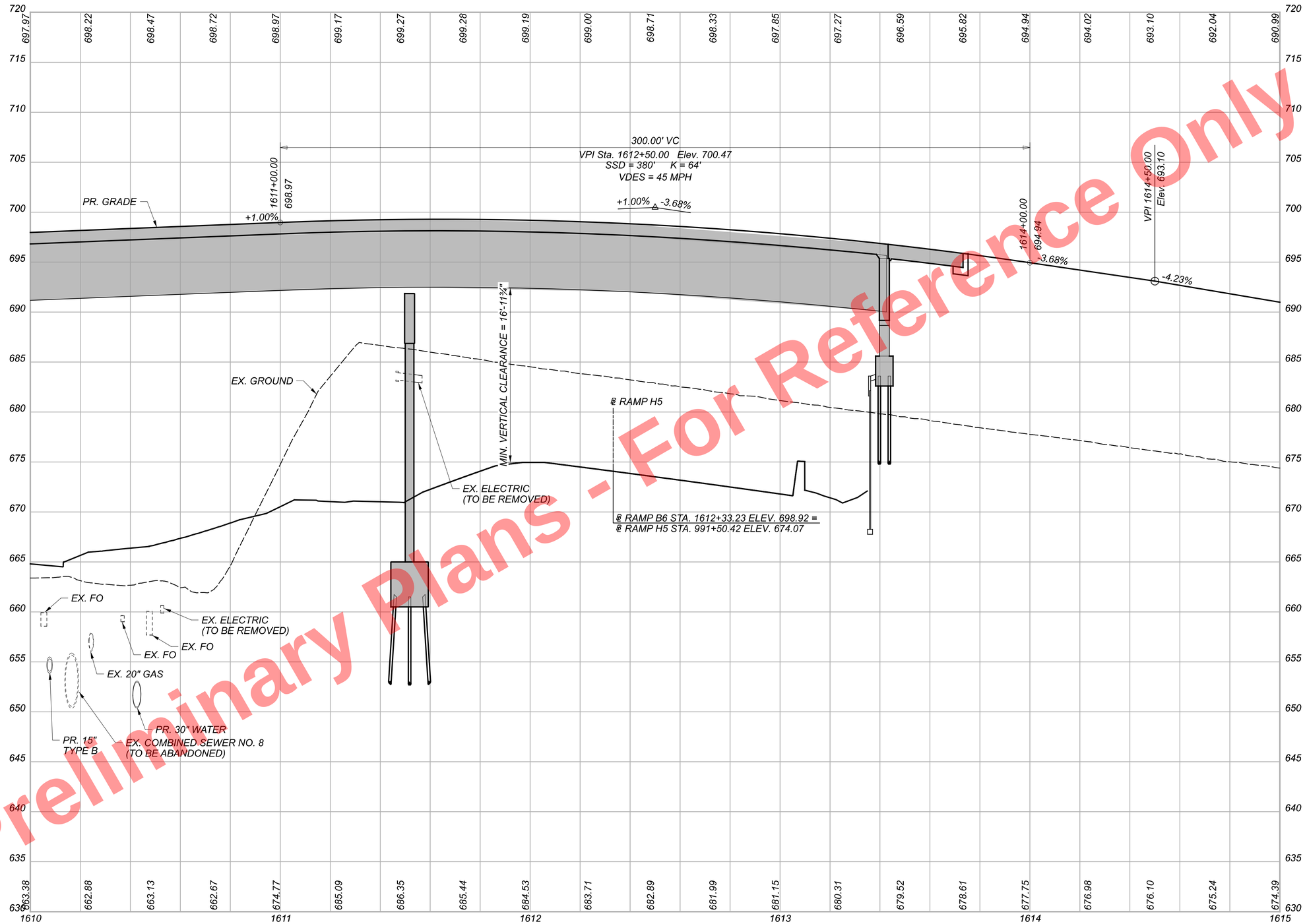

Preliminary Plans - For Reference Only

PROFILE - RAMP B6
STA. 1610+00.00 TO STA. 1615+00.00

DESIGN AGENCY

DESIGNER BMV
REVIEWER TJS 04/30/24
PROJECT ID 82382
SHEET 585 TOTAL 2696

CUY-90-16.28 (CCG3A)

MODEL: 82382_GF4604 PAPERSIZE: 34x22 (in.) DATE: 3/27/2025 TIME: 10:01:03 PM USER: Alexandria.Summers
pw:\\mb-us-pw.bentley.com\mb-us-pw-03\Documents\Cleveland_OHIO_Projects\DOOT\District2\82382\400-Engineering\Roadway\Sheets\82382_GF4604.dgn

CROSS REFERENCES	
SHEET	DESCRIPTION
73	UTILITY SYMBOL LEGEND
28	EX. TYPICAL SECTIONS
49 - 53	PR. TYPICAL SECTIONS
430 - 489	SUBSUMMARIES
679 - 710	REMOVAL PLAN
842 - 858	CROSS SECTIONS
1024	SUPERELEVATION TABLES
578	RAMP TERMINAL DETAILS
1092 - 1120	DRAINAGE PLANS
1310	WALL Y
1317 - 1318	WALL Z
1368	COMBINED SEWER
1716 - 1723	LIGHTING PLAN
1807 - 1817	LANDSCAPING
2383 - 2386	FENCE PLAN

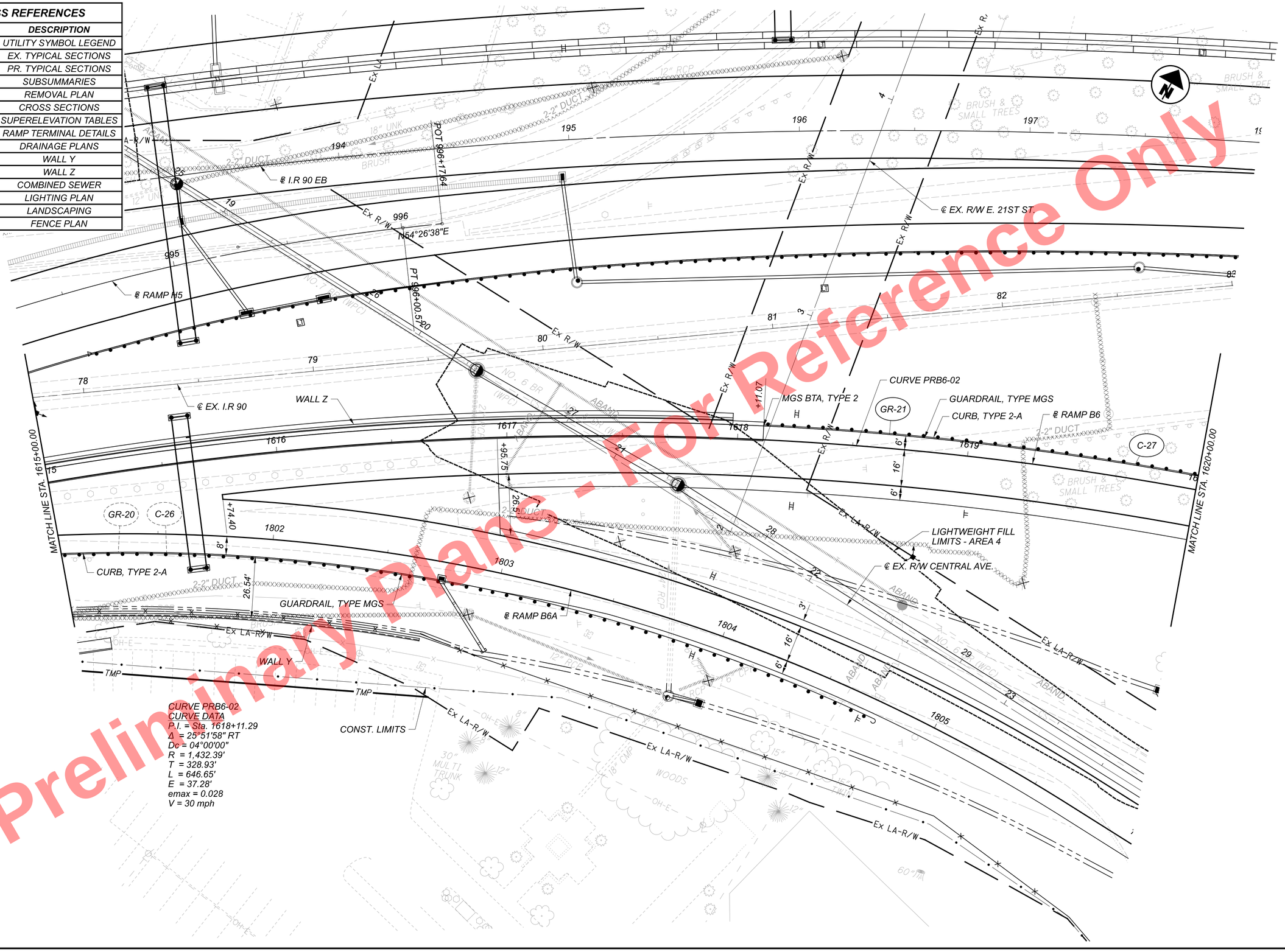

Preliminary Plans - For Reference Only

HORIZONTAL SCALE IN FEET
0 10 20 40

PLAN - RAMP B6
STA. 1615+00.00 TO STA. 1620+00.00

DESIGN AGENCY
HDR

DESIGNER
BMV

REVIEWER
TJS 04/30/24

PROJECT ID
82382

SHEET 586 TOTAL 2696

CUY-90-16.28 (CCG3A)

MODEL: 82382_GP4605 PAPERSIZE: 34x22 (in.) DATE: 3/27/2025 TIME: 10:01:13 PM USER: Alexandria.Summers
pw:\\mb-us-pw.bentley.com:mb-us-pw-03\Documents\Cleveland_OH\OI_Projects\ODOT\District12\82382\400-Engineering\Roadway\Sheets\82382_GP4605.dgn

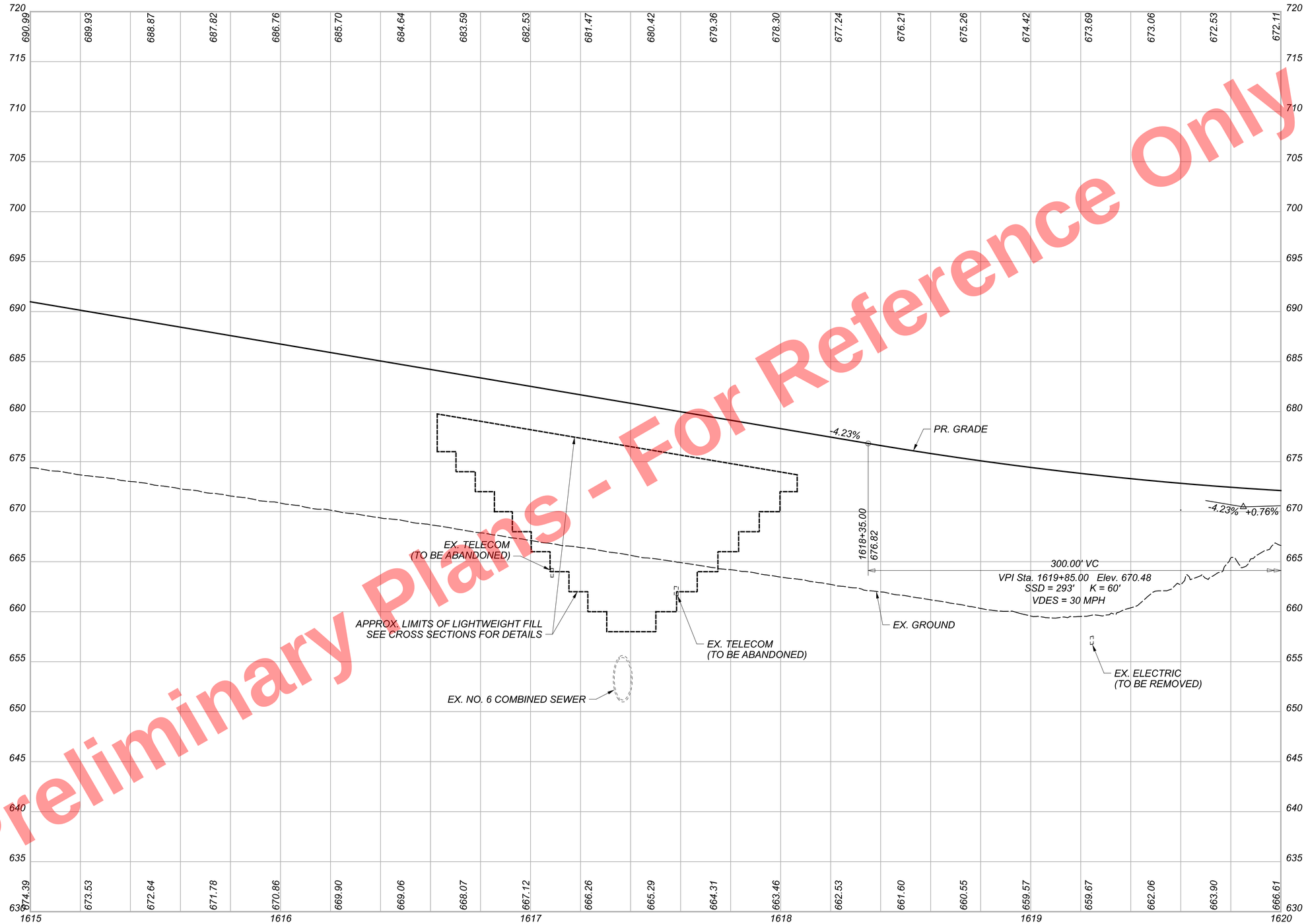

Preliminary Plans - For Reference Only

PROFILE - RAMP B6

STA. 1615+00.00 TO STA. 1620+00.00

CUY-90-16.28 (CCG3A)

MODEL: 82382_GF4605 PAPERSIZE: 34x22 (in.) DATE: 3/27/2025 TIME: 10:01:33 PM USER: Alexandria.Summers
pw:\\mb-us-pw.bentley.com\mb-us-pw-03\Documents\Cleveland_OH\OI_Projects\0007\District2\82382\400-Engineering\Roadway\Sheets\82382_GF4605.dgn

DESIGN AGENCY

HDR

DESIGNER	BMV
REVIEWER	TJS 04/30/24
PROJECT ID	82382
SHEET	587
TOTAL	2696

Preliminary Plans - For Reference Only

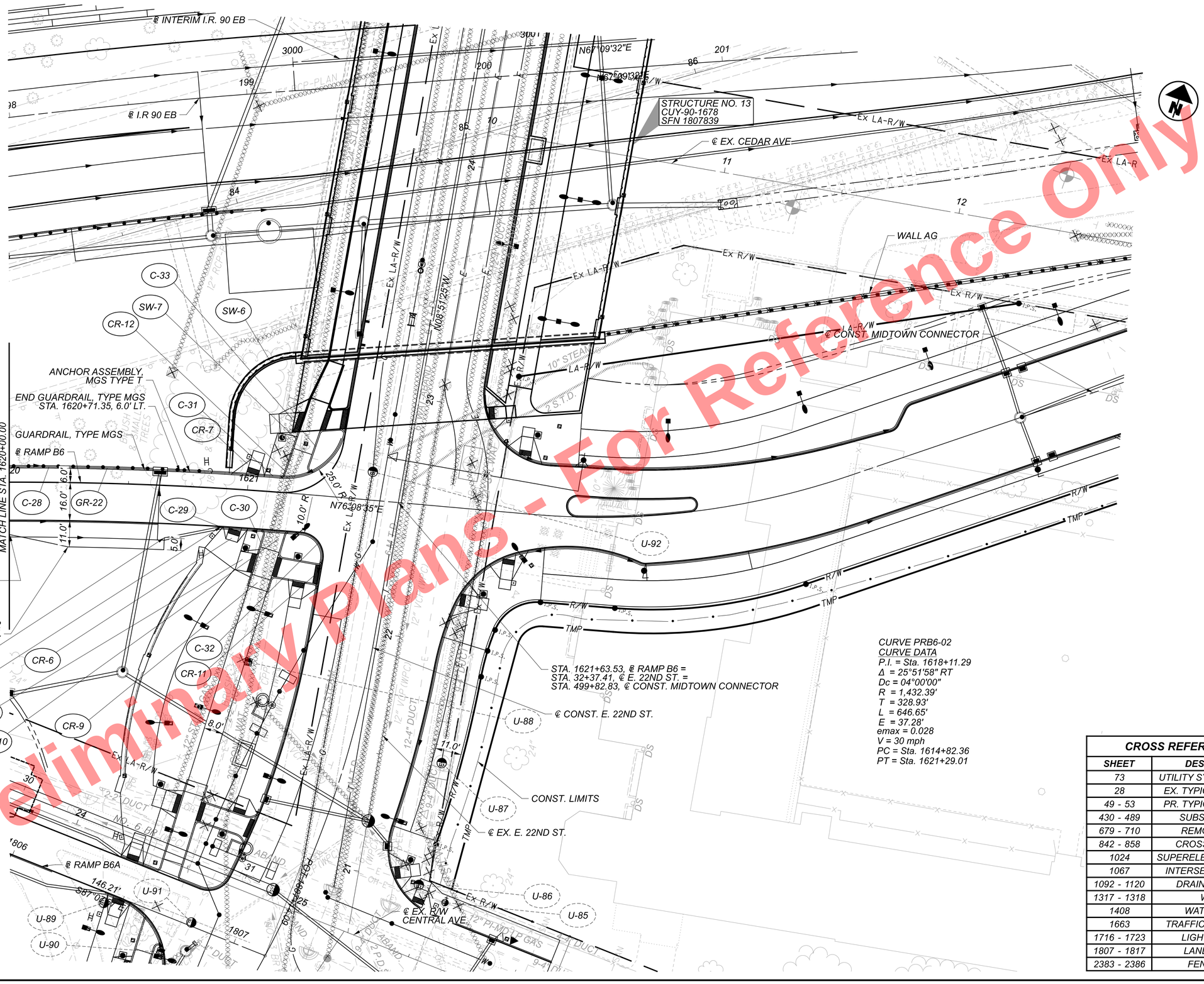

CROSS REFERENCES

SHEET	DESCRIPTION
73	UTILITY SYMBOL LEGEND
28	EX. TYPICAL SECTIONS
49 - 53	PR. TYPICAL SECTIONS
430 - 489	SUBSUMMARIES
679 - 710	REMOVAL PLAN
842 - 858	CROSS SECTIONS
1024	SUPERELEVATION TABLES
1067	INTERSECTION DETAIL
1092 - 1120	DRAINAGE PLANS
1317 - 1318	WALL Z
1408	WATER WORK
1663	TRAFFIC SIGNAL PLAN
1716 - 1723	LIGHTING PLAN
1807 - 1817	LANDSCAPING
2383 - 2386	FENCE PLAN

HORIZONTAL SCALE IN FEET
0 10 20 40

PLAN - RAMP B6
STA. 1620+00.00 TO END

DESIGN AGENCY
Michael Baker INTERNATIONAL

DESIGNER KJM
REVIEWER KGJ 05/22/24
PROJECT ID 82382
SHEET 588 TOTAL 2696

CUY-90-16.28 (CCG3A)

MODEL: 82382_GP4606 PAPERSIZE: 34x22 (in.) DATE: 3/27/2025 TIME: 10:01:44 PM USER: Alexandria.Summers
pw:\\vmb-us-pw.bentley.com:vmb-us-pw-03\Documents\Cleveland_OH\01_Projects\000T\District2\82382\400-Engineering\Roadway\Sheets\82382_GP4606.dgn

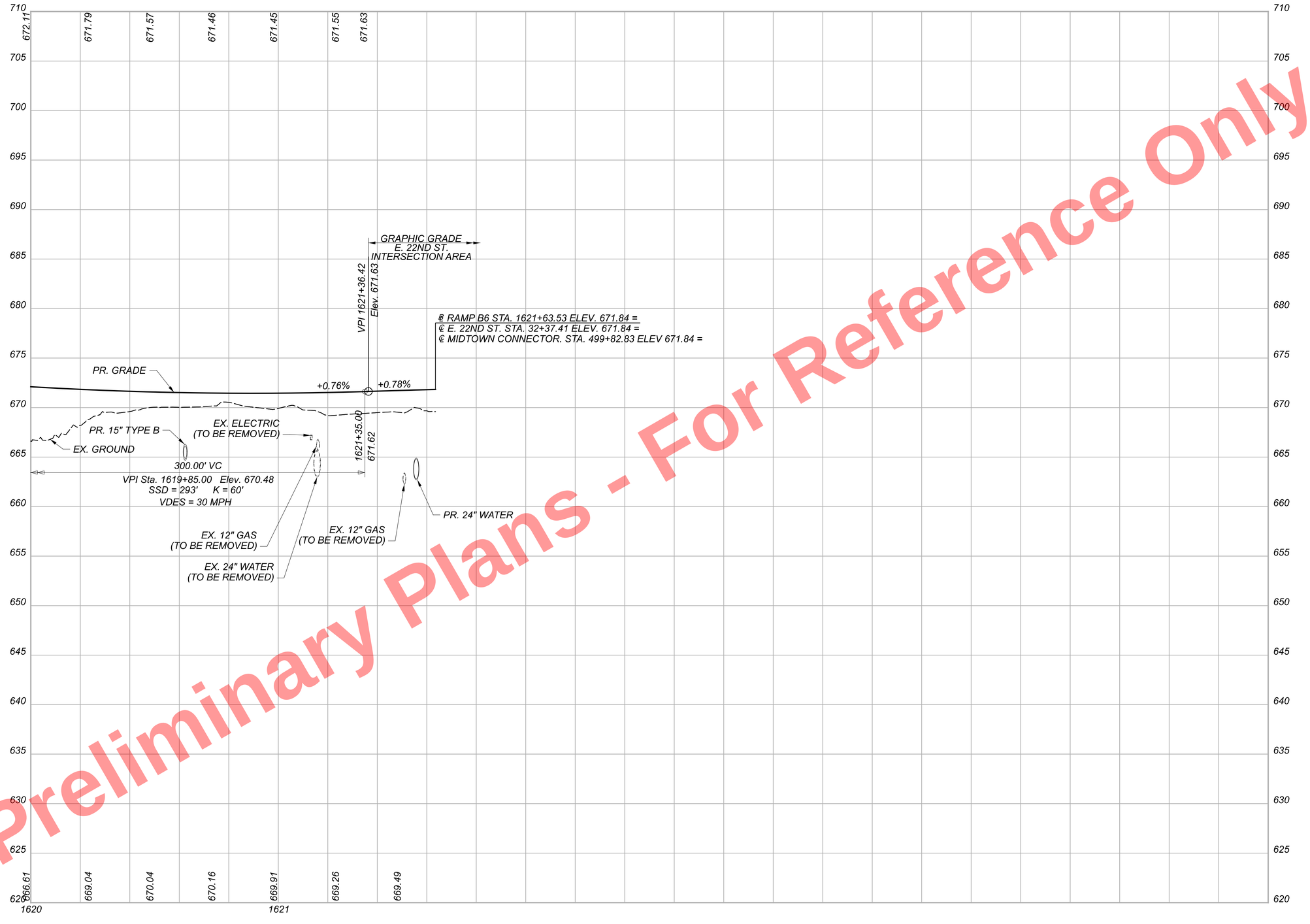

Preliminary Plans - For Reference Only

PROFILE - RAMP B6
STA. 1620+00.00 TO END

CUY-90-16.28 (CCG3A)

MODEL: 82382_GF4606 PAPERSIZE: 34x22 (in.) DATE: 3/27/2025 TIME: 10:02:02 PM USER: AlexandriaSummers
pw:\\mb-us-pw.bentley.com:mb-us-pw-03\Documents\Cleveland_OH\01_Projects\ODOT\District2\82382\400-Engineering\Roadway\Sheets\82382_GF4606.dgn

DESIGN AGENCY

DESIGNER
BMV

REVIEWER
TJS 04/30/24

PROJECT ID
82382

SHEET 589 | TOTAL 2696

CROSS REFERENCES	
SHEET	DESCRIPTION
73	UTILITY SYMBOL LEGEND
28	EX. TYPICAL SECTIONS
53	PR. TYPICAL SECTIONS
430 - 489	SUBSUMMARIES
679 - 710	REMOVAL PLAN
860 - 863	CROSS SECTIONS
1025	SUPERELEVATION TABLES
1053	RAMP TERMINAL DETAILS
1092 - 1120	DRAINAGE PLANS
1310	WALL Y
1368	COMBINED SEWER
1716 - 1723	LIGHTING PLAN
1807 - 1817	LANDSCAPING
2383 - 2386	FENCE PLAN

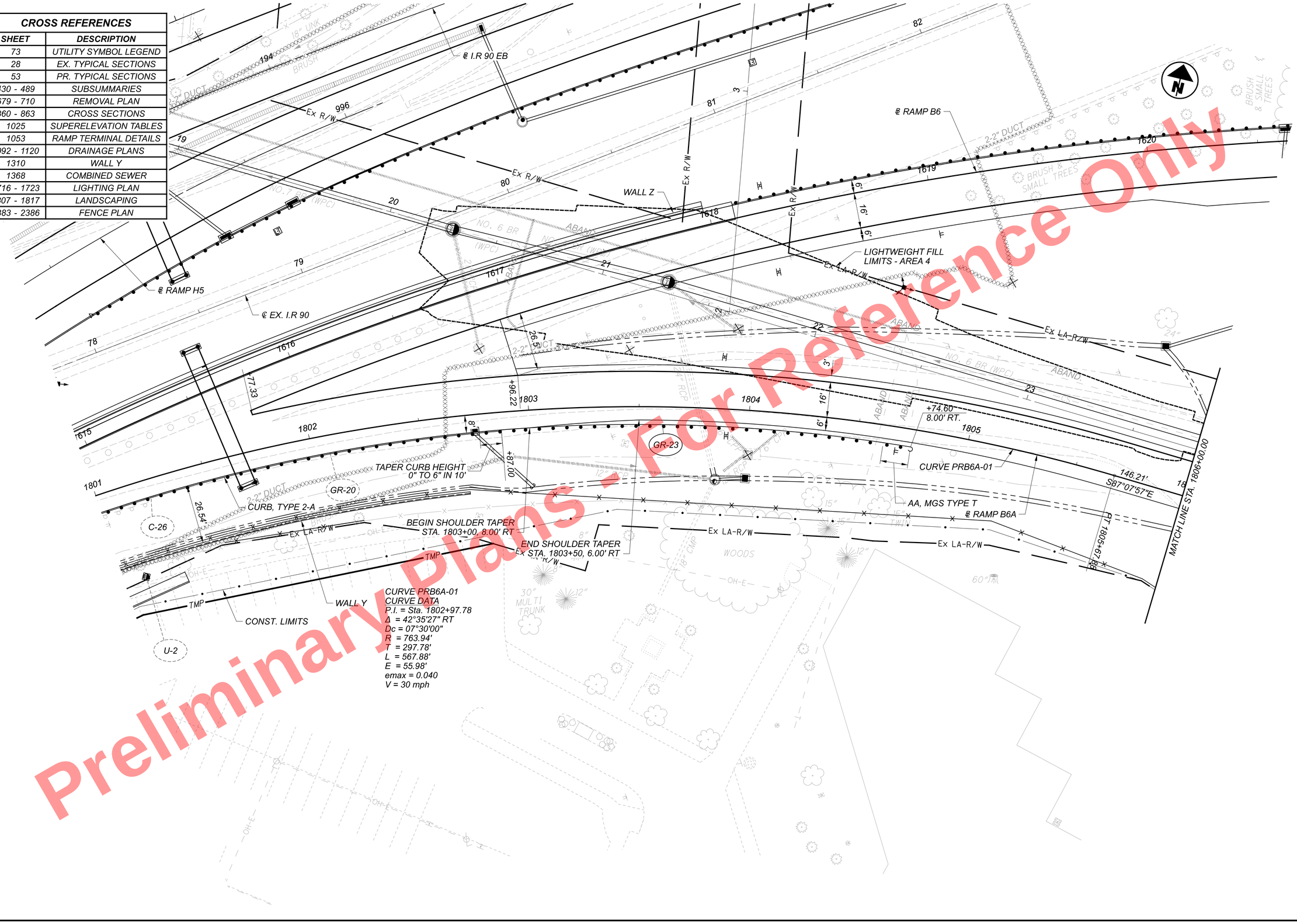

Preliminary Plans - For Reference Only

HORIZONTAL SCALE IN FEET
0 10 20 40

PLAN - RAMP B6A
STA. 1801+00.00 TO STA. 1806+00.00

DESIGN AGENCY

DESIGNER BMV
REVIEWER TJS 04/30/24
PROJECT ID 82382
SHEET 590 TOTAL 2696

CUY-90-16.28 (CCG3A)

MODEL: 82382_GP470I PAPERSIZE: 34x22 (In.) DATE: 3/27/2025 TIME: 10:02:19 PM USER: Alexandria.Summers
pw:\\mb-us-pw.bentley.commb-us-pw-03\Documents\Cleveland_OH\OL_Projects\ODOT\District12\82382\400-Engineering\Roadway\Sheets\82382_GP470I.dgn

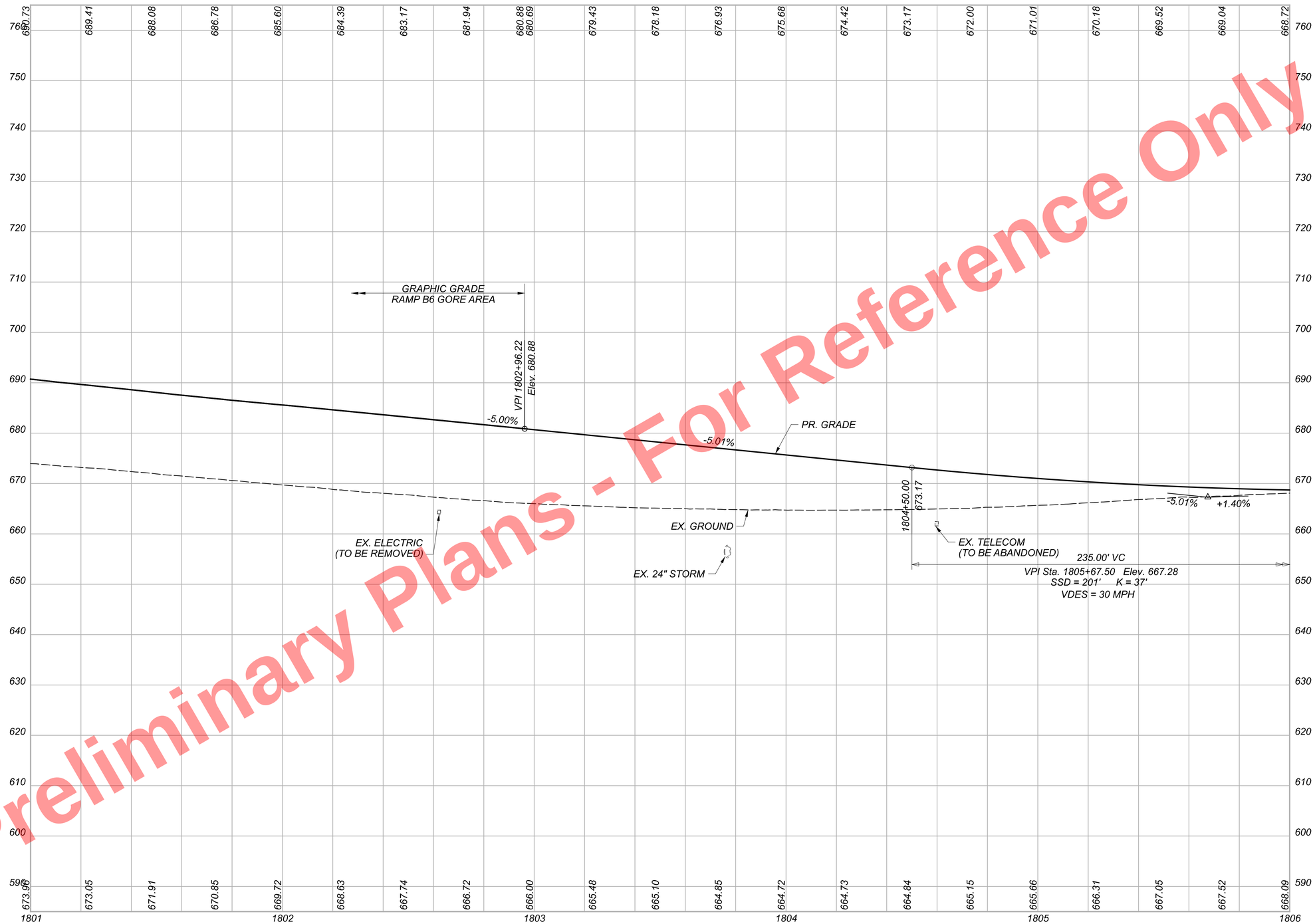

Preliminary Plans - For Reference Only

CUY-90-16.28 (CCG3A)

MODEL: 82382_GF4701 PAPERSIZE: 34x22 (in.) DATE: 3/27/2025 TIME: 10:02:44 PM USER: Alexandria.Summers
pw:\\mb-us-pw.bentley.com:mb-us-pw-03\Documents\Cleveland_OH\01_Projects\ODOT\District12\82382\400-Engineering\Roadway\Sheets\82382_GF4701.dgn

PROFILE RAMP B6A
STA. 1801+00.00 TO STA. 1806+00.00

DESIGN AGENCY
HDR

DESIGNER
BMV

REVIEWER
TJS 04/30/24

PROJECT ID
82382

SHEET 591 TOTAL 2696

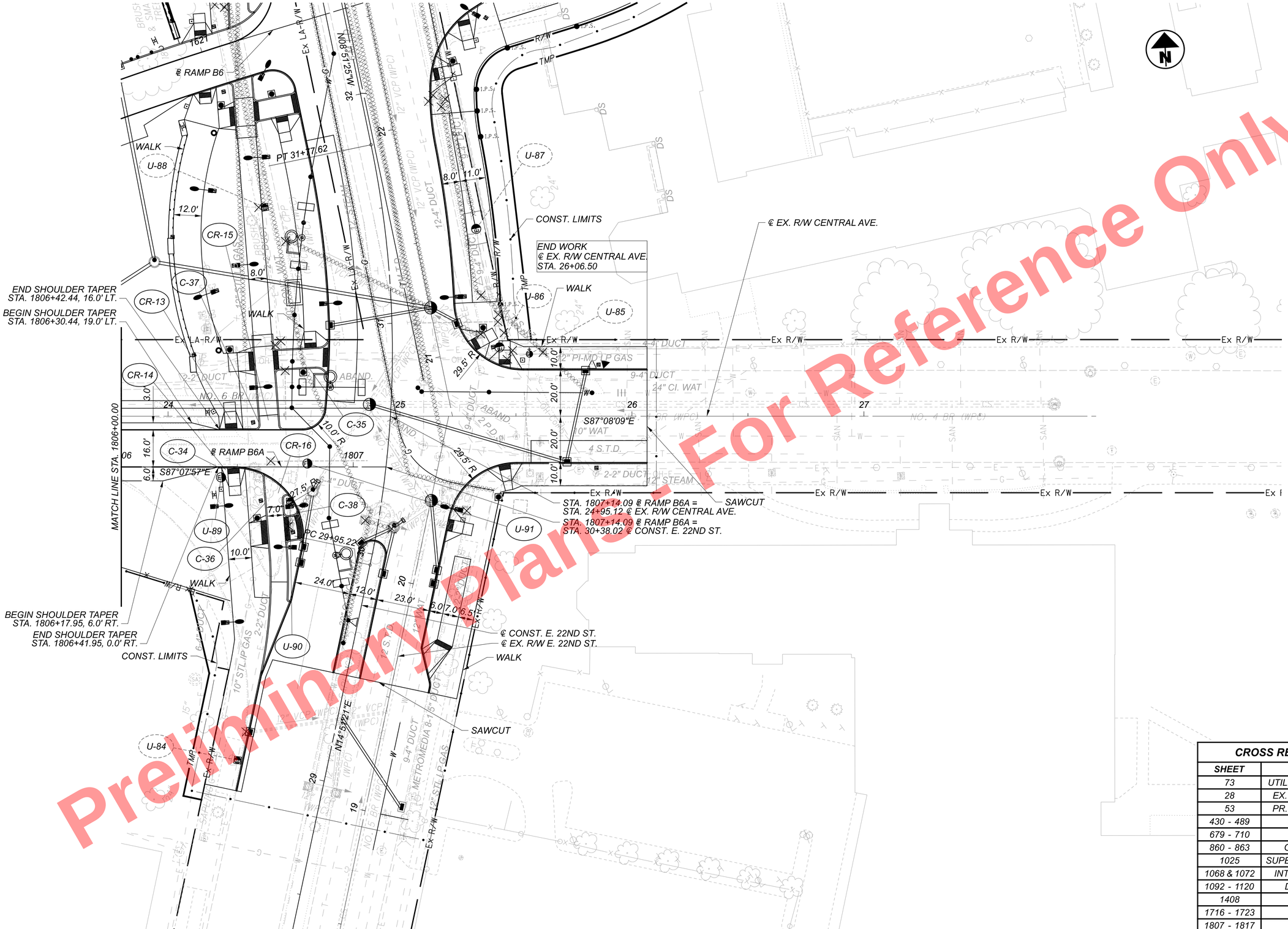

For Reference Only
Preliminary Plans

CROSS REFERENCES	
SHEET	DESCRIPTION
73	UTILITY SYMBOL LEGEND
28	EX. TYPICAL SECTIONS
53	PR. TYPICAL SECTIONS
430 - 489	SUBSUMMARIES
679 - 710	REMOVAL PLAN
860 - 863	CROSS SECTIONS
1025	SUPERELEVATION TABLES
1068 & 1072	INTERSECTION DETAIL
1092 - 1120	DRAINAGE PLANS
1408	WATER WORK
1716 - 1723	LIGHTING PLAN
1807 - 1817	LANDSCAPING
2383 - 2386	FENCE PLAN

PLAN RAMP B6A
STA. 1806+00.00 TO END

DESIGN AGENCY
Michael Baker INTERNATIONAL

DESIGNER KJM
REVIEWER KGJ 05/22/24
PROJECT ID 82382
SHEET 592 TOTAL 2696

CUY-90-16.28 (CCG3A)

MODEL: 82382_GP4702 PAPERSIZE: 34x22 (in.) DATE: 3/27/2025 TIME: 10:02:56 PM USER: Alexandria.Summers
pw:\\mb-us-pw.bentley.com:mb-us-pw-03\Documents\Cleveland_OHIO_Projects\0007\District2\82382\400-Engineering\Roadway\Sheets\82382_GP4702.dgn

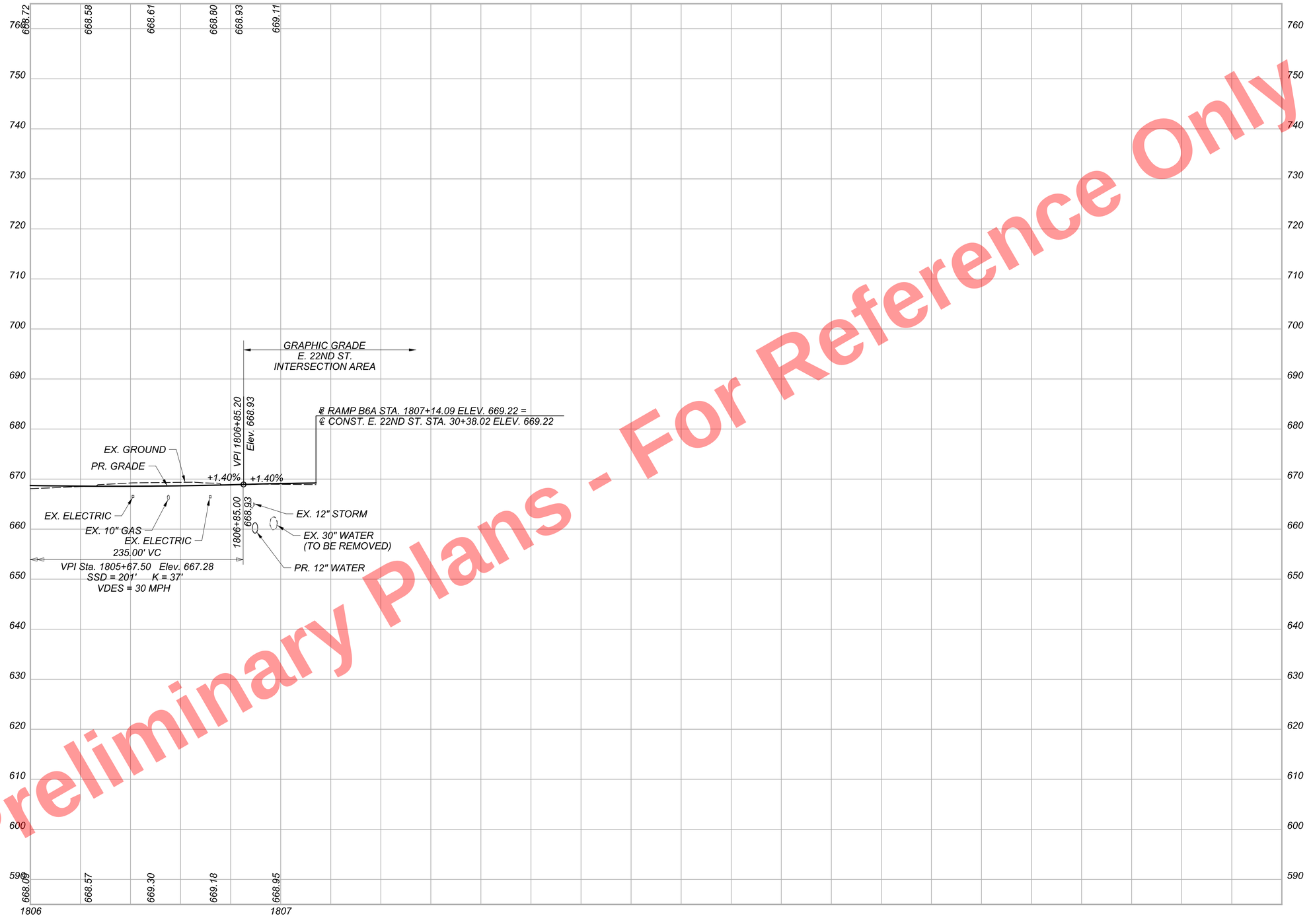

Preliminary Plans - For Reference Only

PROFILE RAMP B6A
STA. 1806+00.00 TO END

CUY-90-16.28 (CCG3A)

MODEL: 82382_GF4702 PAPERSIZE: 34x22 (in.) DATE: 3/27/2025 TIME: 10:03:15 PM USER: Alexandria.Summers
pw:\\mb-us-pw.bentley.com:mb-us-pw-03\Documents\Cleveland_OH\OL_Projects\ODOT\District 12\82382\400-Engineering\Roadway\Sheets\82382_GF4702.dgn

DESIGN AGENCY

DESIGNER
BMV

REVIEWER
TJS 04/30/24

PROJECT ID
82382

SHEET 593 TOTAL 2696

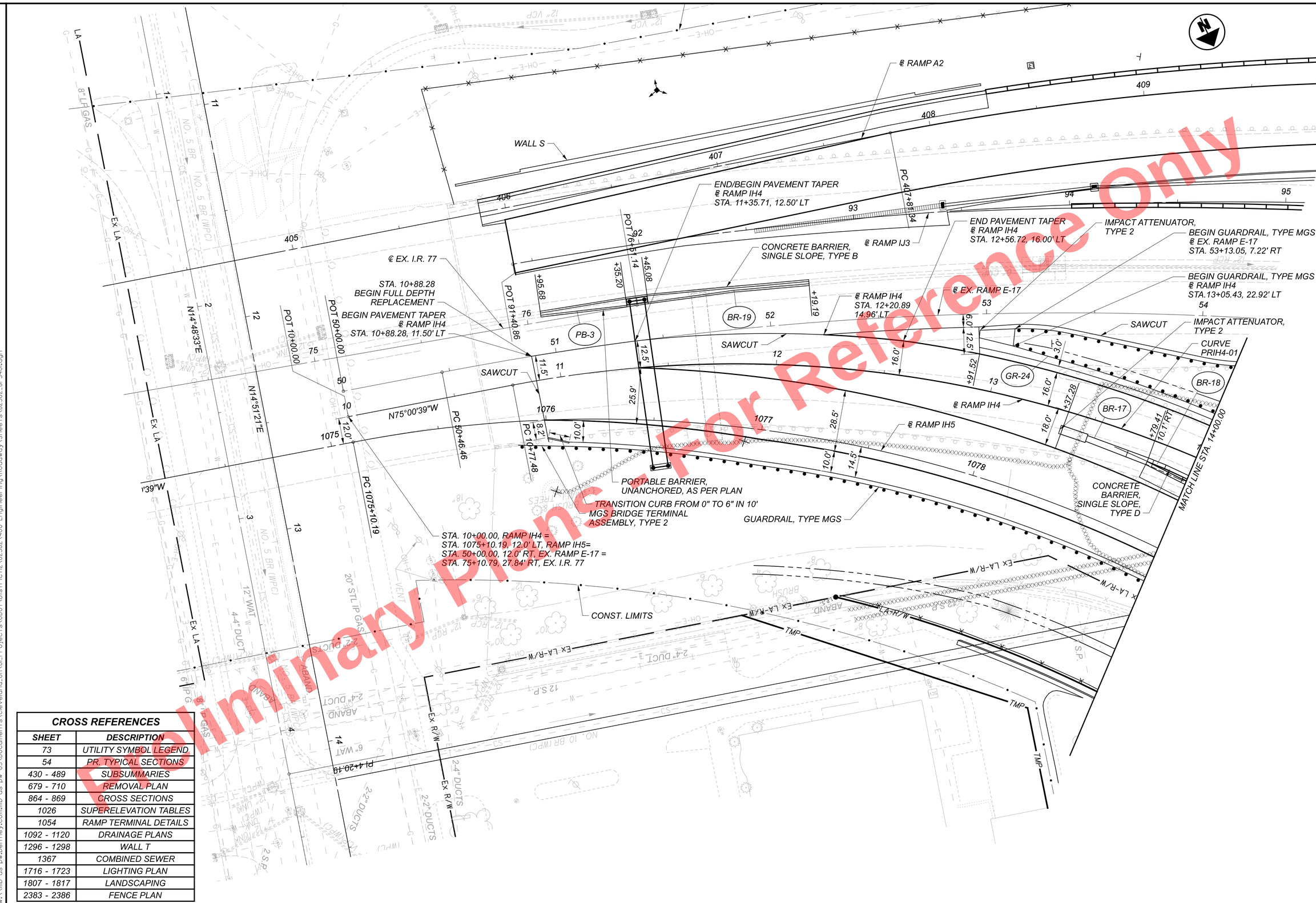

Preliminary Plans - For Reference Only

CROSS REFERENCES	
SHEET	DESCRIPTION
73	UTILITY SYMBOL LEGEND
54	PR. TYPICAL SECTIONS
430 - 489	SUBSUMMARIES
679 - 710	REMOVAL PLAN
864 - 869	CROSS SECTIONS
1026	SUPERELEVATION TABLES
1054	RAMP TERMINAL DETAILS
1092 - 1120	DRAINAGE PLANS
1296 - 1298	WALL T
1367	COMBINED SEWER
1716 - 1723	LIGHTING PLAN
1807 - 1817	LANDSCAPING
2383 - 2386	FENCE PLAN

HORIZONTAL SCALE IN FEET
0 10 20 40

PLAN - RAMP IH4
BEGIN TO STA. 14+00.00

DESIGN AGENCY
Michael Baker INTERNATIONAL

DESIGNER
KJM

REVIEWER
KGJ 05/22/24

PROJECT ID
82382

SHEET 594 TOTAL 2696

CUY-90-16.28 (CCG3A)

MODEL: 82382_GP5401 PAPERSIZE: 34x22 (in.) DATE: 3/27/2025 TIME: 10:03:26 PM USER: Alexandria.Summers
pw:\\mb-us-pw.bentley.com:mb-us-pw-03\Documents\Cleveland_OH\01_Projects\ODOT\District12\82382\400-Engineering\Roadway\Sheets\82382_GP5401.dgn

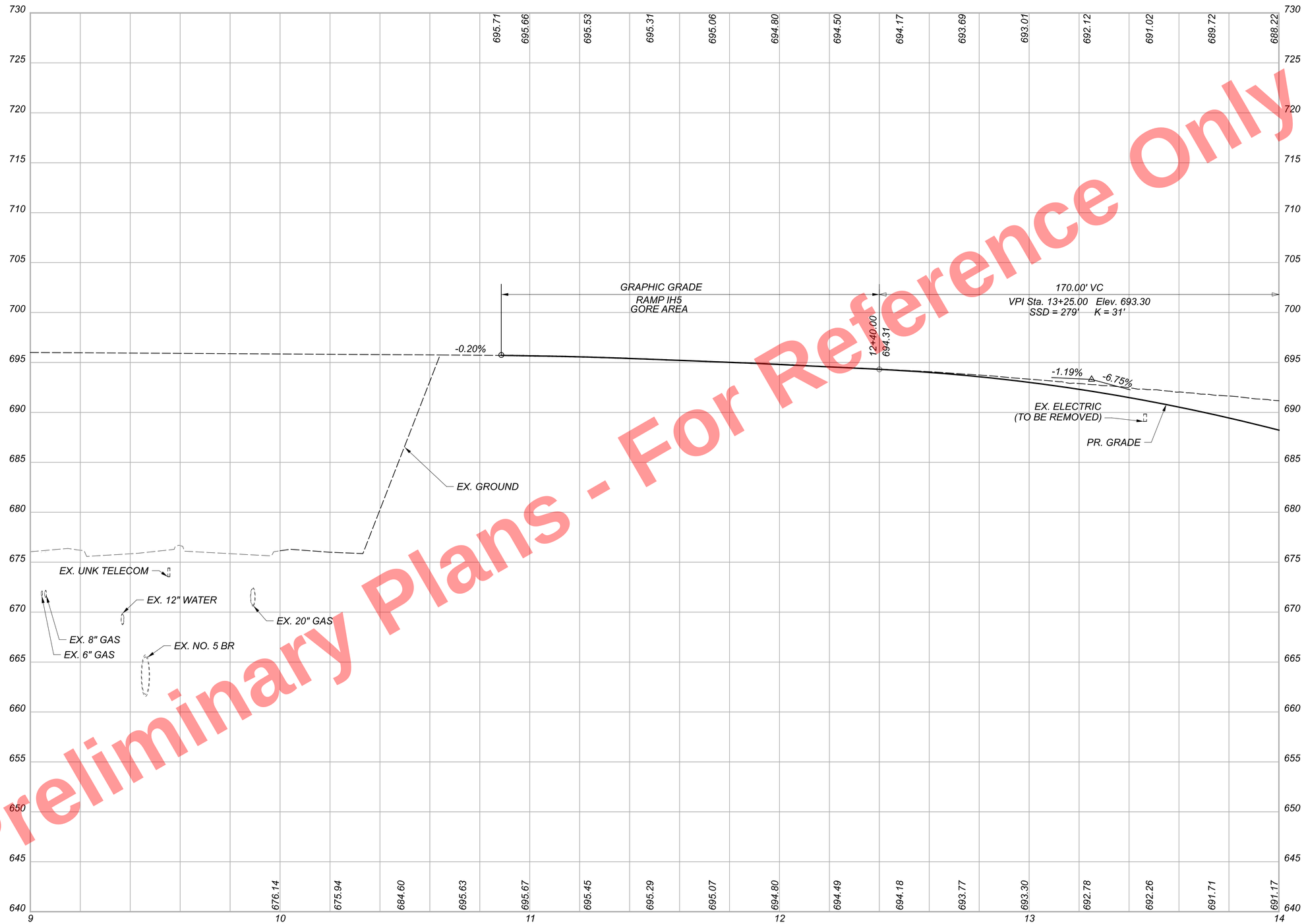

Preliminary Plans - For Reference Only

PROFILE - RAMP IH4
BEGIN TO STA. 14+00.00

CUY-90-16.28 (CCG3A)

MODEL: 82382_GF540I PAPERSIZE: 34x22 (in.) DATE: 3/27/2025 TIME: 10:03:54 PM USER: AlexandriaSummers
pw:\\mb-us-pw.bentley.com\mb-us-pw-03\Documents\Cleveland.OH\OI_Projects\ODOT\District2\82382\400-Engineering\Roadway\Sheets\82382_GF540I.dgn

DESIGN AGENCY
Michael Baker INTERNATIONAL

DESIGNER	KJM
REVIEWER	KGJ 05/22/24
PROJECT ID	82382
SHEET	595
TOTAL	2696

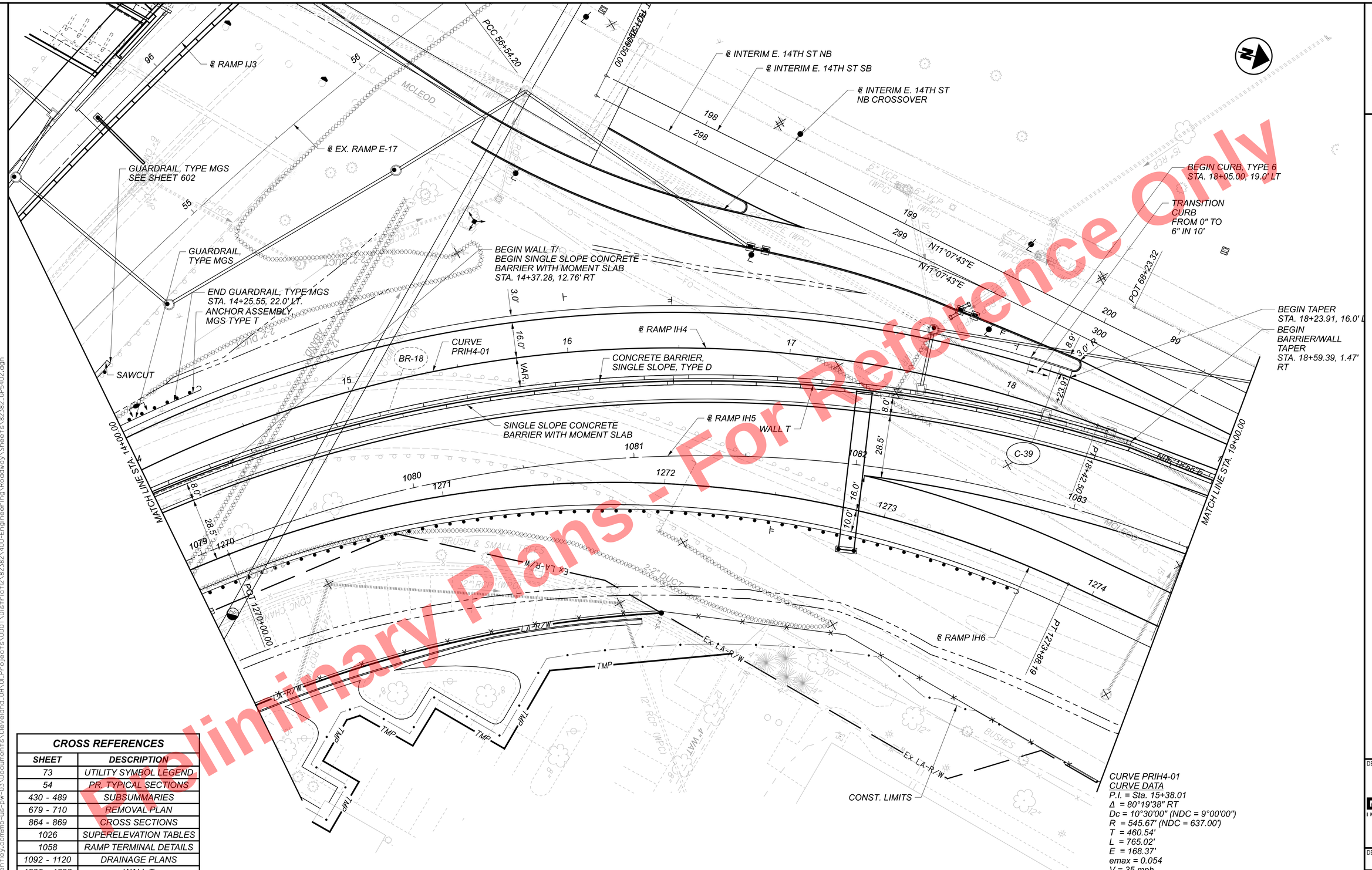

CROSS REFERENCES	
SHEET	DESCRIPTION
73	UTILITY SYMBOL LEGEND
54	PR. TYPICAL SECTIONS
430 - 489	SUBSUMMARIES
679 - 710	REMOVAL PLAN
864 - 869	CROSS SECTIONS
1026	SUPERELEVATION TABLES
1058	RAMP TERMINAL DETAILS
1092 - 1120	DRAINAGE PLANS
1296 - 1298	WALL T
1367	COMBINED SEWER
1716 - 1723	LIGHTING PLAN
1807 - 1817	LANDSCAPING
2383 - 2386	FENCE PLAN

CURVE PRIH4-01
CURVE DATA
P.I. = Sta. 15+38.01
Δ = 80°19'38" RT
Dc = 10°30'00" (NDC = 9°00'00")
R = 545.67' (NDC = 637.00')
T = 460.54'
L = 765.02'
E = 168.37'
emax = 0.054
V = 35 mph

Preliminary Plans - For Reference Only

HORIZONTAL SCALE IN FEET
0 10 20 40

PLAN - RAMP IH4
STA. 14+00.00 TO STA. 19+00.00

DESIGN AGENCY
Michael Baker INTERNATIONAL

DESIGNER KJM
REVIEWER KGJ 05/22/24
PROJECT ID 82382
SHEET 596 TOTAL 2696

CUY-90-16.28 (CCG3A)

MODEL: 82382_GP5402 PAPERSIZE: 34x22 (in.) DATE: 3/27/2025 TIME: 10:04:06 PM USER: Alexandria.Summers
pw:\\mb-us-pw.bentley.com:mb-us-pw-03\Documents\Cleveland.OH\01_Projects\ODOT\District12\82382\400-Engineering\Roadway\Sheets\82382_GP5402.dgn

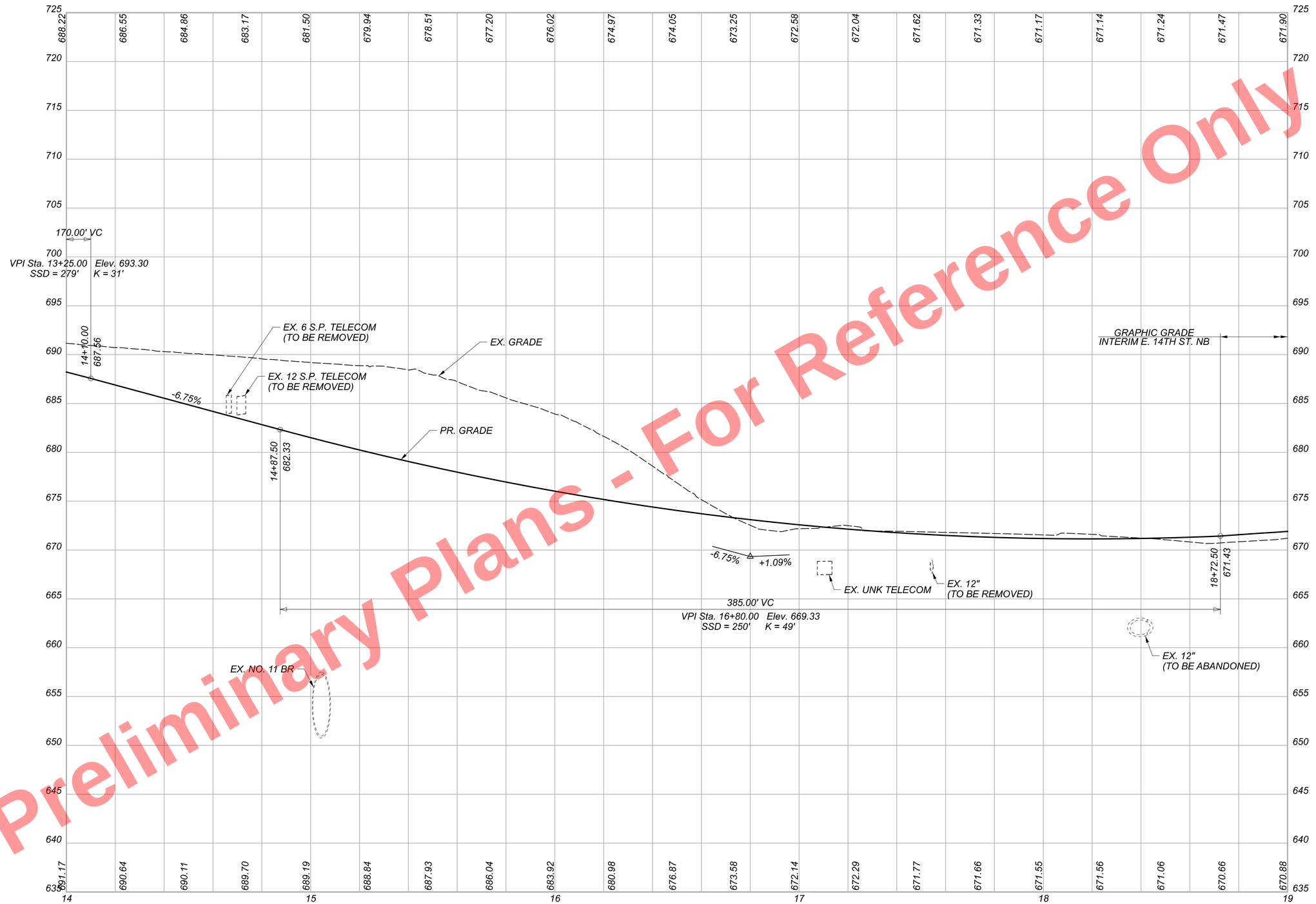

Preliminary Plans - For Reference Only

PROFILE - RAMP IH4
STA. 14+00.00 TO STA. 19+00.00

CUY-90-16.28 (CCG3A)

MODEL: 82382_GF5402 PAPERSIZE: 34x22 (in.) DATE: 3/27/2025 TIME: 10:04:31 PM USER: Alexandria.Summers
pw:\\mb-us-pw.bentley.com\mb-us-pw-03\Documents\Cleveland.OH\01_Projects\ODOT\District2\82382\400-Engineering\Roadway\Sheets\82382_GF5402.dgn

DESIGN AGENCY
Michael Baker INTERNATIONAL

DESIGNER KJM
REVIEWER KGJ 05/22/24
PROJECT ID 82382
SHEET 597 TOTAL 2696

Preliminary Plans - For Reference Only

CURVE PRIH4-02
CURVE DATA
P.I. = Sta. 19+95.29
Δ = 00°56'28" RT
Dc = 01°54'00"
R = 3,015.57'
T = 24.76'
L = 49.53'
E = .1'
emax = 0.020
V = 30 mph

℄ EX. RAMP E-17

END BARRIER/WALL TAPER
℄ RAMP IH4
STA. 20+16.09, 2.4' RT

END/BEGIN
BARRIER/WALL TAPER
℄ RAMP IH4
STA. 19+60.07, 3.25' RT

℄ RAMP IH4
STA. 20+07.09, 11.0' LT

END TAPER
℄ RAMP IH4
STA. 19+26.09, 11.0' LT

STA. 20+20.05 ℄ RAMP IH4 =
STA. 301+93.07, 21.0' RT, ℄ INTERIM E. 14TH ST. NB

END PR. WALL T
END SINGLE SLOPE CONCRETE
BARRIER WITH MOMENT SLAB
℄ RAMP H5
STA. 987+65.00, 17.83' LT

℄ INTERIM
E. 14TH ST. SB

℄ INTERIM
E. 14TH ST. NB

PC 301+00.00
PC 201+00.00
PT 67+01.46
PT 201+46.42
PT 301+47.27
PC 202+67.36
PC 302+98.37
PT 303+33.66
PC 305+01.45

MATCH LINE STA. 19+00.00

N05°18'58"E
N06°15'26"E
N02°24'22"E
N06°15'27"E
N09°59'43"E

PR. WALL T
℄ RAMP IH4
℄ RAMP IH5
℄ RAMP H5
℄ RAMP H6

PC 19+70.82
BR-18
POT 20+20.05

Sta. 1085+39.27 ℄ RAMP IH5 =
Sta. 985+16.78 ℄ RAMP H5

PT 1083+54.14
PC 1183+59.15
Sta. 1274+83.98 ℄ RAMP H6 =
Sta. 1183+59.15 ℄ RAMP H6

PCC 1185+83.70

CURVE PRIH4-02

CONCRETE BARRIER,
SINGLE SLOPE, TYPE D

SINGLE SLOPE CONCRETE
BARRIER WITH MOMENT SLAB

CONCRETE BARRIER,
SINGLE SLOPE, TYPE D

EX LA R/W

CROSS REFERENCES	
SHEET	DESCRIPTION
73	UTILITY SYMBOL LEGEND
54	PR. TYPICAL SECTIONS
430 - 489	SUBSUMMARIES
679 - 710	REMOVAL PLAN
864 - 869	CROSS SECTIONS
1026	SUPERELEVATION TABLES
1058	RAMP TERMINAL DETAILS
1092 - 1120	DRAINAGE PLANS
1296 - 1298	WALL T
1716 - 1723	LIGHTING PLAN
1807 - 1817	LANDSCAPING
2383 - 2386	FENCE PLAN

HORIZONTAL
SCALE IN FEET
0 10 20 40

PLAN - RAMP IH4
STA. 19+00.00 TO END

DESIGN AGENCY
Michael Baker INTERNATIONAL

DESIGNER
KJM

REVIEWER
KGJ 05/22/24

PROJECT ID
82382

SHEET 598 TOTAL 2696

CUY-90-16.28 (CCG3A)

MODEL: 82382_GP5403 PAPERSIZE: 34x22 (in.) DATE: 3/27/2025 TIME: 10:04:42 PM USER: Alexandria.Summers
pw:\\mb-us-pw.bentley.com:mb-us-pw-03\Documents\Cleveland_OHIO_Projects\ODOT\District2\82382\400-Engineering\Roadway\Sheets\82382_GP5403.dgn

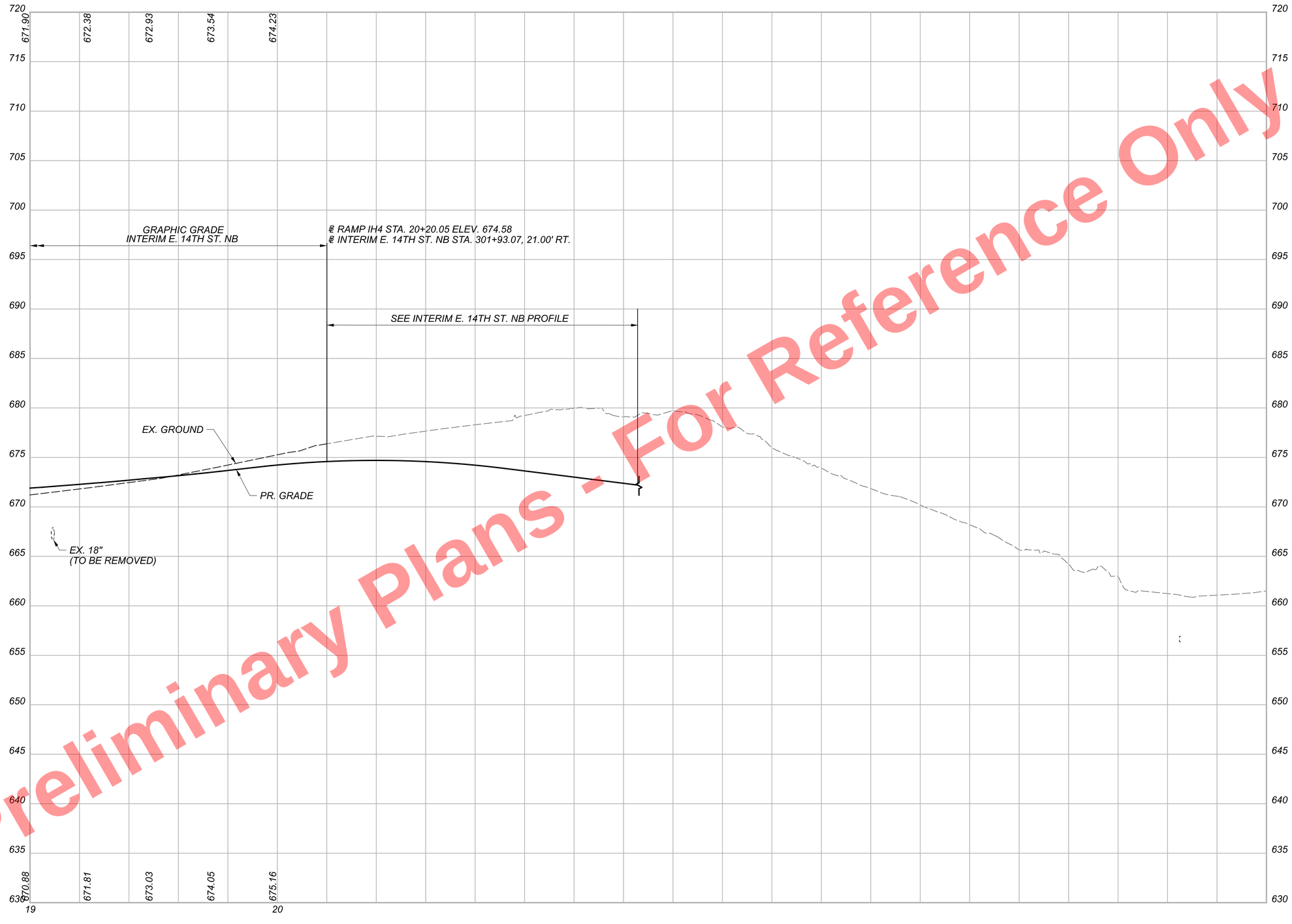

Preliminary Plans - For Reference Only

PROFILE - RAMP IH4
STA. 19+00.00 TO END

CUY-90-16.28 (CCG3A)

MODEL: 82382_GF5406 PAPERSIZE: 34x22 (in.) DATE: 3/27/2025 TIME: 10:05:12 PM USER: Alexandria.Summers
pw:\\mb-us-pw.bentley.commb-us-pw-03\Documents\Cleveland_OH\01_Projects\ODOT\District2\82382\400-Engineering\Roadway\Sheets\82382_GF5403.dgn

DESIGN AGENCY
Michael Baker INTERNATIONAL

DESIGNER
KJM

REVIEWER
KGJ 05/22/24

PROJECT ID
82382

SHEET 599 | TOTAL 2696

Preliminary Plans - For Reference Only

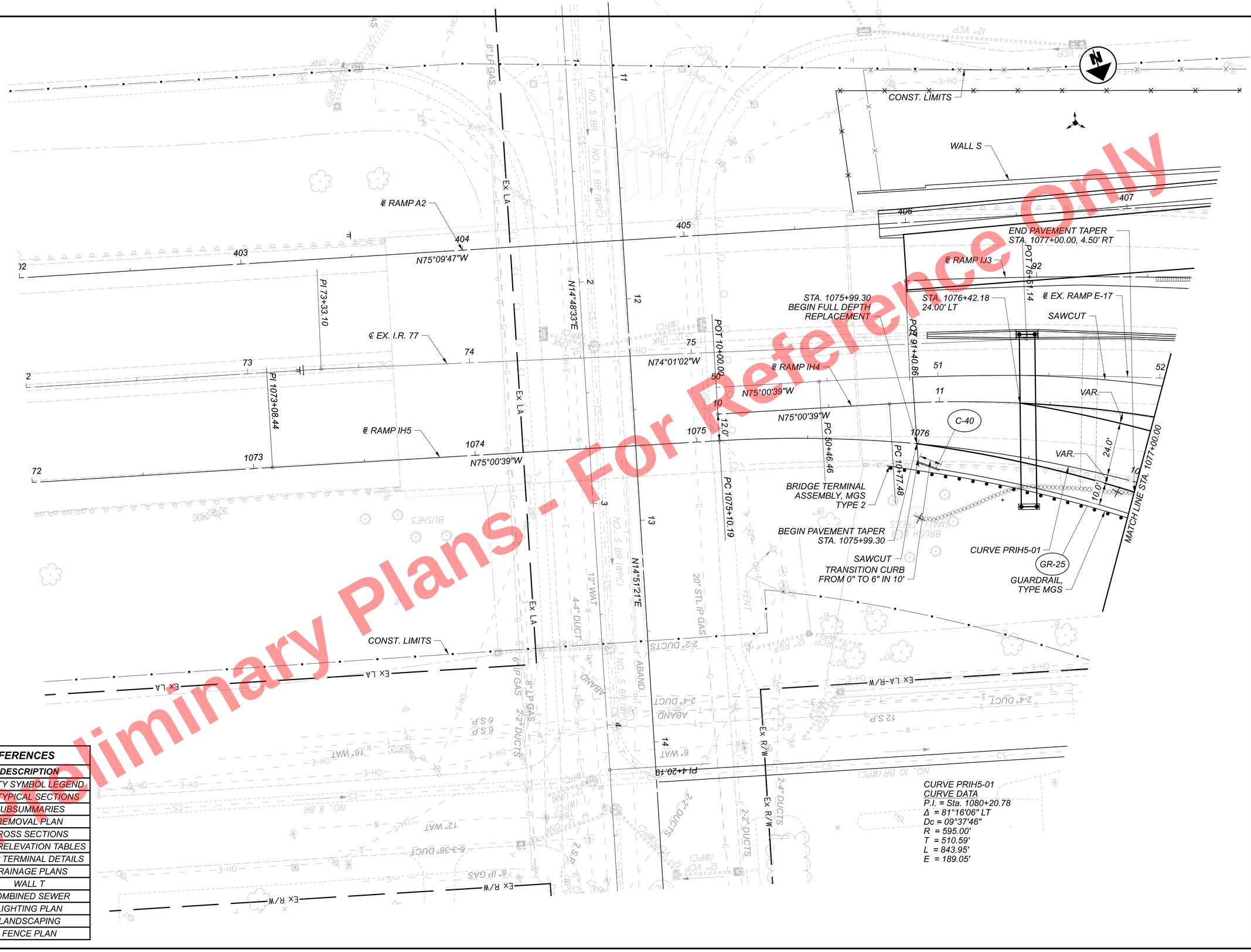

CROSS REFERENCES	
SHEET	**DESCRIPTION**
73	UTILITY SYMBOL LEGEND
54 - 55	PR. TYPICAL SECTIONS
430 - 489	SUBSUMMARIES
679 - 710	REMOVAL PLAN
870 - 899	CROSS SECTIONS
1027	SUPERELEVATION TABLES
1054	RAMP TERMINAL DETAILS
1092 - 1120	DRAINAGE PLANS
1296 - 1298	WALL T
1367	COMBINED SEWER
1716 - 1723	LIGHTING PLAN
1807 - 1817	LANDSCAPING
2383 - 2386	FENCE PLAN

HORIZONTAL
SCALE IN FEET
0 10 20 40

PLAN - RAMP IH5
BEGIN TO STA. 1077+00.00

DESIGN AGENCY
Michael Baker INTERNATIONAL

DESIGNER KJM
REVIEWER KGJ 05/22/24
PROJECT ID 82382
SHEET 600 TOTAL 2696

CUY-90-16.28 (CCG3A)

MODEL: 82382_GP550I PAPERSIZE: 34x22 (in.) DATE: 3/27/2025 TIME: 10:05:24 PM USER: Alexandria.Summers
pw:\\mb-us-pw.bentley.com:mb-us-pw-03\Documents\Cleveland_OH\OI_Projects\ODOT\District 12\82382\400-Engineering\Engineering\Roadway\Sheets\82382_GP550i.dgn

Preliminary Plans - For Reference Only

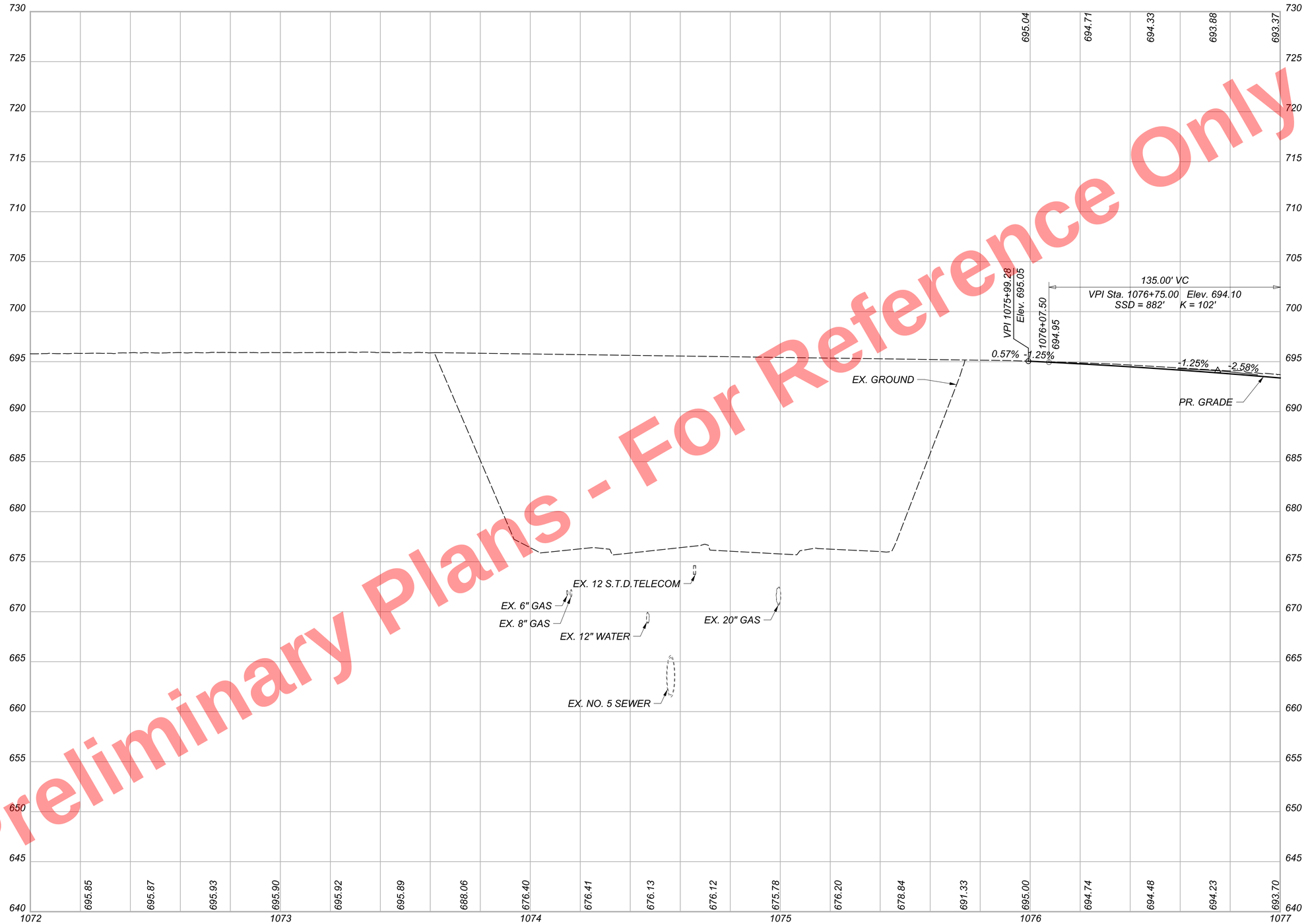

PROFILE - RAMP IH5
BEGIN TO STA. 1077+00.00

CUY-90-16.28 (CCG3A)

MODEL: 82382_GF550I PAPERSIZE: 34x22 (in.) DATE: 3/27/2025 TIME: 10:05:41 PM USER: Alexandria.Summers
pw:\\mb-us-pw.bentley.commb-us-pw-03\Documents\Cleveland_OH\01_Projects\0001\District2\82382\400-Engineering\Roadway\Sheets\82382_GF550I.dgn

DESIGN AGENCY
Michael Baker INTERNATIONAL

DESIGNER
KJM

REVIEWER
KGJ 05/22/24

PROJECT ID
82382

SHEET 601 | TOTAL 2696

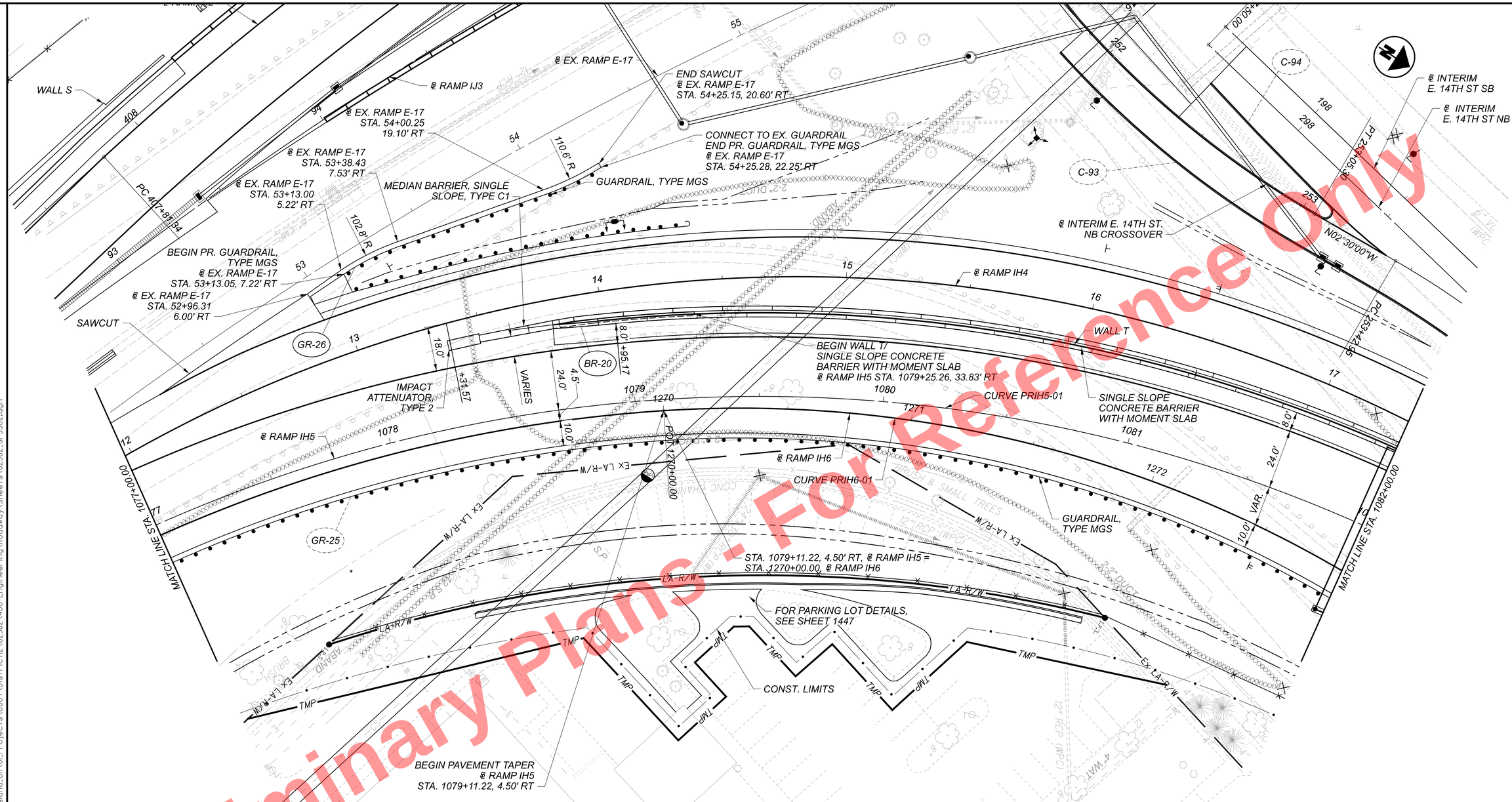

CROSS REFERENCES	
SHEET	DESCRIPTION
73	UTILITY SYMBOL LEGEND
54 - 55	PR. TYPICAL SECTIONS
430 - 489	SUBSUMMARIES
679 - 710	REMOVAL PLAN
870 - 899	CROSS SECTIONS
1027	SUPERELEVATION TABLES
1054 - 1056	RAMP TERMINAL DETAILS
1092 - 1120	DRAINAGE PLANS
1296 - 1298	WALL T
1367	COMBINED SEWER
1716 - 1723	LIGHTING PLAN
1807 - 1817	LANDSCAPING
2383 - 2386	FENCE PLAN

NOTE: CONTRACTOR TO BE RESPONSIBLE FOR FIXING DAMAGED PAVEMENT.

CURVE PRIH5-01
CURVE DATA
P.I. = Sta. 1080+20.78
Δ = 81°16'06" RT
Dc = 09°37'46" (NDC = 9°00'00")
R = 595.00' (NDC = 637.00')
T = 510.59'
L = 843.95'
E = 189.05'
emax = 0.058
V = 40 mph

CURVE PRIH6-01
CURVE DATA
P.I. = Sta. 1272+05.44
Δ = 46°23'19" RT
Dc = 11°57'00"
R = 479.46'
T = 205.44'
L = 388.19'
E = 42.16'
emax = 0.053
V = 35 mph

Preliminary Plans - For Reference Only

HORIZONTAL SCALE IN FEET
0 10 20 40

PLAN - RAMP IH5
STA. 1077+00.00 TO 1082+00.00

DESIGN AGENCY
Michael Baker INTERNATIONAL

DESIGNER KJM
REVIEWER KGJ 05/22/24
PROJECT ID 82382
SHEET 602 TOTAL 2696

CUY-90-16.28 (CCG3A)

MODEL: 82382_GP5502 PAPERSIZE: 34x22 (in.) DATE: 3/27/2025 TIME: 10:05:52 PM USER: Alexandria.Summers
pw:\\mb-us-pw.bentley.com:mb-us-pw-03\Documents\Cleveland_OH\OL_Projects\ODOT\District2\82382\400-Engineering\Roadway\Sheets\82382_GP5502.dgn

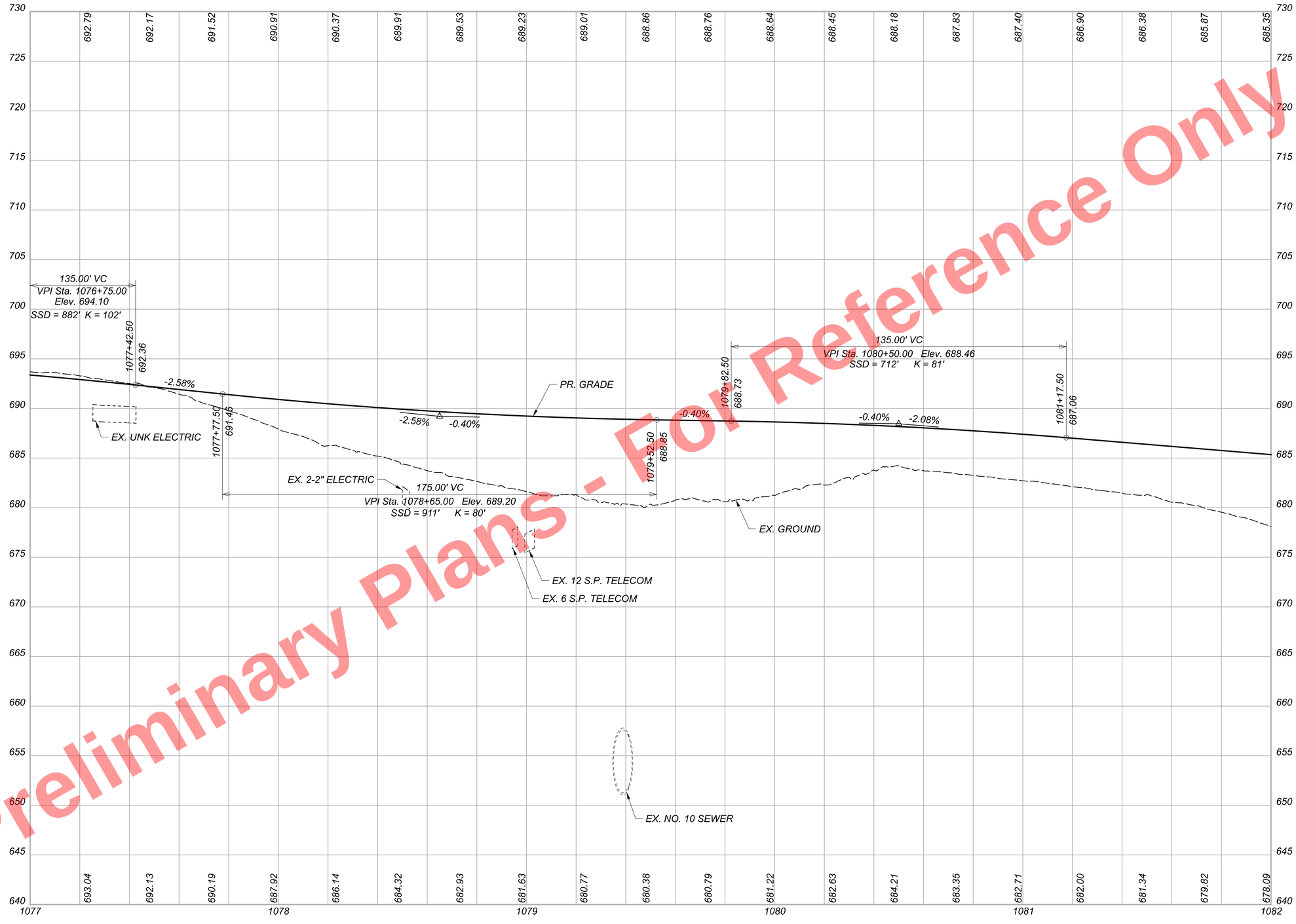

Preliminary Plans - Not For Reference Only

PROFILE - RAMP IH5
STA. 1077+00.00 TO STA. 1082+00.00

CUY-90-16.28 (CCG3A)

MODEL: 82382_GF5502 PAPERSIZE: 34x22 (in.) DATE: 3/27/2025 TIME: 10:06:18 PM USER: Alexandria.Summers
pw:\\mb-us-pw.bentley.commb-us-pw-03\Documents\Cleveland_OH\01_Projects\ODOT\District2\82382\400-Engineering\Roadway\Sheets\82382_GF5502.dgn

DESIGN AGENCY
Michael Baker INTERNATIONAL

DESIGNER KJM
REVIEWER KGJ 05/22/24
PROJECT ID 82382
SHEET 603 TOTAL 2696

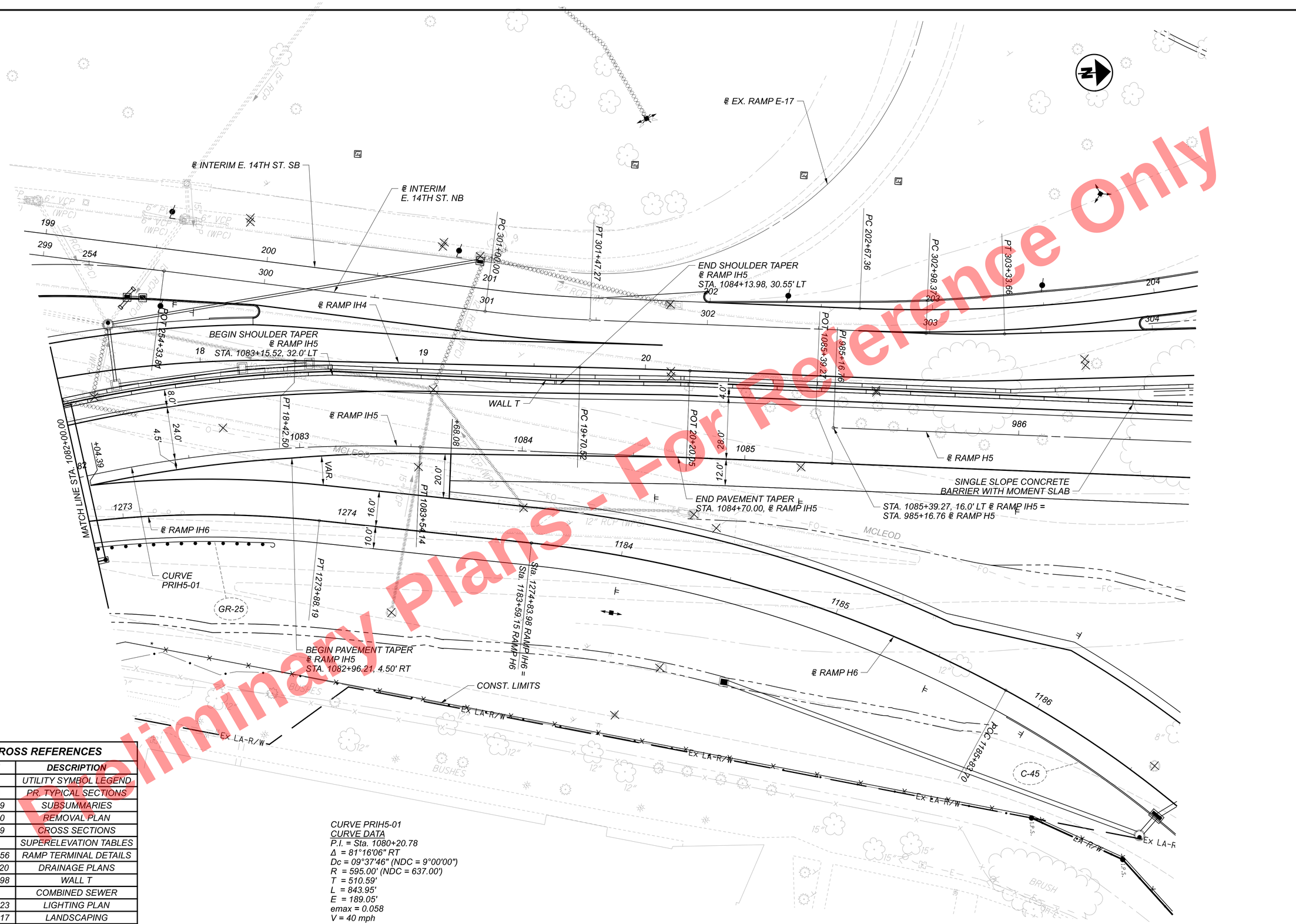

CURVE PRIH5-01
CURVE DATA
P.I. = Sta. 1080+20.78
Δ = 81°16'06" RT
Dc = 09°37'46" (NDC = 9°00'00")
R = 595.00' (NDC = 637.00')
T = 510.59'
L = 843.95'
E = 189.05'
emax = 0.058
V = 40 mph

CROSS REFERENCES	
SHEET	DESCRIPTION
73	UTILITY SYMBOL LEGEND
54 - 55	PR. TYPICAL SECTIONS
430 - 489	SUBSUMMARIES
679 - 710	REMOVAL PLAN
870 - 899	CROSS SECTIONS
1027	SUPERELEVATION TABLES
1055 - 1056	RAMP TERMINAL DETAILS
1092 - 1120	DRAINAGE PLANS
1296 - 1298	WALL T
1367	COMBINED SEWER
1716 - 1723	LIGHTING PLAN
1807 - 1817	LANDSCAPING
2383 - 2386	FENCE PLAN

Preliminary Plans - For Reference Only

HORIZONTAL SCALE IN FEET
0 10 20 40

PLAN - RAMP IH5
STA. 1082+00.00 TO END

DESIGN AGENCY
Michael Baker INTERNATIONAL

DESIGNER KJM
REVIEWER KGJ 05/22/24
PROJECT ID 82382
SHEET 604 TOTAL 2696

CUY-90-16.28 (CCG3A)

MODEL: 82382_GP5503 PAPERSIZE: 34x22 (in.) DATE: 3/27/2025 TIME: 10:06:29 PM USER: Alexandria.Summers
pw:\\mb-us-pw.bentley.com:mb-us-pw-03\Documents\Cleveland_OH\01_Projects\ODOT\District2\82382\400-Engineering\Roadway\Sheets\82382_GP5503.dgn

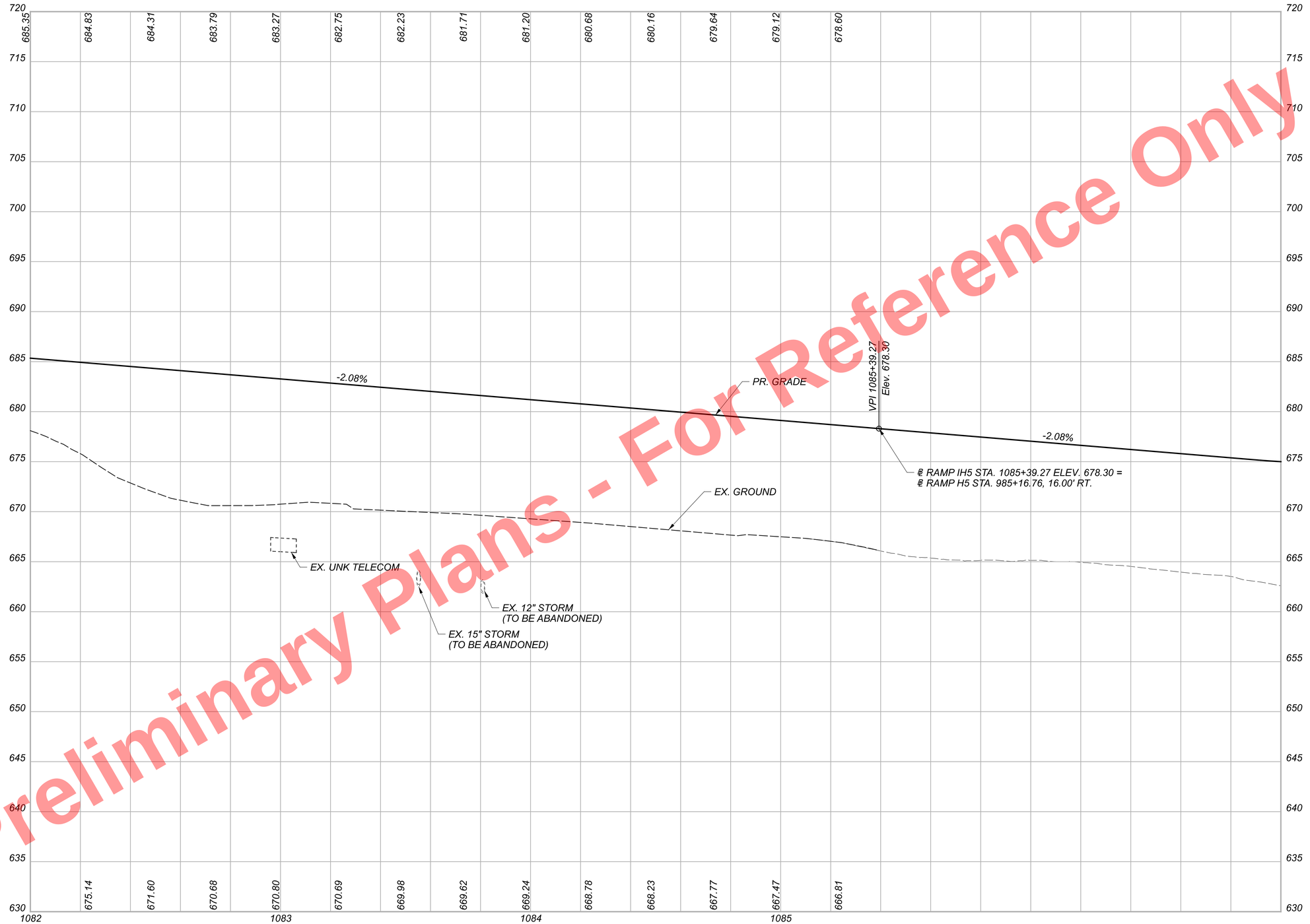

Preliminary Plans - For Reference Only

PROFILE - RAMP IH5
STA. 1082+00.00 TO END

CUY-90-16.28 (CCG3A)

MODEL: 82382_GF5503 PAPERSIZE: 34x22 (in.) DATE: 3/27/2025 TIME: 10:06:47 PM USER: AlexandriaSummers
pw:\\mb-us-pw.bentley.com:mb-us-pw-03\Documents\Cleveland.OHNO_Projects\ODOT\District2\82382\400-Engineering\Roadway\Sheets\82382_GF5503.dgn

DESIGN AGENCY
Michael Baker INTERNATIONAL

DESIGNER KJM
REVIEWER KGJ 05/22/24
PROJECT ID 82382
SHEET 605 TOTAL 2696

Preliminary Plans - For Reference Only

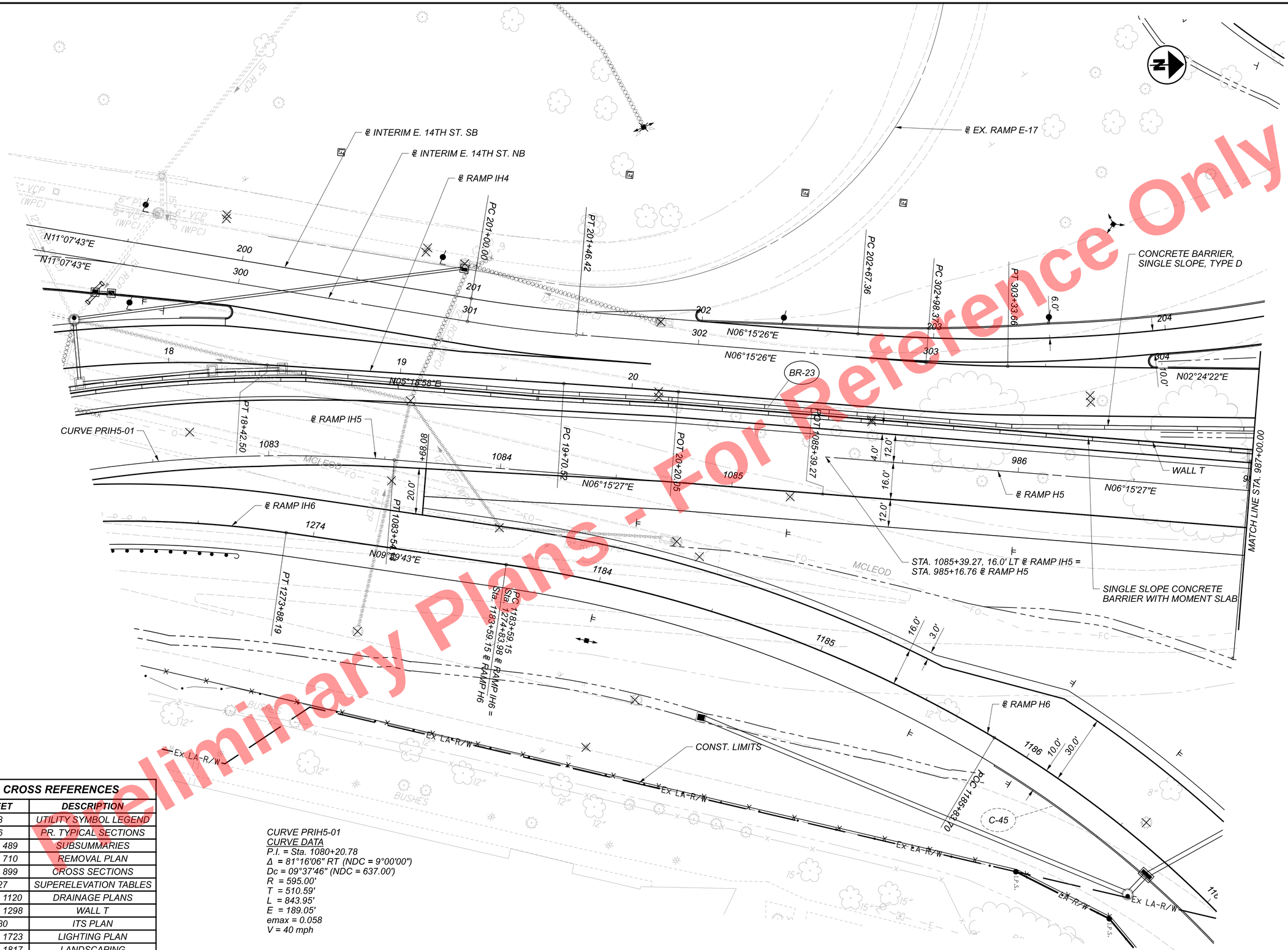

CROSS REFERENCES	
SHEET	**DESCRIPTION**
73	UTILITY SYMBOL LEGEND
56	PR. TYPICAL SECTIONS
430 - 489	SUBSUMMARIES
679 - 710	REMOVAL PLAN
870 - 899	CROSS SECTIONS
1027	SUPERELEVATION TABLES
1092 - 1120	DRAINAGE PLANS
1296 - 1298	WALL T
1680	ITS PLAN
1716 - 1723	LIGHTING PLAN
1807 - 1817	LANDSCAPING
2383 - 2386	FENCE PLAN

CURVE PRIH5-01
CURVE DATA
P.I. = Sta. 1080+20.78
Δ = 81°16'06" RT (NDC = 9°00'00")
Dc = 09°37'46" (NDC = 637.00')
R = 595.00'
T = 510.59'
L = 843.95'
E = 189.05'
emax = 0.058
V = 40 mph

HORIZONTAL SCALE IN FEET
0 10 20 40

PLAN - RAMP H5
BEGIN TO STA. 987+00.00

DESIGN AGENCY
Michael Baker INTERNATIONAL

DESIGNER KJM
REVIEWER KGJ 05/22/24
PROJECT ID 82382
SHEET 606 TOTAL 2696

CUY-90-16.28 (CCG3A)

MODEL: 82382_GP55II PAPERSIZE: 34x22 (in.) DATE: 3/27/2025 TIME: 10:06:58 PM USER: Alexandria.Summers
pw:\\mb-us-pw.bentley.com:mb-us-pw-03\Documents\Cleveland_OH\01_Projects\ODOT\District2\82382\400-Engineering\Roadway\Sheets\82382_GP55II.dgn

Preliminary Plans - For Reference Only

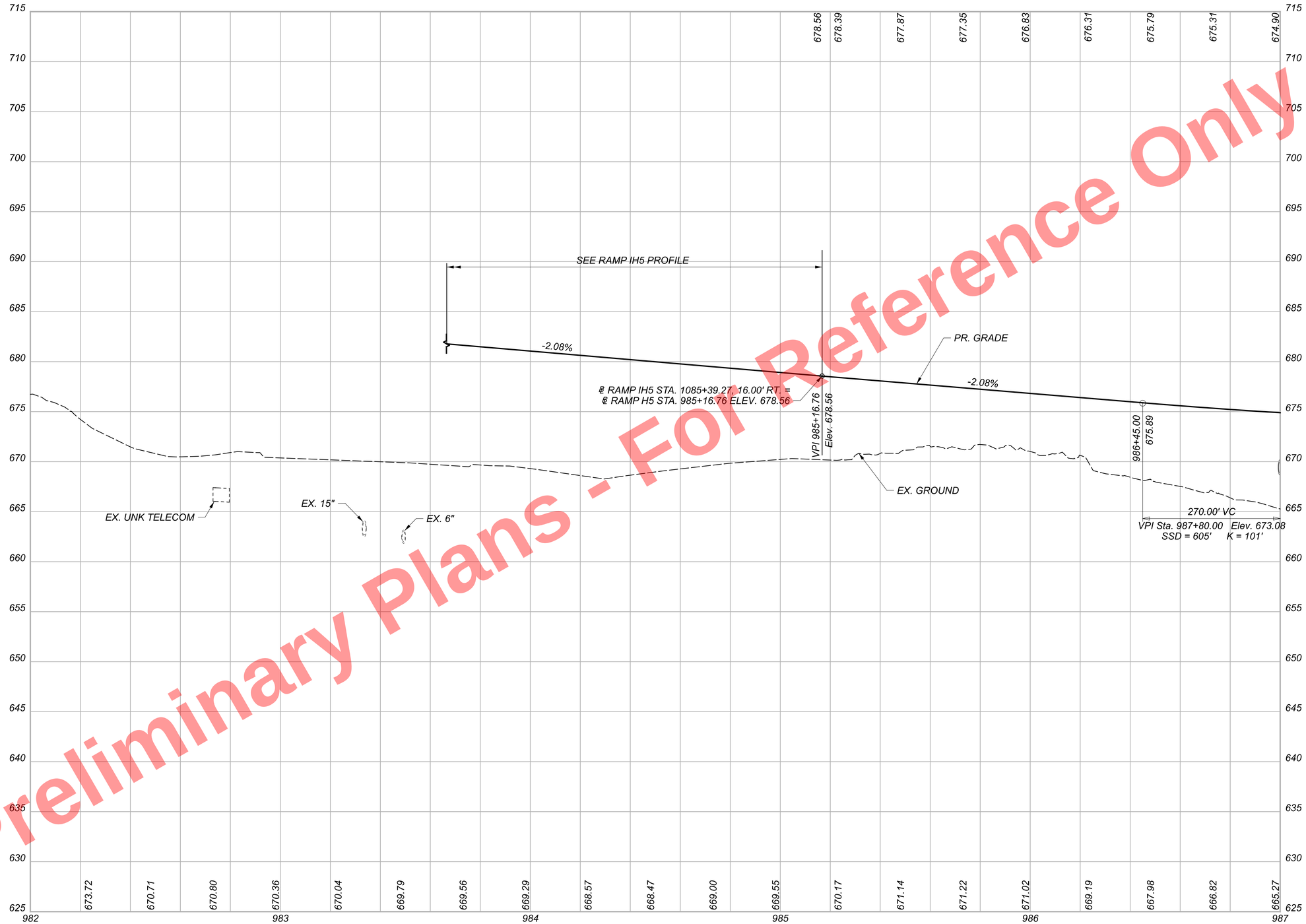

CUY-90-16.28 (CCG3A)

MODEL: 82382_GF55II PAPERSIZE: 34x22 (in.) DATE: 3/27/2025 TIME: 10:07:21 PM USER: Alexandria.Summers
pw:\\mb-us-pw.bentley.commb-us-pw-03\Documents\Cleveland.OH\01_Projects\ODOT\District2\82382\400-Engineering\Roadway\Sheets\82382_GF55II.dgn

PROFILE - RAMP H5
BEGIN TO STA. 987+00.00

DESIGN AGENCY
Michael Baker INTERNATIONAL

DESIGNER
KJM

REVIEWER
KGJ 05/22/24

PROJECT ID
82382

SHEET 607 TOTAL 2696

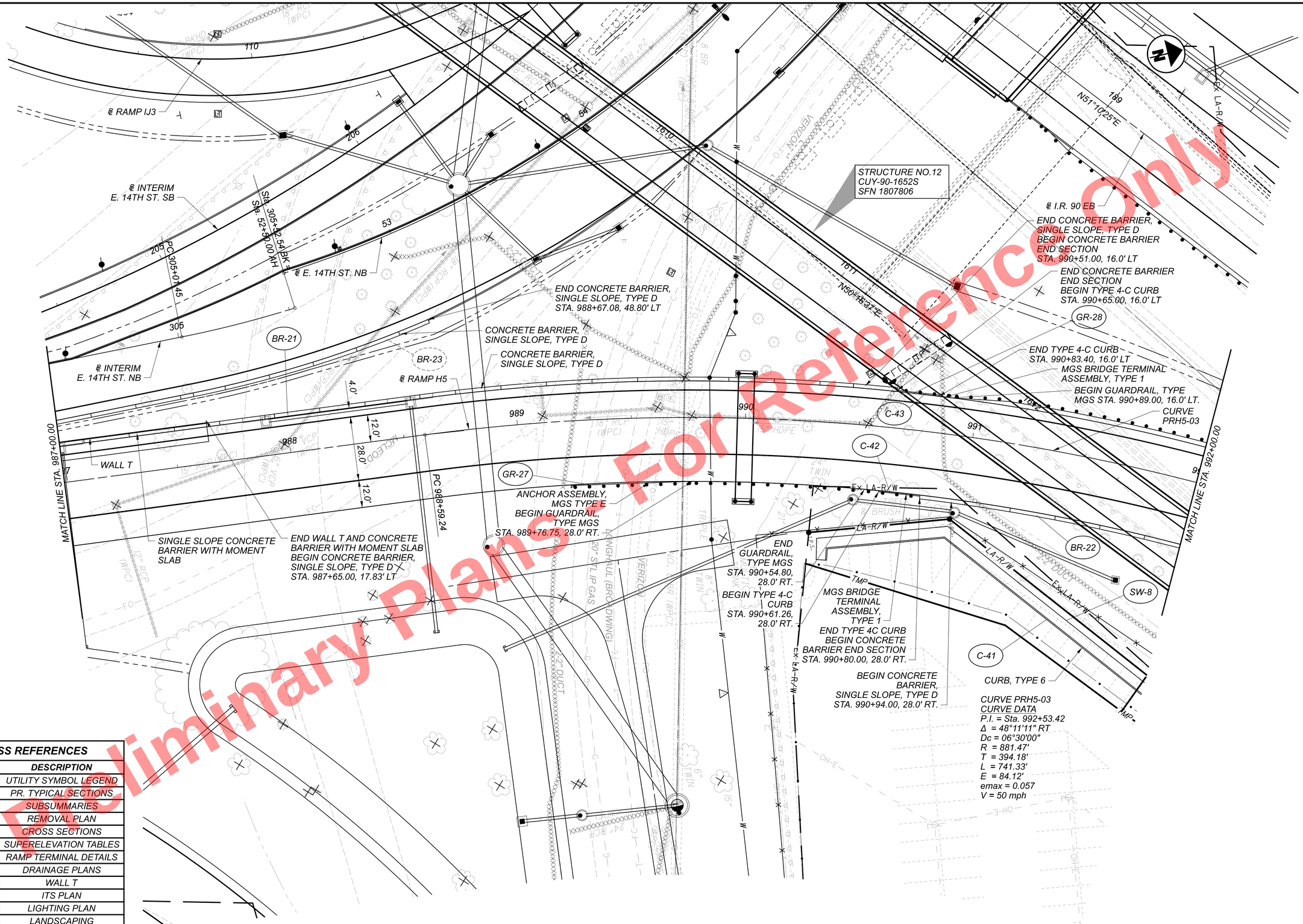

Preliminary Plans Not For Reference Only

CROSS REFERENCES	
SHEET	DESCRIPTION
73	UTILITY SYMBOL LEGEND
56	PR. TYPICAL SECTIONS
430 - 489	SUBSUMMARIES
679 - 710	REMOVAL PLAN
870 - 899	CROSS SECTIONS
1027	SUPERELEVATION TABLES
1032 - 1038	RAMP TERMINAL DETAILS
1092 - 1120	DRAINAGE PLANS
1296 - 1298	WALL T
1680	ITS PLAN
1716 - 1723	LIGHTING PLAN
1807 - 1817	LANDSCAPING
2129 2130	CUY-90-1652S (BRIDGE 12)
2383 - 2386	FENCE PLAN

PLAN - RAMP H5
STA. 987+00.00 TO STA. 992+00.00

DESIGN AGENCY
Michael Baker INTERNATIONAL

DESIGNER KJM
REVIEWER KGJ 05/22/24
PROJECT ID 82382
SHEET 608 TOTAL 2696

CUY-90-16.28 (CCG3A)

MODEL: 82382_GP5SI2 PAPERSIZE: 34x22 (In.) DATE: 6/9/2025 TIME: 1:02:20 PM USER: Julie.Ross
pw:\\mb-us-pw.bentley.com:mb-us-pw-03\Documents\Cleveland_OH\OI_Projects\DOT\District2\82382\400-Engineering\Roadway\Sheets\82382_GP5SI2.dgn

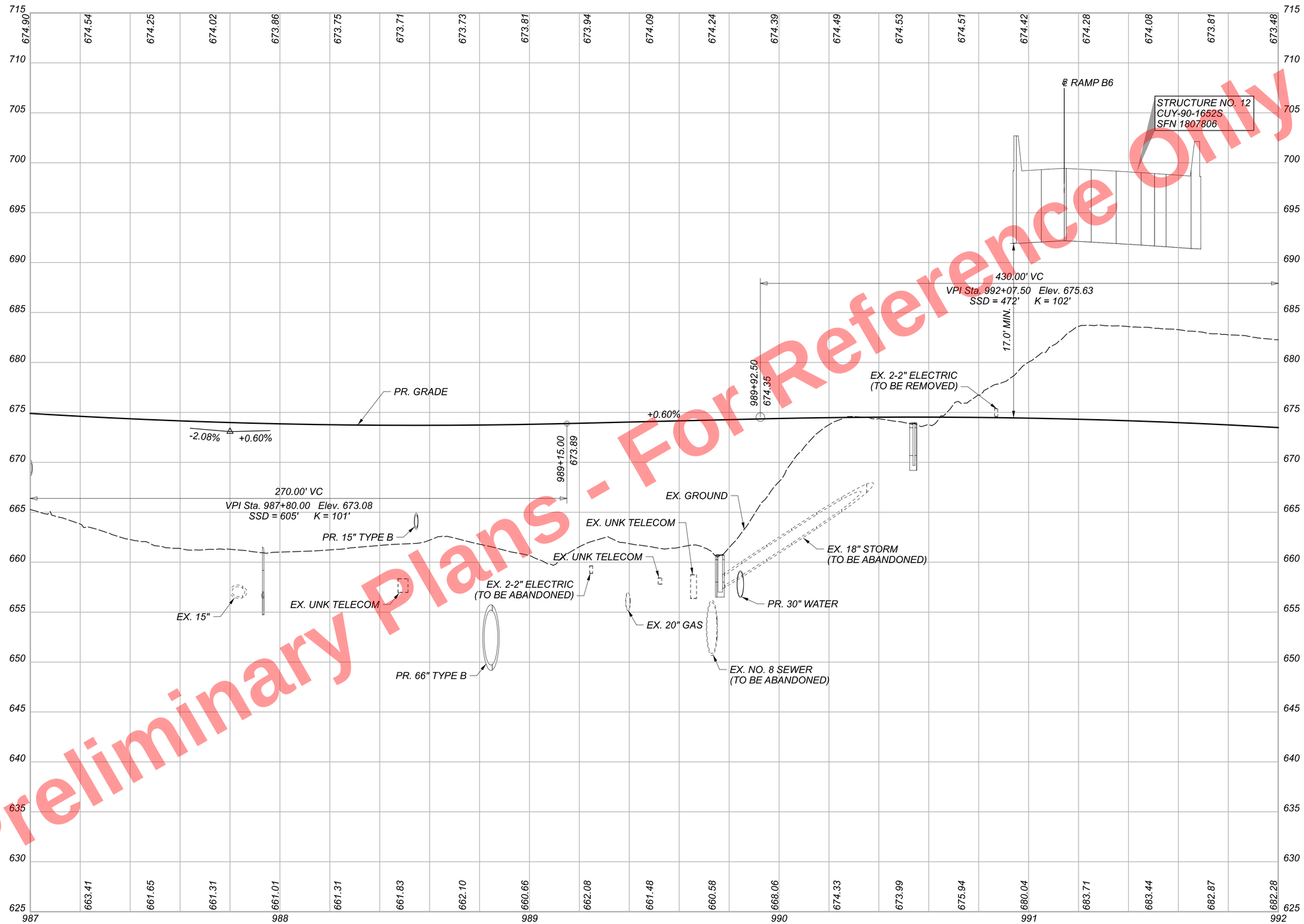

Preliminary Plans - Not For Reference Only

PROFILE - RAMP H5
STA. 987+00.00 TO STA. 992+00.00

CUY-90-16.28 (CCG3A)

MODEL: 82382_GF55I2 PAPERSIZE: 34x22 (In.) DATE: 3/27/2025 TIME: 10:07:53 PM USER: AlexandriaSummers
pw:\\mb-us-pw.bentley.com:mb-us-pw-03\Documents\Cleveland_OH\01_Projects\ODOT\District2\82382\400-Engineering\Roadway\Sheets\82382_GF55I2.dgn

DESIGN AGENCY
Michael Baker INTERNATIONAL

DESIGNER KJM
REVIEWER KGJ 05/22/24
PROJECT ID 82382
SHEET 609 TOTAL 2696

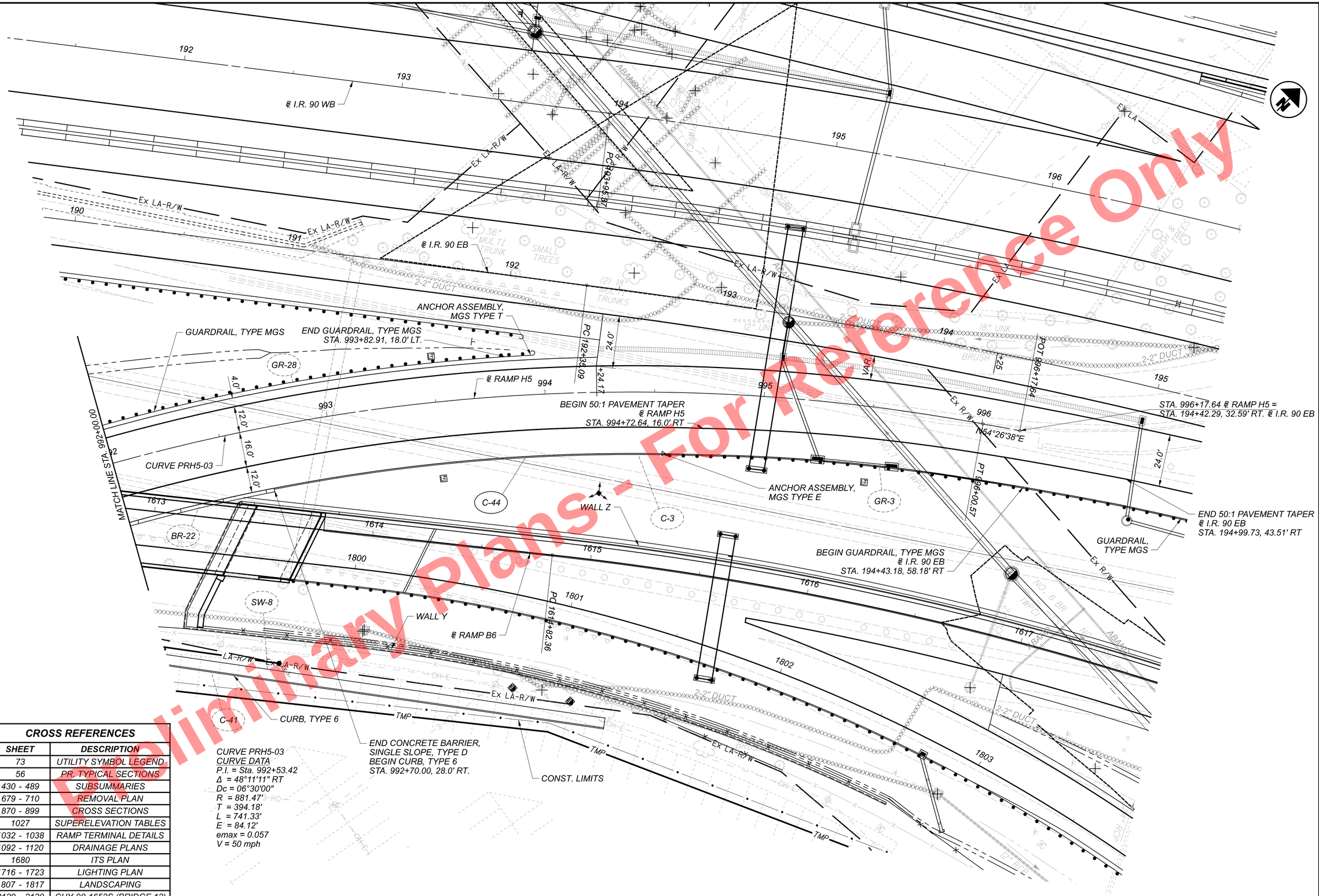

CURVE PRH5-03
CURVE DATA
P.I. = Sta. 992+53.42
Δ = 48°11'11" RT
Dc = 06°30'00"
R = 881.47'
T = 394.18'
L = 741.33'
E = 84.12'
emax = 0.057
V = 50 mph

Preliminary Plans - For Reference Only

CROSS REFERENCES	
SHEET	DESCRIPTION
73	UTILITY SYMBOL LEGEND
56	PR. TYPICAL SECTIONS
430 - 489	SUBSUMMARIES
679 - 710	REMOVAL PLAN
870 - 899	CROSS SECTIONS
1027	SUPERELEVATION TABLES
1032 - 1038	RAMP TERMINAL DETAILS
1092 - 1120	DRAINAGE PLANS
1680	ITS PLAN
1716 - 1723	LIGHTING PLAN
1807 - 1817	LANDSCAPING
2129 2130	CUY-90-1652S (BRIDGE 12)
2383 - 2386	FENCE PLAN

HORIZONTAL SCALE IN FEET
0 10 20 40

PLAN - RAMP H5
STA. 992+00.00 TO END

DESIGN AGENCY
Michael Baker INTERNATIONAL

DESIGNER KJM
REVIEWER KGJ 05/22/24
PROJECT ID 82382
SHEET 610 TOTAL 2696

CUY-90-16.28 (CCG3A)

MODEL: 82382_GP55I3 PAPERSIZE: 34x22 (in.) DATE: 3/27/2025 TIME: 10:08:04 PM USER: Alexandria.Summers
pw:\\mb-us-pw.bentley.com:mb-us-pw-03\Documents\Cleveland_OH\OI_Projects\ODOT\District12\82382\400-Engineering\Roadway\Sheets\82382_GP55I3.dgn

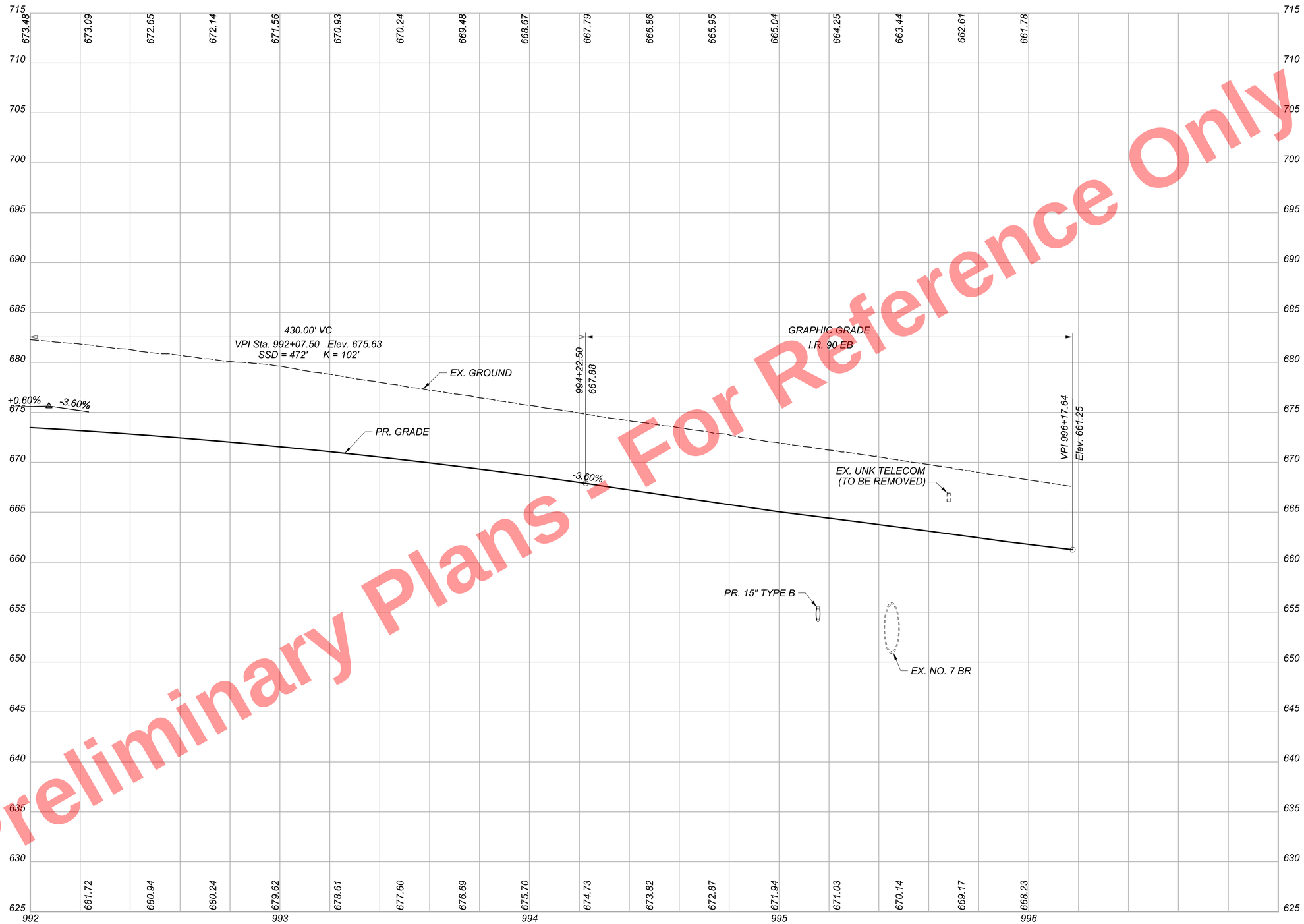

Preliminary Plans - For Reference Only

CUY-90-16.28 (CCG3A)

MODEL: 82382_GF55i3 PAPERSIZE: 34x22 (in) DATE: 3/27/2025 TIME: 10:08:27 PM USER: Alexandria.Summers
pw:\\mb-us-pw.bentley.com:mb-us-pw-03\Documents\Cleveland.OH\01_Projects\ODOT\District2\82382\400-Engineering\Roadway\Sheets\82382_GF55i3.dgn

PROFILE - RAMP H5
STA. 992+00.00 TO END

DESIGN AGENCY
Michael Baker INTERNATIONAL

DESIGNER
KJM

REVIEWER
KGJ 05/22/24

PROJECT ID
82382

SHEET 611 TOTAL 2696

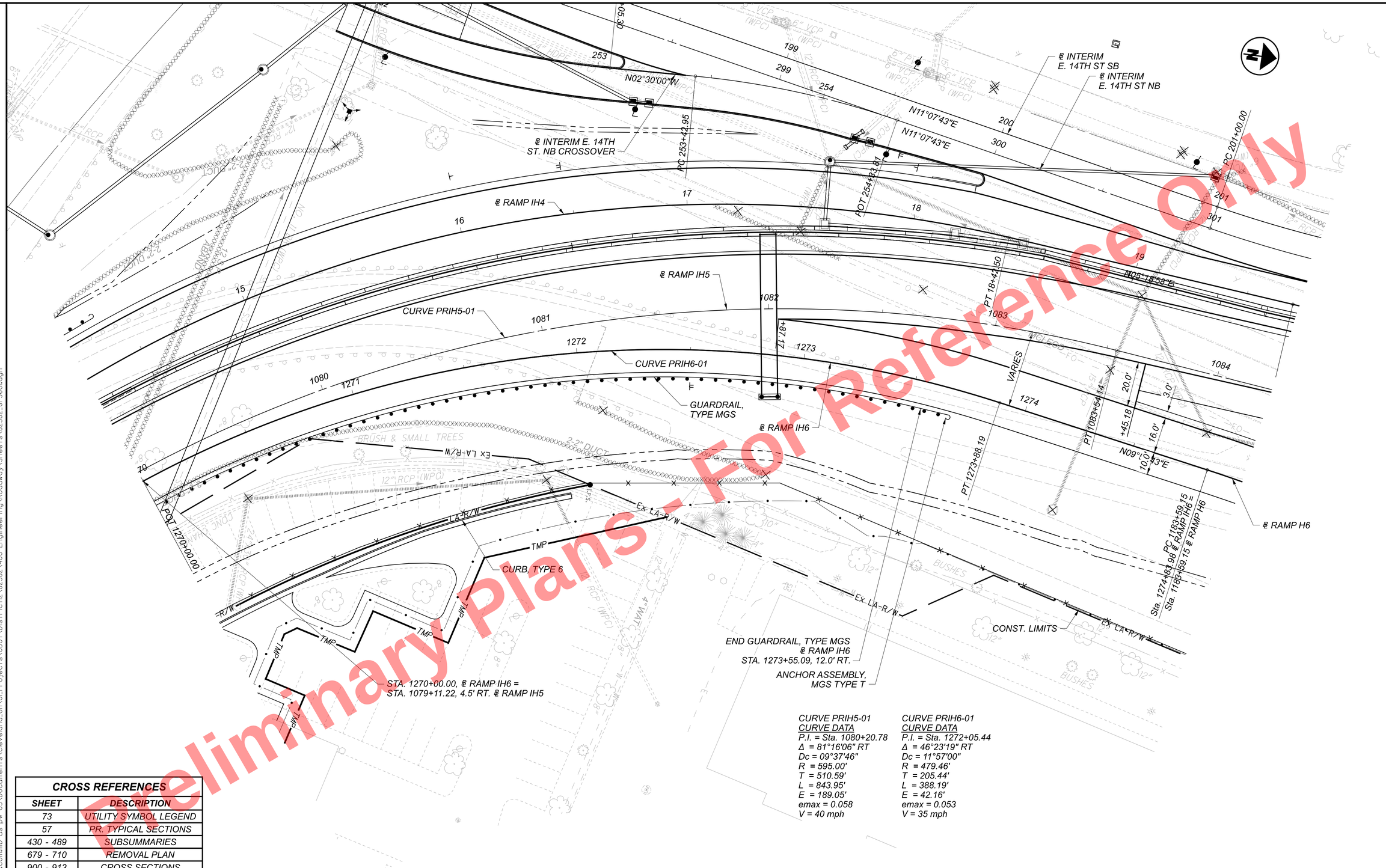

CURVE PRIH5-01
CURVE DATA
P.I. = Sta. 1080+20.78
Δ = 81°16'06" RT
Dc = 09°37'46"
R = 595.00'
T = 510.59'
L = 843.95'
E = 189.05'
emax = 0.058
V = 40 mph

CURVE PRIH6-01
CURVE DATA
P.I. = Sta. 1272+05.44
Δ = 46°23'19" RT
Dc = 11°57'00"
R = 479.46'
T = 205.44'
L = 388.19'
E = 42.16'
emax = 0.053
V = 35 mph

CROSS REFERENCES	
SHEET	DESCRIPTION
73	UTILITY SYMBOL LEGEND
57	PR. TYPICAL SECTIONS
430 - 489	SUBSUMMARIES
679 - 710	REMOVAL PLAN
900 - 913	CROSS SECTIONS
1028	SUPERELEVATION TABLES
1055 - 1056	RAMP TERMINAL DETAILS
1092 - 1120	DRAINAGE PLANS
1716 - 1723	LIGHTING PLAN
1807 - 1817	LANDSCAPING
2383 - 2386	FENCE PLAN

Preliminary Plans - For Reference Only

HORIZONTAL SCALE IN FEET
0 10 20 40

PLAN - RAMP IH6
STA. 1270+00.00 TO END

DESIGN AGENCY
Michael Baker INTERNATIONAL

DESIGNER KJM
REVIEWER KGJ 05/22/24
PROJECT ID 82382
SHEET 612 TOTAL 2696

CUY-90-16.28 (CCG3A)

MODEL: 82382_GP5601 PAPERSIZE: 34x22 (in.) DATE: 3/27/2025 TIME: 10:08:38 PM USER: Alexandria.Summers
pw:\\mb-us-pw.bentley.com:mb-us-pw-03\Documents\Cleveland_OH\01_Projects\ODOT\District12\82382\400-Engineering\Roadway\Sheets\82382_GP5601.dgn

Preliminary Plans - Not For Reference Only

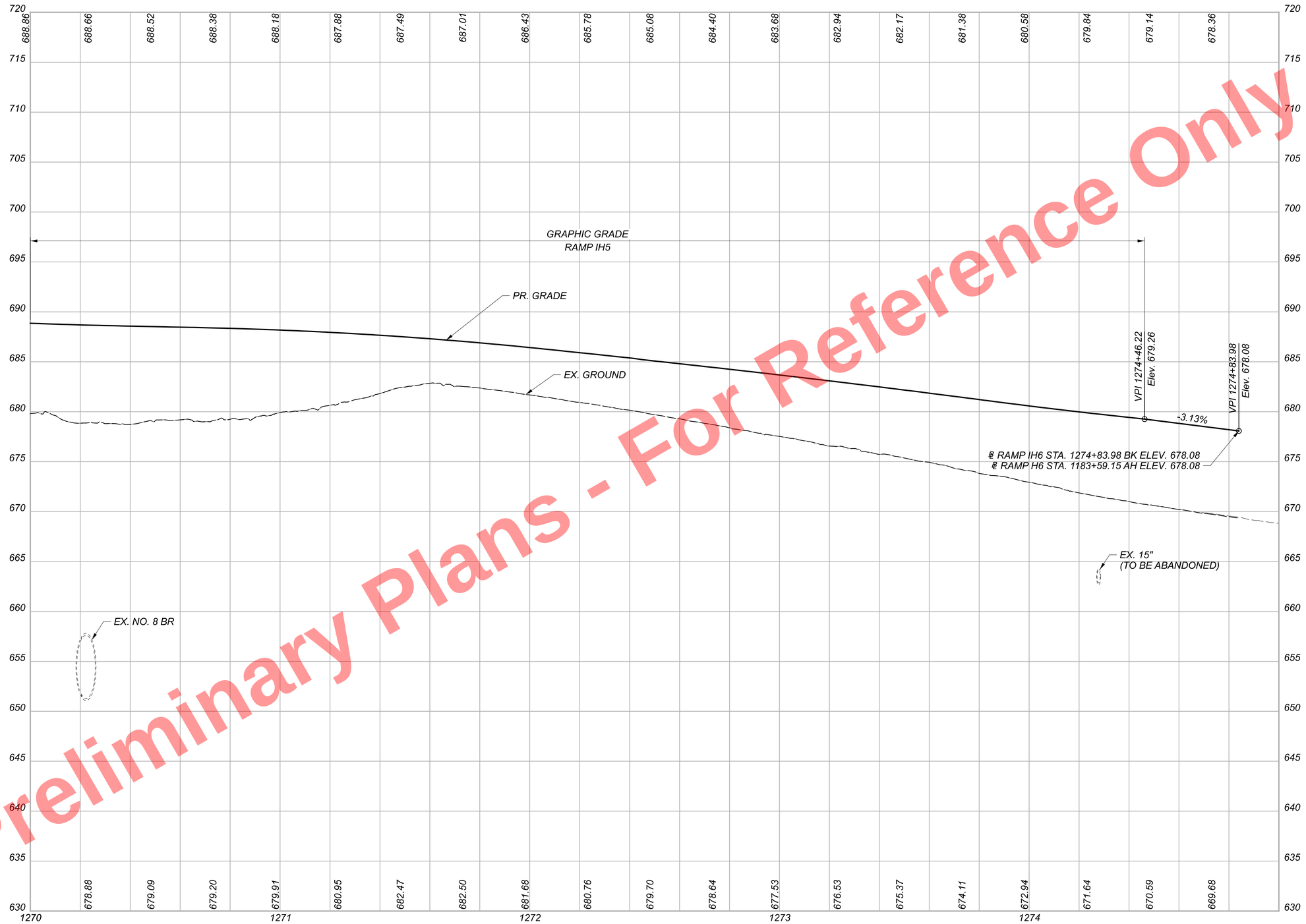

PROFILE - RAMP IH6
STA. 1270+00.00 TO END

CUY-90-16.28 (CCG3A)

MODEL: 82382_GF560l PAPERSIZE: 34x22 (in.) DATE: 3/27/2025 TIME: 10:08:57 PM USER: Alexandria.Summers
pw:\\mb-us-pw.bentley.com:mb-us-pw-03\Documents\Cleveland_OH\01_Projects\ODOT\District2\82382\400-Engineering\Roadway\Sheets\82382_GF560l.dgn

DESIGN AGENCY
Michael Baker INTERNATIONAL

DESIGNER
KJM

REVIEWER
KGJ 05/22/24

PROJECT ID
82382

SHEET 613 TOTAL 2696

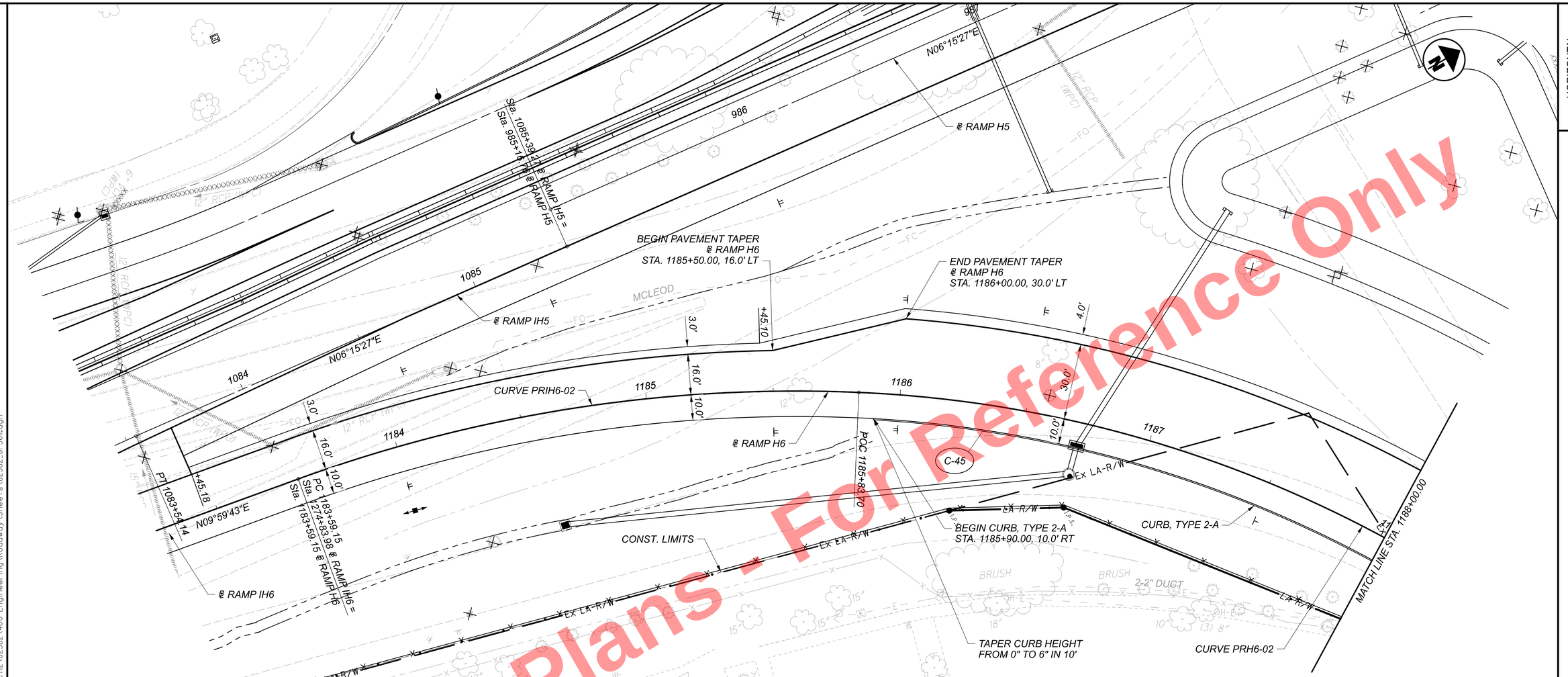

Preliminary Plans - For Reference Only

CROSS REFERENCES	
SHEET	**DESCRIPTION**
73	UTILITY SYMBOL LEGEND
57	PR. TYPICAL SECTIONS
430 - 489	SUBSUMMARIES
679 - 710	REMOVAL PLAN
900 - 913	CROSS SECTIONS
1028	SUPERELEVATION TABLES
1055 - 1056	RAMP TERMINAL DETAILS
1087 - 1084	DRIVE DETAILS
1092 - 1120	DRAINAGE PLANS
1716 - 1723	LIGHTING PLAN
1807 - 1817	LANDSCAPING
2383 - 2386	FENCE PLAN

CURVE PRIH6-02
CURVE DATA
P.I. = Sta. 1184+72.89
Δ = 22°27'19" RT
Dc = 10°00'00"
R = 572.96'
T = 113.74'
L = 224.55'
E = 11.18'
emax = 0.053
V = 35 mph

CURVE PRH6-02
CURVE DATA
P.I. = Sta. 1189+12.52
Δ = 69°06'30" RT
Dc = 12°00'00"
R = 477.46'
T = 328.82'
L = 575.9'
E = 102.27'
emax = 0.057
V = 35 mph

PLAN - RAMP H6
BEGIN TO STA. 1188+00.00

DESIGN AGENCY
Michael Baker INTERNATIONAL

DESIGNER KJM
REVIEWER KGJ 05/22/24
PROJECT ID 82382
SHEET 614 TOTAL 2696

CUY-90-16.28 (CCG3A)

MODEL: 82382_GP56ll PAPERSIZE: 34x22 (in.) DATE: 3/27/2025 TIME: 10:09:0 PM USER: AlexandriaSummers
pw:\\mb-us-pw.bentley.com\mb-us-pw-03\Documents\Cleveland_OH\01_Projects\0007\District2\82382\400-Engineering\Roadway\Sheets\82382_GP56ll.dgn

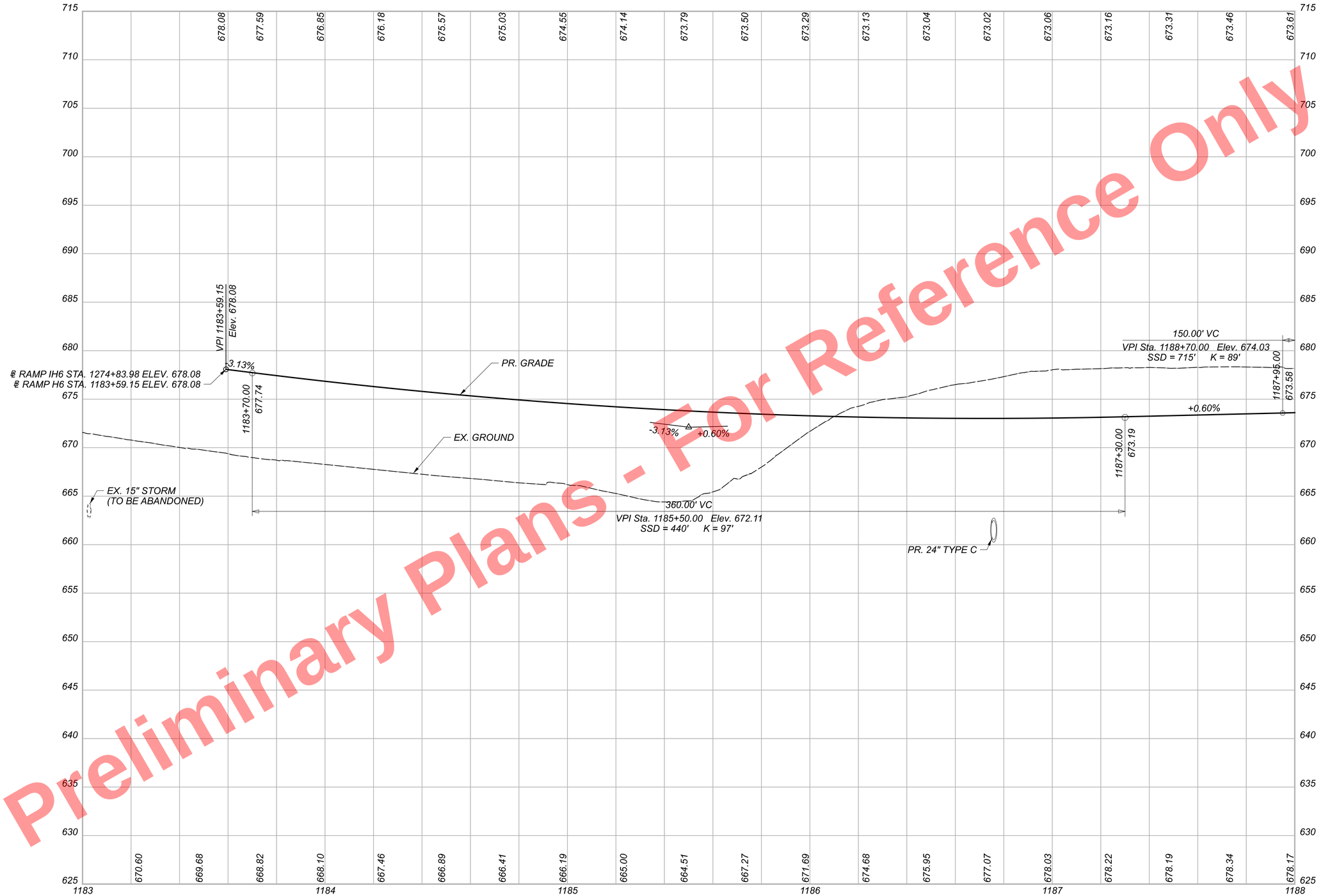

Preliminary Plans - For Reference Only

PROFILE - RAMP H6
BEGIN TO STA. 1188+00.00

CUY-90-16.28 (CCG3A)

MODEL: 82382_GF56II PAPERSIZE: 34x22 (in.) DATE: 3/27/2025 TIME: 10:09:38 PM USER: Alexandria.Summers
pw:\\mb-us-pw.bentley.com:mb-us-pw-03\Documents\Cleveland.OH\01_Projects\ODOT\District2\82382\400-Engineering\Roadway\Sheets\82382_GF56II.dgn

DESIGN AGENCY
Michael Baker INTERNATIONAL

DESIGNER	KJM
REVIEWER	KGJ 05/22/24
PROJECT ID	82382
SHEET	615
TOTAL	2696

Preliminary Plans - For Reference Only

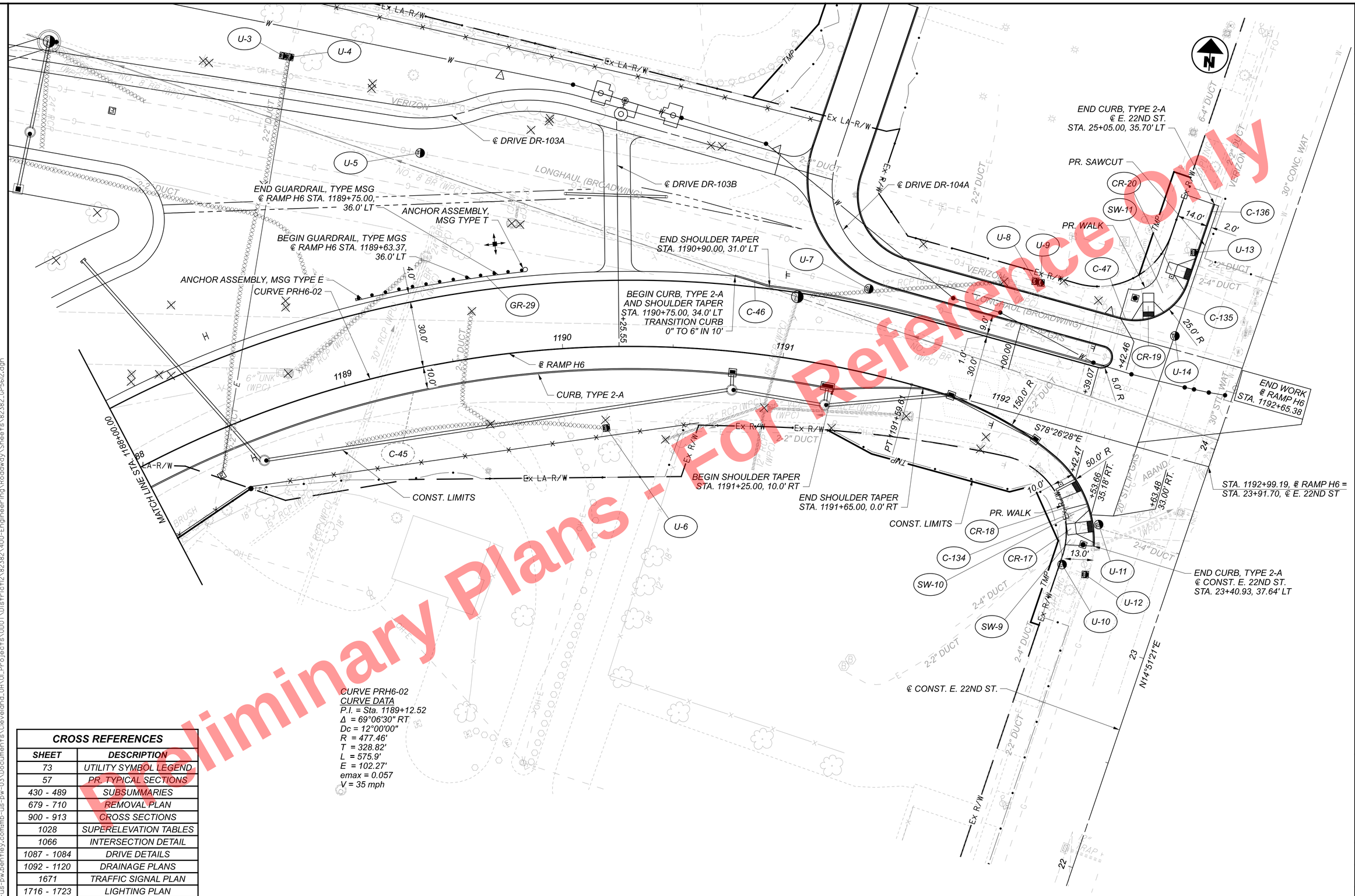

CROSS REFERENCES	
SHEET	**DESCRIPTION**
73	UTILITY SYMBOL LEGEND
57	PR. TYPICAL SECTIONS
430 - 489	SUBSUMMARIES
679 - 710	REMOVAL PLAN
900 - 913	CROSS SECTIONS
1028	SUPERELEVATION TABLES
1066	INTERSECTION DETAIL
1087 - 1084	DRIVE DETAILS
1092 - 1120	DRAINAGE PLANS
1671	TRAFFIC SIGNAL PLAN
1716 - 1723	LIGHTING PLAN
1807 - 1817	LANDSCAPING
2383 - 2386	FENCE PLAN

HORIZONTAL SCALE IN FEET
0 10 20 40

PLAN - RAMP H6
STA. 1188+00.00 TO END

DESIGN AGENCY
Michael Baker INTERNATIONAL

DESIGNER KJM
REVIEWER KGJ 05/22/24
PROJECT ID 82382
SHEET 616 TOTAL 2696

CUY-90-16.28 (CCG3A)

MODEL: 82382_GP5612 PAPERSIZE: 34x22 (in.) DATE: 6/9/2025 TIME: 1:02:42 PM USER: Julie.Ross
pw:\\mb-us-pw.bentley.com:mb-us-pw-03\Documents\Cleveland_OH\01_Projects\000T\District2\82382\400-Engineering\Roadway\Sheets\82382_GP5612.dgn

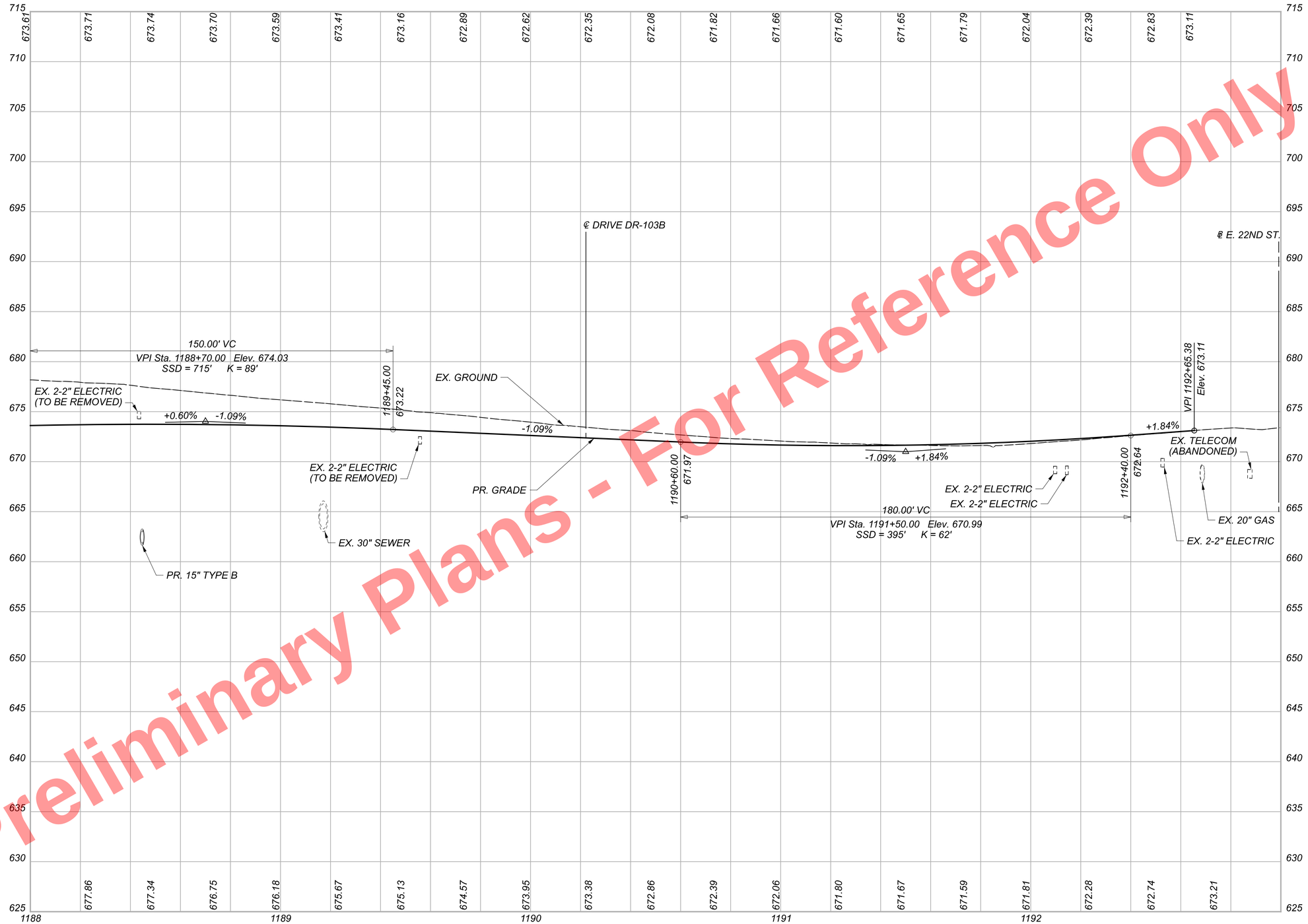

Preliminary Plans - For Reference Only

PROFILE - RAMP H6
STA. 1188+00.00 TO END

CUY-90-16.28 (CCG3A)

MODEL: 82382_GF562 PAPERSIZE: 34x22 (in.) DATE: 3/27/2025 TIME: 10:10:09 PM USER: Alexandria.Summers
pw:\\mb-us-pw.bentley.com:mb-us-pw-03\Documents\Cleveland.OH\01_Projects\ODOT\District2\82382\400-Engineering\Roadway\Sheets\82382_GF562.dgn

DESIGN AGENCY
Michael Baker INTERNATIONAL

DESIGNER	KJM
REVIEWER	KGJ 05/22/24
PROJECT ID	82382
SHEET	617
TOTAL	2696

CROSS REFERENCES	
SHEET	**DESCRIPTION**
73	UTILITY SYMBOL LEGEND
28	EX. TYPICAL SECTIONS
430 - 489	SUBSUMMARIES
679 - 710	REMOVAL PLAN
1029	SUPERELEVATION TABLES
1048 - 1049	RAMP TERMINAL DETAILS
1092 - 1120	DRAINAGE PLANS
1366 - 1367	COMBINED SEWER
1716 - 1723	LIGHTING PLAN
1807 - 1817	LANDSCAPING
2383 - 2386	FENCE PLAN

CURVE PRIJ-01
CURVE DATA
P.I. = Sta. 94+88.28
Δ = 20°37'12" RT
Dc = 03°00'00"
R = 1,909.86'
T = 347.42'
L = 687.33'
E = 31.34'
emax = 0.045
V = 50 mph

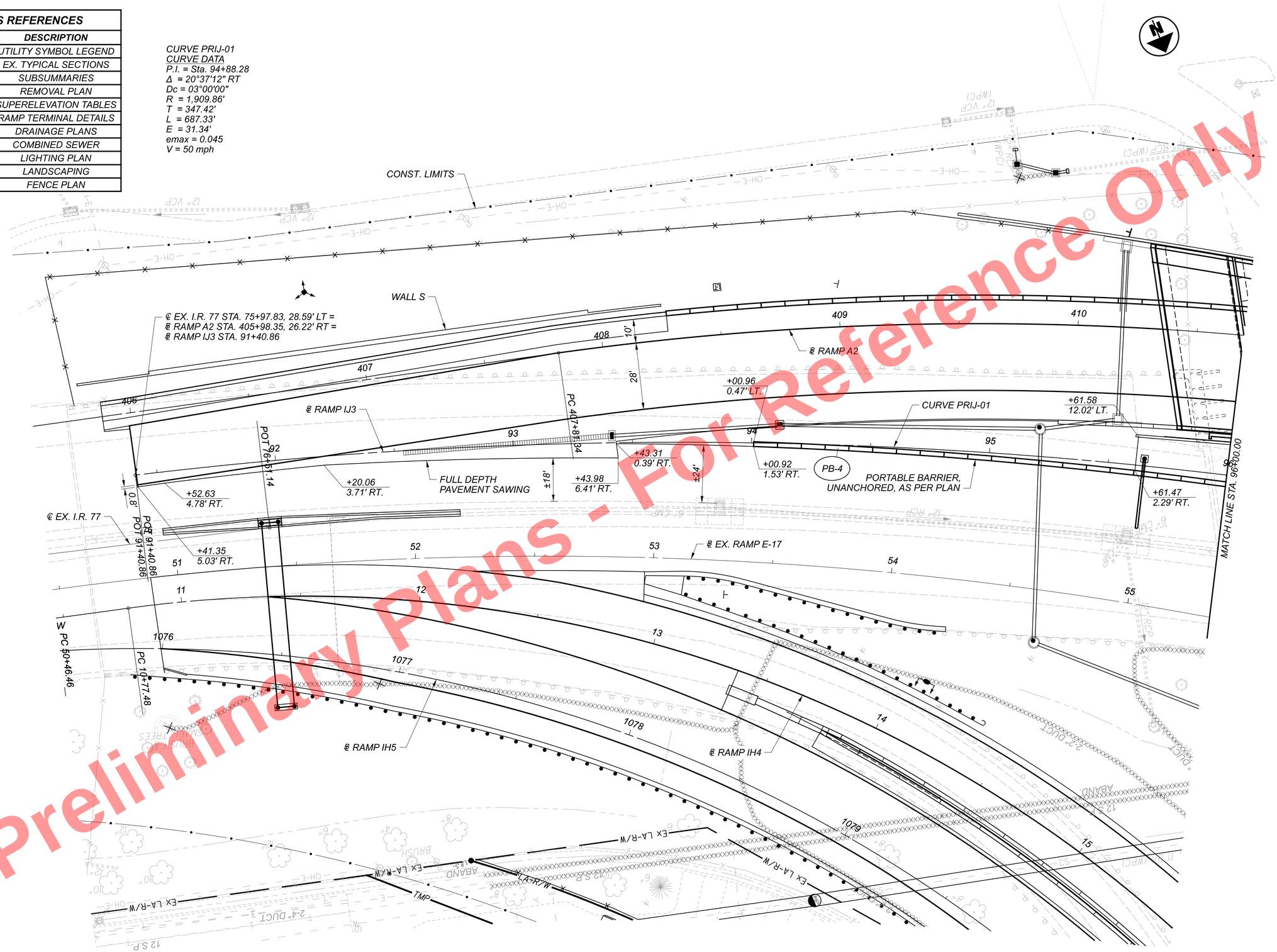

Preliminary Plans - For Reference Only

HORIZONTAL SCALE IN FEET
0 10 20 40

PLAN - RAMP IJ3
BEGIN TO STA. 96+00.00

DESIGN AGENCY
HDR

DESIGNER
BMV

REVIEWER
TJS 04/30/24

PROJECT ID
82382

SHEET 618 TOTAL 2696

CUY-90-16.28 (CCG3A)

MODEL: Ramp IJ3 - Plan (ISheet) PAPERSIZE: 34x22 (In.) DATE: 3/27/2025 TIME: 10:10:23 PM USER: Alexandria.Summers
pw:\\mb-us-pw.bentley.com:mb-us-pw-03\Documents\Cleveland_0H10\Projects\D0DOT\District2\82382\400-Engineering\Roadway\Sheets\82382_GP6300A.dgn

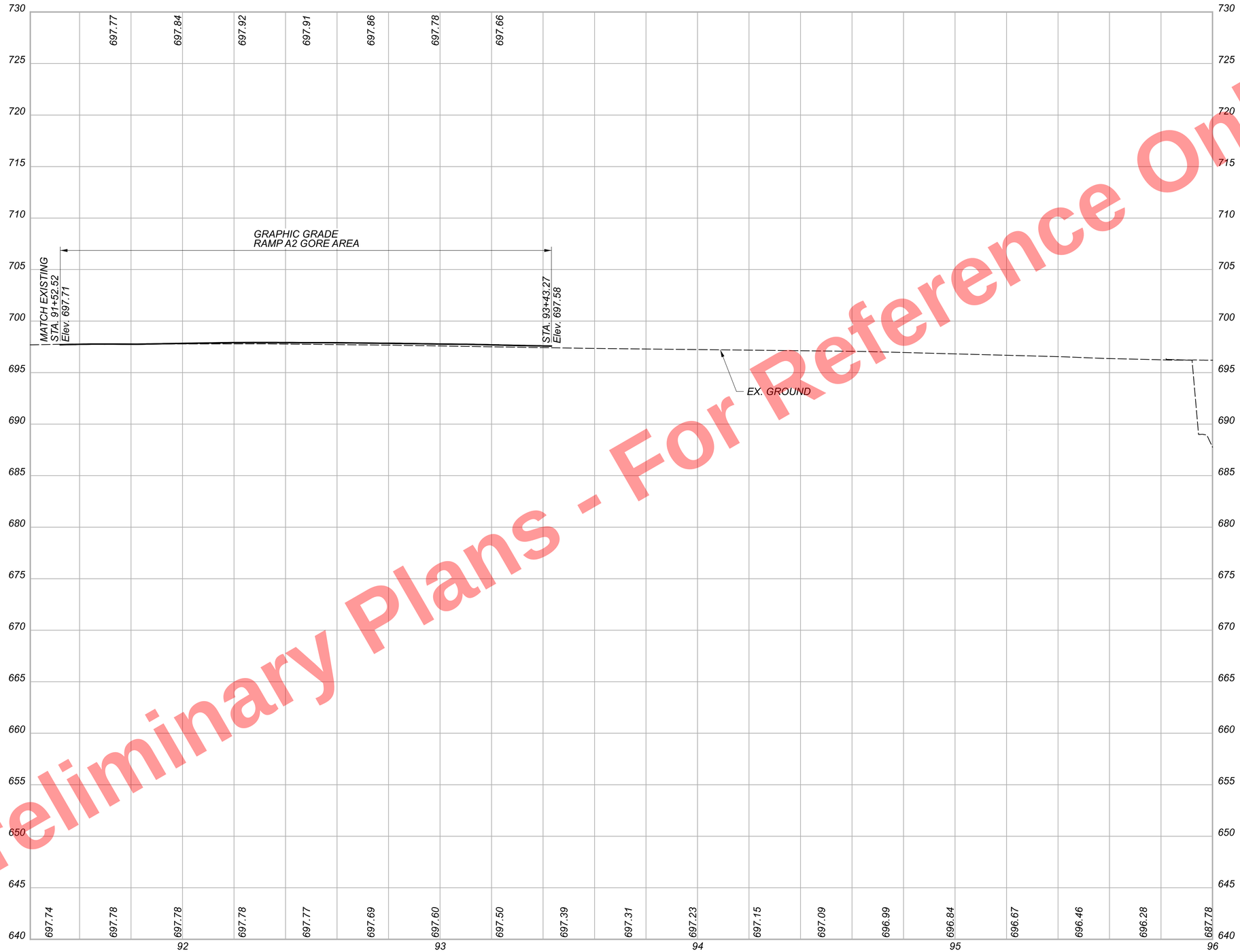

Preliminary Plans - For Reference Only

PROFILE - RAMP IJ3
BEGIN TO STA. 96+00.00

CUY-90-16.28 (CCG3A)

MODEL: BL_Ramp IJ3 - Profile 1-[Sheet] PAPERSIZE: 34x22 (In.) DATE: 3/27/2025 TIME: 10:10:37 PM USER: Alexandria.Summers
pw:\\mb-us-pw.bentley.com:mb-us-pw-03\Documents\Cleveland_OH\01_Projects\ODOT\District2\82382\400-Engineering\Roadway\Sheets\82382_GF6300A.dgn

DESIGN AGENCY
Michael Baker INTERNATIONAL

DESIGNER	BMV
REVIEWER	TJS 04/30/24
PROJECT ID	82382
SHEET	619
TOTAL	2696

CROSS REFERENCES	
SHEET	DESCRIPTION
73	UTILITY SYMBOL LEGEND
28	EX. TYPICAL SECTIONS
430 - 489	SUBSUMMARIES
679 - 710	REMOVAL PLAN
1029	SUPERELEVATION TABLES
1092 - 1120	DRAINAGE PLANS
1366 - 1367	COMBINED SEWER
1716 - 1723	LIGHTING PLAN
1807 - 1817	LANDSCAPING
2383 - 2386	FENCE PLAN

CURVE PRIJ-01
CURVE DATA
P.I. = Sta. 94+88.28
Δ = 20°37'12" RT
Dc = 03°00'00"
R = 1,909.86'
T = 347.42'
L = 687.33'
E = 31.34'
emax = 0.045
V = 50 mph

CURVE PRIJ-02
CURVE DATA
P.I. = Sta. 100+12.53
Δ = 22°30'40" RT
Dc = 06°11'08"
R = 926.27'
T = 184.34'
L = 363.93'
E = 18.16'
emax = 0.037
V = 30 mph

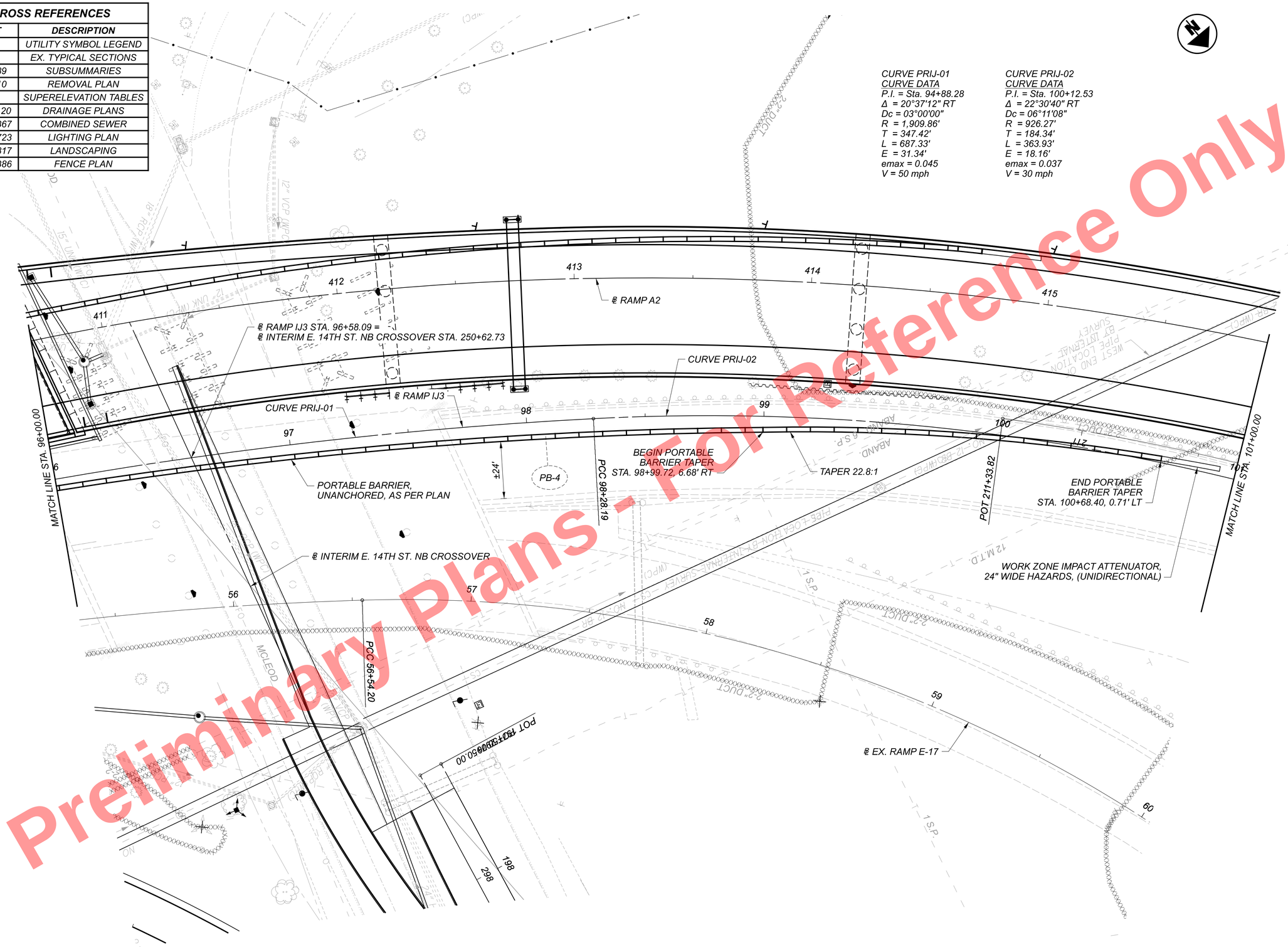

Preliminary Plans - For Reference Only

HORIZONTAL SCALE IN FEET
0 10 20 40

PLAN - RAMP IJ3
STA. 96+00.00 TO STA. 101+00.00

DESIGN AGENCY
HDR

DESIGNER
BMV

REVIEWER
TJS 04/30/24

PROJECT ID
82382

SHEET 620 TOTAL 2696

CUY-90-16.28 (CCG3A)

MODEL: Ramp IJ3 - Plan 2-1[Sheet] PAPERSIZE: 34x22 (in.) DATE: 3/27/2025 TIME: 10:10:45 PM USER: Alexandria.Summers
pw:\\mb-us-pw.bentley.com:mb-us-pw-03\Documents\Cleveland_OH\OI_Projects\ODOT\District2\82382\400-Engineering\Roadway\Sheets\82382_GP6300B.dgn

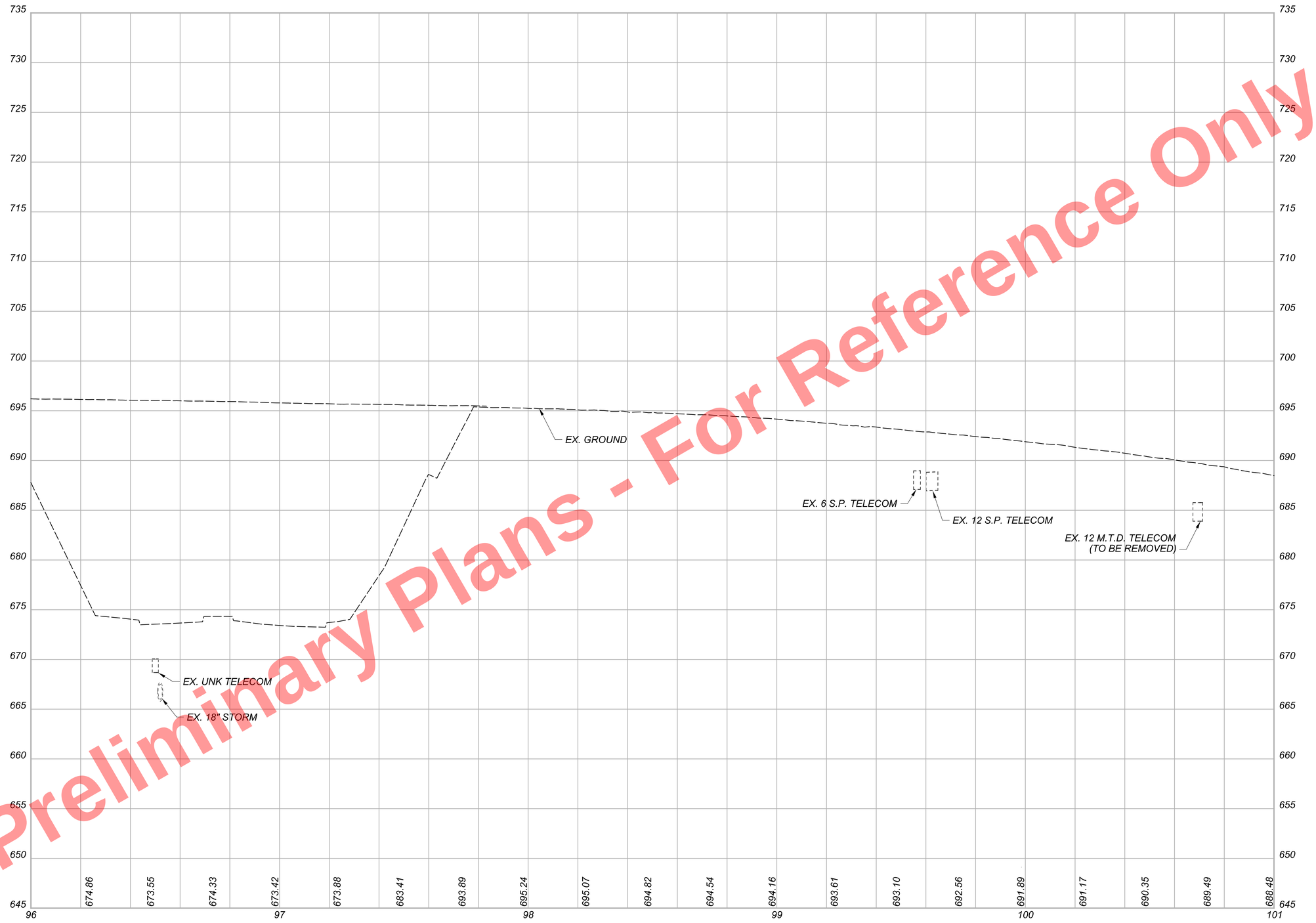

Preliminary Plans - For Reference Only

PROFILE - RAMP IJ3
STA. 96+00.00 TO STA. 101+00.00

CUY-90-16.28 (CCG3A)

MODEL: BL_Ramp IJ3 - Profile 2 [Sheet] PAPERSIZE: 34x22 (in.) DATE: 3/27/2025 TIME: 10:04:04 PM USER: Alexandria.Summers
pw:\\mb-us-pw.bentley.com:mb-us-pw-03\Documents\Cleveland.OH\DgnLibrary\Projects\ODOT\District2\82382\400-Engineering\Roadway\Sheets\82382_GF6300B.dgn

DESIGN AGENCY
Michael Baker INTERNATIONAL

DESIGNER
BMV

REVIEWER
TJS 04/30/24

PROJECT ID
82382

SHEET 621 | TOTAL 2696

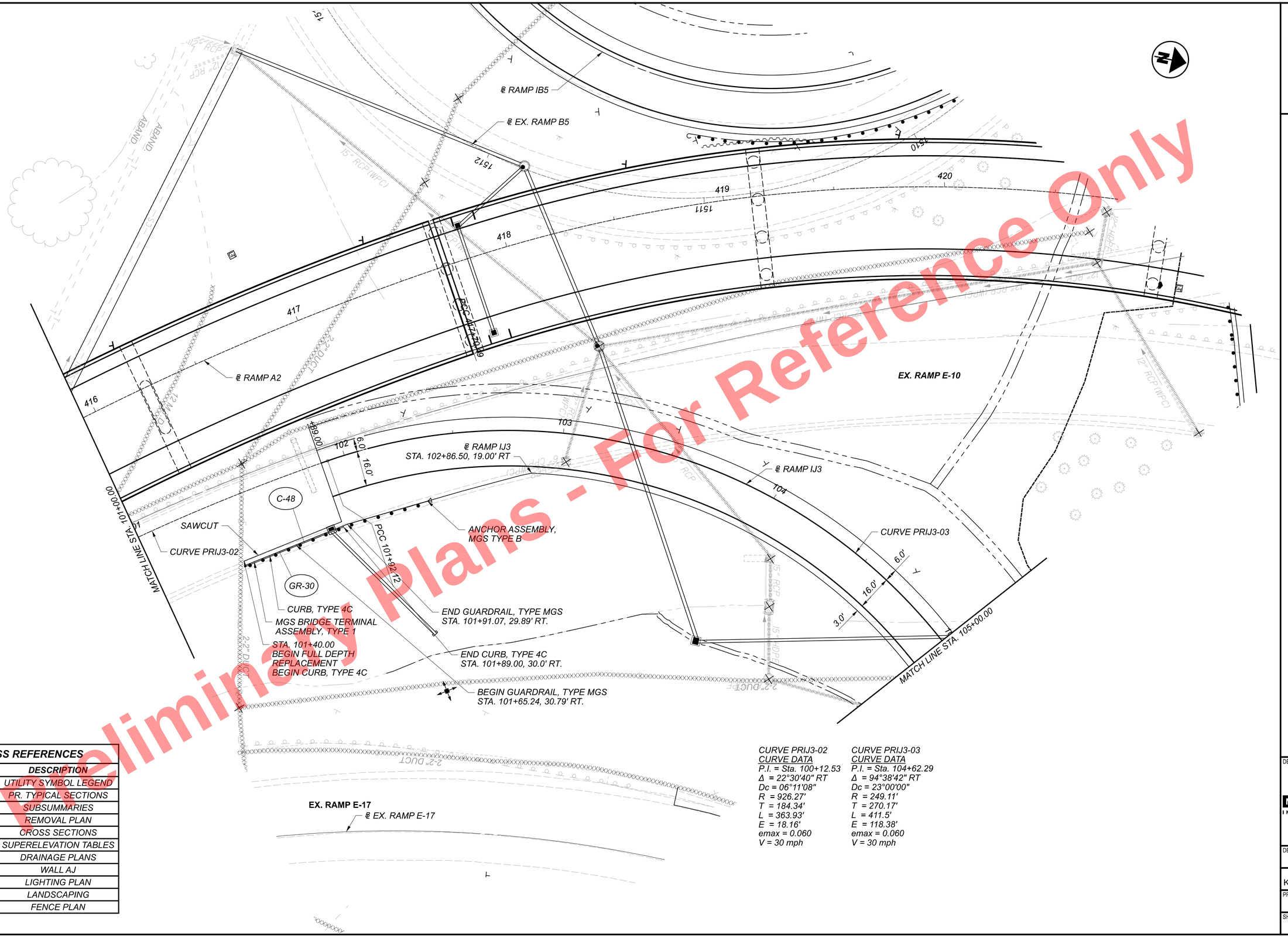

CURVE PRIJ3-02
CURVE DATA
P.I. = Sta. 100+12.53
Δ = 22°30'40" RT
Dc = 06°11'08"
R = 926.27'
T = 184.34'
L = 363.93'
E = 18.16'
emax = 0.060
V = 30 mph

CURVE PRIJ3-03
CURVE DATA
P.I. = Sta. 104+62.29
Δ = 94°38'42" RT
Dc = 23°00'00"
R = 249.11'
T = 270.17'
L = 411.5'
E = 118.38'
emax = 0.060
V = 30 mph

CROSS REFERENCES

SHEET	DESCRIPTION
73	UTILITY SYMBOL LEGEND
58 - 59	PR. TYPICAL SECTIONS
430 - 489	SUBSUMMARIES
679 - 710	REMOVAL PLAN
914 - 930	CROSS SECTIONS
1029	SUPERELEVATION TABLES
1092 - 1120	DRAINAGE PLANS
1262	WALL AJ
1716 - 1723	LIGHTING PLAN
1807 - 1817	LANDSCAPING
2383 - 2386	FENCE PLAN

Preliminary Plans - For Reference Only

HORIZONTAL SCALE IN FEET
0 10 20 40

PLAN - RAMP IJ3
STA. 101+00.00 TO STA. 105+00.00

DESIGN AGENCY
Michael Baker INTERNATIONAL

DESIGNER KJM
REVIEWER KGJ 05/22/24
PROJECT ID 82382
SHEET 622 TOTAL 2696

CUY-90-16.28 (CCG3A)

MODEL: 82382_GP630I PAPERSIZE: 34x22 (in.) DATE: 3/27/2025 TIME: 10:15 PM USER: Alexandria.Summers
pw:\\mb-us-pw.bentley.com:mb-us-pw-03\Documents\Cleveland.OH\01_Projects\0DOT\District2\82382\400-Engineering\Engineering\Roadway\Sheets\82382_GP630I.dgn

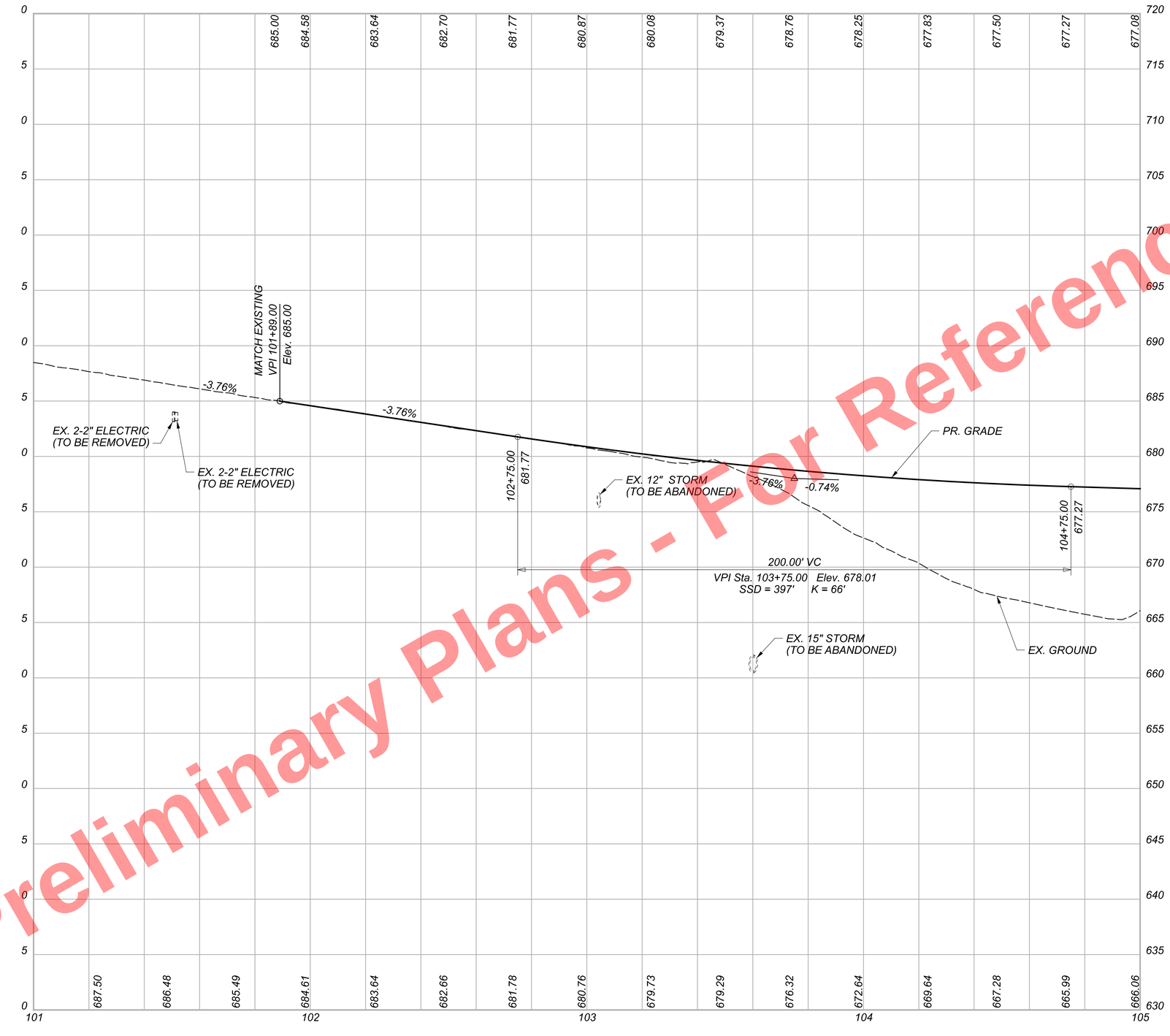

Preliminary Plans - Not For Reference Only

PROFILE - RAMP IJ3
STA. 101+00.00 TO STA. 105+00.00

CUY-90-16.28 (CCG3A)

MODEL: 82382_GF630i PAPERSIZE: 34x22 (in.) DATE: 3/27/2025 TIME: 10:11:29 PM USER: Alexandria.Summers
pw:\\mb-us-pw.bentley.com:mb-us-pw-03\Documents\Cleveland_OH\01_Projects\ODOT\District2\82382\400-Engineering\Roadway\Sheets\82382_GF630i.dgn

DESIGN AGENCY
Michael Baker INTERNATIONAL

DESIGNER
KJM

REVIEWER
KGJ 05/22/24

PROJECT ID
82382

SHEET 623 | TOTAL 2696

Preliminary Plans - Not For Reference Only

HORIZONTAL SCALE IN FEET
0 10 20 40

PLAN - RAMP IJ3
STA. 105+00.00 TO 110+00.00

CURVE PRIJ-03
CURVE DATA
P.I. = Sta. 104+62.29
Δ = 94°38'42" RT
Dc = 23°00'00"
R = 249.11'
T = 270.17'
L = 411.5'
E = 118.38'
emax = 0.060
V = 30 mph

CURVE PRIJ-04
CURVE DATA
P.I. = Sta. 109+98.27
Δ = 69°22'21" LT
Dc = 23°00'00"
R = 249.11'
T = 172.40'
L = 301.62'
E = 53.84'
emax = 0.060
V = 30 mph

PC 1604+21.20
1604
1605
℄ RAMP B6
2" DUCT
1606
1607
PT 107+42.69
STRUCTURE NO. 12
CUY-90-1652S
SFN 1807806
MATCH LINE STA. 105+00.00
BEGIN GUARDRAIL, TYPE MGS
STA. 106+14.10
22.0' RT
CURVE PRIJ-03
106
GR-31
2" DUCT
15" HDPE
PC 107+66.73
TAPER CURB HEIGHT
FROM 0" TO 6" IN 10'
BEGIN PR. CURB
STA. 109+25.00
6.0' LT
C-49
MATCH LINE STA. 110+00.00
107
N63°40'54"E
6.0'
℄ RAMP IJ3
109
108
16.0'
BEGIN PR. WALL AJ
STA. 105+30.00, 43.60' RT
GR-32
PT 106+03.62
GUARDRAIL,
TYPE MGS
ANCHOR ASSEMBLY,
MGS TYPE B
℄ EX. RAMP E-17
STA. 62+57.30,
32.44' RT
EX. RAMP E-17
3.0'
WALL AJ
END PR. WALL AJ
STA. 108+04.78, 37.4' RT
STA. 108+56.72
28.34' RT
CURVE PRIJ-04
PC 305+01.45
63
25.0'
64
PCC 63+42.58
END GUARDRAIL, TYPE MGS
STA. 108+21.74
22.0' RT
ANCHOR ASSEMBLY,
MGS TYPE B
62
PCC 61+94.23
GUARDRAIL,
TYPE MGS
END GUARDRAIL, TYPE MGS
℄ EX. RAMP E-17
STA. 63+87.10, 25.0' LT
ANCHOR ASSEMBLY,
MGS TYPE T
BEGIN GUARDRAIL, TYPE MGS
℄ EX. RAMP E-17
STA. 62+90.00, 25.0' LT
℄ EX. RAMP E-17
65
℄ INTERIM E. 14TH ST NB
℄ INTERIM E. 14TH ST SB
℄ RAMP H5
N02°24'22"E

CROSS REFERENCES	
SHEET	DESCRIPTION
73	UTILITY SYMBOL LEGEND
58 - 59	PR. TYPICAL SECTIONS
430 - 489	SUBSUMMARIES
679 - 710	REMOVAL PLAN
914 - 930	CROSS SECTIONS
1029	SUPERELEVATION TABLES
1092 - 1120	DRAINAGE PLANS
1262	WALL AJ
1716 - 1723	LIGHTING PLAN
1807 - 1817	LANDSCAPING
2383 - 2386	FENCE PLAN

DESIGN AGENCY
Michael Baker INTERNATIONAL
DESIGNER KJM
REVIEWER KGJ 05/22/24
PROJECT ID 82382
SHEET 624 TOTAL 2696

CUY-90-16.28 (CCG3A)

MODEL: 82382_GP6302 PAPERSIZE: 34x22 (in.) DATE: 3/27/2025 TIME: 10:11:39 PM USER: Alexandria.Summers
pw:\\mb-us-pw.bentley.com:mb-us-pw-03\Documents\Cleveland_OHIO_Projects\0007\District2\82382\400-Engineering\Roadway\Sheets\82382_GP6302.dgn

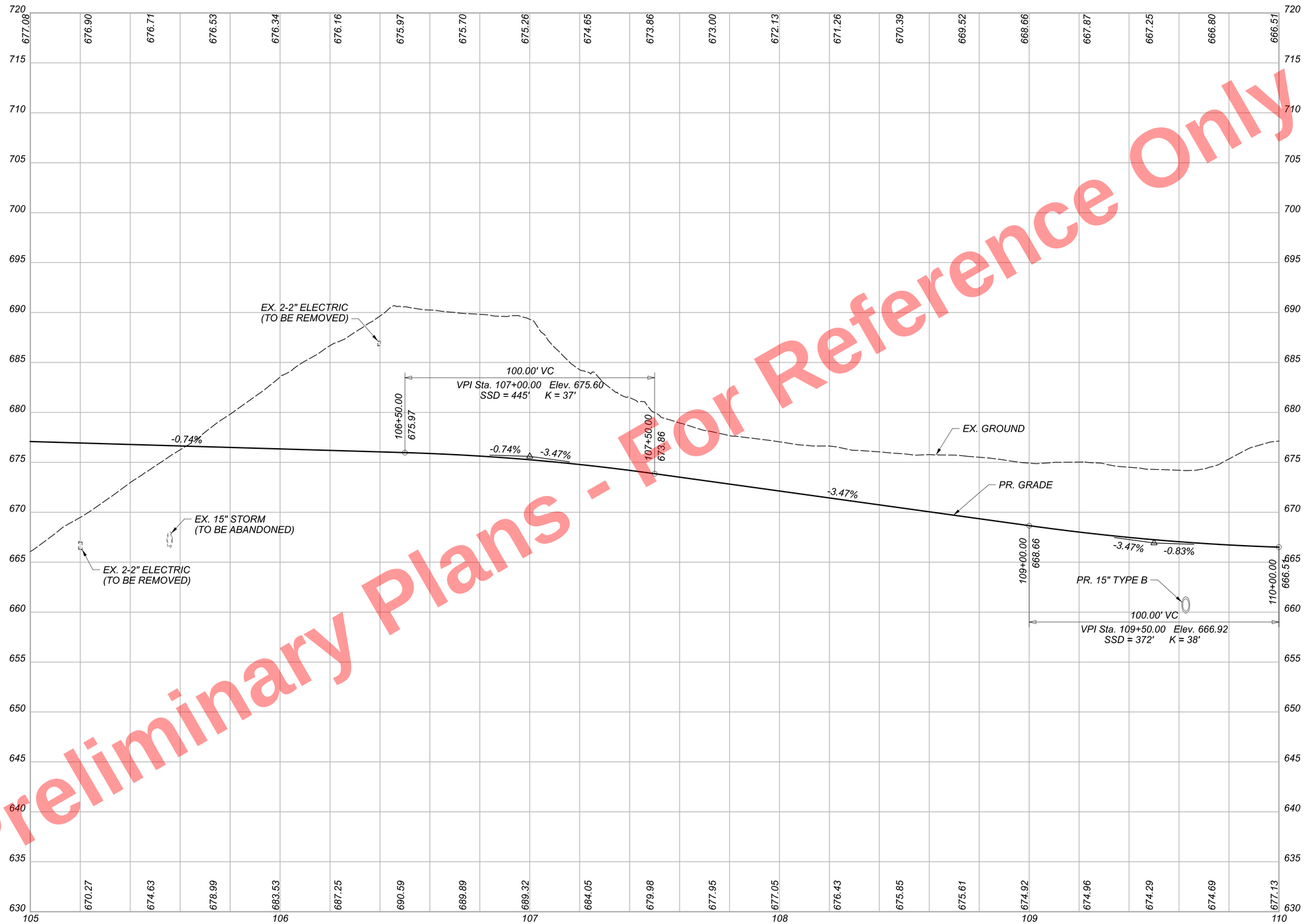

Preliminary Plans - Not For Reference Only

PROFILE - RAMP IJ3
STA. 105+00.00 TO 110+00.00

CUY-90-16.28 (CCG3A)

MODEL: 82382_GF6302 PAPERSIZE: 34x22 (In.) DATE: 3/27/2025 TIME: 10:11:55 PM USER: Alexandria.Summers
pw:\\mb-us-pw.bentley.com:mb-us-pw-03\Documents\Cleveland_OH\DL_Projects\ODOT\District2\82382\400-Engineering\Roadway\Sheets\82382_GF6302.dgn

DESIGN AGENCY
Michael Baker INTERNATIONAL

DESIGNER KJM
REVIEWER KGJ 05/22/24
PROJECT ID 82382
SHEET 625 TOTAL 2696

CROSS REFERENCES	
SHEET	**DESCRIPTION**
73	UTILITY SYMBOL LEGEND
58 - 59	PR. TYPICAL SECTIONS
430 - 489	SUBSUMMARIES
679 - 710	REMOVAL PLAN
914 - 930	CROSS SECTIONS
1029	SUPERELEVATION TABLES
1057	RAMP TERMINAL DETAILS
1092 - 1120	DRAINAGE PLANS
1716 - 1723	LIGHTING PLAN
1807 - 1817	LANDSCAPING
2383 - 2386	FENCE PLAN

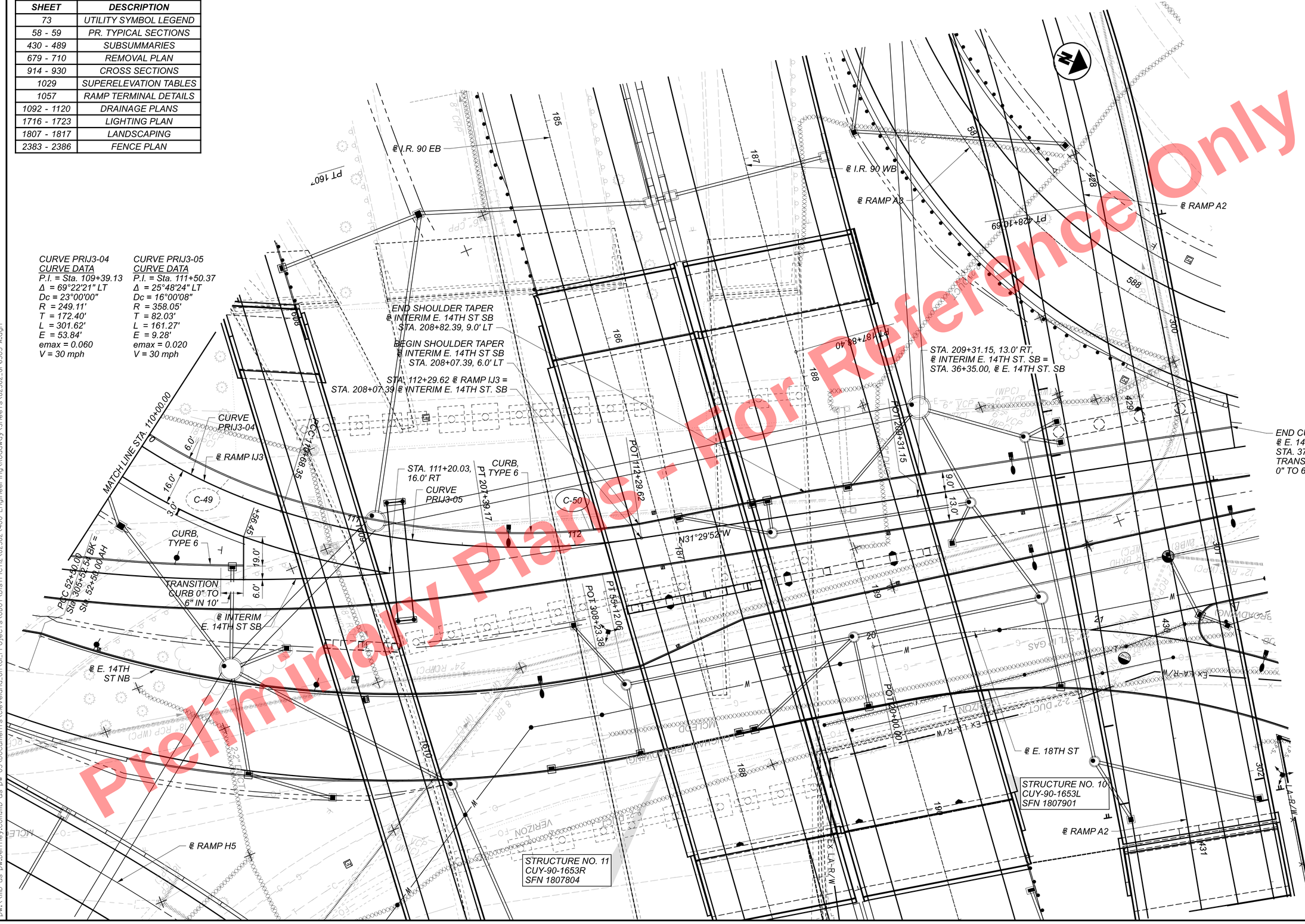

Preliminary Plans - Not For Reference Only

HORIZONTAL SCALE IN FEET
0 10 20 40

PLAN - RAMP IJ3
STA. 110+00.00 TO END

CUY-90-16.28 (CCG3A)

DESIGN AGENCY
Michael Baker INTERNATIONAL

DESIGNER KJM
REVIEWER KGJ 05/22/24
PROJECT ID 82382
SHEET 626 TOTAL 2696

MODEL: 82382_GP6303 PAPERSIZE: 34x22 (in.) DATE: 6/9/2025 TIME: 10:30:01PM USER: Julie.Ross
pw:\\mb-us-pw.bentley.com:mb-us-pw-03\Documents\Cleveland_OH\OL_Projects\0DOT\Dist1c12\82382\400-Engineering\Roadway\Sheets\82382_GP6303-A.dgn

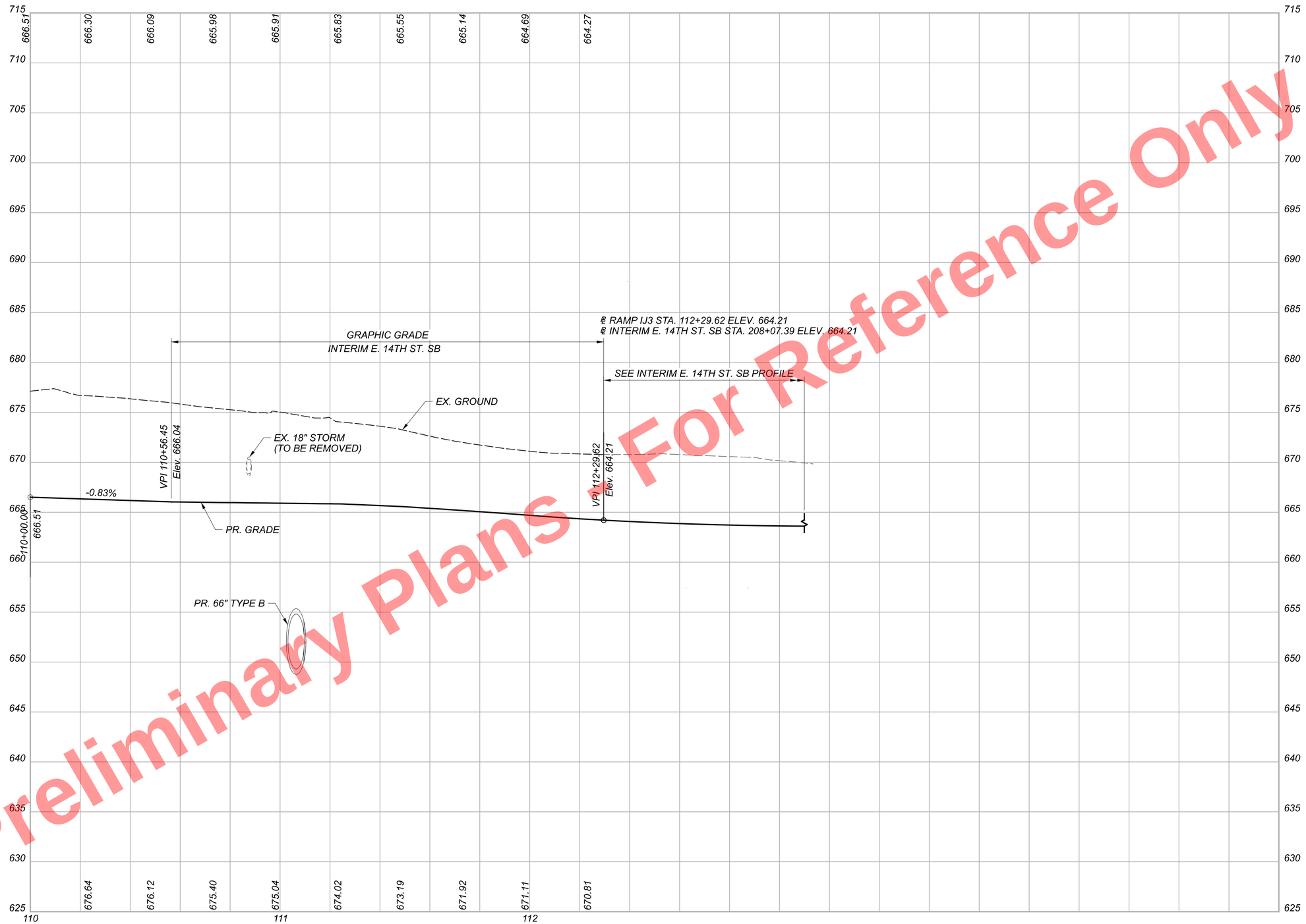

For Reference Only
Preliminary Plans

PROFILE - RAMP IJ3
STA. 110+00.00 TO END

CUY-90-16.28 (CCG3A)

MODEL: 82382_GF6303 PAPERSIZE: 34x22 (ln.) DATE: 3/27/2025 TIME: 10:12:23 PM USER: Alexandria.Summers
pw:\\mb-us-pw.bentley.com:mb-us-pw-03\Documents\Cleveland_OH\DL_Projects\ODOT\District2\82382\400-Engineering\Roadway\Sheets\82382_GF6303.dgn

DESIGN AGENCY
Michael Baker INTERNATIONAL

DESIGNER	KJM
REVIEWER	KGJ 05/22/24
PROJECT ID	82382
SHEET	627
TOTAL	2696

CROSS REFERENCES	
SHEET	DESCRIPTION
73	UTILITY SYMBOL LEGEND
24	EX. TYPICAL SECTIONS
60 - 61	PR. TYPICAL SECTIONS
430 - 489	SUBSUMMARIES
679 - 710	REMOVAL PLAN
932 - 946	CROSS SECTIONS
1063	INTERSECTION DETAIL
1073	DRIVE DETAILS
1092 - 1120	DRAINAGE PLANS
1724 - 1741	LIGHTING PLAN
1840 - 1843	HARDSCAPING
1807 - 1817	LANDSCAPING
2383 - 2386	FENCE PLAN

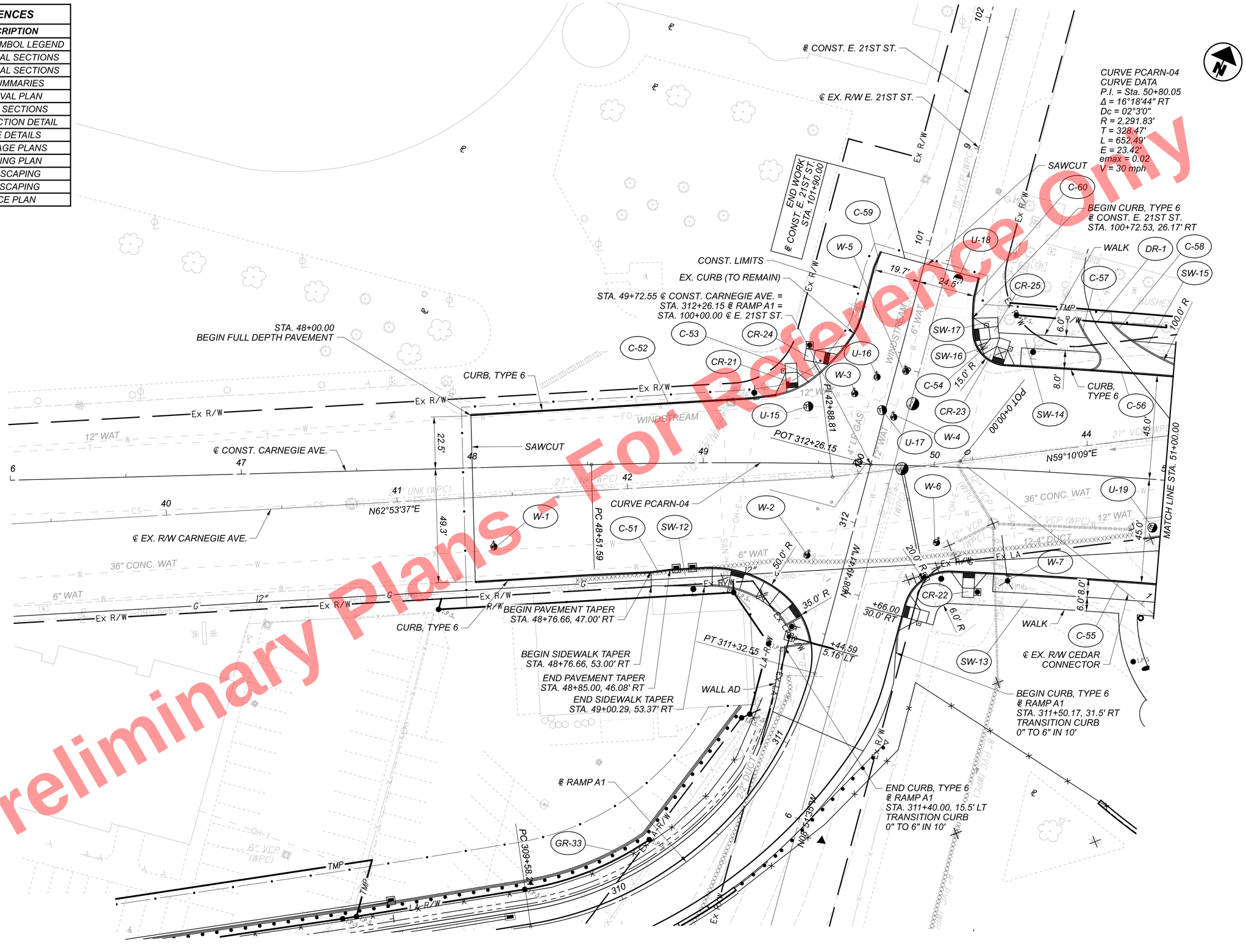

Preliminary Plans - For Reference Only

HORIZONTAL SCALE IN FEET
0 10 20 40

PLAN - CARNEGIE AVE. BEGIN TO STA. 51+00.00

CUY-90-16.28 (CCG3A)

MODEL: 82382_GP710I PAPERSIZE: 34x22 (in.) DATE: 3/27/2025 TIME: 10:12:35 PM USER: AlexandriaSummers
pw:\\mb-us-pw.bentley.com:mb-us-pw-03\Documents\Cleveland_OH\01_Projects\000T\District2\82382\400-Engineering\Roadway\Sheets\82382_GP710I.dgn

DESIGN AGENCY	Michael Baker INTERNATIONAL
DESIGNER	KJM
REVIEWER	KGJ 05/22/24
PROJECT ID	82382
SHEET	628
TOTAL	2696

Preliminary Plans - For Reference Only

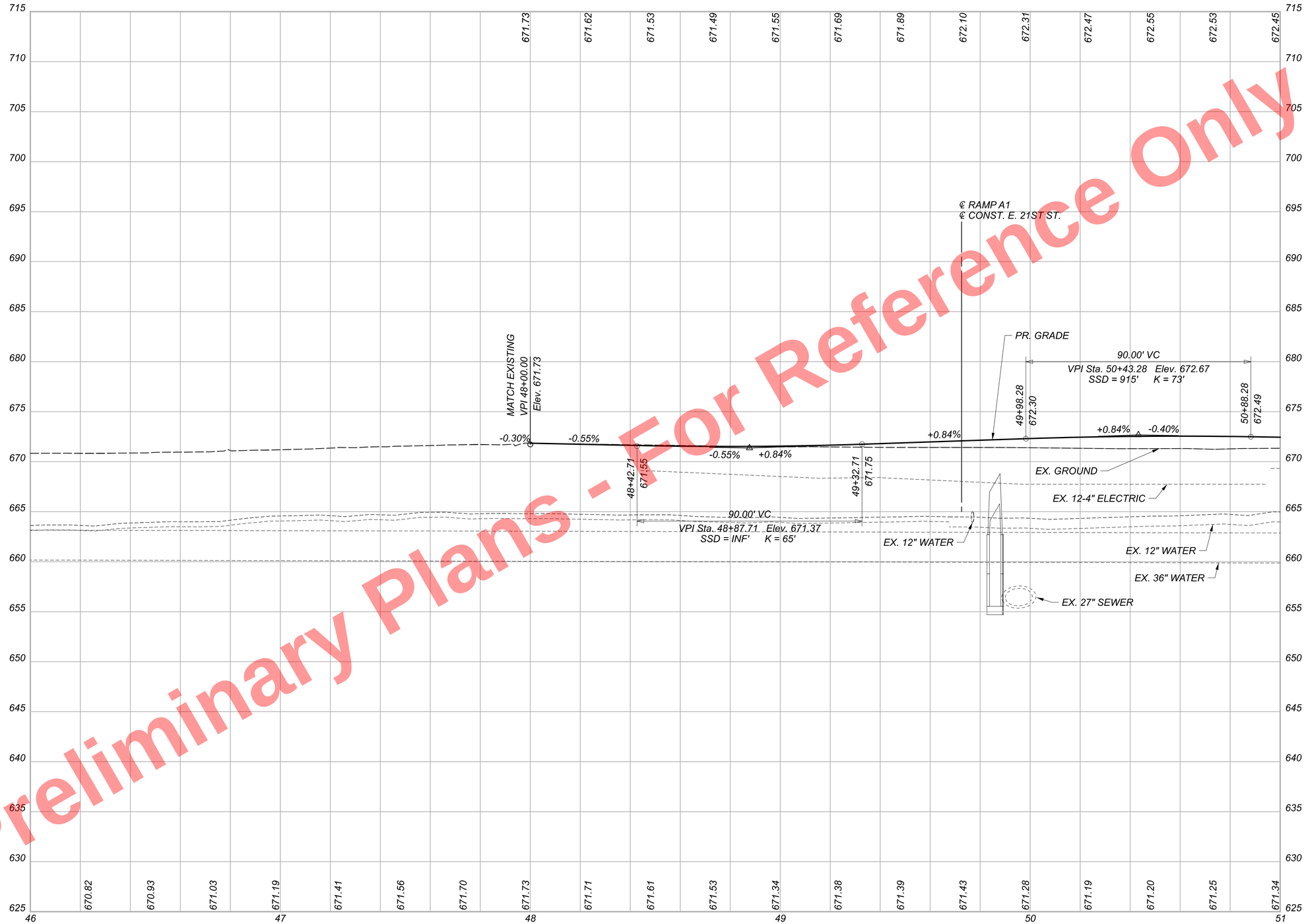

PROFILE - CARNEGIE AVE.
BEGIN TO STA. 51+00.00

CUY-90-16.28 (CCG3A)

MODEL: 82382_GF701 PAPERSIZE: 34x22 (in.) DATE: 3/27/2025 TIME: 10:12:59 PM USER: Alexandria.Summers
pw:\\mb-us-pw.bentley.commb-us-pw-03\Documents\Cleveland_0H10\Projects\ODOT\District2\82382\400-Engineering\Roadway\Sheets\82382_GF701.dgn

DESIGN AGENCY
Michael Baker INTERNATIONAL

DESIGNER KJM
REVIEWER KGJ 05/22/24
PROJECT ID 82382
SHEET 629 TOTAL 2696

CROSS REFERENCES	
SHEET	DESCRIPTION
73	UTILITY SYMBOL LEGEND
24	EX. TYPICAL SECTIONS
60 - 61	PR. TYPICAL SECTIONS
430 - 489	SUBSUMMARIES
679 - 710	REMOVAL PLAN
932 - 946	CROSS SECTIONS
1062	INTERSECTION DETAIL
1092 - 1120	DRAINAGE PLANS
1409	WATER WORK
1651	TRAFFIC SIGNAL PLAN
1724 - 1741	LIGHTING PLAN
1840 - 1843	HARDSCAPING
1807 - 1817	LANDSCAPING
2383 - 2386	FENCE PLAN

CURVE PCARN-04
CURVE DATA
P.I. = Sta. 51+80.05
Δ = 16°18'44" RT
Dc = 02°30'00"
R = 2,291.83'
T = 328.47'
L = 652.49'
E = 23.42'
emax = 0.020
V = 30 mph

STA. 37+41.90 ℄ CONST. E. 22ND ST. =
STA. 53+31.81 ℄ CONST. CARNEGIE AVE.

℄ EX. R/W E. 22ND ST.
END WORK ℄ EX. R/W E. 22ND ST. STA. 28+80.00
POT 29+00.00
CONST. LIMITS
SAWCUT
12.0'
18.5'
21.0'
8.0'
END SIDEWALK TAPER STA. 52+64.05, 51.0' LT.
BEGIN SIDEWALK TAPER STA. 52+39.77, 53.0' LT.
WALK
BEGIN PAVEMENT TAPER STA. 53+97.47, 36.52' LT.
END PAVEMENT TAPER STA. 55+04.08, 34.0' LT.
CONST. LIMITS
WALK
CURVE PCARN-04
℄ EX. R/W CARNEGIE AVE.
℄ CONST. CARNEGIE AVE.
PI 27+72.55
POT 37+41.90
END BUS PAD STA. 52+36.97 OFF. 33.00' RT.
MATCH LINE STA. 51+00.00
MATCH LINE STA. 56+00.00
N08°51'29"W
N80°56'18"E
GAS LINE (BY OTHERS)
BEGIN BUS PAD STA. 51+14.56 OFF. 33.00' RT.
12' X 120' CONCRETE BUS PAD
WALK
WALK
STA. 53+42.42, ℄ CONST. CARNEGIE AVE. = STA. 27+60.60, ℄ EX. R/W E. 22ND ST.
PT 55+04.08
WALL AF
BRIDGE 13 WINGWALL
℄ EX. R/W CEDAR AVE. CONNECTION
℄ CONST. E. 22ND ST.
STRUCTURE NO 13
CUY-90-1678
SFN 1807839
℄ INTERIM I.R. 90 WP
℄ I.R. 90 WB
BRIDGE 13 WINGWALL

Preliminary Plans - Not For Reference Only

HORIZONTAL SCALE IN FEET
0 10 20 40

PLAN - CARNEGIE AVE.
STA. 51+00.00 TO STA. 56+00.00

DESIGN AGENCY
Michael Baker INTERNATIONAL

DESIGNER KJM
REVIEWER KGJ 05/22/24
PROJECT ID 82382
SHEET 630 TOTAL 2696

CUY-90-16.28 (CCG3A)

MODEL: 82382_GP7102 PAPERSIZE: 34x22 (in.) DATE: 3/27/2025 TIME: 10:30 PM USER: Alexandria.Summers
pw:\\mb-us-pw.bentley.com:mb-us-pw-03\Documents\Cleveland_OH\OI_Projects\ODOT\District 12\82382\400-Engineering\Roadway\Sheets\82382_GP7102.dgn

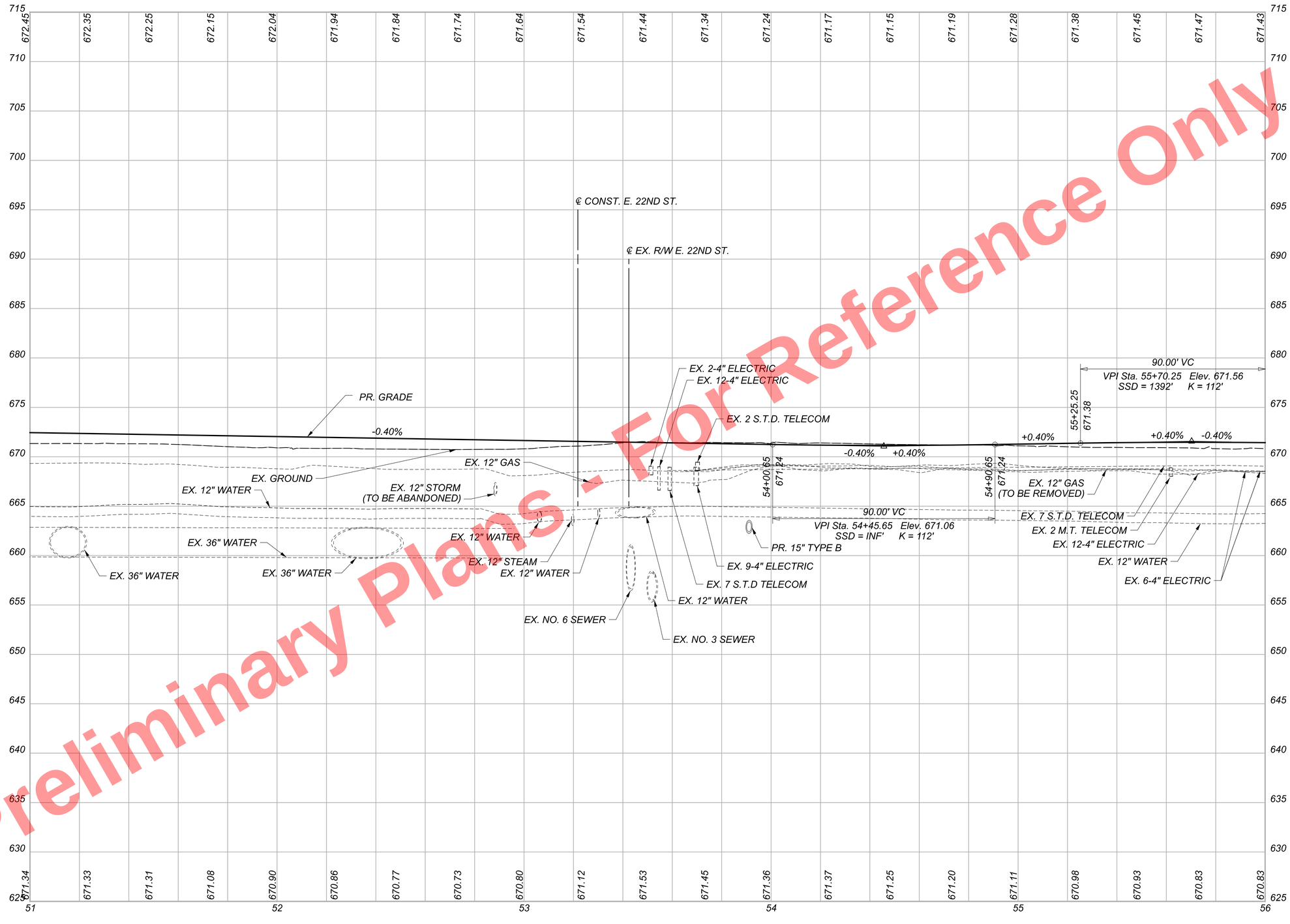

Preliminary Plans - Not For Reference Only

PROFILE - CARNEGIE AVE.
STA. 51+00.00 TO STA. 56+00.00

CUY-90-16.28 (CCG3A)

MODEL: 82382_GF7102 PAPERSIZE: 34x22 (in.) DATE: 3/27/2025 TIME: 10:13:36 PM USER: Alexandria.Summers
pw:\\mb-us-pw.bentley.com:mb-us-pw-03\Documents\Cleveland_OH\01_Projects\ODOT\District2\82382\400-Engineering\Roadway\Sheets\82382_GF7102.dgn

DESIGN AGENCY
Michael Baker INTERNATIONAL

DESIGNER KJM
REVIEWER KGJ 05/22/24
PROJECT ID 82382
SHEET 631 TOTAL 2696

CROSS REFERENCES	
SHEET	DESCRIPTION
73	UTILITY SYMBOL LEGEND
24	EX. TYPICAL SECTIONS
60 - 61	PR. TYPICAL SECTIONS
430 - 489	SUBSUMMARIES
679 - 710	REMOVAL PLAN
932 - 946	CROSS SECTIONS
1074 - 1075	DRIVE DETAILS
1092 - 1120	DRAINAGE PLANS
1241	WALL AH
1411 - 1413	WATER WORK
1655	TRAFFIC SIGNAL PLAN
1724 - 1741	LIGHTING PLAN
1783 - 1796	CPP DUCT BANK
1840 - 1843	HARDSCAPING
1807 - 1817	LANDSCAPING
2281 - 2282	CUY-90-1696 (BRIDGE 14)
2383 - 2386	FENCE PLAN

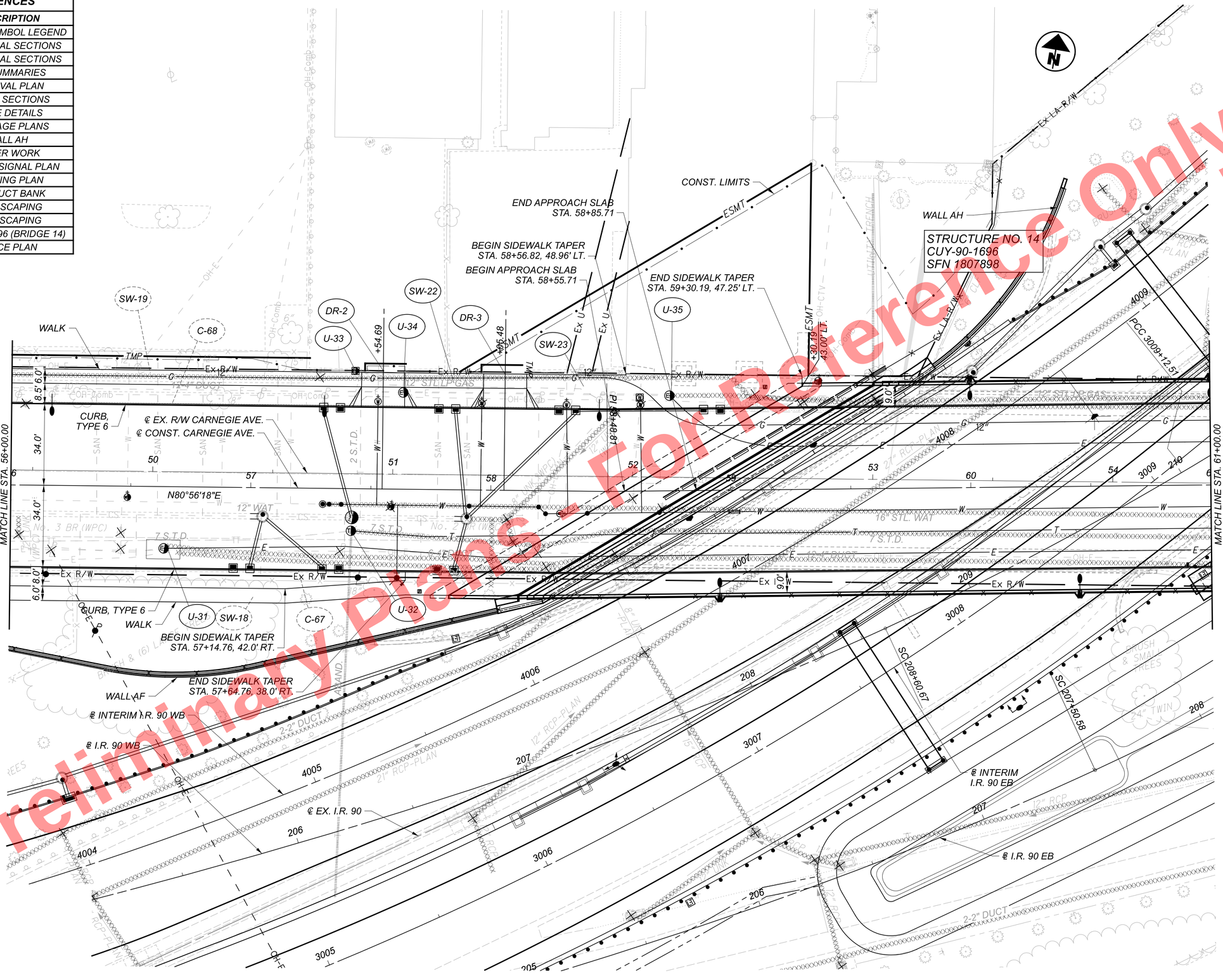

Preliminary Plans - Not For Reference Only

HORIZONTAL SCALE IN FEET
0 10 20 40

PLAN - CARNEGIE AVE.
STA. 56+00.00 TO STA. 61+00.00

DESIGN AGENCY
Michael Baker INTERNATIONAL

DESIGNER
KJM

REVIEWER
KGJ 05/22/24

PROJECT ID
82382

SHEET 632 | TOTAL 2696

CUY-90-16.28 (CCG3A)

MODEL: 82382_GP7103 PAPERSIZE: 34x22 (In.) DATE: 3/27/2025 TIME: 10:35:47 PM USER: Alexandria.Summers
pw:\\mb-us-pw.bentley.com:mb-us-pw-03\Documents\Cleveland_OH\01_Projects\ODOT\District2\82382\400-Engineering\Roadway\Sheets\82382_GP7103.dgn

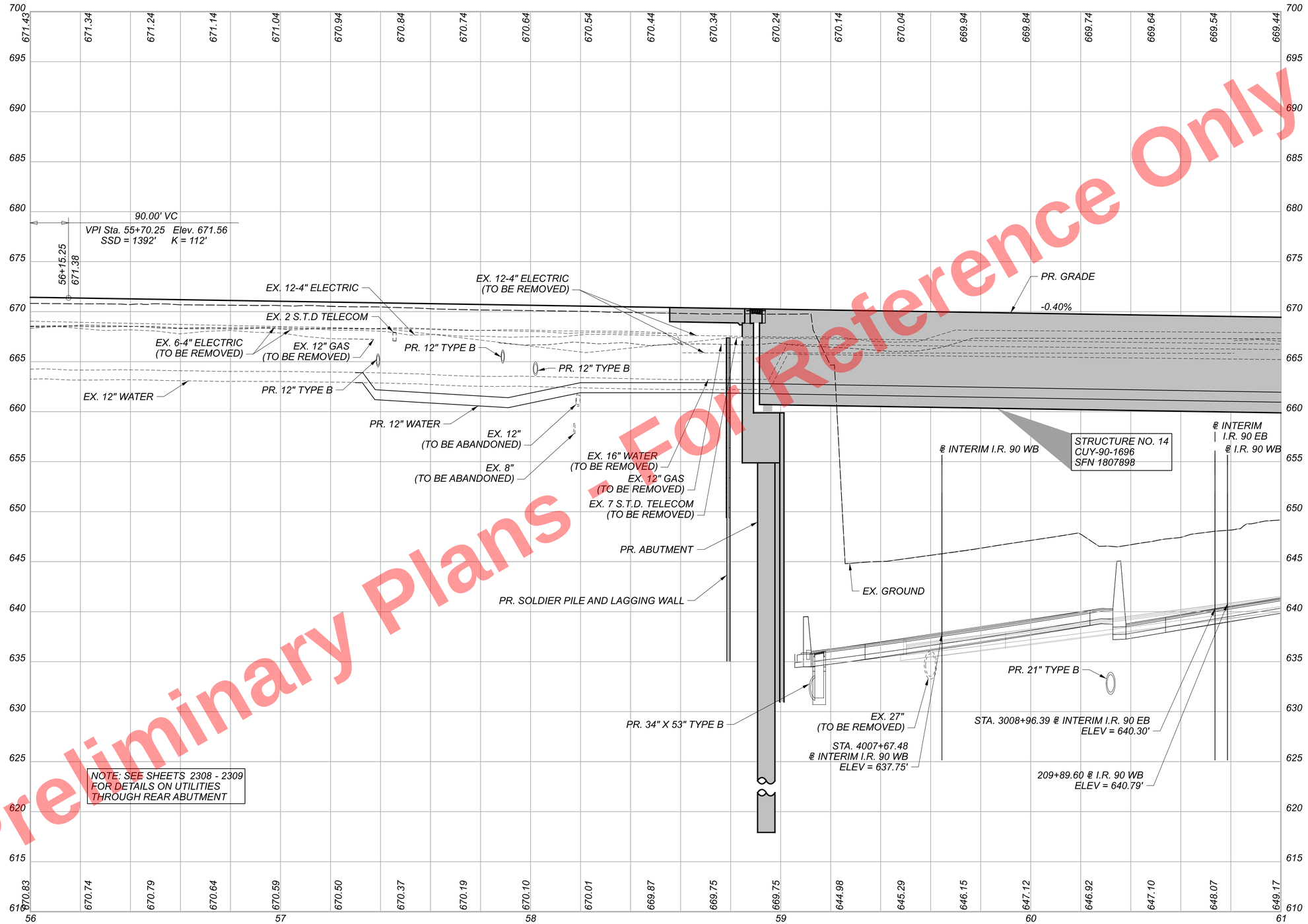

Preliminary Plans - For Reference Only

PROFILE - CARNEGIE AVE.
STA. 56+00.00 TO STA. 61+00.00

CUY-90-16.28 (CCG3A)

MODEL: 82382_GF7103 PAPERSIZE: 34x22 (in.) DATE: 3/27/2025 TIME: 10:41:11 PM USER: Alexandria.Summers
pw:\\mb-us-pw.bentley.com\mb-us-pw-03\Documents\Cleveland.OH\01_Projects\ODOT\District2\82382\400-Engineering\Roadway\Sheets\82382_GF7103.dgn

DESIGN AGENCY
Michael Baker INTERNATIONAL

DESIGNER KJM
REVIEWER KGJ 05/22/24
PROJECT ID 82382
SHEET 633 TOTAL 2696

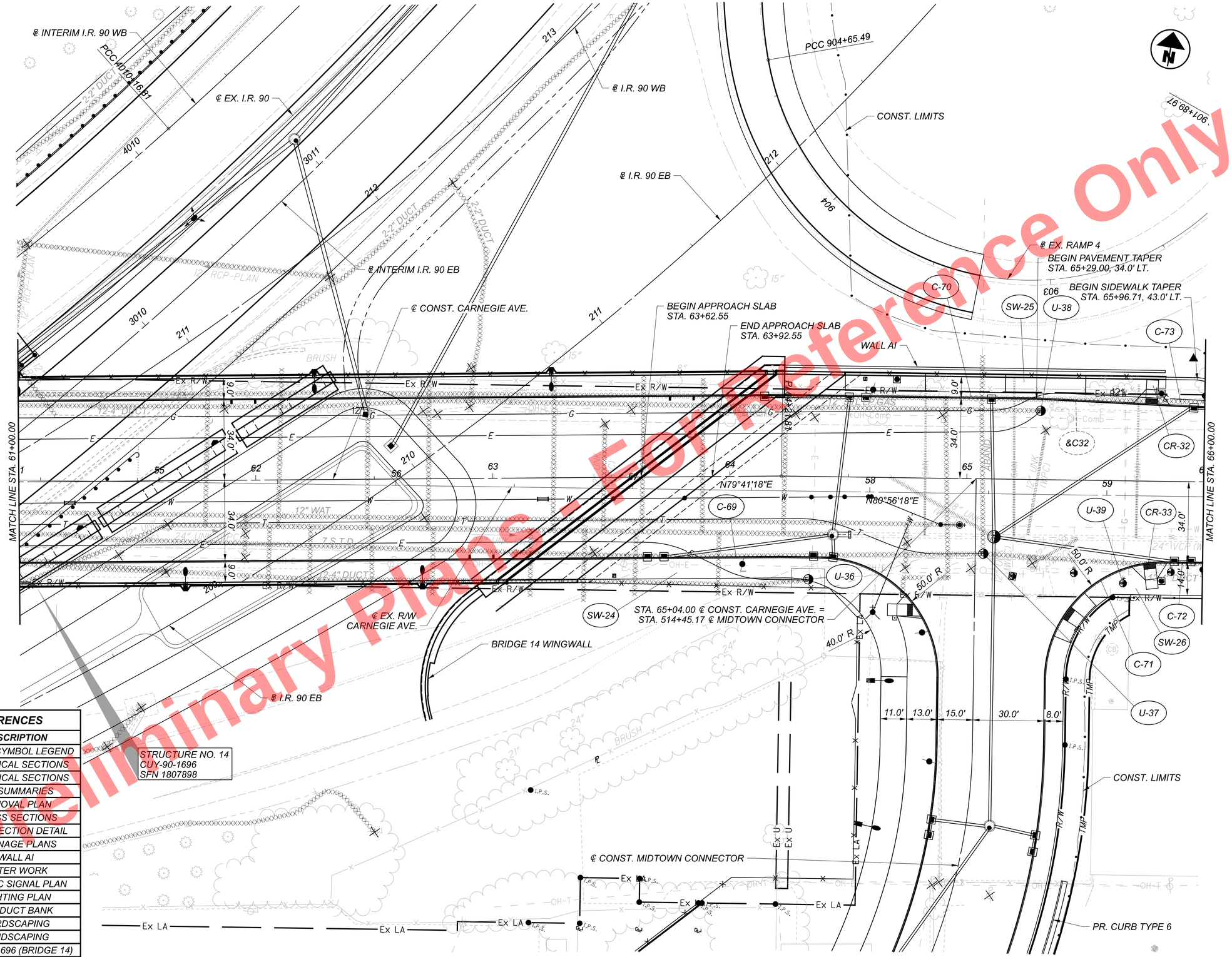

Preliminary Plans - For Reference Only

CROSS REFERENCES	
SHEET	DESCRIPTION
73	UTILITY SYMBOL LEGEND
24	EX. TYPICAL SECTIONS
60 - 61	PR. TYPICAL SECTIONS
430 - 489	SUBSUMMARIES
679 - 710	REMOVAL PLAN
932 - 946	CROSS SECTIONS
1059	INTERSECTION DETAIL
1092 - 1120	DRAINAGE PLANS
1250	WALL AI
1411 - 1413	WATER WORK
1659	TRAFFIC SIGNAL PLAN
1724 - 1741	LIGHTING PLAN
1783 - 1796	CPP DUCT BANK
1840 - 1843	HARDSCAPING
1807 - 1817	LANDSCAPING
2281 - 2282	CUY-90-1696 (BRIDGE 14)
2383 - 2386	FENCE PLAN

HORIZONTAL SCALE IN FEET
0 10 20 40

PLAN - CARNEGIE AVE.
STA. 61+00.00 TO STA. 66+00.00

DESIGN AGENCY
Michael Baker INTERNATIONAL

DESIGNER
KJM

REVIEWER
KGJ 05/22/24

PROJECT ID
82382

SHEET 634 TOTAL 2696

CUY-90-16.28 (CCG3A)

MODEL: 82382_GP7104 PAPERSIZE: 34x22 (in.) DATE: 3/27/2025 TIME: 10:14:22 PM USER: Alexandria.Summers
pw:\\mb-us-pw.bentley.com:mb-us-pw-03\Documents\Cleveland_OH\OI_Projects\ODOT\District12\82382\400-Engineering\Roadway\Sheets\82382_GP7104.dgn

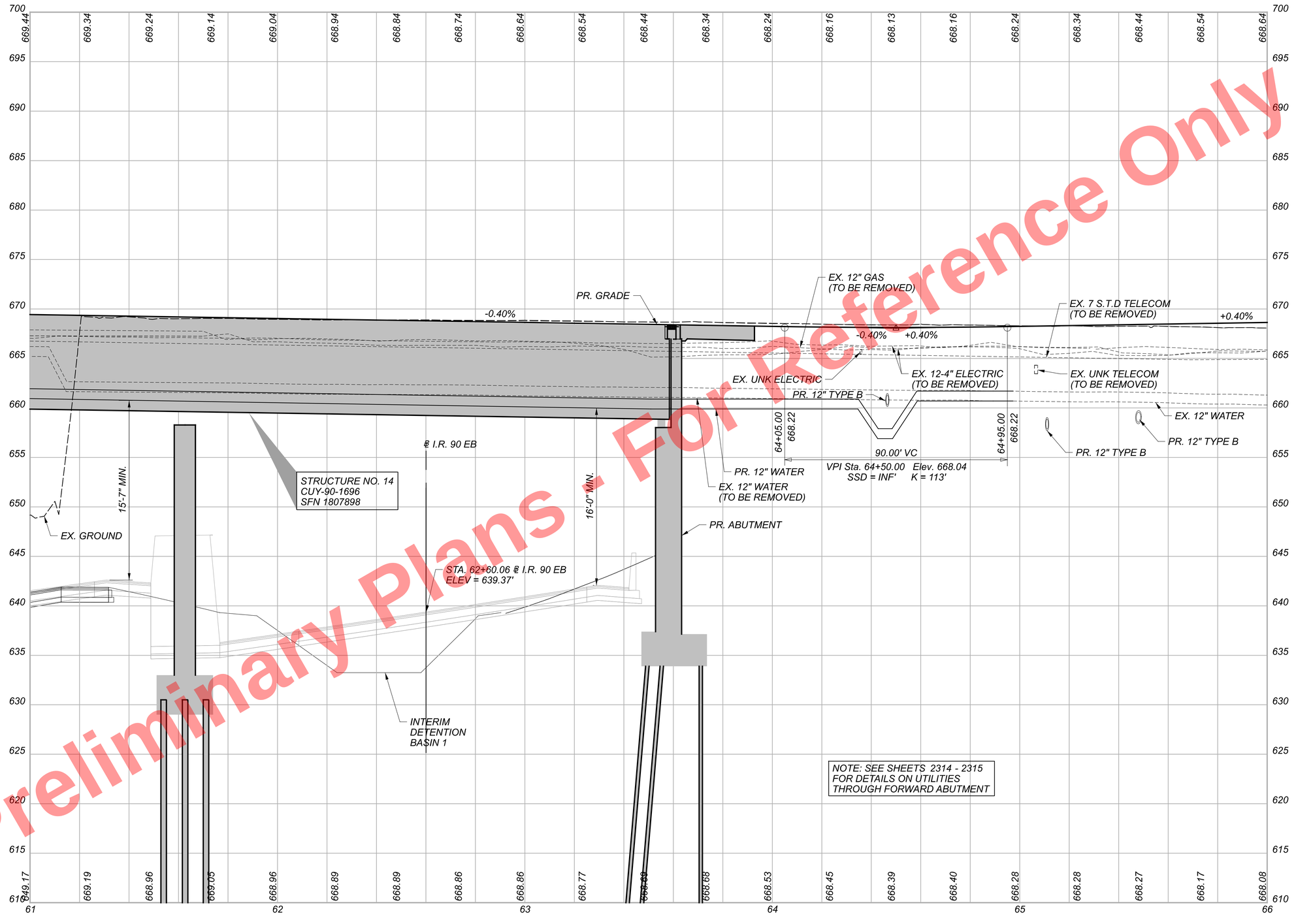

For Reference Only
Preliminary Plans - Not

PROFILE - CARNEGIE AVE.
STA. 61+00.00 TO STA. 66+00.00

CUY-90-16.28 (CCG3A)

MODEL: 82382_GF7104 PAPERSIZE: 34x22 (in.) DATE: 3/27/2025 TIME: 10:14:47 PM USER: Alexandria.Summers
pw:\\mb-us-pw.bentley.commb-us-pw-03\Documents\Cleveland_OH_OL_Projects\ODOT\District12\82382\400-Engineering\Roadway\Sheets\82382_GF7104.dgn

DESIGN AGENCY
Michael Baker INTERNATIONAL

DESIGNER
KJM

REVIEWER
KGJ 05/22/24

PROJECT ID
82382

SHEET 635 TOTAL 2696

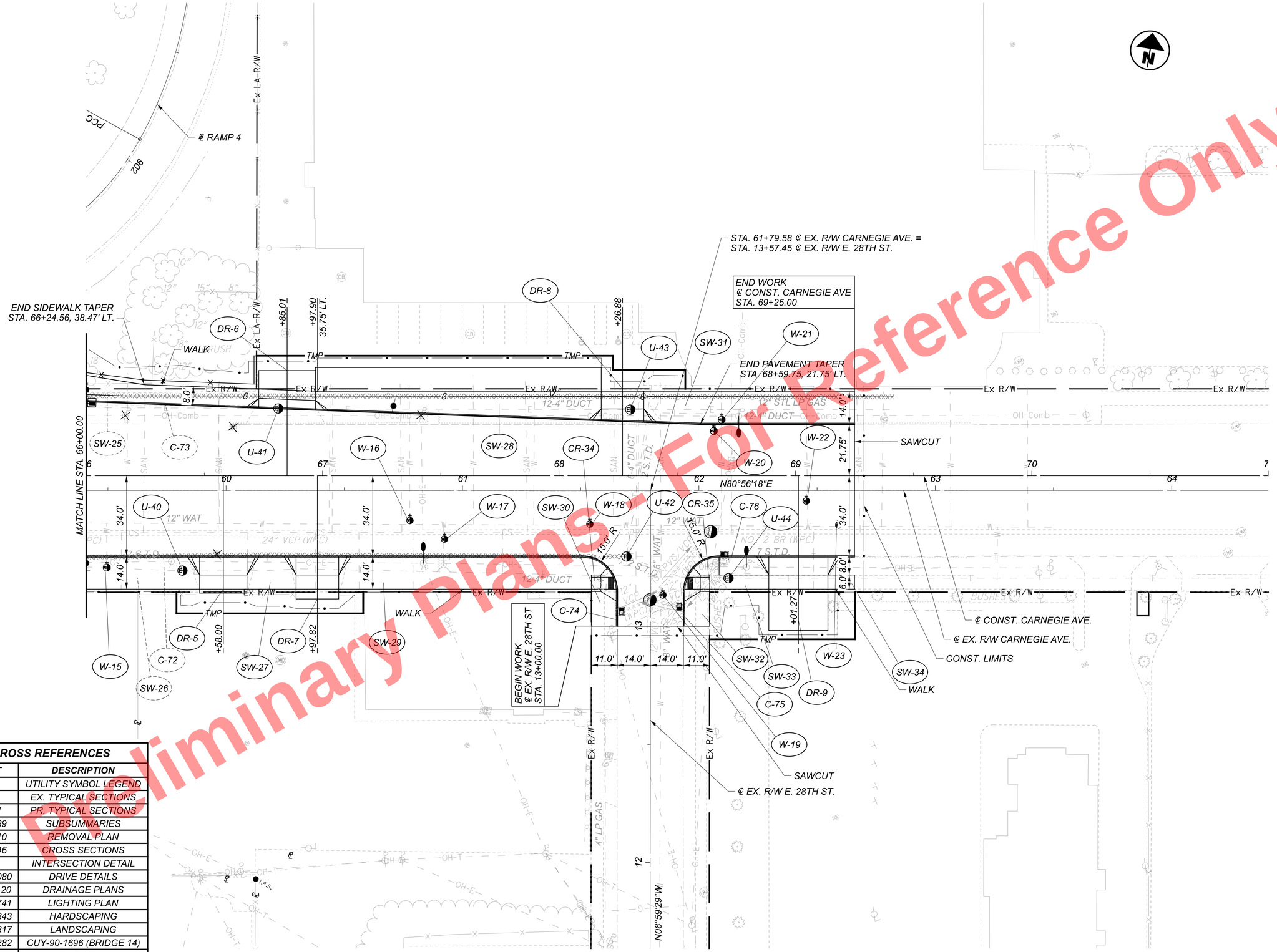

CROSS REFERENCES	
SHEET	DESCRIPTION
73	UTILITY SYMBOL LEGEND
24	EX. TYPICAL SECTIONS
60 - 61	PR. TYPICAL SECTIONS
430 - 489	SUBSUMMARIES
679 - 710	REMOVAL PLAN
932 - 946	CROSS SECTIONS
1069	INTERSECTION DETAIL
1076 - 1080	DRIVE DETAILS
1092 - 1120	DRAINAGE PLANS
1724 - 1741	LIGHTING PLAN
1840 - 1843	HARDSCAPING
1807 - 1817	LANDSCAPING
2281 - 2282	CUY-90-1696 (BRIDGE 14)
2383 - 2386	FENCE PLAN

Preliminary Plans - For Reference Only

HORIZONTAL SCALE IN FEET
0 10 20 40

PLAN - CARNEGIE AVE.
STA. 66+00.00 TO END

DESIGN AGENCY
Michael Baker INTERNATIONAL

DESIGNER KJM
REVIEWER KGJ 05/22/24
PROJECT ID 82382
SHEET 636 TOTAL 2696

CUY-90-16.28 (CCG3A)

MODEL: 82382_GP7105 PAPERSIZE: 34x22 (in.) DATE: 3/27/2025 TIME: 10:14:57 PM USER: Alexandria.Summers
pw:\\mb-us-pw.bentley.com:mb-us-pw-03\Documents\Cleveland_OH\OI_Projects\ODOT\District12\82382\400-Engineering\Roadway\Sheets\82382_GP7105.dgn

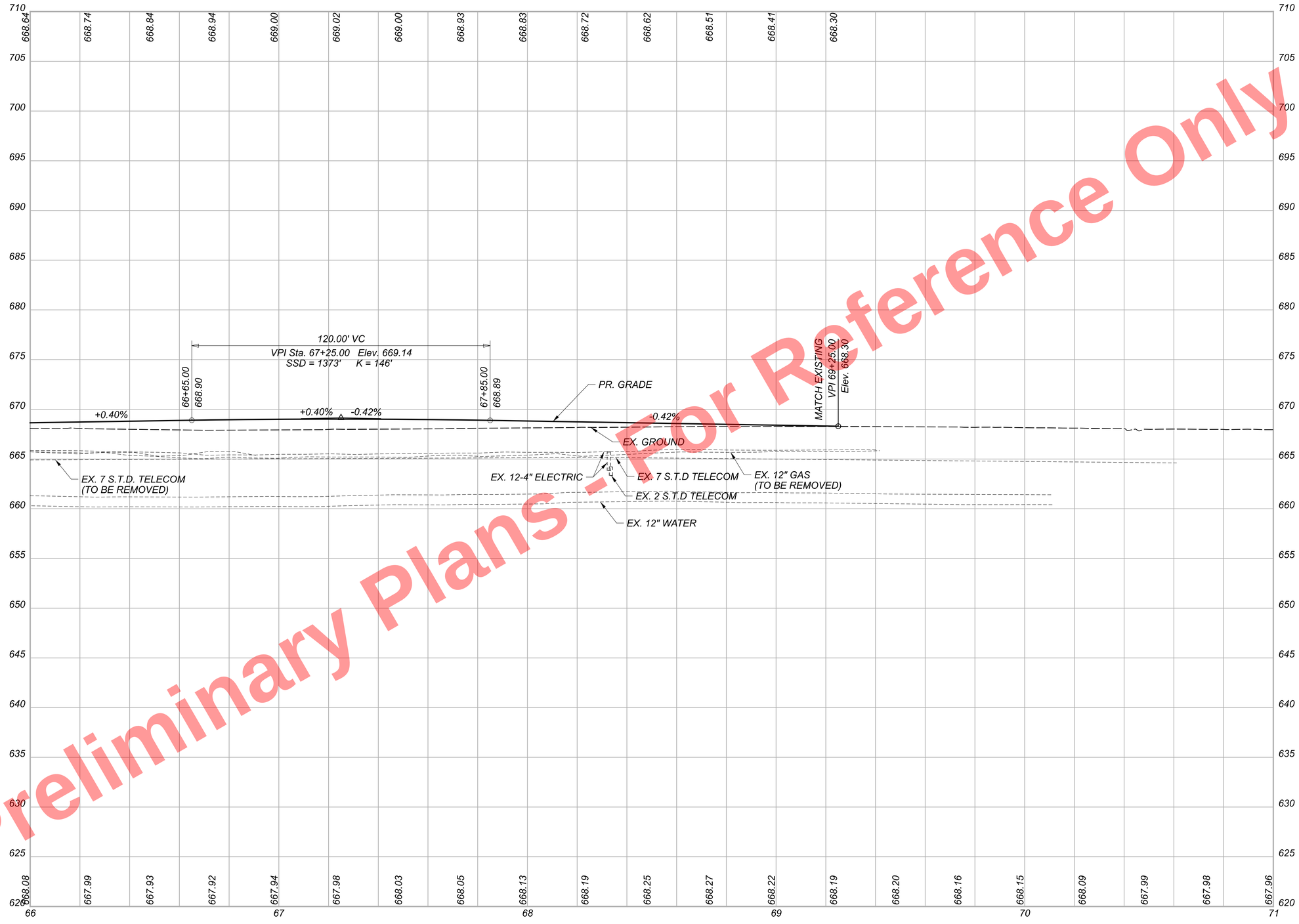

Preliminary Plans - For Reference Only

PROFILE - CARNEGIE AVE.
STA. 66+00.00 TO END

CUY-90-16.28 (CCG3A)

MODEL: 82382_GF7105 PAPERSIZE: 34x22 (in.) DATE: 3/27/2025 TIME: 10:52:21 PM USER: Alexandria.Summers
pw:\\mb-us-pw.bentley.com:mb-us-pw-03\Documents\Cleveland_OH\01_Projects\0007\District2\82382\400-Engineering\Roadway\Sheets\82382_GF7105.dgn

DESIGN AGENCY
Michael Baker INTERNATIONAL

DESIGNER
KJM

REVIEWER
KGJ 05/22/24

PROJECT ID
82382

SHEET 637 TOTAL 2696

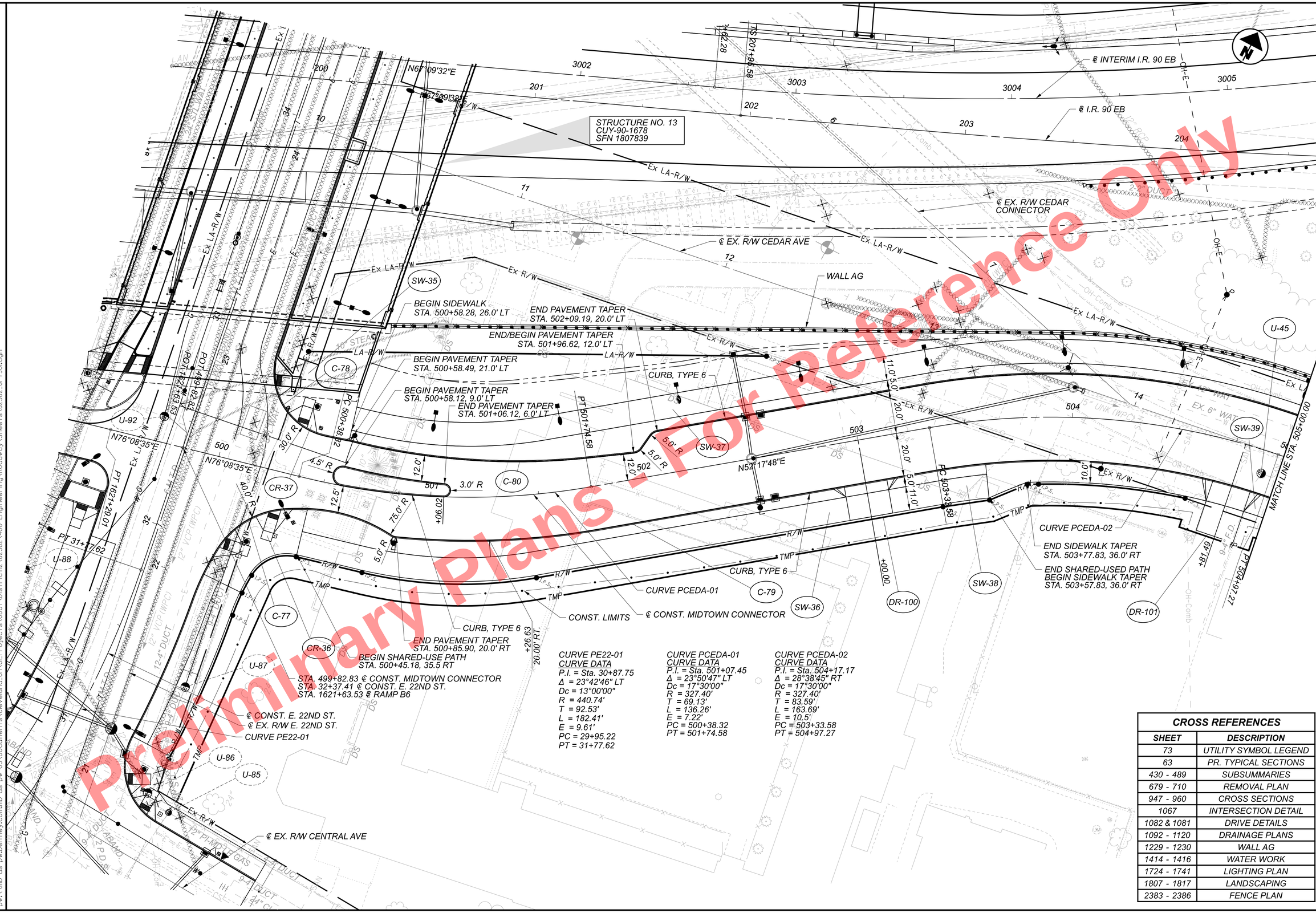

CURVE PE22-01
CURVE DATA
P.I. = Sta. 30+87.75
Δ = 23°42'46" LT
Dc = 13°00'00"
R = 440.74'
T = 92.53'
L = 182.41'
E = 9.61'
PC = 29+95.22
PT = 31+77.62

CURVE PCEDA-01
CURVE DATA
P.I. = Sta. 501+07.45
Δ = 23°50'47" LT
Dc = 17°30'00"
R = 327.40'
T = 69.13'
L = 136.26'
E = 7.22'
PC = 500+38.32
PT = 501+74.58

CURVE PCEDA-02
CURVE DATA
P.I. = Sta. 504+17.17
Δ = 28°38'45" RT
Dc = 17°30'00"
R = 327.40'
T = 83.59'
L = 163.69'
E = 10.5'
PC = 503+33.58
PT = 504+97.27

CROSS REFERENCES	
SHEET	DESCRIPTION
73	UTILITY SYMBOL LEGEND
63	PR. TYPICAL SECTIONS
430 - 489	SUBSUMMARIES
679 - 710	REMOVAL PLAN
947 - 960	CROSS SECTIONS
1067	INTERSECTION DETAIL
1082 & 1081	DRIVE DETAILS
1092 - 1120	DRAINAGE PLANS
1229 - 1230	WALL AG
1414 - 1416	WATER WORK
1724 - 1741	LIGHTING PLAN
1807 - 1817	LANDSCAPING
2383 - 2386	FENCE PLAN

Preliminary Plans - For Reference Only

HORIZONTAL SCALE IN FEET
0 10 20 40

PLAN - MIDTOWN CONNECTOR
BEGIN TO STA. 505+00.00

DESIGN AGENCY
Michael Baker INTERNATIONAL

DESIGNER KJM
REVIEWER KGJ 05/22/24
PROJECT ID 82382
SHEET 638 TOTAL 2696

CUY-90-16.28 (CCG3A)

MODEL: 82382_GP790I[Sheet] PAPERSIZE: 34x22 (in.) DATE: 3/27/2025 TIME: 10:15:31 PM USER: Alexandria.Summers
pw:\\mb-us-pw.bentley.com:mb-us-pw-03\Documents\Cleveland_OH\OI_Projects\ODOT\District12\82382\400-Engineering\Roadway\Sheets\82382_GP790I.dgn

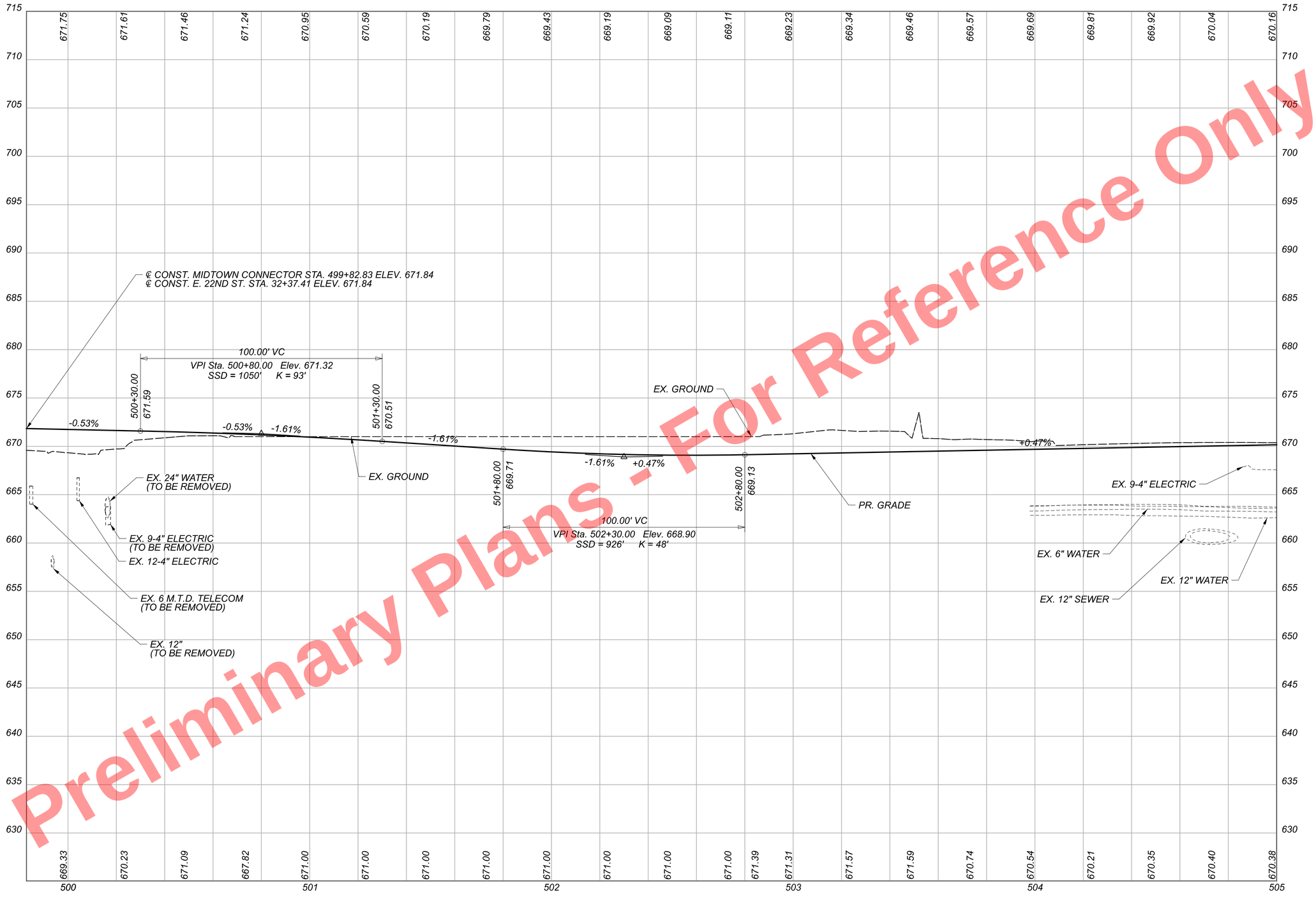

Preliminary Plans - Not For Reference Only

PROFILE - MIDTOWN CONNECTOR
BEGIN TO STA. 505+00.00

DESIGN AGENCY
Michael Baker INTERNATIONAL

DESIGNER
KJM

REVIEWER
KGJ 05/22/24

PROJECT ID
82382

SHEET 639 TOTAL 2696

CUY-90-16.28 (CCG3A)

MODEL: 82382_GF790I PAPERSIZE: 34x22 (In) DATE: 3/27/2025 TIME: 03:59 PM USER: AlexandriaSummers
pw:\\mb-us-pw.bentley.com:mb-us-pw-03\Documents\Cleveland_OH\01_Projects\00T\Distrtc#12\82382\400-Engineering\Roadway\Sheets\82382_GF790I.dgn

Preliminary Plans - For Reference Only

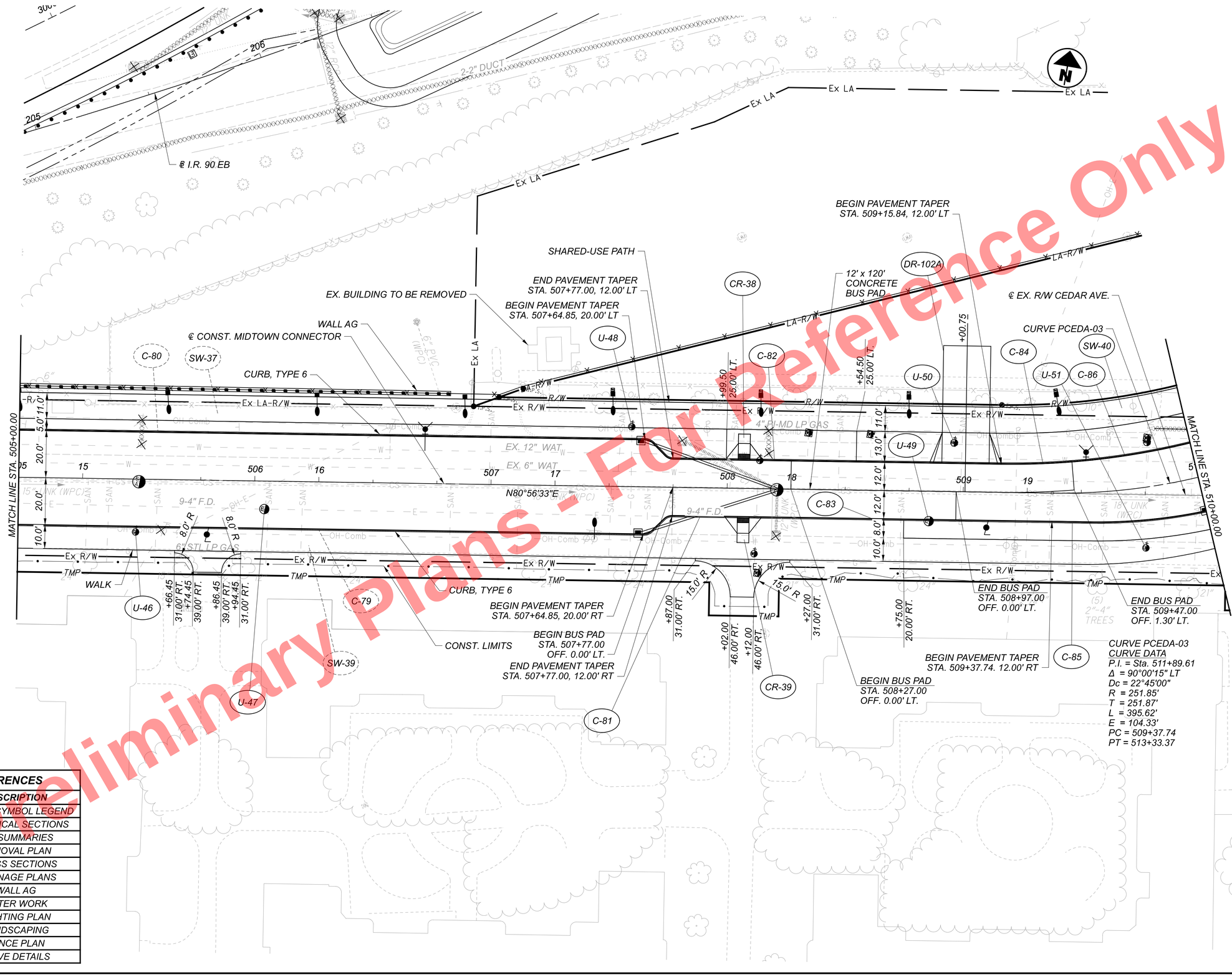

CROSS REFERENCES	
SHEET	**DESCRIPTION**
73	UTILITY SYMBOL LEGEND
63	PR. TYPICAL SECTIONS
430 - 489	SUBSUMMARIES
679 - 710	REMOVAL PLAN
947 - 960	CROSS SECTIONS
1092 - 1120	DRAINAGE PLANS
1229 - 1230	WALL AG
1414 - 1416	WATER WORK
1724 - 1741	LIGHTING PLAN
1807 - 1817	LANDSCAPING
2383 - 2386	FENCE PLAN
1083	DRIVE DETAILS

HORIZONTAL SCALE IN FEET
0 10 20 40

PLAN - MIDTOWN CONNECTOR
STA. 505+00.00 to STA. 510+00.00

CUY-90-16.28 (CCG3A)

MODEL: 82382_GP7902 PAPERSIZE: 34x22 (in.) DATE: 3/27/2025 TIME: 10:16:11 PM USER: Alexandria.Summers
pw:\\mb-us-pw.bentley.com:mb-us-pw-03\Documents\Cleveland_OH\01_Projects\ODOT\District 12\82382\400-Engineering\Roadway\Sheets\82382_GP7902.dgn

DESIGN AGENCY
Michael Baker INTERNATIONAL

DESIGNER KJM
REVIEWER KGJ 05/22/24
PROJECT ID 82382
SHEET 640 TOTAL 2696

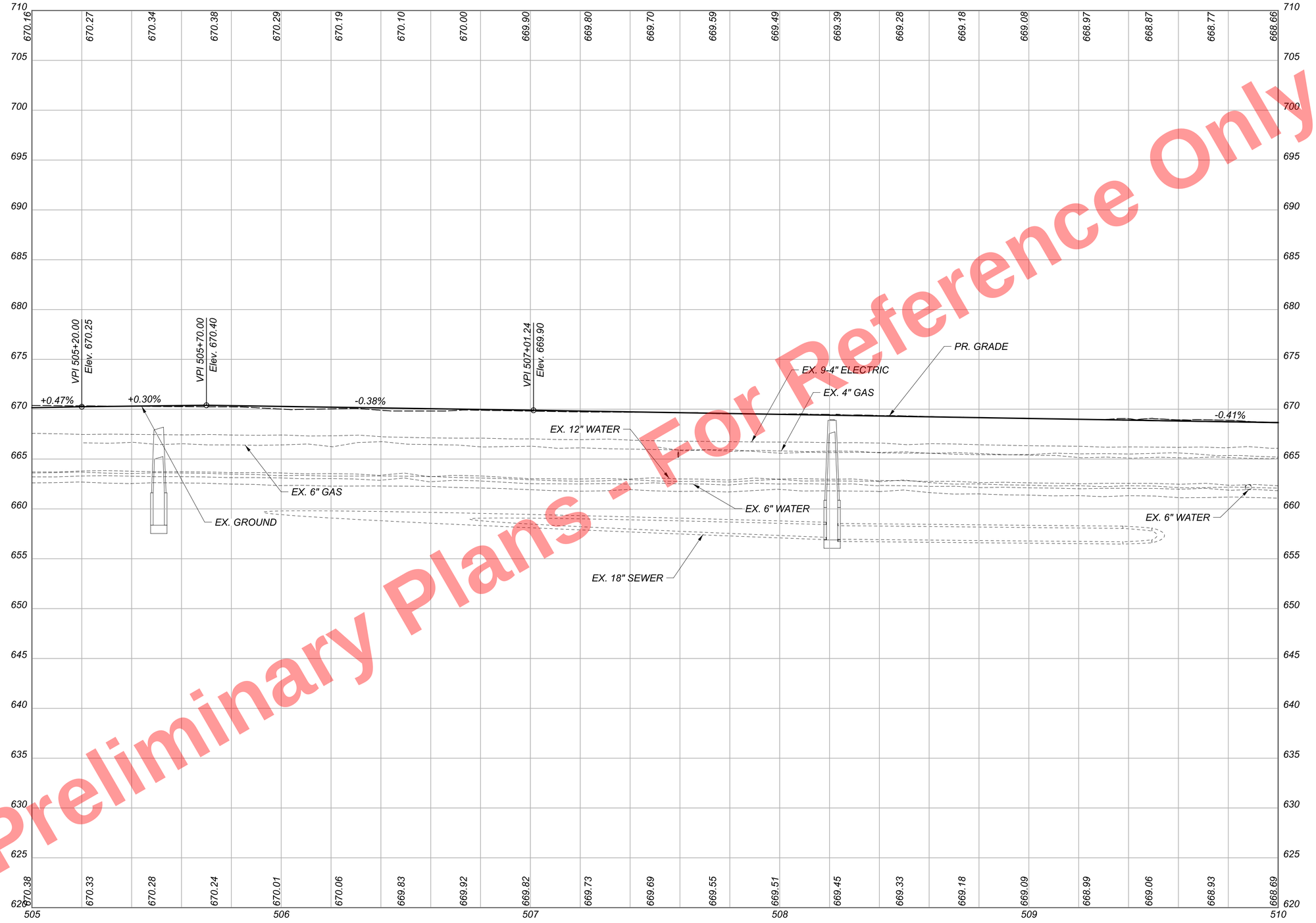

Preliminary Plans - Not For Reference Only

CUY-90-16.28 (CCG3A)

MODEL: 82382_GF7902 PAPERSIZE: 34x22 (in.) DATE: 3/27/2025 TIME: 10:16:37 PM USER: Alexandria.Summers
pw:\\mb-us-pw.bentley.com:mb-us-pw-03\Documents\Cleveland_OH\01_Projects\ODOT\District2\82382\400-Engineering\Roadway\Sheets\82382_GF7902.dgn

PROFILE - MIDTOWN CONNECTOR
STA. 505+00.00 TO STA. 510+00.00

DESIGN AGENCY
Michael Baker INTERNATIONAL

DESIGNER
KJM

REVIEWER
KGJ 05/22/24

PROJECT ID
82382

SHEET 641 TOTAL 2696

CROSS REFERENCES	
SHEET	DESCRIPTION
73	UTILITY SYMBOL LEGEND
63	PR. TYPICAL SECTIONS
430 - 489	SUBSUMMARIES
679 - 710	REMOVAL PLAN
947 - 960	CROSS SECTIONS
1059 & 1064	INTERSECTION DETAIL
1092 - 1120	DRAINAGE PLANS
1414 - 1416	WATER WORK
1659	TRAFFIC SIGNAL PLAN
1724 - 1741	LIGHTING PLAN
1807 - 1817	LANDSCAPING
2383 - 2386	FENCE PLAN

STRUCTURE NO. 14
CUY-90-1696
SFN 1807898

HORIZONTAL SCALE IN FEET
0 10 20 40

END PAVEMENT TAPER
STA. 510+06.30, 15.0' LT

MATCH LINE STA. 510+00.00

STA. 511+29.95 ℄ CONST. MIDTOWN CONNECTOR
STA. 400+00.00 ℄ CONST. CEDAR AVE

STA. 514+45.17 ℄ CONST. MIDTOWN CONNECTOR
STA. 65+04.00 ℄ CONST. CARNEGIE AVE.

END SHARED USE PATH
STA. 513+61.17, 39.0' LT

EX. BUILIDNG TO BE REMOVED
(BY OTHERS)

℄ CONST. MIDTOWN CONNECTOR

CURVE PCEDA-03

CURB, TYPE 6

PI 513+33.36

N09°03'42"W

WALL AI

END PAVEMENT TAPER
STA. 510+30.00, 15.0' RT

℄ EX. R/W CEDAR AVE.

℄ CONST. CEDAR AVE.

CURVE PJJC-01

WALK

CURB, TYPE 6

CONST. LIMITS

℄ CONST. CARNEGIE AVE.

℄ EX. R/W CARNEGIE AVE.

U-36 U-52 U-53 U-54 U-37 U-38 U-39 U-40 U-41

C-85 C-86 C-87 C-88 C-89

CR-40 CR-41 CR-42 CR-43

SW-39 SW-40 SW-41

CURVE PCEDA-03
CURVE DATA
P.I. = Sta. 511+89.61
Δ = 90°00'15" LT
Dc = 22°45'00"
R = 251.85'
T = 251.87'
L = 395.62'
E = 104.33'
PC = 509+37.74
PT = 513+33.37

CURVE PJJC-01
CURVE DATA
P.I. = Sta. 400+96.67
Δ = 46°16'18" LT
Dc = 29°00'00"
R = 197.57'
T = 84.42'
L = 159.56'
E = 17.28'
PC = 400+12.25
PT = 401+71.81

Preliminary Plans - For Reference Only

PLAN - MIDTOWN CONNECTOR
STA. 510+00.00 TO END

DESIGN AGENCY
Michael Baker INTERNATIONAL

DESIGNER KJM
REVIEWER KGJ 05/22/24
PROJECT ID 82382
SHEET 642 TOTAL 2696

CUY-90-16.28 (CCG3A)

MODEL: 82382_GP7903 PAPERSIZE: 34x22 (in.) DATE: 3/27/2025 TIME: 10:16:47 PM USER: Alexandria.Summers
pw:\\mb-us-pw.bentley.com\mb-us-pw-03\Documents\Cleveland_OH\01_Projects\0007\District2\82382\400-Engineering\Roadway\Sheets\82382_GP7903.dgn

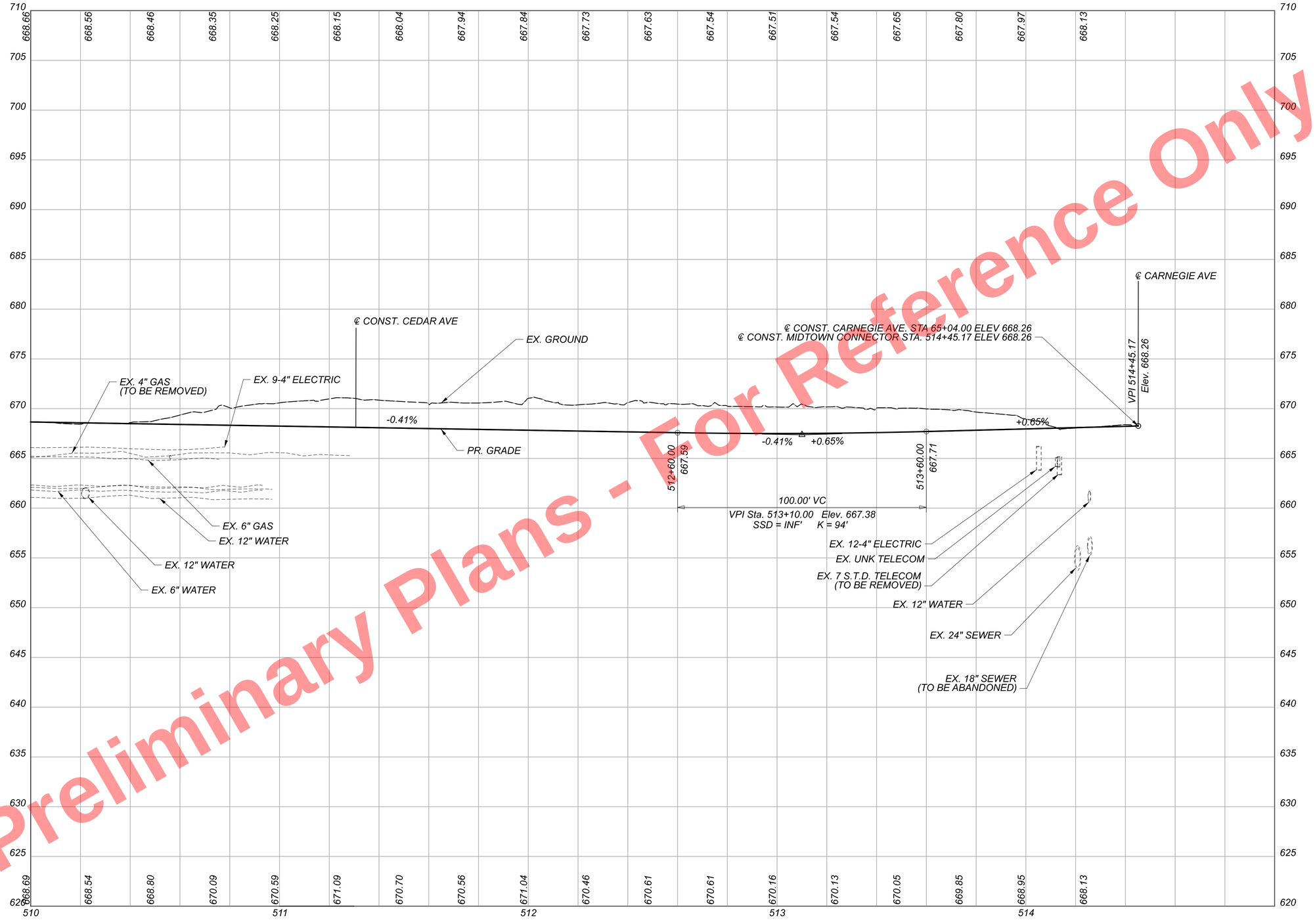

Preliminary Plans - For Reference Only

PROFILE - MIDTOWN CONNECTOR
STA. 510+00.00 TO END

CUY-90-16.28 (CCG3A)

MODEL: 82382_GF7903 PAPERSIZE: 34x22 (in.) DATE: 3/27/2025 TIME: 10:17:16 PM USER: AlexandriaSummers
pw:\\mb-us-pw.bentley.commb-us-pw-03\Documents\Cleveland_OH\01_Projects\ODOT\District2\82382\400-Engineering\Roadway\Sheets\82382_GF7903.dgn

DESIGN AGENCY
Michael Baker INTERNATIONAL

DESIGNER
KJM

REVIEWER
KGJ 05/22/24

PROJECT ID
82382

SHEET 643 TOTAL 2696

CROSS REFERENCES	
SHEET	DESCRIPTION
73	UTILITY SYMBOL LEGEND
25	EX. TYPICAL SECTIONS
25	PR. TYPICAL SECTIONS
430 - 489	SUBSUMMARIES
679 - 710	REMOVAL PLAN
961 - 962	CROSS SECTIONS
1064	INTERSECTION DETAIL
1086	DRIVE DETAILS
1092 - 1120	DRAINAGE PLANS
1416	WATER WORK
1724 - 1741	LIGHTING PLAN
1807 - 1817	LANDSCAPING
2383 - 2386	FENCE PLAN

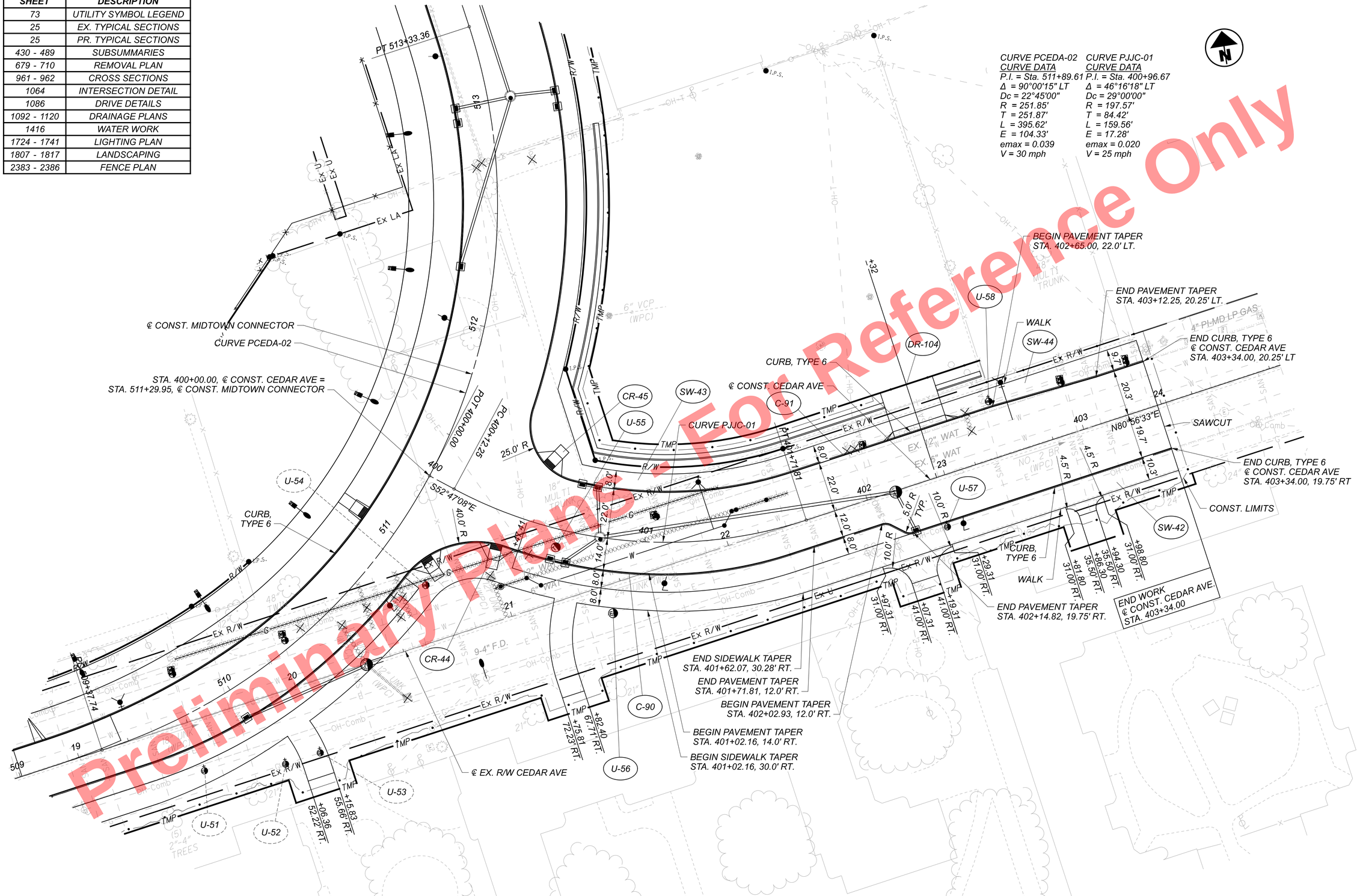

HORIZONTAL SCALE IN FEET
0 10 20 40

PLAN - CEDAR AVE. STA. 400+00.00 TO END

CUY-90-16.28 (CCG3A)

MODEL: 82382_GP79II PAPERSIZE: 34x22 (in.) DATE: 3/27/2025 TIME: 10:17:27 PM USER: Alexandria.Summers
pw:\\mb-us-pw.bentley.com:mb-us-pw-03\Documents\Cleveland_OH\01_Projects\0DOT\District2\82382\400-Engineering\Roadway\Sheets\82382_GP79II.dgn

DESIGN AGENCY	Michael Baker INTERNATIONAL
DESIGNER	KJM
REVIEWER	KGJ 05/22/24
PROJECT ID	82382
SHEET	644
TOTAL	2696

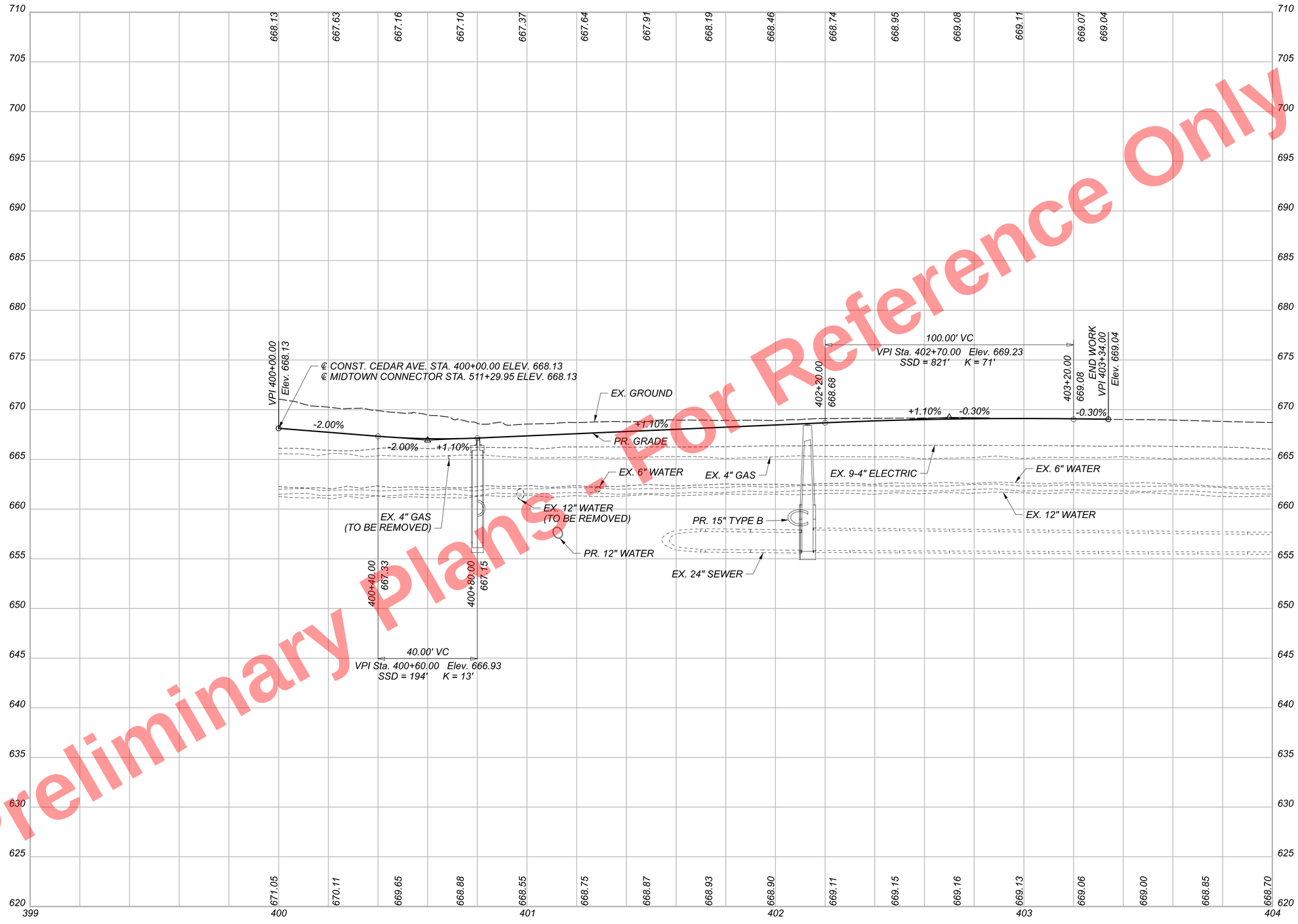

Preliminary Plans - For Reference Only

PROFILE - CEDAR AVE.
STA. 400+00.00 TO END

CUY-90-16.28 (CCG3A)

MODEL: 82382_GF79II PAPERSIZE: 34x22 (In.) DATE: 3/27/2025 TIME: 10:17:45 PM USER: Alexandria.Summers
pw:\\mb-us-pw.bentley.com:mb-us-pw-03\Documents\Cleveland_OH\01_Projects\ODOT\District2\82382\400-Engineering\Roadway\Sheets\82382_GF79II.dgn

DESIGN AGENCY
Michael Baker INTERNATIONAL

DESIGNER
KJM

REVIEWER
KGJ 05/22/24

PROJECT ID
82382

SHEET 645 | TOTAL 2696

CROSS REFERENCES	
SHEET	DESCRIPTION
73	UTILITY SYMBOL LEGEND
27	EX. TYPICAL SECTIONS
64	PR. TYPICAL SECTIONS
430 - 489	SUBSUMMARIES
679 - 710	REMOVAL PLAN
963 - 967	CROSS SECTIONS
1092 - 1120	DRAINAGE PLANS
1366	COMBINED SEWER
1724 - 1741	LIGHTING PLAN
1807 - 1817	LANDSCAPING
1869 - 1873	CUY-77-1587 (BRIDGE 9)

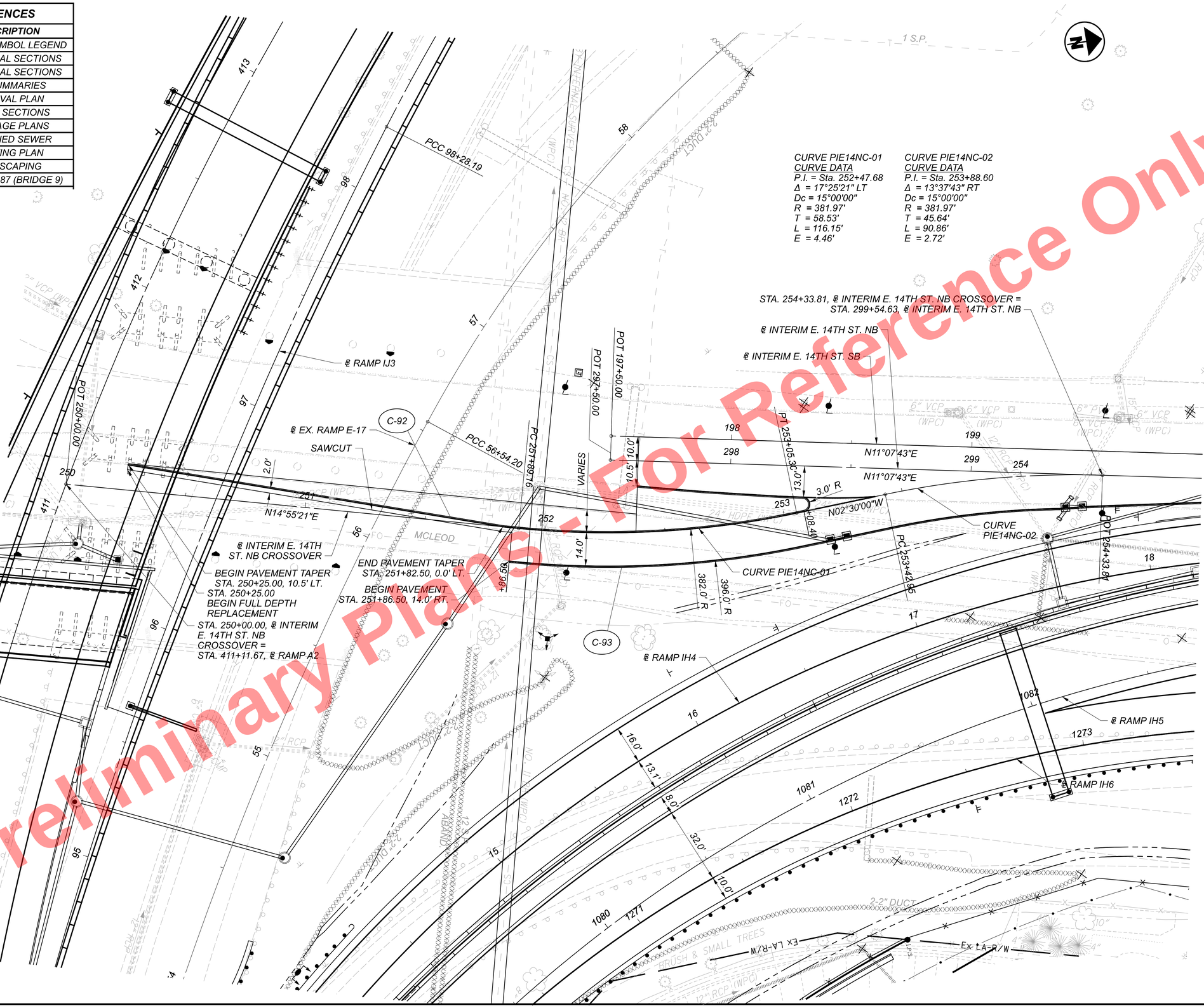

HORIZONTAL SCALE IN FEET
0 10 20 40

PLAN - E. 14TH ST. NB CROSSOVER BEGIN TO END

DESIGN AGENCY	Michael Baker INTERNATIONAL
DESIGNER	KJM
REVIEWER	KGJ 05/22/24
PROJECT ID	82382
SHEET	646
TOTAL	2696

CUY-90-16.28 (CCG3A)

MODEL: 82382_GP727I PAPERSIZE: 34x22 (in.) DATE: 3/27/2025 TIME: 10:17:56 PM USER: Alexandria.Summers
pw:\\mb-us-pw.bentley.com:mb-us-pw-03\Documents\Cleveland_OH\01_Projects\ODOT\District2\82382\400-Engineering\Roadway\Sheets\82382_GP727I.dgn

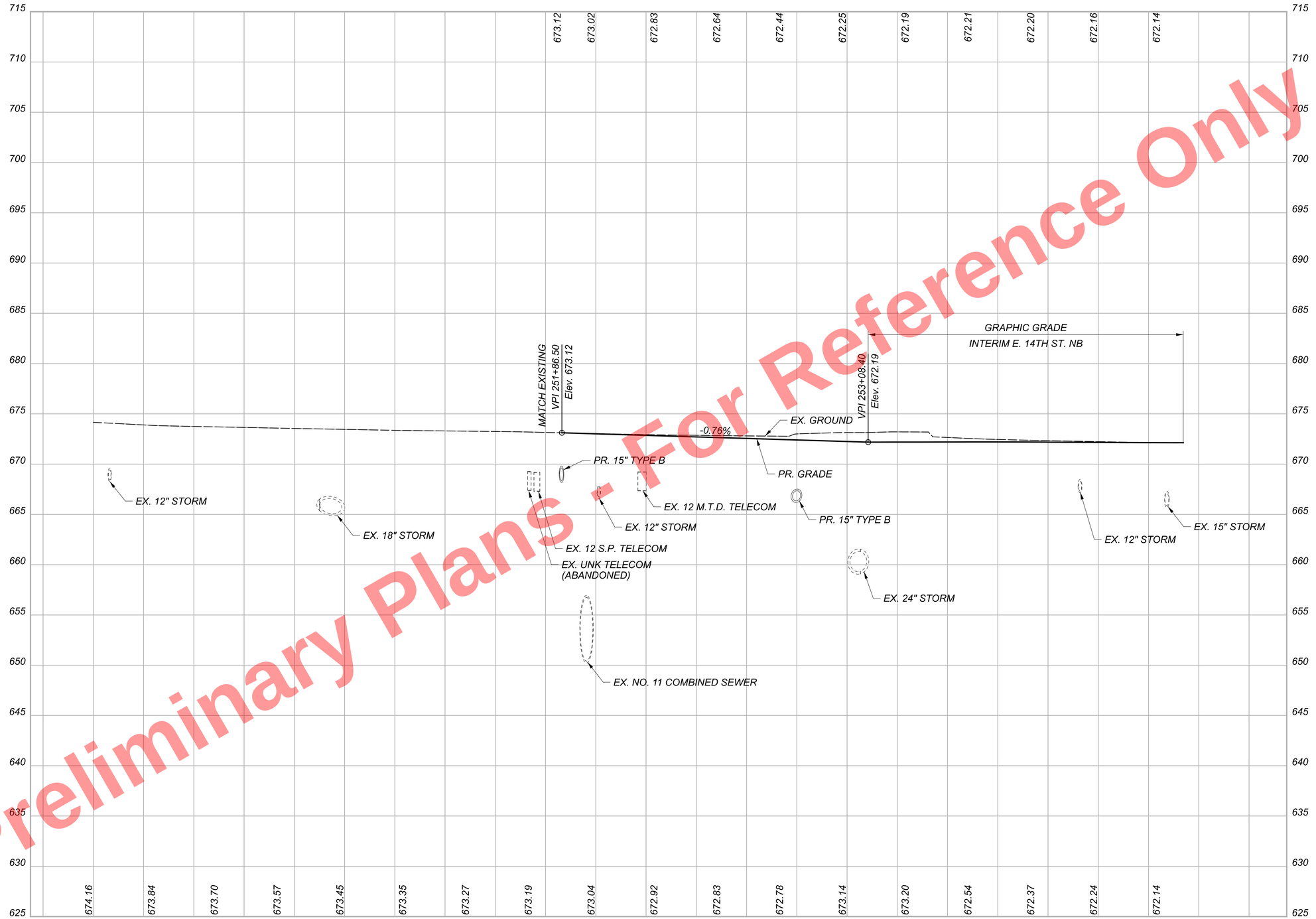

Preliminary Plans - Not For Reference Only

CUY-90-16.28 (CCG3A)

MODEL: 82382_GF727I PAPERSIZE: 34x22 (in.) DATE: 3/27/2025 TIME: 10:18:17 PM USER: Alexandria.Summers
pw:\\mb-us-pw.bentley.com:mb-us-pw-03\Documents\Cleveland_OH\OIL_Projects\ODOT\District2\82382\400-Engineering\Roadway\Sheets\82382_GF727I.dgn

PROFILE - E. 14TH ST. NB CROSSOVER
BEGIN TO END

DESIGN AGENCY
Michael Baker INTERNATIONAL

DESIGNER
KJM

REVIEWER
KGJ 05/22/24

PROJECT ID
82382

SHEET 647 TOTAL 2696

CROSS REFERENCES	
SHEET	DESCRIPTION
73	UTILITY SYMBOL LEGEND
27	EX. TYPICAL SECTIONS
65	PR. TYPICAL SECTIONS
430 - 489	SUBSUMMARIES
679 - 710	REMOVAL PLAN
968 - 987	CROSS SECTIONS
1058	RAMP TERMINAL DETAIL
1092 - 1120	DRAINAGE PLANS
1296 - 1298	WALL T
1724 - 1741	LIGHTING PLAN
1807 - 1817	LANDSCAPING
2383 - 2386	FENCE PLAN

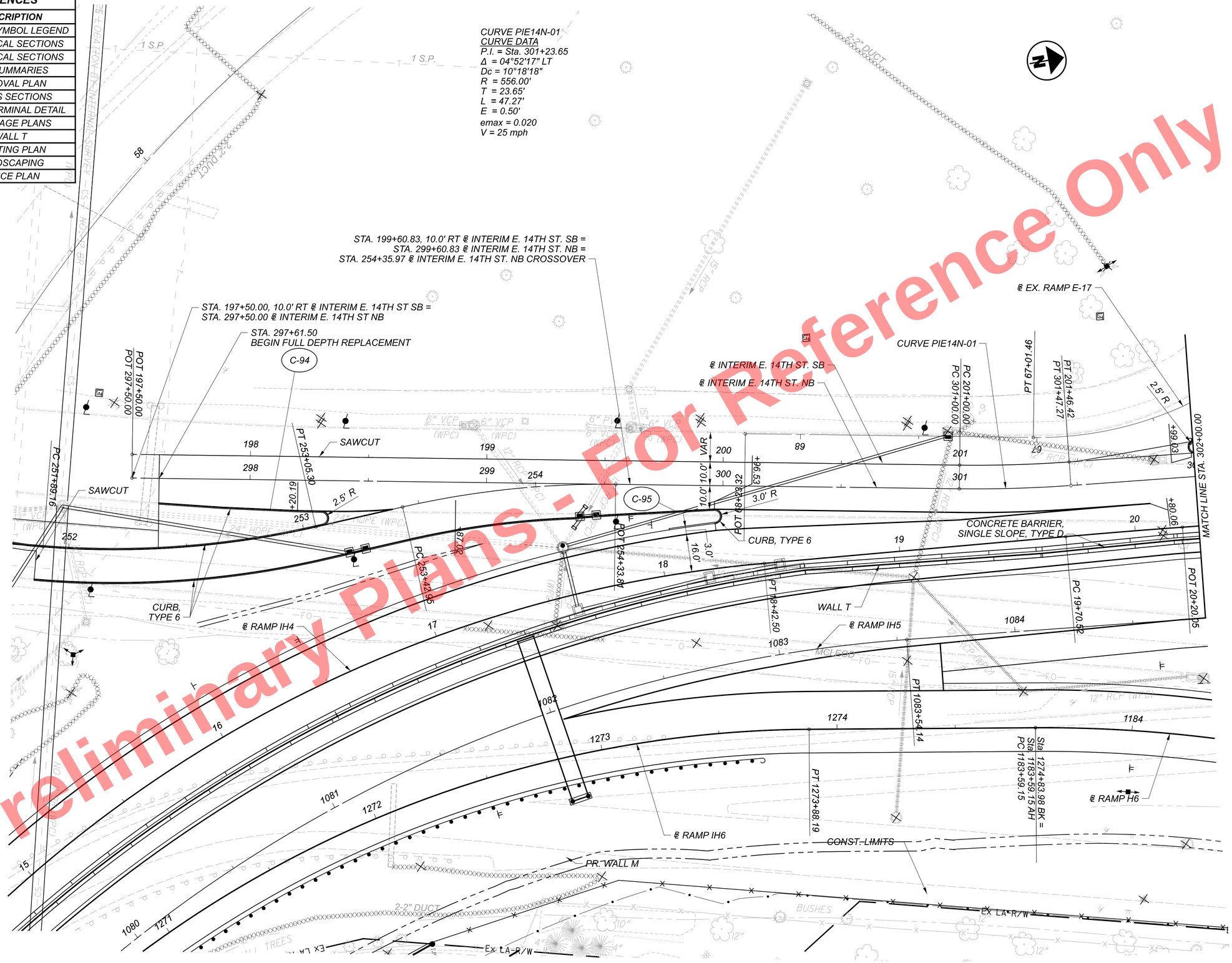

Preliminary Plans - For Reference Only

HORIZONTAL SCALE IN FEET
0 10 20 40

PLAN - INTERIM E. 14TH ST. NB
BEGIN TO STA. 302+00.00

DESIGN AGENCY	Michael Baker INTERNATIONAL
DESIGNER	KJM
REVIEWER	KGJ 05/22/24
PROJECT ID	82382
SHEET	648
TOTAL	2696

CUY-90-16.28 (CCG3A)

MODEL: 82382_GP722I PAPERSIZE: 34x22 (in.) DATE: 3/27/2025 TIME: 10:18:29 PM USER: Alexandria.Summers
pw:\\mb-us-pw.bentley.com:mb-us-pw-03\Documents\Cleveland_OH\01_Projects\ODOT\District2\82382\400-Engineering\Roadway\Sheets\82382_GP722I.dgn

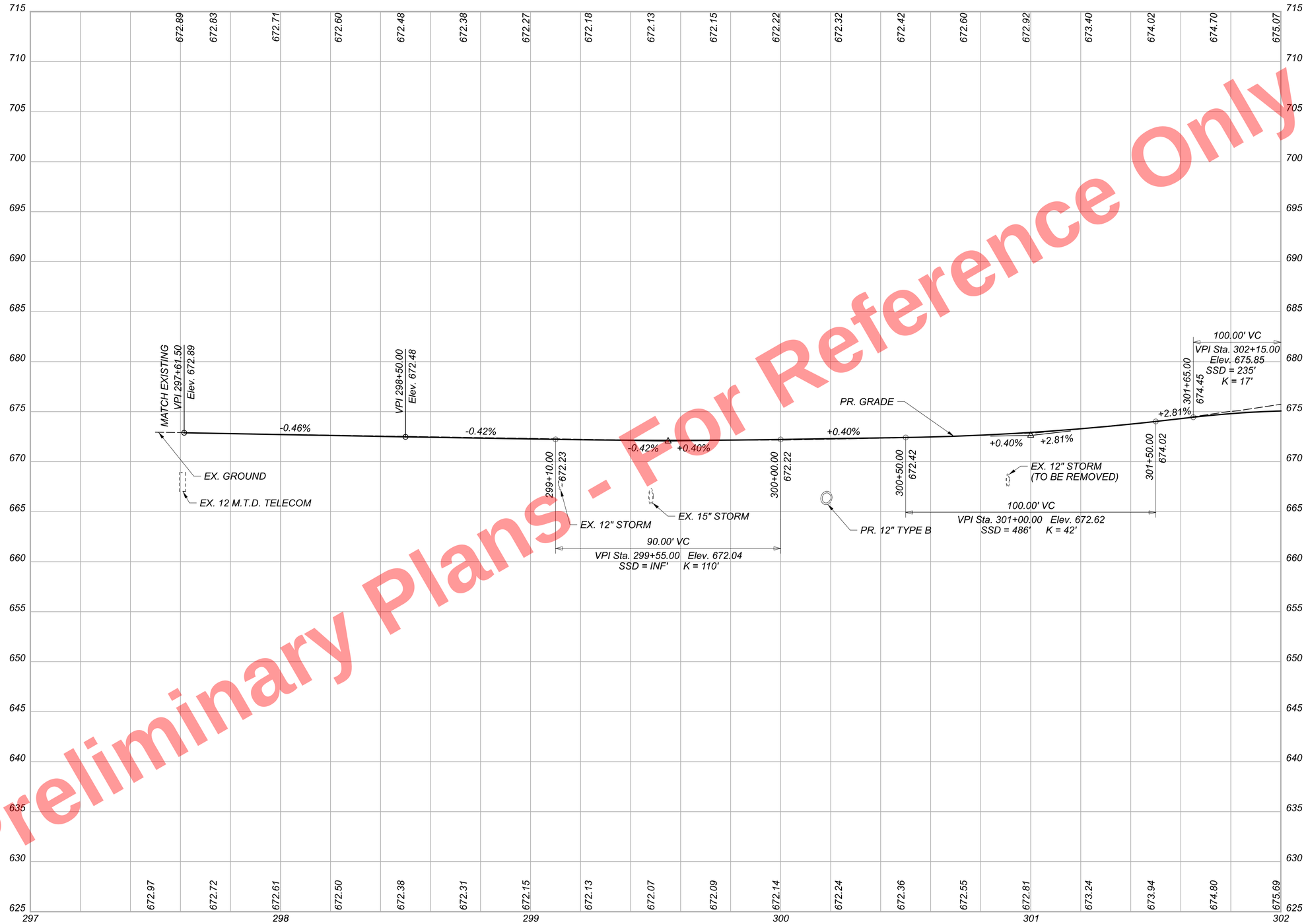

Preliminary Plans - For Reference Only

PROFILE - INTERIM E. 14TH ST. NB
BEGIN TO STA. 302+00.00

CUY-90-16.28 (CCG3A)

MODEL: 82382_GF722I PAPERSIZE: 34x22 (in.) DATE: 3/27/2025 TIME: 10:18:39 PM USER: Alexandria.Summers
pw:\\mb-us-pw.bentley.com\mb-us-pw-03\Documents\Cleveland.OHIO_Projects\ODOT\District2\82382\400-Engineering\Roadway\Sheets\82382_GF722I.dgn

DESIGN AGENCY
Michael Baker INTERNATIONAL

DESIGNER KJM
REVIEWER KGJ 05/22/24
PROJECT ID 82382
SHEET 649 TOTAL 2696

CROSS REFERENCES	
SHEET	DESCRIPTION
73	UTILITY SYMBOL LEGEND
27	EX. TYPICAL SECTIONS
65	PR. TYPICAL SECTIONS
430 - 489	SUBSUMMARIES
679 - 710	REMOVAL PLAN
968 - 987	CROSS SECTIONS
1092 - 1120	DRAINAGE PLANS
1296 - 1298	WALL T
1724 - 1741	LIGHTING PLAN
1807 - 1817	LANDSCAPING
2383 - 2386	FENCE PLAN

CURVE PIE14N-02
CURVE DATA
P.I. = Sta. 53+48.32
Δ = 41°09'46"
Dc = 12°00'00"
R = 477.46'
T = 179.29'
L = 343.02'
E = 32.55'
emax = 0.020
V = 25 mph

CURVE PIE14N-03
CURVE DATA
P.I. = Sta. 53+48.32
Δ = 41°09'46"
Dc = 12°00'00"
R = 477.46'
T = 179.29'
L = 343.02'
E = 32.55'
emax = 0.020
V = 25 mph

CURVE PE14N-01
CURVE DATA
P.I. = Sta. 53+48.32
Δ = 41°09'46" LT
Dc = 12°00'00"
R = 477.46'
T = 179.29'
L = 343.02'
E = 32.55'
emax = 0.02
V = 30 mph

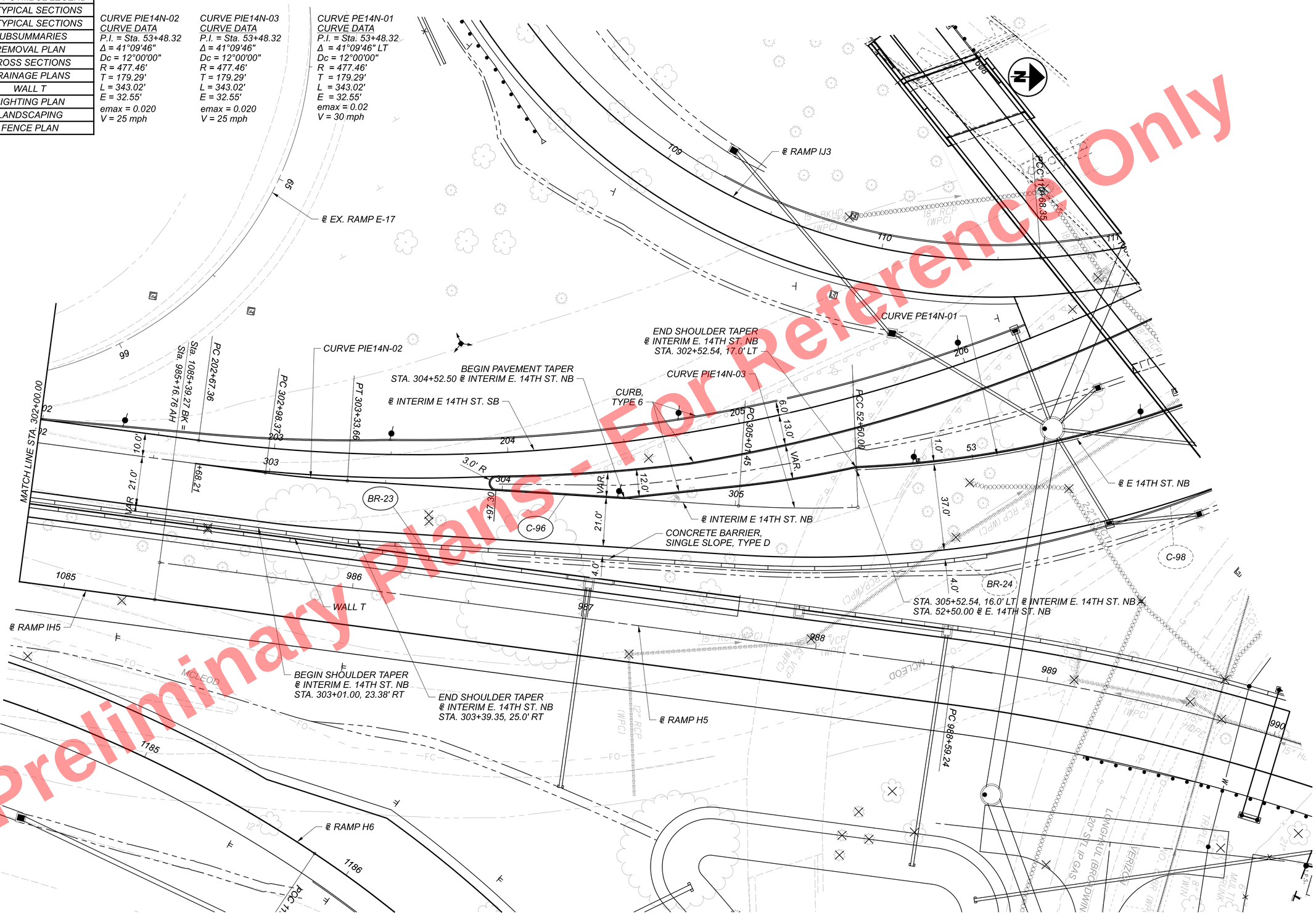

Preliminary Plans - For Reference Only

HORIZONTAL SCALE IN FEET
0 10 20 40

PLAN - INTERIM E. 14TH ST. NB
STA. 302+00.00 TO END

CUY-90-16.28 (CCG3A)

MODEL: 82382_GP7222 PAPERSIZE: 34x22 (in.) DATE: 6/9/2025 TIME: 10:03:35 PM USER: Julie.Ross
pw:\\mb-us-pw.bentley.com:mb-us-pw-03\Documents\Cleveland_OHIO_Projects\0007\District2\82382\400-Engineering\Roadway\Sheets\82382_GP7222.dgn

DESIGN AGENCY	Michael Baker INTERNATIONAL
DESIGNER	KJM
REVIEWER	KGJ 05/22/24
PROJECT ID	82382
SHEET	650
TOTAL	2696

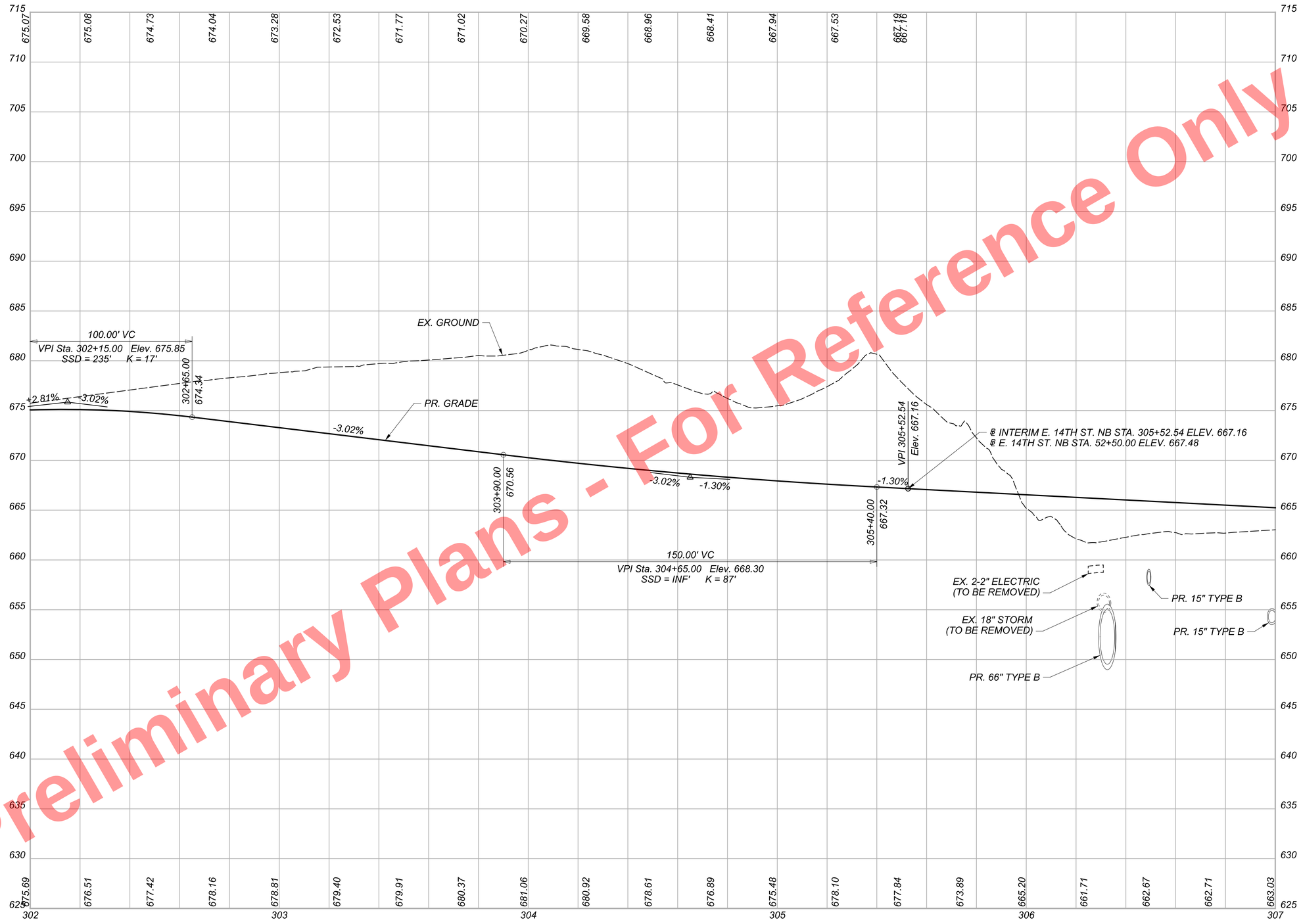

Preliminary Plans - Not For Reference Only

PROFILE - INTERIM E. 14TH ST. NB
STA. 302+00.00 TO END

CUY-90-16.28 (CCG3A)

MODEL: 82382_GF7222 PAPERSIZE: 34x22 (in.) DATE: 3/27/2025 TIME: 10:39:06 PM USER: Alexandria.Summers
pw:\\mb-us-pw.bentley.com:mb-us-pw-03\Documents\Cleveland.OH\OI_Projects\ODOT\District2\82382\400-Engineering\Roadway\Sheets\82382_GF7222.dgn

DESIGN AGENCY
Michael Baker INTERNATIONAL

DESIGNER KJM
REVIEWER KGJ 05/22/24
PROJECT ID 82382
SHEET 651 TOTAL 2696

CROSS REFERENCES	
SHEET	DESCRIPTION
73	UTILITY SYMBOL LEGEND
27	EX. TYPICAL SECTIONS
67 69	PR. TYPICAL SECTIONS
430 - 489	SUBSUMMARIES
679 - 710	REMOVAL PLAN
968 - 987	CROSS SECTIONS
1092 - 1120	DRAINAGE PLANS
1401 - 1404	WATER WORK
1724 - 1741	LIGHTING PLAN
1807 - 1817	LANDSCAPING
2129 2130	CUY-90-1652S (BRIDGE 12)
2383 - 2386	FENCE PLAN

CURVE PE14N-01
CURVE DATA
P.I. = Sta. 53+84.42
Δ = 31°26'49" LT
Dc = 12°00'00"
R = 477.46'
T = 134.42'
L = 262.06'
E = 18.56'
emax = 0.020
V = 25 mph

℄ RAMP IJ3

STRUCTURE NO. 12
CUY-90-1652S
SFN 1807806

℄ EX. I.R. 90

PC 144+68.35

PT 201+39.17

MATCH LINE STA. 55+00.00

POT 50+00.00

PC 302+88.37

PT 303+33.66

℄ INTERIM E. 14TH ST. SB

N06°11'23"E

STA. 305+52.54, 16.0' LT. ℄ INTERIM E. 14TH ST. NB =
STA. 52+50.00 ℄ E. 14TH ST. NB

PC 51+69.63

PC 305+01.45

ACC 52+50.00

℄ E. 14TH ST. NB

CURB, TYPE 6

53

C-97

C-98

U-59

CURVE PE14N-01

END SHOULDER TAPER
℄ E. 14TH ST. NB
STA. 54+00.00, 37.0' RT

N02°24'22"E

℄ INTERIM E. 14TH ST. NB

21.0'

BR-23

CONCRETE BARRIER,
SINGLE SLOPE TYPE D

16.0'

1.0'

21.0'

4.0'

WALL T

N06°15'27"E

BR-24

CURB, TYPE 6

END CONCRETE BARRIER
SINGLE SLOPE, TYPE D
BEGIN SHOULDER TAPER
BEGIN CURB, TYPE 6
℄ E. 14TH ST. NB
STA. 53+00.00, 41.0' RT

℄ RAMP B6

℄ RAMP H5

PC 988+59.24

N50°45'37"E

Preliminary Plans - For Reference Only

HORIZONTAL
SCALE IN FEET
0 10 20 40

PLAN - E. 14TH ST. NB
BEGIN TO STA. 55+00.00

DESIGN AGENCY
Michael Baker INTERNATIONAL

DESIGNER KJM
REVIEWER KGJ 05/22/24
PROJECT ID 82382
SHEET 652 TOTAL 2696

CUY-90-16.28 (CCG3A)

MODEL: 82382_GP724l PAPERSIZE: 34x22 (in.) DATE: 6/9/2025 TIME: 10:03:56 PM USER: Julie.Ross
pw:\\mb-us-pw.bentley.com:mb-us-pw-03\Documents\Cleveland_OH\01_Projects\ODOT\District12\82382\400-Engineering\Roadway\Sheets\82382_GP724l.dgn

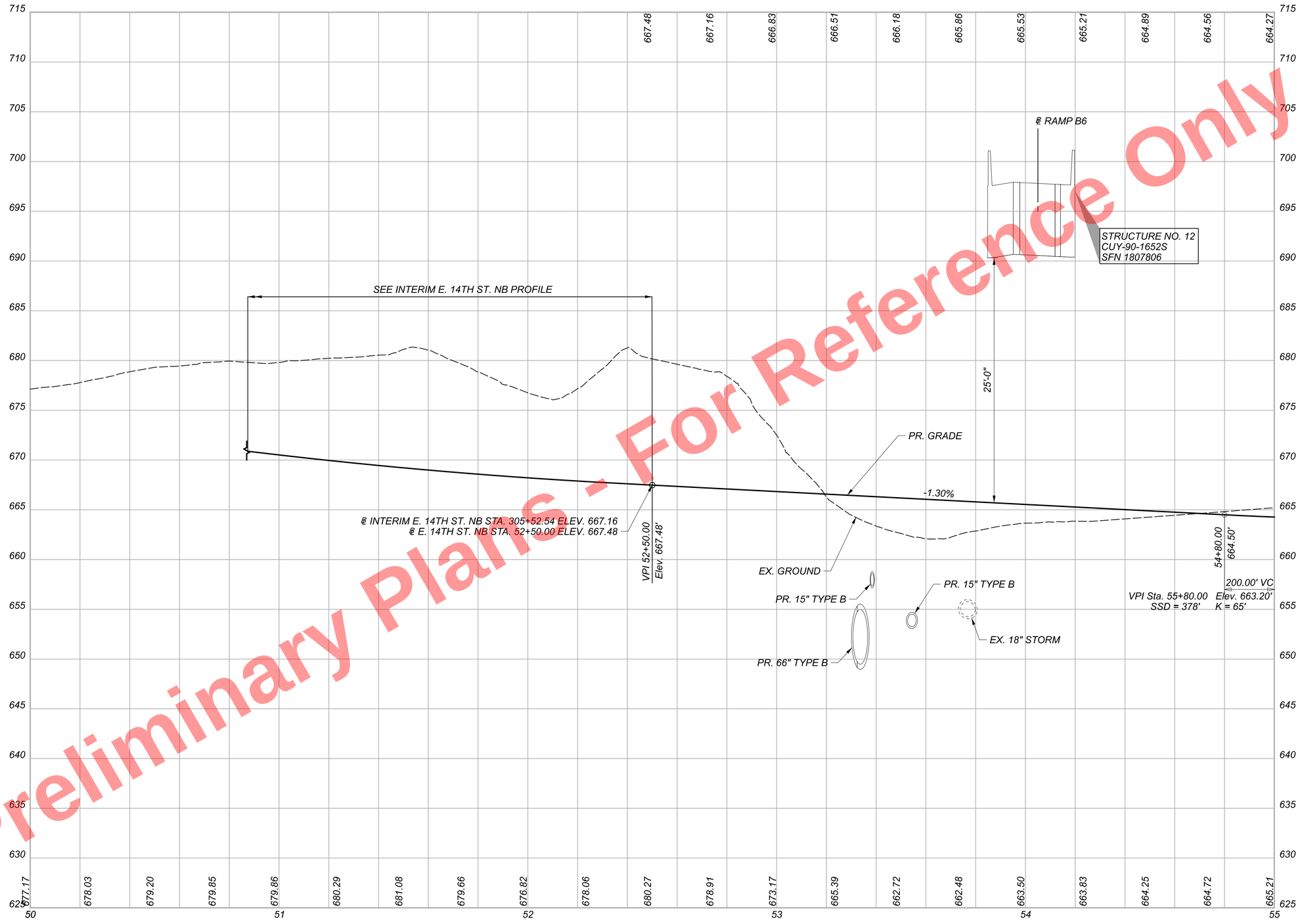

Preliminary Plans - For Reference Only

PROFILE - E. 14TH ST. NB
BEGIN TO STA. 55+00.00

CUY-90-16.28 (CCG3A)

MODEL: 82382_GF724I PAPERSIZE: 34x22 (In.) DATE: 3/27/2025 TIME: 10:19:39 PM USER: Alexandria.Summers
pw:\\mb-us-pw.bentley.commb-us-pw-03\Documents\Cleveland.OH\OI_Projects\ODOT\District2\82382\400-Engineering\Roadway\Sheets\82382_GF724I.dgn

DESIGN AGENCY
Michael Baker INTERNATIONAL

DESIGNER KJM
REVIEWER KGJ 05/22/24
PROJECT ID 82382
SHEET 653 TOTAL 2696

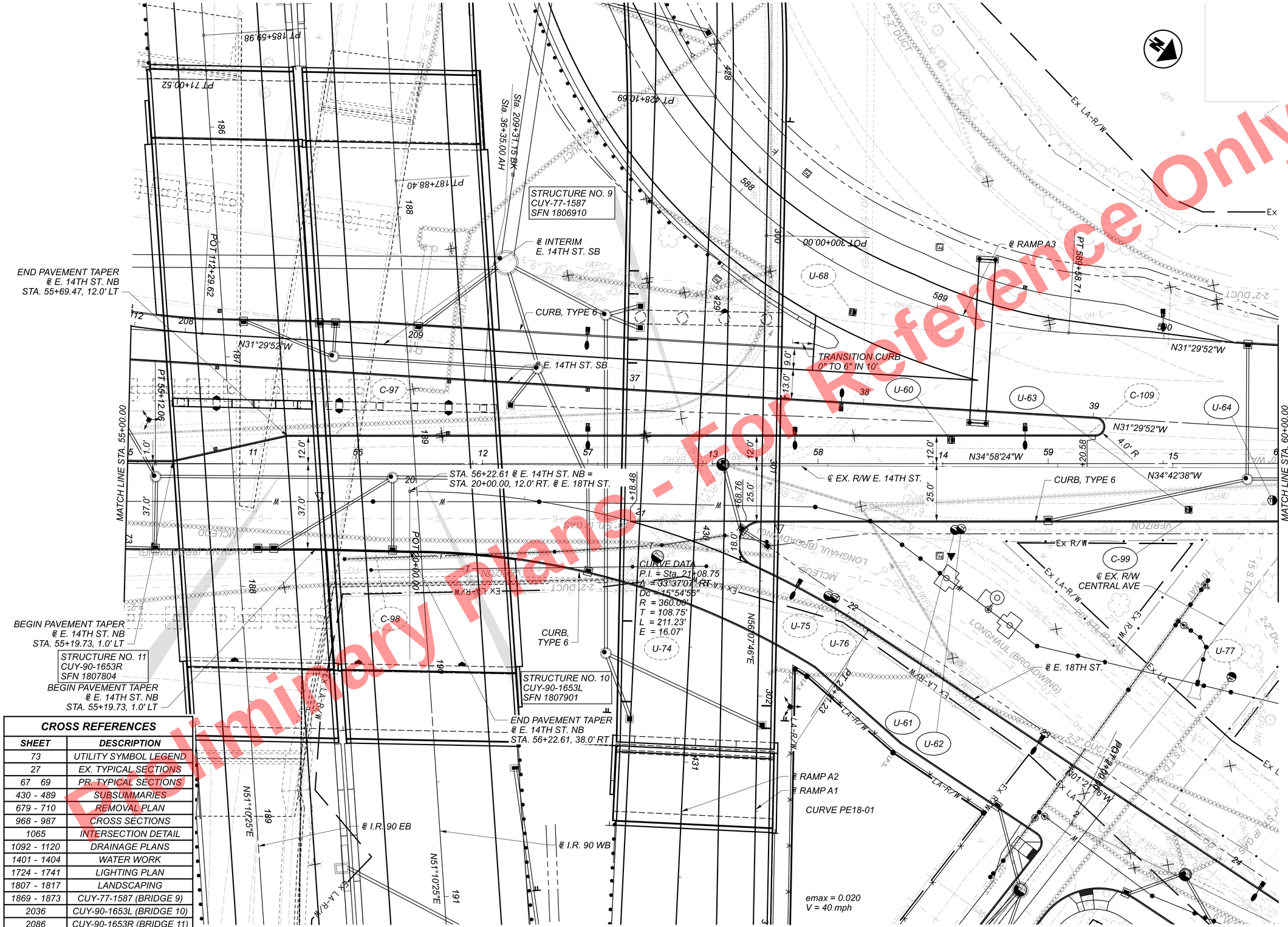
PT 185+59.98
PT 71+00.52
186
Sta. 209+37.75 BK =
Sta. 36+35.00 AH
PT 187+88.40
188
PT 428+10.69
428
588
STRUCTURE NO. 9
CUY-77-1587
SFN 1806910
℄ INTERIM
E. 14TH ST. SB
POT 112+29.62
END PAVEMENT TAPER
℄ E. 14TH ST. NB
STA. 55+69.47, 12.0' LT
112
208
209
CURB, TYPE 6
N31°29'52"W
℄ E. 14TH ST. SB
187
PT 55+12.06
C-97
37
MATCH LINE STA. 55+00.00
5
11
12.0'
56
189
12
57
13
20
STA. 56+22.61 ℄ E. 14TH ST. NB =
STA. 20+00.00, 12.0' RT. ℄ E. 18TH ST.
+18.48
+68.76
25.0'
21
M
37.0'
723
POT 20+00.00
EX LA-R/W
C-98
188
CURVE DATA
P.I. = Sta. 21+08.75
Δ = 33°37'07" RT
Dc = 15°54'55"
R = 360.00'
T = 108.75'
L = 211.23'
E = 16.07'
U-74
CURB,
TYPE 6
N59°07'46"E
190
STRUCTURE NO. 10
CUY-90-1653L
SFN 1807901
END PAVEMENT TAPER
℄ E. 14TH ST. NB
STA. 56+22.61, 38.0' RT
BEGIN PAVEMENT TAPER
℄ E. 14TH ST. NB
STA. 55+19.73, 1.0' LT
STRUCTURE NO. 11
CUY-90-1653R
SFN 1807804
BEGIN PAVEMENT TAPER
℄ E. 14TH ST. NB
STA. 55+19.73, 1.0' LT
N51°10'25"E
189
℄ I.R. 90 EB
℄ I.R. 90 WB
191
EX LA-R/W
EX LA-R/W
EX LA-R/W

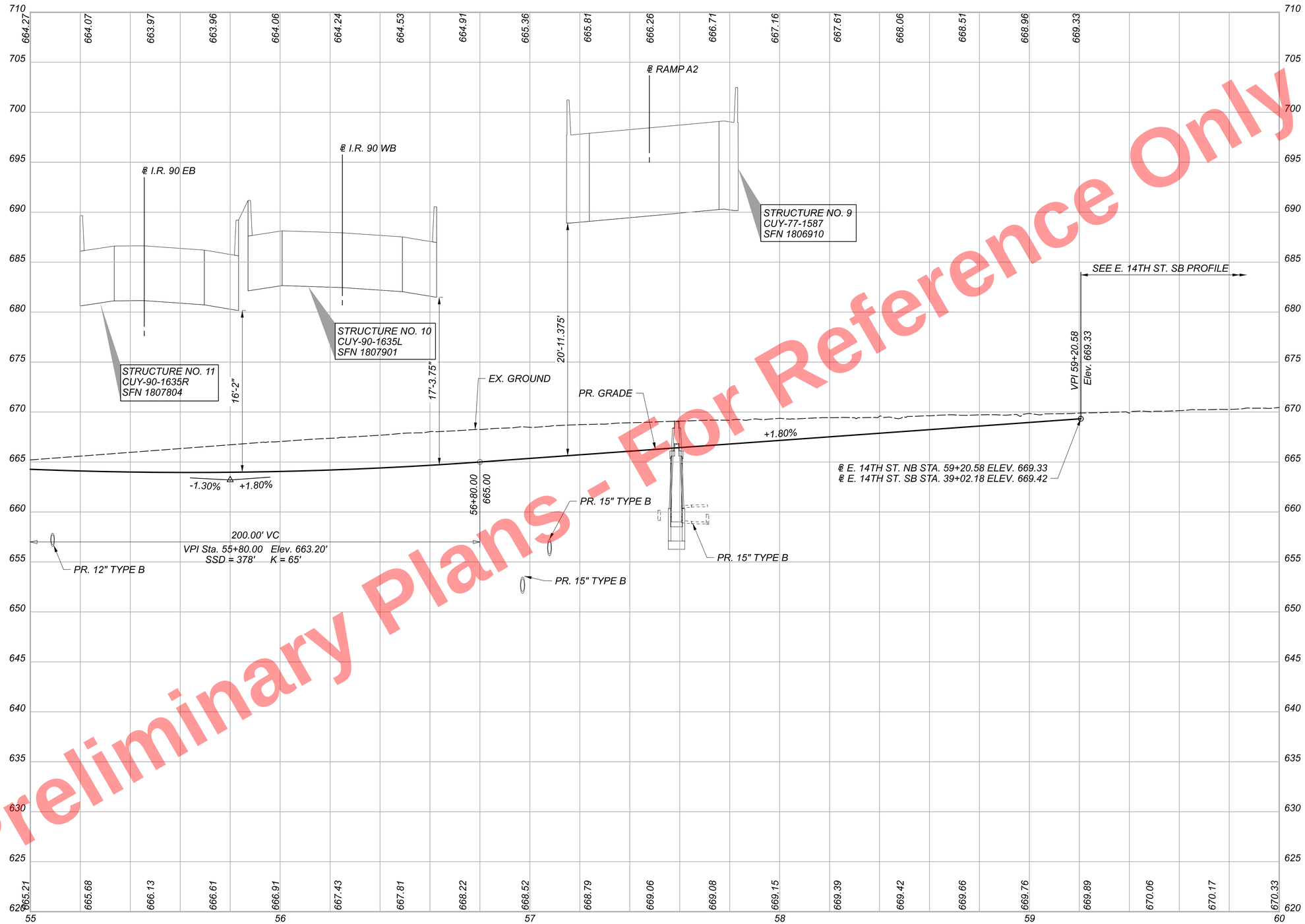

Preliminary Plans - For Reference Only

PROFILE - E. 14TH ST. NB
STA. 55+00.00 TO STA. 60+00.00

CUY-90-16.28 (CCG3A)

MODEL: 82382_GF7242 PAPERSIZE: 34x22 (in) DATE: 3/27/2025 TIME: 10:20:02 PM USER: Alexandria.Summers
pw:\\mb-us-pw.bentley.com:mb-us-pw-03\Documents\Cleveland_OH\01_Projects\ODOT\District2\82382\400-Engineering\Roadway\Sheets\82382_GF7242.dgn

DESIGN AGENCY
Michael Baker INTERNATIONAL

DESIGNER	KJM
REVIEWER	KGJ 05/22/24
PROJECT ID	82382
SHEET	655
TOTAL	2696

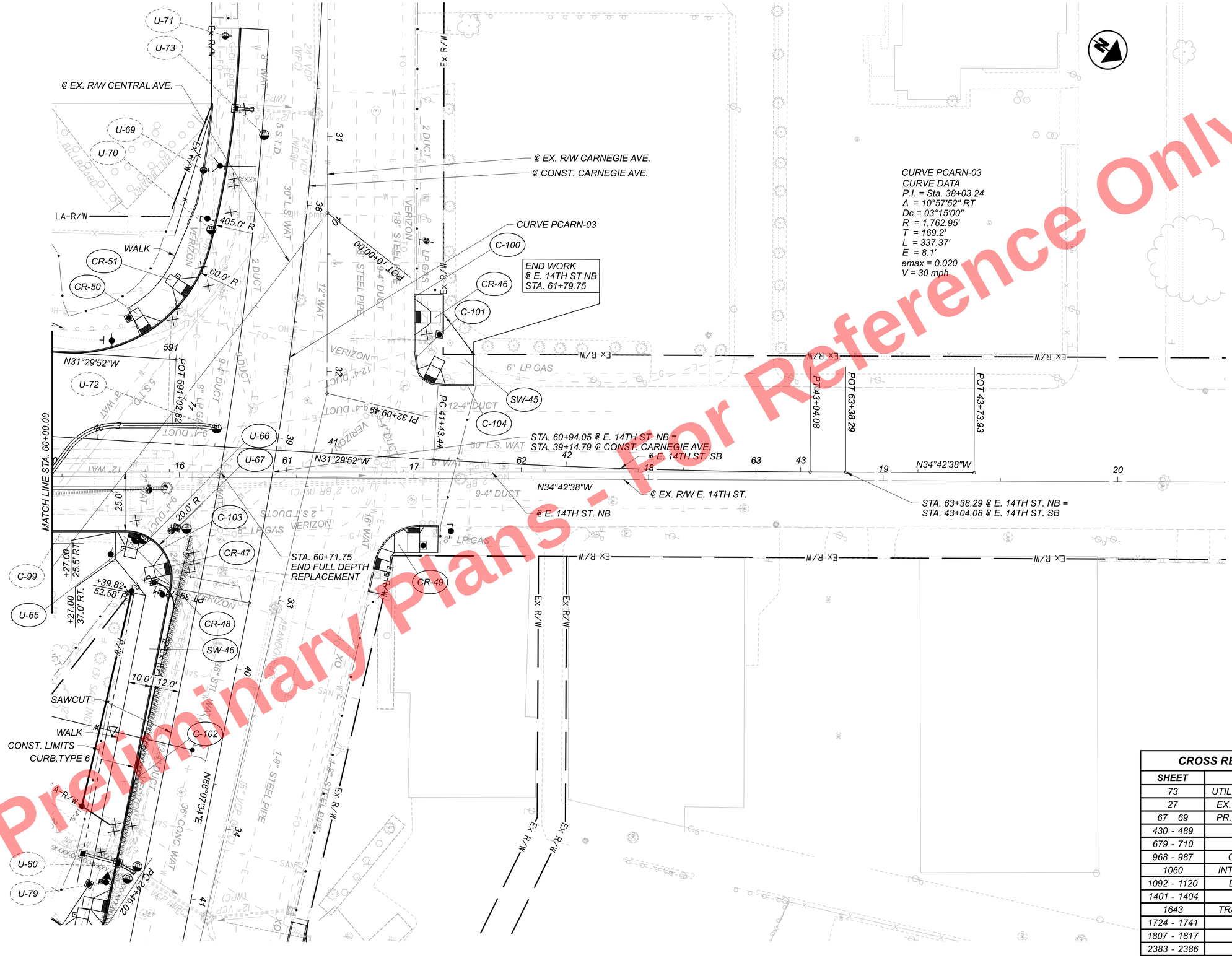

Preliminary Plans - Not For Reference Only

CROSS REFERENCES	
SHEET	DESCRIPTION
73	UTILITY SYMBOL LEGEND
27	EX. TYPICAL SECTIONS
67 69	PR. TYPICAL SECTIONS
430 - 489	SUBSUMMARIES
679 - 710	REMOVAL PLAN
968 - 987	CROSS SECTIONS
1060	INTERSECTION DETAIL
1092 - 1120	DRAINAGE PLANS
1401 - 1404	WATER WORK
1643	TRAFFIC SIGNAL PLAN
1724 - 1741	LIGHTING PLAN
1807 - 1817	LANDSCAPING
2383 - 2386	FENCE PLAN

HORIZONTAL SCALE IN FEET
0 10 20 40

PLAN - E. 14TH ST. NB
STA. 60+00.00 TO END

DESIGN AGENCY
Michael Baker INTERNATIONAL

DESIGNER KJM
REVIEWER KGJ 05/22/24
PROJECT ID 82382
SHEET 656 TOTAL 2696

CUY-90-16.28 (CCG3A)

MODEL: 82382_GP453 PAPERSIZE: 34x22 (in.) DATE: 3/27/2025 TIME: 10:20:15 PM USER: Alexandria.Summers
pw:\\mb-us-pw.bentley.com:mb-us-pw-03\Documents\Cleveland_OH\01_Projects\000T\District2\82382\400-Engineering\Roadway\Sheets\82382_GP7243.dgn

Preliminary Plans - For Reference Only

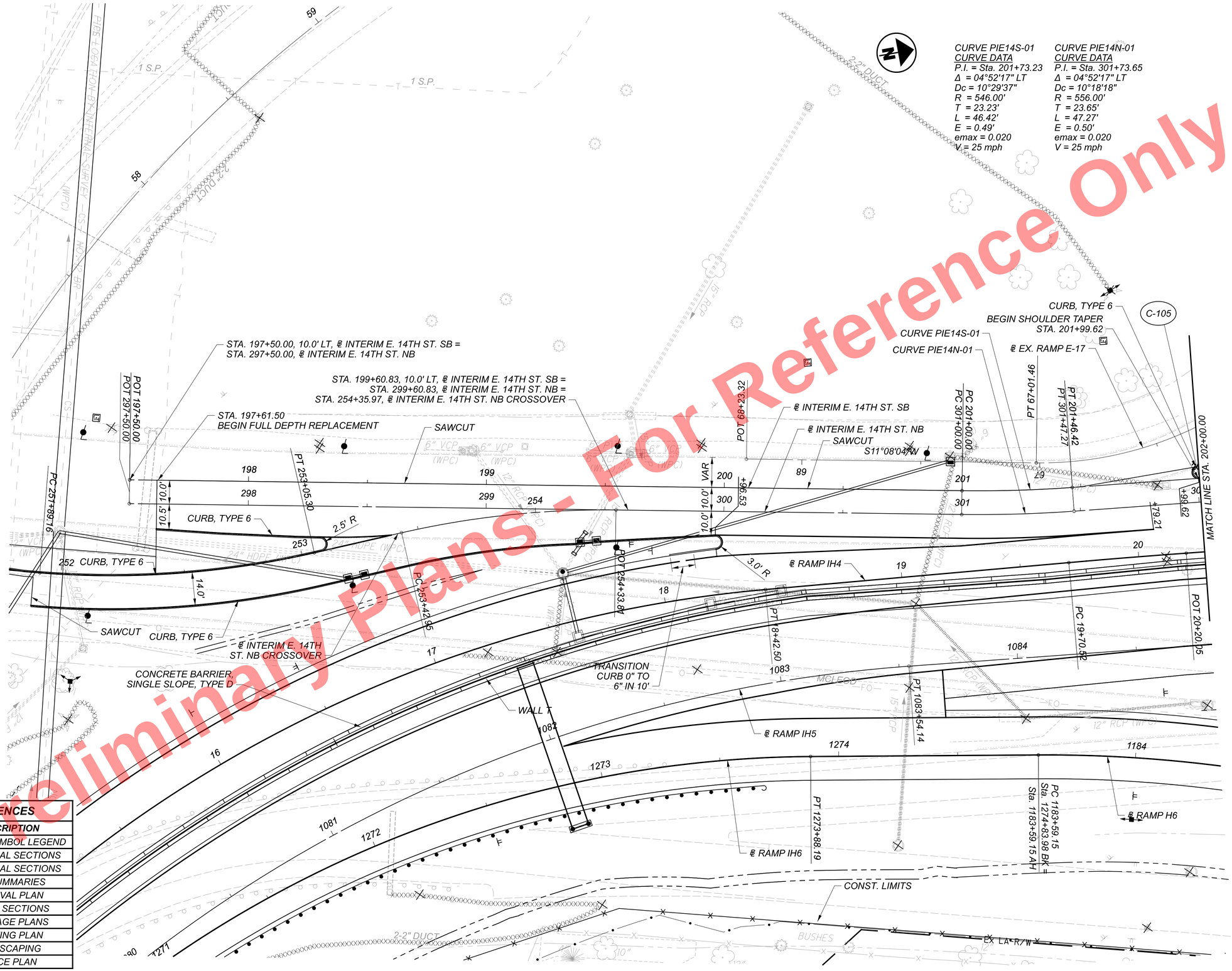

CROSS REFERENCES	
SHEET	DESCRIPTION
73	UTILITY SYMBOL LEGEND
27	EX. TYPICAL SECTIONS
66	PR. TYPICAL SECTIONS
430 - 489	SUBSUMMARIES
679 - 710	REMOVAL PLAN
988 - 1000	CROSS SECTIONS
1092 - 1120	DRAINAGE PLANS
1724 - 1741	LIGHTING PLAN
1807 - 1817	LANDSCAPING
2383 - 2386	FENCE PLAN

HORIZONTAL SCALE IN FEET
0 10 20 40

PLAN - INTERIM E. 14TH ST. SB BEGIN TO STA. 202+00.00

CUY-90-16.28 (CCG3A)

MODEL: 82382_GP72ll PAPERSIZE: 34x22 (in) DATE: 3/27/2025 TIME: 10:20:27 PM USER: Alexandria.Summers
pw:\\mb-us-pw.bentley.com\mb-us-pw-03\Documents\Cleveland.OH\OI_Projects\0007\District2\82382\400-Engineering\Roadway\Sheets\82382_GP72ll.dgn

DESIGN AGENCY
Michael Baker INTERNATIONAL

DESIGNER KJM
REVIEWER KGJ 05/22/24
PROJECT ID 82382
SHEET 657 TOTAL 2696

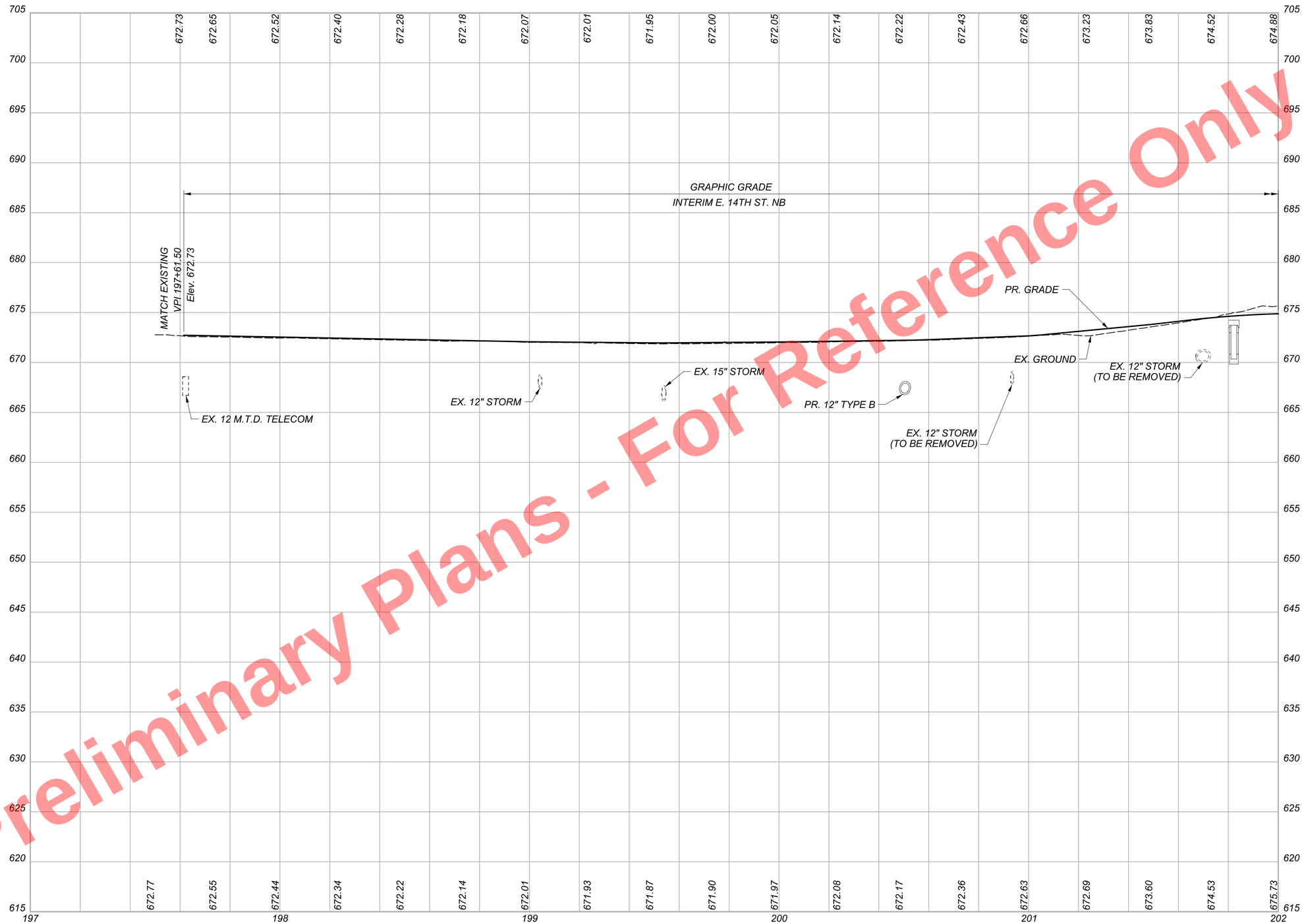

Preliminary Plans - For Reference Only

PROFILE - INTERIM E. 14TH ST. SB
BEGIN TO STA. 202+00.00

CUY-90-16.28 (CCG3A)

MODEL: 82382_GF72ll PAPERSIZE: 34x22 (in) DATE: 3/27/2025 TIME: 10:20:51 PM USER: Alexandria.Summers
pw:\\mb-us-pw.bentley.commb-us-pw-03\Documents\Cleveland.OH\OL_Projects\ODOT\District2\82382\400-Engineering\Roadway\Sheets\82382_GF72ll.dgn

DESIGN AGENCY
Michael Baker INTERNATIONAL

DESIGNER KJM
REVIEWER KGJ 05/22/24
PROJECT ID 82382
SHEET 658 TOTAL 2696

CROSS REFERENCES	
SHEET	DESCRIPTION
73	UTILITY SYMBOL LEGEND
27	EX. TYPICAL SECTIONS
66	PR. TYPICAL SECTIONS
430 - 489	SUBSUMMARIES
679 - 710	REMOVAL PLAN
988 - XS7263	CROSS SECTIONS
1057	RAMP TERMINAL DETAILS
1092 - 1120	DRAINAGE PLANS
1724 - 1741	LIGHTING PLAN
1807 - 1817	LANDSCAPING
2129 2130	CUY-90-1652S (BRIDGE 12)
2383 - 2386	FENCE PLAN

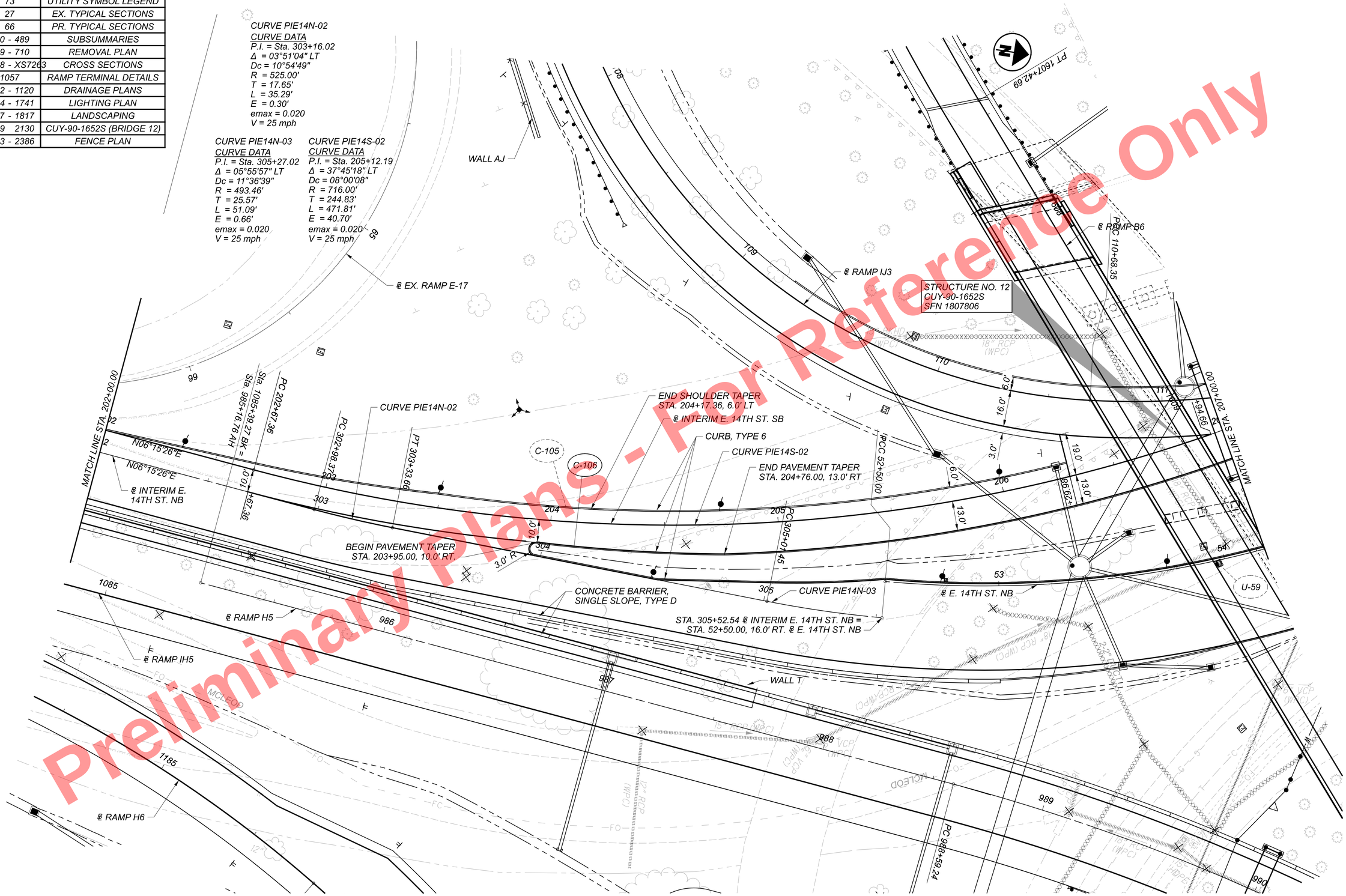

Preliminary Plans - For Reference Only

HORIZONTAL SCALE IN FEET
0 10 20 40

PLAN - INTERIM E. 14TH ST. SB
STA. 202+00.00 TO STA. 207+00.00

DESIGN AGENCY
Michael Baker INTERNATIONAL

DESIGNER
KJM

REVIEWER
KGJ 05/22/24

PROJECT ID
82382

SHEET 659 TOTAL 2696

CUY-90-16.28 (CCG3A)

MODEL: 82382_GP7212 PAPERSIZE: 34x22 (in.) DATE: 6/9/2025 TIME: 1:04:37 PM USER: Julie.Ross
pw:\\mb-us-pw.bentley.com:mb-us-pw-03\Documents\Cleveland_OH\01_Projects\ODOT\District12\82382\400-Engineering\Roadway\Sheets\82382_GP7212.dgn

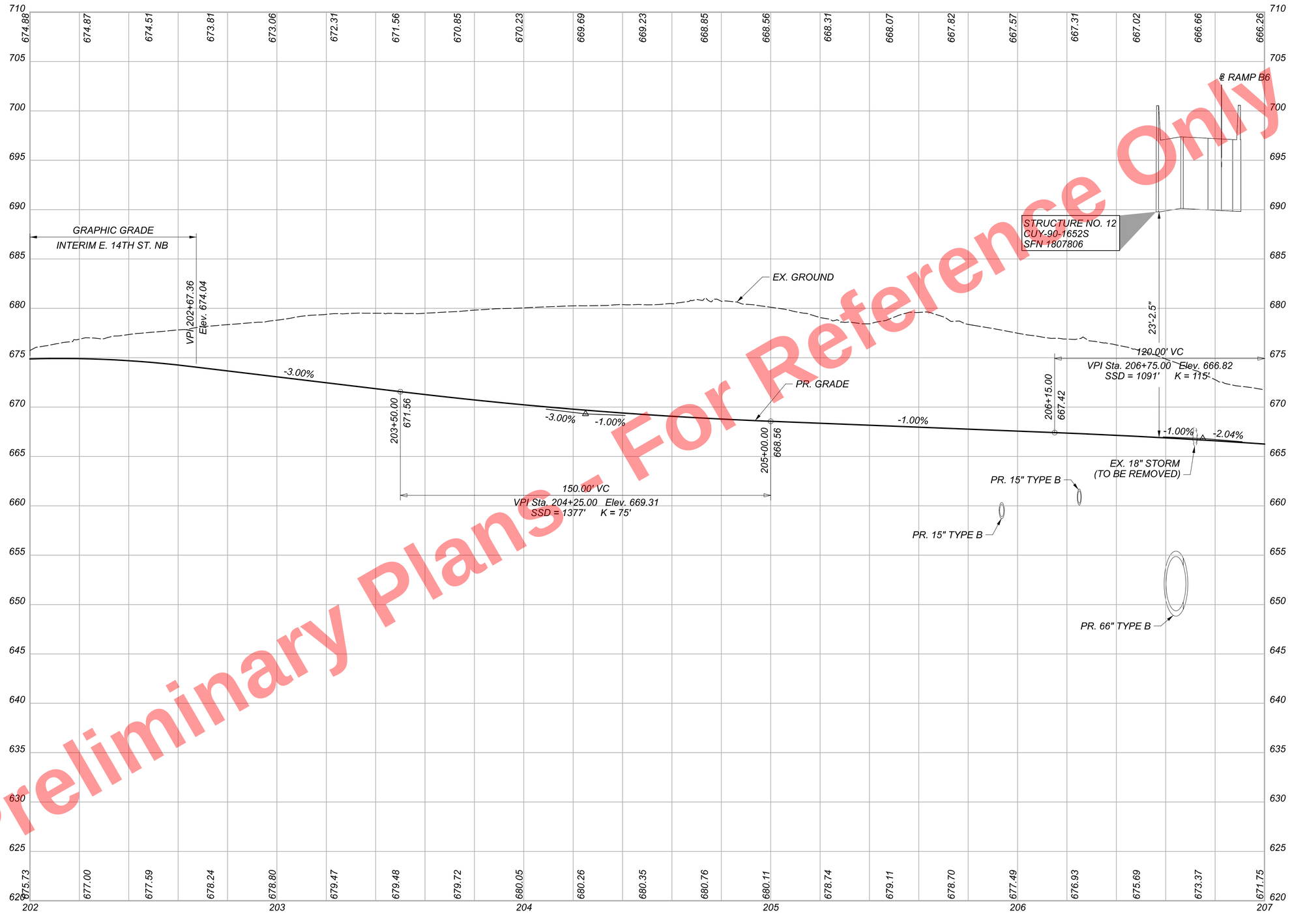

Preliminary Plans - For Reference Only

PROFILE - INTERIM E. 14TH ST. SB
STA. 202+00.00 TO STA. 207+00.00

CUY-90-16.28 (CCG3A)

MODEL: 82382_GF72I2 PAPERSIZE: 34x22 (in.) DATE: 3/27/2025 TIME: 10:21:21 PM USER: Alexandria.Summers
pw:\\mb-us-pw.bentley.com:mb-us-pw-03\Documents\Cleveland_OH\01_Projects\ODOT\District2\82382\400-Engineering\Roadway\Sheets\82382_GF72I2.dgn

DESIGN AGENCY
Michael Baker INTERNATIONAL

DESIGNER	KJM
REVIEWER	KGJ 05/22/24
PROJECT ID	82382
SHEET	660
TOTAL	2696

CURVE PIJ3-05
CURVE DATA
P.I. = Sta. 111+50.37
Δ = 25°48'24" LT
Dc = 16°00'08"
R = 358.05'
T = 82.03'
L = 161.27'
E = 9.28'
emax = 0.020
V = 30 mph

CURVE PIE14S-02
CURVE DATA
P.I. = Sta. 205+12.19
Δ = 37°45'18" LT
Dc = 08°00'08"
R = 716.00'
T = 244.83'
L = 471.81'
E = 40.70'
emax = 0.020
V = 25 mph



CROSS REFERENCES	
SHEET	DESCRIPTION
73	UTILITY SYMBOL LEGEND
27	EX. TYPICAL SECTIONS
66	PR. TYPICAL SECTIONS
430 - 489	SUBSUMMARIES
679 - 710	REMOVAL PLAN
988 - XS7263	CROSS SECTIONS
1057	INTERSECTION DETAIL
1092 - 1120	DRAINAGE PLANS
1724 - 1741	LIGHTING PLAN
1807 - 1817	LANDSCAPING
1869 - 1873	CUY-77-1587 (BRIDGE 9)
2036	CUY-90-1653L (BRIDGE 10)
2086	CUY-90-1653R (BRIDGE 11)
2383 - 2386	FENCE PLAN

Preliminary Plans - For Reference Only

HORIZONTAL SCALE IN FEET
0 10 20 40

PLAN - INTERIM E. 14TH ST. SB STA. 207+00.00 TO END

DESIGN AGENCY
Michael Baker INTERNATIONAL

DESIGNER KJM
REVIEWER KGJ 05/22/24
PROJECT ID 82382
SHEET 661 TOTAL 2696

CUY-90-16.28 (CCG3A)

MODEL: 82382_GP7213 PAPERSIZE: 34x22 (in.) DATE: 6/9/2025 TIME: 04:58 PM USER: JulieRoss
pw:\\mb-us-pw.bentley.com:mb-us-pw-03\Documents\Cleveland_OH\01_Projects\DOT\District2\82382\400-Engineering\Roadway\Sheets\82382_GP7213.dgn

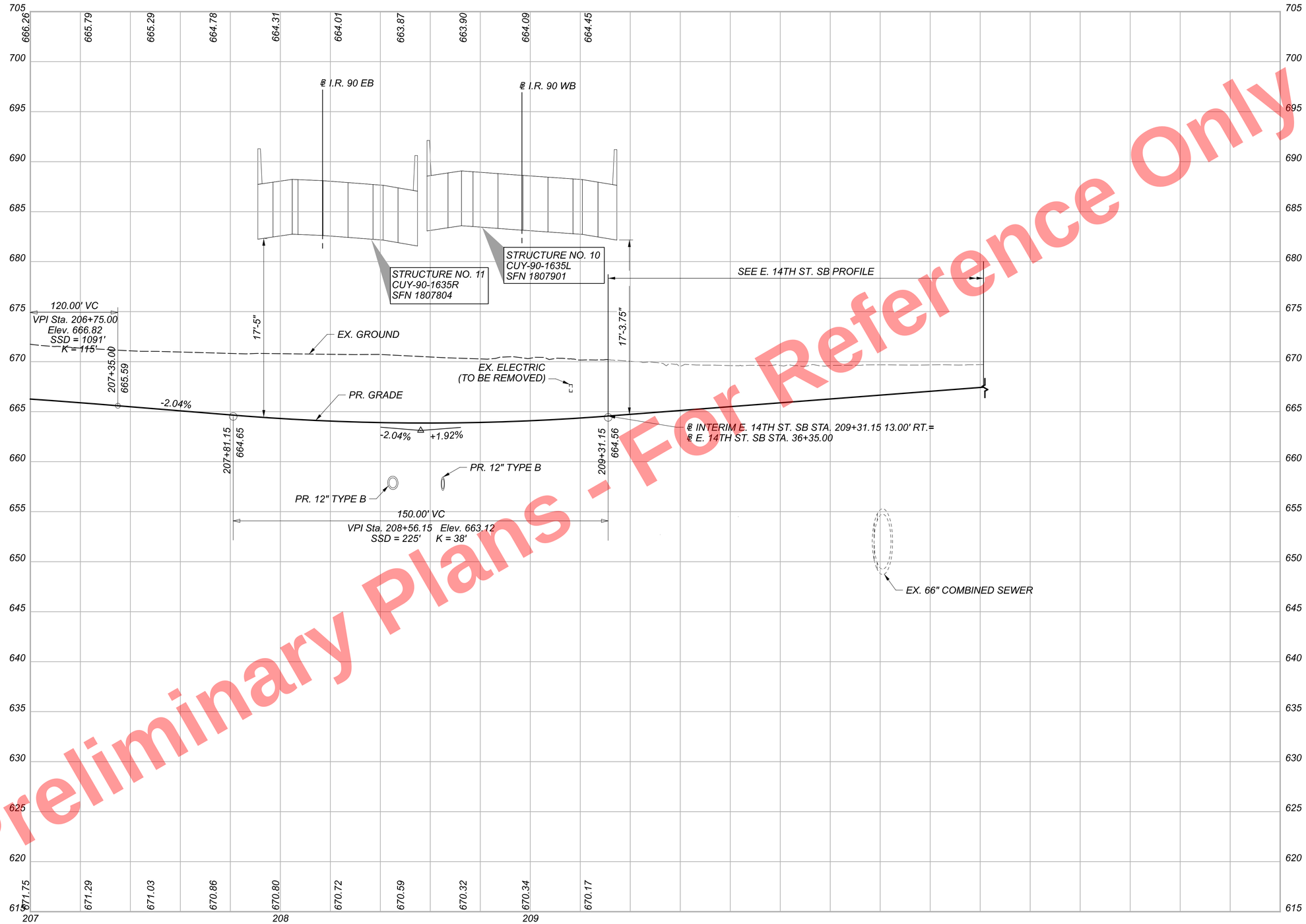

Preliminary Plans - For Reference Only

PROFILE - INTERIM E. 14TH ST. SB
STA. 207+00.00 TO END

CUY-90-16.28 (CCG3A)

MODEL: 82382_GF7213 PAPERSIZE: 34x22 (in.) DATE: 3/27/2025 TIME: 1021:59 PM USER: Alexandria.Summers
pw:\\mb-us-pw.bentley.commb-us-pw-03\Documents\Cleveland_OH\01_Projects\ODOT\District2\82382\400-Engineering\Roadway\Sheets\82382_GF7213.dgn

DESIGN AGENCY
Michael Baker INTERNATIONAL

DESIGNER	KJM
REVIEWER	KGJ 05/22/24
PROJECT ID	82382
SHEET	662
TOTAL	2696

CROSS REFERENCES	
SHEET	DESCRIPTION
73	UTILITY SYMBOL LEGEND
27	EX. TYPICAL SECTIONS
67 - 69	PR. TYPICAL SECTIONS
430 - 489	SUBSUMMARIES
679 - 710	REMOVAL PLAN
988 - 1000	CROSS SECTIONS
1051	RAMP TERMINAL DETAILS
1092 - 1120	DRAINAGE PLANS
1724 - 1741	LIGHTING PLAN
1807 - 1817	LANDSCAPING
1869 - 1873	CUY-77-1587 (BRIDGE 9)
2036	CUY-90-1653L (BRIDGE 10)
2086	CUY-90-1653R (BRIDGE 11)
2383 - 2386	FENCE PLAN

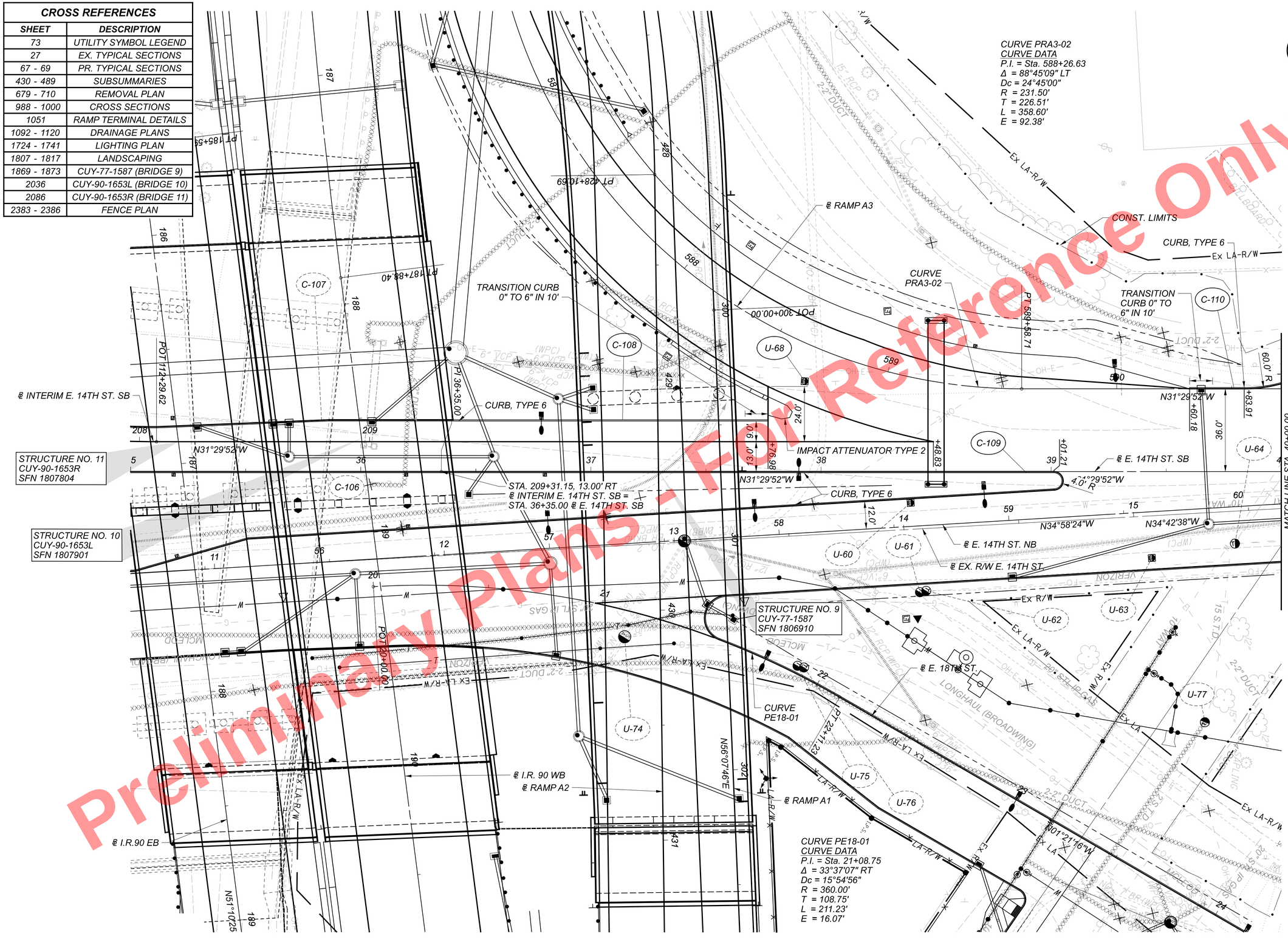

HORIZONTAL SCALE IN FEET
0 10 20 40

PLAN - E. 14TH ST. SB
BEGIN TO STA. 40+00.00

DESIGN AGENCY	Michael Baker INTERNATIONAL
DESIGNER	KJM
REVIEWER	KGJ 05/22/24
PROJECT ID	82382
SHEET	663
TOTAL	2696

CUY-90-16.28 (CCG3A)

MODEL: 82382_GP7232 PAPERSIZE: 34x22 (in.) DATE: 6/9/2025 TIME: 1:05:18 PM USER: Julie.Ross
pw:\\mb-us-pw.bentley.com:mb-us-pw-03\Documents\Cleveland_OH\01_Projects\000T\District2\82382\400-Engineering\Roadway\Sheets\82382_GP7232.dgn

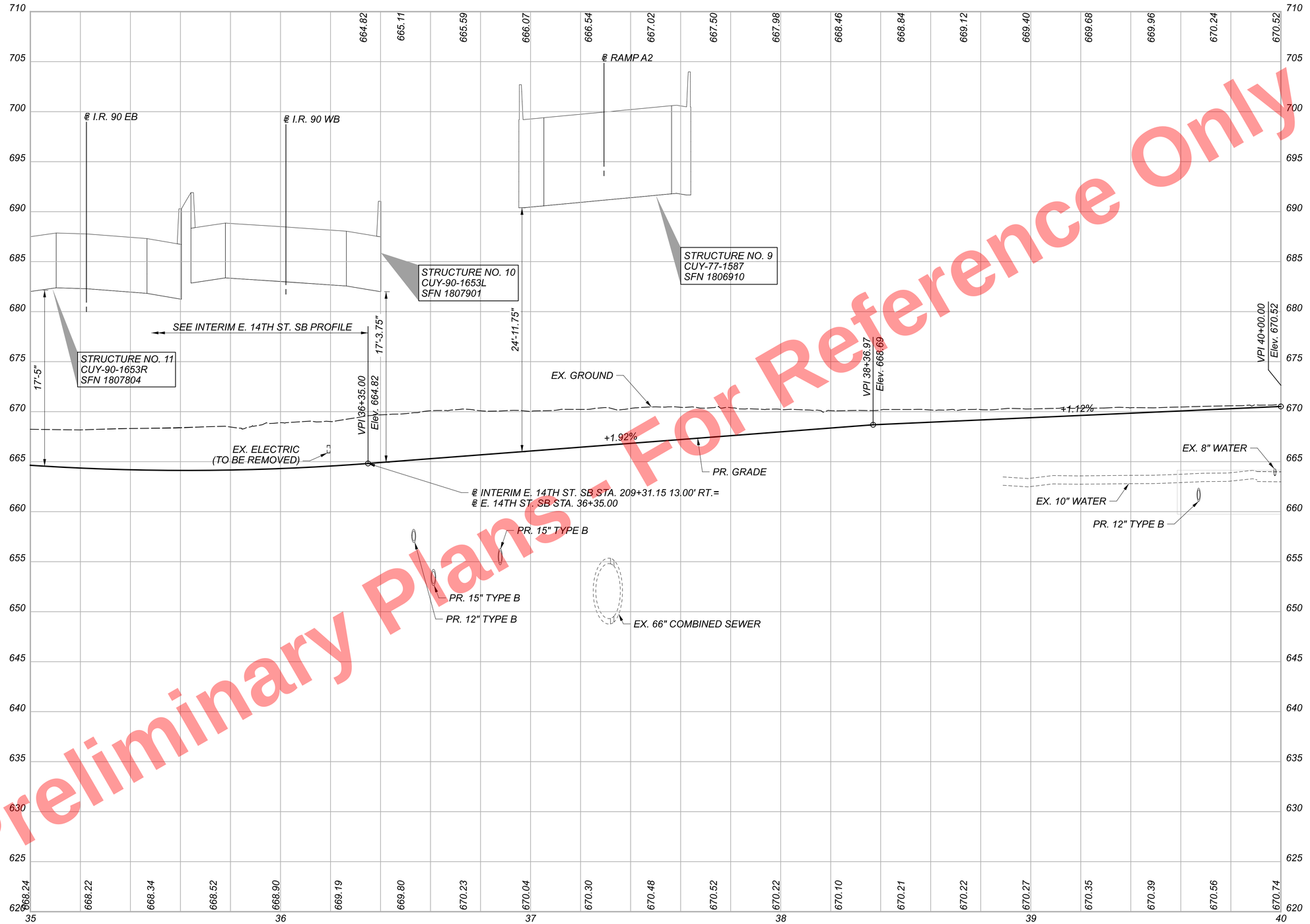

Preliminary Plans - For Reference Only

PROFILE - E. 14TH ST. SB
BEGIN TO STA. 40+00.00

CUY-90-16.28 (CCG3A)

MODEL: 82382_GF7232 PAPERSIZE: 34x22 (in.) DATE: 3/27/2025 TIME: 10:22:29 PM USER: AlexandriaSummers
pw:\\mb-us-pw.bentley.com\mb-us-pw-03\Documents\Cleveland_OH\OIL_Projects\ODOT\District12\82382\400-EngineeringRoadway\Sheets\82382_GF7232.dgn

DESIGN AGENCY
Michael Baker INTERNATIONAL

DESIGNER
KJM

REVIEWER
KGJ 05/22/24

PROJECT ID
82382

SHEET 664 TOTAL 2696

CROSS REFERENCES	
SHEET	DESCRIPTION
73	UTILITY SYMBOL LEGEND
27	EX. TYPICAL SECTIONS
67 - 69	PR. TYPICAL SECTIONS
430 - 489	SUBSUMMARIES
679 - 710	REMOVAL PLAN
988 - 1000	CROSS SECTIONS
1060	INTERSECTION DETAIL
1092 - 1120	DRAINAGE PLANS
1643	TRAFFIC SIGNAL PLAN
1724 - 1741	LIGHTING PLAN
1807 - 1817	LANDSCAPING
2383 - 2386	FENCE PLAN

HORIZONTAL SCALE IN FEET
0 10 20 40

PLAN - E. 14TH ST. SB
STA. 40+00.00 TO END

BEGIN WALK/TAPER
℄ CONST. CARNEGIE AVE.
STA. 37+26.89, 46.58' RT

END CURB, TYPE 6
℄ CONST. CARNEGIE AVE.
STA. 37+26.23, 34.0' RT

END TAPER
℄ CONST, CARNEGIE AVE.
STA. 37+63.19, 44.31' RT

BEGIN TAPER
℄ CONST. CARNEGIE AVE.
STA. 38+10.00, 47.93' RT

END TAPER
℄ CONST. CARNEGIE AVE.
STA. 38+29.30, 54.38' RT

STA. 591+02.82
℄ RAMP A3 =
STA. 40+31.31, 36.0' LT.
℄ E. 14TH ST. SB

END PR. WALK
℄ E. 14TH ST SB
STA. 40+09.38, 56.50' LT.

STA. 37+26.23, 22.00' RT.
℄ CONST. CARNEGIE AVE.
BEGIN FULL DEPTH
REPLACEMENT

CURVE PCARN-03
CURVE DATA
P.I. = Sta. 38+03.24
Δ = 10°57'52" RT
Dc = 03°15'00"
R = 1,762.95'
T = 169.2'
L = 337.37'
E = 8.1'
emax = 0.020
V = 30 mph

℄ EX. R/W CARNEGIE AVE.

℄ CONST. CARNEGIE AVE.

CURVE PCARN-03

STA. 40+76.26 ℄ E. 14TH ST. SB =
STA. 39+05.29 ℄ CONST. CARNEGIE AVE.

END WORK
℄ E. 14TH ST NB
STA. 61+79.75

℄ RAMP A3

MATCH LINE STA. 40+00.00

℄ E. 14TH ST. SB

℄ E. 14TH ST. NB

CURVE PE14S-02

℄ EX. R/W E. 14TH ST.

STA. 43+04.08 ℄ E. 14TH ST. SB =
STA. 63+23.14 ℄ E. 14TH ST. NB

END FULL DEPTH
REPLACEMENT
STA. 40+54.16

CURVE PE14S-02
CURVE DATA
P.I. = Sta. 42+23.78
Δ = 03°12'46" LT
Dc = 02°00'00"
R = 2,864.79'
T = 80.34'
L = 160.64'
E = 1.13'
emax = 0.020
V = 30 mph

WALK
CURB, TYPE 6
SAWCUT

CONST. LIMITS

For Reference Only
Preliminary Plans - Pc

CUY-90-16.28 (CCG3A)
MODEL: 82382_GP7233 PAPERSIZE: 34x22 (in.) DATE: 6/9/2025 TIME: 05:40 PM USER: Julie.Ross
pw:\\mb-us-pw.bentley.com:mb-us-pw-03\Documents\Cleveland.OH\01_Projects\ODOT\District2\82382\400-Engineering\Roadway\Sheets\82382_GP7233.dgn

DESIGN AGENCY
Michael Baker INTERNATIONAL

DESIGNER KJM
REVIEWER KGJ 05/22/24
PROJECT ID 82382
SHEET 665 TOTAL 2696

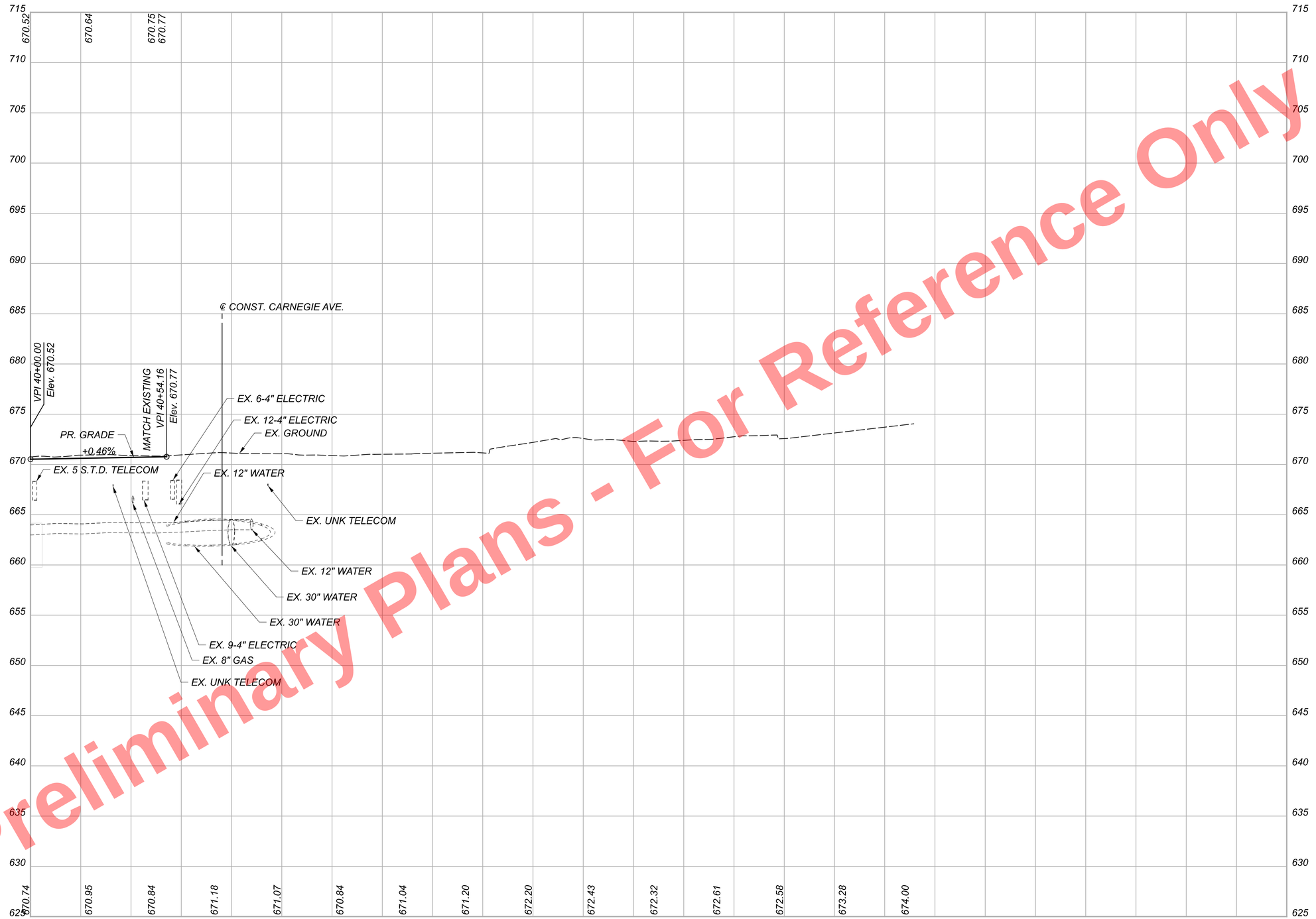

Preliminary Plans - For Reference Only

PROFILE - E. 14TH ST. SB
STA. 40+00.00 TO END

CUY-90-16.28 (CCG3A)

MODEL: 82382_GF7233 PAPERSIZE: 34x22 (in.) DATE: 3/27/2025 TIME: 10:23:02 PM USER: Alexandria.Summers
pw:\\mb-us-pw.bentley.commb-us-pw-03\Documents\Cleveland_OH\Oil_Projects\ODOT\District2\82382\400-Engineering\Roadway\Sheets\82382_GF7233.dgn

DESIGN AGENCY
Michael Baker INTERNATIONAL

DESIGNER KJM
REVIEWER KGJ 05/22/24
PROJECT ID 82382
SHEET 666 TOTAL 2696

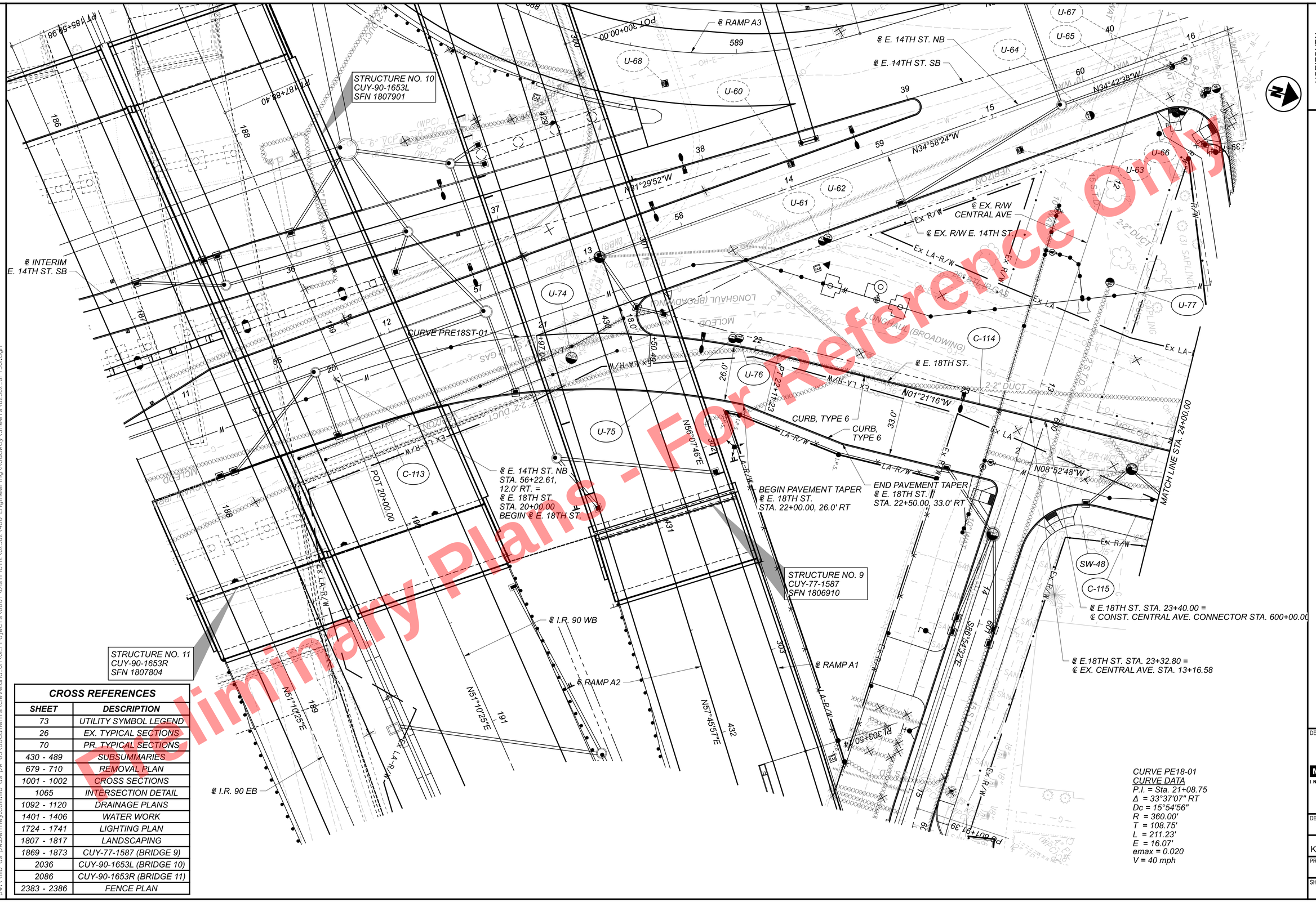

CROSS REFERENCES	
SHEET	**DESCRIPTION**
73	UTILITY SYMBOL LEGEND
26	EX. TYPICAL SECTIONS
70	PR. TYPICAL SECTIONS
430 - 489	SUBSUMMARIES
679 - 710	REMOVAL PLAN
1001 - 1002	CROSS SECTIONS
1065	INTERSECTION DETAIL
1092 - 1120	DRAINAGE PLANS
1401 - 1406	WATER WORK
1724 - 1741	LIGHTING PLAN
1807 - 1817	LANDSCAPING
1869 - 1873	CUY-77-1587 (BRIDGE 9)
2036	CUY-90-1653L (BRIDGE 10)
2086	CUY-90-1653R (BRIDGE 11)
2383 - 2386	FENCE PLAN

CURVE PE18-01
CURVE DATA
P.I. = Sta. 21+08.75
Δ = 33°37'07" RT
Dc = 15°54'56"
R = 360.00'
T = 108.75'
L = 211.23'
E = 16.07'
emax = 0.020
V = 40 mph

Preliminary Plans - For Reference Only

PLAN - E. 18TH ST. BEGIN TO STA. 24+00.00

CUY-90-16.28 (CCG3A)

MODEL: 82382_GP730I PAPERSIZE: 34x22 (in.) DATE: 6/9/2025 TIME: 10:06:01 PM USER: Julie.Ross
pw:\\mb-us-pw.bentley.com:mb-us-pw-03\Documents\Cleveland_OH\01_Projects\ODOT\District2\82382\400-Engineering\Roadway\Sheets\82382_GP730I.dgn

DESIGN AGENCY	Michael Baker INTERNATIONAL
DESIGNER	KJM
REVIEWER	KGJ 05/22/24
PROJECT ID	82382
SHEET	667
TOTAL	2696

Preliminary Plans - For Reference Only

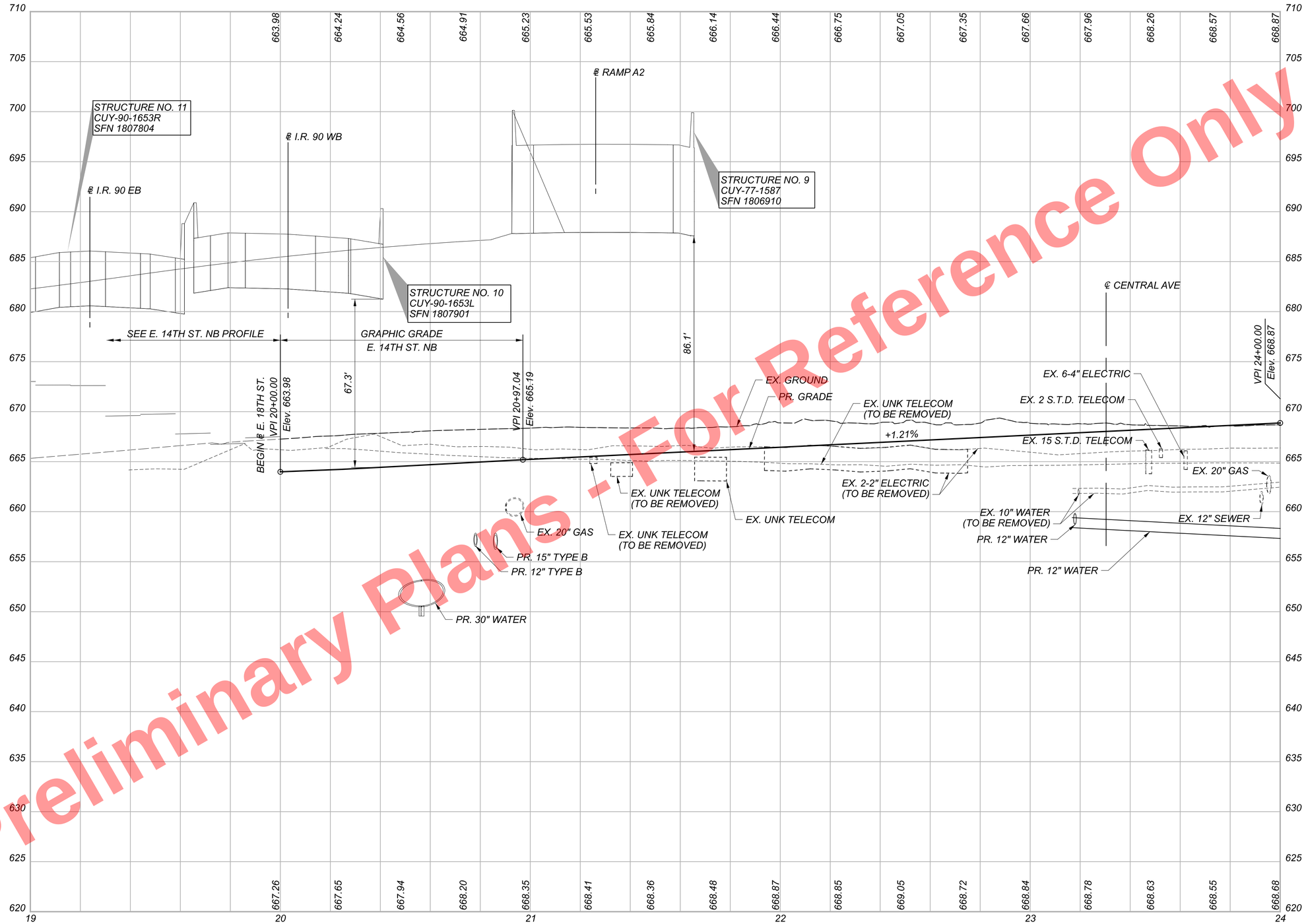

PROFILE - E. 18TH ST.
BEGIN TO STA. 24+00.00

CUY-90-16.28 (CCG3A)

MODEL: 82382_GF730I PAPERSIZE: 34x22 (In.) DATE: 3/27/2025 TIME: 10:23:33 PM USER: Alexandria.Summers
pw:\\mb-us-pw.bentley.com\mb-us-pw-03\Documents\Cleveland_OH\OiL_Projects\ODOT\District2\82382\400-Engineering\Roadway\Sheets\82382_GF730i.dgn

DESIGN AGENCY
Michael Baker INTERNATIONAL

DESIGNER
KJM

REVIEWER
KGJ 05/22/24

PROJECT ID
82382

SHEET 668 | TOTAL 2696

CURVE PE18-02
CURVE DATA
P.I. = Sta. 24+94.95
Δ = 07°31'32" LT
Dc = 07°42'00"
R = 744.10'
T = 48.94'
L = 97.73'
E = 1.61'
emax = 0.020
V = 40 mph

℄ CONST. CARNEGIE AVE
℄ EX. R/W CARNEGIE AVE

CURB, TYPE 6
WALK
10.0'
12.0'
N66°07'34"E
N68°03'48"E
Ex R/W
1-8" STEEL PIPE
36" STL WAT
2-4" DUCT
7-4" DUCT
16" WAT
9-4" DUCT
6" WAT MCLEOD
12" VCP (WPC)
30" VCP (WPC)
ABANDONED P
HORIZON
PT
PC 24+46.02
PT 25+43.75
POT 6+00.00
END WORK
℄ E. 18TH ST
STA. 26+30.00
MATCH LINE STA. 24+00.00
N01°21'16"W
N08°52'48"W
N08°52'48"W
10.0' R
45.0' R
33.0'
+30.00
20.76' LT
+30.00
0.51' LT
+14.00
Pl 41+42.22
EX LANDTRAN GAS
P GAS
TMP
SAWCUT
℄ E. 18TH ST. STA. 24+85.82 =
℄ CONST. CARNEGIE AVE STA. 41+42.22
STA. 24+62.35
END FULL DEPTH REPLACEMENT
℄ E. 18TH ST.
℄ EX. R/W E. 18TH ST.
CONST. LIMITS
LONGHAUL (BROADWING)
20" STL P GAS
NO. 8 BR (WPC)
XO
SAN
FO
OHP
OHPC
UNK (WPC)
12" LINK (WPC)

U-80
U-79
U-81
U-82
U-83
U-78
SW-48
SW-49
SW-50
C-114
C-115
C-116
C-117
C-118
CR-53
CR-54
CR-55
CR-56
CR-57
CR-58
CR-59

CROSS REFERENCES	
SHEET	DESCRIPTION
73	UTILITY SYMBOL LEGEND
26	EX. TYPICAL SECTIONS
70	PR. TYPICAL SECTIONS
430 - 489	SUBSUMMARIES
679 - 710	REMOVAL PLAN
1001 - 1002	CROSS SECTIONS
1061	INTERSECTION DETAIL
1092 - 1120	DRAINAGE PLANS
1401 - 1406	WATER WORK
1724 - 1741	LIGHTING PLAN
1807 - 1817	LANDSCAPING
2383 - 2386	FENCE PLAN

Preliminary Plans - For Reference Only

HORIZONTAL SCALE IN FEET
0 10 20 40

PLAN - E. 18TH ST. STA. 24+00.00 TO END

DESIGN AGENCY
Michael Baker INTERNATIONAL

DESIGNER KJM
REVIEWER KGJ 05/22/24
PROJECT ID 82382
SHEET 669 TOTAL 2696

CUY-90-16.28 (CCG3A)

MODEL: 82382_GP7302 PAPERSIZE: 34x22 (in.) DATE: 3/27/2025 TIME: 10:23:44 PM USER: Alexandria.Summers
pw:\\mb-us-pw.bentley.com:mb-us-pw-03\Documents\Cleveland_OH\01_Projects\000T\District2\82382\400-Engineering\Roadway\Sheets\82382_GP7302.dgn

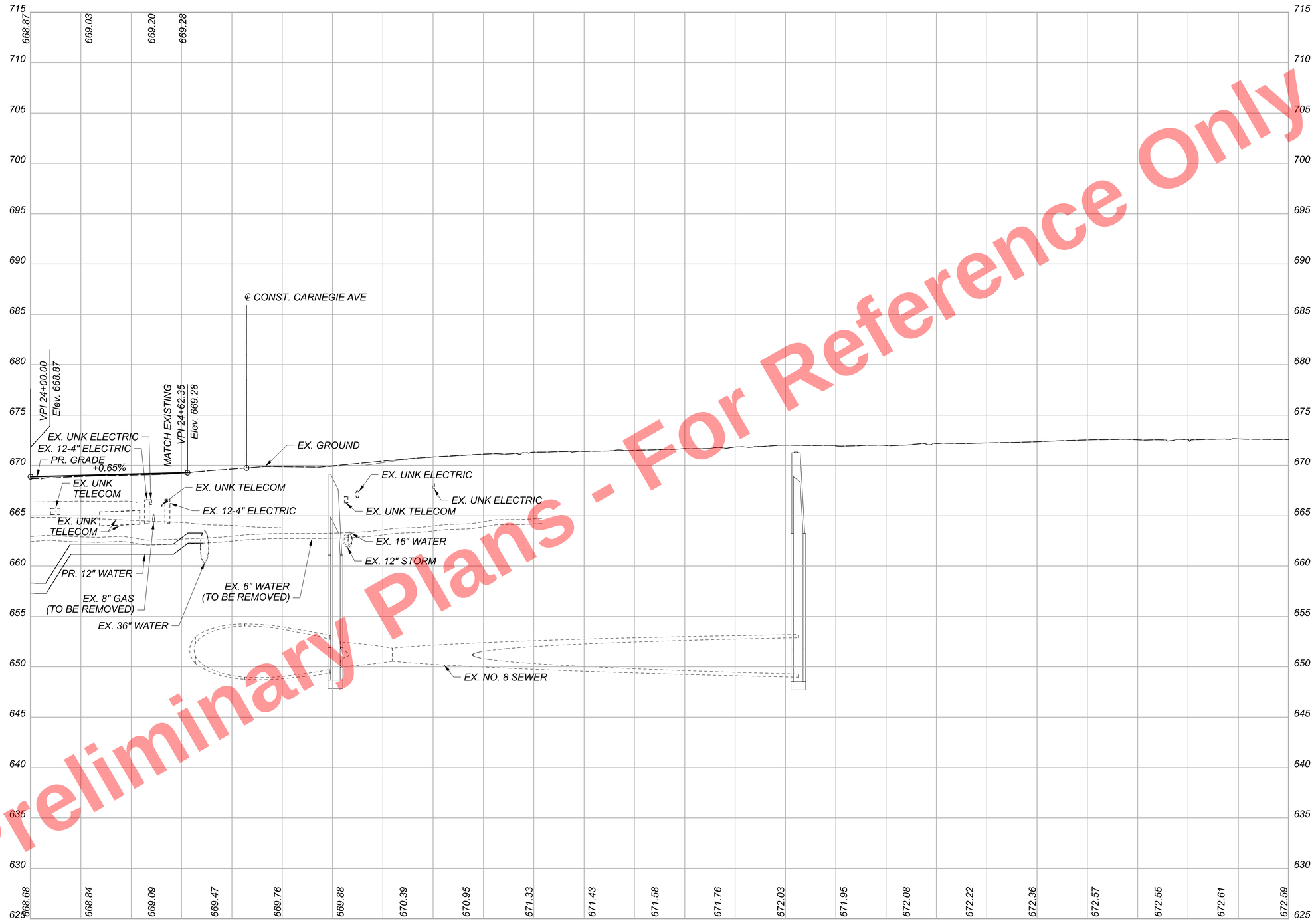

Preliminary Plans - For Reference Only

PROFILE - E. 18TH ST.
STA. 24+00.00 TO END

CUY-90-16.28 (CCG3A)

MODEL: 82382_GF7302 PAPERSIZE: 34x22 (in.) DATE: 3/27/2025 TIME: 10:24:07 PM USER: Alexandria.Summers
pw:\\mb-us-pw.bentley.com\mb-us-pw-03\Documents\Cleveland_OH\01_Projects\ODOT\District2\82382\400-Engineering\Roadway\Sheets\82382_GF7302.dgn

DESIGN AGENCY
Michael Baker INTERNATIONAL

DESIGNER
KJM

REVIEWER
KGJ 05/22/24

PROJECT ID
82382

SHEET 670 | TOTAL 2696

CROSS REFERENCES	
SHEET	DESCRIPTION
73	UTILITY SYMBOL LEGEND
70	PR. TYPICAL SECTIONS
430 - 489	SUBSUMMARIES
679 - 710	REMOVAL PLAN
1003 - 1005	CROSS SECTIONS
1070 - 1071	INTERSECTION DETAIL
1092 - 1120	DRAINAGE PLANS
1191 - 1192	WALL AD
1724 - 1741	LIGHTING PLAN
1807 - 1817	LANDSCAPING
2383 - 2386	FENCE PLAN

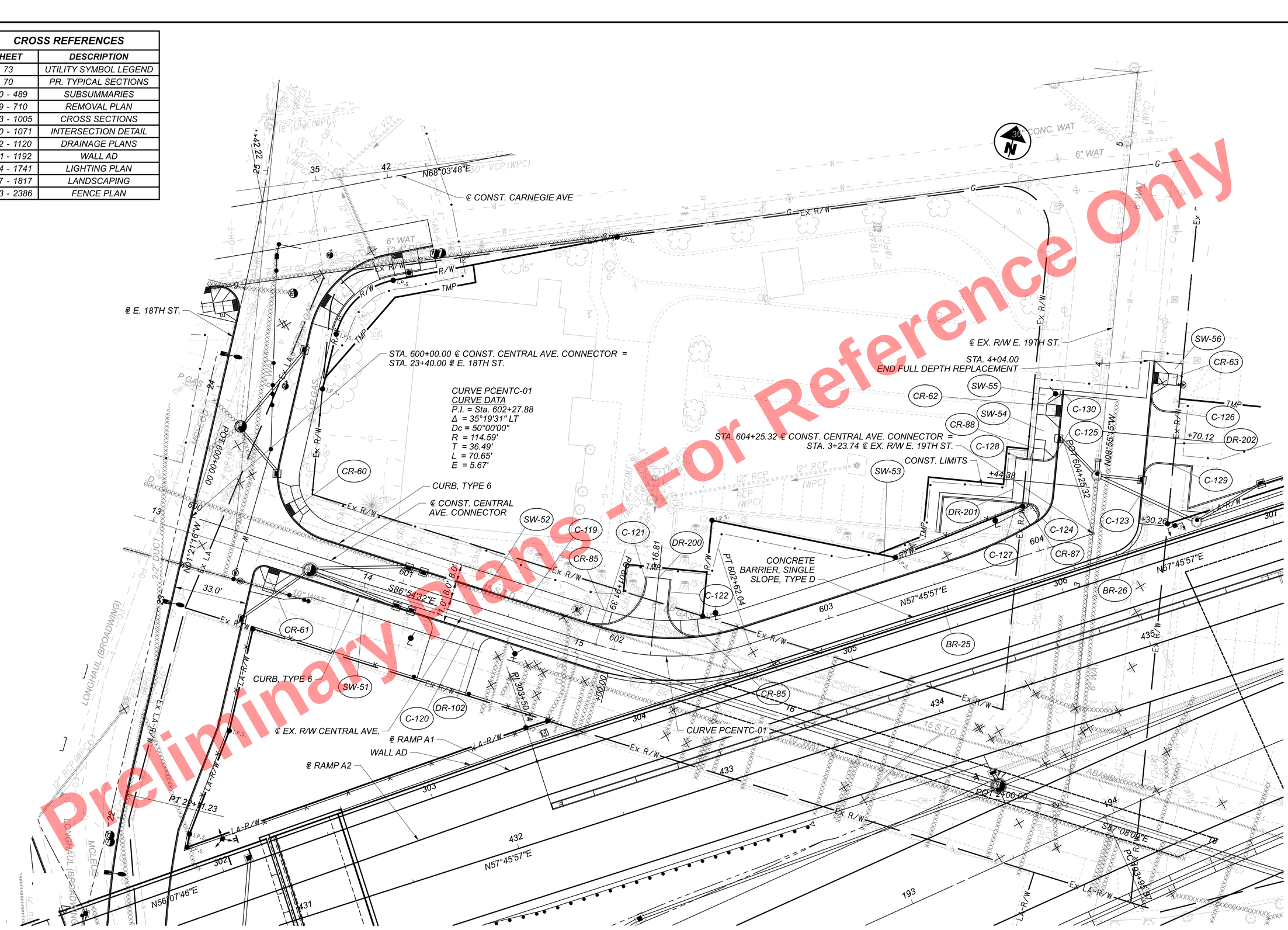

HORIZONTAL SCALE IN FEET
0 10 20 40

PLAN - CENTRAL AVE. CONNECTOR BEGIN TO END

DESIGN AGENCY
Michael Baker INTERNATIONAL

DESIGNER KJM
REVIEWER KGJ 05/22/24
PROJECT ID 82382
SHEET 671 TOTAL 2696

CUY-90-16.28 (CCG3A)

MODEL: 82382_GP792I PAPERSIZE: 34x22 (in.) DATE: 6/9/2025 TIME: 06:20 PM USER: Julie.Ross
pw:\\mb-us-pw.bentley.com:mb-us-pw-03\Documents\Cleveland.OH\OI_Projects\000T\District2\82382\400-Engineering\Roadway\Sheets\82382_GP792I.dgn

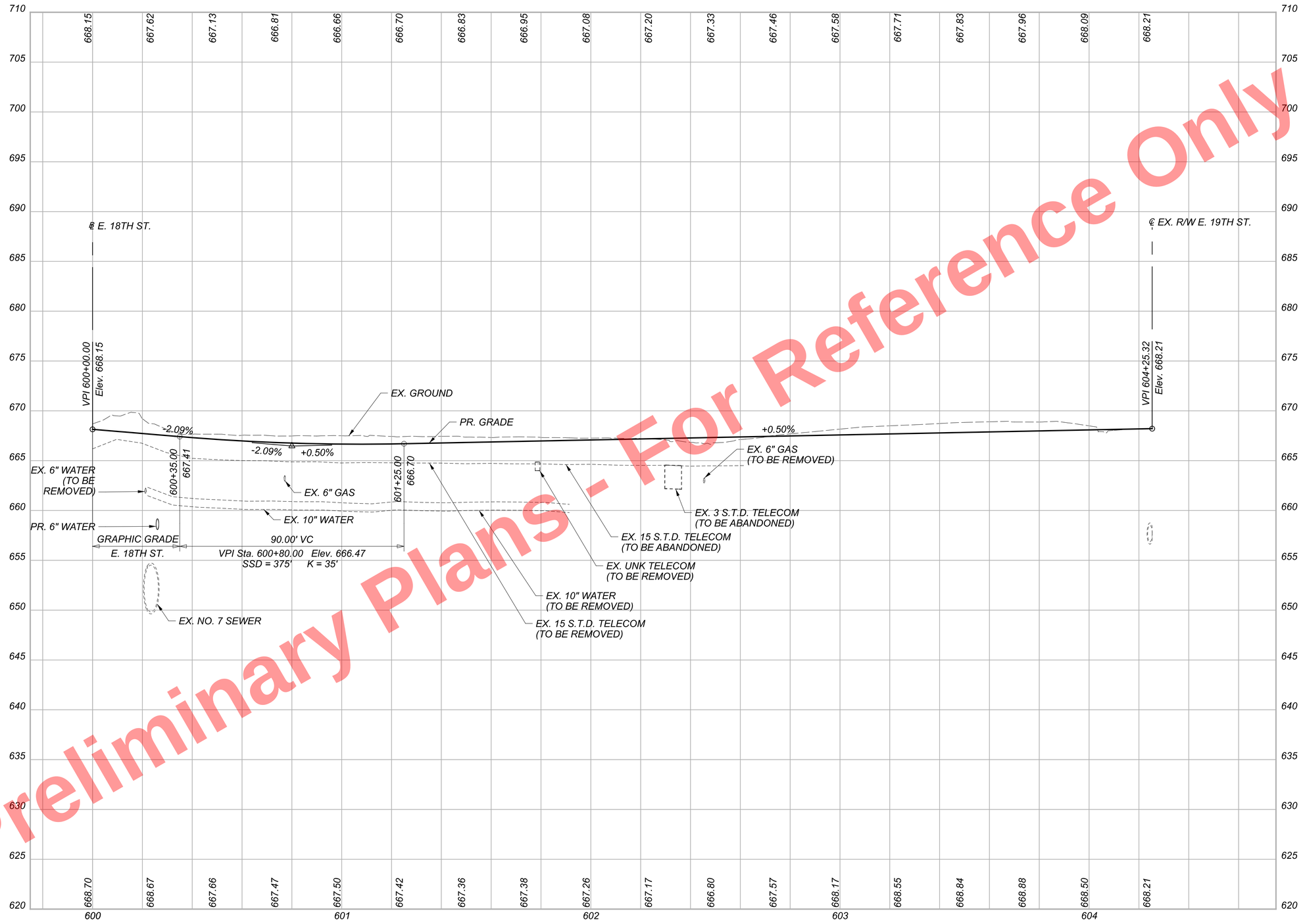

Preliminary Plans - For Reference Only

PROFILE - CENTRAL AVE. CONNECTOR
BEGIN TO END

CUY-90-16.28 (CCG3A)

MODEL: 82382_GF792I PAPERSIZE: 34x22 (in.) DATE: 3/27/2025 TIME: 10:24:54 PM USER: Alexandria.Summers
pw:\\mb-us-pw.bentley.com:mb-us-pw-03\Documents\Cleveland_OH\OI_Projects\ODOT\District 12\82382\400-Engineering\Roadway\Sheets\82382_GF792I.dgn

DESIGN AGENCY
Michael Baker INTERNATIONAL

DESIGNER
KJM

REVIEWER
KGJ 05/22/24

PROJECT ID
82382

SHEET 672 | TOTAL 2696

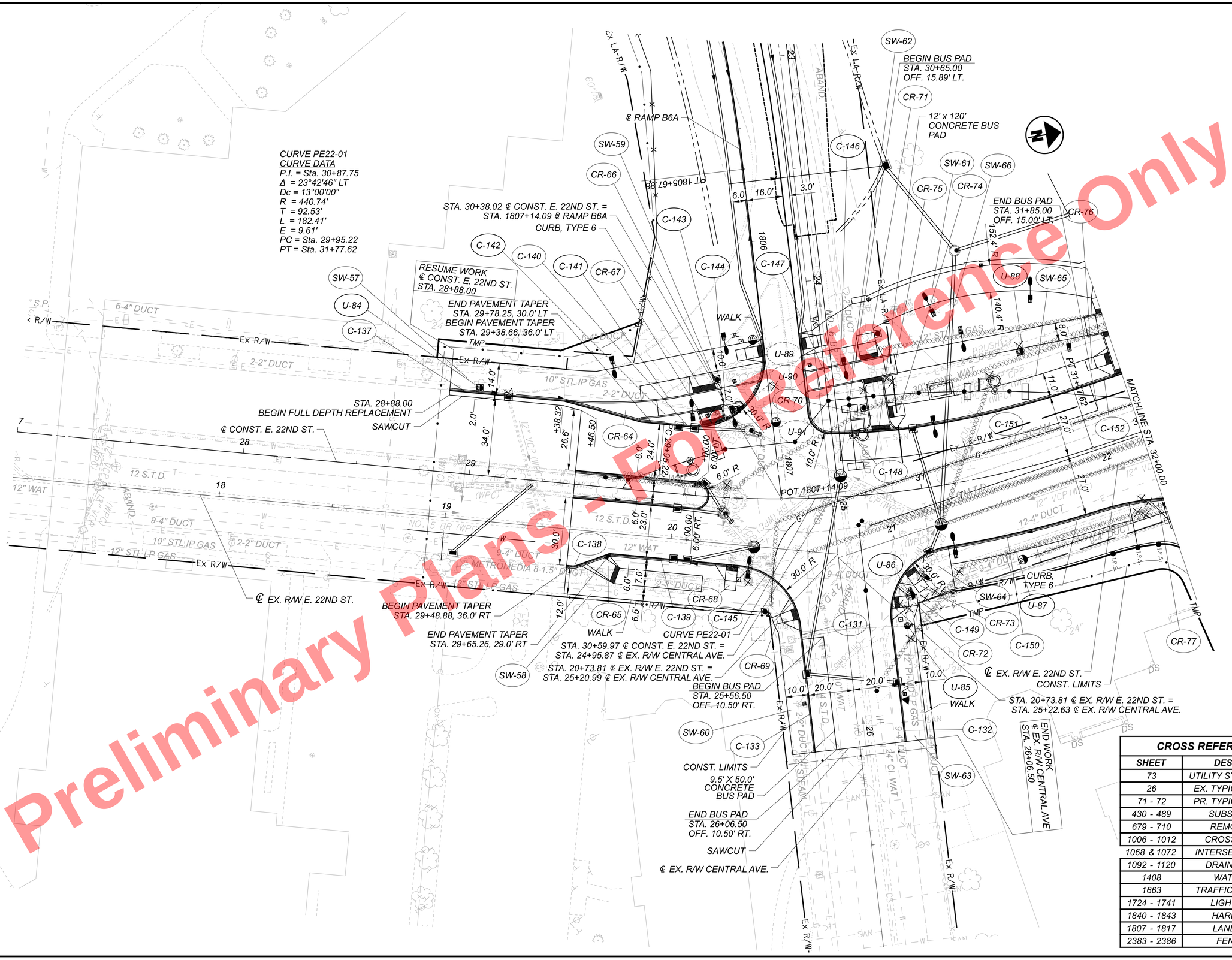

Preliminary Plans - Not For Reference Only

CROSS REFERENCES

SHEET	DESCRIPTION
73	UTILITY SYMBOL LEGEND
26	EX. TYPICAL SECTIONS
71 - 72	PR. TYPICAL SECTIONS
430 - 489	SUBSUMMARIES
679 - 710	REMOVAL PLAN
1006 - 1012	CROSS SECTIONS
1068 & 1072	INTERSECTION DETAIL
1092 - 1120	DRAINAGE PLANS
1408	WATER WORK
1663	TRAFFIC SIGNAL PLAN
1724 - 1741	LIGHTING PLAN
1840 - 1843	HARDSCAPING
1807 - 1817	LANDSCAPING
2383 - 2386	FENCE PLAN

HORIZONTAL
SCALE IN FEET
0 10 20 40

PLAN - E. 22ND ST.
BEGIN TO STA. 32+00.00

DESIGN AGENCY
Michael Baker INTERNATIONAL

DESIGNER KJM
REVIEWER KGJ 05/22/24
PROJECT ID 82382
SHEET 673 TOTAL 2696

CUY-90-16.28 (CCG3A)

MODEL: 82382_GP740I PAPERSIZE: 34x22 (In) DATE: 3/27/2025 TIME: 01:25:06 PM USER: Alexandria.Summers
pw:\\mb-us-pw.bentley.com:mb-us-pw-03\Documents\Cleveland_OH\01_Projects\DOT\Dist1\Ch12\82382.400-Engineering\Roadway\Sheets\82382_GP740I.dgn

Preliminary Plans - For Reference Only

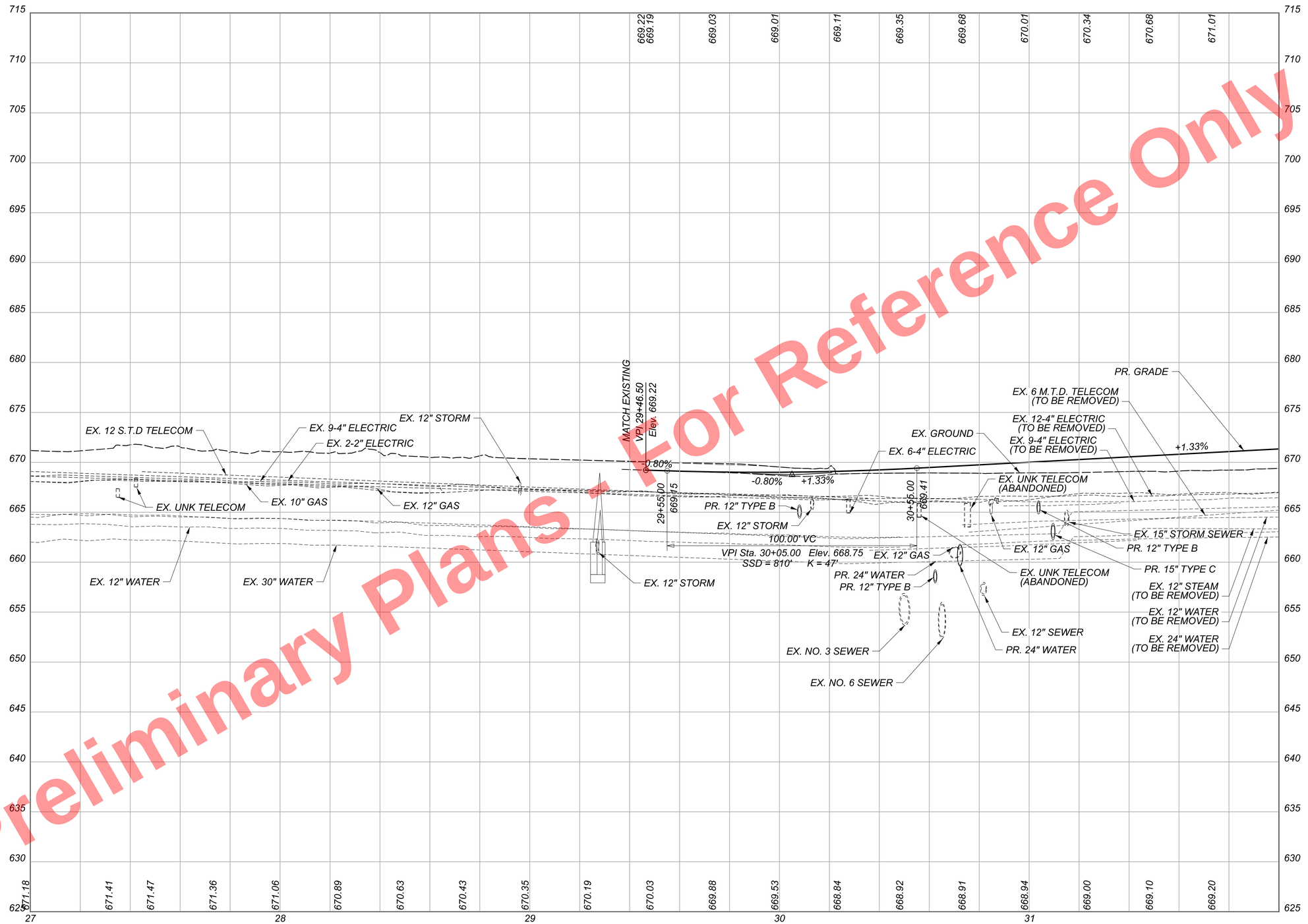

PROFILE - E. 22ND ST.
BEGIN TO STA. 32+00.00

CUY-90-16.28 (CCG3A)

MODEL: 82382_GF740I PAPERSIZE: 34x22 (In.) DATE: 3/27/2025 TIME: 10:25:40 PM USER: Alexandria.Summers
pw:\\mb-us-pw.bentley.com:mb-us-pw-03\Documents\Cleveland.OH\01_Projects\ODOT\District2\82382\400-Engineering\Roadway\Sheets\82382_GF740I.dgn

DESIGN AGENCY
Michael Baker INTERNATIONAL

DESIGNER KJM
REVIEWER KGJ 05/22/24
PROJECT ID 82382
SHEET 674 TOTAL 2696

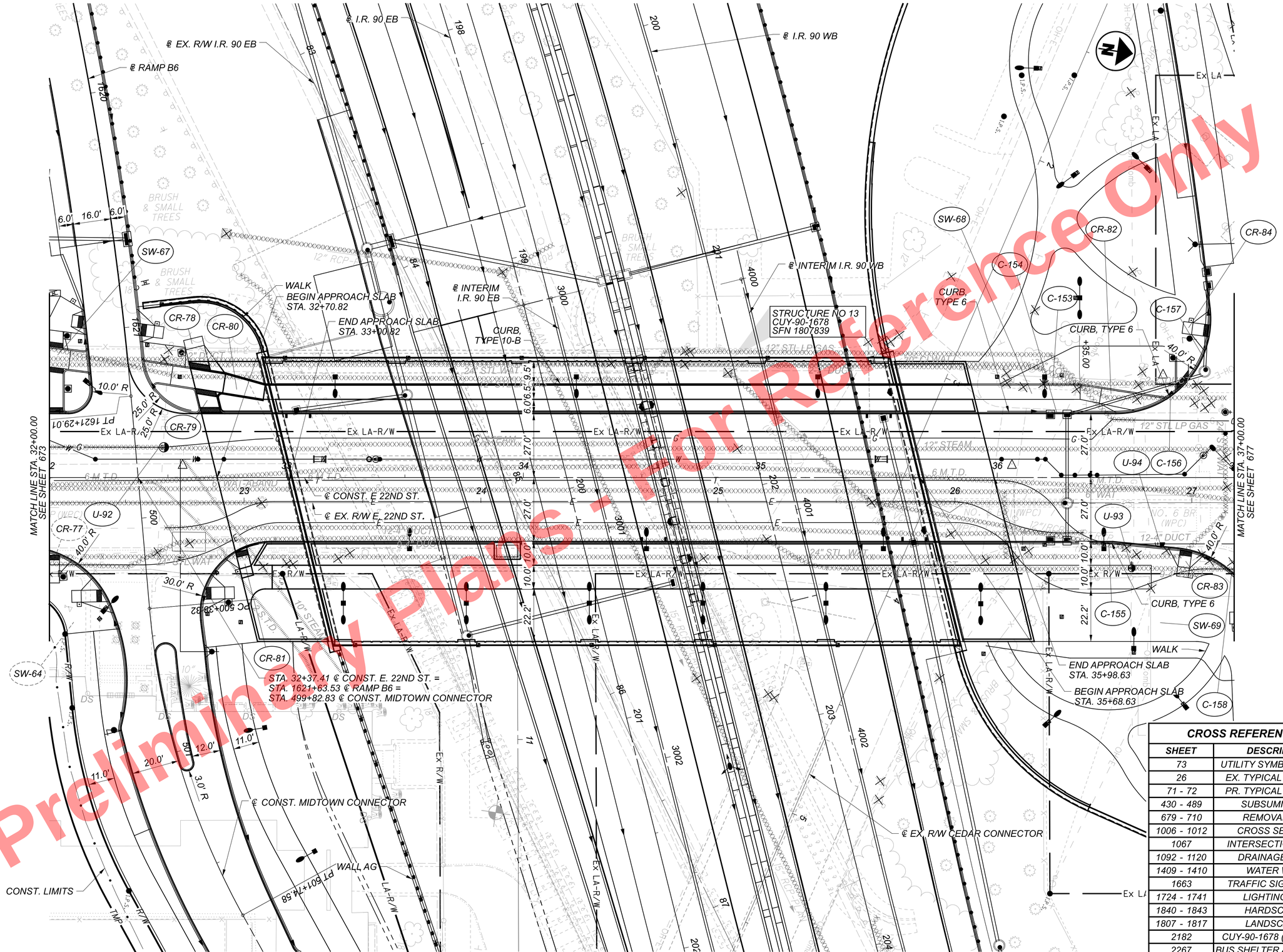

CROSS REFERENCES	
SHEET	DESCRIPTION
73	UTILITY SYMBOL LEGEND
26	EX. TYPICAL SECTIONS
71 - 72	PR. TYPICAL SECTIONS
430 - 489	SUBSUMMARIES
679 - 710	REMOVAL PLAN
1006 - 1012	CROSS SECTIONS
1067	INTERSECTION DETAIL
1092 - 1120	DRAINAGE PLANS
1409 - 1410	WATER WORK
1663	TRAFFIC SIGNAL PLAN
1724 - 1741	LIGHTING PLAN
1840 - 1843	HARDSCAPING
1807 - 1817	LANDSCAPING
2182	CUY-90-1678 (BRIDGE 13)
2267	BUS SHELTER ANCHORAGE
2383 - 2386	FENCE PLAN

HORIZONTAL SCALE IN FEET
0 10 20 40

PLAN - E. 22ND ST.
STA. 32+00.00 TO STA. 37+00.00

DESIGN AGENCY
Michael Baker INTERNATIONAL

DESIGNER KJM
REVIEWER KGJ 05/22/24
PROJECT ID 82382
SHEET 675 TOTAL 2696

CUY-90-16.28 (CCG3A)

MODEL: 82382_GP7402 PAPERSIZE: 34x22 (in.) DATE: 3/27/2025 TIME: 10:25:52 PM USER: Alexandria.Summers
pw:\\mb-us-pw.bentley.com:mb-us-pw-03\Documents\Cleveland_OH\01_Projects\ODOT\District2\82382\400-Engineering\Roadway\Sheets\82382_GP7402.dgn

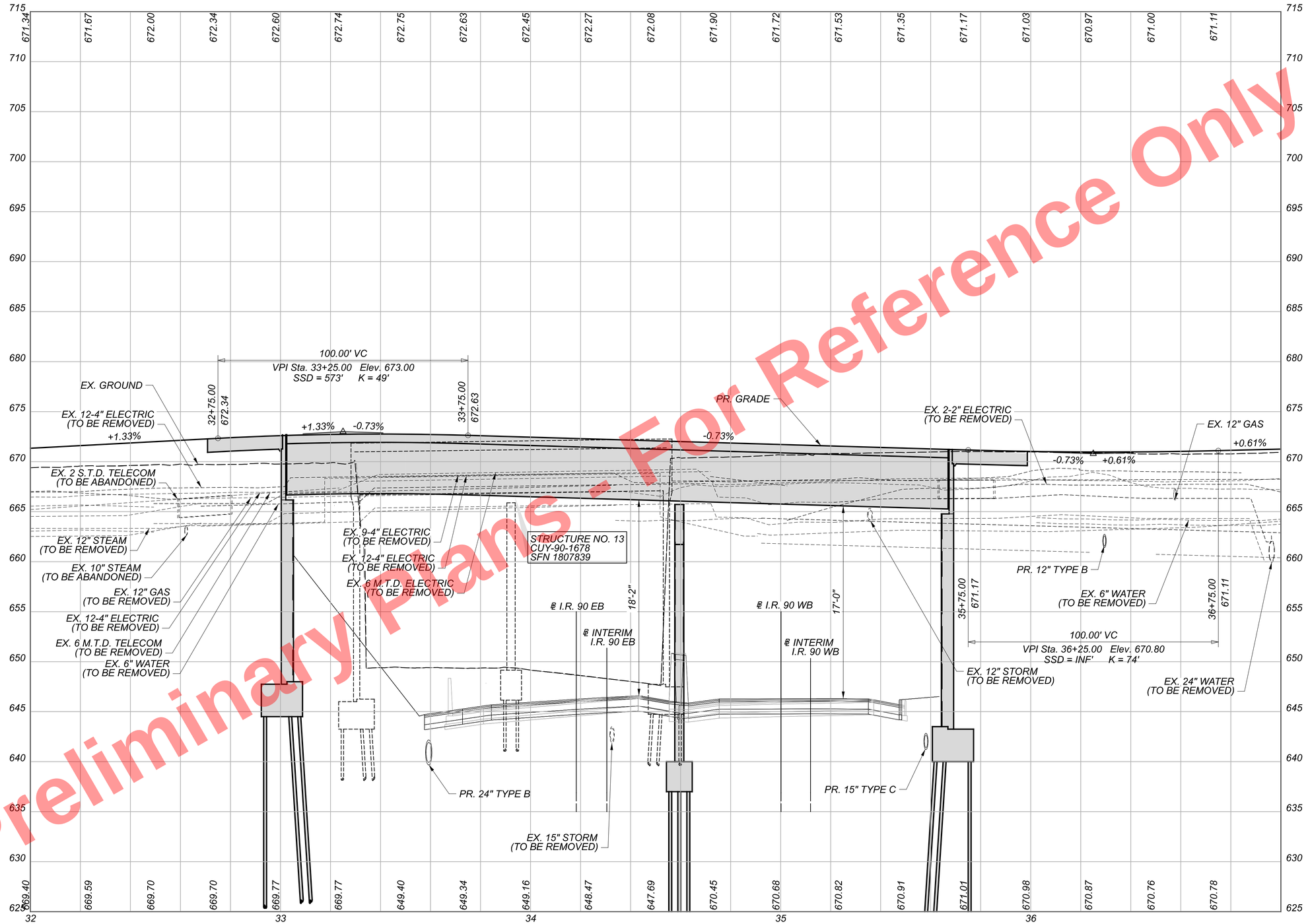

Preliminary Plans - Not For Reference Only

PROFILE - E. 22ND ST.
STA. 32+00.00 TO STA. 37+00.00

CUY-90-16.28 (CCG3A)

MODEL: 82382_GF7402 PAPERSIZE: 34x22 (in.) DATE: 3/27/2025 TIME: 10:26:25 PM USER: AlexandriaSummers
pw:\\mb-us-pw.bentley.commb-us-pw-03\Documents\Cleveland.OH\OI_Projects\ODOT\District2\82382\400-Engineering\Roadway\Sheets\82382_GF7402.dgn

DESIGN AGENCY
Michael Baker INTERNATIONAL

DESIGNER KJM
REVIEWER KGJ 05/22/24
PROJECT ID 82382
SHEET 676 TOTAL 2696

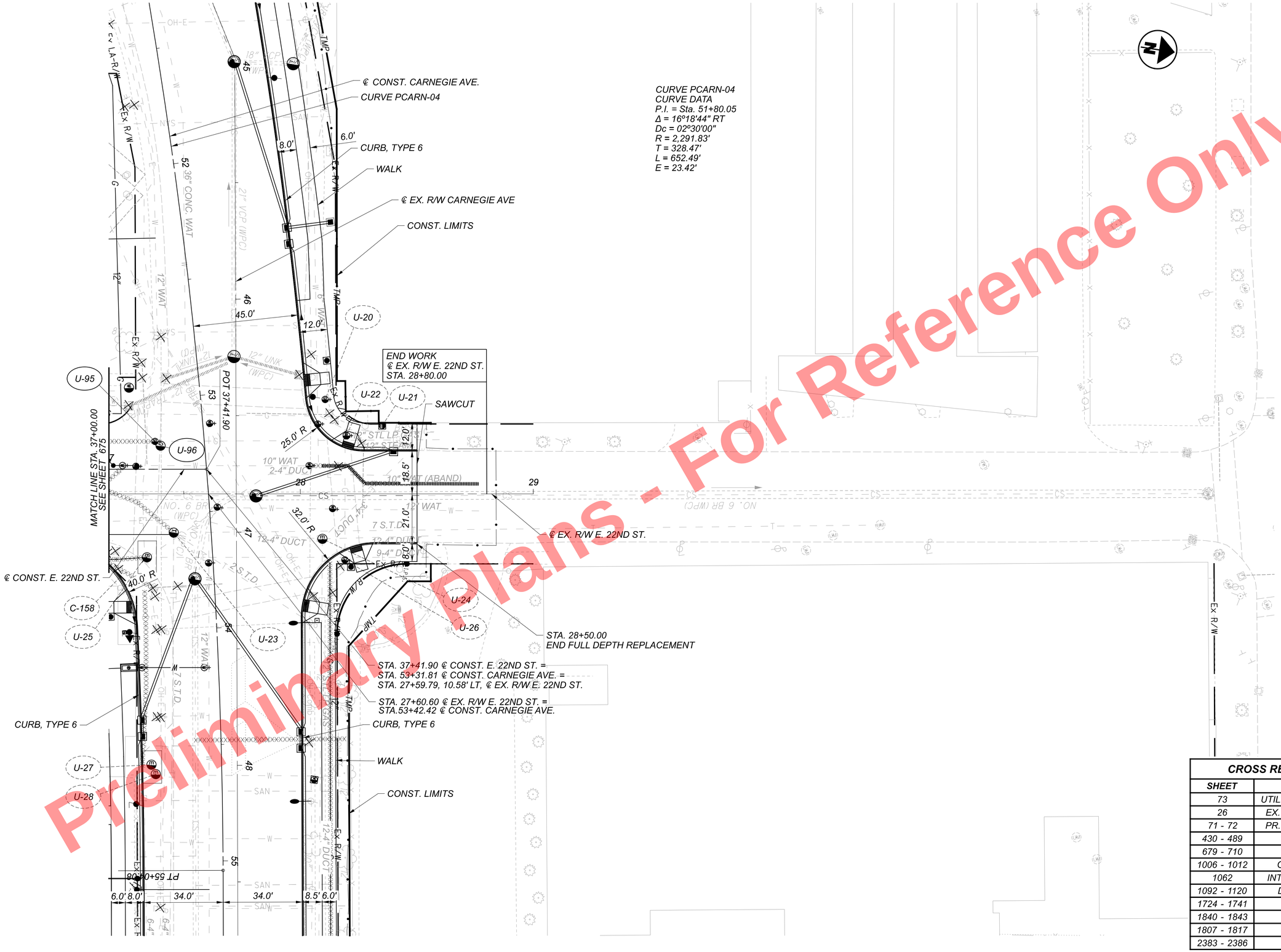

Preliminary Plans - For Reference Only

HORIZONTAL SCALE IN FEET
0 10 20 40

PLAN - E. 22ND ST. STA. 37+00.00 TO END

CROSS REFERENCES	
SHEET	DESCRIPTION
73	UTILITY SYMBOL LEGEND
26	EX. TYPICAL SECTIONS
71 - 72	PR. TYPICAL SECTIONS
430 - 489	SUBSUMMARIES
679 - 710	REMOVAL PLAN
1006 - 1012	CROSS SECTIONS
1062	INTERSECTION DETAIL
1092 - 1120	DRAINAGE PLANS
1724 - 1741	LIGHTING PLAN
1840 - 1843	HARDSCAPING
1807 - 1817	LANDSCAPING
2383 - 2386	FENCE PLAN

DESIGN AGENCY
Michael Baker INTERNATIONAL

DESIGNER KJM

REVIEWER KGJ 05/22/24

PROJECT ID 82382

SHEET 677 TOTAL 2696

CUY-90-16.28 (CCG3A)

MODEL: 82382_GP7403 PAPERSIZE: 34x22 (in.) DATE: 3/27/2025 TIME: 10:26:37 PM USER: Alexandria.Summers
pw:\\mb-us-pw.bentley.com:mb-us-pw-03\Documents\Cleveland_OH\01_Projects\000T\District2\82382\400-Engineering\Roadway\Sheets\82382_GP7403.dgn

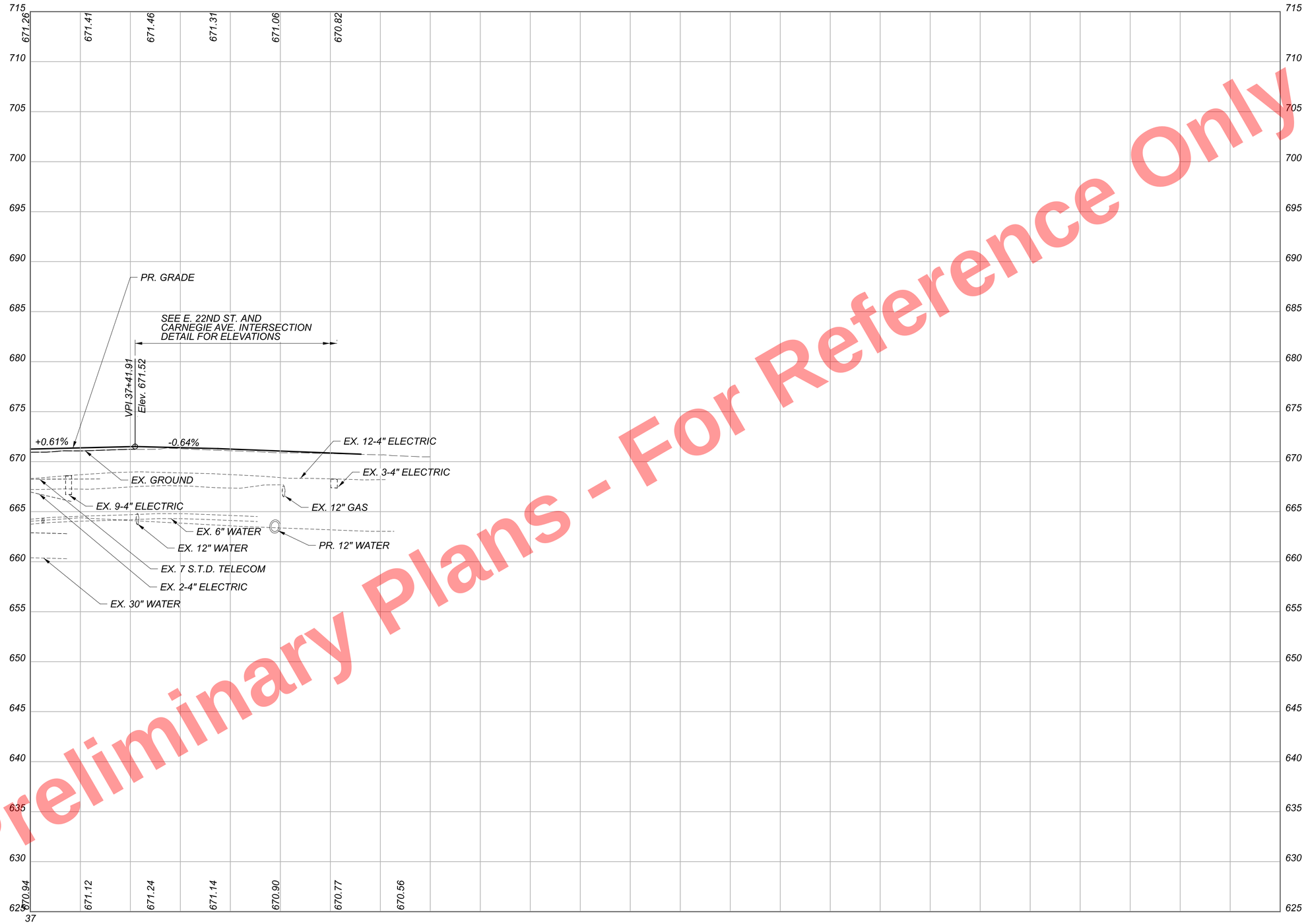

Preliminary Plans - For Reference Only

PROFILE - E. 22ND ST.
STA. 37+00.00 TO END

CUY-90-16.28 (CCG3A)

MODEL: 82382_GF7403 PAPERSIZE: 34x22 (in.) DATE: 3/27/2025 TIME: 10:27:08 PM USER: Alexandria.Summers
pw:\\mb-us-pw.bentley.commb-us-pw-03\Documents\Cleveland_OH\01_Projects\ODOT\District2\82382\400-Engineering\Roadway\Sheets\82382_GF7403.dgn

DESIGN AGENCY
Michael Baker INTERNATIONAL

DESIGNER
KJM

REVIEWER
KGJ 05/22/24

PROJECT ID
82382

SHEET 678 | TOTAL 2696

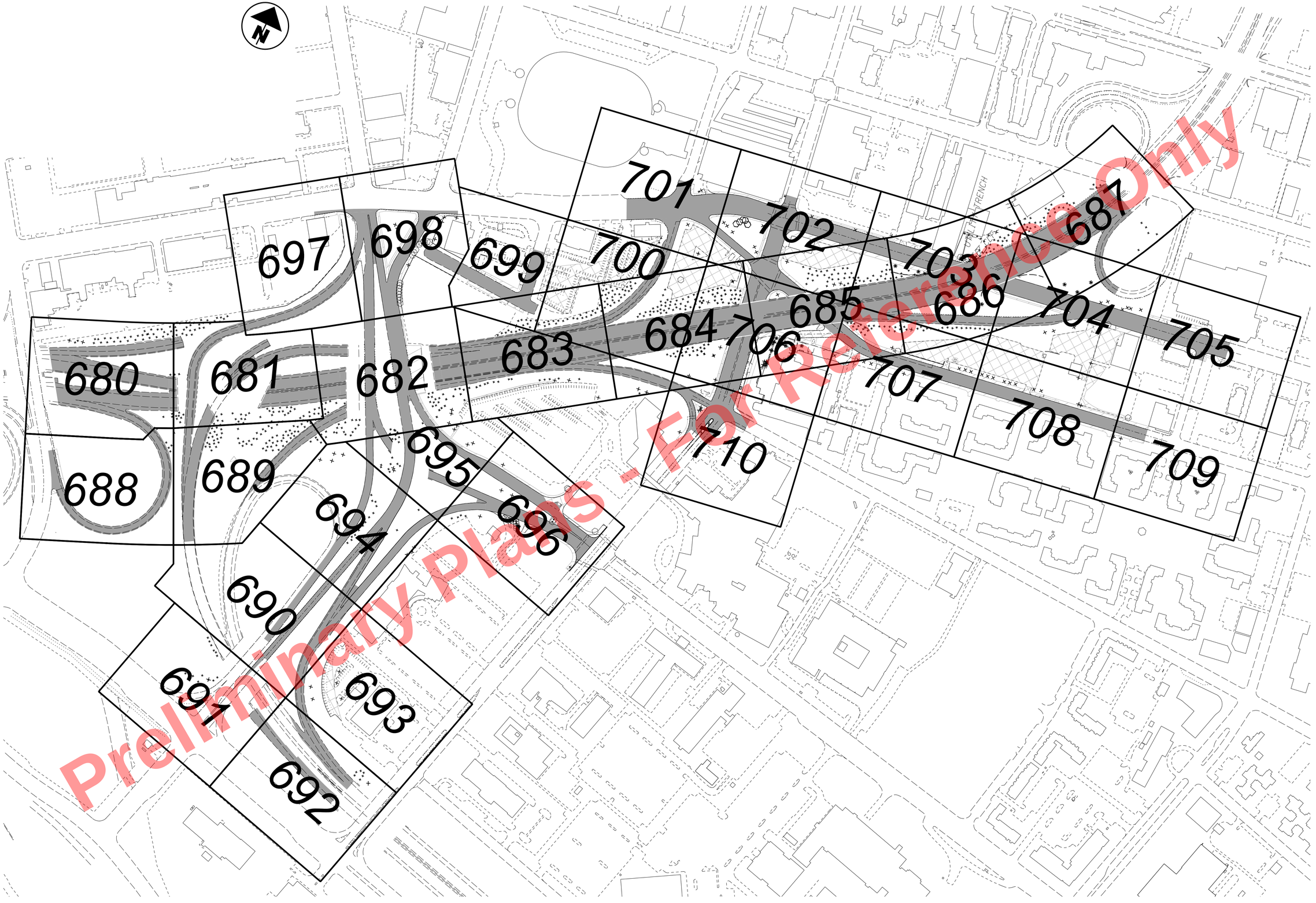

Preliminary Plans - Plans for Reference Only

HORIZONTAL SCALE IN FEET
0 75 150 300

REMOVAL PLAN
KEY PLAN

DESIGN AGENCY
Michael Baker INTERNATIONAL

DESIGNER KJM
REVIEWER KGJ 05/22/24
PROJECT ID 82382
SHEET 679 TOTAL 2696

CUY-90-16.28 (CCG3A)

MODEL: Sheet PAPERSIZE: 34x22 (in.) DATE: 3/27/2025 TIME: 10:27:21 PM USER: AlexandriaSummers
pw:\\mb-us-pw.bentley.com:mb-us-pw-03\Documents\Cleveland_OH\01_Projects\ODOT\District2\82382\400-Engineering\Roadway\Sheets\8238_GP900i.dgn

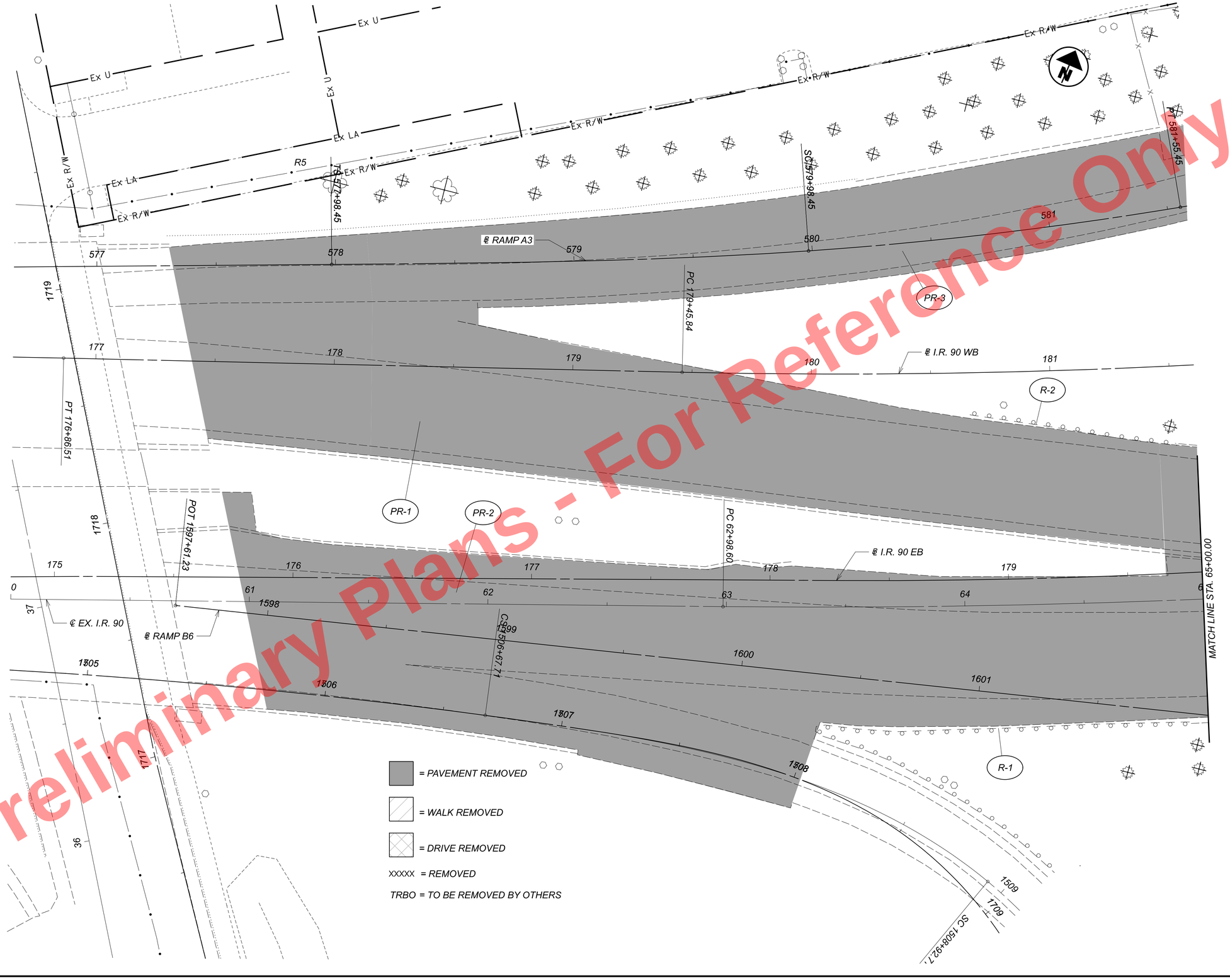

Preliminary Plans - For Reference Only

HORIZONTAL SCALE IN FEET
0 10 20 40

REMOVAL PLAN - I.R. 90
STA. 60+00 TO STA. 65+00

CUY-90-16.28 (CCG3A)

MODEL: 82382_GP920I PAPERSIZE: 34x22 (in.) DATE: 3/27/2025 TIME: 02:36 PM USER: Alexandria.Summers
pw:\\mb-us-pw.bentley.com:mb-us-pw-03\Documents\Cleveland_OH\OI_Projects\ODOT\District#12\82382\400-Engineering\Roadway\Sheets\82382_GP920I.dgn

DESIGN AGENCY
B&N
burgessniple.com

DESIGNER
AJS

REVIEWER
MRT 05/01/24

PROJECT ID
82382

SHEET 680
TOTAL 2696

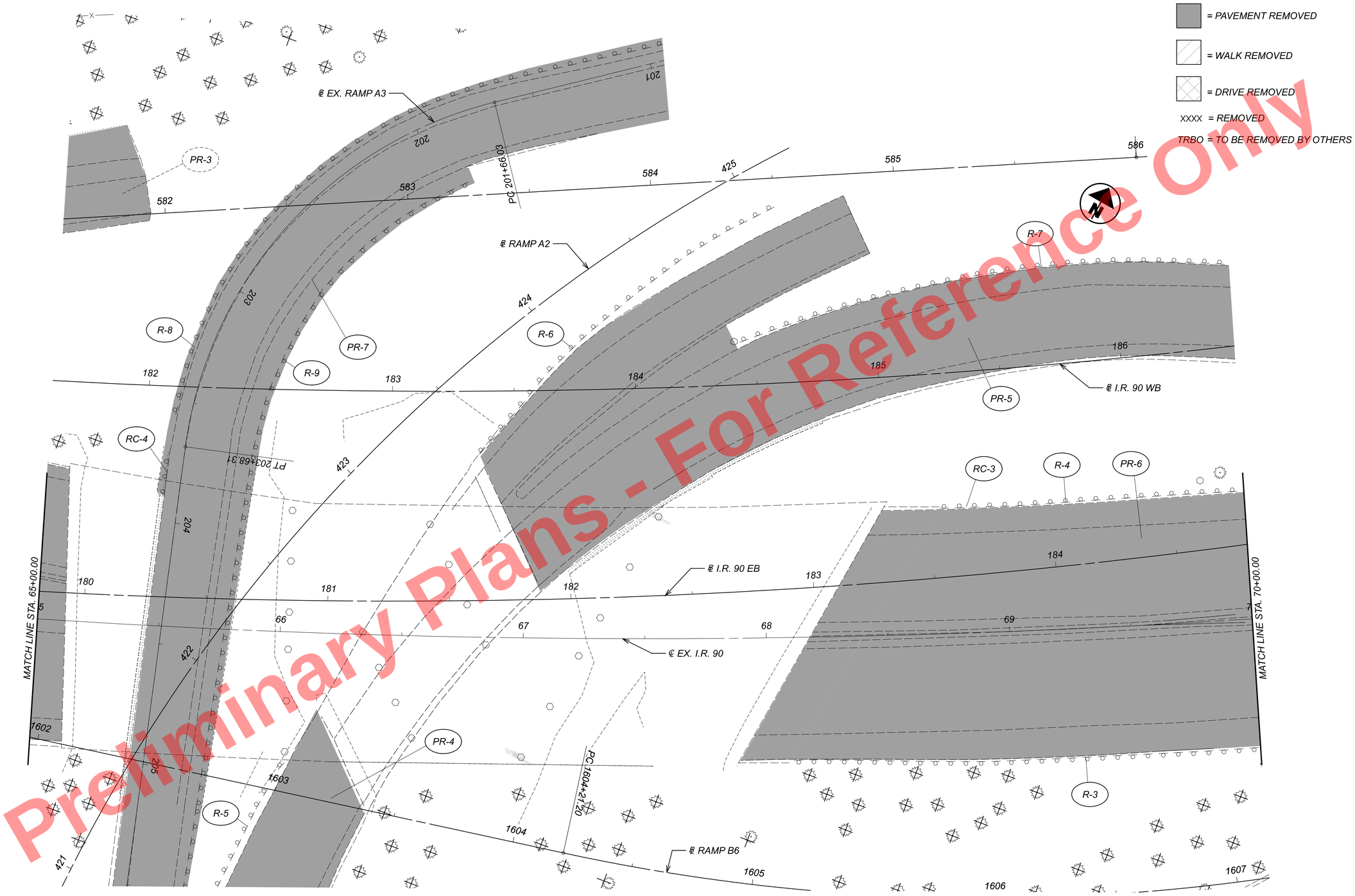

Preliminary Plans - For Reference Only

HORIZONTAL SCALE IN FEET
0 10 20 40

REMOVAL PLAN - I.R. 90
STA. 65+00 TO STA. 70+0

CUY-90-16.28 (CCG3A)

MODEL: 82382_GP9202 PAPERSIZE: 34x22 (in.) DATE: 3/27/2025 TIME: 10:27:50 PM USER: AlexandriaSummers
pw:\\mb-us-pw.bentley.com:mb-us-pw-03\Documents\Cleveland.OH\01_Projects\ODOT\District2\82382\400-Engineering\Roadway\Sheets\82382_GP9202.dgn

DESIGN AGENCY
B&N
burgessniple.com

DESIGNER AJS
REVIEWER MRT 05/01/24
PROJECT ID 82382
SHEET 681 TOTAL 2696

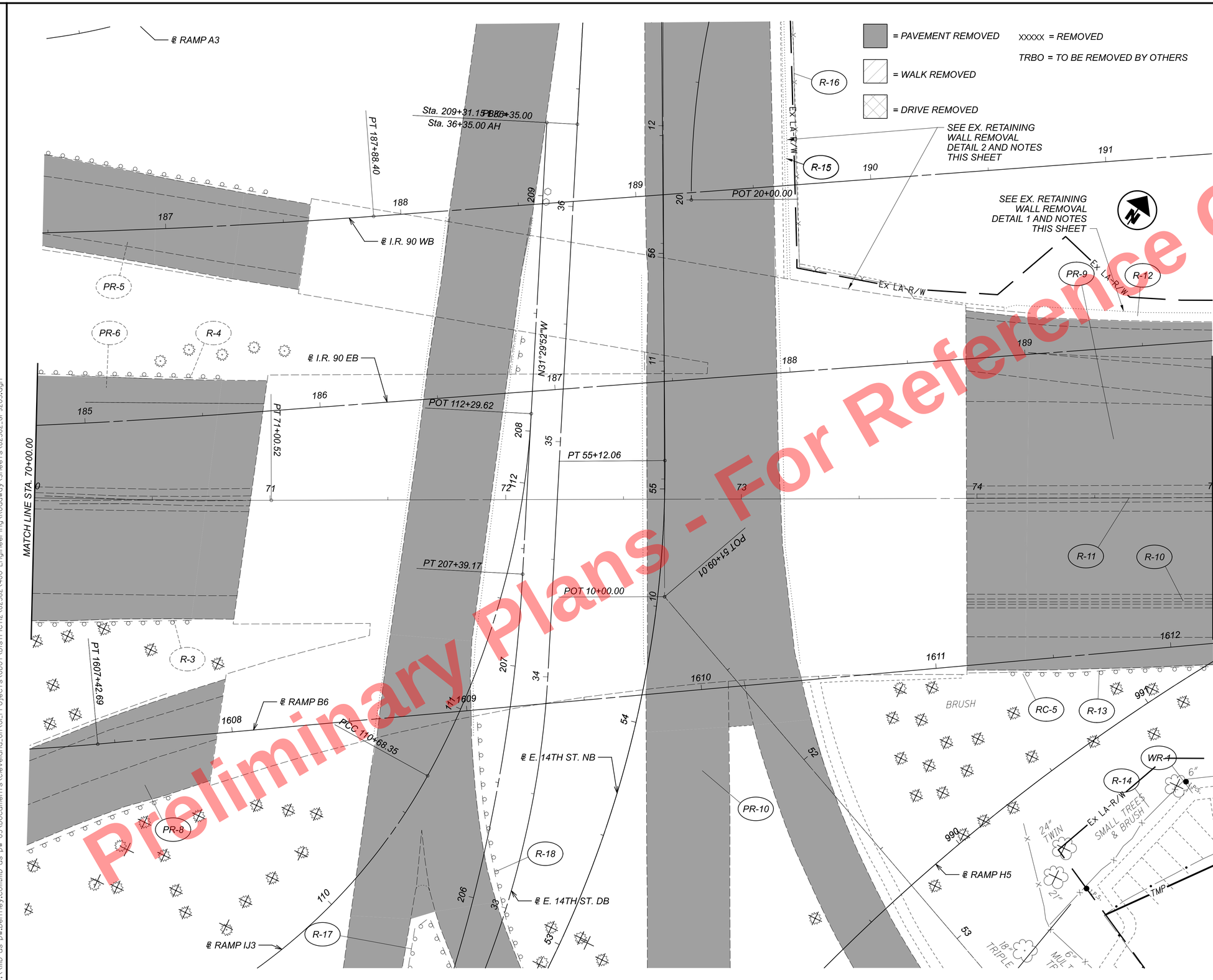

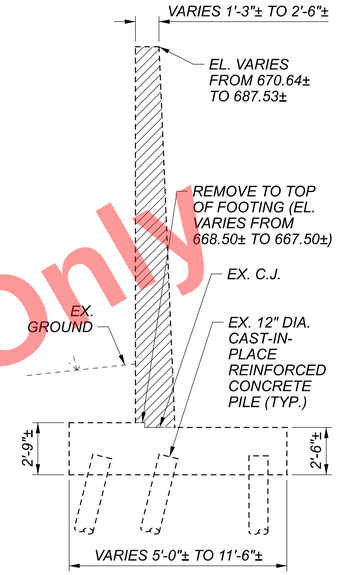

EX. RETAINING WALL REMOVAL DETAIL 1

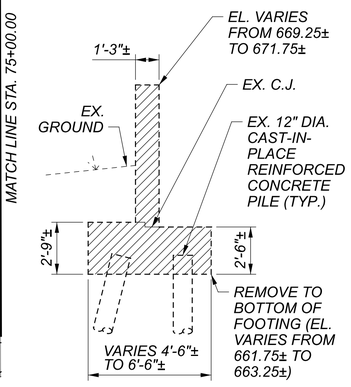

EX. RETAINING WALL REMOVAL DETAIL 2

NOTES:

1. REMOVE RETAINING WALL PORTIONS PARALLEL TO I.R. 90 IN PHASE 7 MOT.
2. REMOVE RETAINING WALL PORTIONS PARALLEL TO EAST 14TH PRIOR TO PHASE 5 MOT.
3. SEE STRUCTURE SHEETS 2042/2696 , 2044/2696 , AND 2046/2696 FOR MORE RETAINING WALL REMOVAL DETAILS.

Preliminary Plans - For Reference Only

HORIZONTAL SCALE IN FEET 0 10 20 40

REMOVAL PLAN - I.R. 90
STA. 70+00 TO STA. 75+00

DESIGN AGENCY
B&N
burgessniple.com

DESIGNER AJS
REVIEWER MRT 05/01/24
PROJECT ID 82382
SHEET 682 TOTAL 2696

CUY-90-16.28 (CCG3A)

MODEL: 82382_GP9203 PAPERSIZE: 34x22 (in.) DATE: 3/27/2025 TIME: 10:28:09 PM USER: Alexandria.Summers
pw:\\mb-us-pw.bentley.com:mb-us-pw-03\Documents\Cleveland_OH\OI_Projects\ODOT\District12\82382\400-Engineering\Roadway\Sheets\82382_GP9203.dgn

Preliminary Plans - For Reference Only

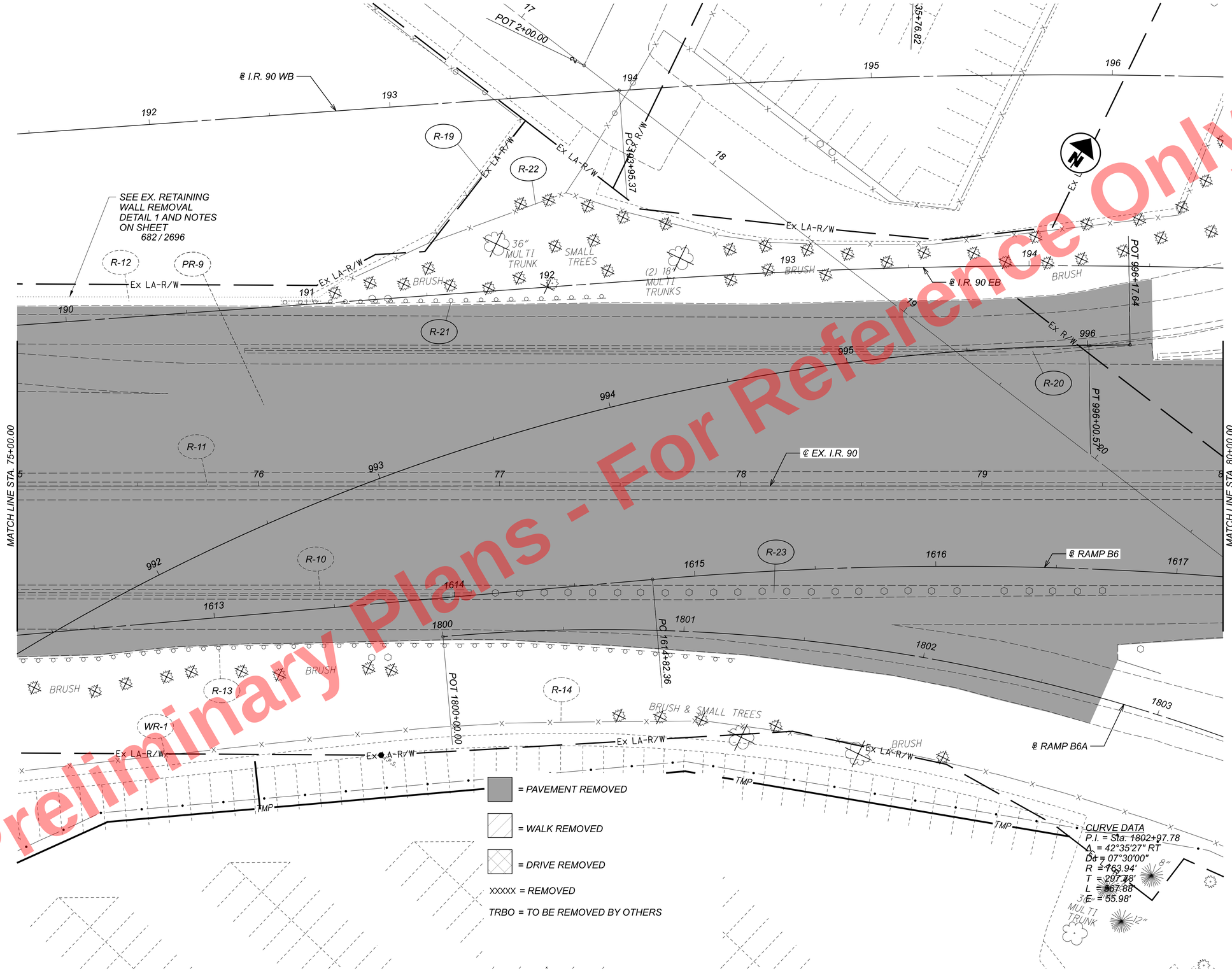

HORIZONTAL SCALE IN FEET
0 10 20 40

REMOVAL PLAN - I.R. 90
STA. 75+00 TO STA. 80+00

CUY-90-16.28 (CCG3A)

MODEL: 82382_GP9204 PAPERSIZE: 34x22 (In.) DATE: 3/27/2025 TIME: 10:28:21PM USER: Alexandria.Summers
pw:\\mb-us-pw.bentley.com:mb-us-pw-03\Documents\Cleveland_OH\DL_Projects\ODOT\District2\82382\400-Engineering\Roadway\Sheets\8238

DESIGN AGENCY
B&N
burgessniple.com

DESIGNER AJS
REVIEWER MRT 05/01/24
PROJECT ID 82382
SHEET 683 TOTAL 2696

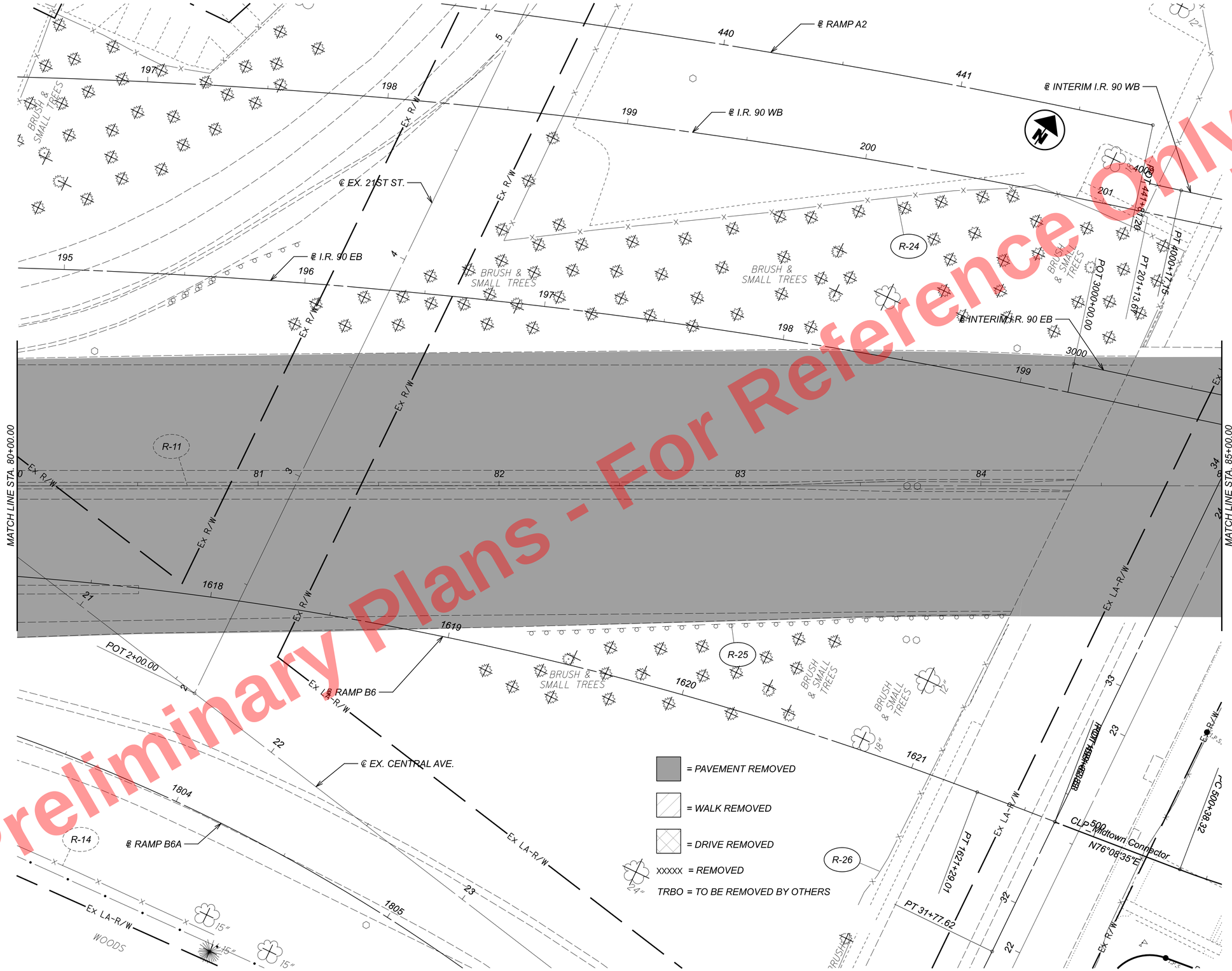

Preliminary Plans - For Reference Only

HORIZONTAL SCALE IN FEET
0 10 20 40

REMOVAL PLAN - I.R. 90
STA. 80+00 TO STA. 85+00

DESIGN AGENCY
B&N
burgessniple.com

DESIGNER AJS
REVIEWER MRT 05/01/24
PROJECT ID 82382
SHEET 684 TOTAL 2696

CUY-90-16.28 (CCG3A)

MODEL: 82382_GP9205 PAPERSIZE: 34x22 (in.) DATE: 3/27/2025 TIME: 10:28:34 PM USER: Alexandria.Summers
pw:\\mb-us-pw.bentley.com:mb-us-pw-03\Documents\Cleveland_OH\OI_Projects\0007\District2\82382\400-Engineering\Engineering\Roadway\Sheets\82382_GP9205.dgn

Preliminary Plans - For Reference Only

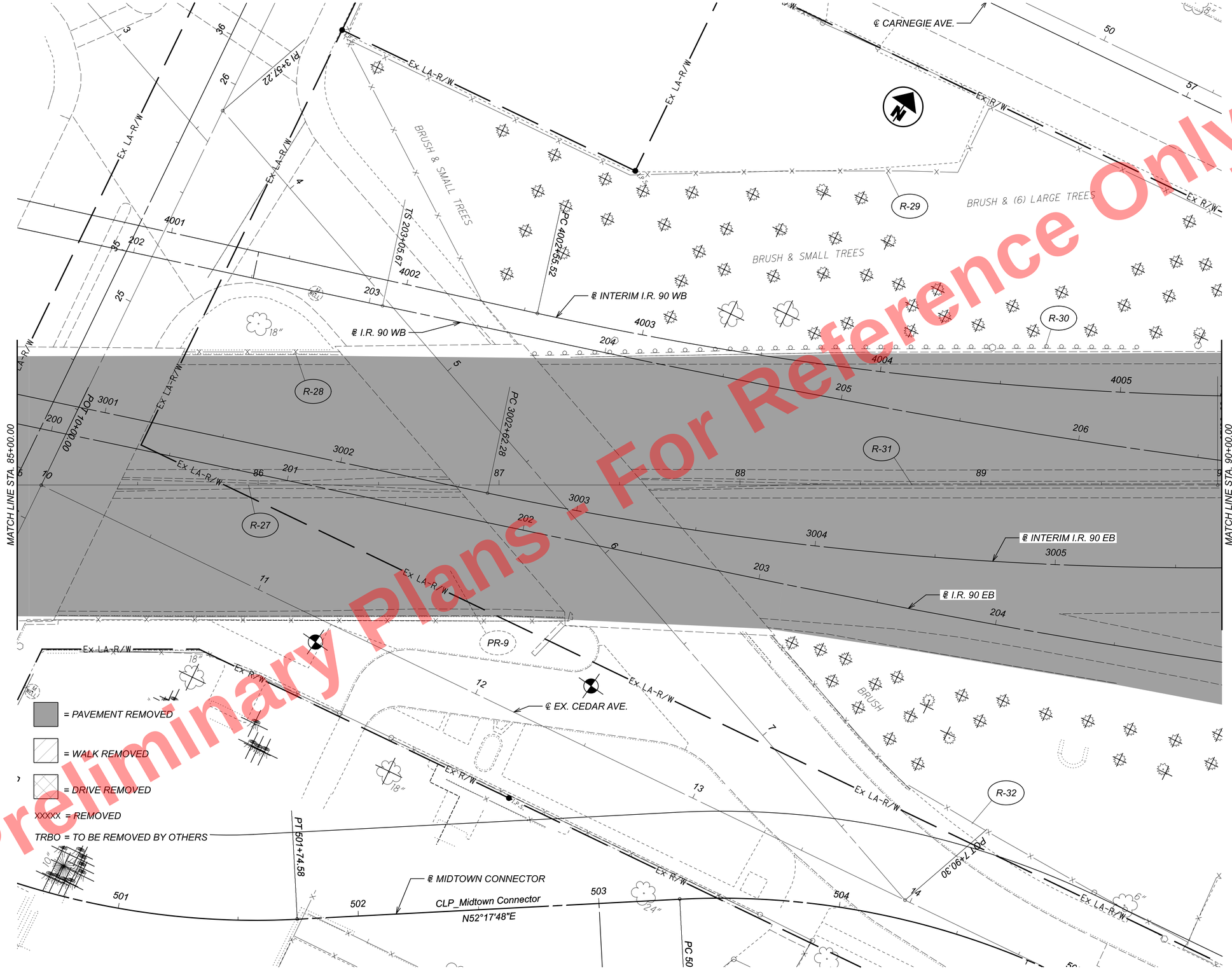

HORIZONTAL SCALE IN FEET
0 10 20 40

REMOVAL PLAN - I.R. 90
STA. 85+00 TO STA. 90+00

CUY-90-16.28 (CCG3A)

MODEL: 82382_GP9206 PAPERSIZE: 34x22 (in.) DATE: 3/27/2025 TIME: 10:28:44 PM USER: Alexandria.Summers
pw:\\mb-us-pw.bentley.com:mb-us-pw-03\Documents\Cleveland_OH\01_Projects\ODOT\District2\82382\400-Engineering\Roadway\Sheets\82382_GP9206.dgn

DESIGN AGENCY
B&N
burgessniple.com

DESIGNER AJS
REVIEWER MRT 05/01/24
PROJECT ID 82382
SHEET 685 TOTAL 2696

= PAVEMENT REMOVED

= WALK REMOVED

= DRIVE REMOVED

XXXXX = REMOVED

TRBO = TO BE REMOVED BY OTHERS

HORIZONTAL SCALE IN FEET
0 10 20 40

REMOVAL PLAN - I.R. 90
STA. 90+00 TO STA. 95+00

Preliminary Plans - For Reference Only

CUY-90-16.28 (CCG3A)
MODEL: 82382_GP9207 PAPERSIZE: 34x22 (in.) DATE: 3/27/2025 TIME: 10:28:58 PM USER: Alexandria.Summers
pw:\\mb-us-pw.bentley.com:mb-us-pw-03\Documents\Cleveland_OH\01_Projects\ODOT\District2\82382\400-Engineering\Roadway\Sheets\82382_GP9207.dgn

DESIGN AGENCY
B&N
burgessniple.com

DESIGNER
AJS

REVIEWER
MRT 05/01/24

PROJECT ID
82382

SHEET 686 | TOTAL 2696

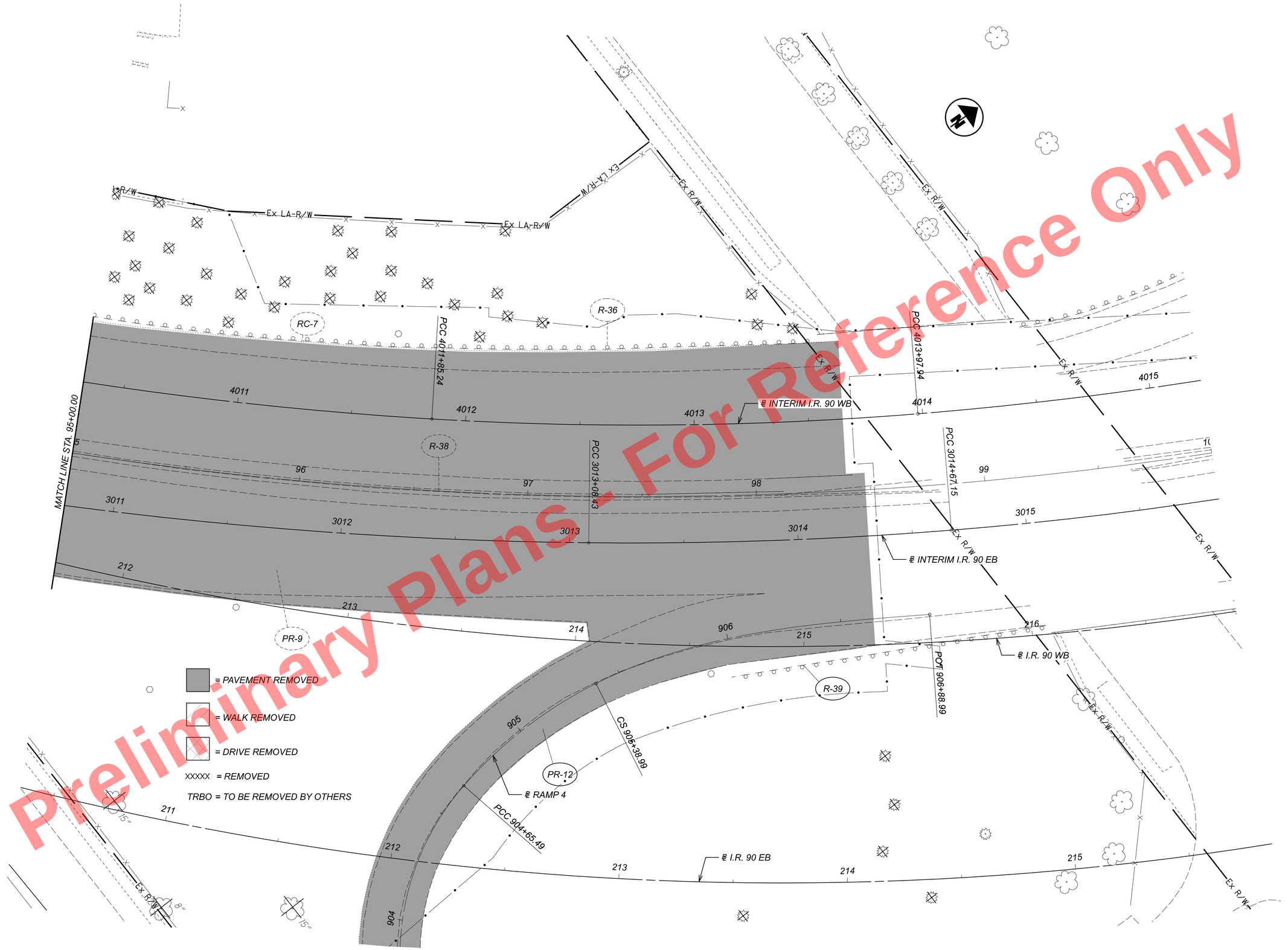

Preliminary Plans - For Reference Only

HORIZONTAL SCALE IN FEET
0 10 20 40

REMOVAL PLAN - I.R. 90
STA. 95+00 TO STA. 100+00

DESIGN AGENCY
B&N
burgessniple.com

DESIGNER
AJS

REVIEWER
MRT 05/01/24

PROJECT ID
82382

SHEET 687 TOTAL 2696

CUY-90-16.28 (CCG3A)

MODEL: 82382_GP9208 PAPERSIZE: 34x22 (in.) DATE: 3/27/2025 TIME: 10:29:08 PM USER: Alexandria.Summers
pw:\\mb-us-pw.bentley.com:mb-us-pw-03\Documents\Cleveland_OH\OI_Projects\ODOT\District12\82382\400-Engineering\Roadway\Sheets\82382_GP9208.dgn

Preliminary Plans - Not For Reference Only

MATCH LINE SEE SHEET 680

SC 1708+41.76

ST 1715+60.50

PT 34+90.38

CS 1714+10.50

POT 1514+63.86

PCC 1512+08.85

MATCH LINE SEE SHEET 689

RC-8

WR-3

RC-9

WR-4

PR-13

R-40

℄ RAMP IB5

℄ EX. RAMP B5

℄ EX. R/W E. 9TH ST.

CONST. LIMITS

= PAVEMENT REMOVED

= WALK REMOVED

= DRIVE REMOVED

XXXX = UTILITY REMOVED

TRBO = TO BE REMOVED BY OTHERS

15" RCP (WPC)

HORIZONTAL SCALE IN FEET

0 10 20 40

REMOVAL PLAN RAMP IB5

CUY-90-16.28 (CCG3A)

MODEL: HDR - Plan [(Sheet)] PAPERSIZE: 34x22 (in.) DATE: 3/27/2025 TIME: 10:29:32 PM USER: Alexandria.Summers
pw:\\mb-us-pw.bentley.com:mb-us-pw-03\Documents\Cleveland_OH\01_Projects\000T\District2\82382\400-Engineering\Roadway\Sheets\82382_GP930i.dgn

DESIGN AGENCY

HDR

DESIGNER TJS

REVIEWER BMV 04/30/24

PROJECT ID 82382

SHEET 688 TOTAL 2696

Preliminary Plans - For Reference Only

MATCH LINE SEE SHEET 681

MATCH LINE SEE SHEET 682

MATCH LINE SEE SHEET 688

MATCH LINE SEE SHEET 690

MATCH LINE SEE SHEET 694

R-46 R-45 R-44 R-47 R-41 R-42 R-43 R-48 R-49 R-50

PR-16 PR-15 PR-14

EX. RAMP E-10

℄ EX. RAMP A3

℄ RAMP IJ3

℄ EX. RAMP E-17

PC 206+62.02

PT 106+03.62

PCC 107+69.73

N63°40'54"E

PCC 63+42.58

PCC 61+94.23

PCC 208+66.62

PCC 101+92.12

15" RCP

(WPC)

101 102 103 104 105 106 107 108 61 62 63 201 202 206 207 209

= PAVEMENT REMOVED

= WALK REMOVED

= DRIVE REMOVED

XXXX = UTILITY REMOVED

TRBO = TO BE REMOVED BY OTHERS

HORIZONTAL SCALE IN FEET
0 10 20 40

REMOVAL PLAN RAMP IJ3

CUY-90-16.28 (CCG3A)

DESIGN AGENCY

DESIGNER TJS

REVIEWER BMV 04/30/24

PROJECT ID 82382

SHEET 689 TOTAL 2696

MODEL: HDR - Plan 2 [Sheet] PAPERSIZE: 34x22 (in.) DATE: 3/27/2025 TIME: 10:29:46 PM USER: Alexandria.Summers
pw:\\vmb-us-pw.bentley.com:vmb-us-pw-03\Documents\Cleveland_OHIO\Projects\ODOT\District2\82382\400-Engineering\Roadway\Sheets\82382_GP9302.dgn

MATCHLINE SEE SHEET 694

= PAVEMENT REMOVED

= WALK REMOVED

= DRIVE REMOVED

XXXX = UTILITY REMOVED

TRBO = TO BE REMOVED BY OTHERS

MATCHLINE SEE SHEET 689

MATCHLINE SEE SHEET 689

℄ INTERIM E. 14TH ST. SB

℄ INTERIM E. 14TH ST. NB

℄ EX. RAMP E-17

℄ INTERIM E. 14TH ST. NB CROSSOVER

℄ RAMP A2

RC-15

PR-17

PR-19

RC-12

RC-11

CONST. LIMITS

RC-10

R-52

PR-18

R-51

PR-21

PR-20

RC-14

RC-13

℄ RAMP IH6

℄ RAMP IH5

℄ RAMP IH4

TRBO

TRBO

NO. 12 BR (WPC)

NO. 11 BR (WPC)

24" HDPE (WPC)

MATCHLINE SEE SHEET 693

MATCHLINE SEE SHEET 691

Preliminary Plans - For Reference Only

HORIZONTAL SCALE IN FEET
0 10 20 40

REMOVAL PLAN
E. 14TH ST / I.R. 77

DESIGN AGENCY
Michael Baker INTERNATIONAL

DESIGNER KJM
REVIEWER KGJ 05/22/24
PROJECT ID 82382
SHEET 690 TOTAL 2696

CUY-90-16.28 (CCG3A)

MODEL: 82382_GP910I PAPERSIZE: 34x22 (in.) DATE: 3/27/2025 TIME: 10:30:01 PM USER: Alexandria.Summers
pw:\\mb-us-pw.bentley.com:mb-us-pw-03\Documents\Cleveland_OH\01_Projects\00DOT\District2\82382\400-Engineering\Roadway\Sheets\82382_GP910I.dgn

MATCHLINE SEE SHEET 690

= PAVEMENT REMOVED

= WALK REMOVED

= DRIVE REMOVED

XXXX = UTILITY REMOVED

TRBO = TO BE REMOVED BY OTHERS

℄ RAMP IJ3

E. 14TH ST

PR-23

℄ EX. RAMP E-17

RC-16

PR-22

℄ RAMP A2

R-53

CONST. LIMIT

℄ INTERIM E. 14TH ST.
NB CROSSOVER

R-55

R-54

ORANGE AVE.

MATCHLINE SEE SHEET 692

Preliminary Plans - For Reference Only

HORIZONTAL
SCALE IN FEET
0 10 20 40

REMOVAL PLAN
E. 14TH ST / ORANGE AVE / I.R. 77

DESIGN AGENCY
Michael Baker INTERNATIONAL

DESIGNER KJM

REVIEWER KGJ 05/22/24

PROJECT ID 82382

SHEET 691 TOTAL 2696

CUY-90-16.28 (CCG3A)

MODEL: 82382_GP9102 PAPERSIZE: 34x22 (in) DATE: 3/27/2025 TIME: 10:30:15 PM USER: Alexandria.Summers
pw:\\mb-us-pw.bentley.com:mb-us-pw-03\Documents\Cleveland_OH\01_Projects\000T\District2\82382\400-Engineering\Roadway\Sheets\82382_GP9102.dgn

MATCHLINE SEE SHEET 693

MATCHLINE SEE SHEET 691

℄ RAMP IH5

℄ EX. I.R. 77

℄ RAMP IH4

℄ RAMP IJ3

℄ RAMP A2

℄ CONST. E. 22ND ST.

R-56 R-57 R-58 R-59 R-60 R-61 R-62 R-63 RC-17 PR-24 PR-25

E. 22ND ST

ORANGE AVE.

CONST. LIMIT

BRUSH & SMALL TREES

18"

VENT

= PAVEMENT REMOVED

= WALK REMOVED

= DRIVE REMOVED

XXXX = UTILITY REMOVED

TRBO = TO BE REMOVED BY OTHERS

Ex. R/W

Preliminary Plans - For Reference Only

HORIZONTAL SCALE IN FEET
0 10 20 40

REMOVAL PLAN
I.R. 77

DESIGN AGENCY
Michael Baker INTERNATIONAL

DESIGNER KJM
REVIEWER KGJ 05/22/24
PROJECT ID 82382
SHEET 692 TOTAL 2696

CUY-90-16.28 (CCG3A)

MODEL: 82382_GP9103 PAPERSIZE: 34x22 (in.) DATE: 3/27/2025 TIME: 10:30:29 PM USER: Alexandria.Summers
pw:\\mb-us-pw.bentley.commb-us-pw-03\Documents\Cleveland_OH\01_Projects\000T\District2\82382\400-Engineering\Roadway\Sheets\82382_GP9103.dgn

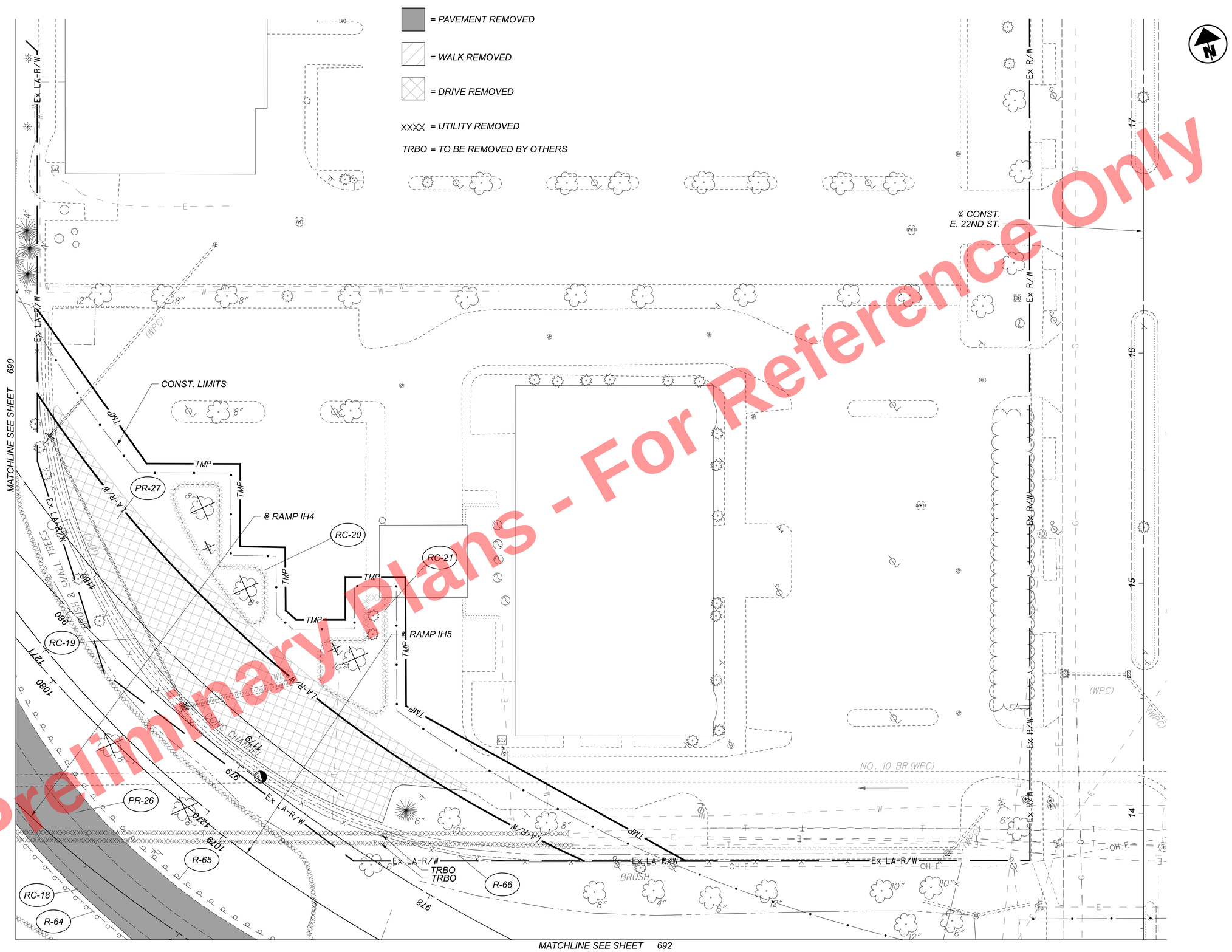

Preliminary Plans - For Reference Only

HORIZONTAL SCALE IN FEET
0 10 20 40

REMOVAL PLAN
E. 22ND ST / I.R. 77

DESIGN AGENCY
Michael Baker INTERNATIONAL

DESIGNER
KJM

REVIEWER
KGJ 05/22/24

PROJECT ID
82382

SHEET 693 TOTAL 2696

CUY-90-16.28 (CCG3A)

MODEL: 82382_GP9104 PAPERSIZE: 34x22 (in.) DATE: 3/27/2025 TIME: 10:30:46 PM USER: Alexandria.Summers
pw:\\mb-us-pw.bentley.com:mb-us-pw-03\Documents\Cleveland_OH\01_Projects\ODOT\District12\82382\400-Engineering\Roadway\Sheets\82382_GP9104.dgn

Preliminary Plans - For Reference Only

MATCHLINE SEE SHEET 695

MATCHLINE SEE SHEET 682

MATCHLINE SEE SHEET 689

MATCHLINE SEE SHEET 690

E. 14TH ST.

E. 14TH ST.

Ex LA-R/W

℄ RAMP H6

℄ RAMP H5

℄ RAMP IJ3

℄ E. 14TH ST. NB

℄ E. 14TH ST. SB

℄ EX. RAMP E-17

℄ RAMP IH5

℄ INTERIM E. 14TH ST. NB

℄ INTERIM E. 14TH ST. SB

℄ RAMP IH4

℄ RAMP IH6

PR-28

PR-29

PR-30

PR-31

PR-32

PR-33

RC-22

RC-23

RC-24

RC-25

RC-26

RC-27

RC-28

RC-29

R-67

CONST. LIMIT

FO

(WPC)

= PAVEMENT REMOVED

= WALK REMOVED

= DRIVE REMOVED

XXXX = UTILITY REMOVED

TRBO = TO BE REMOVED BY OTHERS

HORIZONTAL SCALE IN FEET

0 10 20 40

REMOVAL PLAN
E. 14TH ST.

CUY-90-16.28 (CCG3A)

MODEL: 82382_GP9106 PAPERSIZE: 34x22 (in.) DATE: 3/27/2025 TIME: 10:31:08 PM USER: Alexandria.Summers
pw:\\mb-us-pw.bentley.com:mb-us-pw-03\Documents\Cleveland_OH\OL_Projects\ODOT\District2\82382\400-Engineering\Roadway\Sheets\82382_GP9106.dgn

DESIGN AGENCY
Michael Baker INTERNATIONAL

DESIGNER KJM

REVIEWER KGJ 05/22/24

PROJECT ID 82382

SHEET 694 TOTAL 2696

= PAVEMENT REMOVED

= WALK REMOVED

= DRIVE REMOVED

XXXX = UTILITY REMOVED

TRBO = TO BE REMOVED BY OTHERS

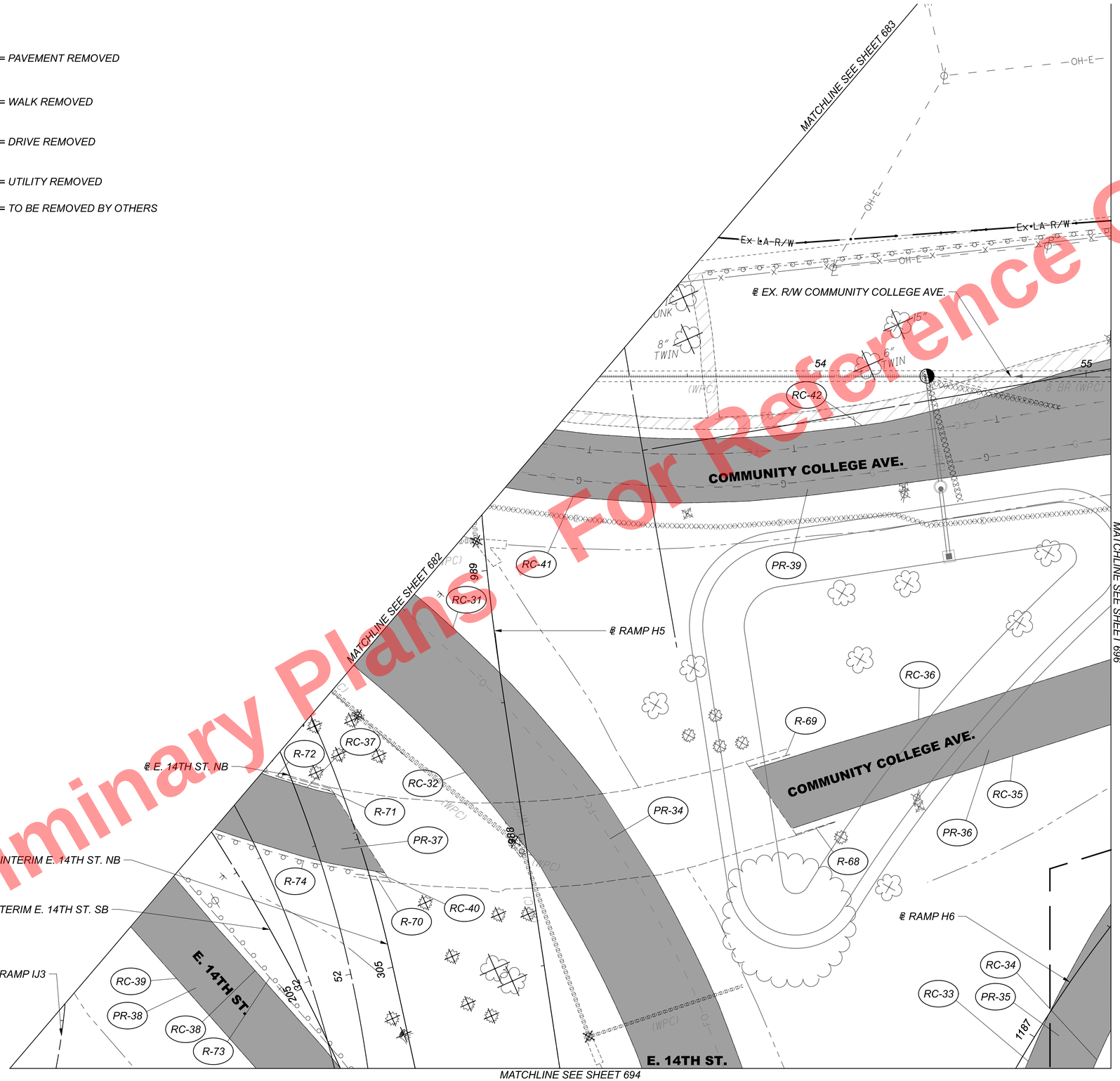

Preliminary Plans
Not For Reference Only

HORIZONTAL SCALE IN FEET
0 10 20 40

REMOVAL PLAN
COMMUNITY COLLEGE AVE / E. 14TH ST

DESIGN AGENCY
Michael Baker INTERNATIONAL

DESIGNER KJM
REVIEWER KGJ 05/22/24
PROJECT ID 82382
SHEET 695 TOTAL 2696

CUY-90-16.28 (CCG3A)

MODEL: 82382_GP907 PAPERSIZE: 34x22 (in.) DATE: 3/27/2025 TIME: 10:32:22 PM USER: Alexandria.Summers
pw:\\mb-us-pw.bentley.com:mb-us-pw-03\Documents\Cleveland_OH\01_Projects\0DOT\District#12\82382\400-Engineering\Roadway\Sheets\82382_GP907.dgn

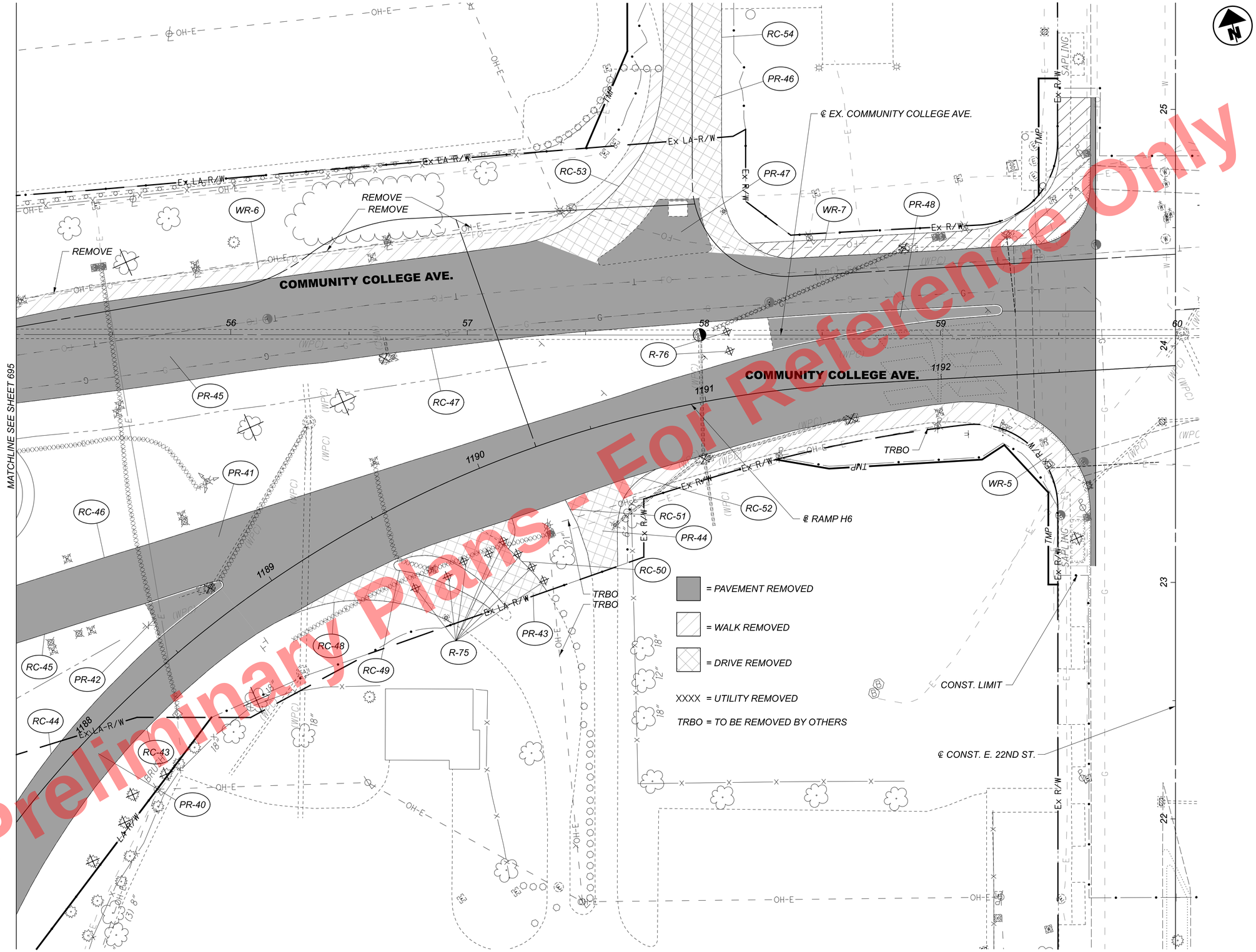

Preliminary Plans - For Reference Only

HORIZONTAL SCALE IN FEET
0 10 20 40

REMOVAL PLAN
COMMUNITY COLLEGE AVE / E. 22ND ST

DESIGN AGENCY
Michael Baker INTERNATIONAL

DESIGNER KJM
REVIEWER KGJ 05/22/24
PROJECT ID 82382
SHEET 696 TOTAL 2696

CUY-90-16.28 (CCG3A)

MODEL: 82382_GP9108 PAPERSIZE: 34x22 (in.) DATE: 3/27/2025 TIME: 10:38:38 PM USER: Alexandria.Summers
pw:\\mb-us-pw.bentley.com:mb-us-pw-03\Documents\Cleveland_OH\01_Projects\ODOT\District2\82382\400-Engineering\Roadway\Sheets\82382_GP9108.dgn

Preliminary Plans - For Reference Only

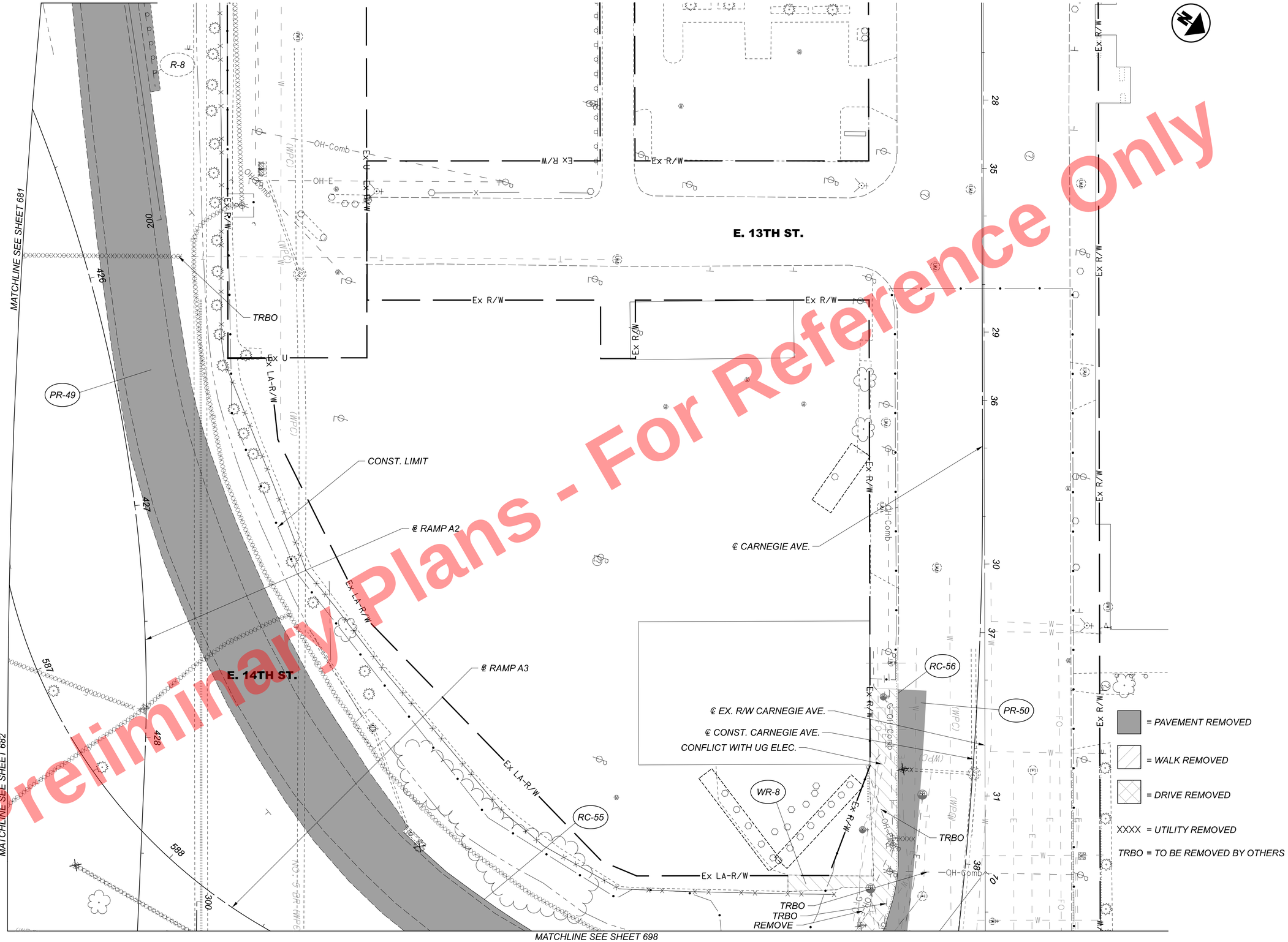

HORIZONTAL SCALE IN FEET
0 10 20 40

REMOVAL PLAN
CARNEGIE AVE / E. 14TH ST

CUY-90-16.28 (CCG3A)

MODEL: 82382_GP9109 PAPERSIZE: 34x22 (In.) DATE: 3/27/2025 TIME: 03:55 PM USER: AlexandriaSummers
pw:\\mb-us-pw.bentley.com\mb-us-pw-03\Documents\Cleveland_OHIO\Projects\ODOT\District12\82382\400-Engineering\Roadway\Sheets\82382_GP9109.dgn

DESIGN AGENCY
Michael Baker INTERNATIONAL

DESIGNER KJM
REVIEWER KGJ 05/22/24
PROJECT ID 82382
SHEET 697 TOTAL 2696

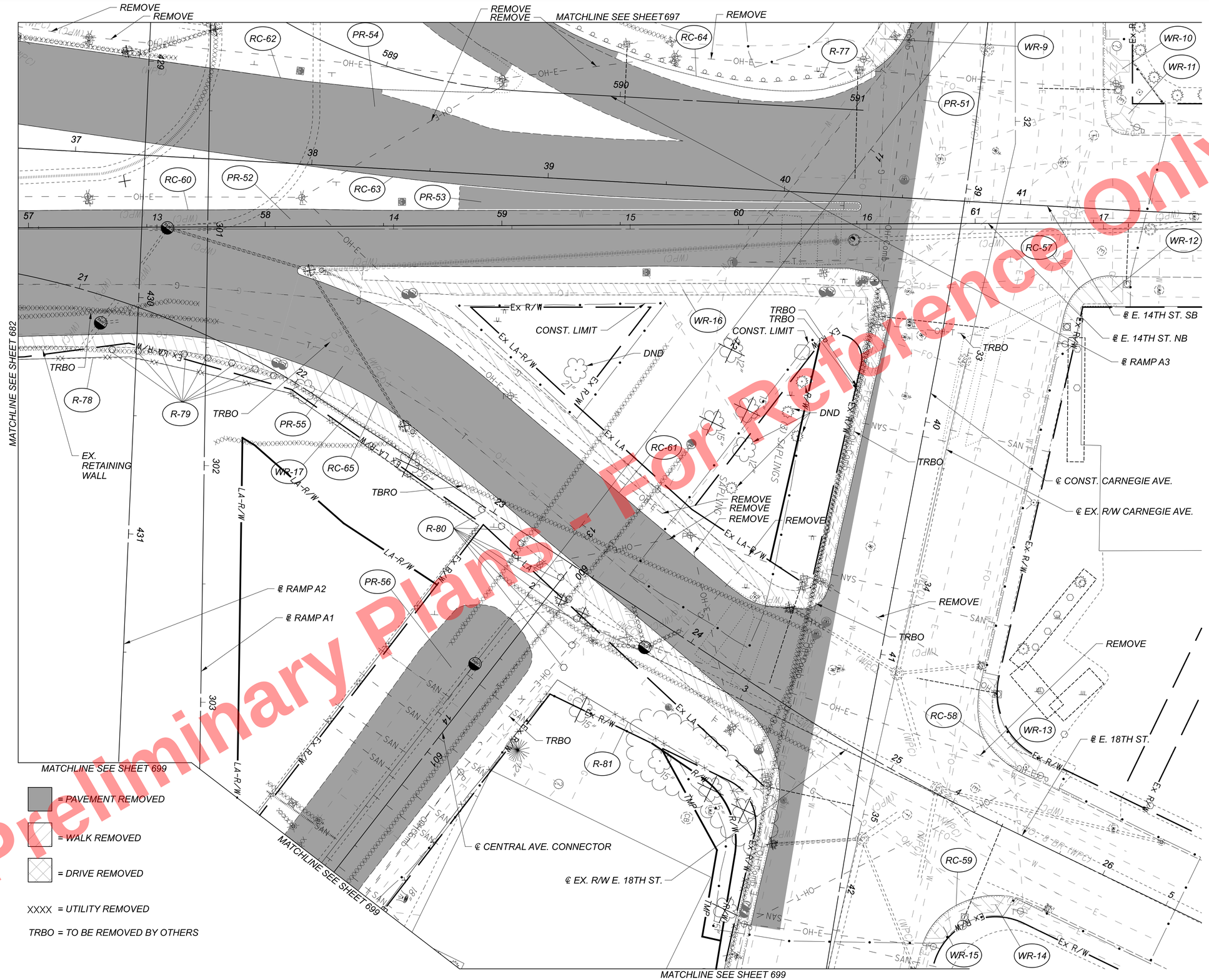

Preliminary Plans - For Reference Only

HORIZONTAL SCALE IN FEET
0 10 20 40

REMOVAL PLAN
CARNEGIE AVE. / E. 14TH ST / E. 18TH ST

DESIGN AGENCY
Michael Baker INTERNATIONAL

DESIGNER
KJM

REVIEWER
KGJ 05/22/24

PROJECT ID
82382

SHEET 698 TOTAL 2696

CUY-90-16.28 (CCG3A)

MODEL: 82382_GP9110 PAPERSIZE: 34x22 (in.) DATE: 3/27/2025 TIME: 10:32:14 PM USER: Alexandria.Summers
pw:\\mb-us-pw.bentley.com:mb-us-pw-03\Documents\Cleveland_OH\01_Projects\ODOT\District12\82382\400-Engineering\Roadway\Sheets\82382_GP9110.dgn

Preliminary Plans - For Reference Only

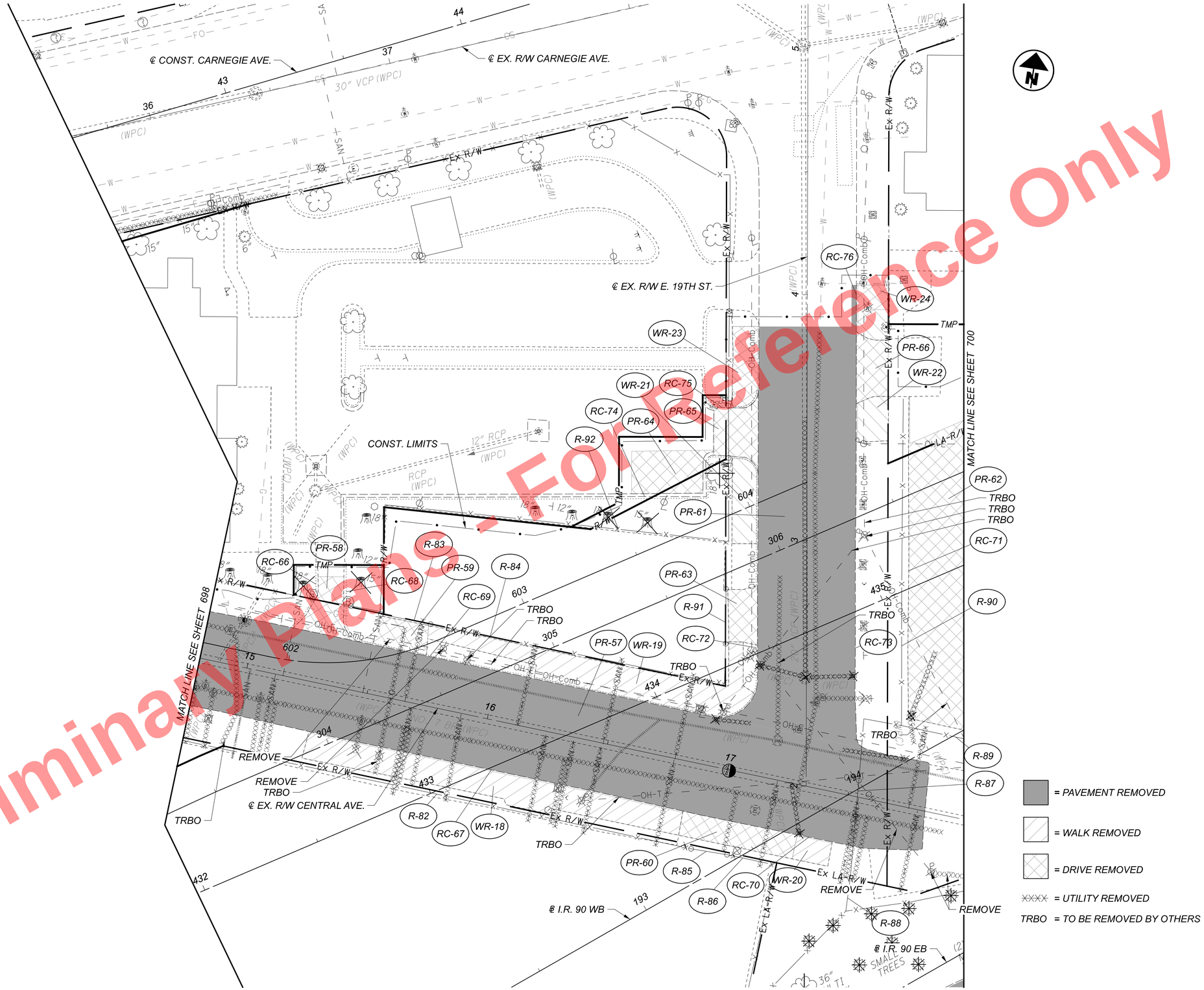

HORIZONTAL SCALE IN FEET
0 10 20 40

REMOVAL PLAN
E. 19TH ST. / CENTRAL AVE.

DESIGN AGENCY

DESIGNER TJS
REVIEWER BMV 04/30/24
PROJECT ID 82382
SHEET 699 TOTAL 2696

CUY-90-16.28 (CCG3A)

MODEL: HDR - Plan 3 [Sheet] PAPERSIZE: 34x22 (in.) DATE: 3/27/2025 TIME: 10:32:32 PM USER: Alexandria.Summers
pw:\\mb-us-pw.bentley.com:mb-us-pw-03\Documents\Cleveland.OH\OI_Projects\000T\District2\82382\400-Engineering\Roadway\Sheets\82382_GP9303.dgn

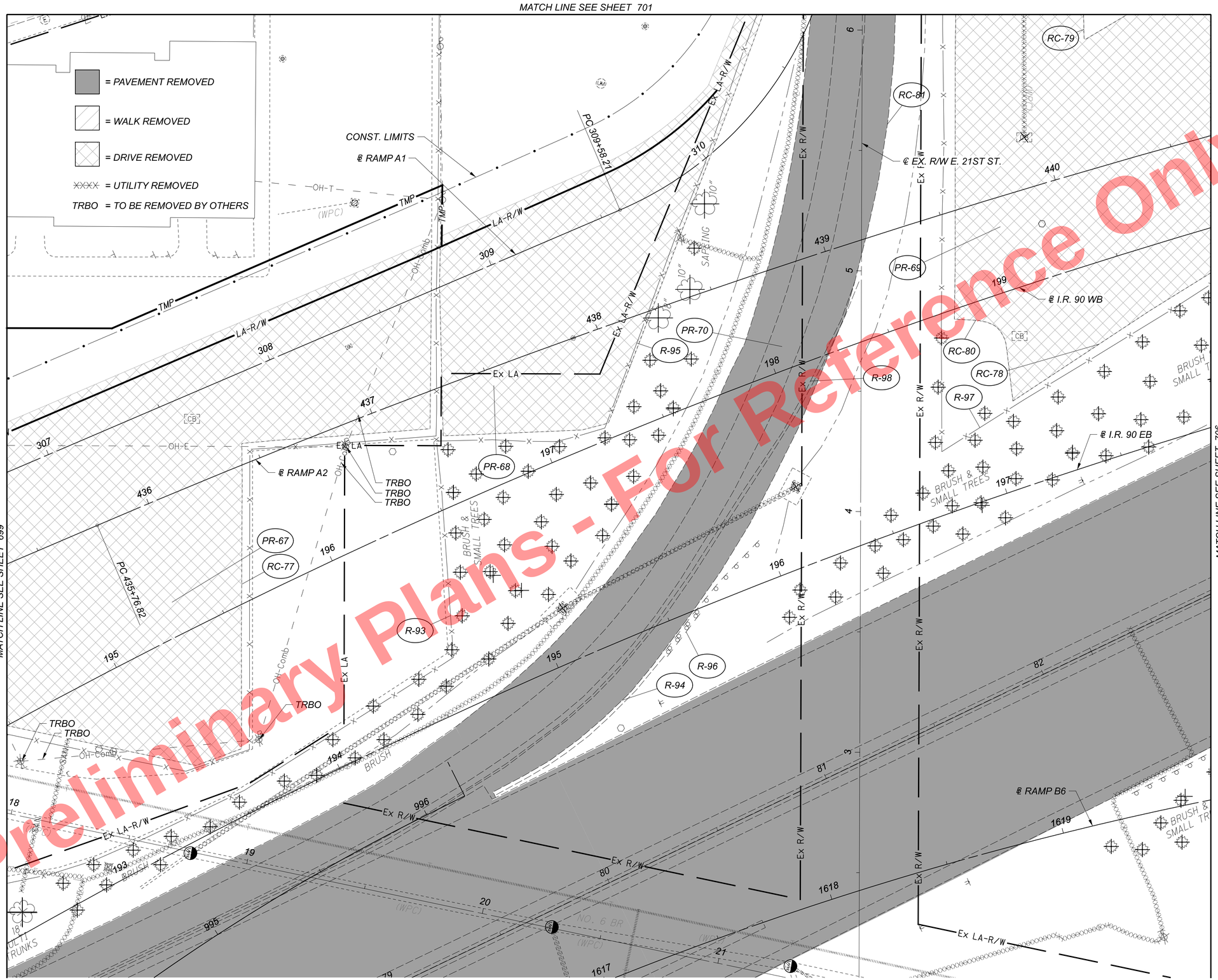

Preliminary Plans - For Reference Only

HORIZONTAL SCALE IN FEET
0 10 20 40

REMOVAL PLAN
RAMP A1 / RAMP A2 / I.R. 90

DESIGN AGENCY
HDR

DESIGNER
TJS

REVIEWER
BMV 04/30/24

PROJECT ID
82382

SHEET 700 TOTAL 2696

CUY-90-16.28 (CCG3A)

MODEL: HDR - Plan 4 [Sheet] PAPERSIZE: 34x22 (in.) DATE: 3/27/2025 TIME: 10:32:52 PM USER: Alexandria.Summers
pw:\\mb-us-pw.bentley.com:mb-us-pw-03\Documents\Cleveland_OH\OI_Projects\ODOT\District2\82382\400-Engineering\Roadway\Sheets\82382_GP9304.dgn

CUY-90-16.28 (CCG3A)

MODEL: 82382_GP9III PAPERSIZE: 34x22 (in.) DATE: 3/27/2025 TIME: 10:33:16 PM USER: Alexandria.Summers
pw:\\mb-us-pw.bentley.com:mb-us-pw-03\Documents\Cleveland_OH\01_Projects\ODOT\District12\82382\400-Engineering\Roadway\Sheets\82382_GP9III.dgn

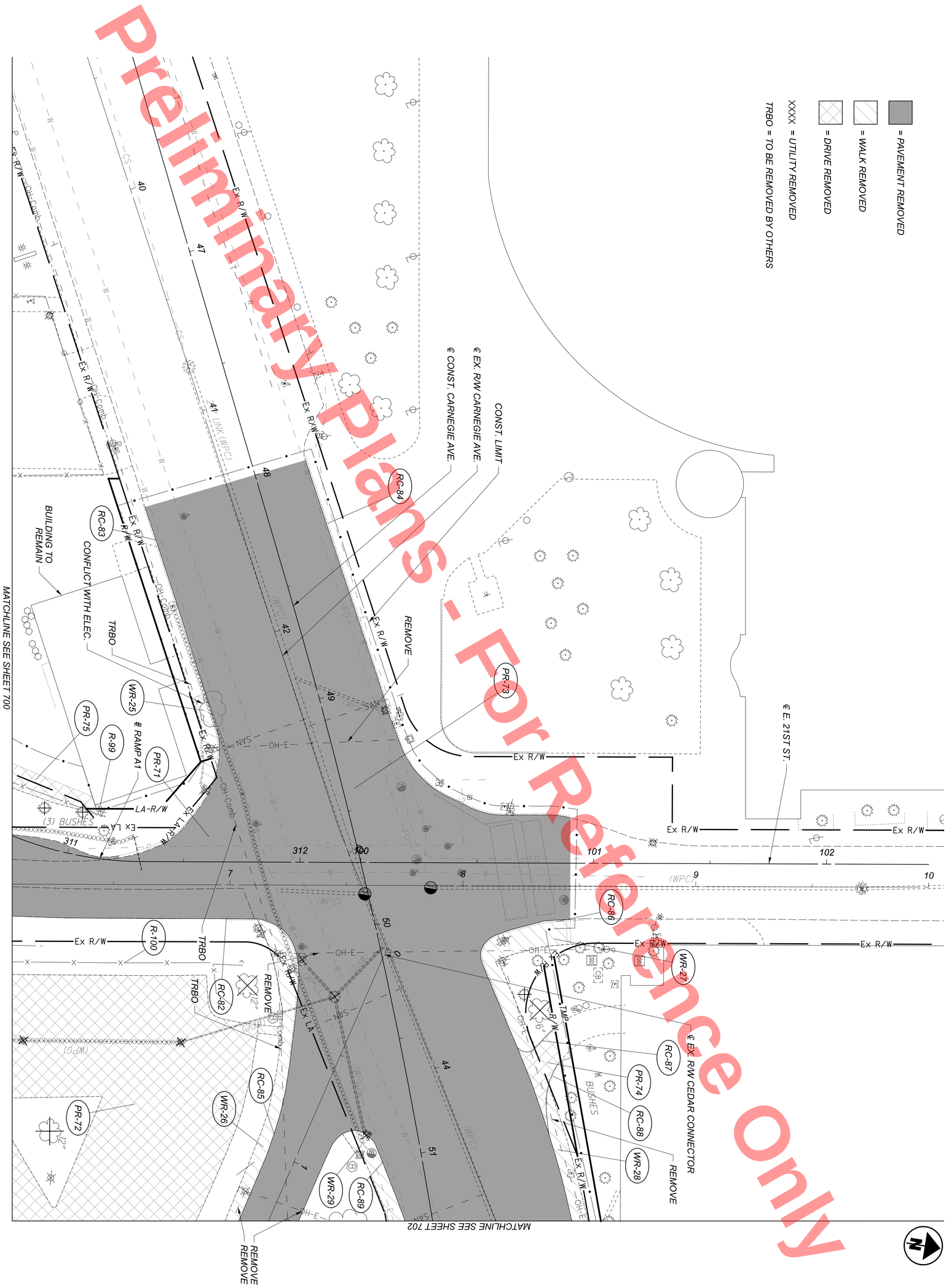

Preliminary Plans - For Reference Only

DESIGN AGENCY	Michael Baker INTERNATIONAL
DESIGNER	KJM
REVIEWER	KGJ 05/22/24
PROJECT ID	82382
SHEET	701
TOTAL	2696

REMOVAL PLAN
CARNEGIE AVE. / E. 21ST ST / CEDAR AVE.

HORIZONTAL SCALE IN FEET
0 10 20 40

= PAVEMENT REMOVED

= WALK REMOVED

= DRIVE REMOVED

XXXX = UTILITY REMOVED

TRBO = TO BE REMOVED BY OTHERS

CONST. LIMIT

℄ EX. R/W E. 22ND ST.

℄ CONST. E. 22ND ST.

℄ CONST. CARNEGIE AVE.

℄ EX. R/W CARNEGIE AVE.

WR-31 PR-76 RC-91 WR-33 RC-93

REMOVE TRBO

EX. BILLBOARD (TO BE REMOVED)

RC-90 R-101 WR-30 WR-38 RC-92 WR-32 R-104 WR-34

CONFLICT WITH ELECTRIC

PR-79 ℄ EX. R/W CEDAR CONNECTOR WR-35 WR-36 PR-82 RC-94 PR-80 R-103

PR-83 PR-77 WR-37 PR-81 R-102 PR-78 R-29 PR-9

FOR I.R. 90 REMOVAL DETAILS SEE SHEET 685

BRUSH & SMALL TREES

℄ INTERIM I.R. 90 WB

℄ I.R. 90 WB

MATCHLINE SEE SHEET 701

MATCHLINE SEE SHEET 703

MATCHLINE SEE SHEET 706

Preliminary Plans - For Reference Only

HORIZONTAL SCALE IN FEET
0 10 20 40

REMOVAL PLAN
CARNEGIE AVE. / E. 22ND ST / CEDAR AVE.

CUY-90-16.28 (CCG3A)

MODEL: 82382_GP9I2 PAPERSIZE: 34x22 (in.) DATE: 3/27/2025 TIME: 10:33:31 PM USER: Alexandria.Summers
pw:\\mb-us-pw.bentley.com:mb-us-pw-03\Documents\Cleveland_OH\OI_Projects\ODOT\District12\82382\400-Engineering\Roadway\Sheets\82382_GP9I2.dgn

DESIGN AGENCY
Michael Baker INTERNATIONAL

DESIGNER KJM
REVIEWER KGJ 05/22/24
PROJECT ID 82382
SHEET 702 TOTAL 2696

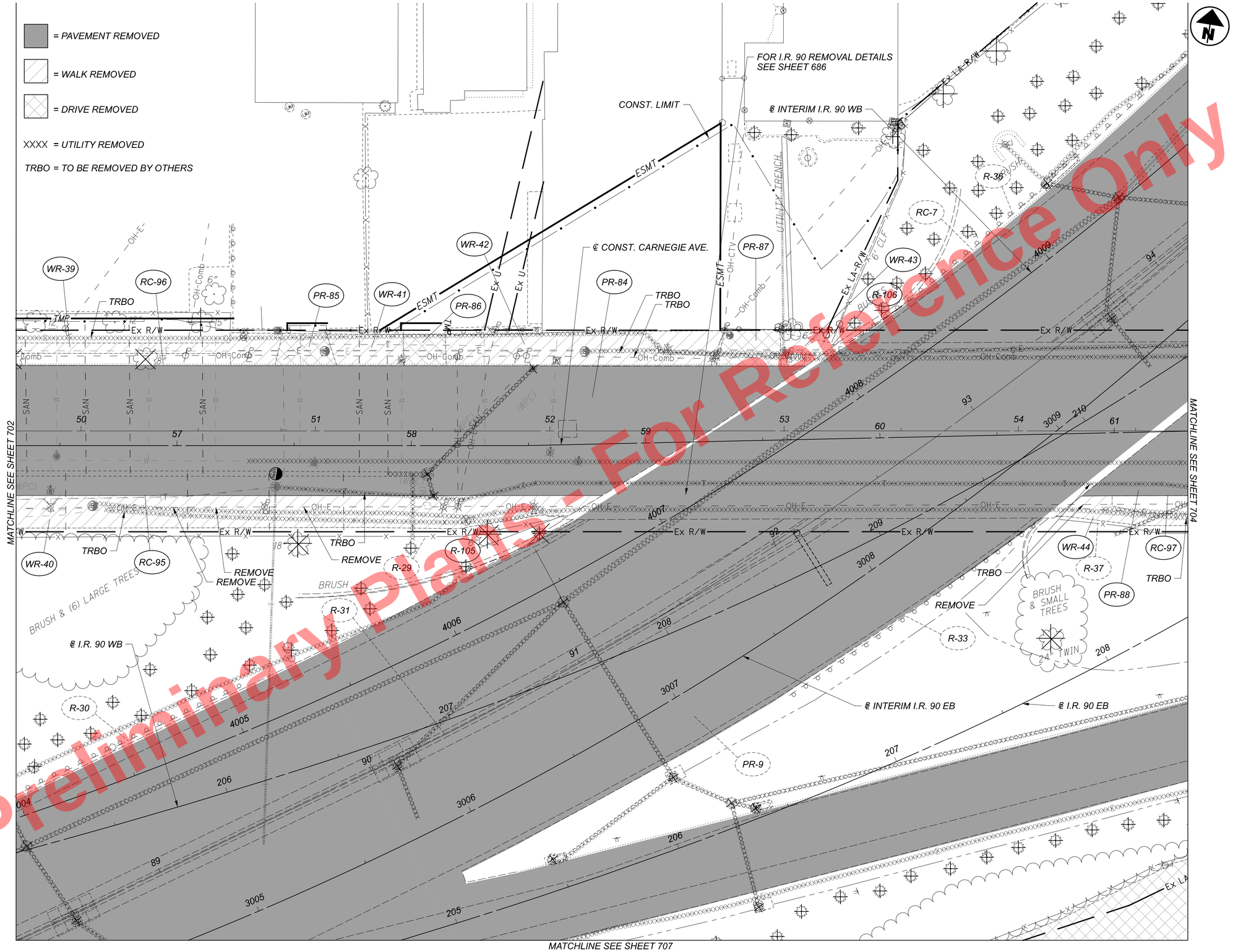

Preliminary Plans - For Reference Only

HORIZONTAL SCALE IN FEET
0 10 20 40

REMOVAL PLAN
CARNEGIE AVE. / I.R. 90

DESIGN AGENCY
Michael Baker INTERNATIONAL

DESIGNER
KJM

REVIEWER
KGJ 05/22/24

PROJECT ID
82382

SHEET 703 TOTAL 2696

CUY-90-16.28 (CCG3A)

MODEL: 82382_GP9116 PAPERSIZE: 34x22 (in.) DATE: 3/27/2025 TIME: 10:33:48 PM USER: Alexandria.Summers
pw:\\mb-us-pw.bentley.com:mb-us-pw-03\Documents\Cleveland_OH\OI_Projects\ODOT\District12\82382\400-Engineering\Roadway\Sheets\82382_GP9116.dgn

= PAVEMENT REMOVED

= WALK REMOVED

= DRIVE REMOVED

XXXX = UTILITY REMOVED

TRBO = TO BE REMOVED BY OTHERS

HORIZONTAL SCALE IN FEET
0 10 20 40

PR-9
℄ INTERIM I.R. 90 WB
℄ I.R. 90 EB
℄ INTERIM I.R.90 EB
℄ I.R. 90 WB
℄ CONST. CARNEGIE AVE.
CONST. LIMIT
℄ EX. RAMP 4
TRBO
REMOVE
R-107
PR-90
BRUSH
RC-99
R-108
WR-46
Ex R/W
OH-Comb
OH-E
OH-T
SAN
MATCHLINE SEE SHEET 703
MATCHLINE SEE SHEET 705
MATCHLINE SEE SHEET 708
R-37
WR-45
RC-98
PR-9
RC-6
WR-47
PR-91
WR-48
WR-49
RC-100
R/W
TMP
CB
CONFLICT WITH TELECOM
℄ EX. R/W CARNEGIE AVE.
℄ MIDTOWN COONNECTOR
R-32
PR-92
PR-89
R-109
PR-94
R-113
R-111
R-112
PR-93
R-110
Ex LA
Ex U
LA-R/W

Preliminary Plans - For Reference Only

REMOVAL PLAN
CARNEGIE AVE. / MIDTOWN CONNECTOR

DESIGN AGENCY
Michael Baker INTERNATIONAL

DESIGNER KJM
REVIEWER KGJ 05/22/24
PROJECT ID 82382
SHEET 704 TOTAL 2696

CUY-90-16.28 (CCG3A)

MODEL: 82382_GP9II7 PAPERSIZE: 34x22 (In.) DATE: 3/27/2025 TIME: 03:34:07 PM USER: Alexandria.Summers
pw:\\mb-us-pw.bentley.commb-us-pw-03\Documents\Cleveland_OHIO\Projects\0007\District2\82382\400-Engineering\Roadway\Sheets\82382_GP9II7.dgn

= PAVEMENT REMOVED

= WALK REMOVED

= DRIVE REMOVED

XXXX = UTILITY REMOVED

TRBO = TO BE REMOVED BY OTHERS

MATCHLINE SEE SHEET 704

MATCHLINE SEE SHEET 709

REMOVE

℄ CONST. CARNEGIE AVE.

℄ EX. R/W CARNEGIE AVE.

℄ EX. R/W E. 28TH ST.

CONST. LIMITS

Ex R/W

Ex LA-R/W

OH-Comb

OH-E

OH-T

SAN

W

(WPC)

TMP

BRUSH

BUSHES

WR-50 WR-51 WR-52 WR-53 WR-54 WR-55 WR-56 WR-57

PR-95 PR-96 PR-97 PR-98 PR-99 PR-100 PR-101

RC-101 RC-102 RC-103

60 61 62 63 64 67 68 69 70 71

12 13

Preliminary Plans - Not For Reference Only

HORIZONTAL SCALE IN FEET
0 10 20 40

REMOVAL PLAN
CARNEGIE AVE / E 28TH ST

DESIGN AGENCY
Michael Baker INTERNATIONAL

DESIGNER KJM

REVIEWER KGJ 05/22/24

PROJECT ID 82382

SHEET 705 TOTAL 2696

CUY-90-16.28 (CCG3A)

MODEL: 82382_GP9120 PAPERSIZE: 34x22 (in) DATE: 3/27/2025 TIME: 10:34:31 PM USER: Alexandria.Summers
pw:\\mb-us-pw.bentley.com:mb-us-pw-03\Documents\Cleveland.OH\OI_Projects\0007\District2\82382\400-Engineering\Roadway\Sheets\82382_GP9120.dgn

CUY-90-16.28 (CCG3A)

MODEL: 82382_GP9113 PAPERSIZE: 34x22 (in.) DATE: 3/27/2025 TIME: 10:34:46 PM USER: Alexandria.Summers
pw:\\mb-us-pw.bentley.com:mb-us-pw-03\Documents\Cleveland_OH\01_Projects\ODOT\District12\82382\400-Engineering\Roadway\Sheets\82382_GP9113.dgn

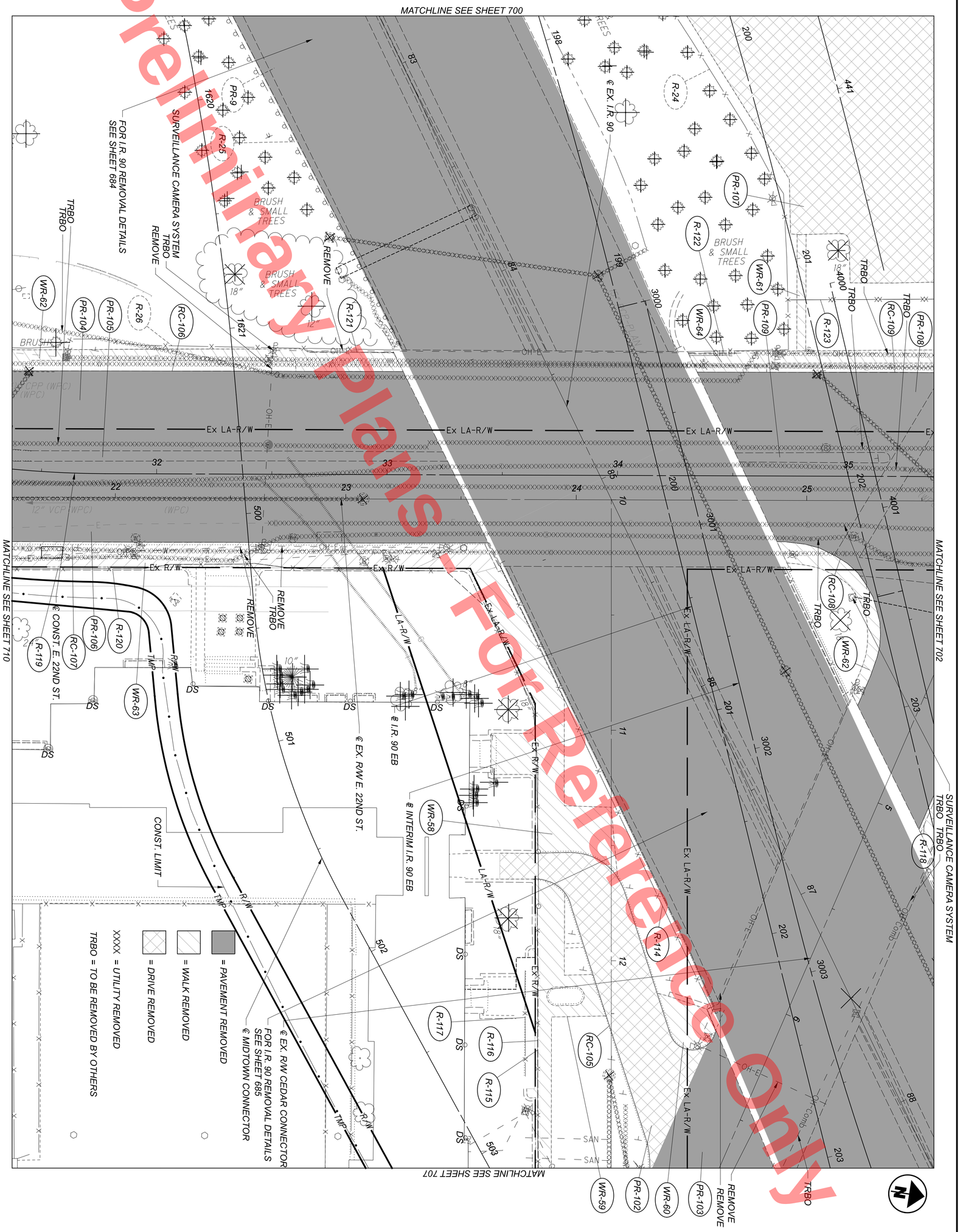

Preliminary Plans - For Reference Only

DESIGN AGENCY	Michael Baker INTERNATIONAL
DESIGNER	KJM
REVIEWER	KGJ 05/22/24
PROJECT ID	82382
SHEET	706
TOTAL	2696

REMOVAL PLAN
E. 22ND ST / CEDAR CONNECTOR

HORIZONTAL SCALE IN FEET
0 10 20 40

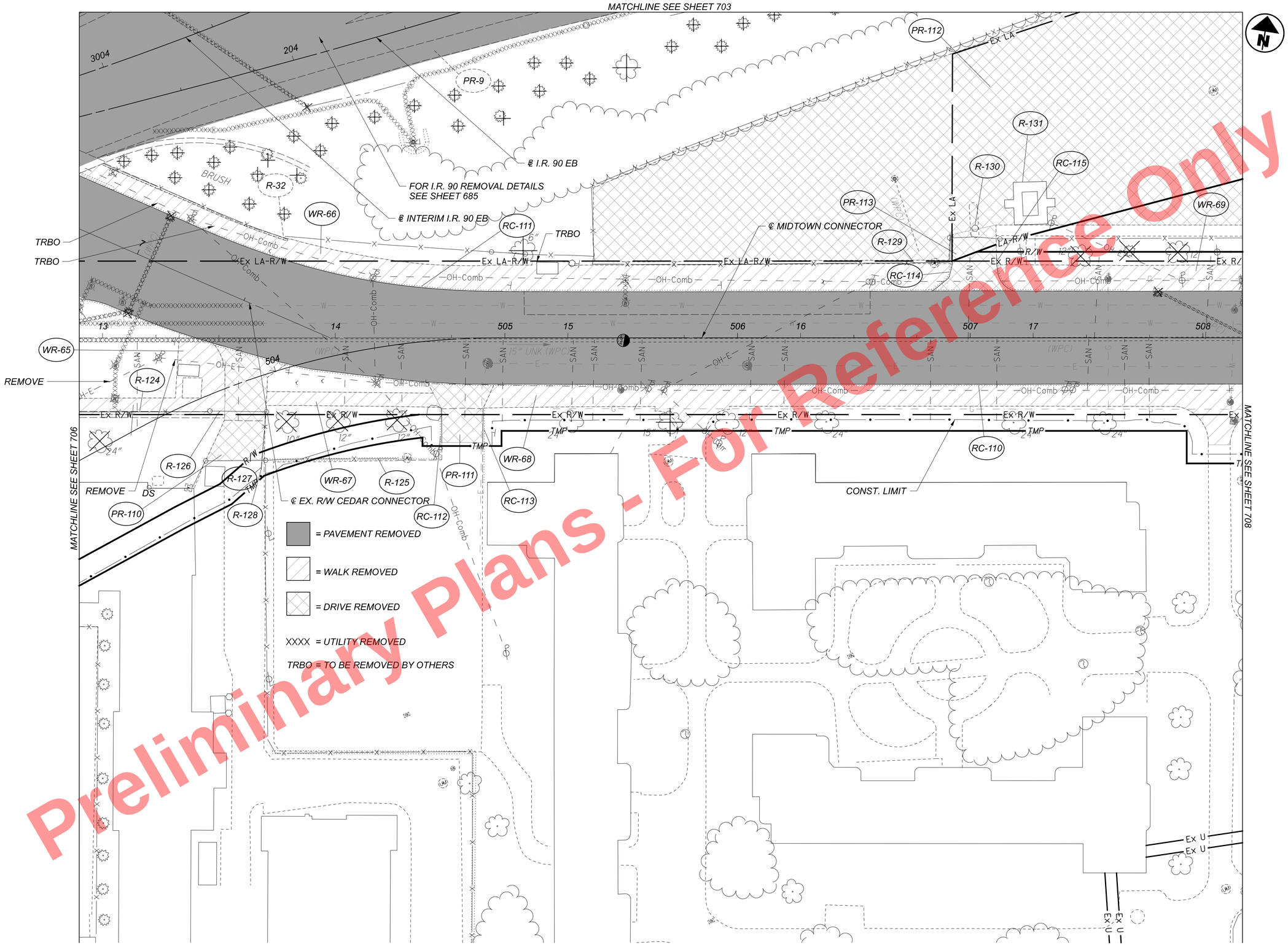

Preliminary Plans - For Reference Only

HORIZONTAL SCALE IN FEET
0 10 20 40

REMOVAL PLAN
CEDAR CONNECTOR / CEDAR AVE.

DESIGN AGENCY
Michael Baker INTERNATIONAL

DESIGNER
KJM

REVIEWER
KGJ 05/22/24

PROJECT ID
82382

SHEET 707 TOTAL 2696

CUY-90-16.28 (CCG3A)

MODEL: 82382_GP9115 PAPERSIZE: 34x22 (in.) DATE: 3/27/2025 TIME: 10:35:00 PM USER: Alexandria.Summers
pw:\\mb-us-pw.bentley.com:mb-us-pw-03\Documents\Cleveland_OH\OI_Projects\ODOT\District12\82382\400-Engineering\Roadway\Sheets\82382_GP9115.dgn

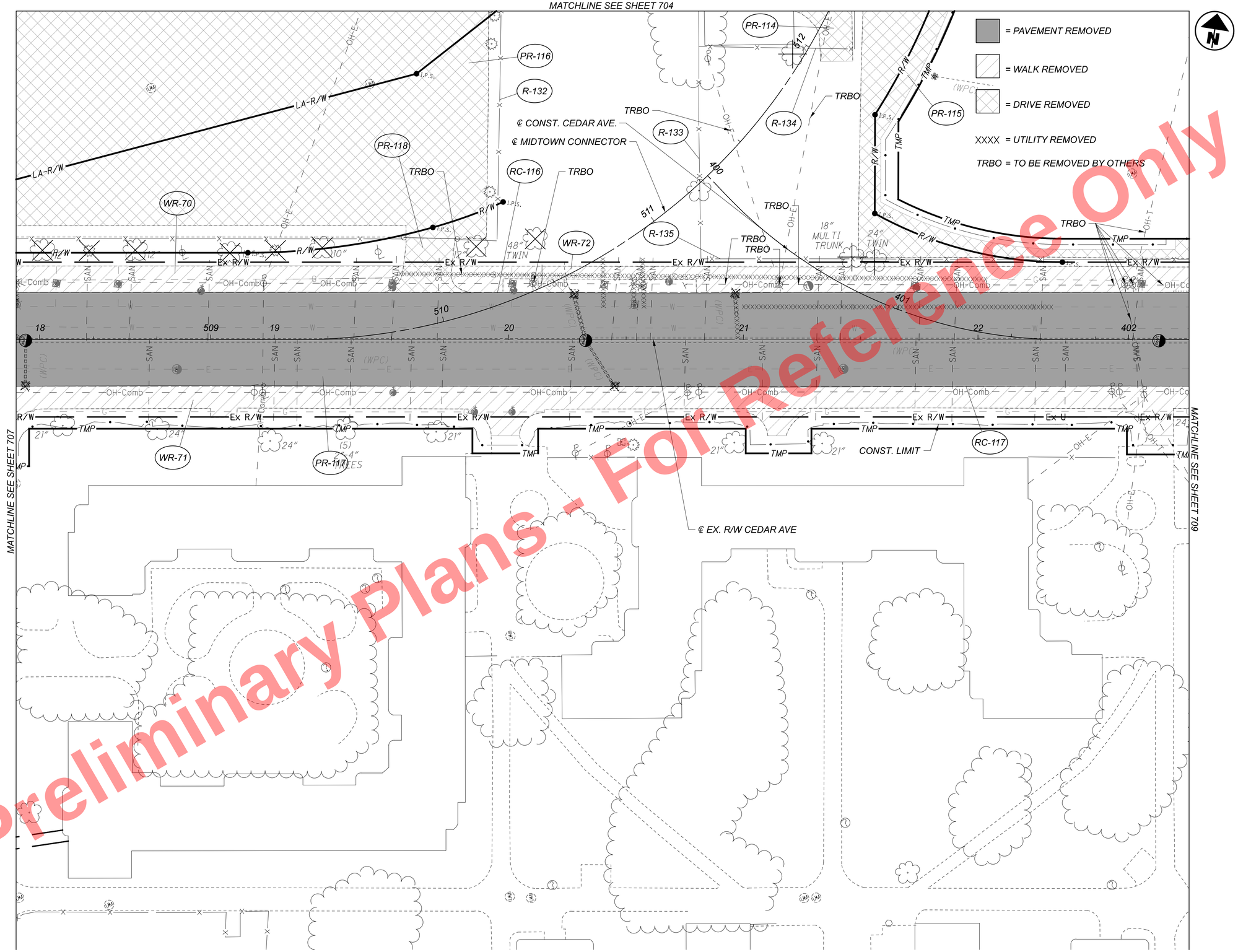

Preliminary Plans - For Reference Only

HORIZONTAL SCALE IN FEET
0 10 20 40

REMOVAL PLAN
MIDTOWN CONNECTOR / CEDAR AVE.

DESIGN AGENCY
Michael Baker INTERNATIONAL

DESIGNER
KJM

REVIEWER
KGJ 05/22/24

PROJECT ID
82382

SHEET 708 TOTAL 2696

CUY-90-16.28 (CCG3A)

MODEL: 82382_GP9118 PAPERSIZE: 34x22 (in.) DATE: 3/27/2025 TIME: 10:35:15 PM USER: Alexandria.Summers
pw:\\mb-us-pw.bentley.com:mb-us-pw-03\Documents\Cleveland_OH\01_Projects\ODOT\District12\82382\400-Engineering\Roadway\Sheets\82382_GP9118.dgn

MATCHLINE SEE SHEET 705

= PAVEMENT REMOVED

= WALK REMOVED

= DRIVE REMOVED

XXXX = UTILITY REMOVED

TRBO = TO BE REMOVED BY OTHERS

E. 28TH ST.

℄ EX. R/W E. 28TH ST.

℄ CEDAR AVE.

℄ EX. R/W CEDAR AVE.

Ex R/W

DND

48" MULTI TRUNK

R-137

PR-119

R-136

RC-118

PR-120

WR-73

RC-119

WR-74

TMP 16"

TMP 24"

24"

CONST. LIMIT

MATCHLINE SEE SHEET 708

23 403 24 404 25 26 27

OH-T

OH-Comb

SAN

(WPC)

Ex U

Preliminary Plans - For Reference Only

HORIZONTAL SCALE IN FEET
0 10 20 40

REMOVAL PLAN
CEDAR AVE.

DESIGN AGENCY
Michael Baker INTERNATIONAL

DESIGNER KJM

REVIEWER KGJ 05/22/24

PROJECT ID 82382

SHEET 709 TOTAL 2696

CUY-90-16.28 (CCG3A)

MODEL: 82382_GP9I9 PAPERSIZE: 34x22 (In.) DATE: 3/27/2025 TIME: 10:35:31PM USER: Alexandria.Summers
pw:\\mb-us-pw.bentley.com:mb-us-pw-03\Documents\Cleveland.OH\01_Projects\ODOT\District2\82382\400-Engineering\Roadway\Sheets\82382_GP9I9.dgn

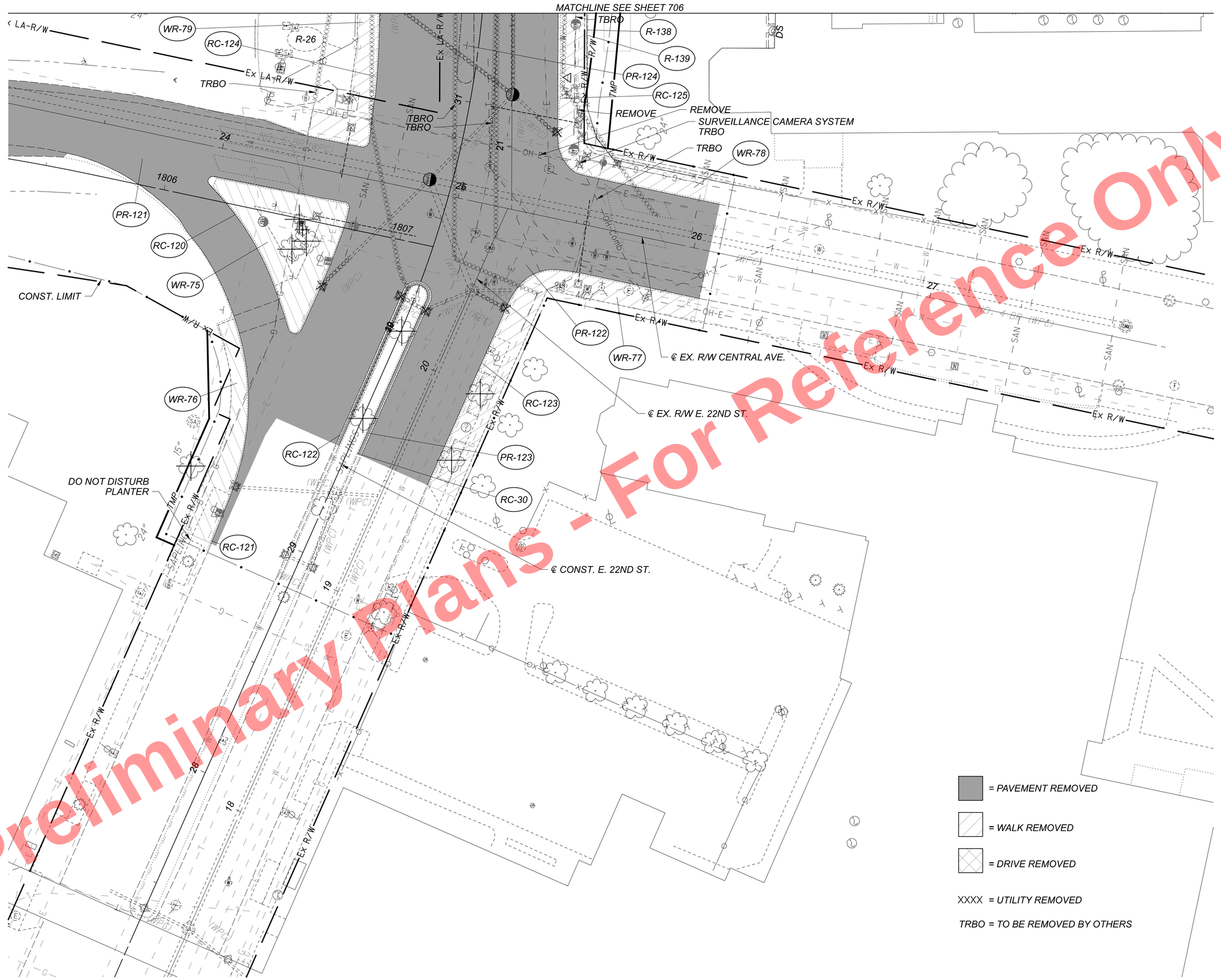

Preliminary Plans - For Reference Only

HORIZONTAL SCALE IN FEET
0 10 20 40

REMOVAL PLAN
E. 22ND ST / CENTRAL AVE.

DESIGN AGENCY
Michael Baker INTERNATIONAL

DESIGNER KJM
REVIEWER KGJ 05/22/24
PROJECT ID 82382
SHEET 710 TOTAL 2696

CUY-90-16.28 (CCG3A)

MODEL: 82382_GP9II4 PAPERSIZE: 34x22 (In.) DATE: 3/27/2025 TIME: 03:35:45 PM USER: AlexandriaSummers
pw:\\mb-us-pw.bentley.com\mb-us-pw-03\Documents\Cleveland_OHIO_Projects\0007\District2\82382\400-Engineering\Roadway\Sheets\82382_GP9II4.dgn

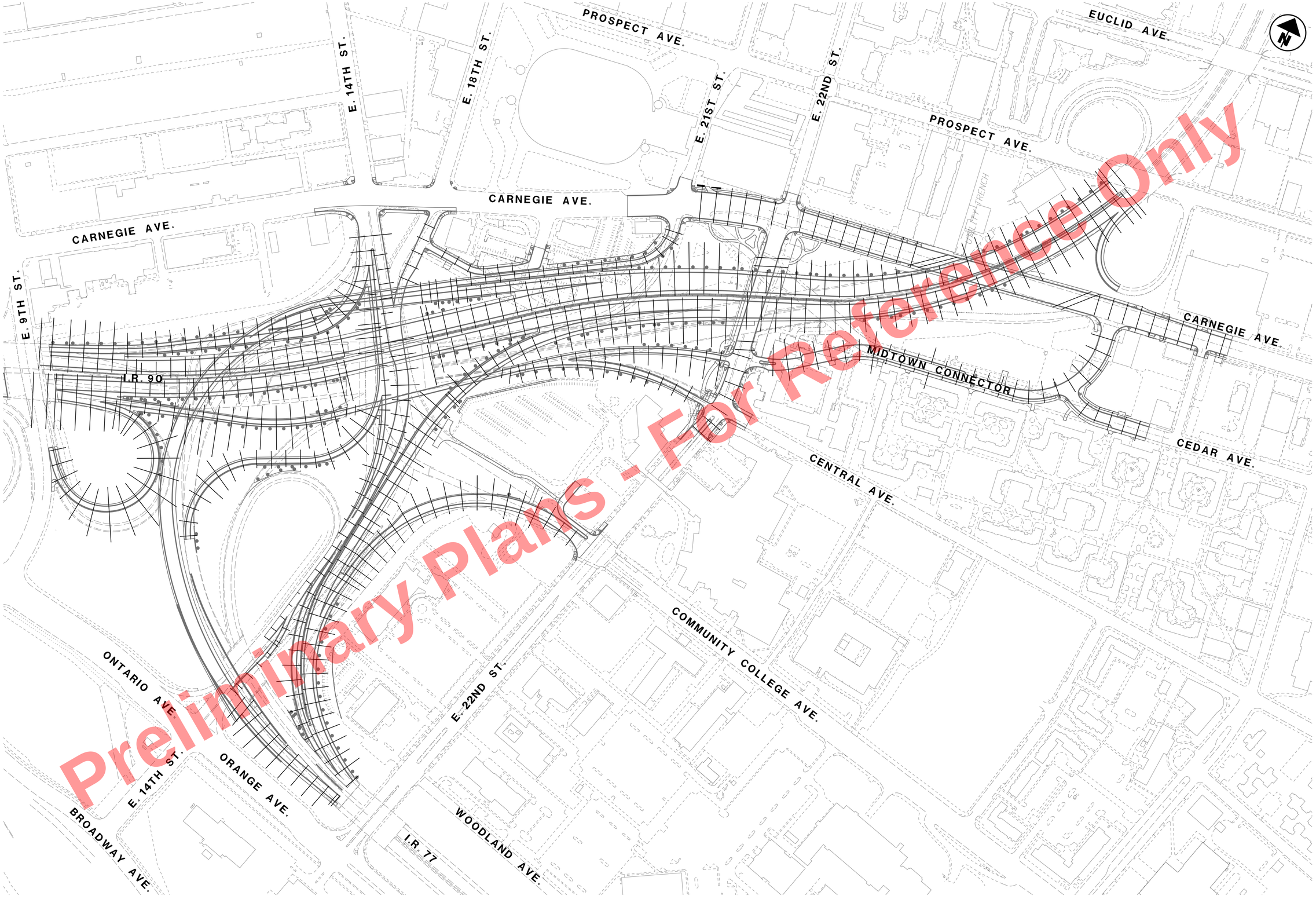

Preliminary Plans - For Reference Only

HORIZONTAL SCALE IN FEET
0 75 150 300

CROSS SECTION LAYOUT

CUY-90-16.28 (CCG3A)

MODEL: Sheet PAPERSIZE: 34x22 (In.) DATE: 3/28/2025 TIME: 8:32:47 AM USER: Kevin.McNutt
pw:\\mb-us-pw.bentley.com:mb-us-pw-03\Documents\Cleveland_OH\01_Projects\ODOT\District2\82382\400-Engineering\Roadway\Sheets\82382_XL001.dgn

DESIGN AGENCY
Michael Baker INTERNATIONAL

DESIGNER MJB
REVIEWER KGJ 05/22/24
PROJECT ID 82382
SHEET 711 TOTAL 2696

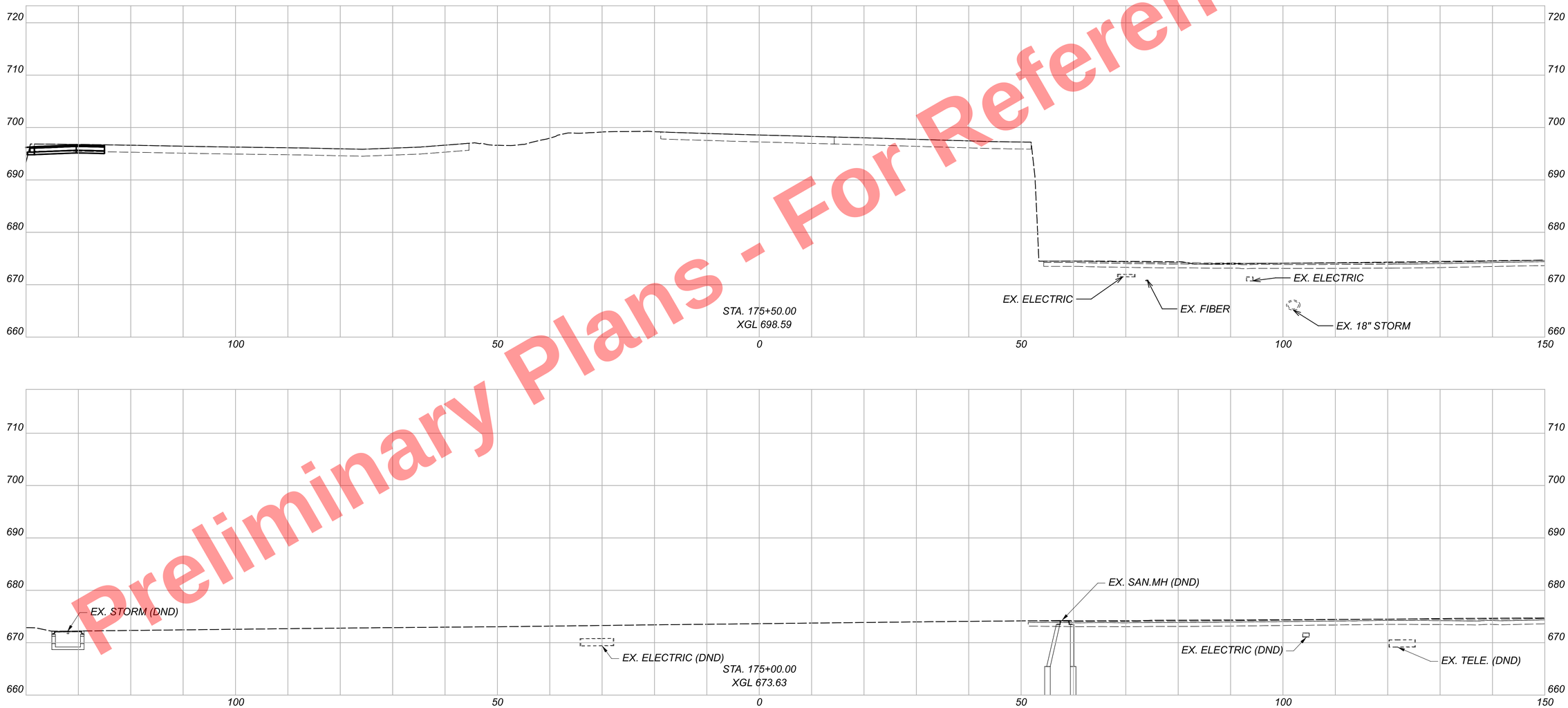

Preliminary Plans - For Reference Only

CUY-90-16.28

MODEL: BLP_IR90_EB - I75+00.00 [Sheet] PAPERSIZE: 34x22 (in) DATE: 5/6/2025 TIME: 1:35:54 PM USER: sisson
pw:\\mb-us-pw.bentley.com:mb-us-pw-03\Documents\Cleveland_OH\OL_Projects\ODOT\District12\82382\400-Engineering\Roadway\Sheets\82382_XS200.dgn

CROSS SECTIONS
I.R. 90 EB

DESIGN AGENCY
B&N
burgessniple.com

DESIGNER
AJS

REVIEWER
MRT 05/01/24

PROJECT ID
82382

Sheet Totals		
Seeding	Cut	Fill
0	0	0

SHEET 712 TOTAL 2696

Preliminary Plans - For Reference Only

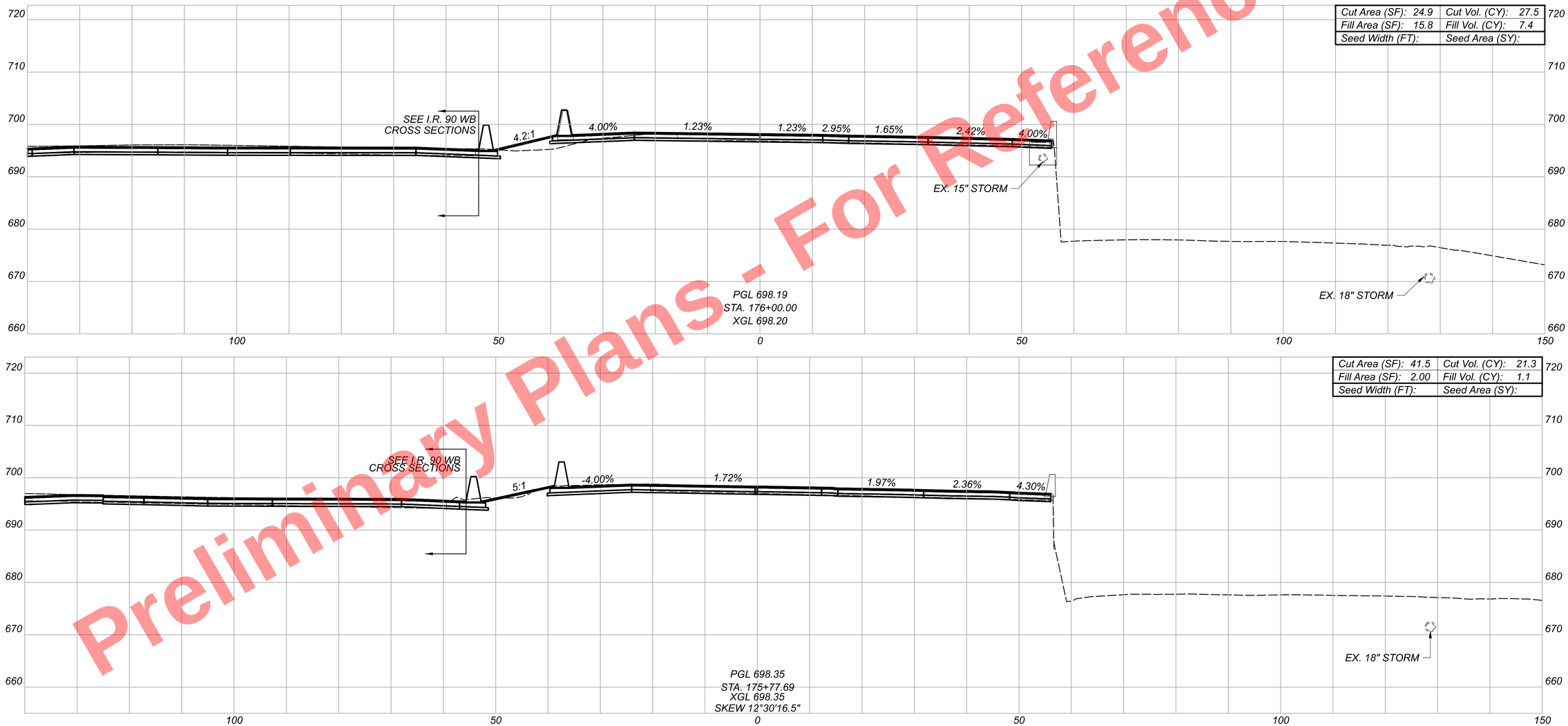

CROSS SECTIONS
I.R. 90 EB

Sheet Totals		
Seeding	Cut	Fill
0	49	9

DESIGN AGENCY
B&N
burgessniple.com

DESIGNER
AJS

REVIEWER
MRT 05/01/24

PROJECT ID
82382

SHEET 713 | TOTAL 2696

CUY-90-16.28

MODEL: BLP_IR90_EB - I75+77.69 [Sheet] PAPERSIZE: 34x22 (In.) DATE: 5/16/2025 TIME: 11:36:07 PM USER: slsson
pw:\\mb-us-pw.bentley.com:mb-us-pw-03\Documents\Cleveland.OH\OiL_Projects\ODOT\District2\82382\400-Engineering\Roadway\Sheets\82382_XS200.dgn

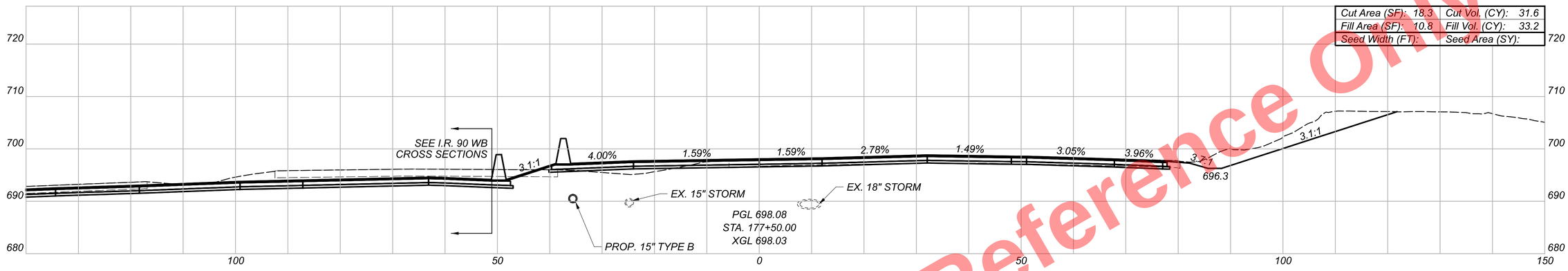

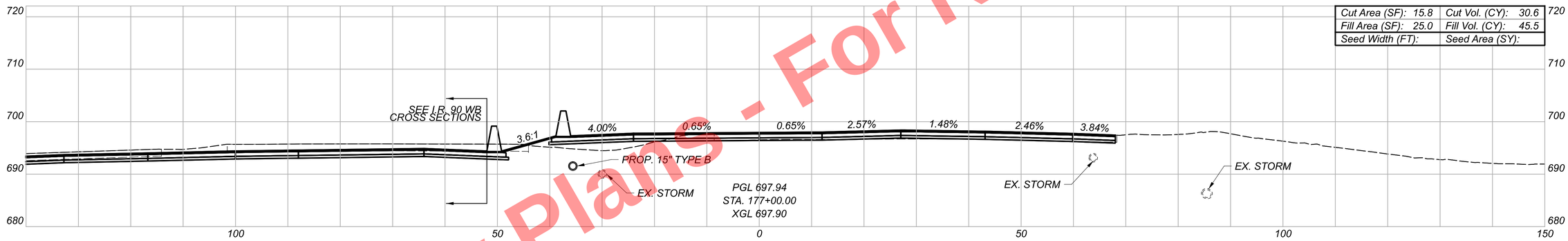

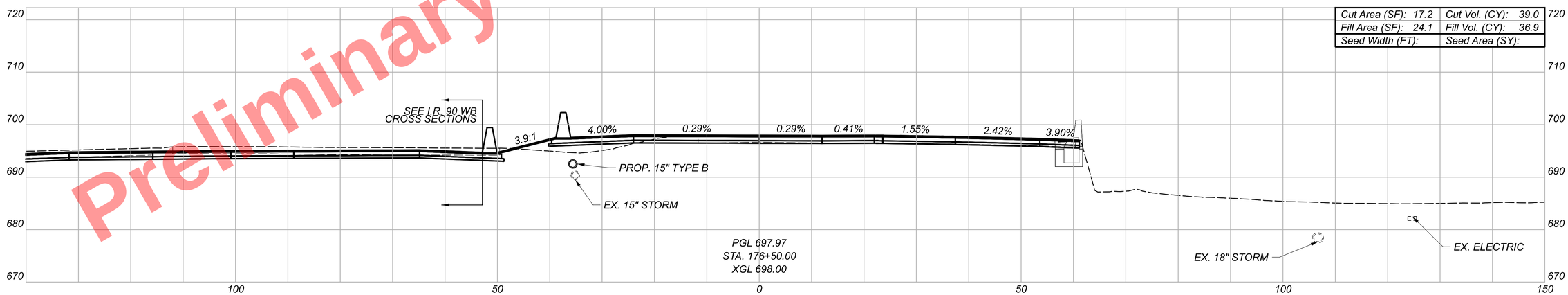

Preliminary Plans - For Reference Only

CROSS SECTIONS
I.R. 90 EB

Sheet Totals		
Seeding	Cut	Fill
0	102	116

DESIGN AGENCY
B&N
burgessniple.com

DESIGNER
AJS

REVIEWER
MRT 05/01/24

PROJECT ID
82382

SHEET 714 TOTAL 2696

CUY-90-16.28

MODEL: BLP_IR90_EB - 176+50.00 (Sheet) PAPERSIZE: 34x22 (In.) DATE: 5/6/2025 TIME: 1:36:19 PM USER: slsson
pw:\\mb-us-pw.bentley.com:mb-us-pw-03\Documents\Cleveland.OH\OI_Projects\ODOT\District#2\82382\400-Engineering\Roadway\Sheets\82382_XS200.dgn

Preliminary Plans - For Reference Only

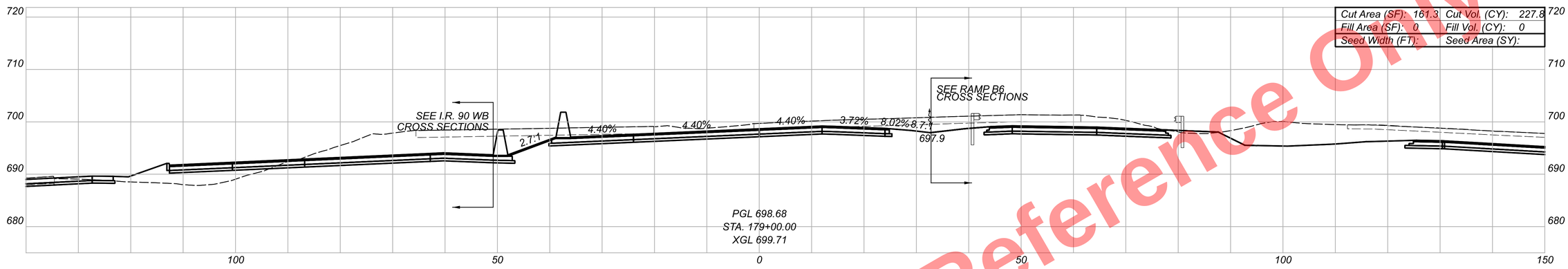

Cut Area (SF): 161.3	Cut Vol. (CY): 227.8
Fill Area (SF): 0	Fill Vol. (CY): 0
Seed Width (FT):	Seed Area (SY):

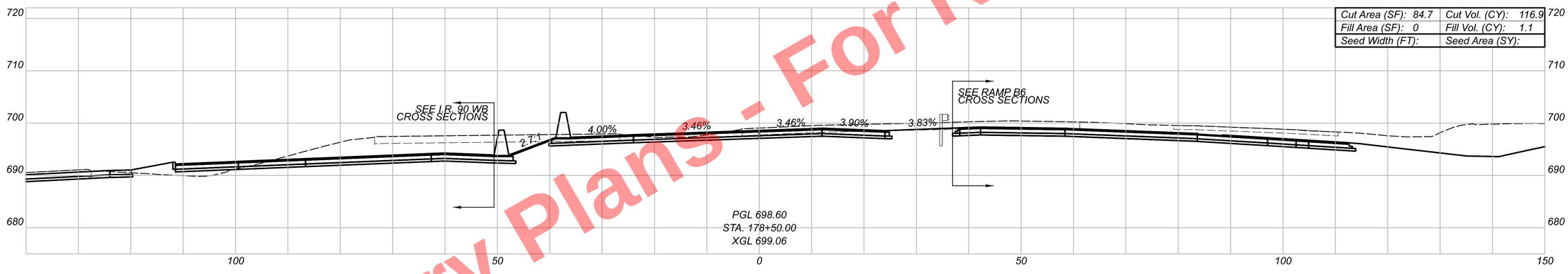

Cut Area (SF): 84.7	Cut Vol. (CY): 116.9
Fill Area (SF): 0	Fill Vol. (CY): 1.1
Seed Width (FT):	Seed Area (SY):

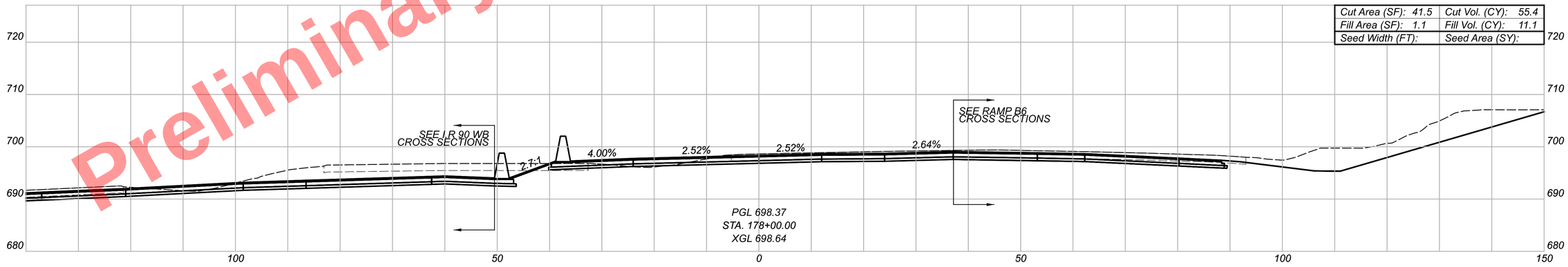

Cut Area (SF): 41.5	Cut Vol. (CY): 55.4
Fill Area (SF): 1.1	Fill Vol. (CY): 11.1
Seed Width (FT):	Seed Area (SY):

CTY-RTE-SECTION

CROSS SECTIONS
I.R. 90 EB

MODEL: BLP_IR90_EB - 178+00.00 [Sheet] PAPERSIZE: 34x22 (in.) DATE: 5/16/2025 TIME: 1:36:32 PM USER: sisson
pw:\\mb-us-pw.bentley.com:mb-us-pw-03\Documents\Cleveland_OH\01_Projects\ODOT\District2\82382\400-Engineering\Roadway\Sheets\82382_XS200.dgn

DESIGN AGENCY
B&N
burgessniple.com

DESIGNER
AJS

REVIEWER
MRT 05/01/24

PROJECT ID
82382

Sheet Totals		
Seeding	Cut	Fill
0	401	13

SHEET	TOTAL
715	2696

Preliminary Plans - For Reference Only

Cut Area (SF):	0	Cut Vol. (CY):	236.1
Fill Area (SF):	0	Fill Vol. (CY):	0
Seed Width (FT):		Seed Area (SY):	
Excavation, APP (SF):	495.3	Excavation, APP (CY):	458.7
Embankment, APP (SF):	332.2	Embankment, APP (CY):	307.6
Geofoam (SF):	808.0	Geofoam (CY):	749

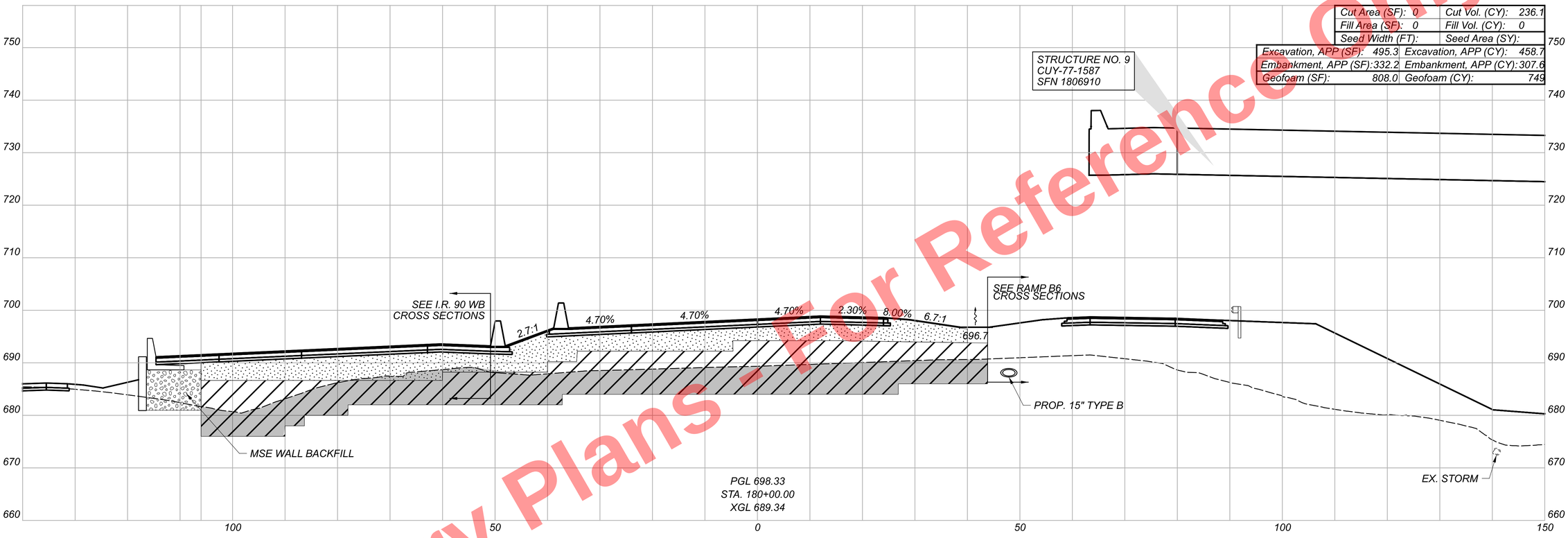

Cut Area (SF):	254.9	Cut Vol. (CY):	385.4
Fill Area (SF):	0	Fill Vol. (CY):	0
Seed Width (FT):		Seed Area (SY):	

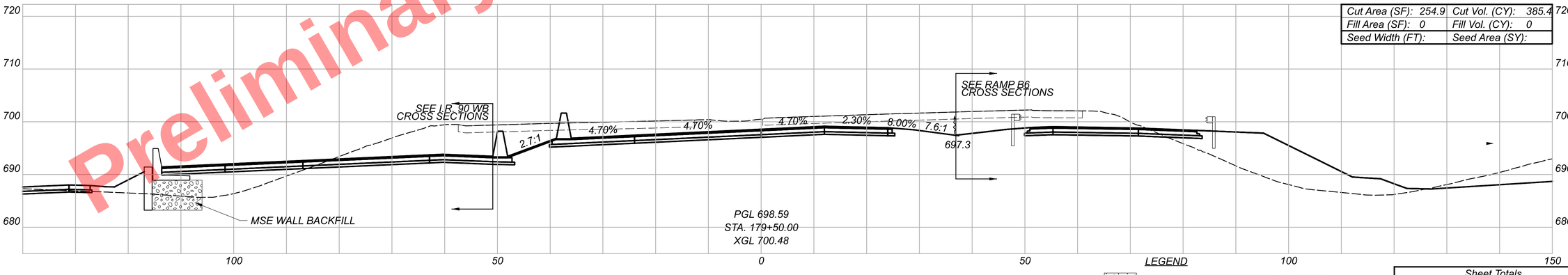

LEGEND

- ITEM 203 - EMBANKMENT, AS PER PLAN
- ITEM 203 - ROADWAY MISC.: EPS GEOFOAM FILL
- ITEM 203 - EXCAVATION, AS PER PLAN

Sheet Totals		
Seeding	Cut	Fill
0	622	0
Embankment, APP	Excavation, APP	Geofoam
459	308	749

CUY-90-16.28

MODEL: BLP_IR90_EB - I79+50.00 [Sheet] PAPERSIZE: 34x22 (in) DATE: 5/16/2025 TIME: 1:36:45 PM USER: sisson
pw:\\mb-us-pw.bentley.com:mb-us-pw-03\Documents\Cleveland_OH\01_Projects\ODOT\District2\82382\400-Engineering\Roadway\Sheets\82382_XS200.dgn

CROSS SECTIONS
I.R. 90 EB

DESIGN AGENCY
B&N
burgessniple.com

DESIGNER
AJS

REVIEWER
MRT 05/01/24

PROJECT ID
82382

SHEET	TOTAL
716	2696

Preliminary Plans - For Reference Only

CROSS SECTIONS
I.R. 90 EB

Cut Area (SF): 0	Cut Vol. (CY): 0
Fill Area (SF): 0	Fill Vol. (CY): 0
Seed Width (FT):	Seed Area (SY):

Excavation, APP (SF):	536.1	Excavation, APP (CY):	955.0
Embankment, APP (SF):	407.9	Embankment, APP (CY):	685.3
Geofoam (SF):	1919.4	Geofoam (CY):	2526

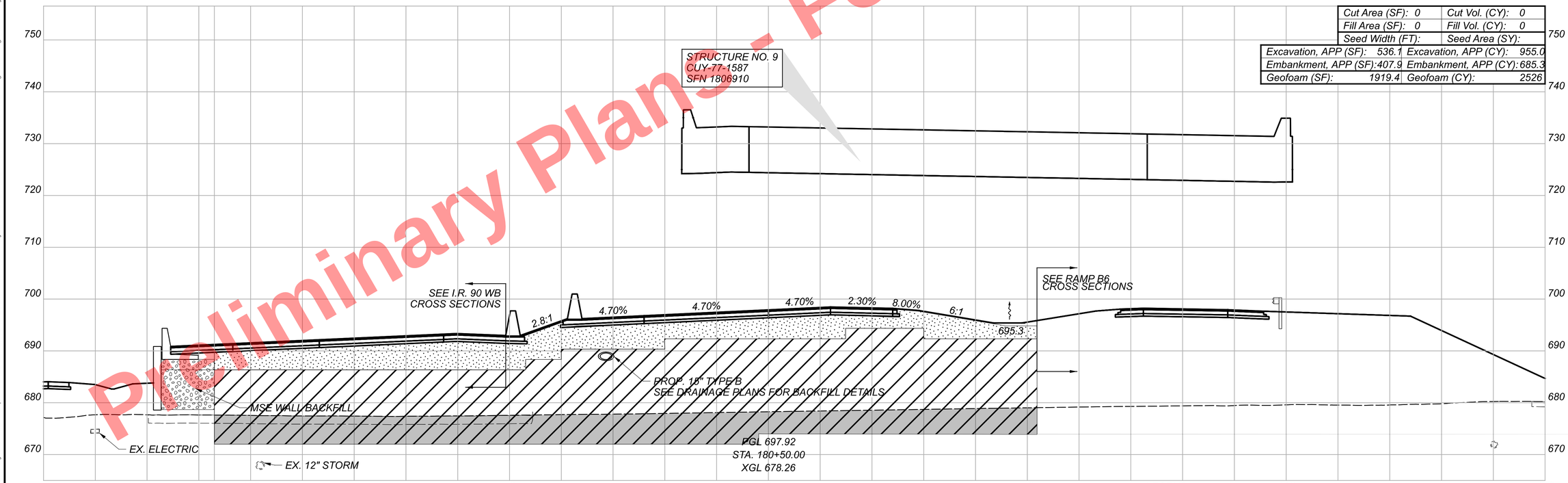

LEGEND

- ITEM 203 - EMBANKMENT, AS PER PLAN
- ITEM 203 - ROADWAY MISC.: EPS GEOFOAM FILL
- ITEM 203 - EXCAVATION, AS PER PLAN

Sheet Totals		
Seeding	Cut	Fill
0	0	0
Embankment, APP	Excavation, APP	Geofoam
686	955	2526

DESIGN AGENCY
B&N
burgessniple.com

DESIGNER
AJS

REVIEWER
MRT 05/01/24

PROJECT ID
82382

SHEET 717 TOTAL 2696

CUY-90-16.28

MODEL: BLP_IR90_EB - 180+50.00 [Sheet] PAPERSIZE: 34x22 (in.) DATE: 5/16/2025 TIME: 1:36:56 PM USER: slsson
pw:\\vmb-us-pw.bentley.com:vmb-us-pw-03\Documents\Cleveland_OH\01_Projects\ODOT\District2\82382\400-Engineering\Roadway\Sheets\82382_XS200.dgn

Preliminary Plans - For Reference Only

Cut Area (SF):	0	Cut Vol. (CY):	0
Fill Area (SF):	0	Fill Vol. (CY):	0
Seed Width (FT):		Seed Area (SY):	
Excavation, APP (SF):	608.7	Excavation, APP (CY):	1060
Embankment, APP (SF):	478.0	Embankment, APP (CY):	820.3
Geofoam (SF):	2992	Geofoam (CY):	4548

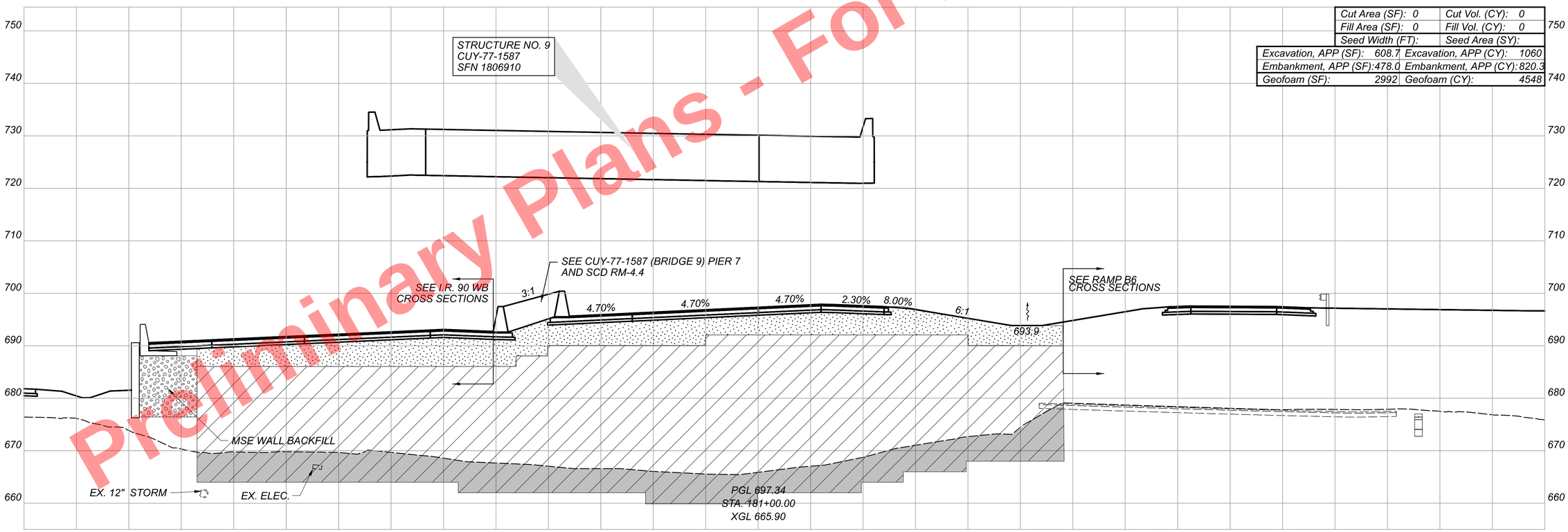

LEGEND

- ITEM 203 - EMBANKMENT, AS PER PLAN
- ITEM 203 - ROADWAY MISC.: EPS GEOFOAM FILL
- ITEM 203 - EXCAVATION, AS PER PLAN

Sheet Totals		
Seeding	Cut	Fill
0	0	0
Embankment, APP	Excavation, APP	Geofoam
821	1060	4548

CROSS SECTIONS
I.R. 90 EB

DESIGN AGENCY
B&N
burgessniple.com

DESIGNER
AJS

REVIEWER
MRT 05/01/24

PROJECT ID
82382

SHEET 718 TOTAL 2696

CUY-90-16.28

MODEL: BLP_IR90_EB - I81+00.00 [Sheet] PAPERSIZE: 34x22 (In.) DATE: 5/6/2025 TIME: 11:37:04 PM USER: slsson
pw:\\mb-us-pw.bentley.com:mb-us-pw-03\Documents\Cleveland.OH\Oi_Projects\0007\District2\82382\400-Engineering\Roadway\Sheets\82382_XS200.dgn

Preliminary Plans - For Reference Only

Cut Area (SF):	0	Cut Vol. (CY):	0
Fill Area (SF):	0	Fill Vol. (CY):	0
Seed Width (FT):		Seed Area (SY):	
Excavation, APP (SF):	594.2	Excavation, APP (CY):	1114
Embankment, APP (SF):	489.5	Embankment, APP (CY):	896
Geofoam (SF):	4125	Geofoam (CY):	6590

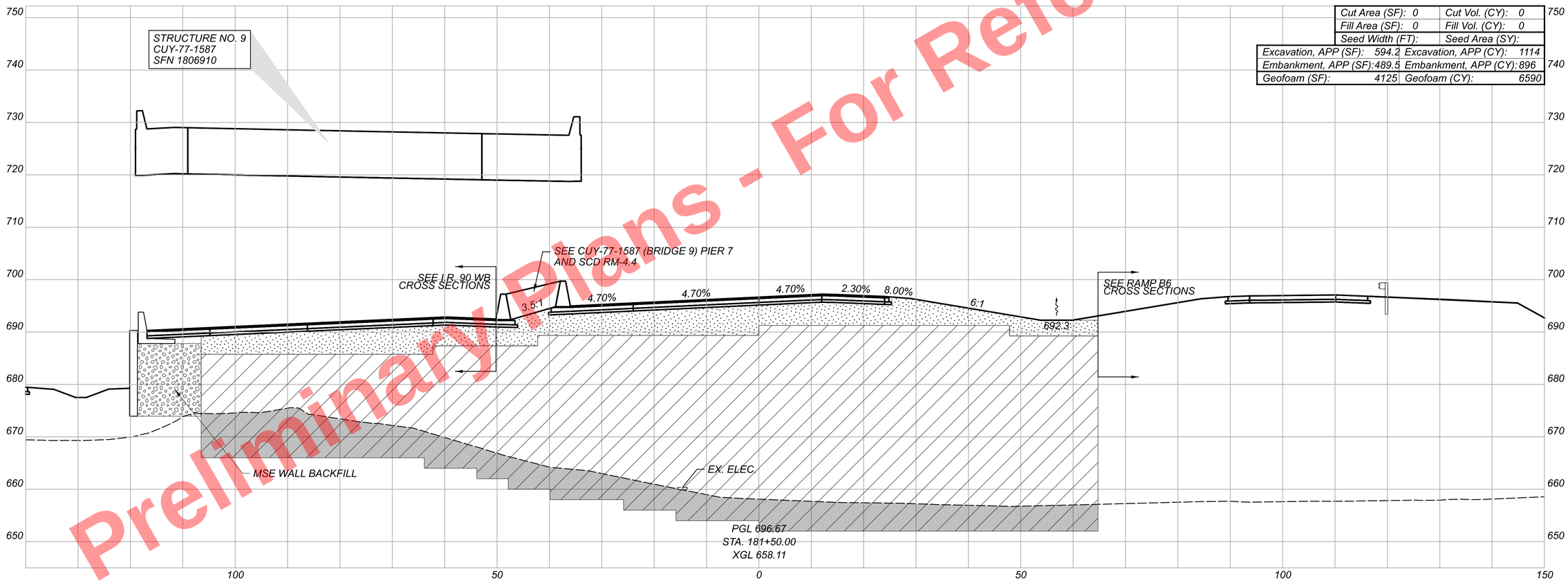

LEGEND

- ITEM 203 - EMBANKMENT, AS PER PLAN
- ITEM 203 - ROADWAY MISC.: EPS GEOFOAM FILL
- ITEM 203 - EXCAVATION, AS PER PLAN

Sheet Totals		
Seeding	Cut	Fill
0	0	0
Embankment, APP	Excavation, APP	Geofoam
896	1114	6590

CROSS SECTIONS
I.R. 90 EB

DESIGN AGENCY
B&N
burgessniple.com

DESIGNER
AJS

REVIEWER
MRT 05/01/24

PROJECT ID
82382

SHEET 719 TOTAL 2696

CUY-90-16.28

MODEL: BLP_IR90_EB - 181+50.00 [Sheet] PAPERSIZE: 34x22 (in) DATE: 5/6/2025 TIME: 1:37:10 PM USER: slsson
pw:\\vmb-us-pw.bentley.com:vmb-us-pw-03\Documents\Cleveland_OH\01_Projects\ODOT\District2\82382\400-Engineering\Roadway\Sheets\82382_XS200.dgn

Cut Area (SF): 0	Cut Vol. (CY): 0
Fill Area (SF): 0	Fill Vol. (CY): 0
Seed Width (FT):	Seed Area (SY):
Excavation, APP (SF): 587	Excavation, APP (CY): 1170
Embankment, APP (SF):689	Embankment, APP (CY):1125
Geofoam (SF): 1420	Geofoam (CY): 3704

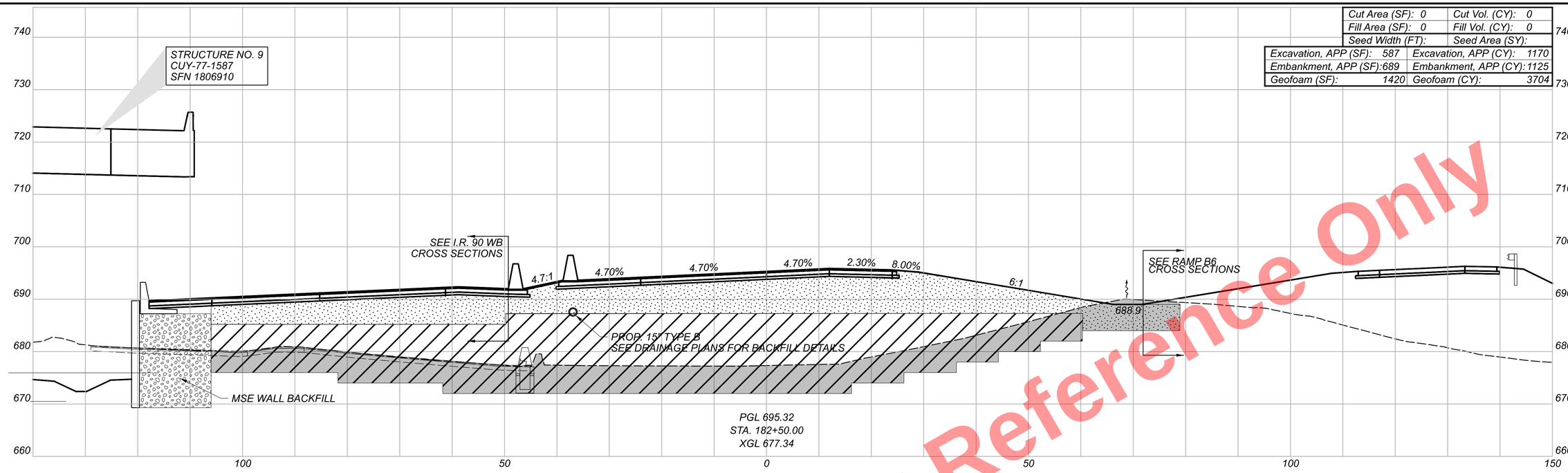

Cut Area (SF): 0	Cut Vol. (CY): 0
Fill Area (SF): 0	Fill Vol. (CY): 0
Seed Width (FT):	Seed Area (SY):
Excavation, APP (SF): 676	Excavation, APP (CY): 1176
Embankment, APP (SF):526	Embankment, APP (CY):940
Geofoam (SF): 2580	Geofoam (CY): 6208

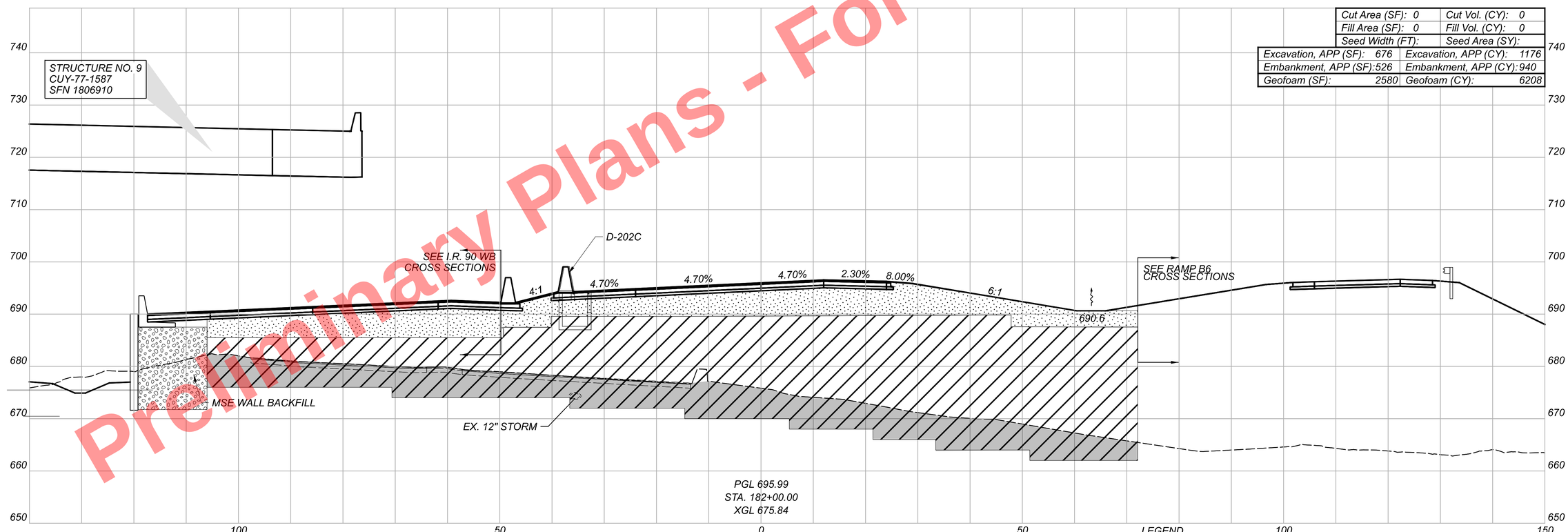

LEGEND

- ITEM 203 - EMBANKMENT, AS PER PLAN
- ITEM 203 - ROADWAY MISC.: EPS GEOFOAM FILL
- ITEM 203 - EXCAVATION, AS PER PLAN

Sheet Totals		
Seeding	Cut	Fill
0	0	0
Embankment, APP	Excavation, APP	Geofoam
2065	2346	9912

Preliminary Plans - Not For Reference Only

CROSS SECTIONS
I.R. 90 EB

DESIGN AGENCY
B&N
burgessniple.com

DESIGNER
AJS

REVIEWER
MRT 05/01/24

PROJECT ID
82382

SHEET 720 | TOTAL 2696

CUY-90-16.28

MODEL: BLP_IR90_EB - 182+00.00 [Sheet] PAPERSIZE: 34x22 (in.) DATE: 5/16/2025 TIME: 1:37:20 PM USER: slsson
pw:\\mb-us-pw.bentley.com:mb-us-pw-03\Documents\Cleveland_OH\01_Projects\ODOT\District 12\82382\400-Engineering\Roadway\Sheets\82382_XS200.dgn

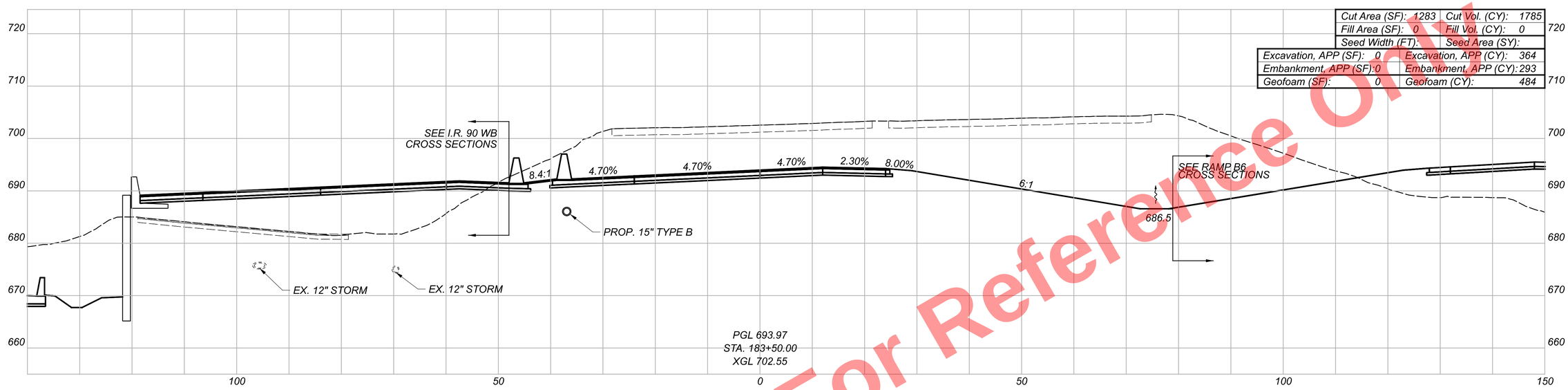

Cut Area (SF):	1283	Cut Vol. (CY):	1785
Fill Area (SF):	0	Fill Vol. (CY):	0
Seed Width (FT):		Seed Area (SY):	
Excavation, APP (SF):	0	Excavation, APP (CY):	364
Embankment, APP (SF):	0	Embankment, APP (CY):	293
Geofoam (SF):	0	Geofoam (CY):	484

Cut Area (SF):	645.4	Cut Vol. (CY):	597.6
Fill Area (SF):	0	Fill Vol. (CY):	0
Seed Width (FT):		Seed Area (SY):	
Excavation, APP (SF):	393	Excavation, APP (CY):	908
Embankment, APP (SF):	316	Embankment, APP (CY):	931
Geofoam (SF):	522	Geofoam (CY):	1800

LEGEND

- ITEM 203 - EMBANKMENT, AS PER PLAN
- ITEM 203 - ROADWAY MISC.: EPS GEOFOAM FILL
- ITEM 203 - EXCAVATION, AS PER PLAN

Sheet Totals		
Seeding	Cut	Fill
0	2383	0
Embankment, APP	Excavation, APP	Geofoam
1224	1272	2284

CROSS SECTIONS
I.R. 90 EB

DESIGN AGENCY
B&N
burgessniple.com

DESIGNER
AJS

REVIEWER
MRT 05/01/24

PROJECT ID
82382

SHEET 721 TOTAL 2696

CUY-90-16.28

Preliminary Plans - For Reference Only

MODEL: BLP_IR90_EB - I83+00.00 (Sheet) PAPERSIZE: 34x22 (In.) DATE: 5/16/2025 TIME: 11:37:33 PM USER: sisson
pw:\\mb-us-pw.bentley.com:mb-us-pw-03\Documents\Cleveland_OH\OL_Projects\ODOT_District2\82382\400-Engineering\Roadway\Sheets\8238_XS200.dgn

Preliminary Plans For Reference Only

Cut Area (SF): 1187	Cut Vol. (CY): 2285
Fill Area (SF): 0	Fill Vol. (CY): 0
Seed Width (FT):	Seed Area (SY):

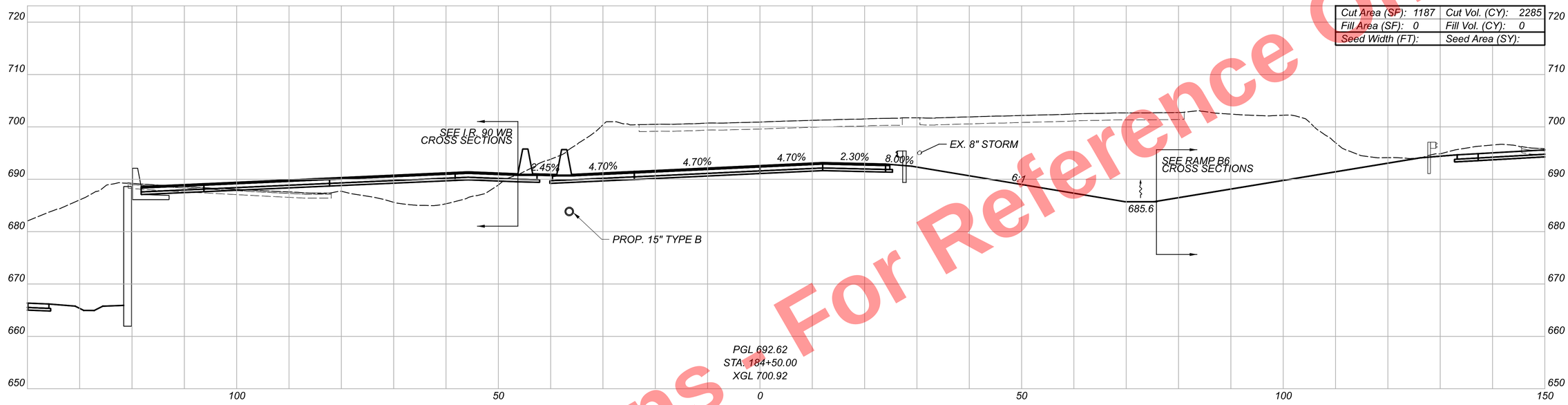

Cut Area (SF): 1281	Cut Vol. (CY): 2374
Fill Area (SF): 0	Fill Vol. (CY): 0
Seed Width (FT):	Seed Area (SY):

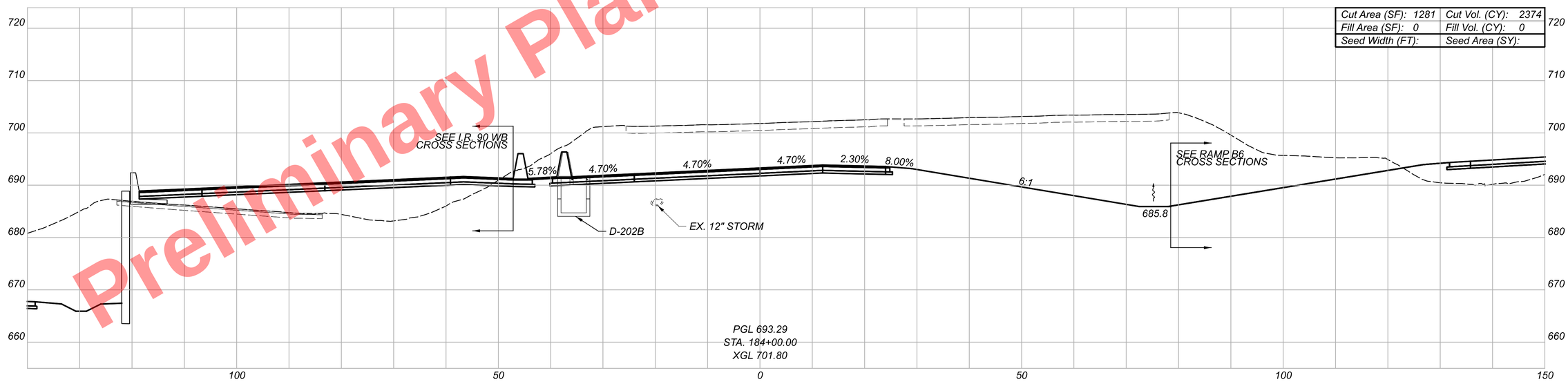

CUY-90-16.28

MODEL: BLP_IR90_EB - I84+00.00 (Sheet) PAPERSIZE: 34x22 (in.) DATE: 5/16/2025 TIME: 11:37:47 PM USER: slsson
pw:\\mb-us-pw.bentley.com:mb-us-pw-03\Documents\Cleveland.OH\OI_Projects\ODOT\District2\82382\400-Engineering\Roadway\Sheets\82382_XS2100.dgn

CROSS SECTIONS
I.R. 90 EB

DESIGN AGENCY
B&N
burgessniple.com

DESIGNER
AJS

REVIEWER
MRT 05/01/24

PROJECT ID
82382

Sheet Totals		
Seeding	Cut	Fill
0	4659	0

SHEET	TOTAL
722	2696

Preliminary Plans - For Reference Only

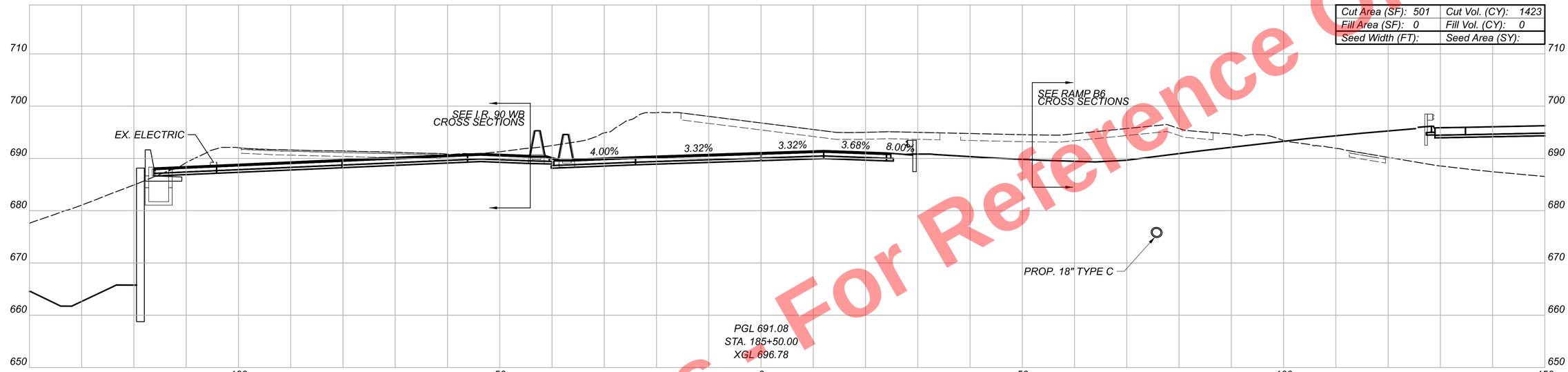

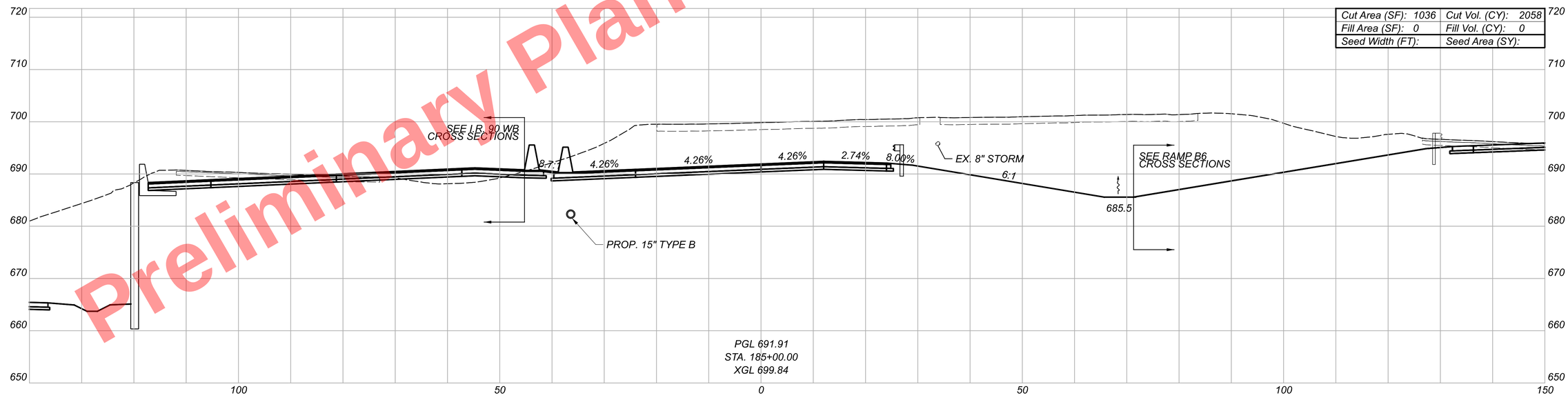

CUY-90-16.28

MODEL: BLP_IR90_EB - I85+00.00 [Sheet] PAPERSIZE: 34x22 (In.) DATE: 5/6/2025 TIME: 1:38:01 PM USER: slsson
pw:\\mb-us-pw.bentley.com:mb-us-pw-03\Documents\Cleveland_OH\OI_Projects\ODOT\District#12\82382\400-Engineering\Roadway\Sheets\82382_XS200.dgn

CROSS SECTIONS
I.R. 90 EB

DESIGN AGENCY
B&N
burgessniple.com

DESIGNER
AJS

REVIEWER
MRT 05/01/24

PROJECT ID
82382

Sheet Totals		
Seeding	Cut	Fill
0	3481	0

SHEET	TOTAL
723	2696

Preliminary Plans - For Reference Only

Cut Area (SF): 0	Cut Vol. (CY): 0
Fill Area (SF): 337	Fill Vol. (CY): 124.9
Seed Width (FT):	Seed Area (SY):
Excavation, APP (SF): 88	Excavation, APP (CY): 32.6
Embankment, APP (SF): 79	Embankment, APP (CY): 29.3
Geofoam (SF): 279	Geofoam (CY): 104

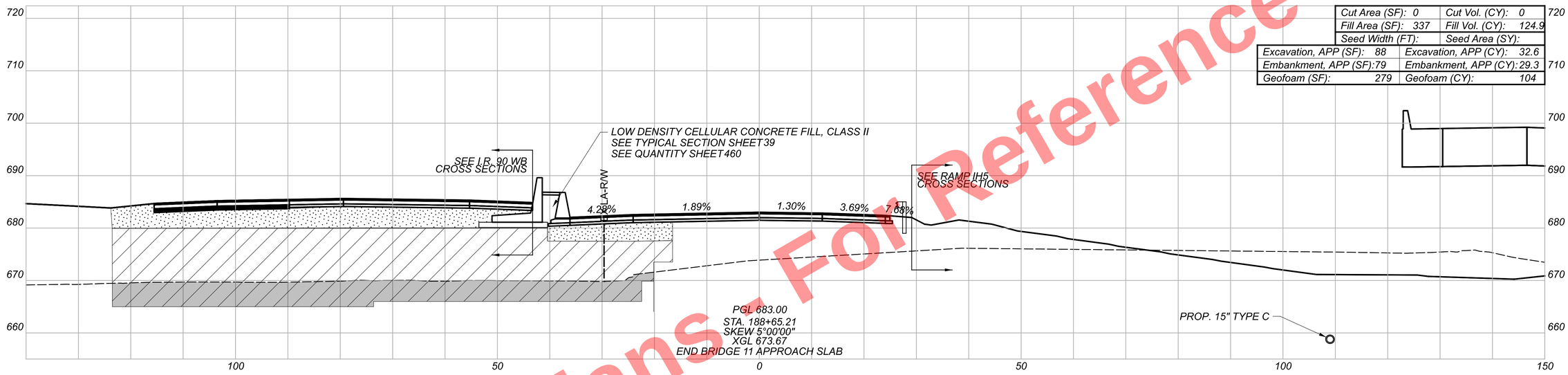

Cut Area (SF): 172	Cut Vol. (CY): 314.1
Fill Area (SF): 54	Fill Vol. (CY): 25.3
Seed Width (FT):	Seed Area (SY):

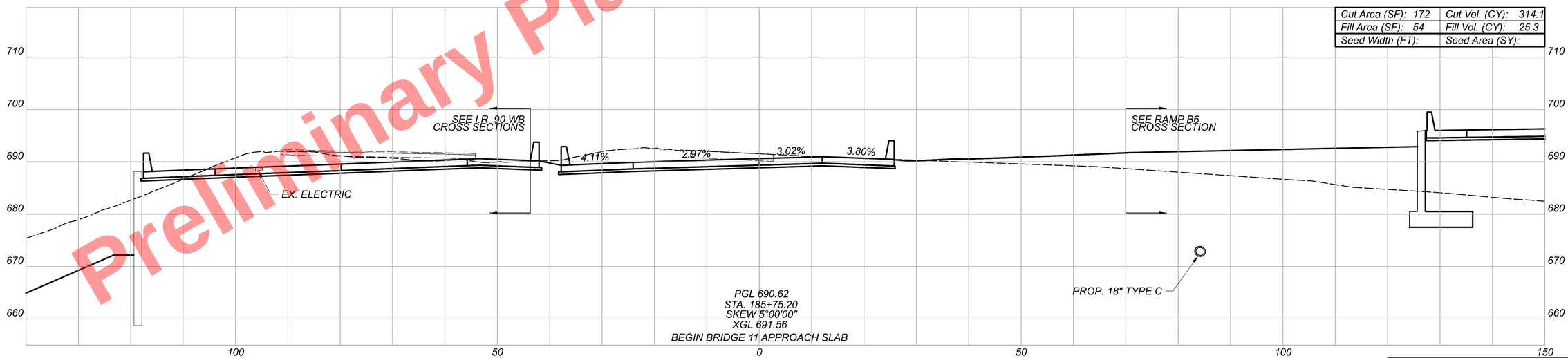

Sheet Totals		
Seeding	Cut	Fill
0	315	151
Embankment, APP	Excavation, APP	Geofoam
30	33	104

CROSS SECTIONS
I.R. 90 EB

DESIGN AGENCY
B&N
burgessniple.com

DESIGNER
AJS

REVIEWER
MRT 05/01/24

PROJECT ID
82382

SHEET 724 TOTAL 2696

CTY-RTE-SECTION

MODEL: BLP_IR90_EB - I85+75.20-I[Sheet] PAPERSIZE: 34x22 (in.) DATE: 5/16/2025 TIME: 11:38:14 PM USER: slsson
pw:\\mb-us-pw.bentley.com:mb-us-pw-03\Documents\Cleveland_OH\OL_Projects\ODOT\District2\82382\400-Engineering\Roadway\Sheets\82382_XS200.dgn

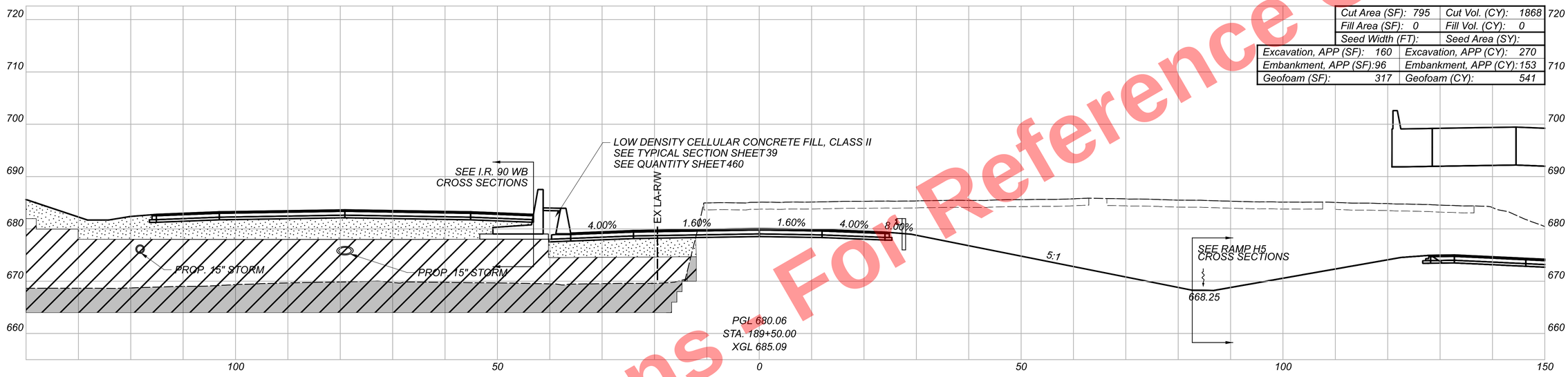

Cut Area (SF): 795	Cut Vol. (CY): 1868
Fill Area (SF): 0	Fill Vol. (CY): 0
Seed Width (FT):	Seed Area (SY):
Excavation, APP (SF): 160	Excavation, APP (CY): 270
Embankment, APP (SF): 96	Embankment, APP (CY): 153
Geofoam (SF): 317	Geofoam (CY): 541

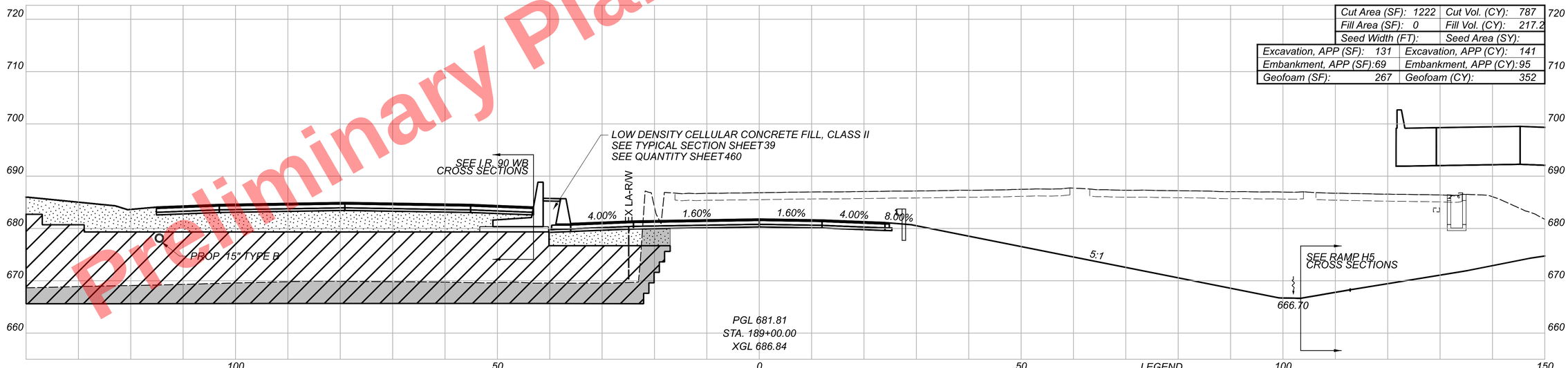

Cut Area (SF): 1222	Cut Vol. (CY): 787
Fill Area (SF): 0	Fill Vol. (CY): 217.2
Seed Width (FT):	Seed Area (SY):
Excavation, APP (SF): 131	Excavation, APP (CY): 141
Embankment, APP (SF): 69	Embankment, APP (CY): 95
Geofoam (SF): 267	Geofoam (CY): 352

LEGEND

- ITEM 203 - EMBANKMENT, AS PER PLAN
- ITEM 203 - ROADWAY MISC.: EPS GEOFOAM FILL
- ITEM 203 - EXCAVATION, AS PER PLAN

Sheet Totals		
Seeding	Cut	Fill
0	2655	218
Embankment, APP	Excavation, APP	Geofoam
248	411	893

CROSS SECTIONS
I.R. 90 EB

DESIGN AGENCY
B&N
burgessniple.com

DESIGNER
AJS

REVIEWER
MRT 05/01/24

PROJECT ID
82382

SHEET 725 TOTAL 2696

CUY-90-16.28

MODEL: BLP_IR90_EB - 189+00.00 [Sheet] PAPERSIZE: 34x22 (in.) DATE: 5/22/2025 TIME: 9:33:01 PM USER: sisson
pw:\\mb-us-pw.bentley.com:mb-us-pw-03\Documents\Cleveland_OH\OI_Projects\ODOT\District12\82382\400-Engineering\Roadway\Sheets\82382_XS2100.dgn

Preliminary Plans - For Reference Only

Preliminary Plans - For Reference Only

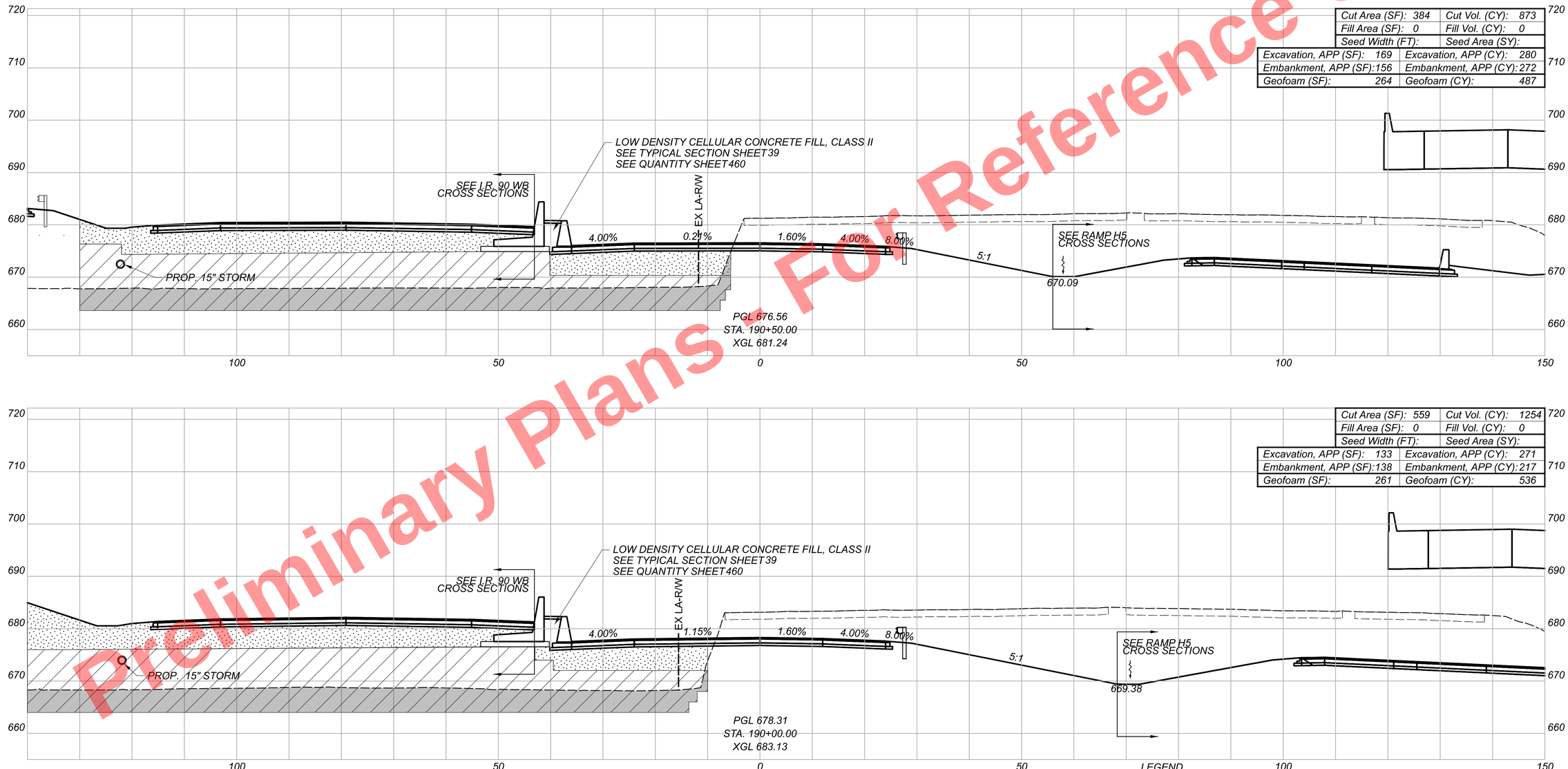

LEGEND

- ITEM 203 - EMBANKMENT, AS PER PLAN
- ITEM 203 - ROADWAY MISC.: EPS GEOFOAM FILL
- ITEM 203 - EXCAVATION, AS PER PLAN

Sheet Totals		
Seeding	Cut	Fill
0	2127	0
Embankment, APP	Excavation, APP	Geofoam
489	551	1023

CROSS SECTIONS
I.R. 90 EB

DESIGN AGENCY
B&N
burgessniple.com

DESIGNER
AJS

REVIEWER
MRT 05/01/24

PROJECT ID
82382

SHEET 726 | TOTAL 2696

CUY-90-16.28

MODEL: BLP_IR90_EB - I90+00.00 [Sheet] PAPERSIZE: 34x22 (In.) DATE: 5/6/2025 TIME: 1:38:42 PM USER: slsson
pw:\\mb-us-pw.bentley.com:mb-us-pw-03\Documents\Cleveland_OH\OI_Projects\ODOT\District#2\82382\400-Engineering\Roadway\Sheets\82382_XS200.dgn

Preliminary Plans - For Reference Only

Cut Area (SF): 264	Cut Vol. (CY): 510.2
Fill Area (SF): 3	Fill Vol. (CY): 2.8
Seed Width (FT):	Seed Area (SY):
Excavation, APP (SF): 199	Excavation, APP (CY): 411
Embankment, APP (SF): 89	Embankment, APP (CY): 229
Geofoam (SF): 204	Geofoam (CY): 465

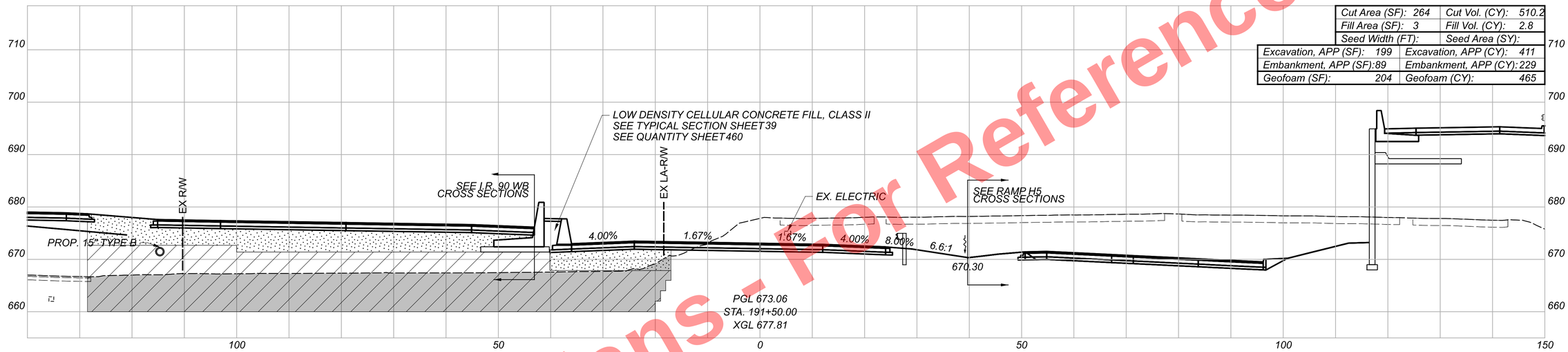

Cut Area (SF): 287	Cut Vol. (CY): 621
Fill Area (SF): 0	Fill Vol. (CY): 0
Seed Width (FT):	Seed Area (SY):
Excavation, APP (SF): 245	Excavation, APP (CY): 383
Embankment, APP (SF): 158	Embankment, APP (CY): 291
Geofoam (SF): 298	Geofoam (CY): 521

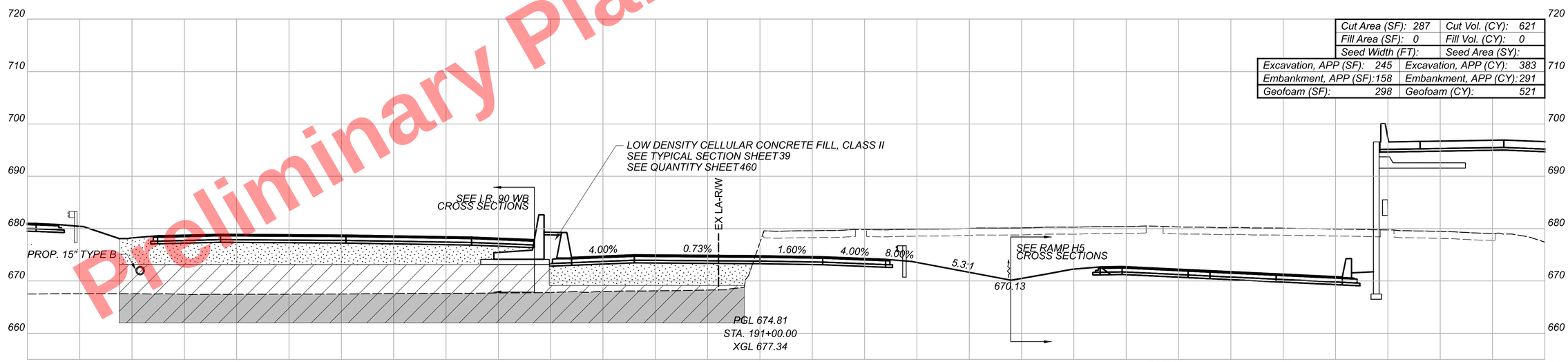

LEGEND

- ITEM 203 - EMBANKMENT, AS PER PLAN
- ITEM 203 - ROADWAY MISC.: EPS GEOFOAM FILL
- ITEM 203 - EXCAVATION, AS PER PLAN

Sheet Totals		
Seeding	Cut	Fill
0	1132	3
Embankment, APP	Excavation, APP	Geofoam
520	794	986

CROSS SECTIONS
I.R. 90 EB

DESIGN AGENCY
B&N
burgessniple.com

DESIGNER AJS
REVIEWER MRT 05/01/24
PROJECT ID 82382
SHEET 727 TOTAL 2696

CUY-90-16.28

MODEL: BLP_IR90_EB - 191+00.00 [Sheet] PAPERSIZE: 34x22 (in) DATE: 5/6/2025 TIME: 3:38:55 PM USER: sisson
pw:\\mb-us-pw.bentley.com:mb-us-pw-03\Documents\Cleveland_OH\01_Projects\ODOT\District2\82382\400-Engineering\Roadway\Sheets\82382_XS200.dgn

Preliminary Plans - For Reference Only

Cut Area (SF): 232	Cut Vol. (CY): 416
Fill Area (SF): 0	Fill Vol. (CY): 2.8
Seed Width (FT):	Seed Area (SY):
Excavation, APP (SF): 276	Excavation, APP (CY): 439
Embankment, APP (SF):159	Embankment, APP (CY):247
Geofoam (SF): 141	Geofoam (CY): 234

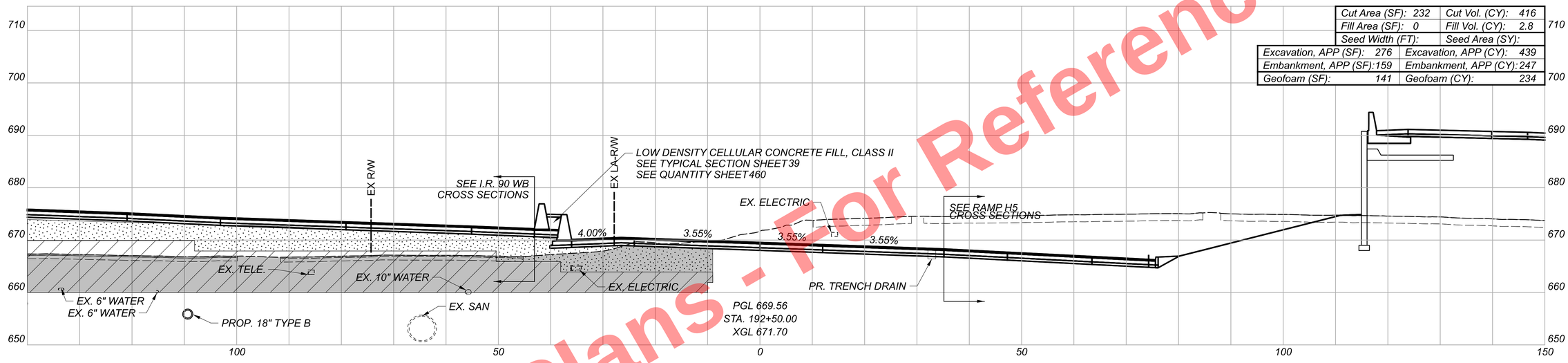

Cut Area (SF): 217	Cut Vol. (CY): 445
Fill Area (SF): 3	Fill Vol. (CY): 6
Seed Width (FT):	Seed Area (SY):
Excavation, APP (SF): 198	Excavation, APP (CY): 368
Embankment, APP (SF):108	Embankment, APP (CY):183
Geofoam (SF): 111	Geofoam (CY): 292

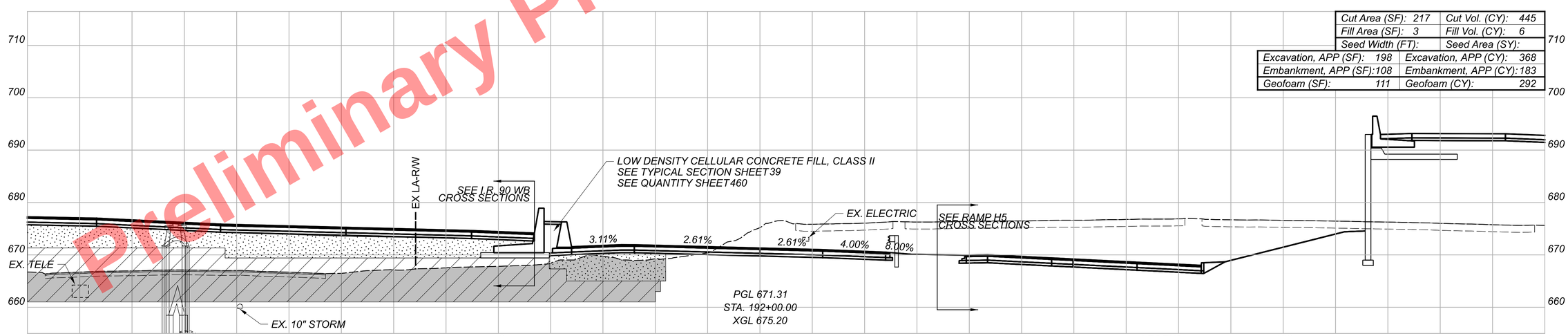

LEGEND

- ITEM 203 - EMBANKMENT, AS PER PLAN
- ITEM 203 - ROADWAY MISC.: EPS GEOFOAM FILL
- ITEM 203 - EXCAVATION, AS PER PLAN

Sheet Totals		
Seeding	Cut	Fill
0	861	9
Embankment, APP	Excavation, APP	Geofoam
430	807	526

CROSS SECTIONS
I.R. 90 EB

DESIGN AGENCY
B&N
burgessniple.com

DESIGNER AJS
REVIEWER MRT 05/01/24
PROJECT ID 82382
SHEET 728 TOTAL 2696

CUY-90-16.28

MODEL: BLP_IR90_EB - 192+00.00 [Sheet] PAPERSIZE: 34x22 (in.) DATE: 5/6/2025 TIME: 1:39:08 PM USER: sisson
pw:\\mb-us-pw.bentley.com:mb-us-pw-03\Documents\Cleveland_OH\OI_Projects\ODOT\District 12\82382\400-Engineering\Engineering\Roadway\Sheets\82382_XS200.dgn

Preliminary Plans - For Reference Only

Cut Area (SF): 698	Cut Vol. (CY): 1245
Fill Area (SF): 27	Fill Vol. (CY): 36
Seed Width (FT):	Seed Area (SY):

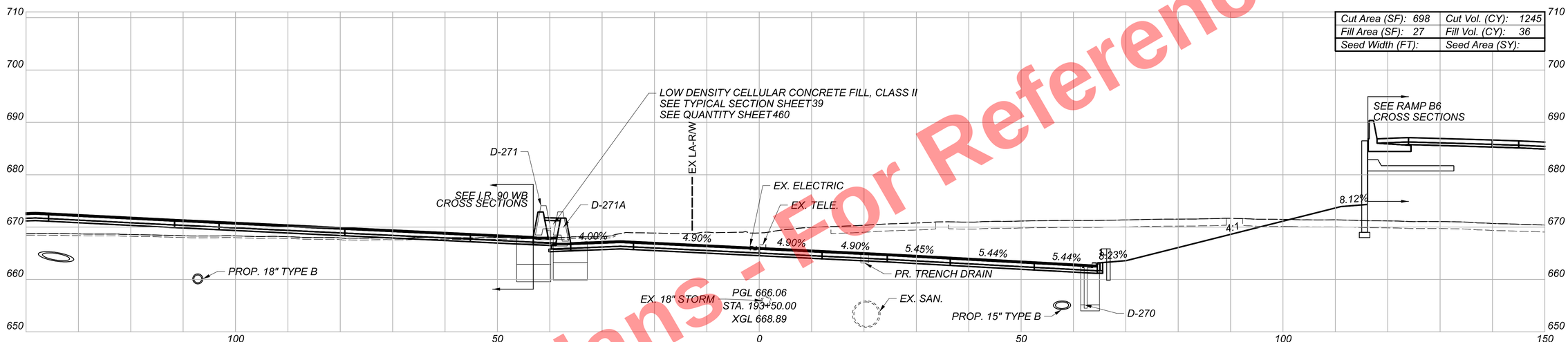

Cut Area (SF): 646	Cut Vol. (CY): 813
Fill Area (SF): 12	Fill Vol. (CY): 11
Seed Width (FT):	Seed Area (SY):
Excavation, APP (SF): 0	Excavation, APP (CY): 256
Embankment, APP (SF):0	Embankment, APP (CY): 147
Geofoam (SF): 0	Geofoam (CY): 131

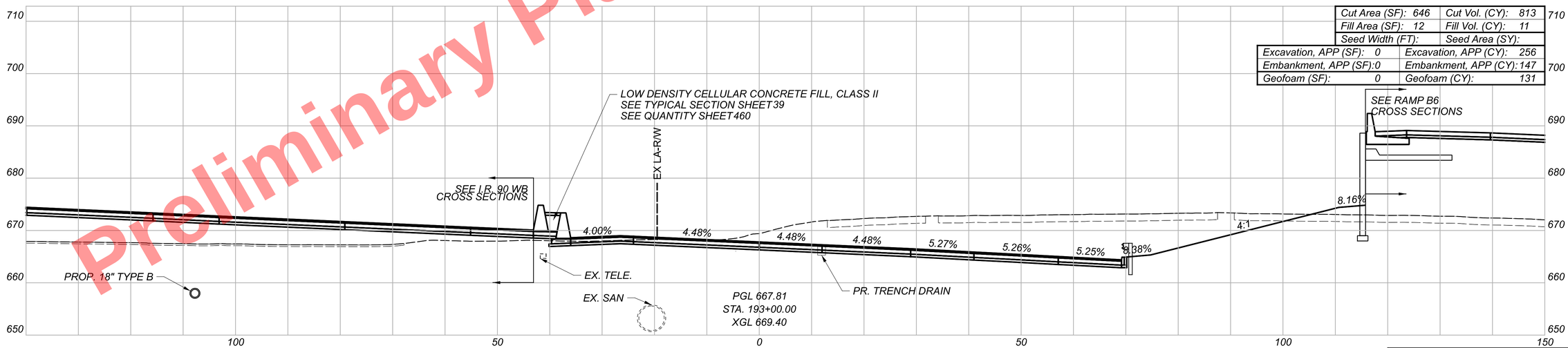

Sheet Totals		
Seeding	Cut	Fill
0	2058	47
Embankment, APP	Excavation, APP	Geofoam
147	256	131

CUY-90-16.28

MODEL: BLP_IR90_EB - 193+00.00 [Sheet] PAPERSIZE: 34x22 (in.) DATE: 5/6/2025 TIME: 1:39:20 PM USER: slsson
pw:\\mb-us-pw.bentley.com:mb-us-pw-03\Documents\Cleveland.OH\DgnProjects\ODOT\District2\82382\400-Engineering\Roadway\Sheets\82382_XS200.dgn

CROSS SECTIONS
I.R. 90 EB

DESIGN AGENCY
B&N
burgessniple.com

DESIGNER
AJS

REVIEWER
MRT 05/01/24

PROJECT ID
82382

SHEET 729 | TOTAL 2696

Preliminary Plans - For Reference Only

Cut Area (SF): 720	Cut Vol. (CY): 1344	Excavation, APP (SF): 159	Excavation, APP (CY): 147
Fill Area (SF): 0	Fill Vol. (CY): 54	Embankment, APP (SF): 142	Embankment, APP (CY): 132
Seed Width (FT):	Seed Area (SY):	Geofoam (SF): 130	Geofoam (CY): 121

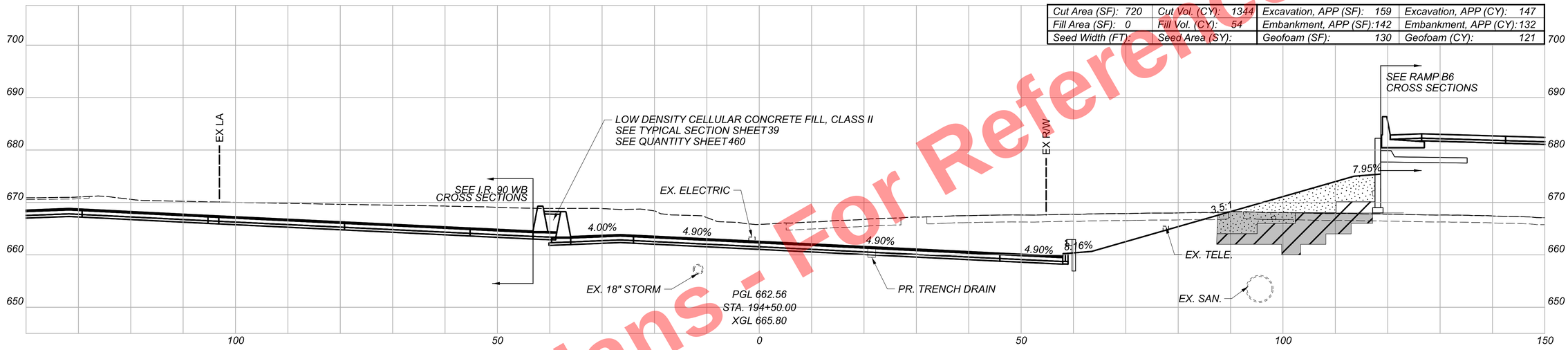

Cut Area (SF): 731	Cut Vol. (CY): 1323		
Fill Area (SF): 58	Fill Vol. (CY): 79		
Seed Width (FT):	Seed Area (SY):		

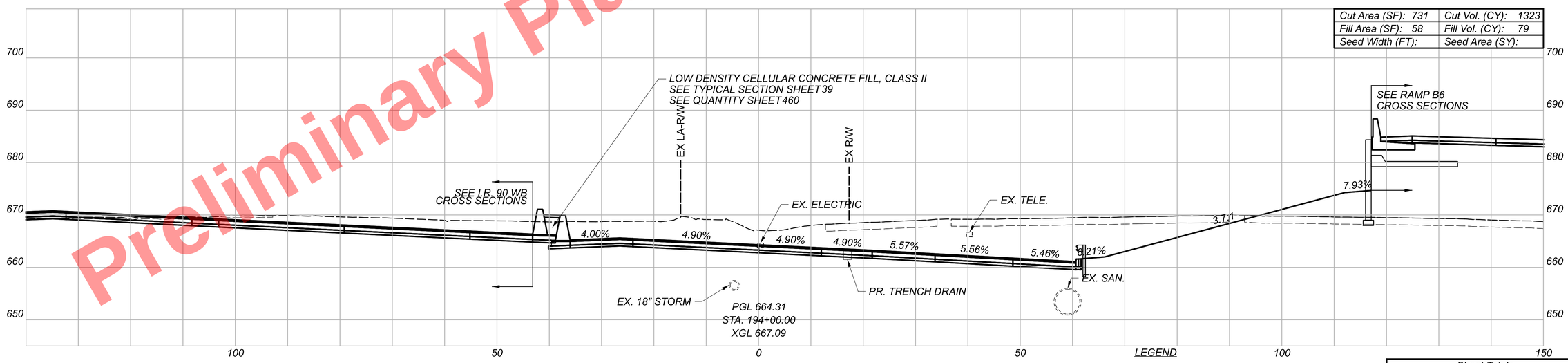

LEGEND

- ITEM 203 - EMBANKMENT, AS PER PLAN
- ITEM 203 - ROADWAY MISC.: EPS GEOFOAM FILL
- ITEM 203 - EXCAVATION, AS PER PLAN

Sheet Totals		
Seeding	Cut	Fill
0	2667	133
Embankment, APP	Excavation, APP	Geofoam
132	147	121

CROSS SECTIONS
I.R. 90 EB

DESIGN AGENCY
B&N
burgessniple.com

DESIGNER
AJS

REVIEWER
MRT 05/01/24

PROJECT ID
82382

SHEET 730 | TOTAL 2696

CUY-90-16.28

MODEL: BLP_IR90_EB - 194+00.00 [Sheet] PAPERSIZE: 34x22 (in.) DATE: 5/16/2025 TIME: 1:39:32 PM USER: sisson
pw:\\mb-us-pw.bentley.com:mb-us-pw-03\Documents\Cleveland_OH\01_Projects\ODOT\District2\82382\400-Engineering\Roadway\Sheets\82382_XS200.dgn

Cut Area (SF): 735	Cut Vol. (CY): 1305	Excavation, APP (SF): 0	Excavation, APP (CY): 34
Fill Area (SF): 262	Fill Vol. (CY): 292	Embankment, APP (SF): 0	Embankment, APP (CY): 71
Seed Width (FT):	Seed Area (SY):	Geofoam (SF): 0	Geofoam (CY): 90

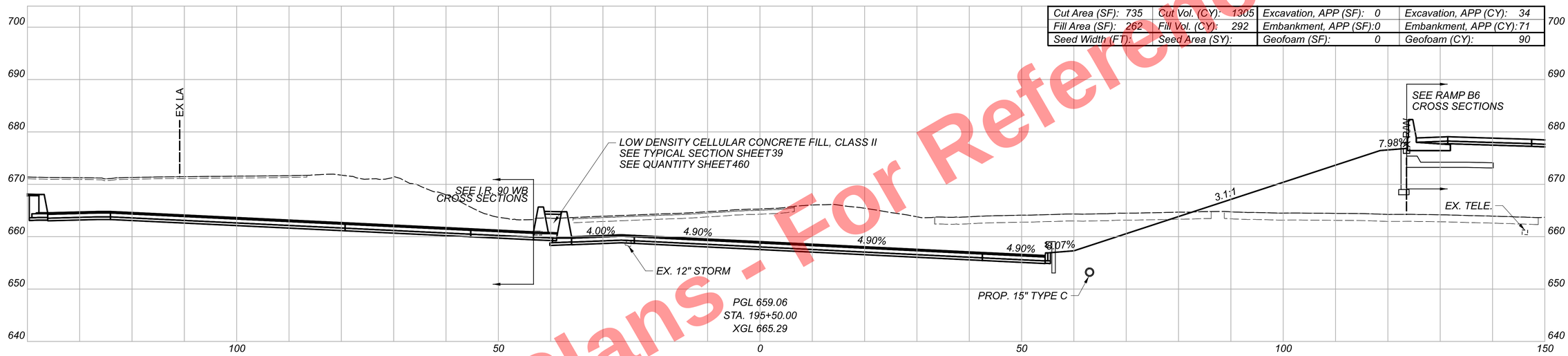

Cut Area (SF): 674	Cut Vol. (CY): 1291	Excavation, APP (SF): 37	Excavation, APP (CY): 182
Fill Area (SF): 53	Fill Vol. (CY): 49	Embankment, APP (SF): 77	Embankment, APP (CY): 203
Seed Width (FT):	Seed Area (SY):	Geofoam (SF): 97	Geofoam (CY): 211

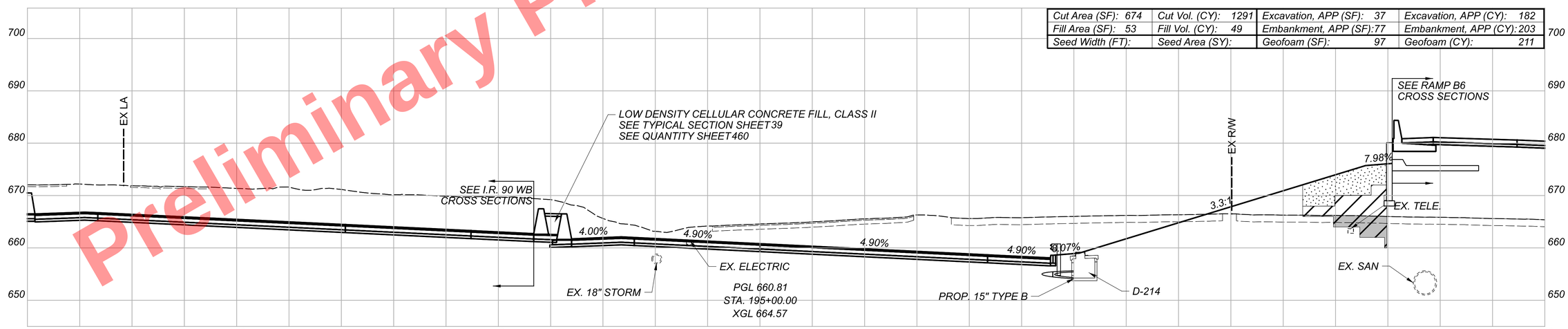

LEGEND

- ITEM 203 - EMBANKMENT, AS PER PLAN
- ITEM 203 - ROADWAY MISC.: EPS GEOFOAM FILL
- ITEM 203 - EXCAVATION, AS PER PLAN

Sheet Totals		
Seeding	Cut	Fill
0	2596	341
Embankment, APP	Excavation, APP	Geofoam
274	216	301

CROSS SECTIONS
I.R. 90 EB

DESIGN AGENCY
B&N
burgessniple.com

DESIGNER
AJS

REVIEWER
MRT 05/01/24

PROJECT ID
82382

SHEET 731 TOTAL 2696

CUY-90-16.28

MODEL: BLP_IR90_EB - 195+00.00 [Sheet] PAPERSIZE: 34x22 (in.) DATE: 5/16/2025 TIME: 1:39:46 PM USER: sisson
pw:\\mb-us-pw.bentley.com:mb-us-pw-03\Documents\Cleveland_OH\01_Projects\ODOT\District12\82382\400-Engineering\Roadway\Sheets\82382_XS2100.dgn

Preliminary Plans - For Reference Only

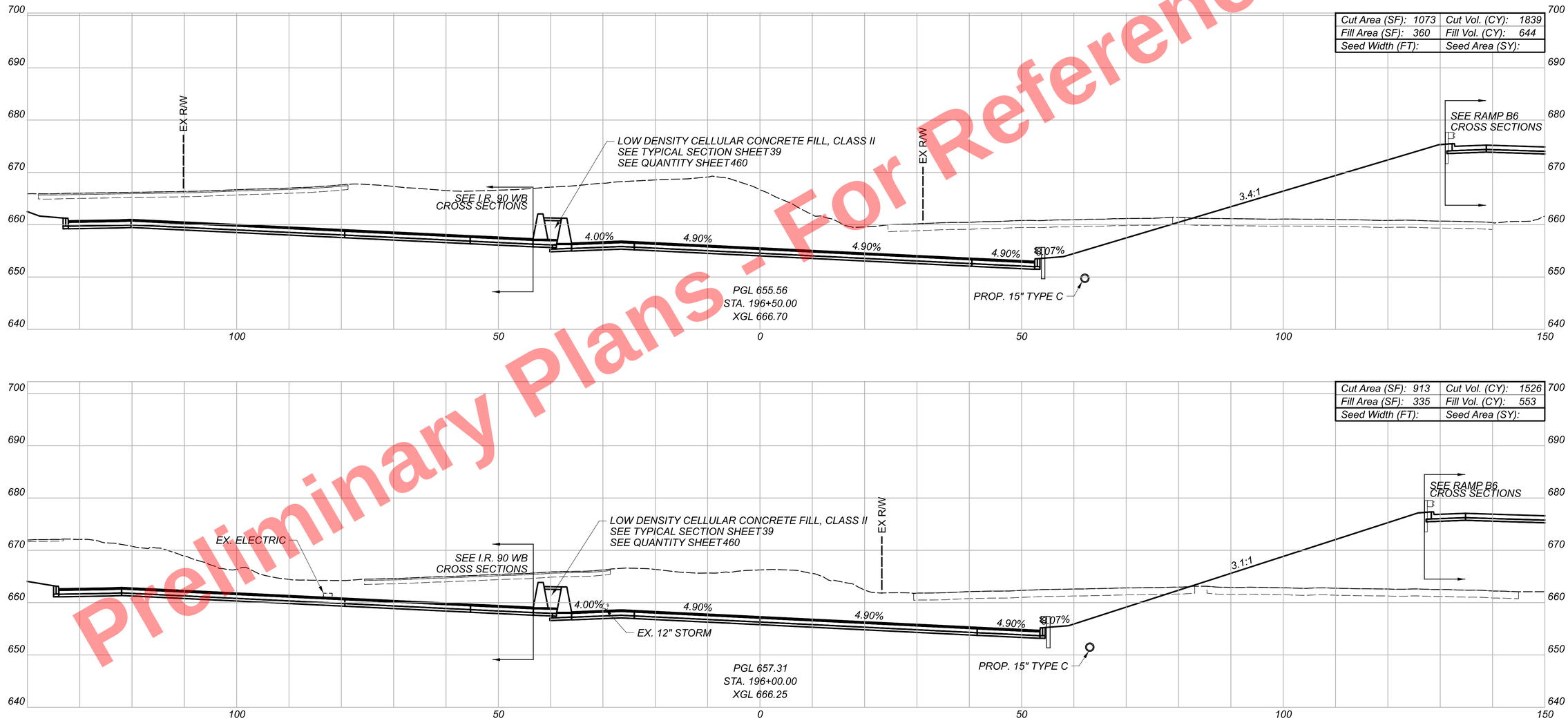

Preliminary Plans - For Reference Only

CROSS SECTIONS
I.R. 90 EB

Sheet Totals		
Seeding	Cut	Fill
0	3365	1197

DESIGN AGENCY
B&N
burgessniple.com

DESIGNER
AJS

REVIEWER
MRT 05/01/24

PROJECT ID
82382

SHEET 732 | TOTAL 2696

CUY-90-16.28

MODEL: BLP_IR90_EB - 196+00.00 [Sheet] PAPERSIZE: 34x22 (in.) DATE: 5/16/2025 TIME: 1:39:57 PM USER: sisson
pw:\\mb-us-pw.bentley.com:mb-us-pw-03\Documents\Cleveland_OH\DL_Projects\ODOT\District2\82382\400-Engineering\Roadway\Sheets\8282_XS200.dgn

Preliminary Plans - For Reference Only

Cut Area (SF): 1107	Cut Vol. (CY): 2096
Fill Area (SF): 463	Fill Vol. (CY): 810
Seed Width (FT):	Seed Area (SY):

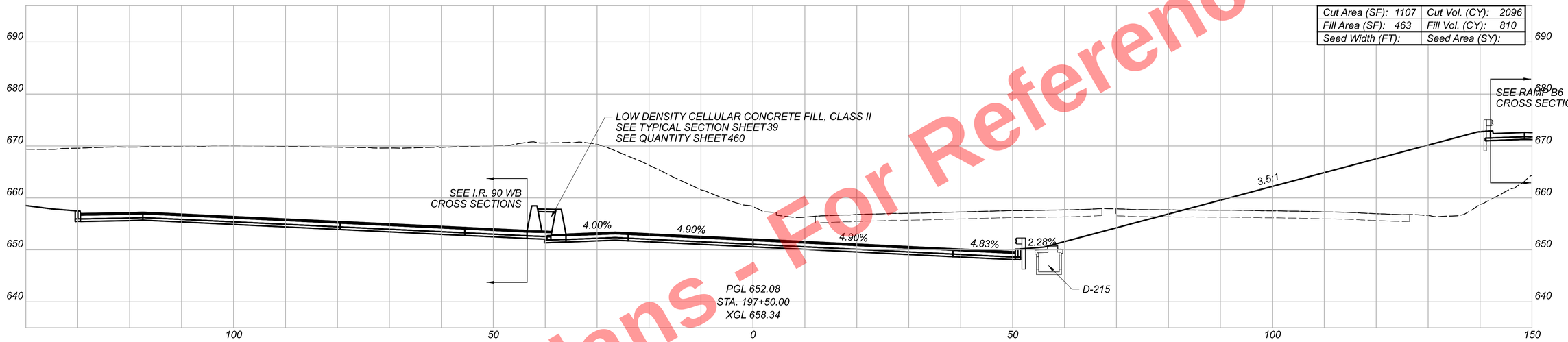

Cut Area (SF): 1157	Cut Vol. (CY): 2065
Fill Area (SF): 412	Fill Vol. (CY): 715
Seed Width (FT):	Seed Area (SY):

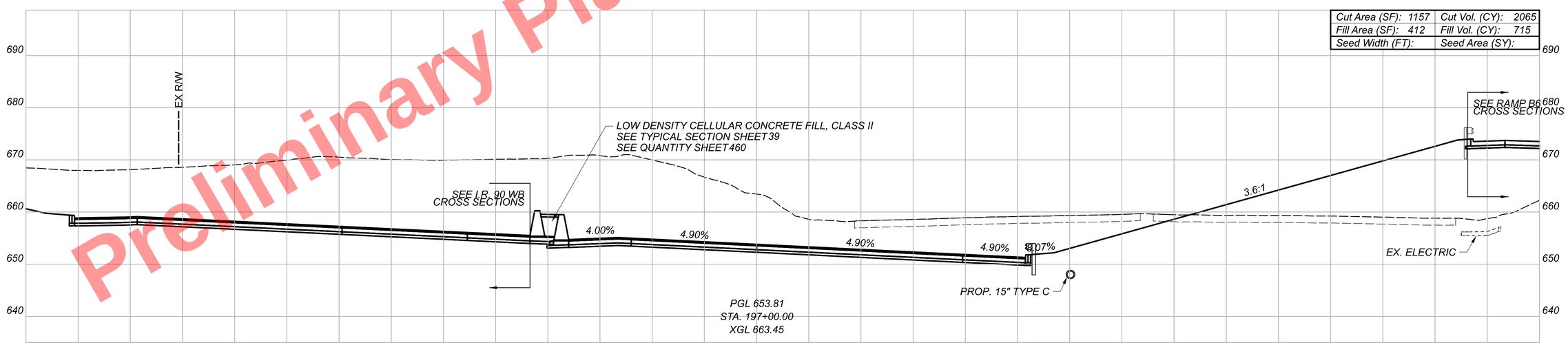

CUY-90-16.28

CROSS SECTIONS
I.R. 90 EB

Sheet Totals		
Seeding	Cut	Fill
0	4161	1525

DESIGN AGENCY
B&N
burgessniple.com

DESIGNER
AJS

REVIEWER
MRT 05/01/24

PROJECT ID
82382

SHEET 733 TOTAL 2696

MODEL: BLP_IR90_EB - 197+00.00 [Sheet] PAPERSIZE: 34x22 (in.) DATE: 5/16/2025 TIME: 1:40:08 PM USER: slsson
pw:\\mb-us-pw.bentley.com:mb-us-pw-03\Documents\Cleveland.OH\DI_Projects\ODOT\District2\82382\400-Engineering\Roadway\Sheets\82382_XS200.dgn

Preliminary Plans - For Reference Only

Cut Area (SF): 876	Cut Vol. (CY): 1756
Fill Area (SF): 257	Fill Vol. (CY): 555
Seed Width (FT):	Seed Area (SY):

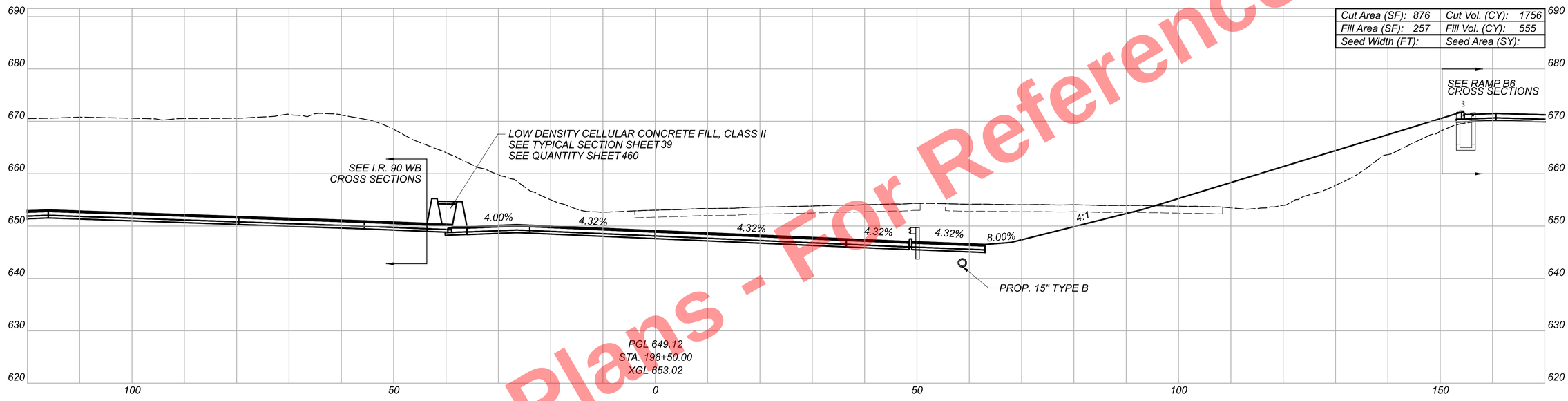

Cut Area (SF): 1020	Cut Vol. (CY): 1970
Fill Area (SF): 342	Fill Vol. (CY): 745
Seed Width (FT):	Seed Area (SY):

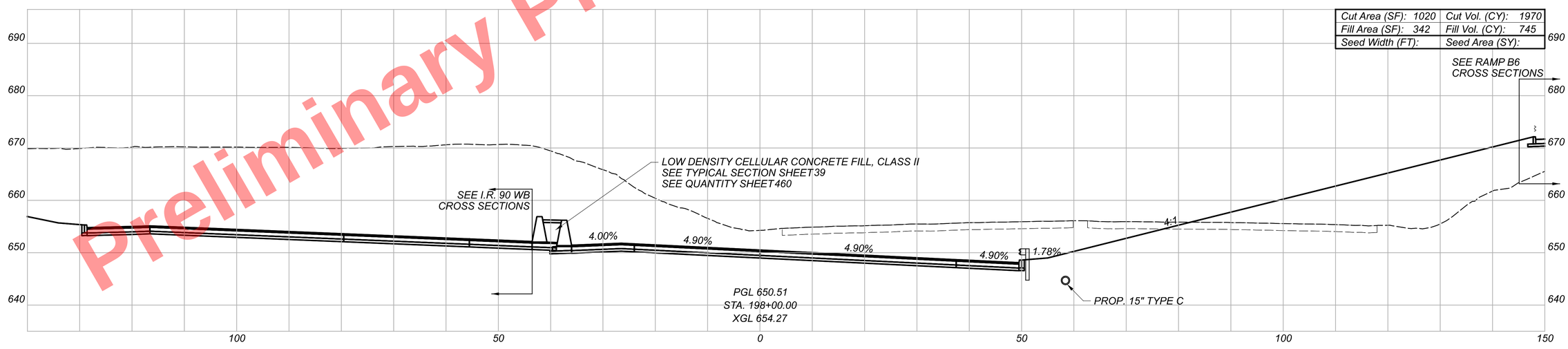

Sheet Totals		
Seeding	Cut	Fill
0	3726	1300

CUY-90-16.28

CROSS SECTIONS
I.R. 90 EB

DESIGN AGENCY
B&N
burgessniple.com

DESIGNER
AJS

REVIEWER
MRT 05/01/24

PROJECT ID
82382

SHEET 734 | TOTAL 2696

MODEL: BLP_IR90_EB - 198+00.00 [Sheet] PAPERSIZE: 34x22 (in.) DATE: 5/16/2025 TIME: 1:40:19 PM USER: sisson
pw:\\mb-us-pw.bentley.com:mb-us-pw-03\Documents\Cleveland_OH\01_Projects\ODOT\District2\82382\400-Engineering\Roadway\Sheets\82382_XS200.dgn

Preliminary Plans - For Reference Only

Cut Area (SF): 758	Cut Vol. (CY): 562
Fill Area (SF): 0	Fill Vol. (CY): 11
Seed Width (FT):	Seed Area (SY):

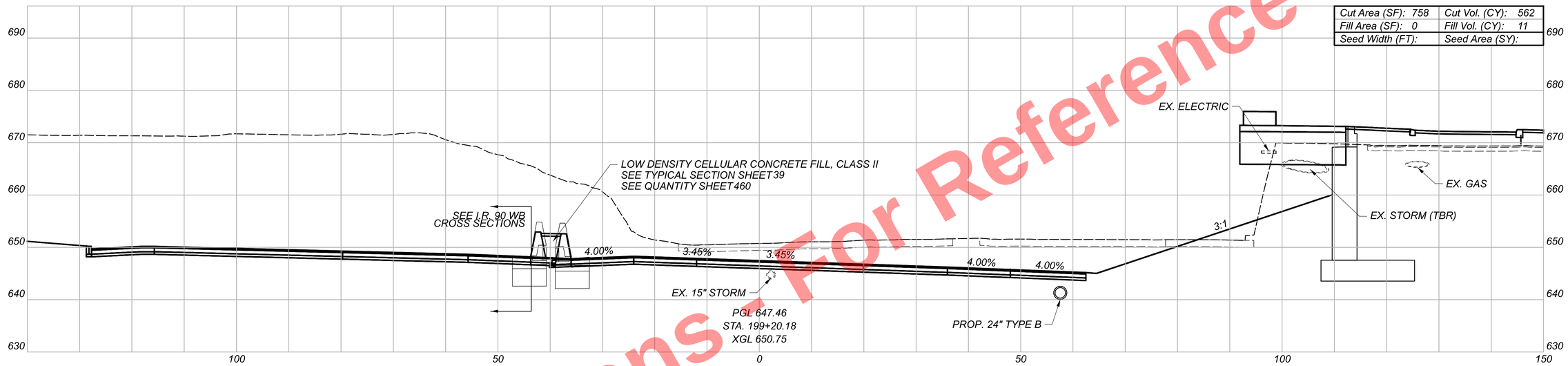

Cut Area (SF): 746	Cut Vol. (CY): 1502
Fill Area (SF): 30	Fill Vol. (CY): 266
Seed Width (FT):	Seed Area (SY):

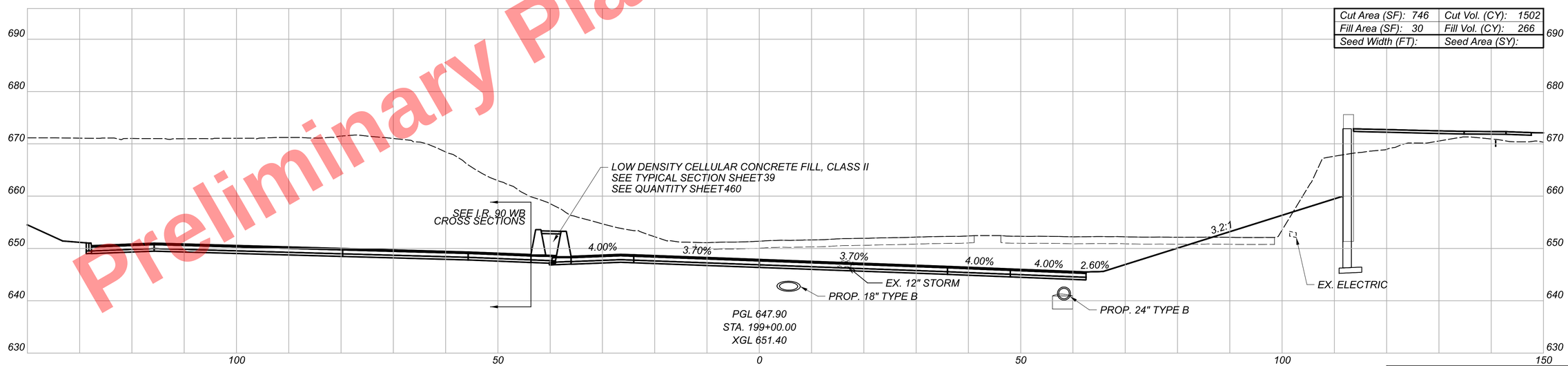

Grand Totals Carried to Subsummary		
Seeding	Cut	Fill
0	39424	5339

Sheet Totals		
Seeding	Cut	Fill
0	2064	277

Embankment, APP	Excavation, APP	Geofoam
8421	10270	30694

CROSS SECTIONS
I.R. 90 EB

DESIGN AGENCY
B&N
burgessniple.com

DESIGNER
AJS

REVIEWER
MRT 05/01/24

PROJECT ID
82382

SHEET 735 TOTAL 2696

CUY-90-16.28

MODEL: BLP_IR90_EB - 199+00.00 [Sheet] PAPERSIZE: 34x22 (in.) DATE: 5/16/2025 TIME: 1:40:32 PM USER: slsson
pw:\\mb-us-pw.bentley.com:mb-us-pw-03\Documents\Cleveland_OH\01_Projects\000T\District2\82382\400-Engineering\Roadway\Sheets\8238_XS200.dgn

Preliminary Plans - For Reference Only

Cut Area (SF): 1065.5	Cut Vol. (CY): 1677.6
Fill Area (SF): 19.6	Fill Vol. (CY): 55.2
Seed Width (FT):	Seed Area (SY):

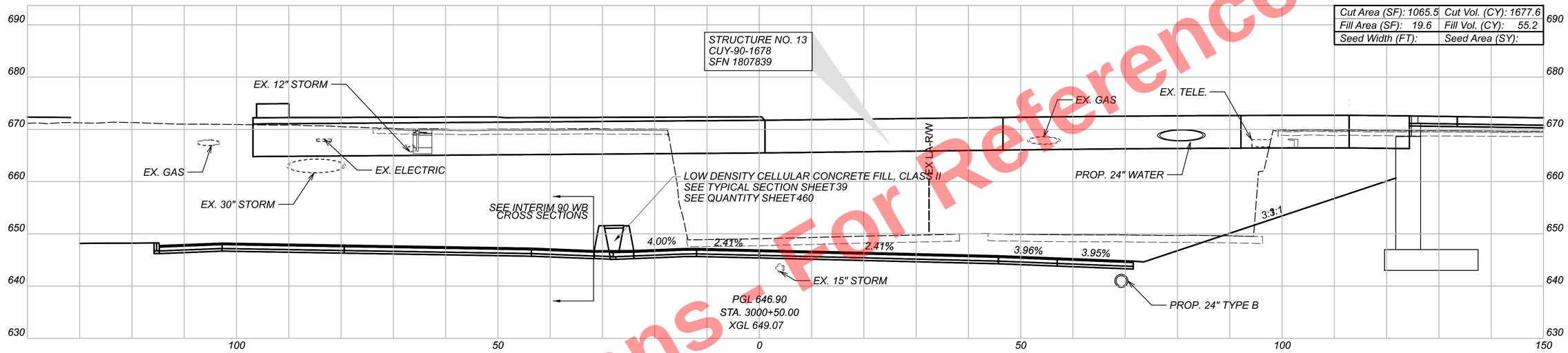

Cut Area (SF): 746.3	Cut Vol. (CY): 1392.9
Fill Area (SF): 40.0	Fill Vol. (CY): 74.1
Seed Width (FT):	Seed Area (SY):

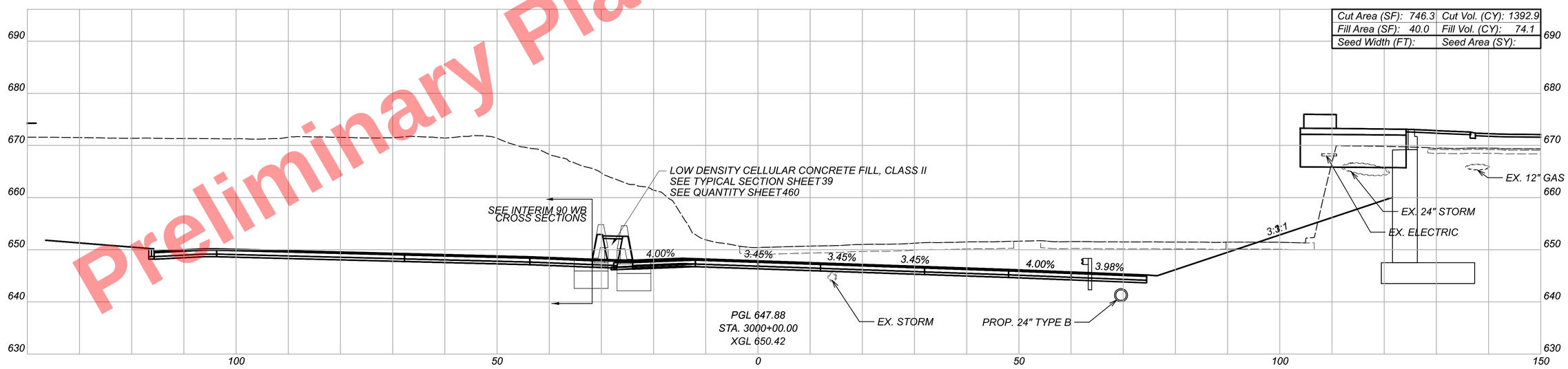

CROSS SECTIONS
INTERIM I.R. 90 EB

Sheet Totals		
Seeding	Cut	Fill
0	3071	130

DESIGN AGENCY
B&N
burgessniple.com

DESIGNER
AJS

REVIEWER
MRT 05/01/24

PROJECT ID
82382

SHEET 736 | TOTAL 2696

CUY-90-16.28

MODEL: BL I.R. 90 EB TIE IN - 3000+00.00 (Sheet) PAPERSIZE: 34x22 (in.) DATE: 5/16/2025 TIME: 1:07:39 PM USER: slsson
pw:\\mb-us-pw.bentley.com:mb-us-pw-03\Documents\Cleveland_OH\OI_Projects\ODOT\District2\82382\400-Engineering\Roadway\Sheets\82382_XS2300.dgn

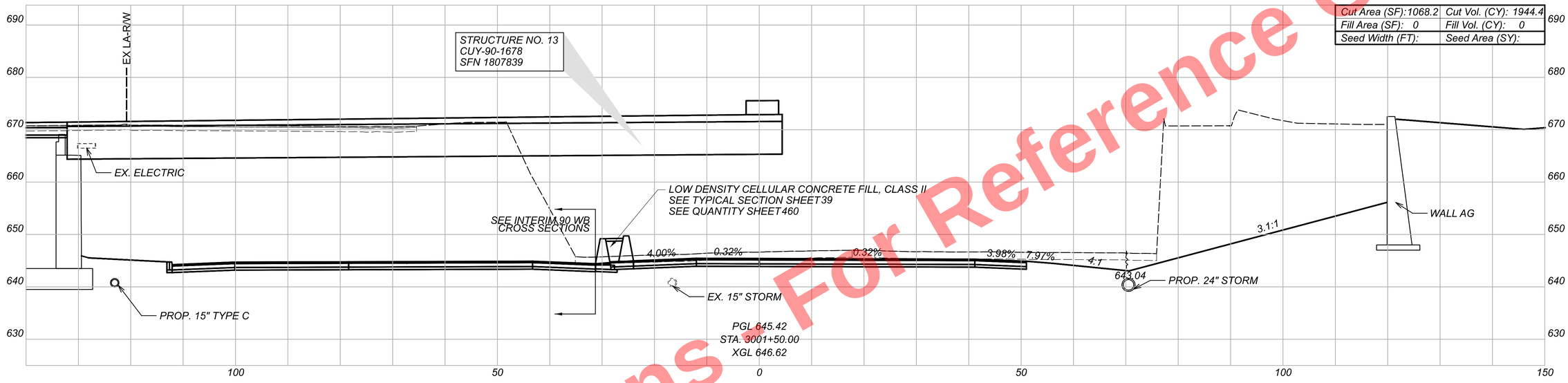

Cut Area (SF): 1068.2	Cut Vol. (CY): 1944.4
Fill Area (SF): 0	Fill Vol. (CY): 0
Seed Width (FT):	Seed Area (SY):

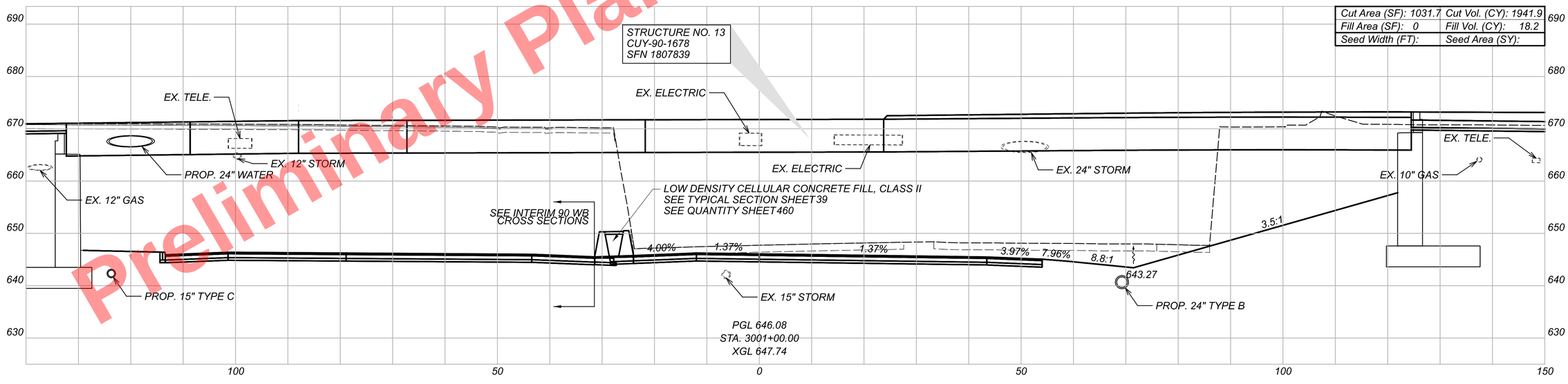

Cut Area (SF): 1031.7	Cut Vol. (CY): 1941.9
Fill Area (SF): 0	Fill Vol. (CY): 18.2
Seed Width (FT):	Seed Area (SY):

Preliminary Plans For Reference Only

CUY-90-16.28

MODEL: BL I.R. 90 EB TIE IN - 3001+00.00 [Sheet] PAPERSIZE: 34x22 (in.) DATE: 5/6/2025 TIME: 10:07:53 PM USER: sisson
pw:\\mb-us-pw.bentley.com:mb-us-pw-03\Documents\Cleveland_OH\OI_Projects\ODOT\District2\82382\400-Engineering\Roadway\Sheets\82382_XS2300.dgn

CROSS SECTIONS
INTERIM I.R. 90 EB

Sheet Totals		
Seeding	Cut	Fill
0	3887	19

DESIGN AGENCY
B&N
burgessniple.com

DESIGNER
AJS

REVIEWER
MRT 05/01/24

PROJECT ID
82832

SHEET 737 TOTAL 2696

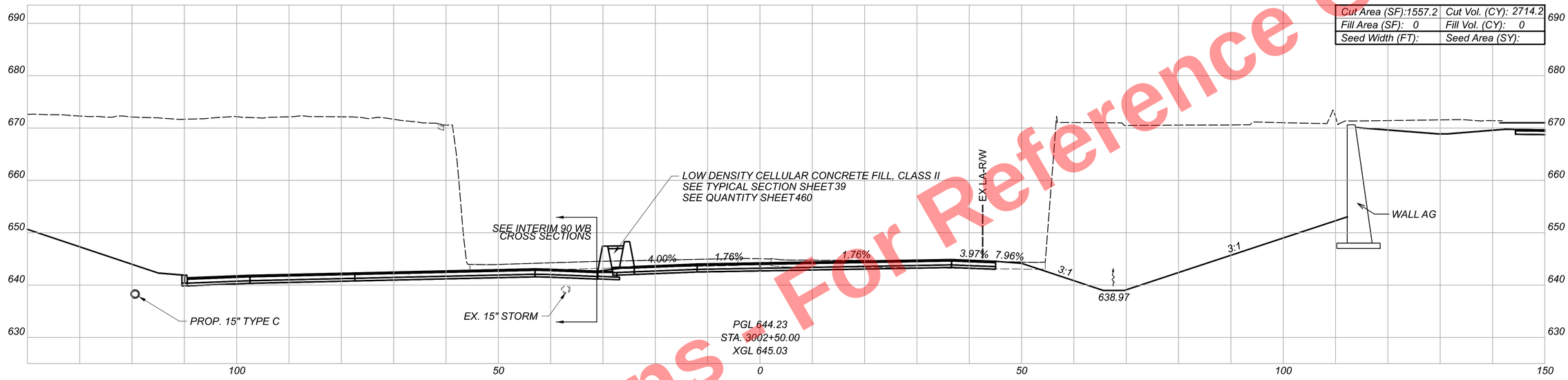

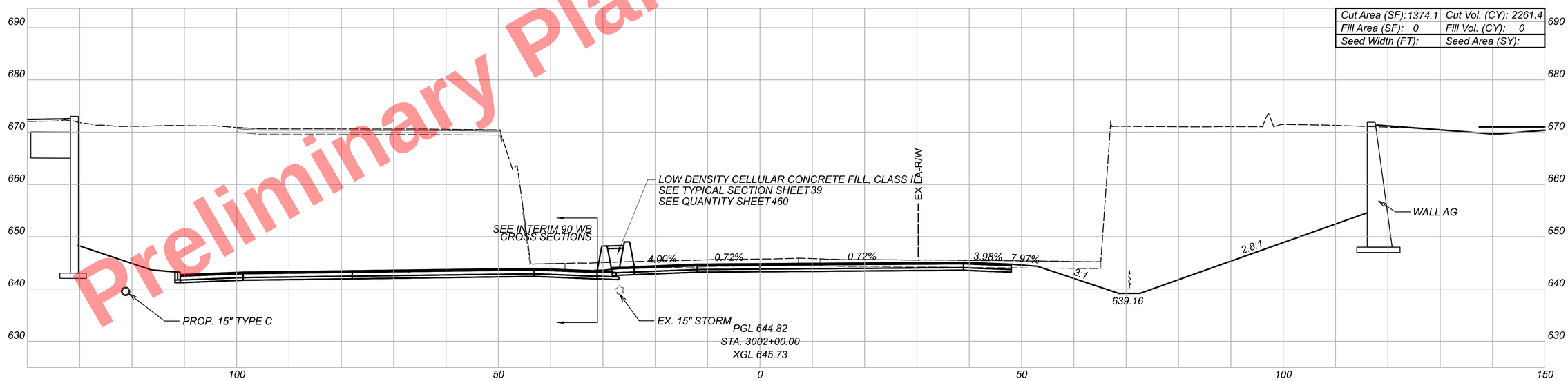

Preliminary Plans For Reference Only

CROSS SECTIONS
INTERIM I.R. 90 EB

DESIGN AGENCY
B&N
burgessniple.com

DESIGNER
AJS

REVIEWER
MRT 05/01/24

PROJECT ID
82382

Sheet Totals		
Seeding	Cut	Fill
0	4976	0

SHEET	TOTAL
738	2696

CUY-90-16.28

MODEL: BL I.R. 90 EB TIE IN - 3002+00.00 (Sheet) PAPERSIZE: 34x22 (in) DATE: 5/6/2025 TIME: 108:03 PM USER: alsson
pw:\\mb-us-pw.bentley.com:mb-us-pw-03\Documents\Cleveland_OH\OI_Projects\ODOT\District2\82382\400-Engineering\Roadway\Sheets\82382_XS2300.dgn

Preliminary Plans For Reference Only

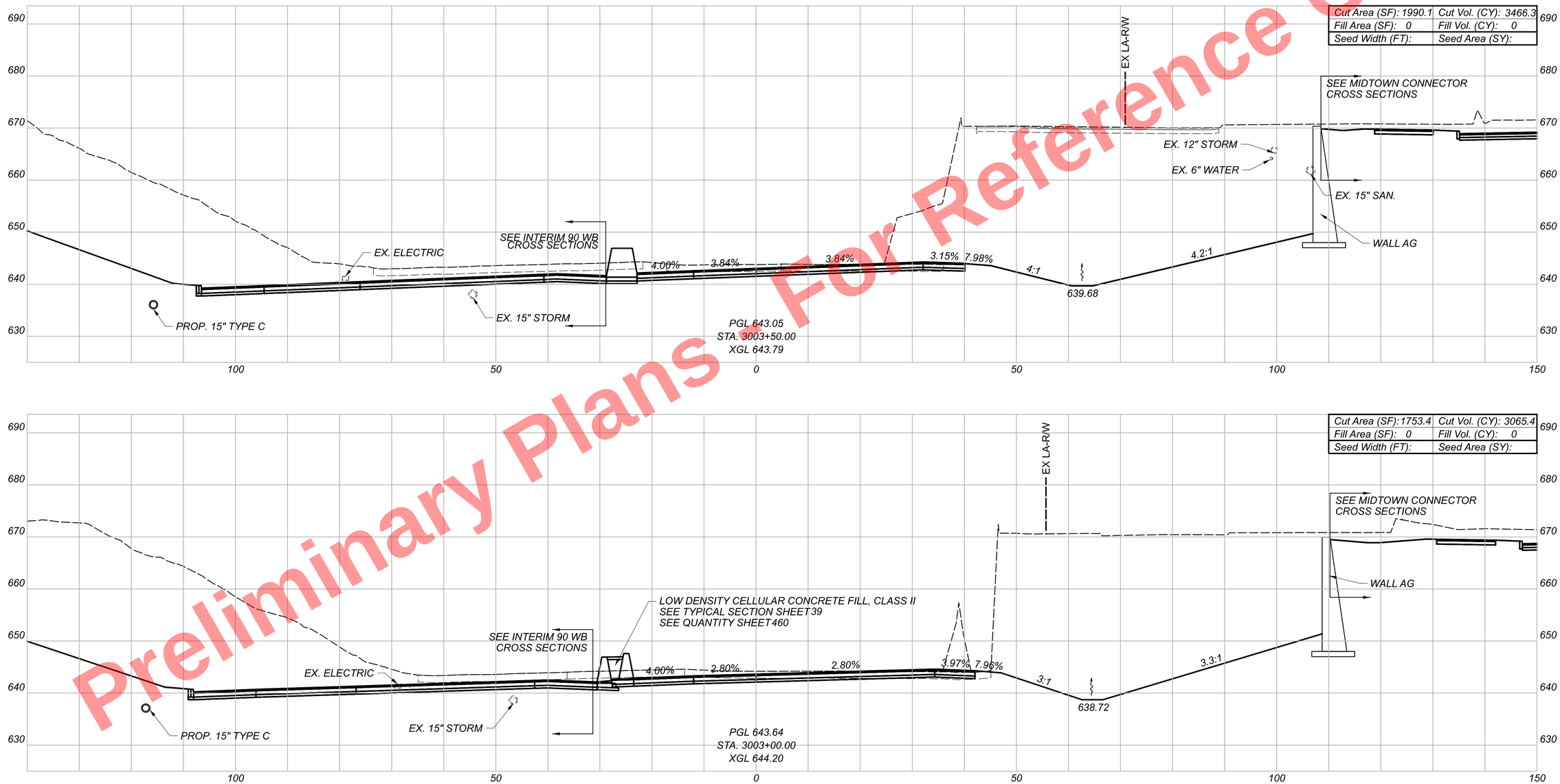

CUY-90-16.28

MODEL: BL LR. 90 EB TIE IN - 3003+00.00 [Sheet] PAPERSIZE: 34x22 (in.) DATE: 5/16/2025 TIME: 08:13 PM USER: sisson
pw:\\mb-us-pw.bentley.com:mb-us-pw-03\Documents\Cleveland_OH\OL_Projects\ODOT\District2\82382\400-Engineering\Roadway\Sheets\82382_XS2300.dgn

CROSS SECTIONS
INTERIM I.R. 90 EB

Sheet Totals		
Seeding	Cut	Fill
0	6532	0

DESIGN AGENCY
B&N
burgessniple.com

DESIGNER
AJS

REVIEWER
MRT 05/01/24

PROJECT ID
82382

SHEET 739 TOTAL 2696

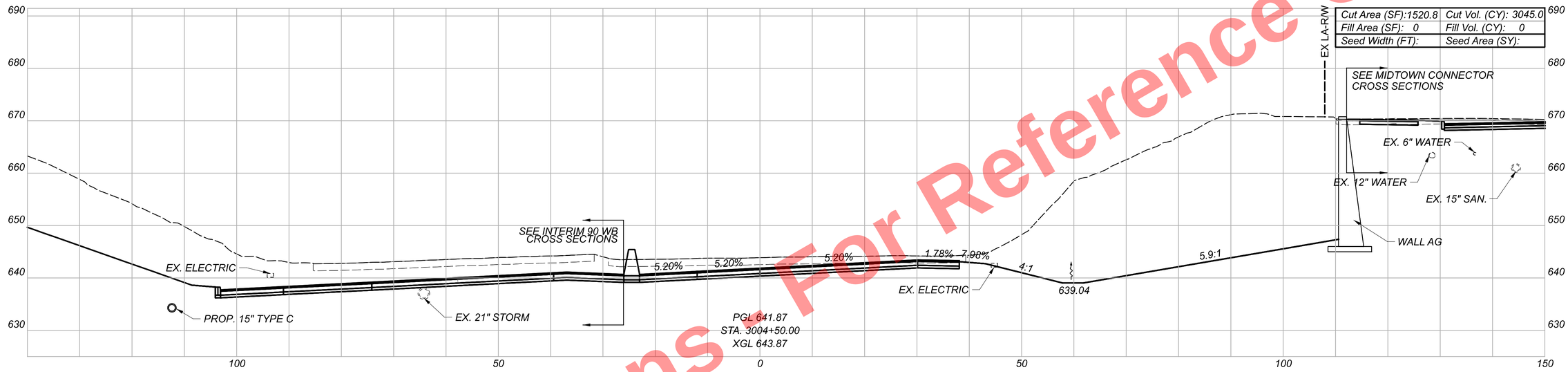

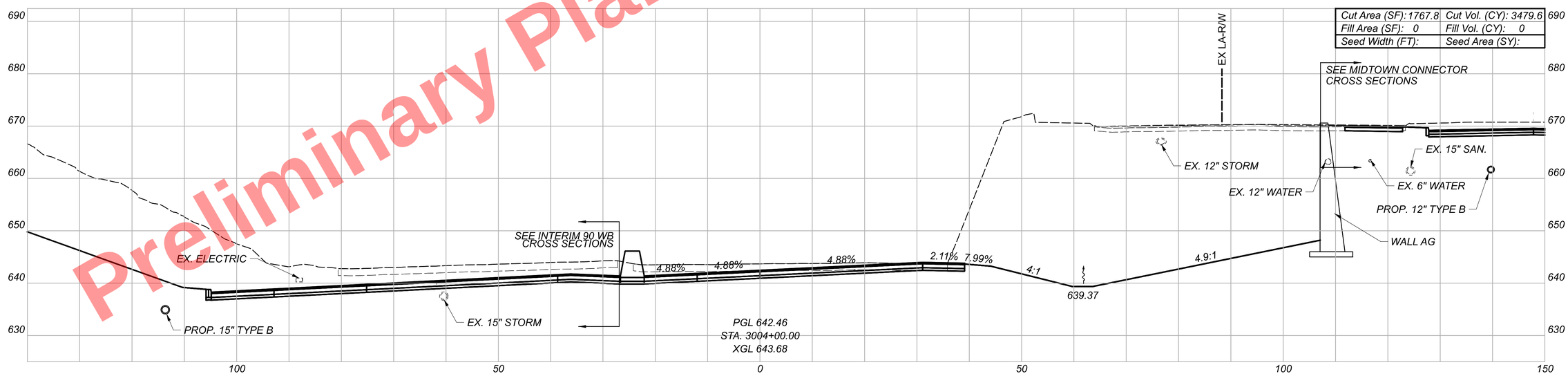

Preliminary Plans - For Reference Only

CUY-90-16.28

MODEL: BL_I.R. 90 EB TIE IN - 3004+00.00 [Sheet] PAPERSIZE: 34x22 (in.) DATE: 5/6/2025 TIME: 08:24 PM USER: sisson
pw:\\mb-us-pw.bentley.com:mb-us-pw-03\Documents\Cleveland_OH\OI_Projects\ODOT\District#2\82382\400-Engineering\Roadway\Sheets\82382_XS2300.dgn

CROSS SECTIONS
INTERIM I.R. 90 EB

Sheet Totals		
Seeding	Cut	Fill
0	6525	0

DESIGN AGENCY
B&N
burgessniple.com

DESIGNER
AJS

REVIEWER
MRT 05/01/24

PROJECT ID
82382

SHEET 740 TOTAL 2696

Preliminary Plans For Reference Only

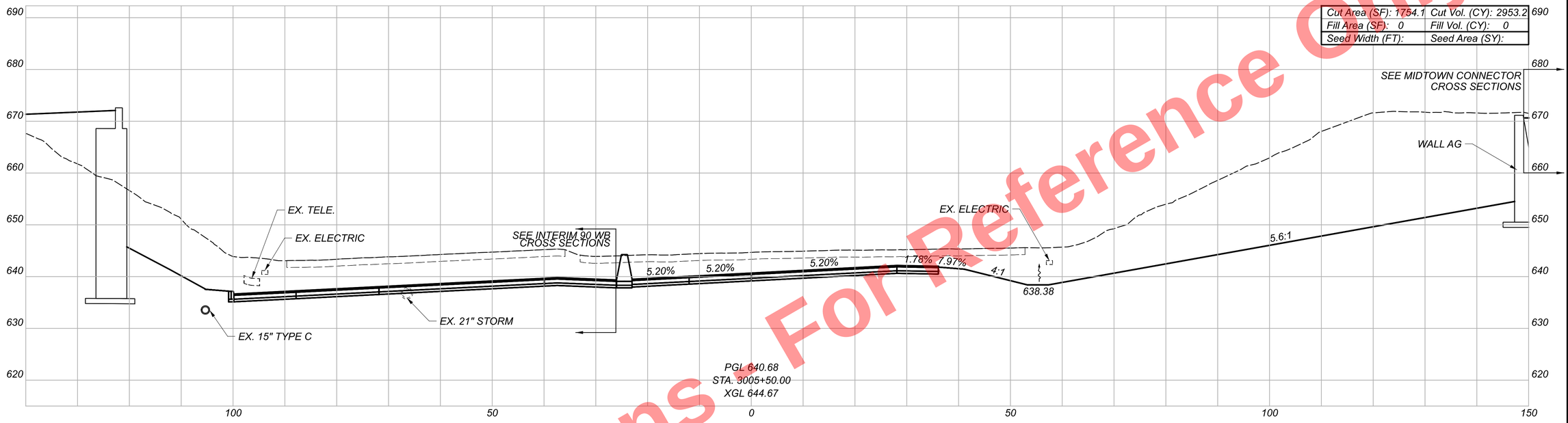

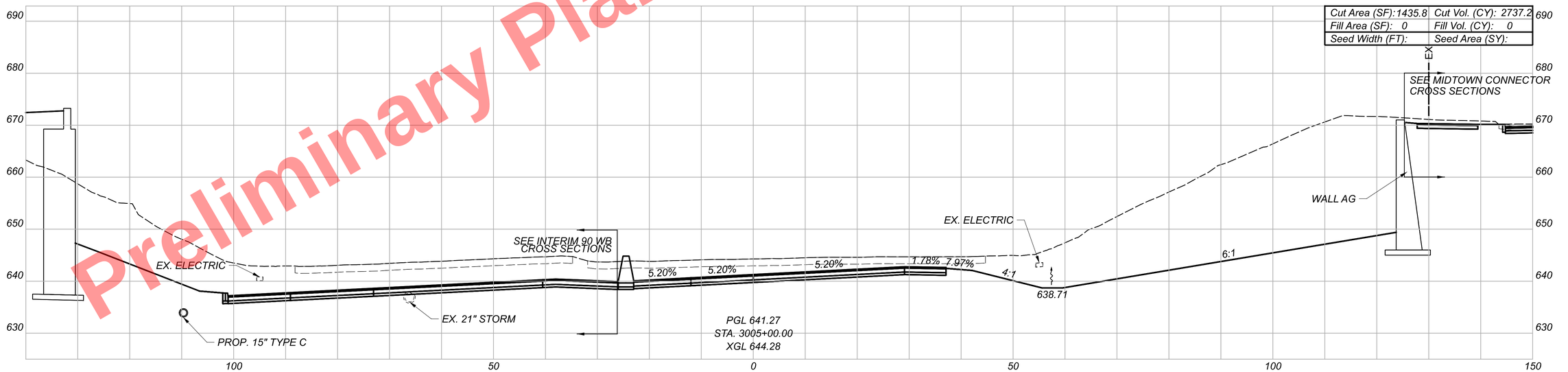

CTY-RTE-SECTION

CROSS SECTIONS
INTERIM I.R. 90 EB

DESIGN AGENCY
B&N
burgessniple.com

DESIGNER
AJS

REVIEWER
MRT 05/01/24

PROJECT ID
82382

Sheet Totals		
Seeding	Cut	Fill
0	5691	0

SHEET	TOTAL
741	2696

MODEL: BL I.R. 90 EB TIE IN - 3005+00.00 [Sheet] PAPERSIZE: 34x22 (in.) DATE: 5/6/2025 TIME: 1:08:35 PM USER: alsson
pw:\\mb-us-pw.bentley.com:mb-us-pw-03\Documents\Cleveland_OH\01_Projects\000T\District2\82382\400-Engineering\Roadway\Sheets\82382_XS2300.dgn

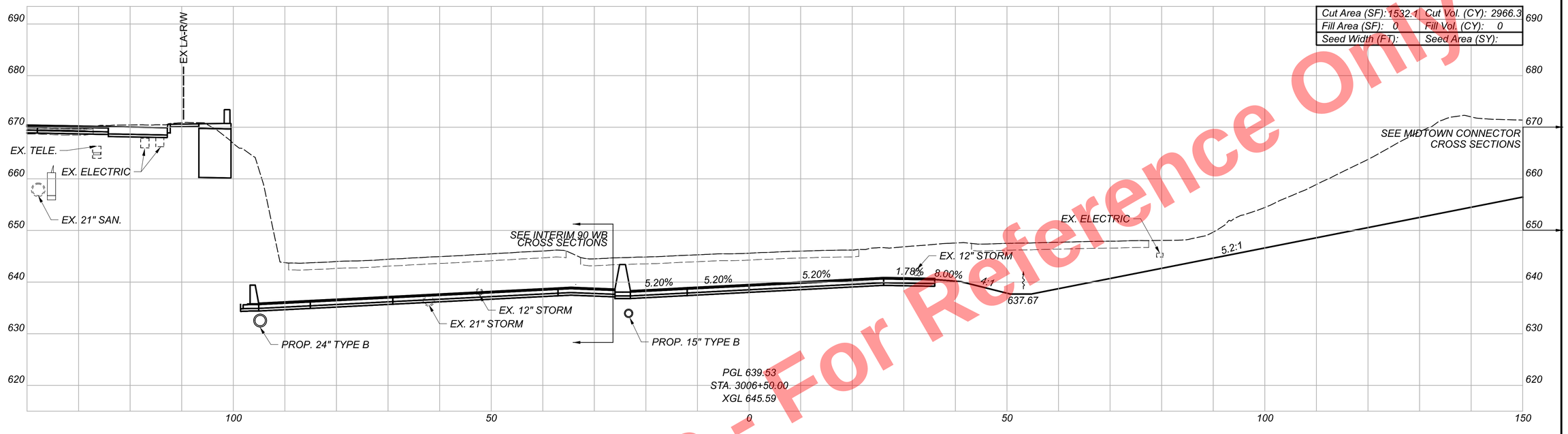

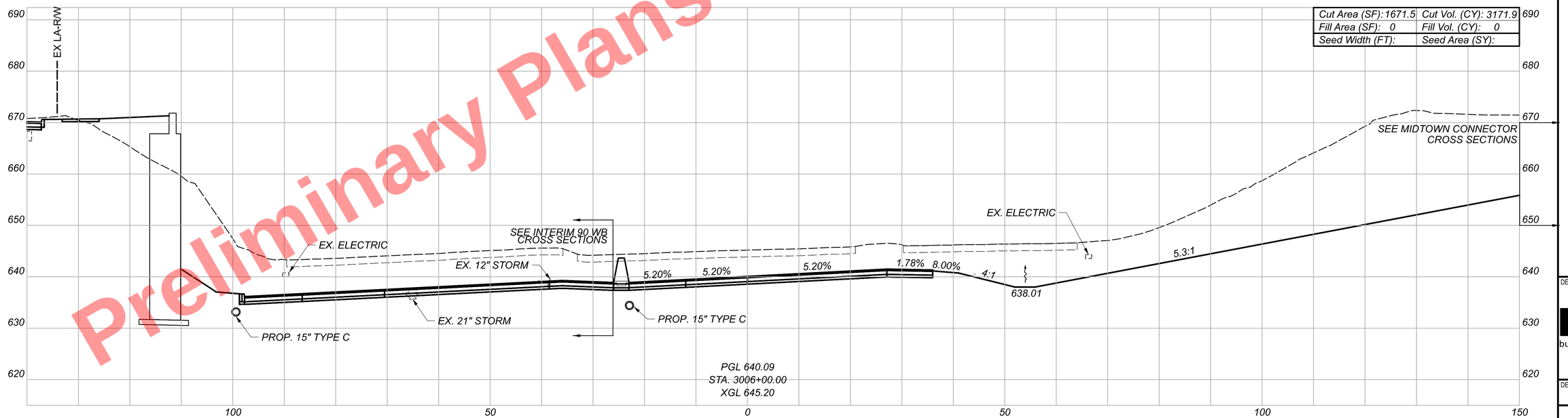

Preliminary Plans - For Reference Only

CUY-90-16.28

MODEL: BL I.R. 90 EB TIE IN - 3006+00.00 [Sheet] PAPERSIZE: 34x22 (in.) DATE: 5/6/2025 TIME: 08:46 PM USER: sisson
pw:\\mb-us-pw.bentley.com:mb-us-pw-03\Documents\Cleveland.OH\OI_Projects\ODOT\District2\82382\400-Engineering\Roadway\Sheets\82382_XS2300.dgn

CROSS SECTIONS
INTERIM I.R. 90 EB

Sheet Totals		
Seeding	Cut	Fill
0	6139	0

DESIGN AGENCY
B&N
burgessniple.com

DESIGNER
AJS

REVIEWER
MRT 05/01/24

PROJECT ID
82382

SHEET 742 | TOTAL 2696

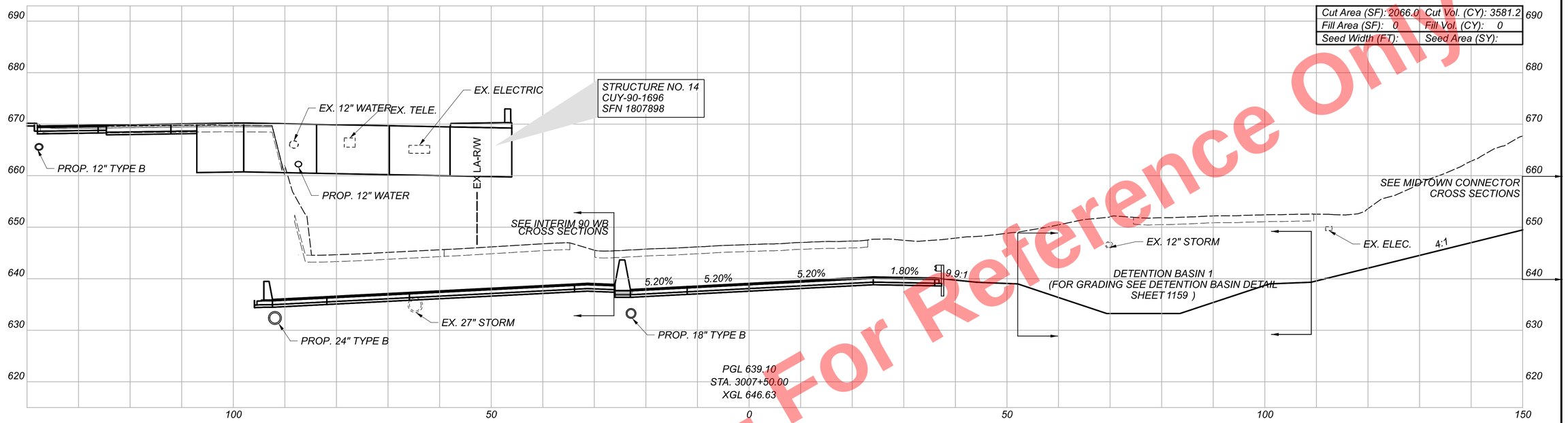

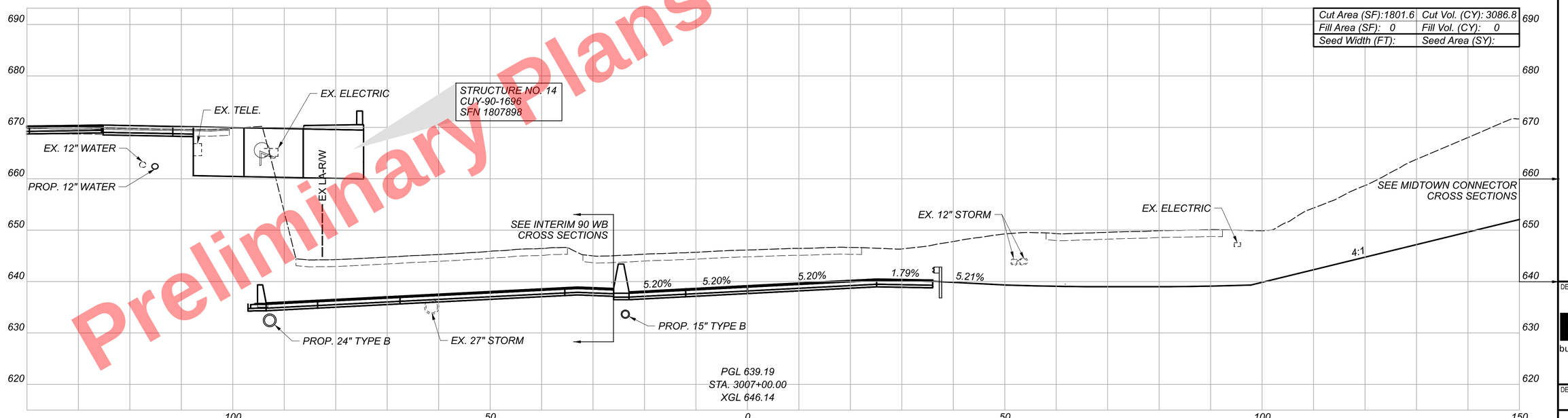

Preliminary Plans - For Reference Only

CROSS SECTIONS
INTERIM I.R. 90 EB

Sheet Totals		
Seeding	Cut	Fill
0	6668	0

DESIGN AGENCY
B&N
burgessniple.com

DESIGNER
AJS

REVIEWER
MRT 05/01/24

PROJECT ID
82382

SHEET 743 TOTAL 2696

CUY-90-16.28

MODEL: BL I.R. 90 EB TIE IN - 3007+00.00 [Sheet] PAPERSIZE: 34x22 (in) DATE: 5/6/2025 TIME: 4:08:58 PM USER: sisson
pw:\\mb-us-pw.bentley.com:mb-us-pw-03\Documents\Cleveland.OH\OL_Projects\ODOT\District2\82382\400-Engineering\Roadway\Sheets\82382_XS2300.dgn

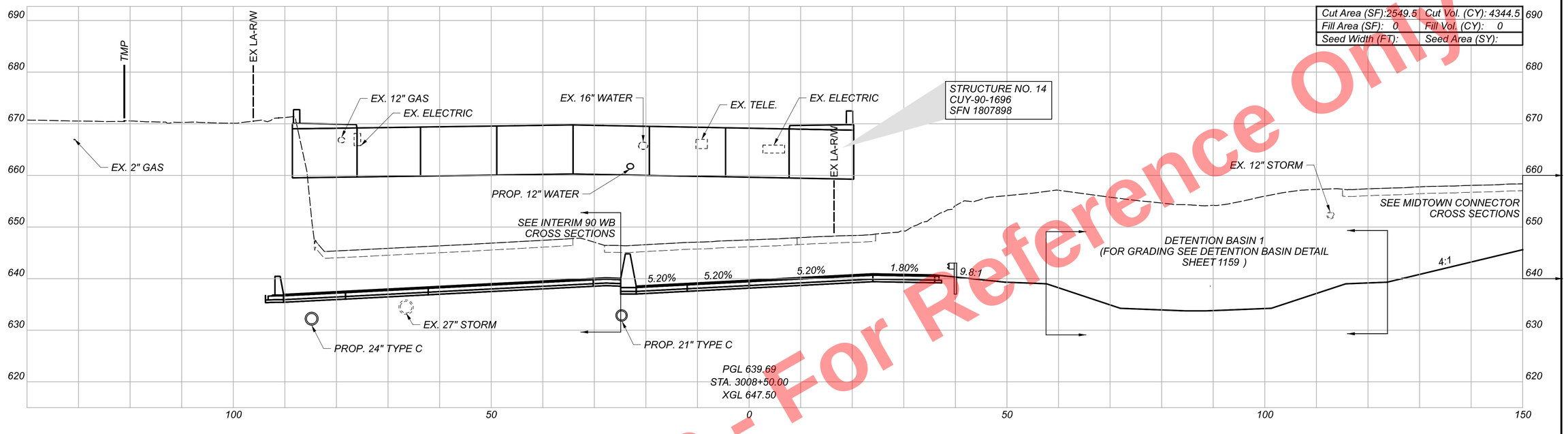

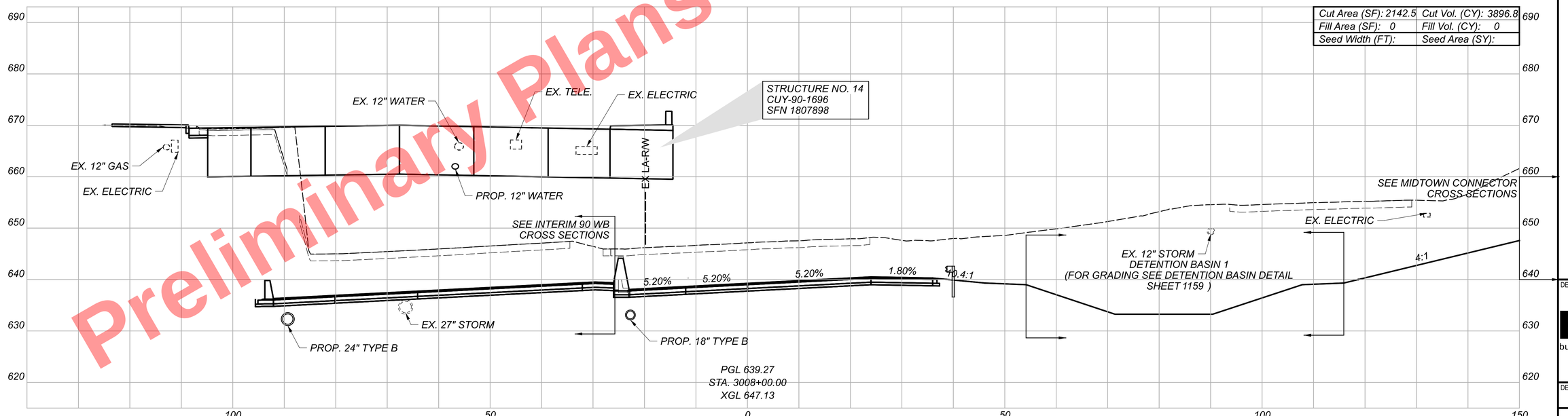

Preliminary Plans - For Reference Only

CROSS SECTIONS
INTERIM I.R. 90 EB

Sheet Totals		
Seeding	Cut	Fill
0	8242	0

DESIGN AGENCY
B&N
burgessniple.com

DESIGNER	AJS
REVIEWER	MRT 05/01/24
PROJECT ID	82382
SHEET	744
TOTAL	2696

CUY-90-16.28

MODEL: BL I.R. 90 EB TIE IN - 3008+00.00 [Sheet] PAPERSIZE: 34x22 (in.) DATE: 5/6/2025 TIME: 09:09 PM USER: sisson
pw:\\mb-us-pw.bentley.com:mb-us-pw-03\Documents\Cleveland.OH\Oi_Projects\ODOT\District2\82382\400-Engineering\Roadway\Sheets\82382_XS2300.dgn

Preliminary Plans - For Reference Only

Cut Area (SF): 4048	Cut Vol. (CY): 7190
Fill Area (SF): 0	Fill Vol. (CY): 0
Seed Width (FT):	Seed Area (SY):

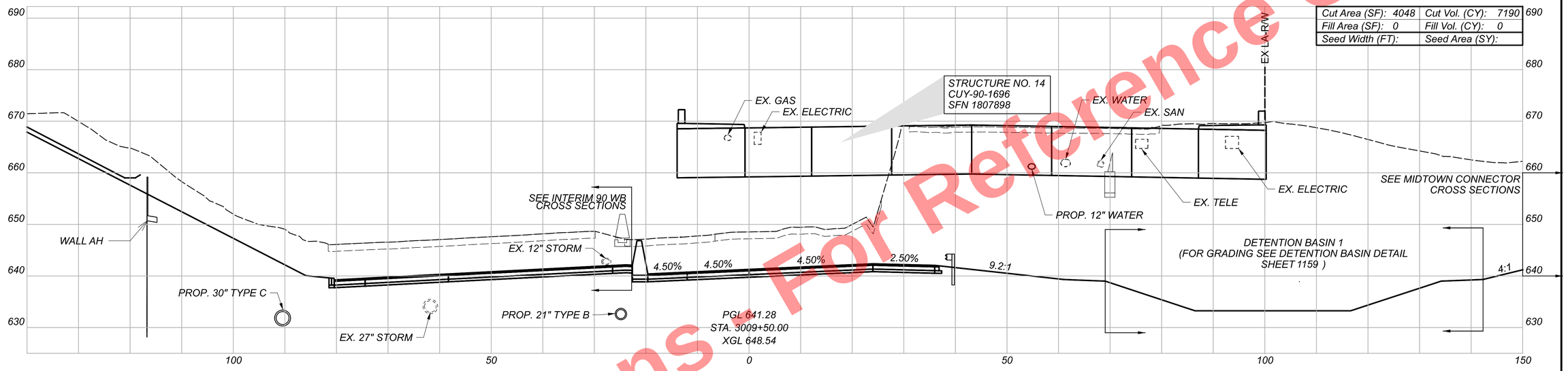

Cut Area (SF): 3717.1	Cut Vol. (CY): 5802.5
Fill Area (SF): 0	Fill Vol. (CY): 0
Seed Width (FT):	Seed Area (SY):

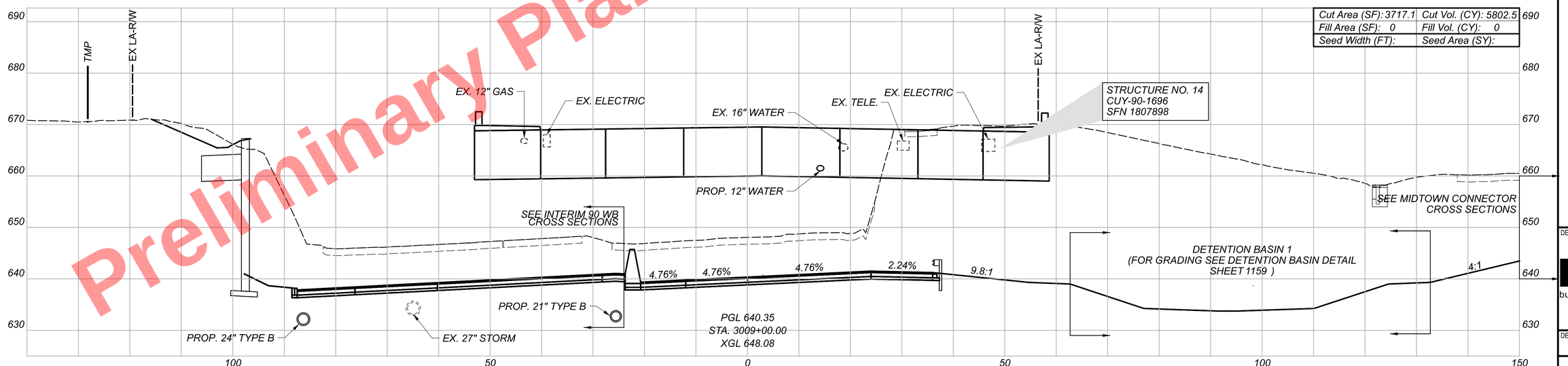

CROSS SECTIONS
INTERIM I.R. 90 EB

Sheet Totals		
Seeding	Cut	Fill
0	12993	0

DESIGN AGENCY
B&N
burgessniple.com

DESIGNER
AJS

REVIEWER
MRT 05/01/24

PROJECT ID
82382

SHEET 745 TOTAL 2696

CUY-90-16.28

MODEL: BL_IR_90_EB_TIE_IN_-_3009+00.00 [Sheet] PAPERSIZE: 34x22 (in.) DATE: 5/16/2025 TIME: 09:20 PM USER: slsson
pw:\\mb-us-pw.bentley.com:mb-us-pw-03\Documents\Cleveland_OH\OL_Projects\ODOT\District#12\82382\400-Engineering\Roadway\Sheets\82382_XS2300.dgn

Preliminary Plans - For Reference Only

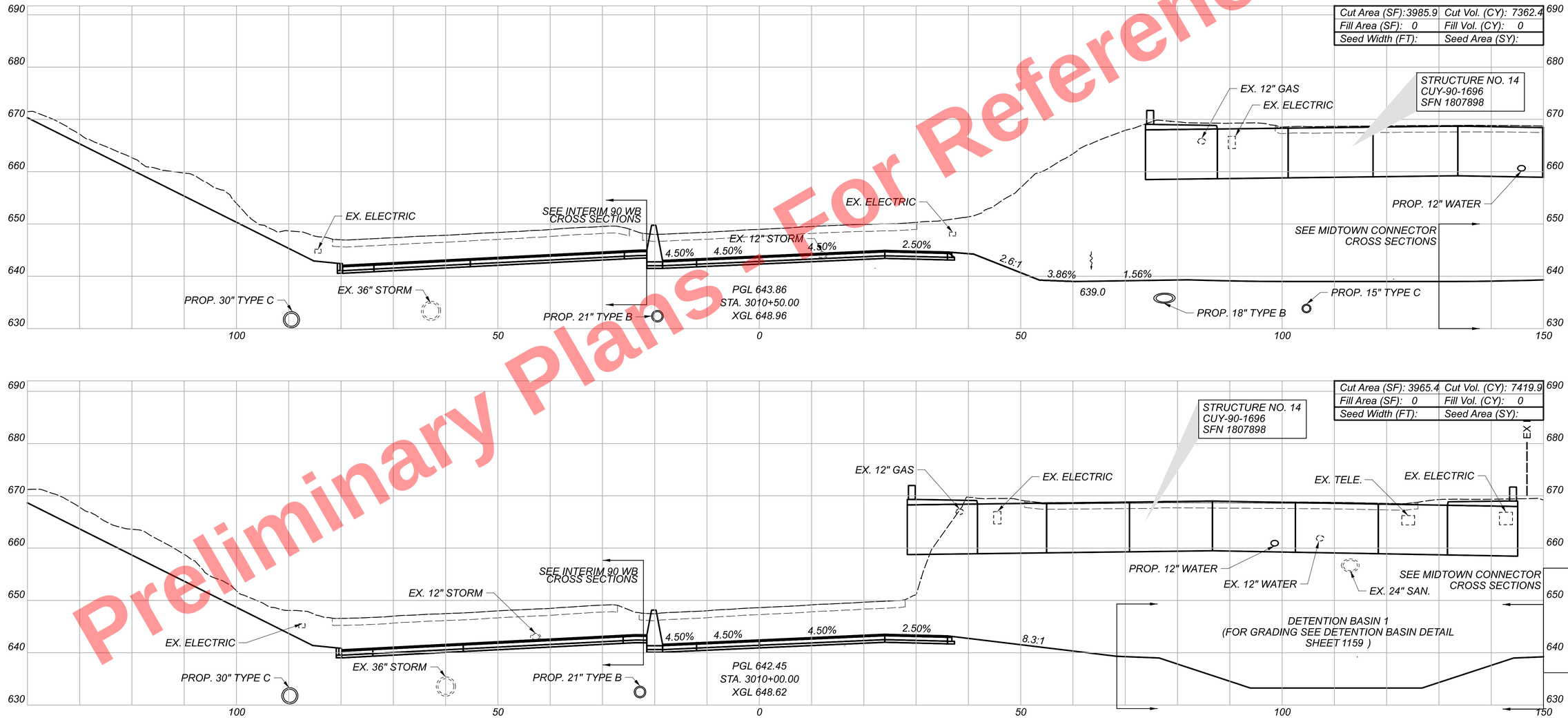

CROSS SECTIONS
INTERIM I.R. 90 EB

CUY-90-16.28

MODEL: BL I.R. 90 EB TIE IN - 3010+00.00 [Sheet] PAPERSIZE: 34x22 (in.) DATE: 5/16/2025 TIME: 1:09:31 PM USER: sisson
pw:\\mb-us-pw.bentley.com:mb-us-pw-03\Documents\Cleveland_OH\OI_Projects\0007\District2\82382\400-Engineering\

Sheet Totals		
Seeding	Cut	Fill
0	14782	0

DESIGN AGENCY
B&N
burgessniple.com

DESIGNER
AJS

REVIEWER
MRT 05/01/24

PROJECT ID
82382

SHEET 746 TOTAL 2696

Preliminary Plans - For Reference Only

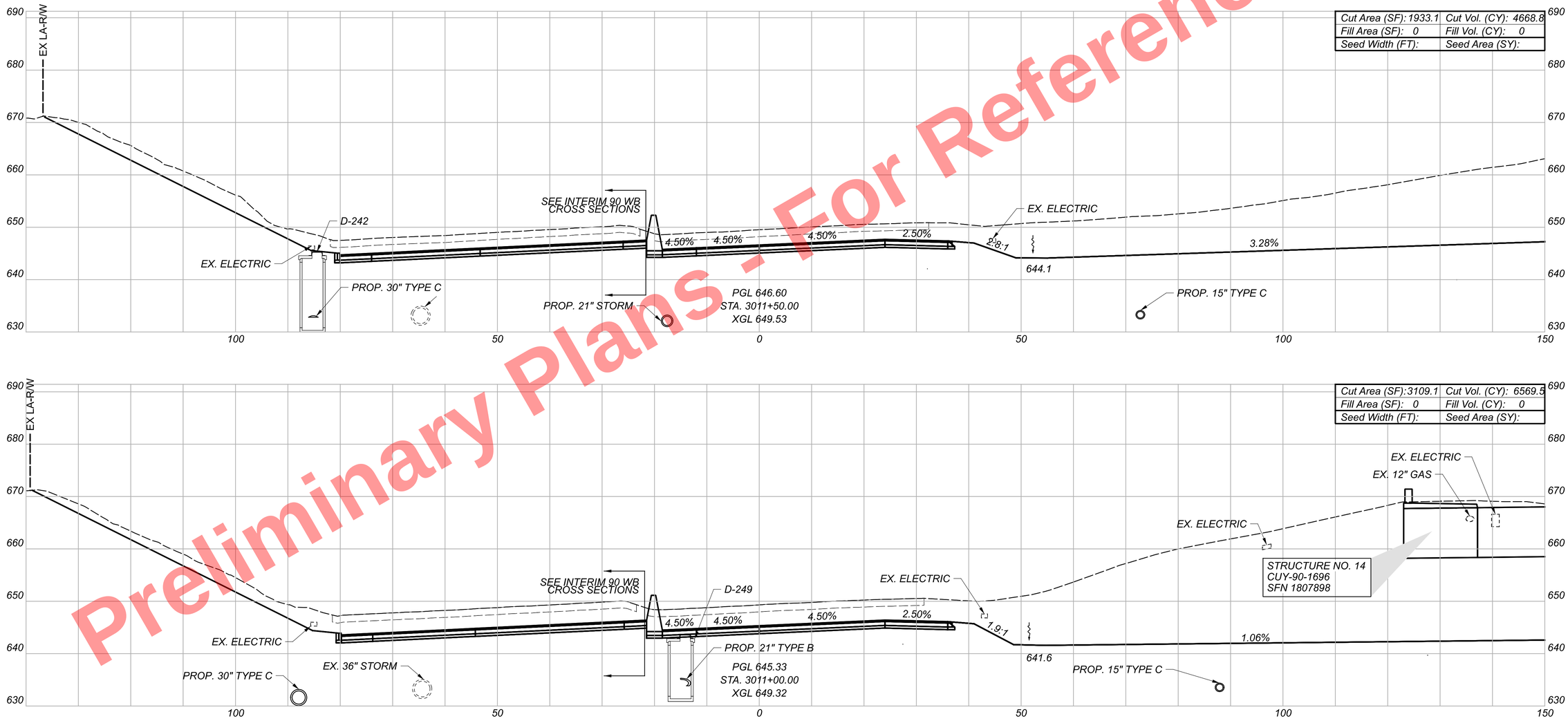

CUY-90-16.28

MODEL: BL I.R. 90 EB TIE IN - 3011+00.00 (Sheet) PAPERSIZE: 34x22 (in.) DATE: 5/16/2025 TIME: 1:09:41 PM USER: slsson
pw:\\mb-us-pw.bentley.com:mb-us-pw-03\Documents\Cleveland.OH\DgnProjects\ODOT\District2\82382\400-Engineering\

CROSS SECTIONS
INTERIM I.R. 90 EB

Sheet Totals		
Seeding	Cut	Fill
0	11239	0

DESIGN AGENCY
B&N
burgessniple.com

DESIGNER
AJS

REVIEWER
MRT 05/01/24

PROJECT ID
82382

SHEET 747 TOTAL 2696

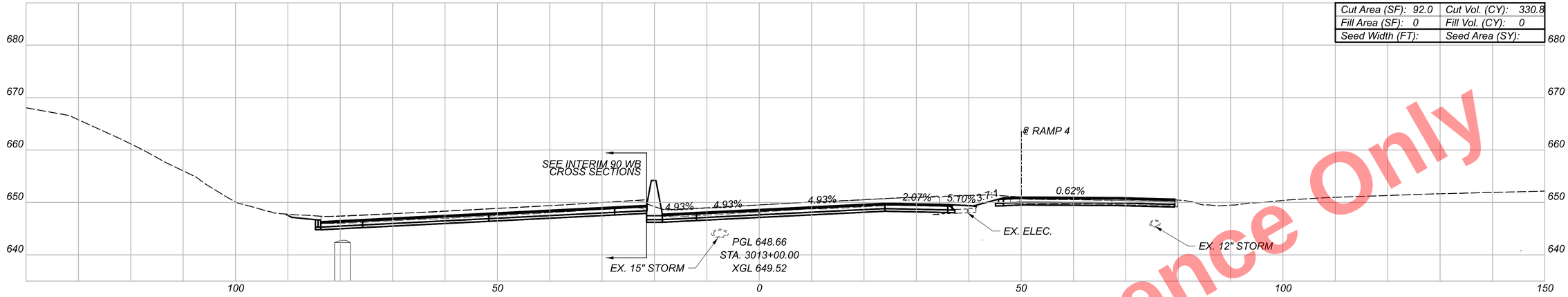

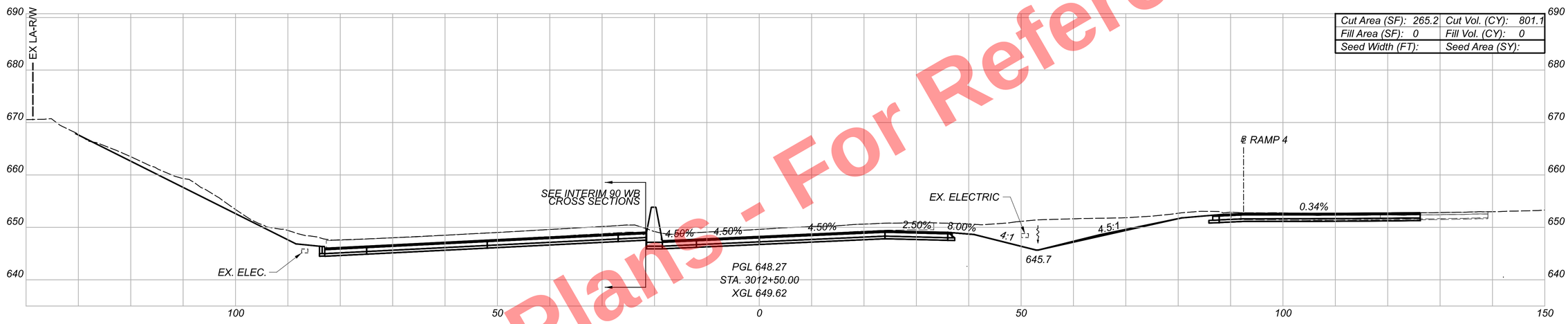

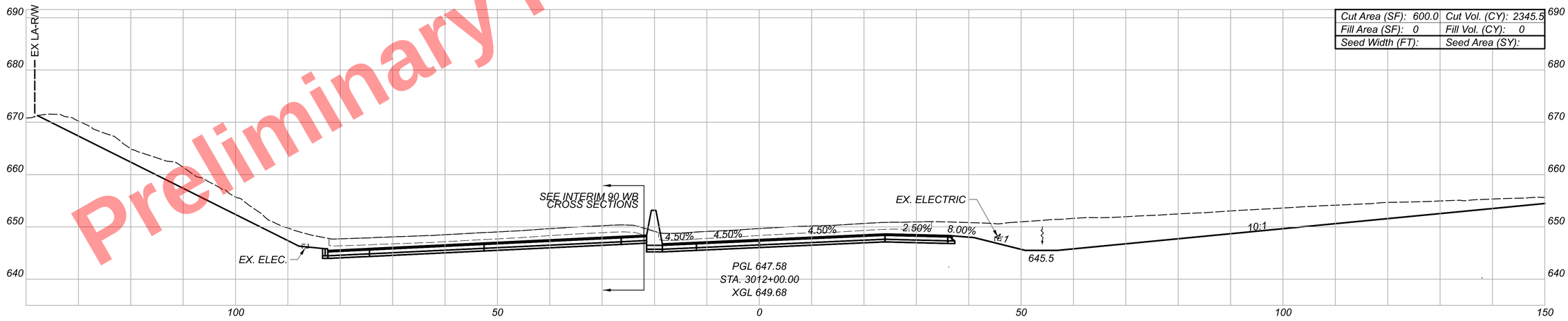

Preliminary Plans - Not For Reference Only

CUY-90-16.28

MODEL: BL I.R. 90 EB TIE IN - 3012+00.00 [Sheet] PAPERSIZE: 34x22 (in.) DATE: 5/6/2025 TIME: 1:09:51 PM USER: alsson
pw:\\mb-us-pw.bentley.com:mb-us-pw-03\Documents\Cleveland_OH\01_Projects\0007\District2\82382\400-Engineering\Roadway\Sheets\82382_XS2300.dgn

CROSS SECTIONS
INTERIM I.R. 90 EB

DESIGN AGENCY
B&N
burgessniple.com

DESIGNER
AJS

REVIEWER
MRT 05/01/24

PROJECT ID
82382

Sheet Totals		
Seeding	Cut	Fill
0	3478	0

SHEET	TOTAL
748	2696

Preliminary Plans - Not For Reference Only

Cut Area (SF): 0	Cut Vol. (CY): 11.9
Fill Area (SF): 0	Fill Vol. (CY): 0
Seed Width (FT):	Seed Area (SY):

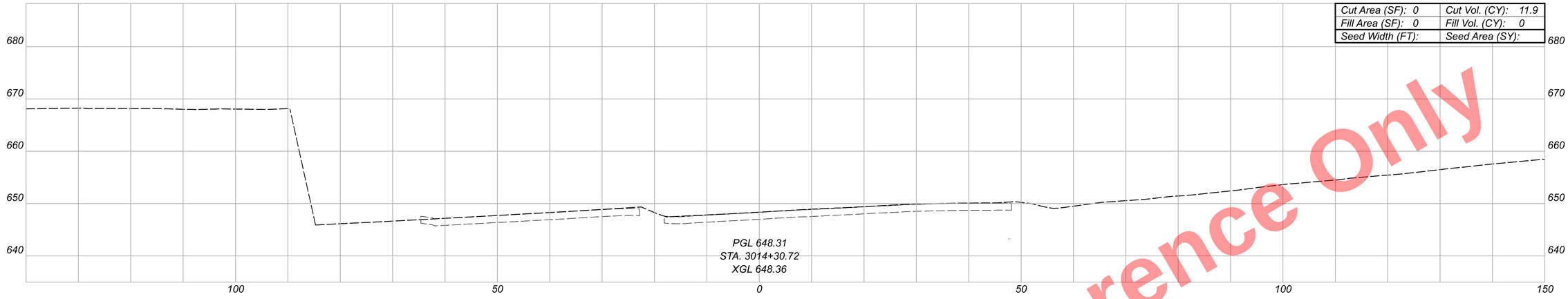

Cut Area (SF): 20.9	Cut Vol. (CY): 57.0
Fill Area (SF): 0	Fill Vol. (CY): 0
Seed Width (FT):	Seed Area (SY):

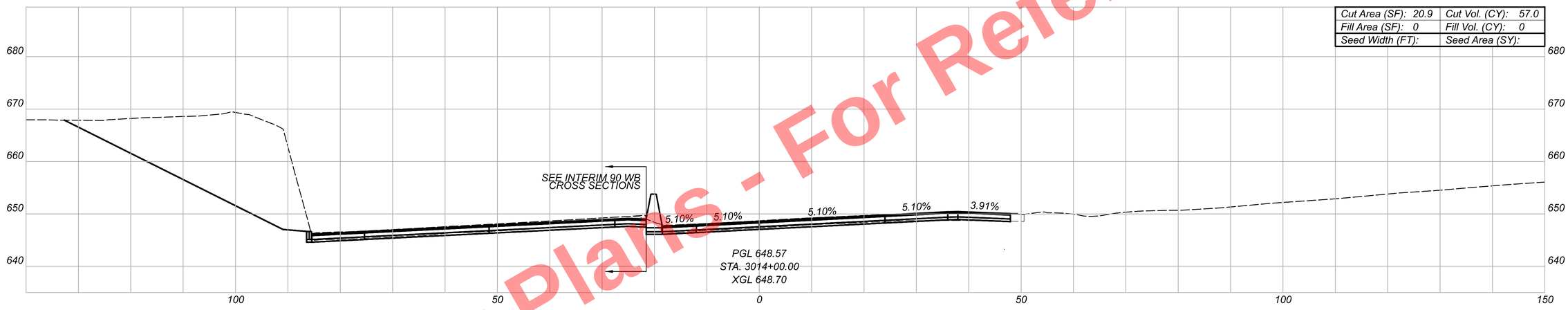

Cut Area (SF): 40.6	Cut Vol. (CY): 122.8
Fill Area (SF): 0	Fill Vol. (CY): 0
Seed Width (FT):	Seed Area (SY):

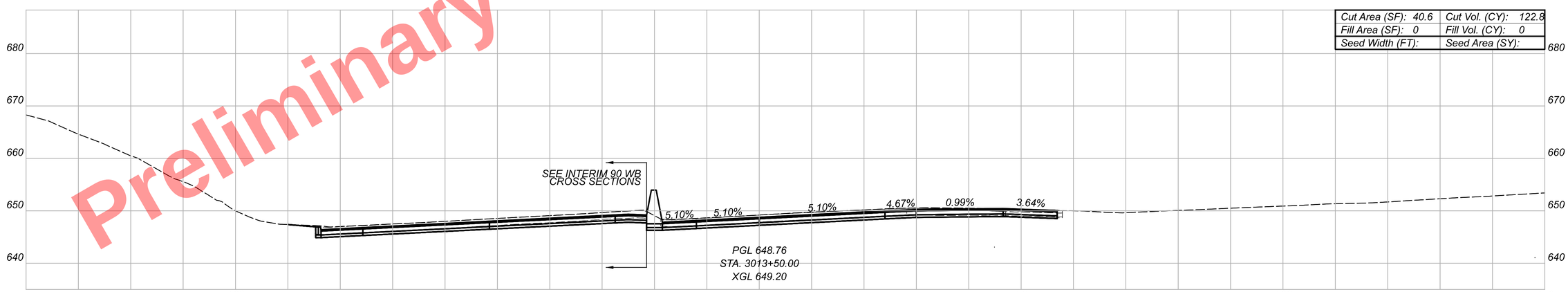

CUY-90-16.28

MODEL: BL_IR_90_EB_TIE_IN - 3013+50.00 (Sheet) PAPERSIZE: 34x22 (In.) DATE: 5/6/2025 TIME: 11:03:03 PM USER: slsson
pw:\\mb-us-pw.bentley.com:mb-us-pw-03\Documents\Cleveland_OH\OI_Projects\ODOT\District#12\82382\400-Engineering\Roadway\Sheets\82382_XS2300.dgn

CROSS SECTIONS
INTERIM I.R. 90 EB

DESIGN AGENCY
B&N
burgessniple.com

DESIGNER
AJS

REVIEWER
MRT 05/01/24

PROJECT ID
82382

SHEET 749 TOTAL 2696

Sheet Totals			Grand Totals Carried to Subsummary		
Seeding	Cut	Fill	Seeding	Cut	Fill
0	192	0	0	94415	149

Preliminary Plans - For Reference Only

Cut Area (SF): 0	Cut Vol. (CY): 0
Fill Area (SF): 0	Fill Vol. (CY): 0
Seed Width (FT):	Seed Area (SY):

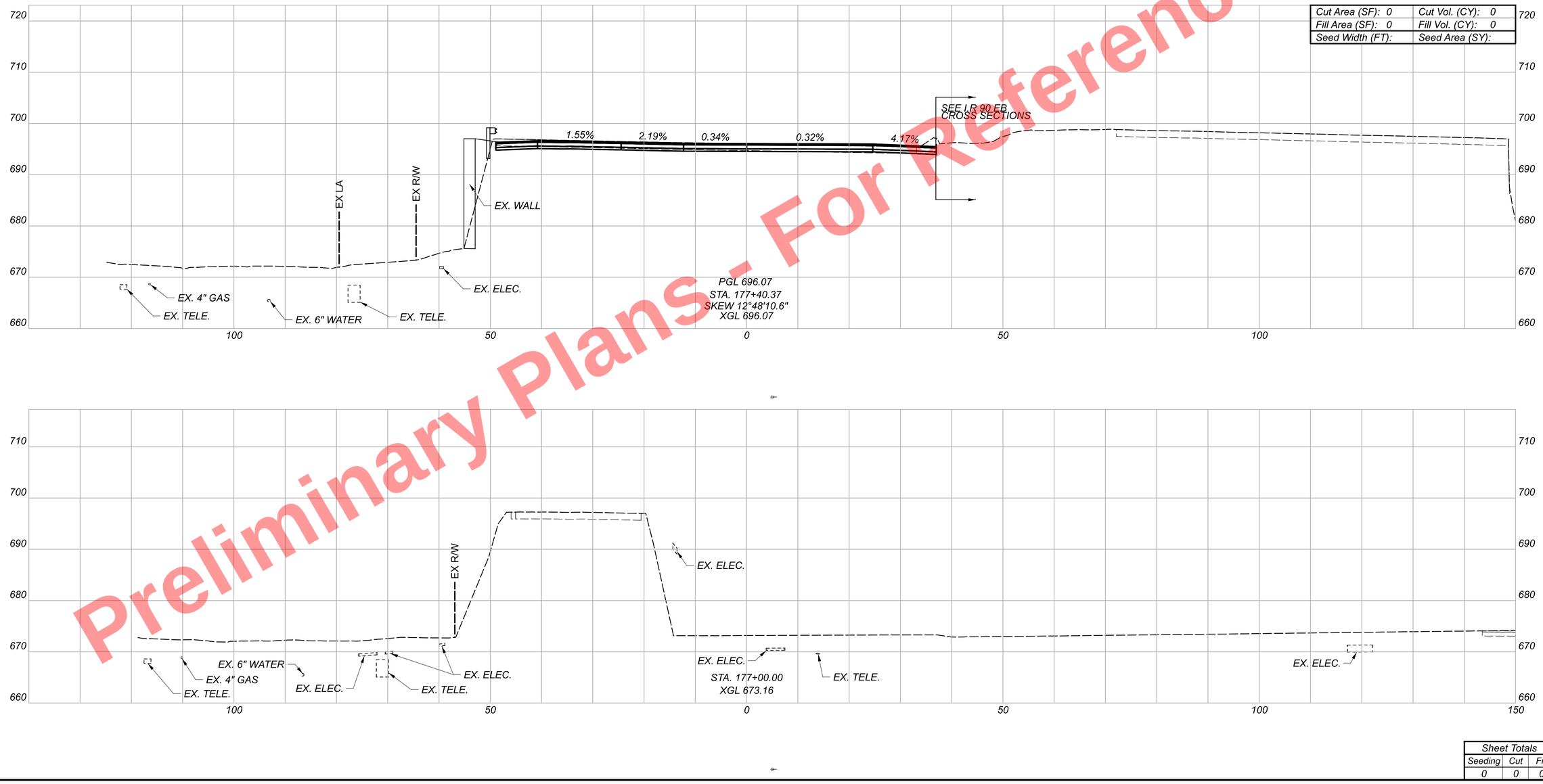

CROSS SECTIONS
I.R. 90 WB

Sheet Totals		
Seeding	Cut	Fill
0	0	0

DESIGN AGENCY
B&N
burgessniple.com

DESIGNER
AJS

REVIEWER
MRT 05/01/24

PROJECT ID
82382

SHEET 750 | TOTAL 2696

CUY-90-16.28

MODEL: BL I.R. 90 WB - 177+00.00 [Sheet] PAPERSIZE: 34x22 (in.) DATE: 5/6/2025 TIME: 3:34:28 PM USER: slsson
pw:\\mb-us-pw.bentley.com:mb-us-pw-03\Documents\Cleveland_OHIO\Projects\ODOT\District2\82382\400-Engineering\Roadway\Sheets\82382_XS2200.dgn

Preliminary Plans - For Reference Only

Cut Area (SF): 42.8	Cut Vol. (CY): 62.1
Fill Area (SF): 0	Fill Vol. (CY): 0
Seed Width (FT):	Seed Area (SY):

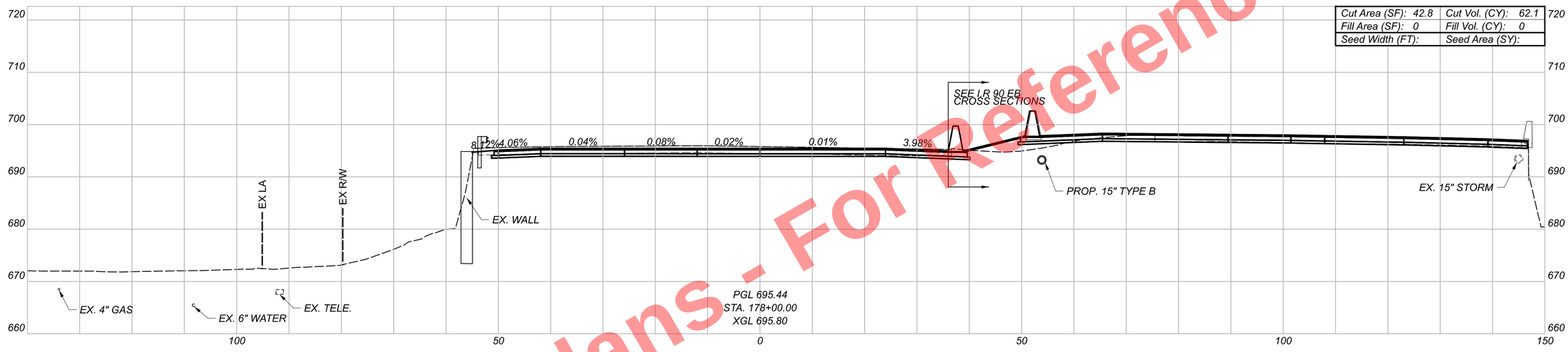

Cut Area (SF): 24.2	Cut Vol. (CY): 4.4
Fill Area (SF): 0	Fill Vol. (CY): 0
Seed Width (FT):	Seed Area (SY):

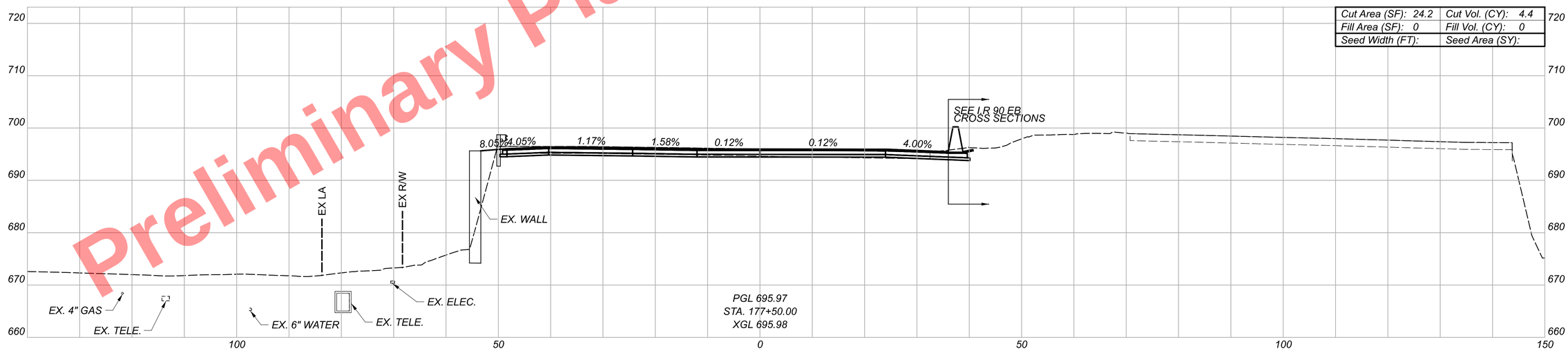

Sheet Totals		
Seeding	Cut	Fill
0	67	0

CUY-90-16.28

MODEL: BL I.R. 90 WB - 177+50.00 [Sheet] PAPERSIZE: 34x22 (in.) DATE: 5/6/2025 TIME: 3:35:03 PM USER: sisson
pw:\\mb-us-pw.bentley.com:mb-us-pw-03\Documents\Cleveland_OH\01_Projects\ODOT\District 12\82382\400-Engineering\Roadway\Sheets\82382_XS2200.dgn

CROSS SECTIONS
I.R. 90 WB

DESIGN AGENCY
B&N
burgessniple.com

DESIGNER
AJS

REVIEWER
MRT 05/01/24

PROJECT ID
82382

SHEET	TOTAL
751	2696

Preliminary Plans - For Reference Only

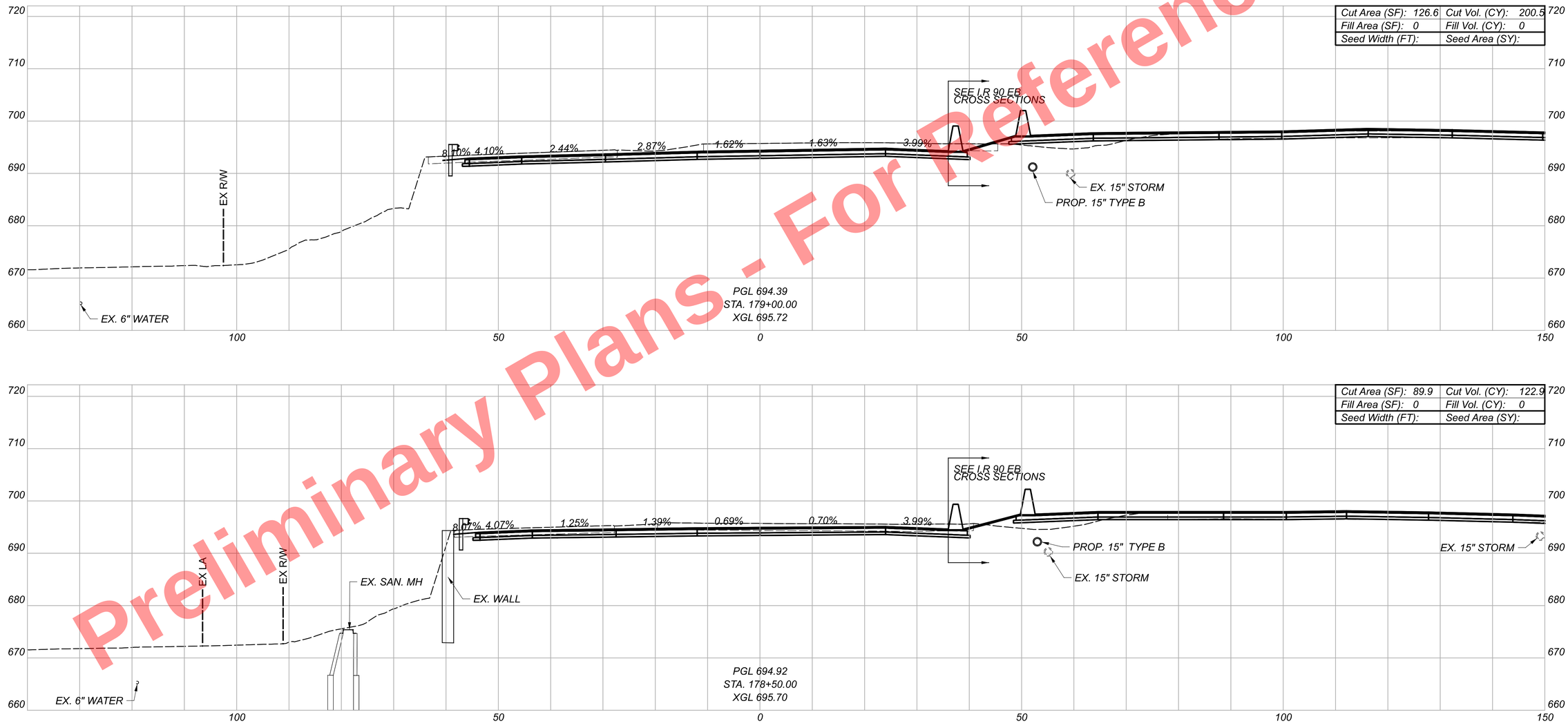

CUY-90-16.28

MODEL: BL I-R. 90 WB - 178+00.00 (Sheet) PAPERSIZE: 34x22 (in.) DATE: 5/16/2025 TIME: 3:35:10 PM USER: slsson
pw:\\mb-us-pw.bentley.com:mb-us-pw-03\Documents\Cleveland_OH\DLProjects\ODOT\District2\82382\400-Engineering\Roadway\Sheets\82382_XS2200.dgn

CROSS SECTIONS
I.R. 90 WB

Sheet Totals		
Seeding	Cut	Fill
0	324	0

DESIGN AGENCY
B&N
burgessniple.com

DESIGNER
AJS

REVIEWER
MRT 05/01/24

PROJECT ID
82382

SHEET 752 | TOTAL 2696

Preliminary Plans - For Reference Only

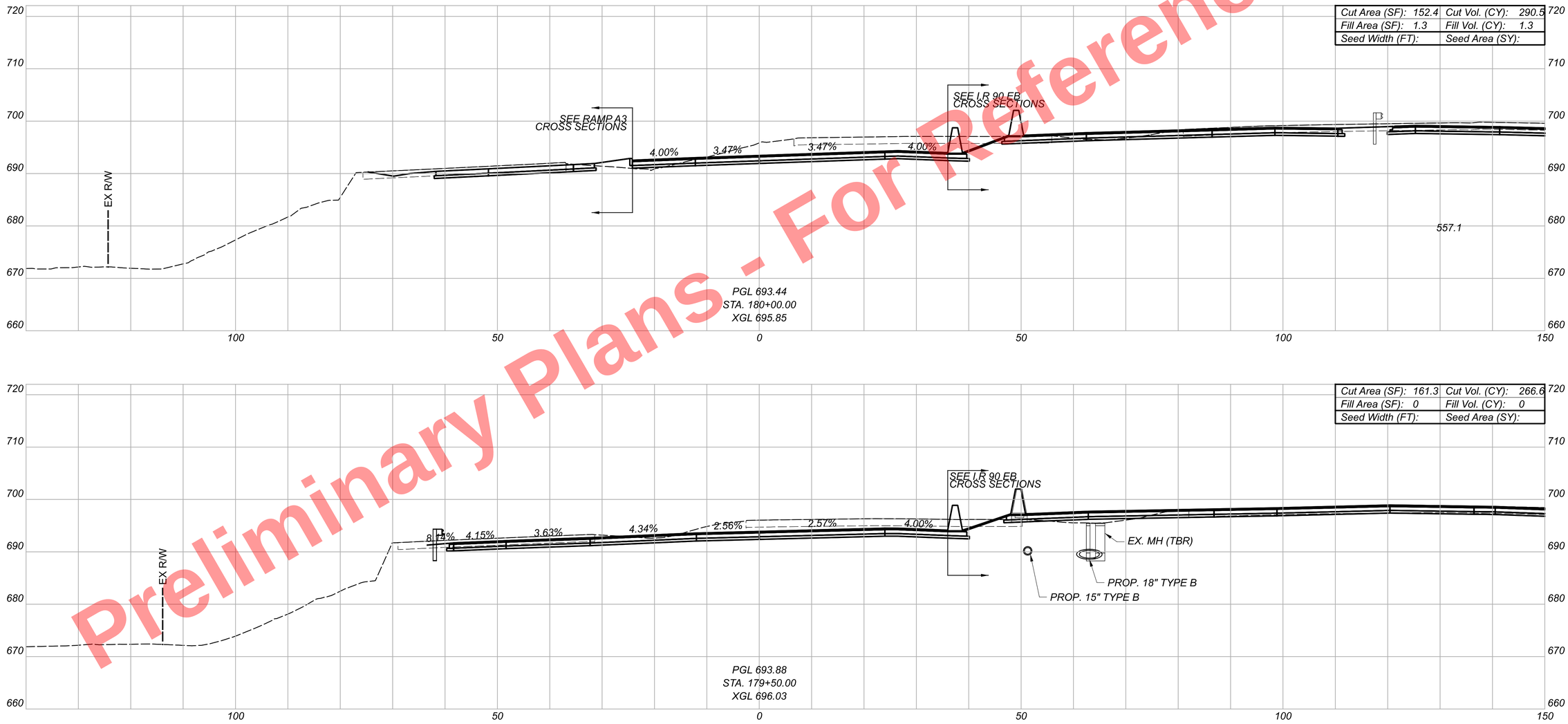

CUY-90-16.28

MODEL: BL_I-R_90_WB - I78+50.00 [Sheet] PAPERSIZE: 34x22 (In.) DATE: 5/16/2025 TIME: 3:35:17 PM USER: sisson
pw:\\mb-us-pw.bentley.com:mb-us-pw-03\Documents\Cleveland_OH\OI_Projects\ODOT\District#2\82382\400-Engineering\Roadway\Sheets\82382_XS2200.dgn

CROSS SECTIONS
I.R. 90 WB

Sheet Totals		
Seeding	Cut	Fill
0	558	2

DESIGN AGENCY
B&N
burgessniple.com

DESIGNER
AJS

REVIEWER
MRT 05/01/24

PROJECT ID
82382

SHEET 753 TOTAL 2696

Preliminary Plans - For Reference Only

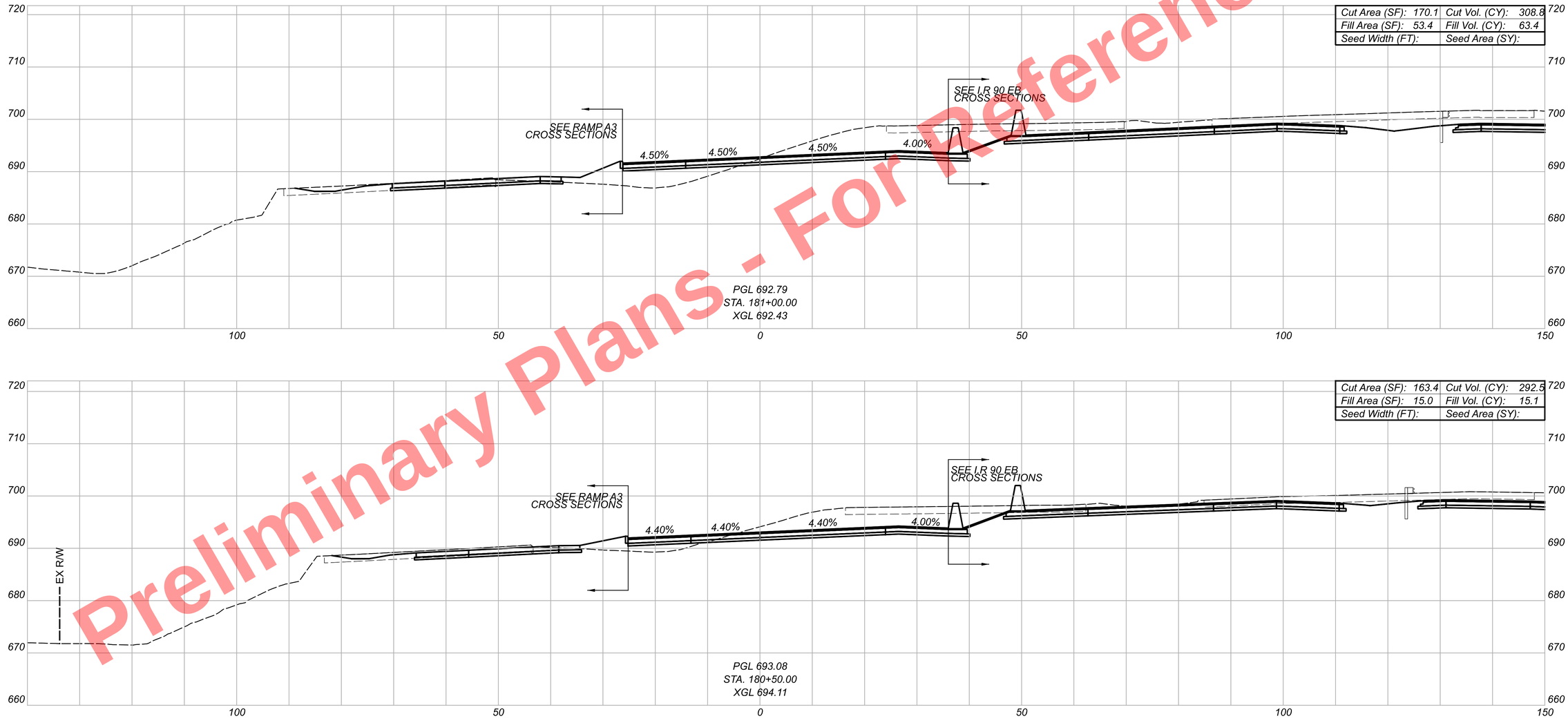

CUY-90-16.28

MODEL: BL I-R 90 WB - 179+00.00 [Sheet] PAPERSIZE: 34x22 (in.) DATE: 5/6/2025 TIME: 3:35:25 PM USER: sisson
pw:\\mb-us-pw.bentley.com:mb-us-pw-03\Documents\Cleveland_OH\01_Projects\000T\District2\82382\400-Engineering\

CROSS SECTIONS
I.R. 90 WB

Sheet Totals		
Seeding	Cut	Fill
0	602	79

DESIGN AGENCY
B&N
burgessniple.com

DESIGNER
AJS

REVIEWER
MRT 05/01/24

PROJECT ID
82382

SHEET 754 TOTAL 2696

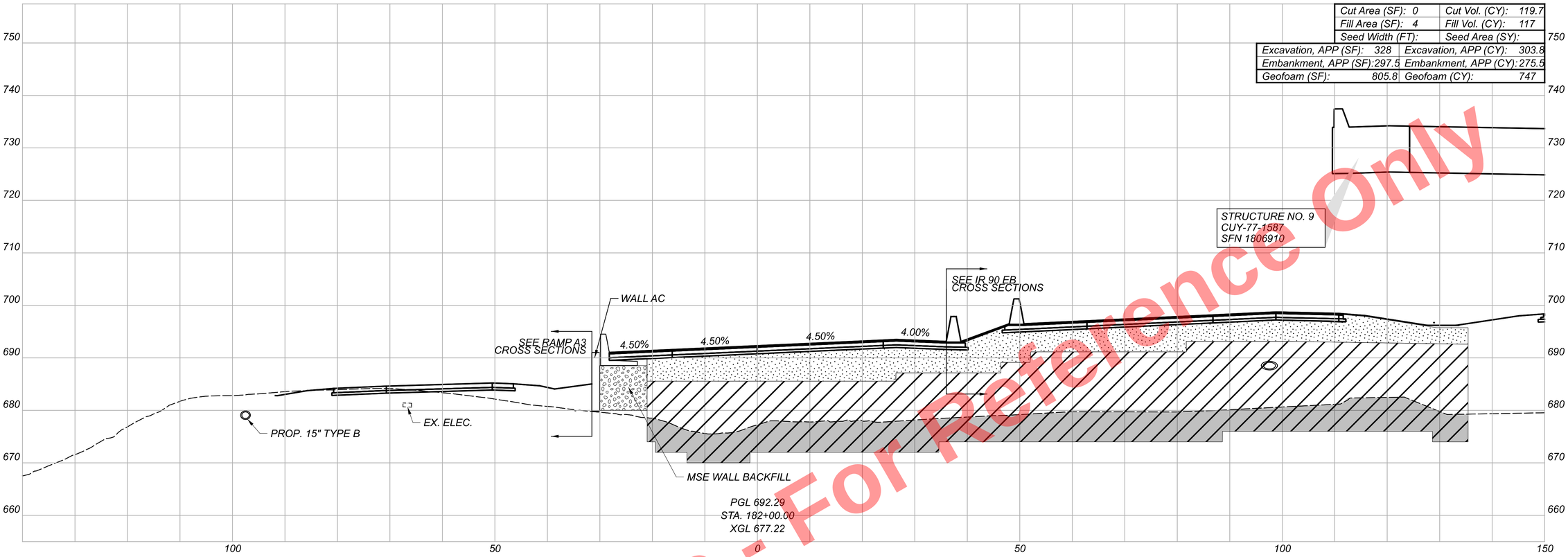

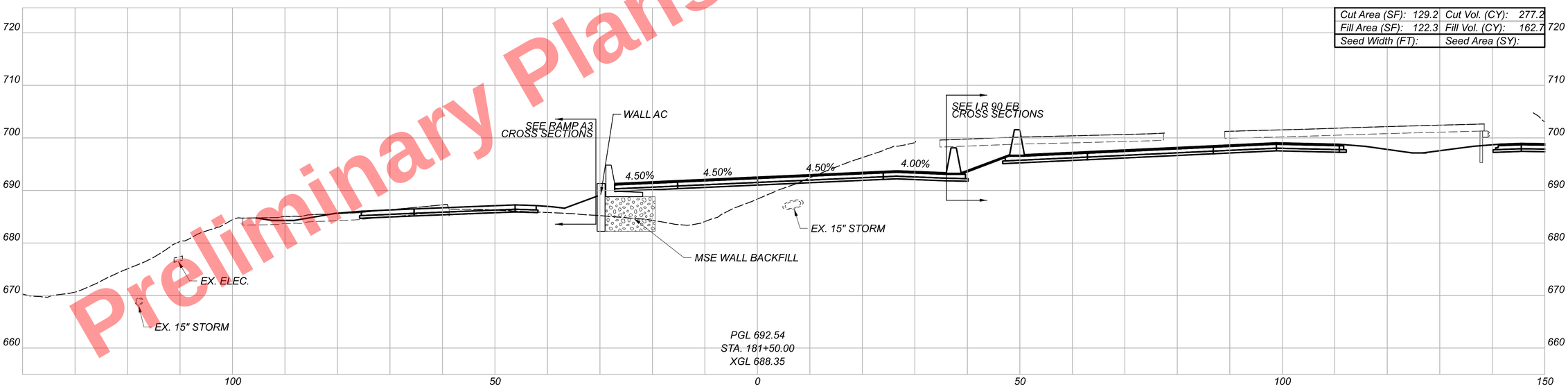

Preliminary Plans - For Reference Only

LEGEND

- ITEM 203 - EMBANKMENT, AS PER PLAN
- ITEM 203 - ROADWAY MISC.: EPS GEOFOAM FILL
- ITEM 203 - EXCAVATION, AS PER PLAN

Sheet Totals		
Seeding	Cut	Fill
0	397	280
Embankment, APP	Excavation, APP	Geofoam
276	304	747

CROSS SECTIONS
I.R. 90 WB

DESIGN AGENCY
B&N
burgessniple.com

DESIGNER
AJS

REVIEWER
MRT 05/01/24

PROJECT ID
82382

SHEET 755 TOTAL 2696

CUY-90-16.28

MODEL: BL I.R. 90 WB - 179+50.00 [Sheet] PAPERSIZE: 34x22 (in.) DATE: 5/16/2025 TIME: 3:35:42 PM USER: sisson
pw:\\mb-us-pw.bentley.com:mb-us-pw-03\Documents\Cleveland_OH\OI_Projects\ODOT\District12\82382\400-Engineering\Roadway\Sheets\82382_XS2200.dgn

Preliminary Plans - For Reference Only

Cut Area (SF): 0	Cut Vol. (CY): 0
Fill Area (SF): 7	Fill Vol. (CY): 11
Seed Width (FT):	Seed Area (SY):

Excavation, APP (SF): 254.0	Excavation, APP (CY): 538.9
Embankment, APP (SF): 253.7	Embankment, APP (CY): 510.4
Geofoam (SF): 789.3	Geofoam (CY): 1477

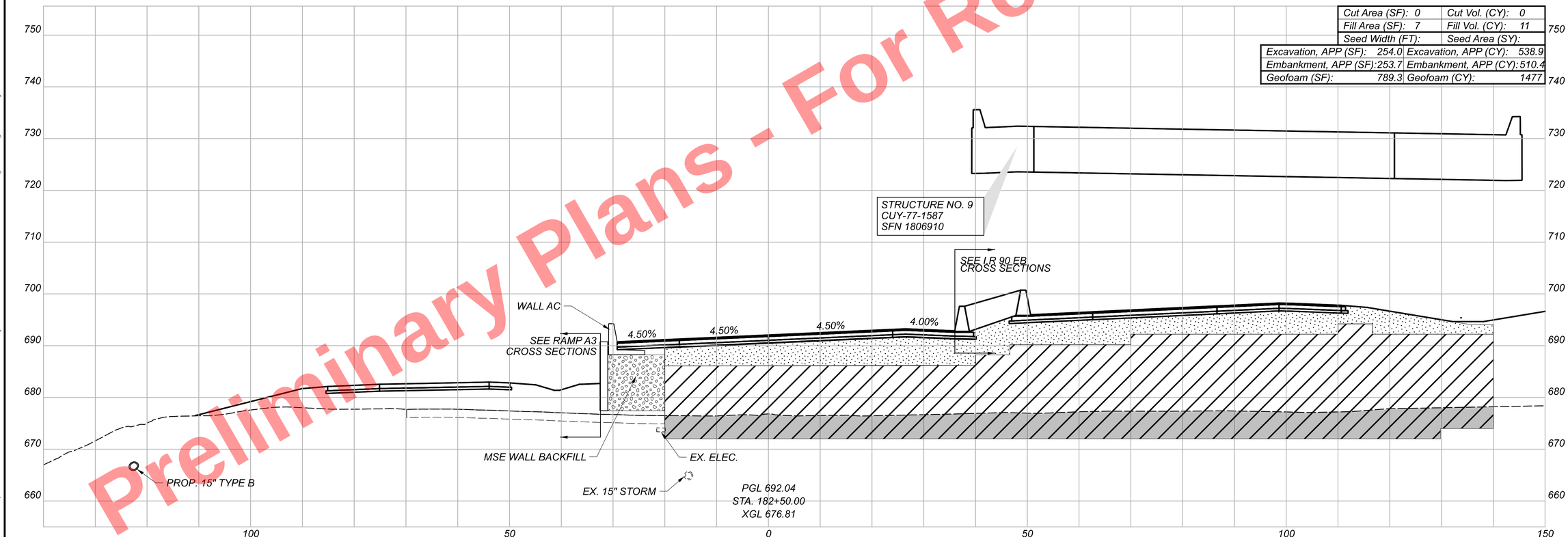

LEGEND

- ITEM 203 - EMBANKMENT, AS PER PLAN
- ITEM 203 - ROADWAY MISC.: EPS GEOFOAM FILL
- ITEM 203 - EXCAVATION, AS PER PLAN

Sheet Totals		
Seeding	Cut	Fill
0	0	11
Embankment, APP	Excavation, APP	Geofoam
511	539	1477

CROSS SECTIONS
I.R. 90 WB

DESIGN AGENCY
B&N
burgessniple.com

DESIGNER
AJS

REVIEWER
MRT 05/01/24

PROJECT ID
82382

SHEET 756 | TOTAL 2696

CUY-90-16.28

MODEL: BL I.R. 90 WB - 180+00.00 (Sheet) PAPERSIZE: 34x22 (in.) DATE: 5/16/2025 TIME: 3:35:51PM USER: sisson
pw:\\mb-us-pw.bentley.com:mb-us-pw-03\Documents\Cleveland.OH\OI_Projects\ODOT\District2\82382\400-Engineering\Roadway\Sheets\82382_XS2200.dgn

Preliminary Plans - For Reference Only

Cut Area (SF):	0	Cut Vol. (CY):	0
Fill Area (SF):	8	Fill Vol. (CY):	14
Seed Width (FT):		Seed Area (SY):	
Excavation, APP (SF):	298.0	Excavation, APP (CY):	511.2
Embankment, APP (SF):	260.7	Embankment, APP (CY):	476.3
Geofoam (SF):	1334.4	Geofoam (CY):	1967

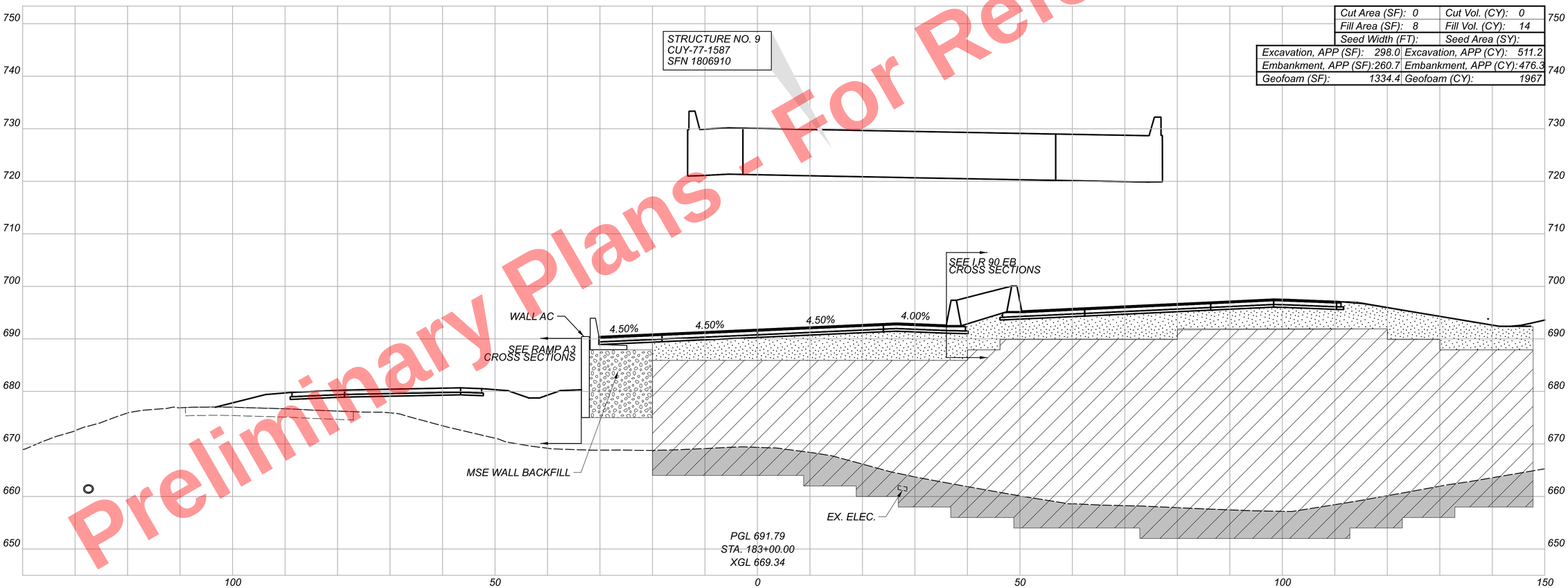

LEGEND

- ITEM 203 - EMBANKMENT, AS PER PLAN
- ITEM 203 - ROADWAY MISC.: EPS GEOFOAM FILL
- ITEM 203 - EXCAVATION, AS PER PLAN

Sheet Totals		
Seeding	Cut	Fill
0	0	14
Embankment, APP	Excavation, APP	Geofoam
477	512	1967

CROSS SECTIONS
I.R. 90 WB

DESIGN AGENCY
B&N
burgessniple.com

DESIGNER
AJS

REVIEWER
MRT 05/01/24

PROJECT ID
82382

SHEET 757 | TOTAL 2696

CUY-90-16.28

MODEL: BL IR 90 WB - 180+50.00 (Sheet) PAPERSIZE: 34x22 (In.) DATE: 5/16/2025 TIME: 3:35:57 PM USER: slsson
pw:\\mb-us-pw.bentley.com:mb-us-pw-03\Documents\Cleveland_OH\OI_Projects\ODOT\District#2\82382\400-Engineering\Roadway\Sheets\82382_XS2200.dgn

Preliminary Plans - Not For Reference Only

Cut Area (SF): 0	Cut Vol. (CY): 0
Fill Area (SF): 12	Fill Vol. (CY): 21
Seed Width (FT):	Seed Area (SY):
Excavation, APP (SF): 260.3	Excavation, APP (CY): 532.1
Embankment, APP (SF): 263.1	Embankment, APP (CY): 466.4
Geofoam (SF): 576.4	Geofoam (CY): 1100

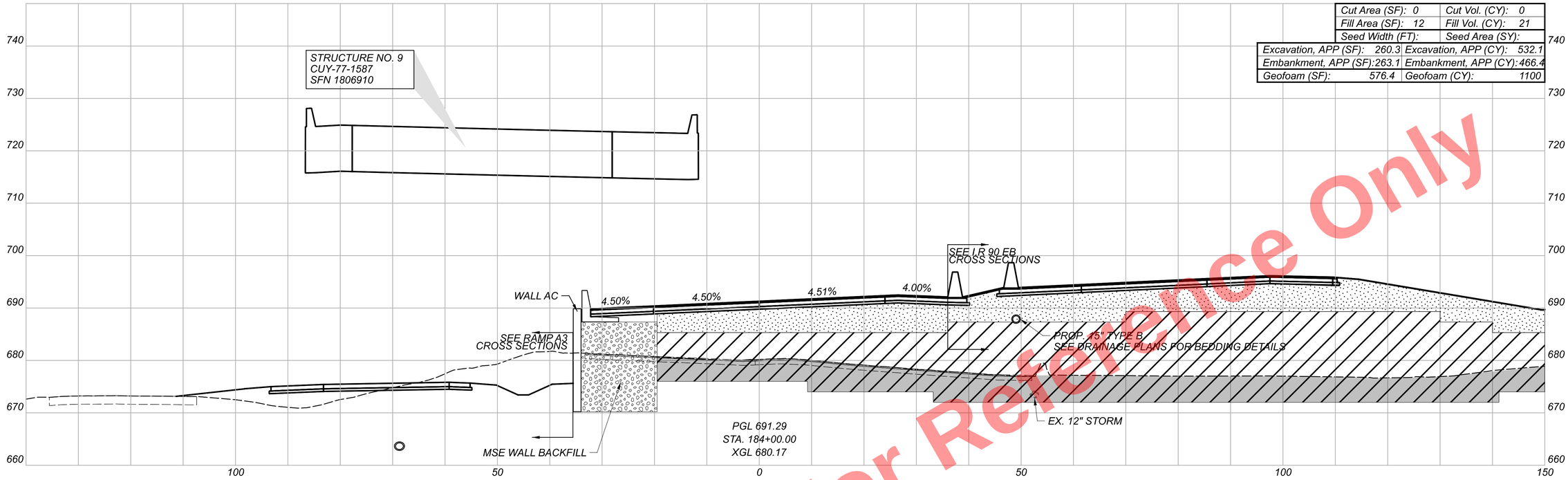

LEGEND

- ITEM 203 - EMBANKMENT, AS PER PLAN
- ITEM 203 - ROADWAY MISC.: EPS GEOFOAM FILL
- ITEM 203 - EXCAVATION, AS PER PLAN

Cut Area (SF): 0	Cut Vol. (CY): 0
Fill Area (SF): 10	Fill Vol. (CY): 17
Seed Width (FT):	Seed Area (SY):
Excavation, APP (SF): 314.3	Excavation, APP (CY): 567.0
Embankment, APP (SF): 240.6	Embankment, APP (CY): 464.2
Geofoam (SF): 610.9	Geofoam (CY): 1802

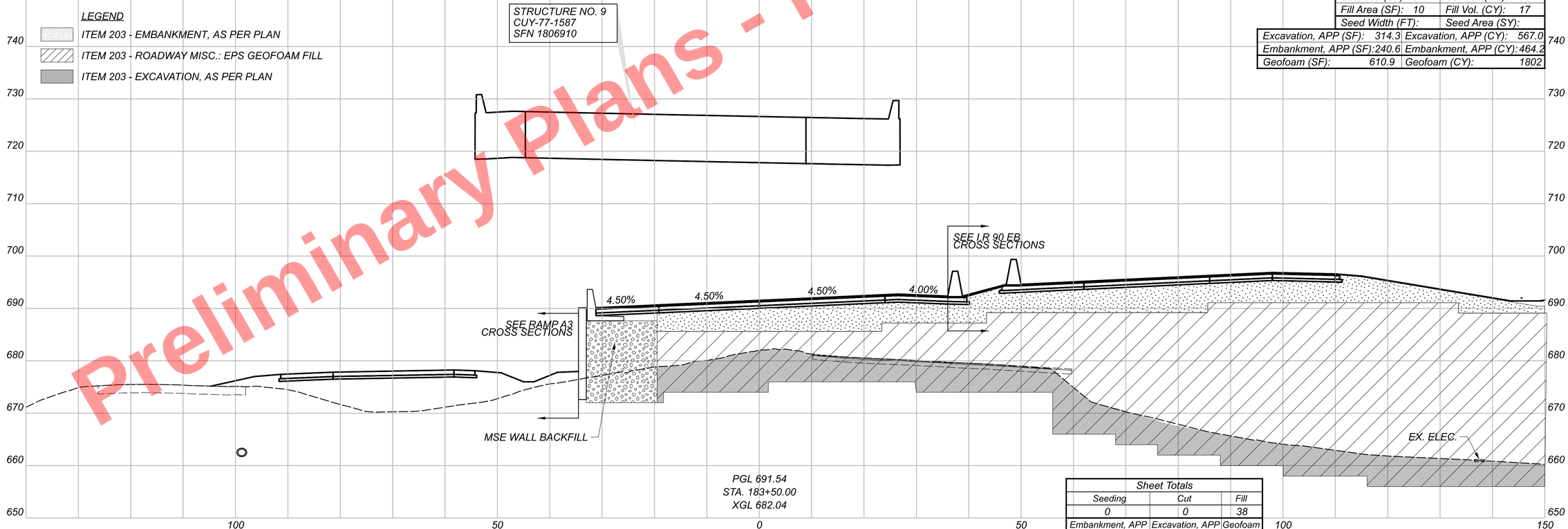

Sheet Totals		
Seeding	Cut	Fill
0	0	38
Embankment, APP	Excavation, APP	Geofoam
931	1100	2902

CROSS SECTIONS
I.R. 90 WB

CTY-RTE-SECTION

MODEL: BL I.R. 90 WB - 181+00.00 [Sheet] PAPERSIZE: 34x22 (in.) DATE: 5/16/2025 TIME: 3:36:04 PM USER: slsson
pw:\\mb-us-pw.bentley.com:mb-us-pw-03\Documents\Cleveland_OH\DOT_Projects\ODOT\District2\82382\400-Engineering\Roadway\Sheets\82382_XS2200.dgn

DESIGN AGENCY
B&N
burgessniple.com

DESIGNER
AJS

REVIEWER
MRT 05/01/24

PROJECT ID
82382

SHEET 758 | TOTAL 2696

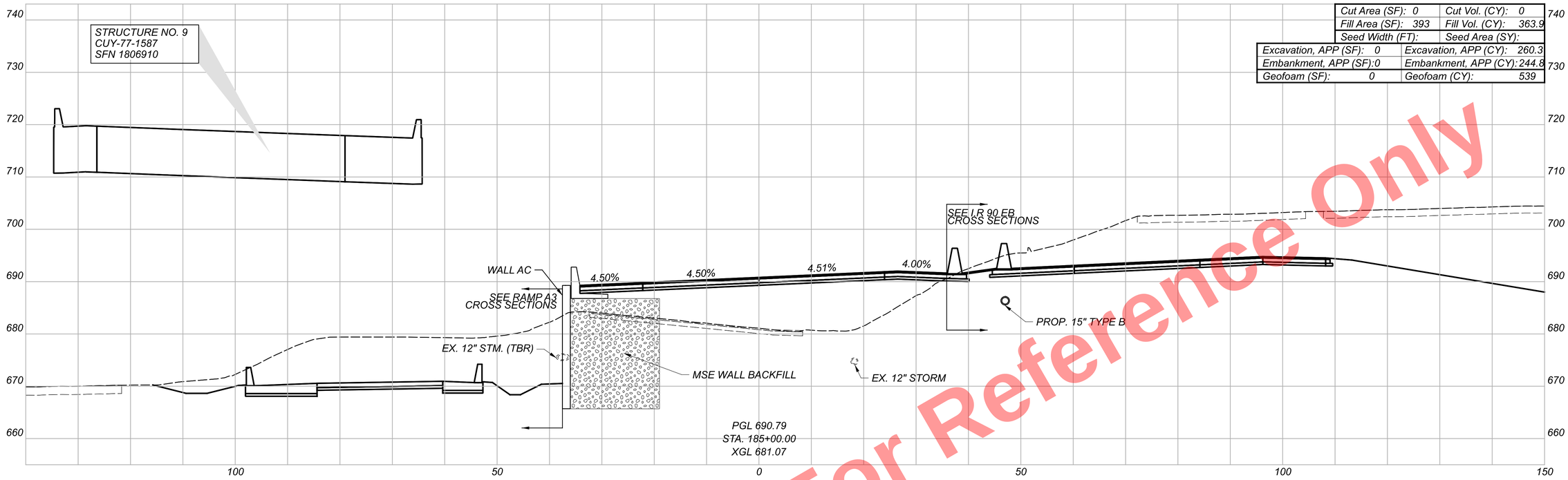

Cut Area (SF): 0	Cut Vol. (CY): 0
Fill Area (SF): 393	Fill Vol. (CY): 363.9
Seed Width (FT):	Seed Area (SY):
Excavation, APP (SF): 0	Excavation, APP (CY): 260.3
Embankment, APP (SF): 0	Embankment, APP (CY): 244.8
Geofoam (SF): 0	Geofoam (CY): 539

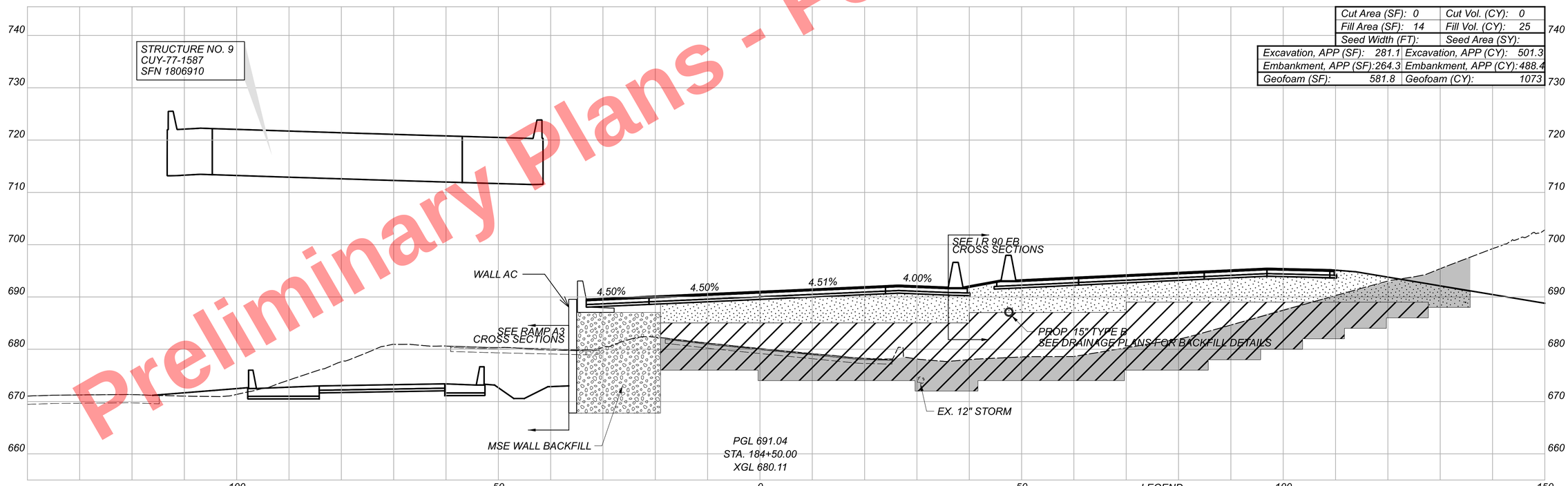

Cut Area (SF): 0	Cut Vol. (CY): 0
Fill Area (SF): 14	Fill Vol. (CY): 25
Seed Width (FT):	Seed Area (SY):
Excavation, APP (SF): 281.1	Excavation, APP (CY): 501.3
Embankment, APP (SF): 264.3	Embankment, APP (CY): 488.4
Geofoam (SF): 581.8	Geofoam (CY): 1073

LEGEND

- ITEM 203 - EMBANKMENT, AS PER PLAN
- ITEM 203 - ROADWAY MISC.: EPS GEOFOAM FILL
- ITEM 203 - EXCAVATION, AS PER PLAN

Sheet Totals		
Seeding	Cut	Fill
0	0	389
Embankment, APP	Excavation, APP	Geofoam
734	762	1612

CROSS SECTIONS
I.R. 90 WB

DESIGN AGENCY
B&N
burgessniple.com

DESIGNER
AJS

REVIEWER
MRT 05/01/24

PROJECT ID
82382

SHEET 759 TOTAL 2696

CUY-90-16.28

MODEL: BL I.R. 90 WB - 181+50.00 [Sheet] PAPERSIZE: 34x22 (in.) DATE: 5/16/2025 TIME: 3:36:15 PM USER: sisson
pw:\\mb-us-pw.bentley.com:mb-us-pw-03\Documents\Cleveland_OH\01_Projects\ODOT\District12\82382\400-Engineering\Roadway\Sheets\82382_XS2200.dgn

Preliminary Plans - For Reference Only

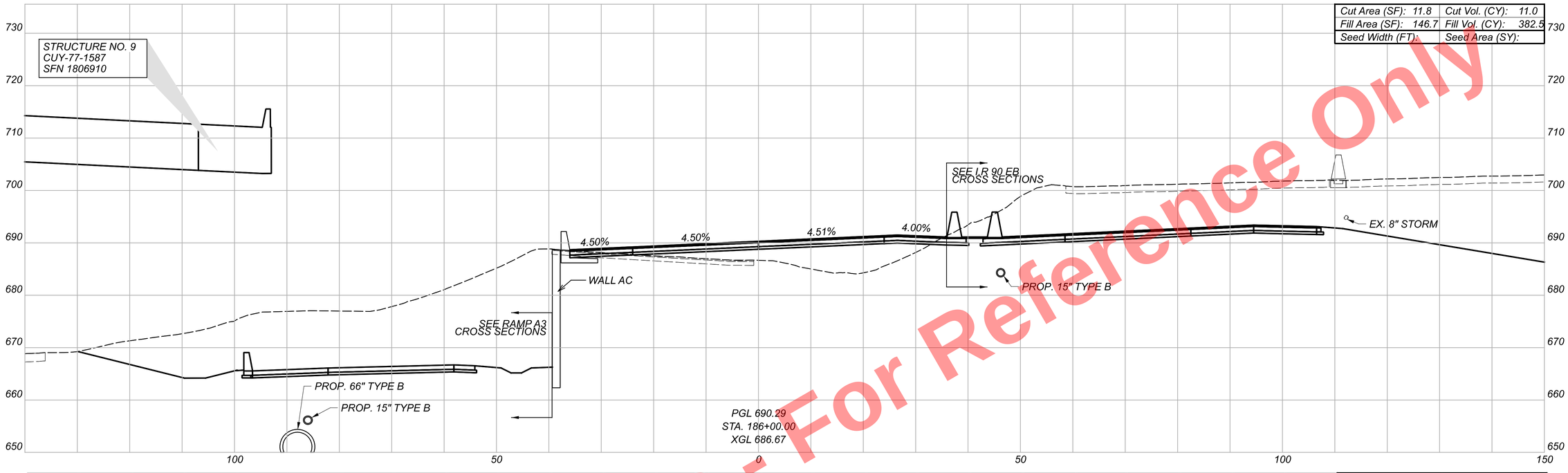

Cut Area (SF): 11.8	Cut Vol. (CY): 11.0
Fill Area (SF): 146.7	Fill Vol. (CY): 382.5
Seed Width (FT):	Seed Area (SY):

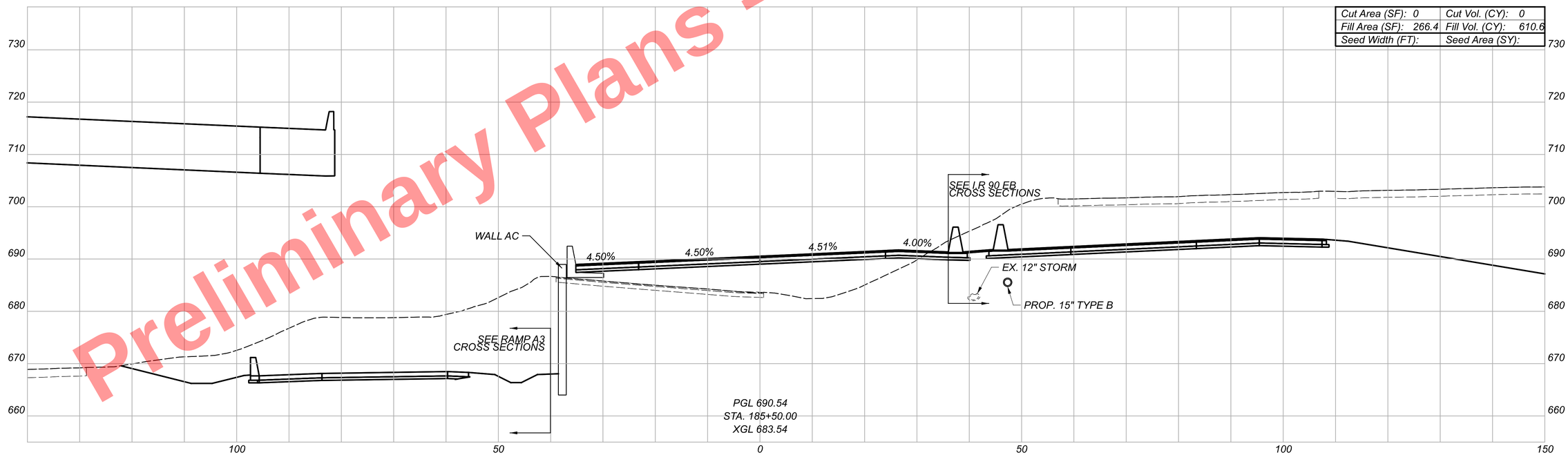

Cut Area (SF): 0	Cut Vol. (CY): 0
Fill Area (SF): 266.4	Fill Vol. (CY): 610.6
Seed Width (FT):	Seed Area (SY):

Preliminary Plans - For Reference Only

CROSS SECTIONS
I.R. 90 WB

Sheet Totals		
Seeding	Cut	Fill
0	11	994

DESIGN AGENCY
B&N
burgessniple.com

DESIGNER
AJS

REVIEWER
MRT 05/01/24

PROJECT ID
82382

SHEET 760 TOTAL 2696

CUY-90-16.28

MODEL: BL I.R. 90 WB - 182+00.00 [Sheet] PAPERSIZE: 34x22 (in.) DATE: 5/16/2025 TIME: 3:36:26 PM USER: sisson
pw:\\mb-us-pw.bentley.com:mb-us-pw-03\Documents\Cleveland_OH\OI_Projects\ODOT\District12\82382\400-Engineering\Roadway\Sheets\82382_XS2200.dgn

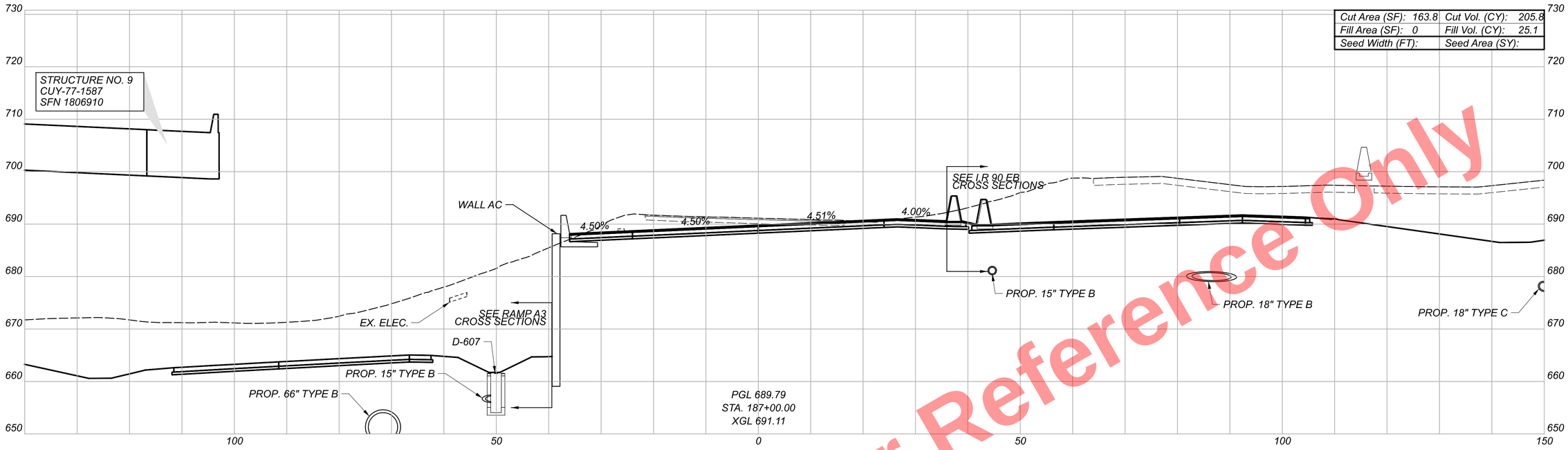

Cut Area (SF): 163.8	Cut Vol. (CY): 205.8
Fill Area (SF): 0	Fill Vol. (CY): 25.1
Seed Width (FT):	Seed Area (SY):

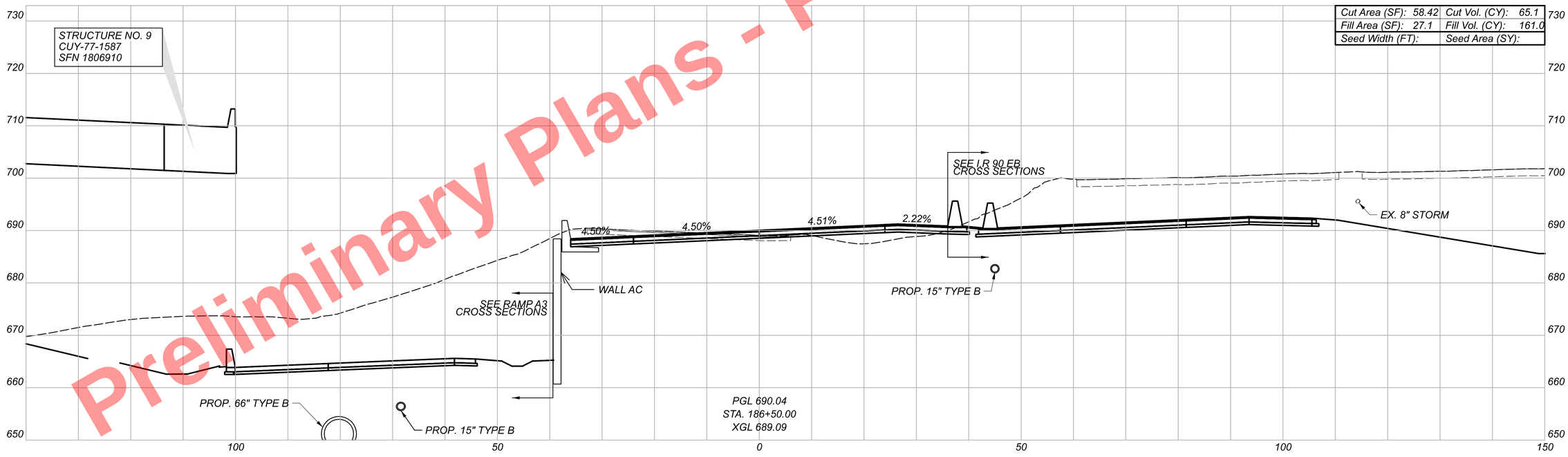

Cut Area (SF): 58.42	Cut Vol. (CY): 65.1
Fill Area (SF): 27.1	Fill Vol. (CY): 161.0
Seed Width (FT):	Seed Area (SY):

Preliminary Plans - For Reference Only

CROSS SECTIONS
I.R. 90 WB

Sheet Totals		
Seeding	Cut	Fill
0	271	187

DESIGN AGENCY
B&N
burgessniple.com

DESIGNER
AJS

REVIEWER
MRT 05/01/24

PROJECT ID
82382

SHEET 761 TOTAL 2696

CUY-90-16.28

MODEL: BL_I-R_90_WB - I82+50.00 [Sheet] PAPERSIZE: 34x22 (in.) DATE: 5/16/2025 TIME: 3:36:38 PM USER: slsson
pw:\\mb-us-pw.bentley.commb-us-pw-03\Documents\Cleveland_OH_OL_Projects\ODOT\District 12\82382\400-Engineering\Roadway\Sheets\82382_XS2200.dgn

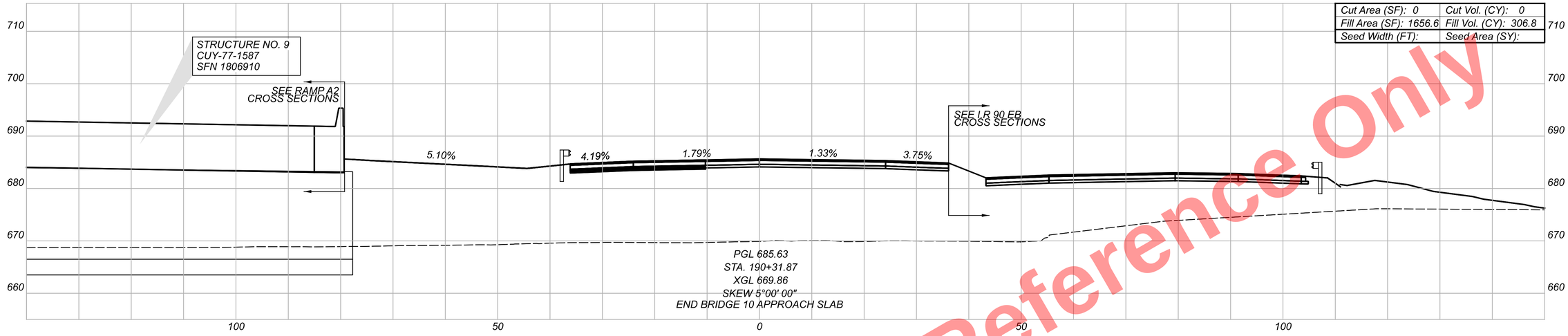

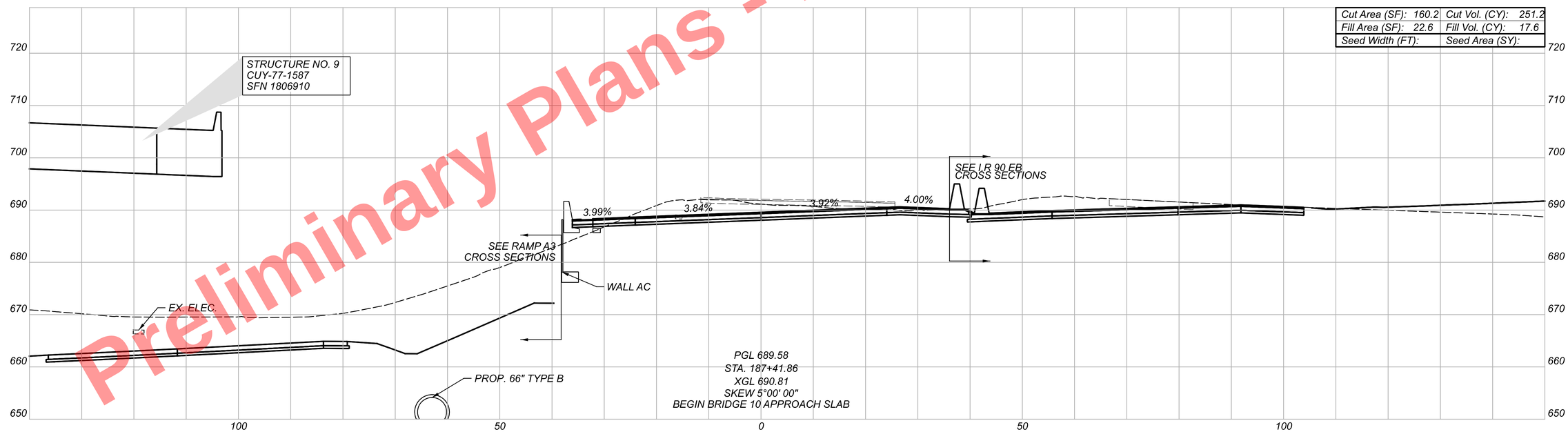

Preliminary Plans - For Reference Only

CROSS SECTIONS
I.R. 90 WB

DESIGN AGENCY
B&N
burgessniple.com

DESIGNER
AJS

REVIEWER
MRT 05/01/24

PROJECT ID
82382

Sheet Totals		
Seeding	Cut	Fill
0	252	325

SHEET 762 TOTAL 2696

CUY-90-16.28

MODEL: BL I.R. 90 WB - I83+00.00 [Sheet] PAPERSIZE: 34x22 (in.) DATE: 5/16/2025 TIME: 3:36:49 PM USER: sisson
pw:\\mb-us-pw.bentley.com:mb-us-pw-03\Documents\Cleveland_OH\01_Projects\0DOT\District2\82382\400-Engineering\Roadway\Sheets\82382_XS2200.dgn

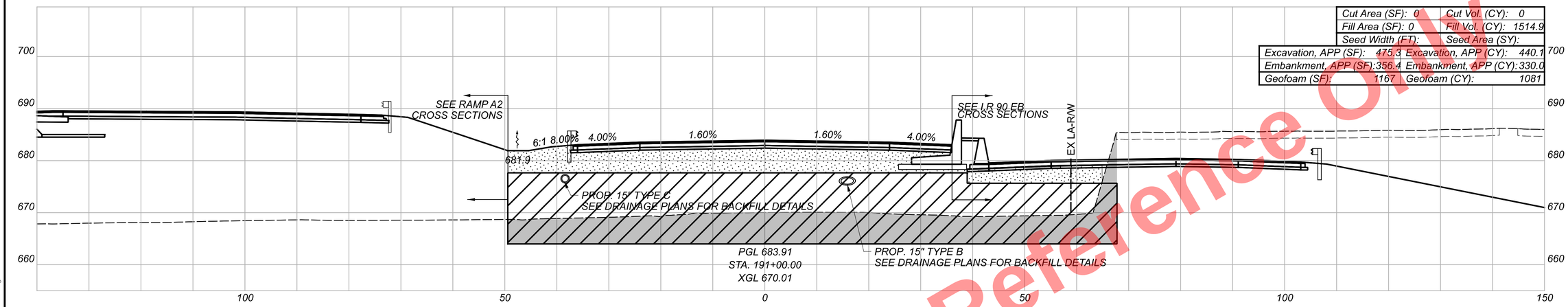

Cut Area (SF): 0		Cut Vol. (CY): 0	
Fill Area (SF): 0		Fill Vol. (CY): 1514.9	
Seed Width (FT):		Seed Area (SY):	
Excavation, APP (SF):	475.3	Excavation, APP (CY):	440.1
Embankment, APP (SF):	356.4	Embankment, APP (CY):	330.0
Geofoam (SF):	1167	Geofoam (CY):	1081

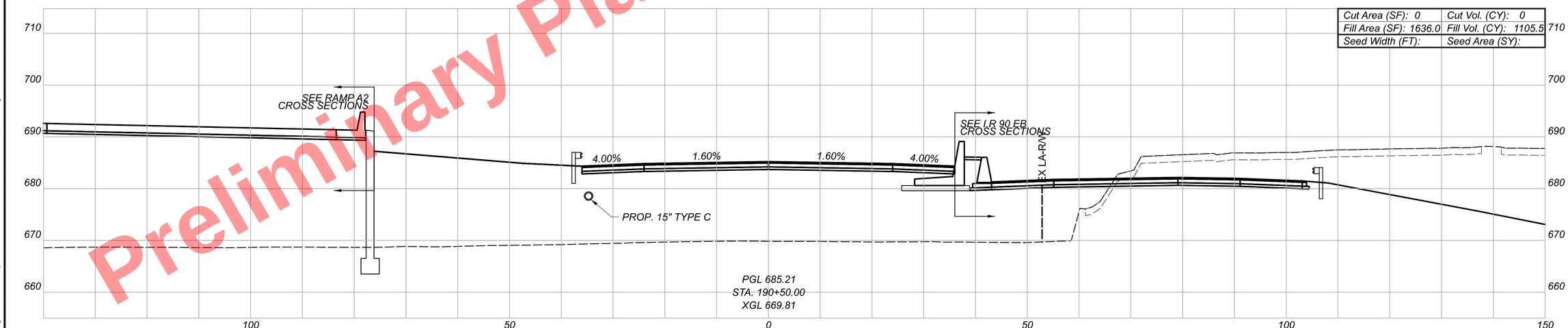

Cut Area (SF): 0		Cut Vol. (CY): 0	
Fill Area (SF): 1636.0		Fill Vol. (CY): 1105.5	
Seed Width (FT):		Seed Area (SY):	

LEGEND

- ITEM 203 - EMBANKMENT, AS PER PLAN
- ITEM 203 - ROADWAY MISC.: EPS GEOFOAM FILL
- ITEM 203 - EXCAVATION, AS PER PLAN

Sheet Totals		
Seeding	Cut	Fill
0	0	2621
Embankment, APP	Excavation, APP	Geofoam
330	441	1081

Preliminary Plans - For Reference Only

CUY-90-16.28

MODEL: BL I.R. 90 WB - 183+50.00 [Sheet] PAPERSIZE: 34x22 (in) DATE: 5/6/2025 TIME: 3:37:02 PM USER: sisson
pw:\\mb-us-pw.bentley.com:mb-us-pw-03\Documents\Cleveland.OH\OI_Projects\ODOT\District2\82382\400-Engineering\Roadway\Sheets\82382_XS2200.dgn

CROSS SECTIONS
I.R. 90 WB

DESIGN AGENCY
B&N
burgessniple.com

DESIGNER	AJS
REVIEWER	MRT 05/01/24
PROJECT ID	82382
SHEET	763
TOTAL	2696

Preliminary Plans - Not For Reference Only

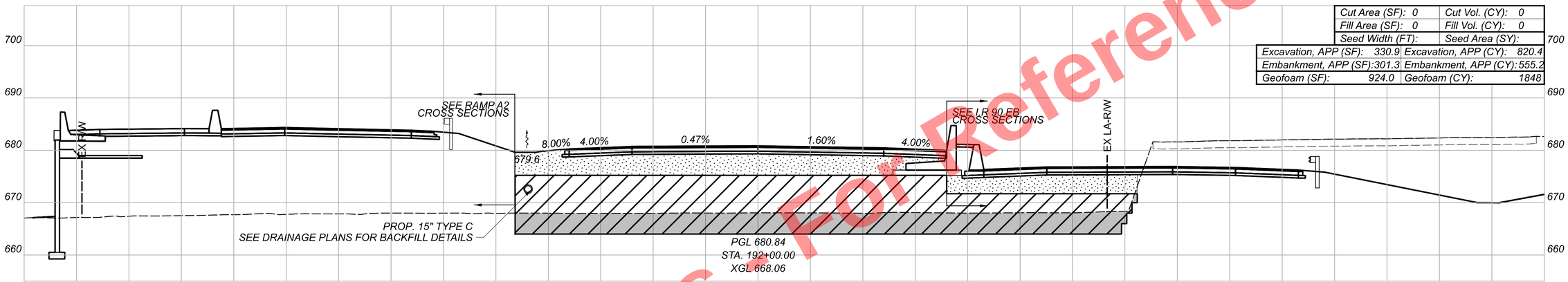

Cut Area (SF):	0	Cut Vol. (CY):	0
Fill Area (SF):	0	Fill Vol. (CY):	0
Seed Width (FT):		Seed Area (SY):	
Excavation, APP (SF):	330.9	Excavation, APP (CY):	820.4
Embankment, APP (SF):	301.3	Embankment, APP (CY):	555.2
Geofoam (SF):	924.0	Geofoam (CY):	1848

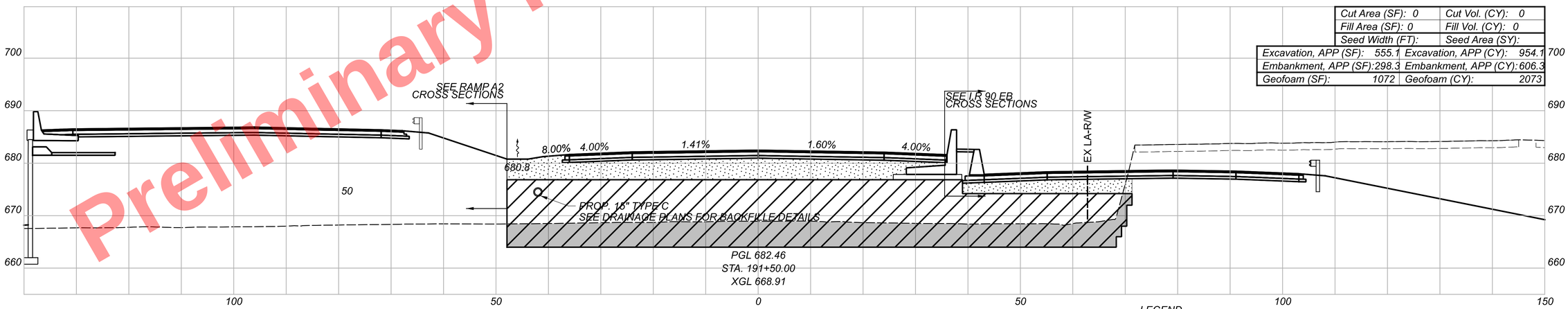

Cut Area (SF):	0	Cut Vol. (CY):	0
Fill Area (SF):	0	Fill Vol. (CY):	0
Seed Width (FT):		Seed Area (SY):	
Excavation, APP (SF):	555.1	Excavation, APP (CY):	954.1
Embankment, APP (SF):	298.3	Embankment, APP (CY):	606.3
Geofoam (SF):	1072	Geofoam (CY):	2073

LEGEND

- ITEM 203 - EMBANKMENT, AS PER PLAN
- ITEM 203 - ROADWAY MISC.: EPS GEOFOAM FILL
- ITEM 203 - EXCAVATION, AS PER PLAN

Sheet Totals		
Seeding	Cut	Fill
0	0	0
Embankment, APP	Excavation, APP	Geofoam
1162	1775	3921

CROSS SECTIONS
I.R. 90 WB

CUY-90-16.28

MODEL: BL I.R. 90 WB - I84+00.00 (Sheet) PAPERSIZE: 34x22 (In.) DATE: 5/16/2025 TIME: 3:37:13 PM USER: slsson
pw:\\mb-us-pw.bentley.com:mb-us-pw-03\Documents\Cleveland.OH\OI_Projects\ODOT\District#12\82382\400-Engineering\Roadway\Sheets\82382_XS2200.dgn

DESIGN AGENCY
B&N
burgessniple.com

DESIGNER
AJS

REVIEWER
MRT 05/01/24

PROJECT ID
82382

SHEET 764 TOTAL 2696

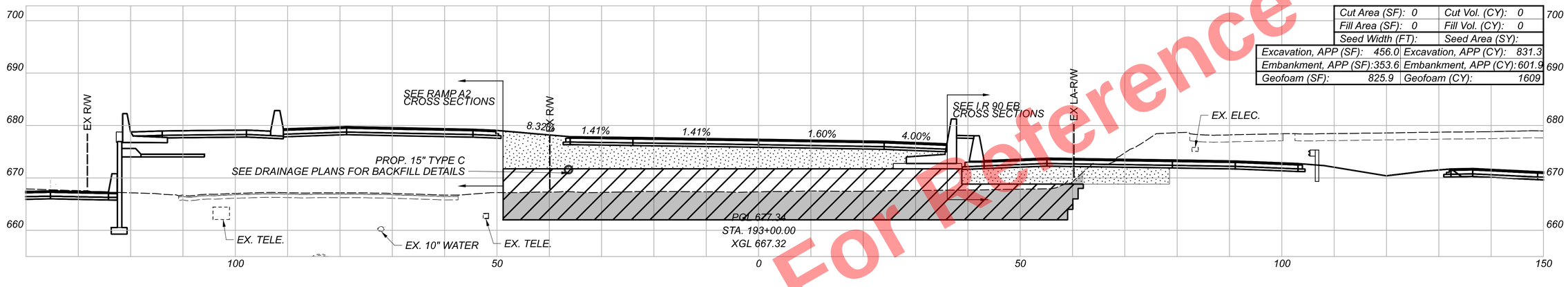

Cut Area (SF):	0	Cut Vol. (CY):	0
Fill Area (SF):	0	Fill Vol. (CY):	0
Seed Width (FT):		Seed Area (SY):	
Excavation, APP (SF):	456.0	Excavation, APP (CY):	831.3
Embankment, APP (SF):	353.6	Embankment, APP (CY):	601.9
Geofoam (SF):	825.9	Geofoam (CY):	1609

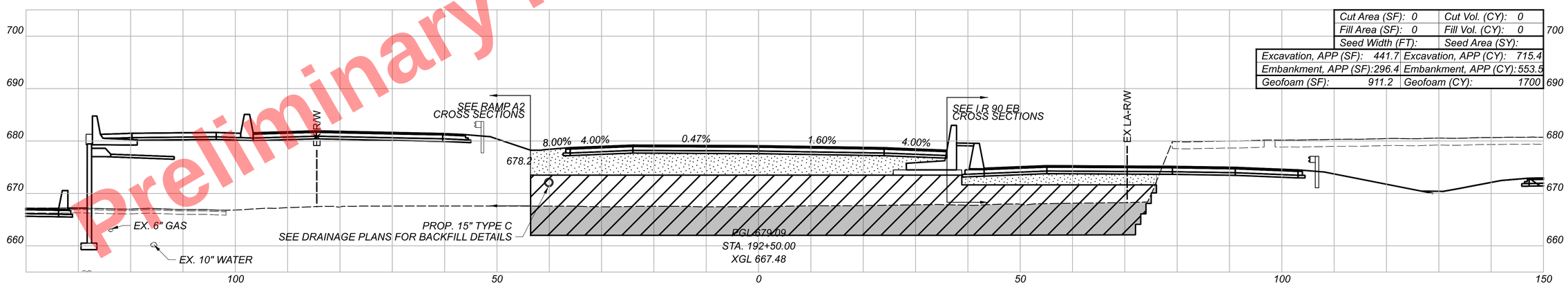

Cut Area (SF):	0	Cut Vol. (CY):	0
Fill Area (SF):	0	Fill Vol. (CY):	0
Seed Width (FT):		Seed Area (SY):	
Excavation, APP (SF):	441.7	Excavation, APP (CY):	715.4
Embankment, APP (SF):	296.4	Embankment, APP (CY):	553.5
Geofoam (SF):	911.2	Geofoam (CY):	1700

LEGEND

- ITEM 203 - EMBANKMENT, AS PER PLAN
- ITEM 203 - ROADWAY MISC.: EPS GEOFOAM FILL
- ITEM 203 - EXCAVATION, AS PER PLAN

Sheet Totals		
Seeding	Cut	Fill
0	0	0
Embankment, APP	Excavation, APP	Geofoam
1156	1547	3309

Preliminary Plans - For Reference Only

CUY-90-16.28

MODEL: BL I.R. 90 WB - 184+50.00 [Sheet] PAPERSIZE: 34x22 (in.) DATE: 5/16/2025 TIME: 3:37:23 PM USER: slsson
pw:\\mb-us-pw.bentley.com:mb-us-pw-03\Documents\Cleveland_OH\DL_Projects\ODOT\District12\82382\400-Engineering\Roadway\Sheets\8238_XS2200.dgn

CROSS SECTIONS
I.R. 90 WB

DESIGN AGENCY
B&N
burgessniple.com

DESIGNER
AJS

REVIEWER
MRT 05/01/24

PROJECT ID
82382

SHEET 765 | TOTAL 2696

Preliminary Plans - For Reference Only

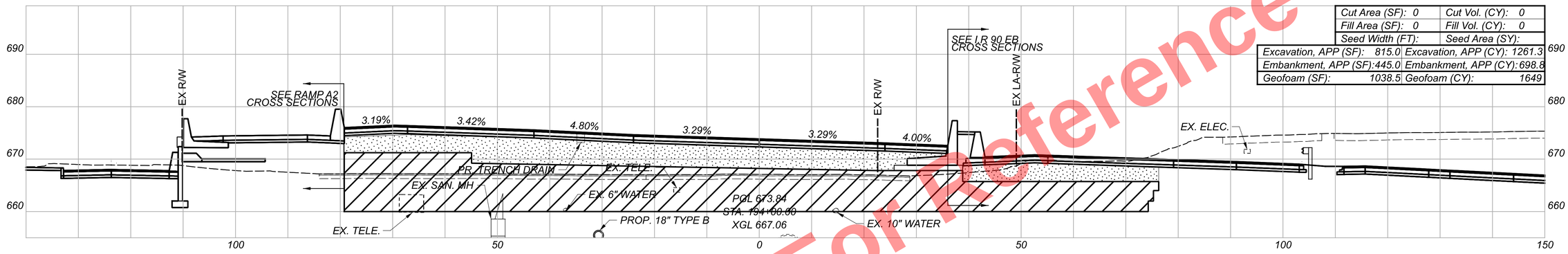

Cut Area (SF):	0	Cut Vol. (CY):	0
Fill Area (SF):	0	Fill Vol. (CY):	0
Seed Width (FT):		Seed Area (SY):	
Excavation, APP (SF):	815.0	Excavation, APP (CY):	1261.3
Embankment, APP (SF):	445.0	Embankment, APP (CY):	698.8
Geofoam (SF):	1038.5	Geofoam (CY):	1649

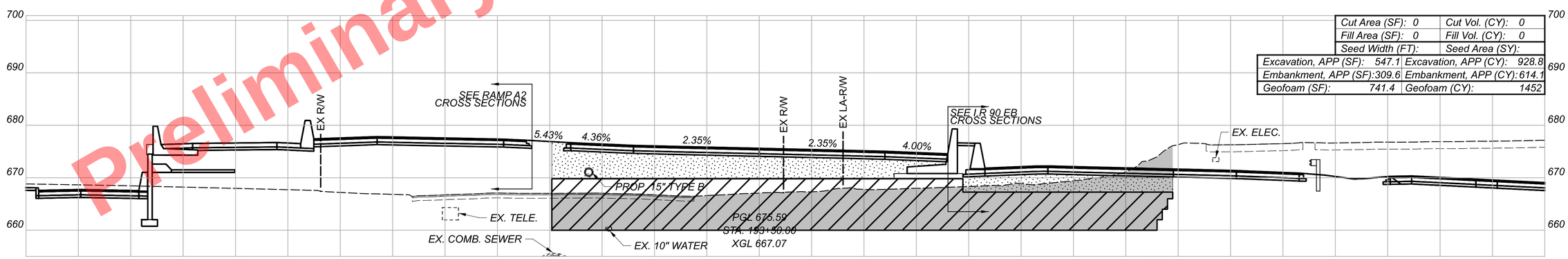

Cut Area (SF):	0	Cut Vol. (CY):	0
Fill Area (SF):	0	Fill Vol. (CY):	0
Seed Width (FT):		Seed Area (SY):	
Excavation, APP (SF):	547.1	Excavation, APP (CY):	928.8
Embankment, APP (SF):	309.6	Embankment, APP (CY):	614.1
Geofoam (SF):	741.4	Geofoam (CY):	1452

LEGEND

- ITEM 203 - EMBANKMENT, AS PER PLAN
- ITEM 203 - ROADWAY MISC.: EPS GEOFOAM FILL
- ITEM 203 - EXCAVATION, AS PER PLAN

Sheet Totals		
Seeding	Cut	Fill
0	0	0
Embankment, APP	Excavation, APP	Geofoam
1313	2191	3101

CROSS SECTIONS
I.R. 90 WB

DESIGN AGENCY
B&N
burgessniple.com

DESIGNER
AJS

REVIEWER
MRT 05/01/24

PROJECT ID
82382

SHEET 766 | TOTAL 2696

CUY-90-16.28

MODEL: BL I.R. 90 WB - 185+00.00 [Sheet] PAPERSIZE: 34x22 (in.) DATE: 5/16/2025 TIME: 3:37:33 PM USER: sisson
pw:\\mb-us-pw.bentley.com:mb-us-pw-03\Documents\Cleveland.OH\OI_Projects\ODOT\District2\82382\400-Engineering\Roadway\Sheets\82382_XS2200.dgn

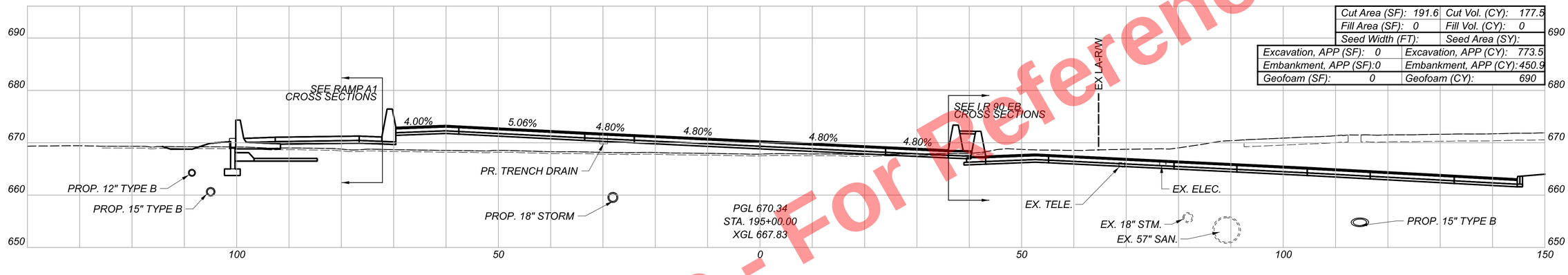

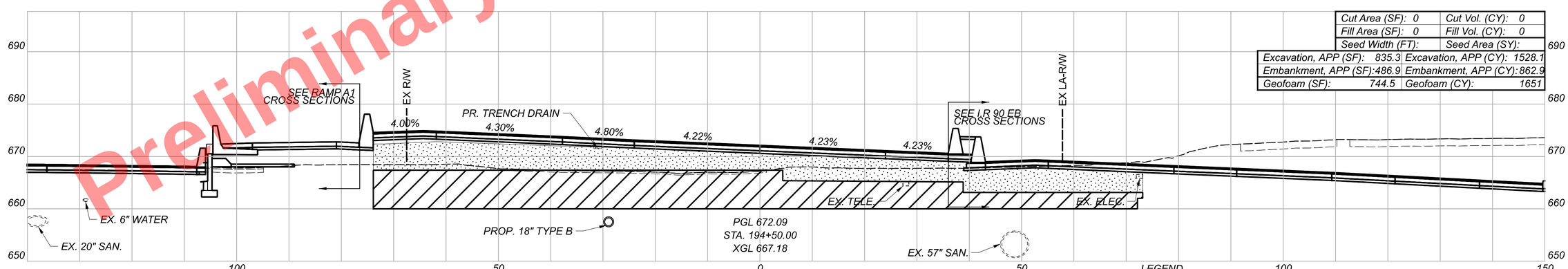

LEGEND

- ITEM 203 - EMBANKMENT, AS PER PLAN
- ITEM 203 - ROADWAY MISC.: EPS GEOFOAM FILL
- ITEM 203 - EXCAVATION, AS PER PLAN

Sheet Totals		
Seeding	Cut	Fill
0	178	0
Embankment, APP	Excavation, APP	Geofoam
1314	2302	2341

CROSS SECTIONS
I.R 90 WB

DESIGN AGENCY
B&N
burgessniple.com

DESIGNER
AJS

REVIEWER
MRT 05/01/24

PROJECT ID
82382

SHEET 767 | TOTAL 2696

CUY-90-16.28

MODEL: BL I.R. 90 WB - 185+50.00 [Sheet] PAPERSIZE: 34x22 (in) DATE: 5/16/2025 TIME: 3:37:44 PM USER: slsson
pw:\\mb-us-pw.bentley.com:mb-us-pw-03\Documents\Cleveland.OH\OI_Projects\ODOT\District2\8282\400-Engineering\Roadway\Sheets\8282_XS2200.dgn

Preliminary Plans - For Reference Only

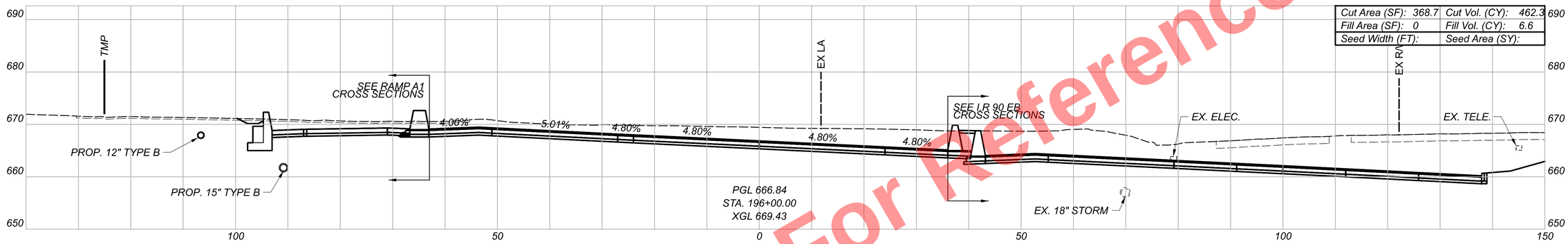

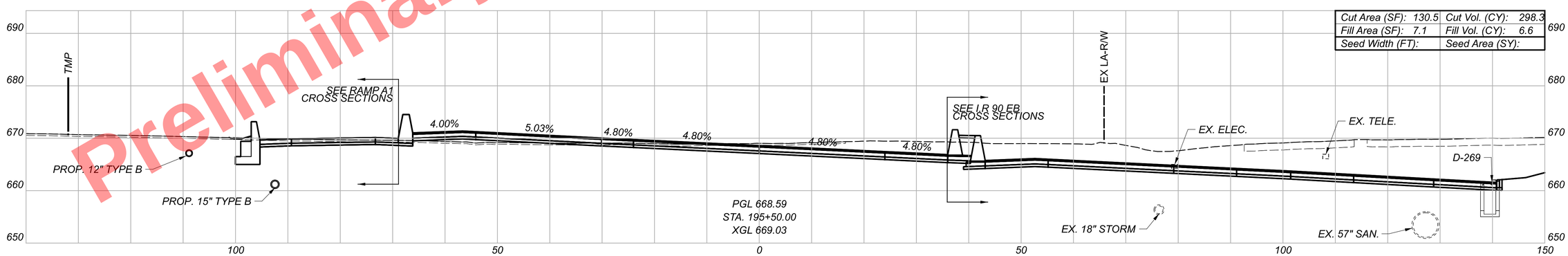

Preliminary Plans - For Reference Only

CUY-90-16.28

MODEL: BL I.R. 90 WB - I86+00.00 [Sheet] PAPERSIZE: 34x22 (in.) DATE: 5/16/2025 TIME: 3:37:55 PM USER: sisson
pw:\\mb-us-pw.bentley.com:mb-us-pw-03\Documents\Cleveland.OH\OI_Projects\ODOT\District2\82382\400-Engineering\Roadway\Sheets\82382_XS2200.dgn

CROSS SECTIONS
I.R. 90 WB

Sheet Totals		
Seeding	Cut	Fill
0	761	14

DESIGN AGENCY
B&N
burgessniple.com

DESIGNER
AJS

REVIEWER
MRT 05/01/24

PROJECT ID
82382

SHEET	TOTAL
768	2696

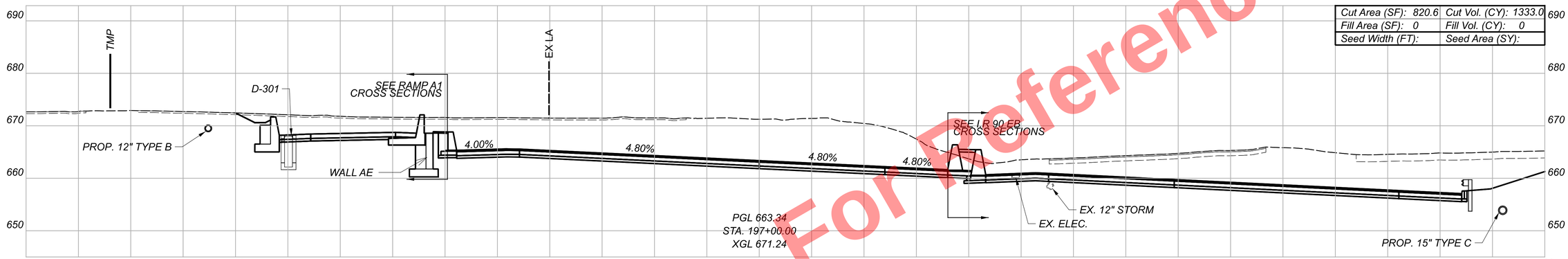

Cut Area (SF): 820.6	Cut Vol. (CY): 1333.0
Fill Area (SF): 0	Fill Vol. (CY): 0
Seed Width (FT):	Seed Area (SY):

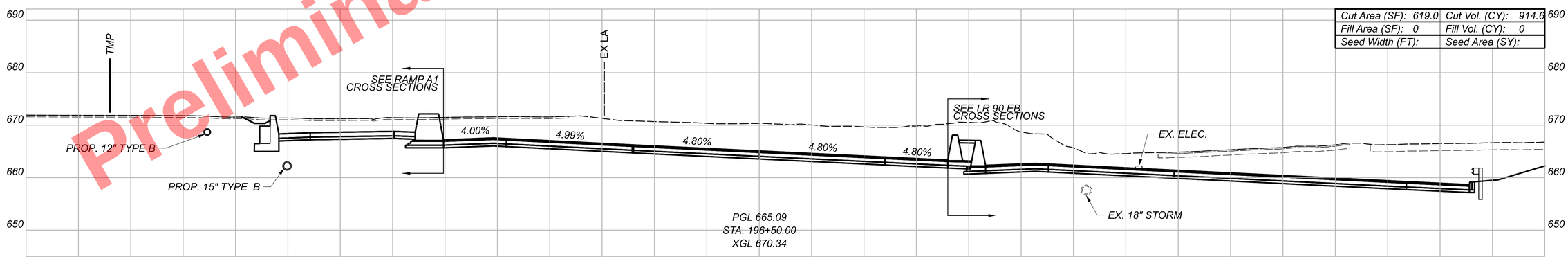

Cut Area (SF): 619.0	Cut Vol. (CY): 914.6
Fill Area (SF): 0	Fill Vol. (CY): 0
Seed Width (FT):	Seed Area (SY):

Sheet Totals		
Seeding	Cut	Fill
0	2248	0

Preliminary Plans - For Reference Only

CUY-90-16.28

MODEL: BL I.R. 90 WB - I86+50.00 (Sheet) PAPERSIZE: 34x22 (In.) DATE: 5/6/2025 TIME: 3:38:04 PM USER: sisson
pw:\\mb-us-pw.bentley.com:mb-us-pw-03\Documents\Cleveland_OH\OL_Projects\ODOT\District2\82382\400-Engineering\Roadway\Sheets\82382_XS2200.dgn

CROSS SECTIONS
I.R. 90 WB

DESIGN AGENCY
B&N
burgessniple.com

DESIGNER
AJS

REVIEWER
MRT 05/01/24

PROJECT ID
82382

SHEET	TOTAL
769	2696

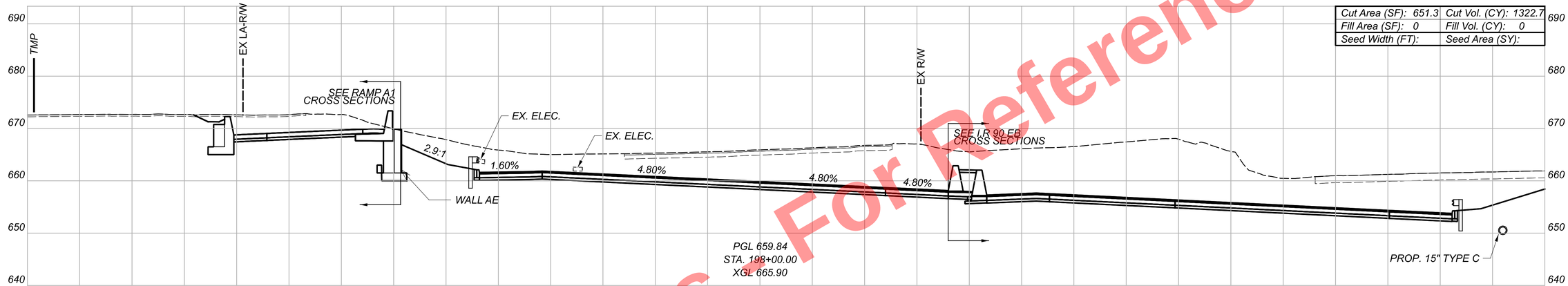

Cut Area (SF): 651.3	Cut Vol. (CY): 1322.7
Fill Area (SF): 0	Fill Vol. (CY): 0
Seed Width (FT):	Seed Area (SY):

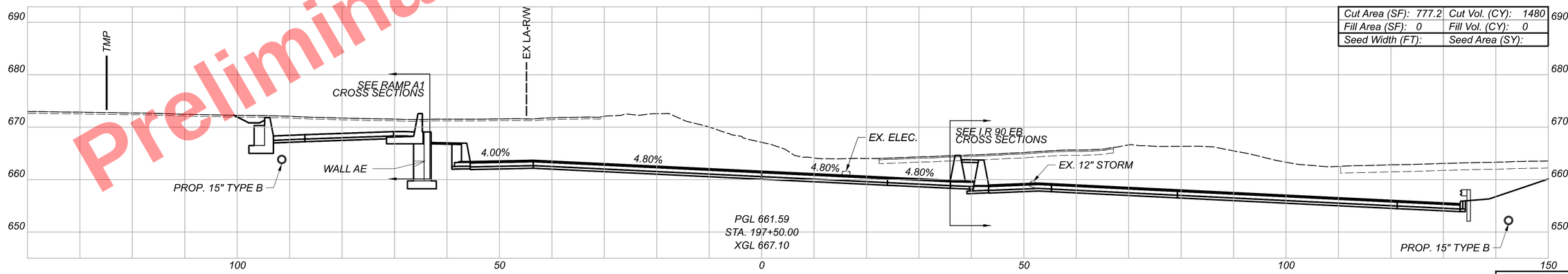

Cut Area (SF): 777.2	Cut Vol. (CY): 1480
Fill Area (SF): 0	Fill Vol. (CY): 0
Seed Width (FT):	Seed Area (SY):

Preliminary Plans - For Reference Only

CROSS SECTIONS
I.R. 90 WB

Sheet Totals		
Seeding	Cut	Fill
	2803	0

DESIGN AGENCY
B&N
burgessniple.com

DESIGNER
AJS

REVIEWER
MRT 05/01/24

PROJECT ID
82382

SHEET 770 | TOTAL 2696

CUY-90-16.28

MODEL: BL_IR_90_WB - I87+00.00 [Sheet] PAPERSIZE: 34x22 (in.) DATE: 5/16/2025 TIME: 3:38:13 PM USER: sisson
pw:\\mb-us-pw.bentley.com:mb-us-pw-03\Documents\Cleveland_OH\01_Projects\ODOT\District2\82382\400-Engineering\Roadway\Sheets\8282_XS2200.dgn

Preliminary Plans - For Reference Only

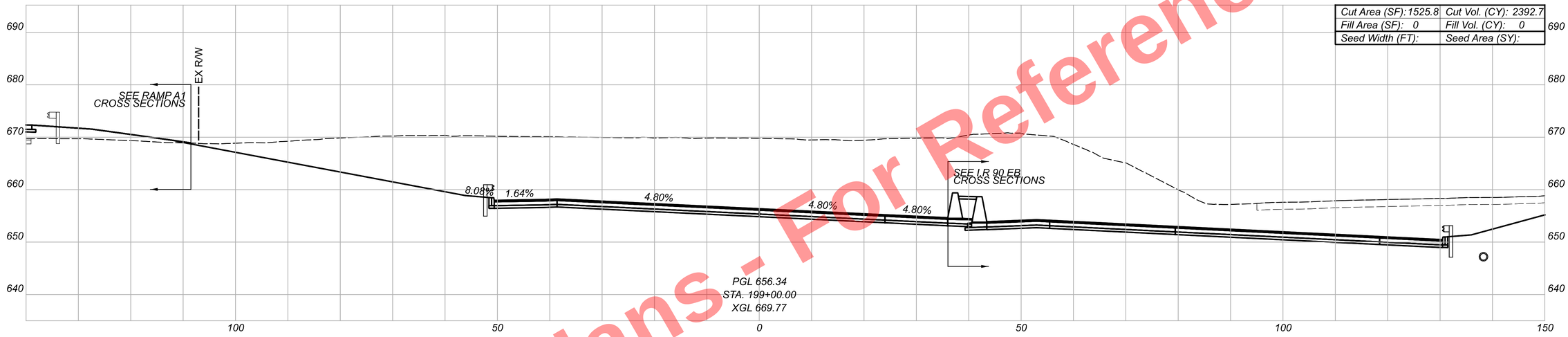

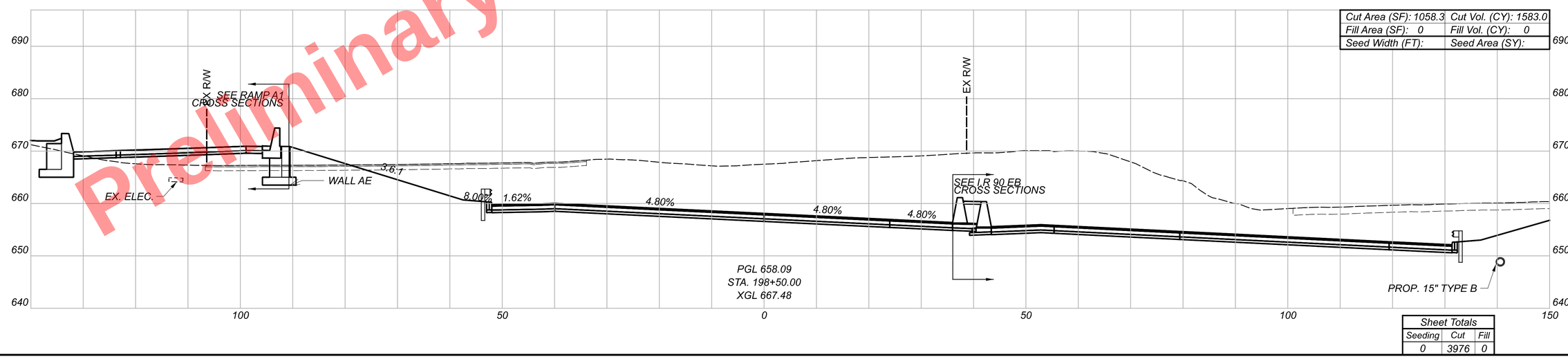

Sheet Totals		
Seeding	Cut	Fill
0	3976	0

CUY-90-16.28

MODEL: BL I.R. 90 WB - I87+41.88 [Sheet] PAPERSIZE: 34x22 (In.) DATE: 5/6/2025 TIME: 3:38:22 PM USER: sisson
pw:\\mb-us-pw.bentley.com:mb-us-pw-03\Documents\Cleveland.OH\OI_Projects\ODOT\District2\82382\400-Engineering\Roadway\Sheets\82382_XS2200.dgn

CROSS SECTIONS
I.R. 90 WB

DESIGN AGENCY
B&N
burgessniple.com

DESIGNER
AJS

REVIEWER
MRT 05/01/24

PROJECT ID
82382

SHEET	TOTAL
771	2696

For Reference Only
Preliminary Plans

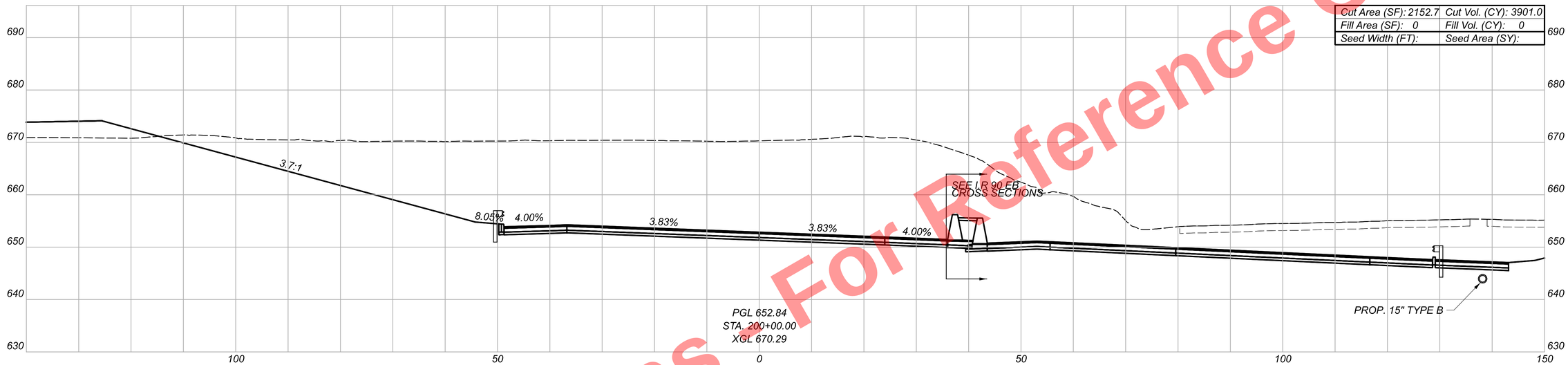

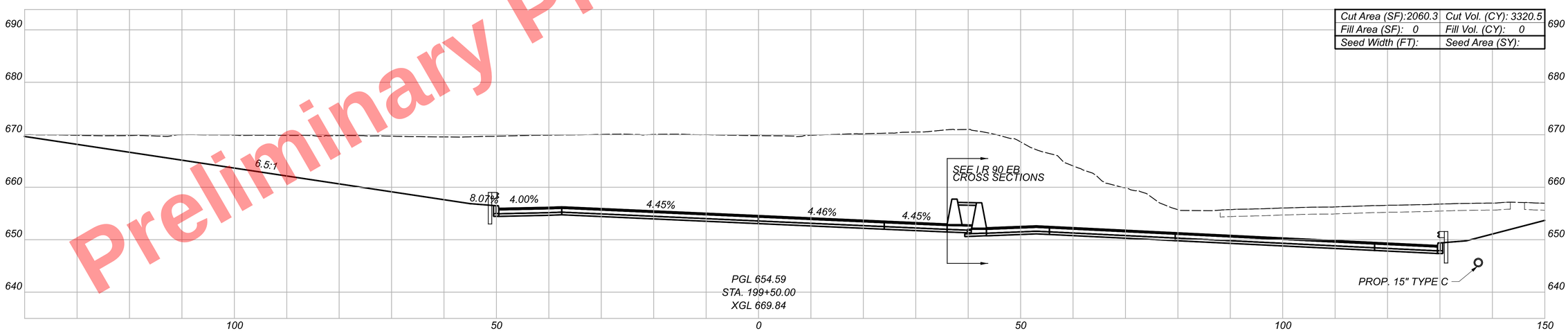

CROSS SECTIONS
I.R. 90 WB

DESIGN AGENCY
B&N
burgessniple.com

DESIGNER
AJS

REVIEWER
MRT 05/01/24

PROJECT ID
82382

SHEET 772 TOTAL 2696

Sheet Totals		
Seeding	Cut	Fill
0	7222	0

CUY-90-16.28

MODEL: BL I.R. 90 WB - 190+50.00 [Sheet] PAPERSIZE: 34x22 (in.) DATE: 5/16/2025 TIME: 3:38:31PM USER: slsson
pw:\\mb-us-pw.bentley.com:mb-us-pw-03\Documents\Cleveland.OH\OI_Projects\ODOT\District2\8238\400-Engineering\Roadway\Sheets\8238_XS2200.dgn

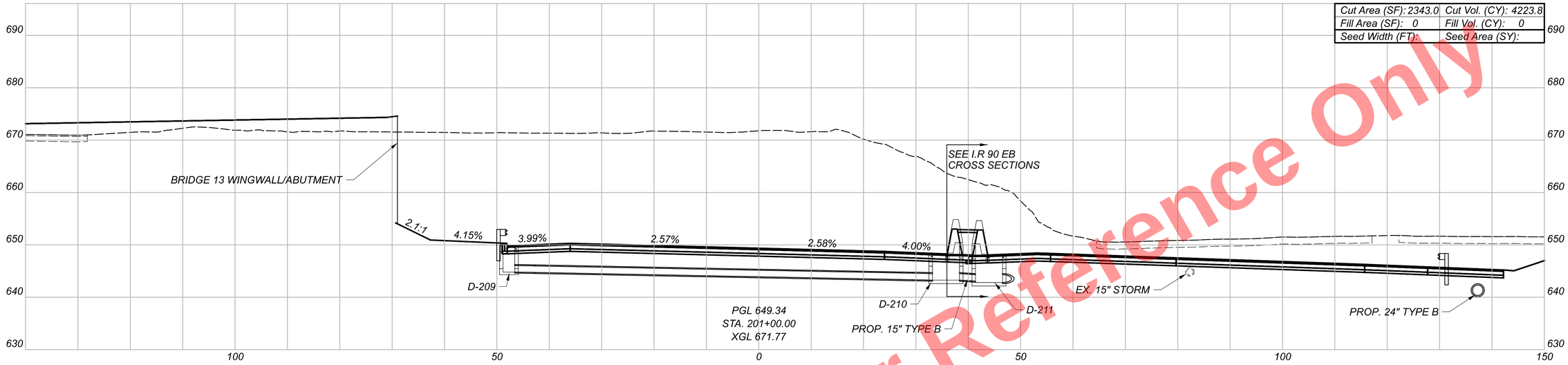

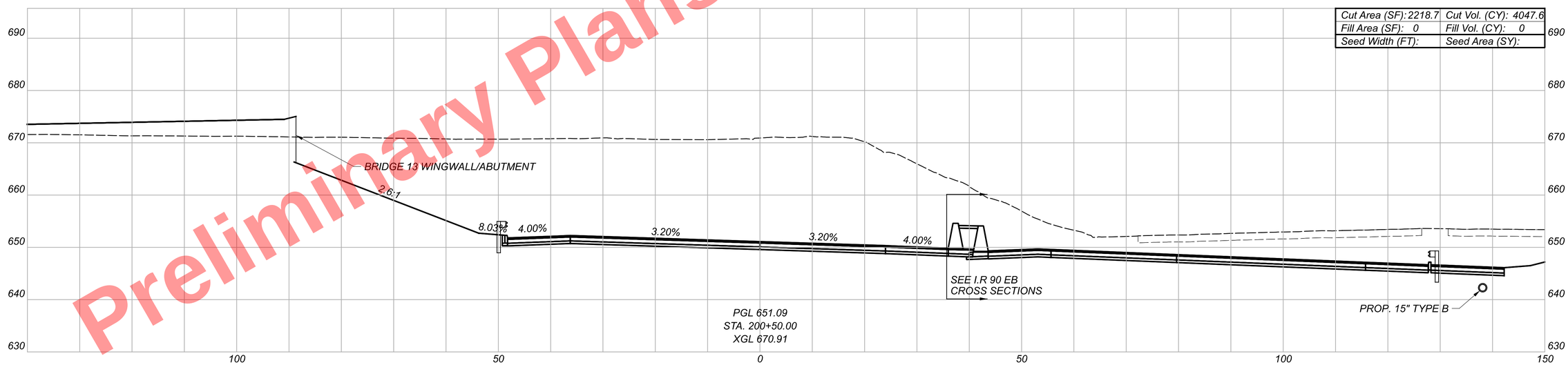

Preliminary Plans - For Reference Only

CUY-90-16.28

MODEL: BL I.R. 90 WB - I92+00.00 [Sheet] PAPERSIZE: 34x22 (in.) DATE: 5/16/2025 TIME: 3:38:41PM USER: slsson
pw:\\mb-us-pw.bentley.com:mb-us-pw-03\Documents\Cleveland.OH\OI_Projects\ODOT\District2\82382\400-Engineering\Roadway\Sheets\82382_XS2200.dgn

CROSS SECTIONS
I.R. 90 WB

Sheet Totals		
Seeding	Cut	Fill
	8272	0

DESIGN AGENCY
B&N
burgessniple.com

DESIGNER
AJS

REVIEWER
MRT 05/01/24

PROJECT ID
82382

SHEET	TOTAL
773	2696

Preliminary Plans - For Reference Only

MODEL: BL I.R. 90 WB - 193+50.00 [Sheet] PAPERSIZE: 34x22 (in.) DATE: 5/16/2025 TIME: 3:38:50 PM USER: slsson
pw:\\mb-us-pw.bentley.com:mb-us-pw-03\Documents\Cleveland_OH\01_Projects\0001\District2\82382\400-Engineering\Roadway\Sheets\82382_XS2200.dgn

CUY-90-16.28

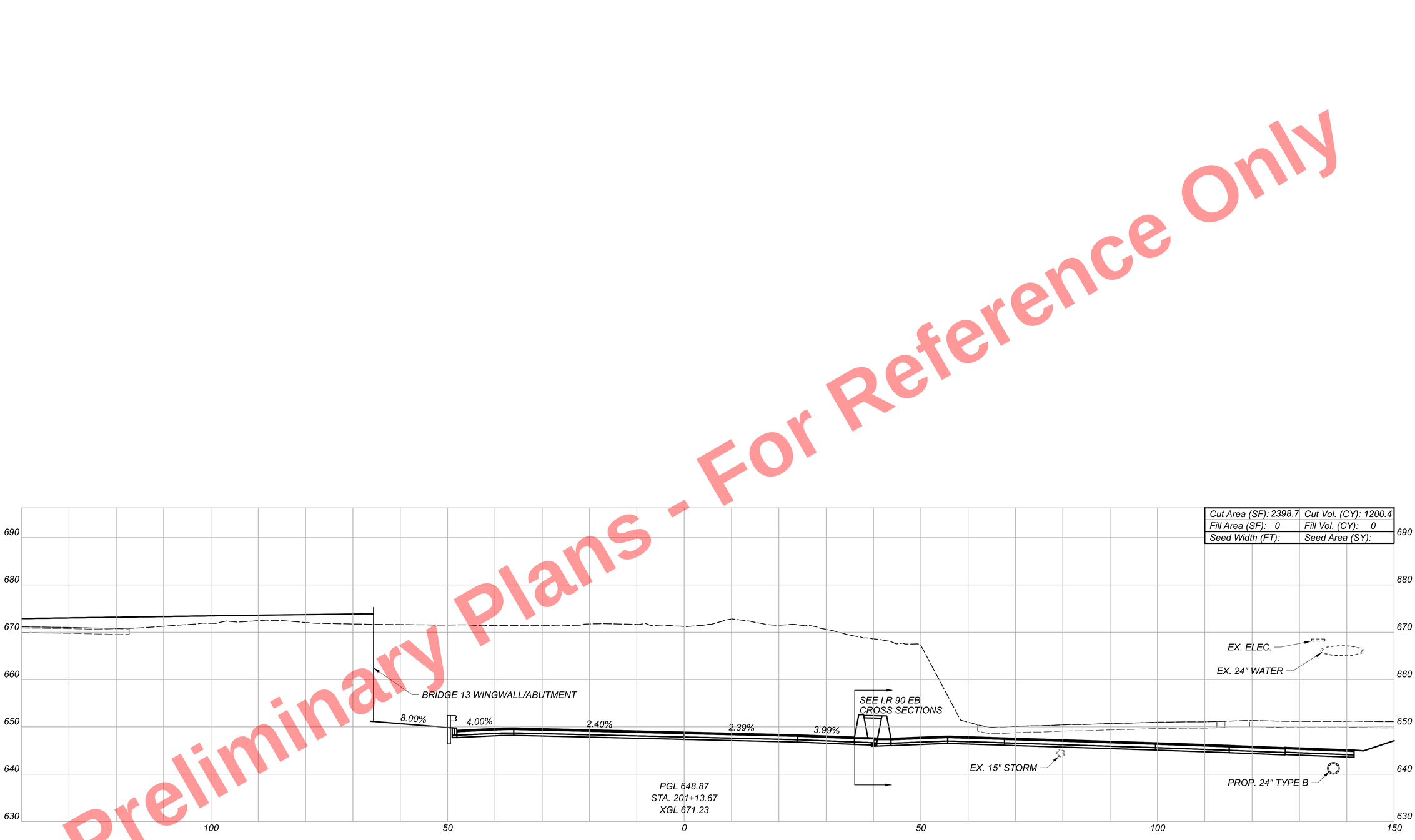

CROSS SECTIONS
I.R. 90 WB

DESIGN AGENCY
B&N
burgessniple.com

DESIGNER
AJS

REVIEWER
MRT 05/01/24

PROJECT ID
82382

SHEET 774 TOTAL 2696

Sheet Totals		
Seeding	Cut	Fill
0	1201	0

Grand Totals Carried to Subsummary		
Seeding	Cut	Fill
0	29143	4954
Embankment, APP	Excavation, APP	Geofoam
8204	11473	22458

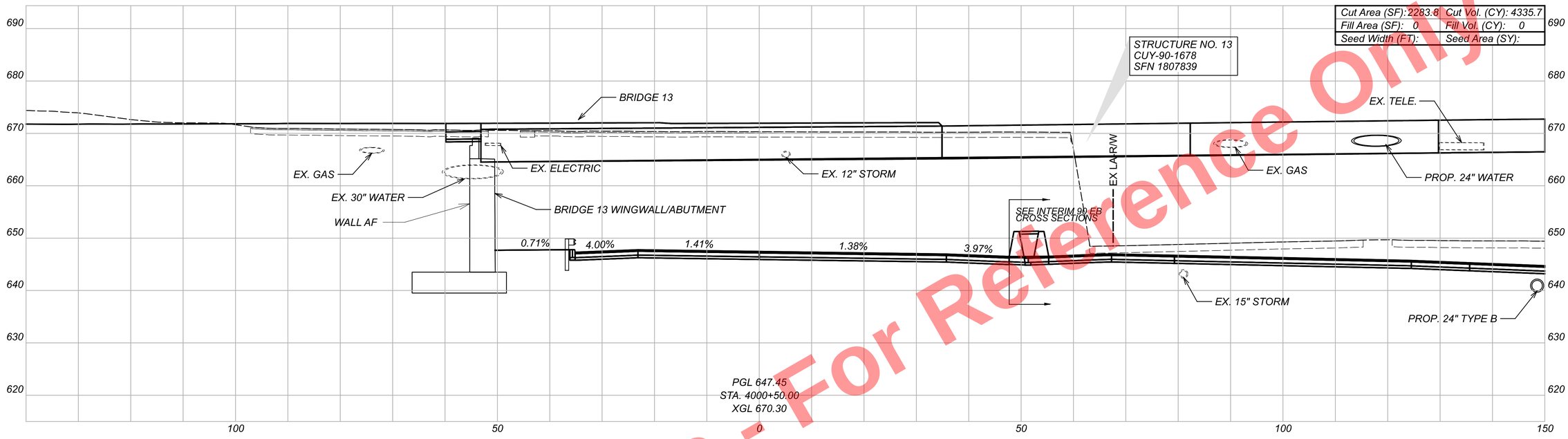

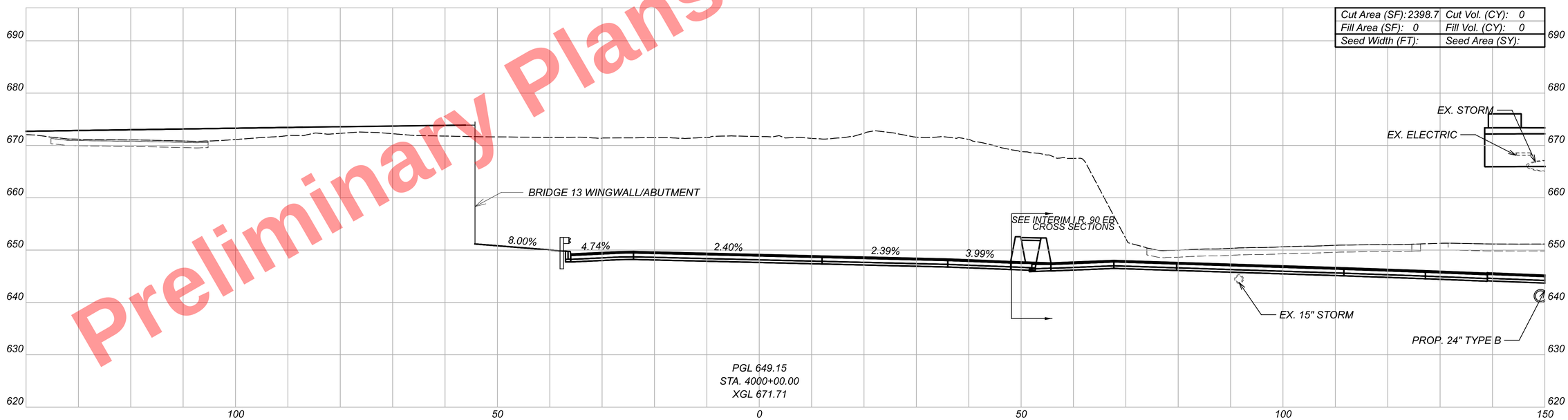

Preliminary Plans - For Reference Only

CROSS SECTIONS
INTERIM I.R. 90 WB

Sheet Totals		
Seeding	Cut	Fill
0	4336	0

DESIGN AGENCY
B&N
burgessniple.com

DESIGNER AJS
REVIEWER MRT 05/01/24
PROJECT ID 82382
SHEET 775 TOTAL 2696

CUY-90-16.28

MODEL: BL I.R. 90 WB TIE IN - 4000+00.00 [Sheet] PAPERSIZE: 34x22 (in) DATE: 5/16/2025 TIME: 11:08 PM USER: slsson
pw:\\mb-us-pw.bentley.com:mb-us-pw-03\Documents\Cleveland.OH\OI_Projects\ODOT\District2\82382\400-Engineering\Roadway\Sheets\82382_XS2400.dgn

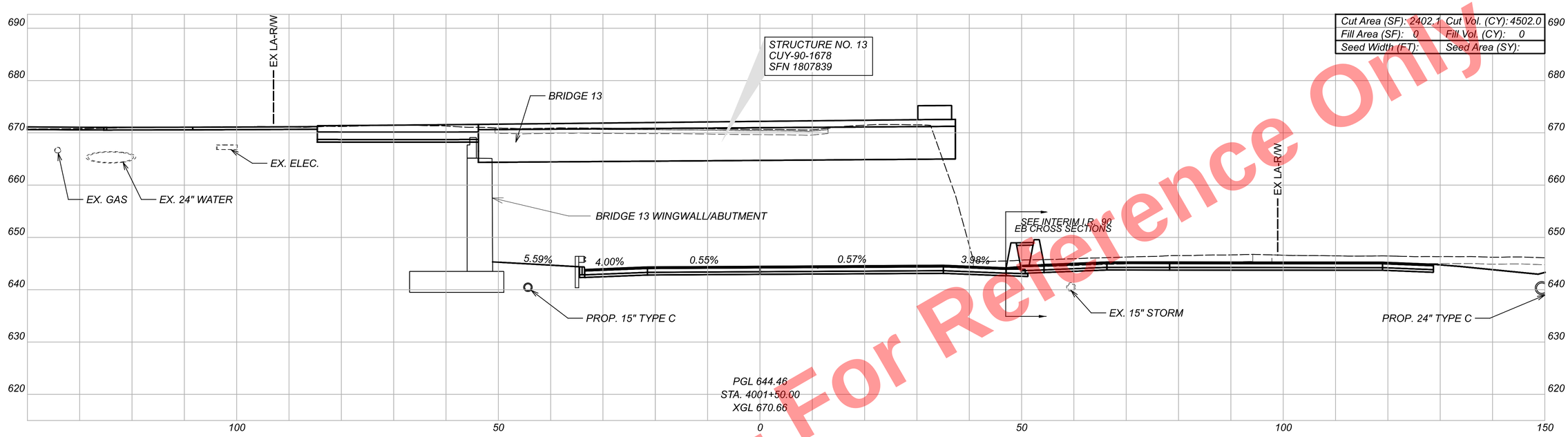

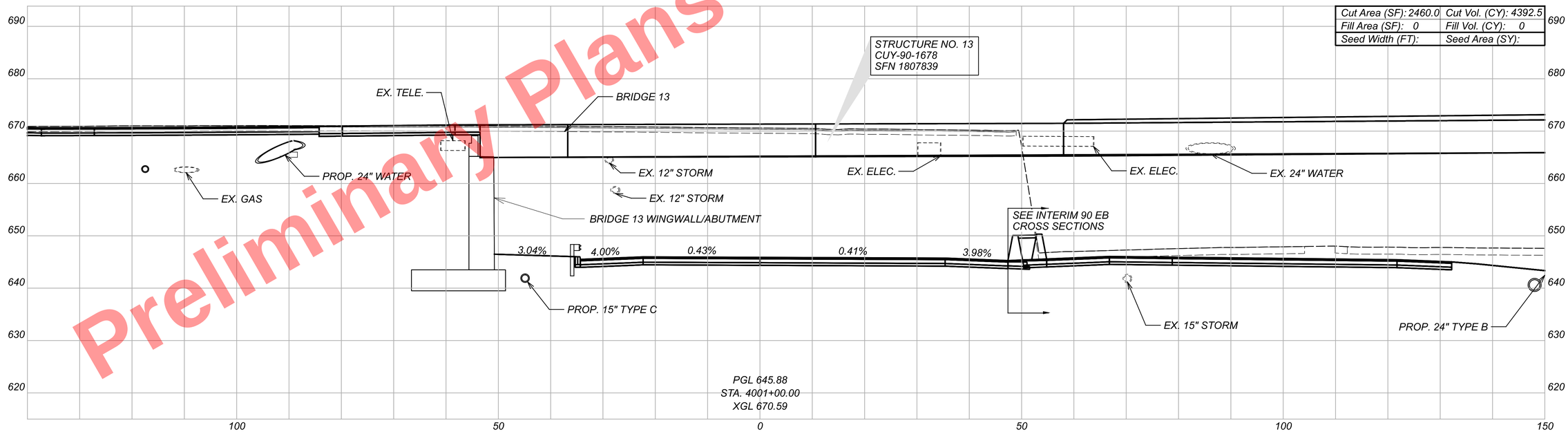

Preliminary Plans - For Reference Only

CUY-90-16.28

MODEL: BL I.R. 90 WB TIE IN - 4001+00.00 (Sheet) PAPERSIZE: 34x22 (In.) DATE: 5/16/2025 TIME: 11:19 PM USER: sisson
pw:\\mb-us-pw.bentley.com:mb-us-pw-03\Documents\Cleveland.OH\OI_Projects\ODOT\District2\82382\400-Engineering\Roadway\Sheets\82382_XS2400.dgn

CROSS SECTIONS
INTERIM I.R. 90 WB

Sheet Totals		
Seeding	Cut	Fill
0	8895	0

DESIGN AGENCY
B&N
burgessniple.com

DESIGNER
AJS

REVIEWER
MRT 05/01/24

PROJECT ID
82382

SHEET 776 TOTAL 2696

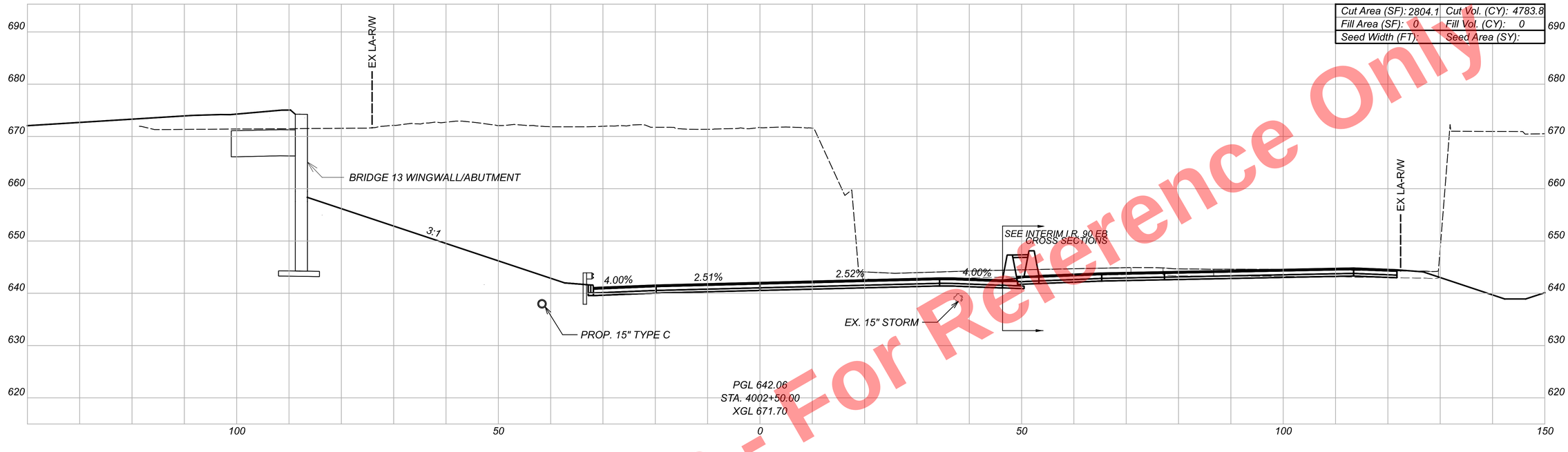

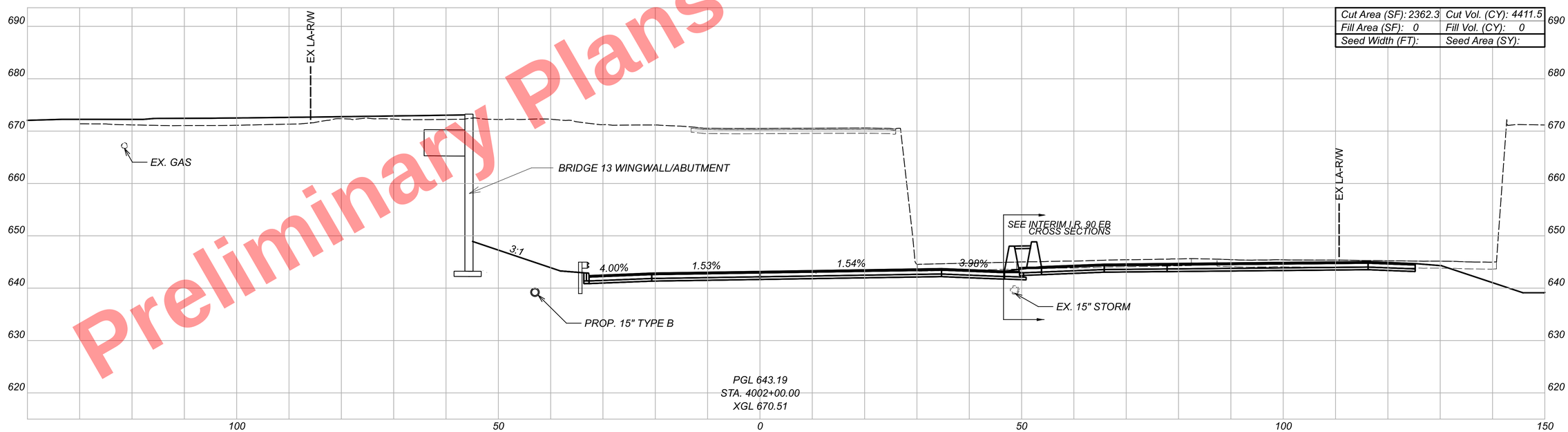

Preliminary Plans - For Reference Only

CROSS SECTIONS
INTERIM I.R. 90 WB

CUY-90-16.28

MODEL: BL I.R. 90 WB TIE IN - 4002+00.00 [Sheet] PAPERSIZE: 34x22 (In.) DATE: 5/6/2025 TIME: 01:23:31PM USER: sisson
pw:\\mb-us-pw.bentley.com:mb-us-pw-03\Documents\Cleveland_OH\01_Projects\0007\District2\82382\400-Engineering\Roadway\Sheets\82382_XS2400.dgn

DESIGN AGENCY
B&N
burgessniple.com

DESIGNER
AJS

REVIEWER
MRT 05/01/24

PROJECT ID
82382

Sheet Totals		
Seeding	Cut	Fill
0	9196	0

SHEET 777 TOTAL 2696

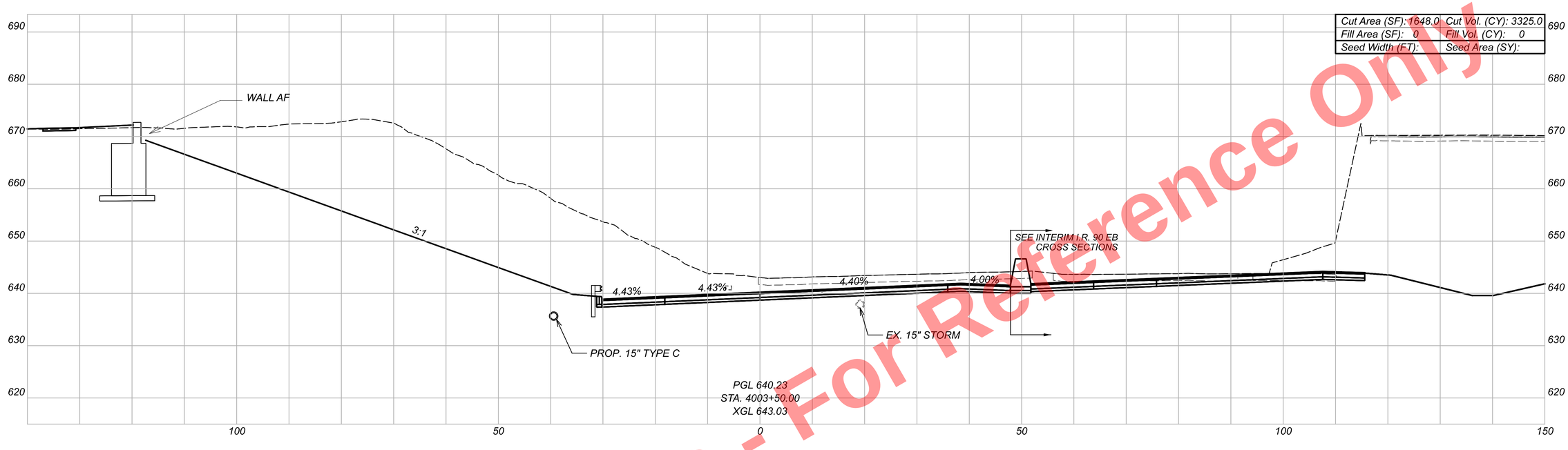

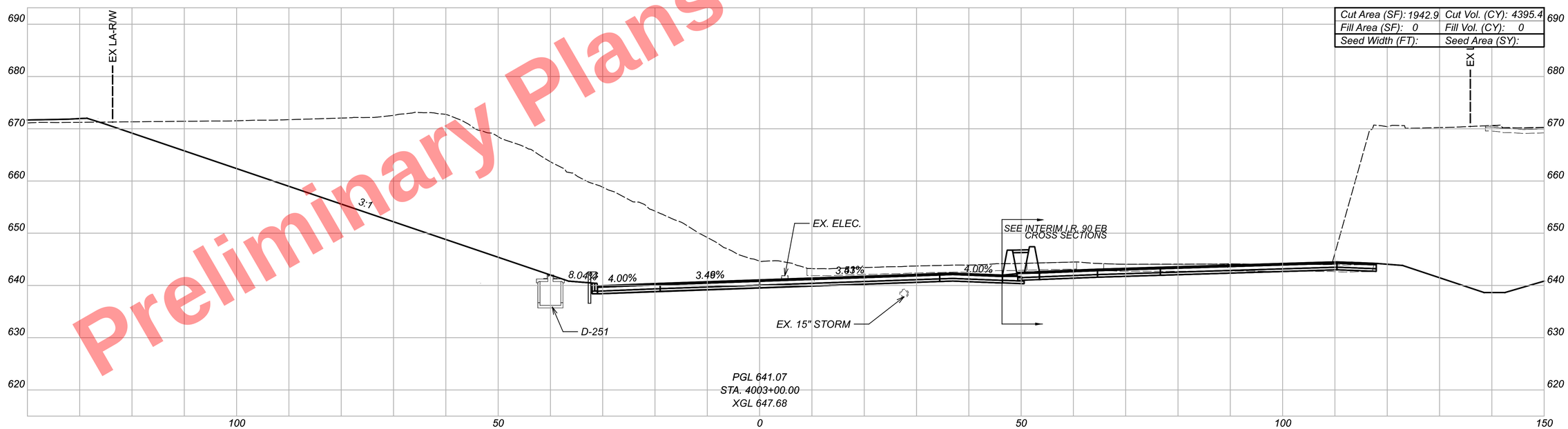

Preliminary Plans - For Reference Only

CUY-90-16.28

MODEL: BL I.R. 90 WB TIE IN - 4003+00.00 [Sheet] PAPERSIZE: 34x22 (In.) DATE: 5/6/2025 TIME: 01:17:41 PM USER: sisson
pw:\\mb-us-pw.bentley.com:mb-us-pw-03\Documents\Cleveland_OH\01_Projects\000T\District2\82382\400-Engineering\Roadway\Sheets\82382_XS2400.dgn

CROSS SECTIONS
INTERIM I.R. 90 WB

Sheet Totals		
Seeding	Cut	Fill
0	7721	0

DESIGN AGENCY
B&N
burgessniple.com

DESIGNER
AJS

REVIEWER
MRT 05/01/24

PROJECT ID
82382

SHEET 778 TOTAL 2696

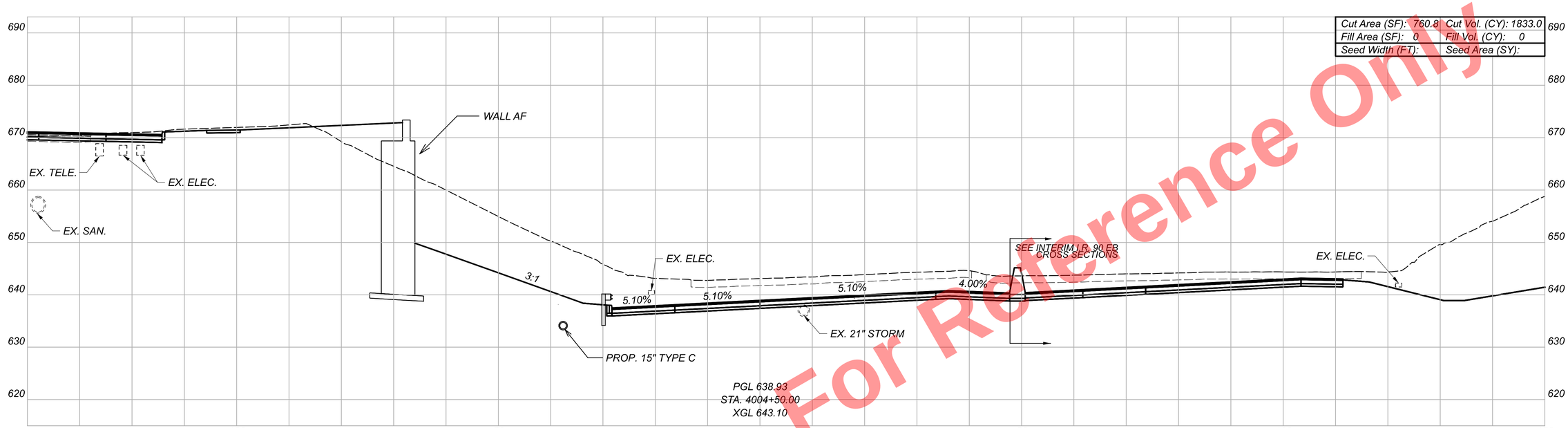

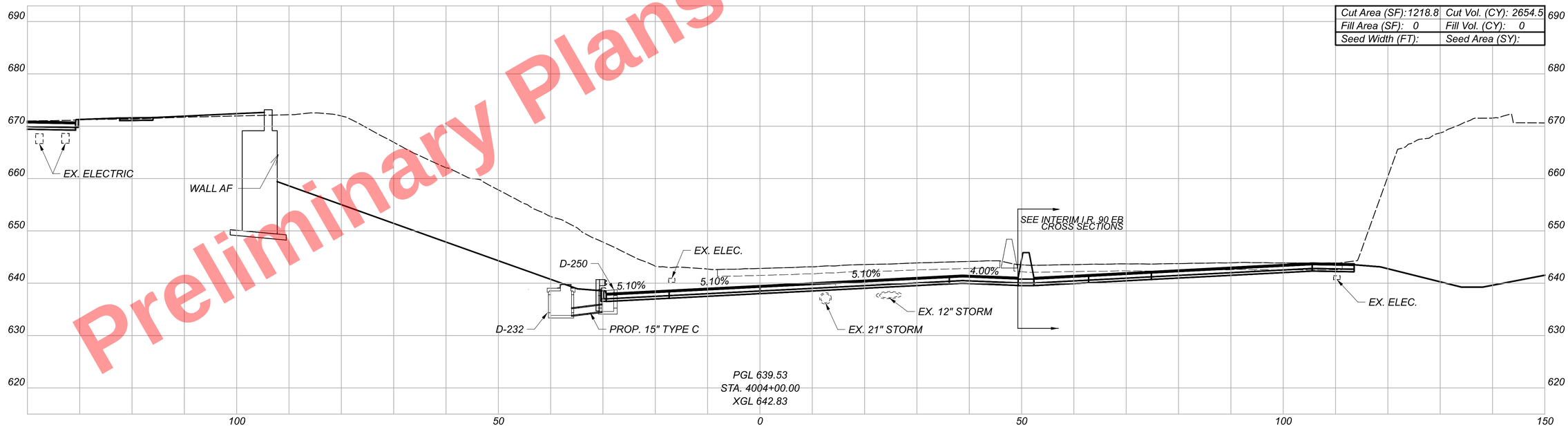

Preliminary Plans - For Reference Only

CROSS SECTIONS
INTERIM I.R. 90 WB

CUY-90-16.28

MODEL: BL I.R. 90 WB TIE IN - 4004+00.00 [Sheet] PAPERSIZE: 34x22 (in.) DATE: 5/16/2025 TIME: 1:17:52 PM USER: sisson
pw:\\mb-us-pw.bentley.com:mb-us-pw-03\Documents\Cleveland_OH\OI_Projects\ODOT\District12\82382\400-Engineering\Roadway\Sheets\82382_XS2400.dgn

Sheet Totals		
Seeding	Cut	Fill
0	4488	0

DESIGN AGENCY
B&N
burgessniple.com

DESIGNER
AJS

REVIEWER
MRT 05/01/24

PROJECT ID
82382

SHEET 779 TOTAL 2696

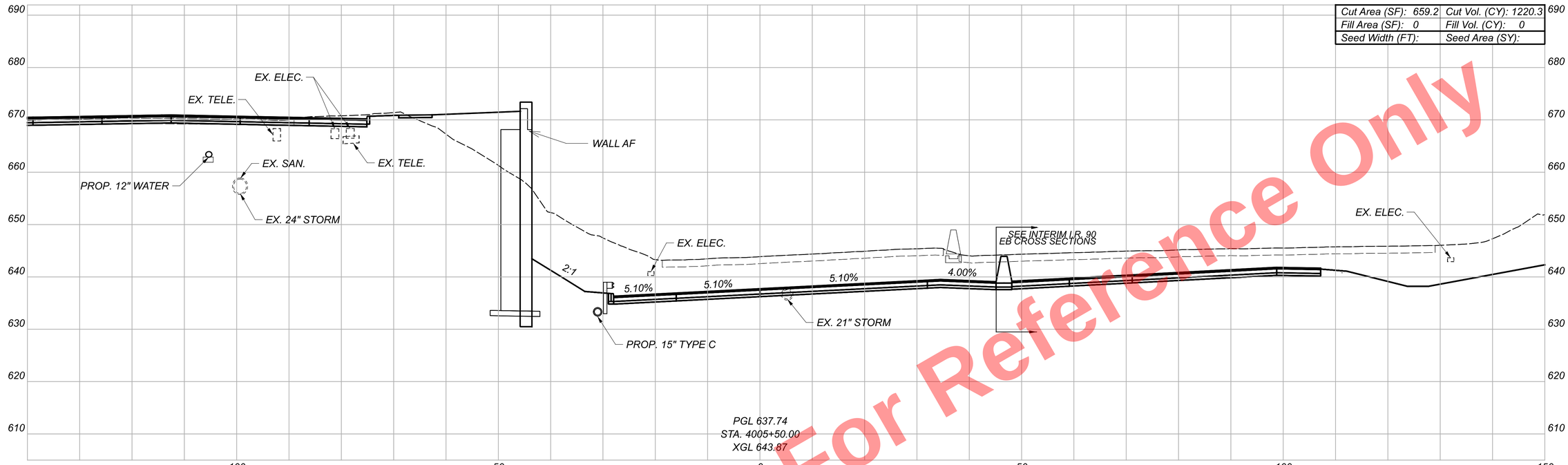

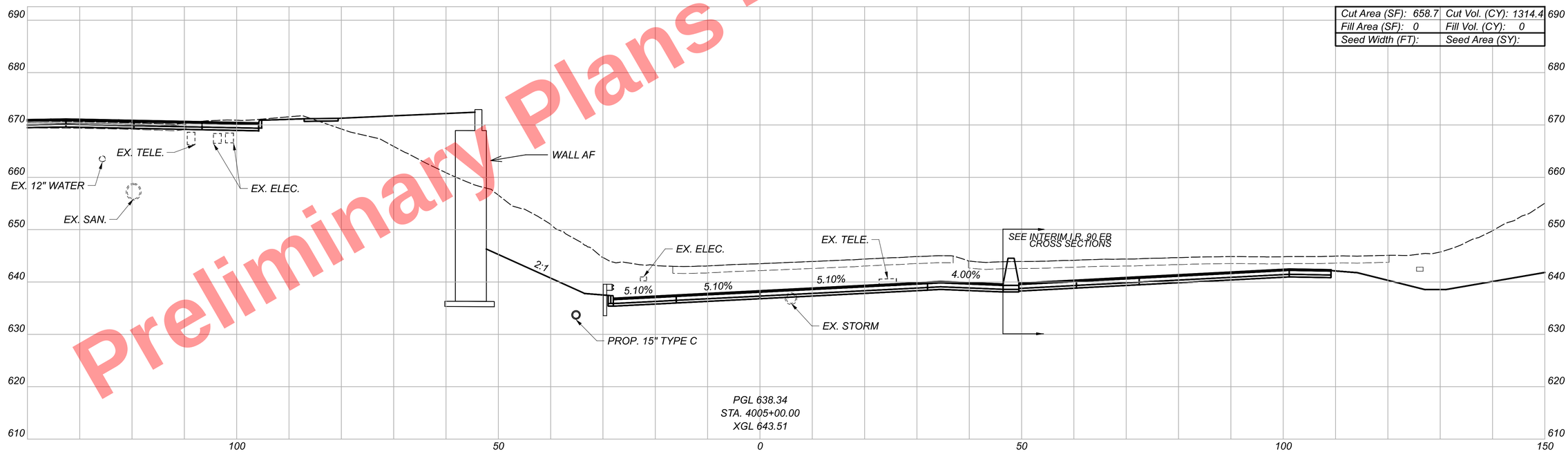

Preliminary Plans - For Reference Only

CUY-90-16.28

MODEL: BL I.R. 90 WB TIE IN - 4005+00.00 [Sheet] PAPERSIZE: 34x22 (in.) DATE: 5/6/2025 TIME: 8:03 PM USER: sisson
pw:\\mb-us-pw.bentley.com:mb-us-pw-03\Documents\Cleveland_OH\OI_Projects\0007\District2\82382\400-Engineering\Roadway\Sheets\82382_XS2400.dgn

CROSS SECTIONS
INTERIM I.R. 90 WB

DESIGN AGENCY
B&N
burgessniple.com

DESIGNER
AJS

REVIEWER
MRT 05/01/24

PROJECT ID
82382

Sheet Totals		
Seeding	Cut	Fill
0	2535	0

SHEET	TOTAL
780	2696

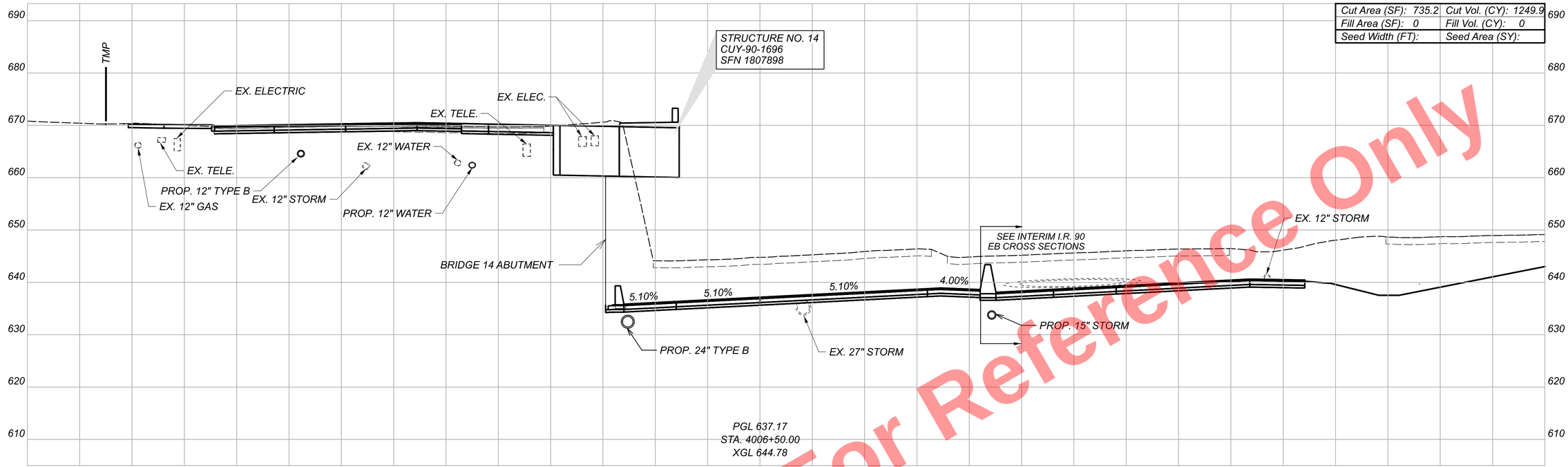

Cut Area (SF): 735.2	Cut Vol. (CY): 1249.9
Fill Area (SF): 0	Fill Vol. (CY): 0
Seed Width (FT):	Seed Area (SY):

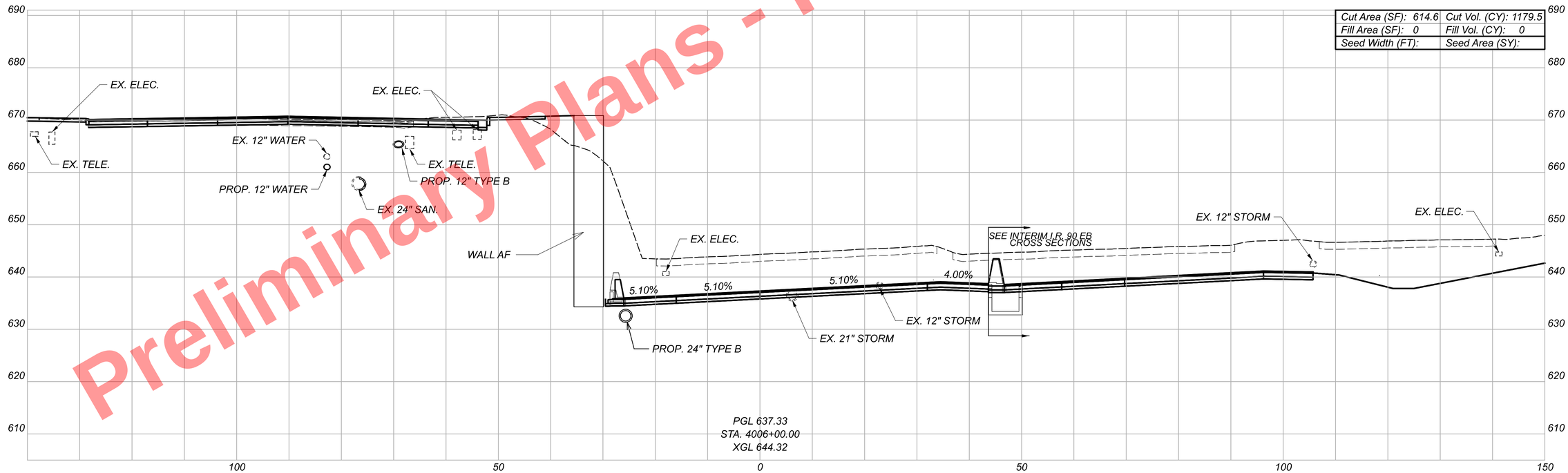

Cut Area (SF): 614.6	Cut Vol. (CY): 1179.5
Fill Area (SF): 0	Fill Vol. (CY): 0
Seed Width (FT):	Seed Area (SY):

Preliminary Plans - For Reference Only

CUY-90-16.28

MODEL: BL I.R. 90 WB TIE IN - 4006+00.00 [Sheet] PAPERSIZE: 34x22 (in.) DATE: 5/6/2025 TIME: 1:31:14 PM USER: slisson
pw:\\mb-us-pw.bentley.com:mb-us-pw-03\Documents\Cleveland.OH\DgnProjects\0007\District2\82382\400-Engineering\Roadway\Sheets\82382_XS2400.dgn

CROSS SECTIONS
INTERIM I.R. 90 WB

Sheet Totals		
Seeding	Cut	Fill
0	2430	0

DESIGN AGENCY
B&N
burgessniple.com

DESIGNER
AJS

REVIEWER
MRT 05/01/24

PROJECT ID
82382

SHEET	TOTAL
781	2696

Cut Area (SF): 820.1	Cut Vol. (CY): 1452.1
Fill Area (SF): 0	Fill Vol. (CY): 0
Seed Width (FT):	Seed Area (SY):

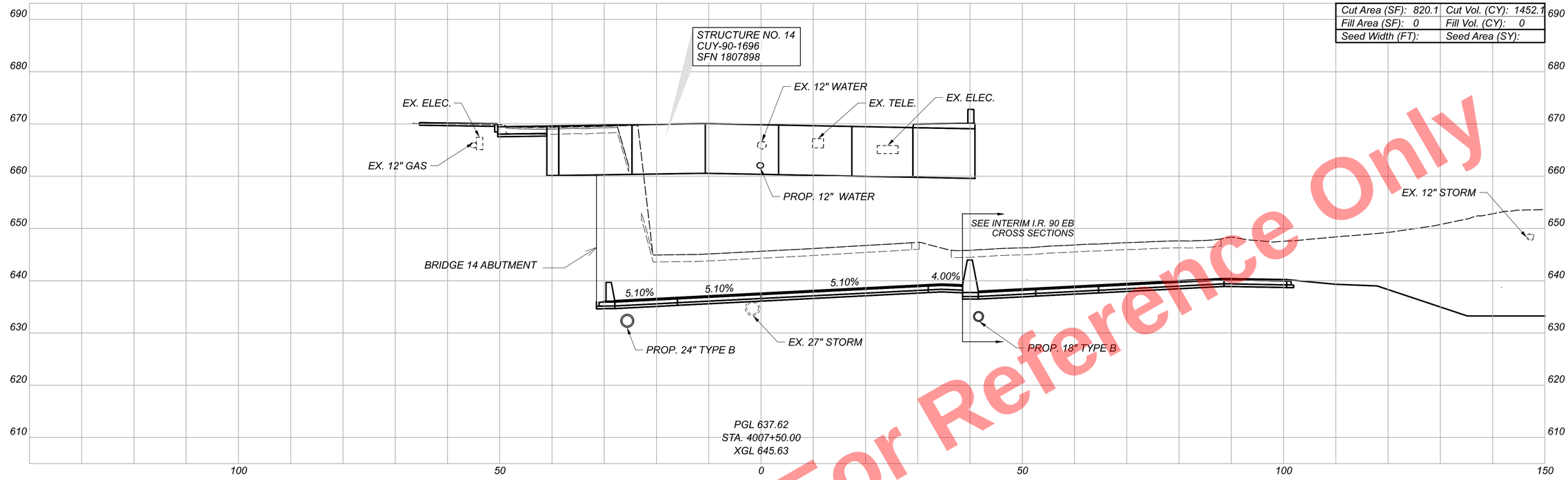

Cut Area (SF): 748.1	Cut Vol. (CY): 1373.5
Fill Area (SF): 0	Fill Vol. (CY): 0
Seed Width (FT):	Seed Area (SY):

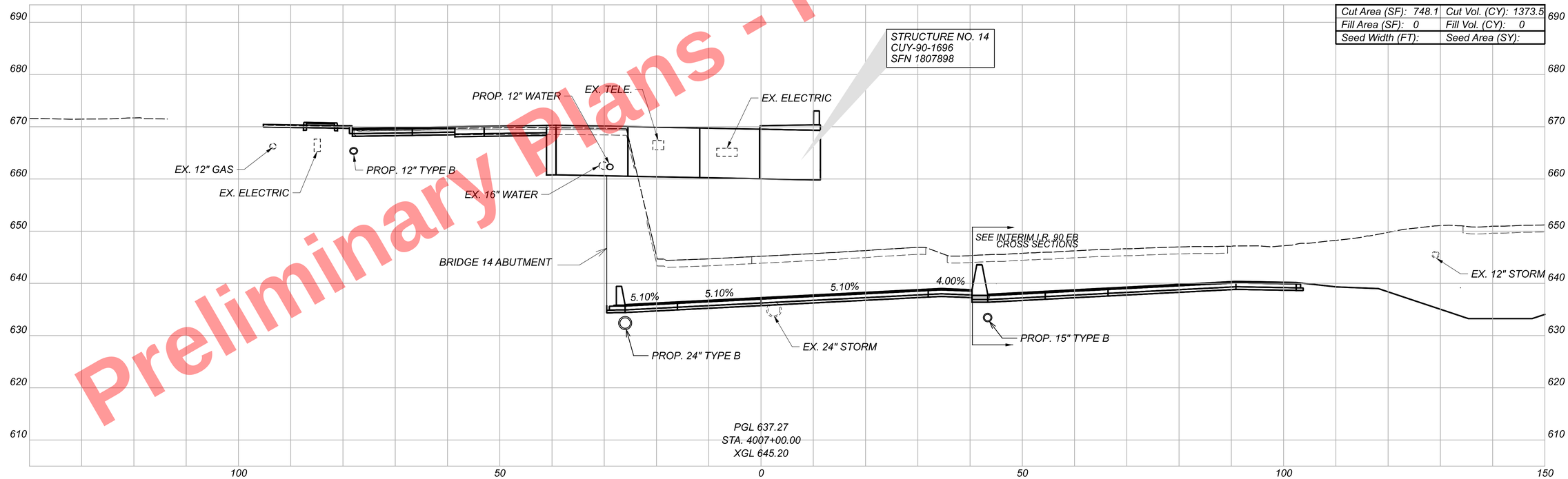

Preliminary Plans - For Reference Only

CROSS SECTIONS
INTERIM I.R. 90 WB

CUY-90-16.28

MODEL: BL I.R. 90 WB TIE IN - 4007+00.00 [Sheet] PAPERSIZE: 34x22 (In.) DATE: 5/6/2025 TIME: 08:26 PM USER: sisson
pw:\\mb-us-pw.bentley.com:mb-us-pw-03\Documents\Cleveland_OH\OL_Projects\0007\District2\82382\400-Engineering\Roadway\Sheets\82382_XS2400.dgn

Sheet Totals		
Seeding	Cut	Fill
0	2826	0

DESIGN AGENCY
B&N
burgessniple.com

DESIGNER
AJS

REVIEWER
MRT 05/01/24

PROJECT ID
82382

SHEET 782 TOTAL 2696

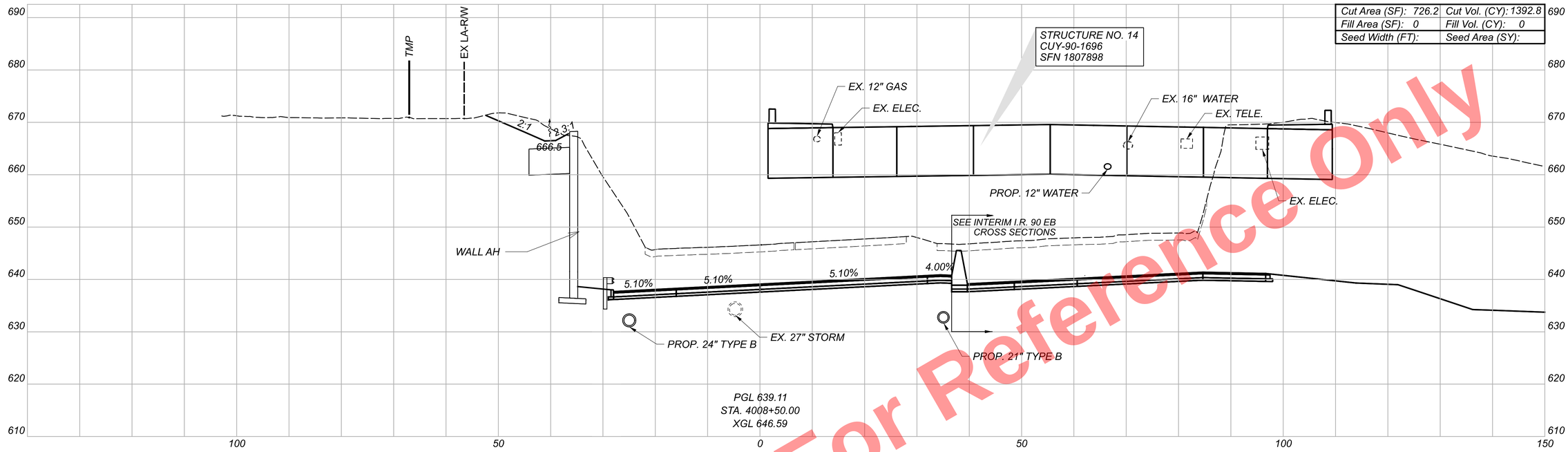

Preliminary Plans - For Reference Only

CROSS SECTIONS
INTERIM I.R. 90 WB

Sheet Totals		
Seeding	Cut	Fill
0	2873	0

DESIGN AGENCY
B&N
burgessniple.com

DESIGNER
AJS

REVIEWER
MRT 05/01/24

PROJECT ID
82382

SHEET 783 TOTAL 2696

CUY-90-16.28

MODEL: BL I.R. 90 WB TIE IN - 4008+00.00 [Sheet] PAPERSIZE: 34x22 (In.) DATE: 5/6/2025 TIME: 10:37 PM USER: sisson
pw:\\mb-us-pw.bentley.com:mb-us-pw-03\Documents\Cleveland_OH\01_Projects\0007\District2\82382\400-Engineering\Roadway\Sheets\82382_XS2400.dgn

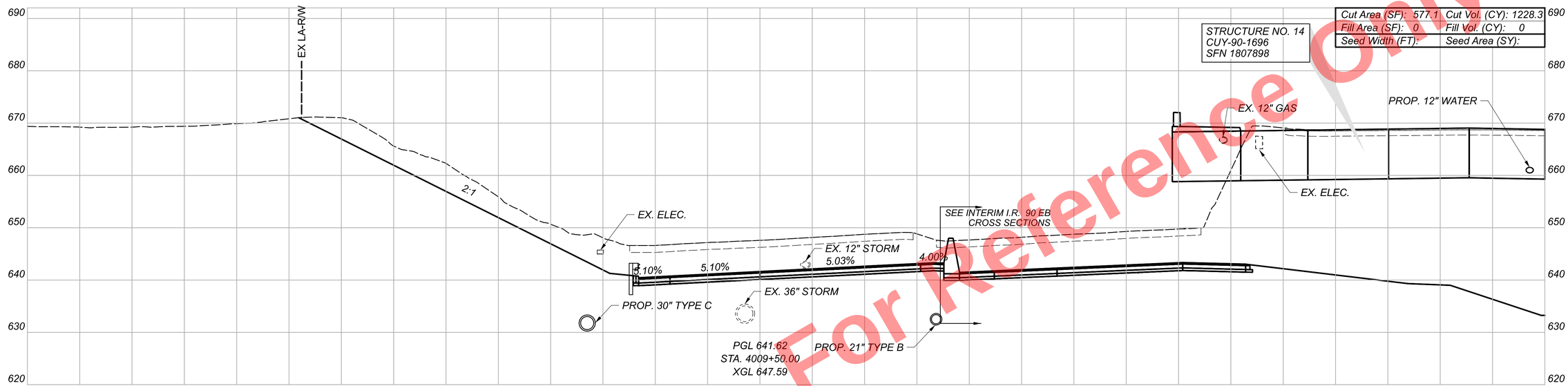

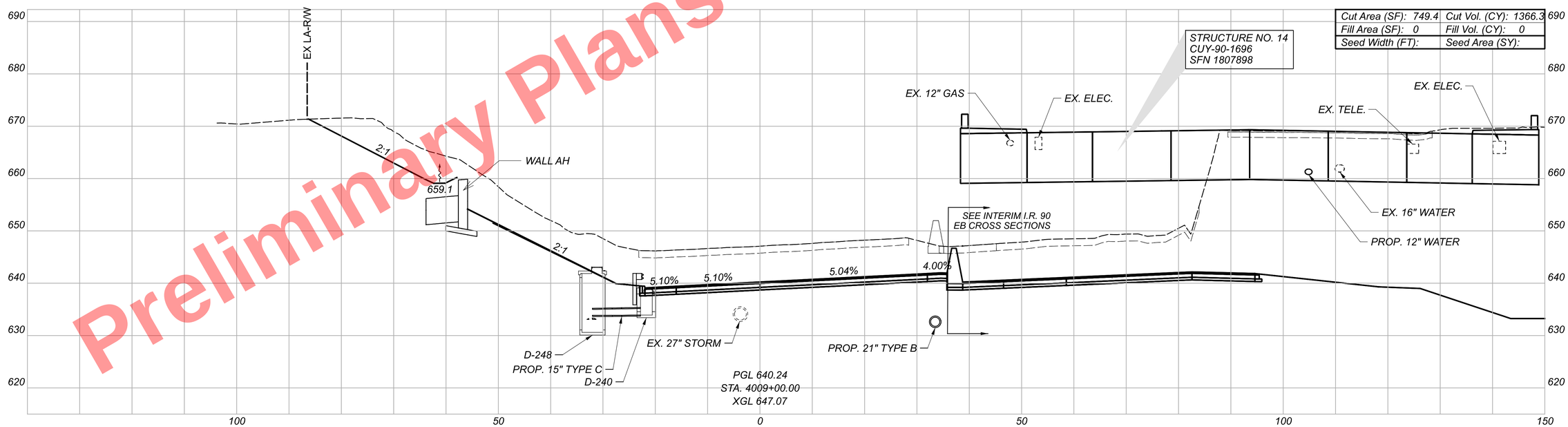

Preliminary Plans - Not For Reference Only

CROSS SECTIONS
INTERIM I.R. 90 WB

CUY-90-16.28

MODEL: BL I.R. 90 WB TIE IN - 4009+00.00 [Sheet] PAPERSIZE: 34x22 (in) DATE: 5/6/2025 TIME: 11:49:49 PM USER: slsson
pw:\\vmb-us-pw.bentley.com:vmb-us-pw-03\Documents\Cleveland_OH\01_Projects\ODOT\District2\82382\400-Engineering\Roadway\Sheets\82382_XS2400.dgn

Sheet Totals		
Seeding	Cut	Fill
0	2595	0

DESIGN AGENCY
B&N
burgessniple.com

DESIGNER
AJS

REVIEWER
MRT 05/01/24

PROJECT ID
82382

SHEET 784 TOTAL 2696

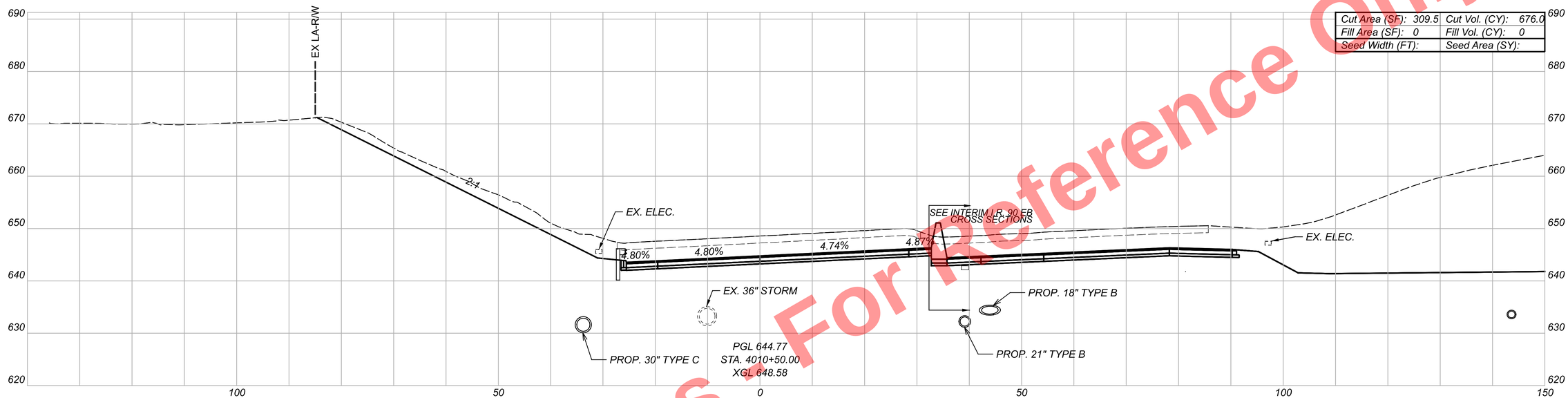

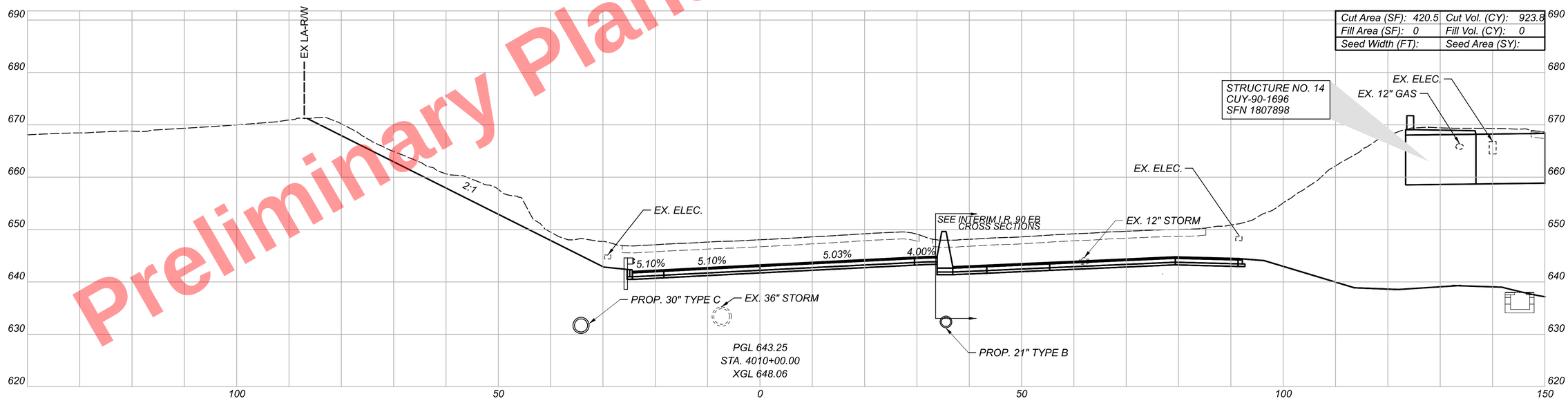

Preliminary Plans - For Reference Only

CUY-90-16.28

MODEL: BL I.R. 90 WB TIE IN - 4010+00.00 [Sheet] PAPERSIZE: 34x22 (in.) DATE: 5/16/2025 TIME: 9:00 PM USER: slsson
pw:\\mb-us-pw.bentley.com:mb-us-pw-03\Documents\Cleveland_OH\01_Projects\0D0T\District2\82382400-Engineering\Roadway\Sheets\82382_XS2400.dgn

CROSS SECTIONS
INTERIM I.R. 90 WB

Sheet Totals		
Seeding	Cut	Fill
0	1600	0

DESIGN AGENCY
B&N
burgessniple.com

DESIGNER
AJS

REVIEWER
MRT 05/01/24

PROJECT ID
82382

SHEET 785 TOTAL 2696

Preliminary Plans - For Reference Only

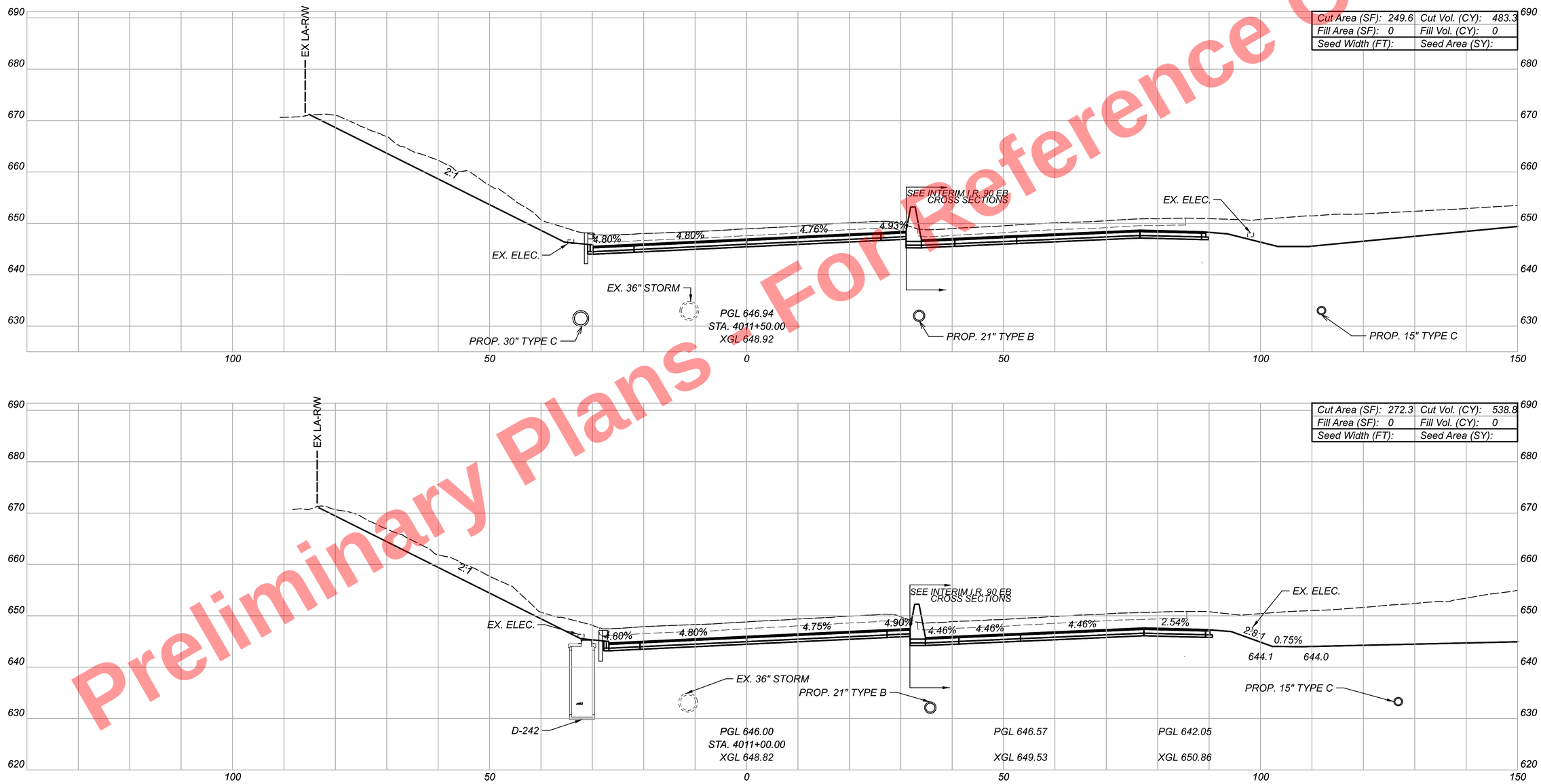

CROSS SECTIONS
INTERIM I.R. 90 WB

CUY-90-16.28

MODEL: BL I.R. 90 WB TIE IN - 4011+00.00 (Sheet) PAPERSIZE: 34x22 (in.) DATE: 5/6/2025 TIME: 1:19:1 PM USER: sisson
pw:\\mb-us-pw.bentley.com:mb-us-pw-03\Documents\Cleveland.OH\DgnProjects\OOOT\District2\82382\400-Engineering\Roadway\Sheets\82382_XS2400.dgn

Sheet Totals		
Seeding	Cut	Fill
0	1023	0

DESIGN AGENCY
B&N
burgessniple.com

DESIGNER
AJS

REVIEWER
MRT 05/01/24

PROJECT ID
82382

SHEET 786 TOTAL 2696

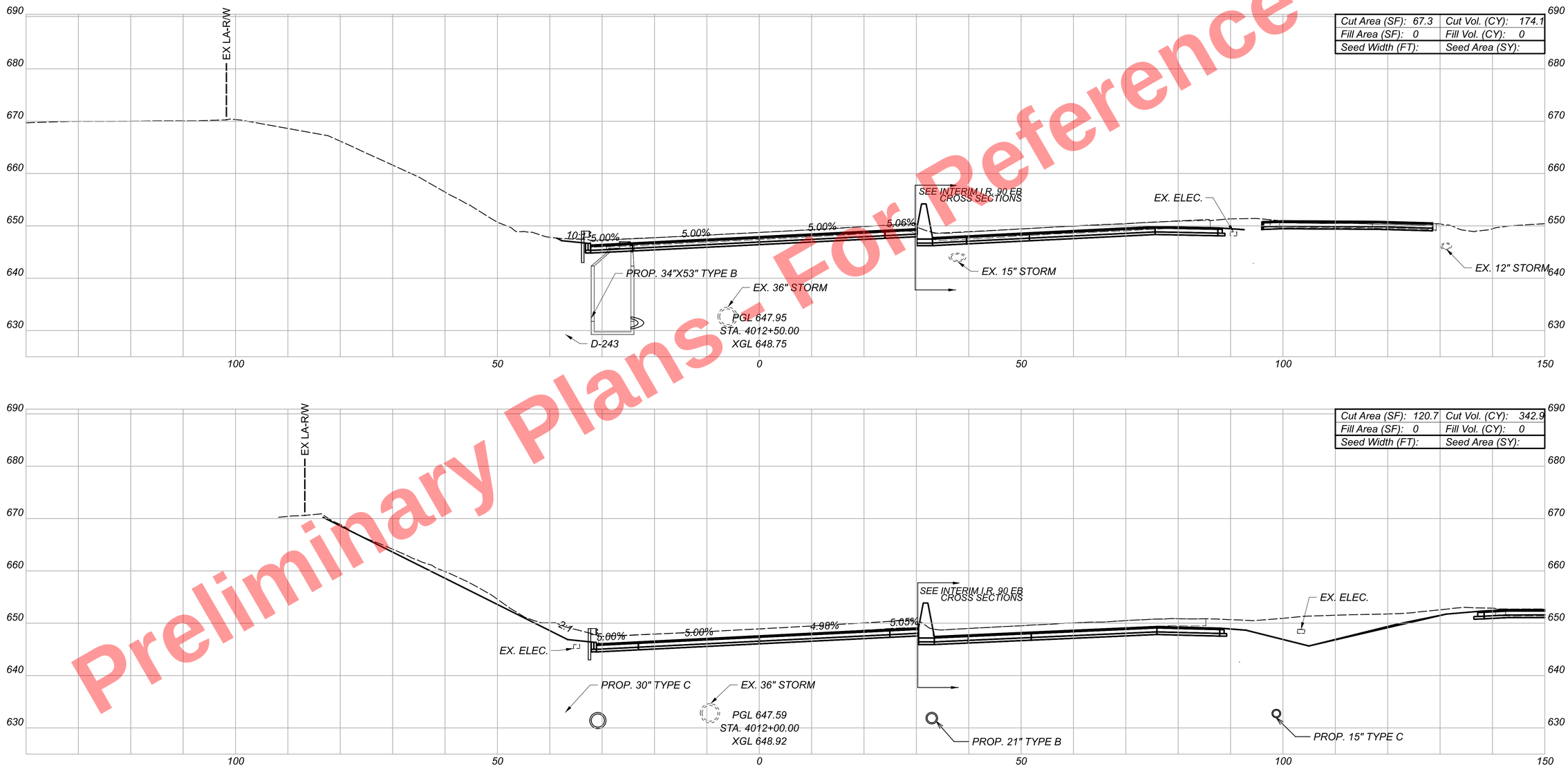

Preliminary Plans - For Reference Only

CUY-90-16.28

MODEL: BL I.R. 90 WB TIE IN - 4012+00.00 [Sheet] PAPERSIZE: 34x22 (in.) DATE: 5/16/2025 TIME: 11:9:20 PM USER: slsson
pw:\\mb-us-pw.bentley.com:mb-us-pw-03\Documents\Cleveland_OH\01_Projects\0007\District2\82382\400-Engineering\Roadway\Sheets\82382_XS2400.dgn

CROSS SECTIONS
INTERIM I.R. 90 WB

Sheet Totals		
Seeding	Cut	Fill
0	517	0

DESIGN AGENCY
B&N
burgessniple.com

DESIGNER
AJS

REVIEWER
MRT 05/01/24

PROJECT ID
82382

SHEET 787 TOTAL 2696

Preliminary Plans - For Reference Only

Cut Area (SF): 540.3	Cut Vol. (CY): 500.3
Fill Area (SF): 0	Fill Vol. (CY): 0
Seed Width (FT):	Seed Area (SY):

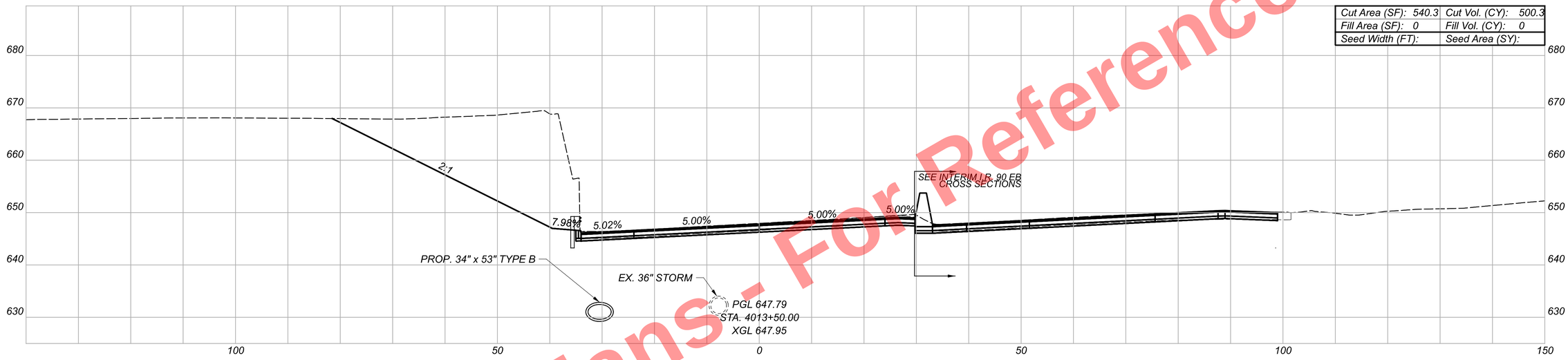

Cut Area (SF): 0	Cut Vol. (CY): 62.4
Fill Area (SF): 0	Fill Vol. (CY): 0
Seed Width (FT):	Seed Area (SY):

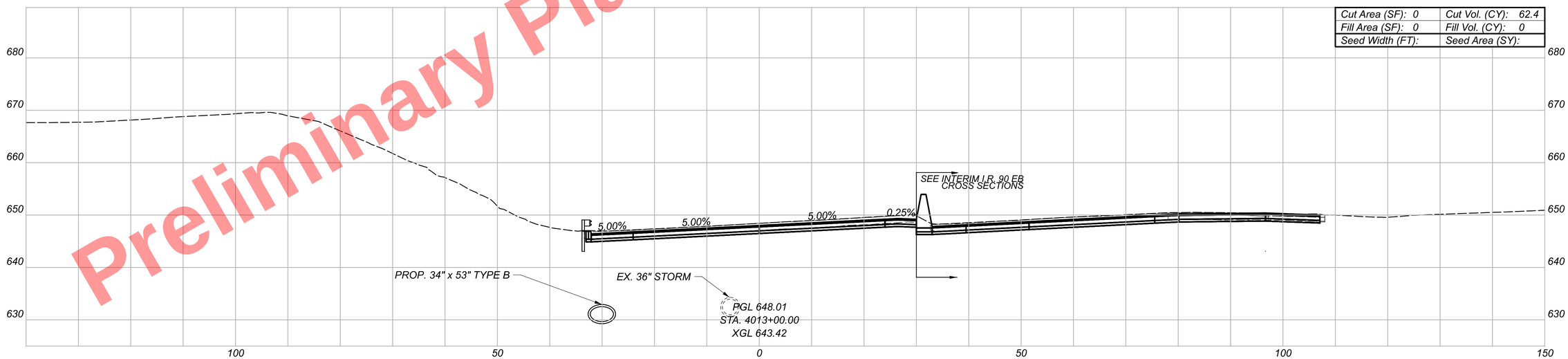

CROSS SECTIONS
INTERIM I.R. 90 WB

CUY-90-16.28

MODEL: BL I.R. 90 WB TIE IN - 4013+00.00 [Sheet] PAPERSIZE: 34x22 (in) DATE: 5/16/2025 TIME: 1:19:29 PM USER: alsson
pw:\\mb-us-pw.bentley.com:mb-us-pw-03\Documents\Cleveland_OH\01_Projects\ODOT\District2\82382\400-Engineering\Roadway\Sheets\82382_XS2400.dgn

DESIGN AGENCY
B&N
burgessniple.com

DESIGNER
AJS

REVIEWER
MRT 05/01/24

PROJECT ID
82382

Sheet Totals		
Seeding	Cut	Fill
0	563	0

SHEET	TOTAL
788	2696

Preliminary Plans - For Reference Only

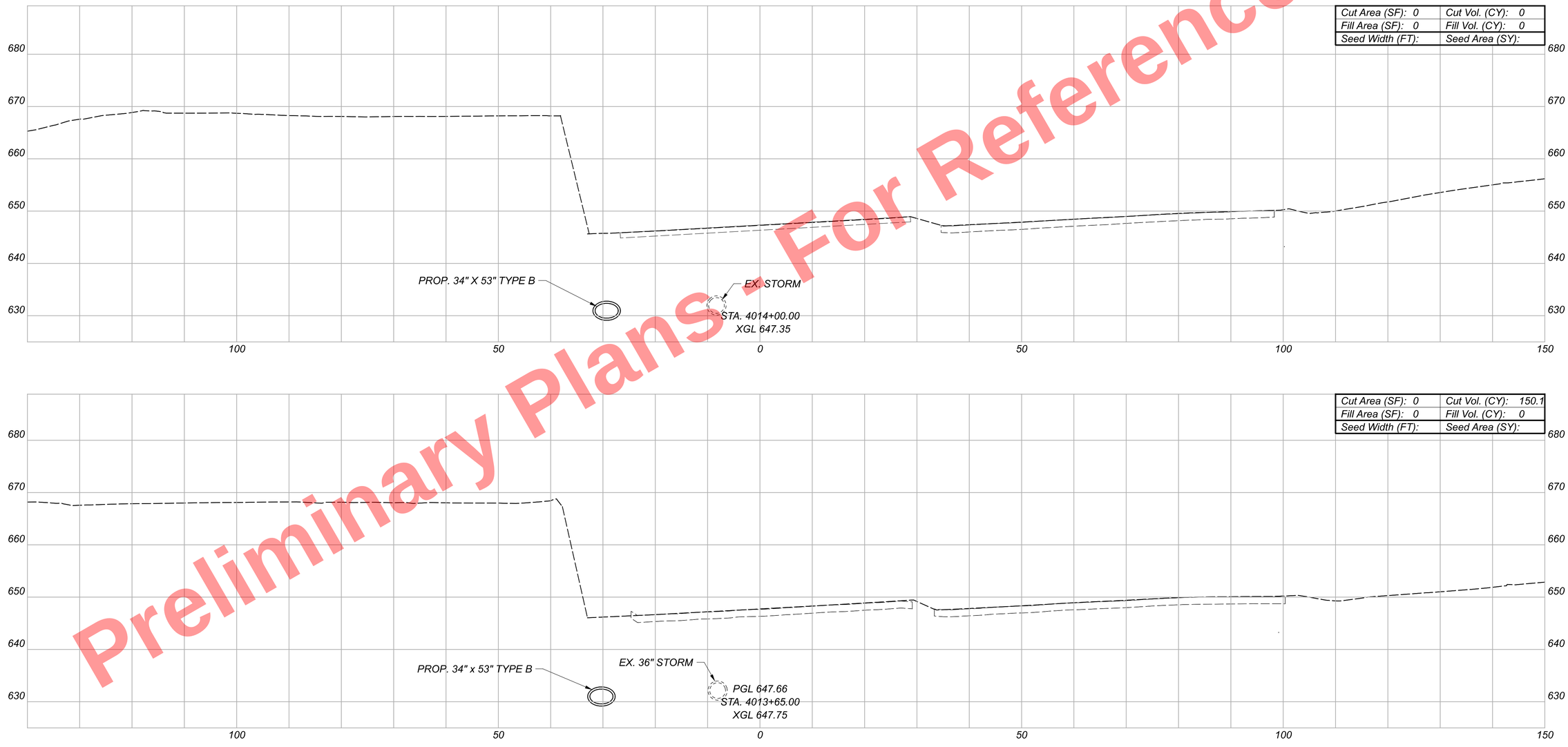

Sheet Totals			Grand Totals Carried to Subsummary		
Seeding	Cut	Fill	Seeding	Cut	Fill
0	151	0	0	51749	0

CROSS SECTIONS
INTERIM I.R. 90 WB

DESIGN AGENCY
B&N
burgessniple.com

DESIGNER
AJS

REVIEWER
MRT 05/01/24

PROJECT ID
82382

SHEET 789 TOTAL 2696

CUY-90-16.28

MODEL: BL I.R. 90 WB TIE IN - 4013+65.00 (Sheet) PAPERSIZE: 34x22 (in.) DATE: 5/16/2025 TIME: 11:9:37 PM USER: slsson
pw:\\mb-us-pw.bentley.com:mb-us-pw-03\Documents\Cleveland.OH\DgnProjects\ODOT\District2\82382\400-Engineering\Roadway\Sheets\82382_XS2400.dgn

Preliminary Plans - Not For Reference Only

Cut Area (SF): 0	Cut Vol. (CY): 0
Fill Area (SF): 2	Fill Vol. (CY): 0
Seed Width (FT):	Seed Area (SY):

Excavation, APP (SF): 160	Excavation, APP (CY): 0
Embankment, APP (SF):99	Embankment, APP (CY):0
Geofoam (SF): 545	Geofoam (CY): 0

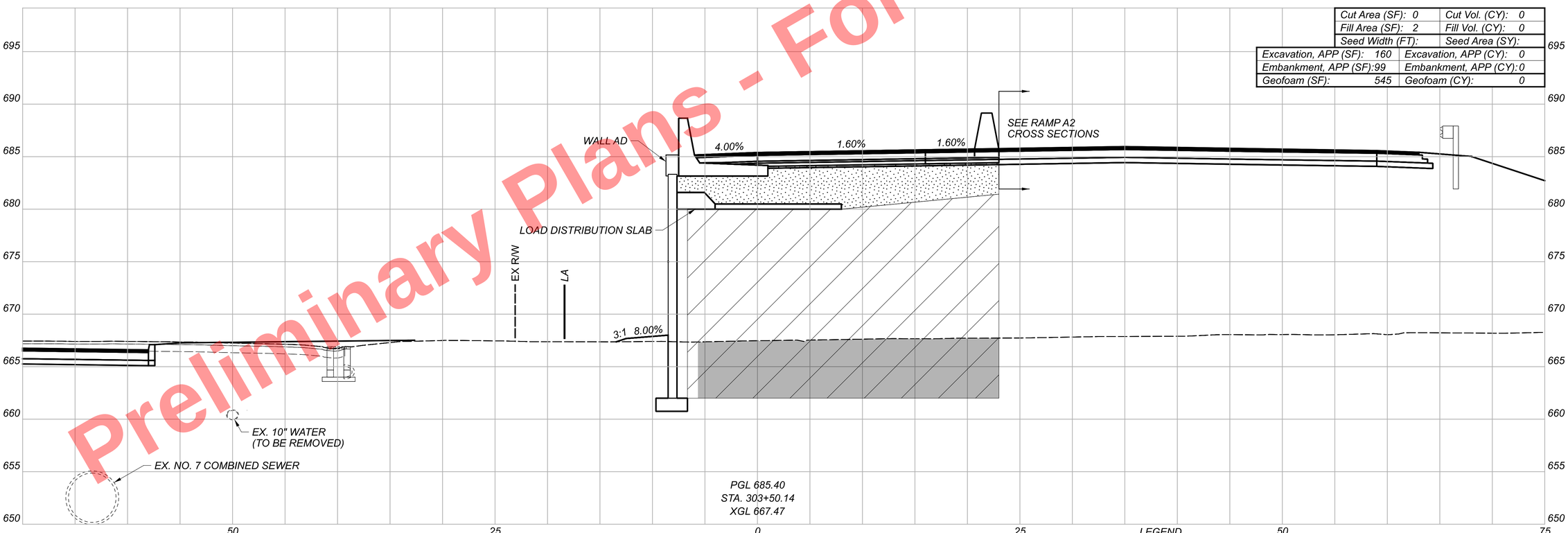

LEGEND

- ITEM 203 - EMBANKMENT, AS PER PLAN
- ITEM 203 - ROADWAY MISC.: EPS GEOFOAM FILL
- ITEM 203 - EXCAVATION, AS PER PLAN

Sheet Totals		
Seeding	Cut	Fill
0	0	0
Embankment, APP	Excavation, APP	Geofoam
0	0	0

CROSS SECTIONS
RAMP A1

DESIGN AGENCY
HDR

DESIGNER BMV

REVIEWER TJS 04/30/24

PROJECT ID 82382

SHEET 790 | TOTAL 2696

CUY-90-16.28 (CCG3A)

MODEL: 303+50.14 [Sheet] PAPERSIZE: 34x22 (in.) DATE: 6/13/2025 TIME: 6:49:15 AM USER: TSCHOEN
pw:\\mb-us-pw.bentley.com:mb-us-pw-03\Documents\Cleveland_OH\01_Projects\ODOT\District2\82382\400-Engineering\Roadway\Sheets\82382_XS300.dgn

Cut Area (SF): 0	Cut Vol. (CY): 0
Fill Area (SF): 0	Fill Vol. (CY): 10
Seed Width (FT):	Seed Area (SY):

Excavation, APP (SF): 154	Excavation, APP (CY): 281
Embankment, APP (SF):89	Embankment, APP (CY):166
Geofoam (SF): 437	Geofoam (CY): 848

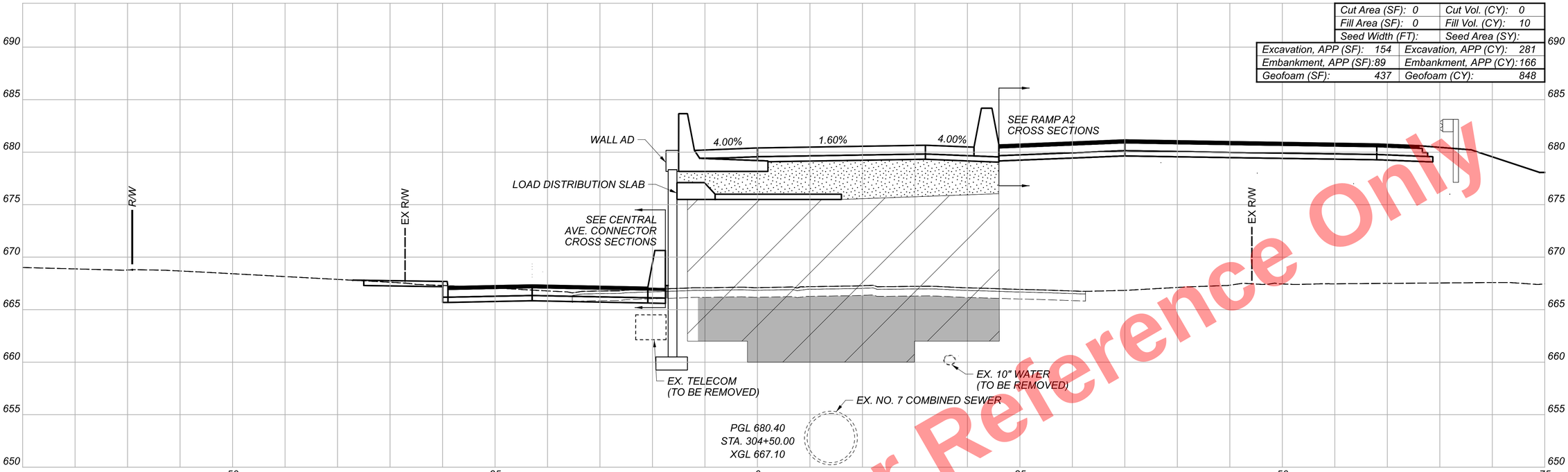

Cut Area (SF): 0	Cut Vol. (CY): 0
Fill Area (SF): 11	Fill Vol. (CY): 12
Seed Width (FT):	Seed Area (SY):

Excavation, APP (SF): 150	Excavation, APP (CY): 286
Embankment, APP (SF):90	Embankment, APP (CY):174
Geofoam (SF): 479	Geofoam (CY): 945

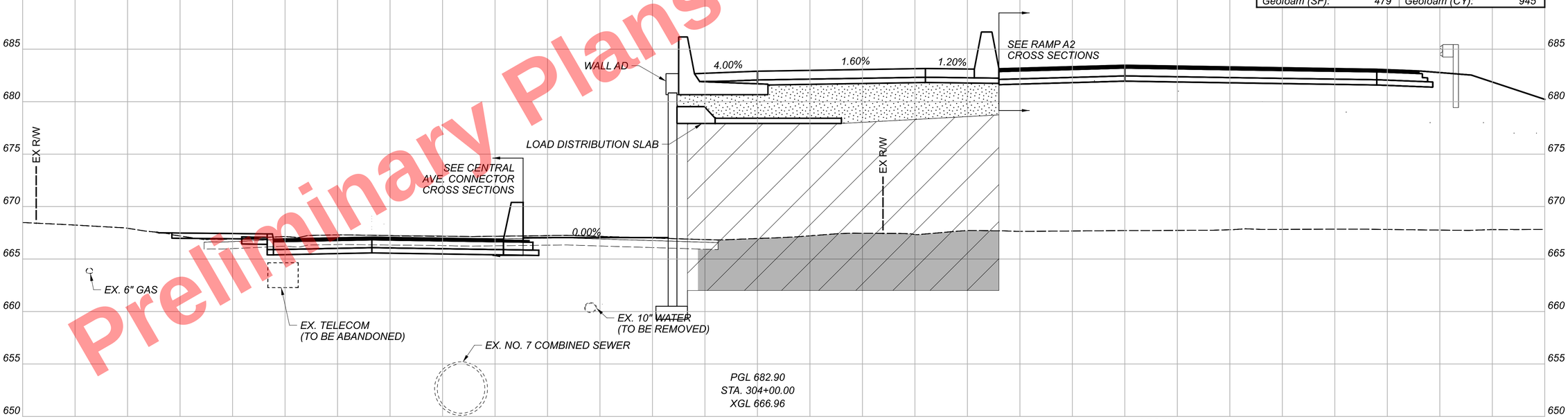

LEGEND

- ITEM 203 - EMBANKMENT, AS PER PLAN
- ITEM 203 - ROADWAY MISC.: EPS GEOFOAM FILL
- ITEM 203 - EXCAVATION, AS PER PLAN

Sheet Totals		
Seeding	Cut	Fill
0	0	22
Embankment, APP	Excavation, APP	Geofoam
340	567	1793

Preliminary Plans - For Reference Only

CUY-90-16.28 (CCG3A)

MODEL: 304+00.00 [Sheet] PAPERSIZE: 34x22 (in.) DATE: 6/13/2025 TIME: 6:49:58 AM USER: TSCHOEN
pw:\\mb-us-pw.bentley.com:mb-us-pw-03\Documents\Cleveland.OH\OI_Projects\ODOT\District2\82382\400-Engineering\Roadway\Sheets\82382_XS300.dgn

CROSS SECTIONS
RAMP A1

DESIGN AGENCY

DESIGNER
BMV

REVIEWER
TJS 04/30/24

PROJECT ID
82382

SHEET 791 TOTAL 2696

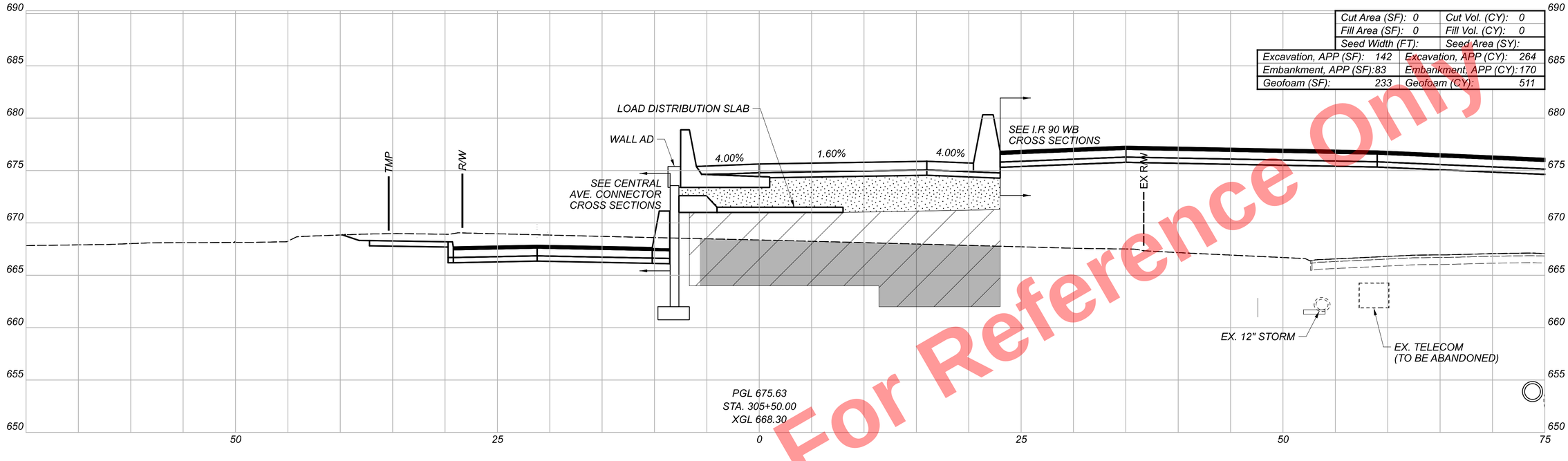

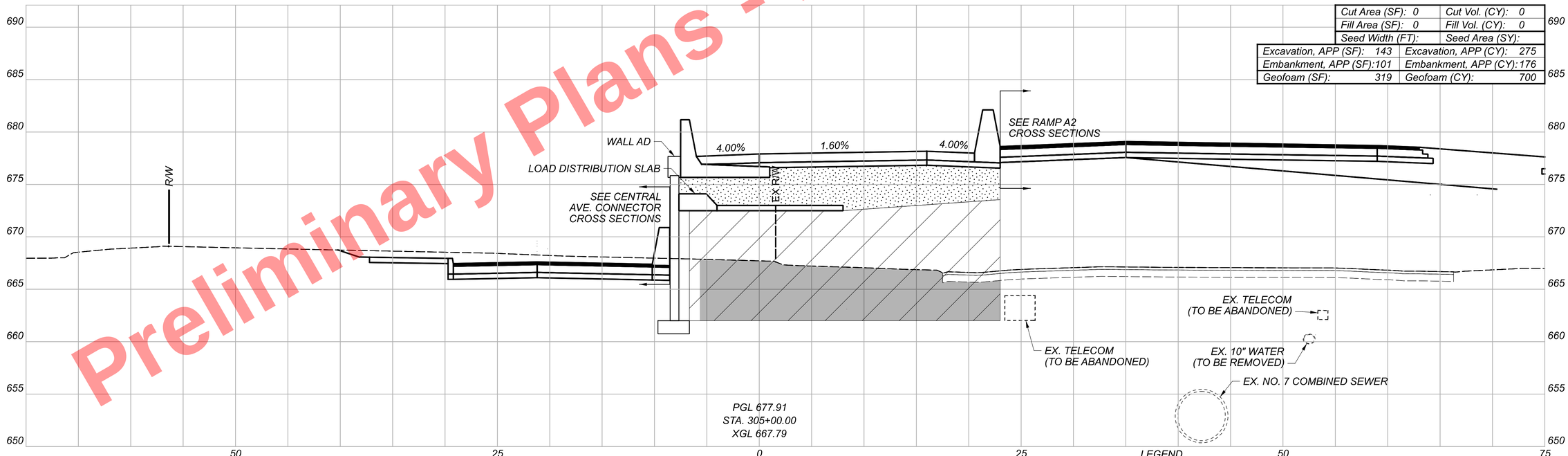

LEGEND

ITEM 203 - EMBANKMENT, AS PER PLAN

ITEM 203 - ROADWAY MISC.: EPS GEOFOAM FILL

ITEM 203 - EXCAVATION, AS PER PLAN

Sheet Totals		
Seeding	Cut	Fill
0	0	0
Embankment, APP	Excavation, APP	Geofoam
346	539	1211

Preliminary Plans - For Reference Only

CROSS SECTIONS
RAMP A1

DESIGN AGENCY

DESIGNER BMV

REVIEWER TJS 04/30/24

PROJECT ID 82382

SHEET 792 TOTAL 2696

CUY-90-16.28 (CCG3A)

MODEL: 305+00.00 [Sheet] PAPERSIZE: 34x22 (in.) DATE: 6/13/2025 TIME: 6:50:10 AM USER: TSCHOEN
pw:\\mb-us-pw.bentley.com:mb-us-pw-03\Documents\Cleveland_OH\01_Projects\00DT\District2\82382\400-Engineering\Roadway\Sheets\82382_XS300.dgn

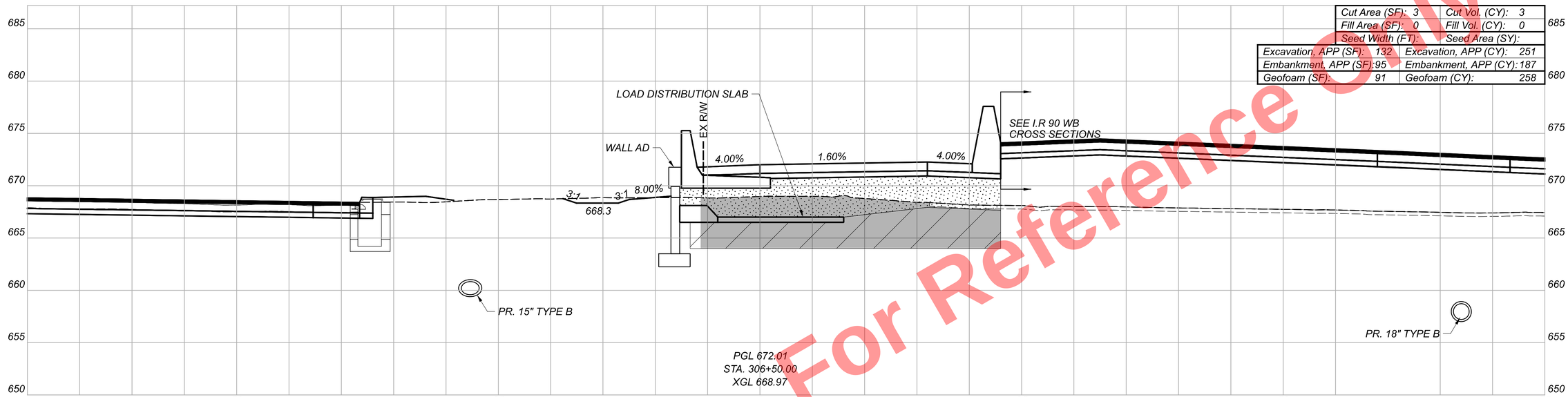

Cut Area (SF): 3	Cut Vol. (CY): 3
Fill Area (SF): 0	Fill Vol. (CY): 0
Seed Width (FT):	Seed Area (SY):
Excavation, APP (SF): 132	Excavation, APP (CY): 251
Embankment, APP (SF): 95	Embankment, APP (CY): 187
Geofoam (SF): 91	Geofoam (CY): 258

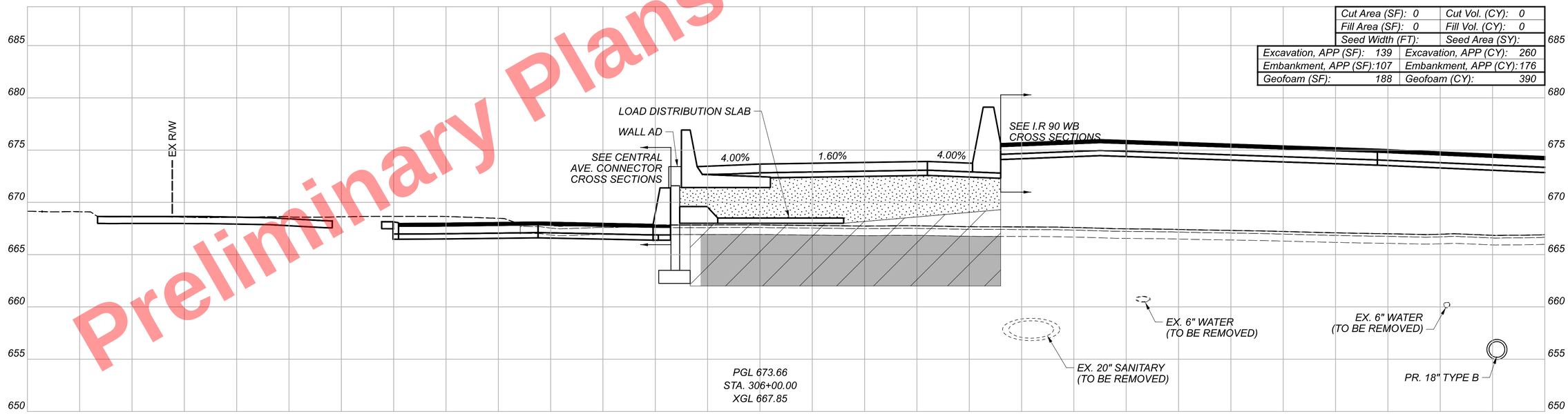

Cut Area (SF): 0	Cut Vol. (CY): 0
Fill Area (SF): 0	Fill Vol. (CY): 0
Seed Width (FT):	Seed Area (SY):
Excavation, APP (SF): 139	Excavation, APP (CY): 260
Embankment, APP (SF): 107	Embankment, APP (CY): 176
Geofoam (SF): 188	Geofoam (CY): 390

LEGEND

- ITEM 203 - EMBANKMENT, AS PER PLAN
- ITEM 203 - ROADWAY MISC.: EPS GEOFOAM FILL
- ITEM 203 - EXCAVATION, AS PER PLAN

Sheet Totals		
Seeding	Cut	Fill
0	3	0
Embankment, APP	Excavation, APP	Geofoam
363	511	648

CROSS SECTIONS
RAMP A1

DESIGN AGENCY
HDR

DESIGNER
BMV

REVIEWER
TJS 04/30/24

PROJECT ID
82382

SHEET 793 TOTAL 2696

CUY-90-16.28 (CCG3A)

MODEL: 306+00.00 [Sheet] PAPERSIZE: 34x22 (in.) DATE: 6/13/2025 TIME: 6:50:22 AM USER: TSCHOEN
pw:\\mb-us-pw.bentley.com:mb-us-pw-03\Documents\Cleveland_OH\OI_Projects\ODOT\District12\82382\400-Engineering\Roadway\Sheets\82382_XS3100.dgn

Preliminary Plans - For Reference Only

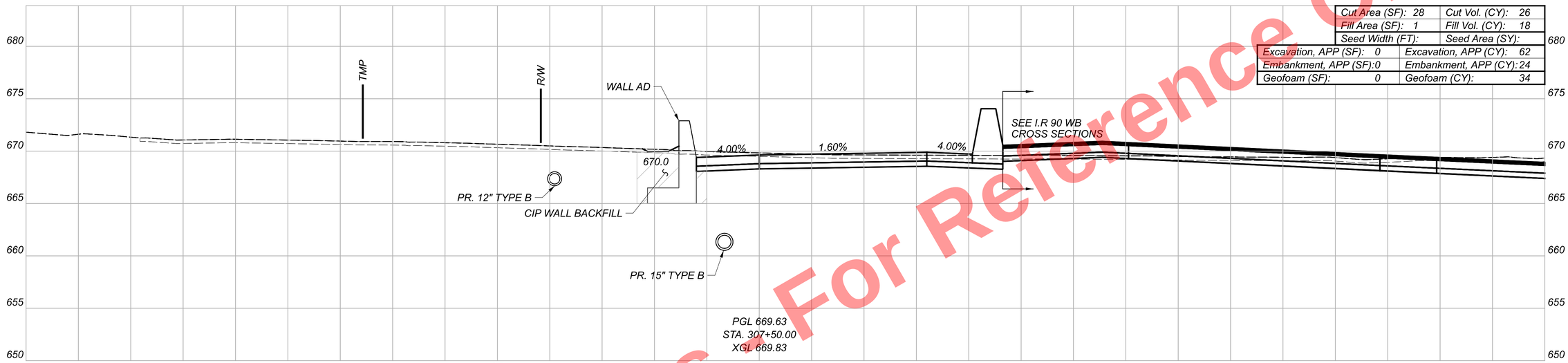

Cut Area (SF):	28	Cut Vol. (CY):	26
Fill Area (SF):	1	Fill Vol. (CY):	18
Seed Width (FT):		Seed Area (SY):	
Excavation, APP (SF):	0	Excavation, APP (CY):	62
Embankment, APP (SF):	0	Embankment, APP (CY):	24
Geofoam (SF):	0	Geofoam (CY):	34

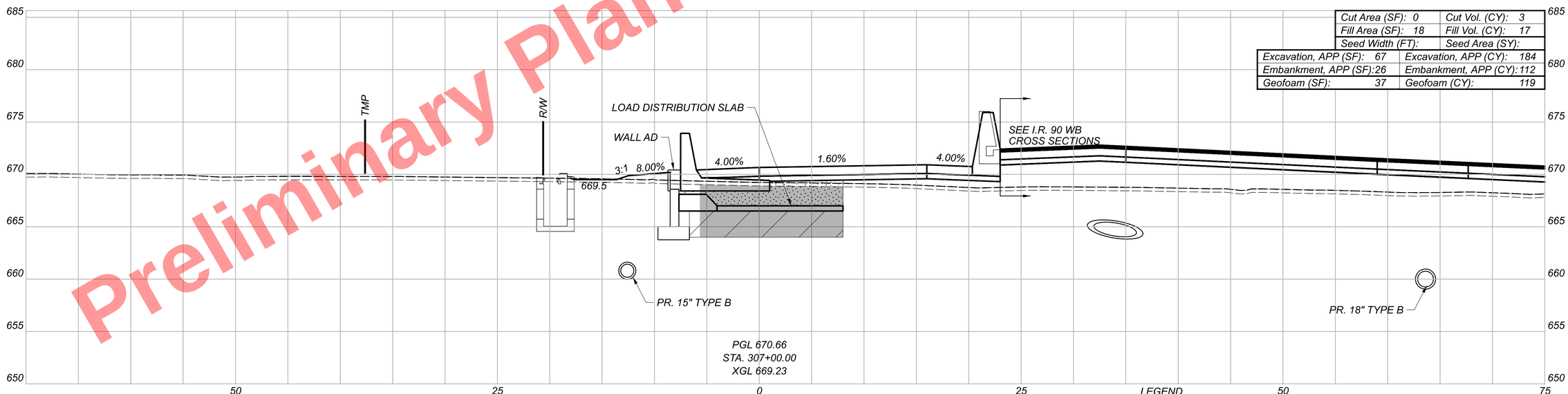

Cut Area (SF):	0	Cut Vol. (CY):	3
Fill Area (SF):	18	Fill Vol. (CY):	17
Seed Width (FT):		Seed Area (SY):	
Excavation, APP (SF):	67	Excavation, APP (CY):	184
Embankment, APP (SF):	26	Embankment, APP (CY):	112
Geofoam (SF):	37	Geofoam (CY):	119

LEGEND

- ITEM 203 - EMBANKMENT, AS PER PLAN
- ITEM 203 - ROADWAY MISC.: EPS GEOFOAM FILL
- ITEM 203 - EXCAVATION, AS PER PLAN

Sheet Totals		
Seeding	Cut	Fill
0	29	35
Embankment, APP	Excavation, APP	Geofoam
136	246	153

CROSS SECTIONS
RAMP A1

DESIGN AGENCY

DESIGNER BMV

REVIEWER TJS 04/30/24

PROJECT ID 82382

SHEET 794 TOTAL 2696

Preliminary Plans For Reference Only

CUY-90-16.28 (CCG3A)
MODEL: 307+00.00 [Sheet] PAPERSIZE: 34x22 (In.) DATE: 6/13/2025 TIME: 6:50:33 AM USER: TSCHOEN
pw:\\mb-us-pw.bentley.com:mb-us-pw-03\Documents\Cleveland_OH\01_Projects\ODOT\District2\82382\400-Engineering\Roadway\Sheets\82382_XS300.dgn

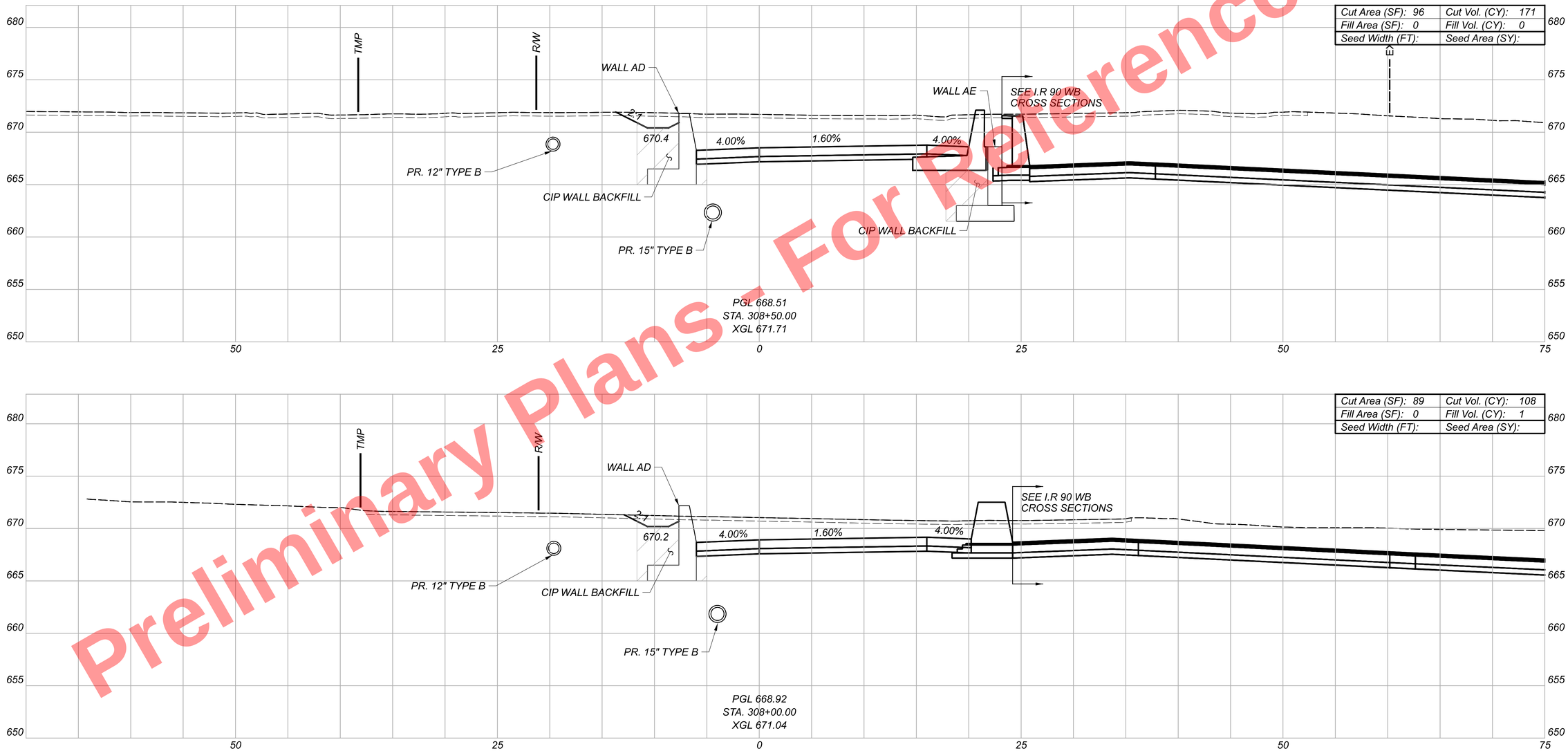

Preliminary Plans - Not For Reference Only

CUY-90-16.28 (CCG3A)

MODEL: 308+00.00 [Sheet] PAPERSIZE: 34x22 (in.) DATE: 3/28/2025 TIME: 9:00:15 AM USER: KevinMcNutt
pw:\\mb-us-pw.bentley.com:mb-us-pw-03\Documents\Cleveland_OH\01_Projects\0001\District2\82382\400-Engineering\Roadway\Sheets\82382_XS300.dgn

CROSS SECTIONS
RAMP A1

Sheet Totals		
Seeding	Cut	Fill
0	279	1

DESIGN AGENCY

DESIGNER
BMV

REVIEWER
TJS 04/30/24

PROJECT ID
82382

SHEET 795 TOTAL 2696

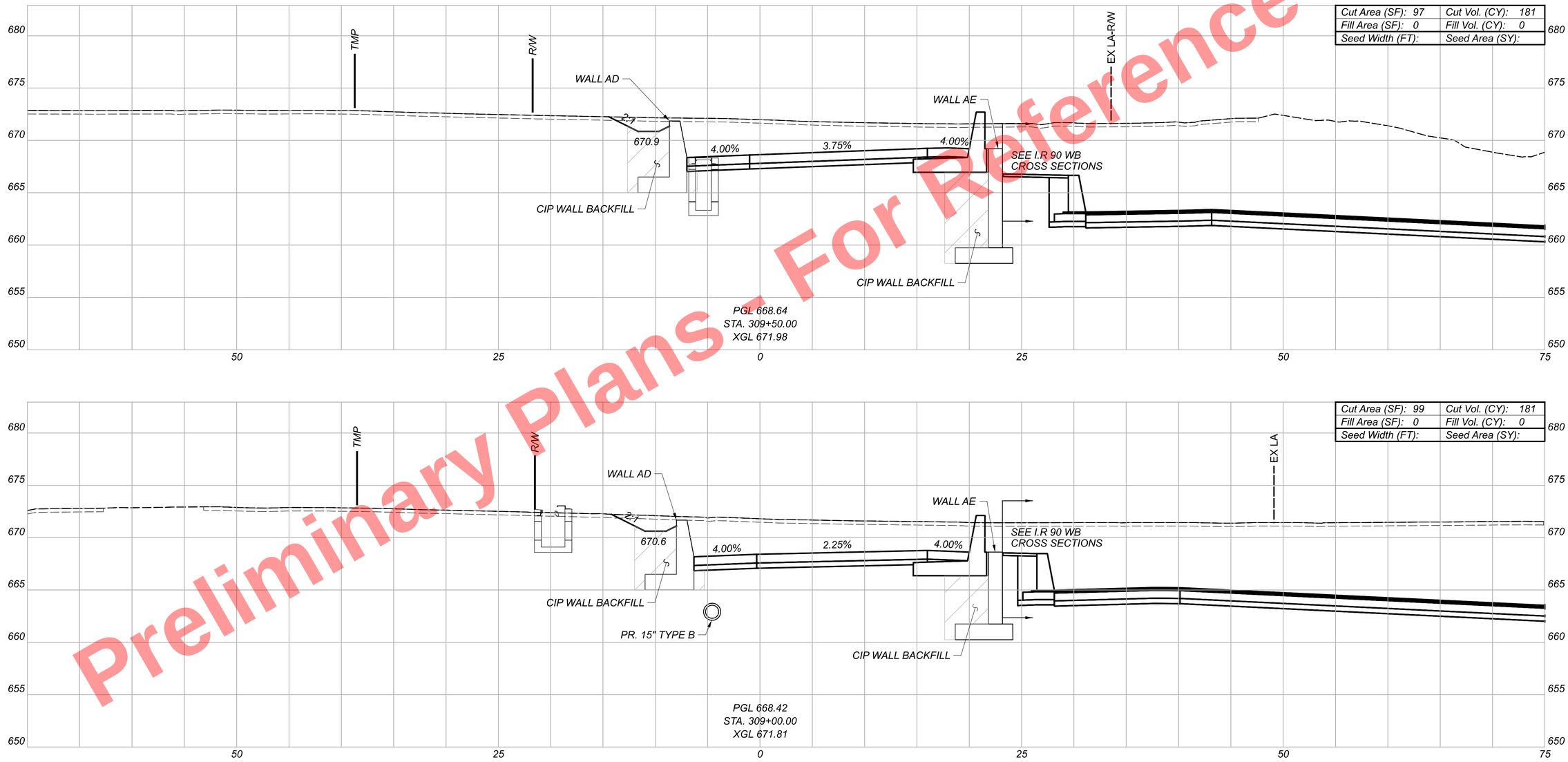

Preliminary Plans - For Reference Only

CUY-90-16.28 (CCG3A)

MODEL: 309+00.00 [Sheet] PAPERSIZE: 34x22 (in.) DATE: 3/28/2025 TIME: 9:00:25 AM USER: Kevin.McNutt
pw:\\mb-us-pw.bentley.com:mb-us-pw-03\Documents\Cleveland_OH\01_Projects\ODOT\District 12\82382\400-Engineering\Roadway\Sheets\82382_XS300.dgn

CROSS SECTIONS
RAMP A1

DESIGN AGENCY
HDR

DESIGNER
BMV

REVIEWER
TJS 04/30/24

PROJECT ID
82382

Sheet Totals		
Seeding	Cut	Fill
0	362	0

SHEET 796 TOTAL 2696

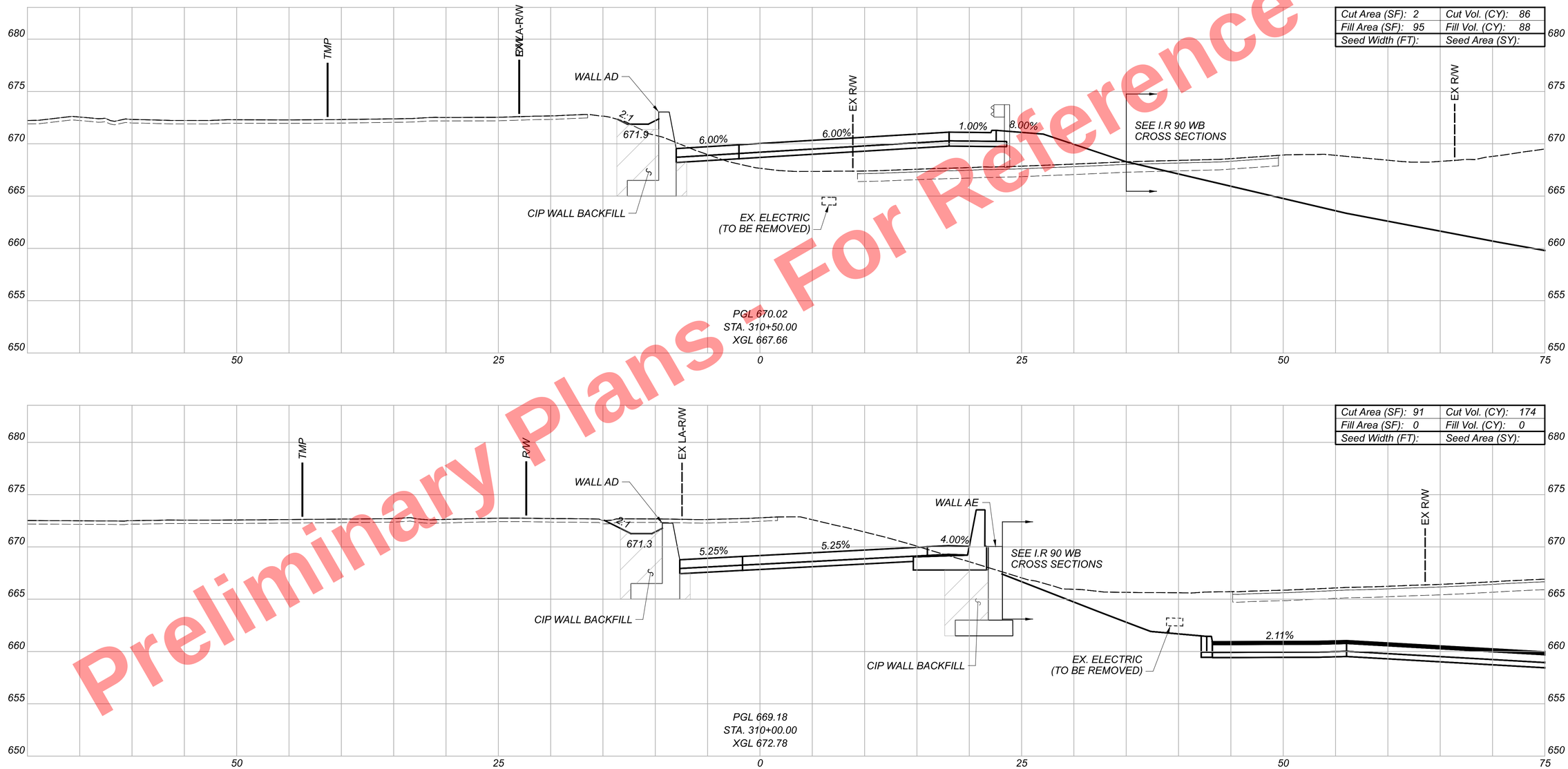

Cut Area (SF): 2	Cut Vol. (CY): 86
Fill Area (SF): 95	Fill Vol. (CY): 88
Seed Width (FT):	Seed Area (SY):

Cut Area (SF): 91	Cut Vol. (CY): 174
Fill Area (SF): 0	Fill Vol. (CY): 0
Seed Width (FT):	Seed Area (SY):

Preliminary Plans - For Reference Only

CROSS SECTIONS
RAMP A1

Sheet Totals		
Seeding	Cut	Fill
0	260	88

DESIGN AGENCY

DESIGNER
BMV

REVIEWER
TJS 04/30/24

PROJECT ID
82382

SHEET 797 TOTAL 2696

CUY-90-16.28 (CCG3A)

MODEL: 310+00.00 [Sheet] PAPERSIZE: 34x22 (in.) DATE: 3/28/2025 TIME: 9:00:34 AM USER: Kevin.McNutt
pw:\\mb-us-pw.bentley.com:mb-us-pw-03\Documents\Cleveland.OH\OI_Projects\ODOT\District2\82382\400-Engineering\Roadway\Sheets\82382_XS300.dgn

Preliminary Plans - Not For Reference Only

Cut Area (SF): 14	Cut Vol. (CY): 8
Fill Area (SF): 59	Fill Vol. (CY): 90
Seed Width (FT):	Seed Area (SY):

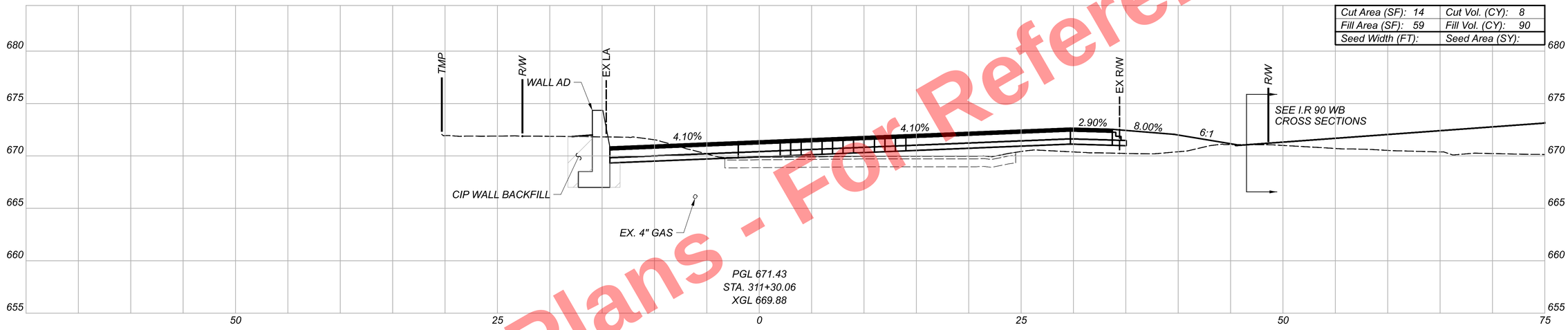

Cut Area (SF): 1	Cut Vol. (CY): 3
Fill Area (SF): 102	Fill Vol. (CY): 182
Seed Width (FT):	Seed Area (SY):

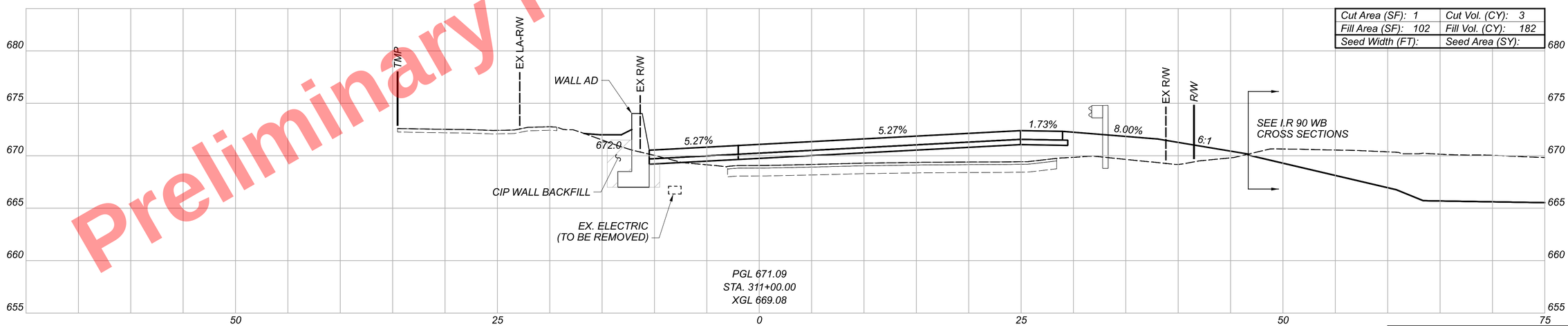

Grand Totals Carried to Subsummary		
Seeding	Cut	Fill
0	944	418

Sheet Totals		
Seeding	Cut	Fill
0	11	272

Embankment, APP	Excavation, APP	Geofoam
1185	1863	3805

CROSS SECTIONS
RAMP A1

DESIGN AGENCY

DESIGNER BMV

REVIEWER TJS 04/30/24

PROJECT ID 82382

SHEET 798 TOTAL 2696

CUY-90-16.28 (CCG3A)

MODEL: 311+00.00 (Sheet) PAPERSIZE: 34x22 (in.) DATE: 3/28/2025 TIME: 9:00:43 AM USER: KevinMcNutt
pw:\\mb-us-pw.bentley.com:mb-us-pw-03\Documents\Cleveland_OH\DOT_Projects\ODOT\District2\82382\400-Engineering\Roadway\Sheets\82382_XS300.dgn

Preliminary Plans - Not For Reference Only

CUY-90-16.28 (CCG3A)

MODEL: 405+50.00 [Sheet] PAPERSIZE: 34x22 (in.) DATE: 3/28/2025 TIME: 9:01:03 AM USER: Kevin.McNutt
pw:\\mb-us-pw.bentley.com:mb-us-pw-03\Documents\Cleveland.OH\OI_Projects\ODOT\District2\82382\400-Engineering\Roadway\Sheets\82382_XS3200.dgn

CROSS SECTIONS
RAMP A2

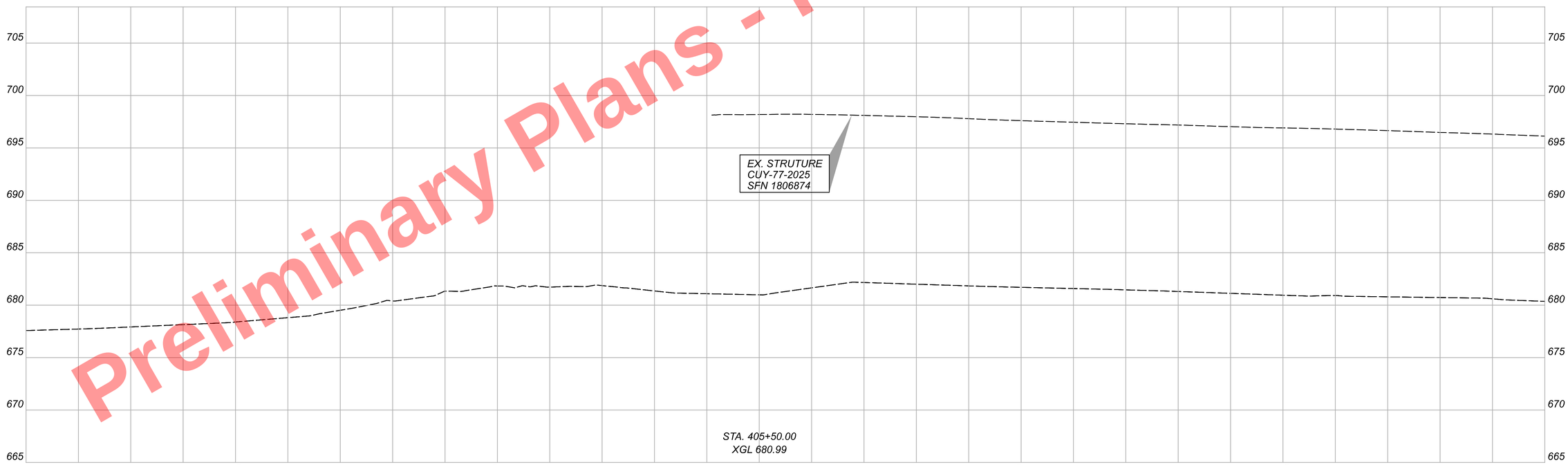

DESIGN AGENCY

DESIGNER
BMV

REVIEWER
TJS 04/30/24

PROJECT ID
82382

Sheet Totals		
Seeding	Cut	Fill
0	0	0

SHEET 799 TOTAL 2696

Preliminary Plans - For Reference Only

MODEL: 406+10.10 [Sheet] PAPERSIZE: 34x22 (in.) DATE: 5/15/2025 TIME: 11:09:31 AM USER: TSCHOEN
pw:\\mb-us-pw.bentley.com:mb-us-pw-03\Documents\Cleveland_OH\01_Projects\ODOT\District2\82382\400-Engineering\Roadway\Sheets\82382_XS3200.dgn

CUY-90-16.28 (CCG3A)

CROSS SECTIONS
RAMP A2

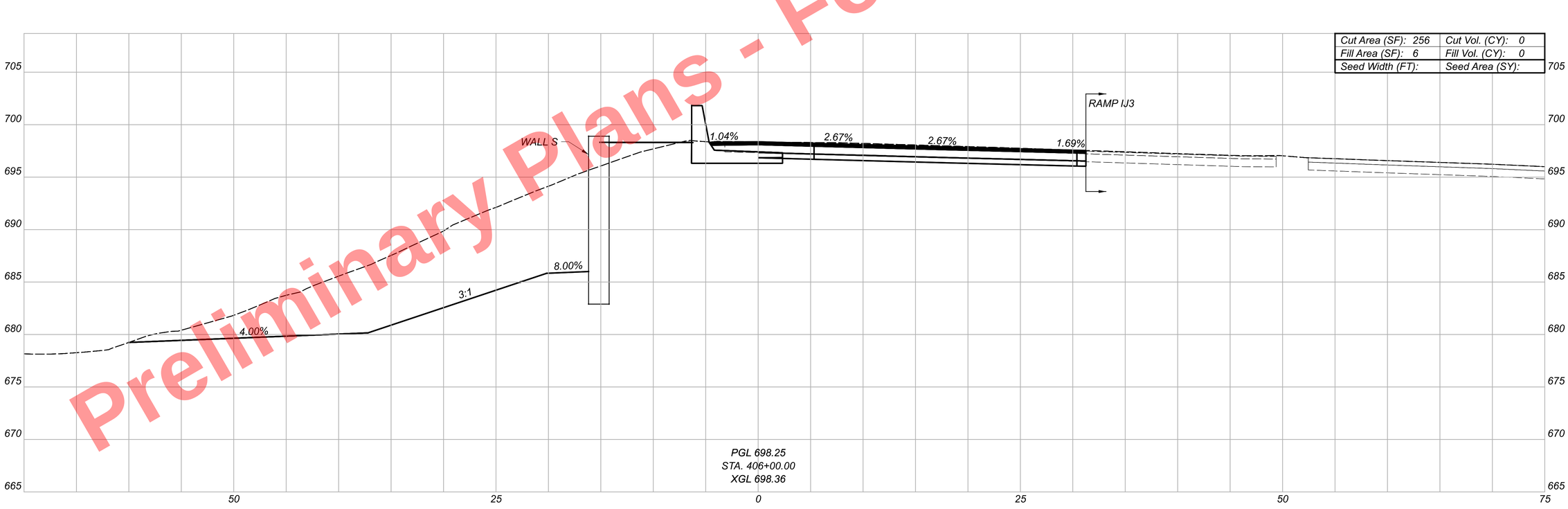

Sheet Totals		
Seeding	Cut	Fill
0	0	0

DESIGN AGENCY

DESIGNER
BMV

REVIEWER
TJS 04/30/24

PROJECT ID
82382

SHEET 800 TOTAL 2696

Preliminary Plans - For Reference Only

Cut Area (SF): 304	Cut Vol. (CY): 519
Fill Area (SF): 13	Fill Vol. (CY): 18
Seed Width (FT):	Seed Area (SY):

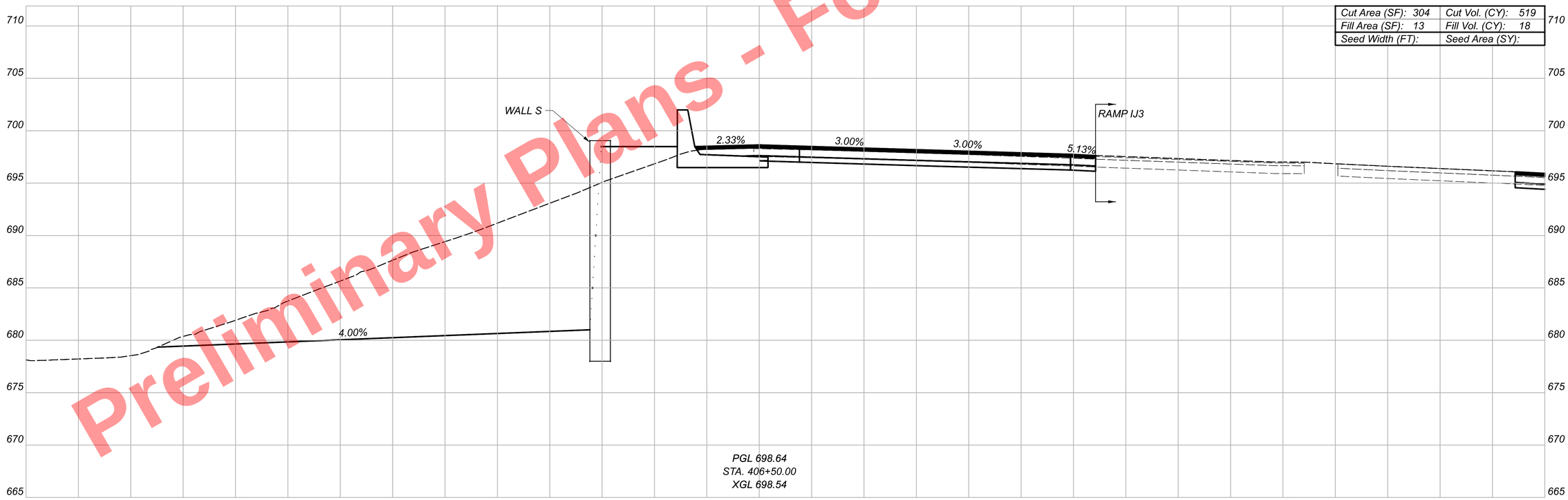

Sheet Totals		
Seeding	Cut	Fill
0	519	18

CROSS SECTIONS
RAMP A2

DESIGN AGENCY

DESIGNER BMV

REVIEWER TJS 04/30/24

PROJECT ID 82382

SHEET 801 TOTAL 2696

CUY-90-16.28 (CCG3A)

MODEL: 406+50.00 [Sheet] PAPERSIZE: 34x22 (in.) DATE: 5/15/2025 TIME: 11:09:36 AM USER: TSCHOEN
pw:\\mb-us-pw.bentley.com:mb-us-pw-03\Documents\Cleveland.OH\01_Projects\ODOT\District2\82382\400-Engineering\Roadway\Sheets\82382_XS3200.dgn

Preliminary Plans - For Reference Only

Cut Area (SF): 249	Cut Vol. (CY): 512
Fill Area (SF): 20	Fill Vol. (CY): 31
Seed Width (FT):	Seed Area (SY):

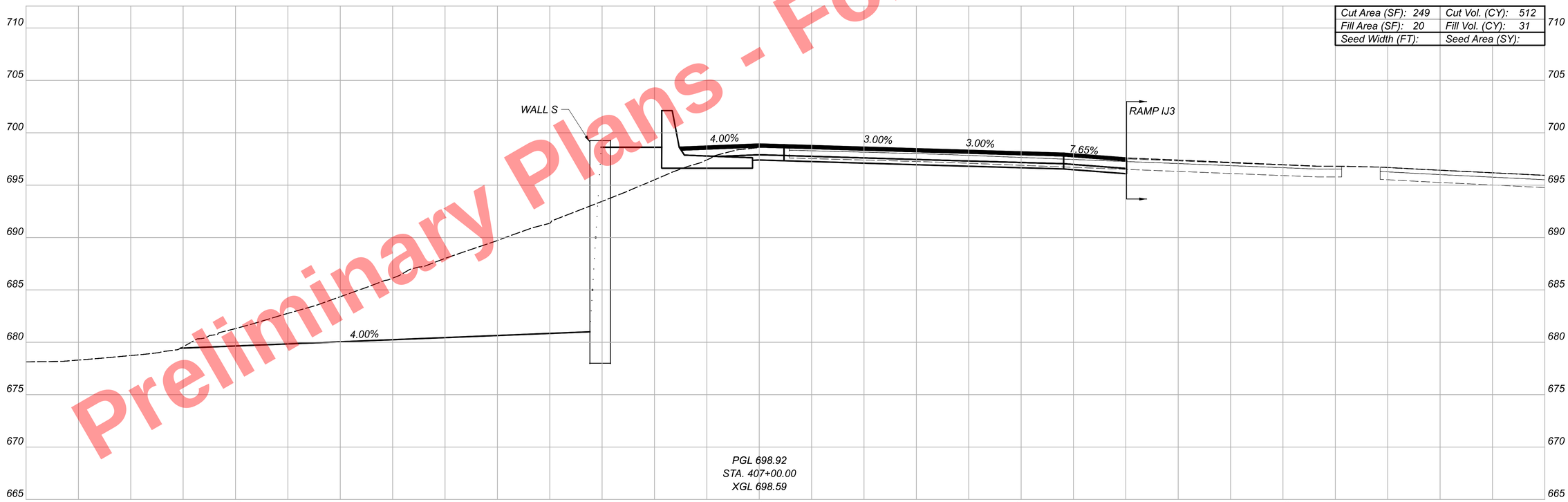

Sheet Totals		
Seeding	Cut	Fill
0	512	31

CUY-90-16.28 (CCG3A)

MODEL: 407+00.00 [Sheet] PAPERSIZE: 34x22 (in.) DATE: 5/15/2025 TIME: 11:09:40 AM USER: TSCHOEN
pw:\\mb-us-pw.bentley.com:mb-us-pw-03\Documents\Cleveland.OH\OI_Projects\ODOT\District2\82382\400-Engineering\Roadway\Sheets\82382_XS3200.dgn

CROSS SECTIONS
RAMP A2

DESIGN AGENCY

DESIGNER
BMV

REVIEWER
TJS 04/30/24

PROJECT ID
82382

SHEET	TOTAL
802	2696

Preliminary Plans - For Reference Only

Cut Area (SF): 175	Cut Vol. (CY): 393
Fill Area (SF): 43	Fill Vol. (CY): 58
Seed Width (FT):	Seed Area (SY):

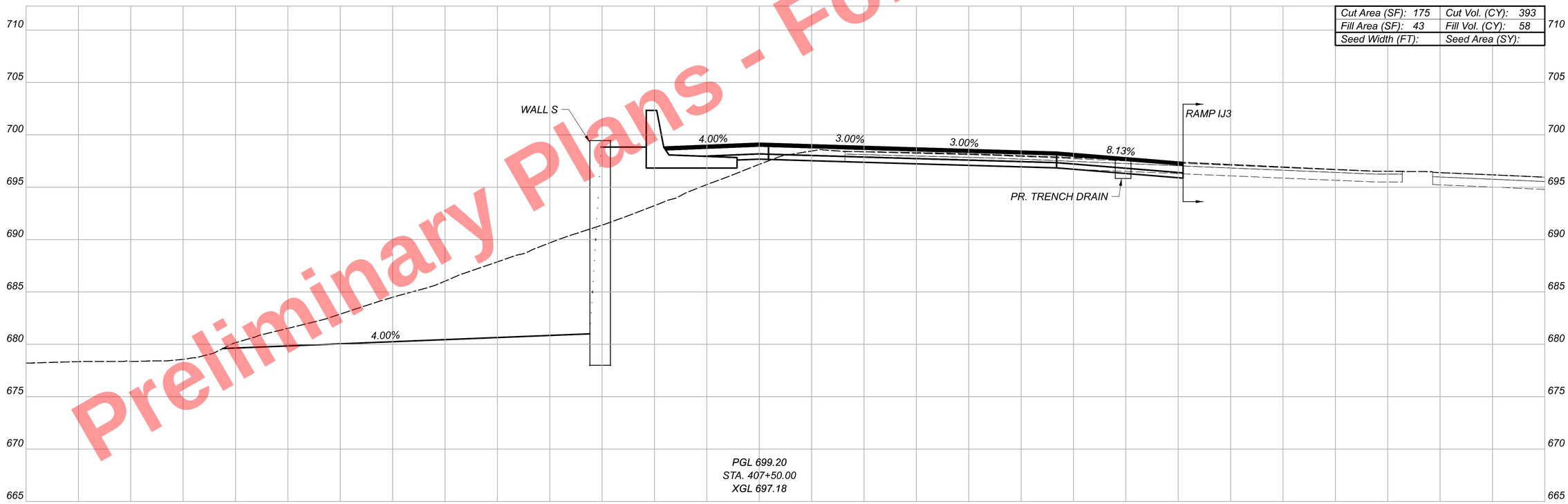

Sheet Totals		
Seeding	Cut	Fill
0	393	58

CROSS SECTIONS
RAMP A2

DESIGN AGENCY

DESIGNER
BMV

REVIEWER
TJS 04/30/24

PROJECT ID
82382

SHEET 803 | TOTAL 2696

CUY-90-16.28 (CCG3A)

MODEL: 407+50.00 [Sheet] PAPERSIZE: 34x22 (in.) DATE: 5/20/2025 TIME: 12:26 AM USER: TSCHOEN
pw:\\mb-us-pw.bentley.com:mb-us-pw-03\Documents\Cleveland.OH\OI_Projects\ODOT\District2\82382\400-Engineering\Roadway\Sheets\82382_XS3200.dgn

Preliminary Plans - For Reference Only

Cut Area (SF): 103	Cut Vol. (CY): 257
Fill Area (SF): 97	Fill Vol. (CY): 130
Seed Width (FT):	Seed Area (SY):

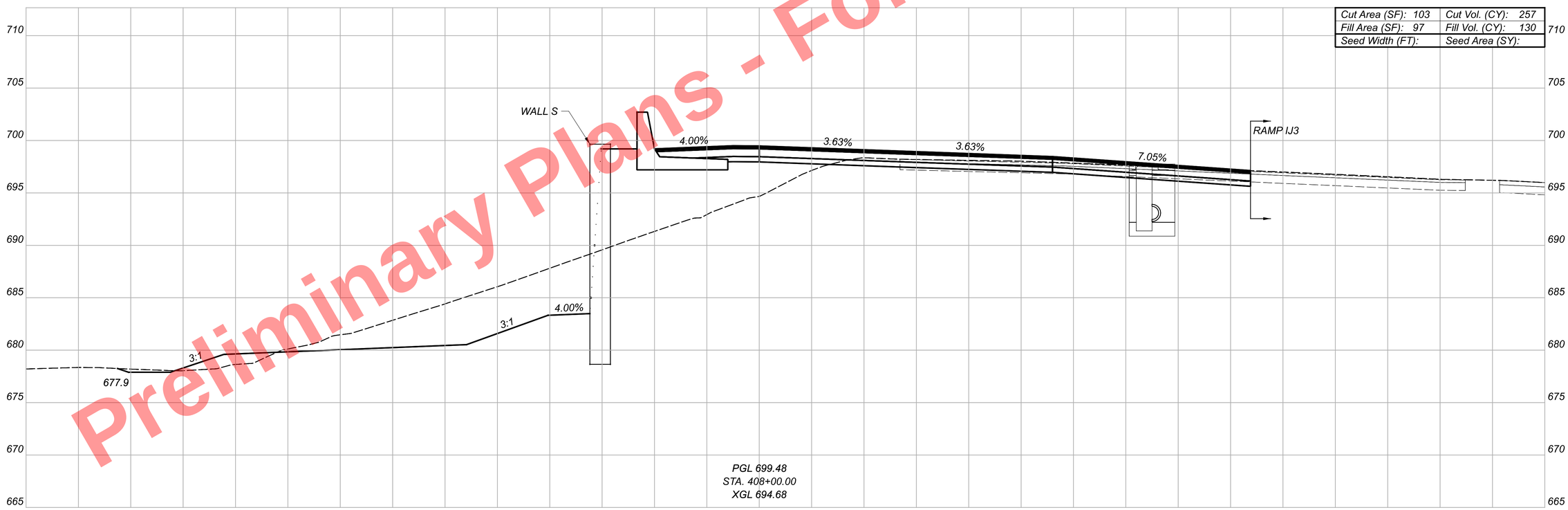

Sheet Totals		
Seeding	Cut	Fill
0	257	130

CROSS SECTIONS
RAMP A2

DESIGN AGENCY

DESIGNER
BMV

REVIEWER
TJS 04/30/24

PROJECT ID
82382

SHEET 804 | TOTAL 2696

CUY-90-16.28 (CCG3A)

MODEL: 408+00.00 [Sheet] PAPERSIZE: 34x22 (in.) DATE: 5/15/2025 TIME: 11:09:48 AM USER: TSCHOEN
pw:\\mb-us-pw.bentley.com:mb-us-pw-03\Documents\Cleveland.OH\OI_Projects\ODOT\District2\82382\400-Engineering\Roadway\Sheets\82382_XS3200.dgn

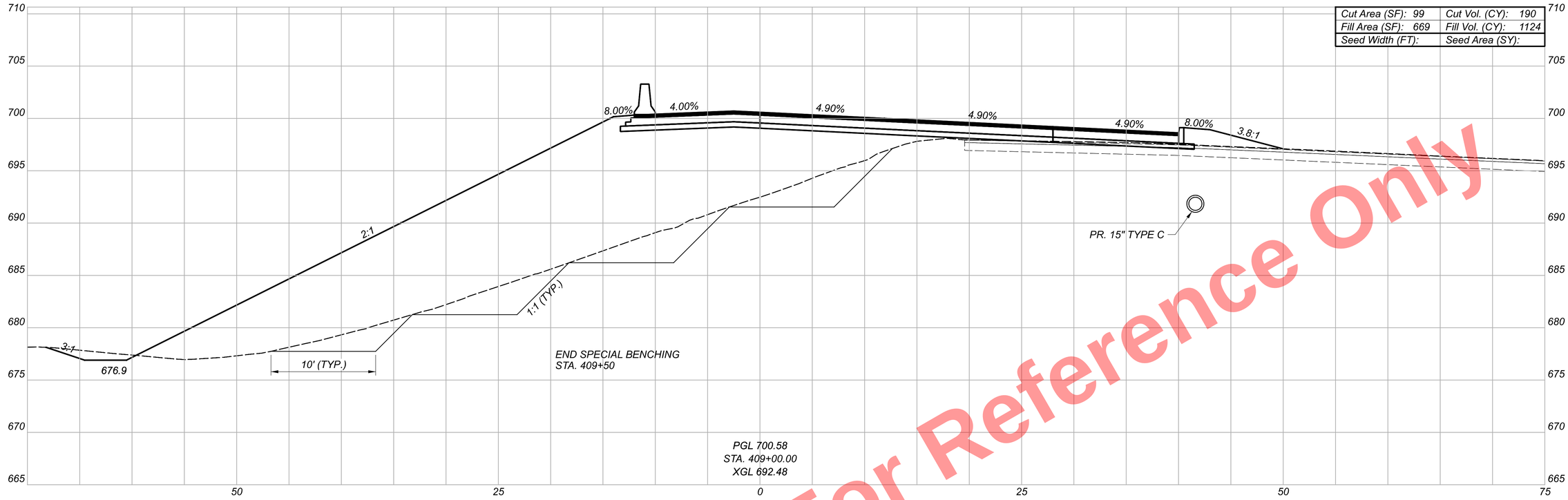

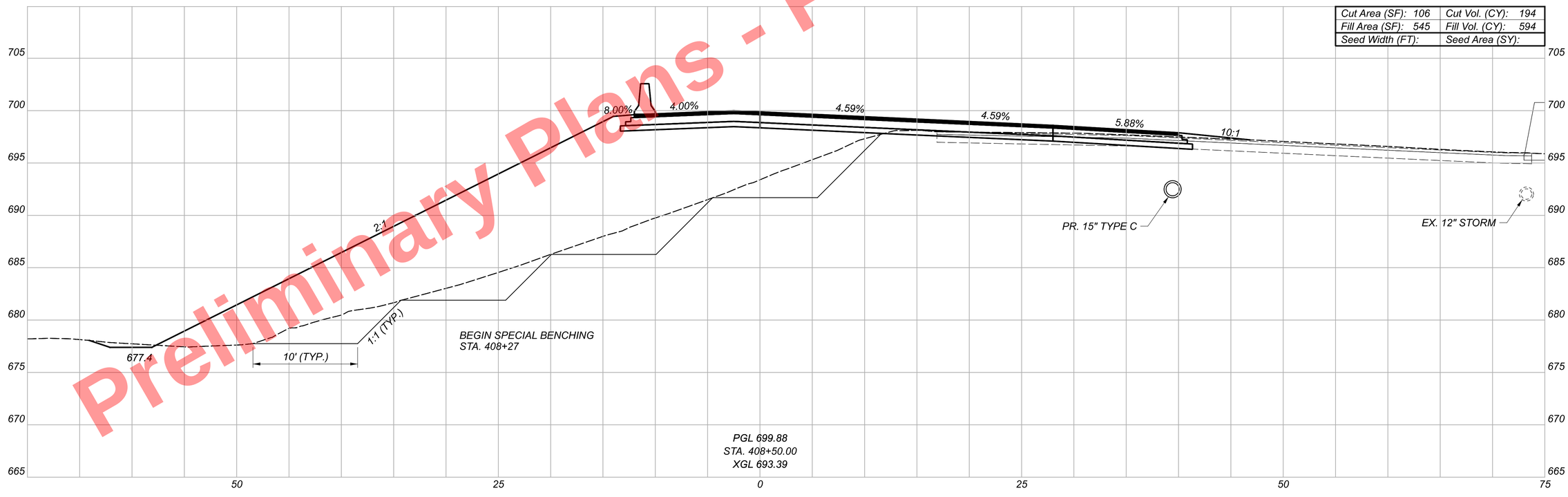

Preliminary Plans - For Reference Only

CROSS SECTIONS
RAMP A2

Sheet Totals		
Seeding	Cut	Fill
0	384	1718

DESIGN AGENCY
HDR

DESIGNER
BMV

REVIEWER
TJS 04/30/24

PROJECT ID
82382

SHEET 805 TOTAL 2696

CUY-90-16.28 (CCG3A)

MODEL: 408+50.00 [Sheet] PAPERSIZE: 34x22 (in.) DATE: 5/15/2025 TIME: 11:24:34 AM USER: TSCHOEN
pw:\\mb-us-pw.bentley.com:mb-us-pw-03\Documents\Cleveland_OH_OL_Projects\ODOT\District12\82382\400-Engineering\Roadway\Sheets\82382_XS3200.dgn

Preliminary Plans - For Reference Only

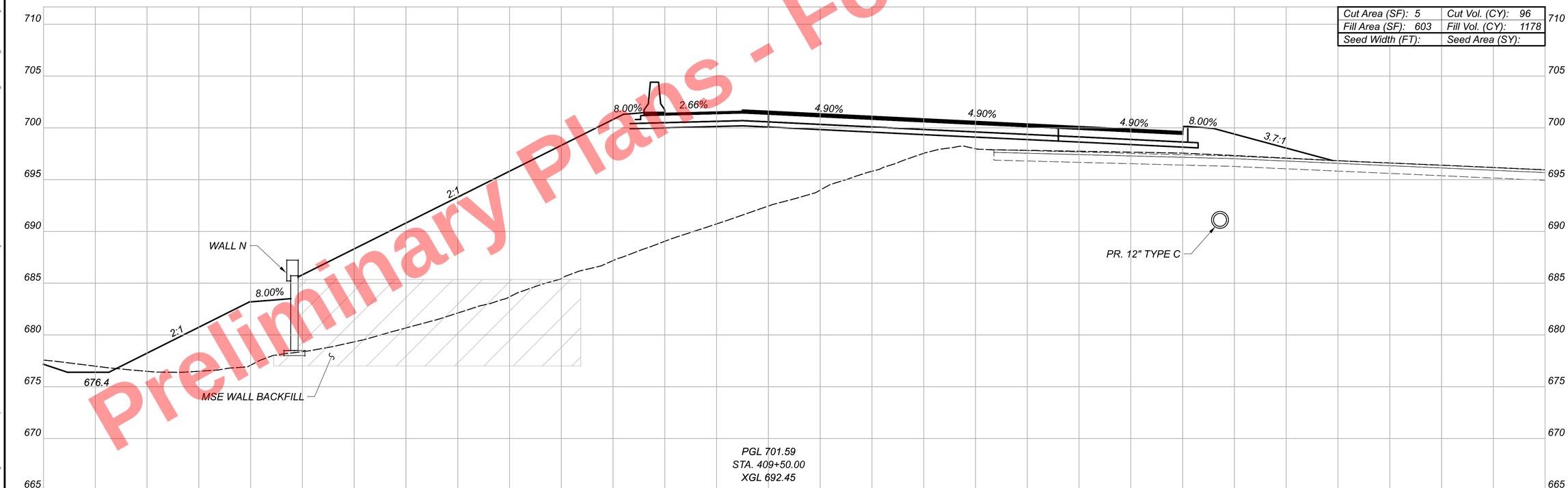

Cut Area (SF): 5	Cut Vol. (CY): 96
Fill Area (SF): 603	Fill Vol. (CY): 1178
Seed Width (FT):	Seed Area (SY):

CUY-90-16.28 (CCG3A)

MODEL: 409+50.00 [Sheet] PAPERSIZE: 34x22 (in.) DATE: 5/15/2025 TIME: 11:09:59 AM USER: TSCHOEN
pw:\\mb-us-pw.bentley.com:mb-us-pw-03\Documents\Cleveland.OH\OI_Projects\ODOT\District2\82382\400-Engineering\Roadway\Sheets\82382_XS3200.dgn

CROSS SECTIONS
RAMP A2

Sheet Totals		
Seeding	Cut	Fill
0	96	1178

DESIGN AGENCY

HDR

DESIGNER
BMV

REVIEWER
TJS 04/30/24

PROJECT ID
82382

SHEET 806 TOTAL 2696

Preliminary Plans - For Reference Only

Cut Area (SF): 0	Cut Vol. (CY): 5
Fill Area (SF): 397	Fill Vol. (CY): 926
Seed Width (FT):	Seed Area (SY):

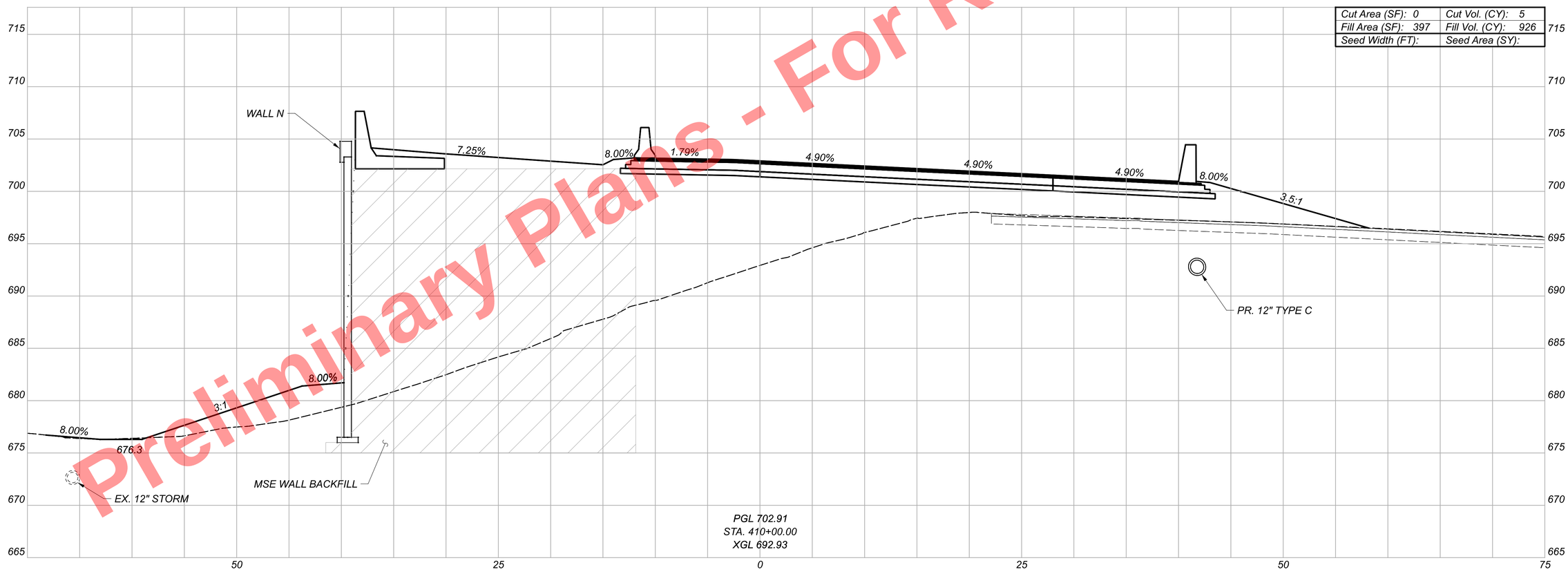

CROSS SECTIONS
RAMP A2

Sheet Totals		
Seeding	Cut	Fill
0	5	926

DESIGN AGENCY

DESIGNER BMV

REVIEWER TJS 04/30/24

PROJECT ID 82382

SHEET 807 TOTAL 2696

CUY-90-16.28 (CCG3A)

MODEL: 400+00.00 [Sheet] PAPERSIZE: 34x22 (in.) DATE: 5/5/2025 TIME: 11:10:04 AM USER: TSCHOEN
pw:\\mb-us-pw.bentley.com:mb-us-pw-03\Documents\Cleveland_OH\OL_Projects\ODOT\District12\82382\400-Engineering\Roadway\Sheets\82382_XS3200.dgn

For Reference Only
Preliminary Plans - Pe

Cut Area (SF): 0	Cut Vol. (CY): 0
Fill Area (SF): 239	Fill Vol. (CY): 443
Seed Width (FT):	Seed Area (SY):

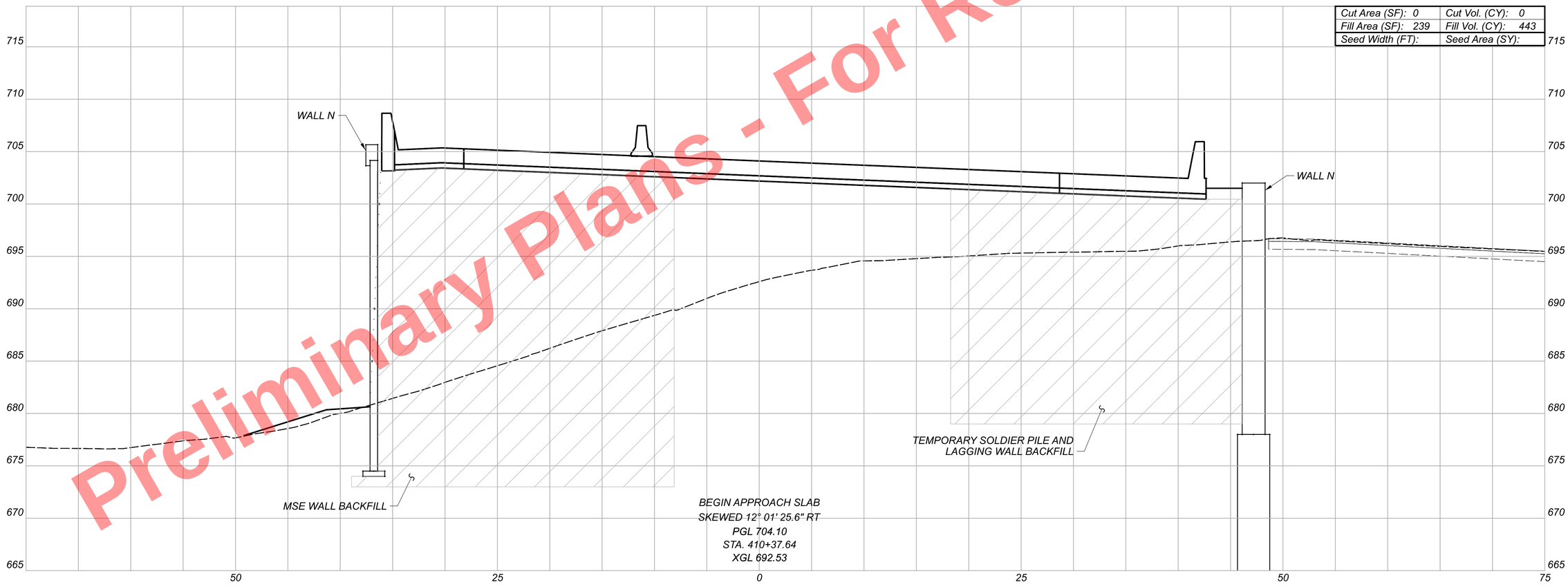

CROSS SECTIONS
RAMP A2

Sheet Totals		
Seeding	Cut	Fill
0	0	443

DESIGN AGENCY

DESIGNER
BMV

REVIEWER
TJS 04/30/24

PROJECT ID
82382

SHEET 808 TOTAL 2696

CUY-90-16.28 (CCG3A)

MODEL: 410+37.72 [Sheet] PAPERSIZE: 34x22 (in.) DATE: 5/15/2025 TIME: 11:10:09 AM USER: TSCHOEN
pw:\\mb-us-pw.bentley.com:mb-us-pw-03\Documents\Cleveland_OH\OL_Projects\ODOT\District12\82382\400-Engineering\Roadway\Sheets\82382_XS3200.dgn

Preliminary Plans - For Reference Only

Cut Area (SF): 0	Cut Vol. (CY): 0
Fill Area (SF): 16	Fill Vol. (CY): 142
Seed Width (FT):	Seed Area (SY):

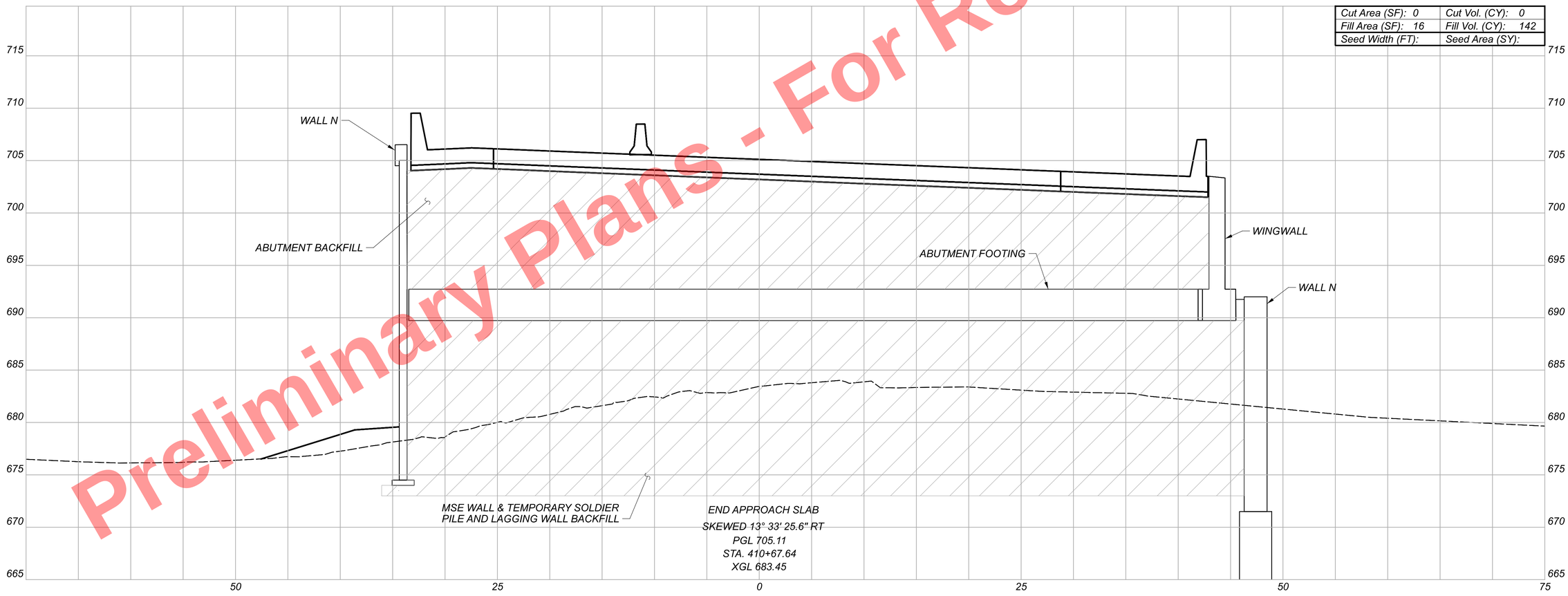

CROSS SECTIONS
RAMP A2

Sheet Totals		
Seeding	Cut	Fill
0	0	142

DESIGN AGENCY

DESIGNER
BMV

REVIEWER
TJS 04/30/24

PROJECT ID
82382

SHEET 809 | TOTAL 2696

CUY-90-16.28 (CCG3A)

MODEL: 410+67.72-[Sheet] PAPERSIZE: 34x22 (in.) DATE: 5/15/2025 TIME: 11:01:15 AM USER: TSCHOEN
pw:\\mb-us-pw.bentley.com:mb-us-pw-03\Documents\Cleveland_OH\OL_Projects\ODOT\District12\82382\400-Engineering\Roadway\Sheets\82382_XS3200.dgn

Preliminary Plans - For Reference Only

Cut Area (SF):	0	Cut Vol. (CY):	0
Fill Area (SF):	2	Fill Vol. (CY):	0
Seed Width (FT):		Seed Area (SY):	
Excavation, APP (SF):	150	Excavation, APP (CY):	0
Embankment, APP (SF):	208	Embankment, APP (CY):	0
Geofoam (SF):	1408	Geofoam (CY):	0

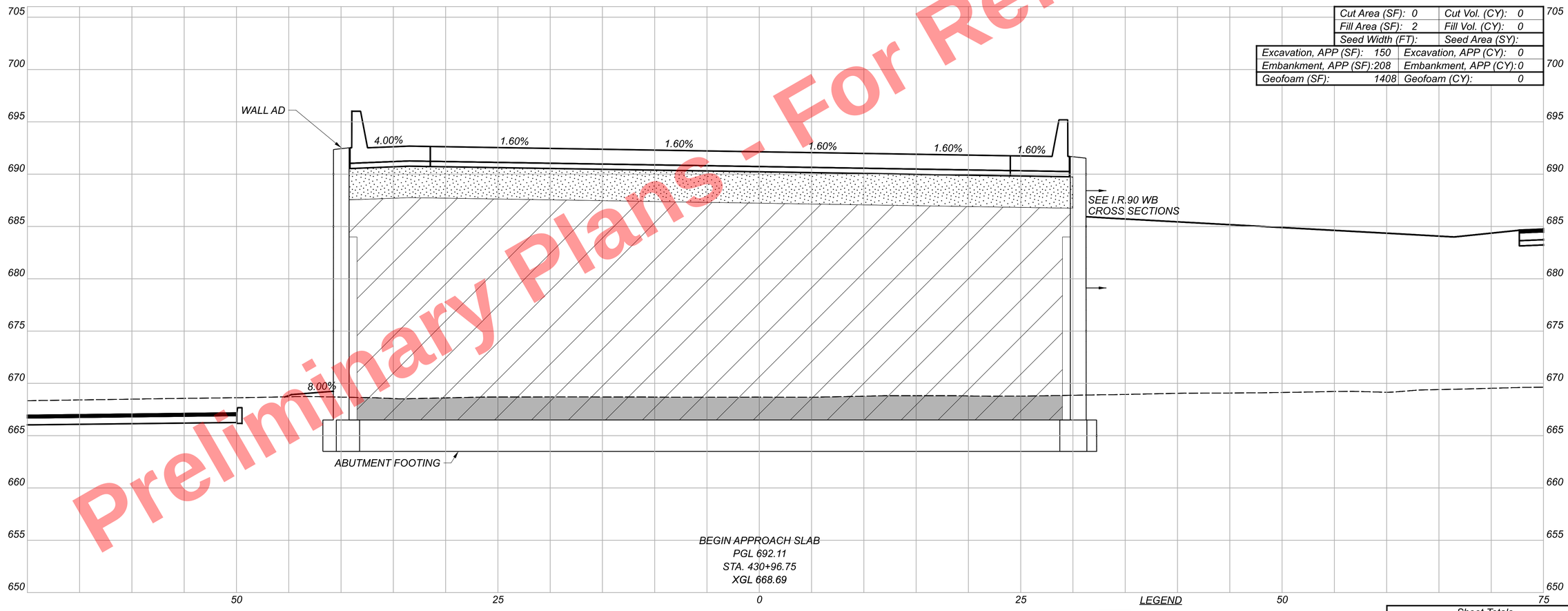

LEGEND

- ITEM 203 - EMBANKMENT, AS PER PLAN
- ITEM 203 - ROADWAY MISC.: EPS GEOFOAM FILL
- ITEM 203 - EXCAVATION, AS PER PLAN

Sheet Totals		
Seeding	Cut	Fill
0	0	0
Embankment, APP	Excavation, APP	Geofoam
0	0	0

CROSS SECTIONS
RAMP A2

DESIGN AGENCY

DESIGNER BMV

REVIEWER TJS 04/30/24

PROJECT ID 82382

SHEET 810 TOTAL 2696

CUY-90-16.28 (CCG3A)

MODEL: 430+96.17 (Sheet) PAPERSIZE: 34x22 (in.) DATE: 5/15/2025 TIME: 11:24:39 AM USER: TSCHOEN
pw:\\mb-us-pw.bentley.com:mb-us-pw-03\Documents\Cleveland_OH\OL_Projects\ODOT\District12\82382\400-Engineering\Roadway\Sheets\82382_XS3200.dgn

For Reference Only
Preliminary Plans - Pe

Cut Area (SF): 0	Cut Vol. (CY): 0
Fill Area (SF): 2	Fill Vol. (CY): 2
Seed Width (FT):	Seed Area (SY):
Excavation, APP (SF): 317	Excavation, APP (CY): 259
Embankment, APP (SF):219	Embankment, APP (CY):237
Geofoam (SF): 1542	Geofoam (CY): 1639

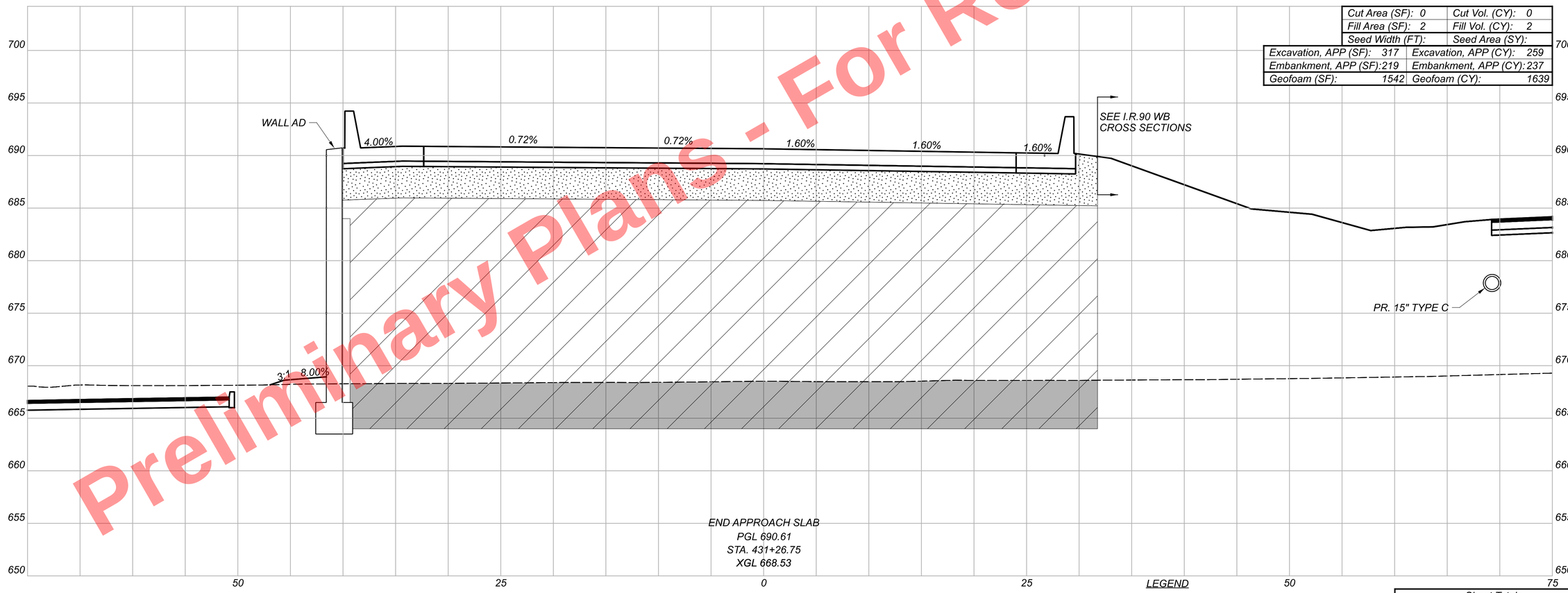

LEGEND

- ITEM 203 - EMBANKMENT, AS PER PLAN
- ITEM 203 - ROADWAY MISC.: EPS GEOFOAM FILL
- ITEM 203 - EXCAVATION, AS PER PLAN

Sheet Totals		
Seeding	Cut	Fill
0	0	2
Embankment, APP	Excavation, APP	Geofoam
237	259	1639

CROSS SECTIONS
RAMP A2

DESIGN AGENCY

DESIGNER BMV

REVIEWER TJS 04/30/24

PROJECT ID 82382

SHEET 811 TOTAL 2696

CUY-90-16.28 (CCG3A)

MODEL: 431+26.17 [Sheet] PAPERSIZE: 34x22 (in.) DATE: 5/15/2025 TIME: 11:10:33 AM USER: TSCHOEN
pw:\\mb-us-pw.bentley.com:mb-us-pw-03\Documents\Cleveland_OH\OL_Projects\ODOT\District12\82382\400-Engineering\Roadway\Sheets\82382_XS3200.dgn

Preliminary Plans - For Reference Only

Cut Area (SF): 0	Cut Vol. (CY): 0
Fill Area (SF): 4	Fill Vol. (CY): 3
Seed Width (FT):	Seed Area (SY):

Excavation, APP (SF): 430	Excavation, APP (CY): 330
Embankment, APP (SF):280	Embankment, APP (CY):220
Geofoam (SF): 1889	Geofoam (CY): 1514

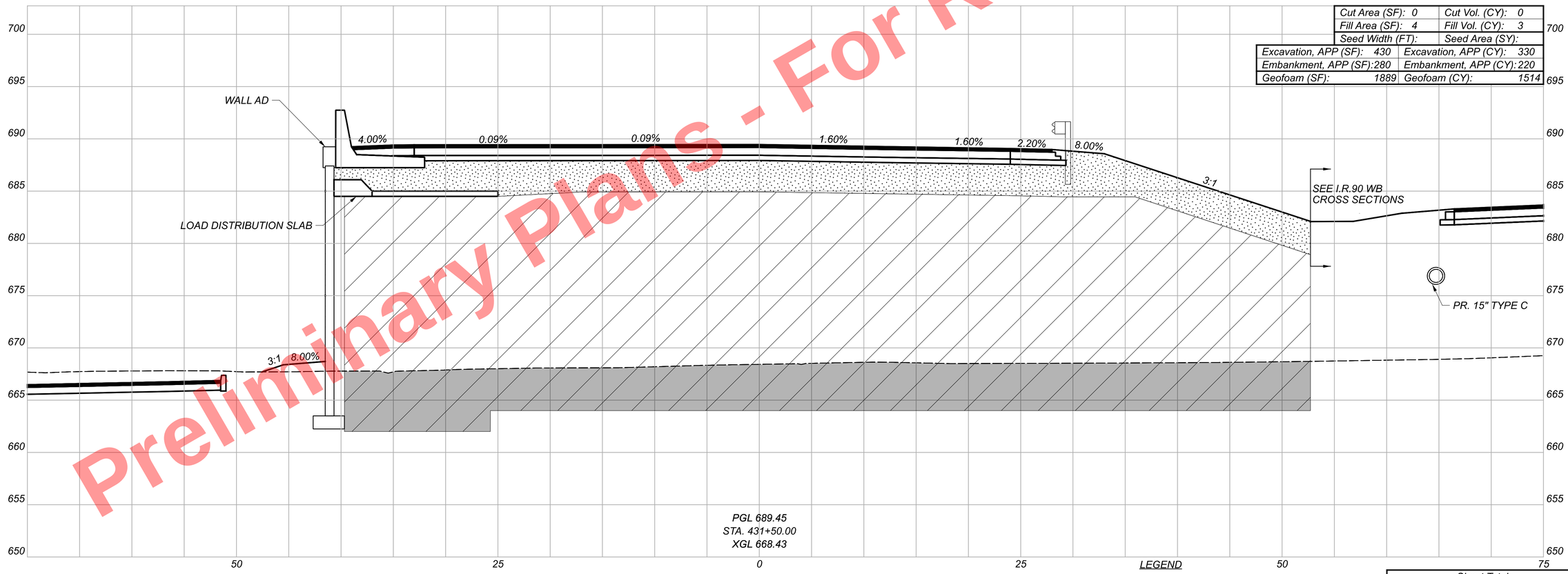

LEGEND

- ITEM 203 - EMBANKMENT, AS PER PLAN
- ITEM 203 - ROADWAY MISC.: EPS GEOFOAM FILL
- ITEM 203 - EXCAVATION, AS PER PLAN

Sheet Totals		
Seeding	Cut	Fill
0	0	3
Embankment, APP	Excavation, APP	Geofoam
220	330	1514

CROSS SECTIONS
RAMP A2

DESIGN AGENCY

DESIGNER BMV

REVIEWER TJS 04/30/24

PROJECT ID 82382

SHEET 812 TOTAL 2696

CUY-90-16.28 (CCG3A)

MODEL: 431+50.00 [Sheet] PAPERSIZE: 34x22 (in.) DATE: 6/3/2025 TIME: 6:55:34 AM USER: TSCHOEN
pw:\\mb-us-pw.bentley.com:mb-us-pw-03\Documents\Cleveland_OH\OL_Projects\ODOT\District12\82382\400-Engineering\Roadway\Sheets\82382_XS3200.dgn

Preliminary Plans - For Reference Only

Cut Area (SF): 0	Cut Vol. (CY): 0
Fill Area (SF): 3	Fill Vol. (CY): 6
Seed Width (FT):	Seed Area (SY):
Excavation, APP (SF): 456	Excavation, APP (CY): 820
Embankment, APP (SF): 272	Embankment, APP (CY): 511
Geofoam (SF): 1679	Geofoam (CY): 3304

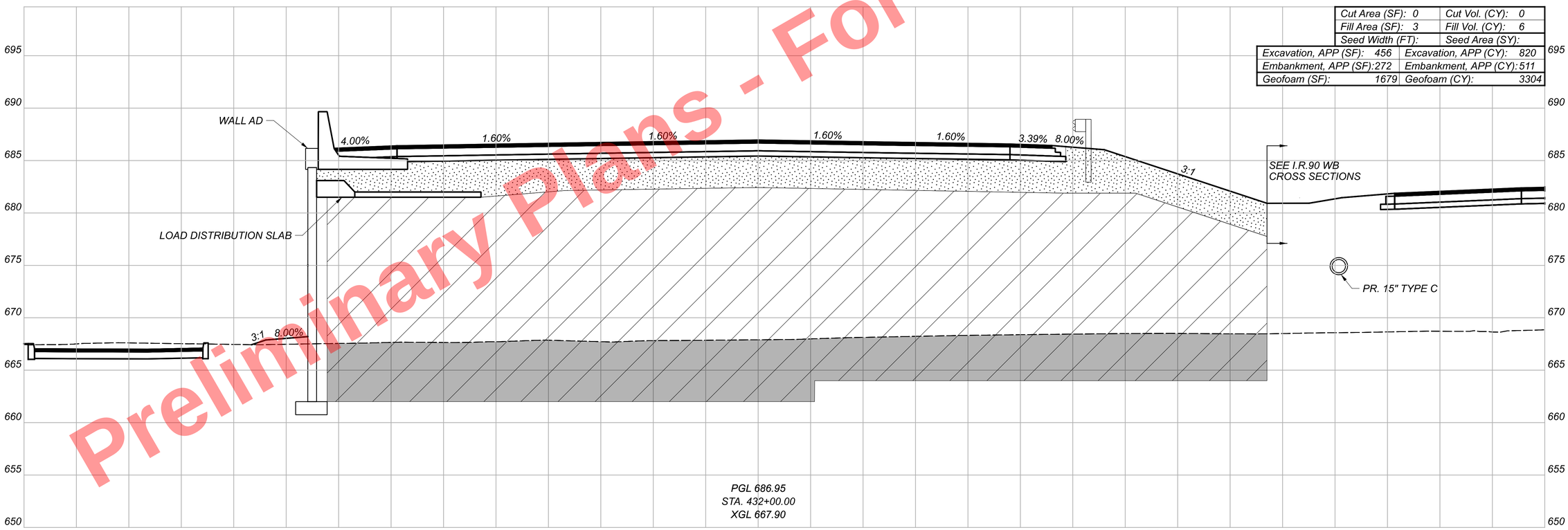

LEGEND

- ITEM 203 - EMBANKMENT, AS PER PLAN
- ITEM 203 - ROADWAY MISC.: EPS GEOFOAM FILL
- ITEM 203 - EXCAVATION, AS PER PLAN

Sheet Totals		
Seeding	Cut	Fill
0	0	6
Embankment, APP	Excavation, APP	Geofoam
511	820	3304

CROSS SECTIONS
RAMP A2

DESIGN AGENCY

HDR

DESIGNER: BMV

REVIEWER: TJS 04/30/24

PROJECT ID: 82382

SHEET: 813 TOTAL: 2696

CUY-90-16.28 (CCG3A)

MODEL: 432+00.00 [Sheet] PAPERSIZE: 34x22 (in.) DATE: 6/3/2025 TIME: 6:55:41 AM USER: TSCHOEN
pw:\\mb-us-pw.bentley.com:mb-us-pw-03\Documents\Cleveland.OH\OI_Projects\ODOT\District2\82382\400-Engineering\Roadway\Sheets\82382_XS3200.dgn

Preliminary Plans - For Reference Only

Cut Area (SF): 0	Cut Vol. (CY): 0
Fill Area (SF): 2	Fill Vol. (CY): 2
Seed Width (FT):	Seed Area (SY):

Excavation, APP (SF): 521	Excavation, APP (CY): 360
Embankment, APP (SF):277	Embankment, APP (CY):202
Geofoam (SF): 1650	Geofoam (CY): 1226

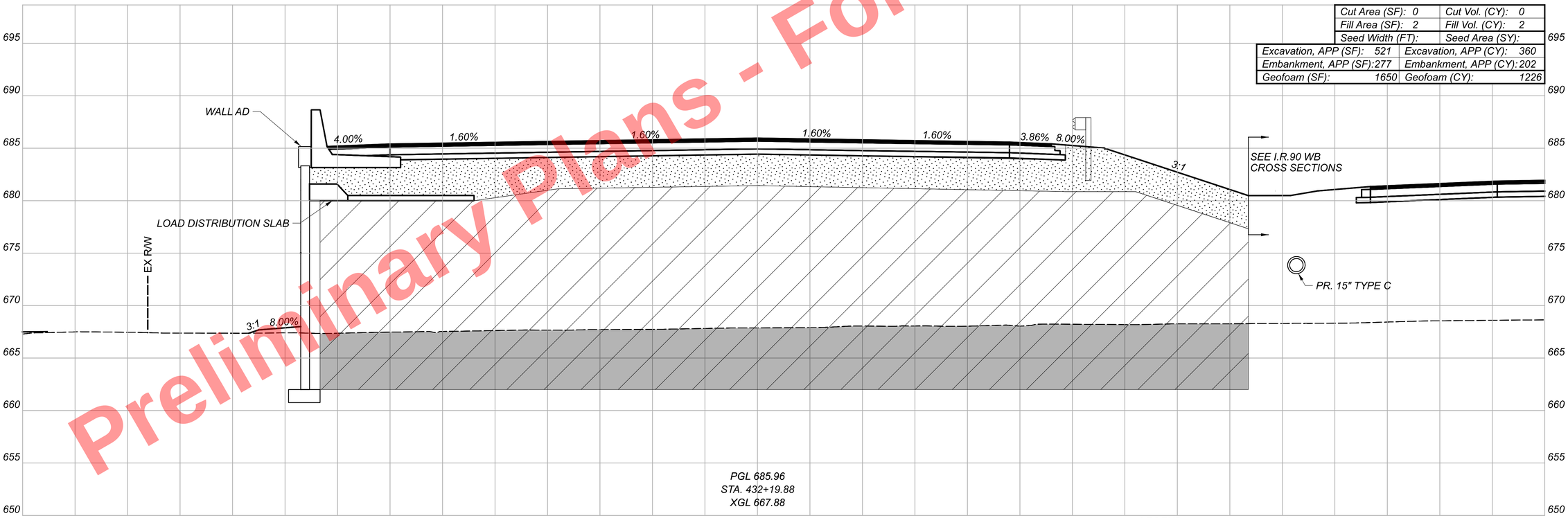

LEGEND

- ITEM 203 - EMBANKMENT, AS PER PLAN
- ITEM 203 - ROADWAY MISC.: EPS GEOFOAM FILL
- ITEM 203 - EXCAVATION, AS PER PLAN

Sheet Totals		
Seeding	Cut	Fill
0	0	2
Embankment, APP	Excavation, APP	Geofoam
202	360	1226

CROSS SECTIONS
RAMP A2

DESIGN AGENCY

DESIGNER BMV

REVIEWER TJS 04/30/24

PROJECT ID 82382

SHEET 814 TOTAL 2696

CUY-90-16.28 (CCG3A)

MODEL: 432+19.88 [Sheet] PAPERSIZE: 34x22 (in.) DATE: 6/13/2025 TIME: 6:55:47 AM USER: TSCHOEN
pw:\\mb-us-pw.bentley.com:mb-us-pw-03\Documents\Cleveland_OHNOI_Projects\ODOT\District2\82382\400-Engineering\Roadway\Sheets\82382_XS3200.dgn

Preliminary Plans - For Reference Only

Cut Area (SF): 0	Cut Vol. (CY): 0
Fill Area (SF): 0	Fill Vol. (CY): 1
Seed Width (FT):	Seed Area (SY):

Excavation, APP (SF): 332	Excavation, APP (CY): 476
Embankment, APP (SF):177	Embankment, APP (CY):253
Geofoam (SF): 980	Geofoam (CY): 1467

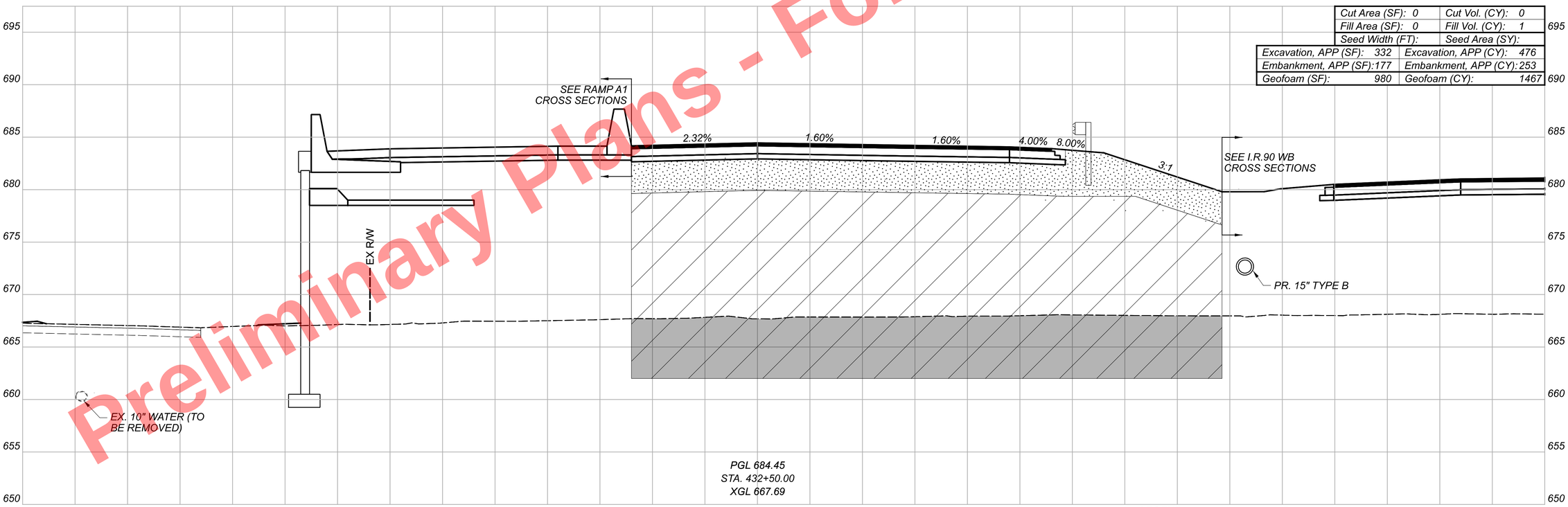

LEGEND

- ITEM 203 - EMBANKMENT, AS PER PLAN
- ITEM 203 - ROADWAY MISC.: EPS GEOFOAM FILL
- ITEM 203 - EXCAVATION, AS PER PLAN

Sheet Totals		
Seeding	Cut	Fill
0	0	1
Embankment, APP	Excavation, APP	Geofoam
253	476	1467

CROSS SECTIONS
RAMP A2

DESIGN AGENCY

DESIGNER BMV

REVIEWER TJS 04/30/24

PROJECT ID 82382

SHEET 815 TOTAL 2696

CUY-90-16.28 (CCG3A)

MODEL: 432+50.00 [Sheet] PAPERSIZE: 34x22 (in.) DATE: 3/28/2025 TIME: 9:02:15 AM USER: Kevin.McNutt
pw:\\mb-us-pw.bentley.com:mb-us-pw-03\Documents\Cleveland_OH\01_Projects\000T\District2\82382\400-Engineering\Roadway\Sheets\82382_XS3200.dgn

Preliminary Plans - For Reference Only

Cut Area (SF): 0	Cut Vol. (CY): 0
Fill Area (SF): 0	Fill Vol. (CY): 0
Seed Width (FT):	Seed Area (SY):
Excavation, APP (SF): 250	Excavation, APP (CY): 504
Embankment, APP (SF):157	Embankment, APP (CY):300
Geofoam (SF): 675	Geofoam (CY): 1371

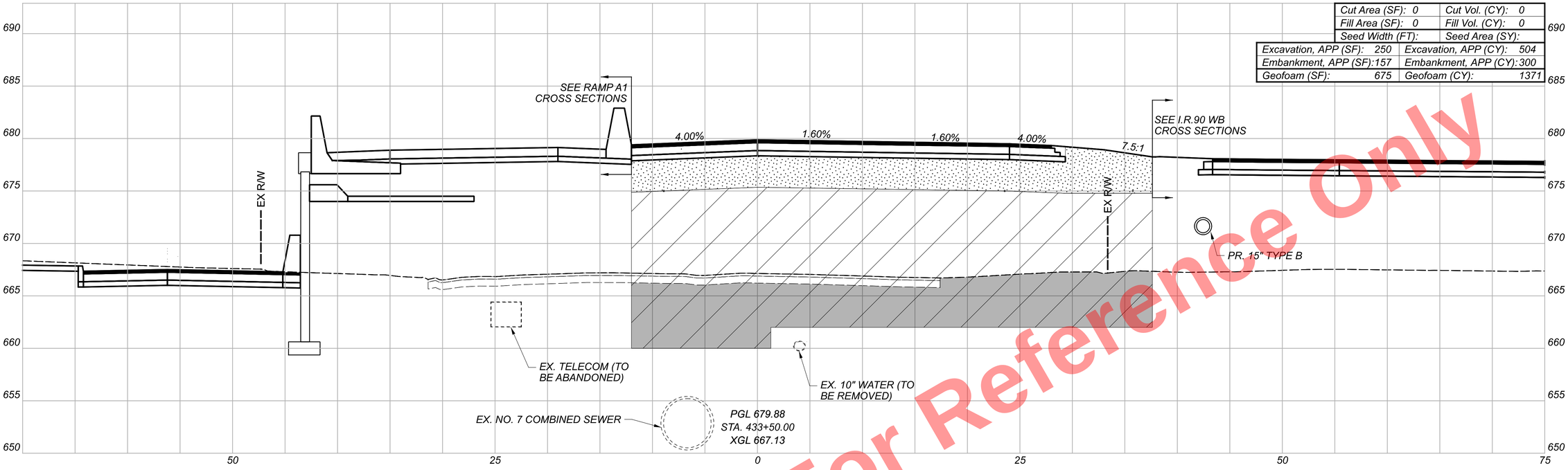

Cut Area (SF): 0	Cut Vol. (CY): 0
Fill Area (SF): 0	Fill Vol. (CY): 0
Seed Width (FT):	Seed Area (SY):
Excavation, APP (SF): 294	Excavation, APP (CY): 580
Embankment, APP (SF):167	Embankment, APP (CY):319
Geofoam (SF): 806	Geofoam (CY): 1654

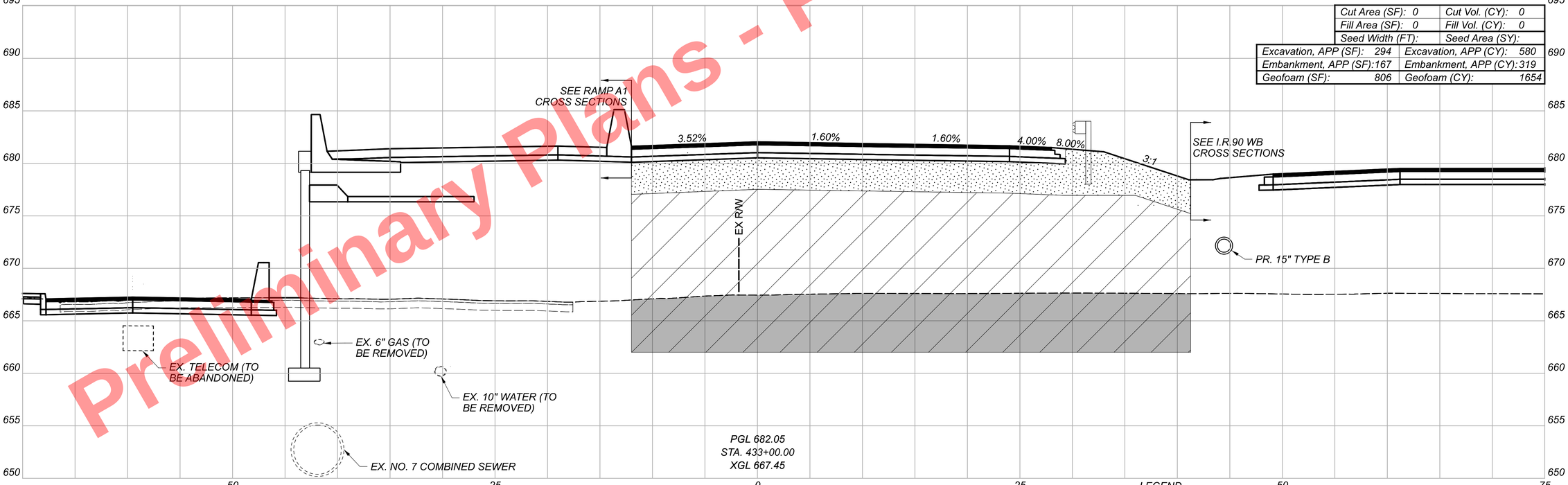

LEGEND

- ITEM 203 - EMBANKMENT, AS PER PLAN
- ITEM 203 - ROADWAY MISC.: EPS GEOFOAM FILL
- ITEM 203 - EXCAVATION, AS PER PLAN

Sheet Totals		
Seeding	Cut	Fill
0	0	0
Embankment, APP	Excavation, APP	Geofoam
619	1084	3025

CROSS SECTIONS
RAMP A2

DESIGN AGENCY

DESIGNER BMV

REVIEWER TJS 04/30/24

PROJECT ID 82382

SHEET 816 TOTAL 2696

CUY-90-16.28 (CCG3A)

MODEL: 433+00.00 [Sheet] PAPERSIZE: 34x22 (in.) DATE: 3/28/2025 TIME: 9:02:21 AM USER: Kevin.McNutt
pw:\\mb-us-pw.bentley.com:mb-us-pw-03\Documents\Cleveland_OH\01_Projects\0DOT\District#12\82382\400-Engineering\Roadway\Sheets\82382_XS3200.dgn

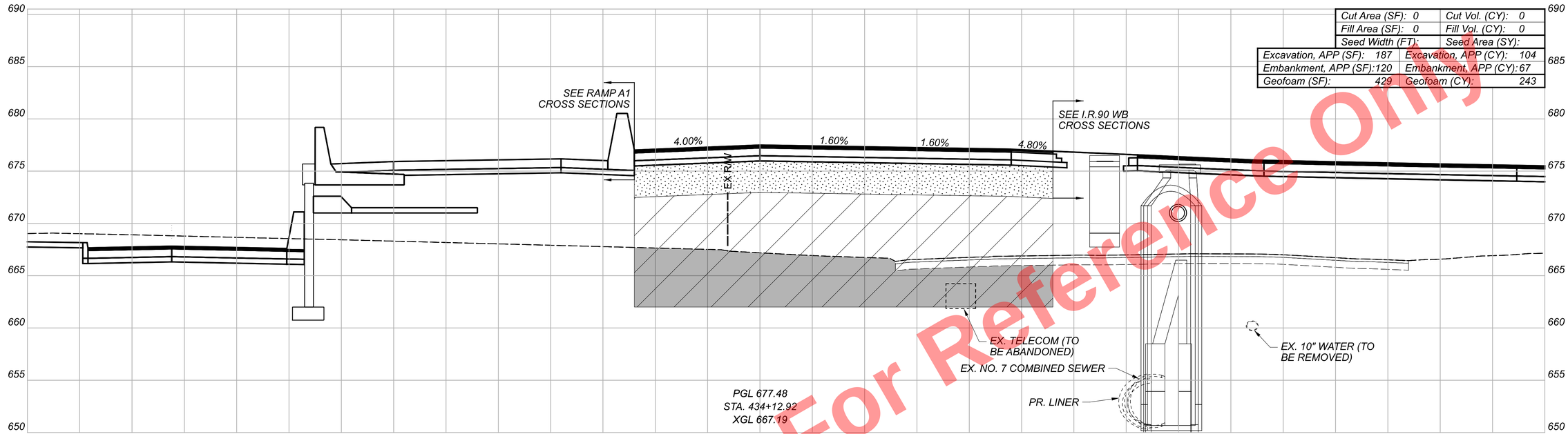

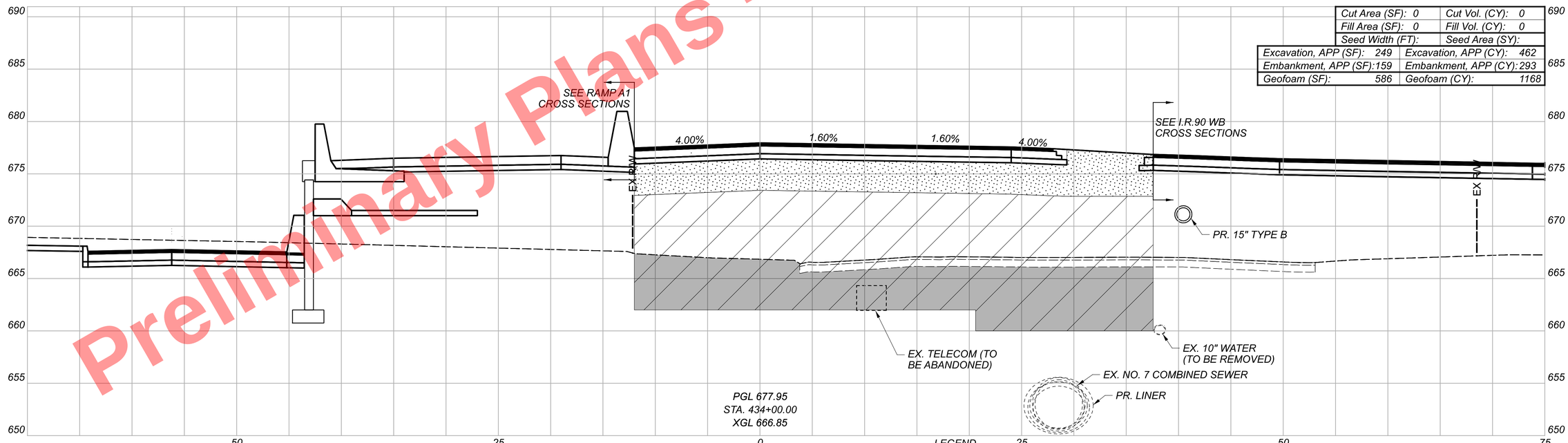

LEGEND

- ITEM 203 - EMBANKMENT, AS PER PLAN
- ITEM 203 - ROADWAY MISC.: EPS GEOFOAM FILL
- ITEM 203 - EXCAVATION, AS PER PLAN

Sheet Totals			Grand Totals Carried to Subsummary		
Seeding	Cut	Fill	Seeding	Cut	Fill
0	0	0	0	2166	4658
Embankment, APP	Excavation, APP	Geofoam	Embankment, APP	Excavation, APP	Geofoam
360	566	1411	2402	3895	13586

Preliminary Plans - For Reference Only

CUY-90-16.28 (CCG3A)

MODEL: 434+00.00 [Sheet] PAPERSIZE: 34x22 (In.) DATE: 3/28/2025 TIME: 9:02:27 AM USER: Kevin.McNutt
pw:\\mb-us-pw.bentley.com:mb-us-pw-03\Documents\Cleveland_OH_OL_Projects\ODOT\District 12\82382\400-Engineering\Roadway\Sheets\82382_XS3200.dgn

CROSS SECTIONS
RAMP A2

DESIGN AGENCY

DESIGNER
BMV

REVIEWER
TJS 04/30/24

PROJECT ID
82382

SHEET 817 TOTAL 2696

Preliminary Plans - For Reference Only

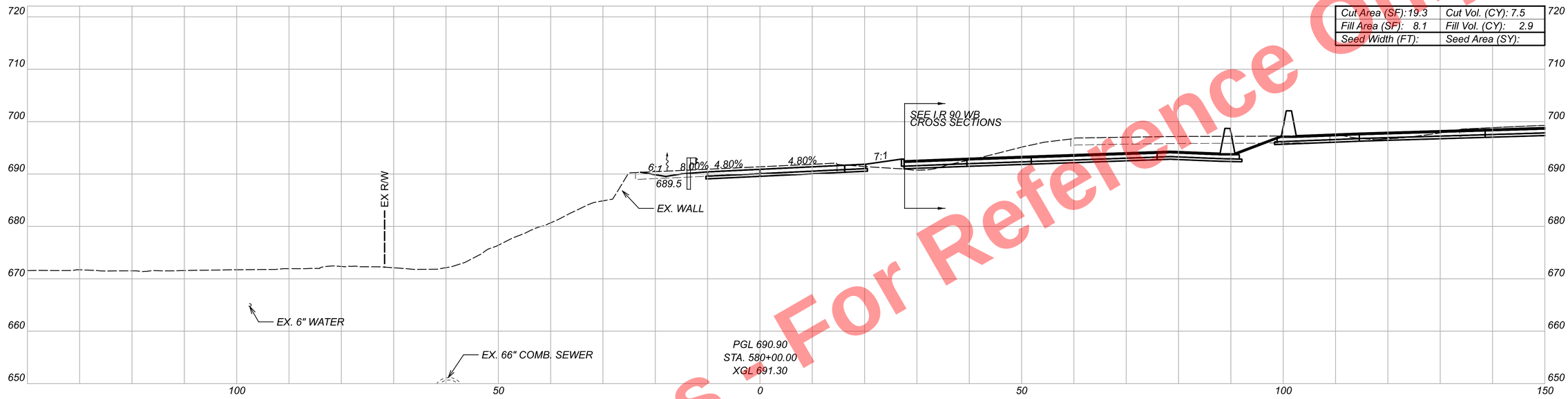

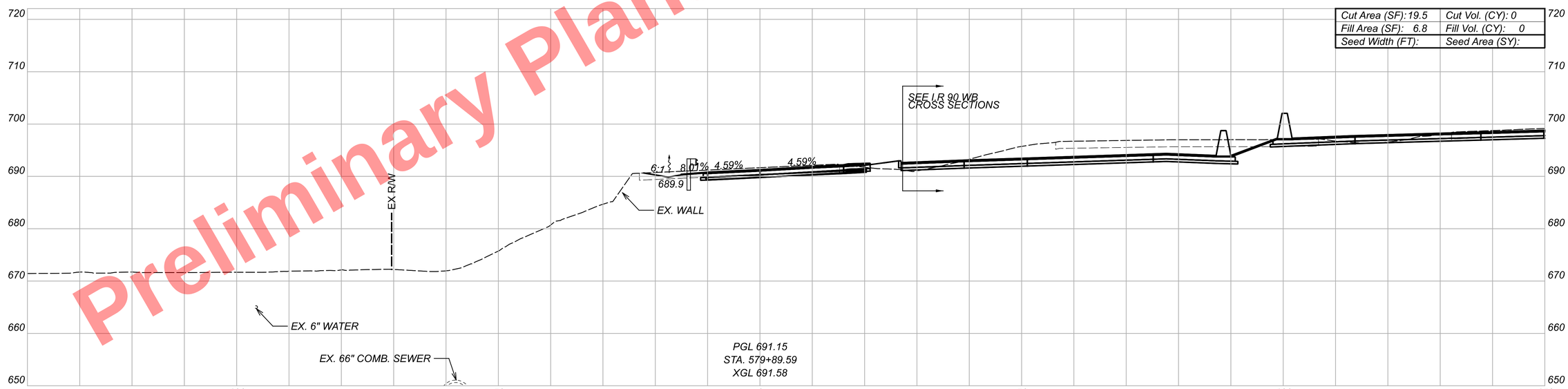

CUY-90-16.28

MODEL: BL RAMP A3 - 579+89.59 [Sheet] PAPERSIZE: 34x22 (in) DATE: 3/28/2025 TIME: 9:02:43 AM USER: KevinJMcNutt
pw:\\mb-us-pw.bentley.com:mb-us-pw-03\Documents\Cleveland_OH\OI_Projects\ODOT\District 12\82382\400-Engineering\Roadway\Sheets\82382_XS3300.dgn

CROSS SECTIONS
RAMP A3

DESIGN AGENCY
B&N
burgessniple.com

DESIGNER
AJS

REVIEWER
MRT 05/01/24

PROJECT ID
82382

SHEET 818 TOTAL 2696

Sheet Totals

Seeding	Cut	Fill
0	8	3

Preliminary Plans - For Reference Only

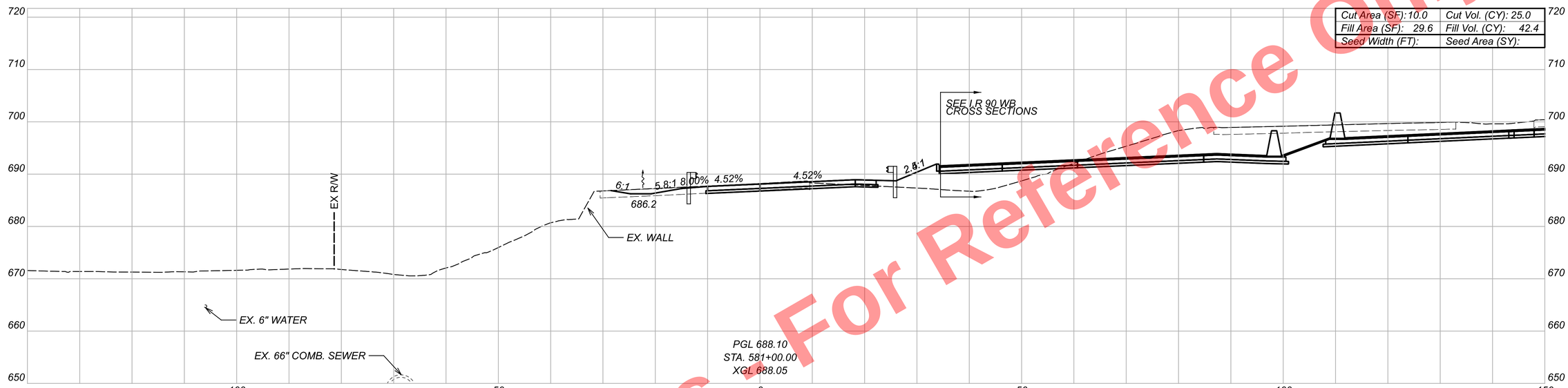

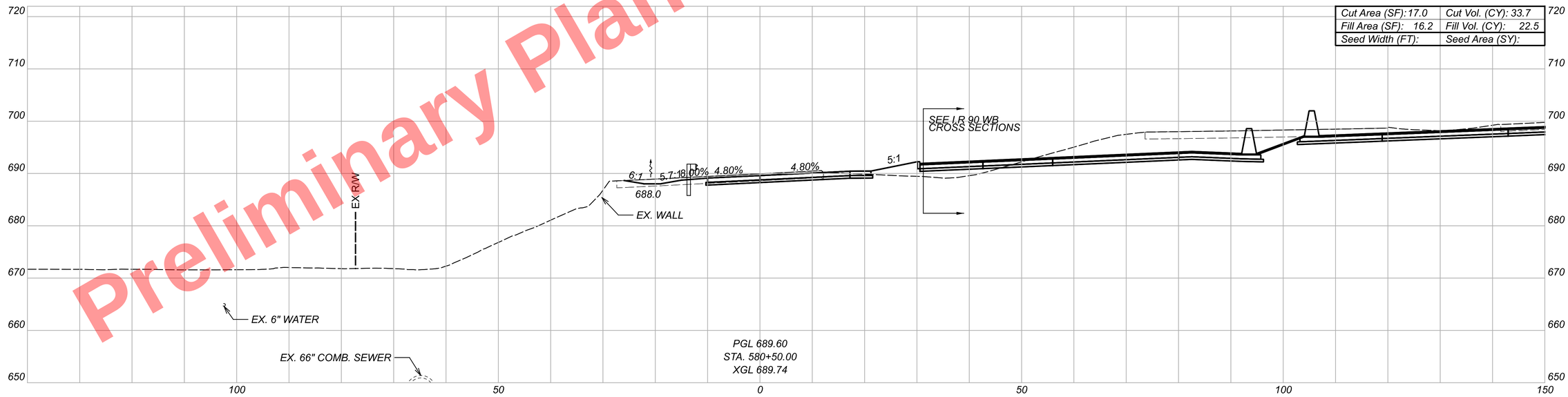

CUY-90-16.28

MODEL: BL RAMP A3 - 580+50.00 [Sheet] PAPERSIZE: 34x22 (In) DATE: 3/28/2025 TIME: 9:02:50 AM USER: KevinMcNutt
pw:\\mb-us-pw.bentley.com:mb-us-pw-03\Documents\Cleveland.OH\OI_Projects\ODOT\District2\82382\400-Engineering\Roadway\Sheets\82382_XS3300.dgn

CROSS SECTIONS
RAMP A3

Sheet Totals		
Seeding	Cut	Fill
0	59	66

DESIGN AGENCY
B&N
burgessniple.com

DESIGNER
AJS

REVIEWER
MRT 05/01/24

PROJECT ID
82382

SHEET 819 | TOTAL 2696

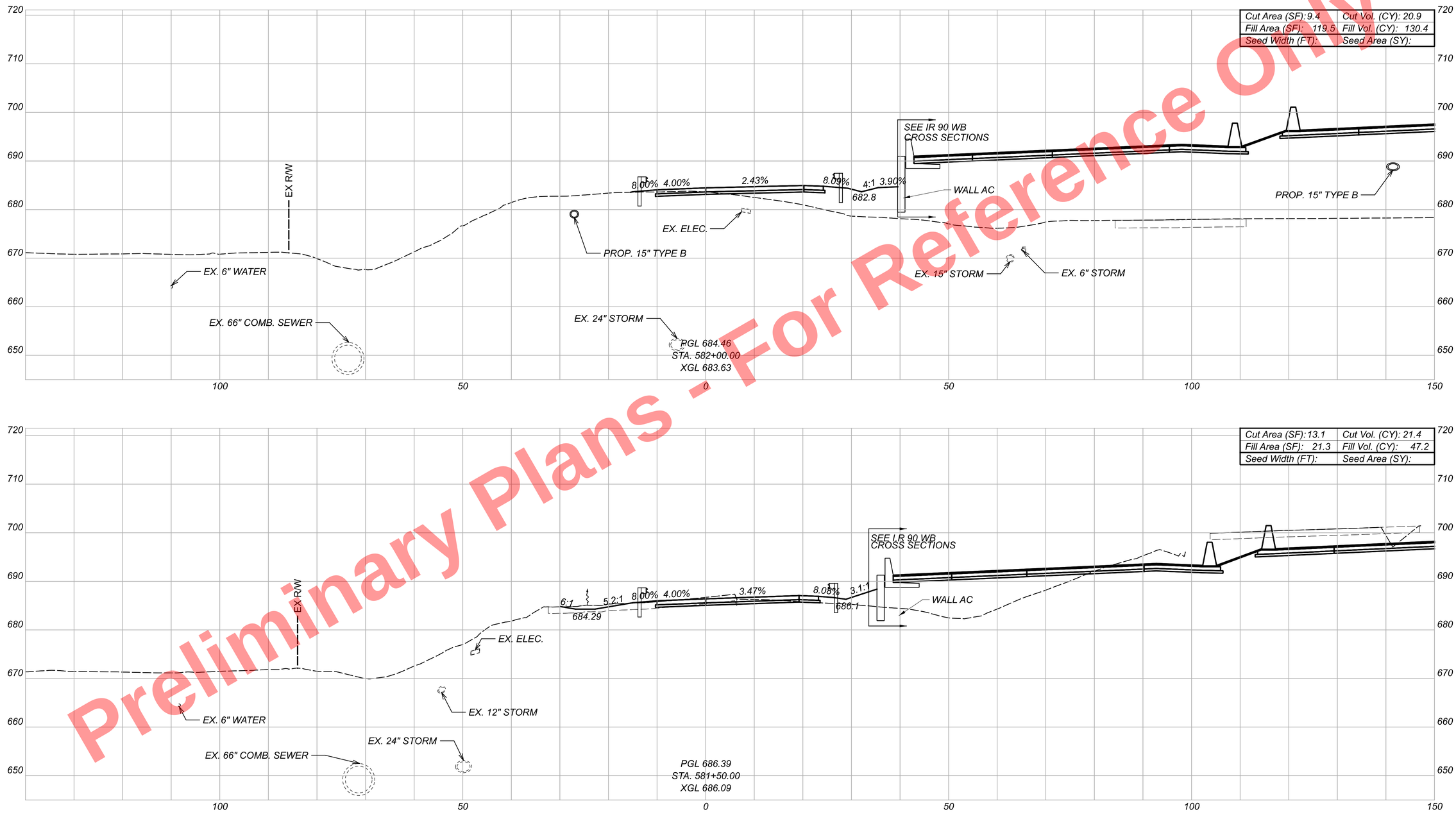

Preliminary Plans - Not For Reference Only

CUY-90-16.28

MODEL: BL RAMP A3 - 581+50.00 [Sheet] PAPERSIZE: 34x22 (in.) DATE: 3/28/2025 TIME: 9:02:55 AM USER: KevinJMcNutt
pw:\\mb-us-pw.bentley.com:mb-us-pw-03\Documents\Cleveland_OH\OL_Projects\ODOT\District 12\82382\400-Engineering\Roadway\Sheets\82382_XS3300.dgn

CROSS SECTIONS
RAMP A3

Sheet Totals		
Seeding	Cut	Fill
0	43	179

DESIGN AGENCY
B&N
burgessniple.com

DESIGNER
AJS

REVIEWER
MRT 05/01/24

PROJECT ID
82382

SHEET 820 TOTAL 2696

Preliminary Plans - For Reference Only

Cut Area (SF): 0	Cut Vol. (CY): 8.8
Fill Area (SF): 269.1	Fill Vol. (CY): 359.9
Seed Width (FT):	Seed Area (SY):

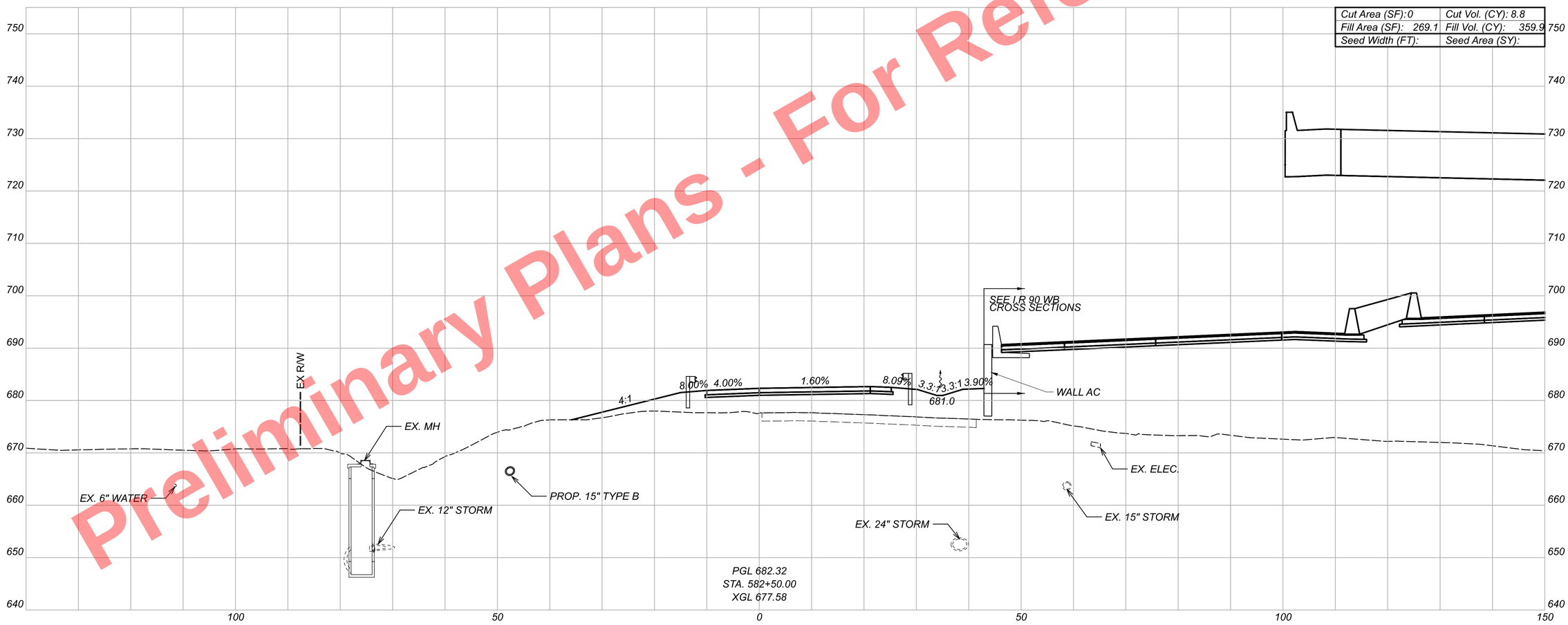

CROSS SECTIONS
RAMP A3

DESIGN AGENCY
B&N
burgessniple.com

DESIGNER
AJS

REVIEWER
MRT 05/01/24

PROJECT ID
82382

SHEET 821 TOTAL 2696

Sheet Totals		
Seeding	Cut	Fill
0	9	360

CUY-90-16.28

MODEL: BL RAMP A3 - 582+50.00 [Sheet] PAPERSIZE: 34x22 (in.) DATE: 3/28/2025 TIME: 9:03:00 AM USER: Kevin.McNutt
pw:\\mb-us-pw.bentley.com:mb-us-pw-03\Documents\Cleveland_OH\OL_Projects\ODOT\District 12\82382\400-Engineering\Roadway\Sheets\82382_XS3300.dgn

Preliminary Plans - For Reference Only

Cut Area (SF): 0	Cut Vol. (CY): 0
Fill Area (SF): 382.2	Fill Vol. (CY): 603.1
Seed Width (FT):	Seed Area (SY):

STRUCTURE NO. 9
CUY-77-1587
SFN 1806910



CROSS SECTIONS
RAMP A3

CUY-90-16.28

MODEL: BL RAMP A3 - 583+00.00 [Sheet] PAPERSIZE: 34x22 (In.) DATE: 3/28/2025 TIME: 9:03:04 AM USER: Kevin.McNutt
pw:\\mb-us-pw.bentley.com:mb-us-pw-03\Documents\Cleveland_OH\01_Projects\ODOT\District2\82382\400-Engineering\Roadway\Sheets\82382_XS3300.dgn

Sheet Totals		
Seeding	Cut	Fill
0	0	604

DESIGN AGENCY
B&N
burgessniple.com

DESIGNER
AJS

REVIEWER
MRT 05/01/24

PROJECT ID
82382

SHEET 822 TOTAL 2696

Preliminary Plans - For Reference Only

CROSS SECTIONS
RAMP A3

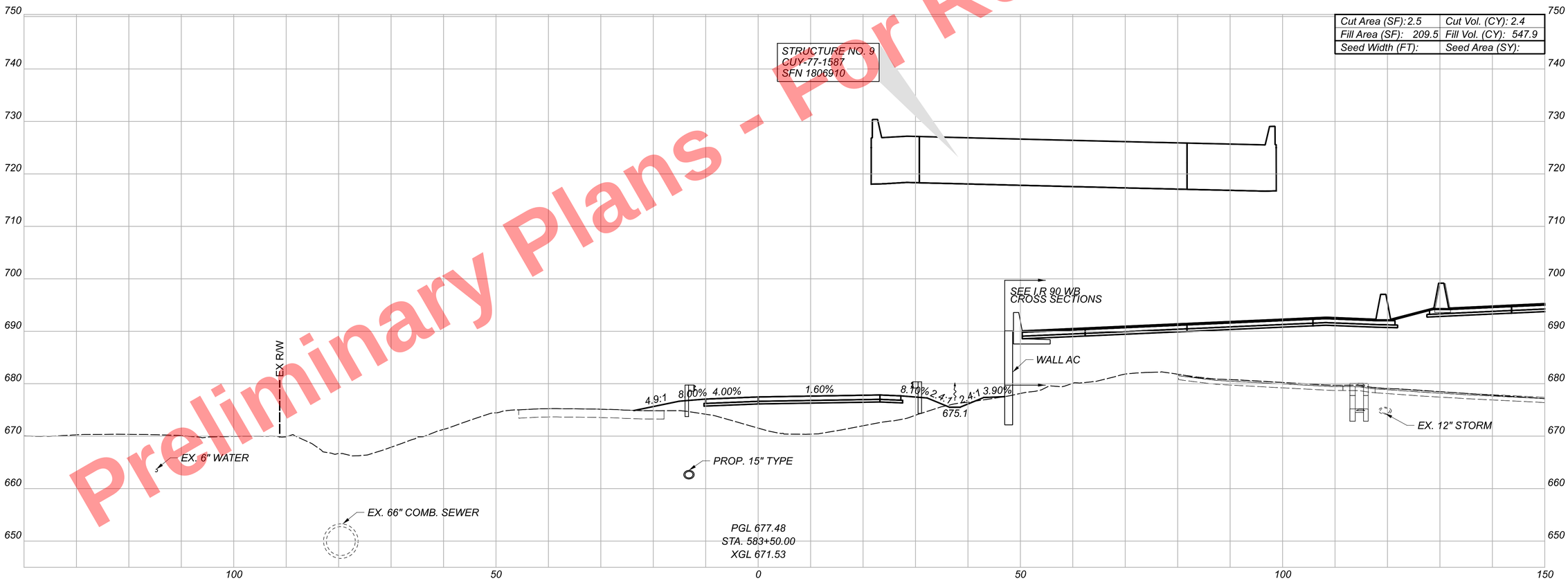

Sheet Totals		
Seeding	Cut	Fill
0	3	548

DESIGN AGENCY
B&N
burgessniple.com

DESIGNER
AJS

REVIEWER
MRT 05/01/24

PROJECT ID
82382

SHEET 823 | TOTAL 2696

CUY-90-16.28

MODEL: BL RAMP A3 - 583+50.00 [Sheet] PAPERSIZE: 34x22 (in) DATE: 3/28/2025 TIME: 9:03:08 AM USER: KevinMcNutt
pw:\\mb-us-pw.bentley.com:mb-us-pw-03\Documents\Cleveland.OH\DgnProjects\ODOT\District2\82382\400-Engineering\Roadway\Sheets\82382_XS3300.dgn

Preliminary Plans - For Reference Only

CROSS SECTIONS
RAMP A3

Cut Area (SF): 193.4	Cut Vol. (CY): 181.4
Fill Area (SF): 52.6	Fill Vol. (CY): 242.7
Seed Width (FT):	Seed Area (SY):

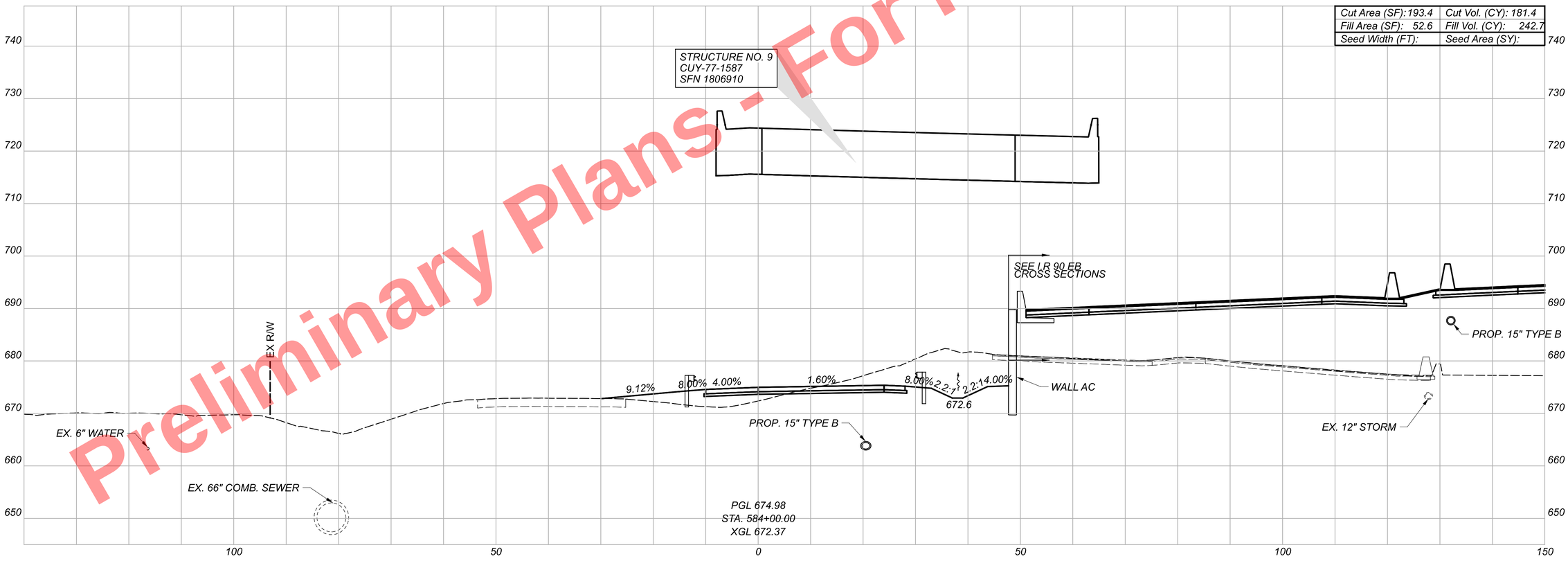

Sheet Totals		
Seeding	Cut	Fill
0	182	243

DESIGN AGENCY
B&N
burgessniple.com

DESIGNER
AJS

REVIEWER
MRT 05/01/24

PROJECT ID
82382

SHEET	TOTAL
824	2696

CUY-90-16.28

MODEL: BL RAMP A3 - 584+00.00 [Sheet] PAPERSIZE: 34x22 (in) DATE: 3/28/2025 TIME: 9:03:12 AM USER: Kevin.McNutt
pw:\\mb-us-pw.bentley.com:mb-us-pw-03\Documents\Cleveland.OH\OI_Projects\ODOT\District2\82382\400-Engineering\Roadway\Sheets\82382_XS3300.dgn

Preliminary Plans - For Reference Only

Cut Area (SF): 443.7	Cut Vol. (CY): 590.0
Fill Area (SF): 7.2	Fill Vol. (CY): 55.4
Seed Width (FT):	Seed Area (SY):

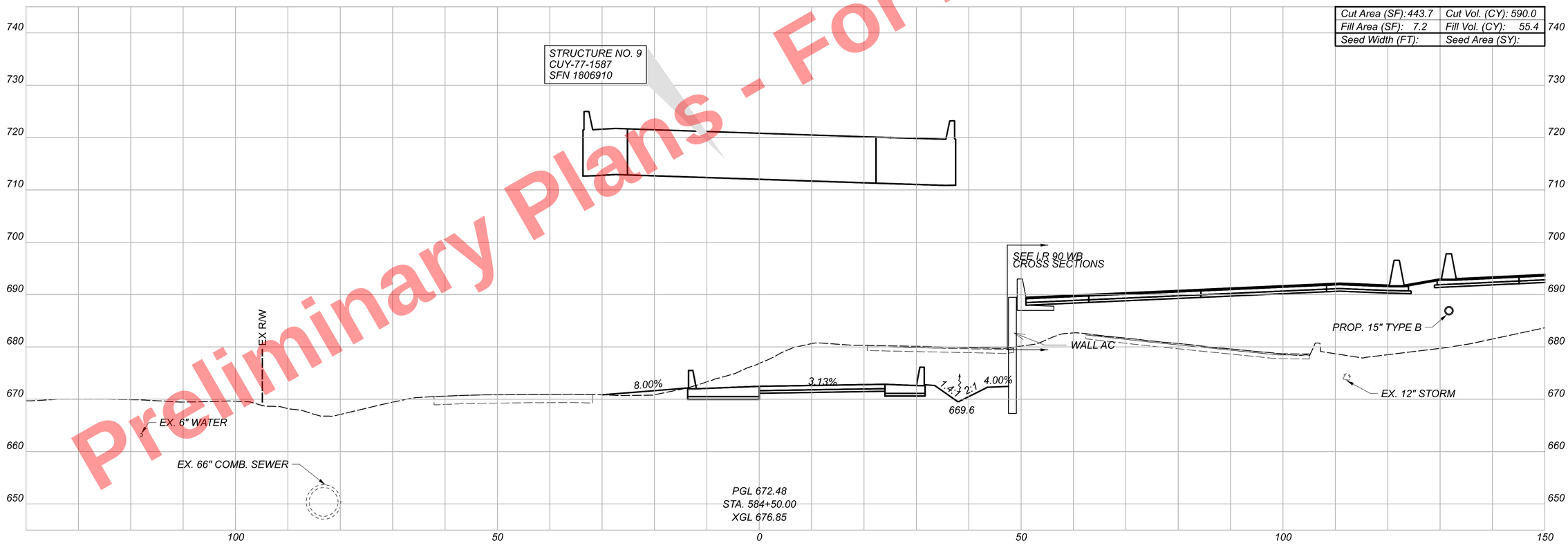

CUY-90-16.28

MODEL: BL RAMP A3 - 584+50.00 [Sheet] PAPERSIZE: 34x22 (in) DATE: 3/28/2025 TIME: 9:03:16 AM USER: Kevin.McNutt
pw:\\mb-us-pw.bentley.com:mb-us-pw-03\Documents\Cleveland.OH\OI_Projects\ODOT\District2\82382\400-Engineering\Roadway\Sheets\82382_XS3300.dgn

CROSS SECTIONS
RAMP A3

Sheet Totals		
Seeding	Cut	Fill
0	590	56

DESIGN AGENCY
B&N
burgessniple.com

DESIGNER
AJS

REVIEWER
MRT 05/01/24

PROJECT ID
82382

SHEET	TOTAL
825	2696

Preliminary Plans - For Reference Only

CROSS SECTIONS
RAMP A3

Cut Area (SF): 667.5	Cut Vol. (CY): 1028.9
Fill Area (SF): 0	Fill Vol. (CY): 6.7
Seed Width (FT):	Seed Area (SY):

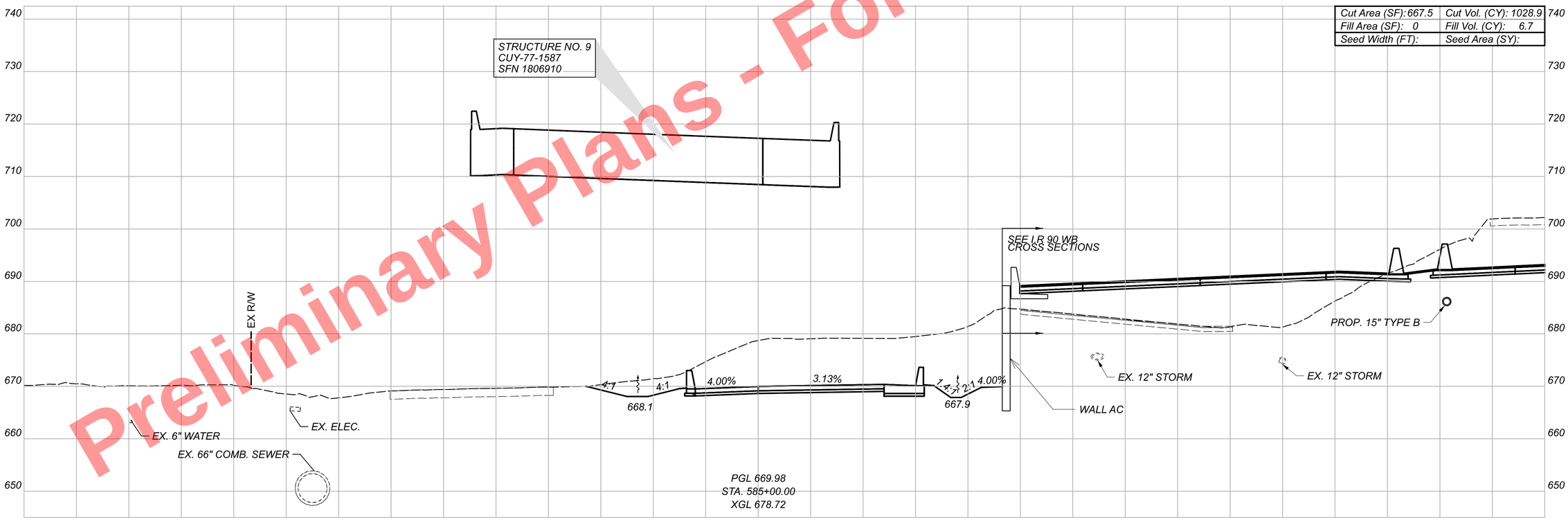

Sheet Totals		
Seeding	Cut	Fill
0	1029	7

DESIGN AGENCY
B&N
burgessniple.com

DESIGNER
AJS

REVIEWER
MRT 05/01/24

PROJECT ID
82382

SHEET 826 TOTAL 2696

CUY-90-16.28

MODEL: BL RAMP A3 - 585+00.00 [Sheet] PAPERSIZE: 34x22 (In.) DATE: 3/28/2025 TIME: 9:03:20 AM USER: KevinJMcNutt
pw:\\mb-us-pw.bentley.com:mb-us-pw-03\Documents\Cleveland_OH\01_Projects\ODOT\District2\82382\400-Engineering\Roadway\Sheets\82382_XS3300.dgn

Preliminary Plans - For Reference Only

Cut Area (SF): 920.9	Cut Vol. (CY): 1470.8
Fill Area (SF): 0	Fill Vol. (CY): 0
Seed Width (FT):	Seed Area (SY):

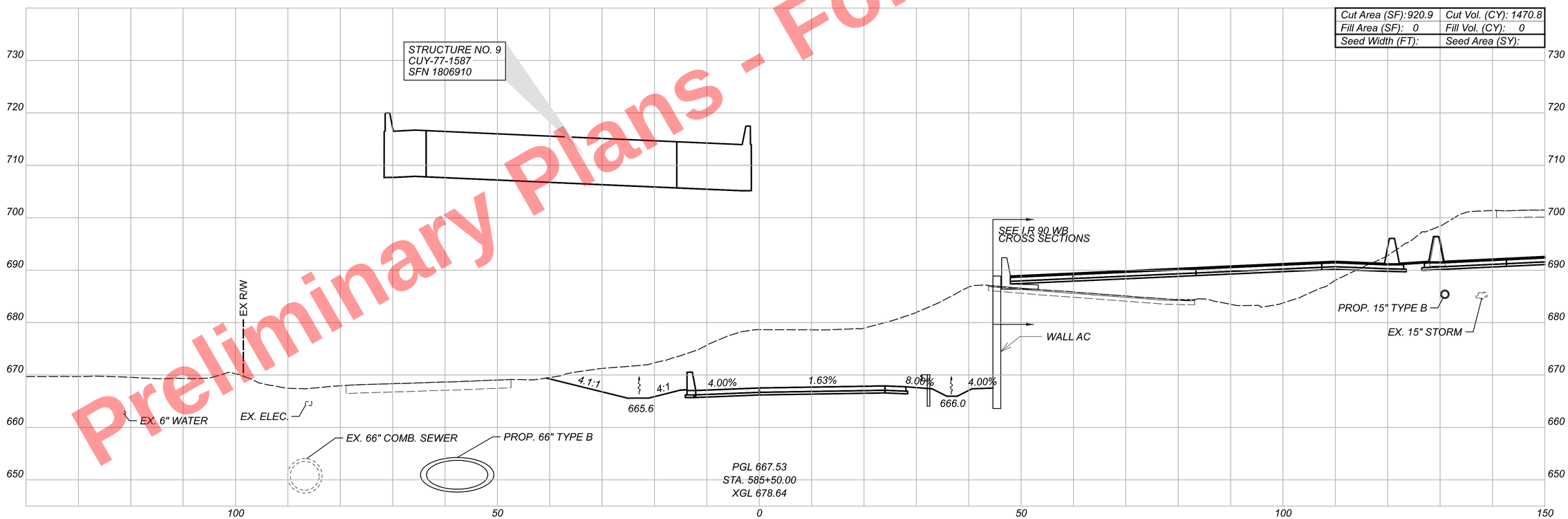

CROSS SECTIONS
RAMP A3

Sheet Totals		
Seeding	Cut	Fill
0	1471	0

DESIGN AGENCY
B&N
burgessniple.com

DESIGNER
AJS

REVIEWER
MRT 05/01/24

PROJECT ID
82382

SHEET 827 | TOTAL 2696

CUY-90-16.28

MODEL: BL RAMP A3 - 585+50.00 [Sheet] PAPERSIZE: 34x22 (in) DATE: 3/28/2025 TIME: 9:03:24 AM USER: Kevin.McNutt
pw:\\mb-us-pw.bentley.com:mb-us-pw-03\Documents\Cleveland_OH\OI_Projects\ODOT\District#12\82382\400-Engineering\Roadway\Sheets\82382_XS3300.dgn

Preliminary Plans - For Reference Only

Cut Area (SF): 1143.0	Cut Vol. (CY): 1911.1
Fill Area (SF): 0	Fill Vol. (CY): 0
Seed Width (FT):	Seed Area (SY):

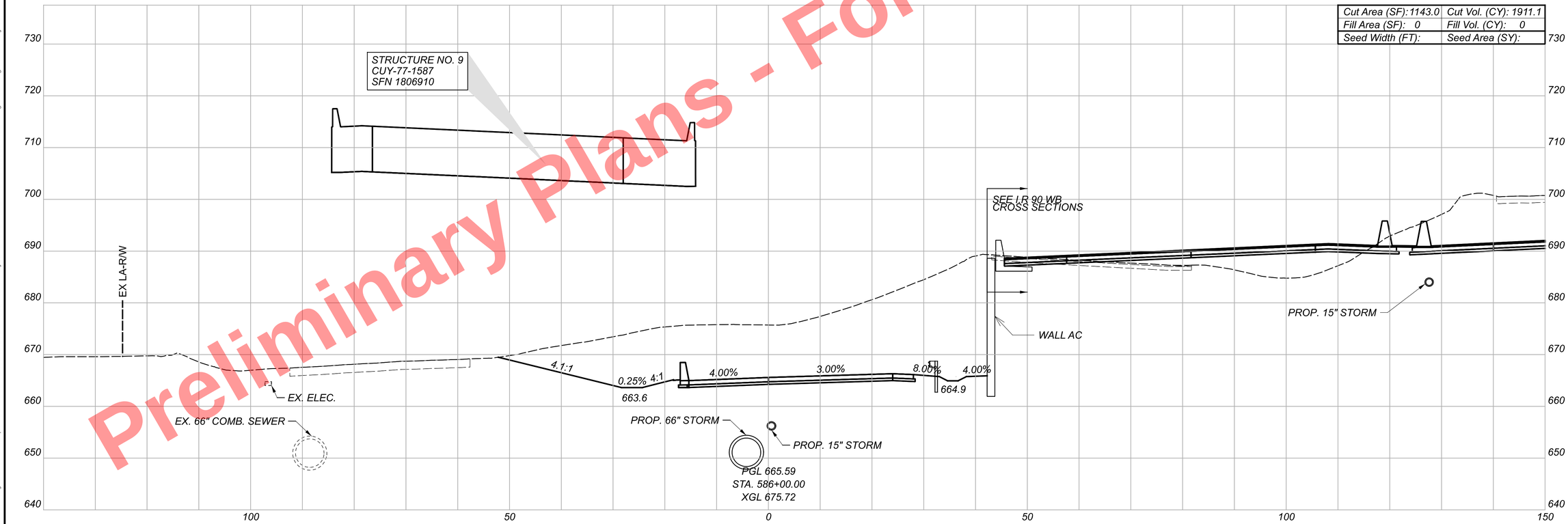

CROSS SECTIONS
RAMP A3

DESIGN AGENCY
B&N
burgessniple.com

DESIGNER
AJS

REVIEWER
MRT 05/01/24

PROJECT ID
82382

Sheet Totals		
Seeding	Cut	Fill
0	1912	0

SHEET	TOTAL
828	2696

CUY-90-16.28

MODEL: BL RAMP A3 - 586+00.00 [Sheet] PAPERSIZE: 34x22 (in) DATE: 3/28/2025 TIME: 9:03:28 AM USER: KevinJMcNutt
pw:\\mb-us-pw.bentley.com:mb-us-pw-03\Documents\Cleveland_OH\OI_Projects\000T\District2\82382\400-Engineering\Roadway\Sheets\82382_XS3300.dgn

Preliminary Plans - For Reference Only

CROSS SECTIONS
RAMP A3

Cut Area (SF): 1228.2	Cut Vol. (CY): 2195.6
Fill Area (SF): 0	Fill Vol. (CY): 0
Seed Width (FT):	Seed Area (SY):

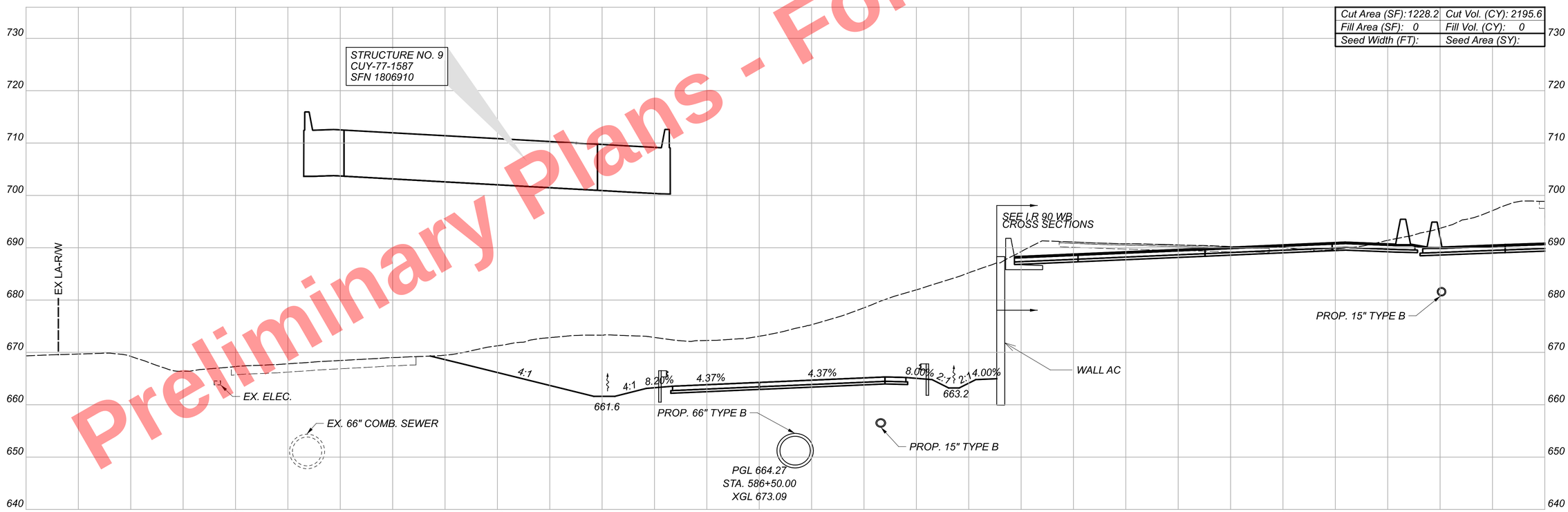

Sheet Totals		
Seeding	Cut	Fill
0	2196	0

DESIGN AGENCY
B&N
burgessniple.com

DESIGNER
AJS

REVIEWER
MRT 05/01/24

PROJECT ID
82382

SHEET 829 TOTAL 2696

CUY-90-16.28

MODEL: BL RAMP A3 - 586+50.00 [Sheet] PAPERSIZE: 34x22 (In.) DATE: 3/28/2025 TIME: 9:03:33 AM USER: KevinMcNutt
pw:\\mb-us-pw.bentley.com:mb-us-pw-03\Documents\Cleveland_OH\01_Projects\ODOT\District2\82382\400-Engineering\Roadway\Sheets\82382_XS3300.dgn

Preliminary Plans - For Reference Only

Cut Area (SF): 1185.4	Cut Vol. (CY): 2234.9
Fill Area (SF): 0	Fill Vol. (CY): 0
Seed Width (FT):	Seed Area (SY):

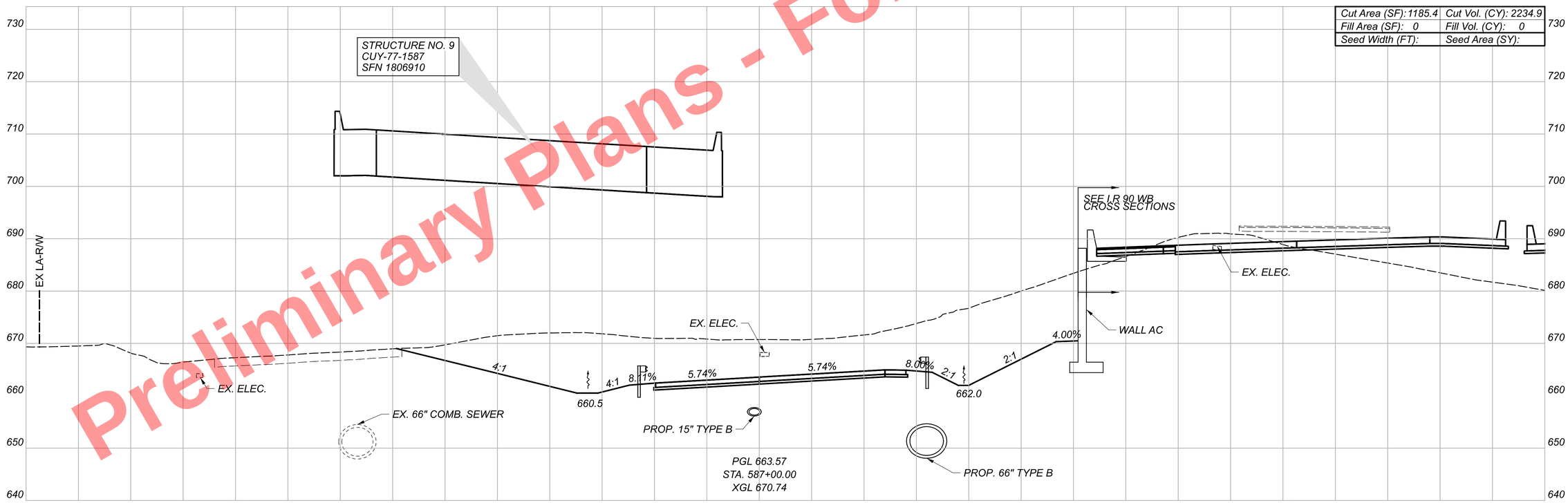

CROSS SECTIONS
RAMP A3

DESIGN AGENCY
B&N
burgessniple.com

DESIGNER
AJS

REVIEWER
MRT 05/01/24

PROJECT ID
82382

Sheet Totals		
Seeding	Cut	Fill
0	2235	0

SHEET	TOTAL
830	2696

CUY-90-16.28

MODEL: BL RAMP A3 - 587+00.00 [Sheet] PAPERSIZE: 34x22 (in.) DATE: 3/28/2025 TIME: 9:03:37 AM USER: KevinJMcNutt
pw:\\mb-us-pw.bentley.com:mb-us-pw-03\Documents\Cleveland_OH\01_Projects\ODOT\District2\82382\400-Engineering\Roadway\Sheets\82382_XS3300.dgn

Cut Area (SF): 554.2	Cut Vol. (CY): 1214.0
Fill Area (SF): 0	Fill Vol. (CY): 0
Seed Width (FT):	Seed Area (SY):

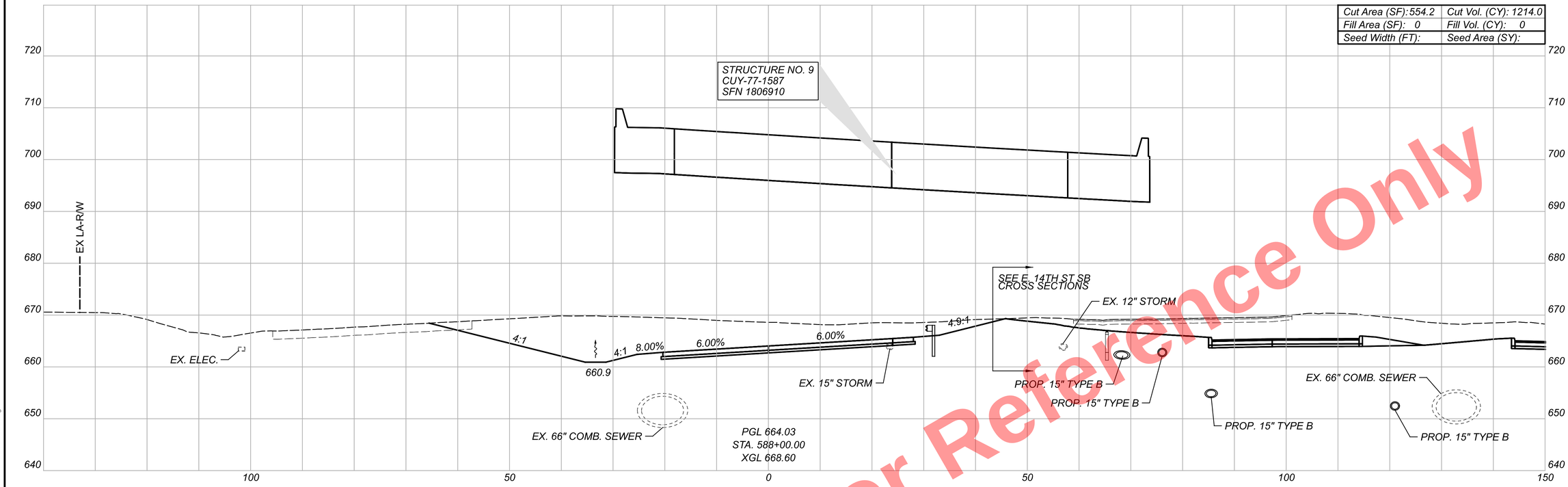

Cut Area (SF): 756.9	Cut Vol. (CY): 1798.5
Fill Area (SF): 0	Fill Vol. (CY): 0
Seed Width (FT):	Seed Area (SY):

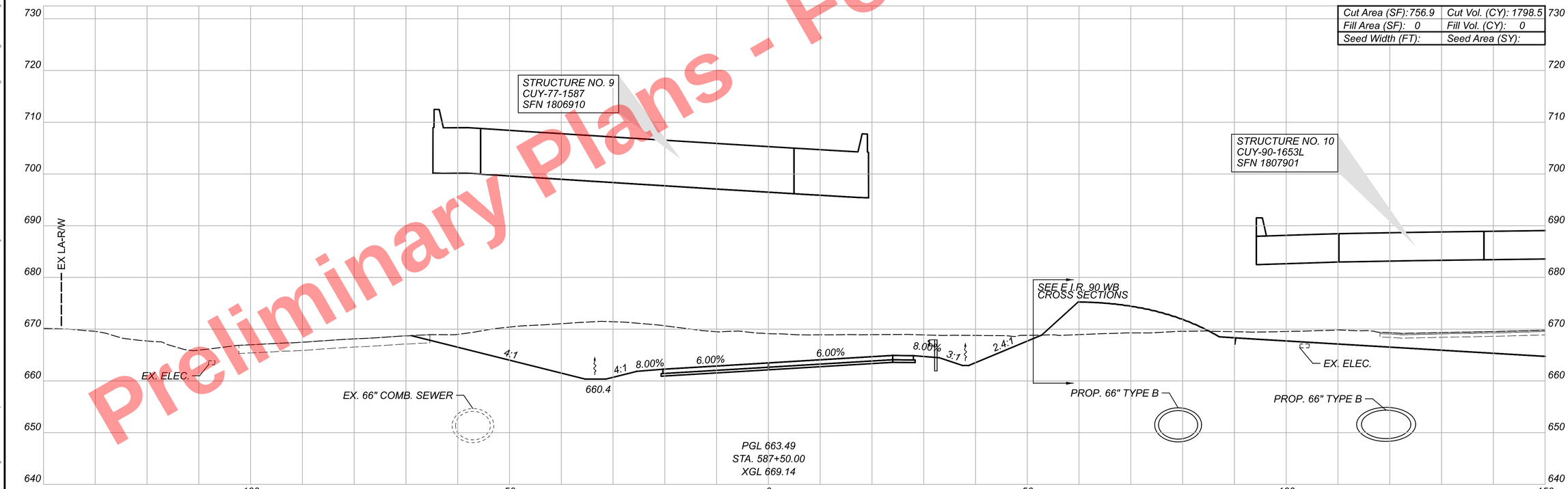

Preliminary Plans - For Reference Only

CROSS SECTIONS
RAMP A3

CUY-90-16.28

MODEL: BL RAMP A3 - 587+50.00 [Sheet] PAPERSIZE: 34x22 (In.) DATE: 3/28/2025 TIME: 9:03:41 AM USER: KevinMcNutt
pw:\\mb-us-pw.bentley.com:mb-us-pw-03\Documents\Cleveland_OH\01_Projects\DOT\District2\82382\400-Engineering\Roadway\Sheets\82382_XS3300.dgn

DESIGN AGENCY
B&N
burgessniple.com

DESIGNER	AJS
REVIEWER	MRT 05/01/24
PROJECT ID	82382
SHEET	831
TOTAL	2696

Sheet Totals		
Seeding	Cut	Fill
0	3013	0

Preliminary Plans - For Reference Only

CROSS SECTIONS
RAMP A3

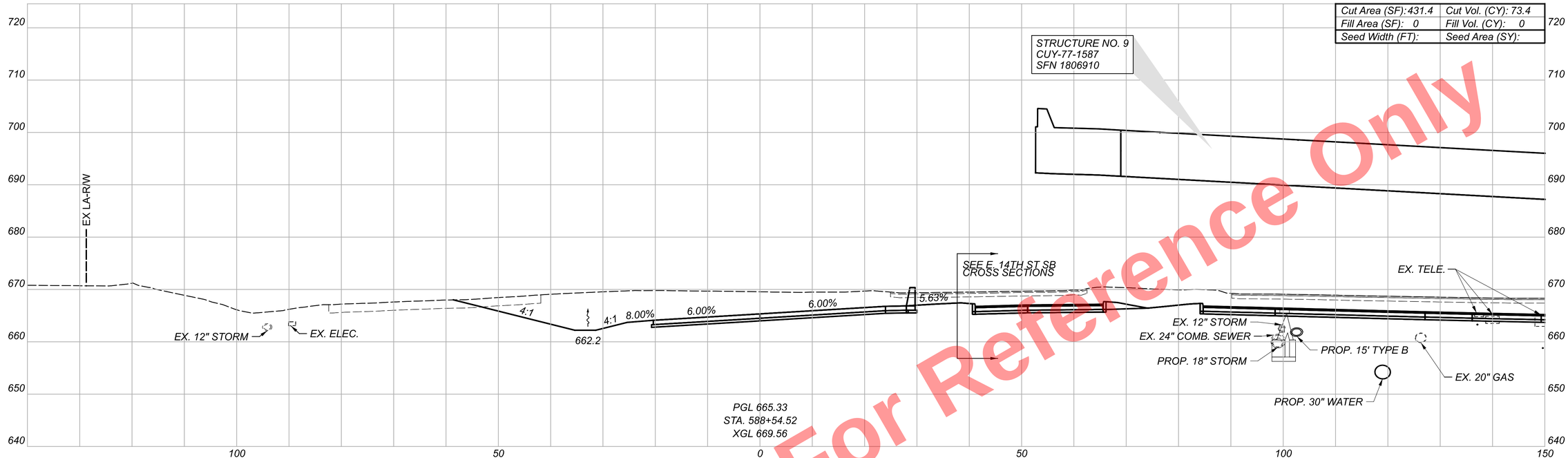

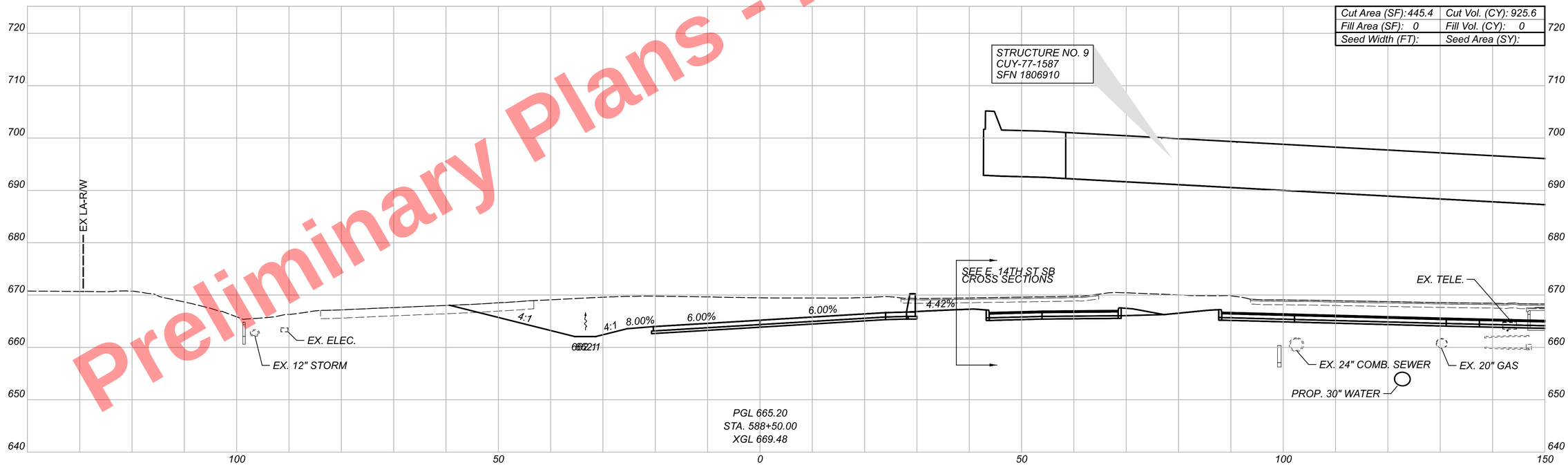

Sheet Totals			Grand Totals Carried to Subsummary		
Seeding	Cut	Fill	Seeding	Cut	Fill
0	1000	0	0	13750	2066

DESIGN AGENCY
B&N
burgessniple.com

DESIGNER
AJS

REVIEWER
MRT 05/01/24

PROJECT ID
82382

SHEET	TOTAL
832	2696

CUY-90-16.28

MODEL: BL RAMP A3 - 588+50.00 [Sheet] PAPERSIZE: 34x22 (In.) DATE: 3/28/2025 TIME: 9:03:46 AM USER: KevinJMcNutt
pw:\\mb-us-pw.bentley.com:mb-us-pw-03\Documents\Cleveland_OH\01_Projects\0DOT\District2\82382\400-Engineering\Roadway\Sheets\82382_XS3300.dgn

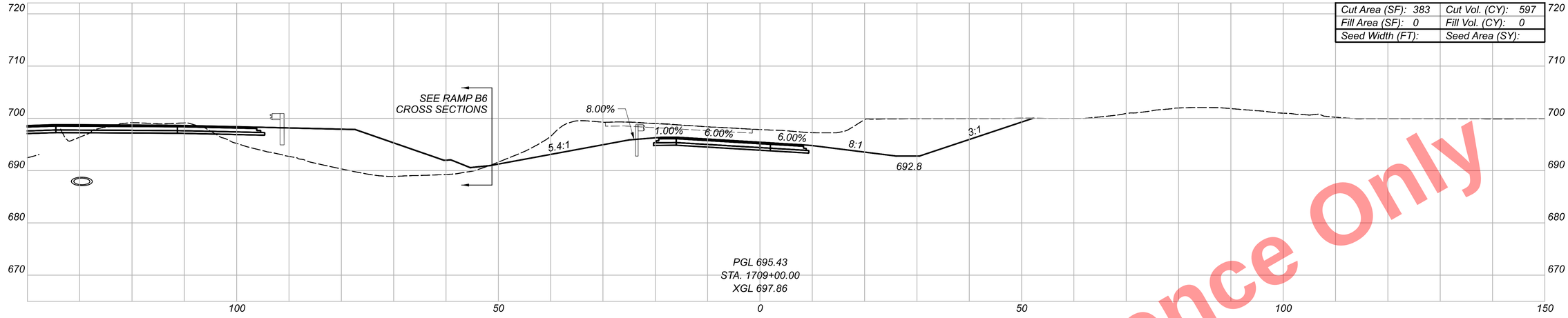

Cut Area (SF): 383	Cut Vol. (CY): 597
Fill Area (SF): 0	Fill Vol. (CY): 0
Seed Width (FT):	Seed Area (SY):

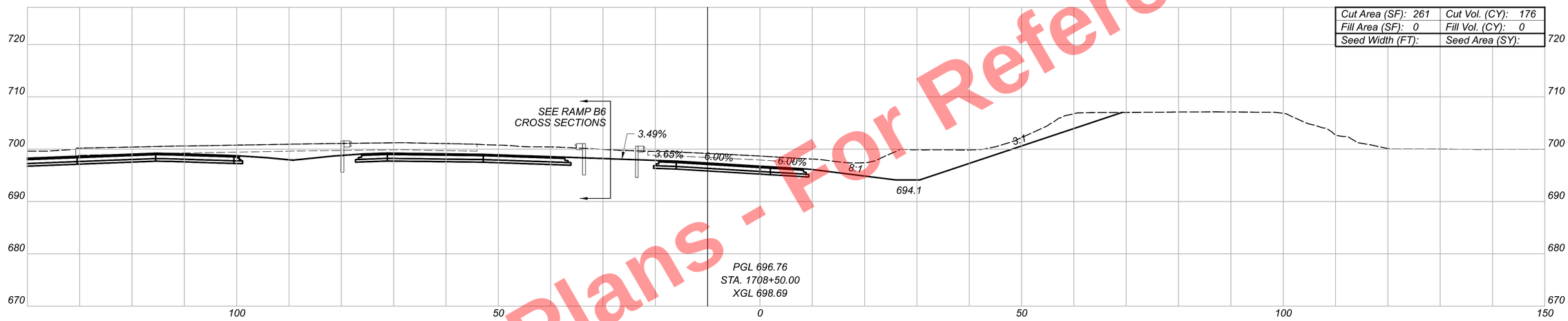

Cut Area (SF): 261	Cut Vol. (CY): 176
Fill Area (SF): 0	Fill Vol. (CY): 0
Seed Width (FT):	Seed Area (SY):

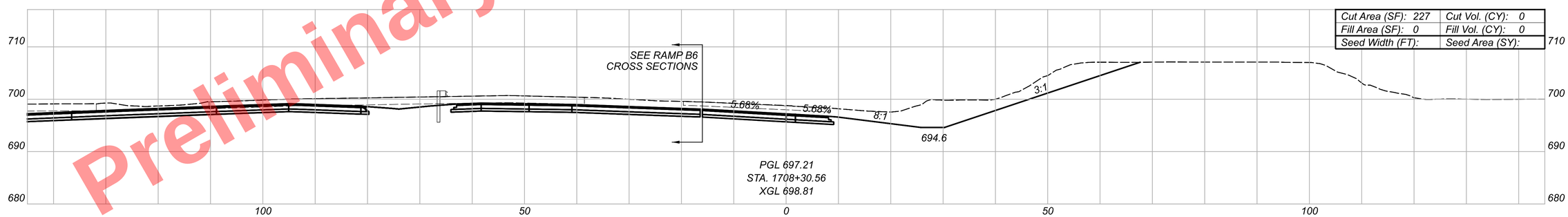

Cut Area (SF): 227	Cut Vol. (CY): 0
Fill Area (SF): 0	Fill Vol. (CY): 0
Seed Width (FT):	Seed Area (SY):

Preliminary Plans - For Reference Only

CROSS SECTIONS
RAMP IB5

DESIGN AGENCY

DESIGNER
BMV

REVIEWER
TJS 04/30/24

PROJECT ID
82382

Sheet Totals		
Seeding	Cut	Fill
0	773	0

SHEET	TOTAL
833	2696

CUY-90-16.28 (CCG3A)

MODEL: Interim Ramp B5 - 1708+29.50-I[Sheet] PAPERSIZE: 34x22 (in.) DATE: 3/28/2025 TIME: 9:04:06 AM USER: Kevin.McNutt
pw:\\mb-us-pw.bentley.com:mb-us-pw-03\Documents\Cleveland_OH\OI_Projects\DOT\District2\82382\400-Engineering\Roadway\Sheets\82382_XS4500.dgn

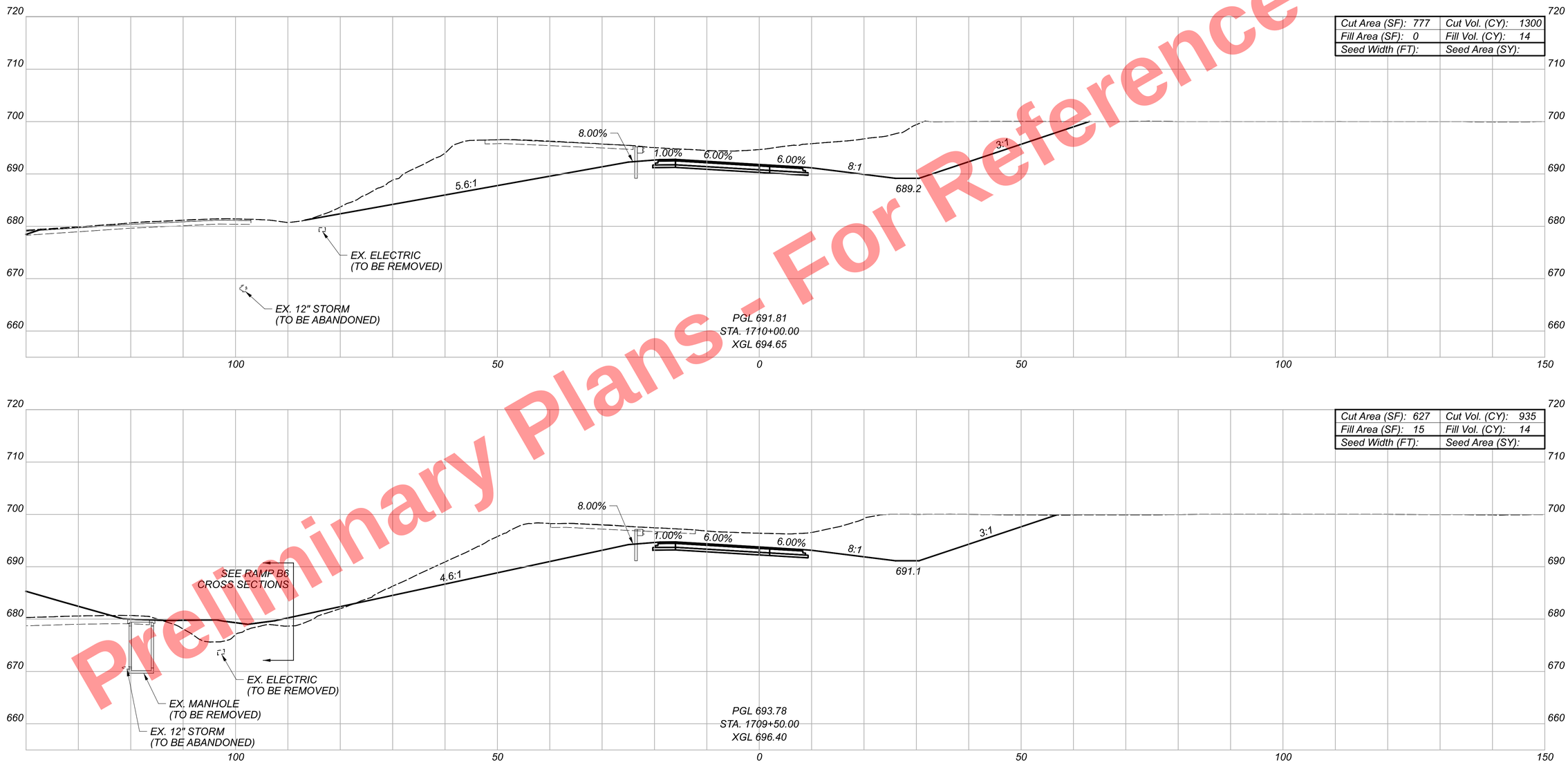

Preliminary Plans - For Reference Only

CUY-90-16.28 (CCG3A)

MODEL: Interim Ramp B5 - I709+50.00-[Sheet] PAPERSIZE: 34x22 (in) DATE: 5/15/2025 TIME: 11:26:32 AM USER: TSCHOEN
pw:\\mb-us-pw.bentley.com:mb-us-pw-03\Documents\Cleveland_OH\OiLProjects\ODOT\District12\82382\400-Engineering\Roadway\Sheets\82382_XS4500.dgn

CROSS SECTIONS
RAMP IB5

DESIGN AGENCY

DESIGNER
BMV

REVIEWER
TJS 04/30/24

PROJECT ID
82382

Sheet Totals		
Seeding	Cut	Fill
0	2235	28

SHEET	TOTAL
834	2696

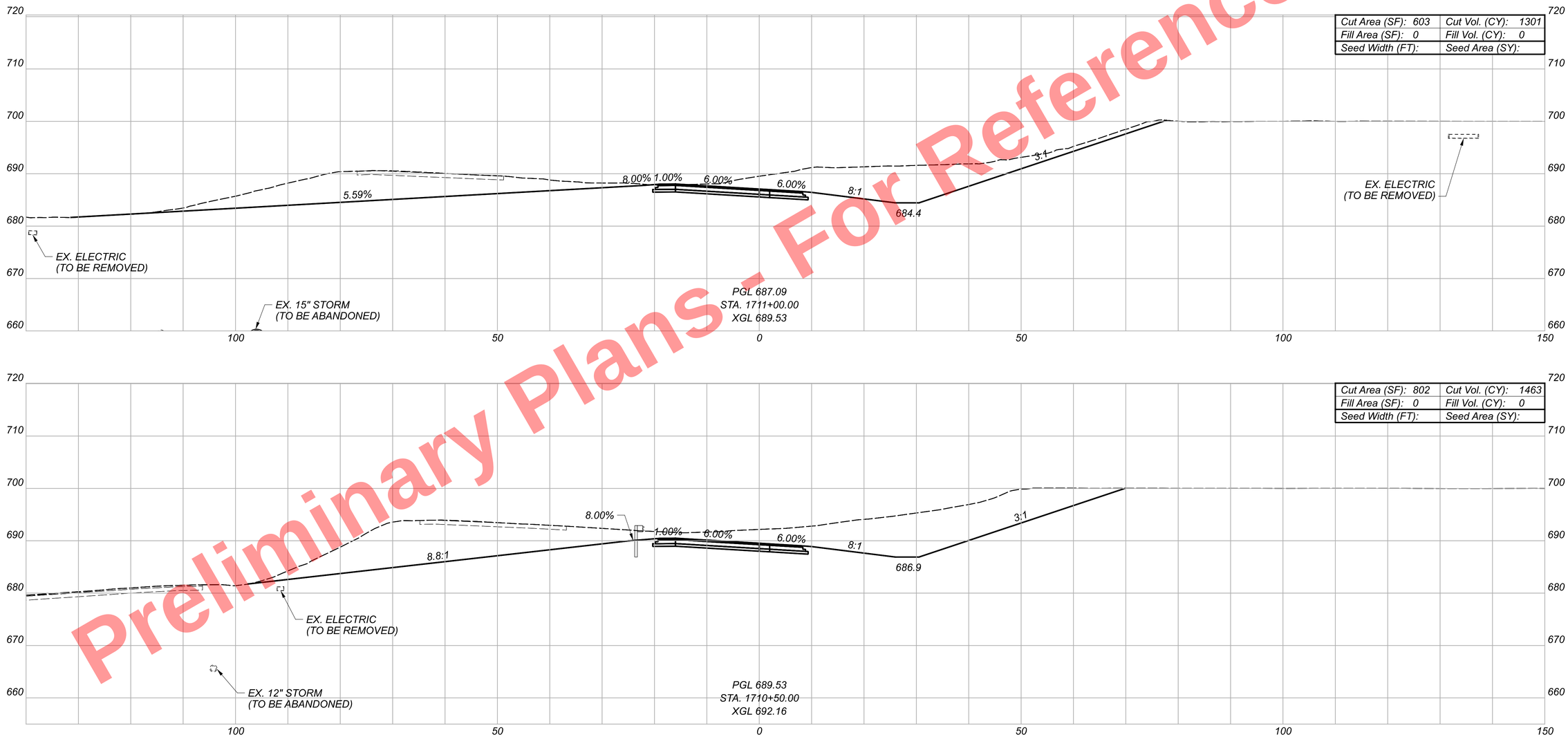

Preliminary Plans - For Reference Only

CUY-90-16.28 (CCG3A)

MODEL: Interim Ramp B5 - I710+50.00-I[Sheet] PAPERSIZE: 34x22 (in.) DATE: 3/28/2025 TIME: 9:04:23 AM USER: KevinMcNutt
pw:\\vmb-us-pw.bentley.com:vmb-us-pw-03\Documents\Cleveland_OH\OL_Projects\ODOT\District2\82382\400-Engineering\Roadway\Sheets\82382_XS4500.dgn

CROSS SECTIONS
RAMP IB5

DESIGN AGENCY

HDR

DESIGNER	BMV
REVIEWER	TJS 04/30/24
PROJECT ID	82382
SHEET	835
TOTAL	2696

Sheet Totals		
Seeding	Cut	Fill
0	2764	0

Preliminary Plans - For Reference Only

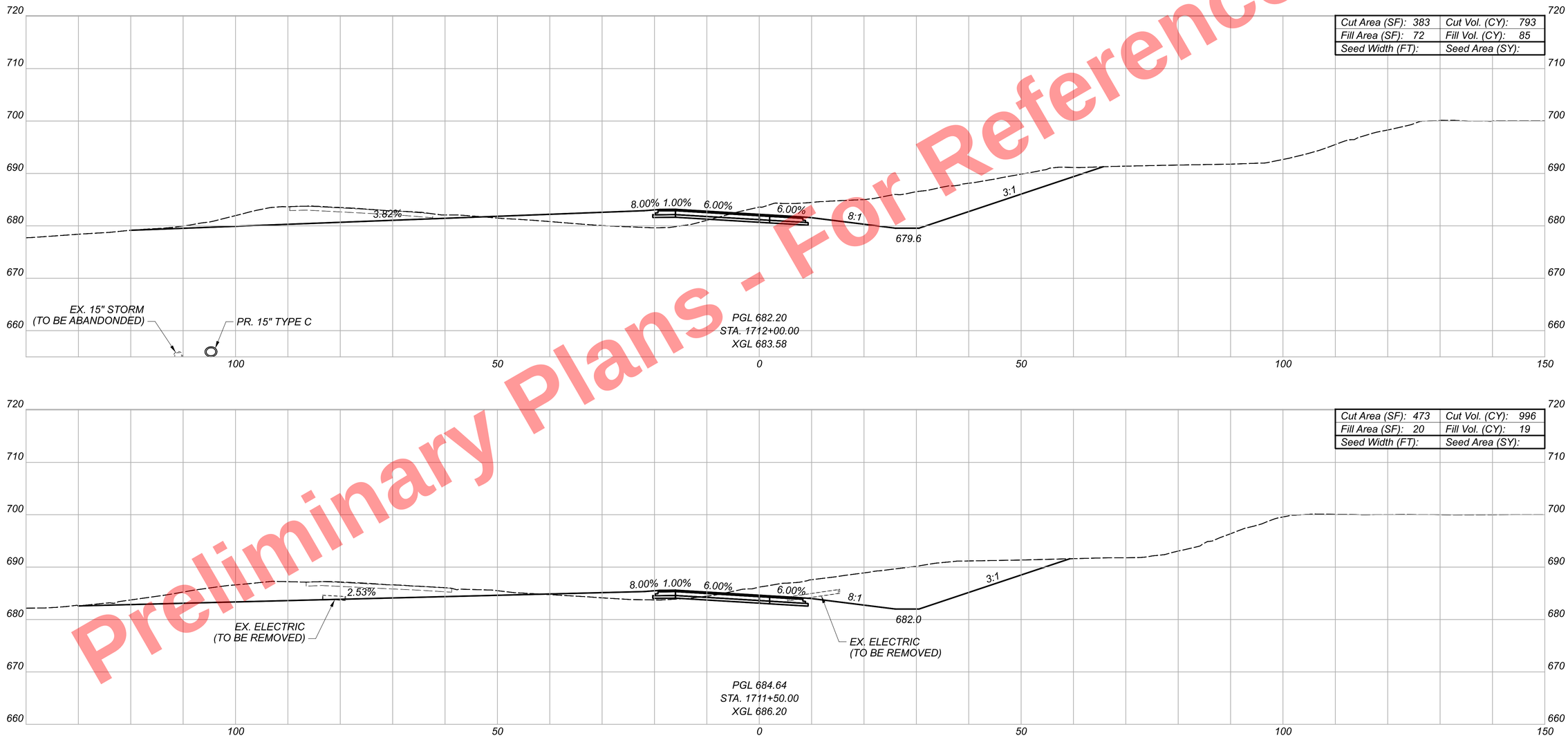

CUY-90-16.28 (CCG3A)

MODEL: Interim Ramp B5 - 17li+50.00-[Sheet] PAPERSIZE: 34x22 (in) DATE: 3/28/2025 TIME: 9:04:29 AM USER: kevin.McNutt
pw:\\mb-us-pw.bentley.com:mb-us-pw-03\Documents\Cleveland_OH\OI_Projects\0007\District2\82382\400-Engineering\Roadway\Sheets\82382_XS4500.dgn

CROSS SECTIONS
RAMP IB5

Sheet Totals		
Seeding	Cut	Fill
0	1789	104

DESIGN AGENCY

HDR

DESIGNER
BMV

REVIEWER
TJS 04/30/24

PROJECT ID
82382

SHEET 836 | TOTAL 2696

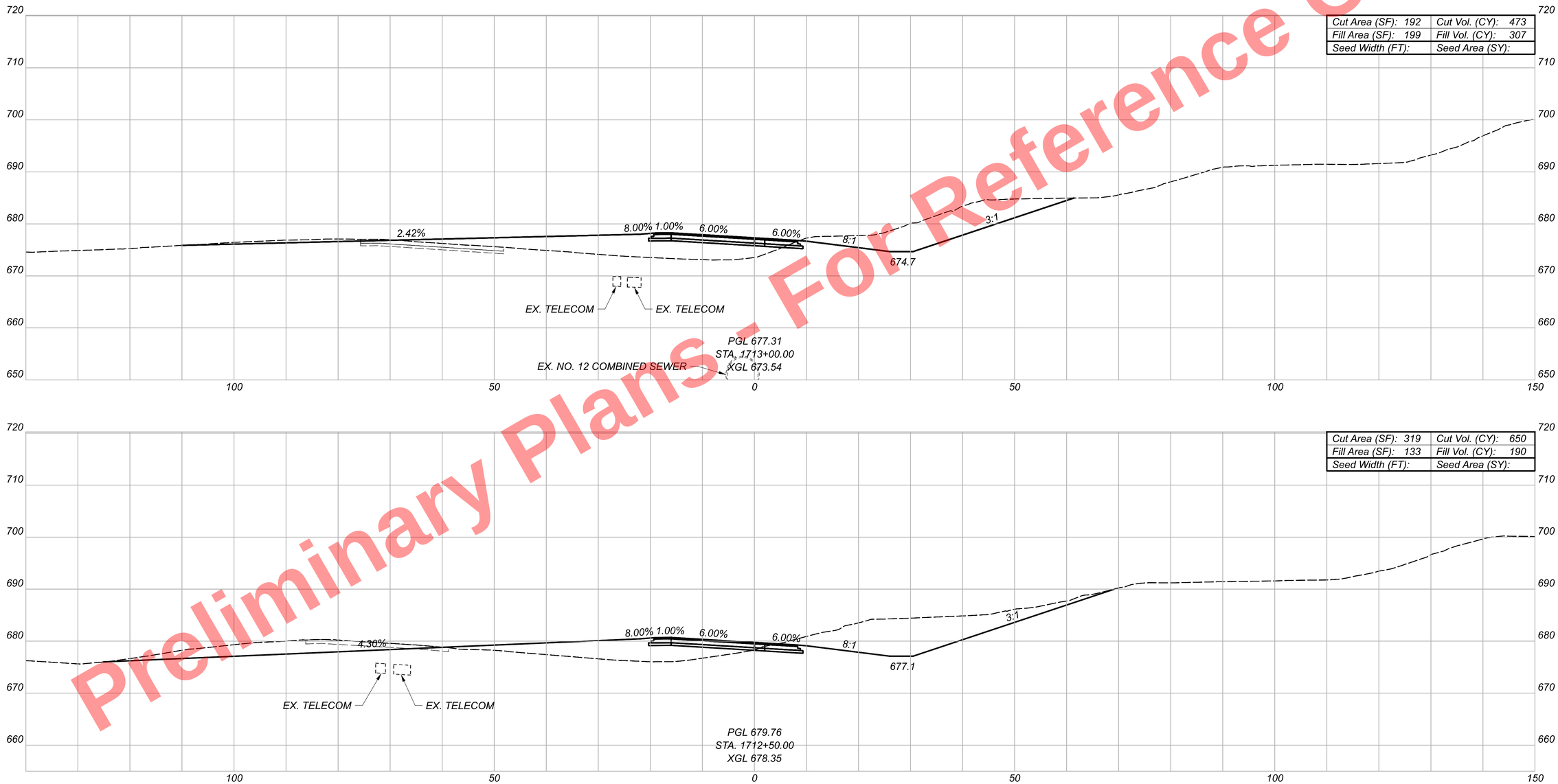

Preliminary Plans - For Reference Only

CUY-90-16.28 (CCG3A)

MODEL: Interim Ramp B5 - 1712+50.00-1[Sheet] PAPERSIZE: 34x22 (in.) DATE: 3/28/2025 TIME: 9:04:36 AM USER: KevinMcNutt
pw:\\mb-us-pw.bentley.com:mb-us-pw-03\Documents\Cleveland_OH\OI_Projects\ODOT\District2\82382\400-Engineering\Roadway\Sheets\82382_XS4500.dgn

CROSS SECTIONS
RAMP IB5

DESIGN AGENCY

DESIGNER
BMV

REVIEWER
TJS 04/30/24

PROJECT ID
82382

Sheet Totals		
Seeding	Cut	Fill
0	1123	497

SHEET 837 TOTAL 2696

Preliminary Plans - For Reference Only

Cut Area (SF): 78	Cut Vol. (CY): 188
Fill Area (SF): 58	Fill Vol. (CY): 196
Seed Width (FT):	Seed Area (SY):

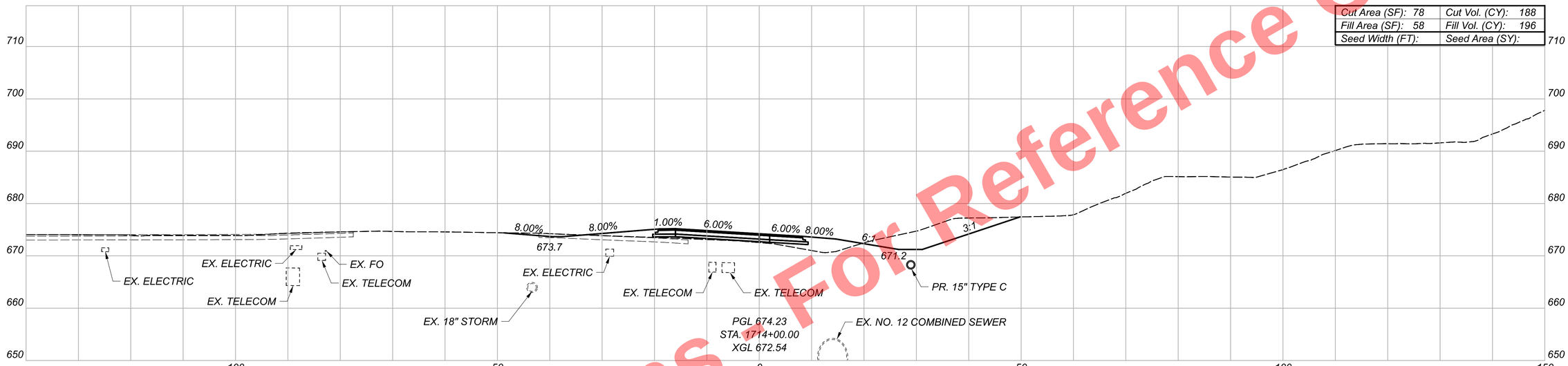

Cut Area (SF): 125	Cut Vol. (CY): 294
Fill Area (SF): 153	Fill Vol. (CY): 326
Seed Width (FT):	Seed Area (SY):

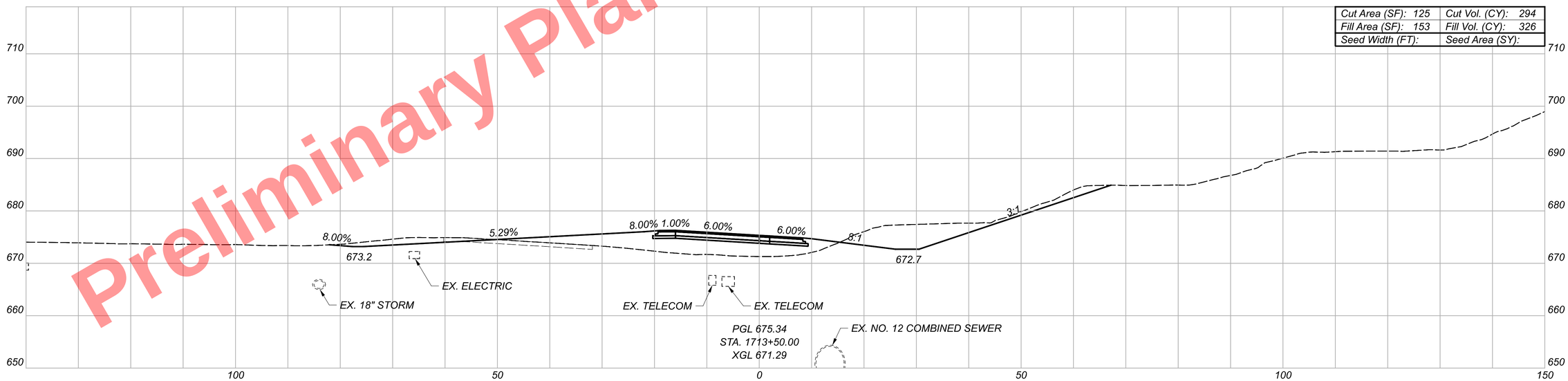

CUY-90-16.28 (CCG3A)

MODEL: Interim Ramp B5 - 1713+50.00-1[Sheet] PAPERSIZE: 34x22 (In.) DATE: 3/28/2025 TIME: 9:04:43 AM USER: Kevin.McNutt
pw:\\mb-us-pw.bentley.com:mb-us-pw-03\Documents\Cleveland_OH\01_Projects\00DT\District2\82382\400-Engineering\Roadway\Sheets\82382_XS4500.dgn

CROSS SECTIONS
RAMP IB5

DESIGN AGENCY

DESIGNER
BMV

REVIEWER
TJS 04/30/24

PROJECT ID
82382

Sheet Totals		
Seeding	Cut	Fill
0	482	522

SHEET	TOTAL
838	2696

Preliminary Plans - For Reference Only

Cut Area (SF): 40	Cut Vol. (CY): 110
Fill Area (SF): 10	Fill Vol. (CY): 52
Seed Width (FT):	Seed Area (SY):

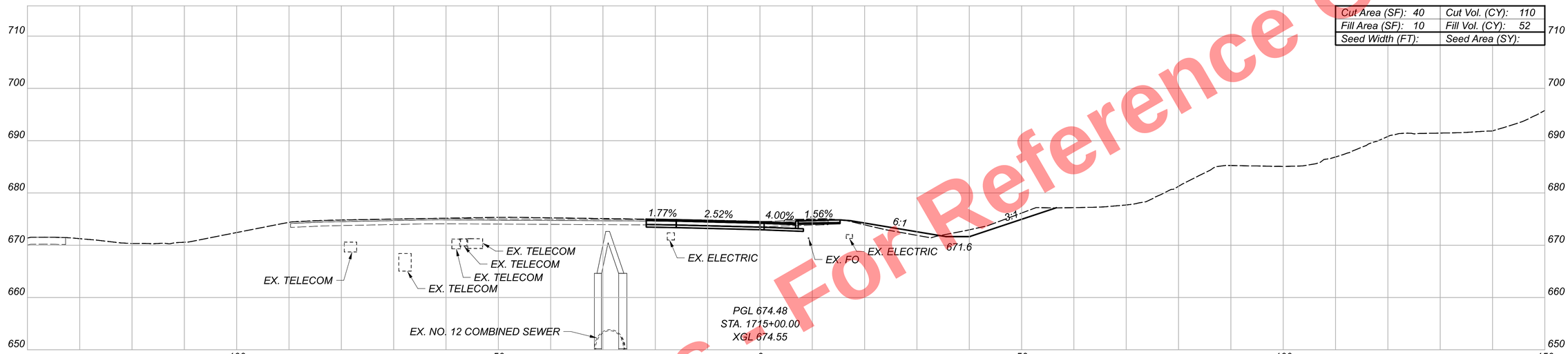

Cut Area (SF): 80	Cut Vol. (CY): 146
Fill Area (SF): 46	Fill Vol. (CY): 96
Seed Width (FT):	Seed Area (SY):

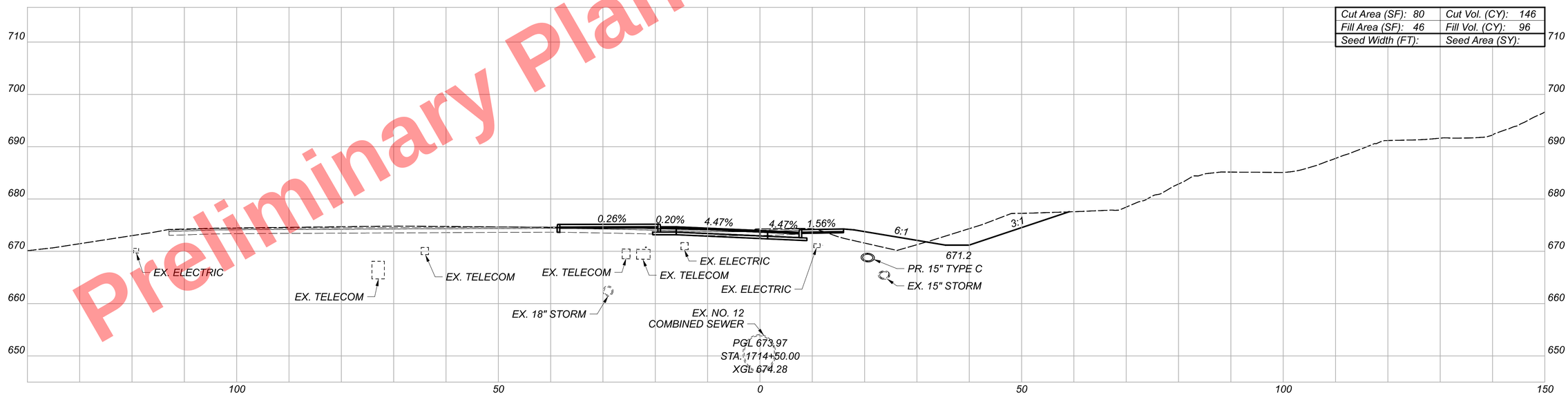

CROSS SECTIONS
RAMP IB5

Sheet Totals		
Seeding	Cut	Fill
0	256	148

DESIGN AGENCY

DESIGNER BMV

REVIEWER TJS 04/30/24

PROJECT ID 82382

SHEET 839 TOTAL 2696

CUY-90-16.28 (CCG3A)

MODEL: Interim Ramp B5 - I714+50.00-I[Sheet] PAPERSIZE: 34x22 (in) DATE: 3/28/2025 TIME: 9:04:50 AM USER: Kevin.McNutt
pw:\\mb-us-pw.bentley.com:mb-us-pw-03\Documents\Cleveland_OH\OI_Projects\ODOT\District#12\82382\400-Engineering\Engineering\Roadway\Sheets\82382_XS4500.dgn

Preliminary Plans For Reference Only

Cut Area (SF): 14	Cut Vol. (CY): 6
Fill Area (SF): 6	Fill Vol. (CY): 2
Seed Width (FT):	Seed Area (SY):

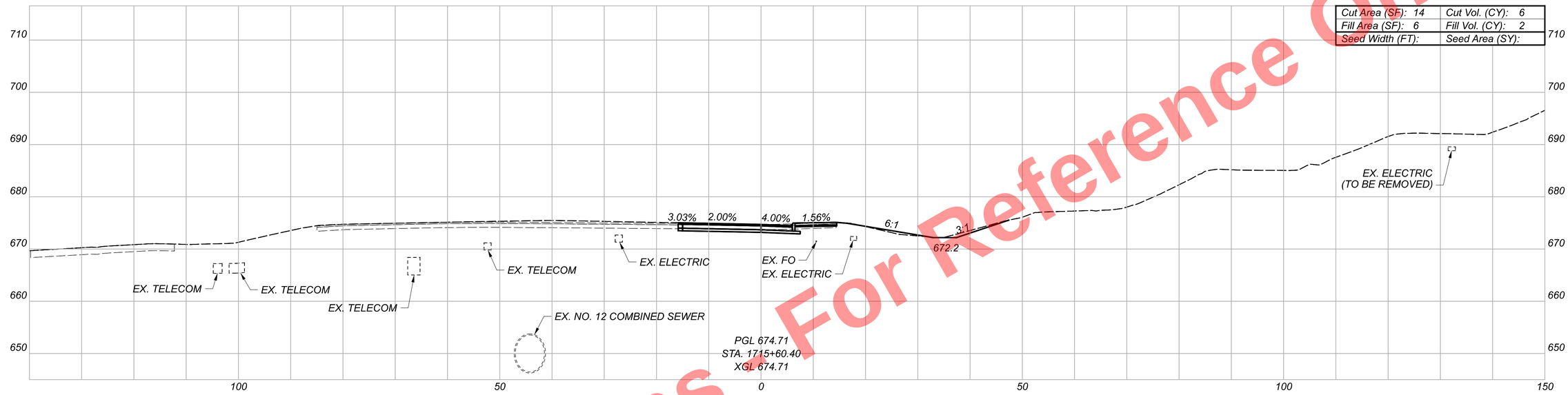

Cut Area (SF): 17	Cut Vol. (CY): 52
Fill Area (SF): 6	Fill Vol. (CY): 15
Seed Width (FT):	Seed Area (SY):

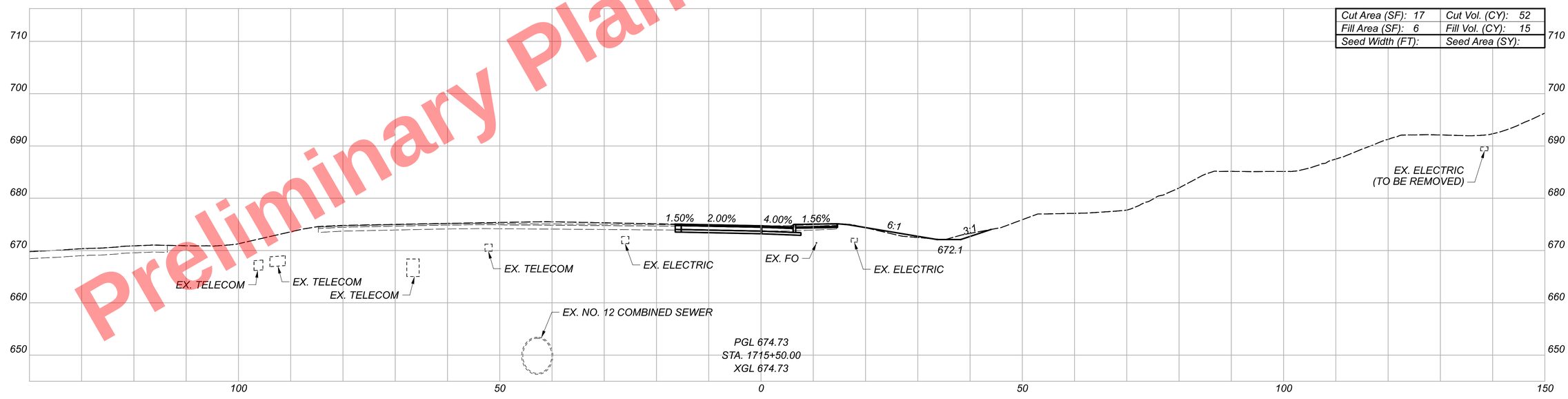

CROSS SECTIONS
RAMP IB5

DESIGN AGENCY

DESIGNER
BMV

REVIEWER
TJS 04/30/24

PROJECT ID
82382

Sheet Totals		
Seeding	Cut	Fill
0	58	17

SHEET	TOTAL
840	2696

CUY-90-16.28 (CCG3A)

MODEL: Interim Ramp B5 - 1715+50.00-[Sheet] PAPERSIZE: 34x22 (in.) DATE: 3/28/2025 TIME: 9:04:57 AM USER: KevinMcNutt
pw:\\mb-us-pw.bentley.com:mb-us-pw-03\Documents\Cleveland.OH\OI_Projects\ODOT\District2\82382\400-Engineering\Roadway\Sheets\

Preliminary Plans - For Reference Only

CUY-90-16.28 (CCG3A)

MODEL: Interim Ramp B5 - 1716+00.00-[Sheet] PAPERSIZE: 34x22 (in.) DATE: 3/28/2025 TIME: 9:05:01 AM USER: KevinJMcNutt
pw:\\mb-us-pw.bentley.com:mb-us-pw-03\Documents\Cleveland_OH\01_Projects\000T\District2\82382\400-Engineering\Roadway\Sheets\82382_XS4500.dgn

CROSS SECTIONS
RAMP IB5

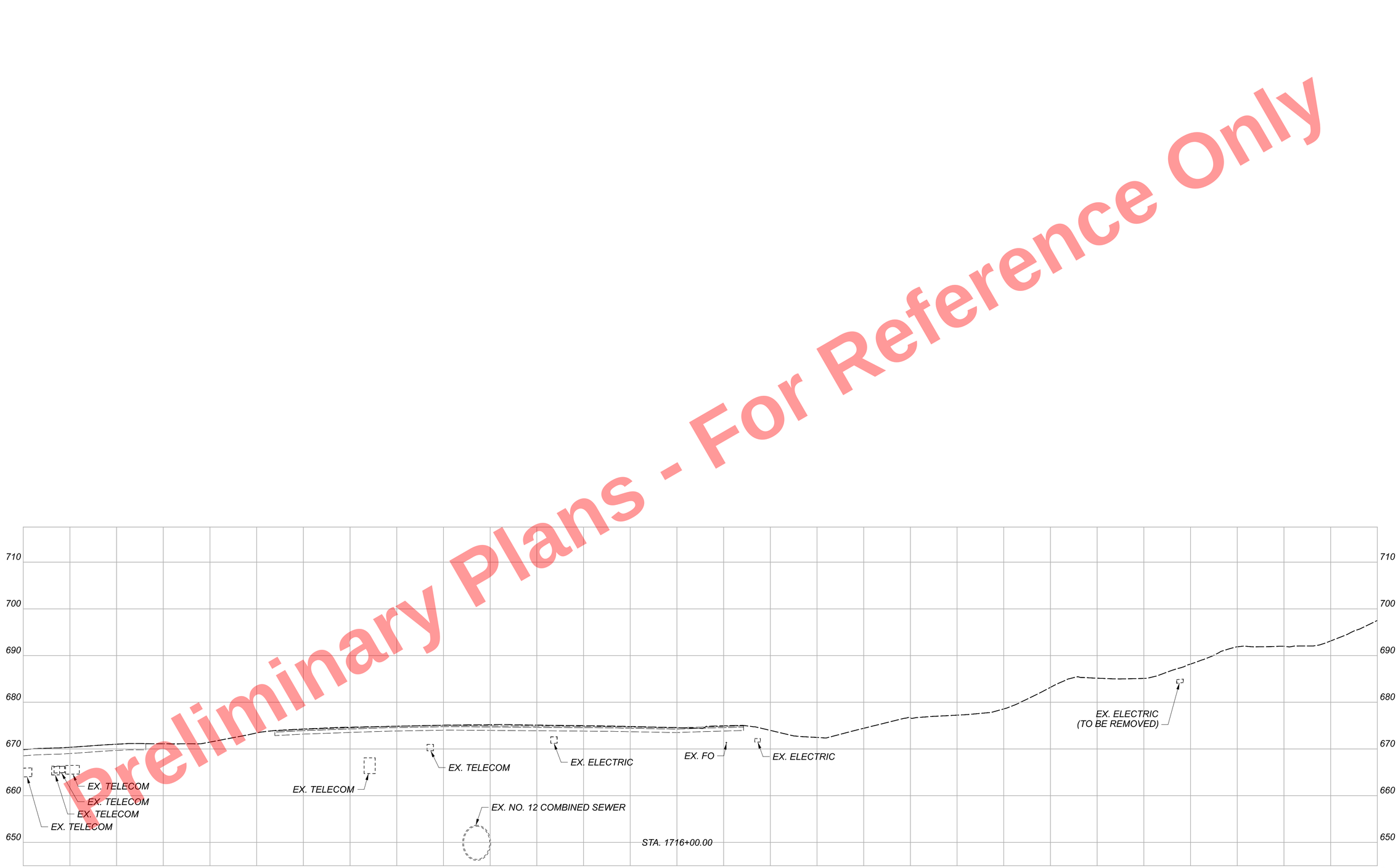

Grand Totals Carried to Subsummary		
Seeding	Cut	Fill
0	9480	1316

DESIGN AGENCY

DESIGNER
BMV

REVIEWER
TJS 04/30/24

PROJECT ID
82382

SHEET 841 TOTAL 2696

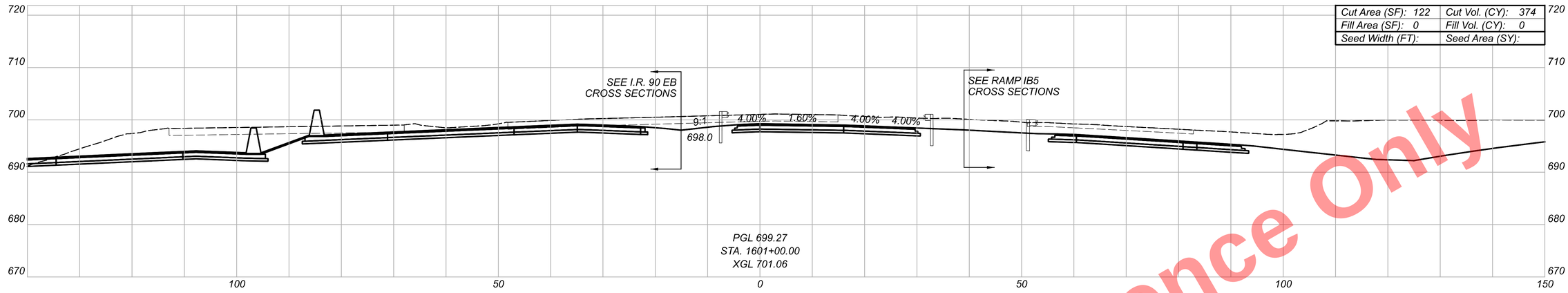

Cut Area (SF): 122	Cut Vol. (CY): 374
Fill Area (SF): 0	Fill Vol. (CY): 0
Seed Width (FT):	Seed Area (SY):

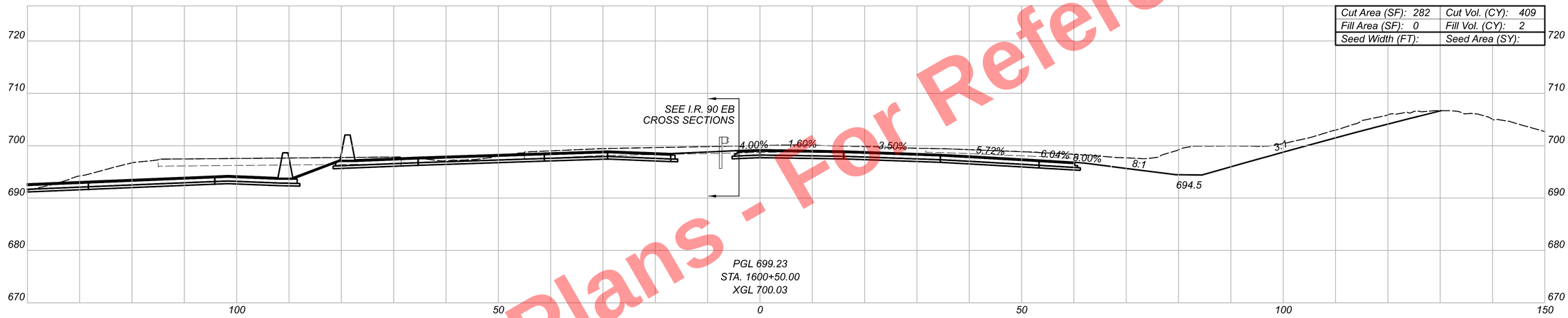

Cut Area (SF): 282	Cut Vol. (CY): 409
Fill Area (SF): 0	Fill Vol. (CY): 2
Seed Width (FT):	Seed Area (SY):

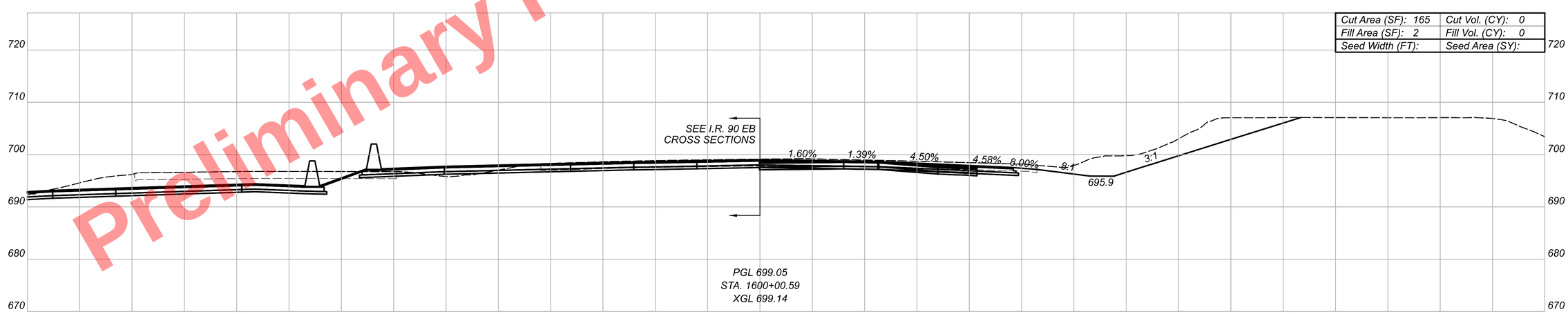

Cut Area (SF): 165	Cut Vol. (CY): 0
Fill Area (SF): 2	Fill Vol. (CY): 0
Seed Width (FT):	Seed Area (SY):

Preliminary Plans - For Reference Only

CUY-90-16.28 (CCG3A)

MODEL: I600+00.59 [Sheet] PAPERSIZE: 34x22 (In.) DATE: 3/28/2025 TIME: 9:05:19 AM USER: Kevin.McNutt
pw:\\mb-us-pw.bentley.com:mb-us-pw-03\Documents\Cleveland.OH\OI_Projects\ODOT\District2\82382\400-Engineering\Roadway\Sheets\82382_XS4600.dgn

CROSS SECTIONS
RAMP B6

Sheet Totals		
Seeding	Cut	Fill
0	783	2

DESIGN AGENCY

HDR

DESIGNER
BMV

REVIEWER
TJS 04/30/24

PROJECT ID
82382

SHEET 842 | TOTAL 2696

Preliminary Plans - For Reference Only

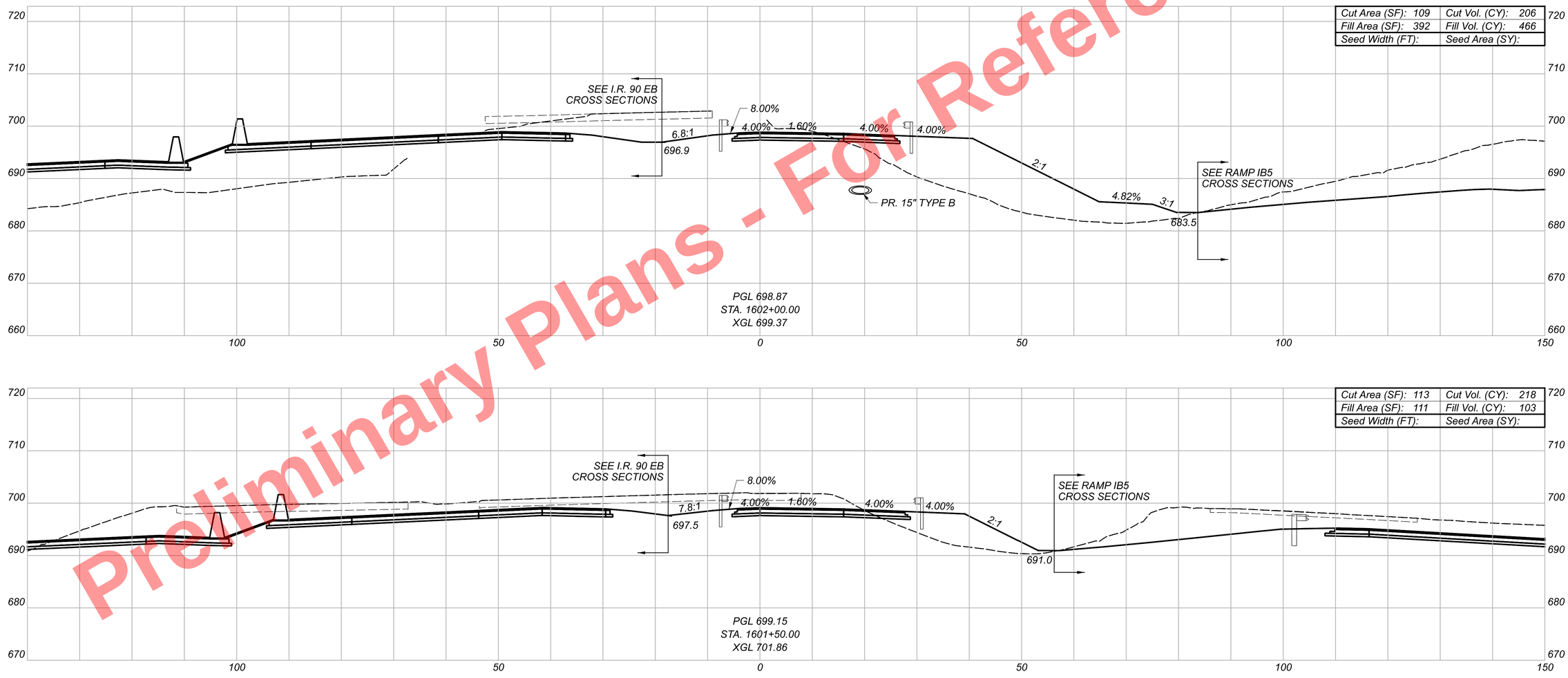

CUY-90-16.28 (CCG3A)

MODEL: I601+50.00 [Sheet] PAPERSIZE: 34x22 (in) DATE: 3/28/2025 TIME: 9:05:29 AM USER: KevinMcNutt
pw:\\mb-us-pw.bentley.com:mb-us-pw-03\Documents\Cleveland_OH\01_Projects\ODOT\District 12\82382\400-Engineering\

CROSS SECTIONS
RAMP B6

Sheet Totals		
Seeding	Cut	Fill
0	424	569

DESIGN AGENCY

HDR

DESIGNER
BMV

REVIEWER
TJS 04/30/24

PROJECT ID
82382

SHEET 843 TOTAL 2696

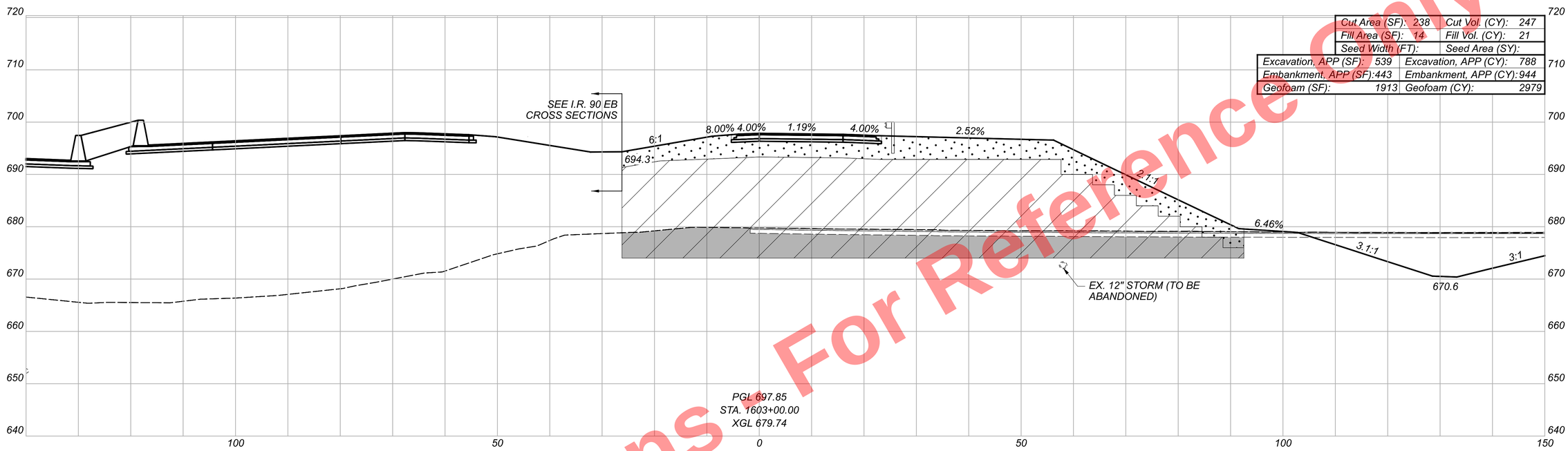

Cut Area (SF): 238	Cut Vol. (CY): 247
Fill Area (SF): 14	Fill Vol. (CY): 21
Seed Width (FT):	Seed Area (SY):
Excavation, APP (SF): 539	Excavation, APP (CY): 788
Embankment, APP (SF): 443	Embankment, APP (CY): 944
Geofoam (SF): 1913	Geofoam (CY): 2979

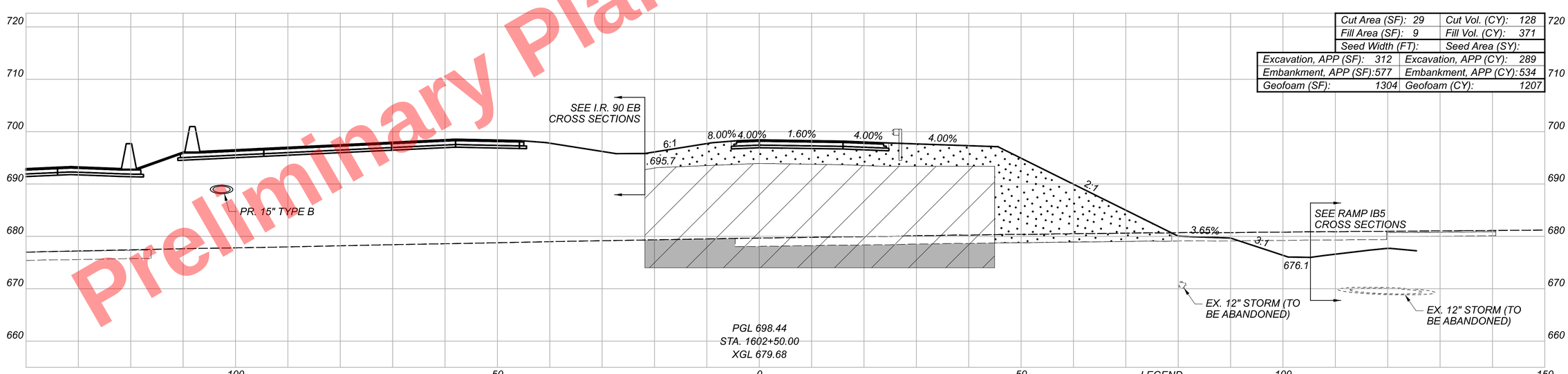

Cut Area (SF): 29	Cut Vol. (CY): 128
Fill Area (SF): 9	Fill Vol. (CY): 371
Seed Width (FT):	Seed Area (SY):
Excavation, APP (SF): 312	Excavation, APP (CY): 289
Embankment, APP (SF): 577	Embankment, APP (CY): 534
Geofoam (SF): 1304	Geofoam (CY): 1207

LEGEND

- ITEM 203 - EMBANKMENT, AS PER PLAN
- ITEM 203 - ROADWAY MISC.: EPS GEOFOAM FILL
- ITEM 203 - EXCAVATION, AS PER PLAN

Sheet Totals		
Seeding	Cut	Fill
0	375	392
Embankment, APP	Excavation, APP	Geofoam
1478	1077	4186

CROSS SECTIONS
RAMP B6

DESIGN AGENCY
HDR

DESIGNER
BMV

REVIEWER
TJS 04/30/24

PROJECT ID
82382

SHEET 844 TOTAL 2696

CUY-90-16.28 (CCG3A)

MODEL: I602+50.00 [Sheet] PAPERSIZE: 34x22 (in.) DATE: 3/28/2025 TIME: 9:05:37 AM USER: Kevin.McNutt
pw:\\mb-us-pw.bentley.com:mb-us-pw-03\Documents\Cleveland_OH\OI_Projects\ODOT\District12\82382\400-Engineering\Roadway\Sheets\82382_XS4600.dgn

Preliminary Plans - For Reference Only

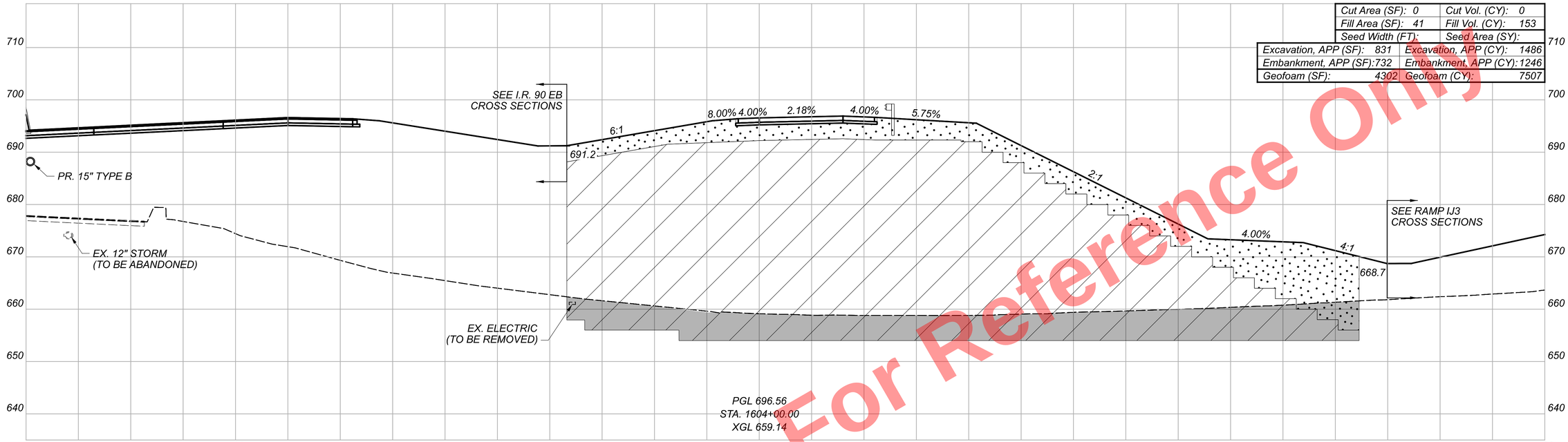

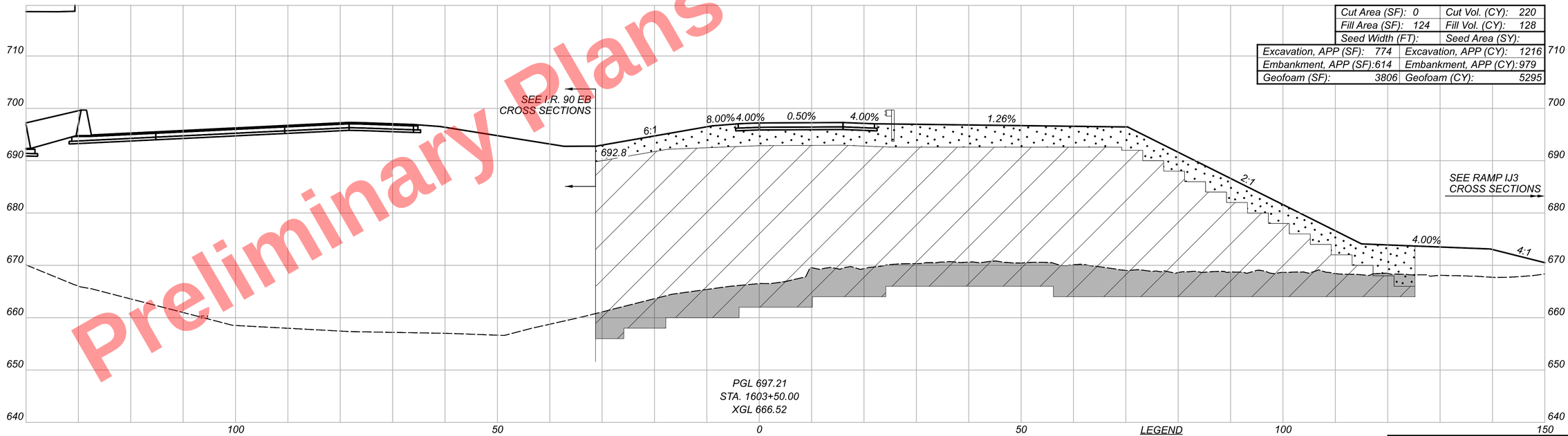

Preliminary Plans - For Reference Only

LEGEND

- ITEM 203 - EMBANKMENT, AS PER PLAN
- ITEM 203 - ROADWAY MISC.: EPS GEOFOAM FILL
- ITEM 203 - EXCAVATION, AS PER PLAN

Sheet Totals		
Seeding	Cut	Fill
0	220	281
Embankment, APP	Excavation, APP	Geofoam
2225	2702	12802

CROSS SECTIONS
RAMP B6

DESIGN AGENCY
HDR

DESIGNER
BMV

REVIEWER
TJS 04/30/24

PROJECT ID
82382

SHEET 845 TOTAL 2696

CUY-90-16.28 (CCG3A)

MODEL: I603+50.00 (Sheet) PAPERSIZE: 34x22 (in.) DATE: 3/28/2025 TIME: 9:05:45 AM USER: KevIn.McNutt
pw:\\mb-us-pw.bentley.com:mb-us-pw-03\Documents\Cleveland_OH\01_Projects\000T\Dist12\82382\400-Engineering\Roadway\Sheets\82382_XS4600.dgn

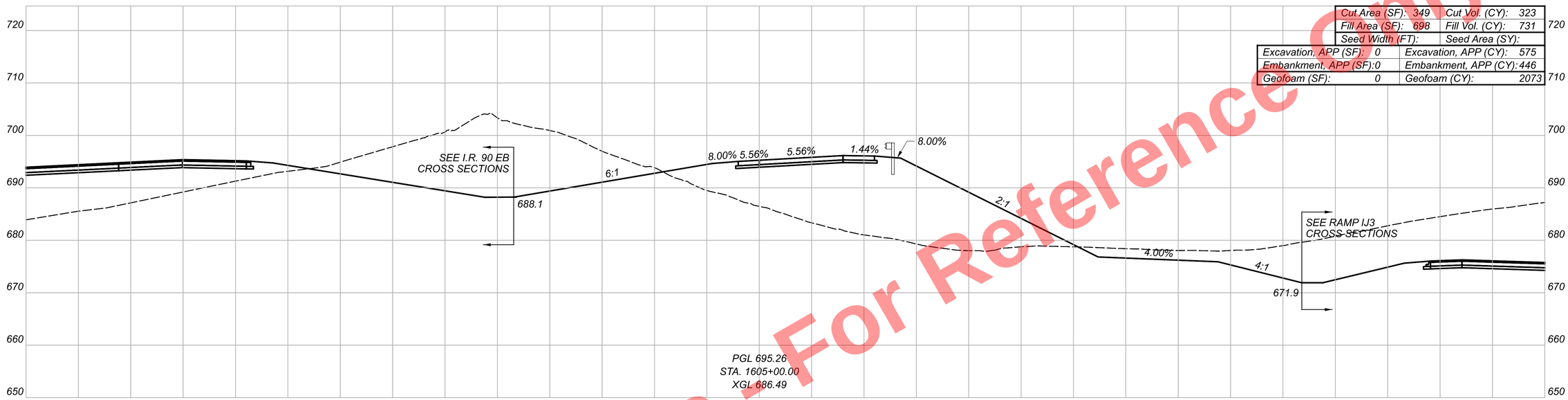

Cut Area (SF): 349	Cut Vol. (CY): 323
Fill Area (SF): 698	Fill Vol. (CY): 731
Seed Width (FT):	Seed Area (SY):
Excavation, APP (SF): 0	Excavation, APP (CY): 575
Embankment, APP (SF): 0	Embankment, APP (CY): 446
Geofoam (SF): 0	Geofoam (CY): 2073

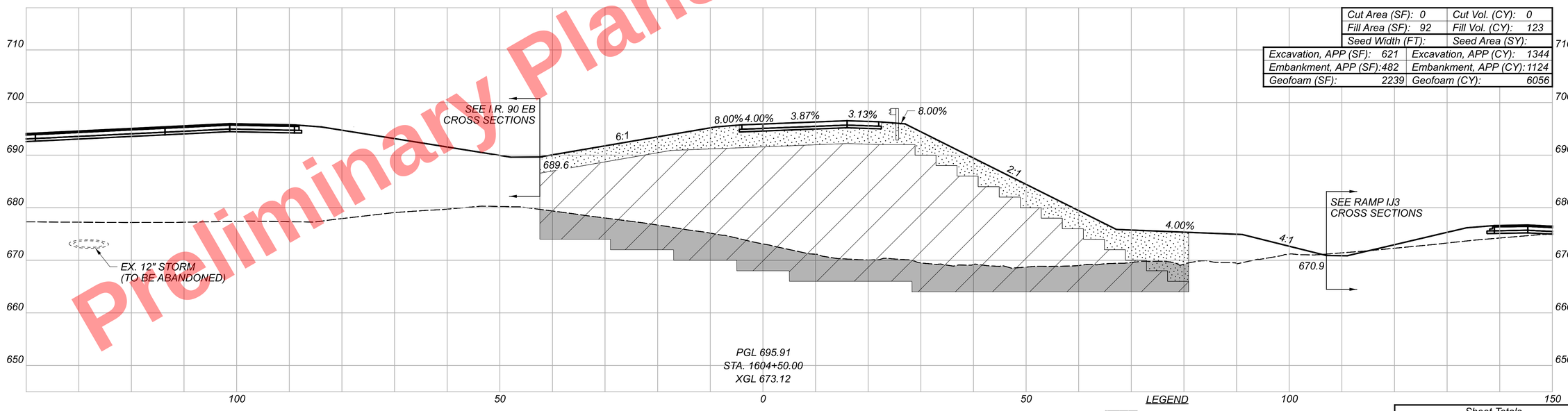

Cut Area (SF): 0	Cut Vol. (CY): 0
Fill Area (SF): 92	Fill Vol. (CY): 123
Seed Width (FT):	Seed Area (SY):
Excavation, APP (SF): 621	Excavation, APP (CY): 1344
Embankment, APP (SF): 482	Embankment, APP (CY): 1124
Geofoam (SF): 2239	Geofoam (CY): 6056

LEGEND

- ITEM 203 - EMBANKMENT, AS PER PLAN
- ITEM 203 - ROADWAY MISC.: EPS GEOFOAM FILL
- ITEM 203 - EXCAVATION, AS PER PLAN

Sheet Totals		
Seeding	Cut	Fill
0	323	854
Embankment, APP	Excavation, APP	Geofoam
1570	1919	8129

CROSS SECTIONS
RAMP B6

DESIGN AGENCY
HDR

DESIGNER
BMV

REVIEWER
TJS 04/30/24

PROJECT ID
82382

SHEET 846 TOTAL 2696

CUY-90-16.28 (CCG3A)

MODEL: I604+50.00 [Sheet] PAPERSIZE: 34x22 (in.) DATE: 3/28/2025 TIME: 9:05:52 AM USER: Kevin.McNutt
pw:\\mb-us-pw.bentley.com:mb-us-pw-03\Documents\Cleveland_OH\OI_Projects\ODOT\District12\82382\400-Engineering\Roadway\Sheets\82382_XS4600.dgn

Preliminary Plans - For Reference Only

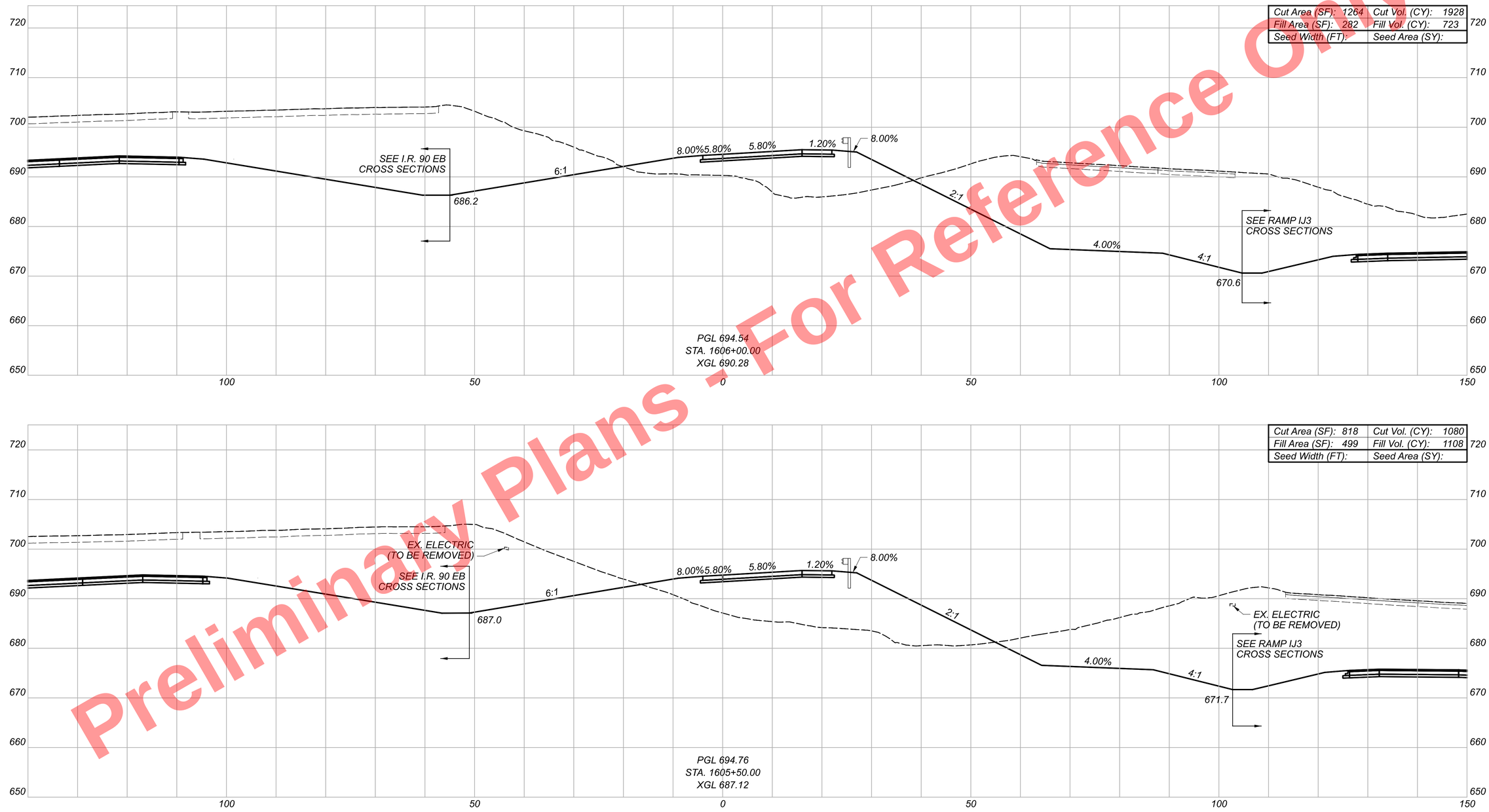

Preliminary Plans - For Reference Only

CUY-90-16.28 (CCG3A)

MODEL: 1605+50.00 [Sheet] PAPERSIZE: 34x22 (In.) DATE: 3/28/2025 TIME: 9:06:01 AM USER: Kevin.McNutt
pw:\\mb-us-pw.bentley.com:mb-us-pw-03\Documents\Cleveland.OH\OI_Projects\ODOT\District2\82382\400-Engineering\Roadway\Sheets\82382_XS4600.dgn

CROSS SECTIONS
RAMP B6

Sheet Totals		
Seeding	Cut	Fill
0	3008	1831

DESIGN AGENCY

DESIGNER
BMV

REVIEWER
TJS 04/30/24

PROJECT ID
82382

SHEET 847 TOTAL 2696

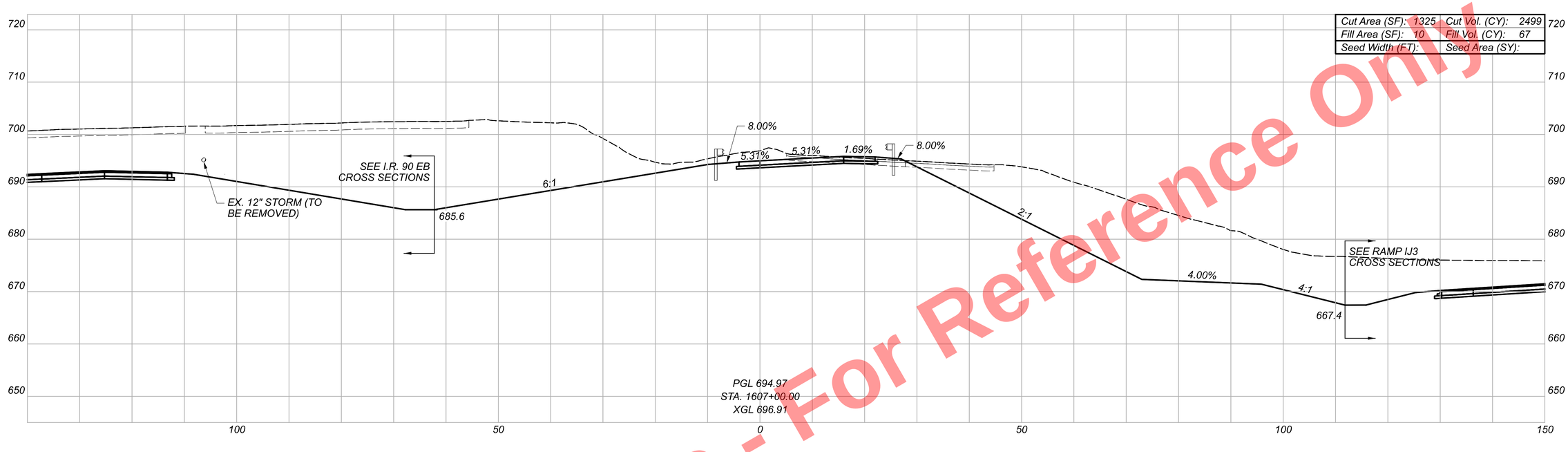

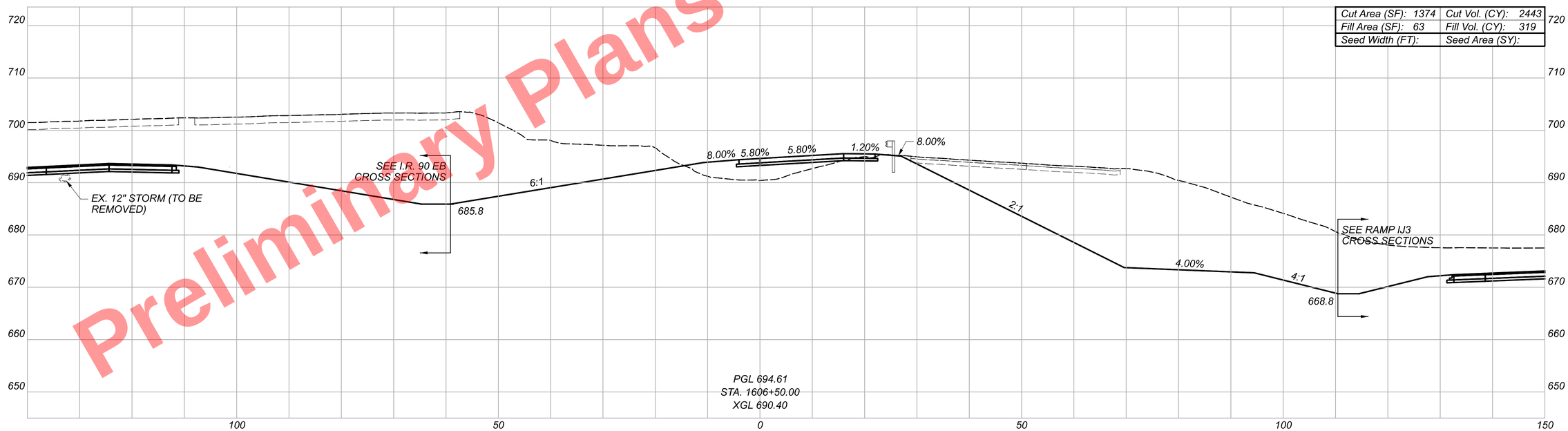

Preliminary Plans - For Reference Only

CUY-90-16.28 (CCG3A)

MODEL: I606+50.00 [Sheet] PAPERSIZE: 34x22 (in) DATE: 3/28/2025 TIME: 9:06:11 AM USER: Kevin.McNutt
pw:\\mb-us-pw.bentley.com:mb-us-pw-03\Documents\Cleveland.OH\01_Projects\ODOT\District2\82382\400-Engineering\Roadway\Sheets\82382_XS4600.dgn

CROSS SECTIONS
RAMP B6

DESIGN AGENCY

DESIGNER
BMV

REVIEWER
TJS 04/30/24

PROJECT ID
82382

Sheet Totals		
Seeding	Cut	Fill
0	4942	386

SHEET	TOTAL
848	2696

Preliminary Plans - For Reference Only

Cut Area (SF): 0	Cut Vol. (CY): 809
Fill Area (SF): 0	Fill Vol. (CY): 5
Seed Width (FT):	Seed Area (SY):

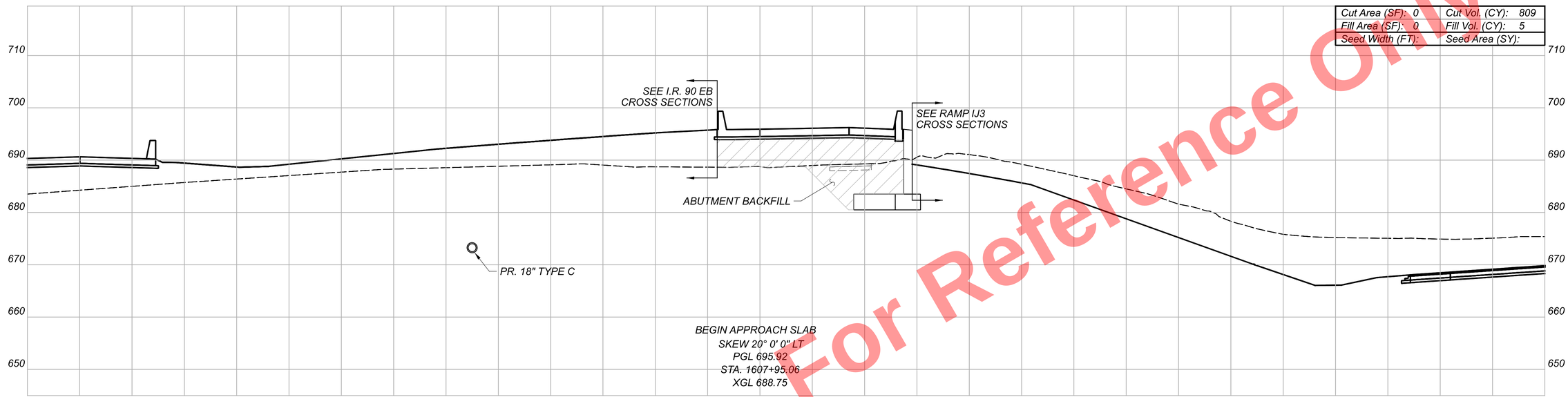

Cut Area (SF): 970	Cut Vol. (CY): 2125
Fill Area (SF): 6	Fill Vol. (CY): 15
Seed Width (FT):	Seed Area (SY):

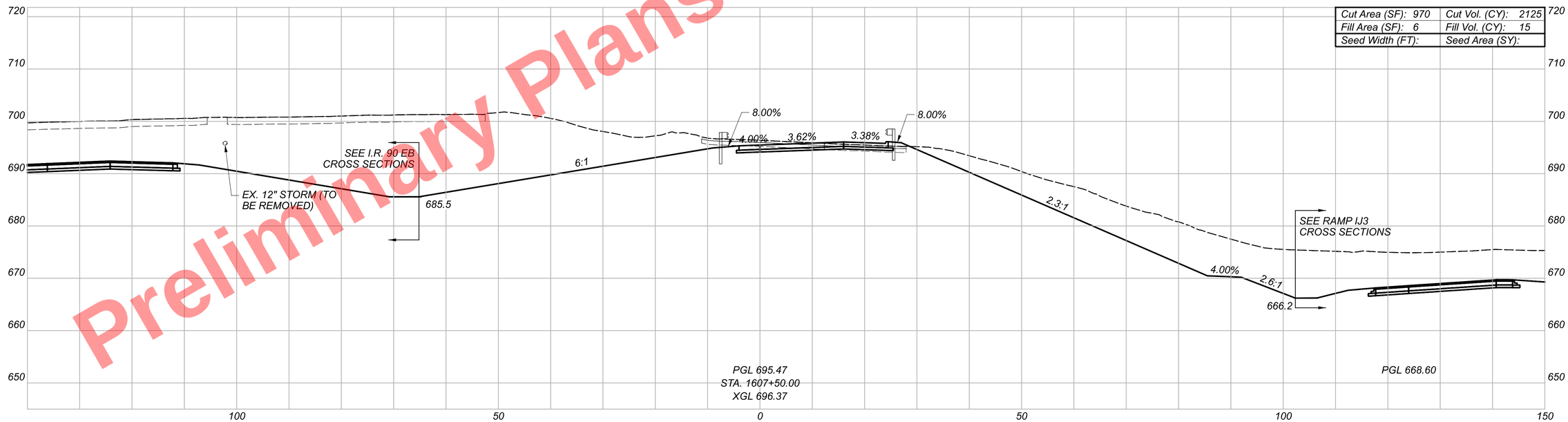

CUY-90-16.28 (CCG3A)

MODEL: 1607+50.00 [Sheet] PAPERSIZE: 34x22 (in.) DATE: 5/15/2025 TIME: 11:28:39 AM USER: TSCHOEN
pw:\\mb-us-pw.bentley.com:mb-us-pw-03\Documents\Cleveland_OH\OI_Projects\ODOT\District#12\82382\400-Engineering\Roadway\Sheets\82382_XS4600.dgn

CROSS SECTIONS
RAMP B6

Sheet Totals		
Seeding	Cut	Fill
0	2934	20

DESIGN AGENCY

DESIGNER
BMV

REVIEWER
TJS 04/30/24

PROJECT ID
82382

SHEET 849 TOTAL 2696

Preliminary Plans - Not For Reference Only

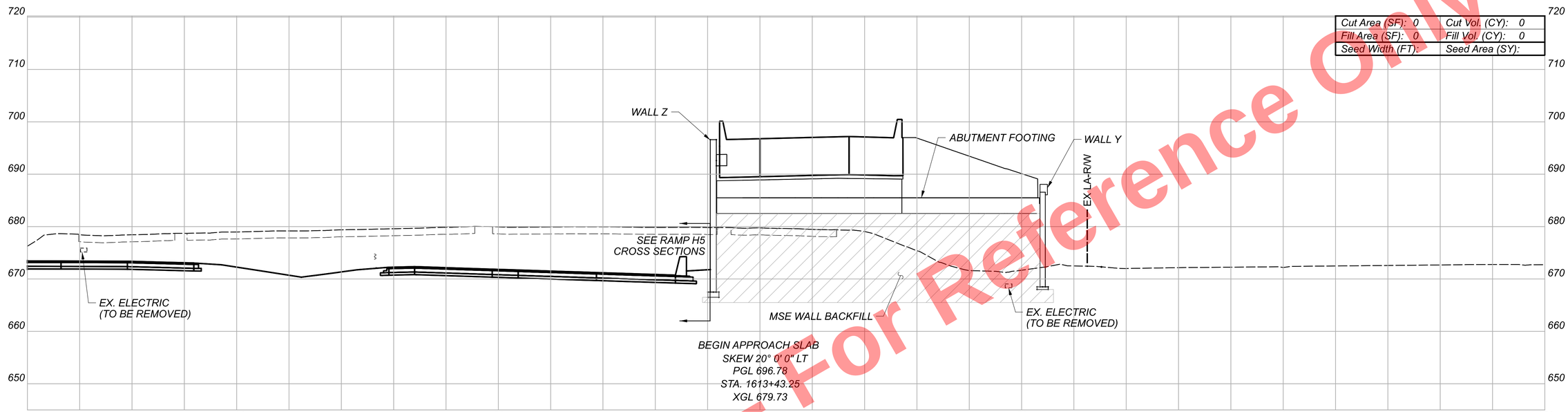

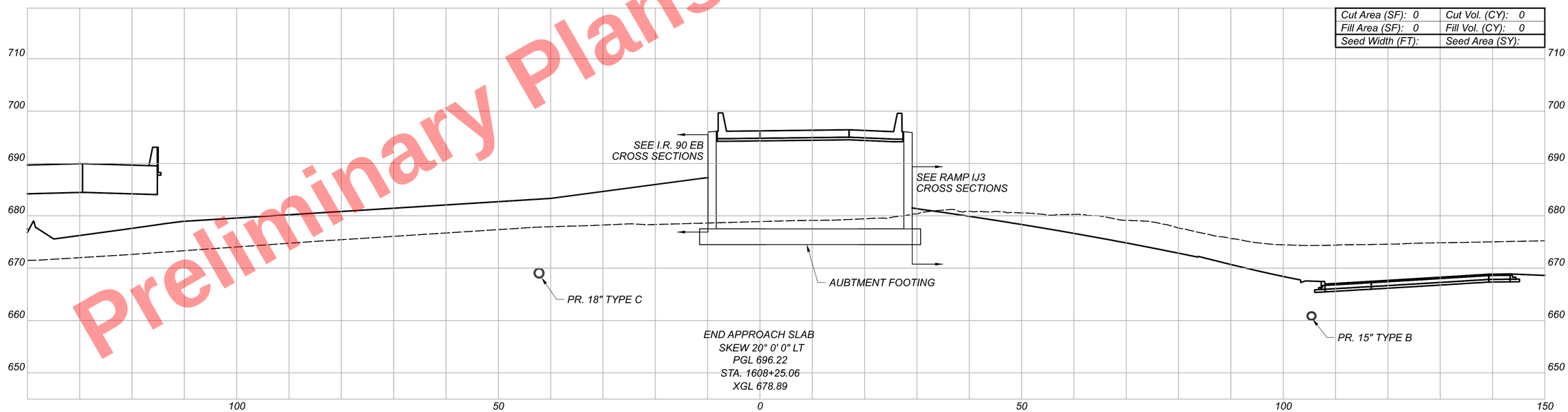

CUY-90-16.28 (CCG3A)

MODEL: 1608+25.06 [Sheet] PAPERSIZE: 34x22 (in) DATE: 5/15/2025 TIME: 11:28:52 AM USER: TSCHOEN
pw:\\mb-us-pw.bentley.com:mb-us-pw-03\Documents\Cleveland_OH\OL_Projects\ODOT\Distrtc12\82382\400-Engineering\Roadway\Sheets\82382_XS4600.dgn

CROSS SECTIONS
RAMP B6

Sheet Totals		
Seeding	Cut	Fill
0	0	0

DESIGN AGENCY

DESIGNER BMV

REVIEWER TJS 04/30/24

PROJECT ID 82382

SHEET 850 TOTAL 2696

Preliminary Plans - For Reference Only

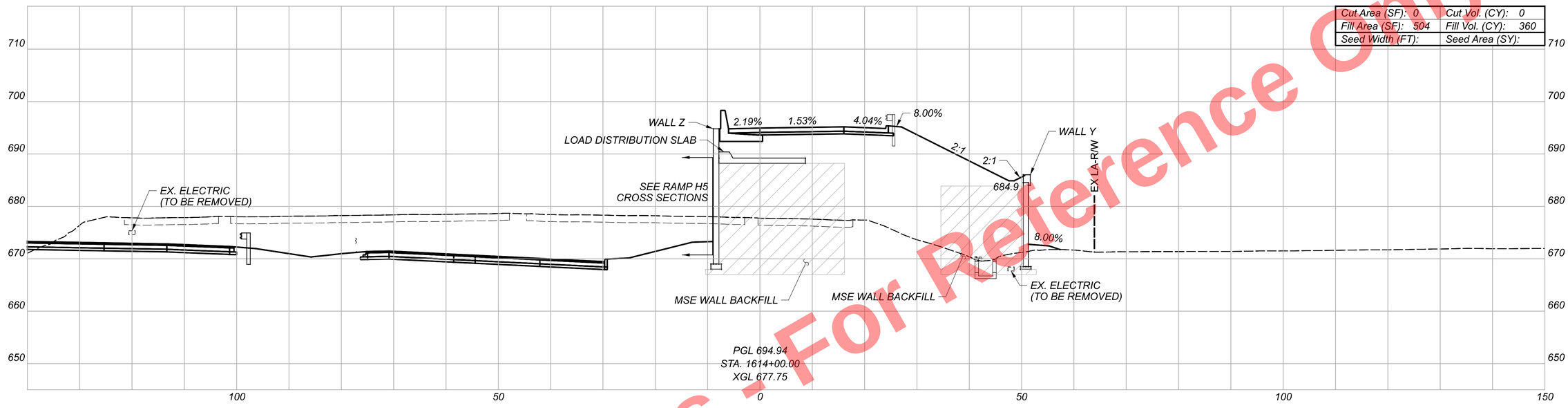

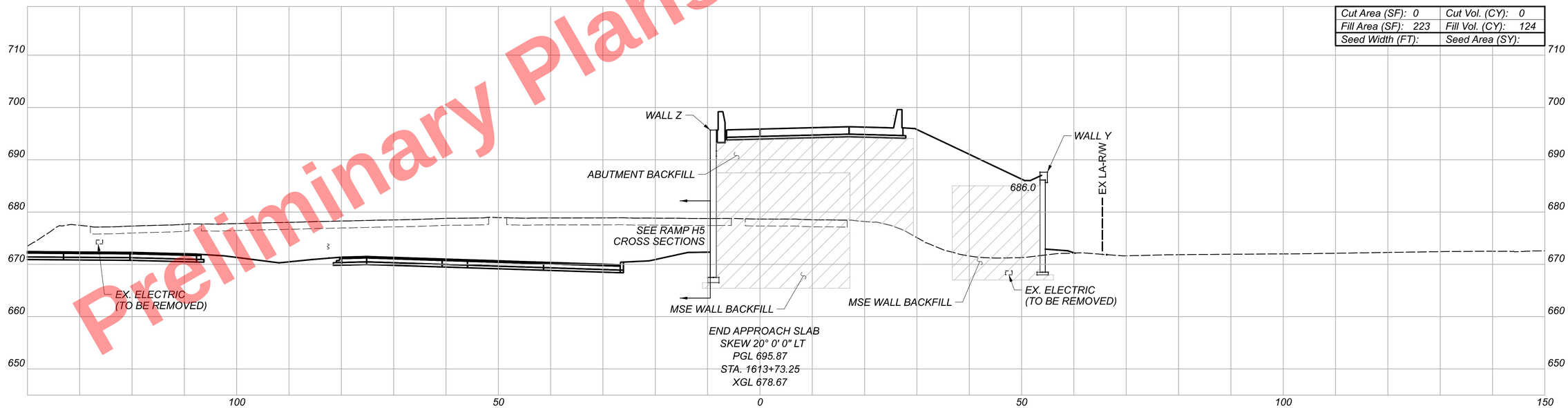

CROSS SECTIONS
RAMP B6

Sheet Totals		
Seeding	Cut	Fill
0	0	484

DESIGN AGENCY

DESIGNER BMV

REVIEWER TJS 04/30/24

PROJECT ID 82382

SHEET 851 TOTAL 2696

CUY-90-16.28 (CCG3A)

MODEL: 1613+73.25 (Sheet) PAPERSIZE: 34x22 (in.) DATE: 6/13/2025 TIME: 6:58:04 AM USER: TSCHOEN
pw:\\mb-us-pw.bentley.com:mb-us-pw-03\Documents\Cleveland_OH\OiL_Projects\ODOT\District#12\82382\400-Engineering\Roadway\Sheets\82382_XS4600.dgn

Preliminary Plans - For Reference Only

CUY-90-16.28 (CCG3A)

MODEL: 1614+50.00 [Sheet] PAPERSIZE: 34x22 (in.) DATE: 6/13/2025 TIME: 6:58:14 AM USER: TSCHOEN
pw:\\mb-us-pw.bentley.com:mb-us-pw-03\Documents\Cleveland.OH\OI_Projects\ODOT\District2\82382\400-Engineering\Roadway\Sheets\82382_XS4600.dgn

CROSS SECTIONS
RAMP B6

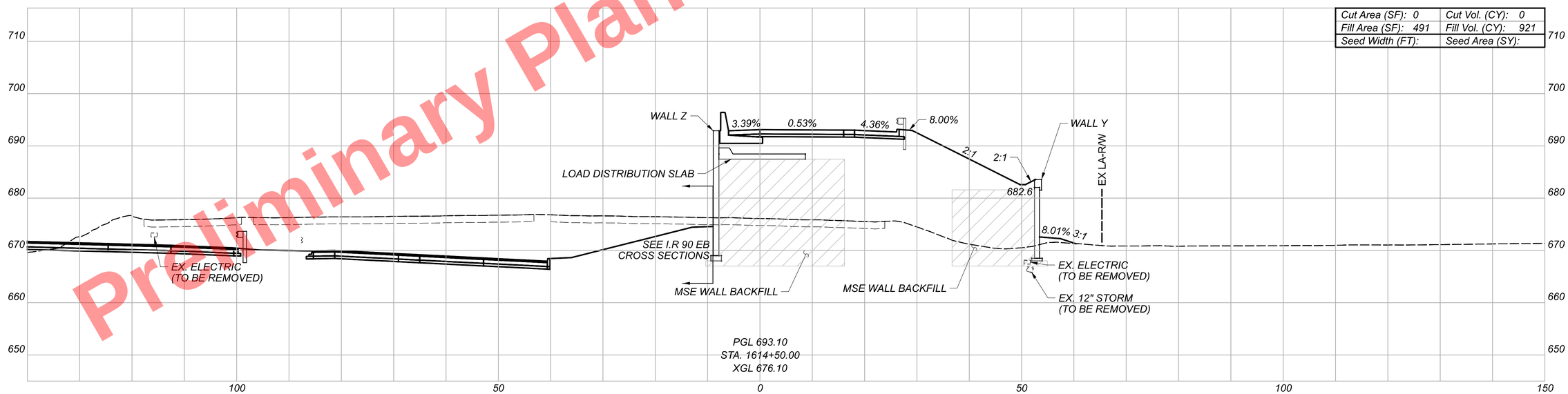

DESIGN AGENCY

DESIGNER
BMV

REVIEWER
TJS 04/30/24

PROJECT ID
82382

Sheet Totals		
Seeding	Cut	Fill
0	0	921

SHEET	TOTAL
852	2696

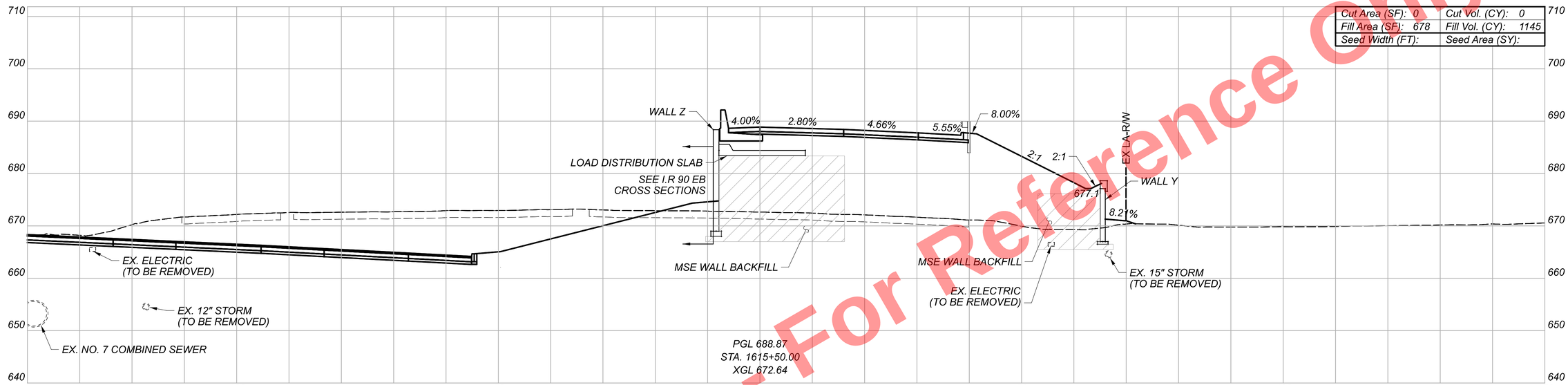

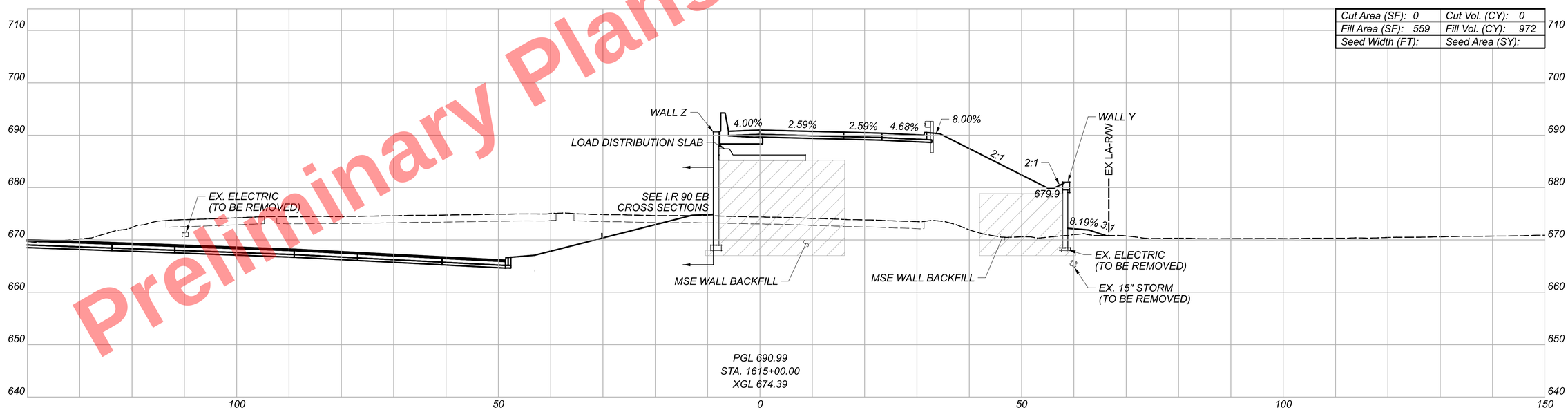

Preliminary Plans - For Reference Only

CUY-90-16.28 (CCG3A)

MODEL: BLP_RB6 - 1615+00.00 [Sheet] PAPERSIZE: 34x22 (in.) DATE: 6/13/2025 TIME: 6:58:21 AM USER: TSCHOEN
pw:\\mb-us-pw.bentley.com:mb-us-pw-03\Documents\Cleveland_OH\01_Projects\000TYDistrict2\82382\400-Engineering\Roadway\Sheets\82382_XS4600.dgn

CROSS SECTIONS
RAMP B6

DESIGN AGENCY

DESIGNER
BMV

REVIEWER
TJS 04/30/24

PROJECT ID
82382

Sheet Totals		
Seeding	Cut	Fill
0	0	2117

SHEET 853 TOTAL 2696

Preliminary Plans For Reference Only

Cut Area (SF): 0	Cut Vol. (CY): 0
Fill Area (SF): 986	Fill Vol. (CY): 1673
Seed Width (FT):	Seed Area (SY):

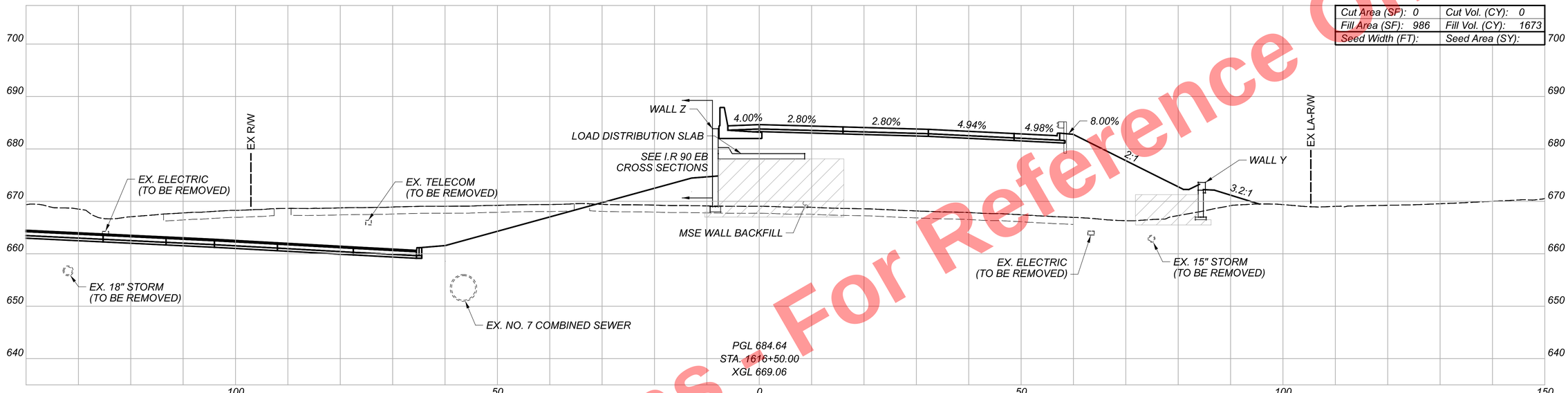

Cut Area (SF): 0	Cut Vol. (CY): 0
Fill Area (SF): 821	Fill Vol. (CY): 1388
Seed Width (FT):	Seed Area (SY):

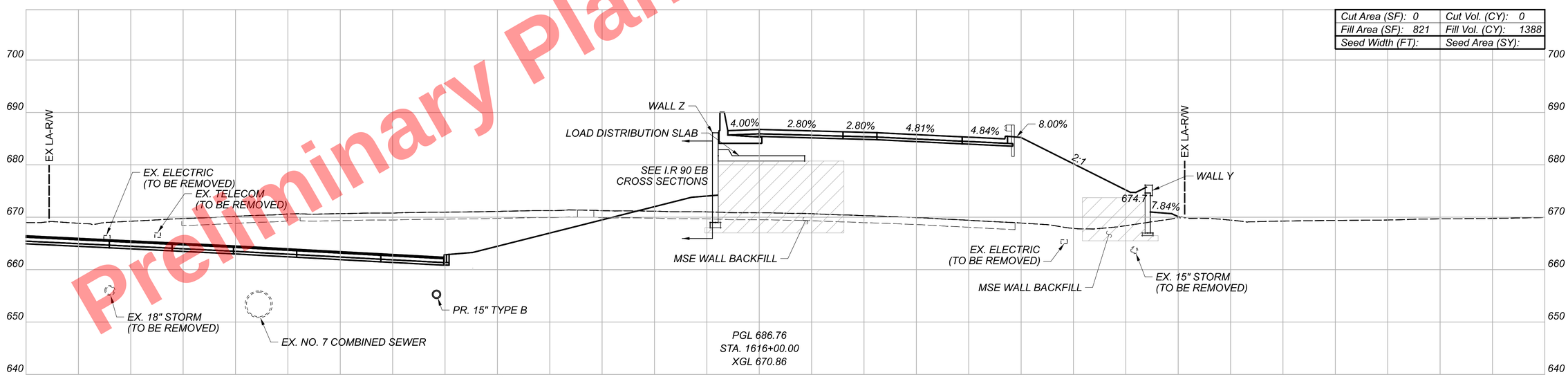

CUY-90-16.28 (CCG3A)

MODEL: BLP_RB6 - I616+00.00 (Sheet) PAPERSIZE: 34x22 (in.) DATE: 6/13/2025 TIME: 6:58:31 AM USER: TSCHOEN
pw:\\mb-us-pw.bentley.com:mb-us-pw-03\Documents\Cleveland.OH\OI_Projects\ODOT\District2\82382\400-Engineering\Roadway\Sheets\82382_XS4600.dgn

CROSS SECTIONS
RAMP B6

Sheet Totals		
Seeding	Cut	Fill
0	0	3061

DESIGN AGENCY

DESIGNER
BMV

REVIEWER
TJS 04/30/24

PROJECT ID
82382

SHEET	TOTAL
854	2696

Preliminary Plans - For Reference Only

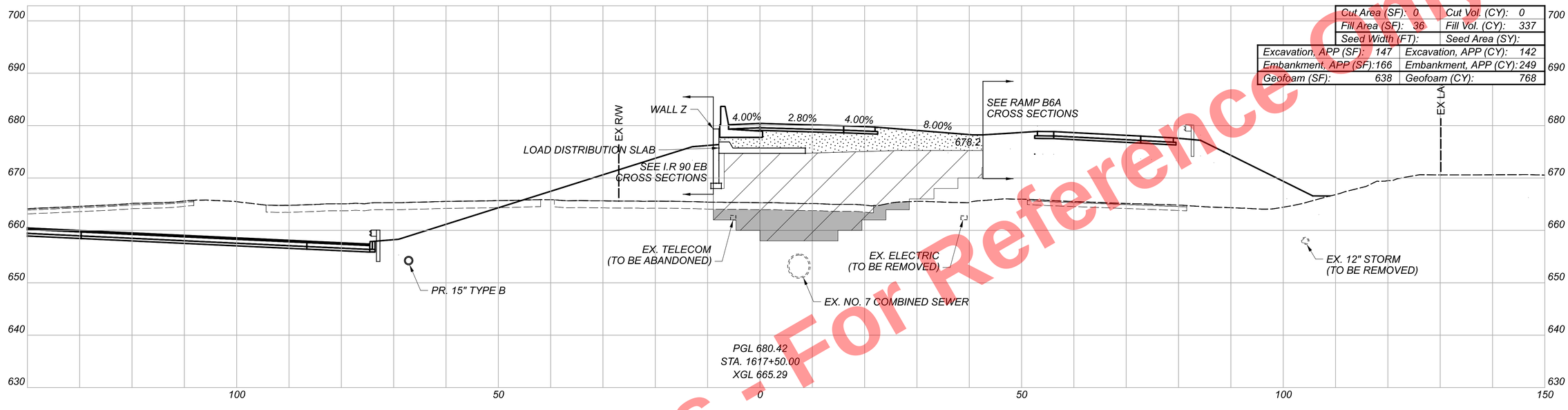

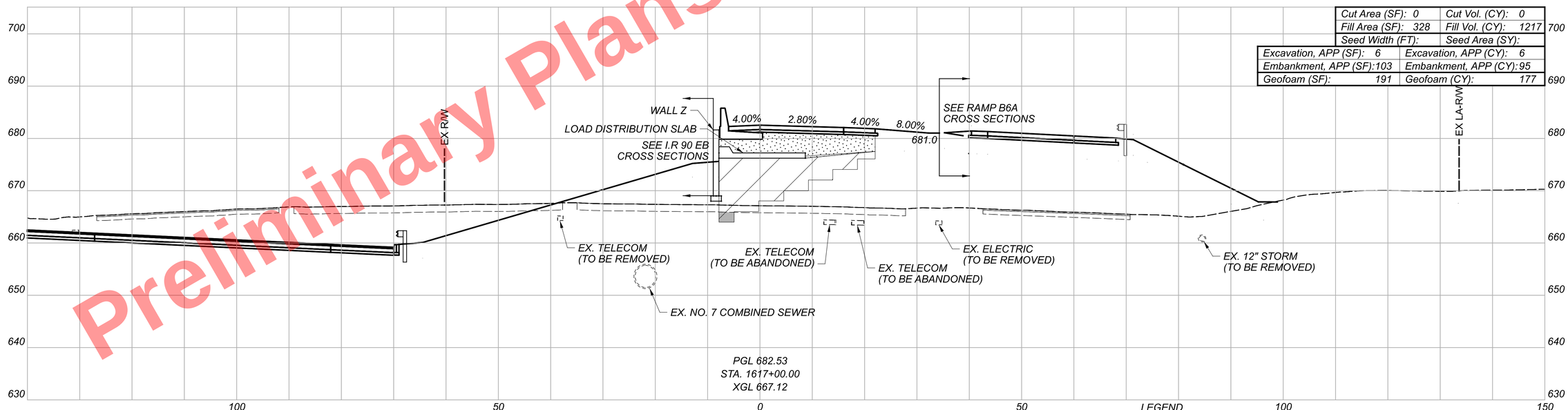

LEGEND

- ITEM 203 - EMBANKMENT, AS PER PLAN
- ITEM 203 - ROADWAY MISC.: EPS GEOFOAM FILL
- ITEM 203 - EXCAVATION, AS PER PLAN

Sheet Totals		
Seeding	Cut	Fill
0	0	1554
Embankment, APP	Excavation, APP	Geofoam
344	148	945

CROSS SECTIONS RAMP B6

CUY-90-16.28 (CCG3A)

DESIGN AGENCY

DESIGNER BMV

REVIEWER TJS 04/30/24

PROJECT ID 82382

SHEET 855 TOTAL 2696

MODEL: BLP_RB6 - 1617+00.00 [Sheet] PAPERSIZE: 34x22 (in.) DATE: 6/3/2025 TIME: 6:58:42 AM USER: TSCHOEN
pw:\\mb-us-pw.bentley.com:mb-us-pw-03\Documents\Cleveland_OH\OL_Projects\ODOT\District#2\82382\400-Engineering\Engineering\Roadway\Sheets\82382_XS4600.dgn

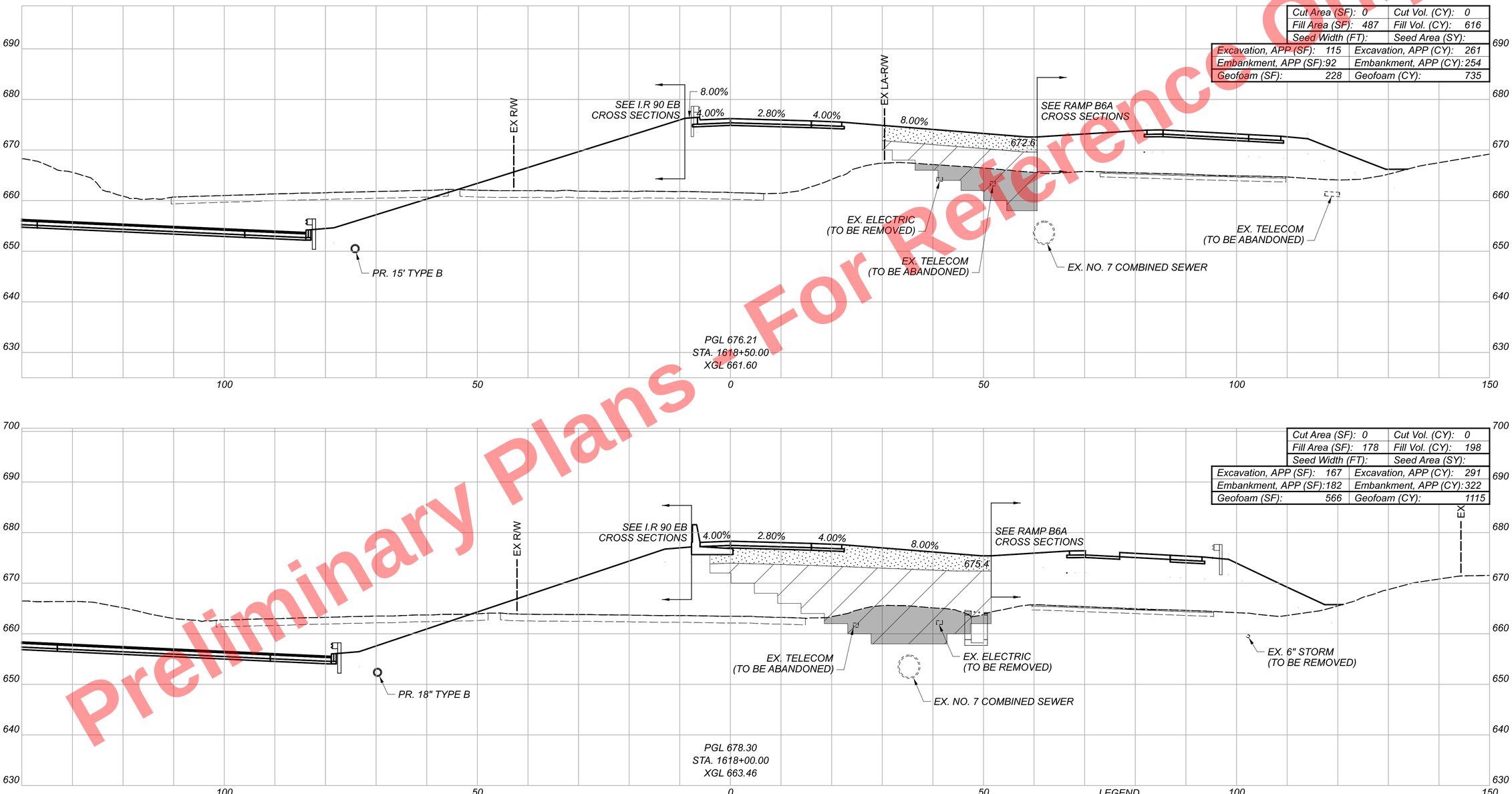

Preliminary Plans - For Reference Only

CUY-90-16.28 (CCG3A)

MODEL: BLP_RB6 - 1618+00.00 [Sheet] PAPERSIZE: 34x22 (in.) DATE: 3/28/2025 TIME: 9:07:15 AM USER: Kevin.McNutt
pw:\\mb-us-pw.bentley.com:mb-us-pw-03\Documents\Cleveland_OH\OL_Projects\ODOT\District12\82382\400-Engineering\Roadway\Sheets\8238

Sheet Totals		
Seeding	Cut	Fill
0	0	814
Embankment, APP	Excavation, APP	Geofoam
576	552	1850

CROSS SECTIONS RAMP B6

DESIGN AGENCY

DESIGNER BMV

REVIEWER TJS 04/30/24

PROJECT ID 82382

SHEET 856 TOTAL 2696

Preliminary Plans - For Reference Only

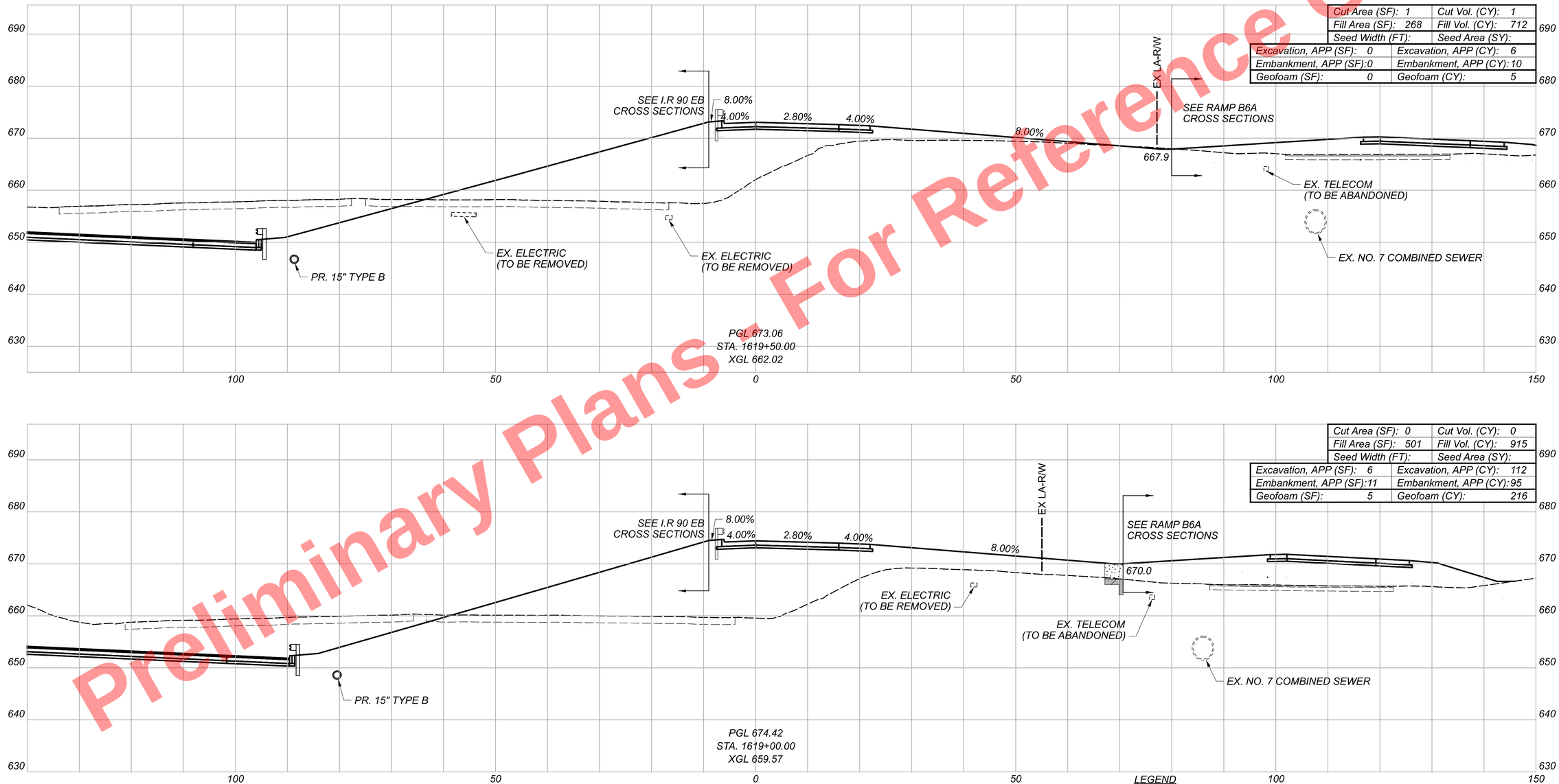

Sheet Totals		
Seeding	Cut	Fill
0	1	1627
Embankment, APP	Excavation, APP	Geofoam
105	118	221

CUY-90-16.28 (CCG3A)

MODEL: BLP_RB6 - 1619+00.00 [Sheet] PAPERSIZE: 34x22 (in) DATE: 3/28/2025 TIME: 9:07:23 AM USER: Kevin.McNutt
pw:\\mb-us-pw.bentley.com:mb-us-pw-03\Documents\Cleveland_OH\01_Projects\000T\District2\82382\400-Engineering\Roadway\Sheets\82382_XS4600.dgn

CROSS SECTIONS
RAMP B6

DESIGN AGENCY

DESIGNER
BMV

REVIEWER
TJS 04/30/24

PROJECT ID
82382

SHEET 857 TOTAL 2696

Preliminary Plans - For Reference Only

CROSS SECTIONS
RAMP B6

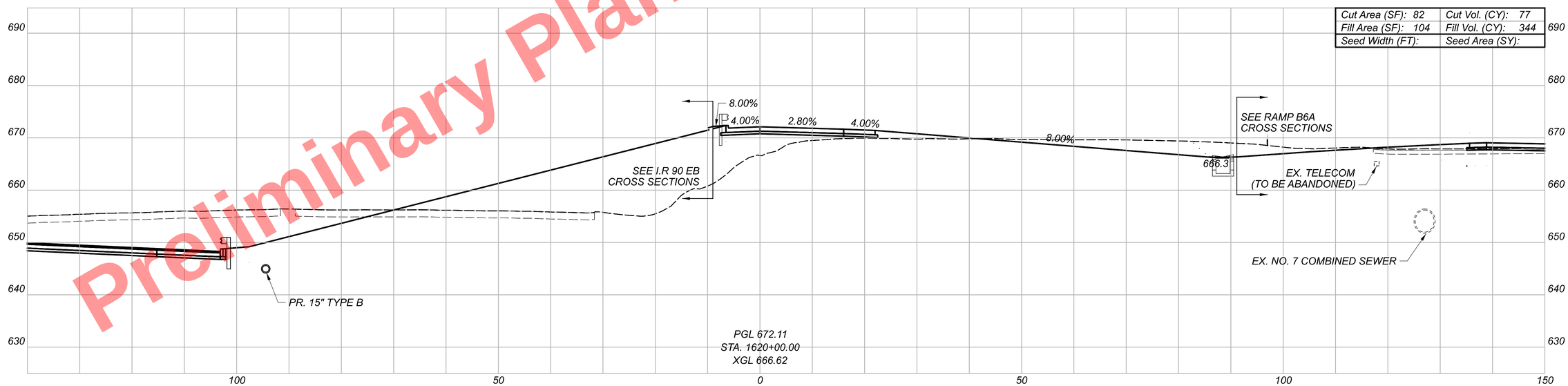

Cut Area (SF): 82	Cut Vol. (CY): 77
Fill Area (SF): 104	Fill Vol. (CY): 344
Seed Width (FT):	Seed Area (SY):

Sheet Totals		
Seeding	Cut	Fill
0	77	344

DESIGN AGENCY

DESIGNER BMV

REVIEWER TJS 04/30/24

PROJECT ID 82382

SHEET 858 TOTAL 2696

CUY-90-16.28 (CCG3A)

MODEL: BLP_RB6 - 1620+00.00 (Sheet) PAPERSIZE: 34x22 (In.) DATE: 5/15/2025 TIME: 11:29:19 AM USER: TSCHOEN
pw:\\mb-us-pw.bentley.com:mb-us-pw-03\Documents\Cleveland_OH\01_Projects\ODOT\District2\82382\400-Engineering\Roadway\Sheets\82382_XS4600.dgn

Preliminary Plans - For Reference Only

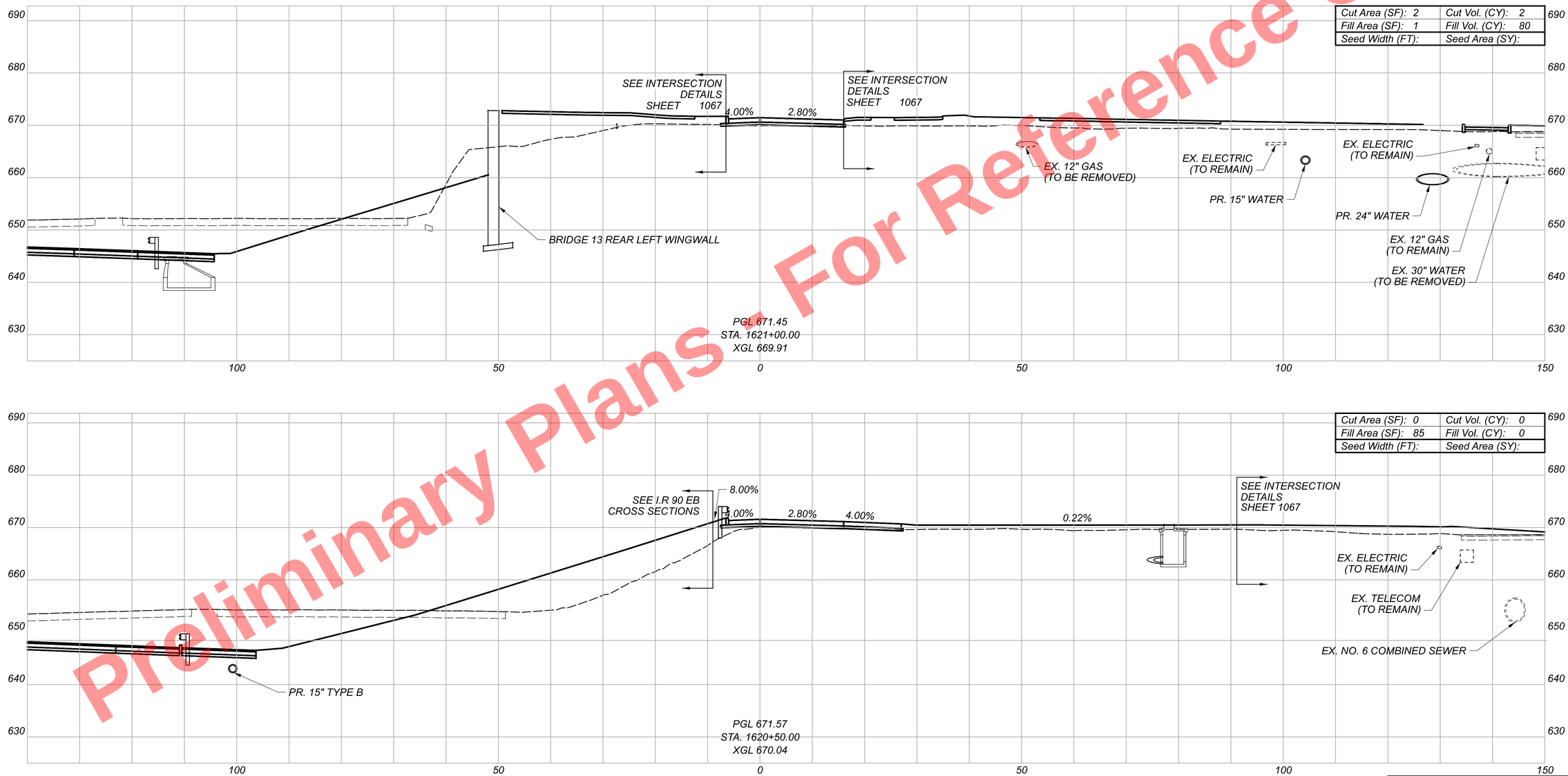

Cut Area (SF): 2	Cut Vol. (CY): 2
Fill Area (SF): 1	Fill Vol. (CY): 80
Seed Width (FT):	Seed Area (SY):

Cut Area (SF): 0	Cut Vol. (CY): 0
Fill Area (SF): 85	Fill Vol. (CY): 0
Seed Width (FT):	Seed Area (SY):

CROSS SECTIONS RAMP B6

CUY-90-16.28 (CCG3A)

MODEL: BLP_RB6 - 1620+50.00 [Sheet] PAPERSIZE: 34x22 (in.) DATE: 5/9/2025 TIME: 8:43:39 AM USER: KevinMcNutt
pw:\\mb-us-pw.bentley.com:mb-us-pw-03\Documents\Cleveland_OH\01_Projects\000T\District2\82382\400-Engineering\Roadway\Sheets\82382_XS4610.dgn

Sheet Totals		
Seeding	Cut	Fill
0	2	80

Grand Totals Carried to Subsummary		
Seeding	Cut	Fill
0	13089	15337
Embankment, APP	Excavation, APP	Geofoam
6298	6516	28133

DESIGN AGENCY
Michael Baker INTERNATIONAL

DESIGNER
KJM

REVIEWER
KGJ 05/22/24

PROJECT ID
82382

SHEET 859 TOTAL 2696

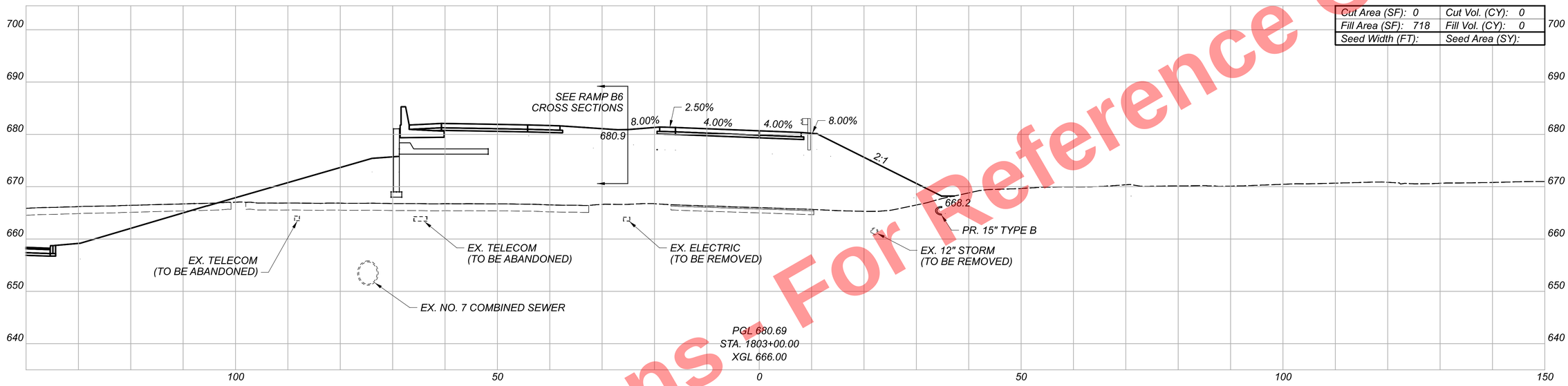

Cut Area (SF): 0	Cut Vol. (CY): 0
Fill Area (SF): 718	Fill Vol. (CY): 0
Seed Width (FT):	Seed Area (SY):

Preliminary Plans - For Reference Only

CROSS SECTIONS
RAMP B6A

DESIGN AGENCY

DESIGNER
BMV

REVIEWER
TJS 04/30/24

PROJECT ID
82382

Sheet Totals		
Seeding	Cut	Fill
0	0	0

SHEET 860 TOTAL 2696

CUY-90-16.26 (CCG3A)

MODEL: BLP_RB6A - I802+50.00 (Sheet) PAPERSIZE: 34x22 (in.) DATE: 3/28/2025 TIME: 9:08:12 AM USER: KevinJMcNutt
pw:\\mb-us-pw.bentley.com:mb-us-pw-03\Documents\Cleveland_OH\OL_Projects\ODOT\District 12\82382\400-Engineering\Roadway\Sheets\82382_XS4700.dgn

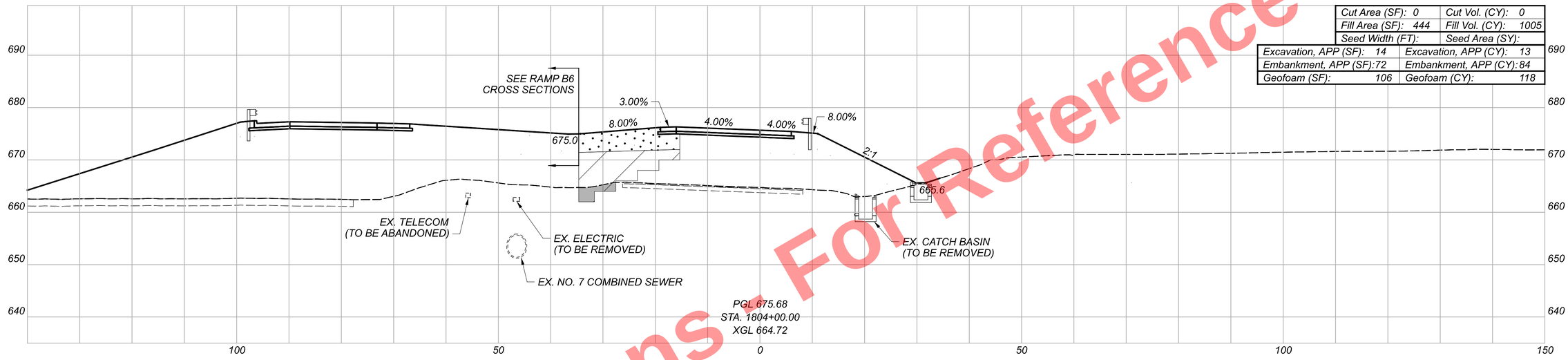

Cut Area (SF): 0	Cut Vol. (CY): 0
Fill Area (SF): 444	Fill Vol. (CY): 1005
Seed Width (FT):	Seed Area (SY):
Excavation, APP (SF): 14	Excavation, APP (CY): 13
Embankment, APP (SF): 72	Embankment, APP (CY): 84
Geofoam (SF): 106	Geofoam (CY): 118

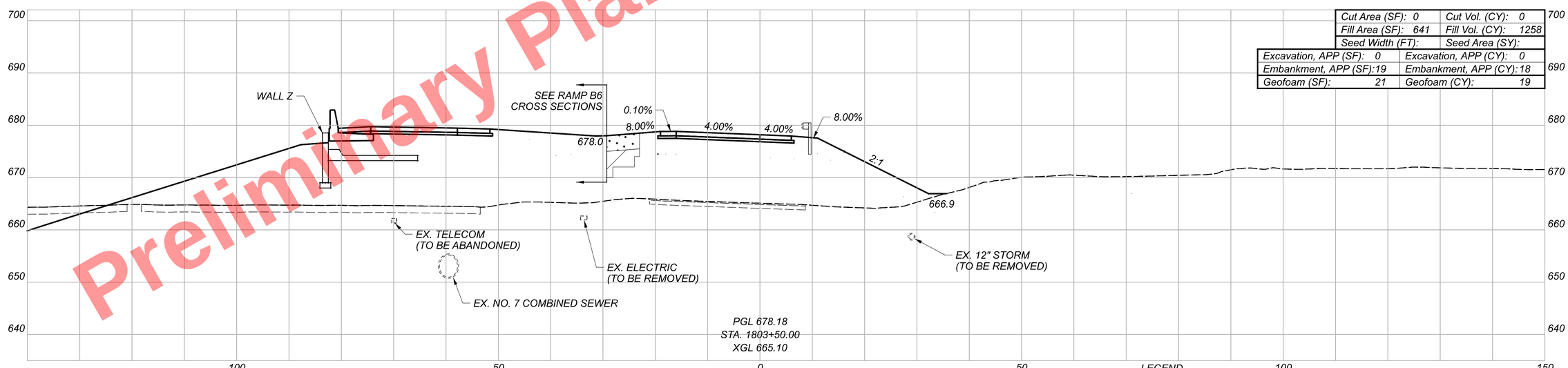

Cut Area (SF): 0	Cut Vol. (CY): 0
Fill Area (SF): 641	Fill Vol. (CY): 1258
Seed Width (FT):	Seed Area (SY):
Excavation, APP (SF): 0	Excavation, APP (CY): 0
Embankment, APP (SF): 19	Embankment, APP (CY): 18
Geofoam (SF): 21	Geofoam (CY): 19

LEGEND

- ITEM 203 - EMBANKMENT, AS PER PLAN
- ITEM 203 - ROADWAY MISC.: EPS GEOFOAM FILL
- ITEM 203 - EXCAVATION, AS PER PLAN

Sheet Totals		
Seeding	Cut	Fill
0	0	2263
Embankment, APP	Excavation, APP	Geofoam
102	13	137

CROSS SECTIONS
RAMP B6A

DESIGN AGENCY
HDR

DESIGNER
BMV

REVIEWER
TJS 04/30/24

PROJECT ID
82382

SHEET 861 TOTAL 2696

CUY-90-16.26 (CCG3A)

MODEL: BLP_RB6A - 1803+50.00 [Sheet] PAPERSIZE: 34x22 (in.) DATE: 3/28/2025 TIME: 9:08:17 AM USER: Kevin.McNutt
pw:\\mb-us-pw.bentley.com:mb-us-pw-03\Documents\Cleveland_OH\01_Projects\ODOT\District12\82382\400-Engineering\Roadway\Sheets\82382_XS4700.dgn

Preliminary Plans - For Reference Only

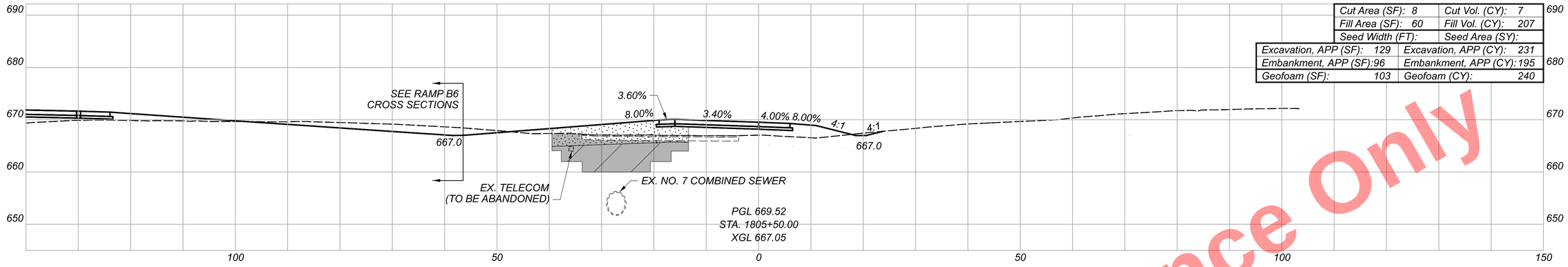

Cut Area (SF):	8	Cut Vol. (CY):	7
Fill Area (SF):	60	Fill Vol. (CY):	207
Seed Width (FT):		Seed Area (SY):	
Excavation, APP (SF):	129	Excavation, APP (CY):	231
Embankment, APP (SF):	96	Embankment, APP (CY):	195
Geofoam (SF):	103	Geofoam (CY):	240

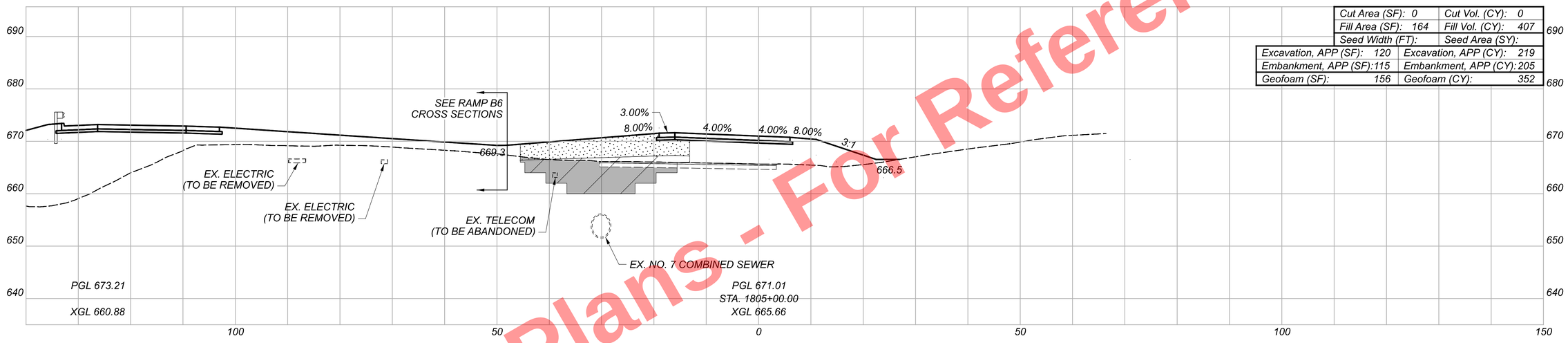

Cut Area (SF):	0	Cut Vol. (CY):	0
Fill Area (SF):	164	Fill Vol. (CY):	407
Seed Width (FT):		Seed Area (SY):	
Excavation, APP (SF):	120	Excavation, APP (CY):	219
Embankment, APP (SF):	115	Embankment, APP (CY):	205
Geofoam (SF):	156	Geofoam (CY):	352

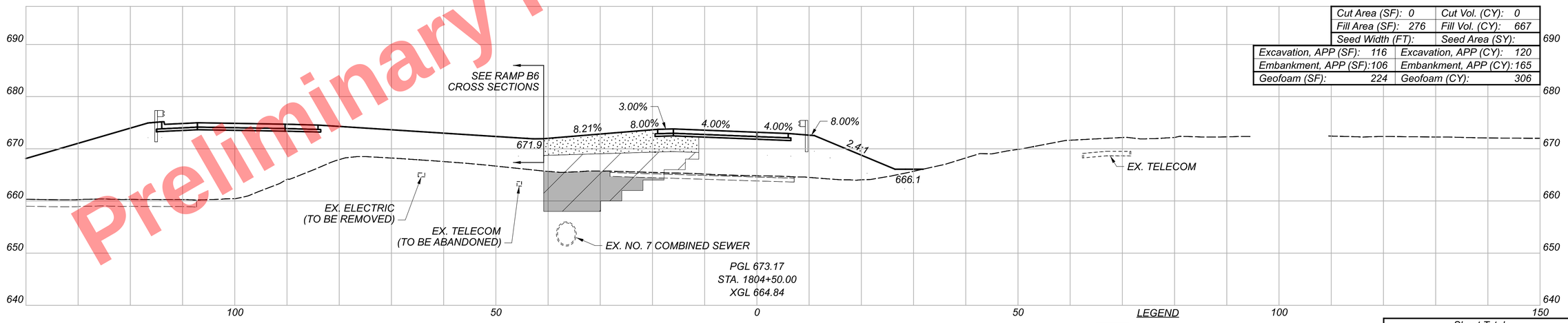

Cut Area (SF):	0	Cut Vol. (CY):	0
Fill Area (SF):	276	Fill Vol. (CY):	667
Seed Width (FT):		Seed Area (SY):	
Excavation, APP (SF):	116	Excavation, APP (CY):	120
Embankment, APP (SF):	106	Embankment, APP (CY):	165
Geofoam (SF):	224	Geofoam (CY):	306

LEGEND

- ITEM 203 - EMBANKMENT, AS PER PLAN
- ITEM 203 - ROADWAY MISC.: EPS GEOFOAM FILL
- ITEM 203 - EXCAVATION, AS PER PLAN

Sheet Totals		
Seeding	Cut	Fill
0	7	1281
Embankment, APP	Excavation, APP	Geofoam
565	570	898

Preliminary Plans - For Reference Only

CUY-90-16.28 (CCG3A)

MODEL: BLP_RB6A - 1804+50.00 [Sheet] PAPERSIZE: 34x22 (in.) DATE: 3/28/2025 TIME: 9:08:25 AM USER: Kevin.McNutt
pw:\\mb-us-pw.bentley.com:mb-us-pw-03\Documents\Cleveland_OH\01_Projects\ODOT\District2\82382\400-Engineering\Roadway\Sheets\82382_XS4700.dgn

CROSS SECTIONS
RAMP B6A

DESIGN AGENCY

DESIGNER
BMV

REVIEWER
TJS 04/30/24

PROJECT ID
82382

SHEET 862 TOTAL 2696

Preliminary Plans - For Reference Only

CUY-90-16.28 (CCG3A)

MODEL: BLP_RB6A - 1806+00.00 (Sheet) PAPERSIZE: 34x22 (in) DATE: 3/28/2025 TIME: 9:08:31 AM USER: KevinMcNutt
pw:\\mb-us-pw.bentley.com:mb-us-pw-03\Documents\Cleveland.OH\OI_Projects\ODOT\District2\82382\400-Engineering\Roadway\Sheets\82382_XS4700.dgn

CROSS SECTIONS
RAMP B6A

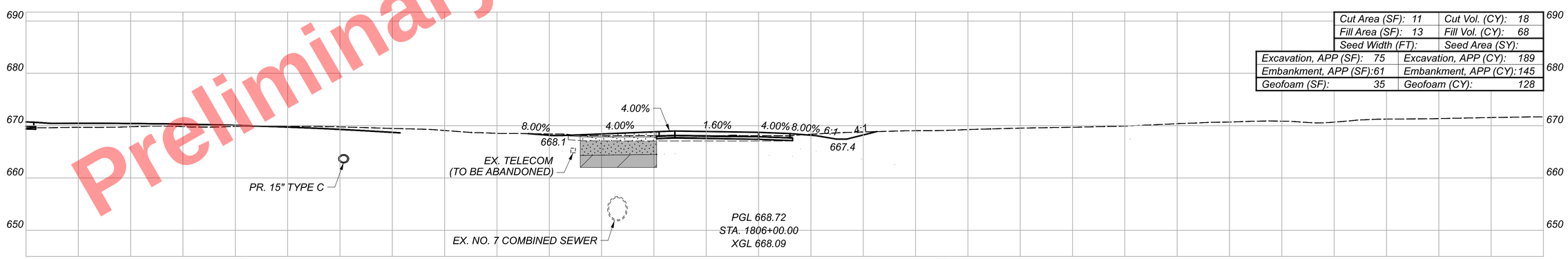

Cut Area (SF): 11		Cut Vol. (CY): 18	
Fill Area (SF): 13		Fill Vol. (CY): 68	
Seed Width (FT):		Seed Area (SY):	
Excavation, APP (SF): 75		Excavation, APP (CY): 189	
Embankment, APP (SF): 61		Embankment, APP (CY): 145	
Geofoam (SF): 35		Geofoam (CY): 128	

LEGEND

- ITEM 203 - EMBANKMENT, AS PER PLAN
- ITEM 203 - ROADWAY MISC.: EPS GEOFOAM FILL
- ITEM 203 - EXCAVATION, AS PER PLAN

Sheet Totals			Grand Totals Carried to Subsummary		
Seeding	Cut	Fill	Seeding	Cut	Fill
0	18	68	0	25	3612
Embankment, APP	Excavation, APP	Geofoam	Embankment, APP	Excavation, APP	Geofoam
145	189	128	812	772	1163

DESIGN AGENCY

HDR

DESIGNER
BMV

REVIEWER
TJS 04/30/24

PROJECT ID
82382

SHEET 863 TOTAL 2696

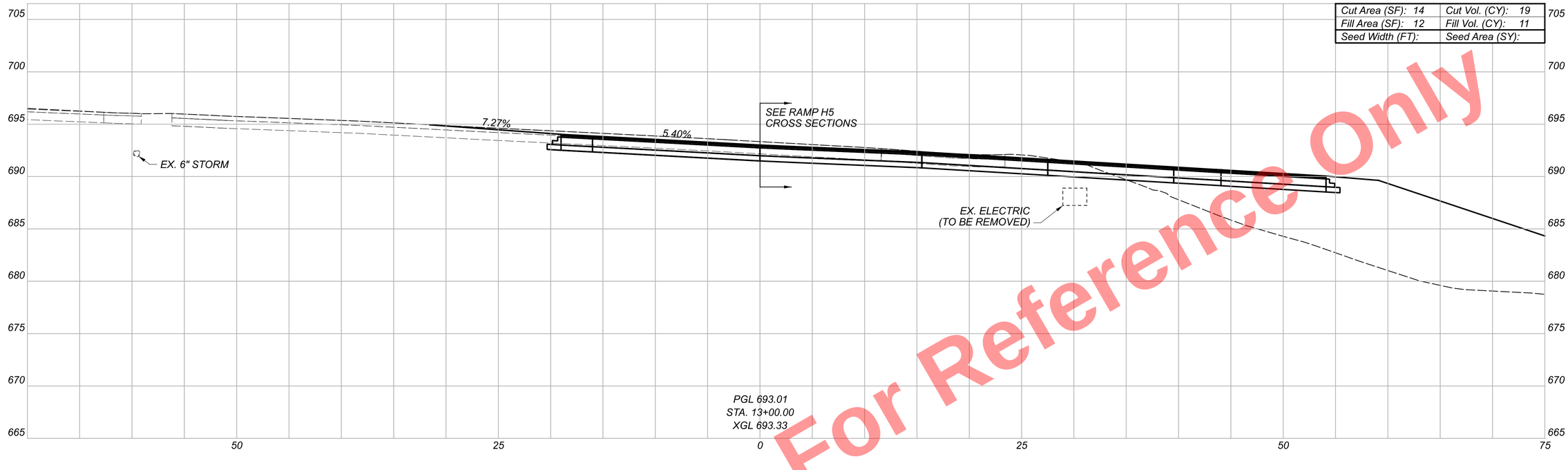

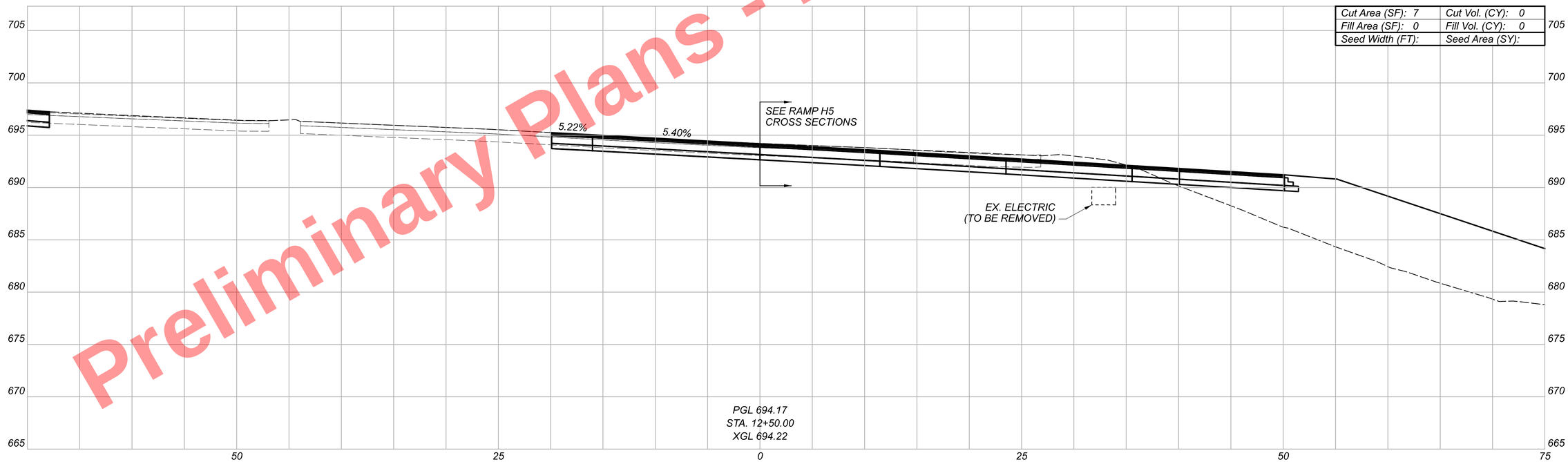

Preliminary Plans - For Reference Only

CUY-90-16.28 (CCG3A)

MODEL: BL_Ramp_IH4 - 12+50.00 [Sheet] PAPERSIZE: 34x22 (in) DATE: 3/28/2025 TIME: 9:08:48 AM USER: KevinMcNutt
pw:\\mb-us-pw.bentley.com:mb-us-pw-03\Documents\Cleveland_OH\01_Projects\000T\District2\82382\400-Engineering\Roadway\Sheets\82382_XS5400.dgn

CROSS SECTIONS
RAMP IH4

DESIGN AGENCY
Michael Baker INTERNATIONAL

DESIGNER
KJM

REVIEWER
KGJ 05/22/24

PROJECT ID
82382

Sheet Totals		
Seeding	Cut	Fill
0	19	11

SHEET	TOTAL
864	2696

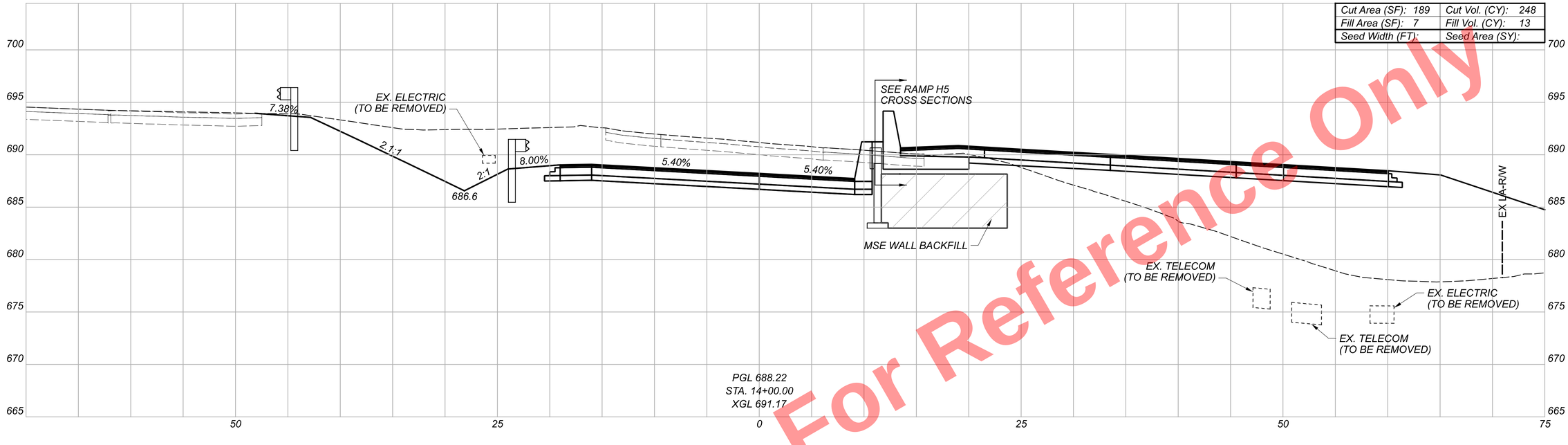

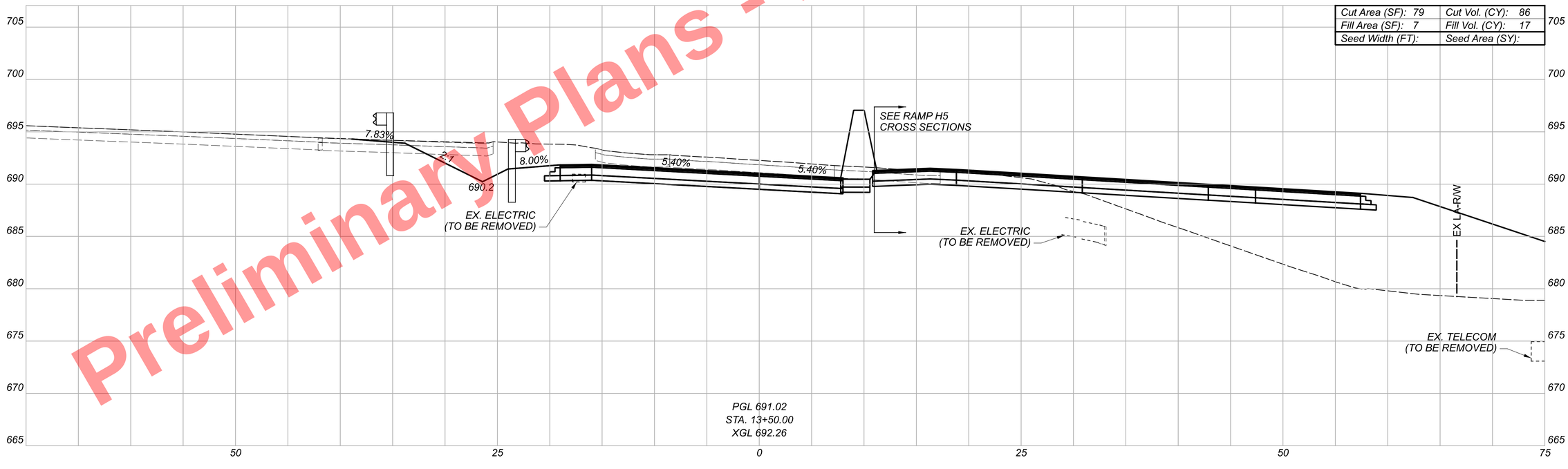

Preliminary Plans - For Reference Only

CUY-90-16.28 (CCG3A)

MODEL: BL_Ramp_IH4 - 13+50.00 [Sheet] PAPERSIZE: 34x22 (in) DATE: 3/28/2025 TIME: 9:08:58 AM USER: KevinJMcNutt
pw:\\mb-us-pw.bentley.com:mb-us-pw-03\Documents\Cleveland_OH\01_Projects\000T\District2\82382\400-Engineering\Roadway\Sheets\82382_XS5400.dgn

CROSS SECTIONS
RAMP IH4

Sheet Totals		
Seeding	Cut	Fill
0	334	30

DESIGN AGENCY
Michael Baker INTERNATIONAL

DESIGNER
KJM

REVIEWER
KGJ 05/22/24

PROJECT ID
82382

SHEET 865 TOTAL 2696

Preliminary Plans - For Reference Only

Cut Area (SF): 445	Cut Vol. (CY): 695
Fill Area (SF): 12	Fill Vol. (CY): 17
Seed Width (FT):	Seed Area (SY):

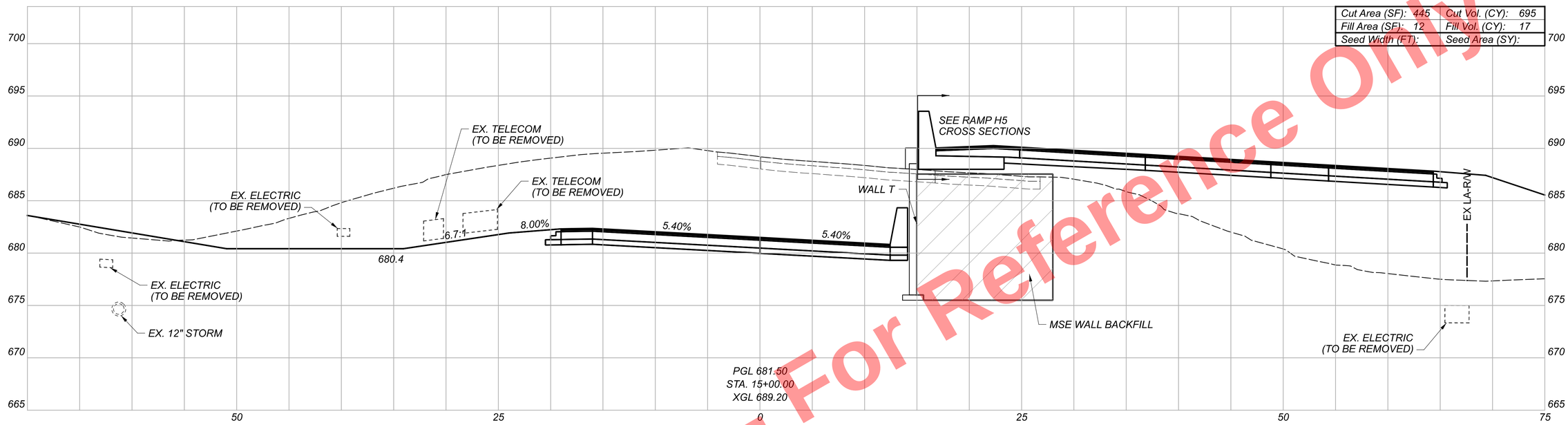

Cut Area (SF): 306	Cut Vol. (CY): 458
Fill Area (SF): 7	Fill Vol. (CY): 13
Seed Width (FT):	Seed Area (SY):

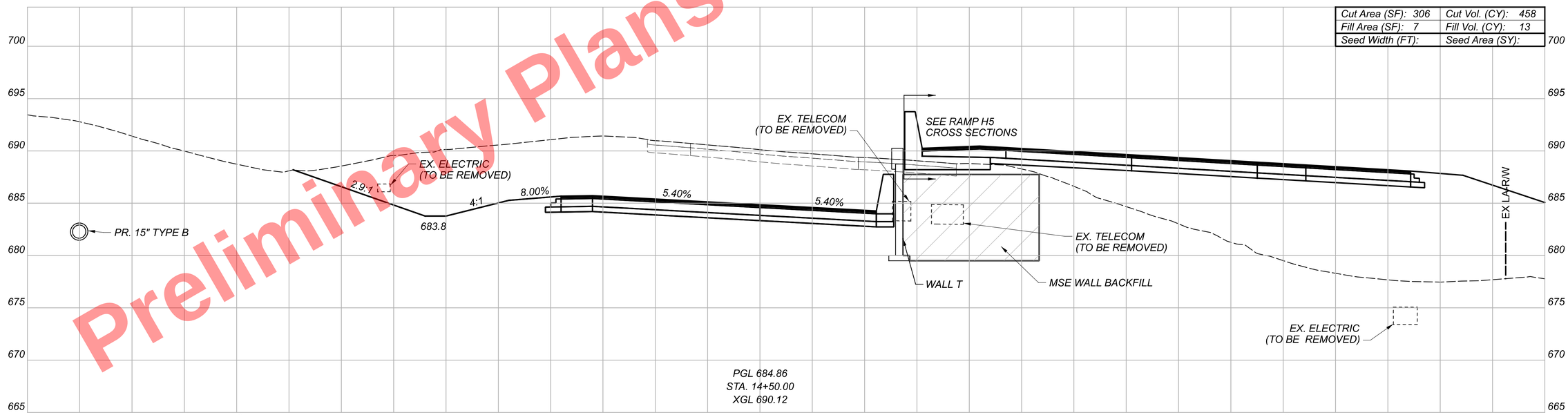

CUY-90-16.28 (CCG3A)

MODEL: BL_Ramp_IH4 - I4+50.00 (Sheet) PAPERSIZE: 34x22 (in.) DATE: 3/28/2025 TIME: 9:09:08 AM USER: KevIn.McNutt
pw:\\mb-us-pw.bentley.com:mb-us-pw-03\Documents\Cleveland.OH\01_Projects\ODOT\District2\82382\400-Engineering\Roadway\Sheets\82382_XS5400.dgn

CROSS SECTIONS
RAMP IH4

Sheet Totals		
Seeding	Cut	Fill
0	1153	30

DESIGN AGENCY
Michael Baker INTERNATIONAL

DESIGNER KJM

REVIEWER KGJ 05/22/24

PROJECT ID 82382

SHEET 866 TOTAL 2696

Preliminary Plans - For Reference Only

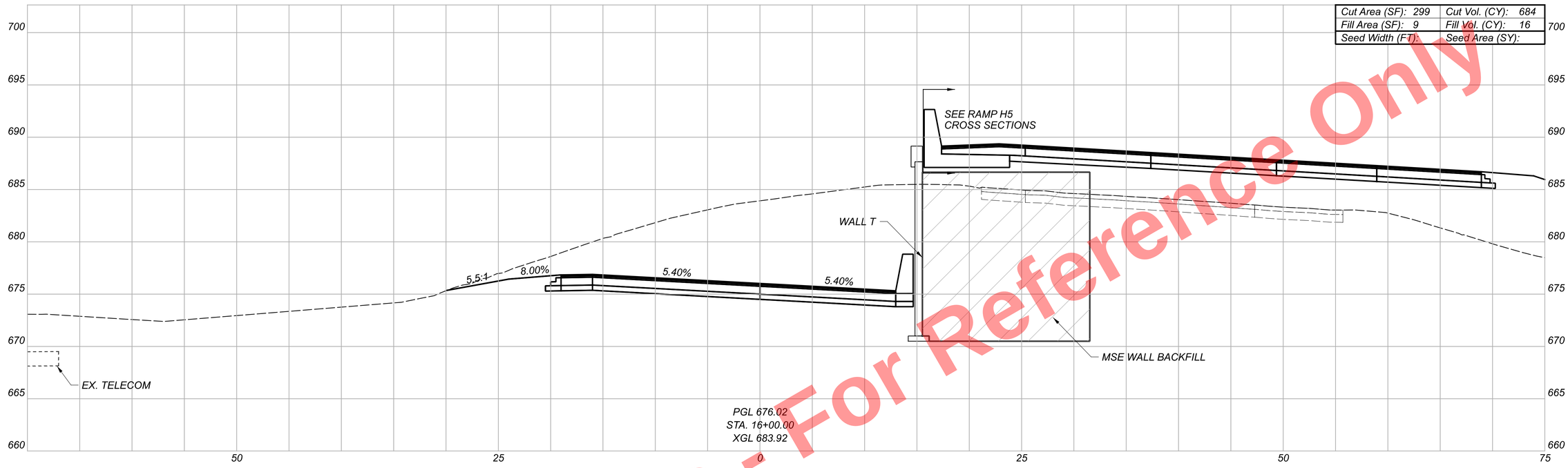

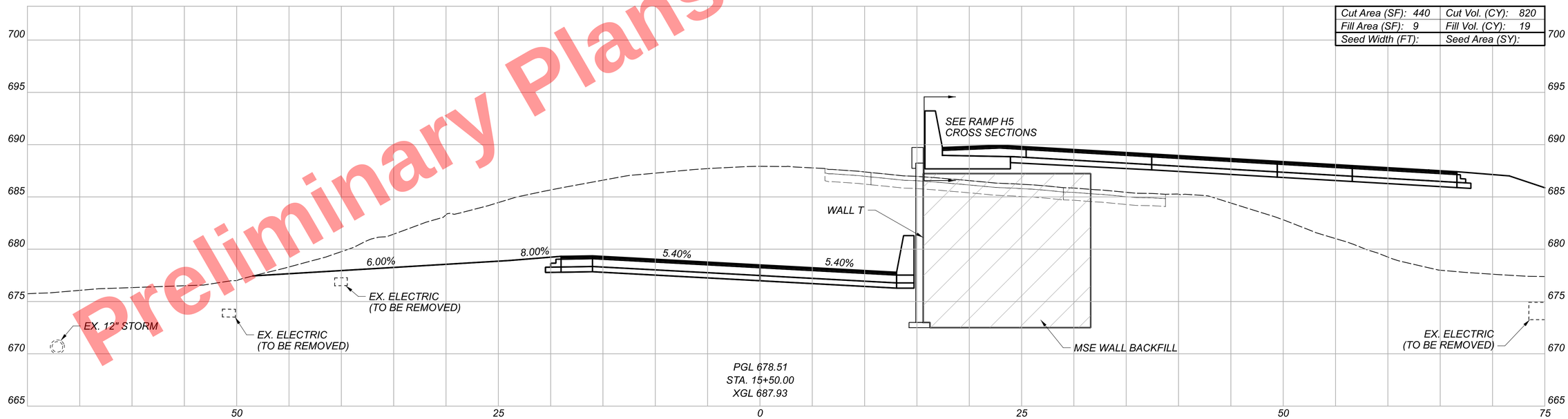

CUY-90-16.28 (CCG3A)

MODEL: BL_Ramp_IH4 - I5+50.00 [Sheet] PAPERSIZE: 34x22 (in.) DATE: 3/28/2025 TIME: 9:09:20 AM USER: KevinJMcNutt
pw:\\mb-us-pw.bentley.com:mb-us-pw-03\Documents\Cleveland_OH\01_Projects\ODOT\District2\82382\400-Engineering\Roadway\Sheets\82382_XS5400.dgn

CROSS SECTIONS
RAMP IH4

DESIGN AGENCY
Michael Baker INTERNATIONAL

DESIGNER
KJM

REVIEWER
KGJ 05/22/24

PROJECT ID
82382

Sheet Totals		
Seeding	Cut	Fill
0	1504	35

SHEET 867 TOTAL 2696

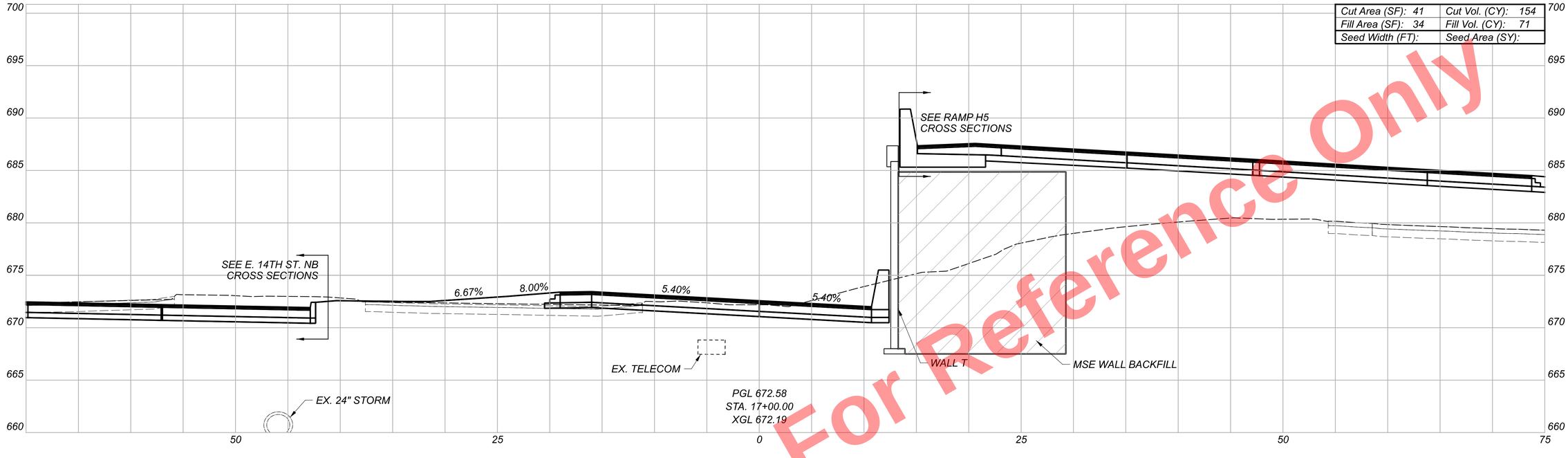

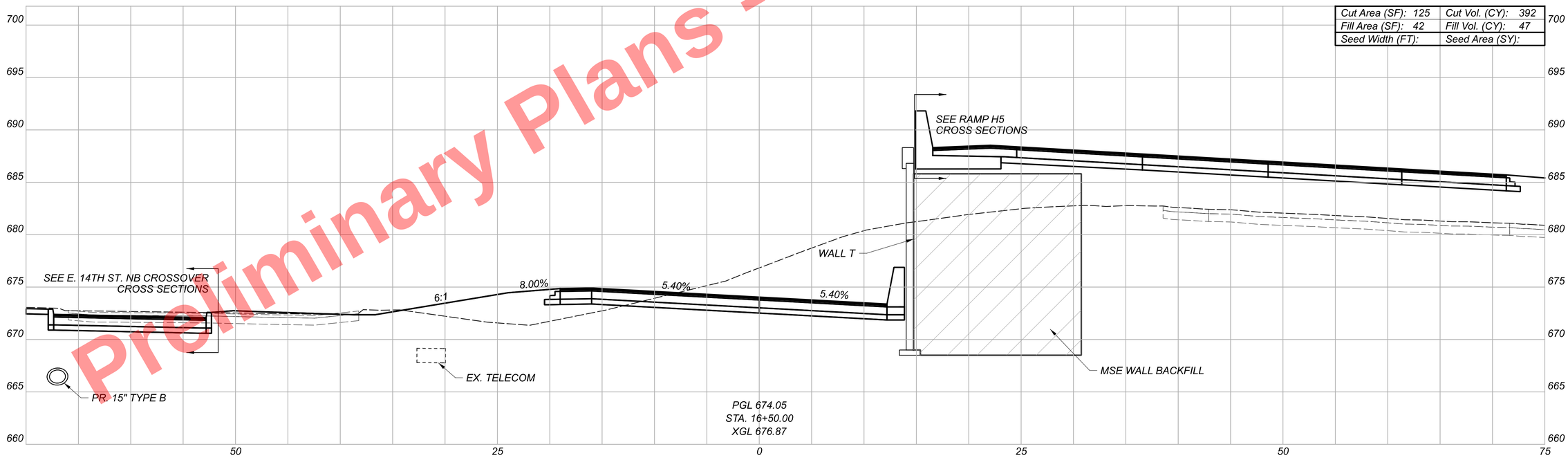

Preliminary Plans - For Reference Only

CROSS SECTIONS
RAMP IH4

CUY-90-16.28 (CCG3A)

MODEL: BL_Ramp_IH4 - 16+50.00 [Sheet] PAPERSIZE: 34x22 (in.) DATE: 3/28/2025 TIME: 9:09:30 AM USER: Kevin.McNutt
pw:\\mb-us-pw.bentley.com:mb-us-pw-03\Documents\Cleveland_OH\OI_Projects\ODOT\District2\82382\400-Engineering\Roadway\Sheets\82382_XS5400.dgn

Sheet Totals		
Seeding	Cut	Fill
0	546	118

DESIGN AGENCY
Michael Baker INTERNATIONAL

DESIGNER
KJM

REVIEWER
KGJ 05/22/24

PROJECT ID
82382

SHEET 868 TOTAL 2696

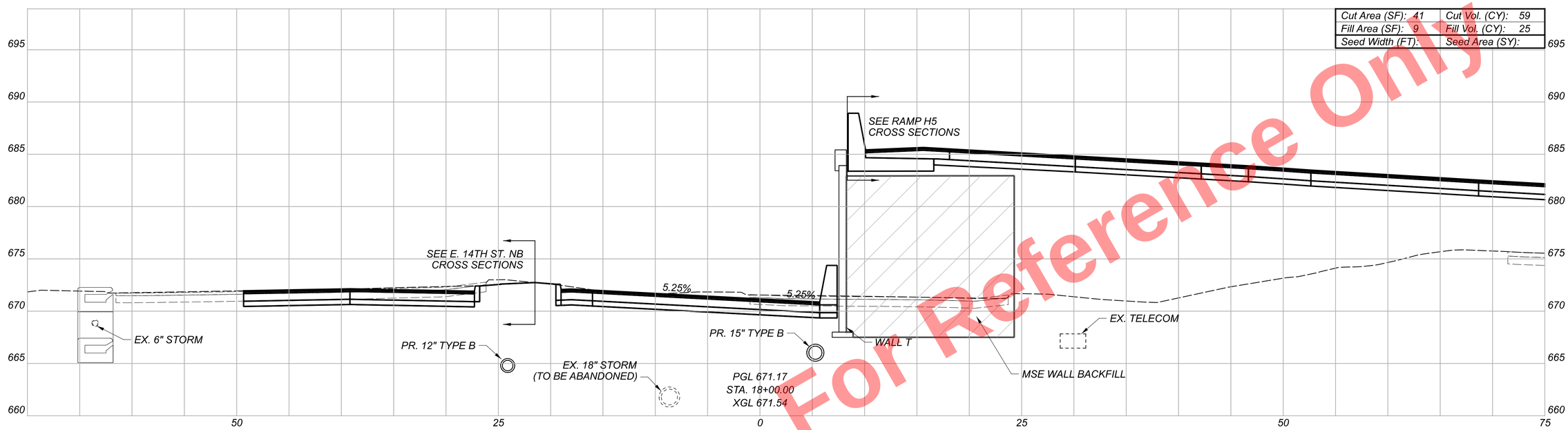

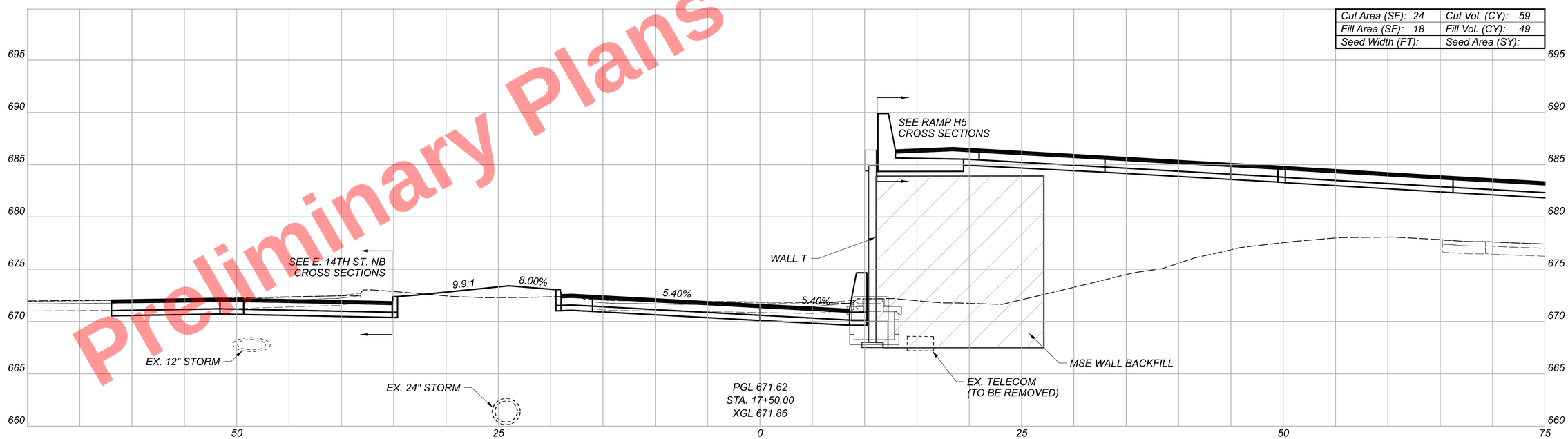

Sheet Totals			Grand Totals Carried to Subsummary		
Seeding	Cut	Fill	Seeding	Cut	Fill
0	118	74	0	3674	298

CROSS SECTIONS
RAMP IH4

DESIGN AGENCY
Michael Baker INTERNATIONAL

DESIGNER
KJM

REVIEWER
KGJ 05/22/24

PROJECT ID
82382

SHEET 869 TOTAL 2696

CUY-90-16.28 (CCG3A)

MODEL: BL_Ramp_IH4 - 17+50.00 [Sheet] PAPERSIZE: 34x22 (in.) DATE: 3/28/2025 TIME: 9:09:40 AM USER: Kevin.McNutt
pw:\\mb-us-pw.bentley.com:mb-us-pw-03\Documents\Cleveland_OH\OI_Projects\ODOT\District2\82382\400-Engineering\Roadway\Sheets\82382_XS5400.dgn

Preliminary Plans - For Reference Only

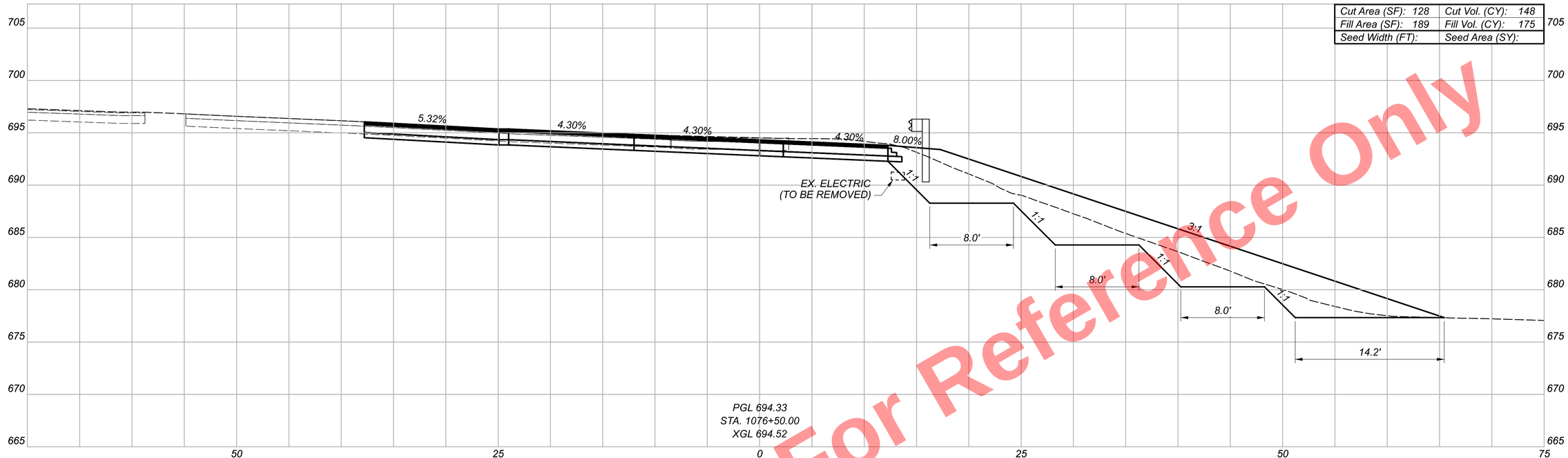

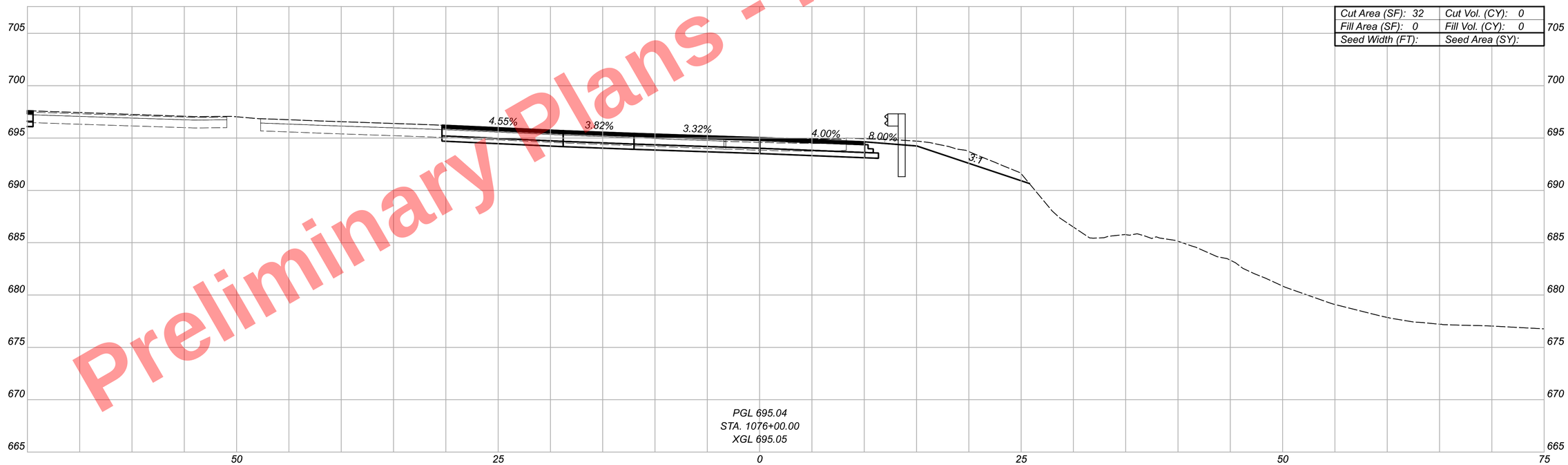

Preliminary Plans - For Reference Only

CROSS SECTIONS
RAMP IH5/H5

CUY-90-16.28 (CCG3A)

MODEL: BL_Ramp H5 Hybrid - 1076+00.00-1 PAPERSIZE: 34x22 (in.) DATE: 5/19/2025 TIME: 8:36:29 AM USER: Kevin.McNutt
pw:\\mb-us-pw.bentley.com:mb-us-pw-03\Documents\Cleveland_OH\01_Projects\ODOT\District12\82382\400-Engineering\Roadway\Sheets\82382_XS5500.dgn

Sheet Totals		
Seeding	Cut	Fill
0	148	175

DESIGN AGENCY
Michael Baker INTERNATIONAL

DESIGNER
KJM

REVIEWER
KGJ 05/22/24

PROJECT ID
82382

SHEET 870 TOTAL 2696

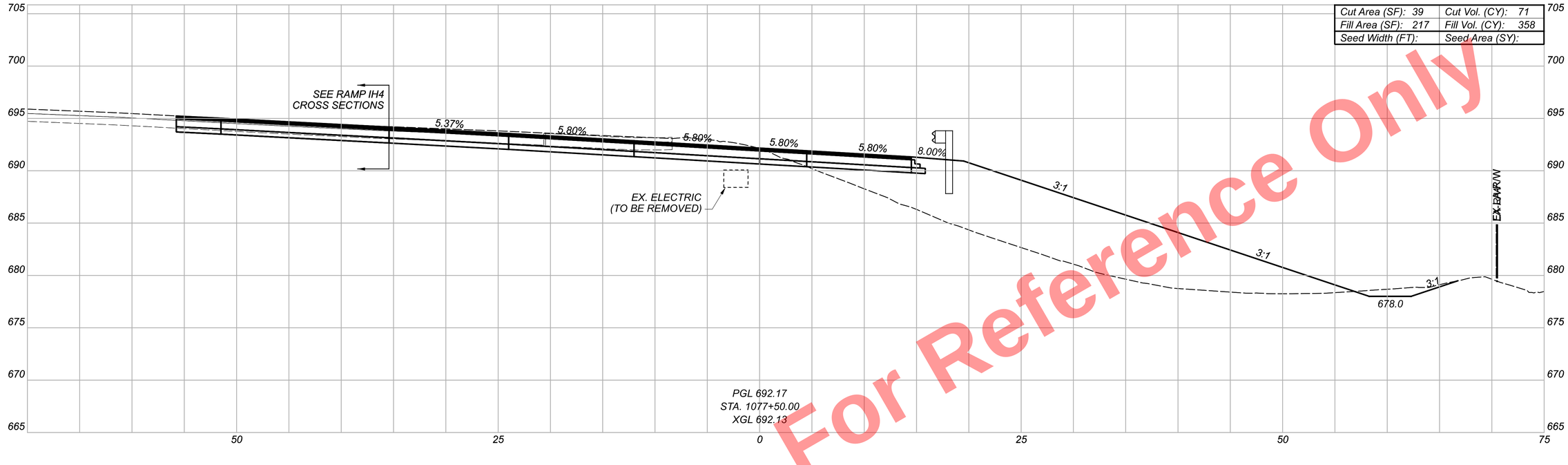

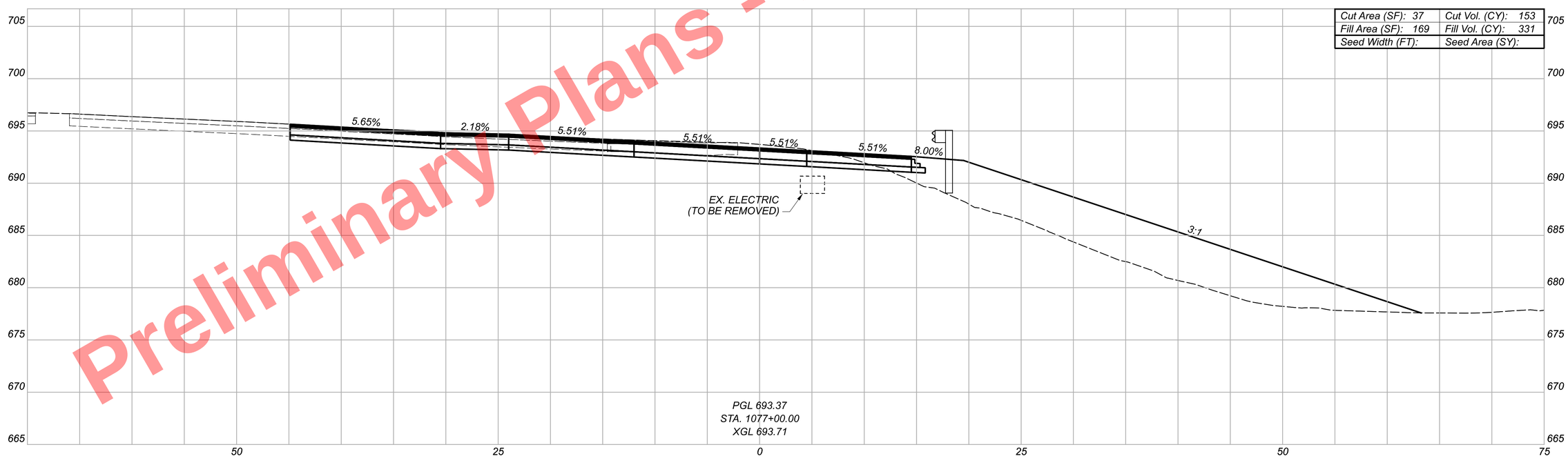

Preliminary Plans - For Reference Only

CUY-90-16.28 (CCG3A)

MODEL: BL_Ramp H5 Hybrid - 1077+00.00-I PAPERSIZE: 34x22 (in.) DATE: 5/19/2025 TIME: 8:37:08 AM USER: Kevin.McNutt
pw:\\mb-us-pw.bentley.com:mb-us-pw-03\Documents\Cleveland_OH\01_Projects\ODOT\District2\82382\400-Engineering\Roadway\Sheets\82382_XS5500.dgn

CROSS SECTIONS
RAMP IH5/H5

Sheet Totals		
Seeding	Cut	Fill
0	224	689

DESIGN AGENCY
Michael Baker INTERNATIONAL

DESIGNER
KJM

REVIEWER
KGJ 05/22/24

PROJECT ID
82382

SHEET 871 TOTAL 2696

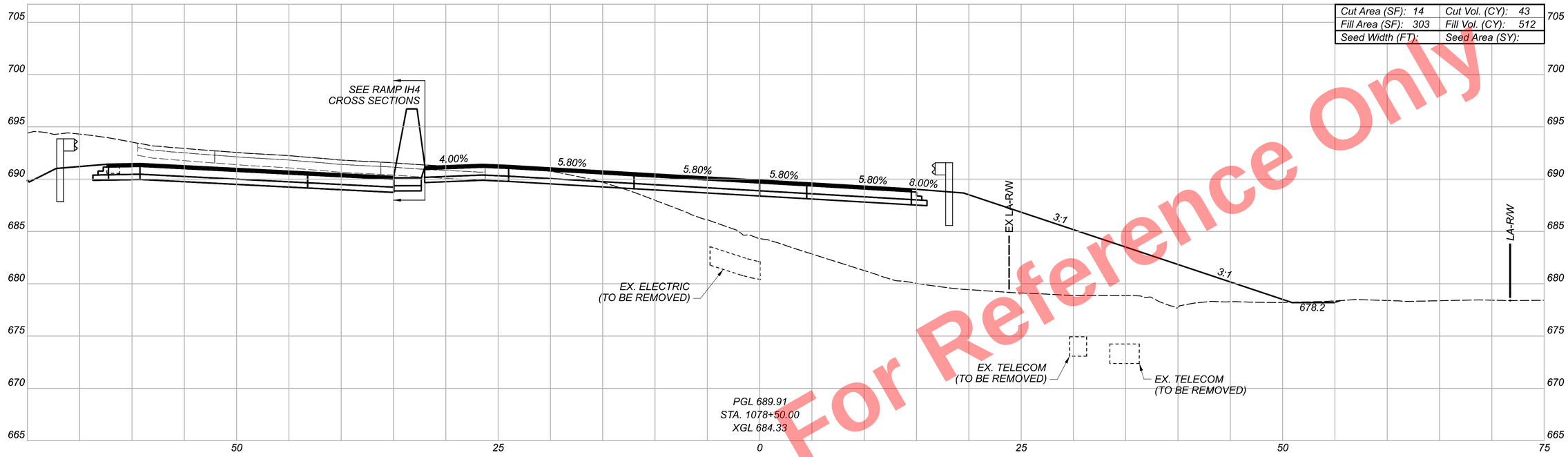

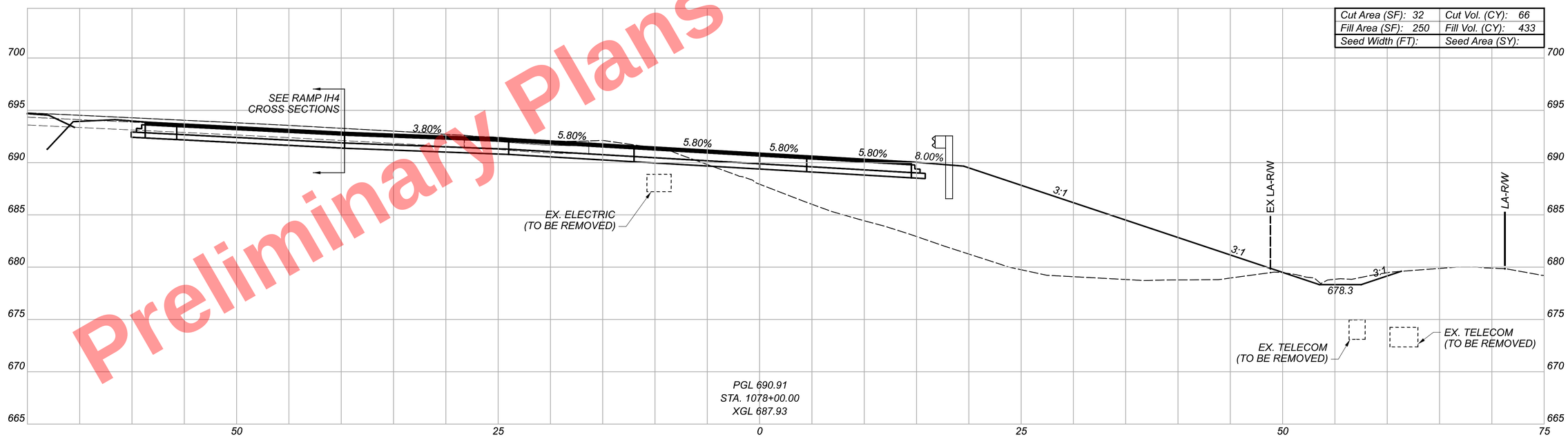

Preliminary Plans - For Reference Only

CUY-90-16.28 (CCG3A)

MODEL: BL_Ramp H5 Hybrid - 1078+00.00-1 PAPERSIZE: 34x22 (in.) DATE: 5/19/2025 TIME: 8:37:14 AM USER: KevinMcNutt
pw:\\mb-us-pw.bentley.com:mb-us-pw-03\Documents\Cleveland_OH\01_Projects\ODOT\District2\82382\400-Engineering\Roadway\Sheets\82382_XS5500.dgn

CROSS SECTIONS
RAMP IH5/H5

Sheet Totals		
Seeding	Cut	Fill
0	109	945

DESIGN AGENCY
Michael Baker INTERNATIONAL

DESIGNER
KJM

REVIEWER
KGJ 05/22/24

PROJECT ID
82382

SHEET	TOTAL
872	2696

Preliminary Plans - For Reference Only

Cut Area (SF): 13	Cut Vol. (CY): 33
Fill Area (SF): 427	Fill Vol. (CY): 761
Seed Width (FT):	Seed Area (SY):

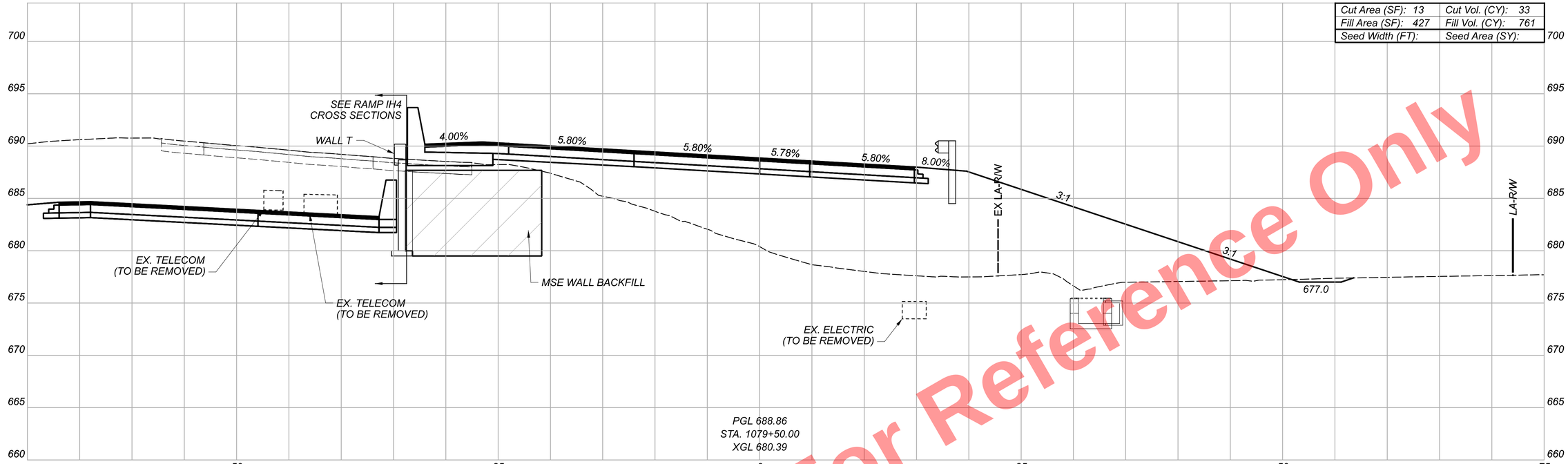

Cut Area (SF): 23	Cut Vol. (CY): 34
Fill Area (SF): 394	Fill Vol. (CY): 645
Seed Width (FT):	Seed Area (SY):

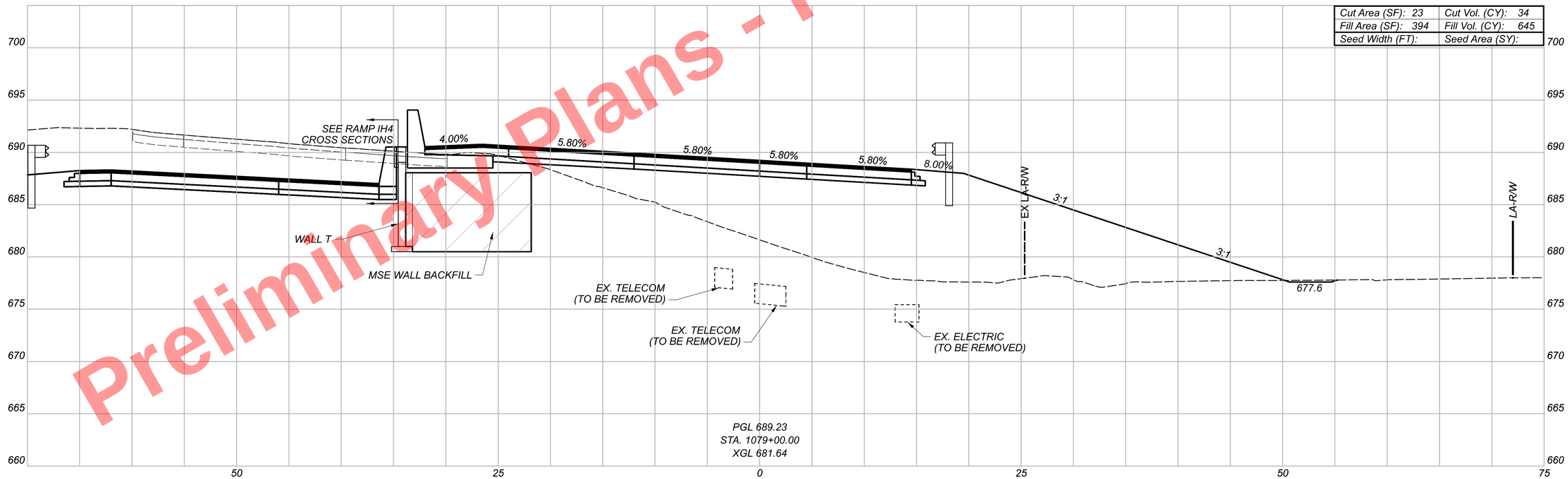

CROSS SECTIONS
RAMP IH5/H5

CUY-90-16.28 (CCG3A)

MODEL: BL_Ramp H5 Hybrid - 1079+00.00-1 PAPERSIZE: 34x22 (in.) DATE: 5/19/2025 TIME: 8:37:20 AM USER: KevinMcNutt
pw:\\mb-us-pw.bentley.com:mb-us-pw-03\Documents\Cleveland_OH\01_Projects\00DT\District2\82382\400-Engineering\Roadway\Sheets\82382_XS5500.dgn

Sheet Totals		
Seeding	Cut	Fill
0	67	1406

DESIGN AGENCY
Michael Baker INTERNATIONAL

DESIGNER
KJM

REVIEWER
KGJ 05/22/24

PROJECT ID
82382

SHEET 873 TOTAL 2696

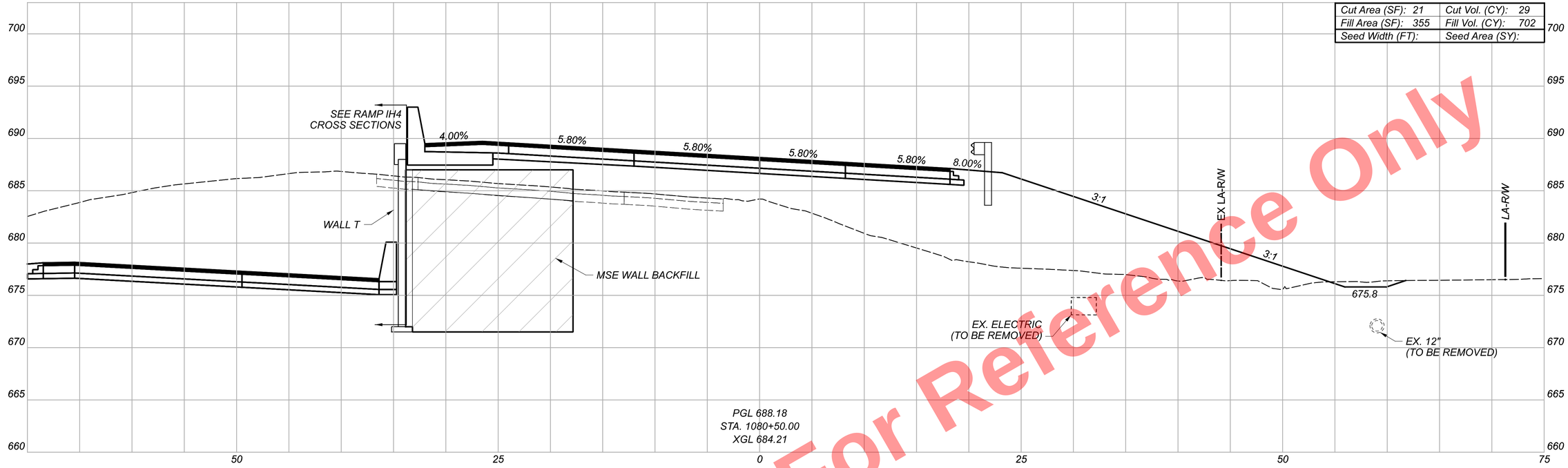

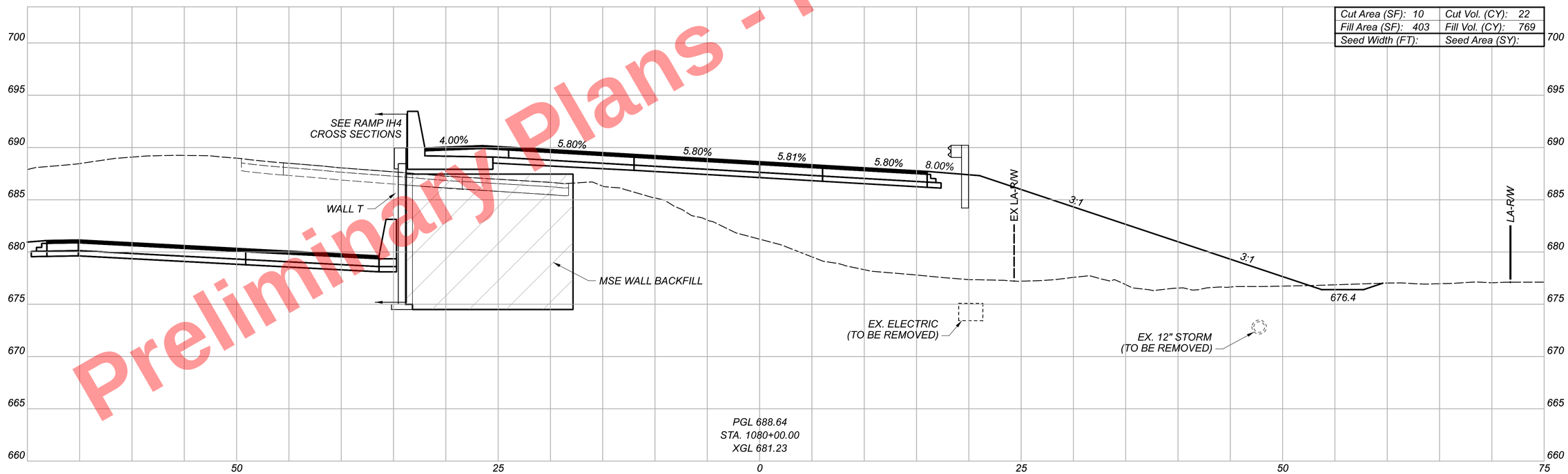

Preliminary Plans - For Reference Only

CUY-90-16.28 (CCG3A)

MODEL: BL_Ramp H5 Hybrid - 1080+00.00-1 PAPERSIZE: 34x22 (in) DATE: 5/19/2025 TIME: 8:37:26 AM USER: KevinJMcNutt
pw:\\mb-us-pw.bentley.com:mb-us-pw-03\Documents\Cleveland_OH\01_Projects\00DT\District2\82382\400-Engineering\Roadway\Sheets\82382_XS5500.dgn

CROSS SECTIONS
RAMP IH5/H5

Sheet Totals		
Seeding	Cut	Fill
0	51	1471

DESIGN AGENCY
Michael Baker INTERNATIONAL

DESIGNER
KJM

REVIEWER
KGJ 05/22/24

PROJECT ID
82382

SHEET 874 TOTAL 2696

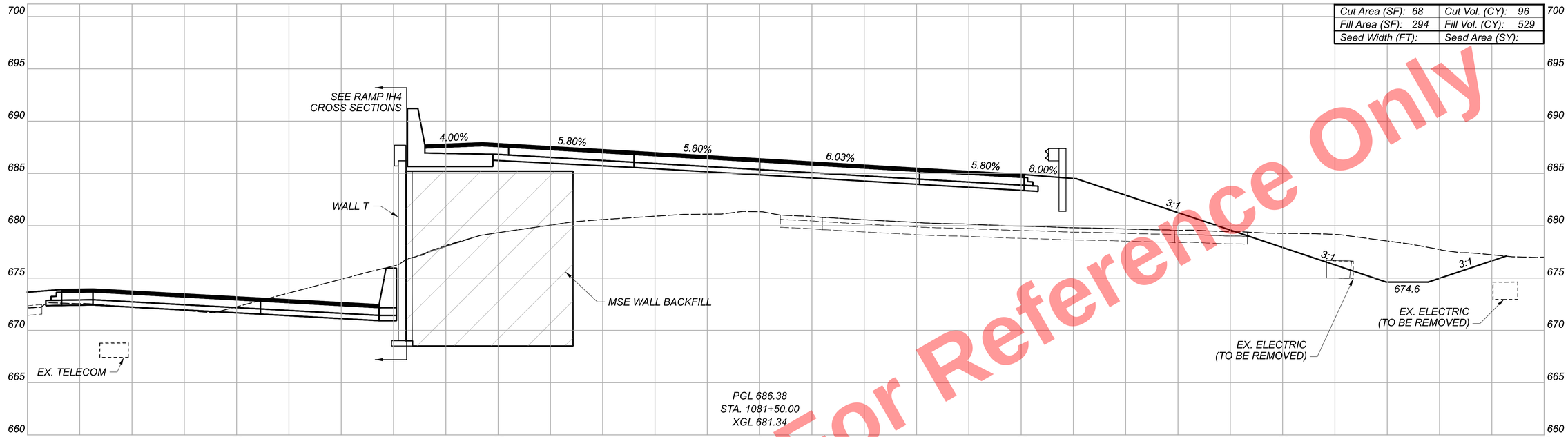

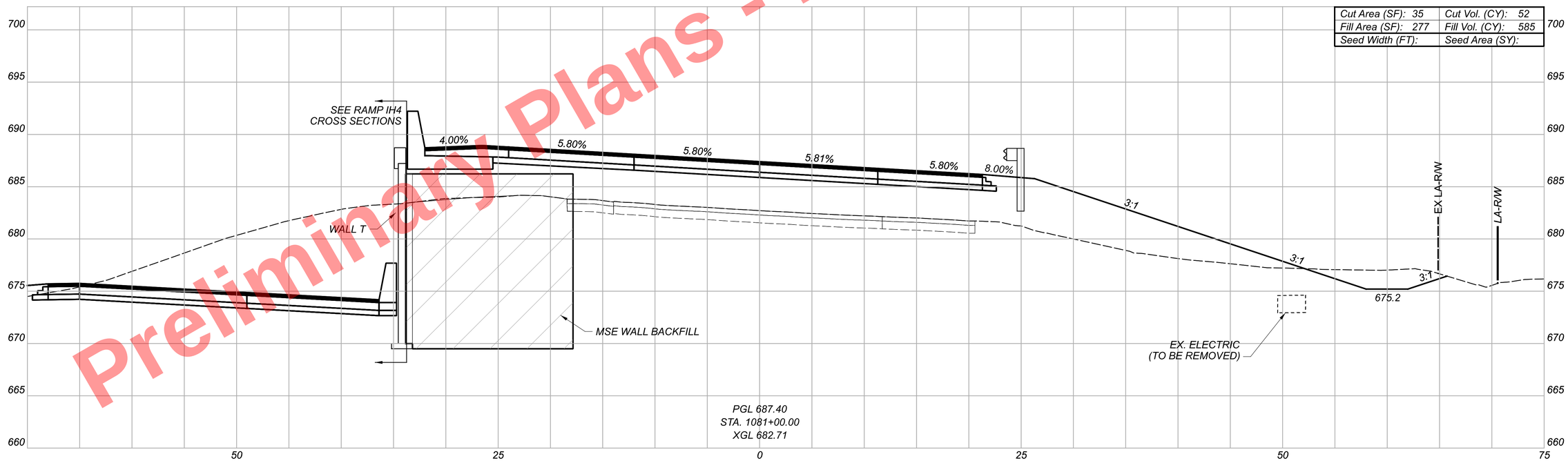

Preliminary Plans - For Reference Only

CUY-90-16.28 (CCG3A)

MODEL: BL_Ramp H5 Hybrid - 1081+00.00-I PAPERSIZE: 34x22 (In.) DATE: 5/19/2025 TIME: 8:37:36 AM USER: Kevin.McNutt
pw:\\mb-us-pw.bentley.com:mb-us-pw-03\Documents\Cleveland.OH\01_Projects\ODOT\District2\82382\400-Engineering\Roadway\Sheets\82382_XS5500.dgn

CROSS SECTIONS
RAMP IH5/H5

Sheet Totals		
Seeding	Cut	Fill
0	148	1114

DESIGN AGENCY
Michael Baker INTERNATIONAL

DESIGNER
KJM

REVIEWER
KGJ 05/22/24

PROJECT ID
82382

SHEET 875 TOTAL 2696

Preliminary Plans - For Reference Only

Cut Area (SF): 28	Cut Vol. (CY): 89
Fill Area (SF): 414	Fill Vol. (CY): 656
Seed Width (FT):	Seed Area (SY):

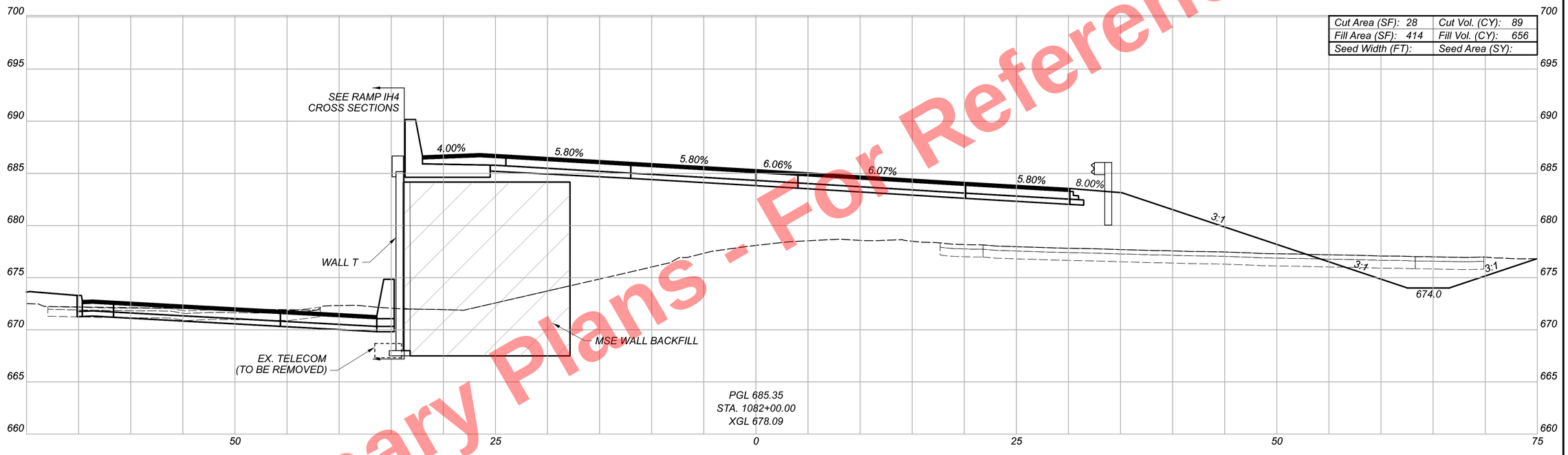

CUY-90-16.28 (CCG3A)

MODEL: BL_Ramp H5 Hybrid - 1082+00.00 [Sheet] PAPERSIZE: 34x22 (in) DATE: 5/19/2025 TIME: 8:37:43 AM USER: Kevin.McNutt
pw:\\mb-us-pw.bentley.com:mb-us-pw-03\Documents\Cleveland_OH\01_Projects\ODOT\District2\82382\400-Engineering\Roadway\Sheets\82382_XS5500.dgn

CROSS SECTIONS
RAMP IH5/H5

DESIGN AGENCY
Michael Baker INTERNATIONAL

DESIGNER
KJM

REVIEWER
KGJ 05/22/24

PROJECT ID
82382

Sheet Totals		
Seeding	Cut	Fill
0	89	656

SHEET 876 TOTAL 2696

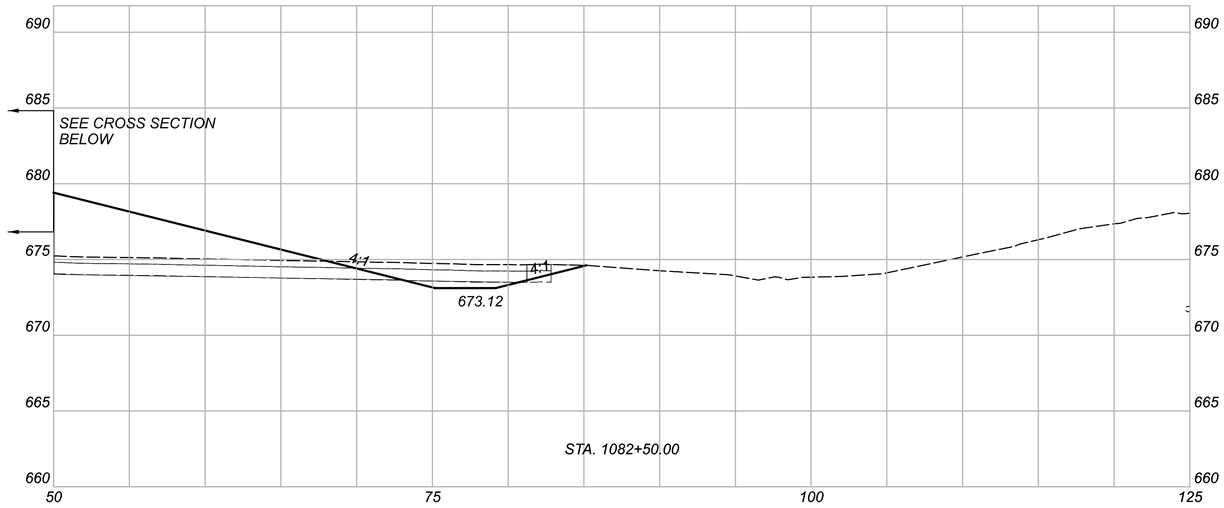

Cut Area (SF): 7	Cut Vol. (CY): 32
Fill Area (SF): 619	Fill Vol. (CY): 957
Seed Width (FT):	Seed Area (SY):

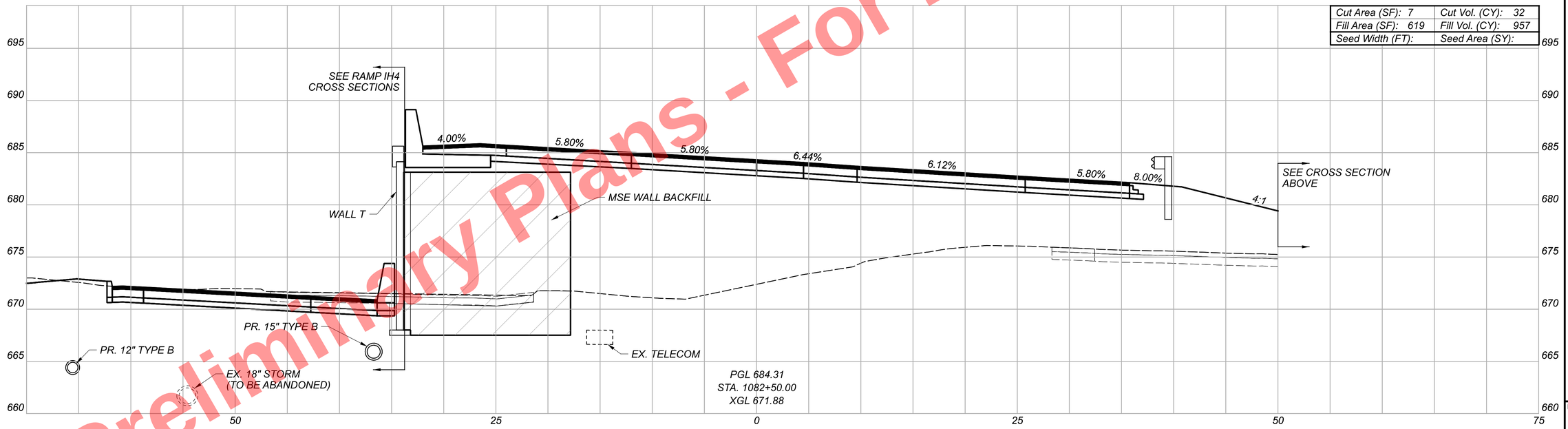

Preliminary Plans - For Reference Only

CUY-90-16.28 (CCG3A)

MODEL: BL_Ramp H5 Hybrid - 1082+50.00 [Sheet] PAPERSIZE: 34x22 (in) DATE: 5/19/2025 TIME: 8:37:47 AM USER: KevIn.McNutt
pw:\\mb-us-pw.bentley.com:mb-us-pw-03\Documents\Cleveland_OH\OL_Projects\ODOT\Distrtct12\82382\400-EngIneerIng\Roadway\Sheets\82382_XS5500.dgn

CROSS SECTIONS
RAMP IH5/H5

DESIGN AGENCY
Michael Baker INTERNATIONAL

DESIGNER
KJM

REVIEWER
KGJ 05/22/24

PROJECT ID
82382

Sheet Totals		
Seeding	Cut	Fill
0	32	957

SHEET	TOTAL
877	2696

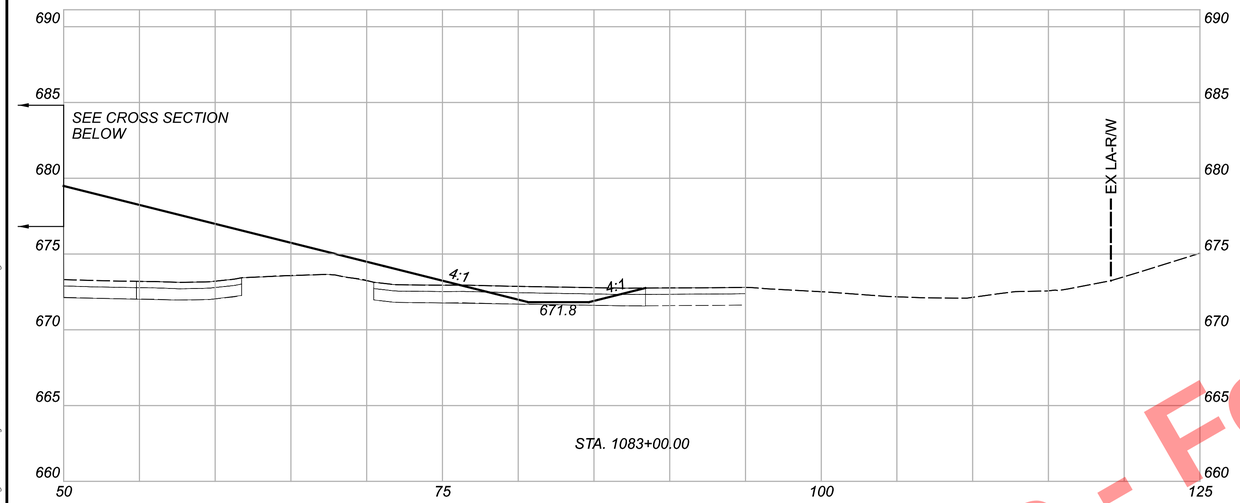

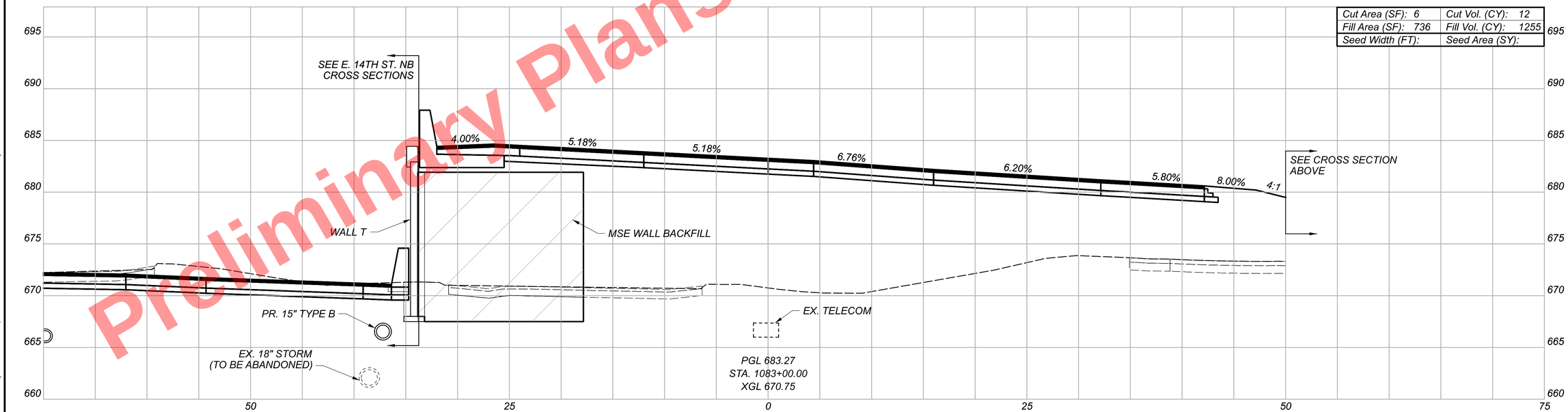

Cut Area (SF): 6	Cut Vol. (CY): 12
Fill Area (SF): 736	Fill Vol. (CY): 1255
Seed Width (FT):	Seed Area (SY):

Sheet Totals		
Seeding	Cut	Fill
0	12	1255

Preliminary Plans - For Reference Only

CUY-90-16.28 (CCG3A)

MODEL: BL_Ramp H5 Hybrid - 1083+00.00-H[Sheet] PAPERSIZE: 34x22 (in) DATE: 5/19/2025 TIME: 8:37:55 AM USER: Kevin.McNutt
pw:\\mb-us-pw.bentley.com:mb-us-pw-03\Documents\Cleveland.OH\OI_Projects\ODOT\District2\82382\400-Engineering\Roadway\Sheets\82382_XS5500.dgn

CROSS SECTIONS
RAMP IH5/H5

DESIGN AGENCY
Michael Baker INTERNATIONAL

DESIGNER
KJM

REVIEWER
KGJ 05/22/24

PROJECT ID
82382

SHEET	TOTAL
878	2696

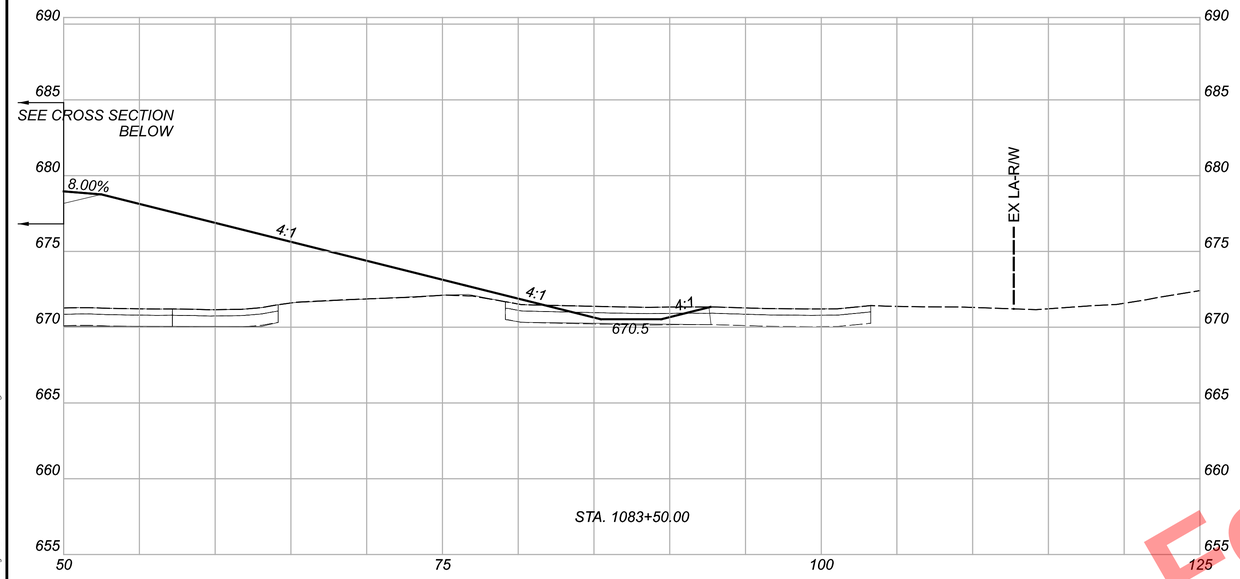

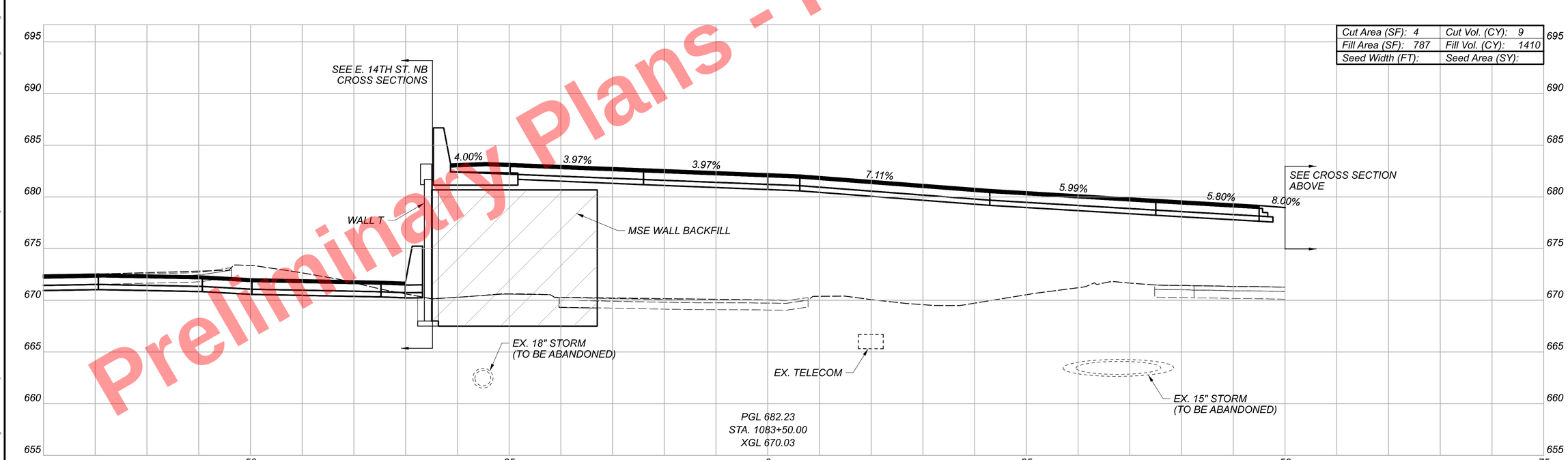

Cut Area (SF): 4	Cut Vol. (CY): 9
Fill Area (SF): 787	Fill Vol. (CY): 1410
Seed Width (FT):	Seed Area (SY):

Sheet Totals		
Seeding	Cut	Fill
0	9	1410

Preliminary Plans - For Reference Only

CROSS SECTIONS
RAMP IH5/H5

DESIGN AGENCY
Michael Baker INTERNATIONAL

DESIGNER KJM

REVIEWER KGJ 05/22/24

PROJECT ID 82382

SHEET 879 TOTAL 2696

CUY-90-16.28 (CCG3A)

MODEL: BL_Ramp H5 Hybrid - 1083+50.00-[Sheet] PAPERSIZE: 34x22 (In.) DATE: 5/9/2025 TIME: 8:38:01 AM USER: KevinJMcNutt
pw:\\mb-us-pw.bentley.com\mb-us-pw-03\Documents\Cleveland_OH\01_Projects\0007\District2\82382\400-Engineering\Roadway\Sheets\82382_XS5500.dgn

Preliminary Plans - For Reference Only

Cut Area (SF): 10	Cut Vol. (CY): 16
Fill Area (SF): 514	Fill Vol. (CY): 954
Seed Width (FT):	Seed Area (SY):

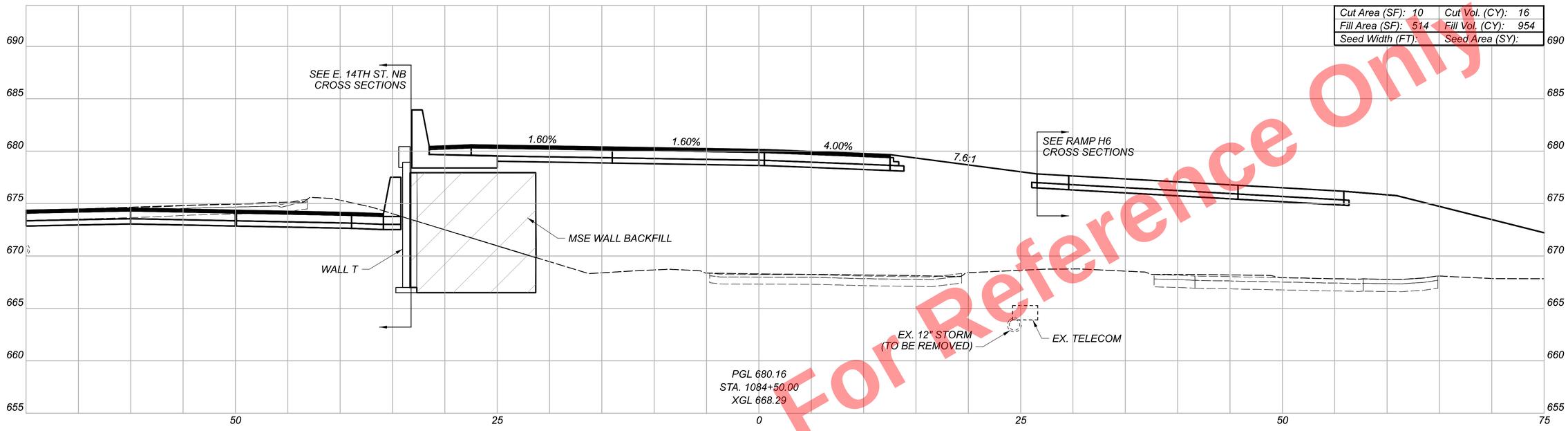

Cut Area (SF): 7	Cut Vol. (CY): 10
Fill Area (SF): 516	Fill Vol. (CY): 1206
Seed Width (FT):	Seed Area (SY):

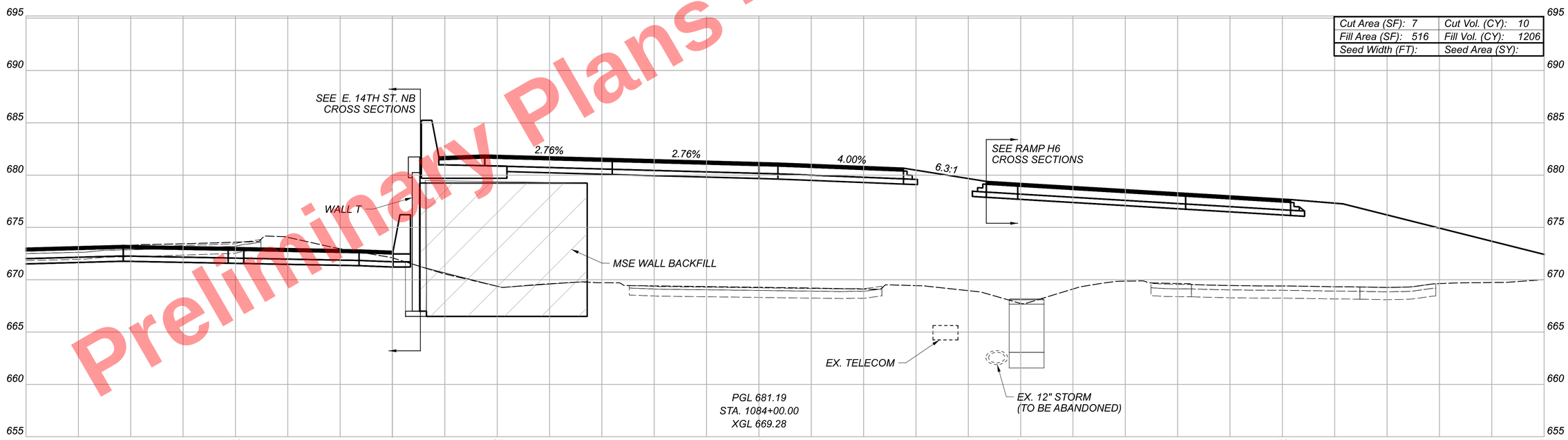

CROSS SECTIONS
RAMP IH5/H5

Sheet Totals		
Seeding	Cut	Fill
0	26	2160

DESIGN AGENCY
Michael Baker INTERNATIONAL

DESIGNER	
KJM	
REVIEWER	
KGJ	05/22/24
PROJECT ID	
82382	
SHEET	TOTAL
880	2696

CUY-90-16.28 (CCG3A)

MODEL: BL_Ramp H5 Hybrid - 1084+00.00-I PAPERSIZE: 34x22 (in) DATE: 5/19/2025 TIME: 8:38:07 AM USER: Kevin.McNutt
pw:\\mb-us-pw.bentley.com:mb-us-pw-03\Documents\Cleveland.OH\OL_Projects\ODOT\District2\8282\400-Engineering\Ro

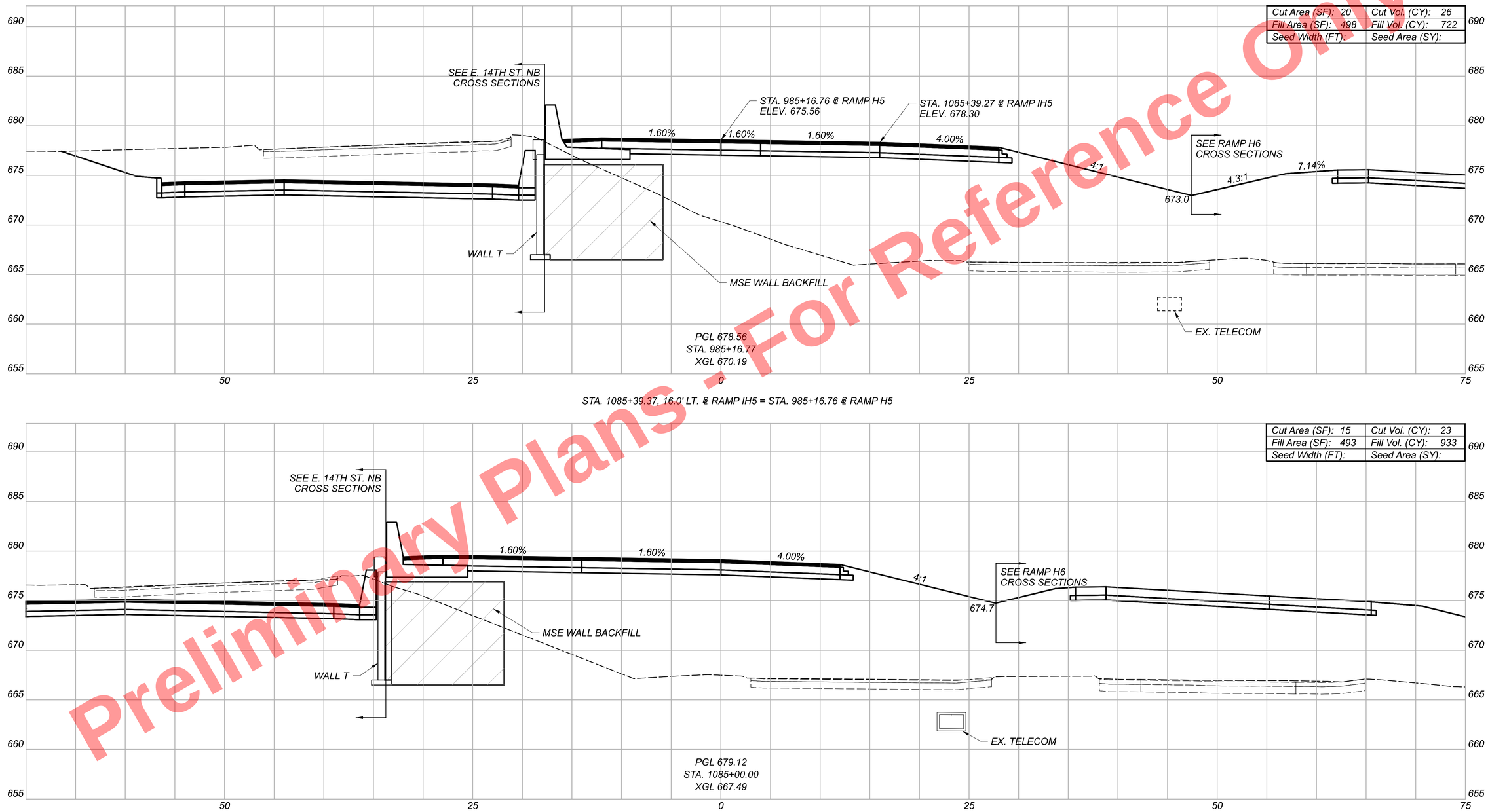

Preliminary Plans - For Reference Only

CUY-90-16.28 (CCG3A)

MODEL: BL_Ramp H5 Hybrid - 1085+00.00=1 PAPERSIZE: 34x22 (in.) DATE: 5/19/2025 TIME: 8:38:13 AM USER: Kevin.McNutt
pw:\\mb-us-pw.bentley.com:mb-us-pw-03\Documents\Cleveland_OH\OI_Projects\ODOT\District12\82382\400-Engineering\Roadway\Sheets\8238_XS5500.dgn

CROSS SECTIONS
RAMP IH5/H5

Sheet Totals		
Seeding	Cut	Fill
0	49	1655

DESIGN AGENCY
Michael Baker INTERNATIONAL

DESIGNER
KJM

REVIEWER
KGJ 05/22/24

PROJECT ID
82382

SHEET 881 TOTAL 2696

Preliminary Plans - For Reference Only

Cut Area (SF): 35	Cut Vol. (CY): 70
Fill Area (SF): 568	Fill Vol. (CY): 997
Seed Width (FT):	Seed Area (SY):

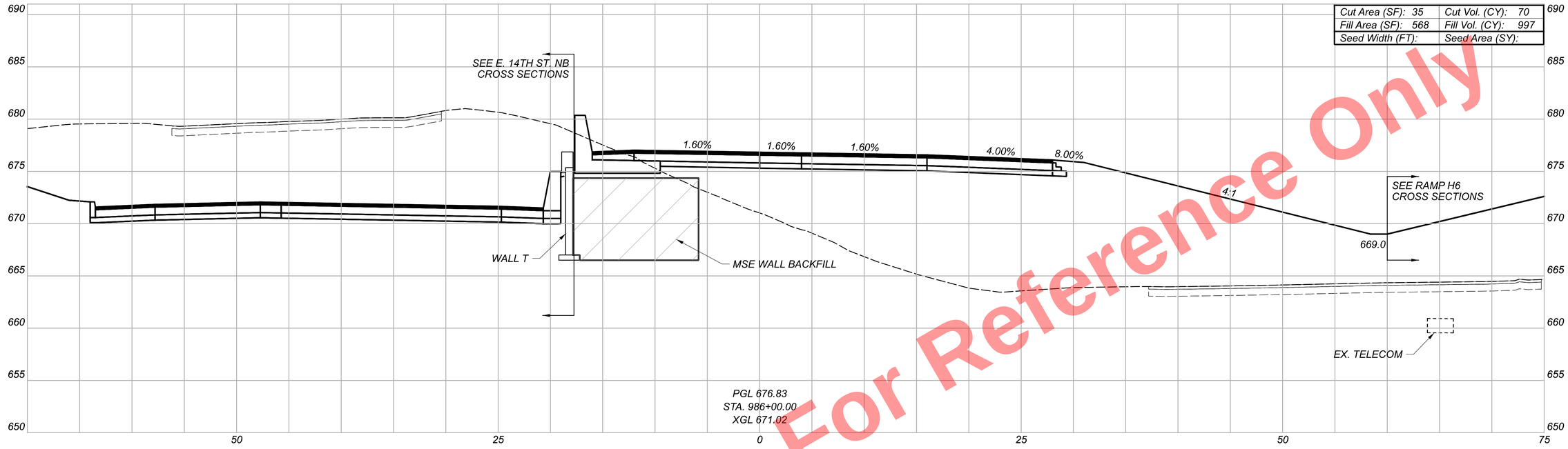

Cut Area (SF): 40	Cut Vol. (CY): 37
Fill Area (SF): 509	Fill Vol. (CY): 619
Seed Width (FT):	Seed Area (SY):

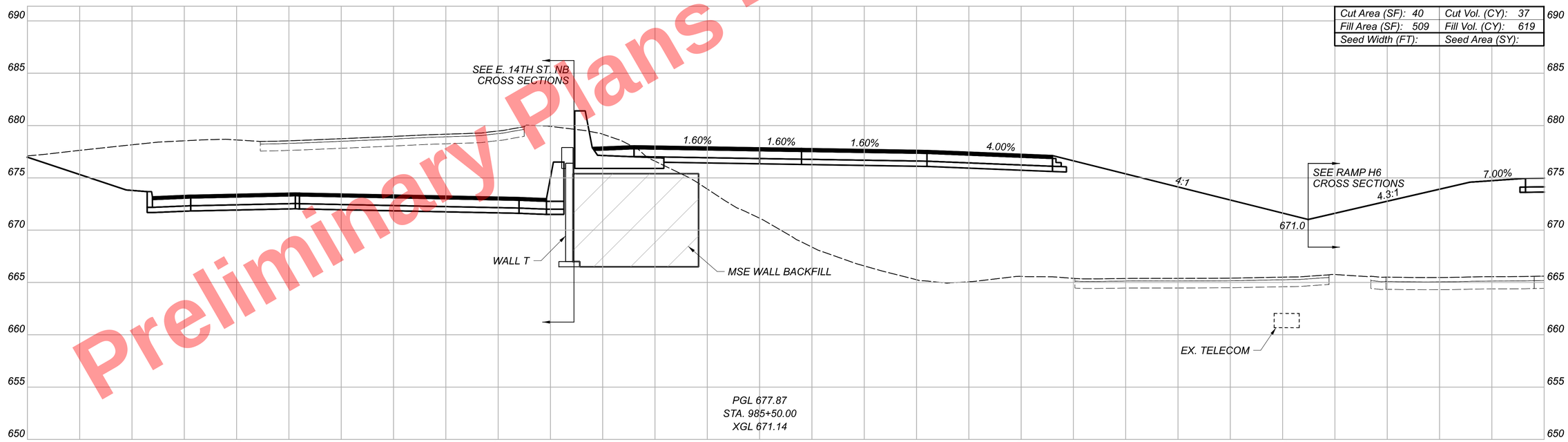

CROSS SECTIONS
RAMP IH5/H5

CUY-90-16.28 (CCG3A)

MODEL: BL_Ramp H5 Hybrid - 985+50.00 R2-1 PAPERSIZE: 34x22 (In) DATE: 5/19/2025 TIME: 8:38:20 AM USER: KevinJMcNutt
pw:\\mb-us-pw.bentley.com:mb-us-pw-03\Documents\Cleveland_OH\01_Projects\0007\District2\82382\400-Engineering\Roadway\Sheets\82382_XS5500.dgn

Sheet Totals		
Seeding	Cut	Fill
0	107	1616

DESIGN AGENCY
Michael Baker INTERNATIONAL

DESIGNER
KJM

REVIEWER
KGJ 05/22/24

PROJECT ID
82382

SHEET 882 TOTAL 2696

Preliminary Plans - For Reference Only

Cut Area (SF): 14	Cut Vol. (CY): 45
Fill Area (SF): 627	Fill Vol. (CY): 1106
Seed Width (FT):	Seed Area (SY):

Sheet Totals		
Seeding	Cut	Fill
0	45	1106

CROSS SECTIONS
RAMP IH5/H5

DESIGN AGENCY
Michael Baker INTERNATIONAL

DESIGNER
KJM

REVIEWER
KGJ 05/22/24

PROJECT ID
82382

SHEET 883 TOTAL 2696

CUY-90-16.28 (CCG3A)

MODEL: BL_Ramp H5 Hybrid - 986+50.00 R2=1 PAPERSIZE: 34x22 (in) DATE: 5/19/2025 TIME: 8:38:26 AM USER: KevinJMcNutt
pw:\\mb-us-pw.bentley.com:mb-us-pw-03\Documents\Cleveland_OH\01_Projects\000T\District2\82382\400-Engineering\Roadway\Sheets\82382_XS5500.dgn

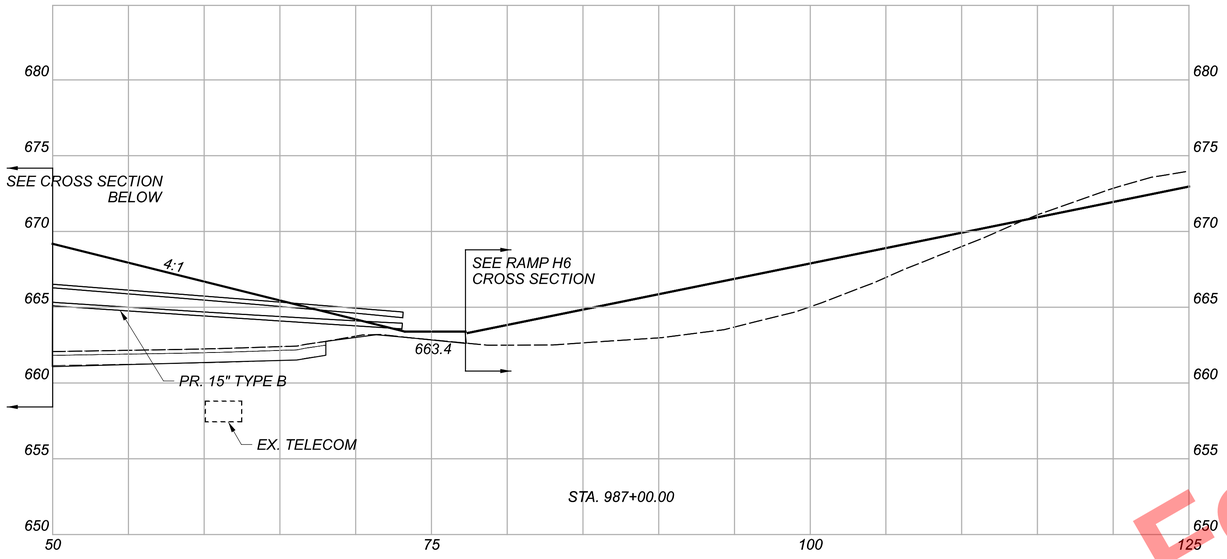

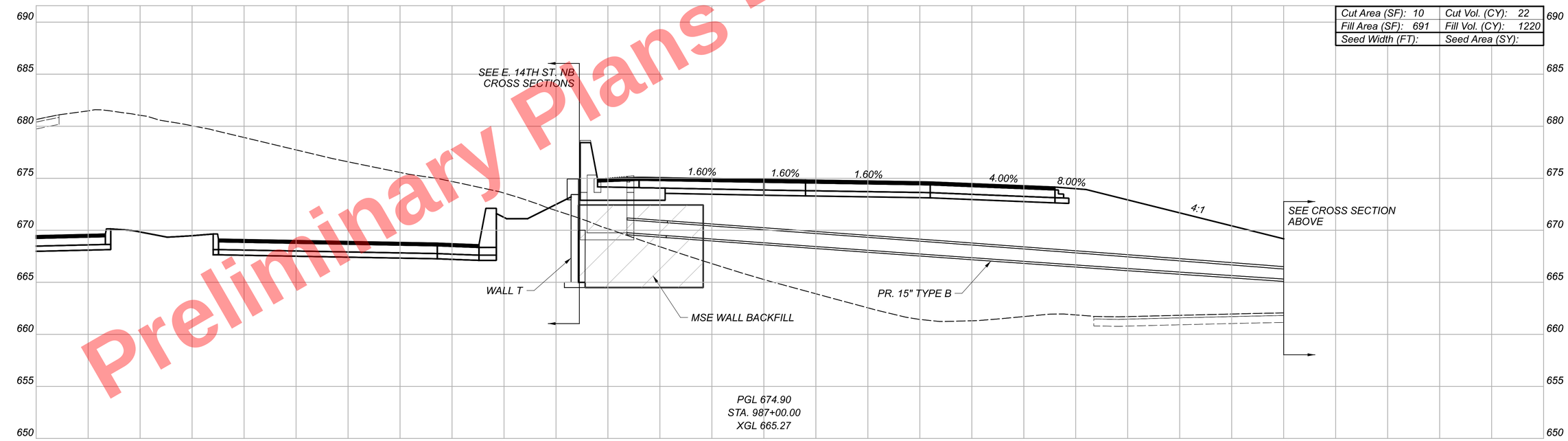

Cut Area (SF): 10	Cut Vol. (CY): 22
Fill Area (SF): 691	Fill Vol. (CY): 1220
Seed Width (FT):	Seed Area (SY):

Sheet Totals		
Seeding	Cut	Fill
0	22	1220

CROSS SECTIONS
RAMP IH5/H5

DESIGN AGENCY
Michael Baker INTERNATIONAL

DESIGNER KJM

REVIEWER KGJ 05/22/24

PROJECT ID 82382

SHEET 884 TOTAL 2696

Preliminary Plans - For Reference Only

CUY-90-16.28 (CCG3A)
MODEL: BL_Ramp H5 Hybrid - 987+00.00 R2-2 PAPERSIZE: 34x22 (in.) DATE: 5/19/2025 TIME: 8:38:29 AM USER: KevinJMcNutt
pw:\\mb-us-pw.bentley.com:mb-us-pw-03\Documents\Cleveland.OH\01_Projects\0007\District2\82382\400-Engineering\Roadway\Sheets\82382_XS5500.dgn

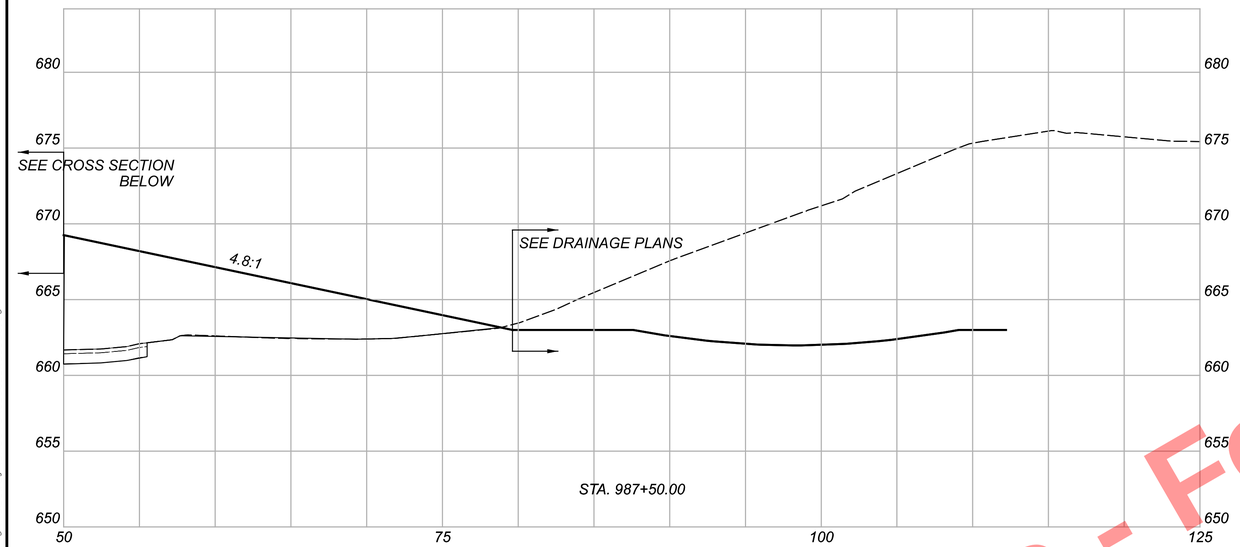

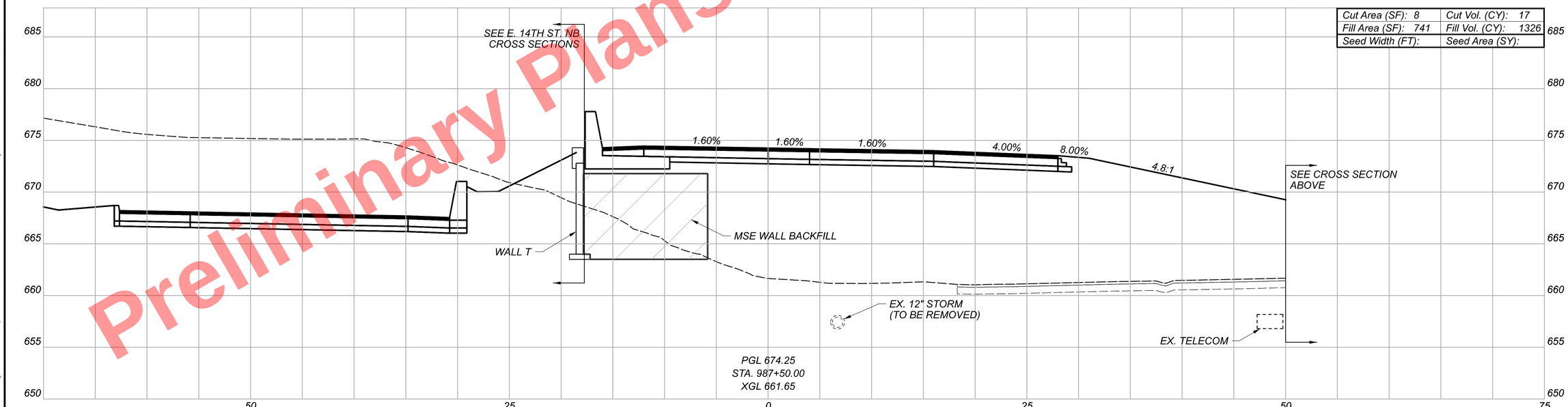

Cut Area (SF): 8	Cut Vol. (CY): 17
Fill Area (SF): 741	Fill Vol. (CY): 1326
Seed Width (FT):	Seed Area (SY):

Preliminary Plans - For Reference Only

CUY-90-16.28 (CCG3A)

MODEL: BL_Ramp H5 Hybrid - 987+50.00 R2-2 PAPERSIZE: 34x22 (in.) DATE: 5/19/2025 TIME: 8:38:36 AM USER: KevinJMcNutt
pw:\\mb-us-pw.bentley.com:mb-us-pw-03\Documents\Cleveland.OH\OI_Projects\ODOT\District2\82382\400-Engineering\Roadway\Sheets\82382_XS5500.dgn

CROSS SECTIONS
RAMP IH5/H5

DESIGN AGENCY
Michael Baker INTERNATIONAL

DESIGNER KJM

REVIEWER KGJ 05/22/24

PROJECT ID 82382

SHEET 885 TOTAL 2696

Sheet Totals		
Seeding	Cut	Fill
0	17	1326

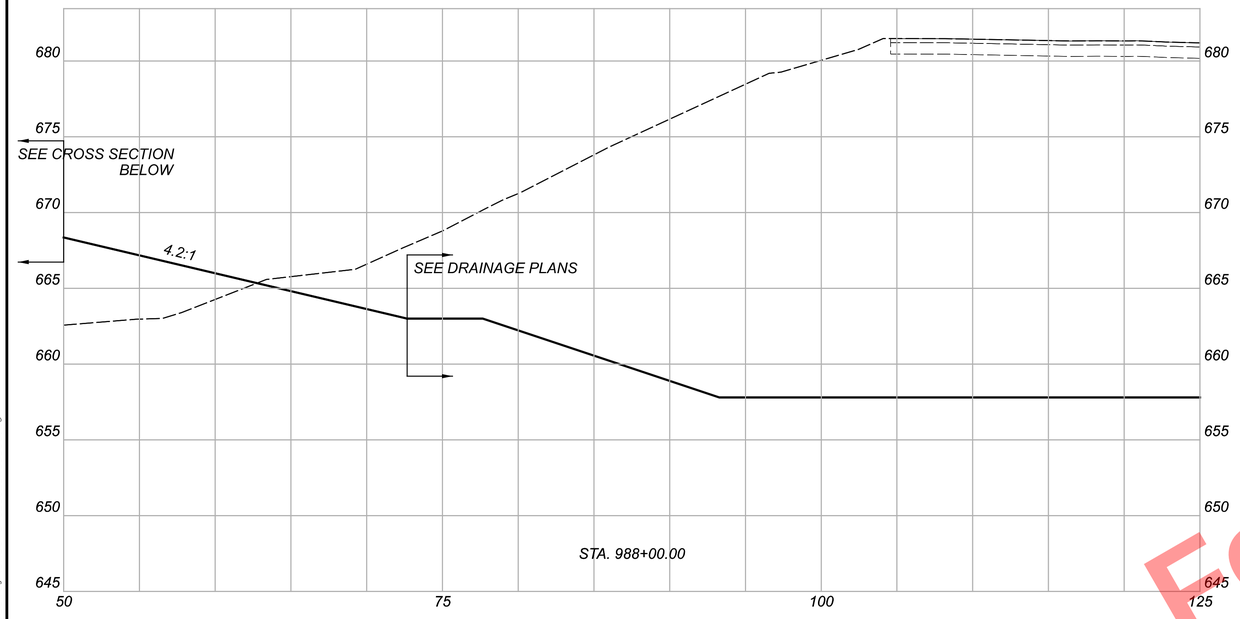

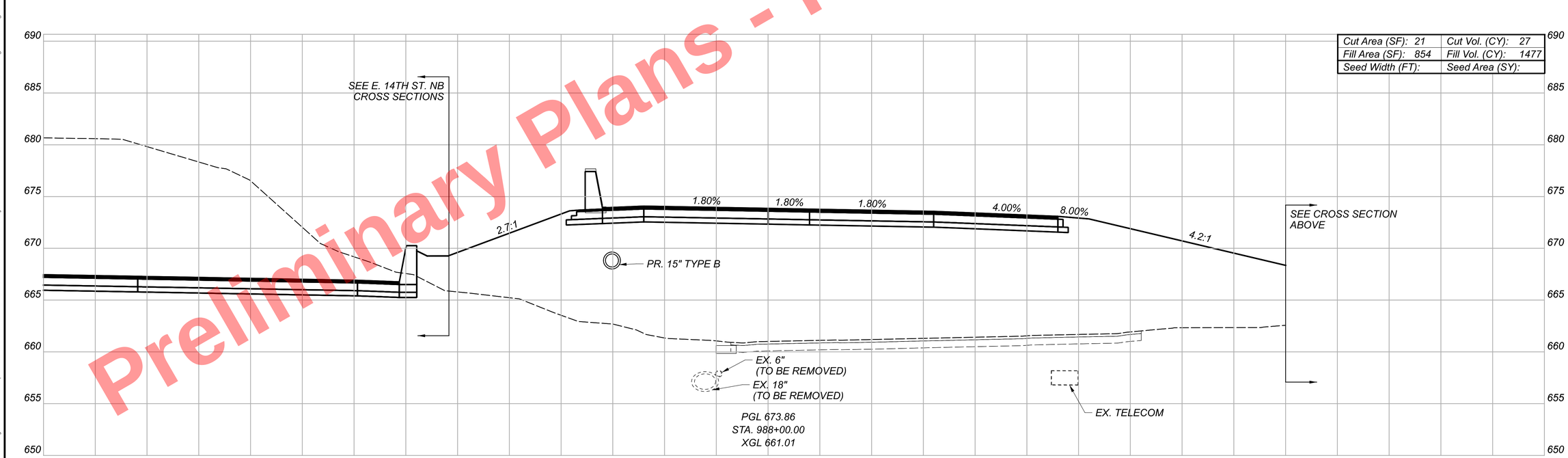

Cut Area (SF): 21	Cut Vol. (CY): 27
Fill Area (SF): 854	Fill Vol. (CY): 1477
Seed Width (FT):	Seed Area (SY):

Sheet Totals		
Seeding	Cut	Fill
0	27	1477

Preliminary Plans - For Reference Only

CROSS SECTIONS
RAMP IH5/H5

DESIGN AGENCY
Michael Baker INTERNATIONAL

DESIGNER KJM

REVIEWER KGJ 05/22/24

PROJECT ID 82382

SHEET 886 TOTAL 2696

CUY-90-16.28 (CCG3A)

MODEL: BL_Ramp H5 Hybrid - 988+00.00 R2-2 PAPERSIZE: 34x22 (in.) DATE: 5/19/2025 TIME: 8:38:42 AM USER: KevinJMcNutt
pw:\\mb-us-pw.bentley.com:mb-us-pw-03\Documents\Cleveland.OH\OI_Projects\ODOT\District2\82382\400-Engineering\Roadway\Sheets\82382_XS5500.dgn

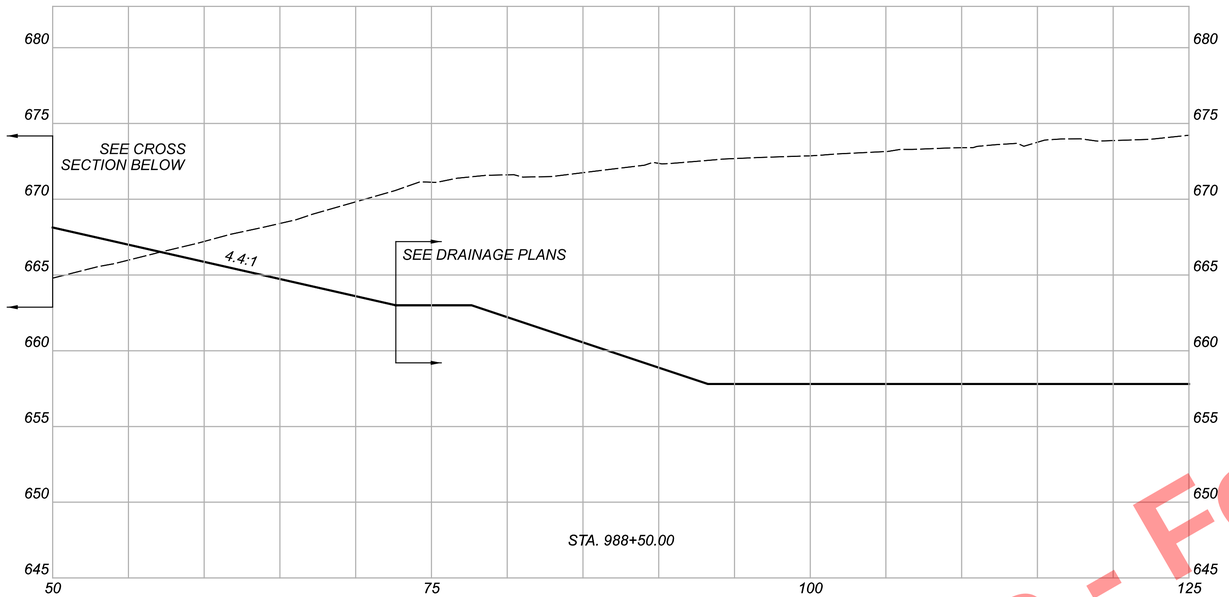

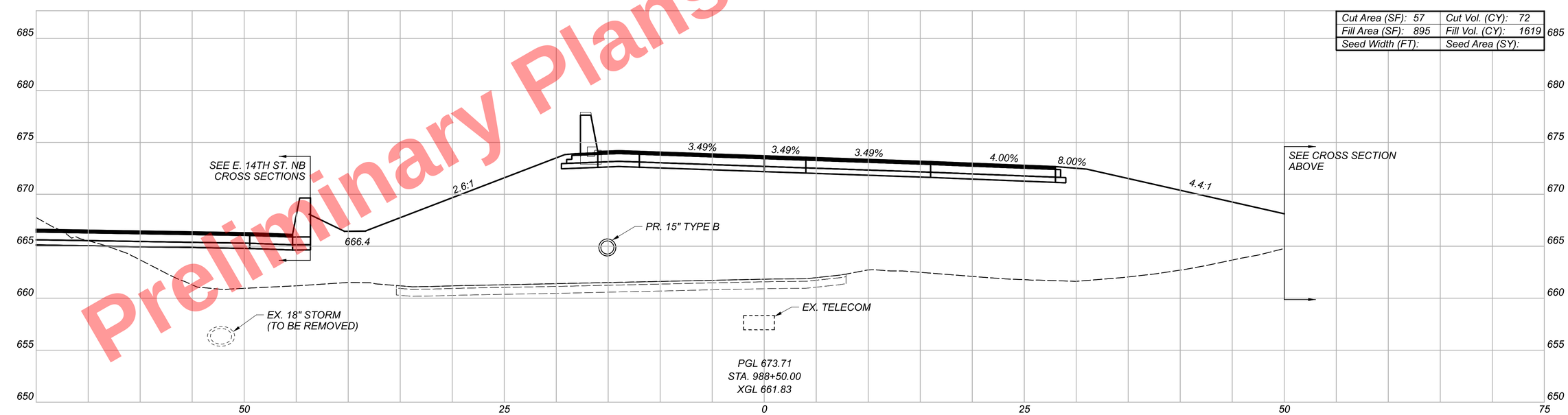

Cut Area (SF): 57	Cut Vol. (CY): 72
Fill Area (SF): 895	Fill Vol. (CY): 1619
Seed Width (FT):	Seed Area (SY):

Preliminary Plans - For Reference Only

CROSS SECTIONS
RAMP IH5/H5

CUY-90-16.28 (CCG3A)

MODEL: BL_Ramp H5 Hybrid - 988+50.00 R2-2 PAPERSIZE: 34x22 (in.) DATE: 5/19/2025 TIME: 8:38:48 AM USER: KevinJMcNutt
pw:\\mb-us-pw.bentley.com:mb-us-pw-03\Documents\Cleveland.OH\OI_Projects\ODOT\District2\82382\400-Engineering\Roadway\Sheets\82382_XS5500.dgn

DESIGN AGENCY
Michael Baker INTERNATIONAL

DESIGNER KJM
REVIEWER KGJ 05/22/24
PROJECT ID 82382
SHEET 887 TOTAL 2696

Sheet Totals		
Seeding	Cut	Fill
0	72	1619

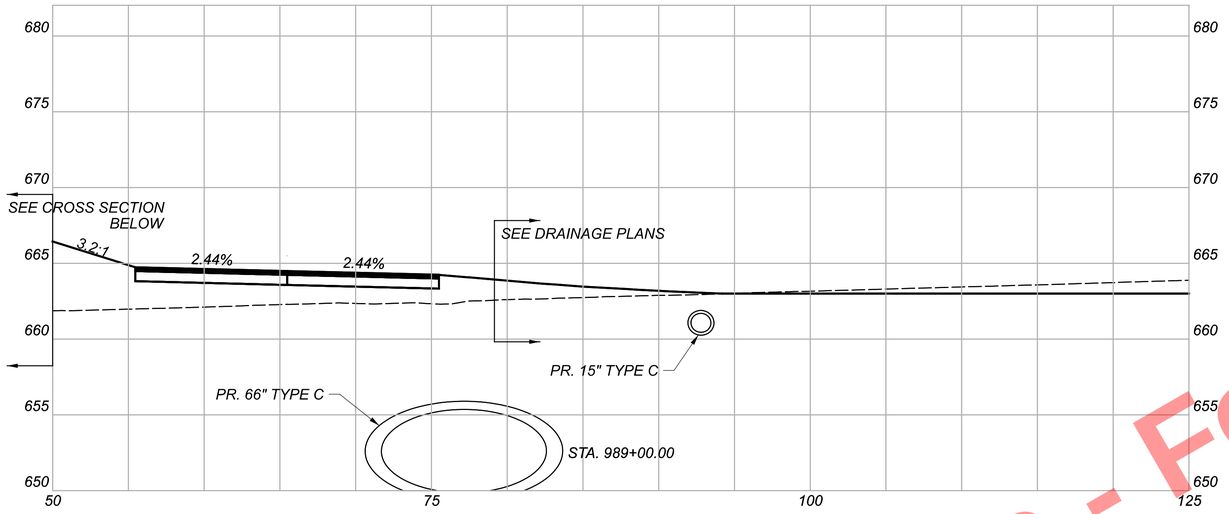

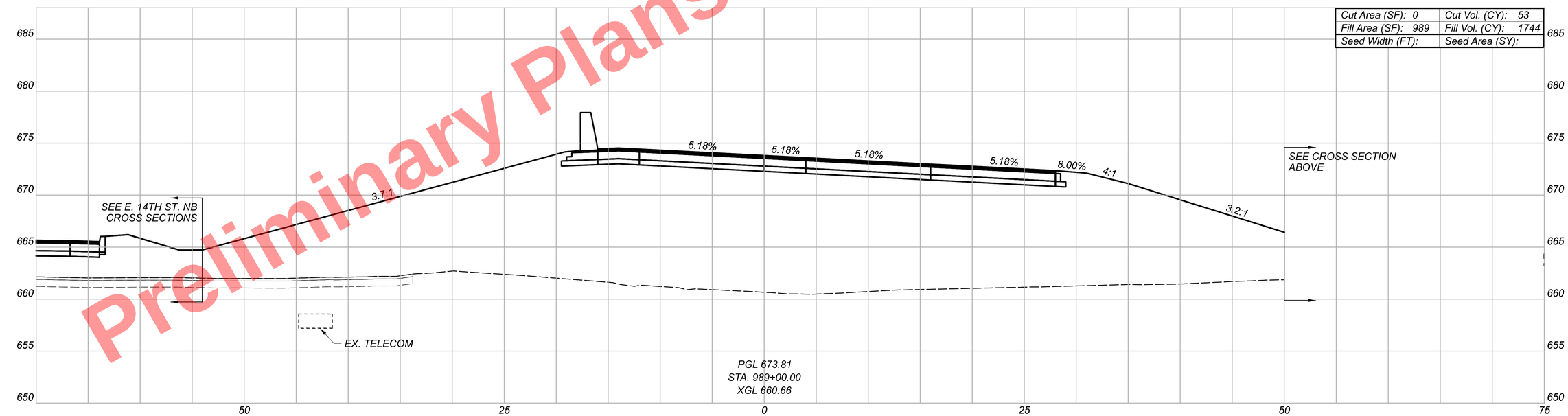

Cut Area (SF): 0	Cut Vol. (CY): 53
Fill Area (SF): 989	Fill Vol. (CY): 1744
Seed Width (FT):	Seed Area (SY):

Preliminary Plans - For Reference Only

CUY-90-16.28 (CCG3A)

CROSS SECTIONS
RAMP IH5/H5

DESIGN AGENCY
Michael Baker INTERNATIONAL

DESIGNER KJM

REVIEWER KGJ 05/22/24

PROJECT ID 82382

SHEET 888 TOTAL 2696

Sheet Totals		
Seeding	Cut	Fill
0	53	1744

MODEL: BL_Ramp H5 Hybrid - 989+00.00 R2-2 PAPERSIZE: 34x22 (in.) DATE: 5/19/2025 TIME: 8:38:54 AM USER: KevinJMcNutt
pw:\\mb-us-pw.bentley.com:mb-us-pw-03\Documents\Cleveland.OH\OI_Projects\ODOT\District2\82382\400-Engineering\Roadway\Sheets\82382_XS5500.dgn

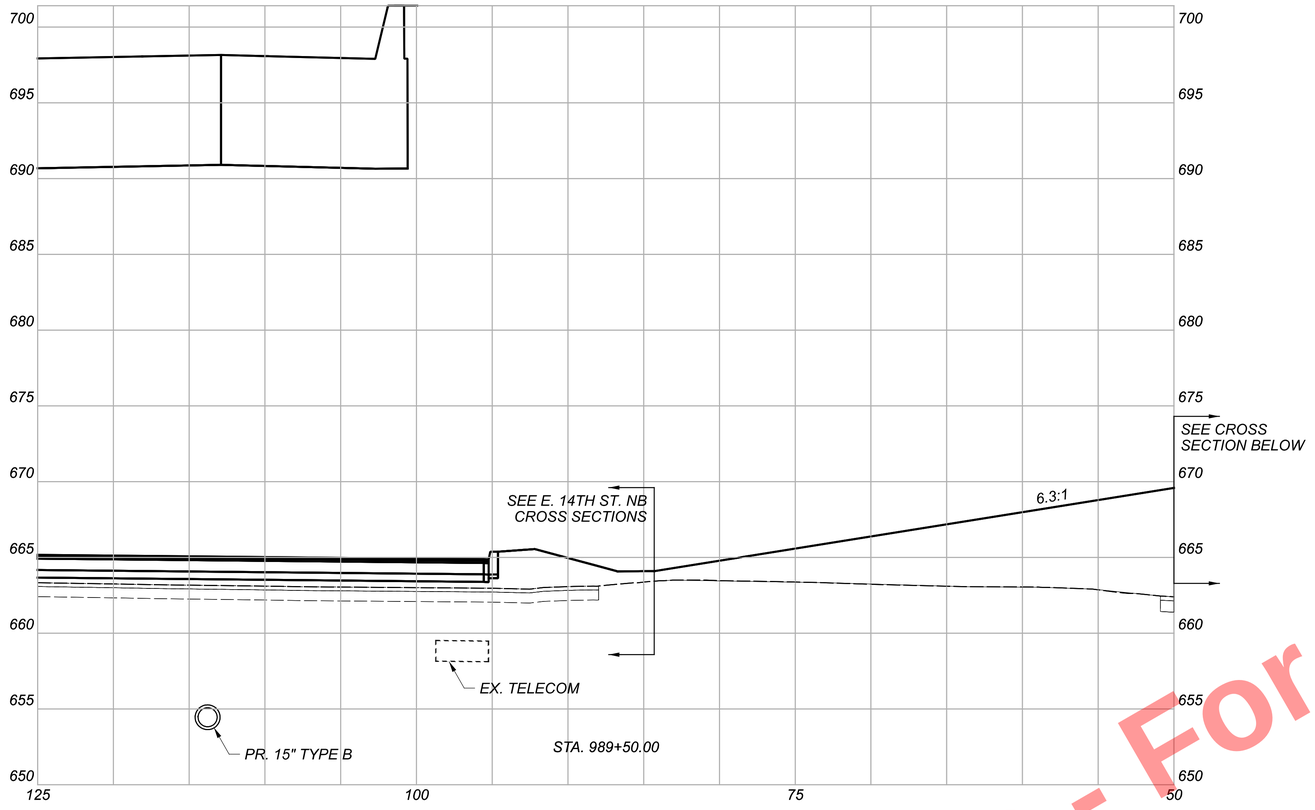

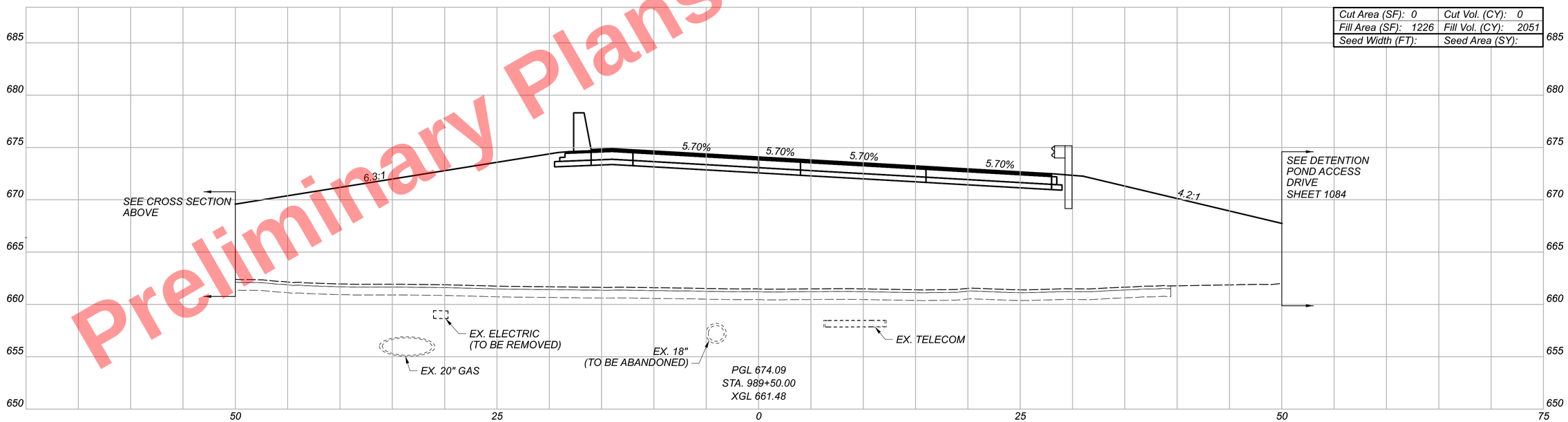

Preliminary Plans - For Reference Only

CROSS SECTIONS
RAMP IH5/H5

DESIGN AGENCY
Michael Baker INTERNATIONAL

DESIGNER KJM

REVIEWER KGJ 05/22/24

PROJECT ID 82382

SHEET 889 TOTAL 2696

Sheet Totals		
Seeding	Cut	Fill
0	0	2051

CUY-90-16.28 (CCG3A)

MODEL: BL_Ramp H5 Hybrid - 989+50.00 R2-2 PAPERSIZE: 34x22 (in.) DATE: 5/19/2025 TIME: 8:39:03 AM USER: KevinJMcNutt
pw:\\mb-us-pw.bentley.com:mb-us-pw-03\Documents\Cleveland.OH\OI_Projects\ODOT\District2\82382\400-Engineering\Roadway\Sheets\82382_XS5500.dgn

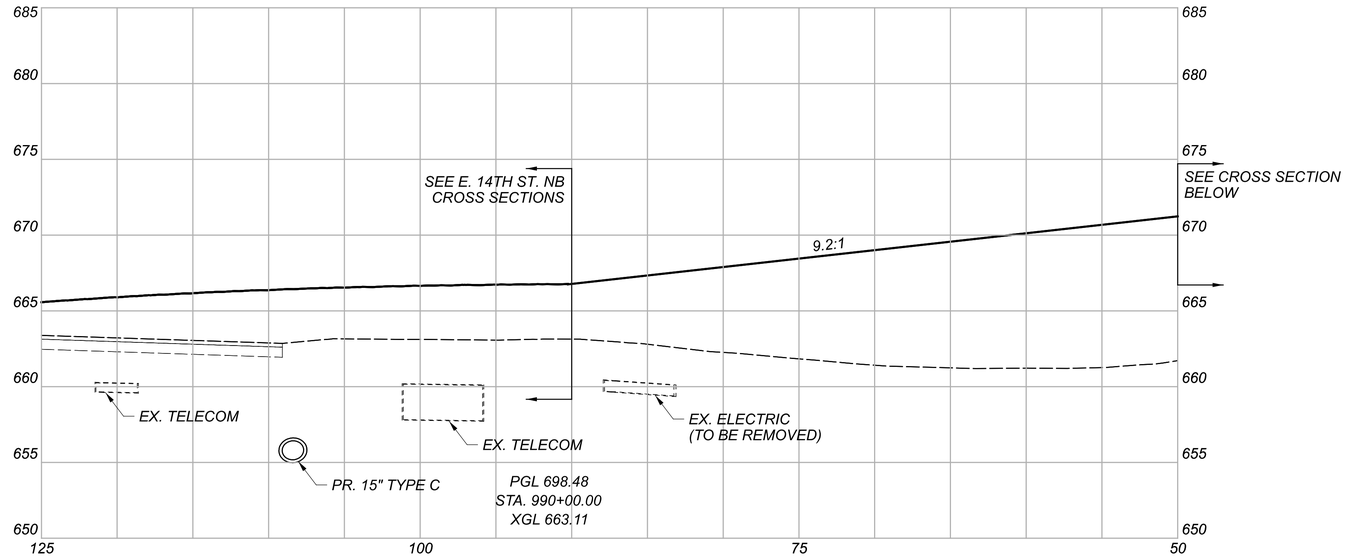

Cut Area (SF): 25	Cut Vol. (CY): 23
Fill Area (SF): 757	Fill Vol. (CY): 1836
Seed Width (FT):	Seed Area (SY):



Preliminary Plans - For Reference Only

CUY-90-16.28 (CCG3A)

MODEL: BL_Ramp H5 Hybrid - 990+00.00 R2-2 PAPERSIZE: 34x22 (in.) DATE: 5/19/2025 TIME: 8:39:10 AM USER: Kevin.McNutt
pw:\\mb-us-pw.bentley.com:mb-us-pw-03\Documents\Cleveland.OH\OI_Projects\ODOT\District2\82382\400-Engineering\Roadway\Sheets\82382_XS5500.dgn

CROSS SECTIONS
RAMP IH5/H5

Sheet Totals		
Seeding	Cut	Fill
0	23	1836

DESIGN AGENCY
Michael Baker INTERNATIONAL

DESIGNER
KJM

REVIEWER
KGJ 05/22/24

PROJECT ID
82382

SHEET 890 TOTAL 2696

Preliminary Plans - For Reference Only

Cut Area (SF): 529	Cut Vol. (CY): 513
Fill Area (SF): 0	Fill Vol. (CY): 701
Seed Width (FT):	Seed Area (SY):

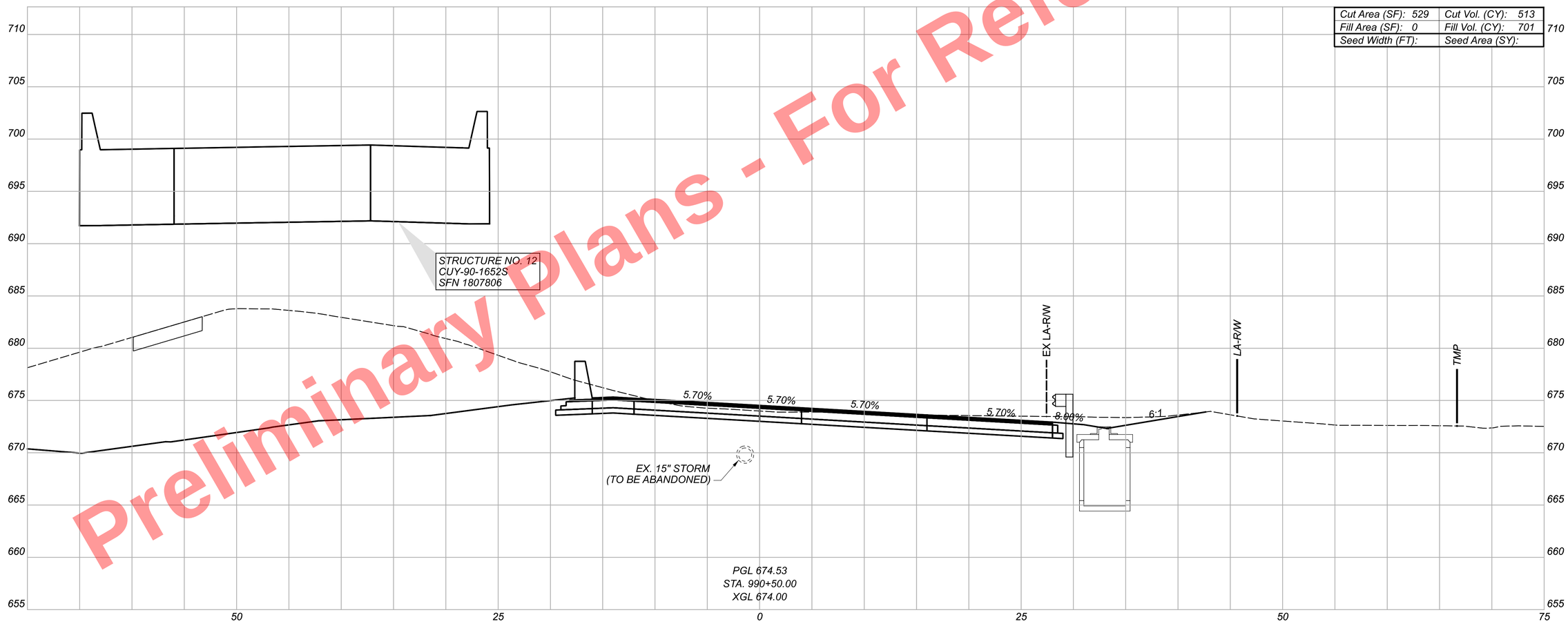

CROSS SECTIONS
RAMP IH5/H5

CUY-90-16.28 (CCG3A)

MODEL: BL_Ramp H5 Hybrid - 990+50.00 R2-2 PAPERSIZE: 34x22 (In.) DATE: 5/19/2025 TIME: 8:39:6 AM USER: KevinJMcNutt
pw:\\mb-us-pw.bentley.commb-us-pw-03\Documents\Cleveland_OH\OL_Projects\ODOT\District12\82382\400-Engineering\Roadway\Sheets\82382_XS5500.dgn

Sheet Totals		
Seeding	Cut	Fill
0	513	701

DESIGN AGENCY
Michael Baker INTERNATIONAL

DESIGNER
KJM

REVIEWER
KGJ 05/22/24

PROJECT ID
82382

SHEET 891 TOTAL 2696

Preliminary Plans - For Reference Only

Cut Area (SF): 711	Cut Vol. (CY): 255
Fill Area (SF): 0	Fill Vol. (CY): 0
Seed Width (FT):	Seed Area (SY):

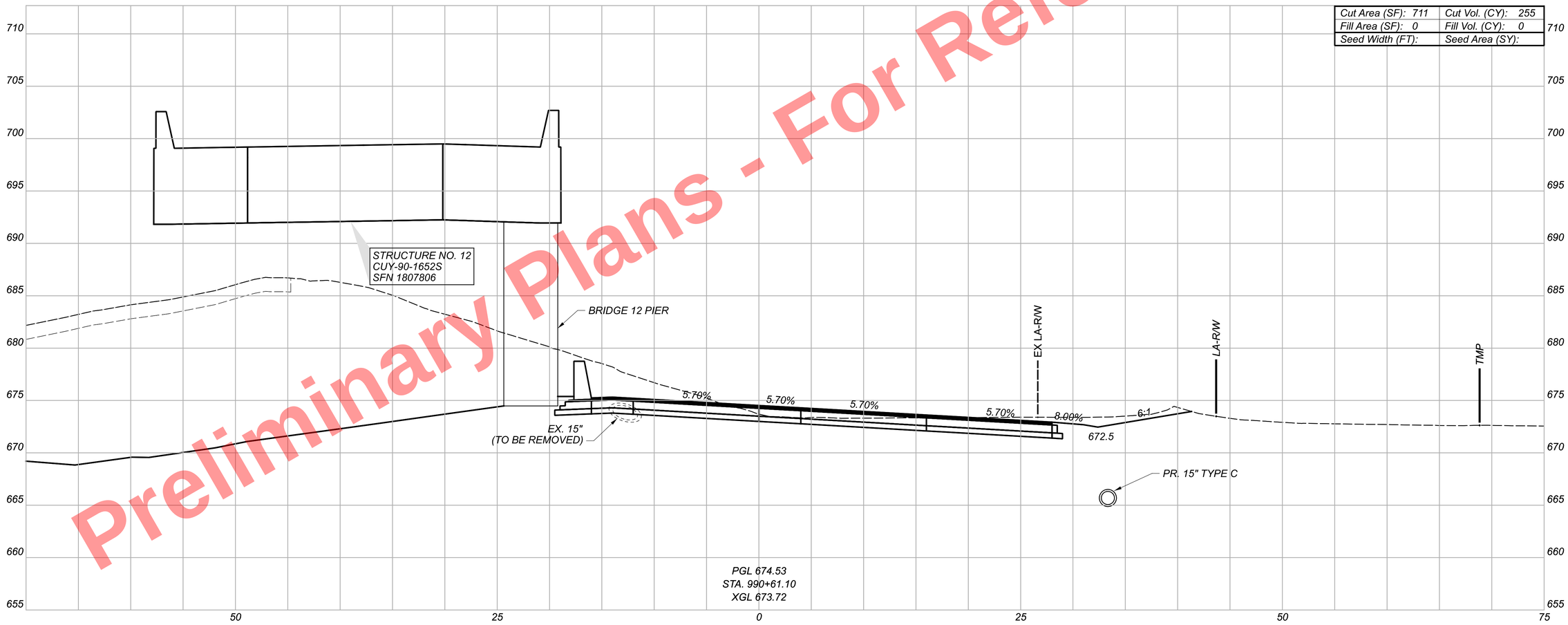

CROSS SECTIONS
RAMP IH5/H5

CUY-90-16.28 (CCG3A)

MODEL: BL_Ramp H5 Hybrid - 990+61.0 R2-2 PAPERSIZE: 34x22 (in.) DATE: 5/9/2025 TIME: 8:39:20 AM USER: Kevin.McNutt
pw:\\mb-us-pw.bentley.com:mb-us-pw-03\Documents\Cleveland_OH_OL_Projects\ODOT\District12\82382\400-Engineering\Roadway\Sheets\82382_XS5500.dgn

DESIGN AGENCY
Michael Baker INTERNATIONAL

DESIGNER
KJM

REVIEWER
KGJ 05/22/24

PROJECT ID
82382

Sheet Totals		
Seeding	Cut	Fill
0	255	0

SHEET	TOTAL
892	2696

Preliminary Plans - For Reference Only

Cut Area (SF): 907	Cut Vol. (CY): 1166
Fill Area (SF): 0	Fill Vol. (CY): 0
Seed Width (FT):	Seed Area (SY):

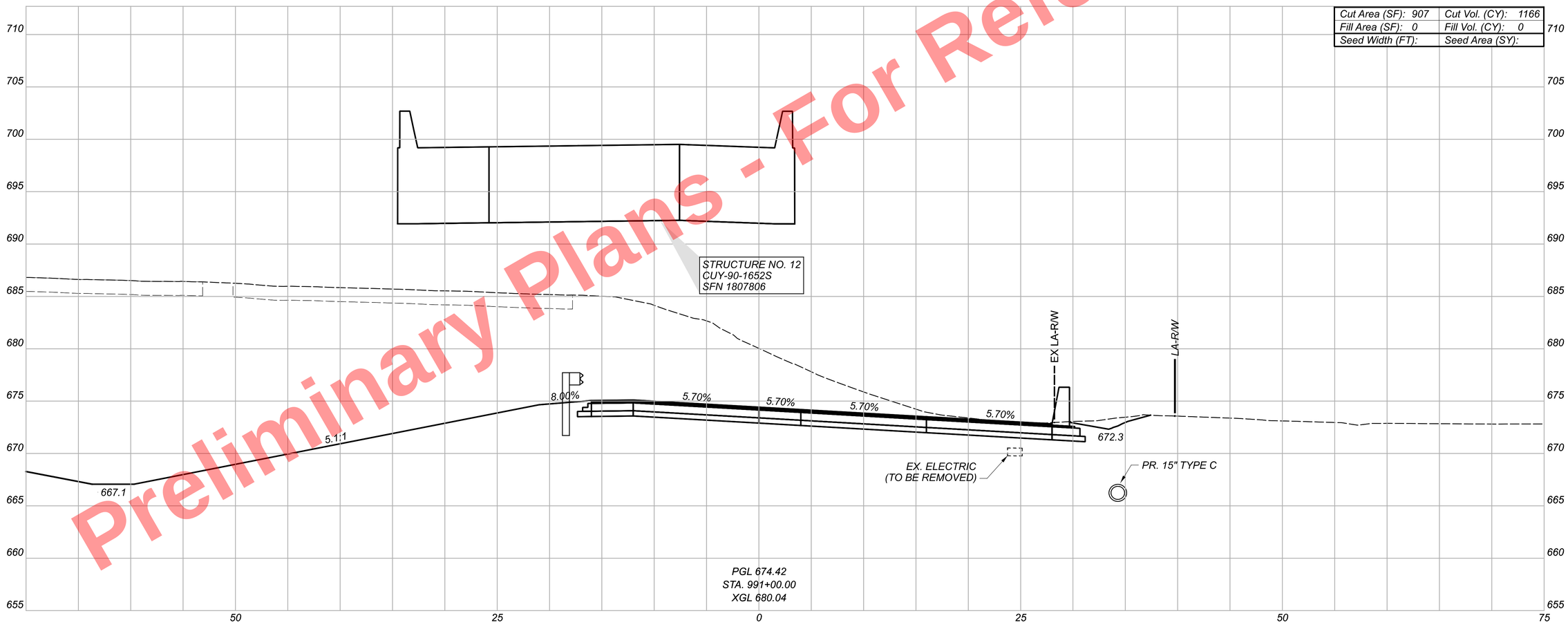

CROSS SECTIONS
RAMP IH5/H5

CUY-90-16.28 (CCG3A)

MODEL: BL_Ramp H5 Hybrid - 991+00.00 R2-2 PAPERSIZE: 34x22 (in.) DATE: 5/19/2025 TIME: 8:39:25 AM USER: KevinJMcNutt
pw:\\mb-us-pw.bentley.commb-us-pw-03\Documents\Cleveland_OH_OL_Projects\ODOT\District12\82382\400-Engineering\Roadway\Sheets\82382_XS5500.dgn

DESIGN AGENCY
Michael Baker INTERNATIONAL

DESIGNER
KJM

REVIEWER
KGJ 05/22/24

PROJECT ID
82382

Sheet Totals		
Seeding	Cut	Fill
0	1166	0

SHEET 893 TOTAL 2696

Preliminary Plans - For Reference Only

Cut Area (SF): 937	Cut Vol. (CY): 1707
Fill Area (SF): 0	Fill Vol. (CY): 0
Seed Width (FT):	Seed Area (SY):

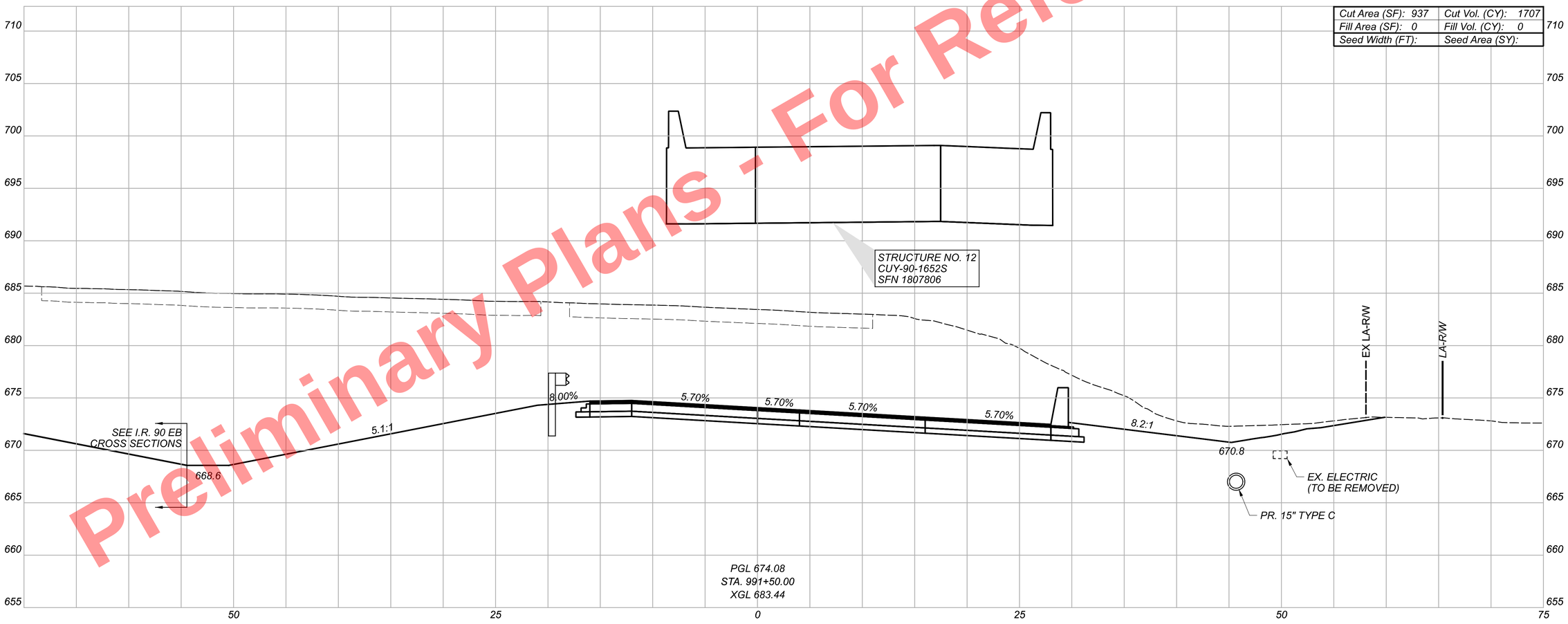

CUY-90-16.28 (CCG3A)

MODEL: BL_Ramp H5 Hybrid - 991+50.00 R2-2 PAPERSIZE: 34x22 (in.) DATE: 5/19/2025 TIME: 8:39:29 AM USER: Kevin.McNutt
pw:\\mb-us-pw.bentley.com:mb-us-pw-03\Documents\Cleveland_OH\OL_Projects\ODOT\District12\82382\400-Engineering\Roadway\Sheets\82382_XS5500.dgn

CROSS SECTIONS
RAMP IH5/H5

DESIGN AGENCY
Michael Baker INTERNATIONAL

DESIGNER
KJM

REVIEWER
KGJ 05/22/24

PROJECT ID
82382

Sheet Totals		
Seeding	Cut	Fill
0	1707	0

SHEET 894 TOTAL 2696

Preliminary Plans - For Reference Only

CROSS SECTIONS
RAMP IH5/H5

Cut Area (SF): 935	Cut Vol. (CY): 1733
Fill Area (SF): 2	Fill Vol. (CY): 2
Seed Width (FT):	Seed Area (SY):

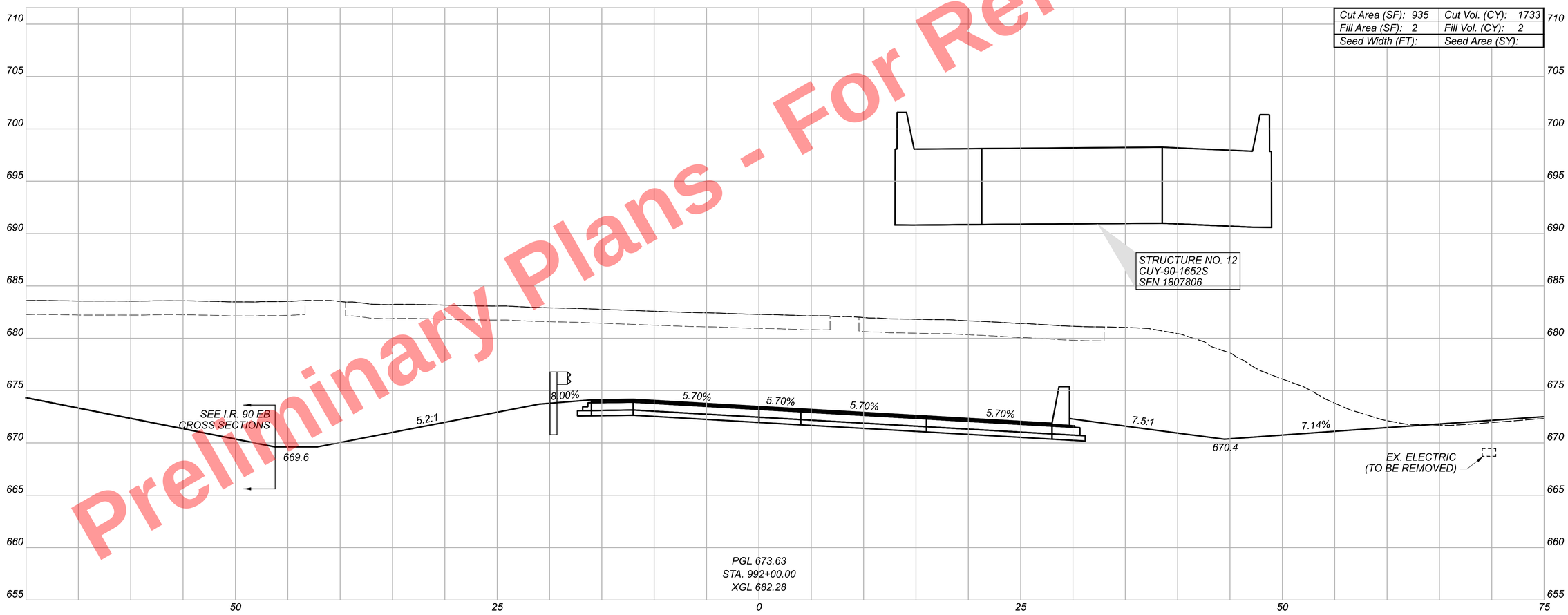

Sheet Totals		
Seeding	Cut	Fill
0	1733	2

DESIGN AGENCY
Michael Baker INTERNATIONAL

DESIGNER
KJM

REVIEWER
KGJ 05/22/24

PROJECT ID
82382

SHEET 895 | TOTAL 2696

CUY-90-16.28 (CCG3A)

MODEL: BL_Ramp H5 Hybrid - 992+00.00 R2-2 PAPERSIZE: 34x22 (in.) DATE: 5/19/2025 TIME: 8:39:33 AM USER: Kevin.McNutt
pw:\\mb-us-pw.bentley.com:mb-us-pw-03\Documents\Cleveland_OH\OL_Projects\ODOT\District 12\82382\400-Engineering\Roadway\Sheets\82382_XS5500.dgn

Preliminary Plans - For Reference Only

Cut Area (SF): 668	Cut Vol. (CY): 1484
Fill Area (SF): 0	Fill Vol. (CY): 2
Seed Width (FT):	Seed Area (SY):

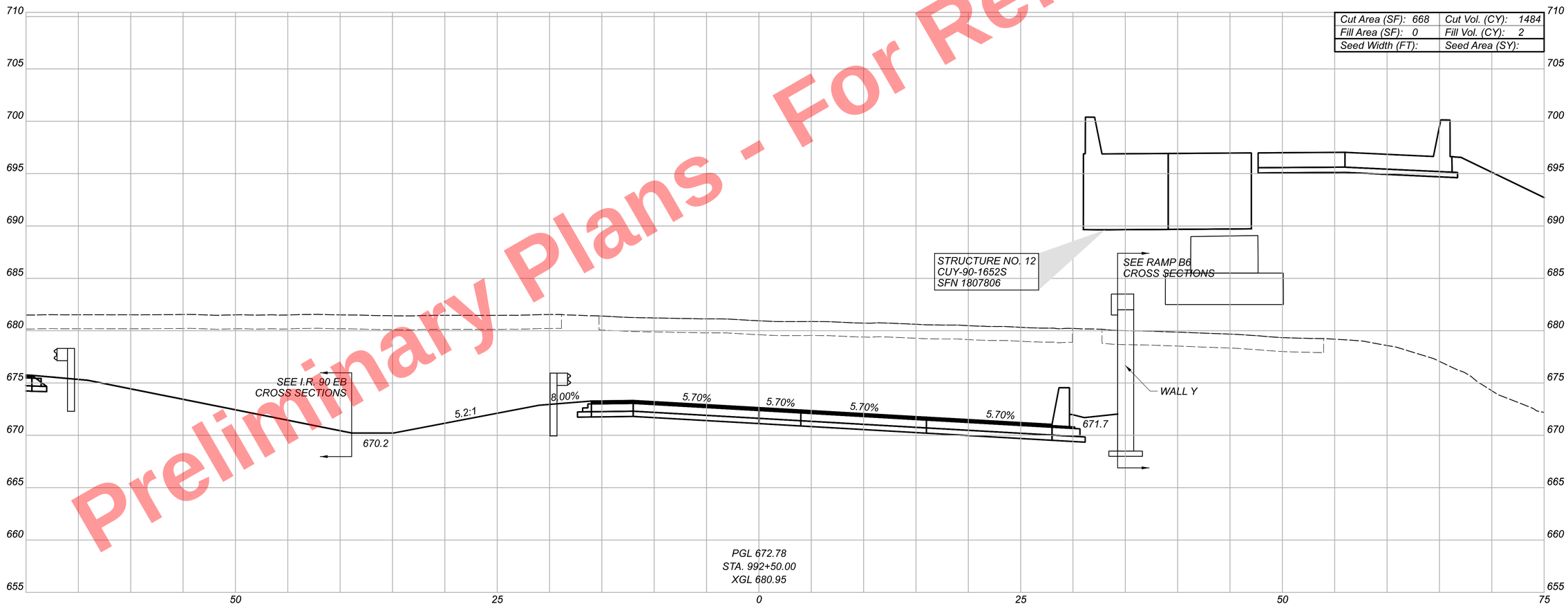

Sheet Totals		
Seeding	Cut	Fill
0	1484	2

CUY-90-16.28 (CCG3A)

MODEL: BL_Ramp H5 Hybrid - 992+50.00 R2-2 PAPERSIZE: 34x22 (In.) DATE: 5/9/2025 TIME: 8:39:38 AM USER: Kevin.McNutt
pw:\\mb-us-pw.bentley.commb-us-pw-03\Documents\Cleveland_OH\OI_Projects\000T\District2\82382\400-Engineering\Roadway\Sheets\82382_XS5500.dgn

CROSS SECTIONS
RAMP IH5/H5

DESIGN AGENCY
Michael Baker INTERNATIONAL

DESIGNER
KJM

REVIEWER
KGJ 05/22/24

PROJECT ID
82382

SHEET 896 TOTAL 2696

Preliminary Plans - For Reference Only

Cut Area (SF): 580	Cut Vol. (CY): 1156
Fill Area (SF): 0	Fill Vol. (CY): 0
Seed Width (FT):	Seed Area (SY):

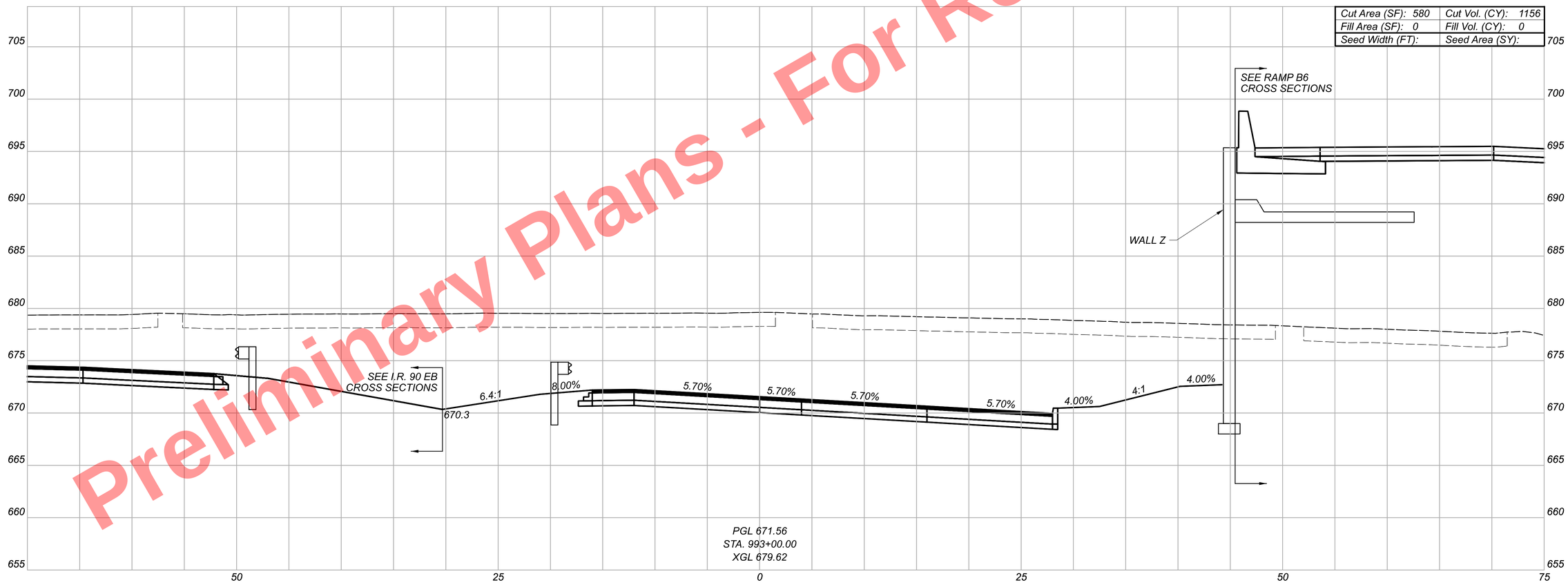

CUY-90-16.28 (CCG3A)

MODEL: BL_Ramp H5 Hybrid - 993+00.00 R2-2 PAPERSIZE: 34x22 (in.) DATE: 5/19/2025 TIME: 8:39:43 AM USER: Kevin.McNutt
pw:\\mb-us-pw.bentley.com:mb-us-pw-03\Documents\Cleveland_OH\OL_Projects\ODOT\District 12\82382\400-Engineering\Roadway\Sheets\82382_XS5500.dgn

CROSS SECTIONS
RAMP IH5/H5

Sheet Totals		
Seeding	Cut	Fill
0	1156	0

DESIGN AGENCY
Michael Baker INTERNATIONAL

DESIGNER
KJM

REVIEWER
KGJ 05/22/24

PROJECT ID
82382

SHEET 897 TOTAL 2696

Preliminary Plans - For Reference Only

Cut Area (SF): 534	Cut Vol. (CY): 1031
Fill Area (SF): 0	Fill Vol. (CY): 0
Seed Width (FT):	Seed Area (SY):

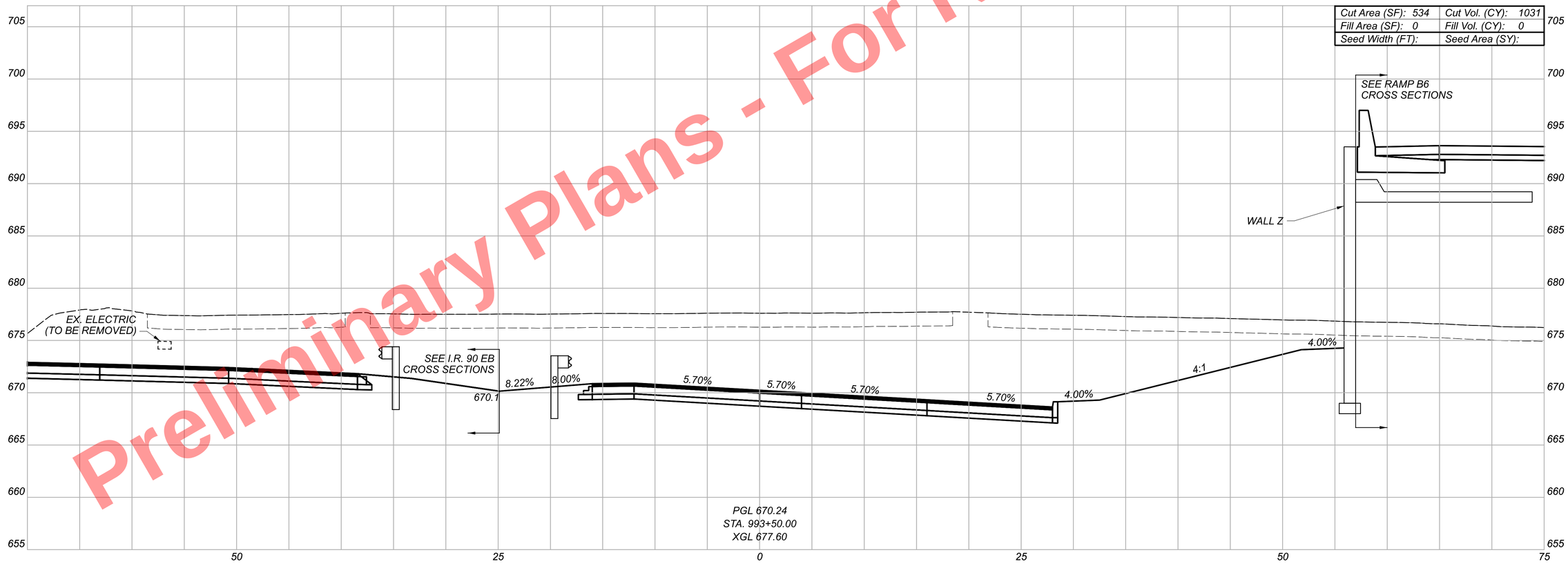

CROSS SECTIONS
RAMP IH5/H5

DESIGN AGENCY
Michael Baker INTERNATIONAL

DESIGNER
KJM

REVIEWER
KGJ 05/22/24

PROJECT ID
82382

Sheet Totals		
Seeding	Cut	Fill
0	1031	0

SHEET	TOTAL
898	2696

CUY-90-16.28 (CCG3A)

MODEL: BL_Ramp H5 Hybrid - 993+50.00 R2-2 PAPERSIZE: 34x22 (in.) DATE: 5/19/2025 TIME: 8:39:47 AM USER: KevinJMcNutt
pw:\\mb-us-pw.bentley.com:mb-us-pw-03\Documents\Cleveland_OH\OL_Projects\ODOT\District 12\82382\400-Engineering\Roadway\Sheets\8238_XS5500.dgn

Preliminary Plans - For Reference Only

MODEL: BL_Ramp H5 Hybrid - 994+00.00 R2-2 PAPERSIZE: 34x22 (in.) DATE: 5/19/2025 TIME: 8:39:52 AM USER: KevinJMcNutt
pw:\\mb-us-pw.bentley.com:mb-us-pw-03\Documents\Cleveland.OHNO_Projects\000T\District2\82382\400-Engineering\Roadway\Sheets\82382_XS5500.dgn

CUY-90-16.28 (CCG3A)

Cut Area (SF): 473	Cut Vol. (CY): 932
Fill Area (SF): 0	Fill Vol. (CY): 0
Seed Width (FT):	Seed Area (SY):

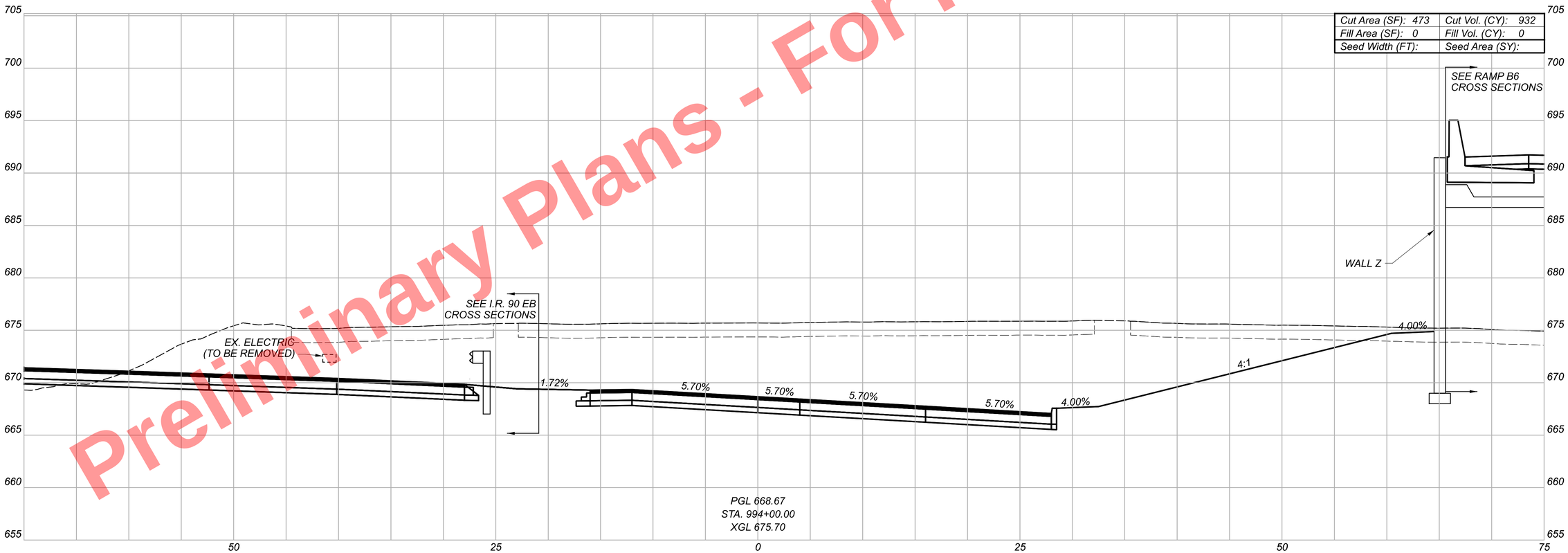

CROSS SECTIONS
RAMP IH5/H5

Sheet Totals			Grand Totals Carried to Subsummary		
Seeding	Cut	Fill	Seeding	Cut	Fill
0	932	0	0	11307	28593

DESIGN AGENCY
Michael Baker INTERNATIONAL

DESIGNER KJM

REVIEWER KGJ 05/22/24

PROJECT ID 82382

SHEET 899 TOTAL 2696

Preliminary Plans - For Reference Only

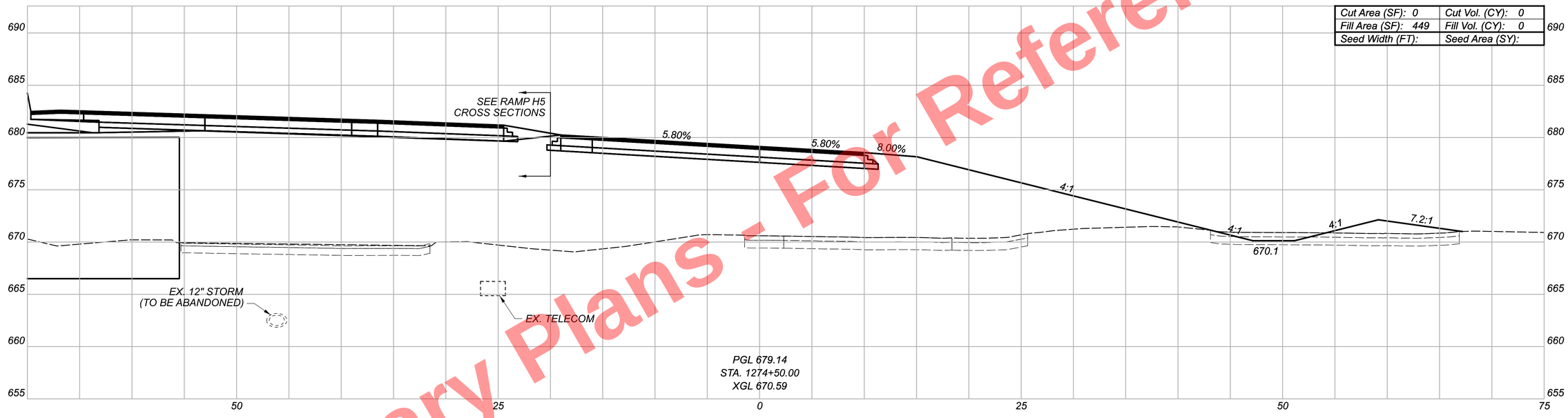

Cut Area (SF): 0	Cut Vol. (CY): 0
Fill Area (SF): 449	Fill Vol. (CY): 0
Seed Width (FT):	Seed Area (SY):

CUY-90-16.28 (CCG3A)

MODEL: RAMP H6 - I274+50.00-I PAPERSIZE: 34x22 (in) DATE: 5/9/2025 TIME: 8:40:05 AM USER: Kevin.McNutt
pw:\\mb-us-pw.bentley.com:mb-us-pw-03\Documents\Cleveland_OH\01_Projects\00DOT\District2\82382\400-Engineering\Roadway\Sheets\82382_XS5600.dgn

CROSS SECTIONS
RAMP IH6/H6

DESIGN AGENCY
Michael Baker INTERNATIONAL

DESIGNER
KJM

REVIEWER
KGJ 05/22/24

PROJECT ID
82382

Sheet Totals		
Seeding	Cut	Fill
-	-	-

SHEET 900 TOTAL 2696

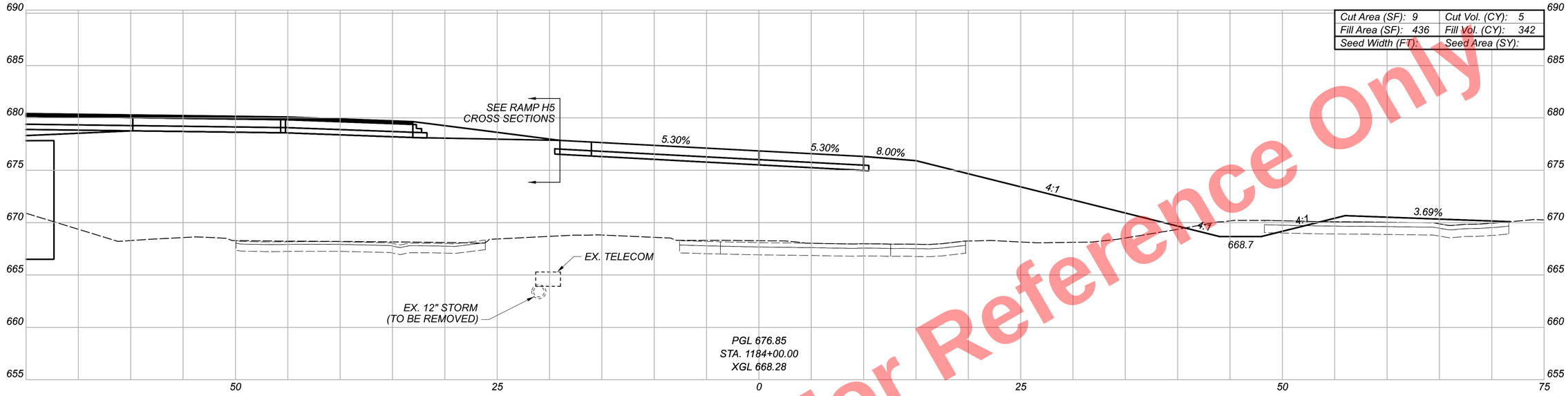

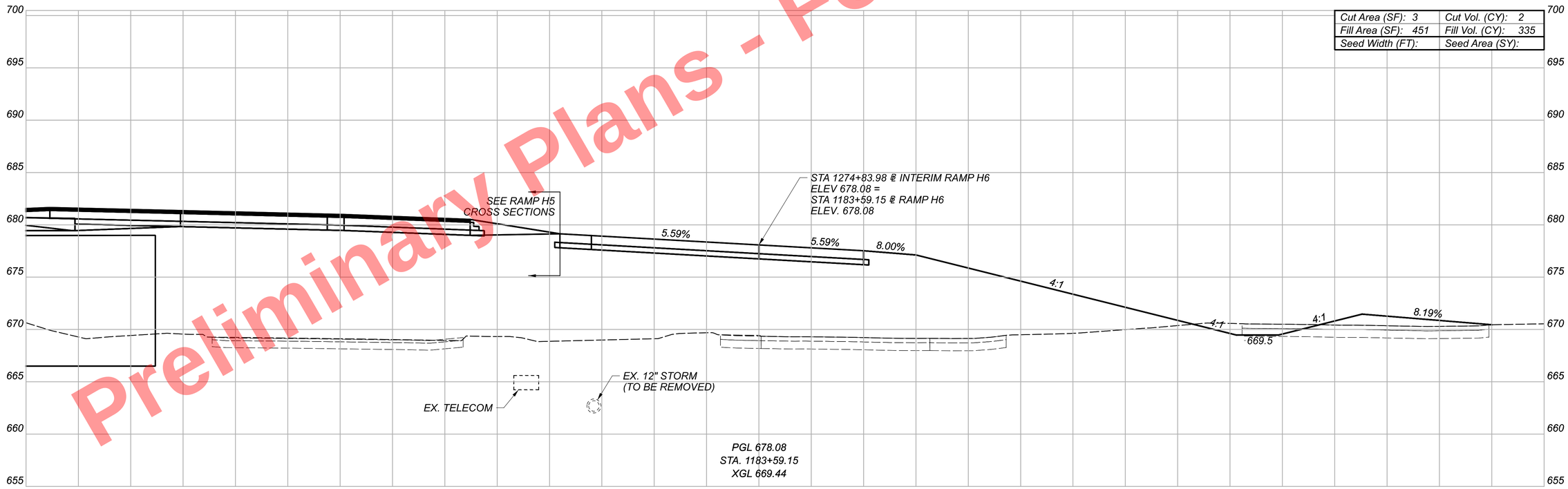

Preliminary Plans - For Reference Only

CUY-90-16.28 (CCG3A)

MODEL: RAMP H6 - 1183+59.15-1 PAPERSIZE: 34x22 (in.) DATE: 5/19/2025 TIME: 8:40:10 AM USER: Kevin.McNutt
pw:\\mb-us-pw.bentley.com:mb-us-pw-03\Documents\Cleveland_OH\OI_Projects\ODOT\District2\82382\400-Engineering\Roadway\Sheets\82382_XS5600.dgn

CROSS SECTIONS
RAMP IH6/H6

Sheet Totals		
Seeding	Cut	Fill
0	7	677

DESIGN AGENCY
Michael Baker INTERNATIONAL

DESIGNER
KJM

REVIEWER
KGJ 05/22/24

PROJECT ID
82382

SHEET 901 TOTAL 2696

For Reference Only
Preliminary Plans

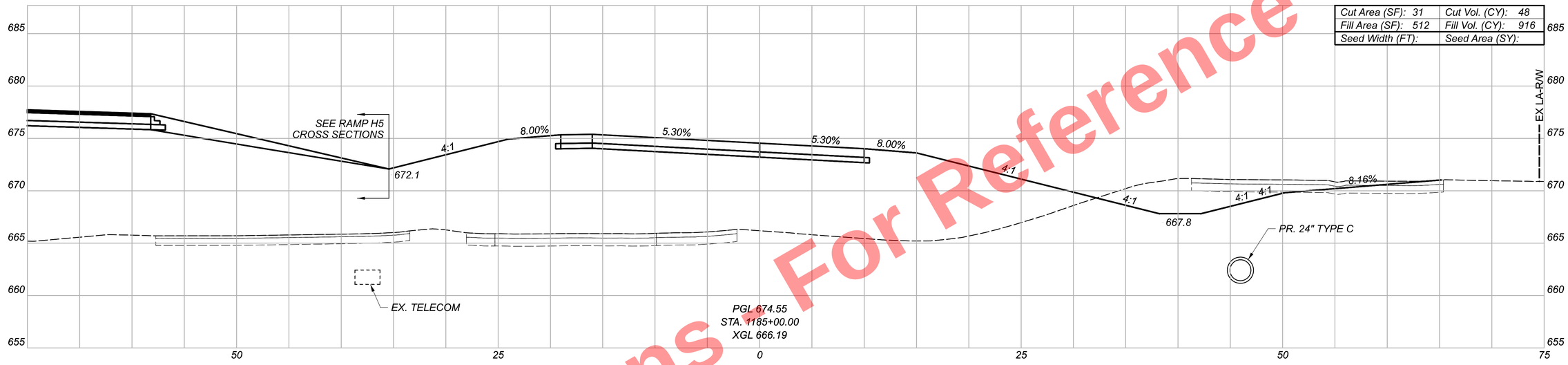

Cut Area (SF): 31	Cut Vol. (CY): 48
Fill Area (SF): 512	Fill Vol. (CY): 916
Seed Width (FT):	Seed Area (SY):

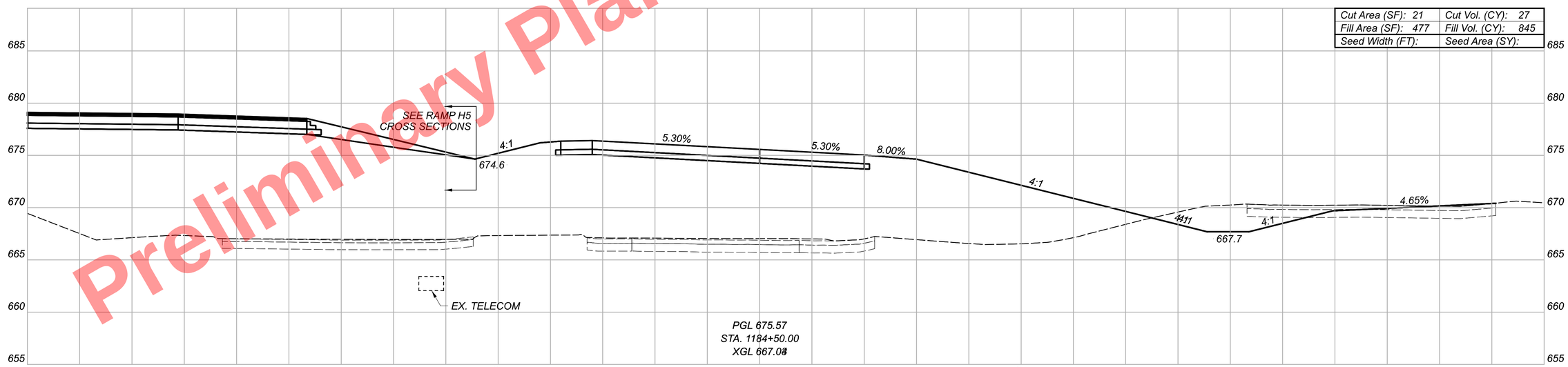

Cut Area (SF): 21	Cut Vol. (CY): 27
Fill Area (SF): 477	Fill Vol. (CY): 845
Seed Width (FT):	Seed Area (SY):

Sheet Totals		
Seeding	Cut	Fill
0	75	1761

CUY-90-16.28 (CCG3A)

MODEL: RAMP H6 - 1184+50.00 R2-1 PAPERSIZE: 34x22 (in.) DATE: 5/9/2025 TIME: 8:40:16 AM USER: KevinJMcNutt
pw:\\mb-us-pw.bentley.com:mb-us-pw-03\Documents\Cleveland_OH\01_Projects\00OT\District2\82382\400-Engineering\Roadway\Sheets\82382_XS5600.dgn

CROSS SECTIONS
RAMP IH6/H6

DESIGN AGENCY
Michael Baker INTERNATIONAL

DESIGNER
KJM

REVIEWER
KGJ 05/22/24

PROJECT ID
82382

SHEET 902 TOTAL 2696

Preliminary Plans - For Reference Only

CUY-90-16.28 (CCG3A)

MODEL: RAMP H6 - 1185+50.00 R2=1 PAPERSIZE: 34x22 (in.) DATE: 5/19/2025 TIME: 8:40:23 AM USER: KevinJMcNutt
pw:\\mb-us-pw.bentley.com:mb-us-pw-03\Documents\Cleveland.OHNOI_Projects\ODOT\District2\82382\400-Engineering\Roadway\Sheets\82382_XS5600.dgn

CROSS SECTIONS
RAMP IH6/H6

Cut Area (SF): 27	Cut Vol. (CY): 54
Fill Area (SF): 483	Fill Vol. (CY): 921
Seed Width (FT):	Seed Area (SY):

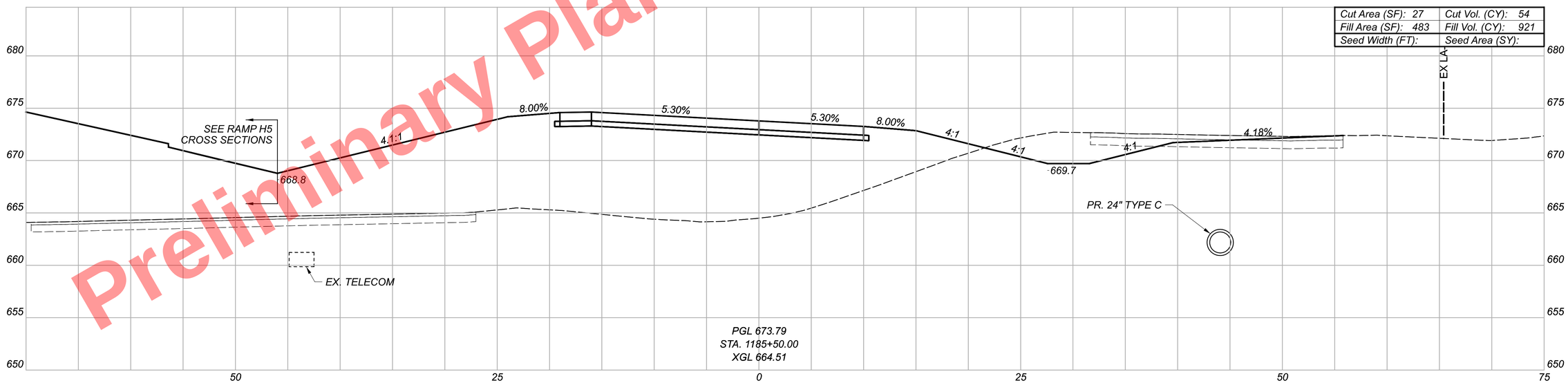

Sheet Totals		
Seeding	Cut	Fill
0	54	921

DESIGN AGENCY
Michael Baker INTERNATIONAL

DESIGNER
KJM

REVIEWER
KGJ 05/22/24

PROJECT ID
82382

SHEET 903 TOTAL 2696

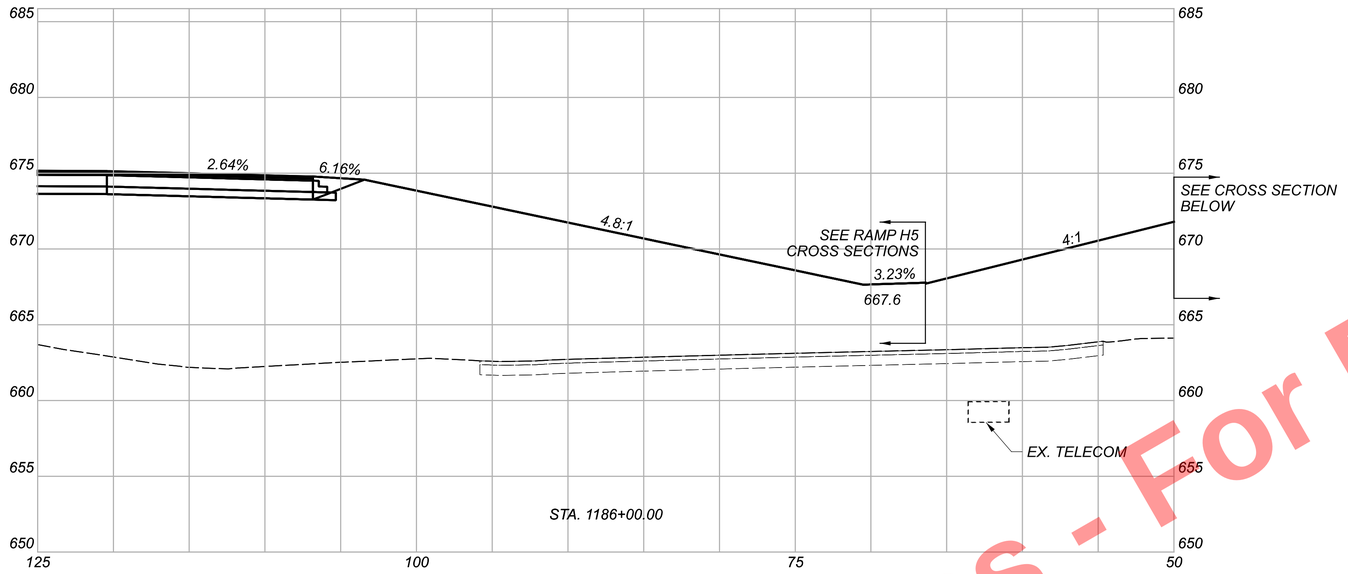

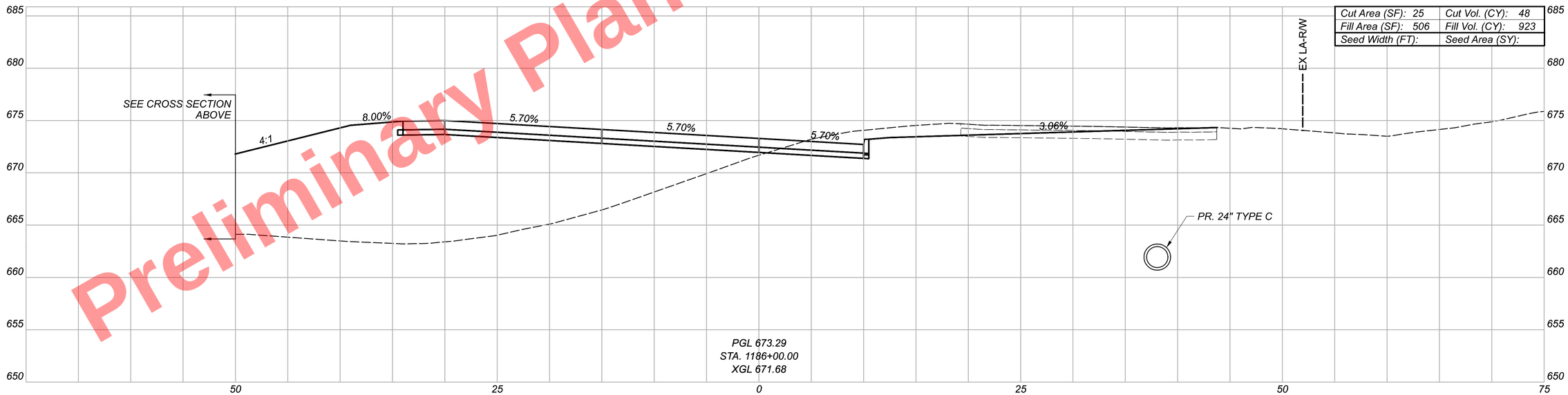

Preliminary Plans - For Reference Only

CUY-90-16.28 (CCG3A)

MODEL: RAMP H6 - 1186+00.00 R2-1 PAPERSIZE: 34x22 (in.) DATE: 5/19/2025 TIME: 8:40:28 AM USER: KevinMcNutt
pw:\\mb-us-pw.bentley.com:mb-us-pw-03\Documents\Cleveland.OH\OI_Projects\ODOT\District2\82382\400-Engineering\Engineering\Roadway\Sheets\82382_XS5600.dgn

CROSS SECTIONS
RAMP IH6/H6

Sheet Totals		
Seeding	Cut	Fill
0	48	923

DESIGN AGENCY
Michael Baker INTERNATIONAL

DESIGNER KJM

REVIEWER KGJ 05/22/24

PROJECT ID 82382

SHEET 904 TOTAL 2696

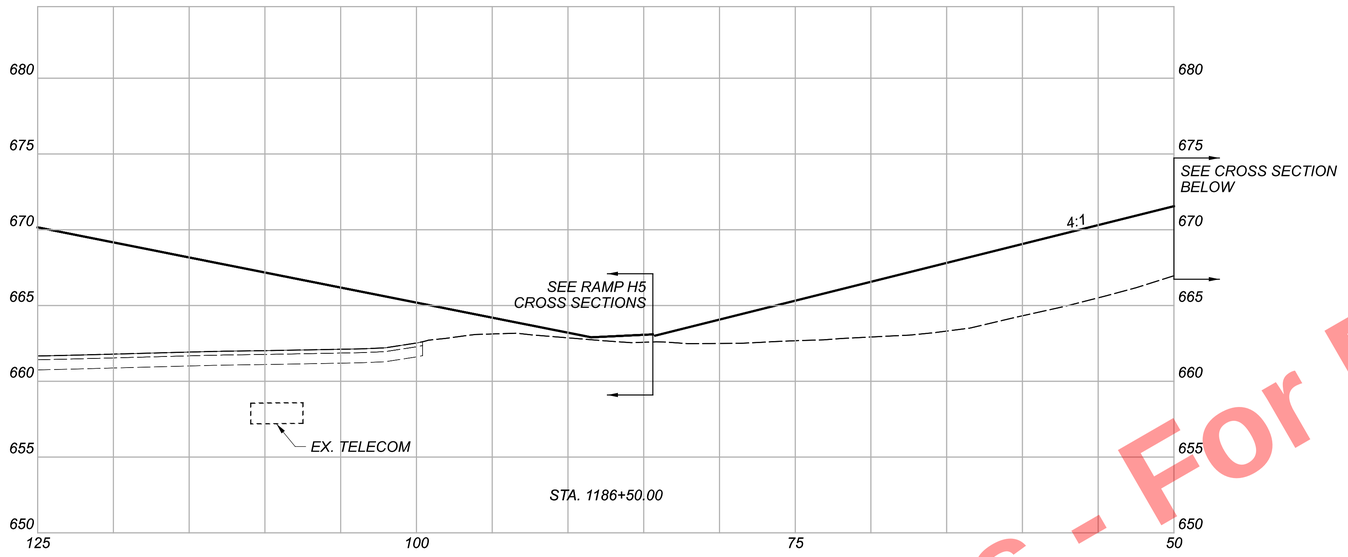

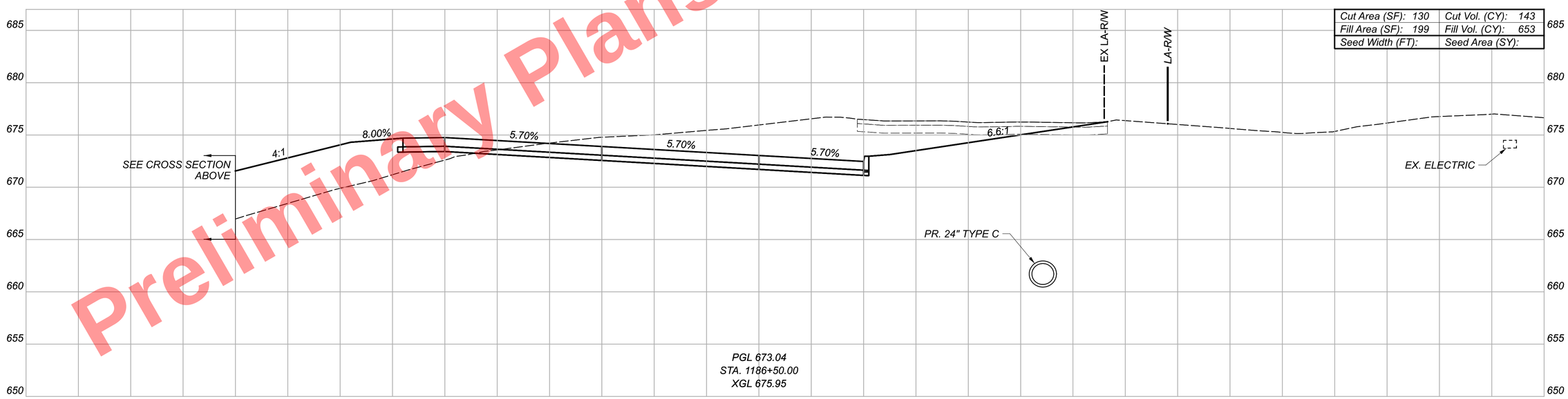

Preliminary Plans - For Reference Only

CUY-90-16.28 (CCG3A)

MODEL: RAMP H6 - I186+50.00 R2-1 PAPERSIZE: 34x22 (in) DATE: 5/19/2025 TIME: 8:40:35 AM USER: KevinJMcNutt
pw:\\mb-us-pw.bentley.com:mb-us-pw-03\Documents\Cleveland_OH\01_Projects\ODOT\District2\82382\400-Engineering\Roadway\Sheets\82382_XS5600.dgn

CROSS SECTIONS
RAMP IH6/H6

Sheet Totals		
Seeding	Cut	Fill
0	143	653

DESIGN AGENCY
Michael Baker INTERNATIONAL

DESIGNER KJM
REVIEWER KGJ 05/22/24
PROJECT ID 82382
SHEET 905 TOTAL 2696

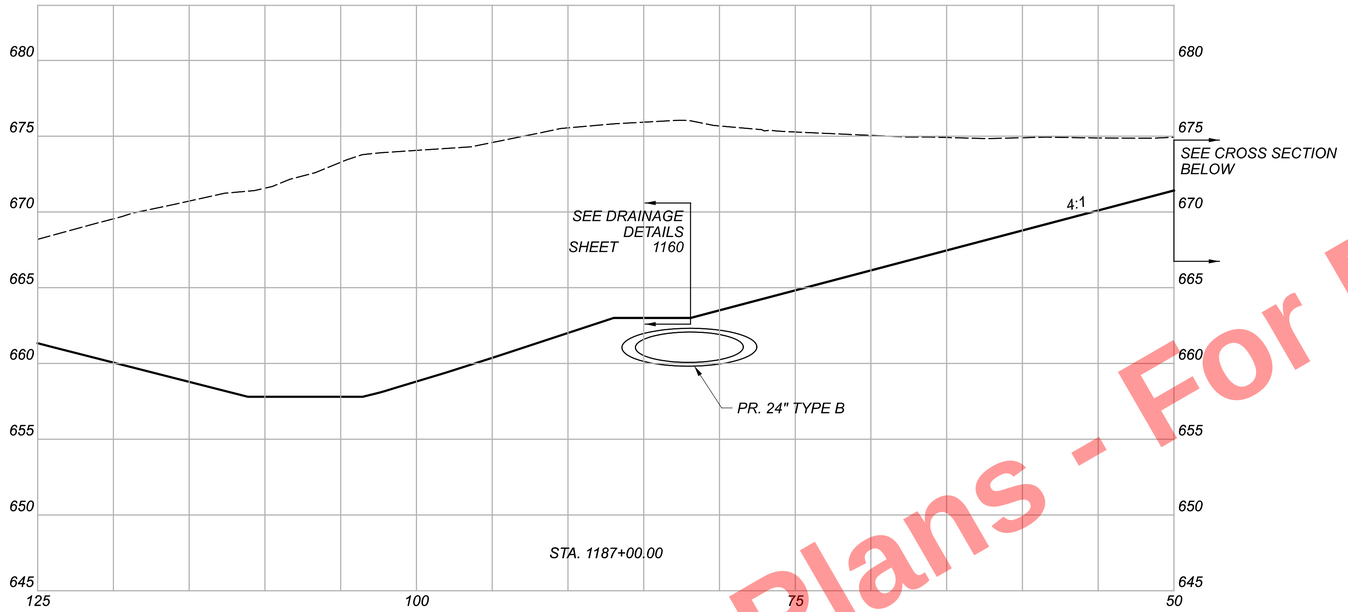

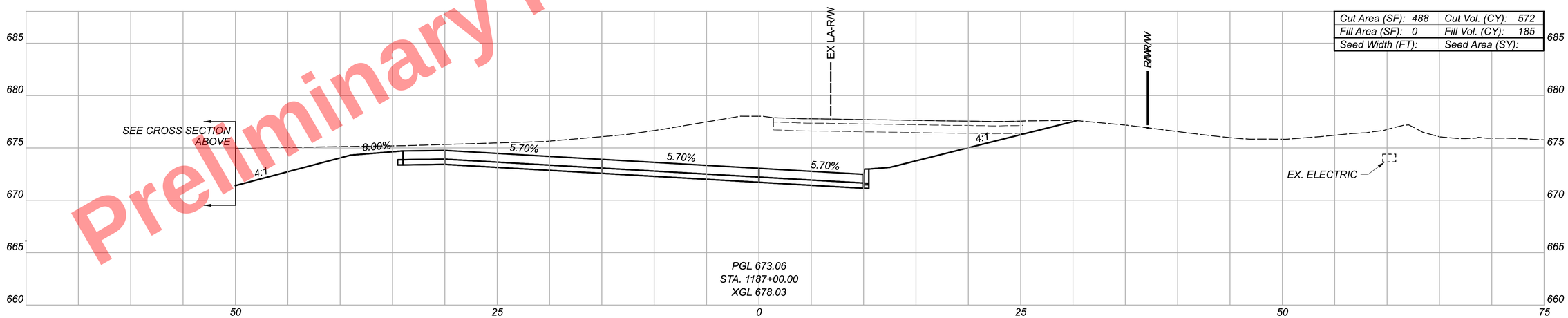

Preliminary Plans - For Reference Only

CUY-90-16.28 (CCG3A)

MODEL: RAMP H6 - I187+00.00 R2-I PAPERSIZE: 34x22 (in.) DATE: 5/19/2025 TIME: 8:40:43 AM USER: KevinMcNutt
pw:\\mb-us-pw.bentley.com:mb-us-pw-03\Documents\Cleveland_OH\01_Projects\ODOT\District2\82382\400-Engineering\Roadway\Sheets\82382_XS5600.dgn

CROSS SECTIONS
RAMP IH6/H6

Sheet Totals		
Seeding	Cut	Fill
0	572	185

DESIGN AGENCY
Michael Baker INTERNATIONAL

DESIGNER KJM

REVIEWER KGJ 05/22/24

PROJECT ID 82382

SHEET 906 TOTAL 2696

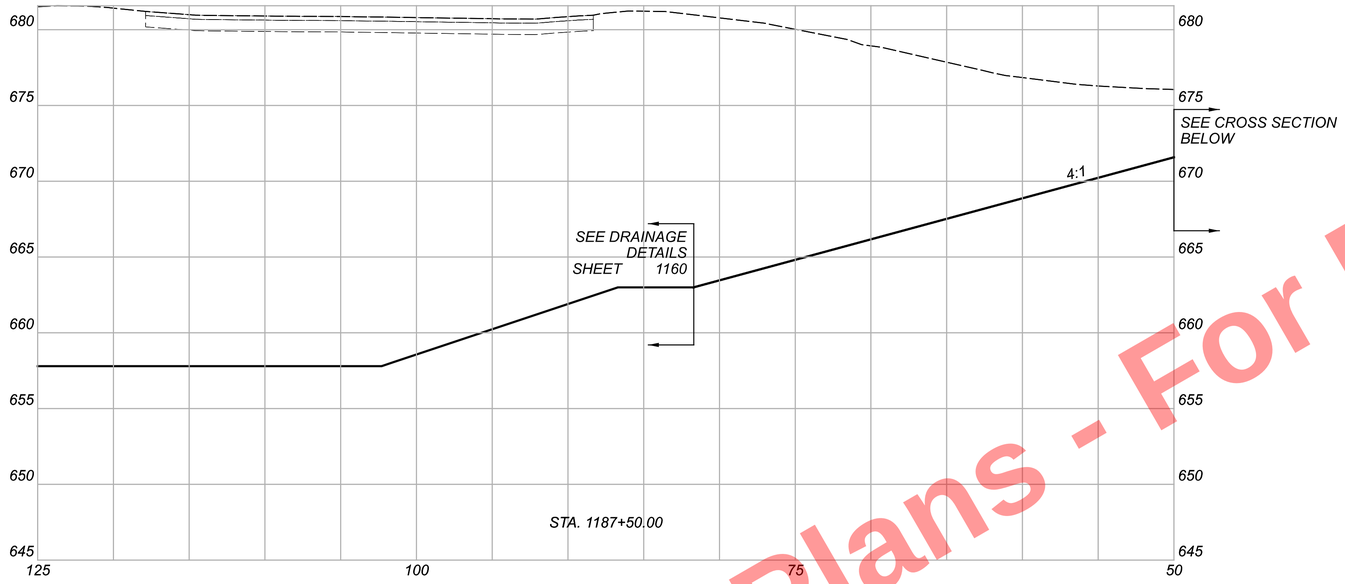

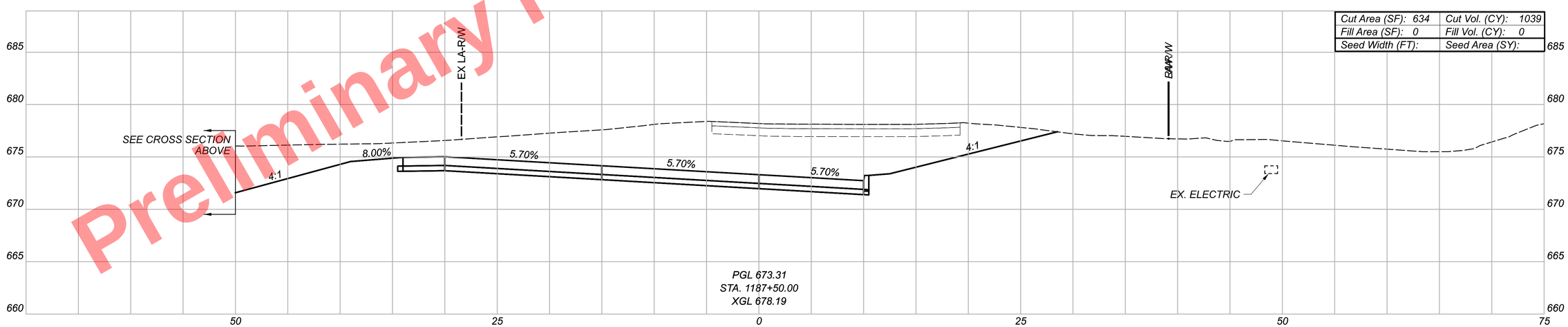

Preliminary Plans - Not for Construction - For Reference Only

CUY-90-16.28 (CCG3A)

MODEL: RAMP H6 - I187+50.00 R2=1 PAPERSIZE: 34x22 (in.) DATE: 5/19/2025 TIME: 8:40:50 AM USER: KevinMcNutt
pw:\\mb-us-pw.bentley.com:mb-us-pw-03\Documents\Cleveland.OH\01_Projects\ODOT\District2\82382\400-Engineering\Roadway\Sheets\82382_XS5600.dgn

CROSS SECTIONS
RAMP IH6/H6

Sheet Totals		
Seeding	Cut	Fill
0	1039	0

DESIGN AGENCY
Michael Baker INTERNATIONAL

DESIGNER
KJM

REVIEWER
KGJ 05/22/24

PROJECT ID
82382

SHEET 907 TOTAL 2696

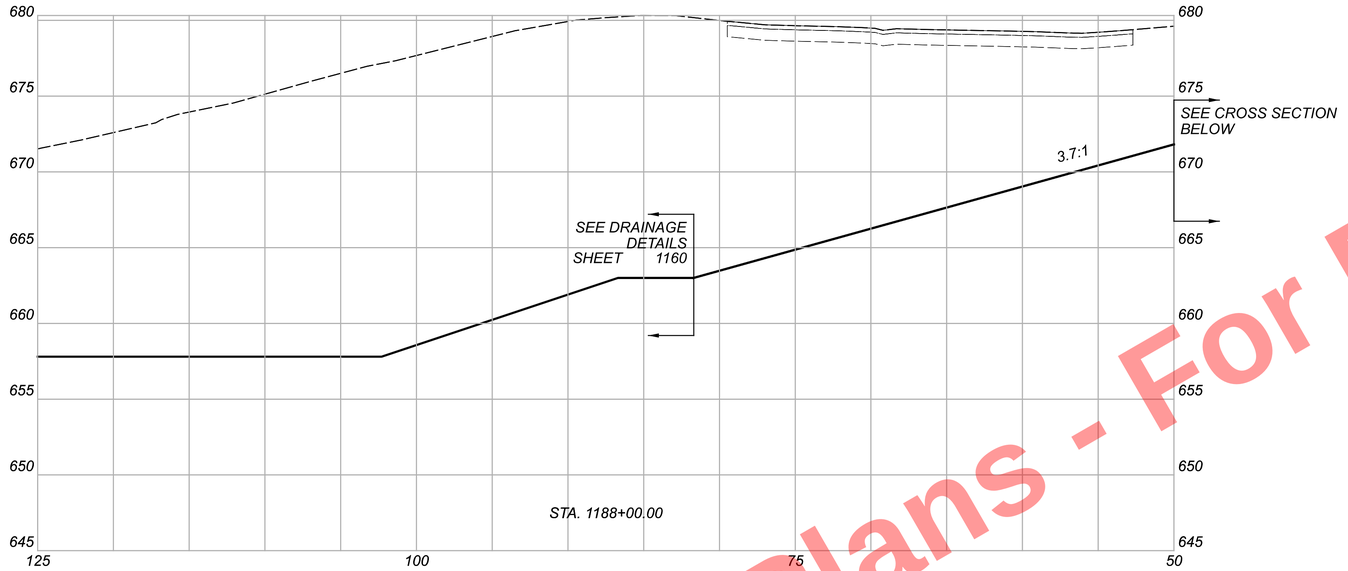

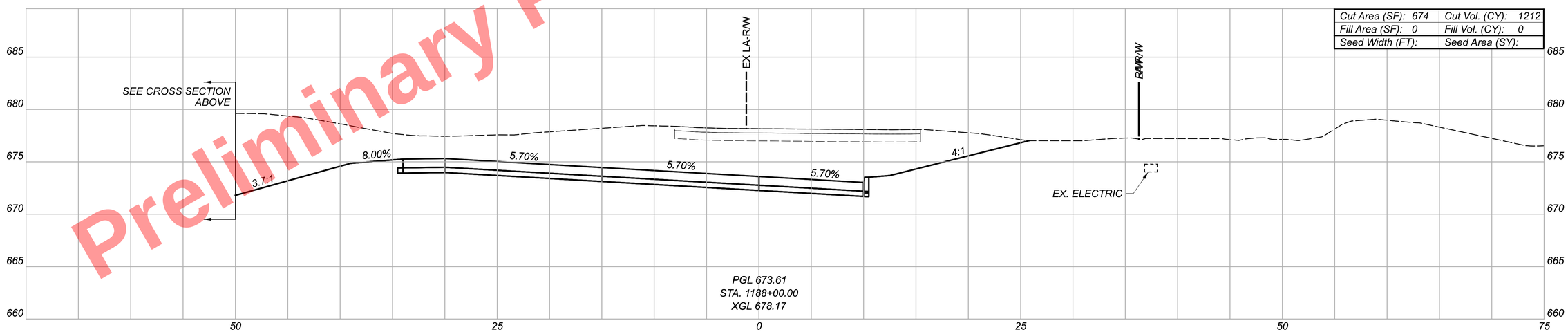

Preliminary Plans - For Reference Only

CROSS SECTIONS
RAMP IH6/H6

CUY-90-16.28 (CCG3A)

MODEL: RAMP H6 - I188+00.00 R2-I PAPERSIZE: 34x22 (in.) DATE: 5/19/2025 TIME: 8:40:56 AM USER: KevinMcNutt
pw:\\mb-us-pw.bentley.com:mb-us-pw-03\Documents\Cleveland_OH\01_Projects\0007\District2\82382\400-Engineering\Roadway\Sheets\82382_XS5600.dgn

DESIGN AGENCY
Michael Baker INTERNATIONAL

DESIGNER
KJM

REVIEWER
KGJ 05/22/24

PROJECT ID
82382

Sheet Totals		
Seeding	Cut	Fill
0	1212	0

SHEET	TOTAL
908	2696

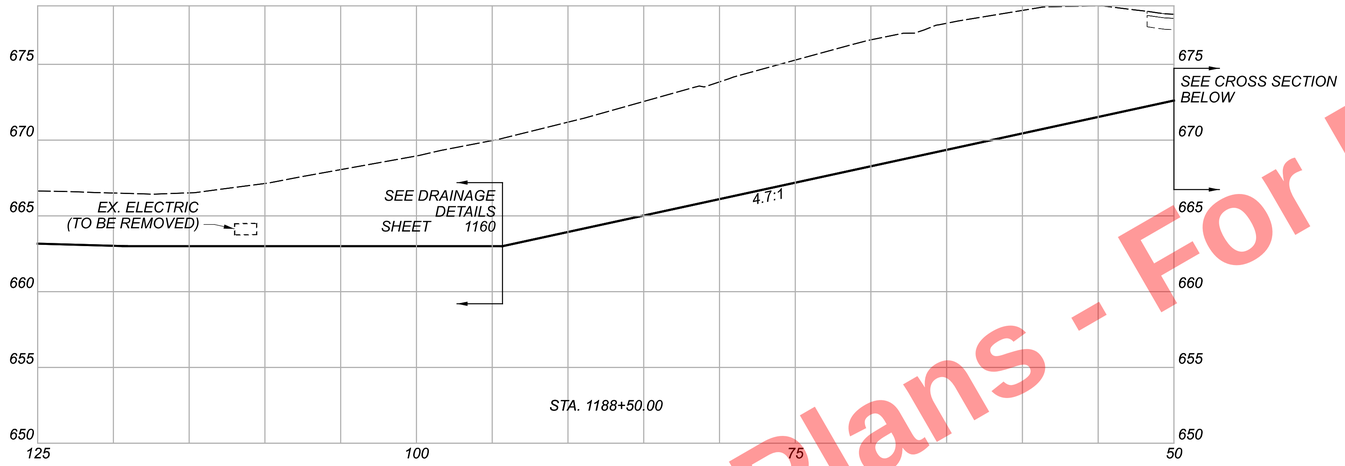

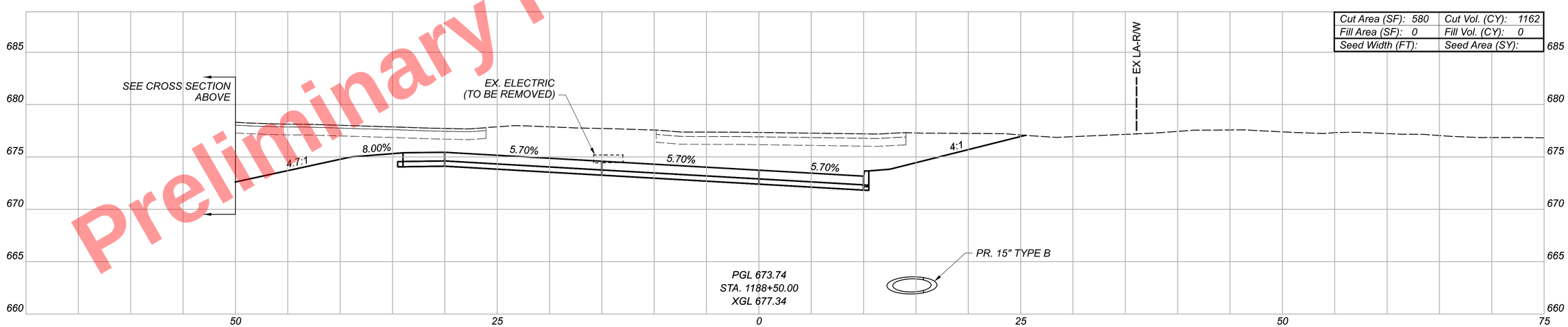

Cut Area (SF): 580	Cut Vol. (CY): 1162
Fill Area (SF): 0	Fill Vol. (CY): 0
Seed Width (FT):	Seed Area (SY):

Preliminary Plans - For Reference Only

CUY-90-16.28 (CCG3A)

MODEL: RAMP H6 - I188+50.00 R2=1 PAPERSIZE: 34x22 (in.) DATE: 5/19/2025 TIME: 8:41:04 AM USER: Kevin.McNutt
pw:\\mb-us-pw.bentley.com:mb-us-pw-03\Documents\Cleveland.OH\01_Projects\ODOT\District2\82382\400-Engineering\Roadway\Sheets\82382_XS5600.dgn

CROSS SECTIONS
RAMP IH6/H6

DESIGN AGENCY
Michael Baker INTERNATIONAL

DESIGNER
KJM

REVIEWER
KGJ 05/22/24

PROJECT ID
82382

Sheet Totals		
Seeding	Cut	Fill
0	1162	0

SHEET	TOTAL
909	2696

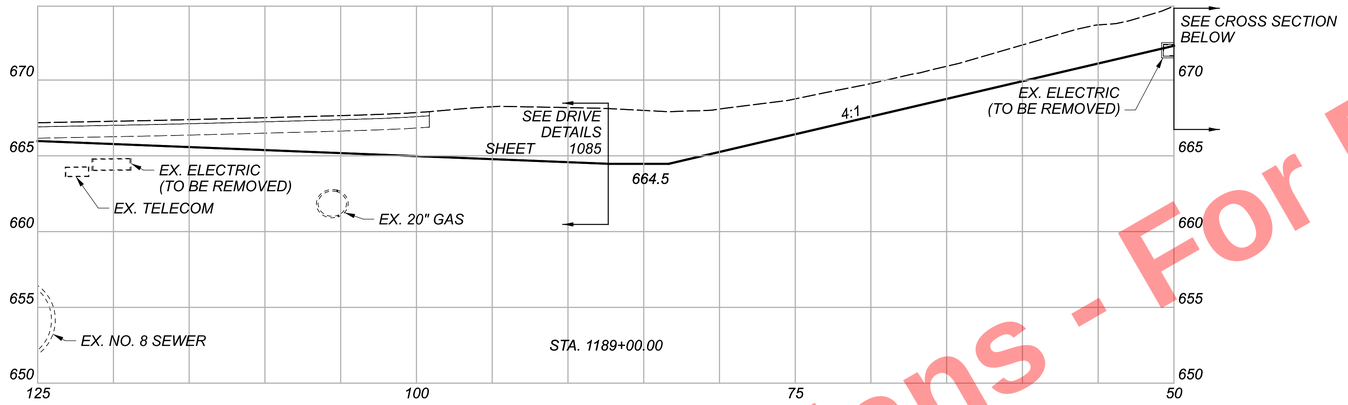

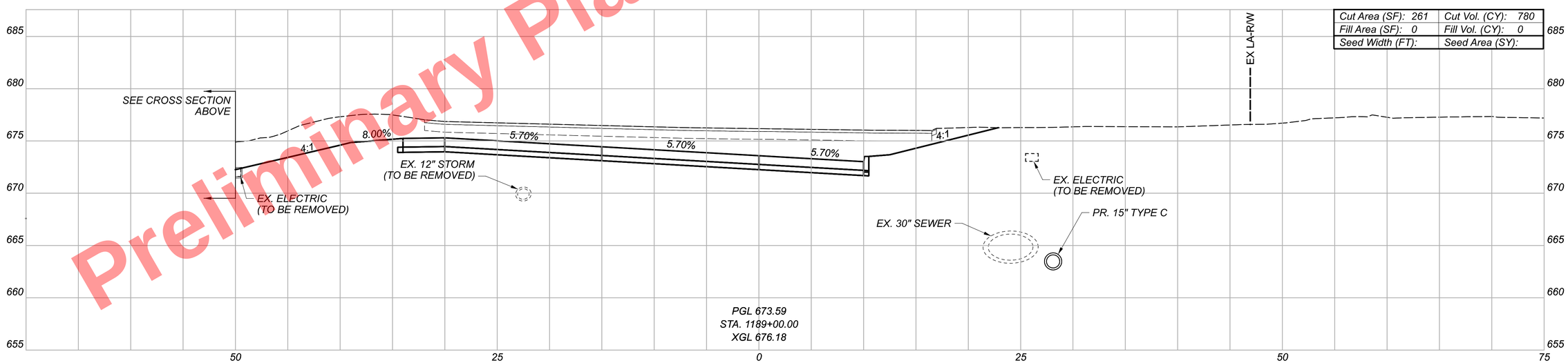

Cut Area (SF): 261	Cut Vol. (CY): 780
Fill Area (SF): 0	Fill Vol. (CY): 0
Seed Width (FT):	Seed Area (SY):

Preliminary Plans - For Reference Only

CROSS SECTIONS
RAMP IH6/H6

CUY-90-16.28 (CCG3A)

MODEL: RAMP H6 - 1189+00.00 R2-1 PAPERSIZE: 34x22 (in.) DATE: 5/19/2025 TIME: 8:41:10 AM USER: Kevin.McNutt
pw:\\mb-us-pw.bentley.com:mb-us-pw-03\Documents\Cleveland_OH\01_Projects\0007\District2\82382\400-Engineering\Roadway\Sheets\82382_XS5600.dgn

DESIGN AGENCY
Michael Baker INTERNATIONAL

DESIGNER
KJM

REVIEWER
KGJ 05/22/24

PROJECT ID
82382

Sheet Totals		
Seeding	Cut	Fill
0	780	0

SHEET	TOTAL
910	2696

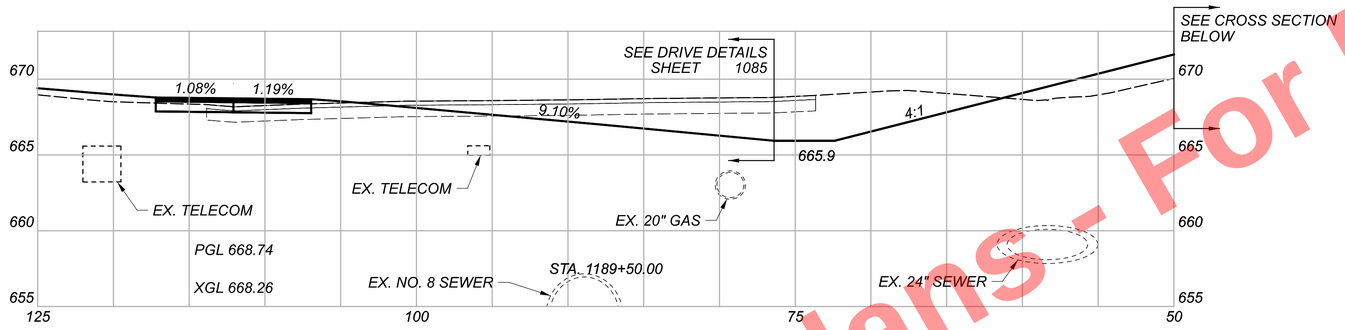

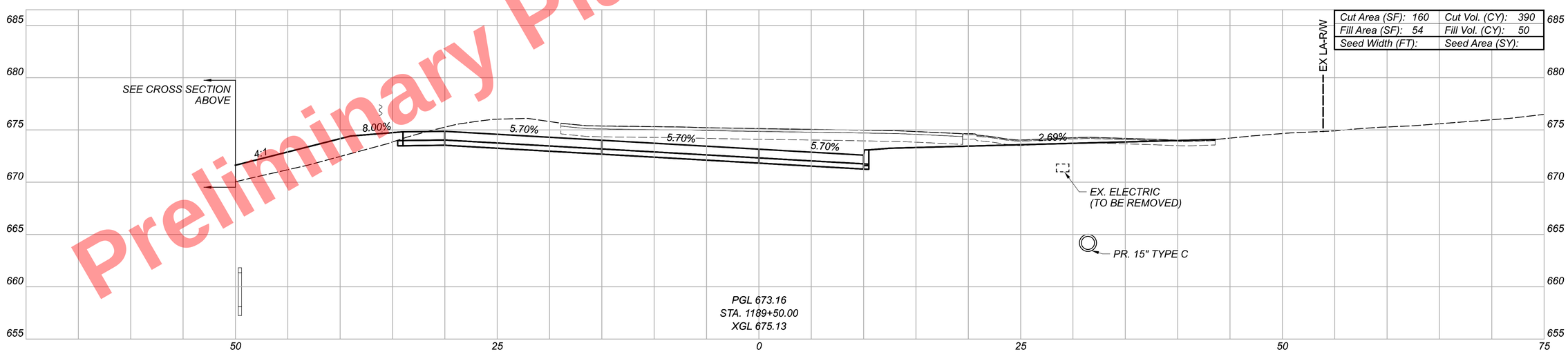

Cut Area (SF): 160	Cut Vol. (CY): 390
Fill Area (SF): 54	Fill Vol. (CY): 50
Seed Width (FT):	Seed Area (SY):

Sheet Totals		
Seeding	Cut	Fill
0	390	50

Preliminary Plans - For Reference Only

CUY-90-16.28 (CCG3A)

MODEL: RAMP H6 - I189+50.00 R2=1 PAPERSIZE: 34x22 (in.) DATE: 5/19/2025 TIME: 8:41:16 AM USER: Kevin.McNutt
pw:\\mb-us-pw.bentley.com:mb-us-pw-03\Documents\Cleveland.OH\OI_Projects\ODOT\District2\82382\400-Engineering\Roadway\Sheets\82382_XS5600.dgn

CROSS SECTIONS
RAMP IH6/H6

DESIGN AGENCY
Michael Baker INTERNATIONAL

DESIGNER
KJM

REVIEWER
KGJ 05/22/24

PROJECT ID
82382

SHEET 911 TOTAL 2696

Preliminary Plans - For Reference Only

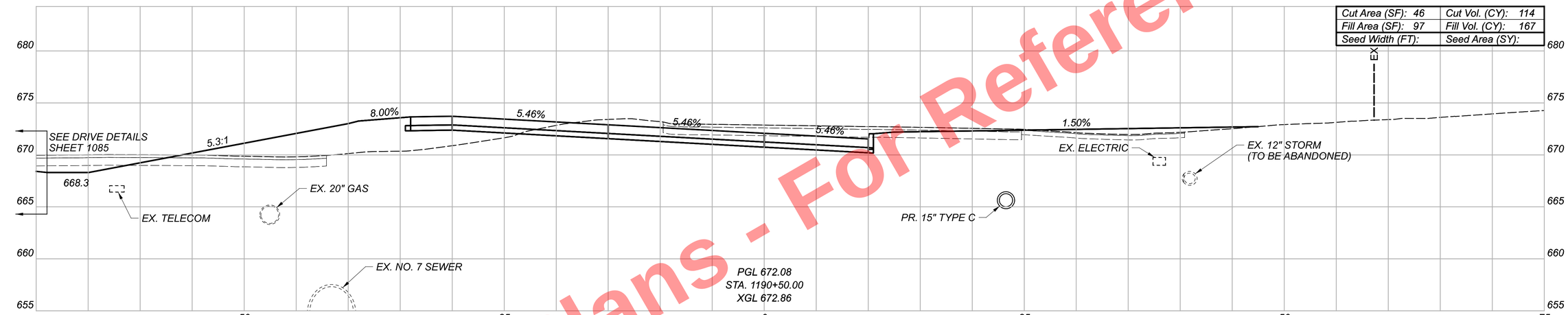

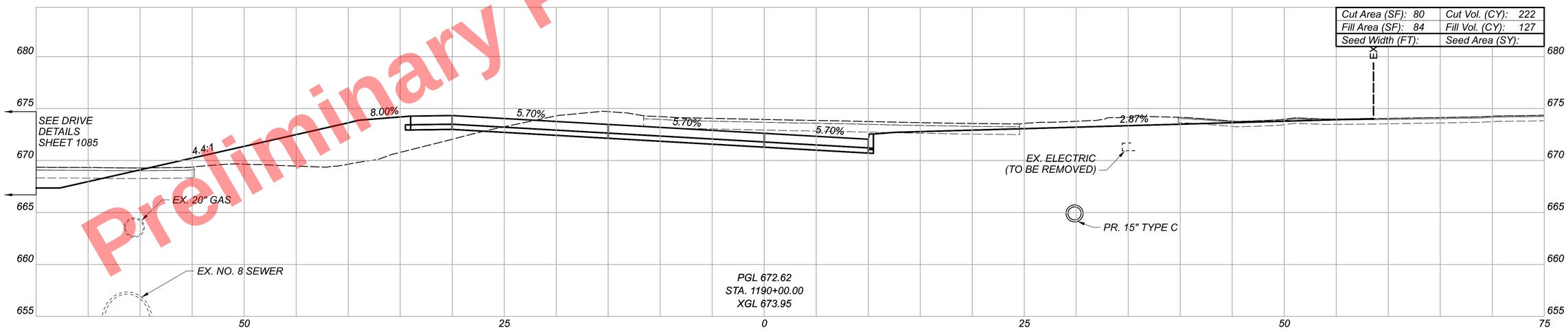

CROSS SECTIONS
RAMP IH6/H6

CUY-90-16.28 (CCG3A)

MODEL: RAMP IH6 - 1190+00.00 R2-1 PAPERSIZE: 34x22 (in.) DATE: 5/19/2025 TIME: 8:41:22 AM USER: KevinMcNutt
pw:\\mb-us-pw.bentley.com:mb-us-pw-03\Documents\Cleveland_OH\01_Projects\ODOT\District2\82382\400-Engineering\Roadway\Sheets\82382_XS5600.dgn

DESIGN AGENCY
Michael Baker INTERNATIONAL

DESIGNER
KJM

REVIEWER
KGJ 05/22/24

PROJECT ID
82382

Sheet Totals		
Seeding	Cut	Fill
0	336	294

SHEET 912 TOTAL 2696

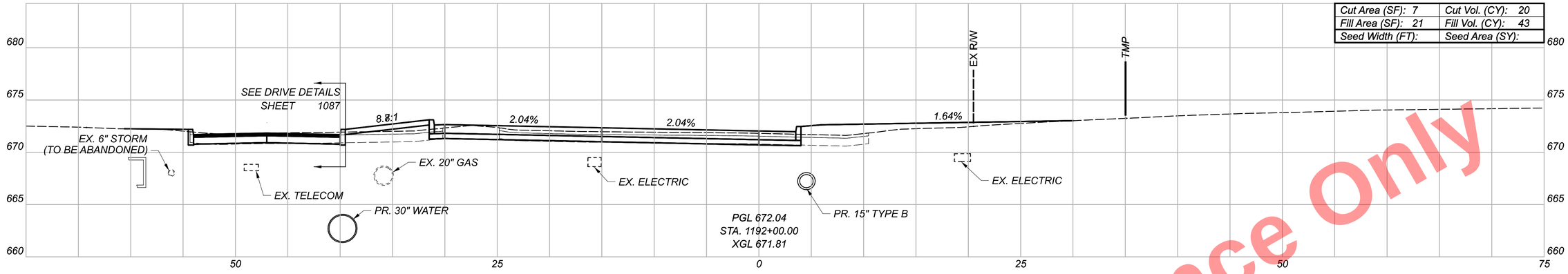

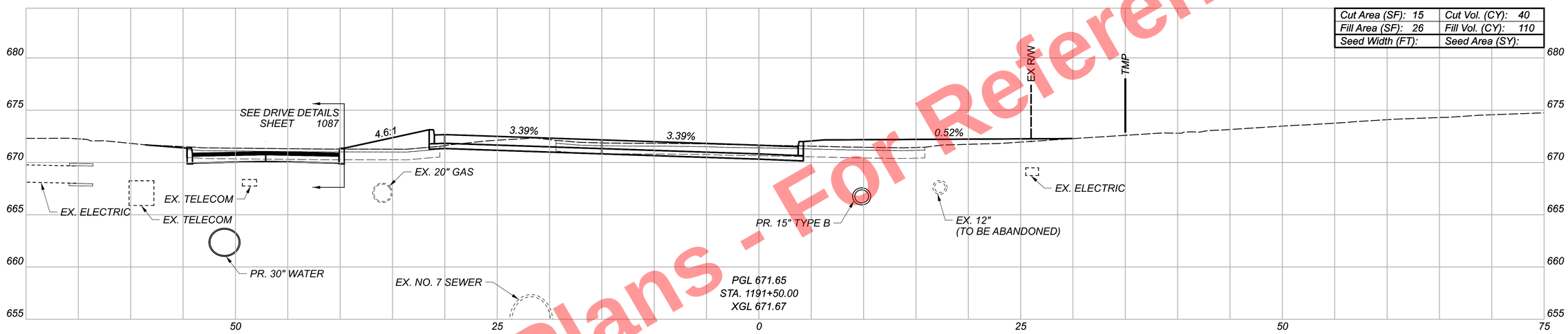

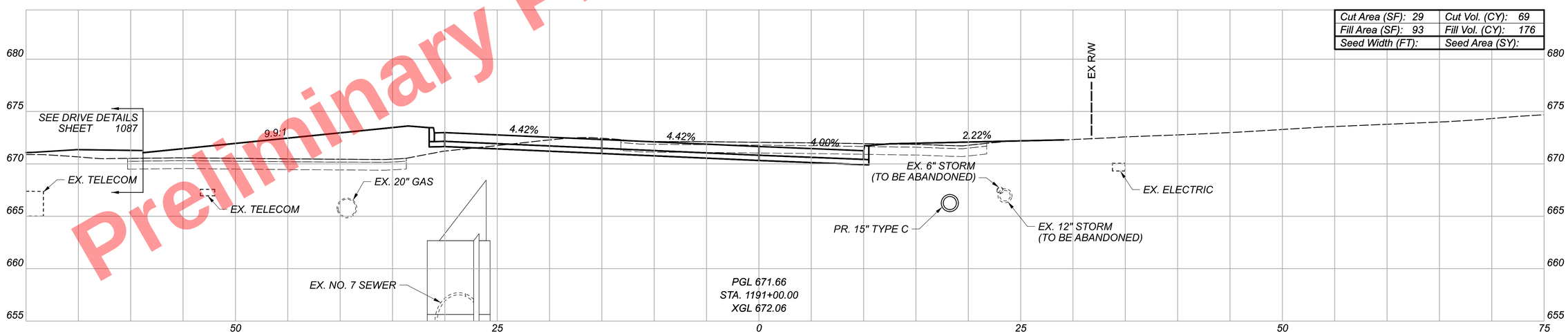

Preliminary Plans - For Reference Only

CROSS SECTIONS
RAMP IH6/H6

Sheet Totals			Grand Totals Carried to Subsummary		
Seeding	Cut	Fill	Seeding	Cut	Fill
0	129	329	0	5947	5793

DESIGN AGENCY
Michael Baker INTERNATIONAL

DESIGNER KJM
REVIEWER KGJ 05/22/24
PROJECT ID 82382
SHEET 913 TOTAL 2696

CUY-90-16.28 (CCG3A)

MODEL: RAMP H6 - 1191+00.00 R2-1 PAPERSIZE: 34x22 (in.) DATE: 5/19/2025 TIME: 8:41:25 AM USER: Kevin.McNutt
pw:\\mb-us-pw.bentley.com:mb-us-pw-03\Documents\Cleveland.OH\OI_Projects\ODOT\District2\82382\400-Engineering\Roadway\Sheets\82382_XS5600.dgn

Preliminary Plans - For Reference Only

Cut Area (SF): 0	Cut Vol. (CY): 0
Fill Area (SF): 0	Fill Vol. (CY): 0
Seed Width (FT):	Seed Area (SY):

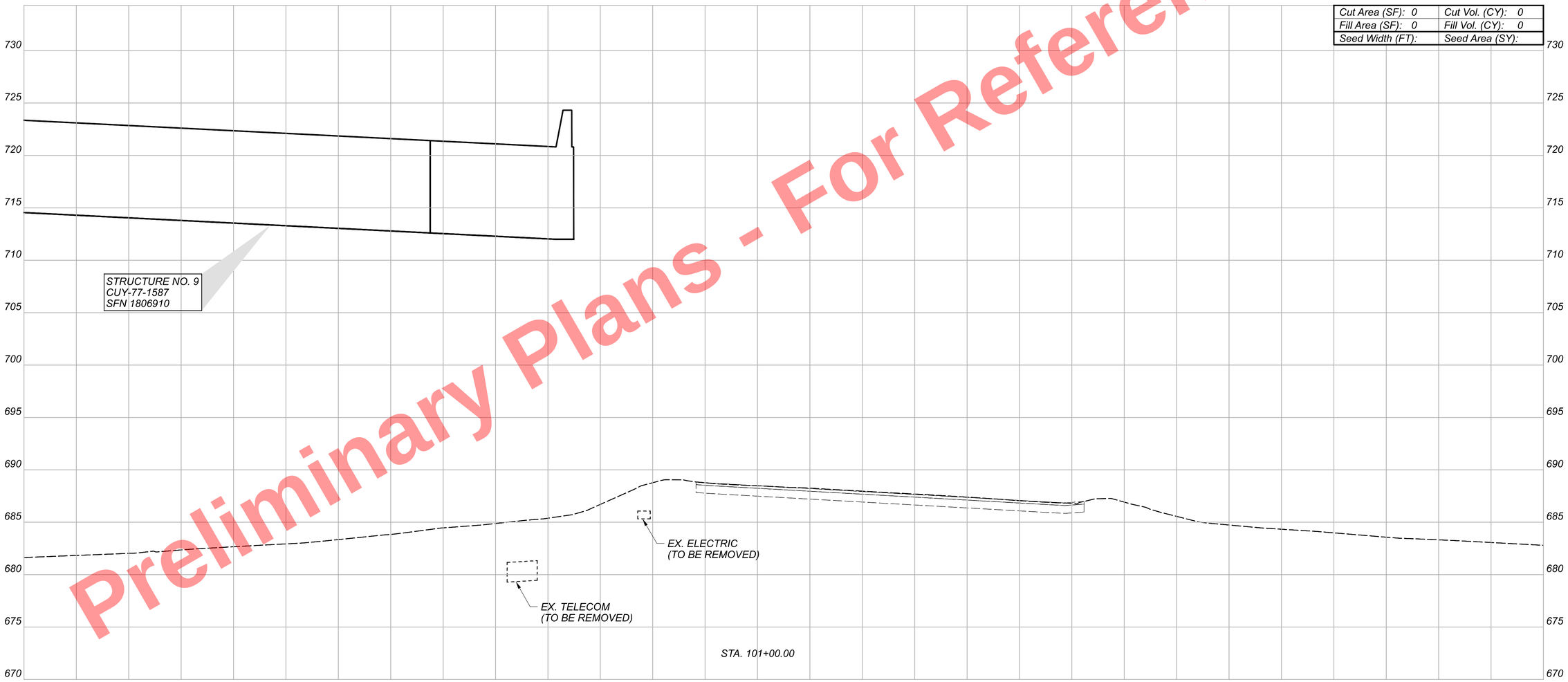

Sheet Totals		
Seeding	Cut	Fill
-	-	-

CROSS SECTIONS
RAMP IJ3

DESIGN AGENCY
Michael Baker INTERNATIONAL

DESIGNER
KJM

REVIEWER
KGJ 05/22/24

PROJECT ID
82382

SHEET 914 | TOTAL 2696

CUY-90-16.28 (CCG3A)

MODEL: CLP_7 - [0]+00.00+[PAPERSIZE: 34x22 (in.) DATE: 5/9/2025 TIME: 8:41:36 AM USER: KevinJMcNutt
pw:\\mb-us-pw.bentley.com:mb-us-pw-03\Documents\Cleveland.OH\OI_Projects\ODOT\District2\82382\400-Engineering\Roadway\Sheets\82382_XS6300.dgn

Cut Area (SF): 2	Cut Vol. (CY): 1
Fill Area (SF): 31	Fill Vol. (CY): 23
Seed Width (FT):	Seed Area (SY):

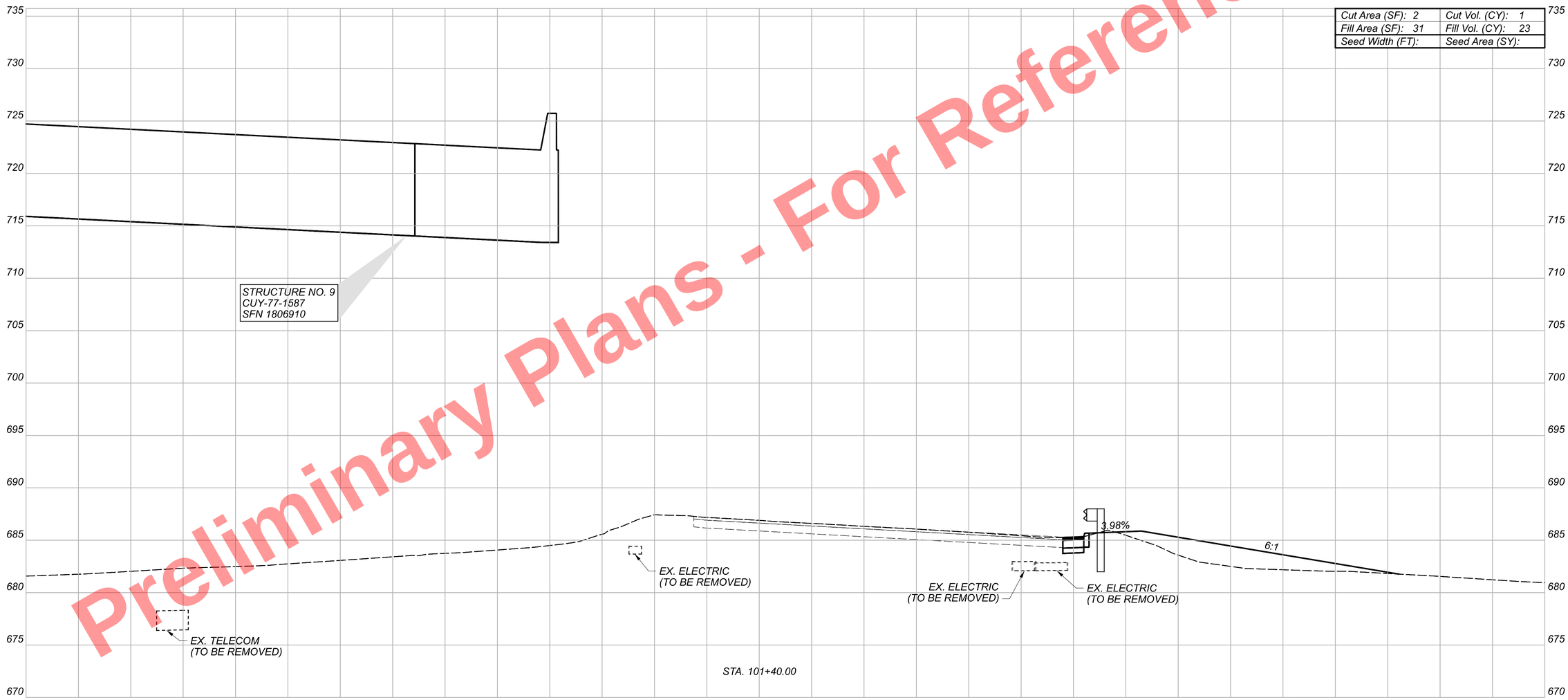

Preliminary Plans - For Reference Only

CROSS SECTIONS
RAMP IJ3

CUY-90-16.28 (CCG3A)

MODEL: CLP_7 - 10+40.00-I PAPERSIZE: 34x22 (in.) DATE: 5/9/2025 TIME: 8:41:41 AM USER: Kevin.McNutt
pw:\\mb-us-pw.bentley.com:mb-us-pw-03\Documents\Cleveland.OH\01_Projects\ODOT\District2\82382\400-Engineering\Roadway\Sheets\82382_XS6300.dgn

Sheet Totals		
Seeding	Cut	Fill
0	1	23

DESIGN AGENCY
Michael Baker INTERNATIONAL

DESIGNER
KJM

REVIEWER
KGJ 05/22/24

PROJECT ID
82382

SHEET	TOTAL
915	2696

Preliminary Plans - For Reference Only

Cut Area (SF): 1	Cut Vol. (CY): 1
Fill Area (SF): 31	Fill Vol. (CY): 12
Seed Width (FT):	Seed Area (SY):

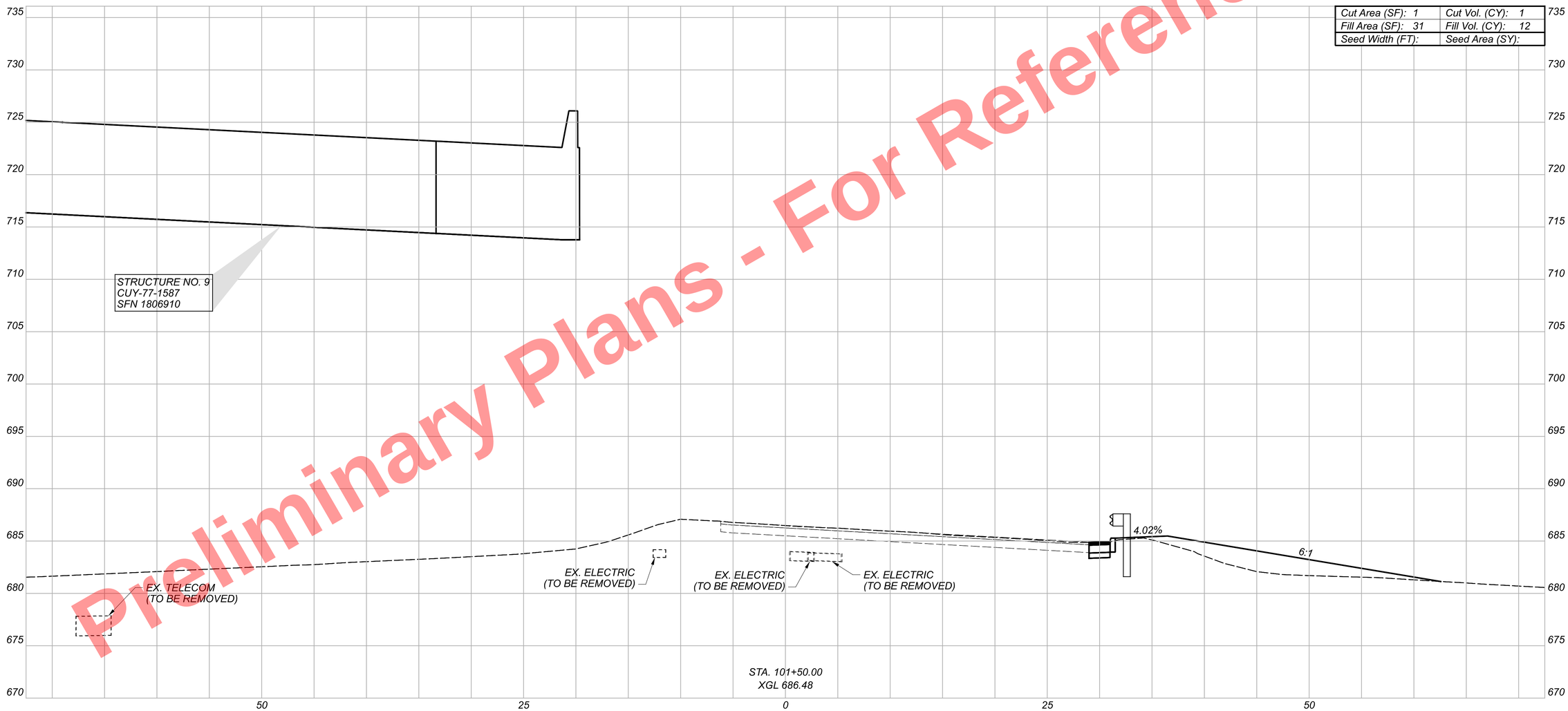

CROSS SECTIONS
RAMP IJ3

CUY-90-16.28 (CCG3A)

MODEL: CLP_7 - 10i+50.00-i PAPERSIZE: 34x22 (in.) DATE: 5/19/2025 TIME: 8:45:45 AM USER: Kevin.McNutt
pw:\\mb-us-pw.bentley.com:mb-us-pw-03\Documents\Cleveland.0H\0i_Projects\ODOT\District2\82382\400-Engineering\Roadway\Sheets\82382_XS6300.dgn

Sheet Totals		
Seeding	Cut	Fill
0	1	12

DESIGN AGENCY
Michael Baker INTERNATIONAL

DESIGNER	KJM
REVIEWER	KGJ 05/22/24
PROJECT ID	82382
SHEET	916
TOTAL	2696

Preliminary Plans - For Reference Only

Cut Area (SF): 40	Cut Vol. (CY): 30
Fill Area (SF): 0	Fill Vol. (CY): 23
Seed Width (FT):	Seed Area (SY):

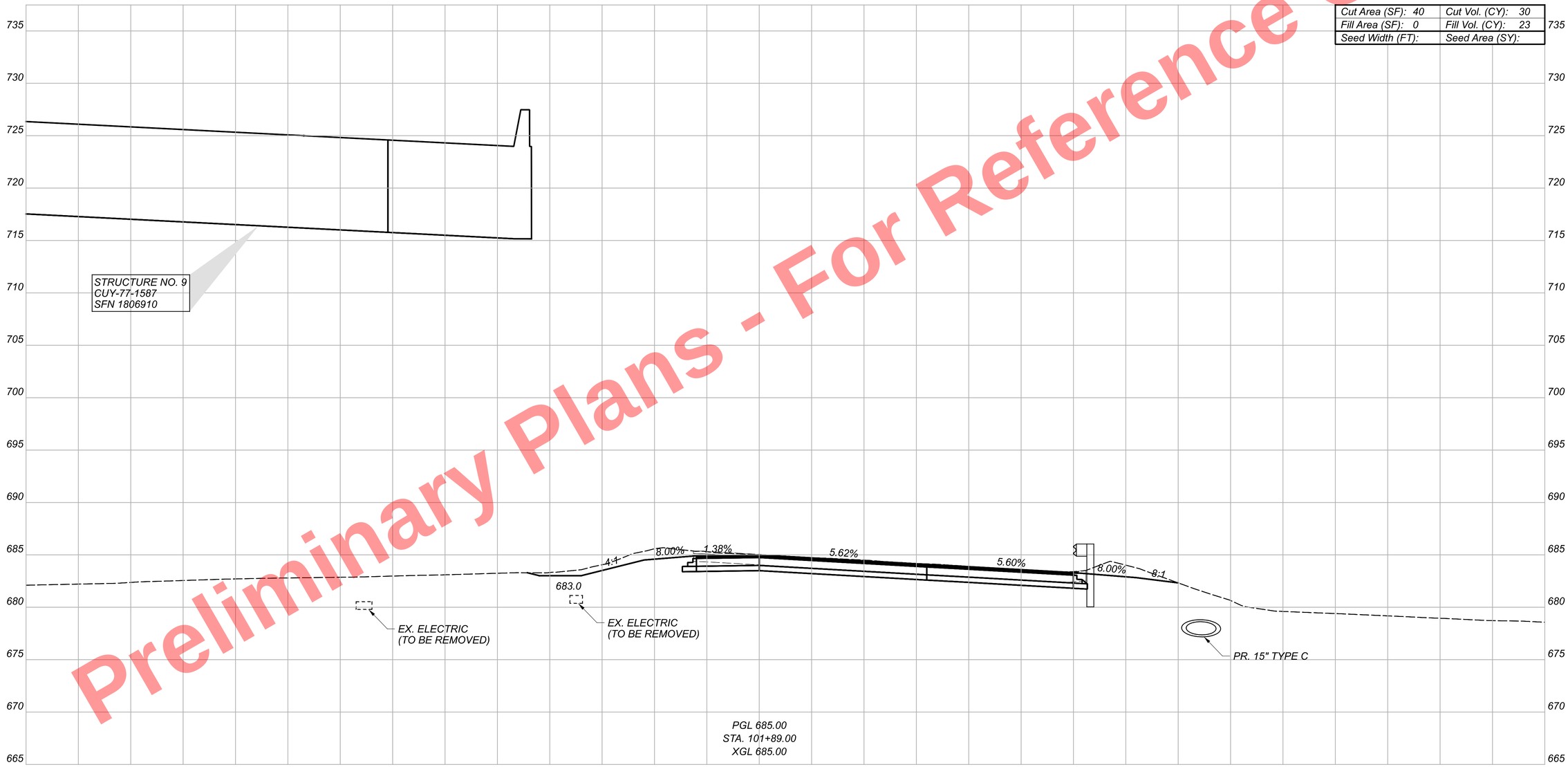

CUY-90-16.28 (CCG3A)

MODEL: CLP_7 - 101+89.00-1 PAPERSIZE: 34x22 (in.) DATE: 5/19/2025 TIME: 8:41:49 AM USER: Kevin.McNutt
pw:\\mb-us-pw.bentley.com:mb-us-pw-03\Documents\Cleveland_OH\01_Projects\ODOT\District2\82382\400-Engineering\Roadway\Sheets\82382_XS6300.dgn

CROSS SECTIONS
RAMP IJ3

DESIGN AGENCY
Michael Baker INTERNATIONAL

DESIGNER
KJM

REVIEWER
KGJ 05/22/24

PROJECT ID
82382

Sheet Totals		
Seeding	Cut	Fill
0	30	23

SHEET	TOTAL
917	2696

Preliminary Plans - For Reference Only

Cut Area (SF): 49	Cut Vol. (CY): 18
Fill Area (SF): 0	Fill Vol. (CY): 0
Seed Width (FT):	Seed Area (SY):



CROSS SECTIONS
RAMP IJ3

DESIGN AGENCY
Michael Baker INTERNATIONAL

DESIGNER
KJM

REVIEWER
KGJ 05/22/24

PROJECT ID
82382

Sheet Totals		
Seeding	Cut	Fill
0	18	0

SHEET 918 TOTAL 2696

CUY-90-16.28 (CCG3A)

MODEL: CLP-7 - I02+00.00-I PAPERSIZE: 34x22 (in.) DATE: 5/19/2025 TIME: 8:41:53 AM USER: Kevin.McNutt
pw:\\mb-us-pw.bentley.com:mb-us-pw-03\Documents\Cleveland_OH_OL_Projects\ODOT\District12\82382\400-Engineering\Roadway\Sheets\8238_XS6300.dgn

Cut Area (SF): 78	Cut Vol. (CY): 118
Fill Area (SF): 1	Fill Vol. (CY): 1
Seed Width (FT):	Seed Area (SY):

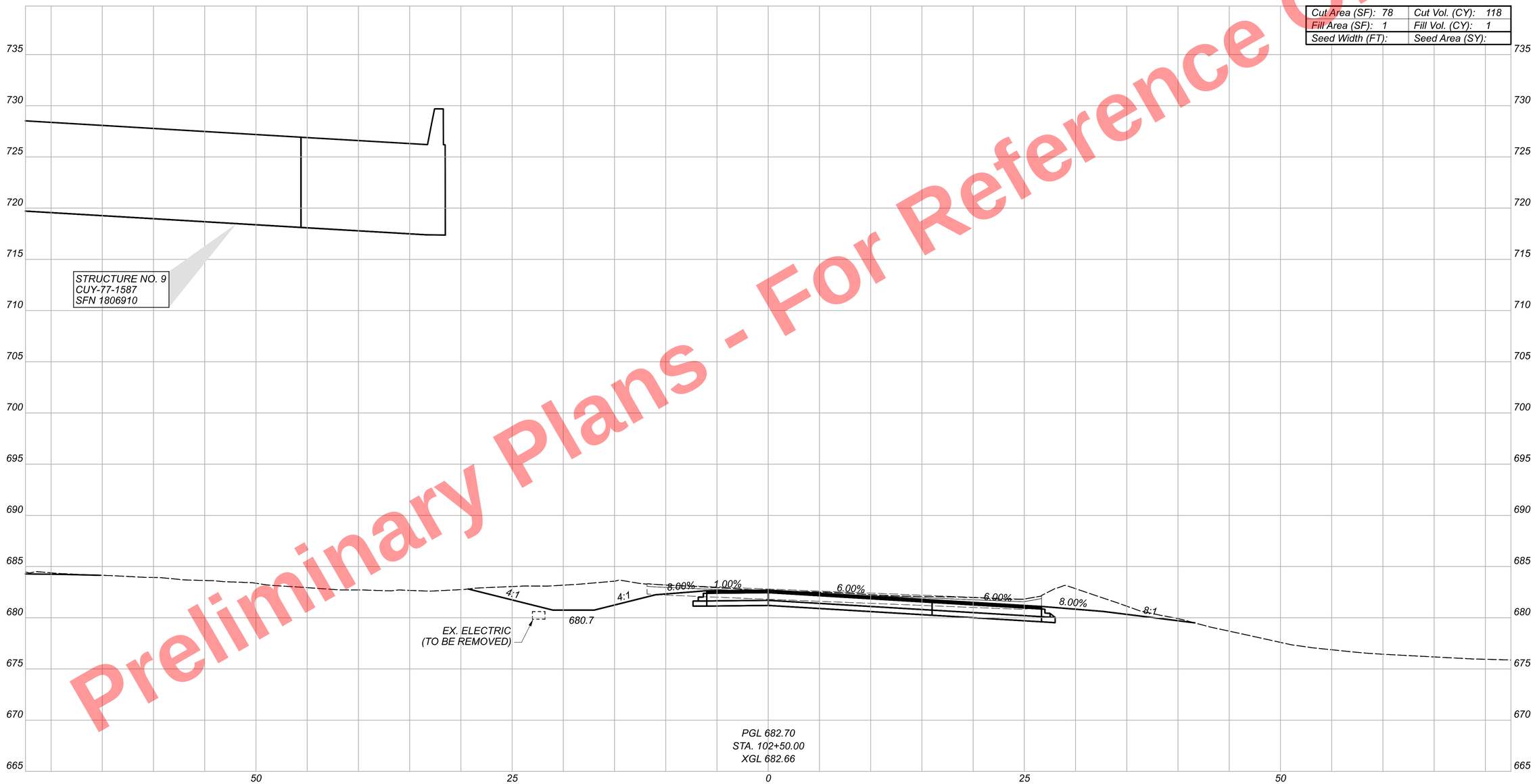

Preliminary Plans - For Reference Only

CROSS SECTIONS
RAMP IJ3

CUY-90-16.28 (CCG3A)

MODEL: CLP_7 - 102+50.00-I PAPERSIZE: 34x22 (in.) DATE: 5/19/2025 TIME: 8:41:57 AM USER: Kevin.McNutt
pw:\\mb-us-pw.bentley.com:mb-us-pw-03\Documents\Cleveland.OHNO_Projects\ODOT\District2\82382\400-Engineering\Roadway\Sheets\82382_XS6300.dgn

Sheet Totals		
Seeding	Cut	Fill
0	118	1

DESIGN AGENCY
Michael Baker INTERNATIONAL

DESIGNER
KJM

REVIEWER
KGJ 05/22/24

PROJECT ID
82382

SHEET 919 TOTAL 2696

Cut Area (SF): 59	Cut Vol. (CY): 127
Fill Area (SF): 1	Fill Vol. (CY): 2
Seed Width (FT):	Seed Area (SY):

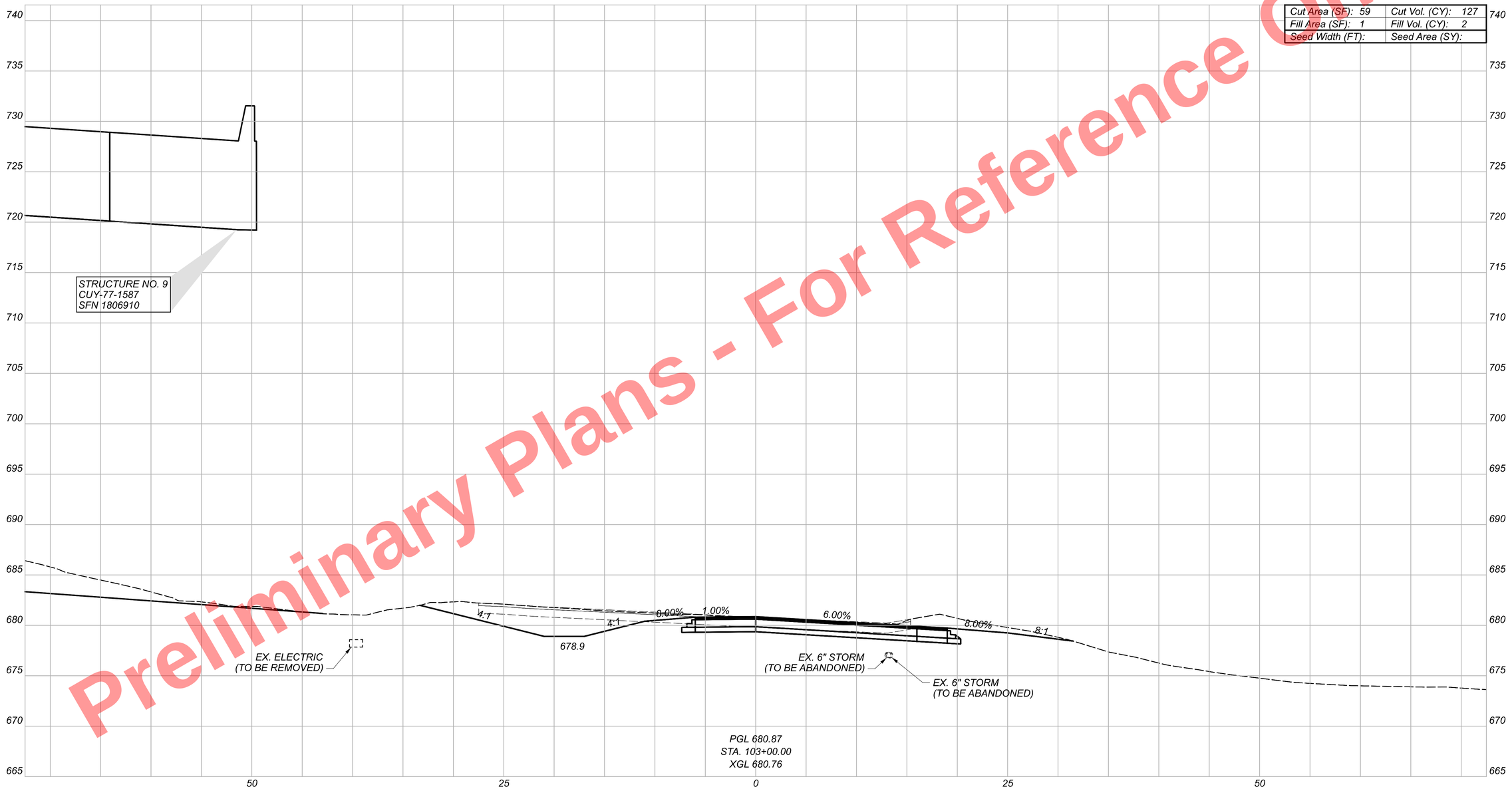

Preliminary Plans - For Reference Only

CROSS SECTIONS
RAMP IJ3

CUY-90-16.28 (CCG3A)

MODEL: CLP_7 - 103+00.00-I PAPERSIZE: 34x22 (in.) DATE: 5/19/2025 TIME: 8:42:00 AM USER: Kevin.McNutt
pw:\\mb-us-pw.bentley.com:mb-us-pw-03\Documents\Cleveland.OH\OI_Projects\ODOT\District2\82382\400-Engineering\Roadway\Sheets\82382_XS6300.dgn

DESIGN AGENCY
Michael Baker INTERNATIONAL

DESIGNER
KJM

REVIEWER
KGJ 05/22/24

PROJECT ID
82382

Sheet Totals		
Seeding	Cut	Fill
0	127	2

SHEET	TOTAL
920	2696

Preliminary Plans - For Reference Only

CROSS SECTIONS
RAMP IJ3

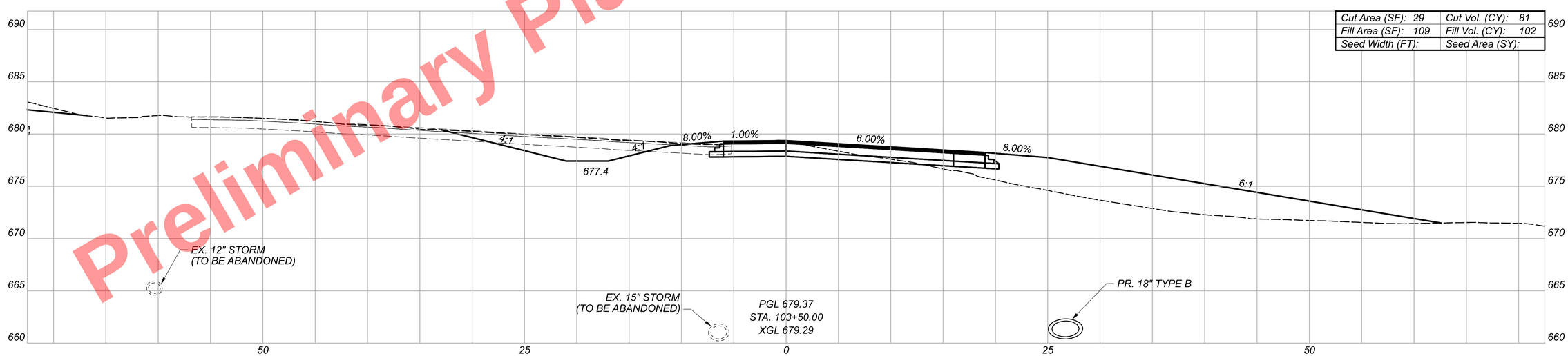

Cut Area (SF): 29	Cut Vol. (CY): 81
Fill Area (SF): 109	Fill Vol. (CY): 102
Seed Width (FT):	Seed Area (SY):

Sheet Totals		
Seeding	Cut	Fill
0	81	102

DESIGN AGENCY
Michael Baker INTERNATIONAL

DESIGNER
KJM

REVIEWER
KGJ 05/22/24

PROJECT ID
82382

SHEET 921 TOTAL 2696

CUY-90-16.28 (CCG3A)

MODEL: CLP_7 - 103+50.00-I PAPERSIZE: 34x22 (in.) DATE: 5/19/2025 TIME: 8:42:04 AM USER: KevinMcNutt
pw:\\mb-us-pw.bentley.com:mb-us-pw-03\Documents\Cleveland.OHOI_Projects\ODOT\District2\82382\400-Engineering\Roadway\Sheets\82382_XS6300.dgn

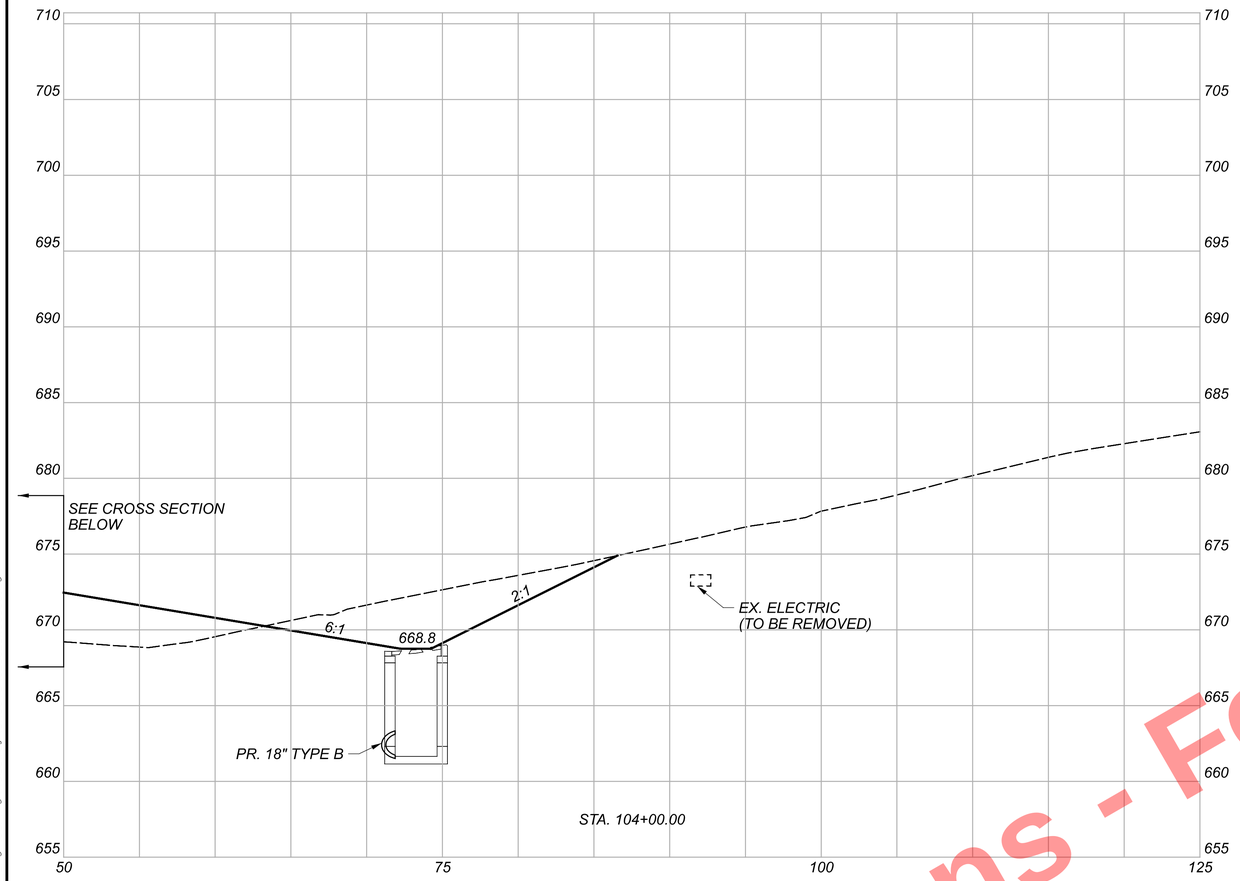

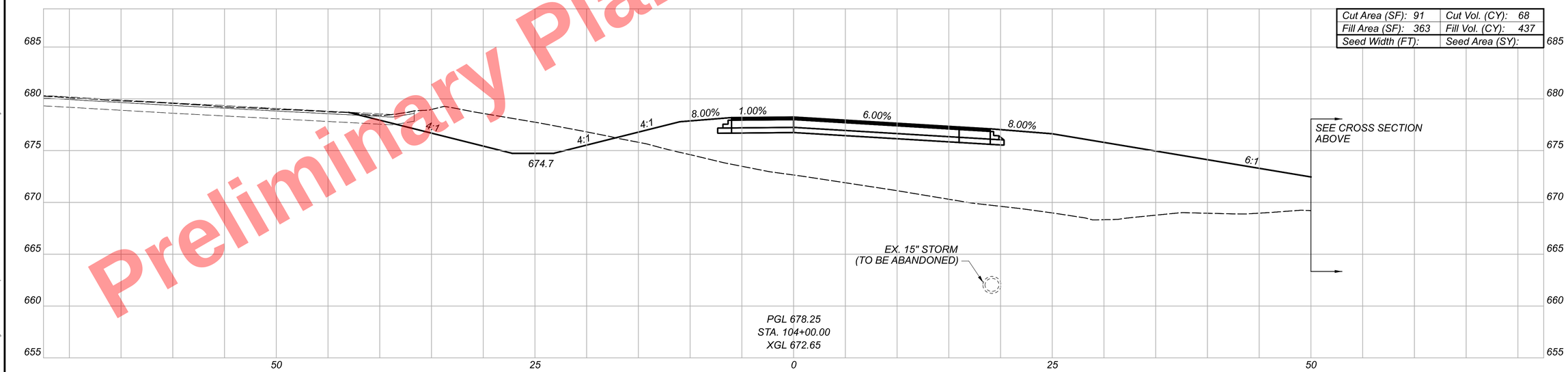

Cut Area (SF): 91	Cut Vol. (CY): 68
Fill Area (SF): 363	Fill Vol. (CY): 437
Seed Width (FT):	Seed Area (SY):

Preliminary Plans - For Reference Only

CUY-90-16.28 (CCG3A)

MODEL: CLP_7 - 104+00.00-2 PAPERSIZE: 34x22 (in.) DATE: 5/19/2025 TIME: 8:42:08 AM USER: KevinJMcNutt
pw:\\mb-us-pw.bentley.com:mb-us-pw-03\Documents\Cleveland.OH\OI_Projects\ODOT\District2\82382\400-Engineering\Roadway\Sheets\82382_XS6300.dgn

CROSS SECTIONS
RAMP IJ3

DESIGN AGENCY
Michael Baker INTERNATIONAL

DESIGNER
KJM

REVIEWER
KGJ 05/22/24

PROJECT ID
82382

Sheet Totals		
Seeding	Cut	Fill
0	68	437

SHEET	TOTAL
922	2696

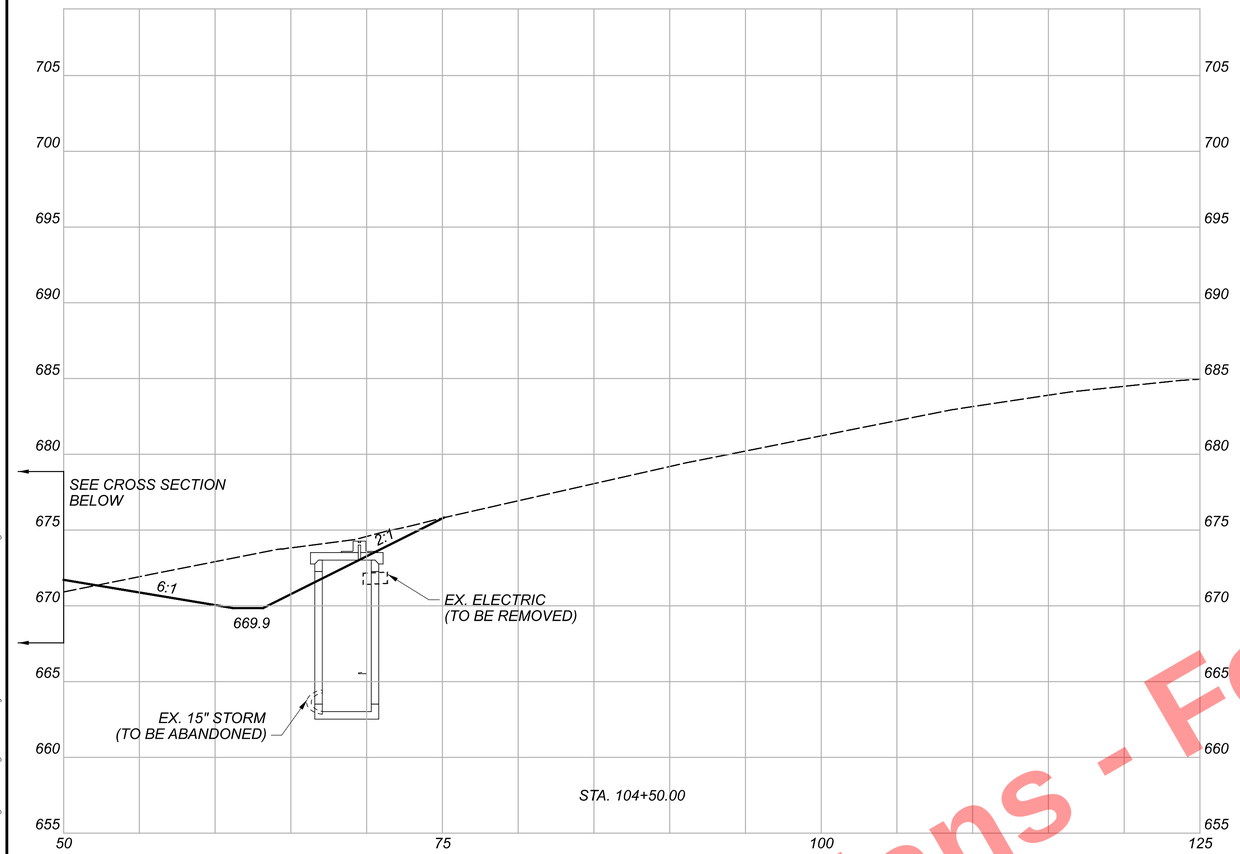

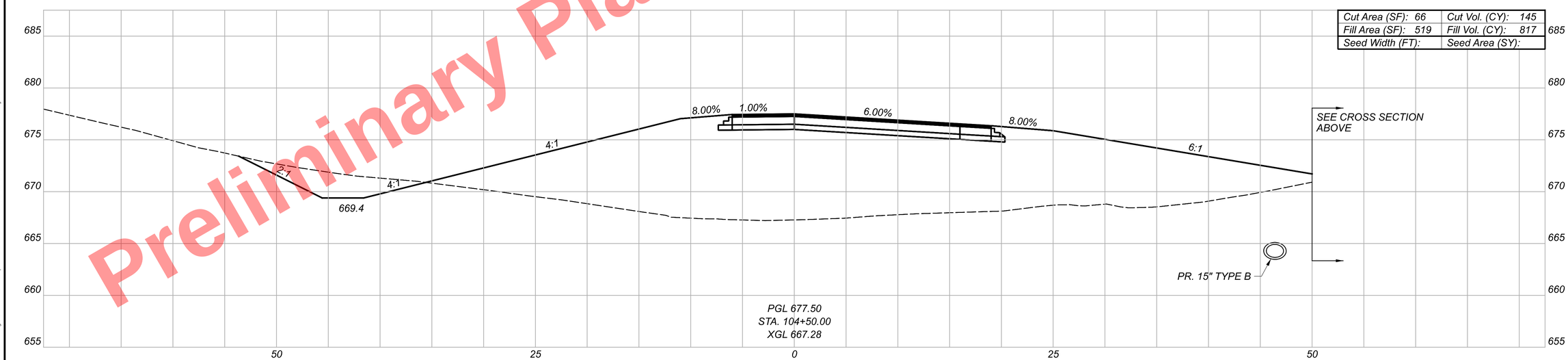

Preliminary Plans - Not For Reference Only

CROSS SECTIONS
RAMP IJ3

CUY-90-16.28 (CCG3A)

MODEL: CLP_7 - I04+50.00-2 PAPERSIZE: 34x22 (in.) DATE: 5/19/2025 TIME: 8:42:14 AM USER: Kevin.McNutt
pw:\\mb-us-pw.bentley.com:mb-us-pw-03\Documents\Cleveland.OH\OI_Projects\ODOT\District2\82382\400-Engineering\Roadway\Sheets\82382_XS6300.dgn

Sheet Totals		
Seeding	Cut	Fill
0	145	817

DESIGN AGENCY
Michael Baker INTERNATIONAL

DESIGNER
KJM

REVIEWER
KGJ 05/22/24

PROJECT ID
82382

SHEET 923 TOTAL 2696

Preliminary Plans - For Reference Only

Cut Area (SF): 134	Cut Vol. (CY): 167
Fill Area (SF): 87	Fill Vol. (CY): 662
Seed Width (FT):	Seed Area (SY):

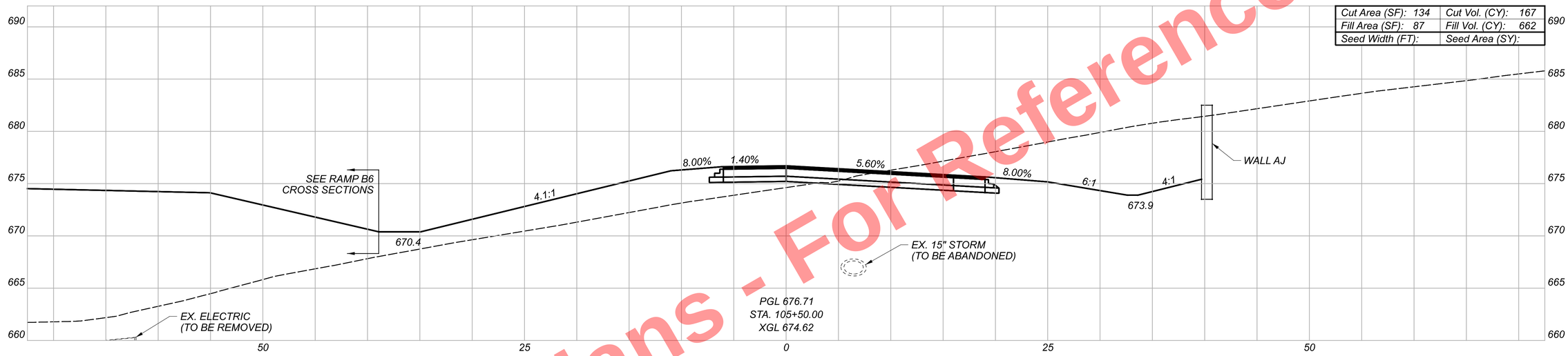

Cut Area (SF): 46	Cut Vol. (CY): 104
Fill Area (SF): 628	Fill Vol. (CY): 1062
Seed Width (FT):	Seed Area (SY):

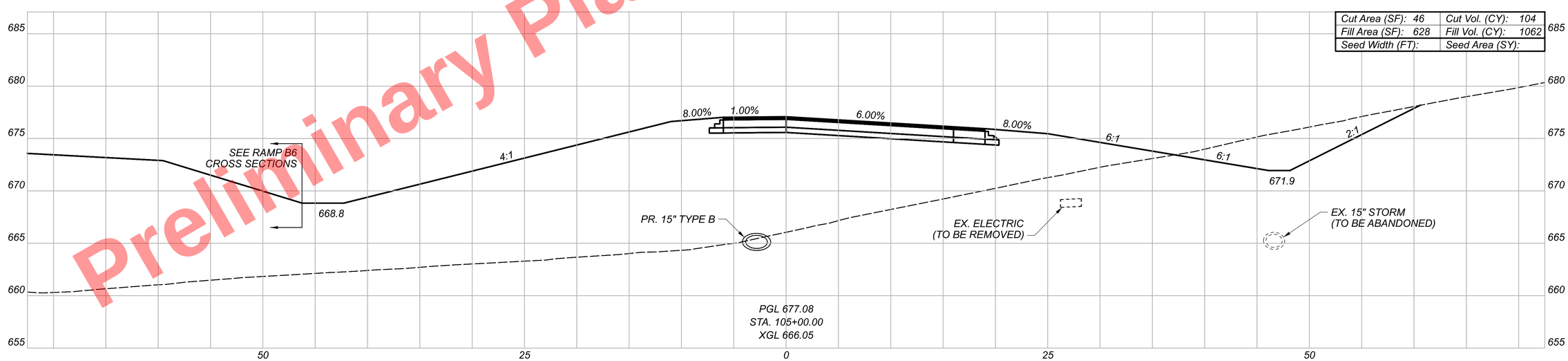

CUY-90-16.28 (CCG3A)

MODEL: CLP_7 - 105+00.00-I PAPERSIZE: 34x22 (in.) DATE: 5/19/2025 TIME: 8:42:21 AM USER: KevinMcNutt
pw:\\mb-us-pw.bentley.com:mb-us-pw-03\Documents\Cleveland.OH\OI_Projects\ODOT\District2\82382\400-Engineering\Roadway\Sheets\82382_XS6300.dgn

CROSS SECTIONS
RAMP IJ3

DESIGN AGENCY
Michael Baker INTERNATIONAL

DESIGNER
KJM

REVIEWER
KGJ 05/22/24

PROJECT ID
82382

SHEET 924 TOTAL 2696

Sheet Totals		
Seeding	Cut	Fill
0	271	1724

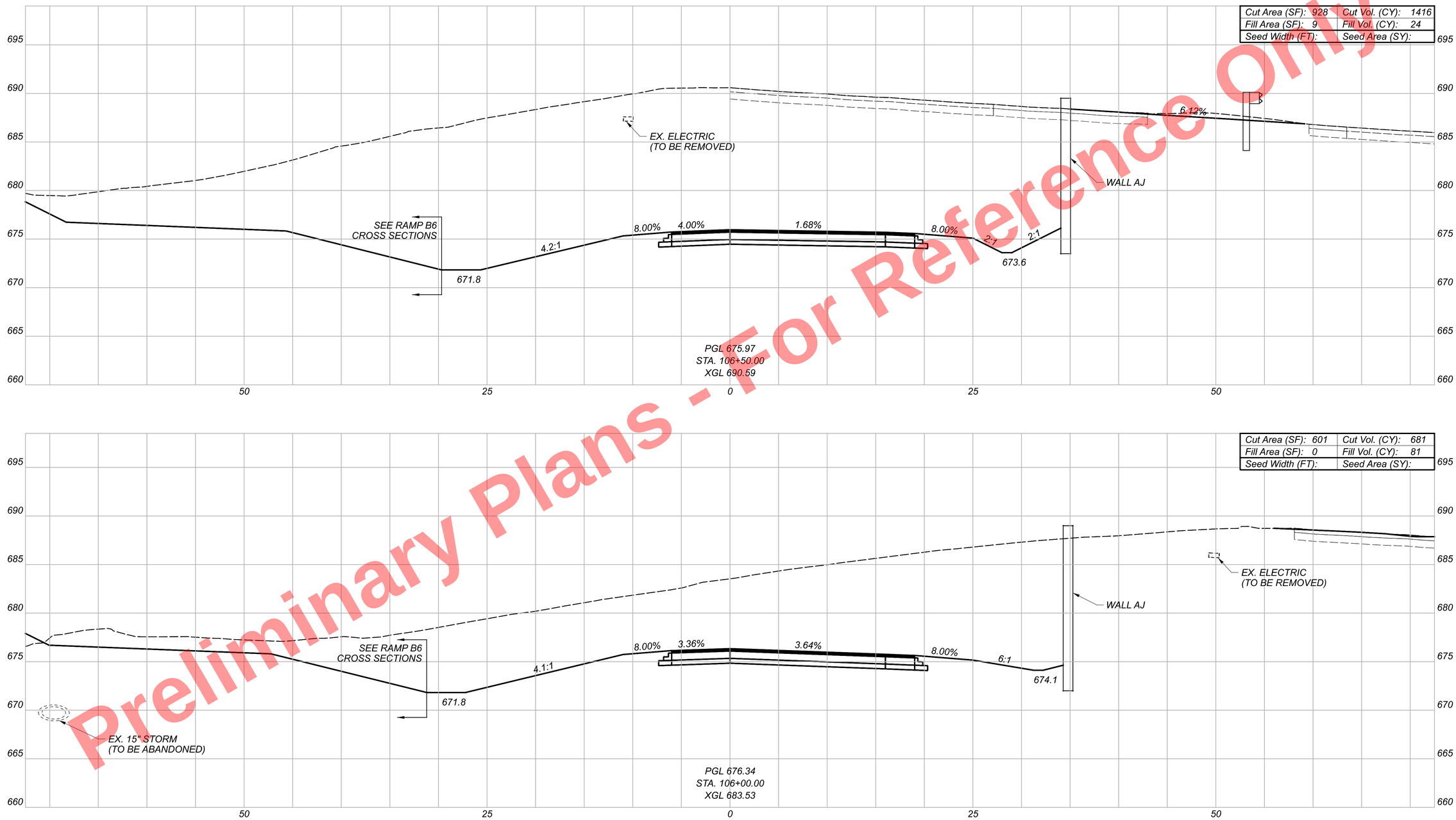

Preliminary Plans - Not For Reference Only

CUY-90-16.28 (CCG3A)

MODEL: CLP_7 - I06+00.00-I PAPERSIZE: 34x22 (in.) DATE: 5/19/2025 TIME: 8:42:27 AM USER: Kevin.McNutt
pw:\\mb-us-pw.bentley.com:mb-us-pw-03\Documents\Cleveland_OHIO_Projects\0007\District2\82382\400-Engineering\Roadway\Sheets\82382_XS6300.dgn

CROSS SECTIONS
RAMP IJ3

DESIGN AGENCY
Michael Baker INTERNATIONAL

DESIGNER
KJM

REVIEWER
KGJ 05/22/24

PROJECT ID
82382

Sheet Totals		
Seeding	Cut	Fill
0	2097	105

SHEET	TOTAL
925	2696



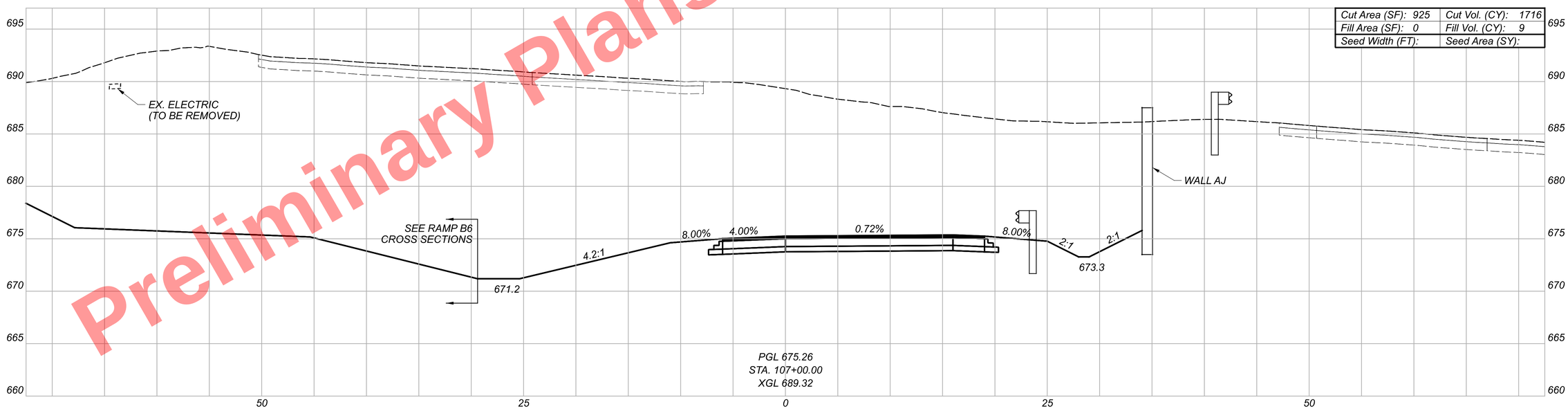

Preliminary Plans - For Reference Only

CUY-90-16.28 (CCG3A)

MODEL: CLP_7 - 107+00.00-1 PAPERSIZE: 34x22 (in.) DATE: 5/19/2025 TIME: 8:42:34 AM USER: KevinJMcNutt
pw:\\mb-us-pw.bentley.com:mb-us-pw-03\Documents\Cleveland_OH\01_Projects\000T\District2\82382\400-Engineering\Roadway\Sheets\82382_XS6300.dgn

CROSS SECTIONS
RAMP IJ3

DESIGN AGENCY
Michael Baker INTERNATIONAL

DESIGNER
KJM

REVIEWER
KGJ 05/22/24

PROJECT ID
82382

SHEET 926 TOTAL 2696

Sheet Totals		
Seeding	Cut	Fill
0	3140	9

Preliminary Plans - For Reference Only

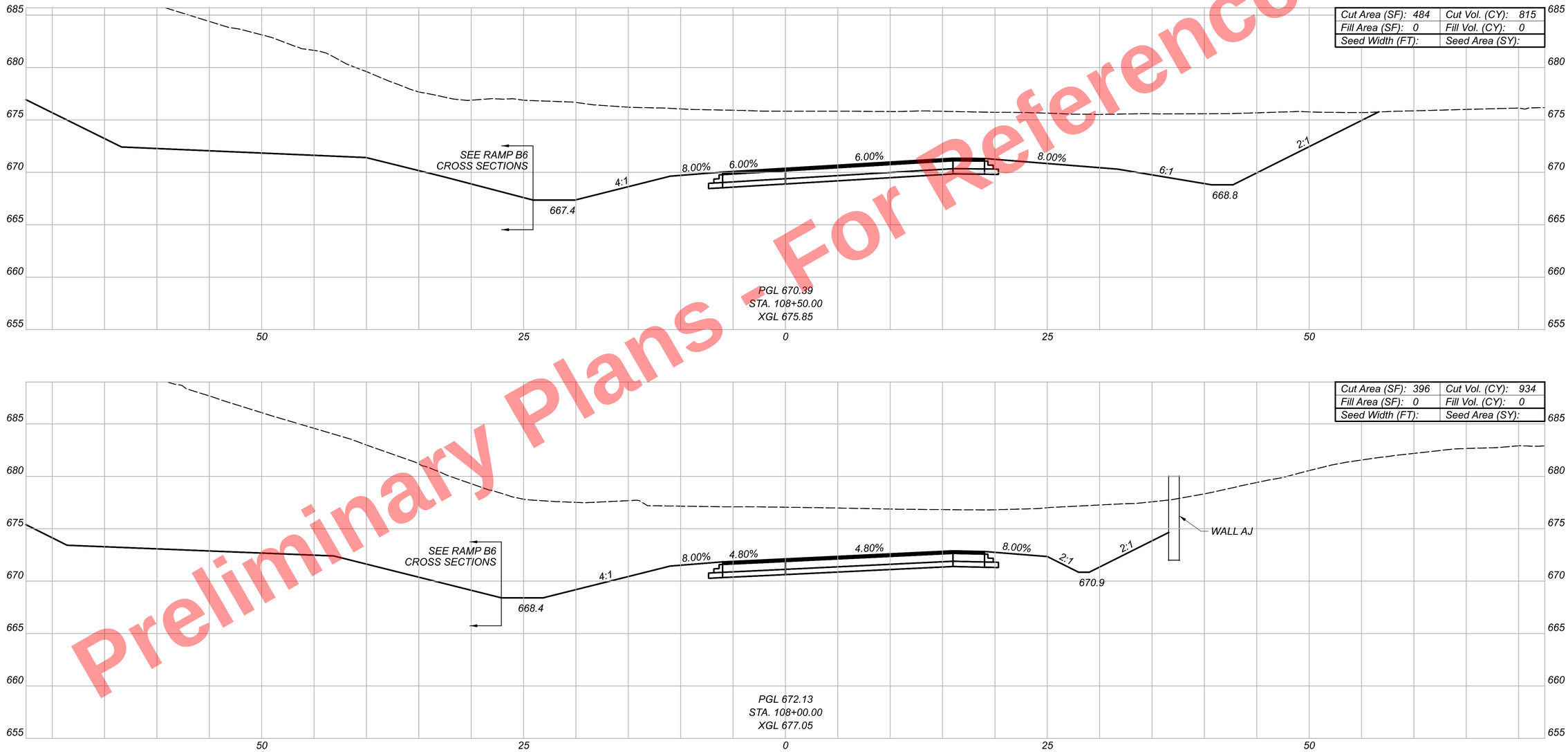

CUY-90-16.28 (CCG3A)

MODEL: CLP_7 - 108+00.00-I PAPERSIZE: 34x22 (in.) DATE: 5/19/2025 TIME: 8:42:41 AM USER: KevinMcNutt
pw:\\mb-us-pw.bentley.com:mb-us-pw-03\Documents\Cleveland.OH\OI_Projects\ODOT\District2\82382\400-Engineering\Roadway\Sheets\82382_XS6300.dgn

CROSS SECTIONS
RAMP IJ3

Sheet Totals		
Seeding	Cut	Fill
0	1749	0

DESIGN AGENCY
Michael Baker INTERNATIONAL

DESIGNER
KJM

REVIEWER
KGJ 05/22/24

PROJECT ID
82382

SHEET 927 TOTAL 2696

Preliminary Plans - For Reference Only

CUY-90-16.28 (CCG3A)

MODEL: CLP_7 - 109+00.00-I PAPERSIZE: 34x22 (in.) DATE: 5/19/2025 TIME: 8:42:48 AM USER: KevinMcNutt
pw:\\mb-us-pw.bentley.com:mb-us-pw-03\Documents\Cleveland.OHOI_Projects\ODOT\District2\82382\400-Engineering\Roadway\Sheets\82382_XS6300.dgn

CROSS SECTIONS
RAMP IJ3

Cut Area (SF): 487	Cut Vol. (CY): 899
Fill Area (SF): 0	Fill Vol. (CY): 0
Seed Width (FT):	Seed Area (SY):

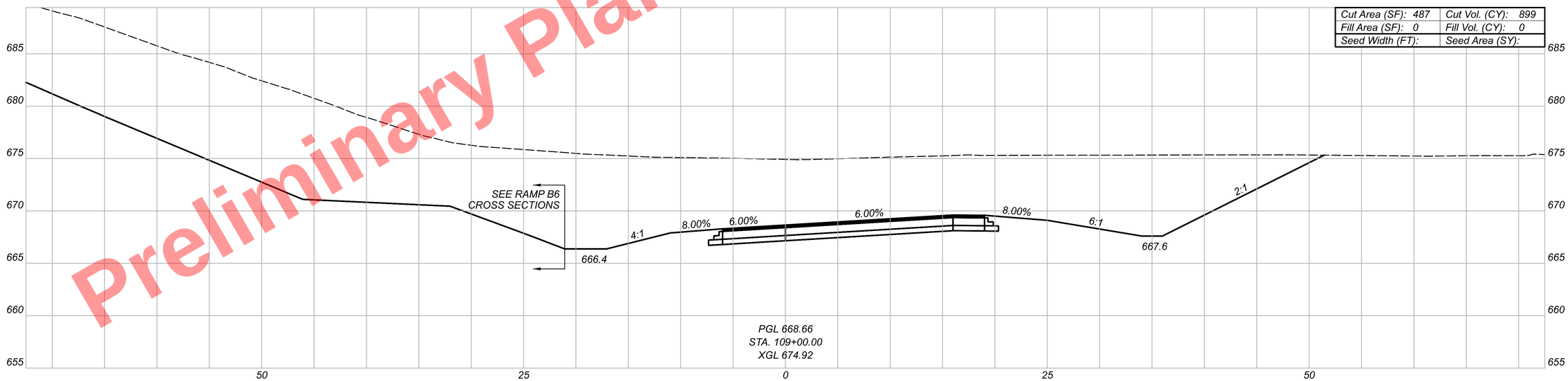

Sheet Totals		
Seeding	Cut	Fill
0	899	0

DESIGN AGENCY
Michael Baker INTERNATIONAL

DESIGNER
KJM

REVIEWER
KGJ 05/22/24

PROJECT ID
82382

SHEET 928 TOTAL 2696

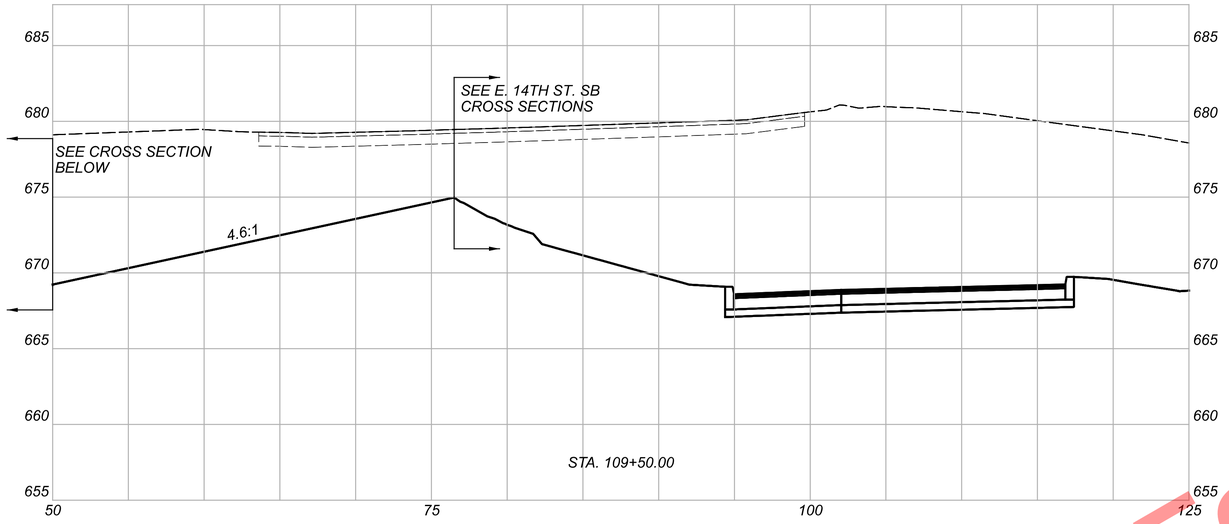

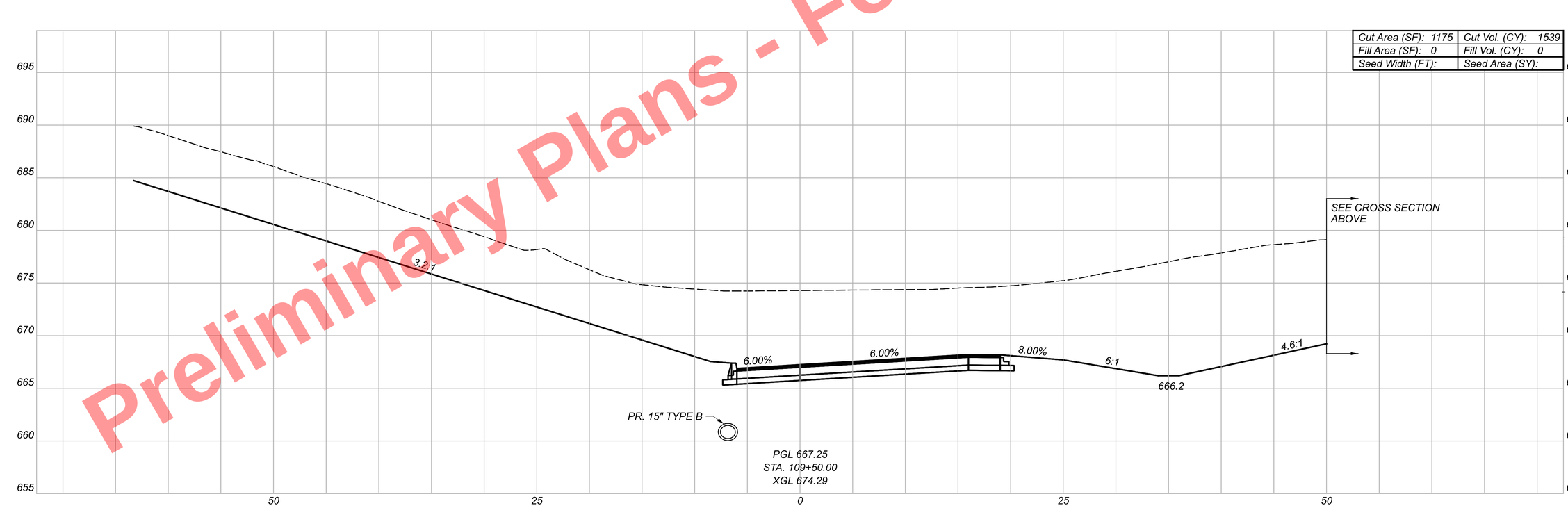

Preliminary Plans - For Reference Only

CROSS SECTIONS
RAMP IJ3

CUY-90-16.28 (CCG3A)

MODEL: CLP_7 - 109+50.00-2 PAPERSIZE: 34x22 (in) DATE: 5/19/2025 TIME: 8:42:52 AM USER: Kevin.McNutt
pw:\\mb-us-pw.bentley.com:mb-us-pw-03\Documents\Cleveland_OH\01_Projects\ODOT\District2\82382\400-Engineering\Roadway\Sheets\82382_XS6300.dgn

Sheet Totals		
Seeding	Cut	Fill
0	1539	0

DESIGN AGENCY
Michael Baker INTERNATIONAL

DESIGNER
KJM

REVIEWER
KGJ 05/22/24

PROJECT ID
82382

SHEET 929 TOTAL 2696

Preliminary Plans - For Reference Only

Cut Area (SF): 897	Cut Vol. (CY): 1919
Fill Area (SF): 1	Fill Vol. (CY): 1
Seed Width (FT):	Seed Area (SY):

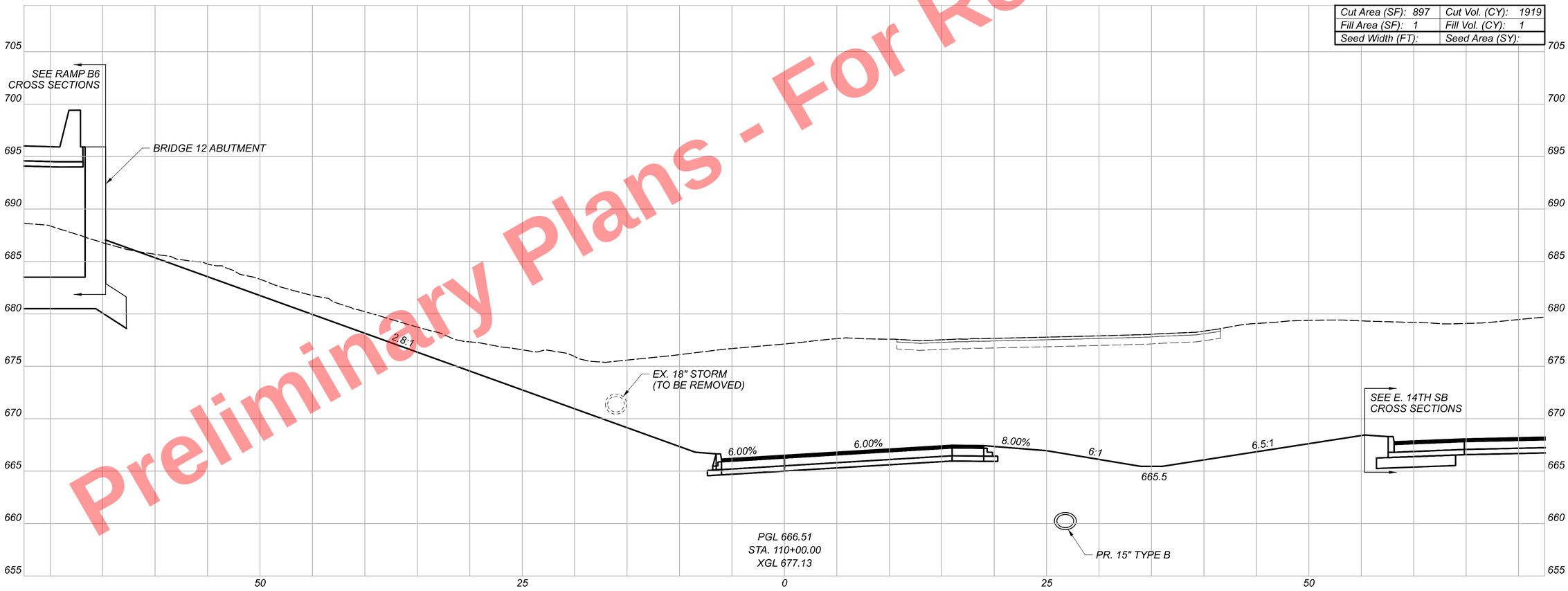

Sheet Totals		
Seeding	Cut	Fill
0	1919	1

CROSS SECTIONS
RAMP IJ3

DESIGN AGENCY
Michael Baker INTERNATIONAL

DESIGNER
KJM

REVIEWER
KGJ 05/22/24

PROJECT ID
82382

SHEET	TOTAL
930	2696

CUY-90-16.28 (CCG3A)

MODEL: CLP_7 - 110+00.00-I PAPERSIZE: 34x22 (in.) DATE: 5/19/2025 TIME: 8:42:58 AM USER: KevinJMcNutt
pw:\\mb-us-pw.bentley.com:mb-us-pw-03\Documents\Cleveland_OH\OL_Projects\ODOT\District12\82382\400-Engineering\Roadway\Sheets\82382_XS6300.dgn

Preliminary Plans - For Reference Only

Cut Area (SF): 567	Cut Vol. (CY): 1356
Fill Area (SF): 47	Fill Vol. (CY): 44
Seed Width (FT):	Seed Area (SY):

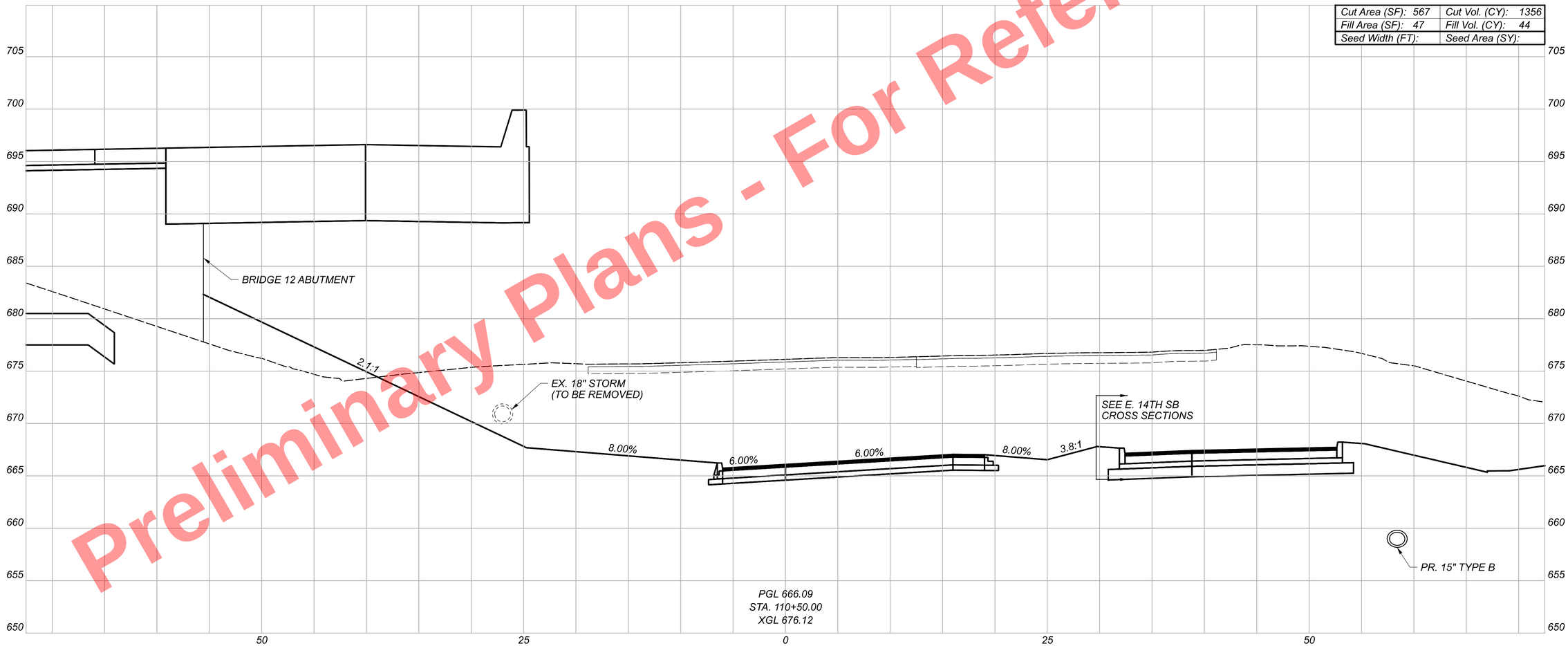

Sheet Totals			Grand Totals Carried to Subsummary		
Seeding	Cut	Fill	Seeding	Cut	Fill
0	1356	44	0	13559	3300

CROSS SECTIONS
RAMP IJ3

DESIGN AGENCY
Michael Baker INTERNATIONAL

DESIGNER
KJM

REVIEWER
KGJ 05/22/24

PROJECT ID
82382

SHEET 931 TOTAL 2696

CUY-90-16.28 (CCG3A)

MODEL: CLP_7 - 110+50.00-I PAPERSIZE: 34x22 (in.) DATE: 5/19/2025 TIME: 8:43:03 AM USER: Kevin.McNutt
pw:\\mb-us-pw.bentley.com:mb-us-pw-03\Documents\Cleveland.OH\OI_Projects\ODOT\District2\82382\400-Engineering\Roadway\Sheets\82382_XS6300.dgn

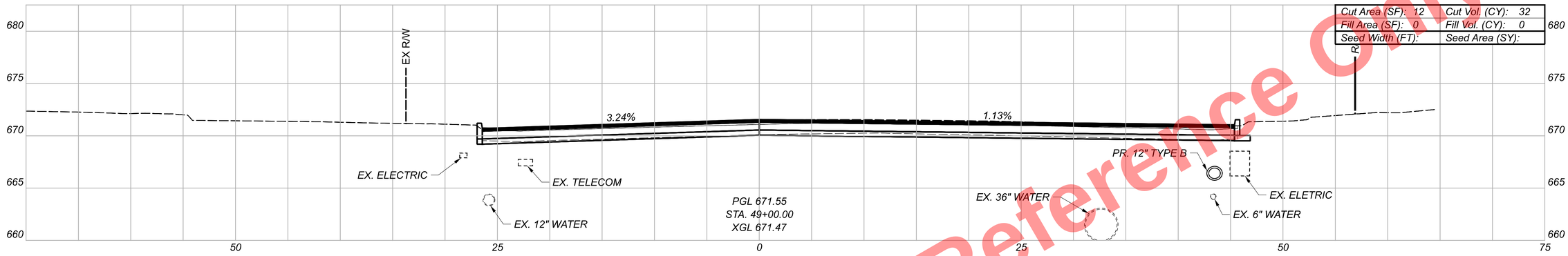

Cut Area (SF): 12	Cut Vol. (CY): 32
Fill Area (SF): 0	Fill Vol. (CY): 0
Seed Width (FT):	Seed Area (SY):

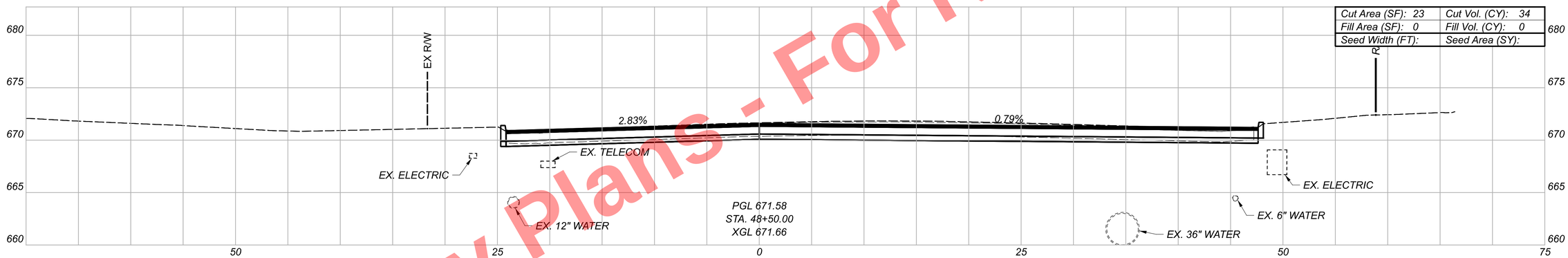

Cut Area (SF): 23	Cut Vol. (CY): 34
Fill Area (SF): 0	Fill Vol. (CY): 0
Seed Width (FT):	Seed Area (SY):

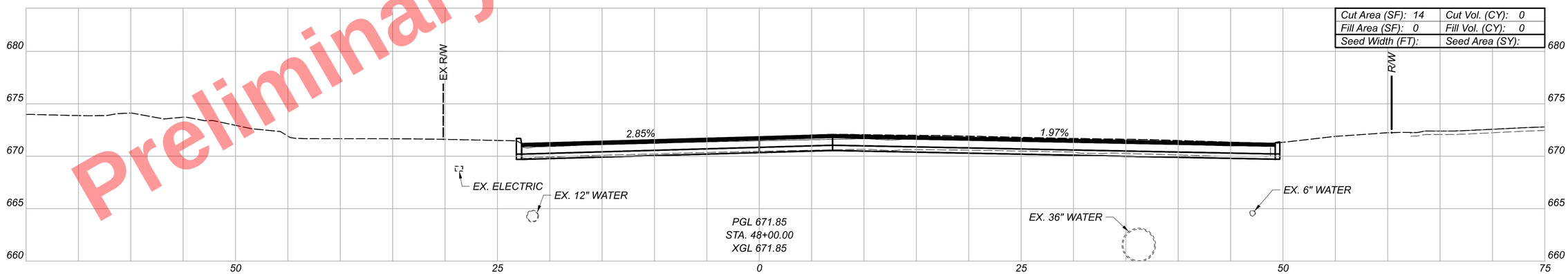

Cut Area (SF): 14	Cut Vol. (CY): 0
Fill Area (SF): 0	Fill Vol. (CY): 0
Seed Width (FT):	Seed Area (SY):

Preliminary Plans - Not For Reference Only

CROSS SECTIONS
CARNEGIE AVE.

CUY-90-16.28 (CCG3A)

MODEL: CL_CARNEGIE AVE. - 48+00.00 [Sheet] PAPERSIZE: 34x22 (in) DATE: 3/28/2025 TIME: 9:17:53 AM USER: Kevin.McNutt
pw:\\mb-us-pw.bentley.com:mb-us-pw-03\Documents\Cleveland_OH_OL_Projects\ODOT\District 12\82382\400-Engineering\Roadway\Sheets\82382_XS7100.dgn

DESIGN AGENCY
Michael Baker INTERNATIONAL

DESIGNER
KJM

REVIEWER
KGJ 05/22/24

PROJECT ID
82382

Sheet Totals		
Seeding	Cut	Fill
0	66	0

SHEET 932 TOTAL 2696

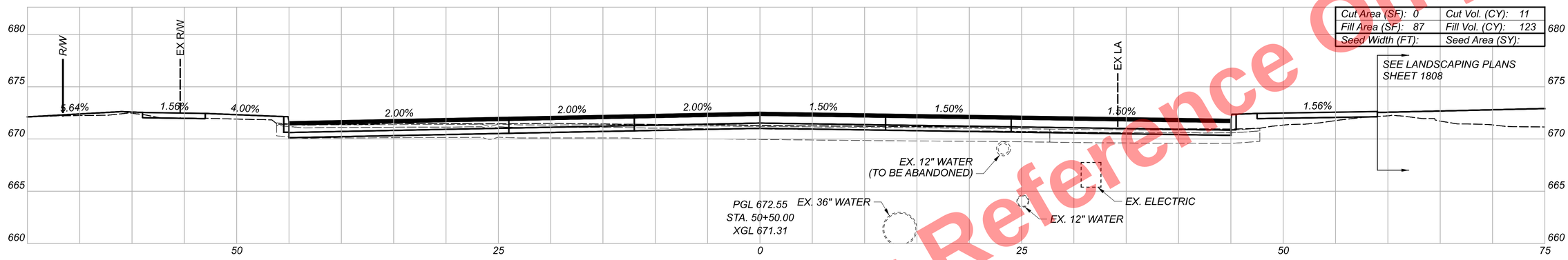

Cut Area (SF): 0	Cut Vol. (CY): 11
Fill Area (SF): 87	Fill Vol. (CY): 123
Seed Width (FT):	Seed Area (SY):

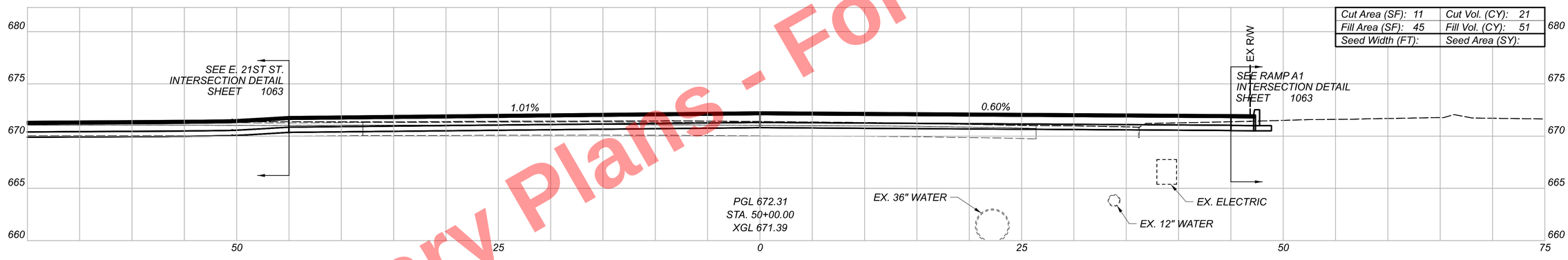

Cut Area (SF): 11	Cut Vol. (CY): 21
Fill Area (SF): 45	Fill Vol. (CY): 51
Seed Width (FT):	Seed Area (SY):

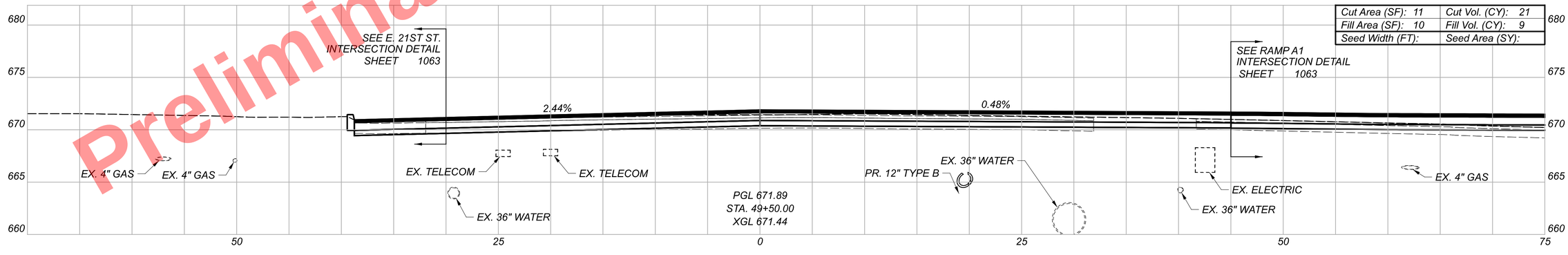

Cut Area (SF): 11	Cut Vol. (CY): 21
Fill Area (SF): 10	Fill Vol. (CY): 9
Seed Width (FT):	Seed Area (SY):

Preliminary Plans - For Reference Only

CROSS SECTIONS
CARNEGIE AVE.

Sheet Totals		
Seeding	Cut	Fill
0	53	183

DESIGN AGENCY
Michael Baker INTERNATIONAL

DESIGNER KJM

REVIEWER KGJ 05/22/24

PROJECT ID 82382

SHEET 933 TOTAL 2696

CUY-90-16.28 (CCG3A)

MODEL: CL CARNEGIE AVE. - 49+50.00 [Sheet] PAPERSIZE: 34x22 (in) DATE: 3/28/2025 TIME: 9:18:04 AM USER: Kevin.McNutt
pw:\\mb-us-pw.bentley.com:mb-us-pw-03\Documents\Cleveland_OH_OL_Projects\ODOT\Districts\12\82382\400-Engineering\Roadway\Sheets\82382_XS7100.dgn

Preliminary Plans - For Reference Only

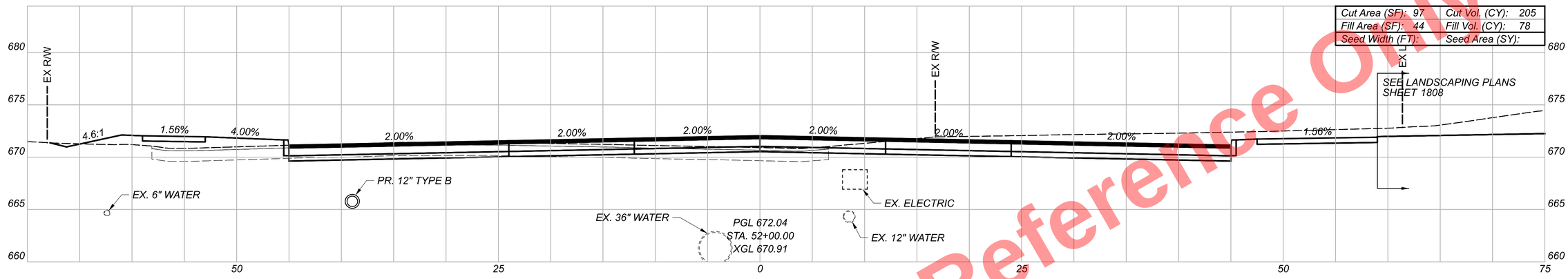

Cut Area (SF): 97	Cut Vol. (CY): 205
Fill Area (SF): 44	Fill Vol. (CY): 78
Seed Width (FT):	Seed Area (SY):

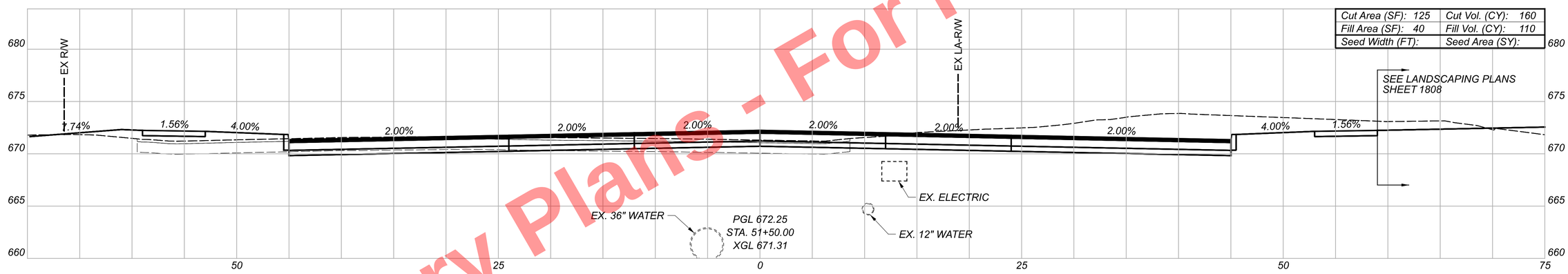

Cut Area (SF): 125	Cut Vol. (CY): 160
Fill Area (SF): 40	Fill Vol. (CY): 110
Seed Width (FT):	Seed Area (SY):

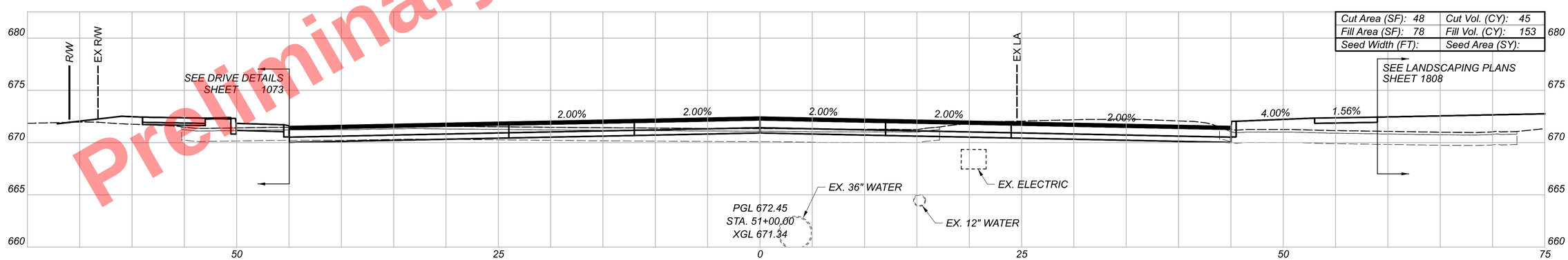

Cut Area (SF): 48	Cut Vol. (CY): 45
Fill Area (SF): 78	Fill Vol. (CY): 153
Seed Width (FT):	Seed Area (SY):

CROSS SECTIONS
CARNEGIE AVE.

Sheet Totals		
Seeding	Cut	Fill
0	410	341

DESIGN AGENCY
Michael Baker INTERNATIONAL

DESIGNER
KJM

REVIEWER
KGJ 05/22/24

PROJECT ID
82382

SHEET 934 TOTAL 2696

CUY-90-16.28 (CCG3A)

MODEL: CL CARNEGIE AVE. - 5I+00.00 [Sheet] PAPERSIZE: 34x22 (in.) DATE: 3/28/2025 TIME: 9:8:14 AM USER: Kevin.McNutt
pw:\\mb-us-pw.bentley.com:mb-us-pw-03\Documents\Cleveland.OH\OI_Projects\OOOT\District2\82382\400-Engineering\Roadway\Sheets\82382_XS7100.dgn

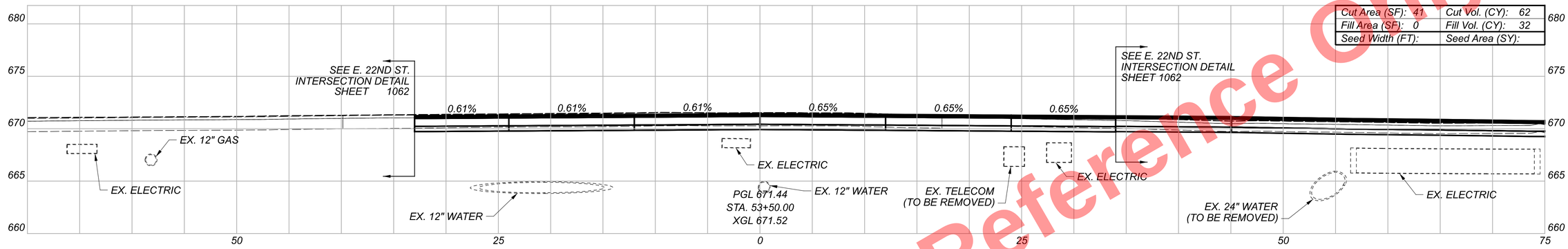

Cut Area (SF): 41	Cut Vol. (CY): 62
Fill Area (SF): 0	Fill Vol. (CY): 32
Seed Width (FT):	Seed Area (SY):

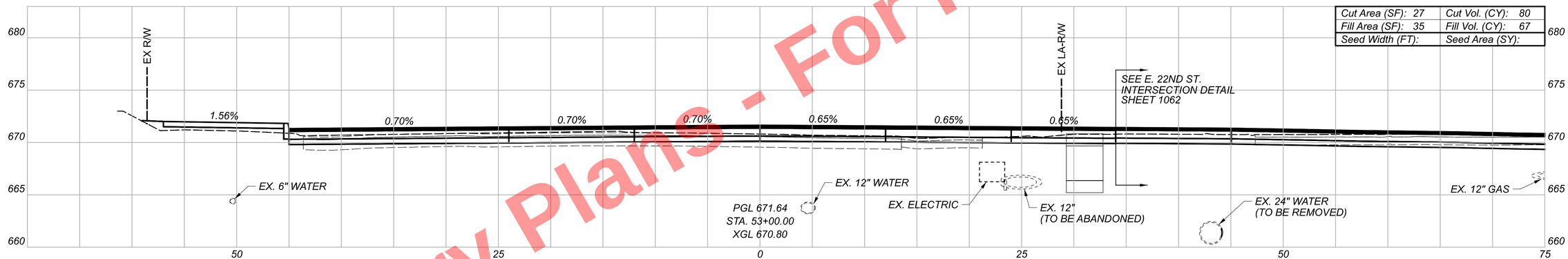

Cut Area (SF): 27	Cut Vol. (CY): 80
Fill Area (SF): 35	Fill Vol. (CY): 67
Seed Width (FT):	Seed Area (SY):

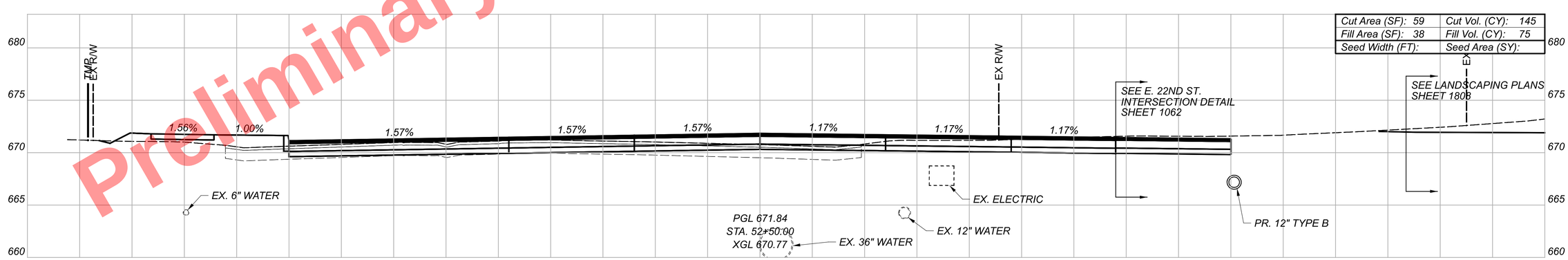

Cut Area (SF): 59	Cut Vol. (CY): 145
Fill Area (SF): 38	Fill Vol. (CY): 75
Seed Width (FT):	Seed Area (SY):

Preliminary Plans - Not For Reference Only

CROSS SECTIONS
CARNEGIE AVE.

CUY-90-16.28 (CCG3A)

MODEL: CL_CARNEGIE AVE. - 52+50.00 [Sheet] PAPERSIZE: 34x22 (In.) DATE: 3/28/2025 TIME: 9:8:20 AM USER: KevinMcNutt
pw:\\mb-us-pw.bentley.com\mb-us-pw-03\Documents\Cleveland.OH\01_Projects\0007\District2\82382\400-Engineering\Roadway\Sheets\82382_XS7100.dgn

Sheet Totals		
Seeding	Cut	Fill
0	287	174

DESIGN AGENCY
Michael Baker INTERNATIONAL

DESIGNER
KJM

REVIEWER
KGJ 05/22/24

PROJECT ID
82382

SHEET 935 TOTAL 2696

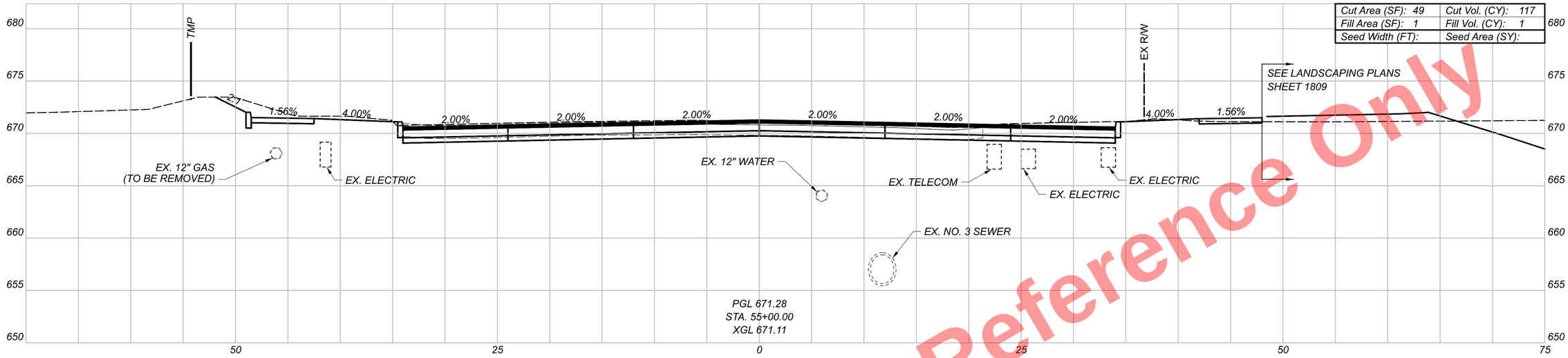

Cut Area (SF): 49	Cut Vol. (CY): 117
Fill Area (SF): 1	Fill Vol. (CY): 1
Seed Width (FT):	Seed Area (SY):

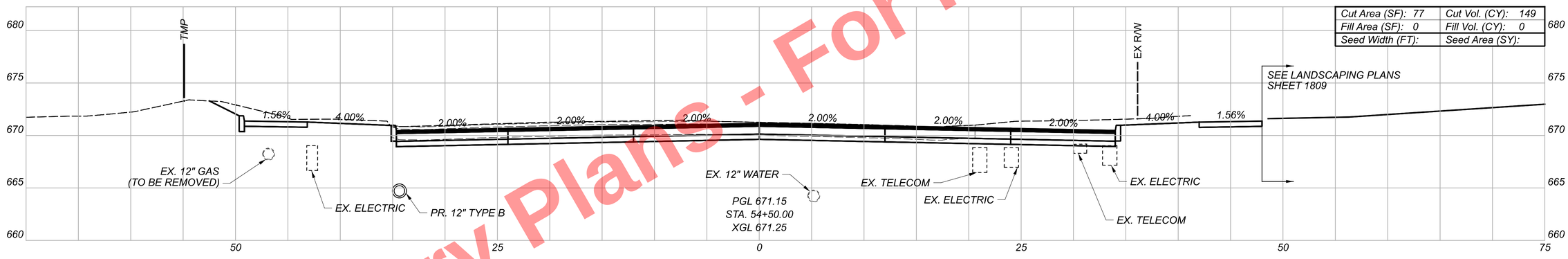

Cut Area (SF): 77	Cut Vol. (CY): 149
Fill Area (SF): 0	Fill Vol. (CY): 0
Seed Width (FT):	Seed Area (SY):

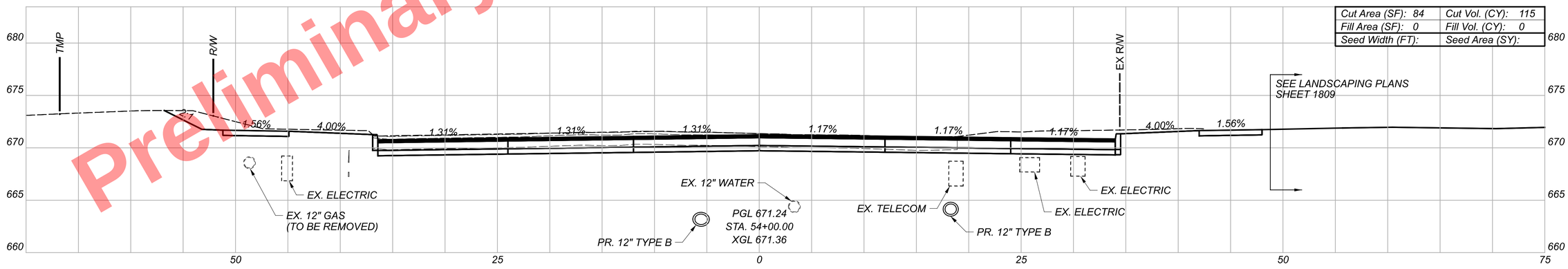

Cut Area (SF): 84	Cut Vol. (CY): 115
Fill Area (SF): 0	Fill Vol. (CY): 0
Seed Width (FT):	Seed Area (SY):

Preliminary Plans - For Reference Only

CROSS SECTIONS
CARNEGIE AVE.

DESIGN AGENCY
Michael Baker INTERNATIONAL

DESIGNER
KJM

REVIEWER
KGJ 05/22/24

PROJECT ID
82382

Sheet Totals		
Seeding	Cut	Fill
0	381	1

SHEET 936 TOTAL 2696

CUY-90-16.28 (CCG3A)

MODEL: CL CARNEGIE AVE. - 54+00.00 (Sheet) PAPERSIZE: 34x22 (in.) DATE: 3/28/2025 TIME: 9:18:26 AM USER: KevinJMcNutt
pw:\\mb-us-pw.bentley.com:mb-us-pw-03\Documents\Cleveland_OH\01_Projects\ODOT\District2\82382\400-Engineering\Roadway\Sheets\82382_XS7100.dgn

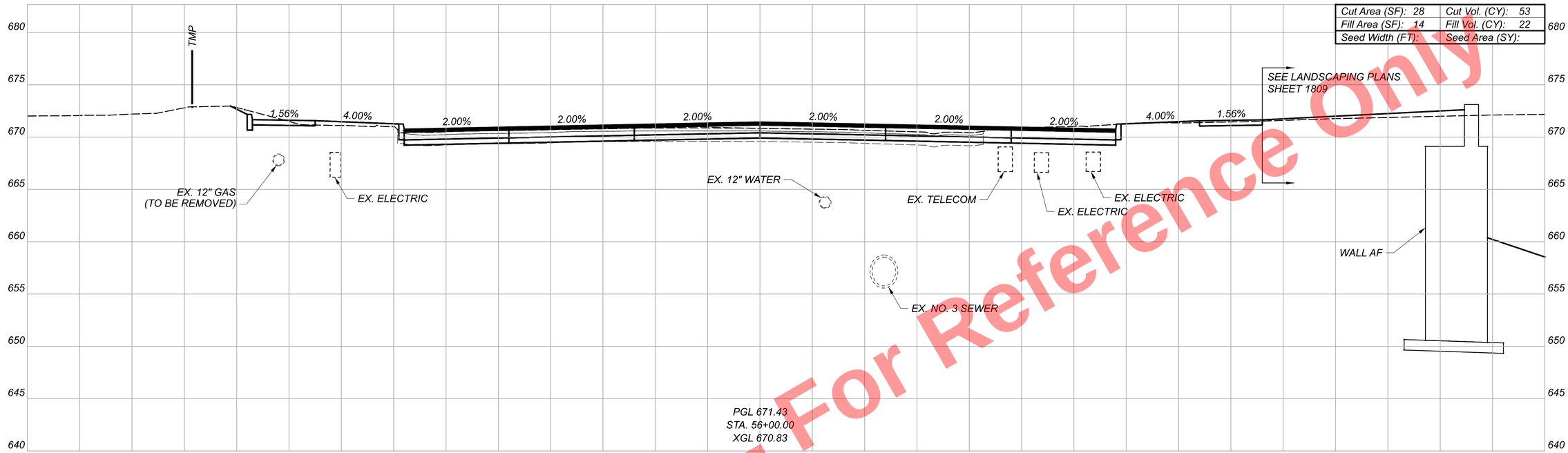

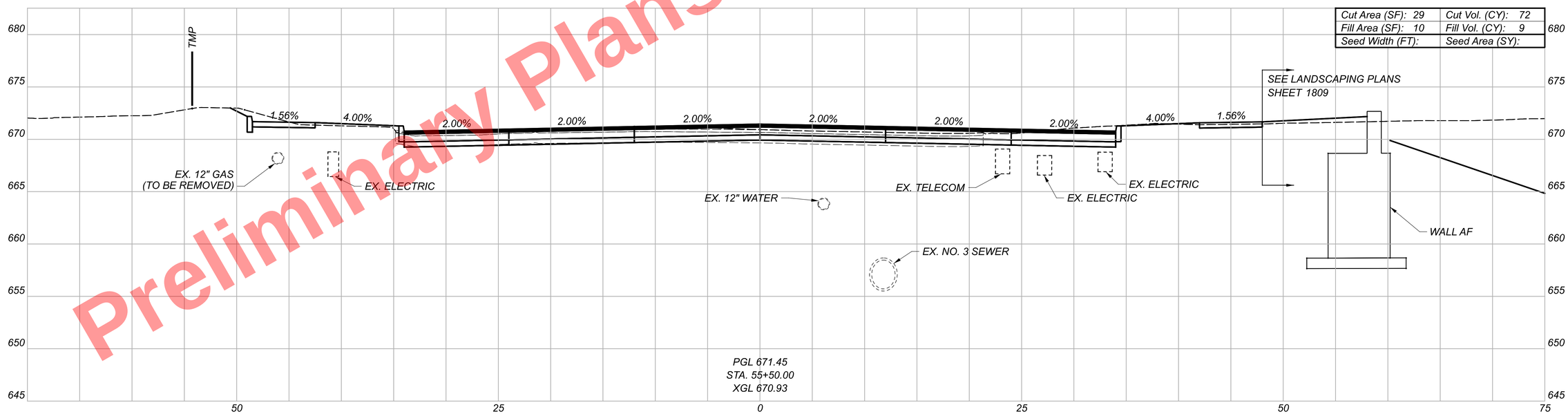

Preliminary Plans - For Reference Only

CROSS SECTIONS
CARNEGIE AVE.

DESIGN AGENCY
Michael Baker INTERNATIONAL

DESIGNER
KJM

REVIEWER
KGJ 05/22/24

PROJECT ID
82382

Sheet Totals		
Seeding	Cut	Fill
0	125	31

SHEET	TOTAL
937	2696

CUY-90-16.28 (CCG3A)

MODEL: CL_CARNEGIE AVE. - 55+50.00 [Sheet] PAPERSIZE: 34x22 (in.) DATE: 3/28/2025 TIME: 9:18:33 AM USER: Kevin.McNutt
pw:\\mb-us-pw.bentley.com:mb-us-pw-03\Documents\Cleveland.OH\01_Projects\0007\District2\82382\400-Engineering\Roadway\Sheets\82382_XS7100.dgn

Preliminary Plans - For Reference Only

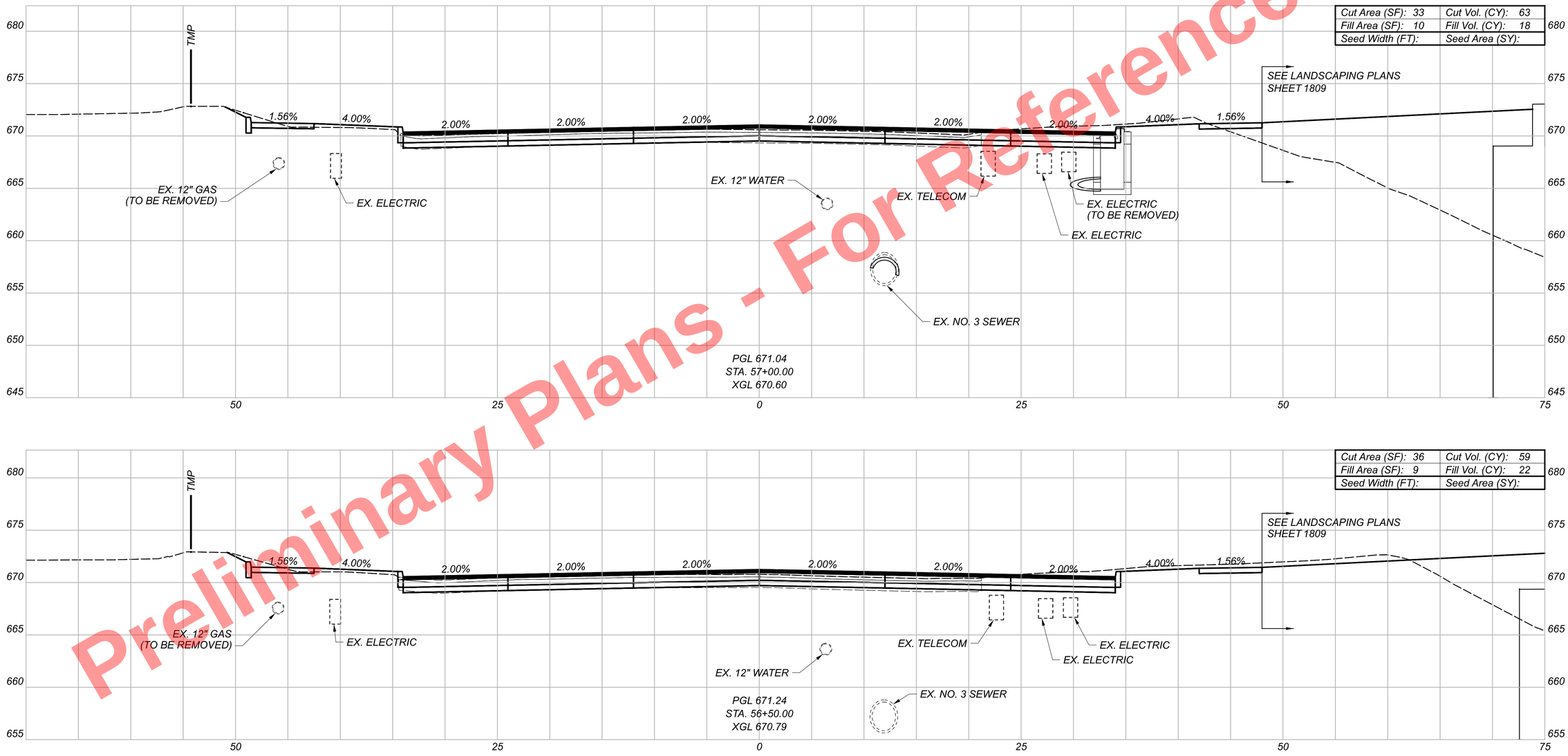

Cut Area (SF): 33	Cut Vol. (CY): 63
Fill Area (SF): 10	Fill Vol. (CY): 18
Seed Width (FT):	Seed Area (SY):

Cut Area (SF): 36	Cut Vol. (CY): 59
Fill Area (SF): 9	Fill Vol. (CY): 22
Seed Width (FT):	Seed Area (SY):

CUY-90-16.28 (CCG3A)

MODEL: CL_CARNEGIE AVE. - 56+50.00 [Sheet] PAPERSIZE: 34x22 (In.) DATE: 3/28/2025 TIME: 9:18:38 AM USER: Kevin.McNutt
pw:\\mb-us-pw.bentley.com:mb-us-pw-03\Documents\Cleveland_OH\01_Projects\0001\District2\82382\400-Engineering\Roadway\Sheets\82382_XS7100.dgn

CROSS SECTIONS
CARNEGIE AVE.

DESIGN AGENCY
Michael Baker INTERNATIONAL

DESIGNER
KJM

REVIEWER
KGJ 05/22/24

PROJECT ID
82382

Sheet Totals		
Seeding	Cut	Fill
0	122	40

SHEET	TOTAL
938	2696

For Reference Only
Preliminary Plans - Pending

Cut Area (SF): 30	Cut Vol. (CY): 58
Fill Area (SF): 7	Fill Vol. (CY): 16
Seed Width (FT):	Seed Area (SY):

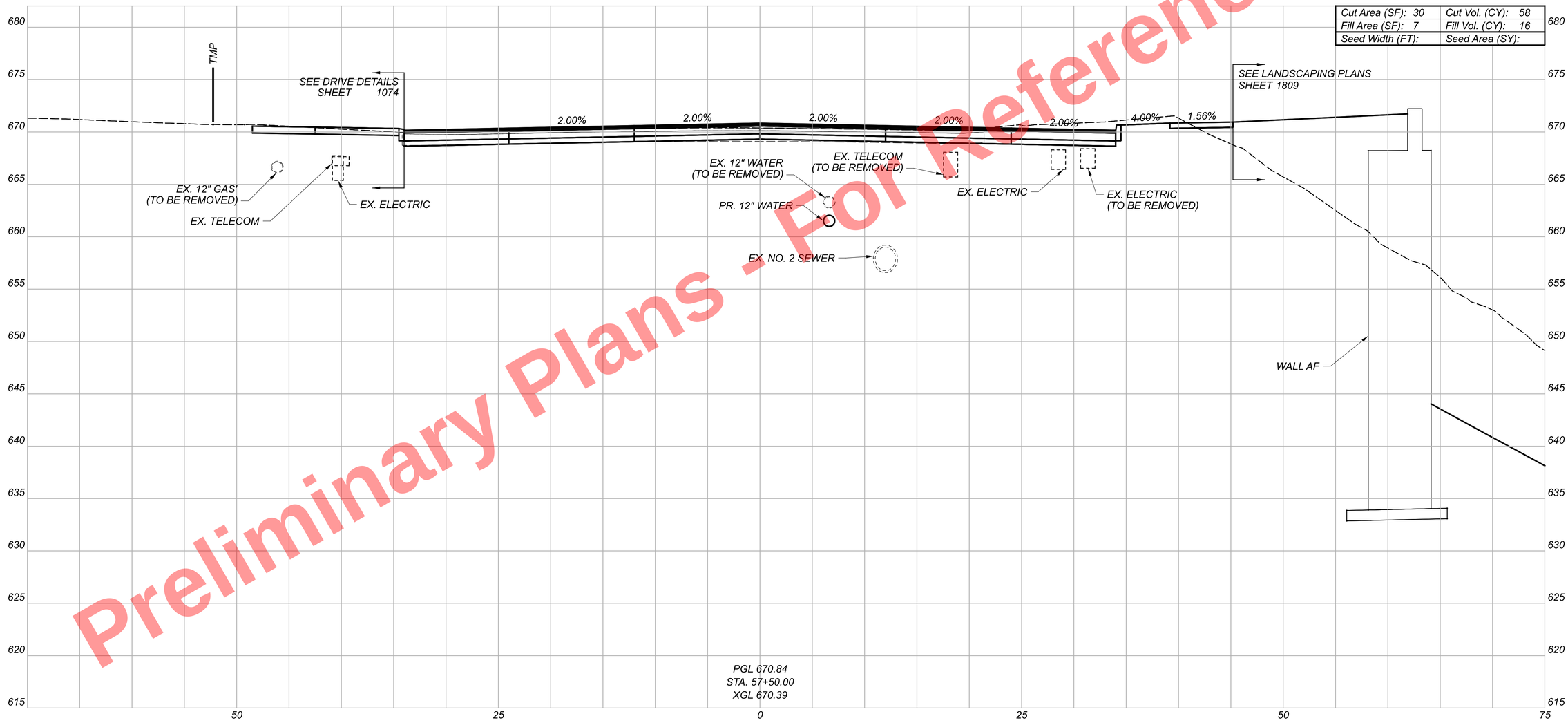

CUY-90-16.28 (CCG3A)

MODEL: CL CARNEGIE AVE. - 57+50.00 [Sheet] PAPERSIZE: 34x22 (in.) DATE: 3/28/2025 TIME: 9:18:44 AM USER: Kevin.McNutt
pw:\\mb-us-pw.bentley.com:mb-us-pw-03\Documents\Cleveland_OH\OL_Projects\ODOT\District12\82382\400-Engineering\Roadway\Sheets\82382_XS7100.dgn

CROSS SECTIONS
CARNEGIE AVE.

DESIGN AGENCY
Michael Baker INTERNATIONAL

DESIGNER
KJM

REVIEWER
KGJ 05/22/24

PROJECT ID
82382

Sheet Totals		
Seeding	Cut	Fill
0	58	16

SHEET	TOTAL
939	2696

Preliminary Plans - For Reference Only

Cut Area (SF): 15	Cut Vol. (CY): 42
Fill Area (SF): 7	Fill Vol. (CY): 13
Seed Width (FT):	Seed Area (SY):

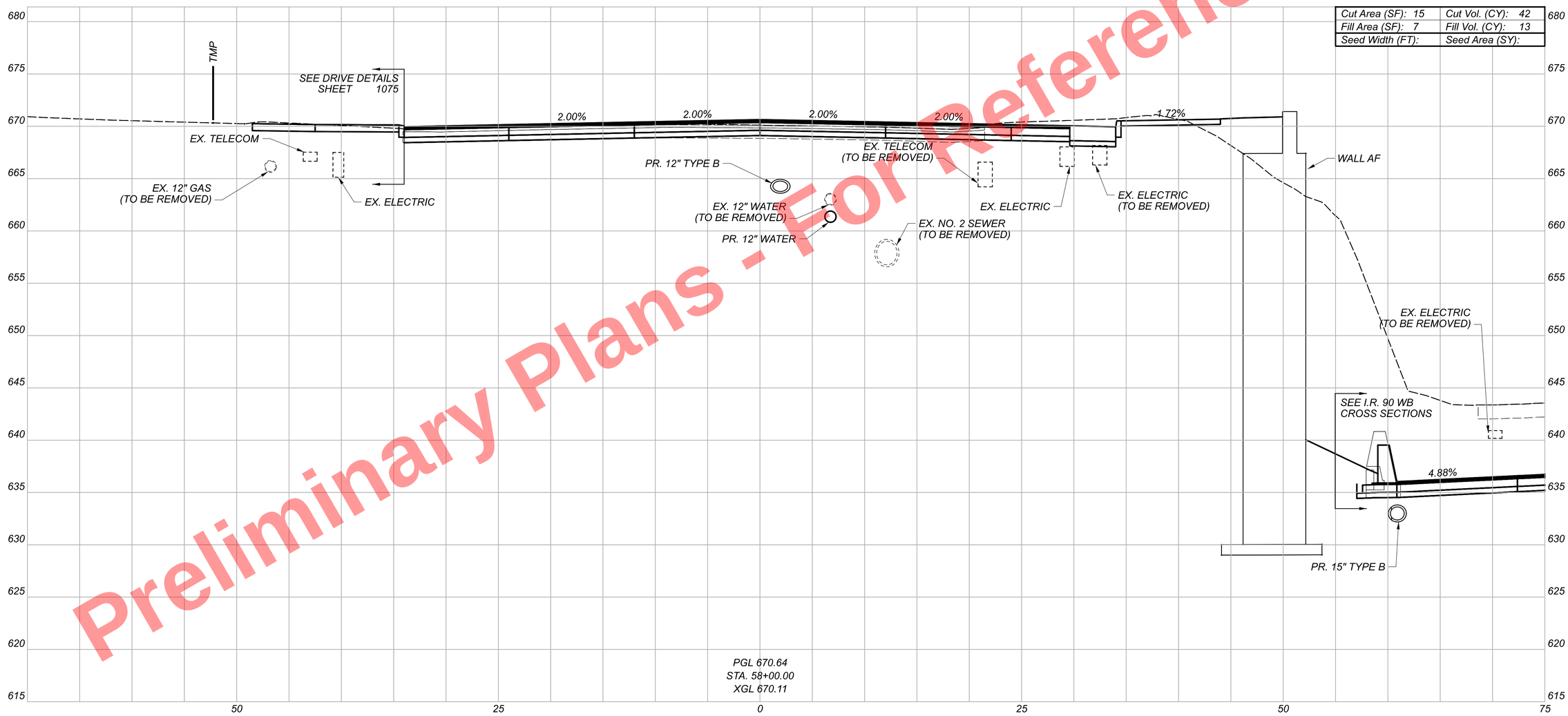

CROSS SECTIONS
CARNEGIE AVE.

CUY-90-16.28 (CCG3A)

MODEL: CL_CARNEGIE AVE. - 58+00.00 [Sheet] PAPERSIZE: 34x22 (in) DATE: 3/28/2025 TIME: 9:18:48 AM USER: Kevin.McNutt
pw:\\mb-us-pw.bentley.com:mb-us-pw-03\Documents\Cleveland_OH_OL_Projects\ODOT\District 12\82382\400-Engineering\Roadway\Sheets\82382_XS7100.dgn

DESIGN AGENCY
Michael Baker INTERNATIONAL

DESIGNER
KJM

REVIEWER
KGJ 05/22/24

PROJECT ID
82382

Sheet Totals		
Seeding	Cut	Fill
0	42	13

SHEET 940 TOTAL 2696

Preliminary Plans - For Reference Only

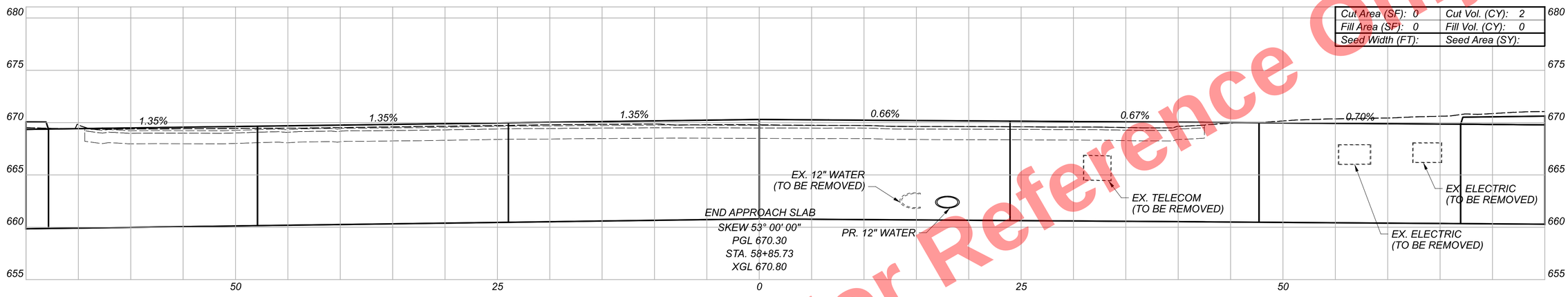

Cut Area (SF): 0	Cut Vol. (CY): 2
Fill Area (SF): 0	Fill Vol. (CY): 0
Seed Width (FT):	Seed Area (SY):

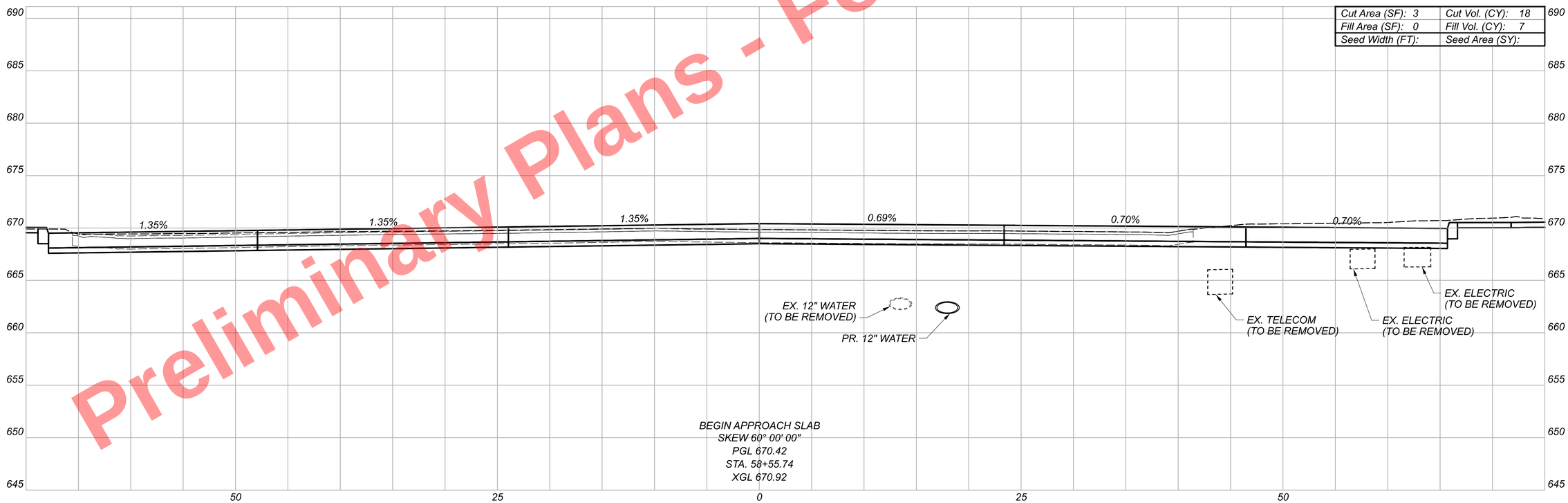

Cut Area (SF): 3	Cut Vol. (CY): 18
Fill Area (SF): 0	Fill Vol. (CY): 7
Seed Width (FT):	Seed Area (SY):

CROSS SECTIONS
CARNEGIE AVE.

Sheet Totals		
Seeding	Cut	Fill
0	20	7

DESIGN AGENCY
Michael Baker INTERNATIONAL

DESIGNER KJM

REVIEWER KGJ 05/22/24

PROJECT ID 82382

SHEET 941 TOTAL 2696

CUY-90-16.28 (CCG3A)

MODEL: CL CARNEGIE AVE. - 58+55.74 (Sheet) PAPERSIZE: 34x22 (In.) DATE: 3/28/2025 TIME: 9:18:52 AM USER: KevinJMcNutt
pw:\\mb-us-pw.bentley.com:mb-us-pw-03\Documents\Cleveland_OH\01_Projects\ODOT\District2\82382\400-Engineering\Roadway\Sheets\82382_XS7100.dgn

Preliminary Plans - For Reference Only

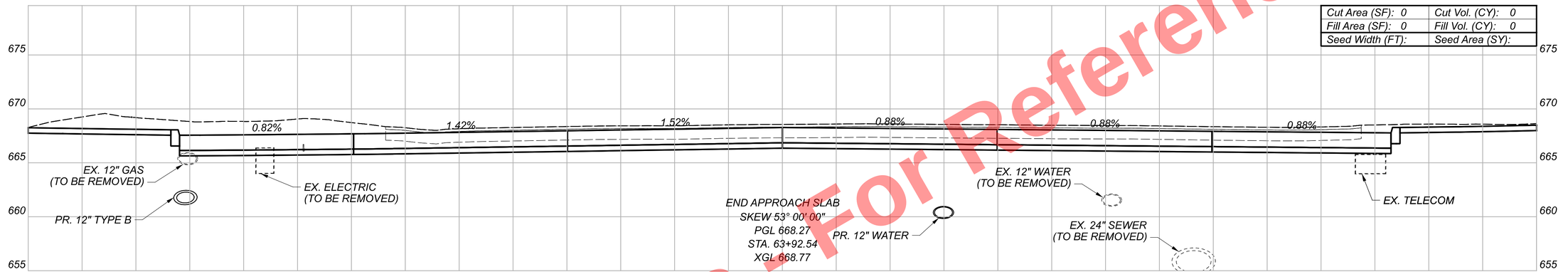

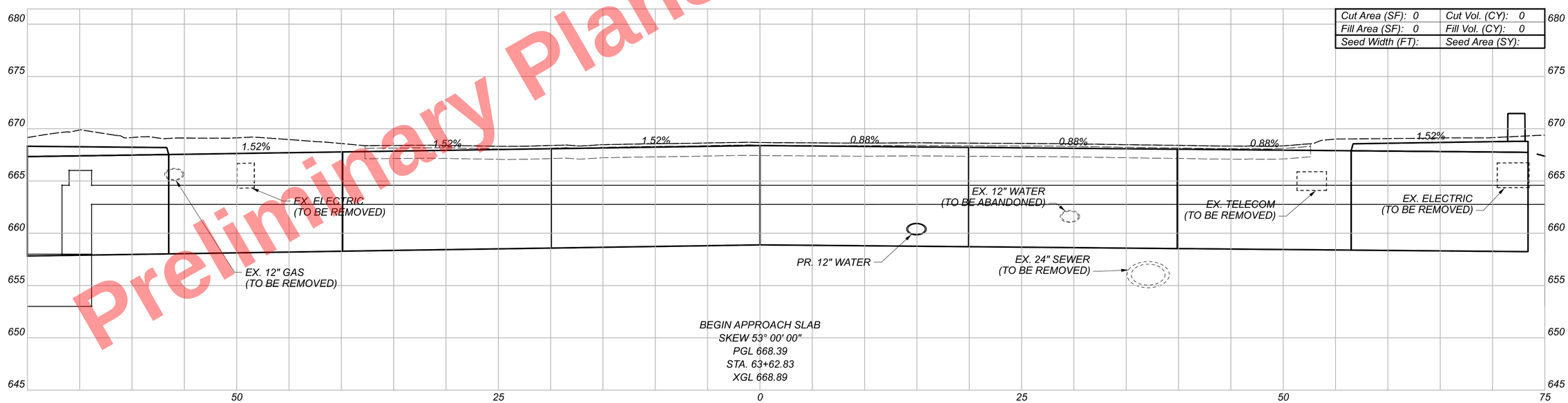

CROSS SECTIONS
CARNEGIE AVE.

CUY-90-16.28 (CCG3A)

MODEL: CL CARNEGIE AVE. - 63+62.83-I[Sheet] PAPERSIZE: 34x22 (in) DATE: 3/28/2025 TIME: 9:18:58 AM USER: Kevin.McNutt
pw:\\mb-us-pw.bentley.com:mb-us-pw-03\Documents\Cleveland_OH\OL_Projects\ODOT\District#12\82382\400-Engineering\Roadway\Sheets\82382_XS7100.dgn

DESIGN AGENCY
Michael Baker INTERNATIONAL

DESIGNER
KJM

REVIEWER
KGJ 05/22/24

PROJECT ID
82382

Sheet Totals		
Seeding	Cut	Fill
0	0	0

SHEET 942 TOTAL 2696

Preliminary Plans - For Reference Only

Cut Area (SF): 61	Cut Vol. (CY): 206
Fill Area (SF): 4	Fill Vol. (CY): 4
Seed Width (FT):	Seed Area (SY):

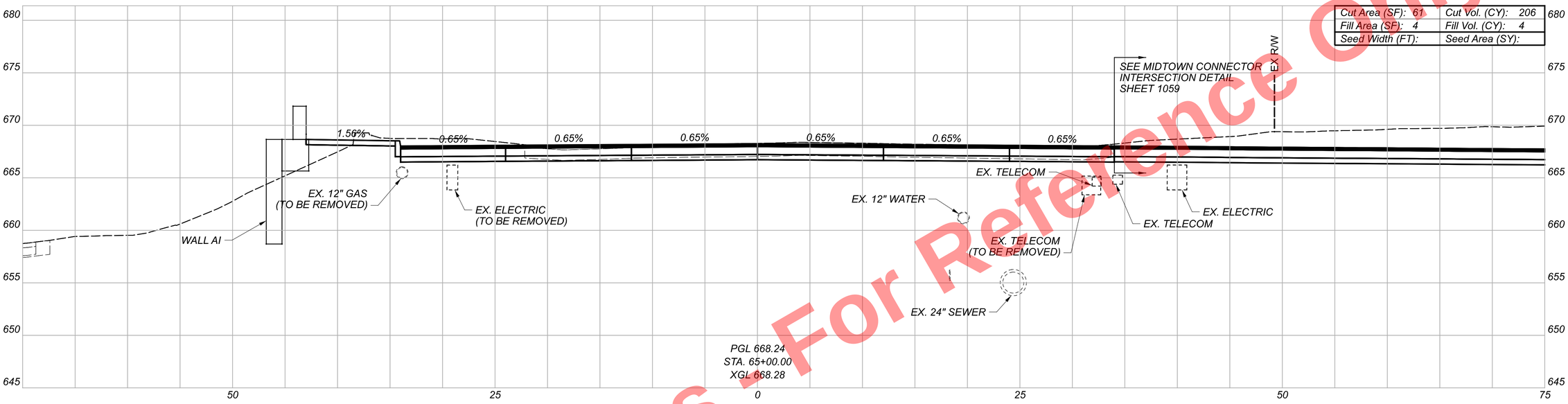

Cut Area (SF): 161	Cut Vol. (CY): 172
Fill Area (SF): 0	Fill Vol. (CY): 0
Seed Width (FT):	Seed Area (SY):

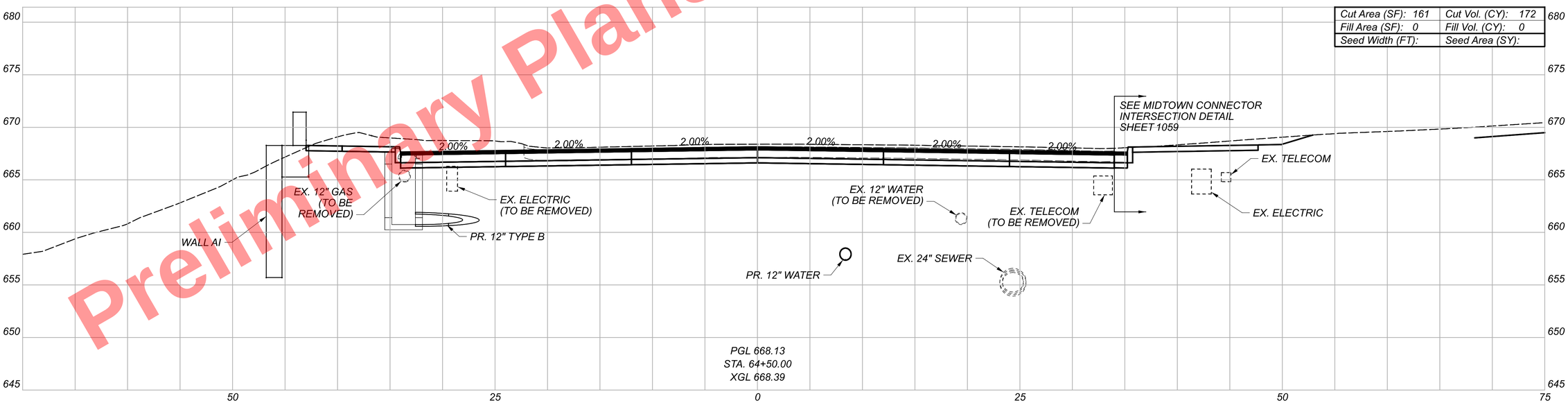

CROSS SECTIONS
CARNEGIE AVE.

CUY-90-16.28 (CCG3A)

MODEL: CL_CARNEGIE AVE. - 64+50.00 [Sheet] PAPERSIZE: 34x22 (in.) DATE: 3/28/2025 TIME: 9:19:04 AM USER: Kevin.McNutt
pw:\\mb-us-pw.bentley.com:mb-us-pw-03\Documents\Cleveland_OH\01_Projects\0001\District2\82382\400-Engineering\Roadway\Sheets\82382_XS7100.dgn

DESIGN AGENCY
Michael Baker INTERNATIONAL

DESIGNER
KJM

REVIEWER
KGJ 05/22/24

PROJECT ID
82382

Sheet Totals		
Seeding	Cut	Fill
0	378	4

SHEET	TOTAL
943	2696

CROSS SECTIONS
CARNEGIE AVE.

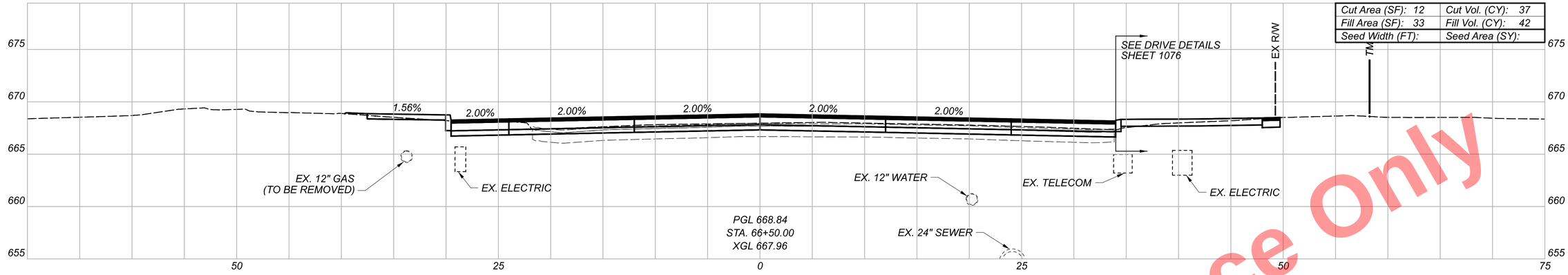

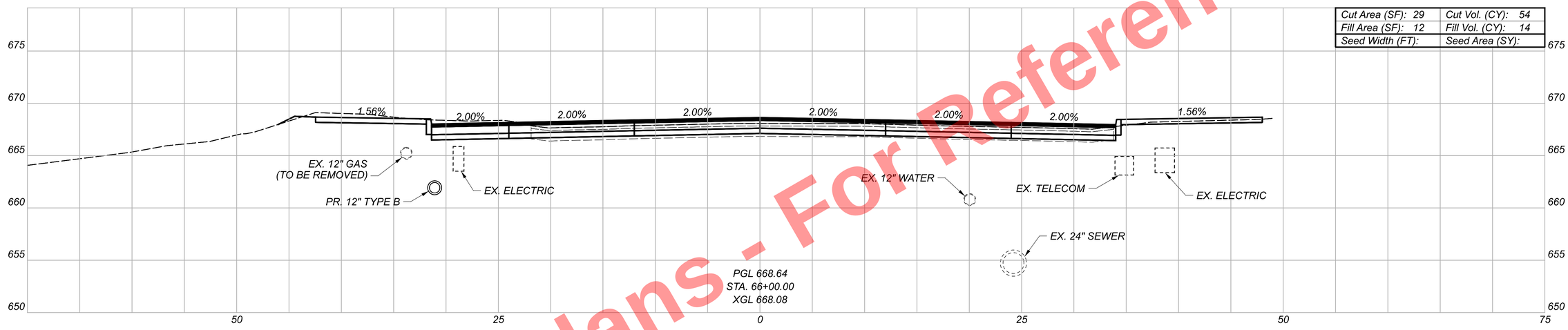

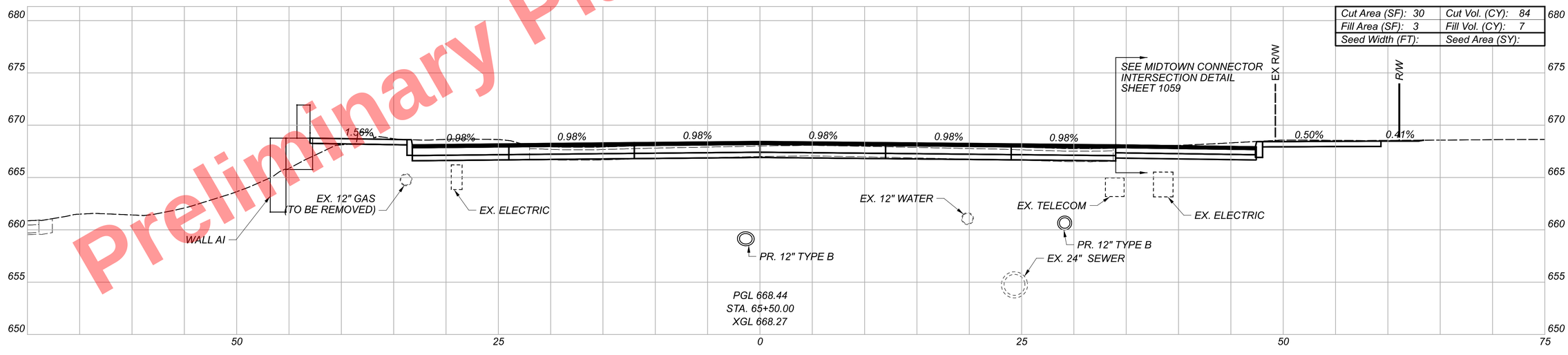

Preliminary Plans - For Reference Only

Sheet Totals		
Seeding	Cut	Fill
0	175	63

DESIGN AGENCY
Michael Baker INTERNATIONAL

DESIGNER
KJM

REVIEWER
KGJ 05/22/24

PROJECT ID
82382

SHEET 944 TOTAL 2696

CUY-90-16.28 (CCG3A)

MODEL: CL CARNEGIE AVE. - 65+50.00 [Sheet] PAPERSIZE:34x22 (in) DATE:3/28/2025 TIME:9:19:09 AM USER:Kevin.McNutt
pw:\\mb-us-pw.bentley.com:mb-us-pw-03\Documents\Cleveland_OH\OL Projects\0DOT\District12\82382\400-Engineering\Roadway\Sheets\82382_XS7100.dgn

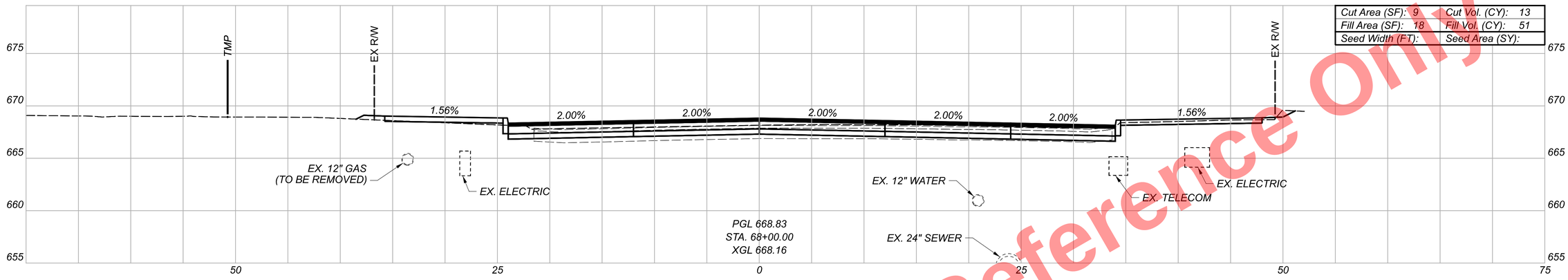

Cut Area (SF): 9	Cut Vol. (CY): 13
Fill Area (SF): 18	Fill Vol. (CY): 51
Seed Width (FT):	Seed Area (SY):

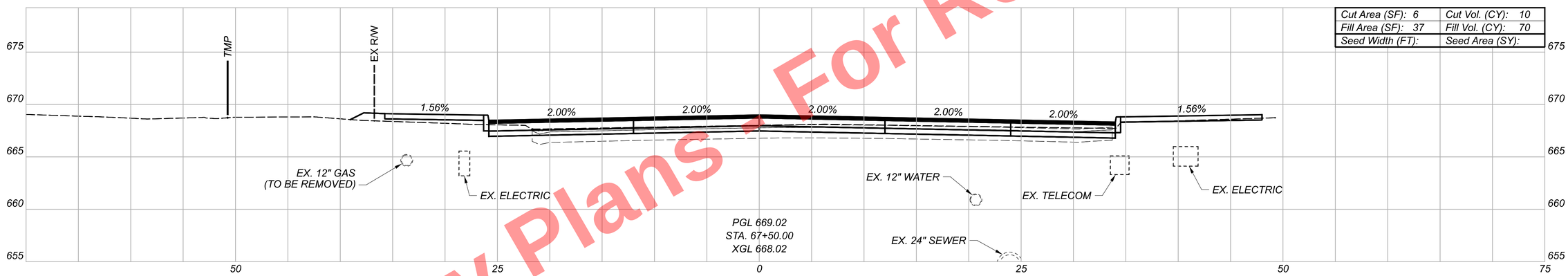

Cut Area (SF): 6	Cut Vol. (CY): 10
Fill Area (SF): 37	Fill Vol. (CY): 70
Seed Width (FT):	Seed Area (SY):

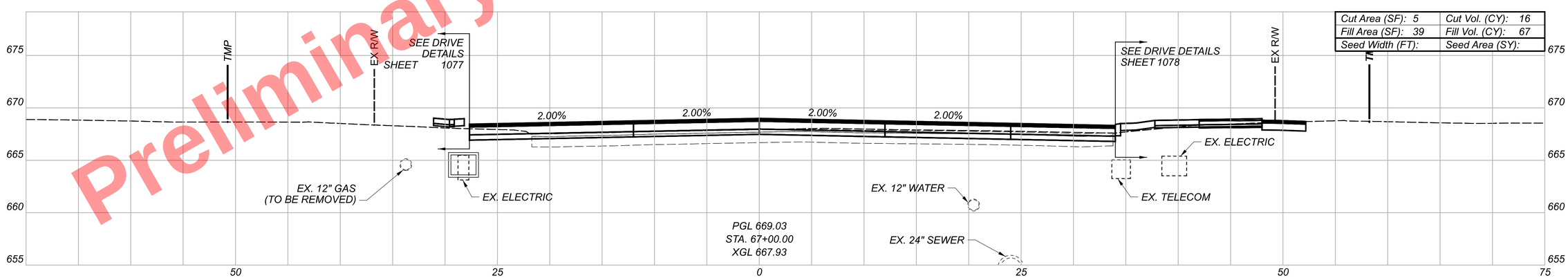

Cut Area (SF): 5	Cut Vol. (CY): 16
Fill Area (SF): 39	Fill Vol. (CY): 67
Seed Width (FT):	Seed Area (SY):

Preliminary Plans - For Reference Only

CROSS SECTIONS
CARNEGIE AVE.

Sheet Totals		
Seeding	Cut	Fill
0	39	188

DESIGN AGENCY
Michael Baker INTERNATIONAL

DESIGNER
KJM

REVIEWER
KGJ 05/22/24

PROJECT ID
82382

SHEET 945 TOTAL 2696

CUY-90-16.28 (CCG3A)

MODEL: CL CARNEGIE AVE. - 67+00.00 [Sheet] PAPERSIZE: 34x22 (in.) DATE: 3/28/2025 TIME: 9:19:15 AM USER: Kevin.McNutt
pw:\\mb-us-pw.bentley.com:mb-us-pw-03\Documents\Cleveland_OH\OI_Projects\ODOT\District12\82382\400-Engineering\Roadway\Sheets\82382_XS7100.dgn

Preliminary Plans - For Reference Only

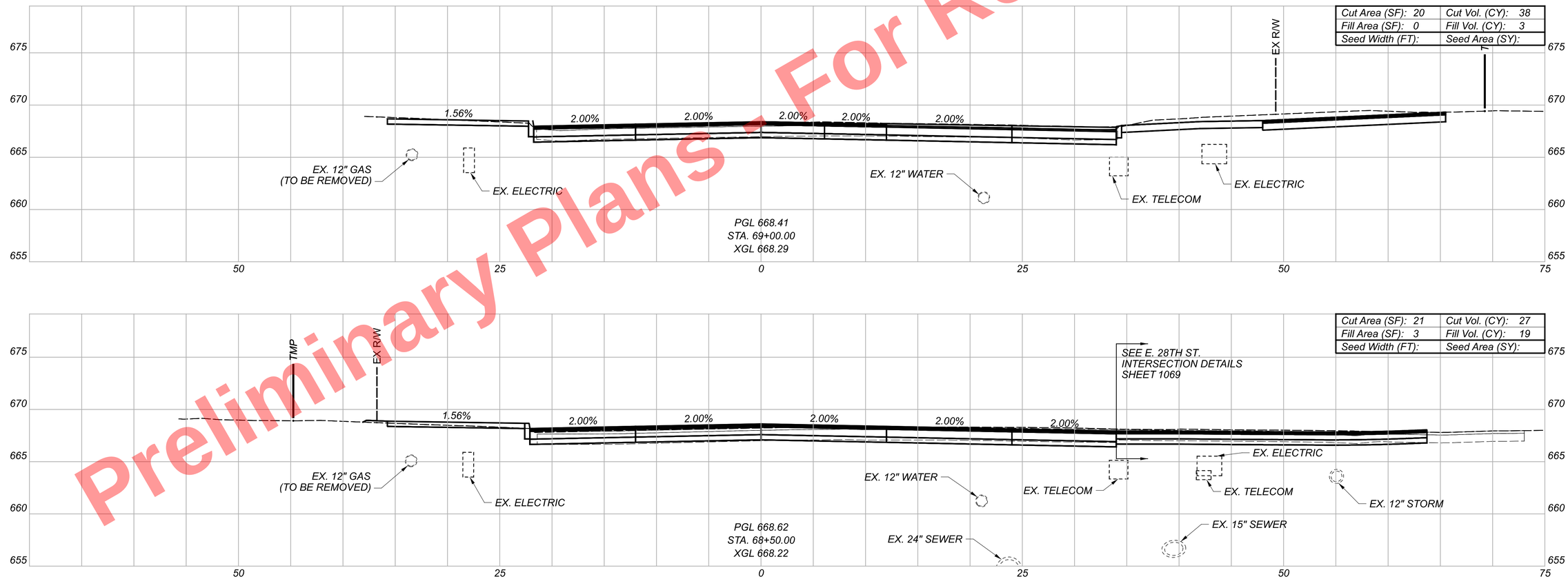

Sheet Totals			Grand Totals Carried to Subsummary		
Seeding	Cut	Fill	Seeding	Cut	Fill
0	65	22	0	2221	1083

CUY-90-16.28 (CCG3A)

CROSS SECTIONS
CARNEGIE AVE.

DESIGN AGENCY
Michael Baker INTERNATIONAL

DESIGNER
KJM

REVIEWER
KGJ 05/22/24

PROJECT ID
82382

SHEET 946 TOTAL 2696

MODEL: CL_CARNEGIE AVE. - 68+50.00 [Sheet] PAPERSIZE: 34x22 (In.) DATE: 3/28/2025 TIME: 9:19:22 AM USER: KevinMcNutt
pw:\\mb-us-pw.bentley.com:mb-us-pw-03\Documents\Cleveland_OH\OI_Projects\ODOT\District 12\82382\400-Engineering\Roadway\Sheets\82382_XS7100.dgn

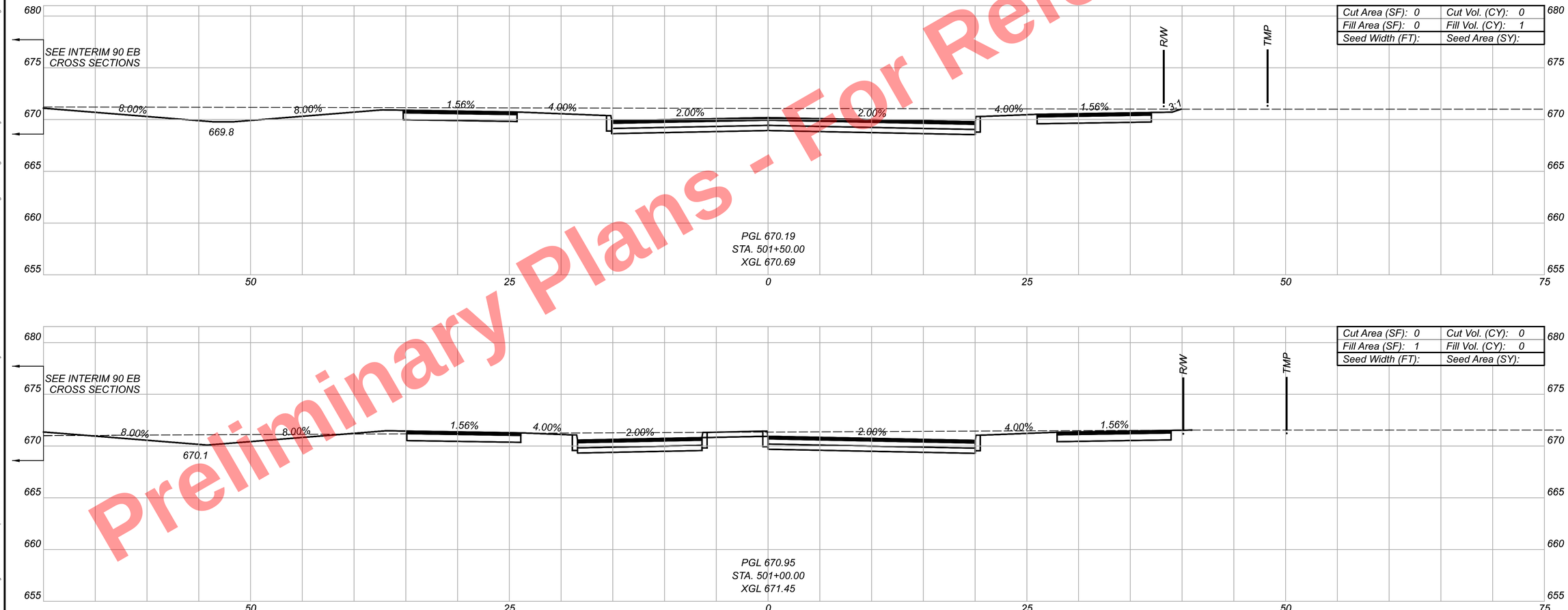

Preliminary Plans - For Reference Only

CUY-90-16.28 (CCG3A)

MODEL: CLP_Midtown Connector - 501+00.00 [Sheet] PAPERSIZE: 34x22 (In.) DATE: 3/28/2025 TIME: 3:04:36 PM USER: Joseph.Hogan
pw:\\mb-us-pw.bentley.com:mb-us-pw-03\Documents\Cleveland_OH\01_Projects\0DOT\District2\82382\400-Engineering\Roadway\Sheets\82382_XS7900.dgn

CROSS SECTIONS
MIDTOWN CONNECTOR

Sheet Totals		
Seeding	Cut	Fill
0	0	1

DESIGN AGENCY
Michael Baker INTERNATIONAL

DESIGNER
KJM

REVIEWER
KGJ 05/22/24

PROJECT ID
82382

SHEET 947 TOTAL 2696

Preliminary Plans - For Reference Only

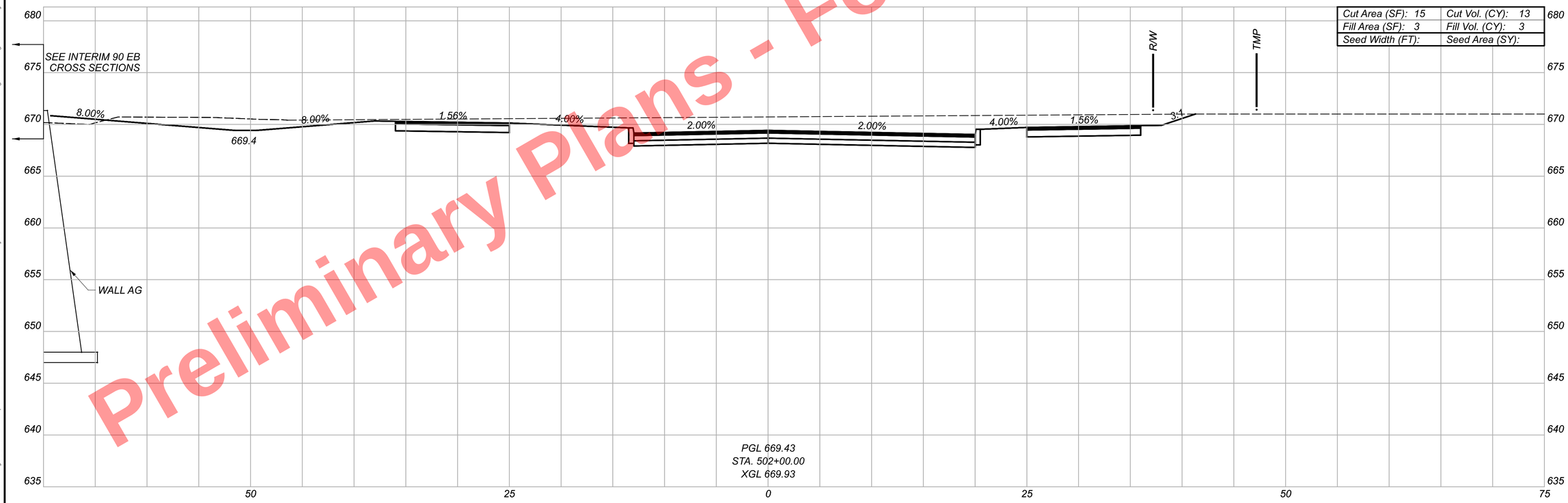

Cut Area (SF): 15	Cut Vol. (CY): 13
Fill Area (SF): 3	Fill Vol. (CY): 3
Seed Width (FT):	Seed Area (SY):

Sheet Totals		
Seeding	Cut	Fill
0	13	3

CROSS SECTIONS
MIDTOWN CONNECTOR

DESIGN AGENCY
Michael Baker INTERNATIONAL

DESIGNER
KJM

REVIEWER
KGJ 05/22/24

PROJECT ID
82382

SHEET 948 TOTAL 2696

CUY-90-16.28 (CCG3A)

MODEL: CLP_Midtown Connector - 502+00.00 [Sheet] PAPERSIZE: 34x22 (in.) DATE: 3/28/2025 TIME: 3:05:47 PM USER: Joseph.Hogan
pw:\\mb-us-pw.bentley.com:mb-us-pw-03\Documents\Cleveland_OH\01_Projects\0D0T\District2\82382\400-Engineering\Roadway\Sheets\82382_XS7900.dgn

Preliminary Plans - For Reference Only

Cut Area (SF): 105	Cut Vol. (CY): 110
Fill Area (SF): 0	Fill Vol. (CY): 3
Seed Width (FT):	Seed Area (SY):

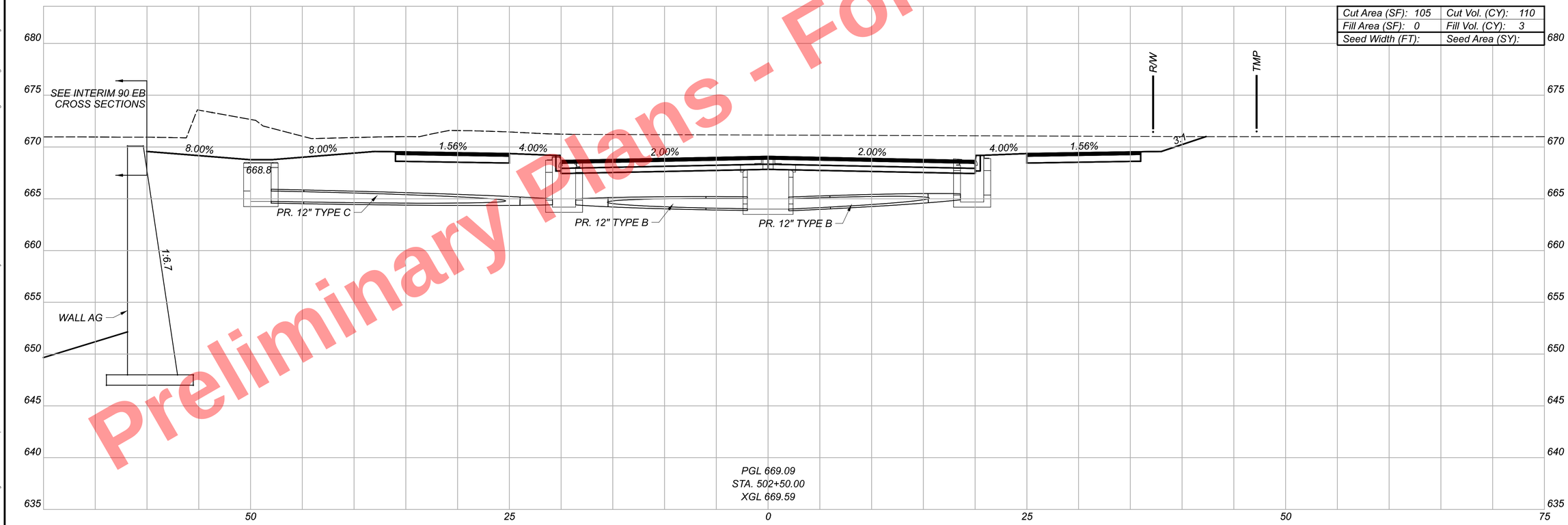

Sheet Totals		
Seeding	Cut	Fill
0	110	3

CROSS SECTIONS
MIDTOWN CONNECTOR

CUY-90-16.28 (CCG3A)

DESIGN AGENCY
Michael Baker INTERNATIONAL

DESIGNER KJM
REVIEWER KGJ 05/22/24
PROJECT ID 82382
SHEET 949 TOTAL 2696

MODEL: CLP_Midtown Connector - 502+50.00 [Sheet] PAPERSIZE: 34x22 (in.) DATE: 3/28/2025 TIME: 3:05:53 PM USER: Joseph.Hogan
pw:\\mb-us-pw.bentley.com:mb-us-pw-03\Documents\Cleveland_OH\01_Projects\0001\District2\82382\400-Engineering\Roadway\Sheets\8238_XS7900.dgn

Preliminary Plans - For Reference Only

Cut Area (SF): 153	Cut Vol. (CY): 239
Fill Area (SF): 0	Fill Vol. (CY): 0
Seed Width (FT):	Seed Area (SY):

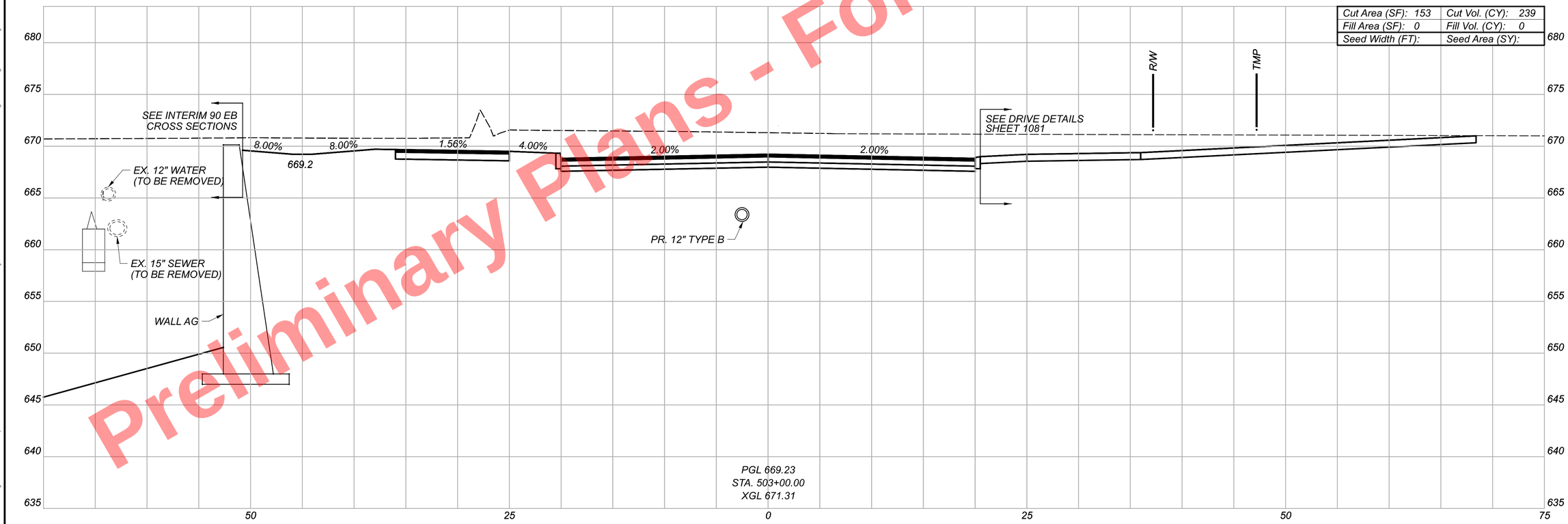

CROSS SECTIONS
MIDTOWN CONNECTOR

Sheet Totals		
Seeding	Cut	Fill
0	239	0

DESIGN AGENCY
Michael Baker INTERNATIONAL

DESIGNER KJM
REVIEWER KGJ 05/22/24
PROJECT ID 82382
SHEET 950 TOTAL 2696

CUY-90-16.28 (CCG3A)

MODEL: CLP_Midtown Connector - 503+00.00 [Sheet] PAPERSIZE: 34x22 (In.) DATE: 3/28/2025 TIME: 3:05:59 PM USER: Joseph.Hogan
pw:\\mb-us-pw.bentley.com:mb-us-pw-03\Documents\Cleveland_OH\01_Projects\000T\District2\82382\400-Engineering\Roadway\Sheets\82382_XS7900.dgn

Preliminary Plans - For Reference Only

Cut Area (SF): 203	Cut Vol. (CY): 330
Fill Area (SF): 0	Fill Vol. (CY): 0
Seed Width (FT):	Seed Area (SY):

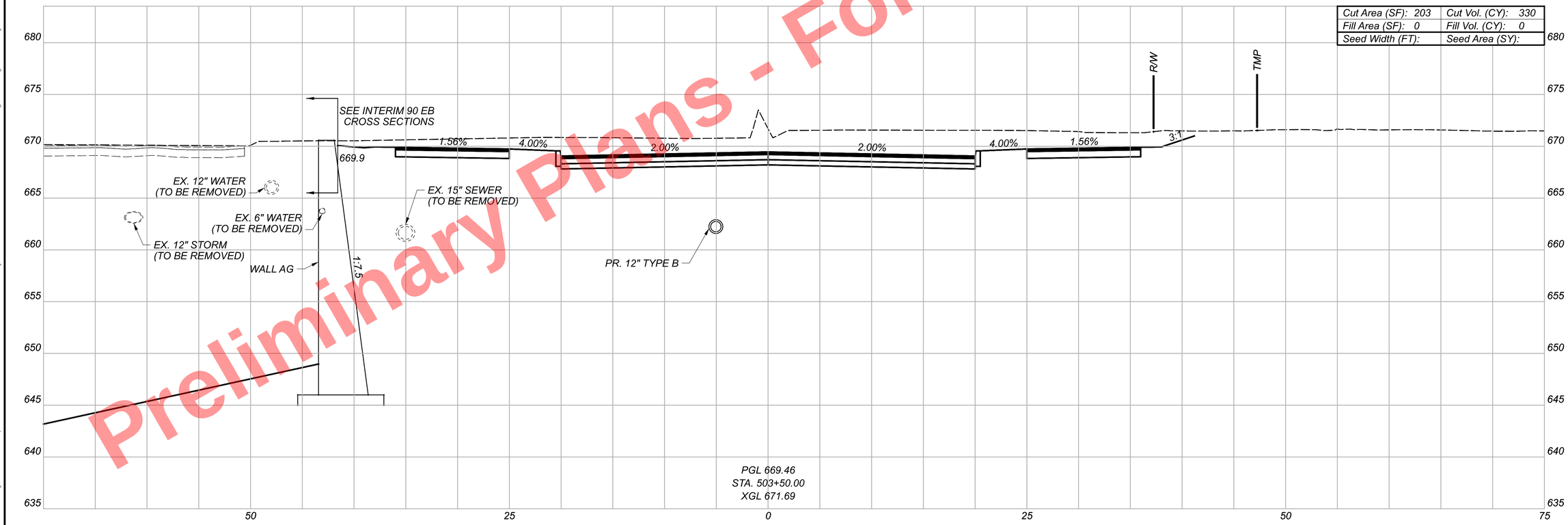

CUY-90-16.28 (CCG3A)

MODEL: CLP_Midtown Connector - 503+50.00 [Sheet] PAPERSIZE: 34x22 (In) DATE: 3/28/2025 TIME: 3:06:05 PM USER: Joseph.Hogan
pw:\\mb-us-pw.bentley.com:mb-us-pw-03\Documents\Cleveland_OH\01_Projects\00DT\District2\82382\400-Engineering\Roadway\Sheets\82382_XS7900.dgn

CROSS SECTIONS
MIDTOWN CONNECTOR

DESIGN AGENCY
Michael Baker INTERNATIONAL

DESIGNER
KJM

REVIEWER
KGJ 05/22/24

PROJECT ID
82382

Sheet Totals		
Seeding	Cut	Fill
0	330	0

SHEET 951 TOTAL 2696

Preliminary Plans - For Reference Only

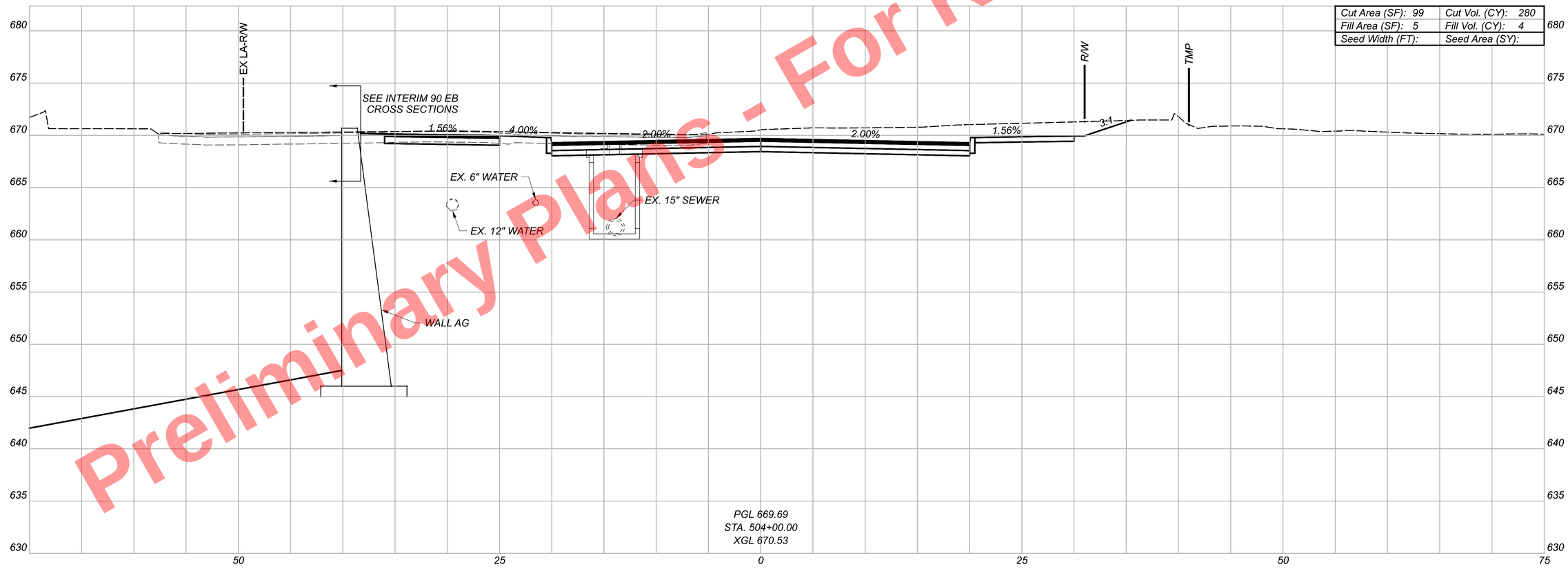

Cut Area (SF): 99	Cut Vol. (CY): 280
Fill Area (SF): 5	Fill Vol. (CY): 4
Seed Width (FT):	Seed Area (SY):

CROSS SECTIONS
MIDTOWN CONNECTOR

DESIGN AGENCY
Michael Baker INTERNATIONAL

DESIGNER
KJM

REVIEWER
KGJ 05/22/24

PROJECT ID
82382

Sheet Totals		
Seeding	Cut	Fill
0	280	4

SHEET 952 TOTAL 2696

CUY-90-16.28 (CCG3A)

MODEL: CLP_Midtown Connector - 504+00.00 [Sheet] PAPERSIZE: 34x22 (in.) DATE: 3/28/2025 TIME: 3:06:11 PM USER: Joseph.Hogan
pw:\\mb-us-pw.bentley.com:mb-us-pw-03\Documents\Cleveland_OH\Oil_Projects\ODOT\District2\82382\400-Engineering\Roadway\Sheets\82382_XS7900.dgn

Preliminary Plans - For Reference Only

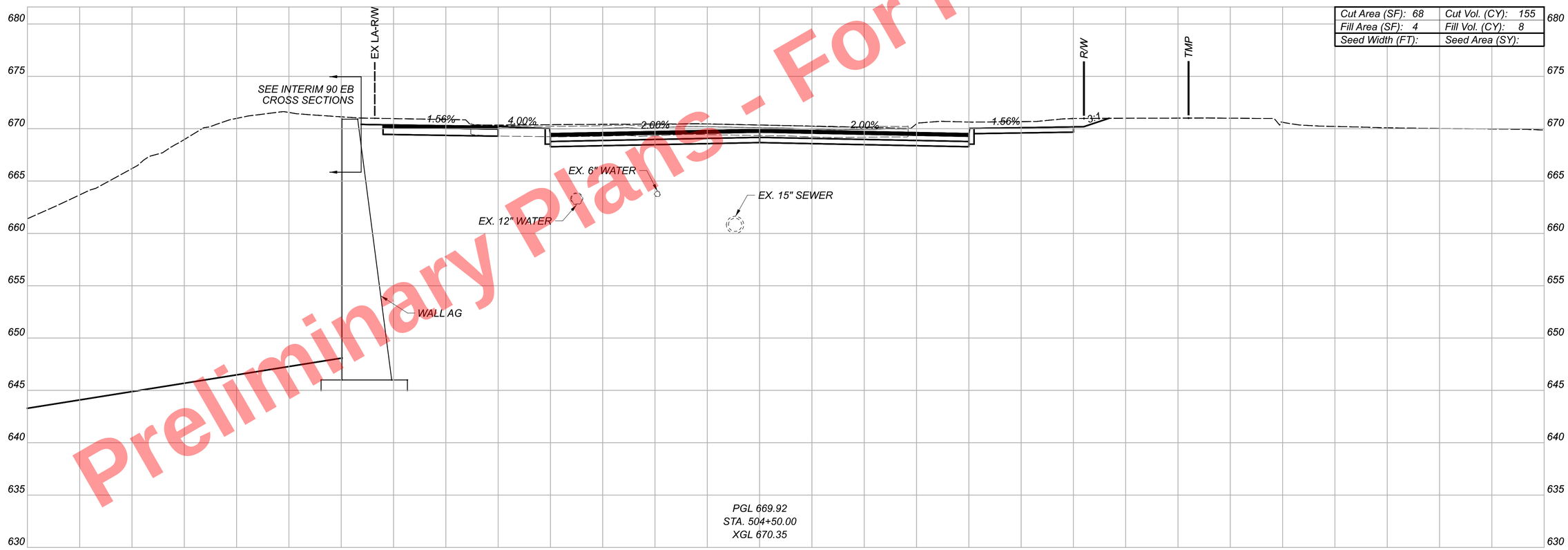

Cut Area (SF): 68	Cut Vol. (CY): 155
Fill Area (SF): 4	Fill Vol. (CY): 8
Seed Width (FT):	Seed Area (SY):

PGL 669.92
STA. 504+50.00
XGL 670.35

CROSS SECTIONS
MIDTOWN CONNECTOR

CUY-90-16.28 (CCG3A)

MODEL: CLP_Midtown Connector - 504+50.00 [Sheet] PAPERSIZE: 34x22 (In.) DATE: 3/28/2025 TIME: 3:06:16 PM USER: Joseph.Hogan
pw:\\mb-us-pw.bentley.com:mb-us-pw-03\Documents\Cleveland_OH\Oil_Projects\D0DT\District2\82382\400-Engineering\Roadway\Sheets\82382_XS7900.dgn

DESIGN AGENCY
Michael Baker INTERNATIONAL

DESIGNER
KJM

REVIEWER
KGJ 05/22/24

PROJECT ID
82382

Sheet Totals		
Seeding	Cut	Fill
0	155	8

SHEET	TOTAL
953	2696

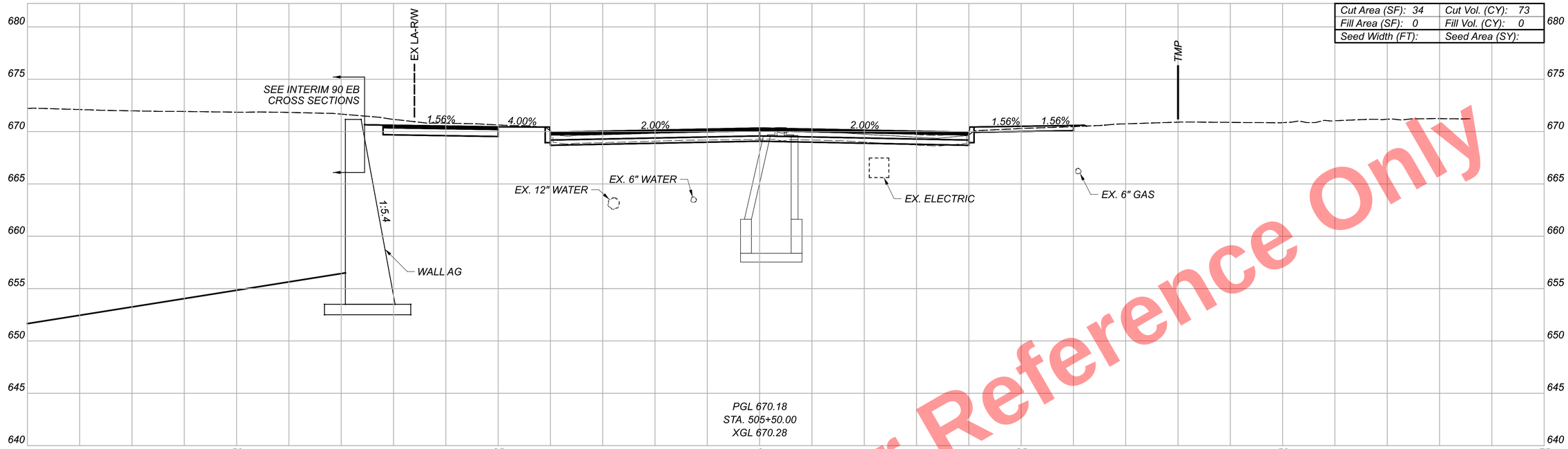

Cut Area (SF): 34	Cut Vol. (CY): 73
Fill Area (SF): 0	Fill Vol. (CY): 0
Seed Width (FT):	Seed Area (SY):

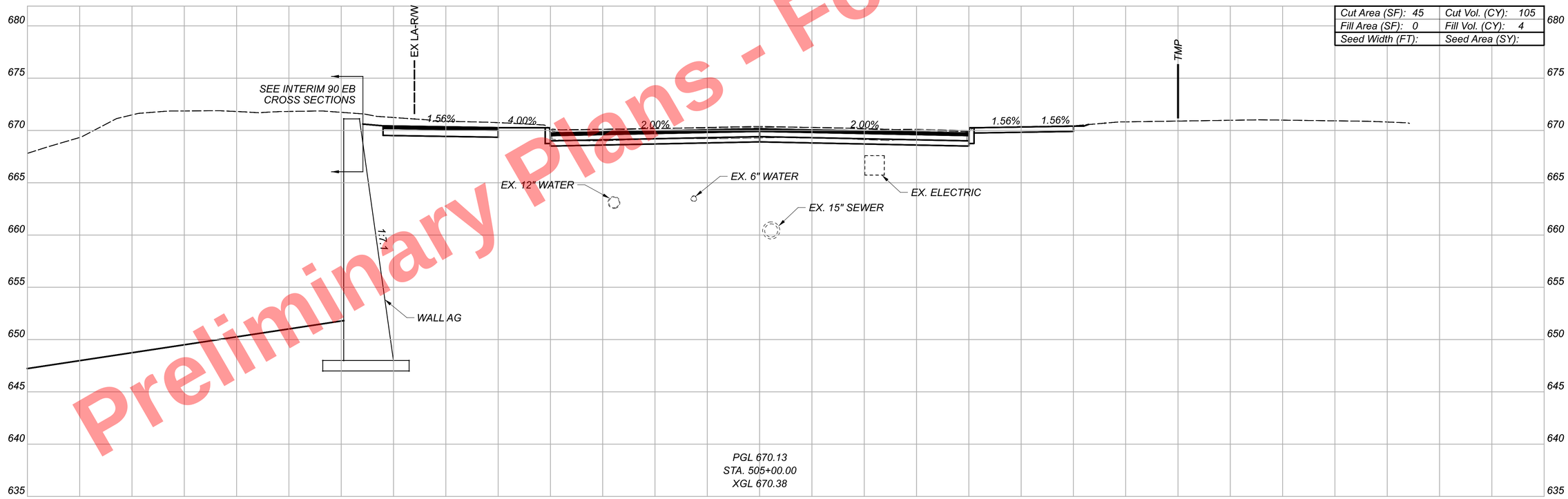

Cut Area (SF): 45	Cut Vol. (CY): 105
Fill Area (SF): 0	Fill Vol. (CY): 4
Seed Width (FT):	Seed Area (SY):

Preliminary Plans - For Reference Only

CROSS SECTIONS
MIDTOWN CONNECTOR

CUY-90-16.28 (CCG3A)

MODEL: CLP_Midtown Connector - 505+00.00 [Sheet] PAPERSIZE: 34x22 (in.) DATE: 3/28/2025 TIME: 3:06:21 PM USER: Joseph.Hogan
pw:\\mb-us-pw.bentley.com\mb-us-pw-03\Documents\Cleveland_OH\Oil_Projects\ODOT\District2\82382\400-Engineering\Roadway\Sheets\82382_XS7900.dgn

Sheet Totals		
Seeding	Cut	Fill
0	178	4

DESIGN AGENCY
Michael Baker INTERNATIONAL

DESIGNER
KJM

REVIEWER
KGJ 05/22/24

PROJECT ID
82382

SHEET	TOTAL
954	2696

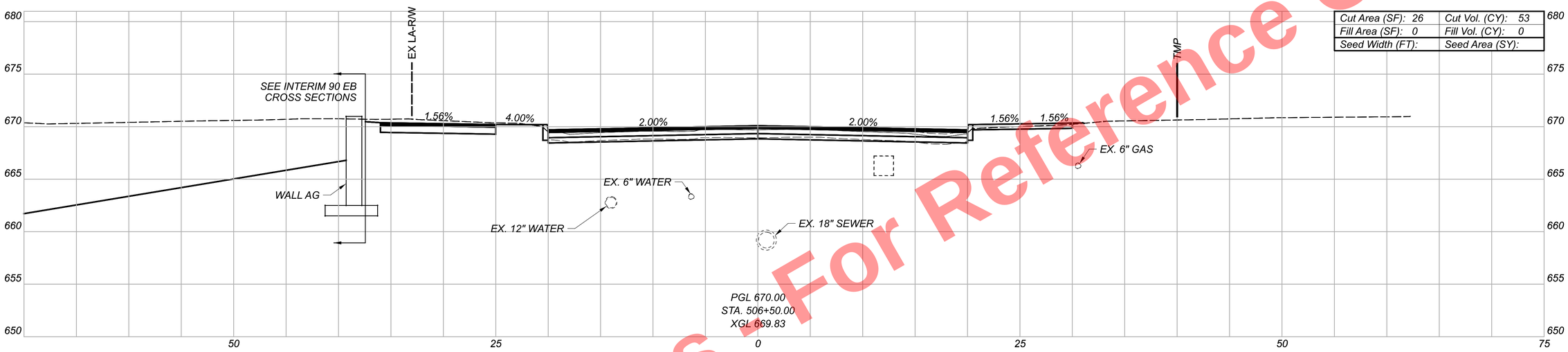

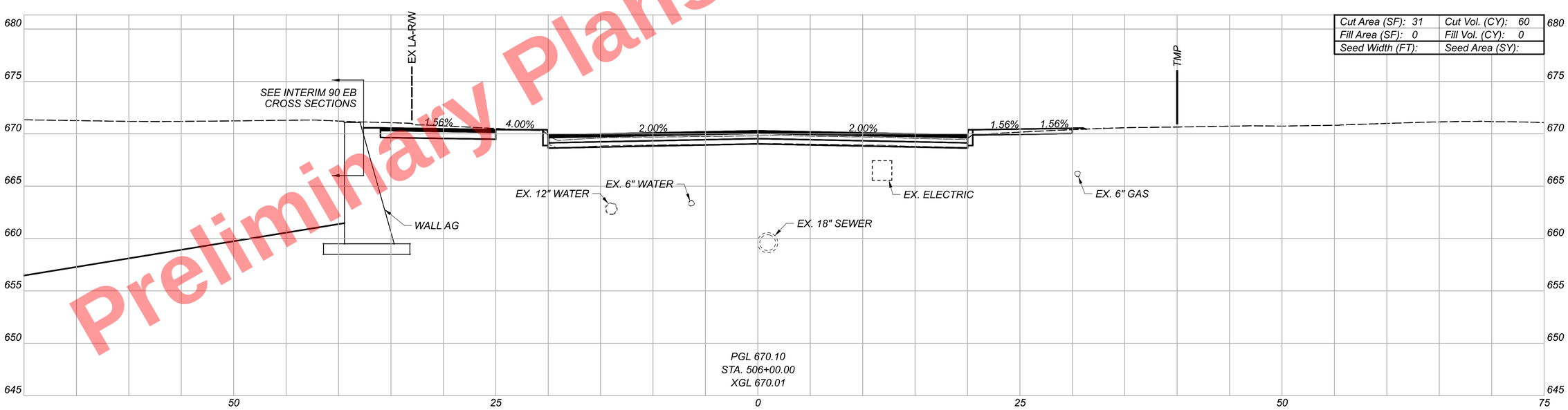

Preliminary Plans - For Reference Only

CROSS SECTIONS
MIDTOWN CONNECTOR

CUY-90-16.28 (CCG3A)

MODEL: CLP_Midtown Connector - 506+00.00 [Sheet] PAPERSIZE: 34x22 (in.) DATE: 3/28/2025 TIME: 3:06:29 PM USER: Joseph.Hogan
pw:\\mb-us-pw.bentley.com:mb-us-pw-03\Documents\Cleveland_OH\OI_Projects\ODOT\District2\82382\400-Engineering\Roadway\Sheets\82382_XS7900.dgn

Sheet Totals		
Seeding	Cut	Fill
0	113	0

DESIGN AGENCY
Michael Baker INTERNATIONAL

DESIGNER
KJM

REVIEWER
KGJ 05/22/24

PROJECT ID
82382

SHEET 955 TOTAL 2696

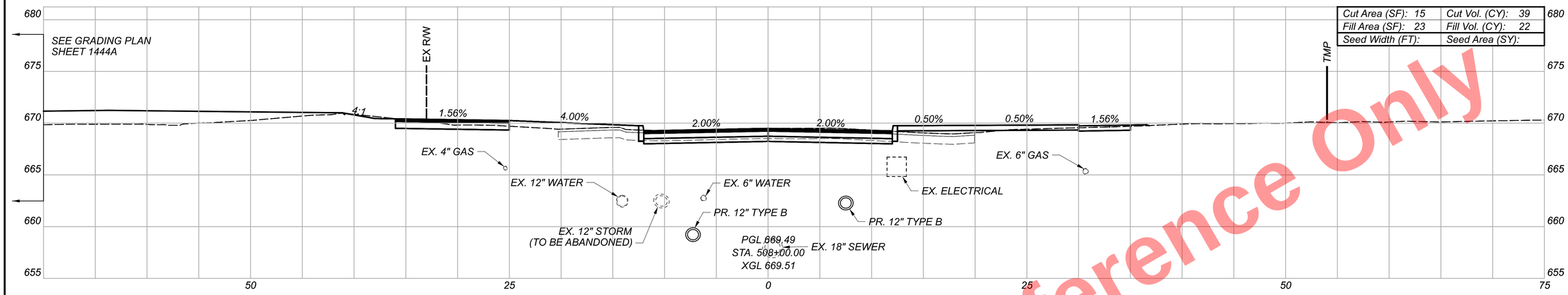

Cut Area (SF): 15	Cut Vol. (CY): 39
Fill Area (SF): 23	Fill Vol. (CY): 22
Seed Width (FT):	Seed Area (SY):

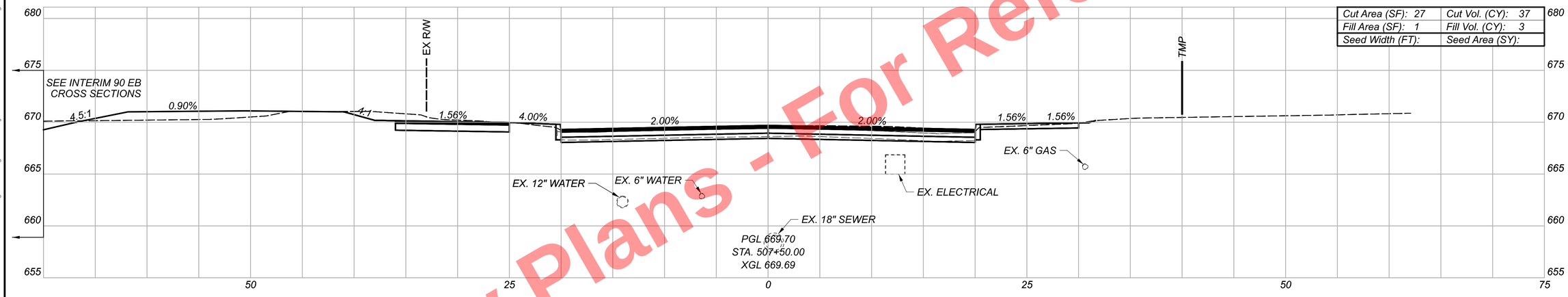

Cut Area (SF): 27	Cut Vol. (CY): 37
Fill Area (SF): 1	Fill Vol. (CY): 3
Seed Width (FT):	Seed Area (SY):

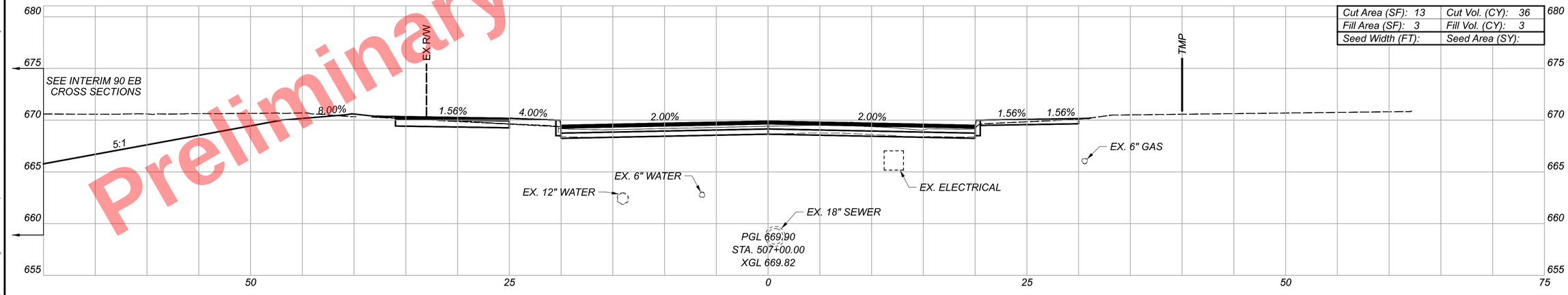

Cut Area (SF): 13	Cut Vol. (CY): 36
Fill Area (SF): 3	Fill Vol. (CY): 3
Seed Width (FT):	Seed Area (SY):

Preliminary Plans - For Reference Only

CUY-90-16.28 (CCG3A)

MODEL: CLP_Midtown Connector - 507+00.00 [Sheet] PAPERSIZE: 34x22 (in.) DATE: 5/13/2025 TIME: 4:26:44 PM USER: MaLaGallagher
pw:\\mb-us-pw.bentley.com:mb-us-pw-03\Documents\Cleveland_OH\01_Projects\000T\District2\82382\400-Engineering\Roadway\Sheets\82382_XS7900.dgn

CROSS SECTIONS
MIDTOWN CONNECTOR

DESIGN AGENCY
Michael Baker INTERNATIONAL

DESIGNER
KJM

REVIEWER
KGJ 05/22/24

PROJECT ID
82382

Sheet Totals		
Seeding	Cut	Fill
0	112	28

SHEET 956 TOTAL 2696

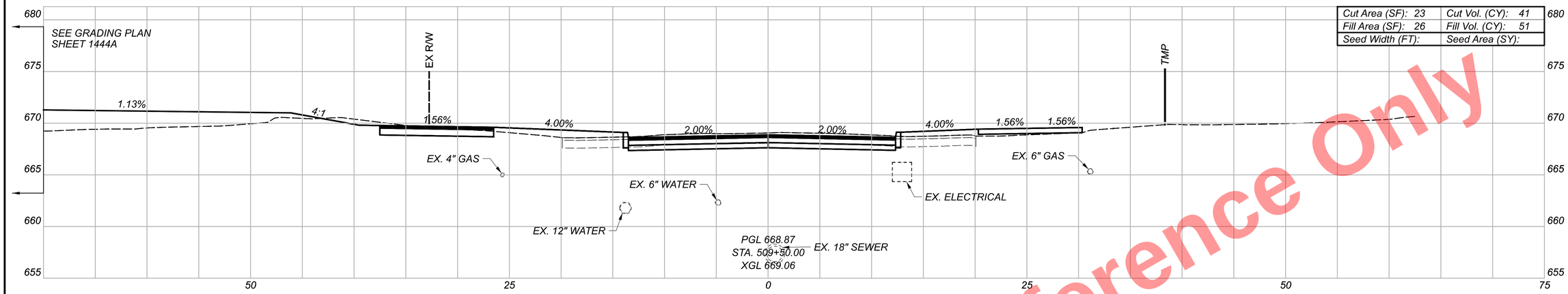

Cut Area (SF): 23	Cut Vol. (CY): 41
Fill Area (SF): 26	Fill Vol. (CY): 51
Seed Width (FT):	Seed Area (SY):

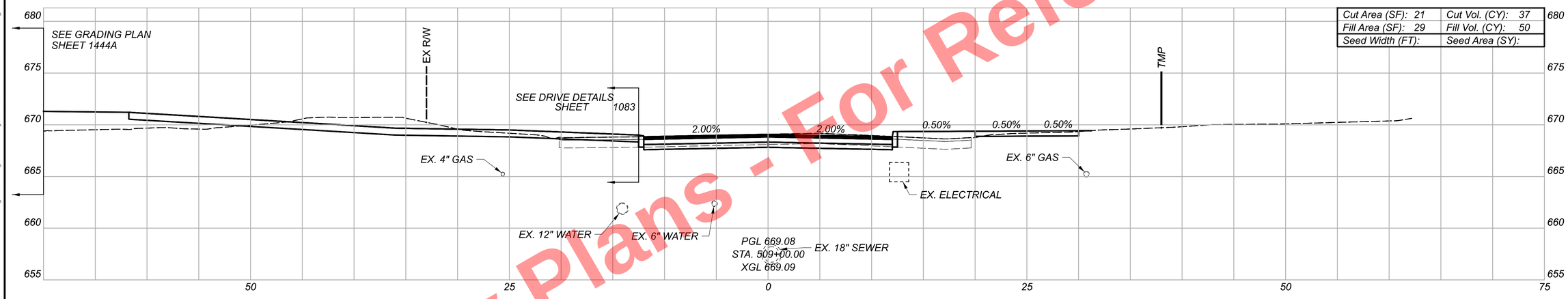

Cut Area (SF): 21	Cut Vol. (CY): 37
Fill Area (SF): 29	Fill Vol. (CY): 50
Seed Width (FT):	Seed Area (SY):

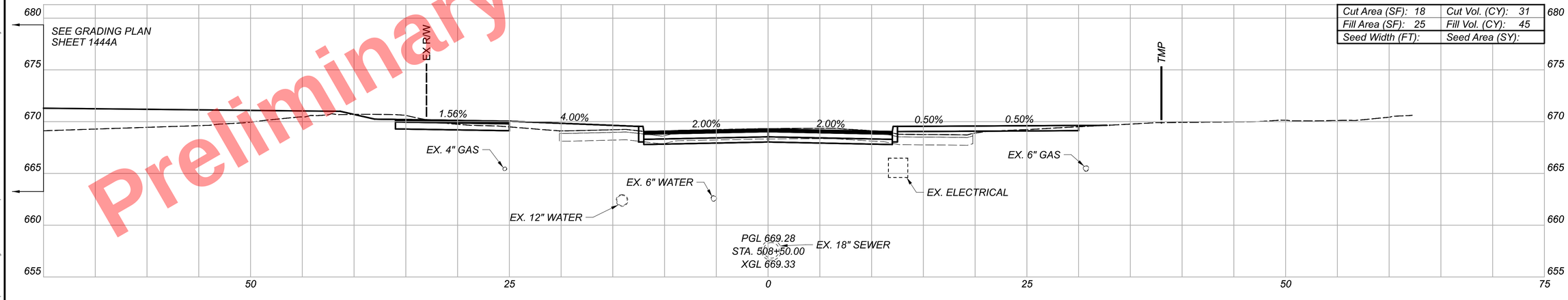

Cut Area (SF): 18	Cut Vol. (CY): 31
Fill Area (SF): 25	Fill Vol. (CY): 45
Seed Width (FT):	Seed Area (SY):

Preliminary Plans - For Reference Only

CUY-90-16.28 (CCG3A)

MODEL: CLP_Midtown Connector - 508+50.00 [Sheet] PAPERSIZE: 34x22 (in.) DATE: 5/13/2025 TIME: 5:43:38 PM USER: MaLaGallagher
pw:\\mb-us-pw.bentley.com\mb-us-pw-03\Documents\Cleveland_OH\DL_Projects\ODOT\District2\82382\400-Engineering\Roadway\Sheets\82382_XS7900.dgn

CROSS SECTIONS
MIDTOWN CONNECTOR

Sheet Totals		
Seeding	Cut	Fill
0	109	146

DESIGN AGENCY
Michael Baker INTERNATIONAL

DESIGNER KJM

REVIEWER KGJ 05/22/24

PROJECT ID 82382

SHEET 957 TOTAL 2696

Preliminary Plans - For Reference Only

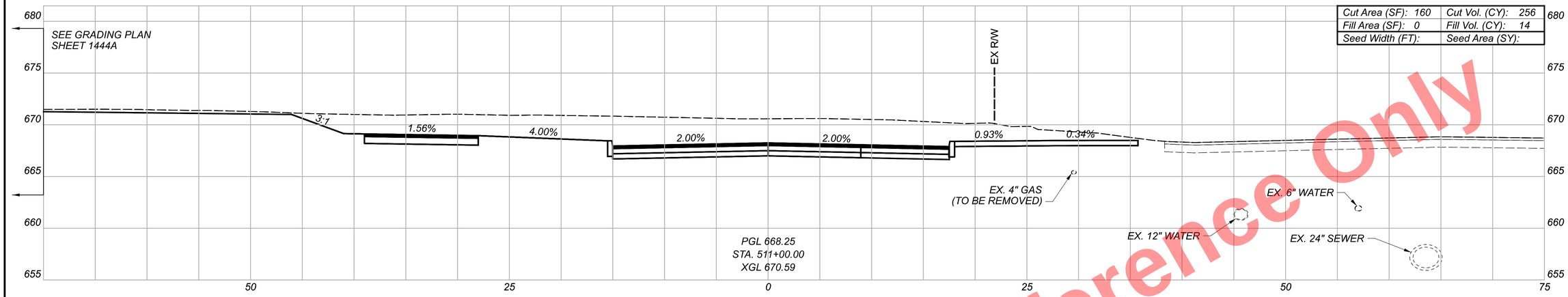

Cut Area (SF): 160	Cut Vol. (CY): 256
Fill Area (SF): 0	Fill Vol. (CY): 14
Seed Width (FT):	Seed Area (SY):

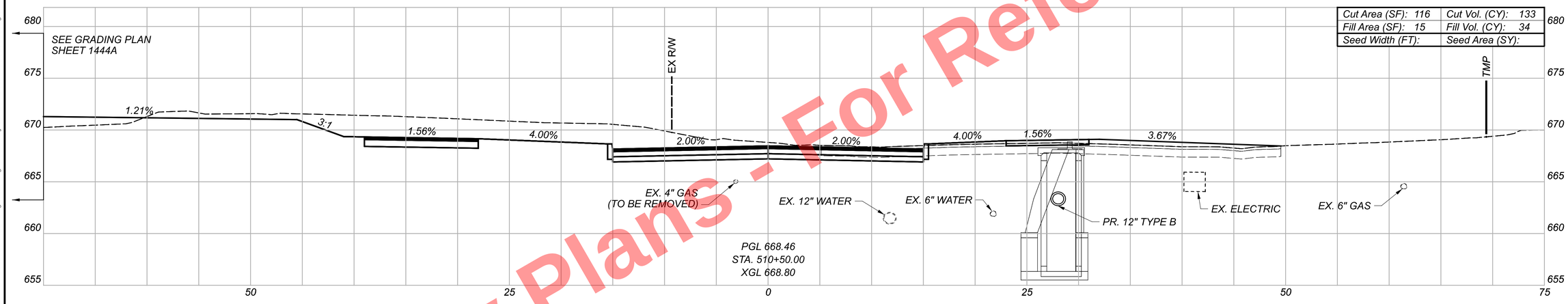

Cut Area (SF): 116	Cut Vol. (CY): 133
Fill Area (SF): 15	Fill Vol. (CY): 34
Seed Width (FT):	Seed Area (SY):

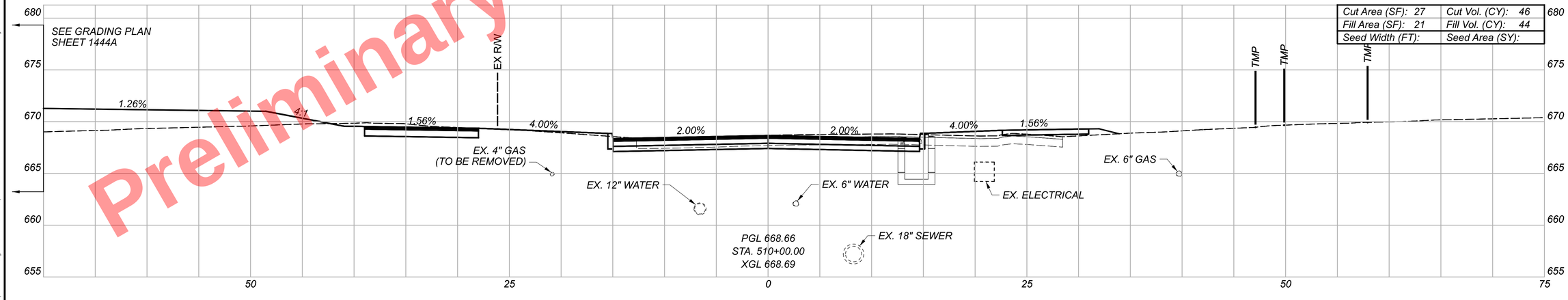

Cut Area (SF): 27	Cut Vol. (CY): 46
Fill Area (SF): 21	Fill Vol. (CY): 44
Seed Width (FT):	Seed Area (SY):

Sheet Totals		
Seeding	Cut	Fill
0	435	92

CUY-90-16.28 (CCG3A)

CROSS SECTIONS
MIDTOWN CONNECTOR

DESIGN AGENCY
Michael Baker INTERNATIONAL

DESIGNER
KJM

REVIEWER
KGJ 05/22/24

PROJECT ID
82382

SHEET 958 | TOTAL 2696

MODEL: CLP_Midtown Connector - 510+00.00 [Sheet] PAPERSIZE: 34x22 (in.) DATE: 5/13/2025 TIME: 5:44:51 PM USER: MaloGallagher
pw:\\mb-us-pw.bentley.com\mb-us-pw-03\Documents\Cleveland_OH\01_Projects\0007\01_District2\82382\400-Engineering\Roadway\Sheets\82382_XS7900.dgn

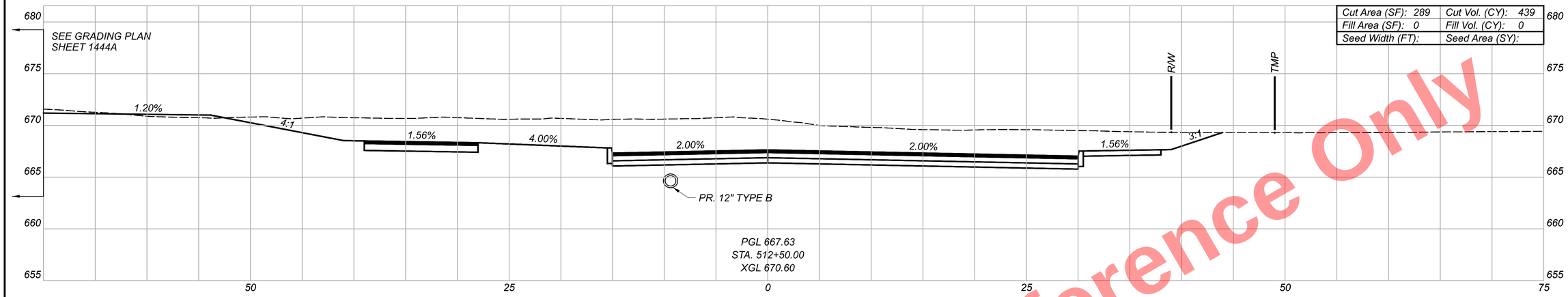

Cut Area (SF): 289	Cut Vol. (CY): 439
Fill Area (SF): 0	Fill Vol. (CY): 0
Seed Width (FT):	Seed Area (SY):

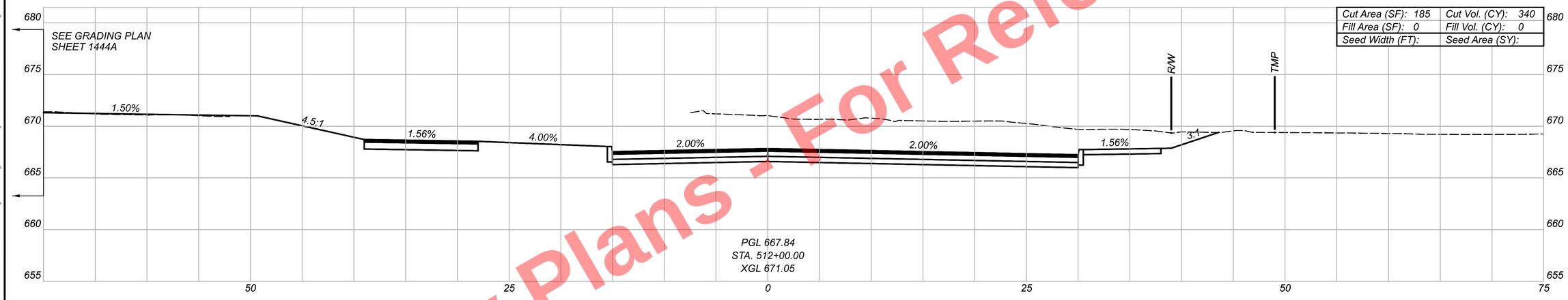

Cut Area (SF): 185	Cut Vol. (CY): 340
Fill Area (SF): 0	Fill Vol. (CY): 0
Seed Width (FT):	Seed Area (SY):

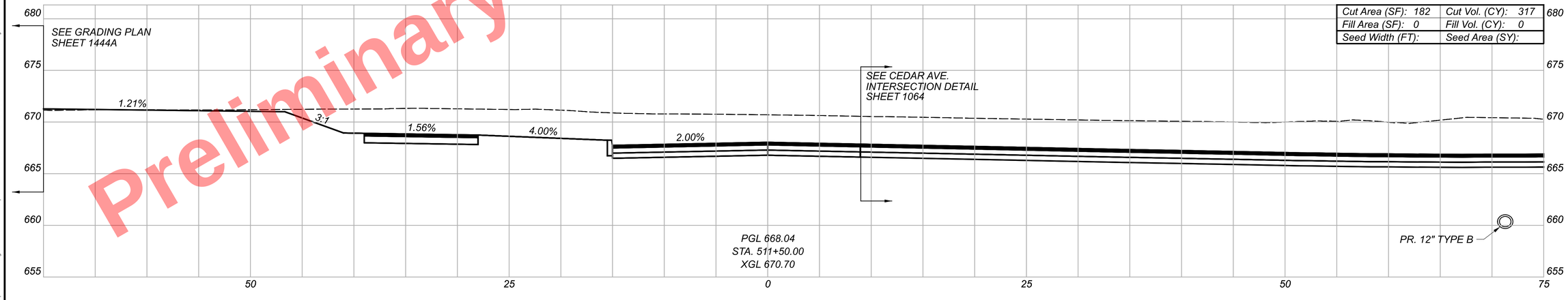

Cut Area (SF): 182	Cut Vol. (CY): 317
Fill Area (SF): 0	Fill Vol. (CY): 0
Seed Width (FT):	Seed Area (SY):

Preliminary Plans - For Reference Only

CROSS SECTIONS
MIDTOWN CONNECTOR

CUY-90-16.28 (CCG3A)

MODEL: CLP_Midtown Connector - 5ft=50.00 [Sheet] PAPERSIZE: 34x22 (in.) DATE: 5/13/2025 TIME: 5:45:54 PM USER: Mala.Gallagher
pw:\\mb-us-pw.bentley.com:mb-us-pw-03\Documents\Cleveland_OH\01_Projects\0007\Distrlct2\82382\400-Engineering\Roadway\Sheets\82382_XS7900.dgn

Sheet Totals		
Seeding	Cut	Fill
0	1096	0

DESIGN AGENCY
Michael Baker INTERNATIONAL

DESIGNER
KJM

REVIEWER
KGJ 05/22/24

PROJECT ID
82382

SHEET 959 TOTAL 2696

Preliminary Plans - For Reference Only

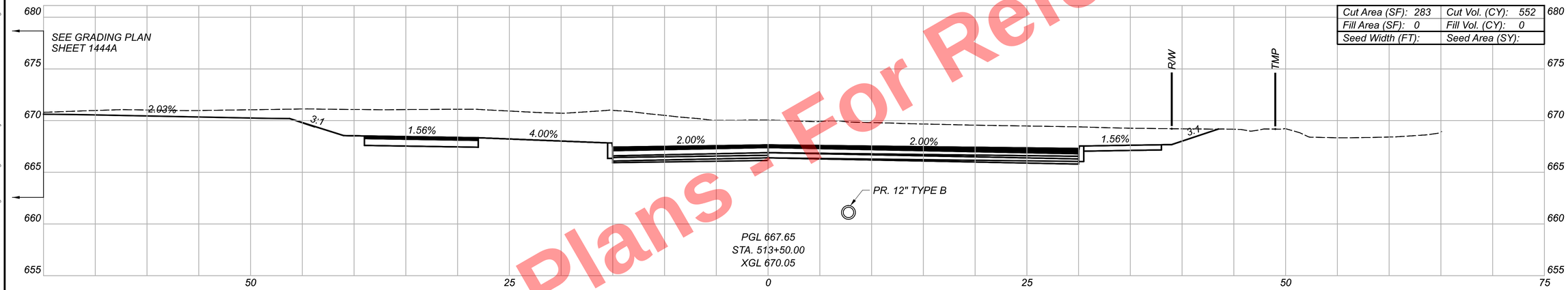

Cut Area (SF): 283	Cut Vol. (CY): 552
Fill Area (SF): 0	Fill Vol. (CY): 0
Seed Width (FT):	Seed Area (SY):

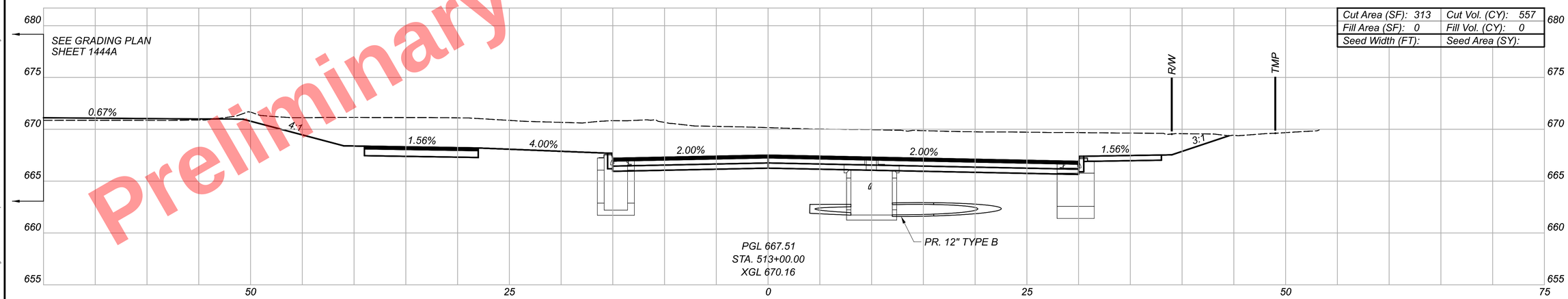

Cut Area (SF): 313	Cut Vol. (CY): 557
Fill Area (SF): 0	Fill Vol. (CY): 0
Seed Width (FT):	Seed Area (SY):

Sheet Totals			Grand Totals Carried to Subsummary		
Seeding	Cut	Fill	Seeding	Cut	Fill
0	1109	0	0	4279	289

CUY-90-16.28 (CCG3A)

MODEL: CLP_Midtown Connector - 513+00.00 [Sheet] PAPERSIZE: 34x22 (In.) DATE: 5/13/2025 TIME: 5:46:50 PM USER: Mala.Gallagher
pw:\\mb-us-pw.bentley.com\mb-us-pw-03\Documents\Cleveland_OH\01_Projects\000T\District2\82382\400-Engineering\Roadway\Sheets\82382_XS7900.dgn

CROSS SECTIONS
MIDTOWN CONNECTOR

DESIGN AGENCY
Michael Baker INTERNATIONAL

DESIGNER KJM

REVIEWER KGJ 05/22/24

PROJECT ID 82382

SHEET 960 TOTAL 2696

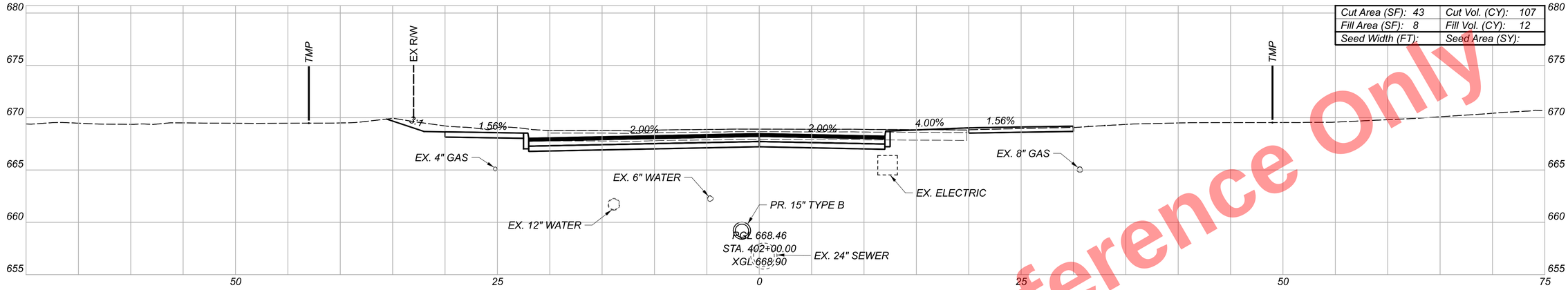

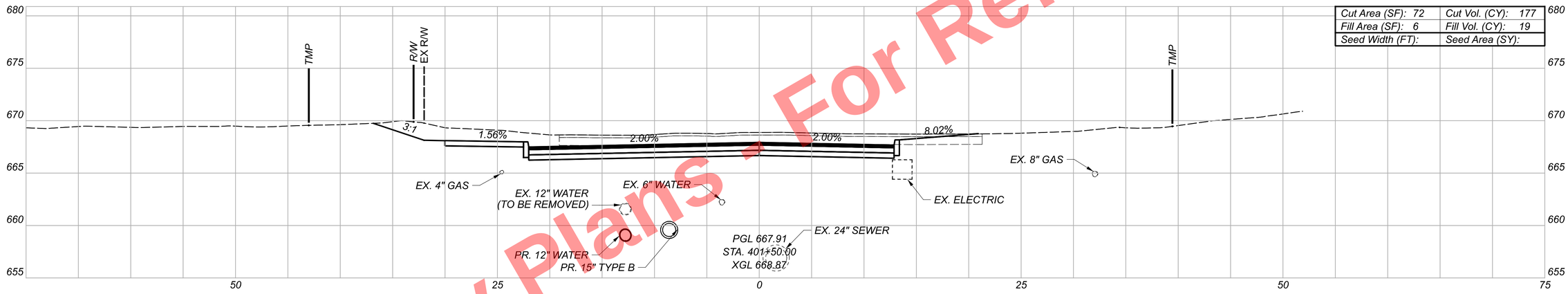

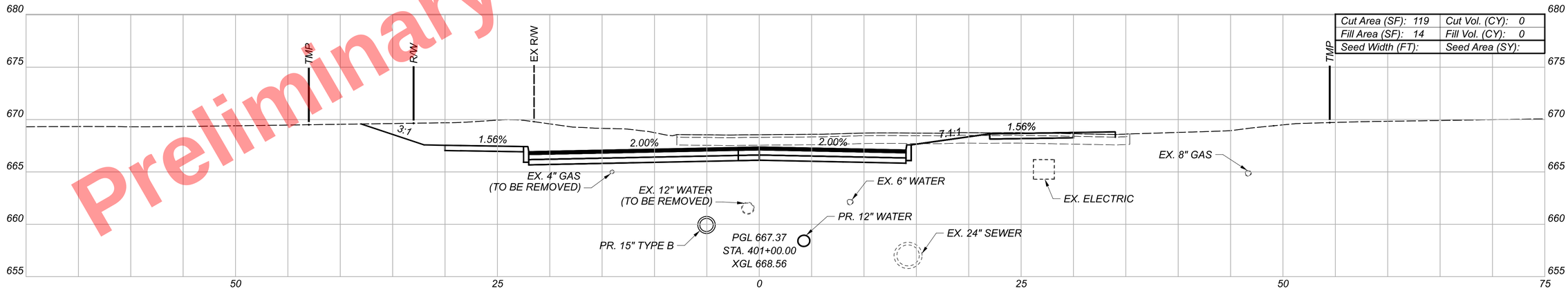

For Reference Only
Preliminary Plans - Not

CROSS SECTIONS
CEDAR AVE.

CUY-90-16.28 (CCG3A)

MODEL: CLP_Cedar - 40+00.00 [Sheet] PAPERSIZE: 34x22 (in.) DATE: 5/19/2025 TIME: 8:44:35 AM USER: KevinJMcNutt
pw:\\mb-us-pw.bentley.com:mb-us-pw-03\Documents\Cleveland_OH\OL_Projects\ODOT\District 12\82382\400-Engineering\Roadway\Sheets\82382_XS790.dgn

DESIGN AGENCY
Michael Baker INTERNATIONAL

DESIGNER
KJM

REVIEWER
KGJ 05/22/24

PROJECT ID
82382

Sheet Totals		
Seeding	Cut	Fill
0	284	31

SHEET 961 TOTAL 2696

Preliminary Plans - For Reference Only

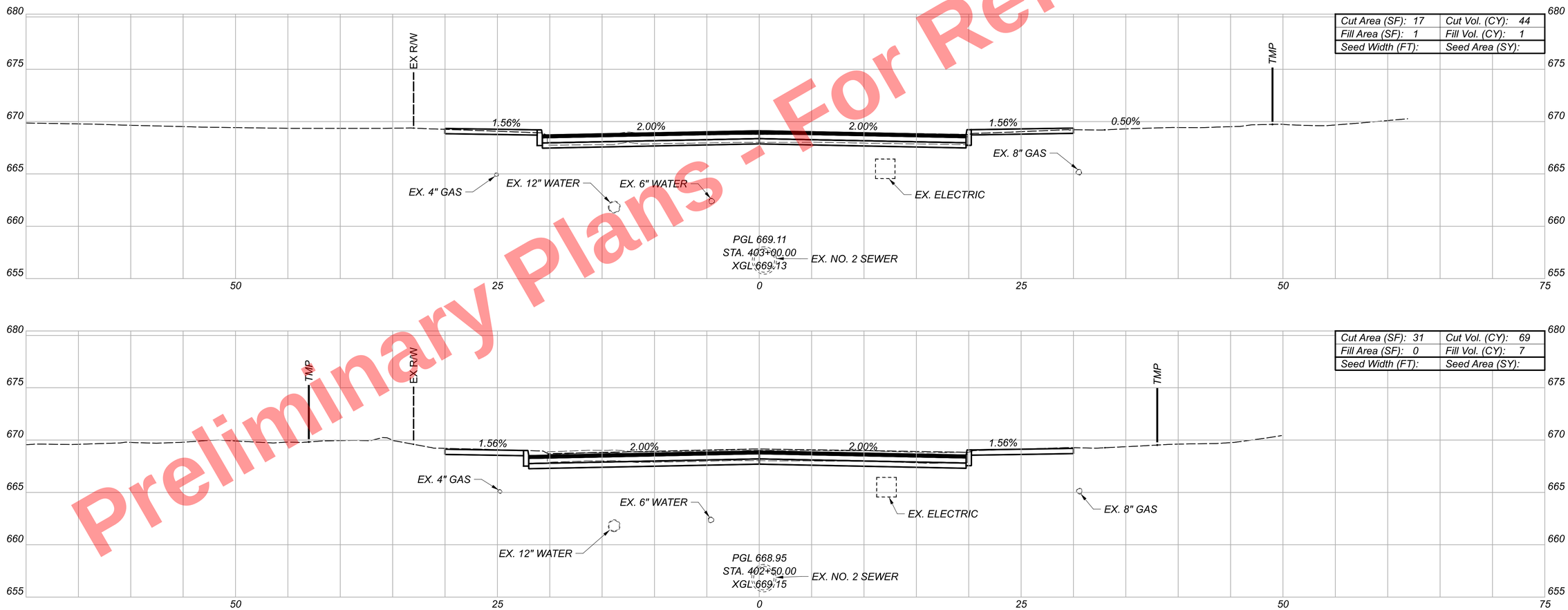

CROSS SECTIONS
CEDAR AVE.

CUY-90-16.28 (CCG3A)

MODEL: CLP_Cedar - 402+50.00 [Sheet] PAPERSIZE: 34x22 (in.) DATE: 5/19/2025 TIME: 8:44:43 AM USER: KevinJMcNutt
pw:\\mb-us-pw.bentley.com:mb-us-pw-03\Documents\Cleveland_OH\01_Projects\DOT\District2\82382\400-Engineering\Roadway\Sheets\82382_XS7910.dgn

Sheet Totals			Grand Totals Carried to Subsummary		
Seeding	Cut	Fill	Seeding	Cut	Fill
0	113	8	0	397	39

DESIGN AGENCY
Michael Baker INTERNATIONAL

DESIGNER KJM

REVIEWER KGJ 05/22/24

PROJECT ID 82382

SHEET 962 TOTAL 2696

Preliminary Plans - For Reference Only



CROSS SECTIONS
E. 14TH ST. NB CROSSOVER

DESIGN AGENCY
Michael Baker INTERNATIONAL

DESIGNER
KJM

REVIEWER
KGJ 05/22/24

PROJECT ID
82382

Sheet Totals		
Seeding	Cut	Fill
0	0	0

SHEET	TOTAL
963	2696

CUY-90-16.28 (CCG3A)

MODEL: E_14th NBC - 250+25.00 (Sheet) PAPERSIZE: 34x22 (In) DATE: 3/28/2025 TIME: 9:22:01 AM USER: KevinJMcNutt
pw:\\mb-us-pw.bentley.com:mb-us-pw-03\Documents\Cleveland_OH\01_Projects\ODOT\District2\82382\400-Engineering\Roadway\Sheets\82382_XS7270.dgn

Preliminary Plans - For Reference Only

Cut Area (SF): 2	Cut Vol. (CY): 1
Fill Area (SF): 1	Fill Vol. (CY): 0
Seed Width (FT):	Seed Area (SY):

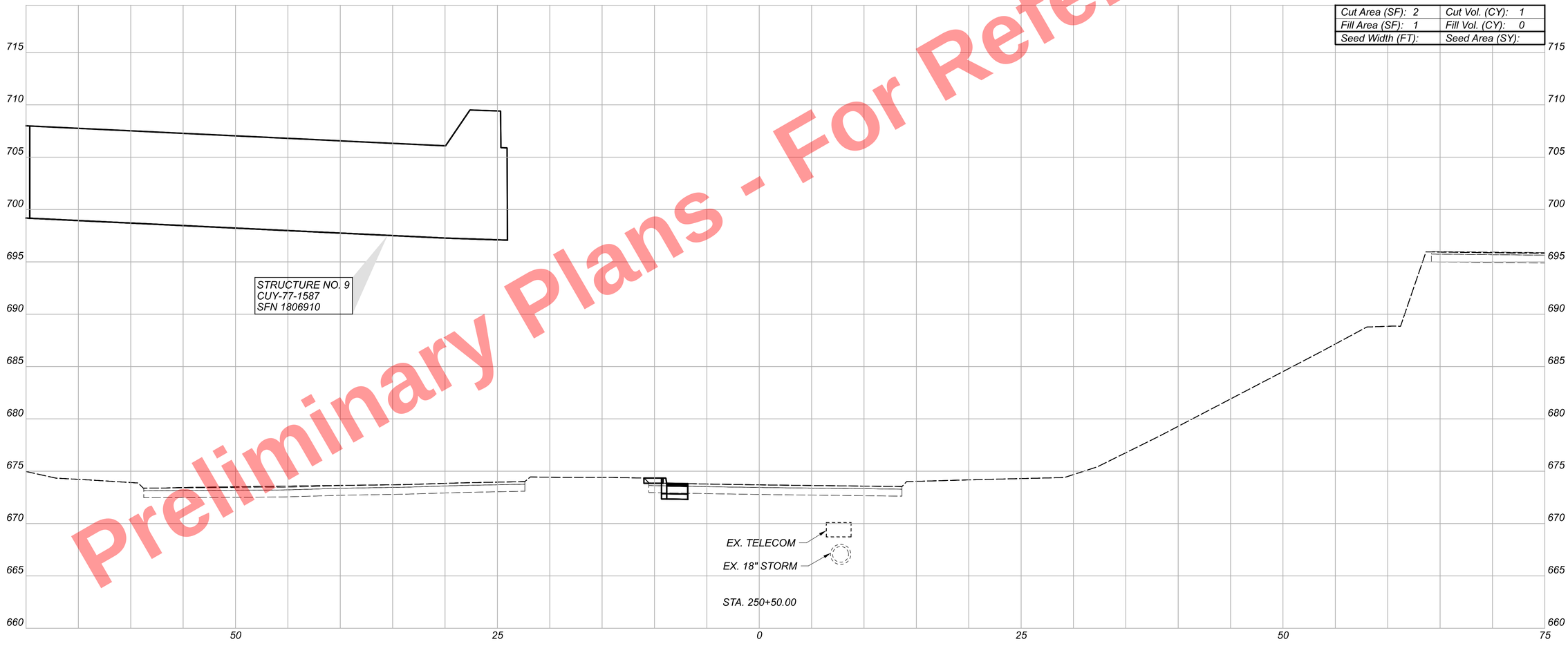

CUY-90-16.28 (CCG3A)

MODEL: E.14th NBC - 250+50.00 [Sheet] PAPERSIZE: 34x22 (in) DATE: 3/28/2025 TIME: 9:22:07 AM USER: KevinJMcNutt
pw:\\mb-us-pw.bentley.com:mb-us-pw-03\Documents\Cleveland_OH\OL_Projects\ODOT\District12\82382\400-Engineering\Roadway\Sheets\8382_XS7270.dgn

CROSS SECTIONS
E. 14TH ST. NB CROSSOVER

DESIGN AGENCY
Michael Baker INTERNATIONAL

DESIGNER
KJM

REVIEWER
KGJ 05/22/24

PROJECT ID
82382

Sheet Totals		
Seeding	Cut	Fill
0	1	0

SHEET	TOTAL
964	2696

Preliminary Plans - For Reference Only

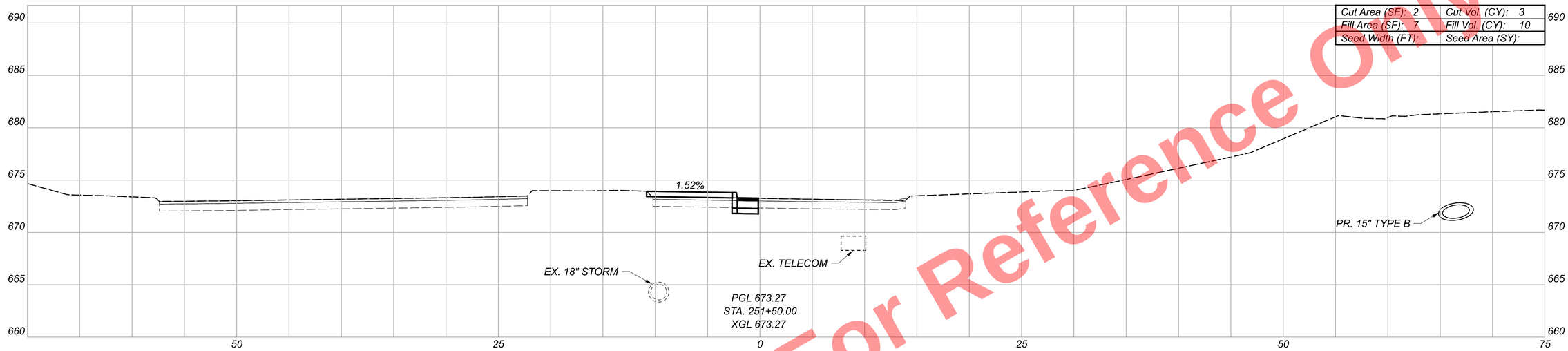

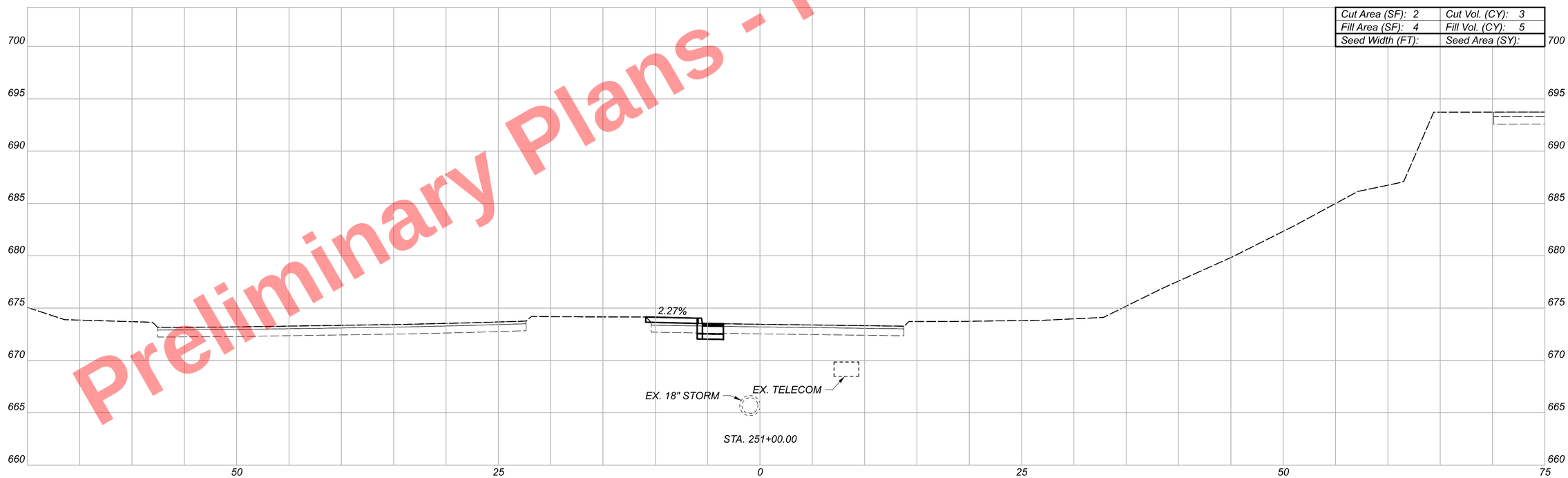

CROSS SECTIONS
E. 14TH ST. NB CROSSOVER

CUY-90-16.28 (CCG3A)

MODEL: E. 14th NBC - 251+00.00 (Sheet) PAPERSIZE: 34x22 (in.) DATE: 3/28/2025 TIME: 9:22:14 AM USER: KevinJMcNutt
pw:\\mb-us-pw.bentley.com:mb-us-pw-03\Documents\Cleveland_OH\01_Projects\ODOT\District2\82382\400-Engineering\Roadway\Sheets\82382_XS7270.dgn

DESIGN AGENCY
Michael Baker INTERNATIONAL

DESIGNER
KJM

REVIEWER
KGJ 05/22/24

PROJECT ID
82382

Sheet Totals		
Seeding	Cut	Fill
0	6	15

SHEET	TOTAL
965	2696

Preliminary Plans - Not For Reference Only

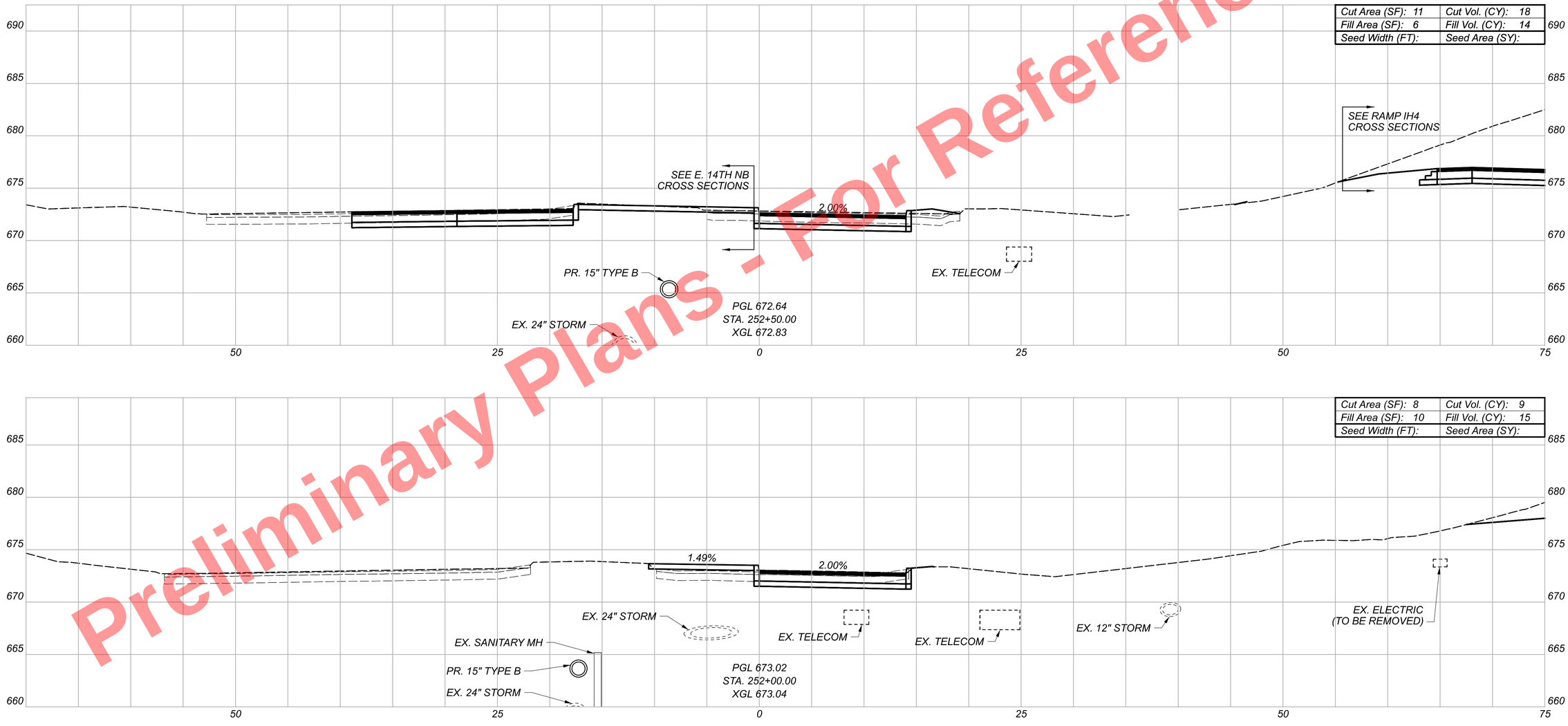

CUY-90-16.28 (CCG3A)

MODEL: E. 14th NBC - 252+00.00 [Sheet] PAPERSIZE: 34x22 (in.) DATE: 3/28/2025 TIME: 9:22:23 AM USER: KevinMcNutt
pw:\\mb-us-pw.bentley.com:mb-us-pw-03\Documents\Cleveland_OH\Oi_Projects\0007\District2\82382\400-Engineering\Roadway\Sheets\82382_XS7270.dgn

CROSS SECTIONS
E. 14TH ST. NB CROSSOVER

DESIGN AGENCY
Michael Baker INTERNATIONAL

DESIGNER
KJM

REVIEWER
KGJ 05/22/24

PROJECT ID
82382

Sheet Totals		
Seeding	Cut	Fill
0	27	29

SHEET 966 TOTAL 2696

Preliminary Plans - For Reference Only

CUY-90-16.28 (CCG3A)

MODEL: E. 14th NBC - 253+00.00 [Sheet] PAPERSIZE: 34x22 (in.) DATE: 3/28/2025 TIME: 9:22:31 AM USER: Kevin.McNutt
pw:\\mb-us-pw.bentley.com:mb-us-pw-03\Documents\Cleveland.OH\01_Projects\ODOT\District2\82382\400-Engineering\Roadway\Sheets\82382_XS7270.dgn

CROSS SECTIONS
E. 14TH ST. NB CROSSOVER

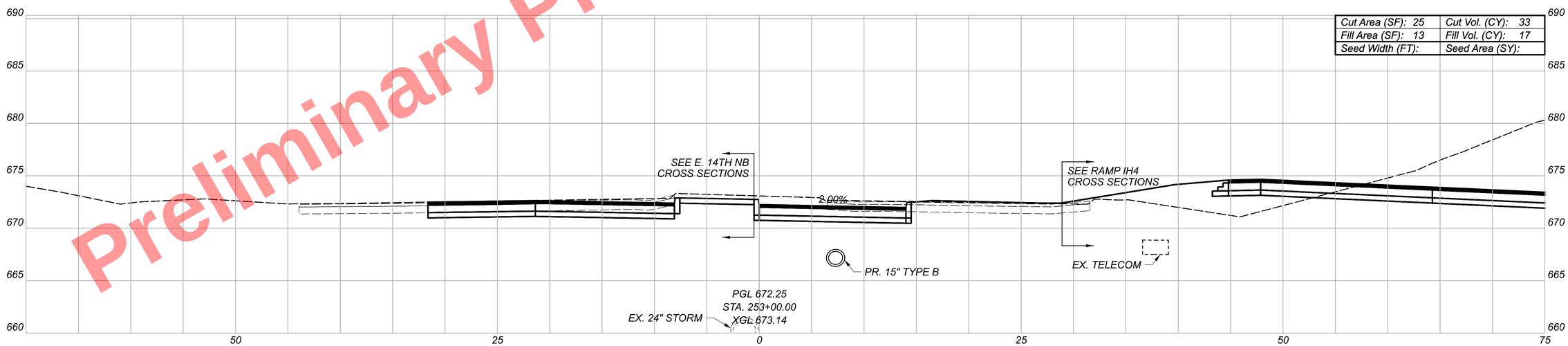

Cut Area (SF): 25	Cut Vol. (CY): 33
Fill Area (SF): 13	Fill Vol. (CY): 17
Seed Width (FT):	Seed Area (SY):

Sheet Totals			Grand Totals Carried to Subsummary		
Seeding	Cut	Fill	Seeding	Cut	Fill
0	33	17	0	67	61

DESIGN AGENCY
Michael Baker INTERNATIONAL

DESIGNER KJM

REVIEWER KGJ 05/22/24

PROJECT ID 82382

SHEET 967 TOTAL 2696

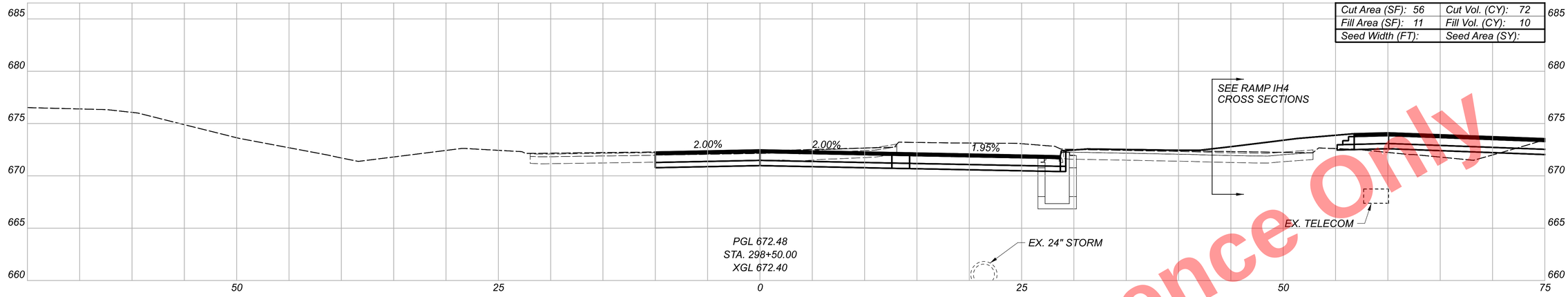

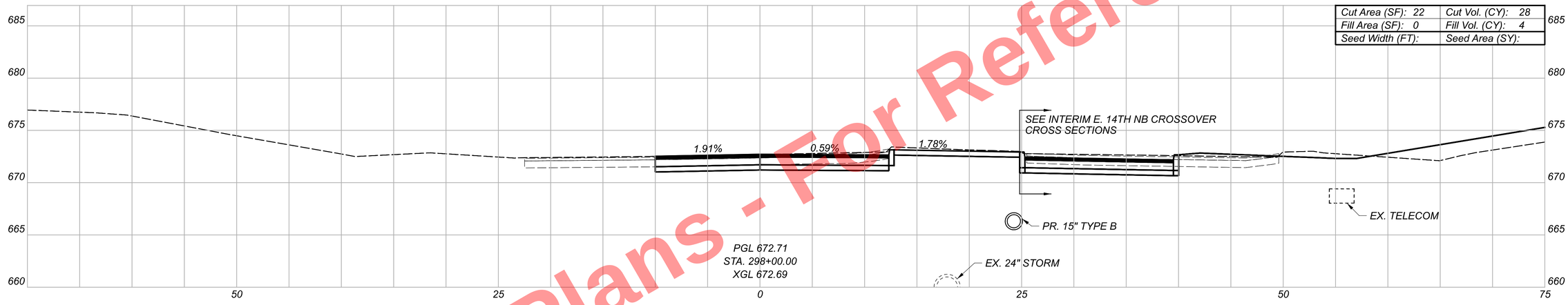

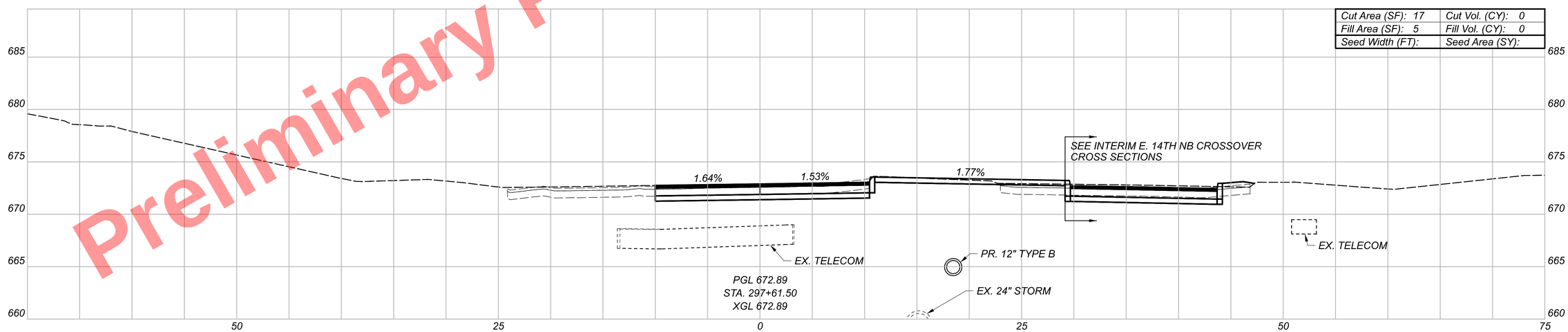

Preliminary Plans - Not For Reference Only

CUY-90-16.28 (CCG3A)

MODEL: CLP_EI4NB_Hybrid - 297+61.50 [Sheet] PAPERSIZE: 34x22 (In.) DATE: 3/28/2025 TIME: 9:22:50 AM USER: KevinJMcNutt
pw:\\mb-us-pw.bentley.com:mb-us-pw-03\Documents\Cleveland_OH\01_Projects\0001_District2\82382\400-Engineering\Roadway\Sheets\82382_XS7240.dgn

CROSS SECTIONS
E. 14TH ST. NB

DESIGN AGENCY
Michael Baker INTERNATIONAL

DESIGNER
KJM

REVIEWER
KGJ 05/22/24

PROJECT ID
82382

Sheet Totals		
Seeding	Cut	Fill
0	100	14

SHEET	TOTAL
968	2696

Preliminary Plans - For Reference Only

CUY-90-16.28 (CCG3A)

MODEL: CLP_EI4NB_Hybrid - 299+00.00 [Sheet] PAPERSIZE: 34x22 (In.) DATE: 3/28/2025 TIME: 9:23:02 AM USER: Kevin.McNutt
pw:\\mb-us-pw.bentley.com:mb-us-pw-03\Documents\Cleveland_OH\OL_Projects\ODOT\District12\82382\400-Engineering\Roadway\Sheets\82382_XS7240.dgn

Cut Area (SF): 29	Cut Vol. (CY): 78
Fill Area (SF): 2	Fill Vol. (CY): 12
Seed Width (FT):	Seed Area (SY):

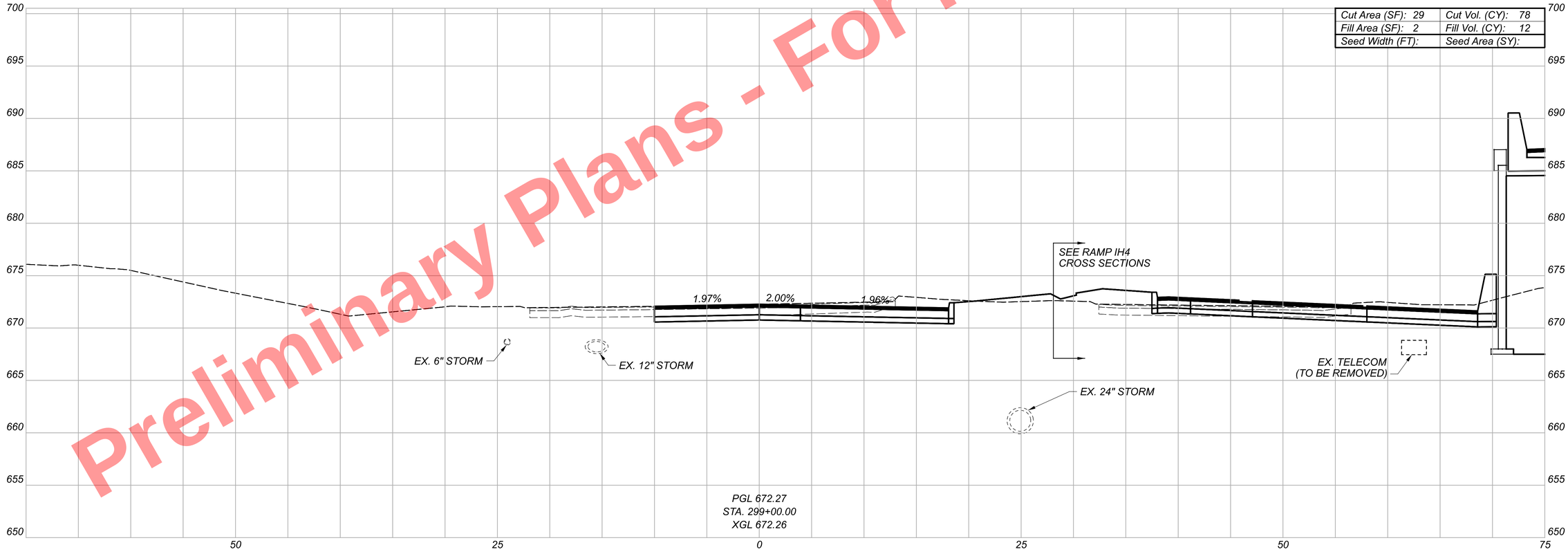

CROSS SECTIONS
E. 14TH ST. NB

DESIGN AGENCY
Michael Baker INTERNATIONAL

DESIGNER
KJM

REVIEWER
KGJ 05/22/24

PROJECT ID
82382

Sheet Totals		
Seeding	Cut	Fill
0	78	12

SHEET	TOTAL
969	2696

Preliminary Plans - For Reference Only

Cut Area (SF): 19	Cut Vol. (CY): 44
Fill Area (SF): 9	Fill Vol. (CY): 11
Seed Width (FT):	Seed Area (SY):

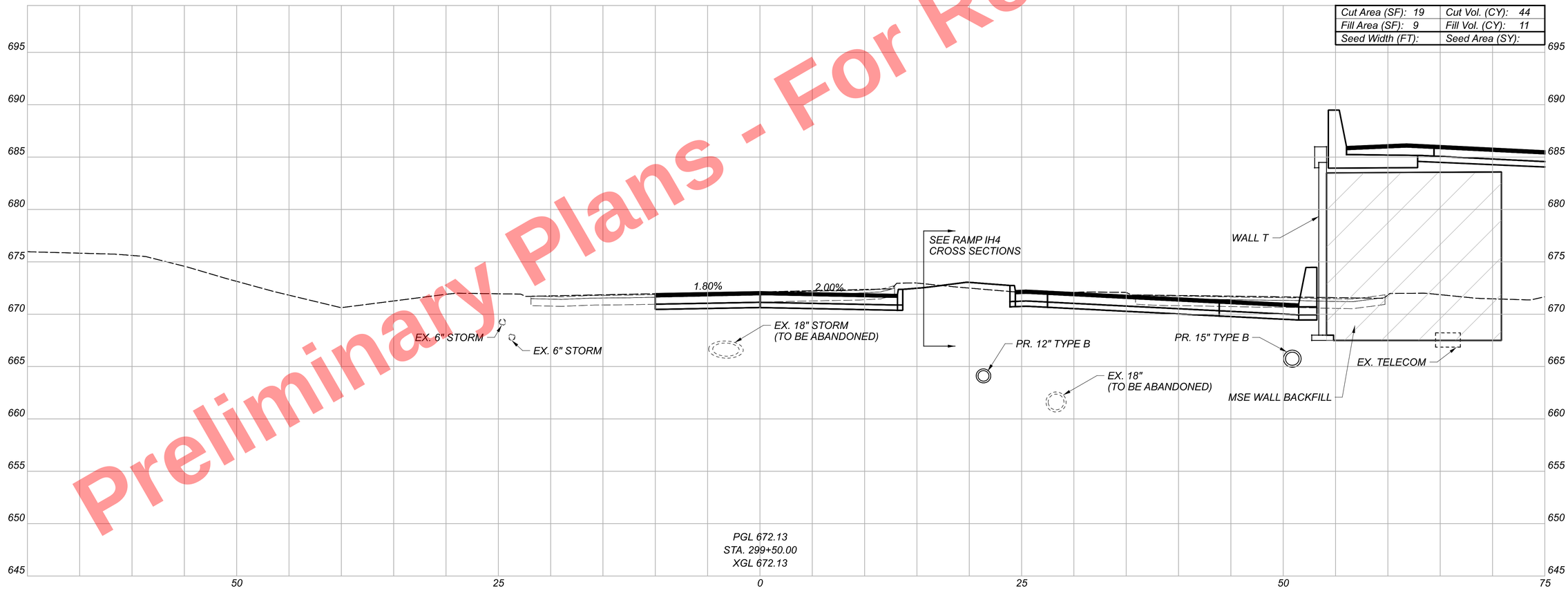

CROSS SECTIONS
E. 14TH ST. NB

CUY-90-16.28 (CCG3A)

MODEL: CLP_EI4NB_Hybrid - 299+50.00 [Sheet] PAPERSIZE: 34x22 (in) DATE: 3/28/2025 TIME: 9:23:08 AM USER: Kevin.McNutt
pw:\\mb-us-pw.bentley.com:mb-us-pw-03\Documents\Cleveland_OH\OL_Projects\ODOT\District12\82382\400-Engineering\Roadway\Sheets\82382_XS7240.dgn

DESIGN AGENCY
Michael Baker INTERNATIONAL

DESIGNER
KJM

REVIEWER
KGJ 05/22/24

PROJECT ID
82382

Sheet Totals		
Seeding	Cut	Fill
0	44	11

SHEET 970 TOTAL 2696

Preliminary Plans - For Reference Only

MODEL: CLP_E4NB_Hybrid - 300+00.00 (Sheet) PAPERSIZE: 34x22 (In.) DATE: 3/28/2025 TIME: 9:23:14 AM USER: KevinJMcNutt
pw:\\mb-us-pw.bentley.commb-us-pw-03\Documents\Cleveland_OH\01_Projects\000T\District2\82382\400-Engineering\Roadway\Sheets\82382_XS7240.dgn

CUY-90-16.28 (CCG3A)

CROSS SECTIONS
E. 14TH ST. NB

Cut Area (SF): 12	Cut Vol. (CY): 28
Fill Area (SF): 9	Fill Vol. (CY): 17
Seed Width (FT):	Seed Area (SY):

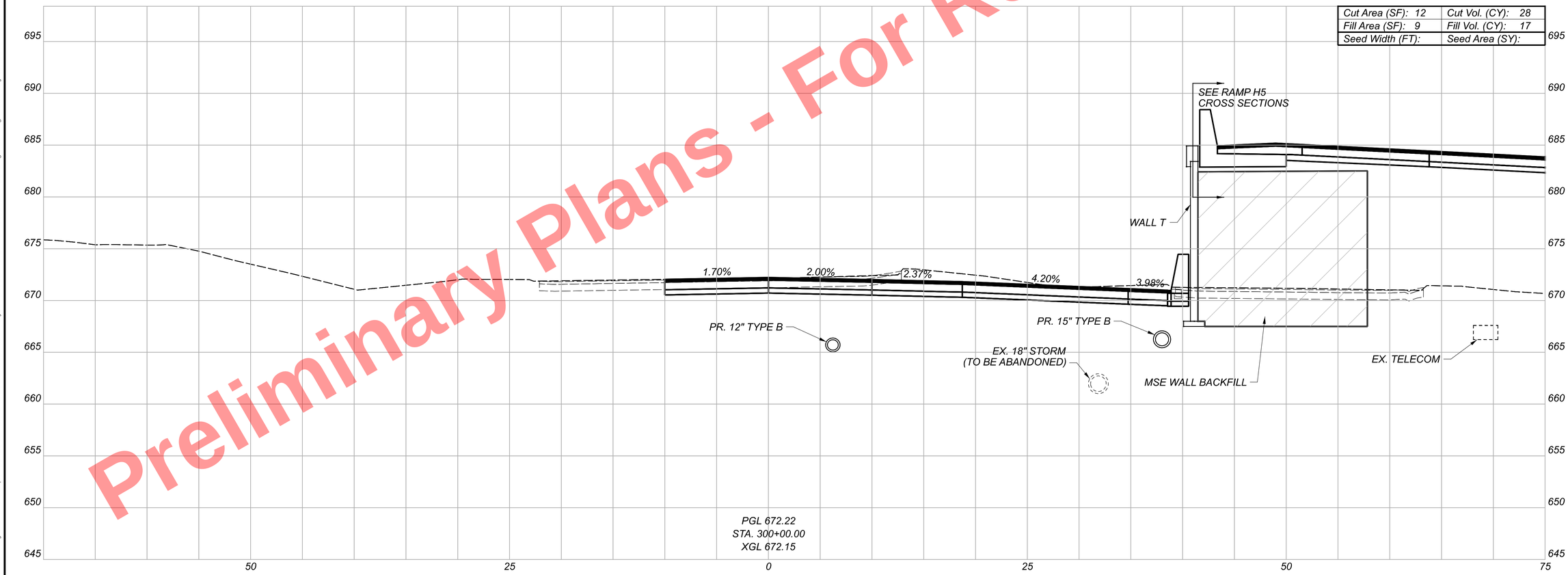

Sheet Totals		
Seeding	Cut	Fill
0	28	17

DESIGN AGENCY
Michael Baker INTERNATIONAL

DESIGNER
KJM

REVIEWER
KGJ 05/22/24

PROJECT ID
82382

SHEET 971 TOTAL 2696

Preliminary Plans - For Reference Only

Cut Area (SF): 52	Cut Vol. (CY): 59
Fill Area (SF): 9	Fill Vol. (CY): 17
Seed Width (FT):	Seed Area (SY):

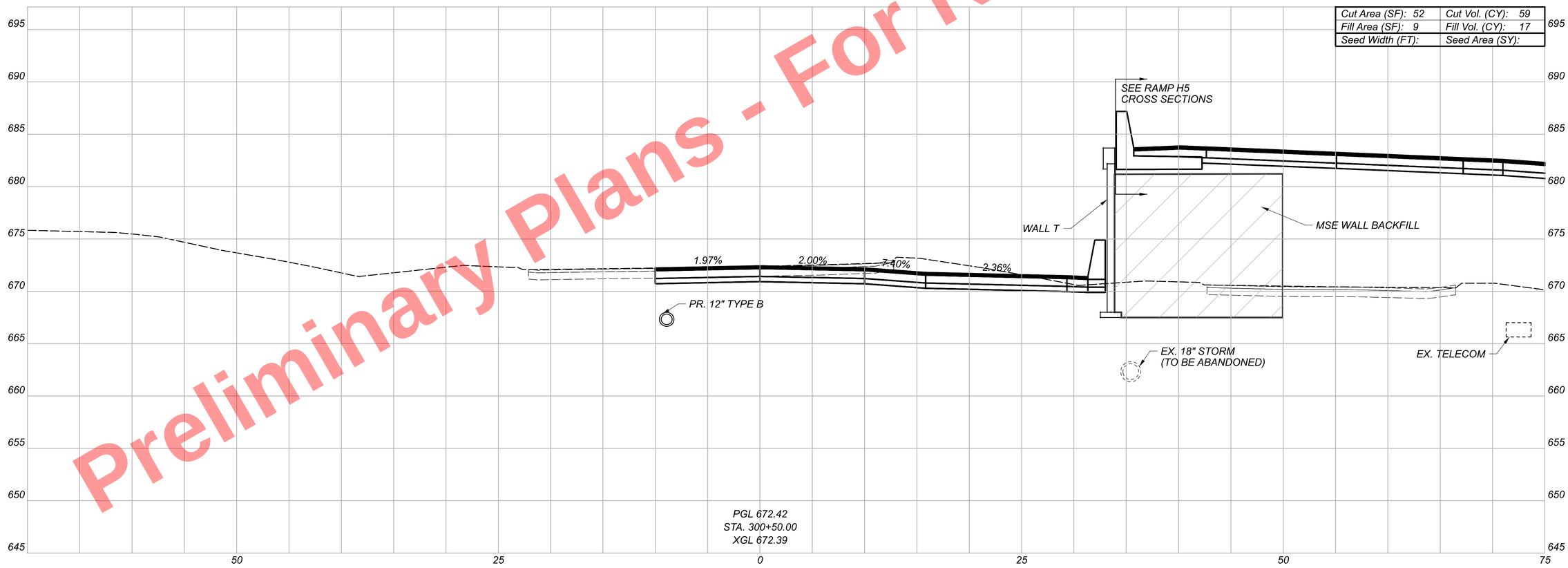

CUY-90-16.28 (CCG3A)

MODEL: CLP_EI4NB_Hybrid - 300+50.00 [Sheet] PAPERSIZE: 34x22 (in) DATE: 3/28/2025 TIME: 9:23:19 AM USER: Kevin.McNutt
pw:\\mb-us-pw.bentley.com:mb-us-pw-03\Documents\Cleveland_OH\OL_Projects\ODOT\Districts\12\82382\400-Engineering\Roadway\Sheets\82382_XS7240.dgn

CROSS SECTIONS
E. 14TH ST. NB

DESIGN AGENCY
Michael Baker INTERNATIONAL

DESIGNER
KJM

REVIEWER
KGJ 05/22/24

PROJECT ID
82382

Sheet Totals		
Seeding	Cut	Fill
0	59	17

SHEET 972 TOTAL 2696

Preliminary Plans - For Reference Only

CROSS SECTIONS
E. 14TH ST. NB

Cut Area (SF): 40	Cut Vol. (CY): 85
Fill Area (SF): 9	Fill Vol. (CY): 16
Seed Width (FT):	Seed Area (SY):

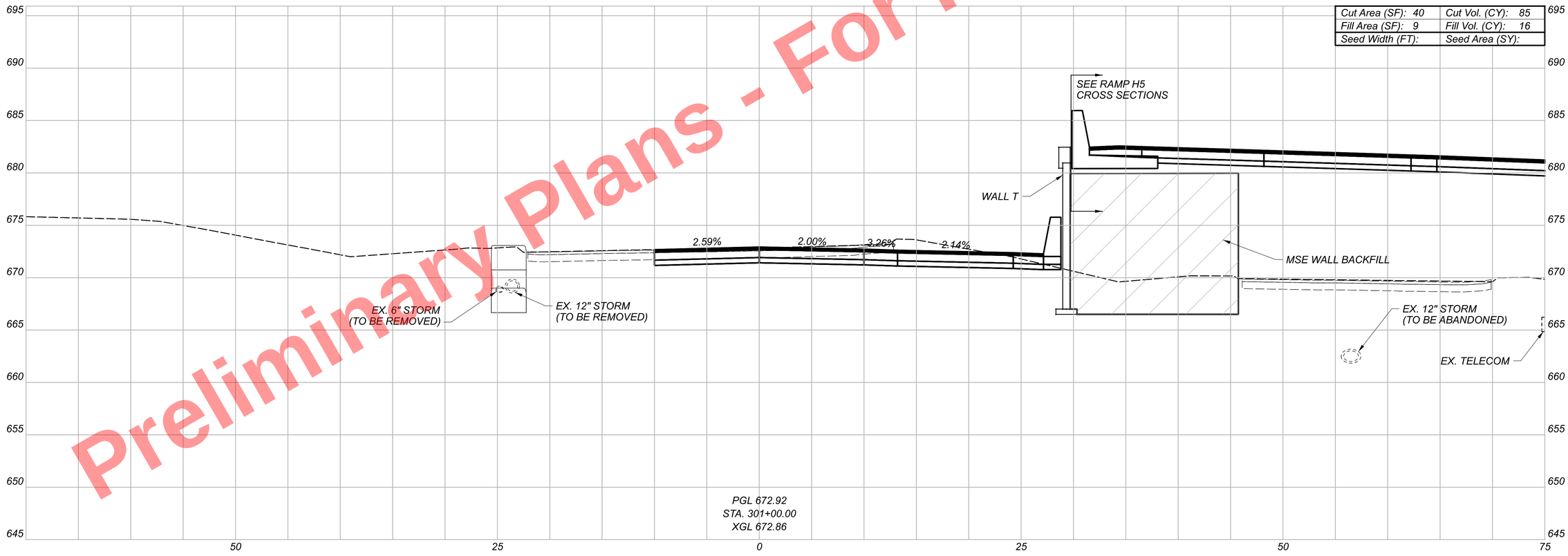

Sheet Totals		
Seeding	Cut	Fill
0	85	16

DESIGN AGENCY
Michael Baker INTERNATIONAL

DESIGNER
KJM

REVIEWER
KGJ 05/22/24

PROJECT ID
82382

SHEET 973 TOTAL 2696

CUY-90-16.28 (CCG3A)

MODEL: CLP_EI4NB_Hybrid - 30+00.00 [Sheet] PAPERSIZE: 34x22 (in.) DATE: 3/28/2025 TIME: 9:23:24 AM USER: Kevin.McNutt
pw:\\mb-us-pw.bentley.com:mb-us-pw-03\Documents\Cleveland_OH_OL_Projects\ODOT\District 12\82382\400-Engineering\Roadway\Sheets\82382_XS7240.dgn

Preliminary Plans - For Reference Only

Cut Area (SF): 73	Cut Vol. (CY): 106
Fill Area (SF): 7	Fill Vol. (CY): 14
Seed Width (FT):	Seed Area (SY):

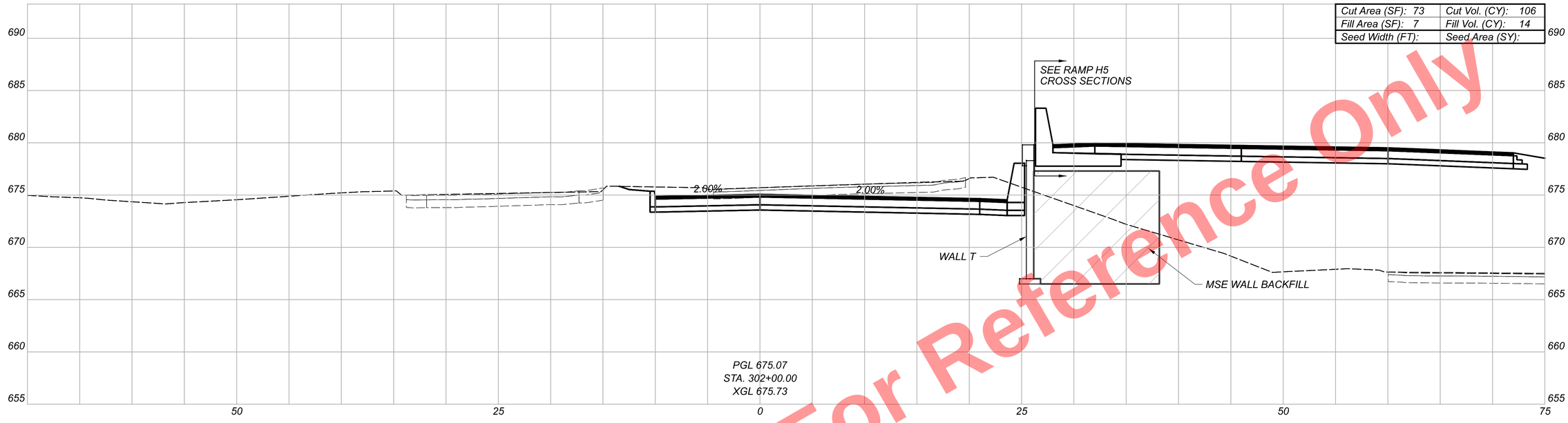

Cut Area (SF): 41	Cut Vol. (CY): 76
Fill Area (SF): 9	Fill Vol. (CY): 16
Seed Width (FT):	Seed Area (SY):

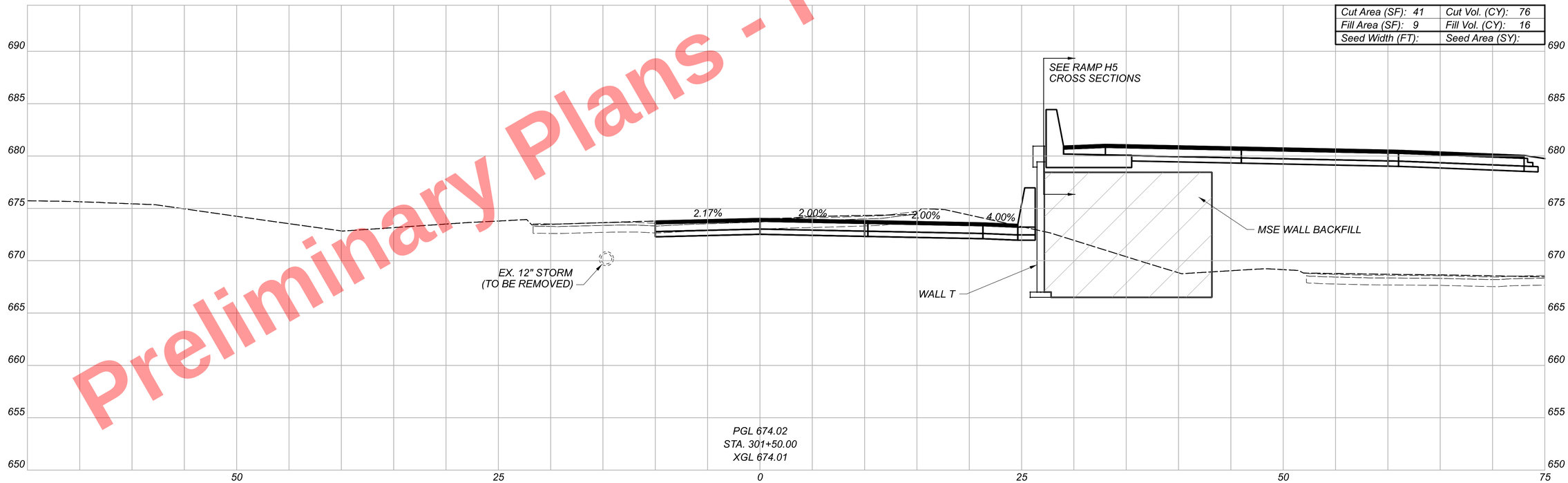

CUY-90-16.28 (CCG3A)

MODEL: CLP_E14NB_Hybrid - 301+50.00 [Sheet] PAPERSIZE: 34x22 (in) DATE: 3/28/2025 TIME: 9:23:29 AM USER: KevinJMcNutt
pw:\\mb-us-pw.bentley.commb-us-pw-03\Documents\Cleveland_OH\01_Projects\0DOT\District2\82382\400-Engineering\Roadway\Sheets\82382_XS7240.dgn

CROSS SECTIONS
E. 14TH ST. NB

Sheet Totals		
Seeding	Cut	Fill
0	182	30

DESIGN AGENCY
Michael Baker INTERNATIONAL

DESIGNER
KJM

REVIEWER
KGJ 05/22/24

PROJECT ID
82382

SHEET 974 TOTAL 2696

Preliminary Plans - For Reference Only

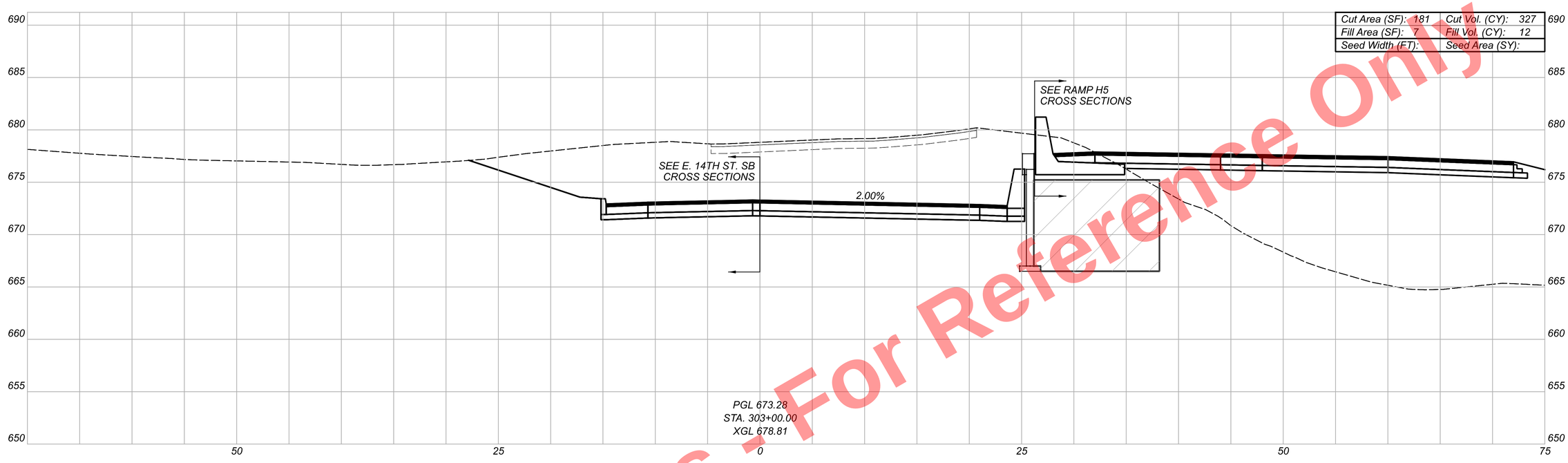

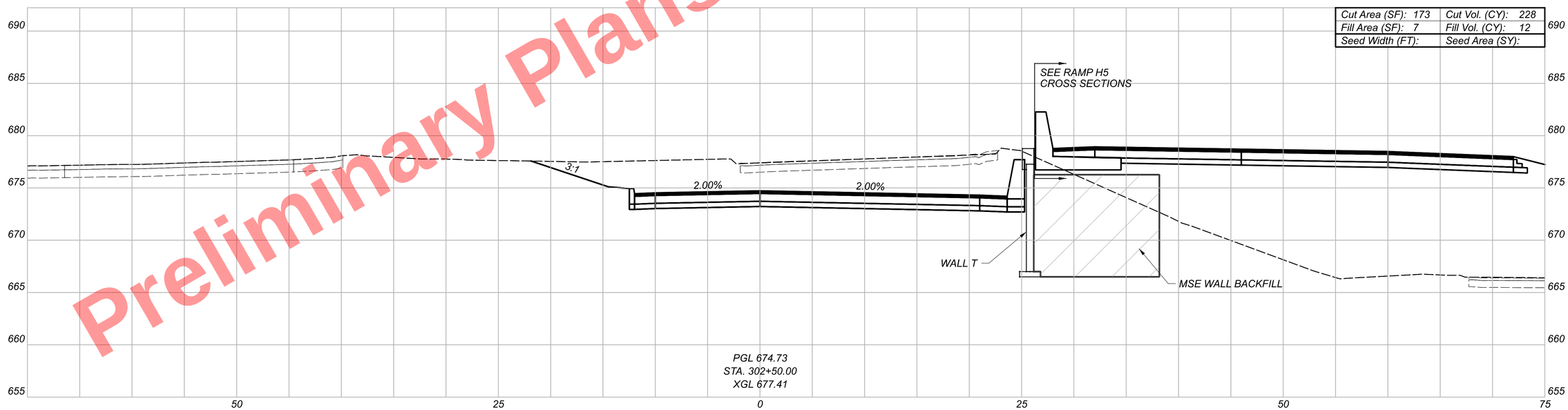

CUY-90-16.28 (CCG3A)

MODEL: CLP_EI4NB_Hybrid - 302+50.00 [Sheet] PAPERSIZE: 34x22 (in.) DATE: 3/28/2025 TIME: 9:23:36 AM USER: Kevin.McNutt
pw:\\mb-us-pw.bentley.com:mb-us-pw-03\Documents\Cleveland_OH\01_Projects\ODOT\District#12\82382\400-Engineering\Engineering\Roadway\Sheets\82382_XS7240.dgn

CROSS SECTIONS
E. 14TH ST. NB

Sheet Totals		
Seeding	Cut	Fill
0	555	24

DESIGN AGENCY
Michael Baker INTERNATIONAL

DESIGNER
KJM

REVIEWER
KGJ 05/22/24

PROJECT ID
82382

SHEET 975 TOTAL 2696

Preliminary Plans - For Reference Only

Cut Area (SF): 327	Cut Vol. (CY): 549
Fill Area (SF): 7	Fill Vol. (CY): 12
Seed Width (FT):	Seed Area (SY):

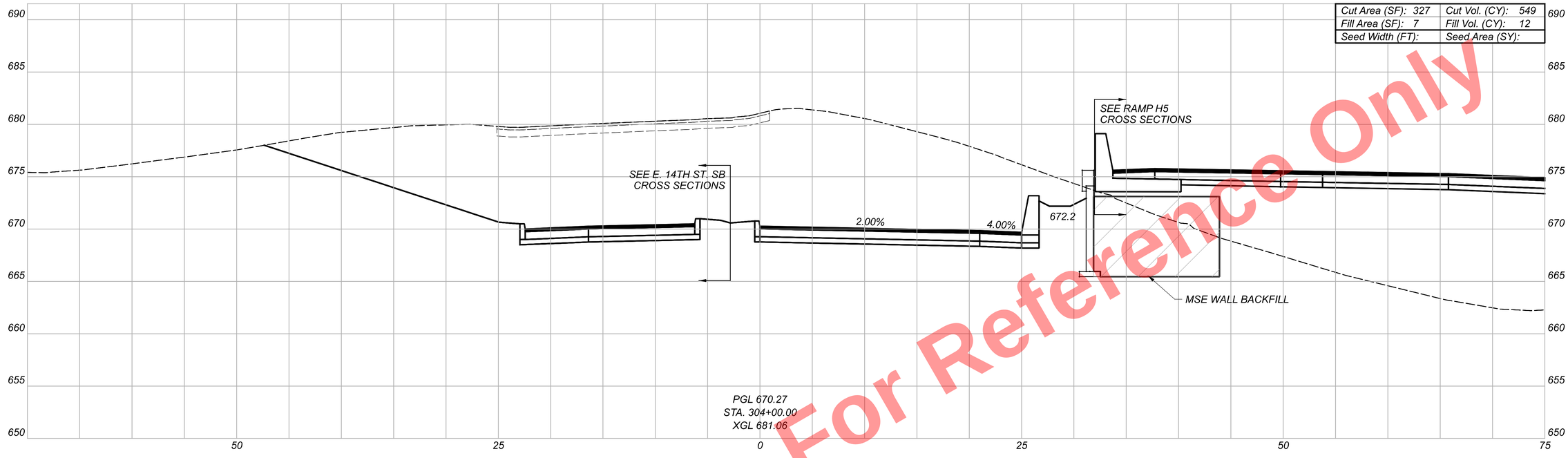

Cut Area (SF): 266	Cut Vol. (CY): 414
Fill Area (SF): 7	Fill Vol. (CY): 12
Seed Width (FT):	Seed Area (SY):

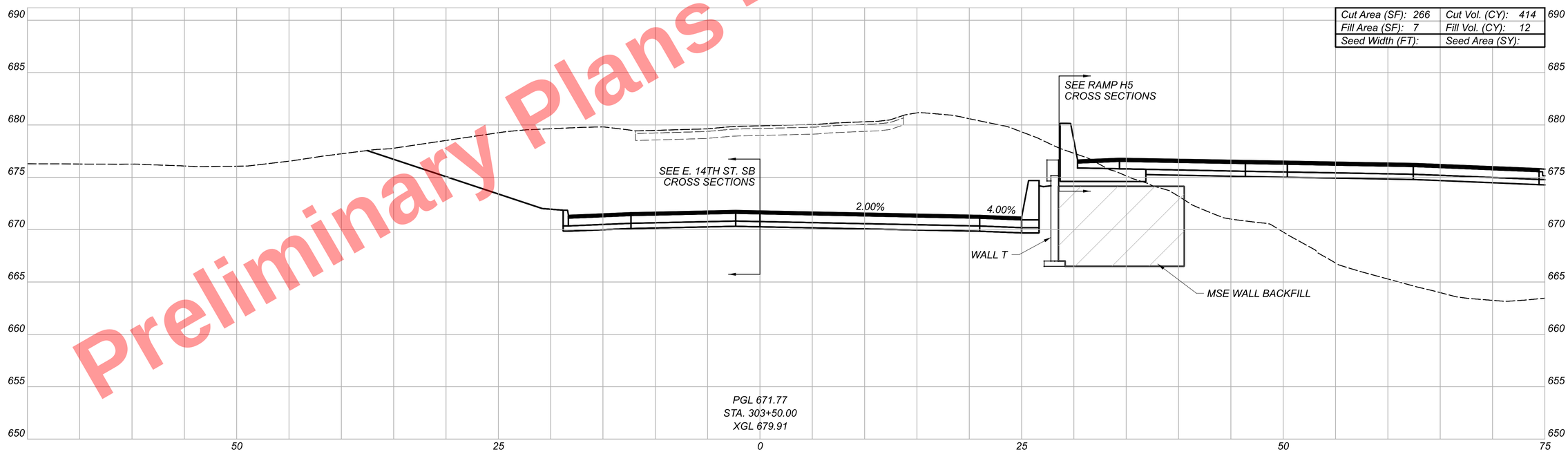

CUY-90-16.28 (CCG3A)

MODEL: CLP_E14NB_Hybrid - 303+50.00 [Sheet] PAPERSIZE: 34x22 (in.) DATE: 3/28/2025 TIME: 9:23:43 AM USER: KevinJMcNutt
pw:\\mb-us-pw.bentley.com:mb-us-pw-03\Documents\Cleveland_OH\OI_Projects\ODOT\District2\82382\400-Engineering\Roadway\Sheets\82382_XS7240.dgn

CROSS SECTIONS
E. 14TH ST. NB

DESIGN AGENCY
Michael Baker INTERNATIONAL

DESIGNER
KJM

REVIEWER
KGJ 05/22/24

PROJECT ID
82382

Sheet Totals		
Seeding	Cut	Fill
0	963	24

SHEET	TOTAL
976	2696

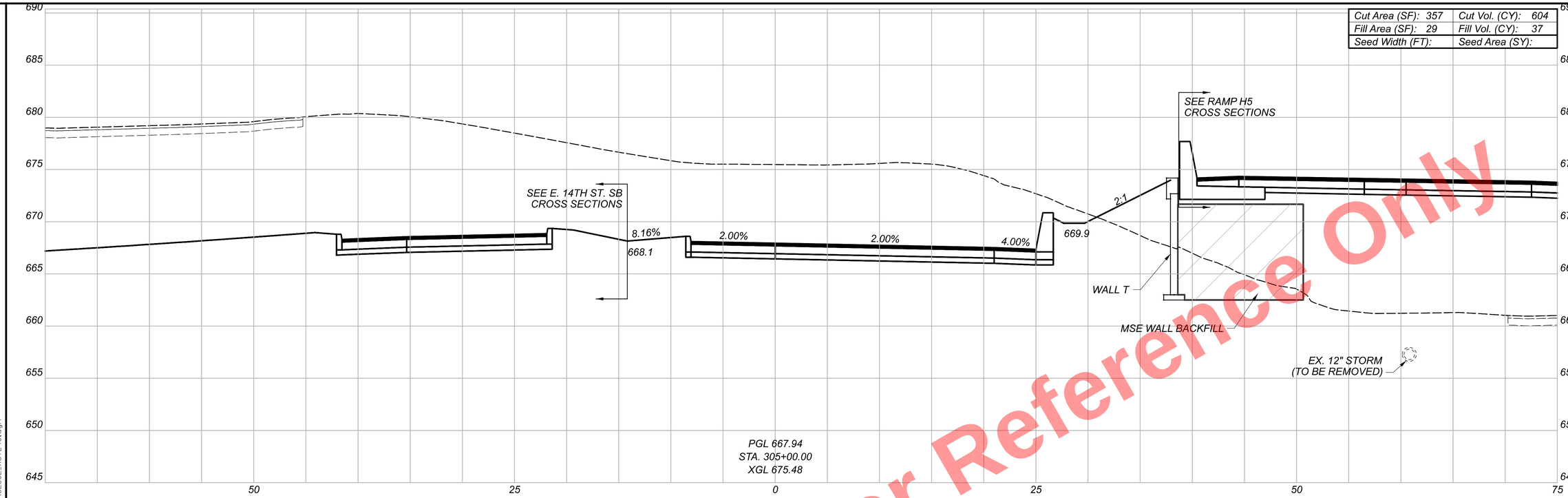

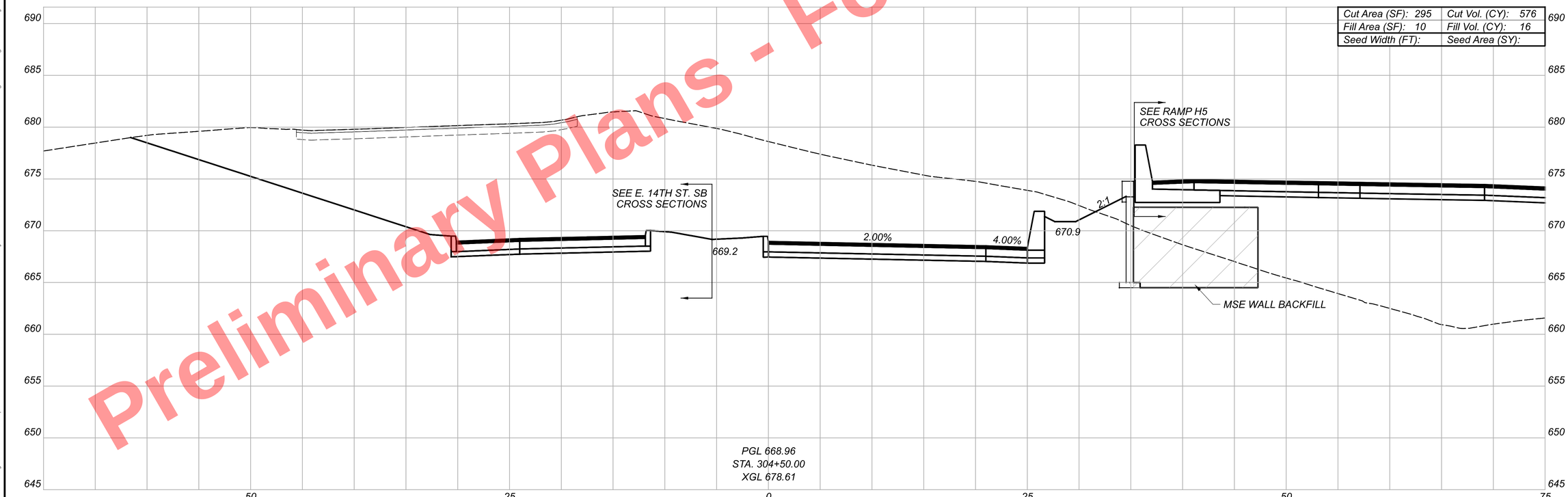

Preliminary Plans - For Reference Only

CUY-90-16.28 (CCG3A)

MODEL: CLP_EI4NB_Hybrid - 304+50.00 [Sheet] PAPERSIZE: 34x22 (in.) DATE: 3/28/2025 TIME: 9:23:49 AM USER: Kevin.McNutt
pw:\\mb-us-pw.bentley.com:mb-us-pw-03\Documents\Cleveland_OH\OI_Projects\ODOT\District2\82382\400-Engineering\Roadway\Sheets\82382_XS7240.dgn

CROSS SECTIONS
E. 14TH ST. NB

DESIGN AGENCY
Michael Baker INTERNATIONAL

DESIGNER
KJM

REVIEWER
KGJ 05/22/24

PROJECT ID
82382

Sheet Totals		
Seeding	Cut	Fill
0	1180	53

SHEET 977 TOTAL 2696

Preliminary Plans - For Reference Only

Cut Area (SF): 491	Cut Vol. (CY): 786
Fill Area (SF): 0	Fill Vol. (CY): 27
Seed Width (FT):	Seed Area (SY):

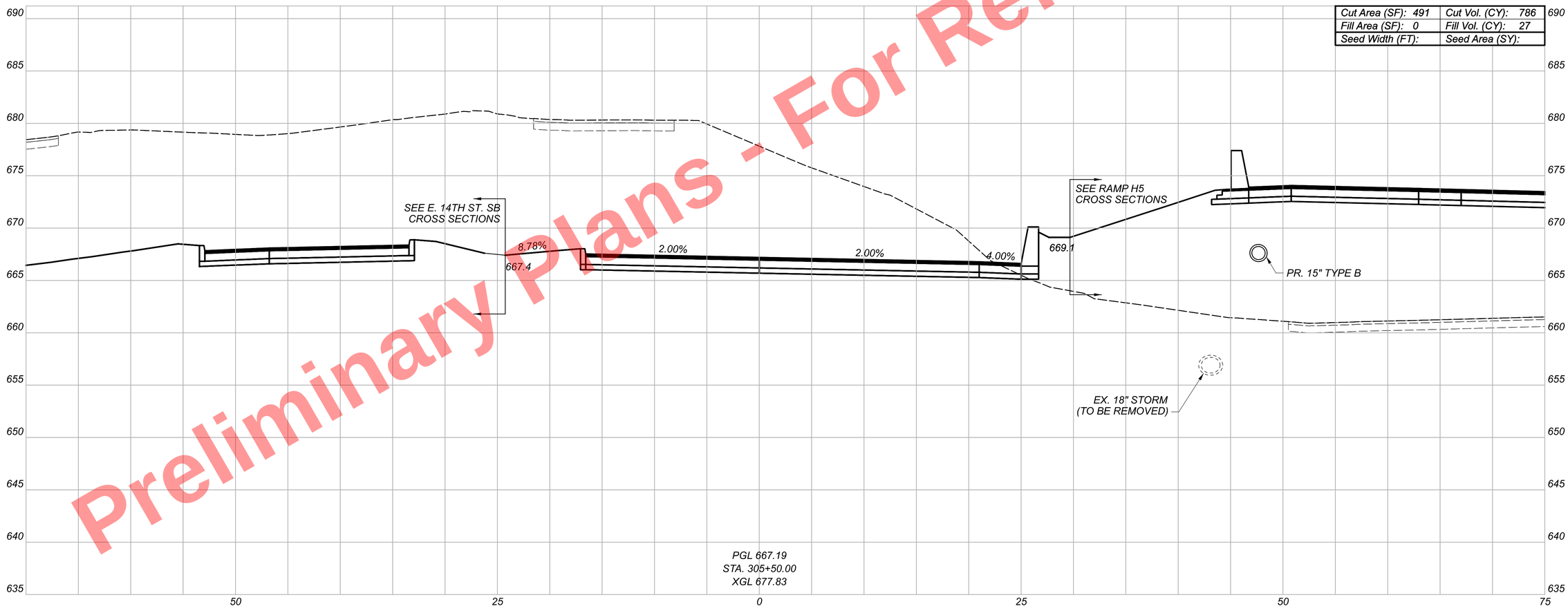

Sheet Totals		
Seeding	Cut	Fill
0	786	27

CUY-90-16.28 (CCG3A)

MODEL: CLP_EI4NB_Hybrid - 305+50.00 [Sheet] PAPERSIZE: 34x22 (in.) DATE: 3/28/2025 TIME: 9:23:55 AM USER: Kevin.McNutt
pw:\\mb-us-pw.bentley.com:mb-us-pw-03\Documents\Cleveland_OH\01_Projects\ODOT\District2\82382\400-Engineering\Roadway\Sheets\82382_XS7240.dgn

CROSS SECTIONS
E. 14TH ST. NB

DESIGN AGENCY
Michael Baker INTERNATIONAL

DESIGNER
KJM

REVIEWER
KGJ 05/22/24

PROJECT ID
82382

SHEET	TOTAL
978	2696

Preliminary Plans - For Reference Only

CROSS SECTIONS
E. 14TH ST. NB

Cut Area (SF): 493	Cut Vol. (CY): 46
Fill Area (SF): 1	Fill Vol. (CY): 0
Seed Width (FT):	Seed Area (SY):

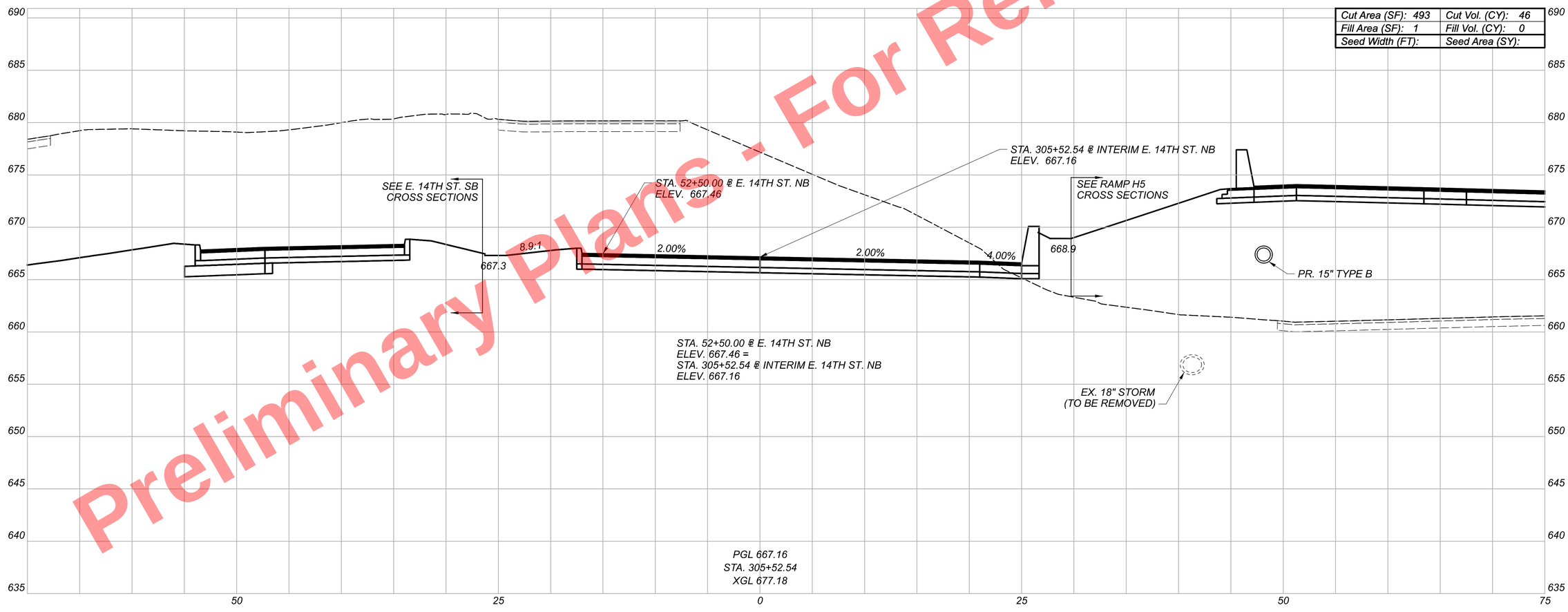

Sheet Totals		
Seeding	Cut	Fill
0	46	0

DESIGN AGENCY
Michael Baker INTERNATIONAL

DESIGNER
KJM

REVIEWER
KGJ 05/22/24

PROJECT ID
82382

SHEET 979 TOTAL 2696

CUY-90-16.28 (CCG3A)

MODEL: CLP_EI4NB_Hybrid - 52+50.00 R2 [Sheet] PAPERSIZE: 34x22 (In) DATE: 3/28/2025 TIME: 9:24:00 AM USER: KevinMcNutt
pw:\\mb-us-pw.bentley.com:mb-us-pw-03\Documents\Cleveland_OH\01_Projects\ODOT\District2\82382\400-Engineering\Roadway\Sheets\82382_XS7240.dgn

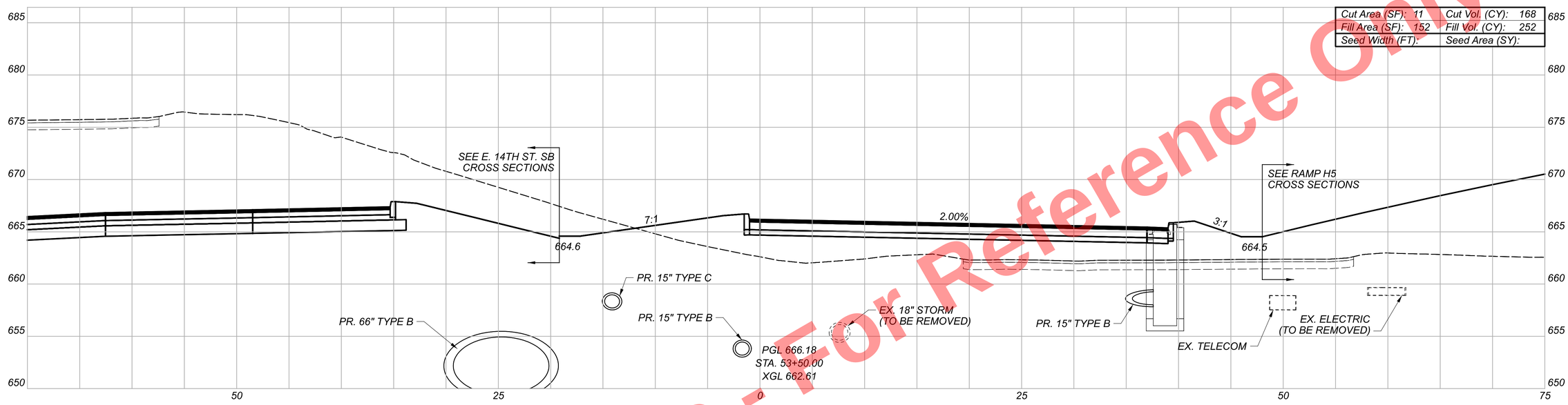

Cut Area (SF): 11	Cut Vol. (CY): 168
Fill Area (SF): 152	Fill Vol. (CY): 252
Seed Width (FT):	Seed Area (SY):

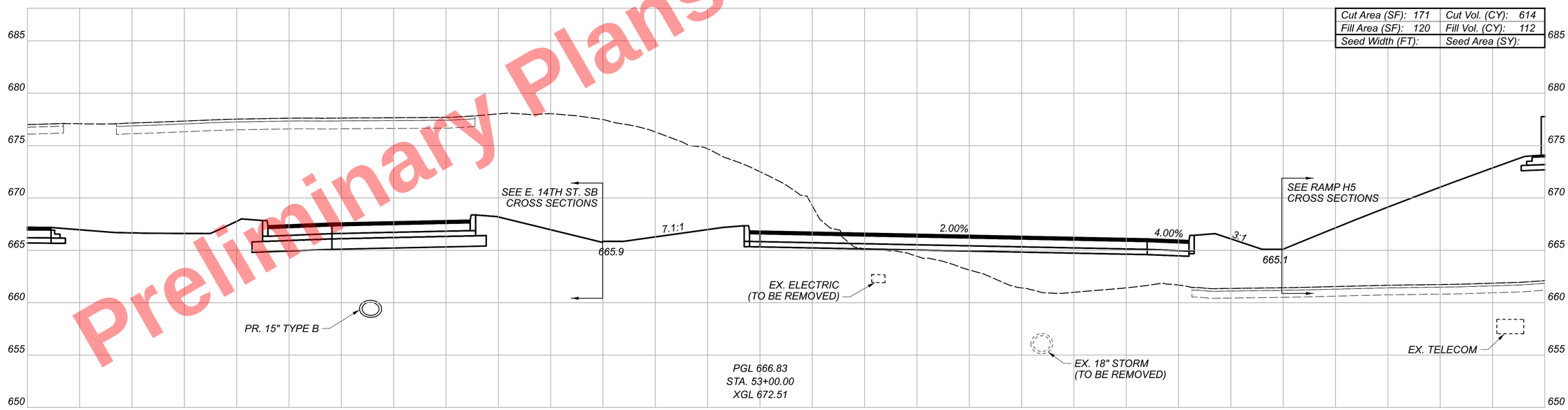

Cut Area (SF): 171	Cut Vol. (CY): 614
Fill Area (SF): 120	Fill Vol. (CY): 112
Seed Width (FT):	Seed Area (SY):

Preliminary Plans - For Reference Only

CROSS SECTIONS
E. 14TH ST. NB

Sheet Totals		
Seeding	Cut	Fill
0	782	364

DESIGN AGENCY
Michael Baker INTERNATIONAL

DESIGNER KJM
REVIEWER KGJ 05/22/24
PROJECT ID 82382
SHEET 980 TOTAL 2696

CUY-90-16.28 (CCG3A)

MODEL: CLP_EI4NB_Hybrid - 53+00.00 R2 (Sheet) PAPERSIZE: 34x22 (in.) DATE: 3/28/2025 TIME: 9:24:05 AM USER: Kevin.McNutt
pw:\\mb-us-pw.bentley.com:mb-us-pw-03\Documents\Cleveland_OH\01_Projects\0007\District2\82382\400-Engineering\Roadway\Sheets\82382_XS7240.dgn

Preliminary Plans - For Reference Only

CROSS SECTIONS
E. 14TH ST. NB

Cut Area (SF): 0	Cut Vol. (CY): 10
Fill Area (SF): 131	Fill Vol. (CY): 262
Seed Width (FT):	Seed Area (SY):

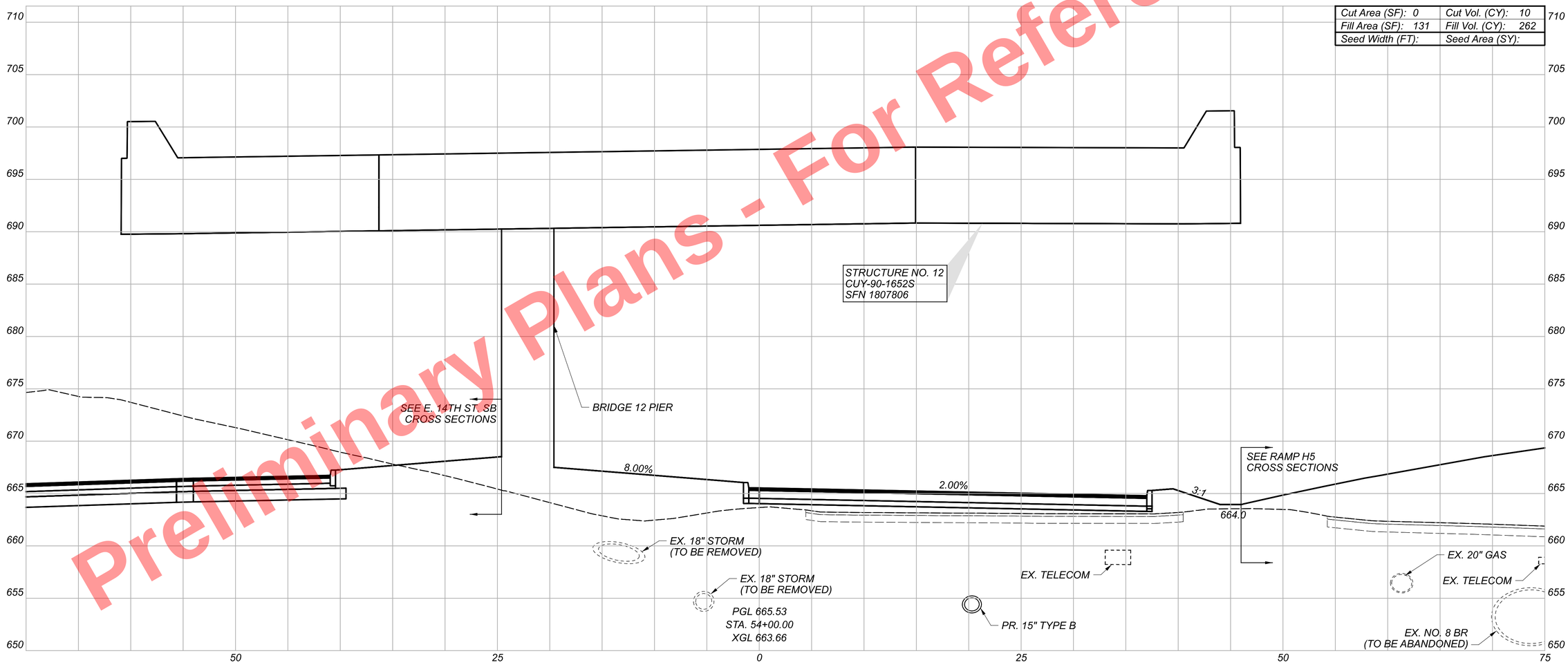

Sheet Totals		
Seeding	Cut	Fill
0	10	262

DESIGN AGENCY
Michael Baker INTERNATIONAL

DESIGNER KJM

REVIEWER KGJ 05/22/24

PROJECT ID 82382

SHEET 981 TOTAL 2696

CUY-90-16.28 (CCG3A)

MODEL: CLP_EI4NB_Hybrid - 54+00.00 R2 [Sheet] PAPERSIZE: 34x22 (In.) DATE: 3/28/2025 TIME: 9:24:12 AM USER: Kevin.McNutt
pw:\\mb-us-pw.bentley.com:mb-us-pw-03\Documents\Cleveland_OH\OLProjects\ODOT\District12\82382\400-Engineering\Roadway\Sheets\82382_XS7240.dgn

Preliminary Plans - For Reference Only

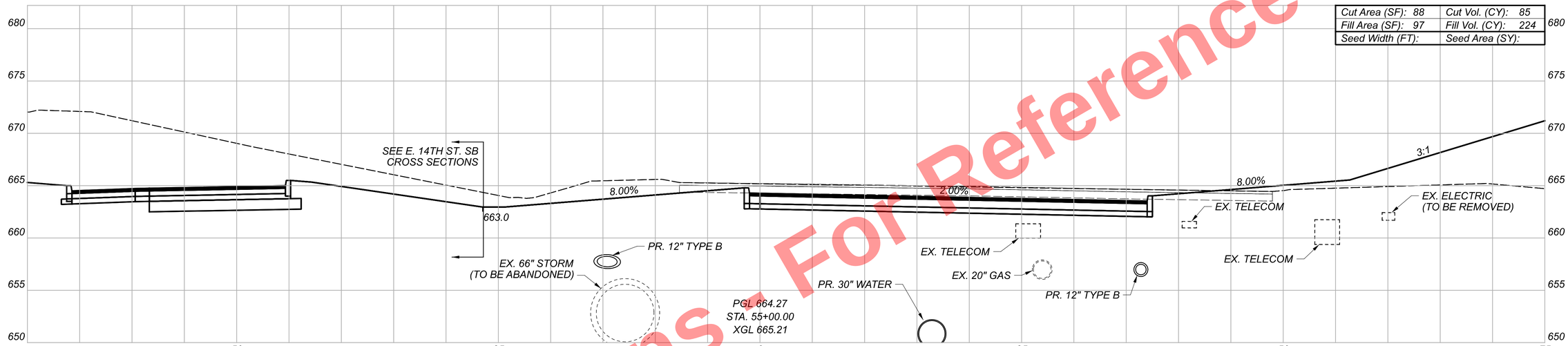

Cut Area (SF): 88	Cut Vol. (CY): 85
Fill Area (SF): 97	Fill Vol. (CY): 224
Seed Width (FT):	Seed Area (SY):

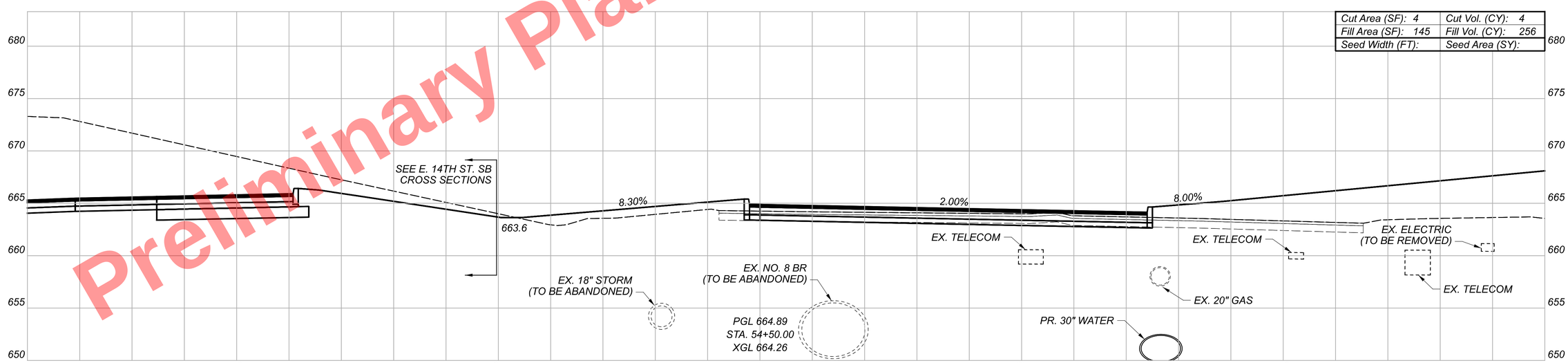

Cut Area (SF): 4	Cut Vol. (CY): 4
Fill Area (SF): 145	Fill Vol. (CY): 256
Seed Width (FT):	Seed Area (SY):

CUY-90-16.28 (CCG3A)

MODEL: CLP_EI4NB_Hybrid - 54+50.00 R2 [Sheet] PAPERSIZE: 34x22 (in.) DATE: 3/28/2025 TIME: 9:24:18 AM USER: KevinMcNutt
pw:\\mb-us-pw.bentley.com:mb-us-pw-03\Documents\Cleveland_OH\OIL_Projects\ODOT\District2\82382\400-Engineering\Roadway\Sheets\82382_XS7240.dgn

CROSS SECTIONS
E. 14TH ST. NB

DESIGN AGENCY
Michael Baker INTERNATIONAL

DESIGNER	KJM
REVIEWER	KGJ 05/22/24
PROJECT ID	82382

Sheet Totals		
Seeding	Cut	Fill
0	89	480

SHEET	TOTAL
982	2696

Preliminary Plans - For Reference Only

CROSS SECTIONS
E. 14TH ST. NB

Cut Area (SF): 161	Cut Vol. (CY): 231
Fill Area (SF): 23	Fill Vol. (CY): 111
Seed Width (FT):	Seed Area (SY):

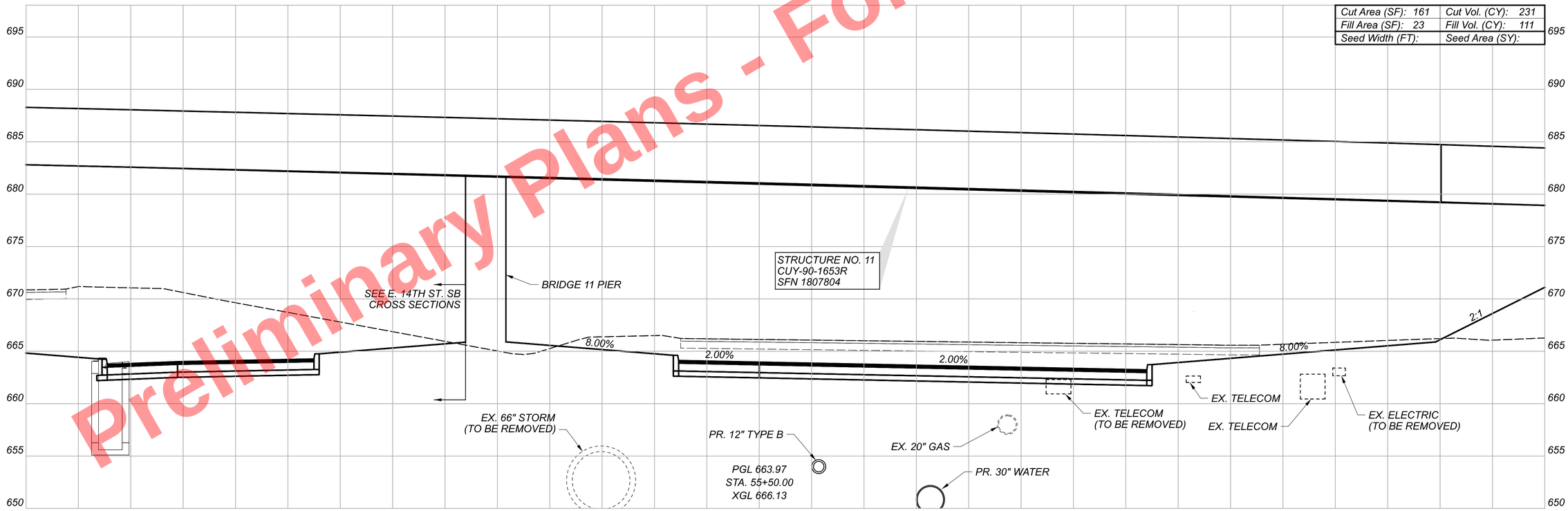

Sheet Totals		
Seeding	Cut	Fill
0	231	111

DESIGN AGENCY
Michael Baker INTERNATIONAL

DESIGNER
KJM

REVIEWER
KGJ 05/22/24

PROJECT ID
82382

SHEET 983 | TOTAL 2696

CUY-90-16.28 (CCG3A)

MODEL: CLP_EI4NB_Hybrid - 55+50.00 R2 (Sheet) PAPERSIZE: 34x22 (In.) DATE: 3/28/2025 TIME: 9:24:25 AM USER: Kevin.McNutt
pw:\\mb-us-pw.bentley.com:mb-us-pw-03\Documents\Cleveland.OH\OI_Projects\ODOT\District2\82382\400-Engineering\Roadway\Sheets\82382_XS7240.dgn

Preliminary Plans - For Reference Only

Cut Area (SF): 308	Cut Vol. (CY): 435
Fill Area (SF): 0	Fill Vol. (CY): 21
Seed Width (FT):	Seed Area (SY):

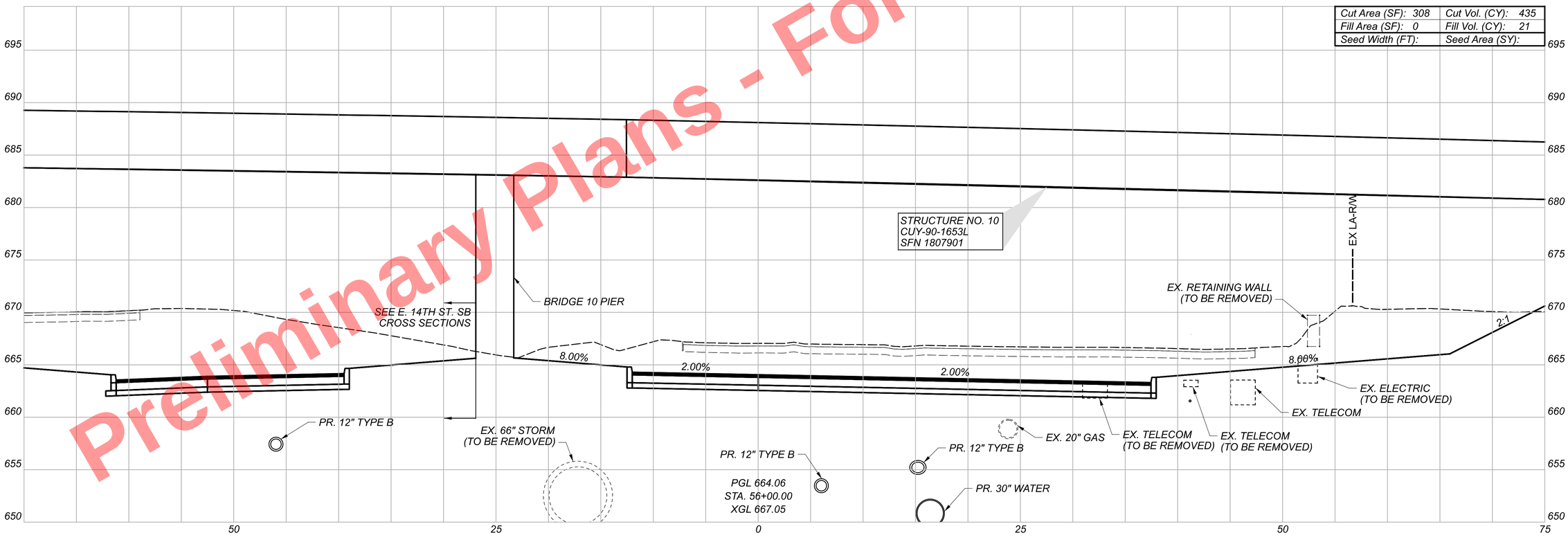

CROSS SECTIONS
E. 14TH ST. NB

Sheet Totals		
Seeding	Cut	Fill
0	435	21

DESIGN AGENCY
Michael Baker INTERNATIONAL

DESIGNER
KJM

REVIEWER
KGJ 05/22/24

PROJECT ID
82382

SHEET 984 TOTAL 2696

CUY-90-16.28 (CCG3A)

MODEL: CLP_EI4NB_Hybrid - 56+00.00 R2 [Sheet] PAPERSIZE: 34x22 (in.) DATE: 3/28/2025 TIME: 9:24:30 AM USER: KevinJMcNutt
pw:\\mb-us-pw.bentley.com:mb-us-pw-03\Documents\Cleveland_OH\OLProjects\ODOT\District12\82382\400-Engineering\Roadway\Sheets\82382_XS7240.dgn

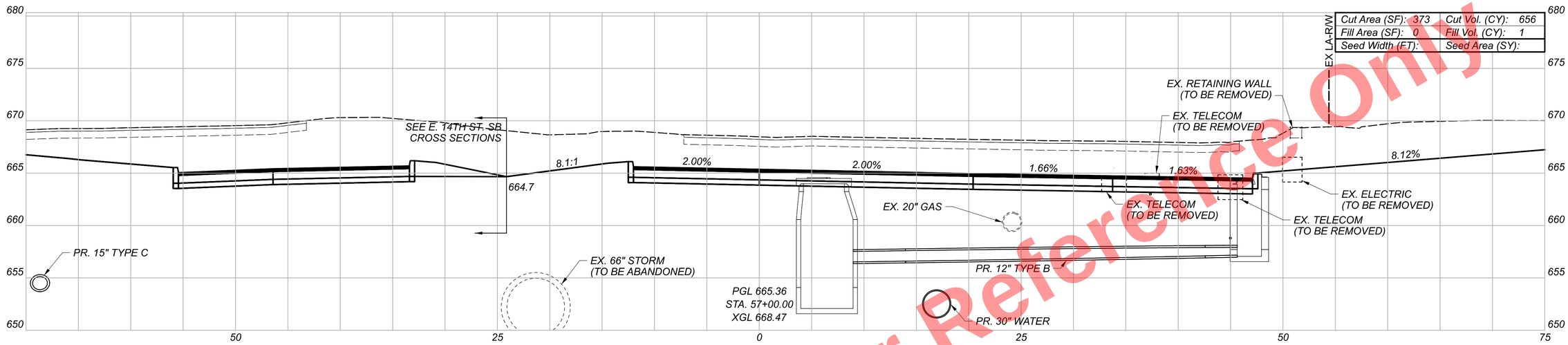

Cut Area (SF): 373	Cut Vol. (CY): 656
Fill Area (SF): 0	Fill Vol. (CY): 1
Seed Width (FT):	Seed Area (SY):

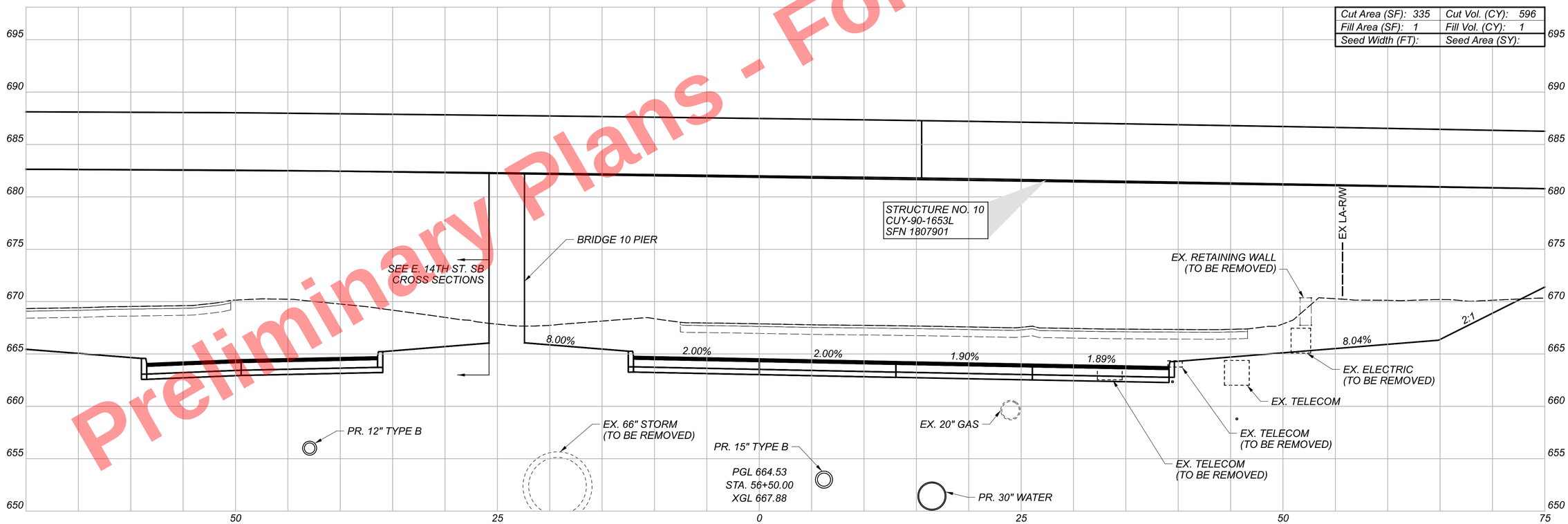

Cut Area (SF): 335	Cut Vol. (CY): 596
Fill Area (SF): 1	Fill Vol. (CY): 1
Seed Width (FT):	Seed Area (SY):

Preliminary Plans - For Reference Only

CROSS SECTIONS
E. 14TH ST. NB

Sheet Totals		
Seeding	Cut	Fill
0	1252	2

DESIGN AGENCY
Michael Baker INTERNATIONAL

DESIGNER KJM
REVIEWER KGJ 05/22/24
PROJECT ID 82382
SHEET 985 TOTAL 2696

CUY-90-16.28 (CCG3A)

MODEL: CLP_EI4NB_Hybrid - 56+50.00 R2 [Sheet1 PAPERSIZE: 34x22 (In.) DATE: 3/28/2025 TIME: 9:24:36 AM USER: Kevin.McNutt
pw:\\mb-us-pw.bentley.com\mb-us-pw-03\Documents\Cleveland_OHIO\Projects\0007\District2\82382\400-Engineering\Roadway\Sheets\82382_XS7240.dgn

Preliminary Plans - For Reference Only

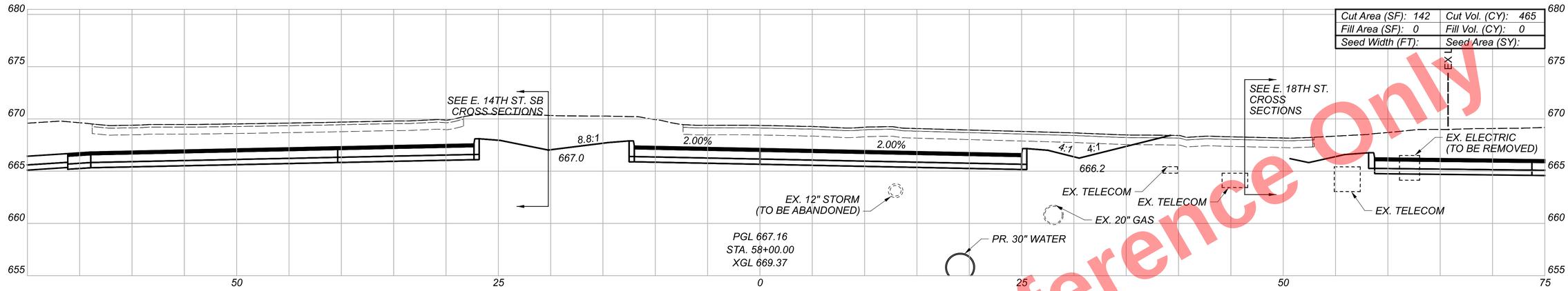

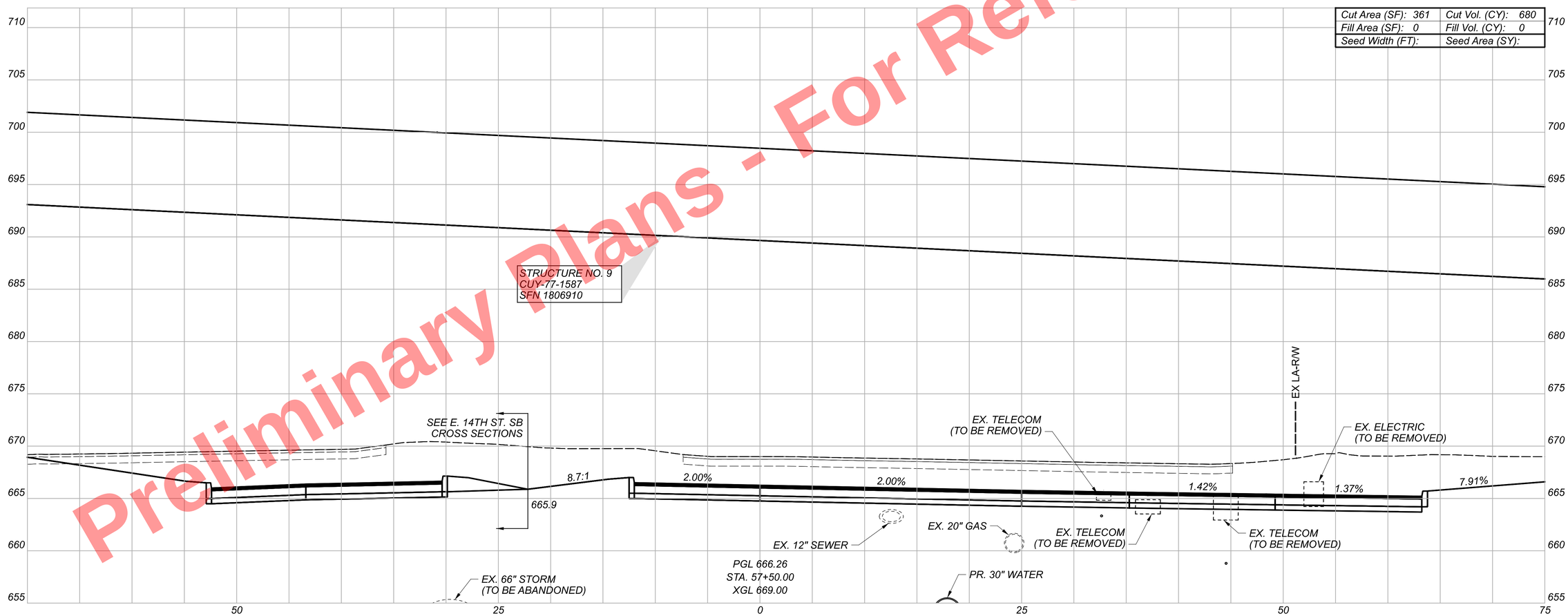

CUY-90-16.28 (CCG3A)

MODEL: CLP_EI4NB_Hybrid - 57+50.00 R2 [Sheet] PAPERSIZE: 34x22 (in.) DATE: 6/13/2025 TIME: 2:08:54 PM USER: Mala.Gallagher
pw:\\mb-us-pw.bentley.com:mb-us-pw-03\Documents\Cleveland.OH\OL_Projects\ODOT\District2\82382\400-Engineering\Roadway\Sheets\82382_XS7240.dgn

CROSS SECTIONS
E. 14TH ST. NB

Sheet Totals		
Seeding	Cut	Fill
0	1145	0

DESIGN AGENCY
Michael Baker INTERNATIONAL

DESIGNER
KJM

REVIEWER
KGJ 05/22/24

PROJECT ID
82382

SHEET 986 TOTAL 2696

Preliminary Plans - For Reference Only

CROSS SECTIONS
E. 14TH ST. NB

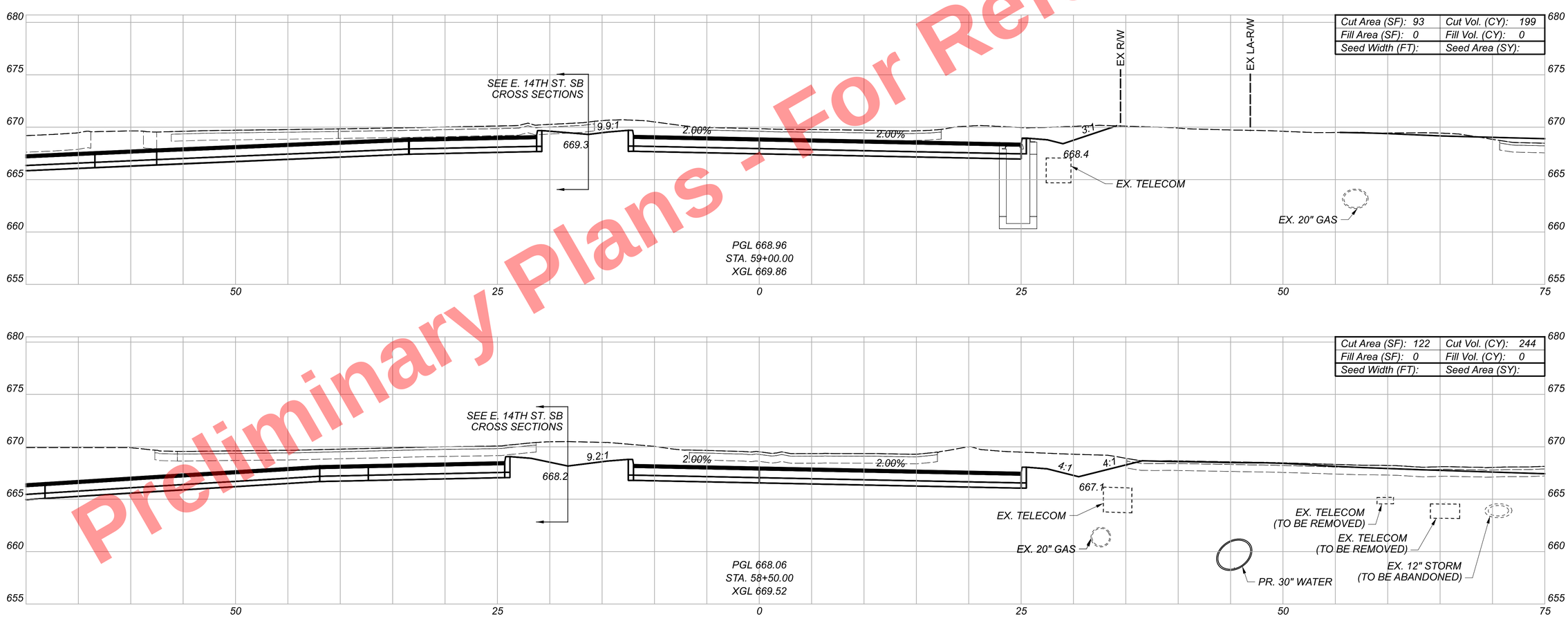

Sheet Totals			Grand Totals Carried to Subsummary		
Seeding	Cut	Fill	Seeding	Cut	Fill
0	443	0	0	8493	1485

DESIGN AGENCY
Michael Baker INTERNATIONAL

DESIGNER
KJM

REVIEWER
KGJ 05/22/24

PROJECT ID
82382

SHEET 987 TOTAL 2696

CUY-90-16.28 (CCG3A)

MODEL: CLP_EI4NB_Hybrid - 58+50.00 R2 [Sheet] PAPERSIZE: 34x22 (in.) DATE: 3/28/2025 TIME: 9:24:51 AM USER: Kevin.McNutt
pw:\\mb-us-pw.bentley.com:mb-us-pw-03\Documents\Cleveland_OH\OI_Projects\ODOT\District2\82382\400-Engineering\Roadway\Sheets\82382_XS7240.dgn

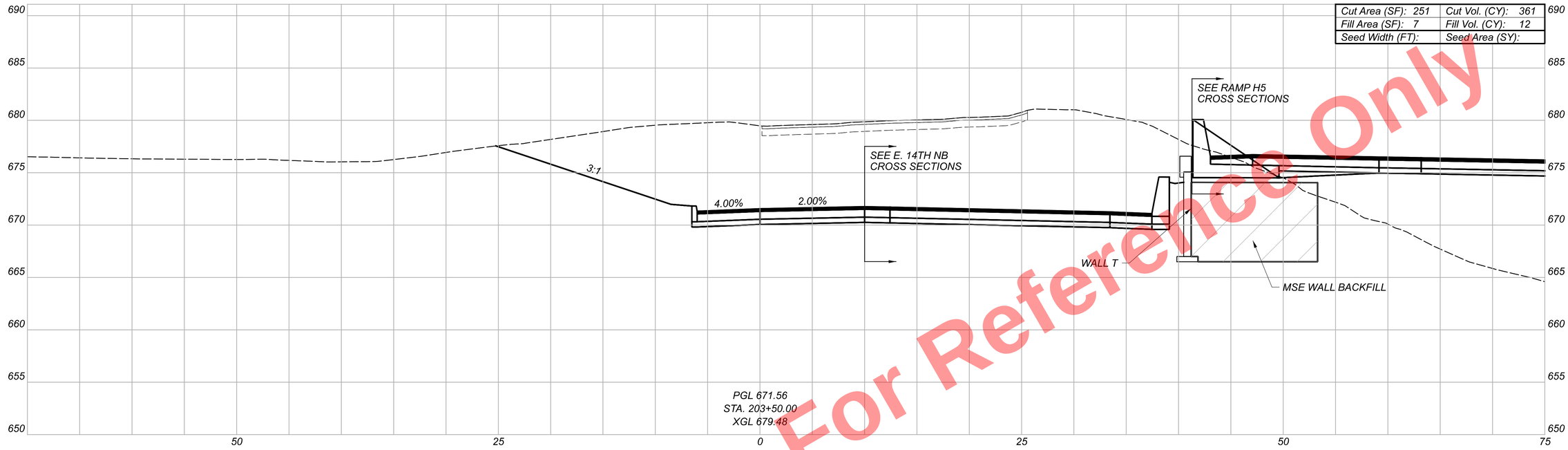

Cut Area (SF): 251	Cut Vol. (CY): 361
Fill Area (SF): 7	Fill Vol. (CY): 12
Seed Width (FT):	Seed Area (SY):

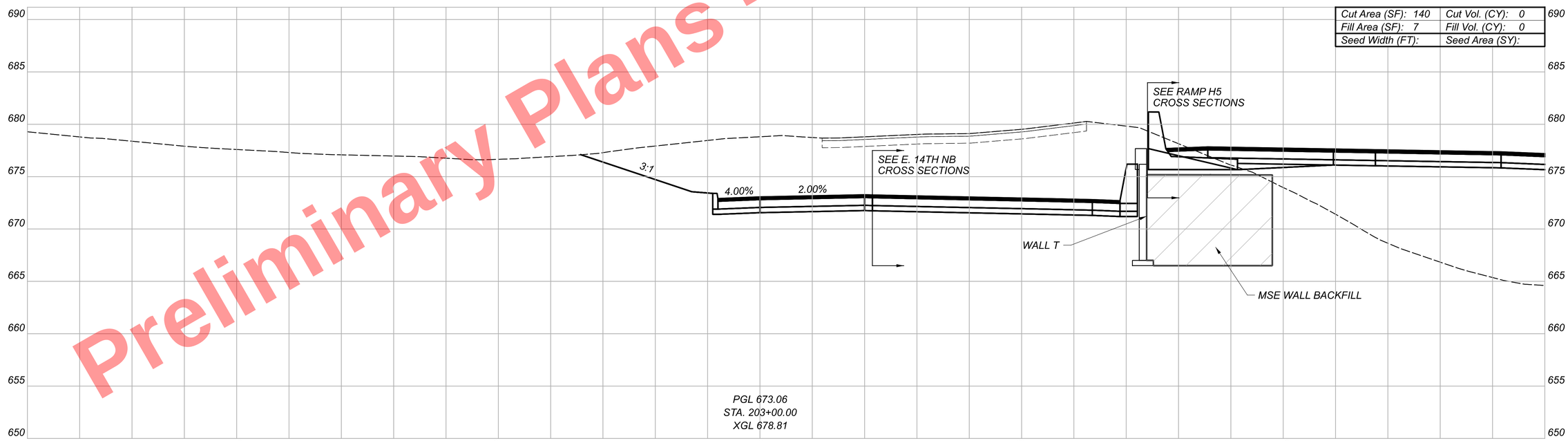

Cut Area (SF): 140	Cut Vol. (CY): 0
Fill Area (SF): 7	Fill Vol. (CY): 0
Seed Width (FT):	Seed Area (SY):

Preliminary Plans - For Reference Only

CROSS SECTIONS
E. 14TH ST. SB

CUY-90-16.28 (CCG3A)

MODEL: CLP_EI4SB_Hybrid - 203+00.00 (Sheet) PAPERSIZE: 34x22 (in.) DATE: 3/28/2025 TIME: 9:25:11 AM USER: Kevin.McNutt
pw:\\mb-us-pw.bentley.com:mb-us-pw-03\Documents\Cleveland_OH\01_Projects\0007\District2\82382\400-Engineering\Roadway\Sheets\82382_XS7230.dgn

Sheet Totals		
Seeding	Cut	Fill
0	361	12

DESIGN AGENCY
Michael Baker INTERNATIONAL

DESIGNER
KJM

REVIEWER
KGJ 05/22/24

PROJECT ID
82382

SHEET 988 TOTAL 2696

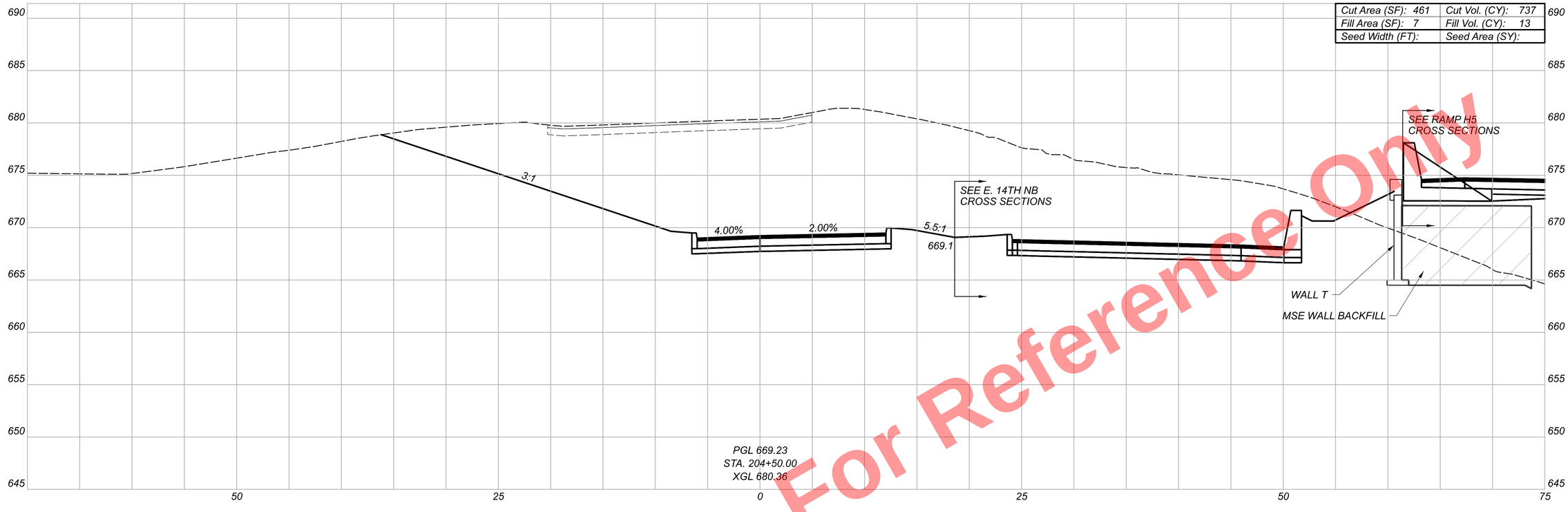

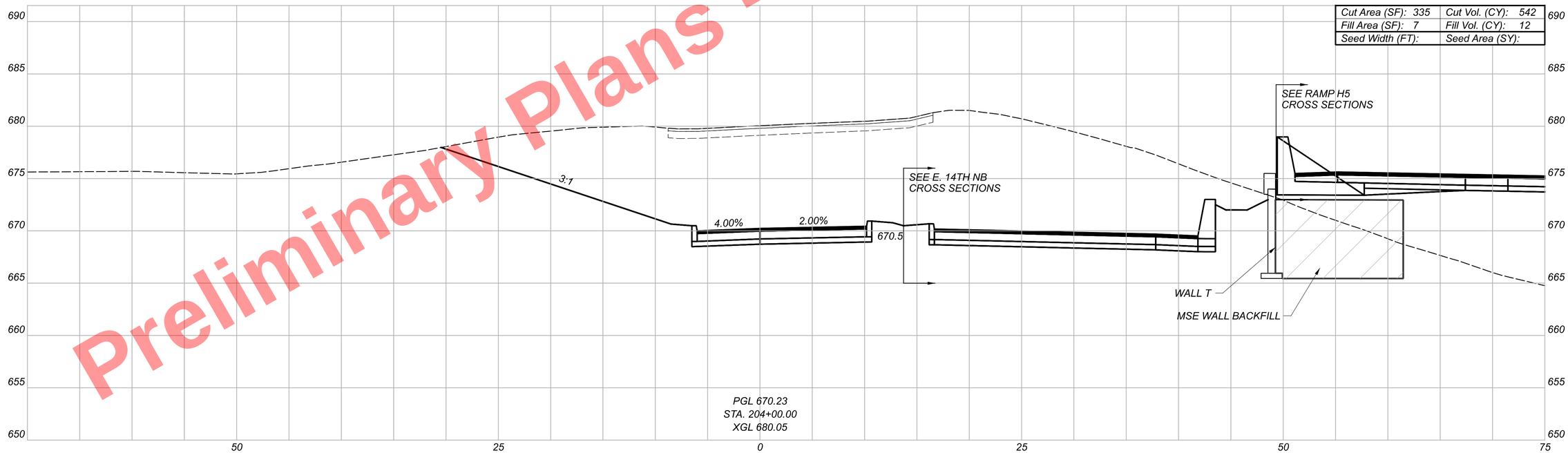

Preliminary Plans - For Reference Only

CUY-90-16.28 (CCG3A)

MODEL: CLP_E45B_Hybrid - 204+00.00 [Sheet] PAPERSIZE: 34x22 (in.) DATE: 3/28/2025 TIME: 9:25:26 AM USER: Kevin.McNutt
pw:\\mb-us-pw.bentley.commb-us-pw-03\Documents\Cleveland_OH\OL_Projects\000T\District2\82382\400-Engineering\Roadway\Sheets\82382_XS7230.dgn

CROSS SECTIONS
E. 14TH ST. SB

DESIGN AGENCY
Michael Baker INTERNATIONAL

DESIGNER
KJM

REVIEWER
KGJ 05/22/24

PROJECT ID
82382

Sheet Totals		
Seeding	Cut	Fill
0	1279	25

SHEET	TOTAL
989	2696

Preliminary Plans - For Reference Only

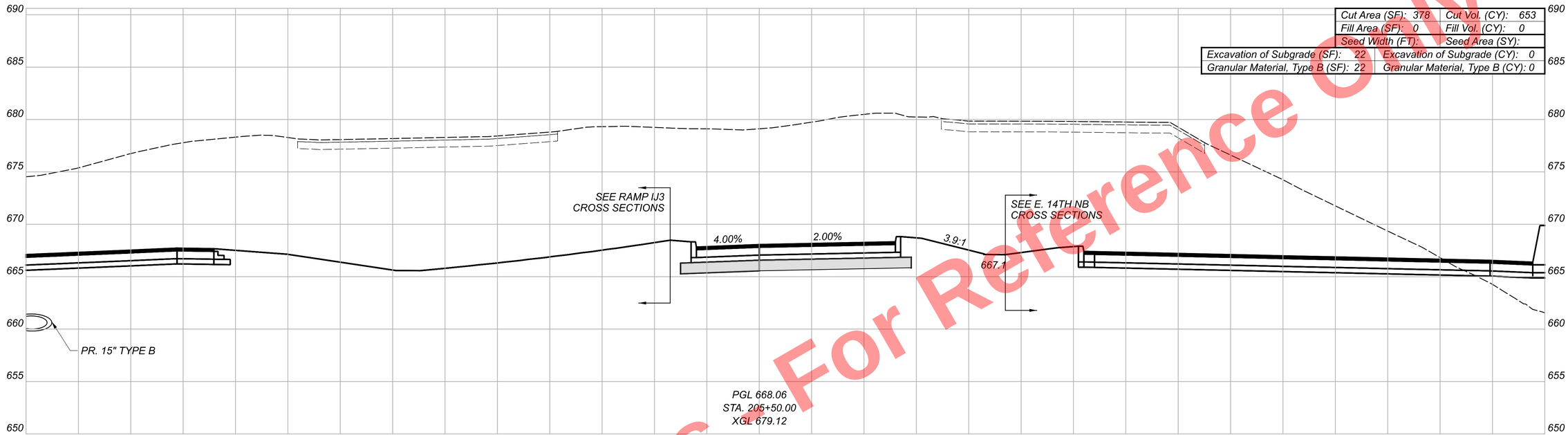

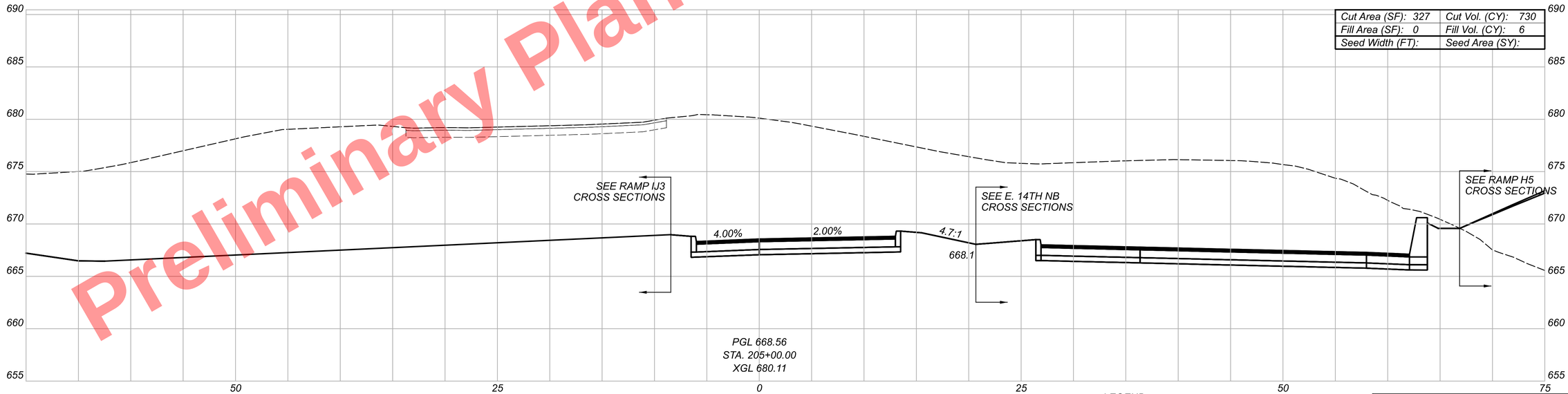

LEGEND

ITEM 204 - EXCAVATION OF SUBGRADE
ITEM 204 - GRANULAR MATERIAL, TYPE B

Sheet Totals		
Seeding	Cut	Fill
0	1383	6
Excavation of Subgrade		Granular Material, Type B
0		0

CROSS SECTIONS
E. 14TH ST. SB

DESIGN AGENCY
Michael Baker INTERNATIONAL

DESIGNER KJM
REVIEWER KGJ 05/22/24
PROJECT ID 82382
SHEET 990 TOTAL 2696

CUY-90-16.28 (CCG3A)

MODEL: CLP_EI4SB_Hybrid - 205+00.00 [Sheet] PAPERSIZE: 34x22 (in.) DATE: 3/28/2025 TIME: 9:25:40 AM USER: Kevin.McNutt
pw:\\mb-us-pw.bentley.com:mb-us-pw-03\Documents\Cleveland_OH\01_Projects\ODOT\District#12\82382\400-Engineering\Roadway\Sheets\82382_XS7230.dgn

Preliminary Plans - For Reference Only

MODEL: CLP_E45B_Hybrid - 206+00.00 [Sheet] PAPERSIZE: 34x22 (in.) DATE: 3/28/2025 TIME: 9:25:51 AM USER: Kevin.McNutt
pw:\\mb-us-pw.bentley.commb-us-pw-03\Documents\Cleveland_OH\OL_Projects\000T\District2\82382\400-Engineering\Roadway\Sheets\82382_XS7230.dgn

CUY-90-16.28 (CCG3A)

CROSS SECTIONS
E. 14TH ST. SB

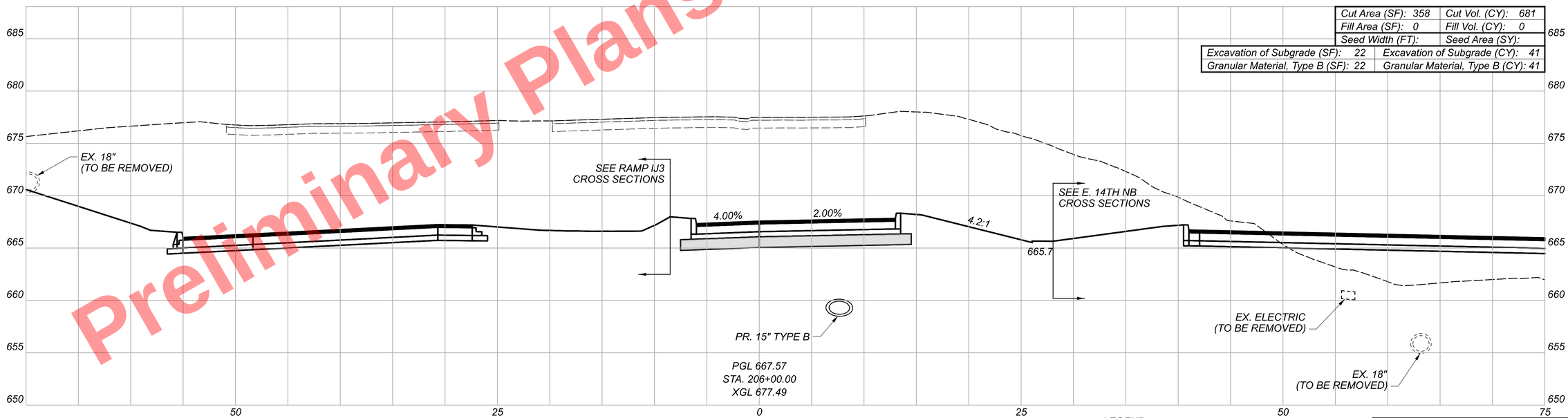

LEGEND

ITEM 204 - EXCAVATION OF SUBGRADE
ITEM 204 - GRANULAR MATERIAL, TYPE B

Sheet Totals		
Seeding	Cut	Fill
0	681	0
Excavation of Subgrade		Granular Material, Type B
41		41

DESIGN AGENCY
Michael Baker INTERNATIONAL

DESIGNER
KJM

REVIEWER
KGJ 05/22/24

PROJECT ID
82382

SHEET 991 TOTAL 2696

Preliminary Plans - For Reference Only

Cut Area (SF): 727	Cut Vol. (CY): 999
Fill Area (SF): 0	Fill Vol. (CY): 0
Seed Width (FT):	Seed Area (SY):
Excavation of Subgrade (SF): 52	Excavation of Subgrade (CY): 69
Granular Material, Type B (SF): 52	Granular Material, Type B (CY): 69

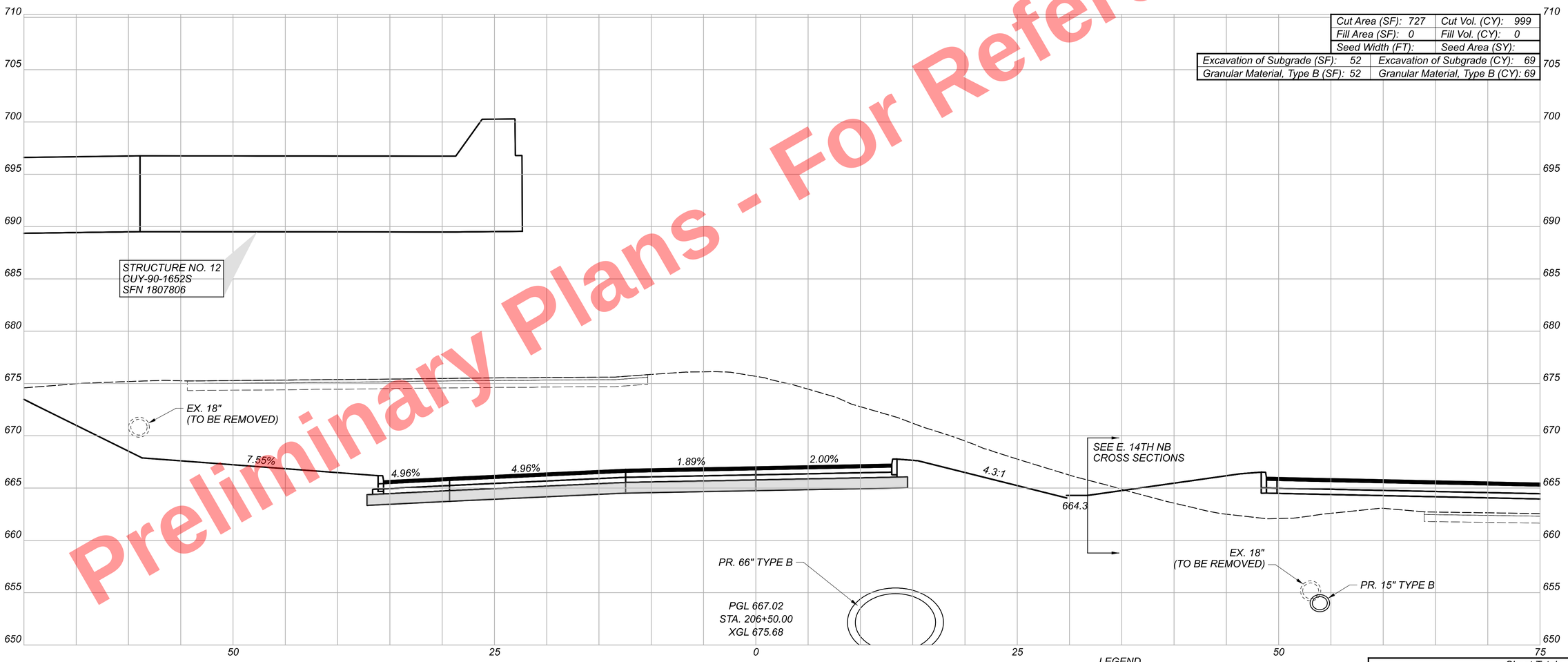

LEGEND

ITEM 204 - EXCAVATION OF SUBGRADE
ITEM 204 - GRANULAR MATERIAL, TYPE B

Sheet Totals		
Seeding	Cut	Fill
0	999	0
Excavation of Subgrade		Granular Material, Type B
69		69

CUY-90-16.28 (CCG3A)

CROSS SECTIONS
E. 14TH ST. SB

DESIGN AGENCY
Michael Baker INTERNATIONAL

DESIGNER
KJM

REVIEWER
KGJ 05/22/24

PROJECT ID
82382

SHEET 992 TOTAL 2696

MODEL: CLP_E14SB_Hybrid - 206+50.00 [Sheet] PAPERSIZE: 34x22 (in.) DATE: 3/28/2025 TIME: 9:25:57 AM USER: Kevin.McNutt
pw:\\mb-us-pw.bentley.com:mb-us-pw-03\Documents\Cleveland_OH\OL_Projects\ODOT\District 12\82382\400-Engineering\Roadway\Sheets\8238_XS7230.dgn

Preliminary Plans - For Reference Only

Cut Area (SF): 492	Cut Vol. (CY): 1129
Fill Area (SF): 3	Fill Vol. (CY): 3
Seed Width (FT):	Seed Area (SY):
Excavation of Subgrade (SF): 77	Excavation of Subgrade (CY): 119
Granular Material, Type B (SF): 77	Granular Material, Type B (CY): 119

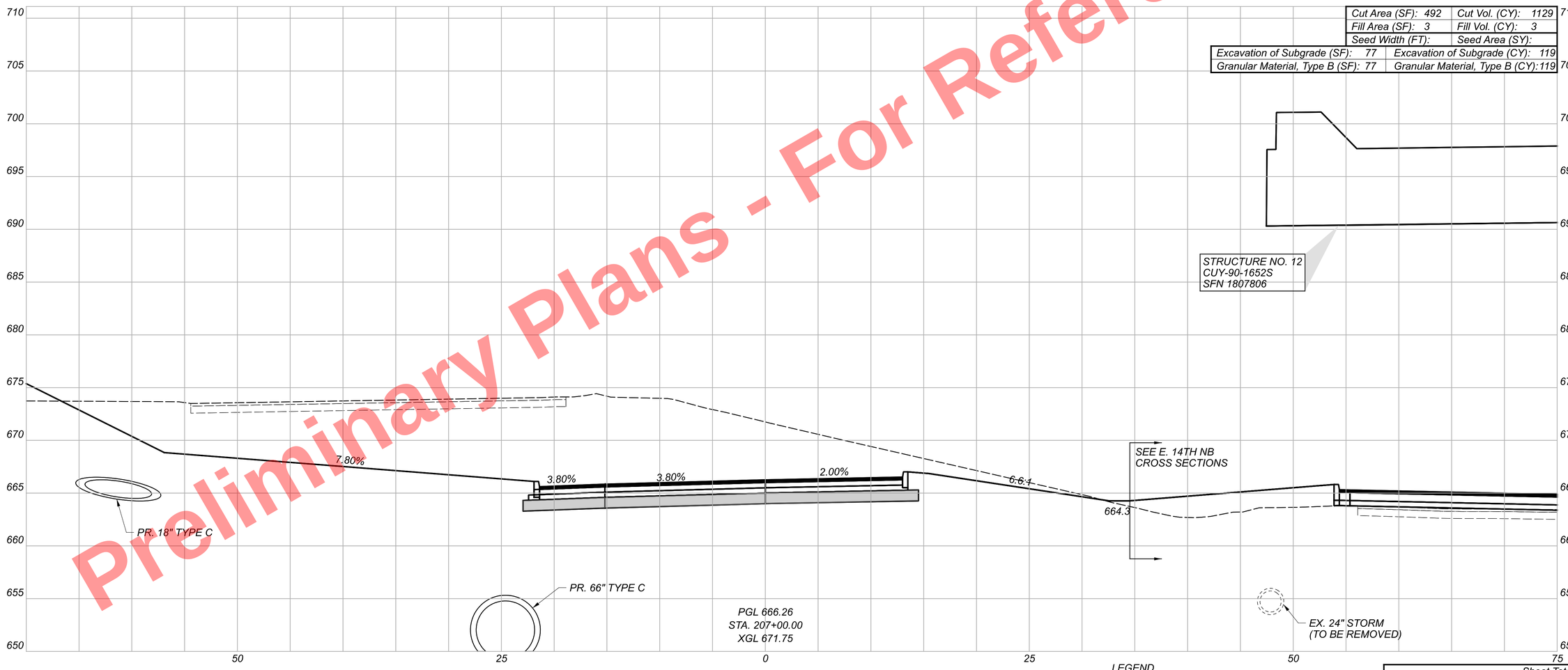

LEGEND

ITEM 204 - EXCAVATION OF SUBGRADE
ITEM 204 - GRANULAR MATERIAL, TYPE B

Sheet Totals		
Seeding	Cut	Fill
0	1129	3
Excavation of Subgrade	Granular Material, Type B	
119	119	

CROSS SECTIONS
E. 14TH ST. SB

DESIGN AGENCY
Michael Baker INTERNATIONAL

DESIGNER KJM

REVIEWER KGJ 05/22/24

PROJECT ID 82382

SHEET 993 TOTAL 2696

CUY-90-16.28 (CCG3A)

MODEL: CLP_E14SB_Hybrid - 207+00.00 [Sheet] PAPERSIZE: 34x22 (in.) DATE: 3/28/2025 TIME: 9:26:03 AM USER: KevinJMcNutt
pw:\\mb-us-pw.bentley.com:mb-us-pw-03\Documents\Cleveland_OH\OL_Projects\ODOT\District12\82382\400-Engineering\Roadway\Sheets\8238_XS7230.dgn

Cut Area (SF): 353	Cut Vol. (CY): 693
Fill Area (SF): 31	Fill Vol. (CY): 45
Seed Width (FT):	Seed Area (SY):
Excavation of Subgrade (SF): 15	Excavation of Subgrade (CY): 28
Granular Material, Type B (SF): 15	Granular Material, Type B (CY): 28

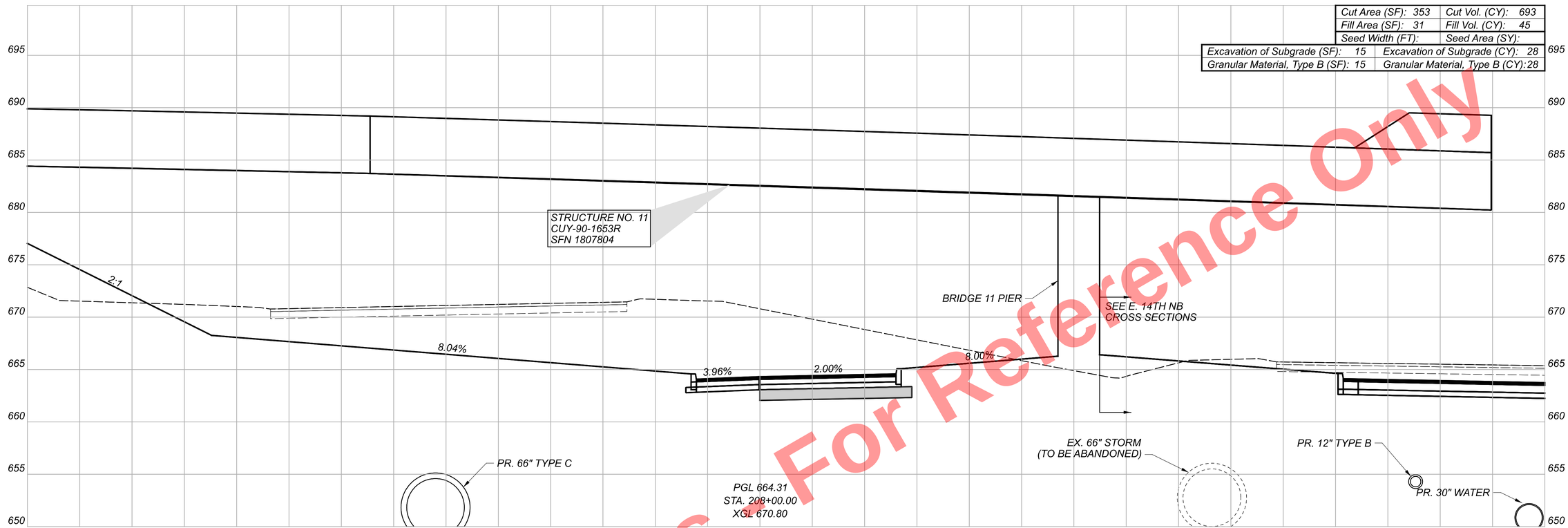

LEGEND

ITEM 204 - EXCAVATION OF SUBGRADE
ITEM 204 - GRANULAR MATERIAL, TYPE B

Cut Area (SF): 395	Cut Vol. (CY): 818
Fill Area (SF): 18	Fill Vol. (CY): 19
Seed Width (FT):	Seed Area (SY):
Excavation of Subgrade (SF): 15	Excavation of Subgrade (CY): 50
Granular Material, Type B (SF): 15	Granular Material, Type B (CY): 50

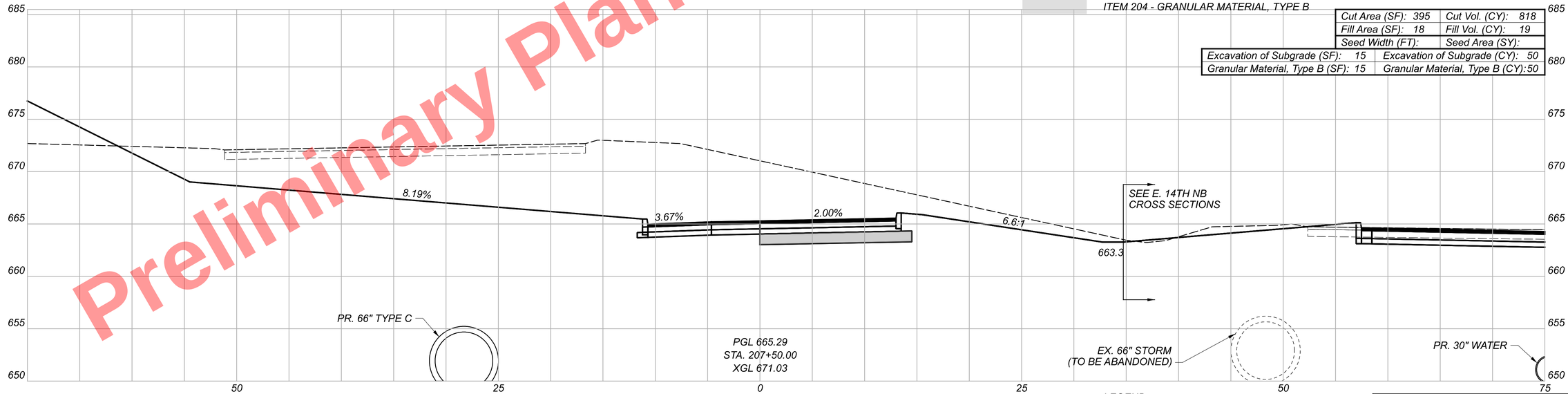

LEGEND

ITEM 204 - EXCAVATION OF SUBGRADE
ITEM 204 - GRANULAR MATERIAL, TYPE B

Sheet Totals		
Seeding	Cut	Fill
0	1511	64
Excavation of Subgrade		Granular Material, Type B
78		78

CROSS SECTIONS
E. 14TH ST. SB

DESIGN AGENCY
Michael Baker INTERNATIONAL

DESIGNER
KJM

REVIEWER
KGJ 05/22/24

PROJECT ID
82382

SHEET 994 TOTAL 2696

CUY-90-16.28 (CCG3A)

MODEL: CLP_EI4SB_Hybrid - 207+50.00 [Sheet] PAPERSIZE: 34x22 (in.) DATE: 6/13/2025 TIME: 1:58:50 PM USER: Maia.Gallagher
pw:\\mb-us-pw.bentley.com:mb-us-pw-03\Documents\Cleveland_OH\OI_Projects\ODOT\District2\82382\400-Engineering\Roadway\Sheets\82382_XS7230.dgn

Preliminary Plans - For Reference Only

Preliminary Plans - For Reference Only

Cut Area (SF): 364	Cut Vol. (CY): 664
Fill Area (SF): 11	Fill Vol. (CY): 39
Seed Width (FT):	Seed Area (SY):

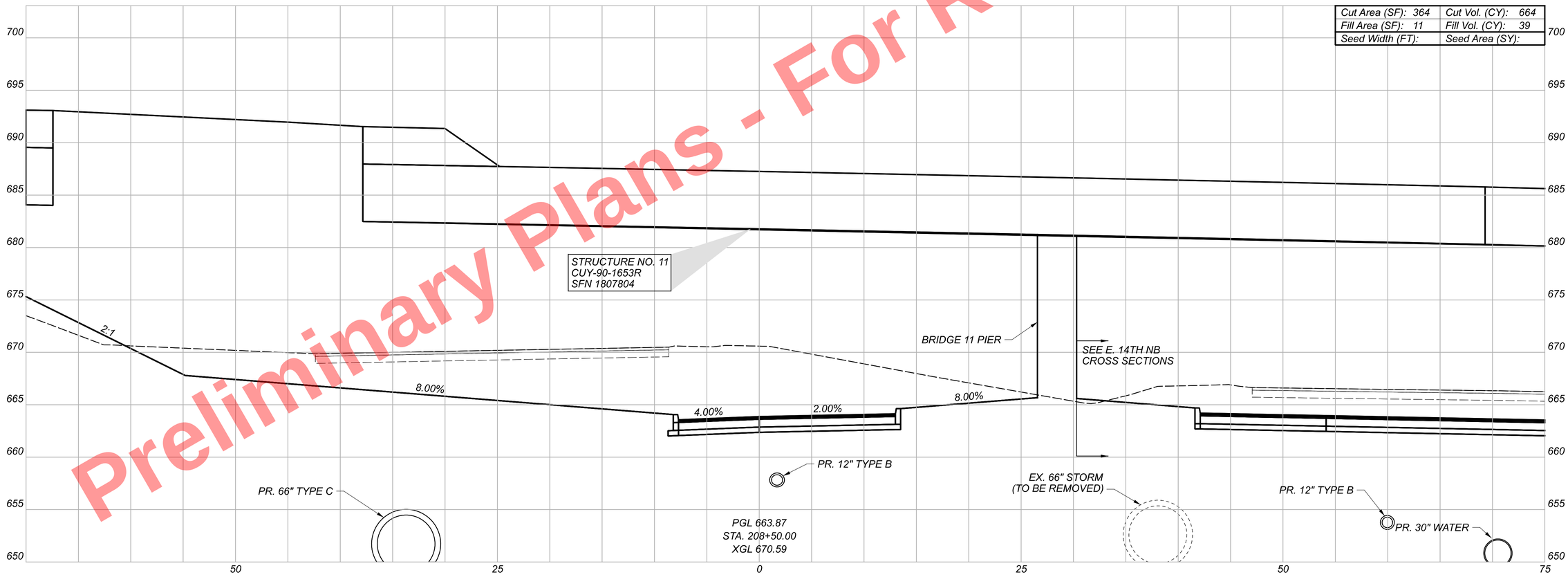

CUY-90-16.28 (CCG3A)

MODEL: CLP_E45B_Hybrid - 208+50.00 [Sheet] PAPERSIZE: 34x22 (In.) DATE: 3/28/2025 TIME: 9:26:15 AM USER: Kevin.McNutt
pw:\\mb-us-pw.bentley.com:mb-us-pw-03\Documents\Cleveland_OH\OL_Projects\ODOT\District 12\82382\400-Engineering\Roadway\Sheets\82382_XS7230.dgn

CROSS SECTIONS
E. 14TH ST. SB

DESIGN AGENCY
Michael Baker INTERNATIONAL

DESIGNER
KJM

REVIEWER
KGJ 05/22/24

PROJECT ID
82382

Sheet Totals		
Seeding	Cut	Fill
0	664	39

SHEET 995 TOTAL 2696

Preliminary Plans - For Reference Only

CROSS SECTIONS
E. 14TH ST. SB

Cut Area (SF): 366	Cut Vol. (CY): 676
Fill Area (SF): 0	Fill Vol. (CY): 10
Seed Width (FT):	Seed Area (SY):

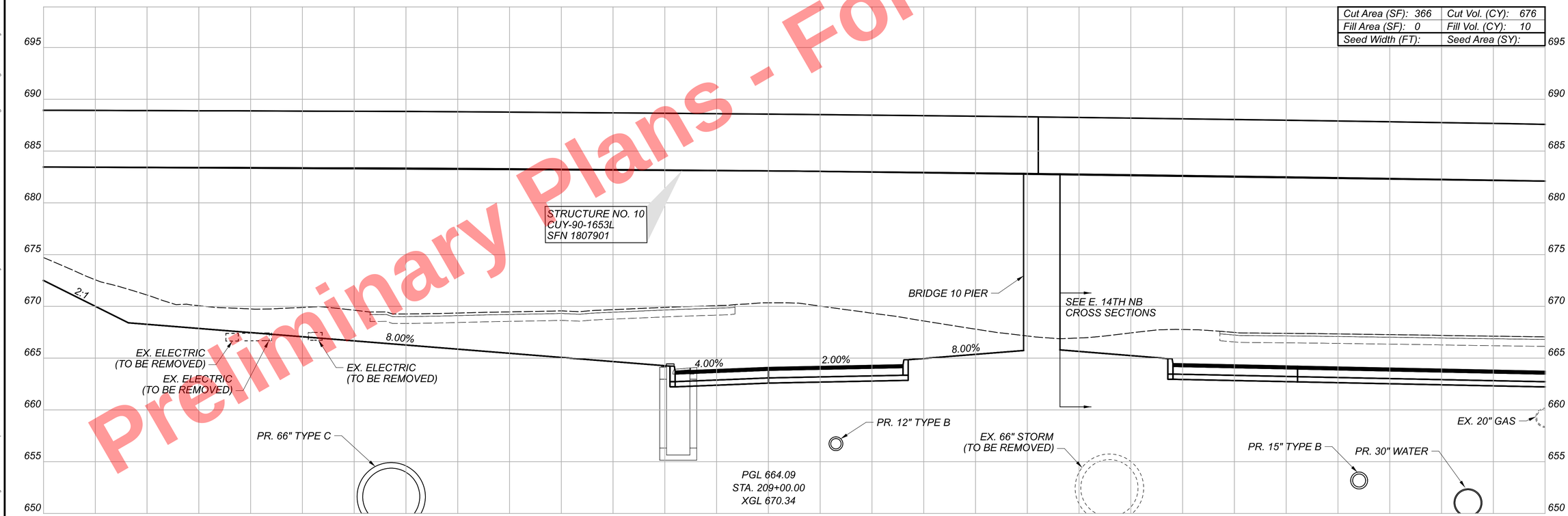

Sheet Totals		
Seeding	Cut	Fill
0	676	10

DESIGN AGENCY
Michael Baker INTERNATIONAL

DESIGNER
KJM

REVIEWER
KGJ 05/22/24

PROJECT ID
82382

SHEET 996 TOTAL 2696

CUY-90-16.28 (CCG3A)

MODEL: CLP_E45B_Hybrid - 209+00.00 [Sheet] PAPERSIZE: 34x22 (in.) DATE: 3/28/2025 TIME: 9:26:20 AM USER: KevinMcNutt
pw:\\mb-us-pw.bentley.com:mb-us-pw-03\Documents\Cleveland_OHIO_Projects\0007\District2\82382\400-Engineering\Roadway\Sheets\82382_XS7230.dgn

Preliminary Plans - For Reference Only

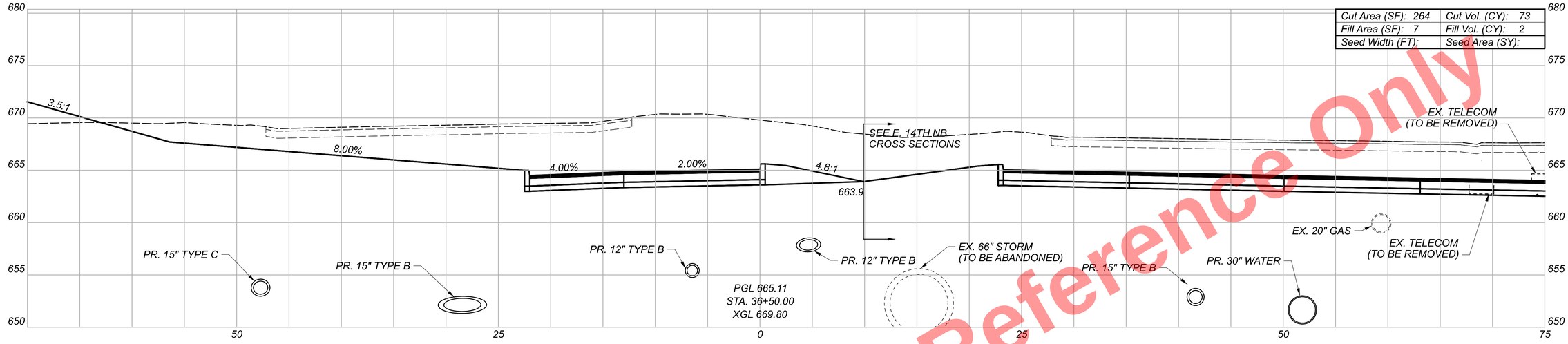

Cut Area (SF): 264	Cut Vol. (CY): 73
Fill Area (SF): 7	Fill Vol. (CY): 2
Seed Width (FT):	Seed Area (SY):

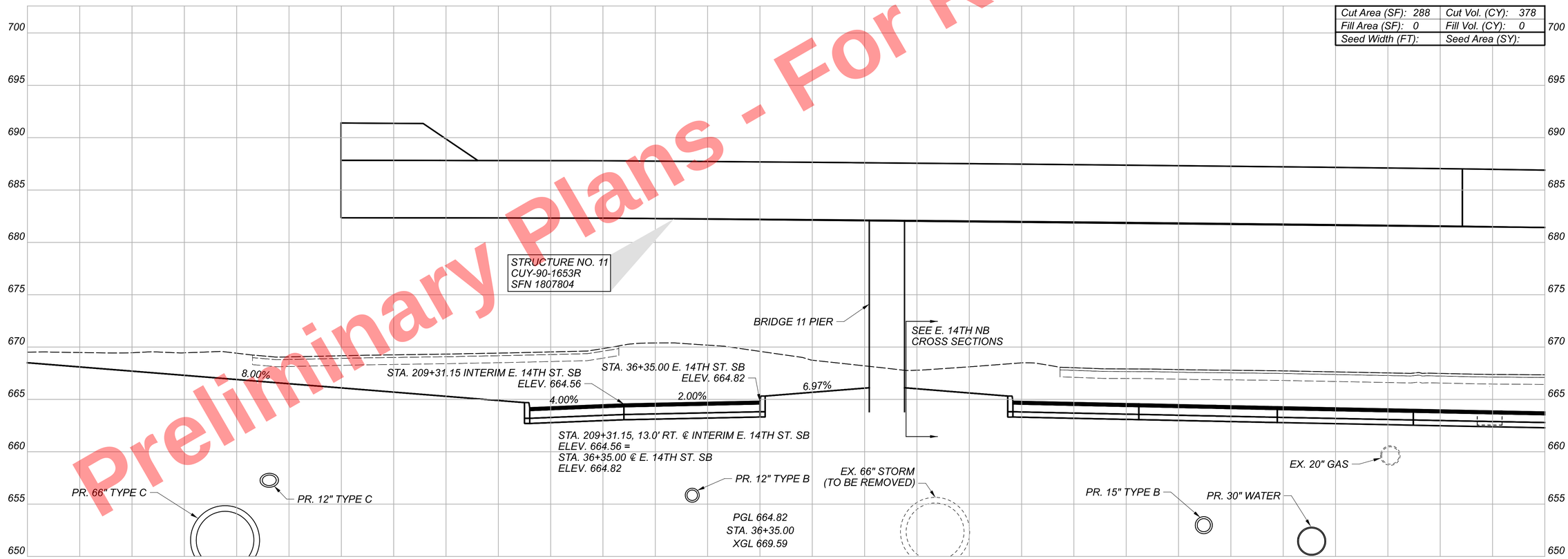

Cut Area (SF): 288	Cut Vol. (CY): 378
Fill Area (SF): 0	Fill Vol. (CY): 0
Seed Width (FT):	Seed Area (SY):

CROSS SECTIONS
E. 14TH ST. SB

Sheet Totals		
Seeding	Cut	Fill
0	451	2

DESIGN AGENCY
Michael Baker INTERNATIONAL

DESIGNER KJM

REVIEWER KGJ 05/22/24

PROJECT ID 82382

SHEET 997 TOTAL 2696

CUY-90-16.28 (CCG3A)

MODEL: CLP_EI45B_Hybrid - 36+35.00 R2 (Sheet) PAPERSIZE: 34x22 (in.) DATE: 3/28/2025 TIME: 9:26:24 AM USER: Kevin.McNutt
pw:\\mb-us-pw.bentley.com:mb-us-pw-03\Documents\Cleveland.04N0i_Projects\000T\District2\82382\400-Engineering\Roadway\Sheets\82382_XS7230.dgn

Preliminary Plans - For Reference Only

CROSS SECTIONS
E. 14TH ST. SB

Cut Area (SF): 202	Cut Vol. (CY): 432
Fill Area (SF): 0	Fill Vol. (CY): 7
Seed Width (FT):	Seed Area (SY):

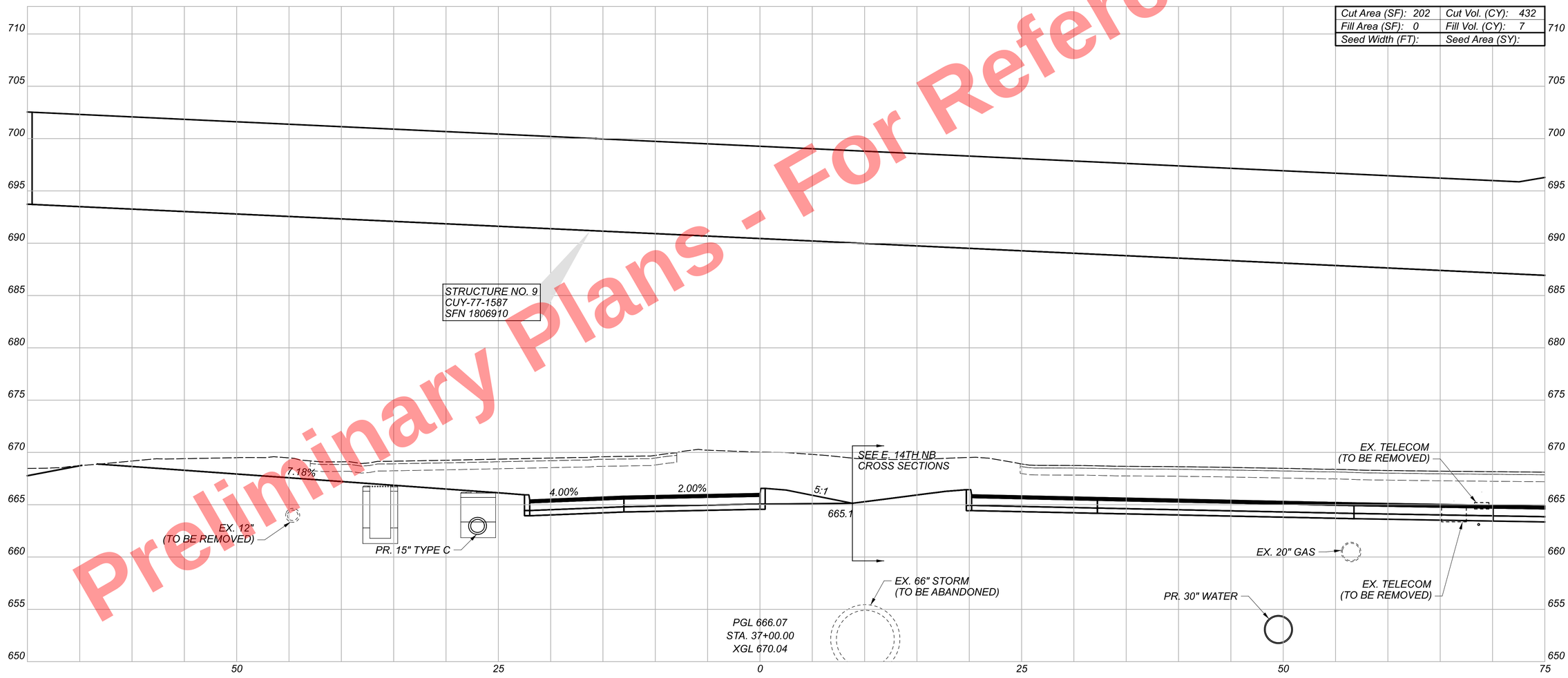

Sheet Totals		
Seeding	Cut	Fill
0	432	7

DESIGN AGENCY
Michael Baker INTERNATIONAL

DESIGNER
KJM

REVIEWER
KGJ 05/22/24

PROJECT ID
82382

SHEET 998 TOTAL 2696

CUY-90-16.28 (CCG3A)

MODEL: CLP_E45B_Hybrid - 37+00.00 R2 [Sheet] PAPERSIZE: 34x22 (in) DATE: 3/28/2025 TIME: 9:26:31 AM USER: KevinMcNutt
pw:\\mb-us-pw.bentley.com:mb-us-pw-03\Documents\Cleveland_OH\OLProjects\ODOT\District12\82382\400-Engineering\Roadway\Sheets\82382_XS7230.dgn

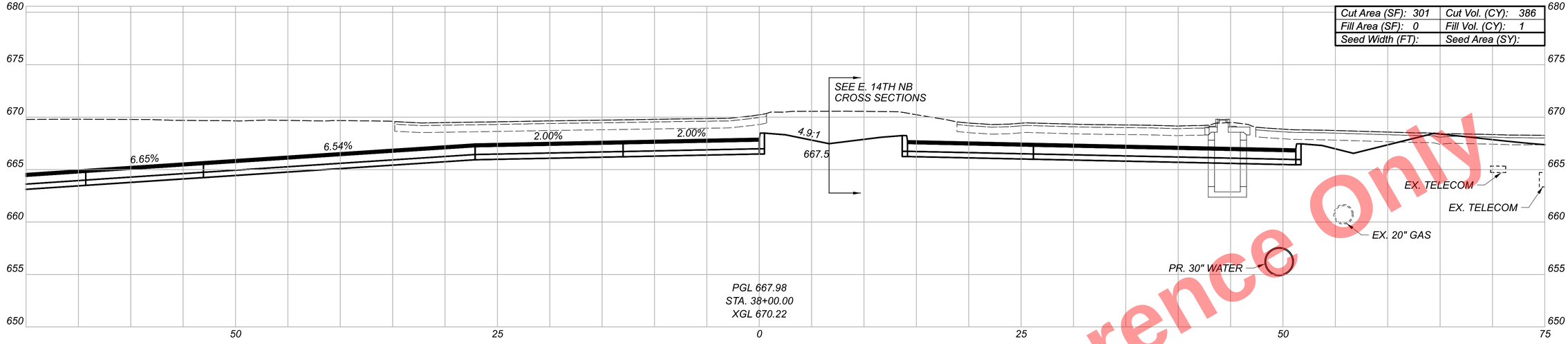

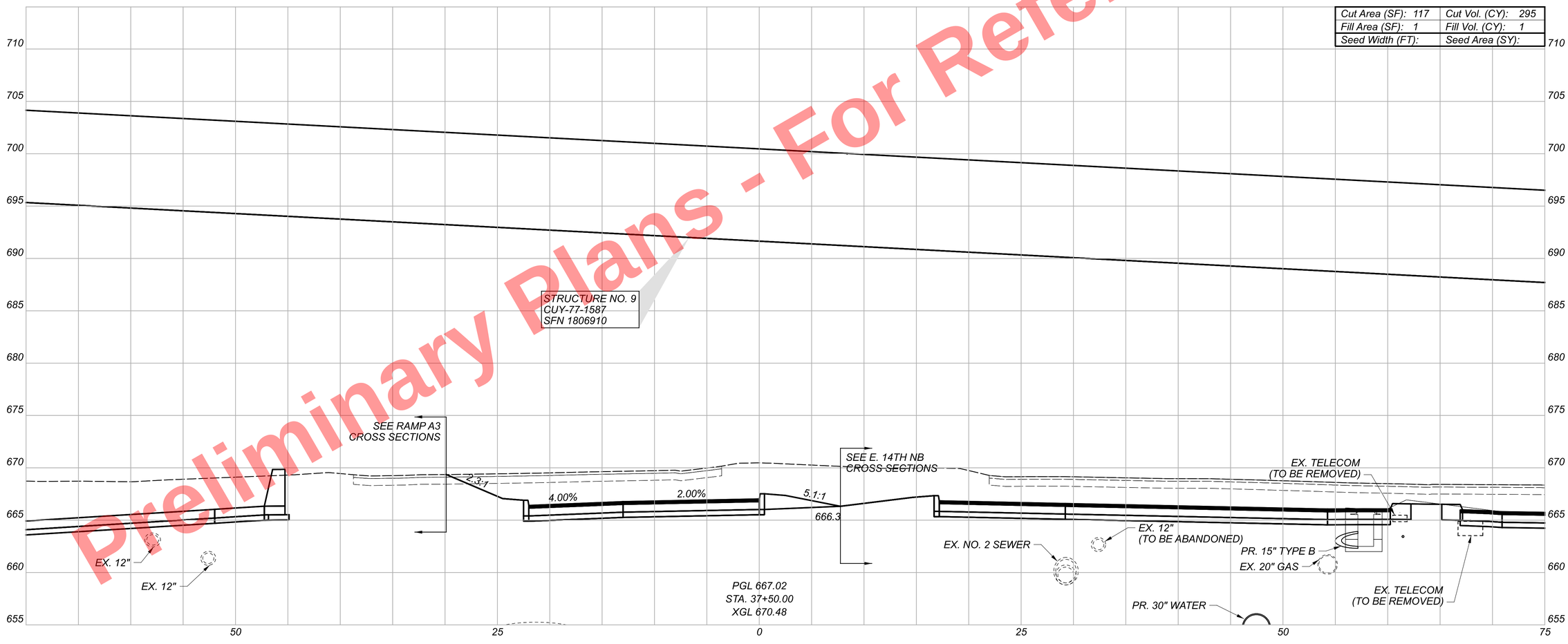

Preliminary Plans - For Reference Only

CROSS SECTIONS
E. 14TH ST. SB

CUY-90-16.28 (CCG3A)

MODEL: CLP_EI4SB_Hybrid - 37+50.00 R2 [Sheet] PAPERSIZE: 34x22 (in.) DATE: 3/28/2025 TIME: 9:26:35 AM USER: Kevin.McNutt
pw:\\mb-us-pw.bentley.com:mb-us-pw-03\Documents\Cleveland_OH\OI_Projects\ODOT\District2\82382\400-Engineering\Roadway\Sheets\82382_XS7230.dgn

Sheet Totals		
Seeding	Cut	Fill
0	681	2

DESIGN AGENCY
Michael Baker INTERNATIONAL

DESIGNER
KJM

REVIEWER
KGJ 05/22/24

PROJECT ID
82382

SHEET 999 TOTAL 2696

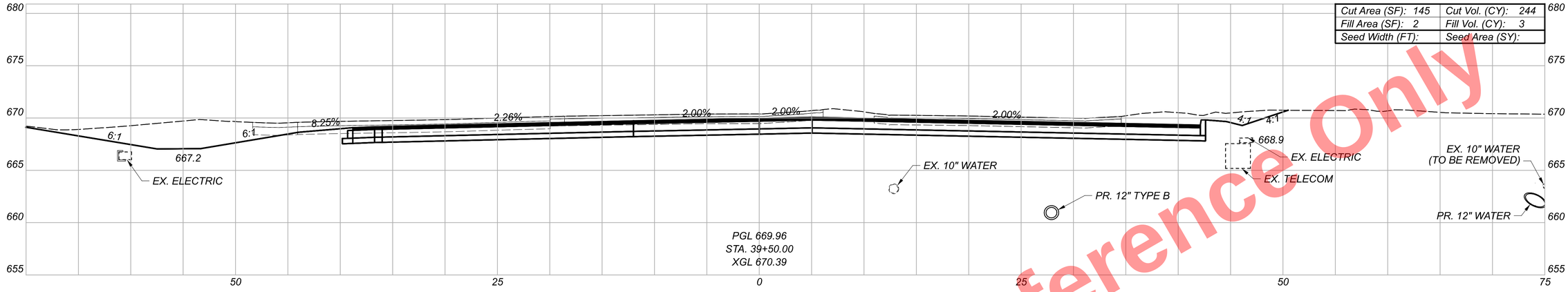

Cut Area (SF): 145	Cut Vol. (CY): 244
Fill Area (SF): 2	Fill Vol. (CY): 3
Seed Width (FT):	Seed Area (SY):

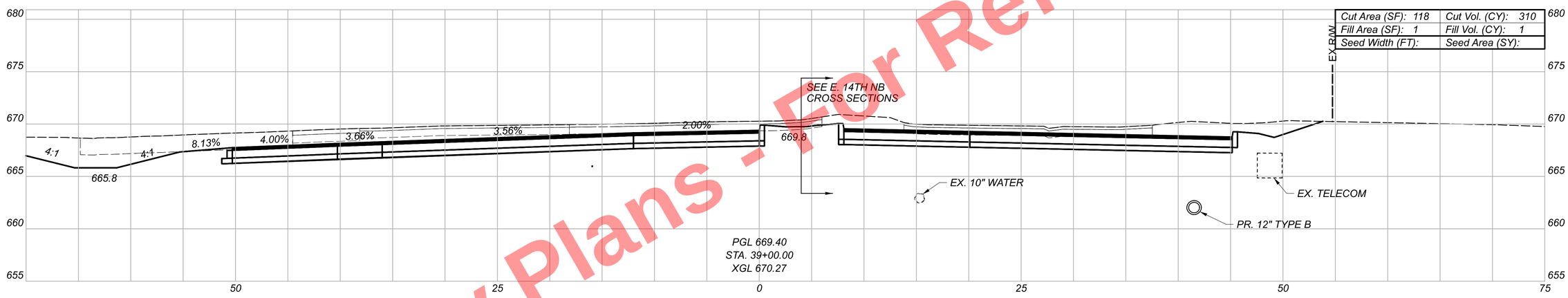

Cut Area (SF): 118	Cut Vol. (CY): 310
Fill Area (SF): 1	Fill Vol. (CY): 1
Seed Width (FT):	Seed Area (SY):

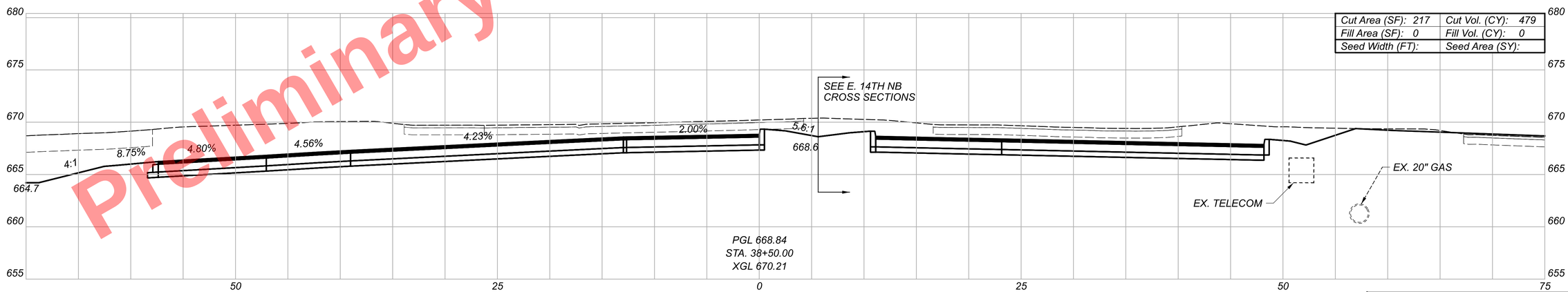

Cut Area (SF): 217	Cut Vol. (CY): 479
Fill Area (SF): 0	Fill Vol. (CY): 0
Seed Width (FT):	Seed Area (SY):

Preliminary Plans - For Reference Only

CUY-90-16.28 (CCG3A)

MODEL: CLP_EI4SB_Hybrid - 38+50.00 R2 [Sheet] PAPERSIZE: 34x22 (in.) DATE: 6/13/2025 TIME: 1:59:57 PM USER: Mata,Gallagher
pw:\\mb-us-pw.bentley.com:mb-us-pw-03\Documents\Cleveland_OH\01_Projects\00DOT\District#12\82382\400-Engineering\Roadway\Sheets\82382_XS7230.dgn

CROSS SECTIONS
E. 14TH ST. SB

Sheet Totals		
Seeding	Cut	Fill
0	1033	4

Grand Totals Carried to Subsummary		
Seeding	Cut	Fill
0	11280	174
Excavation of Subgrade	Granular Material, Type B	
272	272	

DESIGN AGENCY
Michael Baker INTERNATIONAL

DESIGNER
KJM

REVIEWER
KGJ 05/22/24

PROJECT ID
82382

SHEET 1000 TOTAL 2696

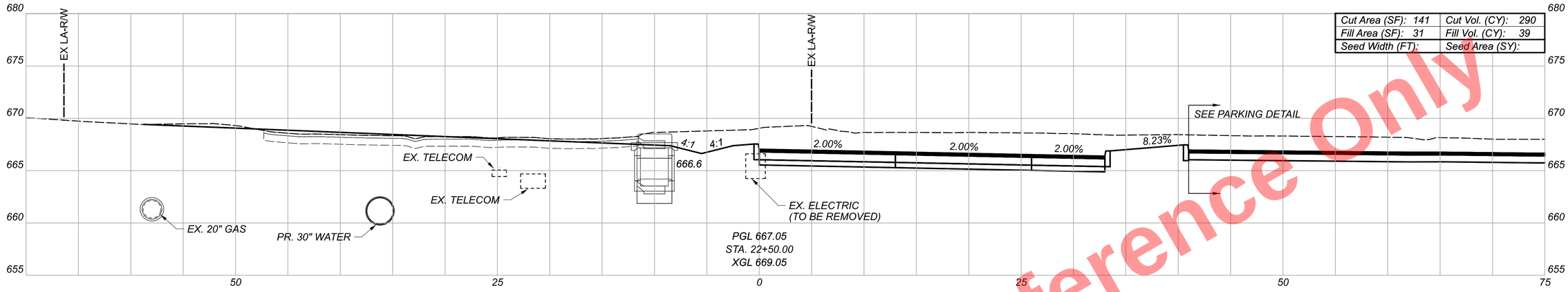

Cut Area (SF): 141	Cut Vol. (CY): 290
Fill Area (SF): 31	Fill Vol. (CY): 39
Seed Width (FT):	Seed Area (SY):

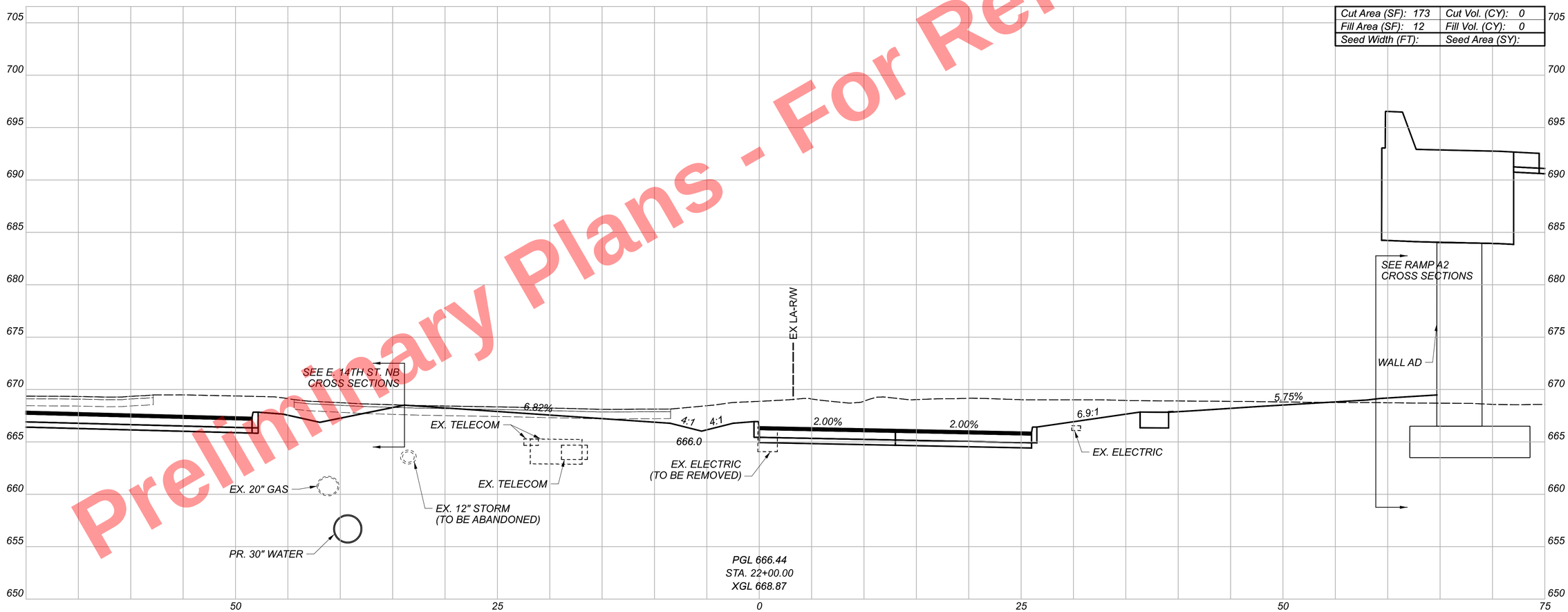

Cut Area (SF): 173	Cut Vol. (CY): 0
Fill Area (SF): 12	Fill Vol. (CY): 0
Seed Width (FT):	Seed Area (SY):

Preliminary Plans - For Reference Only

CROSS SECTIONS
E. 18TH ST.

CUY-90-16.28 (CCG3A)

MODEL: BL_E_18TH ST. - 22+00.00 [Sheet] PAPERSIZE: 34x22 (in.) DATE: 3/28/2025 TIME: 9:27:11 AM USER: Kevin.McNutt
pw:\\mb-us-pw.bentley.com:mb-us-pw-03\Documents\Cleveland_OH\01_Projects\ODOT\District 12\82382\400-Engineering\Roadway\Sheets\82382_XS7300.dgn

DESIGN AGENCY
Michael Baker INTERNATIONAL

DESIGNER
KJM

REVIEWER
KGJ 05/22/24

PROJECT ID
82382

Sheet Totals		
Seeding	Cut	Fill
0	290	39

SHEET 1001 TOTAL 2696

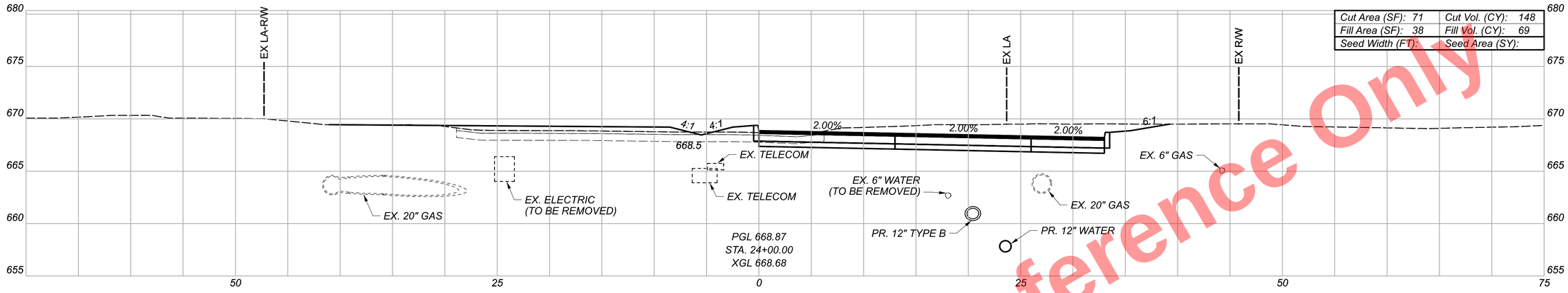

Cut Area (SF): 71	Cut Vol. (CY): 148
Fill Area (SF): 38	Fill Vol. (CY): 69
Seed Width (FT):	Seed Area (SY):

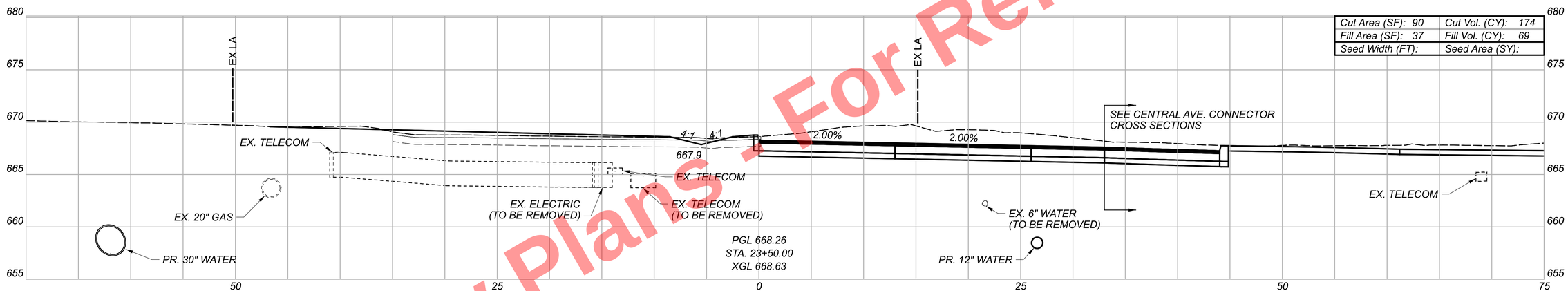

Cut Area (SF): 90	Cut Vol. (CY): 174
Fill Area (SF): 37	Fill Vol. (CY): 69
Seed Width (FT):	Seed Area (SY):

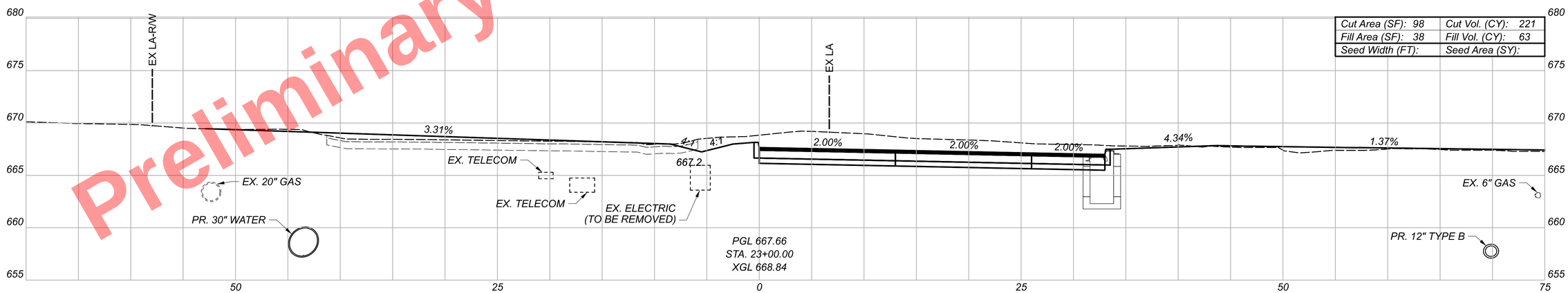

Cut Area (SF): 98	Cut Vol. (CY): 221
Fill Area (SF): 38	Fill Vol. (CY): 63
Seed Width (FT):	Seed Area (SY):

For Reference Only
Preliminary Plans - Not

CUY-90-16.28 (CCG3A)

MODEL: BL E. 18TH ST. - 23+00.00 [Sheet] PAPERSIZE: 34x22 (in.) DATE: 3/28/2025 TIME: 9:27:21 AM USER: Kevin.McNutt
pw:\\mb-us-pw.bentley.com:mb-us-pw-03\Documents\Cleveland.OH\01_Projects\ODOT\District2\82382\400-Engineering\Roadway\Sheets\82382_XS7300.dgn

CROSS SECTIONS
E. 18TH ST.

Sheet Totals			Grand Totals Carried to Subsummary		
Seeding	Cut	Fill	Seeding	Cut	Fill
0	543	201	0	833	240

DESIGN AGENCY
Michael Baker INTERNATIONAL

DESIGNER
KJM

REVIEWER
KGJ 05/22/24

PROJECT ID
82382

SHEET 1002 TOTAL 2696

Preliminary Plans - For Reference Only

Cut Area (SF): 26	Cut Vol. (CY): 56
Fill Area (SF): 2	Fill Vol. (CY): 3
Seed Width (FT):	Seed Area (SY):

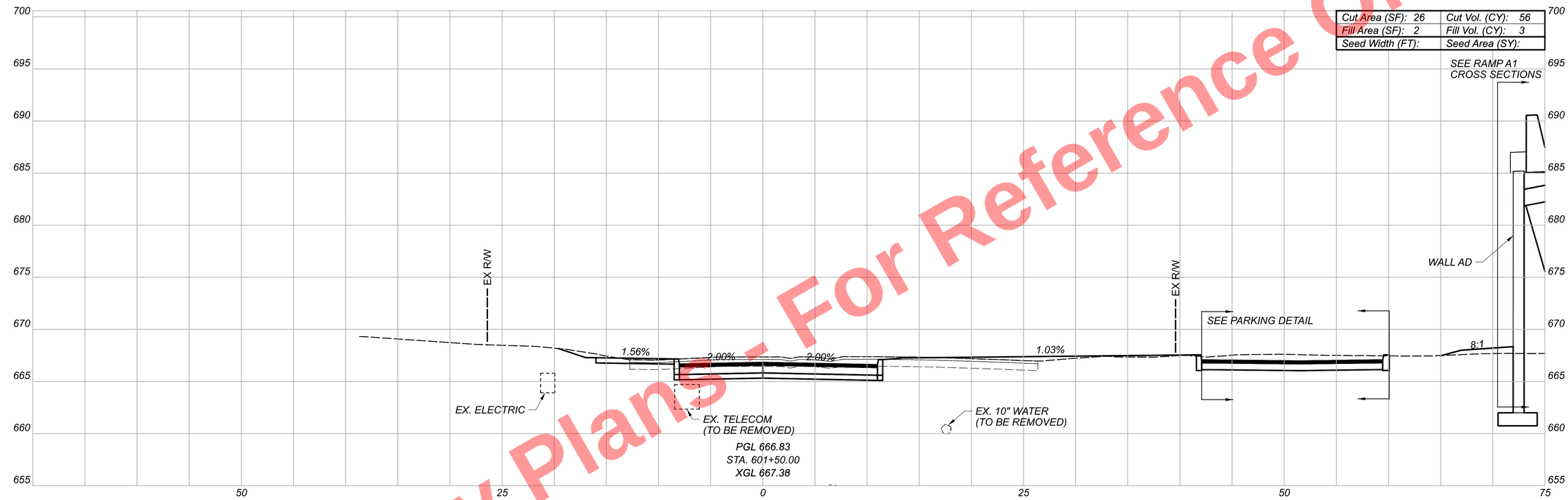

Cut Area (SF): 35	Cut Vol. (CY): 0
Fill Area (SF): 1	Fill Vol. (CY): 0
Seed Width (FT):	Seed Area (SY):

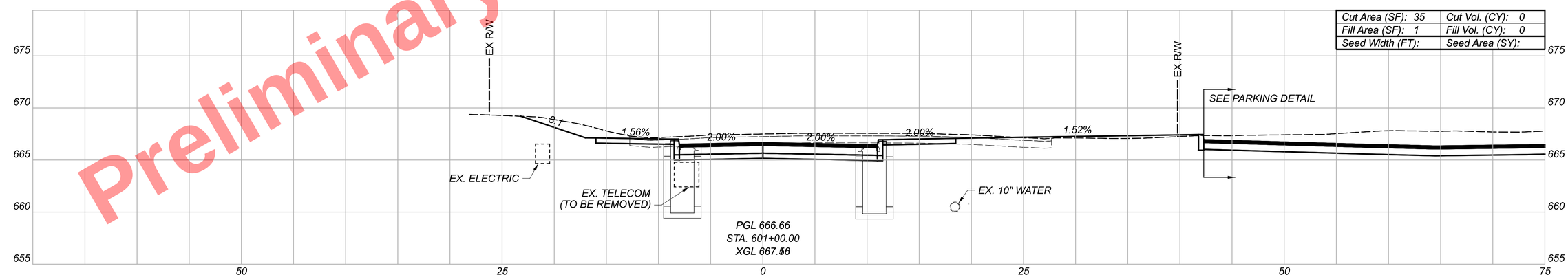

CUY-90-16.28 (CCG3A)

MODEL: CL Central Ave. Connector - 60I+00.00 [Sheet] PAPERSIZE: 34x22 (in.) DATE: 3/28/2025 TIME: 9:27:41 AM USER: KevinJMcNutt
pw:\\mb-us-pw.bentley.com:mb-us-pw-03\Documents\Cleveland.OH\OI_Projects\ODOT\District2\82382\400-Engineering\Roadway\Sheets\82382_XS7920.dgn

CROSS SECTIONS
CENTRAL AVE. CONNECTOR

Sheet Totals		
Seeding	Cut	Fill
0	56	3

DESIGN AGENCY
Michael Baker INTERNATIONAL

DESIGNER
KJM

REVIEWER
KGJ 05/22/24

PROJECT ID
82382

SHEET 1003 TOTAL 2696

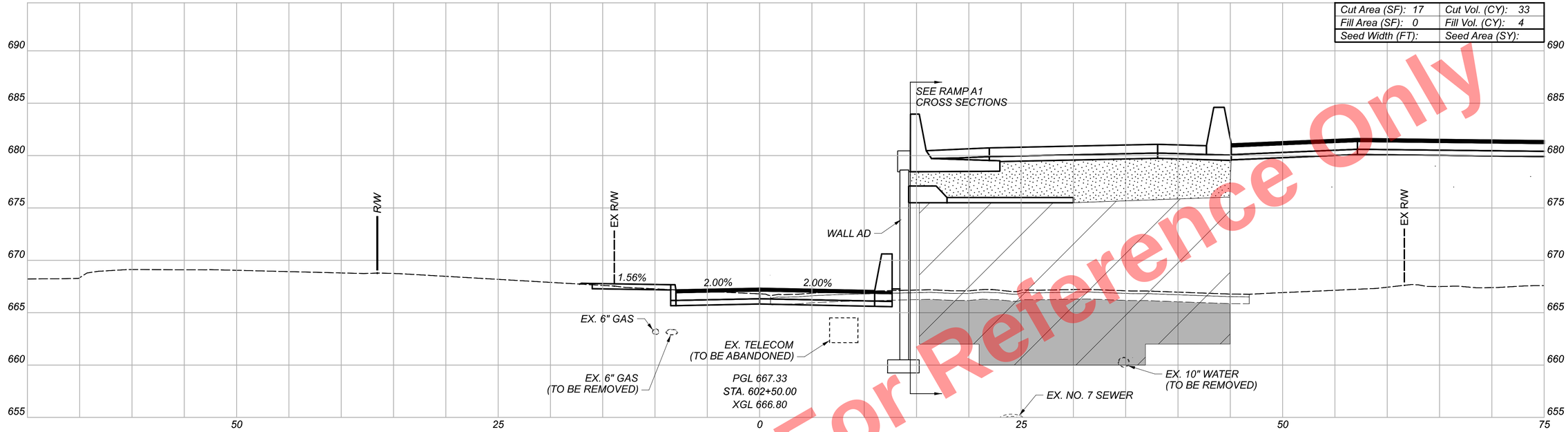

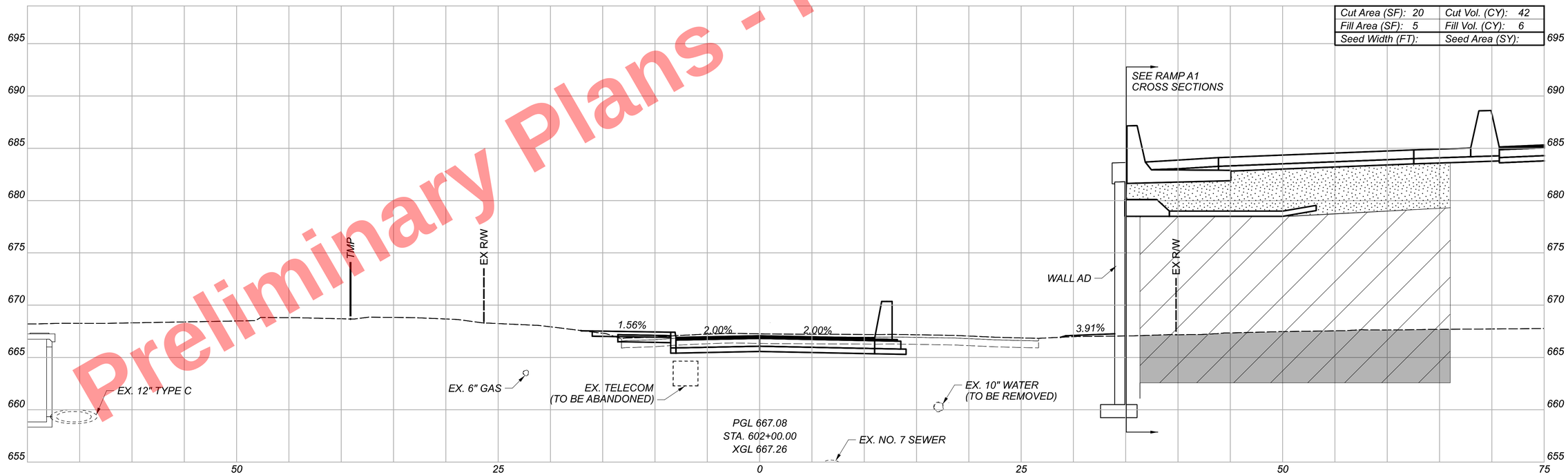

Preliminary Plans - Not For Reference Only

CUY-90-16.28 (CCG3A)

MODEL: CL Central Ave. Connector - 602+00.00 [Sheet] PAPERSIZE: 34x22 (in.) DATE: 3/28/2025 TIME: 9:27:50 AM USER: Kevin.McNutt
pw:\\mb-us-pw.bentley.com:mb-us-pw-03\Documents\Cleveland.OH.OI_Projects\ODOT\District2\82382\400-Engineering\Roadway\Sheets\82382_XS7920.dgn

CROSS SECTIONS
CENTRAL AVE. CONNECTOR

Sheet Totals		
Seeding	Cut	Fill
0	75	10

DESIGN AGENCY
Michael Baker INTERNATIONAL

DESIGNER KJM

REVIEWER KGJ 05/22/24

PROJECT ID 82382

SHEET 1004 TOTAL 2696

Preliminary Plans - For Reference Only

Cut Area (SF): 65	Cut Vol. (CY): 105
Fill Area (SF): 0	Fill Vol. (CY): 0
Seed Width (FT):	Seed Area (SY):

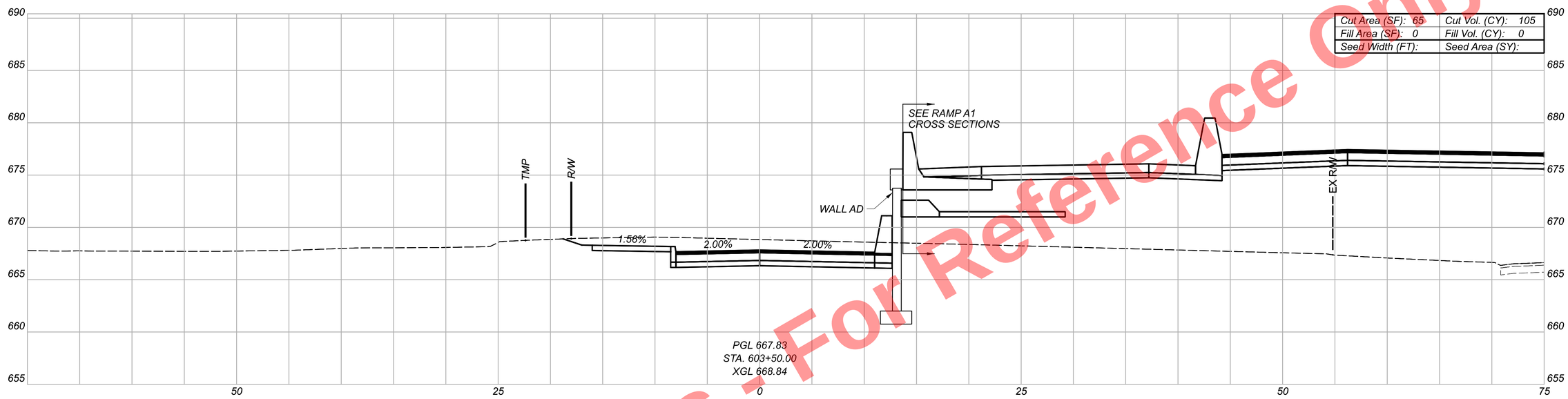

Cut Area (SF): 49	Cut Vol. (CY): 61
Fill Area (SF): 0	Fill Vol. (CY): 0
Seed Width (FT):	Seed Area (SY):

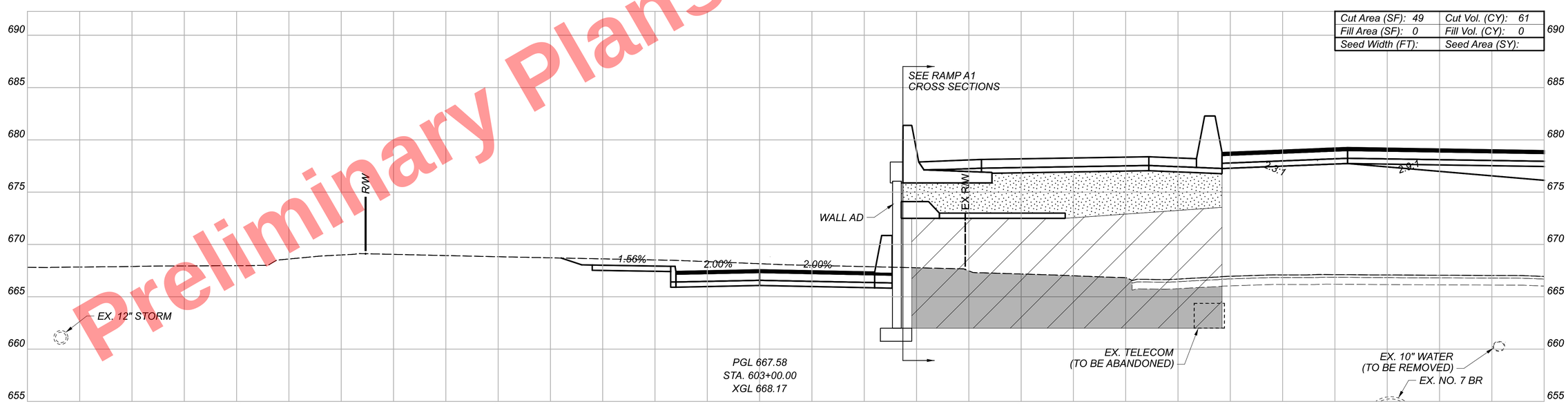

Sheet Totals			Grand Totals Carried to Subsummary		
Seeding	Cut	Fill	Seeding	Cut	Fill
0	166	0	0	297	13

CUY-90-16.28 (CCG3A)

CROSS SECTIONS
CENTRAL AVE. CONNECTOR

DESIGN AGENCY
Michael Baker INTERNATIONAL

DESIGNER KJM

REVIEWER KGJ 05/22/24

PROJECT ID 82382

SHEET 1005 TOTAL 2696

MODEL: CL_CentralAve_Connector - 603+00.00 [Sheet] PAPERSIZE: 34x22 (In.) DATE: 3/28/2025 TIME: 9:27:58 AM USER: Kevin.McNutt
pw:\\mb-us-pw.bentley.com:mb-us-pw-03\Documents\Cleveland_OH\01_Projects\0007\District2\82382\400-Engineering\Roadway\Sheets\82382_XS7920.dgn

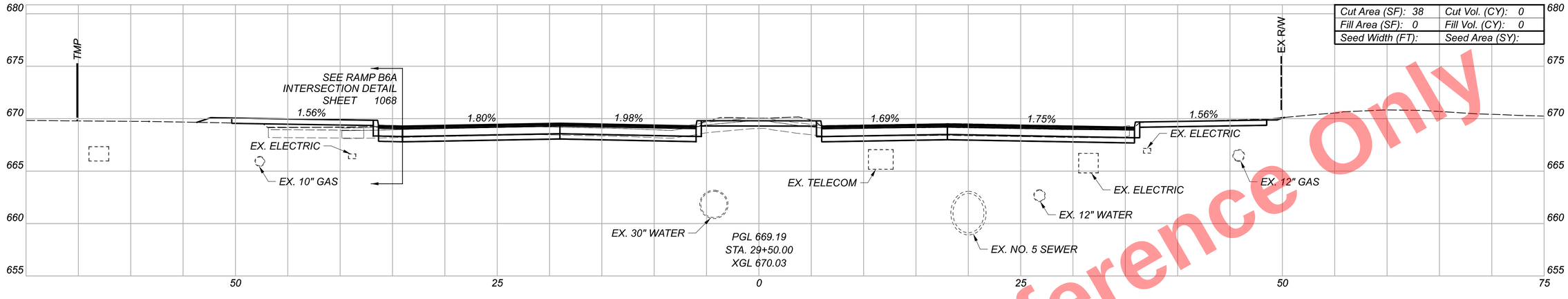

Cut Area (SF): 38	Cut Vol. (CY): 0
Fill Area (SF): 0	Fill Vol. (CY): 0
Seed Width (FT):	Seed Area (SY):

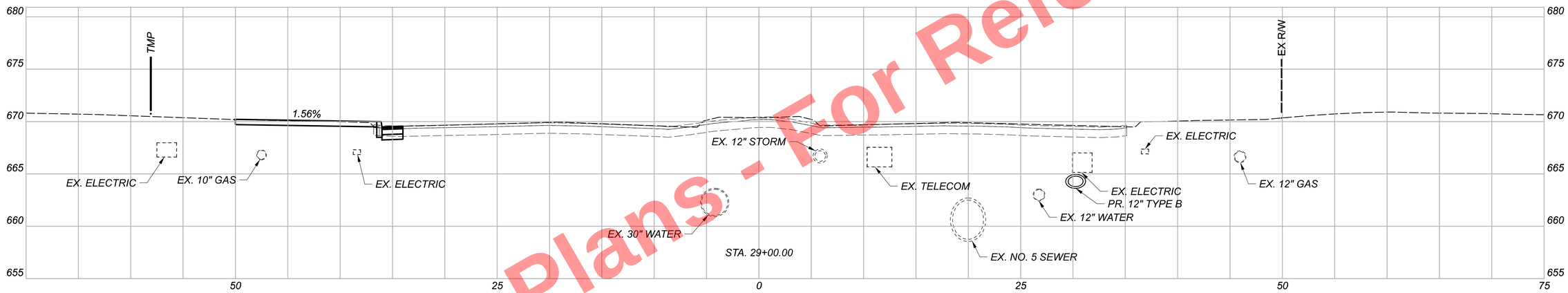

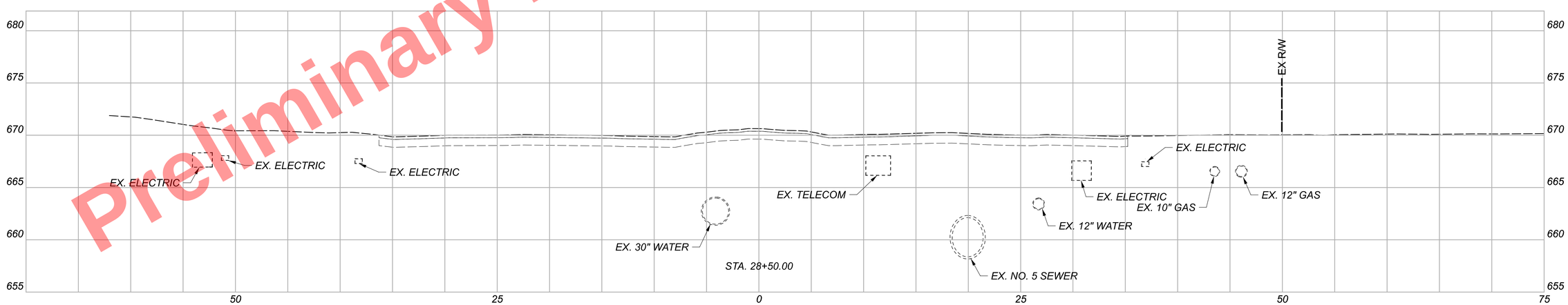

Preliminary Plans - For Reference Only

CROSS SECTIONS
E. 22ND ST.

CUY-90-16.28 (CCG3A)

MODEL: CLP_E 22ND ST - 28+50.00 [Sheet] PAPERSIZE: 34x22 (In.) DATE: 5/19/2025 TIME: 8:45:16 AM USER: KevinJMcNutt
pw:\\mb-us-pw.bentley.commb-us-pw-03\Documents\Cleveland_OHIO\Projects\ODOT\District2\82382400-EngineerIng\Roadway\Sheets\82382_XS7400.dgn

DESIGN AGENCY
Michael Baker INTERNATIONAL

DESIGNER
KJM

REVIEWER
KGJ 05/22/24

PROJECT ID
82382

Sheet Totals		
Seeding	Cut	Fill
0	0	0

SHEET 1006 TOTAL 2696

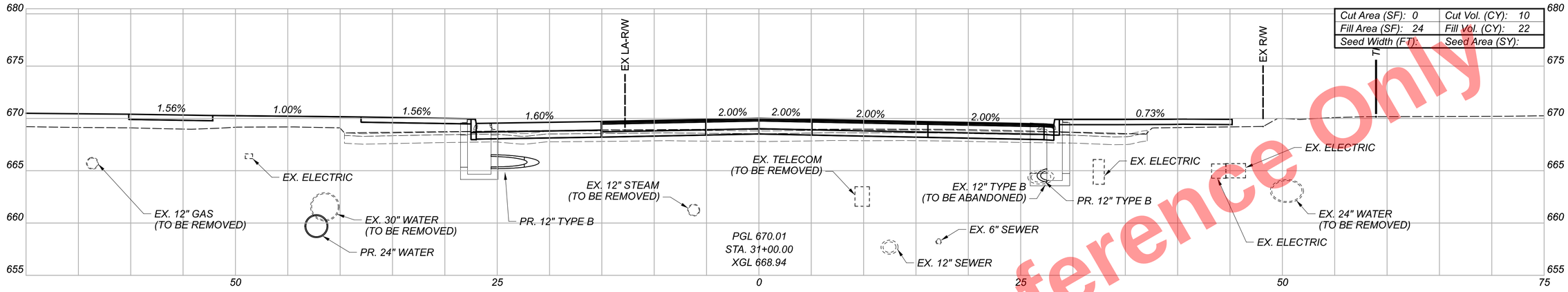

Cut Area (SF): 0	Cut Vol. (CY): 10
Fill Area (SF): 24	Fill Vol. (CY): 22
Seed Width (FT):	Seed Area (SY):

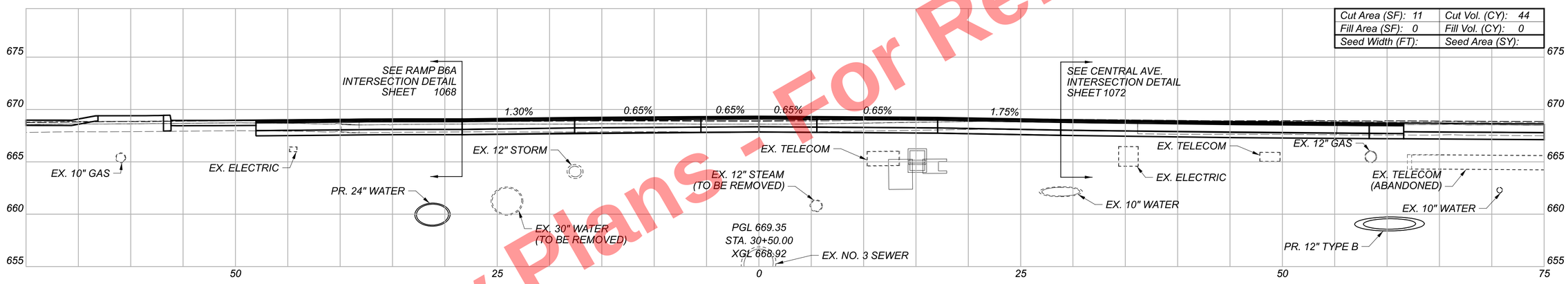

Cut Area (SF): 11	Cut Vol. (CY): 44
Fill Area (SF): 0	Fill Vol. (CY): 0
Seed Width (FT):	Seed Area (SY):

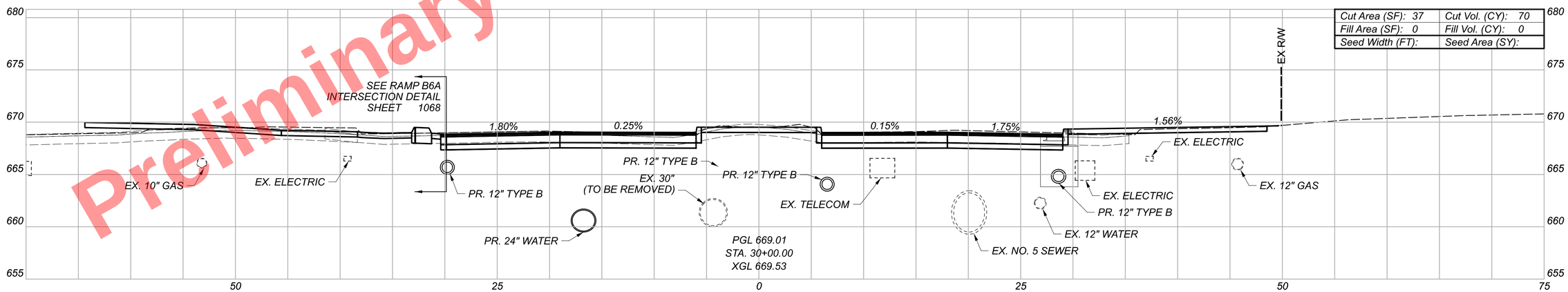

Cut Area (SF): 37	Cut Vol. (CY): 70
Fill Area (SF): 0	Fill Vol. (CY): 0
Seed Width (FT):	Seed Area (SY):

Preliminary Plans - For Reference Only

CROSS SECTIONS
E. 22ND ST.

DESIGN AGENCY
Michael Baker INTERNATIONAL

DESIGNER
KJM

REVIEWER
KGJ 05/22/24

PROJECT ID
82382

Sheet Totals		
Seeding	Cut	Fill
0	124	22

SHEET	TOTAL
1007	2696

CUY-90-16.28 (CCG3A)

MODEL: CLP_E 22ND ST - 30+00.00 [Sheet] PAPERSIZE: 34x22 (In.) DATE: 5/9/2025 TIME: 8:45:24 AM USER: KevinMcNutt
pw:\\mb-us-pw.bentley.com:mb-us-pw-03\Documents\Cleveland_OH\01_Projects\0DOT\District2\82382\400-Engineering\Roadway\Sheets\82382_XS7400.dgn

Preliminary Plans - For Reference Only

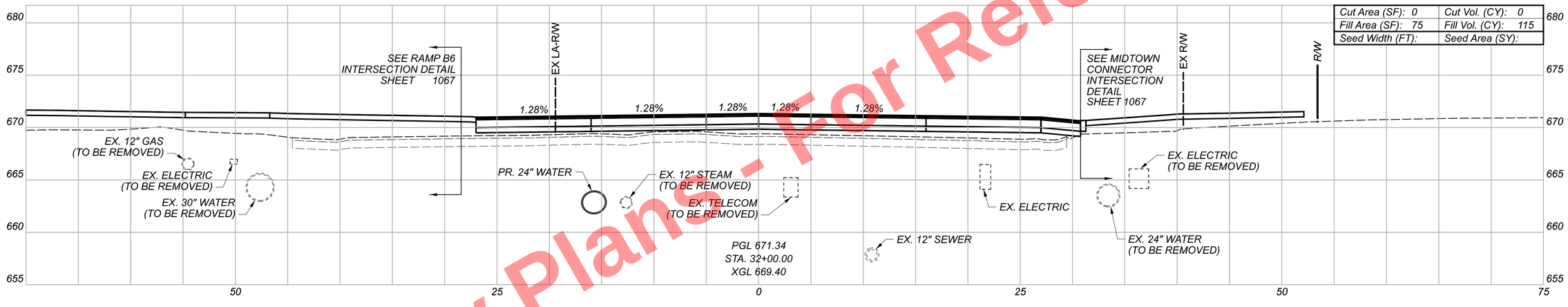

Cut Area (SF): 0	Cut Vol. (CY): 0
Fill Area (SF): 75	Fill Vol. (CY): 115
Seed Width (FT):	Seed Area (SY):

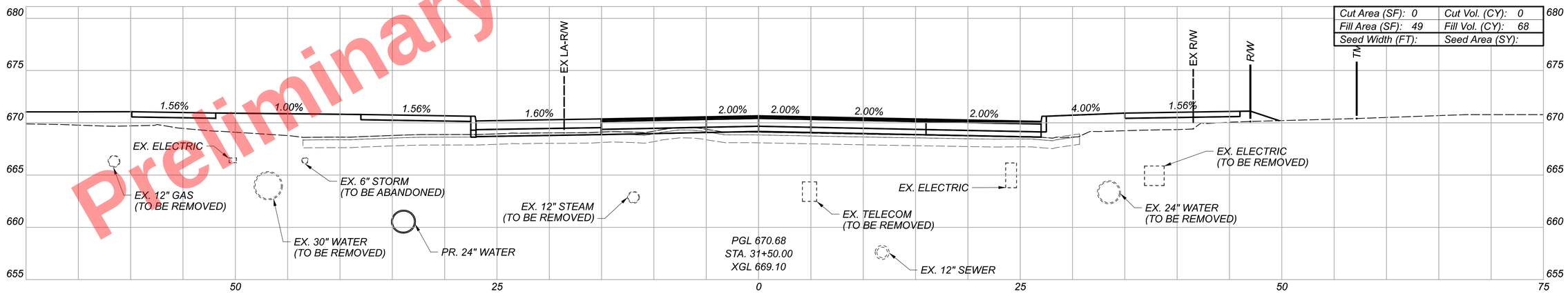

Cut Area (SF): 0	Cut Vol. (CY): 0
Fill Area (SF): 49	Fill Vol. (CY): 68
Seed Width (FT):	Seed Area (SY):

Sheet Totals		
Seeding	Cut	Fill
0	0	183

CROSS SECTIONS
E. 22ND ST.

DESIGN AGENCY
Michael Baker INTERNATIONAL

DESIGNER
KJM

REVIEWER
KGJ 05/22/24

PROJECT ID
82382

SHEET 1008 | TOTAL 2696

CUY-90-16.28 (CCG3A)

MODEL: CLP_E 22ND ST - 31+50.00 [Sheet] PAPERSIZE: 34x22 (in.) DATE: 5/19/2025 TIME: 8:45:35 AM USER: KevinJMcNutt
pw:\\mb-us-pw.bentley.com:mb-us-pw-03\Documents\Cleveland_OH\01_Projects\ODOT\District2\82382\400-Engineering\Roadway\Sheets\82382_XS7400.dgn

Preliminary Plans - For Reference Only

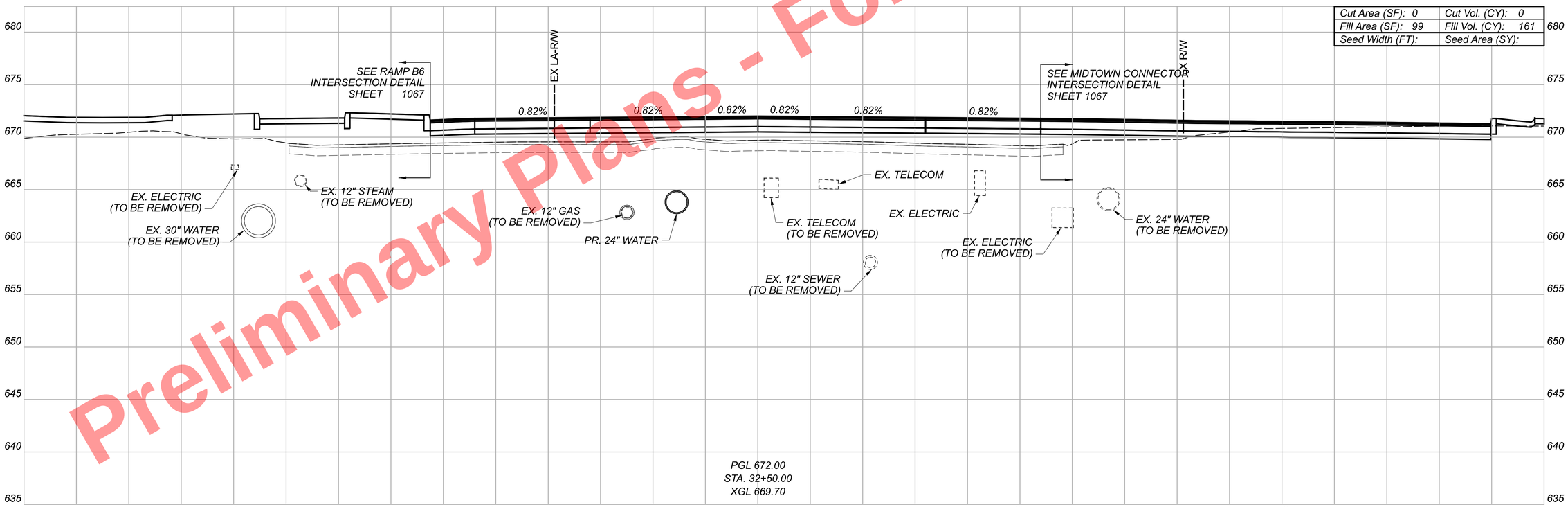

Cut Area (SF): 0	Cut Vol. (CY): 0
Fill Area (SF): 99	Fill Vol. (CY): 161
Seed Width (FT):	Seed Area (SY):

Sheet Totals		
Seeding	Cut	Fill
0	0	161

CROSS SECTIONS
E. 22ND ST.

DESIGN AGENCY
Michael Baker INTERNATIONAL

DESIGNER
KJM

REVIEWER
KGJ 05/22/24

PROJECT ID
82382

SHEET 1009 TOTAL 2696

CUY-90-16.28 (CCG3A)

MODEL: CLP_E 22ND ST - 32+50.00 (Sheet) PAPERSIZE: 34x22 (In) DATE: 5/19/2025 TIME: 8:45:44 AM USER: Kevin.McNutt
pw:\\mb-us-pw.bentley.com:mb-us-pw-03\Documents\Cleveland_OH\OIL_Projects\ODOT\District2\82382\400-Engineering\Roadway\Sheets\82382_XS7400.dgn

Preliminary Plans - For Reference Only

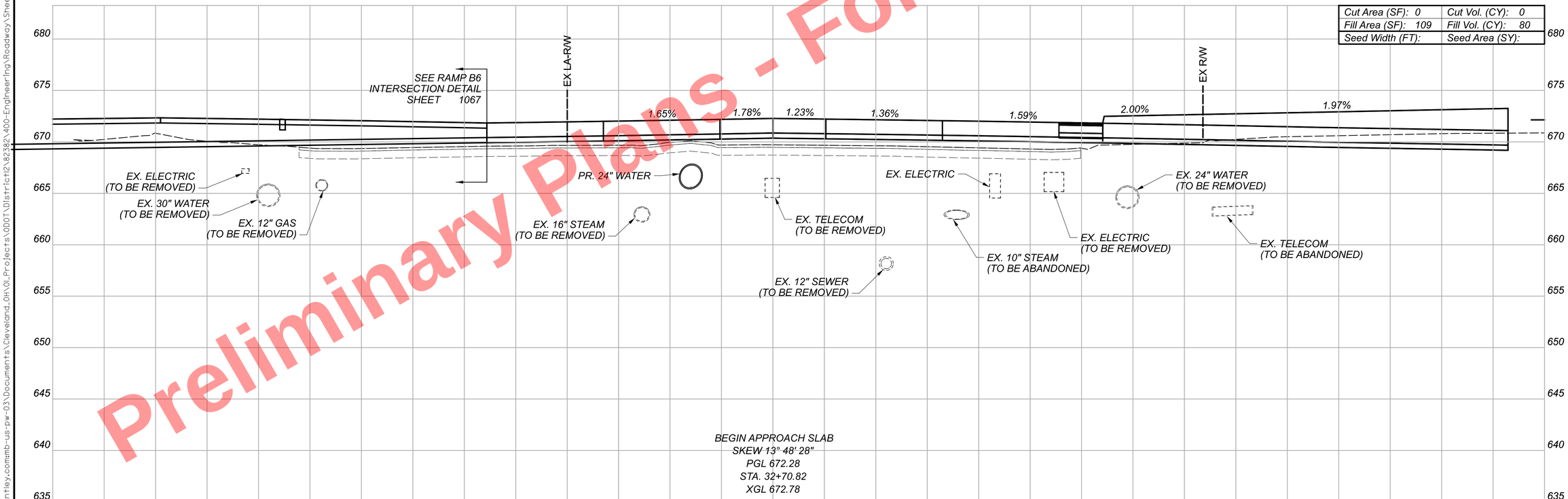

Cut Area (SF): 0	Cut Vol. (CY): 0
Fill Area (SF): 109	Fill Vol. (CY): 80
Seed Width (FT):	Seed Area (SY):

CROSS SECTIONS
E. 22ND ST.

CUY-90-16.28 (CCG3A)

MODEL: CLP_E 22ND ST - 32+70.82 [Sheet] PAPERSIZE: 34x22 (In.) DATE: 5/19/2025 TIME: 8:45:50 AM USER: Kevin.McNutt
pw:\\mb-us-pw.bentley.com\mb-us-pw-03\Documents\Cleveland_OHIO_Projects\000T\District12\82382\400-Engineering\Roadway\Sheets\82382_XS7400.dgn

Sheet Totals		
Seeding	Cut	Fill
0	0	80

DESIGN AGENCY
Michael Baker INTERNATIONAL

DESIGNER
KJM

REVIEWER
KGJ 05/22/24

PROJECT ID
82382

SHEET 1010 TOTAL 2696

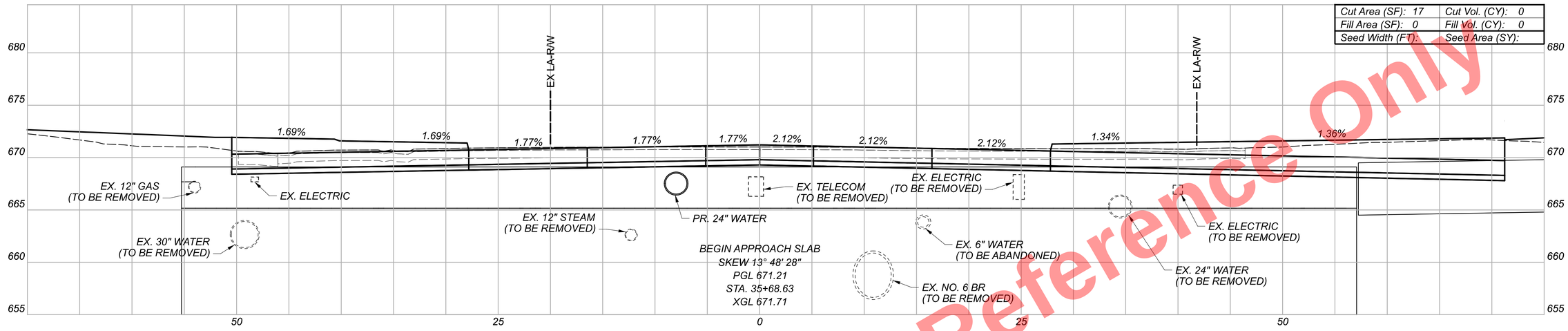

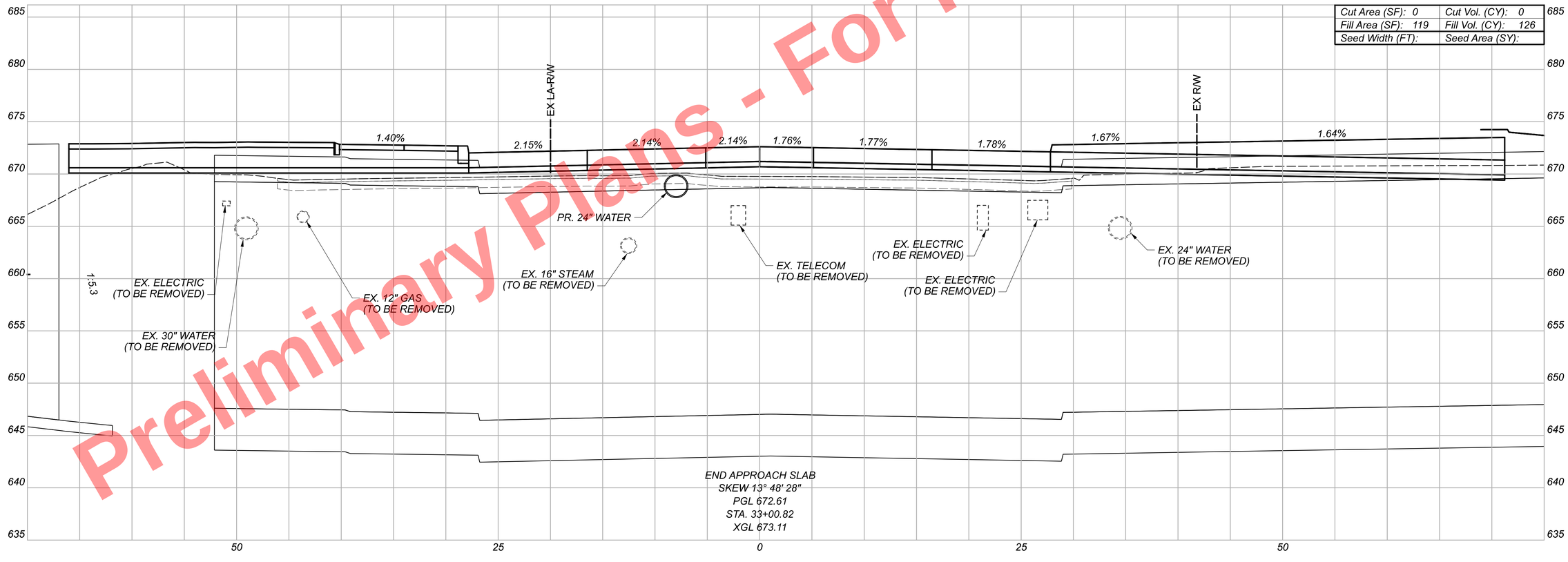

Preliminary Plans - For Reference Only

CUY-90-16.28 (CCG3A)

MODEL: CLP-E 22ND ST - 33+00.82 [Sheet] PAPERSIZE: 34x22 (in.) DATE: 5/9/2025 TIME: 8:45:58 AM USER: Kevin.McNutt
pw:\\mb-us-pw.bentley.com:mb-us-pw-03\Documents\Cleveland_OH\OL_Projects\ODOT\District12\82382\400-Engineering\Roadway\Sheets\82382_XS7400.dgn

CROSS SECTIONS
E. 22ND ST.

Sheet Totals		
Seeding	Cut	Fill
0	0	126

DESIGN AGENCY
Michael Baker INTERNATIONAL

DESIGNER
KJM

REVIEWER
KGJ 05/22/24

PROJECT ID
82382

SHEET 1011 TOTAL 2696

Preliminary Plans - For Reference Only

MODEL: CLP_E 22ND ST - 35+98.63 (Sheet) PAPERSIZE: 34x22 (In.) DATE: 5/9/2025 TIME: 8:46:10 AM USER: KevinMcNutt
pw:\\mb-us-pw.bentley.com:mb-us-pw-03\Documents\Cleveland_OH\01_Projects\ODOT\District2\82382\400-EngineeringRoadway\Sheets\82382_XS7400.dgn

CUY-90-16.28 (CCG3A)

CROSS SECTIONS
E. 22ND ST.

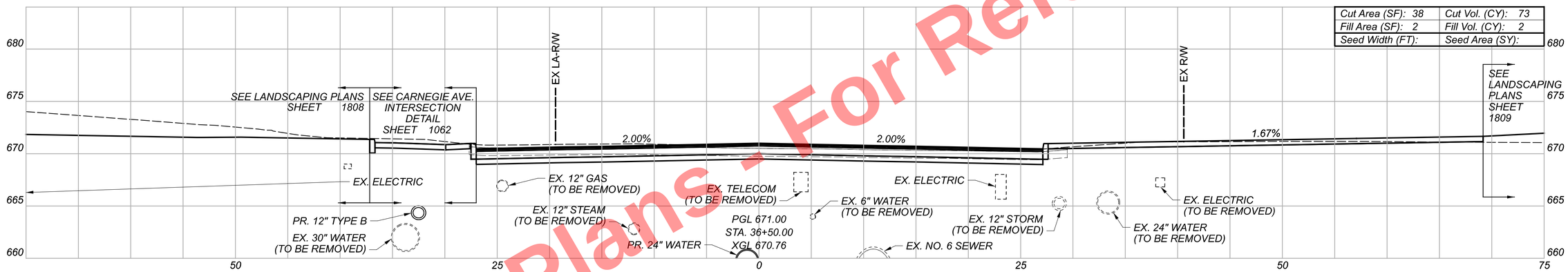

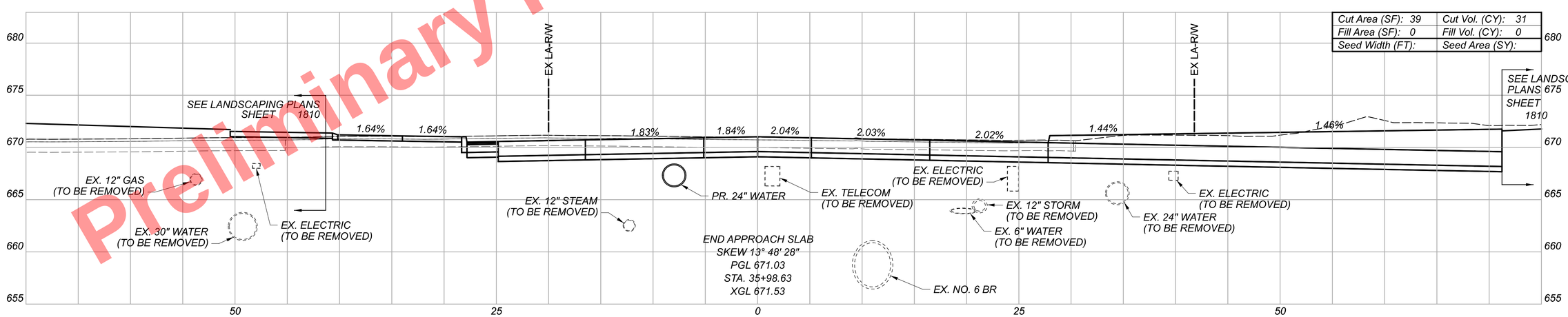

Sheet Totals			Grand Totals Carried to Subsummary		
Seeding	Cut	Fill	Seeding	Cut	Fill
0	104	2	0	228	574

DESIGN AGENCY
Michael Baker INTERNATIONAL

DESIGNER
KJM

REVIEWER
KGJ 05/22/24

PROJECT ID
82382

SHEET 1012 TOTAL 2696

SUPERELEVATION TABLE

P. I. Station 181+96.50 | Dc = 2°10'0"

LEFT SIDE					CENTERLINE CONTROL		RIGHT SIDE					REMARKS
EDGE ELEVATION	TRANSITION RATE	*ELEVATION CORRECTION	CROSS SLOPE	WIDTH	STATION	PROFILE GRADE	WIDTH	CROSS SLOPE	*ELEVATION CORRECTION	TRANSITION RATE	EDGE ELEVATION	
698.76		+0.41	+0.017	24.00	175+77.69	698.35	12.00	-0.017	-0.20		698.15	
698.71		+0.38	+0.016	24.00	175+80.30	698.33	12.00	-0.016	-0.19		698.14	R.C.
698.49		+0.30	+0.012	24.00	176+00.00	698.19	12.00	-0.012	-0.15		698.05	
698.24		+0.18	+0.008	24.00	176+25.00	698.06	12.00	-0.008	-0.09		697.97	
698.04		+0.07	+0.003	24.00	176+50.00	697.97	12.00	-0.003	-0.04		697.94	
697.94		+0.00	+0.000	24.00	176+65.55	697.94	13.00	+0.000	+0.00		697.94	FLAT
697.89		-0.04	-0.002	24.00	176+75.00	697.93	12.00	+0.002	+0.02		697.95	
697.78		-0.16	-0.006	24.00	177+00.00	697.94	12.00	+0.006	+0.08		698.01	
697.72	222:1	-0.27	-0.011	24.00	177+25.00	697.99	12.00	+0.011	+0.13	222:1	698.12	
697.70		-0.38	-0.016	24.00	177+50.00	698.08	12.00	+0.016	+0.19		698.27	
697.70		-0.38	-0.016	24.00	177+50.80	698.08	12.00	+0.016	+0.19		698.27	
697.73		-0.49	-0.021	24.00	177+75.00	698.22	12.00	+0.021	+0.25		698.47	R.C.
697.76		-0.61	-0.025	24.00	178+00.00	698.37	12.00	+0.025	+0.30		698.67	
697.79		-0.72	-0.030	24.00	178+25.00	698.51	12.00	+0.030	+0.36		698.87	
697.77		-0.83	-0.035	24.00	178+50.00	698.60	12.00	+0.035	+0.42		699.02	
697.72		-0.94	-0.039	24.00	178+75.00	698.66	12.00	+0.039	+0.47		699.13	
697.62		-1.06	-0.044	24.00	179+00.00	698.68	12.00	+0.044	+0.53		699.21	
697.53		-1.13	-0.047	24.00	179+15.97	698.66	12.00	+0.047	+0.56		699.22	F.S.
697.52		-1.13	-0.047	24.00	179+25.00	698.65	12.00	+0.047	+0.56		699.21	
697.46		-1.13	-0.047	24.00	179+50.00	698.59	12.00	+0.047	+0.56		699.15	
697.35		-1.13	-0.047	24.00	179+75.00	698.48	12.00	+0.047	+0.56		699.05	
697.21		-1.13	-0.047	24.00	180+00.00	698.33	12.00	+0.047	+0.56		698.90	
697.02		-1.13	-0.047	24.00	180+25.00	698.15	12.00	+0.047	+0.56		698.71	
696.79		-1.13	-0.047	24.00	180+50.00	697.92	12.00	+0.047	+0.56		698.48	
696.52		-1.13	-0.047	24.00	180+75.00	697.65	12.00	+0.047	+0.56		698.21	
696.21		-1.13	-0.047	24.00	181+00.00	697.34	12.00	+0.047	+0.56		697.91	
695.88		-1.13	-0.047	24.00	181+25.00	697.00	12.00	+0.047	+0.56		697.57	
695.54		-1.13	-0.047	24.00	181+50.00	696.67	12.00	+0.047	+0.56		697.23	
695.20		-1.13	-0.047	24.00	181+75.00	696.33	12.00	+0.047	+0.56		696.89	
694.86		-1.13	-0.047	24.00	182+00.00	695.99	12.00	+0.047	+0.56		696.56	
694.53		-1.13	-0.047	24.00	182+25.00	695.65	12.00	+0.047	+0.56		696.22	
694.19		-1.13	-0.047	24.00	182+50.00	695.32	12.00	+0.047	+0.56		695.88	
693.85		-1.13	-0.047	24.00	182+75.00	694.98	12.00	+0.047	+0.56		695.54	
693.51		-1.13	-0.047	24.00	183+00.00	694.64	12.00	+0.047	+0.56		695.21	
693.18		-1.13	-0.047	24.00	183+25.00	694.30	12.00	+0.047	+0.56		694.87	
692.84		-1.13	-0.047	24.00	183+50.00	693.97	12.00	+0.047	+0.56		694.53	
692.50		-1.13	-0.047	24.00	183+75.00	693.63	12.00	+0.047	+0.56		694.19	
692.16		-1.13	-0.047	24.00	184+00.00	693.29	12.00	+0.047	+0.56		693.86	
691.83		-1.13	-0.047	24.00	184+25.00	692.95	12.00	+0.047	+0.56		693.52	
691.49		-1.13	-0.047	24.00	184+50.00	692.62	12.00	+0.047	+0.56		693.18	
691.15		-1.13	-0.047	24.00	184+75.00	692.28	12.00	+0.047	+0.56		692.84	
691.12		-1.13	-0.047	24.00	184+76.51	692.25	12.00	+0.047	+0.56		692.81	F.S.
690.89		-1.02	-0.043	24.00	185+00.00	691.91	12.00	+0.043	+0.51		692.42	
690.60		-0.91	-0.038	24.00	185+25.00	691.51	12.00	+0.038	+0.45		691.97	
690.28		-0.80	-0.033	24.00	185+50.00	691.08	12.00	+0.033	+0.40		691.48	
690.16	222:1	-0.75	-0.031	24.00	185+59.98	690.91	12.00	+0.031	+0.38	222:1	691.29	P.T.
689.94		-0.68	-0.029	24.00	185+75.00	690.63	12.00	+0.029	+0.34		690.97	
689.56		-0.57	-0.024	24.00	186+00.00	690.13	12.00	+0.024	+0.29		690.42	
689.15		-0.46	-0.019	24.00	186+25.00	689.61	12.00	+0.019	+0.23		689.84	
688.87		-0.38	-0.016	24.00	186+41.68	689.25	12.00	+0.016	+0.19		689.44	R.C.
688.68		-0.38	-0.016	24.00	186+50.00	689.06	12.00	+0.014	+0.17		689.23	

SUPERELEVATION TABLE

P.I. Station 181+96.50 | Dc = 2°10'0"

LEFT SIDE					CENTERLINE CONTROL		RIGHT SIDE					REMARKS
EDGE ELEVATION	TRANSITION RATE	*ELEVATION CORRECTION	CROSS SLOPE	WIDTH	STATION	PROFILE GRADE	WIDTH	CROSS SLOPE	*ELEVATION CORRECTION	TRANSITION RATE	EDGE ELEVATION	
688.09		-0.38	-0.016	24.00	186+75.00	688.48	12.00	+0.010	+0.12		688.59	
687.48		-0.38	-0.016	24.00	187+00.00	687.86	12.00	+0.005	+0.06		687.92	
686.83		-0.38	-0.016	24.00	187+25.00	687.21	12.00	+0.000	+0.00		687.22	
686.78		-0.38	-0.016	24.00	187+26.92	687.16	12.00	+0.000	+0.00		687.16	½ LEVEL
686.15		-0.38	-0.016	24.00	187+50.00	686.53	12.00	-0.004	-0.05	222:1	686.48	
685.44		-0.38	-0.016	24.00	187+75.00	685.83	12.00	-0.009	-0.11		685.72	
684.70		-0.38	-0.016	24.00	188+00.00	685.08	12.00	-0.014	-0.16		684.92	
684.33		-0.38	-0.016	24.00	188+12.17	684.71	12.00	-0.016	-0.19		684.52	N.C.

* NEGATIVE CORRECTIONS MEANING BELOW PROFILE GRADE
POSITIVE CORRECTIONS MEANING ABOVE PROFILE GRADE.

Preliminary Plans - For Reference Only

SUPERELEVATION TABLE
I.R. 90 EB

CUY-90-16.28

MODEL: Sheet PAPERSIZE: 34x22 (in.) DATE: 3/28/2025 TIME: 9:18:12 AM USER: Alexandria.Summers
pw:\\vmb-us-pw.bentley.com:vmb-us-pw-03\Documents\Cleveland_OH\01_Projects\ODOT\District2\82382\400-Engineering\Roadway\Sheets\82382_GE2101.dgn

DESIGN AGENCY
B&N
burgessniple.com

DESIGNER MDO
REVIEWER MRT 5/1/24
PROJECT ID 82382
SHEET 1013 TOTAL 2696

SUPERELEVATION TABLE

P. I. Station 195+79.88 | Dc = 2°20'0"

LEFT SIDE					CENTERLINE CONTROL		RIGHT SIDE					REMARKS
EDGE ELEVATION	TRANSITION RATE	*ELEVATION CORRECTION	CROSS SLOPE	WIDTH	STATION	PROFILE GRADE	WIDTH	CROSS SLOPE	*ELEVATION CORRECTION	TRANSITION RATE	EDGE ELEVATION	
678.78		-0.38	-0.016	24.00	189+75.80	679.16	12.00	-0.016	-0.19		678.97	N.C.
678.03		-0.28	-0.011	24.00	190+00.00	678.31	12.00	-0.016	-0.19		678.12	
677.27		-0.16	-0.007	24.00	190+25.00	677.43	12.00	-0.016	-0.19		677.24	
676.51		-0.05	-0.002	24.00	190+50.00	676.56	12.00	-0.016	-0.19		676.37	
676.17		+0.00	+0.000	24.00	190+61.05	676.17	12.00	-0.016	-0.19		675.98	½ LEVEL
675.74		+0.06	+0.003	24.00	190+75.00	675.68	12.00	-0.016	-0.19		675.49	
674.99		+0.18	+0.007	24.00	191+00.00	674.81	12.00	-0.016	-0.19		674.62	
674.22		+0.29	+0.012	24.00	191+25.00	673.93	12.00	-0.016	-0.19		673.74	
673.57		+0.38	+0.016	24.00	191+46.30	673.19	12.00	-0.016	-0.19		673.00	R.C.
673.46	222:1	+0.40	+0.017	24.00	191+50.00	673.06	12.00	-0.017	-0.20	222:1	672.86	
672.69		+0.51	+0.021	24.00	191+75.00	672.18	12.00	-0.021	-0.26		671.92	
671.94		+0.63	+0.026	24.00	192+00.00	671.31	12.00	-0.026	-0.31		671.00	
671.17		+0.74	+0.031	24.00	192+25.00	670.43	12.00	-0.031	-0.37		670.06	
670.87		+0.78	+0.033	24.00	192+35.09	670.08	12.00	-0.033	-0.39		669.69	
670.41		+0.85	+0.035	24.00	192+50.00	669.56	12.00	-0.035	-0.43		669.13	
669.64		+0.96	+0.040	24.00	192+75.00	668.68	12.00	-0.040	-0.48		668.20	
668.89		+1.08	+0.045	24.00	193+00.00	667.81	12.00	-0.045	-0.54		667.27	
668.22		+1.18	+0.049	24.00	193+22.12	667.04	12.00	-0.049	-0.59		666.45	F.S.
668.11		+1.18	+0.049	24.00	193+25.00	666.93	12.00	-0.049	-0.59		666.34	
667.24		+1.18	+0.049	24.00	193+50.00	666.06	12.00	-0.049	-0.59		665.47	
666.36		+1.18	+0.049	24.00	193+75.00	665.18	12.00	-0.049	-0.59		664.59	
665.49		+1.18	+0.049	24.00	194+00.00	664.31	12.00	-0.049	-0.59		663.72	
664.61		+1.18	+0.049	24.00	194+25.00	663.43	12.00	-0.049	-0.59		662.84	
663.74		+1.18	+0.049	24.00	194+50.00	662.56	12.00	-0.049	-0.59		661.97	
662.86		+1.18	+0.049	24.00	194+75.00	661.68	12.00	-0.049	-0.59		661.09	
661.99		+1.18	+0.049	24.00	195+00.00	660.81	12.00	-0.049	-0.59		660.22	
661.11		+1.18	+0.049	24.00	195+25.00	659.93	12.00	-0.049	-0.59		659.34	
660.24		+1.18	+0.049	24.00	195+50.00	659.06	12.00	-0.049	-0.59		658.47	
659.36		+1.18	+0.049	24.00	195+75.00	658.18	12.00	-0.049	-0.59		657.59	
658.49		+1.18	+0.049	24.00	196+00.00	657.31	12.00	-0.049	-0.59		656.72	
657.61		+1.18	+0.049	24.00	196+25.00	656.43	12.00	-0.049	-0.59		655.84	
656.74		+1.18	+0.049	24.00	196+50.00	655.56	12.00	-0.049	-0.59		654.97	
655.86		+1.18	+0.049	24.00	196+75.00	654.68	12.00	-0.049	-0.59		654.09	
654.99		+1.18	+0.049	24.00	197+00.00	653.81	12.00	-0.049	-0.59		653.22	
654.12		+1.18	+0.049	24.00	197+25.00	652.94	12.00	-0.049	-0.59		652.35	
653.26		+1.18	+0.049	24.00	197+50.00	652.08	12.00	-0.049	-0.59		651.49	
652.45		+1.18	+0.049	24.00	197+75.00	651.27	12.00	-0.049	-0.59		650.68	
651.69		+1.18	+0.049	24.00	198+00.00	650.51	12.00	-0.049	-0.59		649.92	
651.57		+1.18	+0.049	24.00	198+03.97	650.39	12.00	-0.049	-0.59		649.80	F.S.
650.90		+1.11	+0.046	24.00	198+25.00	649.79	12.00	-0.046	-0.56		649.23	
650.16		+1.04	+0.043	24.00	198+50.00	649.12	12.00	-0.043	-0.52		648.60	
649.45	222:1	+0.96	+0.040	24.00	198+75.00	648.49	12.00	-0.040	-0.48	222:1	648.01	
648.79		+0.89	+0.037	24.00	199+00.00	647.90	12.00	-0.037	-0.44		647.46	
648.30		+0.83	+0.035	24.00	199+20.18	647.47	12.00	-0.035	-0.41		647.06	
					SEE INTERIM I.R. 90 EB							

SUPERELEVATION TABLE

P.I. Station 3005+92.95 | Dc = 3°57'0"

LEFT SIDE					CENTERLINE CONTROL		RIGHT SIDE					REMARKS
EDGE ELEVATION	TRANSITION RATE	*ELEVATION CORRECTION	CROSS SLOPE	WIDTH	STATION	PROFILE GRADE	WIDTH	CROSS SLOPE	*ELEVATION CORRECTION	TRANSITION RATE	EDGE ELEVATION	
					SEE EB I.R. 90							
648.29		+0.41	+0.035	12.00	3000+00.00	647.88	24.00	-0.035	-0.83		647.05	
647.72		+0.35	+0.029	12.00	3000+25.00	647.37	24.00	-0.029	-0.70		646.67	
647.19		+0.29	+0.024	12.00	3000+50.00	646.90	24.00	-0.024	-0.58		646.32	
646.70		+0.23	+0.019	12.00	3000+75.00	646.47	24.00	-0.019	-0.45		646.02	
646.45		+0.19	+0.016	12.00	3000+88.80	646.25	24.00	-0.016	-0.38		645.87	R.C.
646.24		+0.16	+0.014	12.00	3001+00.00	646.08	24.00	-0.014	-0.33		645.75	
645.83		+0.10	+0.008	12.00	3001+25.00	645.73	24.00	-0.008	-0.20		645.53	
645.46		+0.04	+0.003	12.00	3001+50.00	645.42	24.00	-0.003	-0.08		645.34	
645.23	200:1	+0.00	+0.000	12.00	3001+65.60	645.23	24.00	+0.000	+0.00	200:1	645.23	FLAT
645.10		-0.02	-0.002	12.00	3001+75.00	645.12	24.00	+0.002	+0.05		645.17	
644.73		-0.09	-0.007	12.00	3002+00.00	644.82	24.00	+0.007	+0.17		644.99	
644.38		-0.15	-0.012	12.00	3002+25.00	644.53	24.00	+0.012	+0.30		644.83	
644.13		-0.19	-0.016	12.00	3002+42.40	644.32	24.00	+0.016	+0.38		644.70	R.C.
644.02		-0.21	-0.018	12.00	3002+50.00	644.23	24.00	+0.018	+0.42		644.65	
643.67		-0.27	-0.023	12.00	3002+75.00	643.94	24.00	+0.023	+0.55		644.49	
643.30		-0.34	-0.028	12.00	3003+00.00	643.64	24.00	+0.028	+0.67		644.31	
642.95		-0.40	-0.033	12.00	3003+25.00	643.35	24.00	+0.033	+0.80		644.15	
642.59		-0.46	-0.038	12.00	3003+50.00	643.05	24.00	+0.038	+0.92		643.97	
642.23		-0.52	-0.044	12.00	3003+75.00	642.75	24.00	+0.044	+1.05		643.80	
641.87		-0.59	-0.049	12.00	3004+00.00	642.46	24.00	+0.049	+1.17		643.63	
641.65		-0.62	-0.052	12.00	3004+15.20	642.28	24.00	+0.052	+1.25		643.53	F.S.
641.54		-0.62	-0.052	12.00	3004+25.00	642.16	24.00	+0.052	+1.25		643.41	
641.25		-0.62	-0.052	12.00	3004+50.00	641.87	24.00	+0.052	+1.25		643.12	
640.95		-0.62	-0.052	12.00	3004+75.00	641.57	24.00	+0.052	+1.25		642.82	
640.65		-0.62	-0.052	12.00	3005+00.00	641.27	24.00	+0.052	+1.25		642.52	
640.36		-0.62	-0.052	12.00	3005+25.00	640.98	24.00	+0.052	+1.25		642.23	
640.06		-0.62	-0.052	12.00	3005+50.00	640.68	24.00	+0.052	+1.25		641.93	
639.77		-0.62	-0.052	12.00	3005+75.00	640.39	24.00	+0.052	+1.25		641.64	
639.47		-0.62	-0.052	12.00	3006+00.00	640.09	24.00	+0.052	+1.25		641.34	
639.18		-0.62	-0.052	12.00	3006+25.00	639.80	24.00	+0.052	+1.25		641.05	
638.91		-0.62	-0.052	12.00	3006+50.00	639.53	24.00	+0.052	+1.25		640.78	
638.71		-0.62	-0.052	12.00	3006+75.00	639.33	24.00	+0.052	+1.25		640.58	
638.57		-0.62	-0.052	12.00	3007+00.00	639.19	24.00	+0.052	+1.25		640.44	
638.50		-0.62	-0.052	12.00	3007+25.00	639.12	24.00	+0.052	+1.25		640.37	
638.48		-0.62	-0.052	12.00	3007+50.00	639.10	24.00	+0.052	+1.25		640.35	
638.54		-0.62	-0.052	12.00	3007+75.00	639.16	24.00	+0.052	+1.25		640.41	
638.65		-0.62	-0.052	12.00	3008+00.00	639.27	24.00	+0.052	+1.25		640.52	
638.83		-0.62	-0.052	12.00	3008+25.00	639.45	24.00	+0.052	+1.25		640.70	
639.07		-0.62	-0.052	12.00	3008+50.00	639.69	24.00	+0.052	+1.25		640.94	
639.37		-0.62	-0.052	12.00	3008+75.00	639.99	24.00	+0.052	+1.25		641.24	
639.42		-0.62	-0.052	12.00	3008+78.91	640.04	24.00	+0.052	+1.25		641.29	F.S.
639.78	222:1	-0.57	-0.048	12.00	3009+00.00	640.35	24.00	+0.048	+1.14	222:1	641.49	
640.02		-0.54	-0.045	12.00	3009+12.51	640.56	24.00	+0.045	+1.08		641.64	P.C.C.

* NEGATIVE CORRECTIONS MEANING BELOW PROFILE GRADE
POSITIVE CORRECTIONS MEANING ABOVE PROFILE GRADE.

Preliminary Plans - Not For Reference Only

SUPERELEVATION TABLE
I.R. 90 EB

DESIGN AGENCY
B&N
burgessniple.com

DESIGNER MDO
REVIEWER MRT 5/1/24
PROJECT ID 82382
SHEET 1014 TOTAL 2696

CUY-90-16.28

MODEL: Sheet PAPERSIZE: 34x22 (in.) DATE: 3/28/2025 TIME: 9:18:17 AM USER: Alexandria.Summers
pw:\\vmb-us-pw.bentley.com:mb-us-pw-03\Documents\Cleveland_OH\01_Projects\000T\District2\82382\400-Engineering\Roadway\Sheets\82382_GE2102.dgn

SUPERELEVATION TABLE

P. I. Station 3011+11.18 | Dc = 3°0'0''

LEFT SIDE					CENTERLINE CONTROL		RIGHT SIDE					REMARKS
EDGE ELEVATION	TRANSITION RATE	*ELEVATION CORRECTION	CROSS SLOPE	WIDTH	STATION	PROFILE GRADE	WIDTH	CROSS SLOPE	*ELEVATION CORRECTION	TRANSITION RATE	EDGE ELEVATION	
640.02		-0.54	-0.045	12.00	3009+12.51	640.56	24.00	+0.045	+1.08		641.64	P.C.C & FS
640.24		-0.54	-0.045	12.00	3009+25.00	640.78	24.00	+0.045	+1.08		641.86	
640.74		-0.54	-0.045	12.00	3009+50.00	641.28	24.00	+0.045	+1.08		642.36	
641.29		-0.54	-0.045	12.00	3009+75.00	641.83	24.00	+0.045	+1.08		642.91	
641.91		-0.54	-0.045	12.00	3010+00.00	642.45	24.00	+0.045	+1.08		643.53	
642.59		-0.54	-0.045	12.00	3010+25.00	643.13	24.00	+0.045	+1.08		644.21	
643.32		-0.54	-0.045	12.00	3010+50.00	643.86	24.00	+0.045	+1.08		644.94	
644.06		-0.54	-0.045	12.00	3010+75.00	644.60	24.00	+0.045	+1.08		645.68	
644.79		-0.54	-0.045	12.00	3011+00.00	645.33	24.00	+0.045	+1.08		646.41	
645.46		-0.54	-0.045	12.00	3011+25.00	646.00	24.00	+0.045	+1.08		647.08	
646.06		-0.54	-0.045	12.00	3011+50.00	646.60	24.00	+0.045	+1.08		647.68	
646.59		-0.54	-0.045	12.00	3011+75.00	647.13	24.00	+0.045	+1.08		648.21	
647.04		-0.54	-0.045	12.00	3012+00.00	647.58	24.00	+0.045	+1.08		648.66	
647.42		-0.54	-0.045	12.00	3012+25.00	647.96	24.00	+0.045	+1.08		649.04	
647.73		-0.54	-0.045	12.00	3012+50.00	648.27	24.00	+0.045	+1.08		649.35	
647.96		-0.54	-0.045	12.00	3012+75.00	648.50	24.00	+0.045	+1.08		649.58	
647.99		-0.54	-0.045	12.00	3012+78.44	648.53	24.00	+0.045	+1.08		649.61	F.S.
648.61	200:1	-0.05	-0.045	12.00	3013+00.00	648.66	24.00	+0.049	+1.18	200:1	649.85	
648.09		-0.61	-0.051	12.00	3013+08.43	648.70	24.00	+0.051	+1.22		649.92	P.C.C.

SUPERELEVATION TABLE

P.I. Station 3013+87.85 | Dc = 3°17'26''

LEFT SIDE					CENTERLINE CONTROL		RIGHT SIDE					REMARKS
EDGE ELEVATION	TRANSITION RATE	*ELEVATION CORRECTION	CROSS SLOPE	WIDTH	STATION	PROFILE GRADE	WIDTH	CROSS SLOPE	*ELEVATION CORRECTION	TRANSITION RATE	EDGE ELEVATION	
648.09		-0.61	-0.051	12.00	3013+08.43	648.70	24.00	+0.051	+1.22		649.92	P.C.C & FS
648.14		-0.61	-0.051	12.00	3013+25.00	648.75	24.00	+0.051	+1.22		649.97	
648.15		-0.61	-0.051	12.00	3013+50.00	648.76	24.00	+0.051	+1.22		649.99	
648.09		-0.61	-0.051	12.00	3013+75.00	648.70	24.00	+0.051	+1.22		649.93	
647.96		-0.61	-0.051	12.00	3014+00.00	648.57	24.00	+0.051	+1.22		649.80	
647.76		-0.61	-0.051	12.00	3014+25.00	648.37	24.00	+0.051	+1.22		649.59	
647.70		-0.61	-0.051	12.00	3014+30.86	648.31	24.00	+0.051	+1.22		649.53	MATCH

* NEGATIVE CORRECTIONS MEANING BELOW PROFILE GRADE
POSITIVE CORRECTIONS MEANING ABOVE PROFILE GRADE.

Preliminary Plans - Not For Reference Only

SUPERELEVATION TABLE
I.R. 90 EB

CUY-90-16.28

MODEL: Sheet PAPERSIZE: 34x22 (in.) DATE: 3/28/2025 TIME: 9:18:22 AM USER: AlexandriaSummers
pw:\\vmb-us-pw.bentley.commb-us-pw-03\Documents\Cleveland_OHIO\Projects\ODOT\District2\82382\400-Engineering\Roadway\Sheets\82382_GE2103.dgn

DESIGN AGENCY
B&N
burgessniple.com

DESIGNER: MDO
REVIEWER: MRT 5/1/24
PROJECT ID: 82382
SHEET: 1015 TOTAL: 2696

SUPERELEVATION TABLE

P. I. Station 183+70.18 | Dc = 2°0'0"

LEFT SIDE					CENTERLINE CONTROL		RIGHT SIDE					REMARKS
EDGE ELEVATION	TRANSITION RATE	*ELEVATION CORRECTION	CROSS SLOPE	WIDTH	STATION	PROFILE GRADE	WIDTH	CROSS SLOPE	*ELEVATION CORRECTION	TRANSITION RATE	EDGE ELEVATION	
696.41		+0.34	+0.014	24.00	177+40.36	696.07	24.00	-0.014	-0.34		695.73	MATCH
696.12		+0.15	+0.012	12.00	177+50.00	695.97	24.00	-0.012	-0.29		695.68	
695.80		+0.09	+0.007	12.00	177+75.00	695.71	24.00	-0.007	-0.18		695.53	
695.48		+0.03	+0.003	12.00	178+00.00	695.45	24.00	-0.003	-0.07		695.38	
695.29		+0.00	+0.000	12.00	178+15.00	695.29	24.00	+0.000	+0.00		695.29	FLAT
695.16		-0.02	-0.002	12.00	178+25.00	695.18	24.00	+0.002	+0.05		695.23	
694.84		-0.08	-0.007	12.00	178+50.00	694.92	24.00	+0.007	+0.16		695.08	
694.52		-0.14	-0.011	12.00	178+75.00	694.66	24.00	+0.011	+0.27		694.93	
694.20	222:1	-0.19	-0.016	12.00	179+00.00	694.39	24.00	+0.016	+0.38	222:1	694.77	
694.20		-0.19	-0.016	12.00	179+00.25	694.39	24.00	+0.016	+0.38		694.77	R.C.
693.89		-0.25	-0.021	12.00	179+25.00	694.13	24.00	+0.021	+0.50		694.63	
693.63		-0.29	-0.025	12.00	179+45.85	693.92	24.00	+0.025	+0.59		694.51	P.C.
693.58		-0.30	-0.025	12.00	179+50.00	693.88	24.00	+0.025	+0.61		694.49	
693.29		-0.36	-0.030	12.00	179+75.00	693.65	24.00	+0.030	+0.72		694.37	
693.02		-0.42	-0.035	12.20	180+00.00	693.44	24.00	+0.035	+0.83		694.28	
692.75		-0.50	-0.039	12.68	180+25.00	693.25	24.00	+0.039	+0.95		694.20	
692.50		-0.58	-0.044	13.18	180+50.00	693.08	24.00	+0.044	+1.06		694.14	
692.45		-0.60	-0.045	13.28	180+54.76	693.05	24.00	+0.045	+1.08		694.13	F.S.
692.30		-0.62	-0.045	13.69	180+75.00	692.92	24.00	+0.045	+1.08		694.00	
692.15		-0.64	-0.045	14.18	181+00.00	692.79	24.00	+0.045	+1.08		693.87	
692.00		-0.66	-0.045	14.68	181+25.00	692.66	24.00	+0.045	+1.08		693.74	
691.86		-0.68	-0.045	15.18	181+50.00	692.54	24.00	+0.045	+1.08		693.62	
691.70		-0.71	-0.045	15.68	181+75.00	692.41	24.00	+0.045	+1.08		693.49	
691.56		-0.73	-0.045	16.18	182+00.00	692.29	24.00	+0.045	+1.08		693.37	
691.41		-0.75	-0.045	16.68	182+25.00	692.16	24.00	+0.045	+1.08		693.24	
691.27		-0.77	-0.045	17.18	182+50.00	692.04	24.00	+0.045	+1.08		693.12	
691.11		-0.80	-0.045	17.68	182+75.00	691.91	24.00	+0.045	+1.08		692.99	
690.97		-0.82	-0.045	18.18	183+00.00	691.79	24.00	+0.045	+1.08		692.87	
690.82		-0.84	-0.045	18.68	183+25.00	691.66	24.00	+0.045	+1.08		692.74	
690.68		-0.86	-0.045	19.18	183+50.00	691.54	24.00	+0.045	+1.08		692.62	
690.52		-0.89	-0.045	19.68	183+75.00	691.41	24.00	+0.045	+1.08		692.49	
690.38		-0.91	-0.045	20.18	184+00.00	691.29	24.00	+0.045	+1.08		692.37	
690.23		-0.93	-0.045	20.68	184+25.00	691.17	24.00	+0.045	+1.08		692.25	
690.09		-0.95	-0.045	21.18	184+50.00	691.04	24.00	+0.045	+1.08		692.12	
689.94		-0.98	-0.045	21.68	184+75.00	690.92	24.00	+0.045	+1.08		692.00	
689.79		-1.00	-0.045	22.18	185+00.00	690.79	24.00	+0.045	+1.08		691.87	
689.64		-1.02	-0.045	22.68	185+25.00	690.67	24.00	+0.045	+1.08		691.75	
689.50		-1.04	-0.045	23.18	185+50.00	690.54	24.00	+0.045	+1.08		691.62	
689.35		-1.07	-0.045	23.68	185+75.00	690.42	24.00	+0.045	+1.08		691.50	
689.21		-1.08	-0.045	24.00	186+00.00	690.29	24.00	+0.045	+1.08		691.37	
689.09		-1.08	-0.045	24.00	186+25.00	690.17	24.00	+0.045	+1.08		691.25	
688.96		-1.08	-0.045	24.00	186+50.00	690.04	24.00	+0.045	+1.08		691.12	
688.84		-1.08	-0.045	24.00	186+75.00	689.92	24.00	+0.045	+1.08		691.00	
688.71		-1.08	-0.045	24.00	187+00.00	689.79	24.00	+0.045	+1.08		690.87	
688.67		-1.08	-0.045	24.00	187+08.48	689.75	24.00	+0.045	+1.08		690.83	F.S.
688.66		-1.01	-0.042	24.00	187+25.00	689.67	24.00	+0.042	+1.01		690.67	
688.65		-0.89	-0.037	24.00	187+50.00	689.54	24.00	+0.037	+0.89		690.43	
688.62		-0.78	-0.033	24.00	187+75.00	689.40	24.00	+0.033	+0.78		690.18	
688.59	222:1	-0.72	-0.030	24.00	187+88.40	689.31	24.00	+0.030	+0.72	222:1	690.03	P.T.
688.56		-0.67	-0.028	24.00	188+00.00	689.22	24.00	+0.028	+0.67		689.89	
688.45		-0.56	-0.023	24.00	188+25.00	689.01	24.00	+0.023	+0.56		689.56	
688.30		-0.44	-0.018	24.00	188+50.00	688.75	24.00	+0.018	+0.44		689.19	
688.22		-0.38	-0.016	24.00	188+62.99	688.60	24.00	+0.016	+0.38		688.98	R.C.

SUPERELEVATION TABLE

P.I. Station 183+70.18 = | Dc = 2°0'0"

LEFT SIDE					CENTERLINE CONTROL		RIGHT SIDE					REMARKS
EDGE ELEVATION	TRANSITION RATE	*ELEVATION CORRECTION	CROSS SLOPE	WIDTH	STATION	PROFILE GRADE	WIDTH	CROSS SLOPE	*ELEVATION CORRECTION	TRANSITION RATE	EDGE ELEVATION	
688.07		-0.38	-0.016	24.00	188+75.00	688.45	24.00	+0.014	+0.33		688.78	
687.73		-0.38	-0.016	24.00	189+00.00	688.11	24.00	+0.009	+0.22		688.33	
687.34		-0.38	-0.016	24.00	189+25.00	687.72	24.00	+0.004	+0.11		687.83	
686.94		-0.38	-0.016	24.00	189+48.24	687.32	24.00	+0.000	+0.00		687.32	½ LEVEL
686.92		-0.38	-0.016	24.00	189+50.00	687.30	24.00	-0.000	-0.01	222:1	687.29	
686.26		-0.38	-0.016	24.00	189+75.00	686.64	24.00	-0.005	-0.12		686.52	
685.96		-0.38	-0.016	24.00	190+00.00	686.34	24.00	-0.010	-0.23		686.11	
685.40		-0.38	-0.016	24.00	190+25.00	685.79	24.00	-0.014	-0.35		685.44	
685.22		-0.38	-0.016	24.00	190+33.49	685.60	24.00	-0.016	-0.38		685.22	NC

Preliminary Plans - Not For Reference Only

SUPERELEVATION TABLE
I.R. 90 WB

DESIGN AGENCY
B&N
burgessniple.com

DESIGNER MDO
REVIEWER MRT 5/1/24
PROJECT ID 82382
SHEET 1016 TOTAL 2696

CUY-90-16.28

MODEL: Sheet PAPERSIZE: 34x22 (in.) DATE: 3/28/2025 TIME: 9:18:27 AM USER: AlexandriaSummers
pw:\\vmb-us-pw.bentley.com\mb-us-pw-03\Documents\Cleveland_OH\01_Projects\000T\District2\82382\400-Engineering\Roadway\Sheets\82382_GE220i.dgn

SUPERELEVATION TABLE

P. I. Station 197+56.92 | Dc = 2°15'0"

LEFT SIDE					CENTERLINE CONTROL		RIGHT SIDE					REMARKS
EDGE ELEVATION	TRANSITION RATE	*ELEVATION CORRECTION	CROSS SLOPE	WIDTH	STATION	PROFILE GRADE	WIDTH	CROSS SLOPE	*ELEVATION CORRECTION	TRANSITION RATE	EDGE ELEVATION	
682.58		-0.19	-0.016	12.00	191+39.63	682.77	24.00	-0.016	-0.38		682.39	N.C.
682.29		-0.17	-0.014	12.00	191+50.00	682.46	24.00	-0.016	-0.38		682.08	
681.56		-0.11	-0.009	12.00	191+75.00	681.67	24.00	-0.016	-0.38		681.29	
680.78		-0.06	-0.005	12.00	192+00.00	680.84	24.00	-0.016	-0.38		680.46	
679.97		+0.00	+0.000	12.00	192+24.87	679.97	24.00	-0.016	-0.38		679.59	½ LEVEL
679.97		+0.00	+0.000	12.00	192+25.00	679.97	24.00	-0.016	-0.38		679.59	
679.16		+0.06	+0.005	12.00	192+50.00	679.10	24.00	-0.016	-0.38		678.72	
678.33	222:1	+0.11	+0.009	12.00	192+75.00	678.22	24.00	-0.016	-0.38		677.84	
677.52		+0.17	+0.014	12.00	193+00.00	677.35	24.00	-0.016	-0.38		676.97	
680.68	222:1	+0.19	+0.016	12.00	193+10.12	680.49	24.00	-0.016	-0.38		680.11	R.C.
676.69		+0.23	+0.019	12.00	193+25.00	676.47	24.00	-0.019	-0.45	222:1	676.01	
675.87		+0.28	+0.023	12.00	193+50.00	675.59	24.00	-0.023	-0.56		675.03	
675.05		+0.34	+0.028	12.00	193+75.00	674.72	24.00	-0.028	-0.68		674.04	
674.39		+0.38	+0.032	12.00	193+95.37	674.01	24.00	-0.032	-0.77	222:1	673.24	P.C.
674.24		+0.39	+0.033	12.00	194+00.00	673.85	24.00	-0.033	-0.79		673.06	
673.42		+0.45	+0.038	12.00	194+25.00	672.97	24.00	-0.038	-0.90		672.06	
672.60		+0.51	+0.042	12.00	194+50.00	672.09	24.00	-0.042	-1.01		671.08	
671.78		+0.56	+0.047	12.00	194+75.00	671.22	24.00	-0.047	-1.13		670.09	
671.80		+0.58	+0.048	12.00	194+80.62	671.22	24.00	-0.048	-1.15		670.07	F.S.
670.93		+0.58	+0.048	12.00	195+00.00	670.35	24.00	-0.048	-1.15		669.20	
670.05		+0.58	+0.048	12.00	195+25.00	669.47	24.00	-0.048	-1.15		668.32	
669.17		+0.58	+0.048	12.00	195+50.00	668.59	24.00	-0.048	-1.15		667.44	
668.30		+0.58	+0.048	12.00	195+75.00	667.72	24.00	-0.048	-1.15		666.57	
667.43		+0.58	+0.048	12.00	196+00.00	666.85	24.00	-0.048	-1.15		665.70	
666.55		+0.58	+0.048	12.00	196+25.00	665.97	24.00	-0.048	-1.15		664.82	
665.67		+0.58	+0.048	12.00	196+50.00	665.09	24.00	-0.048	-1.15		663.94	
664.80		+0.58	+0.048	12.00	196+75.00	664.22	24.00	-0.048	-1.15		663.07	
663.92		+0.58	+0.048	12.00	197+00.00	663.34	24.00	-0.048	-1.15		662.19	
663.05		+0.58	+0.048	12.00	197+25.00	662.47	24.00	-0.048	-1.15		661.32	
662.18		+0.58	+0.048	12.00	197+50.00	661.60	24.00	-0.048	-1.15		660.45	
661.30		+0.58	+0.048	12.00	197+75.00	660.72	24.00	-0.048	-1.15		659.57	
660.43		+0.58	+0.048	12.00	198+00.00	659.85	24.00	-0.048	-1.15		658.70	
659.55		+0.58	+0.048	12.00	198+25.00	658.97	24.00	-0.048	-1.15		657.82	
658.67		+0.58	+0.048	12.00	198+50.00	658.09	24.00	-0.048	-1.15		656.94	
657.80		+0.58	+0.048	12.00	198+75.00	657.22	24.00	-0.048	-1.15		656.07	
656.93		+0.58	+0.048	12.00	199+00.00	656.35	24.00	-0.048	-1.15		655.20	
656.93		+0.58	+0.048	12.00	199+22.05	656.35	24.00	-0.048	-1.15		655.20	FS
656.04		+0.57	+0.048	12.00	199+25.00	655.47	24.00	-0.048	-1.14		654.33	
655.12		+0.53	+0.045	12.00	199+50.00	654.59	24.00	-0.045	-1.07		653.52	
654.22		+0.50	+0.041	12.00	199+75.00	653.72	24.00	-0.041	-0.99		652.73	
653.30	222:1	+0.46	+0.038	12.00	200+00.00	652.84	24.00	-0.038	-0.92	222:1	651.92	
652.39		+0.42	+0.035	12.00	200+25.00	651.97	24.00	-0.035	-0.84		651.13	
651.48		+0.38	+0.032	12.00	200+50.00	651.10	24.00	-0.032	-0.77		650.33	
650.57		+0.35	+0.029	12.00	200+75.00	650.22	24.00	-0.029	-0.69		649.53	
649.66		+0.31	+0.026	12.00	201+00.00	649.35	24.00	-0.026	-0.62		648.73	
649.16		+0.29	+0.024	12.00	201+13.67	648.87	24.00	-0.024	-0.58		648.29	PT
					SEE IR 90 WB TIE-IN							

Note: Left side of supertable does not include the Ramp A2 deacceleration lane. Reference gore details for super values

SUPERELEVATION TABLE

LEFT SIDE					CENTERLINE CONTROL		RIGHT SIDE					REMARKS
EDGE ELEVATION	TRANSITION RATE	*ELEVATION CORRECTION	CROSS SLOPE	WIDTH	STATION	PROFILE GRADE	WIDTH	CROSS SLOPE	*ELEVATION CORRECTION	TRANSITION RATE	EDGE ELEVATION	

Preliminary Plans - For Reference Only

SUPERELEVATION TABLE
I.R. 90 WB

DESIGN AGENCY
B&N
burgessniple.com

DESIGNER MDO
REVIEWER MRT 5/1/24
PROJECT ID 82382
SHEET 1017 TOTAL 2696

CUY-90-16.28

MODEL: Sheet PAPERSIZE: 34x22 (In.) DATE: 3/28/2025 TIME: 9:8:31 AM USER: AlexandriaSummers
pw:\\mb-us-pw.bentley.com:mb-us-pw-03\Documents\Cleveland_OH\OiL_Projects\ODOT\District#2\82382\400-Engineering\Roadway\Sheets\82382_GE2202.dgn

SUPERELEVATION TABLE

P. I. Station 4006+44.80 | Dc = 3°52'30"

LEFT SIDE					CENTERLINE CONTROL		RIGHT SIDE					REMARKS
EDGE ELEVATION	TRANSITION RATE	*ELEVATION CORRECTION	CROSS SLOPE	WIDTH	STATION	PROFILE GRADE	WIDTH	CROSS SLOPE	*ELEVATION CORRECTION	TRANSITION RATE	EDGE ELEVATION	
	Note: Left side is deacceleraton lane into I.R. 90 WB											
					SEE I.R. 90 WB							
649.44		+0.29	+0.024	12.00	4000+00.00	649.15	24.00	-0.024	-0.58		648.57	
648.51		+0.23	+0.019	12.00	4000+25.00	648.28	24.00	-0.019	-0.46		647.83	
647.95		+0.21	+0.016	13.00	4000+40.90	647.75	24.00	-0.016	-0.38		647.36	RC
647.62		+0.17	+0.014	12.00	4000+50.00	647.45	24.00	-0.014	-0.34		647.10	
646.76		+0.11	+0.009	12.00	4000+75.00	646.65	24.00	-0.009	-0.22		646.42	
645.94		+0.05	+0.004	12.00	4001+00.00	645.88	24.00	-0.004	-0.11		645.78	
645.22		-0.00	-0.000	13.00	4001+22.69	645.22	24.00	+0.000	+0.01		645.23	FLAT
645.15		-0.01	-0.000	12.00	4001+25.00	645.16	24.00	+0.000	+0.01		645.17	
644.40		-0.06	-0.005	12.00	4001+50.00	644.46	24.00	+0.005	+0.13		644.59	
643.69	200:1	-0.12	-0.010	12.00	4001+75.00	643.81	24.00	+0.010	+0.25	200:1	644.06	
643.01		-0.18	-0.015	12.00	4002+00.00	643.19	24.00	+0.015	+0.36		643.55	
642.37		-0.24	-0.020	12.00	4002+25.00	642.61	24.00	+0.020	+0.48		643.09	
641.76		-0.30	-0.025	12.00	4002+50.00	642.06	24.00	+0.025	+0.60		642.66	
641.63		-0.31	-0.026	12.00	4002+55.52	641.94	24.00	+0.030	+0.72		642.66	PC
641.19		-0.36	-0.030	12.00	4002+75.00	641.55	24.00	+0.035	+0.83		642.38	
640.65		-0.42	-0.035	12.00	4003+00.00	641.07	24.00	+0.035	+0.83		641.90	
640.16		-0.47	-0.040	12.00	4003+25.00	640.63	24.00	+0.040	+0.95		641.58	
639.70		-0.53	-0.044	12.00	4003+50.00	640.23	24.00	+0.045	+1.07		641.30	
639.27		-0.59	-0.049	12.00	4003+75.00	639.86	24.00	+0.049	+1.19		641.05	
639.14		-0.61	-0.051	12.00	4003+83.40	639.75	24.00	+0.051	+1.22		640.97	FS
638.92		-0.61	-0.051	12.00	4004+00.00	639.53	24.00	+0.051	+1.22		640.75	
638.62		-0.61	-0.051	12.00	4004+25.00	639.23	24.00	+0.051	+1.22		640.45	
638.32		-0.61	-0.051	12.00	4004+50.00	638.93	24.00	+0.051	+1.22		640.15	
638.02		-0.61	-0.051	12.00	4004+75.00	638.63	24.00	+0.051	+1.22		639.85	
637.72		-0.61	-0.051	12.00	4005+00.00	638.34	24.00	+0.051	+1.22		639.56	
637.43		-0.61	-0.051	12.00	4005+25.00	638.04	24.00	+0.051	+1.22		639.26	
637.13		-0.61	-0.051	12.00	4005+50.00	637.74	24.00	+0.051	+1.22		638.96	
636.88		-0.61	-0.051	12.00	4005+75.00	637.49	24.00	+0.051	+1.22		638.71	
636.69		-0.61	-0.051	12.00	4006+00.00	637.30	24.00	+0.051	+1.22		638.52	
636.57		-0.61	-0.051	12.00	4006+25.00	637.18	24.00	+0.051	+1.22		638.40	
636.52		-0.61	-0.051	12.00	4006+50.00	637.13	24.00	+0.051	+1.22		638.35	
636.53		-0.61	-0.051	12.00	4006+75.00	637.14	24.00	+0.051	+1.22		638.36	
636.60		-0.61	-0.051	12.00	4007+00.00	637.21	24.00	+0.051	+1.22		638.43	
636.75		-0.61	-0.051	12.00	4007+25.00	637.36	24.00	+0.051	+1.22		638.58	
636.96		-0.61	-0.051	12.00	4007+50.00	637.57	24.00	+0.051	+1.22		638.79	
637.21		-0.63	-0.051	12.43	4007+75.00	637.84	24.00	+0.051	+1.22		639.06	
537.52		-0.66	-0.051	12.94	4008+00.00	538.18	24.00	+0.051	+1.22		539.40	
537.90		-0.69	-0.051	13.44	4008+25.00	538.59	24.00	+0.051	+1.22		539.81	
638.34		-0.71	-0.051	13.94	4008+50.00	639.06	24.00	+0.051	+1.22		640.28	
638.86		-0.74	-0.051	14.44	4008+75.00	639.60	24.00	+0.051	+1.22		640.82	
639.44		-0.76	-0.051	14.95	4009+00.00	640.20	24.00	+0.051	+1.22		641.43	
640.08		-0.79	-0.051	15.46	4009+25.00	640.87	24.00	+0.051	+1.22		642.10	
640.80		-0.81	-0.051	15.96	4009+50.00	641.61	24.00	+0.051	+1.22		642.83	
641.57		-0.84	-0.051	16.46	4009+75.00	642.41	24.00	+0.051	+1.22		643.64	
642.38		-0.87	-0.051	16.97	4010+00.00	643.25	24.00	+0.051	+1.22		644.47	
642.46	200:1	-0.87	-0.051	17.02	4010+02.41	643.33	24.00	+0.051	+1.22	200:1	644.55	F.S.
642.96		-0.83	-0.048	17.31	4010+16.81	643.79	24.00	+0.048	+1.15		644.94	P.C.C.

SUPERELEVATION TABLE

P.I. Station 4011+01.10 | Dc = 3°27'36"

LEFT SIDE					CENTERLINE CONTROL		RIGHT SIDE					REMARKS
EDGE ELEVATION	TRANSITION RATE	*ELEVATION CORRECTION	CROSS SLOPE	WIDTH	STATION	PROFILE GRADE	WIDTH	CROSS SLOPE	*ELEVATION CORRECTION	TRANSITION RATE	EDGE ELEVATION	
642.96		-0.83	-0.048	17.31	4010+16.81	643.79	24.00	+0.048	+1.15		644.94	P.C.C. & FS
643.21		-0.84	-0.048	17.47	4010+25.00	644.05	24.00	+0.048	+1.15		645.20	
643.91		-0.86	-0.048	17.98	4010+50.00	644.77	24.00	+0.048	+1.15		645.92	
644.54		-0.89	-0.048	18.48	4010+75.00	645.42	24.00	+0.048	+1.15		646.58	
645.09		-0.91	-0.048	18.98	4011+00.00	646.00	24.00	+0.048	+1.15		647.16	
645.57		-0.94	-0.048	19.49	4011+25.00	646.51	24.00	+0.048	+1.15		647.66	
645.98		-0.96	-0.048	19.99	4011+50.00	646.94	24.00	+0.048	+1.15		648.10	
646.32		-0.98	-0.048	20.50	4011+75.00	647.30	24.00	+0.048	+1.15		648.45	
646.44		-0.99	-0.048	20.70	4011+85.24	647.43	24.00	+0.048	+1.15		648.58	P.C.C.

* NEGATIVE CORRECTIONS MEANING BELOW PROFILE GRADE
POSITIVE CORRECTIONS MEANING ABOVE PROFILE GRADE.

Preliminary Plans - For Reference Only

SUPERELEVATION TABLE
I.R. 90 WB

CUY-90-16.28

MODEL: Sheet PAPERSIZE: 34x22 (in.) DATE: 3/28/2025 TIME: 9:18:35 AM USER: AlexandriaSummers
pw:\\vmb-us-pw.bentley.com\mb-us-pw-03\Documents\Cleveland_OH\01_Projects\00DT\District2\82382\400-Engineering\Roadway\Sheets\82382_GE2203.dgn

DESIGN AGENCY
B&N
burgessniple.com

DESIGNER MDO
REVIEWER MRT 5/1/24
PROJECT ID 82382
SHEET 1018 TOTAL 2696

SUPERELEVATION TABLE

P. I. Station 4012+91.76 | Dc = 3°47'8"

LEFT SIDE					CENTERLINE CONTROL		RIGHT SIDE					REMARKS
EDGE ELEVATION	TRANSITION RATE	*ELEVATION CORRECTION	CROSS SLOPE	WIDTH	STATION	PROFILE GRADE	WIDTH	CROSS SLOPE	*ELEVATION CORRECTION	TRANSITION RATE	EDGE ELEVATION	
646.44	◆	-0.99	-0.048	20.70	4011+85.24	647.43	24.00	+0.048	+1.15	◆	648.58	P.C.C.
646.50		-1.05	-0.050	20.90	4011+94.84	647.54	24.00	+0.050	+1.20		648.74	FS
646.54		-1.05	-0.050	21.00	4012+00.00	647.59	24.00	+0.050	+1.20		648.79	
646.73		-1.08	-0.050	21.51	4012+25.00	647.81	24.00	+0.050	+1.20		649.01	
646.85		-1.10	-0.050	22.01	4012+50.00	647.95	24.00	+0.050	+1.20		649.15	
646.89		-1.13	-0.050	22.51	4012+75.00	648.02	24.00	+0.050	+1.20		649.22	
646.86		-1.15	-0.050	23.02	4013+00.00	648.01	24.00	+0.050	+1.20		649.21	
646.76		-1.18	-0.050	23.52	4013+25.00	647.94	24.00	+0.050	+1.20		649.14	
646.65		-1.19	-0.050	23.87	4013+42.03	647.84	24.00	+0.050	+1.20		649.04	
646.58		-1.20	-0.050	24.03	4013+50.00	647.79	24.00	+0.050	+1.20		648.99	
646.44		-1.22	-0.050	24.33	4013+65.00	647.66	24.00	+0.050	+1.20		648.86	MATCH

SUPERELEVATION TABLE

LEFT SIDE					CENTERLINE CONTROL		RIGHT SIDE					REMARKS
EDGE ELEVATION	TRANSITION RATE	*ELEVATION CORRECTION	CROSS SLOPE	WIDTH	STATION	PROFILE GRADE	WIDTH	CROSS SLOPE	*ELEVATION CORRECTION	TRANSITION RATE	EDGE ELEVATION	

Preliminary Plans - For Reference Only

SUPERELEVATION TABLE
I.R. 90 WB

DESIGN AGENCY
B&N burgessniple.com

DESIGNER MDO
REVIEWER MRT 5/1/24
PROJECT ID 82382
SHEET 1019 TOTAL 2696

CUY-90-16.28

MODEL: Sheet PAPERSIZE: 34x22 (in.) DATE: 3/28/2025 TIME: 9:8:40 AM USER: Alexandria.Summers
pw:\\mb-us-pw.bentley.com:mb-us-pw-03\Documents\Cleveland_OH\OiL_Projects\ODOT\District#2\82382\400-Engineering\Roadway\Sheets\82382_GE2204.dgn

SUPERELEVATION TABLE

P.I. STATION 310+56.73	Dc = 38°11'50"

LEFT SIDE					CENTERLINE CONTROL		RIGHT SIDE					REMARKS
EDGE ELEVATION	TRANSITION RATE	ELEVATION CORRECTION*	CROSS SLOPE	WIDTH	STATION	PROFILE GRADE	WIDTH	CROSS SLOPE	ELEVATION CORRECTION*	TRANSITION RATE	EDGE ELEVATION	
				0.00	308+78.21	688.42	16.00	0.016	0.26		688.68	NC
668.41		-0.01	-0.023	0.30	309+00.00	668.42	16.00	0.023	0.36		668.78	
668.47		-0.02	-0.030	0.64	309+25.00	668.49	16.00	0.030	0.48		668.97	
668.61		-0.04	-0.038	0.98	309+50.00	668.64	16.00	0.038	0.60		669.24	
688.67		-0.04	-0.040	1.09	309+58.21	688.71	16.00	0.040	0.64	185:1	689.35	PC
668.81		-0.06	-0.045	1.32	309+75.00	668.87	16.00	0.045	0.72		669.59	
669.09		-0.09	-0.053	1.66	310+00.00	669.18	16.00	0.053	0.84		670.02	
669.14		-0.09	-0.054	1.71	310+03.71	669.23	16.00	0.054	0.86		670.09	
669.44		-0.12	-0.060	2.00	310+24.88	669.56	16.43	0.060	0.99		670.55	FS
669.44		-0.12	-0.060	2.00	310+25.00	669.56	16.44	0.060	0.99		670.55	
669.90		-0.12	-0.060	2.00	310+50.00	670.02	18.07	0.060	1.08		671.11	
670.43		-0.12	-0.060	2.00	310+75.00	670.55	20.91	0.060	1.25		671.81	
670.56		-0.12	-0.060	2.00	310+81.12	670.68	21.79	0.060	1.31		671.99	FS
670.98		-0.11	-0.053	2.00	311+00.00	671.09	24.95	0.053	1.31		672.40	
671.20		-0.10	-0.049	2.00	311+09.81	671.29	26.86	0.049	1.31	143:1	672.61	
671.31		-0.09	-0.043	2.00	311+25.00	671.40	29.24	0.043	1.26		672.66	
671.35		-0.08	-0.041	2.00	311+30.06	671.43	29.70	0.041	1.22		672.65	
SEE INTERSECTION DETAIL												

* NEGATIVE CORRECTIONS MEANING BELOW PROFILE GRADE.
POSITIVE CORRECTIONS MEANING ABOVE PROFILE GRADE.

SUPERELEVATION TABLE

LEFT SIDE					CENTERLINE CONTROL		RIGHT SIDE					REMARKS
EDGE ELEVATION	TRANSITION RATE	ELEVATION CORRECTION*	CROSS SLOPE	WIDTH	STATION	PROFILE GRADE	WIDTH	CROSS SLOPE	ELEVATION CORRECTION*	TRANSITION RATE	EDGE ELEVATION	

Preliminary Plans - For Reference Only

SUPERELEVATION TABLE
RAMP A1

05

DESIGN AGENCY
HDR

DESIGNER
TJS

REVIEWER
MJL 09/27/21

PROJECT ID
82382

SHEET 1020 TOTAL 2696

CUY-90-16.28 (CCG3A)

MODEL: Sheet PAPERSIZE: 34x22 (In.) DATE: 3/28/2025 TIME: 9:18:44 AM USER: Alexandria.Summers
pw:\\mb-us-pw.bentley.com:mb-us-pw-03\Documents\Cleveland_OH\OI_Projects\ODOT\District2\82382\400-Engineering\Roadway\Sheets\82382_GE3I01.dgn

SUPERELEVATION TABLE

P.I. STATION 413+02.39	Dc = 4°30'00"

LEFT SIDE					CENTERLINE CONTROL		RIGHT SIDE					REMARKS
EDGE ELEVATION	TRANSITION RATE	ELEVATION CORRECTION*	CROSS SLOPE	WIDTH	STATION	PROFILE GRADE	WIDTH	CROSS SLOPE	ELEVATION CORRECTION*	TRANSITION RATE	EDGE ELEVATION	
698.28		-0.14	-0.027	5.03	406+10.00	698.42	30.25	-0.027	-0.82		697.60	
698.37		-0.12	-0.027	4.65	406+22.89	698.49	30.08	-0.027	-0.81		697.68	
698.38	185:1	-0.12	-0.027	4.58	406+25.00	698.50	30.06	-0.027	-0.81	185:1	697.69	
698.47		-0.12	-0.030	4.14	406+40.00	698.59	29.86	-0.030	-0.90		697.69	
698.52		-0.12	-0.030	3.84	406+50.00	698.64	29.72	-0.030	-0.89		697.75	
698.69		-0.09	-0.030	3.10	406+75.00	698.78	29.39	-0.030	-0.88		697.90	
698.85		-0.07	-0.030	2.36	407+00.00	698.92	29.06	-0.030	-0.87		698.05	
699.01		-0.05	-0.030	1.62	407+25.00	699.06	28.73	-0.030	-0.86		698.20	
699.17		-0.03	-0.030	0.88	407+50.00	699.20	28.39	-0.030	-0.85		698.35	
699.29	185:1	-0.01	-0.030	0.36	407+67.51	699.30	28.16	-0.030	-0.84		698.46	
699.34		0.00	-0.031	0.14	407+75.00	699.34	28.06	-0.031	-0.88		698.46	
699.36				0.00	407+79.69	699.36	28.00	-0.032	-0.91		698.45	
699.37				0.00	407+81.34	699.37	28.00	-0.033	-0.91	185:1	698.46	PC
699.48				0.00	408+00.00	699.48	28.00	-0.036	-1.02		698.46	
699.64				0.00	408+25.00	699.64	28.00	-0.041	-1.15		698.49	
699.88				0.00	408+50.00	699.88	28.00	-0.046	-1.29		698.59	
700.07				0.00	408+66.03	700.07	28.00	-0.049	-1.37		698.70	FS
700.19				0.00	408+75.00	700.19	28.00	-0.049	-1.37		698.82	
700.58				0.00	409+00.00	700.58	28.00	-0.049	-1.37		699.21	
701.05				0.00	409+25.00	701.05	28.00	-0.049	-1.37		699.68	
701.59				0.00	409+50.00	701.59	28.00	-0.049	-1.37		700.22	
702.21				0.00	409+75.00	702.21	28.00	-0.049	-1.37		700.84	
702.91				0.00	410+00.00	702.91	28.00	-0.049	-1.37		701.54	
703.68				0.00	410+25.00	703.68	28.00	-0.049	-1.37		702.31	
704.11				0.00	410+37.72	704.11	28.00	-0.049	-1.37		702.74	
SEE BRIDGE PLANS												

* NEGATIVE CORRECTIONS MEANING BELOW PROFILE GRADE.
POSITIVE CORRECTIONS MEANING ABOVE PROFILE GRADE.

SUPERELEVATION TABLE

LEFT SIDE					CENTERLINE CONTROL		RIGHT SIDE					REMARKS
EDGE ELEVATION	TRANSITION RATE	ELEVATION CORRECTION*	CROSS SLOPE	WIDTH	STATION	PROFILE GRADE	WIDTH	CROSS SLOPE	ELEVATION CORRECTION*	TRANSITION RATE	EDGE ELEVATION	

Preliminary Plans - For Reference Only

SUPERELEVATION TABLE
RAMP A2

DESIGN AGENCY	
HDR	
DESIGNER	VLE
REVIEWER	TJS 06/17/22
PROJECT ID	82382
SHEET	1021
TOTAL	2696

CUY-90-16.28 (CCG3A)

MODEL: Sheet PAPERSIZE: 34x22 (In.) DATE: 3/28/2025 TIME: 9:18:48 AM USER: Alexandria.Summers
pw:\\mb-us-pw.bentley.com:mb-us-pw-03\Documents\Cleveland_OH\01_Projects\ODOT\District2\82382\400-Engineering\Roadway\Sheets\82382_GE320i.dgn

SUPERELEVATION TABLE

P. I. Station 580+77.01 | Dc = 3°30'0"

LEFT SIDE					CENTERLINE CONTROL		RIGHT SIDE					REMARKS
EDGE ELEVATION	TRANSITION RATE	*ELEVATION CORRECTION	CROSS SLOPE	WIDTH	STATION	PROFILE GRADE	WIDTH	CROSS SLOPE	*ELEVATION CORRECTION	TRANSITION RATE	EDGE ELEVATION	
							SEE GORE DETAIL					
					579+98.59	691.15	16.00	+0.048	+0.77		691.92	
					580+00.00	690.90	16.21	+0.048	+0.78		691.68	
					580+25.00	690.28	16.71	+0.048	+0.80		691.08	
					580+50.00	689.60	17.21	+0.048	+0.83		690.43	
					580+75.00	688.88	17.71	+0.048	+0.85		689.73	
					580+86.33	688.54	24.00	+0.048	+1.15		689.69	FS
					581+00.00	688.10	24.00	+0.045	+1.08		689.19	
					581+25.00	687.27	24.00	+0.040	+0.96		688.23	
					581+50.00	686.39	24.00	+0.035	+0.83		687.22	
					581+55.45	686.19	19.32	+0.034	+0.65		686.84	P.T.
					581+75.00	685.45	24.00	+0.030	+0.71		686.16	
					582+00.00	684.46	24.00	+0.024	+0.58		685.05	
					582+25.00	683.42	24.00	+0.019	+0.46		683.88	
					582+39.93	682.77	24.00	+0.016	+0.38		683.16	NC

200:1

SUPERELEVATION TABLE

P.I. Station 588+26.63 | Dc = 24°45'0"

LEFT SIDE					CENTERLINE CONTROL		RIGHT SIDE					REMARKS
EDGE ELEVATION	TRANSITION RATE	*ELEVATION CORRECTION	CROSS SLOPE	WIDTH	STATION	PROFILE GRADE	WIDTH	CROSS SLOPE	*ELEVATION CORRECTION	TRANSITION RATE	EDGE ELEVATION	
667.57		+0.00	-0.016	0.00	585+49.04	667.57	24.00	+0.016	+0.38		667.96	N.C.
667.53		-0.00	-0.016	0.06	585+50.00	667.53	24.00	+0.016	+0.39		667.92	
666.44		-0.04	-0.023	1.68	585+75.00	666.48	24.00	+0.023	+0.55		667.03	
665.49		-0.10	-0.030	3.30	586+00.00	665.59	24.00	+0.030	+0.72		666.31	
665.48		-0.10	-0.030	3.30	586+00.11	665.58	24.00	+0.030	+0.72		666.30	P.C.
664.67		-0.18	-0.037	4.91	586+25.00	664.85	24.00	+0.037	+0.88		665.73	
663.98		-0.29	-0.044	6.53	586+50.00	664.27	24.00	+0.044	+1.05		665.32	
663.43		-0.41	-0.051	8.14	586+75.00	663.84	24.00	+0.051	+1.21		665.05	
663.01		-0.56	-0.057	9.76	587+00.00	663.57	24.00	+0.057	+1.38		664.95	
662.88		-0.62	-0.060	10.36	587+09.55	663.51	24.00	+0.060	+1.44		664.95	F.S.
662.83		-0.62	-0.060	10.36	587+25.00	663.45	24.00	+0.060	+1.44		664.89	
662.87		-0.62	-0.060	10.36	587+50.00	663.49	24.00	+0.060	+1.44		664.93	
663.06		-0.62	-0.060	10.36	587+75.00	663.69	24.00	+0.060	+1.44		665.13	
663.41		-0.62	-0.060	10.36	588+00.00	664.03	24.00	+0.060	+1.44		665.47	
663.92		-0.62	-0.060	10.36	588+25.00	664.54	24.00	+0.060	+1.44		665.98	
664.58		-0.62	-0.060	10.36	588+50.00	665.2	24.00	+0.060	+1.44		666.64	
664.74		-0.62	-0.060	10.36	588+55.45	665.36	24.00	+0.060	+1.44		666.80	
		SEE INTERSECTION DETAIL					*SEE INTERSECTION DETAIL*					

152:1

152:1

* *NEGATIVE CORRECTIONS MEANING BELOW PROFILE GRADE*
POSITIVE CORRECTIONS MEANING ABOVE PROFILE GRADE.

Preliminary Plans - Not For Reference Only

SUPERELEVATION TABLE
RAMP A3

DESIGN AGENCY
B&N
burgessniple.com

DESIGNER: MDO
REVIEWER: MRT 05/01/24
PROJECT ID: 82382
SHEET: 1022 TOTAL: 2696

CUY-90-16.28

MODEL: Sheet PAPERSIZE: 34x22 (in.) DATE: 3/28/2025 TIME: 9:18:53 AM USER: AlexandriaSummers
pw:\\vmb-us-pw.bentley.com:vmb-us-pw-03\Documents\Cleveland_OH\01_Projects\ODOT\District2\82382\400-Engineering\Roadway\Sheets\82382_GE330i.dgn

SUPERELEVATION TABLE

P.I. STATION 1720+55.32	Dc = 34°45'00"

LEFT SIDE					CENTERLINE CONTROL		RIGHT SIDE					REMARKS
EDGE ELEVATION	TRANSITION RATE	ELEVATION CORRECTION*	CROSS SLOPE	WIDTH	STATION	PROFILE GRADE	WIDTH	CROSS SLOPE	ELEVATION CORRECTION*	TRANSITION RATE	EDGE ELEVATION	
SEE I.R 90 EB TERMINAL DETAIL SHEETS												
698.11	297:1	0.87	0.054	16.00	1708+29.41	697.24	2.00	-0.054	-0.11	297:1	697.13	
697.77		0.96	0.060	16.00	1708+47.76	696.81	2.00	-0.060	-0.12		696.69	SC/FS
697.72		0.96	0.060	16.00	1708+50.00	696.76	2.00	-0.060	-0.12		696.64	
697.09		0.96	0.060	16.00	1708+75.00	696.13	2.00	-0.060	-0.12		696.01	
696.39		0.96	0.060	16.00	1709+00.00	695.43	2.00	-0.060	-0.12		695.31	
695.60		0.96	0.060	16.00	1709+25.00	694.64	2.00	-0.060	-0.12		694.52	
694.74		0.96	0.060	16.00	1709+50.00	693.78	2.00	-0.060	-0.12		693.66	
693.80		0.96	0.060	16.00	1709+75.00	692.84	2.00	-0.060	-0.12		692.72	
692.77		0.96	0.060	16.00	1710+00.00	691.81	2.00	-0.060	-0.12		691.69	
691.67		0.96	0.060	16.00	1710+25.00	690.71	2.00	-0.060	-0.12		690.59	
690.49		0.96	0.060	16.00	1710+50.00	689.53	2.00	-0.060	-0.12		689.41	
689.27		0.96	0.060	16.00	1710+75.00	688.31	2.00	-0.060	-0.12		688.19	
688.05		0.96	0.060	16.00	1711+00.00	687.09	2.00	-0.060	-0.12		686.97	
686.82		0.96	0.060	16.00	1711+25.00	685.86	2.00	-0.060	-0.12		685.74	
685.60		0.96	0.060	16.00	1711+50.00	684.64	2.00	-0.060	-0.12		684.52	
684.38		0.96	0.060	16.00	1711+75.00	683.42	2.00	-0.060	-0.12		683.30	
683.16		0.96	0.060	16.00	1712+00.00	682.20	2.00	-0.060	-0.12		682.08	
681.94		0.96	0.060	16.00	1712+25.00	680.98	2.00	-0.060	-0.12		680.86	
680.72		0.96	0.060	16.00	1712+50.00	679.76	2.00	-0.060	-0.12		679.64	
679.49		0.96	0.060	16.00	1712+75.00	678.53	2.00	-0.060	-0.12		678.41	
678.27		0.96	0.060	16.00	1713+00.00	677.31	2.00	-0.060	-0.12		677.19	
677.18		0.96	0.060	16.00	1713+25.00	676.22	2.00	-0.060	-0.12		676.10	
676.30		0.96	0.060	16.00	1713+50.00	675.34	2.00	-0.060	-0.12		675.22	
675.64		0.96	0.060	16.00	1713+75.00	674.68	2.00	-0.060	-0.12		674.56	
675.19		0.96	0.060	16.00	1714+00.00	674.23	2.00	-0.060	-0.12		674.11	
675.06		0.96	0.060	16.00	1714+10.50	674.10	2.00	-0.060	-0.12		673.98	CS/FS
674.86		0.87	0.054	16.00	1714+25.00	673.99	1.81	-0.054	-0.10		673.89	
674.68	143:1	0.71	0.045	16.00	1714+50.00	673.97	1.47	-0.045	-0.07	143:1	673.90	
674.72		0.56	0.035	16.00	1714+75.00	674.16	1.14	-0.035	-0.04		674.12	
674.88		0.40	0.025	16.00	1715+00.00	674.48	0.81	-0.025	-0.02		674.46	
674.93		0.32	0.020	16.00	1715+13.50	674.61	0.63	-0.020	-0.01		674.60	
674.98		0.32	0.020	16.00	1715+21.50	674.66	0.52	-0.020	-0.01		674.65	
675.00		0.32	0.020	15.91	1715+25.00	674.68	0.47	-0.020	-0.01		674.67	
675.04		0.31	0.020	15.27	1715+50.00	674.73	0.14	-0.020	0.00		674.73	
675.01		0.30	0.020	15.00	1715+60.50	674.71	0	-0.020	0.00		674.71	ST

** NEGATIVE CORRECTIONS MEANING BELOW PROFILE GRADE.*
POSITIVE CORRECTIONS MEANING ABOVE PROFILE GRADE.

SUPERELEVATION TABLE

LEFT SIDE					CENTERLINE CONTROL		RIGHT SIDE					REMARKS
EDGE ELEVATION	TRANSITION RATE	ELEVATION CORRECTION*	CROSS SLOPE	WIDTH	STATION	PROFILE GRADE	WIDTH	CROSS SLOPE	ELEVATION CORRECTION*	TRANSITION RATE	EDGE ELEVATION	

SUPERELEVATION TABLE
RAMP IB5

Preliminary Plans - For Reference Only

DESIGN AGENCY
HDR

DESIGNER
VLE

REVIEWER
TJS 06/17/22

PROJECT ID
82382

SHEET 1023 TOTAL 2696

CUY-90-16.28 (CCG3A)

MODEL: Sheet PAPERSIZE: 34x22 (in.) DATE: 3/28/2025 TIME: 9:18:57 AM USER: Alexandria.Summers
pw:\\vmb-us-pw.bentley.com:mb-us-pw-03\Documents\Cleveland_OH\01_Projects\ODOT\District2\82382\400-Engineering\Roadway\Sheets\82382_GE450i.dgn

SUPERELEVATION TABLE

P.I. STATION 1605+84.05 | Dc = 07°00'00"

LEFT SIDE					CENTERLINE CONTROL		RIGHT SIDE					REMARKS
EDGE ELEVATION	TRANSITION RATE	ELEVATION CORRECTION*	CROSS SLOPE	WIDTH	STATION	PROFILE GRADE	WIDTH	CROSS SLOPE	ELEVATION CORRECTION*	TRANSITION RATE	EDGE ELEVATION	
					1602+87.87	698.01	16.00	-0.016	-0.26		697.75	NC
					1603+00.00	697.85	16.00	-0.012	-0.19		697.66	
					1603+25.00	697.53	16.00	-0.003	-0.06		697.47	
					1603+35.28	697.40	16.00	0.000	0.00		697.40	
					1603+50.00	697.21	16.00	0.005	0.08		697.29	
					1603+75.00	696.88	16.00	0.013	0.21		697.09	
					1604+00.00	696.56	16.00	0.022	0.35	185:1	696.91	
					1604+21.20	696.29	16.00	0.029	0.46		696.75	PC
					1604+25.00	696.24	16.00	0.030	0.48		696.72	
					1604+50.00	695.91	16.00	0.039	0.62		696.53	
					1604+75.00	695.59	16.00	0.047	0.75		696.34	
					1605+00.00	695.26	16.00	0.056	0.89		696.15	
					1605+07.13	695.18	16.00	0.058	0.93		696.11	FS
					1605+25.00	694.98	16.00	0.058	0.93		695.91	
					1605+50.00	694.76	16.00	0.058	0.93		695.69	
					1605+75.00	694.62	16.00	0.058	0.93		695.55	
					1606+00.00	694.54	16.00	0.058	0.93		695.47	
					1606+25.00	694.54	16.00	0.058	0.93		695.47	
					1606+50.00	694.61	16.00	0.058	0.93		695.54	
					1606+75.00	694.76	16.00	0.058	0.93		695.69	
					1606+85.41	694.84	16.00	0.058	0.93		695.77	FS
					1607+00.00	694.97	16.00	0.053	0.85		695.82	
					1607+25.00	695.22	16.00	0.045	0.71		695.93	
					1607+42.69	695.40	16.00	0.039	0.62	185:1	696.02	PT
					1607+50.00	695.47	16.00	0.036	0.58		696.05	
					1607+75.00	695.72	16.00	0.028	0.44		696.16	
					1608+00.00	695.97	16.00	0.019	0.31		696.28	
					1608+09.85	696.07	16.00	0.016	0.26		696.32	RC

** NEGATIVE CORRECTIONS MEANING BELOW PROFILE GRADE.*
POSITIVE CORRECTIONS MEANING ABOVE PROFILE GRADE.

SUPERELEVATION TABLE

P.I. STATION 1618+11.29 | Dc = 04°00'00"

LEFT SIDE					CENTERLINE CONTROL		RIGHT SIDE					REMARKS
EDGE ELEVATION	TRANSITION RATE	ELEVATION CORRECTION*	CROSS SLOPE	WIDTH	STATION	PROFILE GRADE	WIDTH	CROSS SLOPE	ELEVATION CORRECTION*	TRANSITION RATE	EDGE ELEVATION	
					1613+98.32	695.00	16.00	0.016	0.26		695.26	RC
					1614+00.00	694.94	16.00	0.015	0.24		695.19	
					1614+25.00	694.02	16.00	0.005	0.08		694.10	
					1614+37.11	693.58	16.00	0.000	0.00		693.58	
					1614+50.00	693.10	16.00	-0.005	-0.09		693.01	
					1614+75.00	692.04	16.00	-0.016	-0.25	152:1	691.79	
					1614+82.36	691.73	16.00	-0.019	-0.30		691.43	PC
					1615+00.00	690.99	16.00	-0.026	-0.42		690.57	
					1615+04.99	690.78	16.00	-0.028	-0.45		690.33	FS
					1615+25.00	689.93	16.00	-0.028	-0.45		689.48	
					1615+50.00	688.87	16.00	-0.028	-0.45		688.42	
					1615+75.00	687.82	16.00	-0.028	-0.45		687.37	
					1616+00.00	686.76	16.00	-0.028	-0.45		686.31	
					1616+25.00	685.70	16.00	-0.028	-0.45		685.25	
					1616+50.00	684.64	16.00	-0.028	-0.45		684.20	
					1616+75.00	683.59	16.00	-0.028	-0.45		683.14	
					1617+00.00	682.53	16.00	-0.028	-0.45		682.08	
					1617+25.00	681.47	16.00	-0.028	-0.45		681.03	
					1617+50.00	680.42	16.00	-0.028	-0.45		679.97	
					1617+75.00	679.36	16.00	-0.028	-0.45		678.91	
					1618+00.00	678.30	16.00	-0.028	-0.45		677.85	
					1618+25.00	677.24	16.00	-0.028	-0.45		676.80	
					1618+50.00	676.21	16.00	-0.028	-0.45		675.76	
					1618+75.00	675.26	16.00	-0.028	-0.45		674.82	
					1619+00.00	674.42	16.00	-0.028	-0.45		673.98	
					1619+25.00	673.69	16.00	-0.028	-0.45		673.24	
					1619+50.00	673.06	16.00	-0.028	-0.45		672.61	
					1619+75.00	672.53	16.00	-0.028	-0.45		672.08	
					1620+00.00	672.11	16.00	-0.028	-0.45		671.66	
					1620+25.00	671.79	16.00	-0.028	-0.45		671.34	
					1620+50.00	671.57	16.00	-0.028	-0.45		671.13	
					1620+75.00	671.46	16.00	-0.028	-0.45		671.01	

SEE INTERSECTION DETAIL

Preliminary Plans - For Reference Only

SUPERELEVATION TABLE
RAMP B6

DESIGN AGENCY
HDR

DESIGNER
TJS

REVIEWER
MJL 01/08/24

PROJECT ID
82382

SHEET 1024 | TOTAL 2696

CUY-90-16.28 (CCG3A)

MODEL: Sheet PAPERSIZE: 34x22 (in.) DATE: 3/28/2025 TIME: 9:19:01 AM USER: Alexandria.Summers
pw:\\mb-us-pw.bentley.com:mb-us-pw-03\Documents\Cleveland_OH\01_Projects\ODOT\District2\82382\400-Engineering\Roadway\Sheets\82382_GE460.dgn

SUPERELEVATION TABLE

P.I. STATION 1802+97.78	Dc = 07°30'00"

LEFT SIDE					CENTERLINE CONTROL		RIGHT SIDE					REMARKS
EDGE ELEVATION	TRANSITION RATE	ELEVATION CORRECTION*	CROSS SLOPE	WIDTH	STATION	PROFILE GRADE	WIDTH	CROSS SLOPE	ELEVATION CORRECTION*	TRANSITION RATE	EDGE ELEVATION	
687.30		0.64	0.040	16.00	1801+77.33	686.67						
686.24		0.64	0.040	16.00	1802+00.00	685.60						
685.03		0.64	0.040	16.00	1802+25.00	684.39						
683.81		0.64	0.040	16.00	1802+50.00	683.17						
682.58		0.64	0.040	16.00	1802+75.00	681.94						
681.33		0.64	0.040	16.00	1803+00.00	680.69						
680.07		0.64	0.040	16.00	1803+25.00	679.43						
678.82		0.64	0.040	16.00	1803+50.00	678.18						
677.57		0.64	0.040	16.00	1803+75.00	676.93						
676.32		0.64	0.040	16.00	1804+00.00	675.68						
675.06		0.64	0.040	16.00	1804+25.00	674.42						
673.81		0.64	0.040	16.00	1804+50.00	673.17						
672.64		0.64	0.040	16.00	1804+75.00	672.00						
671.65		0.64	0.040	16.00	1805+00.00	671.01						
670.82		0.64	0.040	16.00	1805+25.00	670.18						
670.52		0.64	0.040	16.00	1805+35.56	669.88						FS
670.07	152:1	0.54	0.034	16.00	1805+50.00	669.52						
669.62		0.43	0.027	16.00	1805+67.88	669.19						PT
669.42		0.38	0.024	16.00	1805+75.00	669.04						
669.05		0.26	0.016	16.00	1805+93.74	668.79						RC

* NEGATIVE CORRECTIONS MEANING BELOW PROFILE GRADE.
POSITIVE CORRECTIONS MEANING ABOVE PROFILE GRADE.

SUPERELEVATION TABLE

LEFT SIDE					CENTERLINE CONTROL		RIGHT SIDE					REMARKS
EDGE ELEVATION	TRANSITION RATE	ELEVATION CORRECTION*	CROSS SLOPE	WIDTH	STATION	PROFILE GRADE	WIDTH	CROSS SLOPE	ELEVATION CORRECTION*	TRANSITION RATE	EDGE ELEVATION	

Preliminary Plans - For Reference Only

SUPERELEVATION TABLE
RAMP B6A

DESIGN AGENCY
HDR

DESIGNER
TJS

REVIEWER
MJL 01/08/24

PROJECT ID
82382

SHEET 1025 | TOTAL 2696

CUY-90-16.28 (CCG3A)

MODEL: Sheet PAPERSIZE: 34x22 (in.) DATE: 3/28/2025 TIME: 9:19:06 AM USER: Alexandria.Summers
pw:\\mb-us-pw.bentley.com:mb-us-pw-03\Documents\Cleveland_OH\01_Projects\ODOT\District2\82382\400-Engineering\Roadway\Sheets\82382_GE470l.dgn

SUPERELEVATION TABLE - RAMP IH4

P.I. STATION 15+38.01	Dc = 10°30'00"

LEFT SIDE					CENTERLINE CONTROL		RIGHT SIDE					REMARKS
EDGE ELEVATION	TRANSITION RATE	ELEVATION CORRECTION	CROSS SLOPE	WIDTH	STATION	PROFILE GRADE	WIDTH	CROSS SLOPE	ELEVATION CORRECTION	TRANSITION RATE	EDGE ELEVATION	
SEE RAMP TERMINAL DETAILS												
694.13		*0.86*	*0.0540*	*16*	*12+91.52*	*693.26*						
693.87		*0.86*	*0.0540*	*16*	*13+00.00*	*693.01*						
692.98		*0.86*	*0.0540*	*16*	*13+25.00*	*692.12*						
691.89		*0.86*	*0.0540*	*16*	*13+50.00*	*691.02*						
690.58		*0.86*	*0.0540*	*16*	*13+75.00*	*689.72*						
689.08		*0.86*	*0.0540*	*16*	*14+00.00*	*688.22*						
687.41		*0.86*	*0.0540*	*16*	*14+25.00*	*686.55*						
685.72		*0.86*	*0.0540*	*16*	*14+50.00*	*684.86*						
684.04		*0.86*	*0.0540*	*16*	*14+75.00*	*683.17*						
682.36		*0.86*	*0.0540*	*16*	*15+00.00*	*681.50*						
680.80		*0.86*	*0.0540*	*16*	*15+25.00*	*679.94*						
680.04		*0.86*	*0.0540*	*16*	*15+38.01*	*679.18*						*PI*
679.37		*0.86*	*0.0540*	*16*	*15+50.00*	*678.51*						
678.06		*0.86*	*0.0540*	*16*	*15+75.00*	*677.20*						
676.89		*0.86*	*0.0540*	*16*	*16+00.00*	*676.02*						
675.83		*0.86*	*0.0540*	*16*	*16+25.00*	*674.97*						
674.91		*0.86*	*0.0540*	*16*	*16+50.00*	*674.05*						
674.11		*0.86*	*0.0540*	*16*	*16+75.00*	*673.25*						
673.44		*0.86*	*0.0540*	*16*	*17+00.00*	*672.58*						
672.90		*0.86*	*0.0540*	*16*	*17+25.00*	*672.04*						
672.49		*0.86*	*0.0540*	*16*	*17+50.00*	*671.62*						
672.20		*0.86*	*0.0540*	*16*	*17+75.00*	*671.34*						
672.06		*0.86*	*0.0540*	*16*	*17+96.05*	*671.19*						*FS*
SEE RAMP TERMINAL DETAILS												

Preliminary Plans - For Reference Only

SUPERELEVATION TABLE
RAMP IH4

DESIGN AGENCY
Michael Baker INTERNATIONAL

DESIGNER
KJM

REVIEWER
KGJ 05/22/24

PROJECT ID
82382

SHEET 1026 | TOTAL 2696

CUY-90-16.28 (CCG3A)

MODEL: Sheet PAPERSIZE: 34x22 (in.) DATE: 3/28/2025 TIME: 9:19:11 AM USER: AlexandriaSummers
pw:\\mb-us-pw.bentley.commb-us-pw-03\Documents\Cleveland_0H10I_Projects\0D0T\District2\82382\400-Engineering\Roadway\Sheets\82382_GE540i.dgn

SUPERELEVATION TABLE - RAMP IH5

P.I. STATION 1080+20.78 | Dc = 09°37'46"

LEFT SIDE					CENTERLINE CONTROL		RIGHT SIDE					REMARKS
EDGE ELEVATION	TRANSITION RATE	ELEVATION CORRECTION	CROSS SLOPE	WIDTH	STATION	PROFILE GRADE	WIDTH	CROSS SLOPE	ELEVATION CORRECTION	TRANSITION RATE	EDGE ELEVATION	
695.29		0.99	0.0411	24	1076+42.18	694.30	0.00	0.0411	0.00		694.30	BEGIN
695.33		1.03	0.0430	24	1076+50.00	694.30	2.27	0.0430	-0.10		694.20	
695.04	172:1	1.18	0.0490	24	1076+75.00	693.86	3.24	0.0490	-0.16	172:1	693.70	
694.68		1.32	0.0551	24	1077+00.00	693.36	4.50	0.0551	-0.25		693.11	
694.49		1.39	0.0580	24	1077+12.11	693.10	4.50	0.0580	-0.26		692.84	FS
694.19		1.39	0.0580	24	1077+25.00	692.80	4.50	0.0580	-0.26		692.53	
693.56		1.39	0.0580	24	1077+50.00	692.17	4.50	0.0580	-0.26		691.91	
692.91		1.39	0.0580	24	1077+75.00	691.52	4.50	0.0580	-0.26		691.26	
692.34		1.39	0.0580	24	1078+00.00	690.95	4.50	0.0580	-0.26		690.69	
691.76		1.39	0.0580	24	1078+25.00	690.37	4.50	0.0580	-0.26		690.11	
691.31		1.39	0.0580	24	1078+50.00	689.91	4.50	0.0580	-0.26		689.65	
690.93		1.39	0.0580	24	1078+75.00	689.53	4.50	0.0580	-0.26		689.27	
690.62		1.39	0.0580	24	1079+00.00	689.23	4.50	0.0580	-0.26		688.97	
690.40		1.39	0.0580	24	1079+25.00	689.01	4.50	0.0580	-0.26		688.75	
690.25		1.39	0.0580	24	1079+50.00	688.86	4.50	0.0580	-0.26		688.60	
690.15		1.39	0.0580	24	1079+75.00	688.76	4.50	0.0580	-0.26		688.50	
690.03		1.39	0.0580	24	1080+00.00	688.64	4.50	0.0580	-0.26		688.38	
689.88		1.39	0.0580	24	1080+20.78	688.49	4.50	0.0580	-0.26		688.23	PI
689.84		1.39	0.0580	24	1080+25.00	688.45	4.50	0.0580	-0.26		688.19	
689.57		1.39	0.0580	24	1080+50.00	688.18	4.50	0.0580	-0.26		687.92	
689.22		1.39	0.0580	24	1080+75.00	687.83	4.50	0.0580	-0.26		687.57	
688.80		1.39	0.0580	24	1081+00.00	687.40	4.50	0.0580	-0.26		687.14	
688.30		1.39	0.0580	24	1081+25.00	686.90	4.50	0.0580	-0.26		686.64	
687.78		1.39	0.0580	24	1081+50.00	686.38	4.50	0.0580	-0.26		686.12	
687.26		1.39	0.0580	24	1081+75.00	685.87	4.50	0.0580	-0.26		685.60	
686.74		1.39	0.0580	24	1082+00.00	685.35	4.50	0.0580	-0.26		685.09	
686.22		1.39	0.0580	24	1082+25.00	684.83	4.50	0.0580	-0.26		684.57	
685.70		1.39	0.0580	24	1082+50.00	684.31	4.50	0.0580	-0.26		684.05	
685.20		1.39	0.0580	24	1082+74.15	683.81	4.50	0.0580	-0.26		683.55	FS
685.18		1.39	0.0578	24	1082+75.00	683.79	4.40	0.0578	-0.25		683.54	
684.51		1.24	0.0518	24	1083+00.00	683.27	4.40	0.0518	-0.23		683.04	
683.86		1.11	0.0457	24.24	1083+25.00	682.75	3.75	0.0457	-0.17		682.58	
683.22	172:1	0.99	0.0397	24.89	1083+50.00	682.23	3.11	0.0397	-0.12	172:1	682.11	
683.13		0.97	0.0387	24.99	1083+54.14	682.16	3.00	0.0387	-0.12		682.04	PT
682.57		0.86	0.0336	25.53	1083+75.00	681.71	2.46	0.0336	-0.08		681.63	
681.92		0.72	0.0276	26.18	1084+00.00	681.20	1.81	0.0276	-0.05		681.15	
681.25		0.58	0.0215	26.83	1084+25.00	680.68	1.17	0.0215	-0.03		680.65	
680.64		0.44	0.0160	27.47	1084+47.94	680.20	0.57	0.0160	-0.01		680.19	NC
680.60		0.44	0.0160	27.47	1084+50.00	680.16	0.52	0.0160	-0.01		680.15	
680.19		0.45	0.0160	27.99	1084+70.00	679.74	0.00	0.0160	0.00		679.74	
680.09		0.45	0.0160	28	1084+75.00	679.64	0.00	0.0160	0.00		679.64	

SUPERELEVATION TABLE - RAMP H5

P.I. STATION 992+53.42 | Dc = 06°30'00"

LEFT SIDE					CENTERLINE CONTROL		RIGHT SIDE					REMARKS
EDGE ELEVATION	TRANSITION RATE	ELEVATION CORRECTION	CROSS SLOPE	WIDTH	STATION	PROFILE GRADE	WIDTH	CROSS SLOPE	ELEVATION CORRECTION	TRANSITION RATE	EDGE ELEVATION	
678.75		0.19	0.0160	12	985+00.00	678.56	16	-0.0160	-0.26		678.304	
678.58		0.19	0.0160	12	985+00.00	678.39	16	-0.0160	-0.26		678.132	
678.06		0.19	0.0160	12	985+50.00	677.87	16	-0.0160	-0.26		677.612	
677.54		0.19	0.0160	12	985+75.00	677.35	16	-0.0160	-0.26		677.092	
677.02		0.19	0.0160	12	986+00.00	676.83	16	-0.0160	-0.26		676.571	
676.50		0.19	0.0160	12	986+25.00	676.31	16	-0.0160	-0.26		676.051	
675.98		0.19	0.0160	12	986+50.00	675.79	16	-0.0160	-0.26		675.532	
675.50		0.19	0.0160	12	986+75.00	675.31	16	-0.0160	-0.26		675.054	
675.10		0.21	0.0160	13	987+00.00	674.90	16	-0.0160	-0.26		674.639	
674.73		0.19	0.0160	12	987+25.00	674.54	16	-0.0160	-0.26		674.286	
674.44		0.19	0.0160	12	987+50.00	674.25	16	-0.0160	-0.26		673.995	
674.21		0.19	0.0160	12	987+75.00	674.02	16	-0.0160	-0.26		673.766	
674.19		0.19	0.0160	12	987+94.06	674.00	16	-0.0160	-0.26		673.744	NC
674.07		0.22	0.0180	12	988+00.00	673.86	16	-0.0180	-0.29		673.567	
674.07		0.32	0.0264	12	988+25.00	673.75	16	-0.0264	-0.42		673.327	
674.13	185:1	0.42	0.0349	12	988+50.00	673.71	16	-0.0349	-0.56	185:1	673.149	
674.16		0.46	0.0380	12	988+59.24	673.71	16	-0.0380	-0.61		673.099	PC
674.25		0.52	0.0433	12	988+75.00	673.73	16	-0.0433	-0.69		673.033	
674.43		0.62	0.0518	12	989+00.00	673.81	16	-0.0518	-0.83		672.979	
674.57		0.68	0.0570	12	989+15.54	673.89	16	-0.0570	-0.91		672.976	FS
674.63		0.68	0.0570	12	989+25.00	673.95	16	-0.0570	-0.91		673.033	
674.78		0.68	0.0570	12	989+50.00	674.09	16	-0.0570	-0.91		673.182	
674.92		0.68	0.0570	12	989+75.00	674.24	16	-0.0570	-0.91		673.324	
675.07		0.68	0.0570	12	990+00.00	674.39	16	-0.0570	-0.91		673.478	
675.17		0.68	0.0570	12	990+25.00	674.49	16	-0.0570	-0.91		673.578	
675.21		0.68	0.0570	12	990+50.00	674.53	16	-0.0570	-0.91		673.617	
675.19		0.68	0.0570	12	990+75.00	674.51	16	-0.0570	-0.91		673.595	
675.11		0.68	0.0570	12	991+00.00	674.42	16	-0.0570	-0.91		673.512	
674.97		0.68	0.0570	12	991+25.00	674.28	16	-0.0570	-0.91		673.369	
674.76		0.68	0.0570	12	991+50.00	674.08	16	-0.0570	-0.91		673.164	
674.49		0.68	0.0570	12	991+75.00	673.81	16	-0.0570	-0.91		672.898	
674.17		0.68	0.0570	12	992+00.00	673.48	16	-0.0570	-0.91		672.571	
673.78		0.68	0.0570	12	992+25.00	673.10	16	-0.0570	-0.91		672.183	
673.33		0.68	0.0570	12	992+50.00	672.65	16	-0.0570	-0.91		671.733	
673.26		0.68	0.0570	12	992+53.42	672.58	16	-0.0570	-0.91		671.668	PI
672.80		0.68	0.0570	12	992+75.00	672.11	16	-0.0570	-0.91		671.202	
672.25		0.68	0.0570	12	993+00.00	671.56	16	-0.0570	-0.91		670.652	
671.62		0.68	0.0570	12	993+25.00	670.93	16	-0.0570	-0.91		670.02	
670.92		0.68	0.0570	12	993+50.00	670.24	16	-0.0570	-0.91		669.327	
670.17		0.68	0.0570	12	993+75.00	669.48	16	-0.0570	-0.91		668.572	
669.35		0.68	0.0570	12	994+00.00	668.67	16	-0.0570	-0.91		667.757	
SEE RAMP TERMINAL DETAIL												

Preliminary Plans - For Reference Only

SUPERELEVATION TABLE
RAMP IH5

05

DESIGN AGENCY
Michael Baker INTERNATIONAL

DESIGNER KJM
REVIEWER KGJ 05/22/24
PROJECT ID 82382
SHEET 1027 TOTAL 2696

CUY-90-16.28 (CCG3A)

MODEL: Sheet PAPERSIZE: 34x22 (in.) DATE: 3/28/2025 TIME: 9:19:15 AM USER: Alexandria.Summers
pw:\\mb-us-pw.bentley.com:mb-us-pw-03\Documents\Cleveland_OH\01_Projects\000T\District2\82382\400-Engineering\Roadway\Sheets\82382_GE550i.dgn

SUPERELEVATION TABLE - RAMP IH6/IH6

P.I. STATIONS = 1184+72.89 / 1189+12.52	Dc = 10°00'00" / 12°00'00"

NOTE: STA. 1274+83.98 = STA. 1183+59.15

LEFT SIDE					CENTERLINE CONTROL		RIGHT SIDE					REMARKS
EDGE ELEVATION	TRANSITION RATE	ELEVATION CORRECTION	CROSS SLOPE	WIDTH	STATION	PROFILE GRADE	WIDTH	CROSS SLOPE	ELEVATION CORRECTION	TRANSITION RATE	EDGE ELEVATION	
SEE RAMP TERMINAL DETAIL												
680.07		0.93	0.0580	16.00	1274+50.00	679.14						
679.29		0.93	0.0580	16.00	1274+75.00	678.36						
679.21	161:1	0.93	0.0580	16.00	1274+77.53	678.28						FS
678.96		0.88	0.0550	16.00	1183+59.15	678.08						PC/STA EQN
678.66		0.85	0.0530	16.00	1183+65.60	677.81						FS
678.44		0.85	0.0530	16.00	1183+75.00	677.59						
677.70		0.85	0.0530	16.00	1184+00.00	676.85						
677.03		0.85	0.0530	16.00	1184+25.00	676.18						
676.42		0.85	0.0530	16.00	1184+50.00	675.57						
675.92		0.85	0.0530	16.00	1184+72.89	675.07						PI
675.88		0.85	0.0530	16.00	1184+75.00	675.03						
675.40		0.85	0.0530	16.00	1185+00.00	674.55						
674.99		0.85	0.0530	16.00	1185+25.00	674.14						
674.64		0.85	0.0530	16.00	1185+50.00	673.79						
674.71		1.20	0.0530	22.64	1185+74.02	673.51						FS
674.72	161:1	1.22	0.0532	23.00	1185+75.00	673.50						
674.82		1.40	0.0550	25.50	1185+83.70	673.42						PCC
674.94		1.61	0.0570	28.30	1185+93.38	673.33						FS
675.00		1.71	0.0570	30.00	1186+00.00	673.29						
674.84		1.71	0.0570	30.00	1186+25.00	673.13						
674.75		1.71	0.0570	30.00	1186+50.00	673.04						
674.73		1.71	0.0570	30.00	1186+75.00	673.02						
674.77		1.71	0.0570	30.00	1187+00.00	673.06						
674.87		1.71	0.0570	30.00	1187+25.00	673.16						
675.02		1.71	0.0570	30.00	1187+50.00	673.31						
675.17		1.71	0.0570	30.00	1187+75.00	673.46						
675.32		1.71	0.0570	30.00	1188+00.00	673.61						
675.42		1.71	0.0570	30.00	1188+25.00	673.71						
675.45		1.71	0.0570	30.00	1188+50.00	673.74						
675.41		1.71	0.0570	30.00	1188+75.00	673.70						
675.30		1.71	0.0570	30.00	1189+00.00	673.59						
675.22		1.71	0.0570	30.00	1189+12.52	673.51						PI
675.12		1.71	0.0570	30.00	1189+25.00	673.41						
674.87		1.71	0.0570	30.00	1189+50.00	673.16						
674.60		1.71	0.0570	30.00	1189+75.00	672.89						
674.33		1.71	0.0570	30.00	1190+00.00	672.62						
674.06		1.71	0.0570	30.00	1190+25.00	672.35						
673.91		1.71	0.0570	30.00	1190+38.26	672.20						FS
673.71		1.63	0.0545	30.00	1190+50.00	672.08						
673.30		1.48	0.0494	30.00	1190+75.00	671.82						
672.99		1.33	0.0443	30.00	1191+00.00	671.66						
672.77	161:1	1.17	0.0391	30.00	1191+25.00	671.60						
672.67		1.02	0.0339	30.00	1191+50.00	671.65						
672.65		0.96	0.0319	30.00	1191+59.61	671.69						PT
672.63		0.84	0.0281	30.00	1191+75.00	671.79						
SEE INTERSECTION DETAIL												

Preliminary Plans - For Reference Only

SUPERELEVATION TABLE
RAMP IH6

DESIGN AGENCY
Michael Baker INTERNATIONAL

DESIGNER KJM
REVIEWER KGJ 05/22/24
PROJECT ID 82382
SHEET 1028 TOTAL 2696

CUY-90-16.28 (CCG3A)

MODEL: Sheet PAPERSIZE: 34x22 (in.) DATE: 3/28/2025 TIME: 9:19:19 AM USER: AlexandriaSummers
pw:\\mb-us-pw.bentley.com:mb-us-pw-03\Documents\Cleveland_OH\01_Projects\0007\District2\82382\400-Engineering\Roadway\Sheets\82382_GE560i.dgn

SUPERELEVATION TABLE - RAMP IJ3

P.I. STATION 104+62.29 and 109+39.13	Dc = 23°00'00"

LEFT SIDE					CENTERLINE CONTROL		RIGHT SIDE					REMARKS
EDGE ELEVATION	TRANSITION RATE	ELEVATION CORRECTION	CROSS SLOPE	WIDTH	STATION	PROFILE GRADE	WIDTH	CROSS SLOPE	ELEVATION CORRECTION	TRANSITION RATE	EDGE ELEVATION	
					101+89.00	685.00	16	-0.0562	-0.90		684.10	BEGIN
					101+92.12	684.88	16	-0.0575	-0.92	1:152	683.96	PCC
					101+98.21	684.65	16	-0.0600	-0.96		683.69	FS
					102+00.00	684.58	16	-0.0600	-0.96		683.62	
					102+25.00	683.64	16	-0.0600	-0.96		682.68	
					102+50.00	682.71	16	-0.0600	-0.96		681.75	
					102+75.00	681.77	16	-0.0600	-0.96		680.81	
					103+00.00	680.87	16	-0.0600	-0.96		679.91	
					103+25.00	680.08	16	-0.0600	-0.96		679.12	
					103+50.00	679.37	16	-0.0600	-0.96		678.41	
					103+75.00	678.76	16	-0.0600	-0.96		677.80	
					104+00.00	678.25	16	-0.0600	-0.96		677.29	
					104+25.00	677.83	16	-0.0600	-0.96		676.87	
					104+50.00	677.50	16	-0.0600	-0.96		676.54	
					104+62.29	677.38	16	-0.0600	-0.96		676.42	PI
					104+75.00	677.27	16	-0.0600	-0.96		676.31	
					105+00.00	677.08	16	-0.0600	-0.96		676.12	
					105+25.00	676.90	16	-0.0600	-0.96		675.94	
					105+39.72	676.79	16	-0.0600	-0.96		675.83	FS
					105+50.00	676.71	16	-0.0558	-0.89		675.82	
					105+75.00	676.53	16	-0.0454	-0.73		675.80	
					106+00.00	676.53	16	-0.0351	-0.56		675.96	
					106+03.62	676.32	16	-0.0336	-0.54		675.78	PT
					106+25.00	676.16	16	-0.0248	-0.40		675.76	
					106+50.00	675.97	16	-0.0145	-0.23		675.74	
					106+75.00	675.70	16	-0.0042	-0.07		675.63	
					106+85.18	675.54	16	0.0000	0.00	1:152	675.54	FLAT
					107+00.00	675.25	16	0.0061	0.10		675.35	
					107+25.00	673.28	16	0.0164	0.26		673.55	
					107+50.00	673.86	16	0.0267	0.43		674.29	
					107+66.73	673.28	16	0.0337	0.54		673.82	PC
					107+75.00	673.00	16	0.0371	0.59		673.59	
					108+00.00	672.13	16	0.0474	0.76		672.89	
					108+25.00	671.28	16	0.0577	0.92		672.20	
					108+30.62	671.06	16	0.0600	0.96		672.02	FS
					108+50.00	670.39	16	0.0600	0.96		671.35	
					108+75.00	669.52	16	0.0600	0.96		670.48	
					109+00.00	668.66	16	0.0600	0.96		669.62	
					109+25.00	667.87	16	0.0600	0.96		668.83	
					109+39.13	667.50	16	0.0600	0.96		668.46	PI
					109+50.00	667.25	16	0.0600	0.96		668.21	
					109+75.00	666.80	16	0.0600	0.96		667.76	
					110+00.00	666.51	16	0.0600	0.96		667.47	
					110+25.00	666.30	16	0.0600	0.96		667.26	
					110+50.00	666.09	16	0.0600	0.96		667.05	
					110+51.85	666.08	16	0.0600	0.96		667.04	FS
					SEE RAMP TERMINAL DETAIL							

Preliminary Plans - For Reference Only

SUPERELEVATION TABLE
RAMP IJ3

DESIGN AGENCY
Michael Baker INTERNATIONAL

DESIGNER KJM
REVIEWER KGJ 05/22/24
PROJECT ID 82382
SHEET 1029 TOTAL 2696

CUY-90-16.28 (CCG3A)

MODEL: Sheet PAPERSIZE: 34x22 (in.) DATE: 3/28/2025 TIME: 9:19:24 AM USER: Alexandria.Summers
pw:\\mb-us-pw.bentley.com:mb-us-pw-03\Documents\Cleveland.OH\01_Projects\000T\District2\82382\400-Engineering\Roadway\Sheets\82382_GE630i.dgn

Preliminary Plans - Not For Reference Only

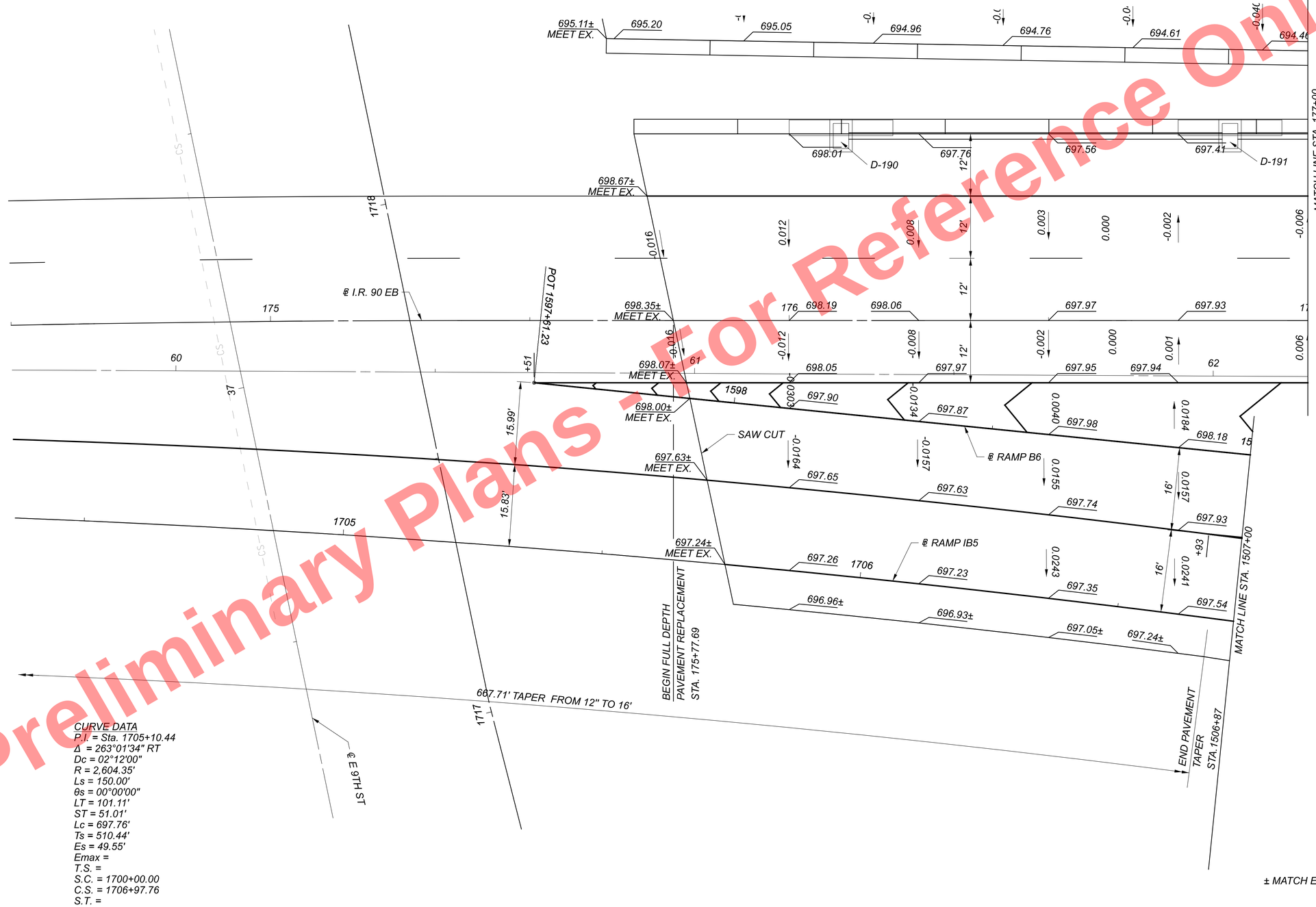

CURVE DATA
P.I. = Sta. 1705+10.44
Δ = 263°01'34" RT
Dc = 02°12'00"
R = 2,604.35'
Ls = 150.00'
θs = 00°00'00"
LT = 101.11'
ST = 51.01'
Lc = 697.76'
Ts = 510.44'
Es = 49.55'
Emax =
T.S. =
S.C. = 1700+00.00
C.S. = 1706+97.76
S.T. =

± MATCH EXISTING ELEVATION

HORIZONTAL SCALE IN FEET
0 5 10 20

RAMP TERMINAL DETAIL - I.R. 90 EB & RAMPS IB5 AND B6
STA. 172+00.00 TO STA. 174+50.00

DESIGN AGENCY
B&N
burgessniple.com

DESIGNER AJS
REVIEWER MRT 05/01/24
PROJECT ID 82382
SHEET 1030 TOTAL 2696

CUY-90-16.28 (CCG3A)

MODEL: 82382_GI2002 PAPERSIZE: 34x22 (in.) DATE: 3/28/2025 TIME: 9:20:03 AM USER: Alexandria.Summers
pw:\\mb-us-pw.bentley.com:mb-us-pw-03\Documents\Cleveland_OH\OiL_Projects\ODOT\District2\82382\400-Engineering\Roadway\Sheets\82382_GI2002.dgn

Preliminary Plans - For Reference Only

CUY-90-16.28 (CCG3A)

MODEL: 82382_GI2003 PAPERSIZE: 34x22 (In.) DATE: 3/28/2025 TIME: 9:20:21 AM USER: Alexandria.Summers
pw:\\mb-us-pw.bentley.com:mb-us-pw-03\Documents\Cleveland_OH\OL_Projects\ODOT\District2\82382\400-Engineering\Roadway\Sheets\82382_GI2003.dgn

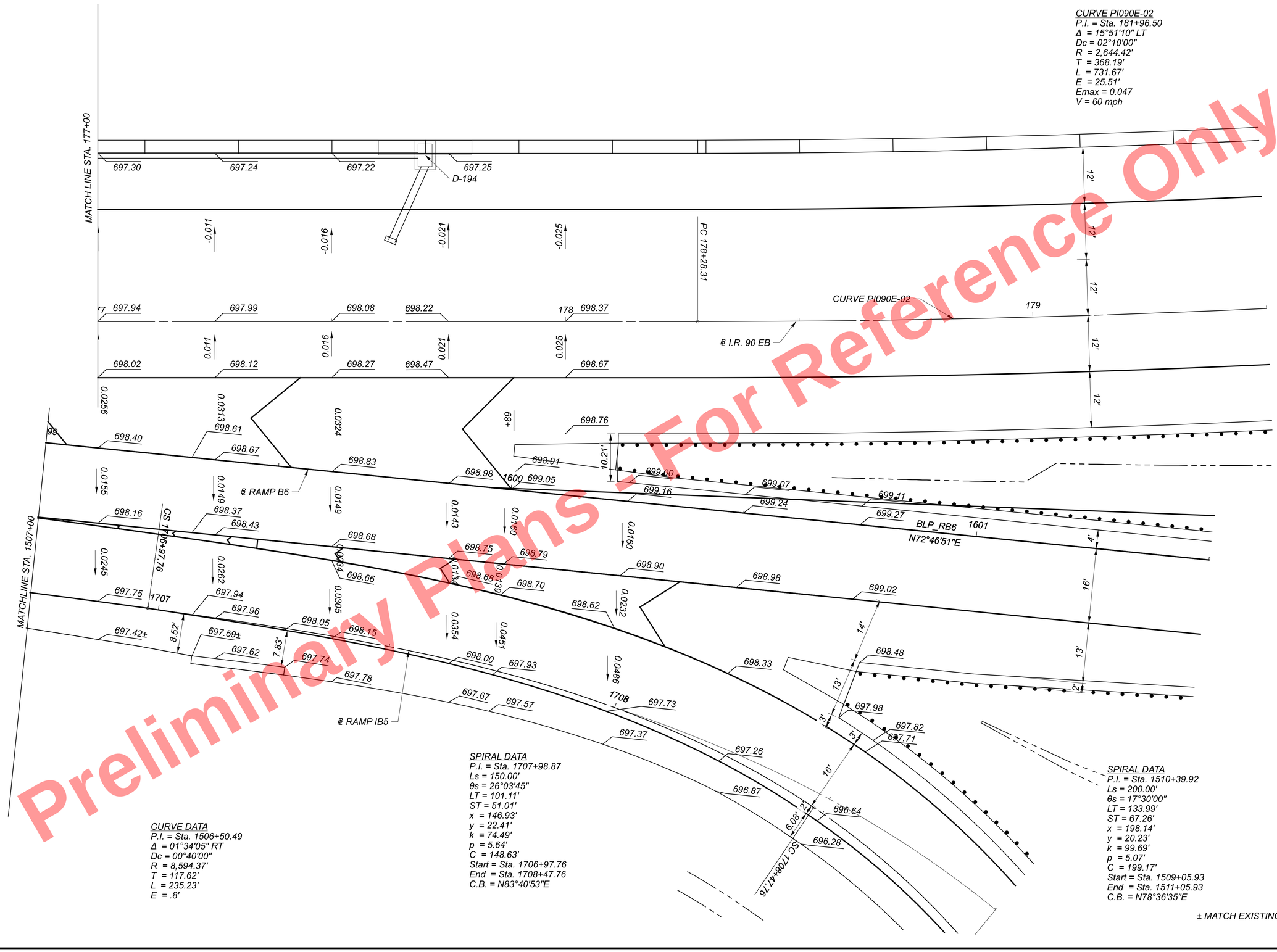

RAMP TERMINAL DETAIL - I.R. 90 EB & RAMPS IB5 AND B6
STA. 174+50.00 TO STA. 179+50.00

DESIGN AGENCY
B&N burgessniple.com

DESIGNER AJS
REVIEWER MRT 05/01/24
PROJECT ID 82382
SHEET 1031 TOTAL 2696

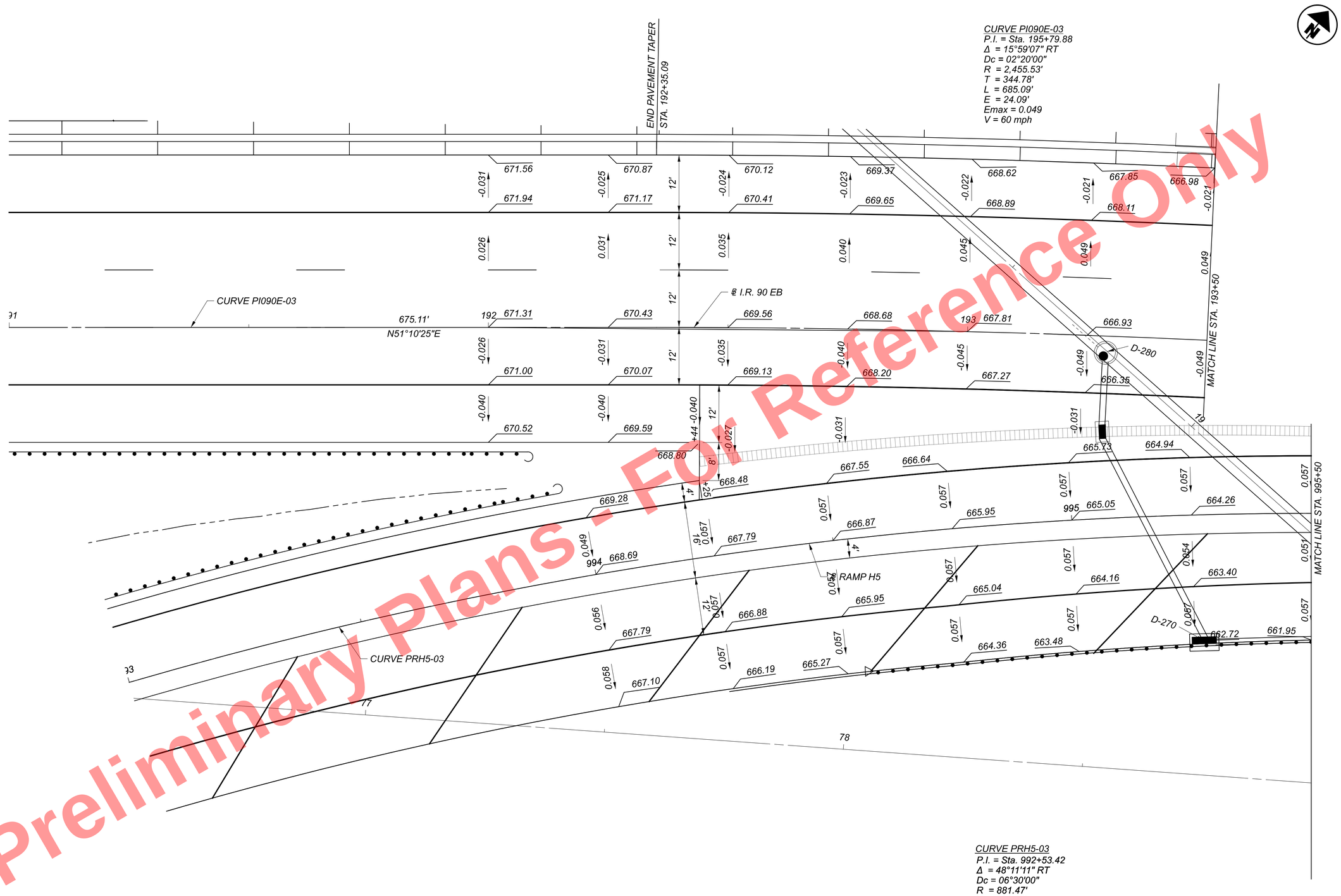

CURVE PRH5-03
P.I. = Sta. 992+53.42
Δ = 48°11'11" RT
Dc = 06°30'00"
R = 881.47'
T = 394.18'
L = 741.33'
E = 84.12'
Emax = 0.057
V = 45 mph

Preliminary Plans - For Reference Only

HORIZONTAL SCALE IN FEET
0 5 10 20

RAMP TERMINAL DETAIL - I.R. 90 EB & RAMP H5
STA. 191+00.00 TO STA. 193+50.00

DESIGN AGENCY
B&N burgessniple.com

DESIGNER AJS
REVIEWER MRT 05/01/24
PROJECT ID 82382
SHEET 1032 TOTAL 2696

CUY-90-16.28 (CCG3A)

MODEL: 82382_GI2001 PAPERSIZE: 34x22 (in.) DATE: 3/28/2025 TIME: 9:20:36 AM USER: Alexandria.Summers
pw:\\mb-us-pw.bentley.com:mb-us-pw-03\Documents\Cleveland_OH\OL_Projects\ODOT\District12\82382\400-Engineering\Roadway\Sheets\82382_GI2104.dgn

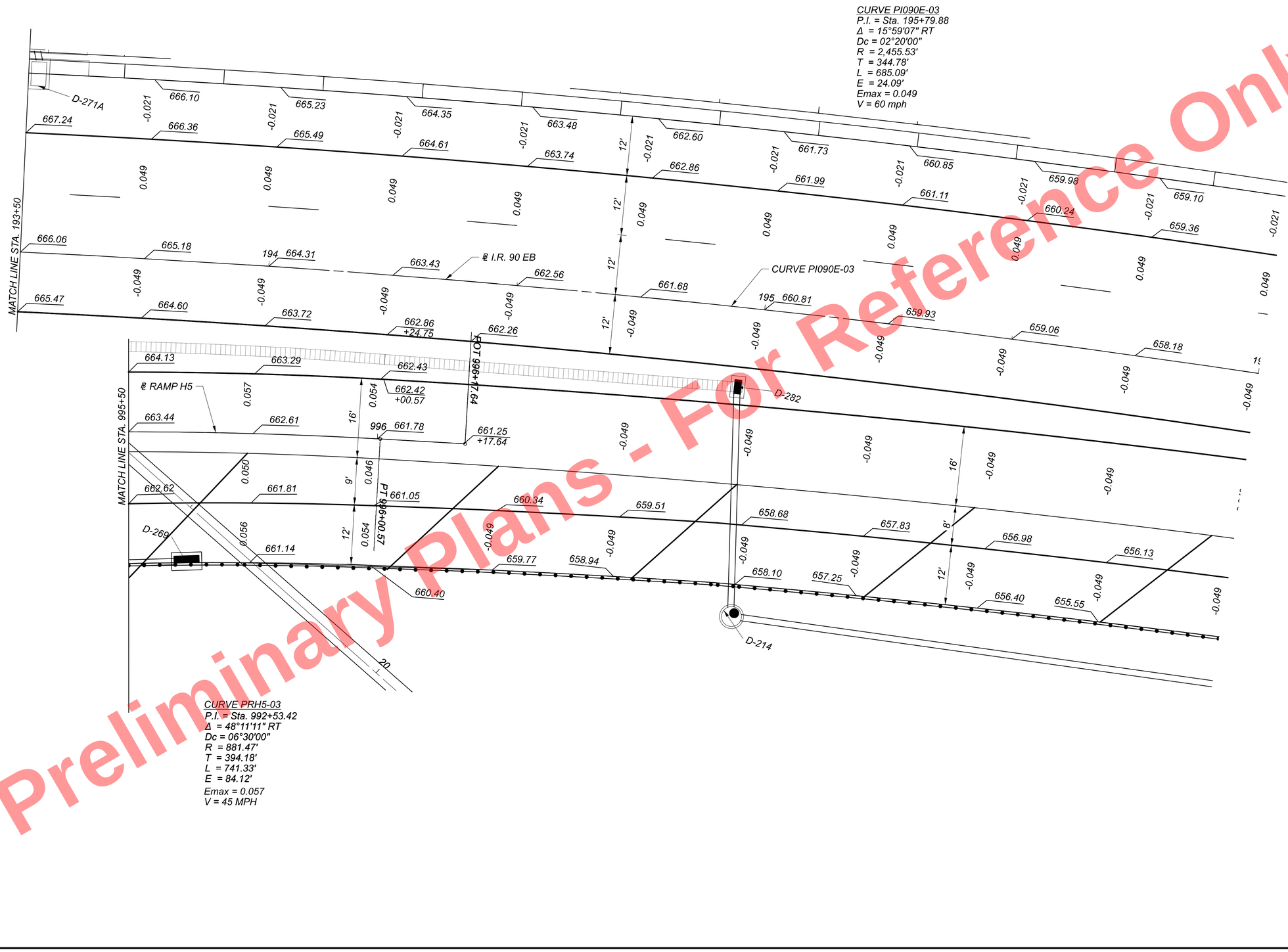

Preliminary Plans - For Reference Only

HORIZONTAL SCALE IN FEET
0 5 10 20

RAMP TERMINAL DETAIL - I.R. 90 EB & RAMP H5
STA. 193+50.00 TO STA. 196+00.00

DESIGN AGENCY
B&N burgessniple.com

DESIGNER AJS
REVIEWER MRT 05/01/24
PROJECT ID 82382
SHEET 1033 TOTAL 2696

CUY-90-16.28 (CCG3A)

MODEL: 82382_GI2001 PAPERSIZE: 34x22 (in.) DATE: 3/28/2025 TIME: 9:20:56 AM USER: Alexandria.Summers
pw:\\mb-us-pw.bentley.com:mb-us-pw-03\Documents\Cleveland_OH\01_Projects\ODOT\District2\82382\400-Engineering\Roadway\Sheets\82382_GI2105.dgn

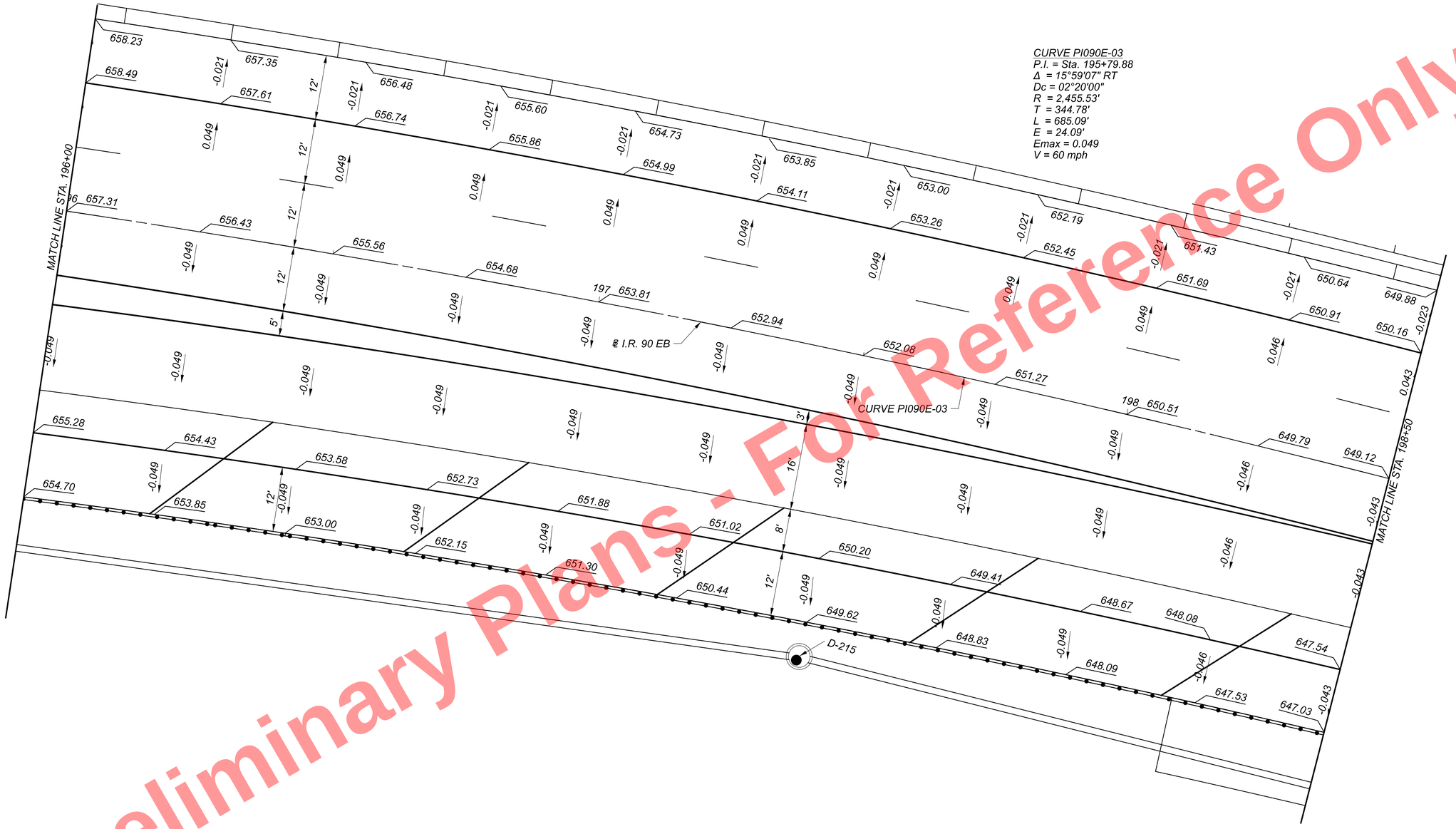

Preliminary Plans - For Reference Only

HORIZONTAL SCALE IN FEET
0 5 10 20

RAMP TERMINAL DETAIL - I.R. 90 EB & RAMP H5
STA. 196+00.00 TO STA. 198+50.00

DESIGN AGENCY	B&N burgessniple.com
DESIGNER	AJS
REVIEWER	MRT 05/01/24
PROJECT ID	82382
SHEET	1034
TOTAL	2696

CUY-90-16.28 (CCG3A)

MODEL: 82382_GI200I PAPERSIZE: 34x22 (In.) DATE: 3/28/2025 TIME: 9:21:11 AM USER: AlexandriaSummers
pw:\\mb-us-pw.bentley.com:mb-us-pw-03\Documents\Cleveland_OHIO_Projects\000T\District2\82382\400-Engineering\Roadway\Sheets\82382_GI2I06.dgn

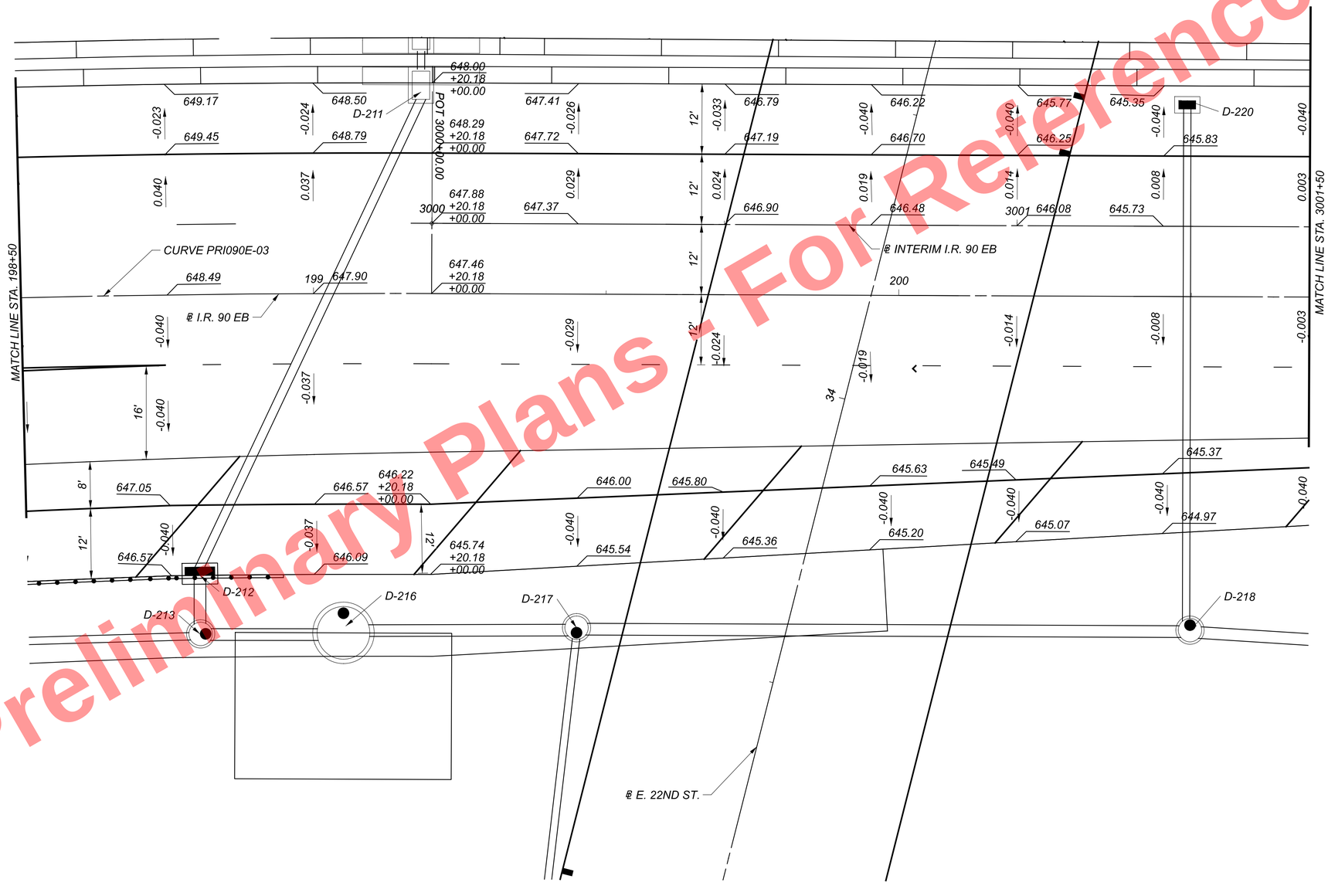

Preliminary Plans - For Reference Only

HORIZONTAL SCALE IN FEET
0 5 10 20

RAMP TERMINAL DETAIL - I.R. 90 EB & RAMP H5
STA. 198+50.00 TO STA. 3001+50.00

DESIGN AGENCY
B&N
burgessniple.com

DESIGNER AJS
REVIEWER MRT 05/01/24
PROJECT ID 82382
SHEET 1035 TOTAL 2696

CUY-90-16.28 (CCG3A)

MODEL: 82382_GI2106A PAPERSIZE: 34x22 (in.) DATE: 3/28/2025 TIME: 9:21:26 AM USER: AlexandriaSummers
pw:\\vmb-us-pw.bentley.com:mb-us-pw-03\Documents\Cleveland_OH\01_Projects\ODOT\District2\82382\400-Engineering\Roadway\Sheets\82382_GI2106A.dgn

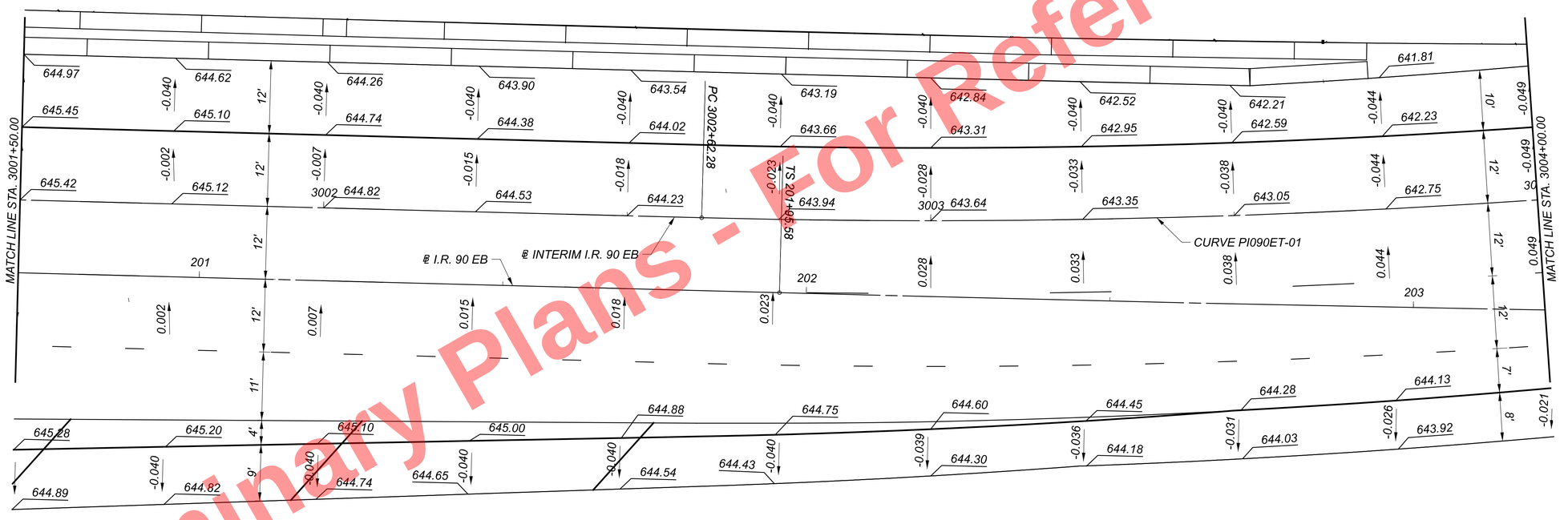

Preliminary Plans - For Reference Only

CURVE PI090ET-01
P.I. = Sta. 3005+92.95
Δ = 25°41'03" LT
Dc = 03°57'00"
R = 1,450.53'
T = 330.67'
L = 650.23'
E = 37.21'
Emax = 0.052
V = 50 mph

HORIZONTAL SCALE IN FEET
0 5 10 20

RAMP TERMINAL DETAIL - I.R. 90 EB & RAMP H5
STA. 3001+50.00 TO STA. 3004+00.00

CUY-90-16.28 (CCG3A)

MODEL: 82382_GI2106B PAPERSIZE: 34x22 (in) DATE: 3/28/2025 TIME: 9:22:03 AM USER: Alexandria.Summers
pw:\\mb-us-pw.bentley.com:mb-us-pw-03\Documents\Cleveland_OH\01_Projects\000T\Distrfctf2\82382\400-Engineering\Roadway\Sheets\82382_GI2106B.dgn

DESIGN AGENCY
B&N burgessniple.com

DESIGNER AJS
REVIEWER MRT 05/01/24
PROJECT ID 82382
SHEET 1036 TOTAL 2696

Preliminary Plans - For Reference Only

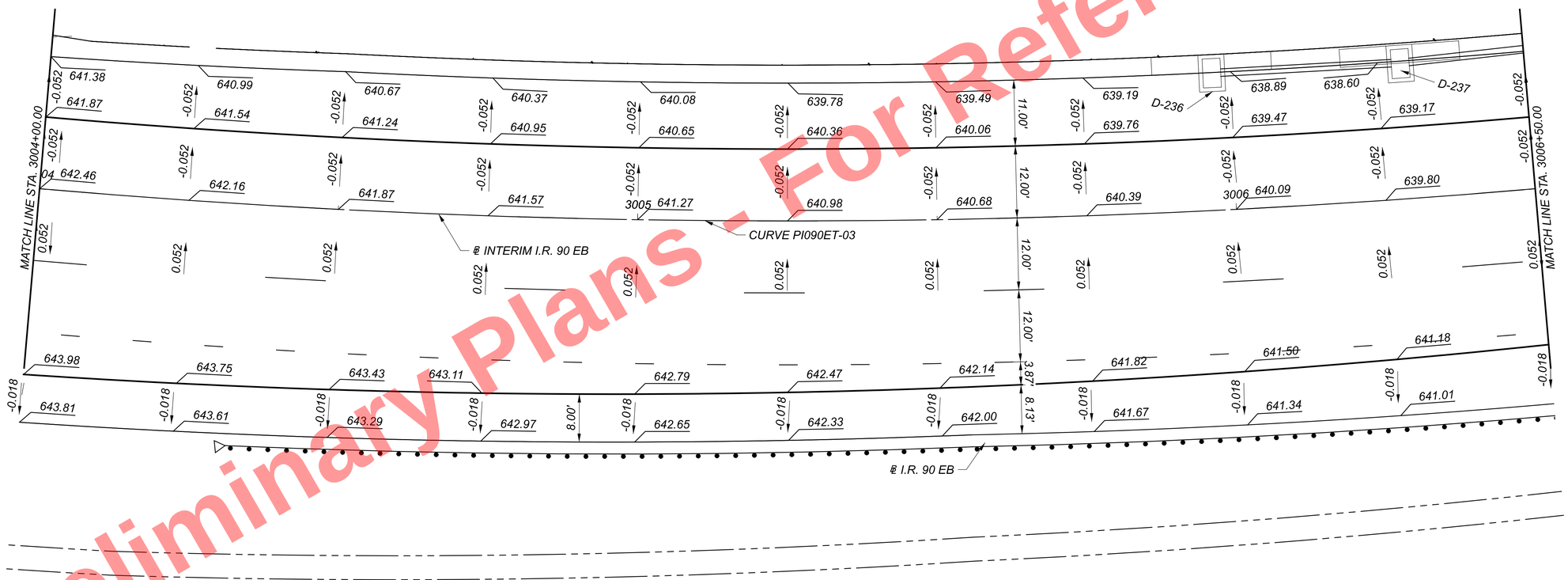

HORIZONTAL SCALE IN FEET
0 5 10 20

RAMP TERMINAL DETAIL - I.R. 90 EB & RAMP H5
STA. 3004+00.00 TO STA. 3006+50.00

DESIGN AGENCY
B&N
burgessniple.com

DESIGNER	AJS
REVIEWER	MRT 05/01/24
PROJECT ID	82382
SHEET	1037
TOTAL	2696

CUY-90-16.28 (CCG3A)

MODEL: 82382_GI2106B-1 PAPERSIZE: 34x22 (in.) DATE: 3/28/2025 TIME: 9:22:26 AM USER: Alexandria.Summers
pw:\\mb-us-pw.bentley.com:mb-us-pw-03\Documents\Cleveland_OH\01_Projects\000T\District2\82382\400-Engineering\Roadway\Sheets\82382_GI2106C.dgn

Preliminary Plans - For Reference Only

CURVE PI090ET-01
P.I. = Sta. 3005+92.95
Δ = 25°41'03" LT
Dc = 03°57'00"
R = 1,450.53'
T = 330.67'
L = 650.23'
E = 37.21'
Emax = 0.052
V = 50 mph

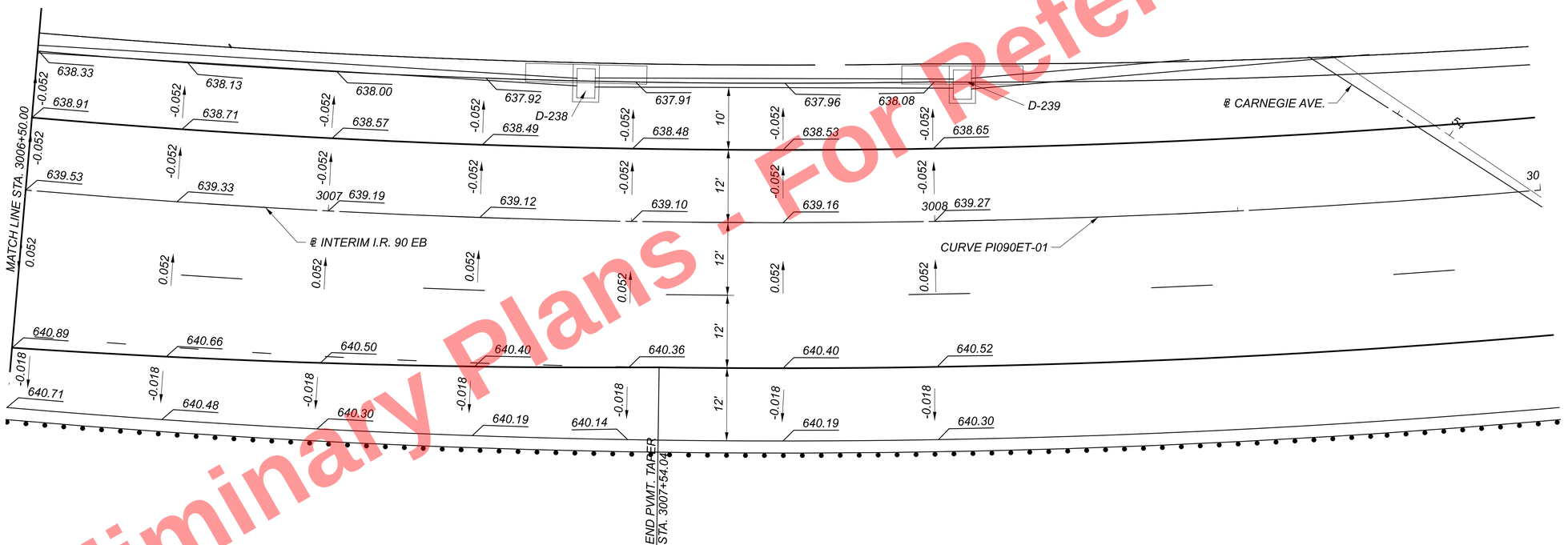

HORIZONTAL SCALE IN FEET
0 5 10 20

RAMP TERMINAL DETAIL - I.R. 90 EB & RAMP H5
STA. 3006+50.00 TO STA. 3009+00.00

CUY-90-16.28 (CCG3A)

MODEL: 82382_GI2106B-2 PAPERSIZE: 34x22 (in) DATE: 3/28/2025 TIME: 9:22:49 AM USER: Alexandria.Summers
pw:\\mb-us-pw.bentley.com:mb-us-pw-03\Documents\Cleveland_OH\01_Projects\000T\District2\82382\400-Engineering\Roadway\Sheets\82382_GI2106B.dgn

DESIGN AGENCY
B&N
burgessniple.com

DESIGNER	AJS
REVIEWER	MRT 05/01/24
PROJECT ID	82382
SHEET	1038
TOTAL	2696

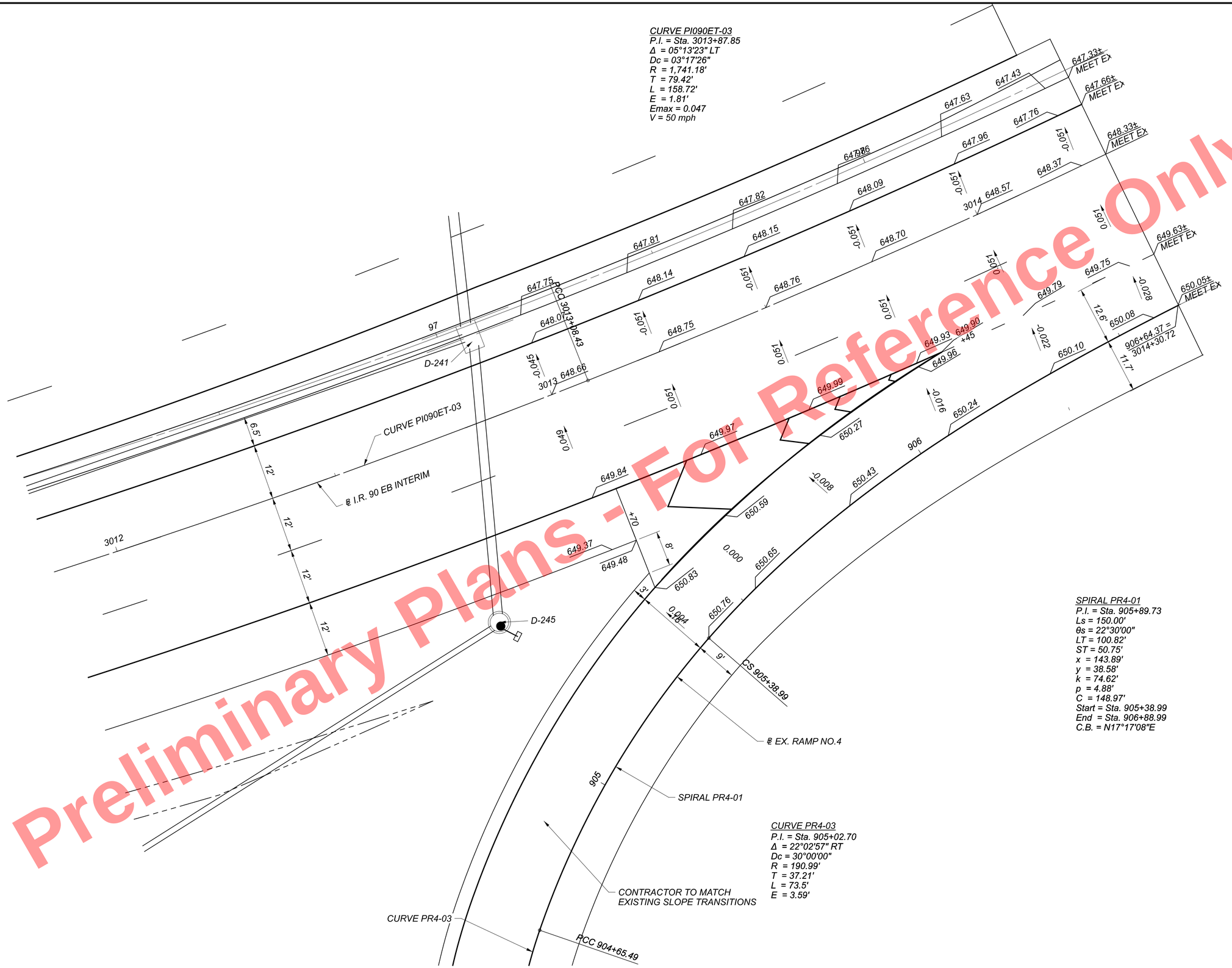

Preliminary Plans - For Reference Only

HORIZONTAL SCALE IN FEET
0 5 10 20

RAMP TERMINAL DETAIL
I.R. 90 EB & RAMP 4

DESIGN AGENCY
B&N
burgessniple.com

DESIGNER AJS
REVIEWER MRT 05/01/24
PROJECT ID 82382
SHEET 1039 TOTAL 2696

CUY-90-16.28 (CCG3A)

MODEL: 82382_GI200I PAPERSIZE: 34x22 (in.) DATE: 3/28/2025 TIME: 9:23:05 AM USER: AlexandriaSummers
pw:\\mb-us-pw.bentley.com:mb-us-pw-03\Documents\Cleveland_OH\OI_Projects\ODOT\District12\82382\400-Engineering\Roadway\Sheets\82382_GI2107.dgn

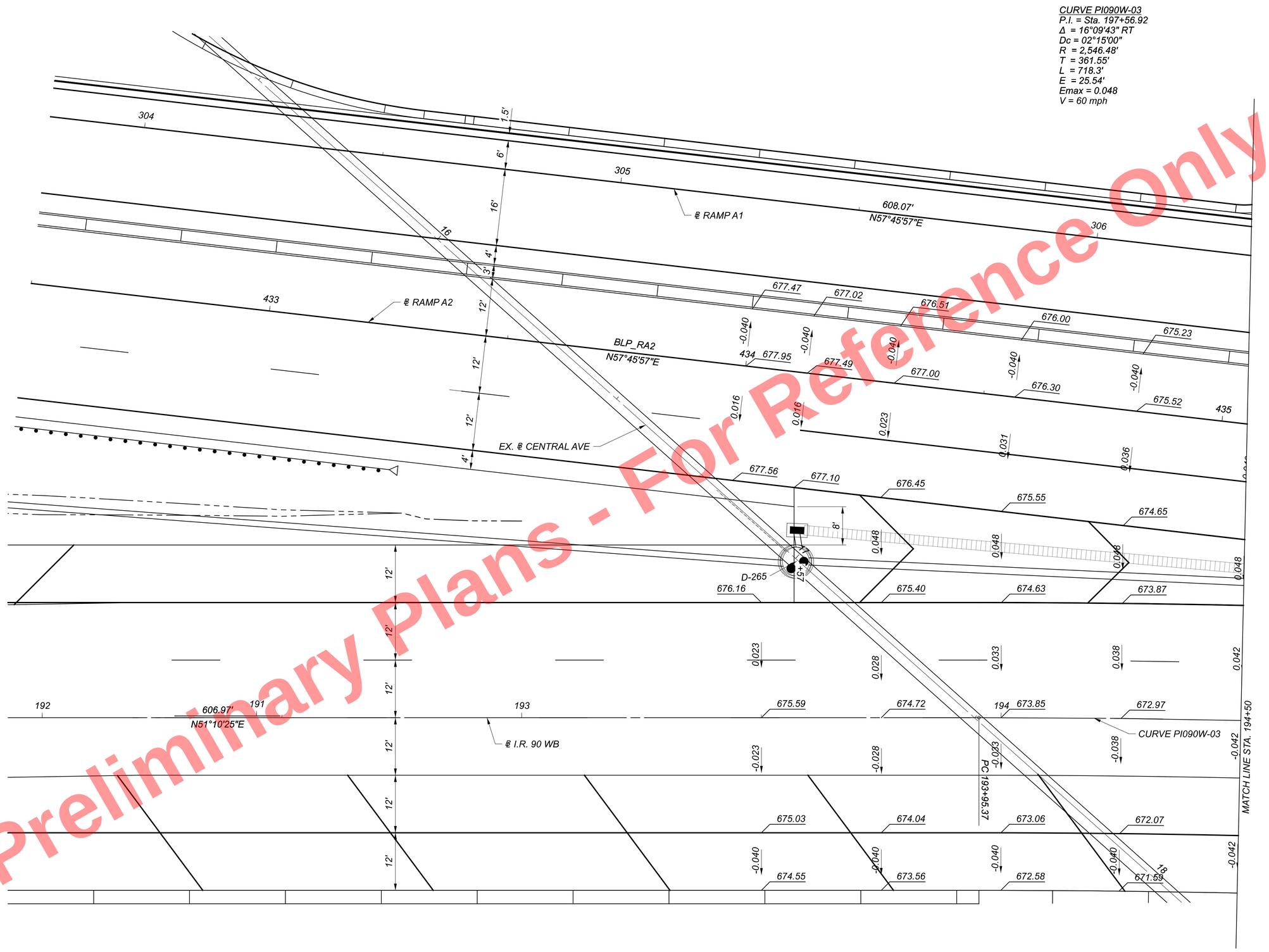

Preliminary Plans - For Reference Only

HORIZONTAL SCALE IN FEET
0 5 10 20

RAMP TERMINAL DETAIL - I.R. 90 WB & RAMP A2
STA. 192+00.00 TO STA. 194+50.00

DESIGN AGENCY
B&N
burgessniple.com

DESIGNER
AJS

REVIEWER
MRT 05/01/24

PROJECT ID
82382

SHEET 1040 TOTAL 2696

CUY-90-16.28 (CCG3A)

MODEL: 82382_GI2001 PAPERSIZE: 34x22 (in.) DATE: 3/28/2025 TIME: 9:23:29 AM USER: Alexandria.Summers
pw:\\mb-us-pw.bentley.com:mb-us-pw-03\Documents\Cleveland_OH\01_Projects\ODOT\District12\82382\400-Engineering\Roadway\Sheets\82382_GI2108.dgn

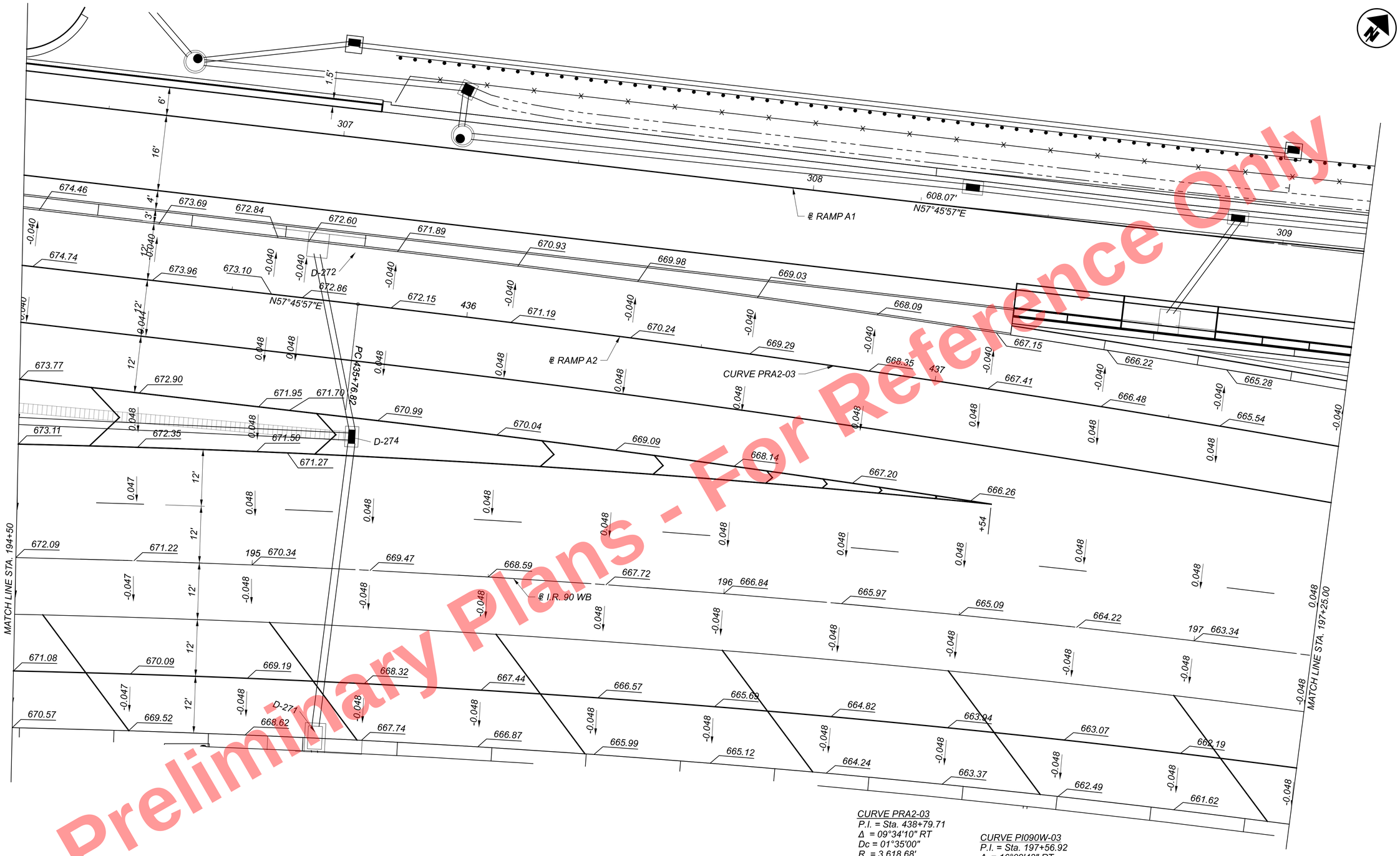

Preliminary Plans - For Reference Only

CURVE PRA2-03
P.I. = Sta. 438+79.71
Δ = 09°34'10" RT
Dc = 01°35'00"
R = 3,618.68'
T = 302.9'
L = 604.39'
E = 12.65'
V = 45 mph

CURVE PI090W-03
P.I. = Sta. 197+56.92
Δ = 16°09'43" RT
Dc = 02°15'00"
R = 2,546.48'
T = 361.55'
L = 718.3'
E = 25.54'
Emax = 0.048
V = 60 mph

HORIZONTAL SCALE IN FEET
0 5 10 20

RAMP TERMINAL DETAIL - I.R. 90 WB & RAMP A2
STA. 194+50.00 TO STA. 197+25.00

DESIGN AGENCY
B&N
burgessniple.com

DESIGNER AJS
REVIEWER MRT 05/01/24
PROJECT ID 82382
SHEET 1041 TOTAL 2696

CUY-90-16.28 (CCG3A)

MODEL: 82382_GI200I PAPERSIZE: 34x22 (in.) DATE: 3/28/2025 TIME: 9:23:45 AM USER: AlexandriaSummers
pw:\\mb-us-pw.bentley.com:mb-us-pw-03\Documents\Cleveland_OH\OI_Projects\ODOT\District2\82382\400-Engineering\Roadway\Sheets\82382_GI2109.dgn

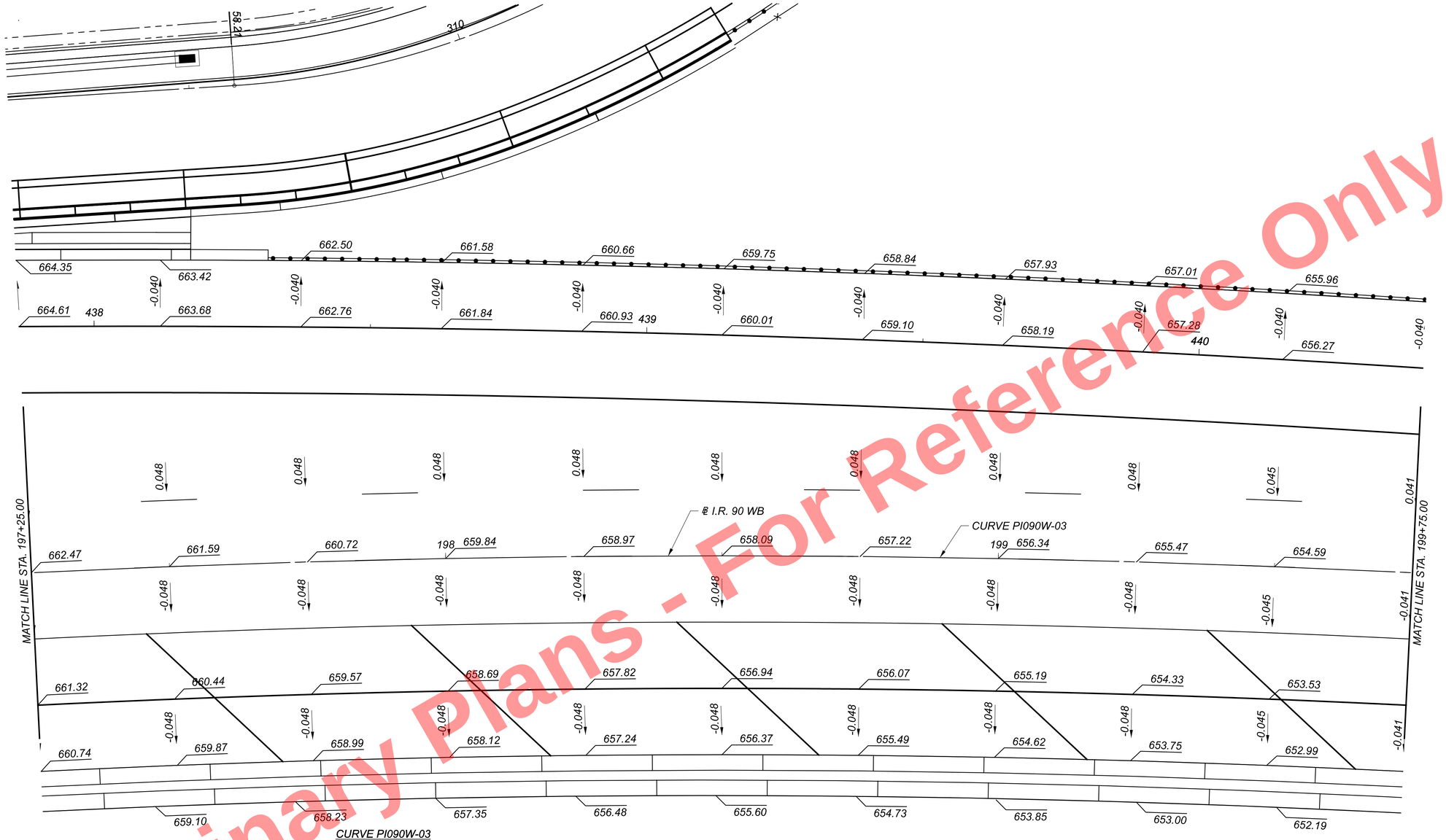

CURVE PI090W-03
P.I. = Sta. 197+56.92
Δ = 16°09'43" RT
Dc = 02°15'00"
R = 2,546.48'
T = 361.55'
L = 718.3'
E = 25.54'
Emax = 0.048
V = 60 mph

Preliminary Plans - For Reference Only

HORIZONTAL SCALE IN FEET
0 5 10 20

RAMP TERMINAL DETAIL - I.R. 90 WB & RAMP A2
STA. 197+25.00 TO STA. 199+75.00

DESIGN AGENCY
B&N burgessniple.com

DESIGNER AJS
REVIEWER MRT 05/01/24
PROJECT ID 82382
SHEET 1042 TOTAL 2696

CUY-90-16.28 (CCG3A)

MODEL: 82382_GI2019A PAPERSIZE: 34x22 (in) DATE: 3/28/2025 TIME: 3:23:34 PM USER: slsson
pw:\\vmb-us-pw.bentley.com:mb-us-pw-03\Documents\Cleveland_OH\01_Projects\000T\District2\82382\400-Engineering\Roadway\Sheets\82382_GI2109A.dgn

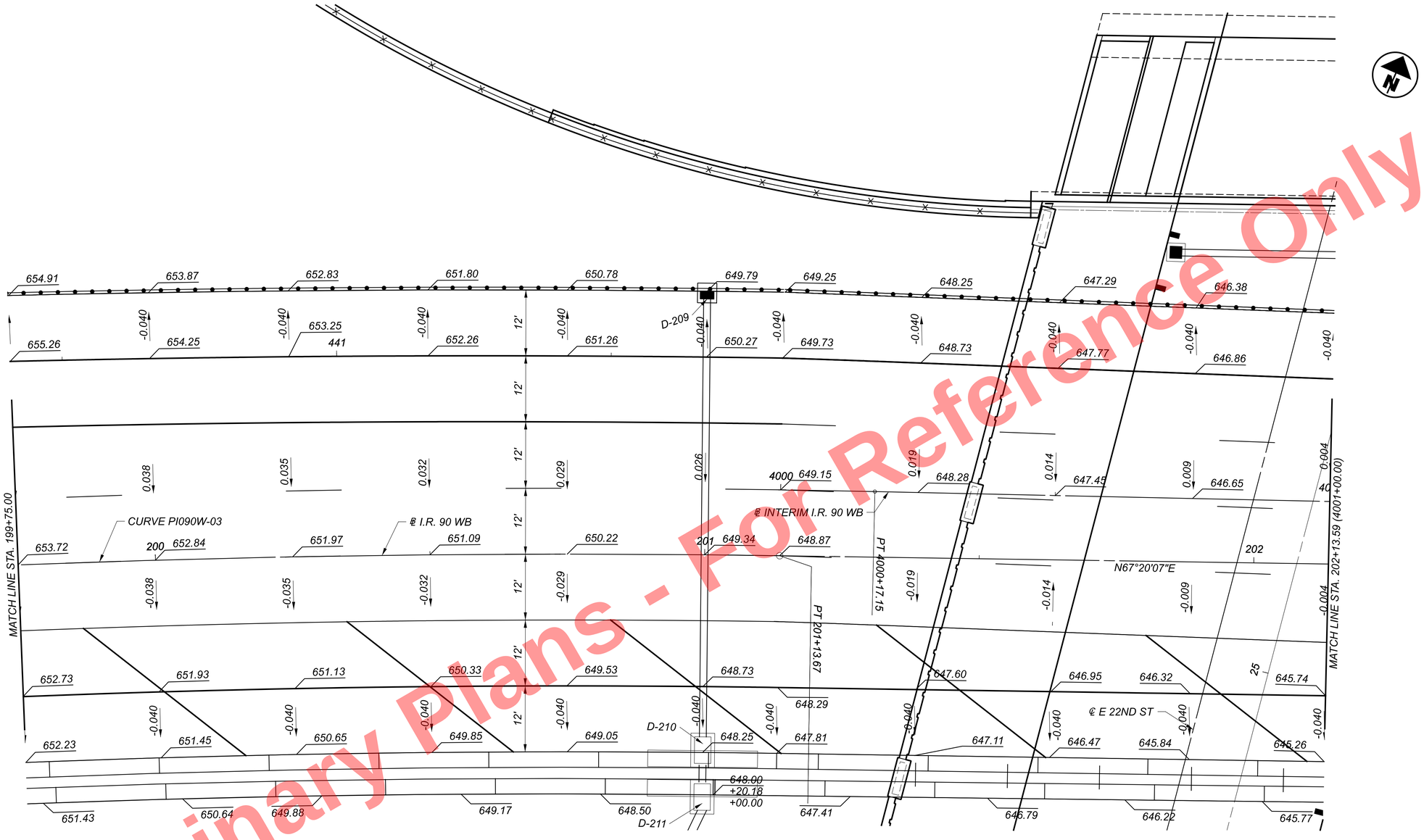

Preliminary Plans - Not For Reference Only

CURVE PI090W-03
P.I. = Sta. 197+56.92
Δ = 16°09'43" RT
Dc = 02°15'00"
R = 2,546.48'
T = 361.55'
L = 718.3'
E = 25.54'
Emax = 0.048
V = 60 mph

HORIZONTAL SCALE IN FEET
0 5 10 20

RAMP TERMINAL DETAIL - I.R. 90 WB & RAMP A2
STA. 199+75.00 TO STA. 4001+00.00

DESIGN AGENCY
B&N
burgessniple.com

DESIGNER AJS
REVIEWER MRT 05/01/24
PROJECT ID 82382
SHEET 1043 TOTAL 2696

CUY-90-16.28 (CCG3A)

MODEL: 82382_GI2019A-I PAPERSIZE: 34x22 (in.) DATE: 3/28/2025 TIME: 9:24:26 AM USER: Alexandria.Summers
pw:\\mb-us-pw.bentley.commb-us-pw-03\Documents\Cleveland_OHIO_Projects\ODOT\District12\82382\400-Engineering\Roadway\Sheets\82382_GI2109B.dgn

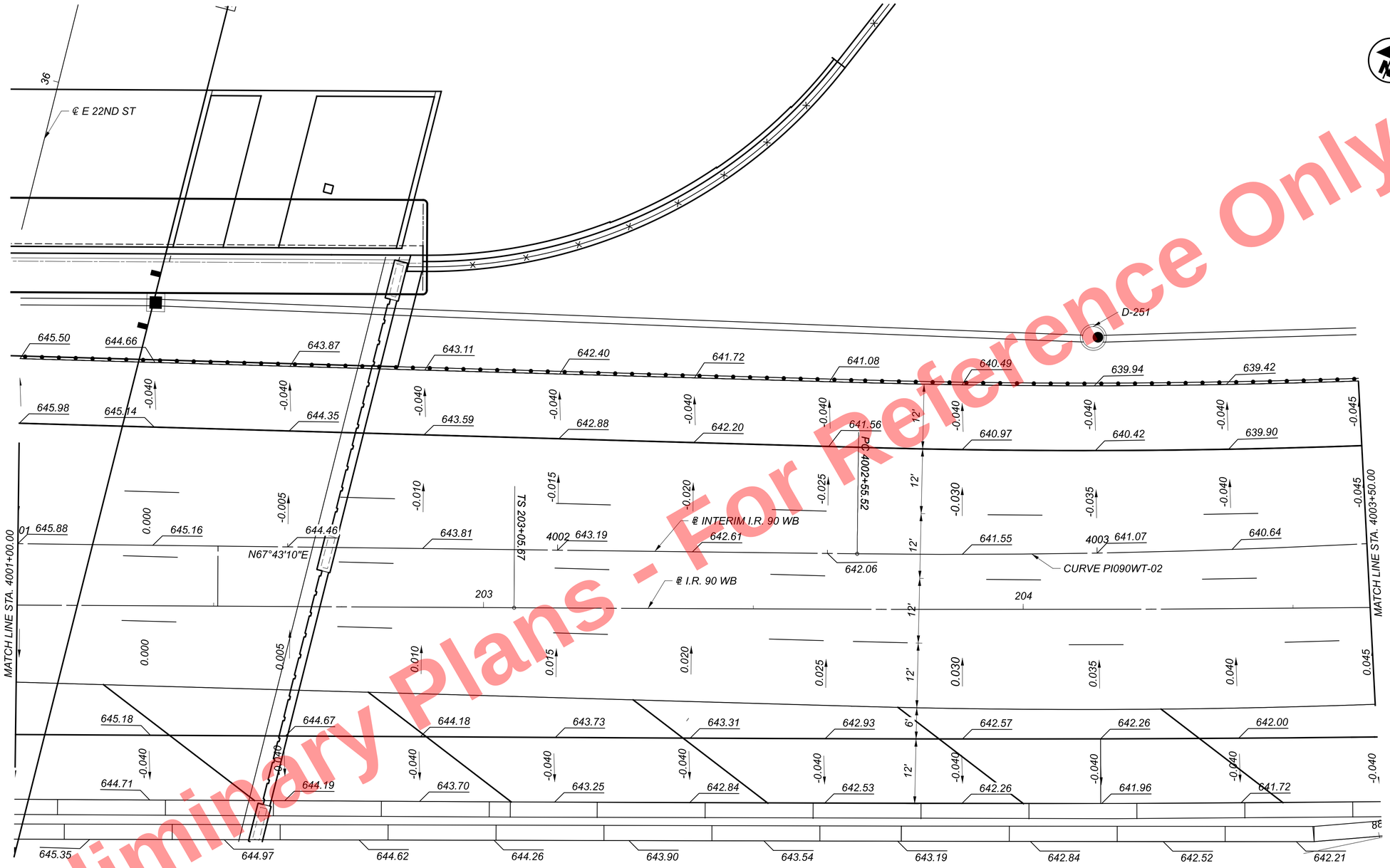

Preliminary Plans - For Reference Only

CURVE PI090WT-02
P.I. = Sta. 4006+44.80
Δ = 29°30'01" LT
Dc = 03°52'30"
R = 1,478.60'
T = 389.29'
L = 761.30'
E = 50.39'
emax = 0.038
V = 50 mph

HORIZONTAL SCALE IN FEET
0 5 10 20

RAMP TERMINAL DETAIL - I.R. 90 WB & RAMP A2
STA. 4001+00.00 TO STA. 4003+50.00

DESIGN AGENCY
B&N
burgessniple.com

DESIGNER AJS
REVIEWER MRT 05/01/24
PROJECT ID 82382
SHEET 1044 TOTAL 2696

CUY-90-16.28 (CCG3A)

MODEL: 82382_GI2109C PAPERSIZE: 34x22 (in.) DATE: 3/28/2025 TIME: 9:24:49 AM USER: Alexandria.Summers
pw:\\mb-us-pw.bentley.com:mb-us-pw-03\Documents\Cleveland.OH\OI_Projects\ODOT\District2\82382\400-Engineering\Engineering\Roadway\Sheets\82382_GI2109C.dgn

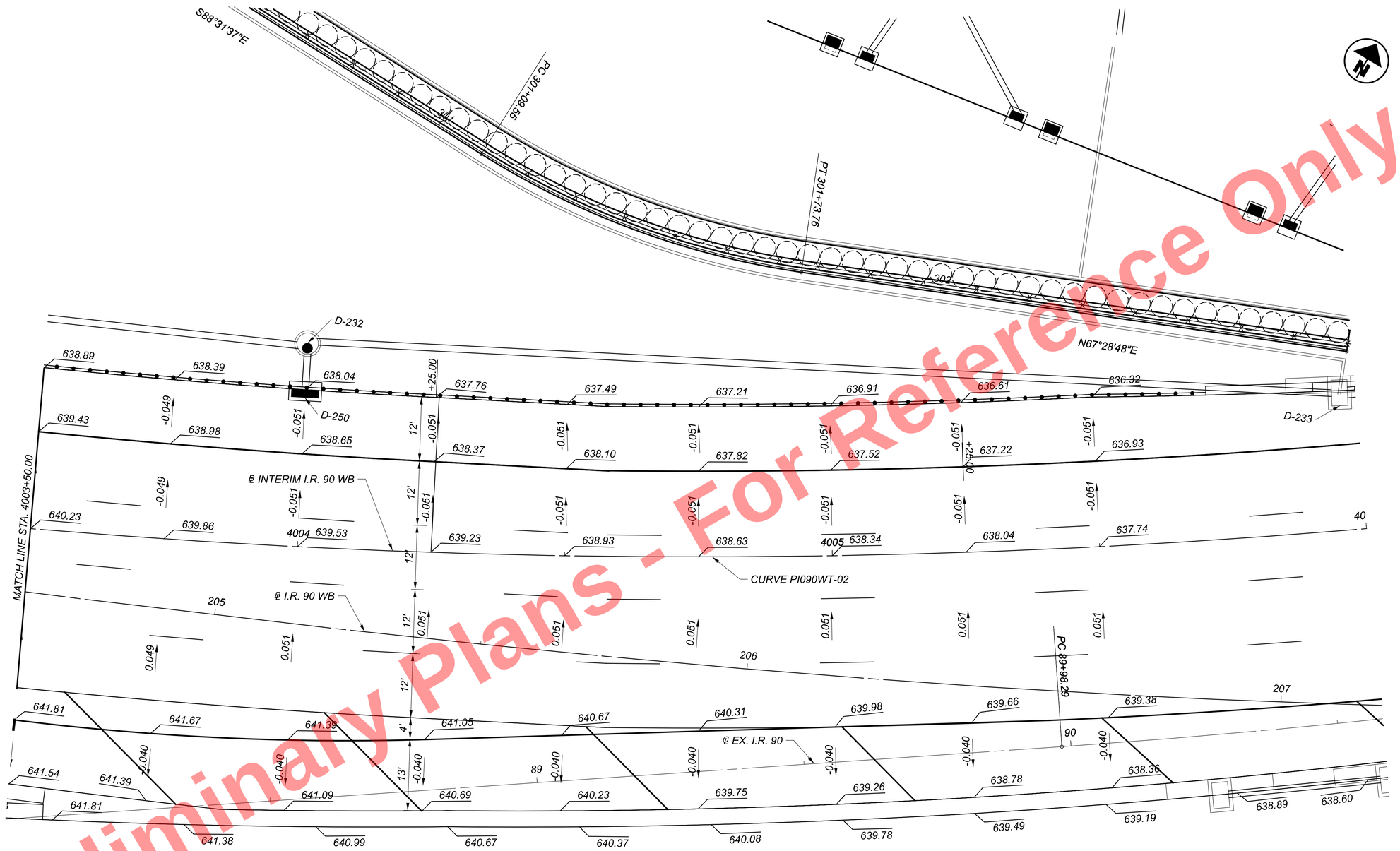

Preliminary Plans - For Reference Only

CURVE PI090WT-02
P.I. = Sta. 4006+44.80
Δ = 29°30'01" LT
Dc = 03°52'30"
R = 1,478.60'
T = 389.29'
L = 761.30'
E = 50.39'
emax = 0.051
V = 50 mph

HORIZONTAL SCALE IN FEET
0 5 10 20

RAMP TERMINAL DETAIL - I.R. 90 WB & RAMP A2
STA. 4003+50.00 TO STA. 4006+00.00

DESIGN AGENCY
B&N
burgessniple.com

DESIGNER	AJS
REVIEWER	MRT 05/01/24
PROJECT ID	82382
SHEET	1045
TOTAL	2696

CUY-90-16.28 (CCG3A)

MODEL: 82382_GI2109C-I PAPERSIZE: 34x22 (in.) DATE: 3/28/2025 TIME: 9:25:19 AM USER: Alexandria.Summers
pw:\\mb-us-pw.bentley.com:mb-us-pw-03\Documents\Cleveland_OHIO\Projects\0007\District2\82382\400-Engineering\Roadway\Sheets\82382_GI2109D.dgn

Preliminary Plans - For Reference Only

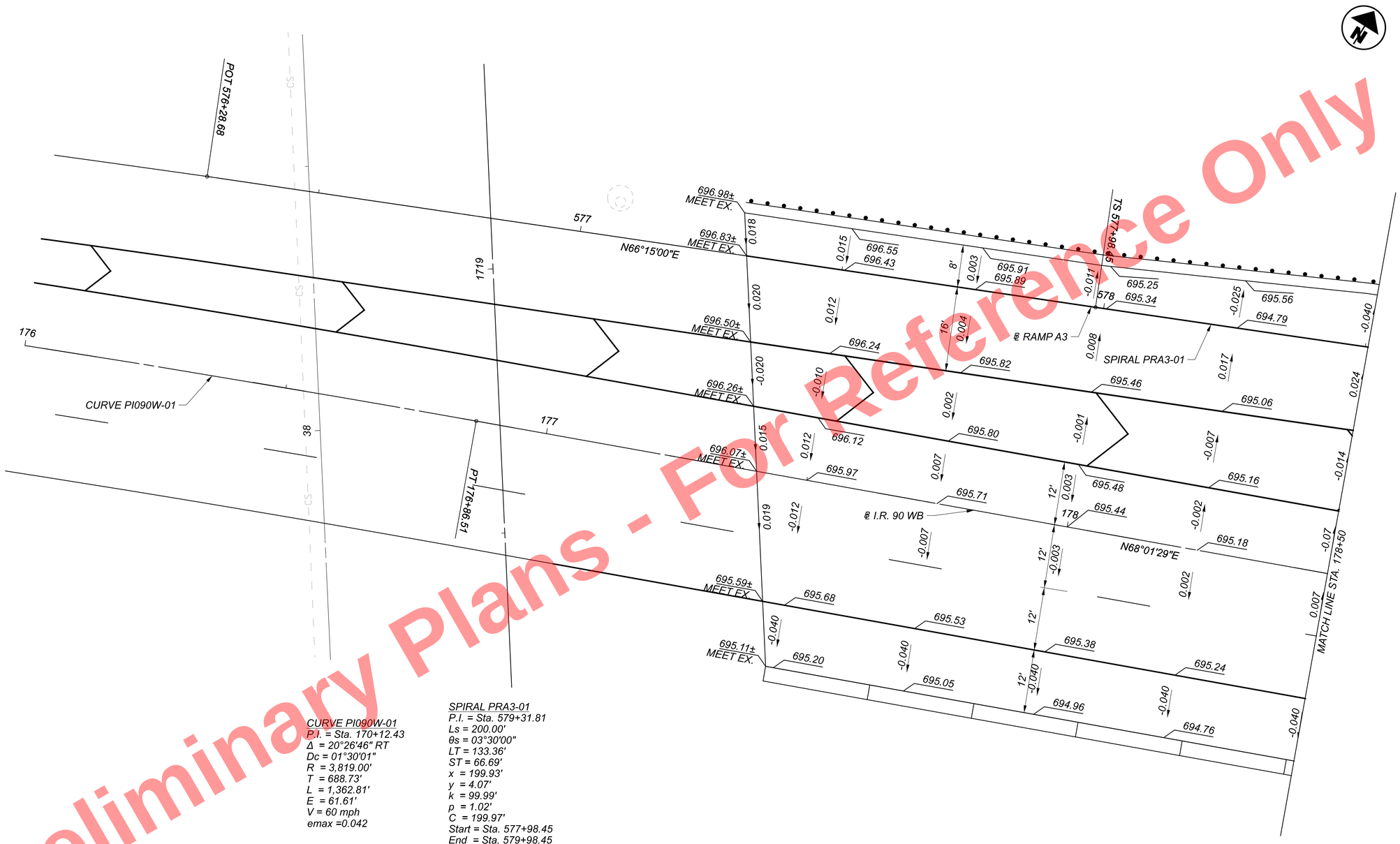

CURVE PI090W-01
P.I. = Sta. 170+12.43
Δ = 20°26'46" RT
Dc = 01°30'01"
R = 3,819.00'
T = 688.73'
L = 1,362.81'
E = 61.61'
V = 60 mph
emax =0.042

SPIRAL PRA3-01
P.I. = Sta. 579+31.81
Ls = 200.00'
θs = 03°30'00"
LT = 133.36'
ST = 66.69'
x = 199.93'
y = 4.07'
k = 99.99'
p = 1.02'
C = 199.97'
Start = Sta. 577+98.45
End = Sta. 579+98.45
C.B. = N65°05'00"E

HORIZONTAL SCALE IN FEET
0 5 10 20

RAMP TERMINAL DETAIL - I.R. 90 WB & RAMP A3
STA. 171+00.00 TO STA. 173+50.00

DESIGN AGENCY
B&N
burgessniple.com

DESIGNER	AJS
REVIEWER	MRT 05/01/24
PROJECT ID	82382
SHEET	1046
TOTAL	2696

CUY-90-16.28 (CCG3A)

MODEL: 82382_GI200| PAPERSIZE: 34x22 (in.) DATE: 3/28/2025 TIME: 9:25:45 AM USER: Alexandria.Summers
pw:\\mb-us-pw.bentley.com:mb-us-pw-03\Documents\Cleveland_OH\OI_Projects\0007\District2\82382\400-Engineering\Roadway\Sheets\82382_GI2I2.dgn

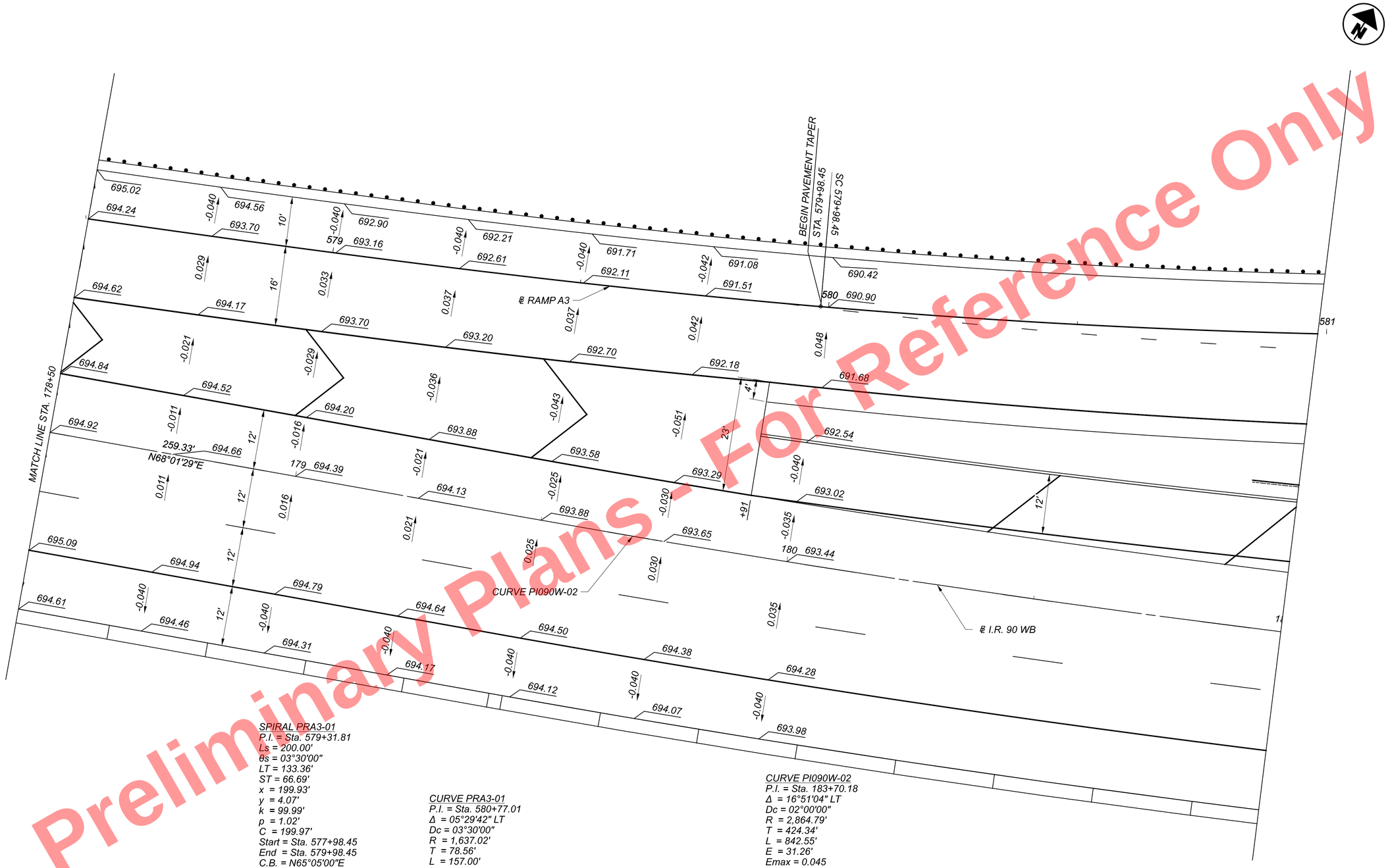

SPIRAL PRA3-01
P.I. = Sta. 579+31.81
Ls = 200.00'
θs = 03°30'00"
LT = 133.36'
ST = 66.69'
x = 199.93'
y = 4.07'
k = 99.99'
p = 1.02'
C = 199.97'
Start = Sta. 577+98.45
End = Sta. 579+98.45
C.B. = N65°05'00"E

CURVE PRA3-01
P.I. = Sta. 580+77.01
Δ = 05°29'42" LT
Dc = 03°30'00"
R = 1,637.02'
T = 78.56'
L = 157.00'
E = 1.88'
emax = 0.048
V = 50 mph

CURVE PI090W-02
P.I. = Sta. 183+70.18
Δ = 16°51'04" LT
Dc = 02°00'00"
R = 2,864.79'
T = 424.34'
L = 842.55'
E = 31.26'
Emax = 0.045
V = 60 mph

Preliminary Plans - For Reference Only

HORIZONTAL SCALE IN FEET
0 5 10 20

RAMP TERMINAL DETAIL - I.R. 90 WB & RAMP A3
STA. 173+50.00 TO STA. 176+00.00

DESIGN AGENCY
B&N
burgessniple.com

DESIGNER
AJS

REVIEWER
MRT 05/01/24

PROJECT ID
82382

SHEET 1047 | TOTAL 2696

CUY-90-16.28 (CCG3A)

MODEL: 82382_GI200I PAPERSIZE: 34x22 (in.) DATE: 3/28/2025 TIME: 9:26:01 AM USER: Alexandria.Summers
pw:\\mb-us-pw.bentley.com:mb-us-pw-03\Documents\Cleveland_OH\01_Projects\000T\District2\82382\400-Engineering\Roadway\Sheets\82382_GI2I3.dgn

Preliminary Plans - For Reference Only

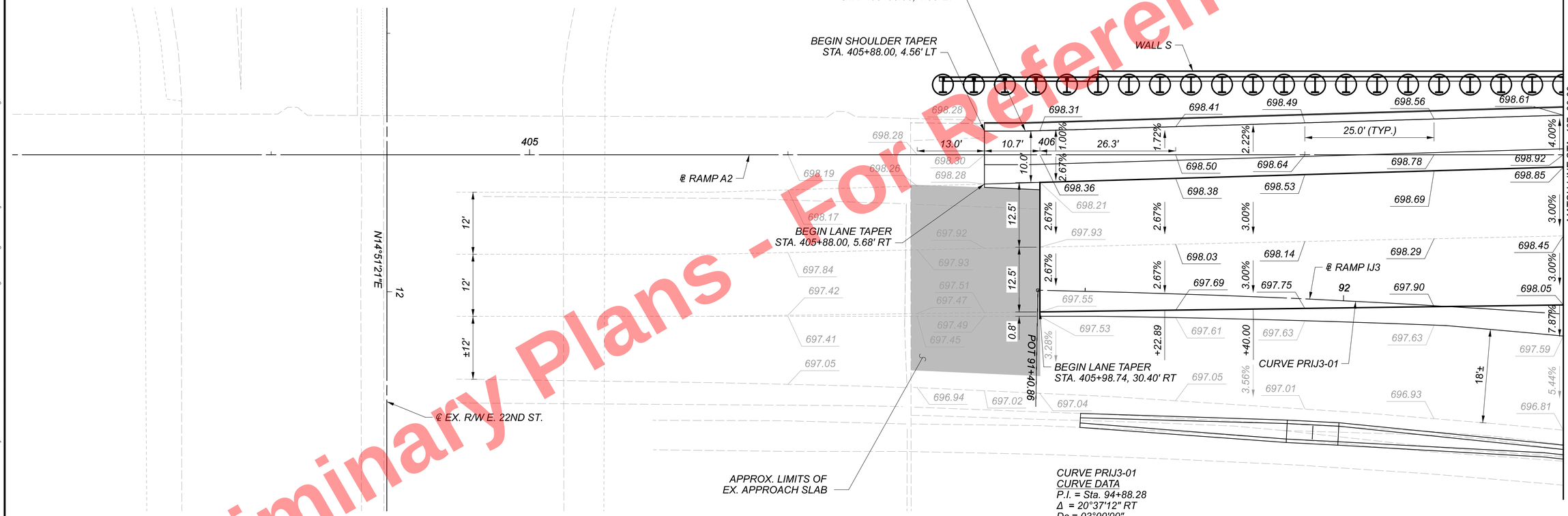

CURVE PRIJ3-01
CURVE DATA
P.I. = Sta. 94+88.28
Δ = 20°37'12" RT
Dc = 03°00'00"
R = 1,909.86'
T = 347.42'
L = 687.33'
E = 31.34'
emax = 0.045
V = 50 mph

HORIZONTAL
SCALE IN FEET
0 5 10 20

RAMP TERMINAL DETAIL - RAMP A2
STA. 404+00.00 TO STA. 407+00.00

DESIGN AGENCY

DESIGNER
VLE

REVIEWER
TJS 06/17/22

PROJECT ID
82382

SHEET 1048 | TOTAL 2696

CUY-90-16.28 (CCG3A)

MODEL: 82382_GI201 PAPERSIZE: 34x22 (In.) DATE: 3/28/2025 TIME: 9:26:23 AM USER: Alexandria.Summers
pw:\\mb-us-pw.bentley.com:mb-us-pw-03\Documents\Cleveland_OH\01_Projects\000T\District2\82382\400-Engineering\Roadway\Sheets\82382_GI201.dgn

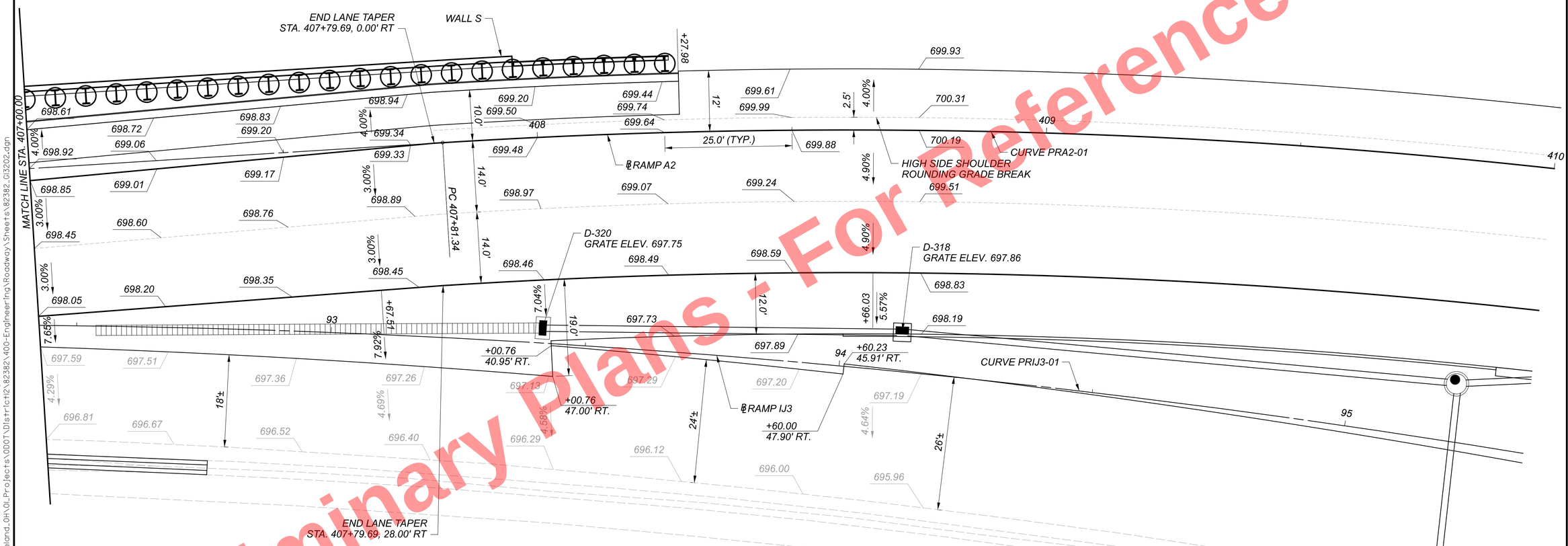

CURVE PRIJ3-01
CURVE DATA
P.I. = Sta. 94+88.28
Δ = 20°37'12" RT
Dc = 03°00'00"
R = 1,909.86'
T = 347.42'
L = 687.33'
E = 31.34'
emax = 0.045
V = 50 mph

CURVE PRA2-01
CURVE DATA
P.I. = Sta. 413+02.39
Δ = 44°30'41" RT
Dc = 04°30'00"
R = 1,273.24'
T = 521.04'
L = 989.14'
E = 102.49'
emax = 0.049
V = 45 mph

Preliminary Plans - For Reference Only

HORIZONTAL SCALE IN FEET
0 5 10 20

RAMP TERMINAL DETAIL - RAMP A2
STA. 407+00.00 TO STA. 410+00.00

DESIGN AGENCY
HDR

DESIGNER
VLE

REVIEWER
TJS 06/17/22

PROJECT ID
82382

SHEET 1049 TOTAL 2696

CUY-90-16.28 (CCG3A)

MODEL: 82382_GI3202 PAPERSIZE: 34x22 (in.) DATE: 3/28/2025 TIME: 4:42:49 PM USER: Joseph.Hogan
pw:\\mb-us-pw.bentley.com:mb-us-pw-03\Documents\Cleveland_OH\OI_Projects\ODOT\District12\82382\400-Engineering\Roadway\Sheets\82382_GI3202.dgn

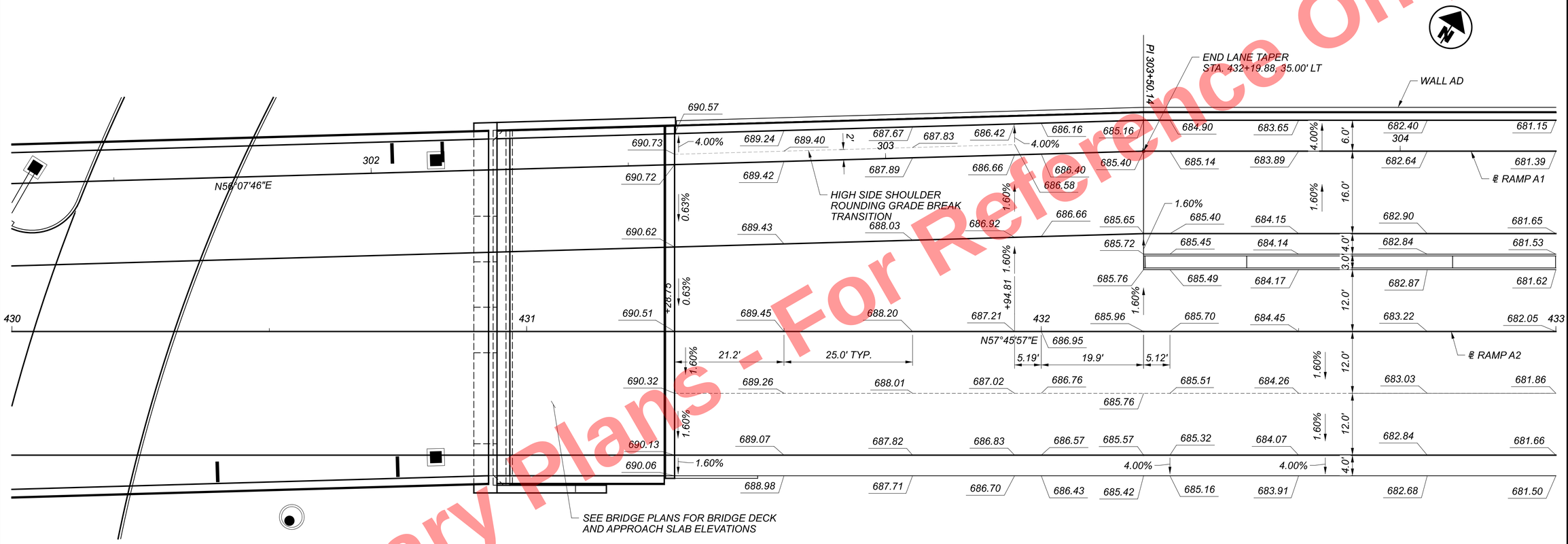

Preliminary Plans - For Reference Only

HORIZONTAL
SCALE IN FEET
0 5 10 20

RAMP TERMINAL DETAIL - RAMP A2
STA. 430+00.00 TO STA. 433+00.00

DESIGN AGENCY
HDR

DESIGNER
VLE

REVIEWER
TJS 06/17/22

PROJECT ID
82382

SHEET 1050 TOTAL 2696

CUY-90-16.28 (CCG3A)

MODEL: 82382_GI3206 PAPERSIZE: 34x22 (in.) DATE: 3/28/2025 TIME: 9:27:25 AM USER: AlexandriaSummers
pw:\\mb-us-pw.bentley.com:mb-us-pw-03\Documents\Cleveland_OH\01_Projects\ODOT\District2\82382\400-Engineering\Roadway\Sheets\82382_GI3206.dgn

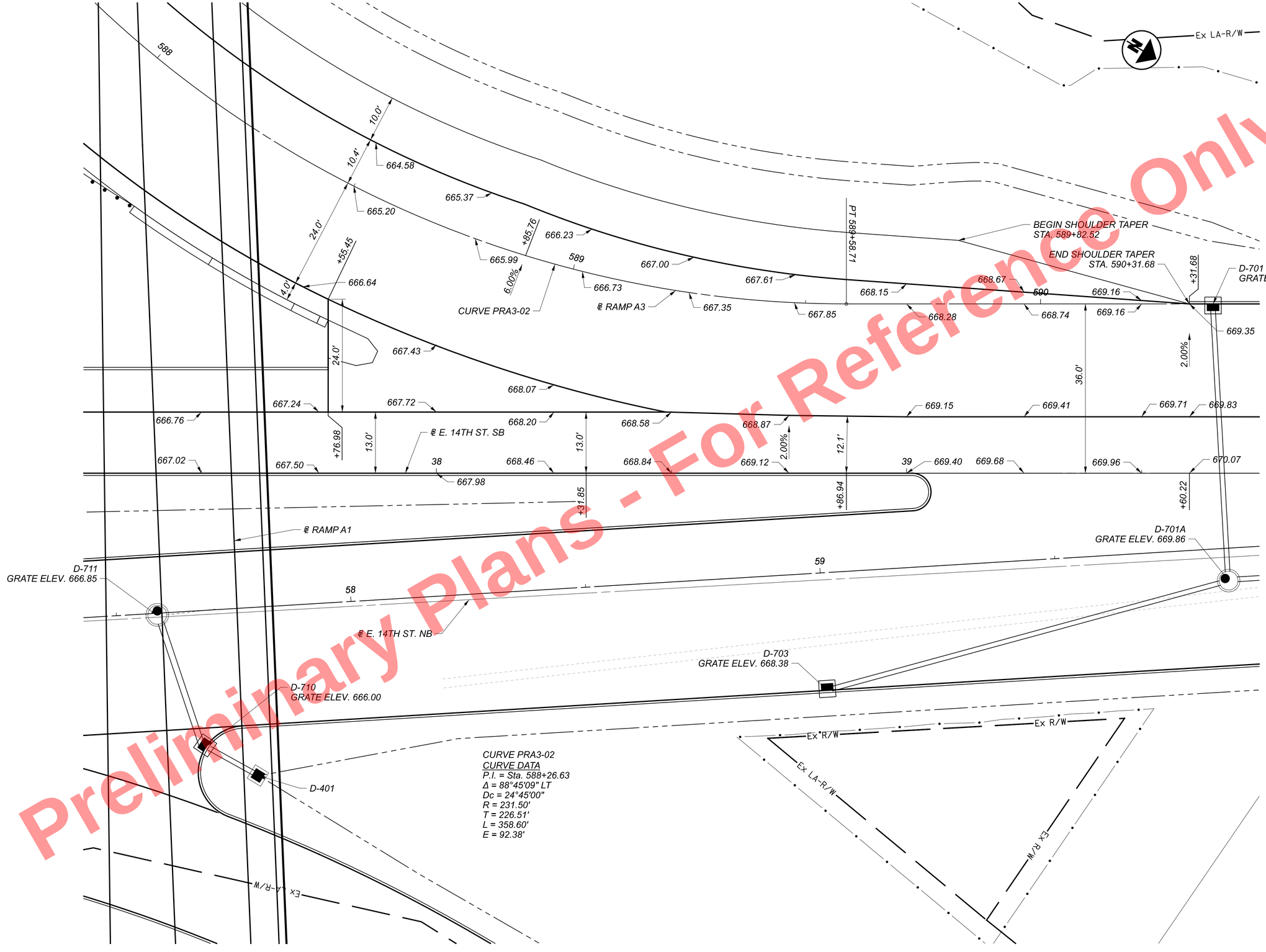

Preliminary Plans - For Reference Only

HORIZONTAL SCALE IN FEET
0 5 10 20

RAMP TERMINAL DETAIL
RAMP A3 & E. 14TH ST. SB

DESIGN AGENCY
Michael Baker INTERNATIONAL

DESIGNER
KJM

REVIEWER
KGJ 05/22/24

PROJECT ID
82382

SHEET 1051 TOTAL 2696

CUY-90-16.28 (CCG3A)

MODEL: 82382_Gill06 PAPERSIZE: 34x22 (in.) DATE: 3/28/2025 TIME: 9:27:47 AM USER: AlexandriaSummers
pw:\\mb-us-pw.bentley.com:mb-us-pw-03\Documents\Cleveland_OH\01_Projects\ODOT\District2\82382\400-Engineering\Roadway\Sheets\82382_Gill06.dgn

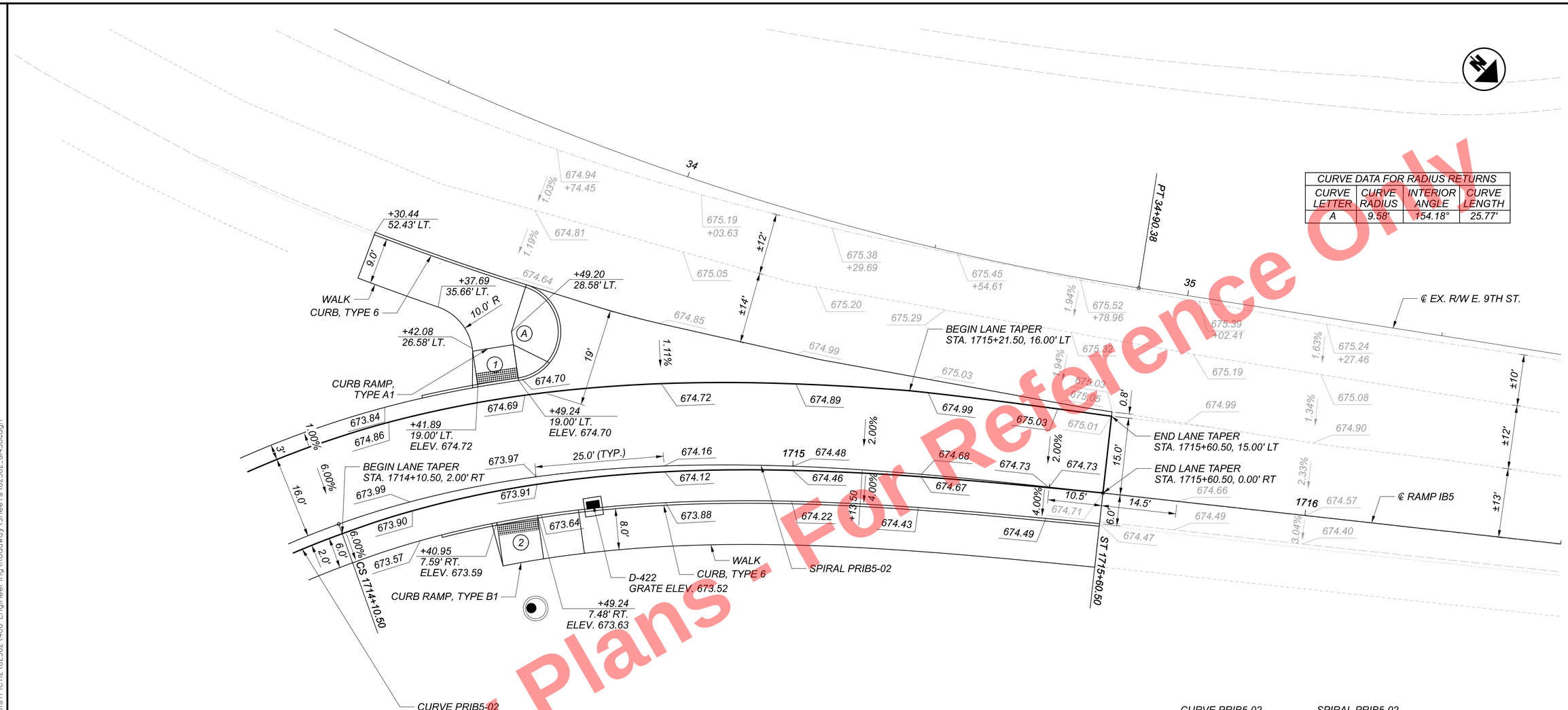

CURVE DATA FOR RADIUS RETURNS			
CURVE LETTER	CURVE RADIUS	INTERIOR ANGLE	CURVE LENGTH
A	9.58'	154.18°	25.77'

CURVE PRIB5-02
CURVE DATA
P.I. = Sta. 1720+55.32
Δ = 195°33'01" RT
Dc = 34°45'00"
R = 164.88'
T = 1,207.55'
L = 562.73'
E = 1.053.88'
emax = 0.060
V = 25 MPH

SPIRAL PRIB5-02
SPIRAL DATA
P.I. = Sta. 1714+61.51
Ls = 150.00'
θs = 26°03'45"
LT = 101.11'
ST = 51.01'
x = 141.83'
y = 44.42'
k = 74.49'
p = 5.64'
C = 148.63'
Start = Sta. 1714+10.50
End = Sta. 1715+60.50
C.B. = N45°59'16"W

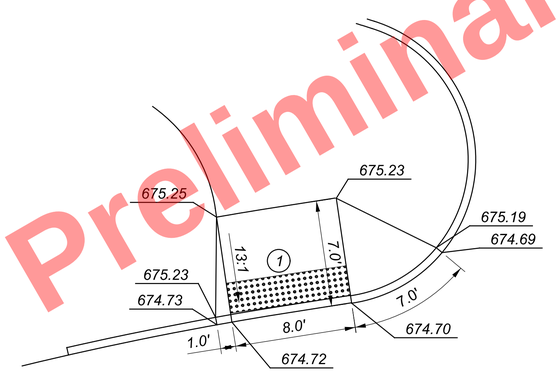

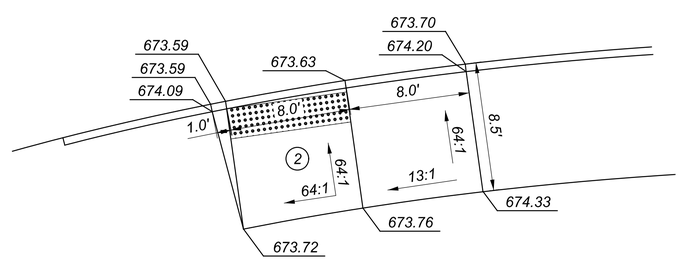

Preliminary Plans - For Reference Only

HORIZONTAL SCALE IN FEET
0 5 10 20

RAMP TERMINAL DETAIL
RAMP IB5 & E. 9TH ST.

DESIGN AGENCY
HDR

DESIGNER
VLE

REVIEWER
TJS 06/17/22

PROJECT ID
82382

SHEET 1052 TOTAL 2696

CUY-90-16.28 (CCG3A)

MODEL: 82382_GI450I PAPERSIZE: 34x22 (in.) DATE: 3/28/2025 TIME: 9:28:21 AM USER: Alexandria.Summers
pw:\\mb-us-pw.bentley.com:mb-us-pw-03\Documents\Cleveland_OH\OI_Projects\ODOT\District12\82382\400-Engineering\Roadway\Sheets\82382_GI450I.dgn

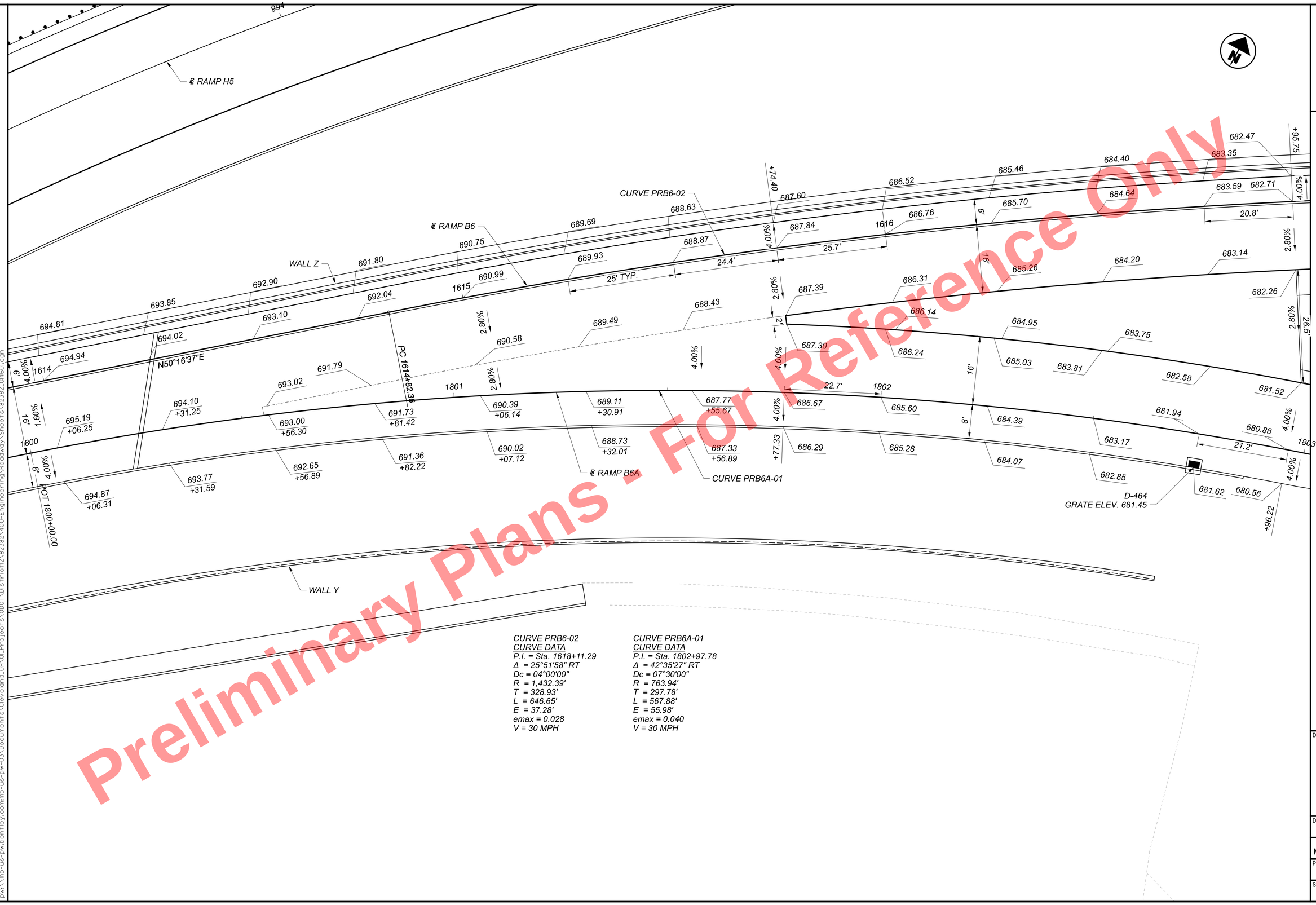

Preliminary Plans - For Reference Only

CURVE PRB6-02
CURVE DATA
P.I. = Sta. 1618+11.29
Δ = 25°51'58" RT
Dc = 04°00'00"
R = 1,432.39'
T = 328.93'
L = 646.65'
E = 37.28'
emax = 0.028
V = 30 MPH

CURVE PRB6A-01
CURVE DATA
P.I. = Sta. 1802+97.78
Δ = 42°35'27" RT
Dc = 07°30'00"
R = 763.94'
T = 297.78'
L = 567.88'
E = 55.98'
emax = 0.040
V = 30 MPH

GORE DETAIL RAMP B6/B6A

CUY-90-16.28 (CCG3A)

DESIGN AGENCY

DESIGNER TJS

REVIEWER MJL 01/08/24

PROJECT ID 82382

SHEET 1053 TOTAL 2696

MODEL: 82382_GI470I(Sheet) PAPERSIZE: 34x22 (In) DATE: 3/28/2025 TIME: 9:28:40 AM USER: Alexandria.Summers
pw:\\mb-us-pw.bentley.com:mb-us-pw-03\Documents\Cleveland.OH\01_Projects\ODOT\District2\82382\400-Engineering\Roadway\Sheets\82382_GI460I.dgn

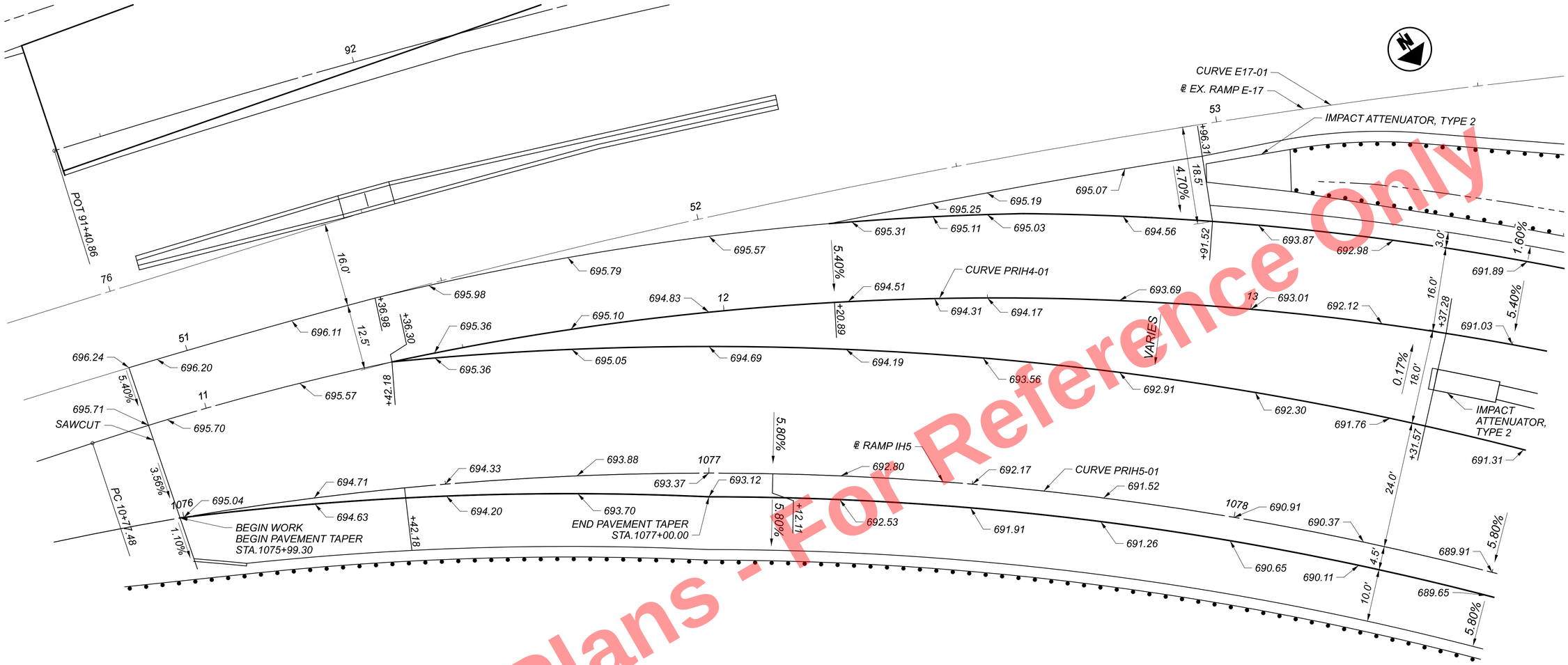

CURVE E17-01
CURVE DATA
P.I. = Sta. 53+54.40
Δ = 22°47'24" RT
Dc = 03°45'00"
R = 1,527.89'
T = 307.94'
L = 607.73'
E = 30.72'
emax = MATCH EXISTING (0.041)
V = MATCH EXISTING (40 mph)

CURVE PRIH5-01
CURVE DATA
P.I. = Sta. 1080+20.78
Δ = 81°16'06" RT
Dc = 09°37'46"
R = 595.00'
T = 510.59'
L = 843.95'
E = 189.05'
emax = 0.058
V = 40 mph

CURVE PRIH4-01
CURVE DATA
P.I. = Sta. 15+38.01
Δ = 80°19'38" RT
Dc = 10°30'00"
R = 545.67'
T = 460.54'
L = 765.02'
E = 168.37'
emax = 0.054
V = 35 mph

Preliminary Plans - For Reference Only

HORIZONTAL SCALE IN FEET
0 5 10 20

RAMP TERMINAL DETAIL
RAMP IH4 & RAMP IH5

CUY-90-16.28 (CCG3A)

MODEL: 82382_Gill01_PAPERSIZE: 34x22 (in.) DATE: 3/28/2025 TIME: 9:29:14 AM USER: Alexandria.Summers
pw:\\mb-us-pw.bentley.com:mb-us-pw-03\Documents\Cleveland.OH\01_Projects\0DOT\District2\82382\400-Engineering\Roadway\Sheets\82382_Gill01.dgn

DESIGN AGENCY
Michael Baker INTERNATIONAL

DESIGNER KJM
REVIEWER KGJ 05/22/24
PROJECT ID 82382
SHEET 1054 TOTAL 2696

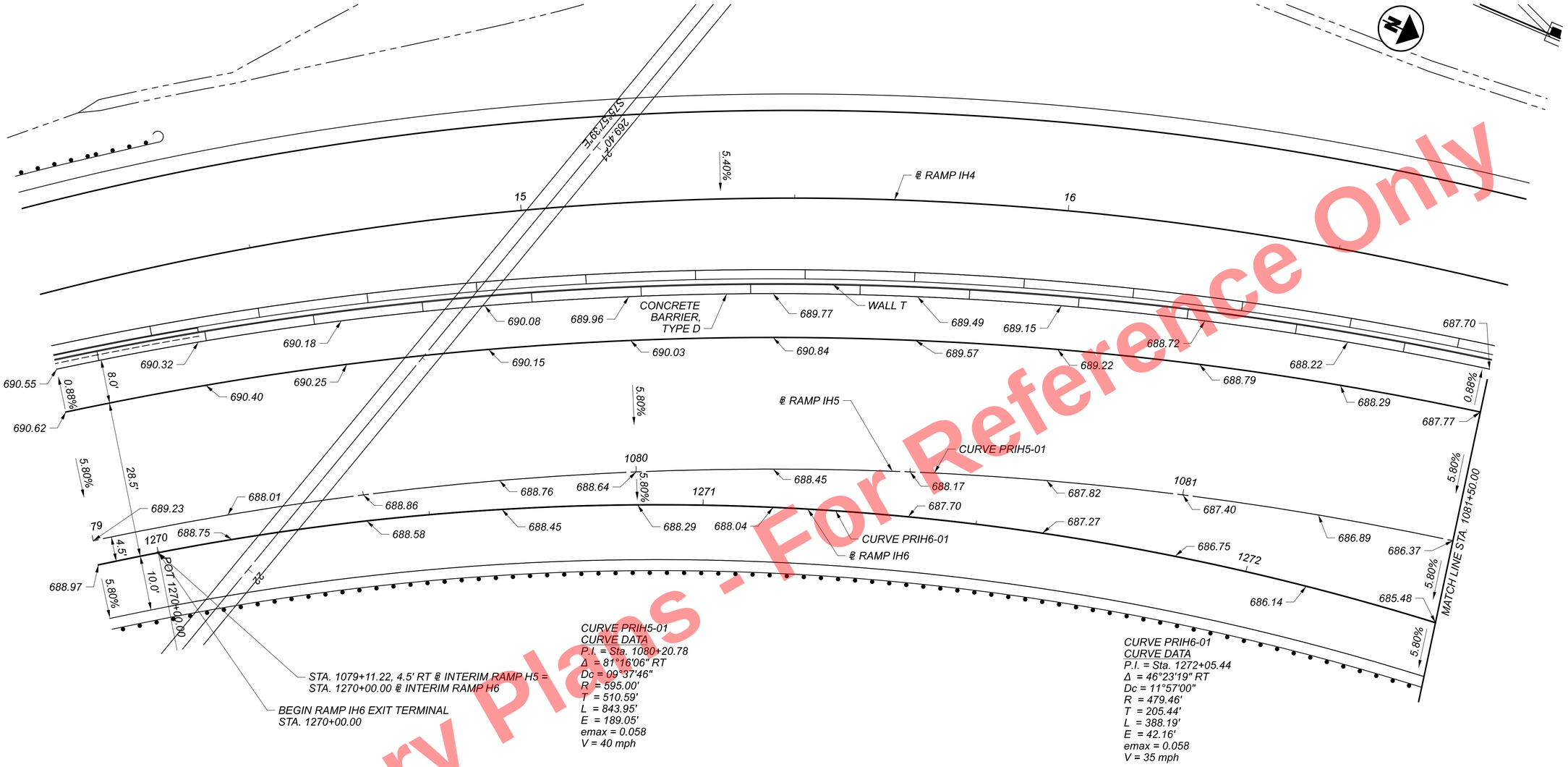

Preliminary Plans - For Reference Only

HORIZONTAL SCALE IN FEET
0 5 10 20

RAMP TERMINAL DETAIL
RAMP IH5 & RAMP IH6

DESIGN AGENCY
Michael Baker INTERNATIONAL

DESIGNER
KJM

REVIEWER
KGJ 05/22/24

PROJECT ID
82382

SHEET 1055 | TOTAL 2696

CUY-90-16.28 (CCG3A)

MODEL: 82382_Gill02 PAPERSIZE: 34x22 (in) DATE: 3/28/2025 TIME: 9:29:36 AM USER: Alexandria.Summers
pw:\\mb-us-pw.bentley.com:mb-us-pw-03\Documents\Cleveland_OH\01_Projects\ODOT\District2\82382\400-Engineering\Roadway\Sheets\82382_Gill02.dgn

Preliminary Plans - For Reference Only

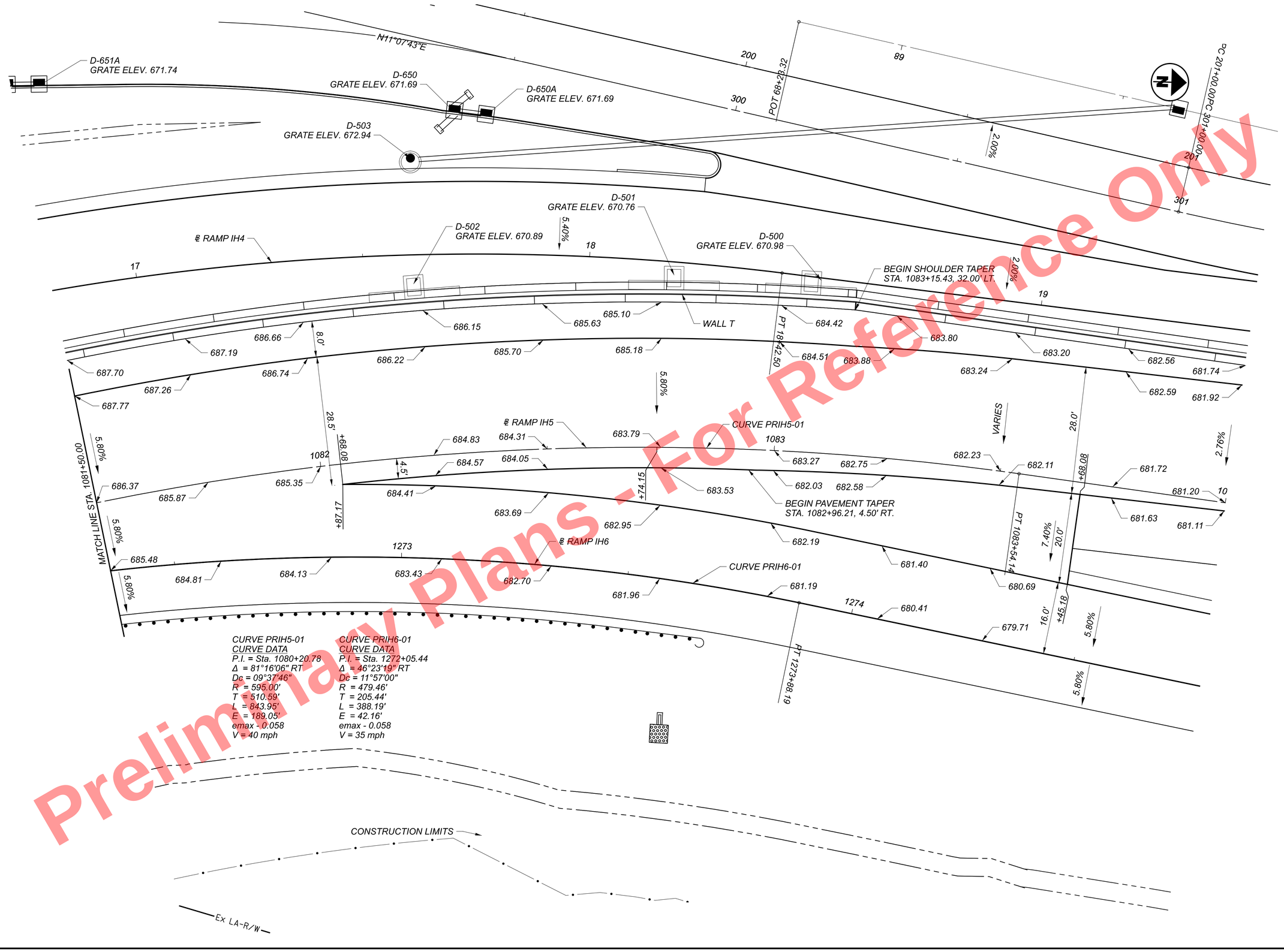

HORIZONTAL SCALE IN FEET
0 5 10 20

RAMP TERMINAL DETAIL
RAMP IH5 & RAMP IH6

CUY-90-16.28 (CCG3A)

MODEL: 82382_GIII03 PAPERSIZE: 34x22 (in) DATE: 3/28/2025 TIME: 9:29:58 AM USER: Alexandria.Summers
pw:\\mb-us-pw.bentley.com:mb-us-pw-03\Documents\Cleveland_OH\01_Projects\DOT\District2\82382\400-Engineering\Roadway\Sheets\82382_GIII03.dgn

DESIGN AGENCY
Michael Baker INTERNATIONAL

DESIGNER KJM
REVIEWER KGJ 05/22/24
PROJECT ID 82382
SHEET 1056 TOTAL 2696

CURVE PRIH4-01
CURVE DATA
P.I. = Sta. 15+38.01
Δ = 80°19'38" RT
Dc = 10°30'00"
R = 545.67'
T = 460.54'
L = 765.02'
E = 168.37'
emax = 0.054
V = 35 mph

CURVE PRIH4-02
CURVE DATA
P.I. = Sta. 19+95.29
Δ = 00°56'28" RT
Dc = 01°54'00"
R = 3,015.57'
T = 24.76'
L = 49.53'
E = .1'
emax = 0.020
V = 30 mph

CURVE PIE14S-01
CURVE DATA
P.I. = Sta. 201+23.23
Δ = 04°52'17" LT
Dc = 10°29'37"
R = 546.00'
T = 23.23'
L = 46.42'
E = 0.49'
emax = 0.020
V = 25 mph

CURVE PIE14N-01
CURVE DATA
P.I. = Sta. 301+23.65
Δ = 04°52'17" LT
Dc = 10°18'18"
R = 556.00'
T = 23.65'
L = 47.27'
E = 0.50'
emax = 0.020
V = 25 mph

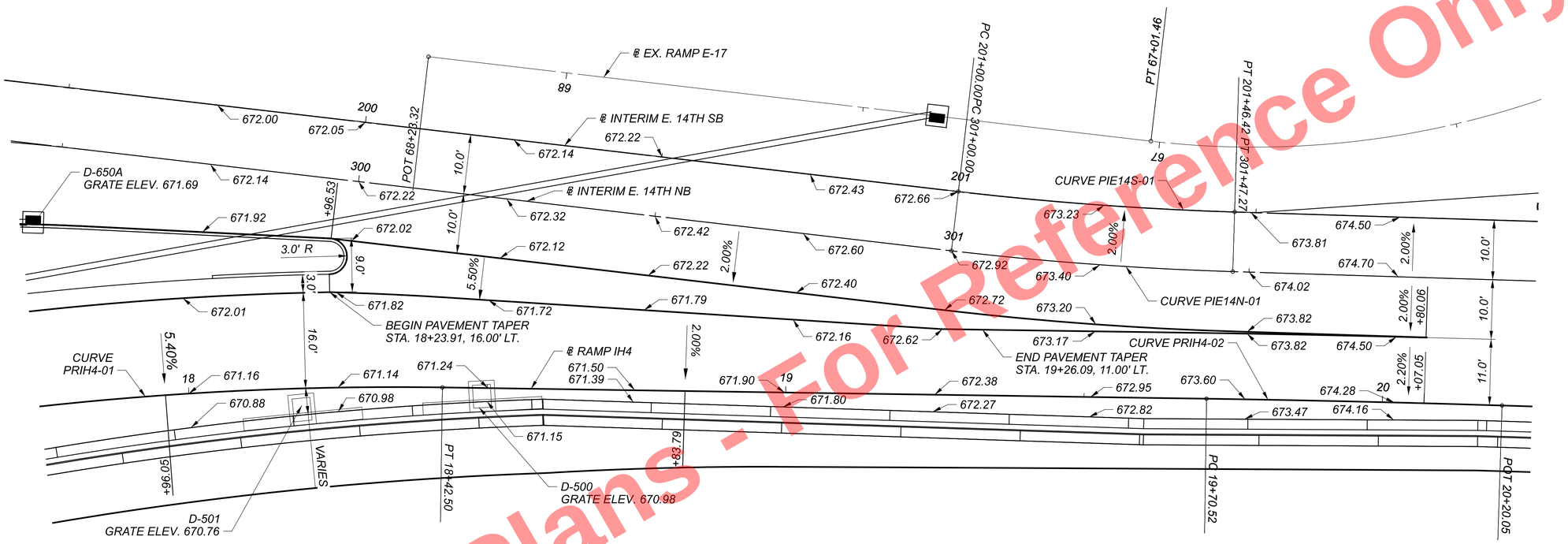

Preliminary Plans - For Reference Only

HORIZONTAL
SCALE IN FEET
0 5 10 20

RAMP TERMINAL DETAIL
RAMP IH4 & E. 14TH ST.

DESIGN AGENCY
Michael Baker INTERNATIONAL

DESIGNER
KJM

REVIEWER
KGJ 05/22/24

PROJECT ID
82382

SHEET 1057 | TOTAL 2696

CUY-90-16.28 (CCG3A)

MODEL: 82382_GIII04 PAPERSIZE: 34x22 (in.) DATE: 3/28/2025 TIME: 9:30:23 AM USER: AlexandriaSummers
pw:\\mb-us-pw.bentley.com:mb-us-pw-03\Documents\Cleveland_OH\OL_Projects\ODOT\District12\82382\400-Engineering\Engineering\Roadway\Sheets\82382_GIII04.dgn

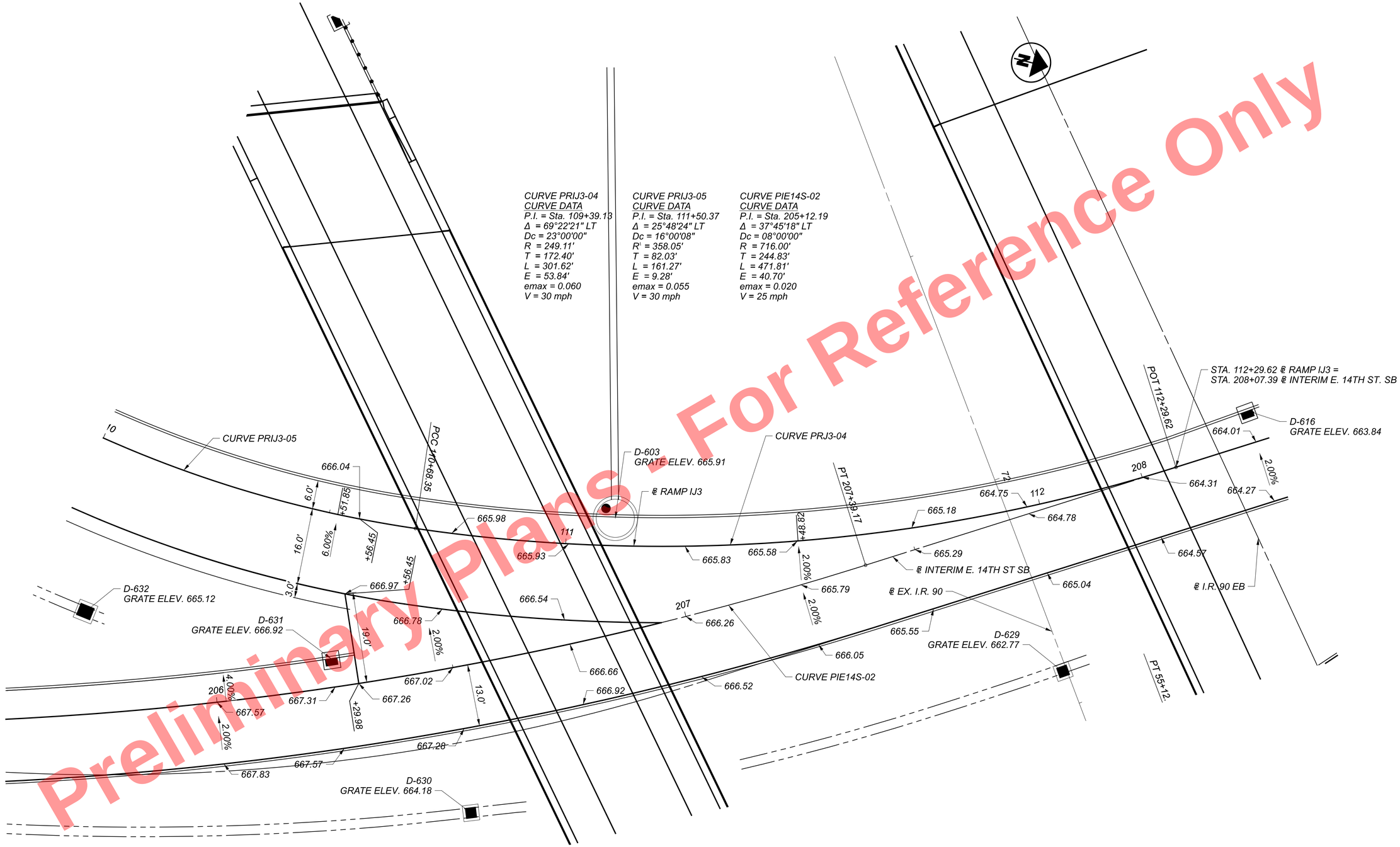

Preliminary Plans - For Reference Only

HORIZONTAL SCALE IN FEET
0 5 10 20

RAMP TERMINAL DETAIL
RAMP IJ3 & E. 14TH ST.

DESIGN AGENCY
Michael Baker INTERNATIONAL

DESIGNER
KJM

REVIEWER
KGJ 05/22/24

PROJECT ID
82382

SHEET 1058 TOTAL 2696

CUY-90-16.28 (CCG3A)

MODEL: 82382_GIII05 PAPERSIZE: 34x22 (in.) DATE: 3/28/2025 TIME: 9:30:58 AM USER: Alexandria.Summers
pw:\\mb-us-pw.bentley.com:mb-us-pw-03\Documents\Cleveland_OH\01_Projects\ODOT\District12\82382\400-Engineering\Roadway\Sheets\82382_GIII05.dgn

CB-3A APP
STA. 64+15.00, 34.00' LT
GRATE EL 667.34

CB-3 APP
STA. 64+49.98, 34.00' LT
GRATE EL 667.47

WALL AI

CB-3A APP
STA. 65+10.00, 34.00' LT
GRATE EL 667.89

BEGIN TAPER
STA. 65+96.71, 43.00' LT

CONSTRUCTION LIMITS

CURB RAMP,
TYPE A1

END TAPER
STA. 66+24.56 , 38.47' LT

Ex R/W

667.56 667.49 667.64 667.84 668.02 668.12 668.12 668.01 668.13

9.0' 7.5'

BEGIN TAPER
STA. 65+29.00, 34.00' LT

STA 65+75.00
32.30' LT
ELEV = 668.06

STA 65+80.00
32.11' LT
ELEV = 668.05

PI 64+21.81

34.0'

STA. 65+04.00 ℄ CONST. CARNEGIE AVE. =
STA. 514+45.17 ℄ CONST. MIDTOWN CONNECTOR

180°

STA 64+89
668.21

STA 65+34
668.30

℄ CONST. CARNEGIE AVE.

CB-3 APP
STA. 65+95.43, 31.54' LT
GRATE EL 667.86

CARNEGIE AVE.

64 65 66

N79°41'18"E N80°56'18"E

57 58 59 60

668.24 668.16 668.13 668.16 668.24 668.34 668.44 668.54 668.64 668.74

90° 90°

STA. 58+44.82 ℄ EX. R/W CARNEGIE AVE. =
STA. 514+38.92 ℄ CONST. MIDTOWN CONNECTOR

℄ EX. R/W CARNEGIE AVE.

CARNEGIE AVE.

2% 34.0' 0.65% 0.65% 2% 34.0'

MH-3 APP
STA. 64+43.91, 24.35' RT
GRATE EL 667.64

CB-3 APP
STA. 64+44.13, 34.26' RT
GRATE EL 667.19

CB-3 APP
STA. 63+72.00, 34.00' RT
GRATE EL 667.51

667.49 667.56 667.64 667.84 668.02 668.04 668.12 668.11

STA. 64+23
667.48

STA 64+89
667.98

STA 65+34
668.16

STA 65+80.00
34.16' RT
ELEV = 668.02'

668.03

STA 65+75.04
34.81 RT
ELEV = 668.02'

CB-3 APP
STA. 65+88.07, 34.00' RT
GRATE EL 667.68

667.96 668.06

9.0' 14.0'

10' TYP. 10' TYP.

667.57 667.62 667.66 667.69 667.97 668.09 668.00 668.01

STA 64+78.47,
53.31' RT
ELEV = 667.68'

667.90

667.09

514

Ex R/W Ex R/W Ex R/W Ex R/W Ex R/W Ex R/W Ex R/W Ex

STA. 64+29.00
43.00' RT

STA 64+81.90,
58.31' RT
ELEV = 667.68'

N09°03'42"W N09°03'42"W

STA 65+44.46
53.40' RT
ELEV = 667.87'

667.91 667.84 667.77

STA 65+41.10,
58.31' RT
ELEV = 667.83'

CONSTRUCTION
LIMITS

TMP

CURB RAMP,
TYPE A1

CURB RAMP,
TYPE A1

STA. 65+62.37,
48.00' RT

CURB RAMP,
TYPE B2

STA. 65+84.00, 84.00' RT.
℄ CONST. CARNEGIE AVE. =
STA. 513+61.17, 80.00' RT.
℄ CONST. MIDTOWN CONNECTOR

CURVE DATA FOR RADIUS RETURNS			
CURVE LETTER	CURVE RADIUS	INTERIOR ANGLE	CURVE LENGTH
A	50.00	90.00°	78.54
B	50.00	90.00°	78.54

Ex LA

8.5'

667.53 667.60 667.66 667.67 667.80 667.69 667.61 667.47

8.6'

R/W TMP R/W TMP

668.52 668.06 668.06 668.56 668.56 668.62 668.51

5.0' 5.0' 7.0' 4.0' 5.0' 2.3' 2.9'

668.63 668.65 668.67

STA. 64+39.00, 84.00 RT. ℄ CONST. CARNEGIE AVE. =
STA. 513+61.17, 65.00' LT. ℄ CONST. MIDTOWN CONNECTOR

℄ CONST. MIDTOWN
CONNECTOR

11.0' 13.0' 15.0' 30.0' 8.0'

℄ CONST. MIDTOWN CONNECTOR
STA. 513+61.17
39.00' LT

667.43 667.65 667.29

667.25 667.55 666.95

MIDTOWN
CONNECTOR

8.0' 42.0' R

8.3' 5.9' 8.3'

668.43 668.60 668.54 667.88 667.99 667.84 667.95 668.27 668.38

7.1' 7.5' 5.1' 7.1'

① SCALE 5:1

668.19 668.24 4.0' 5.4' 7.1' 668.18 667.69 5.0' 10.6' 1.2 668.29 668.23 667.74 667.69 668.18

② SCALE 5:1

668.70 668.68 4.0' 5.0' 668.61 668.63 668.09 6.5' 668.62 668.55 5.0' 668.10 5.0'

③ SCALE 5:1

NOTE:
STA./OFFSET OFF OF ℄ CONST. CARNEGIE AVE.
UNLESS NOTED OTHERWISE

HORIZONTAL
SCALE IN FEET
0 5 10 20

INTERSECTION DETAIL
CARNEGIE AVE. & MIDTOWN CONNECTOR

DESIGN AGENCY
Michael Baker INTERNATIONAL

DESIGNER KJM
REVIEWER KGJ 05/22/24
PROJECT ID 82382
SHEET 1059 TOTAL 2696

CUY-90-16.28 (CCG3A)

MODEL: 82382_GI000I PAPERSIZE: 34x22 (in.) DATE: 3/28/2025 TIME: 9:31:29 AM USER: Alexandria.Summers
pw:\\mb-us-pw.bentley.com:mb-us-pw-03\Documents\Cleveland_OH\OI_Projects\000T\District2\82382\400-Engineering\Roadway\Sheets\82382_GI000I.dgn

Preliminary Plans - For Reference Only

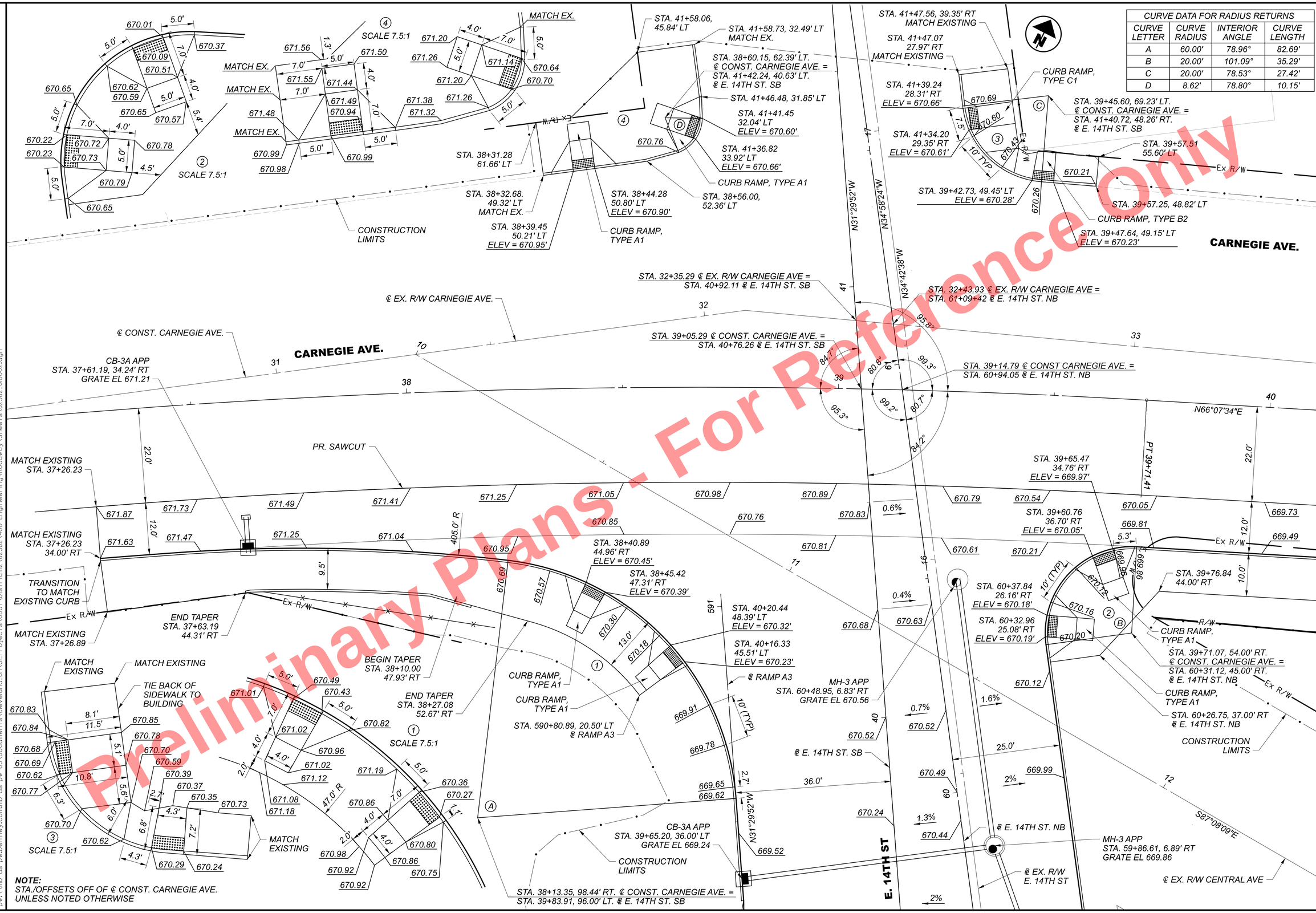

NOTE:
STA./OFFSETS OFF OF ℄ CONST. CARNEGIE AVE. UNLESS NOTED OTHERWISE

CURVE DATA FOR RADIUS RETURNS			
CURVE LETTER	CURVE RADIUS	INTERIOR ANGLE	CURVE LENGTH
A	60.00'	78.96°	82.69'
B	20.00'	101.09°	35.29'
C	20.00'	78.53°	27.42'
D	8.62'	78.80°	10.15'

HORIZONTAL SCALE IN FEET 0 5 10 20

INTERSECTION DETAIL
CARNEGIE AVE. & E. 14TH ST.

DESIGN AGENCY
Michael Baker INTERNATIONAL

DESIGNER KJM
REVIEWER KGJ 05/22/24
PROJECT ID 82382
SHEET 1060 TOTAL 2696

CUY-90-16.28 (CCG3A)

MODEL: 82382_GI0002 PAPERSIZE: 34x22 (in.) DATE: 3/28/2025 TIME: 9:31:41 AM USER: Alexandria.Summers
pw:\\mb-us-pw.bentley.com:mb-us-pw-03\Documents\Cleveland_OH\OI_Projects\ODOT\District2\82382\400-Engineering\Roadway\Sheets\82382_GI0002.dgn

Preliminary Plans - For Reference Only

INTERSECTION DETAIL
CARNEGIE AVE. & E. 18TH ST.

HORIZONTAL SCALE IN FEET
0 5 10 20

CUY-90-16.28 (CCG3A)

MODEL: 82382_GI0003 PAPERSIZE: 34x22 (In.) DATE: 3/28/2025 TIME: 9:31:56 AM USER: Alexandria.Summers
pw:\\mb-us-pw.bentley.com:mb-us-pw-03\Documents\Cleveland_OH\01_Projects\ODOT\District2\82382\400-Engineering\Roadway\Sheets\82382_GI0003.dgn

Preliminary Plans - For Reference Only

MATCH EXISTING
5.0'
7.0'
670.21
670.31
670.07
669.91
669.71
669.65
669.55
669.41
669.83
669.56
669.57
669.30
669.38
669.49
669.29
669.53
669.73
669.17
669.05
668.93
668.87
669.03
669.14
669.06
669.09
669.01
669.09
669.18
668.86
668.71
668.48
668.36
668.21
669.15
669.19
669.34
669.39
669.46
669.51
669.29
669.62
669.74
669.23
669.33
669.35
669.88
669.76
669.63
668.87
668.97
668.84
668.74
669.52
669.70
669.59
669.45
668.98
669.48
669.55
669.63
669.61
669.67
669.54
669.07
669.11
670.47
670.35
670.24
670.14
670.03
670.28
670.27
670.20
670.31
669.92
669.94
669.99
669.55
669.91
669.92
669.94
669.96
669.97
669.98
669.99
670.00
670.01
670.02
670.03
670.04
670.05
670.06
670.07
670.08
670.09
670.10
670.11
670.12
670.13
670.14
670.15
670.16
670.17
670.18
670.19
670.20
670.21
670.22
670.23
670.24
670.25
670.26
670.27
670.28
670.29
670.30
670.31
670.32
670.33
670.34
670.35

NOTE:
STA./OFFSET OFF OF ℄ CONST. CARNEGIE AVE.
UNLESS NOTED OTHERWISE.

CURVE DATA FOR RADIUS RETURNS			
CURVE LETTER	CURVE RADIUS	INTERIOR ANGLE	CURVE LENGTH
A	25.00	84.82°	37.01
B	32.00	90.20°	50.38
C	40.00	96.43°	67.32'
D	40.00	81.40°	56.83'

HORIZONTAL SCALE IN FEET
0 5 10 20

INTERSECTION DETAIL
CARNEGIE AVE. & E. 22ND ST.

Preliminary Plans - For Reference Only

DESIGN AGENCY
Michael Baker INTERNATIONAL

DESIGNER KJM
REVIEWER KGJ 05/22/24
PROJECT ID 82382
SHEET 1062 TOTAL 2696

CUY-90-16.28 (CCG3A)
MODEL: 82382_GI0004 PAPERSIZE: 34x22 (in.) DATE: 3/28/2025 TIME: 9:32:08 AM USER: Alexandria.Summers
pw:\\vmb-us-pw.bentley.com:mb-us-pw-03\Documents\Cleveland_OH\01_Projects\ODOT\District 12\82382\400-Engineering\Roadway\Sheets\82382_GI0004.dgn

CURVE DATA FOR RADIUS RETURNS			
CURVE LETTER	CURVE RADIUS	INTERIOR ANGLE	CURVE LENGTH
A	35.00	26.19°	16.00
B	77.58	15.94°	21.59
C	15.00	83.67°	21.90
D	20.00	77.40°	27.02
E	35.00	68.70°	41.96
F	50.00	40.54°	35.37

NOTE:
STA./OFFSET OFF OF ℄ CONST. CARNEGIE AVE.
UNLESS NOTED OTHERWISE.

Preliminary Plans - For Reference Only

HORIZONTAL SCALE IN FEET
0 5 10 20

INTERSECTION DETAIL CARNEGIE AVE. & E. 21ST ST.

CUY-90-16.28 (CCG3A)

DESIGN AGENCY
Michael Baker INTERNATIONAL

DESIGNER KJM
REVIEWER KGJ 05/22/24
PROJECT ID 82382
SHEET 1063 TOTAL 2696

MODEL: 82382_GI0005 PAPERSIZE: 34x22 (in.) DATE: 3/28/2025 TIME: 9:32:38 AM USER: Alexandria.Summers
pw:\\mb-us-pw.bentley.com\mb-us-pw-03\Documents\Cleveland_OHIO\Projects\0007\District2\82382\400-Engineering\Roadway\Sheets\82382_GI0005.dgn

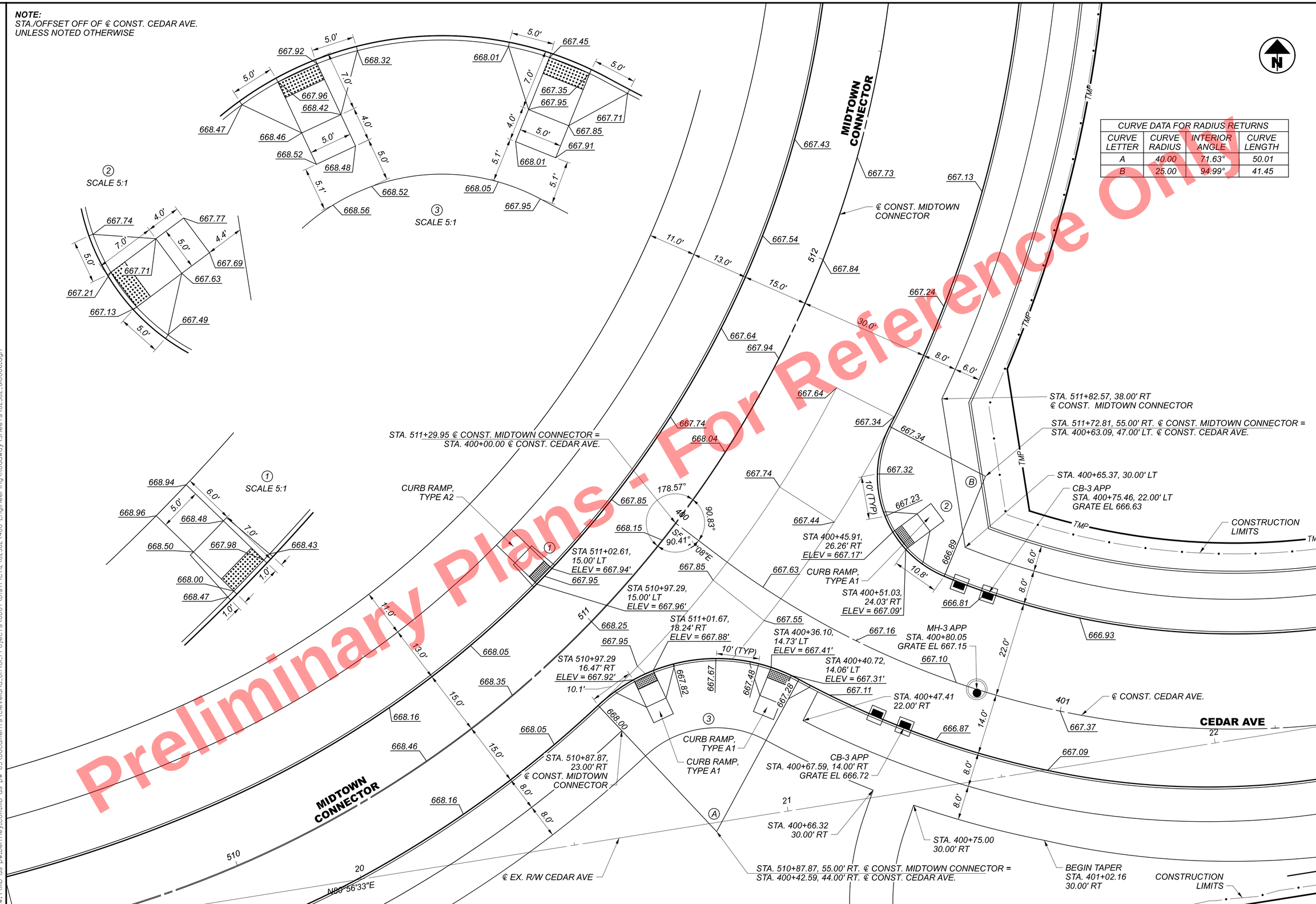

CURVE DATA FOR RADIUS RETURNS			
CURVE LETTER	CURVE RADIUS	INTERIOR ANGLE	CURVE LENGTH
A	40.00	71.63°	50.01
B	25.00	94.99°	41.45

Preliminary Plans - For Reference Only

INTERSECTION DETAIL
CEDAR AVE. & MIDTOWN CONNECTOR

DESIGN AGENCY
Michael Baker INTERNATIONAL

DESIGNER KJM
REVIEWER KGJ 05/22/24
PROJECT ID 82382
SHEET 1064 TOTAL 2696

CUY-90-16.28 (CCG3A)

MODEL: 82382_GI0006 PAPERSIZE: 34x22 (in.) DATE: 3/28/2025 TIME: 9:32:50 AM USER: Alexandria.Summers
pw:\\mb-us-pw.bentley.com:mb-us-pw-03\Documents\Cleveland_OH\OI_Projects\ODOT\District12\82382\400-Engineering\Roadway\Sheets\82382_GI0006.dgn

Preliminary Plans - Not For Reference Only

CB-3A APP
STA. 209+01.00, 9.00' LT
GRATE EL 663.57

℄ RAMP IJ3

STA. 36+35.00, 13.00' LT ℄ E. 14TH ST. SB =
STA. 209+31.15 ℄ RAMP IJ3

MH-3 APP
STA. 429+07.69, 43.03' RT
GRATE EL 666.22

CB-2-2B
STA. 429+03.12, 28.11' RT
GRATE EL 666.79

CB-2 APP
STA. 429+12.47, 27.85' RT
GRATE EL 666.21

CB-3 APP
STA. 208+65.00, 8.31' LT
GRATE EL 663.37

MH-3 APP
STA. 36+57.73, 6.50' LT
GRATE EL 665.13

MH-3 APP
STA. 208+65.00, 6.50' RT
GRATE EL 664.00

E. 14TH ST. SB

℄ E. 14TH ST. SB

CB-2-2B
STA. 36+46.94, 9.95' RT
GRATE EL 663.85

STA. 56+22.61, 12.00' RT. ℄ E. 14TH ST. NB =
STA. 20+00.00 ℄ E. 18TH ST.

MH-3 APP
STA. 56+15.10, 6.08' RT
GRATE EL 664.04

℄ E. 14TH ST. NB

℄ EX. R/W E. 14TH ST. NB

MH-3 APP
STA. 57+58.70, 0.35' RT
GRATE EL 666.41

CB-3A APP
STA. 21+43.79, 12.43' LT
GRATE EL 665.93

E. 14TH ST. NB

MH-3 APP
STA. 57+00.00, 6.46' RT
GRATE EL 665.24

STA. 57+75.36, 25.01' RT. ℄ E. 14TH ST. NB =
STA. 21+53.20, 0.00' LT. ℄ E. 18TH ST.

END TAPER
STA. 20+00.00, 26.00' RT

CB-3A APP
STA. 56+15.10, 37.82' RT
GRATE EL 663.24

℄ E. 18TH ST.

CB-3A APP
STA. 20+84.18, 26.00' RT
GRATE EL 664.34

℄ I.R. 90 WB

I.R. 90 WB

MH-3 APP
STA. 430+54.37, 36.01' RT
GRATE EL 667.78

℄ RAMP A2

RAMP A2

℄ RAMP A1

RAMP A1

CB-2-2B
STA. 430+82.37, 24.00' RT
GRATE EL 676.73

CB-2-2B
STA. 302+12.63, 2.18' LT
GRATE EL 668.81

BEGIN TAPER
STA. 22+00.00, 26.00' RT

END TAPER
STA. 22+50.00, 33.00' RT

E. 18TH ST.

RAMP A3

℄ RAMP A3

N31°29'52"W

N34°42'38"W

N34°58'24"W

N01°21'16"W

HORIZONTAL
SCALE IN FEET
0 5 10 20

INTERSECTION DETAIL
E. 14TH ST. & E. 18TH ST.

DESIGN AGENCY
Michael Baker INTERNATIONAL

DESIGNER KJM
REVIEWER KGJ 05/22/24
PROJECT ID 82382
SHEET 1065 TOTAL 2696

CUY-90-16.28 (CCG3A)

MODEL: 82382_GI0007 PAPERSIZE: 34x22 (in.) DATE: 3/28/2025 TIME: 9:33:05 AM USER: Alexandria.Summers
pw:\\mb-us-pw.bentley.com:mb-us-pw-03\Documents\Cleveland_OH\01_Projects\ODOT\District2\82382\400-Engineering\Roadway\Sheets\82382_GI0007.dgn

NOTE:
STA./OFFSET OFF OF ℄ CONST. E. 22ND ST.
UNLESS NOTED OTHERWISE

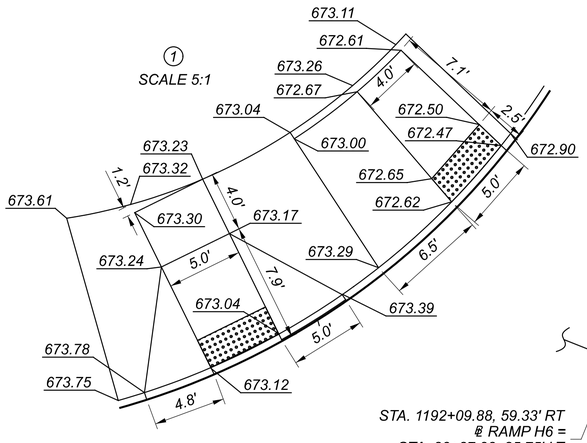

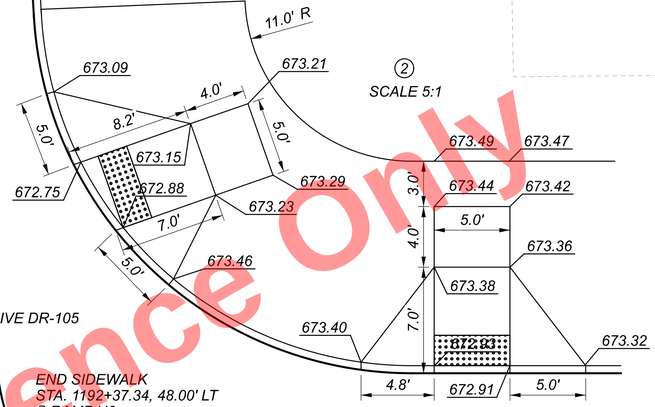

HORIZONTAL SCALE IN FEET
0 5 10 20

CURVE DATA FOR RADIUS RETURNS			
CURVE LETTER	CURVE RADIUS	INTERIOR ANGLE	CURVE LENGTH
A	50.00	52.56°	45.87
B	150.00	24.95°	65.32
C	25.00	86.70°	37.83
D	5.00	180.00°	15.71
E	4.00	90.00°	6.28

INTERSECTION DETAIL E. 22ND ST. & RAMP H6

DESIGN AGENCY
Michael Baker INTERNATIONAL

DESIGNER KJM
REVIEWER KGJ 05/22/24
PROJECT ID 82382
SHEET 1066 TOTAL 2696

CUY-90-16.28 (CCG3A)

MODEL: 82382_GI0008 PAPERSIZE: 34x22 (in.) DATE: 3/28/2025 TIME: 9:33:17 AM USER: Alexandria.Summers
pw:\\mb-us-pw.bentley.com:mb-us-pw-03\Documents\Cleveland_OH\01_Projects\ODOT\District2\82382\400-Engineering\Roadway\Sheets\82382_GI0008.dgn

Preliminary Plans - For Reference Only

NOTE:
STA./OFFSET OFF OF ℄ CONST. E 22ND ST.
UNLESS NOTED OTHERWISE.

CURVE DATA FOR RADIUS RETURNS			
CURVE LETTER	CURVE RADIUS	INTERIOR ANGLE	CURVE LENGTH
A	10.00	95.20°	16.62
B	25.00	84.39°	36.82
C	25.00	84.40°	36.83
D	30.00	96.28°	50.41
E	4.50	180.00°	14.14
F	75.00	31.47°	41.21
G	120.00	4.80°	10.05
H	40.00	54.53°	38.08
I	120.00	12.83°	26.89

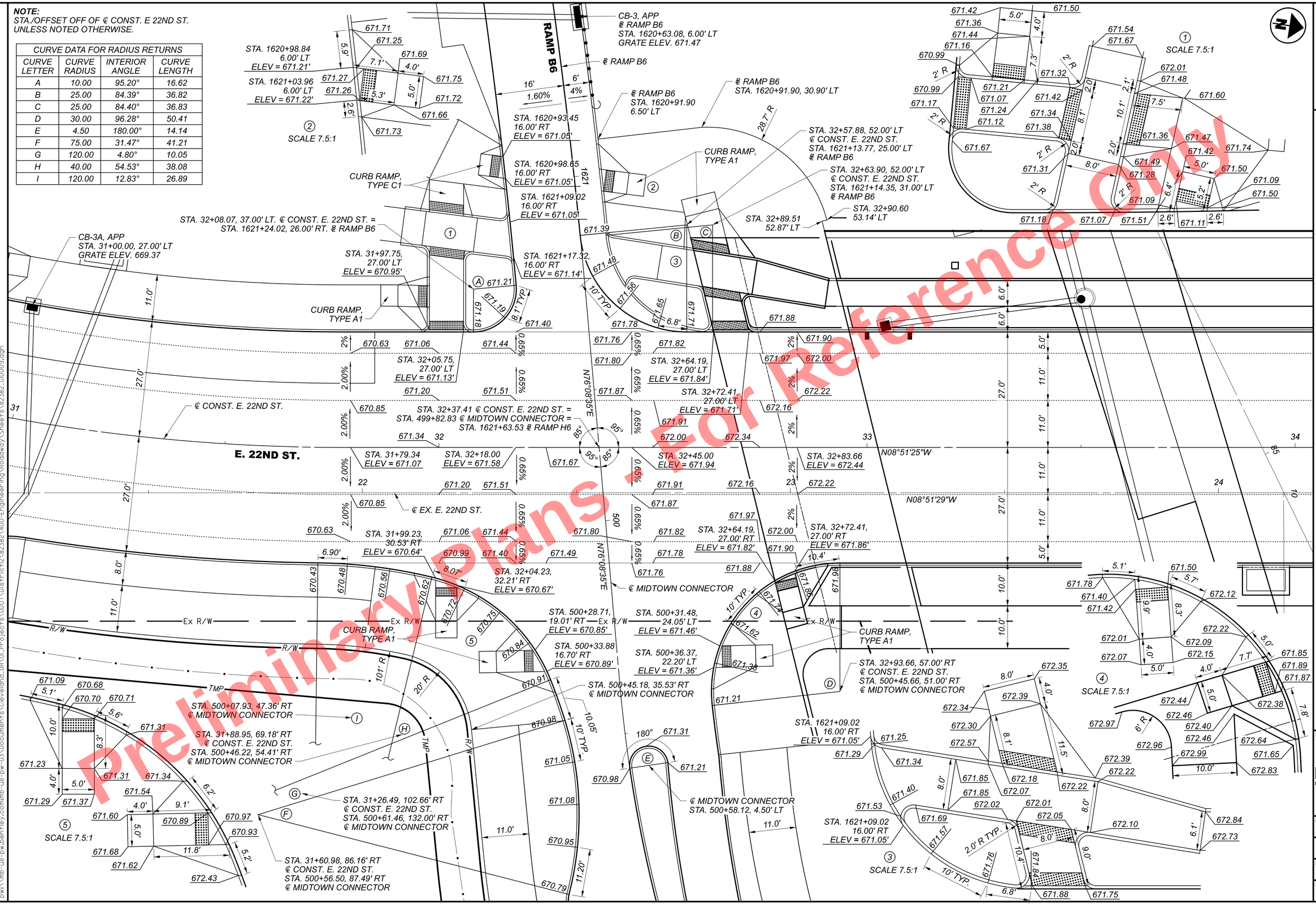

Preliminary Plans - Not For Reference Only

INTERSECTION DETAIL
RAMP B6 & MIDTOWN CONNECTOR & E. 22ND ST.

CUY-90-16.28 (CCG3A)

MODEL: 82382_GI0009 PAPERSIZE: 34x22 (in.) DATE: 3/28/2025 TIME: 9:33:35 AM USER: Alexandria.Summers
pw:\\vmb-us-pw.bentley.com\mb-us-pw-03\Documents\Cleveland_OH\01_Projects\ODOT\District 12\82382\400-Engineering\Roadway\Sheets\82382_GI0009.dgn

DESIGN AGENCY
Michael Baker INTERNATIONAL

DESIGNER	KJM
REVIEWER	KGJ 05/22/24
PROJECT ID	82382
SHEET	1067
TOTAL	2696

CURVE DATA FOR RADIUS RETURNS			
CURVE LETTER	CURVE RADIUS	INTERIOR ANGLE	CURVE LENGTH
A	30.00	101.99°	53.40
B	10.00	85.60°	14.80

MH-3 APP 2
STA. 1806+14.32, 88.38 LT
RIM ELEV. 669.64

CB-3A APP
STA. 31+00.00, 27.00 LT
GRATE ELEV. 669.37

STA. 30+61.91, 37.99' LT. ℄ CONST. E. 22ND ST. =
STA. 1806+48.50, 26.00' LT. ℄ RAMP B6A

CURB RAMP, TYPE B1

669.96 670.10 670.02 670.20 669.99 669.64 670.14 669.40 669.85 669.50 669.79 669.75 669.43 669.32 670.31 670.60 670.37 670.31 670.03 669.94 670.28 670.22 670.35

1.9' 4.0' 7.5' 5.0' 2.0' 2.3' 2.0' R 9.8' 2.0' 5.0' 5.0' R 8.0' 2.0' 2.0' R 15.9' 5.0' R 17.8' 17.5' 12.7'

CURB RAMP, TYPE A2 669.61 5.0' 669.62 4.0' 669.42 669.46 669.16 669.19 669.01 2.0' R 669.37 669.04 8.0' 4.8' 2.0' R 10.0' R 669.33 668.88 668.90

2.5' 7.7' 8.1' 2.5' 3.8' 5.4' 12.0' 8.3'

① SCALE 5:1

STA. 1806+49.96
16.00' LT
ELEV = 668.86

STA. 1806+69.86
16.00' LT
ELEV = 669.00

PR. BUS PAD

669.20 669.10 Ⓑ 7.4' TYP. 669.15

STA. 1806+44.94
16.00' LT
ELEV = 668.84

STA. 1806+57.83
16.00' LT
ELEV = 668.90

STA. 1806+60.37
2.45' RT
ELEV = 668.66

STA. 1806+45.72
0.00' LT
ELEV = 668.59

668.61 668.80 668.70 668.65 668.76 10' TYP

RAMP B6A

STA. 1806+50.75
0.08' RT
ELEV = 668.61

STA. 1806+72.99
12.69' RT
ELEV = 668.75

MH-3 APP
STA. 30+23.00, 30.00' LT
GRATE EL 668.81

668.81 668.60 Ⓐ 668.88 668.86

STA. 29+94.98, 60.00' LT
℄ CONST. E. 22ND ST. =
STA. 1806+48.50, 30.00' LT
℄ RAMP B6A ②

CB-3 APP
STA. 29+97.05, 30.00' LT
GRATE ELEV. 668.78

② 668.87 3.4'

STA. 30+11.26
33.78' LT
ELEV = 668.80

STA. 30+01.07
30.51' LT
ELEV = 668.85

2.00% 2.00% 2.00% +92.00

STA. 30+89.58
27.16' LT
ELEV = 669.39

STA. 30+81.06
27.411' LT
ELEV = 669.31

℄ EX. R/W
E. 22ND ST.

669.68 1.30% 1.30% 1.30% +71.00

℄ EX. R/W
CENTRAL AVE.

1.30% 0.65% 0.65% +54.00 669.35

STA. 30+38.20, ℄ E. CONST. 22ND ST. =
STA. 1807+14.09, ℄ RAMP B6A

668.93 1807 96.42° 83.57° 180.01° 1.30% 0.65% +34.50

℄ EX. R/W
E. 22ND ST

1.80% 0.65% 0.65% +26.00 669.11

MH ADJ. TO GRADE
STA. 30+26.37, 21.23' RT
GRATE EL 668.94

MH-3 APP
STA. 30+13.00, 7.00' RT
GRATE EL 669.04

669.01 669.02 669.05 0.23% 1.66%

CB-3A APP
STA. 30+03.57, 5.28' LT
GRATE ELEV. 669.02

CB-3A APP
STA. 29+92.69, 6.00' RT
GRATE ELEV. 669.02

669.05 1.73% 669.24 669.10 1.08% 669.03

STA. 29+73.40
30.00' LT
ELEV = 669.07

E. 22ND ST.

℄ CONST.
E. 22ND ST

N14°51'21"E

669.30 669.57 669.31 1.80% 2.10% 669.19 +46.50

STA. 29+38.66
36.00' LT
ELEV = 669.33

STA. 29+46.50
MATCH EXISTING
ELEV. 669.22

669.35 2.41% 669.76 669.40 2.72% 670.19

TMP Ex. R/W Ex. R/W

669.07 669.12 668.70 669.21 669.26 669.41 669.46 CURB RAMP, TYPE A2 8.5' 7.5' 4.0' 2.5' 5.0' 2.5' 13.4' 2.0' R

669.08 669.18 669.23 669.11 669.53 669.83 669.33 669.23 668.95 669.94 669.06 669.01 668.88 669.66 669.19 669.62 CURB RAMP, TYPE A2 7.0' 9.7' 2.0' R 6.6' 7.3' 8.1' 12.0' 2.0' 19.0'

669.38 669.28 669.20 1.0' R 7.5' 20.0' 7.0' 14.0'

② SCALE 5:1

Preliminary Plans - Not For Reference Only

HORIZONTAL SCALE IN FEET 0 5 10 20

INTERSECTION DETAIL E. 22ND ST. & RAMP B6A

DESIGN AGENCY
Michael Baker INTERNATIONAL

DESIGNER KJM
REVIEWER KGJ 05/22/24
PROJECT ID 82382
SHEET 1068 TOTAL 2696

CUY-90-16.28 (CCG3A)

MODEL: 82382_GI001I PAPERSIZE: 34x22 (in.) DATE: 3/28/2025 TIME: 9:33:47 AM USER: Alexandria.Summers
pw:\\mb-us-pw.bentley.com:mb-us-pw-03\Documents\Cleveland_OH\01_Projects\00DT\District2\82382\400-Engineering\Roadway\Sheets\82382_GI001I.dgn

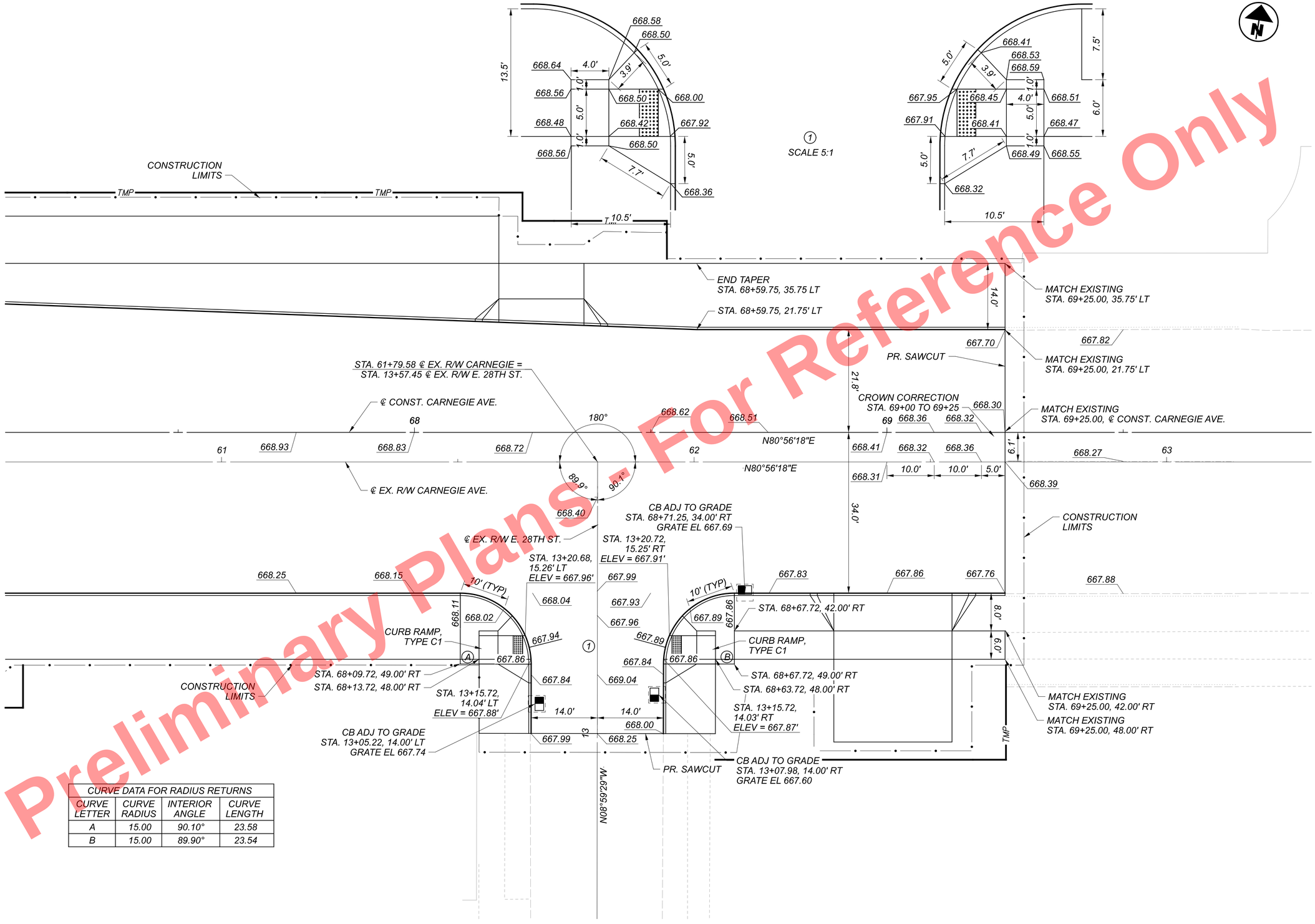

CURVE DATA FOR RADIUS RETURNS			
CURVE LETTER	CURVE RADIUS	INTERIOR ANGLE	CURVE LENGTH
A	15.00	90.10°	23.58
B	15.00	89.90°	23.54

Preliminary Plans - For Reference Only

HORIZONTAL SCALE IN FEET
0 5 10 20

INTERSECTION DETAIL CARNEGIE & E 28TH

DESIGN AGENCY
Michael Baker INTERNATIONAL

DESIGNER KJM
REVIEWER KGJ 05/22/24
PROJECT ID 82382
SHEET 1069 TOTAL 2696

CUY-90-16.28 (CCG3A)

MODEL: 82382_GI002 PAPERSIZE: 34x22 (in.) DATE: 3/28/2025 TIME: 9:34:04 AM USER: AlexandriaSummers
pw:\\mb-us-pw.bentley.com:mb-us-pw-03\Documents\Cleveland_OH\OI_Projects\ODOT\District2\82382\400-Engineering\Roadway\Sheets\82382_GI002.dgn

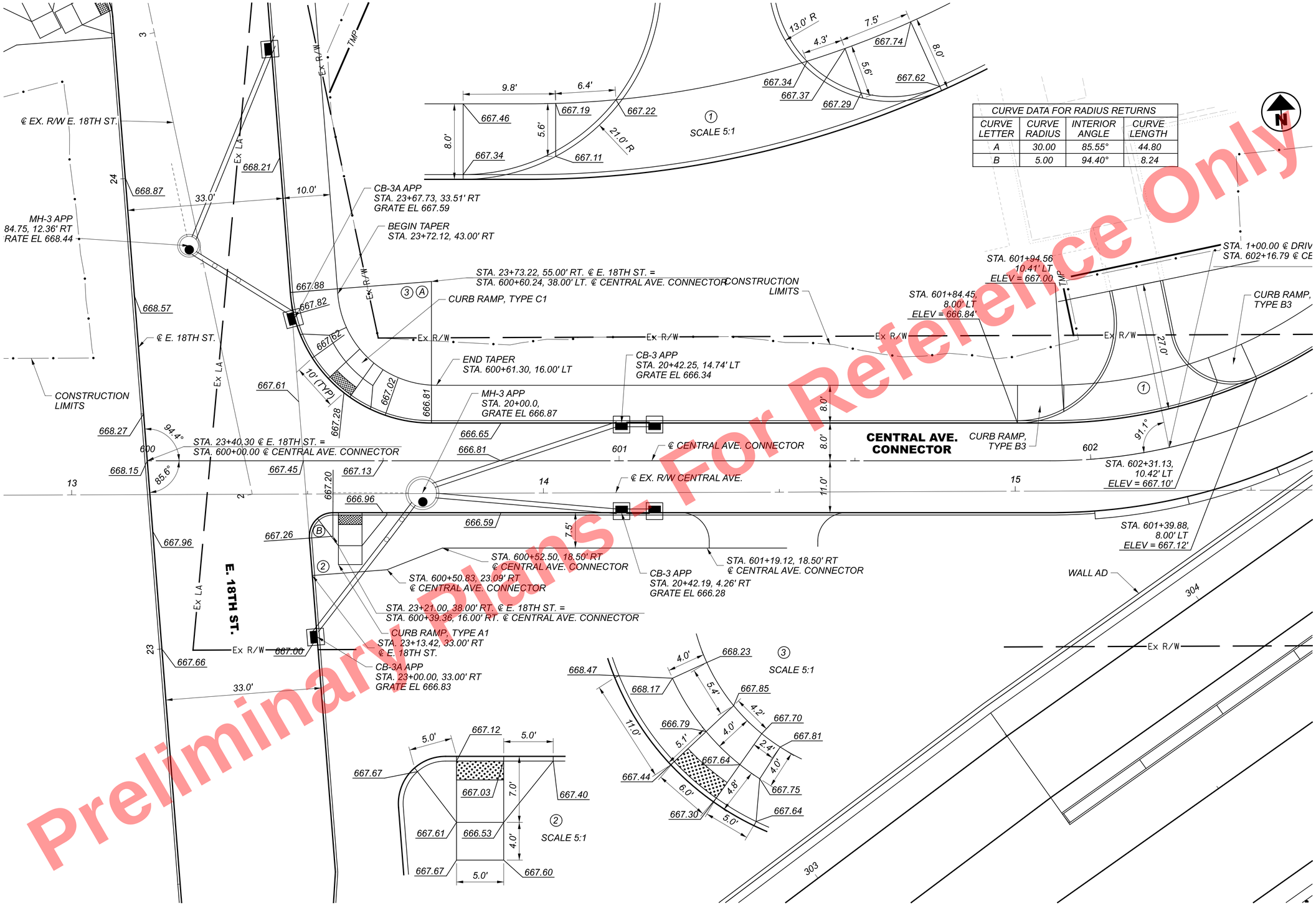

Preliminary Plans - For Reference Only

INTERSECTION DETAIL
E 18TH / CENTRAL AVE CONNECTOR

CUY-90-16.28 (CCG3A)

MODEL: Sheet PAPERSIZE: 34x22 (In.) DATE: 5/16/2025 TIME: 2:25:44 PM USER: Kathy.Johnson
pw:\\mb-us-pw.bentley.com:mb-us-pw-03\Documents\Cleveland_OH\OI_Projects\OOOT\District2\82382\400-Engineering\Roadway\Sheets\82382_GI0013.dgn

DESIGN AGENCY
Michael Baker INTERNATIONAL

DESIGNER KJM
REVIEWER KGJ 05/22/24
PROJECT ID 82382
SHEET 1070 TOTAL 2696

CURVE DATA FOR RADIUS RETURNS			
CURVE LETTER	CURVE RADIUS	INTERIOR ANGLE	CURVE LENGTH
A	15.00	66.69°	14.60
B	15.00	53.13°	13.10
C	175.00	13.56°	41.41

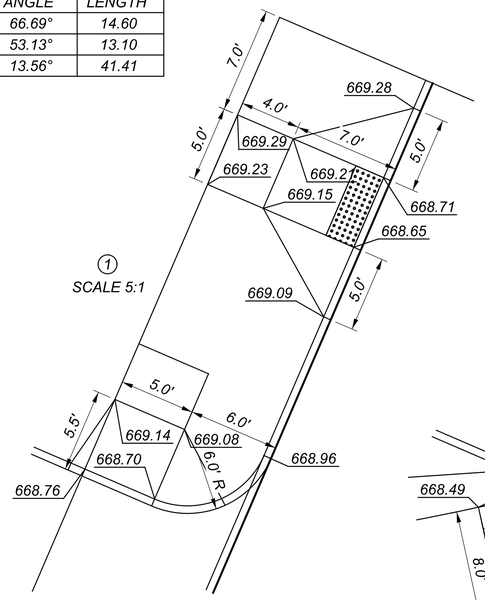

① SCALE 5:1

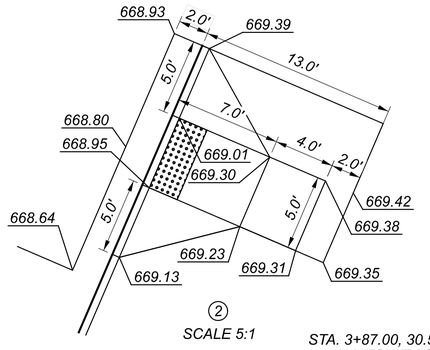

② SCALE 5:1

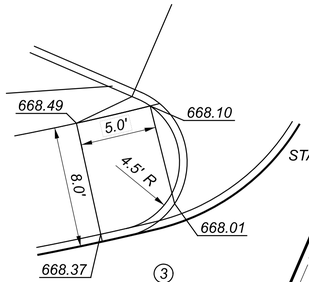

③ SCALE 5:1

Preliminary Plans - For Reference Only

HORIZONTAL SCALE IN FEET
0 5 10 20

INTERSECTION DETAIL
CENTRAL AVE CONNECTOR / E 19TH

CUY-90-16.28 (CCG3A)

MODEL: 82382_GI0014 PAPERSIZE: 34x22 (in.) DATE: 3/28/2025 TIME: 9:34:41 AM USER: Alexandria.Summers
pw:\\mb-us-pw.bentley.com:mb-us-pw-03\Documents\Cleveland_OH\01_Projects\0007\District2\82382\400-Engineering\Roadway\Sheets\82382_GI0014.dgn

DESIGN AGENCY
Michael Baker INTERNATIONAL

DESIGNER	KJM
REVIEWER	KGJ 05/22/24
PROJECT ID	82382
SHEET	1071
TOTAL	2696

CURVE DATA FOR RADIUS RETURNS			
CURVE LETTER	CURVE RADIUS	INTERIOR ANGLE	CURVE LENGTH
A	30.00	78.01°	40.85
B	30.00	87.45°	45.77

NOTE:
STA./OFFSET OFF OF ℄ CONST. E. 22ND ST. UNLESS NOTED OTHERWISE.

HORIZONTAL SCALE IN FEET
0 5 10 20

INTERSECTION DETAIL E. 22ND ST. & CENTRAL AVE.

Preliminary Plans - For Reference Only

CB-3A APP STA. 31+00.00, 27.00' LT GRATE ELEV. 669.64
CB-3A APP STA. 30+99.20, 28.39' RT GRATE ELEV. 669.40
℄ EX. R/W E. 22ND ST.
CURB RAMP, TYPE A1
STA. 31+07.40, 57.00' RT. ℄ CONST. E. 22ND ST. = STA. 25+53.22, 50.00' LT. ℄ EX. R/W CENTRAL AVE.
STA. 25+46.42, 33.00' LT ℄ EX. R/W CENTRAL AVE.
STA. 25+53.22, 30.00' LT ℄ EX. R/W CENTRAL AVE.
CB-3A APP STA. 25+80.00, 20.00' LT GRATE ELEV. 668.55
MATCH EXISTING STA. 26+06.50, 30.00' LT ℄ EX. R/W CENTRAL AVE.
MATCH EXISTING STA. 26+06.50, 20.00' LT ℄ EX. R/W CENTRAL AVE.
MATCH EXISTING STA. 26+06.50, 20.00' RT ℄ EX. R/W CENTRAL AVE.
MATCH EXISTING STA. 26+06.50, 30.00' RT ℄ EX. R/W CENTRAL AVE.
CONSTRUCTION LIMITS
STA. 30+87.09, 41.48' RT ELEV = 669.09'
STA. 25+43.43, 22.17' LT ELEV = 668.84'
STA. 25+48.10, 20.38' LT ELEV = 668.87'
STA. 30+59.97 ℄ CONST. E. 22ND ST. = STA. 24+95.87 ℄ EX. R/W CENTRAL AVE.
STA. 30+44.89, 53.03' RT ELEV = 668.64'
STA. 30+43.62, 48.15' RT ELEV = 668.66'
CB-3A APP STA. 25+72.00, 20.00' RT GRATE ELEV. 668.55
STA. 30+18.96, 59.72' RT ℄ CONST. E. 22ND ST. = STA. 25+50.42, 50.00' RT. ℄ EX. R/W CENTRAL AVE.
℄ RAMP B6A
MH ADJ TO GRADE STA. 30+26.37 21.23' RT GRATE ELEV. 668.94
MH-3 STA. 30+13.00, 7.00' RT GRATE ELEV. 669.04
CB-3 APP STA. 29+97.05, 30.00' LT GRATE ELEV. 668.53
STA. 30+19.93 29.74' RT ELEV = 668.79
STA. 30+15.25 29.49' RT ELEV = 668.80
CB-3A APP STA. 30+03.57, 5.28' LT GRATE ELEV. 669.02
CB-3A APP STA. 29+92.69, 6.00' RT GRATE ELEV. 669.02
CB-3 APP STA. 29+98.78, 28.97' RT GRATE ELEV. 668.74
E. 22ND ST.
CENTRAL AVE.
Ex R/W
N08°51'29"W
N14°51'21"E
N14°49'21"E
SCALE 5:1
SCALE 5:1

CUY-90-16.28 (CCG3A)

MODEL: 82382_GI001 PAPERSIZE: 34x22 (in.) DATE: 3/28/2025 TIME: 9:34:54 AM USER: Alexandria.Summers
pw:\\mb-us-pw.bentley.com:mb-us-pw-03\Documents\Cleveland_OH\01_Projects\DOT\District#12\82382\400-Engineering\Roadway\Sheets\82382_GI001.dgn

DESIGN AGENCY	Michael Baker INTERNATIONAL
DESIGNER	KJM
REVIEWER	KGJ 05/22/24
PROJECT ID	82382
SHEET	1072
TOTAL	2696

NOTES:
STA./OFFSET OFF OF DRIVE ALIGNMENT UNLESS NOTED OTHERWISE

CONCRETE DRIVEWAY PAVEMENT COMPOSITION ON DRIVE APRON, SIDEWALK AND REST OF DRIVE UNLESS NOTED OTHERWISE. SEE DETAIL 10 ON SHEET 17

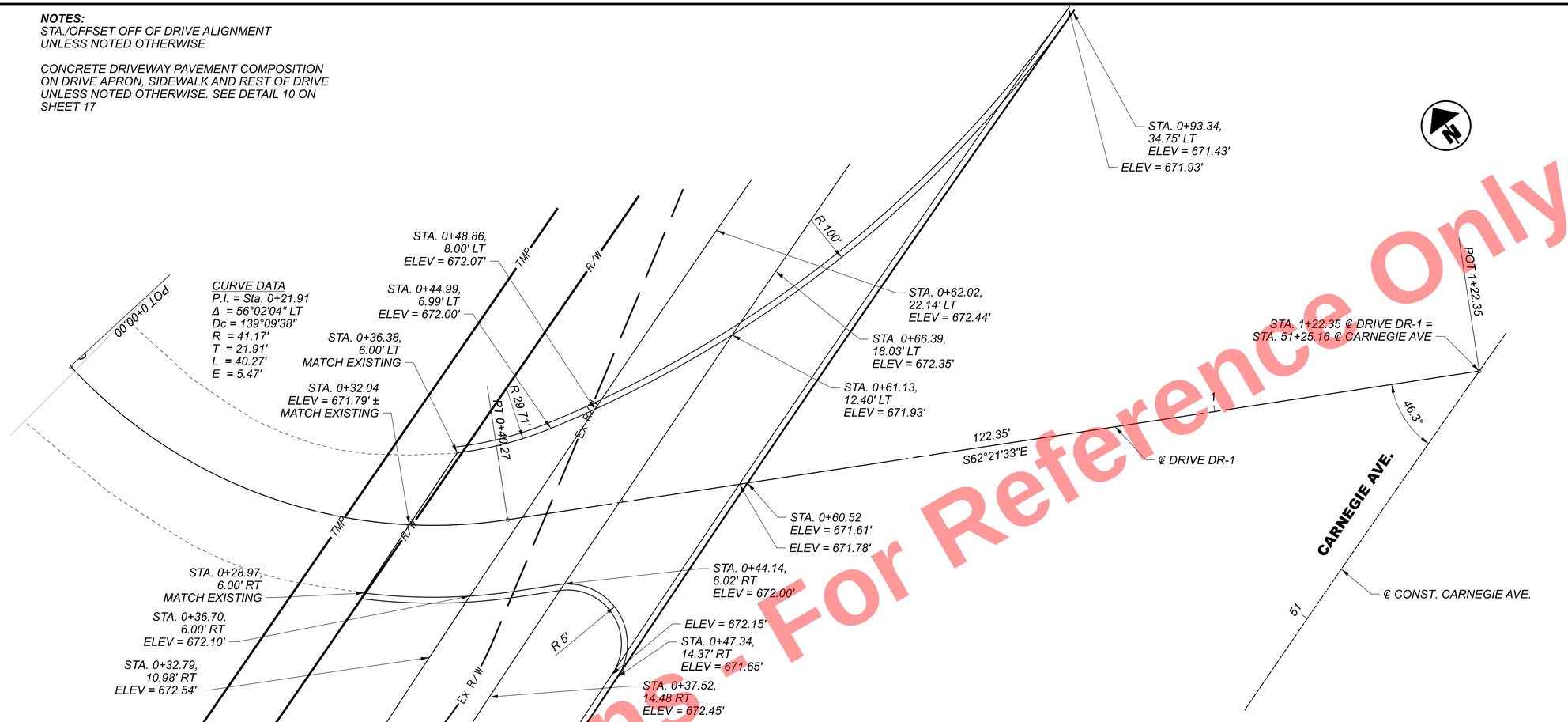

Preliminary Plans - For Reference Only

HORIZONTAL SCALE IN FEET
0 2.5 5 10

PLAN AND PROFILE - DRIVE DR-1
CARNEGIE AVE. STA. 51+25.16

CUY-90-16.28 (CCG3A)

MODEL: 82382_GD7102 PAPERSIZE: 34x22 (in) DATE: 3/28/2025 TIME: 9:35:26 AM USER: Alexandria.Summers
pw:\\mb-us-pw.bentley.com:mb-us-pw-03\Documents\Cleveland.OH\01_Projects\ODOT\District2\82382\400-Engineering\Roadway\Sheets\82382_GD7102.dgn

DESIGN AGENCY
Michael Baker INTERNATIONAL

DESIGNER	KJM
REVIEWER	KGJ 05/22/24
PROJECT ID	82382
SHEET	1073
TOTAL	2696

NOTES:
STA./OFFSET OFF OF DRIVE ALIGNMENT UNLESS NOTED OTHERWISE

CONCRETE DRIVEWAY PAVEMENT COMPOSITION ON DRIVE APRON, SIDEWALK AND REST OF DRIVE UNLESS NOTED OTHERWISE. SEE DETAIL 10 ON SHEET 17

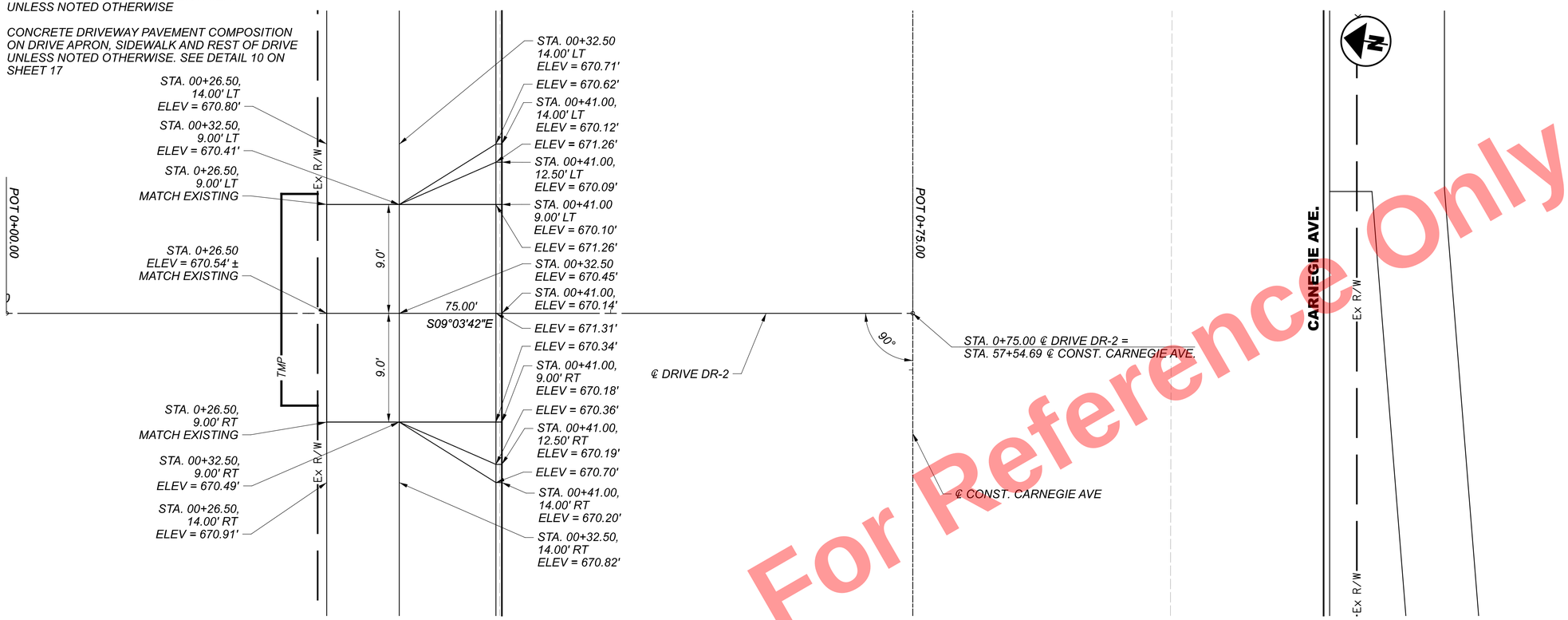

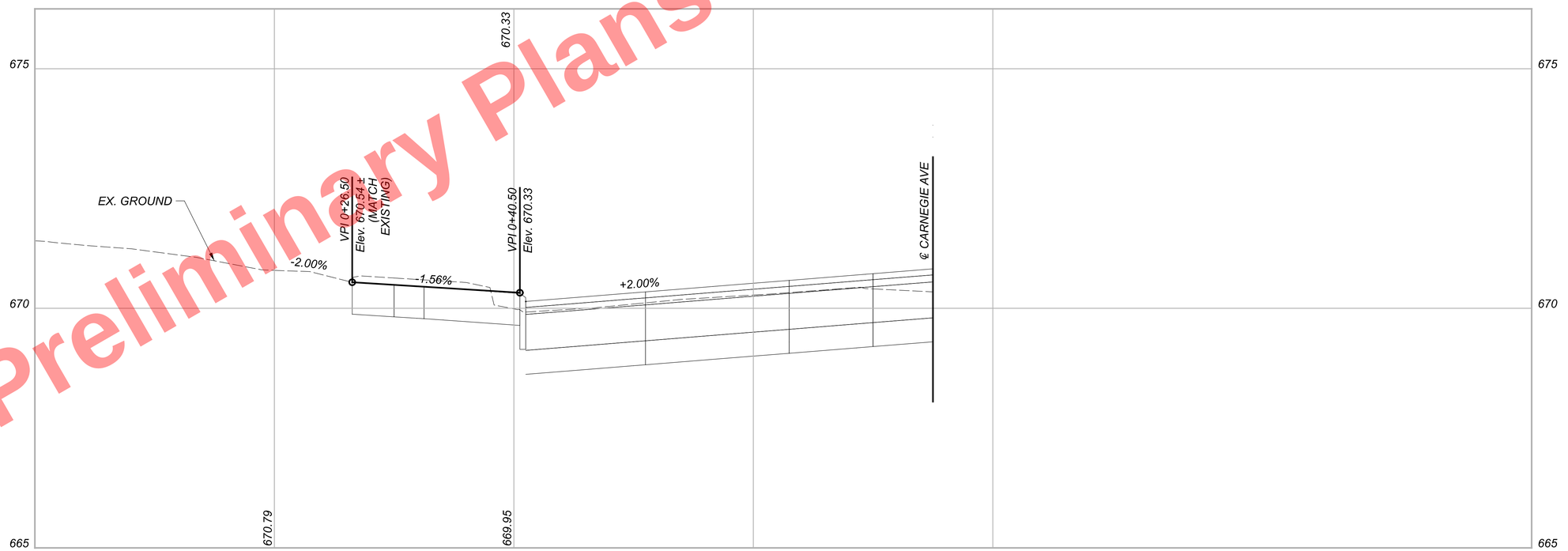

Preliminary Plans - For Reference Only

HORIZONTAL SCALE IN FEET
0 2.5 5 10

PLAN AND PROFILE - DRIVE DR-2
CARNEGIE AVE. STA. 57+54.69

CUY-90-16.28 (CCG3A)

MODEL: 82382_GD7104 PAPERSIZE: 34x22 (in) DATE: 3/28/2025 TIME: 9:35:59 AM USER: Alexandria.Summers
pw:\\mb-us-pw.bentley.com:mb-us-pw-03\Documents\Cleveland_OH\01_Projects\0007\District2\82382\400-Engineering\Roadway\Sheets\82382_GD7103.dgn

DESIGN AGENCY
Michael Baker INTERNATIONAL

DESIGNER	KJM
REVIEWER	KGJ 05/22/24
PROJECT ID	82382
SHEET	1074
TOTAL	2696

NOTES:
STA./OFFSET OFF OF DRIVE ALIGNMENT
UNLESS NOTED OTHERWISE

CONCRETE DRIVEWAY PAVEMENT COMPOSITION ON DRIVE APRON, SIDEWALK AND REST OF DRIVE UNLESS NOTED OTHERWISE. SEE DETAIL 10 ON SHEET 17

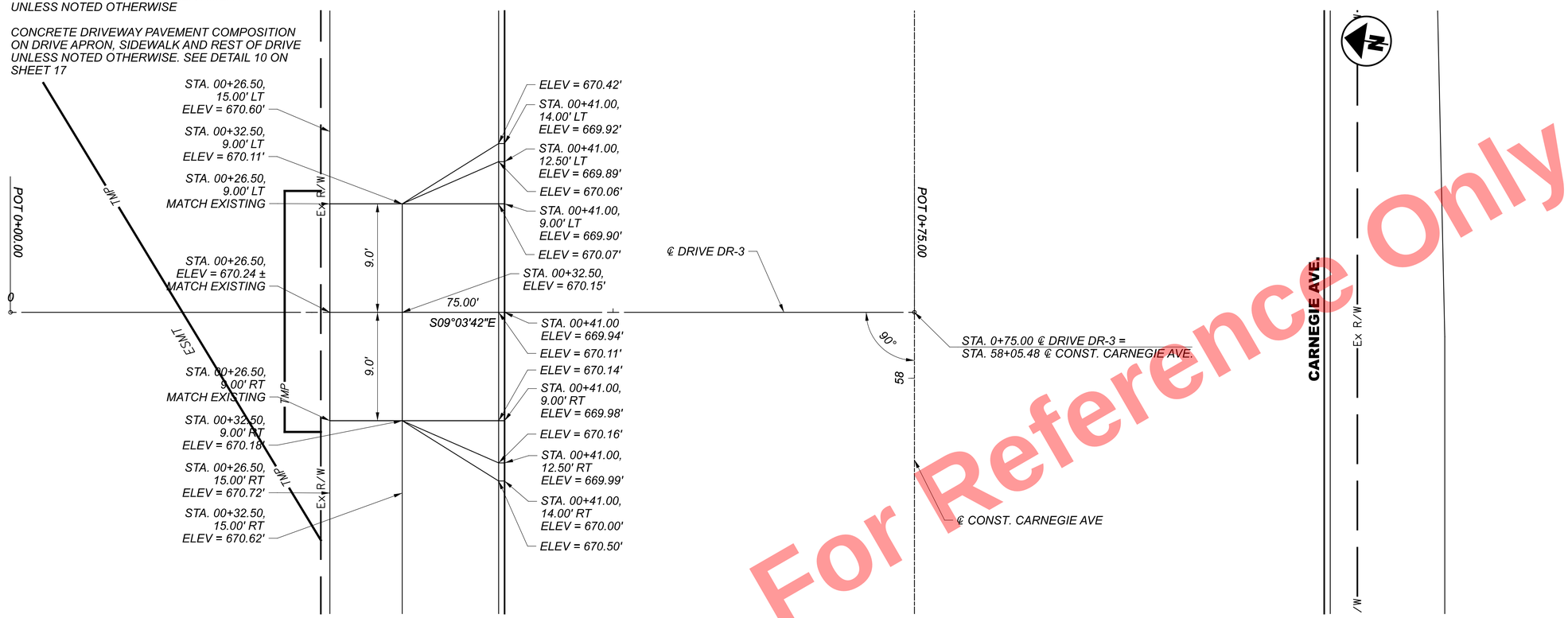

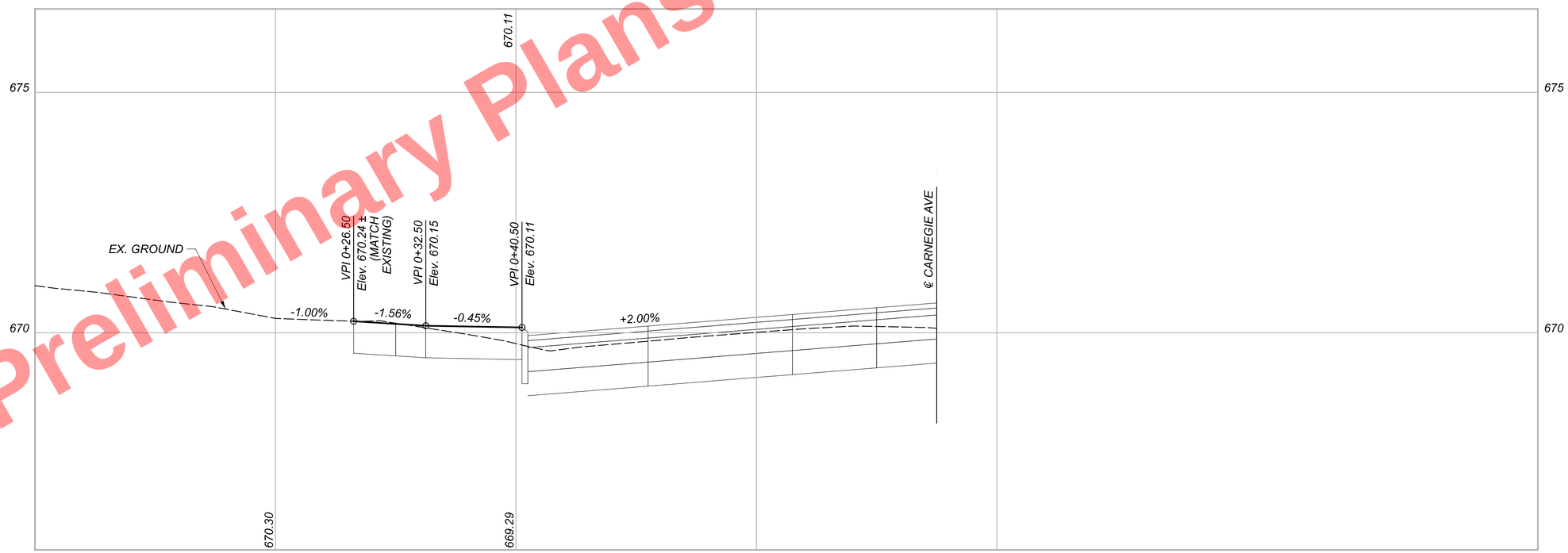

Preliminary Plans - For Reference Only

HORIZONTAL SCALE IN FEET
0 2.5 5 10

PLAN AND PROFILE - DRIVE DR-3
CARNEGIE AVE. STA. 58+05.48

DESIGN AGENCY
Michael Baker INTERNATIONAL

DESIGNER KJM
REVIEWER KGJ 05/22/24
PROJECT ID 82382
SHEET 1075 TOTAL 2696

CUY-90-16.28 (CCG3A)

MODEL: 82382_GD7106 PAPERSIZE: 34x22 (in) DATE: 3/28/2025 TIME: 9:36:24 AM USER: Alexandria.Summers
pw:\\mb-us-pw.bentley.com:mb-us-pw-03\Documents\Cleveland_OHIO_Projects\ODOT\District2\82382\400-Engineering\Roadway\Sheets\82382_GD7106.dgn

NOTES:
STA./OFFSET OFF OF DRIVE ALIGNMENT UNLESS NOTED OTHERWISE

CONCRETE DRIVEWAY PAVEMENT COMPOSITION ON DRIVE APRON, SIDEWALK AND REST OF DRIVE UNLESS NOTED OTHERWISE. SEE DETAIL 10 ON SHEET 17

ASPHALT DRIVEWAY PAVEMENT COMPOSITION SEE DETAIL 9 ON SHEET 16

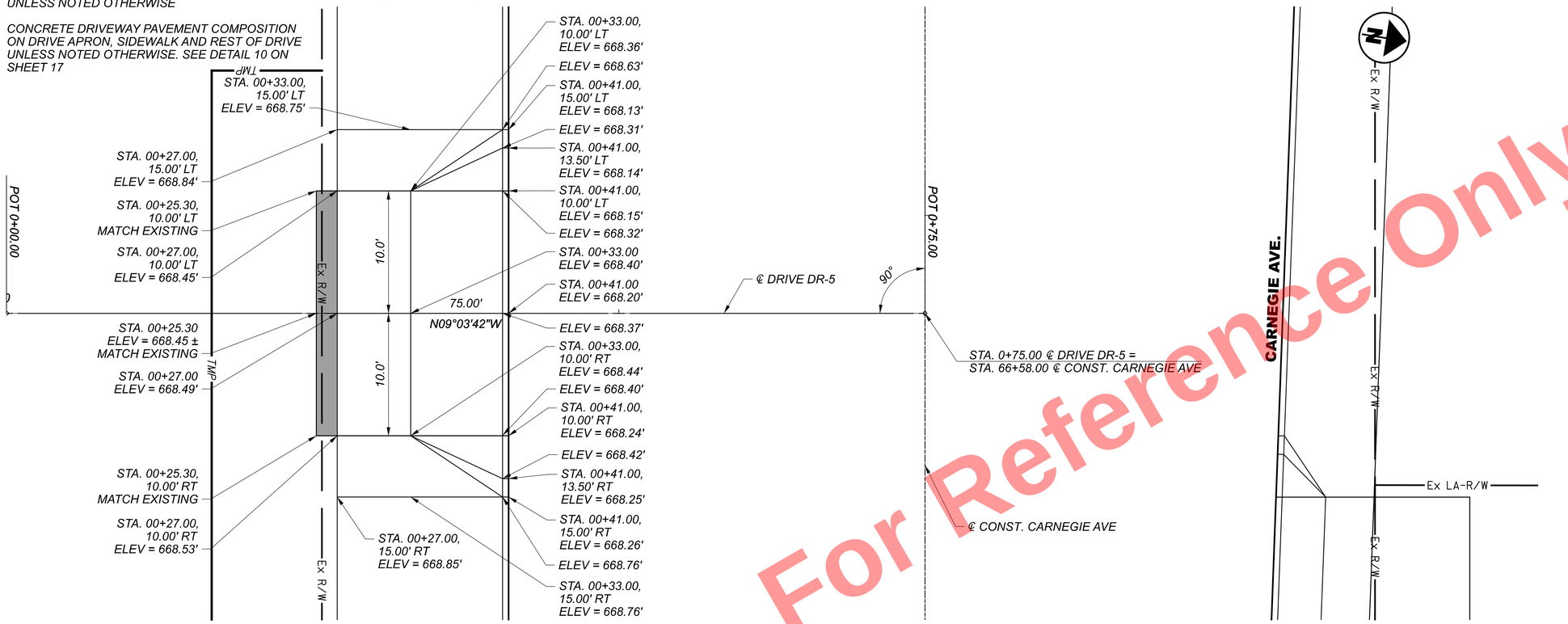

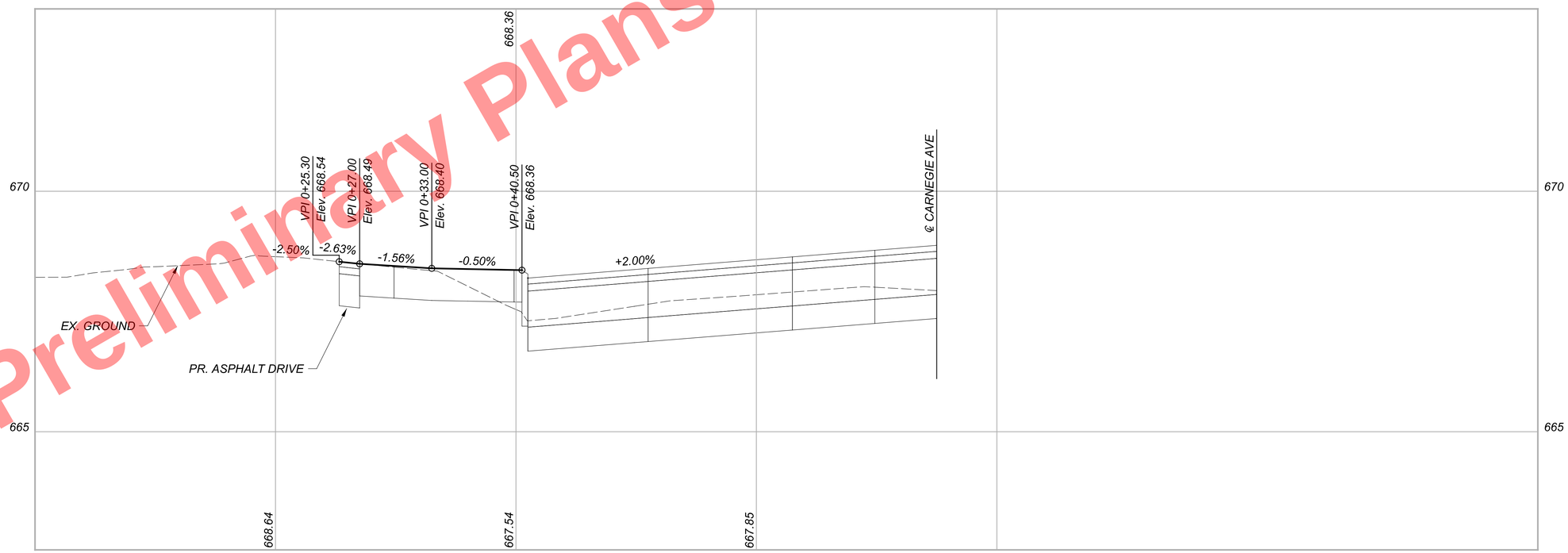

Preliminary Plans - For Reference Only

HORIZONTAL SCALE IN FEET
0 2.5 5 10

PLAN AND PROFILE - DRIVE DR-5
CARNEGIE AVE. STA. 66+58.00

CUY-90-16.28 (CCG3A)

MODEL: 82382_GD7110 PAPERSIZE: 34x22 (In.) DATE: 3/28/2025 TIME: 9:36:40 AM USER: Alexandria.Summers
pw:\\mb-us-pw.bentley.com\mb-us-pw-03\Documents\Cleveland_OH\01_Projects\0007\District2\82382\400-Engineering\Roadway\Sheets\82382_GD7110.dgn

DESIGN AGENCY
Michael Baker INTERNATIONAL

DESIGNER KJM
REVIEWER KGJ 05/22/24
PROJECT ID 82382
SHEET 1076 TOTAL 2696

NOTES:
STA./OFFSET OFF OF DRIVE ALIGNMENT UNLESS NOTED OTHERWISE

CONCRETE DRIVEWAY PAVEMENT COMPOSITION ON DRIVE APRON, SIDEWALK AND REST OF DRIVE UNLESS NOTED OTHERWISE. SEE DETAIL 10 ON SHEET 17

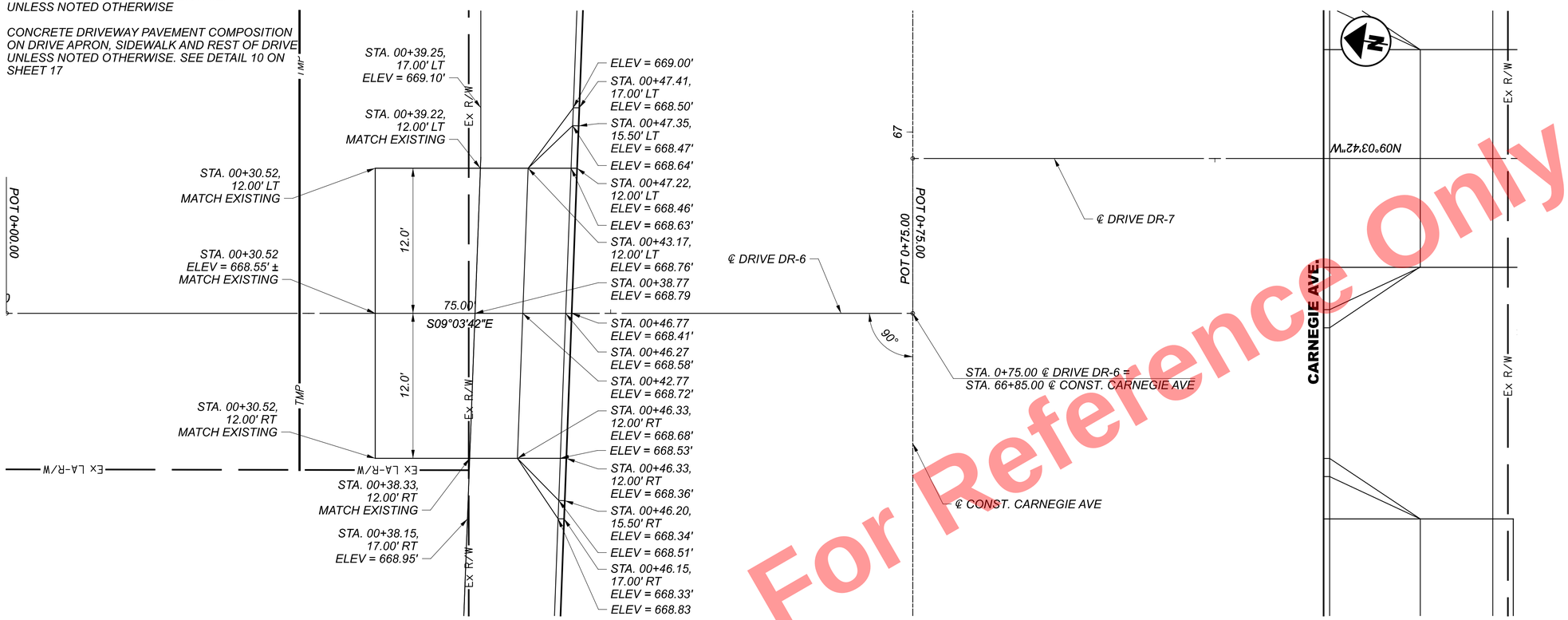

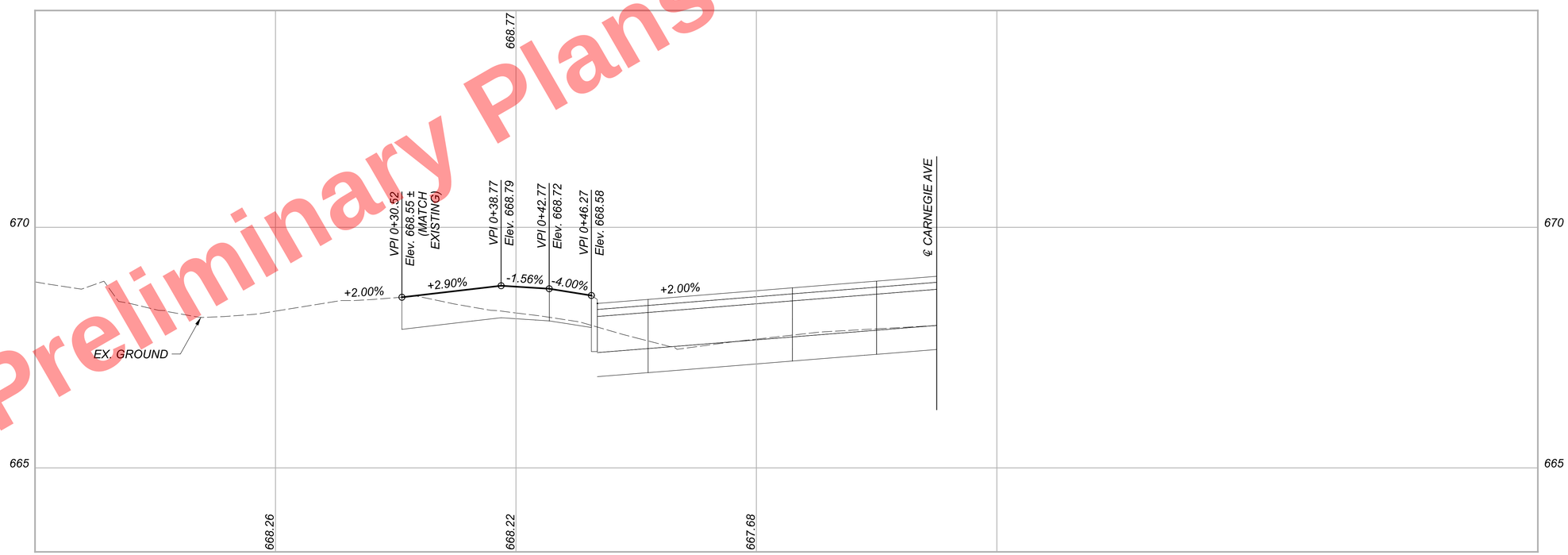

Preliminary Plans - For Reference Only

HORIZONTAL SCALE IN FEET
0 2.5 5 10

PLAN AND PROFILE - DRIVE DR-6
CARNEGIE AVE. STA. 66+85.00

DESIGN AGENCY
Michael Baker INTERNATIONAL

DESIGNER KJM
REVIEWER KGJ 05/22/24
PROJECT ID 82382
SHEET 1077 TOTAL 2696

CUY-90-16.28 (CCG3A)

MODEL: 82382_GD7112 PAPERSIZE: 34x22 (In.) DATE: 3/28/2025 TIME: 9:36:54 AM USER: Alexandria.Summers
pw:\\mb-us-pw.bentley.com\mb-us-pw-03\Documents\Cleveland_OHIO_Projects\ODOT\District2\82382\400-Engineering\Roadway\Sheets\82382_GD7107.dgn

NOTES:
STA./OFFSET OFF OF DRIVE ALIGNMENT UNLESS NOTED OTHERWISE.

CONCRETE DRIVEWAY PAVEMENT COMPOSITION ON DRIVE APRON, SIDEWALK AND REST OF DRIVE UNLESS NOTED OTHERWISE. SEE DETAIL 10 ON SHEET 17

ASPHALT DRIVEWAY PAVEMENT COMPOSITION SEE DETAIL 9 ON SHEET 17

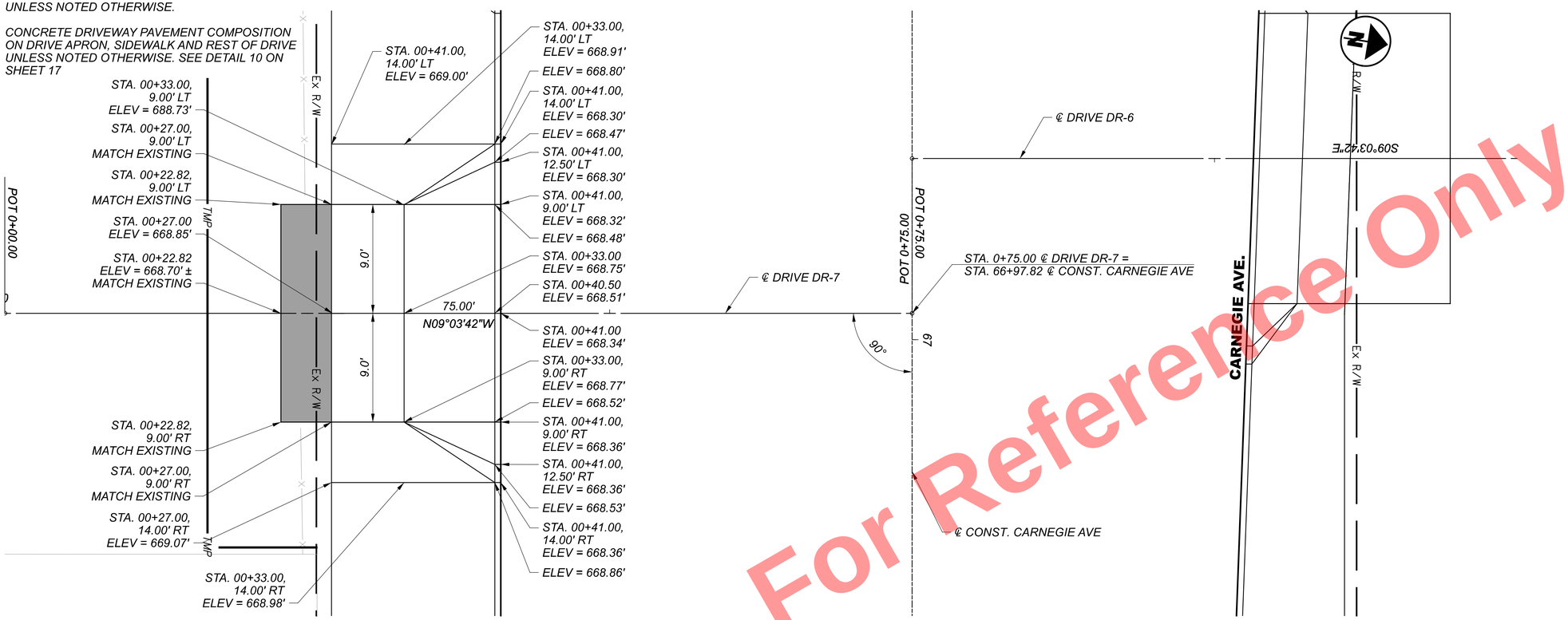

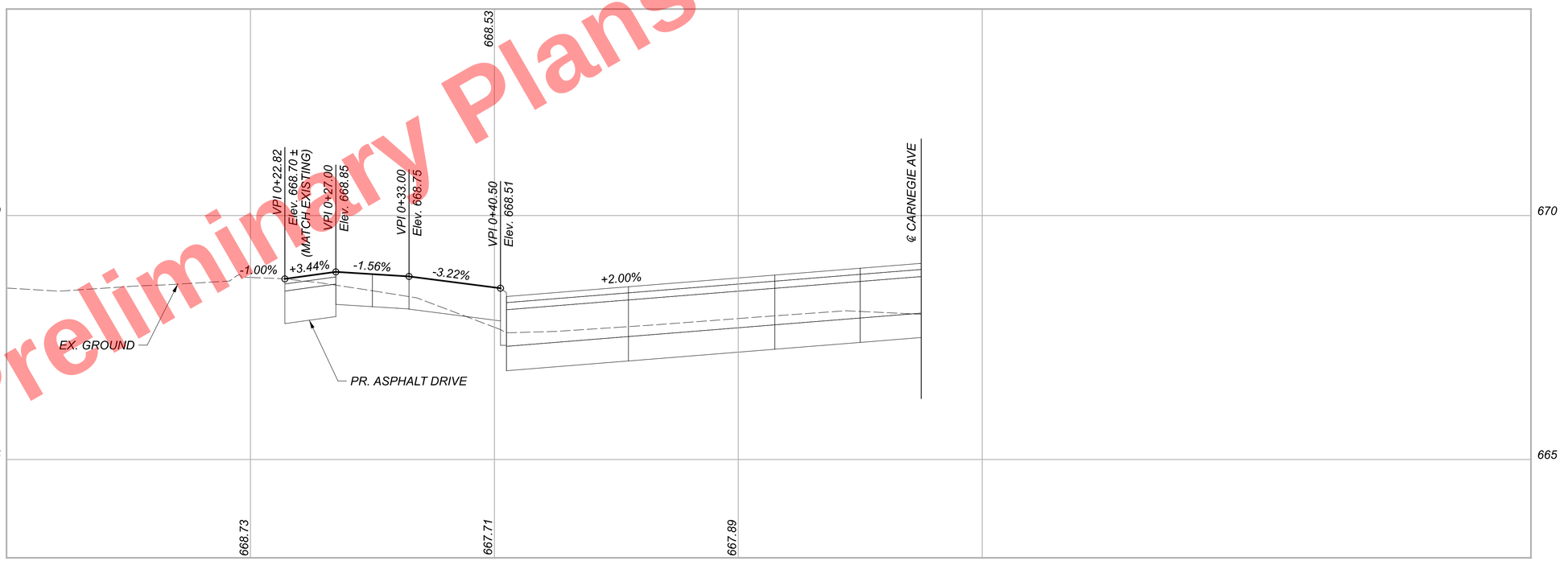

Preliminary Plans - For Reference Only

HORIZONTAL SCALE IN FEET
0 2.5 5 10

PLAN AND PROFILE - DRIVE DR-7
CARNEGIE AVE. STA. 66+97.82

CUY-90-16.28 (CCG3A)

MODEL: 82832_GD7108 PAPERSIZE: 34x22 (in.) DATE: 3/28/2025 TIME: 9:37:10 AM USER: Alexandria.Summers
pw:\\mb-us-pw.bentley.com\mb-us-pw-03\Documents\Cleveland_OH\01_Projects\ODOT\District2\82382\400-Engineering\Roadway\Sheets\82382_GD7108.dgn

DESIGN AGENCY
Michael Baker INTERNATIONAL

DESIGNER	KJM
REVIEWER	KGJ 05/22/24
PROJECT ID	82382
SHEET	1078
TOTAL	2696

NOTES:
STA./OFFSET OFF OF DRIVE ALIGNMENT UNLESS NOTED OTHERWISE.

CONCRETE DRIVEWAY PAVEMENT COMPOSITION ON DRIVE APRON, SIDEWALK AND REST OF DRIVE UNLESS NOTED OTHERWISE. SEE DETAIL 10 ON SHEET 17

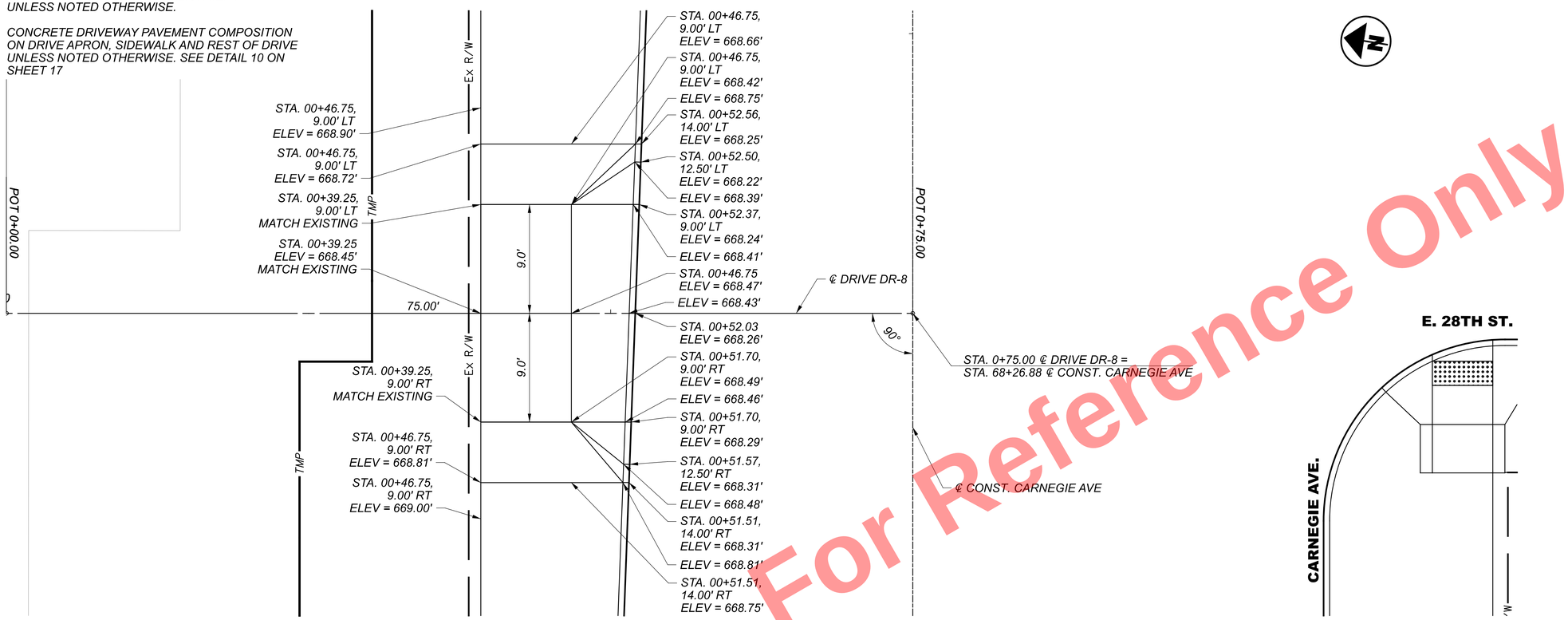

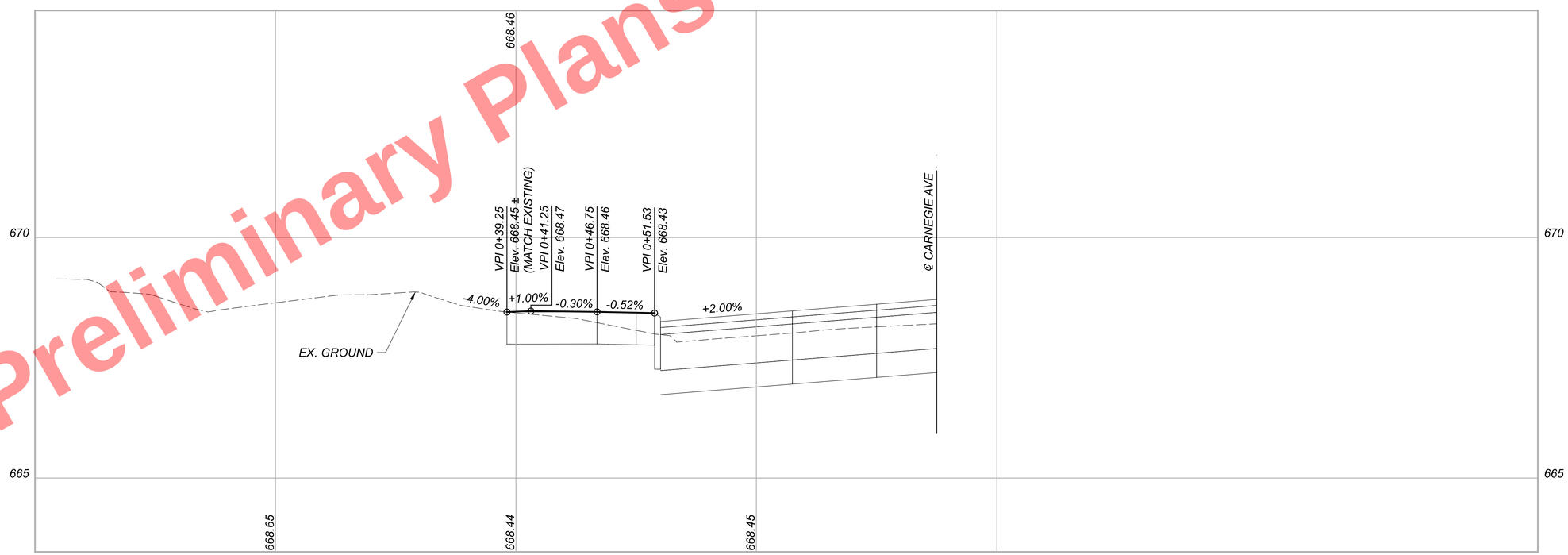

Preliminary Plans - For Reference Only

HORIZONTAL SCALE IN FEET
0 2.5 5 10

PLAN AND PROFILE - DRIVE DR-8 CARNEGIE AVE. STA. 68+26.88

DESIGN AGENCY
Michael Baker INTERNATIONAL

DESIGNER KJM
REVIEWER KGJ 05/22/24
PROJECT ID 82382
SHEET 1079 TOTAL 2696

CUY-90-16.28 (CCG3A)

MODEL: 82382_GD7114 PAPERSIZE: 34x22 (In.) DATE: 3/28/2025 TIME: 9:37:35 AM USER: AlexandriaSummers
pw:\\mb-us-pw.bentley.com:mb-us-pw-03\Documents\Cleveland_OHIO_Projects\DOT\District2\82382\400-Engineering\Roadway\Sheets\82382_GD7109.dgn

NOTES:
STA./OFFSET OFF OF DRIVE ALIGNMENT UNLESS NOTED OTHERWISE.

CONCRETE DRIVEWAY PAVEMENT COMPOSITION ON DRIVE APRON, SIDEWALK AND REST OF DRIVE UNLESS NOTED OTHERWISE. SEE DETAIL 10 ON SHEET 17

ASPHALT DRIVEWAY PAVEMENT COMPOSITION SEE DETAIL 9 ON SHEET 17

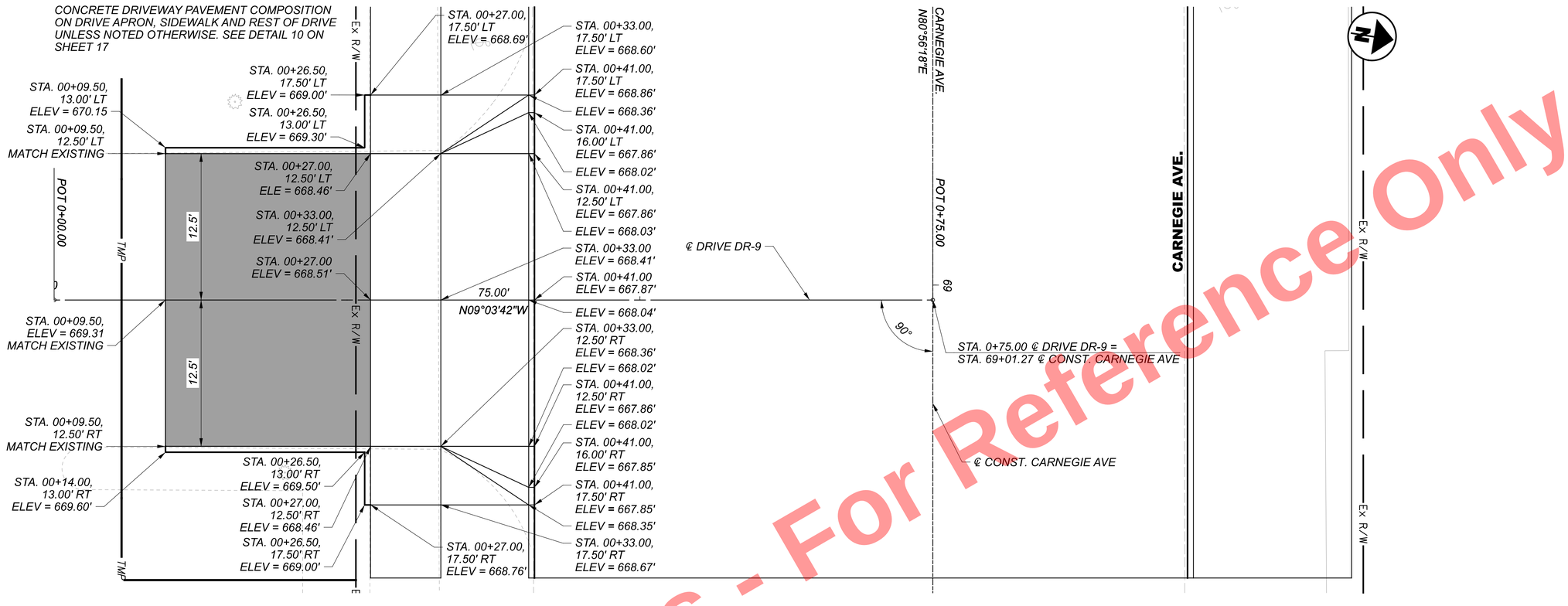

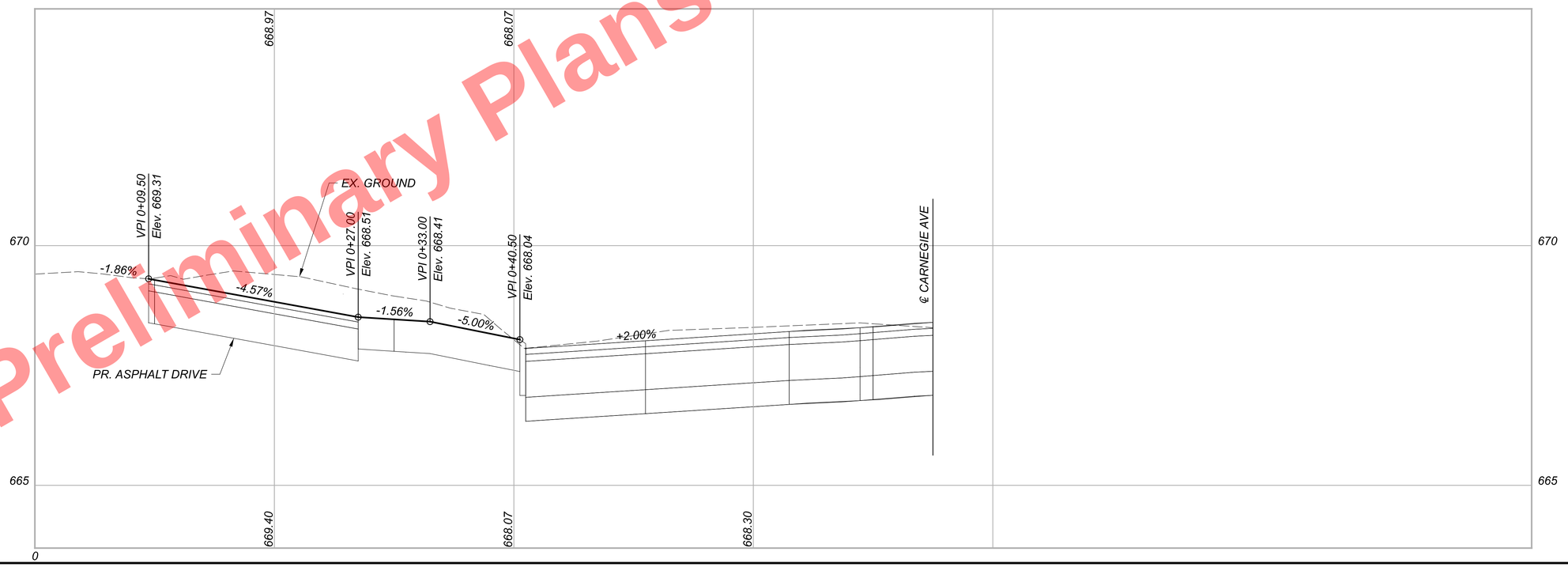

Preliminary Plans - For Reference Only

HORIZONTAL SCALE IN FEET
0 2.5 5 10

PLAN AND PROFILE - DRIVE DR-9
CARNEGIE AVE. STA. 69+01.27

DESIGN AGENCY
Michael Baker INTERNATIONAL

DESIGNER KJM
REVIEWER KGJ 05/22/24
PROJECT ID 82382
SHEET 1080 TOTAL 2696

CUY-90-16.28 (CCG3A)

MODEL: 82382_GD7116 PAPERSIZE: 34x22 (in) DATE: 3/28/2025 TIME: 9:37:51 AM USER: Alexandria.Summers
pw:\\mb-us-pw.bentley.com:mb-us-pw-03\Documents\Cleveland_OH\01_Projects\ODOT\District#12\82382\400-Engineering\Roadway\Sheets\82382_GD7110.dgn

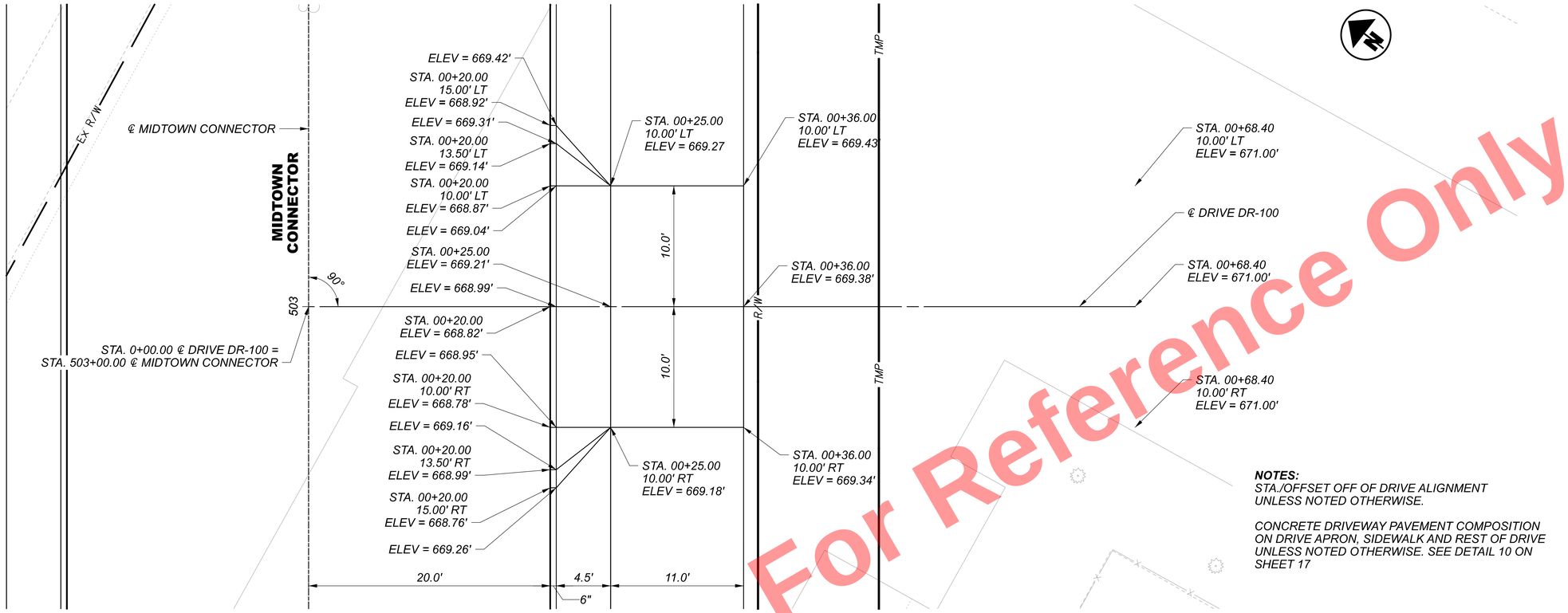

NOTES:
STA./OFFSET OFF OF DRIVE ALIGNMENT UNLESS NOTED OTHERWISE.

CONCRETE DRIVEWAY PAVEMENT COMPOSITION ON DRIVE APRON, SIDEWALK AND REST OF DRIVE UNLESS NOTED OTHERWISE. SEE DETAIL 10 ON SHEET 17

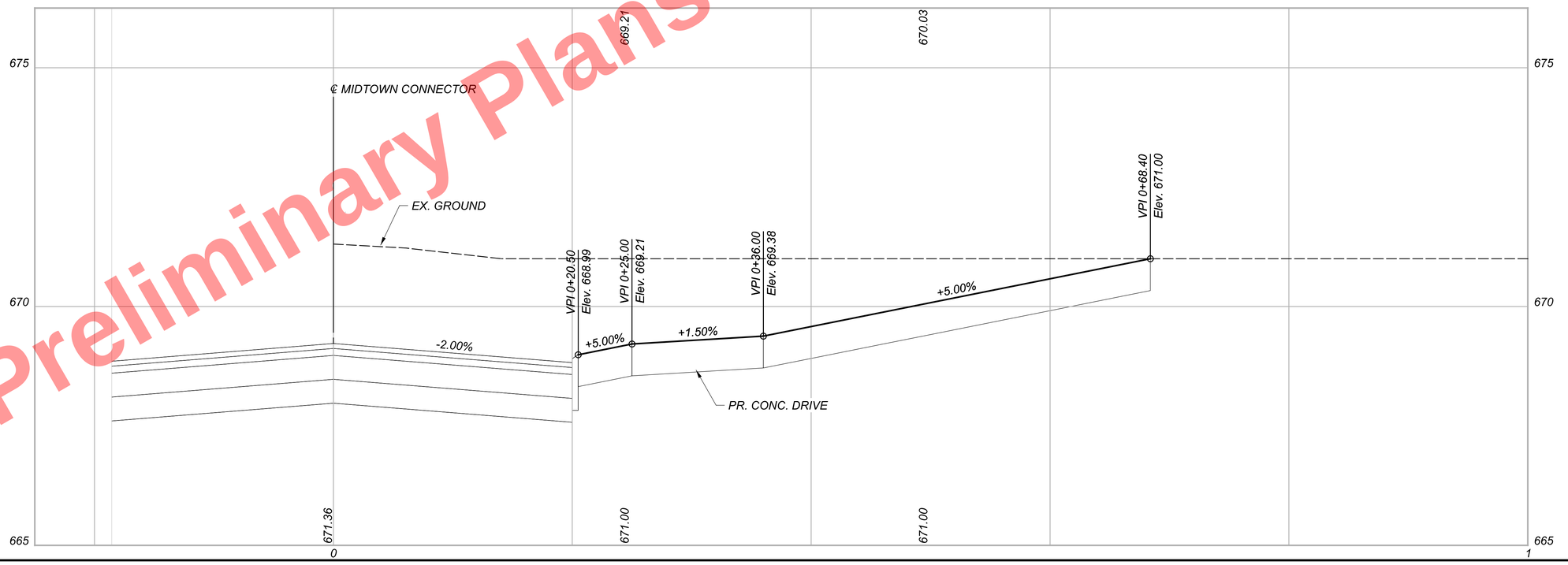

Preliminary Plans - For Reference Only

HORIZONTAL SCALE IN FEET
0 2.5 5 10

PLAN AND PROFILE - DRIVE DR-100
MIDTOWN CONNECTOR - STA. 503+00.00

CUY-90-16.28 (CCG3A)

MODEL: 82382_GD7907 PAPERSIZE: 34x22 (in.) DATE: 3/28/2025 TIME: 9:38:07 AM USER: AlexandriaSummers
pw:\\mb-us-pw.bentley.com:mb-us-pw-03\Documents\Cleveland_OH\OL_Projects\ODOT\District12\82382\400-Engineering\Roadway\Sheets\82382_GD7907.dgn

DESIGN AGENCY
Michael Baker INTERNATIONAL

DESIGNER KJM
REVIEWER KGJ 05/22/24
PROJECT ID 82382
SHEET 1081 TOTAL 2696

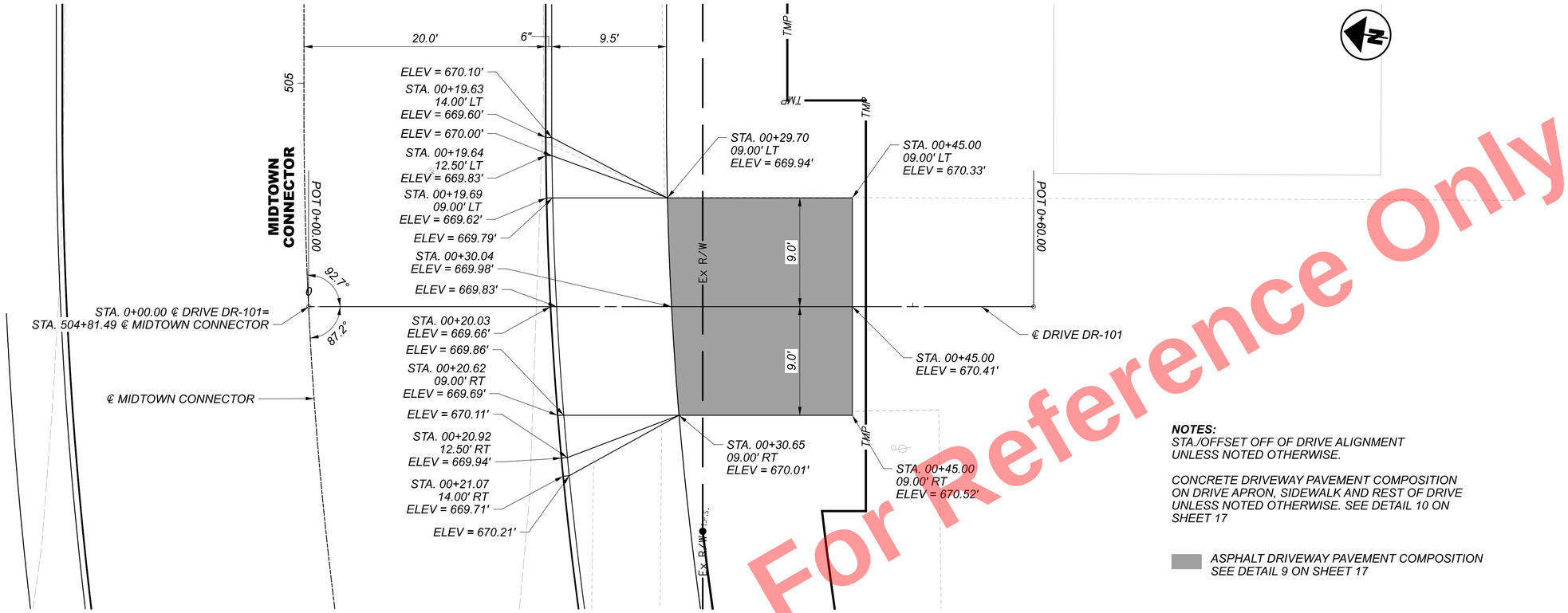

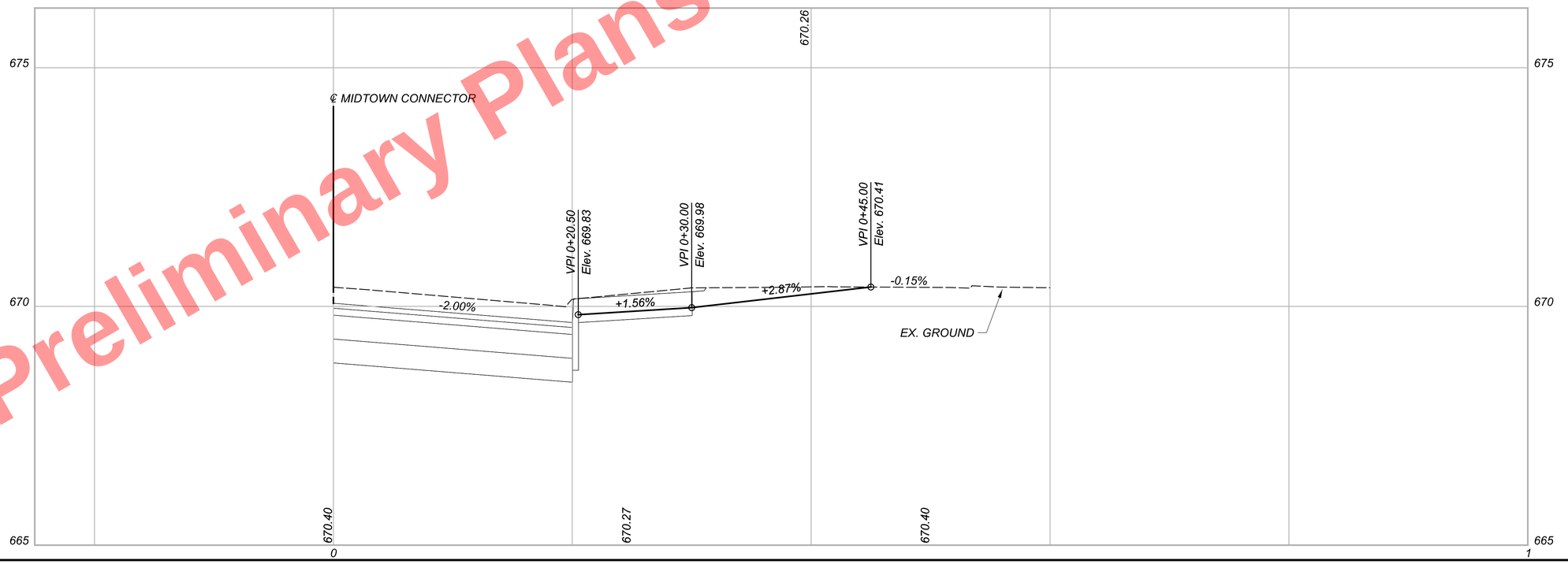

Preliminary Plans - For Reference Only

HORIZONTAL SCALE IN FEET
0 2.5 5 10

PLAN AND PROFILE - DRIVE DR-101
MIDTOWN CONNECTOR - STA. 504+81.49

DESIGN AGENCY
Michael Baker INTERNATIONAL

DESIGNER KJM
REVIEWER KGJ 05/22/24
PROJECT ID 82382
SHEET 1082 TOTAL 2696

CUY-90-16.28 (CCG3A)

MODEL: 82382_GD7903 PAPERSIZE: 34x22 (in.) DATE: 3/28/2025 TIME: 9:38:22 AM USER: AlexandriaSummers
pw:\\mb-us-pw.bentley.commb-us-pw-03\Documents\Cleveland_OH\OI_Projects\ODOT\District#12\82382\400-Engineering\Roadway\Sheets\82382_GD7903.dgn

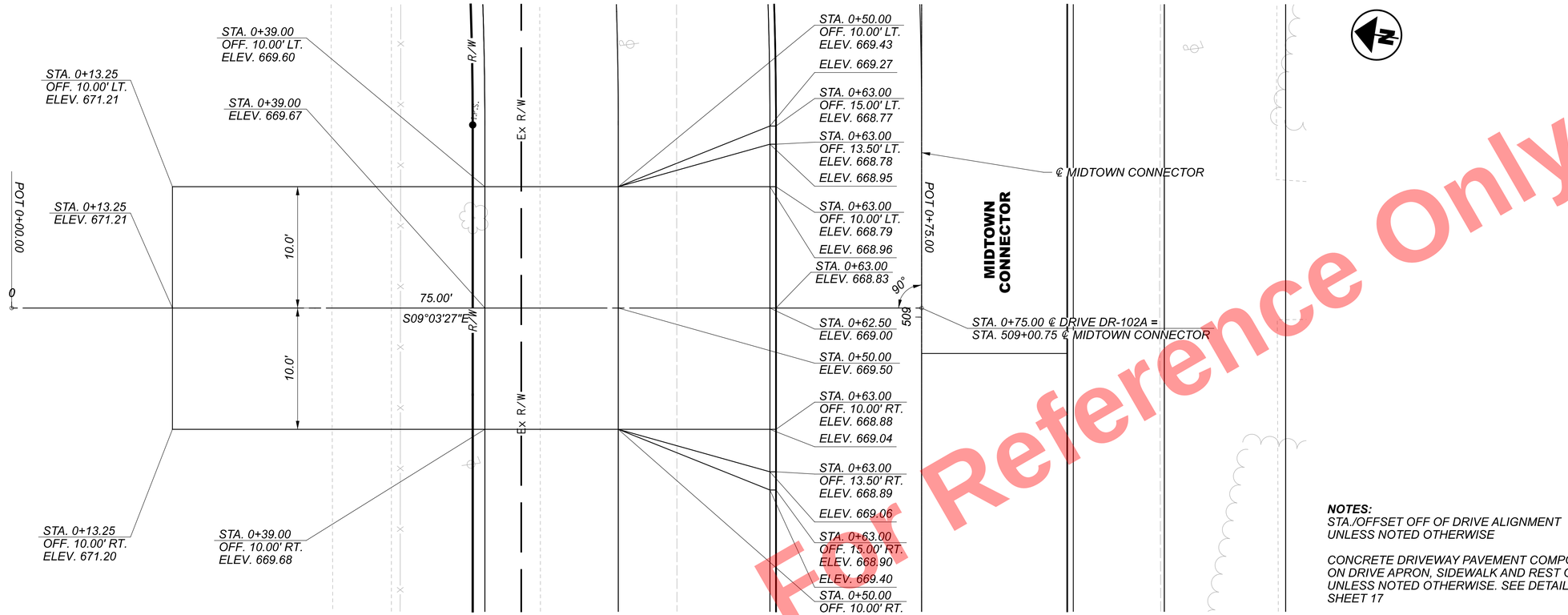

NOTES:
STA./OFFSET OFF OF DRIVE ALIGNMENT UNLESS NOTED OTHERWISE

CONCRETE DRIVEWAY PAVEMENT COMPOSITION ON DRIVE APRON, SIDEWALK AND REST OF DRIVE UNLESS NOTED OTHERWISE. SEE DETAIL 10 ON SHEET 17

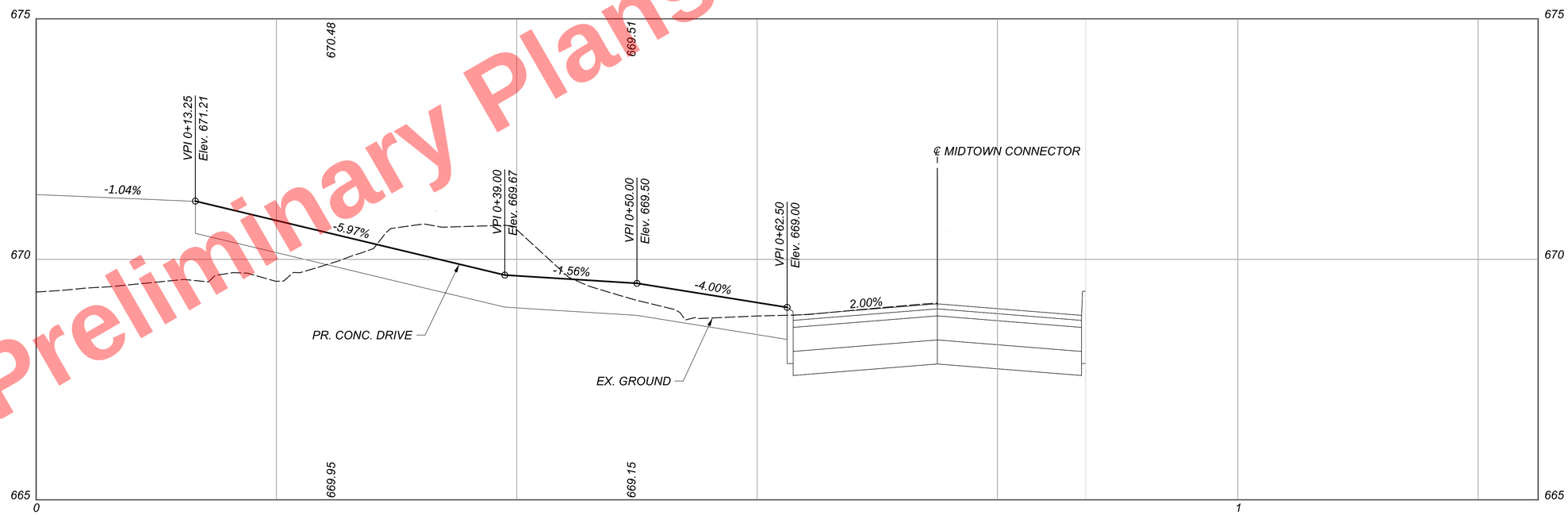

Preliminary Plans - For Reference Only

HORIZONTAL SCALE IN FEET
0 2.5 5 10

PLAN AND PROFILE - DRIVE-102A
MIDTOWN CONNECTOR - STA. 509+00.75

CUY-90-16.28 (CCG3A)

MODEL: 82382_GD7910 PAPERSIZE: 34x22 (in) DATE: 3/28/2025 TIME: 9:38:40 AM USER: Alexandria.Summers
pw:\\mb-us-pw.bentley.com:mb-us-pw-03\Documents\Cleveland_OHIO\Projects\ODOT\District2\82382\400-Engineering\Roadway\Sheets\82382_GD7910.dgn

DESIGN AGENCY
Michael Baker INTERNATIONAL

DESIGNER CRK
REVIEWER KJM 03/13/25
PROJECT ID 82382
SHEET 1083 TOTAL 2696

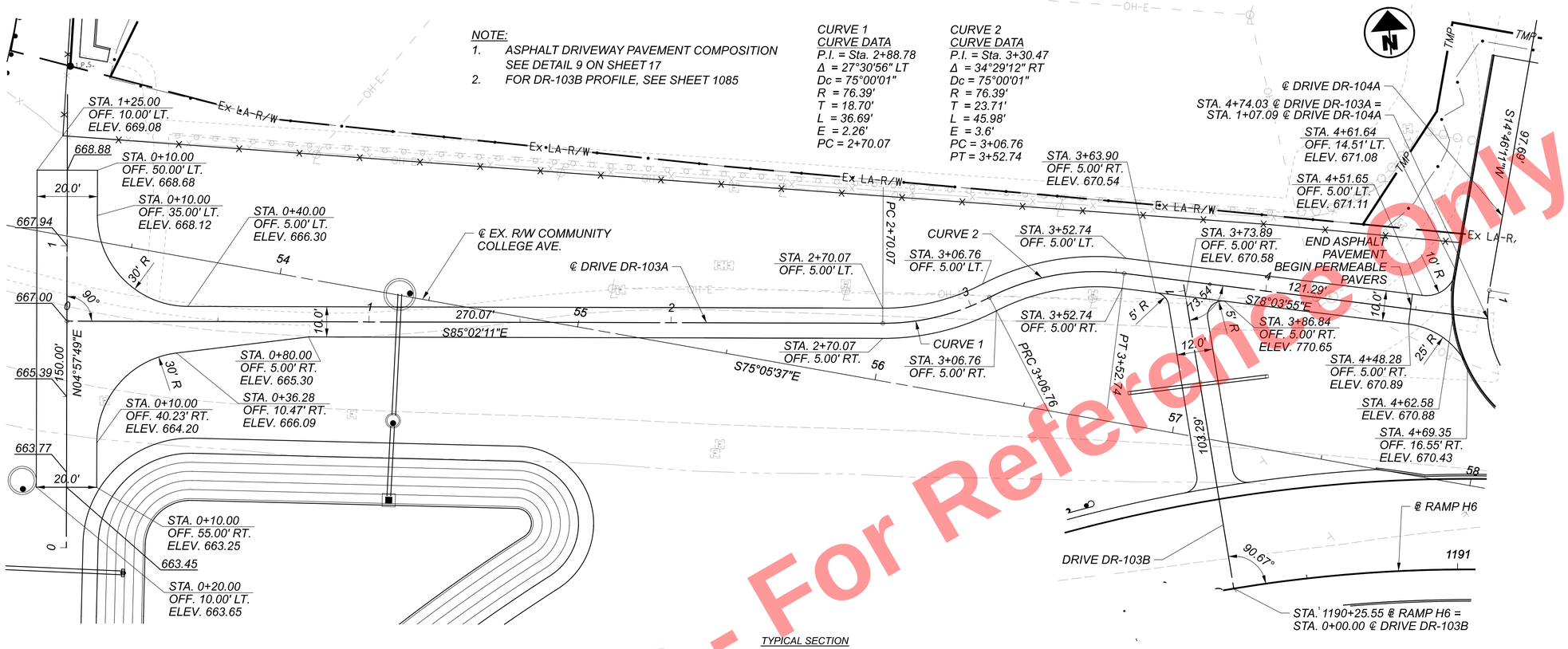

TYPICAL SECTION

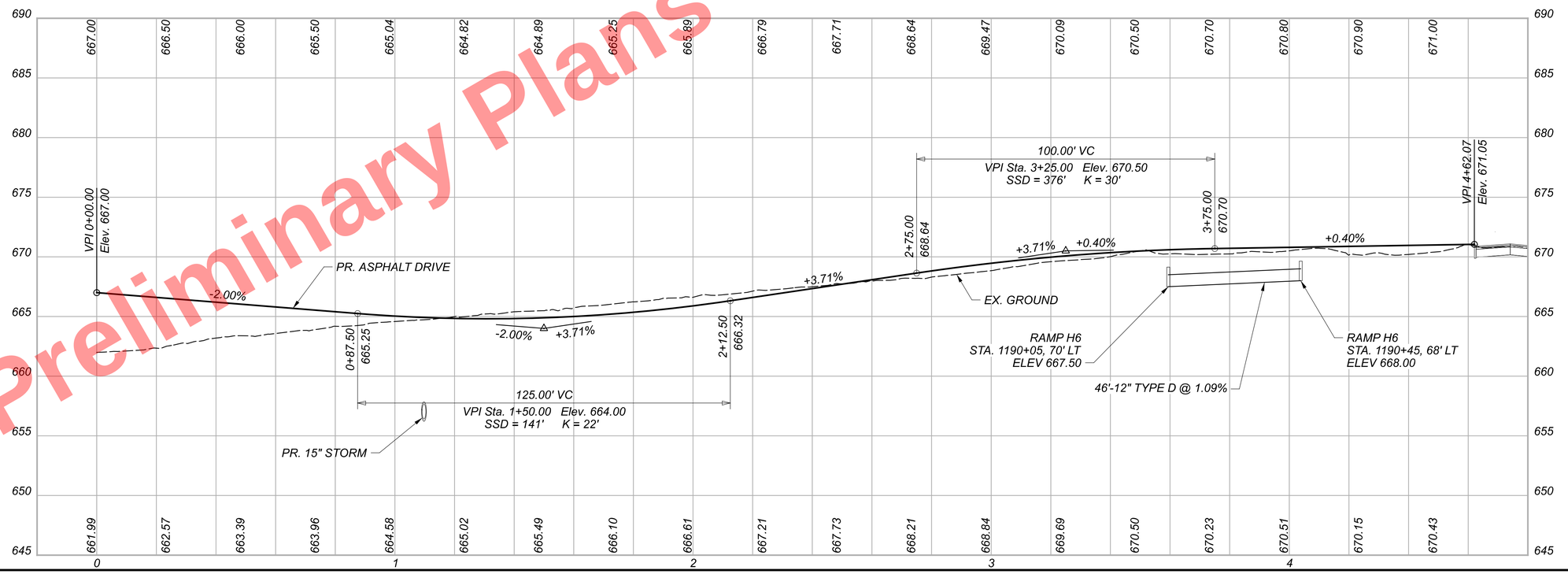

Preliminary Plans - For Reference Only

HORIZONTAL SCALE IN FEET
0 10 20 40

PLAN AND PROFILE - DRIVE DR-103A
DRIVE DR-104A. - STA. 1+07.09

DESIGN AGENCY
Michael Baker INTERNATIONAL

DESIGNER KJM
REVIEWER KGJ 05/22/24
PROJECT ID 82382
SHEET 1084 TOTAL 2696

CUY-90-16.28 (CCG3A)

MODEL: 82382_GD750I PAPERSIZE: 34x22 (in.) DATE: 3/28/2025 TIME: 9:39:42 AM USER: Alexandria.Summers
pw:\\mb-us-pw.bentley.com:mb-us-pw-03\Documents\Cleveland_OH\01_Projects\ODOT\District2\82382\400-Engineering\Roadway\Sheets\82382_GD750I.dgn

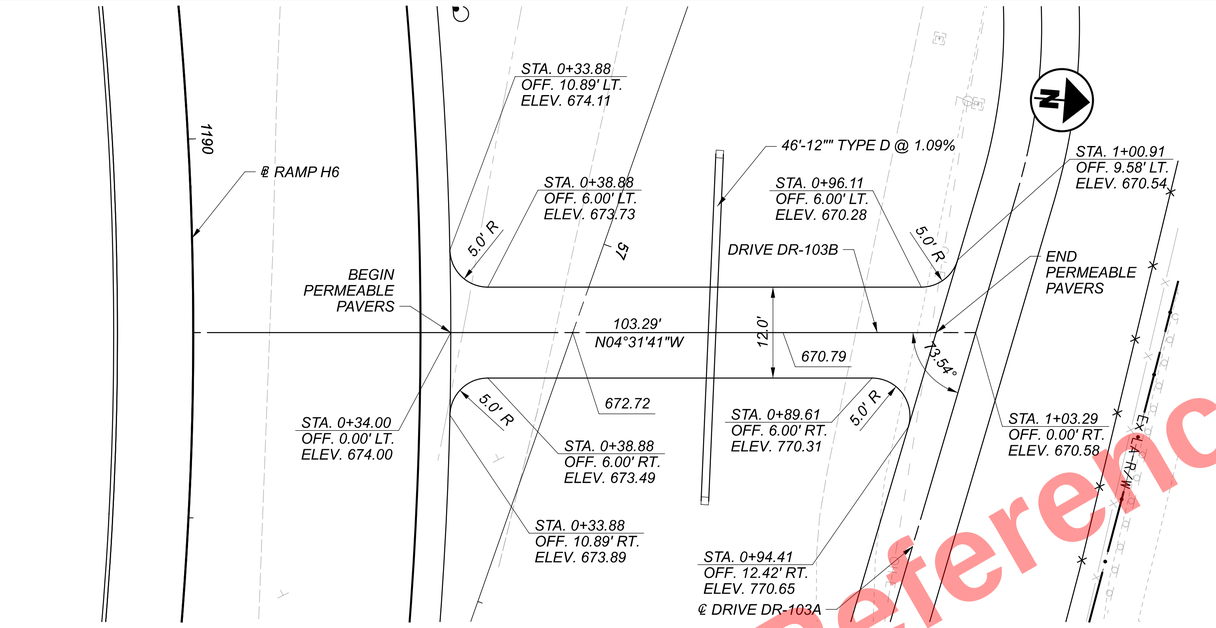

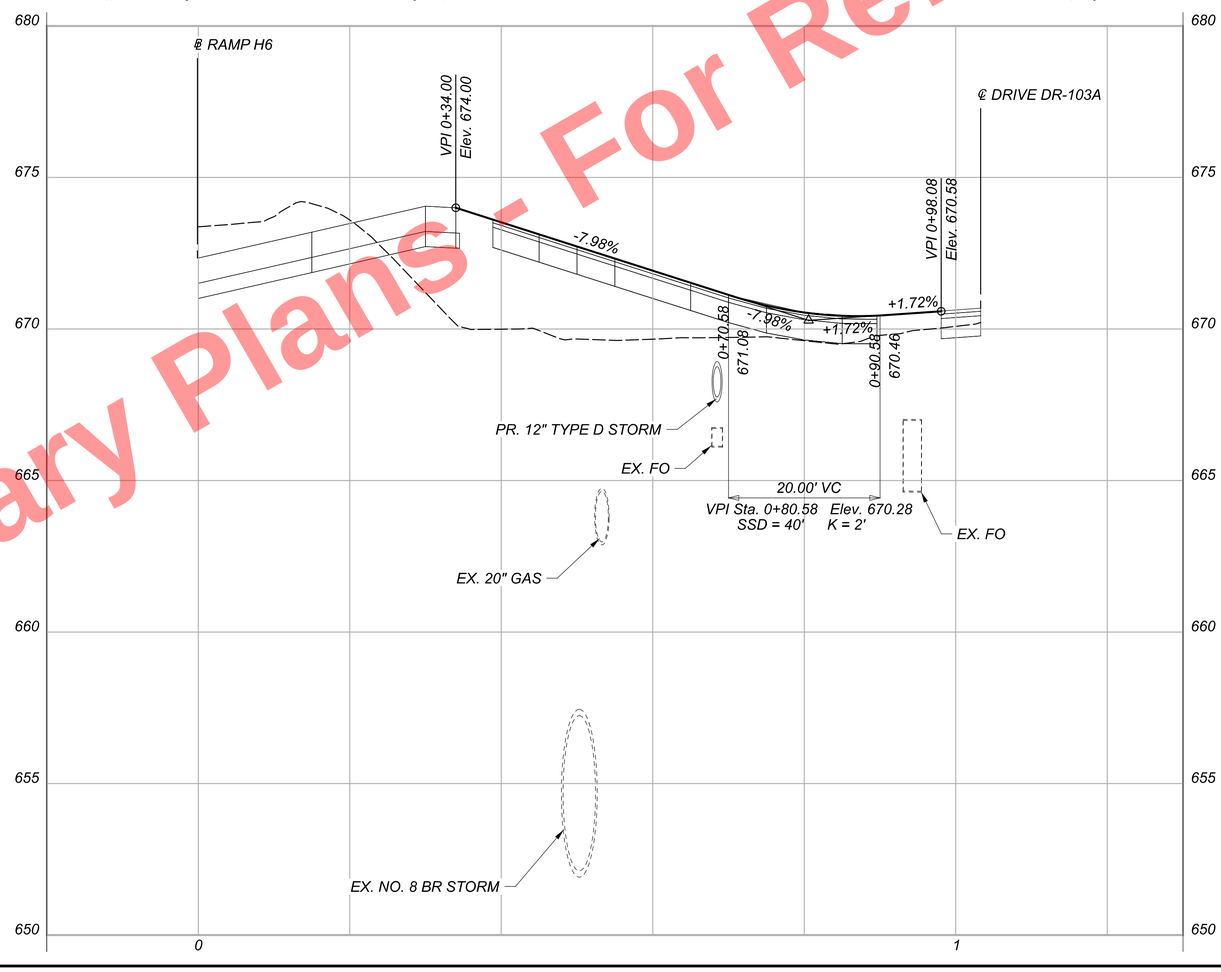

Preliminary Plans - Not For Reference Only

HORIZONTAL SCALE IN FEET
0 5 10 20

PLAN AND PROFILE - DRIVE DR-103B
DRIVE DR-103A. - STA. 3+72.41

CUY-90-16.28 (CCG3A)

MODEL: CLP_Drlvl4 - Plan 3 PAPERSIZE: 34x22 (in.) DATE: 3/28/2025 TIME: 9:40:20 AM USER: AlexandriaSummers
pw:\\mb-us-pw.bentley.com:mb-us-pw-03\Documents\Cleveland_OH\01_Projects\ODOT\District#12\82382\400-Engineering\Roadway\Sheets\82382_GD7502.dgn

DESIGN AGENCY
Michael Baker INTERNATIONAL

DESIGNER KJM
REVIEWER KGJ 05/22/24
PROJECT ID 82382
SHEET 1085 TOTAL 2696

NOTES:
STA./OFFSET OFF OF DRIVE ALIGNMENT UNLESS NOTED OTHERWISE.

CONCRETE DRIVEWAY PAVEMENT COMPOSITION ON DRIVE APRON, SIDEWALK AND REST OF DRIVE UNLESS NOTED OTHERWISE. SEE DETAIL 10 ON SHEET 17

ASPHALT DRIVEWAY PAVEMENT COMPOSITION SEE DETAIL 9 ON SHEET 17

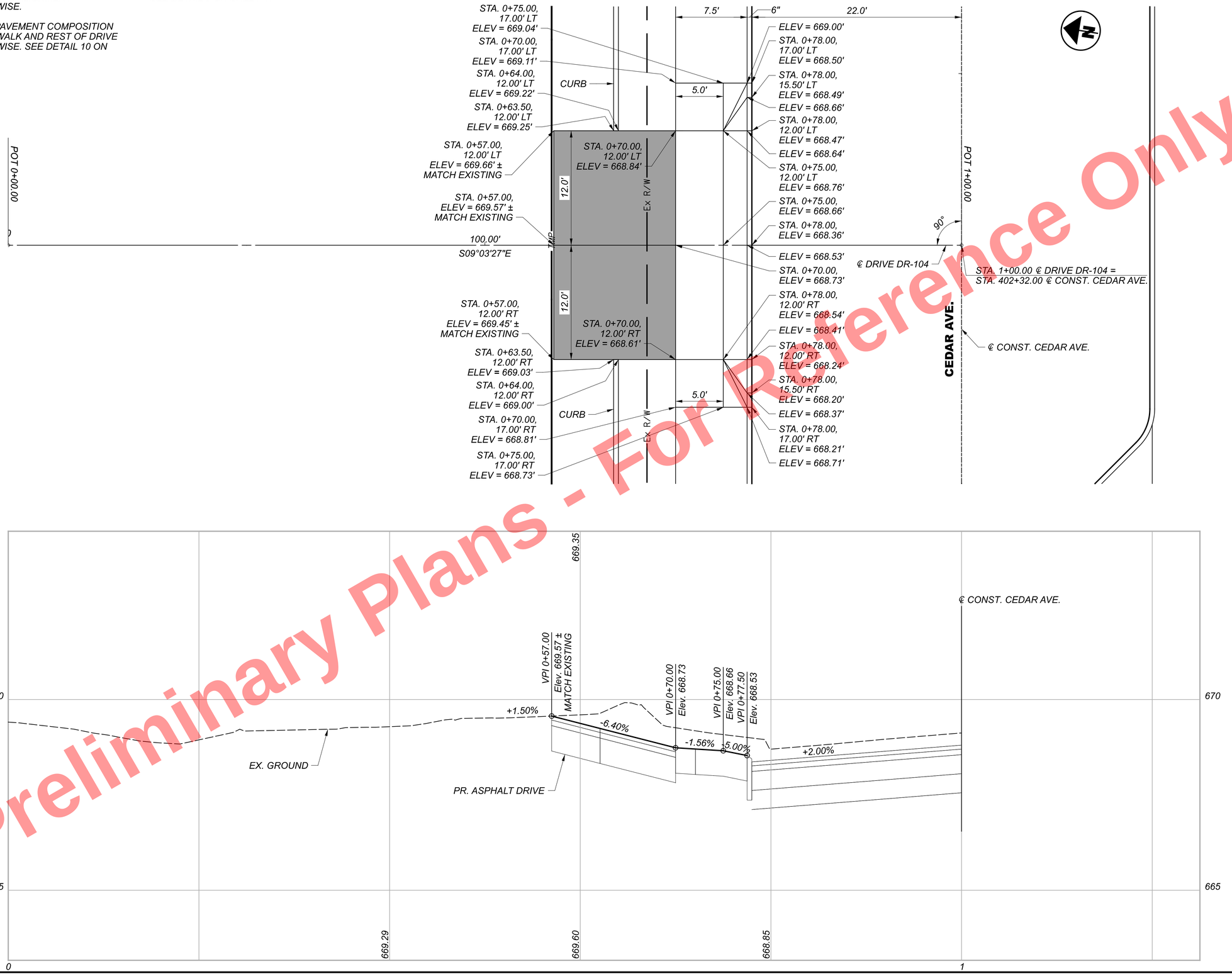

Preliminary Plans - Not For Construction - For Reference Only

HORIZONTAL SCALE IN FEET
0 2.5 5 10

PLAN AND PROFILE - DRIVE DR-104
CEDAR AVE - STA. 402+32.00

CUY-90-16.28 (CCG3A)

MODEL: 82382_GD7909 PAPERSIZE: 34x22 (in.) DATE: 3/28/2025 TIME: 9:40:36 AM USER: Alexandria.Summers
pw:\\mb-us-pw.bentley.com:mb-us-pw-03\Documents\Cleveland_OH\01_Projects\ODOT\District2\82382\400-Engineering\Roadway\Sheets\82382_GD7905.dgn

DESIGN AGENCY
Michael Baker INTERNATIONAL

DESIGNER KJM
REVIEWER KGJ 05/22/24
PROJECT ID 82382
SHEET 1086 TOTAL 2696

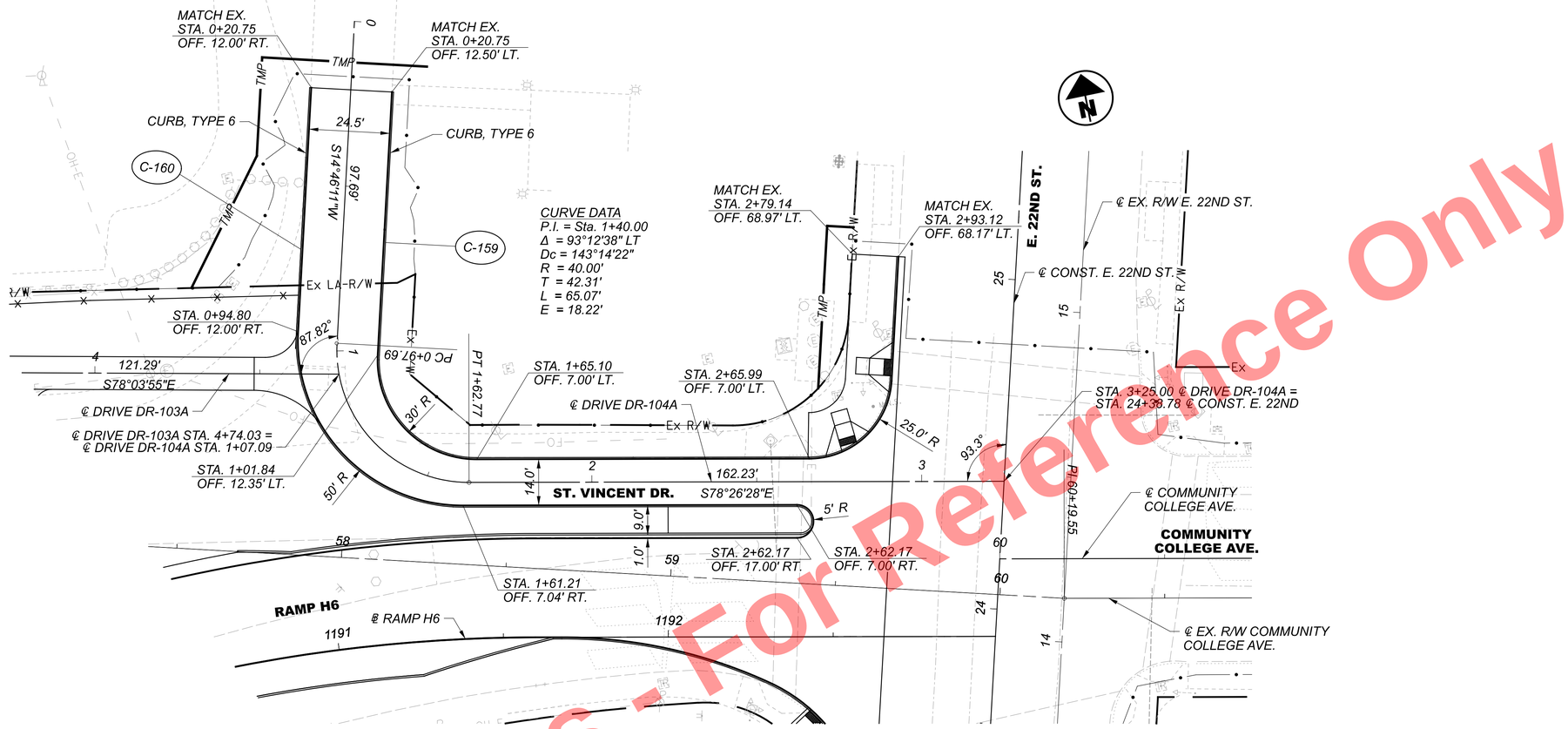

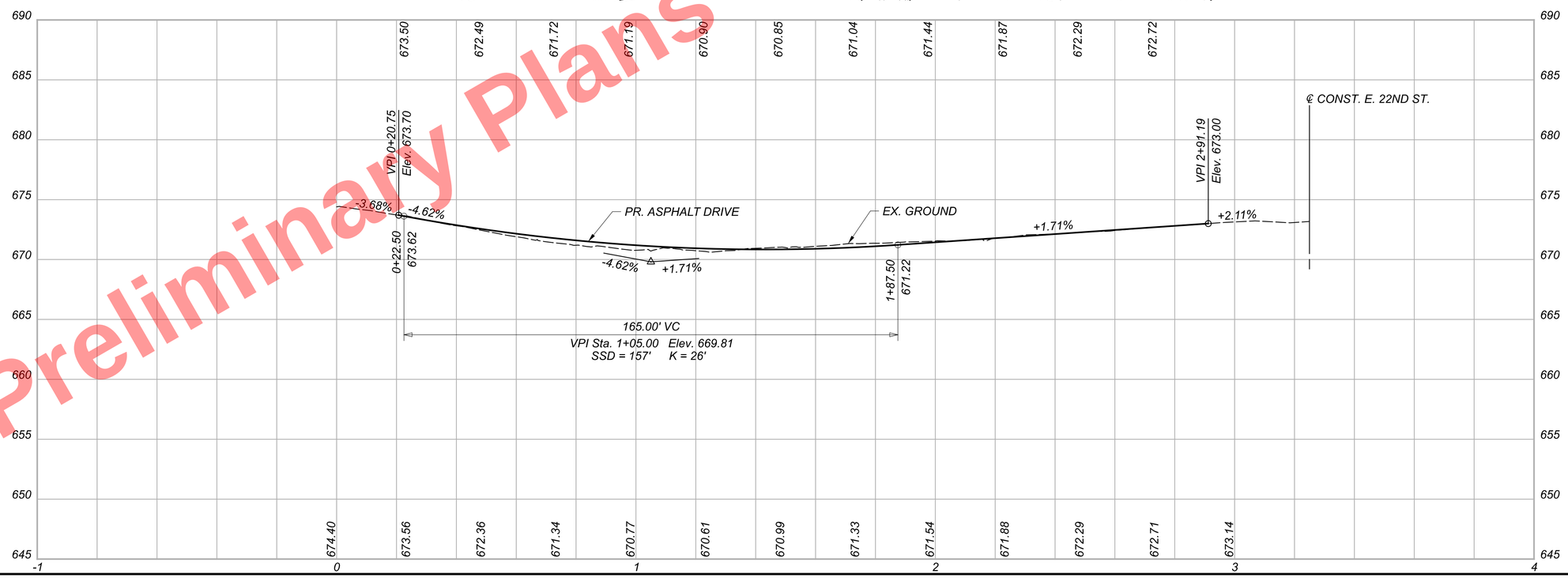

Preliminary Plans - For Reference Only

HORIZONTAL SCALE IN FEET
0 10 20 40

PLAN AND PROFILE - DRIVE DR-104A
E. 22ND ST. - STA. 24+38.78

DESIGN AGENCY
Michael Baker INTERNATIONAL

DESIGNER
KJM

REVIEWER
KGJ 05/22/24

PROJECT ID
82382

SHEET 1087 TOTAL 2696

CUY-90-16.28 (CCG3A)

MODEL: 82382_GD7401 PAPERSIZE: 34x22 (in.) DATE: 3/28/2025 TIME: 9:41:14 AM USER: Alexandria.Summers
pw:\\mb-us-pw.bentley.com:mb-us-pw-03\Documents\Cleveland_OH\01_Projects\ODOT\District12\82382\400-Engineering\Roadway\Sheets\82382_GD7401.dgn

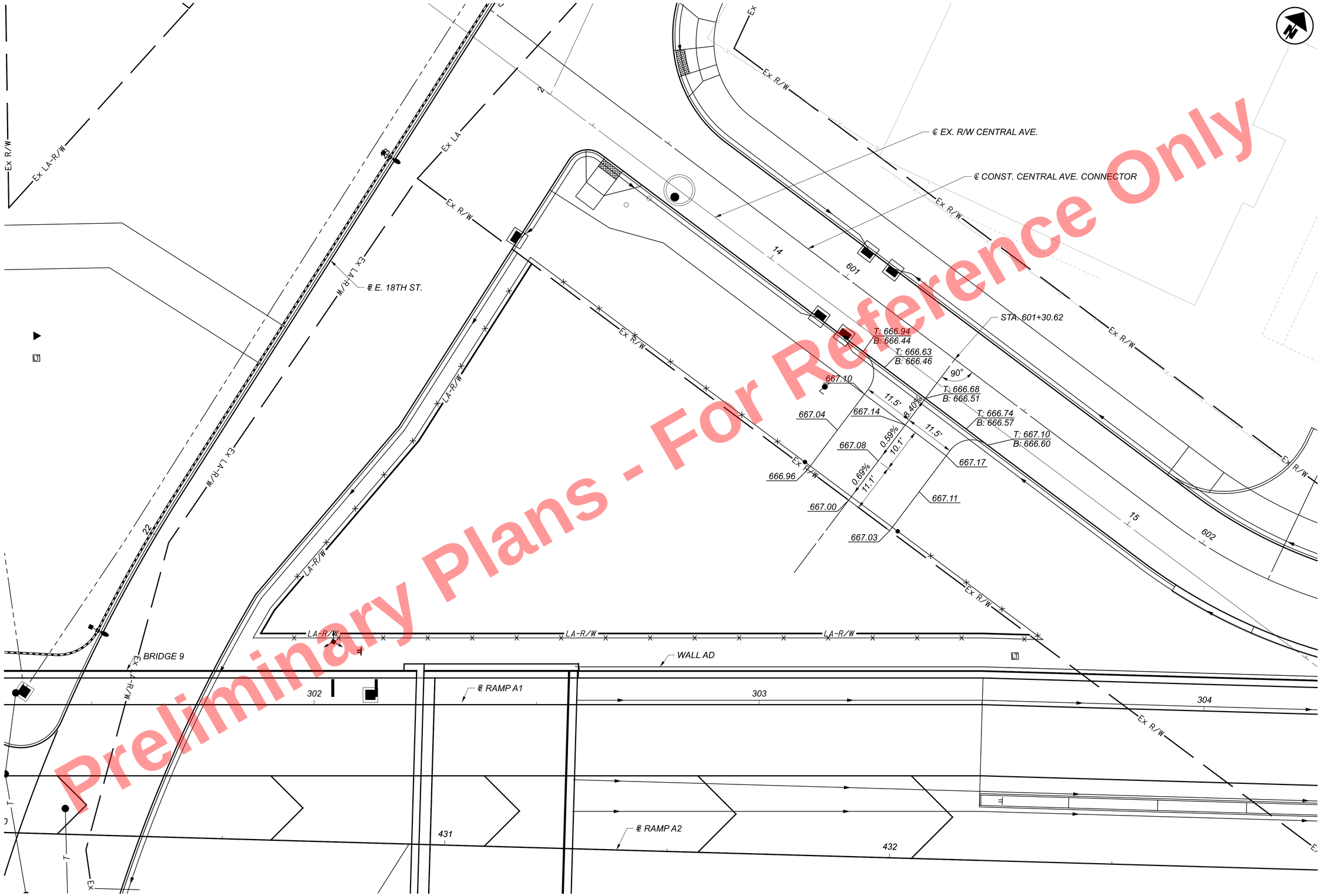

Preliminary Plans - For Reference Only

HORIZONTAL SCALE IN FEET
0 5 10 20

DRIVE GRADING DETAIL - DR-102
E. 18TH ST & CENTRAL AVE. CONNECTOR

DESIGN AGENCY
Michael Baker INTERNATIONAL

DESIGNER MZG
REVIEWER GSH 08/12/2024
PROJECT ID 82382
SHEET 1088 TOTAL 2696

CUY-90-16.28 (CCG3A)

MODEL: 82382_TP7902 PAPERSIZE: 34x22 (in.) DATE: 5/16/2025 TIME: 8:38:45 PM USER: Kathy.Johnson
pw:\\mb-us-pw.bentley.commb-us-pw-03\Documents\Cleveland.OH\OI_Projects\ODOT\District2\82382\400-Engineering\Roadway\Sheets\82382_GI5102.dgn

NOTES:
STA./OFFSET OFF OF DRIVE ALIGNMENT UNLESS NOTED OTHERWISE

USE CONCRETE DRIVEWAY PAVEMENT COMPOSITION ON DRIVE APRON, SIDEWALK AND REST OF DRIVE UNLESS NOTED OTHERWISE. SEE DETAIL 10 ON SHEET 17

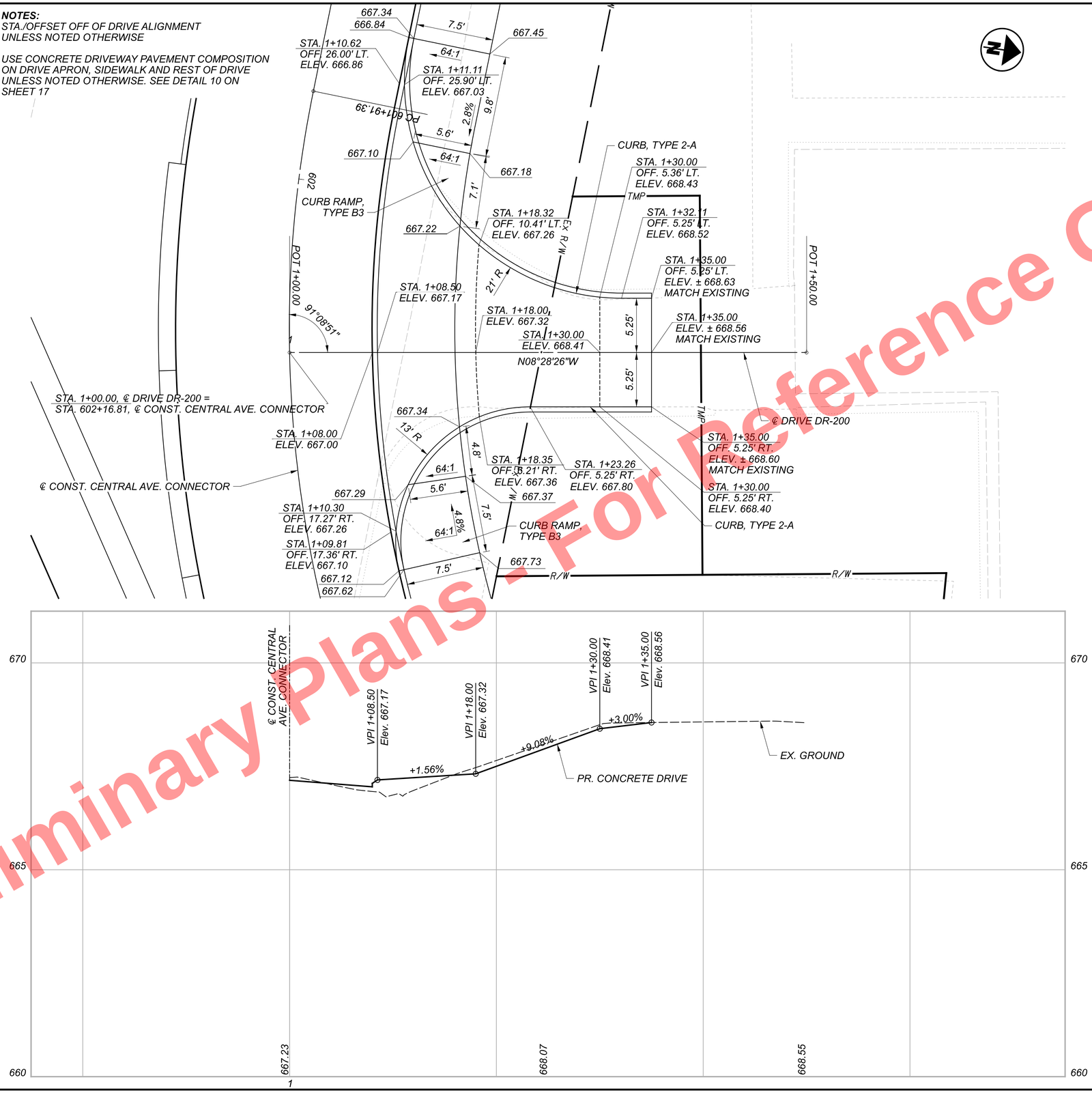

Preliminary Plans - For Reference Only

HORIZONTAL SCALE IN FEET
0 2.5 5 10

PLAN AND PROFILE - DRIVE DR-200
CENTRAL AVE. CONNECTOR - STA. 602+16.81

DESIGN AGENCY
HDR

DESIGNER
BMV

REVIEWER
TJS 04/30/24

PROJECT ID
82382

SHEET 1089 TOTAL 2696

CUY-90-16.28 (CCG3A)

MODEL: DR-200 - Plan and Profile [Sheet] PAPERSIZE: 34x22 (in.) DATE: 3/28/2025 TIME: 9:42:13 AM USER: AlexandriaSummers
pw:\\mb-us-pw.bentley.commb-us-pw-03\Documents\Cleveland_OH\01_Projects\ODOT\District2\82382\400-Engineering\Roadway\Sheets\82382_GD730i.dgn

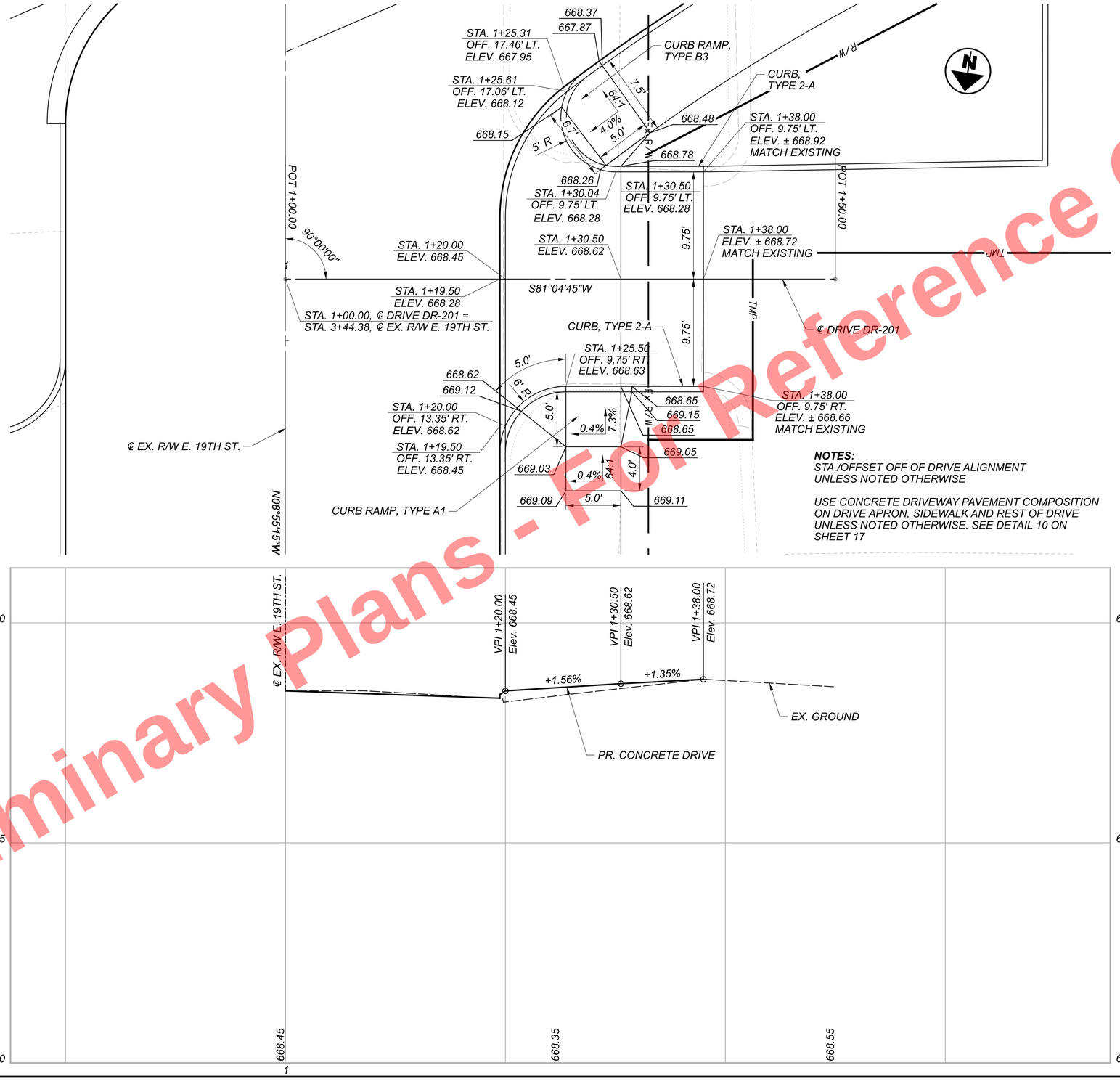

Preliminary Plans - For Reference Only

HORIZONTAL
SCALE IN FEET
0 2.5 5 10

PLAN AND PROFILE - DRIVE DR-201
EX. R/W E. 19TH ST. - STA. 3+44.38

DESIGN AGENCY

DESIGNER
BMV
REVIEWER
TJS 04/30/24
PROJECT ID
82382
SHEET 1090 TOTAL 2696

CUY-90-16.28

MODEL: DR-201 - Plan and Profile [Sheet] PAPERSIZE: 34x22 (in.) DATE: 3/28/2025 TIME: 9:42:43 AM USER: Alexandria.Summers
pw:\\mb-us-pw.bentley.com:mb-us-pw-03\Documents\Cleveland_OH\DLProjects\ODOT\District2\82382\400-Engineering\Roadway\Sheets\82382_GD7302.dgn

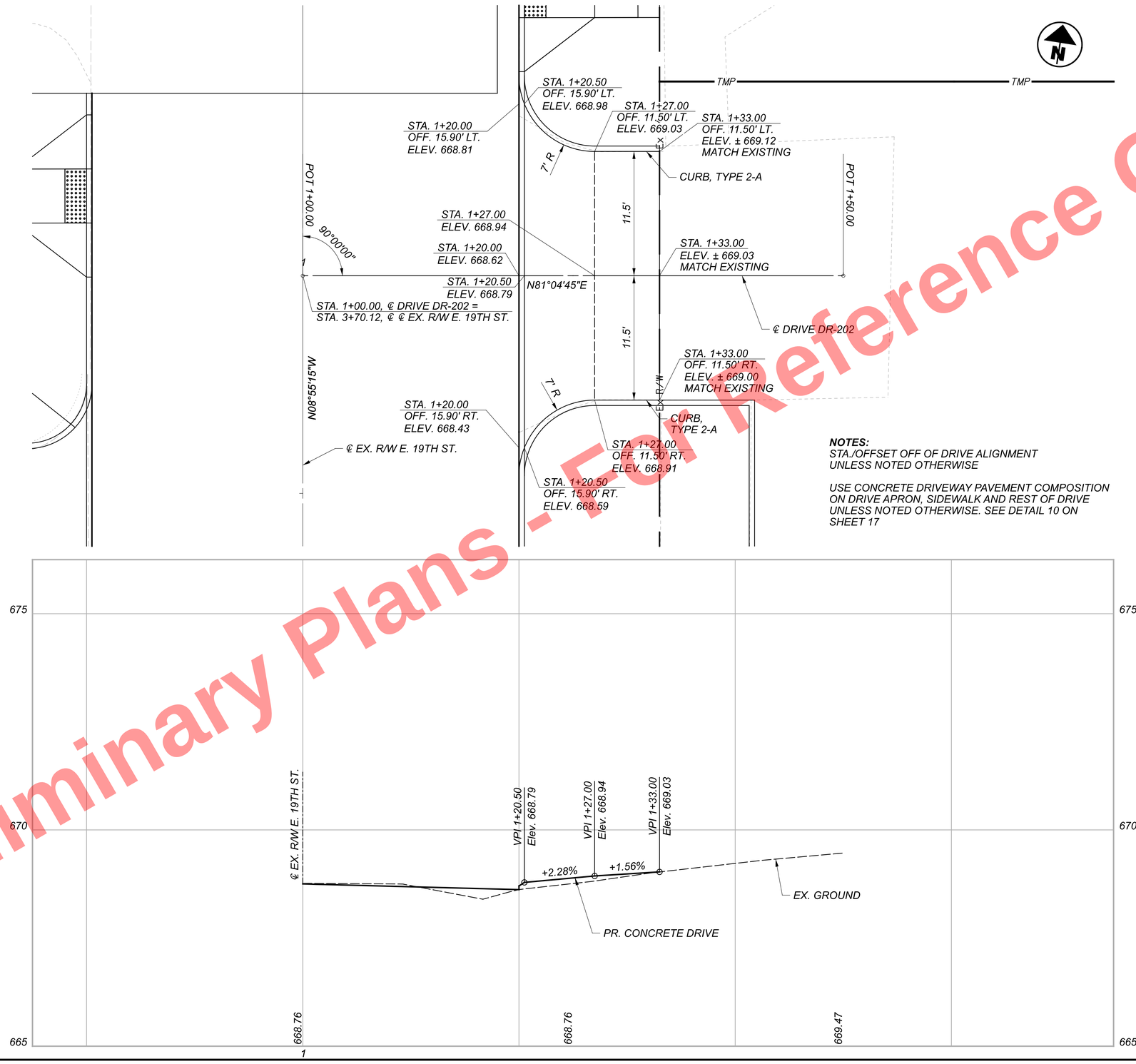

NOTES:
STA./OFFSET OFF OF DRIVE ALIGNMENT UNLESS NOTED OTHERWISE

USE CONCRETE DRIVEWAY PAVEMENT COMPOSITION ON DRIVE APRON, SIDEWALK AND REST OF DRIVE UNLESS NOTED OTHERWISE. SEE DETAIL 10 ON SHEET 17

Preliminary Plans - For Reference Only

HORIZONTAL SCALE IN FEET
0 2.5 5 10

PLAN AND PROFILE - DRIVE DR-202
EX. R/W E. 19TH ST. - STA. 3+70.12

DESIGN AGENCY
HDR

DESIGNER	BMV
REVIEWER	TJS 04/30/24
PROJECT ID	82382
SHEET	1091
TOTAL	2696

CUY-90-16.28 (CCG3A)

MODEL: DR-202 - Plan and Profile (Sheet) PAPERSIZE: 34x22 (In.) DATE: 3/28/2025 TIME: 9:42:58 AM USER: Alexandria.Summers
pw:\\mb-us-pw.bentley.com:mb-us-pw-03\Documents\Cleveland_OH.OI_Projects\ODOT\District2\82382\400-Engineering\Roadway\Sheets\82382_GD7303.dgn

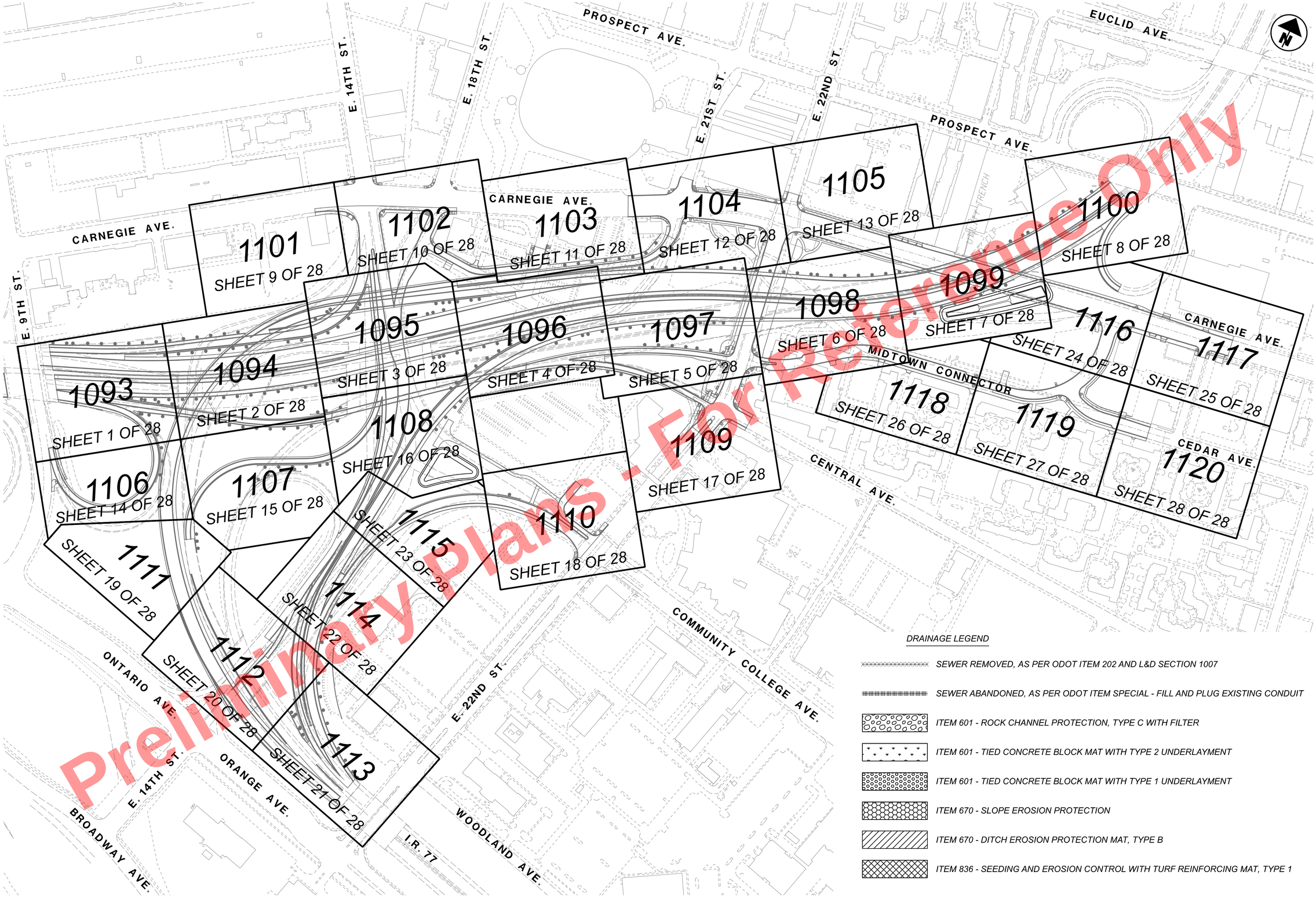

Preliminary Plans - For Reference Only

DRAINAGE LEGEND

- SEWER REMOVED, AS PER ODOT ITEM 202 AND L&D SECTION 1007
- SEWER ABANDONED, AS PER ODOT ITEM SPECIAL - FILL AND PLUG EXISTING CONDUIT
- ITEM 601 - ROCK CHANNEL PROTECTION, TYPE C WITH FILTER
- ITEM 601 - TIED CONCRETE BLOCK MAT WITH TYPE 2 UNDERLAYMENT
- ITEM 601 - TIED CONCRETE BLOCK MAT WITH TYPE 1 UNDERLAYMENT
- ITEM 670 - SLOPE EROSION PROTECTION
- ITEM 670 - DITCH EROSION PROTECTION MAT, TYPE B
- ITEM 836 - SEEDING AND EROSION CONTROL WITH TURF REINFORCING MAT, TYPE 1

HORIZONTAL SCALE IN FEET
0 75 150 300

DRAINAGE PLAN KEY PLAN

DESIGN AGENCY
Michael Baker INTERNATIONAL

DESIGNER BJT
REVIEWER KGJ 05/22/24
PROJECT ID 82382
SHEET 1092 TOTAL 2696

CUY-90-16.28

MODEL: Sheet PAPERSIZE: 34x22 (in.) DATE: 3/27/2025 TIME: 9:19:06 PM USER: Julie.Ross
pw:\\mb-us-pw.bentley.com:mb-us-pw-03\Documents\Cleveland_OH\OI_Projects\ODOT\District12\82382\400-Engineering\Drainage\Sheets\82382_DP9000.dgn

CROSS REFERENCES	
STRUCTURE	SHEET
D-190	1133
D-191	1133
D-194	1133

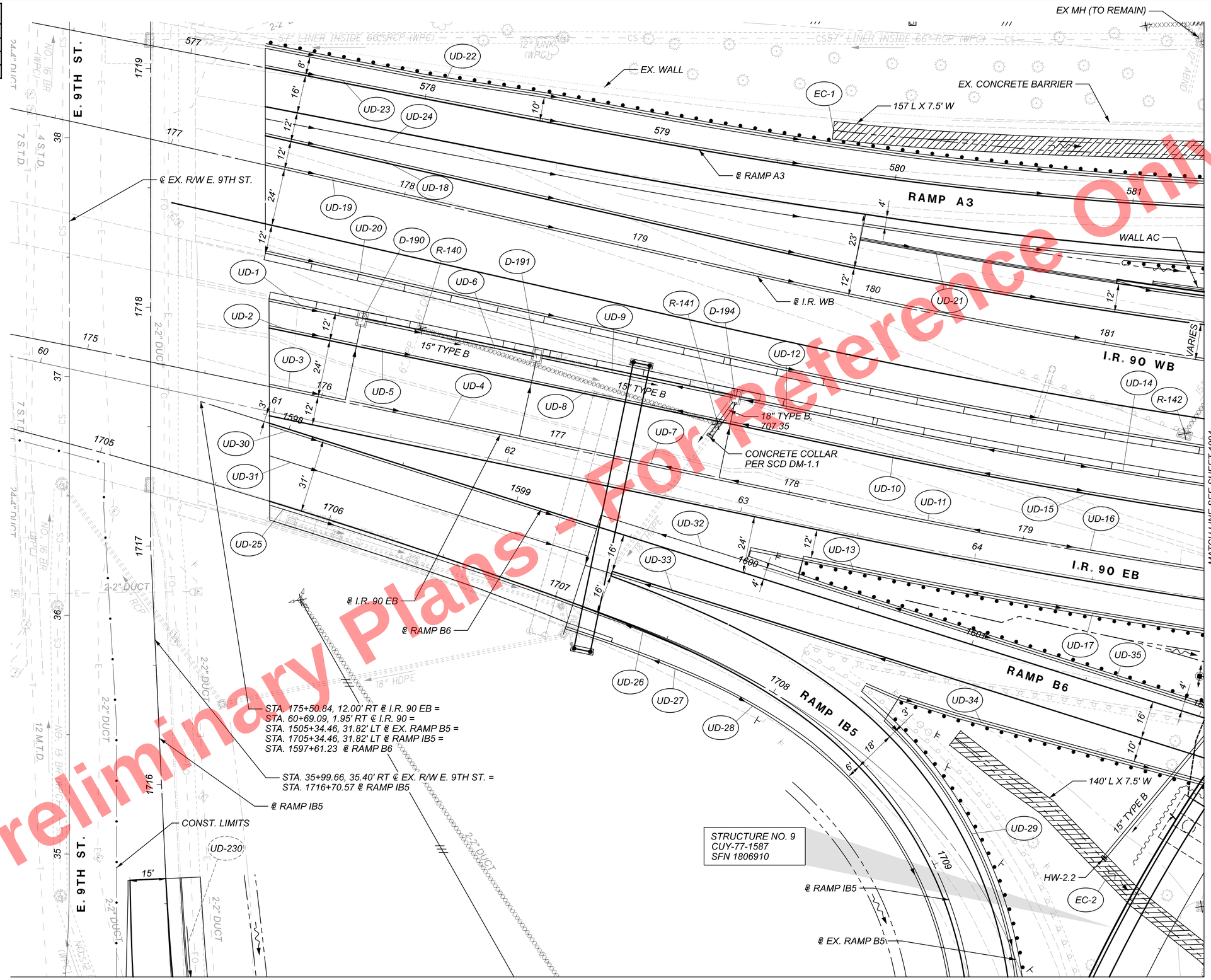

Preliminary Plans - For Reference Only

HORIZONTAL SCALE IN FEET
0 10 20 40

DRAINAGE PLAN
SHEET 1 OF 28

CUY-90-16.28 (CCG3A)

MODEL: Drainage Plans I- Drainage Plans I PAPERSIZE: 34x22 (in.) DATE: 3/27/2025 TIME: 9:09:30 PM USER: Julie.Ross
pw:\\mb-us-pw.bentley.com:mb-us-pw-03\Documents\Cleveland.OH\01_Projects\0007\District2\82382\400-Engineering\Drainage\Sheets\82382_DP0001.dgn

DESIGN AGENCY	Michael Baker INTERNATIONAL
DESIGNER	BJT
REVIEWER	KGJ 05/22/24
PROJECT ID	82382
SHEET	1093
TOTAL	2696

CROSS REFERENCES	
STRUCTURE	SHEET
D-193	1132
D-202B	1155
D-202C	1155
D-600	1150
D-601	1150
D-605	1154
D-638	1151
D-670	1154

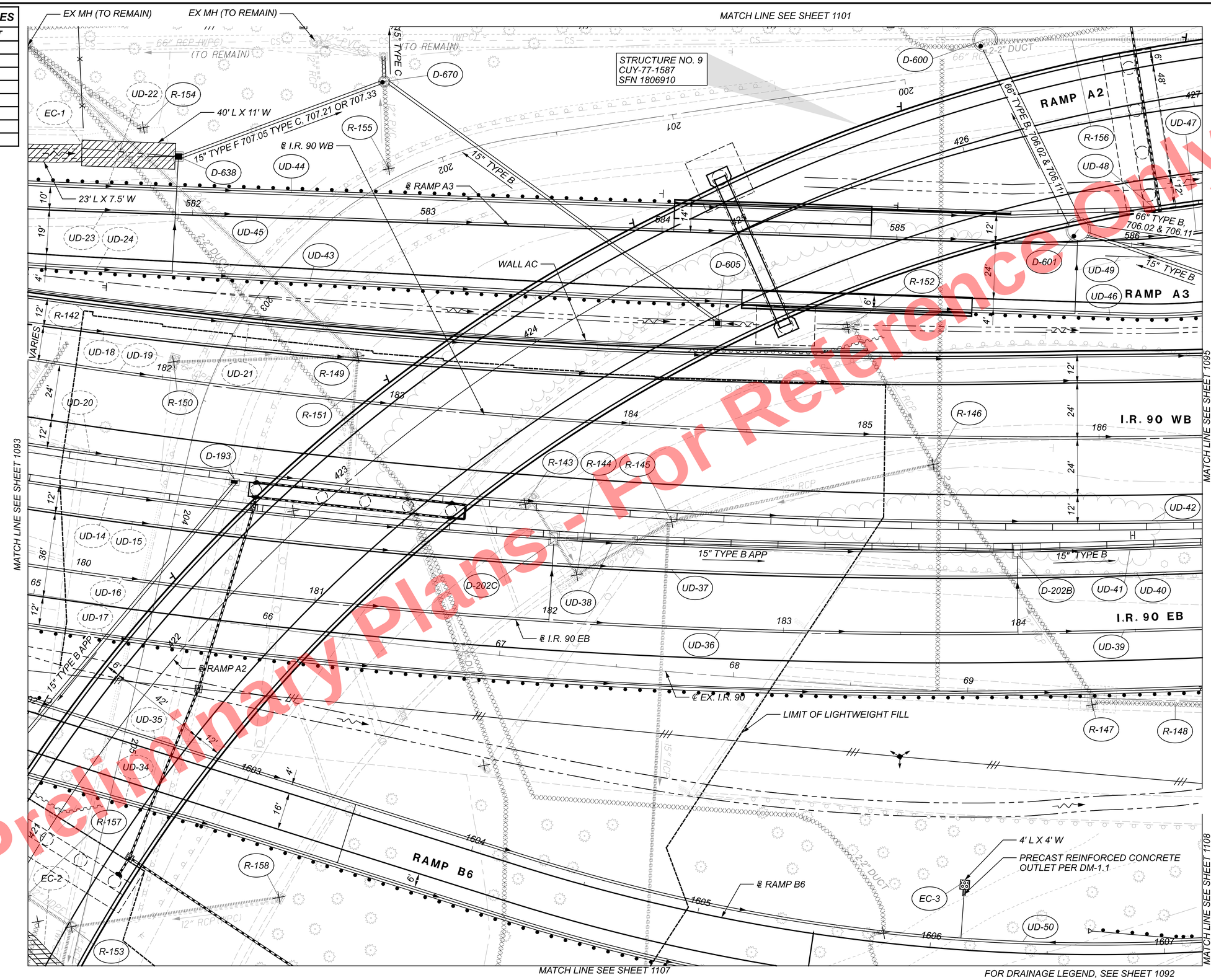

Preliminary Plans - For Reference Only

HORIZONTAL SCALE IN FEET 0 10 20 40

DRAINAGE PLAN
SHEET 2 OF 28

DESIGN AGENCY
Michael Baker INTERNATIONAL

DESIGNER BJT
REVIEWER KGJ 05/22/24
PROJECT ID 82382
SHEET 1094 TOTAL 2696

CUY-90-16.28 (CCG3A)

MODEL: Drainage Plans I - Drainage Plans 2 PAPERSIZE: 34x22 (in.) DATE: 3/27/2025 TIME: 9:19:48 PM USER: Julie.Ross
pw:\\mb-us-pw.bentley.com:mb-us-pw-03\Documents\Cleveland_OH\OI_Projects\ODOT\District12\82382\400-Engineering\Drainage\Sheets\82382_DP0002.dgn

CROSS REFERENCES	
STRUCTURE	SHEET
D-200	1151
D-201	1151
D-202	1151
D-203	1151
D-261	1122
D-264A	1122
D-266	1122
D-401	1142
D-602	1149
D-607	1152
D-608	1152
D-610	1153
D-611	1153
D-612	1154
D-613	1151
D-614	1154
D-616	1151
D-620	1153
D-621	1153
D-622	1153
D-623	1154
D-624	1152
D-626	1153
D-627	1153
D-628	1153
D-629	1153
D-636	1150
D-639	1151
D-640	1151
D-641	1152
D-642	1152
D-643	1152
D-644	1152
D-710	1141

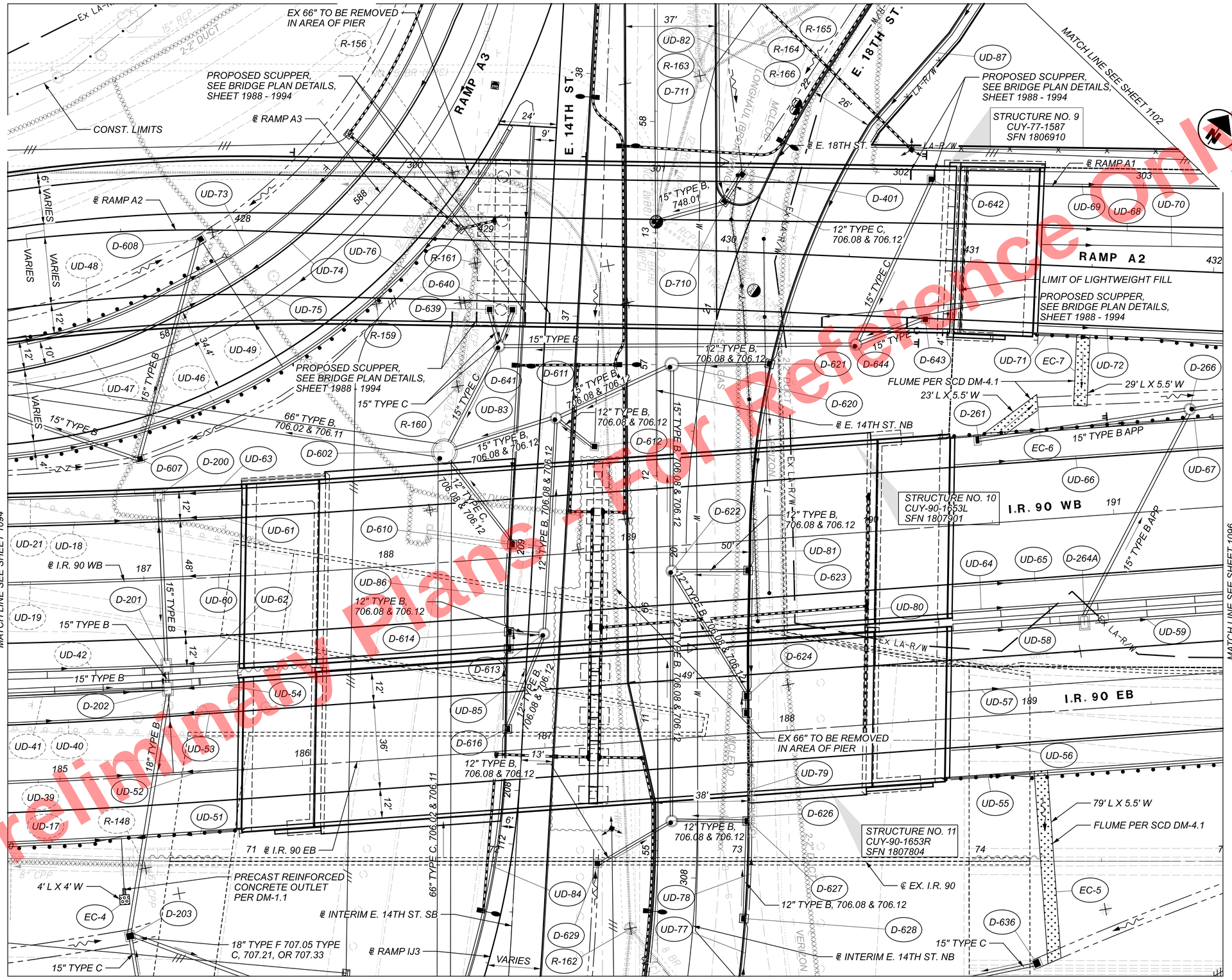

Preliminary Plans Not For Reference Only

HORIZONTAL SCALE IN FEET
0 10 20 40

DRAINAGE PLAN
SHEET 3 OF 28

DESIGN AGENCY
Michael Baker INTERNATIONAL

DESIGNER BJT
REVIEWER KGJ 05/22/24
PROJECT ID 82382
SHEET 1095 TOTAL 2696

CUY-90-16.28 (CCG3A)

MODEL: Drainage Plans I - Drainage Plans 3 PAPERSIZE: 34x22 (in.) DATE: 6/9/2025 TIME: 2:34:50 PM USER: Julie.Ross
pw:\\mb-us-pw.bentley.com:mb-us-pw-03\Documents\Cleveland_OH\01_Projects\00DT\District#12\82382\400-Engineering\Drainage\Sheets\82382_DP0003.dgn

CROSS REFERENCES	
STRUCTURE	SHEET
D-262	1122
D-263	1122
D-265	1121
D-265	1122
D-269	1121
D-270	1121
D-271	1121
D-271A	1121
D-272	1121
D-274	1121
D-274	1121
D-280	1121
D-281	1121
D-464	1158
D-530	1138

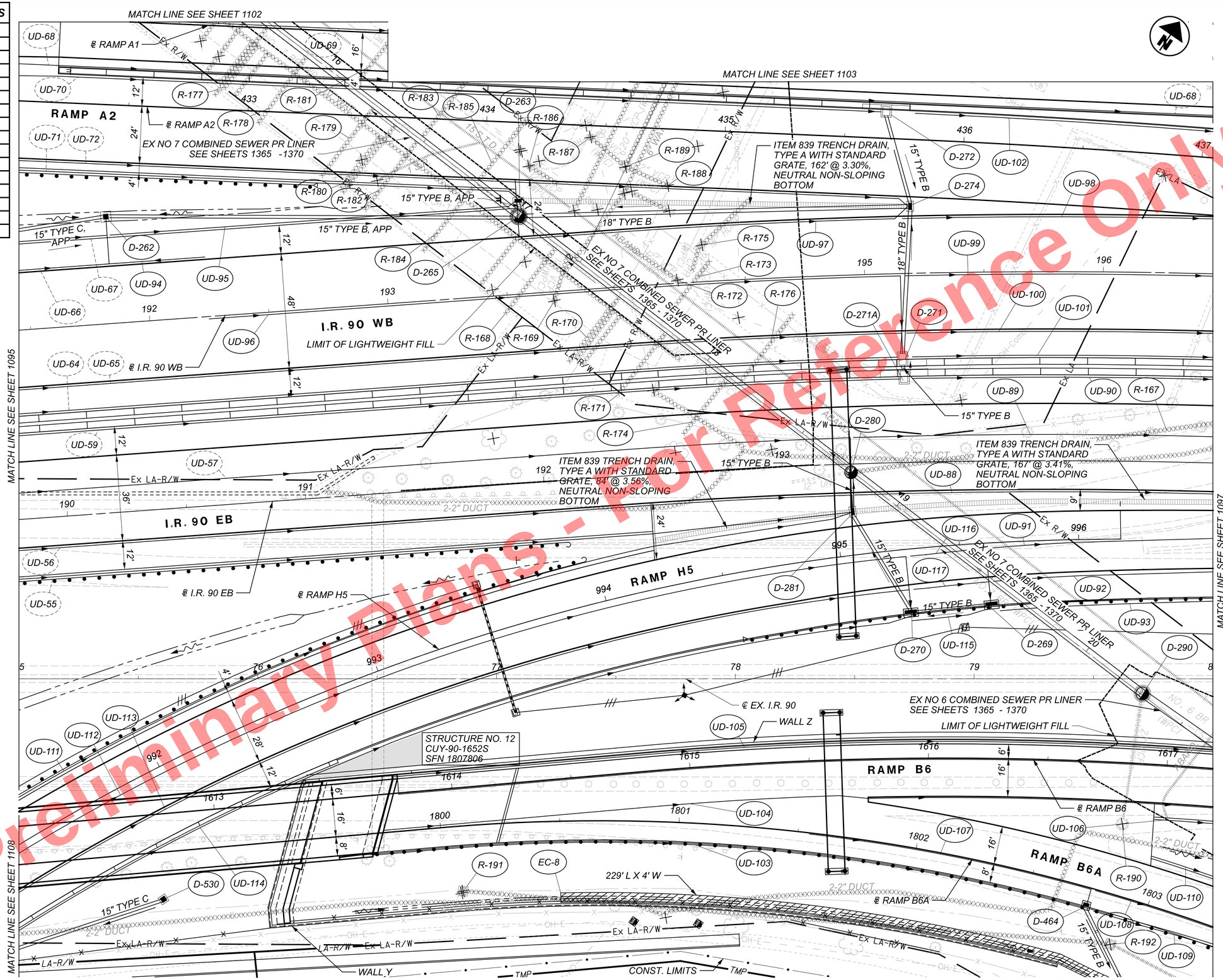

Preliminary Plans - For Reference Only

HORIZONTAL SCALE IN FEET
0 10 20 40

DRAINAGE PLAN
SHEET 4 OF 28

DESIGN AGENCY
Michael Baker INTERNATIONAL

DESIGNER BJT
REVIEWER KGJ 05/22/24
PROJECT ID 82382
SHEET 1096 TOTAL 2696

CUY-90-16.28 (CCG3A)

MODEL: Drainage Plans 1 - Drainage Plans 4 PAPERSIZE: 34x22 (In.) DATE: 3/27/2025 TIME: 9:20:27 PM USER: Julie.Ross
pw:\\mb-us-pw.bentley.com\mb-us-pw-03\Documents\Cleveland_OH\01_Projects\0007\District2\82382\400-Engineering\Drainage\Sheets\82382_DP0004.dgn

CROSS REFERENCES	
STRUCTURE	SHEET
D-209	1124
D-210	1124
D-211	1124
D-212	1124
D-213	1123
D-213	1124
D-214	1123
D-215	1123
D-216	1123
D-217	1123
D-219	1124
D-282	1123
D-460	1157
D-461	1157
D-462	1157
D-463	1158

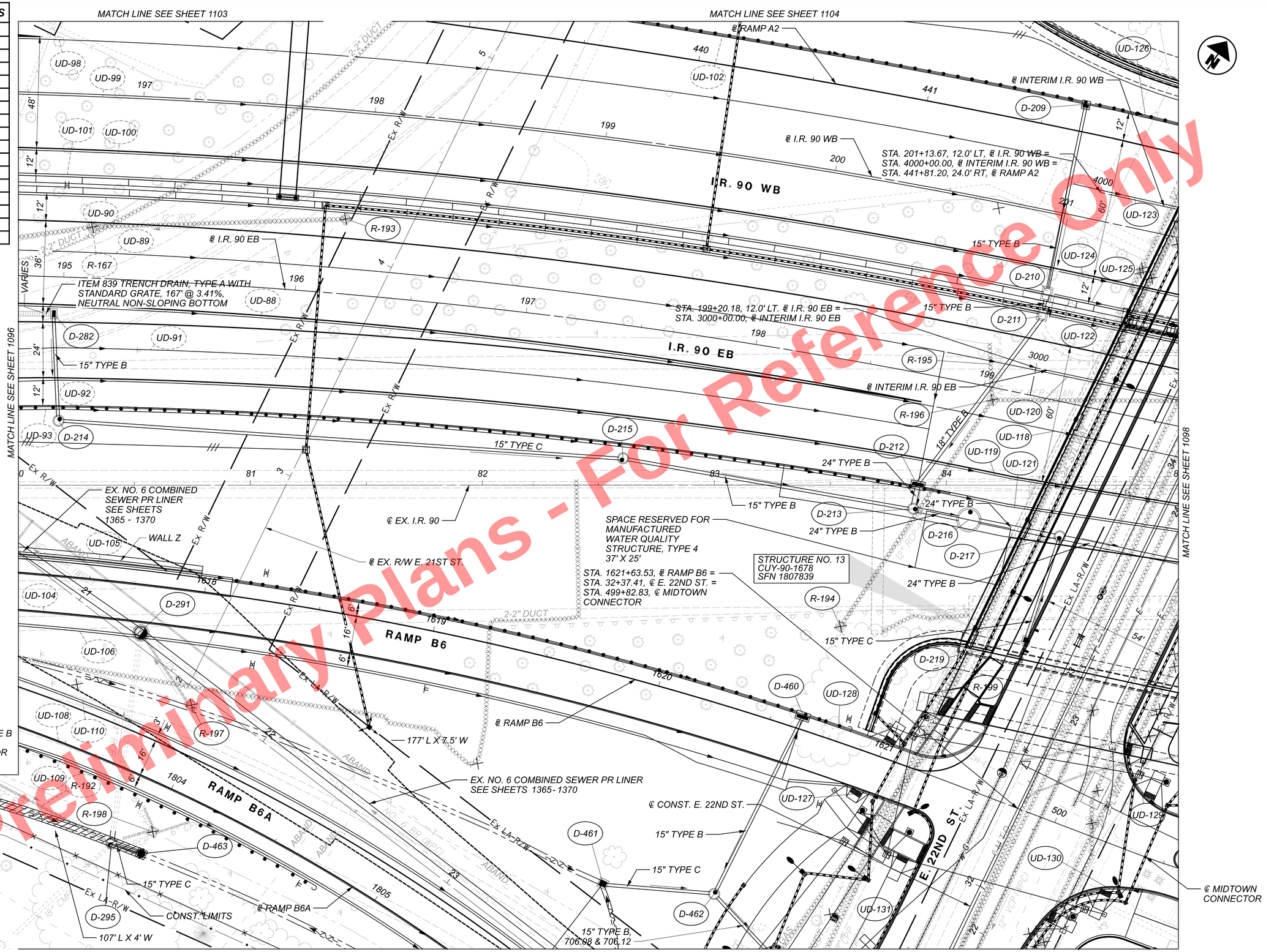

Preliminary Plans - For Reference Only

HORIZONTAL SCALE IN FEET
0 10 20 40

DRAINAGE PLAN
SHEET 5 OF 28

CUY-90-16.28 (CCG3A)

MODEL: Drainage Plans 1 - Drainage Plans 5 PAPERSIZE: 34x22 (In.) DATE: 3/27/2025 TIME: 9:20:45 PM USER: Julie.Ross
pw:\\mb-us-pw.bentley.com:mb-us-pw-03\Documents\Cleveland_OH\01_Projects\0007\District2\82382\400-Engineering\Drainage\Sheets\82382_DP0005.dgn

DESIGN AGENCY	Michael Baker INTERNATIONAL
DESIGNER	BJT
REVIEWER	KGJ 05/22/24
PROJECT ID	82382
SHEET	1097
TOTAL	2696

CROSS REFERENCES	
STRUCTURE	SHEET
D-218	1123
D-220	1124
D-230	1125
D-231	1125
D-232	1125
D-250	1127
D-251	1125
D-730	1145
D-731	1145
D-750	1157
D-752	1157
D-780	1158
D-782	1157

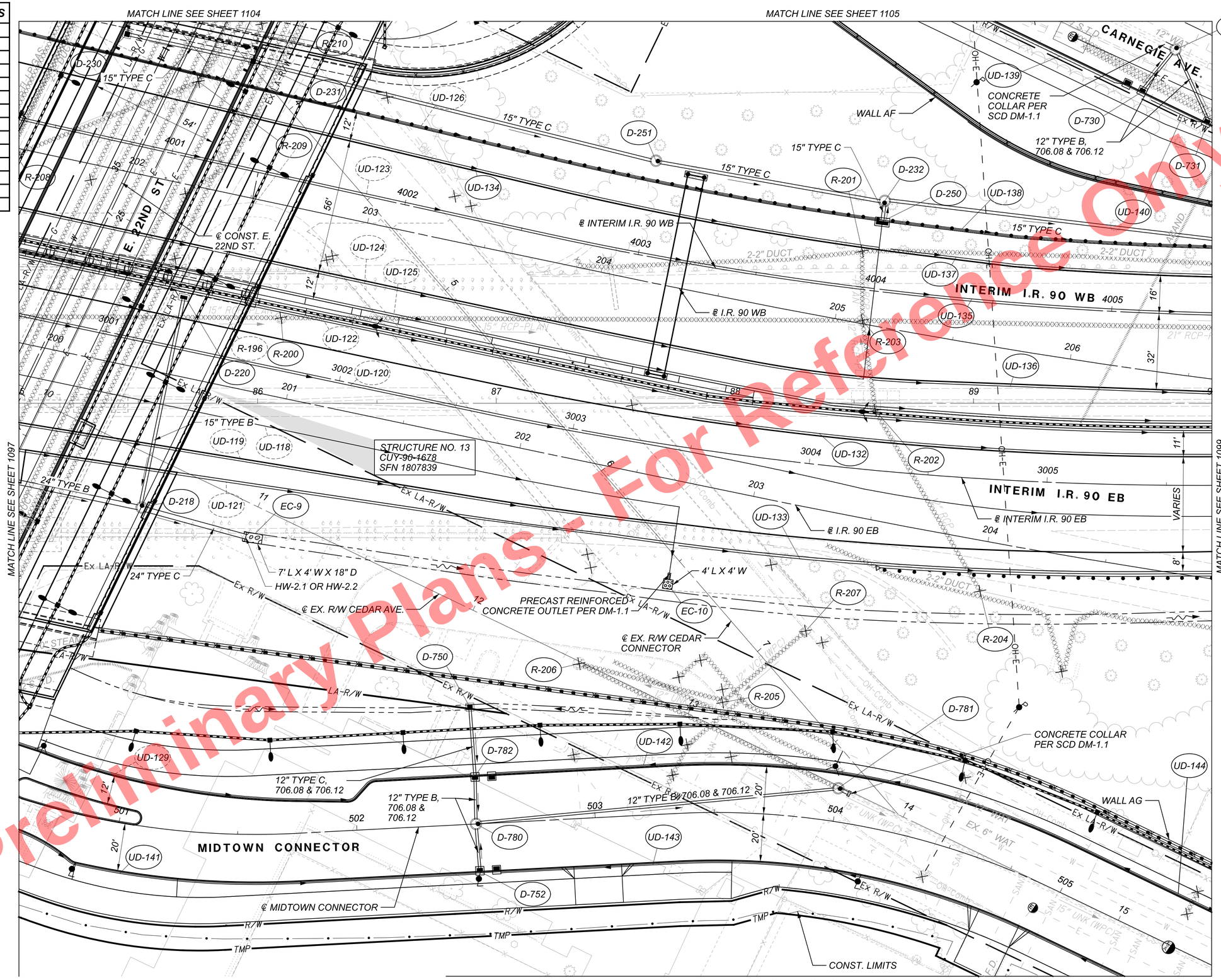

Preliminary Plans - For Reference Only

HORIZONTAL SCALE IN FEET
0 10 20 40

DRAINAGE PLAN
SHEET 6 OF 28

DESIGN AGENCY
Michael Baker INTERNATIONAL

DESIGNER BT
REVIEWER KGJ 05/22/24
PROJECT ID 82382
SHEET 1098 TOTAL 2696

CUY-90-16.28 (CCG3A)

MODEL: Drainage Plans I - Drainage Plans 6 PAPERSIZE: 34x22 (in.) DATE: 3/27/2025 TIME: 9:26:03 PM USER: Julie.Ross
pw:\\mb-us-pw.bentley.com:mb-us-pw-03\Documents\Cleveland_OH\01_Projects\ODOT\District#12\82382\400-Engineering\

CROSS REFERENCES	
STRUCTURE	SHEET
D-233	1125
D-234	1125
D-235	1125
D-236	1128
D-237	1128
D-238	1128
D-239	1128
D-240	1127
D-246	1126
D-248	1126
D-252	1126
D-733	1145
D-734	1145
D-736	1145
D-737	1145
D-738	1145
DO-1	1127
DO-2	1129

MATCH LINE SEE SHEET 1105

℄ EX. R/W CARNEGIE AVE.
ESMT
℄ CONST. CARNEGIE AVE.
CONST. LIMITS
Ex LA R/W
WALL AH
℄ INTERIM I.R. 90 WB
INTERIM I.R. 90 WB
INTERIM I.R. 90 EB
℄ I.R. 90 WB
℄ I.R. 90 EB
℄ EX. I.R. 90
CARNEGIE AVE
12" TYPE B, 706.08 & 706.12
12" TYPE B, 706.08 & 706.12 WALL AF
15" TYPE C
15" TYPE B
18" TYPE B
21" TYPE B
24" TYPE B
27" RCP
30" TYPE C
2-2" DUCT
VARIES
Ex R/W
Ex U
Ex OH-CTV
Ex W
Ex T
Ex G
Ex SAN
Ex STM
Ex 6" CLF
Ex 8" SIDEWALK
Ex 18" SIDEWALK
Ex 12" SIDEWALK
Ex 8" SIDEWALK
Ex 6" SIDEWALK
Ex 2 STY RES
Ex 1 STY RES
Ex 2 STY COMM
Ex 1 STY COMM
Ex 1 STY GARAGE
Ex 2 STY GARAGE
Ex 1 STY CHURCH
Ex 2 STY CHURCH
Ex 1 STY SCHOOL
Ex 2 STY SCHOOL
Ex 1 STY MISC
Ex 2 STY MISC
Ex 1 STY MFR
Ex 2 STY MFR
Ex 1 STY MOBILE HOME
Ex 2 STY MOBILE HOME
Ex 1 STY MFR GARAGE
Ex 2 STY MFR GARAGE
Ex 1 STY MISC GARAGE
Ex 2 STY MISC GARAGE
Ex 1 STY MFR CARPORT
Ex 2 STY MFR CARPORT
Ex 1 STY MISC CARPORT
Ex 2 STY MISC CARPORT

CROSS REFERENCES	
STRUCTURE	SHEET
D-241	1127
D-241	1128
D-242	1126
D-242A	1127
D-243	1126
D-244	1126
D-244A	1129
D-245	1127
D-249	1128

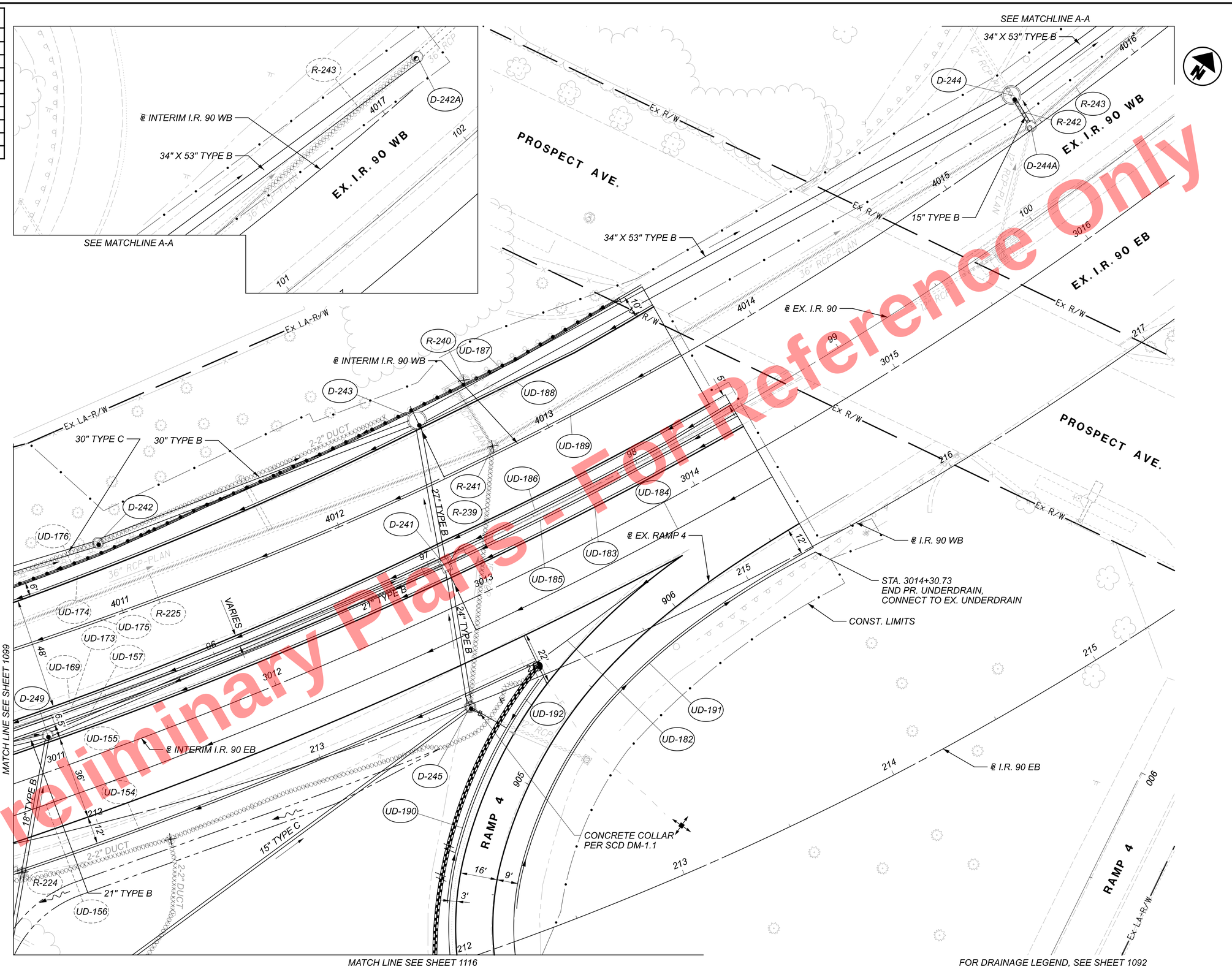

Preliminary Plans - For Reference Only

HORIZONTAL SCALE IN FEET
0 10 20 40

DRAINAGE PLAN
SHEET 8 OF 28

DESIGN AGENCY
Michael Baker INTERNATIONAL

DESIGNER BJT
REVIEWER KGJ 05/22/24
PROJECT ID 82382
SHEET 1100 TOTAL 2696

CUY-90-16.28 (CCG3A)

MODEL: Drainage Plans I- Drainage Plans 8 PAPERSIZE: 34x22 (In) DATE: 3/27/2025 TIME: 9:21:40 PM USER: Julie.Ross
pw:\\mb-us-pw.bentley.com:mb-us-pw-03\Documents\Cleveland_OH\OI_Projects\0007\District2\82382\400-Engineering\

CROSS REFERENCES	
STRUCTURE	SHEET
D-700	1141

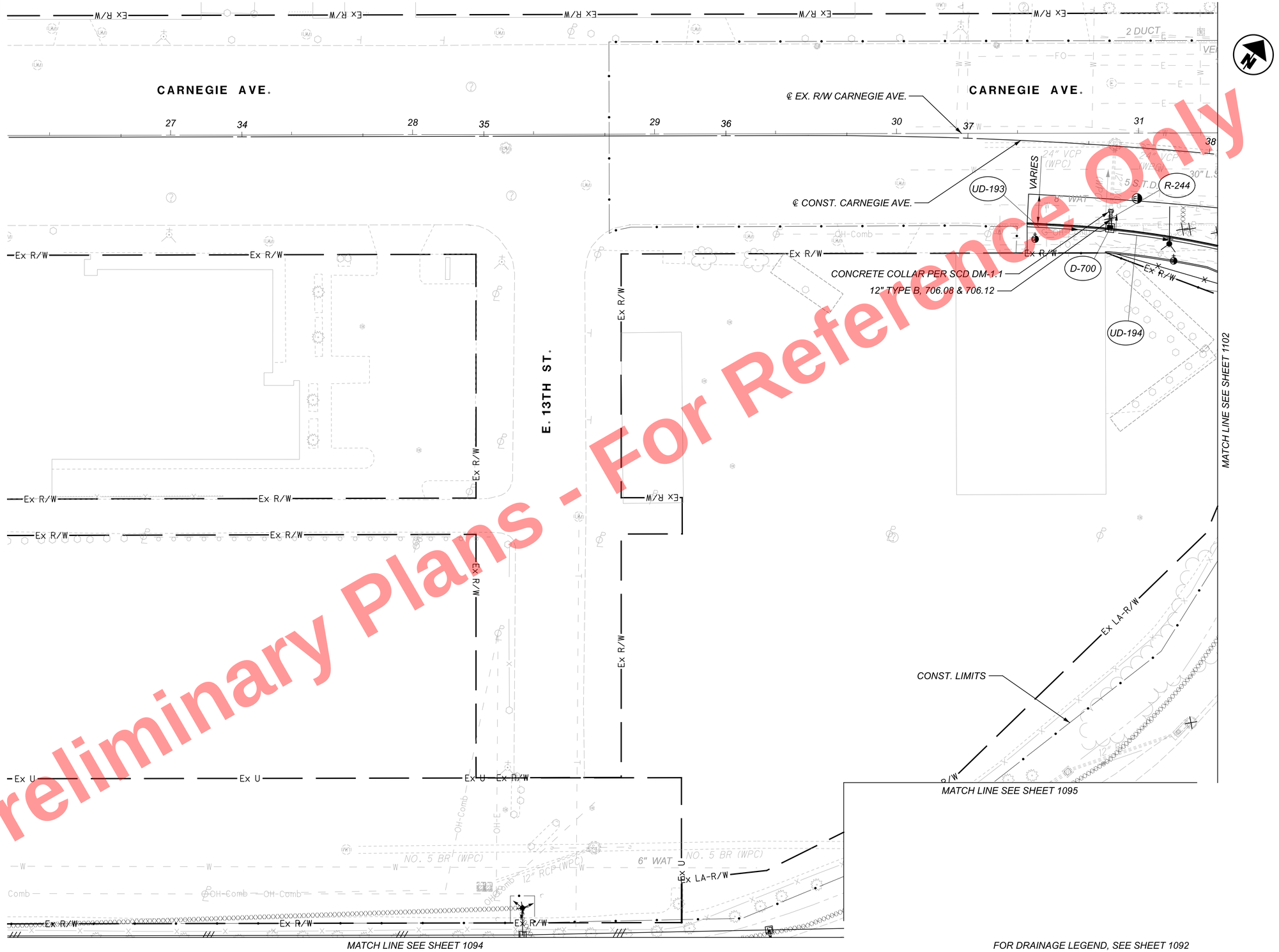

Preliminary Plans - For Reference Only

HORIZONTAL SCALE IN FEET
0 10 20 40

DRAINAGE PLAN
SHEET 9 OF 28

CUY-90-16.28 (CCG3A)

MODEL: Drainage Plans I- Drainage Plans 9 PAPERSIZE: 34x22 (in.) DATE: 3/27/2025 TIME: 9:21:58 PM USER: Julie.Ross
pw:\\mb-us-pw.bentley.com:mb-us-pw-03\Documents\Cleveland.OH\OI_Projects\ODOT\District2\82382\400-Engineering\Dr

DESIGN AGENCY
Michael Baker INTERNATIONAL

DESIGNER	BJT
REVIEWER	KGJ 05/22/24
PROJECT ID	82382
SHEET	1101
TOTAL	2696

CROSS REFERENCES	
STRUCTURE	SHEET
D-400	1142
D-701	1141
D-701A	1141
D-702	1142
D-703	1141
D-705	1141
D-706	1141
D-707	1142
D-708	1141
D-709	1142
D-712	1141

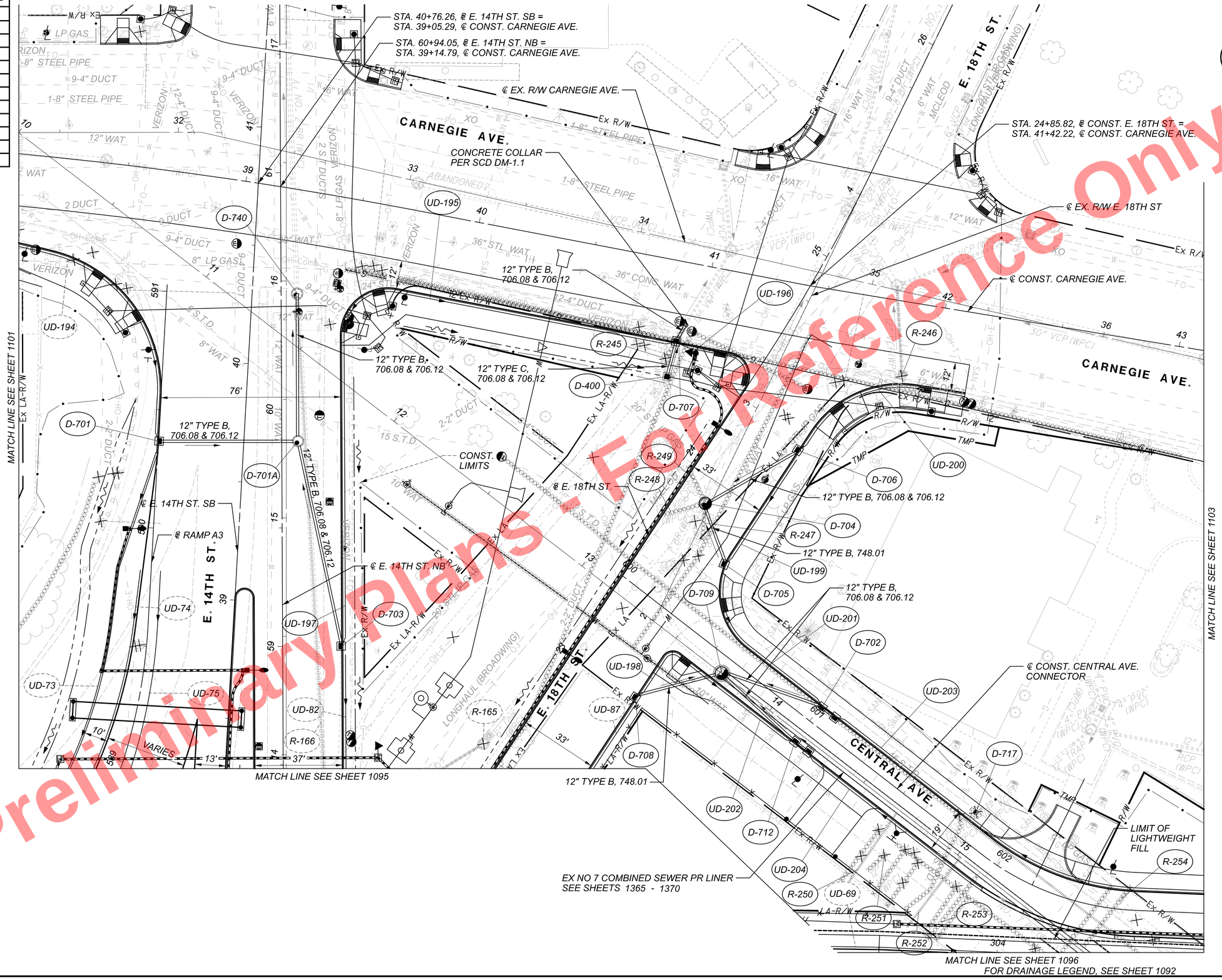

HORIZONTAL SCALE IN FEET
0 10 20 40

DRAINAGE PLAN
SHEET 10 OF 28

CUY-90-16.28 (CCG3A)

MODEL: Drainage Plans I- Drainage Plans 10 PAPERSIZE: 34x22 (in.) DATE: 6/9/2025 TIME: 2:35:13 PM USER: Julie.Ross
pw:\\mb-us-pw.bentley.com\mb-us-pw-03\Documents\Cleveland_OH\01_Projects\0007\District2\82382\400-Engineering\Dr

DESIGN AGENCY	Michael Baker INTERNATIONAL
DESIGNER	BJT
REVIEWER	KGJ 05/22/24
PROJECT ID	82382
SHEET	1102
TOTAL	2696

CROSS REFERENCES	
STRUCTURE	SHEET
D-300	1130
D-301	1130
D-302	1130
D-303	1131
D-304	1130
D-305	1130
D-306	1130
D-307	1130
D-307	1130
D-309	1131
D-310	1130
D-311	1131
D-314	1130

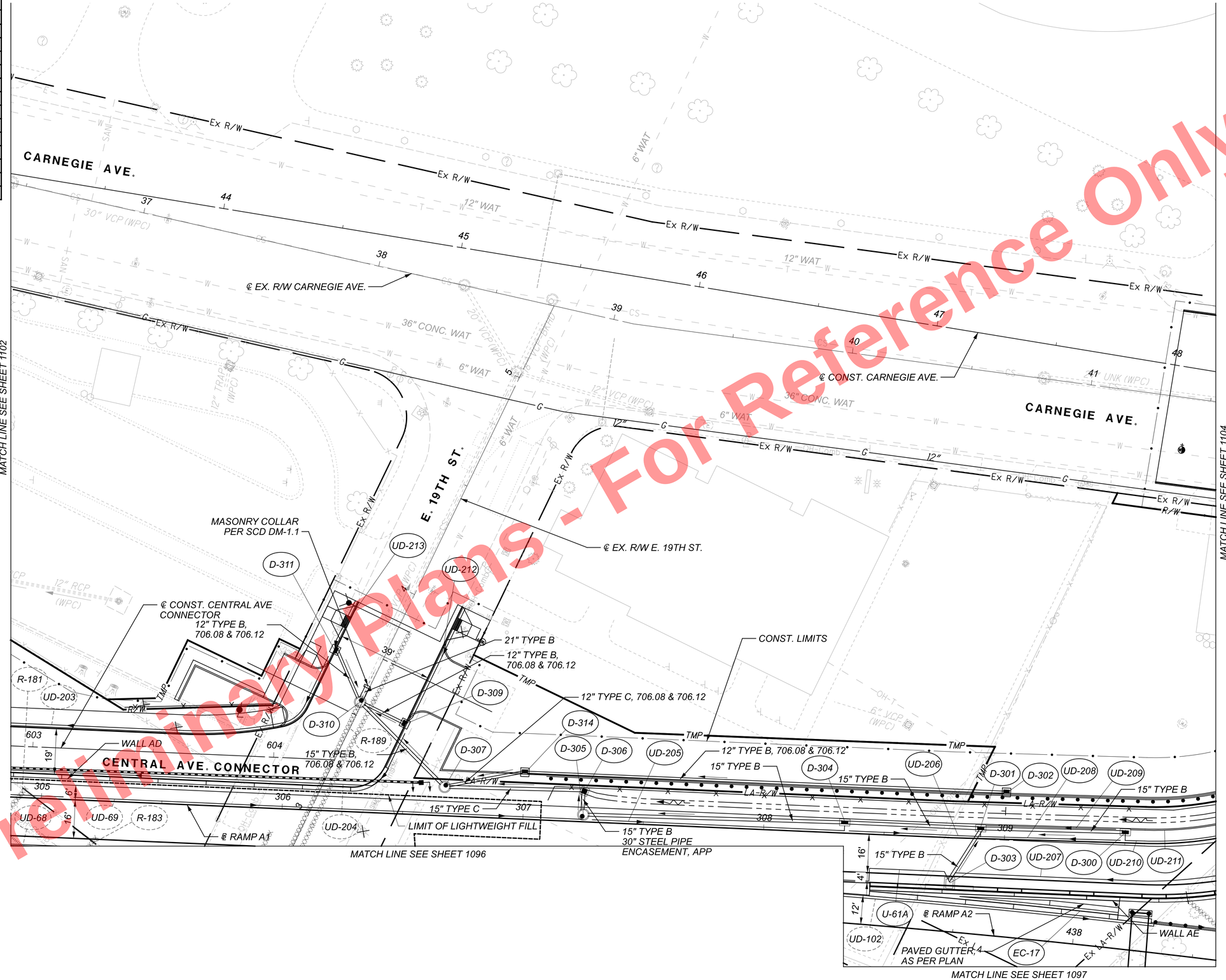

Preliminary Plans - For Reference Only

HORIZONTAL SCALE IN FEET 0 10 20 40

DRAINAGE PLAN
SHEET 11 OF 28

DESIGN AGENCY
Michael Baker INTERNATIONAL

DESIGNER BJT
REVIEWER KGJ 05/22/24
PROJECT ID 82382
SHEET 1103 TOTAL 2696

CUY-90-16.28 (CCG3A)

MODEL: Drainage Plans I - Drainage Plans II PAPERSIZE: 34x22 (in.) DATE: 3/27/2025 TIME: 9:22:33 PM USER: Julie.Ross
pw:\\mb-us-pw.bentley.com:mb-us-pw-03\Documents\Cleveland_OH\OI_Projects\ODOT\District12\82382\400-Engineering\Drainage\Sheets\82382_DP001I.dgn

CROSS REFERENCES	
STRUCTURE	SHEET
D-313	1131
D-313A	1130
D-713	1143
D-714	1143
D-715	1144
D-720	1144
D-727	1144
D-728	1144
D-771	1143
D-783	1144

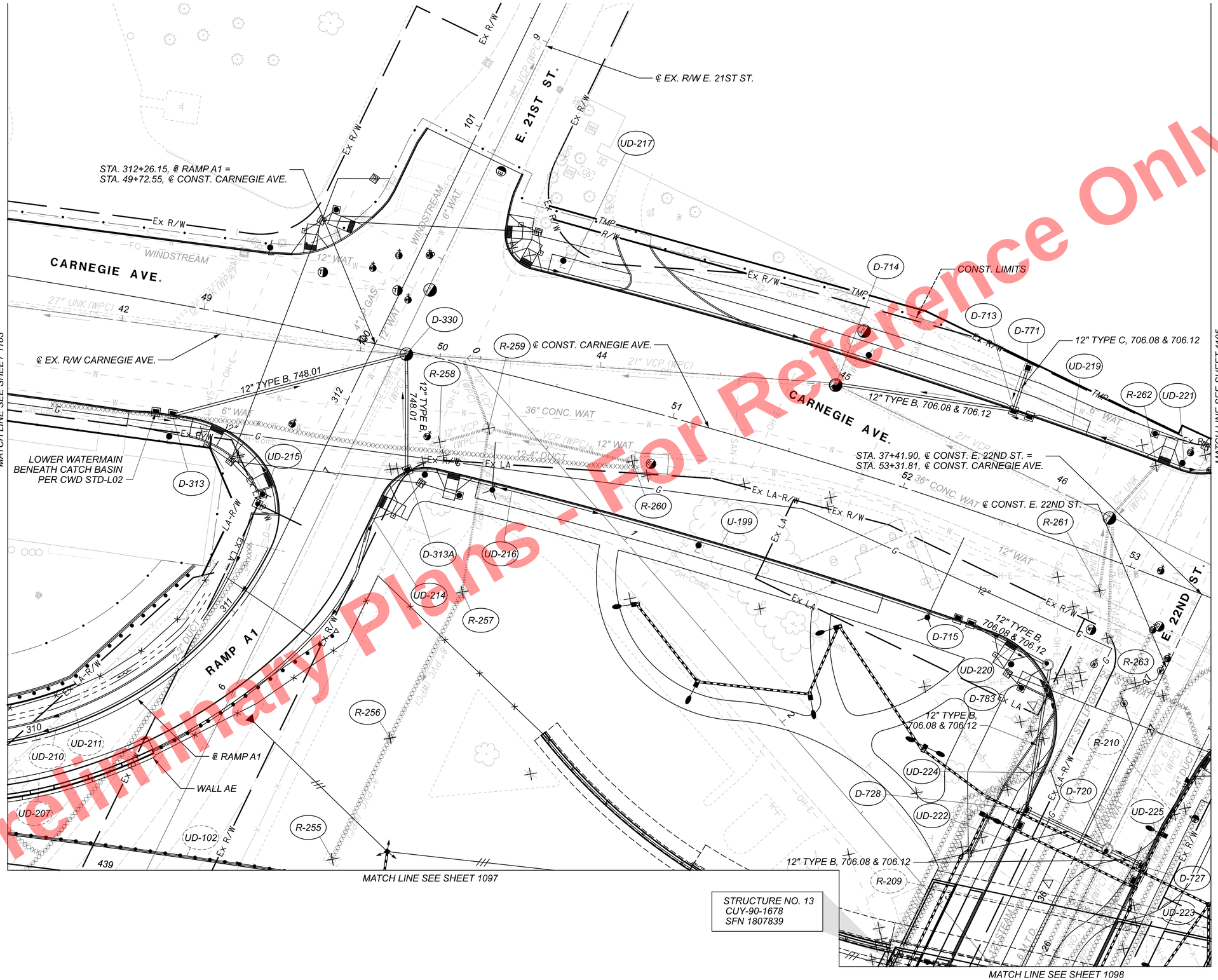

Preliminary Plans - For Reference Only

HORIZONTAL SCALE IN FEET
0 10 20 40

DRAINAGE PLAN
SHEET 12 OF 28

CUY-90-16.28 (CCG3A)

DESIGN AGENCY
Michael Baker INTERNATIONAL

DESIGNER BJT
REVIEWER KGJ 05/22/24
PROJECT ID 82382
SHEET 1104 TOTAL 2696

MODEL: Drainage Plans I- Drainage Plans I2 PAPERSIZE: 34x22 (in.) DATE: 5/16/2025 TIME: 11:43:25 PM USER: Kathy.Johnson
pw:\\mb-us-pw.bentley.com:mb-us-pw-03\Documents\Cleveland_OH\01_Projects\0007\District2\82382\400-Engineering\D

CROSS REFERENCES	
STRUCTURE	SHEET
D-716	1143
D-723	1143
D-724	1143
D-726	1143
D-729	1143

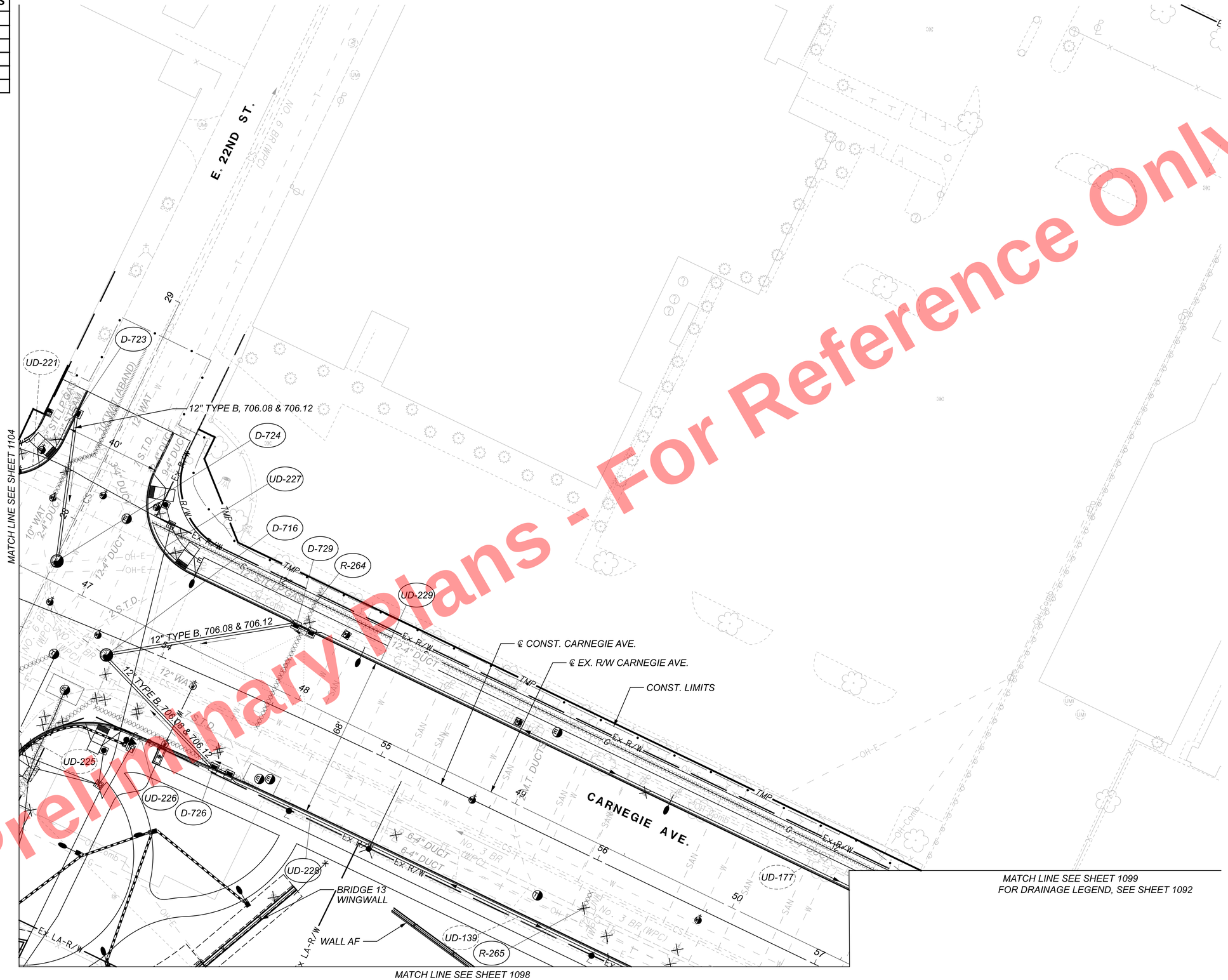

Preliminary Plans - For Reference Only

HORIZONTAL SCALE IN FEET
0 10 20 40

DRAINAGE PLAN
SHEET 13 OF 28

DESIGN AGENCY
Michael Baker INTERNATIONAL

DESIGNER BJT
REVIEWER KGJ 05/22/24
PROJECT ID 82382
SHEET 1105 TOTAL 2696

CUY-90-16.28 (CCG3A)

MODEL: Drainage Plans I - Drainage Plans I3 PAPERSIZE: 34x22 (in.) DATE: 3/27/2025 TIME: 9:23:09 PM USER: Julie.Ross
pw:\\mb-us-pw.bentley.com:mb-us-pw-03\Documents\Cleveland_OH\01_Projects\ODOT\District12\82382\400-Engineering\Engineering\Drainage\Sheets\82382_DP0013.dgn

CROSS REFERENCES	
STRUCTURE	SHEET
D-410A	1132
D-411	1132
D-411A	1132
D-411B	1132
D-420	1133
D-422	1133

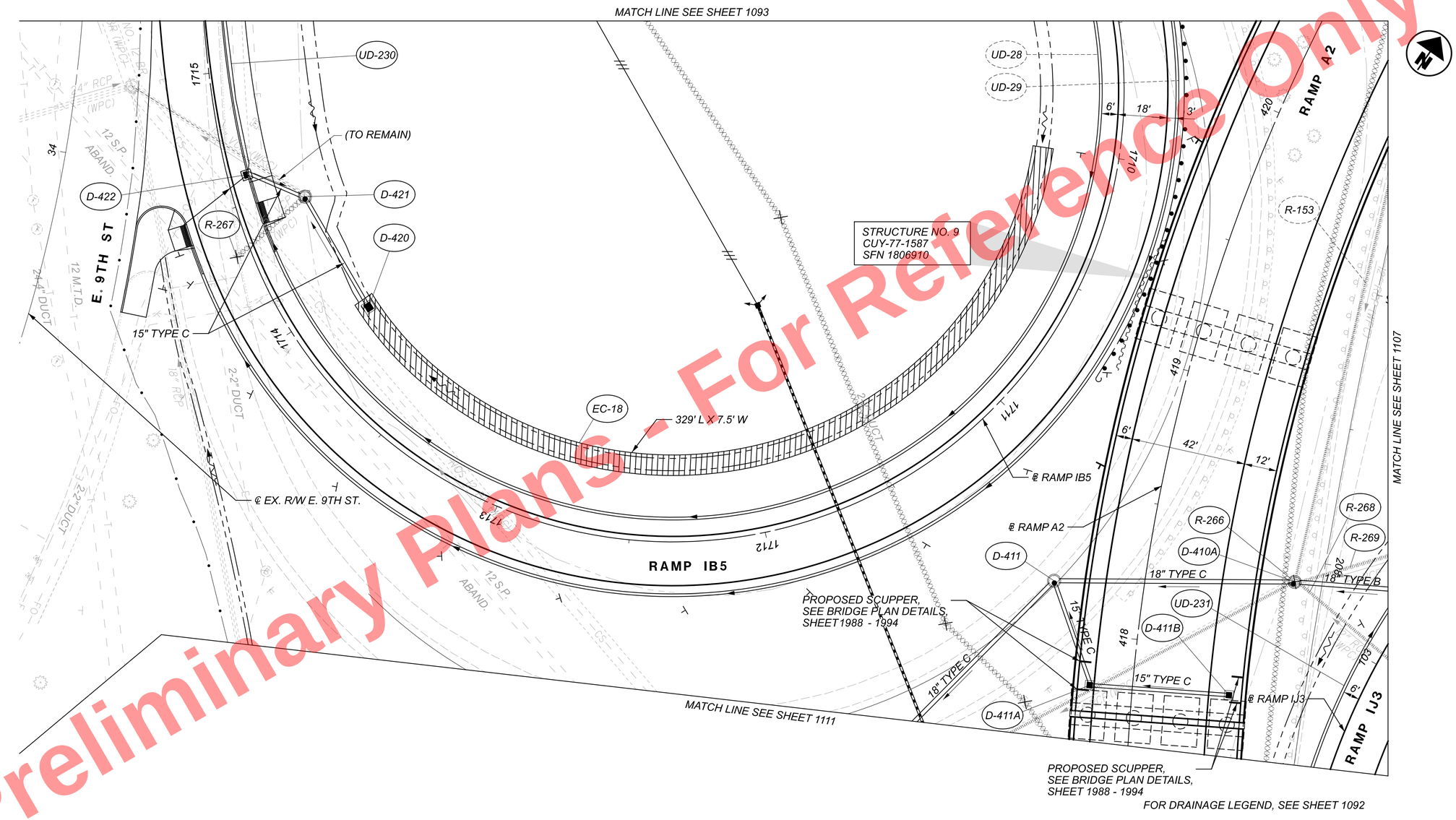

Preliminary Plans - For Reference Only

HORIZONTAL SCALE IN FEET
0 10 20 40

DRAINAGE PLAN
SHEET 14 OF 28

CUY-90-16.28 (CCG3A)

MODEL: Drainage Plans I - Drainage Plans 14 PAPERSIZE: 34x22 (in.) DATE: 3/27/2025 TIME: 9:23:26 PM USER: Julie.Ross
pw:\\mb-us-pw.bentley.com:mb-us-pw-03\Documents\Cleveland_OH\OI_Projects\0001\District2\82382\400-Engineering\Drainage\Sheets\82382_DP0014.dgn

DESIGN AGENCY
Michael Baker INTERNATIONAL

DESIGNER BJT
REVIEWER KGJ 05/22/24
PROJECT ID 82382
SHEET 1106 TOTAL 2696

CROSS REFERENCES	
STRUCTURE	SHEET
D-409	1132
D-410	1132

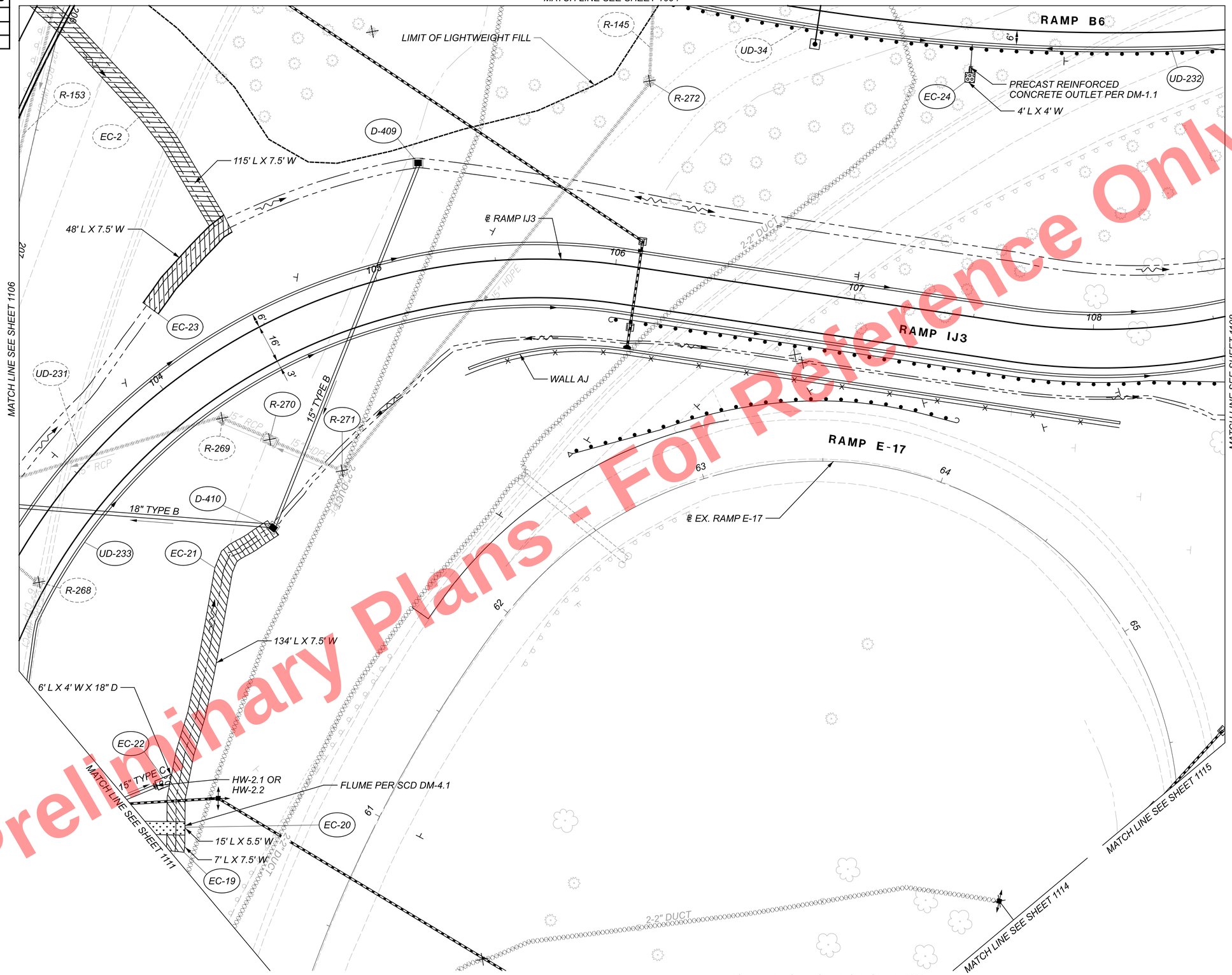

Preliminary Plans - For Reference Only

FOR DRAINAGE LEGEND, SEE SHEET 1092

HORIZONTAL SCALE IN FEET
0 10 20 40

DRAINAGE PLAN
SHEET 15 OF 28

DESIGN AGENCY
Michael Baker INTERNATIONAL

DESIGNER BJT
REVIEWER KGJ 05/22/24
PROJECT ID 82382
SHEET 1107 TOTAL 2696

CUY-90-16.28 (CCG3A)

MODEL: Drainage Plans I - Drainage Plans I5 PAPERSIZE: 34x22 (in.) DATE: 3/27/2025 TIME: 9:23:40 PM USER: Julie.Ross
pw:\\mb-us-pw.bentley.com:mb-us-pw-03\Documents\Cleveland_OH\OI_Projects\ODOT\District12\82382\400-Engineering\Drainage\Sheets\82382_DP0015.dgn

CROSS REFERENCES	
STRUCTURE	SHEET
D-204	1155
D-509	1137
D-510	1137
D-511	1137
D-530A	1138
D-531	1138
D-550	1149
D-551	1149
D-603	1149
D-604	1149
D-630	1154
D-631	1155
D-632	1155
D-633	1155
D-634	1150
D-635	1150
D-636A	1150

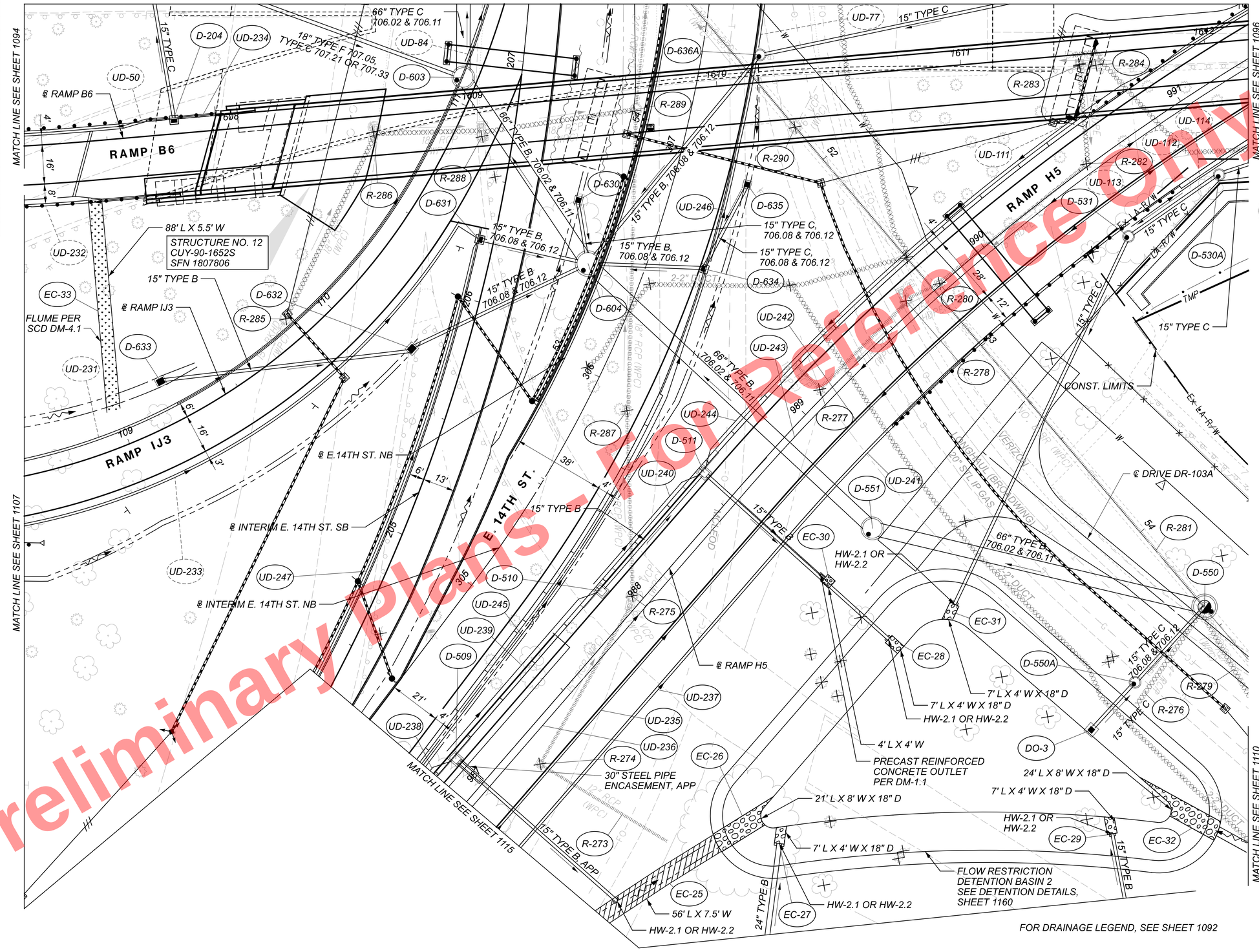

Preliminary Plans - Not for Reference Only

HORIZONTAL SCALE IN FEET
0 10 20 40

DRAINAGE PLAN
SHEET 16 OF 28

DESIGN AGENCY	Michael Baker INTERNATIONAL
DESIGNER	BJT
REVIEWER	KGJ 05/22/24
PROJECT ID	82382
SHEET	1108
TOTAL	2696

CUY-90-16.28 (CCG3A)

MODEL: Drainage Plans I - Drainage Plans I6 PAPERSIZE: 34x22 (in.) DATE: 6/9/2025 TIME: 2:35:33 PM USER: Julie.Ross
pw:\\vmb-us-pw.bentley.com\vmb-us-pw-03\Documents\Cleveland_OH\01_Projects\ODOT_District12\82382\400-Engineering\Drainage\Sheets\82382_DP0016.dgn

CROSS REFERENCES	
STRUCTURE	SHEET
D-405	1158
D-406	1158
D-900	1158
D-901	1158
D-902	1158
D-903	1157
D-904	1157
D-905	1157
D-906	1158
D-909	1157

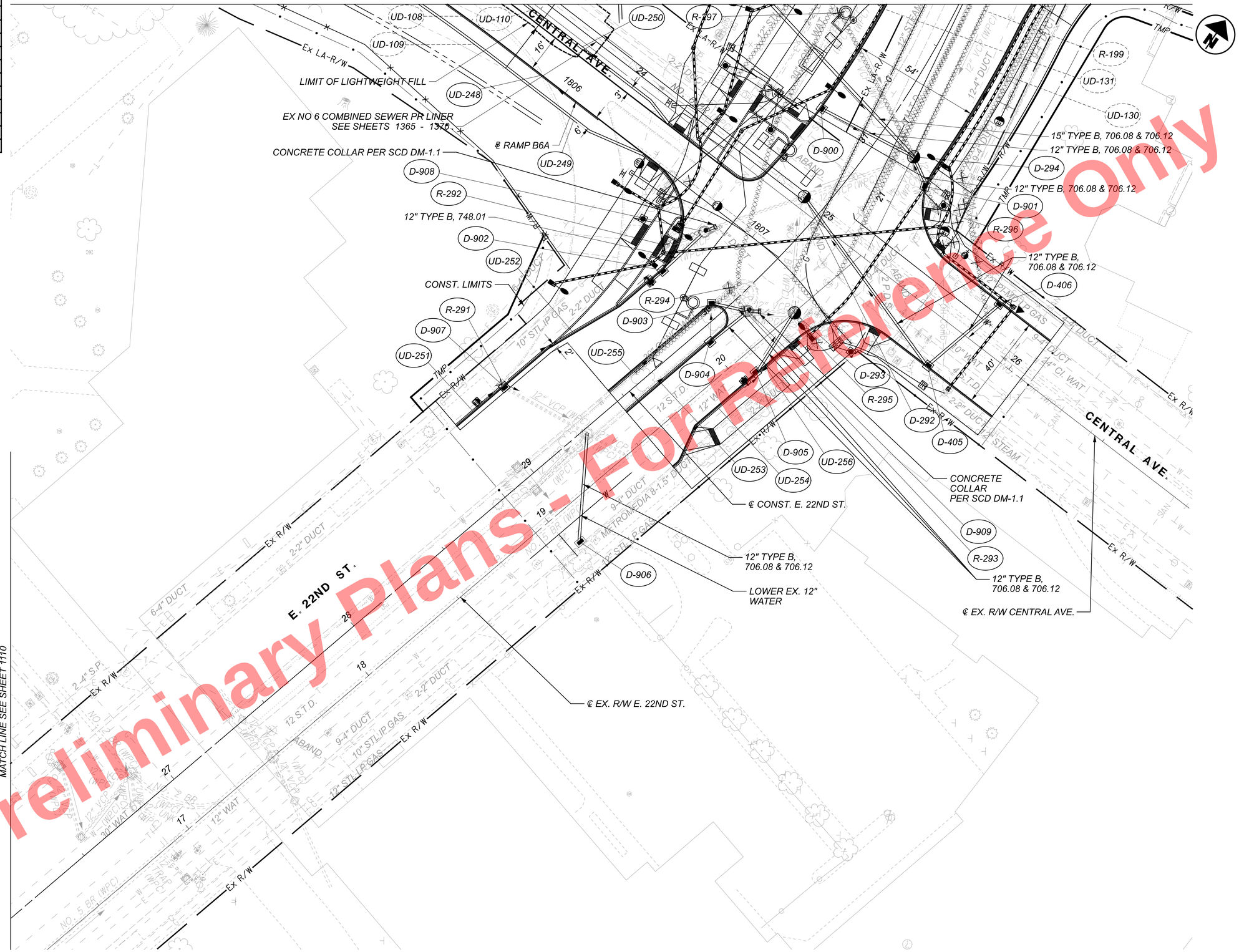

Preliminary Plans - For Reference Only

HORIZONTAL SCALE IN FEET
0 10 20 40

DRAINAGE PLAN
SHEET 17 OF 28

CUY-90-16.28 (CCG3A)

MODEL: Drainage Plans I - Drainage Plans 17 PAPERSIZE: 34x22 (in.) DATE: 3/27/2025 TIME: 9:24:17 PM USER: Julie.Ross
pw:\\mb-us-pw.bentley.com:mb-us-pw-03\Documents\Cleveland.OH\01_Projects\DOT\District2\82382\400-Engineering\Drainage\Sheets\82382_DP017.dgn

DESIGN AGENCY	Michael Baker INTERNATIONAL
DESIGNER	BT
REVIEWER	KGJ 05/22/24
PROJECT ID	82382
SHEET	1109
TOTAL	2696

CROSS REFERENCES	
STRUCTURE	SHEET
D-512	1139
D-513	1139
D-514	1139
D-515	1139
D-516	1139
D-517	1139
D-748	1084

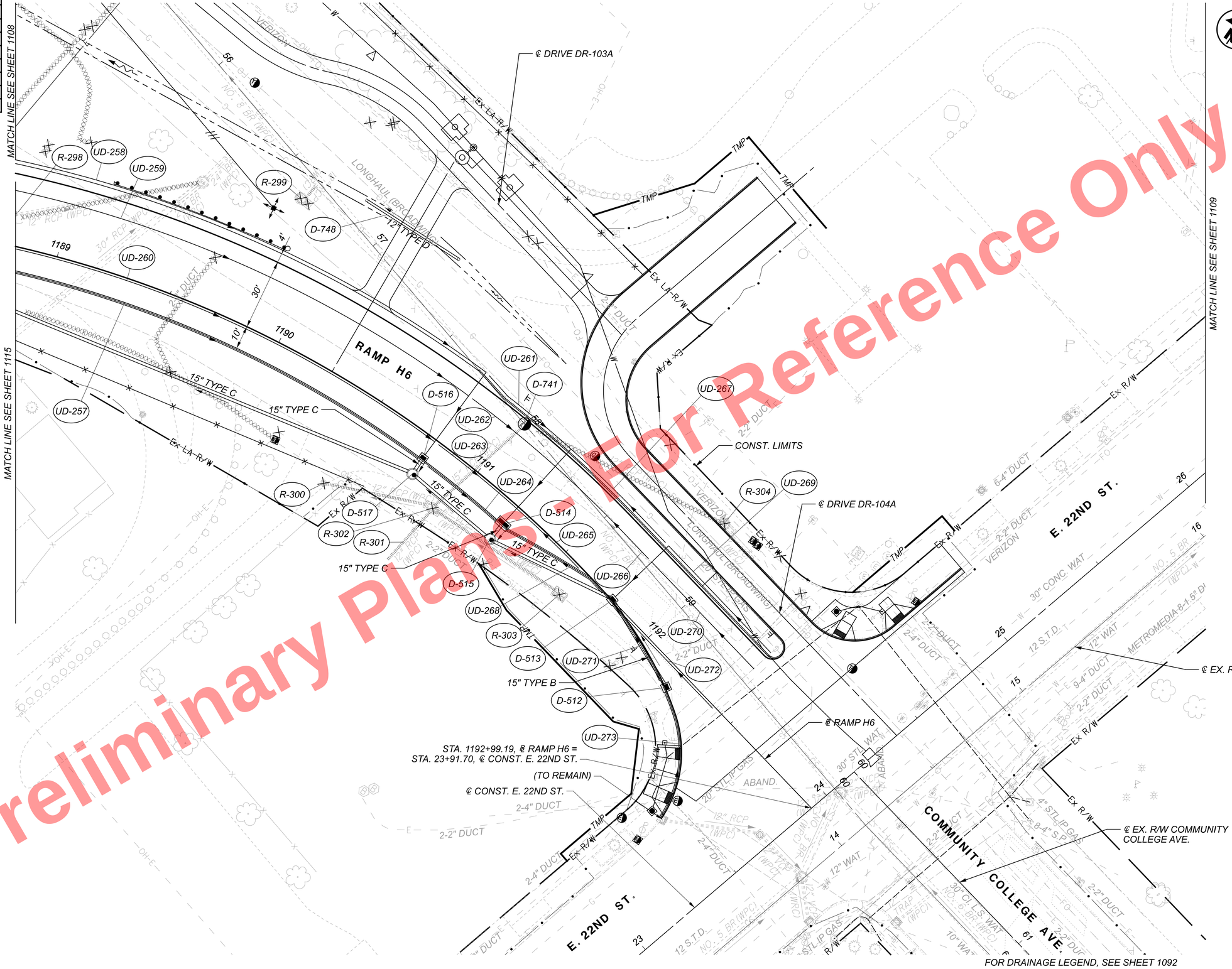

Preliminary Plans - Not for Reference Only

HORIZONTAL SCALE IN FEET
0 10 20 40

DRAINAGE PLAN
SHEET 18 OF 28

DESIGN AGENCY
Michael Baker INTERNATIONAL

DESIGNER BJT
REVIEWER KGJ 05/22/24
PROJECT ID 82382
SHEET 1110 TOTAL 2696

CUY-90-16.28 (CCG3A)

MODEL: Drainage Plans I - Drainage Plans 18 PAPERSIZE: 34x22 (in.) DATE: 6/9/2025 TIME: 2:35:54 PM USER: Julie.Ross
pw:\\mb-us-pw.bentley.com:mb-us-pw-03\Documents\Cleveland_OH\01_Projects\ODOT\District2\82382\400-Engineering\Drainage\Sheets\82382_DP0018.dgn

CROSS REFERENCES	
STRUCTURE	SHEET
D-408	1133
D-412	1133

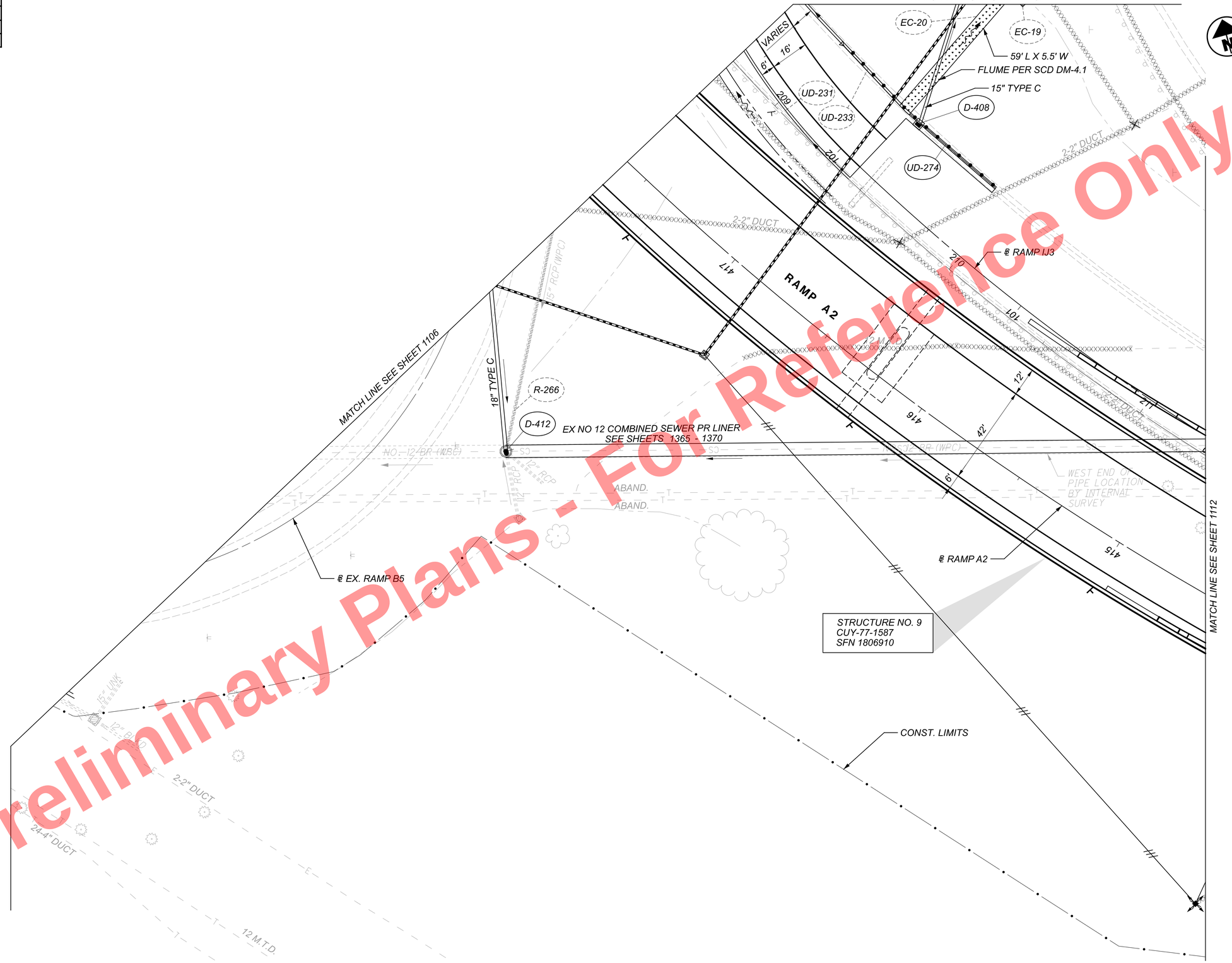

Preliminary Plans - For Reference Only

HORIZONTAL SCALE IN FEET
0 10 20 40

DRAINAGE PLAN
SHEET 19 OF 28

CUY-90-16.28 (CCG3A)

MODEL: 82382_DP00- PAPERSIZE: 34x22 (in.) DATE: 6/13/2025 TIME: 8:53:33 AM USER: Alexandria.Summers
pw:\\mb-us-pw.bentley.com\mb-us-pw-03\Documents\Cleveland_OH\01_Projects\0007\District2\82382\400-Engineering\Drainage\Sheets\82382_DP0019.dgn

DESIGN AGENCY
Michael Baker INTERNATIONAL

DESIGNER BJT
REVIEWER KGJ 05/22/24
PROJECT ID 82382
SHEET 1111 TOTAL 2696

CROSS REFERENCES	
STRUCTURE	SHEET
D-315	1134
D-316	1134
D-321	1134
D-322	1134
D-323	1134
D-324	1135
D-325	1135
D-326	1135
D-327	1134
D-328	1134

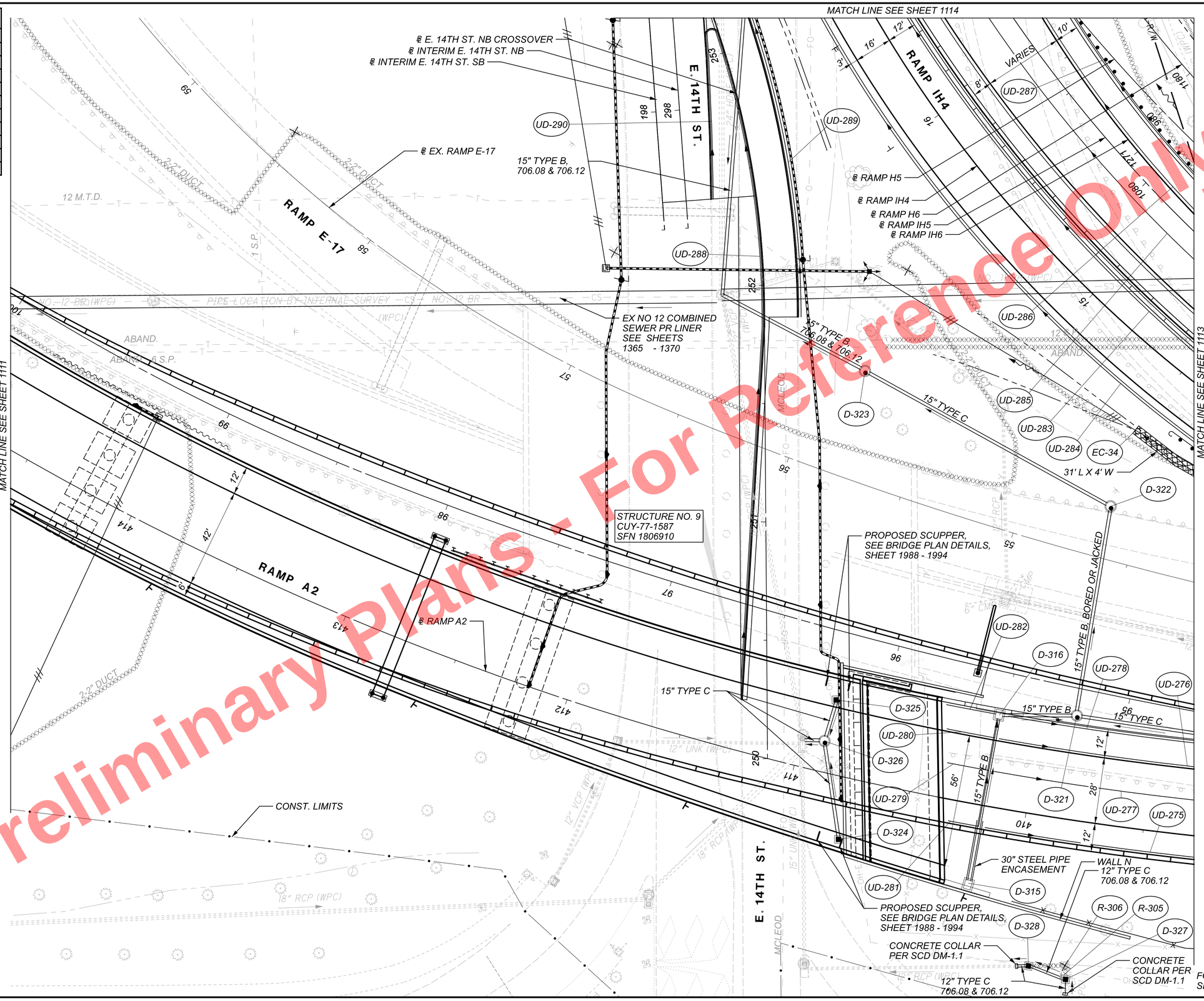

Preliminary Plans - For Reference Only

HORIZONTAL SCALE IN FEET
0 10 20 40

DRAINAGE PLAN
SHEET 20 OF 28

DESIGN AGENCY
Michael Baker INTERNATIONAL

DESIGNER BJT
REVIEWER KGJ 05/22/24
PROJECT ID 82382
SHEET 1112 TOTAL 2696

CUY-90-16.28 (CCG3A)

MODEL: 82382_DP00-1 PAPERSIZE: 34x22 (in.) DATE: 3/27/2025 TIME: 9:25:07 PM USER: Julie.Ross
pw:\\mb-us-pw.bentley.com\mb-us-pw-03\Documents\Cleveland_OH\01_Projects\0007\District2\82382\400-Engineering\Drainage\Sheets\82382_DP0020.dgn

CROSS REFERENCES	
STRUCTURE	SHEET
D-318	1134
D-320	1134

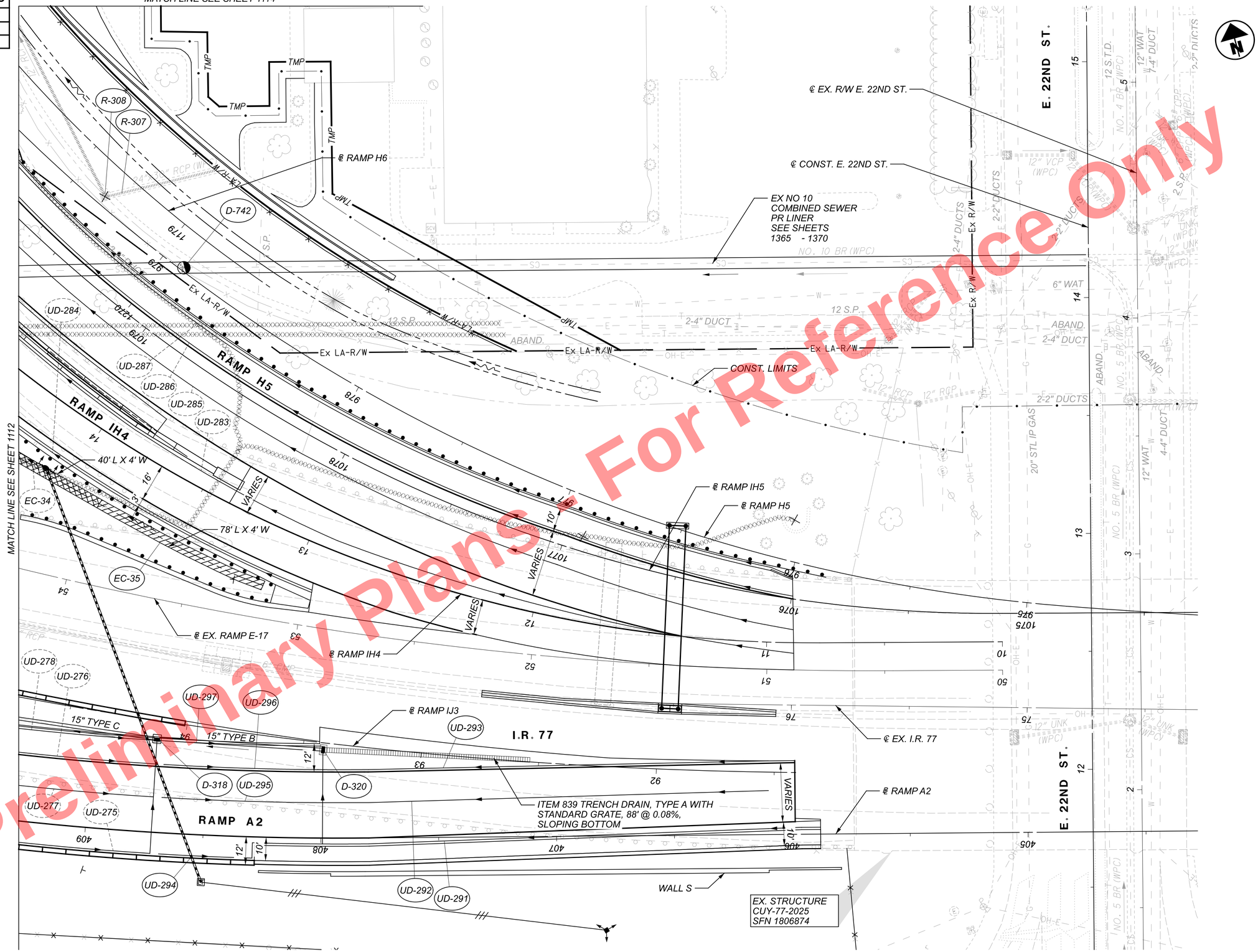

Preliminary Plans - For Reference Only

HORIZONTAL SCALE IN FEET
0 10 20 40

DRAINAGE PLAN
SHEET 21 OF 28

CUY-90-16.28 (CCG3A)

MODEL: 82382_DP00-2 PAPERSIZE: 34x22 (in.) DATE: 3/27/2025 TIME: 9:25:24 PM USER: Julie.Ross
pw:\\mb-us-pw.bentley.com\mb-us-pw-03\Documents\Cleveland.OH\Oi_Projects\ODOT\District2\82382\400-Engineering\Drainage\Sheets\82382_DP002i.dgn

DESIGN AGENCY
Michael Baker INTERNATIONAL

DESIGNER	
BJT	
REVIEWER	
KGJ	05/22/24
PROJECT ID	
82382	
SHEET	TOTAL
1113	2696

CROSS REFERENCES	
STRUCTURE	SHEET
D-500	1136
D-501	1136
D-502	1136
D-503	1136
D-506	1140
D-650	1135
D-651	1135
D-652	1135

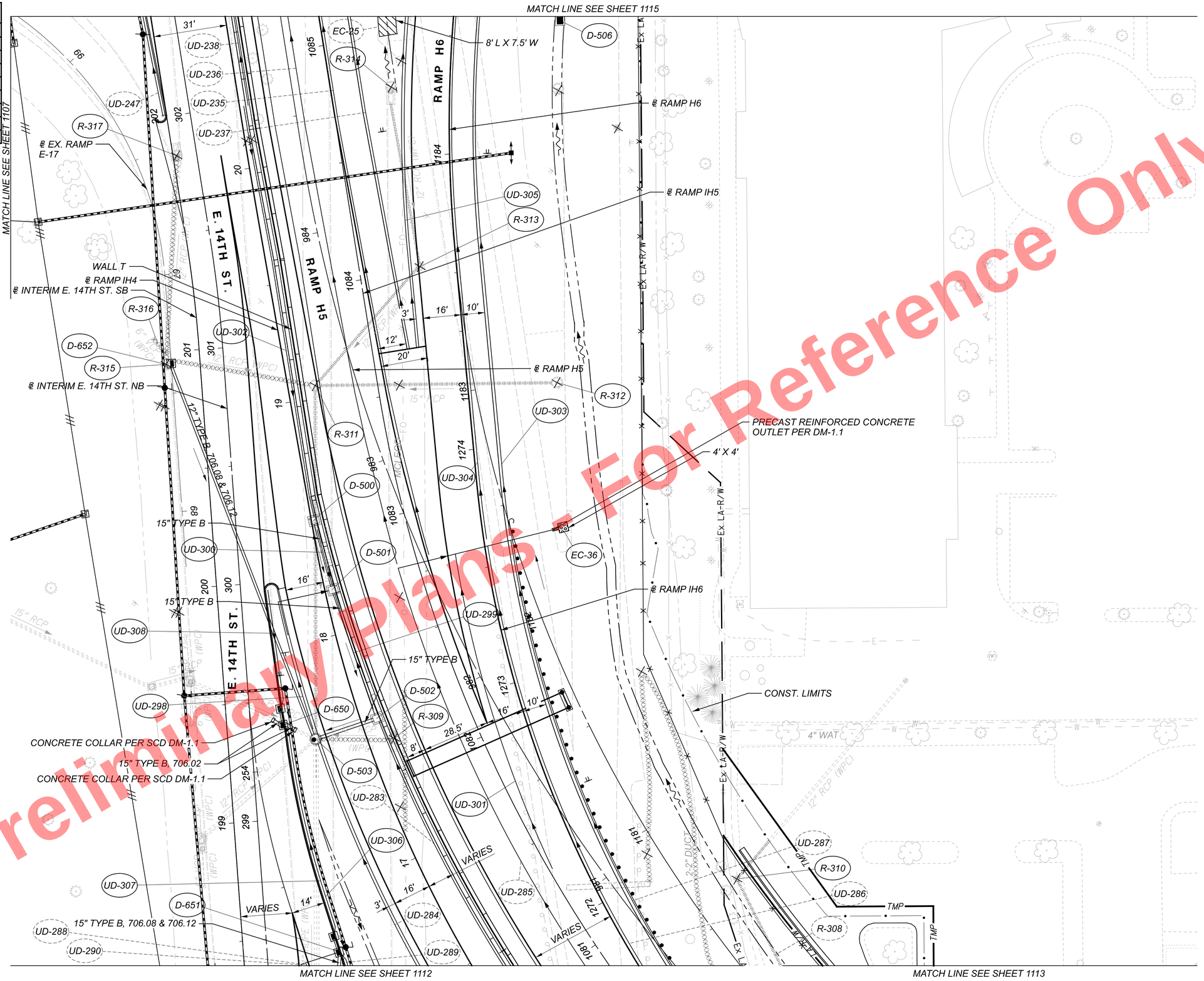

Preliminary Plans - Not For Reference Only

HORIZONTAL SCALE IN FEET
0 10 20 40

DRAINAGE PLAN
SHEET 22 OF 28

DESIGN AGENCY
Michael Baker INTERNATIONAL

DESIGNER BJT
REVIEWER KGJ 05/22/24
PROJECT ID 82382
SHEET 1114 TOTAL 2696

CUY-90-16.28 (CCG3A)

MODEL: 82382_DP00--3 PAPERSIZE: 34x22 (In.) DATE: 3/27/2025 TIME: 9:25:41 PM USER: Julie.Ross
pw:\\mb-us-pw.bentley.commb-us-pw-03\Documents\Cleveland_OH\01_Projects\0001\District2\82382\400-Engineering\Drainage\Sheets\82382_DP0022.dgn

CROSS REFERENCES	
STRUCTURE	SHEET
D-507	1140
D-508	1140
D-518	1139

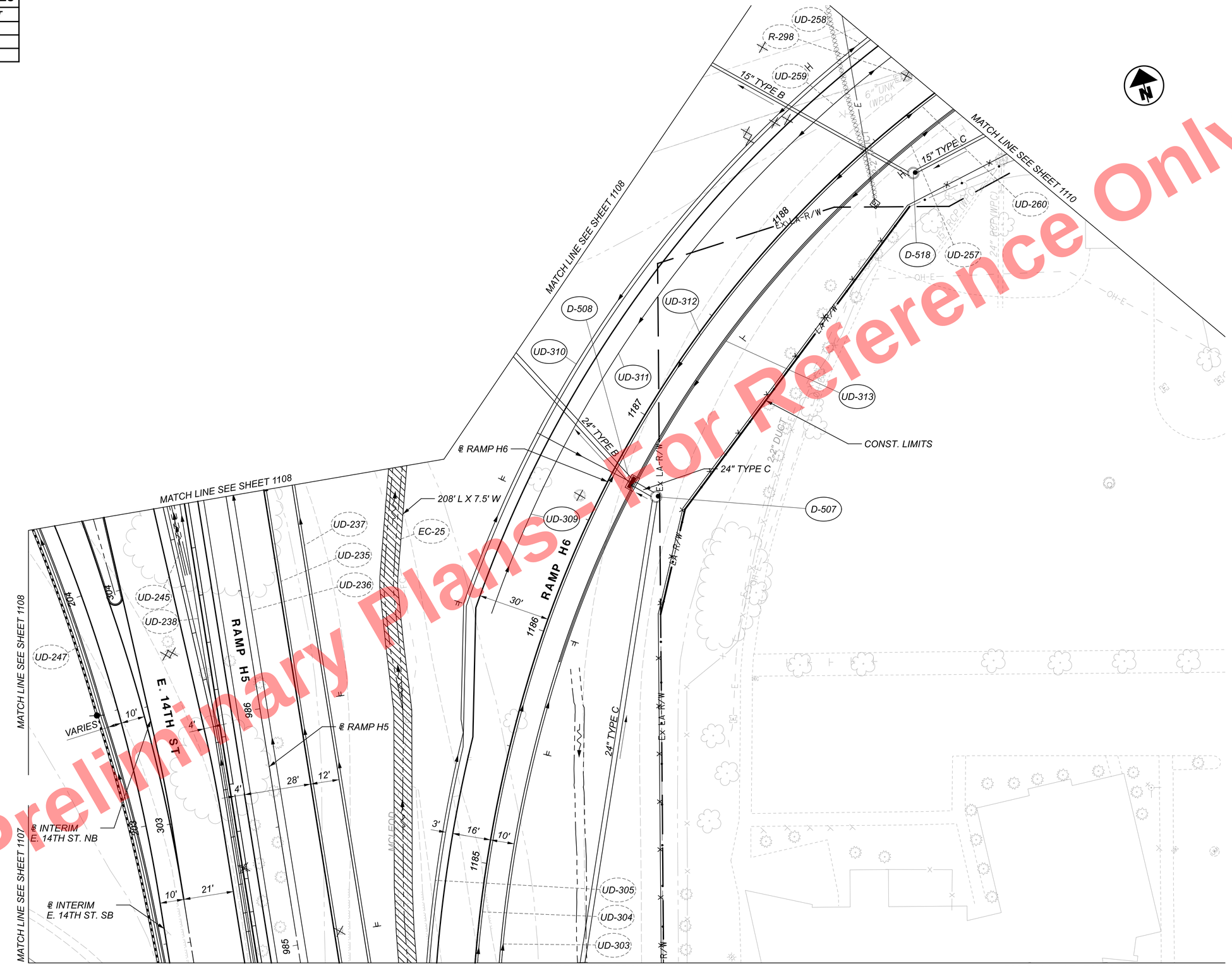

Preliminary Plans - For Reference Only

HORIZONTAL SCALE IN FEET
0 10 20 40

DRAINAGE PLAN
SHEET 23 OF 28

DESIGN AGENCY	Michael Baker INTERNATIONAL
DESIGNER	BJT
REVIEWER	KGJ 05/22/24
PROJECT ID	82382
SHEET	1115
TOTAL	2696

CUY-90-16.28 (CCG3A)

MODEL: 82382_DP00--4 PAPERSIZE: 34x22 (in.) DATE: 3/27/2025 TIME: 9:25:59 PM USER: Julie.Ross
pw:\\mb-us-pw.bentley.com:mb-us-pw-03\Documents\Cleveland.OH\OI_Projects\ODOT\District2\82382\400-Engineering\Drainage\Sheets\82382_DP0023.dgn

CROSS REFERENCES	
STRUCTURE	SHEET
D-751	1146
D-753	1146
D-755	1146
D-756	1146
D-757	1146
D-758	1146
D-760	1146
D-812	1148
D-813	1148
D-814	1148
D-822	1148

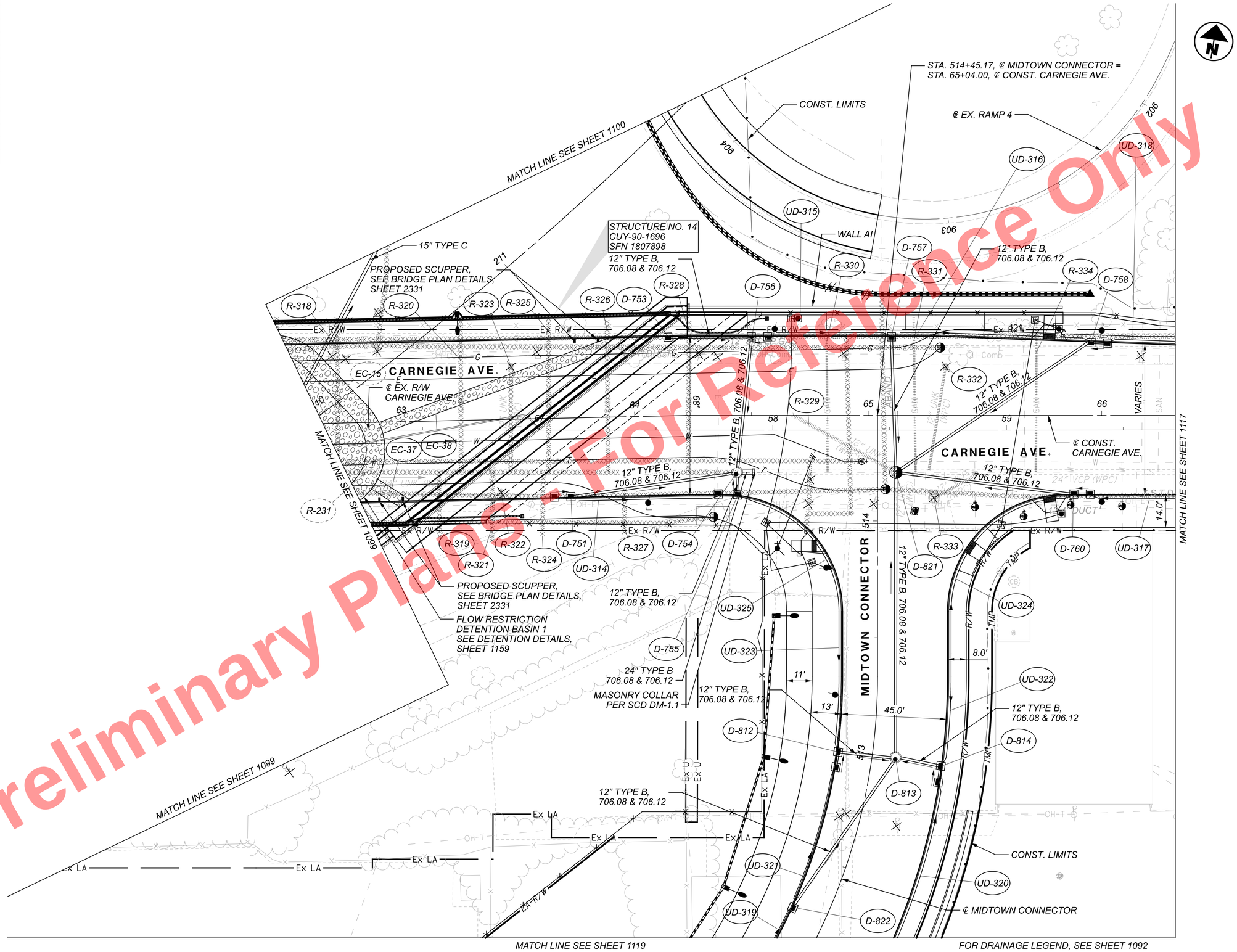

Preliminary Plans - Not for Construction
For Reference Only

HORIZONTAL SCALE IN FEET
0 10 20 40

DRAINAGE PLAN
SHEET 24 OF 28

DESIGN AGENCY
Michael Baker INTERNATIONAL

DESIGNER BJT
REVIEWER KGJ 05/22/24
PROJECT ID 82382
SHEET 1116 TOTAL 2696

CUY-90-16.28 (CCG3A)

MODEL: 82382_DP00 PAPERSIZE: 34x22 (in.) DATE: 3/27/2025 TIME: 9:26:16 PM USER: Julie.Ross
pw:\\mb-us-pw.bentley.com:mb-us-pw-03\Documents\Cleveland_OH\01_Projects\ODOT\District2\82382\400-Engineering\Drainage\Sheets\82382_DP0024.dgn

CROSS REFERENCES	
STRUCTURE	SHEET
D-770	1147
D-772	1147
D-773	1147

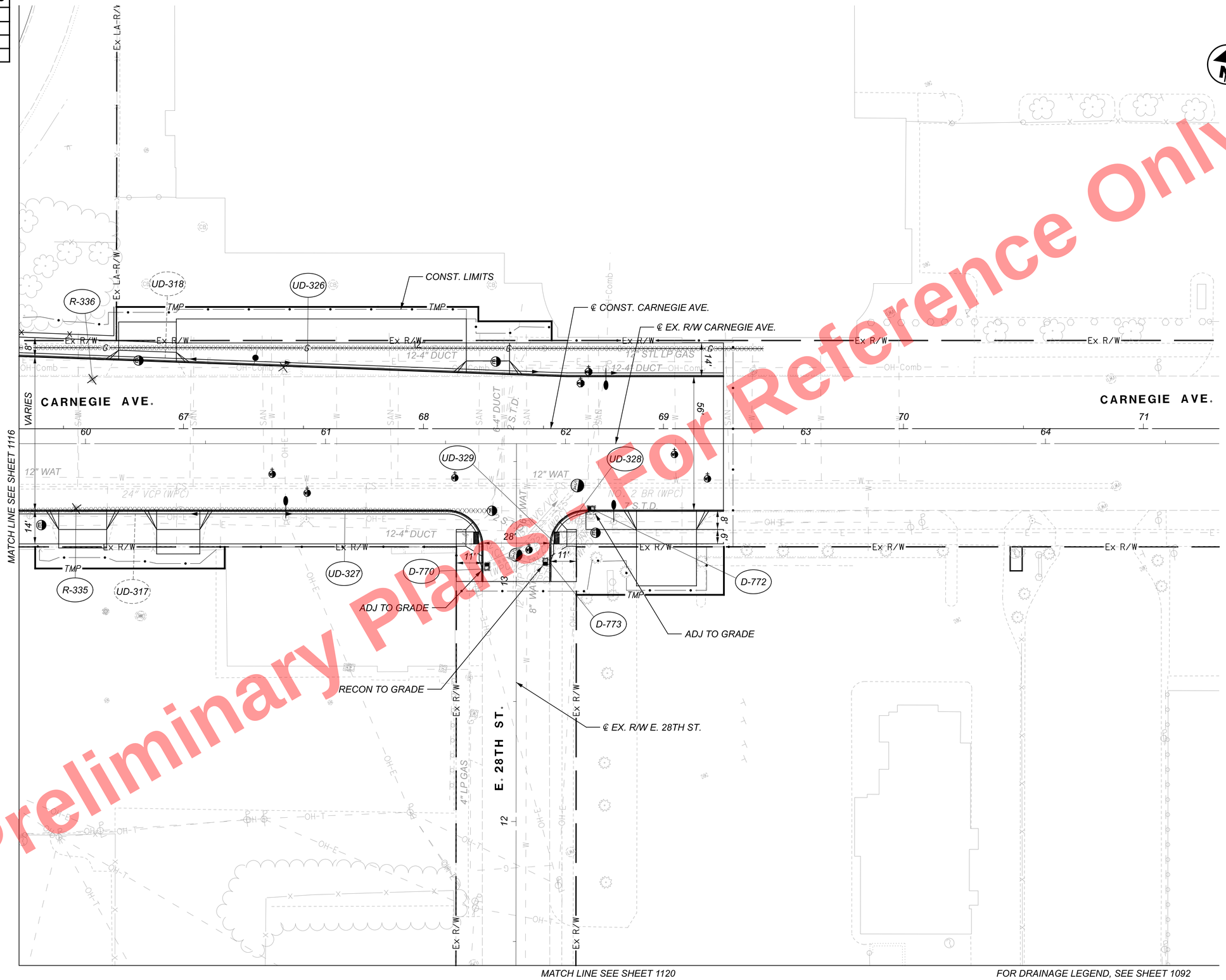

Preliminary Plans
For Reference Only

HORIZONTAL SCALE IN FEET
0 10 20 40

DRAINAGE PLAN
SHEET 25 OF 28

CUY-90-16.28 (CCG3A)

MODEL: 82382_DP01 PAPERSIZE: 34x22 (in.) DATE: 3/27/2025 TIME: 9:26:34 PM USER: Julie.Ross
pw:\\mb-us-pw.bentley.com:mb-us-pw-03\Documents\Cleveland_OH\01_Projects\ODOT\District2\82382\400-Engineering\Drainage\Sheets\82382_DP0025.dgn

DESIGN AGENCY
Michael Baker INTERNATIONAL

DESIGNER	
BJT	
REVIEWER	
KGJ	05/22/24
PROJECT ID	
82382	
SHEET	TOTAL
1117	2696

CROSS REFERENCES	
STRUCTURE	SHEET
D-810	1148
D-811	1148

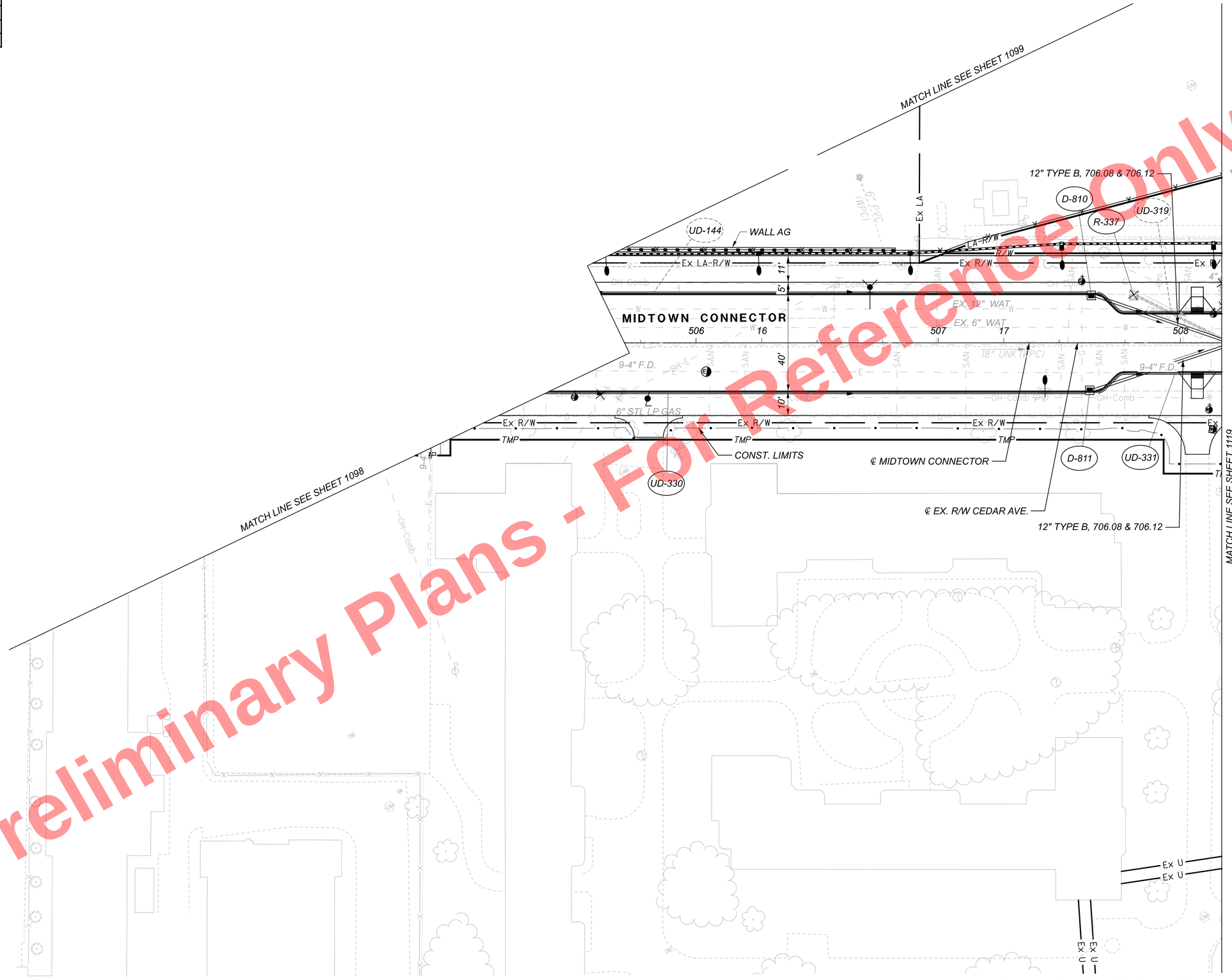

Preliminary Plans - For Reference Only

HORIZONTAL SCALE IN FEET
0 10 20 40

DRAINAGE PLAN
SHEET 26 OF 28

DESIGN AGENCY
Michael Baker INTERNATIONAL

DESIGNER BJT
REVIEWER KGJ 05/22/24
PROJECT ID 82382
SHEET 1118 TOTAL 2696

CUY-90-16.28 (CCG3A)

MODEL: 82382_DP02 PAPERSIZE: 34x22 (in.) DATE: 3/27/2025 TIME: 9:26:50 PM USER: Julie.Ross
pw:\\mb-us-pw.bentley.com:mb-us-pw-03\Documents\Cleveland_OH\OI_Projects\ODOT\District#12\82382\400-Engineering\Drainage\Sheets\82382_DP0026.dgn

CROSS REFERENCES	
STRUCTURE	SHEET
D-815	1156
D-816	1156
D-817	1156
D-818	1156
D-823	1148

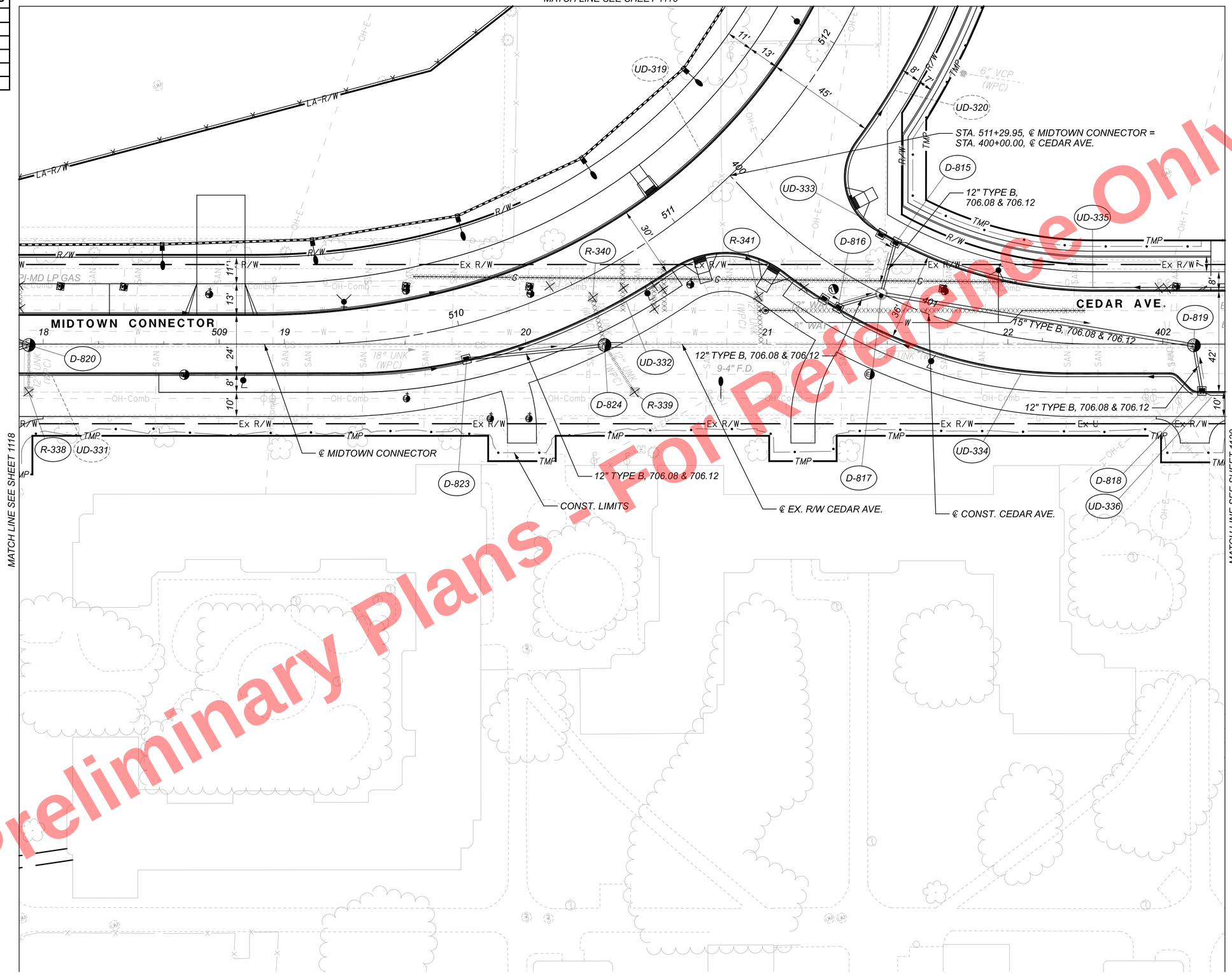

Preliminary Plans - For Reference Only

HORIZONTAL SCALE IN FEET
0 10 20 40

DRAINAGE PLAN
SHEET 27 OF 28

DESIGN AGENCY
Michael Baker INTERNATIONAL

DESIGNER BJT
REVIEWER KGJ 05/22/24
PROJECT ID 82382
SHEET 1119 TOTAL 2696

CUY-90-16.28 (CCG3A)

MODEL: 82382_DP03 PAPERSIZE: 34x22 (in.) DATE: 3/27/2025 TIME: 9:27:08 PM USER: Julie.Ross
pw:\\mb-us-pw.bentley.com:mb-us-pw-03\Documents\Cleveland_OHNO_Projects\0007\District2\82382\400-Engineering\Drainage\Sheets\82382_DP0027.dgn

MATCH LINE SEE SHEET 1117

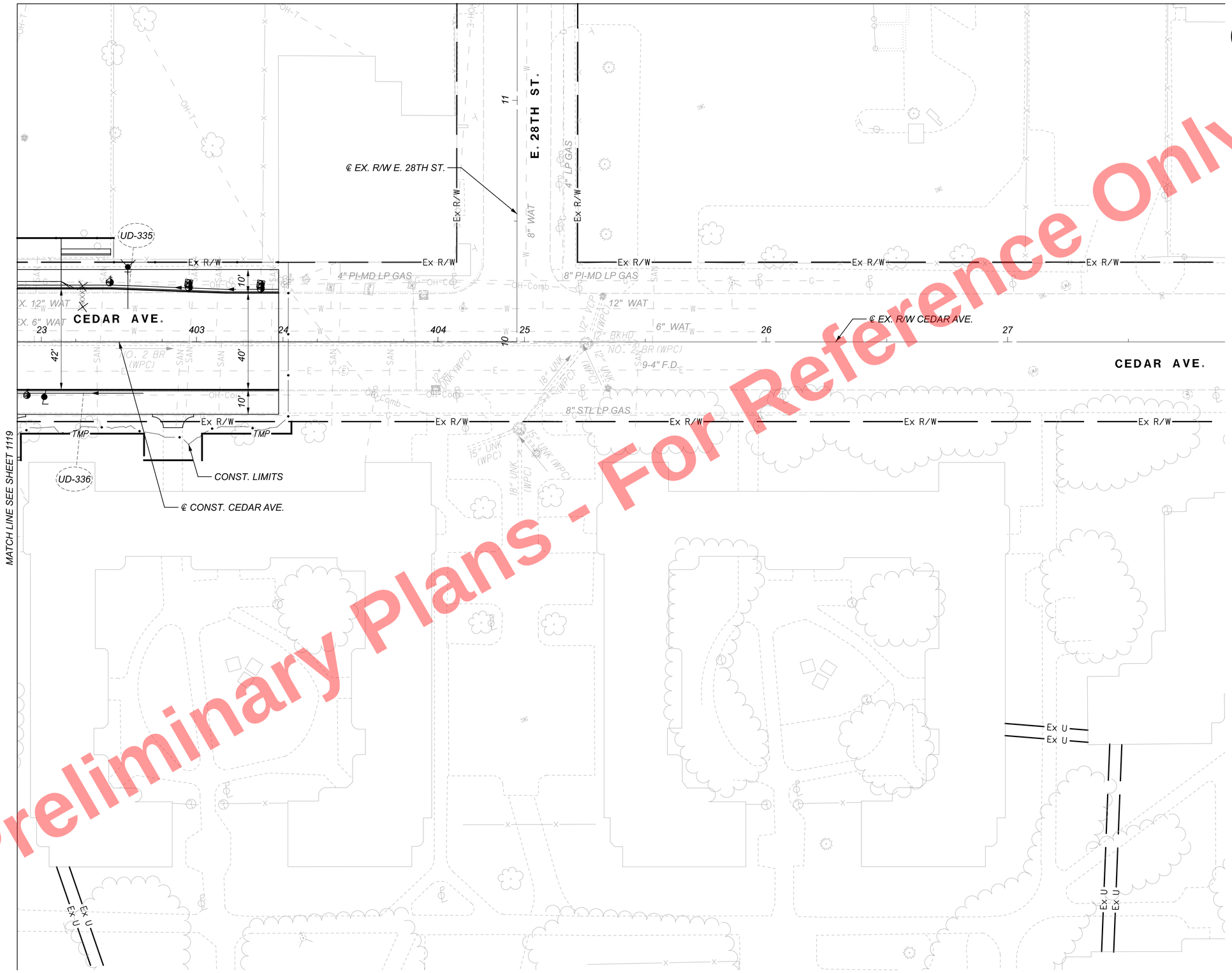

FOR STORM SEWER PROFILES, SEE SHEETS 1121 - 1158

FOR DRAINAGE LEGEND, SEE SHEET 1092

Preliminary Plans - For Reference Only

HORIZONTAL SCALE IN FEET
0 10 20 40

DRAINAGE PLAN
SHEET 28 OF 28

DESIGN AGENCY
Michael Baker INTERNATIONAL

DESIGNER BJT
REVIEWER KGJ 05/22/24
PROJECT ID 82382
SHEET 1120 TOTAL 2696

CUY-90-16.28 (CCG3A)

MODEL: 82382_DP04 PAPERSIZE: 34x22 (in.) DATE: 3/27/2025 TIME: 9:27:25 PM USER: Julie.Ross
pw:\\mb-us-pw.bentley.com:mb-us-pw-03\Documents\Cleveland_OH\01_Projects\ODOT\District#12\82382\400-Engineering\Drainage\Sheets\82382_DP0028.dgn

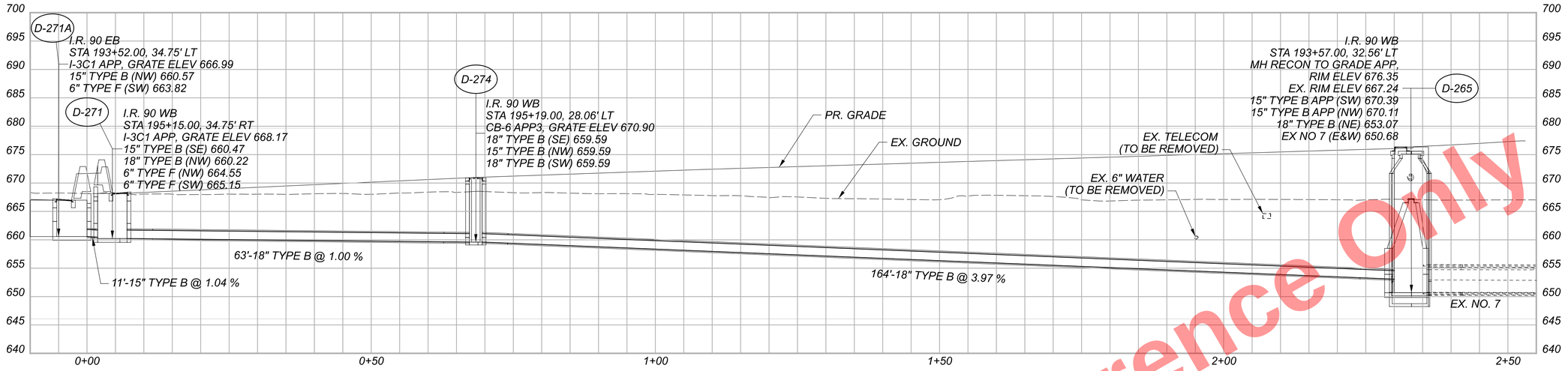

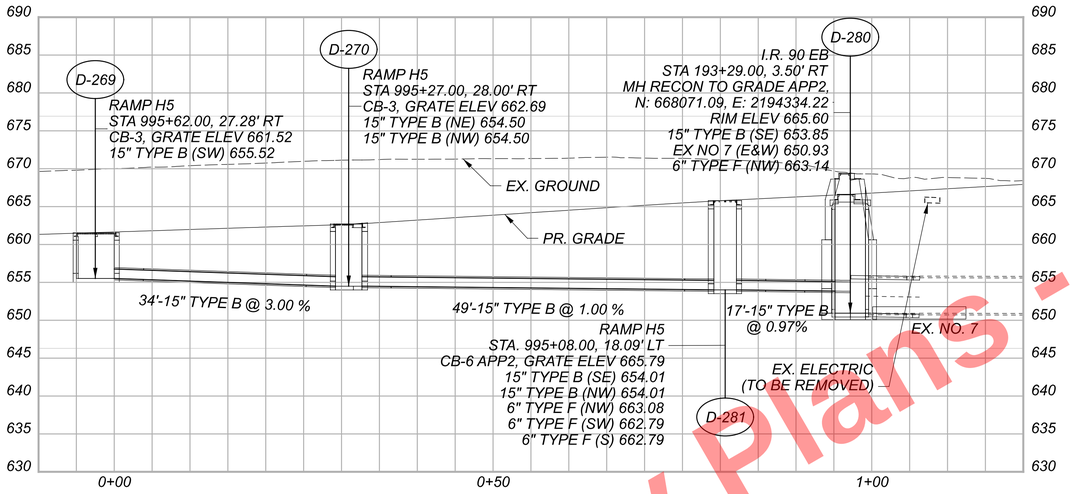

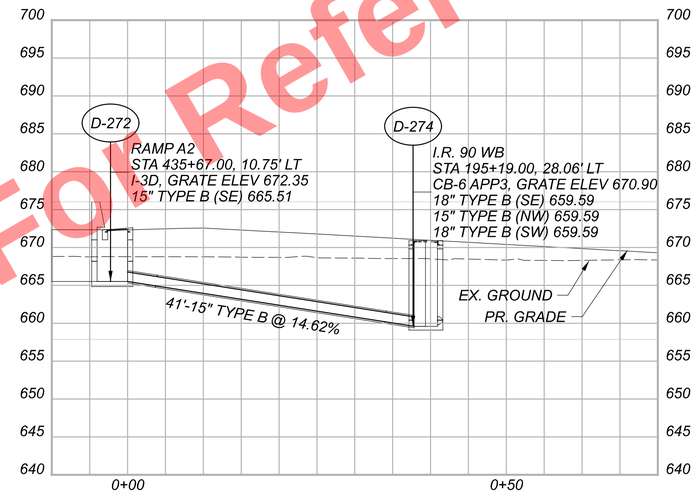

Preliminary Plans - Not For Reference Only

CROSS REFERENCES	
STRUCTURE	SHEET
D-265	1096
D-269	1096
D-270	1096
D-271	1096
D-271A	1096
D-272	1096
D-274	1096
D-274	1096
D-280	1096
D-281	1096

NOTE:
THE STORM SEWER PROFILES WERE GENERATED USING A NEW 3D DRAFTING TECHNOLOGY. THE SOFTWARE IS STILL IN DEVELOPMENT WHICH IMPACTS THE QUALITY OF DISPLAY OF STRUCTURES, PIPES, AND LABELS. UNDERDRAIN FLOWLINE ELEVATIONS ARE INCLUDED IN THE PROFILES WHERE POSSIBLE BUT THE SOFTWARE PREVENTED PROPER DISPLAY OF FLOWLINE ELEVATIONS. SEE THE UNDERDRAIN SUBSUMMARY FOR ALL RELEVENT OUTLET ELEVATIONS.

STORM SEWER PROFILES
I.R. 90 (NEAR RAMP A2 AND RAMP H5 GORES)

DESIGN AGENCY
Michael Baker INTERNATIONAL

DESIGNER BJT
REVIEWER KGJ 05/22/24
PROJECT ID 82382
SHEET 1121 TOTAL 2696

CUY-90-16.28 (CCG3A)

MODEL: Sheet PAPERSIZE: 34x22 (in.) DATE: 3/27/2025 TIME: 10:33:26 PM USER: Julie.Ross
pw:\\mb-us-pw.bentley.com:mb-us-pw-03\Documents\Cleveland_OH\01_Projects\ODOT\District2\82382\400-Engineering\Drainage\Sheets\82382_DF014.dgn

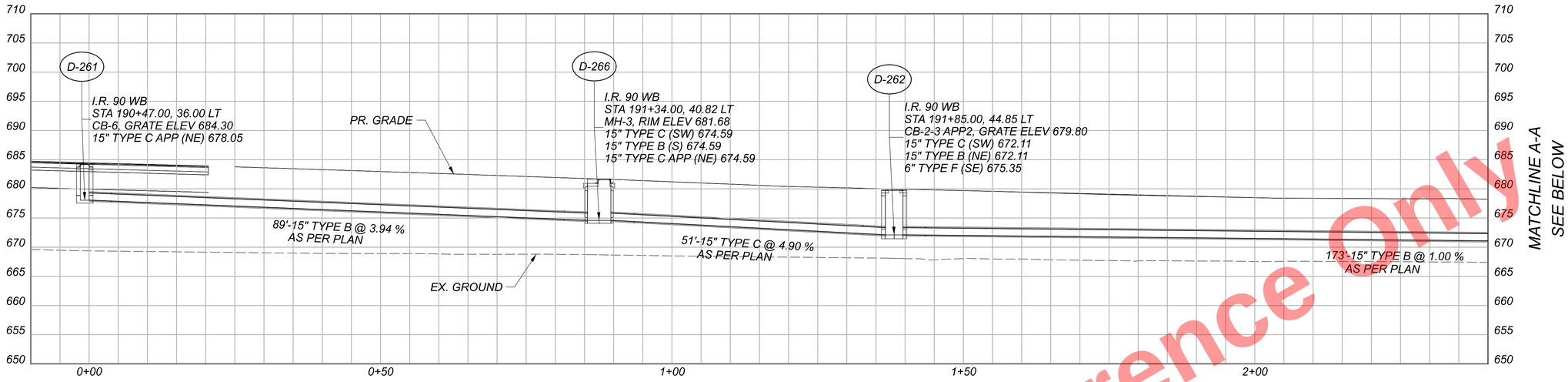

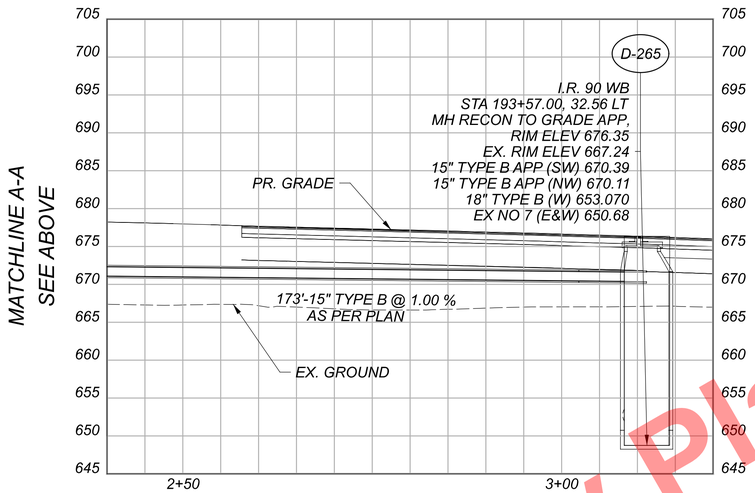

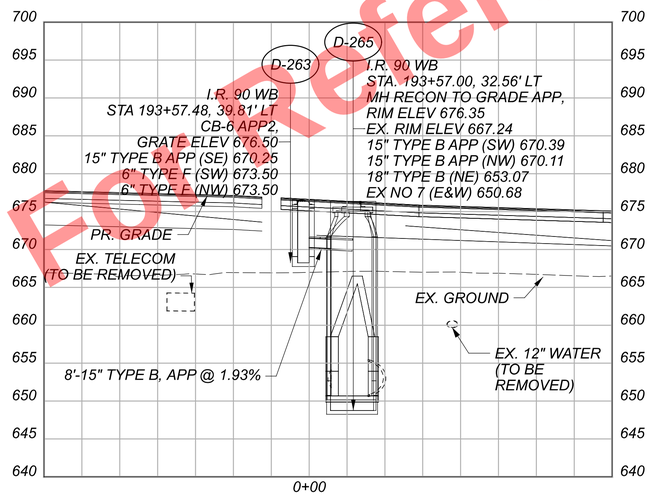

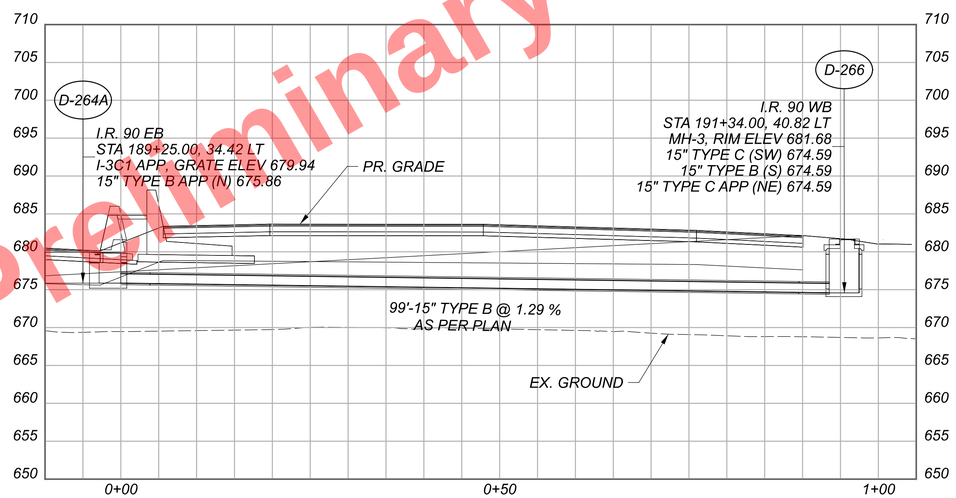

Preliminary Plans - For Reference Only

STORM SEWER PROFILES
I.R. 90 (BETWEEN E. 14TH ST. BRIDGES & RAMP A2)

CROSS REFERENCES	
STRUCTURE	SHEET
D-261	1095
D-262	1096
D-263	1096
D-264A	1095
D-265	1096
D-266	1095

DESIGN AGENCY
Michael Baker INTERNATIONAL

DESIGNER BJT
REVIEWER KGJ 05/22/24
PROJECT ID 82382
SHEET 1122 TOTAL 2696

CUY-90-16.28 (CCG3A)

MODEL: Sheet PAPERSIZE: 34x22 (in.) DATE: 3/27/2025 TIME: 10:33:49 PM USER: Julie.Ross
pw:\\mb-us-pw.bentley.com:mb-us-pw-03\Documents\Cleveland_OH\01_Projects\ODOT\District12\82382\400-Engineering\Drainage\Sheets\82382_DF1028.dgn

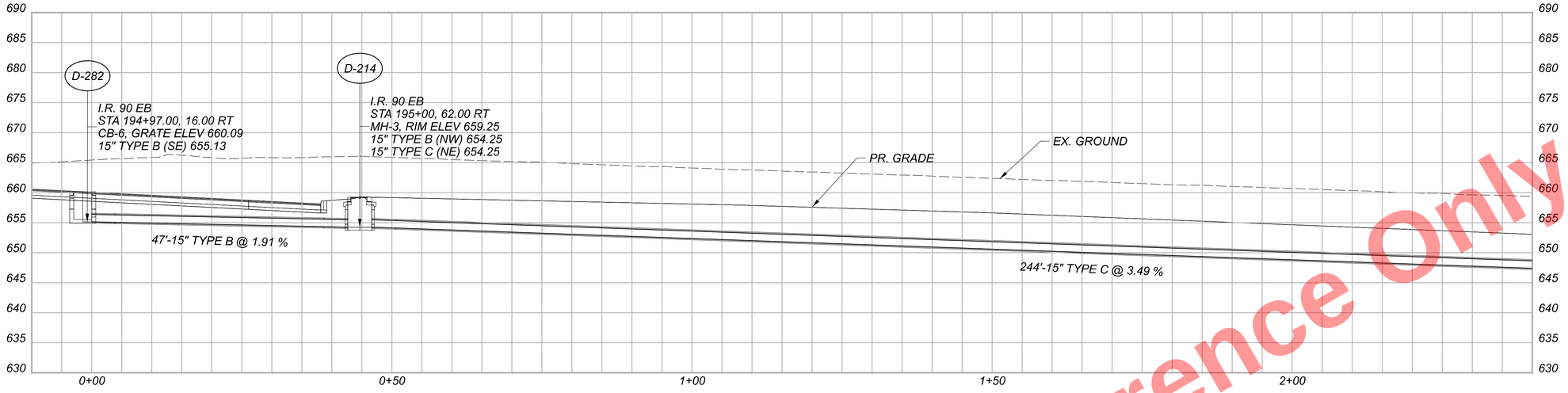

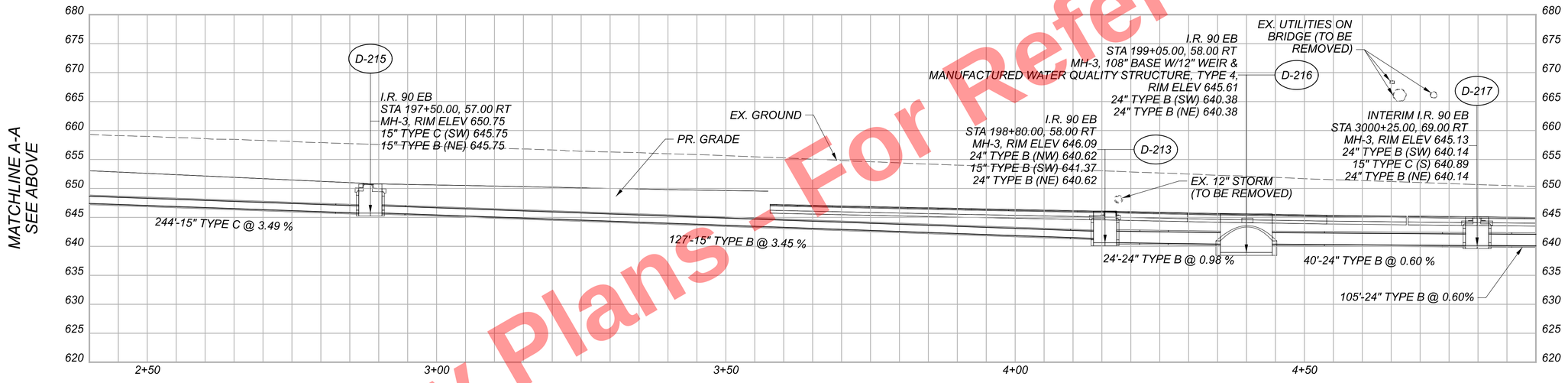

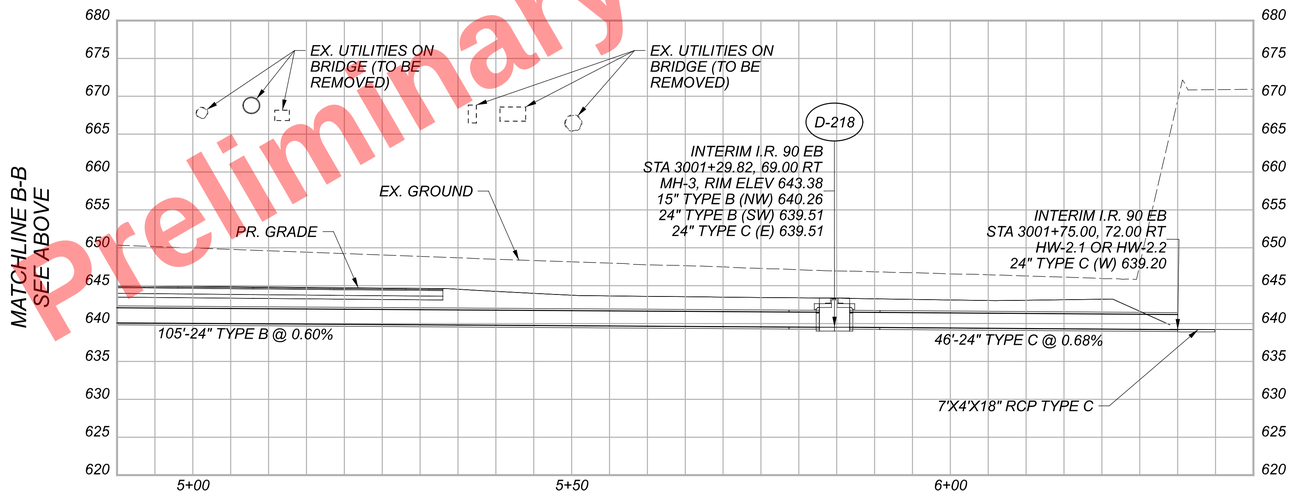

Preliminary Plans - For Reference Only

CROSS REFERENCES	
STRUCTURE	SHEET
D-213	1097
D-214	1097
D-215	1097
D-216	1097
D-217	1097
D-218	1098
D-282	1097

STORM SEWER PROFILES
I.R. 90 (WEST OF E. 22ND ST. BRIDGE

DESIGN AGENCY
Michael Baker INTERNATIONAL

DESIGNER BJT
REVIEWER KGJ 05/22/24
PROJECT ID 82382
SHEET 1123 TOTAL 2696

CUY-90-16.28 (CCG3A)

MODEL: Sheet PAPERSIZE: 34x22 (in.) DATE: 3/27/2025 TIME: 10:34:06 PM USER: JulieRoss
pw:\\mb-us-pw.bentley.commb-us-pw-03\Documents\Cleveland_0H10_Projects\0D0T\District2\82382\400-Engineering\Drainage\Sheets\82382_DF105.dgn

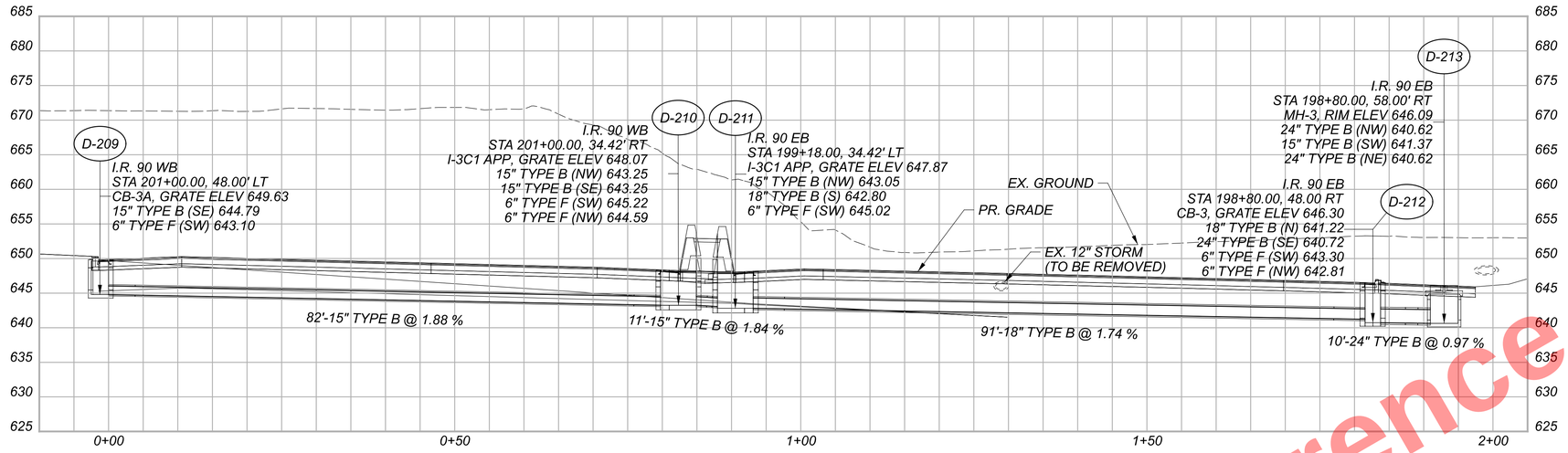

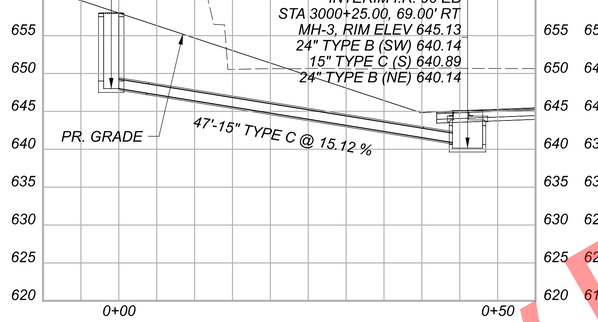

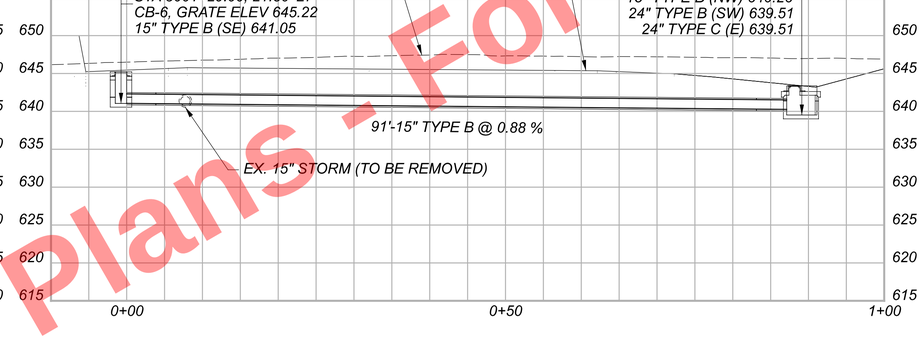

Preliminary Plans - For Reference Only

CROSS REFERENCES	
STRUCTURE	SHEET
D-209	1097
D-210	1097
D-211	1097
D-212	1097
D-213	1097
D-219	1097
D-220	1098

STORM SEWER PROFILES
I.R. 90 (WEST OF AND UNDER E. 22ND ST. BRIDGE

DESIGN AGENCY
Michael Baker INTERNATIONAL

DESIGNER BJT
REVIEWER KGJ 05/22/24
PROJECT ID 82382
SHEET 1124 TOTAL 2696

CUY-90-16.28 (CCG3A)

MODEL: Sheet 2 PAPERSIZE: 34x22 (in.) DATE: 3/27/2025 TIME: 10:34:11 PM USER: Julie.Ross
pw:\\mb-us-pw.bentley.com:mb-us-pw-03\Documents\Cleveland_OH\01_Projects\ODOT\District2\82382\400-Engineering\Drainage\Sheets\82382_DF105.dgn

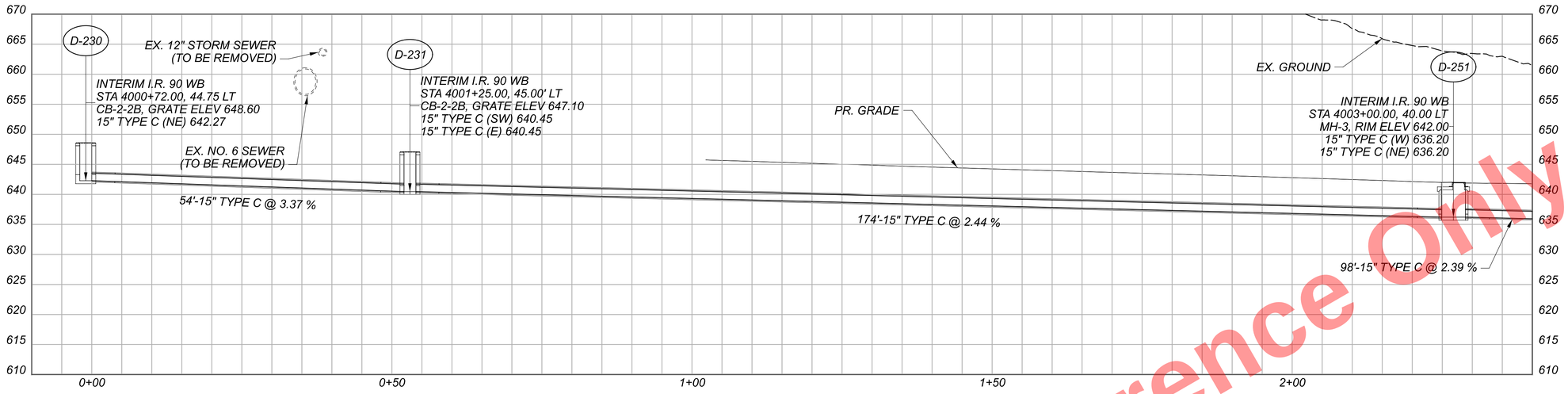

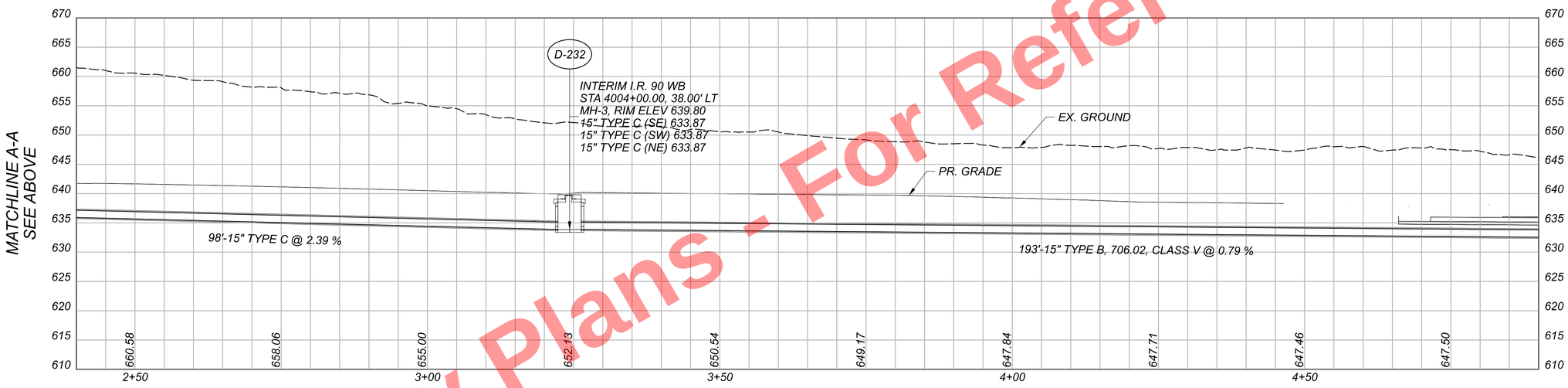

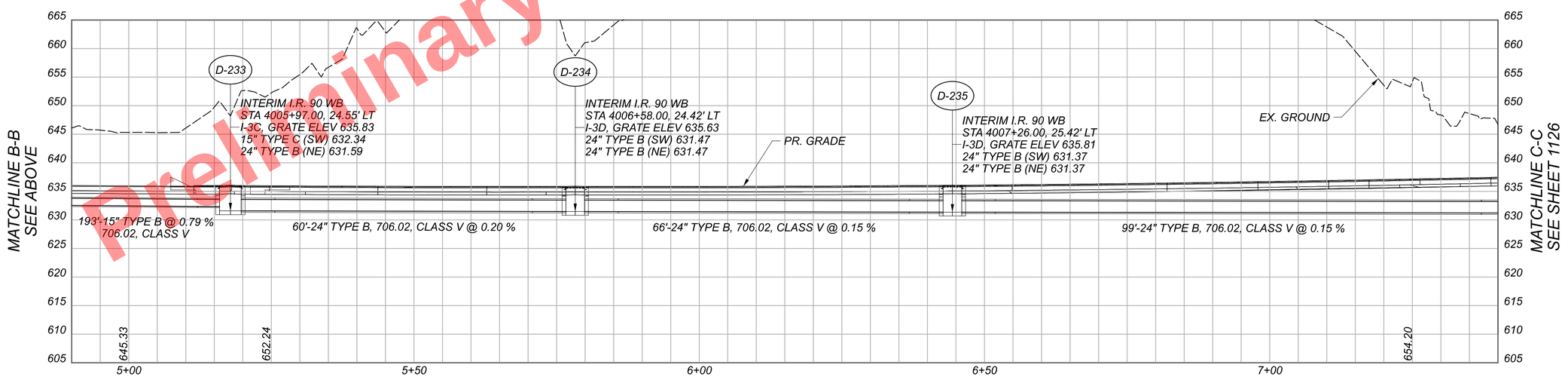

Preliminary Plans - Not For Reference Only

CROSS REFERENCES

STRUCTURE	SHEET
D-230	1098
D-231	1098
D-232	1098
D-233	1099
D-234	1099
D-235	1099
D-251	1098

STORM SEWER PROFILES
I.R. 90 WB (FROM E. 22ND ST. BRIDGE TO CARNEGIE AVE. BRIDGE)

DESIGN AGENCY
Michael Baker INTERNATIONAL

DESIGNER BJT
REVIEWER KGJ 05/22/24
PROJECT ID 82382
SHEET 1125 TOTAL 2696

CUY-90-16.28 (CCG3A)

MODEL: Sheet 2 PAPERSIZE: 34x22 (in.) DATE: 5/9/2025 TIME: 1:18:27 PM USER: MaiaGallagher
pw:\\mb-us-pw.bentley.com:mb-us-pw-03\Documents\Cleveland_OH\DL_Projects\ODOT\District2\82382\400-Engineering\Drainage\Sheets\82382_DF1016.dgn

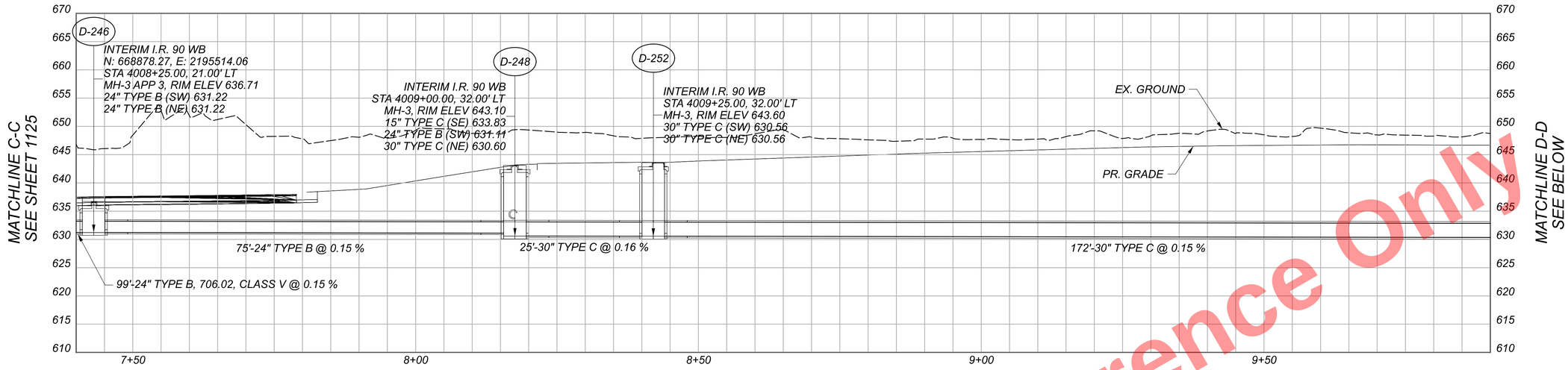

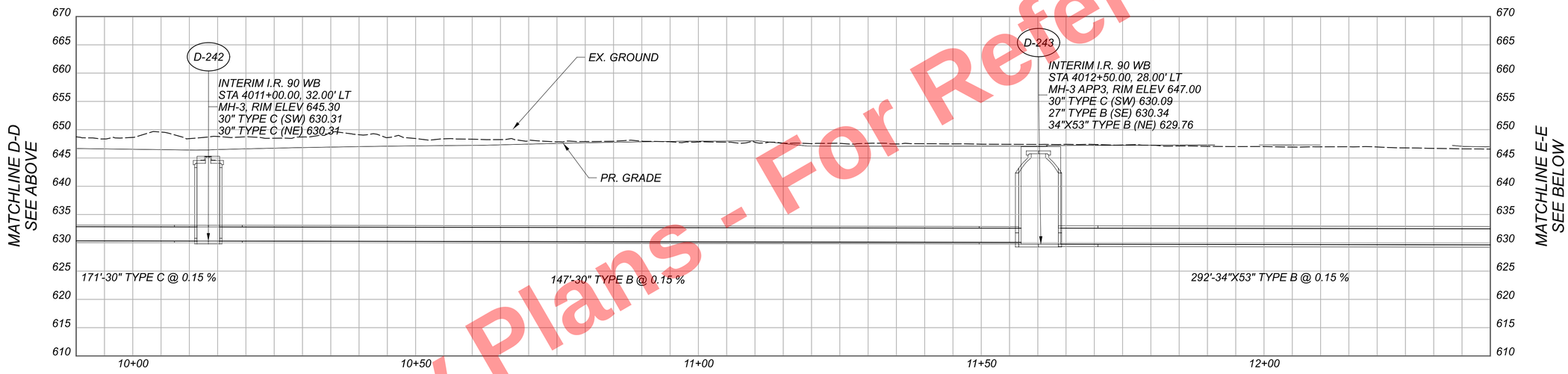

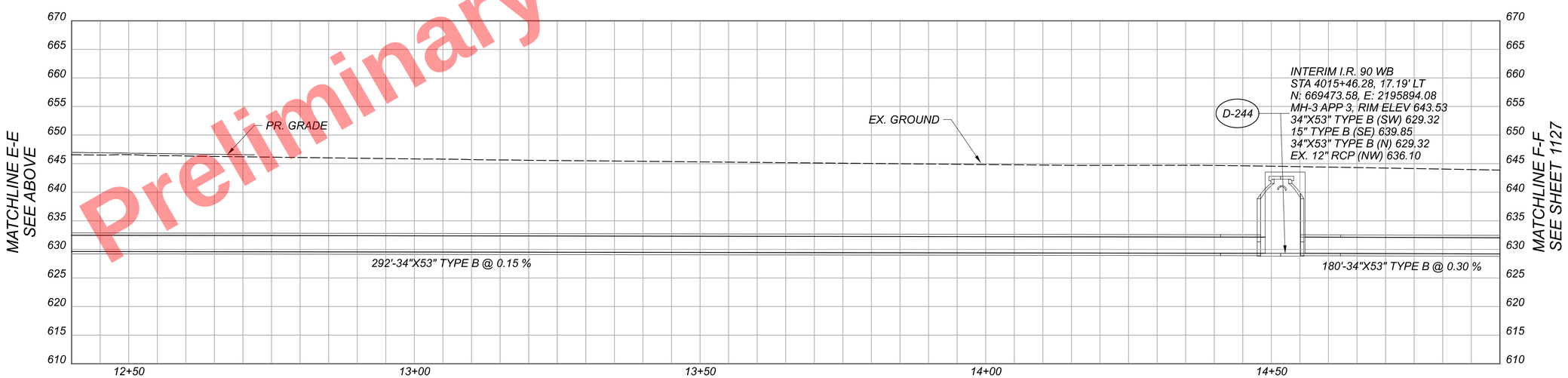

Preliminary Plans - Not For Reference Only

CROSS REFERENCES	
STRUCTURE	SHEET
D-242	1100
D-243	1100
D-244	1100
D-246	1099
D-248	1099
D-252	1099

STORM SEWER PROFILES
I.R. 90 WB (FROM CARNEGIE AVE. BRIDGE TO PROJECT END)

DESIGN AGENCY
Michael Baker INTERNATIONAL

DESIGNER BJT
REVIEWER KGJ 05/22/24
PROJECT ID 82382
SHEET 1126 TOTAL 2696

CUY-90-16.28 (CCG3A)

MODEL: Sheet 4 PAPERSIZE: 34x22 (in.) DATE: 5/9/2025 TIME: 11:4:53 PM USER: Mala.Gallagher
pw:\\mb-us-pw.bentley.com:mb-us-pw-03\Documents\Cleveland_OH\01_Projects\ODOT\District2\82382\400-Engineering\Drainage\Sheets\82382_DF1016.dgn

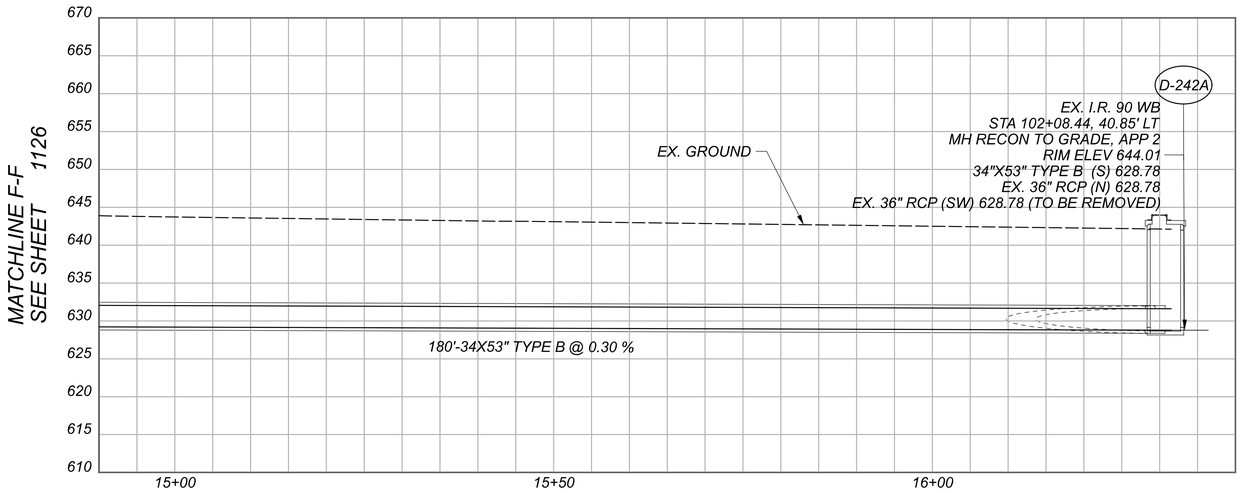

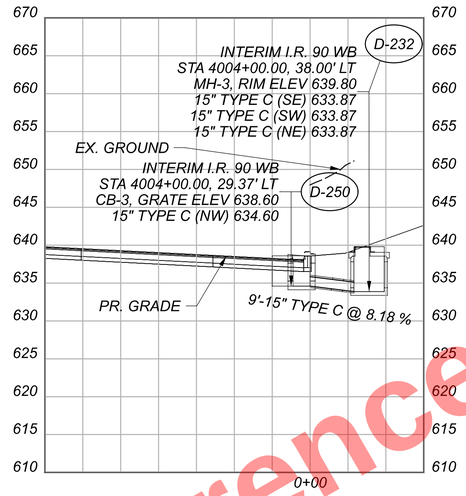

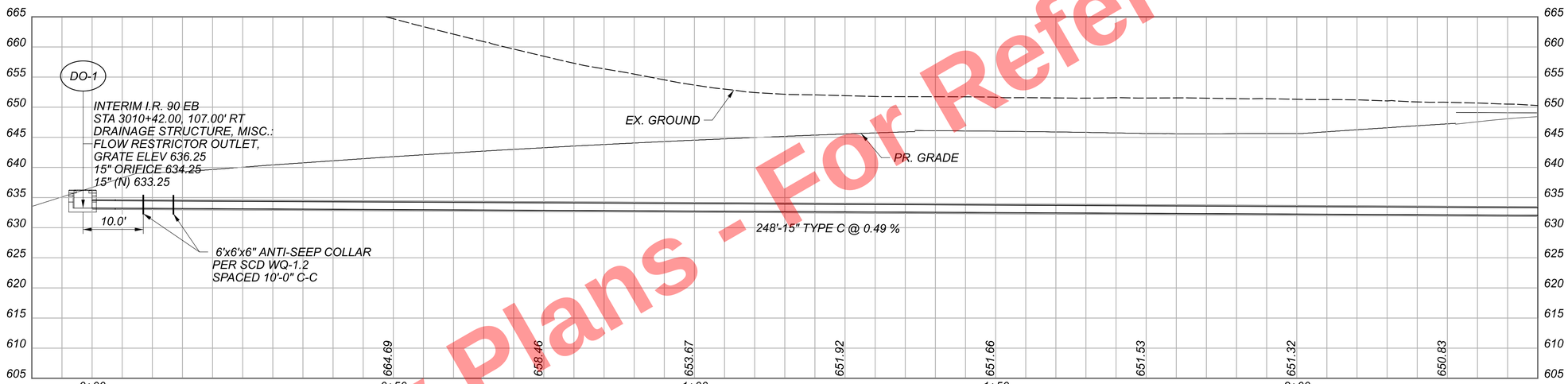

MATCHLINE A-A
SEE BELOW

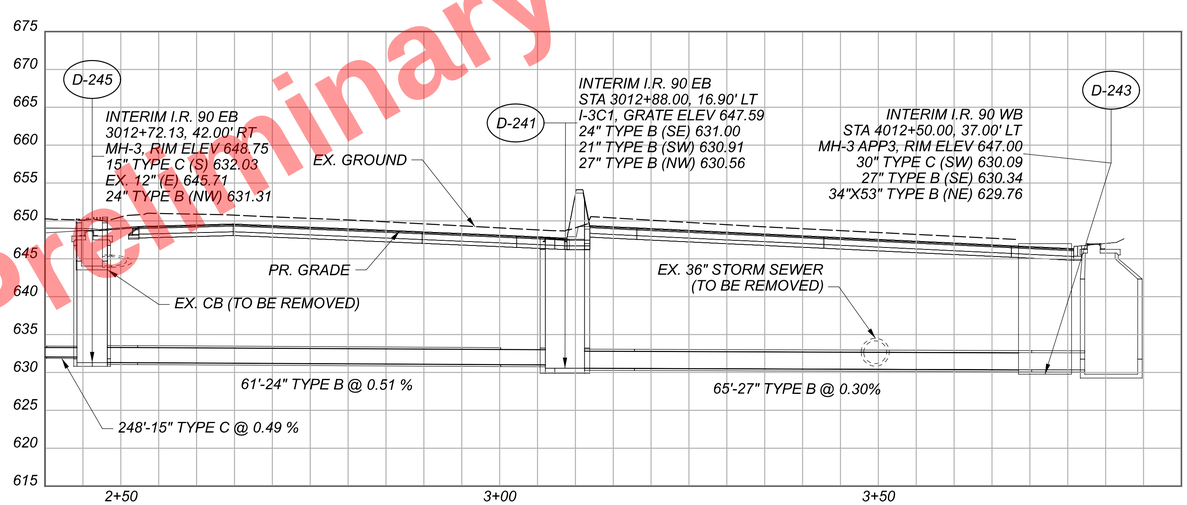

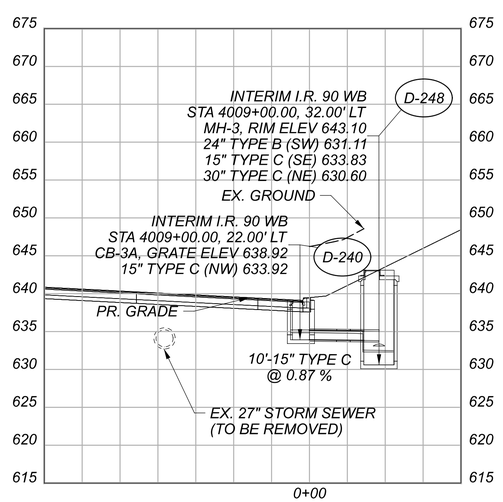

MATCHLINE A-A
SEE ABOVE

CROSS REFERENCES

STRUCTURE	SHEET
D-240	1099
D-241	1100
D-242A	1100
D-245	1100
D-250	1098
DO-1	1099

STORM SEWER PROFILES
I.R. 90 EB/WB (NEAR CARNEGIE AVE. BRIDGE)

DESIGN AGENCY
Michael Baker INTERNATIONAL

DESIGNER BJT
REVIEWER KGJ 05/22/24
PROJECT ID 82382
SHEET 1127 TOTAL 2696

CUY-90-16.28 (CCG3A)

MODEL: Sheet 3 PAPERSIZE: 34x22 (in.) DATE: 3/27/2025 TIME: 10:34:34 PM USER: Julie.Ross
pw:\\mb-us-pw.bentley.com\mb-us-pw-03\Documents\Cleveland_OH\01_Projects\000T\District2\82382\400-Engineering\Drainage\Sheets\82382_DF1016.dgn

Preliminary Plans - For Reference Only

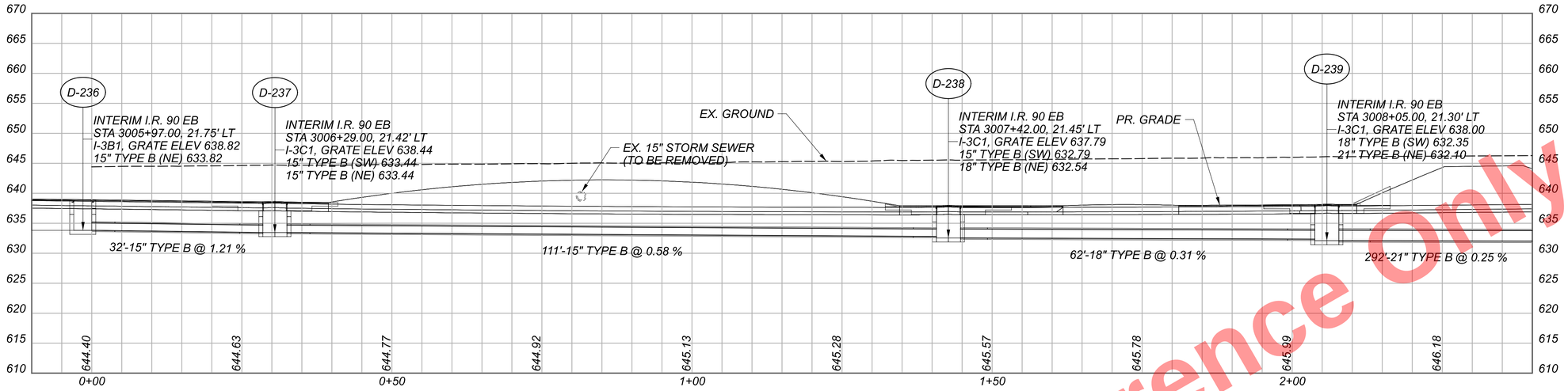

MATCHLINE A-A
SEE BELOW

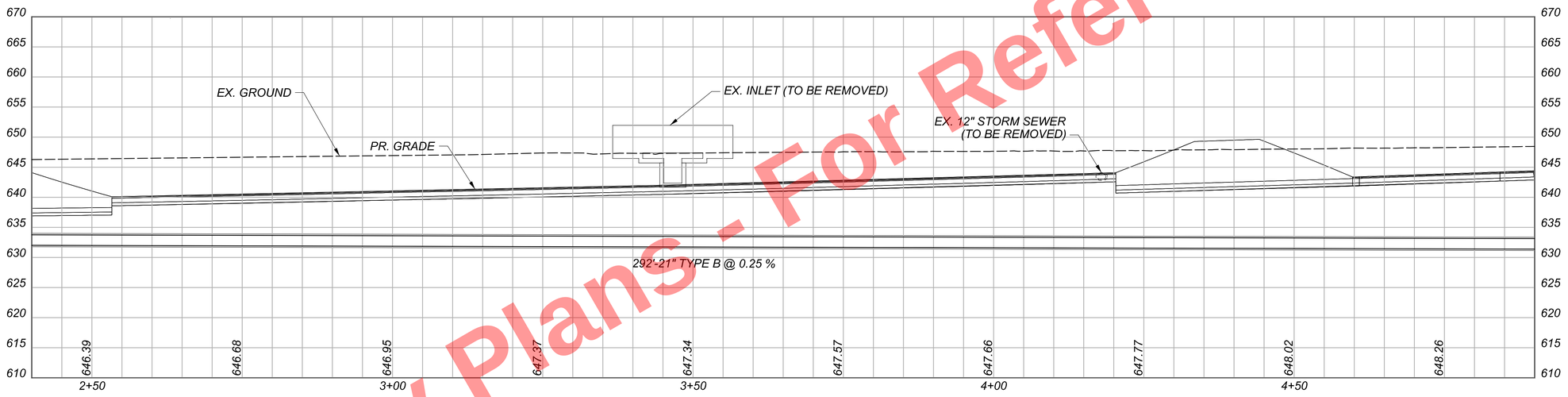

MATCHLINE A-A
SEE ABOVE

MATCHLINE B-B
SEE BELOW

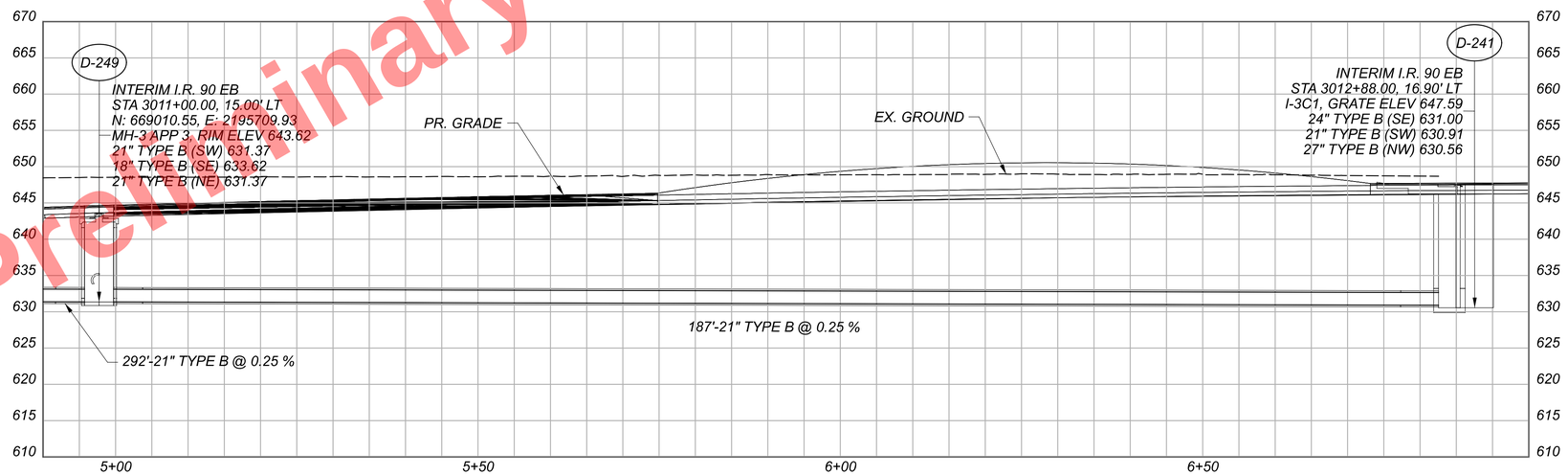

MATCHLINE B-B
SEE ABOVE

Preliminary Plans - For Reference Only

STORM SEWER PROFILES
I.R. 90 MEDIAN (UNDER CARNEGIE AVE. BRIDGE)

CROSS REFERENCES	
STRUCTURE	SHEET
D-236	1099
D-237	1099
D-238	1099
D-239	1099
D-241	1100
D-249	1100

DESIGN AGENCY
Michael Baker INTERNATIONAL

DESIGNER BJT
REVIEWER KGJ 05/22/24
PROJECT ID 82382
SHEET 1128 TOTAL 2696

CUY-90-16.28 (CCG3A)

MODEL: Sheet 5 PAPERSIZE: 34x22 (in.) DATE: 3/27/2025 TIME: 10:34:37 PM USER: Julie.Ross
pw:\\mb-us-pw.bentley.com:mb-us-pw-03\Documents\Cleveland.OH\OI_Projects\ODOT\District2\82382\400-Engineering\Drainage\Sheets\82382_DF1016.dgn

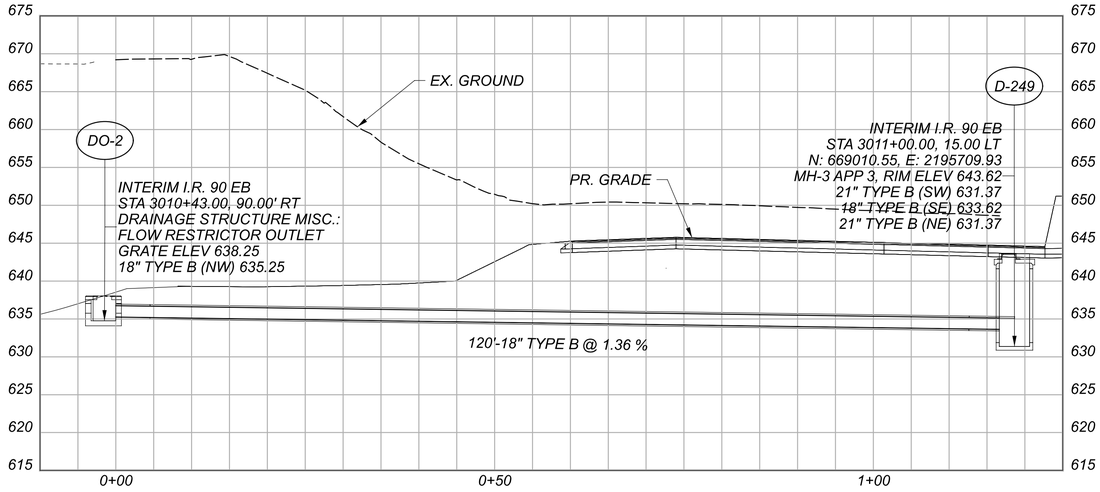

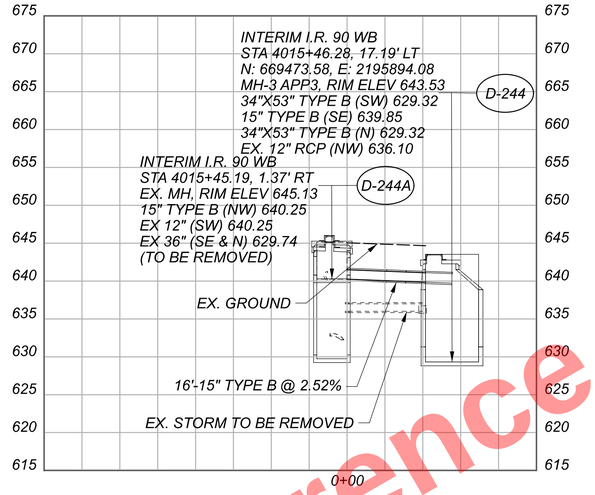

Preliminary Plans - For Reference Only

STORM SEWER PROFILES
I.R. 90 (WEST/SOUTH OF CARNEGIE AVE. BRIDGE)

CROSS REFERENCES	
STRUCTURE	SHEET
D-244A	1100
DO-2	1099

DESIGN AGENCY
Michael Baker INTERNATIONAL

DESIGNER BJT
REVIEWER KGJ 05/22/24
PROJECT ID 82382
SHEET 1129 TOTAL 2696

CUY-90-16.28 (CCG3A)

MODEL: Sheet PAPERSIZE: 34x22 (in) DATE: 3/27/2025 TIME: 10:34:44 PM USER: Julie.Ross
pw:\\mb-us-pw.bentley.com:mb-us-pw-03\Documents\Cleveland_OH\01_Projects\ODOT\District2\82382\400-Engineering\Drainage\Sheets\82382_DF1016.dgn

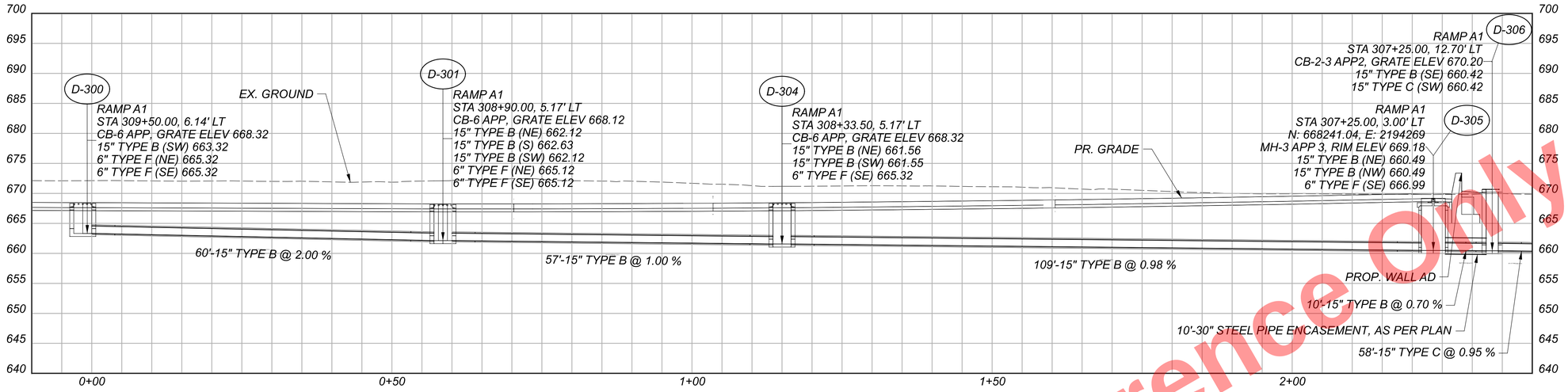

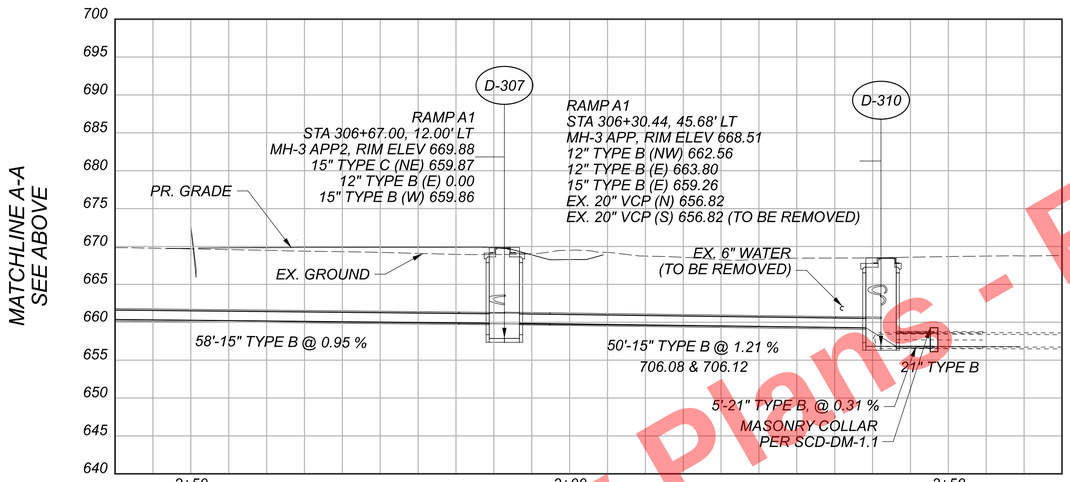

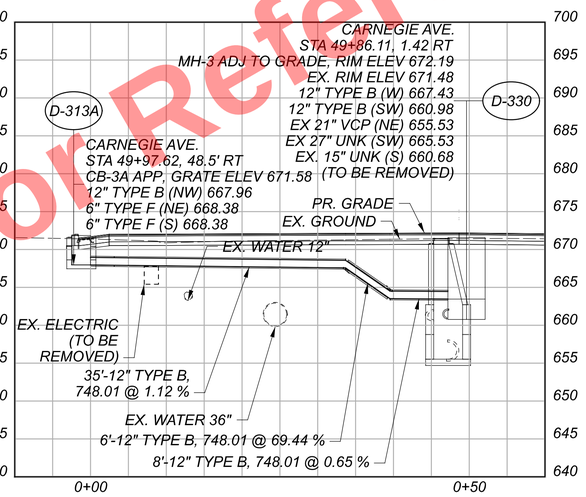

CROSS REFERENCES	
STRUCTURE	SHEET
D-300	1103
D-301	1103
D-302	1103
D-304	1103
D-305	1103
D-306	1103
D-307	1103
D-307	1103
D-310	1103
D-313A	1104
D-314	1103

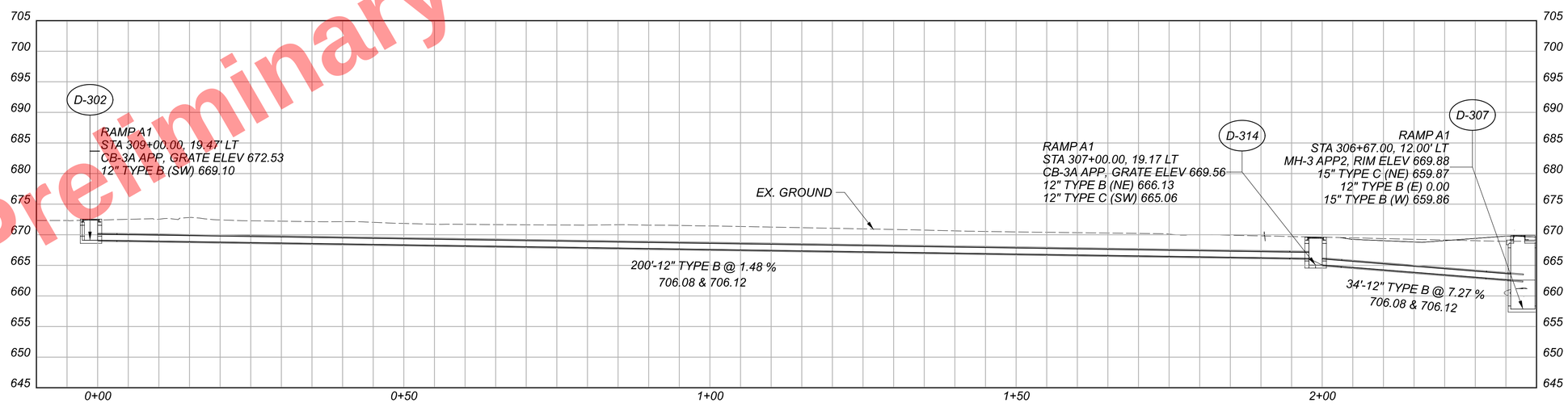

Preliminary Plans - For Reference Only

STORM SEWER PROFILES
RAMP A1 & CARNEGIE AVE.

DESIGN AGENCY
Michael Baker INTERNATIONAL

DESIGNER BJT
REVIEWER KGJ 05/22/24
PROJECT ID 82382
SHEET 1130 TOTAL 2696

CUY-90-16.28 (CCG3A)

MODEL: Sheet | PAPERSIZE: 34x22 (in.) DATE: 5/23/2025 TIME: 10:08:56 AM USER: Julie.Ross
pw:\\mb-us-pw.bentley.com\mb-us-pw-03\Documents\Cleveland_OH\01_Projects\ODOT\District2\82382\400-Engineering\Drainage\Sheets\82382_DF1018.dgn

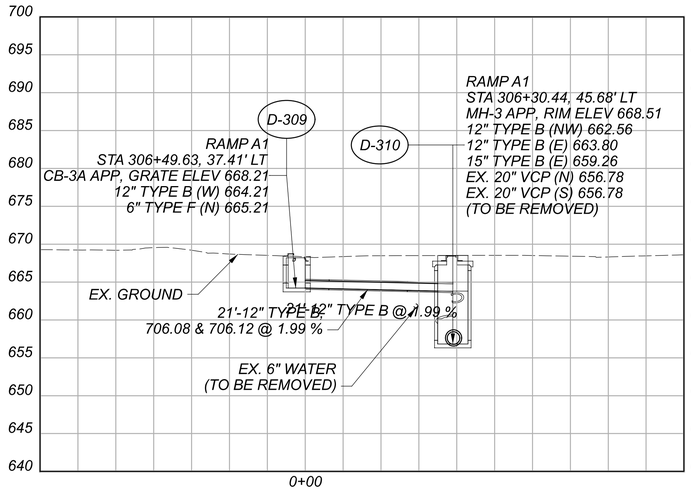

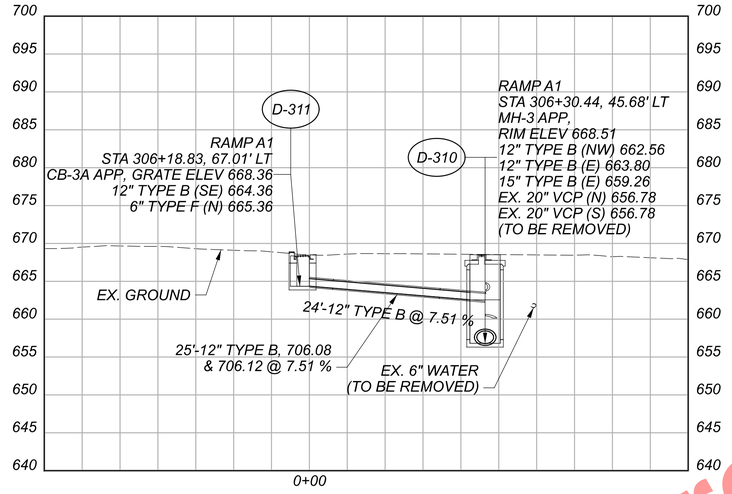

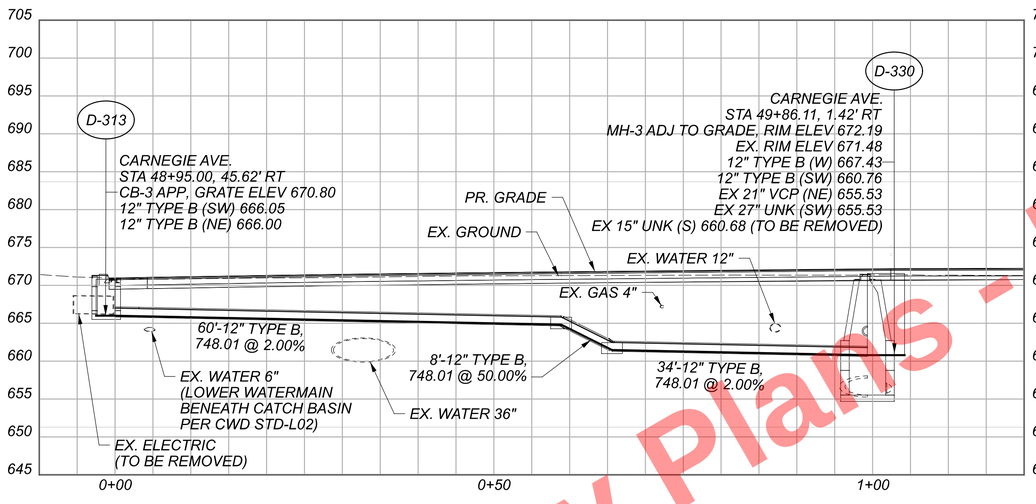

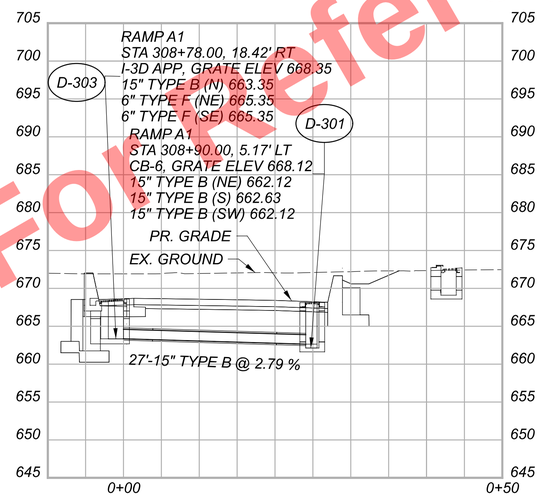

Preliminary Plans - For Reference Only

CROSS REFERENCES	
STRUCTURE	SHEET
D-303	1103
D-309	1103
D-311	1103
D-313	1104

STORM SEWER PROFILES RAMP A1 & CARNEGIE AVE.

DESIGN AGENCY
Michael Baker INTERNATIONAL

DESIGNER BJT
REVIEWER KGJ 05/22/24
PROJECT ID 82382
SHEET 1131 TOTAL 2696

CUY-90-16.28 (CCG3A)

MODEL: Sheet 2 PAPERSIZE: 34x22 (in.) DATE: 3/27/2025 TIME: 03:35:05 PM USER: Julie.Ross
pw:\\mb-us-pw.bentley.com:mb-us-pw-03\Documents\Cleveland_OH\01_Projects\ODOT\District2\82382\400-Engineering\Drainage\Sheets\82382_DF1018.dgn

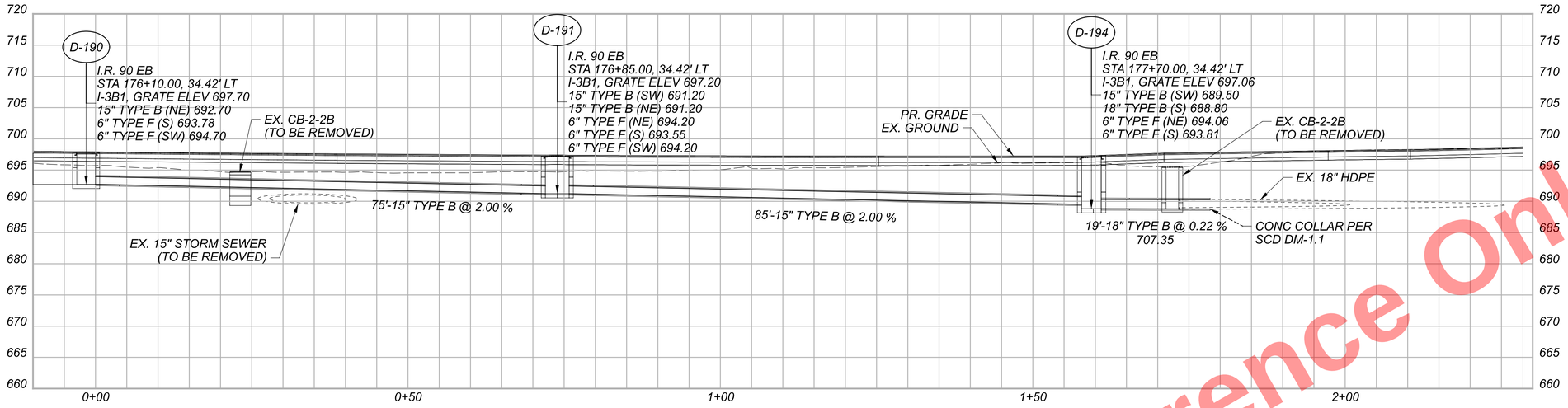

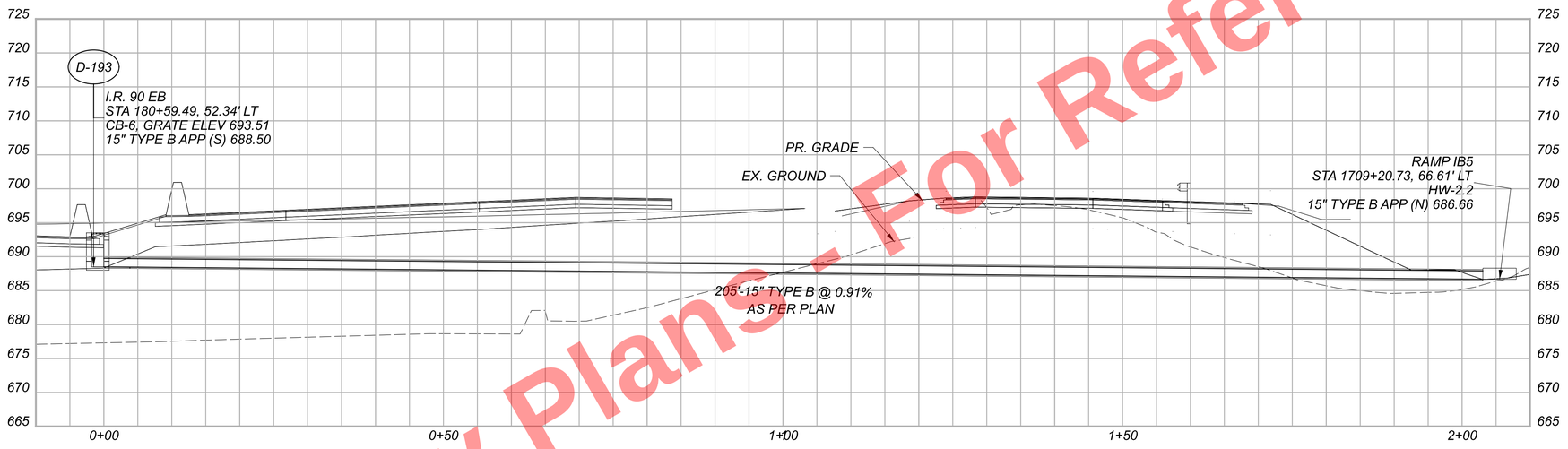

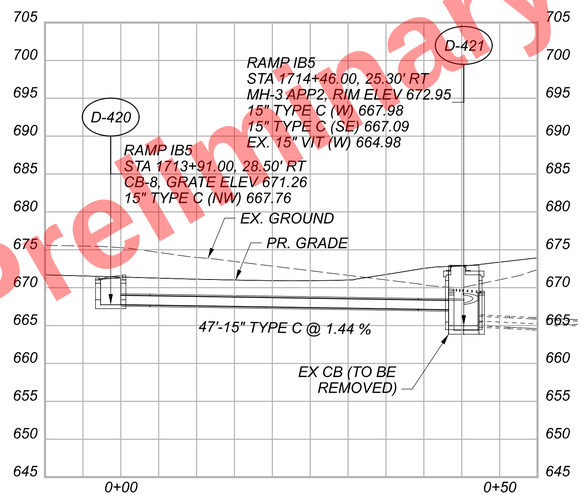

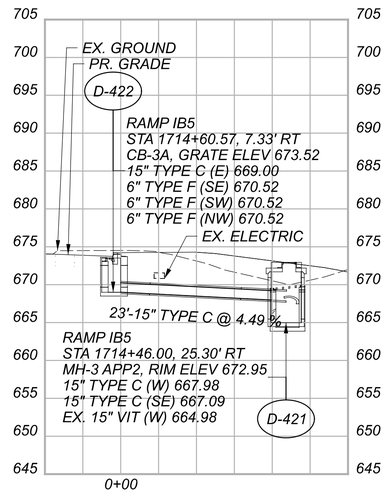

Preliminary Plans - For Reference Only

CROSS REFERENCES	
STRUCTURE	SHEET
D-190	1093
D-191	1093
D-193	1094
D-194	1093
D-420	1106
D-422	1106

STORM SEWER PROFILES
IR 90 EB & RAMP IB5

DESIGN AGENCY
Michael Baker INTERNATIONAL

DESIGNER BJT
REVIEWER KGJ 05/22/24
PROJECT ID 82382
SHEET 1132 TOTAL 2696

CUY-90-16.28 (CCG3A)

MODEL: Sheet 2 PAPERSIZE: 34x22 (in.) DATE: 3/27/2025 TIME: 10:35:32 PM USER: Julie.Ross
pw:\\mb-us-pw.bentley.com:mb-us-pw-03\Documents\Cleveland.OH\OI_Projects\ODOT\District2\82382\400-Engineering\Drainage\Sheets\82382_DF1039.dgn

CROSS REFERENCES	
STRUCTURE	SHEET
D-408	1111
D-409	1107
D-410	1107
D-410A	1106
D-411	1106
D-411A	1106
D-411B	1106
D-412	1111

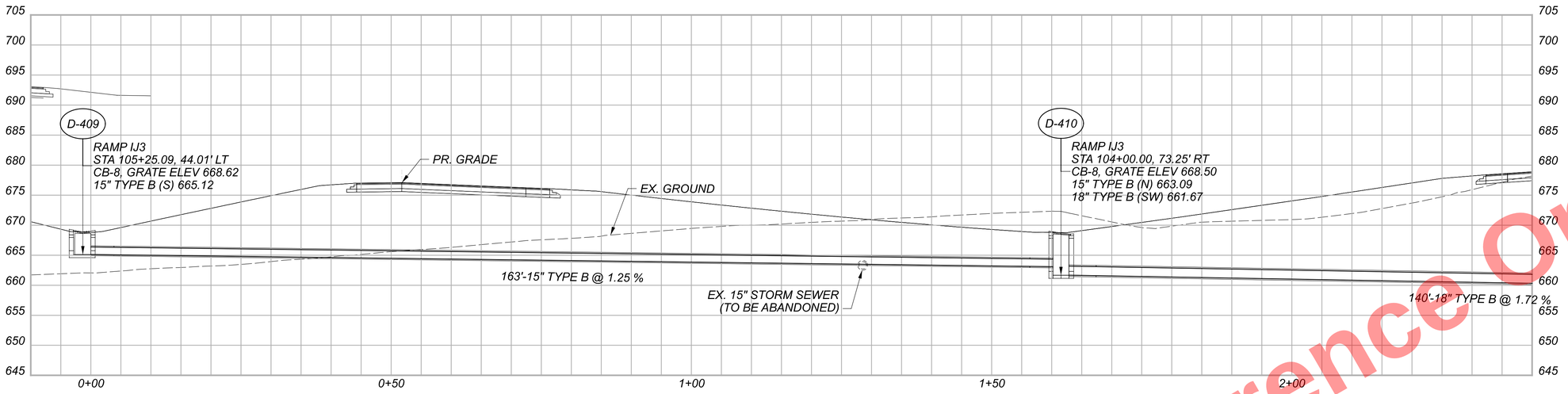

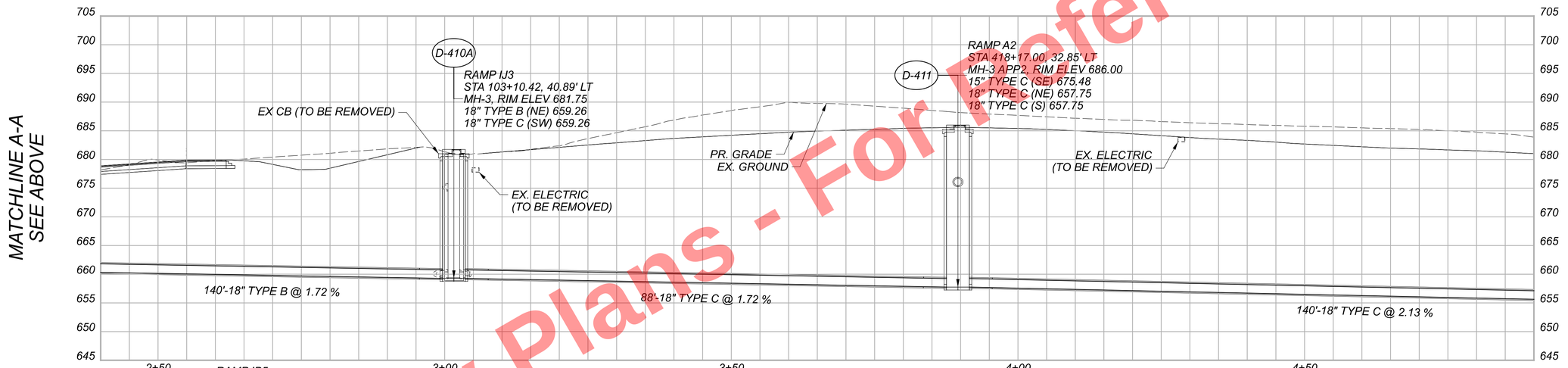

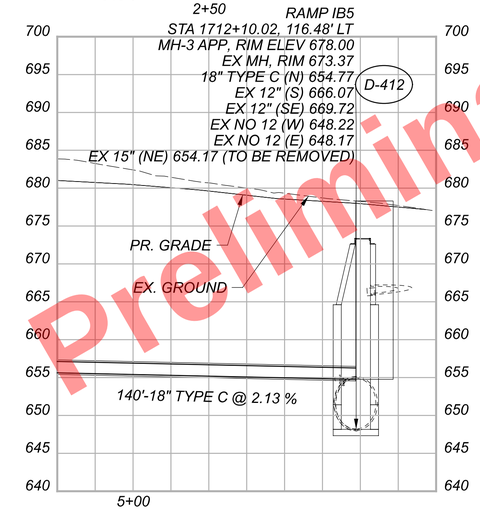

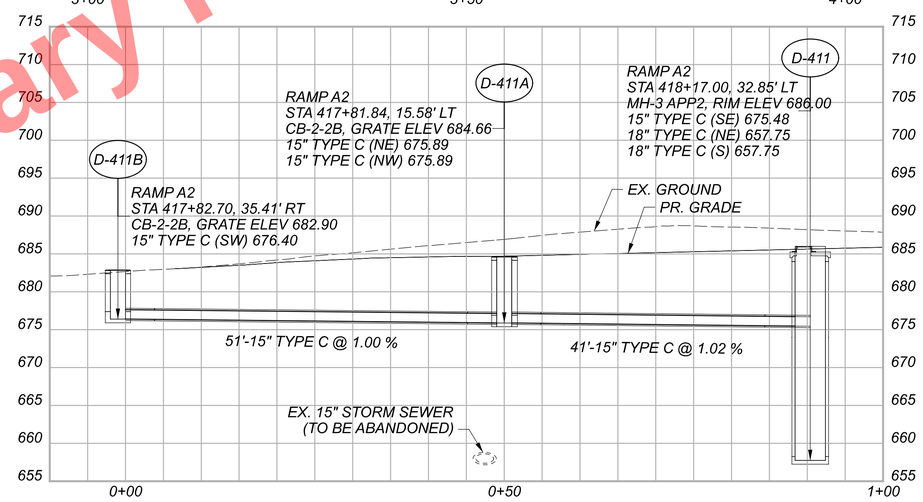

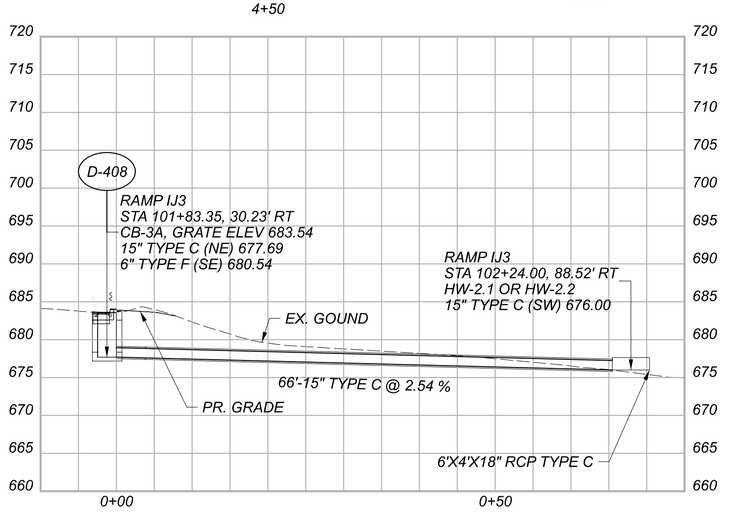

Preliminary Plans - For Reference Only

STORM SEWER PROFILES
RAMP IJ3

CUY-90-16.28 (CCG3A)

MODEL: Sheet | PAPERSIZE: 34x22 (in.) DATE: 6/13/2025 TIME: 7:55:14 AM USER: AlexandriaSummers
pw:\\mb-us-pw.bentley.com:mb-us-pw-03\Documents\Cleveland.OH\DL_Projects\DOT\District2\82382\400-Engineering\Drainage\Sheets\82382_DF1039.dgn

DESIGN AGENCY
Michael Baker INTERNATIONAL
DESIGNER BJT
REVIEWER KGJ 05/22/24
PROJECT ID 82382
SHEET 1133 TOTAL 2696

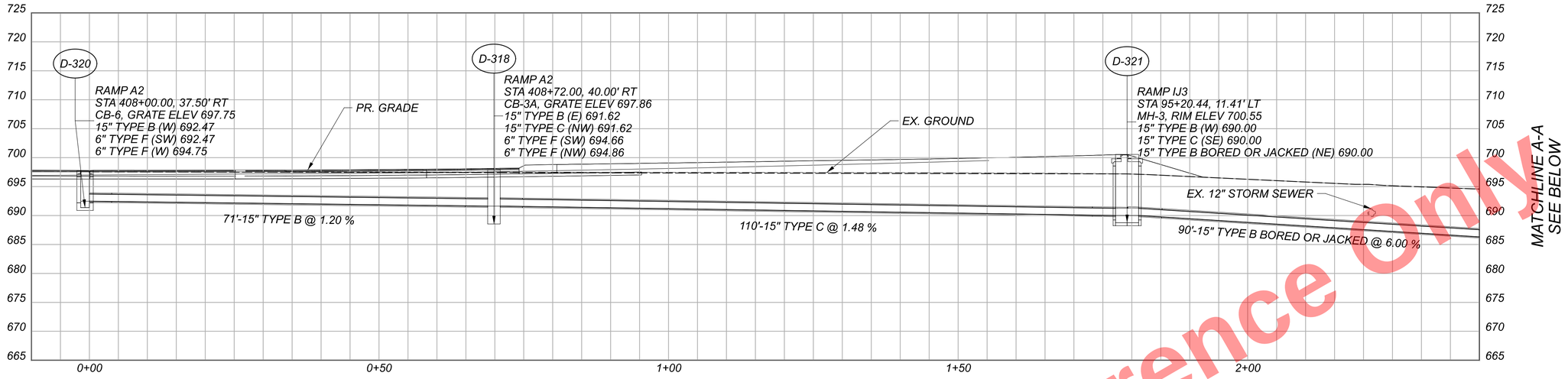

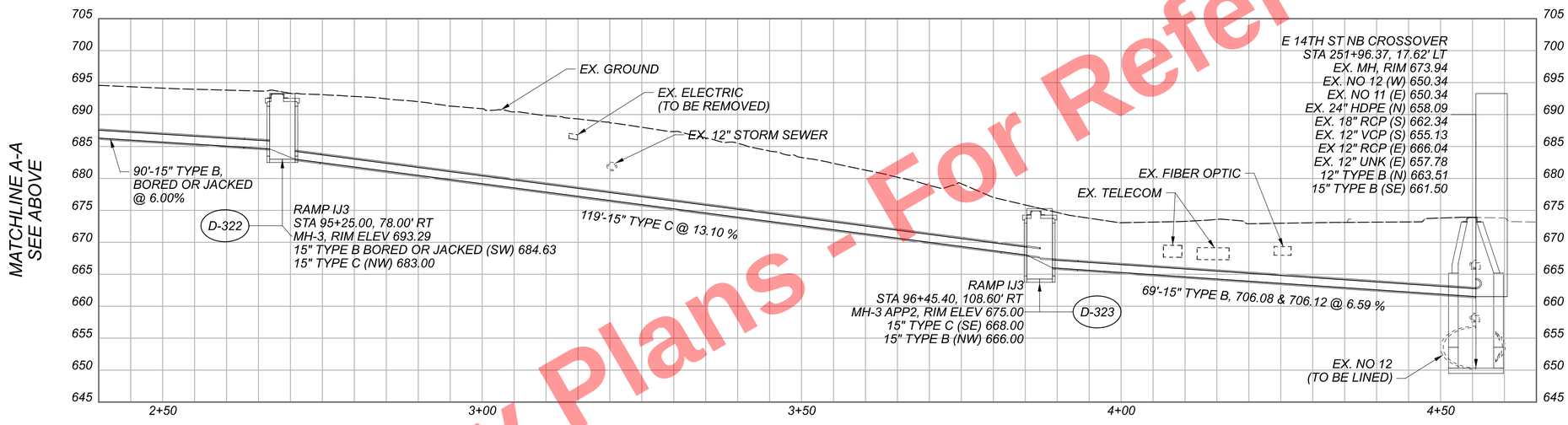

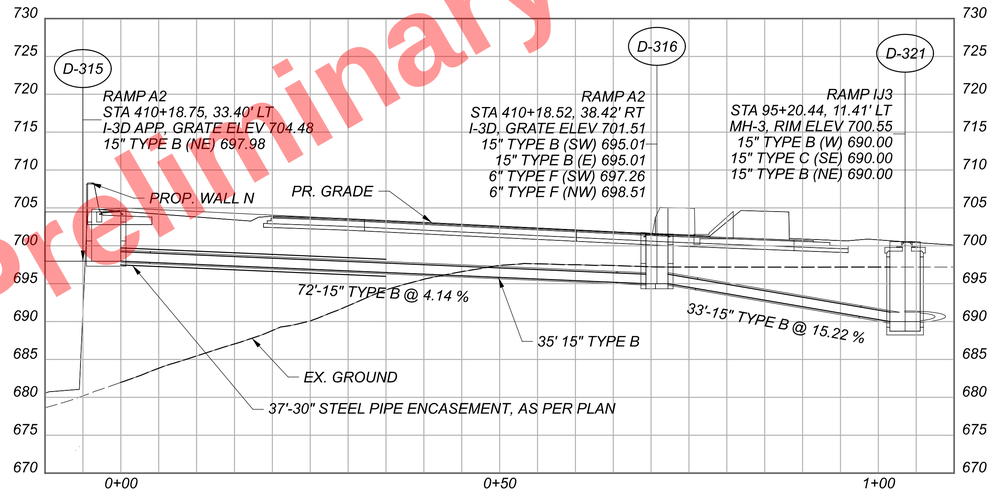

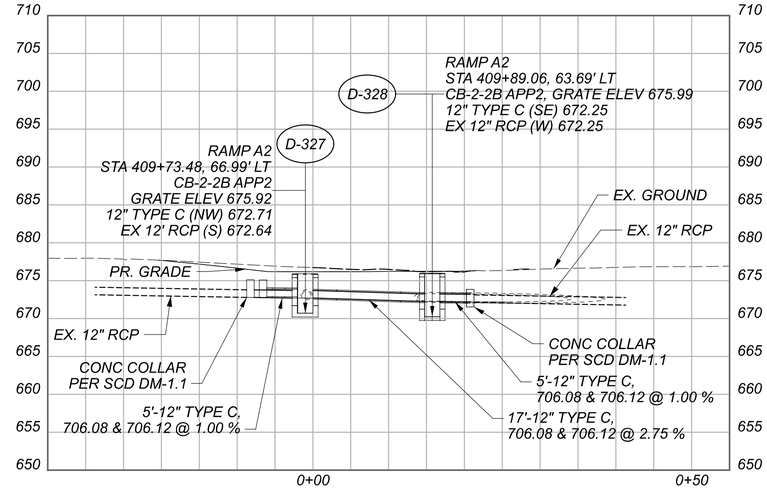

CROSS REFERENCES	
STRUCTURE	SHEET
D-315	1112
D-316	1112
D-318	1113
D-320	1113
D-321	1112
D-322	1112
D-323	1112
D-327	1112
D-328	1112

STORM SEWER PROFILES
RAMP A2/E. 14TH ST NB CROSSOVER

DESIGN AGENCY
Michael Baker INTERNATIONAL

DESIGNER BJT
REVIEWER KGJ 05/22/24
PROJECT ID 82382
SHEET 1134 TOTAL 2696

Preliminary Plans - For Reference Only

CUY-90-16.28 (CCG3A)
MODEL: Sheet | PAPERSIZE: 34x22 (In.) DATE: 3/27/2025 TIME: 03:36:00 PM USER: Julie.Ross
pw:\\mb-us-pw.bentley.com:mb-us-pw-03\Documents\Cleveland_OH\01_Projects\0007\D1\str1c1H2\82382\400-Engineering\Drainage\Sheets\82382_DF1040.dgn

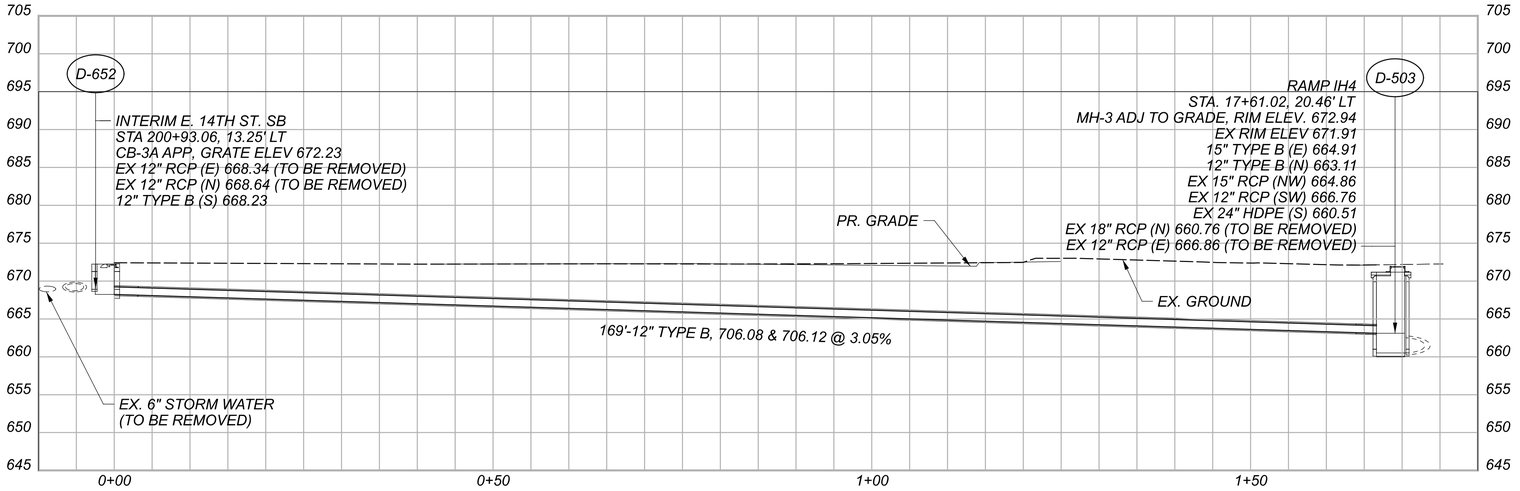

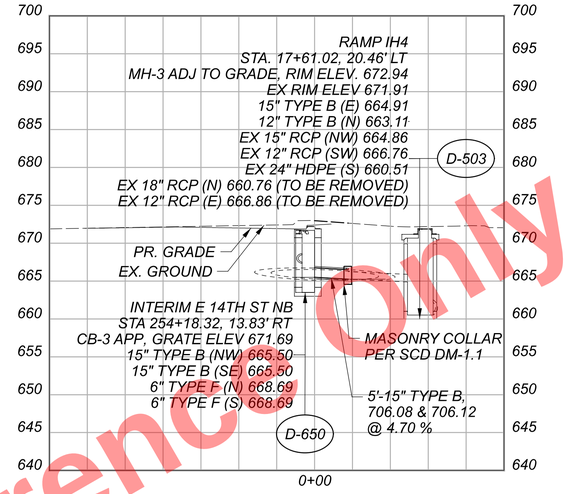

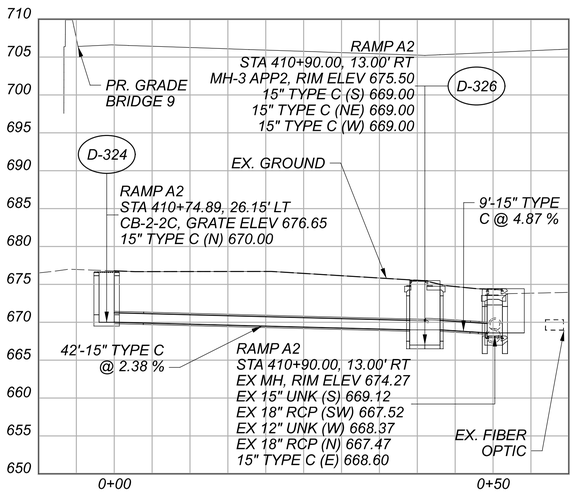

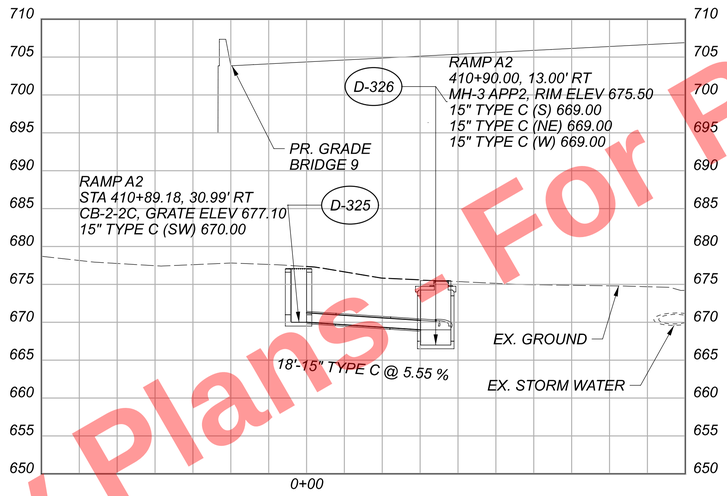

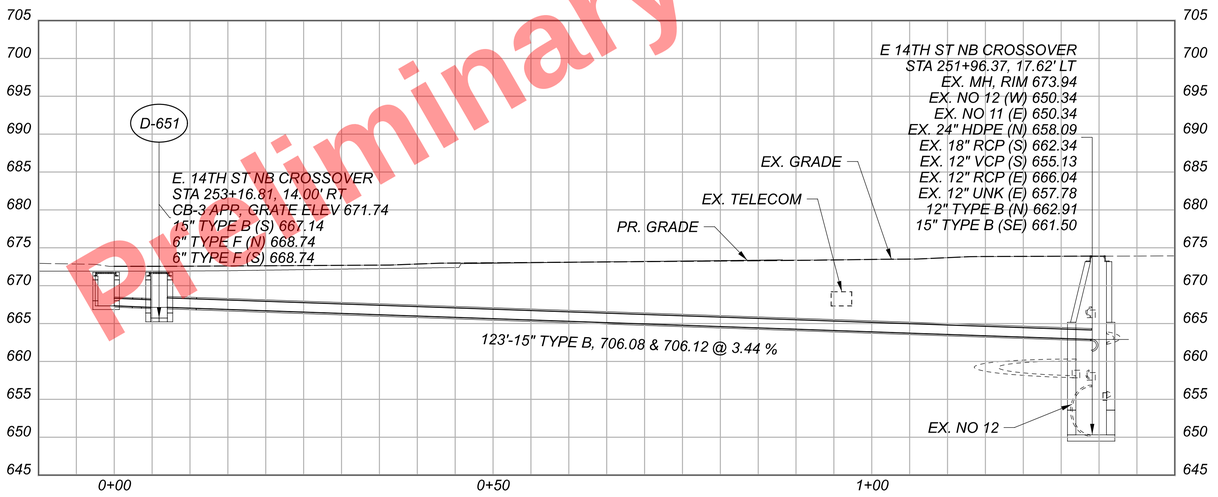

Preliminary Plans - For Reference Only

CROSS REFERENCES	
STRUCTURE	SHEET
D-324	1112
D-325	1112
D-326	1112
D-650	1114
D-651	1114
D-652	1114

STORM SEWER PROFILES
RAMP A2/E. 14TH ST NB CROSSOVER

DESIGN AGENCY
Michael Baker INTERNATIONAL

DESIGNER BJT
REVIEWER KGJ 05/22/24
PROJECT ID 82382
SHEET 1135 TOTAL 2696

CUY-90-16.28 (CCG3A)

MODEL: Sheet 2 PAPERSIZE: 34x22 (in.) DATE: 3/27/2025 TIME: 10:36:03 PM USER: Julie.Ross
pw:\\mb-us-pw.bentley.com:mb-us-pw-03\Documents\Cleveland_OH\01_Projects\000T\District2\82382\400-Engineering\Drainage\Sheets\82382_DF1040.dgn

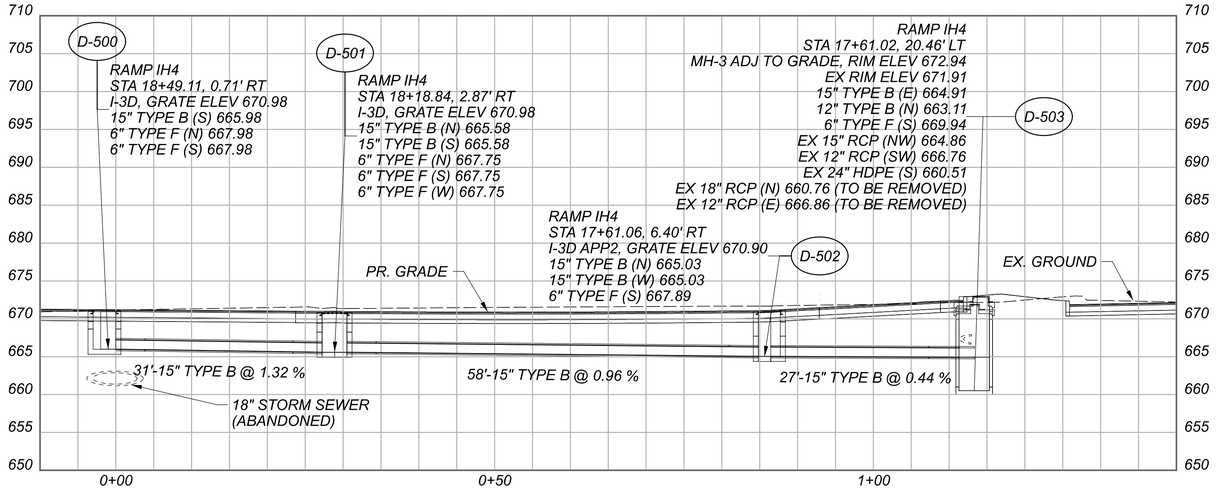

Preliminary Plans - For Reference Only

STORM SEWER PROFILES
RAMP IH4

CROSS REFERENCES	
STRUCTURE	SHEET
D-500	1114
D-501	1114
D-502	1114
D-503	1114

DESIGN AGENCY
Michael Baker INTERNATIONAL

DESIGNER BJT
REVIEWER KGJ 05/22/24
PROJECT ID 82382
SHEET 1136 TOTAL 2696

CUY-90-16.28 (CCG3A)

MODEL: Sheet PAPERSIZE: 34x22 (in.) DATE: 3/27/2025 TIME: 10:36:24 PM USER: Julie.Ross
pw:\\mb-us-pw.bentley.com:mb-us-pw-03\Documents\Cleveland.OH\OI_Projects\ODOT\District2\82382\400-Engineering\Drainage\Sheets\82382_DF1024.dgn

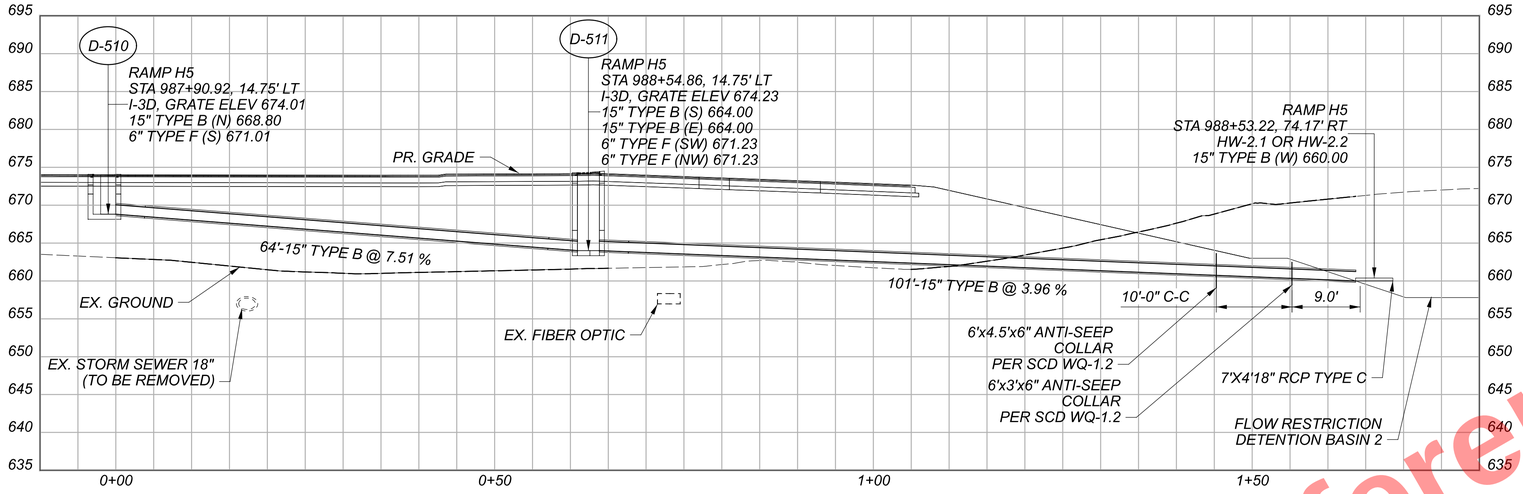

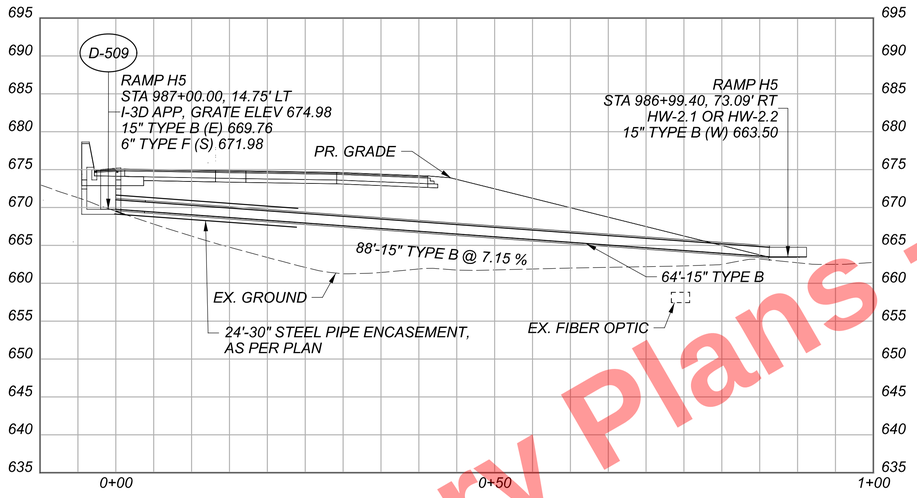

Preliminary Plans - For Reference Only

STORM SEWER PROFILES
RAMP H5

CROSS REFERENCES	
STRUCTURE	SHEET
D-509	1108
D-510	1108
D-511	1108

DESIGN AGENCY
Michael Baker INTERNATIONAL

DESIGNER
BJT

REVIEWER
KGJ 05/22/24

PROJECT ID
82382

SHEET 1137 | TOTAL 2696

CUY-90-16.28 (CCG3A)

MODEL: Sheet PAPERSIZE: 34x22 (in.) DATE: 3/27/2025 TIME: 10:36:40 PM USER: Julie.Ross
pw:\\mb-us-pw.bentley.com:mb-us-pw-03\Documents\Cleveland_OH\01_Projects\ODOT\District2\82382\400-Engineering\Drainage\Sheets\82382_DF1025.dgn

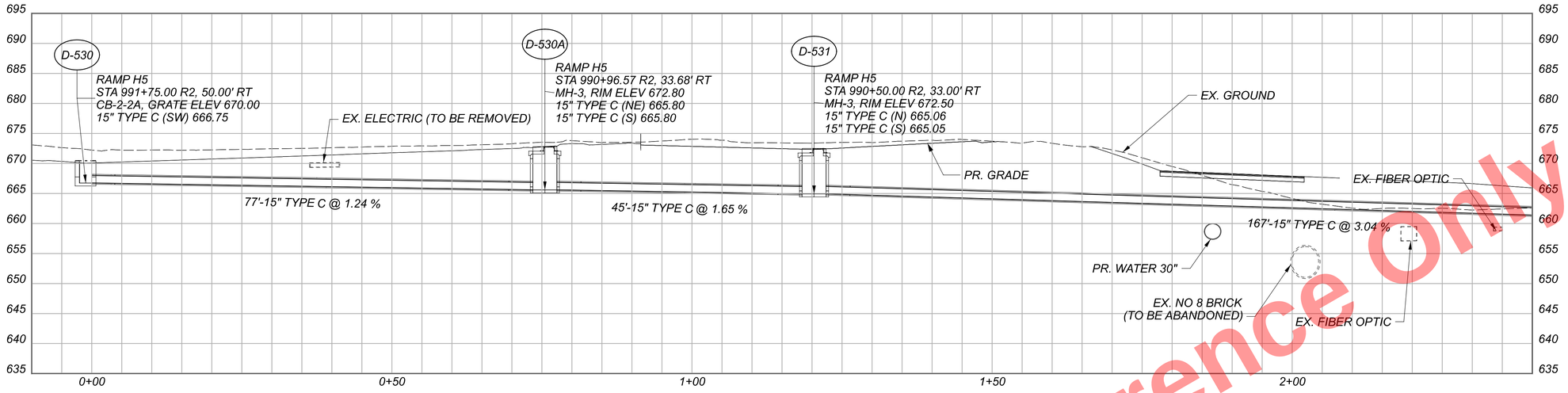

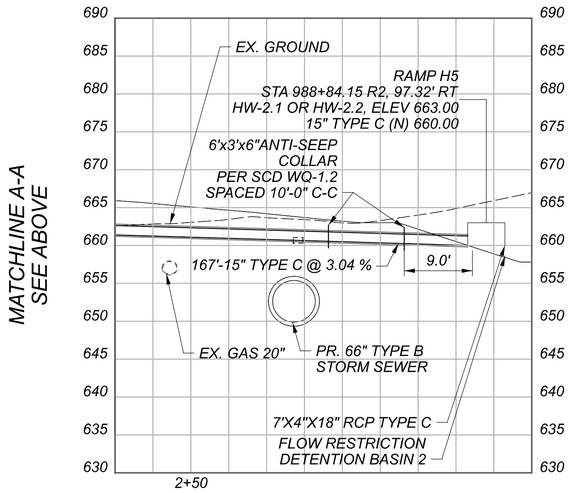

Preliminary Plans - For Reference Only

CROSS REFERENCES	
STRUCTURE	SHEET
D-530	1096
D-530A	1108
D-531	1108

STORM SEWER PROFILES
RAMP H5

DESIGN AGENCY
Michael Baker INTERNATIONAL

DESIGNER BJT
REVIEWER KGJ 05/22/24
PROJECT ID 82382
SHEET 1138 TOTAL 2696

CUY-90-16.28 (CCG3A)

MODEL: D-530 to Y-531 - Profile [Sheet] PAPERSIZE: 34x22 (in.) DATE: 3/27/2025 TIME: 10:37:42 PM USER: Julie.Ross
pw:\\mb-us-pw.bentley.com:mb-us-pw-03\Documents\Cleveland_OH\01_Projects\ODOT\District2\82382\400-Engineering\Drainage\Sheets\82382_DF1043.dgn

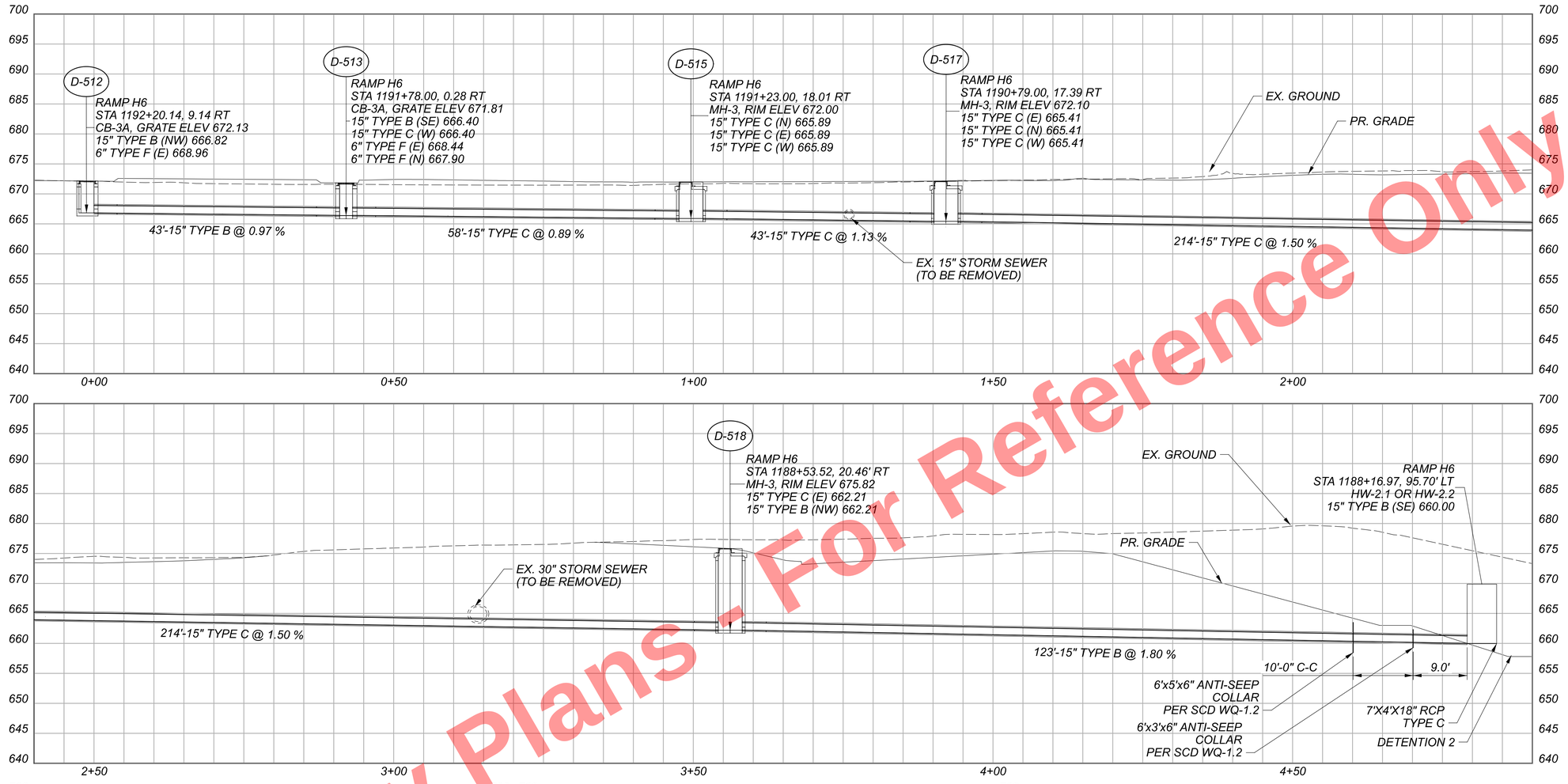

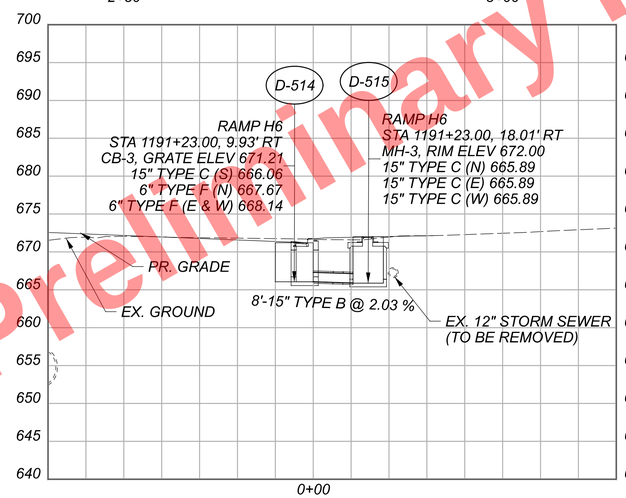

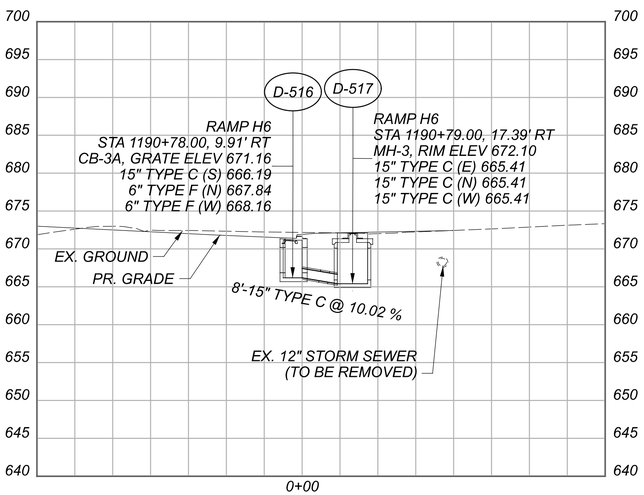

Preliminary Plans - Not For Reference Only

CROSS REFERENCES	
STRUCTURE	SHEET
D-512	1110
D-513	1110
D-514	1110
D-515	1110
D-516	1110
D-517	1110
D-518	1115

STORM SEWER PROFILES
RAMP H6

DESIGN AGENCY
Michael Baker INTERNATIONAL

DESIGNER BJT
REVIEWER KGJ 05/22/24
PROJECT ID 82382
SHEET 1139 TOTAL 2696

CUY-90-16.28 (CCG3A)

MODEL: Sheet PAPERSIZE: 34x22 (in.) DATE: 5/9/2025 TIME: 11:52:12 PM USER: Mala.Gallagher
pw:\\mb-us-pw.bentley.com:mb-us-pw-03\Documents\Cleveland_OH\01_Projects\ODOT\District2\82382\400-Engineering\Drainage\Sheets\82382_DF1020.dgn

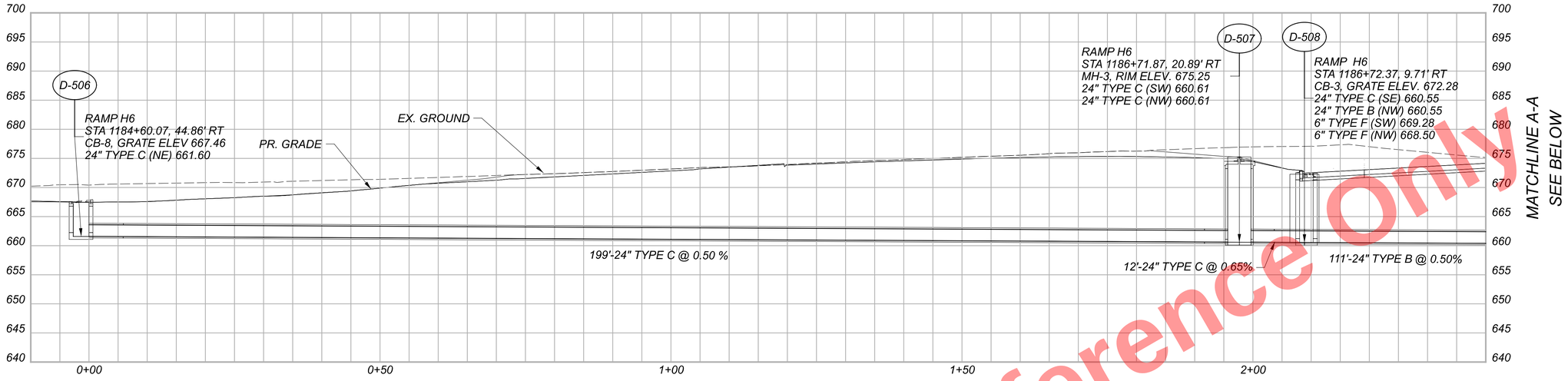

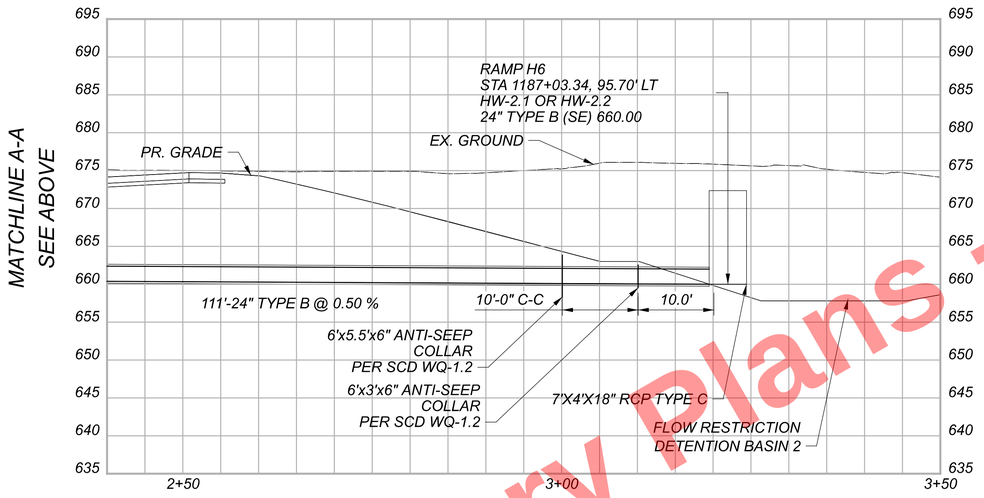

Preliminary Plans - For Reference Only

CROSS REFERENCES	
STRUCTURE	SHEET
D-506	1114
D-507	1115
D-508	1115

STORM SEWER PROFILES
RAMP H6

DESIGN AGENCY
Michael Baker INTERNATIONAL

DESIGNER BJT
REVIEWER KGJ 05/22/24
PROJECT ID 82382
SHEET 1140 TOTAL 2696

CUY-90-16.28 (CCG3A)

MODEL: Sheet PAPERSIZE: 34x22 (in.) DATE: 3/27/2025 TIME: 03:39:03 PM USER: Julie.Ross
pw:\\mb-us-pw.bentley.com:mb-us-pw-03\Documents\Cleveland_OH\01_Projects\ODOT\District2\82382\400-Engineering\Drainage\Sheets\82382_DF102.dgn

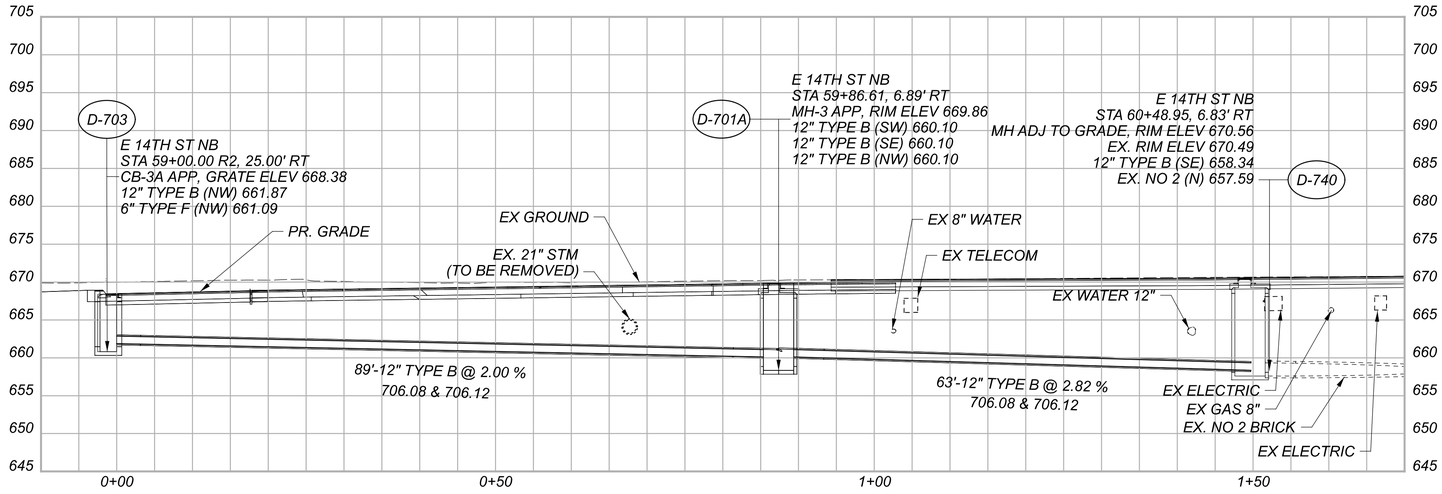

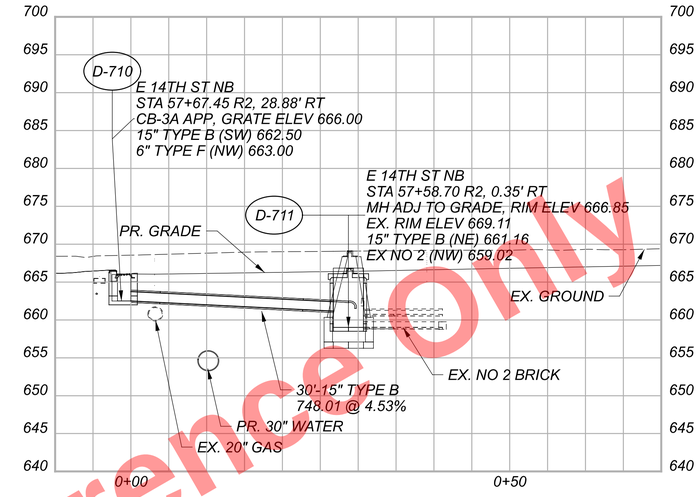

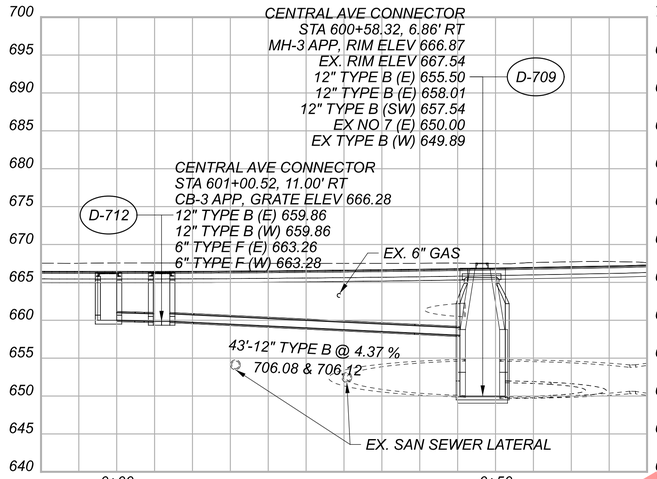

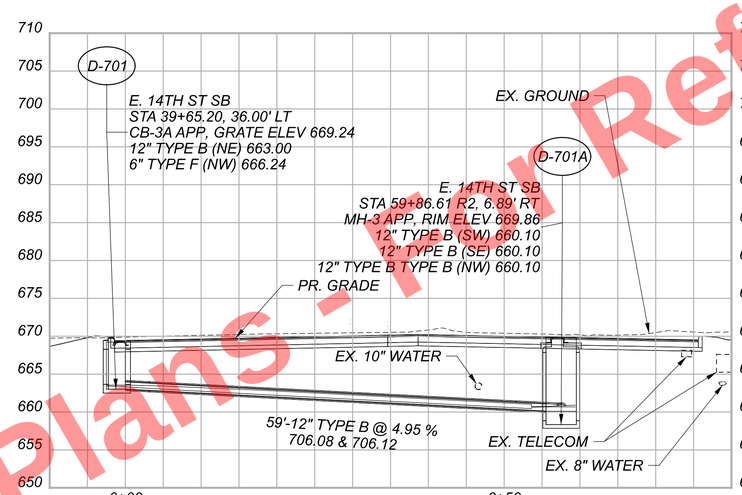

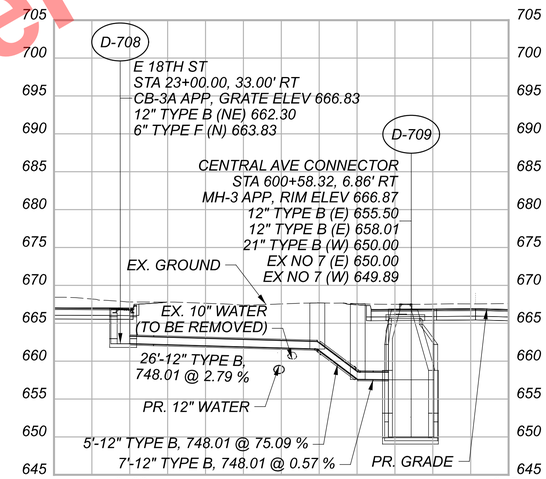

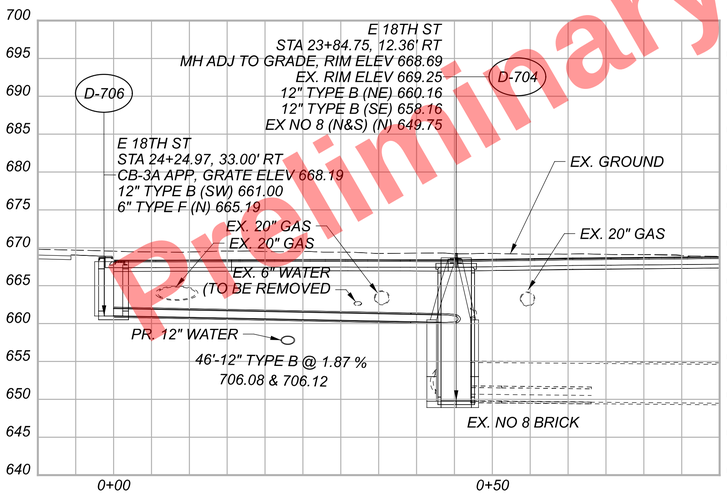

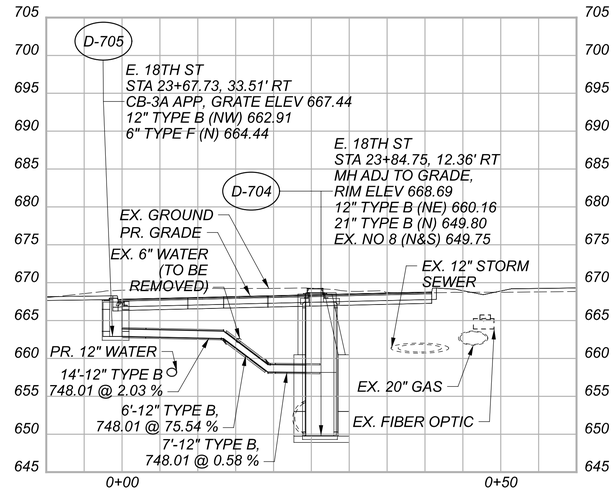

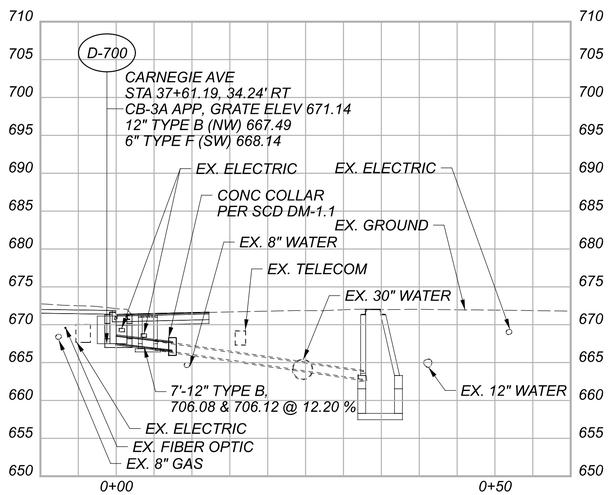

CROSS REFERENCES	
STRUCTURE	SHEET
D-700	1101
D-701	1102
D-701A	1102
D-703	1102
D-705	1102
D-706	1102
D-708	1102
D-710	1095
D-712	1102

Preliminary Plans - For Reference Only

STORM SEWER PROFILES
CARNEGIE AVE. & E. 14TH ST./E. 18TH ST.

DESIGN AGENCY
Michael Baker INTERNATIONAL

DESIGNER BJT
REVIEWER KGJ 05/22/24
PROJECT ID 82382
SHEET 1141 TOTAL 2696

CUY-90-16.28 (CCG3A)

MODEL: Sheet | PAPERSIZE: 34x22 (in.) DATE: 6/13/2025 TIME: 8:00:23 AM USER: AlexandriaSummers
pw:\\vmb-us-pw.bentley.com\mb-us-pw-03\Documents\Cleveland_OH\01_Projects\000T\District2\82382\400-Engineering\Drainage\Sheets\82382_DF1038.dgn

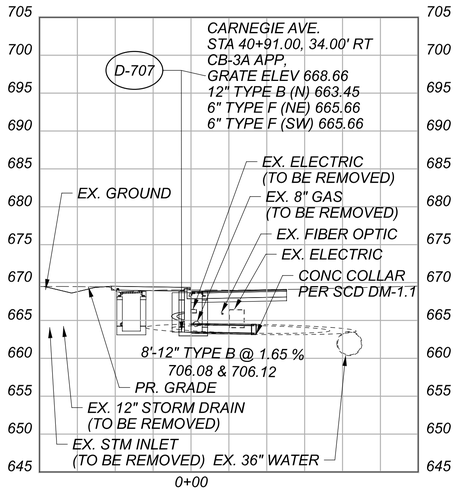

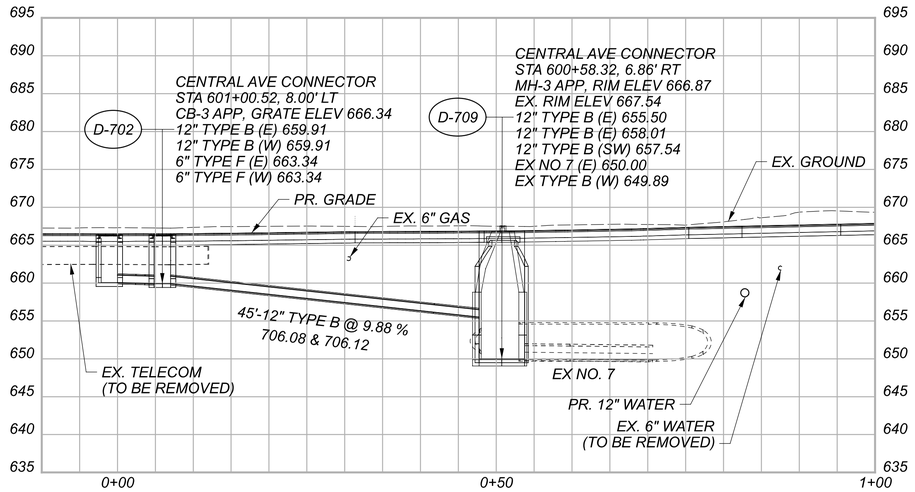

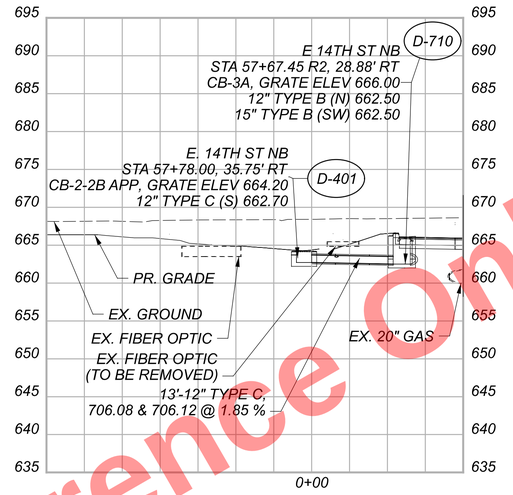

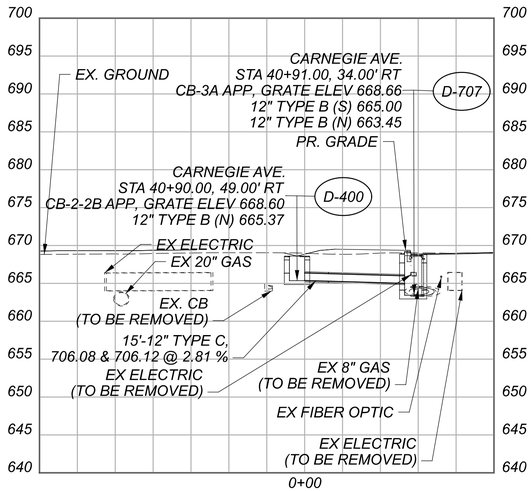

Preliminary Plans - For Reference Only

CROSS REFERENCES	
STRUCTURE	SHEET
D-400	1102
D-401	1095
D-702	1102
D-707	1102
D-709	1102

STORM SEWER PROFILES
CARNEGIE AVE. & CENTRAL AVE. CONNECTOR

DESIGN AGENCY
Michael Baker INTERNATIONAL

DESIGNER BJT
REVIEWER KGJ 05/22/24
PROJECT ID 82382
SHEET 1142 TOTAL 2696

CUY-90-16.28 (CCG3A)

MODEL: Sheet 2 PAPERSIZE: 34x22 (in.) DATE: 6/13/2025 TIME: 8:00:26 AM USER: Alexandria.Summers
pw:\\mb-us-pw.bentley.com:mb-us-pw-03\Documents\Cleveland_OH\01_Projects\0007\District2\82382\400-Engineering\Drainage\Sheets\82382_DF1038.dgn

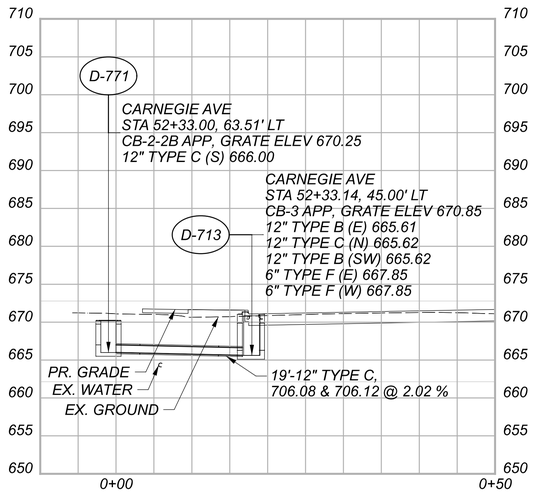

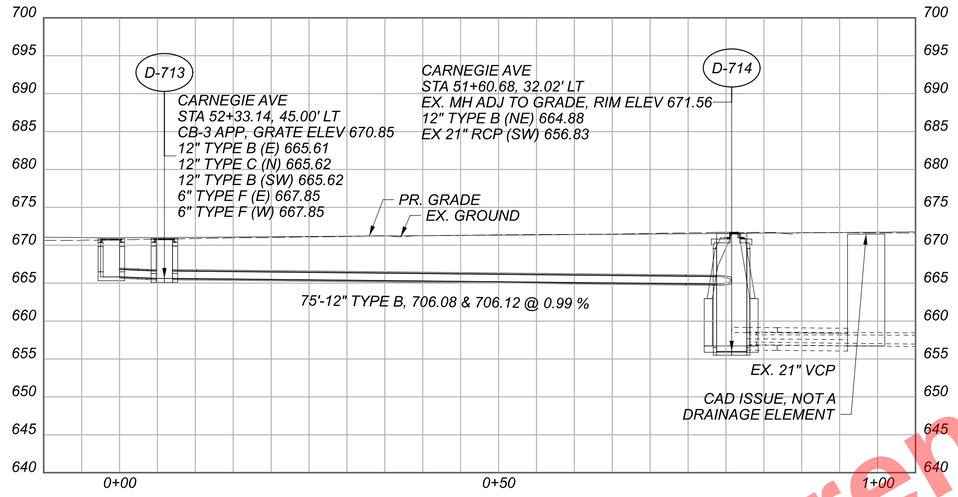

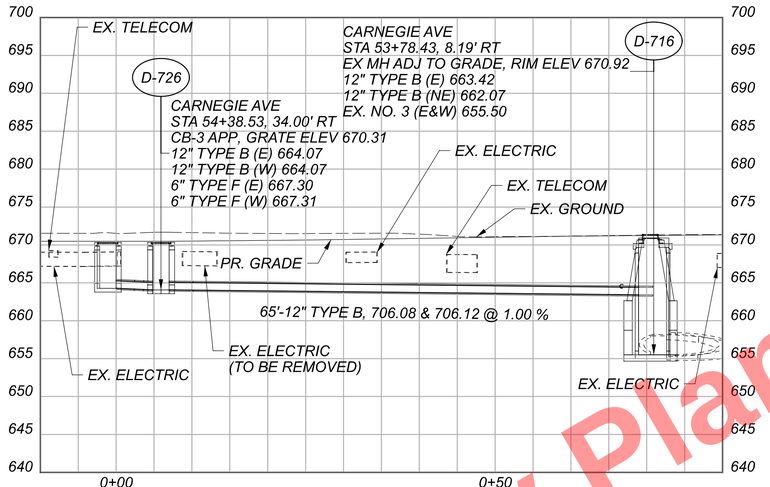

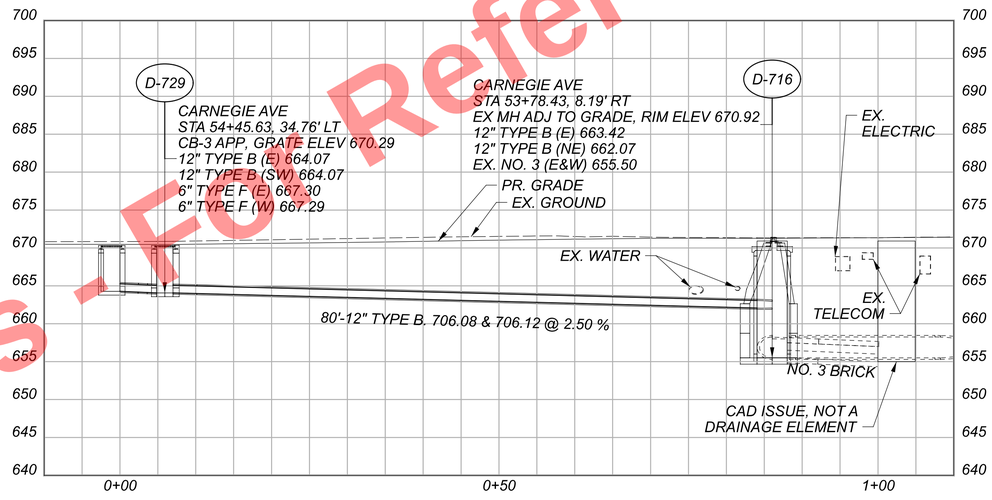

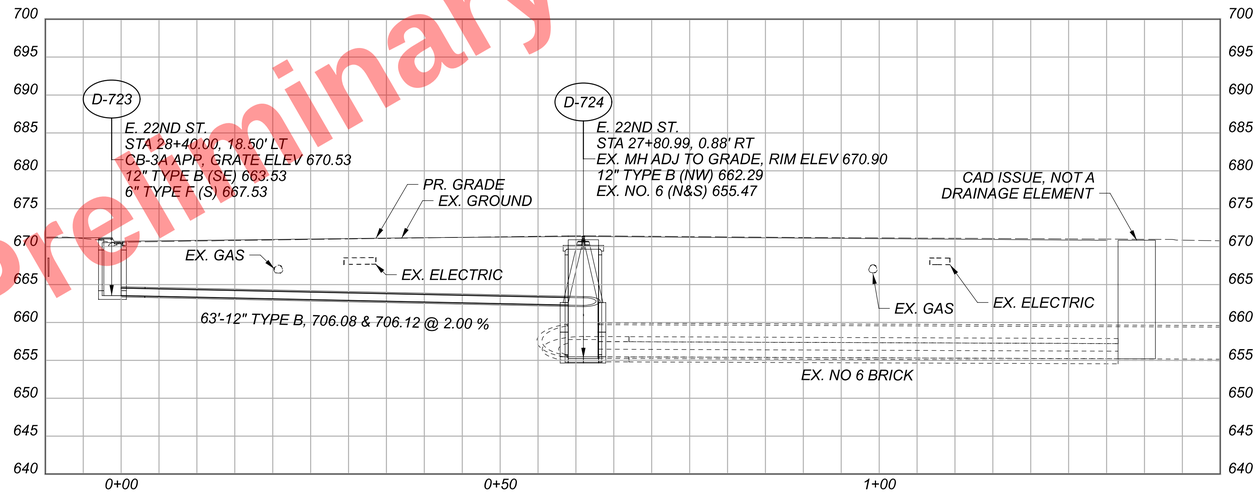

Preliminary Plans - For Reference Only

STORM SEWER PROFILES
CARNEGIE AVE. & E. 22ND ST.

CROSS REFERENCES	
STRUCTURE	SHEET
D-713	1104
D-714	1104
D-716	1105
D-723	1105
D-724	1105
D-726	1105
D-729	1105
D-771	1104

DESIGN AGENCY
Michael Baker INTERNATIONAL

DESIGNER BJT

REVIEWER KGJ 05/22/24

PROJECT ID 82382

SHEET 1143 TOTAL 2696

CUY-90-16.28 (CCG3A)
MODEL: Sheet PAPERSIZE: 34x22 (In.) DATE: 3/27/2025 TIME: 10:41:10 PM USER: Julie.Ross
pw:\\mb-us-pw.bentley.commb-us-pw-03\Documents\Cleveland_OH\OL_Projects\ODOT\District12\82382\400-Engineering\Drainage\Drainage Sheets\82382_DF1029.dgn

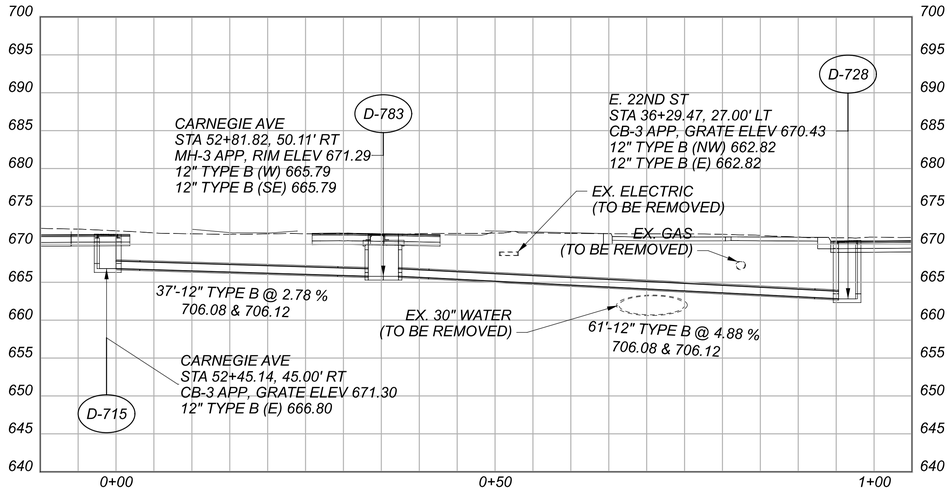

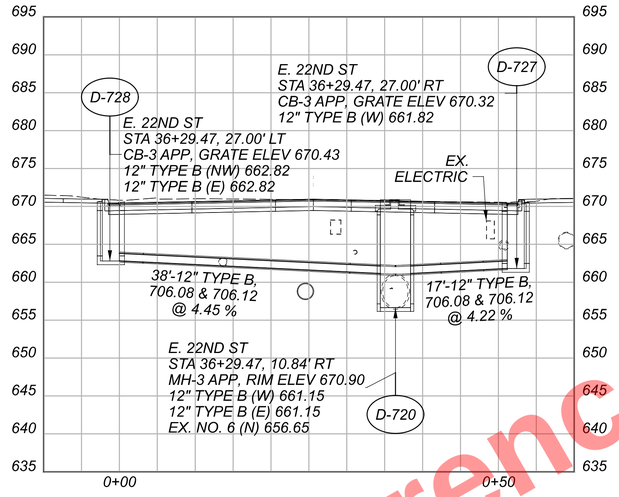

Preliminary Plans - For Reference Only

CROSS REFERENCES	
STRUCTURE	SHEET
D-715	1104
D-720	1104
D-727	1104
D-728	1104
D-783	1104

STORM SEWER PROFILES
CARNEGIE AVE. & E. 22ND ST.

DESIGN AGENCY
Michael Baker INTERNATIONAL

DESIGNER BJT
REVIEWER KGJ 05/22/24
PROJECT ID 82382
SHEET 1144 TOTAL 2696

CUY-90-16.28 (CCG3A)

MODEL: Sheet 2 PAPERSIZE: 34x22 (in.) DATE: 3/27/2025 TIME: 10:41:11PM USER: Julie.Ross
pw:\\mb-us-pw.bentley.com:mb-us-pw-03\Documents\Cleveland.OH\01_Projects\ODOT\District2\82382\400-Engineering\Drainage\Sheets\82382_DF1029.dgn

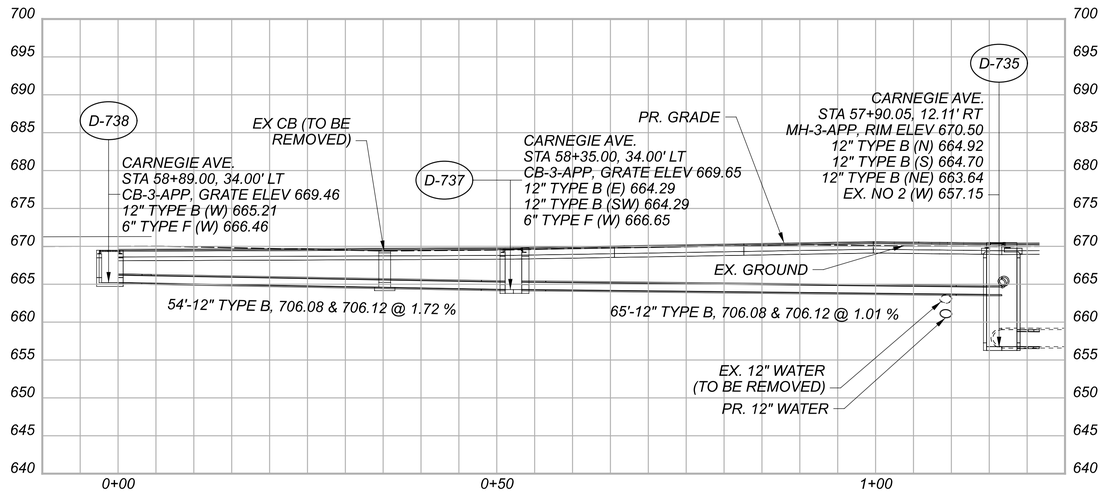

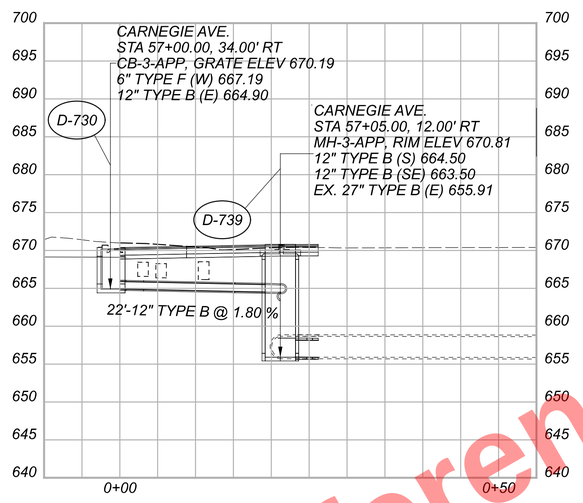

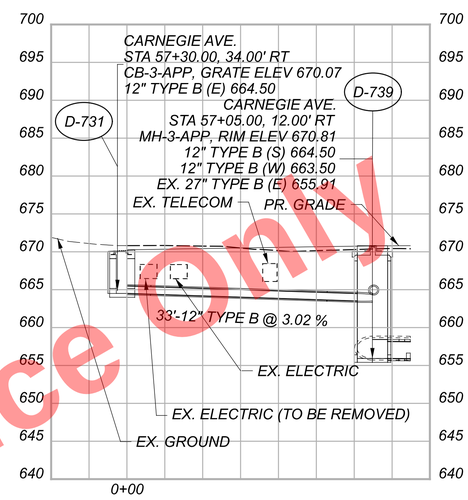

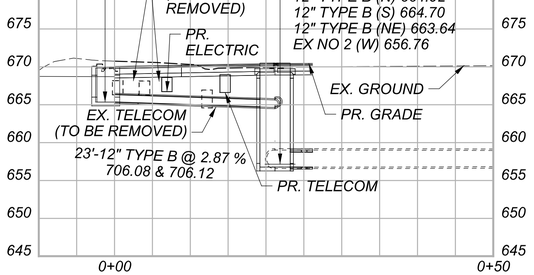

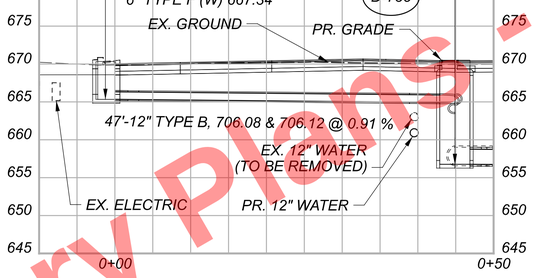

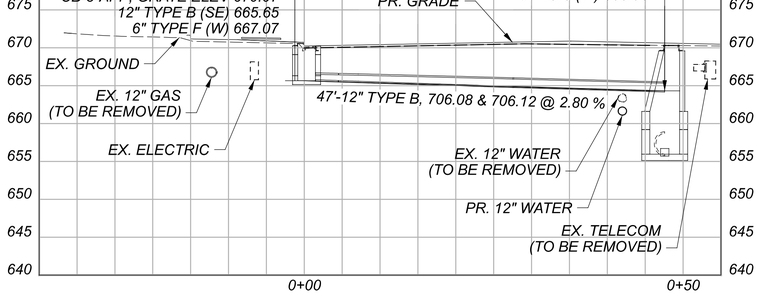

Preliminary Plans - For Reference Only

STORM SEWER PROFILES
CARNEGIE AVE

CROSS REFERENCES	
STRUCTURE	SHEET
D-730	1098
D-731	1098
D-733	1099
D-734	1099
D-736	1099
D-737	1099
D-738	1099

DESIGN AGENCY
Michael Baker INTERNATIONAL
DESIGNER CRK
REVIEWER KGJ 05/22/24
PROJECT ID 82382
SHEET 1145 TOTAL 2696

CUY-90-16.28 (CCG3A)

MODEL: Sheet PAPERSIZE: 34x22 (in.) DATE: 3/27/2025 TIME: 10:41:36 PM USER: Julie.Ross
pw:\\mb-us-pw.bentley.com:mb-us-pw-03\Documents\Cleveland_OH\01_Projects\0007\District2\82382\400-Engineering\Drainage\Sheets\82382_DFI036.dgn

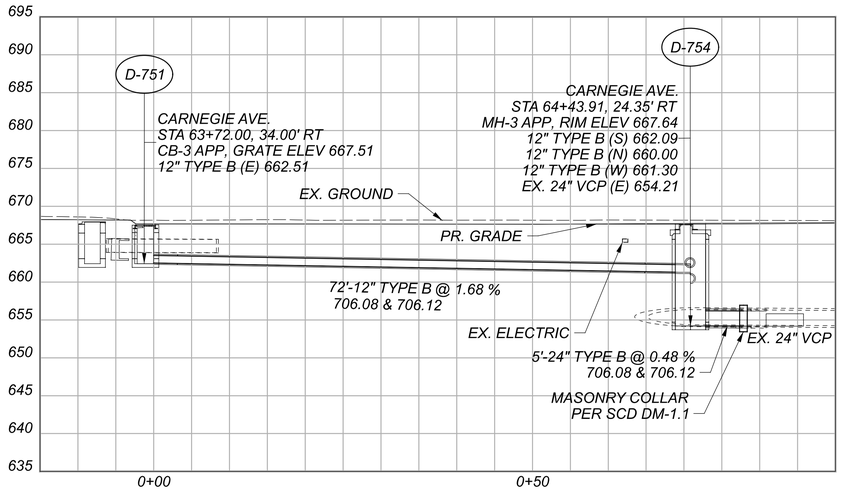

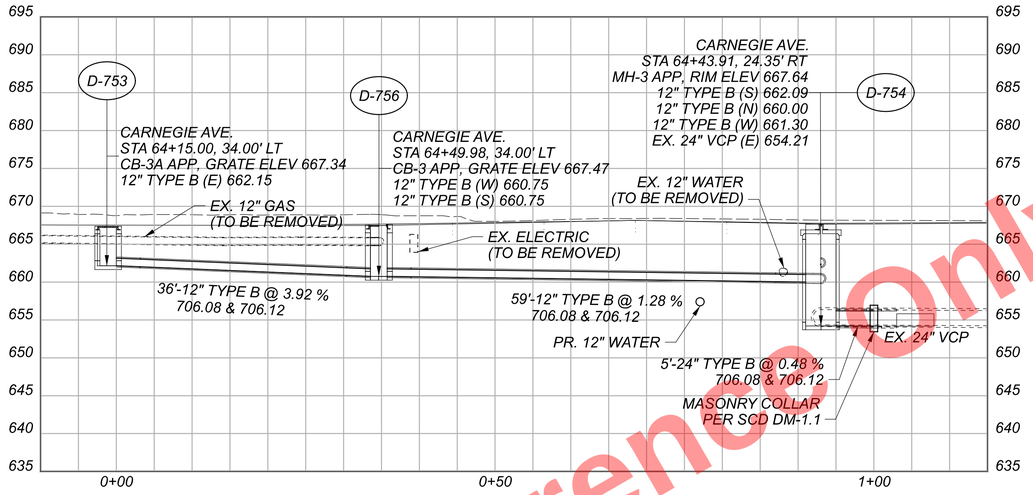

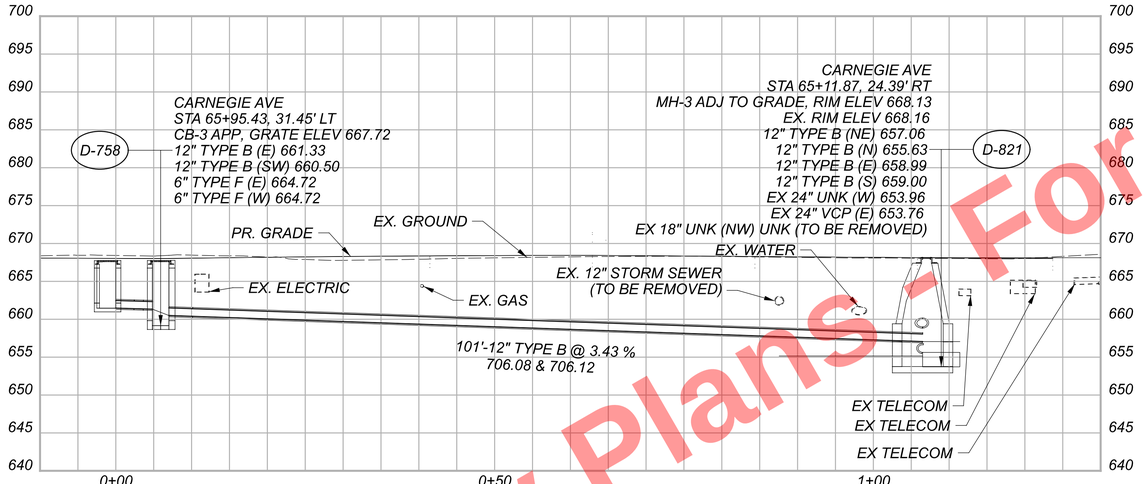

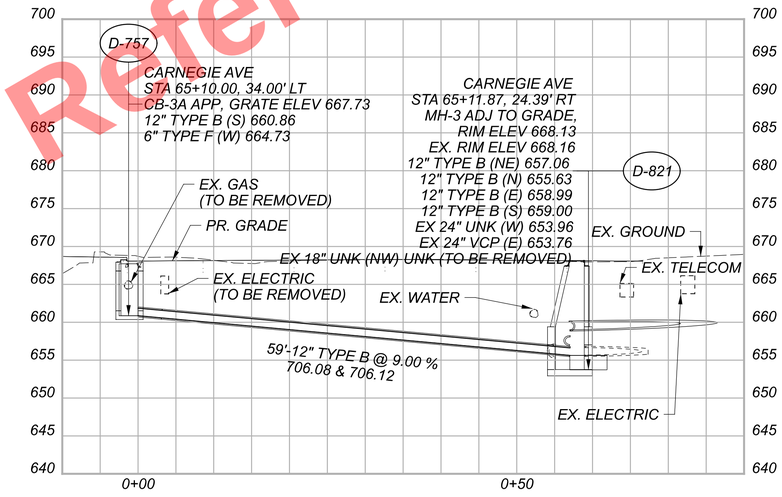

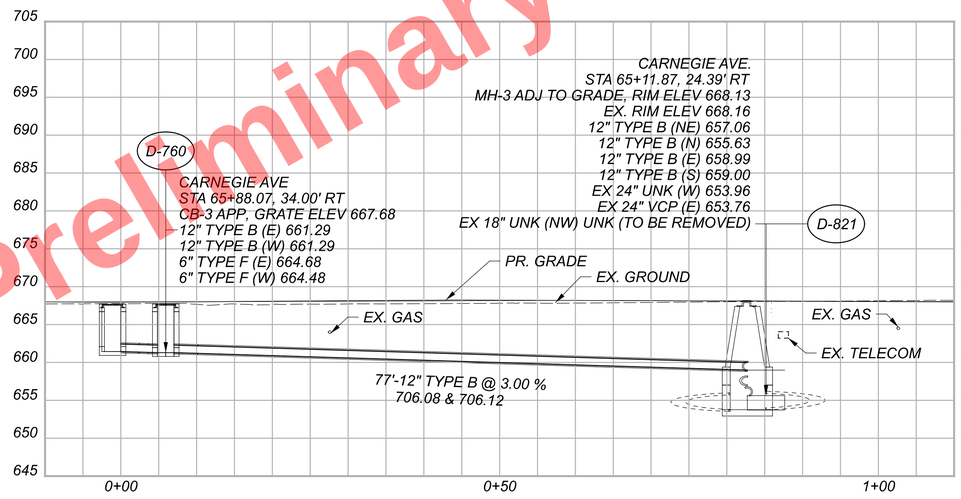

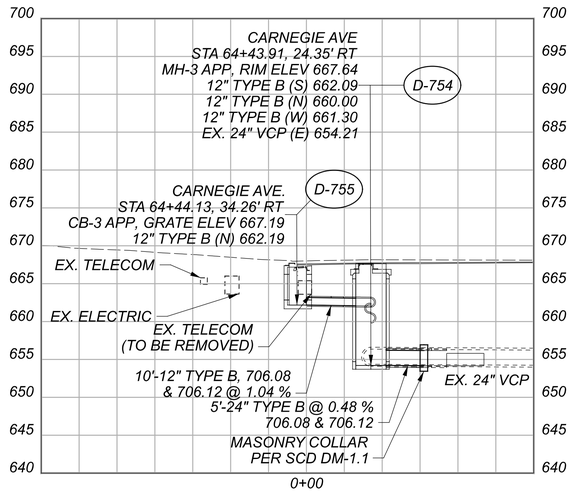

Preliminary Plans - For Reference Only

CROSS REFERENCES

STRUCTURE	SHEET
D-751	1116
D-753	1116
D-755	1116
D-756	1116
D-757	1116
D-758	1116
D-760	1116

STORM SEWER PROFILES
CARNEGIE AVE. & MIDTOWN CONNECTOR

DESIGN AGENCY
Michael Baker INTERNATIONAL

DESIGNER BJT
REVIEWER KGJ 05/22/24
PROJECT ID 82382
SHEET 1146 TOTAL 2696

CUY-90-16.28 (CCG3A)
MODEL: Sheet ! PAPERSIZE: 34x22 (in.) DATE: 5/23/2025 TIME: 10:09:28 AM USER: Julie.Ross
pw:\\mb-us-pw.bentley.com:mb-us-pw-03\Documents\Cleveland_OH\01_Projects\DOT\District2\82382\400-Engineering\Drainage\Sheets\82382_DF1035.dgn

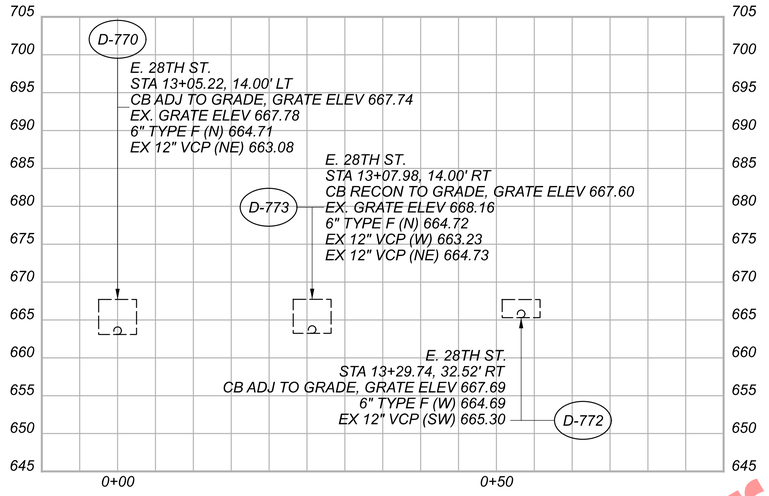

Preliminary Plans - For Reference Only

STORM SEWER PROFILES
CARNEGIE AVE. & E. 28TH ST.

CROSS REFERENCES	
STRUCTURE	SHEET
D-770	1117
D-772	1117
D-773	1117

DESIGN AGENCY
Michael Baker INTERNATIONAL

DESIGNER BJT
REVIEWER KGJ 05/22/24
PROJECT ID 82382
SHEET 1147 TOTAL 2696

CUY-90-16.28 (CCG3A)

MODEL: Sheet 2 PAPERSIZE: 34x22 (in.) DATE: 3/27/2025 TIME: 10:4t53 PM USER: Julie.Ross
pw:\\mb-us-pw.bentley.com:mb-us-pw-03\Documents\Cleveland.OH\Oi_Projects\ODOT\District2\82382\400-Engineering\Drainage\Sheets\82382_DFI035.dgn

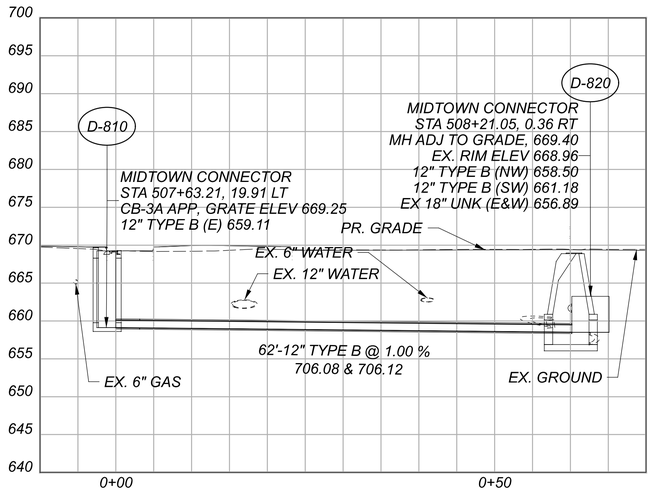

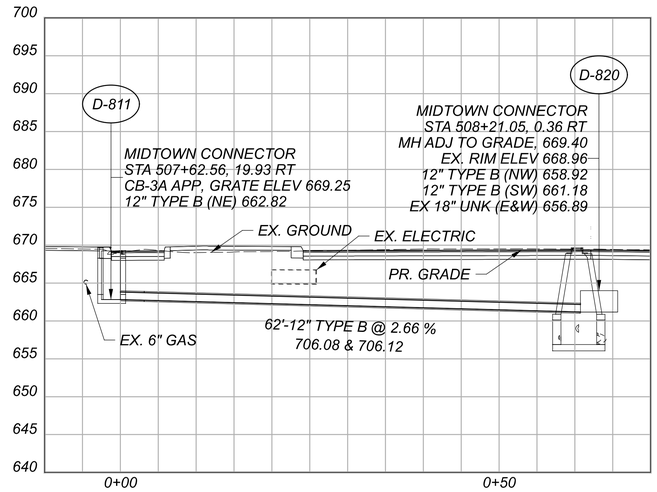

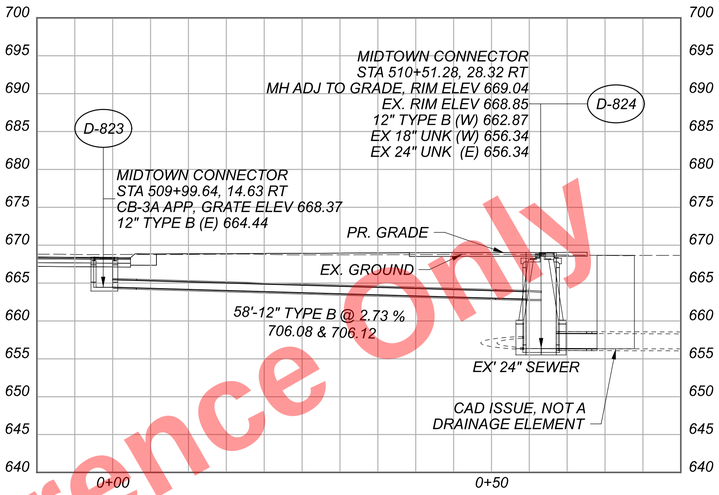

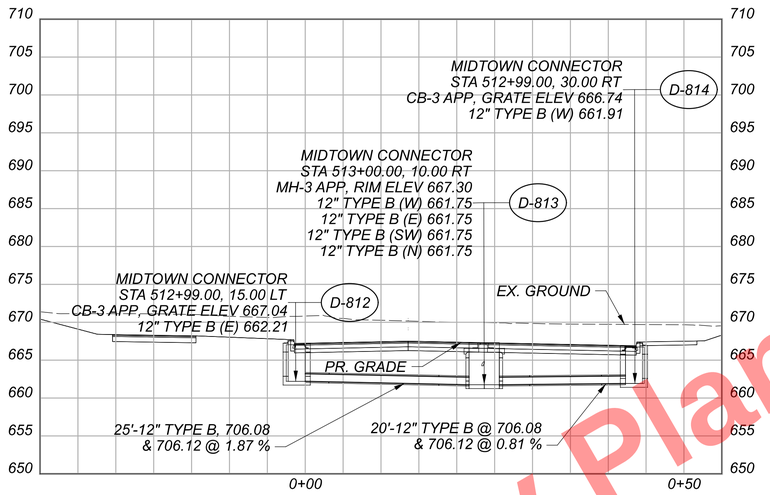

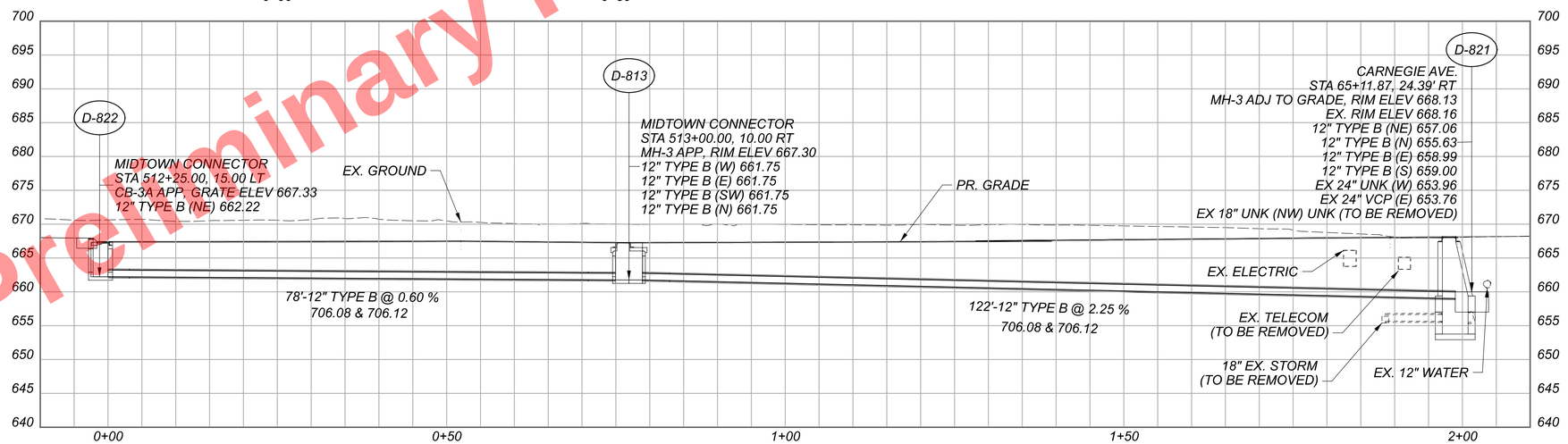

Preliminary Plans - For Reference Only

CROSS REFERENCES	
STRUCTURE	SHEET
D-810	1118
D-811	1118
D-812	1116
D-813	1116
D-814	1116
D-822	1116
D-823	1119

STORM SEWER PROFILES
MIDTOWN CONNECTOR

DESIGN AGENCY
Michael Baker INTERNATIONAL

DESIGNER BJT
REVIEWER KGJ 05/22/24
PROJECT ID 82382
SHEET 1148 TOTAL 2696

CUY-90-16.28 (CCG3A)

MODEL: Sheet PAPERSIZE: 34x22 (in.) DATE: 5/23/2025 TIME: 11:51:49 AM USER: Julie.Ross
pw:\\mb-us-pw.bentley.com:mb-us-pw-03\Documents\Cleveland_OH\01_Projects\0007\District2\82382\400-Engineering\Drainage\Sheets\82382_DF1034.dgn

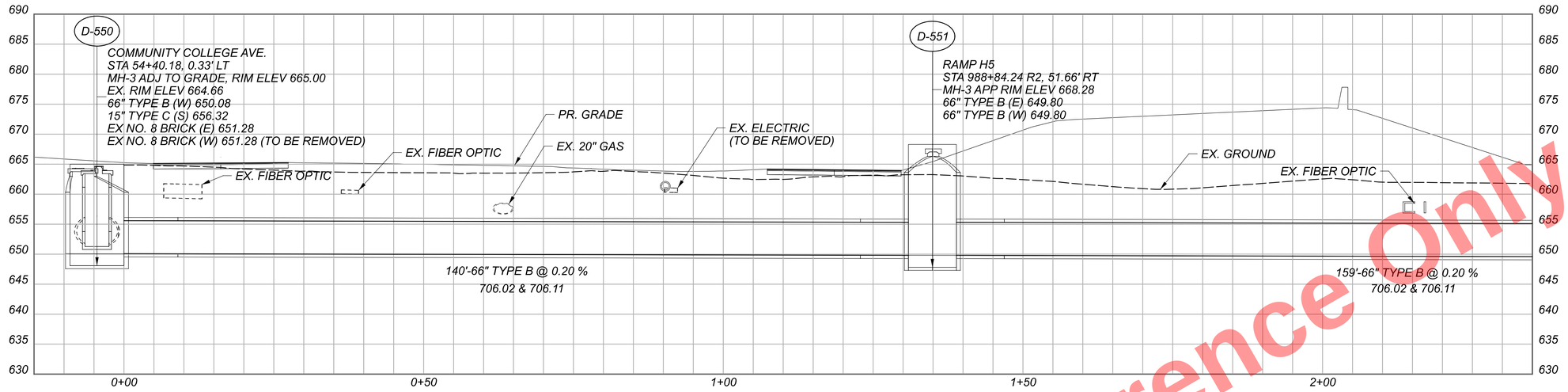

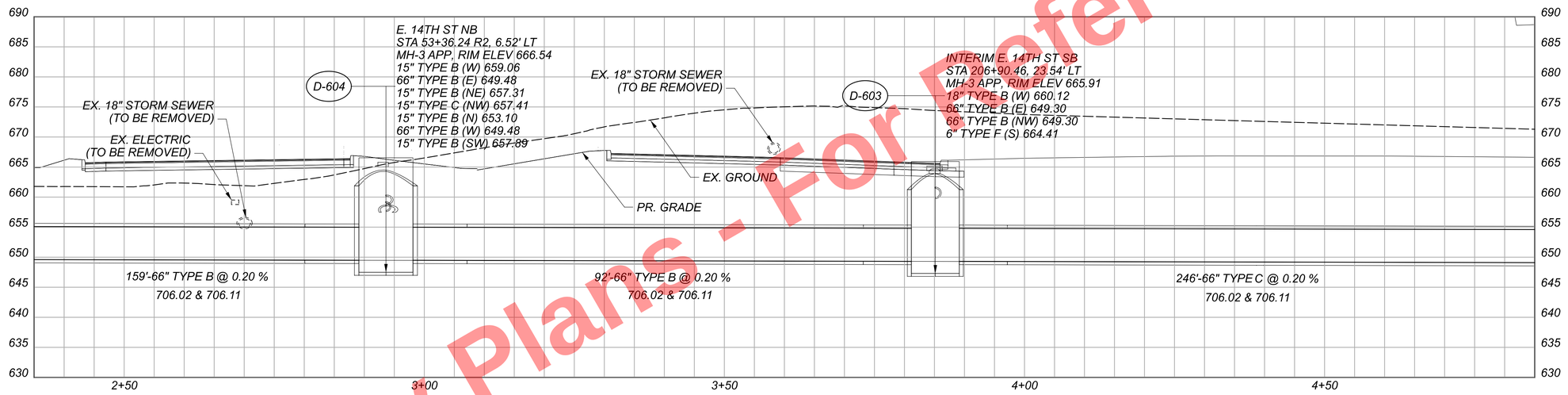

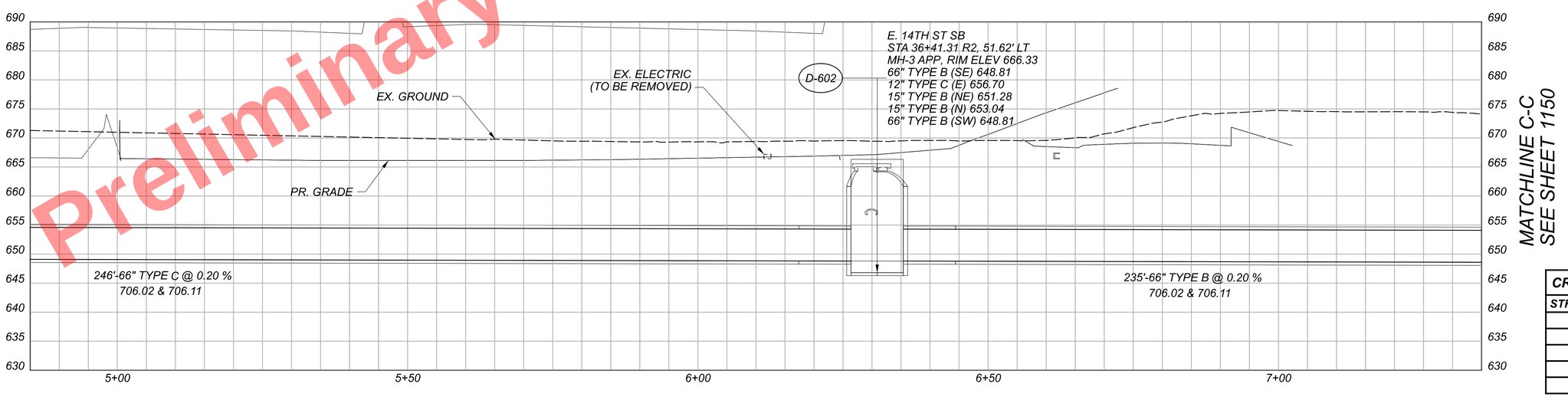

Preliminary Plans - For Reference Only

CROSS REFERENCES	
STRUCTURE	SHEET
D-550	1108
D-551	1108
D-602	1095
D-603	1108
D-604	1108

STORM SEWER PROFILES
E. 14TH ST.

DESIGN AGENCY
Michael Baker INTERNATIONAL

DESIGNER BJT
REVIEWER KGJ 05/22/24
PROJECT ID 82382
SHEET 1149 TOTAL 2696

CUY-90-16.28 (CCG3A)

MODEL: Sheet 1 - D-550 to Y-600 - I-3 PAPERSIZE: 34x22 (in.) DATE: 3/27/2025 TIME: 10:42:26 PM USER: JulieRoss
pw:\\mb-us-pw.bentley.commb-us-pw-03\Documents\Cleveland_OH\01_Projects\ODOT\District2\82382\400-Engineering\Drainage\Sheets\82382_DF1030.dgn

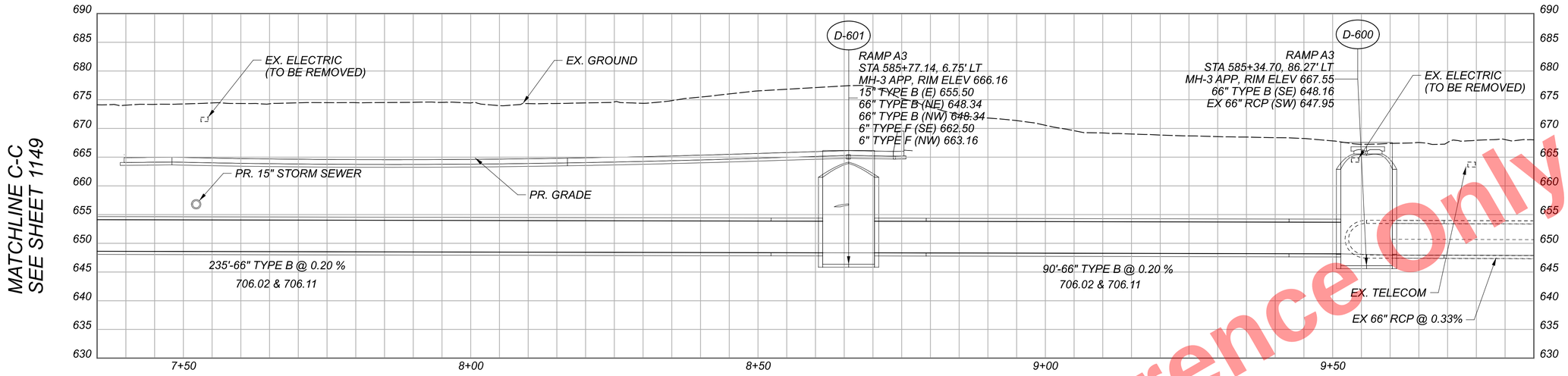

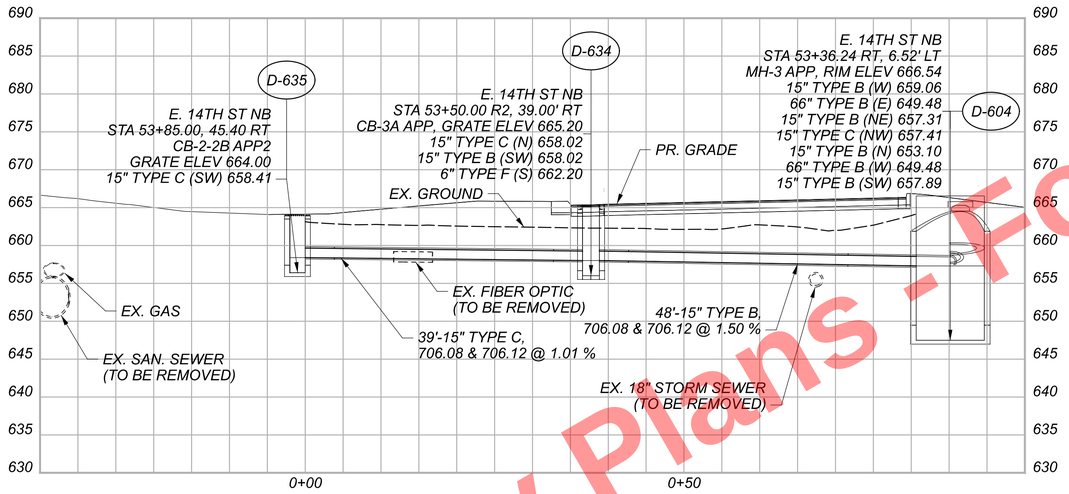

CROSS REFERENCES	
STRUCTURE	SHEET
D-600	1094
D-601	1094
D-634	1108
D-635	1108
D-636	1095
D-636A	1108

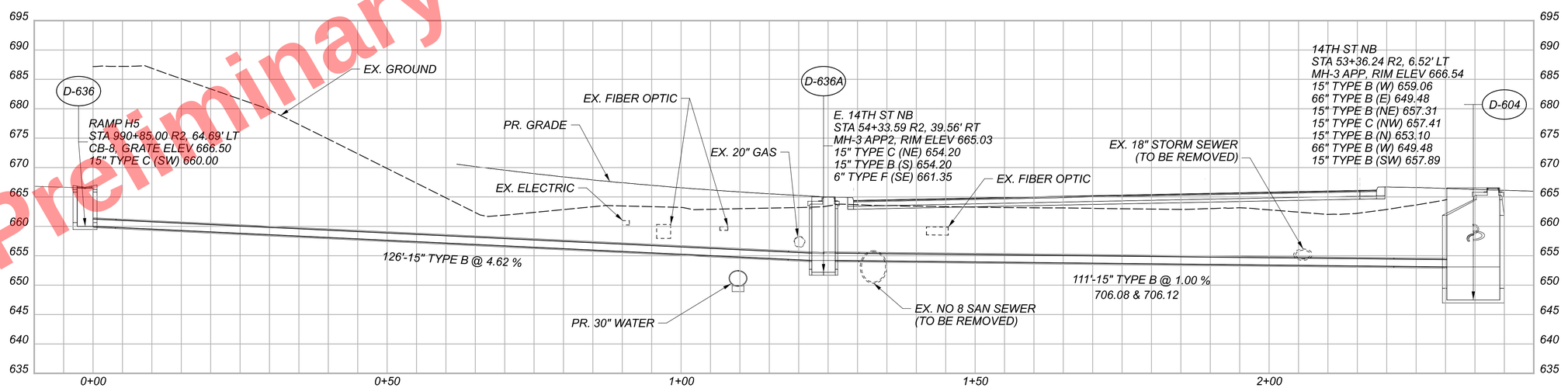

Preliminary Plans - For Reference Only

STORM SEWER PROFILES
E. 14TH ST.

DESIGN AGENCY
Michael Baker INTERNATIONAL

DESIGNER
BJT

REVIEWER
KGJ 05/22/24

PROJECT ID
82382

SHEET 1150 TOTAL 2696

CUY-90-16.28 (CCG3A)

MODEL: Sheet 2 - D-550 to Y-600 - 4-5+ PAPERSIZE: 34x22 (in.) DATE: 3/27/2025 TIME: 10:42:29 PM USER: Julie.Ross
pw:\\mb-us-pw.bentley.com:mb-us-pw-03\Documents\Cleveland_OH\OI_Projects\ODOT\District2\82382\400-Engineering\Drainage\Sheets\82382_DFI030.dgn

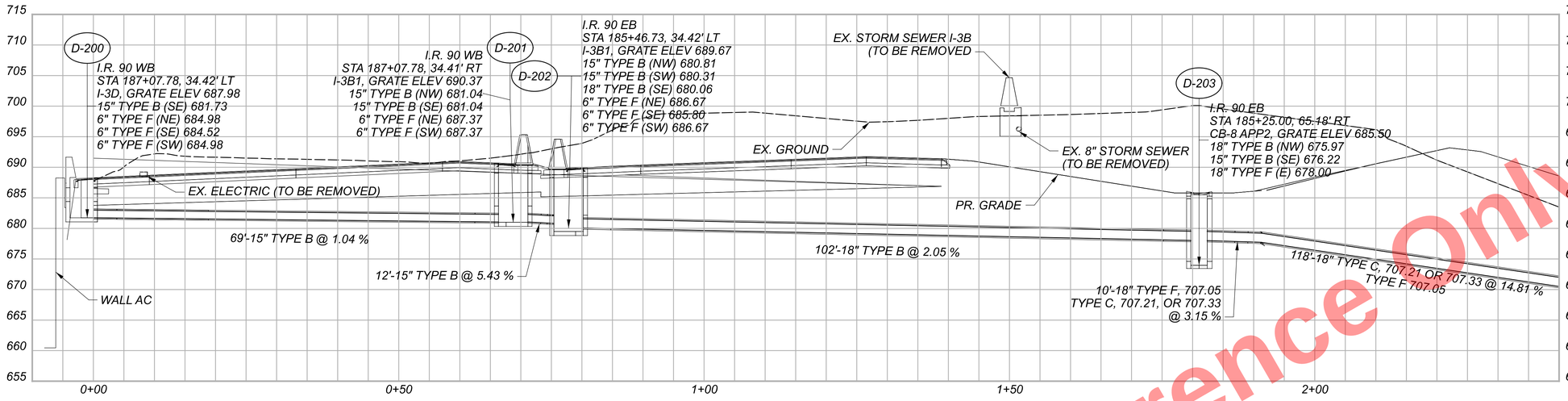

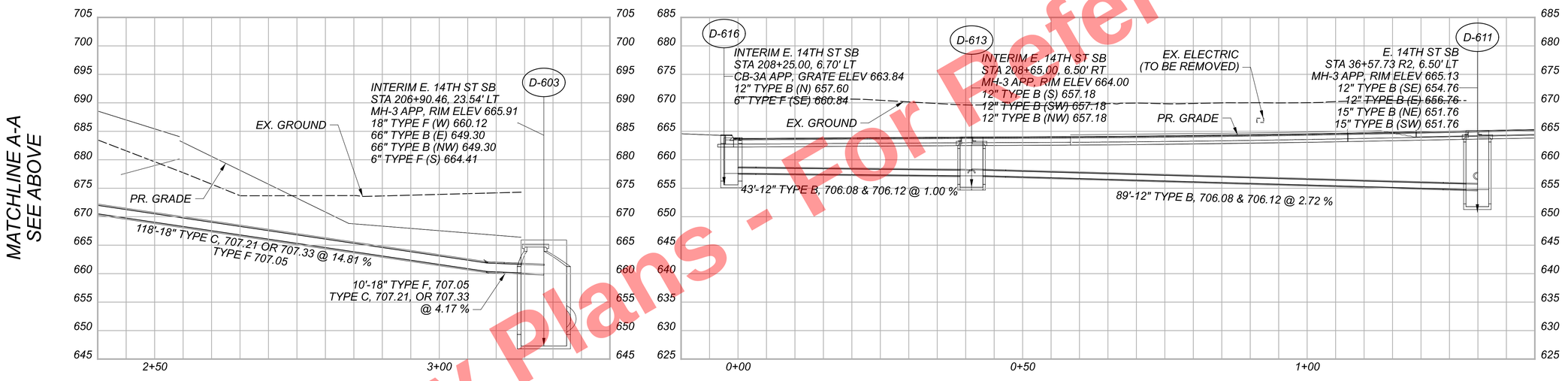

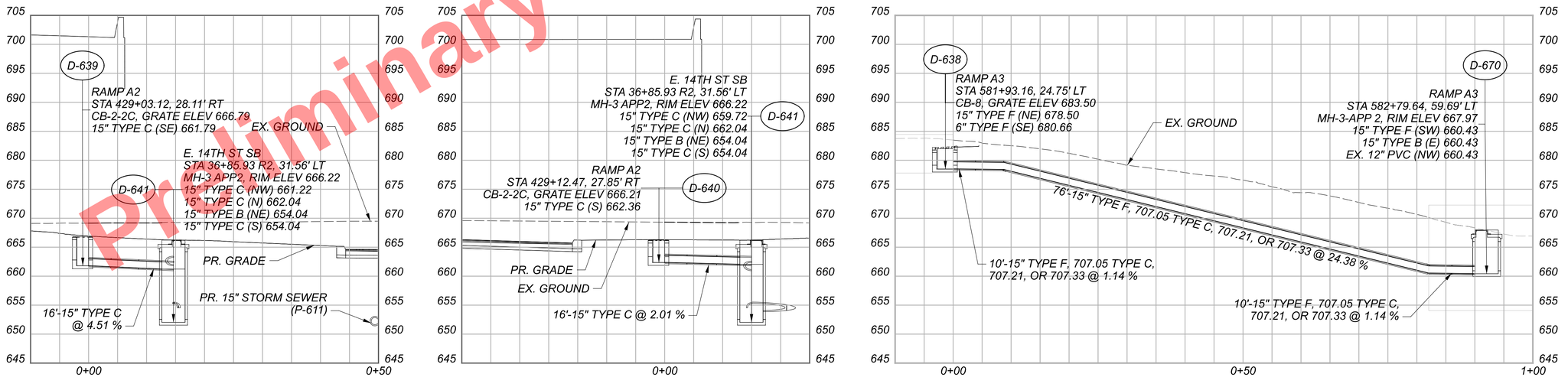

Preliminary Plans - For Reference Only

CROSS REFERENCES

STRUCTURE	SHEET
D-200	1095
D-201	1095
D-202	1095
D-203	1095
D-613	1095
D-616	1095
D-638	1094
D-639	1095
D-640	1095

STORM SEWER PROFILES
E. 14TH ST.

DESIGN AGENCY
Michael Baker INTERNATIONAL

DESIGNER BJT
REVIEWER KGJ 05/22/24
PROJECT ID 82382
SHEET 1151 TOTAL 2696

CUY-90-16.28 (CCG3A)

MODEL: Sheet 3 PAPERSIZE: 34x22 (in.) DATE: 3/27/2025 TIME: 10:42:35 PM USER: Julie.Ross
pw:\\mb-us-pw.bentley.com\mb-us-pw-03\Documents\Cleveland_OH\OI_Projects\ODOT\District2\82382\400-Engineering\Drainage\Sheets\82382_DF1030.dgn

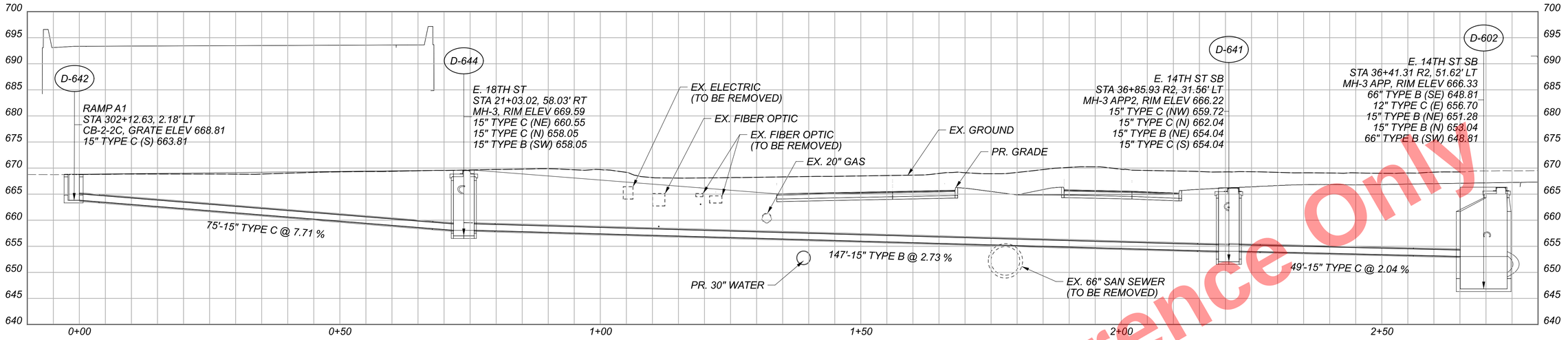

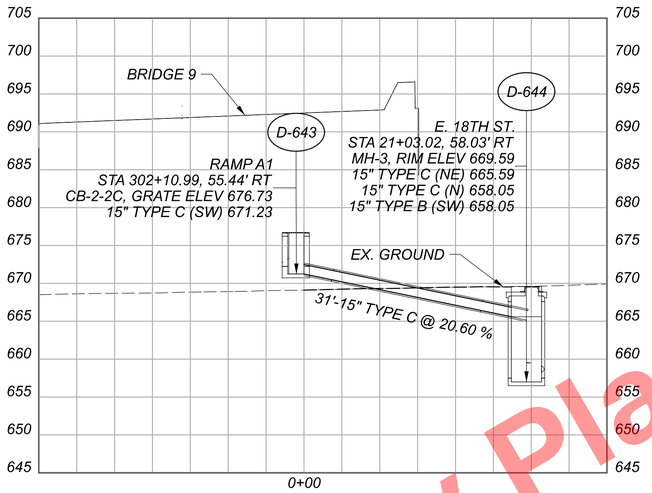

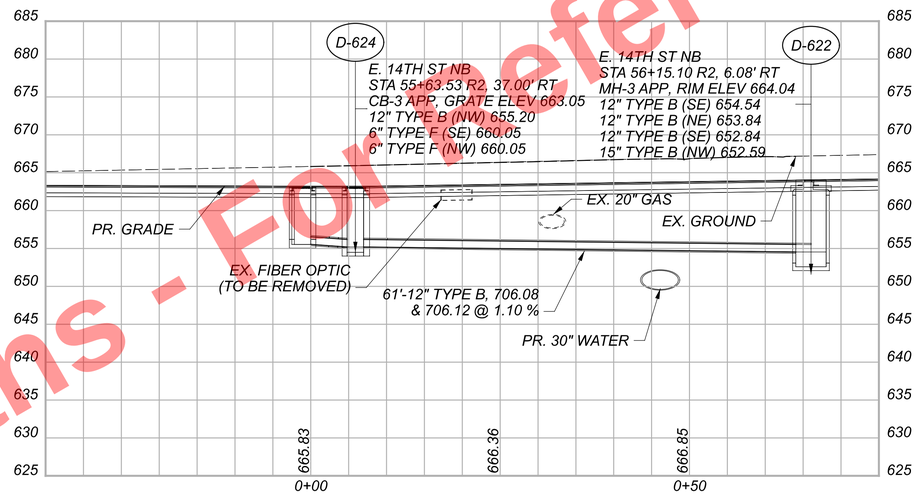

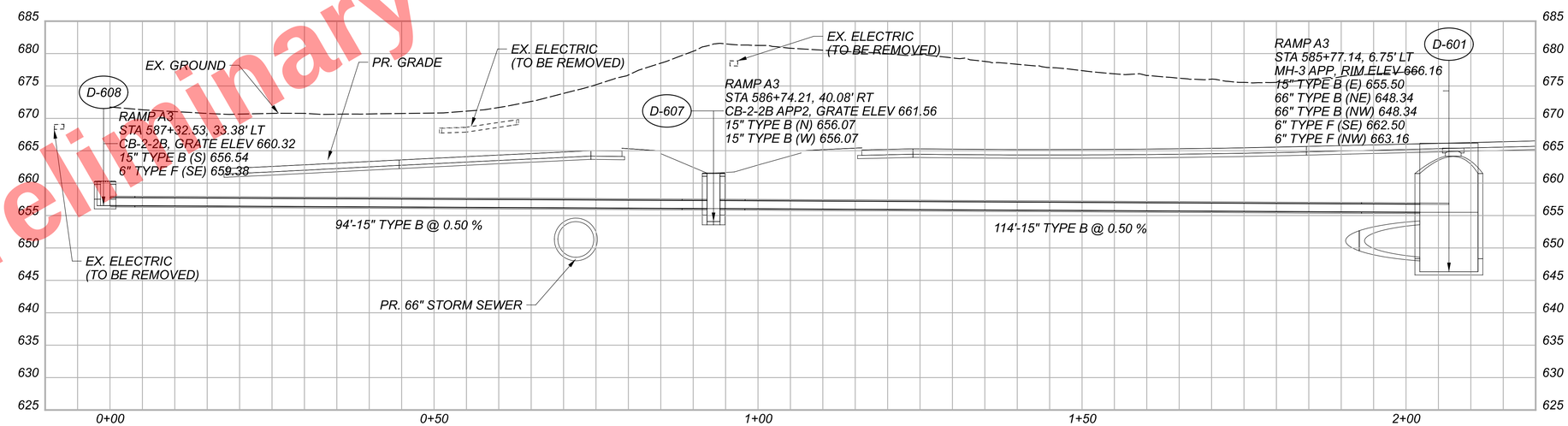

CROSS REFERENCES	
STRUCTURE	SHEET
D-607	1095
D-608	1095
D-624	1095
D-641	1095
D-642	1095
D-643	1095
D-644	1095

Preliminary Plans - For Reference Only

STORM SEWER PROFILES
E. 14TH ST.

CUY-90-16.28 (CCG3A)

MODEL: Sheet 4 PAPERSIZE: 34x22 (in.) DATE: 3/27/2025 TIME: 10:42:40 PM USER: Julie.Ross
pw:\\mb-us-pw.bentley.com\mb-us-pw-03\Documents\Cleveland_OH\01_Projects\ODOT\District2\82382\400-Engineering\Drainage\Sheets\82382_DF1030.dgn

DESIGN AGENCY
Michael Baker INTERNATIONAL

DESIGNER BJT
REVIEWER KGJ 05/22/24
PROJECT ID 82382
SHEET 1152 TOTAL 2696

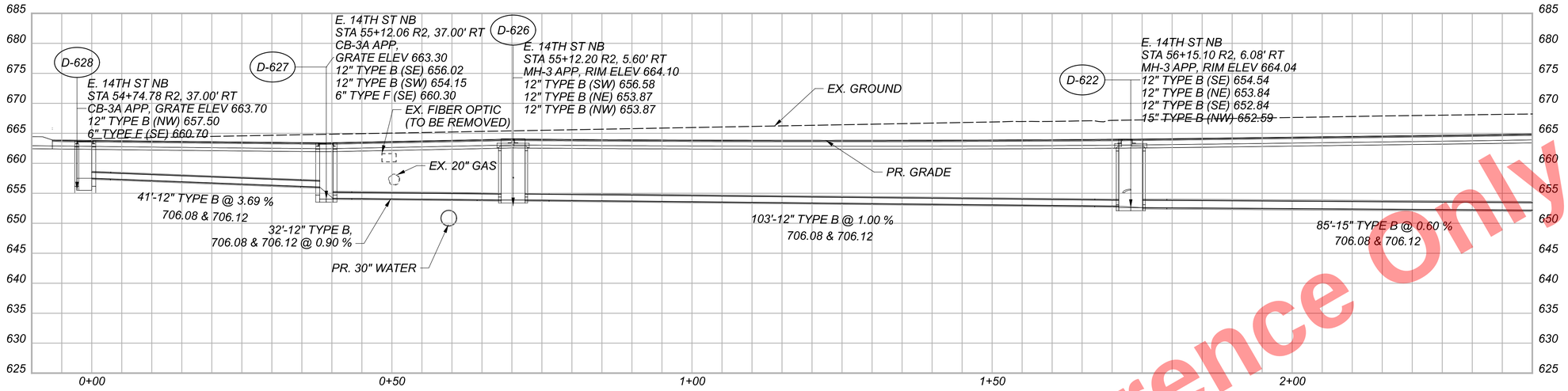

MATCHLINE A-A
SEE BELOW

MATCHLINE A-A
SEE ABOVE

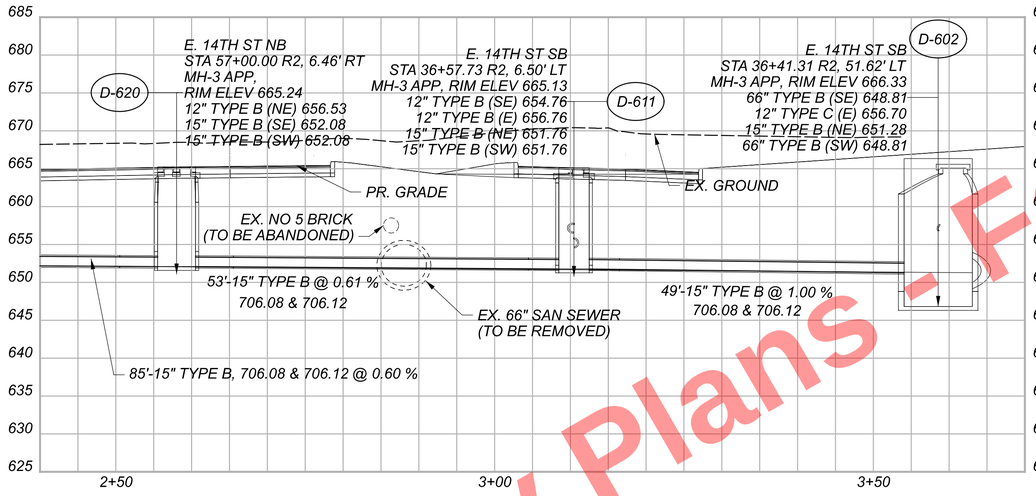

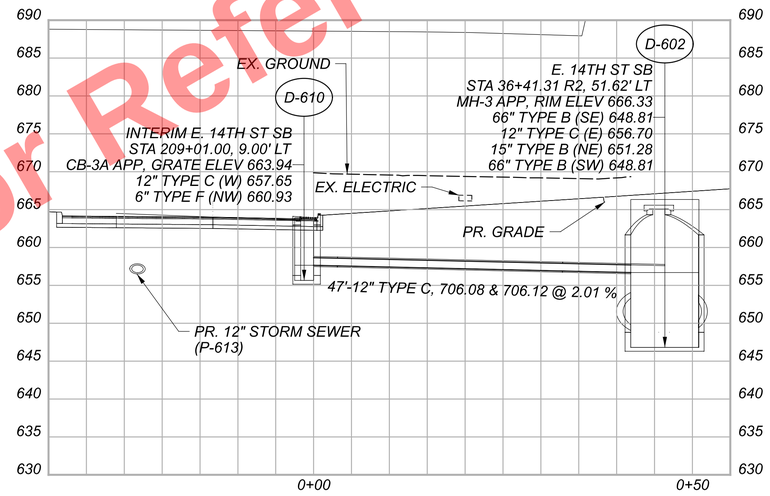

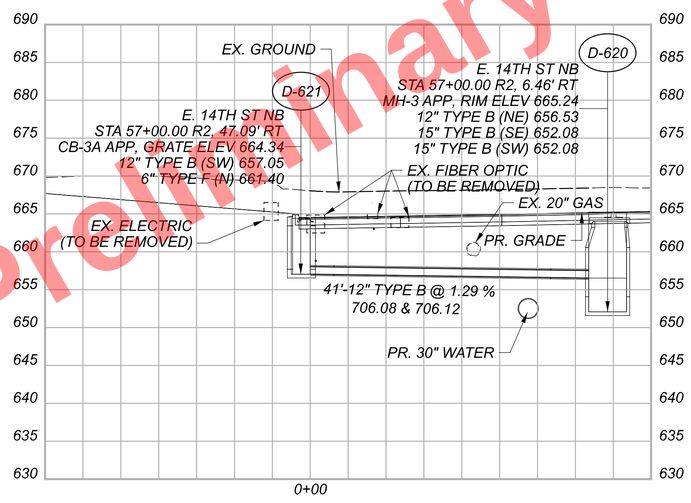

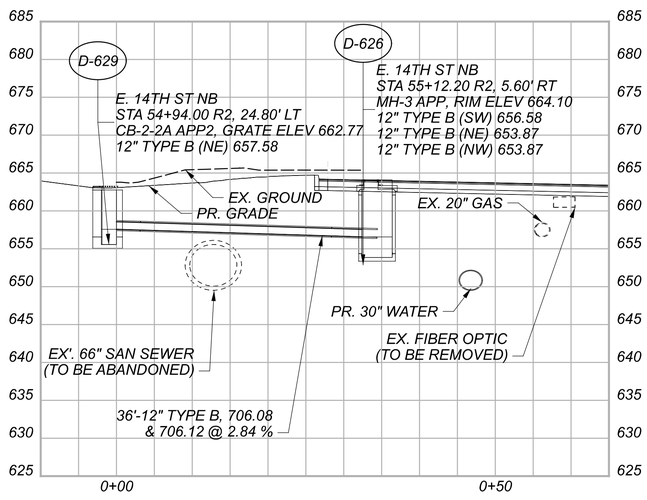

Preliminary Plans - For Reference Only

CROSS REFERENCES

STRUCTURE	SHEET
D-610	1095
D-611	1095
D-620	1095
D-621	1095
D-622	1095
D-626	1095
D-627	1095
D-628	1095
D-629	1095

STORM SEWER PROFILES
E. 14TH ST.

CUY-90-16.28 (CCG3A)

MODEL: Sheet 5 PAPERSIZE: 34x22 (in.) DATE: 5/9/2025 TIME: 2:35:01 PM USER: MaiaGallagher
pw:\\mb-us-pw.bentley.com\mb-us-pw-03\Documents\Cleveland_OH\DL_Projects\ODOT\District2\82382\400-Engineering\Drainage\Sheets\82382_DF1030.dgn

DESIGN AGENCY
Michael Baker INTERNATIONAL

DESIGNER BJT
REVIEWER KGJ 05/22/24
PROJECT ID 82382
SHEET 1153 TOTAL 2696

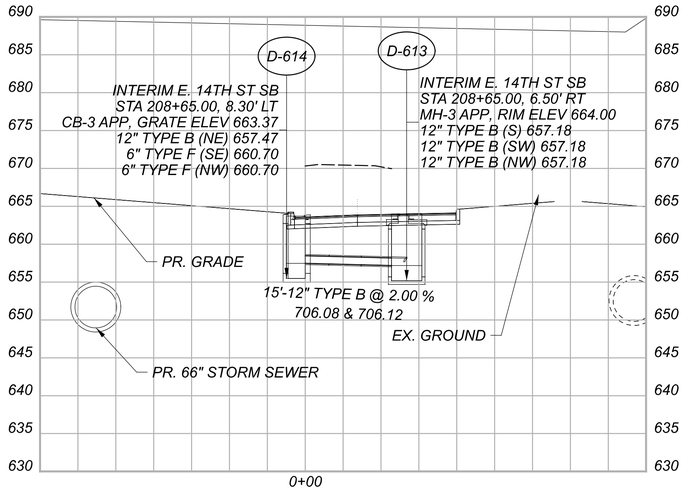

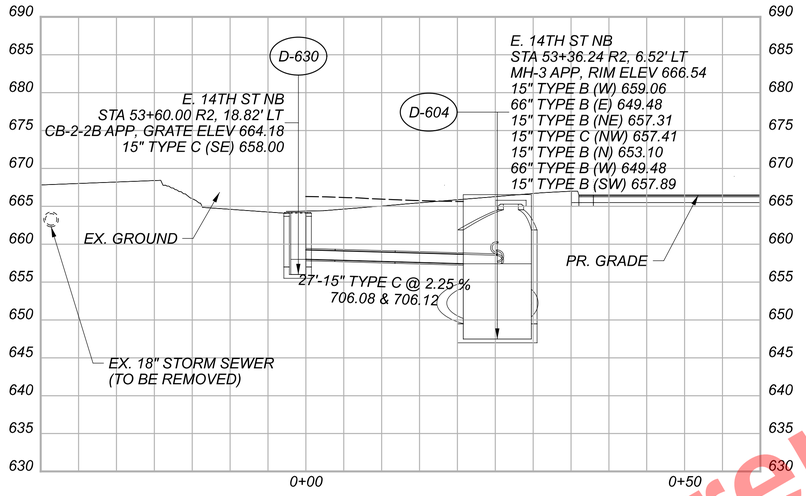

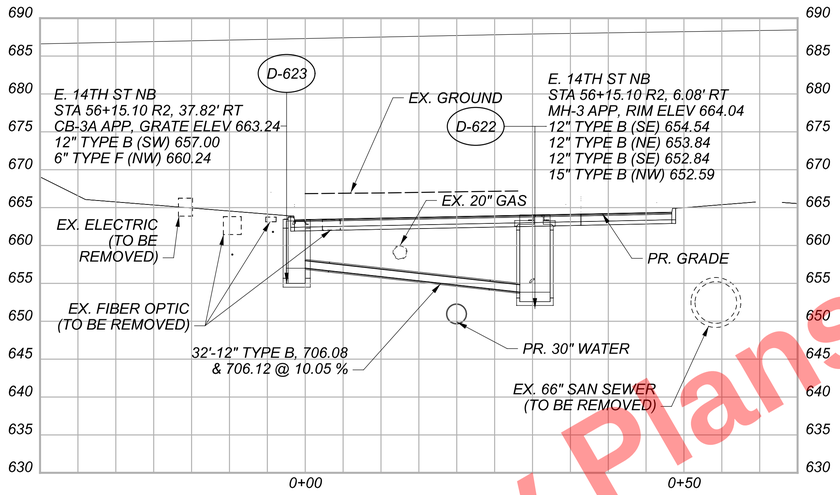

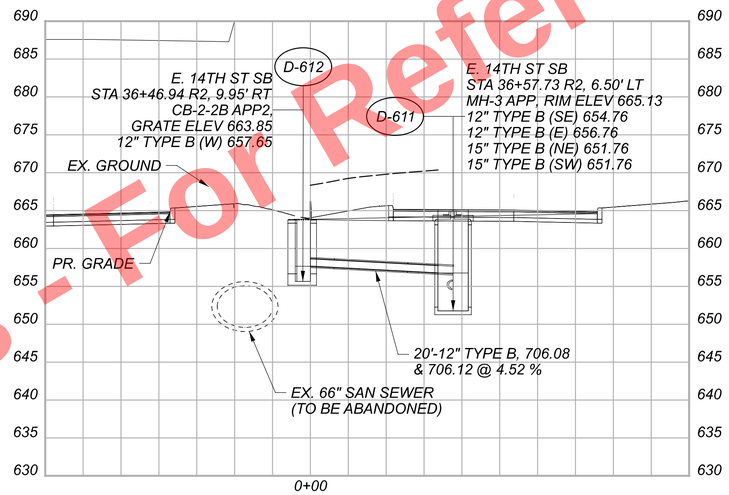

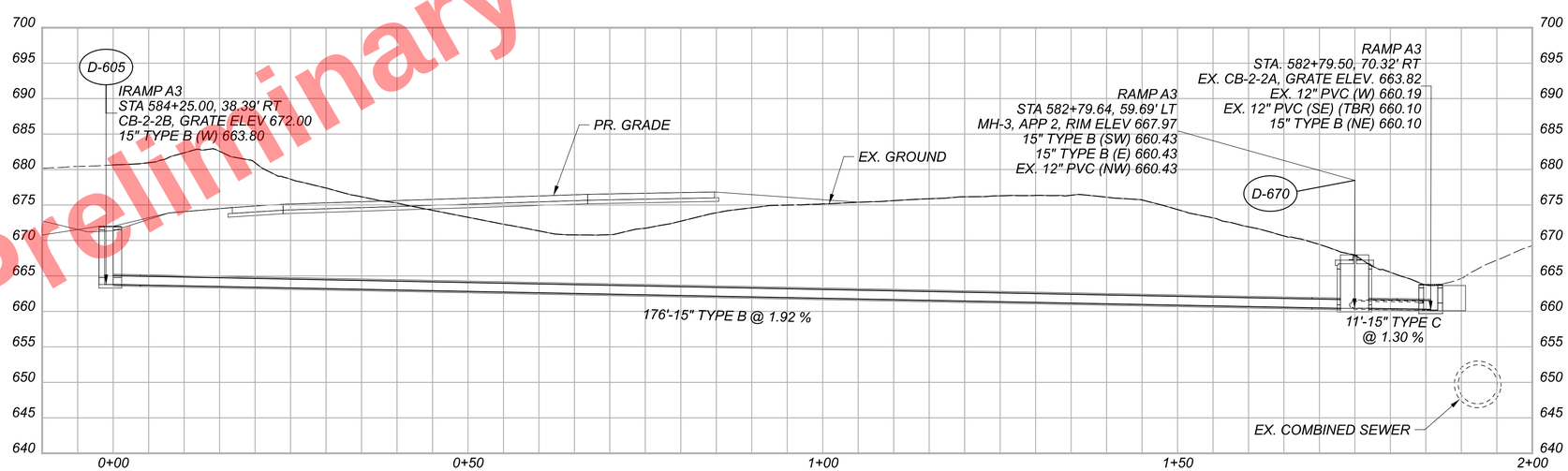

Preliminary Plans - For Reference Only

CROSS REFERENCES

STRUCTURE	SHEET
D-605	1094
D-612	1095
D-614	1095
D-623	1095
D-630	1108
D-670	1094

STORM SEWER PROFILES
E. 14TH ST.

DESIGN AGENCY
Michael Baker INTERNATIONAL

DESIGNER BJT
REVIEWER KGJ 05/22/24
PROJECT ID 82382
SHEET 1154 TOTAL 2696

CUY-90-16.28 (CCG3A)

MODEL: Sheet 6 PAPERSIZE: 34x22 (in.) DATE: 3/27/2025 TIME: 10:42:46 PM USER: Julie.Ross
pw:\\mb-us-pw.bentley.com:mb-us-pw-03\Documents\Cleveland.OHIO\Projects\DOT\District2\82382\400-Engineering\Drainage\Sheets\82382_DFI030.dgn

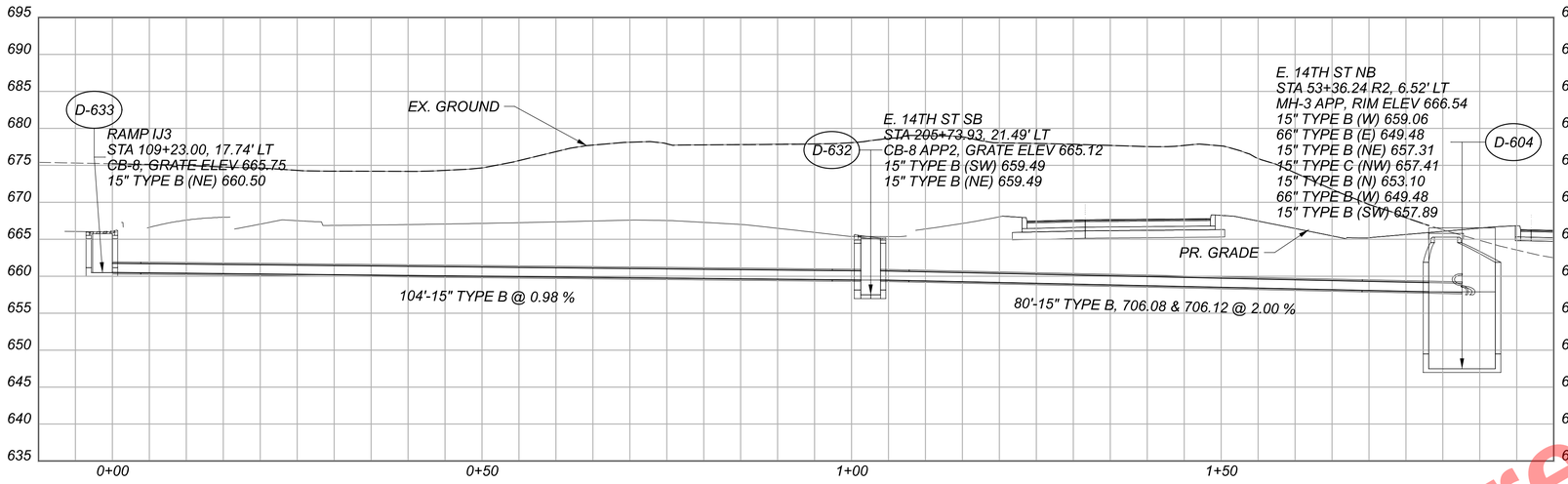

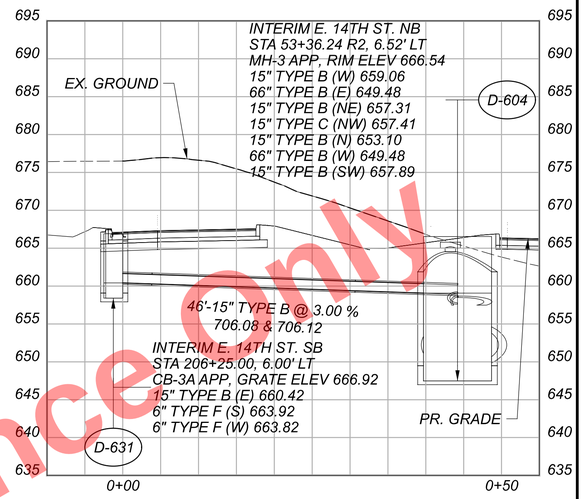

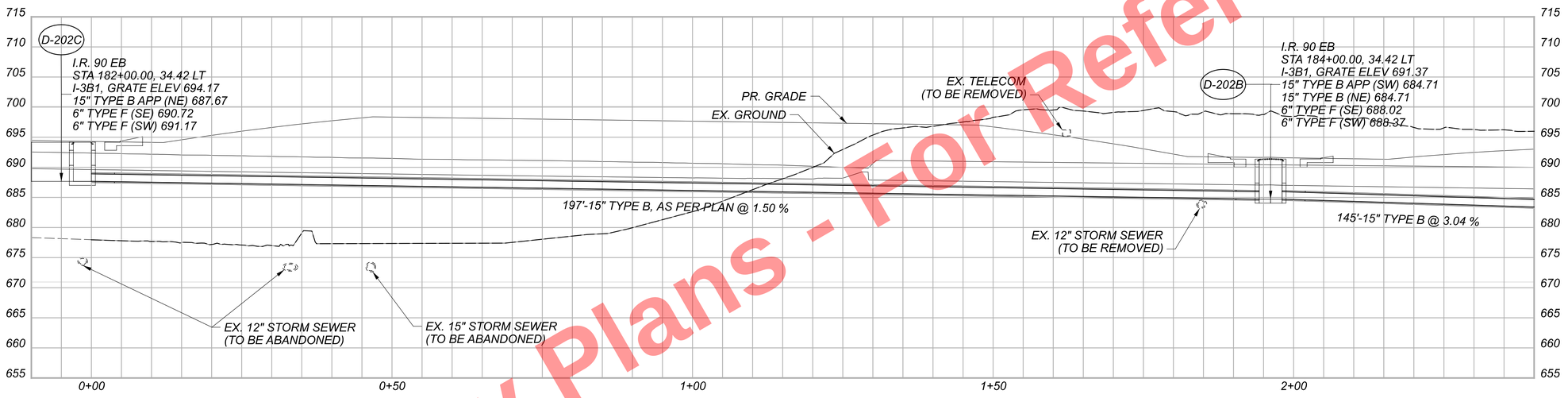

MATCHLINE A-A
SEE BELOW

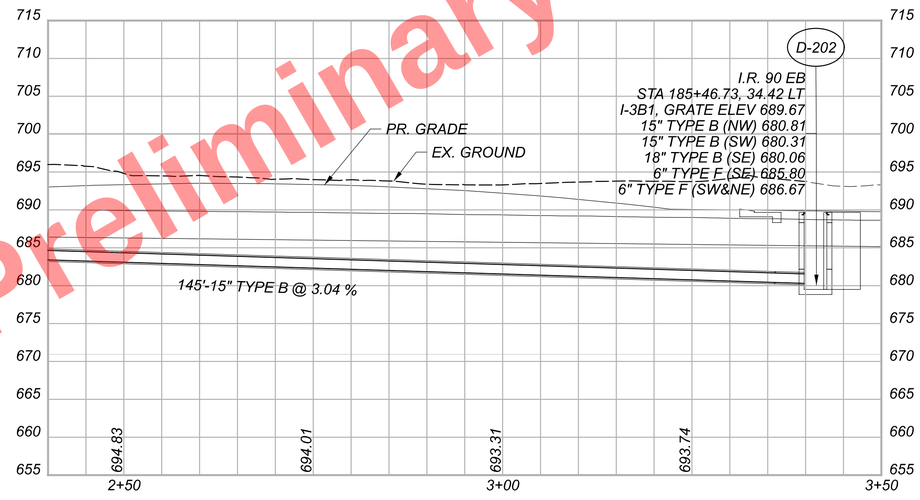

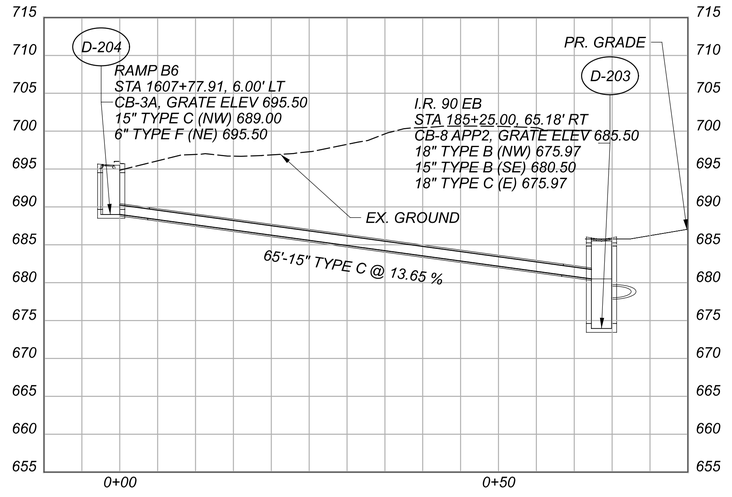

Preliminary Plans - For Reference Only

CROSS REFERENCES

STRUCTURE	SHEET
D-202B	1094
D-202C	1094
D-204	1108
D-631	1108
D-632	1108
D-633	1108

STORM SEWER PROFILES
E. 14TH ST.

DESIGN AGENCY
Michael Baker INTERNATIONAL

DESIGNER BJT
REVIEWER KGJ 05/22/24
PROJECT ID 82382
SHEET 1155 TOTAL 2696

CUY-90-16.28 (CCG3A)

MODEL: Sheet 7 PAPERSIZE: 34x22 (in.) DATE: 3/27/2025 TIME: 10:42:51 PM USER: Julie.Ross
pw:\\mb-us-pw.bentley.com:mb-us-pw-03\Documents\Cleveland.OH\DL_Projects\DOT\District2\82382\400-Engineering\Drainage\Sheets\82382_DF1030.dgn

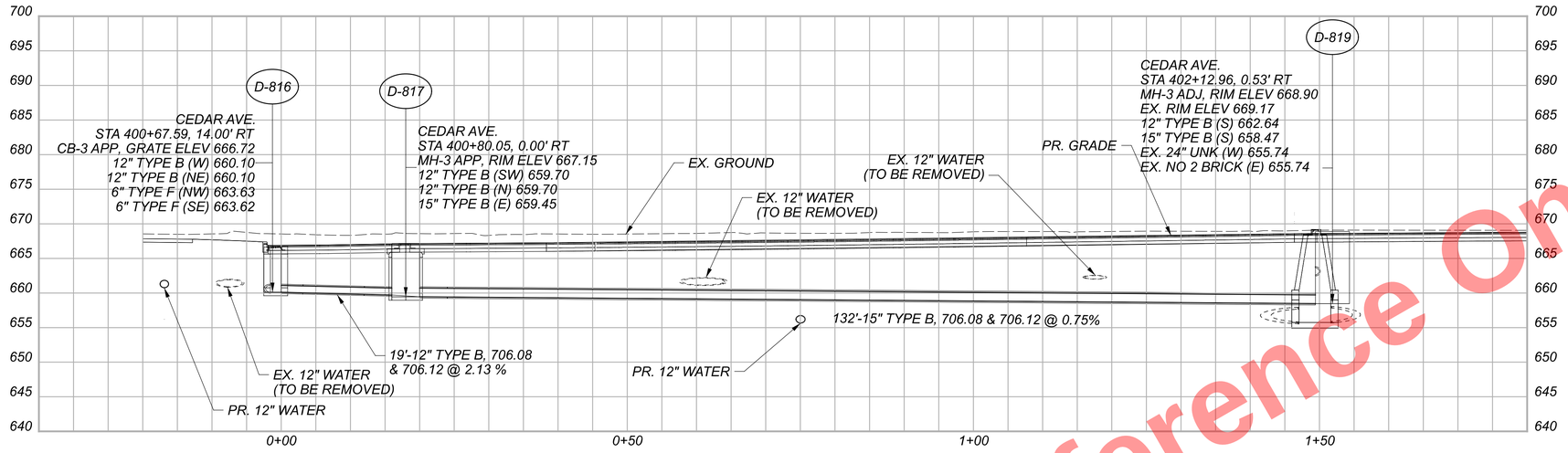

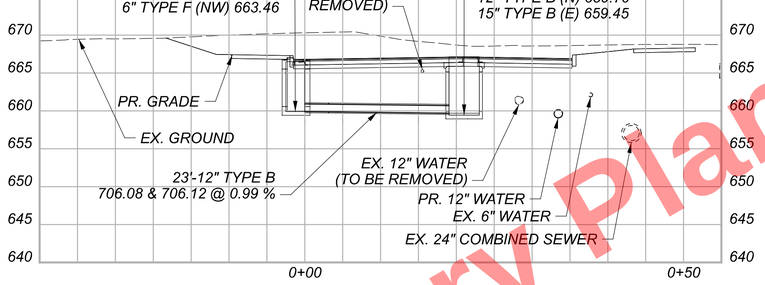

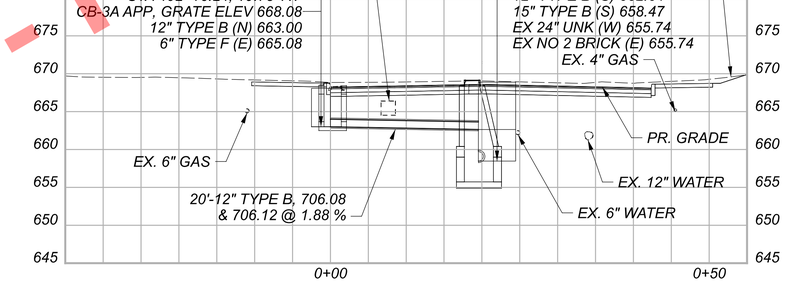

Preliminary Plans - For Reference Only

CROSS REFERENCES

STRUCTURE	SHEET
D-815	1119
D-816	1119
D-817	1119
D-818	1119

STORM SEWER PROFILES
CEDAR AVE.

DESIGN AGENCY
Michael Baker INTERNATIONAL

DESIGNER BJT
REVIEWER KGJ 05/22/24
PROJECT ID 82382
SHEET 1156 TOTAL 2696

CUY-90-16.28 (CCG3A)

MODEL: Sheet PAPERSIZE: 34x22 (in.) DATE: 3/27/2025 TIME: 10:43:06 PM USER: Julie.Ross
pw:\\mb-us-pw.bentley.com:mb-us-pw-03\Documents\Cleveland_OH\OI_Projects\ODOT\District2\82382\400-Engineering\Drainage\Sheets\82382_DFI033.dgn

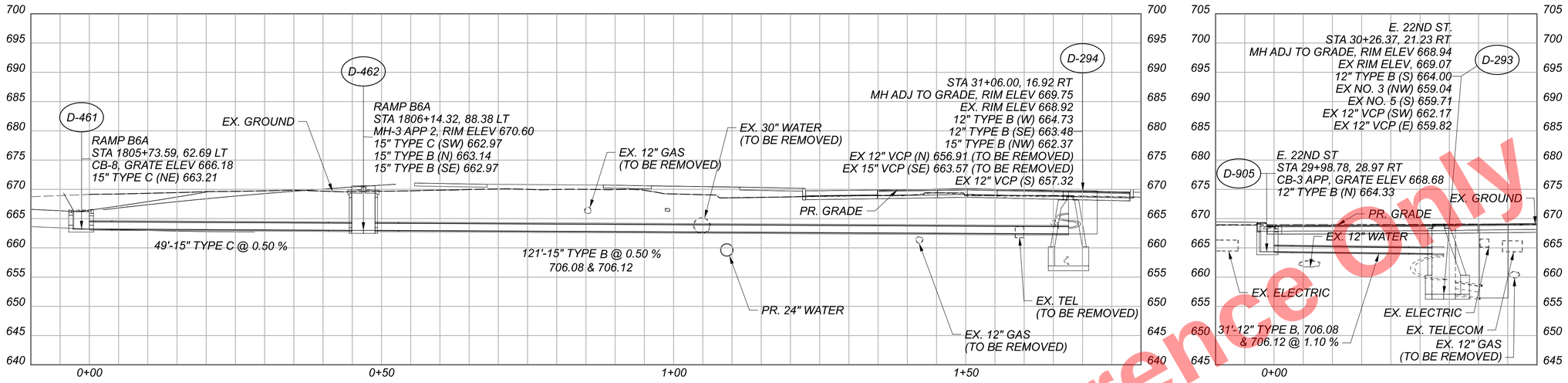

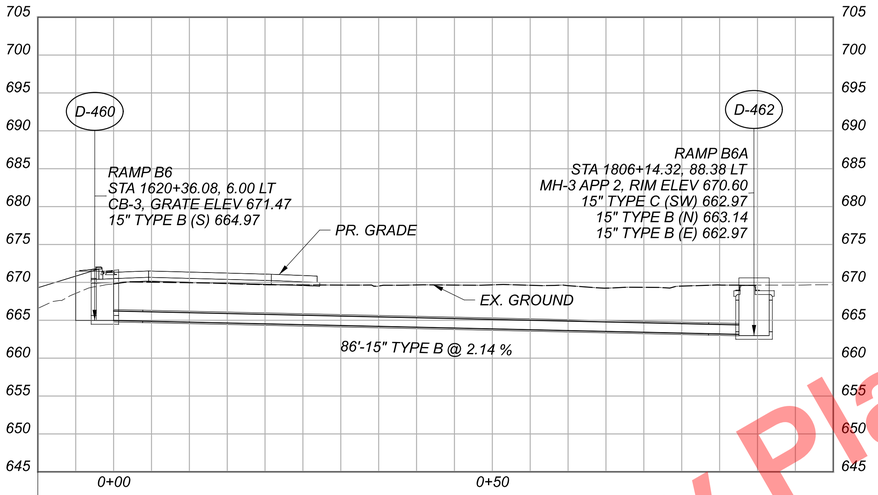

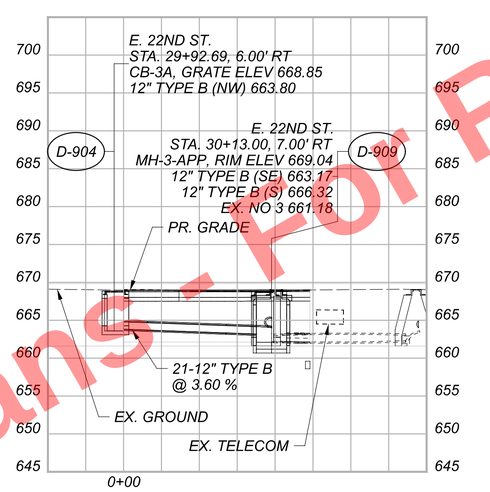

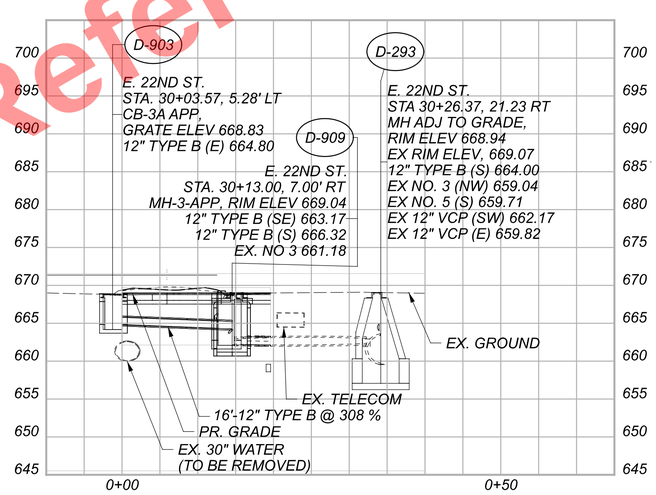

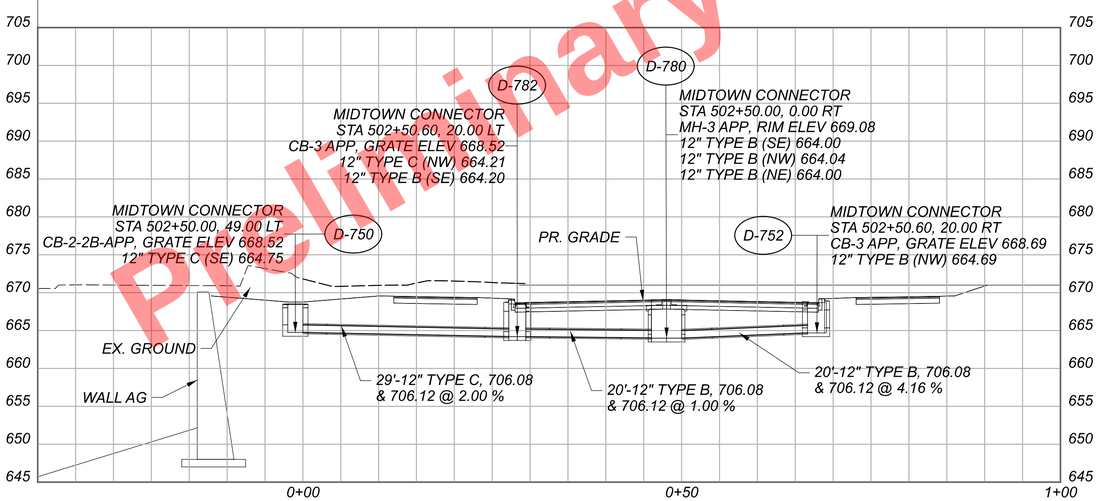

Preliminary Plans - Not for Reference Only

CROSS REFERENCES	
STRUCTURE	SHEET
D-460	1097
D-461	1097
D-462	1097
D-750	1098
D-752	1098
D-782	1098
D-903	1109
D-904	1109
D-905	1109
D-909	1109

STORM SEWER PROFILES
E. 22ND ST. & MIDTOWN CONNECTOR

DESIGN AGENCY
Michael Baker INTERNATIONAL

DESIGNER BJT
REVIEWER KGJ 05/22/24
PROJECT ID 82382
SHEET 1157 TOTAL 2696

CUY-90-16.28 (CCG3A)

MODEL: Sheet PAPERSIZE: 34x22 (in.) DATE: 5/23/2025 TIME: 10:20:31 AM USER: Julie.Ross
pw:\\vmb-us-pw.bentley.commb-us-pw-03\Documents\Cleveland_OH\01\Projects\0DOT\District2\82382\400-Engineering\Drainage\Sheets\82382_DF104.dgn

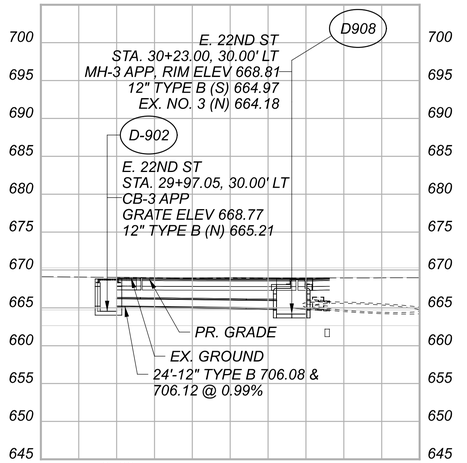

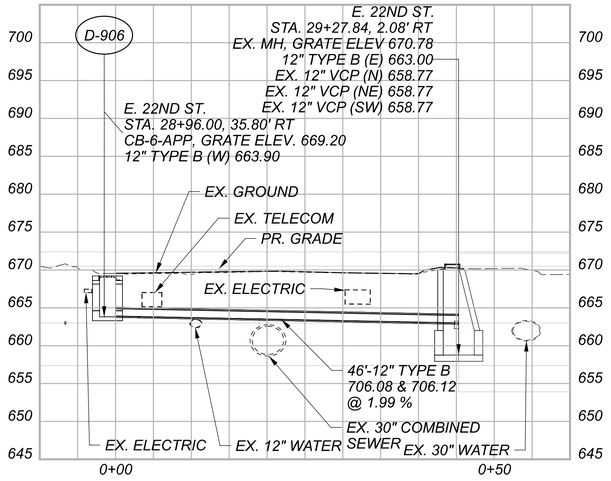

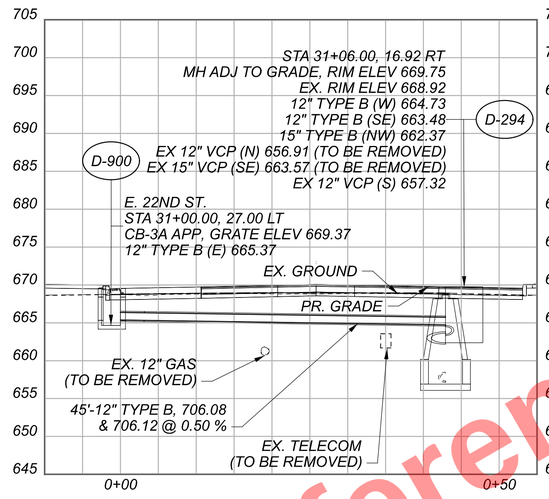

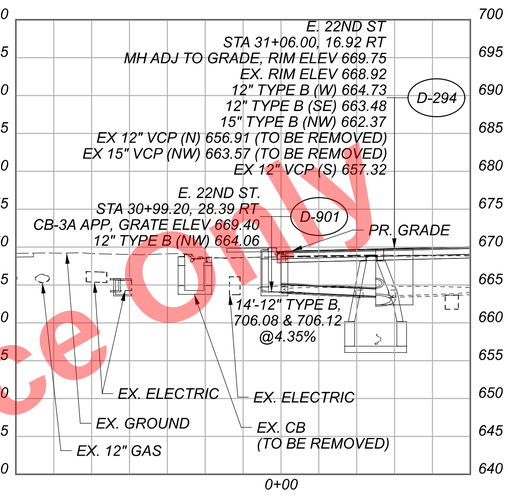

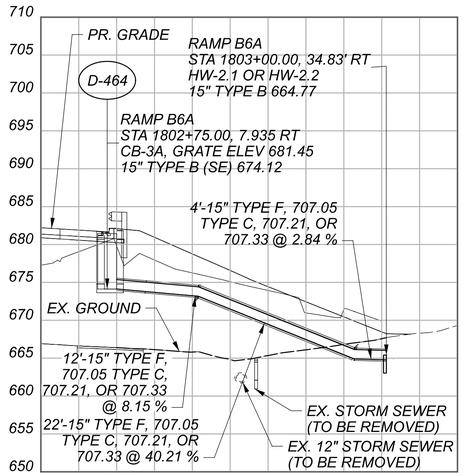

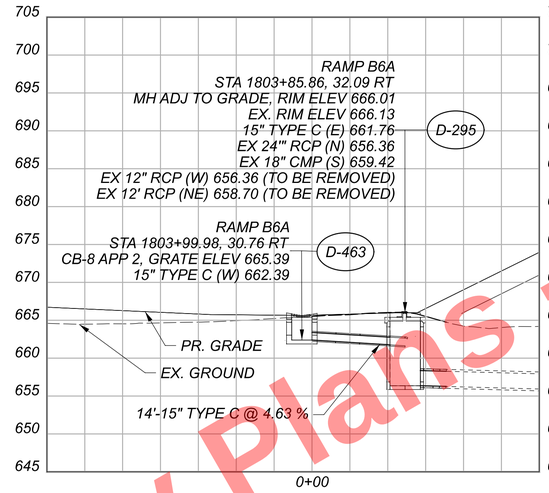

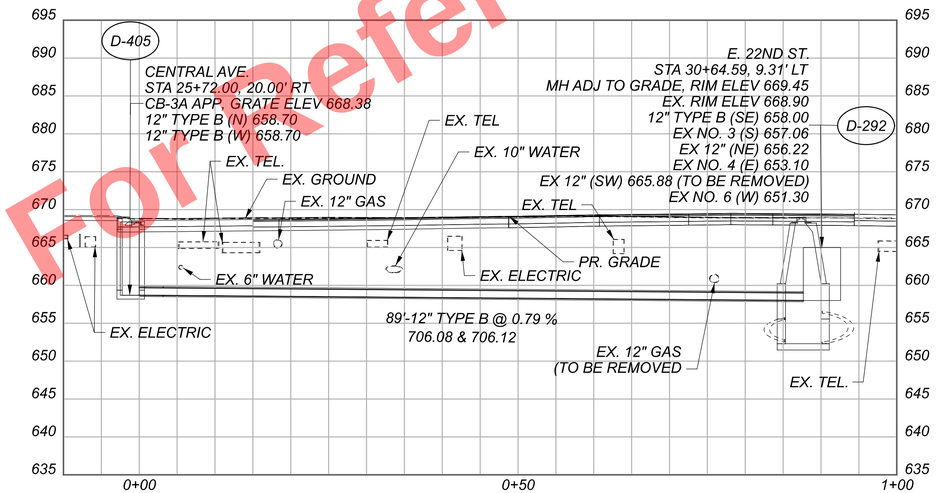

CROSS REFERENCES	
STRUCTURE	SHEET
D-405	1109
D-406	1109
D-463	1097
D-464	1096
D-780	1098
D-900	1109
D-901	1109
D-902	1109
D-906	1109

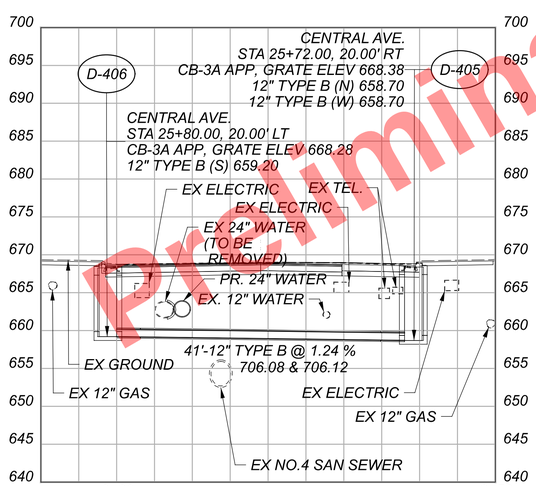

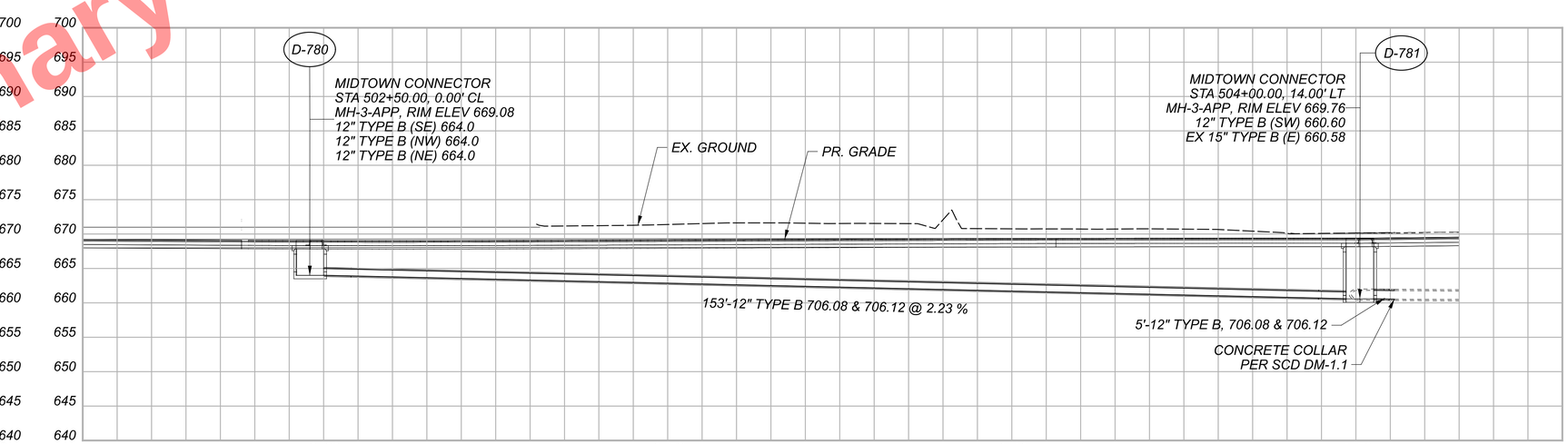

Preliminary Plans - For Reference Only

STORM SEWER PROFILES
RAMP B6A & E. 22ND AVE. & MIDTOWN CONNECTOR

DESIGN AGENCY
Michael Baker INTERNATIONAL

DESIGNER BJT
REVIEWER KGJ 05/22/24
PROJECT ID 82382
SHEET 1158 TOTAL 2696

CUY-90-16.28 (CCG3A)

MODEL: D-753 to D-754 - Profile [Sheet] PAPERSIZE: 34x22 (in.) DATE: 5/23/2025 TIME: 10:20:36 AM USER: Julie.Ross
pw:\\mb-us-pw.bentley.com\mb-us-pw-03\Documents\Cleveland_OH\01_Projects\0007\District2\82382\400-Engineering\Drainage\Sheets\82382_DF104.dgn

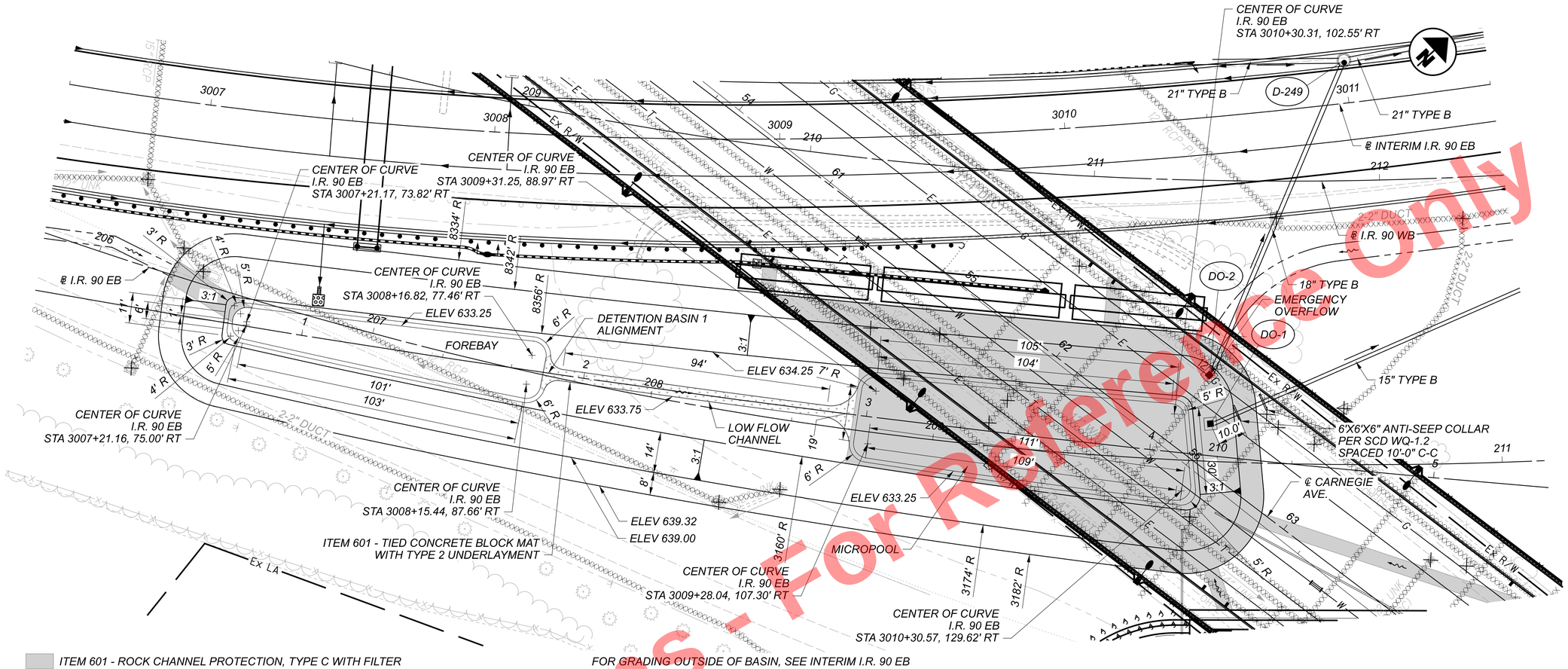

ITEM 601 - ROCK CHANNEL PROTECTION, TYPE C WITH FILTER

ITEM 601 - TIED CONCRETE BLOCK MAT WITH TYPE 2 UNDERLAYMENT

NOTE:
VEGETATE BASIN LIMITS NOT ALREADY COVERED BY RCP OR TIED CONCRETE BLOCK MAT WITH ITEM 670 - SLOPE EROSION PROTECTION

FOR GRADING OUTSIDE OF BASIN, SEE INTERIM I.R. 90 EB CROSS SECTIONS, SHEETS 743 TO 746

FOR STORM SEWER PROFILES, SEE SHEETS 1121 TO 1158

FOR OUTLET STRUCTURE DETAILS, SEE SHEET 1161

DO-2 — STA. 3010+43.00, 90.00' RT
DRAINAGE STRUCTURE, MISC.:
FLOW RESTRICTOR OUTLET,
GRATE ELEV 638.25
18" (NW) 635.25

DO-1 — STA. 3010+42.00, 107.00' RT
DRAINAGE STRUCTURE, MISC.:
FLOW RESTRICTOR OUTLET,
GRATE ELEV 636.25
15" ORIFICE 634.25
15" (NE) 633.25

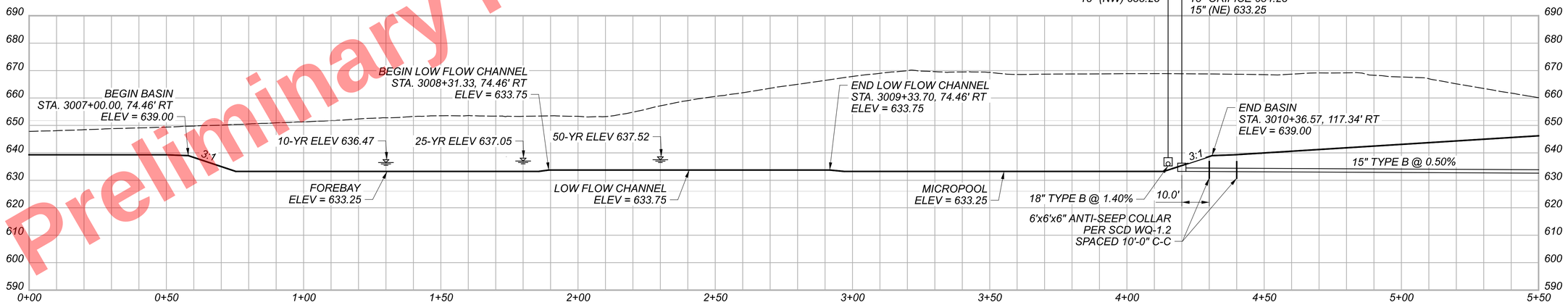

Preliminary Plans - For Reference Only

HORIZONTAL SCALE IN FEET
0 10 20 40

FLOW RESTRICTION DETENTION BASIN 1
I.R. 90

DESIGN AGENCY
Michael Baker INTERNATIONAL

DESIGNER JAR
REVIEWER KGJ 05/22/24
PROJECT ID 82382
SHEET 1159 TOTAL 2696

CUY-90-16.28 (CCG3A)

MODEL: Detention 1-Plan [Sheet] PAPERSIZE: 34x22 (In.) DATE: 6/13/2025 TIME: 10:05:47 AM USER: Kathy.Johnson
pw:\\mb-us-pw.bentley.com:mb-us-pw-03\Documents\Cleveland_OH_Oil_Projects\ODOT\District 12\82382\400-Engineering\Engineering\Drainage\Sheets\82382_DD1200.dgn

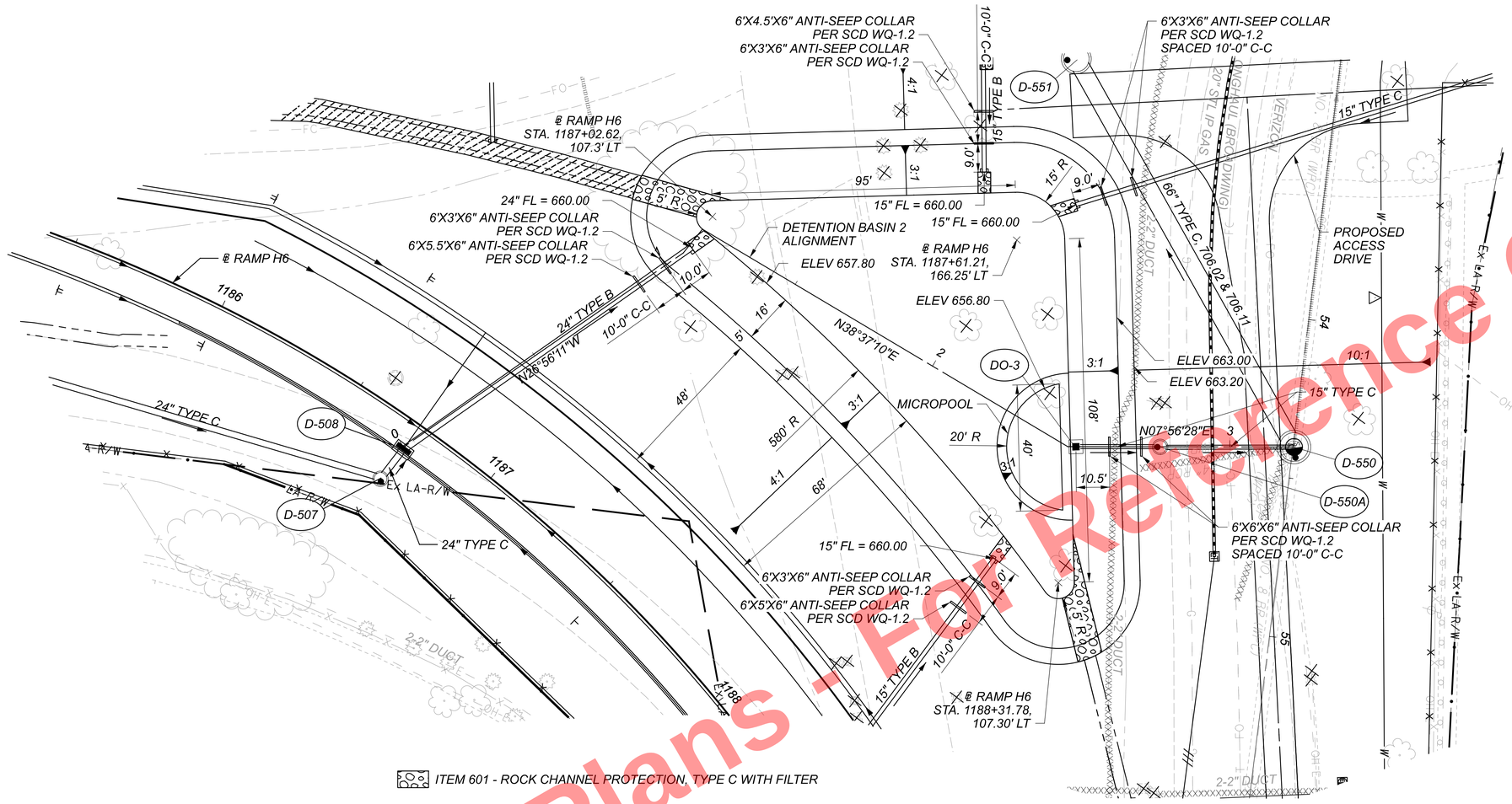

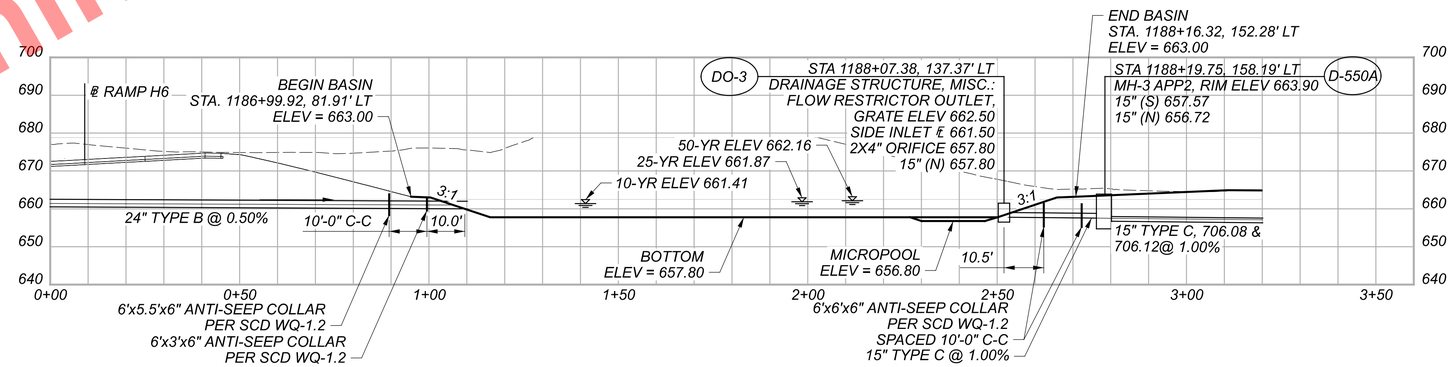

Preliminary Plans - For Reference Only

HORIZONTAL SCALE IN FEET
0 10 20 40

FLOW RESTRICTION DETENTION BASIN 2
RAMP H5/H6

DESIGN AGENCY
Michael Baker INTERNATIONAL

DESIGNER JAR
REVIEWER KGJ 05/22/24
PROJECT ID 82382
SHEET 1160 TOTAL 2696

CUY-90-16.28 (CCG3A)

MODEL: Detention 2 [Sheet] PAPERSIZE: 34x22 (in) DATE: 6/9/2025 TIME: 2:36:16 PM USER: Julie.Ross
pw:\\mb-us-pw.bentley.com:mb-us-pw-03\Documents\Cleveland_OH\OL_Projects\ODOT\District#12\82382\400-Engineering\Drainage\Sheets\82382_DD1300.dgn

611 - DRAINAGE STRUCTURE, MISC.: FLOW RESTRICTOR OUTLET.

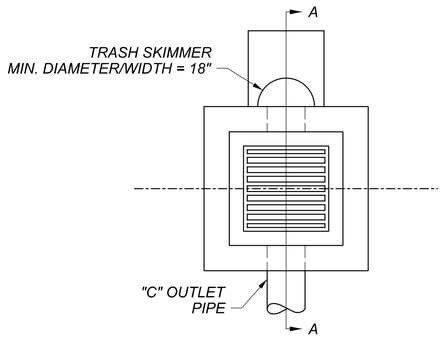

PLAN VIEW
NTS

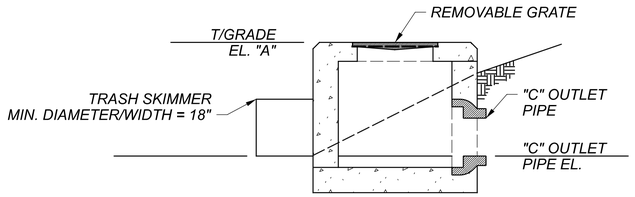

SECTION A-A
NTS

LOCATION AND ELEVATION:
THE LOCATION AND THE ELEVATION ARE AT THE TOP CENTER OF THE GRATE. THE ORIFICES SHOULD BE PLACED AT THE ELEVATIONS SHOWN IN THE TABLE.

BASIN MATERIALS:
THE BASIN DIMENSIONS, MATERIALS, AND GRATE ARE TO BE PER CB-2-3, EXCEPT AS DETAILED HEREIN. SIDE INLET WINDOWS SHALL ONLY BE USED FOR DO-3.

TRASH SKIMMER:
USE TRASH SKIMMER SCREENS TO PROTECT THE ORIFICES. IT MUST EXTEND FROM THE BOTTOM OF THE DETENTION BASIN TO A MINIMUM OF 3" ABOVE THE TOP OF THE ORIFICE(S). THE TRASH SKIMMER SHALL BE A STAINLESS STEEL OR GALVANIZED STEEL PER CMS 711.02. MAXIMUM PERFORMATION SIZE SHALL BE 2 INCHES. SECURELY FASTEN TRASH SKIMMER TO THE BASIN USING HARDWARE GALVANIZED PER CMS 711.02.

PAYMENT:
ALL MATERIALS AND LABOR, INCLUDING EXCAVATION AND BACKFILL, SHALL BE PAID FOR AT THE CONTRACT PRICE FOR ITEM 611 - DRAINAGE STRUCTURE, MISC.: FLOW RESTRICTOR OUTLET.

STRUCTURE I.D.	A GRATE ELEVATION	B ORIFICE HOLES AND ELEVATION	C OUTLET PIPE AND ELEVATION	D SIDE INLET ELEVATION
DO-1	636.25	1 - 15" HOLE 634.25	15" CONDUIT 633.25	N/A
DO-2	638.25	N/A	18" CONDUIT 635.25	N/A
DO-3	662.50	2 - 4" HOLES 657.80	15" CONDUIT 657.80	661.50

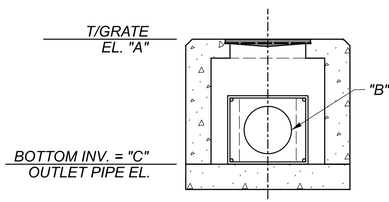

ORIFICE DETAIL - DO-1
NTS

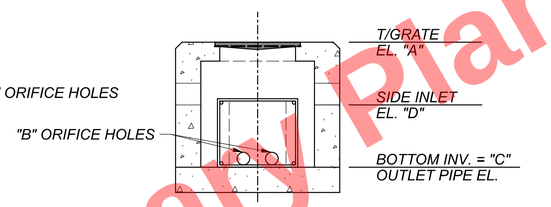

ORIFICE DETAIL - DO-3
NTS

Preliminary Plans - For Reference Only

FLOW RESTRICTION DETENTION BASIN DETAILS

DESIGN AGENCY
Michael Baker INTERNATIONAL

DESIGNER
JAR

REVIEWER
KGJ 05/22/24

PROJECT ID
82382

SHEET 1161 | TOTAL 2696

CUY-90-16.28 (CCG3A)

MODEL: Outlet and Collars (Sheet) PAPERSIZE: 34x22 (In) DATE: 3/27/2025 TIME: 10:44:51 PM USER: Julie.Ross
pw:\\mb-us-pw.bentley.com:mb-us-pw-03\Documents\Cleveland_0H10_Projects\ODOT\District2\82382\400-Engineering\Drainage\Sheets\82382_DD120.dgn

Preliminary Plans - For Reference Only

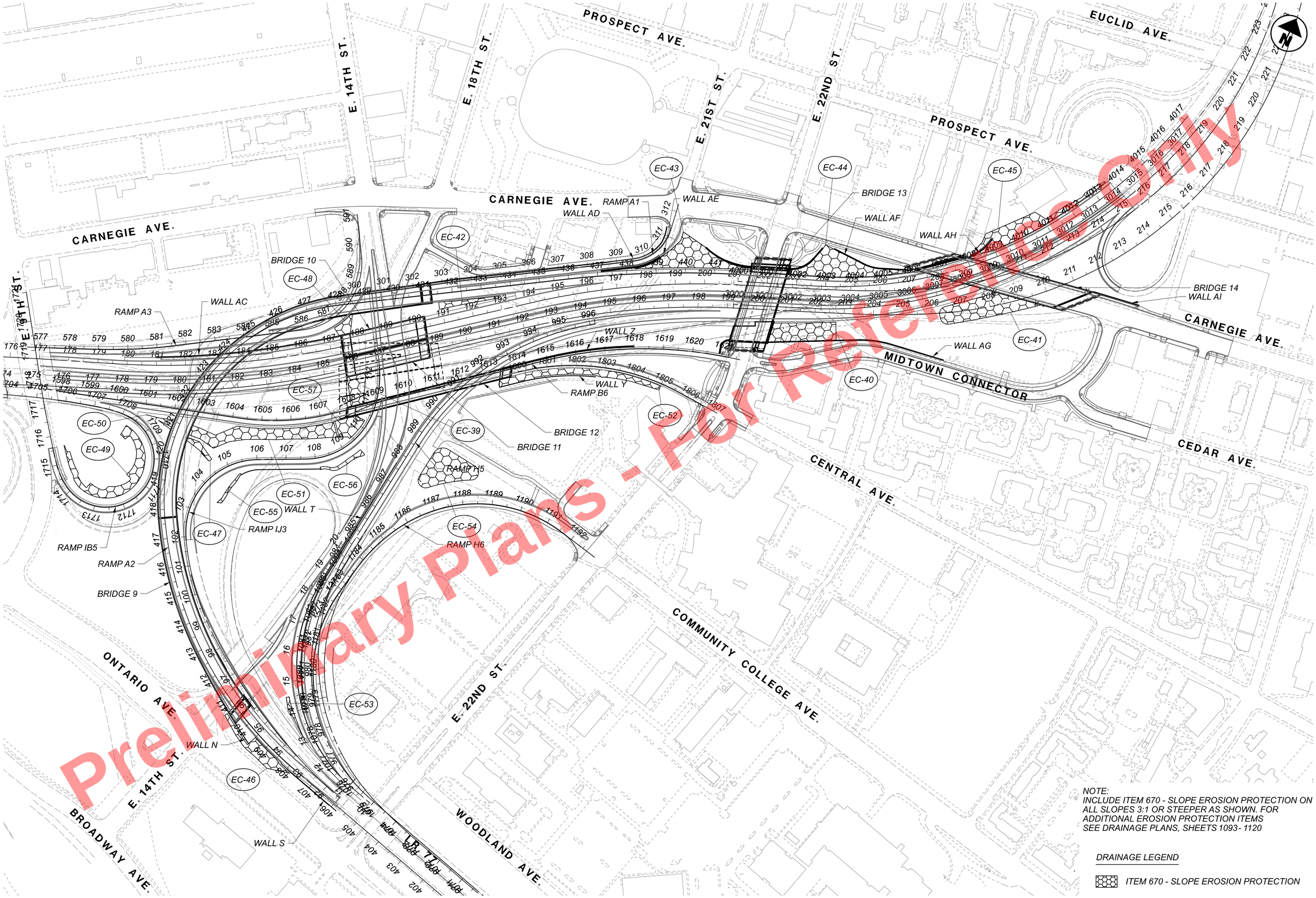

NOTE:
INCLUDE ITEM 670 - SLOPE EROSION PROTECTION ON ALL SLOPES 3:1 OR STEEPER AS SHOWN. FOR ADDITIONAL EROSION PROTECTION ITEMS SEE DRAINAGE PLANS, SHEETS 1093- 1120

DRAINAGE LEGEND

ITEM 670 - SLOPE EROSION PROTECTION

HORIZONTAL SCALE IN FEET
0 75 150 300

DRAINAGE DETAILS
SLOPE EROSION PROTECTION

DESIGN AGENCY
Michael Baker INTERNATIONAL

DESIGNER JAR
REVIEWER KGJ 05/22/24
PROJECT ID 82382
SHEET 1162 TOTAL 2696

CUY-90-16.28 (CCG3A)

MODEL: Sheet PAPERSIZE: 34x22 (in.) DATE: 3/27/2025 TIME: 10:45:00 PM USER: Julie.Ross
pw:\\vmb-us-pw.bentley.com:vmb-us-pw-03\Documents\Cleveland_OH\01_Projects\ODOT\District 12\82382\400-Engineering\Drainage\Sheets\82382_D0010.dgn

ITEM 638 - 30" STEEL PIPE ENCASEMENT, OPEN CUT, AS PER PLAN

FURNISH AND INSTALL A 30" STEEL CASING PIPE WITH A 15" INTERIOR CONDUIT ACCORDING TO ITEMS 638 AND 611 THROUGH AND EXTENDING 10' BEYOND MSE WALL SELECT GRANULAR FILL.

STEEL CASING PIPE SHALL BE ACCORDING TO 748.06. CONDUIT MATERIAL MUST BE REINFORCED CONCRETE PIPE PER 706.02. PROVIDE PREMIUM JOINTS PER 706.11 AND WRAP THE PIPE JOINTS IN GEOTEXTILE FABRIC, TYPE A, PER 712.09.

PAYMENT FOR REINFORCED CONCRETE PIPE, PREMIUM JOINTS, GEOTEXTILE FABRIC, STEEL CASING, HARDWOOD BLOCKING OR STAINLESS STEEL CHOCKS, BULKHEAD, LDCC FILL, EXCAVATION AND ALL LABOR, TOOLS, EQUIPMENT AND MATERIALS NECESSARY SHALL BE INCLUDED IN THE UNIT PRICE BID FOR ITEM 638 - 30" STEEL PIPE ENCASMENT, OPEN CUT, AS PER PLAN.

ITEM 611 – MANHOLE, AS PER PLAN 2
ITEM 611 – CATCH BASIN, AS PER PLAN 2
ITEM 611 – INLET, NO. 3 FOR SINGLE SLOPE BARRIER, TYPE D, AS PER PLAN 2

CONSTRUCT MANHOLES, CATCH BASINS AND INLETS AS PER PLAN 2 PER CMS 611 AND APPLICABLE STANDARD CONSTRUCTION DRAWINGS EXCEPT THAT A SUMP AND TRAP SHALL BE PROVIDED AS SHOWN HEREIN. TRAPS SHALL BE CONSTRUCTED OF TWO PREFABRICATED 45 DEGREE BENDS OR TWO PAIRS OF 22.5 DEGREE CUT CONDUIT TO FORM A 45 DEGREE BEND. IF RIGID PIPE IS USED, THERE SHALL BE SUFFICIENT LENGTH OF CONDUIT BETWEEN THE BENDS TO ENSURE THAT THE CROWN OF THE OUTLET PIPE AT THE STRUCTURE IS AT LEAST 2 INCHES LOWER THAN THE FLOWLINE ELEVATION OF THE OUTLET PIPE AT ITS PLAN INDICATED ELEVATION. INSTALL MASONRY COLLARS AT EACH BEND PER SCD DM-1.1.

PAYMENT FOR THE ABOVE WORK SHALL BE MADE AT THE UNIT PRICE BID FOR ITEM 611 MANHOLES, CATCH BASINS, AND INLETS AS PER PLAN 2, EACH, AND SHALL INCLUDE ALL MATERIALS, LABOR, EQUIPMENT, TOOLS, AND INCIDENTALS NECESSARY TO COMPLETE THE WORK DESCRIBED ABOVE.

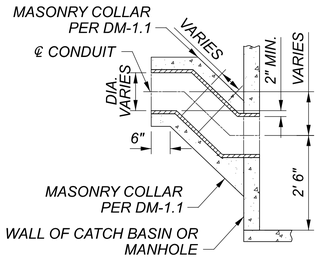

ITEM 611 - MANHOLE RECONSTRUCTED TO GRADE, AS PER PLAN

RECONSTRUCT MANHOLE PER CMS 611 EXCEPT THAT THE COVER SHALL BE ONE THAT CAN BE AND IS BOLTED CLOSED PER THE MANUFACTURER'S INSTRUCTIONS.

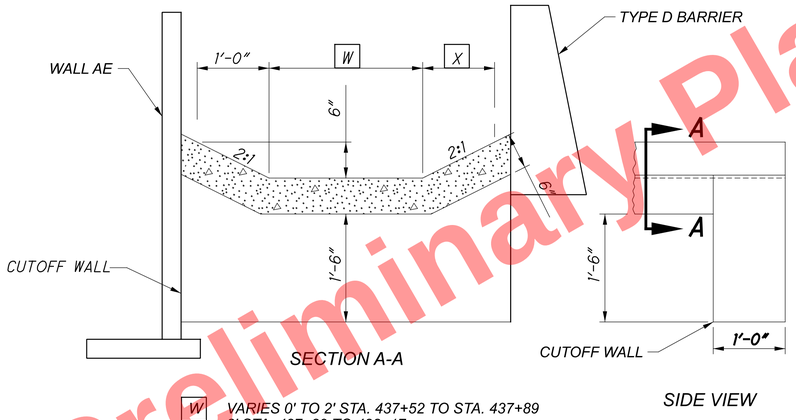

W VARIES 0' TO 2' STA. 437+52 TO STA. 437+89
2' STA. 437+89 TO 438+17

X 1' STA. 437+52 TO STA. 437+89
VARIES 1' TO 2.8' STA. 437+89 TO STA. 438+17

ITEM 601 - PAVED GUTTER, TYPE 1-2, AS PER PLAN

CONSTRUCT PAVED GUTTER PER SCD DM-2.1 EXCEPT THAT THE DIMENSIONS SHALL FOLLOW THE DETAIL ABOVE.

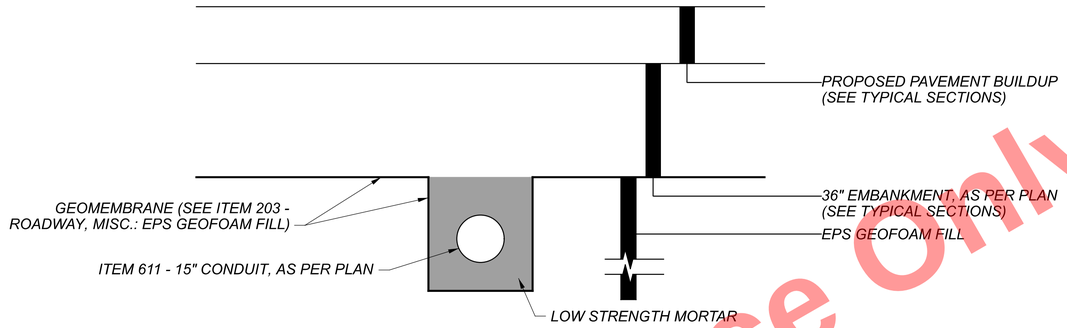

ITEM 611 - 15" CONDUIT, AS PER PLAN

ITEM 611 - 15" CONDUIT, AS PER PLAN

CONSTRUCT CONDUIT ACCORDING TO CMS 611 THROUGH THE LIMITS OF AND EXTENDING 10' BEYOND THE EPS GEOFOAM FILL EXCEPT THAT THE CONDUIT MATERIAL MUST BE REINFORCED CONCRETE PIPE PER 706.02 WITH PREMIUM JOINTS PER 706.11.

LINE THE TRENCH THROUGH THE EPS GEOFOAM FILL WITH GEOMEMBRANCE PER ITEM 203 - ROADWAY, MISC.: EPS GEOFOAM FILL. THE BEDDING AND BACKFILL SHALL BE LOW STRENGTH MORTAR PER 613 PER THE DETAIL ON THIS SHEET, UP TO THE TOP OF THE EPS GEOFOAM FILL.

PAYMENT FOR THE PIPE, PREMIUM JOINTS, LOW STRENGTH MORTAR, EXCAVATION AND ALL LABOR, TOOLS, EQUIPMENT AND MATERIALS NECESSARY SHALL BE INCLUDED IN THE UNIT PRICE BID FOR ITEM 611 - 15" CONDUIT, AS PER PLAN. GEOMEMBRANE AND EPS GEOFOAM FILL SHALL BE PAID FOR UNDER ITEM 203 - ROADWAY, MISC.: EPS GEOFOAM FILL.

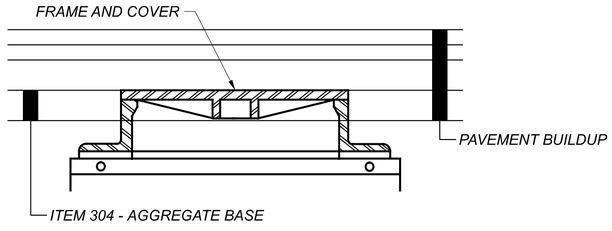

ITEM 611 - MANHOLE, NO. 3, AS PER PLAN 3 & ITEM 611 - MANHOLE RECONSTRUCTED TO GRADE, AS PER PLAN 2

ITEM 611 - MANHOLE, NO. 3, AS PER PLAN 3
ITEM 611 - MANHOLE RECONSTRUCTED TO GRADE, AS PER PLAN 2

CONSTRUCT/RECONSTRUCT MANHOLE PER CMS 611 EXCEPT THAT THE FRAME AND COVER SHALL BE BURIED BENEATH THE PAVEMENT LAYERS WITH THE TOP OF THE FRAME AND COVER FLUSH WITH THE TOP OF THE ITEM 304 AGGREGATE BASE AND THE COVER SHALL BE SOLID.

Preliminary Plans - For Reference Only

DRAINAGE DETAILS
ITEM 601, 611 & 638 AS PER PLANS

DESIGN AGENCY
Michael Baker INTERNATIONAL

DESIGNER JAR
REVIEWER KGJ 05/22/24
PROJECT ID 82382
SHEET 1163 TOTAL 2696

CUY-90-16.28 (CCG3A)

MODEL: Sheet PAPERSIZE: 34x22 (in.) DATE: 5/16/2025 TIME: 1:53:37 PM USER: Kathy.Johnson
pw:\\mb-us-pw.bentley.com:mb-us-pw-03\Documents\Cleveland_OH\DL_Projects\ODOT\District2\82382\400-Engineering\Drainage\Sheets\82382_DD0007.dgn

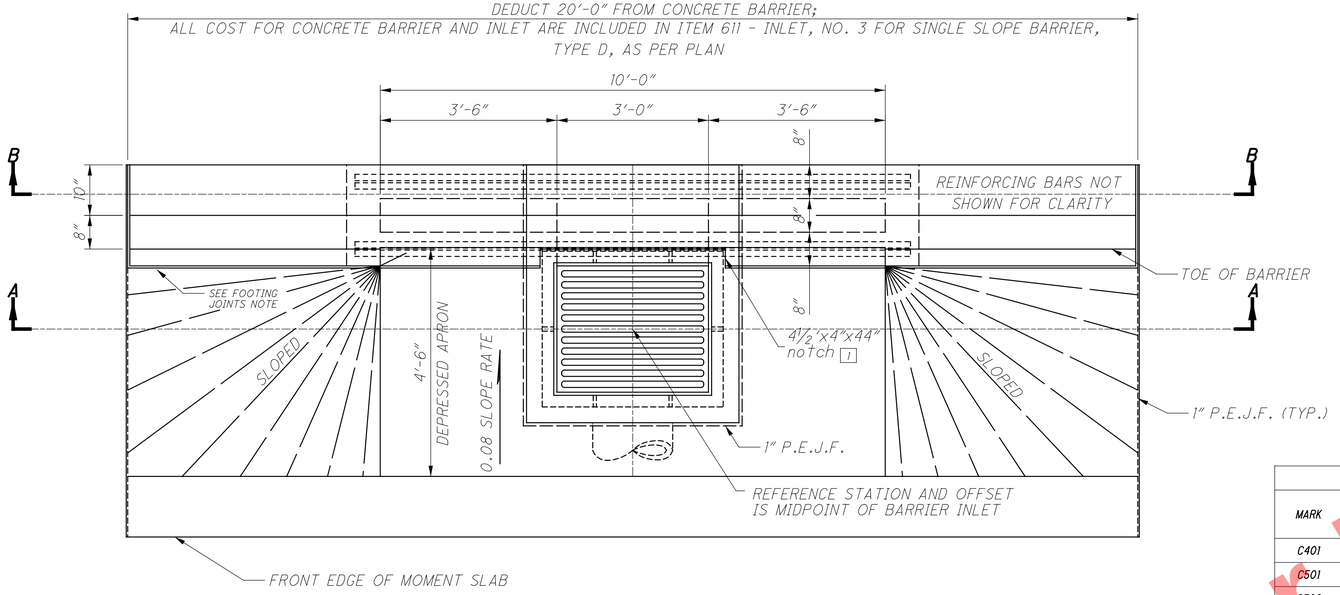

PLAN VIEW

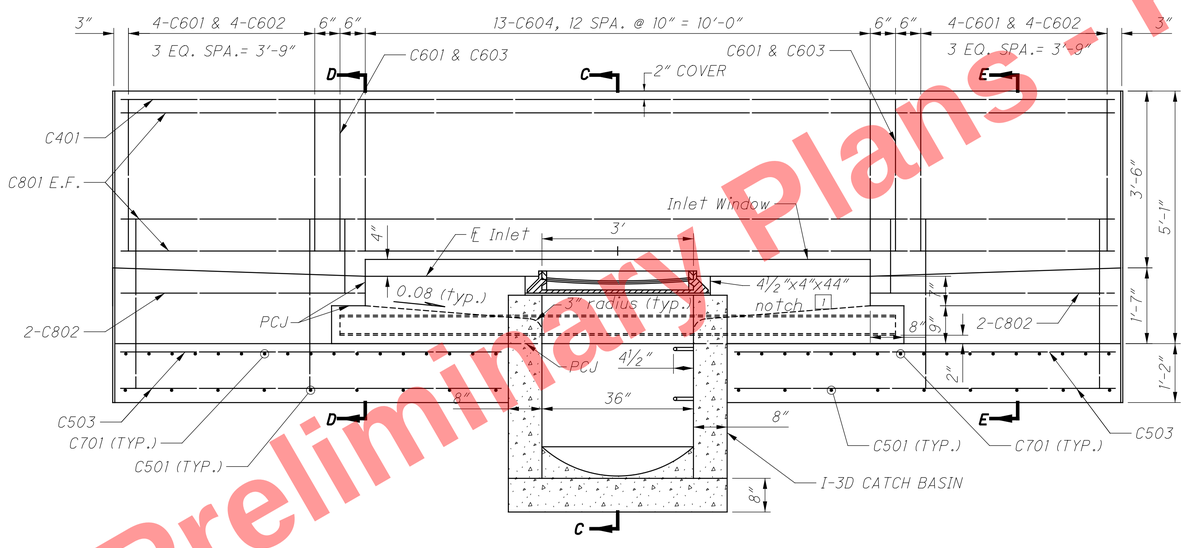

SECTION B-B

MOMENT SLAB

MARK	MAT'RL TYPE	NUMBER TOTAL	LENGTH	WEIGHT (LBS.)	TYPE	DIMENSIONS A	B	C	D	E	R	SER INC.
C401	ECSR	1	19'-6"	13	STR.							
C501	ECSR	18	7'-4"	138	STR.							
C502	ECSR	6	19'-6"	122	STR.							
C503	ECSR	20	7'-5"	155	STR.							
C601	ECSR	10	7'-1"	106	23	0'-6"	3'-3"	3'-3"			0'-2"	
C602	ECSR	8	7'-3"	87	37	0'-9 ¾"						
C603	ECSR	2	6'-7"	20	37	0'-6"						
C604	ECSR	13	6'-9"	132	23	0'-6"	3'-1"	3'-1"			0'-2"	
C701	ECSR	34	8'-0"	556	16	7'-2"						
C702	ECSR	14	1'-11"	55	STR.							
C801	ECSR	12	19'-6"	625	STR.							
C802	ECSR	4	4'-8"	50	STR.							
			SUBTOTAL	2059	LBS.							

BENDING DIAGRAMS

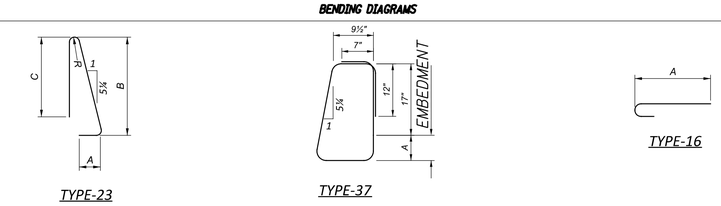

LEGENDS

* - DIMENSION TO CENTER OF P.E.J.F

NOTES

1. SEE DRAINAGE STD. DWG. I-3D FOR ADDITIONAL NOTES AND DETAILS

Preliminary Plans - For Reference Only

DRAINAGE DETAILS
ITEM 611 - INLET, NO. 3 FOR SINGLE SLOPE BARRIER, TYPE D, AS PER PLAN
SHEET 1 OF 2

DESIGN AGENCY
Michael Baker INTERNATIONAL

DESIGNER JAR
REVIEWER KGJ 05/22/24
PROJECT ID 82382
SHEET 1164 TOTAL 2696

CUY-90-16.28 (CCG3A)

MODEL: SHEET-1 PAPERSIZE: 34x22 (in.) DATE: 3/27/2025 TIME: 10:45:14 PM USER: Julie.Ross
pw:\\mb-us-pw.bentley.com:mb-us-pw-03\Documents\Cleveland_OH\01_Projects\ODOT\District12\82382\400-Engineering\Drainage\Sheets\82382_DD0001.dgn

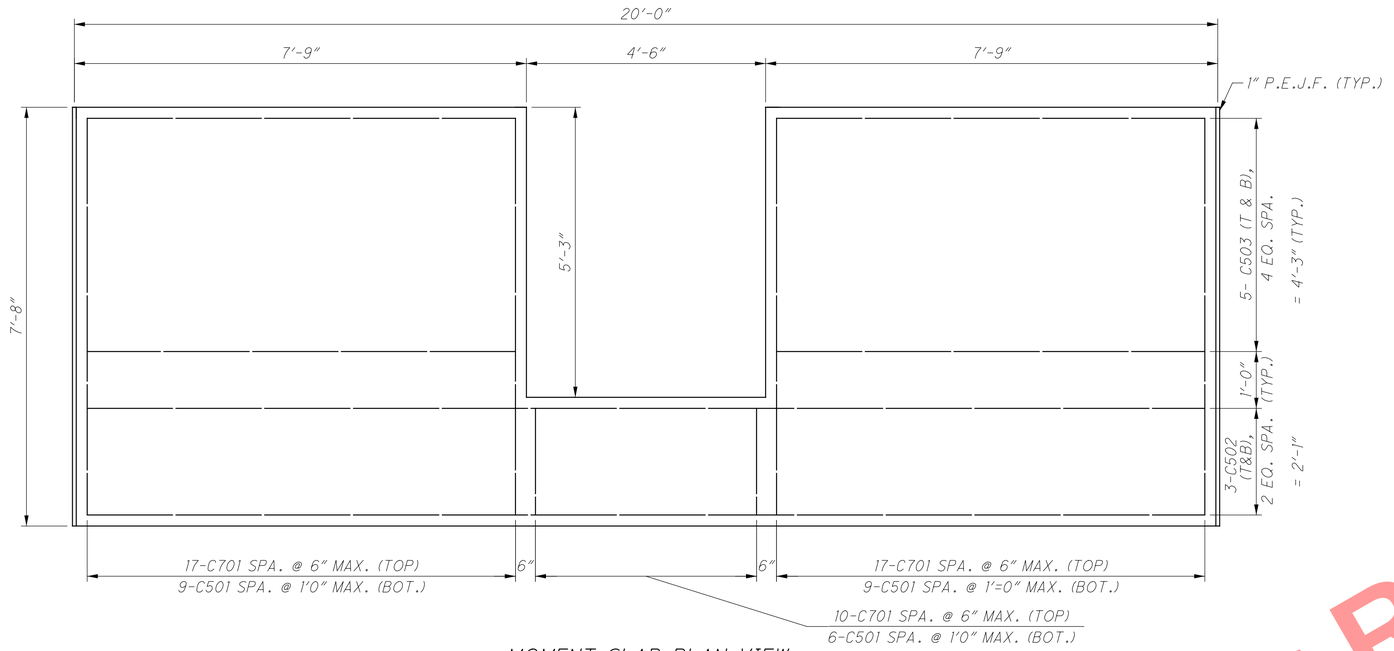

MOMENT SLAB PLAN VIEW

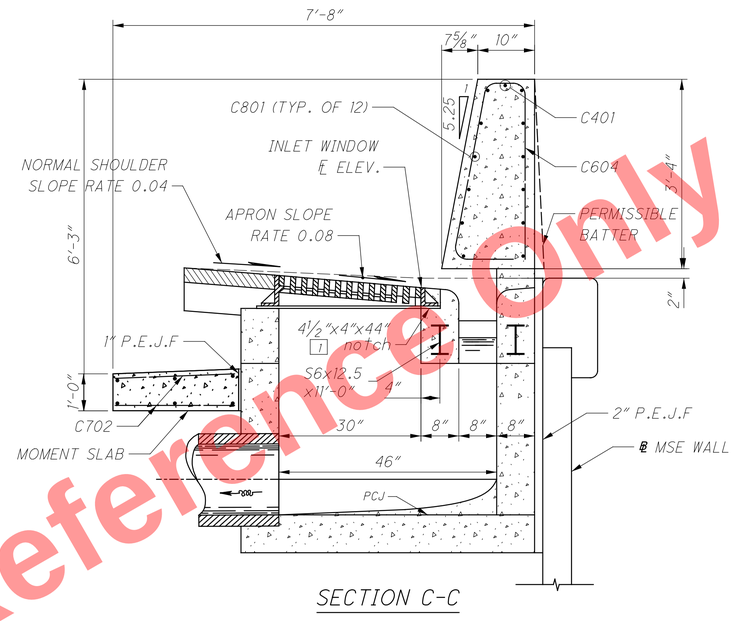

SECTION C-C

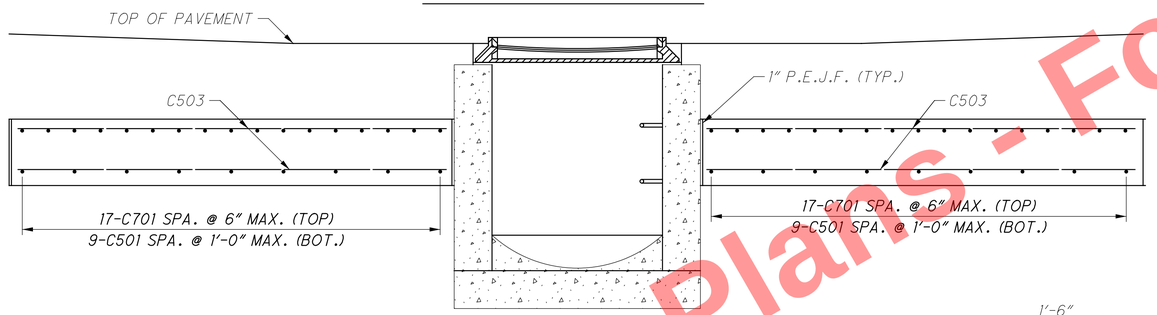

SECTION A-A

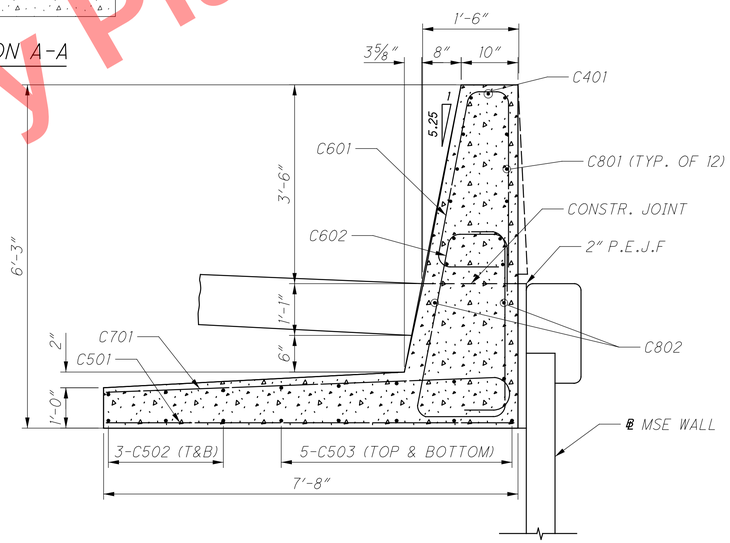

SECTION E-E

See Sheet 1

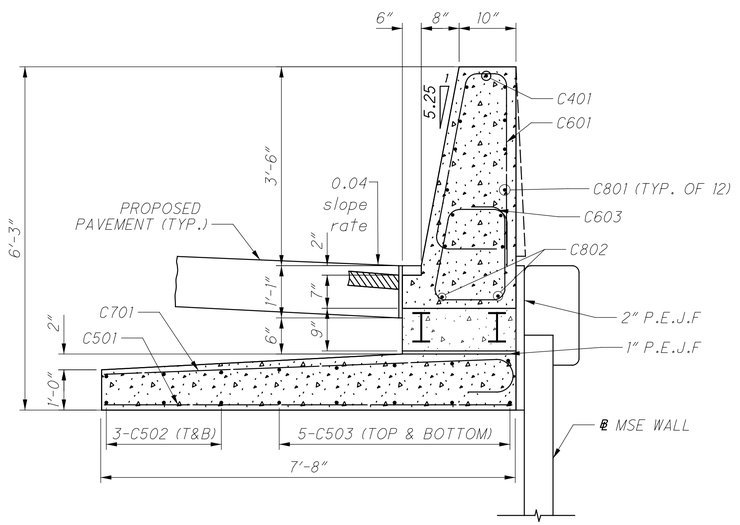

SECTION D-D

See Sheet 1

Preliminary Plans - For Reference Only

ITEM 611 - INLET, NO. 3 FOR SINGLE SLOPE BARRIER, TYPE D, AS PER PLAN

DRAINAGE DETAILS

SHEET 2 OF 2

DESIGN AGENCY
Michael Baker INTERNATIONAL

DESIGNER JAR

REVIEWER KGJ 05/22/24

PROJECT ID 82382

SHEET 1165 TOTAL 2696

CUY-90-16.28 (CCG3A)

MODEL: SHEET-2 PAPERSIZE: 34x22 (In.) DATE: 3/27/2025 TIME: 10:45:15 PM USER: Julie.Ross
pw:\\vmb-us-pw.bentley.com:vmb-us-pw-03\Documents\Cleveland_OH\01_Projects\ODOT\District2\82382\400-Engineering\Drainage\Sheets\82382_D0001.dgn

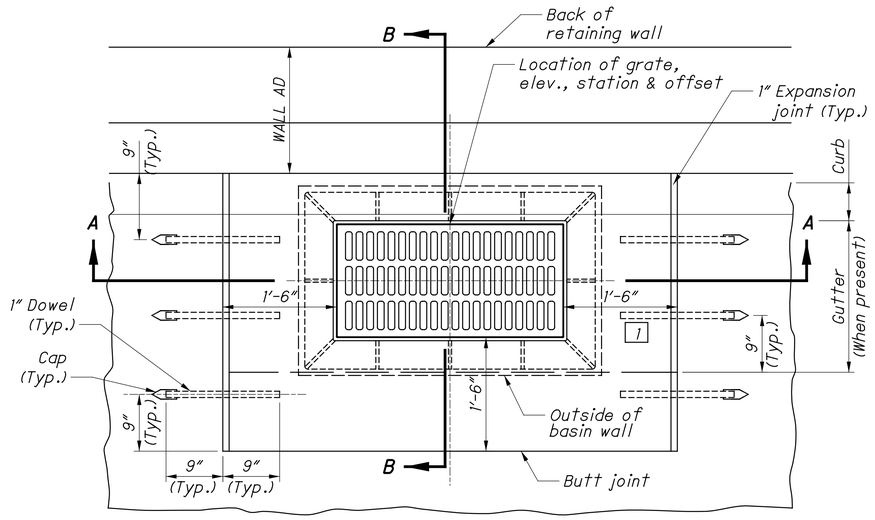

CATCH BASIN AND APRON PLAN

1 Include dowels where concrete pavement or gutter are present

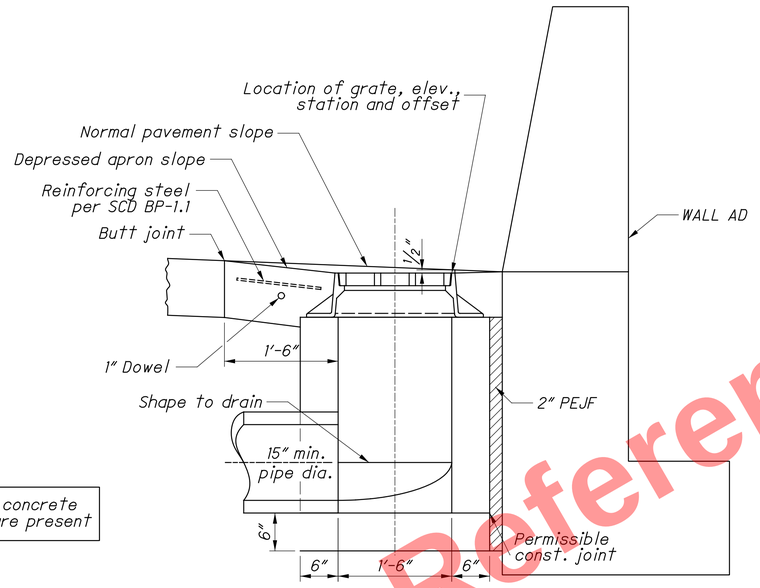

SECTION B-B
W/O GUTTER

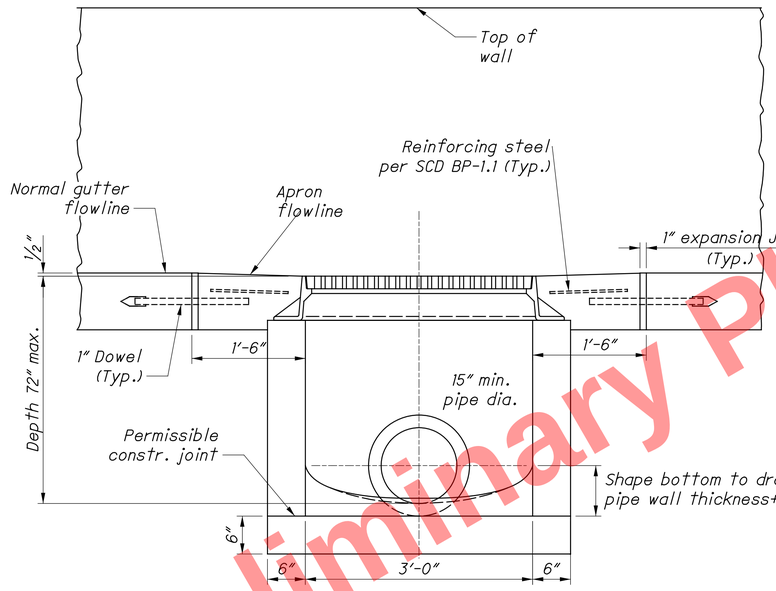

SECTION A-A

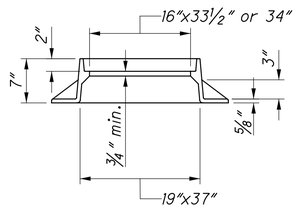

FRAME SECTION

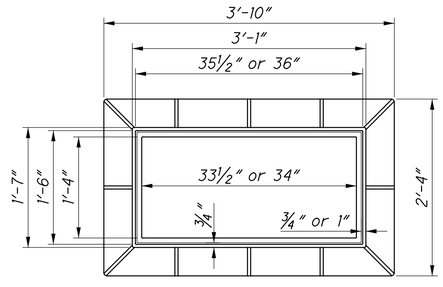

FRAME PLAN

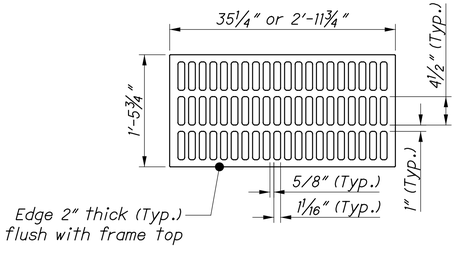

GRATE

NOTES

GRATE AND FRAME: *Provide a design essentially the same and equally as strong as the one shown (see construction information table), or meet the requirements of CMS 711.14. Provide grate openings and dimensions as shown here unless otherwise shown in the plans. When a "V" grate is specified provide Neenah No. R-3067-V or EJ No. 7030 Type M4 or approved equals.*

Cast the following text into the top of the grate:

"DUMP NO WASTE" *and* ***"DRAINS TO WATERWAYS"***

Print text in bold, capital letters at least ½" high. "WATERWAYS" may be substituted with "STREAM", "RIVER", "LAKE", etc. Actual placement and logo may vary by manufacturer.

BEARING AREAS: *Fit and finish the frame and grate to provide a firm and even seat for all portions of the grate in the frame without rocking. Fit, match and mark frame and grate before delivery to the project.*

WALLS: *Provide precast walls at least 6" thick with sufficient reinforcing to permit shipping and handling without damage. Construct cast-in-place walls with a nominal thickness of 8". Maintain internal basin dimensions.*

CONCRETE: *Meet the requirements of CMS 706.13 for precast concrete and mark with the catch basin number. Use 4000 psi concrete for cast-in-place basins.*

MINIMUM DEPTH: *The minimum depth is the outside diameter (O.D.) of the outlet pipe plus 15".*

OPENINGS: *Ensure pipe openings are the O.D. of the pipe being supplied plus 2" when fabricated or field cut. Fill any voids per C&MS 611.*

DOWELS: *Furnish 1"x18" dowels for concrete pavement and gutters. See SCD BP-2.2 for dowel details.*

BLOCKOUT APRONS: *Blockout curb and gutter (when present) for catch basin. In PCC pavement provide a 4000 psi compressive strength concrete apron with dowels. The cost is included as part of the pavement or gutter with no deduction in pavement, curb or gutter quantities because of the castings. In asphalt pavement provide a 4000 psi compressive strength concrete apron with dowels into gutter (when present). No dowels are required between the apron and asphalt pavement. The cost is included in the catch basin bid price. Include 1" expansion joints in the curb for all curb types with no deduction made in curb quantities.*

PAYMENT: *All materials and labor, including excavation and backfilling, are paid for under* ***Item 611 - Catch Basin, No. 6, As Per Plan.***

CONSTRUCTION INFORMATION
Minimum weight of grate, 159 lbs.
Minimum weight of frame, 265 lbs.

Preliminary Plans - For Reference Only

DRAINAGE DETAILS
ITEM 611 - CATCH BASIN, NO. 6, AS PER PLAN
SHEET 1 OF 1

DESIGN AGENCY
Michael Baker INTERNATIONAL

DESIGNER JAR
REVIEWER KGJ 05/22/24
PROJECT ID 82382
SHEET 1166 TOTAL 2696

CUY-90-16.28 (CCG3A)

MODEL: SHEET-1 PAPERSIZE: 34x22 (in.) DATE: 3/27/2025 TIME: 10:45:20 PM USER: Julie.Ross
pw:\\mb-us-pw.bentley.com:mb-us-pw-03\Documents\Cleveland_OH\OI_Projects\ODOT\District2\82382\400-Engineering\Drainage\Sheets\82382_DD0002.dgn

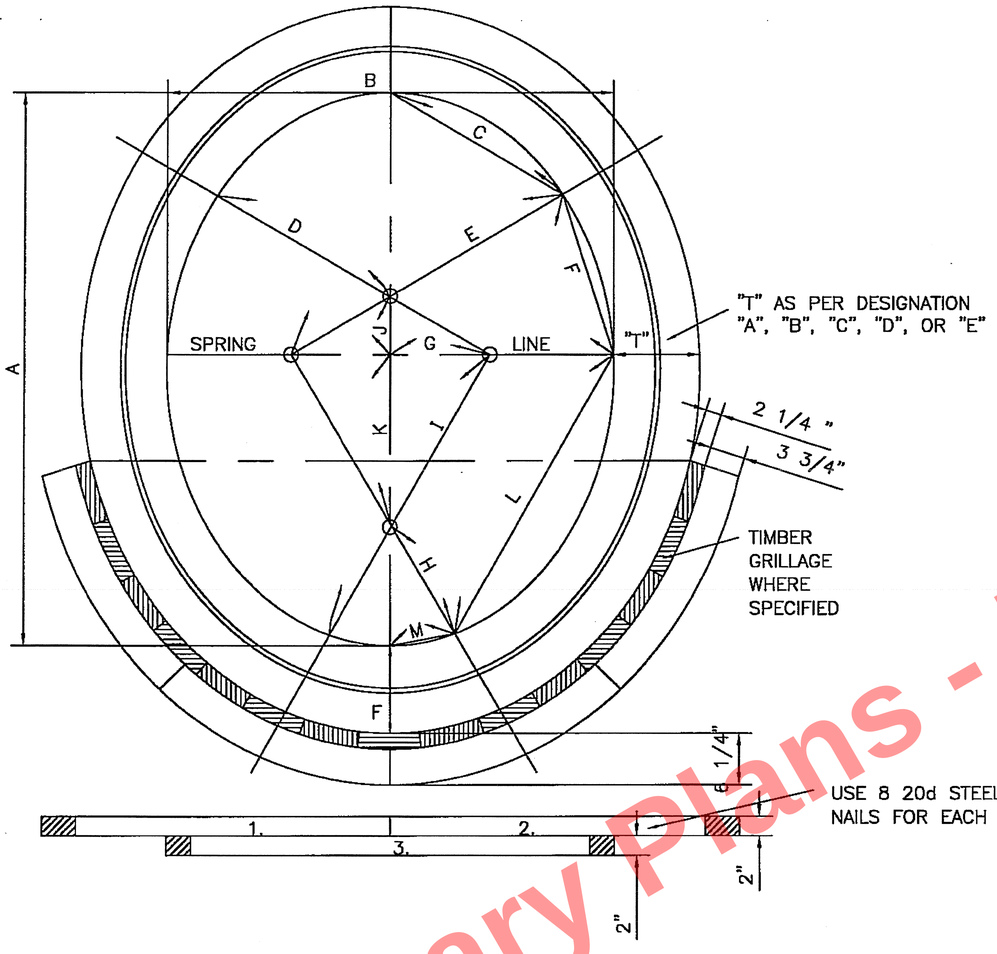

EGG SHAPED SEWERS													
NO.	H FEET	W FEET	S FEET	AREA SQ. FT.	NO.	H FEET	W FEET	S FEET	AREA SQ. FT.	NO.	H FEET	W FEET	S FEET	AREA SQ. FT.
2	2.25	1.94	1.28	3.41	8	5.12	4.04	2.71	16.00	15	7.79	6.14	4.12	36.99
3	2.75	2.23	1.64	4.75	9	5.54	4.37	2.93	18.72	16	8.13	6.41	4.30	40.32
4	3.23	2.54	1.70	6.35	10	5.94	4.69	3.14	21.54	17	8.47	6.68	4.47	43.71
5	3.74	2.95	1.98	8.55	11	6.33	4.99	3.35	24.46	18	8.79	6.94	4.65	47.17
6	4.23	3.34	2.23	10.90	12	6.71	5.29	3.55	27.47	19	9.12	7.19	4.82	50.70
7	4.69	3.70	2.48	13.39	13	7.08	5.58	3.74	30.57	20	9.43	7.44	4.98	54.29
					14	7.44	5.87	3.93	33.74					

TYPES OF EGG SHAPED SEWERS

"A"–1 RING OF BRICK ALL AROUND.
"B"–1 RING OF BRICK ALL AROUND & 1 RING EXTRA ON ARCH.
"C"–2 RINGS OF BRICK ALL AROUND .
"D"–2 RINGS OF BRICK ALL AROUND & 1 RING EXTRA ON ARCH.
"E"–3 RINGS OF BRICK ALL AROUND.

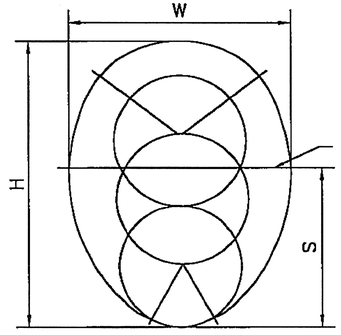

FOR RECORD ONLY

TABULAR DIMENSIONS FOR EGG SHAPED SEWERS NO.2 TO NO. 8													
NO.	A	B	C	D	E	F	G	H	I	J	K	L	M
2	2'–3"	1'–11 1/4"					6 3/8"	9"	1'–6"		6 3/8"		
3	2'–9"	2'–2 3/4"					10 5/8"	9"	2'–0"		10 5/8"		
4	3'–2 3/4"	2'–6 5/8"	1'–2 1/8"	1'–2 1/8"	1'–10 1/2"	11 1/2"	7 3/16"	8 1/8"	1'–10 1/2"	4 1/16"	12 3/16"	1'–10 1/2"	4 1/4"
5	3'–9"	2'–11 3/8"	1'–4 3/8"	1'–4 3/8"	2'–1 7/8"	1'–1 3/8"	8 3/16"	9 1/2"	2'–1 7/8"	4 3/4"	1'–2 1/4"	2'–1 7/8"	4 7/8"
6	4'–2 3/4"	3'–4"	1'–6 1/2'	1'–6 1/2'	2'–5 1/4"	1'–3 1/8"	9 1/4"	10 3/4"	2'–5 1/4"	5 3/8"	1'–4 1/8"	2'–5 1/4"	5 1/2"
7	4'–8 1/4"	3'–8 3/8"	1'–8 1/2"	1'–8 1/2"	2'–8 1/2"	1'–4 3/4"	10 5/16"	11 7/8"	2'–8 1/2"	5 15/16"	1'–5 13/16"	2'–8 1/2"	6 1/8"
8	5'–1 1/2"	4'–0 1/2"	1'–10 1/2"	1'–10 1/2"	2'–11 1/2"	1'–6 1/4"	11 1/4"	1'–1"	2'–11 1/2"	6 1/2"	1'–7 1/2"	2'–11 1/2"	6 3/4"

CITY OF CLEVELAND
DEPARTMENT OF PUBLIC SERVICE
DIVISION OF ENGINEERING & CONSTRUCTION
JOMARIE WASIK–DIRECTOR OF PUBLIC SERVICE
STANDARD CONSTRUCTION DRAWING
STANDARD PLAN FOR EGG SHAPED SEWERS
DIMENSIONS & AREAS
NOT TO SCALE

DRAWN BY: R. PLIODZINSKAS DATE: 4/8/08
SUBMITTED BY: W. McLAUGHLIN DATE: 4/8/08
APPROVED: DATE: 7-8-08
COMMISSIONER OF ENGINEERING & CONSTRUCTION

FILE NO. 73M | 24

DRAINAGE DETAILS
CITY OF CLEVELAND EGG SHAPED SEWERS

DESIGN AGENCY: Michael Baker INTERNATIONAL
DESIGNER: JAR
REVIEWER: KGJ 05/22/24
PROJECT ID: 82382
SHEET: 1167 TOTAL: 2696

CUY-90-16.28 (CCG3A)

MODEL: SHEET-1 PAPERSIZE: 34x22 (in.) DATE: 3/27/2025 TIME: 10:45:26 PM USER: JulieRoss
pw:\\mb-us-pw.bentley.com:mb-us-pw-03\Documents\Cleveland_OH\01_Projects\ODOT\District2\82382\400-Engineering\Drainage\Sheets\82382_DD0003.dgn

Preliminary Plans - For Reference Only

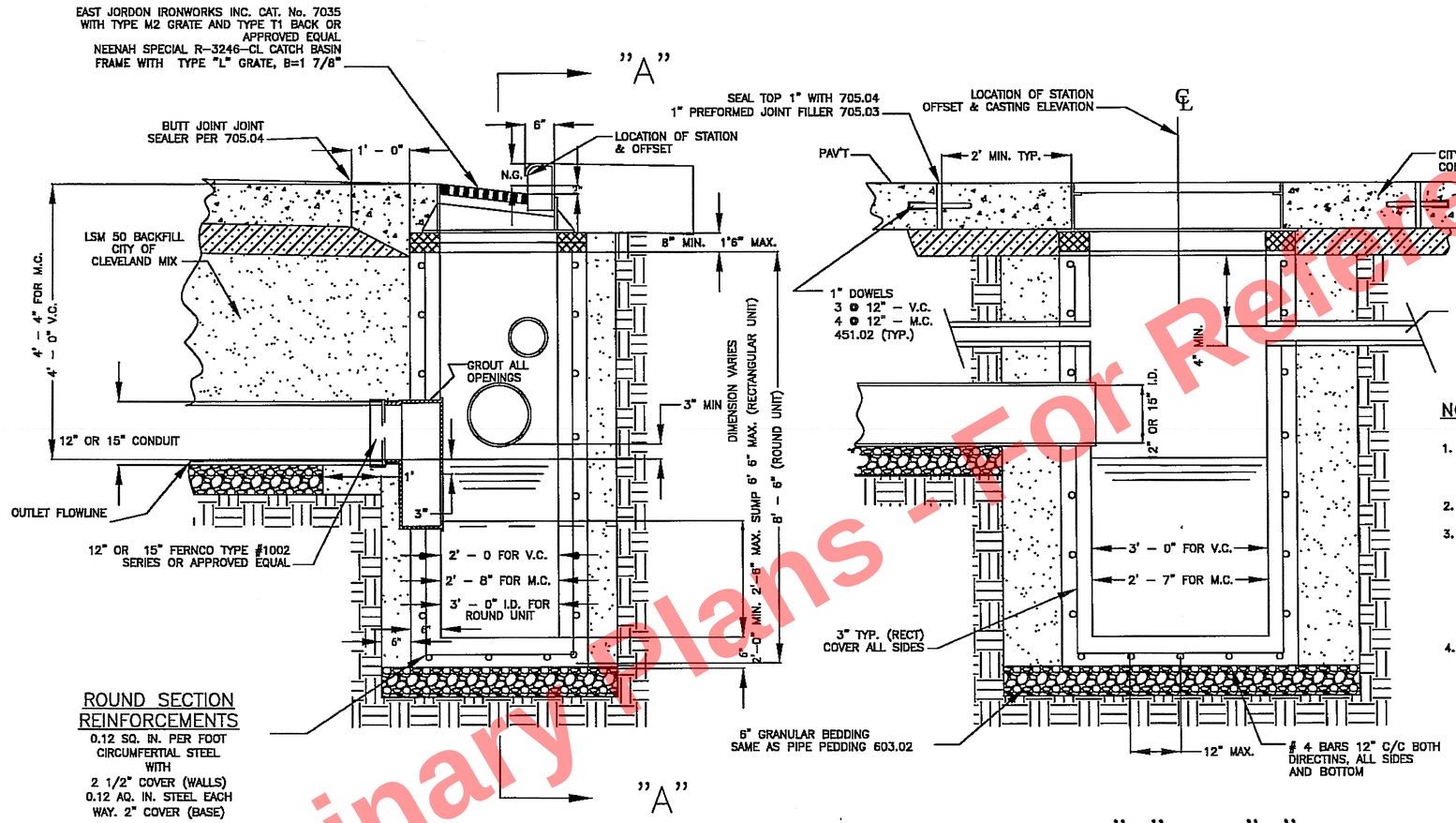

NOTES

1. ALL REINFORCING SHALL BE # 4 DEFORMED BARS, AS PER ODOT 709, AND SUFFICIENT TO PERMIT SHIPPING AND PLACEMENT WITHOUT DAMAGE TO DECTANGULAR SHAPE.
2. CONCRETE SHALL BE ODOT 499 CLASS "C" 4000 PSI IN 28 DAYS.
3. BOX-OUT SHALL BE PAID FOR AS PAVEMENT IN PORTLAND CEMENT CONCRETE PAVEMENT AND AS PART OF THE CATCH BASIN IN ASPHALTIC CONCRETE PAVEMENT WITH NO REDUCTION IN PAVEMENT OR CURB QUANTITY BECAUSE OF CASTING.

   FOR FULL WIDTH ASPHALTIC CONCRET PAVEMENT CONSTRUCT A PORTLAND CEMENT CONCRET APRON.
4. MINIMUM WALL THICKNESS 8" CAST IN PLACE AND 6" FOR PRECAST.

ALTERNATE BASIN SHAPE

A ROUND PRECAST CONCRETE UNIT MAY BE USED IN LIEU OF RECTANGULAR UNIT. THE ROUND SECTION SHALL BE 36" I.D. UNIT WITH INTEGRAL BASE AND PRECAST TOP TRANSITION SECTION (ROUND TO RECTANGULAR) TO FIT CASTING BEING USED. THE TRANSITION UNIT REQUIRES A # 5 REBAR AT CORNERS OF THE RECTANGULAR SHAPED SECTION AND 3 X 8 W6 X W5 WELDED WIRE FABRIC IN VERTICAL SECTION. ALSO, IF APPROVED BY THE ENGINEER, 8" THICK MASONRY WALL MAY BE USED IN LIEU OF PRECAST UNITS.

NOTE: IF PRECAST CATCH BASIN IS CONSTRUCTED IN TWO PIECES THE JOINT BETWEEN UNITS MUST BE A PERMIUM JOINT,PER 706.11.

LEGEND

V.C. = VERTICAL CURB
M.C. = MOUNTABLE CURB
T/C = TOP OF CASTING
N.G. = NORMAL GUTTER

CITY OF CLEVELAND

DEPARTMENT OF PUBLIC SERVICE
DIVISION OF ENGINEERING & CONSTRUCTION
JOMARIE WASIK-DIRECTOR OF PUBLIC SERVICE
STANDARD CONSTRUCTION DRAWING
STANDARD DETAIL FOR
RECTANGULAR CATCH BASIN
NOT TO SCALE

REVISED BY: R. PLIODZINSKAS DATE: 4/8/08

SUBMITTED BY: W. MCLAUGHLIN DATE: 4/8/08

APPROVED: [signature] DATE: 7-8-08
COMMISSIONER OF ENGINEERING & CONSTRUCTION

SHEET 1/7 | 26

Preliminary Plans - Not For Reference Only

DRAINAGE DETAILS
ITEM 611 – CATCH BASIN, NO. 3A, AS PER PLAN

DESIGN AGENCY
Michael Baker INTERNATIONAL
DESIGNER JAR
REVIEWER KGJ 05/22/24
PROJECT ID 82382
SHEET 1168 TOTAL 2696

CUY-90-16.28 (CCG3A)

MODEL: SHEET-I PAPERSIZE: 34x22 (in.) DATE: 3/27/2025 TIME: 10:45:56 PM USER: Julie.Ross
pw:\\mb-us-pw.bentley.commb-us-pw-03\Documents\Cleveland_OH\OL_Projects\ODOT\District12\82382\400-Engineering\Drainage\Sheets\82382_D00004.dgn

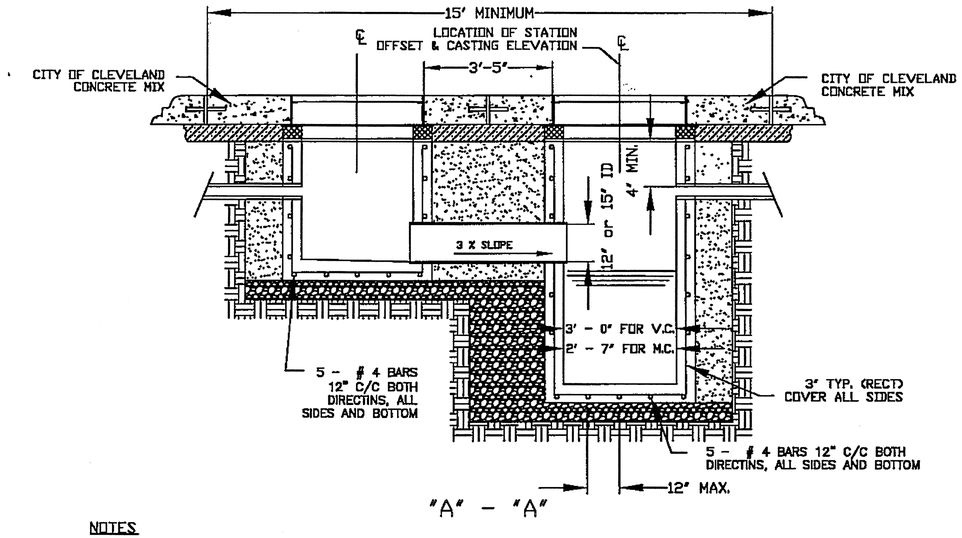

"A" - "A"

NOTES

1. THE CATCH BASIN SHALL BE SET AT THE LOW POINT OF A SAG VERTICAL CURVE OR AT THE POINT WHERE THE GRADE OF THE STREET CHANGES FROM NEGATIVE TO POSITIVE OR DOWNSTREAM FROM THE INLET BASIN.
2. THE CONCRETE BETWEEN THE CASTINGS SHALL BE SLOPED TO MATCH THE SLOPE OF THE CASTINGS.
3. REFER TO SHEET 1168 FOR FULL DETAILS AND DIMENSIONS.
4. PIPE BETWEEN BASINS SHALL BE EXTRA STRENGTH VCP PIPE AND IS INCLUDED IN THE BID TIEM FOR CB-3 APP.
5. DOWEL SPACING AND SIZE SHALL BE AS FOLLOWS:

   1" DOWELS-
   3 @ 12" - V.C.
   4 @ 12" - M.C.
   451.02 (TYP.)
6. MINIMUM WALL THICKNESS 8" FOR CAST IN PLACE AND 6" FOR PRECAST

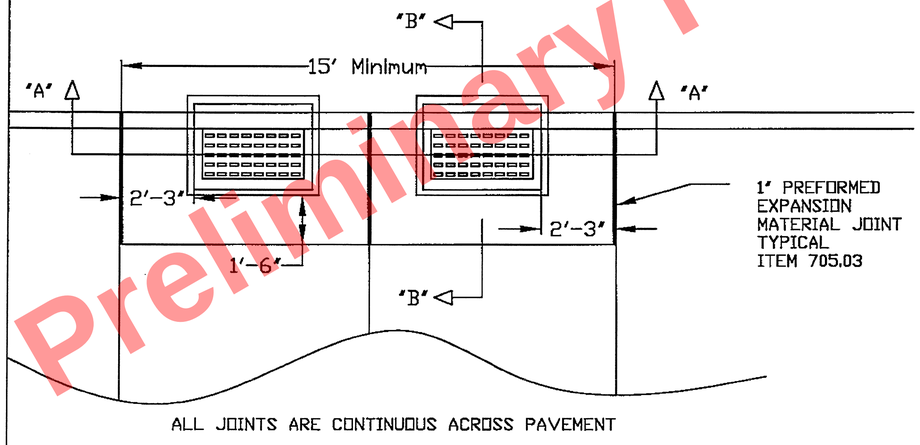

ALL JOINTS ARE CONTINUOUS ACROSS PAVEMENT

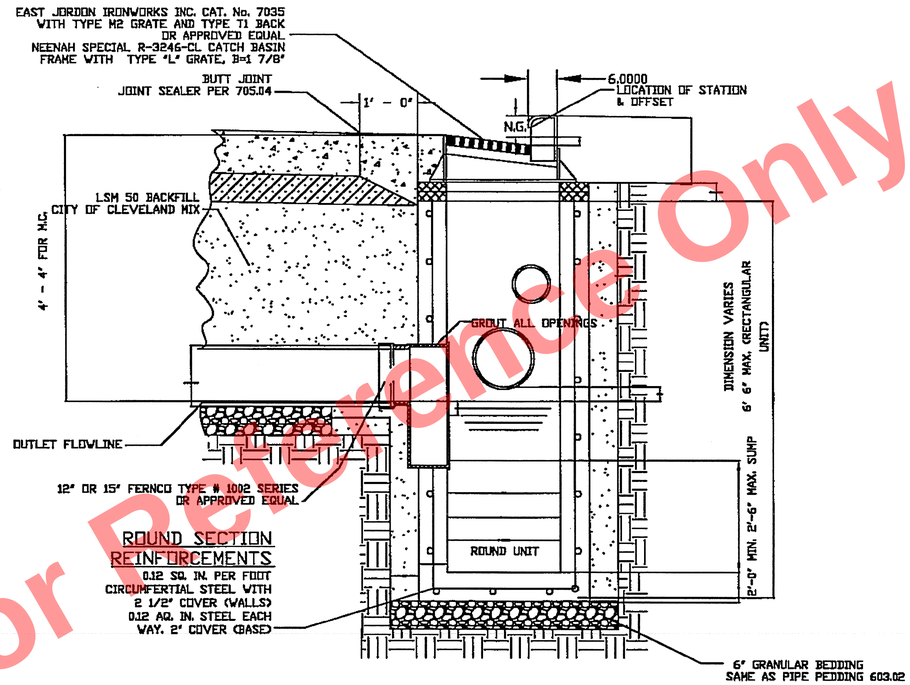

"B"- "B"

CITY OF CLEVELAND
DIVISION OF ENGINEERING & CONSTRUCTION
JOMARIE WASIK-DIRECTOR OF PUBLIC SERVICE
STANDARD CONSTRUCION DRAWING
DETAILS FOR
TWIN BASIN - CB-3
NOT TO SCALE

DRAWN BY: R. PLIODZINSKAS DATE: 4/8/08
SUBMITTED BY: W. MCLAUGHLIN DATE: 4/8/08

APPROVED: [signature] DATE: 1-8-08

COMMISSIONER OF ENGINEERING & CONSTRUCTION

SHEET 3/7 (28)

Preliminary Plans - For Reference Only

DRAINAGE DETAILS
ITEM 611 - CATCH BASIN, NO. 3, AS PER PLAN

DESIGN AGENCY
Michael Baker INTERNATIONAL
DESIGNER JAR
REVIEWER KGJ 05/22/24
PROJECT ID 82382
SHEET 1169 TOTAL 2696

CUY-90-16.28 (CCG3A)

MODEL: SHEET-I PAPERSIZE: 34x22 (In.) DATE: 3/27/2025 TIME: 10:46:28 PM USER: Julie.Ross
pw:\\mb-us-pw.bentley.com\mb-us-pw-03\Documents\Cleveland_OHIO_Projects\ODOT\District12\82382\400-Engineering\Drainage\Sheets\82382_DD0005.dgn

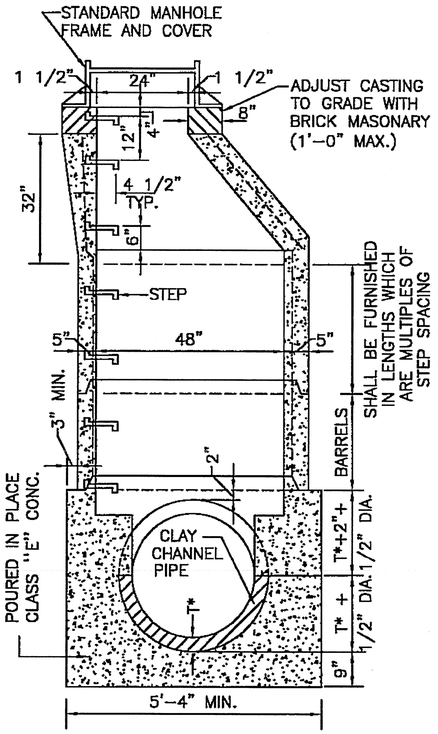

SEWERS 42" AND UNDER

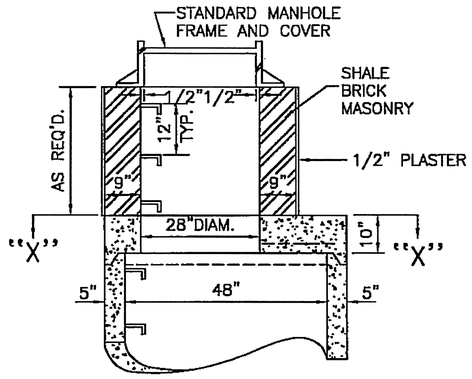

ALTERNATE DOME

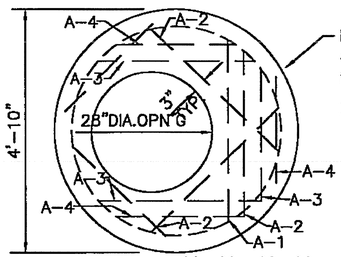

NOTE:
ALL REINFORCING STEEL #5 BARS @ 4" C.C.

BAR LENGTHS
A-1 – 3'-10"
A-2 – 3'-7"
A-3 – 3'-0"
A-4 – 2'-2"
T*-REPRESENTS THICKNESS OF PIPE

SECTION "X"-"X"

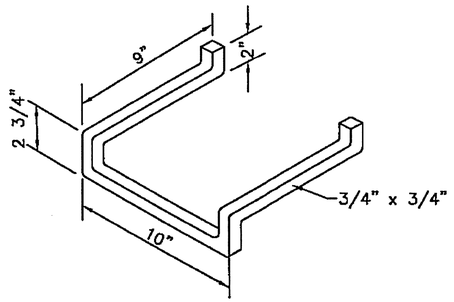

STEP DETAIL

NOTE:
STEPS SHALL BE CAST IRON AS PER ASTM A 48 CLASS 30 GRAY IRON OR ALUMINUM AS PER ASTM B 221,6061-T6

NOTES:

NO HOLES FOR 12" INLET OR CATCH BASIN CONNECTIONS SHALL BE CUT IN ANY SECTION LESS THAN 36"MANHOLE BARREL. NOT MORE THAN 2 INLET CONNECTIONS SPACED 2± FEET APART HORIZONTALLY PERMITTED IN 3 OR 4 FOOT MANHOLE SECTIONS.

ALL JOINTS AND PIPE OPENINGS IN THE MANHOLE SHALL BE THOROUGHLY CALKED WITH 1:3 CEMENT MORTAR HAVING A 1/2" MINIMUM THICKNESS.

PRECAST REINFORCED CONCRETE MANHOLE SECTIONS SHALL COMPLY WITH THE REQUIREMENTS OF ASTM DESIGNATION C 478-06a: MINIMUM WALL THICKNESS SHALL BE 5 INCHES.

CONNECTION BOXES FOR SEWERS 48" AND OVER IN DIAMETER SHALL BE REINFORCED AS SHOWN AND AS SPECIFIED BELOW:

A) BARS SHALL BE SPACED AT 12" CENTERS IN BOTH DIRECTIONS.

B) BARS SHALL BE SPACED AT 3" CENTERS IN BOTH DIRECTIONS.
A,B & L BARS SIZES:
5/8" DIAM. FOR 48" TO 60" SEWERS.
3/4" DIAM. FOR 66" TO 78" SEWERS.
7/8" DIAM. FOR 84" TO 96" SEWERS.

C) T BARS SHALL BE 5/8" DIAM. SPACED AT 12" CENTERS.

D) BARS SHALL BE 5/8" DIAMETER EPOXY COATED REINFORCING STEEL SHALL HAVE 2" CLEARANCE EXCEPT WHERE OTHERWISE SPECIFIED.

E) STANDARD MANHOLE FRAME AS PER A-503 (SHEET 61) AND COVER AS PER A-605 (SHEET 62) OR A-695 (SHEET 63)

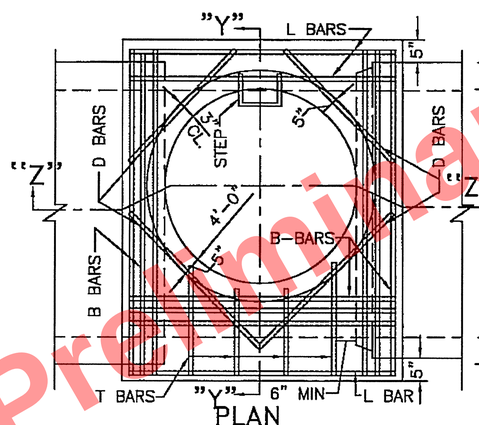

PLAN

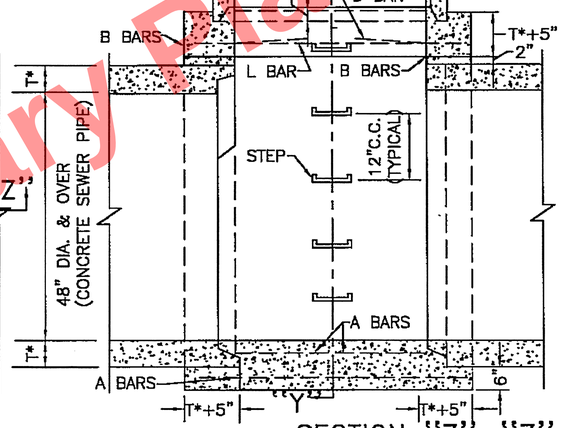

SECTION "Z"-"Z"

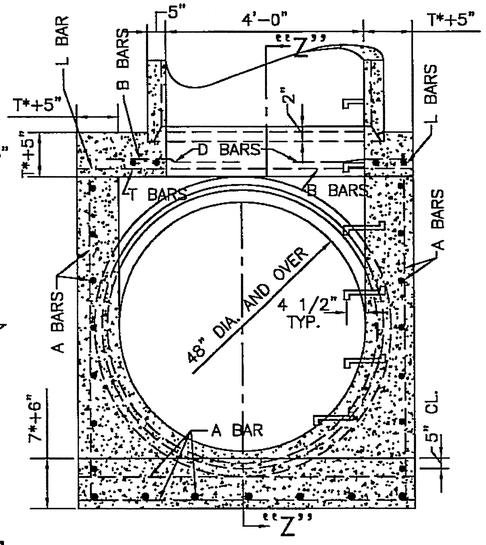

SECTION "Y"-"Y"

CONNECTION BOX FOR PRECAST MANHOLES ON SEWERS 48" AND OVER

CITY OF CLEVELAND

DEPARTMENT OF PUBLIC SERVICE
DIVISION OF ENGINEERING & CONSTRUCTION
JOMARIE WASIK-DIRECTOR OF PUBLIC SERVICE
STANDARD CONSTRUCTION DRAWING
DETAIL PLAN OF PRECAST CONCRETE MANHOLE
NOT TO SCALE
NO. 3, AS PER PLAN

DRAWN BY: R. PLIODZINSKAS DATE: 8/28/07
SUBMITTED BY: W. MCLAUGHLIN DATE: 8/28/07
APPROVED: [signature] DATE: 7-8-08
COMMISSIONER OF ENGINEERING & CONSTRUCTION

SHEET 1/1 | 23

DRAINAGE DETAILS
ITEM 611 – MANHOLE, NO. 3, AS PER PLAN

DESIGN AGENCY
Michael Baker INTERNATIONAL
DESIGNER JAR
REVIEWER KGJ 05/22/24
PROJECT ID 82382
SHEET 1170 TOTAL 2696

Preliminary Plans - For Reference Only

CUY-90-16.28 (CCG3A)
MODEL: SHEET-I PAPERSIZE: 34x22 (In.) DATE: 3/27/2025 TIME: 10:46:57 PM USER: Julie.Ross
pw:\\mb-us-pw.bentley.commb-us-pw-03\Documents\Cleveland_OH\01_Projects\000T\District2\82382\400-Engineering\Drainage\Sheets\82382_DD0006.dgn

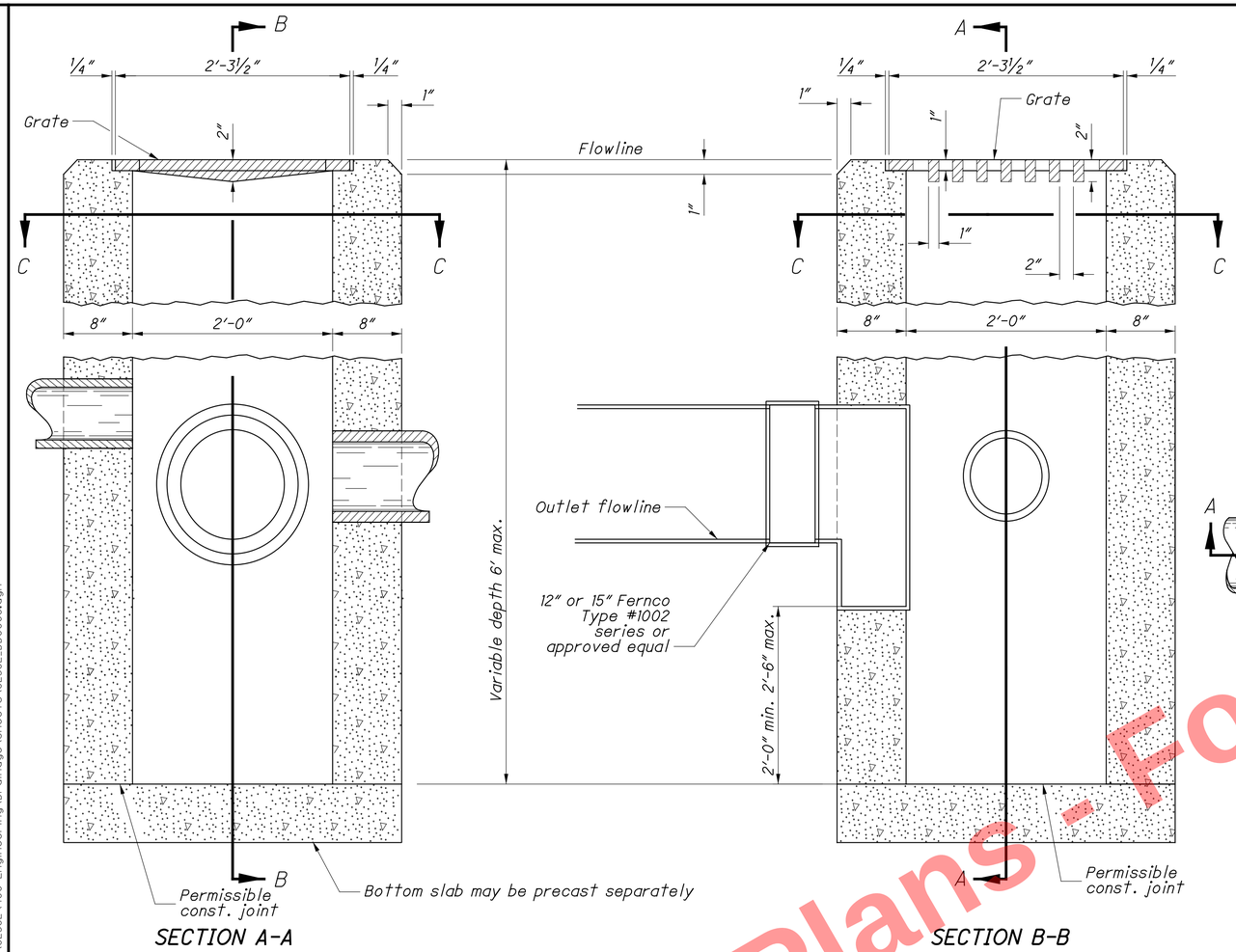

SECTION A-A

SECTION B-B

Item 611 - Catch Basin, No. 2-2B, As Per Plan.

CONSTRUCTION INFORMATION
Minimum weight of grate, 120 lbs.

CATCH BASIN	OUTLET PIPE SIZE
2-2B	12" to 18"

All grate edges to be rounded 1/4" radii.

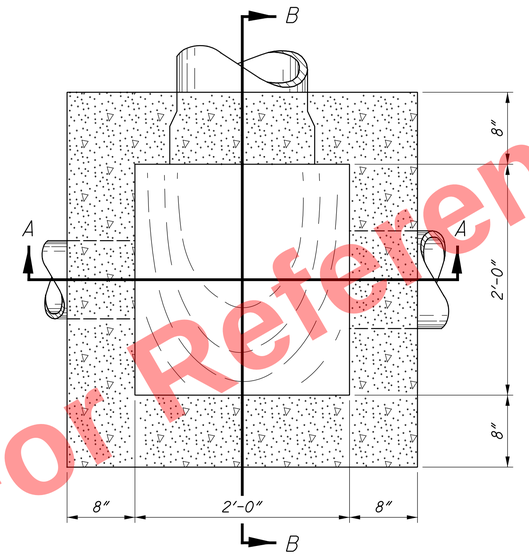

SECTION C-C

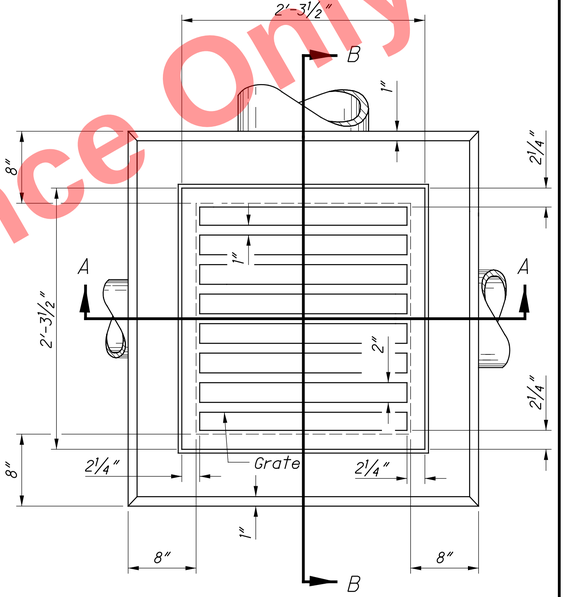

PLAN

CATCH BASIN No. 2-2B APP

Preliminary Plans - For Reference Only

NOTES

CB-2-2B GRATE: Furnish a design essentially the same and equally as strong as the one shown (see Construction Information table), or meet the requirements of CMS 711.14. Provide grate openings and dimensions as shown here unless otherwise shown in the plans.

If necessary, bicycle safe grates will be specified in the plans. Furnish Neenah No. R-4859-S or EJ No. 5110M3 (00511043) grates or approved equals.

Place grate elevation 4" to 6" below normal ditch and return to normal 10' to 15' each side of inlet.

GRATE TEXT: Cast the following text into the top of the grate:

"DRAINS TO WATERWAY" and "DUMP NO WASTE"

Print text in bold, capital letters at least 1/2" high. "WATERWAY" may be substituted with "STREAM", "RIVER", "LAKE", etc. Actual placement and logo may vary per manufacturer.

WALLS: Construct cast-in-place walls with a nominal 8" thickness. Provide precast walls at least 6" thick with sufficient reinforcing to permit shipping and handling without damage.

CONCRETE: Use 4000 psi compressive strength for cast-in-place concrete. Meet the requirements of CMS 706.13 for all precast concrete and mark with the catch basin number.

PRECAST BASE: If a precast base is used, set it deep enough so that the top can be placed on the base to provide the grate elevation specified in the plans. Do not use brick layers to adjust the top elevation.

LOCATION AND ELEVATION: When given on the plans, location and elevation are at the top center of the grate.

MINIMUM DEPTH: The minimum depth of CB No. 2-2B is the outside diameter (O.D.) of the outlet pipe plus 4".

OPENINGS: Ensure pipe openings are the O.D. of the pipe being supplied plus 2" when fabricated or field cut. Fill any voids per C&MS 611.

PAYMENT: Payment for the above work shall be made at the unit price bid for Item 611 - Catch Basin, No. 2-2B, AS PER PLAN, each, and shall include all materials, labor, equipment, tools, and incidentals necessary to complete the work described above.

DRAINAGE DETAILS

ITEM 611 – CATCH BASIN, NO. 2-2B, AS PER PLAN

DESIGN AGENCY
Michael Baker INTERNATIONAL

DESIGNER JAR
REVIEWER KGJ 05/22/24
PROJECT ID 82382
SHEET 1171 TOTAL 2696

CUY-90-16.28 (CCG3A)

MODEL: SHEET-1 PAPERSIZE: 34x22 (in.) DATE: 3/27/2025 TIME: 10:41:26 PM USER: Julie.Ross
pw:\\mb-us-pw.bentley.com:mb-us-pw-03\Documents\Cleveland.OH\OI_Projects\ODOT\District2\82382\400-Engineering\Drainage\Sheets\82382_DD0008.dgn

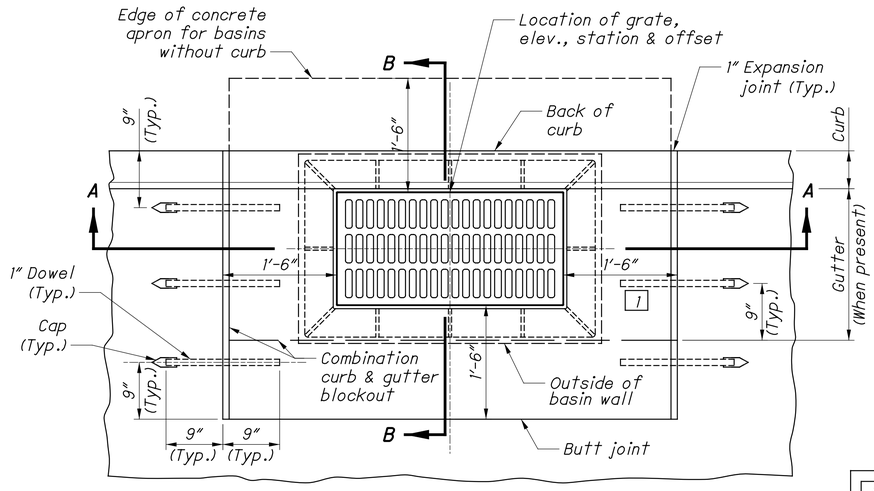

CATCH BASIN AND APRON PLAN

1 Include dowels where concrete pavement or gutter are present

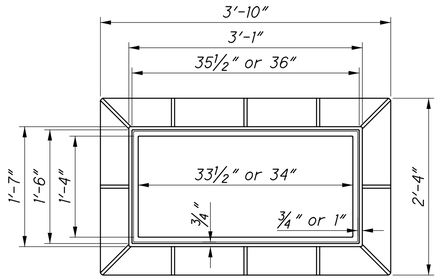

FRAME PLAN

NOTES

GRATE AND FRAME: Provide a design essentially the same and equally as strong as the one shown (see construction information table), or meet the requirements of CMS 711.14. Provide grate openings and dimensions as shown here unless otherwise shown in the plans. When a "V" grate is specified provide Neenah No. R-3067-V or EJ No. 7030 Type M4 or approved equals.

Cast the following text into the top of the grate:

"DUMP NO WASTE" and "DRAINS TO WATERWAYS"

Print text in bold, capital letters at least 1/2" high. "WATERWAYS" may be substituted with "STREAM", "RIVER", "LAKE", etc. Actual placement and logo may vary by manufacturer.

BEARING AREAS: Fit and finish the frame and grate to provide a firm and even seat for all portions of the grate in the frame without rocking. Fit, match and mark frame and grate before delivery to the project.

WALLS: Provide precast walls at least 6" thick with sufficient reinforcing to permit shipping and handling without damage. Construct cast-in-place walls with a nominal thickness of 8". Maintain internal basin dimensions.

CONCRETE: Meet the requirements of CMS 706.13 for precast concrete and mark with the catch basin number. Use 4000 psi concrete for cast-in-place basins.

MINIMUM DEPTH: The minimum depth is the outside diameter (O.D.) of the outlet pipe plus 15".

OPENINGS: Ensure pipe openings are the O.D. of the pipe being supplied plus 2" when fabricated or field cut. Fill any voids per C&MS 611.

DOWELS: Furnish 1"x18" dowels for concrete pavement and gutters. See SCD BP-2.2 for dowel details.

BLOCKOUT APRONS: Blockout curb and gutter (when present) for catch basin. In PCC pavement provide a 4000 psi compressive strength concrete apron with dowels. The cost is included as part of the pavement or gutter with no deduction in pavement, curb or gutter quantities because of the castings. In asphalt pavement provide a 4000 psi compressive strength concrete apron with dowels into gutter (when present). No dowels are required between the apron and asphalt pavement. The cost is included in the catch basin bid price. Include 1" expansion joints in the curb for all curb types with no deduction made in curb quantities.

SUMP AND TRAP: Sump and trap shall be provided as shown herein. Traps shall be constructed of two prefabricated 45 degree bends or two pairs of 22.5 degree cut conduit to form a 45 degree bend. If rigid pipe is used, there shall be sufficient length of conduit between the bends to ensure that the crown of the outlet pipe at the structure is at least 2 inches lower than the flowline elevation of the outlet pipe at its plan indicated elevation. Install masonry collars at each bend per SCD DM-1.1.

PAYMENT: Payment for the above work shall be made at the unit price bid for Item 611 - Catch Basin, No. 6., AS PER PLAN 3, each, and shall include all materials, labor, equipment, tools, and incidentals necessary to complete the work described above.

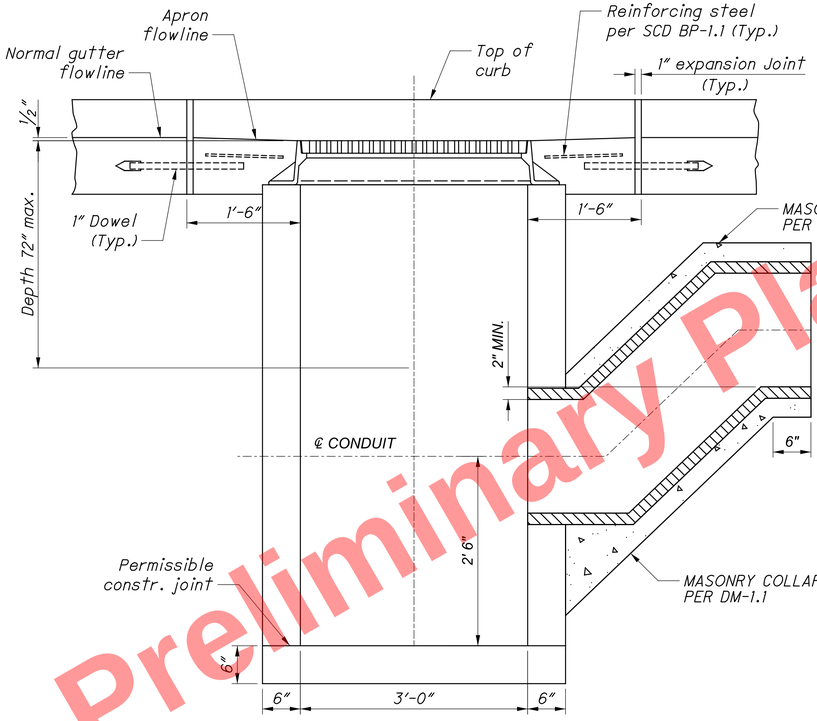

SECTION A-A

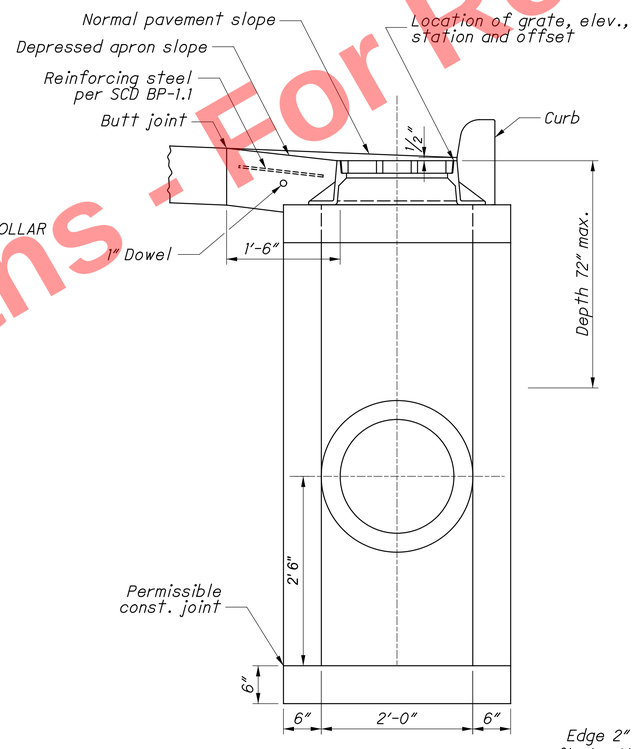

SECTION B-B
W/O GUTTER

CONSTRUCTION INFORMATION
Minimum weight of grate, 159 lbs.
Minimum weight of frame, 265 lbs.

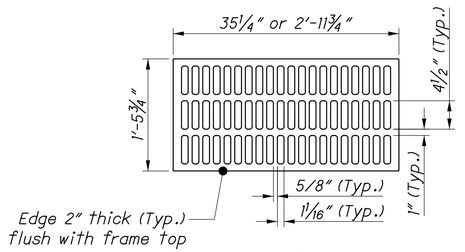

GRATE

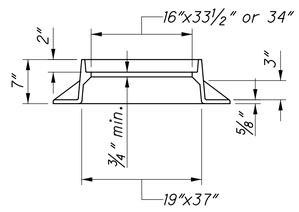

FRAME SECTION

Preliminary Plans - For Reference Only

DRAINAGE DETAILS
ITEM 611 - CATCH BASIN, NO. 6, AS PER PLAN 3
SHEET 1 OF 1

DESIGN AGENCY
Michael Baker INTERNATIONAL

DESIGNER JAR
REVIEWER KGJ 05/22/24
PROJECT ID 82382
SHEET 1172 TOTAL 2696

CUY-90-16.28 (CCG3A)

MODEL: SHEET-I PAPERSIZE: 34x22 (in.) DATE: 3/27/2025 TIME: 10:47:34 PM USER: Julie.Ross
pw:\\mb-us-pw.bentley.com:mb-us-pw-03\Documents\Cleveland.OH\DI_Projects\ODOT\District2\82382\400-Engineering\Drainage\Sheets\82382_DD0009.dgn

Preliminary Plans - For Reference Only

Do not omit rebars if blockout is constructed integrally with the barrier.

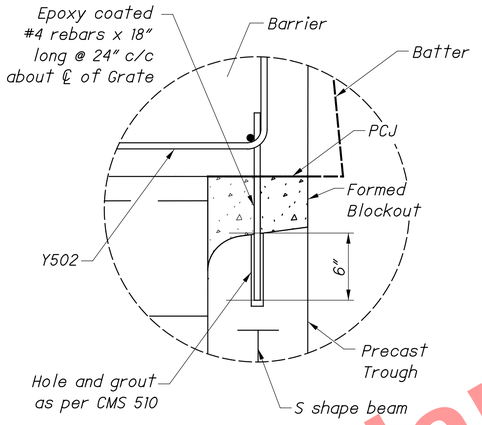

FORMED BLOCKOUT DETAIL

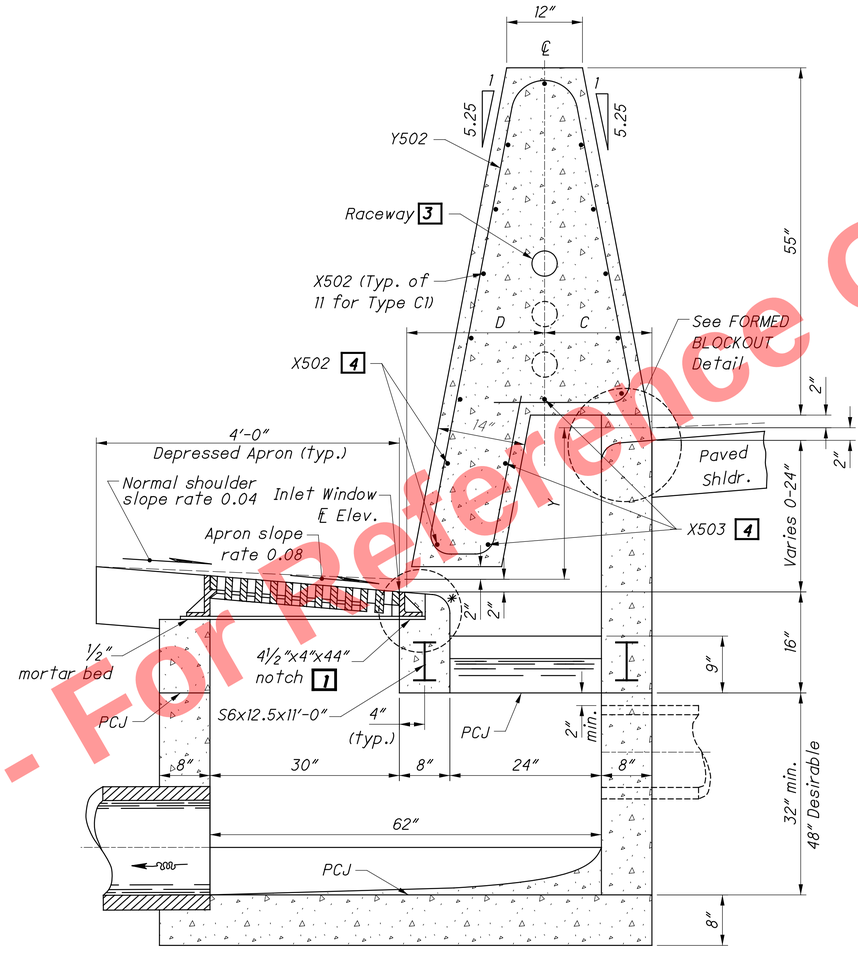

Type C1

SECTION C-C

PER SCD I-3C1

NOTES

GENERAL:

THIS ITEM SHALL MEET ALL THE SPECIFICATIONS OF ITEM 611 - INLET NO. 3 FOR SINGLE SLOPE BARRIER, TYPE C1 AND SCD I-3C1 EXCEPT THAT THE WINDOW INLET ON THE NON-TRAFFIC SIDE SHALL BE CLOSED WITH THE FORMED BLOCKOUT DETAIL SHOWN ON THIS SHEET.

PAYMENT:

PAYMENT WILL BE MADE AT THE UNIT PRICE BID PER EACH FOR ITEM 611 - INLET NO. 3 FOR SINGLE SLOPE BARRIER, TYPE C1, AS PER PLAN AND INCLUDES ALL MATERIALS, REINFORCING STEEL, CASTINGS, LABOR AND INCIDENTALS REQUIRED TO CONSTRUCT THE INLET PER SCD I-3C1 WITH FORMED BLOCKOUT PER THIS SHEET. SEALING OF EXPOSED CONCRETE AND SEALING OF THE BARRIER WILL BE PAID FOR UNDER ITEM 512 WHEN SPECIFIED IN THE PLANS.

DRAINAGE DETAILS

ITEM 611 - INLET, NO. 3 FOR SINGLE SLOPE BARRIER, TYPE C1, AS PER PLAN

SHEET 1 OF 1

DESIGN AGENCY
Michael Baker INTERNATIONAL

DESIGNER JAR

REVIEWER KGJ 05/22/24

PROJECT ID 82382

SHEET 1173 TOTAL 2696

CUY-90-16.28 (CCG3A)

MODEL: SHEET-2 PAPERSIZE: 34x22 (in.) DATE: 3/27/2025 TIME: 10:47:39 PM USER: JulieRoss
pw:\\mb-us-pw.bentley.com:mb-us-pw-03\Documents\Cleveland_OH\DL_Projects\ODOT\District2\82382\400-Engineering\Drainage\Sheets\82382_D0001.dgn

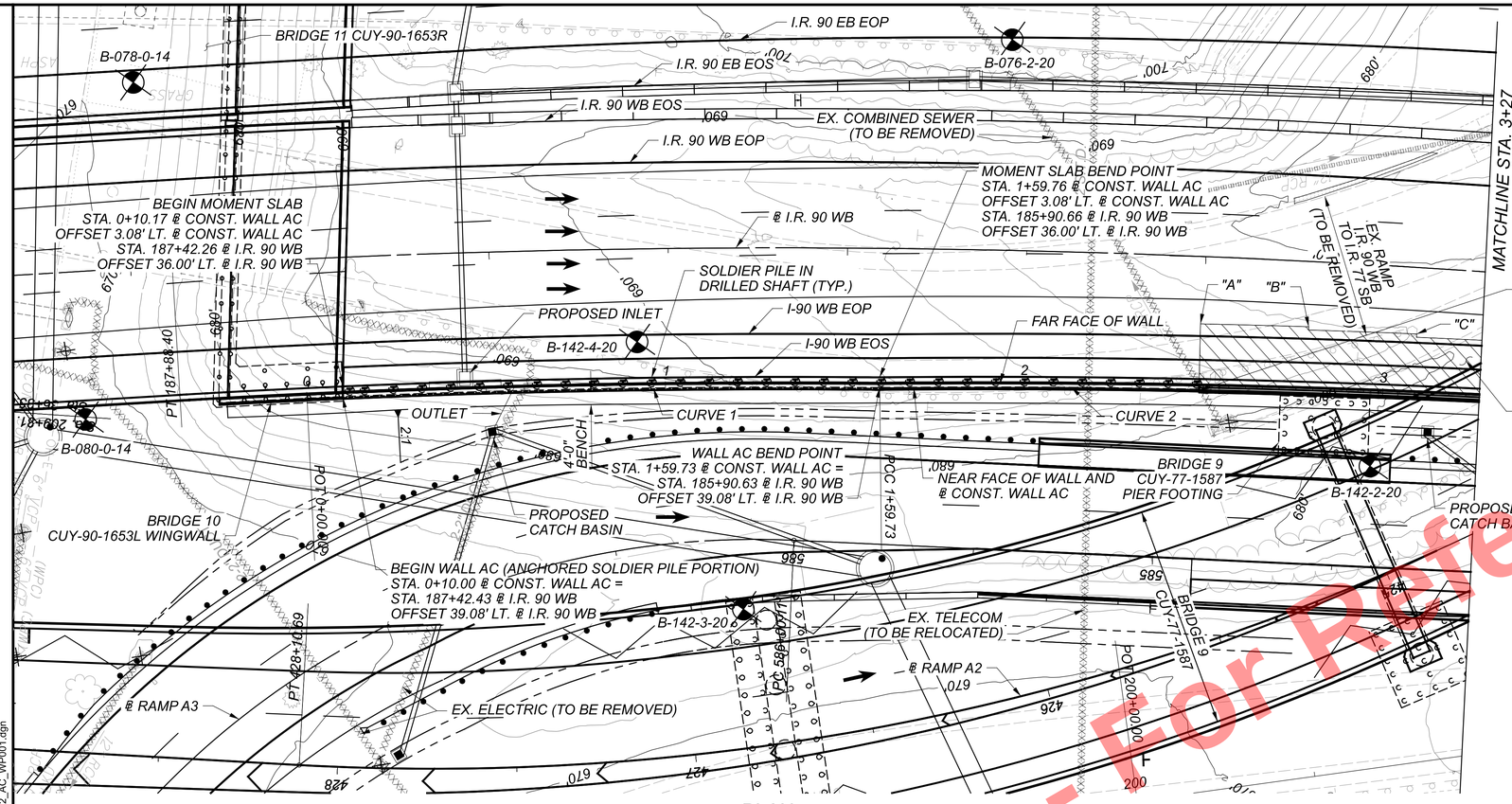

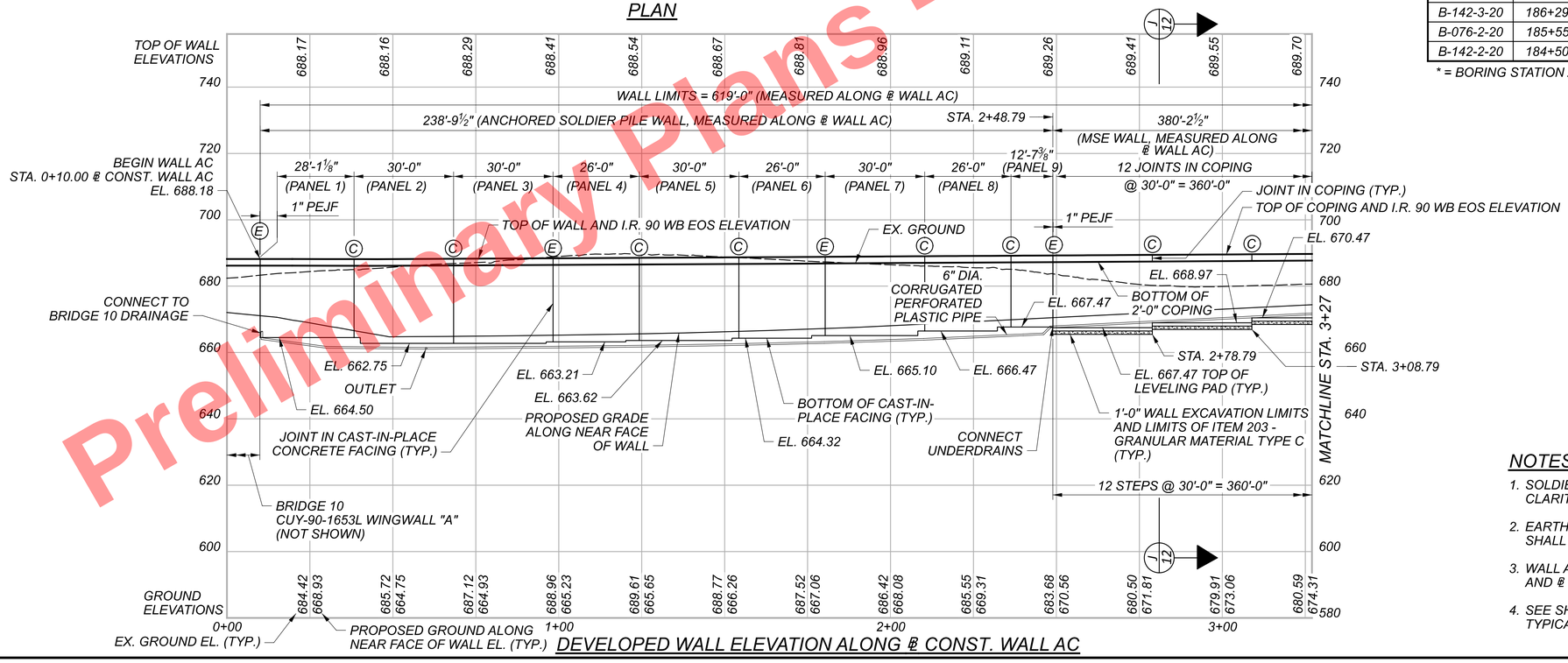

DEVELOPED WALL ELEVATION ALONG @ CONST. WALL AC

BENCHMARK DATA

BM #67 STA. 177+04.24, ELEV. 674.82, OFFSET 493.88' RT.,
@ I.R. 90 WB, CUT CROSS ON EAST LEG JUNCTION 422 SIGN
BM #61 STA. 183+21.08, ELEV. 674.03, OFFSET 454.85' LT.,
@ I.R. 90 WB, RAILROAD SPIKE IN POWER PILE NO. 3-7-65
BM #59 STA. 189+46.10, ELEV. 660.15, OFFSET 342.36' RT.,
@ I.R. 90 WB, MAG NAIL BETWEEN E 14TH ST. AND COM. COLLEGE AVE.

FOR ADDITIONAL BENCHMARK INFORMATION. SEE ROADWAY PLANS.

@ CONST. WALL AC CURVE 1 DATA

P.I. = STA. 0+79.89
Δ = 03°14'20" RT.
Dc = 02°01'40"
R = 2,825.71'
T = 79.89'
L = 159.73'
E = 1.13'

@ CONST. WALL AC CURVE 2 DATA

P.I. = STA. 4+07.45
Δ = 10°00'04" RT.
Dc = 02°01'25"
R = 2,831.06'
T = 247.72'
L = 494.17'
E = 10.82'

MSE BACKFILL LIMIT TABLE

POINT	STATION	OFFSET
"A"	2+48.79	18.46' LT
"B"	2+78.79	18.46' LT
"C"	3+08.79	17.54' LT

STATIONS AND OFFSETS ARE FROM @ CONST. WALL AC

BORING LOCATION*

BORING	STATION	OFFSET	TOP OF ROCK EL.
B-078-0-14	187+96.19	51.71' RT.	-
B-080-0-14	188+15.04	41.29' LT.	-
B-142-4-20	186+59.04	25.94' LT.	-
B-142-3-20	186+29.42	100.72' LT.	-
B-076-2-20	185+55.31	58.70' RT.	-
B-142-2-20	184+50.94	56.09' LT.	-

* = BORING STATION AND OFFSETS ARE FROM @ I.R. 90 WB

LEGEND:

= BORING LOCATION

CONST. = CONSTRUCTION
EOP = EDGE OF PAVEMENT
EOS = EDGE OF SHOULDER
(C) = CONTRACTION JOINT
(E) = EXPANSION JOINT
= PLAN BOUNDARY AT PROPOSED SURFACE OF ITEMS INCLUDED FOR PAYMENT WITH THE MSE RETAINING WALL
= LIMITS OF ITEM 203 - GRANULAR MATERIAL, TYPE C

NOTES:

1. SOLDIER PILES AND ANCHORS NOT SHOWN IN THE ELEVATION FOR CLARITY.
2. EARTHWORK LIMITS SHOWN ARE APPROXIMATE. ACTUAL SLOPES SHALL CONFORM TO PLAN CROSS SECTIONS.
3. WALL AND MOMENT SLAB ALIGNMENT IS DEFINED ALONG NEAR FACE AND @ CONST. WALL AC.
4. SEE SHEET 12/17 FOR PAYMENT BOUNDARY LIMITS AND MSE WALL TYPICAL SECTION.

Preliminary Plans - For Reference Only

WALL PLAN AND PROFILE (1 OF 2)
WALL AC
ALONG NORTH SIDE OF I-90 WB

SFN N/A
DESIGN AGENCY B&N burgessniple.com
DESIGNER CAS | CHECKER BCS
REVIEWER DWL 06/22/22
PROJECT ID 82382
SUBSET 1 | TOTAL 17
SHEET 1174 | TOTAL 2696

CUY-90-16.28 (CCG3A)

MODEL: 82382_AC_WP001 PAPERSIZE: 34x22 (in.) DATE: 6/11/2025 TIME: 10:46:29 AM USER: Tolga.Feran
pw:\\mb-us-pw.bentley.com:mb-us-pw-03\Documents\Cleveland_OH\01_Projects\ODOT\District12\82382400-Engineering\Structures\WALL_AC\Sheets\82382_AC_WP001.dgn

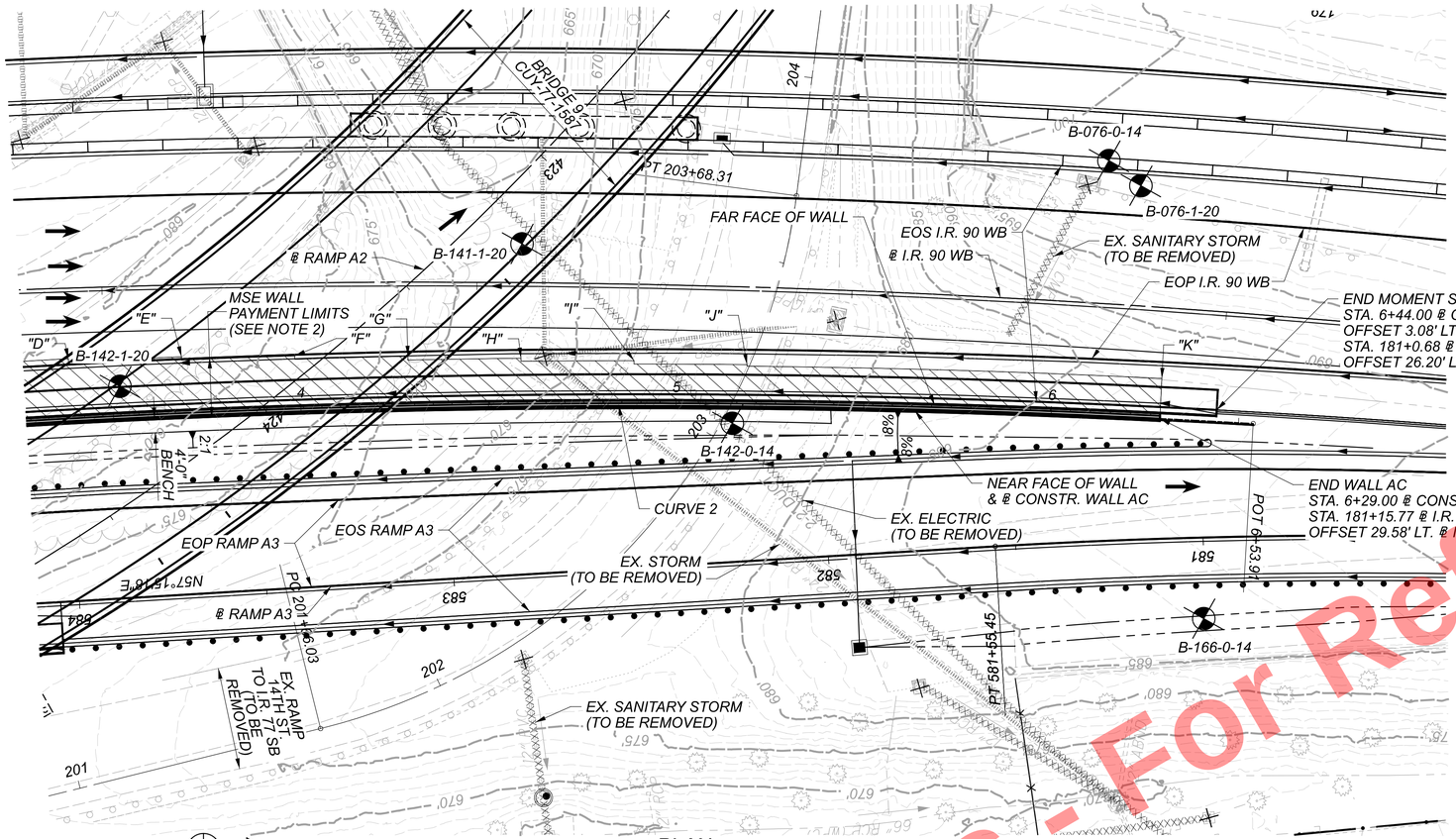

PLAN

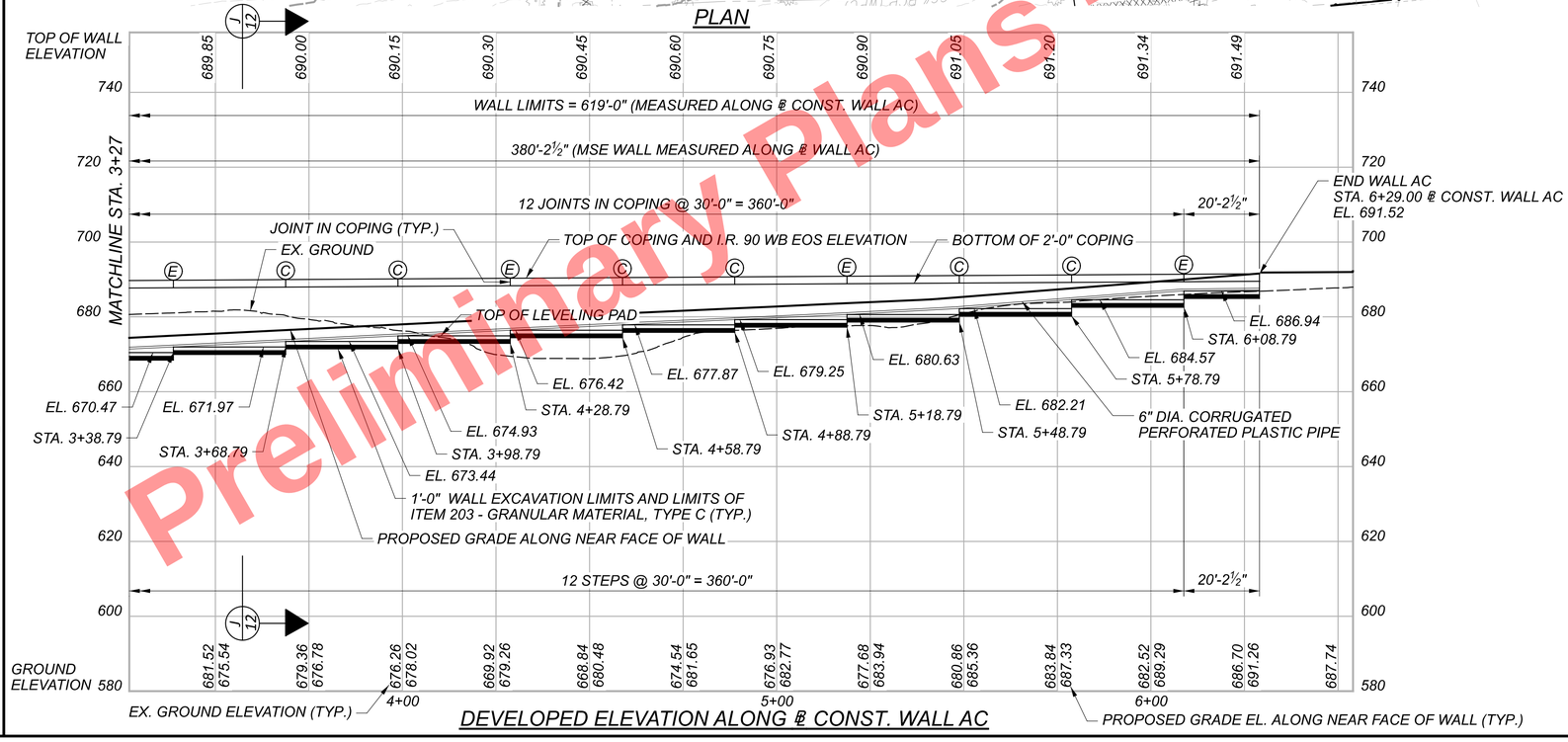

DEVELOPED ELEVATION ALONG ℄ CONST. WALL AC

BORING LOCATION*

BORING	STATION	OFFSET	TOP OF ROCK EL.
B-142-1-20	183+95.95	26.60' LT.	-
B-141-1-20	182+88.08	10.30' RT.	-
B-142-0-14	182+31.86	35.93' LT.	-
B-076-0-14	181+33.83	38.11' RT.	-
B-076-1-20	181+25.01	32.00' RT.	-
B-166-0-14	180+99.96	81.93' LT.	-

* = BORING STATION AND OFFSETS ARE FROM ℄ I.R. 90 WB

℄ CONST. WALL AC CURVE 2 DATA

P.I. = STA. 4+07.45
Δ = 10°00'04" RT.
Dc = 02°01'25"
R = 2,831.06'
T = 247.72'
L = 494.17'
E = 10.82'

MSE BACKFILL LIMIT TABLE

POINT	STATION	OFFSET
"D"	3+38.79	16.63' LT
"E"	3+68.79	15.71' LT
"F"	3+98.79	14.79' LT
"G"	4+28.79	13.88' LT
"H"	4+58.79	12.88' LT
"I"	4+88.79	12.04' LT
"J"	5+18.79	11.31' LT
"K"	6+29.00	10.71' LT

STATIONS AND OFFSETS ARE FROM ℄ CONST. WALL AC

LEGEND:

= BORING LOCATION

CONST. = CONSTRUCTION
EOP = EDGE OF PAVEMENT
EOS = EDGE OF SHOULDER

Ⓒ = CONTRACTION JOINT

Ⓔ = EXPANSION JOINT

= PLAN BOUNDARY AT PROPOSED SURFACE OF ITEMS INCLUDED FOR PAYMENT WITH THE MSE RETAINING WALL

= LIMITS OF ITEM 203 - GRANULAR MATERIAL, TYPE C

NOTES:

1. SEE SHEET 1 /17 FOR NOTES AND BENCHMARK INFORMATION.
2. SEE SHEET 12/17 FOR PAYMENT BOUNDARY LIMITS AND MSE WALL TYPICAL SECTION.

Preliminary Plans - For Reference Only

WALL PLAN AND PROFILE (2 OF 2)
WALL AC
ALONG NORTH SIDE OF I-90 WB

SFN	N/A
DESIGN AGENCY	B&N burgessniple.com
DESIGNER	CAS
CHECKER	BCS
REVIEWER	DWL 06/22/22
PROJECT ID	82382
SUBSET	2
TOTAL	17
SHEET	1175
TOTAL	2696

CUY-90-16.28 (CCG3A)
MODEL: 82382_AC_WP003 PAPERSIZE: 34x22 (in.) DATE: 6/11/2025 TIME: 10:54:50 AM USER: Tolga.Feran
pw:\\mb-us-pw.bentley.com:mb-us-pw-03\Documents\Cleveland_OH\01_Projects\ODOT\District12\82382400-Engineering\Structures\WALL_AC\Sheets\82382_AC_WP002.dgn

PROPOSED WORK:
THE PROPOSED WORK CONSISTS OF CONSTRUCTING RETAINING WALLS AND MOMENT SLABS WITH PARAPETS ALONG THE LEFT SIDE OF I.R.90 WB. THE EAST PORTION OF THE WALL IS TOP DOWN CONSTRUCTION CONSISTING OF SOLDIER PILES, ANCHORS, TIMBER LAGGING AND CAST IN PLACE CONCRETE FACING. THE WEST PORTION OF THE WALL IS BOTTOM UP CONSTRUCTION UTILIZING MSE TYPE WALLS.

REFER TO THE FOLLOWING STANDARD DRAWINGS:
SBR-1-20 DATED 7-19-24

REFER TO THE FOLLOWING SUPPLEMENTAL SPECIFICATIONS:
800 DATED SEE TITLE SHEET 840 DATED 7-21-23
866 DATED 4-21-17

AND THE FOLLOWING SUPPLEMENT:
1083 DATED 1-20-17

DESIGN SPECIFICATIONS:
THIS STRUCTURE CONFORMS TO THE 9TH EDITION OF THE "LRFD BRIDGE DESIGN SPECIFICATIONS" ADOPTED BY THE AMERICAN ASSOCIATION OF STATE HIGHWAY AND TRANSPORTATION OFFICIALS, 2020 AND THE ODOT BRIDGE DESIGN MANUAL, 2020.

DESIGN DATA:
CONCRETE CLASS QC1 WITH QC/QA - COMPRESSIVE STRENGTH 4.0 KSI (CAST IN PLACE WALL FACING AND COPING)
CONCRETE CLASS QC5 - COMPRESSIVE STRENGTH 4.5 KSI (DRILLED SHAFTS)
CONCRETE CLASS QC2 WITH QC/QA - COMPRESSIVE STRENGTH 4.0 KSI (MOMENT SLAB AND PARAPETS)
REINFORCING STEEL - MINIMUM YIELD STRENGTH 60 KSI
STRUCTURAL STEEL - ASTM A709 GRADE 50 - YIELD STRENGTH 50 KSI
STEEL H-PILES - ASTM A572 - YIELD STRENGTH 50 KSI

ITEM 503 - UNCLASSIFIED EXCAVATION, AS PER PLAN
THIS WORK CONSISTS OF EXCAVATION NECESSARY TO INSTALL THE TEMPORARY TIMBER LAGGING AND ANY EMBANKMENT/EXCAVATION REQUIRED TO INSTALL A DRILLING BENCH TO INSTALL THE SOLDIER PILES. THE EXCAVATION SHALL BE PERFORMED IN ACCORDANCE WITH C&MS 503, EXCEPT AS MODIFIED AND SUPPLEMENTED BELOW.

THE SOLDIER PILE WALL SHALL BE CONSTRUCTED IN A TOP-DOWN MANNER. EXCAVATION FOR THE WALL SHALL BE MINIMIZED UNTIL ALL SOLDIER PILES ARE INSTALLED. DO NOT EXCAVATE MORE THAN 3 FEET OF THE EXISTING GRADE FOR INSTALLATION OF THE SOLDIER PILES.

REMOVE LOW STRENGTH MORTAR FROM THE PILE AS THE EXCAVATION PROGRESSES, SUFFICIENT TO PLACE THE TIMBER LAGGING AGAINST THE PILE FLANGE. FOLLOW THE EXCAVATION CLOSELY WITH PLACEMENT OF THE TIMBER LAGGING. LIMIT HEIGHT OF UNSUPPORTED, EXPOSED FACE OF SOIL TO 3 FEET OR LESS AS REQUIRED BY LOCAL SITE CONDITIONS DURING EXCAVATION.

CAREFULLY PERFORM EXCAVATION FOR THE INSTALLATION OF LAGGING TO MINIMIZE THE FORMATION OF VOIDS. BACKPACK VOIDS BETWEEN SOIL AND LAGGING WITH NUMBER 57 STONE PER C&MS TABLE 703.01-1 OR APPROVED EQUAL TO THE SATISFACTION OF THE ENGINEER.

EXCAVATION SHALL PROCEED AT A PACE THAT PREVENTS MOVEMENT OF THE WALL AND LOSS OF GROUND. WHEN UNSTABLE MATERIAL IS ENCOUNTERED DURING EXCAVATION, TAKE NECESSARY ACTIONS TO STABILIZE THE MATERIAL AND PREVENT GROUND DISPLACEMENT.

BEFORE PLACING LAGGING, SMOOTH THE SOIL FACE TO CREATE A CONTACT SURFACE FOR THE LAGGING. FLOWABLE FILL SHALL BE PLACED TO FILL LARGE VOIDS BEHIND THE LAGGING. MAINTAIN A GAP OF ¼ INCH TO ½ INCH BETWEEN EACH HORIZONTAL LAGGING BOARD FOR DRAINAGE BETWEEN ADJACENT LAGGING TIMBERS.

PAYMENT FOR LABOR, EQUIPMENT AND MATERIALS FOR THE WORK OUTLINED ABOVE SHALL BE INCLUDED IN THE LUMP SUM CONTRACT PRICE FOR ITEM 503 UNCLASSIFIED EXCAVATION, AS PER PLAN.

ITEM 507 - STEEL PILES, MISC.: SOLDIER PILES HP14X73
THIS WORK CONSISTS OF FURNISHING AND PLACING STEEL SOLDIER PILES INTO DRILLED HOLES AND INCLUDES MONITORING PLUMBNESS. FURNISH SOLDIER PILES CONSISTING OF STRUCTURAL STEEL MEMBERS THAT MEET THE REQUIREMENTS AND CONFORM TO ASTM A572 GRADE 50. DO NOT FIELD WELD OR SPLICE STEEL SOLDIER PILES. THE ANCHOR DETAIL WHERE THE TIE BACK ANCHOR PASSES THROUGH THE FLANGES AND WEB SHALL BE SHOP FABRICATED AND NOT BE WELDED ON SITE.

MEASUREMENT FOR PAYMENT WILL BE THE DISTANCE FROM THE TOP OF THE PILE TO THE BOTTOM OF THE DRILLED SHAFT, AS DETERMINED BY THE ENGINEER. PAYMENT IS FULL COMPENSATION FOR FURNISHING AND PLACING THE SOLDIER PILES AND MONITORING THEIR PLUMBNESS UNTIL PLACEMENT OF THE CONCRETE FACING HAS BEGUN. THE DEPARTMENT WILL PAY FOR SOLDIER PILES AT THE CONTRACT UNIT PRICE PER FOOT OF ITEM 507 - STEEL PILES, MISC., SOLDIER PILES HP14X73.

ITEM 511 - CLASS QC1 CONCRETE WITH QC/QA, RETAINING/WINGWALL NOT INCLUDING FOOTING, AS PER PLAN
THIS ITEM CONSISTS OF CONSTRUCTING A CAST IN PLACE REINFORCED CONCRETE WALL ON THE FRONT SIDE OF THE SOLDIER PILES TO SERVE AS PERMANENT FACING OVER THE TEMPORARY TIMBER LAGGING.

FORM LINERS (ARCHITECTURAL TREATMENT WITH AESTHETIC PATTERNS) SHALL BE PROVIDED AS SHOWN ON THE LANDSCAPING PLANS.

HORIZONTAL JOINTS ARE PROHIBITED IN THE CAST IN PLACE CONCRETE FACING.

PAYMENT SHALL INCLUDE ALL LABOR, MATERIALS AND INCIDENTALS NECESSARY TO FURNISH AND PLACE CONCRETE FOR THE CAST IN PLACE FACING, INCLUDING ½ INCH AND 1 INCH PREFORMED EXPANSION JOINT FILLER, CONCRETE COPING, DOWELS AT JOINTS, BOND BREAKER AT DOWELS AT EXPANSION JOINTS, NON-BITUMINOUS JOINT SEALER AT THE JOINTS AND FORM LINERS.

ITEM 511 - CLASS QC2 CONCRETE, MISC.: CONCRETE MOMENT SLAB AND BARRIER WITH QC/QA
ALL MATERIAL, LABOR AND INCIDENTALS NECESSARY TO FURNISH AND PLACE CONCRETE FOR THE MOMENT SLABS WITH PARAPETS ALONG THE RETAINING WALL SHALL BE INCLUDED FOR PAYMENT WITH ITEM 511, CLASS QC2 CONCRETE, MISC.: MOMENT SLAB AND PARAPET WITH QC/QA. ALL STEEL AND GFRP REINFORCING EMBEDDED IN THE MOMENT SLAB AND WITHIN THE PARAPET SHALL BE INCLUDED IN THE APPROPRIATE ITEM 509 QUANTITY FOR PAYMENT. QUALITY CONTROL MEETING THE REQUIREMENTS OF C&MS 455 AND 511.04 SHALL BE INCLUDED.

ITEM 512 - SEALING OF CONCRETE SURFACES, AS PER PLAN (PERMANENT GRAFFITI PROTECTION)
APPLY A PERMANENT GRAFFITI COATING MEETING THE REQUIREMENTS OF SUPPLEMENT 1083. THE GRAFFITI COATING MUST BE COMPATIBLE WITH THE UNDERLYING CONCRETE SEALER. APPLY THE GRAFFITI COATING ACCORDING TO THE MANUFACTURE'S REQUIREMENTS. THE ADDITIONAL MATERIAL AND LABOR REQUIRED TO SEAL THE FORM LINER RELIEF SHALL BE INCLUDED IN THIS ITEM. TO ACCOUNT FOR THE SURFACE VARIATIONS DUE TO THE FORM LINERS, AN EXTRA 20 PERCENT HAS BEEN ADDED TO THE SEALING QUANTITIES FOR THE PURPOSE OF ESTIMATING.

ITEM 512 - SEALING OF CONCRETE SURFACES (EPOXY-URETHANE), AS PER PLAN
APPLY SEALER TO ALL EXPOSED SURFACES INCLUDING THE CAST IN PLACE CONCRETE FACING AND COPING, MOMENT SLAB PARAPET, 2 INCH HORIZONTAL SURFACE ON THE TOP OF THE MOMENT SLAB FOOTING, MSE WALL PANELS, MSE WALL COPING AND THE 6 INCH THICK CONCRETE SLAB BETWEEN THE MSE COPING AND THE PARAPET. THE FINISH COAT COLOR SHALL BE AS REQUIRED BY THE LANDSCAPING PLANS. SEE LANDSCAPING PLANS FOR COLOR INFORMATION. THE ADDITIONAL MATERIAL AND LABOR REQUIRED TO SEAL THE FORM LINER RELIEF SHALL BE INCLUDED IN THIS ITEM. TO ACCOUNT FOR THE SURFACE VARIATIONS DUE TO THE FORM LINERS, AN EXTRA 20 PERCENT HAS BEEN ADDED TO THE SEALING QUANTITIES FOR THE PURPOSE OF ESTIMATING.

ITEM 512 - TYPE 2 WATERPROOFING, AS PER PLAN
TYPE 2 WATERPROOFING SHALL BE ATTACHED TO THE WOOD LAGGING, CENTERED AT ALL EXPANSION AND CONTRACTION JOINTS VERTICALLY FROM THE TOP OF THE TIMBER LAGGING DOWN TO THE TOP OF THE POROUS BACKFILL. TYPE 2 WATERPROOFING SHALL ALSO BE ATTACHED TO THE BACK SIDE OF THE CAST IN PLACE CONCRETE FACING AND COPING ABOVE THE TIMBER LAGGING AT ALL EXPANSION AND CONTRACTION JOINTS.

PAYMENT FOR ALL LABOR, EQUIPMENT AND MATERIAL FOR THE WORK OUTLINED ABOVE SHALL BE INCLUDED IN THE PAYMENT PER SQUARE YARD CONTRACT PRICE FOR ITEM 512, TYPE 2 WATERPROOFING, AS PER PLAN.

ITEM 513 - WELDED STUD SHEAR CONNECTORS, AS PER PLAN
STEEL STUDS SHALL BE WELDED ACCORDING TO C&MS 513.22 AND AS SHOWN ON THE PLANS TO THE FRONT FLANGES OF THE SOLDIER PILES FOR CONNECTION OF THE REINFORCED CONCRETE FACING. STUDS SHALL BE SPACED AT 12 INCHES VERTICALLY STARTING 6 INCHES BELOW THE TOP OF THE PILE. THE CONTRACTOR SHALL BE RESPONSIBLE FOR THE PROTECTION OF ALL WELDED AND ACCEPTED STEEL STUDS AGAINST DAMAGE UNTIL THE PERMANENT CAST IN PLACE REINFORCED CONCRETE FACING IS CAST. ALL DAMAGED STUDS SHALL BE REPLACED AT NO EXTRA COST TO THE DEPARTMENT.

PAYMENT FOR ALL LABOR, EQUIPMENT AND MATERIAL FOR THE WORK OUTLINED ABOVE SHALL BE INCLUDED IN THE PAYMENT PER EACH CONTRACT PRICE FOR ITEM 513, WELDED STUD SHEAR CONNECTORS, AS PER PLAN.

ITEM 516 - JOINT SEALER, AS PER PLAN
HOT APPLIED JOINT SEALER SHALL BE PLACED ABOVE THE 1 INCH PREFORMED EXPANSION JOINT FILLER THAT IS PLACED BETWEEN THE MOMENT SLAB AND THE ROADWAY ASPHALT. JOINT SEALER SHALL MEET THE REQUIREMENTS OF C&MS 705.04.

ITEM 518 - PREFABRICATED GEOCOMPOSITE DRAIN
THIS WORK CONSISTS OF FURNISHING AND PLACING PREFABRICATED GEOCOMPOSITE DRAIN (PGD) AGAINST THE TIMBER LAGGING OR AGAINST THE CONCRETE WALL FACING WHERE THE TIMBER LAGGING IS NOT PRESENT.

FURNISH PGD CONSISTING OF A DRAINAGE CORE WITH A GEOTEXTILE FABRIC BONDED TO AT LEAST ONE SIDE. USE CORE MATERIAL THAT CONSISTS OF A STABLE, POLYMER PLASTIC MATERIAL WITH A CUSPATED OR GEONET STRUCTURE. THE CORE MATERIAL SHALL HAVE SUFFICIENT FLEXIBILITY TO WITHSTAND BENDING AND HANDLING DURING INSTALLATION WITHOUT DAMAGE. FURNISH GEOTEXTILE COMPOSED OF STRONG ROT-PROOF POLYMERIC FIBERS FORMED INTO A WOVEN OR NON-WOVEN FABRIC. FURNISH PGD CONFORMING TO THE FOLLOWING REQUIREMENTS. FURNISH MANUFACTURER'S CERTIFIED TEST DATA.

	PROPERTY	TEST METHOD	VALUE
CORE	THICKNESS	ASTM D5199	0.4 INCH
	COMPRESSIVE STRENGTH	ASTM D1621	13,650 PSF MIN.
	FLOW RATE	ASTM D4716	9 TO 25 GPM/FT.
FABRIC	APPARENT OPENING SIZE	ASTM D4751	0.3 MM MAX.
	FLOW RATE	ASTM D4491	40 GPM/ SQ.FT. MIN.
	GRAB TENSILE STRENGTH	ASTM D4632	90 LBS MIN.
	CBR PUNCTURE	ASTM D6241	65 LBS MIN.

PLACE PGD BETWEEN THE SOLDIER PILES, INCLUDING THE CANTILEVERED PORTION AT THE END OF THE WALL. PLACE THE SIDE FACED WITH THE GEOTEXTILE AGAINST THE TIMBER LAGGING, FACING TOWARDS THE RETAINED GROUND, AND SECURE THE PGD TO THE LAGGING. USE NAILS AND WASHERS AT LEAST 1 INCH DIAMETER IN SIZE TO SECURE THE PGD ALONG ITS EDGES AT A MAXIMUM SPACING OF 4 FEET.

SPLICE ABUTTING SECTIONS TOGETHER BY OVERLAPPING THE GEOTEXTILE FLAP (IF PROVIDED) ON ONE SECTION WITH THE ADJACENT SECTION OF PGD. OVERLAP THE GEOTEXTILE IN A SHINGLED OVERLAP SO THAT THE UPPER GEOTEXTILE IS ON TOP OF THE LOWER GEOTEXTILE. IF A GEOTEXTILE FLAP IS NOT PROVIDED, COVER THE SEAM WITH A 12 INCH WIDE STRIP OF GEOTEXTILE FABRIC CENTERED OVER THE SEAM AND SECURED IN PLACE USING 3 INCH WIDE WATERPROOF PLASTIC TAPE.

SEAL ALL EXPOSED EDGES OF THE CORE MATERIAL TO PREVENT SOIL INTRUSION. SEAL EXPOSED EDGES BY FOLDING THE GEOTEXTILE FLAPS OVER AND AROUND THE PGD OR, IF A FLAP IS NOT PROVIDED, COVERING THE EXPOSED EDGE WITH A 12 INCH WIDE STRIP OF GEOTEXTILE FABRIC, TAPING THE STRIP TO THE PGD GEOTEXTILE 8 INCHES FROM THE EXPOSED EDGE, AND FOLDING THE REMAINING 4 INCHES OVER AND AROUND THE PGD. SECURE LOOSE EDGES OF THE GEOTEXTILE FABRIC WITH 3 INCH WIDE WATERPROOF PLASTIC TAPE.

REPAIR ANY DAMAGE TO THE GEOTEXTILE FABRIC BY COVERING WITH A PATCH WHICH OVERLAPS THE DAMAGED AREA AND EXTENDS AT LEAST 6 INCHES BEYOND THE EDGE OF THE DAMAGED AREA. TAPE THE EDGES OF THE PATCH IN PLACE USING 3 INCH WIDE WATERPROOF PLASTIC TAPE. IF THE CORE OF THE PGD IS DAMAGED, REPLACE IT WITH A NEW SECTION OF PGD AND SPLICE AS DESCRIBED ABOVE.

WHERE SHOWN ON THE PLANS, PLACE THE BOTTOM OF THE PGD ADJACENT TO A PERFORATED DRAINAGE COLLECTION PIPE AND POROUS BACKFILL AND COVER WITH GEOTEXTILE FABRIC. ENSURE A CONTINUOUS DRAINAGE PATH FROM THE PGD CORE TO THE PIPE.

IF TIMBER LAGGING IS NOT REQUIRED BECAUSE THE PORTION OF THE WALL IS ABOVE THE EXISTING GROUND, ATTACH THE PGD TO THE BACK FACE OF THE CONCRETE WALL FACING UNTIL BACKFILL IS PLACED.

For Reference Only
Preliminary Plans

GENERAL NOTES - 1
WALL AC
ALONG NORTH SIDE OF I-90 WB

SFN N/A
DESIGN AGENCY B&N burgessniple.com
DESIGNER CAS | CHECKER ODW
REVIEWER DWL 06/22/22
PROJECT ID 82382
SUBSET 3 | TOTAL 17
SHEET 1176 | TOTAL 2696

CUY-90-16.28 (CCG3A)
MODEL: Sheet PAPERSIZE: 34x22 (in.) DATE: 6/9/2025 TIME: 10:29:09 AM USER: Tolga.Feran
pw:\\mb-us-pw.bentley.com:mb-us-pw-03\Documents\Cleveland_OH\01_Projects\ODOT\District12\82382\400-Engineering\Structures\WALL_AC\Sheets\82382_AC_WN001.dgn

ITEM 524 - DRILLED SHAFTS, 30" DIAMETER ABOVE BEDROCK, AS PER PLAN
THIS WORK CONSISTS OF FURNISHING AND INSTALLING DRILLED SHAFTS FOR SOLDIER PILE WALLS. THE DRILLED SHAFTS ARE REINFORCED WITH SOLDIER PILES INSTEAD OF REINFORCING STEEL CAGES. THE SOLDIER PILES EXTEND ABOVE THE TOP OF THE DRILLED SHAFTS. FURNISH AND INSTALL THE DRILLED SHAFTS ACCORDING TO C&MS 524 EXCEPT AS MODIFIED AND SUPPLEMENTED BELOW.

EXCAVATE THE HOLE FOR THE DRILLED SHAFT WITHIN 3 INCHES OF THE PLAN LOCATION. PLACE THE SOLDIER PILE WITHIN THE HOLE SO IT IS VERTICAL. PLACE THE SOLDIER PILE SO THAT THE FLANGES ARE PARALLEL TO THE CENTERLINE OF THE ROW OF DRILLED SHAFTS. DO NOT ALLOW THE ORIENTATION OF THE FLANGES TO VARY BY MORE THAN 10 DEGREES. SUPPORT THE PILE SO THAT IT DOES NOT MOVE DURING CONCRETE PLACEMENT.

USE CLASS QC5 CONCRETE ACCORDING TO C&MS 511 TO FILL THE HOLE TO THE TOP OF THE DRILLED SHAFT (ELEVATION "C"). THE CONTRACTOR MAY PLACE CONCRETE USING THE FREE FALL METHOD PROVIDING THE DEPTH OF WATER IN THE SHAFT IS LESS THAN 6 INCHES AND THE CONCRETE FALLS WITHOUT STRIKING THE SIDES OF THE HOLE. PORING THE CONCRETE ALONG THE WEB OF THE SOLDIER PILE IS ACCEPTABLE.

CHECK THE POSITION, THE VERTICAL ALIGNMENT AND THE ORIENTATION OF THE SOLDIER PILE IMMEDIATELY AFTER CONCRETE PLACEMENT. MAKE CORRECTIONS AS NECESSARY TO THE ABOVE TOLERANCES.

FILL THE HOLE ABOVE THE CONCRETE TO THE EXISTING GROUND SURFACE WITH LOW STRENGTH MORTAR BACKFILL (LSM) PER C&MS 613.

REMOVE CONCRETE AND LSM AS NECESSARY FROM AROUND THE SOLDIER PILE IN ORDER TO PLACE THE LAGGING. WAIT AT LEAST 12 HOURS AFTER PLACING CONCRETE BEFORE PLACING LAGGING.

ITEM SPECIAL - RETAINING WALL, TIMBER LAGGING
THIS ITEM CONSISTS OF FURNISHING AND INSTALLING UNTREATED HARDWOOD LAGGING TO SERVE AS TEMPORARY LAGGING FOR THE SOLDIER PILE WALL. THE LAGGING SHALL CONSIST OF HARDWOOD TIMBER WITH 3 INCH BY 8 INCH DIMENSIONS AND SHALL BE OF A GRADE AND TYPE WITH AN ALLOWABLE EXTREME FIBER STRESS IN BENDING OF A MINIMUM OF 1 KSI. THE TIMBER MATERIAL SHALL BE DOUGLAS FIR-LARCH DENSE NO. 1, SELECT STRUCTURAL OR DENSE SELECT STRUCTURAL. THE WOOD SHALL BE SEASONED, SOUND, AND FREE FROM DECAY AND INSECT ATTACK, WITH NO LOOSE AND/OR CLUSTER KNOTS. THE ENDS OF THE TIMBER SHALL BE SAWED SQUARE WITH THE AXIS OF THE TIMBER. THE TIMBER MEMBERS SHALL ALSO CONFORM TO C&MS 711.26. PROVIDE CERTIFICATION THAT THE TIMBER CONFORMS TO THE GRADE, SPECIES AND OTHER SPECIFIED REQUIREMENTS.

LAGGING SHALL BE PLACED IN A TOP-DOWN MANNER AS EXCAVATION PROCEEDS DOWNWARD. AT NO TIME SHOULD MORE THAN 3 FEET OF UNSUPPORTED EXCAVATION BE PERMITTED. REDUCE THE UNSUPPORTED HEIGHT AS NECESSARY TO PREVENT CAVING AND SLOUGHING OF THE SOILS BETWEEN THE SOLDIER PILES. PROVIDE ¼ INCH TO ½ INCH WOOD SPACERS TO PROVIDE HORIZONTAL JOINT SPACING BETWEEN THE LAGGING BOARDS TO PERMIT DRAINAGE.

HARDWOOD SHIMMING SHALL BE USED AS NEEDED TO MAINTAIN THE POSITIONING OF THE TIMBER MEMBERS AGAINST THE INTERIOR FLANGE FACE OF THE SOLDIER PILE DURING CONSTRUCTION OF THE RETAINING WALL SYSTEM. NO SHIM SHALL EXTEND BEYOND THE FLANGE OF THE H-PILE MORE THAN ¼ INCH AND NO SHIM SHALL EXTEND BEYOND THE TOP FACE OF THE TOP LAGGING.

THE DEPARTMENT WILL MEASURE THE TEMPORARY HARDWOOD LAGGING BY THE NUMBER OF SQUARE FEET. PAYMENT SHALL INCLUDE ALL LABOR, MATERIAL AND INCIDENTALS (INCLUDING HARDWOOD SHIMMING AND WOOD SPACERS) NECESSARY TO FURNISH AND INSTALL THE TEMPORARY HARDWOOD LAGGING.

ITEM 840 - MECHANICALLY STABILIZED EARTH WALL, AS PER PLAN
CONSTRUCTION AND PAYMENT FOR MECHANICALLY STABILIZED EARTH (MSE) WALLS SHALL BE IN ACCORDANCE WITH SUPPLEMENTAL SPECIFICATION 840 EXCEPT AS MODIFIED BELOW.

FOUNDATION BEARING RESISTANCE: THE WALL AC REINFORCED SOIL MASS, AS DESIGNED, PRODUCES A MAXIMUM STRENGTH LIMIT STATE BEARING PRESSURE OF 4.59 KIPS PER SQUARE FOOT. THE FACTORED BEARING RESISTANCE IS 9.50 KIPS PER SQUARE FOOT.

Preliminary Plans - For Reference Only

GENERAL NOTES - 2
WALL AC
ALONG NORTH SIDE OF I-90 WB

SFN N/A

DESIGN AGENCY B&N burgessniple.com

DESIGNER	CHECKER
CAS	ODW

REVIEWER DWL 06/22/22

PROJECT ID 82382

SUBSET	TOTAL
4	17

SHEET	TOTAL
1177	2696

CUY-90-16.28 (CCG3A)

MODEL: Sheet PAPERSIZE: 34x22 (in.) DATE: 3/27/2025 TIME: 10:54:36 PM USER: Julie.Ross
pw:\\mb-us-pw.bentley.com:mb-us-pw-03\Documents\Cleveland_OH\01_Projects\ODOT\District12\82382\400-Engineering\Structures\WALL_AC\Sheets\82382_AC_WN002.dgn

PARTICIPATION	ITEM	EXTENSION	TOTAL	UNIT	DESCRIPTION	REF. SHEET
ANCHORED SOLDIER PILE WITH LAGGING WALL						
01/IMS/04	503	21301	1	LS	UNCLASSIFIED EXCAVATION, AS PER PLAN	3/17
01/IMS/04	507	00400	1455	FT	STEEL PILES, MISC.: SOLDIER PILES HP14X73	3/17
01/IMS/04	509	10000	22971	LB	EPOXY COATED STEEL REINFORCEMENT	
01/IMS/04	511	46013	276	CY	CLASS QC1 CONCRETE WITH QC/QA, RETAINING/WINGWALL NOT INCLUDING FOOTING, AS PER PLAN	3/17
01/IMS/04	512	10001	266	SY	SEALING OF CONCRETE SURFACES, AS PER PLAN (PERMANENT GRAFFITI PROTECTION)	3/17
01/IMS/04	512	10101	646	SY	SEALING OF CONCRETE SURFACES (EPOXY-URETHANE), AS PER PLAN	3/17
01/IMS/04	512	33001	40	SY	TYPE 2 WATERPROOFING, AS PER PLAN	3/17
01/IMS/04	513	20001	663	EACH	WELDED STUD SHEAR CONNECTORS, AS PER PLAN	3/17
01/IMS/04	518	20000	570	SY	PREFABRICATED GEOCOMPOSITE DRAIN	
01/IMS/04	518	21200	20	CY	POROUS BACKFILL WITH GEOTEXTILE FABRIC	
01/IMS/04	518	40000	250	FT	6" PERFORATED CORRUGATED PLASTIC PIPE	
01/IMS/04	518	40010	20	FT	6" NON-PERFORATED CORRUGATED PLASTIC PIPE, INCLUDING SPECIALS	
01/IMS/04	524	94603	775	FT	DRILLED SHAFTS, 30" DIAMETER ABOVE BEDROCK, AS PER PLAN	4/17
01/IMS/04	SPECIAL	530E51020	5225	SF	RETAINING WALL, TIMBER LAGGING	4/17
01/IMS/04	866	00100	9	EACH	GROUND ANCHOR, 122 KIP MAX TEST LOAD	
01/IMS/04	866	00100	22	EACH	GROUND ANCHOR, 113 KIP MAX TEST LOAD	
01/IMS/04	866	00100	9	EACH	GROUND ANCHOR, 100 KIP MAX TEST LOAD	
01/IMS/04	866	00100	22	EACH	GROUND ANCHOR, 77 KIP MAX TEST LOAD	
01/IMS/04	866	00100	22	EACH	GROUND ANCHOR, 73 KIP MAX TEST LOAD	
01/IMS/04	866	00300	1	LS	INVESTIGATIVE ANCHOR PULLOUT TESTS	
01/IMS/04	866	00400	5	EACH	PERFORMANCE TEST	
01/IMS/04	866	00500	2	EACH	EXTENDED CREEP TEST	
MSE WALL						
01/IMS/04	203	20000	120	CY	EMBANKMENT	
01/IMS/04	203	35120	213	CY	GRANULAR MATERIAL, TYPE C	
01/IMS/04	512	10001	329	SY	SEALING OF CONCRETE SURFACES, AS PER PLAN (PERMANENT GRAFFITI PROTECTION)	3/17
01/IMS/04	512	10101	570	SY	SEALING OF CONCRETE SURFACES (EPOXY-URETHANE), AS PER PLAN	3/17
01/IMS/04	601	11000	28	SY	RIPRAP, TYPE D	
01/IMS/04	840	20001	5365	SF	MECHANICALLY STABILIZED EARTH WALL, AS PER PLAN	4/17
01/IMS/04	840	21000	1330	CY	WALL EXCAVATION	
01/IMS/04	840	22000	638	SY	FOUNDATION PREPARATION	
01/IMS/04	840	23000	2631	CY	SELECT GRANULAR BACKFILL	
01/IMS/04	840	25010	810	FT	6" DRAINAGE PIPE, PERFORATED	
01/IMS/04	840	26000	381	FT	CONCRETE COPING	
01/IMS/04	840	26050	4300	SF	AESTHETIC SURFACE TREATMENT	
01/IMS/04	840	27000	5	DAY	ON SITE ASSISTANCE	
01/IMS/04	840	28000	1	LS	SGB INSPECTION AND COMPACTION TESTING	
MOMENT SLAB AND PARAPET						
01/IMS/04	509	10000	65531	LB	EPOXY COATED STEEL REINFORCEMENT	
01/IMS/04	509	30020	9490	FT	NO. 4 GFRP DEFORMED BARS	
01/IMS/04	511	53012	387	CY	CLASS QC2 CONCRETE, MISC.: CONCRETE MOMENT SLAB AND BARRIER WITH QC/QA	3/17
01/IMS/04	512	10101	570	SY	SEALING OF CONCRETE SURFACES (EPOXY-URETHANE), AS PER PLAN	3/17
01/IMS/04	516	31001	634	FT	JOINT SEALER, AS PER PLAN	3/17

Preliminary Plans - For Reference Only

ABBREVIATIONS:

THE FOLLOWING ABBREVIATIONS HAVE BEEN USED THROUGHOUT THESE PLANS TO INDICATE THE DESIGNATIONS CONTAINED IN THE LEGEND BELOW:

ABUT. - ABUTMENT
APPR. - APPROACH
℄ - BASELINE
BOT. - BOTTOM
BRG. - BEARING
BRGS. - BEARINGS
BTA - BRIDGE TERMINAL ASSEMBLY
℄ - CENTERLINE
C/C - CENTER TO CENTER
CIP - CAST-IN-PLACE
C.J. - CONSTRUCTION JOINT
CLR. - CLEARANCE
CP - COMPLETE PENETRATION BUTT WELD
C&MS - CONSTRUCTION AND MATERIAL SPECIFICATIONS
CONC. - CONCRETE
CONST. - CONSTRUCTION
C.P.P. - CORRUGATED PLASTIC PIPE
CS - INDICATES BUTT WELD SUBJECT TO COMPRESSIVE STRESSES ONLY
CU YD - CUBIC YARD
CVN - CHARPY V-NOTCH TESTING
DIA. - DIAMETER
E.F. - EACH FACE
ELEV., EL. - ELEVATION
EQ. - EQUAL
EX. - EXISTING
EXP. - EXPANSION
F.A. - FORWARD ABUTMENT
F.F. - FAR FACE
F/F - FACE TO FACE
F.S. - FIELD SPLICE
FT/FT - FOOT PER FOOT
FTG. - FOOTING
FWD. - FORWARD
GEN. - GENERAL
INT. - INTEGRAL
LF - LEFT FORWARD
LT. - LEFT
MAX. - MAXIMUM
M.E. - MATCH EXISTING
MIN. - MINIMUM
MISC. - MISCELLANEOUS
MOT - MAINTENANCE OF TRAFFIC
NPCPP - NONPERFORATED CORRUGATED PLASTIC PIPE
N.F. - NEAR FACE
NO./# - NUMBER
O/O - OUT TO OUT
P.C.P.P - PERFORATED CORRUGATED PLASTIC PIPE
P.E.J.F. - PREFORMED EXPANSION JOINT FILLER
PG - PROFILE GRADE
PGL - PROFILE GRADE LINE
PROP. - PROPOSED
PT - POINT OF TANGENCY
PVC - POINT OF VERTICAL CURVATURE
PVI - POINT OF VERTICAL INTERSECTION
PVT - POINT OF VERTICAL TANGENCY
R - RADIUS
R.A. - REAR ABUTMENT
RCP - ROCK CHANNEL PROTECTION
RF - RIGHT FORWARD
RT. - RIGHT
R/W - RIGHT OF WAY
SAN. - SANITARY
SER. - SERIES
SHLDR. - SHOULDER
SHT. - SHEET
S.O. - SERIES OF
SPA. - SPACES OR SPACING
SR - STATE ROUTE
STA. - STATION
STD. - STANDARD
STM. - STORM
STR. - STRAIGHT
TBM - TEMPORARY BENCH MARK
TEMP. - TEMPORARY
T.O.S. - TOE OF SLOPE
T/PARAPET - TOE OF PARAPET
T/T - TOE TO TOE
TYP. - TYPICAL
U.G. - UNDERGROUND
U.N.O - UNLESS NOTED OTHERWISE
VAR. - VARIES
VC - VERTICAL CURVE
VERT. - VERTICAL
W/O - WITHOUT

ESTIMATED QUANTITIES
WALL AC
ALONG NORTH SIDE OF I-90 WB

SFN
N/A

DESIGN AGENCY
B&N
burgessniple.com

DESIGNER	CHECKER
CAS	ODW

REVIEWER
DWL 06/22/22

PROJECT ID
82382

SUBSET	TOTAL
5	17

SHEET	TOTAL
1178	2696

CUY-90-16.28 (CCG3A)

MODEL: Sheet PAPERSIZE: 34x22 (in.) DATE: 3/27/2025 TIME: 10:54:41 PM USER: Julie.Ross
pw:\\mb-us-pw.bentley.com:mb-us-pw-03\Documents\Cleveland_OH\01_Projects\ODOT\District12\82382\400-Engineering\Structures\WALL_AC\Sheets\82382_AC_WQ001.dgn

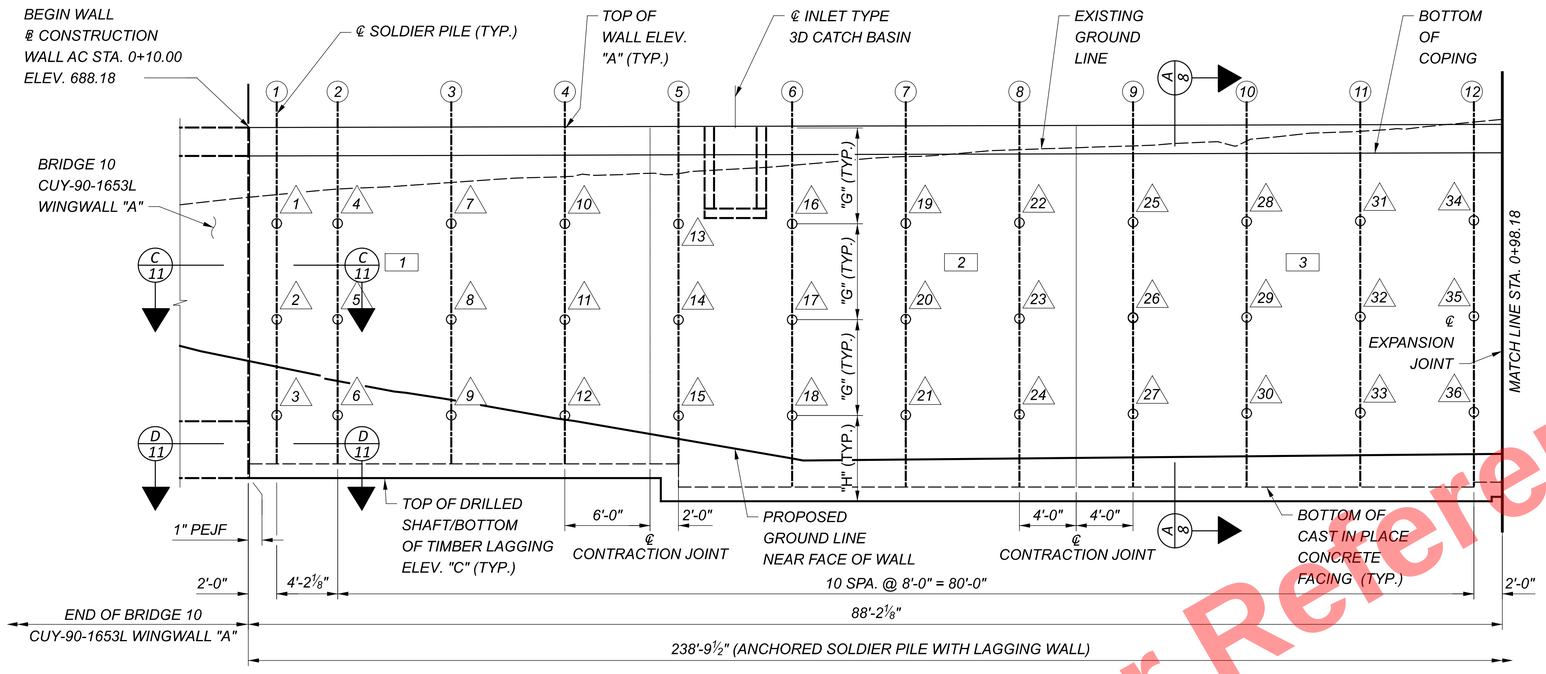

WALL ELEVATION

(FROM SOLDIER PILE NO. 1 THRU NO. 12)

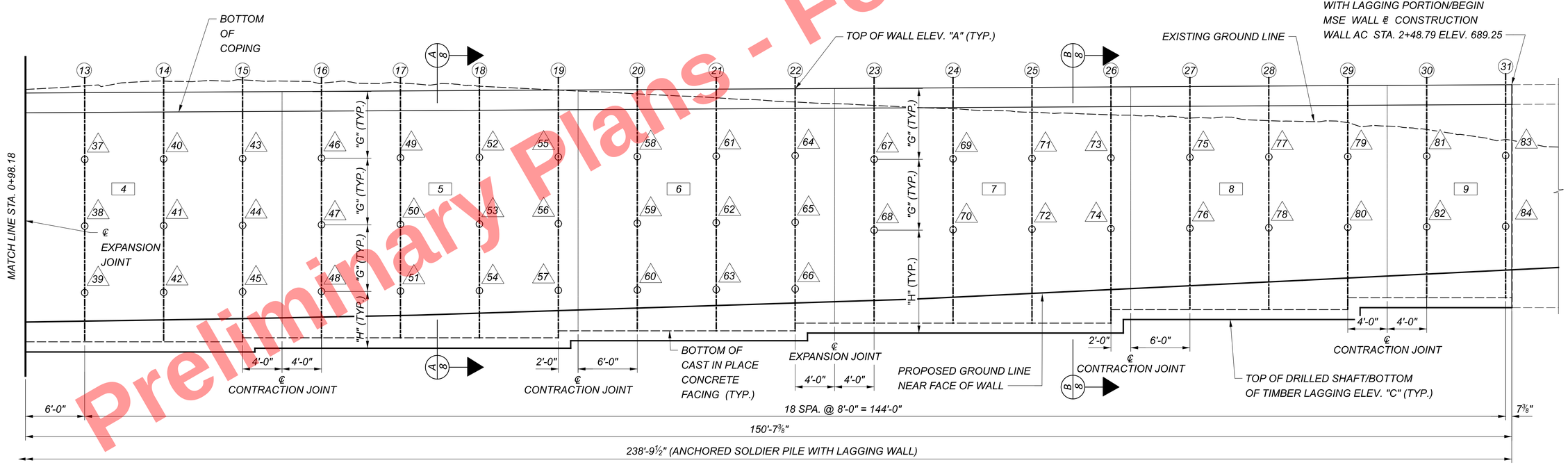

WALL ELEVATION

(FROM SOLDIER PILE NO. 13 THRU NO. 31)

NOTES:

1. ALL HORIZONTAL DIMENSIONS ARE MEASURED ALONG THE BASELINE CONSTRUCTION WALL AC.
2. DRILLED SHAFTS NOT SHOWN.
3. SEE SHEET 13 / 17 FOR SOLDIER PILE STATIONS AND OFFSETS.

LEGEND:

- [#] = WALL PANEL NUMBER
- (#) = DRILLED SHAFT /SOLDIER PILE NUMBER
- ○ = ANCHOR
- △ # = ANCHOR NUMBER

SOLDIER PILE AND ANCHOR WALL ELEVATION WALL AC ALONG NORTH SIDE OF I-90 WB

Preliminary Plans - For Reference Only

CUY-90-16.28 (CCG3A)

MODEL: Sheet PAPERSIZE: 34x22 (in.) DATE: 3/27/2025 TIME: 10:54:46 PM USER: Julie.Ross
pw:\\mb-us-pw.bentley.com:mb-us-pw-03\Documents\Cleveland_OH\01_Projects\ODOT\District12\82382\400-Engineering\Structures\WALL_AC\Sheets\82382_AC_WD006.dgn

SFN	N/A
DESIGN AGENCY	B&N burgessniple.com
DESIGNER	CAS
CHECKER	ODW
REVIEWER	DWL 06/22/22
PROJECT ID	82382
SUBSET	6
TOTAL	17
SHEET	1179
TOTAL	2696

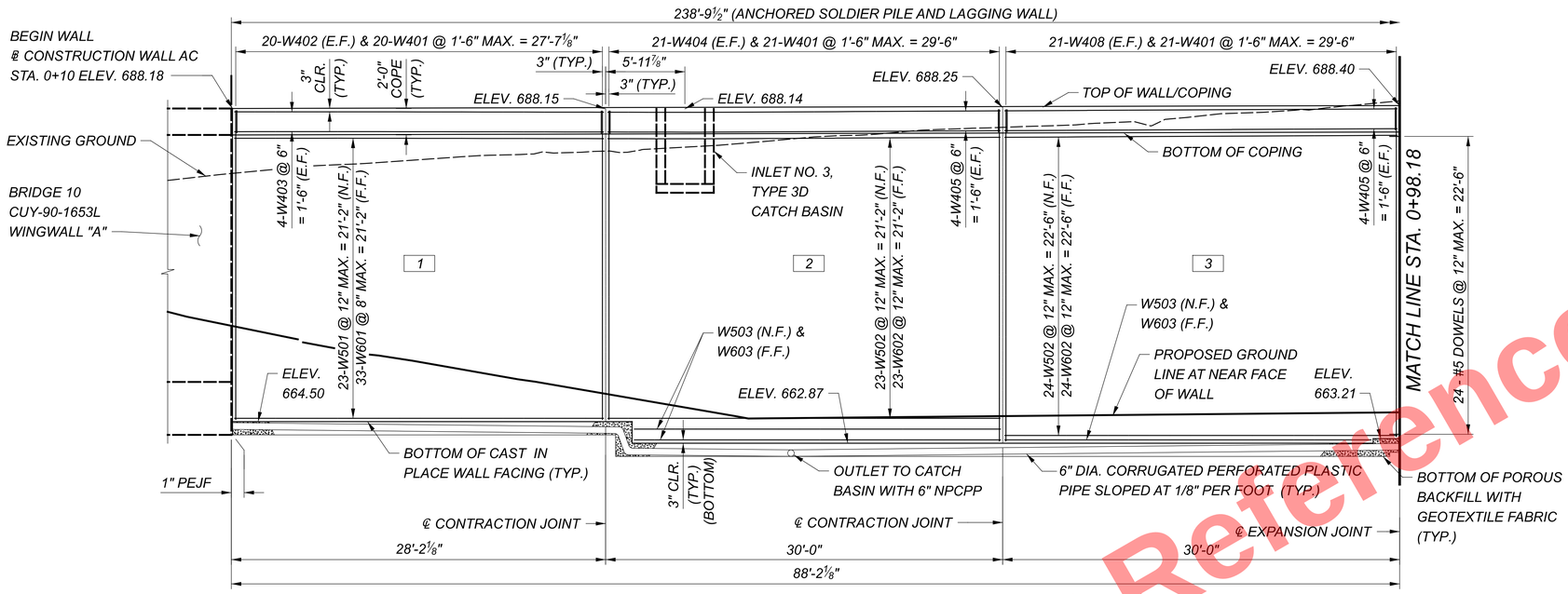

NEAR FACE WALL ELEVATION

NOTES:

1. ALL HORIZONTAL DIMENSIONS ARE MEASURED ALONG THE BASELINE CONSTRUCTION WALL AC.
2. SEE SHEET 9 OF 17 FOR CONTRACTION AND EXPANSION JOINT DETAILS FOR WALL AND COPING.
3. DO NOT EXTEND REINFORCEMENT THROUGH THE CONTRACTION AND EXPANSION JOINTS.
4. ALL LAPS IN THE VERTICAL #4 REINFORCING STEEL SHALL BE A MINIMUM 2'-0" IN LENGTH.
5. ADJUST BAR SPACING AS NEEDED TO CLEAR ANCHORS AND STUDS

LEGEND:

#	= WALL PANEL NUMBER
E.F.	= EACH FACE
F.F.	= FAR FACE
N.F.	= NEAR FACE

END C.I.P. SOLDIER PILE WALL / BEGIN MSE WALL
℄ CONSTRUCTION WALL AC STA. 2+48.79 ELEV. 689.25

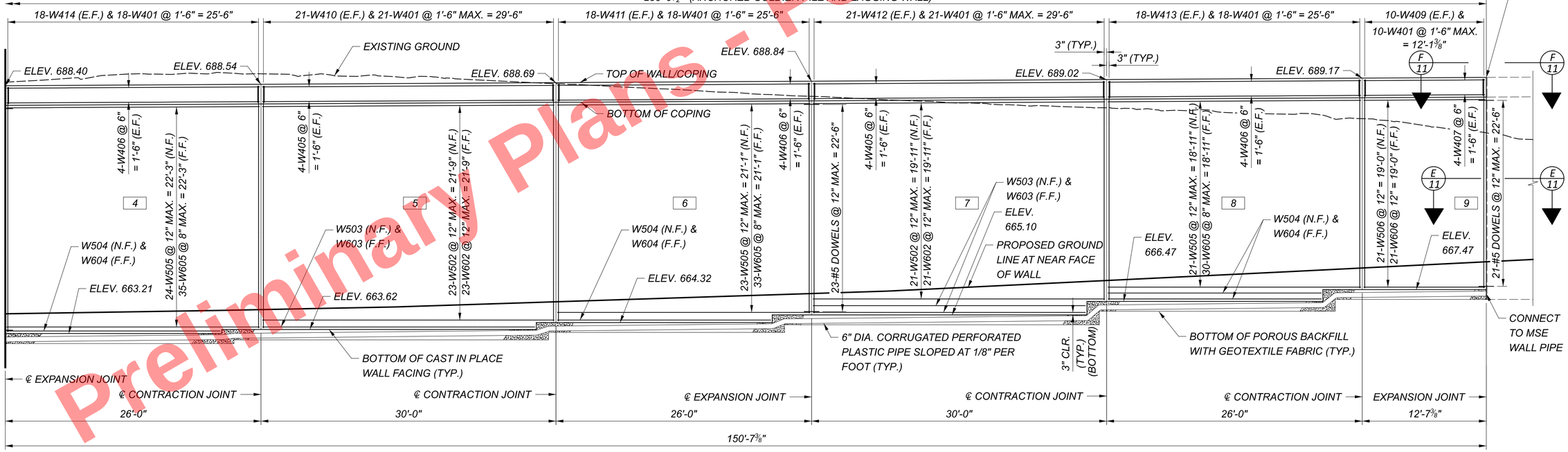

NEAR FACE WALL ELEVATION

C.I.P. SOLDIER PILE WALL REINFORCING DETAILS
WALL AC
ALONG NORTH SIDE OF I-90 WB

SFN	N/A
DESIGN AGENCY	B&N burgessniple.com
DESIGNER	MRC
CHECKER	MAB
REVIEWER	DWL 06/22/22
PROJECT ID	82382
SUBSET	7
TOTAL	17
SHEET	1180
TOTAL	2696

CUY-90-16.28 (CCG3A)

MODEL: Sheet PAPERSIZE: 34x22 (in.) DATE: 3/27/2025 TIME: 10:54:51 PM USER: Julie.Ross
pw:\\mb-us-pw.bentley.com:mb-us-pw-03\Documents\Cleveland_OH\01_Projects\ODOT\District12\82382\400-Engineering\Structures\WALL_AC\Sheets\82382_AC_WD007.dgn
82382_AC_WD007.dgn

Preliminary Plans - For Reference Only

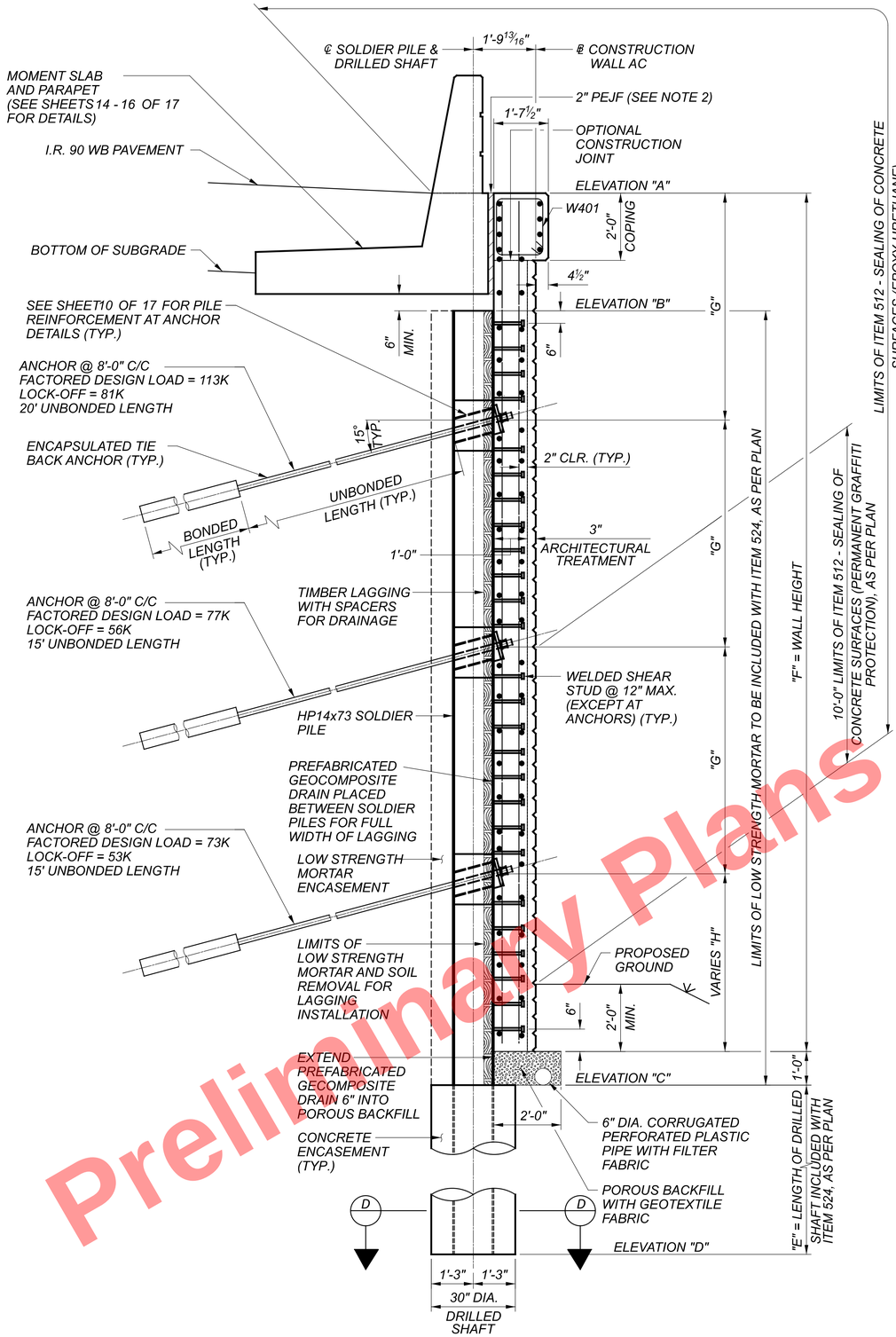

SECTION A-A - PANELS 1-6

(3 ANCHORS)

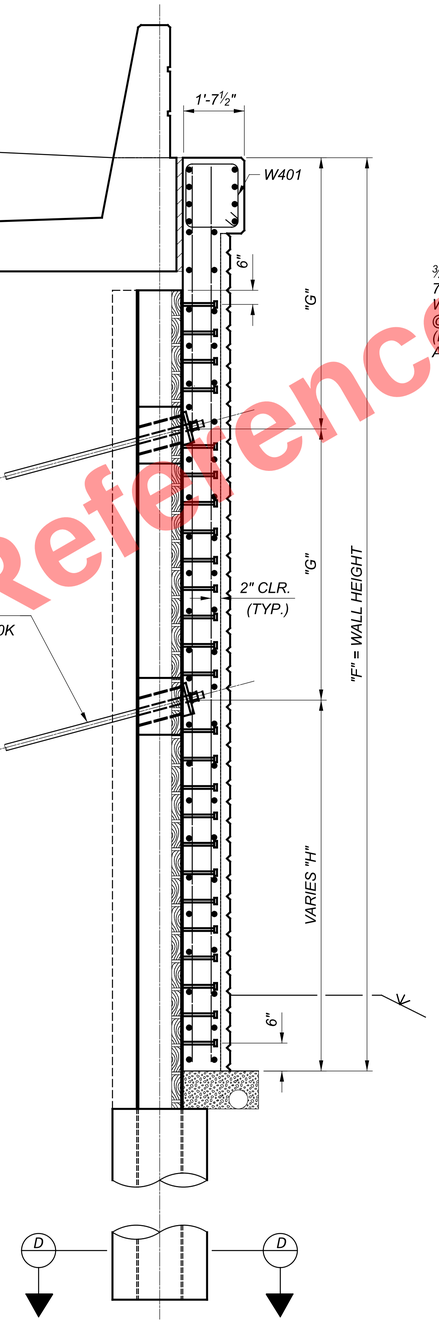

SECTION B-B - PANELS 7-9

(2 ANCHORS)
(SEE SECTION A-A FOR CALLOUTS AND INFORMATION NOT SHOWN)

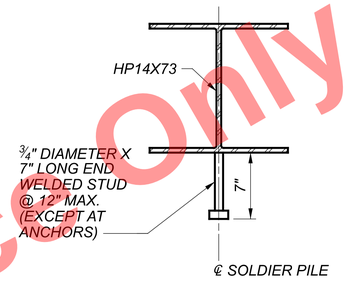

STUD DETAIL

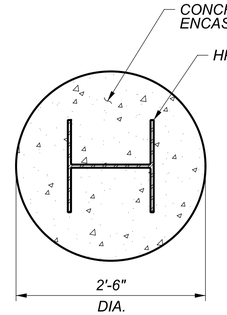

SECTION D-D

NOTES:

1. SEE LANDSCAPING PLANS FOR ARCHITECTURAL TREATMENT (AESTHETIC PATTERNS) ON FACE OF CAST IN PLACE WALL.
2. 2" PEJF IS INCLUDED WITH CLASS QC2 CONCRETE, MISC.: MOMENT SLAB AND PARAPET WITH QC/QA FOR PAYMENT.
3. SEE SHEET 6 OF 17 FOR LOCATIONS OF SECTIONS A-A AND B-B.
4. SOLDIER PILE NUMBER 30 AND 31 SHALL HAVE AN UNBONDED LENGTH OF 55' FOR THE TOP ANCHORS AND 30' FOR THE BOTTOM ANCHORS. CONTRACTOR SHALL PROVIDE A MINIMUM 15'-0" VERTICAL CLEARANCE FROM THE BEGINNING OF THE BONDED LENGTH TO BOTTOM OF PROPOSED GEOFOAM BACKFILL.
5. SEE SHEET 13 / 17 FOR ADDITIONAL INFORMATION.

Preliminary Plans - For Reference Only

SECTIONS AND DETAILS - ANCHORED SOLDIER PILE WITH LAGGING WALL - 1 WALL AC ALONG NORTH SIDE OF I-90 WB

SFN	N/A
DESIGN AGENCY	B&N burgessniple.com
DESIGNER	CAS
CHECKER	ODW
REVIEWER	DWL 06/22/22
PROJECT ID	82382
SUBSET	8
TOTAL	17
SHEET	1181
TOTAL	2696

CUY-90-16.28 (CCG3A)

MODEL: Sheet PAPERSIZE: 34x22 (in.) DATE: 3/27/2025 TIME: 10:54:56 PM USER: Julie.Ross
pw:\\tnb-us-pw.bentley.com:tnb-us-pw-03\Documents\Cleveland_OH\01_Projects\ODOT\District12\82382\400-Engineering\Structures\WALL_AC\Sheets\82382_AC_WD001.dgn

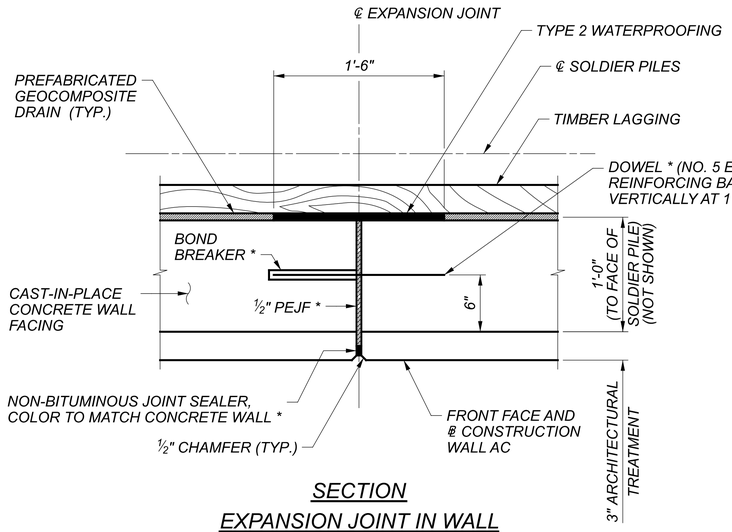

SECTION
EXPANSION JOINT IN WALL

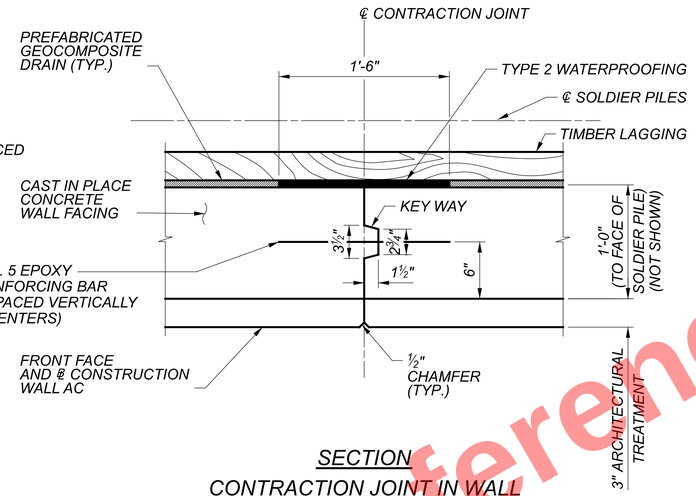

SECTION
CONTRACTION JOINT IN WALL

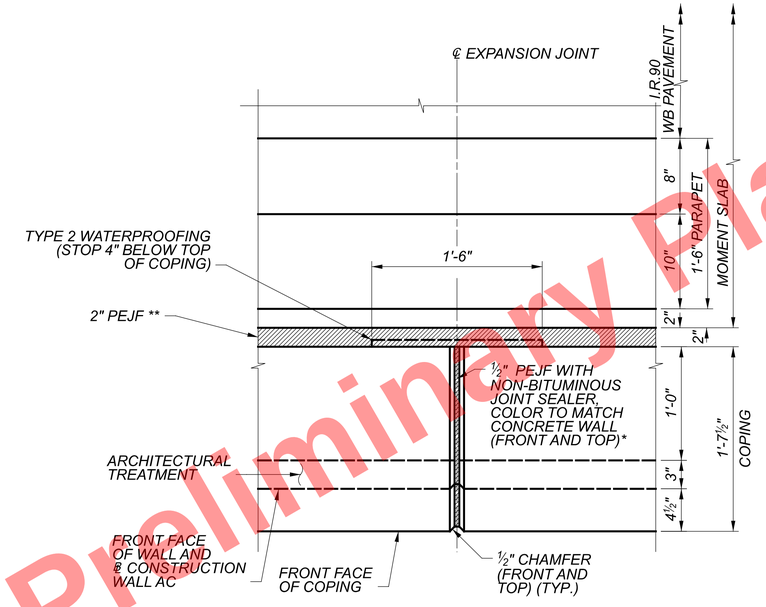

PLAN - COPING
EXPANSION JOINT

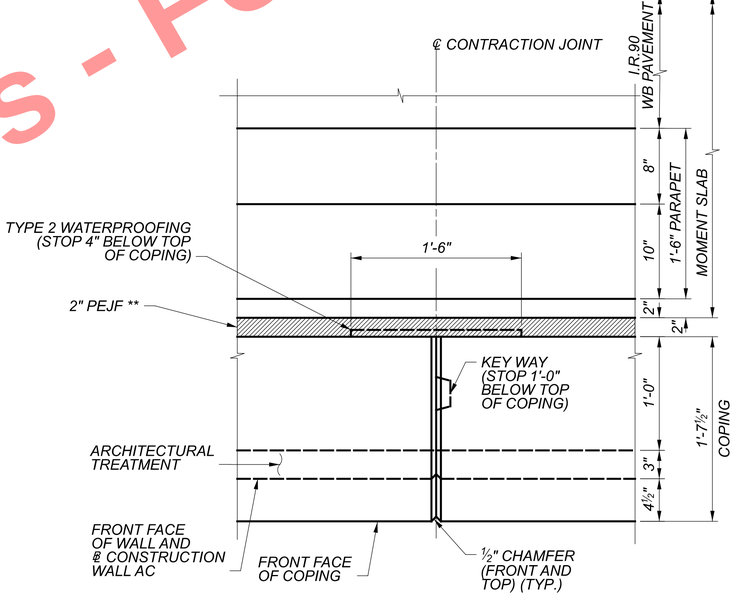

PLAN - COPING
CONTRACTION JOINT

LEGEND:

** = INCLUDE WITH ITEM 511 - CLASS QC1 CONCRETE WITH QC/QA, RETAINING/WINGWALL NOT INCLUDING FOOTING, AS PER PLAN FOR PAYMENT.*

*** = INCLUDE WITH ITEM 511 - CLASS QC2 CONCRTE, MISC.: MOMENT SLAB AND PARAPET WITH QC/QA FOR PAYMENT.*

Preliminary Plans - Not For Reference Only

SECTIONS AND DETAILS - ANCHORED SOLDIER PILE WITH LAGGING WALL - 2
WALL AC
ALONG NORTH SIDE OF I-90 WB

SFN N/A

DESIGN AGENCY B&N burgessniple.com

DESIGNER	CHECKER
CAS	ODW

REVIEWER DWL 06/22/22

PROJECT ID 82382

SUBSET	TOTAL
9	17

SHEET	TOTAL
1182	2696

CUY-90-16.28 (CCG3A)

MODEL: Sheet PAPERSIZE: 34x22 (in.) DATE: 3/27/2025 TIME: 10:55:02 PM USER: Julie.Ross
pw:\\mb-us-pw.bentley.com:mb-us-pw-03\Documents\Cleveland_OH\01_Projects\ODOT\District12\82382\400-Engineering\Structures\WALL_AC\Sheets\82382_AC_WD002.dgn

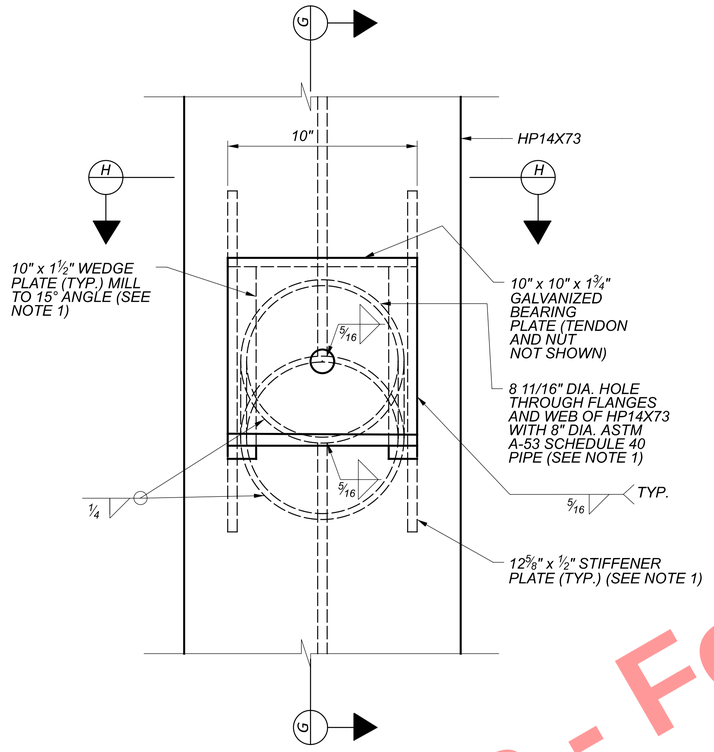

ELEVATION - HP14X73 PILE REINFORCEMENT AT ANCHOR

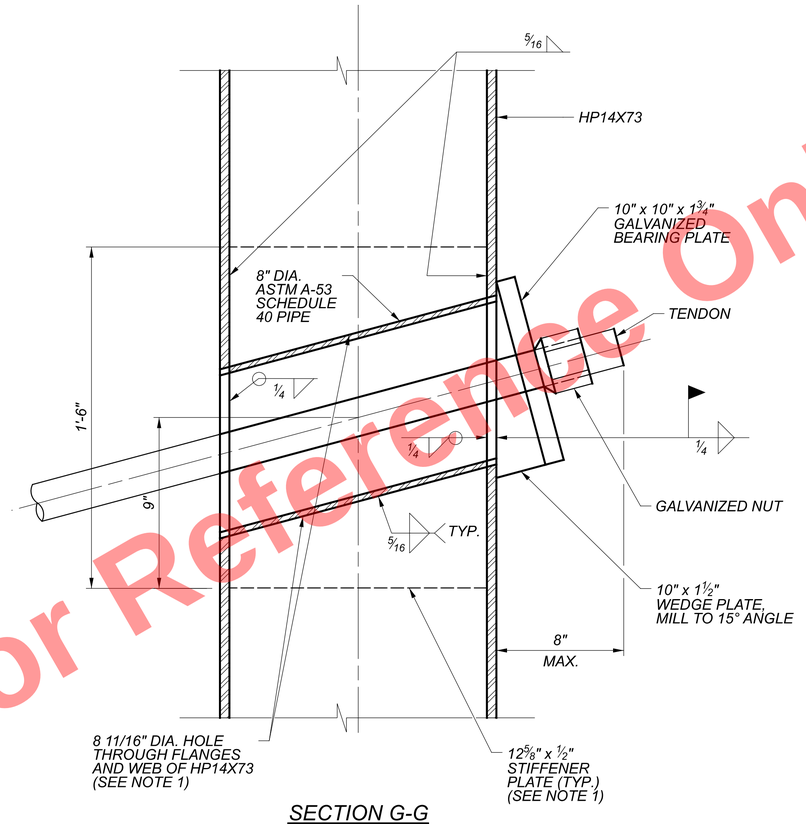

SECTION G-G

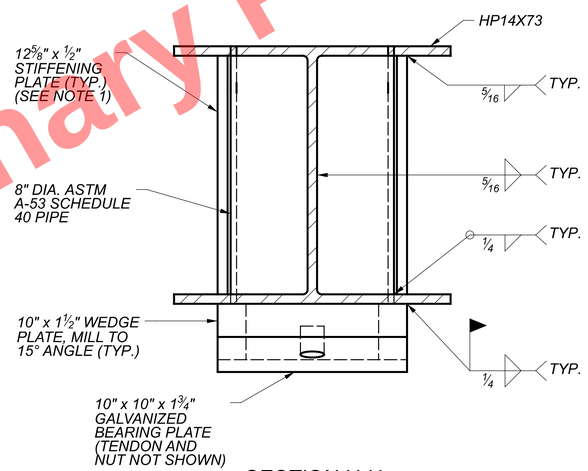

SECTION H-H

NOTES:

1. SOLDIER PILES SHALL BE PRE-FABRICATED WITH THE ANCHOR DETAIL SHOWN BEFORE INSTALLATION INTO THE DRILLED CONCRETE SHAFT. BEARING PLATES, WEDGE PLATES, STIFFENERS, STEEL TRUMPET PIPE, GALVANIZING, AND ANY ADDITIONAL ANCHOR MODIFICATIONS TO THE SOLDIER PILES ARE INCLUDED WITH THE APPROPRIATE ITEM 866 - GROUND ANCHOR, 73 - 122 KIP MAX. TEST LOAD FOR PAYMENT.

Preliminary Plans - For Reference Only

SECTIONS AND DETAILS - ANCHORED SOLDIER PILE WITH LAGGING WALL - 3
WALL AC
ALONG NORTH SIDE OF I-90 WB

SFN N/A

DESIGN AGENCY B&N burgessniple.com

DESIGNER	CHECKER
CAS	ODW

REVIEWER DWL 06/22/22

PROJECT ID 82382

SUBSET	TOTAL
10	17

SHEET	TOTAL
1183	2696

CUY-90-16.28 (CCG3A)

MODEL: Sheet PAPERSIZE: 34x22 (in.) DATE: 3/27/2025 TIME: 10:55:07 PM USER: Julie.Ross
pw:\\mb-us-pw.bentley.com:mb-us-pw-03\Documents\Cleveland_OH01_Projects\ODOT\District12\82382400-Engineering\Structures\WALL_AC\Sheets\82382_AC_WD003.dgn

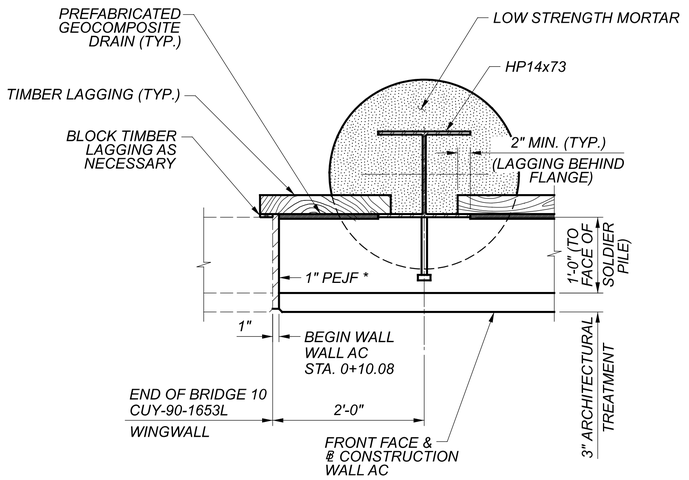

SECTION C-C

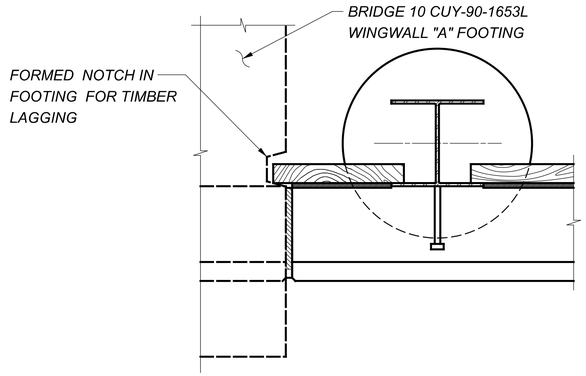

SECTION D-D

(SEE SECTION C-C FOR CALLOUTS AND INFORMATION NOT SHOWN)

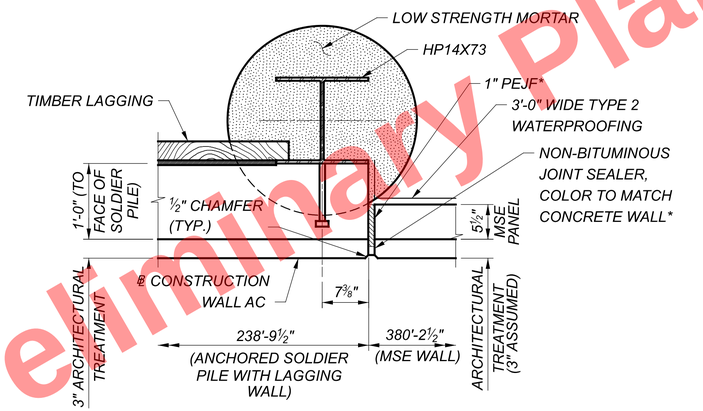

SECTION E-E

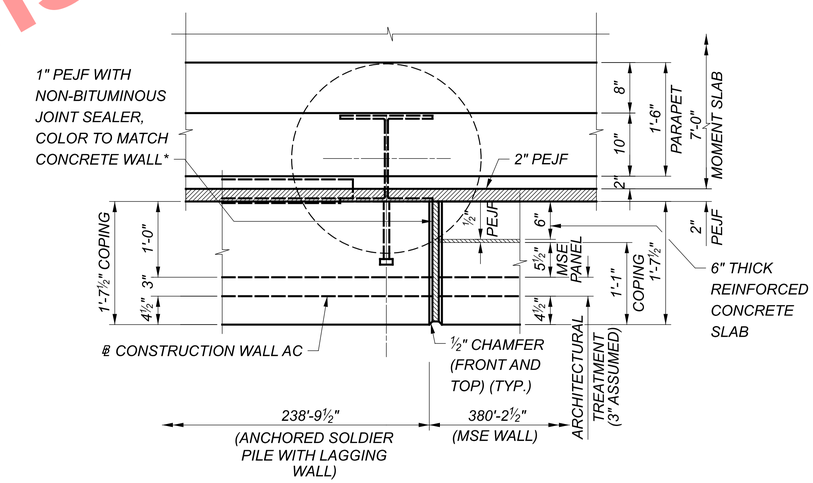

VIEW F-F

LEGEND:

* = INCLUDE WITH ITEM 511 - CLASS QC1 CONCRETE WITH QC/QA, RETAINING WALL NOT INCLUDING FOOTING, AS PER PLAN FOR PAYMENT.

NOTES:

1. SEE SHEET 6 OF 17 FOR LOCATIONS OF SECTIONS C-C AND D-D.
2. SEE SHEET 7 OF 17 FOR LOCATIONS OF SECTION E-E AND VIEW F-F.

Preliminary Plans - For Reference Only

SECTIONS AND DETAILS - ANCHORED SOLDIER PILE / MSE WALL
WALL AC
ALONG NORTH SIDE OF I-90 WB

SFN N/A

DESIGN AGENCY B&N burgessniple.com

DESIGNER	CHECKER
CAS	ODW

REVIEWER DWL 06/22/22

PROJECT ID 82382

SUBSET	TOTAL
11	17

SHEET	TOTAL
1184	2696

CUY-90-16.28 (CCG3A)

MODEL: Sheet PAPERSIZE: 34x22 (in.) DATE: 3/27/2025 TIME: 10:55:12 PM USER: Julie.Ross
pw:\\mb-us-pw.bentley.com:mb-us-pw-03\Documents\Cleveland_OH\01_Projects\ODOT\District12\82382\400-Engineering\Structures\WALL_AC\Sheets\82382_AC_WD004.dgn

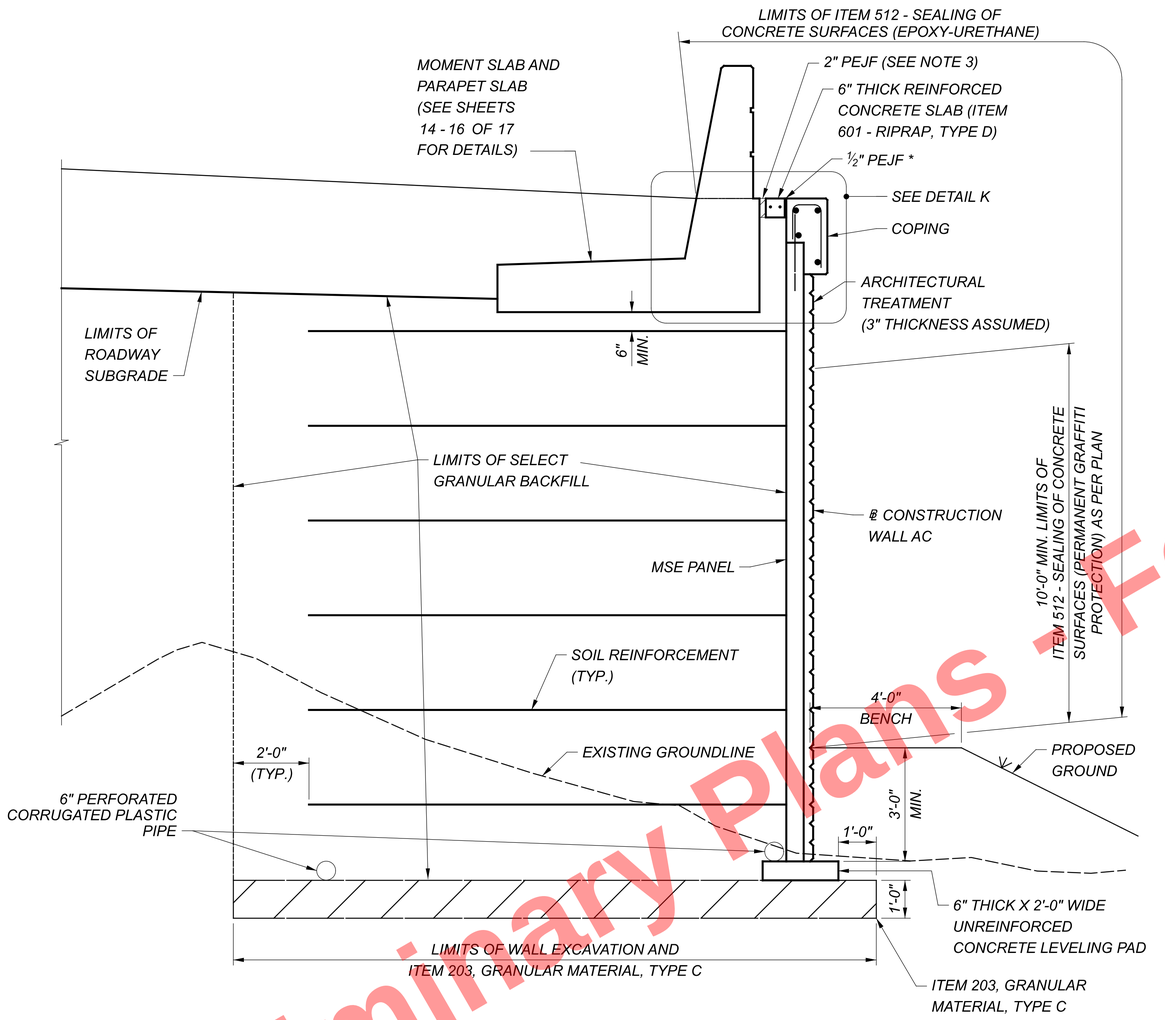

SECTION J-J

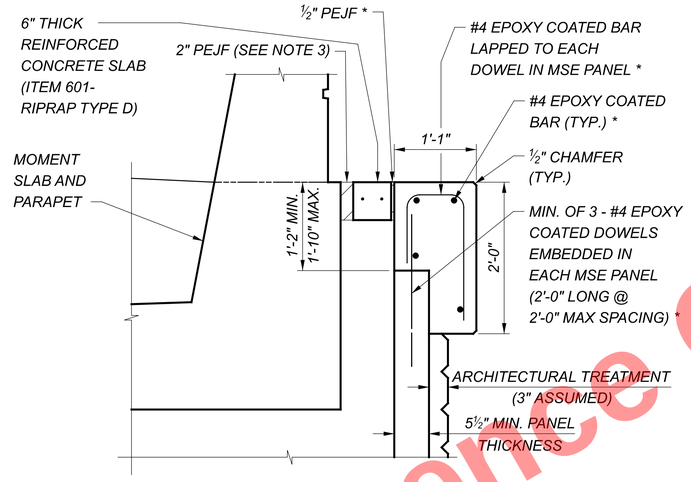

DETAIL K

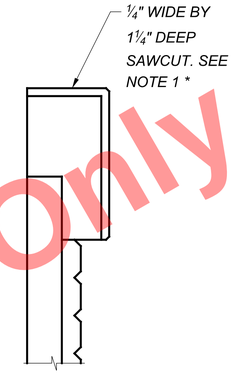

SECTION
COPING CONTRACTION JOINT

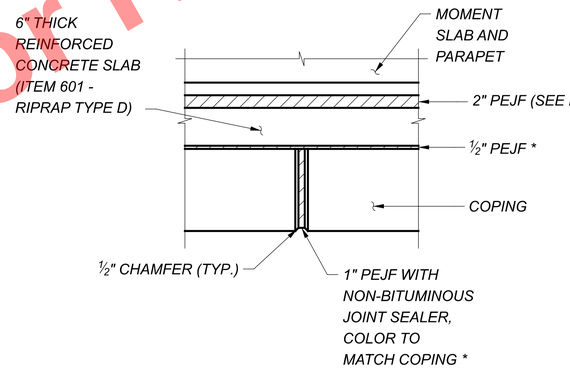

PLAN
COPING EXPANSION JOINT

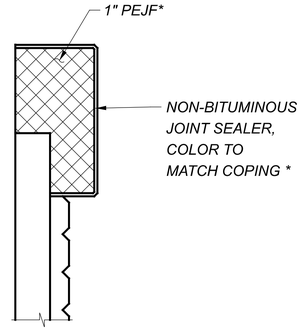

SECTION
COPING EXPANSION JOINT

LEGEND:

* = INCLUDE WITH ITEM 840 - CONCRETE COPING, FOR PAYMENT

NOTES:

1. CONTRACTION JOINT: SAWCUT 1¼" DEEP CONTROL JOINTS ALONG THE PERIMETER AS SHOWN ON THIS SHEET AS SOON AS THE SAW CAN BE OPERATED WITHOUT DAMAGING THE CONCRETE.

   USE AN EDGE GUIDE, FENCE OR JIG TO ENSURE THAT THE CUT JOINT IS STRAIGHT, TRUE AND ALIGNED ON FACES OF THE MSE COPING. THE JOINT WIDTH SHALL BE THE WIDTH OF THE SAW BLADE, A NOMINAL WIDTH OF ¼".

   SEAL THE PERIMETER OF THE CONTROL JOINT TO A MINIMUM DEPTH OF 1" WITH A POLYURETHANE OR POLYMERIC MATERIAL CONFORMING TO C920, TYPE S. LEAVE THE BOTTOM ½" OF THE OUTSIDE FACES OF THE COPING UNSEALED TO ALLOW ANY WATER WHICH MAY ENTER THE JOINT TO ESCAPE. COLOR TO MATCH CONCRETE COPING.

2. SEE LANDSCAPING PLANS FOR ARCHITECTURAL TREATMENT (AESTHETIC PATTERNS) ON FACE OF MSE PANELS.

3. 2" PEJF IS INCLUDED WITH CLASS QC2 CONCRETE, MISC.: MOMENT SLAB AND PARAPET WITH QC/QA FOR PAYMENT.

4. SEE SHEETS 1 AND 2 OF 17 FOR LOCATIONS OF SECTION J-J.

Preliminary Plans - For Reference Only

SECTIONS AND DETAILS - MSE WALL
WALL AC
ALONG NORTH SIDE OF I-90 WB

SFN	N/A
DESIGN AGENCY	B&N burgessniple.com
DESIGNER	CAS
CHECKER	ODW
REVIEWER	DWL 06/22/22
PROJECT ID	82382
SUBSET	12
TOTAL	17
SHEET	1185
TOTAL	2696

CUY-90-16.28 (CCG3A)

MODEL: Sheet PAPERSIZE: 34x22 (in.) DATE: 3/27/2025 TIME: 10:55:18 PM USER: Julie.Ross
pw:\\mb-us-pw.bentley.com:mb-us-pw-03\Documents\Cleveland_OH\01_Projects\ODOT\District12\82382\400-Engineering\Structures\WALL_AC\Sheets\82382_AC_WD005.dgn

LOCATION AND ELEVATION DATA TABLE

PANEL	SOLDIER PILE NUMBER	SOLDIER PILE STATION ALONG BASELINE WALL AC	SOLDIER PILE OFFSET LEFT FROM BASELINE WALL AC (FEET)	SOLDIER PILE STATION ALONG BASELINE I.R. 90 WB	SOLDIER PILE OFFSET LEFT FROM I.R. 90 WB (FEET)	TOP OF WALL/ COPING ELEVATION "A"	TOP OF SOLDIER PILE ELEVATION "B"	TOP OF DRILLED SHAFT ELEVATION "C"	PILE TIP ELEVATION "D"	LENGTH OF DRILLED SHAFT "E" (FEET)	WALL HEIGHT "F" (FEET)	ANCHOR SPACING "G" (FEET)	ANCHOR SPACING "H" (FEET)	NUMBER OF SHEAR STUDS PER PILE	SOLDIER PILE SHAPE	SOLDIER PILE LENGTH (FEET)
1	1	0+12.00	1.82	187+40.41	37.27	688.18	684.68	663.50	638.50	25.00	23.68	6.75	3.43	21	HP14X73	46.18
	2	0+16.18	1.82	187+36.17	37.27	688.18	684.68	663.50	638.50	25.00	23.68	6.75	3.43	21	HP14X73	46.18
	3	0+24.18	1.82	187+28.06	37.27	688.17	684.67	663.50	638.50	25.00	23.67	6.75	3.42	21	HP14X73	46.17
	4	0+32.18	1.82	187+19.95	37.27	688.16	684.66	663.50	638.50	25.00	23.66	6.75	3.41	21	HP14X73	46.16
2	5	0+40.18	1.82	187+11.84	37.27	688.15	684.65	661.75	636.75	25.00	25.40	6.75	5.15	22	HP14X73	47.90
	6	0+48.18	1.82	187+03.72	37.27	688.15	684.65	661.75	636.75	25.00	25.40	6.75	5.15	22	HP14X73	47.90
	7	0+56.18	1.82	186+95.61	37.27	688.20	684.70	661.75	636.75	25.00	25.45	6.75	5.20	22	HP14X73	47.95
	8	0+64.18	1.82	186+87.50	37.27	688.23	684.73	661.75	636.75	25.00	25.48	6.75	5.23	22	HP14X73	47.98
3	9	0+72.18	1.82	186+79.39	37.27	688.28	684.78	661.75	636.75	25.00	25.53	6.75	5.28	23	HP14X73	48.03
	10	0+80.18	1.82	186+71.28	37.27	688.32	684.82	661.75	636.75	25.00	25.57	6.75	5.32	23	HP14X73	48.07
	11	0+88.18	1.82	186+63.17	37.27	688.36	684.86	661.75	636.75	25.00	25.61	6.75	5.36	23	HP14X73	48.11
	12	0+96.18	1.82	186+55.06	37.27	688.40	684.90	661.75	636.75	25.00	25.65	6.75	5.40	23	HP14X73	48.15
4	13	1+04.18	1.82	186+46.95	37.27	688.44	684.94	662.21	637.21	25.00	25.23	6.75	4.98	22	HP14X73	47.73
	14	1+12.18	1.82	186+38.84	37.27	688.48	684.98	662.21	637.21	25.00	25.27	6.75	5.02	22	HP14X73	47.77
	15	1+20.18	1.82	186+30.73	37.27	688.52	685.02	662.21	637.21	25.00	25.31	6.75	5.06	22	HP14X73	47.81
5	16	1+28.18	1.82	186+22.62	37.27	688.56	685.06	662.62	637.62	25.00	24.94	6.75	4.69	22	HP14X73	47.44
	17	1+36.18	1.82	186+14.51	37.27	688.60	685.10	662.62	637.62	25.00	24.98	6.75	4.73	22	HP14X73	47.48
	18	1+44.18	1.82	186+06.40	37.27	688.64	685.14	662.62	637.62	25.00	25.02	6.75	4.77	22	HP14X73	47.52
	19	1+52.18	1.82	185+98.29	37.27	688.68	685.18	662.62	637.62	25.00	25.06	6.75	4.81	22	HP14X73	47.56
6	20	1+60.18	1.82	185+90.21	37.26	688.72	685.22	663.32	638.32	25.00	24.40	6.75	4.15	21	HP14X73	46.90
	21	1+68.18	1.82	185+82.10	37.10	688.78	685.28	663.32	638.32	25.00	24.46	6.75	4.21	21	HP14X73	46.96
	22	1+76.18	1.82	185+74.00	36.93	688.82	685.32	663.32	638.32	25.00	24.50	6.75	4.25	21	HP14X73	47.00
7	23	1+84.18	1.82	185+65.89	36.77	688.86	685.36	664.10	639.10	25.00	23.76	7.17	9.42	21	HP14X73	46.26
	24	1+92.18	1.82	185+57.78	36.61	688.91	685.41	664.10	639.10	25.00	23.81	7.17	9.47	21	HP14X73	46.31
	25	2+00.18	1.82	185+49.67	36.45	688.96	685.46	664.10	639.10	25.00	23.86	7.17	9.52	21	HP14X73	46.36
	26	2+08.18	1.82	185+41.57	36.29	689.01	685.51	664.10	639.10	25.00	23.91	7.17	9.57	21	HP14X73	46.41
8	27	2+16.18	1.82	185+33.46	36.13	689.06	685.56	665.47	640.47	25.00	22.59	7.17	8.25	20	HP14X73	45.09
	28	2+24.18	1.82	185+25.36	35.96	689.10	685.60	665.47	640.47	25.00	22.63	7.17	8.29	20	HP14X73	45.13
	29	2+32.18	1.82	185+17.25	35.80	689.15	685.65	665.47	640.47	25.00	22.68	7.17	8.34	20	HP14X73	45.18
9	30	2+40.18	1.82	185+09.15	35.64	689.20	685.70	666.47	641.47	25.00	21.73	7.17	7.39	19	HP14X73	44.23
	31	2+48.18	1.82	185+01.04	35.48	689.25	685.75	666.47	641.47	25.00	21.78	7.17	7.44	19	HP14X73	44.28

Preliminary Plans - Not For Reference Only

NOTES:

1. SEE SHEETS 6 AND 8 OF 17 FOR ADDITIONAL INFORMATION.

SOLDIER PILE - LOCATION AND DATA TABLE
WALL AC
ALONG NORTH SIDE OF I-90 WB

SFN N/A

DESIGN AGENCY

B&N burgessniple.com

DESIGNER	CHECKER
CAS	ODW

REVIEWER DWL 06/22/22

PROJECT ID 82382

SUBSET	TOTAL
13	17

SHEET	TOTAL
1186	2696

CUY-90-16.28 (CCG3A)

MODEL: Sheet PAPERSIZE: 34x22 (in.) DATE: 3/27/2025 TIME: 10:55:23 PM USER: Julie.Ross
pw:\\mb-us-pw.bentley.com:mb-us-pw-03\Documents\Cleveland_OH01_Projects\ODOT\District12\82382400-Engineering\Structures\WALL_AC\Sheets\82382_AC_WM001.dgn

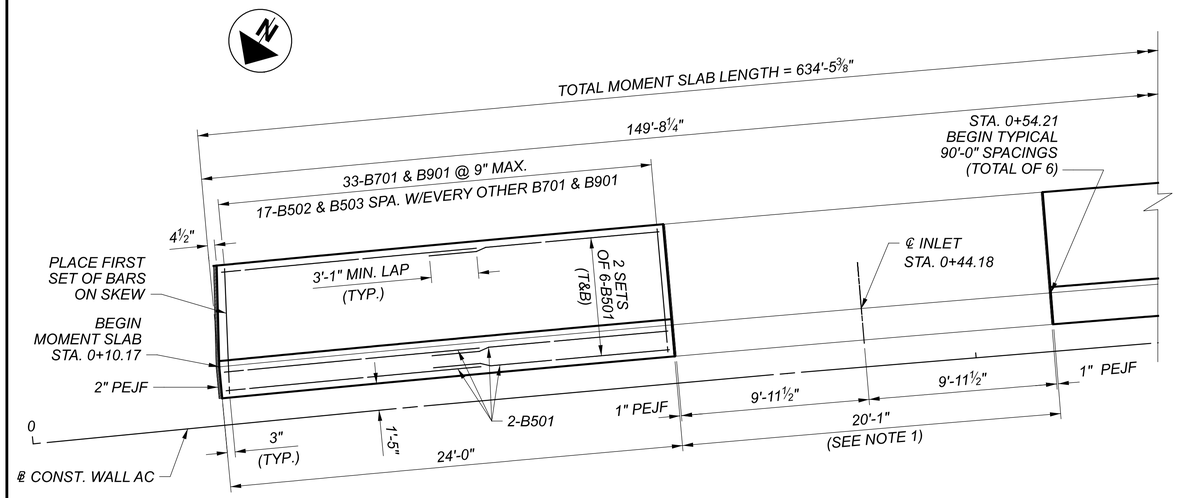

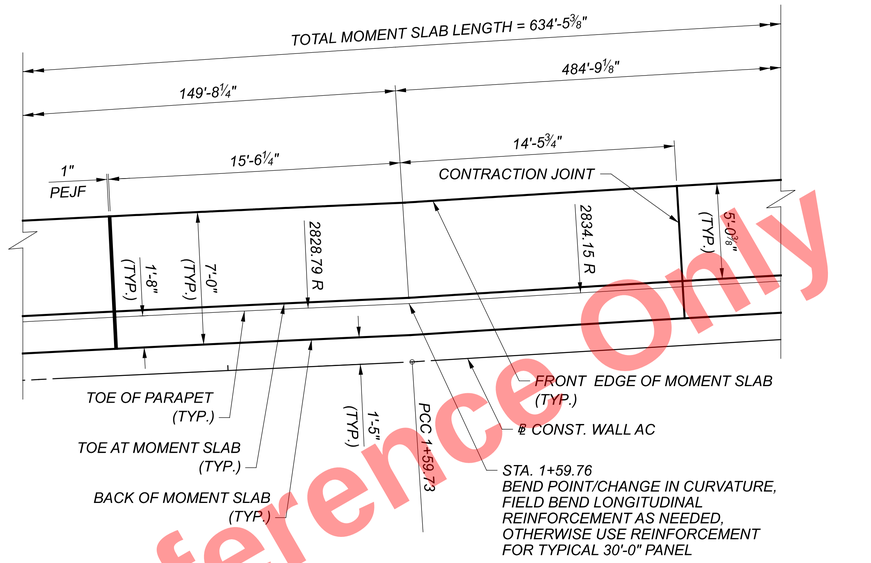

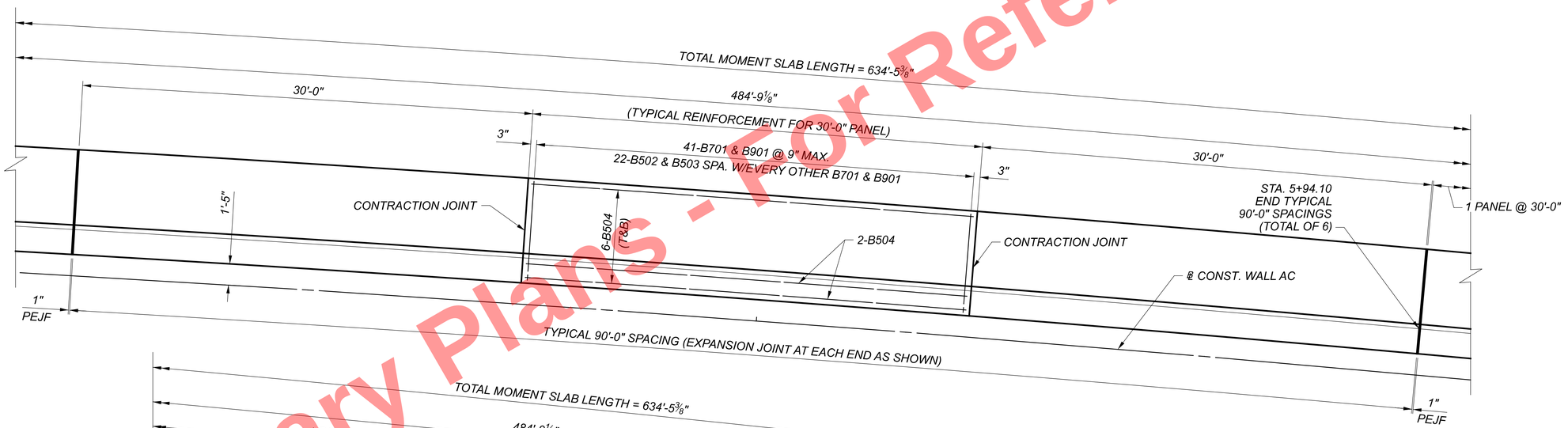

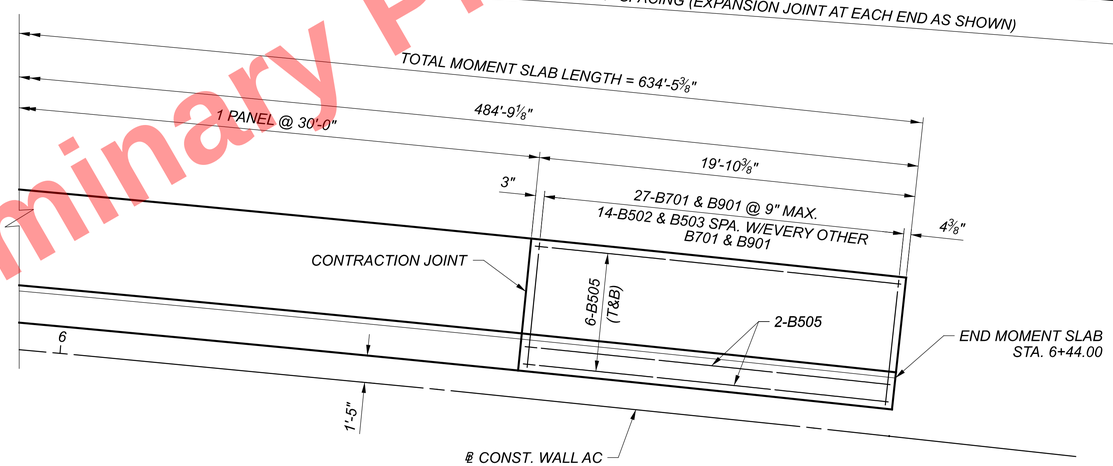

MOMENT SLAB PLAN

(ALL LONGITUDINAL DIMENSIONS ARE GIVEN ALONG TOE OF PARAPET)
(PARAPET REINFORCEMENT NOT SHOWN, SEE NOTE 3)

NOTES:

1. FOR CATCH BASIN DETAILS, MOMENT SLAB AND PARAPET DETAILS WITHIN THESE LIMITS, AND FOR PAYMENT INFORMATION, SEE SHEETS 1164AND 1165OF 2696 .
2. FIELD BEND LONGITUDINAL BARS AS NEEDED TO FOLLOW THE CURVATURE OF THE MOMENT SLAB. PLACE TRANSVERSE BARS RADIALLY UNLESS NOTED OTHERWISE.
3. FOR PARAPET REINFORCING DETAILS ABOVE MOMENT SLAB, SEE SHEET 15 OF 17.
4. SEE SHEET 15 OF 17 FOR ADDITIONAL INFORMATION ON TRANSVERSE BAR SPACINGS IN MOMENT SLAB.
5. SEE SHEET 16 OF 17 FOR A TYPICAL SECTION THROUGH THE MOMENT SLAB.

Preliminary Plans - For Reference Only

MOMENT SLAB AND PARAPET PLAN
WALL AC
ALONG NORTH SIDE OF I-90 WB

SFN N/A
DESIGN AGENCY B&N burgessniple.com
DESIGNER ODW | CHECKER MRC
REVIEWER DWL 06/22/22
PROJECT ID 82382
SUBSET 14 | TOTAL 17
SHEET 1187 | TOTAL 2696

CUY-90-16.28 (CCG3A)

MODEL: Sheet PAPERSIZE: 34x22 (in.) DATE: 3/27/2025 TIME: 10:55:29 PM USER: Julie.Ross
pw:\\mb-us-pw.bentley.com:mb-us-pw-03\Documents\Cleveland_OH\01_Projects\ODOT\District12\82382\400-Engineering\Structures\WALL_AC\Sheets\82382_AC_WP003.dgn

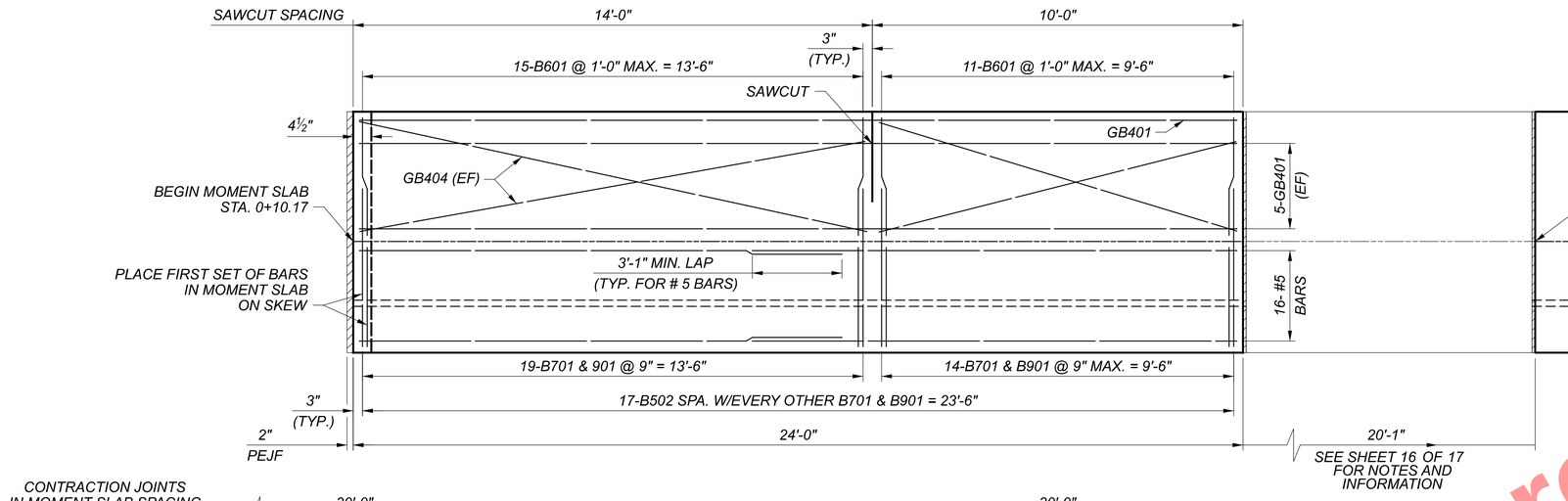

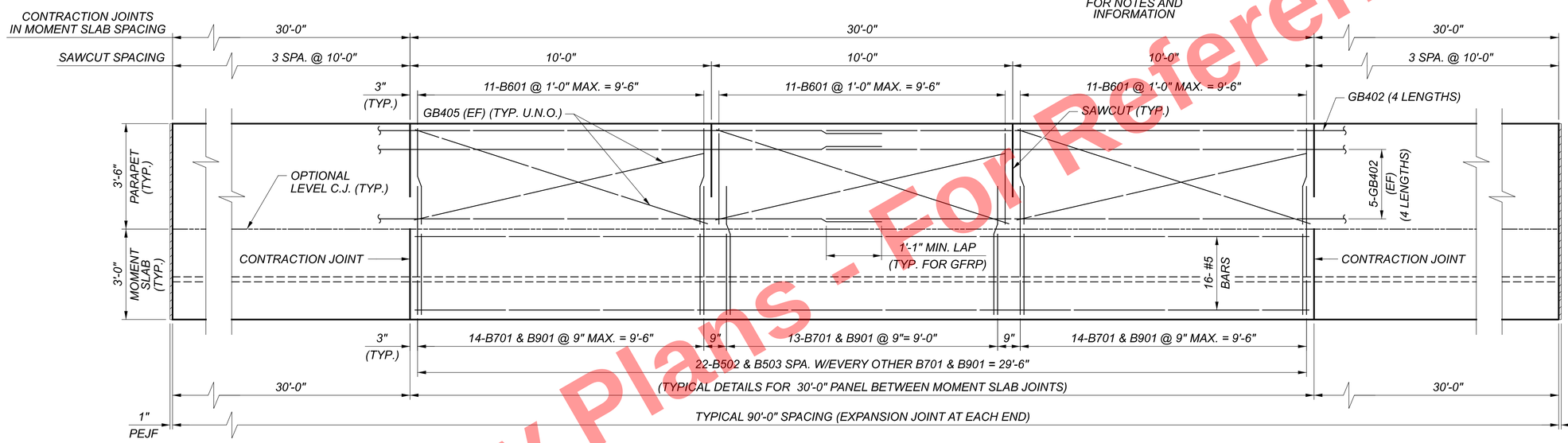

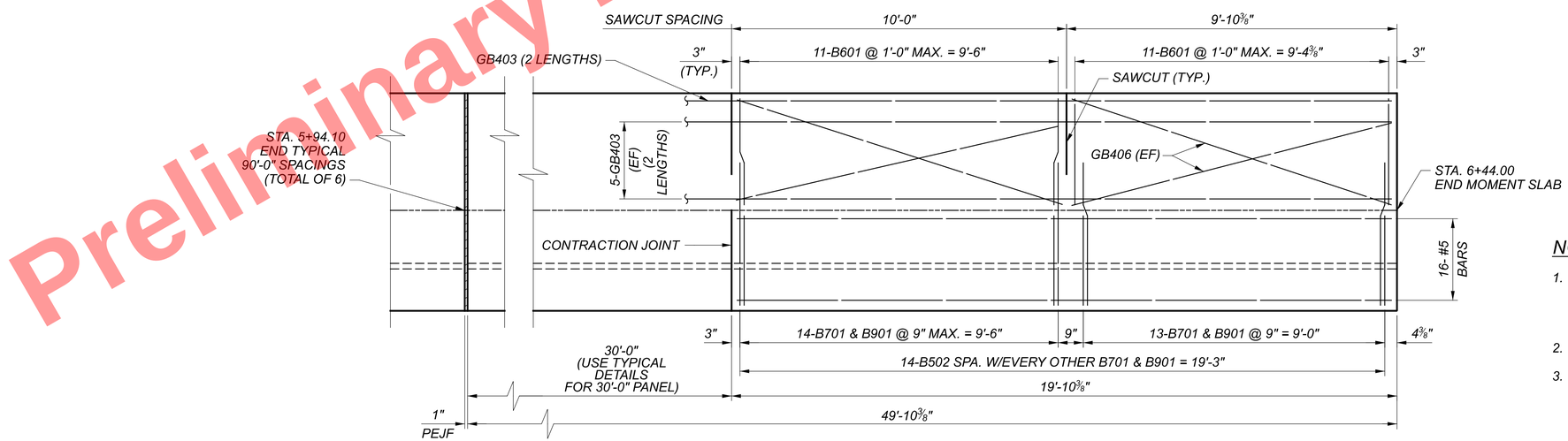

MOMENT SLAB AND PARAPET ELEVATION

NOTES:

1. FIELD BEND LONGITUDINAL BARS AS NEEDED TO FOLLOW THE CURVATURE OF THE MOMENT SLAB AND PARAPET. PLACE TRANSVERSE BARS RADIALLY UNLESS NOTED OTHERWISE.
2. SEE SHEET 16 OF 17 FOR A TYPICAL SECTION.
3. ALL LONGITUDINAL DIMENSIONS ARE GIVEN ALONG THE TOE OF PARAPET. STATIONS ARE GIVEN ALONG THE TOE OF PARAPET ALONG ℄ CONSTRUCTION WALL AC.

Preliminary Plans - Not For Reference Only

MOMENT SLAB AND PARAPET ELEVATION
WALL AC
ALONG NORTH SIDE OF I-90 WB

SFN N/A
DESIGN AGENCY B&N burgessniple.com
DESIGNER ODW | CHECKER MRC
REVIEWER DWL 06/22/22
PROJECT ID 82382
SUBSET 15 | TOTAL 17
SHEET 1188 | TOTAL 2696

CUY-90-16.28 (CCG3A)

MODEL: Sheet PAPERSIZE: 34x22 (in.) DATE: 3/27/2025 TIME: 10:55:36 PM USER: Julie.Ross
pw:\\mb-us-pw.bentley.com:mb-us-pw-03\Documents\Cleveland_OH01_Projects\ODOT\District12\82382400-Engineering\Structures\WALL_AC\Sheets\82382_AC_WD009.dgn

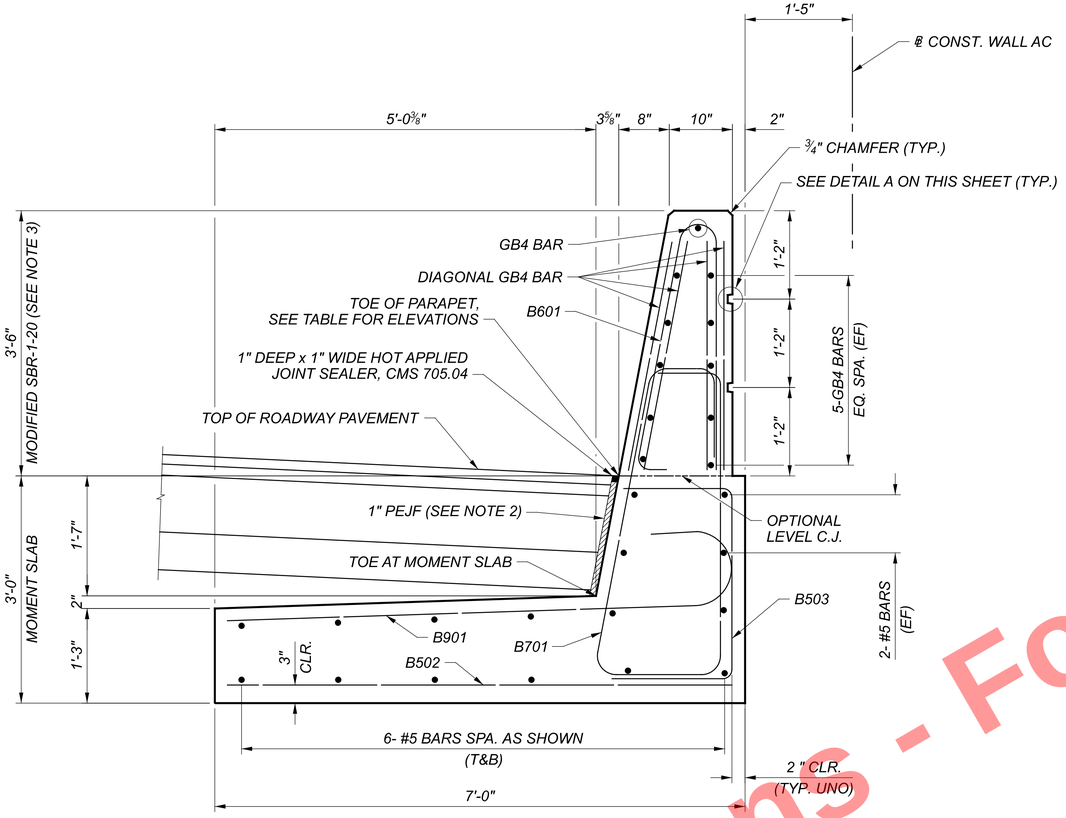

MOMENT SLAB SECTION

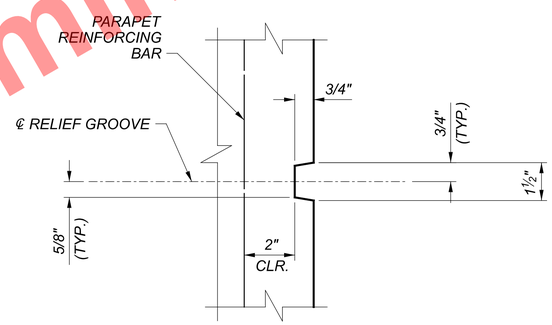

DETAIL A

STATION ALONG ℄ CONST. WALL AC	OFFSET FROM ℄ CONST. WALL AC	ELEVATION AT TOE OF PARAPET	LOCATION
0+10.17	3.08' LT	688.18	BEGIN MOMENT SLAB
0+34.19	3.08' LT	688.16	℄ EXPANSION JOINT
0+54.17	3.08' LT	688.18	℄ EXPANSION JOINT
0+84.18	3.08' LT	688.33	CONTRACTION JOINT
1+14.15	3.08' LT	688.49	CONTRACTION JOINT
1+44.15	3.08' LT	688.64	℄ EXPANSION JOINT
1+74.22	3.08' LT	688.80	CONTRACTION JOINT
2+04.20	3.08' LT	688.98	CONTRACTION JOINT
2+34.20	3.08' LT	689.16	℄ EXPANSION JOINT
2+64.21	3.08' LT	689.34	CONTRACTION JOINT
2+94.18	3.08' LT	689.52	CONTRACTION JOINT
3+24.19	3.08' LT	689.70	℄ EXPANSION JOINT
3+54.20	3.08' LT	689.88	CONTRACTION JOINT
3+84.17	3.08' LT	690.06	CONTRACTION JOINT
4+14.18	3.08' LT	690.24	℄ EXPANSION JOINT
4+44.18	3.08' LT	690.42	CONTRACTION JOINT
4+74.15	3.08' LT	690.60	CONTRACTION JOINT
5+04.16	3.08' LT	690.77	℄ EXPANSION JOINT
5+34.17	3.08' LT	690.97	CONTRACTION JOINT
5+64.14	3.08' LT	691.14	CONTRACTION JOINT
5+94.15	3.08' LT	691.31	℄ EXPANSION JOINT
6+24.15	3.08' LT	694.49	CONTRACTION JOINT
6+44.00	3.08' LT	691.61	END MOMENT SLAB

NOTES:

1. FOR LIMITS OF SEALING CONCRETE SURFACES AND OTHER DETAILS NOT SHOWN, SEE SHEETS 8 AND 12 OF 17 .
2. 1" PREFORMED EXPANSION JOINT FILLER SHALL EXTEND UP BETWEEN CAST-IN-PLACE MOMENT SLAB AND THE ASPHALT PAVEMENT TO THE ELEVATION OF 1" BELOW THE FINAL SURFACE OF THE PAVEMENT. INCLUDE 1" PEJF WITH "ITEM 511 - CLASS QC2 CONCRETE MISC.: CONCRETE MOMENT SLAB AND BARRIER WITH QC/QA" FOR PAYMENT.
3. PARAPET ABOVE LEVEL CONSTRUCTION JOINT SHALL BE PER STD. DWG. SBR-1-20, EXCEPT AS MODIFIED IN THESE PLANS. REFER TO THE STANDARD DRAWING FOR SAWCUT DETAILS, ADDITIONAL NOTES AND INFORMATION NOT SHOWN.

Preliminary Plans - For Reference Only

MOMENT SLAB AND PARAPET SECTION WALL AC ALONG NORTH SIDE OF I-90 WB

SFN N/A

DESIGN AGENCY B&N burgessniple.com

DESIGNER	CHECKER
ODW	MRC

REVIEWER DWL 06/22/22

PROJECT ID 82382

SUBSET	TOTAL
16	17

SHEET	TOTAL
1189	2696

CUY-90-16.28 (CCG3A)

MODEL: Sheet PAPERSIZE: 34x22 (in.) DATE: 3/27/2025 TIME: 10:55:42 PM USER: Julie.Ross
pw:\\mb-us-pw.bentley.com:mb-us-pw-03\Documents\Cleveland_OH01_Projects\ODOT\District12\82382\400-Engineering\Structures\WALL_AC\Sheets\82382_AC_WD008.dgn
82382_AC_WD008.dgn

MOMENT SLAB (EPOXY COATED STEEL REINFORCEMENT - ECSR)											
MARK	MAT. TYPE	NO.	LENGTH	WEIGHT (LBS.)	TYPE	DIMENSIONS					
						A	B	C	D	E/RAD.	INC.
B501	ECSR	32	13'-5"	448	STR						
B502	ECSR	449	6'-8"	3122	STR						
B503	ECSR	449	5'-0"	2342	18	2'-7"	1'-4"	1'-4"			
B504	ECSR	304	29'-8"	9406	STR						
B505	ECSR	16	19'-6"	325	STR						
B601	ECSR	675	6'-11"	7012	2	3'-3"	3'-3"	0'-6"	0'-5 ¼"	0'-2"	
B701	ECSR	839	11'-10"	20293	41A	0'-9 ½"	4'-3 ½"	1'-0"	0'-7"	0'-5 ¼"	
B901	ECSR	839	7'-11"	22583	19	6'-8"					
MOMENT SLAB ECSR TOTAL				65531							

MOMENT SLAB (GLASS FIBER REINFORCED POLYMER - GFRP)											
MARK	MAT. TYPE	NO.	LENGTH	TOTAL LENGTH	TYPE	DIMENSIONS					
						A	B	C	D	E/RAD.	INC.
GB401	GFRP	11	23'-8"	260'-4"	STR						
GB402	GFRP	264	23'-6"	6204'-0"	STR						
GB403	GFRP	22	25'-11"	570'-2"	STR						
GB404	GFRP	4	14'-0"	56'-0"	STR						
GB405	GFRP	236	10'-0"	2360'-0"	STR						
GB406	GFRP	4	9'-10"	39'-4"	STR						
MOMENT SLAB GFRP TOTAL				9490							

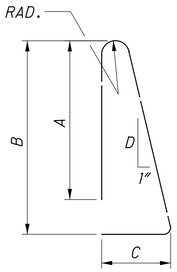

TYPE 2

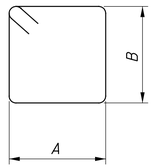

TYPE 16

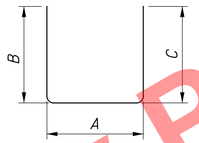

TYPE 18

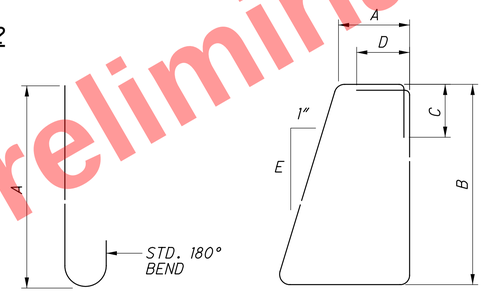

TYPE 19

TYPE 41A

SOLDIER PILE WALL (EPOXY COATED STEEL REINFORCEMENT - ECSR)											
MARK	MAT. TYPE	NO.	LENGTH	WEIGHT (LBS)	TYPE	DIMENSIONS					
						A	B	C	D	E	INC.
W401	ECSR	168	6'-4"	711	16	1'-3"	1'-8"				
W402	ECSR	40	23'-4"	623	STR						
W403	ECSR	8	27'-10"	149	STR						
W404	ECSR	42	25'-0"	701	STR						
W405	ECSR	32	29'-8"	634	STR						
W406	ECSR	24	25'-8"	411	STR						
W407	ECSR	8	12'-3"	65	STR						
W408	ECSR	42	25'-1"	704	STR						
W409	ECSR	20	21'-5"	286	STR						
W410	ECSR	42	24'-8"	692	STR						
W411	ECSR	36	24'-1"	579	STR						
W412	ECSR	42	23'-6"	659	STR						
W413	ECSR	36	22'-3"	535	STR						
W414	ECSR	36	24'-6"	589	STR						
W501	ECSR	23	27'-9"	666	STR						
W502	ECSR	91	29'-8"	2816	STR						
W503	ECSR	4	27'-8"	115	STR						
W504	ECSR	4	21'-8"	90	STR						
W505	ECSR	68	25'-8"	1820	STR						
W506	ECSR	21	12'-3"	268	STR						
W601	ECSR	33	27'-9"	1375	STR						
W602	ECSR	91	29'-8"	4055	STR						
W603	ECSR	4	27'-8"	166	STR						
W604	ECSR	3	21'-8"	98	STR						
W605	ECSR	98	25'-8"	3778	STR						
W606	ECSR	21	12'-3"	386	STR						
SOLDIER PILE WALL ECSR TOTAL				22971							

LEGEND:

S.O. = SERIES OF

NOTES:

1. ALL REINFORCING STEEL SHALL BE EPOXY COATED.
2. BAR SIZE: THE BAR SIZE IS INDICATED IN THE BAR MARK. THE MARK BEGINS WITH TWO OR THREE LETTERS OR NUMBERS THAT IDENTIFY THE BAR LOCATION. THE NEXT ONE OR TWO DIGITS INDICATE THE BAR SIZE, AND THE REMAINING TWO DIGITS ARE THE SEQUENCE NUMBER.

   EXAMPLE: SA1001
   SA = SUPERSTRUCTURE BAR
   10 = #10 BAR
   01 = BAR SEQUENCE NUMBER 1
3. BAR DIMENSIONS SHOWN ARE OUT-TO-OUT UNLESS OTHERWISE INDICATED.
4. STR. IN THE BAR TYPE COLUMN INDICATES A STRAIGHT BAR.
5. RAD INDICATES INSIDE RADIUS, UNLESS OTHERWISE NOTED.
6. INCR. INDICATES THE LENGTH INCREMENT FOR SERIES BARS.
7. STD. WRITTEN IN PLACE OF A DIMENSION INDICATES A STANDARD BEND AT THE END OF A BAR.
8. GFRP BAR WEIGHTS ARE NOT INCLUDED IN THE TOTAL WEIGHT. PAYMENT FOR GFRP BARS IS INCLUDED WITH ITEM 509 - NO. 4 GFRP DEFORMED BARS. TOTAL GFRP BAR LENGTH ROUNDED UP TO THE NEAREST FOOT IS GIVEN AT THE BOTTOM OF THE BAR LIST.

Preliminary Plans - For Reference Only

REINFORCING STEEL LIST
WALL AC
ALONG NORTH SIDE OF I-90 WB

SFN N/A
DESIGN AGENCY B&N burgessniple.com
DESIGNER ODW | CHECKER JAA
REVIEWER DWL 6/22/22
PROJECT ID 82382
SUBSET 17 | TOTAL 17
SHEET 1190 | TOTAL 2696

CUY-90-16.28 (CCG3A)

MODEL: Sheet PAPERSIZE: 34x22 (in.) DATE: 3/27/2025 TIME: 10:55:47 PM USER: Julie.Ross
pw:\\tnb-us-pw.bentley.com:tnb-us-pw-03\Documents\Cleveland_OH\01_Projects\ODOT\District12\82382\400-Engineering\Structures\WALL_AC\Sheets\82382_AC_WL001.dgn

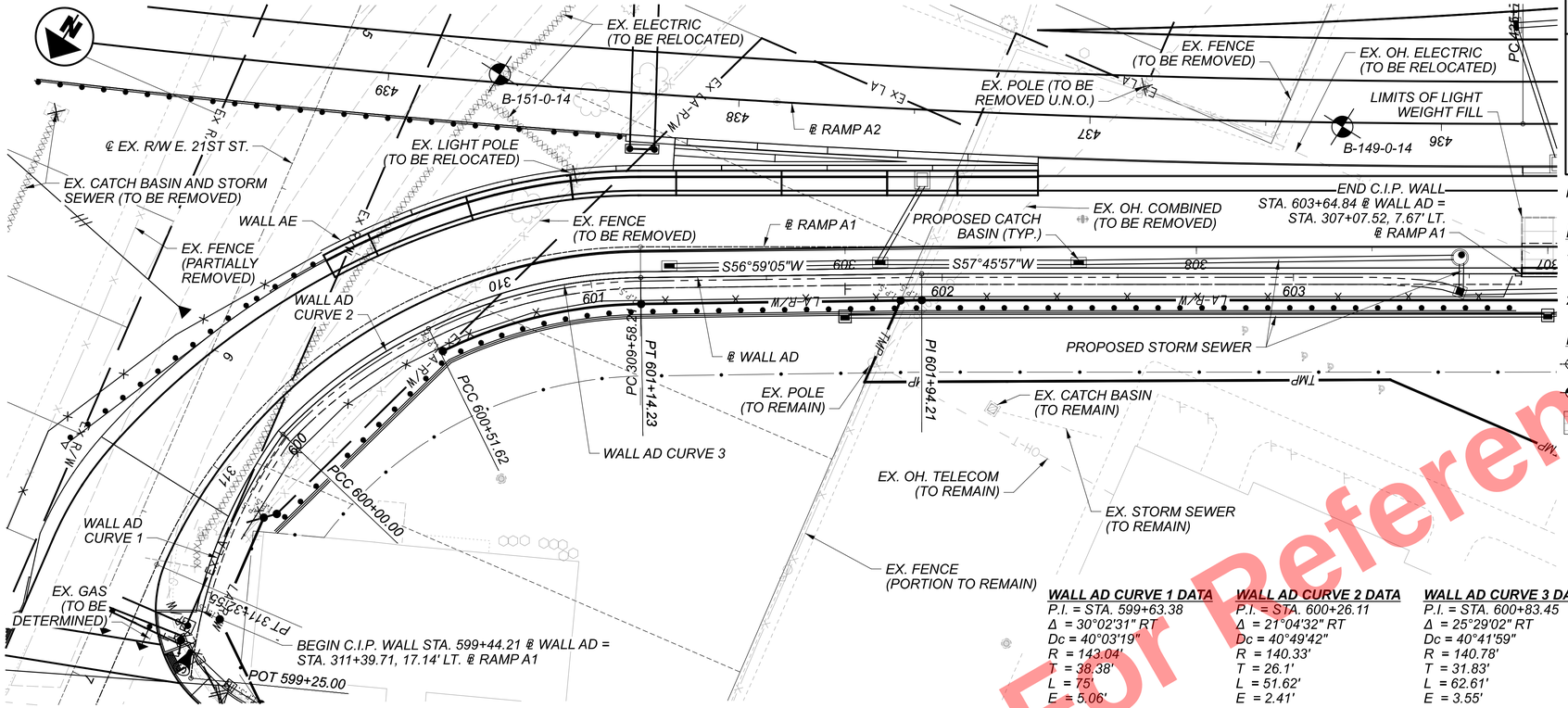

PLAN

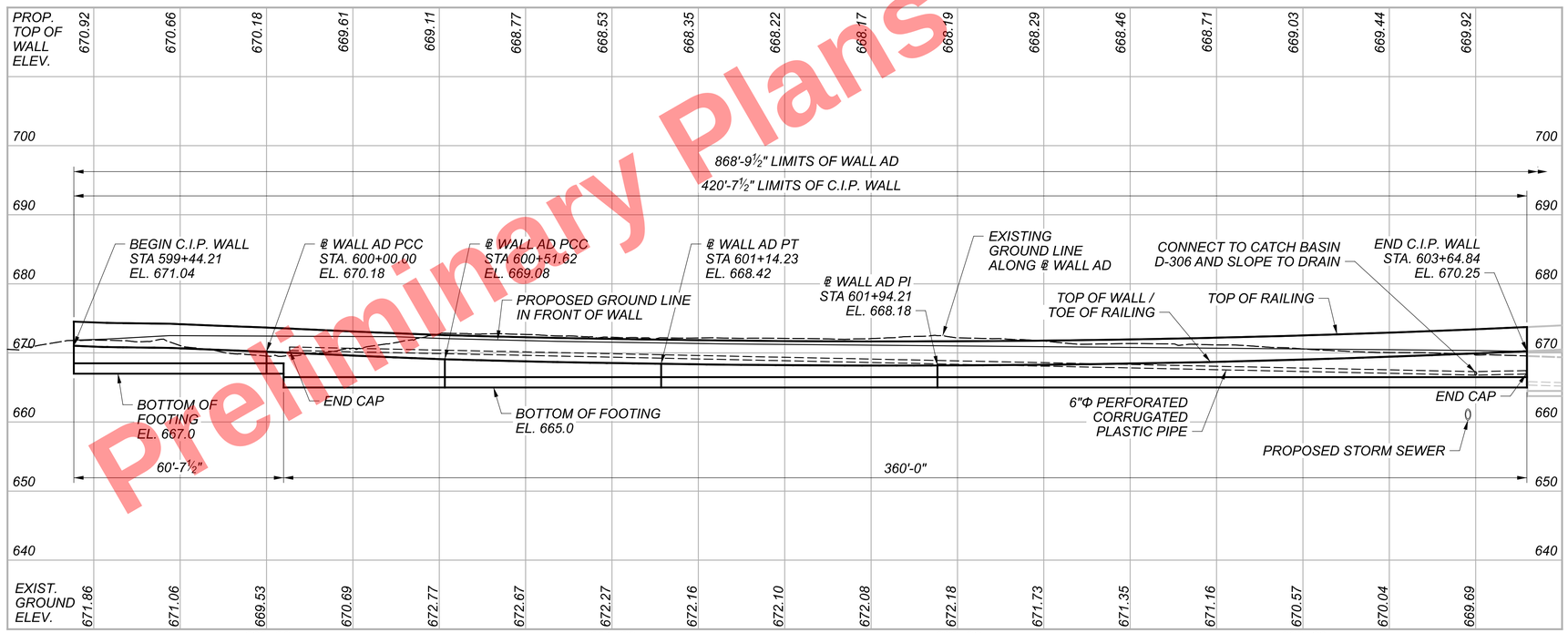

PROFILE

BENCHMARK DATA

BM-54 STA. 310+59.00, ELEV. 672.54, OFFSET 463.02' RT., ℄ RAMP A1, CUT CROSS IN NORTH BONNET BOLT OF FIRE HYDRANT

BM-59 STA. 301+65.97, ELEV. 660.15, OFFSET 488.87' RT., ℄ RAMP A1, MAG NAIL AT NOSE OF DRAINAGE CHANNEL

BM-62 STA. 303+26.43, ELEV. 672.11, OFFSET 354.64' LT., ℄ RAMP A1, RAILROAD SPIKE IN EAST FACE OF POWER/LIGHT POLE

FOR ADDITIONAL BENCHMARK INFORMATION, SEE ROADWAY PLANS.

NOTES

1. EARTHWORK LIMITS SHOWN ARE APPROXIMATE. ACTUAL SLOPES SHALL CONFORM TO PLAN CROSS SECTIONS.
2. VERTICAL SCALE OF PROFILE VIEW IS EXAGGERATED FOR CLARITY.

LEGEND

- HISTORIC BORING LOCATION
- BORING LOCATION
- LIMITS OF LIGHT WEIGHT FILL

WALL AD CURVE 1 DATA
P.I. = STA. 599+63.38
Δ = 30°02'31" RT
Dc = 40°03'19"
R = 143.04'
T = 38.38'
L = 75'
E = 5.06'

WALL AD CURVE 2 DATA
P.I. = STA. 600+26.11
Δ = 21°04'32" RT
Dc = 40°49'42"
R = 140.33'
T = 26.1'
L = 51.62'
E = 2.41'

WALL AD CURVE 3 DATA
P.I. = STA. 600+83.45
Δ = 25°29'02" RT
Dc = 40°41'59"
R = 140.78'
T = 31.83'
L = 62.61'
E = 3.55'

BORING DATA

BORING	STATION	OFFSET
B-151-0-14	600+86.81	62.25' LT.
B-149-0-14	603+13.91	41.85' LT.
B-148-0-14	604+64.20	51.82' LT.
C-147-0-14	606+02.14	50.80' LT.
B-146-0-14	606+99.37	60.36' LT.
C-121-0-14	607+97.94	62.40' LT.
C-145-0-14*	301+99.88	9.70' LT.
B-144-0-14*	301+73.64	82.19' RT.

* LOCATIONS MEASURED RELATIVE TO ℄ RAMP A1

Preliminary Plans - For Reference Only

WALL PLAN AND PROFILE (1 OF 2)
WALL AD
ALONG RAMP A1

SFN N/A
DESIGN AGENCY HDR
DESIGNER CMR | CHECKER DRS
REVIEWER DWW 01/11/24
PROJECT ID 82382
SUBSET 1 | TOTAL 17
SHEET 1191 | TOTAL 2696

CUY-90-16.28 (CCG3A)

MODEL: WALL AD [Sheet] PAPERSIZE: 34x22 (in.) DATE: 3/27/2025 TIME: 10:56:05 PM USER: Julie.Ross
pw:\\mb-us-pw.bentley.com:mb-us-pw-03\Documents\Cleveland_OH\01_Projects\ODOT\District12\82382\400-Engineering\Structures\WALL_AD\Sheets\82382_AD_WP001.dgn

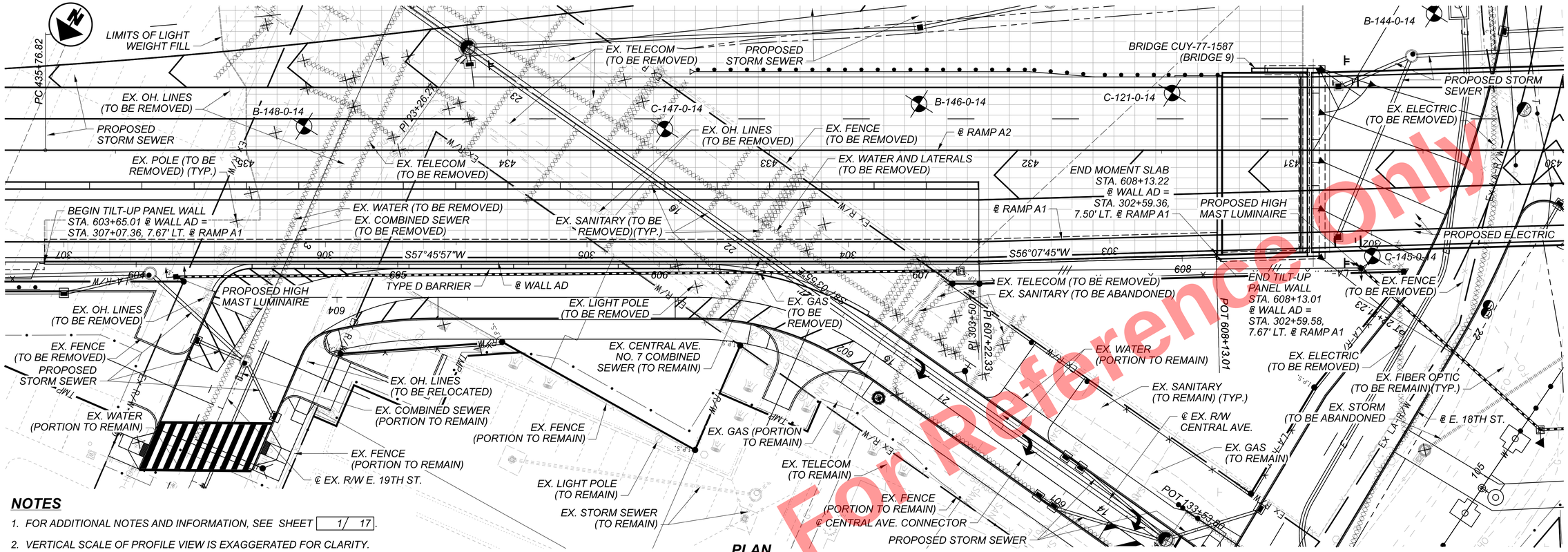

NOTES

1. FOR ADDITIONAL NOTES AND INFORMATION, SEE SHEET 1/ 17.
2. VERTICAL SCALE OF PROFILE VIEW IS EXAGGERATED FOR CLARITY.

PLAN

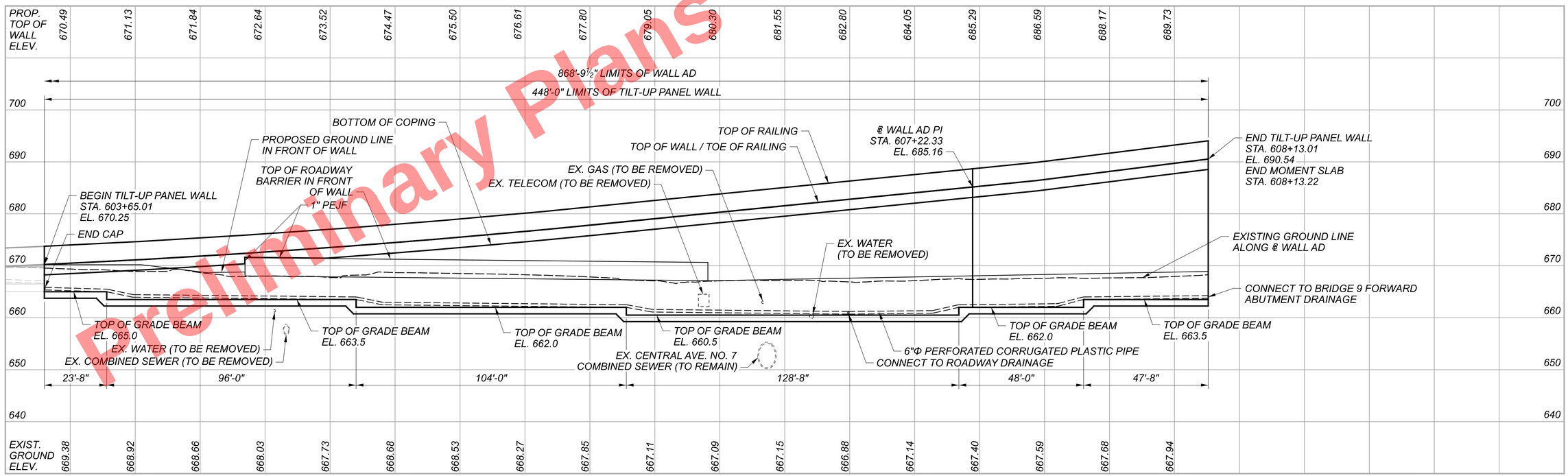

PROFILE

Preliminary Plans - For Reference Only

WALL PLAN AND PROFILE (2 OF 2)
WALL AD
ALONG RAMP A1

SFN	N/A
DESIGN AGENCY	HDR
DESIGNER	TJE
CHECKER	JML
REVIEWER	DWW 01/11/24
PROJECT ID	82382
SUBSET	2
TOTAL	17
SHEET	1192
TOTAL	2696

CUY-90-16.28 (CCG3A)

MODEL: Wall AD [Sheet] PAPERSIZE: 34x22 (in.) DATE: 5/16/2025 TIME: 1:56:07 PM USER: Kathy.Johnson
pw:\\mb-us-pw.bentley.com:mb-us-pw-03\Documents\Cleveland_OH\01_Projects\ODOT\District12\82382\400-Engineering\Structures\WALL_AD\Sheets\82382_AD_WP002.dgn

STANDARD DRAWINGS AND SUPPLEMENTAL SPECIFICATIONS:

REFER TO THE FOLLOWING STANDARD BRIDGE DRAWING:
SBR-1-20 REVISED 07-19-24

REFER TO THE FOLLOWING SUPPLEMENTAL SPECIFICATION:
800 DATED SEE TITLE SHEET
840 DATED 04-15-22

REFER TO THE FOLLOWING SUPPLEMENT:
1073 DATED 10-16-20
1083 DATED 01-20-17

DESIGN SPECIFICATIONS:

THIS STRUCTURE CONFORMS TO THE 9TH EDITION OF THE "LRFD BRIDGE DESIGN SPECIFICATIONS" ADOPTED BY THE AMERICAN ASSOCIATION OF STATE HIGHWAY AND TRANSPORTATION OFFICIALS, 2020 AND THE ODOT BRIDGE DESIGN MANUAL, 2020 (DATED 07-16-2021).

DESIGN DATA:

CONCRETE CLASS QC2 - COMPRESSIVE STRENGTH 4.5 KSI (MOMENT SLAB AND RAILING)

CONCRETE CLASS QC1 - COMPRESSIVE STRENGTH 4.0 KSI (CAST-IN-PLACE COPING, LOAD DISTRIBUTION SLAB, GRADE BEAM, AND FOOTING AND STEM OF CAST-IN-PLACE CONCRETE WALL)

CONCRETE REINFORCEMENT:
EPOXY COATED STEEL REINFORCEMENT - MIN. YIELD STRENGTH 60 KSI (MOMENT SLAB, RAILING, CAST-IN-PLACE COPING, LOAD DISTRIBUTION SLAB, GRADE BEAM, AND FOOTING AND STEM OF CAST-IN-PLACE CONCRETE WALL)
GFRP REINFORCEMENT (RAILING)

WALL DESIGN CRITERIA:

THE FACTORED BEARING RESISTANCE FOR EACH WALL IS LISTED IN THE TABLE BELOW:

FACTORED BEARING RESISTANCE			
WALL LETTER	WALL LIMITS		(PSF)
	FROM STA.	TO STA.	
AD	599+44.21	600+00.00	5,100
AD	600+00.00	603+64.84	5,500

WALL EXCAVATION:

LIMITS OF WALL EXCAVATION SHOWN IN WALL SECTIONS ARE FOR QUANTITY PURPOSES ONLY. CONTRACTOR HAS THE OPTION TO USE AN EXCAVATED SLOPE OR SUPPORTED EXCAVATION. SEE MAINTENANCE OF TRAFFIC PLANS FOR ANY REQUIRED WORK ZONE SHEETING.

MAINTENANCE OF TRAFFIC:

REFER TO THE PROJECT OVERALL MAINTENANCE OF TRAFFIC FOR ADDITIONAL INFORMATION WITH RESPECT TO MAINTENANCE OF TRAFFIC.

ITEM 511, CLASS QC2 CONCRETE, MISC.: MOMENT SLAB AND RAILING:

ALL MATERIAL, LABOR AND INCIDENTALS NECESSARY TO FURNISH AND PLACE CONCRETE FOR THE MOMENT SLABS AND RAILINGS ALONG THE PRECAST TILT-UP PANEL WALLS SHALL BE INCLUDED FOR PAYMENT WITH ITEM 511, CLASS QC2 CONCRETE. PAYMENT FOR THIS ITEM SHALL INCLUDE ALL DOWEL RODS AND ALL JOINT MATERIALS IN CONTACT WITH THE MOMENT SLAB. ALL CONCRETE REINFORCING EMBEDDED IN THE MOMENT SLAB AND WITHIN THE RAILING SHALL BE INCLUDED WITH ITEM 509. THIS ITEM SHALL ALSO REQUIRE QUALITY CONTROL, MEETING THE REQUIREMENTS PER CMS 455 AND CMS 511.04.

ITEM 511, CLASS QC2 CONCRETE, MISC.: RAILING ON RETAINING WALL:

ALL MATERIAL, LABOR AND INCIDENTALS NECESSARY TO FURNISH AND PLACE CONCRETE FOR THE RAILING ON TOP OF THE CAST-IN-PLACE CONCRETE RETAINING WALL SHALL BE INCLUDED FOR PAYMENT WITH ITEM 511, CLASS QC2 CONCRETE. ALL CONCRETE REINFORCING EMBEDDED IN THE RETAINING WALL AND LOCATED WITHIN THE RAILING SHALL BE INCLUDED WITH ITEM 509 FOR PAYMENT. THE QUALITY CONTROL REQUIREMENTS SHALL BE PER CMS 455.

ITEM 512 - SEALING OF CONCRETE SURFACES (EPOXY URETHANE):

SEAL SURFACES OF THE PRECAST TILT-UP PANELS AND COPING AS SHOWN IN THE PLANS WITH EPOXY URETHANE SEALER ACCORDING TO C&MS 512. THE FOLLOWING COLORS SHALL BE USED FOR SEALING STRUCTURAL ELEMENTS:

COPING SEALER:	"DOVETAIL"	7018
PRECAST TILT-UP PANELS:	"ALPACA"	7022

ALL COLOR NAME AND REFERENCE NUMBERS ARE TAKEN FROM THE SHERWIN WILLIAMS COLOR PALATE. THE CONTRACTOR MAY SUBSTITUTE SIMILAR COLORS FROM ALTERNATIVE SUPPLIER'S COLOR PALATE.

ITEM 512 - SEALING OF CONCRETE SURFACES, AS PER PLAN, PERMANENT GRAFFITI PROTECTION:

APPLY A PERMANENT GRAFFITI COATING QUALIFIED ACCORDING TO SUPPLEMENT 1083 THAT IS COMPATIBLE WITH THE CONCRETE SEALER OVER WHICH IT IS APPLIED. PROVIDE A COATING THAT MEETS THE REQUIREMENTS LISTED BELOW. APPLY THE GRAFFITI COATING IN ACCORDANCE WITH THE MANUFACTURER'S PRINTED INSTRUCTIONS.

A. THE MATERIAL SHALL BE A SINGLE COMPONENT, RTV (ROOM TEMPERATURE VULCANIZED), NEUTRAL MOISTURE CURE, PERMANENT (NON-SACRIFICIAL), TYPE III (WATER CLEANABLE) POLYSILOXANE (SILICONE) ANTI-GRAFFITI COATING, FREE OF ANY WAXES, EPOXIES, OR POLYURETHANE COMPONENTS.

B. THE COATING SHALL BE A ONE COAT SYSTEM (NO PRIMER) CAPABLE OF BEING SPRAY APPLIED TO A DRY FILM THICKNESS OF 15 MILS (375 MICRONS) WITHOUT RUNS OR SAGS (MULTIPLE COAT APPLICATION ACCEPTABLE FOR BRUSH/ROLLER USAGE AND PRIMER USAGE ACCEPTABLE FOR SPECIALTY SUBSTRATES SUCH AS GALVANIZED METAL).

C. THE COATING SHALL EMIT LESS THAN 300 G/L (2.5 POUNDS PER GALLON) OF VOLATILE ORGANIZE COMPOUNDS (EPA METHOD 24).

D. THE COATING SHALL MEET THE FOLLOWING PERFORMANCE REQUIREMENTS:

1. CLEANABILITY LEVEL 1 (GRAFFITI COMPLETELY REMOVED WITH COLD WATER POWER WASH) AS PER ASTM D7089 WITH LOW PRESSURE (1200 PSI) COLD WATER WASH AFTER 2000 HOURS ACCELERATED UV-CONDENSATION EXPOSURE IN ACCORDANCE WITH ASTM D4587.
2. GRAFFITI RESISTANCE LESS THAN 7.5 AS PER ASTM D6578 AFTER 2000 HOURS ACCELERATED UV-CONDENSATION EXPOSURE IN ACCORDANCE WITH ASTM D4587.
3. NO SIGNS OF GRAFFITI OR GRAFFITI STAINING AND MUST BE INTACT AND EXHIBIT NO SIGNS OF STREAKING, CRACKING, PINHOLING, DISCOLORING, OR OTHER VISIBLE COATING DEGRADATION UPON CASUAL OBSERVATION WHEN TESTED IN ACCORDANCE WITH TXDOT TEX 890-B, TYPE III METHOD.
4. BREATHABILITY OF 10 PERMS (+/- 3) PER ASTM D1653 USING "WET CUP METHOD".
5. ELONGATION AT BREAK GREATER THAN 100% AS PER ASTM D412 (USING DIE "D").
6. ADHESION RATING OF "8 - DIFFICULT TO REMOVE" AS PER ASTM D6677 (ADHESION BY KNIFE).

ITEM 530 SPECIAL - RETAINING WALL, PRECAST WALL FACADE PANEL:

THIS BID ITEM CONSISTS OF PRECAST PANELS MANUFACTURED AND CONSTRUCTED IN ACCORDANCE WITH THIS SPECIFICATION AND DESIGNED IN ACCORDANCE WITH THE "LRFD BRIDGE DESIGN SPECIFICATIONS", 9TH EDITION, ADOPTED BY THE AMERICAN ASSOCIATION OF STATE HIGHWAY AND TRANSPORTATION OFFICIALS AND THE ODOT BRIDGE DESIGN MANUAL, 2020 (DATED 07-16-2021)

DESIGN DATA:

CONCRETE CLASS QC1 - COMPRESSIVE STRENGTH 4.0 KSI
REINFORCING STEEL / WELDED WIRE REINFORCEMENT - MINIMUM YIELD STRENGTH 60 KSI

MATERIALS – CONCRETE:

PROVIDE CONCRETE IN CONFORMANCE WITH CMS SECTION 511, CLASS QC1.

MATERIALS - REINFORCING AND HARDWARE:

REINFORCEMENT SHALL CONSIST OF WELDED WIRE FABRIC, OR FORMED BILLET-STEEL BARS CONFORMING TO CMS SECTION 509. ALL STEEL SHALL BE EPOXY COATED OR GALVANIZED. ALL INSERTS AND MISCELLANEOUS HARDWARE OR APPURTENANCES SHALL CONFORM TO PLAN REQUIREMENTS.

SHOP DRAWING REQUIREMENTS:

THE MANUFACTURER SHALL SUBMIT SHOP DRAWINGS FOR REVIEW AND APPROVAL PRIOR TO MANUFACTURE. THE SHOP DRAWINGS SHALL INCLUDE THE FOLLOWING:

- ALL STRUCTURAL DESIGN AND LOADING INFORMATION
- A PLAN VIEW
- ALL ELEVATION VIEWS
- ALL DIMENSIONS

MANUFACTURING SHALL NOT BEGIN UNTIL WRITTEN APPROVAL OF THE SUBMITTED SHOP DRAWINGS HAS BEEN RECEIVED.

TESTING AND INSPECTION:

ACCEPTABILITY OF THE CONCRETE FOR THE PRECAST PANELS WILL BE DETERMINED ON THE BASIS OF COMPRESSION TESTS, CERTIFICATIONS AND VISUAL INSPECTION. THE CONCRETE STRENGTH REQUIREMENTS FOR THE PRECAST PANELS SHALL BE CONSIDERED ATTAINED REGARDLESS OF CURING AGE WHEN COMPRESSION TEST RESULTS INDICATE STRENGTH WILL CONFORM TO 28-DAY SPECIFICATIONS AS STATED BELOW. THE MANUFACTURER SHALL FURNISH FACILITIES AND PERFORM ALL NECESSARY SAMPLING AND TESTING IN AN EXPEDITIOUS AND SATISFACTORY MANNER. PANELS UTILIZING TYPE I OR TYPE II CEMENT SHALL BE CONSIDERED ACCEPTABLE FOR PLACEMENT IN THE WALL WHEN 7-DAY INITIAL STRENGTHS EXCEED 85 PERCENT OF 28-DAY REQUIREMENTS. PANELS UTILIZING TYPE III CEMENT SHALL BE CONSIDERED ACCEPTABLE FOR PLACENT IN THE WALL PRIOR TO 28 DAY ONLY WHEN COMPRESSIVE STRENGTH EXCEEDS THE 28-DAY SPECIFICATION.

MANUFACTURE:

THE AGGREGATES, CEMENT AND WATER SHALL BE PROPORTIONED AND MIXED IN A BATCH MIXER TO PRODUCE HOMOGENEOUS CONCRETE MEETING THE STRENGTH REQUIREMENTS OF THESE NOTES. THE PROPORTION OF PORTLAND CEMENT IN THE MIXTURE SHALL NOT BE LESS THAN 564 POUNDS PER CUBIC YARD OF CONCRETE. THE WALL SECTIONS SHALL BE CURED FOR A SUFFICIENT LENGTH OF TIME SO THAT THE CONCRETE WILL DEVELOP THE SPECIFIED COMPRESSIVE STRENGTH IN 28 DAYS OR LESS. ANY ONE OF THE FOLLOWING METHODS OF CURING OR COMBINATION THEREOF SHALL BE USED:

STEAM CURING - THE SECTIONS MAY BE LOW PRESSURE, STEAM CURED BY A SYSTEM THAT WILL MAINTAIN A MOIST ATMOSPHERE.

WATER CURING - THE SECTIONS MAY BE WATER CURED BY ANY METHOD THAT WILL KEEP THE SECTIONS MOIST.

THE FORMS USED IN MANUFACTURE SHALL BE SUFFICIENTLY RIGID AND ACCURATE TO MAINTAIN THE SECTION DIMENSIONS WITHIN THE PERMISSIBLE VARIATIONS GIVEN IN THESE NOTES.

THE WALL SECTIONS SHALL BE STORED IN SUCH A MANNER TO PREVENT CRACKING OR DAMAGE.

THE FRONT FACE OF THE REINFORCED CONCRETE PANELS SHALL HAVE A TEXTURED FINISH AS SHOWN IN THE PLANS. CAULKING BETWEEN PRECAST PANELS SHALL BE IN ACCORDANCE WITH THE PLAN DETAILS. THE BACK SIDE OF THE REINFORCED CONCRETE PANELS SHALL HAVE A UNIFORM SURFACE FINISH AND SHALL BE ROUGH SCREEDED TO ELIMINATE OPEN POCKETS OF AGGREGATE AND SURFACE DISTORTIONS IN EXCESS OF 1/4".

ALL PANELS SHALL BE MANUFACTURED WITH ALL PANEL DIMENSIONS WITHIN 1/4".

COMPRESSIVE STRENGTH:

ACCEPTANCE OF THE CONCRETE PANELS WITH RESPECT TO COMPRESSIVE STRENGTH WILL BE DETERMINED ON THE BASIS OF PRODUCTION LOTS. A PRODUCTION LOT IS DEFINED AS A GROUP OF PANELS THAT WILL BE REPRESENTED BY A SINGLE COMPRESSIVE STRENGTH SAMPLE AND WILL CONSIST OF EITHER 6 PANELS OR A SINGLE DAY'S PRODUCTION, WHICHEVER IS LESS.

DURING THE PRODUCTION OF THE CONCRETE PANELS, THE MANUFACTURER WILL RANDOMLY SAMPLE THE CONCRETE IN ACCORDANCE WITH ASTM C 172. A SINGLE COMPRESSIVE STRENGTH SAMPLE, CONSISTING OF A MINIMUM OF FOUR CYLINDERS, WILL BE RANDOMLY SELECTED FOR EVERY PRODUCTION LOT.

COMPRESSIVE STRENGTH (CONT.):

CYLINDERS FOR COMPRESSIVE STRENGTH TESTS SHALL BE 6" DIA. x 12" OR 4" DIA. x 8" SPECIMENS PREPARED IN ACCORDANCE WITH ASTM C 31. FOR EVERY COMPRESSIVE STRENGTH SAMPLE, A MINIMUM OF 2 CYLINDERS WILL BE CURED IN THE SAME MANNER AS THE PANELS AND TESTED AT APPROXIMATELY 7 DAYS. THE AVERAGE COMPRESSIVE STRENGTH OF THESE CYLINDERS, WHEN TESTED IN ACCORDANCE WITH ASTM C 39, WILL PROVIDE A TEST RESULT WHICH WILL DETERMINE THE INITIAL STRENGTH OF THE CONCRETE. IN ADDITION, 2 CYLINDERS SHALL BE CURED IN ACCORDANCE WITH ASTM C 31 AND TESTED AT 28 DAYS. THE AVERAGE COMPRESSIVE STRENGTH OF THESE TWO CYLINDERS, WHEN TESTED IN ACCORDANCE WITH ASTM C 39, WILL PROVIDE A COMPRESSIVE STRENGTH TEST RESULT WHICH WILL DETERMINE THE COMPRESSIVE STRENGTH OF THE PRODUCTION LOT.

IF THE INITIAL STRENGTH TEST RESULTS INDICATE A COMPRESSIVE STRENGTH IN EXCESS OF 4000 PSI, THEN THESE TEST RESULTS WILL BE UTILIZED AS THE COMPRESSIVE STRENGTH TEST RESULT FOR THE PRODUCTION LOT AND THE REQUIREMENT FOR TESTING AT 28 DAYS WILL BE WAIVED FOR THAT PARTICULAR PRODUCTION LOT.

ACCEPTANCE OF A PRODUCTION LOT WILL BE MADE IF THE COMPRESSIVE STRENGTH TEST RESULT IS GREATER THAN OR EQUAL TO 4000 PSI. IF THE RESULT IS LESS THAN 4000 PSI, THE ACCEPTANCE OF THE PRODUCTION LOT WILL BE BASED ON ITS MEETING OR EXCEEDING THE FOLLOWING THREE ACCEPTANCE CRITERIA:
- 90% OF THE COMPRESSIVE STRENGTH TEST RESULTS FOR THE OVERALL PRODUCTION SHALL EXCEED 4000 PSI.
- THE AVERAGE OF ANY THREE CONSECUTIVE COMPRESSIVE STRENGTH TEST RESULTS SHALL EXCEED 4000 PSI.
- NO INDIVIDUAL COMPRESSIVE STRENGTH TEST RESULT SHALL FALL BELOW 3800 PSI.

IN THE EVENT THAT A PRODUCTION LOT FAILS TO MEET THE SPECIFIED COMPRESSIVE STRENGTH REQUIREMENTS, THE PRODUCTION LOT SHALL BE REJECTED. SUCH REJECTION SHALL PREVAIL UNLESS THE MANUFACTURER, AT HIS OWN EXPENSE, OBTAINS AND SUBMITS EVIDENCE ACCEPTABLE TO THE ENGINEER THAT THE STRENGTH AND QUALITY OF THE CONCRETE PLACED WITHIN THE PANELS OF THE PRODUCTION IS ACCEPTABLE. IF SUCH EVIDENCE CONSISTS OF TESTS MADE ON CORES TAKEN FROM THE PANELS WITHIN THE PRODUCTION LOT, THE CORES SHALL BE OBTAINED AND TESTED IN ACCORDANCE WITH THE SPECIFICATIONS OF ASTM C 42.

REJECTION:

PANELS SHALL BE SUBJECT TO REJECTION BECAUSE OF FAILURE TO MEET ANY OF THE REQUIREMENTS SPECIFIED ABOVE. IN ADDITION, ANY OR ALL OF THE FOLLOWING DEFECTS MAY BE SUFFICIENT CAUSE FOR REJECTION:
- DEFECTS THAT INDICATE IMPERFECT MOLDING
- DEFECTS INDICATING HONEYCOMBED OR OPEN TEXTURED CONCRETE.
- DEFECTS IN THE PHYSICAL CHARACTERISTICS OF THE CONCRETE, SUCH AS BROKEN OR CHIPPED CONCRETE.
- STAINED FORM FACE, DUE TO EXCESS FORM OIL OR OTHER CONTAMINATIONS.
- SIGNS OF AGGREGATE SEGREGATION
- BROKEN OR CRACKED CORNERS
- LIFTING INSERTS NOT USABLE
- EXPOSED REINFORCING STEEL
- INSUFFICIENT CONCRETE COMPRESSIVE STRENGTH
- CRACKS WIDER THAN 0.01 INCH, PENETRATING MORE THAN 1", OR LONGER THAN 12 INCHES
- MISSING COPING DOWELS

THE ENGINEER WILL DECIDE IF AN ATTEMPT MAY BE MADE TO REPAIR A DEFECTIVE PANEL. THE CONTRACTOR OR MANUFACTURER SHALL MAKE THE REPAIRS. IF THE REPAIRS ARE MADE TO THE ENGINEER'S SATISFACTION, THE PANEL WILL BE ACCEPTABLE.

MARKING:

THE DATE OF MANUFACTURE, THE PRODUCTION LOT NUMBER AND THE PIECE OF MARK SHALL BE CLEARLY SCRIBED ON THE BACK SURFACE OF EACH PANEL.

WALL ERECTION:

PANELS ARE HANDLED BY MEANS OF A LIFTING DEVICE CONNECTED TO LIFTING INSERTS CAST INTO THE BACK SIDE OF THE PANELS. ALL PANELS SHALL BE BRACED TO RESIST THE TEMPORARY CONSTRUCTION LOADS INCLUDING WIND LOADS, PRIOR TO POURING THE THICKENED EDGE BEAM FOR THE LOAD DISTRIBUTION SLAB.

MEASUREMENT AND PAYMENT:

ACCEPTED PRECAST FACADE WALL PANELS SHALL BE PAID FOR AT THE CONTRACT UNIT PRICE BID PER SQUARE FOOT FOR ITEM 530 SPECIAL - RETAINING WALL, PRECAST WALL FACADE PANEL. WHICH PRICE SHALL CONSTITUTE FULL COMPENSATIONS FOR ALL LABOR, MATERIALS, EQUIPMENT, SHIPPING AND APPURTENANCES TO FABRICATE AND INSTALL THE PANELS IN ACCORDANCE WITH THESE SPECIFICATIONS.

Preliminary Not For Construction - For Reference Only

GENERAL NOTES (1 OF 2)
WALL AD
ALONG RAMP A1

SFN N/A
DESIGN AGENCY HDR
DESIGNER TJE | CHECKER JML
REVIEWER DWW 01/11/24
PROJECT ID 82382
SUBSET 3 | TOTAL 17
SHEET 1193 | TOTAL 2696

CUY-90-16.28 (CCG3A)
MODEL: Sheet PAPERSIZE: 34x22 (in.) DATE: 6/9/2025 TIME: 10:35:53 AM USER: Tolga.Feran
pw:\\mb-us-pw.bentley.com:mb-us-pw-03\Documents\Cleveland_OH\01_Projects\ODOT\District12\82382\400-Engineering\Structures\WALL_AD\Sheets\82382_AD_WN001.dgn

ITEM 530 SPECIAL - RETAINING WALL, GRADE BEAM:

ALL MATERIAL, LABOR AND INCIDENTALS NECESSARY TO FURNISH AND PLACE THE GRADE BEAM, INCLUDING THE GRANULAR MATERIAL TYPE C, SUPPORTING THE PRECAST TILT-UP PANEL WALL SHALL BE INCLUDED IN THE UNIT BID PRICE PER FOOT FOR THIS ITEM.

ITEM 530 SPECIAL - RETAINING WALL, LOAD DISTRIBUTION SLAB:

ALL MATERIAL, LABOR AND INCIDENTALS NECESSARY TO FURNISH AND PLACE THE LOAD DISTRIBUTION SLAB AT THE TOP OF THE EXPANDED POLYSTYRENE GEOFOAM FILL SHALL BE INCLUDED IN THE UNIT BID PRICE PER LINEAR FOOT FOR THIS ITEM. THIS INCLUDES THE CONCRETE, STEEL REINFORCEMENT, ANCHOR BOLTS, WASHERS, NUTS, WATERPROOFING MEMBRANE, AND VISQUENE PLASTIC BARRIER.

ITEM 518 CORRUGATED PLASTIC PIPE:

PROVIDE A MINIMUM SLOPE OF 1.0% ON ALL WALL DRAINS UNLESS NOTED OTHERWISE. PIPE LOCATED AWAY FROM THE BACK FACE OF BOTH THE CAST-IN-PLACE CONCRETE WALL AND THE PRECAST TILT-UP PANEL WALL SHALL BE INCLUDED WITH THE ROADWAY QUANTITIES FOR PAYMENT.

LOCATE THE PIPE AS CLOSE AS POSSIBLE TO THE TOP OF THE GRADE BEAM FOR THE PRECAST TILT-UP PANEL PORTION OF THE WALL, WHILE MAINTAINING THE MINIMUM SLOPE.

ITEM 840 CONCRETE COPING, AS PER PLAN:

PROVIDE EPOXY COATED REINFORCING AND CLASS QC1 CONCRETE AS SHOWN IN THE PLANS. 1/2" PEJF, CONCRETE AND REINFORCING STEEL IN THE COPING SHALL BE INCLUDED IN THE UNIT BID PRICE PER FOOT FOR THIS ITEM.

ITEM 840 CONCRETE AESTHETIC SURFACE TREATMENT:

ALL PRECAST WALL PANELS SHALL HAVE THE "RAISED PRISM" ARCHITECTURAL TREATMENT, AS SHOW ON SHEET 1824 / 2696 .

THE ARCHITECTURAL TREATMENT SHALL HAVE A MINIMUM OF 0" AND A MAXIMUM OF 3" RELIEF.

ABBREVIATIONS:

THE FOLLOWING ABBREVIATIONS HAVE BEEN USED THROUGHOUT THESE PLANS TO INDICATE THE DESIGNATIONS CONTAINED IN THE LEGEND BELOW:

ABUT. - ABUTMENT
ALT. - ALTERNATE
APPR. - APPROACH
℄ - BASELINE
BOT. - BOTTOM
BRG. - BEARING
BRGS. - BEARINGS
BTA - BRIDGE TERMINAL ASSEMBLY
℄ - CENTERLINE
C/C - CENTER TO CENTER
CIP - CAST-IN-PLACE
C.J. - CONTRUCTION JOINT
CLR. - CLEARANCE
CP - COMPLETE PENETRATION BUTT WELD
CMS - CONSTRUCTION AND MATERIAL SPECIFICATIONS
CONC. - CONCRETE
CONST. - CONSTRUCTION
C.P.P. - CORRUGATED PLASTIC PIPE
CS - INDICATES BUTT WELD SUBJECT TO COMPRESSIVE STRESSES ONLY
CU YD - CUBIC YARD
CVN - CHARPY V-NOTCH TESTING
DIA. - DIAMETER
E.F. - EACH FACE
ELEV., EL. - ELEVATION
EQ. - EQUAL
EX. - EXISTING
EXP. - EXPANSION
F.A. - FORWARD ABUTMENT
F.F. - FAR FACE
F/F - FACE TO FACE
F.S. - FIELD SPLICE
FT/FT - FOOT PER FOOT
FTG. - FOOTING
FWD. - FORWARD
GEN. - GENERAL
INT. - INTEGRAL
LDS - LOAD DISTRIBUTION SLAB
LF - LEFT FORWARD
LT. - LEFT
MAX. - MAXIMUM
M.E. - MATCH EXISTING
MIN. - MINIMUM
MISC. - MISCELLANEOUS
MOT - MAINTENANCE OF TRAFFIC
N.F. - NEAR FACE
NO./# - NUMBER
O.H. - OVERHEAD
O/O - OUT TO OUT
PCPP - PERFORATED CORRUGATED PLASTIC PIPE
PEJF - PREFORMED EXPANSION JOINT FILLER
PG - PROFILE GRADE
PGL - PROFILE GRADE LINE
PROP. - PROPOSED
PT - POINT OF TANGENCY
PVC - POINT OF VERTICAL CURVATURE
PVI - POINT OF VERTICAL INTERSECTION
PVT - POINT OF VERTICAL TANGENCY
R. - RADIUS
R.A. - REAR ABUTMENT
RCP - ROCK CHANNEL PROTECTION
RF - RIGHT FORWARD
RT. - RIGHT
R/W - RIGHT OF WAY
SAN. - SANITARY
SER. - SERIES
SHLDR. - SHOULDER
SHT. - SHEET
S.O. - SERIES OF
SPA. - SPACES OR SPACING
SR - STATE ROUTE
STA. - STATION
STD. - STANDARD
STM. - STORM
STR. - STRAIGHT
T&B - TOP AND BOTTOM
TBM - TEMPORARY BENCH MARK
TEMP. - TEMPORARY
T.O.S. - TOE OF SLOPE
T/RAILING - TOE OF RAILING
T/T - TOE TO TOE
TYP. - TYPICAL
U.G. - UNDERGROUND
U.N.O. - UNLESS NOTED OTHERWISE
VAR. - VARIES
VC - VERTICAL CURVE
VERT. - VERTICAL
W/ - WITH
W/O - WITHOUT

Preliminary Plans - For Reference Only

GENERAL NOTES (2 OF 2)
WALL AD
ALONG RAMP A1

SFN N/A

DESIGN AGENCY HDR

DESIGNER	CHECKER
TJE	JML

REVIEWER DWW 01/11/24

PROJECT ID 82382

SUBSET	TOTAL
4	17

SHEET	TOTAL
1194	2696

CUY-90-16.28 (CCG3A)

MODEL: Sheet PAPERSIZE: 34x22 (in.) DATE: 3/27/2025 TIME: 10:56:58 PM USER: Julie.Ross
pw:\\mb-us-pw.bentley.com:mb-us-pw-03\Documents\Cleveland_OH\01_Projects\ODOT\District12\82382\400-Engineering\Structures\WALL_AD\Sheets\82382_AD_WN002.dgn

ESTIMATED QUANTITIES

CALCULATED BY: DGJ DATE: 01/17/2024
CHECKED BY: RBK DATE: 01/24/2024

PARTICIPATION	ITEM	EXTENSION	TOTAL	UNIT	DESCRIPTION	SHEET REF.
01/IMS/04	503	11100	LS		COFFERDAMS AND EXCAVATION BRACING	
01/IMS/04	503	21100	1279	CY	UNCLASSIFIED EXCAVATION	
01/IMS/04	509	10000	75594	LB	EPOXY COATED STEEL REINFORCEMENT	
01/IMS/04	509	30020	12902	FT	NO. 4 DEFORMED GFRP REINFORCEMENT	
01/IMS/04	511	46212	163	CY	CLASS QC1 CONCRETE WITH QC/QA, RETAINING/WINGWALL INCLUDING FOOTING	
01/IMS/04	511	53012	266	CY	CLASS QC2 CONCRETE, MISC.: MOMENT SLAB AND RAILING (WITH QC/QA)	3 / 17
01/IMS/04	511	53012	73	CY	CLASS QC2 CONCRETE, MISC.: RAILING ON RETAINING WALL (WITH QC/QA)	3 / 17
01/IMS/04	512	10001	338	SY	SEALING OF CONCRETE SURFACES, AS PER PLAN (PERMANENT GRAFFITI PROTECTION)	3 / 17
01/IMS/04	512	10100	1306	SY	SEALING OF CONCRETE SURFACES (EPOXY-URETHANE)	
01/IMS/04	512	33000	147	SY	TYPE 2 WATERPROOFING	
01/IMS/04	512	67300	421	FT	SPECIAL - WATERPROOFING, 6" PVC WATERSTOP	9 / 17
01/IMS/04	516	13600	35	SF	1" PREFORMED EXPANSION JOINT FILLER	
01/IMS/04	518	21200	133	CY	POROUS BACKFILL WITH GEOTEXTILE FABRIC	
01/IMS/04	518	40000	808	FT	6" PERFORATED CORRUGATED PLASTIC PIPE	
01/IMS/04	518	40010	132	FT	6" NON-PERFORATED CORRUGATED PLASTIC PIPE, INCLUDING SPECIALS	
01/IMS/04	530	50020	448	FT	SPECIAL - RETAINING WALL, GRADE BEAM	4 / 17
01/IMS/04	530	50020	471	FT	SPECIAL - RETAINING WALL, LOAD DISTRIBUTION SLAB (LDS)	4 / 17
01/IMS/04	530	51000	7083	SF	SPECIAL - RETAINING WALL, PRECAST WALL FACADE PANEL	3 / 17
01/IMS/04	840	26001	448	FT	CONCRETE COPING, AS PER PLAN	4 / 17
01/IMS/04	840	26050	7083	SF	AESTHETIC SURFACE TREATMENT	

Preliminary Plans - For Reference Only

ESTIMATED QUANTITIES
WALL AD
ALONG RAMP A1

SFN
N/A

DESIGN AGENCY

DESIGNER TJE | CHECKER JML
REVIEWER DWW 01/11/24
PROJECT ID 82382
SUBSET 5 | TOTAL 17
SHEET 1195 | TOTAL 2696

CUY-90-16.28 (CCG3A)

MODEL: Sheet PAPERSIZE: 34x22 (in.) DATE: 3/27/2025 TIME: 10:57:03 PM USER: Julie.Ross
pw:\\mb-us-pw.bentley.com:mb-us-pw-03\Documents\Cleveland_OH\01_Projects\ODOT\District12\82382\400-Engineering\Structures\WALL_AD\Sheets\82382_AD_WQ001.dgn

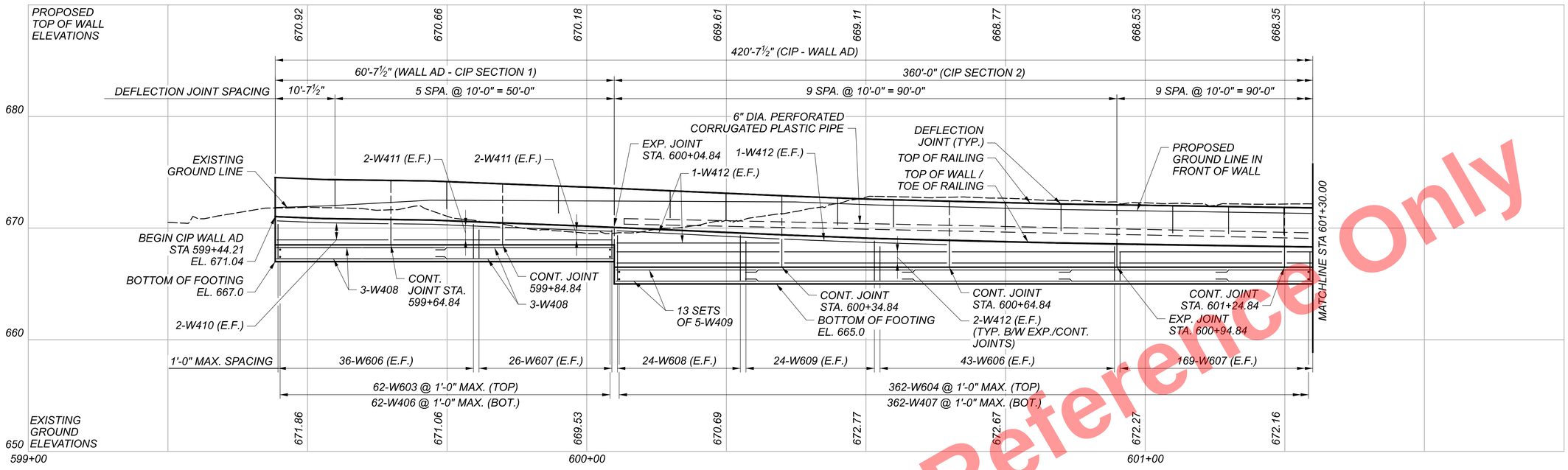

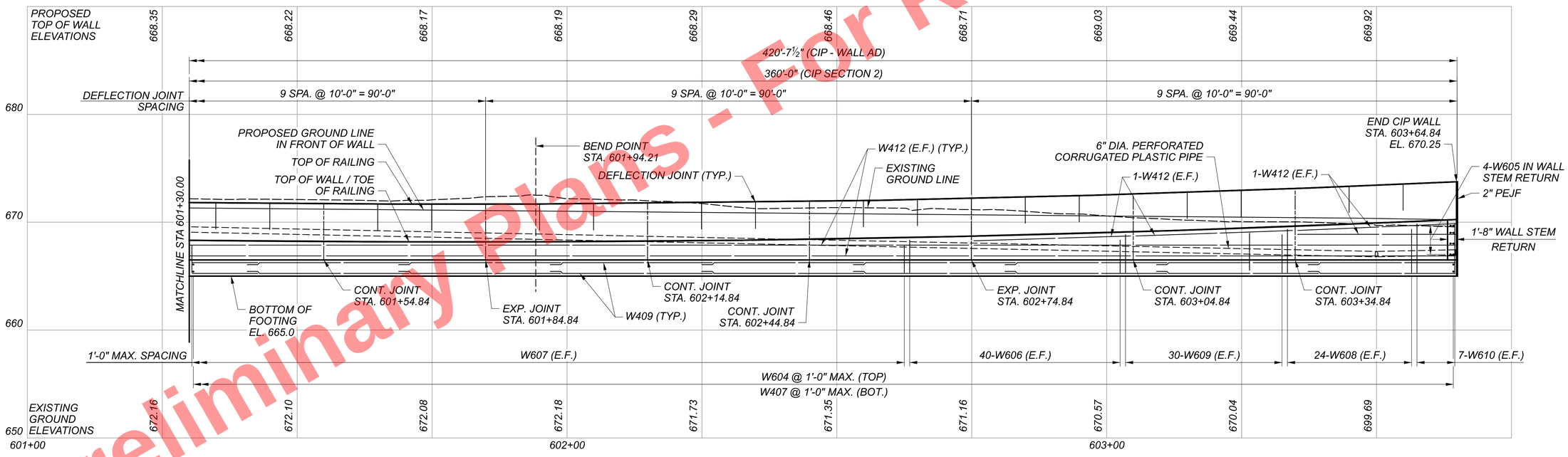

REQUIRED MINIMUM LAP LENGTHS	
#4	2'-6"

NOTES:

1. FOR ADDITIONAL WALL ELEVATIONS, SEE SHEETS 7 / 17 AND 8 / 17 .
2. FOR ADDITIONAL CIP WALL DETAILS, SEE SHEETS 9 / 17 AND 10 / 17 .
3. FOR TILT-UP PANEL WALL DETAILS, SEE SHEET 11 / 17 .
4. FOR RAILING REINFORCING DETAILS, SEE SHEET 16 / 17 .
5. FOR GENERAL NOTES, SEE SHEET 3 / 17 .

CIP WALL ELEVATION
WALL AD
ALONG RAMP A1

SFN	N/A
DESIGN AGENCY	HDR
DESIGNER	CMR
CHECKER	DRS
REVIEWER	DWW 01/11/24
PROJECT ID	82382
SUBSET	6
TOTAL	17
SHEET	1196
TOTAL	2696

Preliminary Plans - For Reference Only

CUY-90-16.28 (CCG3A)
MODEL: Sheet PAPERSIZE: 34x22 (in.) DATE: 3/27/2025 TIME: 10:57:16 PM USER: Julie.Ross
pw:\\mb-us-pw.bentley.com:mb-us-pw-03\Documents\Cleveland_OH101_Projects\ODOT\District12\82382\400-Engineering\Structures\WALL_AD\Sheets\82382_AD_WE001.dgn

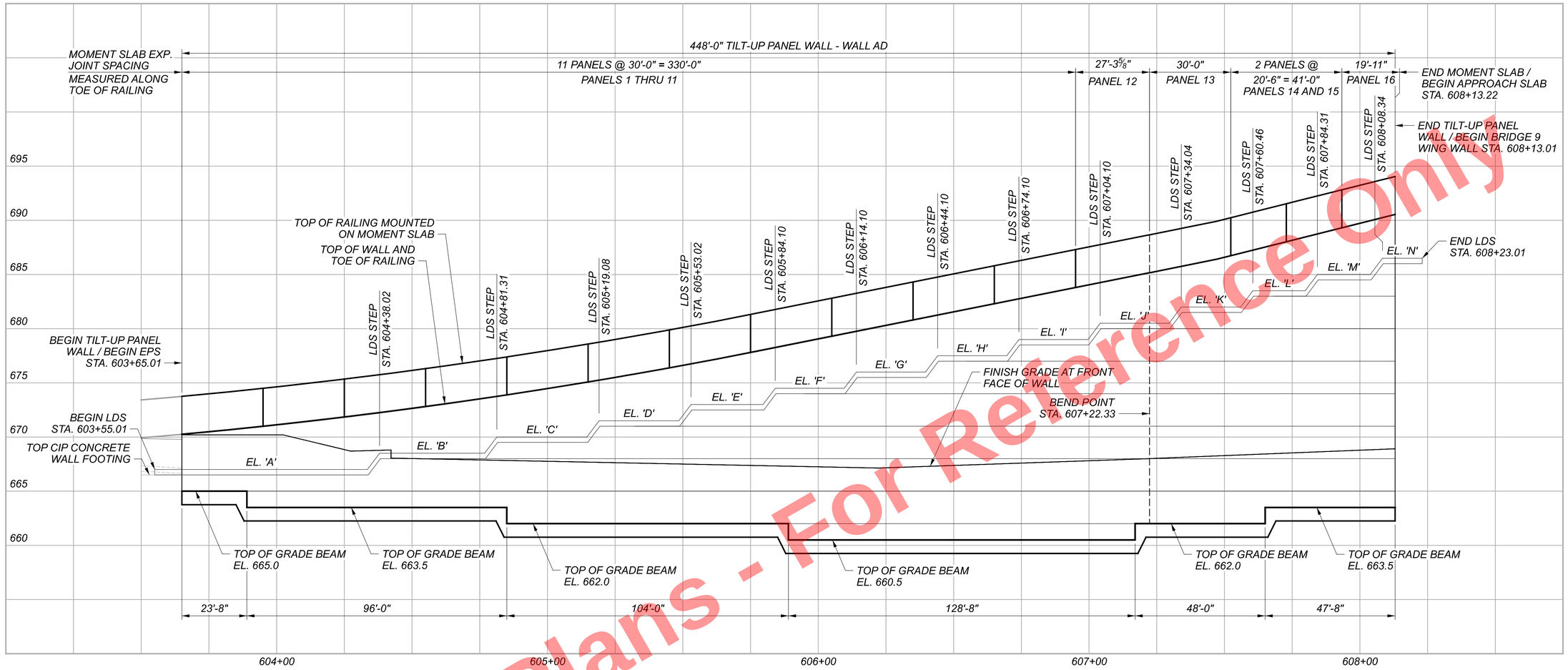

WALL AD TILT-UP PANEL WALL - ELEVATION

LDS ELEVATIONS	
LOC.	EL.
A	667.0
B	668.5
C	670.0
D	671.5
E	673.0
F	674.5
G	676.0
H	677.5
I	679.0
J	680.5
K	682.0
L	683.5
M	685.0
N	686.5

Preliminary Plans - For Reference Only

TILT-UP PANEL WALL ELEVATION (1 OF 2)
WALL AD
ALONG RAMP A1

SFN N/A

DESIGN AGENCY HDR

DESIGNER	CHECKER
TJE	JML

REVIEWER DWW 01/11/24

PROJECT ID 82382

SUBSET	TOTAL
7	17

SHEET	TOTAL
1197	2696

CUY-90-16.28 (CCG3A)

MODEL: Sheet PAPERSIZE: 34x22 (in.) DATE: 3/27/2025 TIME: 10:57:23 PM USER: Julie.Ross
pw:\\mb-us-pw.bentley.com:mb-us-pw-03\Documents\Cleveland_OH\01_Projects\ODOT\District12\82382\400-Engineering\Structures\WALL_AD\Sheets\82382_AD_WE002.dgn

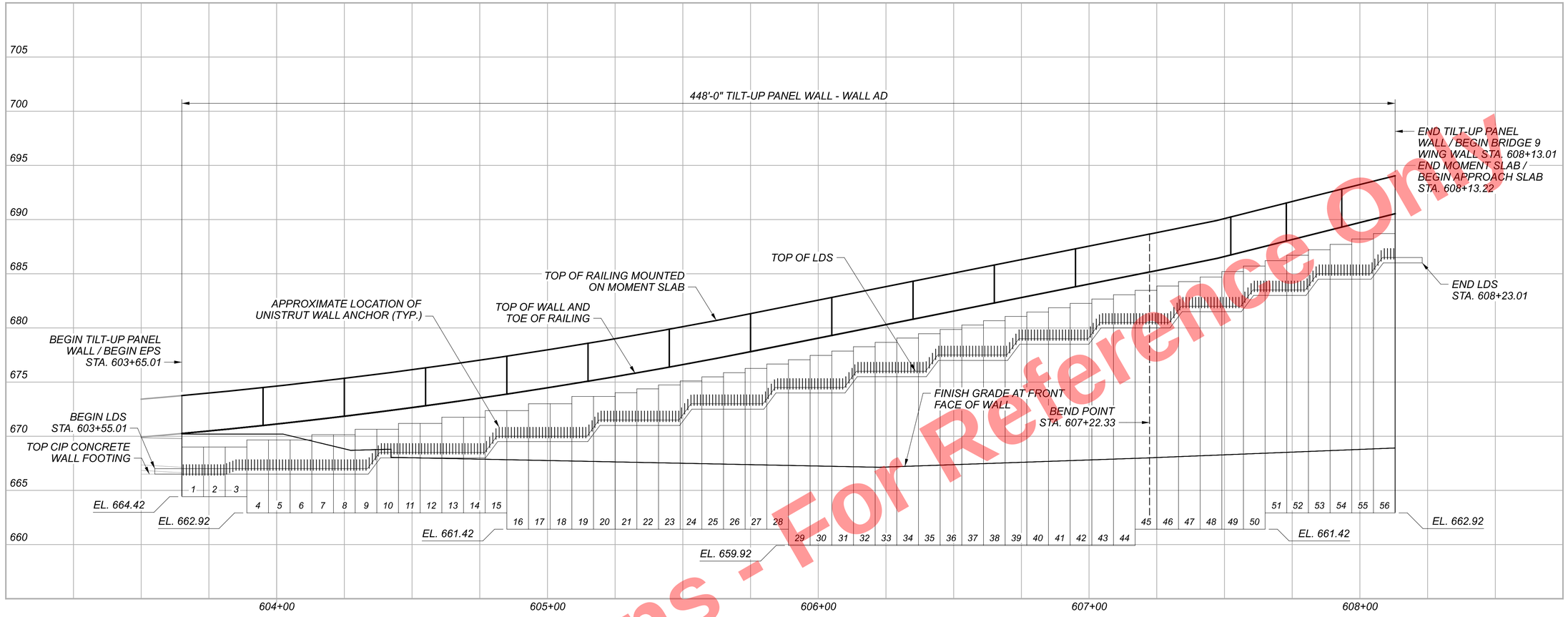

WALL AD TILT-UP PANEL WALL - PRECAST PANEL DATA

PRECAST TILT-UP PANEL HEIGHTS					
PANEL NO.	HEIGHT	PANEL NO.	HEIGHT	PANEL NO.	HEIGHT
1	4.58	21	12.59	41	21.94
2	4.58	22	12.95	42	22.34
3	4.58	23	13.31	43	22.74
4	6.74	24	13.68	44	23.14
5	6.74	25	14.06	45	22.04
6	6.74	26	14.45	46	22.44
7	7.21	27	14.84	47	22.85
8	7.21	28	15.24	48	23.27
9	7.72	29	17.14	49	23.78
10	7.72	30	17.54	50	24.28
11	8.26	31	17.94	51	23.29
12	8.26	32	18.34	52	23.79
13	8.84	33	18.74	53	24.29
14	8.84	34	19.14	54	24.79
15	9.44	35	19.54	55	25.29
16	10.94	36	19.94	56	25.79
17	11.58	37	20.34		
18	11.58	38	20.74		
19	12.25	39	21.14		
20	12.25	40	21.54		

Preliminary Plans - For Reference Only

NOTES:

1. FOR LOAD DISTRIBUTION SLAB ELEVATIONS AND STEP LOCATIONS, SEE SHEET 7 / 17.

TILT-UP PANEL WALL ELEVATION (2 OF 2)
WALL AD
ALONG RAMP A1

SFN N/A

DESIGN AGENCY

DESIGNER TJE | CHECKER JML

REVIEWER DWW 01/11/24

PROJECT ID 82382

SUBSET 8 | TOTAL 17

SHEET 1198 | TOTAL 2696

CUY-90-16.28 (CCG3A)

MODEL: Sheet PAPERSIZE: 34x22 (in.) DATE: 3/27/2025 TIME: 10:57:29 PM USER: Julie.Ross
pw:\\mb-us-pw.bentley.com:mb-us-pw-03\Documents\Cleveland_OH\01_Projects\ODOT\District12\82382\400-Engineering\Structures\WALL_AD\Sheets\82382_AD_WE003.dgn

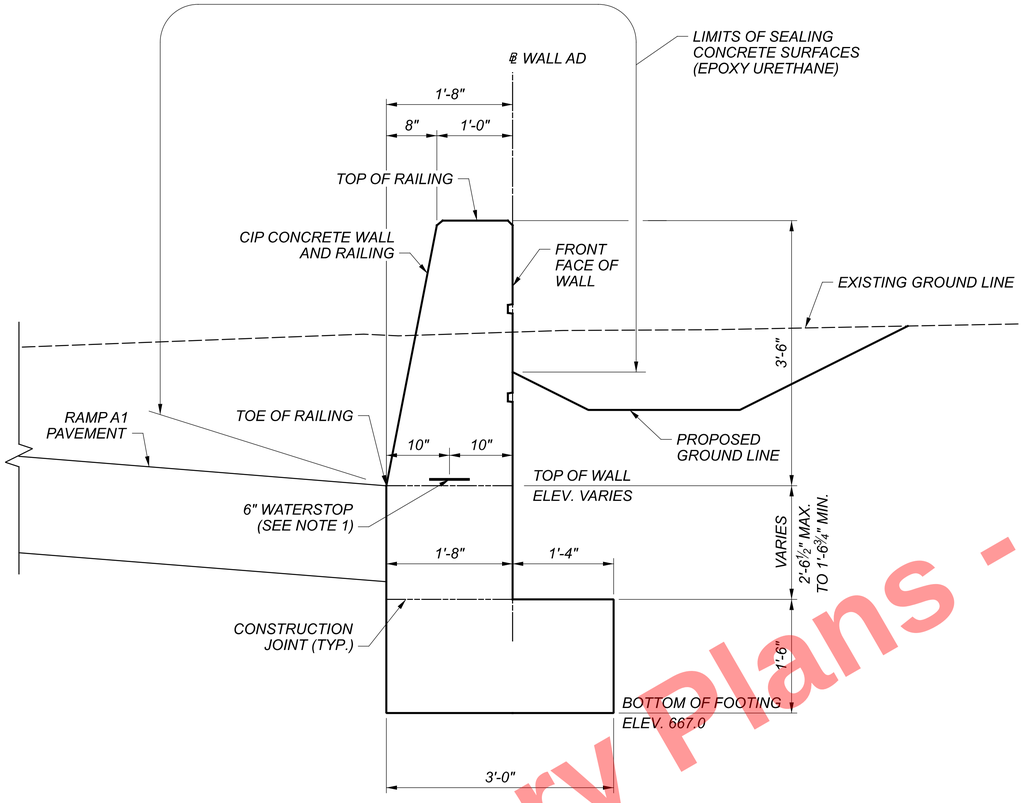

TYPICAL SECTION

(WALL AD - CIP SECTION 1)
(REINFORCEMENT NOT SHOWN FOR CLARITY)

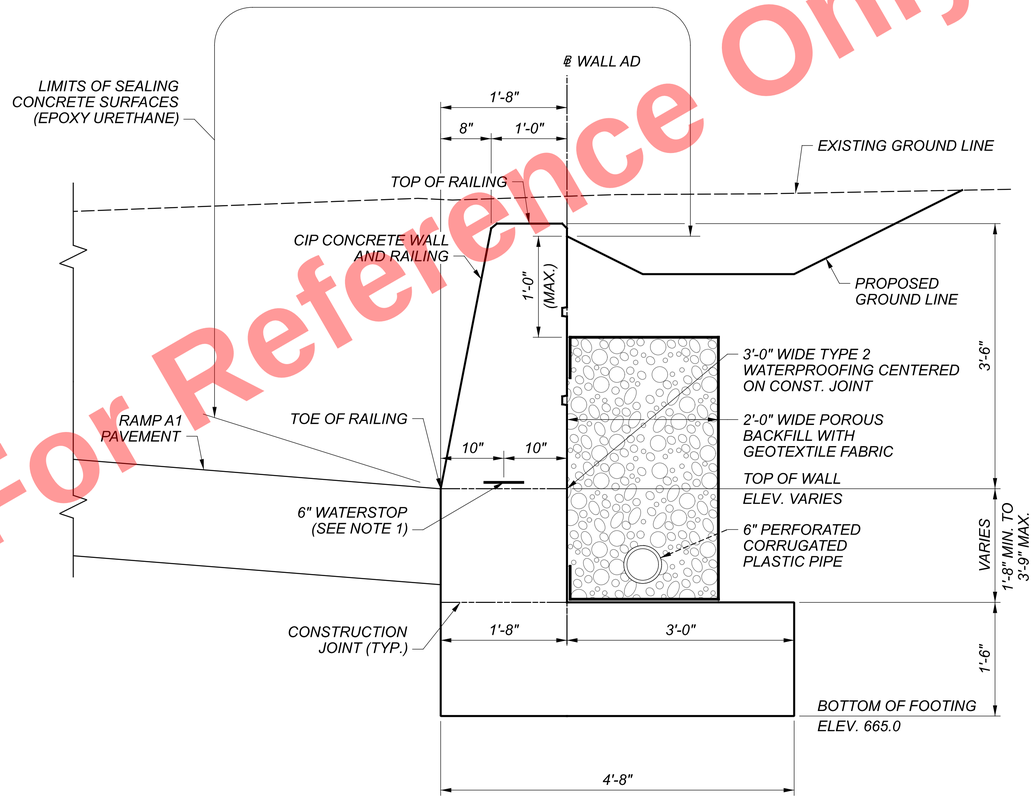

TYPICAL SECTION

(WALL AD - CIP SECTION 2)
(REINFORCEMENT NOT SHOWN FOR CLARITY)

NOTE:

1. WATERSTOP SHALL BE INCLUDED WITH ITEM 512 - SPECIAL - WATERPROOFING, 6" PVC WATERSTOP FOR PAYMENT.

Preliminary Plans - For Reference Only

CIP WALL SECTIONS
WALL AD
ALONG RAMP A1

SFN N/A

DESIGN AGENCY

DESIGNER CMR | CHECKER DRS

REVIEWER DWW 01/11/24

PROJECT ID 82382

SUBSET 9 | TOTAL 17

SHEET 1199 | TOTAL 2696

CUY-90-16.28 (CCG3A)

MODEL: Sheet PAPERSIZE: 34x22 (in.) DATE: 3/27/2025 TIME: 10:57:34 PM USER: Julie.Ross
pw:\\mb-us-pw.bentley.com:mb-us-pw-03\Documents\Cleveland_OH01_Projects\ODOT\District12\82382\400-Engineering\Structures\WALL_AD\Sheets\82382_AD_WY001.dgn
82382_AD_WY001.dgn

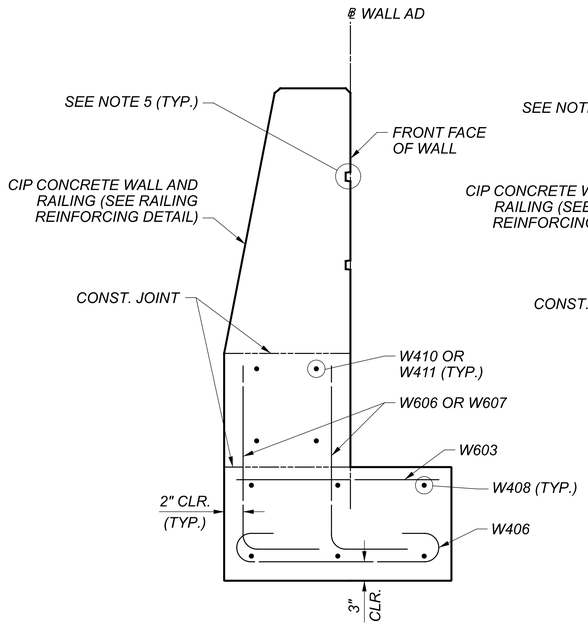

SECTION 1 REINFORCEMENT

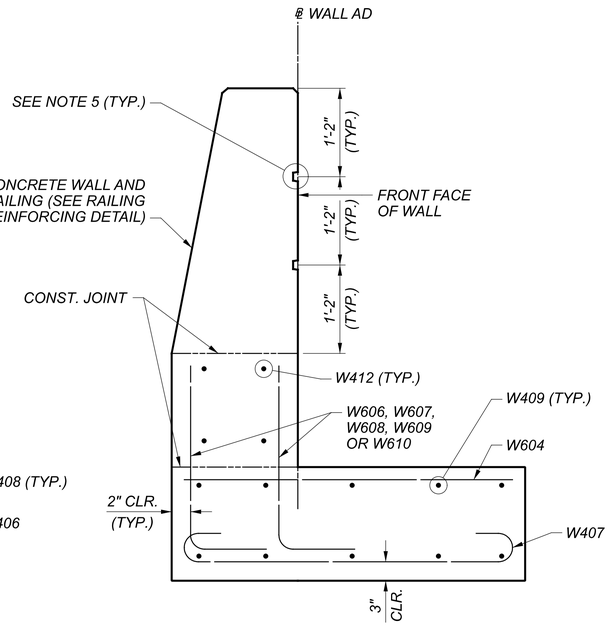

SECTION 2 REINFORCEMENT

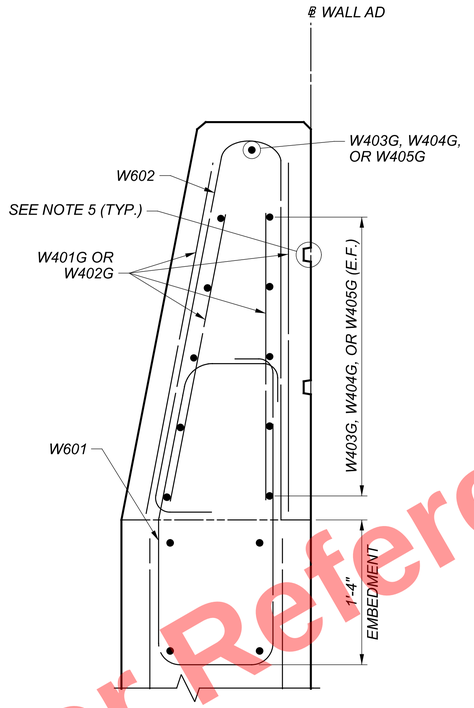

RAILING REINFORCEMENT DETAIL

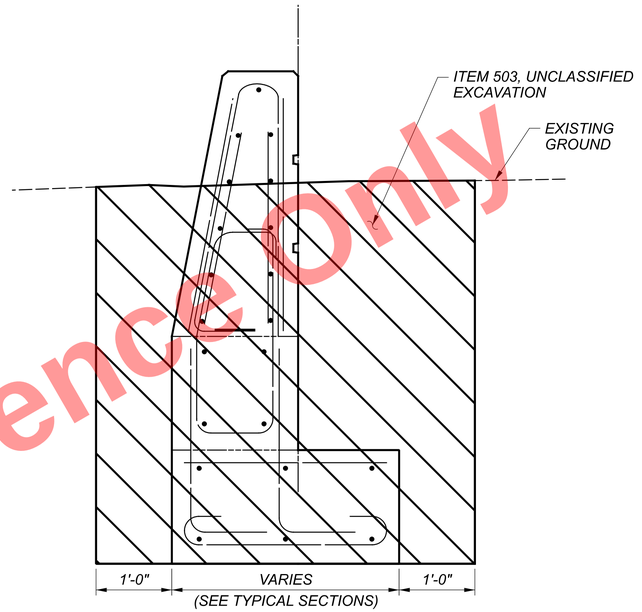

TYPICAL WALL EXCAVATION LIMITS

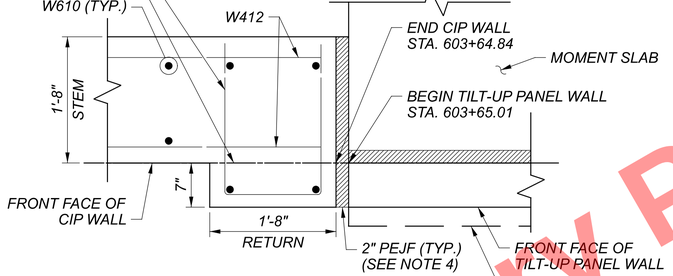

WALL STEM RETURN DETAIL

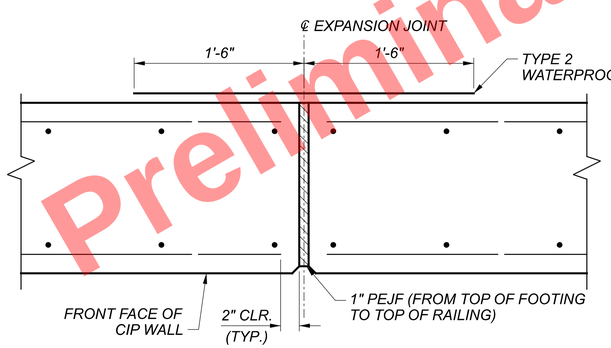

EXPANSION JOINT DETAIL

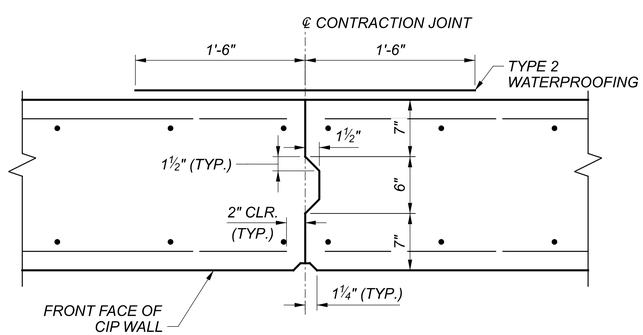

CONTRACTION JOINT DETAIL

NOTES:

1. FOR REINFORCEMENT LISTS, SEE SHEET 17/17.
2. FOR TOP OF WALL ELEVATIONS, SEE SHEET 6/17.
3. FOR ADDITIONAL RAILING NOTES AND DETAILS, SEE ODOT STD. DWG. SBR-1-20 AND SHEET 16/17.
4. 2" PEJF SHALL BE INCLUDED FOR PAYMENT WITH ITEM 511, CLASS QC2 CONCRETE, MISC.: MOMENT SLAB AND RAILING.
5. FOR RAILING RELIEF GROOVE DETAIL, SEE SHEET 14/17.

Preliminary Plans - For Reference Only

MISCELLANEOUS CIP WALL DETAILS
WALL AD
ALONG RAMP A1

SFN N/A
DESIGN AGENCY HDR
DESIGNER CMR | CHECKER DRS
REVIEWER DWW 01/11/24
PROJECT ID 82382
SUBSET 10 | TOTAL 17
SHEET 1200 | TOTAL 2696

CUY-90-16.28 (CCG3A)

MODEL: Sheet PAPERSIZE: 34x22 (in.) DATE: 3/27/2025 TIME: 10:57:38 PM USER: Julie.Ross
pw:\\mb-us-pw.bentley.com:mb-us-pw-03\Documents\Cleveland_OH\01_Projects\ODOT\District12\82382\2400-Engineering\Structures\WALL_AD\Sheets\82382_AD_WD002.dgn

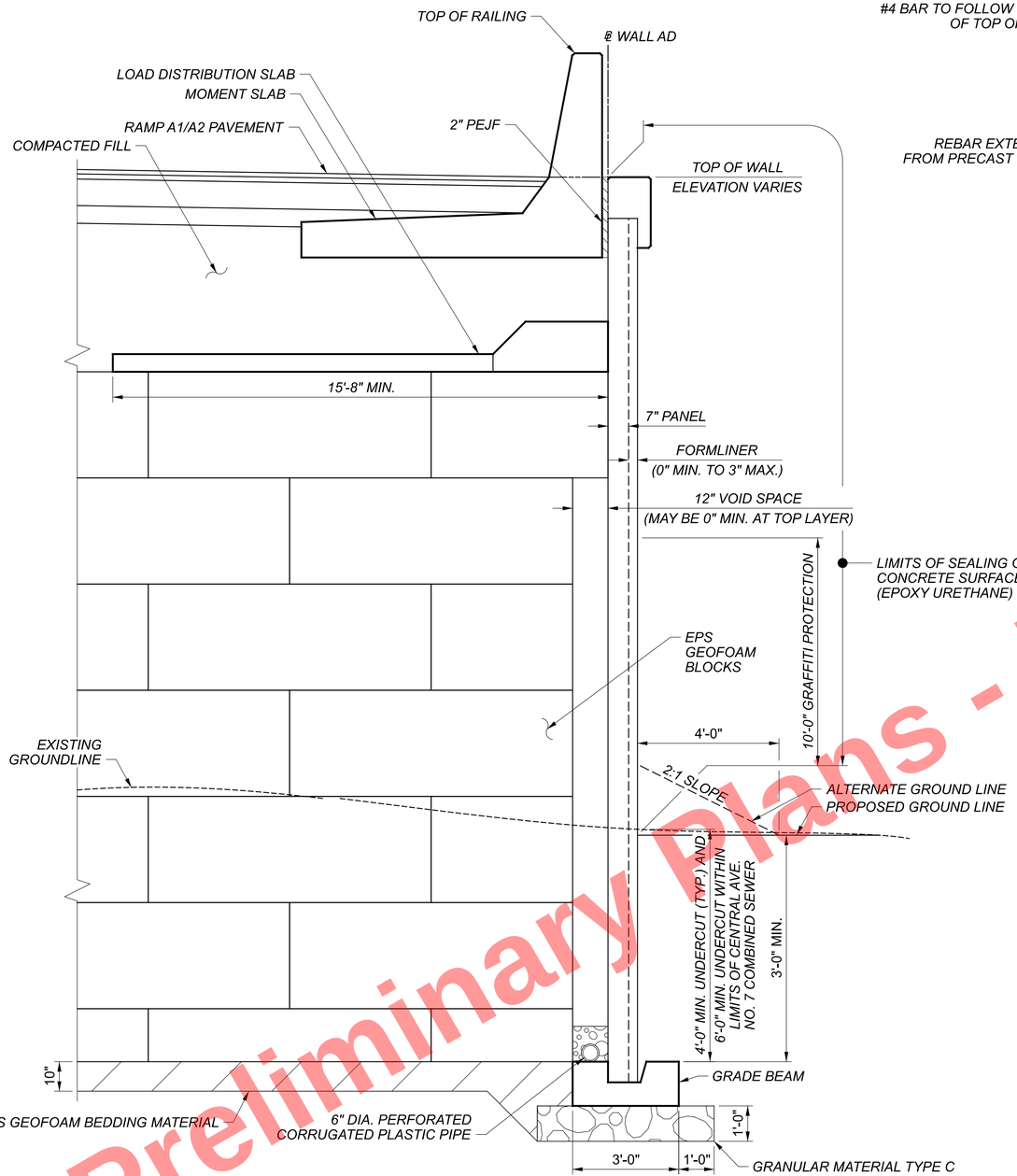

TILT-UP PANEL WALL TYPICAL SECTION

(WALL AD STA. 603+65.01 TO WALL AD STA. 608+13.01)
(SECTION ALONG ROADWAY PAVEMENT LIMITS SHOWN)

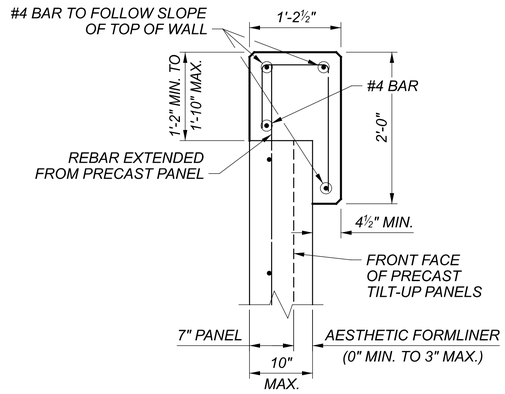

COPING SECTION

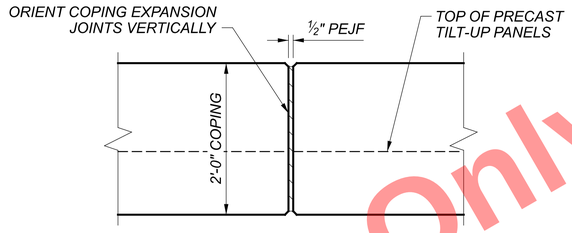

COPING EXPANSION JOINT - ELEVATION

(MAX. JOINT SPACING IS 20'-0")

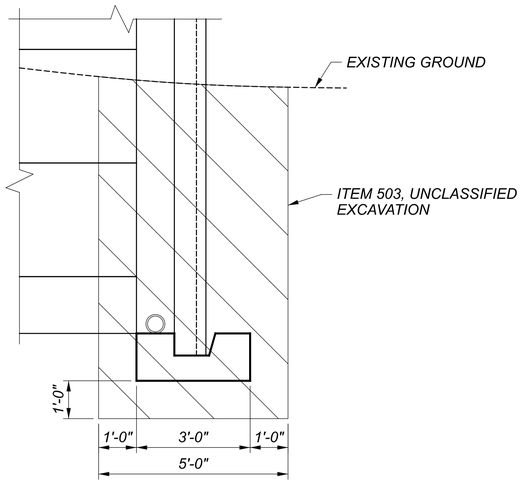

TYPICAL WALL EXCAVATION LIMITS

NOTES:

1. FOR TILT-UP PANEL WALL ELEVATIONS, SEE SHEETS 7/17 AND 8/17.
2. FOR ADDITIONAL NOTES AND DETAILS, SEE SHEETS 12/17 AND 13/17.

Preliminary Plans - For Reference Only

TILT-UP PANEL WALL SECTION
WALL AD
ALONG RAMP A1

SFN	N/A
DESIGN AGENCY	HDR
DESIGNER	TJE
CHECKER	JML
REVIEWER	DWW 01/11/24
PROJECT ID	82382
SUBSET	11
TOTAL	17
SHEET	1201
TOTAL	2696

CUY-90-16.28 (CCG3A)

MODEL: Sheet PAPERSIZE: 34x22 (in.) DATE: 3/27/2025 TIME: 10:57:43 PM USER: Julie.Ross
pw:\\tnb-us-pw.bentley.com:tnb-us-pw-03\Documents\Cleveland_OH\01_Projects\ODOT\District12\82382\2400-Engineering\Structures\WALL_AD\Sheets\82382_AD_WY002.dgn

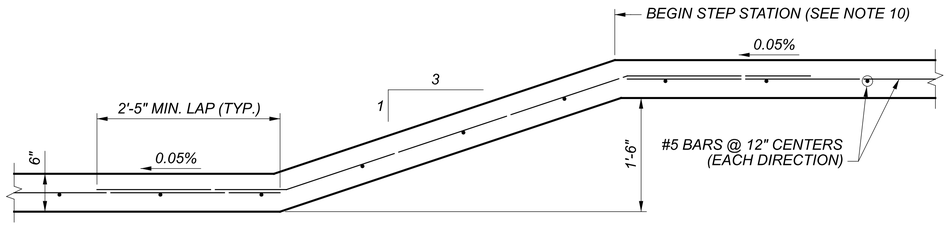

LOAD DISTRIBUTION SLAB DETAIL

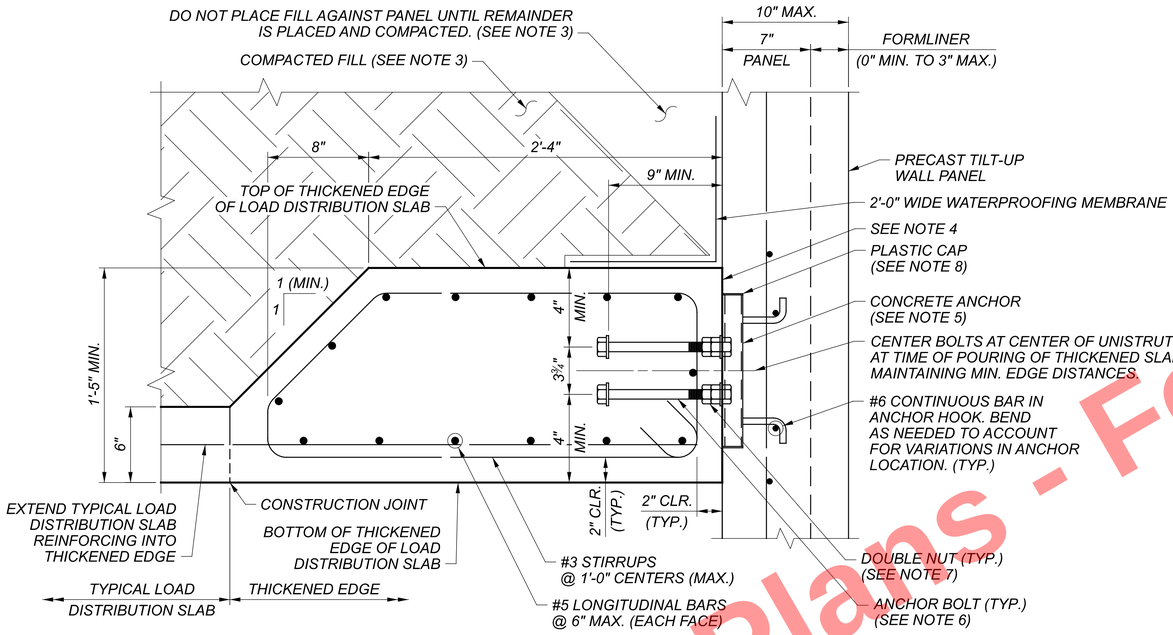

LOAD DISTRIBUTION SLAB THICKENED EDGE DETAIL

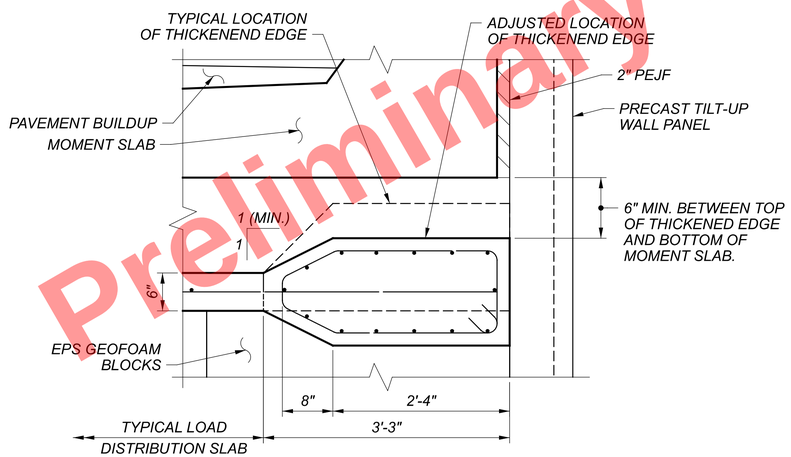

THICKENED EDGE VARIABLE LOCATION DETAIL
(SEE NOTE 2)

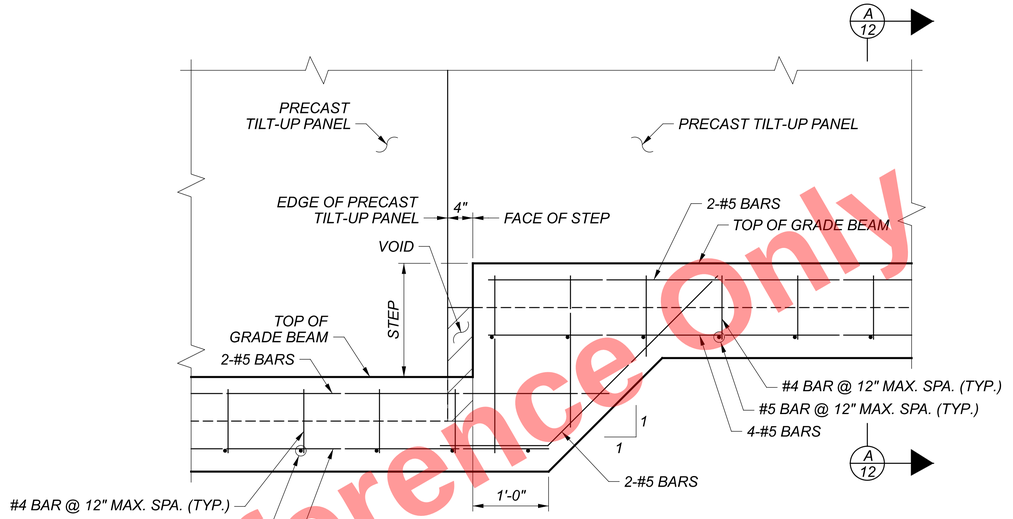

GRADE BEAM STEP DETAIL

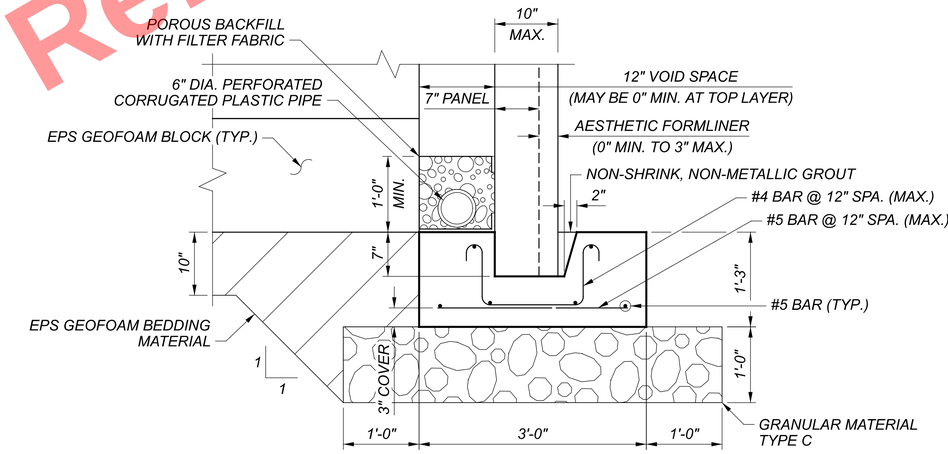

SECTION A-A

NOTES:

1. SHIM BOTTOM OF WALL PANELS AS REQUIRED TO ALIGN VERTICAL WALL JOINTS.
2. THE VERTICAL LOCATION OF THE LOAD DISTRIBUTION SLAB THICKENED EDGE MAY BE ADJUSTED TO MAINTAIN MINIMUM BACKFILL AMOUNT. ALL MINIMUM CLEARANCES AND COVER TO BOLTS AND REINFORCING SHALL BE MAINTAINED AS DETAILED. ADJUST GEOMETRY AND BENDS OF STIRRUPS AS REQUIRED.
3. PLACE AND COMPACT FILL OVER LOAD DISTRIBUTION SLAB PRIOR TO PLACING FILL AGAINST THE WALL PANEL.
4. 30 MIL VISQUENE PLASTIC BARRIER BETWEEN THICKENED EDGE AND WALL PANEL TO PREVENT BONDING BETWEEN THICKENED EDGE AND WALL PANEL AND PREVENT INTRODUCTION OF CONCRETE INTO THE WALL ANCHOR.
5. THE WALL ANCHOR SHALL BE A UNISTRUT P3754 (OR APPROVED EQUAL) CHANNEL WITH TWO P1023SS NUTS WITH SPRINGS, SPACED AS DETAILED.
6. ANCHOR BOLTS SHALL BE ¾" DIA. x 10" LONG 18-8 ASTM A316 STAINLESS STEEL BOLTS WITH 2"x2"x¼" PLATE WASHERS.
7. DOUBLE ¾" 18-8 ASTM A316 STAINLESS STEEL NUTS WITH TEFLON COATED WASHERS. FINGER TIGHTEN FIRST NUT AND HOLD IN POSITION UNTIL SECOND NUT IS TIGHTENED TO 75 FT-LBS OF TORQUE. BOLT ASSEMBLY SHOULD SLIDE IN UNISTRUT AFTER TIGHTENING SECOND NUT (LOCK-NUT).
8. PLASTIC CAP PROVIDED BY MANUFACTURER OR DUCT TAPE AT EACH END TO PREVENT INTRODUCTION OF CONCRETE INTO ANCHOR.
9. HOOKED UNISTRUT ANCHORS SHALL HAVE A MINIMUM OF 1½" COVER TO THE 7" MINIMUM PANEL THICKNESS, NOT ACCOUNTING FOR THE AESTHETIC FORMLINER.
10. FOR LOCATION OF LOAD DISTRIBUTION SLAB STEPS, SEE WALL ELEVATION ON SHEET 7 / 17 .

Preliminary Plans - For Reference Only

TILT-UP PANEL WALL DETAILS (1 OF 2)
WALL AD
ALONG RAMP A1

SFN N/A

DESIGN AGENCY HDR

DESIGNER	CHECKER
TJE	JML

REVIEWER DWW 01/11/24

PROJECT ID 82382

SUBSET	TOTAL
12	17

SHEET	TOTAL
1202	2696

CUY-90-16.28 (CCG3A)

MODEL: Sheet PAPERSIZE: 34x22 (in.) DATE: 3/27/2025 TIME: 10:57:48 PM USER: Julie.Ross
pw:\\mb-us-pw.bentley.com:mb-us-pw-03\Documents\Cleveland_OH\01_Projects\ODOT\District12\82382\400-Engineering\Structures\WALL_AD\Sheets\82382_AD_WD001.dgn

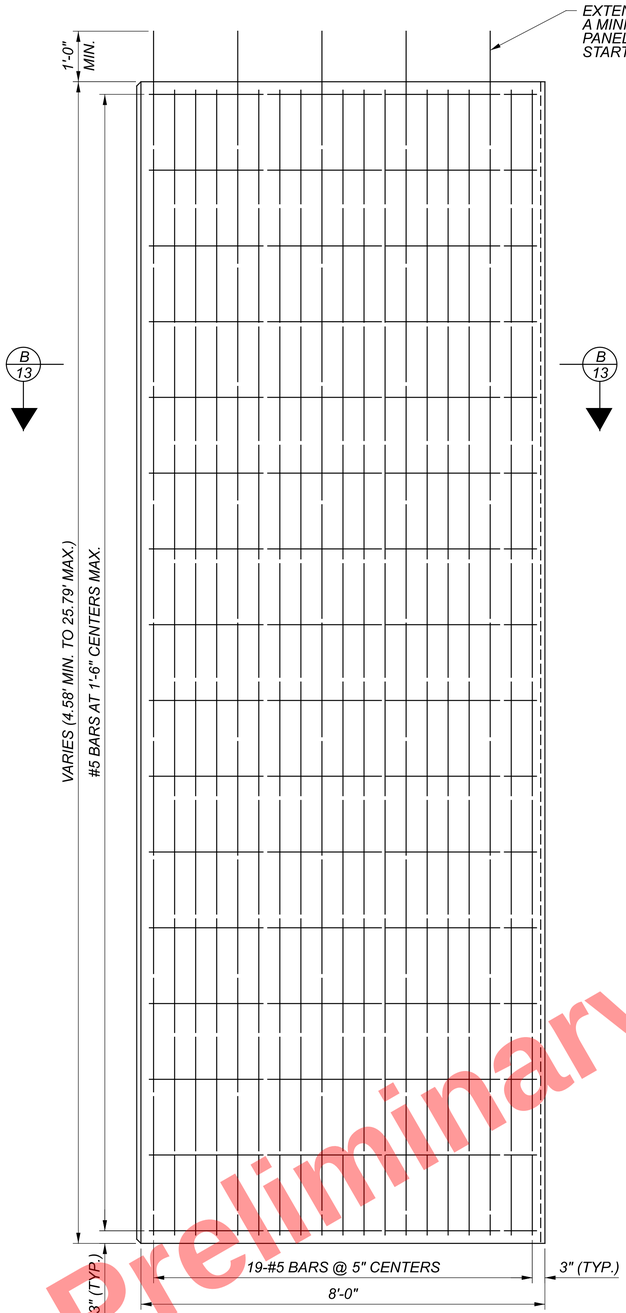

PRECAST TILT-UP WALL PANEL

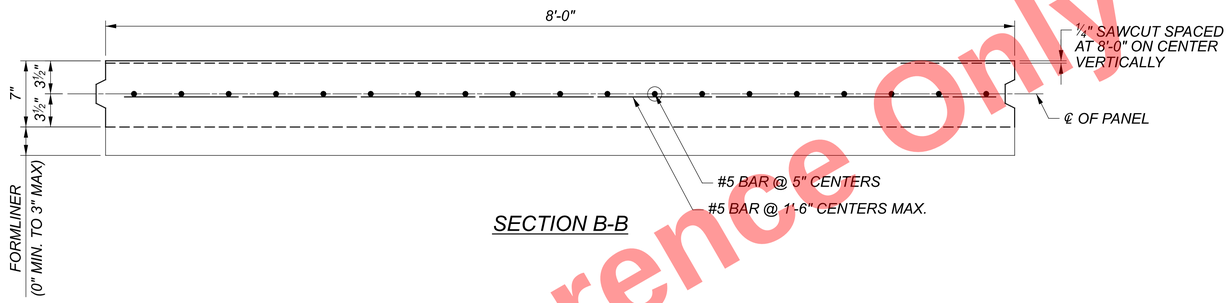

SECTION B-B

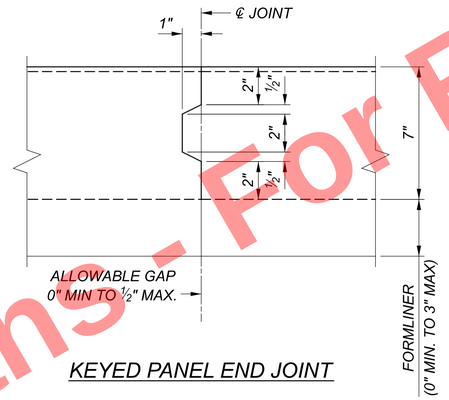

KEYED PANEL END JOINT

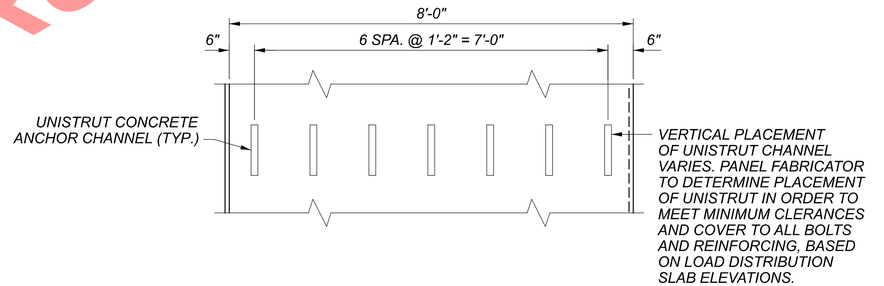

UNISTRUT CHANNEL PLACEMENT

NOTES:

1. PRECAST PANELS LONGER THAN 19'-6" SHALL NOT BE SUPPORTED BY LESS THAN THREE (3) SUPPORTS SPACED EQUALLY APART FOR SHIPPING OR STORAGE, UNLESS OTHERWISE SPECIFIED BY THE PRECASTER.
2. LIFTING INSERTS SHALL BE USED FOR THE TRANSPORTATION AND ERECTION OF THE TILT-UP PANELS. THE INSERTS SHALL BE SPACED NO MORE THAN 10'-0" APART.
3. PANEL CONTRACTOR IS RESPONSIBLE FOR THE FINAL LOCATIONS OF THE LIFTING INSERTS AND VERIFYING THE PANEL CAPACITY IS ADEQUATE THROUGH THE TRANSPORTATION AND INSTALLATION PROCESSES.

Preliminary Plans - For Reference Only

TILT-UP PANEL WALL DETAILS (2 OF 2)
WALL AD
ALONG RAMP A1

SFN N/A
DESIGN AGENCY HDR
DESIGNER TJE | CHECKER JML
REVIEWER DWW 01/11/24
PROJECT ID 82382
SUBSET 13 | TOTAL 17
SHEET 1203 | TOTAL 2696

CUY-90-16.28 (CCG3A)

MODEL: Sheet PAPERSIZE: 34x22 (in.) DATE: 3/27/2025 TIME: 10:57:53 PM USER: Julie.Ross
pw:\\mb-us-pw.bentley.com:mb-us-pw-03\Documents\Cleveland_OH\01_Projects\ODOT\District12\82382\400-Engineering\Structures\WALL_AD\Sheets\82382_AD_WD006.dgn

LEGEND:

1. MS401G, MS402G, MS403G OR MS404G
2. MS405G, MS406G, MS407G, OR MS408G
3. MS501, MS502, MS503, OR MS504

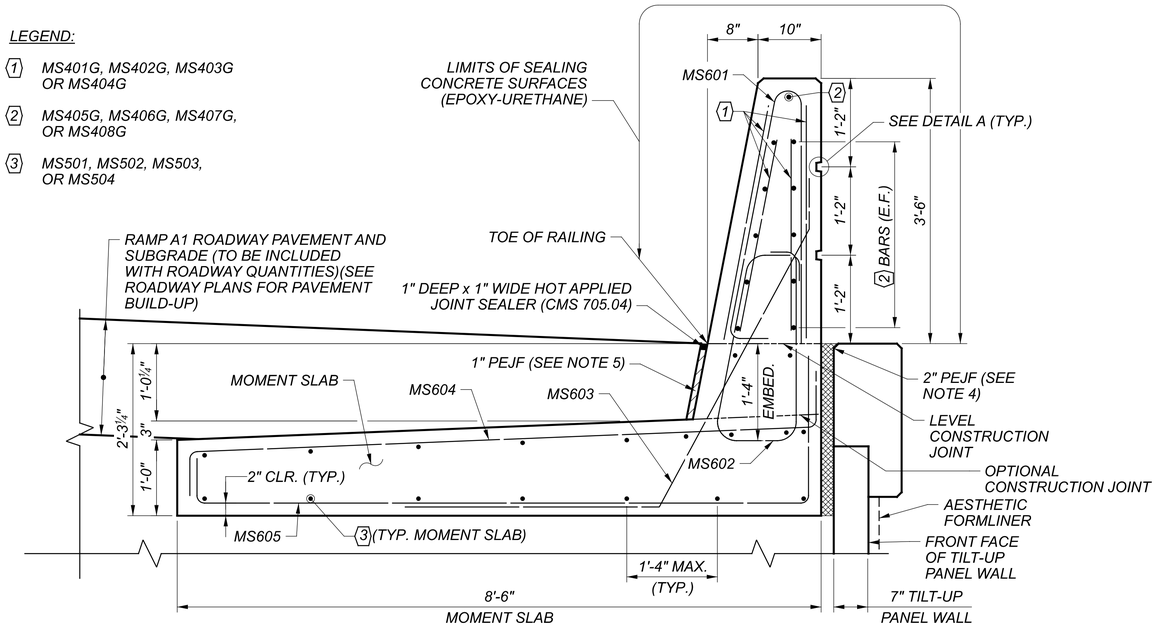

TYPICAL MOMENT SLAB SECTION

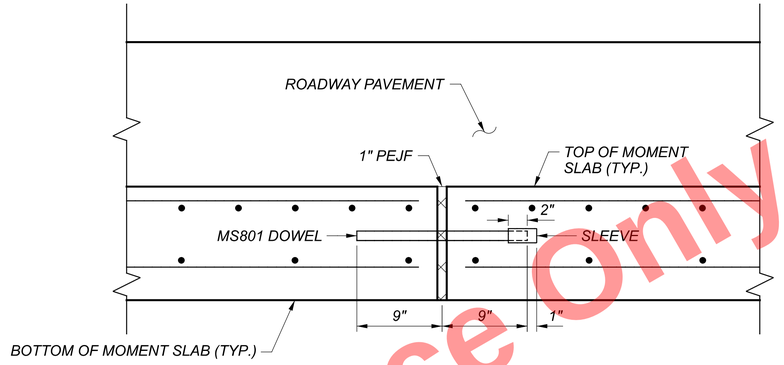

SECTION A-A

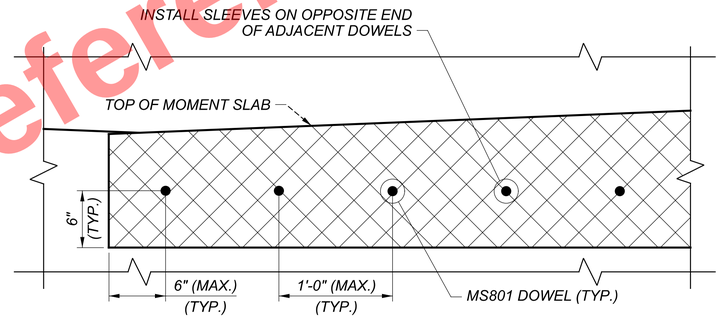

DETAIL B

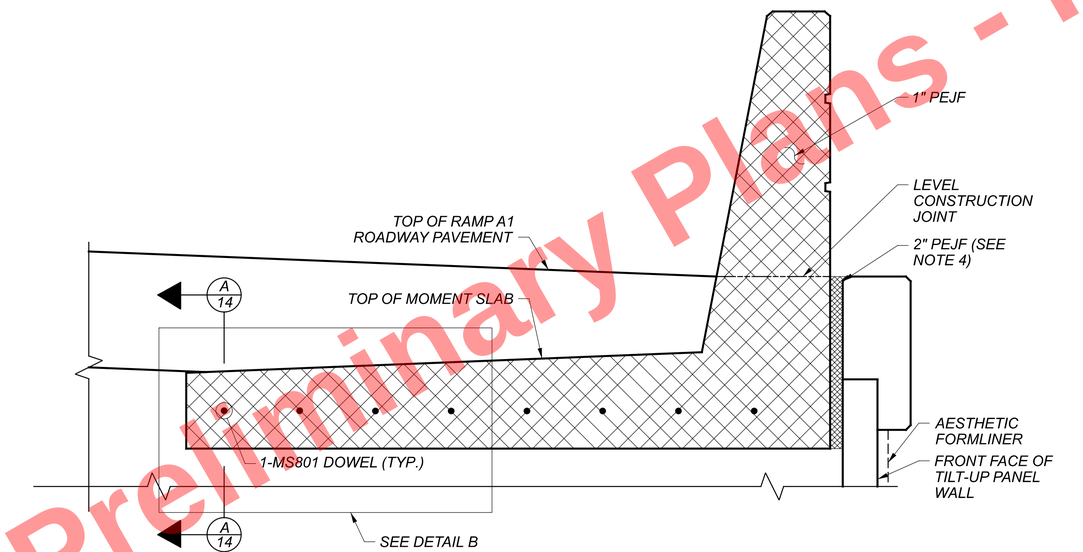

TYPICAL MOMENT SLAB SECTION AT EXPANSION JOINT
(SEE NOTE 2)

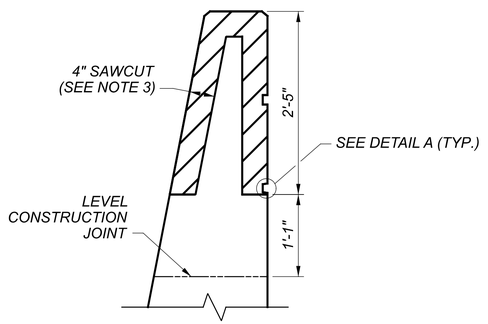

DEFLECTION JOINT DETAIL
(MOMENT SLAB AND RAILING REINFORCING NOT SHOWN)

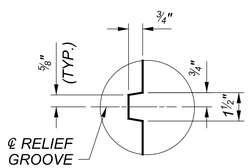

DETAIL A

NOTES:

1. FOR REINFORCEMENT LISTS, SEE SHEET 17/17.
2. FOR EXPANSION JOINT LOCATIONS, SEE SHEET 7/17.
3. FOR ADDITIONAL SAWCUT AND GFRP REINFORCEMENT DETAILS, SEE ODOT STANDARD DRAWING SBR-1-20.
4. 1" AND 2" PEJF SHALL BE INCLUDED FOR PAYMENT WITH ITEM 511, CLASS QC2 CONCRETE, MISC.: MOMENT SLAB AND RAILING. USE ADDITIONAL PEJF BETWEEN THE MOMENT SLAB AND TILT-UP WALL PANELS AS NEEDED ADJACENT TO THE PROPOSED BRIDGE APPROACH SLABS AND/OR MOMENT SLABS TO ACHIEVE PROPER ALIGNMENT OF THE RAILING.
5. 1" PEJF SHALL EXTEND BETWEEN THE MOMENT SLAB AND RAMP A1 PAVEMENT TO AN ELEVATION 1" BELOW THE FINAL PAVEMENT SURFACE.

Preliminary Plans - For Reference Only

MOMENT SLAB AND RAILING DETAILS (1 OF 2)
WALL AD
ALONG RAMP A1

SFN N/A
DESIGN AGENCY HDR
DESIGNER CMR | CHECKER THS
REVIEWER DWW 01/11/24
PROJECT ID 82382
SUBSET 14 | TOTAL 17
SHEET 1204 | TOTAL 2696

CUY-90-16.28 (CCG3A)

MODEL: Sheet PAPERSIZE: 34x22 (in.) DATE: 3/27/2025 TIME: 10:57:59 PM USER: Julie.Ross
pw:\\mb-us-pw.bentley.com:mb-us-pw-03\Documents\Cleveland_OH101_Projects\ODOT\District12\82382\2400-Engineering\Structures\WALL_AD\Sheets\82382_AD_WD003.dgn

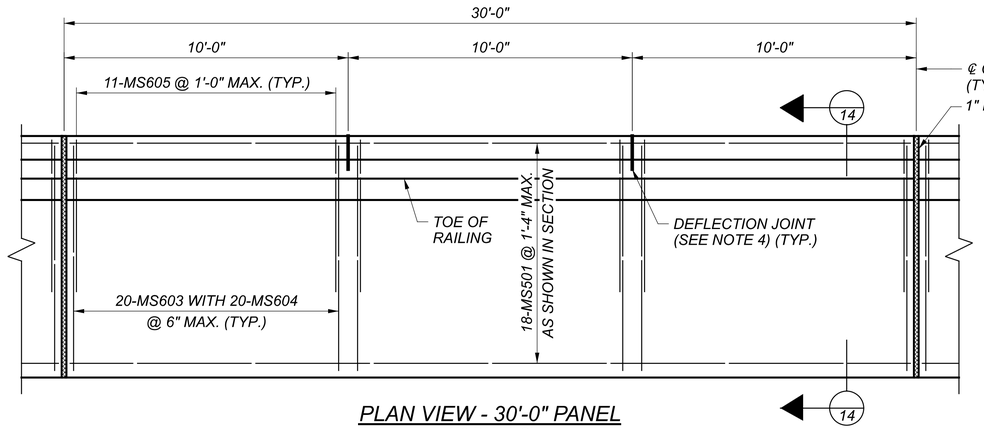

PLAN VIEW - 30'-0" PANEL
(12 PANELS)

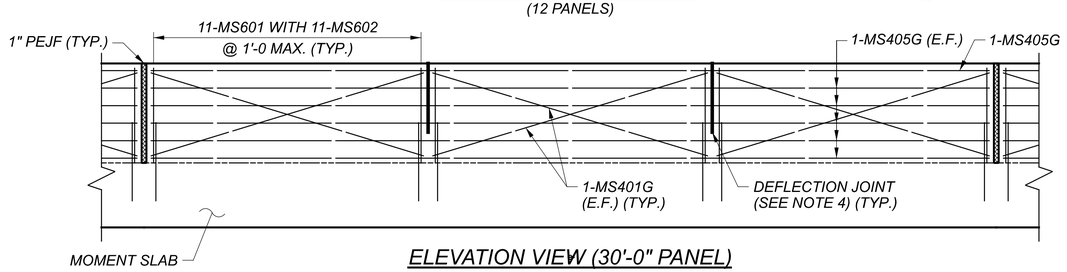

ELEVATION VIEW (30'-0" PANEL)

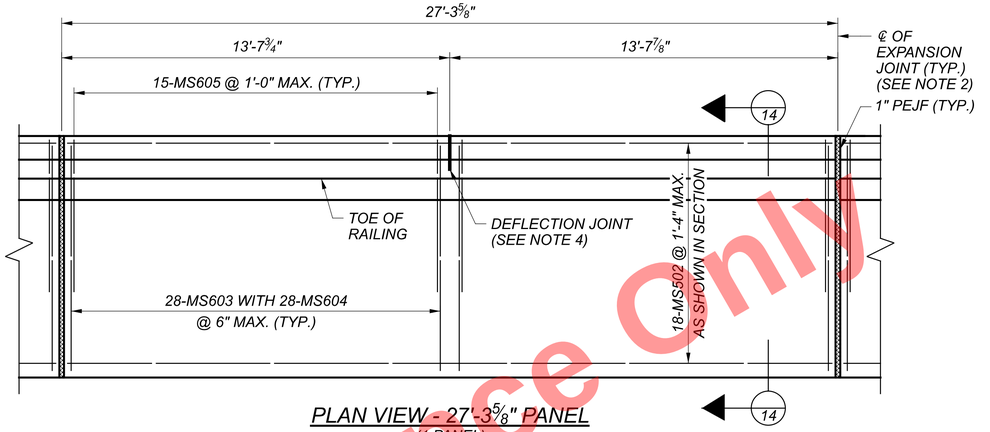

PLAN VIEW - 27'-3⅝" PANEL
(1 PANEL)

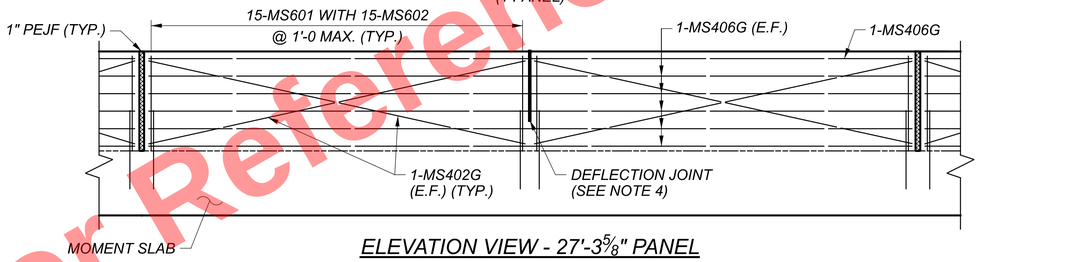

ELEVATION VIEW - 27'-3⅝" PANEL

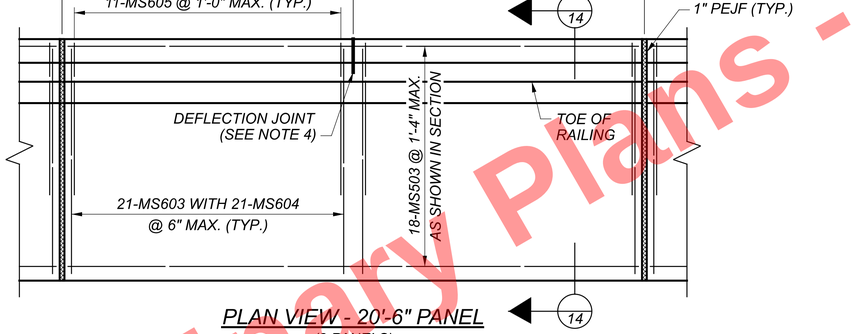

PLAN VIEW - 20'-6" PANEL
(2 PANELS)

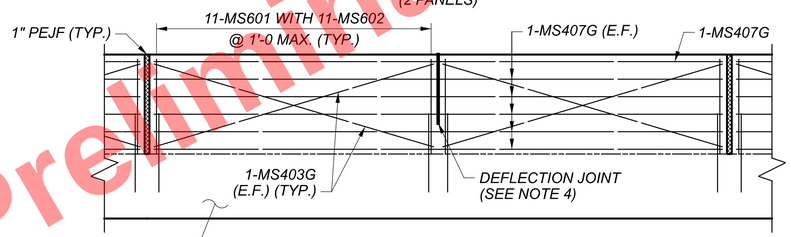

ELEVATION VIEW - 20'-6" PANEL

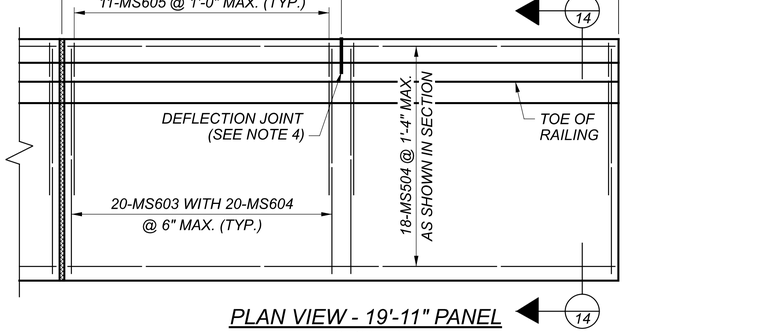

PLAN VIEW - 19'-11" PANEL
(1 PANEL)

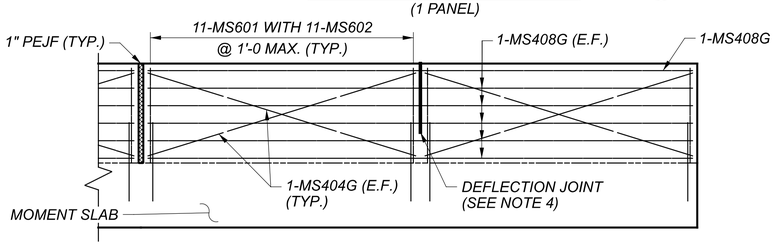

ELEVATION VIEW - 19'-11" PANEL

NOTES:

1. FOR REINFORCEMENT LISTS, SEE SHEET 17/ 17.
2. FOR EXPANSION JOINT LOCATIONS, SEE SHEET 7/ 17.
3. FOR ADDITIONAL SAWCUT AND GFRP REINFORCEMENT DETAILS, SEE ODOT STANDARD DRAWING SBR-1-20.
4. FOR DEFLECTION JOINT DETAIL AND EXPANSION JOINT DETAIL, SEE SHEET 14/ 17.

Preliminary Plans - For Reference Only

CUY-90-16.28 (CCG3A)

MODEL: Sheet PAPERSIZE: 34x22 (in.) DATE: 3/27/2025 TIME: 10:58:04 PM USER: Julie.Ross
pw:\\mb-us-pw.bentley.com:mb-us-pw-03\Documents\Cleveland_OH\01_Projects\ODOT\District12\82382\400-Engineering\Structures\WALL_AD\Sheets\82382_AD_WD005.dgn

MOMENT SLAB AND RAILING DETAILS (2 OF 2)
WALL AD
ALONG RAMP A1

SFN	N/A
DESIGN AGENCY	HDR
DESIGNER	CMR
CHECKER	THS
REVIEWER	DWW 01/11/24
PROJECT ID	82382
SUBSET	15
TOTAL	17
SHEET	1205
TOTAL	2696

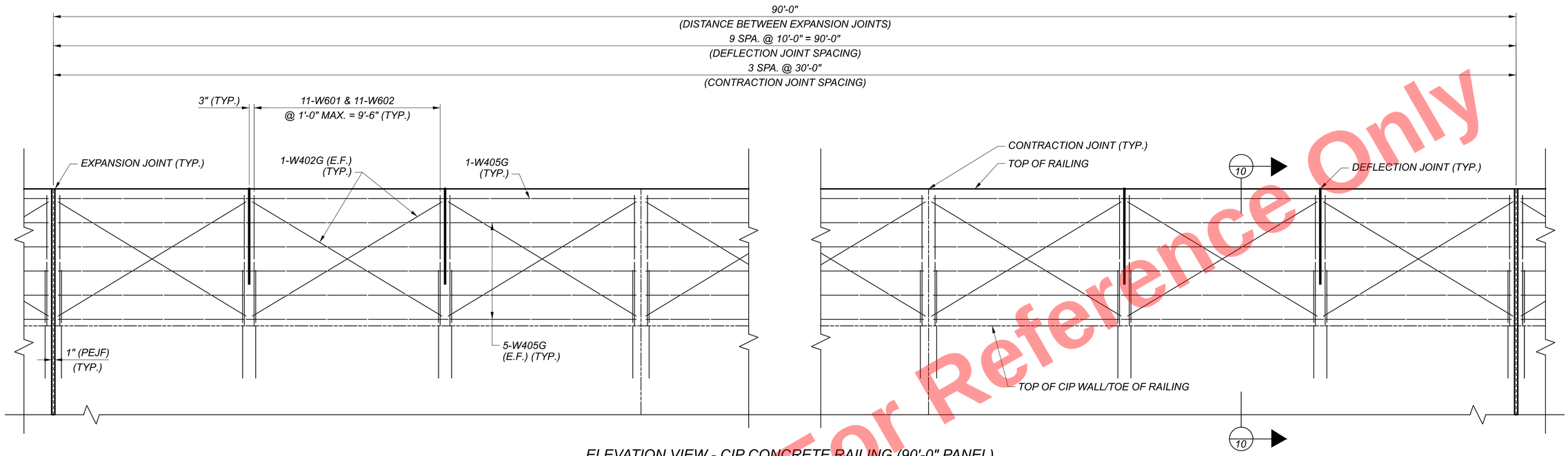

ELEVATION VIEW - CIP CONCRETE RAILING (90'-0" PANEL)
(4 PANELS)

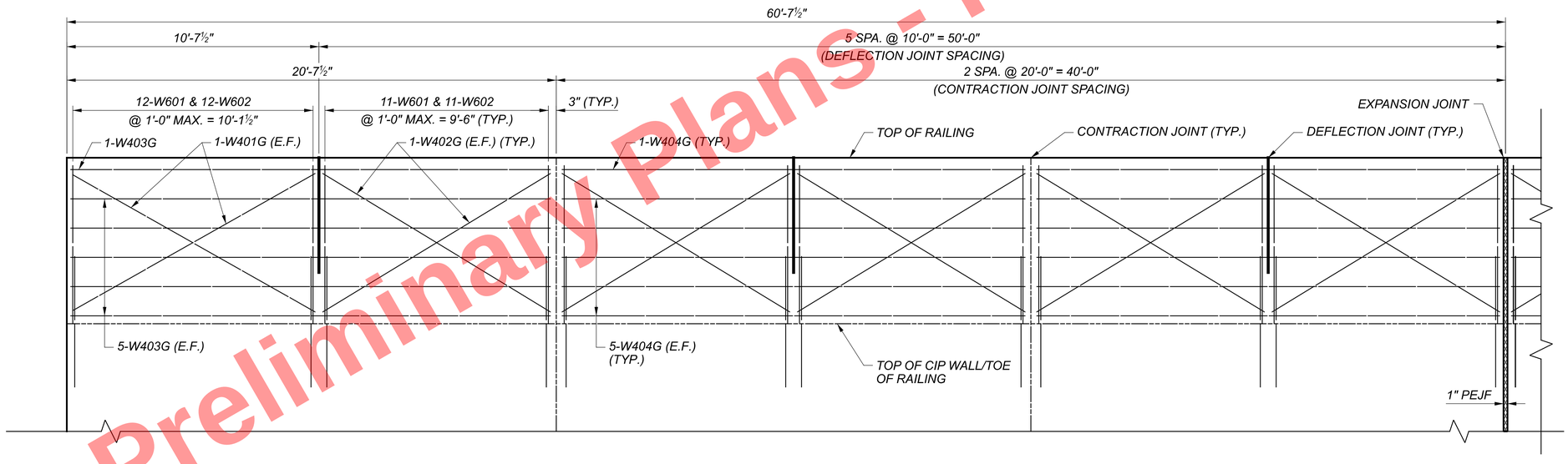

ELEVATION VIEW - CIP CONCRETE RAILING (60'-7½" PANEL)
(1 PANEL)

Preliminary Plans - For Reference Only

NOTES:

1. FOR CIP WALL ELEVATION, SEE SHEET 6 / 17 .
2. FOR ADDITIONAL RAILING NOTES AND DETAILS, SEE ODOT STD. DWG. SBR-1-20.
3. FOR DEFLECTION JOINT DETAIL, SEE SHEET 14 / 17 .
4. FOR CONTRACTION JOINT DETAIL AND EXPANSION JOINT DETAIL, SEE SHEET 10 / 17 .
5. FOR REINFORCEMENT LISTS, SEE SHEET 17 / 17 .

CIP WALL RAILING DETAILS
WALL AD
ALONG RAMP A1

SFN	N/A
DESIGN AGENCY	HDR
DESIGNER	CMR
CHECKER	DRS
REVIEWER	DWW 01/11/24
PROJECT ID	82382
SUBSET	16
TOTAL	17
SHEET	1206
TOTAL	2696

CUY-90-16.28 (CCG3A)

MODEL: Sheet PAPERSIZE: 34x22 (in.) DATE: 3/27/2025 TIME: 10:58:09 PM USER: Julie.Ross
pw:\\mb-us-pw.bentley.com:mb-us-pw-03\Documents\Cleveland_OH01_Projects\ODOT\District12\82382400-Engineering\Structures\WALL_AD\Sheets\82382_AD_WD004.dgn

MARK	NUMBER	LENGTH	MATERIAL	WEIGHT OR LENGTH	TYPE	DIMENSIONS						
						A	B	C	D	E	R	INC.
WALL AD - CAST-IN-PLACE PORTION												
W401G	4	10'-7"	GFRP	42'-4"	STR							
W402G	164	10'-0"	GFRP	1640'-0"	STR							
W403G	11	20'-3"	GFRP	222'-9"	STR							
W404G	22	19'-8"	GFRP	432'-8"	STR							
W405G	132	29'-8"	GFRP	3916'-0"	STR							
W406	62	3'-8"	ECSR	152	17	2'-8"						
W407	362	5'-4"	ECSR	1290	17	4'-4"						
W408	12	31'-6"	ECSR	253	STR							
W409	130	30'-0"	ECSR	2605	STR							
W410	4	20'-3"	ECSR	54	STR							
W411	8	19'-8"	ECSR	105	STR							
W412	62	29'-8"	ECSR	1229	STR							
W601	463	8'-5"	ECSR	5853	37	1'-4"	0'- 9 ½"	1'-5"	1'-0"	0'-7"		
W602	463	7'-0"	ECSR	4868	23	0'-6"	3'-3"	3'-3"			0'-2"	
W603	62	2'-8"	ECSR	248	STR							
W604	362	4'-4"	ECSR	2356	STR							
W605	4	4'-10"	ECSR	29	2	1'-11"	1'-4"	1'-11"				
W606	238	4'-0"	ECSR	1430	1	1'-0"	3'-2"					
W607	390	3'-6"	ECSR	2050	1	1'-0"	2'-8"					
W608	96	4'-11"	ECSR	709	1	1'-0"	4'-1"					
W609	108	4'-6"	ECSR	730	1	1'-0"	3'-8"					
W610	14	5'-6"	ECSR	116	1	1'-0"	4'-8"					
			SUB-TOTAL	6253'-9"	ITEM 509E30020, NO. 4 DEFORMED GFRP REINFORCEMENT							
			SUB-TOTAL	24076	ITEM 509E10000, EPOXY COATED STEEL REINFORCEMENT							

MARK	NUMBER	LENGTH	MATERIAL	WEIGHT OR LENGTH	TYPE	DIMENSIONS						
						A	B	C	D	E	R	INC.
WALL AD - MOMENT SLAB AND RAILING												
MS401G	144	10'-0"	GFRP	1440'-0"	STR							
MS402G	8	13'-7"	GFRP	108'-8"	STR							
MS403G	16	10'-3"	GFRP	164'-0"	STR							
MS404G	8	9'-10"	GFRP	78'-8"	STR							
MS405G	132	29'-7"	GFRP	3905'-0"	STR							
MS406G	11	26'-10"	GFRP	295'-2"	STR							
MS407G	22	20'-1"	GFRP	441'-10"	STR							
MS408G	11	19'-6"	GFRP	214'-6"	STR							
MS501	216	29'-7"	ECSR	6665	STR							
MS502	18	26'-10"	ECSR	504	STR							
MS503	36	20'-1"	ECSR	754	STR							
MS504	18	19'-6"	ECSR	366	STR							
MS601	492	7'-0"	ECSR	5173	23	0'-6"	3'-3"	3'-3"			0'-2"	
MS602	492	8'-5"	ECSR	6220	37	1'-4"	0'- 9 ½"	1'-5"	1'-0"	0'-7"		
MS603	900	8'-3"	ECSR	11152	13	3'-9"	1'-10"	3'-6"	0'-8"			
MS604	900	9'-3"	ECSR	12504	54	0'-8"	8'-2"	0'-4"	0'-8"			
MS605	492	10'-5"	ECSR	7698	2	0'-8"	8'-2"	1'-11"				
MS801	120	1'-6"	ECSR	481	STR							
			SUB-TOTAL	6647'-10"	ITEM 509E30020, NO. 4 DEFORMED GFRP REINFORCEMENT							
			SUB-TOTAL	51517	ITEM 509E10000, EPOXY COATED STEEL REINFORCEMENT							

BAR BENDING DIAGRAMS

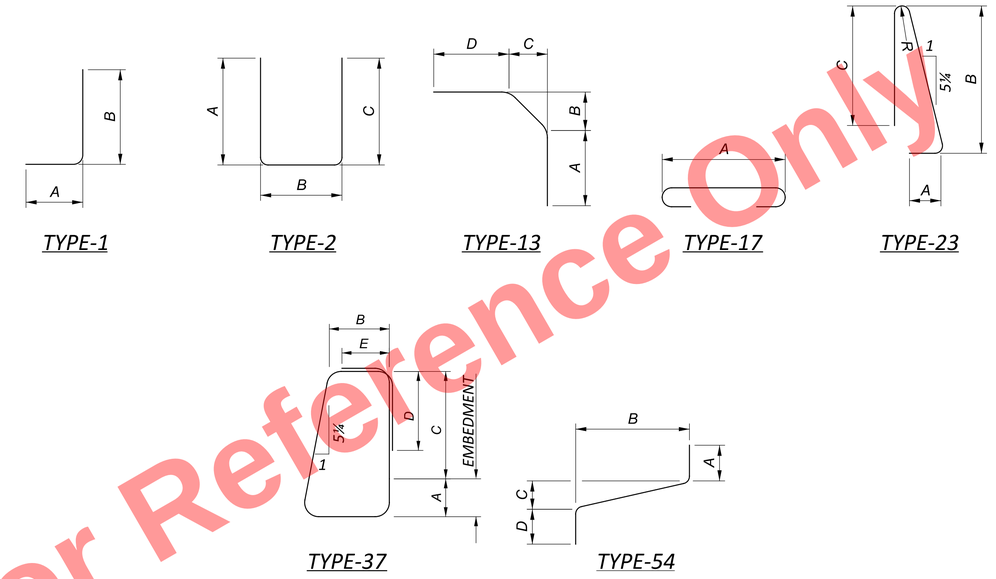

Preliminary Plans - For Reference Only

NOTES:

1. FOR GENERAL NOTES, SEE SHEETS 3/17 AND 4/17 .

2. BAR MARKS: BAR LOCATION IS INDICATED BY THE LETTER PREFIX, BAR SIZE IS INDICATED BY THE FIRST NUMERICAL DIGIT. THE LAST TWO NUMERICAL DIGITS INDICATE THE BAR SEQUENCE NUMBER. ALL CONCRETE REINFORCEMENT IS EPOXY COATED GRADE 60 STEEL UNLESS NOTED OTHERWISE. THE LETTER SUFFIX 'G' INDICATES GFRP REINFORCING BARS. EXAMPLE: W401G

   W: THE LOCATION OF THE BARS IN THE STRUCTURE (CAST-IN-PLACE WALL)
   4: #4 BAR
   01: SEQUENCE NUMBER
   G: GFRP

   THE FOLLOWING IS A LIST OF BAR LOCATION PREFIXES:
   MS: MOMENT SLAB AND RAILING
   W: CAST-IN-PLACE WALL AND RAILING

   THE FOLLOWING IS A LIST OF BAR MATERIAL SUFFIXES:
   G: GFRP

3. BAR DIMENSIONS ARE SHOWN OUT-TO-OUT UNLESS OTHERWISE NOTED. "STD." WRITTEN IN PLACE OF A DIMENSION INDICATES A STANDARD BAR BEND AT THE END OF THE BAR. STRAIGHT BARS ARE INDICATED BY "STR."

4. BAR MATERIAL:

   "ECSR" = EPOXY COATED STEEL REINFORCEMENT
   "GFRP" = GLASS FIBER REINFORCED POLYMER

REINFORCEMENT LIST
WALL AD
ALONG RAMP A1

SFN N/A

DESIGN AGENCY HDR

DESIGNER CMR | CHECKER JTW

REVIEWER DWW 01/11/24

PROJECT ID 82382

SUBSET 17 | TOTAL 17

SHEET 1207 | TOTAL 2696

CUY-90-16.28 (CCG3A)
MODEL: Sheet PAPERSIZE: 34x22 (in.) DATE: 3/27/2025 TIME: 10:58:14 PM USER: Julie.Ross
pw:\\tmb-us-pw.bentley.com:tmb-us-pw-03\Documents\Cleveland_OH\01_Projects\ODOT\District12\82382\400-Engineering\Structures\WALL_AD\Sheets\82382_AD_WL001.dgn

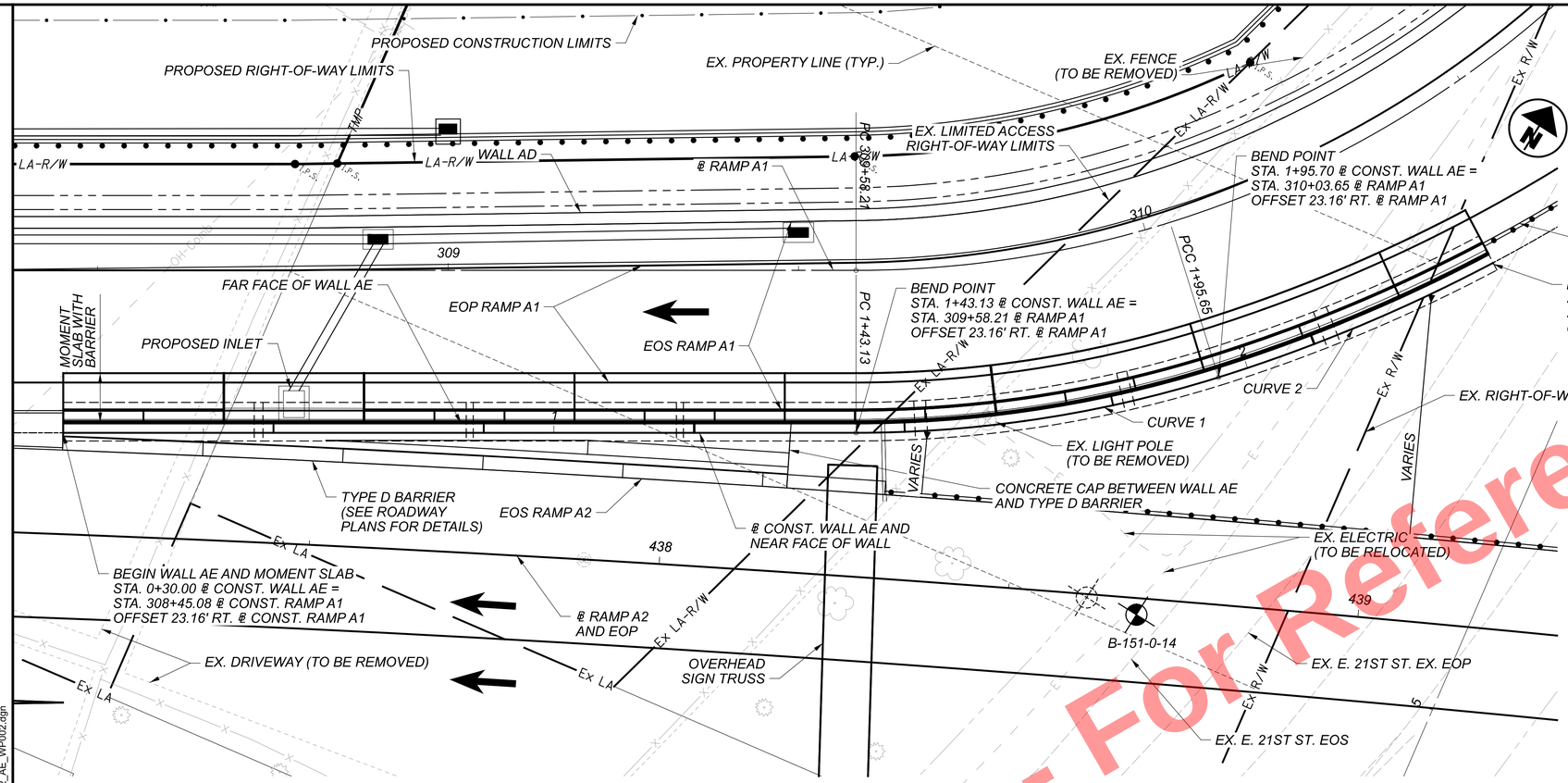

PLAN

BENCHMARK DATA

BM #59 STA. 301+65.97 ELEV. 660.15, OFFSET 488.87' RT.,
℄ RAMP A1, MAG NAIL BETWEEN E 14TH ST. AND COM. COLLEGE AVE.
BM #62 STA. 303+26.43, ELEV. 672.11, OFFSET 354.64' LT.
℄ RAMP A1, RAILROAD SPIKE POWER POLE NO. 121784

FOR ADDITIONAL BENCHMARK INFORMATION. SEE ROADWAY PLANS.

℄ CONST. WALL AE CURVE 1 DATA

P.I. = Sta. 1+69.59
Δ = 17°22'47" LT
Dc = 33°05'18"
R = 173.16'
T = 26.47'
L = 52.52'
E = 2.01'

℄ CONST. WALL AE CURVE 2 DATA

P.I. = Sta. 2+42.91
Δ = 23°00'44" LT
Dc = 24°40'46"
R = 232.16'
T = 47.26'
L = 93.24'
E = 4.76'

LEGEND:

= BORING LOCATION

CONST. = CONSTRUCTION
EOP = EDGE OF PAVEMENT
EOS = EDGE OF SHOULDER
Ⓒ = CONTRACTION JOINT
Ⓔ = EXPANSION JOINT

BORING LOCATION*

BORING	STATION	OFFSET	TOP OF ROCK EL.
B-151-0-14	1+77.46	29.93' RT.	-

* = BORING STATIONS AND OFFSETS ARE FROM ℄ CONST. WALL AE

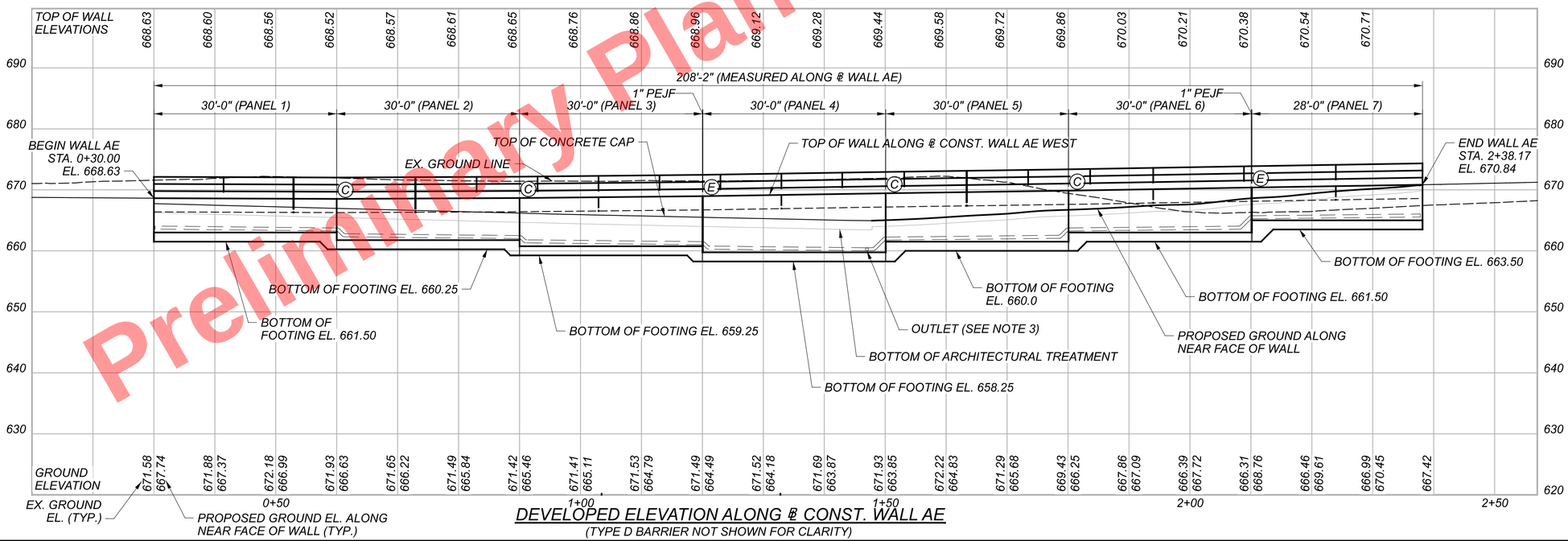

DEVELOPED ELEVATION ALONG ℄ CONST. WALL AE
(TYPE D BARRIER NOT SHOWN FOR CLARITY)

NOTES:

1. EARTHWORK LIMITS SHOWN ARE APPROXIMATE. ACTUAL SLOPES SHALL CONFORM TO PLAN CROSS SECTIONS.
2. WALL ALIGNMENT DEFINED ALONG THE NEAR FACE OF WALL.
3. SEE SHEET 5 OF 22 FOR DETAILS.

Preliminary Plans - For Reference Only

WALL PLAN AND PROFILE WALL AE ALONG SOUTH SIDE OF RAMP A1

CUY-90-16.28 (CCG3A)

MODEL: 82382_WP_002 PAPERSIZE: 34x22 (in.) DATE: 3/27/2025 TIME: 10:58:31 PM USER: Julie.Ross
pw:\\mb-us-pw.bentley.com:mb-us-pw-03\Documents\Cleveland_OH101_Projects\ODOT\District12\82382\400-Engineering\Structures\WALL_AE\Sheets\82382_AE_WP002.dgn

SFN	N/A
DESIGN AGENCY	B&N burgessniple.com
DESIGNER	BCS
CHECKER	MAB
REVIEWER	DWL 06/16/22
PROJECT ID	82382
SUBSET	1
TOTAL	10
SHEET	1208
TOTAL	2696

STANDARD DRAWINGS AND SUPPLEMENTAL SPECIFICATIONS:

REFER TO THE FOLLOWING STANDARD BRIDGE DRAWINGS:
SBR-1-20 REVISED 07-19-24

AND TO THE FOLLOWING SUPPLEMENTAL SPECIFICATIONS:
800 DATED SEE TITLE SHEET

DESIGN SPECIFICATIONS:

THIS STRUCTURE CONFORMS TO THE 9th EDITION OF THE "LRFD BRIDGE DESIGN SPECIFICATIONS" ADOPTED BY THE AMERICAN ASSOCIATION OF STATE HIGHWAY AND TRANSPORTATION OFFICIALS, 2020 AND THE ODOT BRIDGE DESIGN MANUAL, 2020.

OPERATIONAL IMPORTANCE:

A LOAD MODIFIER OF 1.0 HAS BEEN ASSUMED FOR THE DESIGN OF THIS STRUCTURE IN ACCORDANCE WITH AASHTO LRFD BRIDGE DESIGN SPECIFICATIONS, ARTICLE 1.3.5 AND THE ODOT BRIDGE DESIGN MANUAL, 2020.

ABBREVIATIONS:

FOR LIST OF ABBREVIATONS SEE THE QUANTITY SHEET.

DESIGN DATA:

CONCRETE CLASS QC2 - COMPRESSIVE STRENGTH 4.5 KSI
(MOMENT SLAB AND PARAPET)

CONCRETE CLASS QC1 - COMPRESSIVE STRENGTH 4.0 KSI
(CAST-IN-PLACE WALL)

REINFORCING STEEL - MINIMUM YIELD STRENGTH 60 KSI

GFRP - C&MS 705.28 (MODULUS = 8700 KSI)

FOUNDATION BEARING RESISTANCE:

FOOTINGS, AS DESIGNED, PRODUCE A MAXIMUM SERVICE LIMIT STATE BEARING PRESSURE OF 2.80 KSF AND A MAXIMUM STRENGTH LIMIT STATE BEARING PRESSURE OF 4.49 KSF. THE FACTORED BEARING RESISTANCE IS 7.6 KSF.

UTILITY LINES:

THE UTILITY(IES) SHALL BEAR ALL EXPENSE INVOLVED IN RELOCATING THE AFFECTED UTILITY LINES. THE CONTRACTOR AND UTILITY(IES) ARE TO COOPERATE BY ARRANGING THEIR WORK IN SUCH A MANNER THAT INCONVENIENCE TO EITHER WILL BE HELD TO A MINIMUM.

WALL EXCAVATION:

LIMITS OF WALL EXCAVATION SHOWN IN WALL SECTION ON THIS SHEET IS FOR QUANTITY PURPOSES ONLY. CONTRACTOR HAS THE OPTION TO USE AN EXCAVATED SLOPE OR SUPPORTED EXCAVATION, SEE MAINTENANCE OF TRAFFIC PLANS FOR ANY REQUIRED WORK ZONE SHEETING.

MAINTENANCE OF TRAFFIC:

REFER TO THE OVERALL PROJECT MAINTENANCE OF TRAFFIC FOR ADDITIONAL INFORMATION WITH RESPECT TO MAINTENANCE OF TRAFFIC.

ITEM 511, CLASS QC1 CONCRETE WITH QC/QA, RETAINING/ WINGWALL NOT INCLUDING FOOTING, AS PER PLAN

ALL MATERIAL, LABOR AND INCIDENTALS NECESSARY TO FURNISH AND PLACE CONCRETE FOR THE RETAINING WALL, INCLUDING FORM LINERS SHALL BE INCLUDED FOR PAYMENT WITH ITEM 511, CLASS QC1 CONCRETE. ALL REINFORCING STEEL EMBEDDED INTHE RETAINING WALL SHALL BE INCLUDED WITH ITEM 509, EPOXY COATED REINFORCING STEEL FOR PAYMENT. THIS ITEM SHALL ALSO REQUIRE QUALITY CONTROL, MEETING THE REQUIREMENTS PER CMS 455 AND CMS 511.04.

ITEM 511, CLASS QC2 CONCRETE, MISC.: MOMENT SLAB

ALL MATERIAL, LABOR AND INCIDENTALS NECESSARY TO FURNISH AND PLACE CONCRETE FOR THE MOMENT SLABS ALONG THE RETAINING WALLS SHALL BE INCLUDED FOR PAYMENT WITH ITEM 511, CLASS QC2 CONCRETE. ALL REINFORCING STEEL EMBEDDED IN THE MOMENT SLAB AND WITHIN THE PARAPET SHALL BE INCLUDED WITH ITEM 509, EPOXY COATED REINFORCING STEEL FOR PAYMENT. THIS ITEM SHALL ALSO REQUIRE QUALITY CONTROL, MEETING THE REQUIREMENTS PER CMS 455 AND CMS 511.04.

ITEM 512 - SEALING OF CONCRETE SURFACES (EPOXY-URETHANE), AS PER PLAN:

SEALING OF CONCRETE SURFACES (EPOXY-URETHANE) SHALL BE APPLIED TO ALL EXPOSED SURFACES OF THE CONCRETE PARAPET AND RETAINING WALL AS SHOWN ON THE PLANS. THE COST OF SEALING THE ADDITIONAL SURFACE AREA OF THE AESTHETIC TREATMENT WILL BE CONSIDERED INCIDENTAL TO THIS ITEM. THE COLOR OF THE SEALANT TO BE USED IS SPECIFIED IN THE AESTHETIC PORTION OF THE PLANS.

ITEM 512 - SEALING OF CONCRETE SURFACES, AS PER PLAN, PERMANENT GRAFFITI PROTECTION:

APPLY A PERMANENT GRAFFITI COATING QUALIFIED ACCORDING TO SUPPLEMENT 1083 THAT IS COMPATIBLE WITH THE CONCRETE SEALER OVER WHICH IT IS APPLIED. APPLY THE GRAFFITI COATING IN ACCORDANCE WITH THE MANUFACTURER'S PRINTED INSTRUCTIONS.

SEALING LIMITS TO MATCH THAT OF THE EPOXY-URETHANE SEALER.

ITEM 516 - JOINT SEALER, AS PER PLAN:

HOT APPLIED JOINT SEALER SHALL BE APPLIED ABOVE THE 1" PREFORMED EXPANSION JOINT FILLER THAT IS PLACED BETWEEN THE MOMENT SLAB AND ROADWAY ASPHALT. JOINT SEALER SHALL MEET THE REQUIREMENTS OF ODOT CMS 705.04.

ITEM 516 - 1" PREFORMED EXPANSION JOINT FILLER, AS PER PLAN:

SEAL ALL RETAINING WALL EXPANSION JOINTS WITH NON-SAG POLYURETHANE SEALANT CONFORMING TO ASTM C920, TYPE S. LEAVE THE BOTTOM 1/2" UNSEALED TO ALLOW ANY WATER WHICH MAY ENTER THE JOINT TO ESCAPE.

THIS ITEM SHALL INCLUDE, BUT IS NOT LIMITED TO THE PEJF AND JOINT SEAL NECESSARY TO FORM AND PLACE THE RETAINING WALL EXPANSION JOINTS. PAYMENT FOR THIS ITEM SHALL INCLUDE ALL OTHER NECESSARY MATERIAL, LABOR, AND EQUIPMENT AND SHALL BE INCLUDED IN THE UNIT PRICE BID PER SQUARE FOOT FOR ITEM 516 - 1" PREFORMED EXPANSION JOINT FILLER, AS PER PLAN.

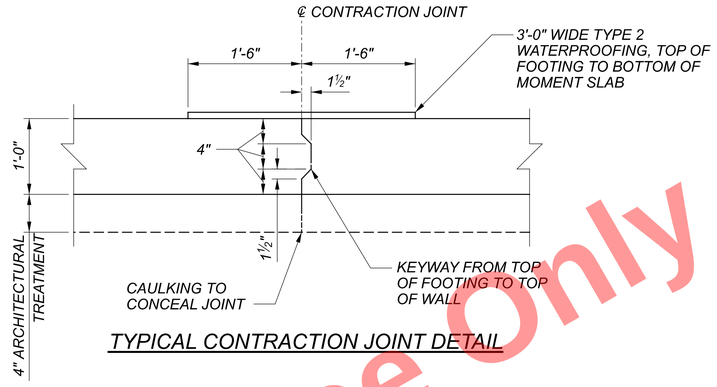

TYPICAL CONTRACTION JOINT DETAIL

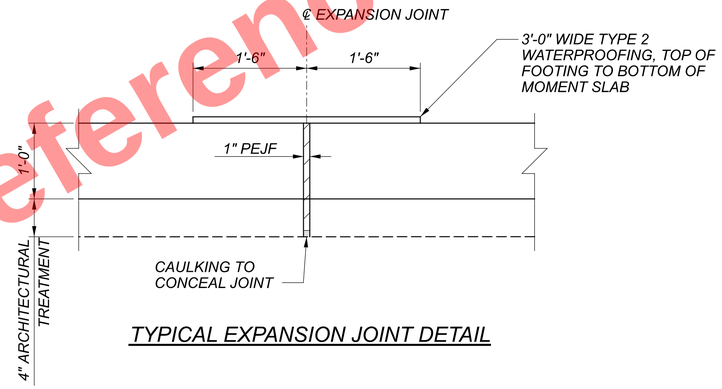

TYPICAL EXPANSION JOINT DETAIL

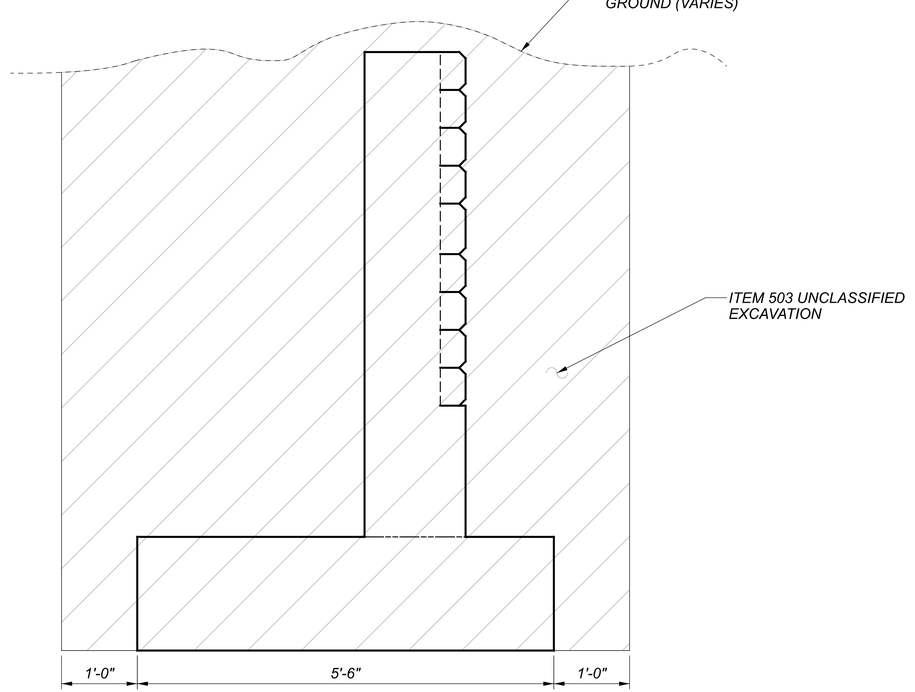

TYPICAL UNCLASSIFIED EXCAVATION SECTION

Preliminary Plans - For Reference Only

WALL GENERAL NOTES
WALL AE
ALONG SOUTH SIDE OF RAMP A1

SFN N/A

DESIGN AGENCY
B&N
burgessniple.com

DESIGNER	CHECKER
JFM	JMK

REVIEWER
DWL 06/16/22

PROJECT ID
82382

SUBSET	TOTAL
2	10

SHEET	TOTAL
1209	2696

CUY-90-16.28 (CCG3A)

MODEL: Sheet PAPERSIZE: 34x22 (in.) DATE: 6/9/2025 TIME: 10:48:23 AM USER: Tolga.Feran
pw:\\mb-us-pw.bentley.com:mb-us-pw-03\Documents\Cleveland_OH\01_Projects\ODOT\District12\82382\400-Engineering\Structures\WALL_AE\Sheets\82382_AE_WP011.dgn

ESTIMATED QUANTITIES						
PARTICIPATION	ITEM	ITEM EXT.	TOTAL	UNIT	DESCRIPTION	REFERENCE
01/IMS/04	503	11100	1	LS	COFFERDAMS AND EXCAVATION BRACING	
01/IMS/04	503	21101	559	CY	UNCLASSIFIED EXCAVATION, AS PER PLAN	2/10
01/IMS/04	509	10000	30805	LB	EPOXY COATED STEEL REINFORCEMENT	
01/IMS/04	509	30020	2846	FT	NO. 4 GFRP DEFORMED BARS	
01/IMS/04	511	34450	28	CY	CLASS QC2 CONCRETE WITH QC/QA, BRIDGE DECK (PARAPET)	
01/IMS/04	511	46013	75	CY	CLASS QC1 CONCRETE WITH QC/QA, RETAINING/WINGWALL NOT INCLUDING FOOTING, AS PER PLAN	2/10
01/IMS/04	511	46512	68	CY	CLASS QC1 CONCRETE WITH QC/QA, FOOTING	
01/IMS/04	511	53012	85	CY	CLASS QC2 CONCRETE, MISC.: MOMENT SLAB WITH QA/QC, AS PER PLAN	2/10
01/IMS/04	512	10001	261	SY	SEALING OF CONCRETE SURFACES, AS PER PLAN, PERMANENT GRAFFITI PROTECTION	2/10
01/IMS/04	512	10101	261	SY	SEALING OF CONCRETE SURFACES (EPOXY-URETHANE), AS PER PLAN	2/10
01/IMS/04	512	33000	12	SY	TYPE 2 WATERPROOFING	
01/IMS/04	516	31001	209	FT	JOINT SEALER, AS PER PLAN	2/10
01/IMS/04	516	13601	224	SF	1" PREFORMED EXPANSION JOINT FILLER, AS PER PLAN	2/10
01/IMS/04	516	13900	469	SF	2" PREFORMED EXPANSION JOINT FILLER	
01/IMS/04	518	21200	78	CY	POROUS BACKFILL WITH GEOTEXTILE FABRIC	
01/IMS/04	518	40000	212	FT	6" PERFORATED CORRUGATED PLASTIC PIPE	
01/IMS/04	518	40010	12	FT	6" NON-PERFORATED CORRUGATED PLASTIC PIPE, INCLUDING SPECIALS	

Preliminary Plans - For Reference Only

ABBREVIATIONS:

THE FOLLOWING ABBREVIATIONS HAVE BEEN USED THROUGHOUT THESE PLANS TO INDICATE THE DESIGNATIONS CONTAINED IN THE LEGEND BELOW:

ABUT. - ABUTMENT
APPR. - APPROACH
℄ - BASELINE
BOT. - BOTTOM
BRG. - BEARING
BRGS. - BEARINGS
BTA - BRIDGE TERMINAL ASSEMBLY
℄ - CENTERLINE
C/C - CENTER TO CENTER
CIP - CAST-IN-PLACE
C.J. - CONTRUCTION JOINT
CLR. - CLEARANCE
CP - COMPLETE PENETRATION BUTT WELD
C&MS - CONSTRUCTION AND MATERIAL SPECIFICATIONS
CONC. - CONCRETE
CONST. - CONSTRUCTION
C.P.P. - CORRUGATED PLASTIC PIPE
CS - INDICATES BUTT WELD SUBJECT TO COMPRESSIVE STRESSES ONLY
CU YD - CUBIC YARD
CVN - CHARPY V-NOTCH TESTING
DIA. - DIAMETER
E.F. - EACH FACE
ELEV., EL. - ELEVATION
EQ. - EQUAL
EX. - EXISTING
EXP. - EXPANSION
F.A. - FORWARD ABUTMENT
F.F. - FAR FACE
F/F - FACE TO FACE
F.S. - FIELD SPLICE
FT/FT - FOOT PER FOOT
FTG. - FOOTING
FWD. - FORWARD
GEN. - GENERAL
INT. - INTEGRAL
LF - LEFT FORWARD
LT. - LEFT
MAX. - MAXIMUM
M.E. - MATCH EXISTING
MIN. - MINIMUM
MISC. - MISCELLANEOUS
MOT - MAINTENANCE OF TRAFFIC
N.F. - NEAR FACE
NO./# - NUMBER
O/O - OUT TO OUT
P.C.P.P - PERFORATED CORRUGATED PLASTIC PIPE
P.E.J.F. - PREFORMED EXPANSION JOINT FILLER
PG - PROFILE GRADE
PGL - PROFILE GRADE LINE
PROP. - PROPOSED
PT - POINT OF TANGENCY
PVC - POINT OF VERTICAL CURVATURE
PVI - POINT OF VERTICAL INTERSECTION
PVT - POINT OF VERTICAL TANGENCY
R. - RADIUS
R.A. - REAR ABUTMENT
RCP - ROCK CHANNEL PROTECTION
RF - RIGHT FORWARD
RT. - RIGHT
R/W - RIGHT OF WAY
SAN. - SANITARY
SER. - SERIES
SHLDR. - SHOULDER
SHT. - SHEET
S.O. - SERIES OF
SPA. - SPACES OR SPACING
SR - STATE ROUTE
STA. - STATION
STD. - STANDARD
STM. - STORM
STR. - STRAIGHT
TBM - TEMPORARY BENCH MARK
TEMP. - TEMPORARY
T.O.S. - TOE OF SLOPE
T/PARAPET - TOE OF PARAPET
T/T - TOE TO TOE
TYP. - TYPICAL
U.G. - UNDERGROUND
U.N.O - UNLESS NOTED OTHERWISE
VAR. - VARIES
VC - VERTICAL CURVE
VERT. - VERTICAL
W/O - WITHOUT

ESTIMATED QUANTITIES
WALL AE
ALONG SOUTH SIDE OF RAMP A1

SFN
N/A

DESIGN AGENCY
B&N
burgessniple.com

DESIGNER	CHECKER
DBH	BCS

REVIEWER
DWL 06/16/22

PROJECT ID
82382

SUBSET	TOTAL
3	10

SHEET	TOTAL
1210	2696

CUY-90-16.28 (CCG3A)

MODEL: Sheet PAPERSIZE: 34x22 (in.) DATE: 3/27/2025 TIME: 10:59:27 PM USER: Julie.Ross
pw:\\mb-us-pw.bentley.com:mb-us-pw-03\Documents\Cleveland_OH\01_Projects\ODOT\District12\82382\400-Engineering\Structures\WALL_AE\Sheets\82382_AE_WQ002.dgn

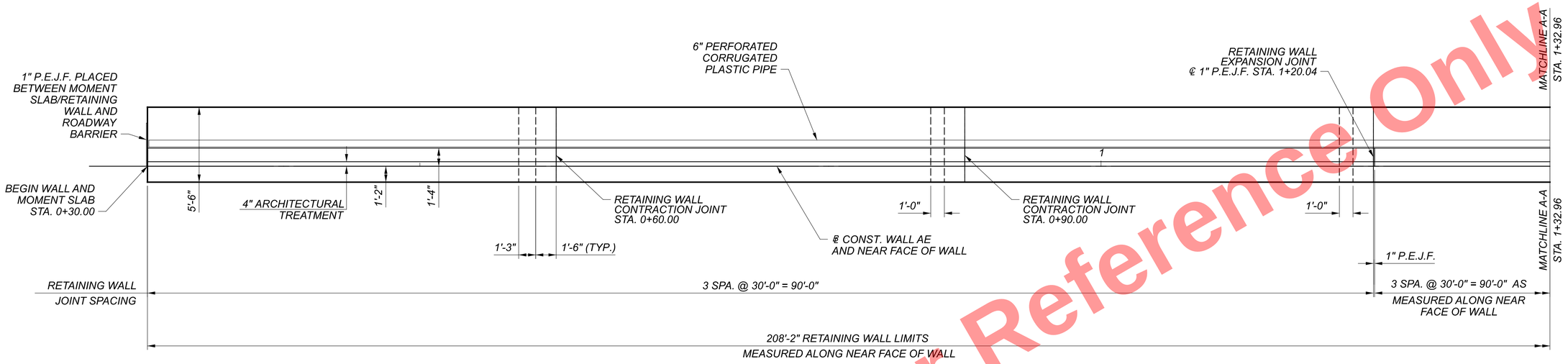

PLAN

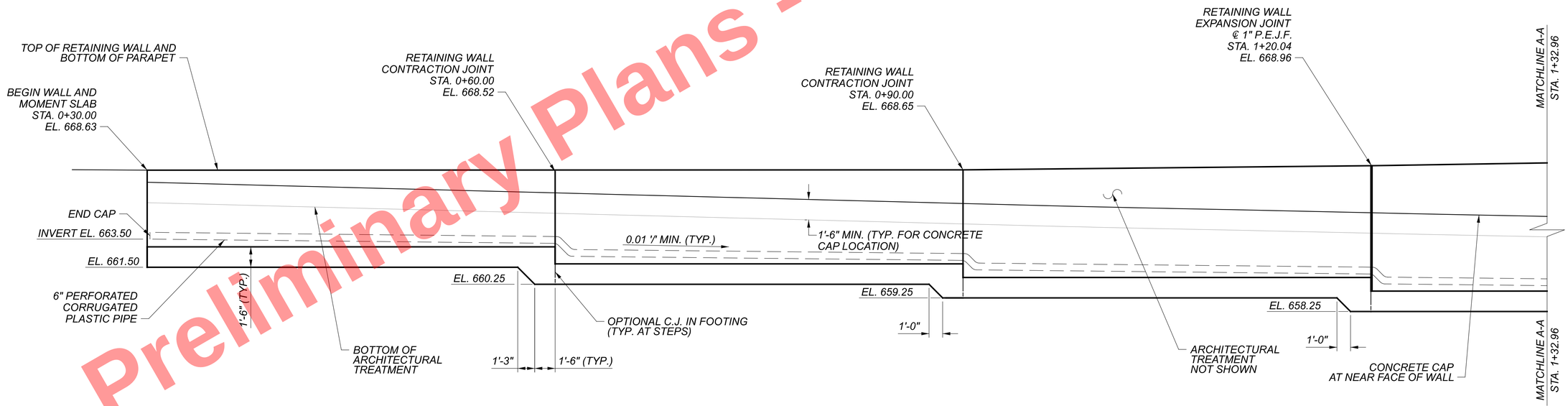

PROFILE

NOTES:

1. FOR CATCH BASIN DETAILS INCLUDING DETAILS OF THE MOMENT SLAB AND BARRIER, SEE SHEET 1164 TO 116520'-1" DIMENSION IS MEASURED OUT TO OUT OF THE PREFORMED EXPANSION JOINT FILLER. ALL COSTS FOR THE MOMENT SLAB, CONCRETE BARRIER, 1" P.E.J.F. AND INLET IN THIS DETAIL ARE TO BE INCLUDED WITH PAYMENT ON THAT SHEET.
2. FOR MATCHLINE A-A, SEE SHEET 5 OF 22.

Preliminary Plans - For Reference Only

WALL PLAN AND ELEVATION - 1
WALL AE
ALONG SOUTH SIDE OF RAMP A1

SFN N/A
DESIGN AGENCY B&N burgessniple.com
DESIGNER JFM | CHECKER JMK
REVIEWER DWL 06/16/22
PROJECT ID 82382
SUBSET 4 | TOTAL 10
SHEET 1211 | TOTAL 2696

CUY-90-16.28 (CCG3A)

MODEL: Sheet PAPERSIZE: 34x22 (in.) DATE: 3/27/2025 TIME: 10:59:41 PM USER: Julie.Ross
pw:\\mb-us-pw.bentley.com:mb-us-pw-03\Documents\Cleveland_OH\01_Projects\ODOT\District12\82382\400-Engineering\Structures\WALL_AE\Sheets\82382_AE_WP001.dgn

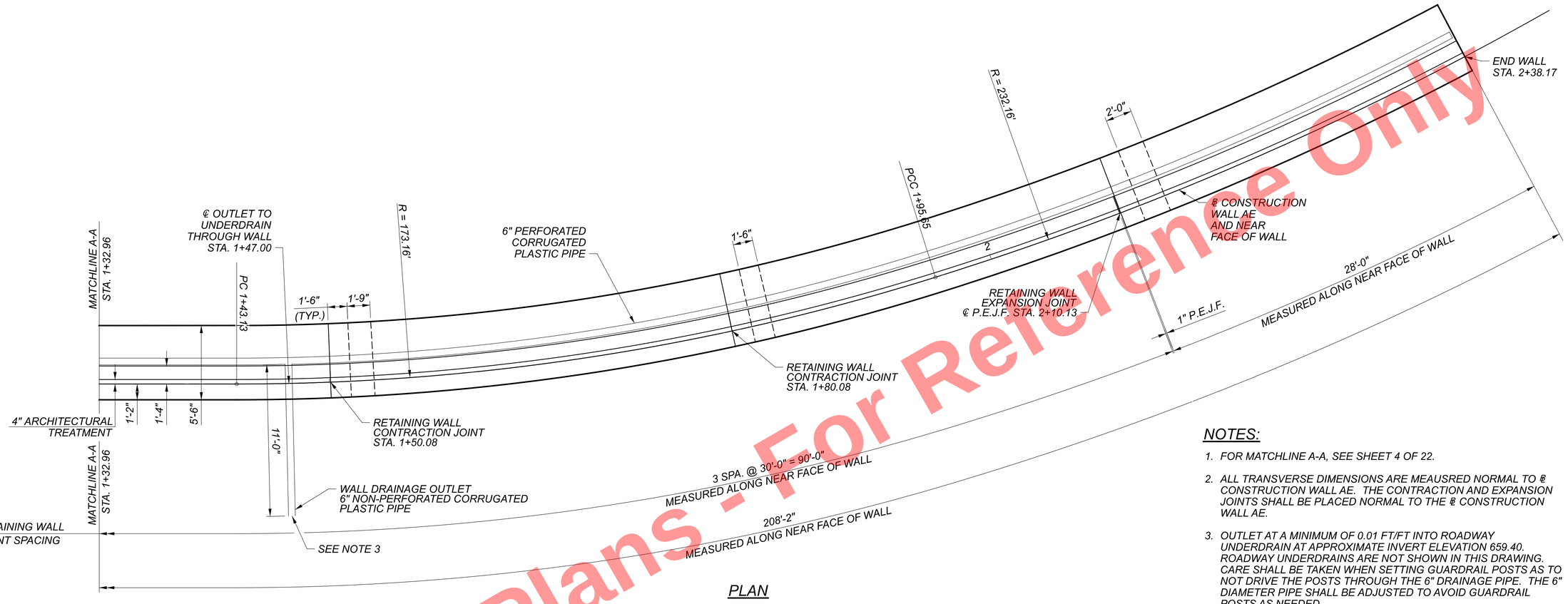

PLAN

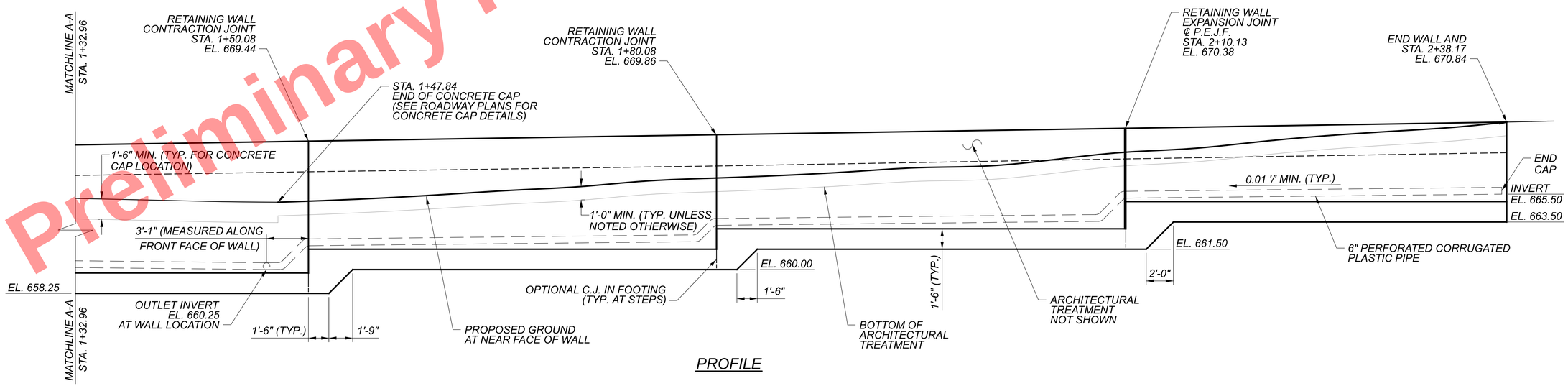

PROFILE

NOTES:

1. FOR MATCHLINE A-A, SEE SHEET 4 OF 22.
2. ALL TRANSVERSE DIMENSIONS ARE MEAUSRED NORMAL TO ℄ CONSTRUCTION WALL AE. THE CONTRACTION AND EXPANSION JOINTS SHALL BE PLACED NORMAL TO THE ℄ CONSTRUCTION WALL AE.
3. OUTLET AT A MINIMUM OF 0.01 FT/FT INTO ROADWAY UNDERDRAIN AT APPROXIMATE INVERT ELEVATION 659.40. ROADWAY UNDERDRAINS ARE NOT SHOWN IN THIS DRAWING. CARE SHALL BE TAKEN WHEN SETTING GUARDRAIL POSTS AS TO NOT DRIVE THE POSTS THROUGH THE 6" DRAINAGE PIPE. THE 6" DIAMETER PIPE SHALL BE ADJUSTED TO AVOID GUARDRAIL POSTS AS NEEDED.

Preliminary Plans - For Reference Only

WALL PLAN AND ELEVATION - 2
WALL AE
ALONG SOUTH SIDE OF RAMP A1

SFN N/A

DESIGN AGENCY B&N burgessniple.com

DESIGNER	CHECKER
JFM	JMK

REVIEWER DWL 06/16/22

PROJECT ID 82382

SUBSET	TOTAL
5	10

SHEET	TOTAL
1212	2696

CUY-90-16.28 (CCG3A)

MODEL: Sheet PAPERSIZE: 34x22 (in.) DATE: 3/27/2025 TIME: 10:59:50 PM USER: Julie.Ross
pw:\\mb-us-pw.bentley.com:mb-us-pw-03\Documents\Cleveland_OH\01_Projects\ODOT\District12\82382400-Engineering\Structures\WALL_AE\Sheets\82382_AE_WP003.dgn

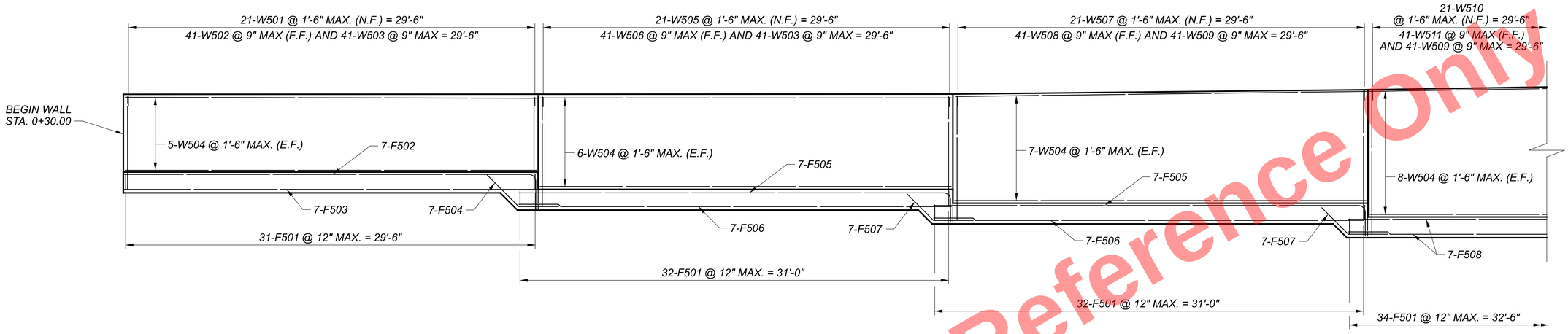

RETAINING WALL REINFORCING ELEVATION 1 OF 2

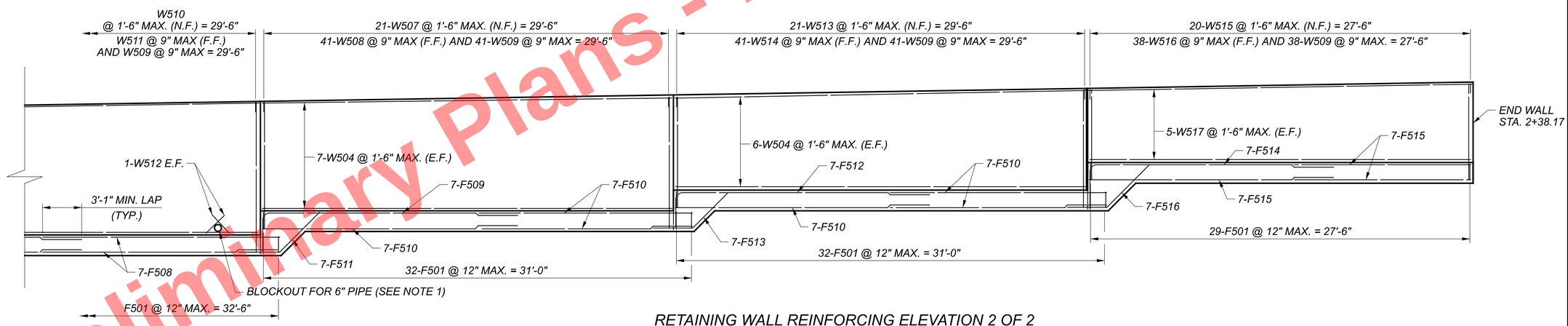

RETAINING WALL REINFORCING ELEVATION 2 OF 2

Preliminary Plans - For Reference Only

NOTES:

1. FOR ADDITIONAL DETAILS OF THE WALL LAYOUT AND DIMENSIONS , SEE SHEETS 4 AND 5 OF 22.
2. FOR SECTION AT THE WALL, SEE SHEET 9 OF 22.
3. DO NOT EXTEND THE REINFORCING STEEL THROUGH THE CONTRACTION AND EXPANSION WALL JOINTS. 3" CLEARANCE SHALL BE PROVIDED BETWEEN THE CONTRACTION/EXPANSION JOINT AND THE REINFORCING STEEL.
4. REINFORCING BARS ARE TO BE PLACED RADIALLY TO ℄ CONSTRUCTION WALL AE.
5. FIELD BEND THE LONGITUDINAL BARS AS NEEDED TO FOLLOW THE CURVATURE.

LEGEND:

E.F. = EACH FACE
F.F. = FAR FACE
N.F. = NEAR FACE

RETAINING WALL REINFORCING DETAILS
WALL AE
ALONG SOUTH SIDE OF RAMP A1

SFN	N/A
DESIGN AGENCY	B&N burgessniple.com
DESIGNER	JFM
CHECKER	JMK
REVIEWER	DWL 06/16/22
PROJECT ID	82382
SUBSET	6
TOTAL	10
SHEET	1213
TOTAL	2696

CUY-90-16.28 (CCG3A)

MODEL: Sheet PAPERSIZE: 34x22 (in.) DATE: 3/27/2025 TIME: 11:00:08 PM USER: Julie.Ross
pw:\\mb-us-pw.bentley.com:mb-us-pw-03\Documents\Cleveland_OH01_Projects\ODOTDistrict12\82382400-Engineering\Structures\WALL_AE\Sheets\82382_AE_WP010.dgn

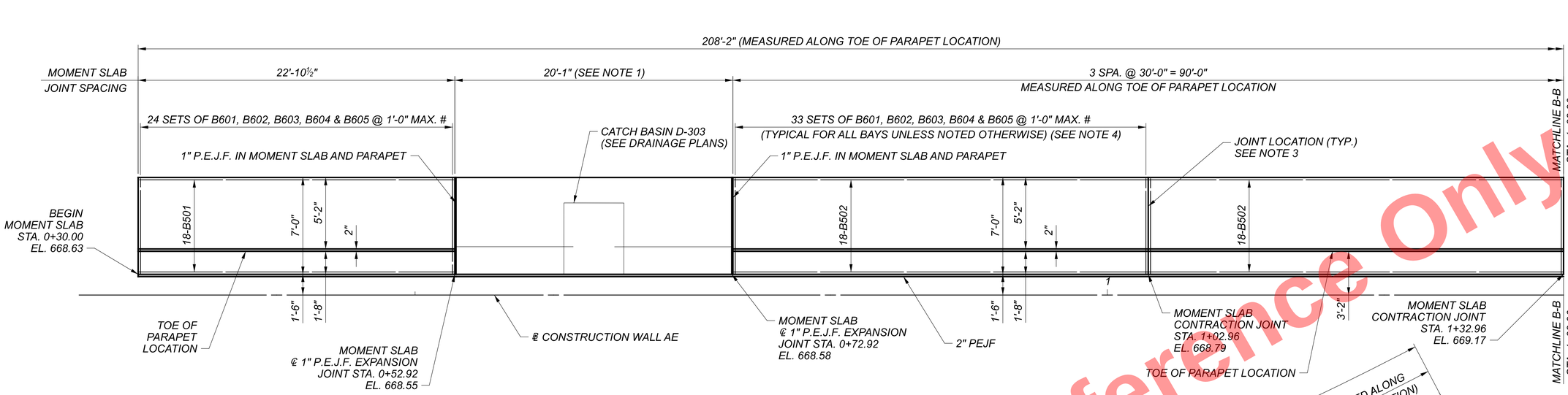

MOMENT SLAB PLAN 1 OF 2

(RETAINING WALL AND PARAPET NOT SHOWN)

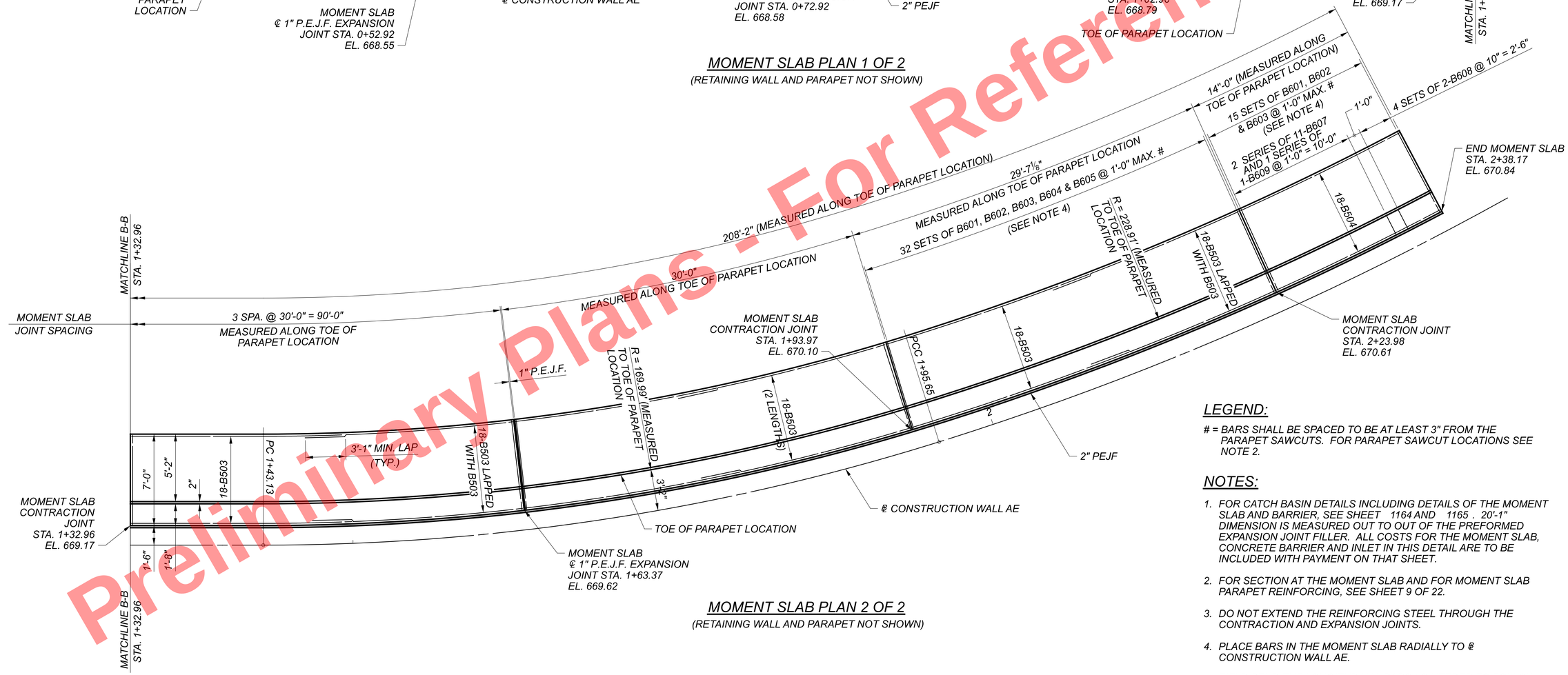

MOMENT SLAB PLAN 2 OF 2

(RETAINING WALL AND PARAPET NOT SHOWN)

LEGEND:

= BARS SHALL BE SPACED TO BE AT LEAST 3" FROM THE PARAPET SAWCUTS. FOR PARAPET SAWCUT LOCATIONS SEE NOTE 2.

NOTES:

1. FOR CATCH BASIN DETAILS INCLUDING DETAILS OF THE MOMENT SLAB AND BARRIER, SEE SHEET 1164 AND 1165 . 20'-1" DIMENSION IS MEASURED OUT TO OUT OF THE PREFORMED EXPANSION JOINT FILLER. ALL COSTS FOR THE MOMENT SLAB, CONCRETE BARRIER AND INLET IN THIS DETAIL ARE TO BE INCLUDED WITH PAYMENT ON THAT SHEET.
2. FOR SECTION AT THE MOMENT SLAB AND FOR MOMENT SLAB PARAPET REINFORCING, SEE SHEET 9 OF 22.
3. DO NOT EXTEND THE REINFORCING STEEL THROUGH THE CONTRACTION AND EXPANSION JOINTS.
4. PLACE BARS IN THE MOMENT SLAB RADIALLY TO ℄ CONSTRUCTION WALL AE.
5. FIELD BEND THE LONGITUDINAL BARS AS NEEDED TO FOLLOW THE MOMENT SLAB CURVATURE.
6. ELEVATIONS PROVIDED IN THE PLAN VIEW ARE GIVEN AT THE TOP OF THE MOMENT SLAB AT THE PARAPET CONSTRUCTION JOINT.

Preliminary Plans - For Reference Only

MOMENT SLAB PLAN
WALL AE
ALONG SOUTH SIDE OF RAMP A1

SFN N/A

DESIGN AGENCY B&N burgessniple.com

DESIGNER	CHECKER
JFM	JMK

REVIEWER DWL 06/16/22

PROJECT ID 82382

SUBSET	TOTAL
7	10

SHEET	TOTAL
1214	2696

CUY-90-16.28 (CCG3A)

MODEL: Sheet PAPERSIZE: 34x22 (in.) DATE: 6/11/2025 TIME: 11:00:39 AM USER: Tolga.Feran
pw:\\mb-us-pw.bentley.com:mb-us-pw-03\Documents\Cleveland_OH\01_Projects\ODOT\District12\82382\400-Engineering\Structures\WALL_AE\Sheets\82382_AE_WP008.dgn

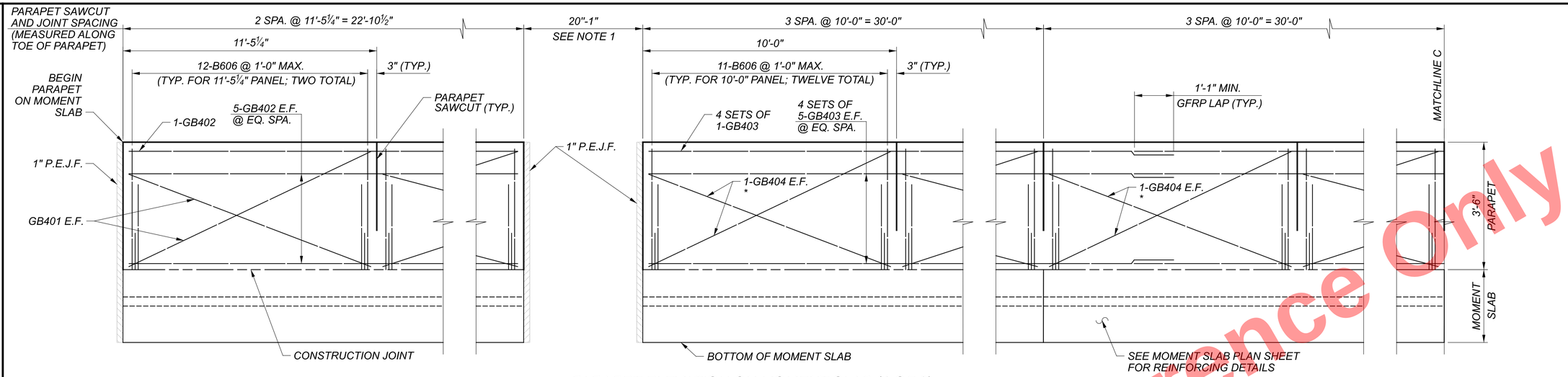

PARAPET ELEVATION ON MOMENT SLAB (1 OF 3)

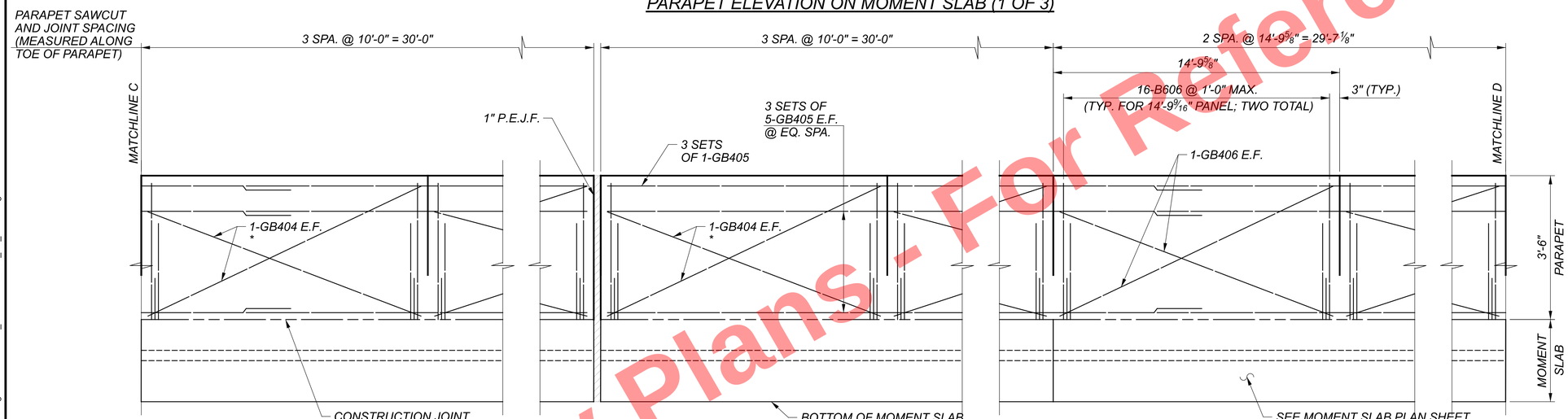

PARAPET ELEVATION ON MOMENT SLAB (2 OF 3)

LEGEND:

* - TYPICAL FOR 10'-0" PANELS

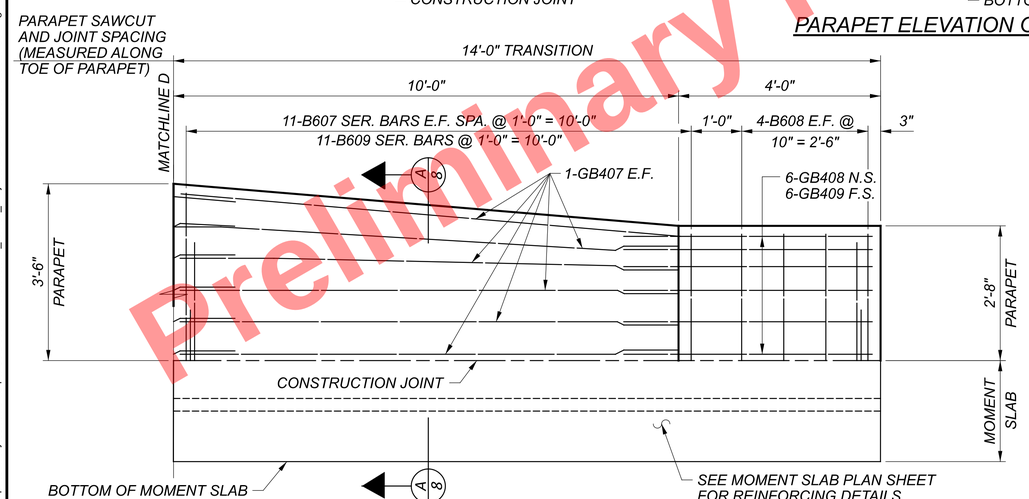

PARAPET ELEVATION ON MOMENT SLAB (3 OF 3)

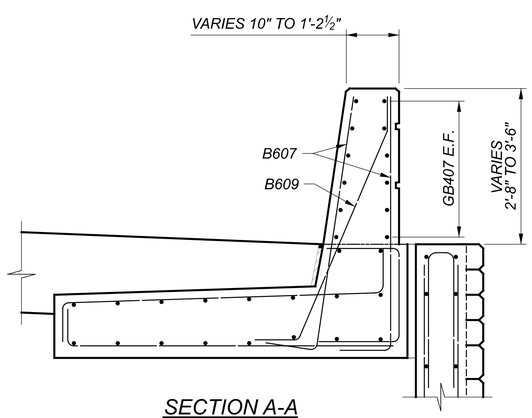

SECTION A-A

(FOR DETAILS NOT SHOWN, SEE SHEET 9 OF 22)

NOTES:

1. FOR CATCH BASIN DETAILS INCLUDING DETAILS OF THE MOMENT SLAB AND BARRIER, SEE SHEET 1164 AND 1165 . 20'-1" DIMENSION IS MEASURED OUT TO OUT OF THE PREFORMED EXPANSION JOINT FILLER. ALL COSTS FOR THE MOMENT SLAB, CONCRETE BARRIER AND INLET IN THIS DETAIL ARE TO BE INCLUDED WITH PAYMENT ON THAT SHEET.
2. THE ELEVATION VIEWS ARE NOT TO SCALE.
3. FOR SECTION OF THE PARAPET ON THE MOMENT SLAB, SEE SHEET 9 OF 22.
4. FOR ADDITIONAL DETAILS OF THE MOMENT SLAB LAYOUT AND DIMENSIONS, SEE SHEET 7 OF 22.
5. FIELD CURVE THE LONGITUDINAL REINFORCING AS NEEDED TO FOLLOW THE PARAPET AND MOMENT SLAB CURVATURE.
6. THE AESTHETIC RELIEF GROOVES ON THE PARAPET ARE NOT SHOWN, SEE SHEET 9 OF 22 FOR DETAILS.
7. FOR ADDITIONAL PARAPET DETAILS INCLUDING DETAILS OF THE 14'-0" PARAPET TRANSITION, SEE ODOT STANDARD DRAWING SBR-1-20.
8. REINFORCEMENT DESIGNATED WITH A "GB" PREFIX ARE GFRP BARS.

Preliminary Plans - For Reference Only

MOMENT SLAB PARAPET DETAILS
WALL AE
ALONG SOUTH SIDE OF RAMP A1

SFN	N/A
DESIGN AGENCY	B&N burgessniple.com
DESIGNER	JFM
CHECKER	JMK
REVIEWER	DWL 06/16/22
PROJECT ID	82382
SUBSET	8
TOTAL	10
SHEET	1215
TOTAL	2696

CUY-90-16.28 (CCG3A)

MODEL: Sheet PAPERSIZE: 34x22 (in.) DATE: 3/27/2025 TIME: 11:00:37 PM USER: Julie.Ross
pw:\\mb-us-pw.bentley.com:mb-us-pw-03\Documents\Cleveland_OH\01_Projects\ODOT\District12\82382\400-Engineering\Structures\WALL_AE\Sheets\82382_AE_WP009.dgn

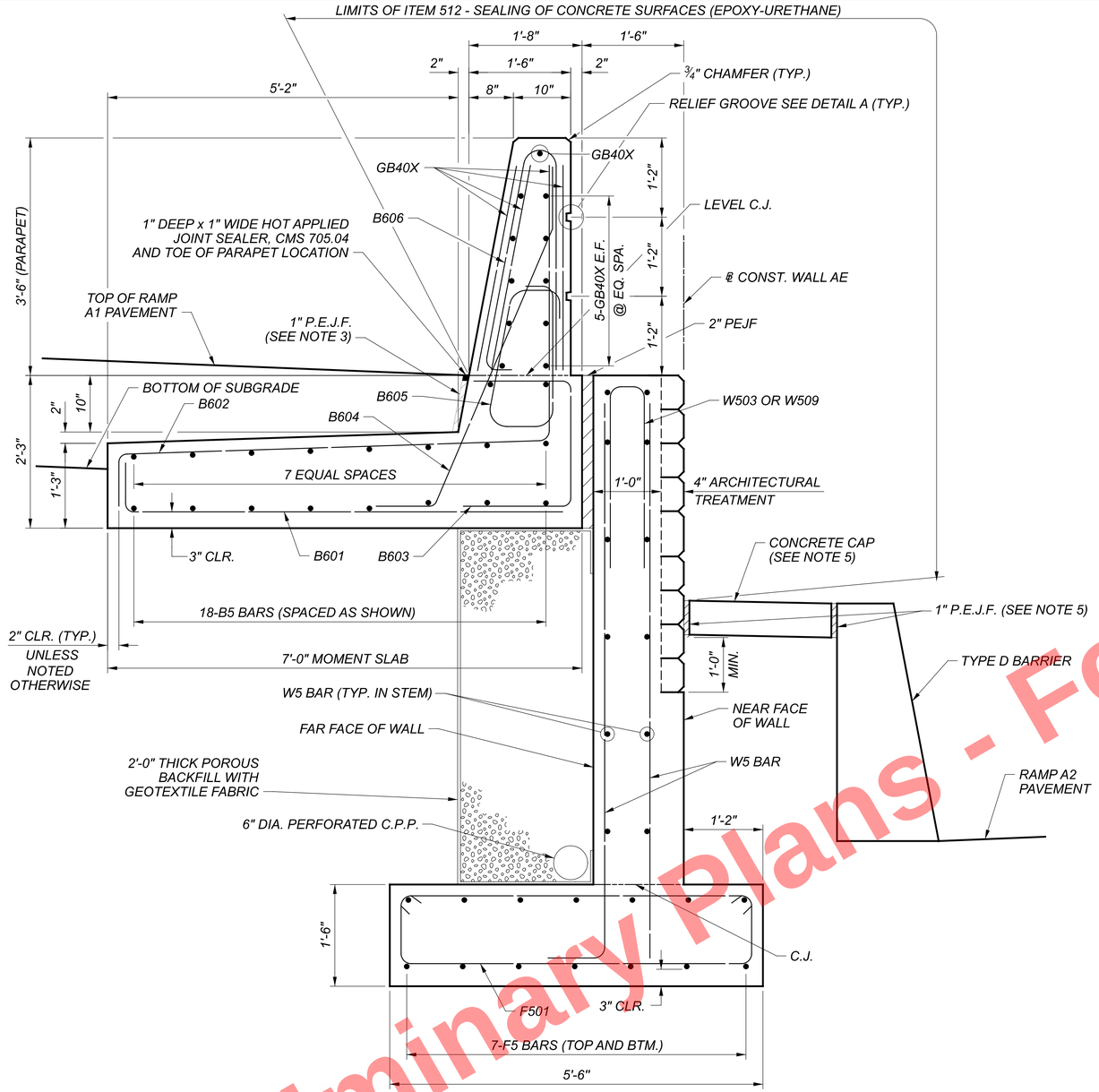

TYPICAL SECTION WITH TYPE D BARRIER

(STA. 0+30.00 TO STA. 1+47.84)

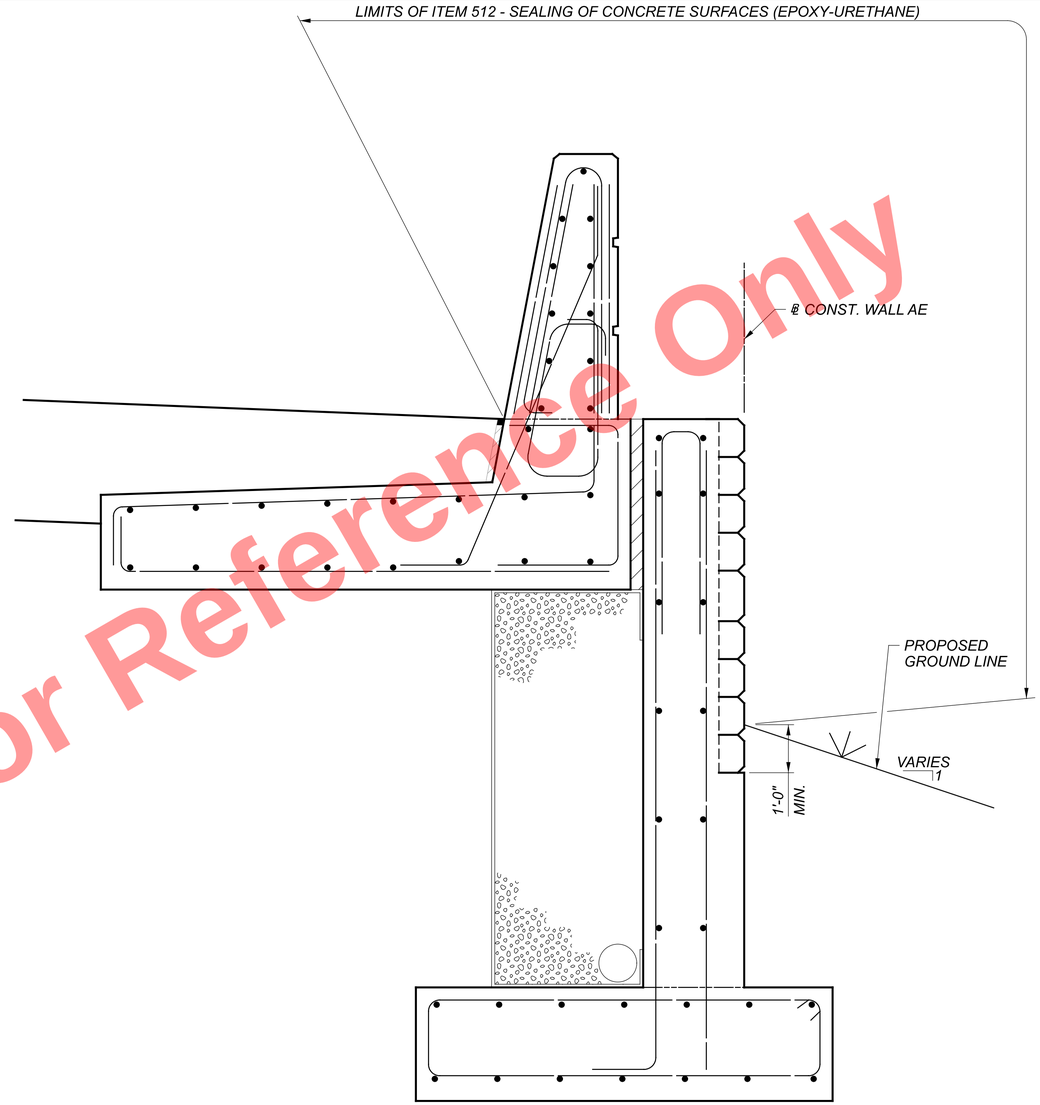

TYPICAL SECTION WITHOUT TYPE D BARRIER

(STA. 1+47.84 TO STA. 2+38.17)

(FOR DETAILS NOT SHOWN SEE TYPICAL SECTION WITH TYPE D BARRIER)

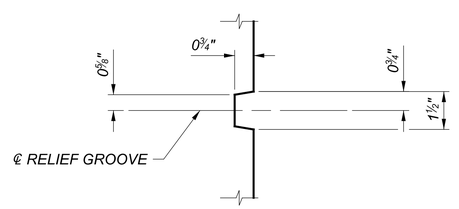

DETAIL A

NOTES:

1. FOR ADDITIONAL DETAILS OF THE WALL LAYOUT AND DIMENSIONS , SEE SHEETS 4 AND 5 OF 22.
2. FOR RETAINING WALL REINFORCING DETAILS, SEE SHEET 6 OF 22.
3. 1" PREFORMED EXPANSION JOINT FILLER SHALL EXTEND UP BETWEEN CAST-IN-PLACE MOMENT SLAB AND THE ASPAHLT PAVEMENT TO THE ELEVATION OF 1" BELOW THE FINAL SURFACE OF THE PAVEMENT.
4. FOR ADDITIONAL PARAPET DETAILS, SEE ODOT STANDARD DRAWING SBR-1-20.
5. SEE THE ROADWAY PLANS FOR CONCRETE CAP AND P.E.J.F. DETAILS AND PAYMENT INFORMATION.

Preliminary Plans - For Reference Only

CUY-90-16.28 (CCG3A)

MODEL: Sheet PAPERSIZE: 34x22 (in.) DATE: 6/11/2025 TIME: 11:03:07 AM USER: Tolga.Feran
pw:\\mb-us-pw.bentley.com:mb-us-pw-03\Documents\Cleveland_OH01_Projects\ODOT\District12\82382\400-Engineering\Structures\WALL_AE\Sheets\82382_AE_

CAST-IN-PLACE WALL SECTIONS
WALL AE
ALONG SOUTH SIDE OF RAMP A1

SFN	N/A
DESIGN AGENCY	B&N burgessniple.com
DESIGNER	JFM
CHECKER	JMK
REVIEWER	DWL 06/16/22
PROJECT ID	82382
SUBSET	9
TOTAL	10
SHEET	1216
TOTAL	2696

WALL AE FOOTING (EPOXY COATED STEEL REINFORCEMENT - ECSR)											
MARK	MAT. TYPE	NO.	LENGTH	WEIGHT (LBS.)	TYPE	DIMENSIONS					
						A	B	C	D	E	INC.
F501	ECSR	222	13'-1"	3029	16	5'-2"	1'-1"				
F502	ECSR	7	31'-11"	233	1	2'-4"	29'-8"				
F503	ECSR	7	29'-8"	217	STR						
F504	ECSR	7	6'-4"	46	20	2'-4"	2'-4"	3'-1"			
F505	ECSR	14	33'-2"	484	1	2'-1"	31'-2"				
F506	ECSR	14	31'-2"	455	STR						
F507	ECSR	14	6'-0"	88	20	2'-1"	2'-1"	3'-1"			
F508	ECSR	28	17'-11"	523	STR						
F509	ECSR	7	20'-0"	146	1	2'-10"	17'-3"				
F510	ECSR	42	17'-3"	756	STR						
F511	ECSR	7	7'-1"	52	20	2'-10"	2'-10"	3'-1"			
F512	ECSR	7	19'-9"	144	1	2'-7"	17'-3"				
F513	ECSR	7	6'-8"	49	20	2'-7"	2'-7"	3'-1"			
F514	ECSR	7	18'-5"	134	1	3'-1"	15'-5"				
F515	ECSR	21	15'-5"	338	STR						
F516	ECSR	7	7'-5"	54	20	3'-1"	3'-1"	3'-1"			
FOOTING ECSR TOTAL				6748							

MOMENT SLAB WALL AE (EPOXY COATED STEEL REINFORCEMENT - ECSR)											
MARK	MAT. TYPE	NO.	LENGTH	WEIGHT (LBS.)	TYPE	DIMENSIONS					
						A	B	C	D	E	INC.
B501	ECSR	18	22'-4"	419	STR						
B502	ECSR	36	29'-6"	1108	STR						
B503	ECSR	108	16'-6"	1859	STR.						
B504	ECSR	18	13'-5"	252	STR						
B601	ECSR	203	7'-4"	2236	1	0'-10"	6'-8"				
B602	ECSR	203	7'-10"	2388	32	0'-10"	6'-6"	0'-10"			
B603	ECSR	203	4'-2"	1270	18	1'-10"	1'-4"	1'-4"			
B604	ECSR	188	6'-5"	1812	26	0'-11"	0'-5"	4'-6"	0'-11"	0'-5"	
B605	ECSR	188	7'-1"	2000	41A	0'-9 ½"	2'-2"	1'-0"	0'-7"	0'-5 ¼"	
B606	ECSR	188	6'-11"	1953	2	3'-3"	3'-3"	0'-6"	0'-5 ¼"	0'-2"	
		2	5'-4"				4'-6"				
B607	ECSR	S.O.	TO	190	1	1'-0"	TO				0'-1"
		11	6'-2"				5'-4"				
B608	ECSR	8	5'-4"	64	1	1'-0"	4'-6"				
		1	5'-7"			0'-2"					
B609	ECSR	S.O.	TO	99	9	TO	4'-2"	1'-0"	1'-9"		0'-1"
		11	6'-5"			1'-0"					
MOMENT SLAB ECSR TOTAL				15650							

WALL AE (EPOXY COATED STEEL REINFORCEMENT - ECSR)											
MARK	MAT. TYPE	NO.	LENGTH	WEIGHT (LBS.)	TYPE	DIMENSIONS					
						A	B	C	D	E	INC.
W501	ECSR	21	6'-7"	144	STR						
W502	ECSR	41	7'-4"	314	1	0'-10"	6'-7"				
W503	ECSR	82	5'-7"	478	18	0'-8"	2'-7"	2'-7"			
W504	ECSR	78	29'-6"	2400	STR						
W505	ECSR	21	7'-10"	172	STR						
W506	ECSR	41	8'-7"	367	1	0'-10"	7'-10"				
W507	ECSR	42	9'-0"	394	STR						
W508	ECSR	82	9'-9"	834	1	0'-10"	9'-0"				
W509	ECSR	202	6'-5"	1352	18	0'-8"	3'-0"	3'-0"			
W510	ECSR	21	10'-3"	225	STR						
W511	ECSR	41	11'-0"	470	1	0'-10"	10'-3"				
W512	ECSR	4	2'-0"	8	STR						
W513	ECSR	21	7'-11"	173	STR						
W514	ECSR	41	8'-8"	371	1	0'-10"	7'-11"				
W515	ECSR	20	6'-5"	134	STR						
W516	ECSR	38	7'-2"	284	1	0'-10"	6'-5"				
W517	ECSR	10	27'-6"	287	STR						
ECSR TOTAL				8407							

MOMENT SLAB WALL AE (GLASS FIBER REINFORCED POLYMER REINFORCEMENT - GFRP)											
MARK	MAT. TYPE	NO.	LENGTH	TOTAL LENGTH	TYPE	DIMENSIONS					
						A	B	C	D	E	INC.
GB401	GFRP	8	11'-6"	92'-0"	STR						
GB402	GFRP	11	22'-6"	247'-6"	STR						
GB403	GFRP	44	23'-4"	1026'-8"	STR						
GB404	GFRP	48	10'-0"	480'-0"	STR						
GB405	GFRP	33	21'-0"	693'-0"	STR						
GB406	GFRP	8	14'-9"	118'-0"	STR						
GB407	GFRP	12	10'-0"	120'-0"	STR						
GB408	GFRP	6	6'-4"	38'-0"	11	2'-5"	0'-1 ½"	1'-4"	2'-6"	0'-5"	
GB409	GFRP	6	5'-1"	30'-6"	STR						
MOMENT SLAB GFRP TOTAL				2845'-8"							

NOTES:

1. ALL REINFORCING STEEL SHALL BE EPOXY COATED.
2. BAR SIZE: THE BAR SIZE IS INDICATED IN THE BAR MARK. THE MARK BEGINS WITH TWO OR THREE LETTERS OR NUMBERS THAT IDENTIFY THE BAR LOCATION. THE NEXT ONE OR TWO DIGITS INDICATE THE BAR SIZE, AND THE REMAINING TWO DIGITS ARE THE SEQUENCE NUMBER.

   EXAMPLE: SA1001
   SA = SUPERSTRUCTURE BAR
   10 = #10 BAR
   01 = BAR SEQUENCE NUMBER 1
3. BAR DIMENSIONS SHOWN ARE OUT-TO-OUT UNLESS OTHERWISE INDICATED.
4. STR. IN THE BAR TYPE COLUMN INDICATES A STRAIGHT BAR.
5. RAD INDICATES INSIDE RADIUS, UNLESS OTHERWISE NOTED.
6. INCR. INDICATES THE LENGTH INCREMENT FOR SERIES BARS.
7. STD. WRITTEN IN PLACE OF A DIMENSION INDICATES A STANDARD BEND AT THE END OF A BAR.
8. SPIRAL REINFORCING BARS: THE "LENGTH" SHOWN IN THE STEEL LIST FOR THE SPIRAL BARS IS THE LENGTH ALONG THE AXIS OF THE SPIRAL. PROVIDE ONE AND ONE-HALF CLOSED-COIL TURNS AT THE ENDS OF EACH SPIRAL UNIT.

LEGEND:

* = REINFORCING BAR UTILIZES A MECHANICAL CONNECTOR. BAR LENGTH IS MEASURED TO THE CONSTRUCTION JOINT, EXCEPT AT PIER COLUMNS, WHERE BAR LENGTH IS MEASURED TO THE CENTER OF THE MECHANICAL CONNECTOR. EXTRA BAR LENGTH AND/OR BAR END PREPARATION MAY BE NECESSARY DEPENDING UPON THE TYPE OF MECHANICAL CONNECTOR FURNISHED.

S.O. = SERIES OF

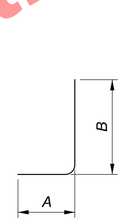

TYPE-1

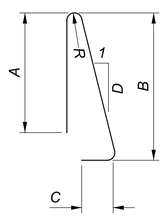

TYPE-2

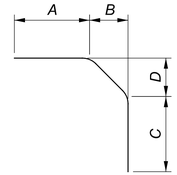

TYPE-9

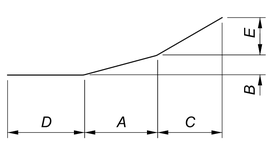

TYPE-11

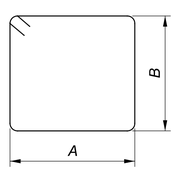

TYPE-16

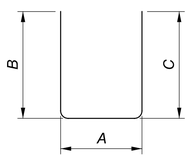

TYPE-18

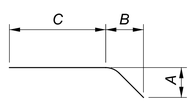

TYPE-20

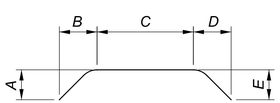

TYPE-26

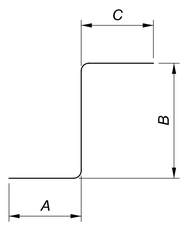

TYPE-32

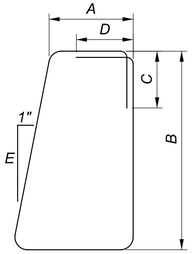

TYPE-41A

Preliminary Plans - For Reference Only

REINFORCING STEEL LIST
WALL AE
ALONG SOUTH SIDE OF RAMP A1

SFN N/A

DESIGN AGENCY B&N burgessniple.com

DESIGNER	CHECKER
DBH	BCS

REVIEWER DWL 06/16/22

PROJECT ID 82382

SUBSET	TOTAL
10	10

SHEET	TOTAL
1217	2696

CUY-90-16.28 (CCG3A)

MODEL: Sheet PAPERSIZE: 34x22 (in.) DATE: 3/27/2025 TIME: 11:00:48 PM USER: Julie.Ross
pw:\\mb-us-pw.bentley.com:mb-us-pw-03\Documents\Cleveland_OH01_Projects\ODOT\District12\82382400-Engineering\Structures\WALL_AE\Sheets\82382_AE_WL001.dgn

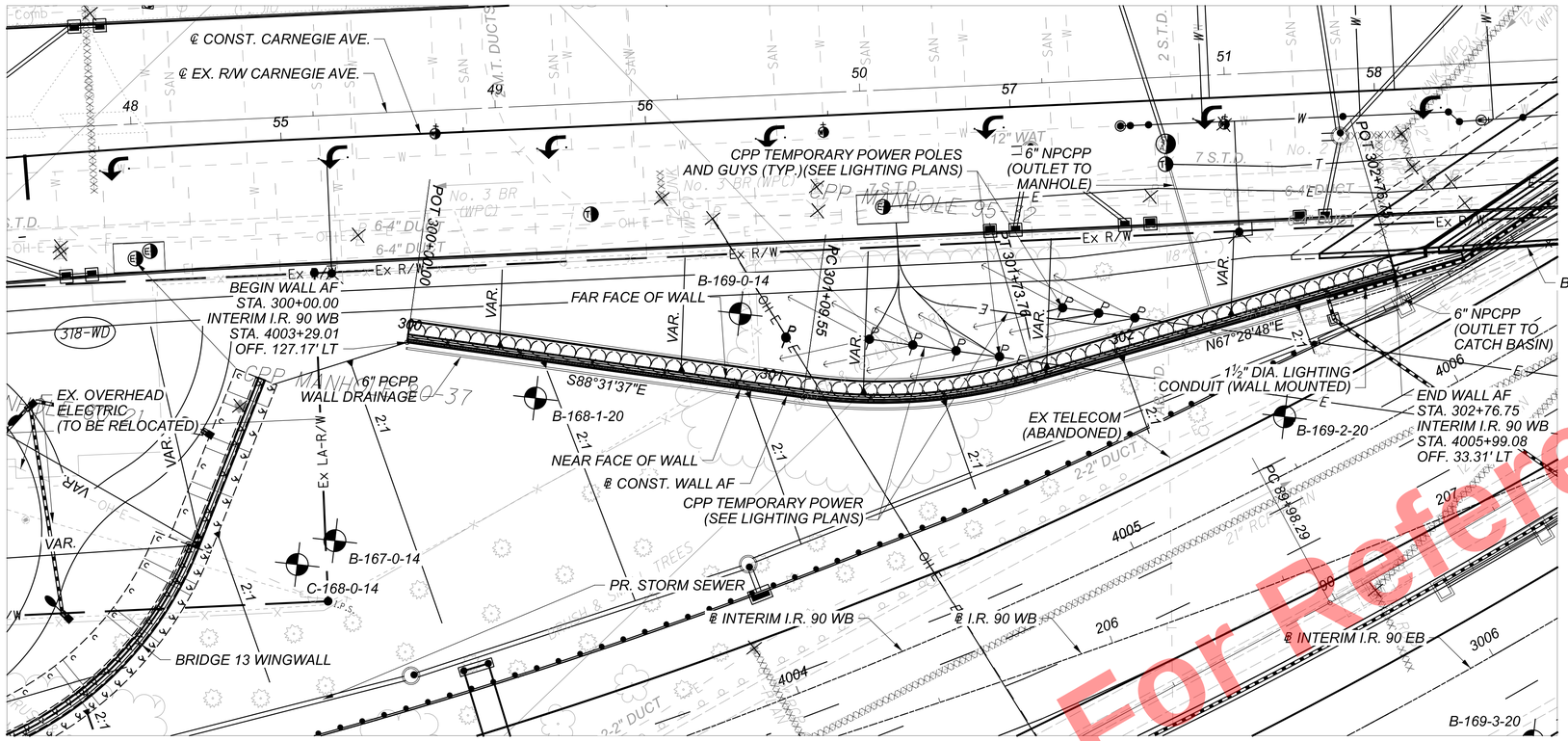

PLAN

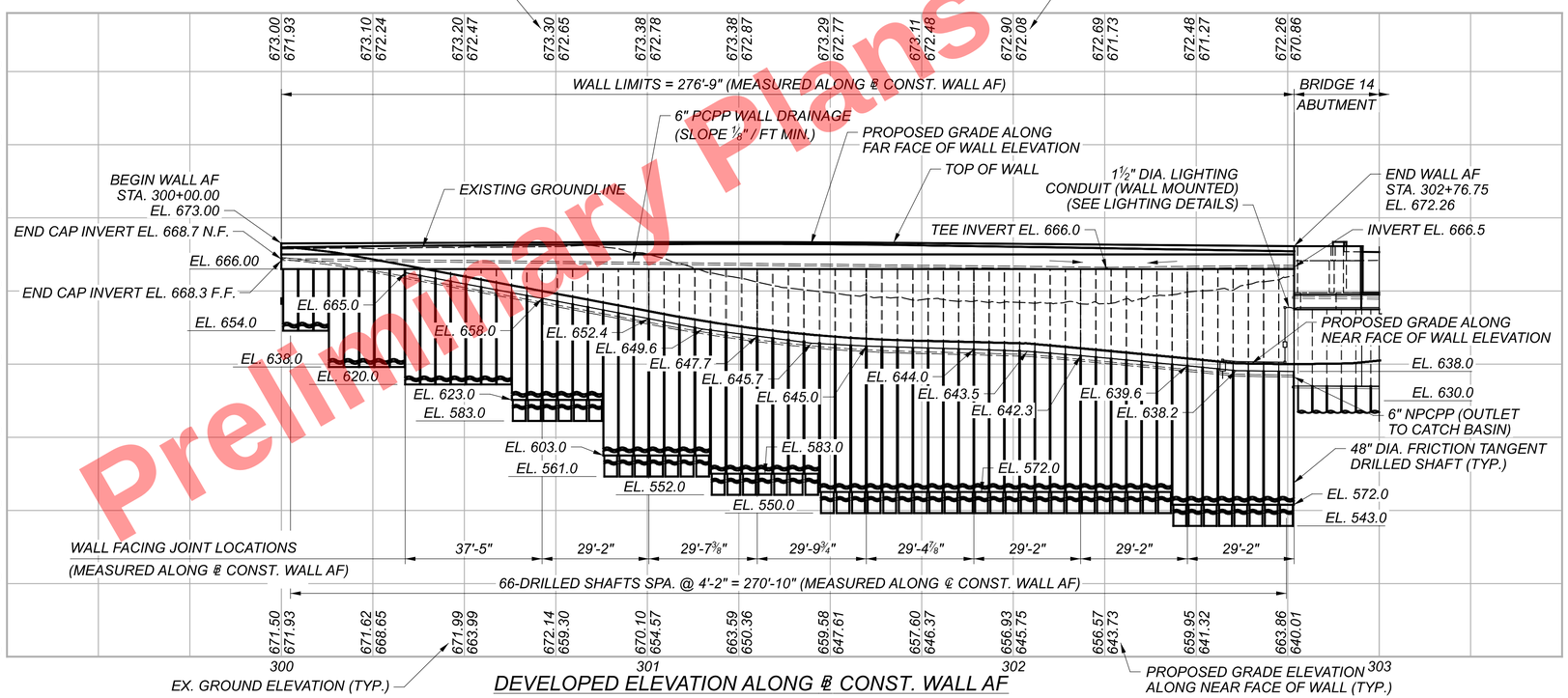

DEVELOPED ELEVATION ALONG ℄ CONST. WALL AF

BENCHMARK DATA

BM #62 STA.	41+38.42,	ELEV.	672.11,	OFFSET 75.42 LT.,	RR SPIKE
BM #64 STA.	58+35.86,	ELEV.	671.25,	OFFSET 47.90 LT.,	RR SPIKE
BM #65 STA.	66+35.73,	ELEV.	668.92,	OFFSET 38.62 RT.,	RR SPIKE
BM #73 STA.	49+25.90,	ELEV.	671.90,	OFFSET 31.86 LT.,	CUT CROSS

BENCHMARK STATION AND OFFSETS ARE FROM ℄ CONST. CARNEGIE AVE.

FOR ADDITIONAL BENCHMARK INFORMATION. SEE ROADWAY PLAN SHEET 4 / 2696.

℄ CONST. WALL AF CURVE DATA
P.I. = Sta. 301+42.14
Δ = 23°59'36" LT
Dc = 37°22'01"
R = 153.33'
T = 32.58'
L = 64.21'
E = 3.42'

BORING LOCATION*

BORING	STATION	OFFSET	TOP OF ROCK EL.
B-167-0-14	4002+90.73	81.55' LT.	-
C-168-0-14	4002+78.29	78.31' LT.	-
B-168-1-20	4003+59.52	101.13' LT.	-
B-169-0-14	4004+24.72	102.48' LT.	-
B-169-2-20	4005+53.34	14.04' LT.	-
B-169-3-20	4005+71.75	96.25' RT.	-

** = BORING STATION AND OFFSETS ARE FROM ℄ INTERIM I.R. 90 WB*

PROPOSED WORK

THE PROPOSED WORK CONSISTS OF CONSTRUCTING A RETAINING WALL ALONG THE RIGHT SIDE OF I.R. 90 WB. THE WALL IS TOP DOWN CONSTRUCTION CONSISTING OF TANGENT DRILLED SHAFTS WITH CAST-IN-PLACE CONCRETE FACING WITH A REINFORCED CONCRETE CAP AND FENCE WALL.

NOTES

1. *EARTHWORK LIMITS SHOWN ARE APPROXIMATE. ACTUAL SLOPES SHALL CONFORM TO PLAN CROSS SECTIONS.*
2. *FOR WALL CROSS SECTIONS, SEE SHEET 775 TO 789 / 2696 .*
3. *STATION AND WALL OFFSETS SHOWN AT FRONT FACE OF WALL.*

LEGEND

PROJECT BORING LOCATIONS

CONST. = CONSTRUCTION
EOP = EDGE OF PAVEMENT
EOS = EDGE OF SHOULDER

Preliminary Plans - For Reference Only

WALL PLAN AND PROFILE
WALL AF
ALONG NORTH SIDE OF I.R. 90 NEAR E. 22ND ST. AND CARNEGIE AVE.

SFN N/A

DESIGN AGENCY Michael Baker INTERNATIONAL

DESIGNER	CHECKER
SW/GZ	JC/SD

REVIEWER LPC 05-09-24

PROJECT ID 82382

SUBSET	TOTAL
1	11

SHEET	TOTAL
1218	2696

CUY-90-16.28 (CCG3A)

MODEL: Wall AF East - Wall AF Plan 2-1 PAPERSIZE: 34x22 (in.) DATE: 3/27/2025 TIME: 11:01:12 PM USER: Julie.Ross
pw:\\mb-us-pw.bentley.com:mb-us-pw-03\Documents\Cleveland_OH101_Projects\ODOT\District12\82382\400-Engineering\Structures\WALL_AF\Sheets\82382_AF_WP002.dgn

STANDARD DRAWINGS AND SUPPLEMENTAL SPECIFICATIONS:

REFER TO THE FOLLOWING STANDARD CONSTRUCTION DRAWINGS:
VPF-1-90 REVISED 7/21/2023
DM-1.1 REVISED 1/17/2025

REFER TO THE FOLLOWING SUPPLEMENTAL SPECIFICATION:
800 DATED SEE TITLE SHEET

REFER TO THE FOLLOWING SUPPLEMENT:
1083 DATED 1/20/2017

DESIGN SPECIFICATIONS:

THIS STRUCTURE CONFORMS TO THE "LRFD BRIDGE DESIGN SPECIFICATIONS", 9TH EDITION, ADOPTED BY THE AMERICAN ASSOCIATION OF STATE HIGHWAY AND TRANSPORTATION OFFICIALS AND THE ODOT BRIDGE DESIGN MANUAL, 2020 (DATED 07-21-23).

DESIGN DATA:

CONCRETE CLASS QC1 - COMPRESSIVE STRENGTH 4.0 KSI
(CONCRETE FACING, DRILLED SHAFT CAP & FENCE WALL)
CONCRETE CLASS QC SCC, WITH $^{3}/_{8}$ IN MAX. AGGREGATE SIZE:
COMPRESSIVE STRENGTH 4.5 KSI (DRILLED SHAFT)

REINFORCING STEEL - MINIMUM YIELD STRENGTH 60 KSI

PERMANENT STEEL CASING - ASTM A252 GRADE 3 - MINIMUM YIELD STRESS 45 KSI

SEQUENCE OF CONSTRUCTION

CONSTRUCT WALL AF DURING MOT PHASE 2.

SEE MAINTENANCE OF TRAFFIC NOTES FOR ADDITIONAL PHASES
AND INFORMATION

ITEM 512 - SEALING OF CONCRETE SURFACES, AS PER PLAN (PERMANENT GRAFFITI PROTECTION)

APPLY A PERMANENT GRAFFITI COATING QUALIFIED ACCORDING TO SUPPLEMENT 1083 THAT IS COMPATIBLE WITH THE CONCRETE SEALER OVER WHICH IT IS APPLIED. PROVIDE A COATING THAT MEETS THE REQUIREMENTS LISTED BELOW. APPLY THE GRAFFITI COATING IN ACCORDANCE WITH THE MANUFACTURER'S PRINTED INSTRUCTIONS.

A. THE MATERIAL SHALL BE A SINGLE COMPONENT, RTV (ROOM TEMPERATURE VULCANIZED), NEUTRAL MOISTURE CURE, PERMANENT (NON-SACRIFICIAL), TYPE III (WATER CLEANABLE) POLYSILOXANE (SILICONE) ANTI-GRAFFITI COATING, FREE OF ANY WAXES, EPOXIES, OR POLYURETHANE COMPONENTS.

B. THE COATING SHALL BE A ONE COAT SYSTEM (NO PRIMER) CAPABLE OF BEING SPRAY APPLIED TO A DRY FILM THICKNESS OF 15 MILS (375 MICRONS) WITHOUT RUNS OR SAGS (MULTIPLE COAT APPLICATION ACCEPTABLE FOR BRUSH/ROLLER USAGE AND PRIMER USAGE ACCEPTABLE FOR SPECIALTY SUBSTRATES SUCH AS GALVANIZED METAL).

C. THE COATING SHALL EMIT LESS THAN 300 G/L (2.5 POUNDS PER GALLON) OF VOLATILE ORGANIZE COMPOUNDS (EPA METHOD 24).

D. THE COATING SHALL MEET THE FOLLOWING PERFORMANCE REQUIREMENTS:
1. CLEANABILITY LEVEL 1 (GRAFFITI COMPLETELY REMOVED WITH COLD WATER POWER WASH) AS PER ASTM D7089 WITH LOW PRESSURE (1200 PSI) COLD WATER WASH AFTER 2000 HOURS ACCELERATED UV-CONDENSATION EXPOSURE IN ACCORDANCE WITH ASTM D4587.
2. GRAFFITI RESISTANCE LESS THAN 7.5 AS PER ASTM D6578 AFTER 2000 HOURS ACCELERATED UV-CONDENSATION EXPOSURE IN ACCORDANCE WITH ASTM 4578.
3. NO SIGNS OF GRAFFITI OR GRAFFITI STAINING AND MUST BE INTACT AND EXHIBIT NO SIGNS OF STREAKING, CRACKING, PINHOLING, DISCOLORING, OR OTHER VISIBLE COATING DEGRADATION UPON CASUAL OBSERVATION WHEN TESTED IN ACCORDANCE WITH TXDOT TEX 890-B, TYPE III METHOD.
4. BREATHABILITY OF 10 PERMS (+/- 3) PER ASTM D1653 USING "WET CUP METHOD".
5. ELONGATION AT BREAK GREATER THAN 100% AS PER ASTM D412 (USING DIE "D").
6. ADHESION RATING OF "8 - DIFFICULT TO REMOVE" AS PER ASTM D6677 (ADHESION BY KNIFE).

ITEM 512 - SEALING OF CONCRETE SURFACES (EPOXY-URETHANE), AS PER PLAN

SEAL ALL EXPOSED SURFACES INCLUDING THE CAST IN PLACE CONCRETE FACING SHOWN IN THE PLANS WITH AN EPOXY-URETHANE SEALER ACCORDING TO C&MS 512. THE FOLLOWING COLOR SHALL BE USED FOR PAINTING AND SEALING STRUCTURAL ELEMENTS:

FACING SEALER: "ALABASTER" 7008

ALL COLOR NAME AND NUMBER REFERENCES ARE TAKEN FROM THE SHERWIN WILLIAMS COLOR PALATE. THE CONTRACTOR MAY SUBSTITUTE SIMILAR COLORS FROM ALTERNATIVE SUPPLIER'S COLOR PALATE.

THE ADDITIONAL MATERIAL AND LABOR REQUIRED TO SEAL THE FORM LINER RELIEF SHALL BE INCLUDED IN THIS ITEM. TO ACCOUNT FOR THE SURFACE VARIATIONS DUE TO THE FORM LINERS, AN EXTRA 20 PERCENT HAS BEEN ADDED TO THE SEALING QUANTITIES FOR THE PURPOSE OF ESTIMATING.

ITEM 518 - PREFABRICATED GEOCOMPOSITE DRAIN

THIS WORK CONSISTS OF FURNISHING AND PLACING PREFABRICATED GEOCOMPOSITE DRAIN (PGD) AGAINST THE CONCRETE WALL FACING.

FURNISH PGD CONSISTING OF A DRAINAGE CORE WITH A GEOTEXTILE FABRIC BONDED TO AT LEAST ONE SIDE. USE CORE MATERIAL THAT CONSISTS OF A STABLE, POLYMER PLASTIC MATERIAL WITH A CUSPATED OR GEONET STRUCTURE. THE CORE MATERIAL SHALL HAVE SUFFICIENT FLEXIBILITY TO WITHSTAND BENDING AND HANDLING DURING INSTALLATION WITHOUT DAMAGE. FURNISH GEOTEXTILE COMPOSED OF STRONG ROT-PROOF POLYMERIC FIBERS FORMED INTO A WOVEN OR NON-WOVEN FABRIC. FURNISH PGD CONFORMING TO THE FOLLOWING REQUIREMENTS. FURNISH MANUFACTURER'S CERTIFIED TEST DATA.

	PROPERTY	TEST METHOD	VALUE
	THICKNESS	ASTM D 5199	0.4 INCH
	COMPRESSIVE STRENGTH	ASTM D 1621	13,650 PSF MIN.
CORE	FLOW RATE	ASTM D 4716	9 TO 25 GPM/FT
	APPARENT OPENING SIZE	ASTM D 4751	0.3 MM MAX.
	FLOW RATE	ASTM D 4491	40 GPM/SQ.FT. MIN.
FABRIC	GRAB TENSILE STRENGTH	ASTM D 4632	90 LBS MIN.
	CBR PUNCTURE	ASTM D 6241	65 LBS MIN.

PLACE PGD BETWEEN THE DRILLED SHAFTS. PLACE THE SIDE FACED WITH GEOTEXTILE AGAINST THE DRILLED SHAFTS, FACING TOWARDS THE RETAINED GROUND, AND SECURE THE PGD TO THE SACRIFICIAL PLYWOOD FORMS BETWEEN THE DRILLED SHAFTS.

SPLICE ABUTTING SECTIONS TOGETHER BY OVERLAPPING THE GEOTEXTILE FLAP (IF PROVIDED) ON ONE SECTION WITH THE ADJACENT SECTION OF PGD. OVERLAP THE GEOTEXTILE IN A SHINGLED OVERLAP SO THAT THE UPPER GEOTEXTILE IS ON TOP OF THE LOWER GEOTEXTILE. IF A GEOTEXTILE FLAP IS NOT PROVIDED, COVER THE SEAM WITH A 12-INCH WIDE STRIP OF GEOTEXTILE FABRIC CENTERED OVER THE SEAM AND SECURED IN PLACE USING 3-INCH WIDE WATERPROOF PLASTIC TAPE.

SEAL ALL EXPOSED EDGES OF THE CORE MATERIAL TO PREVENT SOIL INTRUSION. SEAL EXPOSED EDGES BY FOLDING THE GEOTEXTILE FLAPS OVER AND AROUND THE PGD OR, IF A FLAP IS NOT PROVIDED, COVERING THE EXPOSED EDGE WITH A 12-INCH WIDE STRIP OF GEOTEXTILE FABRIC, TAPING THE STRIP TO THE PGD GEOTEXTILE 8 INCHES FROM THE EXPOSED EDGE, AND FOLDING THE REMAINING 4 INCHES OVER AND AROUND THE PGD. SECURE LOOSE EDGES OF THE GEOTEXTILE FABRIC WITH 3-INCH WIDE WATERPROOF PLASTIC TAPE.

REPAIR ANY DAMAGE TO THE GEOTEXTILE FABRIC BY COVERING WITH A PATCH WHICH OVERLAPS THE DAMAGED AREA AND EXTENDS AT LEAST 6 INCHES BEYOND THE EDGE OF THE DAMAGED AREA. TAPE THE EDGES OF THE PATCH IN PLACE USING 3 INCH WIDE WATERPROOF PLASTIC TAPE. IF THE CORE OF THE PGD IS DAMAGED, REPLACE IT WITH A NEW SECTION OF PGD SPLICE AS DESCRIBED ABOVE.

ITEM 524 - DRILLED SHAFTS, 42" DIAMETER, AS PER PLAN
ITEM 524 - DRILLED SHAFTS, 48" DIAMETER, AS PER PLAN

GENERAL:
THE CONTRACTOR SHALL PROVIDE ALL LABOR, MATERIALS AND EQUIPMENT TO INSTALL DRILLED SHAFTS AS DETAILED IN THE PLANS IN ACCORDANCE WITH THE REQUIREMENTS OF ODOT C&MS SECTION 524, AND WITH THE ADDITIONAL REQUIREMENTS DEFINED BELOW.

ANTICIPATED DRILLED SHAFT DEFLECTIONS:
TANGENT DRILLED SHAFTS ("SHAFT", "SHAFTS") ARE INCORPORATED AS WALLS IN VARIOUS STRUCTURAL ELEMENTS FOR THIS BRIDGE. AS DESIGNED AND DETAILED THE SHAFTS ARE EXPECTED TO DEFLECT UNDER THE APPLIED PERMANENT LOADS (DC, DW, EP, WA) AND TRANSIENT LOADS (LL, LS, TU) AT THE SERVICE LIMIT STATE. MEASURES FOR ACCOMODATING THESE DEFLECTIONS ARE DETAILED BELOW.

THE SHAFT HEAD IS CONSIDERED TO BE THE DESIGN BEAM SEAT ELEVATION FOR SHAFTS INCORPORATED IN ABUTMENTS. THE SHAFT HEAD IS CONSIDERED TO BE THE DESIGN TOP OF CAP ELEVATION FOR SHAFTS INCORPORATED IN RETAINING WALLS. IN BOTH CASES THE FINISHED TOP OF SHAFT IS LOWER THAN THE SHAFT HEAD ELEVATION.

THE ANTICIPATED DEFLECTION AT THE SHAFT HEAD ELEVATION RELATIVE TO THE DREDGE LINE ELEVATION DUE TO PERMANENT LOADS ARE AS FOLLOWS:

WALL AF 6.00 INCHES SHAFTS AF29 THROUGH AF66 ONLY

DESIGN ASSUMPTIONS:
BEHAVIOR OF THE DRILLED SHAFTS AS DESCRIBED ABOVE IS PREDICATED UPON THE FOLOWING DESIGN ASSUMPTIONS:

1. DESIGN HEIGHT OF DRILLED SHAFT IS THE DISTANCE FROM THE SHAFT HEAD ELEVATION TO THE DREDGE LINE ELEVATION
2. PERMANENT LOAD DEFLECTIONS ARE ASSUMED TO OCCUR FOLLOWING REMOVAL OF SOIL IN FRONT OF THE TANGENT SHAFT WALLS
3. ADDITIONAL ASSUMPTIONS AND CONSTRAINTS ARE DETAILED IN THE PLANS.

DREDGE LINE ELEVATIONS:

SHAFTS AF01 THROUGH AF58: SLOPING GROUND 42 INCHES BELOW FINAL GRADE AT NEAR FACE OF WALL.

SHAFTS AF58 THROUGH AF66: ELEV. 631.0 FOR DRAINAGE STRUCTURE EXCAVATION.

DRILLED SHAFT LOCATION SURVEY:
THE CORRECT LOCATION OF SHAFT IS CRITICAL TO ESTABLISHING AND MAINTAINING THE STRUCTURE GEOMETRY. THE CONTRACTOR SHALL EMPLOY THE SERVICES OF A OHIO REGISTERED PROFESSIONAL SURVEYOR ("THE SURVEYOR") TO ESTABLISH, MAINTAIN AND VERIFY HORIZONTAL AND VERTICAL SHAFT GEOMETRY. THE SURVEYOR SHALL BE READILY AVAILABLE TO ESTABLISH GEOMETRIC CONTROL AND PERFORM THE SURVEYS REQUIRED BELOW.

CONTRACTOR'S INSTALLATION PLAN:
THE CONTRACTOR SHALL PROVIDE AN INSTALLATION PLAN AS REQUIRED BY ODOT C&MS SECTION 524.03. THE INSTALLATION PLAN SHALL ALSO INCLUDE:

1. CONTRACTOR'S PROPOSED METHODS TO MAINTAIN LOCATION AND ALIGNMENT OF SHAFTS
2. CONTRACTOR'S PROPOSED METHODS FOR PERFORMING THE DRILLED SHAFT LOCATION SURVEY

COSTRUCTION CONSTRAINTS:
THE CONTRACTOR IS ADVISED THAT THE PROPOSED DRILLED SHAFT INSTALLATIONS MAY REQUIRE ADVANCING SHAFTS THROUCH EXISTING PILES. ADDITIONAL INFORMATION AND NOTES REGARDING POSSIBLE CONFLICTS ARE PROVIDED IN THE PLANS.

MATERIALS:
CONCRETE AND REINFORCING STEEL FOR DRILLED SHAFTS SHALL CONFORM TO ODOT C&MS SECTION 524.02.

A SELF CONSOLIDATING CONCRETE MIX SHALL BE INCORPORATED

THE MAXIMUM COARSE AGGREGATE SIZE SHALL BE: $^{3}/_{8}$"

PERMANENT STEEL CASINGS SHALL BE ASTM A252 GRADE 3 WITH A MINIMUM YIELD STRESS OF 45 KSI. CASING SECTION LENGTHS SHALL BE MAXIMIZED TO MINIMIZE THE NUMBER OF FIELD SPLICE LOCATIONS. FIELD SPLICE LOCATIONS SHALL BE AS REQUIRED BY THE PLAN DETAILS. THE USE OF SPIRAL WELDED PIPE IS PERMITTED.

Preliminary Plans - Not for Construction
For Prior Reference Only

WALL GENERAL NOTES (1 OF 2)
WALL AF
ALONG NORTH SIDE OF I.R. 90 NEAR E. 22ND ST. AND CARNEGIE AVE.

SFN N/A
DESIGN AGENCY
Michael Baker INTERNATIONAL
DESIGNER SW/GZ | CHECKER JC/SD
REVIEWER LPC 05-09-24
PROJECT ID 82382
SUBSET 2 | TOTAL 11
SHEET 1219 | TOTAL 2696

CUY-90-16.28 (CCG3A)

MODEL: Sheet (1 of 2) PAPERSIZE: 34x22 (in.) DATE: 6/9/2025 TIME: 2:34:56 PM USER: Tolga.Feran
pw:\\mb-us-pw.bentley.com:mb-us-pw-03\Documents\Cleveland_OH\01_Projects\ODOT\District12\82382\400-Engineering\Structures\WALL_AF\Sheets\82382_AF_WN001.dgn

ITEM 524 - DRILLED SHAFTS, MISC.: DEMONSTRATION DRILLED SHAFT

PART 1: DESCRIPTION
THIS WORK CONSISTS OF ALL LABOR, MATERIALS, EQUIPMENT AND INCIDENTALS TO CONSTRUCT A DEMONSTRATION DRILLED SHAFT FOR TESTING AND EVALUATION TO VERIFY THE PROPOSED CONSTRUCTION METHODS FOR THE PRODUCTION OF DRILLED SHAFTS.

IF THE VERTICAL DEFLECTION OF THE DEMONSTRATION DRILLED SHAFT DURING LOAD TESTING IS LESS THAN 5% OF THE DRILLED SHAFT NOMINAL DIAMETER, IT MAY BE REUSED AS A PRODUCTION DRILLED SHAFT.

PART 2: MATERIALS
THE DEMONSTRATION DRILLED SHAFT SHALL USE THE SAME CONCRETE MIX DESIGN AND STEEL REINFORCEMENT AS THE PRODUCTION DRILLED SHAFTS.

PART 3: EXECUTION
SUBMIT A DRILLED SHAFT INSTALLATION PLAN TO THE ENGINEER FOR ACCEPTANCE IN ACCORDANCE WITH THE REQUIREMENTS OF C&MS 524.03. CONSTRUCT AT LEAST ONE DEMONSTRATION DRILLED SHAFT IN THE AREA SHOWN ON THE PLANS AND IN ACCORDANCE WITH THE ACCEPTED WRITTEN INSTALLATION. UPON CONSTRUCTION OF THE DEMONSTRATION DRILLED SHAFT, AND RECEIPT OF TESTING AND EVALUATION RESULTS CONFIRMING THE DEMONSTRATION DRILLED SHAFT HAS BEEN INSTALLED IN ACCORDANCE WITH CONTRACT DOCUMENT, THE ENGINEER WILL ISSUE A LETTER ACCEPTING THE INSTALLATION PLAN FOR THE CONSTRUCTION OF THE SUBSEQUENT PRODUCTION DRILLED SHAFTS.

IF MODIFICATION(S) TO THE INSTALLATION PLAN ARE MADE, WHETHER DUE TO THE TESTING AND EVALUATION RESULTS OR FOR OTHER REASON, THE DEPARTMENT WILL REQUIRE CONSTRUCTION OF AN ADDITIONAL DEMONSTRATION SHAFT CONSTRUCTED IN ACCORDANCE WITH THE MODIFIED INSTALLATION PLAN, AT NO ADDITIONAL COST. THE DIAMETER, LENGTH, REINFORCING, INSTALLATION METHODS, AND OTHER MISCELLANEOUS DETAILS OF THE DEMONSTRATION SHAFT SHALL BE THE SAME AS THE PRODUCTION DRILLED SHAFTS.

SUBMIT THE LOCATION OF THE DEMONSTRATION SHAFT TO THE ENGINEER FOR ACCEPTANCE. A PRODUCTION SHAFT SHALL BE USED AS THE DEMONSTRATION SHAFT.

LOCATE THE DEMONSTRATION DRILLED SHAFT SO THAT TESTING DOES NOT DAMAGE THE WALKER WEEKS BUILDING.

TEST THE DEMONSTRATION DRILLED SHAFT BY THERMAL INTEGRITY PROFILING (TIP) ACCORDING TO ASTM D7949, METHOD B.

PART 4: MEASUREMENT AND PAYMENT
THE DEPARTMENT WILL MEASURE DEMONSTRATION DRILLED SHAFT BY THE NUMBER OF FEET, MEASURED ALONG THE AXIS OF THE DRILLED SHAFT FROM THE REQUIRED BOTTOM ELEVATI0N OF THE SHAFT TO THE PROPOSED TOP PLAN ELEVATION.

IN ADDITION TO THE PROVISIONS OF C&MS 524.17, THE DEPARTMENT WILL PAY FOR ACCEPTED QUANTITIES OF DEMONSTRATION DRILLED SHAFT AFTER INSTALLATION OF THE DEMONSTRATION SHAFT AND AFTER BEING PROVIDED WITH WRITTEN TESTING AND EVALUATION RESULTS ACCEPTABLE TO THE ENGINEER.

THE CONTRACT PRICE IS FULL COMPENSATION FOR FURNISHING AND INSTALLING DRILLED SHAFTS IN ACCORDANCE WITH THE ABOVE REQUIREMENTS, INCLUDING MOBILIZATION, AND SITE ACCESS.

THE DEPARTMENT WILL PAY FOR TESTING AND EVALUATION OF THE ACCEPTED DEMONSTRATION SHAFT SEPARATELY.

THE DEPARTMENT WILL NOT PAY FOR TESTING AND EVALUATION FOR ADDITIONAL DEMONSTRATION DRILLED SHAFTS.

THE DEPARTMENT WILL PAY FOR ACCEPTED QUANTITIES AT THE CONTRACT PRICE AS FOLLOWS: ITEM 524 DRILLED SHAFTS, MISC.: DEMONSTRATION DRILLED SHAFT.

ITEM 524 - DRILLED SHAFTS, MISC.: THERMAL INTEGRITY PROFILER (TIP) TEST

PERFORM INTEGRITY TESTING ON 7 OF THE DRILLED SHAFTS AT RETAINING WALL AF BY THERMAL INTEGRITY PROFILING (TIP). PERFORM TIP TESTING PER ASTM D7949, "STANDARD TEST METHODS FOR THERMAL INTEGRITY PROFILING OF CONCRETE DEEP FOUNDATIONS," METHOD B.

ITEM SPECIAL - STRUCTURES: VIBRATION MONITORING

THIS PAY ITEM IS SPECIFICALLY INTENDED FOR THE PROTECTION OF THE WALKER WEEKS BUILDING, 2351 CARNEGIE AVENUE, CLEVELAND, OH 44115.

THIS WORK IS INCLUDED AND PAID FOR WITH THE CUY-90-1696 (BRIDGE 14) PLANS. SEE BRIDGE 14 PLANS FOR DETAILED NOTES.

ITEM SPECIAL - STRUCTURES: PRECONSTRUCTION/POST CONSTRUCTION CONDITION SURVEY

THIS PAY ITEM IS SPECIFICALLY INTENDED FOR THE PROTECTION OF THE WALKER WEEKS BUILDING, 2351 CARNEGIE AVENUE, CLEVELAND, OH 44115.

THIS WORK IS INCLUDED AND PAID FOR WITH THE CUY-90-1696 (BRIDGE 14) PLANS. SEE BRIDGE 14 PLANS FOR DETAILED NOTES.

ITEM 503 - UNCLASSIFIED EXCAVATION, AS PER PLAN

THIS ITEM INCLUDES ALL EXCAVATION NECESSARY TO CONSTRUCT WALL AF.

THE DEPARTMENT WILL PAY FOR THIS ITEM AT THE CONTRACT LUMP SUM PRICE FOR ITEM 503 UNCLASSIFIED EXCAVATION, AS PER PLAN.

ITEM 511 - CLASS QC1 CONCRETE WITH QC/QA, ABUTMENT NOT INCLUDING FOOTING, AS PER PLAN

THIS WORK CONSISTS OF ALL LABOR, MATERIALS, EQUIPMENT, AND INCIDENTALS TO CONSTRUCT THE DRILLED TANGENT SHAFT CAP AND FENCE WALL ABOVE THE CAP. REINFORCING STEEL SHALL BE INCLUDED WITH ITEM 509.

THE DEPARTMENT WILL PAY FOR ACCEPTED QUANTITIES AT THE CONTRACT PRICE AS FOLLOWS: ITEM 511 CLASS QC1 CONCRETE WITH QC/QA, ABUTMENT NOT INCLUDING FOOTING, AS PER PLAN.

ITEM 511 - CLASS QC1 CONCRETE WITH QC/QA, RETAINING/WINGWALL NOT INCLUDING FOOTING, AS PER PLAN

THIS WORK CONSISTS OF ALL LABOR, MATERIALS, EQUIPMENT, AND INCIDENTALS TO CONSTRUCT THE RETAINING WALL CAST-IN-PLACE CONCRETE FACING BELOW THE TANGENT DRILLED SHAFT CAP. REINFORCING STEEL SHALL BE INCLUDED WITH ITEM 509.

THE DEPARTMENT WILL PAY FOR ACCEPTED QUANTITIES AT THE CONTRACT PRICE AS FOLLOWS: ITEM 511 CLASS QC1 CONCRETE WITH QC/QA, RETAINING/WINGWALL NOT INCLUDING FOOTING, AS PER PLAN.

ITEM 511 - CONCRETE, MISC.: ARCHITECTURAL TREATMENT

THIS WORK CONSISTS OF ALL LABOR, MATERIALS, EQUIPMENT, AND INCIDENTALS TO CONSTRUCT THE ARCHITECTURAL TREATMENTS IN THE CONCRETE SURFACE OF THE RETAINING WALL.

THE DEPARTMENT WILL PAY FOR ACCEPTED QUANTITIES AT THE CONTRACT PRICE AS FOLLOWS: ITEM 511 CONCRETE, MISC.: ARCHITECTURAL TREATMENT.

ITEM 607 - VANDAL PROTECTION FENCE, 8' STRAIGHT, COATED FABRIC, AS PER PLAN

INSTALL VANDAL PROTECTION FENCE ACCORDING TO STD. CONSTRUCTION DRAWING VPF-1-90 AND C&MS 607, EXCEPT AS MODIFIED BELOW.

POSTS, PLATES, TIE WIRES, CAULK AND ADDITIONAL VISIBLE HARDWARE SHALL BE COLOR BLACK (FEDERAL STD. 595C #17038). FENCE FABRIC SHALL BE BLACK VINYL-COATED, CHAIN LINK STYLE. MOUNT FENCING TO TOP OF RETAINING WALL WITH CAST-IN-PLACE ANCHORS.

SECTION/DETAIL/VIEW CALLOUTS



(SEE SECTION A ON SHEET 10) (SECTION A CUT FROM SHEET 10)

PLAN ABBREVIATIONS:

ABUT. = ABUTMENT
APPR. = APPROACH
B = BOTTOM
℄ = BASELINE
BM = BENCHMARK
BOT. OR BTM. = BOTTOM
℄ = CENTERLINE
C/C = CENTER TO CENTER
C.I.P. = CAST-IN-PLACE
C.J. = CONSTRUCTION JOINT
CLR. = CLEAR
CMS = CONSTRUCTION AND MATERIAL SPECIFICATIONS
CONC. = CONCRETE
CONST. = CONSTRUCTION
DIA. = DIAMETER
DIM. = DIMENSION
DTBD = DISPOSITION TO BE DETERMINED
DWG. = DRAWING
EB = EASTBOUND
E.F. = EACH FACE
EL. OR ELEV. = ELEVATION
EQ. = EQUAL
EST. = ESTIMATED
EX. = EXISTING
F.A. = FORWARD ABUTMENT
F/F = FACE TO FACE
F.F. = FAR FACE
FT. = FOOT OR FEET
FTG. = FOOTING
FWD. = FORWARD
IN. = INCH
JT. = JOINT
LT. = LEFT
MAX. = MAXIMUM
MIN. = MINIMUM
MISC. = MISCELLANEOUS
N = NORTH
NB = NORTHBOUND
N.F. = NEAR FACE
NO. = NUMBER
N.P.C.P.P. = NON-PERFORATED CORRUGATED PLASTIC PIPE
OHWM = ORDINARY HIGH WATER MARK
O/O = OUT TO OUT
P.C.P.P. = PERFORATED CORRUGATED PLASTIC PIPE
P.E.J.F. = PREFORMED EXPANSION JOINT FILLER
PROP. = PROPOSED
PSF = POUNDS PER SQUARE FOOT
R.A. = REAR ABUTMENT
S = SOUTH
SB = SOUTHBOUND
SER. = SERIES
SHLDR = SHOULDER
SPA. = SPACE OR SPACES
STA. = STATION
STD. = STANDARD
STR = STRAIGHT
T = TOP
T&B = TOP & BOTTOM
TBR = TO BE REMOVED
TBRBO = TO BE RELOCATED BY OTHERS
TEMP. = TEMPORARY
TYP. = TYPICAL
U.N.O. = UNLESS NOTED OTHERWISE
VAR. = VARIES
WB = WESTBOUND
WWR = WELDED WIRE REINFORCEMENT

Preliminary Plans - For Reference Only

WALL GENERAL NOTES (2 OF 2)
WALL AF
ALONG NORTH SIDE OF I.R. 90 NEAR E. 22ND ST. AND CARNEGIE AVE.

SFN N/A
DESIGN AGENCY Michael Baker INTERNATIONAL
DESIGNER SW/GZ | CHECKER JC/SD
REVIEWER LPC 05-09-24
PROJECT ID 82382
SUBSET 3 | TOTAL 11
SHEET 1220 | TOTAL 2696

CUY-90-16.28

MODEL: Untitled Sheet PAPERSIZE: 34x22 (in.) DATE: 6/11/2025 TIME: 12:00:43 PM USER: Tolga.Feran
pw:\\mb-us-pw.bentley.com:mb-us-pw-03\Documents\Cleveland_OH\01_Projects\ODOT\District12\82382400-Engineering\Structures\WALL_AF\Sheets\82382_AF_WN002.dgn

ESTIMATED QUANTITIES

CALCULATED BY: ZES DATE: 04/24/24
CHECKED BY: SSW DATE: 05/14/24

PARTICIPATION	ITEM	ITEM EXT.	TOTAL	UNIT	DESCRIPTION	SHEET REF.
01/IMS/04	503	21301	LS		UNCLASSIFIED EXCAVATION, AS PER PLAN	3
01/IMS/04	509	10000	38,614	LB	EPOXY COATED STEEL REINFORCEMENT	
01/IMS/04	510	10000	58	EACH	DOWEL HOLES WITH NONSHRINK, NONMETALLIC GROUT	
01/IMS/04	511	44113	281	CY	CLASS QC1 CONCRETE WITH QC/QA, ABUTMENT NOT INCLUDING FOOTING, AS PER PLAN	3
01/IMS/04	511	46013	190	CY	CLASS QC1 CONCRETE WITH QC/QA, RETAINING/WINGWALL NOT INCLUDING FOOTING, AS PER PLAN	3
01/IMS/04	511	71200	5,490	SF	CONCRETE, MISC.: ARCHITECTURAL TREATMENT	3
01/IMS/04	512	10001	308	SY	SEALING OF CONCRETE SURFACES, AS PER PLAN (PERMANENT GRAFFITI PROTECTION)	2
01/IMS/04	512	10101	731	SY	SEALING OF CONCRETE SURFACES (EPOXY-URETHANE), AS PER PLAN	2
01/IMS/04	513	20000	1,062	EACH	WELDED STUD SHEAR CONNECTORS	
01/IMS/04	516	13600	82	SF	1" PREFORMED EXPANSION JOINT FILLER	
01/IMS/04	518	20000	590	SY	PREFABRICATED GEOCOMPOSITE DRAIN	
01/IMS/04	518	21200	139	CY	POROUS BACKFILL WITH GEOTEXTILE FABRIC	
01/IMS/04	518	40000	554	FT	6" PERFORATED CORRUGATED PLASTIC PIPE	
01/IMS/04	518	40010	60	FT	6" NON-PERFORATED CORRUGATED PLASTIC PIPE, INCLUDING SPECIALS	
01/IMS/04	524	94801	1,762	FT	DRILLED SHAFTS, 42" DIAMETER, AS PER PLAN	2
01/IMS/04	524	94900	498	FT	DRILLED SHAFTS, 48" DIAMETER	
01/IMS/04	524	94901	4,194	FT	DRILLED SHAFTS, 48" DIAMETER, AS PER PLAN	2
01/IMS/04	524	95100	1	EACH	DRILLED SHAFTS, MISC.: DEMONSTRATION DRILLED SHAFT	3
01/IMS/04	607	39911	277	FT	VANDAL PROTECTION FENCE, 8' STRAIGHT, COATED FABRIC, AS PER PLAN	3
01/IMS/04	894	10000	7	EACH	THERMAL INTEGRITY PROFILING (TIP) TEST	

Preliminary Plans - For Reference Only

ESTIMATED QUANTITIES
WALL AF
ALONG NORTH SIDE OF I.R. 90 NEAR E. 22ND ST. AND CARNEGIE AVE.

SFN N/A

DESIGN AGENCY
Michael Baker INTERNATIONAL

DESIGNER	CHECKER
SW/GZ	JC/SD

REVIEWER LPC 05-09-24

PROJECT ID 82382

SUBSET	TOTAL
4	11

SHEET	TOTAL
1221	2696

CUY-90-16.28 (CCG3A)

MODEL: Untitled Sheet PAPERSIZE: 34x22 (in.) DATE: 6/13/2025 TIME: 2:23:30 PM USER: David.Fell
pw:\\mb-us-pw.bentley.com:mb-us-pw-03\Documents\Cleveland_OH\01_Projects\ODOT\District12\82382\400-Engineering\Structures\WALL_AF\Sheets\82382_AF_WQ001.dgn

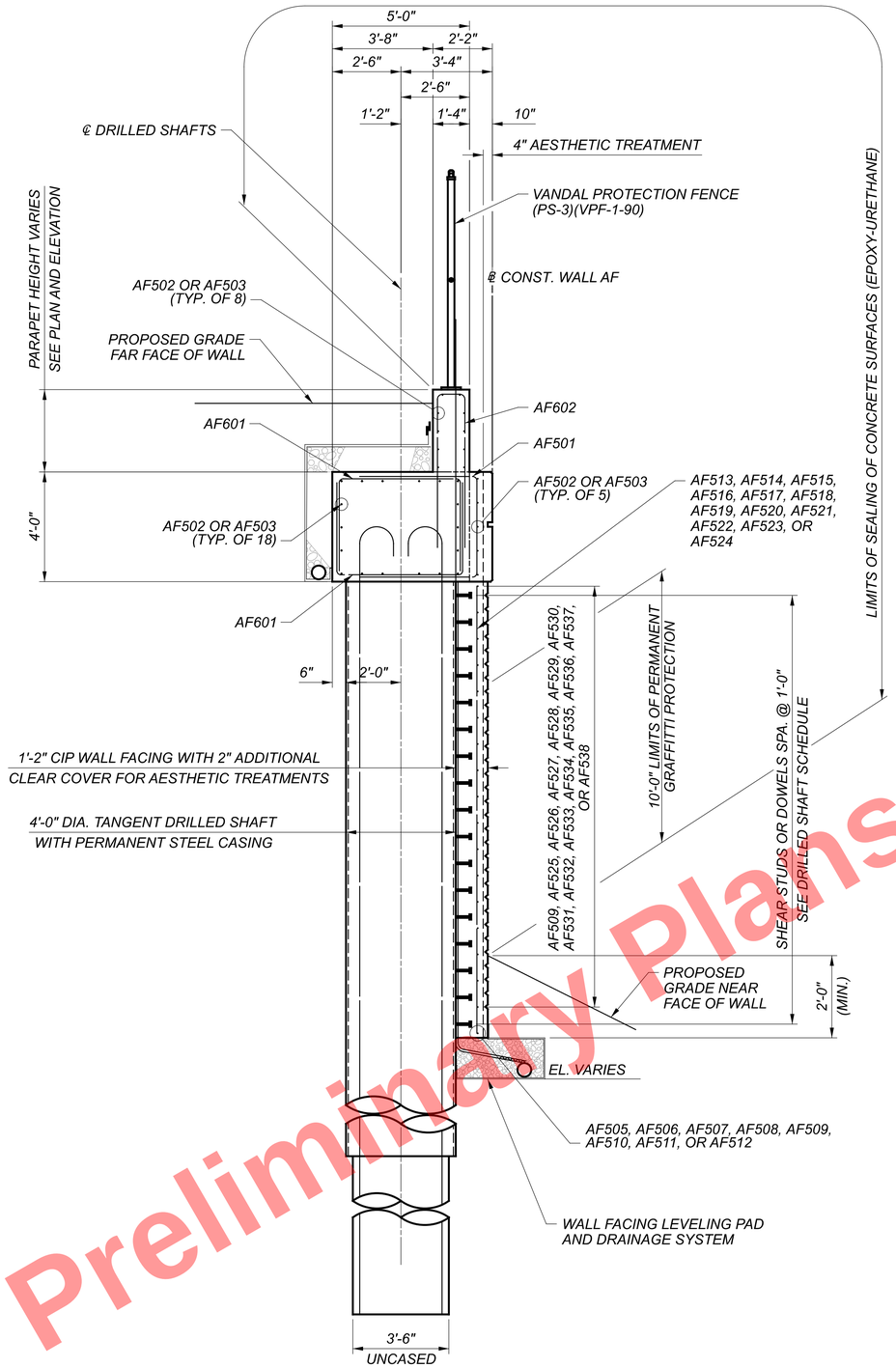

TANGENT DRILLED SHAFT WALL (WITH CASING) TYP. SECTION

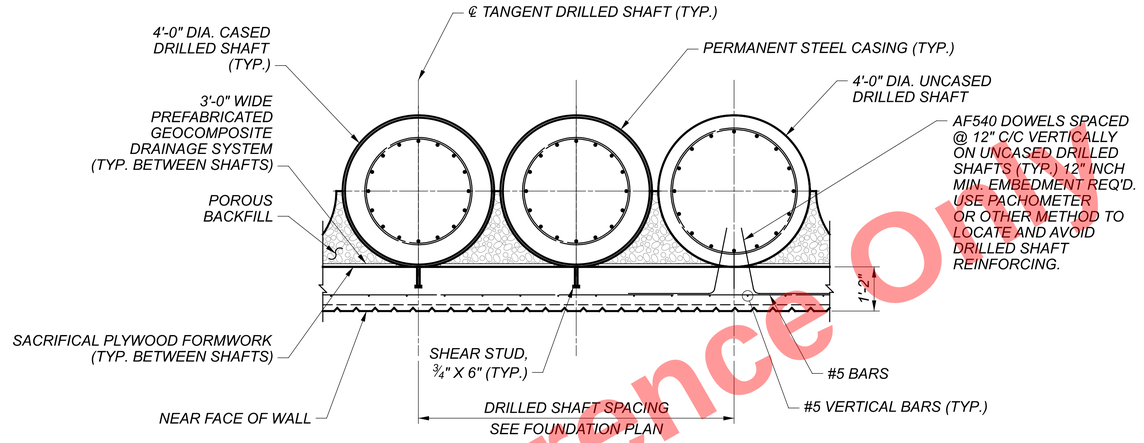

TYPICAL TANGENT DRILLED SHAFT WALL PLAN

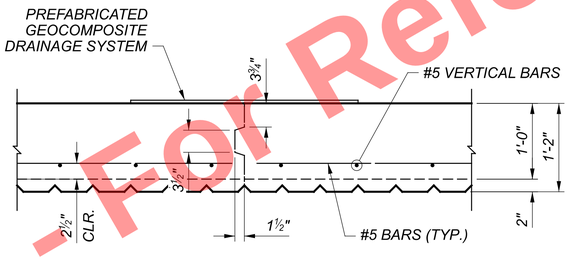

TYPICAL CONTRACTION JOINT DETAIL

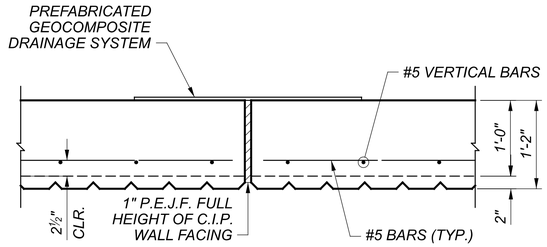

TYPICAL EXPANSION JOINT DETAIL

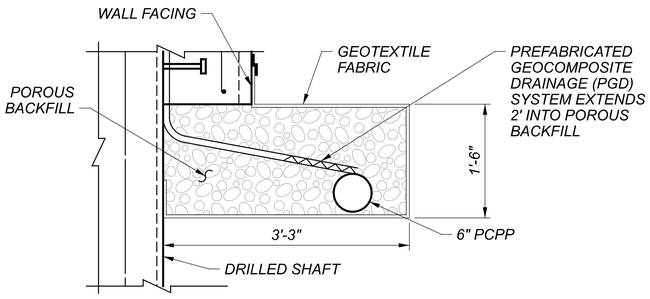

FACING DRAINAGE DETAIL

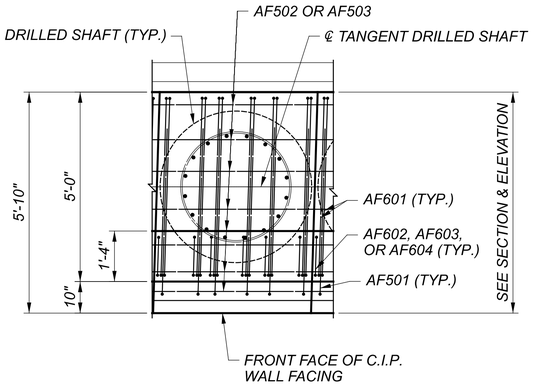

TYPICAL DRILLED SHAFT CAP PLAN

NOTES:

1. PAYMENT FOR DRILLED SHAFTS INSTALLED IN ACCORDANCE WITH THE PLANS AND SPECIFICATIONS SHALL BE MADE UNDER ITEM 524-DRILLED SHAFTS, 48" DIAMETER, ITEM 524-DRILLED SHAFTS, 48" DIAMETER, AS PER PLAN OR ITEM 524-DRILLED SHAFTS, 42" DIAMETER, AS PER PLAN.
2. FOR DRILLED SHAFT SCHEDULES SEE SHEET 7 OF 11.
3. SEE LANDSCAPING PLANS FOR WALL AESTHETIC TREATMENT DETAILS.

WALL TYPICAL SECTION
WALL AF
ALONG NORTH SIDE OF I.R. 90 NEAR E. 22ND ST. AND CARNEGIE AVE.

SFN N/A
DESIGN AGENCY
Michael Baker INTERNATIONAL
DESIGNER SW/GZ | CHECKER JC/SD
REVIEWER LPC 05-09-24
PROJECT ID 82382
SUBSET 5 | TOTAL 11
SHEET 1222 | TOTAL 2696

CUY-90-16.28 (CCG3A)

MODEL: Sheet PAPERSIZE: 34x22 (in.) DATE: 3/27/2025 TIME: 11:02:09 PM USER: Julie.Ross
pw:\\mb-us-pw.bentley.com:mb-us-pw-03\Documents\Cleveland_OH\01_Projects\ODOT\District12\82382\400-Engineering\Structures\WALL_AF\Sheets\82382_AF_WY001.dgn

Preliminary Plans - For Reference Only

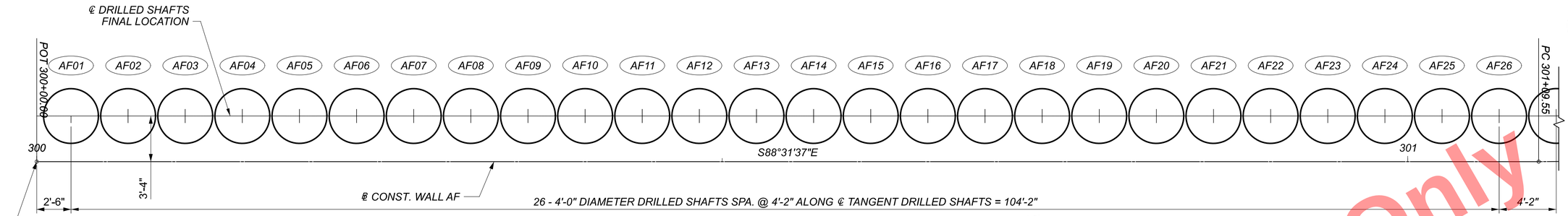

FOUNDATION PLAN - WALL AF

(ALL DIMENSIONS ALONG ℄ DRILLED SHAFTS, FINAL LOCATION)

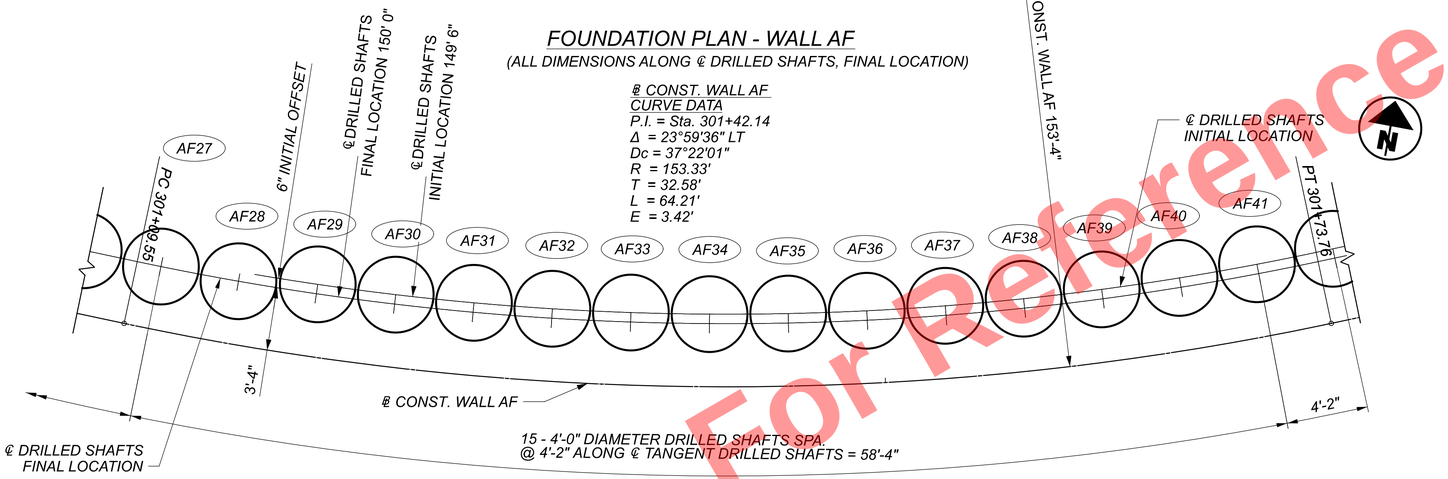

FOUNDATION PLAN - WALL AF

(ALL DIMENSIONS ALONG ℄ DRILLED SHAFTS, FINAL LOCATION)

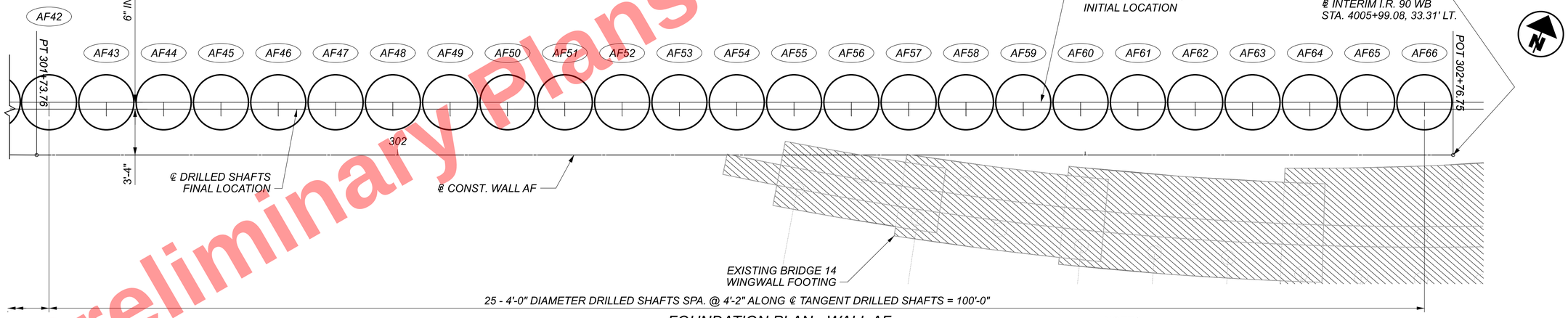

FOUNDATION PLAN - WALL AF

(ALL DIMENSIONS ALONG ℄ DRILLED SHAFTS, FINAL LOCATION)

LEGEND:

AF# — INDICATES PROPOSED DRILLED SHAFT NUMBER

INITIAL DRILLED SHAFT LOCATION

NOTES:

1. DRILLED SHAFTS AF29 THROUGH AF66 TO BE INSTALLED IN THE INITIAL POSITION INDICATED IN THE FOUNDATION PLAN. REFER TO THE GENERAL NOTES FOR ADDITIONAL INFORMATION.
2. DRILLED SHAFTS AF01 THROUGH AF28 TO BE INSTALLED IN THE FINAL POSITION INDICATED IN THE FOUNDATION PLAN.
3. PAYMENT FOR DRILLED SHAFTS INSTALLED IN ACCORDANCE WITH THE PLANS AND SPECIFICATIONS SHALL BE MADE UNDER ITEM 524- DRILLED SHAFTS, 48" DIAMETER, ITEM 524-DRILLED SHAFTS, 48" DIAMETER, AS PER PLAN OR ITEM 524-DRILLED SHAFTS, 42" DIAMETER, AS PER PLAN.
4. FOR DRILLED SHAFT SCHEDULE, SEE SHEET 7 OF 11.
5. FOR DRILLED SHAFT DETAILS, SEE SHEET 8 OF 11.

Preliminary Plans - For Reference Only

FOUNDATION PLAN
WALL AF
ALONG NORTH SIDE OF I.R. 90 NEAR E. 22ND ST. AND CARNEGIE AVE.

CUY-90-16.28 (CCG3A)

MODEL: Sheet PAPERSIZE: 34x22 (in.) DATE: 3/27/2025 TIME: 11:02:16 PM USER: Julie.Ross
pw:\\mb-us-pw.bentley.com:mb-us-pw-03\Documents\Cleveland_OH01_Projects\ODOTDistrict12\82382400-Engineering\Structures\WALL_AF\Sheets\82382_AF_WT002.dgn

SFN	N/A
DESIGN AGENCY	Michael Baker INTERNATIONAL
DESIGNER / CHECKER	SW/GZ / JC/SD
REVIEWER	LPC 05-09-24
PROJECT ID	82382
SUBSET / TOTAL	6 / 11
SHEET / TOTAL	1223 / 2696

WALL AF DRILLED SHAFT SCHEDULE

DESIGNATION	INITIAL NORTHING	INITIAL EASTING	DIAMETER (in.)	TOP ELEV.	TIP ELEV.	TOTAL LENGTH (ft.)	PRIMARY REINF0RCING	CONFINEMENT REINFORCING	NUMBER OF STUDS OR ANCHORS	CASING LENGTH (ft.)	CASING THICKNESS (in.)	DESIGN FINAL NORTHING	DESIGN FINAL EASTING
AF01	-	-	48	666.00	654.00	12	12-DS1002	1-DS SP501	-	-	-	668700.35	2195071.65
AF02	-	-	48	666.00	654.00	12	12-DS1002	1-DS SP501	-	-	-	668700.24	2195075.81
AF03	-	-	48	666.00	654.00	12	12-DS1002	1-DS SP501	-	-	-	668700.13	2195079.98
AF04	-	-	48	666.00	638.00	28	12-DS1003	1-DS SP502	-	-	-	668700.03	2195084.14
AF05	-	-	48	666.00	638.00	28	12-DS1003	1-DS SP502	-	-	-	668699.92	2195088.31
AF06	-	-	48	666.00	638.00	28	12-DS1003	1-DS SP502	-	-	-	668699.81	2195092.47
AF07	-	-	48	666.00	638.00	28	12-DS1003	1-DS SP502	-	-	-	668699.70	2195096.64
AF08	-	-	48	666.00	638.00	28	12-DS1003	1-DS SP502	-	-	-	668699.60	2195100.80
AF09	-	-	48	666.00	620.00	46	12 SETS OF 1-DS1001& 1-DS1004	1-DS SP503	2 SETS OF 2-AF540	-	-	668699.49	2195104.97
AF10	-	-	48	666.00	620.00	46	12 SETS OF 1-DS1001& 1-DS1004	1-DS SP503	2 SETS OF 2-AF540	-	-	668699.38	2195109.13
AF11	-	-	48	666.00	620.00	46	12 SETS OF 1-DS1001& 1-DS1004	1-DS SP503	3 SETS OF 2-AF540	-	-	668699.28	2195113.30
AF12	-	-	48	666.00	620.00	46	12 SETS OF 1-DS1001& 1-DS1004	1-DS SP503	4 SETS OF 2-AF540	-	-	668699.17	2195117.46
AF13	-	-	48	666.00	620.00	46	12 SETS OF 1-DS1001& 1-DS1004	1-DS SP503	5 SETS OF 2-AF540	-	-	668699.06	2195121.63
AF14	-	-	48	666.00	620.00	46	12 SETS OF 1-DS1001& 1-DS1004	1-DS SP503	6 SETS OF 2-AF540	-	-	668698.95	2195125.79
AF15	-	-	48	666.00	620.00	46	12 SETS OF 1-DS1001& 1-DS1004	1-DS SP503	7 SETS OF 2-AF540	-	-	668698.85	2195129.96
AF16	-	-	48	666.00	583.00	83	12 SETS OF 3-DS1001& 1-DS1005	1-DS SP504 & 1-DS SP401	8	43	0.500	668698.74	2195134.12
AF17	-	-	48	666.00	583.00	83	12 SETS OF 3-DS1001& 1-DS1005	1-DS SP504 & 1-DS SP401	8	43	0.500	668698.63	2195138.29
AF18	-	-	48	666.00	583.00	83	12 SETS OF 3-DS1001& 1-DS1005	1-DS SP504 & 1-DS SP401	9	43	0.500	668698.53	2195142.46
AF19	-	-	48	666.00	583.00	83	12 SETS OF 3-DS1001& 1-DS1005	1-DS SP504 & 1-DS SP401	10	43	0.500	668698.42	2195146.62
AF20	-	-	48	666.00	583.00	83	12 SETS OF 3-DS1001& 1-DS1005	1-DS SP504 & 1-DS SP401	11	43	0.500	668698.31	2195150.79
AF21	-	-	48	666.00	583.00	83	12 SETS OF 3-DS1001& 1-DS1005	1-DS SP504 & 1-DS SP401	12	43	0.500	668698.20	2195154.95
AF22	-	-	48	666.00	561.00	105	12 SETS OF 4-DS1001& 1-DS1006	1-DS SP505 & 1-DS SP402	13	63	0.500	668698.10	2195159.12
AF23	-	-	48	666.00	561.00	105	12 SETS OF 4-DS1001& 1-DS1006	1-DS SP505 & 1-DS SP402	14	63	0.500	668697.99	2195163.28
AF24	-	-	48	666.00	561.00	105	12 SETS OF 4-DS1001& 1-DS1006	1-DS SP505 & 1-DS SP402	14	63	0.500	668697.88	2195167.45
AF25	-	-	48	666.00	561.00	105	12 SETS OF 4-DS1001& 1-DS1006	1-DS SP505 & 1-DS SP402	15	63	0.500	668697.78	2195171.61
AF26	-	-	48	666.00	561.00	105	12 SETS OF 4-DS1001& 1-DS1006	1-DS SP505 & 1-DS SP402	16	63	0.500	668697.67	2195175.78
AF27	-	-	48	666.00	561.00	105	12 SETS OF 4-DS1001& 1-DS1006	1-DS SP505 & 1-DS SP402	17	63	0.500	668697.57	2195179.94
AF28	-	-	48	666.00	561.00	105	12 SETS OF 4-DS1001& 1-DS1006	1-DS SP505 & 1-DS SP402	17	63	0.500	668697.55	2195184.11
AF29	668698.16	2195188.26	48	666.00	552.00	114	12 SETS OF 4-DS1001& 1-DS1007	1-DS SP506 & 1-DS SP403	18	83	0.750	668697.66	2195188.28
AF30	668698.37	2195192.40	48	666.00	552.00	114	12 SETS OF 4-DS1001& 1-DS1007	1-DS SP506 & 1-DS SP403	19	83	0.750	668697.87	2195192.44
AF31	668698.70	2195196.54	48	666.00	552.00	114	12 SETS OF 4-DS1001& 1-DS1007	1-DS SP506 & 1-DS SP403	19	83	0.750	668698.21	2195196.59
AF32	668699.15	2195200.67	48	666.00	552.00	114	12 SETS OF 4-DS1001& 1-DS1007	1-DS SP506 & 1-DS SP403	20	83	0.750	668698.65	2195200.73
AF33	668699.71	2195204.79	48	666.00	552.00	114	12 SETS OF 4-DS1001& 1-DS1007	1-DS SP506 & 1-DS SP403	20	83	0.750	668699.22	2195204.86
AF34	668700.39	2195208.88	48	666.00	552.00	114	12 SETS OF 4-DS1001& 1-DS1007	1-DS SP506 & 1-DS SP403	21	83	0.750	668699.90	2195208.97
AF35	668701.18	2195212.96	48	666.00	552.00	114	12 SETS OF 4-DS1001& 1-DS1007	1-DS SP506 & 1-DS SP403	21	83	0.750	668700.69	2195213.06
AF36	668702.08	2195217.01	48	666.00	550.00	116	12 SETS OF 4-DS1001& 1-DS1008	1-DS SP507 & 1-DS SP404	21	94	1.250	668701.59	2195217.13
AF37	668703.09	2195221.04	48	666.00	550.00	116	12 SETS OF 4-DS1001& 1-DS1008	1-DS SP507 & 1-DS SP404	21	94	1.250	668702.61	2195221.17
AF38	668704.22	2195225.04	48	666.00	550.00	116	12 SETS OF 4-DS1001& 1-DS1008	1-DS SP507 & 1-DS SP404	21	94	1.250	668703.74	2195225.18
AF39	668705.45	2195229.00	48	666.00	550.00	116	12 SETS OF 4-DS1001& 1-DS1008	1-DS SP507 & 1-DS SP404	22	94	1.250	668704.98	2195229.16
AF40	668706.80	2195232.93	48	666.00	550.00	116	12 SETS OF 4-DS1001& 1-DS1008	1-DS SP507 & 1-DS SP404	22	94	1.250	668706.33	2195233.10
AF41	668708.25	2195236.82	48	666.00	550.00	116	12 SETS OF 4-DS1001& 1-DS1008	1-DS SP507 & 1-DS SP404	22	94	1.250	668707.79	2195237.00
AF42	668709.79	2195240.61	48	666.00	550.00	116	12 SETS OF 4-DS1001& 1-DS1008	1-DS SP507 & 1-DS SP404	22	94	1.250	668709.33	2195240.80
AF43	668711.39	2195244.46	48	666.00	550.00	116	12 SETS OF 4-DS1001& 1-DS1008	1-DS SP507 & 1-DS SP404	22	94	1.250	668710.92	2195244.65
AF44	668712.98	2195248.31	48	666.00	550.00	116	12 SETS OF 4-DS1001& 1-DS1008	1-DS SP507 & 1-DS SP404	22	94	1.250	668712.52	2195248.50
AF45	668714.58	2195252.16	48	666.00	550.00	116	12 SETS OF 4-DS1001& 1-DS1008	1-DS SP507 & 1-DS SP404	22	94	1.250	668714.12	2195252.35
AF46	668716.17	2195256.01	48	666.00	550.00	116	12 SETS OF 4-DS1001& 1-DS1008	1-DS SP507 & 1-DS SP404	23	94	1.250	668715.71	2195256.20
AF47	668717.77	2195259.86	48	666.00	550.00	116	12 SETS OF 4-DS1001& 1-DS1008	1-DS SP507 & 1-DS SP404	23	94	1.250	668717.31	2195260.05
AF48	668719.37	2195263.71	48	666.00	550.00	116	12 SETS OF 4-DS1001& 1-DS1008	1-DS SP507 & 1-DS SP404	23	94	1.250	668718.90	2195263.90
AF49	668720.96	2195267.55	48	666.00	550.00	116	12 SETS OF 4-DS1001& 1-DS1008	1-DS SP507 & 1-DS SP404	23	94	1.250	668720.50	2195267.75
AF50	668722.56	2195271.40	48	666.00	550.00	116	12 SETS OF 4-DS1001& 1-DS1008	1-DS SP507 & 1-DS SP404	24	94	1.250	668722.10	2195271.60
AF51	668724.15	2195275.25	48	666.00	550.00	116	12 SETS OF 4-DS1001& 1-DS1008	1-DS SP507 & 1-DS SP404	24	94	1.250	668723.69	2195275.44
AF52	668725.75	2195279.10	48	666.00	550.00	116	12 SETS OF 4-DS1001& 1-DS1008	1-DS SP507 & 1-DS SP404	24	94	1.250	668725.29	2195279.29
AF53	668727.34	2195282.95	48	666.00	550.00	116	12 SETS OF 4-DS1001& 1-DS1008	1-DS SP507 & 1-DS SP404	25	94	1.250	668726.88	2195283.14
AF54	668728.94	2195286.80	48	666.00	550.00	116	12 SETS OF 4-DS1001& 1-DS1008	1-DS SP507 & 1-DS SP404	25	94	1.250	668728.48	2195286.99
AF55	668730.54	2195290.65	48	666.00	550.00	116	12 SETS OF 4-DS1001& 1-DS1008	1-DS SP507 & 1-DS SP404	26	94	1.250	668730.07	2195290.84
AF56	668732.13	2195294.50	48	666.00	550.00	116	12 SETS OF 4-DS1001& 1-DS1008	1-DS SP507 & 1-DS SP404	26	94	1.250	668731.67	2195294.69
AF57	668733.73	2195298.35	48	666.00	550.00	116	12 SETS OF 4-DS1001& 1-DS1008	1-DS SP507 & 1-DS SP404	27	94	1.250	668733.27	2195298.54
AF58	668735.32	2195302.20	48	666.00	550.00	116	12 SETS OF 4-DS1001& 1-DS1008	1-DS SP507 & 1-DS SP404	27	94	1.250	668734.86	2195302.39
AF59	668736.92	2195306.04	48	666.00	543.00	123	12 SETS OF 4-DS1001& 1-DS1009	1-DS SP508 & 1-DS SP404	27	94	1.250	668736.46	2195306.24
AF60	668738.52	2195309.89	48	666.00	543.00	123	12 SETS OF 4-DS1001& 1-DS1009	1-DS SP508 & 1-DS SP404	28	94	1.250	668738.05	2195310.08
AF61	668740.11	2195313.74	48	666.00	543.00	123	12 SETS OF 4-DS1001& 1-DS1009	1-DS SP508 & 1-DS SP404	28	94	1.250	668739.65	2195313.93
AF62	668741.71	2195317.59	48	666.00	543.00	123	12 SETS OF 4-DS1001& 1-DS1009	1-DS SP508 & 1-DS SP404	28	94	1.250	668741.25	2195317.78
AF63	668743.30	2195321.44	48	666.00	543.00	123	12 SETS OF 4-DS1001& 1-DS1009	1-DS SP508 & 1-DS SP404	28	94	1.250	668742.84	2195321.63
AF64	668744.90	2195325.29	48	666.00	543.00	123	12 SETS OF 4-DS1001& 1-DS1009	1-DS SP508 & 1-DS SP404	28	94	1.250	668744.44	2195325.48
AF65	668746.50	2195329.14	48	666.00	543.00	123	12 SETS OF 4-DS1001& 1-DS1009	1-DS SP508 & 1-DS SP404	28	94	1.250	668746.03	2195329.33
AF66	668748.09	2195332.99	48	666.00	543.00	123	12 SETS OF 4-DS1001& 1-DS1009	1-DS SP508 & 1-DS SP404	28	94	1.250	668747.63	2195333.18

Preliminary Not for Reference Only

NOTES:

1. DRILLED SHAFTS ARE TO BE INSTALLED IN THE INITIAL POSITION INDICATED IN THE FOUNDATION PLAN AND DRILLED SHAFT SCHEDULES. REFER TO THE GENERAL NOTES FOR DETAILS.
2. PAYMENT FOR DRILLED SHAFTS INSTALLED IN ACCORDANCE WITH THE PLANS AND SPECIFICATIONS SHALL BE MADE UNDER ITEM 524-DRILLED SHAFTS, 48" DIAMETER,ITEM 524-DRILLED SHAFTS, 42" DIAMETER, AS PER PLAN AND ITEM 524-DRILLED SHAFTS, 48" DIAMETER, AS PER PLAN. REFER TO GENERAL NOTES.
3. SEE SHEET 8 OF 11 FOR CASED SHAFT ELEVATION AND SECTION VIEWS.
4. SEE SHEET 8 OF 11 FOR UNCASED SHAFT ELEVATION AND SECTION VIEWS.

DRILLED SHAFT TABLE
WALL AF
ALONG NORTH SIDE OF I.R. 90 NEAR E. 22ND ST. AND CARNEGIE AVE.

SFN N/A

DESIGN AGENCY
Michael Baker INTERNATIONAL

DESIGNER	CHECKER
SW/GZ	JC/SD

REVIEWER LPC 05-09-24

PROJECT ID 82382

SUBSET	TOTAL
7	11

SHEET	TOTAL
1224	2696

CUY-90-16.28 (CCG3A)

MODEL: DRILLED SHAFT TABLE 1 PAPERSIZE: 34x22 (in.) DATE: 3/27/2025 TIME: 11:02:25 PM USER: Julie.Ross
pw:\\mb-us-pw.bentley.com:mb-us-pw-03\Documents\Cleveland_OH01_Projects\ODOT\District12\82382\400-Engineering\Structures\WALL_AF\Sheets\82382_AF_WC001.dgn

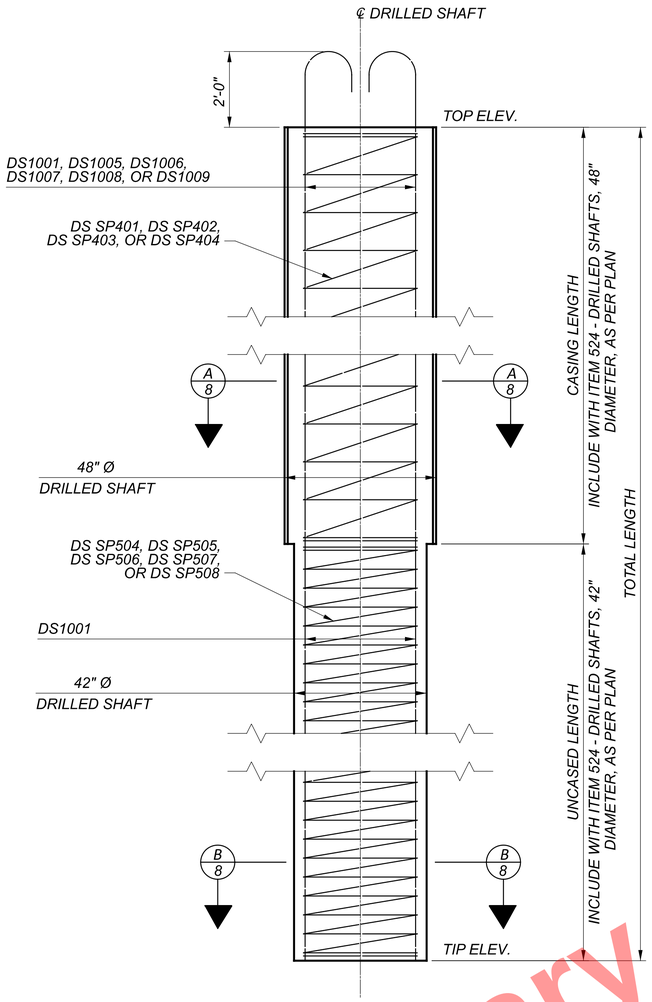

CASED DRILLED SHAFT ELEVATION

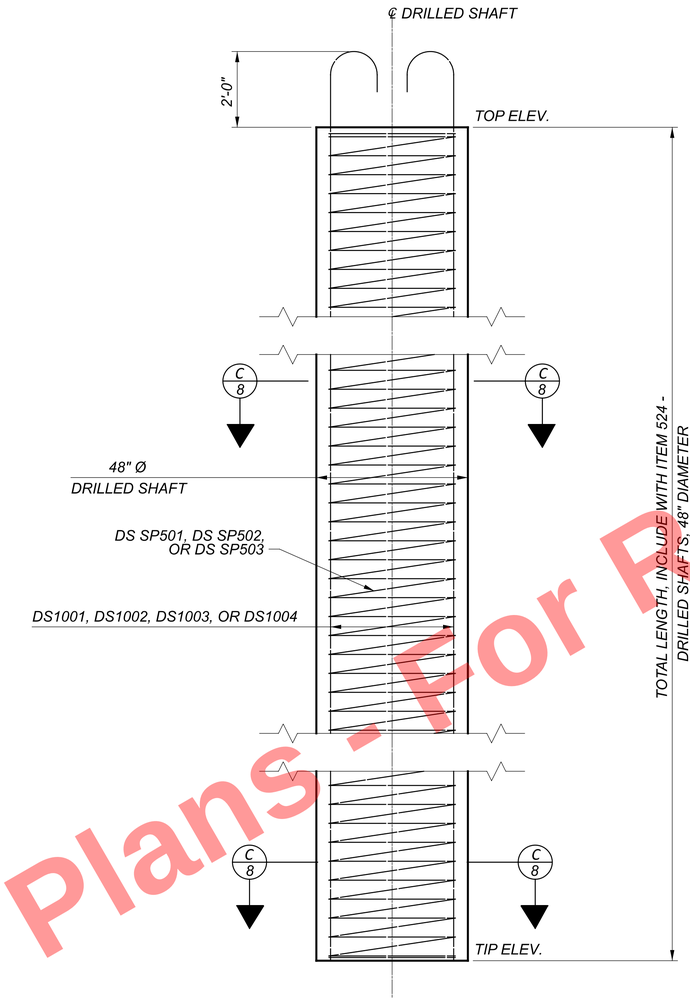

UNCASED DRILLED SHAFT ELEVATION

MARK	LENGTH	TYPE	DIMENSIONS		
			A	B	C
DRILLED SHAFT REINFORCEMENT (FOR INFORMATION ONLY)					
DS1001	30'-0"	STR.			
DS1002	15'-3"	16	13'-10"		
DS1003	31'-3"	16	29'-10"		
DS1004	25'-3"	16	23'-10"		
DS1005	14'-3"	16	12'-10"		
DS1006	12'-3"	16	10'-10"		
DS1007	21'-3"	16	19'-10"		
DS1008	23'-3"	16	21'-10"		
DS1009	30'-3"	16	28'-10"		
DS SP401	407'-11"	27	1'-0"	2'-10"	42'-10"
DS SP402	586'-2"	27	1'-0"	2'-10"	62'-10"
DS SP403	764'-4"	27	1'-0"	2'-10"	82'-10"
DS SP404	862'-4"	27	1'-0"	2'-10"	93'-10"
DS SP501	421'-9"	27	0'-3 3/4"	3'-4"	11'-10"
DS SP502	950'-1"	27	0'-3 3/4"	3'-4"	27'-10"
DS SP503	1544'-6"	27	0'-3 3/4"	3'-4"	45'-10"
DS SP504	956'-5"	27	0'-4 1/2"	2'-10"	39'-10"
DS SP505	1003'-2"	27	0'-4 1/2"	2'-10"	41'-10"
DS SP506	746'-3"	27	0'-4 1/2"	2'-10"	30'-10"
DS SP507	536'-1"	27	0'-4 1/2"	2'-10"	21'-10"
DS SP508	699'-7"	27	0'-4 1/2"	2'-10"	28'-10"

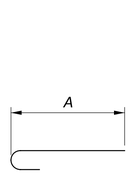

TYPE-16

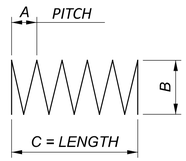

TYPE-27

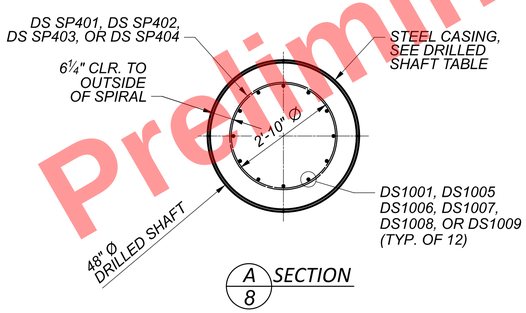

A/8 SECTION

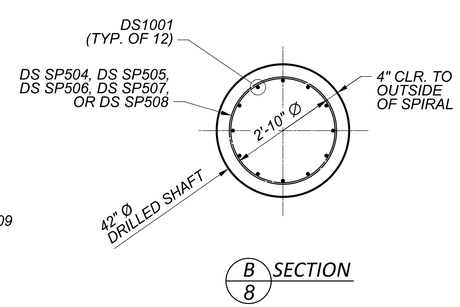

B/8 SECTION

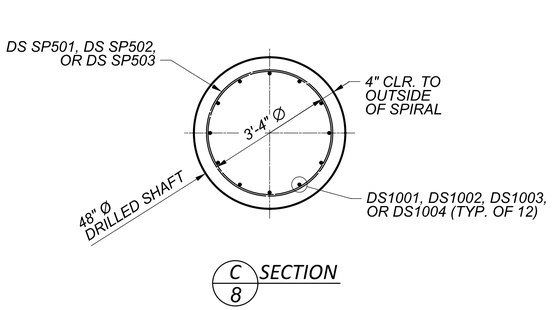

C/8 SECTION

LAP LENGTHS:

#10 BAR = 72"

NOTES:

1. PAYMENT FOR DRILLED SHAFTS INSTALLED IN ACCORDANCE WITH THE PLANS AND SPECIFICATIONS SHALL BE MADE UNDER ITEM 524-DRILLED SHAFTS, 48" DIAMETER,ITEM 524-DRILLED SHAFTS, 42" DIAMETER, AS PER PLAN AND ITEM 524-DRILLED SHAFTS, 48" DIAMETER, AS PER PLAN. REFER TO GENERAL NOTES.
2. DRILLED SHAFT REINFORCING SCHEDULES PROVIDED FOR REFERENCE ONLY.
3. FOR WALL AF DRILLED SHAFT SCHEDULE, SEE SHEETS 7 OF 11.
4. FOR ADDITIONAL NOTES REFER TO THE FOUNDATION PLAN ON SHEET 6 OF 11.

Preliminary Plans - For Reference Only

DRILLED SHAFT DETAILS
WALL AF
ALONG NORTH SIDE OF I.R. 90 NEAR E. 22ND ST. AND CARNEGIE AVE.

SFN N/A

DESIGN AGENCY

Michael Baker INTERNATIONAL

DESIGNER	CHECKER
SW/GZ	JC/SD

REVIEWER LPC 05-09-24

PROJECT ID 82382

SUBSET	TOTAL
8	11

SHEET	TOTAL
1225	2696

CUY-90-16.28 (CCG3A)

MODEL: Untitled Sheet PAPERSIZE: 34x22 (in.) DATE: 3/27/2025 TIME: 11:02:31 PM USER: Julie.Ross
pw:\\mb-us-pw.bentley.com:mb-us-pw-03\Documents\Cleveland_OH\01_Projects\ODOT\District12\82382\400-Engineering\Structures\WALL_AF\Sheets\82382_AF_WD003.dgn

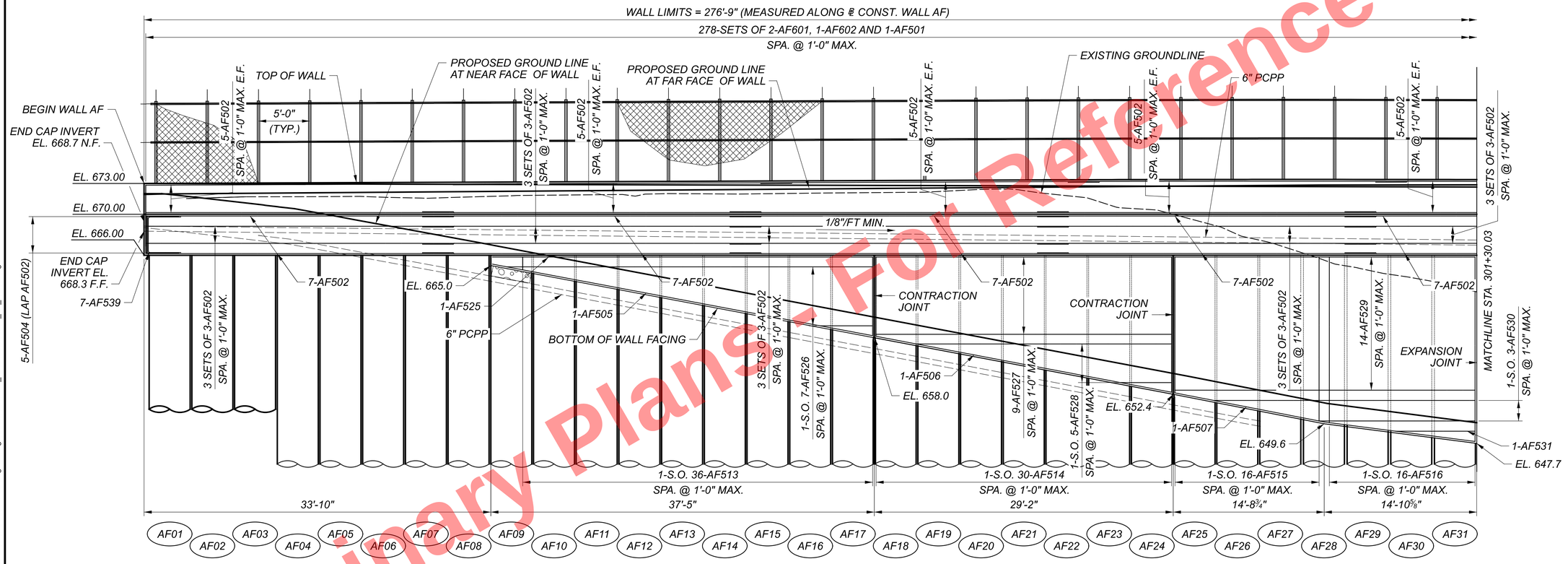

ELEVATION

DEVELOPMENT LENGTHS:

#6 BAR VERTICAL = 33"

LAP LENGTHS:

#5 BAR = 37"
#6 BAR VERTICAL = 43"

LEGEND:

(#) - DENOTES DRILLED SHAFT NUMBER

NOTES:

1. SEE ODOT STANDARD DRAWING VPF-1-90 FOR FENCE DETAILS.
2. FENCE POSTS SHALL BE INSTALLED PLUMB.

Preliminary Plans - For Reference Only

WALL ELEVATION (1 OF 2)
WALL AF
ALONG NORTH SIDE OF I.R. 90 NEAR E. 22ND ST. AND CARNEGIE AVE.

SFN N/A
DESIGN AGENCY Michael Baker INTERNATIONAL
DESIGNER SW/GZ | CHECKER JC/SD
REVIEWER LPC 05-09-24
PROJECT ID 82382
SUBSET 9 | TOTAL 11
SHEET 1226 | TOTAL 2696

CUY-90-16.28 (CCG3A)

MODEL: Untitled Sheet PAPERSIZE: 34x22 (in.) DATE: 3/27/2025 TIME: 11:03:06 PM USER: Julie.Ross
pw:\\mb-us-pw.bentley.com:mb-us-pw-03\Documents\Cleveland_OH01_Projects\ODOT\District12\82382\400-Engineering\Structures\WALL_AF\Sheets\82382_AF_WE002.dgn

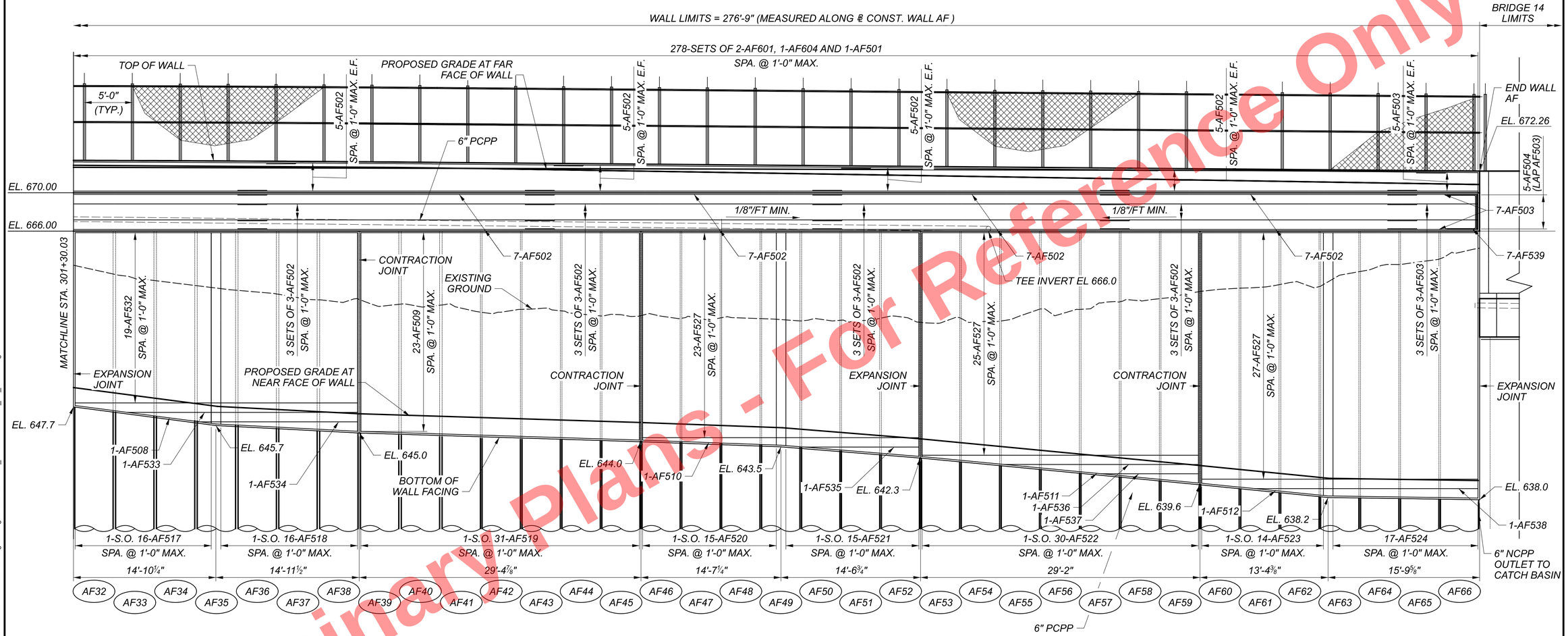

ELEVATION

DEVELOPMENT LENGTHS:

#6 BAR VERTICAL = 33"

LAP LENGTHS:

#5 BAR = 37"
#6 BAR VERTICAL = 43"

LEGEND:

(#) - DENOTES DRILLED SHAFT NUMBER

NOTES:

1. SEE ODOT STANDARD DRAWING VPF-1-90 FOR FENCE DETAILS.
2. FENCE POSTS SHALL BE INSTALLED PLUMB.

Preliminary Plans - For Reference Only

WALL ELEVATION (2 OF 2) WALL AF ALONG NORTH SIDE OF I.R. 90 NEAR E. 22ND ST. AND CARNEGIE AVE.

CUY-90-16.28 (CCG3A)

MODEL: Untitled Sheet PAPERSIZE: 34x22 (in.) DATE: 3/27/2025 TIME: 11:03:39 PM USER: Julie.Ross
pw:\\mb-us-pw.bentley.com:mb-us-pw-03\Documents\Cleveland_OH\01_Projects\ODOT\District12\82382\400-Engineering\Structures\WALL_AF\Sheets\82382_AF_WE004.dgn

SFN	N/A
DESIGN AGENCY	Michael Baker INTERNATIONAL
DESIGNER	SW/GZ
CHECKER	JC/SD
REVIEWER	LPC 05-09-24
PROJECT ID	82382
SUBSET	10
TOTAL	11
SHEET	1227
TOTAL	2696

MARK	MAT'RL TYPE	NUMBER REAR	NUMBER FWD.	NUMBER TOTAL	LENGTH	WEIGHT (LBS.)	TYPE	DIMENSIONS A	B	C	D	E	R	SER INC.
RETAINING WALL AF (EPOXY COATED STEEL REINFORCING ECSR)														
AF501	ECSR			278	10'-7"	3069	2	3'-7"	3'-8"	3'-7"				
AF502	ECSR			297	30'-0"	9293	STR.							
AF503	ECSR			33	34'-6"	1187	STR.							
AF504	ECSR			10	10'-7"	110	2	3'-2"	4'-6"	3'-2"				
AF505	ECSR			1	37'-8"	39	STR.							
AF506	ECSR			1	29'-4"	31	STR.							
AF507	ECSR			1	29'-8"	31	19	14'-9 3/4"	14'-10"	0'-11 1/2"				
AF508	ECSR			1	29'-7"	31	19	14'-9 1/2"	14'-9 3/8"	1'-1 7/8"				
AF509	ECSR			23	29'-1"	698	STR.							
AF510	ECSR			1	28'-11"	30	19	14'-6"	14'-5"	0'-7 1/2"				
AF511	ECSR			1	28'-11"	30	STR.							
AF512	ECSR			1	28'-11"	30	19	15'-7 5/8"	13'-2 3/4"	1'-1 1/2"				
				1	1'-3"									
AF513	ECSR			SER. OF	TO	167	STR.							2 3/16"
				36	7'-8"									
				1	7'-8"									
AF514	ECSR			SER. OF	TO	326	STR.							2 1/4"
				30	13'-2"									
				1	13'-3"									
AF515	ECSR			SER. OF	TO	243	STR.							2 1/8"
				16	15'-11"									
				1	16'-1"									
AF516	ECSR			SER. OF	TO	284	STR.							1 7/16"
				16	17'-11"									
				1	18'-0"									
AF517	ECSR			SER. OF	TO	316	STR.							1 7/16"
				16	19'-10"									
				1	19'-11"									
AF518	ECSR			SER. OF	TO	339	STR.							0 5/8"
				16	20'-8"									
				1	20'-8"									
AF519	ECSR			SER. OF	TO	683	STR.							0 3/8"
				31	21'-7"									
				1	21'-7"									
AF520	ECSR			SER. OF	TO	342	STR.							0 7/16"
				15	22'-1"									
				1	22'-2"									
AF521	ECSR			SER. OF	TO	355	STR.							0 15/16"
				15	23'-3"									
				1	23'-4"									
AF522	ECSR			SER. OF	TO	773	STR.							1 1/8"
				30	26'-1"									
				1	26'-1"									
AF523	ECSR			SER. OF	TO	390	STR.							1 1/8"
				14	27'-4"									
AF524	ECSR			17	27'-6"	488	STR.							
AF525	ECSR			1	37'-1"	39	STR.							
				1	5'-1"									
AF526	ECSR			SER. OF	TO	149	STR.							5'-1 3/16"
				7	35'-8"									
AF527	ECSR			84	28'-10"	2526	STR.							
				1	4'-11"									
AF528	ECSR			SER. OF	TO	78	STR.							4'-11 3/4"
				5	24'-10"									
AF529	ECSR			14	29'-3"	427	STR.							
				1	15'-2"									
AF530	ECSR			SER. OF	TO	64	STR.							5'-2"
				3	25'-6"									
AF531	ECSR			1	7'-9"	8	STR.							
AF532	ECSR			19	29'-5"	583	STR.							
AF533	ECSR			1	24'-0"	25	STR.							
AF534	ECSR			1	16'-5"	17	STR.							
AF535	ECSR			1	12'-0"	13	STR.							
AF536	ECSR			1	20'-3"	21	STR.							
AF537	ECSR			1	10'-1"	11	STR.							
AF538	ECSR			1	23'-3"	24	STR.							
AF539	ECSR			14	9'-7"	140	2	3'-2"	3'-6"	3'-2"				
AF540	ECSR			58	4'-0"	242	19	2'-3"	0'-4 1/4"	1'-9 1/8"				
AF601	ECSR			556	11'-8"	9743	2	3'-8"	4'-8"	3'-8"				
AF602	ECSR			278	12'-6"	5219	2	5'-11"	1'-0"	5'-11"				
RETAINING WALL ECSR SUBTOTAL						38614								

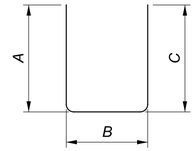

TYPE-2

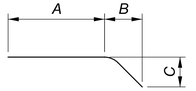

TYPE-19

NOTES:

1. SERIES BARS - EACH BAR VARIES BY TABULATED AMOUNT.
2. ALL DIMENSIONS ARE OUT TO OUT.
3. TYPE "STR" INDICATES STRAIGHT BAR.
4. THE BAR SIZE NUMBER IS SPECIFIED IN THE "MARK" COLUMN. THE FIRST DIGIT INDICATES THE BAR SIZE NUMBER.
5. ALL BARS SHALL BE EPOXY COATED UNLESS NOTED OTHERWISE.
6. SUBTOTALS AND TOTAL WEIGHTS ARE FOR INFORMATIONAL PURPOSES ONLY. IF THE REINFORCING LIST PROVIDED IN THE PLANS IS USED, IT SHALL BE VERIFIED BY THE CONTRACTOR. ANY REVISIONS IN THE REINFORCING STEEL LIST AS SHOWN IN THE PLANS WILL NOT BE REASON FOR ADJUSTMENT IN THE BID PRICE FOR STRUCTURAL CONCRETE.
7. USE STANDARD HOOKS FOR ENDS OF BARS NOT SPECIFICALLY DIMENSIONED IN DETAILS.

Preliminary Plans - For Reference Only

REINFORCING SCHEDULE
WALL AF
ALONG NORTH SIDE OF I.R. 90 NEAR E. 22ND ST. AND CARNEGIE AVE.

SFN N/A
DESIGN AGENCY Michael Baker INTERNATIONAL
DESIGNER SW/GZ | CHECKER JC/SD
REVIEWER LPC 05-09-24
PROJECT ID 82382
SUBSET 11 | TOTAL 11
SHEET 1228 | TOTAL 2696

CUY-90-16.28 (CCG3A)

MODEL: Untitled Sheet PAPERSIZE: 34x22 (in.) DATE: 3/27/2025 TIME: 11:04:01 PM USER: Julie.Ross
pw:\\mb-us-pw.bentley.com:mb-us-pw-03\Documents\Cleveland_OH101_Projects\ODOT\District12\82382\400-Engineering\Structures\WALL_AF\Sheets\82382_AF_WL001.dgn

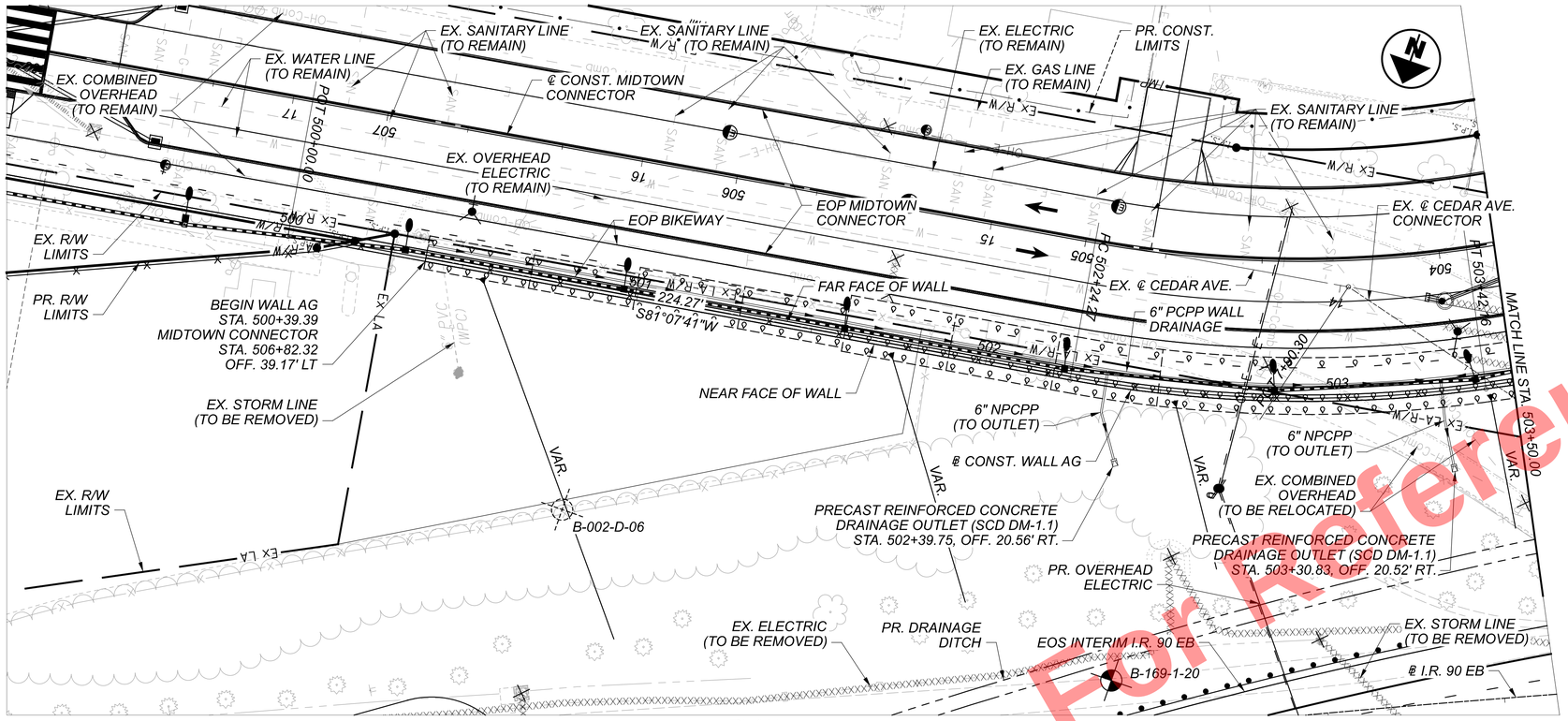

C.I.P. ESTIMATED PILE LENGTHS	
STA.	LENGTH
500+39.4 TO 500+99.4	30'
500+99.4 TO 501+59.4	55'
501+59.4 TO 502+49.4	60'
502+49.4 TO 506+50.0	80'

BENCHMARK DATA

BM #54 STA. 33+03.27	ELEV. 672.54	OFFSET 36.13 RT.	CUT CROSS
BM #62 STA. 35+24.62	ELEV. 672.11	OFFSET 1174.60 LT.	RR SPIKE
BM #72 STA. 23+49.63	ELEV. 674.06	OFFSET 52.19 LT.	CUT CROSS
BM #73 STA. 37+05.22	ELEV. 671.90	OFFSET 407.77' LT.	CUT CROSS

BENCHMARK STATION AND OFFSETS ARE FROM ℄ CONST. E. 22ND ST.

FOR ADDITIONAL BENCHMARK INFORMATION. SEE ROADWAY PLAN SHEET 4 / 2696

WALL AG

CURVE DATA
P.I. = Sta. 502+83.72
Δ = 18°20'06" LT
Dc = 15°33'09"
R = 368.40'
T = 59.45'
L = 117.89'
E = 4.77'

MIDTOWN CONNECTOR

CURVE DATA
P.I. = Sta. 504+17.17
Δ = 28°38'45" LT
Dc = 17°30'00"
R = 327.40'
T = 83.59'
L = 163.69'
E = 10.50'

BORING LOCATION*

BORING	STATION	OFFSET	TOP OF ROCK EL.
B-169-1-20	204+59.78	15.18' RT.	-
B-002-D-06	206+03.17	84.37' RT.	-

* = BORING STATION AND OFFSETS ARE FROM ℄ I.R. 90 EB

PROPOSED WORK

THE PROPOSED WORK CONSISTS OF CONSTRUCTING A RETAINING WALL ALONG THE RIGHT (SOUTH) SIDE OF I.R. 90 EB ADJACENT TO BRIDGE 13. THE WALL UTILIZES BOTTOM UP CONSTRUCTION CONSISTING OF A CAST-IN-PLACE CANTILEVER WALL.

NOTES

1. EARTHWORK LIMITS SHOWN ARE APPROXIMATE. ACTUAL SLOPES SHALL CONFORM TO PLAN CROSS SECTIONS.
2. FOR WALL CROSS SECTIONS, SEE SHEETS:
   INTERIM I.R. 90 EB: 737 / 2696
   MIDTOWN CONNECTOR: 947 TO 960 / 2696
3. STATION AND WALL OFFSETS SHOWN AT NEAR FACE OF WALL.

LEGEND

HISTORIC BORING LOCATIONS

PROJECT BORING LOCATIONS

CONST. = CONSTRUCTION
EOP = EDGE OF PAVEMENT
EOS = EDGE OF SHOULDER

WALL PLAN AND PROFILE (1 OF 2)
WALL AG
ALONG SOUTH SIDE OF I.R. 90

SFN	N/A
DESIGN AGENCY	Michael Baker INTERNATIONAL
DESIGNER	SSW
CHECKER	MKB
REVIEWER	LPC 05-09-24
PROJECT ID	82382
SUBSET	1
TOTAL	12
SHEET	1229
TOTAL	2696

Preliminary Plans - For Reference Only

CUY-90-16.28 (CCG3A)
MODEL: BL_P_Wall AG - Wall AG Plan PAPERSIZE: 34x22 (in.) DATE: 3/27/2025 TIME: 11:04:17 PM USER: Julie.Ross
pw:\\mb-us-pw.bentley.com:mb-us-pw-03\Documents\Cleveland_OH\01_Projects\ODOT\District12\82382400-Engineering\Structures\WALL_AG\Sheets\82382_AG_WP001.dgn

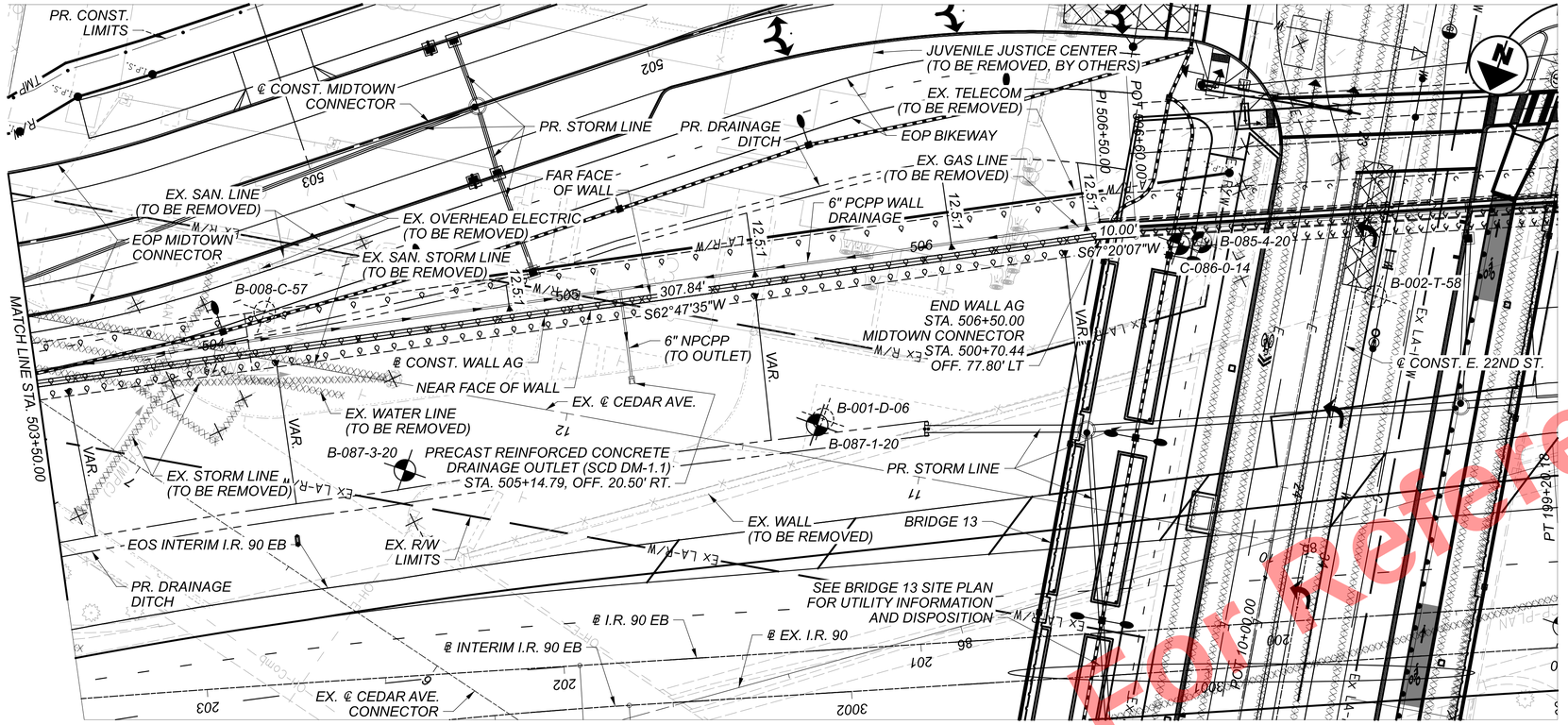

PLAN

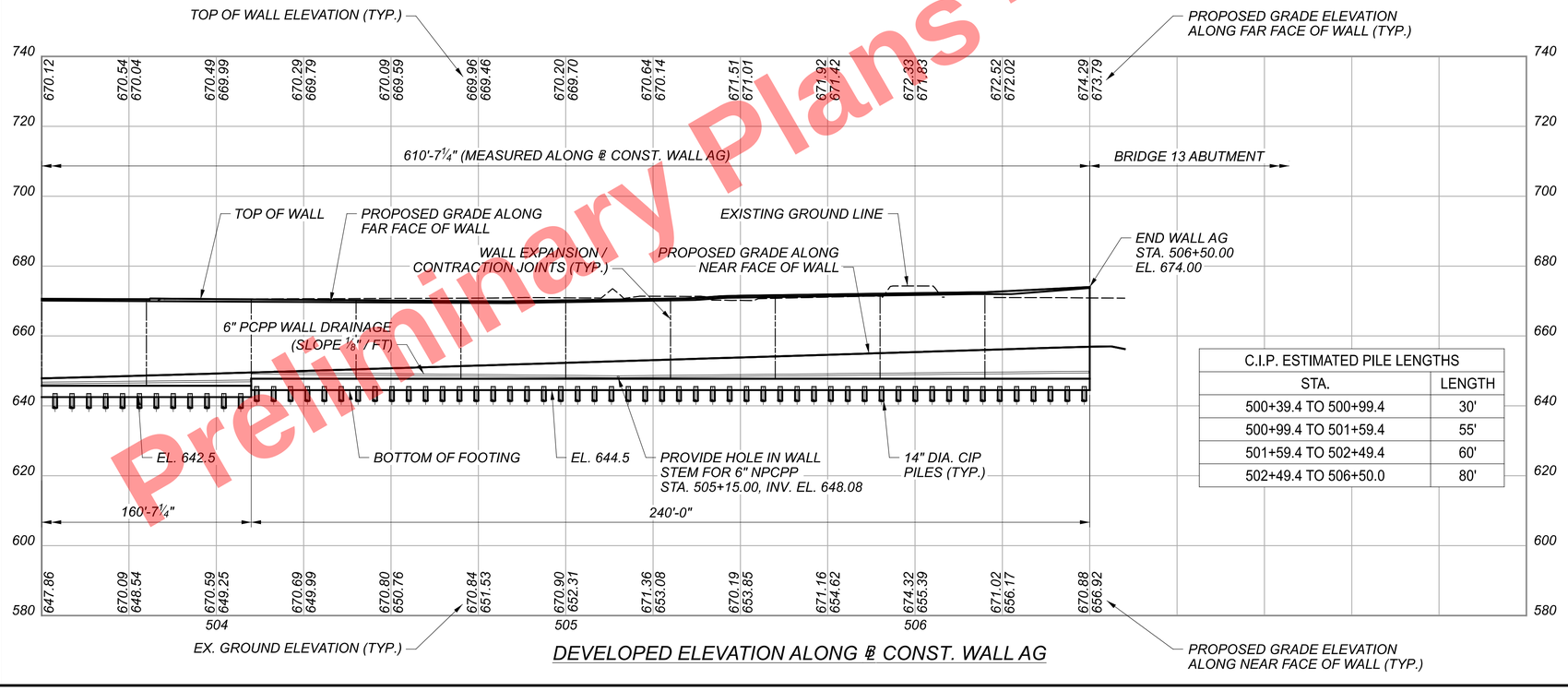

DEVELOPED ELEVATION ALONG ℄ CONST. WALL AG

C.I.P. ESTIMATED PILE LENGTHS	
STA.	LENGTH
500+39.4 TO 500+99.4	30'
500+99.4 TO 501+59.4	55'
501+59.4 TO 502+49.4	60'
502+49.4 TO 506+50.0	80'

BENCHMARK DATA

BM #54 STA. 33+03.27	ELEV. 672.54	OFFSET	36.13 RT.	CUT CROSS
BM #62 STA. 35+24.62	ELEV. 672.11	OFFSET	1174.60 LT.	RR SPIKE
BM #72 STA. 23+49.63	ELEV. 674.06	OFFSET	52.19 LT.	CUT CROSS
BM #73 STA. 37+05.22	ELEV. 671.90	OFFSET	407.77' LT.	CUT CROSS

BENCHMARK STATION AND OFFSETS ARE FROM ℄ CONST. E. 22ND ST.

FOR ADDITIONAL BENCHMARK INFORMATION. SEE ROADWAY PLAN SHEET 4 / 2696

MIDTOWN CONNECTOR

CURVE DATA
P.I. = Sta. 504+17.17
Δ = 28°38'45" LT
Dc = 17°30'00"
R = 327.40'
T = 83.59'
L = 163.69'
E = 10.50'

BORING LOCATION*

BORING	STATION	OFFSET	TOP OF ROCK EL.
B-085-4-20	200+14.75	107.35' RT.	-
B-087-1-20	201+25.11	63.19' RT.	-
B-087-3-20	202+40.86	57.52' RT.	-
B-002-T-58	199+67.00	89.17' RT.	-
B-001-D-06	201+22.78	64.55' RT.	-
B-008-C-57	202+76.93	104.30' RT.	-
C-086-0-14	200+21.04	107.22' RT.	-

* = BORING STATION AND OFFSETS ARE FROM ℄ I.R. 90 EB

PROPOSED WORK

THE PROPOSED WORK CONSISTS OF CONSTRUCTING A RETAINING WALL ALONG THE RIGHT (SOUTH) SIDE OF I.R. 90 EB ADJACENT TO BRIDGE 13. THE WALL UTILIZES BOTTOM UP CONSTRUCTION CONSISTING OF A CAST-IN-PLACE CANTILEVER WALL.

NOTES

1. EARTHWORK LIMITS SHOWN ARE APPROXIMATE. ACTUAL SLOPES SHALL CONFORM TO PLAN CROSS SECTIONS.
2. FOR WALL CROSS SECTIONS, SEE SHEETS:
   INTERIM I.R. 90 EB: 737 / 2696
   MIDTOWN CONNECTOR: 947 TO 960 / 2696
3. STATION AND WALL OFFSETS SHOWN AT NEAR FACE OF WALL.

LEGEND

HISTORIC BORING LOCATIONS

PROJECT BORING LOCATIONS

CONST. = CONSTRUCTION
EOP = EDGE OF PAVEMENT
EOS = EDGE OF SHOULDER

Preliminary Plans - For Reference Only

WALL PLAN AND PROFILE (2 OF 2)
WALL AG
ALONG SOUTH SIDE OF I.R. 90

SFN N/A
DESIGN AGENCY Michael Baker INTERNATIONAL
DESIGNER SSW | CHECKER MKB
REVIEWER LPC 05-09-24
PROJECT ID 82382
SUBSET 2 | TOTAL 12
SHEET 1230 | TOTAL 2696

CUY-90-16.28 (CCG3A)

MODEL: BL_P_Wall AG - Wall AG Plan-1 PAPERSIZE: 34x22 (in.) DATE: 3/27/2025 TIME: 11:04:38 PM USER: Julie.Ross
pw:\\mb-us-pw.bentley.com:mb-us-pw-03\Documents\Cleveland_OH01_Projects\ODOT\District12\82382\400-Engineering\Structures\WALL_AG\Sheets\82382_AG_WP002.dgn

STANDARD DRAWINGS AND SUPPLEMENTAL SPECIFICATIONS:

REFER TO THE FOLLOWING STANDARD DRAWINGS:
VPF-1-90 DATED 7/21/2023
DM-1.1 DATED 1/17/2025

REFER TO THE FOLLOWING SUPPLEMENTAL SPECIFICATION:
800 DATED SEE TITLE SHEET

AND THE FOLLOWING SUPPLEMENT:
1083 DATED 1/20/2017

DESIGN SPECIFICATIONS:

THIS STRUCTURE CONFORMS TO THE 9TH EDITION OF THE "LRFD BRIDGE DESIGN SPECIFICATIONS" ADOPTED BY THE AMERICAN ASSOCIATION OF STATE HIGHWAY AND TRANSPORTATION OFFICIALS, 2020 AND THE ODOT BRIDGE DESIGN MANUAL, 2020 (DATED 07-21-23).

DESIGN DATA:

CONCRETE CLASS QC1 - COMPRESSIVE STRENGTH 4.0 KSI
(WALL FOOTING AND WALL STEM)

REINFORCING STEEL - MINIMUM YIELD STRENGTH 60 KSI

STEEL CIP PILE CASINGS - ASTM A252 GRADE 3: YIELD STRENGTH = 45 KSI,
½" THICK CASING

SEQUENCE OF CONSTRUCTION:

CONSTRUCT WALL AG DURING MOT PHASE 2.

SEE MAINTENANCE OF TRAFFIC NOTES FOR ADDITIONAL PHASES AND INFORMATION.

PILE DESIGN LOADS (ULTIMATE BEARING VALUE):

THE ULTIMATE BEARING VALUE IS 102.0 KIPS PER PILE FOR DESIGN HEIGHT 1 (H ≤ 9'-3").

THE ULTIMATE BEARING VALUE IS 180.0 KIPS PER PILE FOR DESIGN HEIGHT 2 (H ≤ 15'-3").

THE ULTIMATE BEARING VALUE IS 200.0 KIPS PER PILE FOR DESIGN HEIGHT 3 (H ≤ 23'-6").

THE ULTIMATE BEARING VALUE IS 248.0 KIPS PER PILE FOR DESIGN HEIGHT 4 (H ≤ 27'-0").

DESIGN HEIGHT 1 PILES (STA. 500+39.4 TO STA. 500+99.4):
14" DIAMETER CIP PILES 30 FEET LONG, ORDER LENGTH
1 DYNAMIC LOAD TESTING ITEM(S)

DESIGN HEIGHT 2 PILES (STA. 500+99.4 TO STA. 501+59.4):
14" DIAMETER CIP PILES 55 FEET LONG, ORDER LENGTH
1 DYNAMIC LOAD TESTING ITEM(S)

DESIGN HEIGHT 3 PILES (STA. 501+59.4 TO STA. 502+49.4):
14" DIAMETER CIP PILES 60 FEET LONG, ORDER LENGTH
1 DYNAMIC LOAD TESTING ITEM(S)

DESIGN HEIGHT 4 PILES (STA. 502+49.4 TO 506+50.0):
14" DIAMETER CIP PILES 80 FEET LONG, ORDER LENGTH
1 DYNAMIC LOAD TESTING ITEM(S)

ITEM 503 - UNCLASSIFIED EXCAVATION, AS PER PLAN

TEMPORARY EXCAVATIONS SHALL MAINTAIN A MINIMUM OF A 2.5:1 SLOPE. REFER TO THE GEOTECHNICAL REPORTS FOR ADDITIONAL DETAILS.

GROUND WATER LEVELS FLUCTUATE SEASONALLY AS A FUNCTION OF THE PRECIPITATION AND OTHER HYDROLOGICAL FACTORS. THEREFORE, THERE MAY BE CONSIDERABLE CHANGE IN THE WATER TABLE OR THE OCCURRENCE OF WATER WHERE NOT PREVIOUSLY ENCOUNTERED. THE CONTRACTOR SHALL DEWATER ALL EXCAVATIONS AS NECESSARY TO PERFORM THE PROPOSED WORK.

PILES DRIVEN TO FULL ESTIMATED LENGTH WITH PILE/SOIL SETUP:

THE ULTIMATE BEARING VALUE (UBV) IS 173.7 KIPS PER PILE FOR THE 14" DIAMETER CIP DESIGN HEIGHT 4 WALL SEGMENT PILES. PART OF THE UBV WILL BE ACHIEVED THROUGH PILE/SOIL SETUP, WHICH IS A TIME DEPENDENT INCREASE IN RESISTANCE THAT OCCURS IN SOME SOILS.

NOTIFY THE ENGINEER AT LEAST 5 DAYS BEFORE DRIVING PILES SO THAT THE ENGINEER CAN NOTIFY THE DISTRICT GEOTECHNICAL ENGINEER, THE OFFICE OF CONSTRUCTION ADMINISTRATION, AND THE OFFICE OF GEOTECHNICAL ENGINEERING.

DRIVE THE FIRST TWO PILES WITHIN THE DESIGN HEIGHT 4 WALL SEGMENT (STA. 502+49.4 TO STA. 506+50.0) TO THE FULL ESTIMATED LENGTH OF 80 FEET. PERFORM DYNAMIC LOAD TESTING ON BOTH PILES WHILE DRIVING. AFTER DRIVING AND TESTING THE FIRST TWO PILES, DRIVE THE REMAINING PILES IN THE WALL SEGMENT TO THE SAME DEPTH AS THE FIRST TWO PILES. AFTER DRIVING ALL PILES TO THE ESTIMATED LENGTH, CEASE ALL DRIVING OPERATIONS AT THE REFERENCED WALL SEGMENT FOR A PERIOD OF 14 DAYS. INCLUDE THE WAITING PERIOD AS A SEPARATE ACTIVITY IN THE PROGRESS SCHEDULE. AFTER THE WAITING PERIOD, PERFORM PILE RESTRIKES ON BOTH OF THE FIRST TWO PILES (ONE RESTRIKE ITEM).

SUBMIT ALL TEST RESULTS TO THE ENGINEER. IF THE RESTRIKE TEST RESULTS INDICATE THAT BOTH PILES ACHIEVED THE REQUIRED UBV, ALL PILES IN THE SUBSTRUCTURE MAY BE ACCEPTED BY THE ENGINEER. IF THE RESTRIKE TEST RESULTS INDICATE THAT EITHER OF THE TWO PILES DID NOT ACHIEVE THE REQUIRED UBV, IMMEDIATELY NOTIFY THE ENGINEER SO THAT THE ENGINEER CAN NOTIFY THE DISTRICT GEOTECHNICAL ENGINEER, THE OFFICE OF CONSTRUCTION ADMINISTRATION, AND THE OFFICE OF GEOTECHNICAL ENGINEERING.

THE ENGINEER WILL REVIEW THE TEST RESULTS AND ESTABLISH ADDITIONAL RESTRIKE TESTING OR DRIVING CRITERIA FOR THE PILING IN THE SUBSTRUCTURE WITH THE ASSISTANCE OF THE DISTRICT GEOTECHNICAL ENGINEER, THE OFFICE OF CONSTRUCTION ADMINISTRATION, AND THE OFFICE OF GEOTECHNICAL ENGINEERING. IF DIRECTED BY THE ENGINEER, PERFORM ADDITIONAL RESTRIKE TESTING OR DRIVE ALL PILES IN THE SUBSTRUCTURE TO THE ESTABLISHED DRIVING CRITERIA. THE DEPARTMENT WILL PAY FOR SPLICING OF THE PILES BEYOND THE ESTIMATED LENGTH PROVIDED IN THE PLANS UNDER C&MS 109.05 WITH A NEGOTIATED PRICE PER SPLICE.

THIS PLAN NOTE INCLUDES A QUANTITY OF ONE EACH ITEM 523 DYNAMIC LOAD TESTING, AS PER PLAN AND A QUANTITY OF ONE EACH ITEM 523 RESTRIKE, AS PER PLAN PER EACH SUBSTRUCTURE UNIT.

ITEM SPECIAL - STRUCTURES: PRECONSTRUCTION CONDITION SURVEY

BEFORE PILE DRIVING BEGINS, CONDUCT A CONDITION SURVEY OF ALL EXISTING BUILDINGS, STRUCTURES, AND UTILITIES WITHIN 200-FT OF THE PILE DRIVING WORK. THE PURPOSE OF THE SURVEY IS TO DOCUMENT THE CONDITION OF THE BUILDINGS, STRUCTURES, OR UTILITIES PRIOR TO PILE DRIVING, SO THAT CLAIMS OF DAMAGE CAUSED BY THE PILE DRIVING CAN BE VERIFIED.

RETAIN AN EXPERIENCED VIBRATION SPECIALIST TO PERFORM OR SUPERVISE THE CONDITION SURVEY. USE A VIBRATION SPECIALIST THAT MEETS THE QUALIFICATION REQUIREMENTS FOR VIBRATION MONITORING.

RECORD THE CONDITION OF EXISTING STRUCTURES AND BUILDING MATERIALS, USING WRITTEN TEXT, PHOTOGRAPHS, AND VIDEO RECORDINGS. INSPECT INTERIOR WALLS, CEILINGS, AND FLOORS THAT ARE ACCESSIBLE. INSPECT THE EXTERIOR OF THE BUILDING THAT IS VISIBLE FROM GROUND LEVEL. ALSO RECORD THE LOCATION, SIZE, AND TYPE OF ALL CRACKS AND OTHER STRUCTURAL DEFICIENCIES.

IF OWNERS, OR OCCUPANTS, FAIL TO ALLOW ACCESS TO THE PROPERTY FOR THE PRECONSTRUCTION CONDITION SURVEY, SEND A CERTIFIED LETTER TO THE OWNER OR OCCUPANT. DOCUMENT THE NOTIFICATION EFFORT AND THE CERTIFIED LETTER IN THE REPORT.

SUBMIT THREE COPIES OF THE REPORT TO THE ENGINEER THAT SUMMARIZES THE PRECONSTRUCTION CONDITION OF THE BUILDINGS, STRUCTURES, AND UTILITIES, AND THAT IDENTIFIES AREAS OF CONCERN.

THE DEPARTMENT WILL PAY FOR THIS ITEM AT THE CONTRACT LUMP SUM PRICE FOR ITEM SPECIAL - STRUCTURES: PRECONSTRUCTION CONDITION SURVEY.

ITEM SPECIAL - STRUCTURES: VIBRATION MONITORING

MONITOR GROUND VIBRATIONS CAUSED BY PILE DRIVING TO MINIMIZE THE POTENTIAL DAMAGE TO EXISTING STRUCTURES.

RETAIN AN EXPERIENCED VIBRATION SPECIALIST TO ESTABLISH THE ACCEPTABLE VIBRATION LIMITS AND TO PERFORM THE VIBRATION MONITORING. USE A VIBRATION SPECIALIST THAT IS AN EXPERT IN THE INTERPRETATION ING CRITERIA: 1) IS A REGISTERED ENGINEER WITH AT LEAST TWO YEARS OF PROVEN EXPERIENCE IN MONITORING VIBRATIONS ON SIMILAR CONSTRUCTION PROJECTS, OR 2) HAS AT LEAST FIVE YEARS OF PROVEN EXPERIENCE IN MONITORING VIBRATIONS ON SIMILAR CONSTRUCTION PROJECTS. DO NOT USE A VIBRATION SPECIALIST THAT IS AN EMPLOYEE OF THE CONTRACTOR.

SUBMIT A RESUME OF THE CREDENTIALS OF THE PROPOSED VIBRATION SPECIALIST AT, OR BEFORE, THE PRECONSTRUCTION MEETING. INCLUDE IN THE RESUME A LIST OF CONSTRUCTION PROJECTS ON WHICH THE VIBRATION SPECIALIST WAS RESPONSIBLY IN CHARGE OF MONITORING THE VIBRATIONS. LIST A DESCRIPTION OF THE PROJECTS, WITH DETAILS OF THE VIBRATION INTERPRETATIONS MADE ON THE PROJECT. LIST THE NAMES AND TELEPHONE NUMBERS OF PROJECT OWNERS WITH SUFFICIENT KNOWLEDGE OF THE PROJECTS TO VERIFY THE SUBMITTED INFORMATION. OBTAIN THE ENGINEER'S ACCEPTANCE OF THE VIBRATION SPECIALIST BEFORE BEGINNING ANY PILE DRIVING WORK. ALLOW 30 DAYS FOR THE REVIEW OF THIS DOCUMENTATION.

USE SEISMOGRAPHS CAPABLE OF CONTINUOUSLY RECORDING THE PEAK PARTICLE VELOCITY FOR THREE MUTUALLY PERPENDICULAR COMPONENTS OF VIBRATION, AND OF PROVIDING A PERMANENT RECORD OF THE ENTIRE VIBRATION EVENT. USE A SUFFICIENT NUMBER OF SEISMOGRAPHS TO PROVIDE REDUNDANCY IN CASE ONE DEVICE SHOULD FAIL. SUBMIT A PLAN OF THE PROPOSED SEISMOGRAPH LOCATIONS TO THE ENGINEER FOR REVIEW.

THE VIBRATION SPECIALIST SHALL PERFORM THE FOLLOWING:

1. MEASURE THE AMBIENT GROUND VIBRATIONS NEAR EXISTING STRUCTURES BEFORE PILE DRIVING BEGINS.
2. ESTABLISH VIBRATION LIMITS TO MINIMIZE POTENTIAL DAMAGE TO EXISTING STRUCTURES AND EXPLAIN WHY THEY ARE BEING USED TO THE ENGINEER BEFORE DRIVING PILES NEAR EXISTING STRUCTURES.
3. MONITOR GROUND VIBRATIONS DURING PILE DRIVING.
4. IMMEDIATELY INFORM THE CONTRACTOR AND ENGINEER IF THE VIBRATION LIMITS ARE REACHED OR EXCEEDED.
5. FURNISH THE DATA RECORDED AND INCLUDE THE FOLLOWING:
   A. IDENTIFICATION OF SEISMOGRAPH.
   B. DISTANCE AND DIRECTION OF SEISMOGRAPH FROM PILE DRIVING.
   C. START TIME AND DURATION OF PILE DRIVING.
   D. LIST OF PILES DRIVEN DURING EACH MONITORING INTERVAL.

IMMEDIATELY SUSPEND ALL PILE DRIVING IF THE VIBRATION LIMITS ARE REACHED OR EXCEEDED. EVALUATE ALTERNATIVE CONSTRUCTION PROCEDURES, SUCH AS PREBORED HOLES, TO REDUCE THE VIBRATIONS. PREBORED HOLES ARE INCIDENTAL TO ITEM SPECIAL - STRUCTURE MISC.: VIBRATION MONITORING.

SUBMIT THREE COPIES OF THE FINAL REPORT WHICH CONTAINS ALL MEASUREMENTS, INTERPRETATIONS, AND RECOMMENDATIONS TO THE ENGINEER.

THE DEPARTMENT WILL PAY FOR THIS ITEM AT THE CONTRACT LUMP SUM PRICE FOR ITEM SPECIAL - STRUCTURES: VIBRATION MONITORING. THE DEPARTMENT WILL PAY THE FINAL TWENTY PERCENT AFTER THE ENGINEER RECEIVES THE FINAL REPORT.

THE DEPARTMENT WILL PAY ACCORDING TO C&MS 109.05 FOR ALTERNATIVE CONSTRUCTION PROCEDURES THAT THE ENGINEER DETERMINES ARE NECESSARY TO REDUCE VIBRATIONS.

EXISTING STRUCTURE VERIFICATION:

DETAILS AND DIMENSIONS SHOWN ON THESE PLANS PERTAINING TO THE EXISTING STRUCTURE HAVE BEEN OBTAINED FROM PLANS OF THE EXISTING STRUCTURE AND FROM FIELD OBSERVATIONS AND MEASUREMENTS. CONSEQUENTLY, THEY ARE INDICATIVE OF THE EXISTING STRUCTURE AND THE PROPOSED WORK BUT THEY SHALL BE CONSIDERED TENTATIVE AND APPROXIMATE. THE CONTRACTOR IS REFERRED TO C&MS, SECTIONS 102.05, 105.02, AND 513.04. BASE CONTRACT BID PRICES UPON A RECOGNITION OF THE UNCERTAINTIES DESCRIBED ABOVE AND UPON A PREBID EXAMINATION OF THE EXISTING STRUCTURE. HOWEVER, THE DEPARTMENT WILL PAY FOR ALL PROJECT WORK BASED UPON ACTUAL DETAILS AND DIMENSIONS THAT HAVE BEEN VERIFIED IN THE FIELD.

For Reference Only
Preliminary Plans

WALL GENERAL NOTES (1 OF 2)
WALL AG
ALONG SOUTH SIDE OF I.R. 90

SFN	N/A
DESIGN AGENCY	Michael Baker INTERNATIONAL
DESIGNER	SSW
CHECKER	KAG
REVIEWER	LPC 05-09-24
PROJECT ID	82382
SUBSET	3
TOTAL	12
SHEET	1231
TOTAL	2696

CUY-90-16.28 (CCG3A)
MODEL: Sheet PAPERSIZE: 34x22 (in.) DATE: 6/9/2025 TIME: 2:39:49 PM USER: Tolga.Feran
pw:\\mb-us-pw.bentley.com:mb-us-pw-03\Documents\Cleveland_OH\01_Projects\ODOT\District12\82382\400-Engineering\Structures\WALL_AG\Sheets\82382_AG_WN001.dgn

ITEM 512 - SEALING OF CONCRETE SURFACES, AS PER PLAN (PERMANENT GRAFFITI PROTECTION)

APPLY A PERMANENT GRAFFITI COATING MEETING THE REQUIREMENTS OF SUPPLEMENT 1083. THE GRAFFITI COATING MUST BE COMPATIBLE WITH THE UNDERLYING CONCRETE SEALER. APPLY THE GRAFFITI COATING ACCORDING TO THE MANUFACTURE'S REQUIREMENTS. THE ADDITIONAL MATERIAL AND LABOR REQUIRED TO SEAL THE FORM LINER RELIEF SHALL BE INCLUDED IN THIS ITEM. TO ACCOUNT FOR THE SURFACE VARIATIONS DUE TO THE FORM LINERS, AN EXTRA 20 PERCENT HAS BEEN ADDED TO THE SEALING QUANTITIES FOR THE PURPOSE OF ESTIMATING. PROVIDE A COATING THAT MEETS THE REQUIREMENTS LISTED BELOW.

A. THE MATERIAL SHALL BE A SINGLE COMPONENT, RTV (ROOM TEMPERATURE VULCANIZED) NEUTRAL MOISTURE CURE, PERMANENT (NON-SACRIFICIAL), TYPE III (WATER CLEANABLE) POLYSILOXANE (SILICONE) ANTI-GRAFFITI COATING, FREE OF ANY WAXES, EPOXIES OR POLYURETHANE COMPONENTS.

B. THE COATING SHALL BE A ONE COAT SYSTEM (NO PRIMER) CAPABLE OF BEING SPRAY APPLIED TO A DRY FILM THICKNESS OF 15 MILS (375 MICRONS) WITHOUT RUNS OR SAGS (MULTIPLE COAT APPLICATION ACCEPTABLE FOR BRUSH/ROLLER USAGE AND PRIMER USAGE ACCEPTABLE FOR SPECIALTY SUBSTRATES SUCH AS GALVANIZED METAL).

C. THE COATING SHALL EMIT LESS THAN 300 G/L (2.5 POUNDS PER GALLON) OF VOLATILE ORGANIC COMPOUNDS (EPA METHOD 24).

D. THE COATING SHALL MEET THE FOLLOWING PERFORMANCE REQUIREMENTS:

1. CLEANABILITY LEVEL 1 (GRAFFITI COMPLETELY REMOVED WITH COLD WATER POWER WASH) AS PER ASTM D7089 WITH LOW PRESSURE (1200 PSI) COLD WATER WASH AFTER 2000 HOURS ACCELERATED UV-CONDENSATION EXPOSURE IN ACCORDANCE WITH ASTM D4587.
2. GRAFFITI RESISTANCE LESS THAN 7.5 AS PER ASTM D6578 AFTER 2000 HOURS ACCELERATED UV-CONDENSATION EXPOSURE IN ACCORDANCE WITH ASTM D4587.
3. NO SIGNS OF GRAFFITI OR GRAFFITI STAINING AND MUST BE INTACT AND EXHIBIT NO SIGNS OF STREAKING, CRACKING, PINHOLING, DISCOLORING OR OTHER VISIBLE COATING DEGRADATION UPON CASUAL OBSERVATION WHEN TESTED IN ACCORDANCE WITH TXDOT TEX 890-B, TYPE III METHOD.
4. BREATHABILITY OF 10 PERMS (+/- 3) PER ASTM D1653 USING "WET CUP METHOD".
5. ELONGATION AT BREAK GREATER THAN 100% AS PER ASTM D412 (USING DIE "D").
6. ADHESION RATING OF "8 - DIFFICULT TO REMOVE" AS PER ASTM D6677 (ADHESION BY KNIFE).

ITEM 512 - SEALING OF CONCRETE SURFACES (EPOXY-URETHANE), AS PER PLAN

SEAL SURFACES OF THE CONCRETE FACING AND THE PRECAST CONCRETE LAGGING AS SHOWN IN THE PLANS WITH AN EPOXY-URETHANE SEALER ACCORDING TO C&MS 512. THE FOLLOWING COLORS SHALL BE USED FOR PAINTING AND SEALING STRUCTURAL ELEMENTS:

FACING AND LAGGING SEALER: "ALABASTER" 7008

ALL COLOR NAME AND NUMBER REFERENCES ARE TAKEN FROM THE SHERWIN WILLIAMS COLOR PALATE. THE CONTRACTOR MAY SUBSTITUTE SIMILAR COLORS FROM ALTERNATIVE SUPPLIER'S COLOR PALATE.

ITEM 607 - VANDAL PROTECTION FENCE, 8' STRAIGHT, COATED FABRIC, AS PER PLAN

INSTALL VANDAL PROTECTION FENCE ACCORDING TO STD. CONSTRUCTION DRAWING VPF-1-90 AND C&MS 607, EXCEPT AS MODIFIED BELOW.

POSTS, PLATES, TIE WIRES, CAULK AND ADDITIONAL VISIBLE HARDWARE SHALL BE COLOR BLACK (FEDERAL STD. 595C #17038). FENCE FABRIC SHALL BE BLACK VINYL-COATED, CHAIN LINK STYLE. MOUNT FENCING TO TOP OF RETAINING WALL WITH CAST-IN-PLACE ANCHORS.

ITEM 511 - CONCRETE, MISC.: ARCHITECTURAL TREATMENT

THIS WORK CONSISTS OF ALL LABOR, MATERIALS, EQUIPMENT, AND INCIDENTALS TO CONSTRUCT THE ARCHITECTURAL TREATMENTS IN THE CONCRETE SURFACE OF THE RETAINING WALL.

THE DEPARTMENT WILL PAY FOR ACCEPTED QUANTITIES AT THE CONTRACT PRICE AS FOLLOWS: ITEM 511 CONCRETE, MISC.: ARCHITECTURAL TREATMENT.

SECTION/DETAIL/VIEW CALLOUTS



(SEE SECTION A ON SHEET 10) (SECTION A CUT FROM SHEET 10)

PLAN ABBREVIATIONS:

ABUT. = ABUTMENT
APPR. = APPROACH
B = BOTTOM
℄ = BASELINE
BM = BENCHMARK
BOT. OR BTM. = BOTTOM
℄ = CENTERLINE
C/C = CENTER TO CENTER
C.I.P. = CAST-IN-PLACE
C.J. = CONSTRUCTION JOINT
CLR. = CLEAR
CMS = CONSTRUCTION AND MATERIAL SPECIFICATIONS
CONC. = CONCRETE
CONST. = CONSTRUCTION
DIA. = DIAMETER
DIM. = DIMENSION
DTBD = DISPOSITION TO BE DETERMINED
DWG. = DRAWING
EB = EASTBOUND
E.F. = EACH FACE
EL. OR ELEV. = ELEVATION
EQ. = EQUAL
EST. = ESTIMATED
EX. = EXISTING
F.A. = FORWARD ABUTMENT
F/F = FACE TO FACE
F.F. = FAR FACE
FT. = FOOT OR FEET
FTG. = FOOTING
FWD. = FORWARD
IN. = INCH
JT. = JOINT
LT. = LEFT
MAX. = MAXIMUM
MIN. = MINIMUM
MISC. = MISCELLANEOUS
N = NORTH
NB = NORTHBOUND
N.F. = NEAR FACE
NO. = NUMBER
N.P.C.P.P. = NON-PERFORATED CORRUGATED PLASTIC PIPE
OHWM = ORDINARY HIGH WATER MARK
O/O = OUT TO OUT
P.C.P.P. = PERFORATED CORRUGATED PLASTIC PIPE
P.E.J.F. = PREFORMED EXPANSION JOINT FILLER
PROP. = PROPOSED
PSF = POUNDS PER SQUARE FOOT
R.A. = REAR ABUTMENT
S = SOUTH
SB = SOUTHBOUND
SER. = SERIES
SHLDR = SHOULDER
SPA. = SPACE OR SPACES
STA. = STATION
STD. = STANDARD
STR = STRAIGHT
T = TOP
T&B = TOP & BOTTOM
TBR = TO BE REMOVED
TBRBO = TO BE RELOCATED BY OTHERS
TEMP. = TEMPORARY
TYP. = TYPICAL
U.N.O. = UNLESS NOTED OTHERWISE
VAR. = VARIES
WB = WESTBOUND
WWR = WELDED WIRE REINFORCEMENT

Preliminary Plans - For Reference Only

WALL GENERAL NOTES (2 OF 2)
WALL AG
ALONG SOUTH SIDE OF I.R. 90

SFN N/A
DESIGN AGENCY Michael Baker INTERNATIONAL
DESIGNER SSW | CHECKER KAG
REVIEWER LPC 05-09-24
PROJECT ID 82382
SUBSET 4 | TOTAL 12
SHEET 1232 | TOTAL 2696

CUY-90-16.28 (CCG3A)

MODEL: Sheet PAPERSIZE: 34x22 (in.) DATE: 3/27/2025 TIME: 11:05:10 PM USER: Julie.Ross
pw:\\mb-us-pw.bentley.com:mb-us-pw-03\Documents\Cleveland_OH01_Projects\ODOT\District12\82382\400-Engineering\Structures\WALL_AG\Sheets\82382_AG_WN002.dgn

ESTIMATED QUANTITIES

CALCULATED BY: HNW DATE: 01/26/24
CHECKED BY: SSW DATE: 05/14/24

PARTICIPATION	ITEM	ITEM EXT.	TOTAL	UNIT	DESCRIPTION	SHEET REF.
01/IMS/04	503	21101	9,626	CY	UNCLASSIFIED EXCAVATION, AS PER PLAN	3
01/IMS/04	507	00600	19,665	FT	14" CAST-IN-PLACE REINFORCED CONCRETE PILES, DRIVEN	
01/IMS/04	507	00650	21,140	FT	14" CAST-IN-PLACE REINFORCED CONCRETE PILES, FURNISHED	
01/IMS/04	509	10000	272,727	LB	EPOXY COATED STEEL REINFORCEMENT	
01/IMS/04	511	46012	1,073	CY	CLASS QC1 CONCRETE WITH QC/QA, RETAINING/WINGWALL NOT INCLUDING FOOTING	
01/IMS/04	511	46512	1,101	CY	CLASS QC1 CONCRETE WITH QC/QA, FOOTING	
01/IMS/04	511	71200	12,719	SF	CONCRETE, MISC.: ARCHITECTURAL TREATMENT	4
01/IMS/04	512	10001	659	SY	SEALING OF CONCRETE SURFACES, AS PER PLAN (PERMANENT GRAFFITI PROTECTION)	4
01/IMS/04	512	10101	1,359	SY	SEALING OF CONCRETE SURFACES (EPOXY-URETHANE), AS PER PLAN	4
01/IMS/04	512	33000	154	SY	TYPE 2 WATERPROOFING	
01/IMS/04	516	13600	402	SF	1" PREFORMED EXPANSION JOINT FILLER	
01/IMS/04	518	21200	830	CY	POROUS BACKFILL WITH GEOTEXTILE FABRIC	
01/IMS/04	518	40000	633	FT	6" PERFORATED CORRUGATED PLASTIC PIPE	
01/IMS/04	518	40010	100	FT	6" NON-PERFORATED CORRUGATED PLASTIC PIPE, INCLUDING SPECIALS	
01/IMS/04	523	20001	4	EACH	DYNAMIC LOAD TESTING, AS PER PLAN	3
01/IMS/04	523	20501	4	EACH	RESTRIKE, AS PER PLAN	3
01/IMS/04	SPECIAL	530E00200	LS		STRUCTURES: PRECONSTRUCTION CONDITION SURVEY	3
01/IMS/04	SPECIAL	530E00200	LS		STRUCTURES: VIBRATION MONITORING	3
01/IMS/04	607	39911	614	FT	VANDAL PROTECTION FENCE, 8' STRAIGHT, COATED FABRIC, AS PER PLAN	4
01/IMS/04	611	99710	3	EACH	PRECAST REINFORCED CONCRETE OUTLET	

Preliminary Plans - For Reference Only

ESTIMATED QUANTITIES
WALL AG
ALONG SOUTH SIDE OF I.R. 90

SFN N/A

DESIGN AGENCY
Michael Baker INTERNATIONAL

DESIGNER	CHECKER
SSW	KAG

REVIEWER
LPC 05-09-24

PROJECT ID 82382

SUBSET	TOTAL
5	12

SHEET	TOTAL
1233	2696

CUY-90-16.28 (CCG3A)

MODEL: Untitled Sheet PAPERSIZE: 34x22 (in.) DATE: 6/13/2025 TIME: 2:24:06 PM USER: David.Fell
pw:\\mb-us-pw.bentley.com:mb-us-pw-03\Documents\Cleveland_OH\01_Projects\ODOT\District12\82382\400-Engineering\Structures\WALL_AG\Sheets\82382_AG_WQ001.dgn

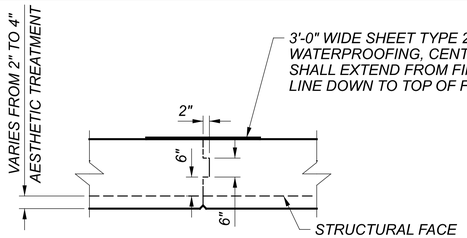

CONTRACTION JOINT DETAIL

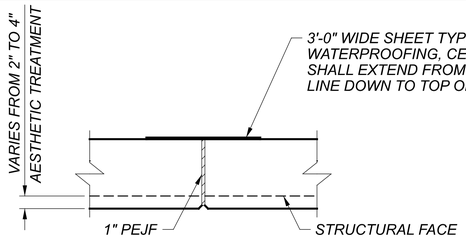

EXPANSION JOINT DETAIL

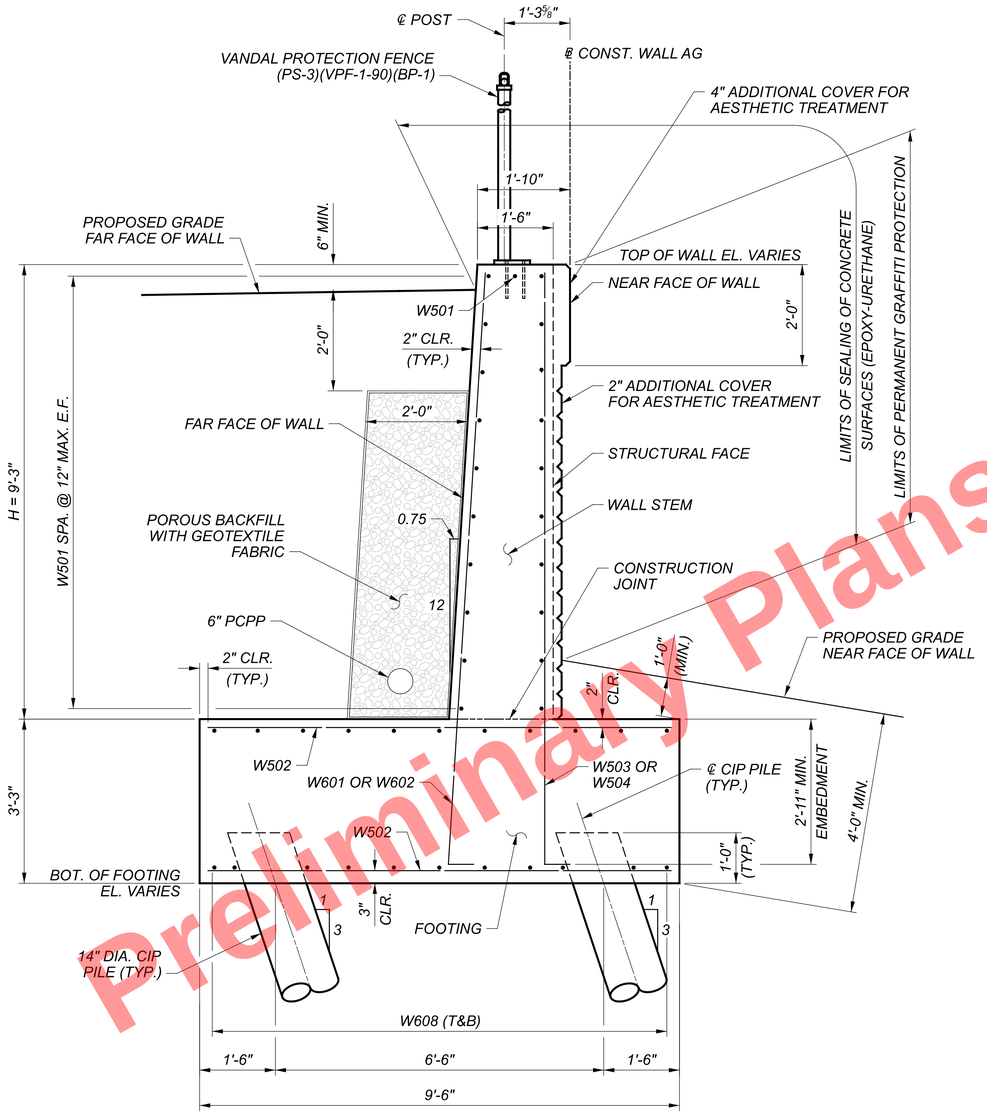

CAST-IN-PLACE CANTILEVER WALL TYP. SECTION
(DESIGN HEIGHT 1, STA. 500+36.4 TO STA. 500+99.4)

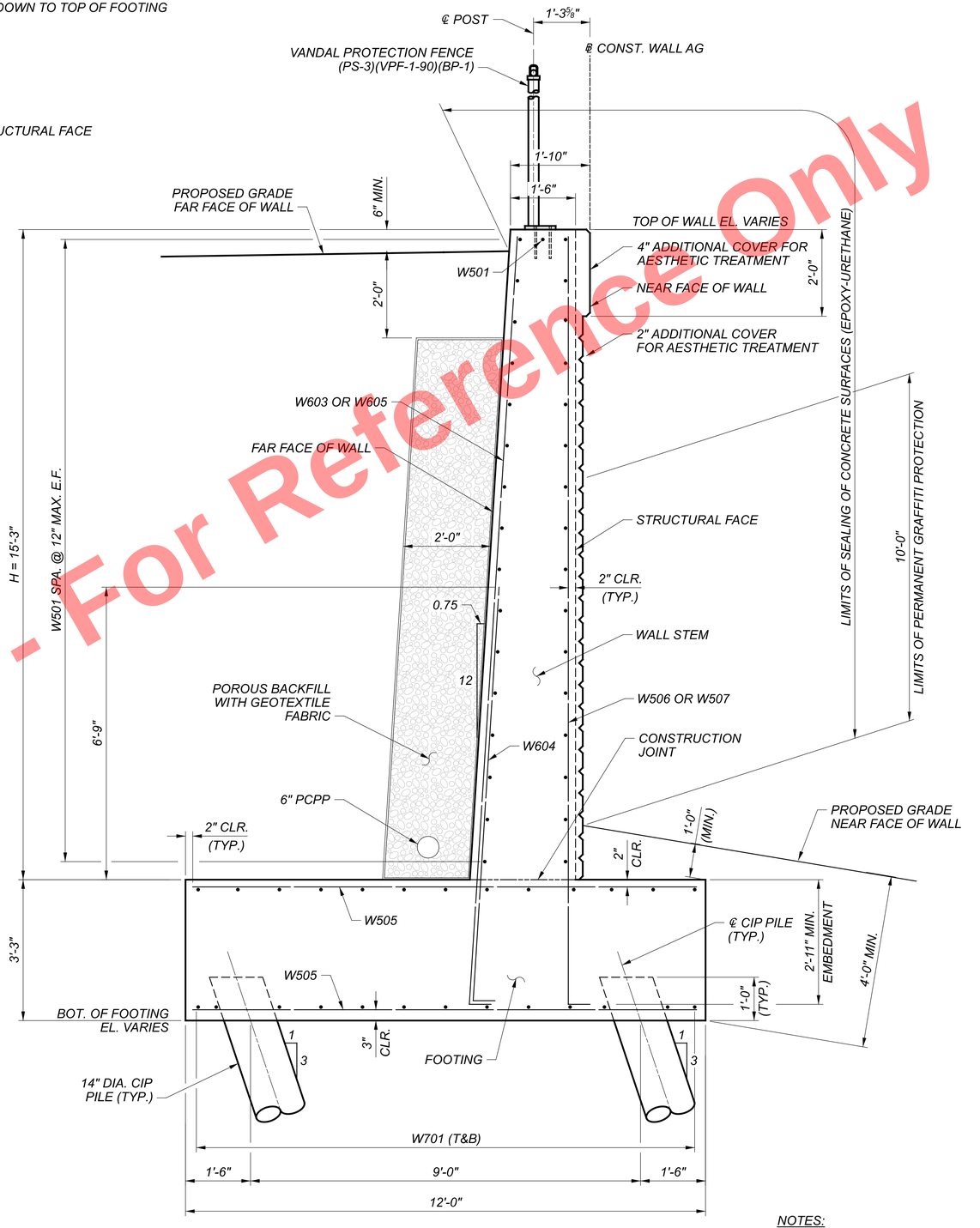

CAST-IN-PLACE CANTILEVER WALL TYP. SECTION
(DESIGN HEIGHT 2, STA. 500+99.4 TO STA. 501+59.4)

NOTES:

1. SEE LANDSCAPING PLANS FOR WALL AESTHETIC TREATMENT DETAILS.

Preliminary Plans - For Reference Only

WALL TYPICAL SECTION (1 OF 2)
WALL AG
ALONG SOUTH SIDE OF I.R. 90

SFN	N/A
DESIGN AGENCY	Michael Baker INTERNATIONAL
DESIGNER	HNW
CHECKER	VJM
REVIEWER	LPC 05-09-24
PROJECT ID	82382
SUBSET	6
TOTAL	12
SHEET	1234
TOTAL	2696

CUY-90-16.28 (CCG3A)

MODEL: Sheet 1 PAPERSIZE: 34x22 (in.) DATE: 3/27/2025 TIME: 11:05:24 PM USER: Julie.Ross
pw:\\mb-us-pw.bentley.com:mb-us-pw-03\Documents\Cleveland_OH\01_Projects\ODOT\District12\82382\400-Engineering\Structures\WALL_AG\Sheets\82382_AG_WY001.dgn

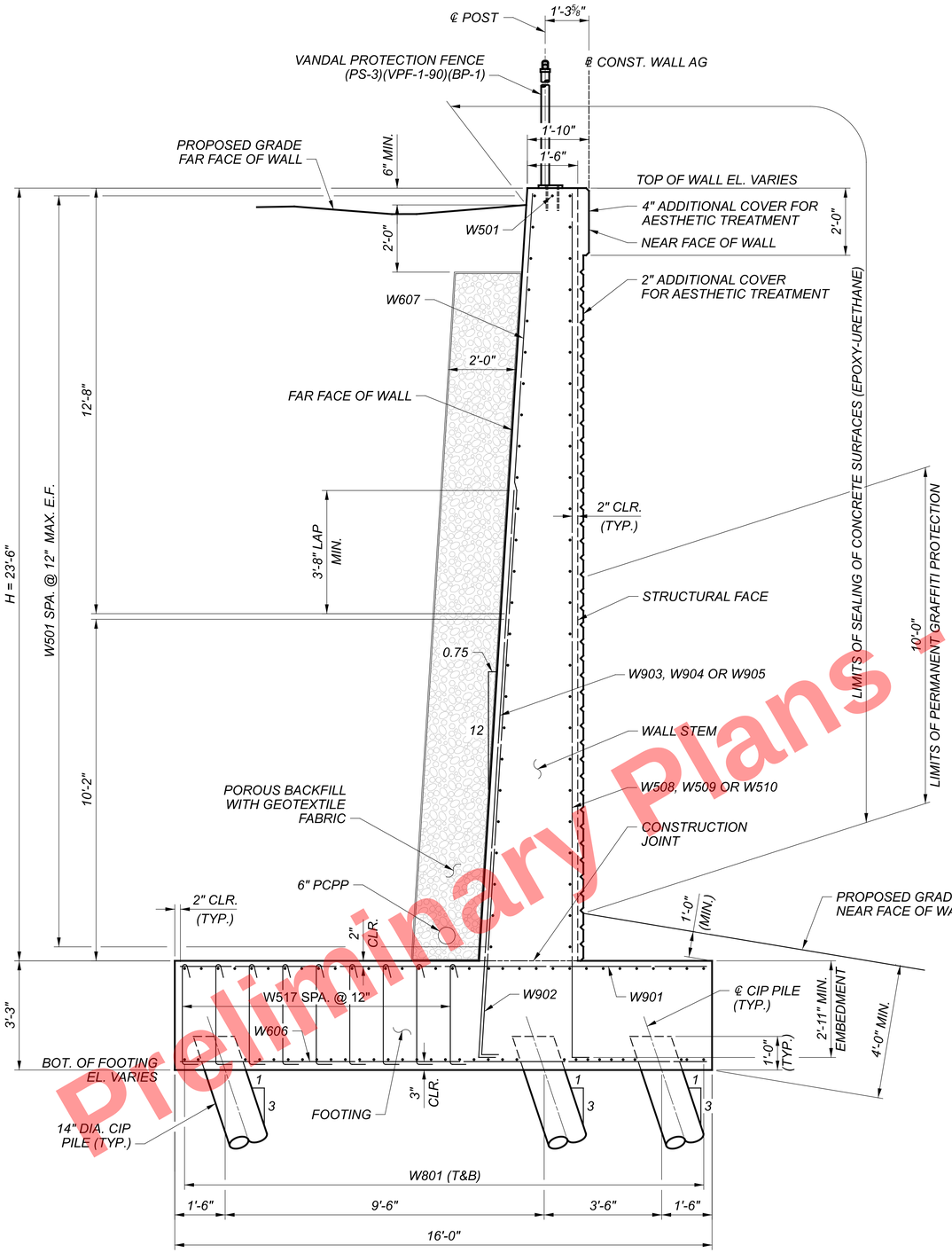

CAST-IN-PLACE CANTILEVER WALL TYP. SECTION

(DESIGN HEIGHT 3, STA. 501+59.4 TO STA. 502+49.4)

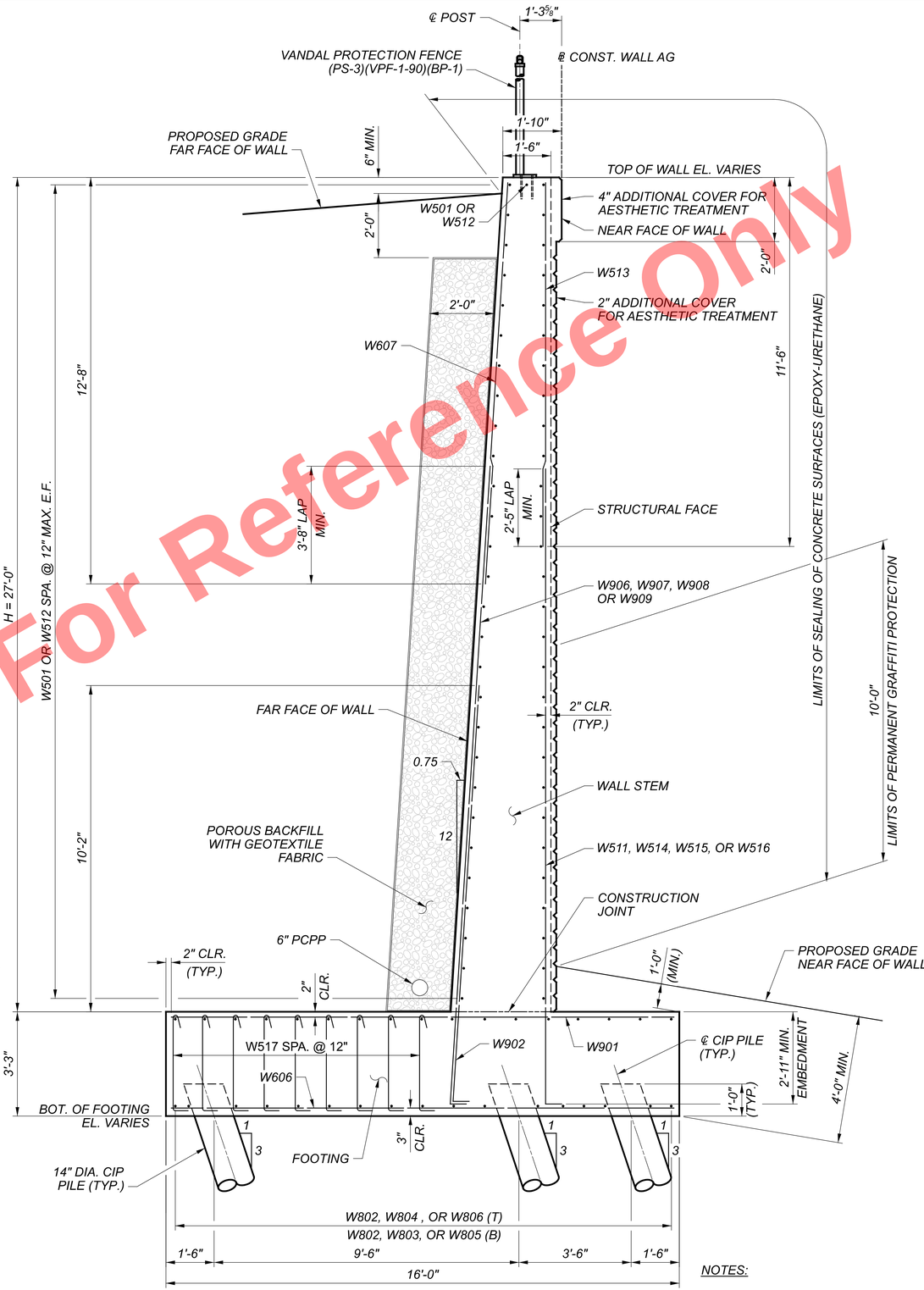

CAST-IN-PLACE CANTILEVER WALL TYP. SECTION

(DESIGN HEIGHT 4, STA. 502+49.4 TO STA. 506+50.0)

NOTES:

1. *SEE LANDSCAPING PLANS FOR WALL AESTHETIC TREATMENT DETAILS.*

Preliminary Plans - For Reference Only

WALL TYPICAL SECTION (2 OF 2)
WALL AG
ALONG SOUTH SIDE OF I.R. 90

SFN	N/A
DESIGN AGENCY	Michael Baker INTERNATIONAL
DESIGNER	HNW
CHECKER	VJM
REVIEWER	LPC 05-09-24
PROJECT ID	82382
SUBSET	7
TOTAL	12
SHEET	1235
TOTAL	2696

CUY-90-16.28 (CCG3A)

MODEL: Sheet 2 PAPERSIZE: 34x22 (in.) DATE: 3/27/2025 TIME: 11:05:24 PM USER: Julie.Ross
pw:\\mb-us-pw.bentley.com:mb-us-pw-03\Documents\Cleveland_OH\01_Projects\ODOT\District12\82382\400-Engineering\Structures\WALL_AG\Sheets\82382_AG_WY001.dgn

Preliminary Plans - For Reference Only

CURVE DATA
P.I. = Sta. 502+83.72
Δ = 18°20'06" LT
Dc = 15°33'09"
R = 368.40'
T = 59.45'
L = 117.89'
E = 4.77'

FOUNDATION PLAN

LEGEND:

- PROPOSED 14" Ø CIP BATTERED PILE (3:1)

NOTES:

1. ALL PROPOSED PILES ARE 14" Ø CIP PILES.
2. PILE CUT OFF ELEVATION EQUALS THE BOTTOM OF FOOTING PLUS 1'-0" EMBEDMENT.
3. PILE SPACING TAKEN ALONG ℄ CONST. WALL AG

FOUNDATION PLAN (1 OF 2)
WALL AG
ALONG SOUTH SIDE OF I.R. 90

SFN	N/A
DESIGN AGENCY	Michael Baker INTERNATIONAL
DESIGNER	HNW
CHECKER	VJM
REVIEWER	LPC 05-09-24
PROJECT ID	82382
SUBSET	8
TOTAL	12
SHEET	1236
TOTAL	2696

CUY-90-16.28 (CCG3A)

MODEL: FP-1 Sheet PAPERSIZE: 34x22 (in.) DATE: 3/27/2025 TIME: 11:05:31 PM USER: Julie.Ross
pw:\\mb-us-pw.bentley.com:mb-us-pw-03\Documents\Cleveland_OH\01_Projects\ODOT\District12\82382\400-Engineering\Structures\WALL_AG\Sheets\82382_AG_WT001.dgn

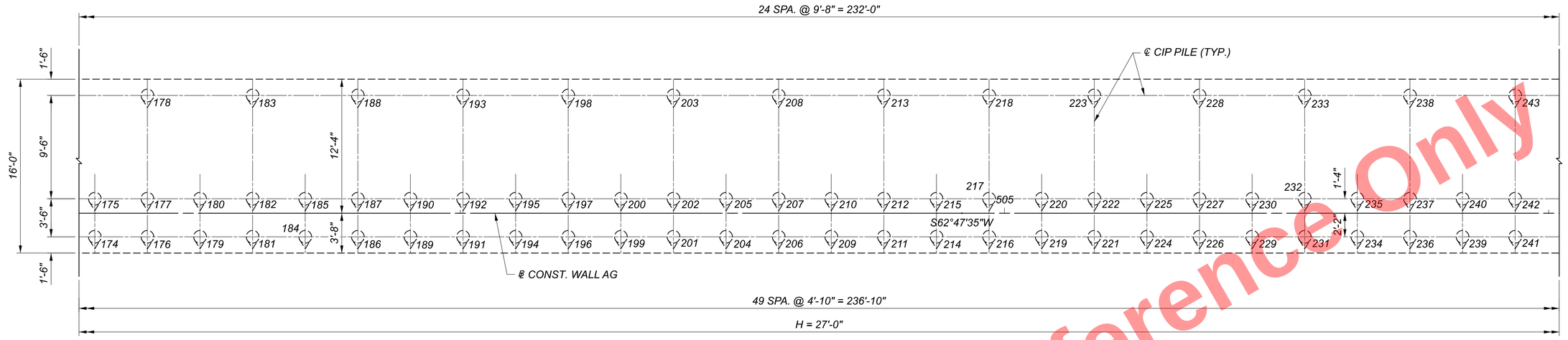

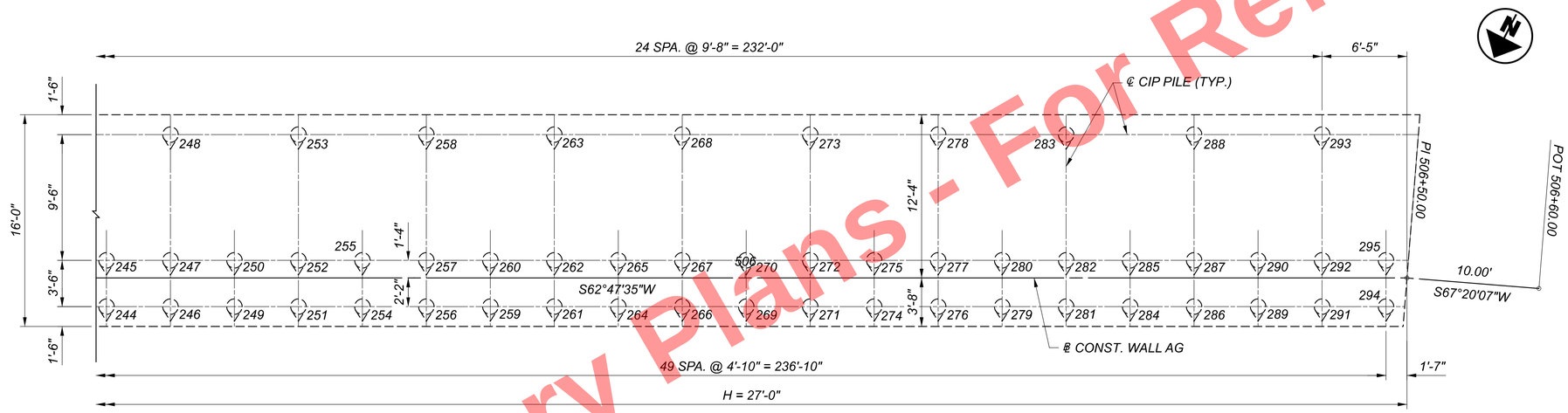

FOUNDATION PLAN

LEGEND:

- PROPOSED 14" Ø CIP BATTERED PILE (3:1)

NOTES:

1. ALL PROPOSED PILES ARE 14" Ø CIP PILES.
2. PILE CUT OFF ELEVATION EQUALS THE BOTTOM OF FOOTING PLUS 1'-0" EMBEDMENT.
3. PILE SPACING TAKEN ALONG ℄ CONST. WALL AG

Preliminary Plans - For Reference Only

FOUNDATION PLAN (2 OF 2)
WALL AG
ALONG SOUTH SIDE OF I.R. 90

SFN N/A
DESIGN AGENCY Michael Baker INTERNATIONAL
DESIGNER HNW | CHECKER VJM
REVIEWER LPC 05-09-24
PROJECT ID 82382
SUBSET 9 | TOTAL 12
SHEET 1237 | TOTAL 2696

CUY-90-16.28 (CCG3A)

MODEL: FP-2 Sheet PAPERSIZE: 34x22 (In.) DATE: 3/27/2025 TIME: 11:05:32 PM USER: Julie.Ross
pw:\\mb-us-pw.bentley.com:mb-us-pw-03\Documents\Cleveland_OH\01_Projects\ODOT\District12\82382\400-Engineering\Structures\WALL_AG\Sheets\82382_AG_WT001.dgn

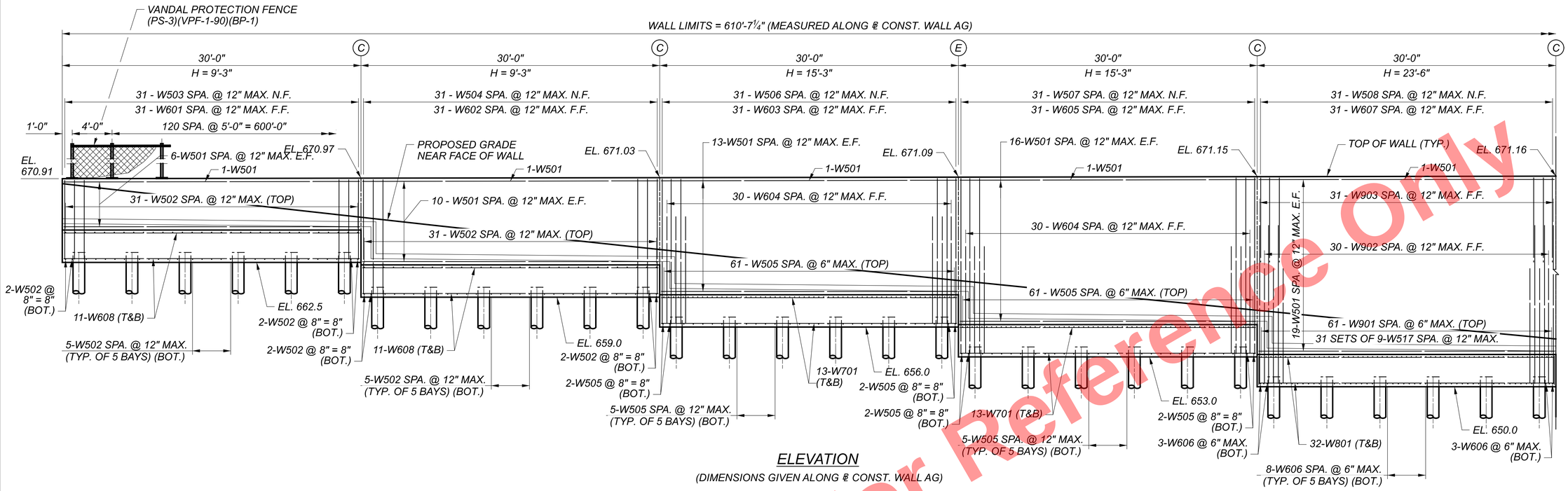

ELEVATION

(DIMENSIONS GIVEN ALONG ℄ CONST. WALL AG)

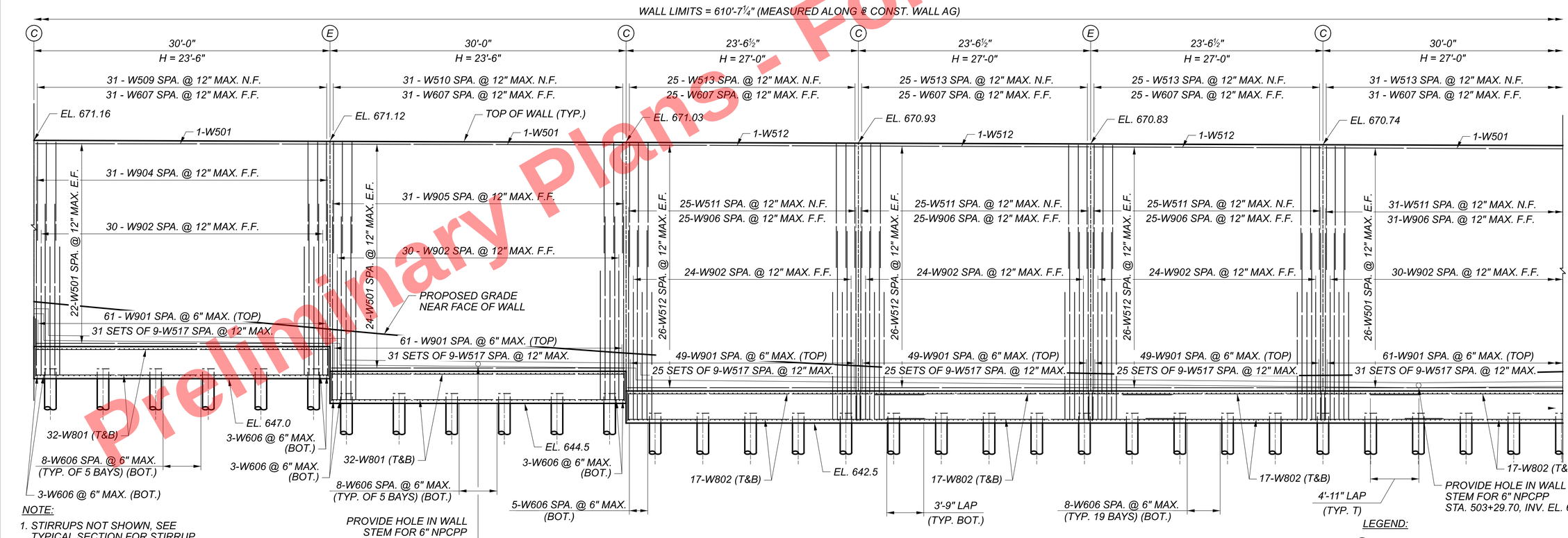

ELEVATION

(DIMENSIONS GIVEN ALONG ℄ CONST. WALL AG)

NOTE:

1. STIRRUPS NOT SHOWN, SEE TYPICAL SECTION FOR STIRRUP LOCATION.
2. SEE SHEET 6 / 12 FOR JOINT DETAILS.

LEGEND:

(E) DESIGNATES EXPANSION JOINT

(C) DESIGNATES CONTRACTION JOINT

WALL ELEVATION (1 OF 2)
WALL AG
ALONG SOUTH SIDE OF I.R. 90

SFN N/A

DESIGN AGENCY Michael Baker INTERNATIONAL

DESIGNER	CHECKER
HNW	VJM

REVIEWER LPC 05-09-24

PROJECT ID 82382

SUBSET	TOTAL
10	12

SHEET	TOTAL
1238	2696

CUY-90-16.28 (CCG3A)

MODEL: Elevation Sheet 1 of 2 PAPERSIZE: 34x22 (in.) DATE: 3/27/2025 TIME: 11:05:49 PM USER: Julie.Ross
pw:\\mb-us-pw.bentley.com:mb-us-pw-03\Documents\Cleveland_OH\01_Projects\ODOT\District12\82382\400-Engineering\Structures\WALL_AG\Sheets\82382_AG_WE001.dgn

Preliminary Plans - For Reference Only

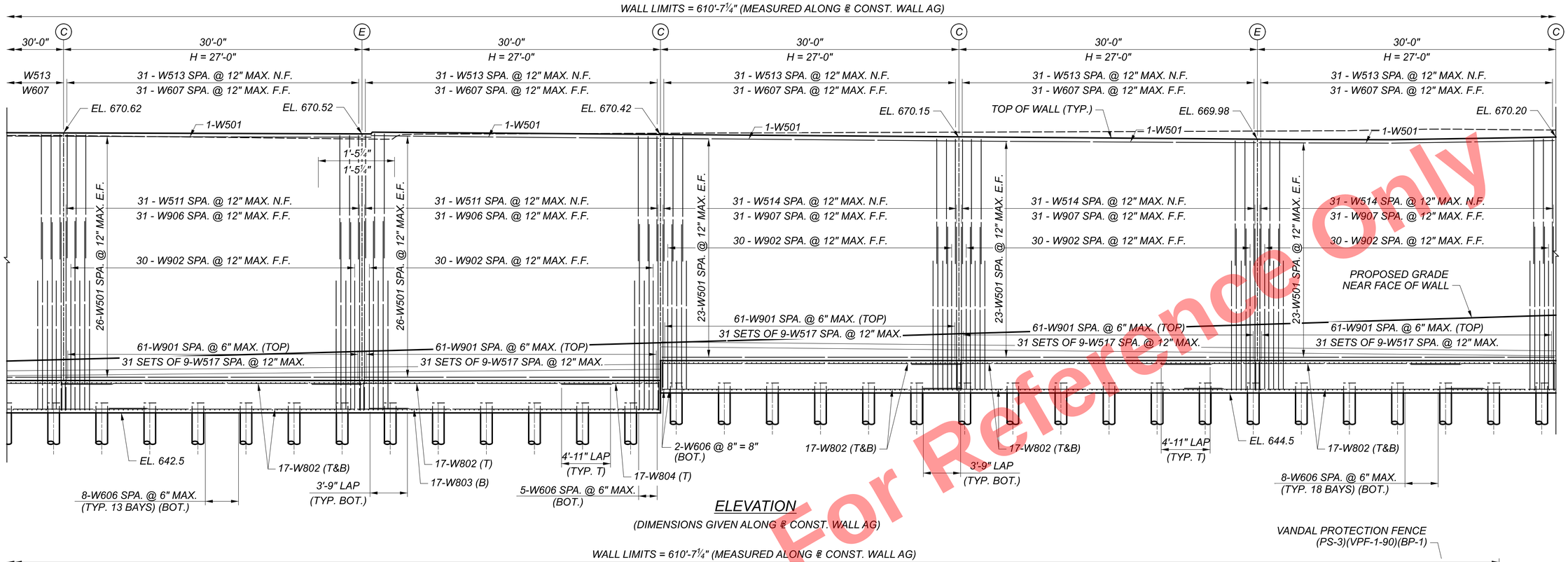

ELEVATION

(DIMENSIONS GIVEN ALONG ℄ CONST. WALL AG)

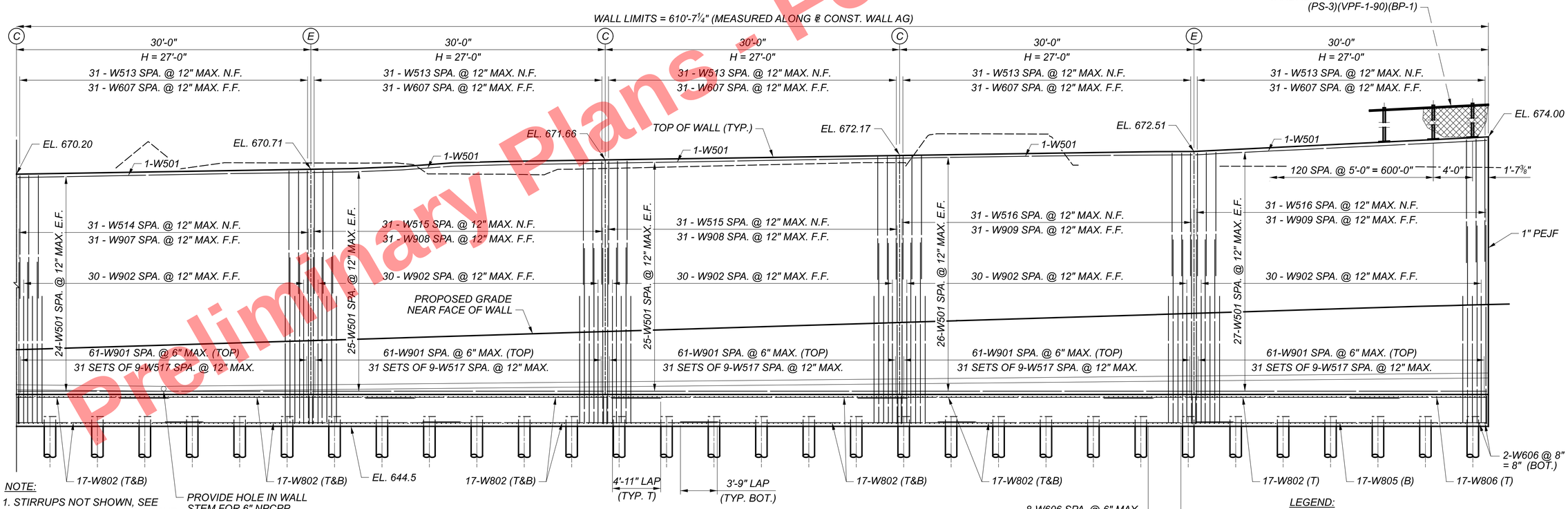

NOTE:

1. STIRRUPS NOT SHOWN, SEE TYPICAL SECTION FOR STIRRUP LOCATION.
2. SEE SHEET 6 / 12 FOR JOINT DETAILS.

PROVIDE HOLE IN WALL STEM FOR 6" NPCPP STA. 505+15.00, INV. EL. 648.08

ELEVATION

(DIMENSIONS GIVEN ALONG ℄ CONST. WALL AG)

LEGEND:

(E) DESIGNATES EXPANSION JOINT

(C) DESIGNATES CONTRACTION JOINT

Preliminary Plans - For Reference Only

WALL ELEVATION (2 OF 2)
WALL AG
ALONG SOUTH SIDE OF I.R. 90

SFN	N/A
DESIGN AGENCY	Michael Baker INTERNATIONAL
DESIGNER	HNW
CHECKER	VJM
REVIEWER	LPC 05-09-24
PROJECT ID	82382
SUBSET	11
TOTAL	12
SHEET	1239
TOTAL	2696

CUY-90-16.28 (CCG3A)
MODEL: Elevation Sheet 2 of 2 PAPERSIZE: 34x22 (in.) DATE: 3/27/2025 TIME: 11:05:52 PM USER: Julie.Ross
pw:\\mb-us-pw.bentley.com:mb-us-pw-03\Documents\Cleveland_OH\01_Projects\ODOT\District12\82382\400-Engineering\Structures\WALL_AG\Sheets\82382_AG_WE001.dgn

MARK	MAT'RL TYPE	NUMBER			LENGTH	WEIGHT (LBS.)	TYPE	DIMENSIONS						SER INC.
		REAR	FWD.	TOTAL				A	B	C	D	E	R	
RETAINING WALL AG (EPOXY COATED STEEL REINFORCING ECSR)														
W501	ECSR			786	29'-8"	24321	STR.							
W502	ECSR			120	9'-2"	1147	STR.							
W503	ECSR			31	8'-9"	283	1	0'-10"	8'-0"					
W504	ECSR			31	12'-3"	396	1	0'-10"	11'-6"					
W505	ECSR			180	11'-8"	2190	STR.							
W506	ECSR			31	15'-4"	496	1	0'-10"	14'-7"					
W507	ECSR			31	18'-5"	595	1	0'-10"	17'-8"					
W508	ECSR			31	21'-5"	692	1	0'-10"	20'-8"					
W509	ECSR			31	24'-5"	789	1	0'-10"	23'-8"					
W510	ECSR			31	26'-10"	868	1	0'-10"	26'-1"					
W511	ECSR			168	19'-9"	3461	1	0'-10"	19'-1"					
W512	ECSR			159	23'-2"	3842	STR.							
W513	ECSR			416	11'-4"	4917	STR.							
W514	ECSR			124	17'-6"	2263	1	0'-10"	16'-9"					
W515	ECSR			62	19'-0"	1229	1	0'-10"	18'-3"					
W516	ECSR			62	20'-9"	1342	1	0'-10"	20'-1"					
W517	ECSR			4581	4'-0"	19112	34	2'-10"						
W601	ECSR			31	8'-10"	411	11	0'-6"	8'-0"	1'-0"				
W602	ECSR			31	12'-4"	574	11	0'-8 5/8"	11'-6"	1'-0"				
W603	ECSR			31	15'-5"	718	11	0'-10 7/8"	14'-7"	1'-0"				
W604	ECSR			60	10'-7"	954	11	0'-7 1/4"	9'-9"	1'-0"				
W605	ECSR			31	18'-6"	861	11	1'-1 1/4"	17'-8"	1'-0"				
W606	ECSR			800	15'-8"	18825	STR.							
W607	ECSR			509	12'-6"	9572	STR.							
W608	ECSR			44	29'-8"	1961	STR.							
W701	ECSR			52	29'-8"	3153	STR.							
W801	ECSR			192	29'-8"	15208	STR.							
W802	ECSR			476	30'-0"	38128	STR.							
W803	ECSR			17	29'-1"	1320	STR.							
W804	ECSR			17	9'-10"	446	STR.							
W805	ECSR			17	29'-8"	1347	STR.							
W806	ECSR			17	13'-11"	632	STR.							
W901	ECSR			1001	15'-8"	53320	STR.							
W902	ECSR			492	14'-6"	24256	11	0'-9 7/8"	13'-2"	1'-7"				
W903	ECSR			31	13'-2"	1388	11	0'-8 7/8"	11'-10"	1'-7"				
W904	ECSR			31	16'-2"	1704	11	0'-11 1/8"	14'-10"	1'-7"				
W905	ECSR			31	18'-7"	1959	11	1'-0 7/8"	17'-3"	1'-7"				
W906	ECSR			168	20'-6"	11710	11	1'-2 3/8"	19'-2"	1'-7"				
W907	ECSR			124	18'-2"	7659	11	1'-0 5/8"	16'-10"	1'-7"				
W908	ECSR			62	19'-8"	4146	11	1'-1 3/4"	18'-4"	1'-7"				
W909	ECSR			62	21'-6"	4532	11	1'-3 1/8"	20'-2"	1'-7"				
RETAINING WALL ECSR SUBTOTAL						272727								

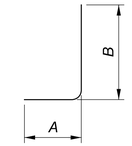

TYPE-1

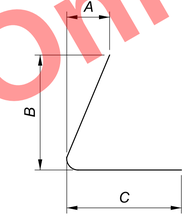

TYPE-11

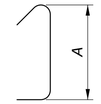

TYPE-34

Preliminary Plans - For Reference Only

NOTES:

1. SERIES BARS - EACH BAR VARIES BY TABULATED AMOUNT.
2. ALL DIMENSIONS ARE OUT TO OUT.
3. TYPE "STR" INDICATES STRAIGHT BAR.
4. THE BAR SIZE NUMBER IS SPECIFIED IN THE "MARK" COLUMN. THE FIRST DIGIT INDICATES THE BAR SIZE NUMBER.
5. ALL BARS SHALL BE EPOXY COATED UNLESS NOTED OTHERWISE.
6. SUBTOTALS AND TOTAL WEIGHTS ARE FOR INFORMATIONAL PURPOSES ONLY. IF THE REINFORCING LIST PROVIDED IN THE PLANS IS USED, IT SHALL BE VERIFIED BY THE CONTRACTOR. ANY REVISIONS IN THE REINFORCING STEEL LIST AS SHOWN IN THE PLANS WILL NOT BE REASON FOR ADJUSTMENT IN THE BID PRICE FOR STRUCTURAL CONCRETE.
7. USE STANDARD HOOKS FOR ENDS OF BARS NOT SPECIFICALLY DIMENSIONED IN DETAILS.

REINFORCING SCHEDULE
WALL AG
ALONG SOUTH SIDE OF I.R. 90

SFN N/A

DESIGN AGENCY
Michael Baker INTERNATIONAL

DESIGNER	CHECKER
JNR	SSW

REVIEWER
LPC 05-09-24

PROJECT ID
82382

SUBSET	TOTAL
12	12

SHEET	TOTAL
1240	2696

CUY-90-16.28 (CCG3A)

MODEL: Untitled Sheet PAPERSIZE: 34x22 (in.) DATE: 3/27/2025 TIME: 11:06:00 PM USER: Julie.Ross
pw:\\mb-us-pw.bentley.com:mb-us-pw-03\Documents\Cleveland_OH\01_Projects\ODOT\District12\82382\400-Engineering\Structures\WALL_AG\Sheets\82382_AG_WL001.dgn

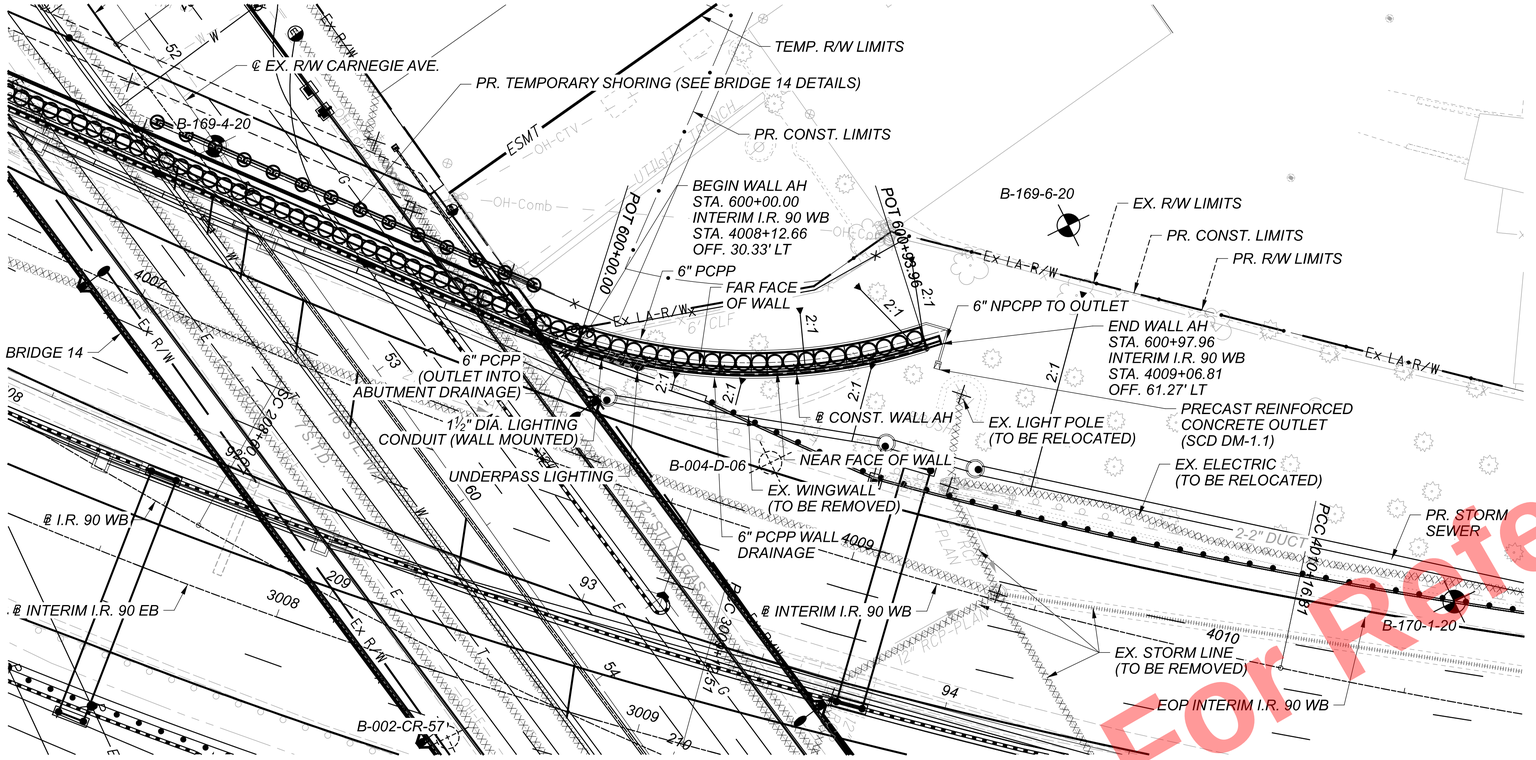

PLAN

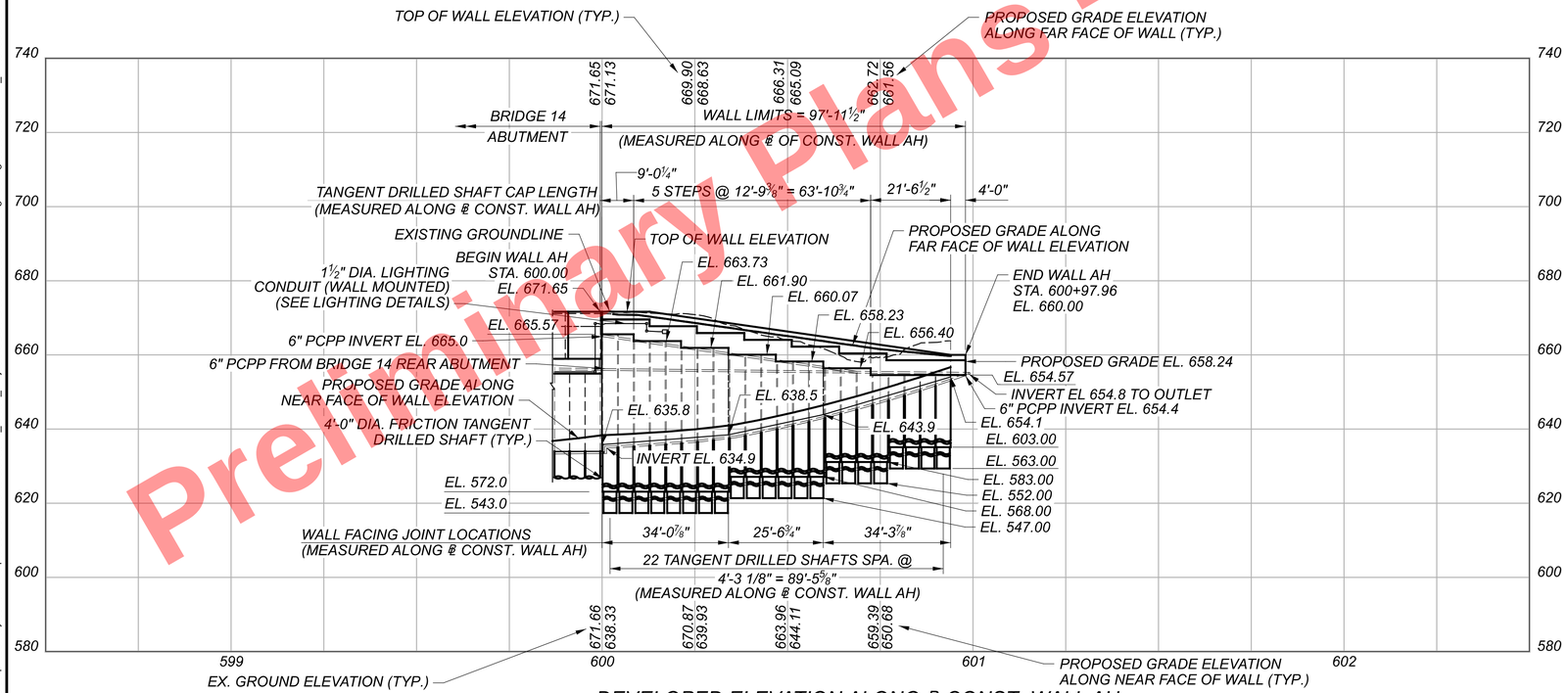

DEVELOPED ELEVATION ALONG ℄ CONST. WALL AH

BENCHMARK DATA

BM #62 STA.	41+38.42,	ELEV.	672.11,	OFFSET 75.42 LT.,	RR SPIKE
BM #64 STA.	58+35.86,	ELEV.	671.25,	OFFSET 47.90 LT.,	RR SPIKE
BM #65 STA.	66+35.73,	ELEV.	668.92,	OFFSET 38.62 RT.,	RR SPIKE
BM #73 STA.	49+25.90,	ELEV.	671.90,	OFFSET 31.86 LT.,	CUT CROSS

BENCHMARK STATION AND OFFSETS ARE FROM ℄ CONST. CARNEGIE AVE.

FOR ADDITIONAL BENCHMARK INFORMATION. SEE ROADWAY PLAN SHEET 4 / 2696

℄ CONST. WALL AH
CURVE DATA
P.I. = Sta. 600+48.51
Δ = 35°06'34" LT
Dc = 37°22'01"
R = 153.33'
T = 48.51'
L = 93.96'
E = 7.49'

BORING LOCATION*

BORING	STATION	OFFSET	TOP OF ROCK EL.
B-169-4-20	4007+01.36	44.10 LT.	-
B-169-6-20	4009+32.04	100.50 LT.	-
B-170-1-20	4010+58.71	26.09 LT.	-
B-004-D-06	4008+71.78	18.21 LT.	-
B-002-CR-57	4008+15.34	77.79 RT.	-

* = BORING STATION AND OFFSETS ARE FROM ℄ INTERIM I.R. 90 WB

PROPOSED WORK

THE PROPOSED WORK CONSISTS OF CONSTRUCTING A RETAINING WALL ALONG THE RIGHT SIDE OF I.R. 90 WB. THE WALL IS TOP DOWN CONSTRUCTION CONSISTING OF TANGENT DRILLED SHAFTS WITH CAST-IN-PLACE CONCRETE FACING WITH A REINFORCED CONCRETE CAP AND FENCE WALL.

NOTES

1. EARTHWORK LIMITS SHOWN ARE APPROXIMATE. ACTUAL SLOPES SHALL CONFORM TO PLAN CROSS SECTIONS.
2. FOR WALL CROSS SECTIONS, SEE SHEET 783 TO 784 / 2696
3. STATION AND WALL OFFSETS SHOWN AT FRONT FACE OF WALL.

LEGEND

- HISTORIC BORING LOCATIONS
- PROJECT BORING LOCATIONS
- INSTRUMENTED BORING LOCATION

CONST. = CONSTRUCTION
EOP = EDGE OF PAVEMENT
EOS = EDGE OF SHOULDER

Preliminary Plans - Not for Construction
Reference Only

WALL PLAN AND PROFILE
WALL AH
ALONG NORTH SIDE OF I.R. 90 UNDER CARNEGIE AVE.

SFN N/A
DESIGN AGENCY Michael Baker INTERNATIONAL
DESIGNER SW/GZ | CHECKER JC/SD
REVIEWER LPC 05-09-24
PROJECT ID 82382
SUBSET 1 | TOTAL 9
SHEET 1241 | TOTAL 2696

CUY-90-16.28 (CCG3A)

MODEL: BL Wall AH-1 - AH Plan 1 PAPERSIZE: 34x22 (in.) DATE: 3/27/2025 TIME: 11:06:11 PM USER: Julie.Ross
pw:\\mb-us-pw.bentley.com:mb-us-pw-03\Documents\Cleveland_OH\01_Projects\ODOT\District12\82382\400-Engineering\Structures\WALL_AH\Sheets\82382_AH_WP001.dgn

STANDARD DRAWINGS AND SUPPLEMENTAL SPECIFICATIONS:

REFER TO THE FOLLOWING STANDARD CONSTRUCTION DRAWINGS:
VPF-1-90 REVISED 7/21/2023
DM-1.1 REVISED 1/17/2025

REFER TO THE FOLLOWING SUPPLEMENTAL SPECIFICATION:
800 DATED SEE TITLE SHEET

REFER TO THE FOLLOWING SUPPLEMENT:
1083 DATED 1/20/2017

DESIGN SPECIFICATIONS:

THIS STRUCTURE CONFORMS TO THE "LRFD BRIDGE DESIGN SPECIFICATIONS", 9TH EDITION, ADOPTED BY THE AMERICAN ASSOCIATION OF STATE HIGHWAY AND TRANSPORTATION OFFICIALS AND THE ODOT BRIDGE DESIGN MANUAL, 2020 (DATED 07-21-23).

DESIGN DATA:

CONCRETE CLASS QC1 - COMPRESSIVE STRENGTH 4.0 KSI
(CONCRETE FACING, DRILLED SHAFT CAP & FENCE WALL)
CONCRETE CLASS QC SCC, WITH $^{3}/_{8}$ IN MAX. AGGREGATE SIZE:
COMPRESSIVE STRENGTH 4.5 KSI (DRILLED SHAFT)

REINFORCING STEEL - MINIMUM YIELD STRENGTH 60 KSI

PERMANENT STEEL CASING - ASTM A252 GRADE 3 - MINIMUM YIELD STRESS 45 KSI

SEQUENCE OF CONSTRUCTION:

CONSTRUCT WALL AH DURING MOT PHASE 4.

SEE MAINTENANCE OF TRAFFIC NOTES FOR ADDITIONAL PHASES
AND INFORMATION

ITEM 512 - SEALING OF CONCRETE SURFACES, AS PER PLAN (PERMANENT GRAFFITI PROTECTION)

APPLY A PERMANENT GRAFFITI COATING QUALIFIED ACCORDING TO SUPPLEMENT 1083 THAT IS COMPATIBLE WITH THE CONCRETE SEALER OVER WHICH IT IS APPLIED. PROVIDE A COATING THAT MEETS THE REQUIREMENTS LISTED BELOW. APPLY THE GRAFFITI COATING IN ACCORDANCE WITH THE MANUFACTURER'S PRINTED INSTRUCTIONS.

A. THE MATERIAL SHALL BE A SINGLE COMPONENT, RTV (ROOM TEMPERATURE VULCANIZED), NEUTRAL MOISTURE CURE, PERMANENT (NON-SACRIFICIAL), TYPE III (WATER CLEANABLE) POLYSILOXANE (SILICONE) ANTI-GRAFFITI COATING, FREE OF ANY WAXES, EPOXIES, OR POLYURETHANE COMPONENTS.

B. THE COATING SHALL BE A ONE COAT SYSTEM (NO PRIMER) CAPABLE OF BEING SPRAY APPLIED TO A DRY FILM THICKNESS OF 15 MILS (375 MICRONS) WITHOUT RUNS OR SAGS (MULTIPLE COAT APPLICATION ACCEPTABLE FOR BRUSH/ROLLER USAGE AND PRIMER USAGE ACCEPTABLE FOR SPECIALTY SUBSTRATES SUCH AS GALVANIZED METAL).

C. THE COATING SHALL EMIT LESS THAN 300 G/L (2.5 POUNDS PER GALLON) OF VOLATILE ORGANIZE COMPOUNDS (EPA METHOD 24).

D. THE COATING SHALL MEET THE FOLLOWING PERFORMANCE REQUIREMENTS:
1. CLEANABILITY LEVEL 1 (GRAFFITI COMPLETELY REMOVED WITH COLD WATER POWER WASH) AS PER ASTM D7089 WITH LOW PRESSURE (1200 PSI) COLD WATER WASH AFTER 2000 HOURS ACCELERATED UV-CONDENSATION EXPOSURE IN ACCORDANCE WITH ASTM D4587.
2. GRAFFITI RESISTANCE LESS THAN 7.5 AS PER ASTM D6578 AFTER 2000 HOURS ACCELERATED UV-CONDENSATION EXPOSURE IN ACCORDANCE WITH ASTM 4578.
3. NO SIGNS OF GRAFFITI OR GRAFFITI STAINING AND MUST BE INTACT AND EXHIBIT NO SIGNS OF STREAKING, CRACKING, PINHOLING, DISCOLORING, OR OTHER VISIBLE COATING DEGRADATION UPON CASUAL OBSERVATION WHEN TESTED IN ACCORDANCE WITH TXDOT TEX 890-B, TYPE III METHOD.
4. BREATHABILITY OF 10 PERMS (+/- 3) PER ASTM D1653 USING "WET CUP METHOD".
5. ELONGATION AT BREAK GREATER THAN 100% AS PER ASTM D412 (USING DIE "D").
6. ADHESION RATING OF "8 - DIFFICULT TO REMOVE" AS PER ASTM D6677 (ADHESION BY KNIFE).

ITEM 512 - SEALING OF CONCRETE SURFACES (EPOXY-URETHANE), AS PER PLAN

SEAL ALL EXPOSED SURFACES INCLUDING THE CAST IN PLACE CONCRETE FACING SHOWN IN THE PLANS WITH AN EPOXY-URETHANE SEALER ACCORDING TO C&MS 512. THE FOLLOWING COLOR SHALL BE USED FOR PAINTING AND SEALING STRUCTURAL ELEMENTS:

FACING SEALER: "ALABASTER" 7008

ALL COLOR NAME AND NUMBER REFERENCES ARE TAKEN FROM THE SHERWIN WILLIAMS COLOR PALATE. THE CONTRACTOR MAY SUBSTITUTE SIMILAR COLORS FROM ALTERNATIVE SUPPLIER'S COLOR PALATE.

THE ADDITIONAL MATERIAL AND LABOR REQUIRED TO SEAL THE FORM LINER RELIEF SHALL BE INCLUDED IN THIS ITEM. TO ACCOUNT FOR THE SURFACE VARIATIONS DUE TO THE FORM LINERS, AN EXTRA 20 PERCENT HAS BEEN ADDED TO THE SEALING QUANTITIES FOR THE PURPOSE OF ESTIMATING.

ITEM 518 - PREFABRICATED GEOCOMPOSITE DRAIN

THIS WORK CONSISTS OF FURNISHING AND PLACING PREFABRICATED GEOCOMPOSITE DRAIN (PGD) AGAINST THE CONCRETE WALL FACING.

FURNISH PGD CONSISTING OF A DRAINAGE CORE WITH A GEOTEXTILE FABRIC BONDED TO AT LEAST ONE SIDE. USE CORE MATERIAL THAT CONSISTS OF A STABLE, POLYMER PLASTIC MATERIAL WITH A CUSPATED OR GEONET STRUCTURE. THE CORE MATERIAL SHALL HAVE SUFFICIENT FLEXIBILITY TO WITHSTAND BENDING AND HANDLING DURING INSTALLATION WITHOUT DAMAGE. FURNISH GEOTEXTILE COMPOSED OF STRONG ROT-PROOF POLYMERIC FIBERS FORMED INTO A WOVEN OR NON-WOVEN FABRIC. FURNISH PGD CONFORMING TO THE FOLLOWING REQUIREMENTS. FURNISH MANUFACTURER'S CERTIFIED TEST DATA.

	PROPERTY	TEST METHOD	VALUE
CORE	THICKNESS	ASTM D 5199	0.4 INCH
	COMPRESSIVE STRENGTH	ASTM D 1621	13,650 PSF MIN.
	FLOW RATE	ASTM D 4716	9 TO 25 GPM/FT
FABRIC	APPARENT OPENING SIZE	ASTM D 4751	0.3 MM MAX.
	FLOW RATE	ASTM D 4491	40 GPM/SQ.FT. MIN.
	GRAB TENSILE STRENGTH	ASTM D 4632	90 LBS MIN.
	CBR PUNCTURE	ASTM D 6241	65 LBS MIN.

PLACE PGD BETWEEN THE DRILLED SHAFTS. PLACE THE SIDE FACED WITH GEOTEXTILE AGAINST THE DRILLED SHAFTS, FACING TOWARDS THE RETAINED GROUND, AND SECURE THE PGD TO THE SACRIFICIAL PLYWOOD FORMS BETWEEN THE DRILLED SHAFTS.

SPLICE ABUTTING SECTIONS TOGETHER BY OVERLAPPING THE GEOTEXTILE FLAP (IF PROVIDED) ON ONE SECTION WITH THE ADJACENT SECTION OF PGD. OVERLAP THE GEOTEXTILE IN A SHINGLED OVERLAP SO THAT THE UPPER GEOTEXTILE IS ON TOP OF THE LOWER GEOTEXTILE. IF A GEOTEXTILE FLAP IS NOT PROVIDED, COVER THE SEAM WITH A 12-INCH WIDE STRIP OF GEOTEXTILE FABRIC CENTERED OVER THE SEAM AND SECURED IN PLACE USING 3-INCH WIDE WATERPROOF PLASTIC TAPE.

SEAL ALL EXPOSED EDGES OF THE CORE MATERIAL TO PREVENT SOIL INTRUSION. SEAL EXPOSED EDGES BY FOLDING THE GEOTEXTILE FLAPS OVER AND AROUND THE PGD OR, IF A FLAP IS NOT PROVIDED, COVERING THE EXPOSED EDGE WITH A 12-INCH WIDE STRIP OF GEOTEXTILE FABRIC, TAPING THE STRIP TO THE PGD GEOTEXTILE 8 INCHES FROM THE EXPOSED EDGE, AND FOLDING THE REMAINING 4 INCHES OVER AND AROUND THE PGD. SECURE LOOSE EDGES OF THE GEOTEXTILE FABRIC WITH 3-INCH WIDE WATERPROOF PLASTIC TAPE.

REPAIR ANY DAMAGE TO THE GEOTEXTILE FABRIC BY COVERING WITH A PATCH WHICH OVERLAPS THE DAMAGED AREA AND EXTENDS AT LEAST 6 INCHES BEYOND THE EDGE OF THE DAMAGED AREA. TAPE THE EDGES OF THE PATCH IN PLACE USING 3 INCH WIDE WATERPROOF PLASTIC TAPE. IF THE CORE OF THE PGD IS DAMAGED, REPLACE IT WITH A NEW SECTION OF PGD SPLICE AS DESCRIBED ABOVE.

ITEM 524 - DRILLED SHAFTS, 42" DIAMETER, AS PER PLAN
ITEM 524 - DRILLED SHAFTS, 48" DIAMETER, AS PER PLAN

GENERAL:
THE CONTRACTOR SHALL PROVIDE ALL LABOR, MATERIALS AND EQUIPMENT TO INSTALL DRILLED SHAFTS AS DETAILED IN THE PLANS IN ACCORDANCE WITH THE REQUIREMENTS OF ODOT C&MS SECTION 524, AND WITH THE ADDITIONAL REQUIREMENTS DEFINED BELOW.

ANTICIPATED DRILLED SHAFT DEFLECTIONS:
TANGENT DRILLED SHAFTS ("SHAFT", "SHAFTS") ARE INCORPORATED AS WALLS IN VARIOUS STRUCTURAL ELEMENTS FOR THIS BRIDGE. AS DESIGNED AND DETAILED THE SHAFTS ARE EXPECTED TO DEFLECT UNDER THE APPLIED PERMANENT LOADS (DC, DW, EP, WA) AND TRANSIENT LOADS (LL, LS, TU) AT THE SERVICE LIMIT STATE. MEASURES FOR ACCOMODATING THESE DEFLECTIONS ARE DETAILED BELOW.

THE SHAFT HEAD IS CONSIDERED TO BE THE DESIGN BEAM SEAT ELEVATION FOR SHAFTS INCORPORATED IN ABUTMENTS. THE SHAFT HEAD IS CONSIDERED TO BE THE DESIGN TOP OF CAP ELEVATION FOR SHAFTS INCORPORATED IN RETAINING WALLS. IN BOTH CASES THE FINISHED TOP OF SHAFT IS LOWER THAN THE SHAFT HEAD ELEVATION.

THE ANTICIPATED DEFLECTION AT THE SHAFT HEAD ELEVATION RELATIVE TO THE DREDGE LINE ELEVATION DUE TO PERMANENT LOADS ARE AS FOLLOWS:

WALL AH	6.00 INCHES	SHAFTS AH01 THROUGH AF14 ONLY

DESIGN ASSUMPTIONS:
BEHAVIOR OF THE DRILLED SHAFTS AS DESCRIBED ABOVE IS PREDICATED UPON THE FOLOWING DESIGN ASSUMPTIONS:

1. DESIGN HEIGHT OF DRILLED SHAFT IS THE DISTANCE FROM THE SHAFT HEAD ELEVATION TO THE DREDGE LINE ELEVATION
2. PERMANENT LOAD DEFLECTIONS ARE ASSUMED TO OCCUR FOLLOWING REMOVAL OF SOIL IN FRONT OF THE TANGENT SHAFT WALLS
3. THE GROUND SURFACE BEHIND THE WALL WAS CONSIDERED AT ELEV. 673 TO ACCOUNT FOR POSSIBLE FILL IN THE FUTURE.
4. ADDITIONAL ASSUMPTIONS AND CONSTRAINTS ARE DETAILED IN THE PLANS.

DREDGE LINE ELEVATIONS:

SHAFTS AH01 THROUGH AH08:	ELEV. 631.0 FOR DRAINAGE STRUCTURE EXCAVATION.
SHAFTS AH09 THROUGH AH22:	SLOPING GROUND 42 INCHES BELOW FINAL GRADE AT NEAR FACE OF WALL.

DRILLED SHAFT LOCATION SURVEY:
THE CORRECT LOCATION OF SHAFT IS CRITICAL TO ESTABLISHING AND MAINTAINING THE STRUCTURE GEOMETRY. THE CONTRACTOR SHALL EMPLOY THE SERVICES OF A OHIO REGISTERED PROFESSIONAL SURVEYOR ("THE SURVEYOR") TO ESTABLISH, MAINTAIN AND VERIFY HORIZONTAL AND VERTICAL SHAFT GEOMETRY. THE SURVEYOR SHALL BE READILY AVAILABLE TO ESTABLISH GEOMETRIC CONTROL AND PERFORM THE SURVEYS REQUIRED BELOW.

CONTRACTOR'S INSTALLATION PLAN:
THE CONTRACTOR SHALL PROVIDE AN INSTALLATION PLAN AS REQUIRED BY ODOT C&MS SECTION 524.03. THE INSTALLATION PLAN SHALL ALSO INCLUDE:

1. CONTRACTOR'S PROPOSED METHODS TO MAINTAIN LOCATION AND ALIGNMENT OF SHAFTS
2. CONTRACTOR'S PROPOSED METHODS FOR PERFORMING THE DRILLED SHAFT LOCATION SURVEY

COSTRUCTION CONSTRAINTS:
THE CONTRACTOR IS ADVISED THAT THE PROPOSED DRILLED SHAFT INSTALLATIONS MAY REQUIRE ADVANCING SHAFTS THROUCH EXISTING PILES. ADDITIONAL INFORMATION AND NOTES REGARDING POSSIBLE CONFLICTS ARE PROVIDED IN THE PLANS.

MATERIALS:
CONCRETE AND REINFORCING STEEL FOR DRILLED SHAFTS SHALL CONFORM TO ODOT C&MS SECTION 524.02.

A SELF CONSOLIDATING CONCRETE MIX SHALL BE INCORPORATED

THE MAXIMUM COARSE AGGREGATE SIZE SHALL BE: $^{3}/_{8}$"

PERMANENT STEEL CASINGS SHALL BE ASTM A252 GRADE 3 WITH A MINIMUM YIELD STRESS OF 45 KSI. CASING SECTION LENGTHS SHALL BE MAXIMIZED TO MINIMIZE THE NUMBER OF FIELD SPLICE LOCATIONS. FIELD SPLICE LOCATIONS SHALL BE AS REQUIRED BY THE PLAN DETAILS. THE USE OF SPIRAL WELDED PIPE IS PERMITTED.

Preliminary Plans - For Reference Only

WALL GENERAL NOTES (1 OF 2)
WALL AH
ALONG NORTH SIDE OF I.R. 90 UNDER CARNEGIE AVE.

SFN N/A
DESIGN AGENCY
Michael Baker INTERNATIONAL
DESIGNER SW/GZ | CHECKER JC/SD
REVIEWER LPC 05-09-24
PROJECT ID 82382
SUBSET 2 | TOTAL 9
SHEET 1242 | TOTAL 2696

CUY-90-16.28 (CCG3A)

MODEL: Sheet (1 of 2) PAPERSIZE: 34x22 (in.) DATE: 6/9/2025 TIME: 11:07:48 AM USER: Tolga.Feran
pw:\\tmb-us-pw.bentley.com:tmb-us-pw-03\Documents\Cleveland_OH\01_Projects\ODOT\District12\82382\400-Engineering\Structures\WALL_AH\Sheets\82382_AH_WN001.dgn

ITEM 524 - DRILLED SHAFTS, MISC.: DEMONSTRATION DRILLED SHAFT

PART 1: DESCRIPTION
THIS WORK CONSISTS OF ALL LABOR, MATERIALS, EQUIPMENT AND INCIDENTALS TO CONSTRUCT A DEMONSTRATION DRILLED SHAFT FOR TESTING AND EVALUATION TO VERIFY THE PROPOSED CONSTRUCTION METHODS FOR THE PRODUCTION OF DRILLED SHAFTS.

IF THE VERTICAL DEFLECTION OF THE DEMONSTRATION DRILLED SHAFT DURING LOAD TESTING IS LESS THAN 5% OF THE DRILLED SHAFT NOMINAL DIAMETER, IT MAY BE REUSED AS A PRODUCTION DRILLED SHAFT.

PART 2: MATERIALS
THE DEMONSTRATION DRILLED SHAFT SHALL USE THE SAME CONCRETE MIX DESIGN AND STEEL REINFORCEMENT AS THE PRODUCTION DRILLED SHAFTS.

PART 3: EXECUTION
SUBMIT A DRILLED SHAFT INSTALLATION PLAN TO THE ENGINEER FOR ACCEPTANCE IN ACCORDANCE WITH THE REQUIREMENTS OF C&MS 524.03. CONSTRUCT AT LEAST ONE DEMONSTRATION DRILLED SHAFT IN THE AREA SHOWN ON THE PLANS AND IN ACCORDANCE WITH THE ACCEPTED WRITTEN INSTALLATION. UPON CONSTRUCTION OF THE DEMONSTRATION DRILLED SHAFT, AND RECEIPT OF TESTING AND EVALUATION RESULTS CONFIRMING THE DEMONSTRATION DRILLED SHAFT HAS BEEN INSTALLED IN ACCORDANCE WITH CONTRACT DOCUMENT, THE ENGINEER WILL ISSUE A LETTER ACCEPTING THE INSTALLATION PLAN FOR THE CONSTRUCTION OF THE SUBSEQUENT PRODUCTION DRILLED SHAFTS.

IF MODIFICATION(S) TO THE INSTALLATION PLAN ARE MADE, WHETHER DUE TO THE TESTING AND EVALUATION RESULTS OR FOR OTHER REASON, THE DEPARTMENT WILL REQUIRE CONSTRUCTION OF AN ADDITIONAL DEMONSTRATION SHAFT CONSTRUCTED IN ACCORDANCE WITH THE MODIFIED INSTALLATION PLAN, AT NO ADDITIONAL COST. THE DIAMETER, LENGTH, REINFORCING, INSTALLATION METHODS, AND OTHER MISCELLANEOUS DETAILS OF THE DEMONSTRATION SHAFT SHALL BE THE SAME AS THE PRODUCTION DRILLED SHAFTS.

SUBMIT THE LOCATION OF THE DEMONSTRATION SHAFT TO THE ENGINEER FOR ACCEPTANCE. A PRODUCTION SHAFT SHALL BE USED AS THE DEMONSTRATION SHAFT.

LOCATE THE DEMONSTRATION DRILLED SHAFT SO THAT TESTING DOES NOT DAMAGE THE WALKER WEEKS BUILDING.

TEST THE DEMONSTRATION DRILLED SHAFT BY THERMAL INTEGRITY PROFILING (TIP) ACCORDING TO ASTM D7949, METHOD B.

PART 4: MEASUREMENT AND PAYMENT
THE DEPARTMENT WILL MEASURE DEMONSTRATION DRILLED SHAFT BY THE NUMBER OF FEET, MEASURED ALONG THE AXIS OF THE DRILLED SHAFT FROM THE REQUIRED BOTTOM ELEVATI0N OF THE SHAFT TO THE PROPOSED TOP PLAN ELEVATION.

IN ADDITION TO THE PROVISIONS OF C&MS 524.17, THE DEPARTMENT WILL PAY FOR ACCEPTED QUANTITIES OF DEMONSTRATION DRILLED SHAFT AFTER INSTALLATION OF THE DEMONSTRATION SHAFT AND AFTER BEING PROVIDED WITH WRITTEN TESTING AND EVALUATION RESULTS ACCEPTABLE TO THE ENGINEER.

THE CONTRACT PRICE IS FULL COMPENSATION FOR FURNISHING AND INSTALLING DRILLED SHAFTS IN ACCORDANCE WITH THE ABOVE REQUIREMENTS, INCLUDING MOBILIZATION, AND SITE ACCESS.

THE DEPARTMENT WILL PAY FOR TESTING AND EVALUATION OF THE ACCEPTED DEMONSTRATION SHAFT SEPARATELY.

THE DEPARTMENT WILL NOT PAY FOR TESTING AND EVALUATION FOR ADDITIONAL DEMONSTRATION DRILLED SHAFTS.

THE DEPARTMENT WILL PAY FOR ACCEPTED QUANTITIES AT THE CONTRACT PRICE AS FOLLOWS: ITEM 524 DRILLED SHAFTS, MISC.: DEMONSTRATION DRILLED SHAFT.

ITEM 524 - DRILLED SHAFTS, MISC.: THERMAL INTEGRITY PROFILER (TIP) TEST

PERFORM INTEGRITY TESTING ON 3 OF THE DRILLED SHAFTS AT RETAINING WALL AH BY THERMAL INTEGRITY PROFILING (TIP). PERFORM TIP TESTING PER ASTM D7949, "STANDARD TEST METHODS FOR THERMAL INTEGRITY PROFILING OF CONCRETE DEEP FOUNDATIONS," METHOD B.

ITEM SPECIAL - STRUCTURES: VIBRATION MONITORING

THIS PAY ITEM IS SPECIFICALLY INTENDED FOR THE PROTECTION OF THE WALKER WEEKS BUILDING, 2351 CARNEGIE AVENUE, CLEVELAND, OH 44115.

THIS WORK IS INCLUDED AND PAID FOR WITH THE CUY-90-1696 (BRIDGE 14) PLANS. SEE BRIDGE 14 PLANS FOR DETAILED NOTES.

ITEM SPECIAL - STRUCTURES: PRECONSTRUCTION/POST CONSTRUCTION CONDITION SURVEY

THIS PAY ITEM IS SPECIFICALLY INTENDED FOR THE PROTECTION OF THE WALKER WEEKS BUILDING, 2351 CARNEGIE AVENUE, CLEVELAND, OH 44115.

THIS WORK IS INCLUDED AND PAID FOR WITH THE CUY-90-1696 (BRIDGE 14) PLANS. SEE BRIDGE 14 PLANS FOR DETAILED NOTES.

ITEM 503 - UNCLASSIFIED EXCAVATION, AS PER PLAN

THIS ITEM INCLUDES ALL EXCAVATION NECESSARY TO CONSTRUCT WALL AH. THIS ALSO INCLUDES THE ADDITIONAL EXCAVATION BELOW THE TANGENT DRILLED SHAFT CAP TO COMPLETE THE INSTALLATION OF THE CUY-90-1696 (BRIDGE 14) REAR ABUTMENT DRAINAGE.

THE DEPARTMENT WILL PAY FOR THIS ITEM AT THE CONTRACT LUMP SUM PRICE FOR ITEM 503 UNCLASSIFIED EXCAVATION, AS PER PLAN.

ITEM 511 - CLASS QC1 CONCRETE WITH QC/QA, ABUTMENT NOT INCLUDING FOOTING, AS PER PLAN

THIS WORK CONSISTS OF ALL LABOR, MATERIALS, EQUIPMENT, AND INCIDENTALS TO CONSTRUCT THE DRILLED TANGENT SHAFT CAP AND FENCE WALL ABOVE THE CAP. REINFORCING STEEL SHALL BE INCLUDED WITH ITEM 509.

THE DEPARTMENT WILL PAY FOR ACCEPTED QUANTITIES AT THE CONTRACT PRICE AS FOLLOWS: ITEM 511 CLASS QC1 CONCRETE WITH QC/QA, ABUTMENT NOT INCLUDING FOOTING, AS PER PLAN.

ITEM 511 - CLASS QC1 CONCRETE WITH QC/QA, RETAINING/WINGWALL NOT INCLUDING FOOTING, AS PER PLAN

THIS WORK CONSISTS OF ALL LABOR, MATERIALS, EQUIPMENT, AND INCIDENTALS TO CONSTRUCT THE RETAINING WALL CAST-IN-PLACE CONCRETE FACING BELOW THE TANGENT DRILLED SHAFT CAP. REINFORCING STEEL SHALL BE INCLUDED WITH ITEM 509.

THE DEPARTMENT WILL PAY FOR ACCEPTED QUANTITIES AT THE CONTRACT PRICE AS FOLLOWS: ITEM 511 CLASS QC1 CONCRETE WITH QC/QA, RETAINING/WINGWALL NOT INCLUDING FOOTING, AS PER PLAN.

ITEM 511 - CONCRETE, MISC.: ARCHITECTURAL TREATMENT

THIS WORK CONSISTS OF ALL LABOR, MATERIALS, EQUIPMENT, AND INCIDENTALS TO CONSTRUCT THE ARCHITECTURAL TREATMENTS IN THE CONCRETE SURFACE OF THE RETAINING WALL.

THE DEPARTMENT WILL PAY FOR ACCEPTED QUANTITIES AT THE CONTRACT PRICE AS FOLLOWS: ITEM 511 CONCRETE, MISC.: ARCHITECTURAL TREATMENT.

ITEM 601 - PAVED GUTTER, MISC.: PAVED GUTTER

THIS WORK CONSISTS OF ALL LABOR, MATERIALS, EQUIPMENT, AND INCIDENTALS TO CONSTRUCT THE PAVED GUTTER BEHIND THE WALL AS DETAILED IN THE PLANS.

THE DEPARTMENT WILL PAY FOR ACCEPTED QUANTITIES AT THE CONTRACT PRICE AS FOLLOWS: ITEM 601 PAVED GUTTER, MISC.: PAVED GUTTER

ITEM 607 - VANDAL PROTECTION FENCE, 8' STRAIGHT, COATED FABRIC, AS PER PLAN

INSTALL VANDAL PROTECTION FENCE ACCORDING TO STD. CONSTRUCTION DRAWING VPF-1-90 AND C&MS 607, EXCEPT AS MODIFIED BELOW.

POSTS, PLATES, TIE WIRES, CAULK AND ADDITIONAL VISIBLE HARDWARE SHALL BE COLOR BLACK (FEDERAL STD. 595C #17038). FENCE FABRIC SHALL BE BLACK VINYL-COATED, CHAIN LINK STYLE. MOUNT FENCING TO TOP OF RETAINING WALL WITH CAST-IN-PLACE ANCHORS.

SECTION/DETAIL/VIEW CALLOUTS



(SEE SECTION A ON SHEET 10) (SECTION A CUT FROM SHEET 10)

PLAN ABBREVIATIONS:

ABUT. = ABUTMENT
APPR. = APPROACH
B = BOTTOM
℄ = BASELINE
BM = BENCHMARK
BOT. OR BTM. = BOTTOM
℄ = CENTERLINE
C/C = CENTER TO CENTER
C.I.P. = CAST-IN-PLACE
C.J. = CONSTRUCTION JOINT
CLR. = CLEAR
CMS = CONSTRUCTION AND MATERIAL SPECIFICATIONS
CONC. = CONCRETE
CONST. = CONSTRUCTION
DIA. = DIAMETER
DIM. = DIMENSION
DTBD = DISPOSITION TO BE DETERMINED
DWG. = DRAWING
EB = EASTBOUND
E.F. = EACH FACE
EL. OR ELEV. = ELEVATION
EQ. = EQUAL
EST. = ESTIMATED
EX. = EXISTING
F.A. = FORWARD ABUTMENT
F/F = FACE TO FACE
F.F. = FAR FACE
FT. = FOOT OR FEET
FTG. = FOOTING
FWD. = FORWARD
IN. = INCH
JT. = JOINT
LT. = LEFT
MAX. = MAXIMUM
MIN. = MINIMUM
MISC. = MISCELLANEOUS
N = NORTH
NB = NORTHBOUND
N.F. = NEAR FACE
NO. = NUMBER
N.P.C.P.P. = NON-PERFORATED CORRUGATED PLASTIC PIPE
OHWM = ORDINARY HIGH WATER MARK
O/O = OUT TO OUT
P.C.P.P. = PERFORATED CORRUGATED PLASTIC PIPE
P.E.J.F. = PREFORMED EXPANSION JOINT FILLER
PROP. = PROPOSED
PSF = POUNDS PER SQUARE FOOT
R.A. = REAR ABUTMENT
S = SOUTH
SB = SOUTHBOUND
SER. = SERIES
SHLDR = SHOULDER
SPA. = SPACE OR SPACES
STA. = STATION
STD. = STANDARD
STR = STRAIGHT
T = TOP
T&B = TOP & BOTTOM
TBR = TO BE REMOVED
TBRBO = TO BE RELOCATED BY OTHERS
TEMP. = TEMPORARY
TYP. = TYPICAL
U.N.O. = UNLESS NOTED OTHERWISE
VAR. = VARIES
WB = WESTBOUND
WWR = WELDED WIRE REINFORCEMENT

For Reference Only
Preliminary Plans - For

GENERAL NOTES (2 OF 2)
WALL AH
ALONG NORTH SIDE OF I.R. 90 UNDER CARNEGIE AVE.

SFN N/A
DESIGN AGENCY
Michael Baker INTERNATIONAL
DESIGNER SW/GZ | CHECKER JC/SD
REVIEWER LPC 05-09-24
PROJECT ID 82382
SUBSET 3 | TOTAL 9
SHEET 1243 | TOTAL 2696

CUY-90-16.28

MODEL: Untitled Sheet PAPERSIZE: 34x22 (in.) DATE: 6/11/2025 TIME: 1:11:45 PM USER: Tolga.Feran
pw:\\mb-us-pw.bentley.com:mb-us-pw-03\Documents\Cleveland_OH01_Projects\ODOTDistrict12\82382400-Engineering\Structures\WALL_AH\Sheets\82382_AH_WN002.dgn

ESTIMATED QUANTITIES

CALCULATED BY: ZES DATE: 04/24/24
CHECKED BY: SSW DATE: 05/14/24

PARTICIPATION	ITEM	ITEM EXT.	TOTAL	UNIT	DESCRIPTION	SHEET REF.
01/IMS/04	503	21301	LS		UNCLASSIFIED EXCAVATION, AS PER PLAN	3
01/IMS/04	509	10000	15,638	LB	EPOXY COATED STEEL REINFORCEMENT	
01/IMS/04	511	44113	105	CY	CLASS QC1 CONCRETE WITH QC/QA, ABUTMENT NOT INCLUDING FOOTING, AS PER PLAN	3
01/IMS/04	511	46013	68	CY	CLASS QC1 CONCRETE WITH QC/QA, RETAINING/WINGWALL NOT INCLUDING FOOTING, AS PER PLAN	3
01/IMS/04	511	71200	2,009	SF	CONCRETE, MISC.: ARCHITECTURAL TREATMENT	3
01/IMS/04	512	10001	109	SY	SEALING OF CONCRETE SURFACES, AS PER PLAN (PERMANENT GRAFFITI PROTECTION)	2
01/IMS/04	512	10101	261	SY	SEALING OF CONCRETE SURFACES (EPOXY-URETHANE), AS PER PLAN	2
01/IMS/04	513	20000	378	EACH	WELDED STUD SHEAR CONNECTORS	
01/IMS/04	516	13600	64	SF	1" PREFORMED EXPANSION JOINT FILLER	
01/IMS/04	518	20000	237	SY	PREFABRICATED GEOCOMPOSITE DRAIN	
01/IMS/04	518	21200	46	CY	POROUS BACKFILL WITH GEOTEXTILE FABRIC	
01/IMS/04	518	40000	200	FT	6" PERFORATED CORRUGATED PLASTIC PIPE	
01/IMS/04	518	40010	30	FT	6" NON-PERFORATED CORRUGATED PLASTIC PIPE, INCLUDING SPECIALS	
01/IMS/04	524	94801	642	FT	DRILLED SHAFTS, 42" DIAMETER, AS PER PLAN	2
01/IMS/04	524	94901	1,778	FT	DRILLED SHAFTS, 48" DIAMETER, AS PER PLAN	2
01/IMS/04	524	95100	1	EACH	DRILLED SHAFTS, MISC.: DEMONSTRATION DRILLED SHAFT	3
01/IMS/04	601	40000	100	FT	PAVED GUTTER, MISC.: PAVED GUTTER	3
01/IMS/04	607	39911	98	FT	VANDAL PROTECTION FENCE, 8' STRAIGHT, COATED FABRIC, AS PER PLAN	3
01/IMS/04	894	10000	3	EACH	THERMAL INTEGRITY PROFILING (TIP) TEST	

Preliminary Plans - For Reference Only

ESTIMATED QUANTITIES
WALL AH
ALONG NORTH SIDE OF I.R. 90 UNDER CARNEGIE AVE.

SFN
N/A

DESIGN AGENCY
Michael Baker INTERNATIONAL

DESIGNER	CHECKER
SW/GZ	JC/SD

REVIEWER
LPC 05-09-24

PROJECT ID
82382

SUBSET	TOTAL
4	9

SHEET	TOTAL
1244	2696

CUY-90-16.28 (CCG3A)

MODEL: Untitled Sheet PAPERSIZE: 34x22 (in.) DATE: 6/11/2025 TIME: 1:14:49 PM USER: Tolga.Feran
pw:\\mb-us-pw.bentley.com:mb-us-pw-03\Documents\Cleveland_OH\01_Projects\ODOT\District12\82382\400-Engineering\Structures\WALL_AH\Sheets\82382_AH_WQ001.dgn

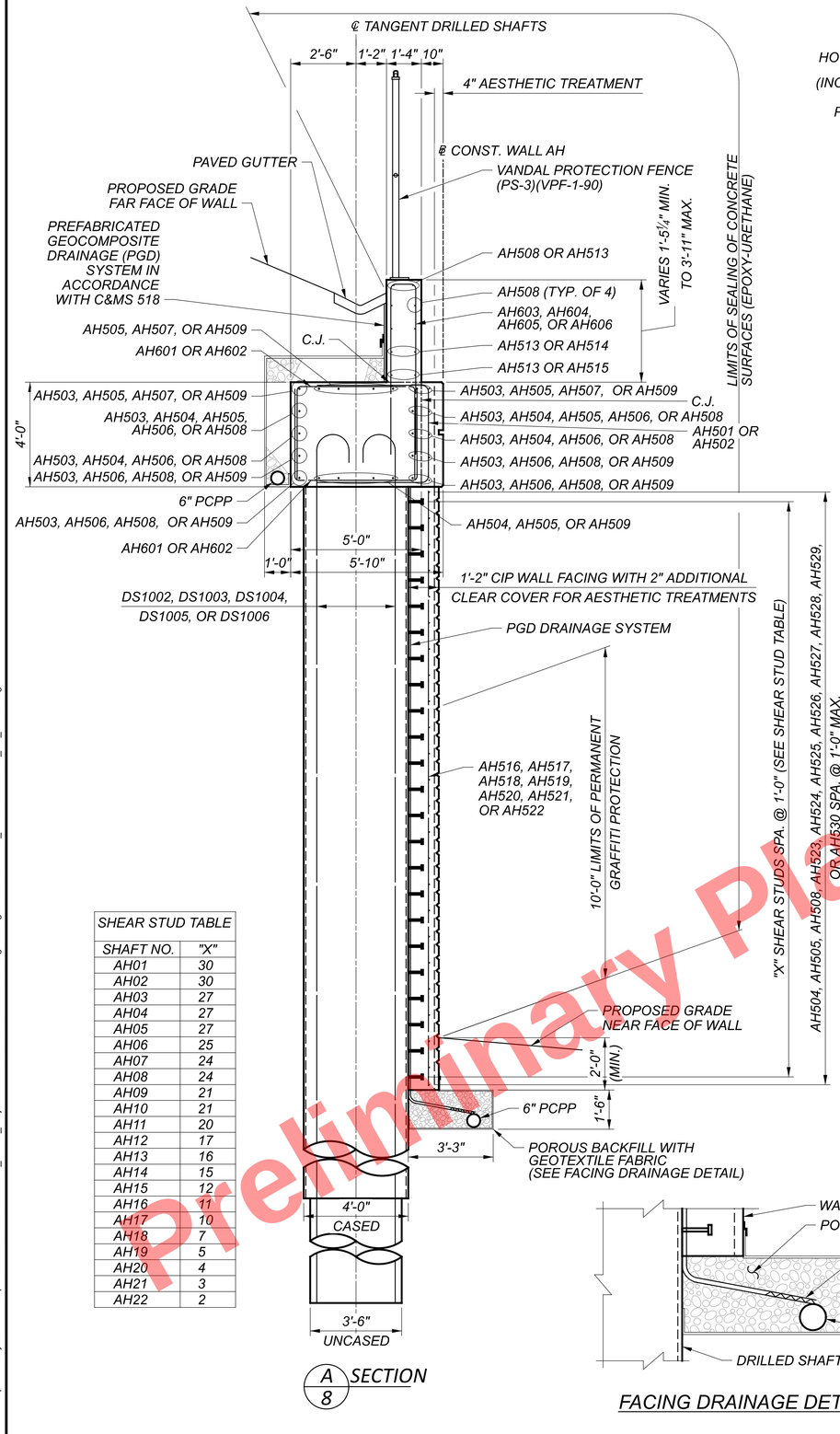

A 8 SECTION

SHEAR STUD TABLE	
SHAFT NO.	"X"
AH01	30
AH02	30
AH03	27
AH04	27
AH05	27
AH06	25
AH07	24
AH08	24
AH09	21
AH10	21
AH11	20
AH12	17
AH13	16
AH14	15
AH15	12
AH16	11
AH17	10
AH18	7
AH19	5
AH20	4
AH21	3
AH22	2

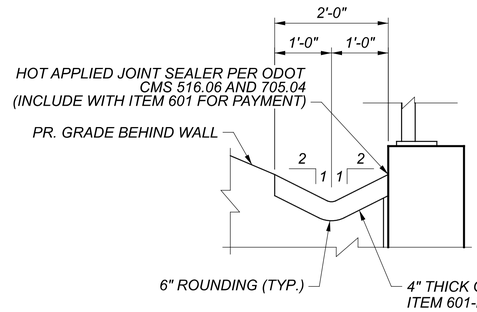

PAVED GUTTER DETAIL

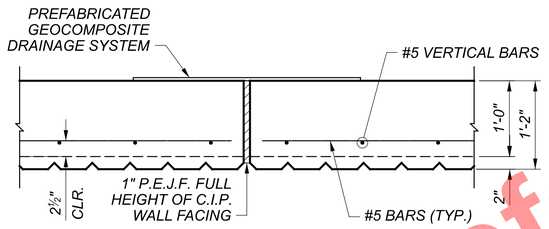

TYPICAL EXPANSION JOINT DETAIL

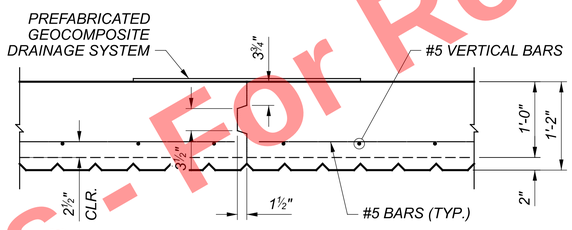

TYPICAL CONTRACTION JOINT DETAIL

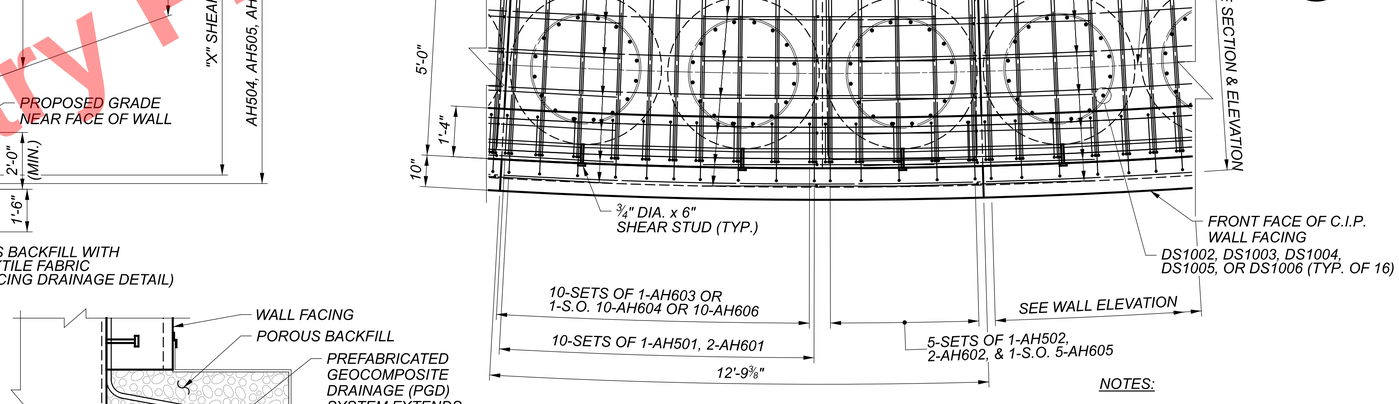

TYPICAL DRILLED SHAFT CAP PLAN

FACING DRAINAGE DETAIL

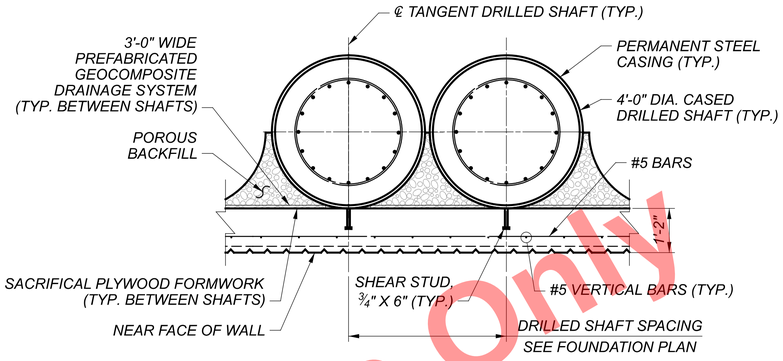

TYPICAL TANGENT DRILLED SHAFT WALL PLAN

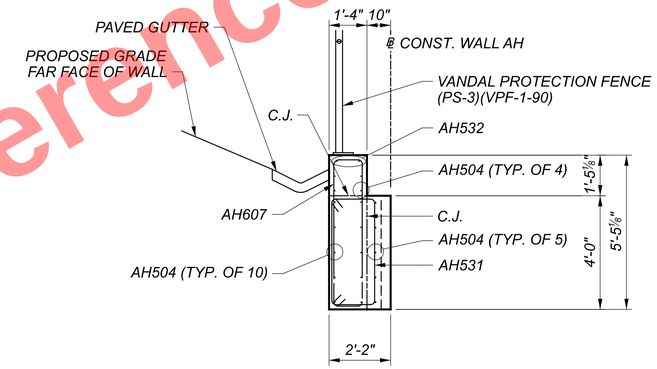

B 8 SECTION

NOTES:

1. PAYMENT FOR DRILLED SHAFTS INSTALLED IN ACCORDANCE WITH THE PLANS AND SPECIFICATIONS SHALL BE MADE UNDER ITEM 524-DRILLED SHAFTS, 48" DIAMETER, ITEM 524-DRILLED SHAFTS, 48" DIAMETER, AS PER PLAN OR ITEM 524-DRILLED SHAFTS, 42" DIAMETER, AS PER PLAN.
2. FOR DRILLED SHAFT SCHEDULES SEE SHEET 7 OF 9 .
3. SEE LANDSCAPING PLANS FOR WALL AESTHETIC TREATMENT DETAILS.

WALL TYPICAL SECTION
WALL AH
ALONG NORTH SIDE OF I.R. 90 UNDER CARNEGIE AVE.

CUY-90-16.28 (CCG3A)

SFN N/A

DESIGN AGENCY
Michael Baker INTERNATIONAL

DESIGNER	CHECKER
SW/GZ	JC/SD

REVIEWER LPC 05-09-24

PROJECT ID 82382

SUBSET	TOTAL
5	9

SHEET	TOTAL
1245	2696

Preliminary Plans - Not For Reference Only

MODEL: Sheet PAPERSIZE: 34x22 (in.) DATE: 3/27/2025 TIME: 11:06:56 PM USER: Julie.Ross
pw:\\mb-us-pw.bentley.com:mb-us-pw-03\Documents\Cleveland_OH\01_Projects\ODOT\District12\82382\400-Engineering\Structures\WALL_AH\Sheets\82382_AH_WY001.dgn

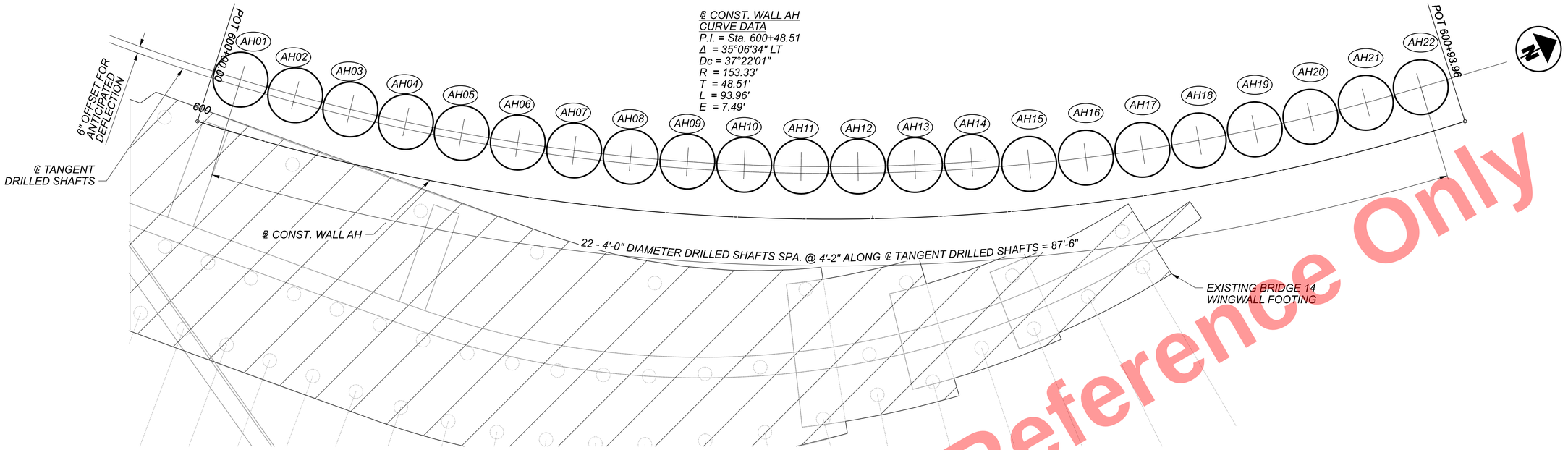

Preliminary Plans - For Reference Only

WALL AH DRILLED SHAFT SCHEDULE

DESIGNATION	INITIAL NORTHING	INITIAL EASTING	DIAMETER	TOP ELEV.	TIP ELEV.	TOTAL LENGTH (FT.)	PRIMARY REINFORCING	CONFINEMENT REINFORCING	CASING LENGTH	CASING THICKNESS	DESIGN FINAL NORTHING	DESIGN FINAL EASTING
AH01	668880.69	2195497.53	48"	665.57	543.00	122.6	12 SETS OF 4-DS1001& 1-DS1002	1-DS SP501& 1-DS SP403	93.6	1.25"	668880.35	2195497.90
AH02	668883.76	2195500.32	48"	665.57	543.00	122.6	12 SETS OF 4-DS1001& 1-DS1002	1-DS SP501& 1-DS SP403	93.6	1.25"	668883.43	2195500.70
AH03	668886.91	2195503.03	48"	663.73	543.00	120.7	12 SETS OF 4-DS1001& 1-DS1002	1-DS SP501& 1-DS SP404	91.7	1.25"	668886.59	2195503.41
AH04	668890.14	2195505.65	48"	663.73	543.00	120.7	12 SETS OF 4-DS1001& 1-DS1002	1-DS SP501& 1-DS SP404	91.7	1.25"	668889.83	2195506.04
AH05	668893.43	2195508.17	48"	663.73	543.00	120.7	12 SETS OF 4-DS1001& 1-DS1002	1-DS SP501& 1-DS SP404	91.7	1.25"	668893.14	2195508.58
AH06	668896.80	2195510.61	48"	661.90	543.00	118.9	12 SETS OF 4-DS1001& 1-DS1003	1-DS SP501& 1-DS SP405	89.9	1.25"	668896.51	2195511.02
AH07	668900.23	2195512.95	48"	661.90	543.00	118.9	12 SETS OF 4-DS1001& 1-DS1003	1-DS SP501& 1-DS SP405	89.9	1.25"	668899.95	2195513.37
AH08	668903.72	2195515.19	48"	661.90	543.00	118.9	12 SETS OF 4-DS1001& 1-DS1003	1-DS SP501& 1-DS SP405	89.9	1.25"	668903.46	2195515.62
AH09	668907.28	2195517.34	48"	660.07	547.00	113.1	12 SETS OF 4-DS1001& 1-DS1004	1-DS SP502 & 1-DS SP406	92.1	1.25"	668907.03	2195517.77
AH10	668910.89	2195519.39	48"	660.07	547.00	113.1	12 SETS OF 4-DS1001& 1-DS1004	1-DS SP502 & 1-DS SP406	92.1	1.25"	668910.65	2195519.82
AH11	668914.56	2195521.33	48"	660.07	547.00	113.1	12 SETS OF 4-DS1001& 1-DS1004	1-DS SP502 & 1-DS SP406	92.1	1.25"	668914.33	2195521.78
AH12	668918.28	2195523.17	48"	658.23	547.00	111.2	12 SETS OF 4-DS1001& 1-DS1004	1-DS SP502 & 1-DS SP407	90.2	1.25"	668918.07	2195523.62
AH13	668922.06	2195524.91	48"	658.23	547.00	111.2	12 SETS OF 4-DS1001& 1-DS1004	1-DS SP502 & 1-DS SP407	90.2	1.25"	668921.85	2195525.37
AH14	668925.87	2195526.54	48"	658.23	547.00	111.2	12 SETS OF 4-DS1001& 1-DS1004	1-DS SP502 & 1-DS SP407	90.2	1.25"	668925.68	2195527.01
AH15	-	-	48"	656.40	552.00	104.4	12 SETS OF 4-DS1001& 1-DS1005	1-DS SP503 & 1-DS SP408	73.4	0.75"	668929.56	2195528.54
AH16	-	-	48"	656.40	552.00	104.4	12 SETS OF 4-DS1001& 1-DS1005	1-DS SP503 & 1-DS SP408	73.4	0.75"	668933.48	2195529.96
AH17	-	-	48"	656.40	552.00	104.4	12 SETS OF 4-DS1001& 1-DS1005	1-DS SP503 & 1-DS SP408	73.4	0.75"	668937.43	2195531.28
AH18	-	-	48"	654.57	552.00	102.6	12 SETS OF 4-DS1001& 1-DS1005	1-DS SP503 & 1-DS SP409	71.6	0.75"	668941.42	2195532.48
AH19	-	-	48"	654.57	563.00	91.6	12 SETS OF 3-DS1001& 1-DS1006	1-DS SP504 & 1-DS SP410	51.6	0.50"	668945.44	2195533.57
AH20	-	-	48"	654.57	563.00	91.6	12 SETS OF 3-DS1001& 1-DS1006	1-DS SP504 & 1-DS SP410	51.6	0.50"	668949.49	2195534.55
AH21	-	-	48"	654.57	563.00	91.6	12 SETS OF 3-DS1001& 1-DS1006	1-DS SP504 & 1-DS SP410	51.6	0.50"	668953.57	2195535.42
AH22	-	-	48"	654.57	563.00	91.6	12 SETS OF 3-DS1001& 1-DS1006	1-DS SP504 & 1-DS SP410	51.6	0.50"	668957.66	2195536.17

LEGEND:

(AHXX) INDICATES PROPOSED DRILLED SHAFT NUMBER.

INITIAL DRILLED SHAFT LOCATION

NOTES:

1. DRILLED SHAFTS ARE TO BE INSTALLED IN THE INITIAL POSITION INDICATED IN THE FOUNDATION PLAN. REFER TO THE GENERAL NOTES FOR DETAILS.
2. PAYMENT FOR DRILLED SHAFTS INSTALLED IN ACCORDANCE WITH THE PLANS AND SPECIFICATIONS SHALL BE MADE UNDER ITEM 524-DRILLED SHAFTS, 42" DIAMETER, AS PER PLAN AND ITEM 524-DRILLED SHAFTS, 48" DIAMETER, AS PER PLAN. REFER TO GENERAL NOTES.

FOUNDATION PLAN
WALL AH
ALONG NORTH SIDE OF I.R. 90 UNDER CARNEGIE AVE.

SFN N/A

DESIGN AGENCY
Michael Baker INTERNATIONAL

DESIGNER	CHECKER
SW/GZ	JC/SD

REVIEWER LPC 05-09-24

PROJECT ID 82382

SUBSET	TOTAL
6	9

SHEET	TOTAL
1246	2696

CUY-90-16.28 (CCG3A)

MODEL: Untitled Sheet PAPERSIZE: 34x22 (in.) DATE: 3/27/2025 TIME: 11:07:03 PM USER: Julie.Ross
pw:\\mb-us-pw.bentley.com:mb-us-pw-03\Documents\Cleveland_OH01_Projects\ODOT\District12\82382\400-Engineering\Structures\WALL_AH\Sheets\82382_AH_WT001.dgn

MARK	LENGTH	TYPE	DIMENSIONS		
			A	B	C
DRILLED SHAFT REINFORCEMENT (FOR INFORMATION ONLY)					
DS1001	30'-0"	STR.			
DS1002	30'-0"	16	28'-7"		
DS1003	26'-4"	16	24'-11"		
DS1004	20'-6"	16	19'-1"		
DS1005	11'-10"	16	10'-5"		
DS1006	23'-0"	16	21'-7"		
DS SP401	NOT	USED			
DS SP402	NOT	USED			
DS SP403	858'-8"	27	1'-0"	2'-10"	93'-5"
DS SP404	842'-4"	27	1'-0"	2'-10"	91'-7"
DS SP405	826'-0"	27	1'-0"	2'-10"	89'-9"
DS SP406	845'-3"	27	1'-0"	2'-10"	91'-11"
DS SP407	828'-11"	27	1'-0"	2'-10"	90'-1"
DS SP408	678'-11"	27	1'-0"	2'-10"	73'-3"
DS SP409	662'-7"	27	1'-0"	2'-10"	71'-5"
DS SP410	484'-5"	27	1'-0"	2'-10"	51'-5"
DS SP501	699'-7"	27	0'-4 1/2"	2'-10"	28'-10"
DS SP502	512'-9"	27	0'-4 1/2"	2'-10"	20'-10"
DS SP503	746'-3"	27	0'-4 1/2"	2'-10"	30'-10"
DS SP504	956'-5"	27	0'-4 1/2"	2'-10"	39'-10"

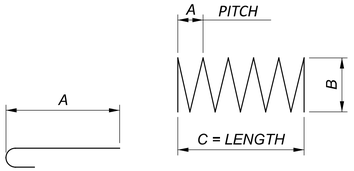

TYPE-16

TYPE-27

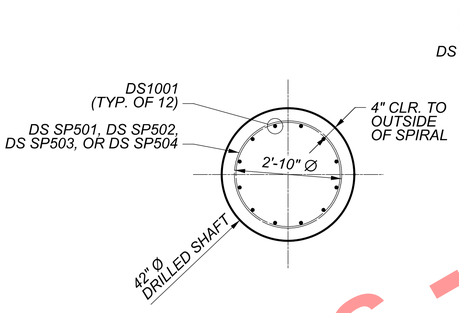

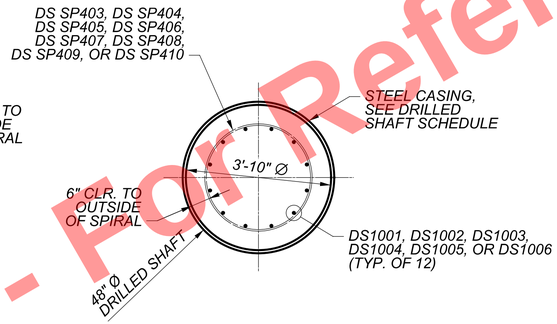

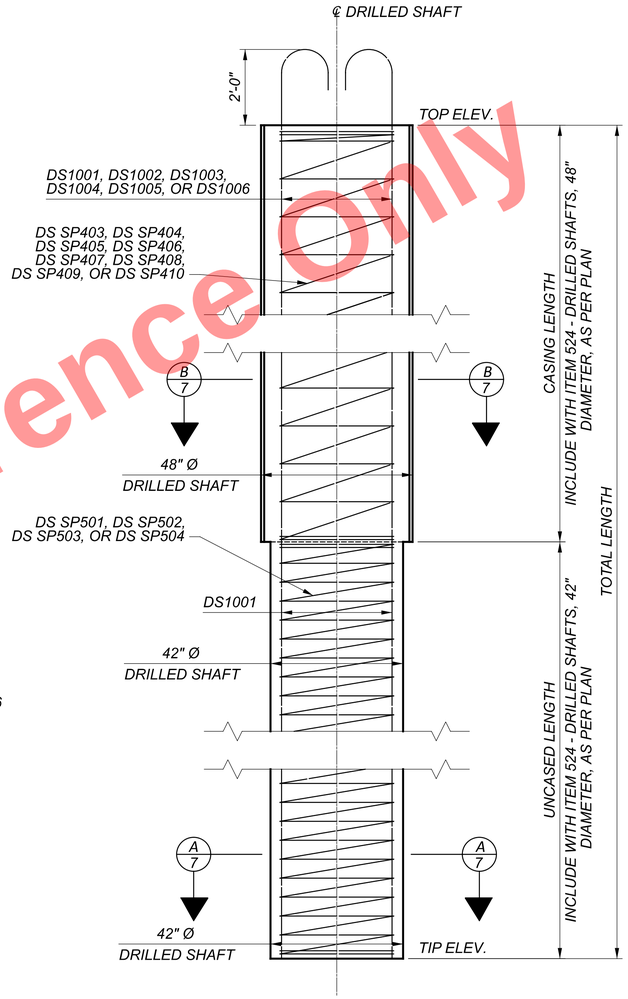

DRILLED SHAFT ELEVATION

A/7 SECTION

B/7 SECTION

LAP LENGTHS:

#10 BAR = 72"

NOTES:

1. DRILLED SHAFTS ARE TO BE INSTALLED IN THE INITIAL POSITION INDICATED IN THE FOUNDATION PLAN. REFER TO THE GENERAL NOTES FOR DETAILS.
2. PAYMENT FOR DRILLED SHAFTS INSTALLED IN ACCORDANCE WITH THE PLANS AND SPECIFICATIONS SHALL BE MADE UNDER ITEM 524-DRILLED SHAFTS, 42" DIAMETER, AS PER PLAN AND ITEM 524-DRILLED SHAFTS, 48" DIAMETER, AS PER PLAN. REFER TO GENERAL NOTES.

Preliminary Plans - For Reference Only

DRILLED SHAFT DETAILS
WALL AH
ALONG NORTH SIDE OF I.R. 90 UNDER CARNEGIE AVE.

SFN N/A

DESIGN AGENCY

Michael Baker INTERNATIONAL

DESIGNER	CHECKER
SW/GZ	JC/SD

REVIEWER LPC 05-09-24

PROJECT ID 82382

SUBSET	TOTAL
7	9

SHEET	TOTAL
1247	2696

CUY-90-16.28 (CCG3A)

MODEL: Untitled Sheet PAPERSIZE: 34x22 (in.) DATE: 3/27/2025 TIME: 11:07:10 PM USER: Julie.Ross
pw:\\mb-us-pw.bentley.com:mb-us-pw-03\Documents\Cleveland_OH\01_Projects\ODOT\District12\82382\400-Engineering\Structures\WALL_AH\Sheets\82382_AH_WC001.dgn

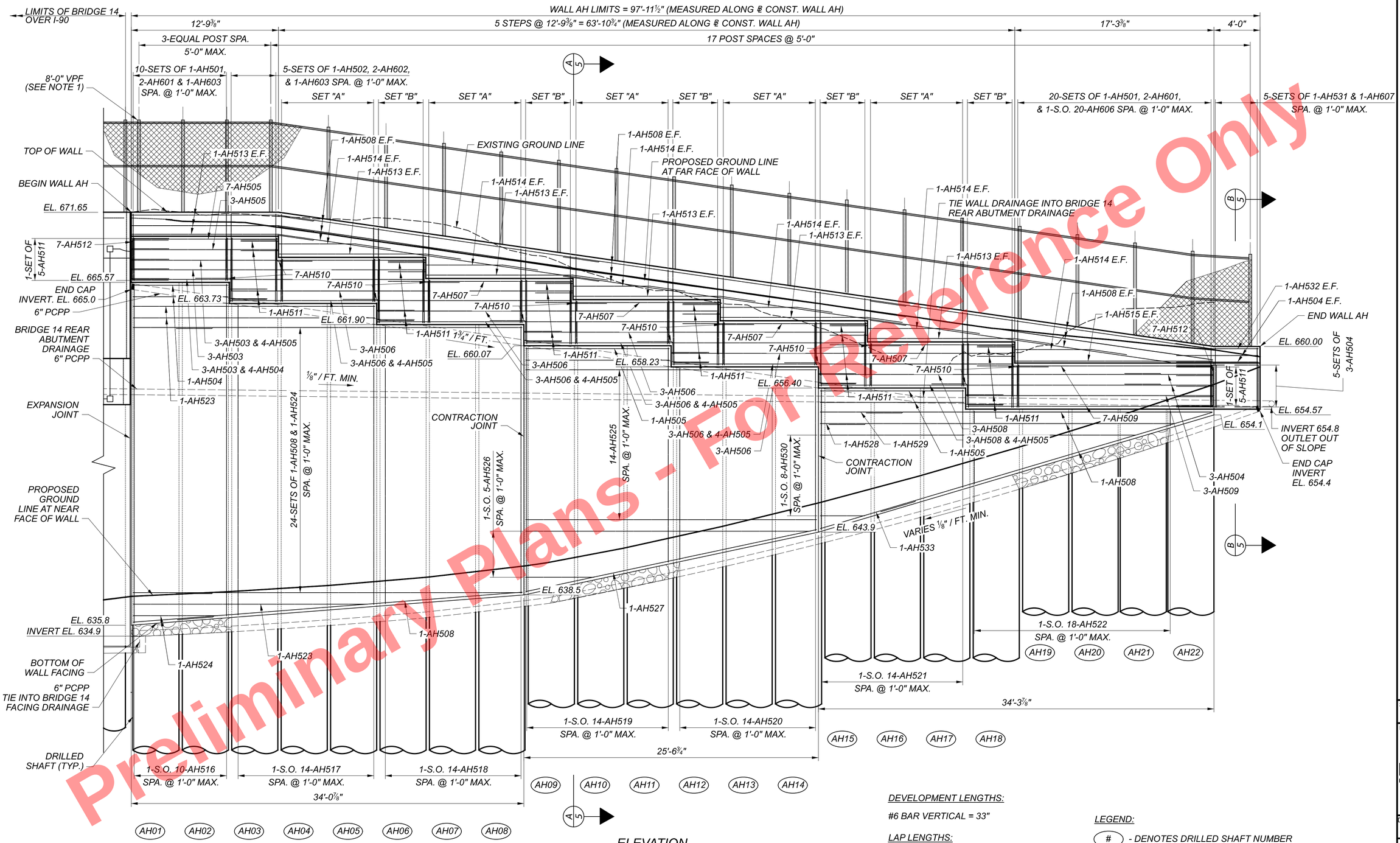

ELEVATION

Preliminary Plans - For Reference Only

DEVELOPMENT LENGTHS:

#6 BAR VERTICAL = 33"

LAP LENGTHS:

#5 BAR = 37"
#6 BAR VERTICAL = 43"

SET "A" = 10-SETS OF 1-AH501, 2-AH601 & 1-S.O. 10-AH604 SPA. @ 1'-0" MAX.

SET "B" = 5-SETS OF 1-AH502, 2-AH602 & 1-S.O. 5-AH605 SPA. @ 1'-0" MAX.

LEGEND:

(#) - DENOTES DRILLED SHAFT NUMBER

NOTES:

1. SEE ODOT STANDARD DRAWING VPF-1-90 FOR FENCE DETAILS.
2. FENCE POSTS SHALL BE INSTALLED PLUMB.

WALL ELEVATION
WALL AH
ALONG NORTH SIDE OF I.R. 90 UNDER CARNEGIE AVE.

SFN N/A

DESIGN AGENCY

Michael Baker INTERNATIONAL

DESIGNER	CHECKER
SW/GZ	JC/SD

REVIEWER LPC 05-09-24

PROJECT ID 82382

SUBSET	TOTAL
8	9

SHEET	TOTAL
1248	2696

CUY-90-16.28 (CCG3A)

MODEL: Untitled Sheet PAPERSIZE: 34x22 (in.) DATE: 3/27/2025 TIME: 11:07:31 PM USER: Julie.Ross
pw:\\mb-us-pw.bentley.com:mb-us-pw-03\Documents\Cleveland_OH01_Projects\ODOT\District12\82382\400-Engineering\Structures\WALL_AH\Sheets\82382_AH_WE001.dgn

MARK	MAT'RL TYPE	NUMBER REAR	NUMBER FWD.	NUMBER TOTAL	LENGTH	WEIGHT (LBS.)	TYPE	DIMENSIONS A	B	C	D	E	R	SER INC.
RETAINING WALL AH (EPOXY COATED STEEL REINFORCING ECSR)														
AH501	ECSR			80	10'-7"	883	2	3'-7"	3'-8"	3'-7"				
AH502	ECSR			30	14'-4"	448	2	5'-6"	3'-7"	5'-6"				
AH503	ECSR			9	25'-2"	236	STR							
AH504	ECSR			31	8'-2"	264	STR							
AH505	ECSR			38	12'-5"	493	STR							
AH506	ECSR			24	29'-6"	738	STR							
AH507	ECSR			28	16'-0"	467	STR							
AH508	ECSR			51	30'-0"	1596	STR							
AH509	ECSR			17	21'-2"	375	STR							
AH510	ECSR			42	7'-9"	339	8	3'-1"	1'-10"	3'-1"				
AH511	ECSR			34	10'-7"	375	2	3'-1"	4'-8"	3'-1"				
AH512	ECSR			14	9'-7"	140	2	3'-2"	3'-6"	3'-2"				
AH513	ECSR			16	15'-10"	264	19	12'-9 1/4"	3'-0 3/4"	0'-5 1/4"				
AH514	ECSR			12	9'-7"	120	19	6'-6 1/8"	3'-1"	0'-5 1/4"				
AH515	ECSR			2	17'-0"	35	STR							
				1	28'-10"									
AH516	ECSR			SER. OF	TO	304	STR							3/4"
				10	29'-5"									
				1	25'-11"									
AH517	ECSR			SER. OF	TO	386	STR							13/16"
				14	26'-10"									
				1	23'-2"									
AH518	ECSR			SER. OF	TO	344	STR							13/16"
				14	24'-0"									
				1	18'-7"									
AH519	ECSR			SER. OF	TO	291	STR							2 3/8"
				14	21'-3"									
				1	14'-1"									
AH520	ECSR			SER. OF	TO	224	STR							2 5/16"
				14	16'-7"									
				1	8'-5"									
AH521	ECSR			SER. OF	TO	150	STR							3 5/16"
				14	12'-1"									
				1	1'-3"									
AH522	ECSR			SER. OF	TO	72	STR							3 9/16"
				18	6'-4"									
AH523	ECSR			3	20'-11"	65	STR							
AH524	ECSR			25	6'-10"	178	STR							
AH525	ECSR			14	25'-3"	369	STR							
				1	5'-11"									
AH526	ECSR			SER. OF	TO	79	STR							4'-7 1/4"
				5	24'-4"									
AH527	ECSR			1	25'-10"	27	STR							
AH528	ECSR			1	3'-10"	4	STR							
AH529	ECSR			1	7'-1"	7	STR							
				1	3'-10"									
AH530	ECSR			SER. OF	TO	130	STR							3'-4 3/8"
				8	27'-5"									
AH531	ECSR			5	10'-10"	56	3	1'-6"	3'-8"					
AH532	ECSR			2	7'-2"	15	19	4'-1 3/8"	3'-0 5/8"	0'-5 1/2"				
AH533	ECSR			1	8'-6"	9	STR							
AH601	ECSR			160	11'-8"	2804	2	3'-8"	4'-8"	3'-8"				
AH602	ECSR			60	15'-4"	1382	2	5'-6"	4'-8"	5'-6"				
AH603	ECSR			15	8'-2"	184	2	1'-0"	6'-6"	1'-0"				
				5	11'-4"			5'-4"		5'-4"				
AH604	ECSR			SER. OF	TO	936	2	TO	1'-0"	TO				3"
				10	13'-7"			6'-5 1/2"		6'-5 1/2"				
				5	10'-1"			4'-8 3/8"		4'-8 3/8"				
AH605	ECSR			SER. OF	TO	399	2	TO	1'-0"	TO				3 5/16"
				5	11'-2"			5'-3"		5'-3"				
				1	10'-0"			4'-8"		4'-8"				
AH606	ECSR			SER. OF	TO	354	2	TO	1'-0"	TO				2 1/4"
				20	13'-7"			6'-5 1/2"		6'-5 1/2"				
AH607	ECSR			5	12'-9"	96	3	1'-0"	5'-1 3/4"					
RETAINING WALL AH ECSR SUBTOTAL						15638	LBS.							

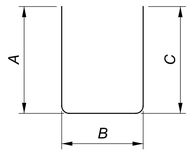

TYPE-2

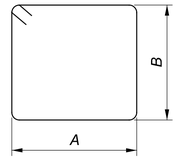

TYPE-3

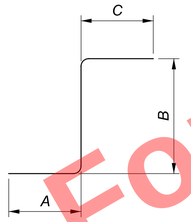

TYPE-8

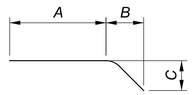

TYPE-19

Preliminary Plans - For Reference Only

NOTES:

1. SERIES BARS - EACH BAR VARIES BY TABULATED AMOUNT.
2. ALL DIMENSIONS ARE OUT TO OUT.
3. TYPE "STR" INDICATES STRAIGHT BAR.
4. THE BAR SIZE NUMBER IS SPECIFIED IN THE "MARK" COLUMN. THE FIRST DIGIT INDICATES THE BAR SIZE NUMBER.
5. ALL BARS SHALL BE EPOXY COATED UNLESS NOTED OTHERWISE.
6. SUBTOTALS AND TOTAL WEIGHTS ARE FOR INFORMATIONAL PURPOSES ONLY. IF THE REINFORCING LIST PROVIDED IN THE PLANS IS USED, IT SHALL BE VERIFIED BY THE CONTRACTOR. ANY REVISIONS IN THE REINFORCING STEEL LIST AS SHOWN IN THE PLANS WILL NOT BE REASON FOR ADJUSTMENT IN THE BID PRICE FOR STRUCTURAL CONCRETE.
7. USE STANDARD HOOKS FOR ENDS OF BARS NOT SPECIFICALLY DIMENSIONED IN DETAILS.

REINFORCING SCHEDULE
WALL AH
ALONG NORTH SIDE OF I.R. 90 UNDER CARNEGIE AVE.

SFN N/A

DESIGN AGENCY Michael Baker INTERNATIONAL

DESIGNER SW/GZ | CHECKER JC/SD

REVIEWER LPC 05-09-24

PROJECT ID 82382

SUBSET 9 | TOTAL 9

SHEET 1249 | TOTAL 2696

CUY-90-16.28 (CCG3A)

MODEL: Untitled Sheet PAPERSIZE: 34x22 (in.) DATE: 3/27/2025 TIME: 11:07:47 PM USER: Julie.Ross
pw:\\mb-us-pw.bentley.com:mb-us-pw-03\Documents\Cleveland_OH101_Projects\ODOT\District12\82382\400-Engineering\Structures\WALL_AH\Sheets\82382_AH_WL001.dgn

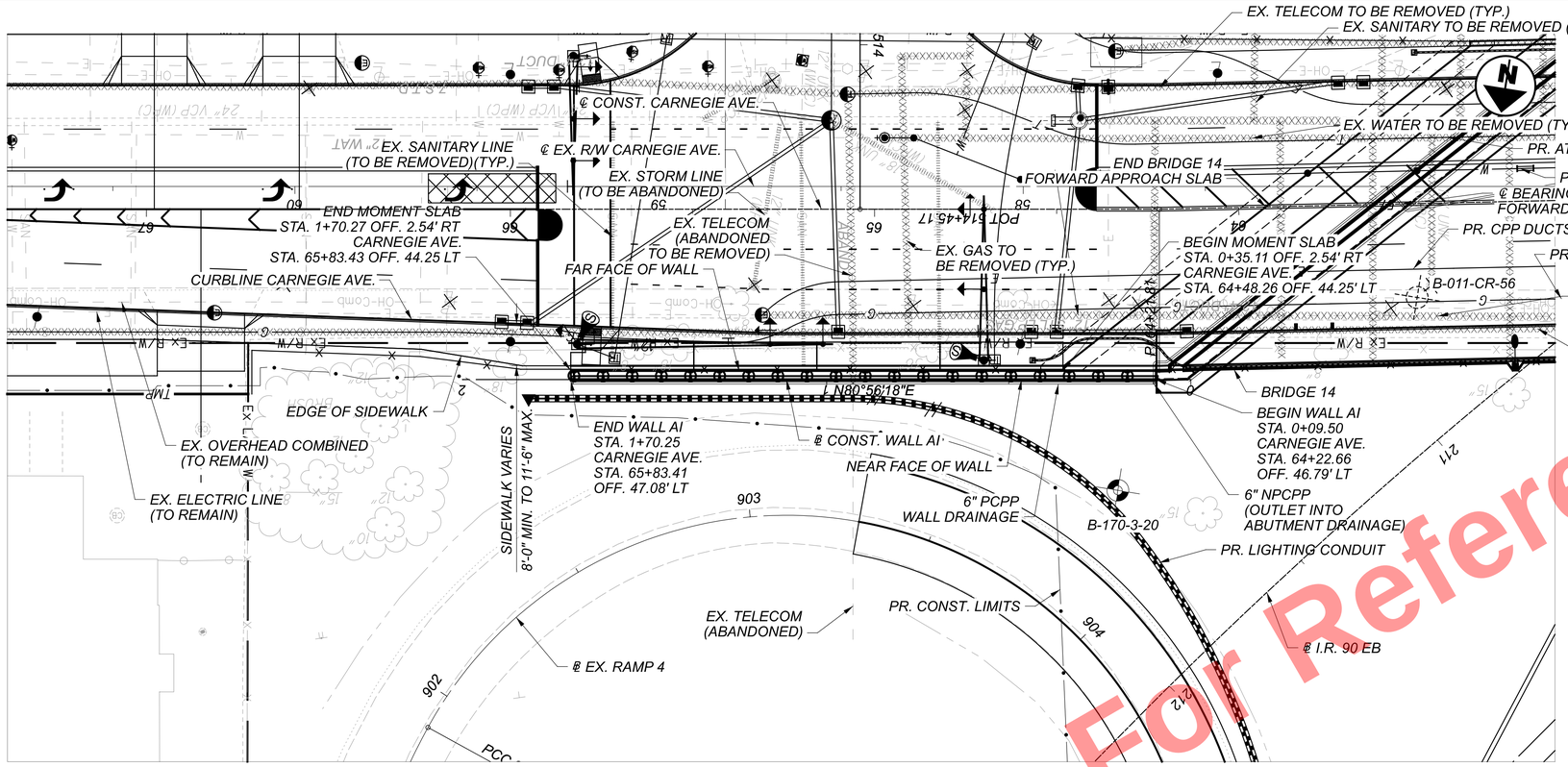

PLAN

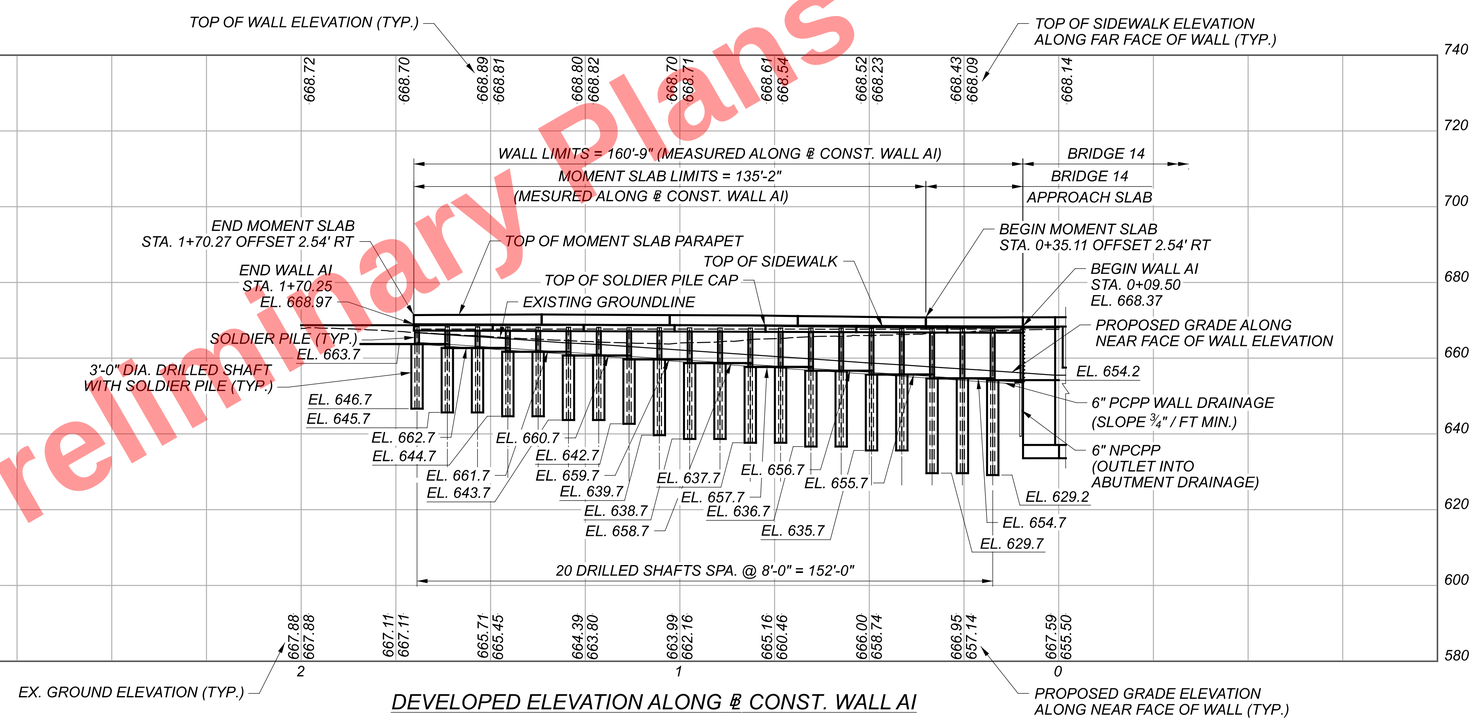

DEVELOPED ELEVATION ALONG ℄ CONST. WALL AI

BENCHMARK DATA

BM #62 STA.	41+38.42,	ELEV.	672.11,	OFFSET 75.42 LT.,	RR SPIKE
BM #64 STA.	58+35.86,	ELEV.	671.25,	OFFSET 47.90 LT.,	RR SPIKE
BM #65 STA.	66+35.73,	ELEV.	668.92,	OFFSET 38.62 RT.,	RR SPIKE
BM #73 STA.	49+25.90,	ELEV.	671.90,	OFFSET 31.86 LT.,	CUT CROSS

FOR ADDITIONAL BENCHMARK INFORMATION. SEE ROADWAY PLAN SHEET 4 / 2696

BORING LOCATION*

BORING	STATION	OFFSET	TOP OF ROCK EL.
B-011-CR-56	210+79.38	33.59' RT.	-
B-170-3-20	211+73.20	48.45' RT.	-

* = BORING STATION AND OFFSETS ARE FROM ℄ I.R. 90 EB

PROPOSED WORK

THE PROPOSED WORK CONSISTS OF CONSTRUCTING A RETAINING WALL ALONG THE NORTH SIDE OF CARNEGIE AVE. NEAR BRIDGE 14. THE WALL IS TO BE TOP DOWN CONSTRUCTION CONSISTING OF SOLDIER PILES AND PRECAST CONCRETE LAGGING WITH A CAST-IN-PLACE CONCRETE CAP.

NOTES

1. EARTHWORK LIMITS SHOWN ARE APPROXIMATE. ACTUAL SLOPES SHALL CONFORM TO PLAN CROSS SECTIONS.
2. FOR WALL CROSS SECTIONS, SEE SHEETS 942 TO 944 / 2696
3. STATION AND WALL OFFSETS SHOWN AT FRONT FACE OF WALL.

LEGEND

- HISTORIC BORING LOCATIONS
- INSTRUMENTED BORING LOCATION

CONST. = CONSTRUCTION

Preliminary Plans - For Reference Only

WALL PLAN AND PROFILE
WALL AI
ALONG NORTH SIDE OF CARNEGIE AVE.

SFN	N/A
DESIGN AGENCY	Michael Baker INTERNATIONAL
DESIGNER	MKB
CHECKER	YC
REVIEWER	LPC 05-09-24
PROJECT ID	82382
SUBSET	1
TOTAL	12
SHEET	1250
TOTAL	2696

CUY-90-16.28 (CCG3A)
MODEL: CLP_1 - Wall AI Plan PAPERSIZE: 34x22 (in.) DATE: 3/27/2025 TIME: 11:07:59 PM USER: Julie.Ross
pw:\\mb-us-pw.bentley.com:mb-us-pw-03\Documents\Cleveland_OH\01_Projects\ODOT\District12\82382\400-Engineering\Structures\WALL_AI\Sheets\82382_AI_WP001.dgn

STANDARD DRAWINGS AND SUPPLEMENTAL SPECIFICATIONS:

REFER TO THE FOLLOWING STANDARD CONSTRUCTION DRAWINGS:
VPF-1-90 REVISED 7/21/2023
BR-2-15 REVISED 1/21/2022

REFER TO THE FOLLOWING SUPPLEMENTAL SPECIFICATION:
800 DATED SEE TITLE SHEET

REFER TO THE FOLLOWING SUPPLEMENTS:
1073 DATED 4/21/2023
1083 DATED 1/20/2017

DESIGN SPECIFICATIONS:

THIS STRUCTURE CONFORMS TO THE "LRFD BRIDGE DESIGN SPECIFICATIONS", 9TH EDITION, ADOPTED BY THE AMERICAN ASSOCIATION OF STATE HIGHWAY AND TRANSPORTATION OFFICIALS, 2020 AND THE ODOT BRIDGE DESIGN MANUAL, 2020 (DATED 07-21-23).

DESIGN DATA:

CONCRETE CLASS QC1 - COMPRESSIVE STRENGTH 4.0 KSI (PRECAST LAGGING)
CONCRETE CLASS QC2 - COMPRESSIVE STRENGTH 4.5 KSI (MOMENT SLAB)
CONCRETE CLASS QC5 - COMPRESSIVE STRENGTH 4.5 KSI (DRILLED SHAFTS)
REINFORCING STEEL / WELDED WIRE REINFORCEMENT - MINIMUM YIELD STRENGTH 60 KSI
STEEL SOLDIER PILES - ASTM A572 - YIELD STRENGTH 50 KSI
RETENTION ANGLE - ASTM A709 - YIELD STRENGTH 50 KSI

SEQUENCE OF CONSTRUCTION:

CONSTRUCT WALL AI DURING MOT PHASE 3.

SEE MAINTENANCE OF TRAFFIC NOTES FOR ADDITIONAL PHASES AND INFORMATION.

ITEM 507 - STEEL PILES, MISC.: W24x162, FURNISHED
ITEM 507 - STEEL PILES, MISC.: W24x229, FURNISHED

THIS WORK CONSISTS OF FURNISHING AND PLACING STEEL SOLDIER PILES INTO DRILLED HOLES. FURNISH SOLDIER PILES CONSISTING OF STRUCTURAL STEEL MEMBERS THAT MEET THE PLAN REQUIREMENTS AND CONFORM TO ASTM A572, GRADE 50 IN ACCORDANCE WITH C&MS 711.01. GALVANIZE SOLDIER PILES AS SHOWN ON THE PLANS AND IN ACCORDANCE WITH C&MS 711.02. DO NOT FIELD WELD OR SPLICE STEEL SOLDIER PILES.

THE DEPARTMENT WILL MEASURE SOLDIER PILES ALONG THE AXIS OF THE SOLDIER PILE FROM THE TOP OF WALL ELEVATION TO THE BOTTOM OF THE DRILLED SHAFT, AS DETERMINED BY THE ENGINEER. THE DEPARTMENT WILL PAY FOR SOLDIER PILES AT THE CONTRACT UNIT PRICE PER FOOT FOR ITEM 507, STEEL PILES, MISC.: W24x162, FURNISHED AND ITEM 507, STEEL PILES, MISC.: W24x229, FURNISHED.

ITEM 511 - CONCRETE, MISC.: CLASS QC1 CONCRETE FOR RAISED PANEL SEAT

PROVIDE LEVEL CAST-IN-PLACE SEATS FOR LEVEL INSTALLATION OF THE BOTTOM ROW OF LAGGING. SEATS SHALL BE PLACED AS SHOWN IN THE PLANS ON SOUND CONCRETE FROM THE SOLDIER PILE DRILLED SHAFT.

THE CONTRACTOR IS PERMITTED TO USE A PRECAST ALTERNATIVE SUBJECT TO APPROVAL OF THE ENGINEER.

ITEM 511 - CLASS QC2 CONCRETE, MISC.: MOMENT SLAB AND PARAPET WITH QC/QA

ALL MATERIAL, LABOR AND INCIDENTALS NECESSARY TO FURNISH AND PLACE CONCRETE FOR THE MOMENT SLABS AND PARAPETS ALONG WALL AI SHALL BE INCLUDED FOR PAYMENT WITH ITEM 511, CLASS QC2 CONCRETE, MISC.: MOMENT SLAB AND PARAPET WITH QC/QA. PAYMENT FOR THIS ITEM SHALL INCLUDE ALL DOWEL RODS, SLEEVES, AND ALL JOINT MATERIALS IN CONTACT WITH THE MOMENT SLAB. ALL REINFORCING STEEL EMBEDDED IN THE MOMENT SLAB AND WITHIN THE PARAPET SHALL BE INCLUDED WITH ITEM 509, EPOXY COATED REINFORCING STEEL FOR PAYMENT. THIS ITEM SHALL ALSO REQUIRE QUALITY CONTROL, MEETING THE REQUIREMENTS PER CMS 455 AND CMS 511.04.

ITEM 511 - CLASS QC1 CONCRETE WITH QC/QA, RETAINING/WINGWALL NOT INCLUDING FOOTING, AS PER PLAN

ALL PORTIONS OF THE WALL CAP SHALL BE PAID FOR UNDER THIS ITEM, UNLESS NOTED OTHERWISE. THIS INCLUDES, BUT IS NOT LIMITED TO WALL CAP CONCRETE, PEJF, JOINT SEALER, AND ANY OTHER INCIDENTALS REQUIRED TO COMPLETE THE WALL CAP.

PAYMENT FOR THE ABOVE COMPLETED AND ACCEPTED QUANTITIES WILL BE MADE AT THE CONTRACT BID PRICE PER CUBIC YARD FOR ITEM 511 - CLASS QC1 CONCRETE WITH QC/QA, RETAINING/WINGWALL NOT INCLUDING FOOTING, AS PER PLAN.

ITEM 512 - SEALING OF CONCRETE SURFACES (EPOXY-URETHANE), AS PER PLAN

SEAL SURFACES OF THE PRECAST CONCRETE LAGGING AND CAST IN PLACE CONCRETE CAP AS SHOWN IN THE PLANS WITH AN EPOXY-URETHANE SEALER ACCORDING TO C&MS 512. THE FOLLOWING COLORS SHALL BE USED FOR PAINTING AND SEALING STRUCTURAL ELEMENTS:

LAGGING AND CAP SEALER: "ALABASTER" 7008

ALL COLOR NAME AND NUMBER REFERENCES ARE TAKEN FROM THE SHERWIN WILLIAMS COLOR PALETTE. THE CONTRACTOR MAY SUBSTITUTE SIMILAR COLORS FROM ALTERNATIVE SUPPLIER'S COLOR PALETTE.

ITEM 512 - SEALING OF CONCRETE SURFACES, AS PER PLAN (PERMANENT GRAFFITI PROTECTION)

APPLY A PERMANENT GRAFFITI COATING QUALIFIED ACCORDING TO SUPPLEMENT 1083 THAT IS COMPATIBLE WITH THE CONCRETE SEALER OVER WHICH IT IS APPLIED. PROVIDE A COATING THAT MEETS THE REQUIREMENTS LISTED BELOW. APPLY THE GRAFFITI COATING IN ACCORDANCE WITH THE MANUFACTURER'S PRINTED INSTRUCTIONS.

A. THE MATERIAL SHALL BE A SINGLE COMPONENT, RTV (ROOM TEMPERATURE VULCANIZED), NEUTRAL MOISTURE CURE, PERMANENT (NON-SACRIFICIAL), TYPE III (WATER CLEANABLE) POLYSILOXANE (SILICONE) ANTI-GRAFFITI COATING, FREE OF ANY WAXES, EPOXIES, OR POLYURETHANE COMPONENTS.

B. THE COATING SHALL BE A ONE COAT SYSTEM (NO PRIMER) CAPABLE OF BEING SPRAY APPLIED TO A DRY FILM THICKNESS OF 15 MILS (375 MICRONS) WITHOUT RUNS OR SAGS (MULTIPLE COAT APPLICATION ACCEPTABLE FOR BRUSH/ROLLER USAGE AND PRIMER USAGE ACCEPTABLE FOR SPECIALTY SUBSTRATES SUCH AS GALVANIZED METAL).

C. THE COATING SHALL EMIT LESS THAN 300 G/L (2.5 POUNDS PER GALLON) OF VOLATILE ORGANIZE COMPOUNDS (EPA METHOD 24).

D. THE COATING SHALL MEET THE FOLLOWING PERFORMANCE REQUIREMENTS:
1. CLEANABILITY LEVEL 1 (GRAFFITI COMPLETELY REMOVED WITH COLD WATER POWER WASH) AS PER ASTM D7089 WITH LOW PRESSURE (1200 PSI) COLD WATER WASH AFTER 2000 HOURS ACCELERATED UV-CONDENSATION EXPOSURE IN ACCORDANCE WITH ASTM D4587.
2. GRAFFITI RESISTANCE LESS THAN 7.5 AS PER ASTM D6578 AFTER 2000 HOURS ACCELERATED UV-CONDENSATION EXPOSURE IN ACCORDANCE WITH ASTM 4578.
3. NO SIGNS OF GRAFFITI OR GRAFFITI STAINING AND MUST BE INTACT AND EXHIBIT NO SIGNS OF STREAKING, CRACKING, PINHOLING, DISCOLORING, OR OTHER VISIBLE COATING DEGRADATION UPON CASUAL OBSERVATION WHEN TESTED IN ACCORDANCE WITH TXDOT TEX 890-B, TYPE III METHOD.
4. BREATHABILITY OF 10 PERMS (+/- 3) PER ASTM D1653 USING "WET CUP METHOD".
5. ELONGATION AT BREAK GREATER THAN 100% AS PER ASTM D412 (USING DIE "D").
6. ADHESION RATING OF "8 - DIFFICULT TO REMOVE" AS PER ASTM D6677 (ADHESION BY KNIFE).

ITEM 513 - STRUCTURAL STEEL, MISC.: RETENTION ANGLE

PROVIDE RETENTION ANGLE FOR PRECAST LAGGING WHERE WALL AI CONNECTS TO THE BRIDGE 14 FORWARD ABUTMENT AS SHOWN IN THE PLANS. ALL MATERIAL, LABOR AND INCIDENTALS NECESSARY TO FURNISH AND INSTALL THE RETENTION ANGLE SHALL BE INCLUDED FOR PAYMENT WITH ITEM 513-STRUCTURAL STEEL, MISC.: RETENTION ANGLE.

ITEM 524 - DRILLED SHAFTS, 36" DIAMETER, ABOVE BEDROCK, AS PER PLAN

THIS WORK CONSISTS OF FURNISHING AND INSTALLING DRILLED SHAFTS FOR SOLDIER PILE AND LAGGING WALLS. THE DRILLED SHAFTS ARE REINFORCED WITH SOLDIER PILES INSTEAD OF REINFORCING STEEL CAGES. THE SOLDIER PILES EXTEND ABOVE THE TOP OF THE DRILLED SHAFT. FURNISH AND INSTALL THE DRILLED SHAFTS IN ACCORDANCE WITH C&MS 524 EXCEPT AS MODIFIED AND SUPPLEMENTED BELOW.

EXCAVATE THE HOLE FOR THE DRILLED SHAFT WITHIN 1½ INCHES OF THE PLAN LOCATION. PLACE THE SOLDIER PILE WITHIN THE HOLE SO IT IS VERTICAL AND NOT INCLINED MORE THAN 1 INCH BETWEEN TOP TO BOTTOM. PLACE THE SOLDIER PILE SO THAT THE FLANGES ARE PARALLEL TO THE CENTERLINE OF THE ROW OF DRILLED SHAFTS. DO NOT ALLOW THE ORIENTATION OF THE FLANGES TO VARY BY MORE THAN 10 DEGREES. SUPPORT THE SOLDIER PILE SO THAT IT DOES NOT MOVE DURING CONCRETE PLACEMENT.

USE CLASS QC 5 CONCRETE ACCORDING TO C&MS 511. PLACE CONCRETE TO THE ELEVATION FOR THE TOP OF THE DRILLED SHAFT. THE CONTRACTOR MAY PLACE CONCRETE USING THE FREE FALL METHOD PROVIDED THE DEPTH OF WATER IS LESS THAN 6 INCHES AND THE CONCRETE FALLS WITHOUT STRIKING THE SIDES OF THE HOLE. POURING CONCRETE ALONG THE WEB OF THE SOLDIER PILE IS ACCEPTABLE.

CHECK THE POSITION, THE VERTICAL ALIGNMENT AND ORIENTATION OF THE SOLDIER PILE IMMEDIATELY AFTER CONCRETE PLACEMENT. MAKE CORRECTIONS AS NECESSARY TO MEET THE ABOVE TOLERANCES. IF SHOWN ON THE PLANS, FILL THE HOLE ABOVE THE BOTTOM OF THE LAGGING TO THE EXISTING GROUND SURFACE WITH ITEM C&MS 613 LOW STRENGTH MORTAR BACKFILL (LSM).

REMOVE CONCRETE AND LSM AS NECESSARY FROM AROUND THE SOLDIER PILE IN ORDER TO PLACE THE LAGGING. PLACE LAGGING SO THAT THE SOLDIER PILE FLANGE OVERLAPS THE END OF THE LAGGING BY AT LEAST 3 INCHES AT BOTH ENDS OF THE LAGGING. WAIT AT LEAST 12 HOURS AFTER PLACING CONCRETE BEFORE PLACING LAGGING.

SEQUENCE OF INSTALLATION: THE INSTALLATION SEQUENCE SHALL BE SUCH THAT NO DRILLED SHAFT IS INSTALLED ADJACENT TO EITHER AN OPEN DRILLED SHAFT EXCAVATION OR A DRILLED SHAFT IN WHICH THE CONCRETE HAS LESS THAN A 48-HOUR CURE. INSTALLING THE SHAFTS IN AN ALTERNATING SEQUENCE OR ANY OTHER SEQUENCE THAT MEETS THESE CRITERIA IS PERMISSIBLE.

PROTECTION OF UNATTENDED OPEN SHAFTS: CARE SHALL BE EXERCISED AS TO COVER UNATTENDED OPEN SHAFTS. TEMPORARY COVERS SHALL BE OF ADEQUATE STRENGTH TO PREVENT A PERSON OR ANIMAL FROM FALLING IN. NO DRILLED SHAFT EXCAVATION SHALL BE LEFT UN-POURED OVERNIGHT.

THE CONTRACTOR SHALL BE RESPONSIBLE FOR THE MEANS AND METHODS USED TO CONSTRUCT THE DRILLED SHAFTS AND PLACE LAGGING. ANY TEMPORARY GRADING, EXCAVATION, EMBANKMENT, AGGREGATE, DRAINAGE, SHEETING, ETC. NEEDED TO COMPLETE THE WORK SHALL BE INCLUDED IN THE BID PRICE FOR THE DRILLED SHAFTS. THE COST OF ANY EXCAVATION AND SUBSEQUENT REPLACEMENT OF EMBANKMENT (PER ITEM 203 EMBANKMENT) SHALL BE INCLUDED IN THE VARIOUS BID ITEMS FOR THE DRILLED SHAFTS AND LAGGING, UNLESS SEPARATELY ITEMIZED. NO SEPARATE PAYMENT WILL BE MADE.

METHOD OF MEASUREMENT: THE DEPARTMENT WILL MEASURE DRILLED SHAFTS ABOVE BEDROCK, AS PER PLAN, ALONG THE AXIS OF THE DRILLED SHAFT FROM THE EXISTING GROUND SURFACE TO THE TOP OF BEDROCK, AS DETERMINED BY THE ENGINEER. THE DEPARTMENT WILL MEASURE DRILLED SHAFTS INTO BEDROCK, AS PER PLAN, ALONG THE AXIS OF THE DRILLED SHAFT FROM TOP OF BEDROCK TO THE BOTTOM OF THE DRILLED SHAFT, AS DETERMINED BY THE ENGINEER.

PAYMENT IS FULL COMPENSATION FOR CONSTRUCTING THE DRILLED SHAFTS, INCLUDING FURNISHING AND PLACING CONCRETE AND LSM, REMOVAL OF CONCRETE OR LSM FROM AROUND THE SOLDIER PILE IN ORDER TO PLACE LAGGING.

Preliminary Plans - For Reference Only

WALL GENERAL NOTES (1 OF 2)
WALL AI
ALONG NORTH SIDE OF CARNEGIE AVE.

SFN N/A
DESIGN AGENCY
Michael Baker INTERNATIONAL
DESIGNER MKB | CHECKER YC
REVIEWER LPC 05-09-24
PROJECT ID 82382
SUBSET 2 | TOTAL 12
SHEET 1251 | TOTAL 2696

CUY-90-16.28 (CCG3A)

MODEL: Sheet (1 of 2) PAPERSIZE: 34x22 (in.) DATE: 6/9/2025 TIME: 11:12:27 AM USER: Tolga.Feran
pw:\\mb-us-pw.bentley.com:mb-us-pw-03\Documents\Cleveland_OH\01_Projects\ODOT\District12\82382\400-Engineering\Structures\WALL_AI\Sheets\82382_AI_WN001.dgn

ITEM SPECIAL - RETAINING WALL, PRECAST CONCRETE LAGGING

THIS WORK CONSISTS OF FURNISHING AND PLACING PRECAST REINFORCED CONCRETE PANELS BETWEEN THE SOLDIER PILES TO FUNCTION AS LAGGING FOR THE RETAINING WALL. PROVIDE PRECAST CONCRETE LAGGING FROM A PRECAST CONCRETE MANUFACTURER CERTIFIED ACCORDING TO SUPPLEMENT 1073. PROVIDE CLASS QC1 CONCRETE ACCORDING TO C&MS 499. PROVIDE EPOXY COATED REINFORCING STEEL ACCORDING TO C&MS 709.00. IN LIEU OF EPOXY COATING, A CORROSION INHIBITING CONCRETE ADMIXTURE MAY BE USED AT THE SPECIFIED DOSAGE RATE. A QUALIFIED PRODUCT LIST OF CORROSION INHIBITING ADMIXTURES IS ON FILE AT THE LABORATORY. MANUFACTURERS SHOULD RECOGNIZE THAT THE CORROSION INHIBITOR MAY AFFECT THE STRENGTH, ENTRAINED AIR CONTENT, WORKABILITY, ETC. OF THEIR CONCRETE MIXES. THE MANUFACTURER'S CHOICE TO USE ONE OF THESE CORROSION INHIBITORS DOES NOT ALLEVIATE MEETING ALL DESIGN REQUIREMENTS. DO NOT ALLOW THE DIMENSIONS OF THE LAGGING OR LOCATION OF THE REINFORCING STEEL TO VARY BY MORE THAN ¼-INCH. CAST THREADED INSERTS INTO THE TOP OF EACH PANEL FOR LIFTING AND PLACEMENT.

FINISH THE FACES OF THE PRECAST CONCRETE LAGGING PANELS THAT WILL NOT BE EXPOSED TO A UNIFORM SURFACE, FREE OF OPEN POCKETS OF AGGREGATE. *FINISH THE EXPOSED FACE OF THE PANELS TO A SMOOTH SURFACE. SEAL THE FRONT (EXPOSED) FACE AND SIDES OF EACH CONCRETE PANEL WITH ITEM 512, SEALING OF CONCRETE SURFACES (EPOXY URETHANE). THE COLOR OF THE URETHANE SHALL BE SHERWIN WILLAMS ALABASTER 7008 OR APPROVED EQUAL.

PERMANENTLY MARK EACH PRECAST CONCRETE LAGGING PANEL TO INDICATE WHICH FACE WILL BE PLACED AGAINST THE SOIL. PLACE THE PANEL BETWEEN THE FLANGES OF THE SOLDIER PILES AND BEARING AGAINST THE FLANGES ON THE EXPOSED SIDE OF THE WALL SO THAT THE SOLDIER PILE FLANGE OVERLAPS THE END OF THE LAGGING BY AT LEAST ONE INCH MORE THAN THE CONCRETE COVER OVER THE REINFORCING STEEL AT BOTH ENDS OF THE LAGGING.

HANDLE, STORE, AND SHIP THE PRECAST CONCRETE LAGGING PANELS TO AVOID CHIPPING, CRACKING AND FRACTURING THE PANELS. SUPPORT THE PANELS ON FIRM BLOCKING WHILE STORING AND SHIPPING. DO NOT SHIP PANELS UNTIL CONCRETE HAS ATTAINED THE REQUIRED COMPRESSIVE STRENGTH. SUBMIT SHIPMENT DOCUMENTATION TO THE ENGINEER AS THE PANELS ARE DELIVERED TO THE PROJECT, INCLUDING THE PRECASTER'S RECORD OF FINAL INSPECTION, THE MEASUREMENTS AND TOLERANCES, STRENGTH, AND DIMENSIONS OF EACH PANEL, ALONG WITH THE TE-24 SHIPPING DOCUMENT AND THE DAMAGE SURVEY REPORT FOR ALL WALL PANELS.

INSPECT ALL PRECAST CONCRETE LAGGING PANELS AND REJECT PANELS HAVING ANY OF THE FOLLOWING:

1. DEFECTS THAT INDICATE IMPERFECT MOLDING.
2. DEFECTS THAT INDICATE HONEYCOMBED OR OPEN TEXTURE CONCRETE.
3. DEFECTS IN THE PHYSICAL CHARACTERISTICS OF THE CONCRETE, OR DAMAGE TO THE AESTHETIC SURFACE TREATMENTS.
4. CONCRETE CHIPS OR SPALLS THAT ARE LARGER THAN 4 INCHES WIDE OR 2 INCHES DEEP. REPAIR ALL CHIPS AND SPALLS THAT ARE SMALLER.
5. STAINED FORM FACES, DUE TO FORM OIL, CURING OR OTHER CONTAMINANTS.
6. SIGNS OF AGGREGATE SEGREGATION.
7. CRACKS WIDER THAN 0.01 INCH OR PENETRATING MORE THAN 1 INCH OR LONGER THAN 20 PERCENT OF THE LENGTH OF THE FACE CONTAINING THE CRACK.
8. PANELS THAT DO NOT MEET THE SPECIFIED DIMENSIONAL TOLERANCES.
9. UNUSABLE LIFTING INSERTS.
10. EXPOSED REINFORCING STEEL.
11. INSUFFICIENT CONCRETE COMPRESSIVE STRENGTH.

EITHER REPLACE DAMAGED PRECAST CONCRETE LAGGING PANELS OR DOCUMENT THE DAMAGE AND PROPOSE TO THE ENGINEER A REPAIR METHOD FOR THE DAMAGED PANEL. PROVIDE ACCEPTABLE REPLACEMENT PANELS FOR ANY THAT ARE REJECTED.
WHEN INSTALLING THE PRECAST CONCRETE LAGGING PANELS, PLACE HARDWOOD WEDGES NEAR THE TOP AND BOTTOM ON EACH SIDE TO HOLD THE LAGGING PANELS AGAINST THE FRONT INSIDE FLANGE OF THE STEEL PILES.

PAYMENT FOR ALL LABOR, EQUIPMENT, AND MATERIAL REQUIRED TO FABRICATE, TRANSPORT, AND INSTALL THE PRECAST REINFORCED CONCRETE PANELS SHALL BE MADE AT THE CONTRACT UNIT PRICE PER SQUARE FOOT FOR ITEM SPECIAL - RETAINING WALL, PRECAST CONCRETE LAGGING.

SECTION/DETAIL/VIEW CALLOUTS

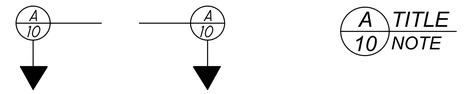

(SEE SECTION A ON SHEET 10) (SECTION A CUT FROM SHEET 10)

PLAN ABBREVIATIONS:

ABUT. = ABUTMENT
APPR. = APPROACH
B = BOTTOM
℄ = BASELINE
BM = BENCHMARK
BOT. OR BTM. = BOTTOM
℄ = CENTERLINE
C/C = CENTER TO CENTER
C.I.P. = CAST-IN-PLACE
C.J. = CONSTRUCTION JOINT
CLR. = CLEAR
CMS = CONSTRUCTION AND MATERIAL SPECIFICATIONS
CONC. = CONCRETE
CONST. = CONSTRUCTION
DIA. = DIAMETER
DIM. = DIMENSION
DTBD = DISPOSITION TO BE DETERMINED
DWG. = DRAWING
EB = EASTBOUND
E.F. = EACH FACE
EL. OR ELEV. = ELEVATION
EQ. = EQUAL
EST. = ESTIMATED
EX. = EXISTING
F.A. = FORWARD ABUTMENT
F/F = FACE TO FACE
F.F. = FAR FACE
FT. = FOOT OR FEET
FTG. = FOOTING
FWD. = FORWARD
IN. = INCH
JT. = JOINT
LT. = LEFT
MAX. = MAXIMUM
MIN. = MINIMUM
MISC. = MISCELLANEOUS
N = NORTH
NB = NORTHBOUND
N.F. = NEAR FACE
NO. = NUMBER
N.P.C.P.P. = NON-PERFORATED CORRUGATED PLASTIC PIPE
OHWM = ORDINARY HIGH WATER MARK
O/O = OUT TO OUT
P.C.P.P. = PERFORATED CORRUGATED PLASTIC PIPE
P.E.J.F. = PREFORMED EXPANSION JOINT FILLER
PROP. = PROPOSED
PSF = POUNDS PER SQUARE FOOT
R.A. = REAR ABUTMENT
S = SOUTH
SB = SOUTHBOUND
SER. = SERIES
SHLDR = SHOULDER
SPA. = SPACE OR SPACES
STA. = STATION
STD. = STANDARD
STR = STRAIGHT
T = TOP
T&B = TOP & BOTTOM
TBR = TO BE REMOVED
TBRBO = TO BE RELOCATED BY OTHERS
TEMP. = TEMPORARY
TYP. = TYPICAL
U.N.O. = UNLESS NOTED OTHERWISE
VAR. = VARIES
WB = WESTBOUND
WWR = WELDED WIRE REINFORCEMENT

Preliminary Plans - Not For Reference Only

WALL GENERAL NOTES (2 OF 2)
WALL AI
ALONG NORTH SIDE OF CARNEGIE AVE.

SFN N/A

DESIGN AGENCY
Michael Baker INTERNATIONAL

DESIGNER	CHECKER
MKB	YC

REVIEWER LPC 05-09-24

PROJECT ID 82382

SUBSET	TOTAL
3	12

SHEET	TOTAL
1252	2696

CUY-90-16.28

MODEL: Untitled Sheet PAPERSIZE: 34x22 (in.) DATE: 3/27/2025 TIME: 11:08:23 PM USER: Julie.Ross
pw:\\mb-us-pw.bentley.com:mb-us-pw-03\Documents\Cleveland_OH\01_Projects\ODOT\District12\82382\400-Engineering\Structures\WALL_AI\Sheets\82382_AI_WN002.dgn

ESTIMATED QUANTITIES

CALCULATED BY: ZES DATE: 04/24/24
CHECKED BY: SSW DATE: 05/14/24

PARTICIPATION	ITEM	ITEM EXT.	TOTAL	UNIT	DESCRIPTION	SHEET REF.
01/IMS/04	507	00400	462	FT	STEEL PILES, MISC.: W24x162, FURNISHED	2
01/IMS/04	507	00400	115	FT	STEEL PILES, MISC.: W24x229, FURNISHED	2
01/IMS/04	509	10000	12,522	LB	EPOXY COATED STEEL REINFORCEMENT	
01/IMS/04	511	46013	27	CY	CLASS QC1 CONCRETE WITH QC/QA, RETAINING/WINGWALL NOT INCLUDING FOOTING, AS PER PLAN	9
01/IMS/04	511	53012	70	CY	CLASS QC2 CONCRETE, MISC.: MOMENT SLAB AND PARAPET WITH QC/QA	2
01/IMS/04	511	81300	11	EACH	CONCRETE, MISC.: CLASS QC1 CONCRETE FOR RAISED PANEL SEAT	2
01/IMS/04	512	10001	276	SY	SEALING OF CONCRETE SURFACES, AS PER PLAN (PERMANENT GRAFFITI PROTECTION)	2
01/IMS/04	512	10101	276	SY	SEALING OF CONCRETE SURFACES (EPOXY-URETHANE), AS PER PLAN	2
01/IMS/04	513	90000	526	LB	STRUCTURAL STEEL, MISC.: RETENTION ANGLE	2
01/IMS/04	516	13600	87	SF	1" PREFORMED EXPANSION JOINT FILLER	
01/IMS/04	516	13900	276	SF	2" PREFORMED EXPANSION JOINT FILLER	
01/IMS/04	516	42000	190	EACH	ELASTOMERIC BEARING PAD, MISC.: 6" x 10" x $\frac{3}{8}$" THICK	8
01/IMS/04	518	40000	161	FT	6" PERFORATED CORRUGATED PLASTIC PIPE	
01/IMS/04	518	40010	14	FT	6" NON-PERFORATED CORRUGATED PLASTIC PIPE, INCLUDING SPECIALS	
01/IMS/04	524	94703	391	FT	DRILLED SHAFTS, 36" DIAMETER, ABOVE BEDROCK, AS PER PLAN	2
01/IMS/04	SPECIAL	530E51010	1,373	SF	RETAINING WALL, PRECAST CONCRETE LAGGING	3
01/IMS/04	607	39910	136	FT	VANDAL PROTECTION FENCE, 8' STRAIGHT, COATED FABRIC	
01/IMS/04	613	41200	17	CY	LOW STRENGTH MORTAR BACKFILL	

Preliminary Plans - For Reference Only

ESTIMATED QUANTITIES
WALL AI
ALONG NORTH SIDE OF CARNEGIE AVE.

SFN
N/A

DESIGN AGENCY
Michael Baker INTERNATIONAL

DESIGNER	CHECKER
MKB	YC

REVIEWER
LPC 05-09-24

PROJECT ID
82382

SUBSET	TOTAL
4	12

SHEET	TOTAL
1253	2696

CUY-90-16.28 (CCG3A)

MODEL: Untitled Sheet PAPERSIZE: 34x22 (in.) DATE: 3/27/2025 TIME: 11:08:33 PM USER: Julie.Ross
pw:\\mb-us-pw.bentley.com:mb-us-pw-03\Documents\Cleveland_OH\01_Projects\ODOT\District12\82382\400-Engineering\Structures\WALL_AI\Sheets\82382_AI_WQ001.dgn

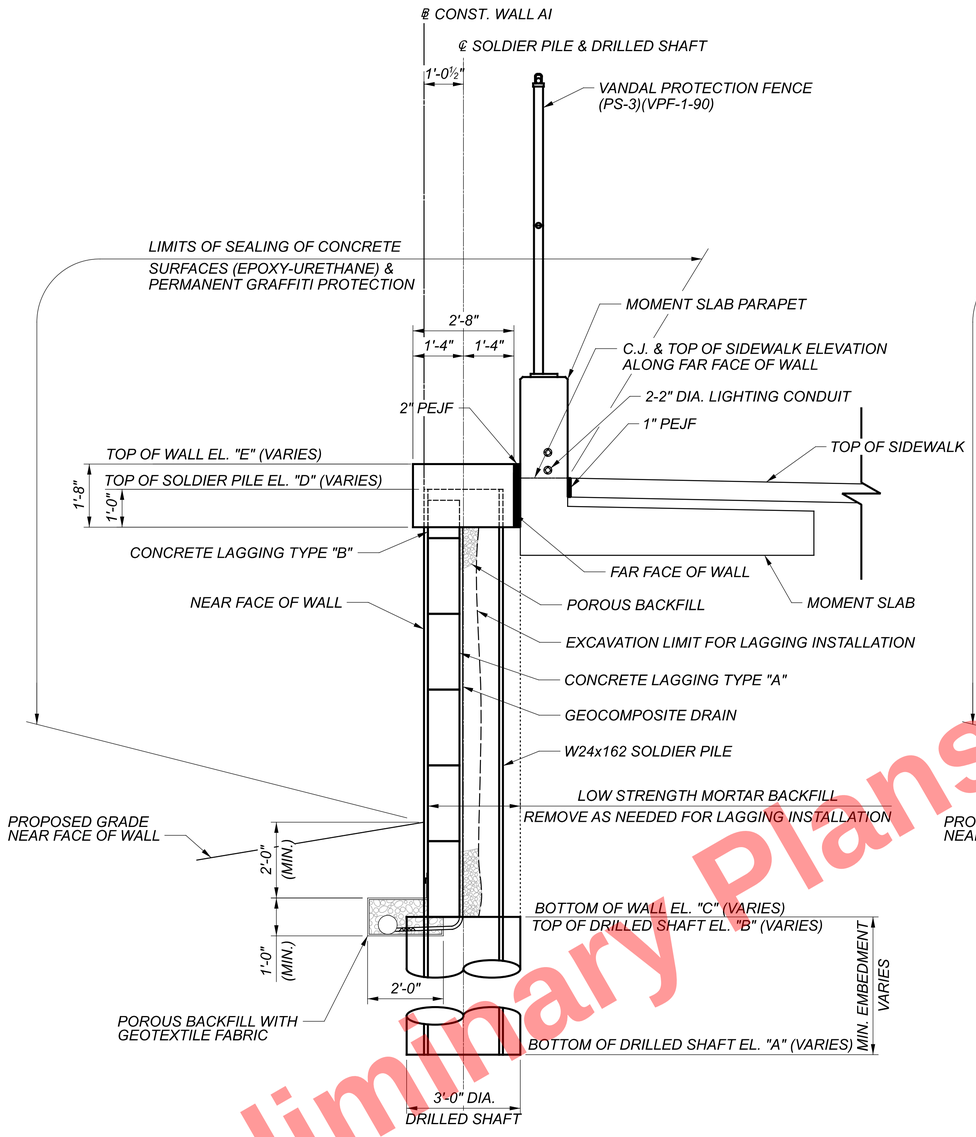

SOLDIER PILE AND LAGGING WALL AI TYP. SECTION

(ALONG MOMENT SLAB)

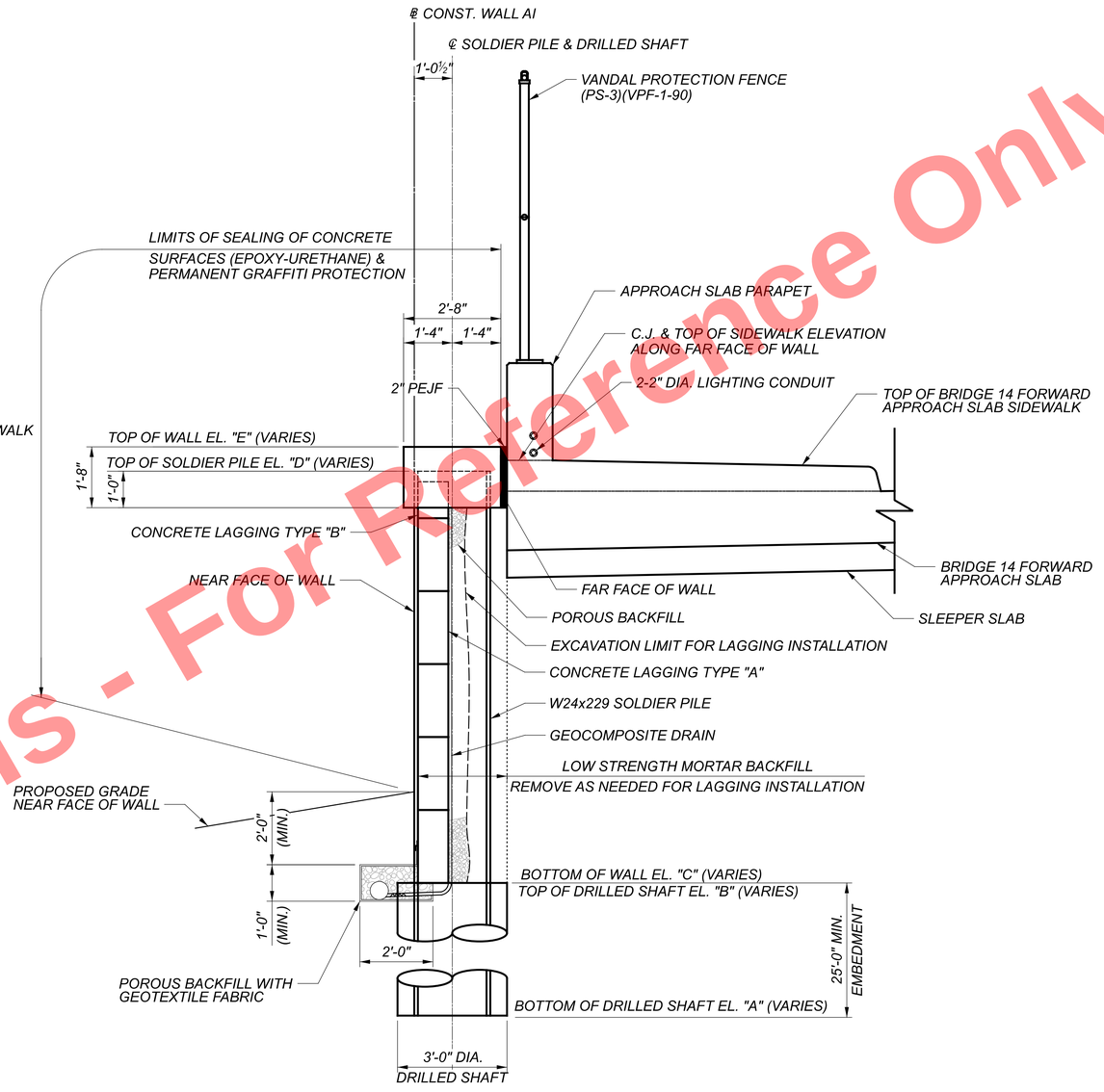

SOLDIER PILE AND LAGGING WALL AI TYP. SECTION

(ALONG BRIDGE 14 APPROACH SLAB)

NOTES:

1. SEE BRIDGE 14 APPROACH SLAB DETAILS FOR ADDITIONAL INFORMATION.

Preliminary Plans - For Reference Only

WALL TYPICAL SECTIONS
WALL AI
ALONG NORTH SIDE OF CARNEGIE AVE.

SFN N/A

DESIGN AGENCY

Michael Baker INTERNATIONAL

DESIGNER	CHECKER
MKB	YC

REVIEWER LPC 05-09-24

PROJECT ID 82382

SUBSET	TOTAL
5	12

SHEET	TOTAL
1254	2696

CUY-90-16.28 (CCG3A)

MODEL: Sheet PAPERSIZE: 34x22 (in.) DATE: 3/27/2025 TIME: 11:08:40 PM USER: Julie.Ross
pw:\\mb-us-pw.bentley.com:mb-us-pw-03\Documents\Cleveland_OH\01_Projects\ODOT\District12\82382\400-Engineering\Structures\WALL_AI\Sheets\82382_AI_WY001.dgn

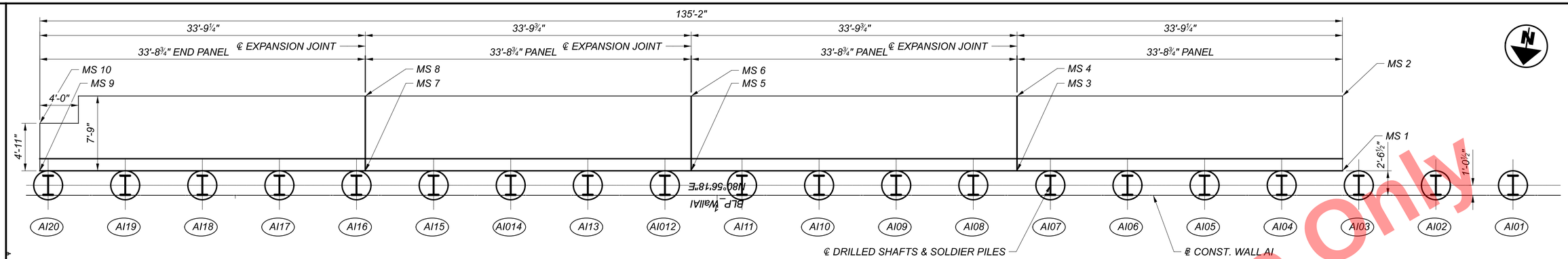

FOUNDATION PLAN

WALL AI DRILLED SHAFT & SOLDIER PILE SCHEDULE

DESIGNATION	STATION BASELINE WALL AI	CENTERLINE OFFSET FROM BASELINE WALL AI (FT.)	DIAMETER (IN.)	SHEAR STUDS (YES/NO)	BOTTOM OF DRILLED SHAFT EL. "A"	TOP OF SHAFT CONCRETE EL. "B"	CONCRETE SHAFT LENGTH (FT.)	BOTTOM OF WALL EL. "C"	TOP OF SOLDIER PILE E. "D"	TOP OF WALL EL. "E"	ESTIMATED LENGTH OF SOLDIER PILE (FT.)	HEIGHT OF LAGGING (FT.)	SOLDIER PILE SIZE
AI01	00+17.42	1.042 RT	36	NO	629.2	654.2	25.0	654.2	667.7	668.4	38.5	13.0	W24x229
AI02	00+25.42	1.042 RT	36	NO	629.7	654.7	25.0	654.7	667.8	668.4	38.1	13.0	W24x229
AI03	00+33.42	1.042 RT	36	NO	629.7	654.7	25.0	654.7	667.8	668.5	38.1	13.0	W24x229
AI04	00+41.42	1.042 RT	36	NO	635.7	655.7	20.0	655.7	667.8	668.5	32.1	12.0	W24x162
AI05	00+49.42	1.042 RT	36	NO	635.7	655.7	20.0	655.7	667.8	668.5	32.1	12.0	W24x162
AI06	00+57.42	1.042 RT	36	NO	636.7	656.7	20.0	656.7	667.9	668.6	31.2	11.0	W24x162
AI07	00+65.42	1.042 RT	36	NO	636.7	656.7	20.0	656.7	667.9	668.6	31.2	11.0	W24x162
AI08	00+73.42	1.042 RT	36	NO	637.7	657.7	20.0	657.7	667.9	668.6	30.2	10.0	W24x162
AI09	00+81.42	1.042 RT	36	NO	637.7	657.7	20.0	657.7	668.0	668.6	30.3	10.0	W24x162
AI10	00+89.42	1.042 RT	36	NO	638.7	658.7	20.0	658.7	668.0	668.7	29.3	9.0	W24x162
AI11	00+97.42	1.042 RT	36	NO	638.7	658.7	20.0	658.7	668.0	668.7	29.3	9.0	W24x162
AI12	01+05.42	1.042 RT	36	NO	639.7	659.7	20.0	659.7	668.0	668.7	28.3	8.0	W24x162
AI13	01+13.42	1.042 RT	36	NO	642.7	659.7	17.0	659.7	668.1	668.8	25.4	8.0	W24x162
AI14	01+21.42	1.042 RT	36	NO	643.7	660.7	17.0	660.7	668.1	668.8	24.4	7.0	W24x162
AI15	01+29.42	1.042 RT	36	NO	643.7	660.7	17.0	660.7	668.1	668.8	24.4	7.0	W24x162
AI16	01+37.42	1.042 RT	36	NO	644.7	661.7	17.0	661.7	668.2	668.8	23.5	6.0	W24x162
AI17	01+45.42	1.042 RT	36	NO	644.7	661.7	17.0	661.7	668.2	668.9	23.5	6.0	W24x162
AI18	01+53.42	1.042 RT	36	NO	645.7	662.7	17.0	662.7	668.2	668.9	22.5	5.0	W24x162
AI19	01+61.42	1.042 RT	36	NO	645.7	662.7	17.0	662.7	668.3	668.9	22.6	5.0	W24x162
AI20	01+69.42	1.042 RT	36	NO	646.7	663.7	17.0	663.7	668.3	669.0	21.6	4.0	W24x162

WALL AI MOMENT SLAB ELEVATIONS

DESIGNATION	STATION BASELINE WALL AI	OFFSET FROM BASELINE WALL AI (FT.)	BOTTOM OF MOMENT SLAB EL. "F"	TOP OF SIDEWALK EL. "G"
MS 1	00+35.11	2.542 RT	666.0	668.09
MS 2	00+35.11	10.292 RT	666.0	
MS 3	00+68.88	2.542 RT	666.4	668.46
MS 4	00+68.88	10.292 RT	666.4	
MS 5	01+02.69	2.542 RT	666.7	668.72
MS 6	01+02.69	10.292 RT	666.7	
MS 7	01+36.50	2.542 RT	666.8	668.87
MS 8	01+36.50	10.292 RT	666.8	
MS 9	01+70.27	2.542 RT	666.7	668.72
MS 10	01+70.27	7.458 RT	666.7	

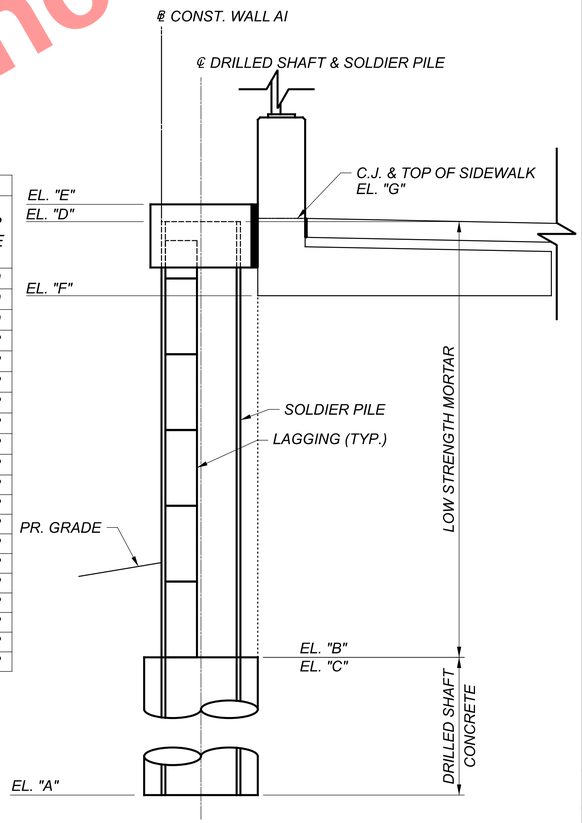

DRILLED SHAFT & SOLDIER PILE SCHEMATIC

LEGEND:

(#) - DENOTES SOLDIER PILE NUMBER

Preliminary Plans - Not For Construction. For Reference Only

FOUNDATION PLAN
WALL AI
ALONG NORTH SIDE OF CARNEGIE AVE.

SFN N/A

DESIGN AGENCY
Michael Baker INTERNATIONAL

DESIGNER	CHECKER
MKB	YC

REVIEWER LPC 05-09-24

PROJECT ID 82382

SUBSET	TOTAL
6	12

SHEET	TOTAL
1255	2696

CUY-90-16.28 (CCG3A)

MODEL: Untitled Sheet PAPERSIZE: 34x22 (in.) DATE: 3/27/2025 TIME: 11:08:47 PM USER: Julie.Ross
pw:\\mb-us-pw.bentley.com:mb-us-pw-03\Documents\Cleveland_OH01_Projects\ODOT\District12\82382\400-Engineering\Structures\WALL_AI\Sheets\82382_AI_WT001.dgn

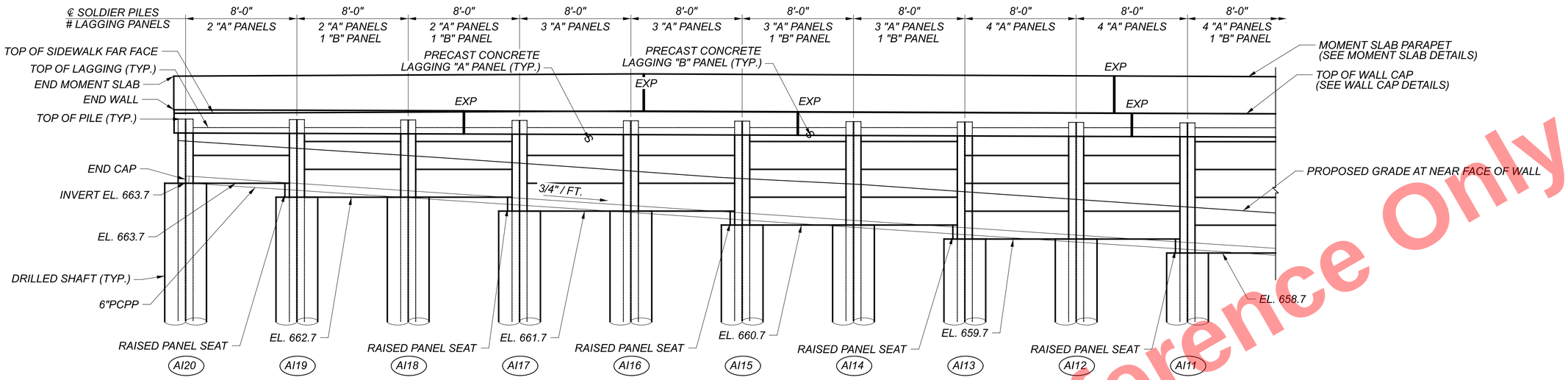

ELEVATION

(DIMENSIONS GIVEN ALONG ℄ CONST. WALL AI)

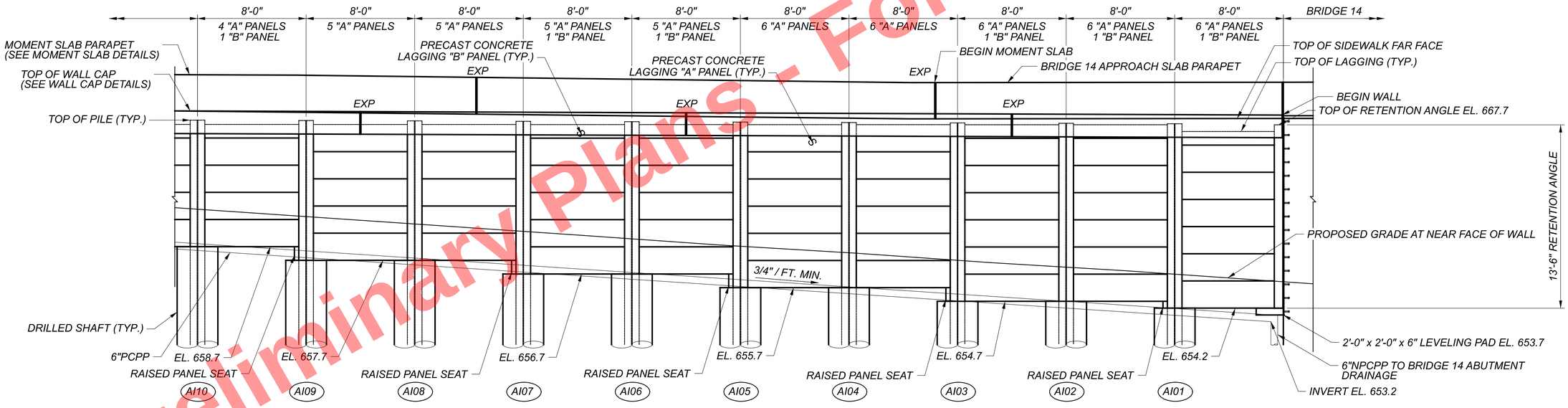

ELEVATION

(DIMENSIONS GIVEN ALONG ℄ CONST. WALL AI)

LEGEND:

(#) - DENOTES SOLDIER PILE NUMBER

EXP - EXPANSION JOINT

NOTES:

1. FOR RAISED PANEL SEAT, SEE SHEET 8 / 9.

WALL ELEVATION
WALL AI
ALONG NORTH SIDE OF CARNEGIE AVE.

SFN	N/A
DESIGN AGENCY	Michael Baker INTERNATIONAL
DESIGNER	MKB
CHECKER	YC
REVIEWER	LPC 05-09-24
PROJECT ID	82382
SUBSET	7
TOTAL	12
SHEET	1256
TOTAL	2696

CUY-90-16.28 (CCG3A)

MODEL: Untitled Sheet PAPERSIZE: 34x22 (in.) DATE: 3/27/2025 TIME: 11:08:54 PM USER: Julie.Ross
pw:\\mb-us-pw.bentley.com:mb-us-pw-03\Documents\Cleveland_OH\01_Projects\ODOT\District12\82382\400-Engineering\Structures\WALL_AI\Sheets\82382_AI_WE001.dgn

Preliminary Plans - For Reference Only

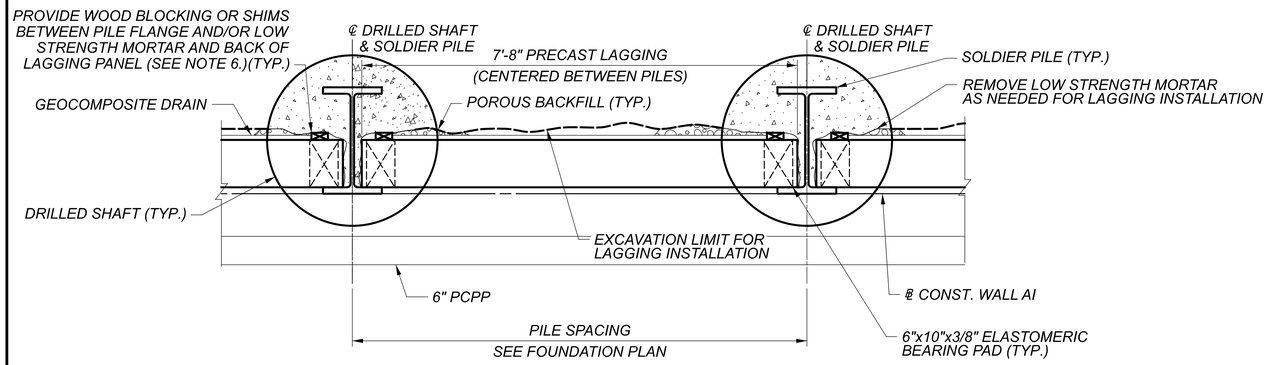

TYPICAL PLAN

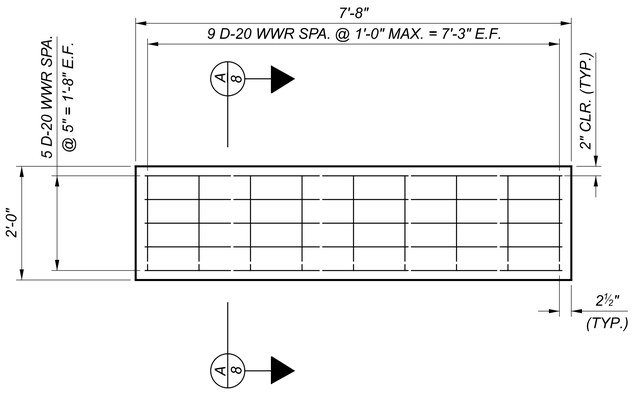

TYPE "A" PRECAST LAGGING ELEVATION

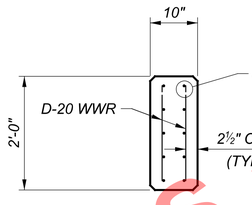

A 8 SECTION

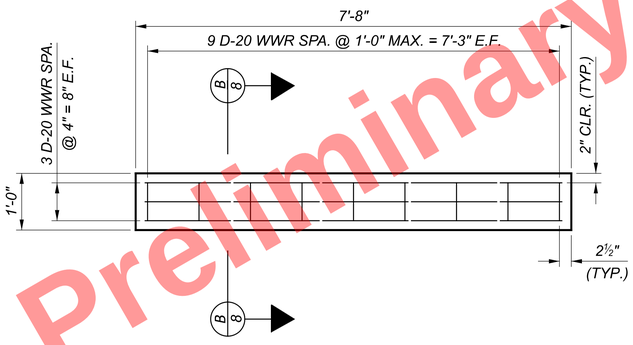

TYPE "B" PRECAST LAGGING ELEVATION

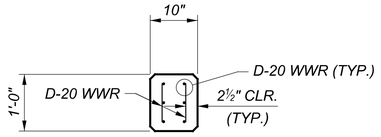

B 8 SECTION

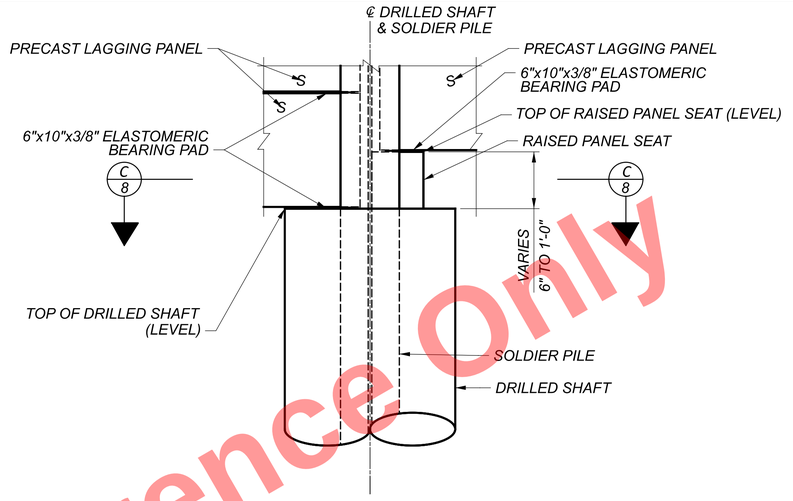

RAISED PANEL SEAT DETAIL

LOW STRENGTH MORTAR NOT SHOWN FOR CLARITY

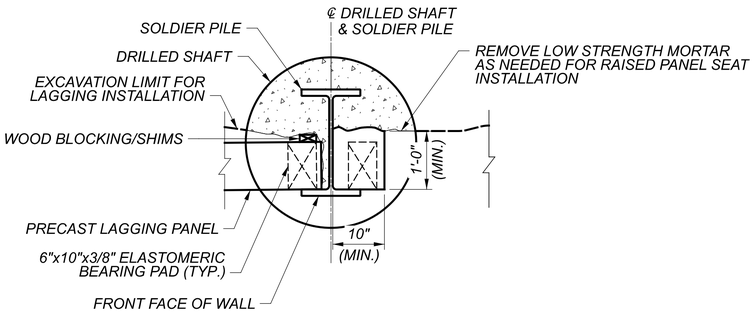

C 8 SECTION

NOTES:

1. ELASTOMERIC BEARING PADS SHALL BE PROVIDED AT ALL BOTTOM PANELS BETWEEN THE PANEL AND TOP OF CONCRETE DRILLED SHAFT AND/OR RAISED PANEL SEAT. THEY SHALL ALSO BE PROVIDED AT EACH END OF EACH PANEL BETWEEN PANELS.
2. ELASTOMERIC BEARING PADS SHALL BE NEOPRENE ELASTOMERIC PADS HAVING DUROMETER HARDNESS OF 55 ± 5, HIGH DENSITY POLYETHYLENE PADS WITH A MINIMUM DENSITY OF 59 LB/FT3 {0.946 G/CM3} OR EQUIVALENT. SUPPLY CERTIFIED TEST DATA TO THE ENGINEER UPON DELIVERY OF THE MATERIAL TO THE PROJECT. BEARING PADS WILL BE PAID FOR UNDER ITEM 516 ELASTOMERIC BEARING PAD, MISC.: 6"x10"x 3/8" THICK.
3. REINFORCEMENT IN PRECAST LAGGING PANELS SHALL INCLUDED WITH ITEM 610 - RETAINING WALL MISC.: PRECAST CONCRETE LAGGING FOR PAYMENT.
4. PROVIDE 1" x 1" CHAMFER AT EXPOSED TOP AND BOTTOM OF LAGGING PANELS.
5. CENTER LAGGING PANELS BETWEEN PILE WEBS.
6. CONTRACTOR HAS THE OPTION TO REMOVE LOW STRENGTH MORTAR AS NEEDED FOR LAGGING INSTALLATION. USE WOOD BLOCKING AND/OR SHIMS TO ENSURE LAGGING PANEL REMAINS FLUSH AGAINST BACK OF SOLDIER PILE FLANGE AT THE FRONT FACE OF WALL.
7. CONTRACTOR IS TO CONSTRUCT A CAST IN PLACE RAISED PANEL SEAT TO HOLD THE BOTTOM PRECAST LAGGING PANEL IN PLACE.

Preliminary Plans - For Reference Only

WALL DETAILS (1 OF 2)
WALL AI
ALONG NORTH SIDE OF CARNEGIE AVE.

SFN	N/A
DESIGN AGENCY	Michael Baker INTERNATIONAL
DESIGNER	MKB
CHECKER	YC
REVIEWER	LPC 05-09-24
PROJECT ID	82382
SUBSET	8
TOTAL	12
SHEET	1257
TOTAL	2696

CUY-90-16.28 (CCG3A)
MODEL: Untitled Sheet PAPERSIZE: 34x22 (in.) DATE: 3/27/2025 TIME: 11:09:00 PM USER: Julie.Ross
pw:\\mb-us-pw.bentley.com:mb-us-pw-03\Documents\Cleveland_OH101_Projects\ODOT\District12\82382\400-Engineering\Structures\WALL_AI\Sheets\82382_AI_WD001.dgn

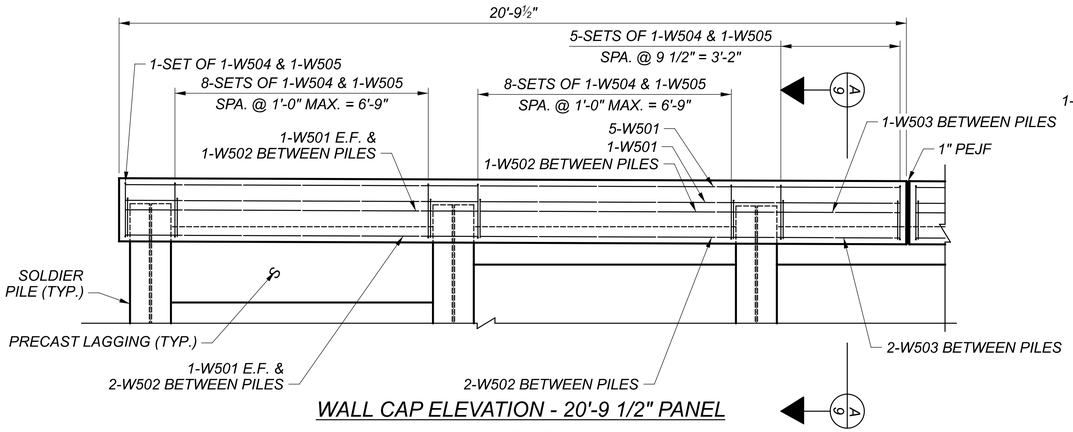

WALL CAP ELEVATION - 20'-9 1/2" PANEL

(1 PANEL)

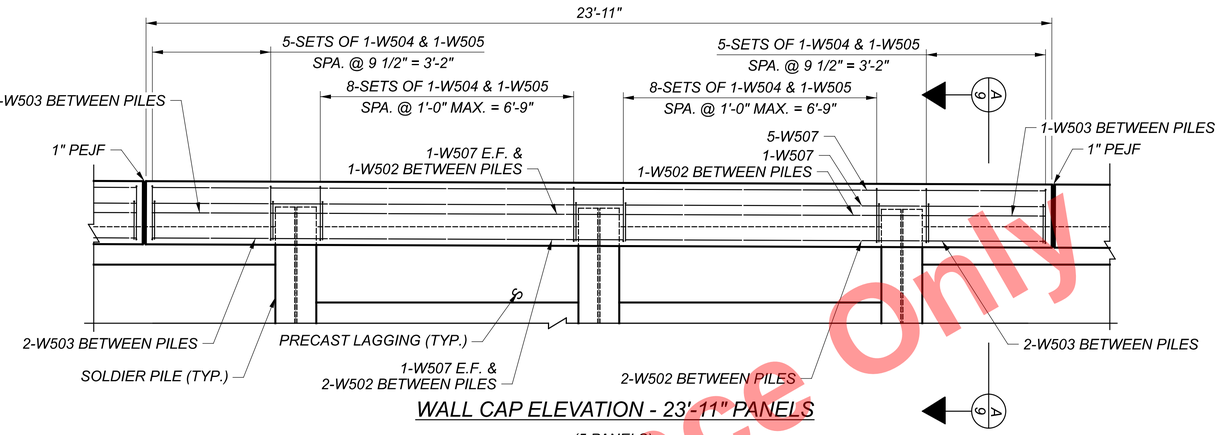

WALL CAP ELEVATION - 23'-11" PANELS

(5 PANELS)

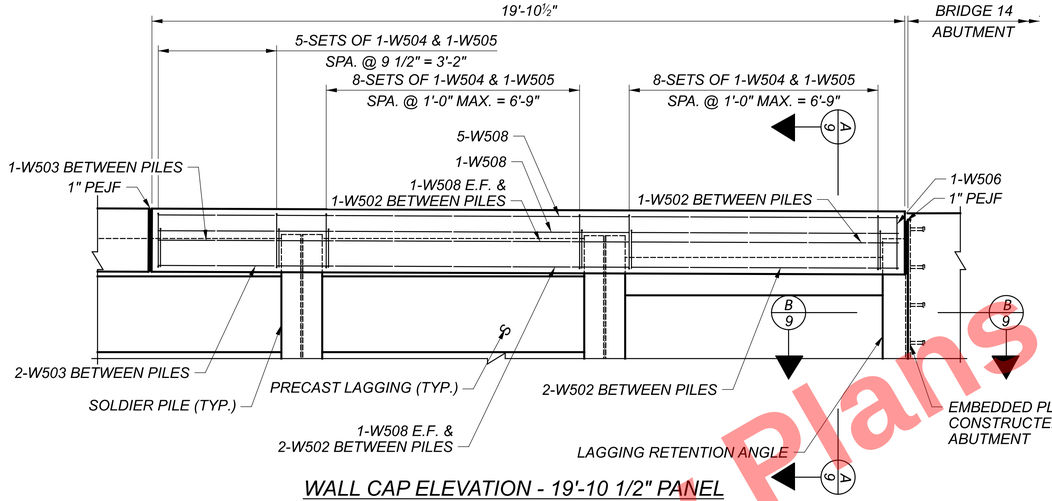

WALL CAP ELEVATION - 19'-10 1/2" PANEL

(1 PANEL)

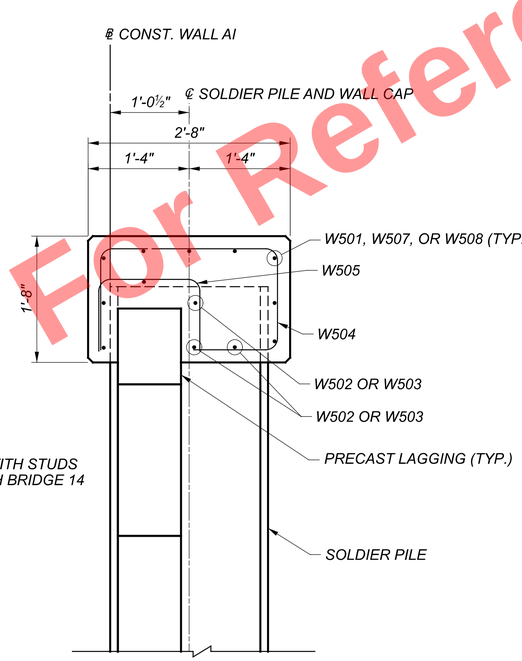

A/9 SECTION
WALL CAP

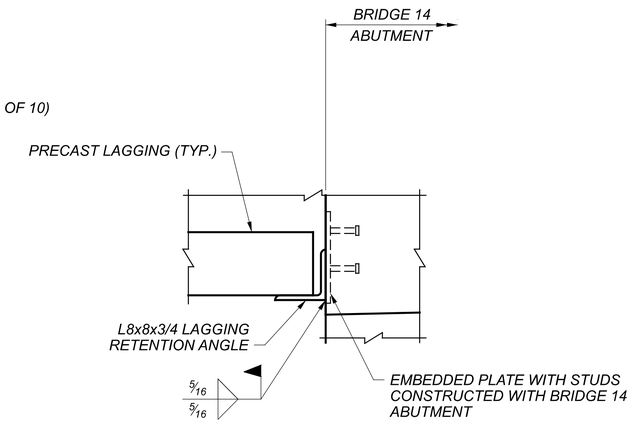

B/9 SECTION
LAGGING RETAINER AT ABUTMENT

NOTES:

1. FOR WALL TYPICAL SECTIONS, SEE SHEET 5 / 12 .
2. FOR WALL ELEVATION, SEE SHEET 7 / 12 .

Preliminary Plans - For Reference Only

WALL DETAILS (2 OF 2)
WALL AI
ALONG NORTH SIDE OF CARNEGIE AVE.

SFN N/A

DESIGN AGENCY
Michael Baker INTERNATIONAL

DESIGNER	CHECKER
MKB	YC

REVIEWER: LPC 05-09-24

PROJECT ID: 82382

SUBSET	TOTAL
9	12

SHEET	TOTAL
1258	2696

CUY-90-16.28 (CCG3A)

MODEL: Untitled Sheet PAPERSIZE: 34x22 (in.) DATE: 3/27/2025 TIME: 11:09:07 PM USER: Julie.Ross
pw:\\mb-us-pw.bentley.com:mb-us-pw-03\Documents\Cleveland_OH\01_Projects\ODOT\District12\82382\400-Engineering\Structures\WALL_AI\Sheets\82382_AI_WD002.dgn

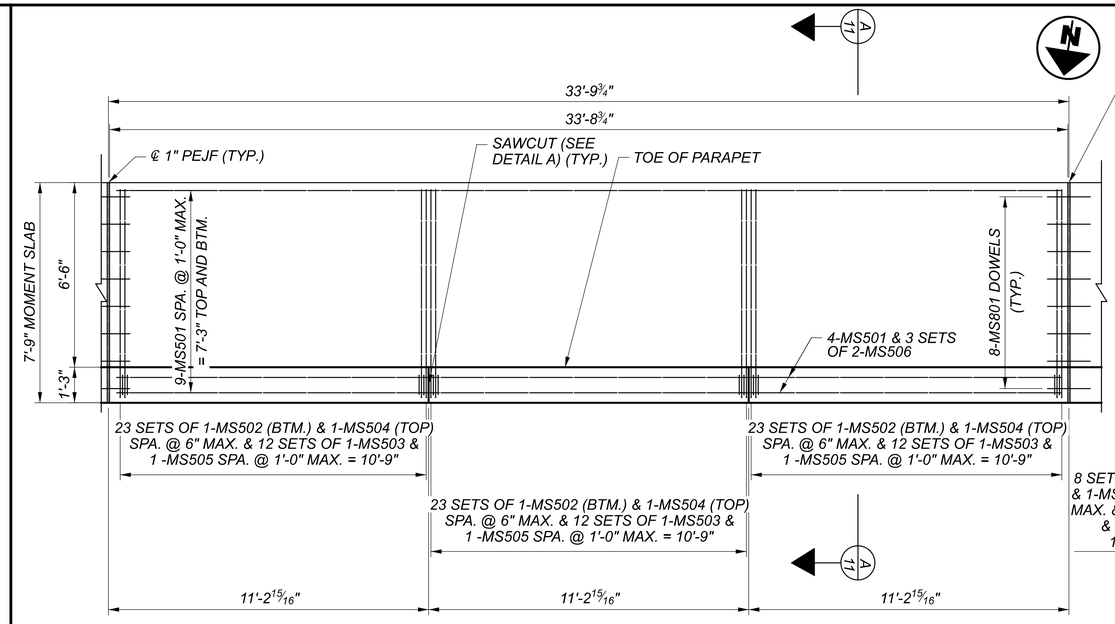

MOMENT SLAB PLAN - 33'-8 3/4" PANELS

(3 PANELS)

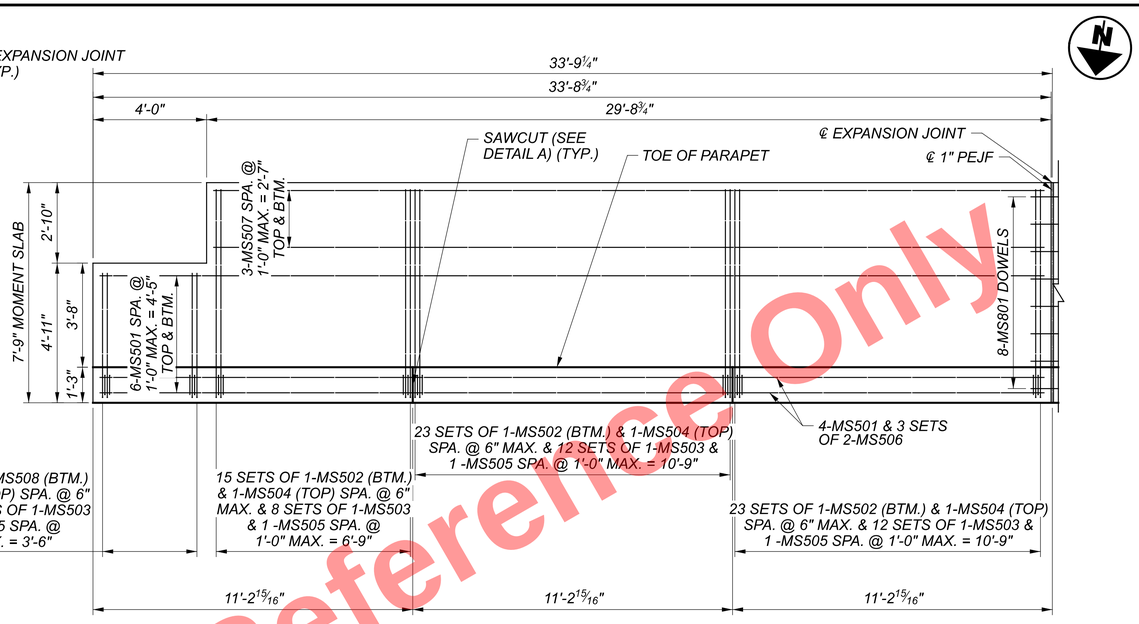

MOMENT SLAB PLAN - 33'-8 3/4" END PANEL

(1 PANEL)

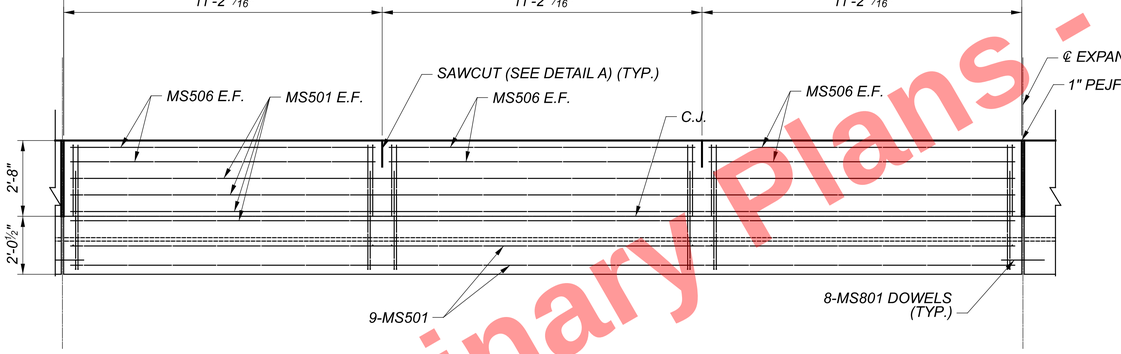

MOMENT SLAB ELEVATION - 33'-8 3/4" PANELS

(3 PANELS)

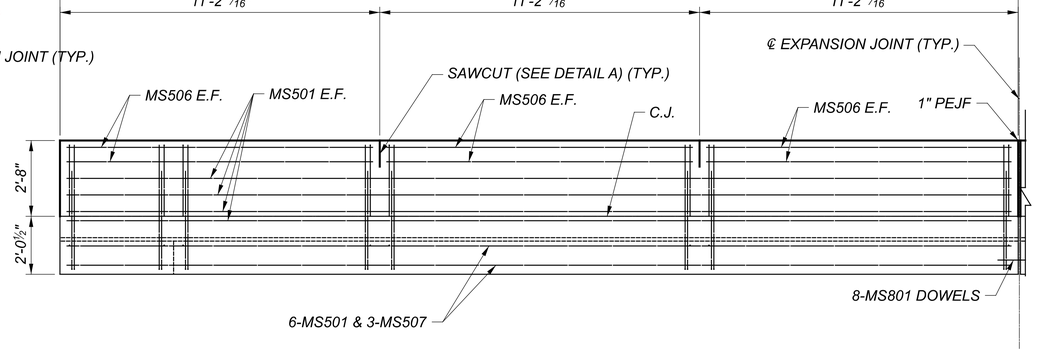

MOMENT SLAB ELEVATION - 33'-8 3/4" END PANEL

(1 PANEL)

NOTES:

1. SEE DETAIL A ON SHEET 11/12 FOR ADDTIONAL SAWCUT INFORMATION.
2. SEE ODOT STANDARD DRAWING BR-2-15 FOR ADDITIONAL DETAILS.
3. VANDAL PROTECTION FENCE NOT SHOWN. SEE ODOT STANDARD DRAWING VPF-1-90 FOR DETAILS

Preliminary Plans - For Reference Only

MOMENT SLAB PLAN AND ELEVATION
WALL A1
ALONG NORTH SIDE OF CARNEGIE AVE.

SFN N/A

DESIGN AGENCY
Michael Baker INTERNATIONAL

DESIGNER	CHECKER
BAH	MKB

REVIEWER LPC 05-09-24

PROJECT ID 82382

SUBSET	TOTAL
10	12

SHEET	TOTAL
1259	2696

CUY-90-16.28 (CCG3A)

MODEL: Untitled Sheet PAPERSIZE: 34x22 (in.) DATE: 3/27/2025 TIME: 11:09:14 PM USER: Julie.Ross
pw:\\mb-us-pw.bentley.com:mb-us-pw-03\Documents\Cleveland_OH\01_Projects\ODOT\District12\82382\400-Engineering\Structures\WALL_A1\Sheets\82382_A1_WD003.dgn

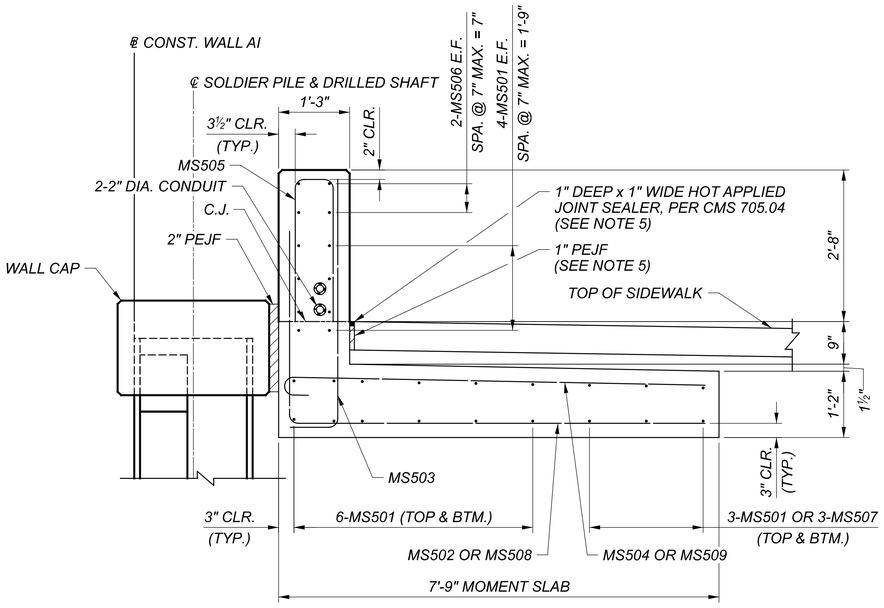

A/10 SECTION

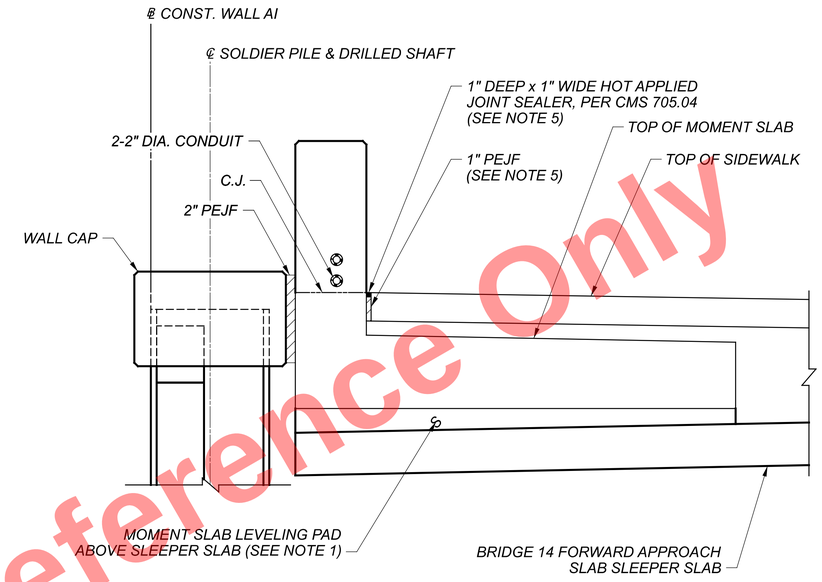

SECTION AT BRIDGE 14 APPROACH SLAB SLEEPER SLAB

(REINFORCEMENT NOT SHOWN)

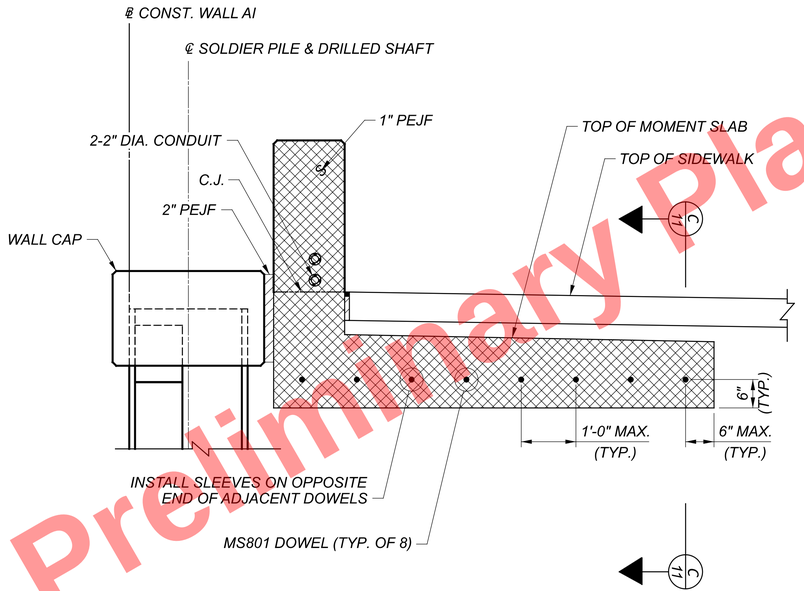

TYPICAL MOMENT SLAB SECTION AT EXPANSION JOINT

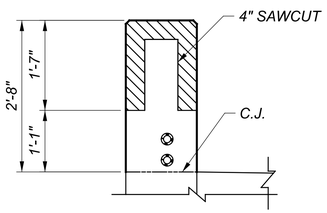

A/10 DETAIL (SECTION THROUGH SAWCUT)

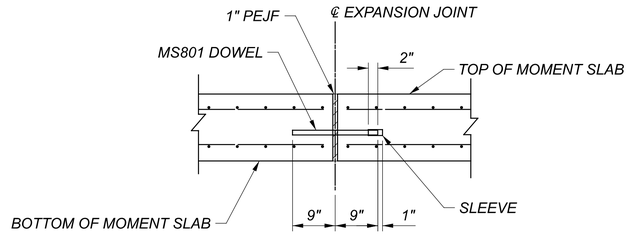

C/11 SECTION

NOTES:

1. INCLUDE MOMENT SLAB LEVELING PAD WITH ITEM 511 FOR PAYMENT.
2. SEE SOLDIER PILE AND LAGGING WALL TYPICAL SECTIONS FOR SEALING LIMITS.
3. SEE ODOT STANDARD DRAWING BR-2-15 FOR ADDITIONAL DETAILS.
4. VANDAL PROTECTION FENCE NOT SHOWN. SEE ODOT STANDARD DRAWING VPF-1-90 FOR DETAILS.
5. HOT APPLIED JOINT SEALER AND 1" PEJF TO BE PAID FOR WITH ITEM 511 - CLASS QC2 CONCRETE MISC.: CONCRETE MOMENT SLAB AND PARAPET WITH QC/QA.

Preliminary Plans - For Reference Only

MOMENT SLAB DETAILS
WALL AI
ALONG NORTH SIDE OF CARNEGIE AVE.

SFN N/A

DESIGN AGENCY

Michael Baker INTERNATIONAL

DESIGNER	CHECKER
MKB	YC

REVIEWER LPC 05-09-24

PROJECT ID 82382

SUBSET	TOTAL
11	12

SHEET	TOTAL
1260	2696

CUY-90-16.28 (CCG3A)

MODEL: Untitled Sheet PAPERSIZE: 34x22 (in.) DATE: 3/27/2025 TIME: 11:09:21 PM USER: Julie.Ross
pw:\\mb-us-pw.bentley.com:mb-us-pw-03\Documents\Cleveland_OH\01_Projects\ODOT\District12\82382\400-Engineering\Structures\WALL_AI\Sheets\82382_AI_WD004.dgn

MARK	MAT'RL TYPE	NUMBER			LENGTH	WEIGHT (LBS.)	TYPE	DIMENSIONS						SER INC.
		REAR	FWD.	TOTAL				A	B	C	D	E	R	
WALL CAP (EPOXY COATED STEEL REINFORCEMENT-ECSR)														
W501	ECSR			10	20'-6"	213	STR.							
W502	ECSR			18	7'-8"	144	STR.							
W503	ECSR			12	3'-8"	46	STR.							
W504	ECSR			69	5'-8"	408	7	1'-4"	2'-4"	1'-4"	1'-0"			
W505	ECSR			69	3'-3"	234	2	1'-1"	1'-4"	1'-1"				
W506	ECSR			1	4'-9"	5	2	1'-4"	2'-4"	1'-4"				
W507	ECSR			10	23'-7"	246	STR.							
W508	ECSR			10	19'-7"	204	STR.							
WALL CAP ECSR SUBTOTAL						1500								

MARK	MAT'RL TYPE	NUMBER			LENGTH	WEIGHT (LBS.)	TYPE	DIMENSIONS						SER INC.
		REAR	FWD.	TOTAL				A	B	C	D	E	R	
MOMENT SLAB (EPOXY COATED STEEL REINFORCEMENT-ECSR)														
MS501	ECSR			98	33'-5"	3414	STR.							
MS502	ECSR			268	10'-5"	2912	1	7'-3"	3'-3"					
MS503	ECSR			145	5'-0"	756	1	0'-11"	4'-2"					
MS504	ECSR			268	7'-10"	2190	16	7'-3"						
MS505	ECSR			145	5'-5"	819	2	2'-6"	0'-8"	2'-6"				
MS506	ECSR			48	10'-11"	547	STR.							
MS507	ECSR			6	29'-3"	183	STR.							
MS508	ECSR			8	7'-7"	63	1	4'-5"	3'-3"					
MS509	ECSR			8	5'-0"	42	16	4'-5"						
MS801	ECSR			24	1'-6"	96	STR.							
MOMENT SLAB ECSR SUBTOTAL						11022								

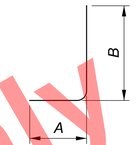

TYPE-1

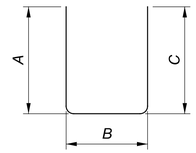

TYPE-2

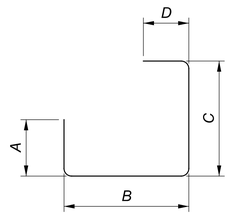

TYPE-7

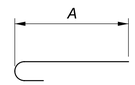

TYPE-16

NOTES:

1. SERIES BARS - EACH BAR VARIES BY TABULATED AMOUNT.
2. ALL DIMENSIONS ARE OUT TO OUT.
3. TYPE "STR." INDICATES STRAIGHT BAR.
4. THE BAR SIZE NUMBER IS SPECIFIED IN THE "MARK" COLUMN. THE FIRST DIGIT INDICATES THE BAR SIZE NUMBER. FOR EXAMPLE, EA501 IS A #5 BAR SIZE.
5. SUBTOTALS AND TOTAL WEIGHTS ARE FOR INFORMATIONAL PURPOSES ONLY. IF THE REINFORCING LIST PROVIDED IN THE PLANS IS USED IT SHALL BE VERIFIED BY THE CONTRACTOR. ANY REVISIONS IN THE REINFORCING STEEL LIST AS SHOWN IN THE PLANS WILL NOT BE REASON FOR ADJUSTMENT IN THE BID PRICE FOR STRUCTURAL CONCRETE.
6. USE STANDARD HOOKS FOR ENDS OF BARS NOT SPECIFICALLY DIMENSIONED IN DETAILS.

Preliminary Plans - For Reference Only

REINFORCING SCHEDULE
WALL AI
ALONG NORTH SIDE OF CARNEGIE AVE.

SFN N/A

DESIGN AGENCY
Michael Baker INTERNATIONAL

DESIGNER	CHECKER
MKB	YC

REVIEWER
LPC 05-09-24

PROJECT ID
82382

SUBSET	TOTAL
12	12

SHEET	TOTAL
1261	2696

CUY-90-16.28 (CCG3A)

MODEL: Untitled Sheet PAPERSIZE: 34x22 (in.) DATE: 3/27/2025 TIME: 11:09:31 PM USER: Julie.Ross
pw:\\mb-us-pw.bentley.com:mb-us-pw-03\Documents\Cleveland_OH\01_Projects\ODOT\District12\82382\400-Engineering\Structures\WALL_AI\Sheets\82382_AI_WL001.dgn

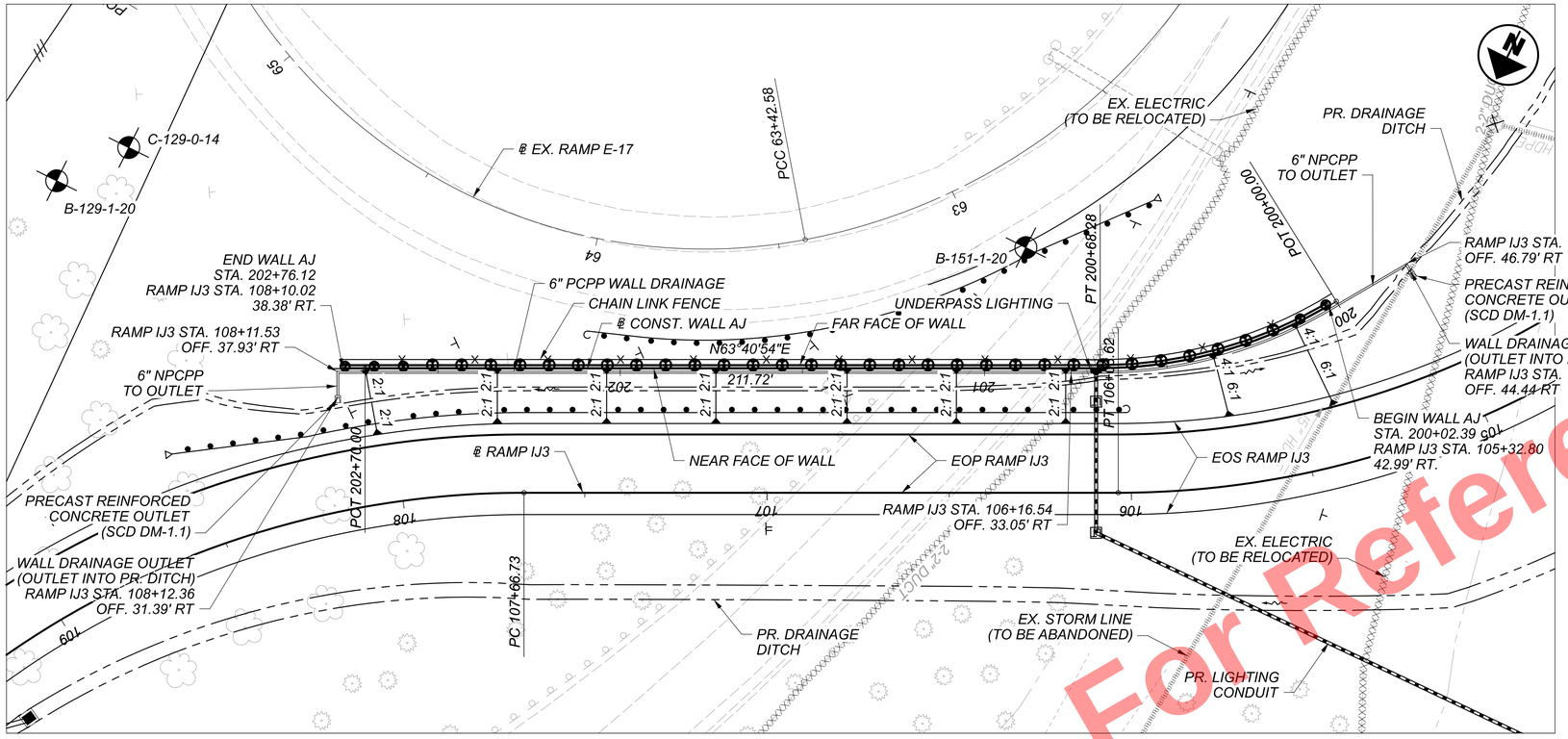

PLAN

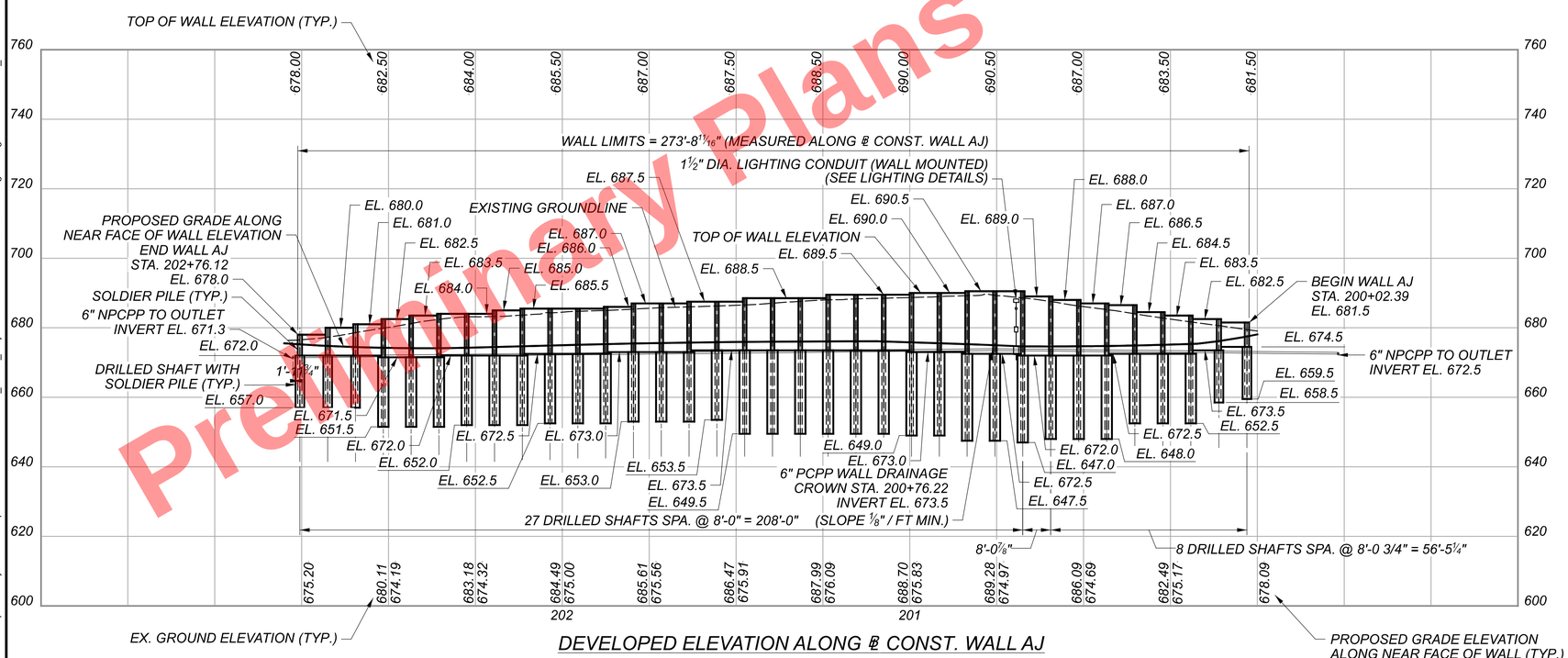

DEVELOPED ELEVATION ALONG ℄ CONST. WALL AJ

BENCHMARK DATA

BM #59 STA. 110+66.50, ELEV. 660.15, OFFSET 184.89' RT., MAG NAIL SET AT NOSE OF CONCRETE DRAINAGE CHANNEL IN GRASS MEDIAN BETWEEN EAST 14TH STREET AND COMMUNITY COLLEGE AVE.

BM #68 STA. 96+41.58 ELEV. 678.92, OFFSET 309.86' LT., CUT CROSS ON NORTHEAST BOLT OF TRAFFIC SIGNAL POLE AT SOUTHWEST CORNER OF E. 14TH AND ORANGE AVENUE.

FOR ADDITIONAL BENCHMARK INFORMATION. SEE ROADWAY PLAN SHEET 4 / 2696

WALL AJ

CURVE DATA
P.I. = Sta. 200+35.04
Δ = 31°47'09" RT
Dc = 46°33'03"
R = 123.08'
T = 35.04'
L = 68.28'
E = 4.89'

RAMP IJ3

CURVE DATA
P.I. = Sta. 104+62.29
Δ = 94°38'42" LT
Dc = 23°00'00"
R = 249.11'
T = 270.17'
L = 411.50'
E = 118.38'

CURVE DATA
P.I. = Sta. 109+39.13
Δ = 69°22'21" LT
Dc = 23°00'00"
R = 249.11'
T = 172.40'
L = 301.62'
E = 53.84'

BORING LOCATION*			
BORING	STATION	OFFSET	TOP OF ROCK EL.
B-129-1-20	108+57.88	109.31' RT.	-
B-151-1-20	106+28.98	67.25' RT.	-
C-129-0-14	108+42.86	111.40' RT.	-

* = BORING STATION AND OFFSETS ARE FROM ℄ RAMP IJ3

PROPOSED WORK

THE PROPOSED WORK CONSISTS OF CONSTRUCTING A RETAINING WALL ALONG THE SOUTH SIDE OF RAMP IJ3. THE WALL IS TO BE TOP DOWN CONSTRUCTION CONSISTING OF SOLDIER PILES AND PRECAST CONCRETE LAGGING.

NOTES

1. EARTHWORK LIMITS SHOWN ARE APPROXIMATE. ACTUAL SLOPES SHALL CONFORM TO PLAN CROSS SECTIONS.
2. FOR WALL CROSS SECTIONS, SEE SHEETS 923 TO 925 / 2696
3. STATION AND WALL OFFSETS SHOWN AT FRONT FACE OF WALL.

LEGEND

PROJECT BORING LOCATIONS

CONST. = CONSTRUCTION
EOP = EDGE OF PAVEMENT
EOS = EDGE OF SHOULDER

Preliminary Plans - For Reference Only

WALL PLAN AND PROFILE
WALL AJ
ALONG SOUTH SIDE OF RAMP IJ3

SFN N/A
DESIGN AGENCY
Michael Baker INTERNATIONAL
DESIGNER MKB | CHECKER YC
REVIEWER LPC 05-09-24
PROJECT ID 82382
SUBSET 1 | TOTAL 8
SHEET 1262 | TOTAL 2696

CUY-90-16.28 (CCG3A)

MODEL: BL_Wall AJ - Wall AJ Plan PAPERSIZE: 34x22 (in.) DATE: 3/27/2025 TIME: 11:09:41 PM USER: Julie.Ross
pw:\\mb-us-pw.bentley.com:mb-us-pw-03\Documents\Cleveland_OH\01_Projects\ODOT\District12\82382\400-Engineering\Structures\WALL_AJ\Sheets\82382_AJ_WP001.dgn

STANDARD DRAWINGS AND SUPPLEMENTAL SPECIFICATIONS:

REFER TO THE FOLLOWING STANDARD CONSTRUCTION DRAWINGS:
F-1.1 REVISED 7/19/2013
DM-1.1 REVISED 1/17/2025

REFER TO THE FOLLOWING SUPPLEMENTAL SPECIFICATION:
800 DATED SEE TITLE SHEET

REFER TO THE FOLLOWING SUPPLEMENTS:
1073 DATED 4/21/2023
1083 DATED 1/20/2017

DESIGN SPECIFICATIONS:

THIS STRUCTURE CONFORMS TO THE "LRFD BRIDGE DESIGN SPECIFICATIONS", 9TH EDITION, ADOPTED BY THE AMERICAN ASSOCIATION OF STATE HIGHWAY AND TRANSPORTATION OFFICIALS, 2020 AND THE ODOT BRIDGE DESIGN MANUAL, 2020 (DATED 07-21-23).

DESIGN DATA:

CONCRETE CLASS QC1 - COMPRESSIVE STRENGTH 4.0 KSI (PRECAST LAGGING AND PANEL SEAT)
CONCRETE CLASS QC5 - COMPRESSIVE STRENGTH 4.5 KSI (DRILLED SHAFTS)
REINFORCING STEEL / WELDED WIRE REINFORCEMENT - MINIMUM YIELD STRENGTH 60 KSI
STEEL SOLDIER PILES - ASTM A572 - YIELD STRENGTH 50 KSI

SEQUENCE OF CONSTRUCTION:

CONSTRUCT WALL AJ DURING MOT PHASE 9.

SEE MAINTENANCE OF TRAFFIC NOTES FOR ADDITIONAL PHASES AND INFORMATION.

ITEM 507 - STEEL PILES, MISC.: HP16x121, FURNISHED
ITEM 507 - STEEL PILES, MISC.: W24x131, FURNISHED
ITEM 507 - STEEL PILES, MISC.: W24x192, FURNISHED
ITEM 507 - STEEL PILES, MISC.: W24x229, FURNISHED

THIS WORK CONSISTS OF FURNISHING AND PLACING STEEL SOLDIER PILES INTO DRILLED HOLES. FURNISH SOLDIER PILES CONSISTING OF STRUCTURAL STEEL MEMBERS THAT MEET THE PLAN REQUIREMENTS AND CONFORM TO ASTM A572, GRADE 50 IN ACCORDANCE WITH C&MS 711.01. GALVANIZE SOLDIER PILES AS SHOWN ON THE PLANS AND IN ACCORDANCE WITH C&MS 711.02. DO NOT FIELD WELD OR SPLICE STEEL SOLDIER PILES.

THE DEPARTMENT WILL MEASURE SOLDIER PILES ALONG THE AXIS OF THE SOLDIER PILE FROM THE TOP OF WALL ELEVATION TO THE BOTTOM OF THE DRILLED SHAFT, AS DETERMINED BY THE ENGINEER. THE DEPARTMENT WILL PAY FOR SOLDIER PILES AT THE CONTRACT UNIT PRICE PER FOOT FOR ITEM 507, STEEL PILES, MISC.: HP16x121, FURNISHED, ITEM 507, STEEL PILES, MISC.: W24x131, FURNISHED, AND ITEM 507, STEEL PILES, MISC.: W24x192, FURNISHED AND ITEM 507, STEEL PILES, MISC.: W24x229, FURNISHED.

ITEM 511 - CONCRETE, MISC.: CLASS QC1 CONCRETE FOR RAISED PANEL SEAT

PROVIDE LEVEL CAST-IN-PLACE SEATS FOR LEVEL INSTALLATION OF THE BOTTOM ROW OF LAGGING. SEATS SHALL BE PLACED AS SHOWN IN THE PLANS ON SOUND CONCRETE FROM THE SOLDIER PILE DRILLED SHAFT.

THE CONTRACTOR IS PERMITTED TO USE A PRECAST ALTERNATIVE SUBJECT TO APPROVAL OF THE ENGINEER.

ITEM 512 - SEALING OF CONCRETE SURFACES, AS PER PLAN (PERMANENT GRAFFITI PROTECTION)

APPLY A PERMANENT GRAFFITI COATING QUALIFIED ACCORDING TO SUPPLEMENT 1083 THAT IS COMPATIBLE WITH THE CONCRETE SEALER OVER WHICH IT IS APPLIED. PROVIDE A COATING THAT MEETS THE REQUIREMENTS LISTED BELOW. APPLY THE GRAFFITI COATING IN ACCORDANCE WITH THE MANUFACTURER'S PRINTED INSTRUCTIONS.

A. THE MATERIAL SHALL BE A SINGLE COMPONENT, RTV (ROOM TEMPERATURE VULCANIZED), NEUTRAL MOISTURE CURE, PERMANENT (NON-SACRIFICIAL), TYPE III (WATER CLEANABLE) POLYSILOXANE (SILICONE) ANTI-GRAFFITI COATING, FREE OF ANY WAXES, EPOXIES, OR POLYURETHANE COMPONENTS.

B. THE COATING SHALL BE A ONE COAT SYSTEM (NO PRIMER) CAPABLE OF BEING SPRAY APPLIED TO A DRY FILM THICKNESS OF 15 MILS (375 MICRONS) WITHOUT RUNS OR SAGS (MULTIPLE COAT APPLICATION ACCEPTABLE FOR BRUSH/ROLLER USAGE AND PRIMER USAGE ACCEPTABLE FOR SPECIALTY SUBSTRATES SUCH AS GALVANIZED METAL).

C. THE COATING SHALL EMIT LESS THAN 300 G/L (2.5 POUNDS PER GALLON) OF VOLATILE ORGANIZE COMPOUNDS (EPA METHOD 24).

D. THE COATING SHALL MEET THE FOLLOWING PERFORMANCE REQUIREMENTS:
1. CLEANABILITY LEVEL 1 (GRAFFITI COMPLETELY REMOVED WITH COLD WATER POWER WASH) AS PER ASTM D7089 WITH LOW PRESSURE (1200 PSI) COLD WATER WASH AFTER 2000 HOURS ACCELERATED UV-CONDENSATION EXPOSURE IN ACCORDANCE WITH ASTM D4587.
2. GRAFFITI RESISTANCE LESS THAN 7.5 AS PER ASTM D6578 AFTER 2000 HOURS ACCELERATED UV-CONDENSATION EXPOSURE IN ACCORDANCE WITH ASTM 4578.
3. NO SIGNS OF GRAFFITI OR GRAFFITI STAINING AND MUST BE INTACT AND EXHIBIT NO SIGNS OF STREAKING, CRACKING, PINHOLING, DISCOLORING, OR OTHER VISIBLE COATING DEGRADATION UPON CASUAL OBSERVATION WHEN TESTED IN ACCORDANCE WITH TXDOT TEX 890-B, TYPE III METHOD.
4. BREATHABILITY OF 10 PERMS (+/- 3) PER ASTM D1653 USING "WET CUP METHOD".
5. ELONGATION AT BREAK GREATER THAN 100% AS PER ASTM D412 (USING DIE "D").
6. ADHESION RATING OF "8 - DIFFICULT TO REMOVE" AS PER ASTM D6677 (ADHESION BY KNIFE).

ITEM 512 - SEALING OF CONCRETE SURFACES (EPOXY-URETHANE), AS PER PLAN

SEAL SURFACES OF THE PRECAST CONCRETE LAGGING AS SHOWN IN THE PLANS WITH AN EPOXY-URETHANE SEALER ACCORDING TO C&MS 512. THE FOLLOWING COLORS SHALL BE USED FOR PAINTING AND SEALING STRUCTURAL ELEMENTS:

LAGGING SEALER: "ALABASTER" 7008

ALL COLOR NAME AND NUMBER REFERENCES ARE TAKEN FROM THE SHERWIN WILLIAMS COLOR PALATE. THE CONTRACTOR MAY SUBSTITUTE SIMILAR COLORS FROM ALTERNATIVE SUPPLIER'S COLOR PALATE.

ITEM 524 - DRILLED SHAFTS, 30" DIAMETER, ABOVE BEDROCK, AS PER PLAN
ITEM 524 - DRILLED SHAFTS, 36" DIAMETER, ABOVE BEDROCK, AS PER PLAN

THIS WORK CONSISTS OF FURNISHING AND INSTALLING DRILLED SHAFTS FOR SOLDIER PILE AND LAGGING WALLS. THE DRILLED SHAFTS ARE REINFORCED WITH SOLDIER PILES INSTEAD OF REINFORCING STEEL CAGES. THE SOLDIER PILES EXTEND ABOVE THE TOP OF THE DRILLED SHAFT. FURNISH AND INSTALL THE DRILLED SHAFTS IN ACCORDANCE WITH C&MS 524 EXCEPT AS MODIFIED AND SUPPLEMENTED BELOW.

EXCAVATE THE HOLE FOR THE DRILLED SHAFT WITHIN 1½ INCHES OF THE PLAN LOCATION. PLACE THE SOLDIER PILE WITHIN THE HOLE SO IT IS VERTICAL AND NOT INCLINED MORE THAN 1 INCH BETWEEN TOP TO BOTTOM. PLACE THE SOLDIER PILE SO THAT THE FLANGES ARE PARALLEL TO THE CENTERLINE OF THE ROW OF DRILLED SHAFTS. DO NOT ALLOW THE ORIENTATION OF THE FLANGES TO VARY BY MORE THAN 10 DEGREES. SUPPORT THE SOLDIER PILE SO THAT IT DOES NOT MOVE DURING CONCRETE PLACEMENT.

USE CLASS QC 5 CONCRETE ACCORDING TO C&MS 511. PLACE CONCRETE TO THE ELEVATION FOR THE TOP OF THE DRILLED SHAFT. THE CONTRACTOR MAY PLACE CONCRETE USING THE FREE FALL METHOD PROVIDED THE DEPTH OF WATER IS LESS THAN 6 INCHES AND THE CONCRETE FALLS WITHOUT STRIKING THE SIDES OF THE HOLE. POURING CONCRETE ALONG THE WEB OF THE SOLDIER PILE IS ACCEPTABLE.

CHECK THE POSITION, THE VERTICAL ALIGNMENT AND ORIENTATION OF THE SOLDIER PILE IMMEDIATELY AFTER CONCRETE PLACEMENT. MAKE CORRECTIONS AS NECESSARY TO MEET THE ABOVE TOLERANCES. IF SHOWN ON THE PLANS, FILL THE HOLE ABOVE THE BOTTOM OF THE LAGGING TO THE EXISTING GROUND SURFACE WITH ITEM C&MS 613 LOW STRENGTH MORTAR BACKFILL (LSM).

REMOVE CONCRETE AND LSM AS NECESSARY FROM AROUND THE SOLDIER PILE IN ORDER TO PLACE THE LAGGING. PLACE LAGGING SO THAT THE SOLDIER PILE FLANGE OVERLAPS THE END OF THE LAGGING BY AT LEAST 3 INCHES AT BOTH ENDS OF THE LAGGING. WAIT AT LEAST 12 HOURS AFTER PLACING CONCRETE BEFORE PLACING LAGGING.

SEQUENCE OF INSTALLATION: THE INSTALLATION SEQUENCE SHALL BE SUCH THAT NO DRILLED SHAFT IS INSTALLED ADJACENT TO EITHER AN OPEN DRILLED SHAFT EXCAVATION OR A DRILLED SHAFT IN WHICH THE CONCRETE HAS LESS THAN A 48-HOUR CURE. INSTALLING THE SHAFTS IN AN ALTERNATING SEQUENCE OR ANY OTHER SEQUENCE THAT MEETS THESE CRITERIA IS PERMISSIBLE.

PROTECTION OF UNATTENDED OPEN SHAFTS: CARE SHALL BE EXERCISED AS TO COVER UNATTENDED OPEN SHAFTS. TEMPORARY COVERS SHALL BE OF ADEQUATE STRENGTH TO PREVENT A PERSON OR ANIMAL FROM FALLING IN. NO DRILLED SHAFT EXCAVATION SHALL BE LEFT UN-POURED OVERNIGHT.

THE CONTRACTOR SHALL BE RESPONSIBLE FOR THE MEANS AND METHODS USED TO CONSTRUCT THE DRILLED SHAFTS AND PLACE LAGGING. ANY TEMPORARY GRADING, EXCAVATION, EMBANKMENT, AGGREGATE, DRAINAGE, SHEETING, ETC. NEEDED TO COMPLETE THE WORK SHALL BE INCLUDED IN THE BID PRICE FOR THE DRILLED SHAFTS. THE COST OF ANY EXCAVATION AND SUBSEQUENT REPLACEMENT OF EMBANKMENT (PER ITEM 203 EMBANKMENT) SHALL BE INCLUDED IN THE VARIOUS BID ITEMS FOR THE DRILLED SHAFTS AND LAGGING, UNLESS SEPARATELY ITEMIZED. NO SEPARATE PAYMENT WILL BE MADE.

METHOD OF MEASUREMENT: THE DEPARTMENT WILL MEASURE DRILLED SHAFTS ABOVE BEDROCK, AS PER PLAN, ALONG THE AXIS OF THE DRILLED SHAFT FROM THE EXISTING GROUND SURFACE TO THE TOP OF BEDROCK, AS DETERMINED BY THE ENGINEER. THE DEPARTMENT WILL MEASURE DRILLED SHAFTS INTO BEDROCK, AS PER PLAN, ALONG THE AXIS OF THE DRILLED SHAFT FROM TOP OF BEDROCK TO THE BOTTOM OF THE DRILLED SHAFT, AS DETERMINED BY THE ENGINEER.

PAYMENT IS FULL COMPENSATION FOR CONSTRUCTING THE DRILLED SHAFTS, INCLUDING FURNISHING AND PLACING CONCRETE AND LSM, REMOVAL OF CONCRETE OR LSM FROM AROUND THE SOLDIER PILE IN ORDER TO PLACE LAGGING.

Preliminary Plans - For Reference Only

WALL GENERAL NOTES (1 OF 2)
WALL AJ
ALONG SOUTH SIDE OF RAMP IJ3

SFN N/A

DESIGN AGENCY
Michael Baker INTERNATIONAL

DESIGNER	CHECKER
MKB	YC

REVIEWER
LPC 05-09-24

PROJECT ID 82382

SUBSET	TOTAL
2	8

SHEET	TOTAL
1263	2696

CUY-90-16.28 (CCG3A)
MODEL: Sheet (1 of 2) PAPERSIZE: 34x22 (in.) DATE: 6/9/2025 TIME: 11:36:32 AM USER: Tolga.Feran
pw:\\mb-us-pw.bentley.com:mb-us-pw-03\Documents\Cleveland_OH\01_Projects\ODOT\District12\82382\400-Engineering\Structures\WALL_AJ\Sheets\82382_AJ_WN001.dgn

ITEM SPECIAL - RETAINING WALL, PRECAST CONCRETE LAGGING

THIS WORK CONSISTS OF FURNISHING AND PLACING PRECAST REINFORCED CONCRETE PANELS BETWEEN THE SOLDIER PILES TO FUNCTION AS LAGGING FOR THE RETAINING WALL. PROVIDE PRECAST CONCRETE LAGGING FROM A PRECAST CONCRETE MANUFACTURER CERTIFIED ACCORDING TO SUPPLEMENT 1073. PROVIDE CLASS QC1 CONCRETE ACCORDING TO C&MS 499. PROVIDE EPOXY COATED REINFORCING STEEL ACCORDING TO C&MS 709.00. IN LIEU OF EPOXY COATING, A CORROSION INHIBITING CONCRETE ADMIXTURE MAY BE USED AT THE SPECIFIED DOSAGE RATE. A QUALIFIED PRODUCT LIST OF CORROSION INHIBITING ADMIXTURES IS ON FILE AT THE LABORATORY. MANUFACTURERS SHOULD RECOGNIZE THAT THE CORROSION INHIBITOR MAY AFFECT THE STRENGTH, ENTRAINED AIR CONTENT, WORKABILITY, ETC. OF THEIR CONCRETE MIXES. THE MANUFACTURER'S CHOICE TO USE ONE OF THESE CORROSION INHIBITORS DOES NOT ALLEVIATE MEETING ALL DESIGN REQUIREMENTS. DO NOT ALLOW THE DIMENSIONS OF THE LAGGING OR LOCATION OF THE REINFORCING STEEL TO VARY BY MORE THAN ¼-INCH. CAST THREADED INSERTS INTO THE TOP OF EACH PANEL FOR LIFTING AND PLACEMENT.

FINISH THE FACES OF THE PRECAST CONCRETE LAGGING PANELS THAT WILL NOT BE EXPOSED TO A UNIFORM SURFACE, FREE OF OPEN POCKETS OF AGGREGATE. *FINISH THE EXPOSED FACE OF THE PANELS TO A SMOOTH SURFACE. SEAL THE FRONT (EXPOSED) FACE AND SIDES OF EACH CONCRETE PANEL WITH ITEM 512, SEALING OF CONCRETE SURFACES (EPOXY URETHANE). THE COLOR OF THE URETHANE SHALL BE SHERWIN WILLIAMS ALABASTER 7008 OR APPROVED EQUAL.

PERMANENTLY MARK EACH PRECAST CONCRETE LAGGING PANEL TO INDICATE WHICH FACE WILL BE PLACED AGAINST THE SOIL. PLACE THE PANEL BETWEEN THE FLANGES OF THE SOLDIER PILES AND BEARING AGAINST THE FLANGES ON THE EXPOSED SIDE OF THE WALL SO THAT THE SOLDIER PILE FLANGE OVERLAPS THE END OF THE LAGGING BY AT LEAST ONE INCH MORE THAN THE CONCRETE COVER OVER THE REINFORCING STEEL AT BOTH ENDS OF THE LAGGING.

HANDLE, STORE, AND SHIP THE PRECAST CONCRETE LAGGING PANELS TO AVOID CHIPPING, CRACKING AND FRACTURING THE PANELS. SUPPORT THE PANELS ON FIRM BLOCKING WHILE STORING AND SHIPPING. DO NOT SHIP PANELS UNTIL CONCRETE HAS ATTAINED THE REQUIRED COMPRESSIVE STRENGTH. SUBMIT SHIPMENT DOCUMENTATION TO THE ENGINEER AS THE PANELS ARE DELIVERED TO THE PROJECT, INCLUDING THE PRECASTER'S RECORD OF FINAL INSPECTION, THE MEASUREMENTS AND TOLERANCES, STRENGTH, AND DIMENSIONS OF EACH PANEL, ALONG WITH THE TE-24 SHIPPING DOCUMENT AND THE DAMAGE SURVEY REPORT FOR ALL WALL PANELS.

INSPECT ALL PRECAST CONCRETE LAGGING PANELS AND REJECT PANELS HAVING ANY OF THE FOLLOWING:

1. DEFECTS THAT INDICATE IMPERFECT MOLDING.
2. DEFECTS THAT INDICATE HONEYCOMBED OR OPEN TEXTURE CONCRETE.
3. DEFECTS IN THE PHYSICAL CHARACTERISTICS OF THE CONCRETE, OR DAMAGE TO THE AESTHETIC SURFACE TREATMENTS.
4. CONCRETE CHIPS OR SPALLS THAT ARE LARGER THAN 4 INCHES WIDE OR 2 INCHES DEEP. REPAIR ALL CHIPS AND SPALLS THAT ARE SMALLER.
5. STAINED FORM FACES, DUE TO FORM OIL, CURING OR OTHER CONTAMINANTS.
6. SIGNS OF AGGREGATE SEGREGATION.
7. CRACKS WIDER THAN 0.01 INCH OR PENETRATING MORE THAN 1 INCH OR LONGER THAN 20 PERCENT OF THE LENGTH OF THE FACE CONTAINING THE CRACK.
8. PANELS THAT DO NOT MEET THE SPECIFIED DIMENSIONAL TOLERANCES.
9. UNUSABLE LIFTING INSERTS.
10. EXPOSED REINFORCING STEEL.
11. INSUFFICIENT CONCRETE COMPRESSIVE STRENGTH.

EITHER REPLACE DAMAGED PRECAST CONCRETE LAGGING PANELS OR DOCUMENT THE DAMAGE AND PROPOSE TO THE ENGINEER A REPAIR METHOD FOR THE DAMAGED PANEL. PROVIDE ACCEPTABLE REPLACEMENT PANELS FOR ANY THAT ARE REJECTED.
WHEN INSTALLING THE PRECAST CONCRETE LAGGING PANELS, PLACE HARDWOOD WEDGES NEAR THE TOP AND BOTTOM ON EACH SIDE TO HOLD THE LAGGING PANELS AGAINST THE FRONT INSIDE FLANGE OF THE STEEL PILES.

PAYMENT FOR ALL LABOR, EQUIPMENT, AND MATERIAL REQUIRED TO FABRICATE, TRANSPORT, AND INSTALL THE PRECAST REINFORCED CONCRETE PANELS SHALL BE MADE AT THE CONTRACT UNIT PRICE PER SQUARE FOOT FOR ITEM SPECIAL - RETAINING WALL, PRECAST CONCRETE LAGGING.

SECTION/DETAIL/VIEW CALLOUTS

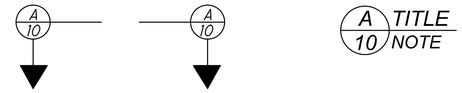

(SEE SECTION A ON SHEET 10) (SECTION A CUT FROM SHEET 10)

PLAN ABBREVIATIONS:

ABUT. = ABUTMENT
APPR. = APPROACH
B = BOTTOM
℄ = BASELINE
BM = BENCHMARK
BOT. OR BTM. = BOTTOM
℄ = CENTERLINE
C/C = CENTER TO CENTER
C.I.P. = CAST-IN-PLACE
C.J. = CONSTRUCTION JOINT
CLR. = CLEAR
CMS = CONSTRUCTION AND MATERIAL SPECIFICATIONS
CONC. = CONCRETE
CONST. = CONSTRUCTION
DIA. = DIAMETER
DIM. = DIMENSION
DTBD = DISPOSITION TO BE DETERMINED
DWG. = DRAWING
EB = EASTBOUND
E.F. = EACH FACE
EL. OR ELEV. = ELEVATION
EQ. = EQUAL
EST. = ESTIMATED
EX. = EXISTING
F.A. = FORWARD ABUTMENT
F/F = FACE TO FACE
F.F. = FAR FACE
FT. = FOOT OR FEET
FTG. = FOOTING
FWD. = FORWARD
IN. = INCH
JT. = JOINT
LT. = LEFT
MAX. = MAXIMUM
MIN. = MINIMUM
MISC. = MISCELLANEOUS
N = NORTH
NB = NORTHBOUND
N.F. = NEAR FACE
NO. = NUMBER
N.P.C.P.P. = NON-PERFORATED CORRUGATED PLASTIC PIPE
OHWM = ORDINARY HIGH WATER MARK
O/O = OUT TO OUT
P.C.P.P. = PERFORATED CORRUGATED PLASTIC PIPE
P.E.J.F. = PREFORMED EXPANSION JOINT FILLER
PROP. = PROPOSED
PSF = POUNDS PER SQUARE FOOT
R.A. = REAR ABUTMENT
S = SOUTH
SB = SOUTHBOUND
SER. = SERIES
SHLDR = SHOULDER
SPA. = SPACE OR SPACES
STA. = STATION
STD. = STANDARD
STR = STRAIGHT
T = TOP
T&B = TOP & BOTTOM
TBR = TO BE REMOVED
TBRBO = TO BE RELOCATED BY OTHERS
TEMP. = TEMPORARY
TYP. = TYPICAL
U.N.O. = UNLESS NOTED OTHERWISE
VAR. = VARIES
WB = WESTBOUND
WWR = WELDED WIRE REINFORCEMENT

Preliminary Plans - For Reference Only

WALL GENERAL NOTES (2 OF 2)
WALL AJ
ALONG SOUTH SIDE OF RAMP IJ3

SFN
N/A

DESIGN AGENCY
Michael Baker INTERNATIONAL

DESIGNER	CHECKER
MKB	YC

REVIEWER
LPC 05-09-24

PROJECT ID
82382

SUBSET	TOTAL
3	8

SHEET	TOTAL
1264	2696

CUY-90-16.28

MODEL: Untitled Sheet PAPERSIZE: 34x22 (in.) DATE: 3/27/2025 TIME: 11:10:07 PM USER: Julie.Ross
pw:\\mb-us-pw.bentley.com:mb-us-pw-03\Documents\Cleveland_OH\01_Projects\ODOT\District12\82382\400-Engineering\Structures\WALL_AJ\Sheets\82382_AJ_WN002.dgn

ESTIMATED QUANTITIES

CALCULATED BY: ZES DATE: 04/24/24
CHECKED BY: SSW DATE: 05/14/24

PARTICIPATION	ITEM	ITEM EXT.	TOTAL	UNIT	DESCRIPTION	SHEET REF.
01/IMS/04	507	00400	114	FT	STEEL PILES, MISC.: HP16x121, FURNISHED	2
01/IMS/04	507	00400	527	FT	STEEL PILES, MISC.: W24x131, FURNISHED	2
01/IMS/04	507	00400	439	FT	STEEL PILES, MISC.: W24x192, FURNISHED	2
01/IMS/04	507	00400	130	FT	STEEL PILES, MISC.: W24x229, FURNISHED	2
01/IMS/04	511	81300	11	EACH	CONCRETE, MISC.: CLASS QC1 CONCRETE FOR RAISED PANEL SEAT	2
01/IMS/04	512	10001	440	SY	SEALING OF CONCRETE SURFACES, AS PER PLAN (PERMANENT GRAFFITI PROTECTION)	2
01/IMS/04	512	10101	440	SY	SEALING OF CONCRETE SURFACES (EPOXY-URETHANE), AS PER PLAN	2
01/IMS/04	516	42000	472	EACH	ELASTOMERIC BEARING PAD, MISC.: 6" x 10" x $\frac{3}{8}$" THICK	8
01/IMS/04	518	40000	280	FT	6" PERFORATED CORRUGATED PLASTIC PIPE	
01/IMS/04	518	40010	34	FT	6" NON-PERFORATED CORRUGATED PLASTIC PIPE, INCLUDING SPECIALS	
01/IMS/04	524	94603	75	FT	DRILLED SHAFTS, 30" DIAMETER, ABOVE BEDROCK, AS PER PLAN	2
01/IMS/04	524	94703	659	FT	DRILLED SHAFTS, 36" DIAMETER, ABOVE BEDROCK, AS PER PLAN	2
01/IMS/04	SPECIAL	530E51010	3,489	SF	RETAINING WALL, PRECAST CONCRETE LAGGING	3
01/IMS/04	607	23000	274	FT	FENCE, TYPE CLT	
01/IMS/04	611	99710	2	EACH	PRECAST REINFORCED CONCRETE OUTLET	
01/IMS/04	613	41200	108	CY	LOW STRENGTH MORTAR BACKFILL	

Preliminary Plans - For Reference Only

ESTIMATED QUANTITIES
WALL AJ
ALONG SOUTH SIDE OF RAMP IJ3

SFN
N/A

DESIGN AGENCY
Michael Baker INTERNATIONAL

DESIGNER	CHECKER
MKB	YC

REVIEWER
LPC 05-09-24

PROJECT ID
82382

SUBSET	TOTAL
4	8

SHEET	TOTAL
1265	2696

CUY-90-16.28

MODEL: Untitled Sheet PAPERSIZE: 34x22 (in.) DATE: 3/27/2025 TIME: 11:10:13 PM USER: Julie.Ross
pw:\\mb-us-pw.bentley.com:mb-us-pw-03\Documents\Cleveland_OH\01_Projects\ODOT\District12\82382\400-Engineering\Structures\WALL_AJ\Sheets\82382_AJ_WQ001.dgn

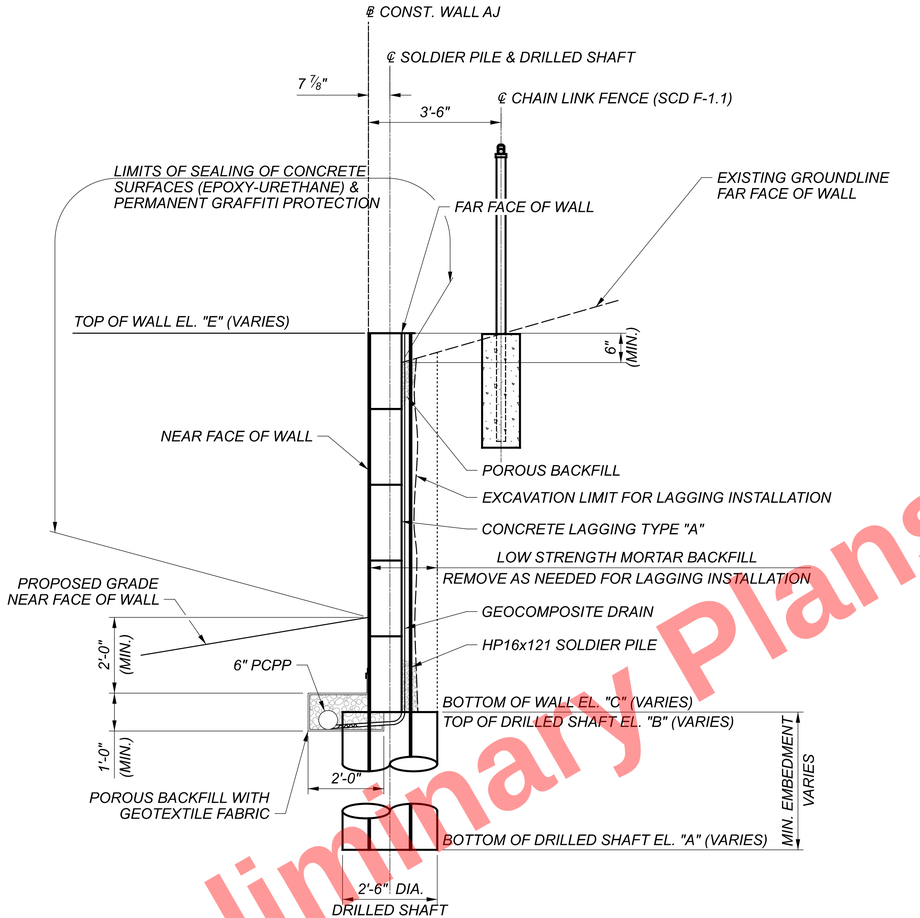

SOLDIER PILE AND LAGGING WALL TYP. SECTION 1

WALL HEIGHT LESS THAN OR EQUAL TO 10'-0"

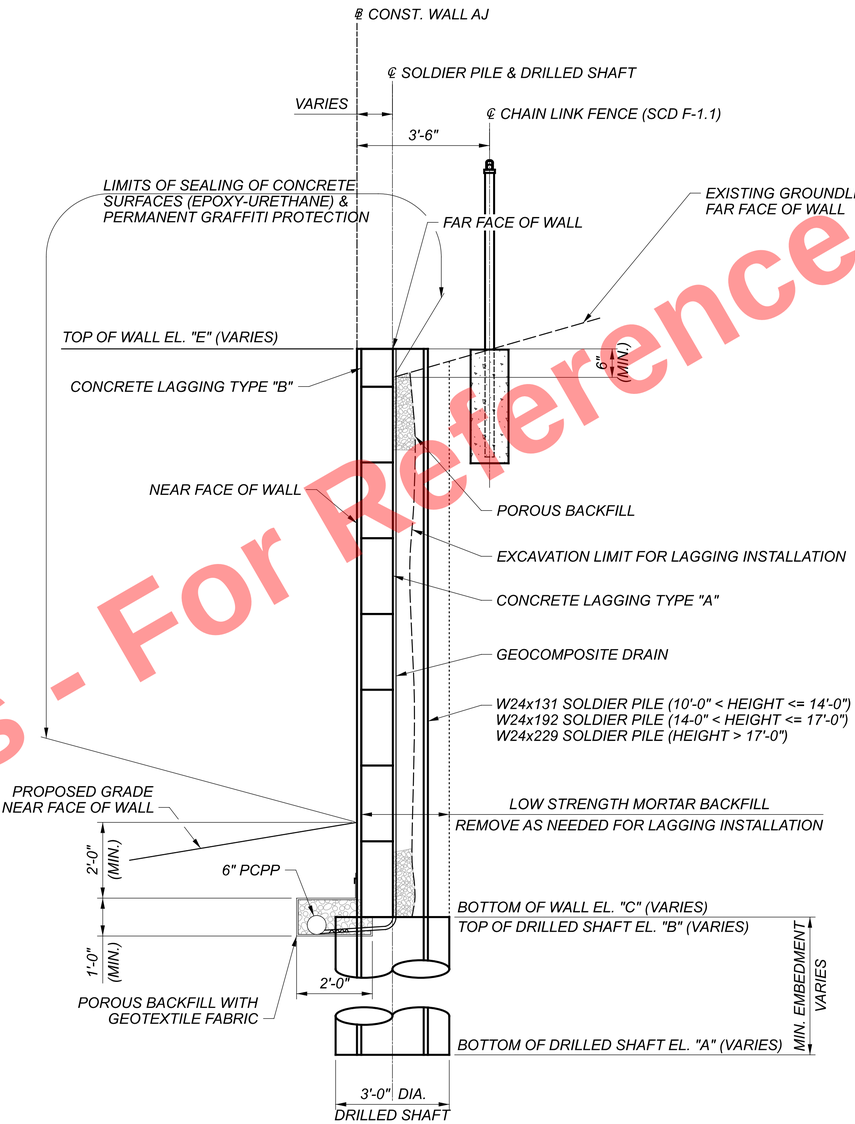

SOLDIER PILE AND LAGGING WALL TYP. SECTION 2

WALL HEIGHT GREATER THAN 10'-0"

Preliminary Plans - For Reference Only

WALL TYPICAL SECTIONS
WALL AJ
ALONG SOUTH SIDE OF RAMP IJ3

CUY-90-16.28 (CCG3A)

MODEL: Sheet PAPERSIZE: 34x22 (in.) DATE: 3/27/2025 TIME: 11:10:20 PM USER: Julie.Ross
pw:\\mb-us-pw.bentley.com:mb-us-pw-03\Documents\Cleveland_OH\01_Projects\ODOT\District12\82382\400-Engineering\Structures\WALL_AJ\Sheets\82382_AJ_WY001.dgn

SFN	N/A
DESIGN AGENCY	Michael Baker INTERNATIONAL
DESIGNER	MKB
CHECKER	YC
REVIEWER	LPC 05-09-24
PROJECT ID	82382
SUBSET	5
TOTAL	8
SHEET	1266
TOTAL	2696

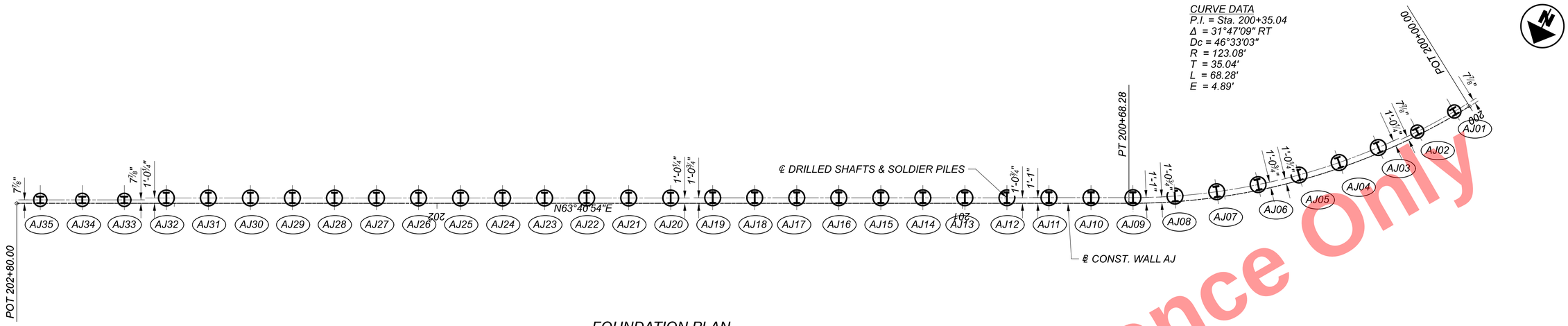

FOUNDATION PLAN

WALL AJ DRILLED SHAFT & SOLDIER PILE SCHEDULE

DESIGNATION	STATION BASELINE WALL AJ	CENTERLINE OFFSET FROM BASELINE WALL AJ (FT.)	DIAMETER (IN.)	SHEAR STUDS (YES/NO)	BOTTOM OF DRILLED SHAFT EL. "A"	TOP OF SHAFT CONCRETE EL. "B"	CONCRETE SHAFT LENGTH (FT.)	BOTTOM OF WALL EL. "C"	TOP OF SOLDIER PILE E. "D"	TOP OF WALL EL. "E"	ESTIMATED LENGTH OF SOLDIER PILE (FT.)	HEIGHT OF LAGGING (FT.)	SOLDIER PILE SIZE
AJ01	200+03.00	0.656 RT	30	NO	659.5	674.5	15.0	674.5	681.5	681.5	22.0	7.0	HP16x121
AJ02	200+11.06	0.656 RT	30	NO	658.5	673.5	15.0	673.5	682.5	682.5	24.0	9.0	HP16x121
AJ03	200+19.13	1.021RT	36	NO	652.5	672.5	20.0	672.5	683.5	683.5	31.0	11.0	W24x131
AJ04	200+27.19	1.021RT	36	NO	652.5	672.5	20.0	672.5	684.5	684.5	32.0	12.0	W24x131
AJ05	200+35.25	1.021RT	36	NO	652.5	672.5	20.0	672.5	686.5	686.5	34.0	14.0	W24x131
AJ06	200+43.32	1.063 RT	36	NO	648.0	672.0	24.0	672.0	687.0	687.0	39.0	15.0	W24x192
AJ07	200+51.38	1.063 RT	36	NO	648.0	672.0	24.0	672.0	688.0	688.0	40.0	16.0	W24x192
AJ08	200+59.44	1.063 RT	36	NO	648.0	672.0	24.0	672.0	689.0	689.0	41.0	17.0	W24x192
AJ09	200+67.51	1.084 RT	36	NO	647.0	672.0	25.0	672.0	690.5	690.5	43.5	18.0	W24x229
AJ10	200+75.51	1.084 RT	36	NO	647.5	672.5	25.0	672.5	690.5	690.5	43.0	18.0	W24x229
AJ11	200+83.51	1.084 RT	36	NO	647.5	672.5	25.0	672.5	690.5	690.5	43.0	18.0	W24x229
AJ12	200+91.51	1.063 RT	36	NO	649.0	673.0	24.0	673.0	690.0	690.0	41.0	17.0	W24x192
AJ13	200+99.51	1.063 RT	36	NO	649.0	673.0	24.0	673.0	690.0	690.0	41.0	17.0	W24x192
AJ14	201+07.51	1.063 RT	36	NO	649.5	673.5	24.0	673.5	689.5	689.5	40.0	16.0	W24x192
AJ15	201+15.51	1.063 RT	36	NO	649.5	673.5	24.0	673.5	689.5	689.5	40.0	16.0	W24x192
AJ16	201+23.51	1.063 RT	36	NO	649.5	673.5	24.0	673.5	689.5	689.5	40.0	16.0	W24x192
AJ17	201+31.51	1.063 RT	36	NO	649.5	673.5	24.0	673.5	688.5	688.5	39.0	15.0	W24x192
AJ18	201+39.51	1.063 RT	36	NO	649.5	673.5	24.0	673.5	688.5	688.5	39.0	15.0	W24x192
AJ19	201+47.51	1.063 RT	36	NO	649.5	673.5	24.0	673.5	688.5	688.5	39.0	15.0	W24x192
AJ20	201+55.51	1.021RT	36	NO	653.5	673.5	20.0	673.5	687.5	687.5	34.0	14.0	W24x131
AJ21	201+63.51	1.021RT	36	NO	653.0	673.0	20.0	673.0	687.5	687.5	34.5	14.0	W24x131
AJ22	201+71.51	1.021RT	36	NO	653.0	673.0	20.0	673.0	687.0	687.0	34.0	14.0	W24x131
AJ23	201+79.51	1.021RT	36	NO	653.0	673.0	20.0	673.0	687.0	687.0	34.0	14.0	W24x131
AJ24	201+87.51	1.021RT	36	NO	652.5	672.5	20.0	672.5	686.0	686.0	33.5	13.0	W24x131
AJ25	201+95.51	1.021RT	36	NO	652.5	672.5	20.0	672.5	685.5	685.5	33.0	13.0	W24x131
AJ26	202+03.51	1.021RT	36	NO	652.5	672.5	20.0	672.5	685.5	685.5	33.0	13.0	W24x131
AJ27	202+11.51	1.021RT	36	NO	652.0	672.0	20.0	672.0	685.5	685.5	33.5	13.0	W24x131
AJ28	202+19.51	1.021RT	36	NO	652.0	672.0	20.0	672.0	685.0	685.0	33.0	13.0	W24x131
AJ29	202+27.51	1.021RT	36	NO	652.0	672.0	20.0	672.0	684.0	684.0	32.0	12.0	W24x131
AJ30	202+35.51	1.021RT	36	NO	651.5	671.5	20.0	671.5	684.0	684.0	32.5	12.0	W24x131
AJ31	202+43.51	1.021RT	36	NO	651.5	671.5	20.0	671.5	683.5	683.5	32.0	12.0	W24x131
AJ32	202+51.51	1.021RT	36	NO	651.5	671.5	20.0	671.5	682.5	682.5	31.0	11.0	W24x131
AJ33	202+59.51	0.656 RT	30	NO	657.0	672.0	15.0	672.0	681.0	681.0	24.0	9.0	HP16x121
AJ34	202+67.51	0.656 RT	30	NO	657.0	672.0	15.0	672.0	680.0	680.0	23.0	8.0	HP16x121
AJ35	202+68.51	0.656 RT	30	NO	657.0	672.0	15.0	672.0	678.0	678.0	21.0	6.0	HP16x121

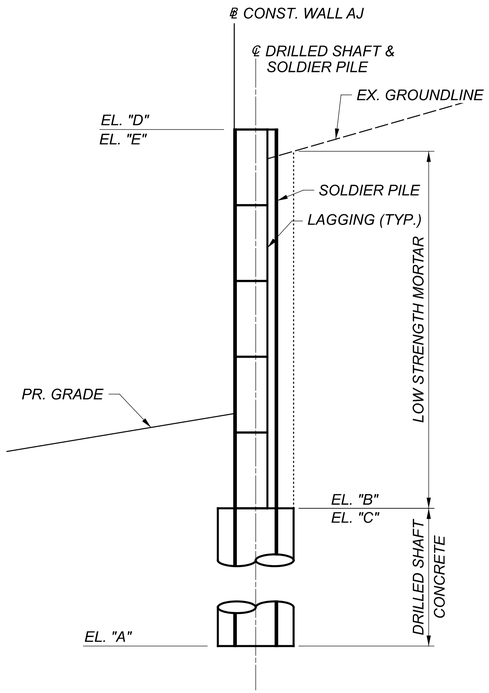

DRILLED SHAFT & SOLDIER PILE SCHEMATIC

LEGEND:

(#) - DENOTES SOLDIER PILE NUMBER

Preliminary Plans - Not For Construction. For Reference Only

FOUNDATION PLAN
WALL AJ
ALONG SOUTH SIDE OF RAMP IJ3

SFN N/A

DESIGN AGENCY Michael Baker INTERNATIONAL

DESIGNER MKB | CHECKER YC

REVIEWER LPC 05-09-24

PROJECT ID 82382

SUBSET 6 | TOTAL 8

SHEET 1267 | TOTAL 2696

CUY-90-16.28 (CCG3A)

MODEL: Untitled Sheet PAPERSIZE: 34x22 (in.) DATE: 3/27/2025 TIME: 11:10:29 PM USER: Julie.Ross
pw:\\mb-us-pw.bentley.com:mb-us-pw-03\Documents\Cleveland_OH101_Projects\ODOT\District12\82382\400-Engineering\Structures\WALL_AJ\Sheets\82382_AJ_WT001.dgn

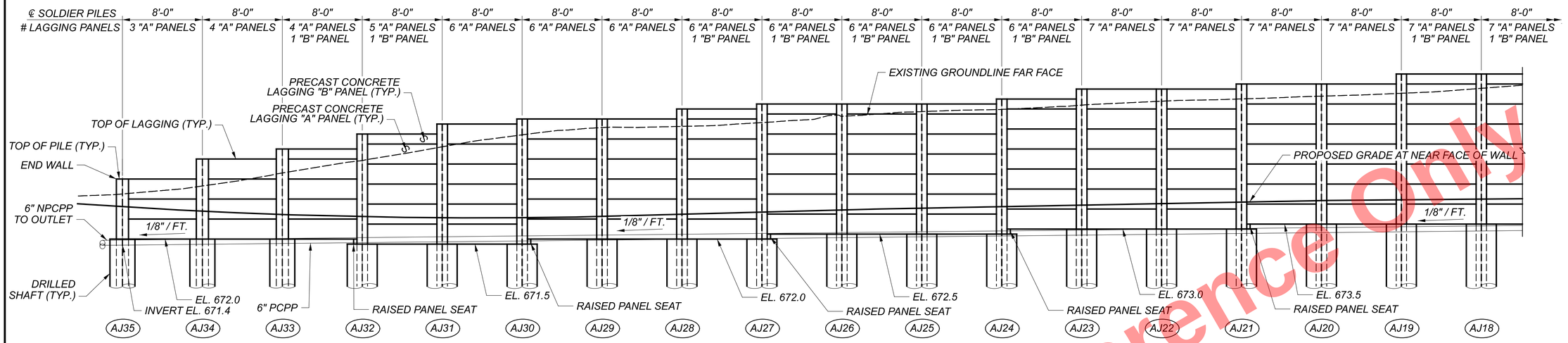

ELEVATION

(DIMENSIONS GIVEN ALONG ℄ CONST. WALL AJ)

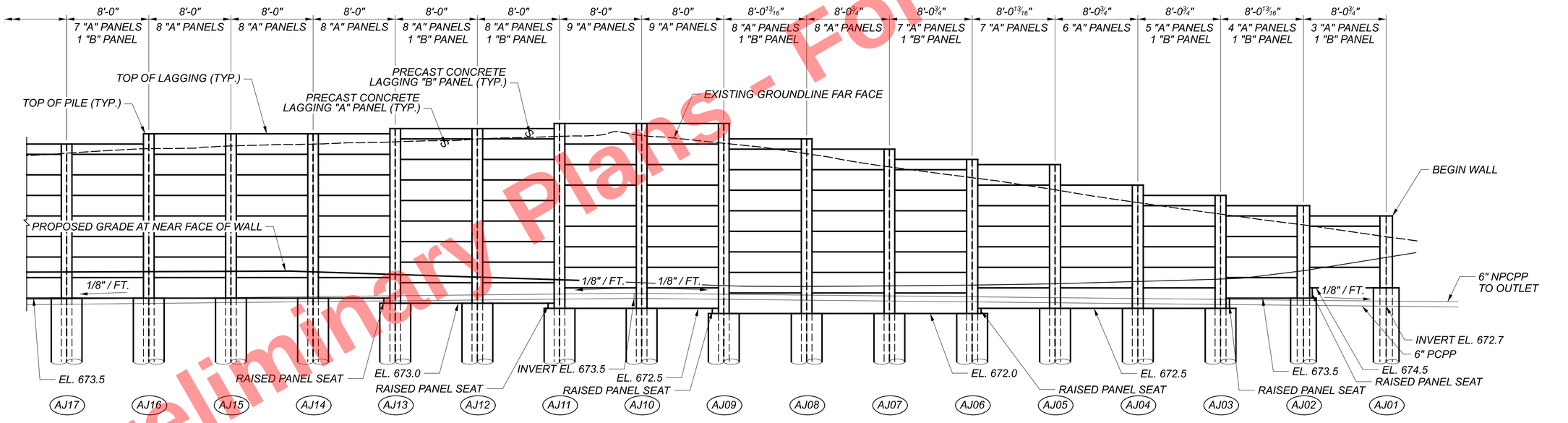

ELEVATION

(DIMENSIONS GIVEN ALONG ℄ CONST. WALL AJ)

LEGEND:

(#) - DENOTES SOLDIER PILE NUMBER

Preliminary Plans - For Reference Only

WALL ELEVATION
WALL AJ
ALONG SOUTH SIDE OF RAMP IJ3

SFN	N/A
DESIGN AGENCY	Michael Baker INTERNATIONAL
DESIGNER	MKB
CHECKER	YC
REVIEWER	LPC 05-09-24
PROJECT ID	82382
SUBSET	7
TOTAL	8
SHEET	1268
TOTAL	2696

CUY-90-16.28 (CCG3A)

MODEL: Untitled Sheet PAPERSIZE: 34x22 (in.) DATE: 3/27/2025 TIME: 11:10:41 PM USER: Julie.Ross
pw:\\mb-us-pw.bentley.com:mb-us-pw-03\Documents\Cleveland_OH\01_Projects\ODOT\District12\82382400-Engineering\Structures\WALL_AJ\Sheets\82382_AJ_WE001.dgn

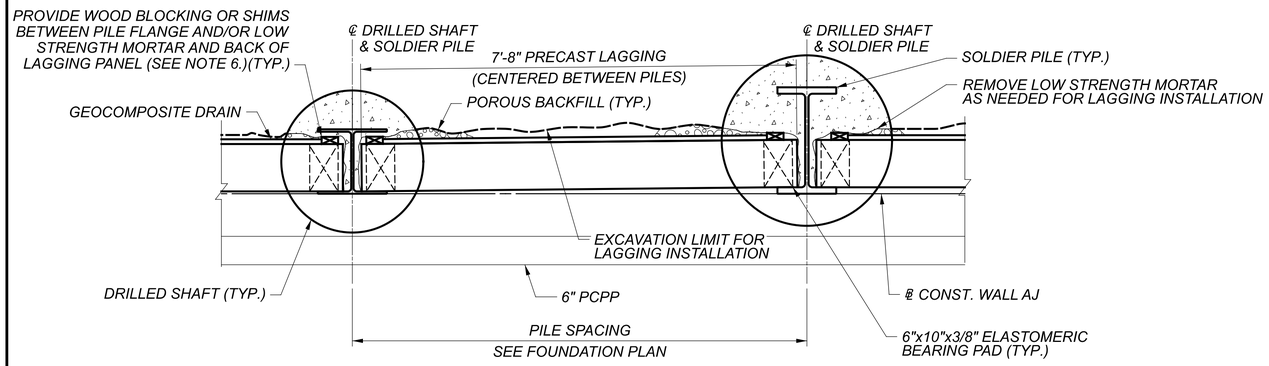

TYPICAL PLAN

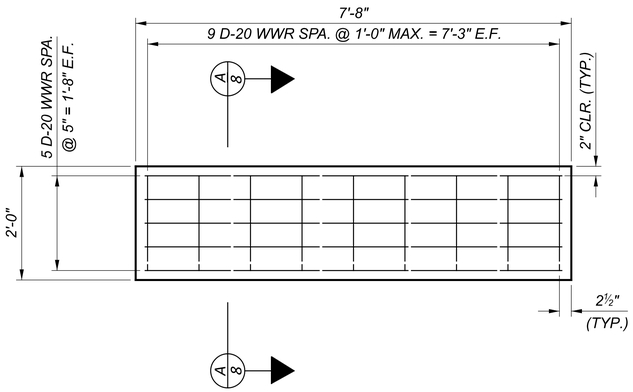

TYPE "A" PRECAST LAGGING ELEVATION

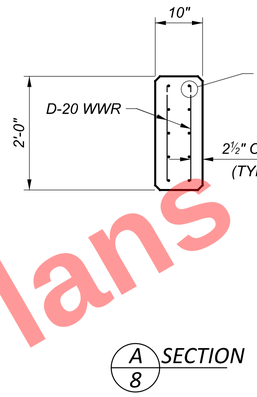

A 8 SECTION

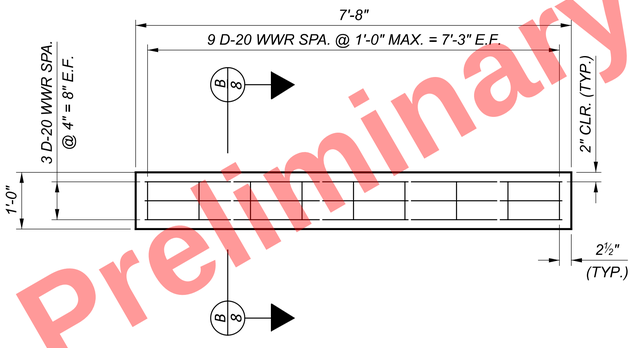

TYPE "B" PRECAST LAGGING ELEVATION

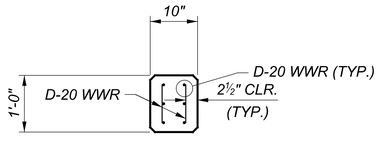

B 8 SECTION

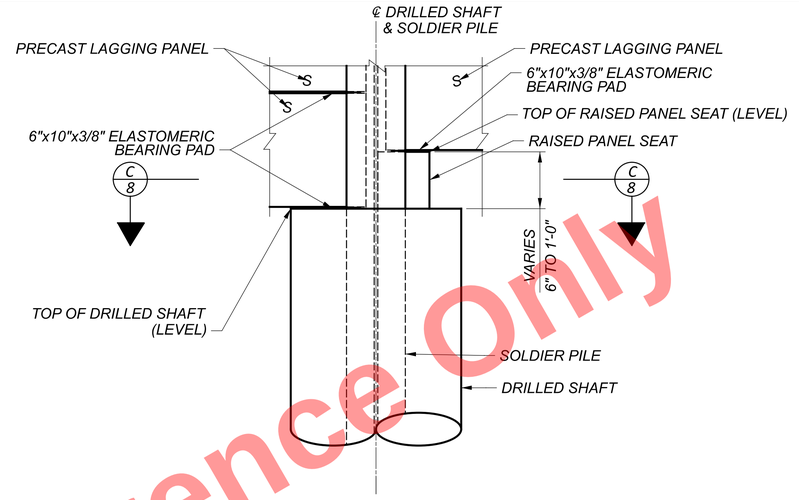

RAISED PANEL SEAT DETAIL

LOW STRENGTH MORTAR NOT SHOWN FOR CLARITY

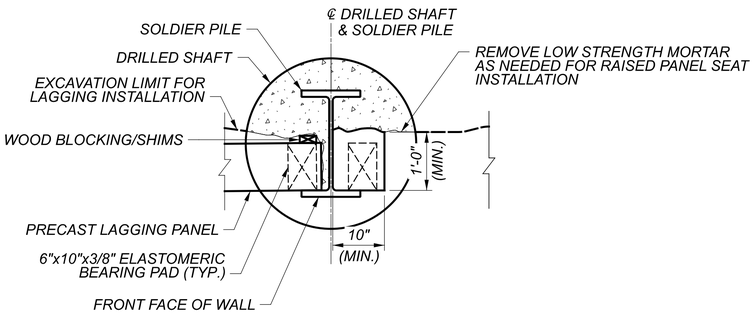

C 8 SECTION

NOTES:

1. ELASTOMERIC BEARING PADS SHALL BE PROVIDED AT ALL BOTTOM PANELS BETWEEN THE PANEL AND TOP OF CONCRETE DRILLED SHAFT AND/OR RAISED PANEL SEAT. THEY SHALL ALSO BE PROVIDED AT EACH END OF EACH PANEL BETWEEN PANELS.
2. ELASTOMERIC BEARING PADS SHALL BE NEOPRENE ELASTOMERIC PADS HAVING DUROMETER HARDNESS OF 55 ± 5, HIGH DENSITY POLYETHYLENE PADS WITH A MINIMUM DENSITY OF 59 LB/FT3 {0.946 G/CM3} OR EQUIVALENT. SUPPLY CERTIFIED TEST DATA TO THE ENGINEER UPON DELIVERY OF THE MATERIAL TO THE PROJECT. BEARING PADS WILL BE PAID FOR UNDER ITEM 516 ELASTOMERIC BEARING PAD, MISC.: 6"x10"x 3/8" THICK.
3. REINFORCEMENT IN PRECAST LAGGING PANELS SHALL INCLUDED WITH ITEM 610 - RETAINING WALL MISC.: PRECAST CONCRETE LAGGING FOR PAYMENT.
4. PROVIDE 1" x 1" CHAMFER AT EXPOSED TOP AND BOTTOM OF LAGGING PANELS.
5. CENTER LAGGING PANELS BETWEEN PILE WEBS.
6. CONTRACTOR HAS THE OPTION TO REMOVE LOW STRENGTH MORTAR AS NEEDED FOR LAGGING INSTALLATION. USE WOOD BLOCKING AND/OR SHIMS TO ENSURE LAGGING PANEL REMAINS FLUSH AGAINST BACK OF SOLDIER PILE FLANGE AT THE FRONT FACE OF WALL.
7. CONTRACTOR IS TO CONSTRUCT A CAST IN PLACE SEAT TO HOLD THE BOTTOM PRECAST LAGGING PANEL IN PLACE.

Preliminary Plans - For Reference Only

WALL DETAILS
WALL AJ
ALONG SOUTH SIDE OF RAMP IJ3

SFN	N/A
DESIGN AGENCY	Michael Baker INTERNATIONAL
DESIGNER	MKB
CHECKER	YC
REVIEWER	LPC 05-09-24
PROJECT ID	82382
SUBSET	8
TOTAL	8
SHEET	1269
TOTAL	2696

CUY-90-16.28 (CCG3A)

MODEL: Untitled Sheet PAPERSIZE: 34x22 (in.) DATE: 3/27/2025 TIME: 11:10:51 PM USER: Julie.Ross
pw:\\mb-us-pw.bentley.com:mb-us-pw-03\Documents\Cleveland_OH101_Projects\ODOT\District12\82382\400-Engineering\Structures\WALL_AJ\Sheets\82382_A

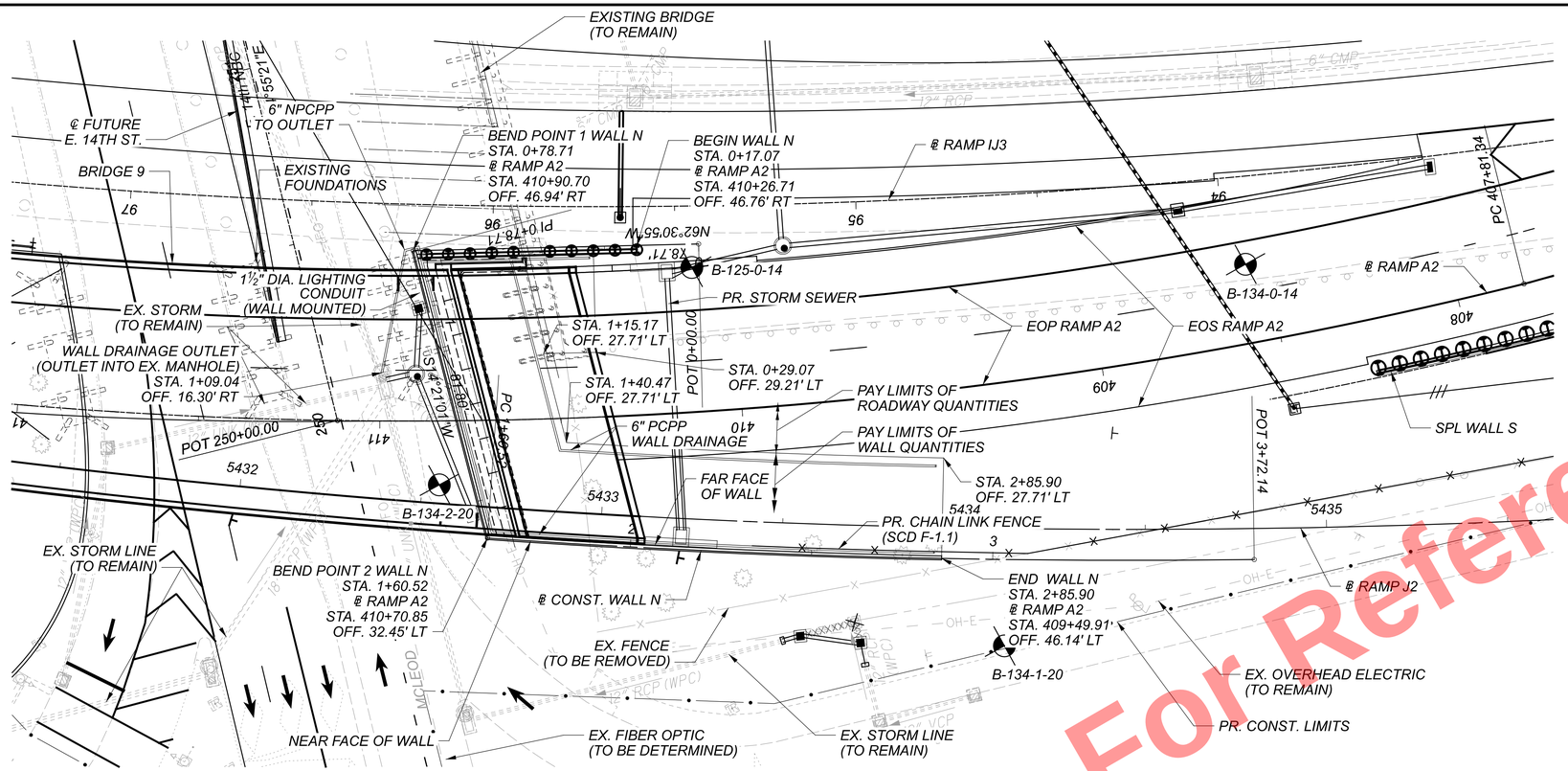

PLAN

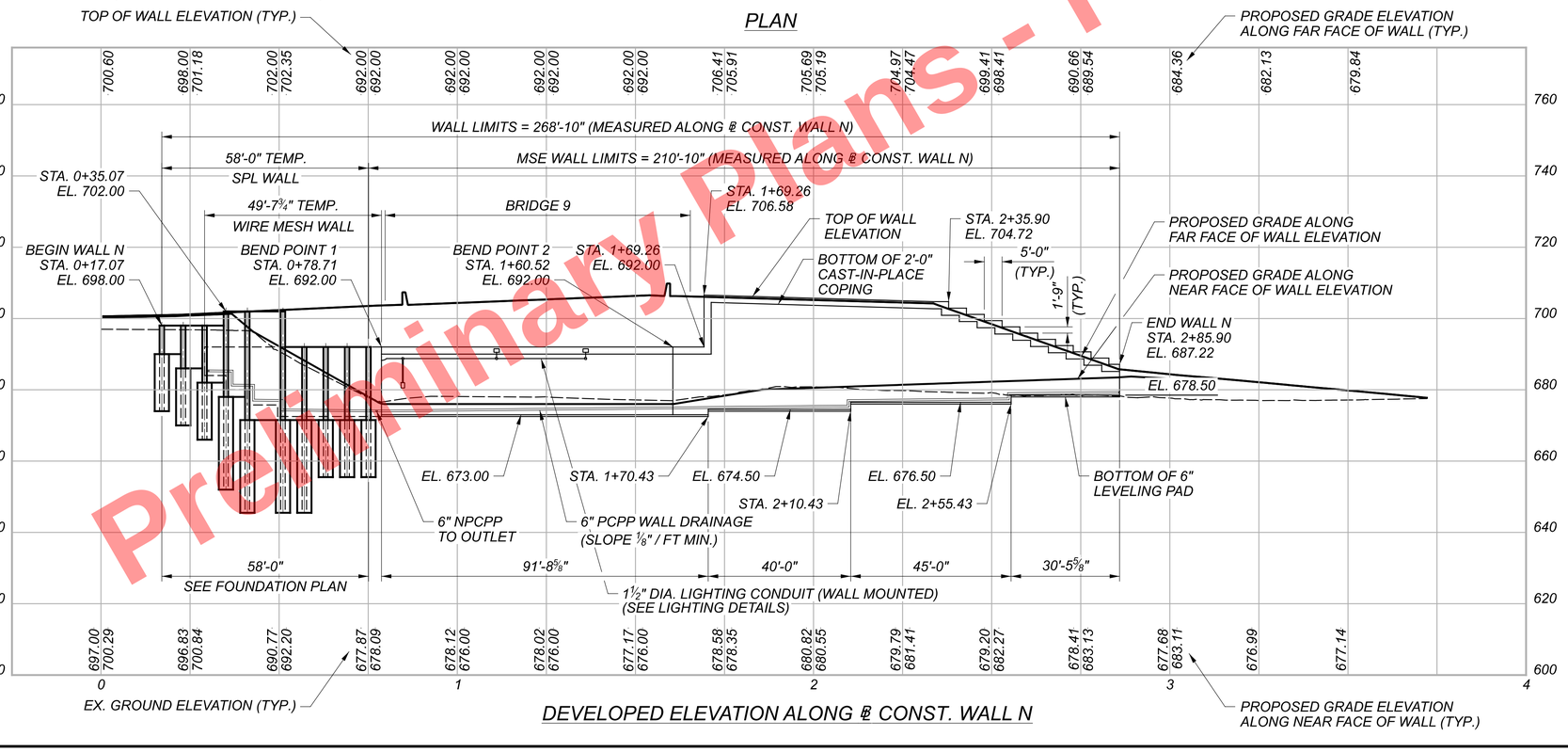

DEVELOPED ELEVATION ALONG ℄ CONST. WALL N

BENCHMARK DATA

BM-59 STA. 430+49.74, ELEV. 660.15', OFFSET 458.93' RT., ℄ RAMP A2, MAG NAIL AT NOSE OF DRAINAGE CHANNEL

BM-61 STA. 425+47.56, ELEV. 674.03', OFFSET 381.20' LT., ℄ RAMP A2, RAILROAD SPIKE IN NORTH FACE OF POWER/LIGHT POLE

BM-62 STA. 431+86.05, ELEV. 672.11', OFFSET 388.05' LT., ℄ RAMP A2, RAILROAD SPIKE IN EAST FACE OF POWER/LIGHT POLE

BM-66 STA. 421+92.16, ELEV. 671.90', OFFSET 844.15' LT., ℄ RAMP A2, CUT CROSS ON N-E BOLT OF CANTILEVER OVERHEAD SIGN

BM-67 STA. 418+24.32, ELEV. 674.82', OFFSET 454.15' LT., ℄ RAMP A2, CUT CROSS ON N-E BOLT OF EAST LEG OF JCT 422 SIGN

BM-68 STA. 411+16.80, ELEV. 678.92', OFFSET 249.57' LT., ℄ RAMP A2, CUT CROSS ON N-E BOLT OF TRAFFIC SIGNAL POLE

FOR ADDITIONAL BENCHMARK INFORMATION. SEE ROADWAY PLAN SHEET 4 / 2696

WALL N

CURVE DATA
P.I. = Sta. 2+66.39
Δ = 04°44'44" LT
Dc = 02°14'33"
R = 2,555.02'
T = 105.87'
L = 211.62'
E = 2.19'

RAMP IJ3

CURVE DATA
P.I. = Sta. 94+88.28
Δ = 20°37'12" LT
Dc = 03°00'00"
R = 1,909.86'
T = 347.42'
L = 687.33'
E = 31.34'

RAMP A2

CURVE DATA
P.I. = Sta. 413+02.39
Δ = 44°30'41" LT
Dc = 04°30'00"
R = 1,273.24'
T = 521.04'
L = 989.14'
E = 102.49'

RAMP J2

CURVE DATA
P.I. = Sta. 5435+61.54
Δ = 23°06'15" LT
Dc = 02°15'00"
R = 2,546.48'
T = 520.50'
L = 1,026.85'
E = 52.65'

BORING LOCATION*

BORING	STATION	OFFSET	TOP OF ROCK EL.
B-134-0-14	408+55.86	21.67' RT.	-
B-134-1-20	409+36.16	72.09' LT.	-
B-125-0-14	410+11.35	39.83' RT	-
B-134-2-20	410+83.70	17.62' LT.	-

* = BORING STATION AND OFFSETS ARE FROM ℄ RAMP A2

PROPOSED WORK

THE PROPOSED WORK CONSISTS OF CONSTRUCTING RETAINING WALLS AROUND THE BRIDGE 9 REAR ABUTMENT CARRYING RAMP A2. PORTIONS OF THE WALL ARE TOP DOWN CONSTRUCTION CONSISTING OF SOLDIER PILES AND PRECAST CONCRETE LAGGING. THE REMAINDER OF THE WALL IS BOTTOM UP CONSTRUCTION UTILIZING MSE & WIRE MESH TYPE WALLS.

NOTES

1. EARTHWORK LIMITS SHOWN ARE APPROXIMATE. ACTUAL SLOPES SHALL CONFORM TO PLAN CROSS SECTIONS.
2. FOR WALL CROSS SECTIONS, SEE SHEETS 806 TO 809 / 2696
3. STATION AND WALL OFFSETS SHOWN AT NEAR FACE OF WALL.
4. STEPS AT THE END OF THE WALL ARE A TEMPORARY CONDITION FOR INTERIM CONSTRUCTION. WALL IS TO BE FULL HEIGHT IN FINAL CONDITION.
5. TEMPORARY SPL WALL TO BE REMOVED IN A FUTURE CONSTRUCTION CONTRACT. MSE WALL IN FRONT OF B9 REAR ABUTMENT WILL BE EXTENDED AT THAT TIME.

LEGEND

PROJECT BORING LOCATIONS

CONST. = CONSTRUCTION
EOP = EDGE OF PAVEMENT
EOS = EDGE OF SHOULDER

WALL PLAN AND PROFILE WALL N UNDER BRIDGE 9 AND ALONG WEST SIDE OF RAMP A2 AND RAMP J2

SFN N/A
DESIGN AGENCY Michael Baker INTERNATIONAL
DESIGNER SSW | CHECKER MKB
REVIEWER LPC 05-09-24
PROJECT ID 82382
SUBSET 1 | TOTAL 13
SHEET 1270 | TOTAL 2696

Preliminary Plans - For Reference Only

CUY-90-16.28 (CCG3A)
MODEL: WALL N - Wall N Plan-3 PAPERSIZE: 34x22 (in.) DATE: 3/27/2025 TIME: 11:11:02 PM USER: Julie.Ross
pw:\\mb-us-pw.bentley.com:mb-us-pw-03\Documents\Cleveland_OH\01_Projects\ODOT\District12\82382400-Engineering\Structures\WALL_N\Sheets\82382_N_WP001.dgn
_WP001.dgn

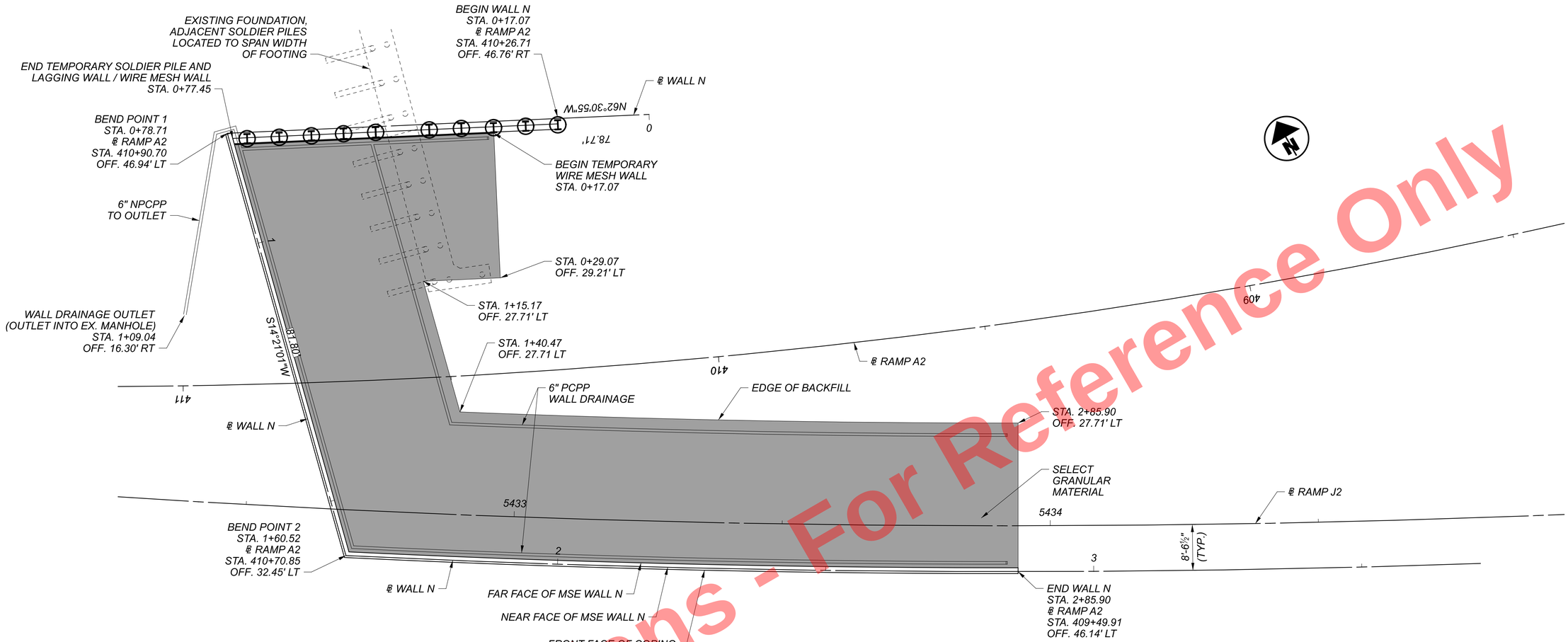

PLAN

Preliminary Plans - For Reference Only

WALL N

CURVE DATA
P.I. = Sta. 2+66.39
Δ = 04°44'44" LT
Dc = 02°14'33"
R = 2,555.02'
T = 105.87'
L = 211.62'
E = 2.19'

RAMP A2

CURVE DATA
P.I. = Sta. 413+02.39
Δ = 44°30'41" LT
Dc = 04°30'00"
R = 1,273.24'
T = 521.04'
L = 989.14'
E = 102.49'

RAMP J2

CURVE DATA
P.I. = Sta. 5435+61.54
Δ = 23°06'15" LT
Dc = 02°15'00"
R = 2,546.48'
T = 520.50'
L = 1,026.85'
E = 52.65'

WALL BASELINE GEOMETRY

	℄ WALL N STA.	℄ RAMP A2	OFFSET
BEGIN WALL N	0+17.07	410+26.71	46.76' RT
BEND POINT 1 WALL N	0+78.71	410+90.70	46.94' LT
BEND POINT 2 WALL N	1+60.52	410+70.85	32.45' LT
END WALL N	2+85.90	409+49.91	46.14' LT

NOTES

1. FOR WALL CROSS SECTIONS, SEE SHEETS 806 TO 809 / 2696
2. ℄ WALL N IS CONCENTRIC WITH ℄ RAMP J2.

LEGEND

LIMITS OF SELECT GRANULAR BACKFILL

SCHEMATIC PLAN
WALL N
UNDER BRIDGE 9 AND ALONG WEST SIDE OF RAMP A2 AND RAMP J2

SFN N/A
DESIGN AGENCY
Michael Baker INTERNATIONAL
DESIGNER SSW | CHECKER MKB
REVIEWER LPC 05-09-24
PROJECT ID 82382
SUBSET 2 | TOTAL 13
SHEET 1271 | TOTAL 2696

CUY-90-16.28 (CCG3A)

MODEL: Untitled Sheet PAPERSIZE: 34x22 (in.) DATE: 3/27/2025 TIME: 11:11:25 PM USER: Julie.Ross
pw:\\mb-us-pw.bentley.com:mb-us-pw-03\Documents\Cleveland_OH\01_Projects\ODOT\District12\82382\400-Engineering\Structures\WALL_N\Sheets\82382_N_WB001.dgn

STANDARD DRAWINGS AND SUPPLEMENTAL SPECIFICATIONS:

REFER TO THE FOLLOWING STANDARD CONSTRUCTION DRAWINGS:
- F-1.1 REVISED 7/19/2013
- DM-1.1 REVISED 1/17/2025

REFER TO THE FOLLOWING SUPPLEMENTAL SPECIFICATIONS:
- 800 DATED SEE TITLE SHEET
- 840 DATED 7/21/2023

REFER TO THE FOLLOWING SUPPLEMENTS:
- 1073 DATED 4/21/2023
- 1083 DATED 1/20/2017

DESIGN SPECIFICATIONS:

THIS STRUCTURE CONFORMS TO THE "LRFD BRIDGE DESIGN SPECIFICATIONS", 9TH EDITION, ADOPTED BY THE AMERICAN ASSOCIATION OF STATE HIGHWAY AND TRANSPORTATION OFFICIALS AND THE ODOT BRIDGE DESIGN MANUAL, 2020 (DATED 07-21-23).

DESIGN DATA:

CONCRETE CLASS QC1 - COMPRESSIVE STRENGTH 4.0 KSI
(CONCRETE COPING, LEVELING PAD, AND PRECAST LAGGING)
CONCRETE CLASS QC5 - COMPRESSIVE STRENGTH 4.5 KSI (DRILLED SHAFTS)
REINFORCING STEEL / WELDED WIRE REINFORCEMENT - MINIMUM YIELD STRENGTH 60 KSI
STEEL SOLDIER PILES - ASTM A572 - YIELD STRENGTH 50 KSI

REINFORCED FILL:
- EFFECTIVE INTERNAL FRICTION ANGLE = 34°
- UNIT WEIGHT = 120 pcf
- EFFECTIVE COHESION = N/A

RETAINED FILL
- EFFECTIVE INTERNAL FRICTION ANGLE = 30°
- UNIT WEIGHT = 120 pcf
- EFFECTIVE COHESION = N/A

FOUNDATION SOIL - DRAINED CONDITIONS
- EFFECTIVE INTERNAL FRICTION ANGLE = 29°
- UNIT WEIGHT = 108 pcf
- EFFECTIVE COHESION = N/A

FOUNDATION SOIL - UNDRAINED CONDITIONS
- EFFECTIVE INTERNAL FRICTION ANGLE = 29°
- UNIT WEIGHT = 108 pcf
- EFFECTIVE COHESION = N/A

SURCHARGE LOADS
- LIVE LOAD SURCHARGE = 250 psf

THE DESIGN ASSUMES NO WATER PRESSURE ACT ON THE WALL

MSE WALL DESIGN PARAMETERS:

THE MINIMUM SOIL REINFORCEMENT LENGTH IS AT LEAST 8 FEET OR 70% OF THE WALL HEIGHT, WHICHEVER IS GREATER. FOR WALL SECTIONS AROUND ABUTMENTS, THE STRAP LENGTH WILL NEED TO BE 70% OF THE DISTANCE BETWEEN THE TOP OF THE LEVELING PAD AND THE TOP OF THE PAVEMENT.

FACTORED BEARING RESISTANCE = 13.2 ksf

SEQUENCE OF CONSTRUCTION:

CONSTRUCT WALL N DURING MOT PHASE 4.

SEE MAINTENANCE OF TRAFFIC NOTES FOR ADDITIONAL PHASES AND INFORMATION.

PROPRIETARY RETAINING WALL DATA:

THE PROPRIETARY WALL SUPPLIER SHALL DESIGN THE INTERNAL STABILITY OF A MECHANICALLY STABILIZED EARTH (MSE) WALL IN ACCORDANCE WITH SS840 TO RETAIN EARTH FILL AROUND AND BELOW THE ABUTMENT. FOR LOADS AND NOTES PERTAINING TO THE ABUTMENT, SEE THE GENERAL NOTES SHEETS FOR BRIDGE 9, BRIDGE NUMBER CUY-77-1587.

ITEM 507 - STEEL PILES, MISC.: W21x101, FURNISHED
ITEM 507 - STEEL PILES, MISC.: W24x192, FURNISHED

THIS WORK CONSISTS OF FURNISHING AND PLACING STEEL SOLDIER PILES INTO DRILLED HOLES. FURNISH SOLDIER PILES CONSISTING OF STRUCTURAL STEEL MEMBERS THAT MEET THE PLAN REQUIREMENTS AND CONFORM TO ASTM A572, GRADE 50 IN ACCORDANCE WITH C&MS 711.01. GALVANIZE SOLDIER PILES AS SHOWN ON THE PLANS AND IN ACCORDANCE WITH C&MS 711.02. DO NOT FIELD WELD OR SPLICE STEEL SOLDIER PILES.

THE DEPARTMENT WILL MEASURE SOLDIER PILES ALONG THE AXIS OF THE SOLDIER PILE FROM THE TOP OF WALL ELEVATION TO THE BOTTOM OF THE DRILLED SHAFT, AS DETERMINED BY THE ENGINEER. THE DEPARTMENT WILL PAY FOR SOLDIER PILES AT THE CONTRACT UNIT PRICE PER FOOT FOR ITEM 507, STEEL PILES, MISC.: W21x101 OR W24x192.

ITEM 512 - SEALING OF CONCRETE SURFACES (EPOXY-URETHANE), AS PER PLAN

SEAL SURFACES OF THE PRECAST CONCRETE LAGGING, MSE WALL PANELS, AND COPING AS SHOWN IN THE PLANS WITH AN EPOXY-URETHANE SEALER ACCORDING TO C&MS 512. THE FOLLOWING COLORS SHALL BE USED FOR PAINTING AND SEALING STRUCTURAL ELEMENTS:

COPING SEALER:	"DOVETAIL"	7018
LAGGING AND MSE PANEL SEALER:	"ALABASTER"	7008

ALL COLOR NAME AND NUMBER REFERENCES ARE TAKEN FROM THE SHERWIN WILLIAMS COLOR PALATE. THE CONTRACTOR MAY SUBSTITUTE SIMILAR COLORS FROM ALTERNATIVE SUPPLIER'S COLOR PALATE.

ITEM 512 - SEALING OF CONCRETE SURFACES, AS PER PLAN (PERMANENT GRAFFITI PROTECTION)

APPLY A PERMANENT GRAFFITI COATING QUALIFIED ACCORDING TO SUPPLEMENT 1083 THAT IS COMPATIBLE WITH THE CONCRETE SEALER OVER WHICH IT IS APPLIED. PROVIDE A COATING THAT MEETS THE REQUIREMENTS LISTED BELOW. APPLY THE GRAFFITI COATING IN ACCORDANCE WITH THE MANUFACTURER'S PRINTED INSTRUCTIONS.

A. THE MATERIAL SHALL BE A SINGLE COMPONENT, RTV (ROOM TEMPERATURE VULCANIZED), NEUTRAL MOISTURE CURE, PERMANENT (NON-SACRIFICIAL), TYPE III (WATER CLEANABLE) POLYSILOXANE (SILICONE) ANTI-GRAFFITI COATING, FREE OF ANY WAXES, EPOXIES, OR POLYURETHANE COMPONENTS.

B. THE COATING SHALL BE A ONE COAT SYSTEM (NO PRIMER) CAPABLE OF BEING SPRAY APPLIED TO A DRY FILM THICKNESS OF 15 MILS (375 MICRONS) WITHOUT RUNS OR SAGS (MULTIPLE COAT APPLICATION ACCEPTABLE FOR BRUSH/ROLLER USAGE AND PRIMER USAGE ACCEPTABLE FOR SPECIALTY SUBSTRATES SUCH AS GALVANIZED METAL).

C. THE COATING SHALL EMIT LESS THAN 300 G/L (2.5 POUNDS PER GALLON) OF VOLATILE ORGANIZE COMPOUNDS (EPA METHOD 24).

D. THE COATING SHALL MEET THE FOLLOWING PERFORMANCE REQUIREMENTS:
1. CLEANABILITY LEVEL 1 (GRAFFITI COMPLETELY REMOVED WITH COLD WATER POWER WASH) AS PER ASTM D7089 WITH LOW PRESSURE (1200 PSI) COLD WATER WASH AFTER 2000 HOURS ACCELERATED UV-CONDENSATION EXPOSURE IN ACCORDANCE WITH ASTM D4587.
2. GRAFFITI RESISTANCE LESS THAN 7.5 AS PER ASTM D6578 AFTER 2000 HOURS ACCELERATED UV-CONDENSATION EXPOSURE IN ACCORDANCE WITH ASTM 4578.
3. NO SIGNS OF GRAFFITI OR GRAFFITI STAINING AND MUST BE INTACT AND EXHIBIT NO SIGNS OF STREAKING, CRACKING, PINHOLING, DISCOLORING, OR OTHER VISIBLE COATING DEGRADATION UPON CASUAL OBSERVATION WHEN TESTED IN ACCORDANCE WITH TXDOT TEX 890-B, TYPE III METHOD.
4. BREATHABILITY OF 10 PERMS (+/- 3) PER ASTM D1653 USING "WET CUP METHOD".
5. ELONGATION AT BREAK GREATER THAN 100% AS PER ASTM D412 (USING DIE "D").
6. ADHESION RATING OF "8 - DIFFICULT TO REMOVE" AS PER ASTM D6677 (ADHESION BY KNIFE).

ITEM 513 - STRUCTURAL STEEL, MISC.: RETENTION ANGLE

PROVIDE RETENTION ANGLES FOR PRECAST LAGGING ON ALL PILES WITHIN THE LIMITS OF THE PRECAST LAGGING, AS SHOWN IN THE PLANS. RETENTION ANGLES MUST BE INSTALLED ON THE PILES PRIOR TO PLACEMENT OF THE PILES. ALL MATERIAL, LABOR AND INCIDENTALS NECESSARY TO FURNISH AND INSTALL THE RETENTION ANGLE SHALL BE INCLUDED FOR PAYMENT WITH ITEM 513-STRUCTURAL STEEL, MISC.: RETENTION ANGLE.

ADDITIONALLY, PAYMENT FOR LAGGING SUPPORT ANGLES, AS SHOWN IN PLANS, ARE TO BE INCLUDED WITH ITEM 513-STRUCTURAL STEEL, MISC.: RETENTION ANGLE.

ITEM 524 - DRILLED SHAFTS, 36" DIAMETER, ABOVE BEDROCK, AS PER PLAN

THIS WORK CONSISTS OF FURNISHING AND INSTALLING DRILLED SHAFTS FOR SOLDIER PILE AND LAGGING WALLS. THE DRILLED SHAFTS ARE REINFORCED WITH SOLDIER PILES INSTEAD OF REINFORCING STEEL CAGES. THE SOLDIER PILES EXTEND ABOVE THE TOP OF THE DRILLED SHAFT. FURNISH AND INSTALL THE DRILLED SHAFTS IN ACCORDANCE WITH C&MS 524 EXCEPT AS MODIFIED AND SUPPLEMENTED BELOW.

EXCAVATE THE HOLE FOR THE DRILLED SHAFT WITHIN 1½ INCHES OF THE PLAN LOCATION. PLACE THE SOLDIER PILE WITHIN THE HOLE SO IT IS VERTICAL AND NOT INCLINED MORE THAN 1 INCH BETWEEN TOP TO BOTTOM. PLACE THE SOLDIER PILE SO THAT THE FLANGES ARE PARALLEL TO THE CENTERLINE OF THE ROW OF DRILLED SHAFTS. DO NOT ALLOW THE ORIENTATION OF THE FLANGES TO VARY BY MORE THAN 10 DEGREES. SUPPORT THE SOLDIER PILE SO THAT IT DOES NOT MOVE DURING CONCRETE PLACEMENT.

USE CLASS QC 5 CONCRETE ACCORDING TO C&MS 511. PLACE CONCRETE TO THE ELEVATION FOR THE TOP OF THE DRILLED SHAFT. THE CONTRACTOR MAY PLACE CONCRETE USING THE FREE FALL METHOD PROVIDED THE DEPTH OF WATER IS LESS THAN 6 INCHES AND THE CONCRETE FALLS WITHOUT STRIKING THE SIDES OF THE HOLE. POURING CONCRETE ALONG THE WEB OF THE SOLDIER PILE IS ACCEPTABLE.

CHECK THE POSITION, THE VERTICAL ALIGNMENT AND ORIENTATION OF THE SOLDIER PILE IMMEDIATELY AFTER CONCRETE PLACEMENT. MAKE CORRECTIONS AS NECESSARY TO MEET THE ABOVE TOLERANCES. IF SHOWN ON THE PLANS, FILL THE HOLE ABOVE THE BOTTOM OF THE LAGGING TO THE EXISTING GROUND SURFACE WITH ITEM C&MS 613 LOW STRENGTH MORTAR BACKFILL (LSM).

REMOVE CONCRETE AND LSM AS NECESSARY FROM AROUND THE SOLDIER PILE IN ORDER TO PLACE THE LAGGING. PLACE LAGGING SO THAT THE SOLDIER PILE FLANGE OVERLAPS THE END OF THE LAGGING BY AT LEAST 3 INCHES AT BOTH ENDS OF THE LAGGING. WAIT AT LEAST 12 HOURS AFTER PLACING CONCRETE BEFORE PLACING LAGGING.

SEQUENCE OF INSTALLATION: THE INSTALLATION SEQUENCE SHALL BE SUCH THAT NO DRILLED SHAFT IS INSTALLED ADJACENT TO EITHER AN OPEN DRILLED SHAFT EXCAVATION OR A DRILLED SHAFT IN WHICH THE CONCRETE HAS LESS THAN A 48-HOUR CURE. INSTALLING THE SHAFTS IN AN ALTERNATING SEQUENCE OR ANY OTHER SEQUENCE THAT MEETS THESE CRITERIA IS PERMISSIBLE.

PROTECTION OF UNATTENDED OPEN SHAFTS: CARE SHALL BE EXERCISED AS TO COVER UNATTENDED OPEN SHAFTS. TEMPORARY COVERS SHALL BE OF ADEQUATE STRENGTH TO PREVENT A PERSON OR ANIMAL FROM FALLING IN. NO DRILLED SHAFT EXCAVATION SHALL BE LEFT UN-POURED OVERNIGHT.

THE CONTRACTOR SHALL BE RESPONSIBLE FOR THE MEANS AND METHODS USED TO CONSTRUCT THE DRILLED SHAFTS AND PLACE LAGGING. ANY TEMPORARY GRADING, EXCAVATION, EMBANKMENT, AGGREGATE, DRAINAGE, SHEETING, ETC. NEEDED TO COMPLETE THE WORK SHALL BE INCLUDED IN THE BID PRICE FOR THE DRILLED SHAFTS. THE COST OF ANY EXCAVATION AND SUBSEQUENT REPLACEMENT OF EMBANKMENT (PER ITEM 203 EMBANKMENT) SHALL BE INCLUDED IN THE VARIOUS BID ITEMS FOR THE DRILLED SHAFTS AND LAGGING, UNLESS SEPARATELY ITEMIZED. NO SEPARATE PAYMENT WILL BE MADE.

METHOD OF MEASUREMENT: THE DEPARTMENT WILL MEASURE DRILLED SHAFTS ABOVE BEDROCK, AS PER PLAN, ALONG THE AXIS OF THE DRILLED SHAFT FROM THE EXISTING GROUND SURFACE TO THE TOP OF BEDROCK, AS DETERMINED BY THE ENGINEER. THE DEPARTMENT WILL MEASURE DRILLED SHAFTS INTO BEDROCK, AS PER PLAN, ALONG THE AXIS OF THE DRILLED SHAFT FROM TOP OF BEDROCK TO THE BOTTOM OF THE DRILLED SHAFT, AS DETERMINED BY THE ENGINEER.

PAYMENT IS FULL COMPENSATION FOR CONSTRUCTING THE DRILLED SHAFTS, INCLUDING FURNISHING AND PLACING CONCRETE AND LSM, REMOVAL OF CONCRETE OR LSM FROM AROUND THE SOLDIER PILE IN ORDER TO PLACE LAGGING.

Preliminary Plans - For Reference Only

WALL GENERAL NOTES (1 OF 2)
WALL N
UNDER BRIDGE 9 AND ALONG WEST SIDE OF RAMP A2 AND RAMP J2

SFN N/A
DESIGN AGENCY
Michael Baker INTERNATIONAL
DESIGNER SSW | CHECKER MKB
REVIEWER LPC 05-09-24
PROJECT ID 82382
SUBSET 3 | TOTAL 13
SHEET 1272 | TOTAL 2696

CUY-90-16.28 (CCG3A)
MODEL: Sheet PAPERSIZE: 34x22 (in.) DATE: 6/9/2025 TIME: 11:40:46 AM USER: Tolga.Feran
pw:\\mb-us-pw.bentley.com:mb-us-pw-03\Documents\Cleveland_OH\01_Projects\ODOT\District12\82382\400-Engineering\StructuresWALL_N\Sheets\82382_N_WN001.dgn

ITEM SPECIAL - RETAINING WALL, PRECAST CONCRETE LAGGING

THIS WORK CONSISTS OF FURNISHING AND PLACING PRECAST REINFORCED CONCRETE PANELS BETWEEN THE SOLDIER PILES TO FUNCTION AS LAGGING FOR THE RETAINING WALL. PROVIDE PRECAST CONCRETE LAGGING FROM A PRECAST CONCRETE MANUFACTURER CERTIFIED ACCORDING TO SUPPLEMENT 1073. PROVIDE CLASS QC1 CONCRETE ACCORDING TO C&MS 499. PROVIDE EPOXY COATED REINFORCING STEEL ACCORDING TO C&MS 709.00. IN LIEU OF EPOXY COATING, A CORROSION INHIBITING CONCRETE ADMIXTURE MAY BE USED AT THE SPECIFIED DOSAGE RATE. A QUALIFIED PRODUCT LIST OF CORROSION INHIBITING ADMIXTURES IS ON FILE AT THE LABORATORY. MANUFACTURERS SHOULD RECOGNIZE THAT THE CORROSION INHIBITOR MAY AFFECT THE STRENGTH, ENTRAINED AIR CONTENT, WORKABILITY, ETC. OF THEIR CONCRETE MIXES. THE MANUFACTURER'S CHOICE TO USE ONE OF THESE CORROSION INHIBITORS DOES NOT ALLEVIATE MEETING ALL DESIGN REQUIREMENTS. DO NOT ALLOW THE DIMENSIONS OF THE LAGGING OR LOCATION OF THE REINFORCING STEEL TO VARY BY MORE THAN ¼-INCH. CAST THREADED INSERTS INTO THE TOP OF EACH PANEL FOR LIFTING AND PLACEMENT.

FINISH THE FACES OF THE PRECAST CONCRETE LAGGING PANELS THAT WILL NOT BE EXPOSED TO A UNIFORM SURFACE, FREE OF OPEN POCKETS OF AGGREGATE. *FINISH THE EXPOSED FACE OF THE PANELS TO A SMOOTH SURFACE. SEAL THE FRONT (EXPOSED) FACE AND SIDES OF EACH CONCRETE PANEL WITH ITEM 512, SEALING OF CONCRETE SURFACES (EPOXY URETHANE). THE COLOR OF THE URETHANE SHALL BE SHERWIN WILLIAMS ALABASTER 7008 OR APPROVED EQUAL.

PERMANENTLY MARK EACH PRECAST CONCRETE LAGGING PANEL TO INDICATE WHICH FACE WILL BE PLACED AGAINST THE SOIL. PLACE THE PANEL BETWEEN THE FLANGES OF THE SOLDIER PILES AND BEARING AGAINST THE FLANGES ON THE EXPOSED SIDE OF THE WALL SO THAT THE SOLDIER PILE FLANGE OVERLAPS THE END OF THE LAGGING BY AT LEAST ONE INCH MORE THAN THE CONCRETE COVER OVER THE REINFORCING STEEL AT BOTH ENDS OF THE LAGGING.

HANDLE, STORE, AND SHIP THE PRECAST CONCRETE LAGGING PANELS TO AVOID CHIPPING, CRACKING AND FRACTURING THE PANELS. SUPPORT THE PANELS ON FIRM BLOCKING WHILE STORING AND SHIPPING. DO NOT SHIP PANELS UNTIL CONCRETE HAS ATTAINED THE REQUIRED COMPRESSIVE STRENGTH. SUBMIT SHIPMENT DOCUMENTATION TO THE ENGINEER AS THE PANELS ARE DELIVERED TO THE PROJECT, INCLUDING THE PRECASTER'S RECORD OF FINAL INSPECTION, THE MEASUREMENTS AND TOLERANCES, STRENGTH, AND DIMENSIONS OF EACH PANEL, ALONG WITH THE TE-24 SHIPPING DOCUMENT AND THE DAMAGE SURVEY REPORT FOR ALL WALL PANELS.

INSPECT ALL PRECAST CONCRETE LAGGING PANELS AND REJECT PANELS HAVING ANY OF THE FOLLOWING:

1. DEFECTS THAT INDICATE IMPERFECT MOLDING.
2. DEFECTS THAT INDICATE HONEYCOMBED OR OPEN TEXTURE CONCRETE.
3. DEFECTS IN THE PHYSICAL CHARACTERISTICS OF THE CONCRETE, OR DAMAGE TO THE AESTHETIC SURFACE TREATMENTS.
4. CONCRETE CHIPS OR SPALLS THAT ARE LARGER THAN 4 INCHES WIDE OR 2 INCHES DEEP. REPAIR ALL CHIPS AND SPALLS THAT ARE SMALLER.
5. STAINED FORM FACES, DUE TO FORM OIL, CURING OR OTHER CONTAMINANTS.
6. SIGNS OF AGGREGATE SEGREGATION.
7. CRACKS WIDER THAN 0.01 INCH OR PENETRATING MORE THAN 1 INCH OR LONGER THAN 20 PERCENT OF THE LENGTH OF THE FACE CONTAINING THE CRACK.
8. PANELS THAT DO NOT MEET THE SPECIFIED DIMENSIONAL TOLERANCES.
9. UNUSABLE LIFTING INSERTS.
10. EXPOSED REINFORCING STEEL.
11. INSUFFICIENT CONCRETE COMPRESSIVE STRENGTH.

EITHER REPLACE DAMAGED PRECAST CONCRETE LAGGING PANELS OR DOCUMENT THE DAMAGE AND PROPOSE TO THE ENGINEER A REPAIR METHOD FOR THE DAMAGED PANEL. PROVIDE ACCEPTABLE REPLACEMENT PANELS FOR ANY THAT ARE REJECTED.
WHEN INSTALLING THE PRECAST CONCRETE LAGGING PANELS, PLACE HARDWOOD WEDGES NEAR THE TOP AND BOTTOM ON EACH SIDE TO HOLD THE LAGGING PANELS AGAINST THE FRONT INSIDE FLANGE OF THE STEEL PILES.

PAYMENT FOR ALL LABOR, EQUIPMENT, AND MATERIAL REQUIRED TO FABRICATE, TRANSPORT, AND INSTALL THE PRECAST REINFORCED CONCRETE PANELS SHALL BE MADE AT THE CONTRACT UNIT PRICE PER SQUARE FOOT FOR ITEM SPECIAL - RETAINING WALL, PRECAST CONCRETE LAGGING.

ITEM 840 - MECHANICALLY STABILIZED EARTH WALL, AS PER PLAN: WIRE FACED MSE WALL

GENERAL:

THIS WORK CONSISTS OF DESIGNING THE INTERNAL STABILITY OF THE WALL; PREPARING SHOP DRAWINGS; AND FABRICATING AND CONSTRUCTING THE WIRE FACED MSE WALLS.

ALL MSE WALL DESIGN, FABRICATION, ERECTION AND CONSTRUCTION SHALL CONFORM TO ODOT SUPPLEMENTAL SPECIFICATION 840 "MECHANICALLY STABILIZED EARTH WALLS" EXCEPT AS MODIFIED BELOW, AND AS SHOWN IN THE PLANS.

MATERIALS:

MATERIALS SHALL COMPLY WITH 840.03 EXCEPT THAT WIRE FACING AND SOIL RETENTION FABRIC SHALL BE PROVIDED INSTEAD OF PRECAST CONCRETE FACING PANELS.

A. WIRE FACING
THE WIRE FACING SHALL BE WELDED WIRE FABRIC (WWF) SATISFYING THE REQUIREMENTS OF CMS 709.10.

B. SOIL RETENTION FABRIC
THE INSIDE OF THE WIRE FACED MSE WALL SHALL HAVE RETENTION OR FILTER FABRIC PLACED WITHIN THE REINFORCED FILL AS SHOWN IN THE PLANS. RETENTION FABRIC SHALL BE A WOVEN POLYPOPYLENE FABRIC.

SECTION/DETAIL/VIEW CALLOUTS



(SEE SECTION A ON SHEET 10) (SECTION A CUT FROM SHEET 10)

PLAN ABBREVIATIONS:

ABUT. = ABUTMENT
APPR. = APPROACH
B = BOTTOM
℄ = BASELINE
BM = BENCHMARK
BOT. OR BTM. = BOTTOM
℄ = CENTERLINE
C/C = CENTER TO CENTER
C.I.P. = CAST-IN-PLACE
C.J. = CONSTRUCTION JOINT
CLR. = CLEAR
CMS = CONSTRUCTION AND MATERIAL SPECIFICATIONS
CONC. = CONCRETE
CONST. = CONSTRUCTION
DIA. = DIAMETER
DIM. = DIMENSION
DTBD = DISPOSITION TO BE DETERMINED
DWG. = DRAWING
EB = EASTBOUND
E.F. = EACH FACE
EL. OR ELEV. = ELEVATION
EQ. = EQUAL
EST. = ESTIMATED
EX. = EXISTING
F.A. = FORWARD ABUTMENT
F/F = FACE TO FACE
F.F. = FAR FACE
FT. = FOOT OR FEET
FTG. = FOOTING
FWD. = FORWARD
IN. = INCH
JT. = JOINT
LT. = LEFT
MAX. = MAXIMUM
MIN. = MINIMUM
MISC. = MISCELLANEOUS
N = NORTH
NB = NORTHBOUND
N.F. = NEAR FACE
NO. = NUMBER
N.P.C.P.P. = NON-PERFORATED CORRUGATED PLASTIC PIPE
OHWM = ORDINARY HIGH WATER MARK
O/O = OUT TO OUT
P.C.P.P. = PERFORATED CORRUGATED PLASTIC PIPE
P.E.J.F. = PREFORMED EXPANSION JOINT FILLER
PROP. = PROPOSED
PSF = POUNDS PER SQUARE FOOT
R.A. = REAR ABUTMENT
S = SOUTH
SB = SOUTHBOUND
SER. = SERIES
SHLDR = SHOULDER
SPA. = SPACE OR SPACES
STA. = STATION
STD. = STANDARD
STR = STRAIGHT
T = TOP
T&B = TOP & BOTTOM
TBR = TO BE REMOVED
TBRBO = TO BE RELOCATED BY OTHERS
TEMP. = TEMPORARY
TYP. = TYPICAL
U.N.O. = UNLESS NOTED OTHERWISE
VAR. = VARIES
WB = WESTBOUND
WWR = WELDED WIRE REINFORCEMENT

Preliminary Plans - For Reference Only

WALL GENERAL NOTES (2 OF 2)
WALL N
UNDER BRIDGE 9 AND ALONG WEST SIDE OF RAMP A2 AND RAMP J2

SFN N/A

DESIGN AGENCY
Michael Baker INTERNATIONAL

DESIGNER	CHECKER
SSW	MKB

REVIEWER LPC 05-09-24

PROJECT ID 82382

SUBSET	TOTAL
4	13

SHEET	TOTAL
1273	2696

CUY-90-16.28 (CCG3A)
MODEL: Sheet PAPERSIZE: 34x22 (in.) DATE: 3/27/2025 TIME: 11:11:38 PM USER: Julie.Ross
pw:\\mb-us-pw.bentley.com:mb-us-pw-03\Documents\Cleveland_OH\01_Projects\ODOT\District12\82382\400-Engineering\Structures\WALL_N\Sheets\82382_N_WN002.dgn

ESTIMATED QUANTITIES

CALCULATED BY: ZES DATE: 04/24/24
CHECKED BY: SSW DATE: 05/14/24

PARTICIPATION	ITEM	ITEM EXT.	TOTAL	UNIT	DESCRIPTION	SHEET REF.
01/IMS/04	203	35120	209	CY	GRANULAR MATERIAL, TYPE C	
01/IMS/04	507	00400	194	FT	STEEL PILES, MISC.: W21x101, FURNISHED	3
01/IMS/04	507	00400	210	FT	STEEL PILES, MISC.: W24x192, FURNISHED	3
01/IMS/04	512	10001	279	SY	SEALING OF CONCRETE SURFACES, AS PER PLAN (PERMANENT GRAFFITI PROTECTION)	3
01/IMS/04	512	10101	486	SY	SEALING OF CONCRETE SURFACES (EPOXY-URETHANE), AS PER PLAN	3
01/IMS/04	513	90000	6,851	LB	STRUCTURAL STEEL, MISC.: RETENTION ANGLE	3
01/IMS/04	516	13600	20	SF	1" PREFORMED EXPANSION JOINT FILLER	
01/IMS/04	516	13900	44	SF	2" PREFORMED EXPANSION JOINT FILLER	
01/IMS/04	516	42000	5	EACH	ELASTOMERIC BEARING PAD, MISC.: 6" x 8" x $\frac{3}{8}$" THICK	12
01/IMS/04	516	42000	165	EACH	ELASTOMERIC BEARING PAD, MISC.: 6" x 10" x $\frac{3}{8}$" THICK	12
01/IMS/04	524	94703	200	FT	DRILLED SHAFTS, 36" DIAMETER, ABOVE BEDROCK, AS PER PLAN	3
01/IMS/04	SPECIAL	530E51010	1,195	SF	RETAINING WALL, PRECAST CONCRETE LAGGING	4
01/IMS/04	607	23000	62	FT	FENCE, TYPE CLT	
01/IMS/04	613	41200	37	CY	LOW STRENGTH MORTAR BACKFILL	
01/IMS/04	840	20000	4,643	SF	MECHANICALLY STABILIZED EARTH WALL	
01/IMS/04	840	20001	823	SF	MECHANICALLY STABILIZED EARTH WALL, AS PER PLAN: WIRE FACED MSE WALL	4
01/IMS/04	840	21000	2,149	CY	WALL EXCAVATION	
01/IMS/04	840	22000	626	SY	FOUNDATION PREPARATION	
01/IMS/04	840	23000	4,380	CY	SELECT GRANULAR BACKFILL	
01/IMS/04	840	23050	173	CY	NATURAL SOIL	
01/IMS/04	840	25010	424	FT	6" DRAINAGE PIPE, PERFORATED	
01/IMS/04	840	25020	40	FT	6" DRAINAGE PIPE, NON-PERFORATED	
01/IMS/04	840	26000	243	FT	CONCRETE COPING	
01/IMS/04	840	26050	4,643	SF	AESTHETIC SURFACE TREATMENT	
01/IMS/04	840	27000	1	DAY	ON-SITE ASSISTANCE	
01/IMS/04	840	28000	LS		SGB INSPECTION AND COMPACTION TESTING	

Preliminary Plans - For Reference Only

MODEL: Untitled Sheet PAPERSIZE: 34x22 (in.) DATE: 3/27/2025 TIME: 11:11:44 PM USER: Julie.Ross
pw:\\mb-us-pw.bentley.com:mb-us-pw-03\Documents\Cleveland_OH\01_Projects\ODOT\District12\82382\400-Engineering\Structures\WALL_N\Sheets\82382_N_WQ001.dgn

CUY-90-16.28 (CCG3A)

ESTIMATED QUANTITIES
WALL N
UNDER BRIDGE 9 AND ALONG WEST SIDE OF RAMP A2 AND RAMP J2

SFN
N/A

DESIGN AGENCY
Michael Baker INTERNATIONAL

DESIGNER	CHECKER
SSW	MKB

REVIEWER
LPC 05-09-24

PROJECT ID
82382

SUBSET	TOTAL
5	13

SHEET	TOTAL
1274	2696

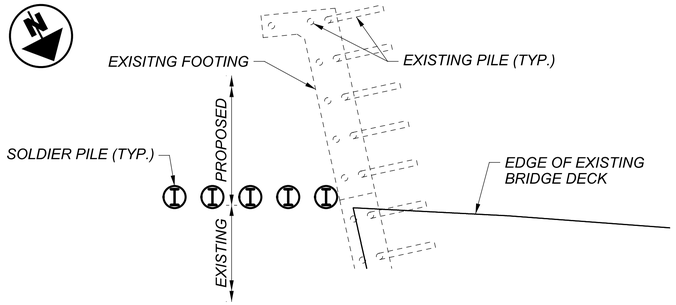

STEP 1 PLAN

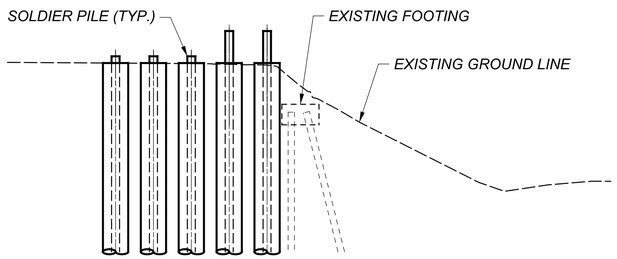

STEP 1 ELEVATION

SOLDIER PILES INSTALLED INTO EXISTING EMBANKMENT

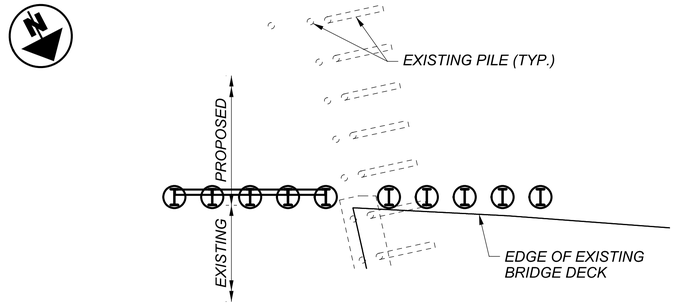

STEP 3 PLAN

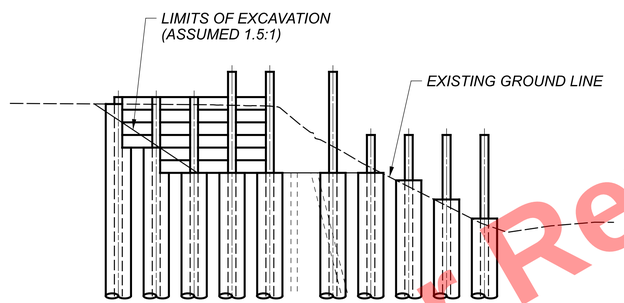

STEP 3 ELEVATION

EXISTING FOOTING REMOVED, CONTINUE EXISTING PILE REMOVAL
ADDING LAGGING AS NEEDED. REMAINING PROPOSED SOLDIER PILES INSTALLED.

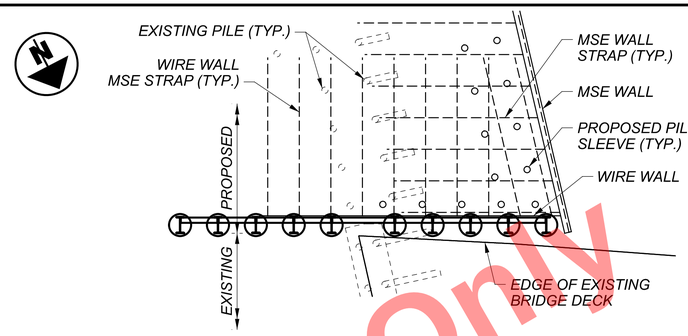

STEP 5 PLAN

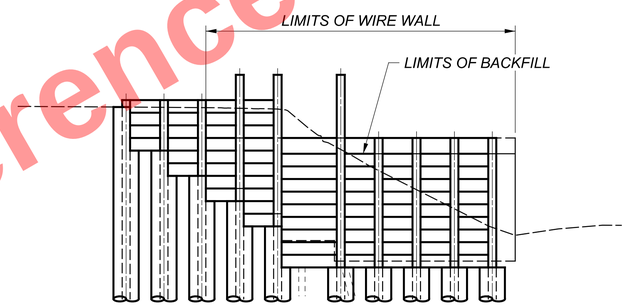

STEP 5 ELEVATION

PROPOSED BRIDGE 9 PILE SLEEVES INSTALLED, PROPOSED SIDE BACKFILLED,
MSE WALL INSTALLED AND WIRE WALL INSTALLED, ADDING LAGGING AS NEEDED

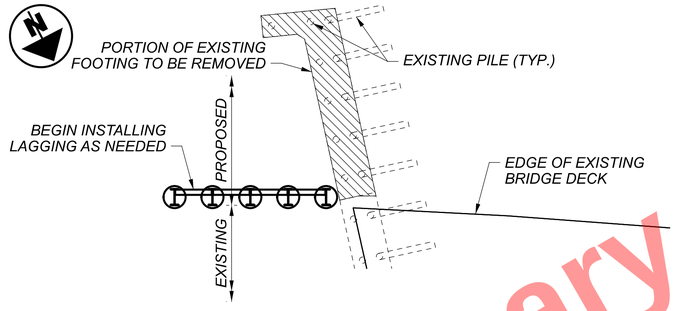

STEP 2 PLAN

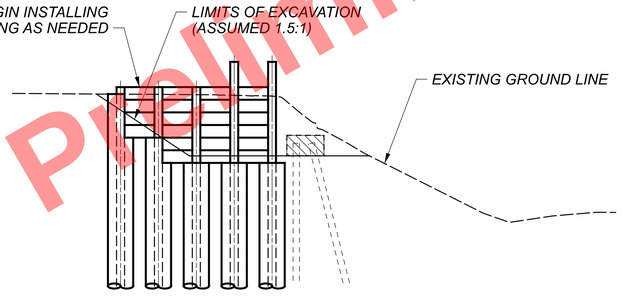

STEP 2 ELEVATION

BEGIN EXCAVATION ON PROPOSED SIDE AND INSTALLING LAGGING

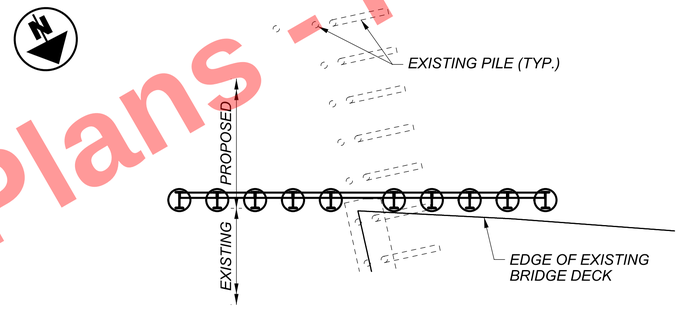

STEP 4 PLAN

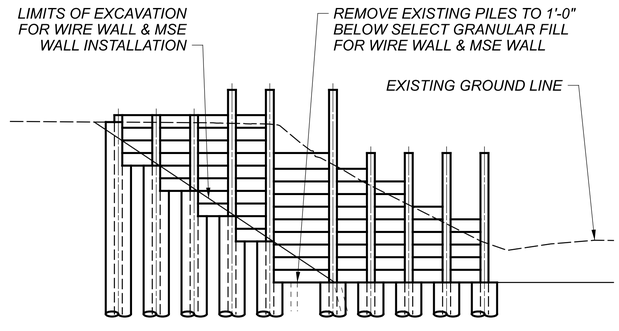

STEP 4 ELEVATION

EXCAVATE PROPOSED SIDE TO INSTALL WIRE WALL &
MSE WALL ADDING LAGGING AS NEEDED

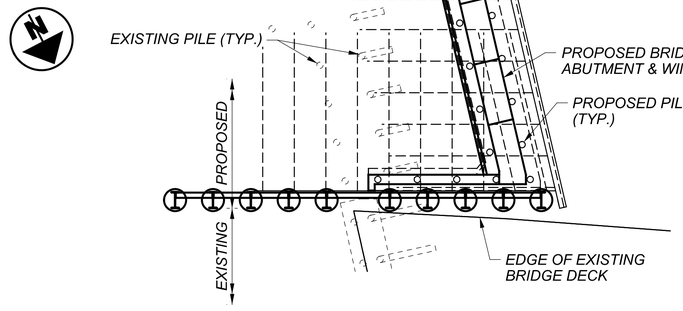

STEP 6 PLAN

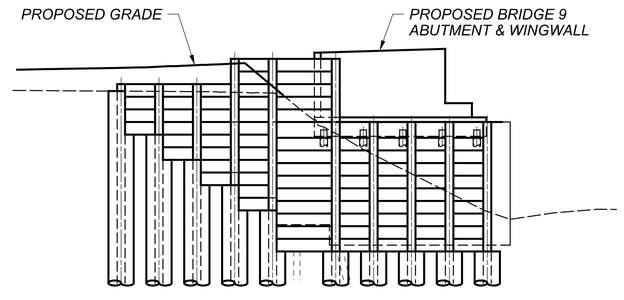

STEP 6 ELEVATION

PROPOSED BRIDGE 9 ABUTMENT AND WINGWALL INSTALLED, PROPOSED SIDE
BACKFILLED TO FINAL GRADE, AND FINAL LAGGING INSTALLED

Preliminary Plans - Not For Reference Only

STAGED CONSTRUCTION SEQUENCE
WALL N
UNDER BRIDGE 9 AND ALONG WEST SIDE OF RAMP A2 AND RAMP J2

SFN N/A

DESIGN AGENCY
Michael Baker INTERNATIONAL

DESIGNER	CHECKER
SSW	MKB

REVIEWER LPC 05-09-24

PROJECT ID 82382

SUBSET	TOTAL
6	13

SHEET	TOTAL
1275	2696

CUY-90-16.28 (CCG3A)

MODEL: Sheet 1 PAPERSIZE: 34x22 (in.) DATE: 3/27/2025 TIME: 11:11:50 PM USER: Julie.Ross
pw:\\mb-us-pw.bentley.com:mb-us-pw-03\Documents\Cleveland_OH\01_Projects\ODOT\District12\82382400-Engineering\Structures\WALL_N\Sheets\82382_N_WD003.dgn

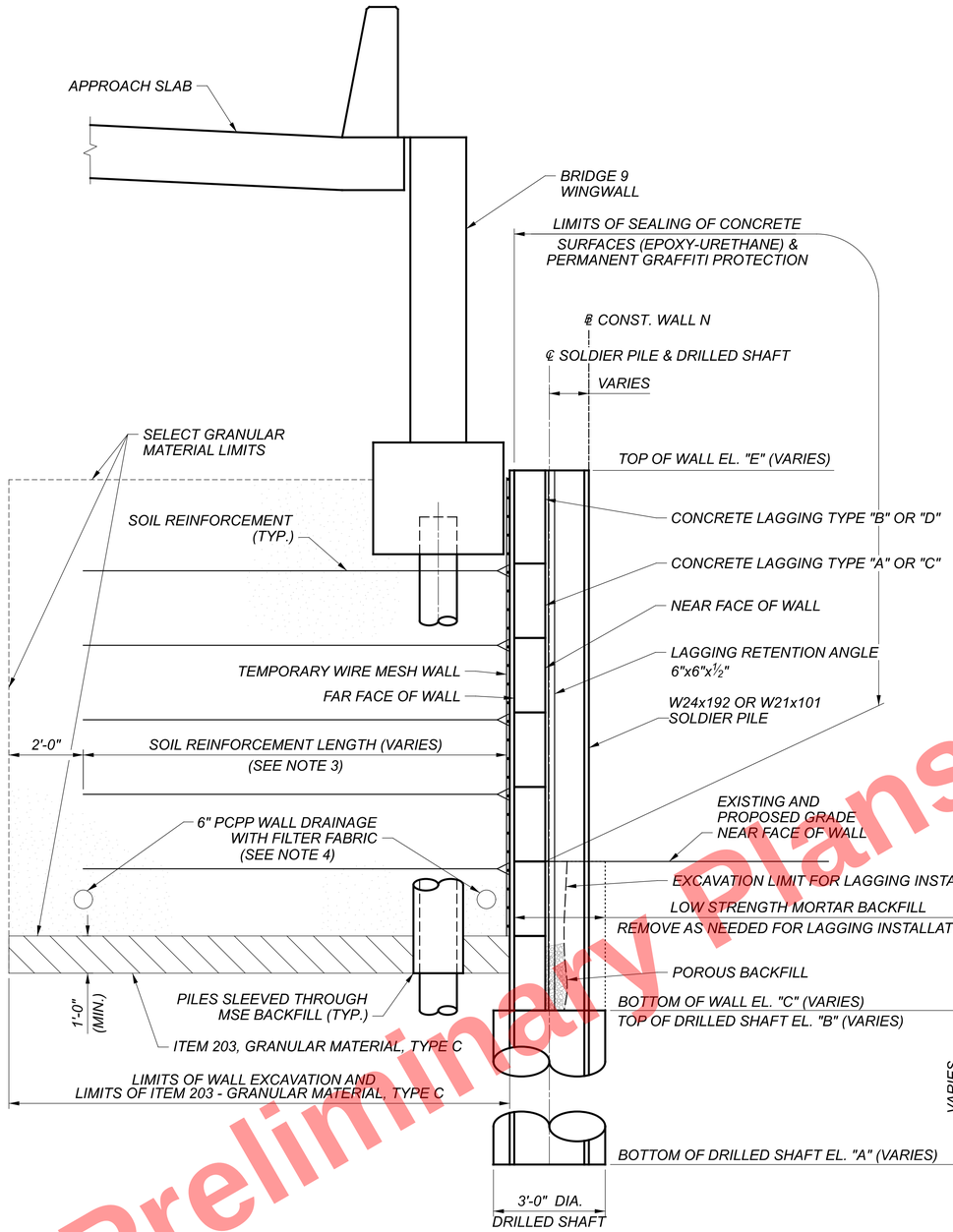

TEMPORARY WALL TYP. SECTION

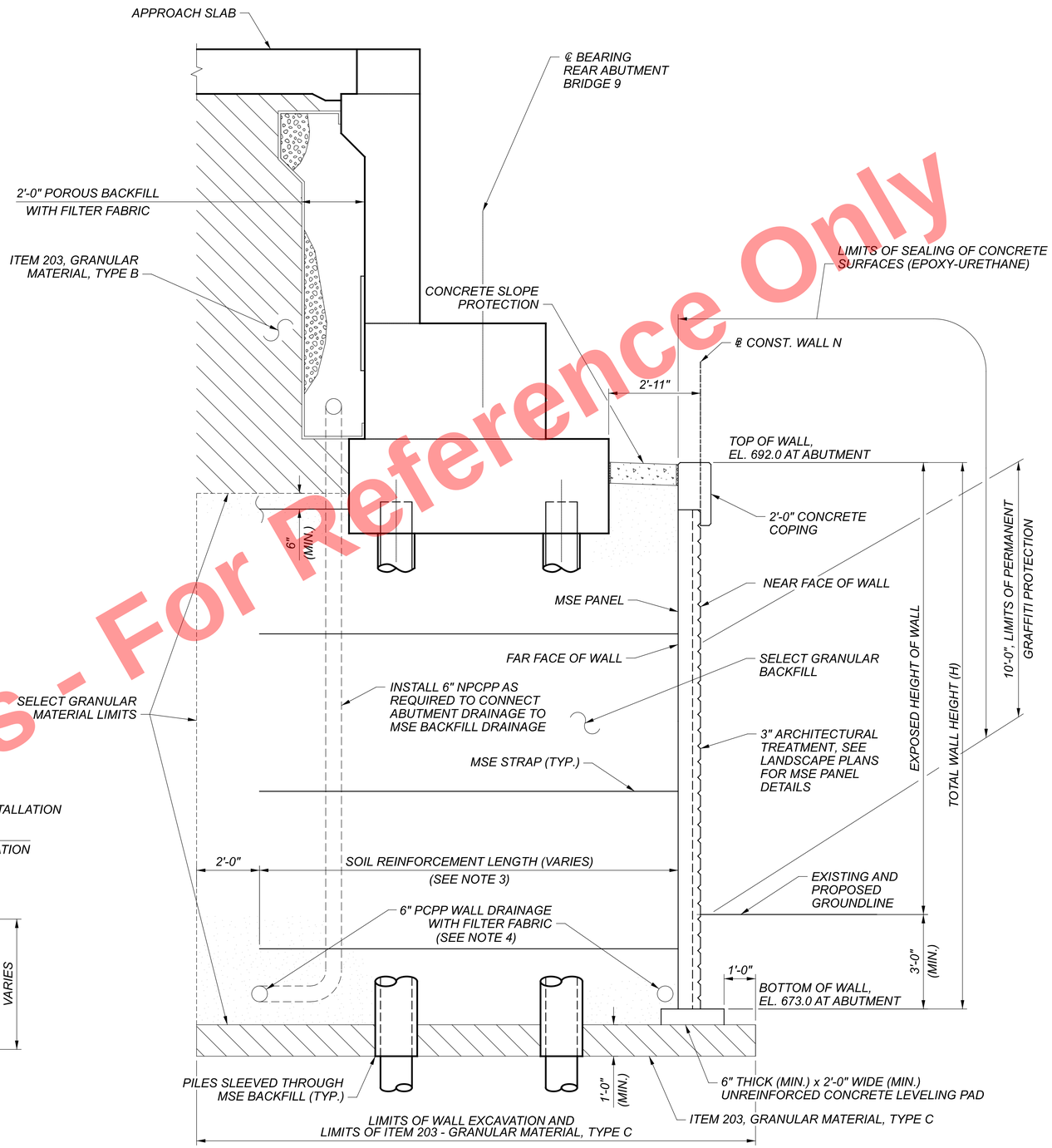

MSE WALL TYP. SECTION

Preliminary Plans - For Reference Only

NOTES:

1. TEMPORARY SOLDIER PILE AND LAGGING WALL MUST BE BUILT PRIOR TO CONSTRUCTION OF THE TEMPORARY WIRE MESH WALL AND THE BRIDGE 9 REAR ABUTMENT.
2. TEMPORARY SOLDIER PILE AND LAGGING WALL TO BE REMOVED IN A FUTURE CONSTRUCTION PROJECT.
3. SOIL REINFORCEMENT LENGTH TO BE DETERMINED BY WALL SUPPLIER OF THE APPROVED WALL SYSTEM, BUT SHALL NOT BE LESS THAN 70 PERCENT OF THE DESIGN HEIGHT OF THE WALL OR 8 FT, WHICHEVER IS GREATER.
4. FILTER FABRIC IS TO BE INCLUDED WITH ITEM 840 - 6" DRAINAGE PIPE, PERFORATED, FOR PAYMENT.

NOTES:

1. MSE WALL PANELS ARE TO BE 5'-0"x5'-0", ARRANGED IN VERTICAL RUNNING BOND.
2. SEE LANDSCAPE DETAILS FOR MSE PANEL AESTHETIC TREATMENT DETAILS.
3. SOIL REINFORCEMENT LENGTH TO BE DETERMINED BY WALL SUPPLIER OF THE APPROVED WALL SYSTEM, BUT SHALL NOT BE LESS THAN 70 PERCENT OF THE DESIGN HEIGHT OF THE WALL OR 8 FT, WHICH IS EVEN GREATER.
4. FILTER FABRIC IS TO BE INCLUDED WITH ITEM 840 - 6" DRAINAGE PIPE, PERFORATED, FOR PAYMENT.

WALL TYPICAL SECTION (1 OF 2)
WALL N
UNDER BRIDGE 9 AND ALONG WEST SIDE OF RAMP A2 AND RAMP J2

CUY-90-16.28 (CCG3A)

SFN N/A

DESIGN AGENCY Michael Baker INTERNATIONAL

DESIGNER	CHECKER
SSW	MKB

REVIEWER LPC 05-09-24

PROJECT ID 82382

SUBSET	TOTAL
7	13

SHEET	TOTAL
1276	2696

MODEL: Sheet PAPERSIZE: 34x22 (in.) DATE: 3/27/2025 TIME: 11:11:56 PM USER: Julie.Ross
pw:\\mb-us-pw.bentley.com:mb-us-pw-03\Documents\Cleveland_OH01_Projects\ODOT\District12\82382\400-Engineering\StructuresWALL_N\Sheets\82382_N_WY001.dgn

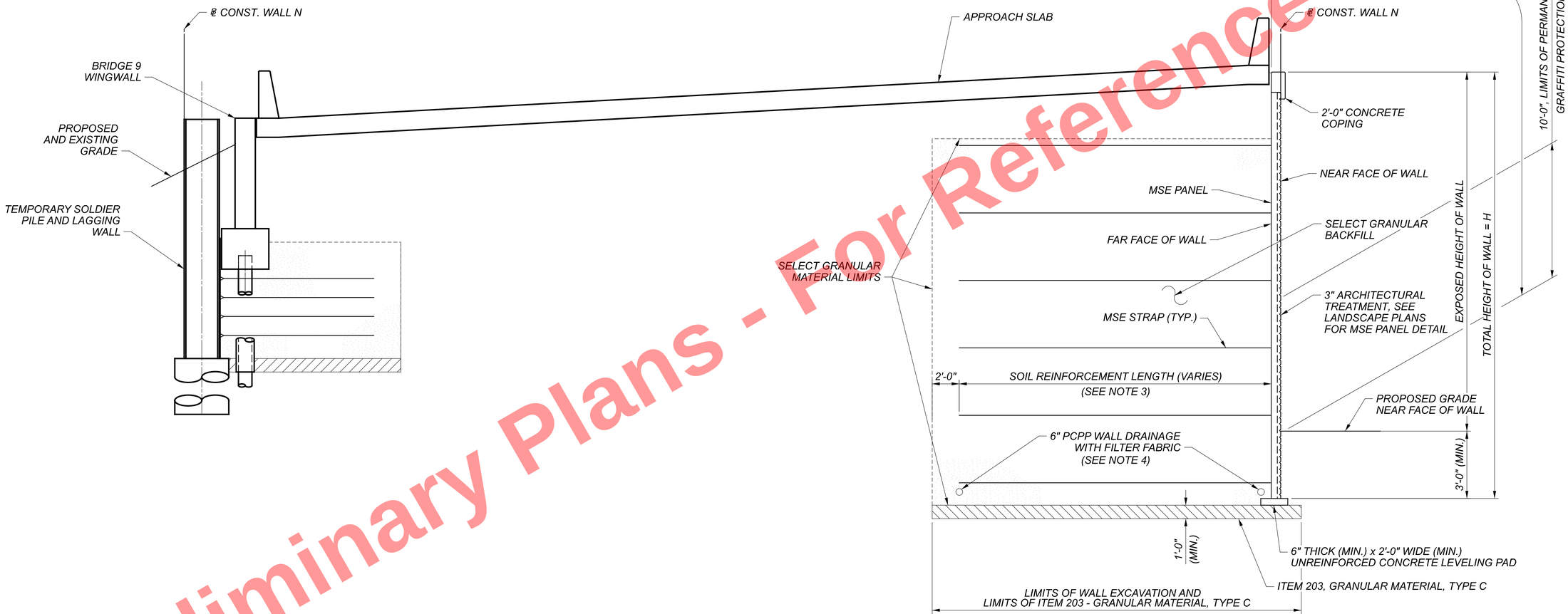

MSE WALL TYP. SECTION

NOTES:

1. TEMPORARY SOLDIER PILE AND LAGGING WALL MUST BE BUILT PRIOR TO CONSTRUCTION OF THE TEMPORARY WIRE MESH WALL AND THE BRIDGE 9 REAR ABUTMENT.
2. TEMPORARY SOLDIER PILE AND LAGGING WALL TO BE REMOVED IN A FUTURE CONSTRUCTION PROJECT.
3. SOIL REINFORCEMENT LENGTH TO BE DETERMINED BY WALL SUPPLIER OF THE APPROVED WALL SYSTEM, BUT SHALL NOT BE LESS THAN 70 PERCENT OF THE DESIGN HEIGHT OF THE WALL OR 8 FT, WHICH IS EVEN GREATER.
4. FILTER FABRIC IS TO BE INCLUDED WITH ITEM 840 - 6" DRAINAGE PIPE, PERFORATED, FOR PAYMENT.

Preliminary Plans - For Reference Only

WALL TYPICAL SECTION (2 OF 2)
WALL N
UNDER BRIDGE 9 AND ALONG WEST SIDE OF RAMP A2 AND RAMP J2

SFN N/A

DESIGN AGENCY

Michael Baker INTERNATIONAL

DESIGNER	CHECKER
SSW	MKB

REVIEWER LPC 05-09-24

PROJECT ID 82382

SUBSET	TOTAL
8	13

SHEET	TOTAL
1277	2696

CUY-90-16.28 (CCG3A)

MODEL: Untitled Sheet PAPERSIZE: 34x22 (in.) DATE: 3/27/2025 TIME: 11:12:07 PM USER: Julie.Ross
pw:\\mb-us-pw.bentley.com:mb-us-pw-03\Documents\Cleveland_OH\01_Projects\ODOT\District12\82382\400-Engineering\Structures\WALL_NSheets\82382_N_WY002.dgn

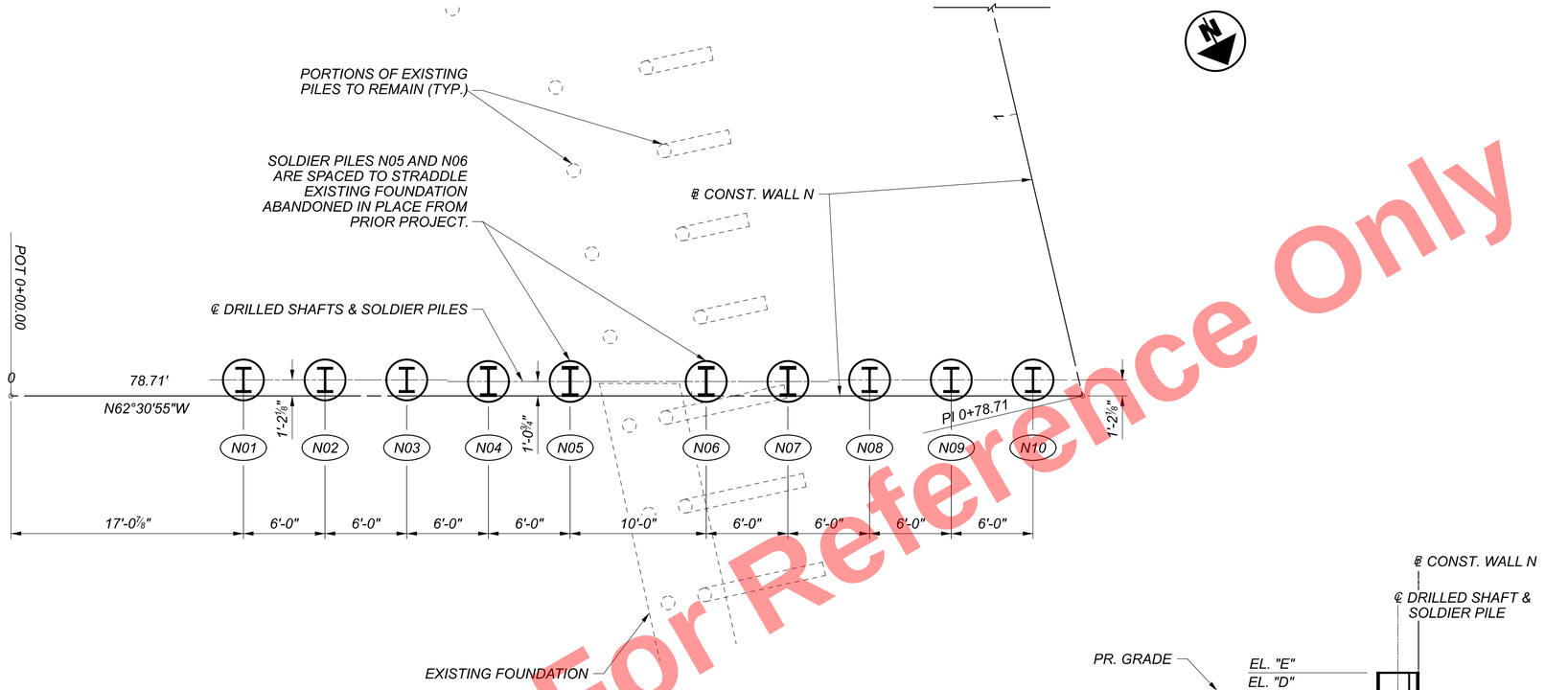

FOUNDATION PLAN

WALL N DRILLED SHAFT & SOLDIER PILE SCHEDULE													
DESIGNATION	STATION BASELINE WALL N	CENTERLINE OFFSET FROM BASELINE WALL N (FT.)	DIAMETER (IN.)	SHEAR STUDS (YES/NO)	BOTTOM OF DRILLED SHAFT EL. "A"	TOP OF SHAFT CONCRETE EL. "B"	CONCRETE SHAFT LENGTH (FT.)	BOTTOM OF WALL EL. "C"	TOP OF SOLDIER PILE E. "D"	TOP OF WALL EL. "E"	ESTIMATED LENGTH OF SOLDIER PILE (FT.)	HEIGHT OF LAGGING (FT.)	SOLDIER PILE SIZE
N01	00+17.07	1.18' LT	36	NO	674.0	690.0	16.0	690.0	698.0	698.0	24.0	8.0	W21x101
N02	00+23.07	1.18' LT	36	NO	670.0	686.0	16.0	686.0	698.0	698.0	28.0	12.0	W21x101
N03	00+29.07	1.18' LT	36	NO	666.0	682.0	16.0	682.0	698.0	698.0	32.0	16.0	W21x101
N04	00+35.07	1.06' LT	36	NO	652.0	678.0	26.0	678.0	702.0	702.0	50.0	24.0	W24x192
N05	00+41.07	1.06' LT	36	NO	645.5	671.5	26.0	671.5	702.0	702.0	56.5	30.5	W24x192
N06	00+51.07	1.06' LT	36	NO	645.5	671.5	26.0	671.5	702.0	702.0	56.5	30.5	W24x192
N07	00+57.07	1.06' LT	36	NO	645.5	671.5	26.0	671.5	692.0	692.0	46.5	20.5	W24x192
N08	00+63.07	1.18' LT	36	NO	655.5	671.5	16.0	671.5	692.0	692.0	36.5	20.5	W21x101
N09	00+69.07	1.18' LT	36	NO	655.5	671.5	16.0	671.5	692.0	692.0	36.5	20.5	W21x101
N10	00+75.07	1.18' LT	36	NO	655.5	671.5	16.0	671.5	692.0	692.0	36.5	20.5	W21x101

DRILLED SHAFT & SOLDIER PILE SCHEMATIC

LEGEND:

(#) - DENOTES SOLDIER PILE NUMBER

Preliminary Plans - For Reference Only

UNDER BRIDGE 9 AND ALONG WEST SIDE OF RAMP A2 AND RAMP J2

SFN N/A

DESIGN AGENCY

Michael Baker INTERNATIONAL

DESIGNER	CHECKER
SSW	MKB

REVIEWER LPC 05-09-24

PROJECT ID 82382

SUBSET	TOTAL
9	13

SHEET	TOTAL
1278	2696

CUY-90-16.28 (CCG3A)

MODEL: Sheet PAPERSIZE: 34x22 (in.) DATE: 3/27/2025 TIME: 11:12:14 PM USER: Julie.Ross
pw:\\mb-us-pw.bentley.com:mb-us-pw-03\Documents\Cleveland_OH\01_Projects\ODOT\District12\82382\400-Engineering\Structures\WALL_N\Sheets\82382_N_WT001.dgn

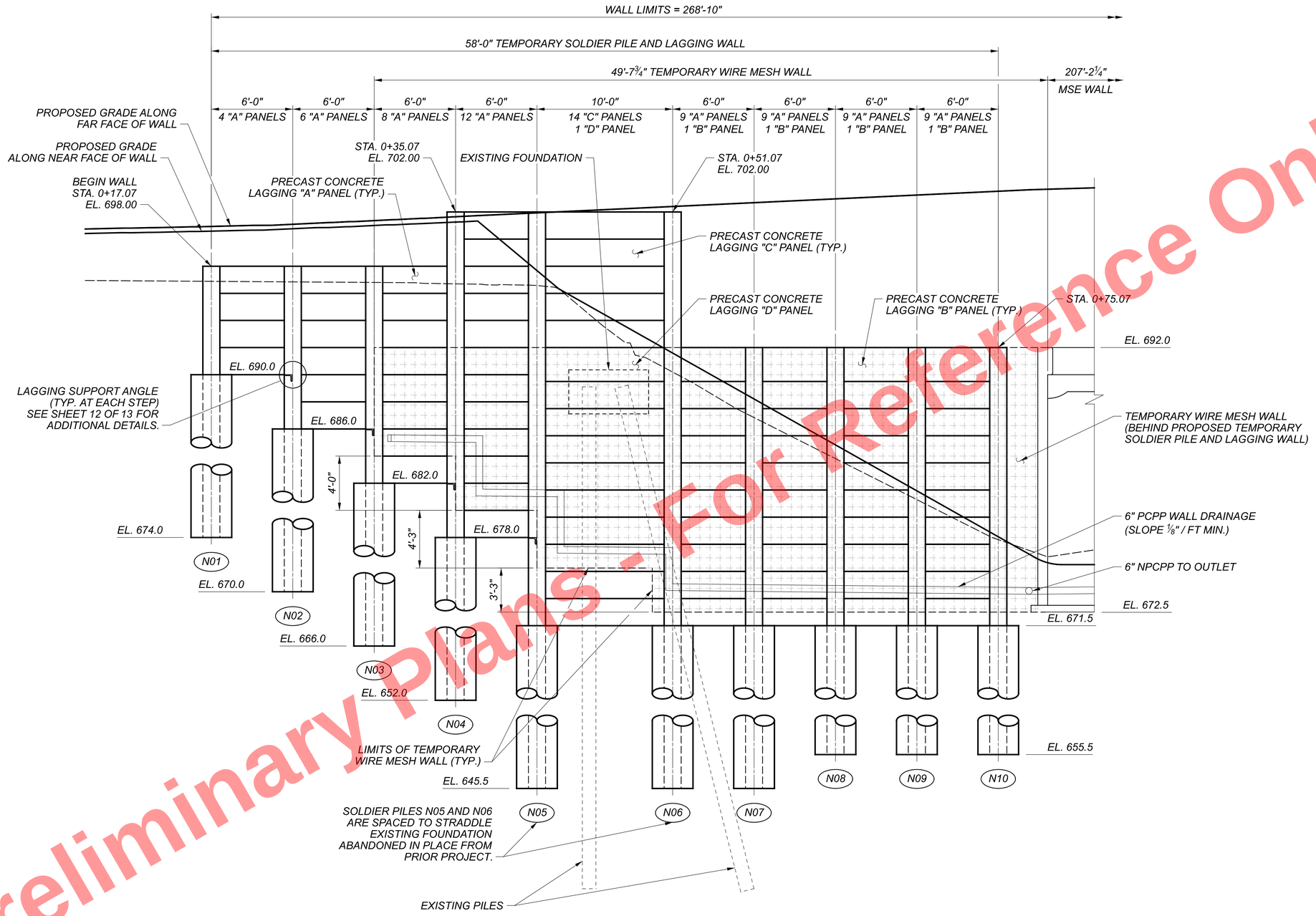

ELEVATION

(DIMENSIONS GIVEN ALONG ℄ CONST. WALL N)

LEGEND:

(#) - DENOTES SOLDIER PILE NUMBER

Preliminary Plans - For Reference Only

WALL ELEVATION
WALL N
UNDER BRIDGE 9 AND ALONG WEST SIDE OF RAMP A2 AND RAMP J2

SFN	N/A
DESIGN AGENCY	Michael Baker INTERNATIONAL
DESIGNER	SSW
CHECKER	MKB
REVIEWER	LPC 05-09-24
PROJECT ID	82382
SUBSET	10
TOTAL	13
SHEET	1279
TOTAL	2696

CUY-90-16.28 (CCG3A)

MODEL: Sheet PAPERSIZE: 34x22 (in.) DATE: 3/27/2025 TIME: 11:12:24 PM USER: Julie.Ross
pw:\\mb-us-pw.bentley.com:mb-us-pw-03\Documents\Cleveland_OH101_Projects\ODOT\District12\82382\400-Engineering\Structures\WALL_N\Sheets\82382_N_WE001.dgn

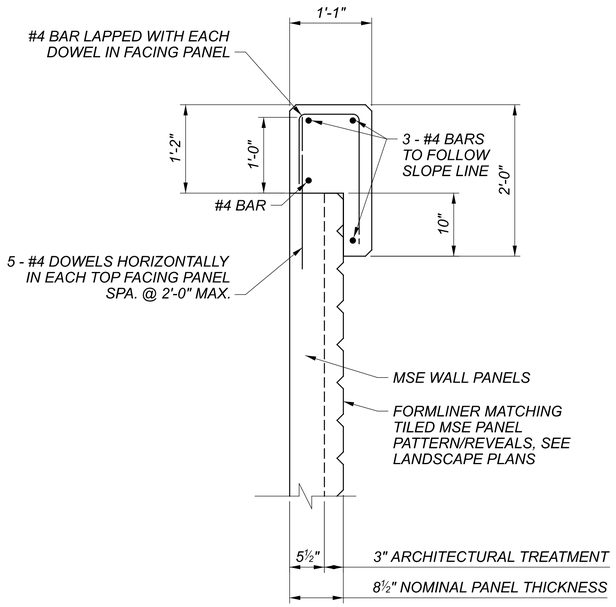

MSE WALL COPING DETAIL
(ALL REINFORCING STEEL TO BE EPOXY COATED)

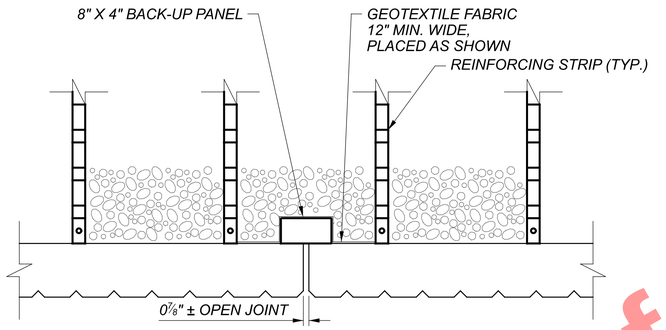

TYPICAL FRONT WALL VIEW OF JOINT ELEVATION
(AT MSE WALL)

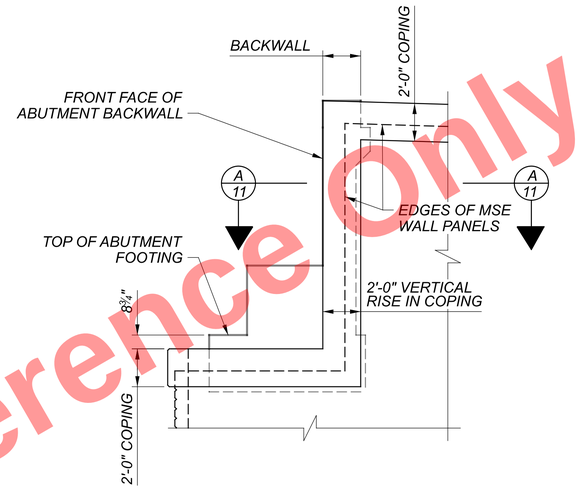

TYPICAL COPING DETAIL AT BRIDGE ABUTMENT

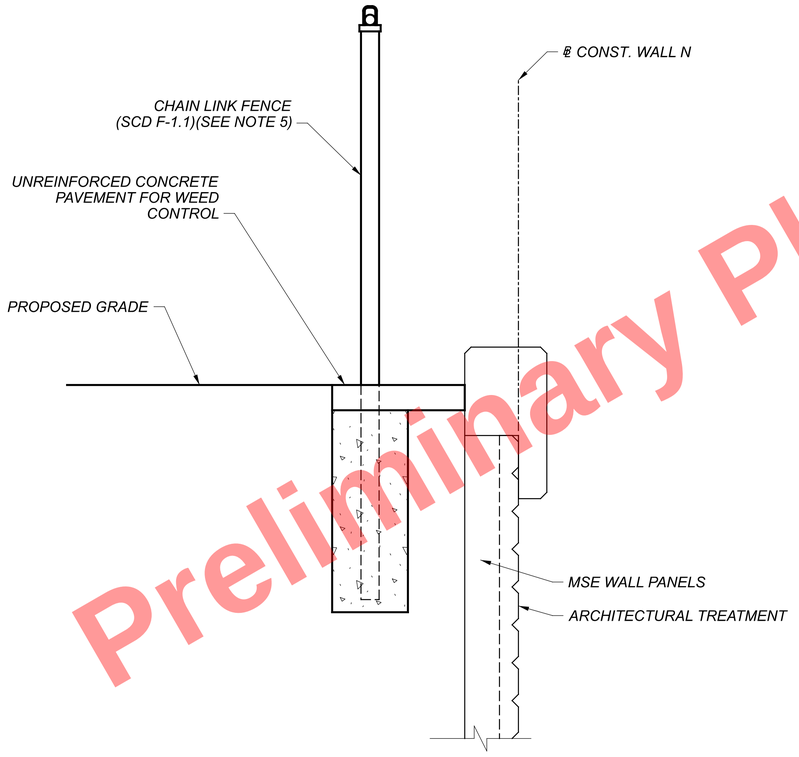

CHAIN LINK FENCE DETAIL
(SEE PLAN AND PROFILE SHEET FOR LOCATIONS)

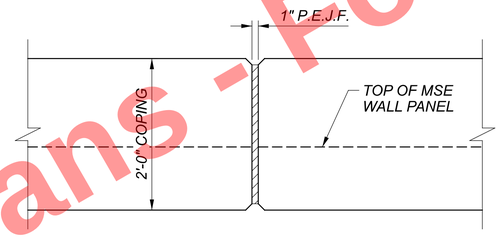

COPING EXPANSION JOINT - ELEVATION
(MAX JOINT SPACING IS 20'-0")

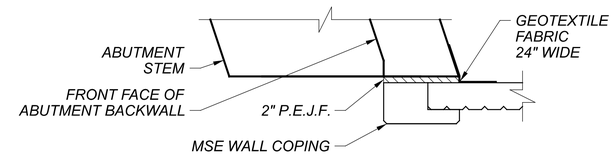

A 11 SECTION

NOTES:

1. MSE WALL PANELS ARE TO BE 5'-0"x5'-0", ARRANGED IN VERTICAL RUNNING BOND.
2. SEE LANDSCAPE DETAILS FOR MSE PANEL AESTHETIC TREATMENT DETAILS.
3. DETAILS FOR ALL VERTICAL AND LONGITUDINAL REINFORCING STEEL IN THE COPING SHALL BE INCLUDED IN THE PROPRIETARY WALL MANUFACTURER'S SHOP DRAWINGS.
4. P.E.J.F. SHALL EXTEND THE FULL HEIGHT OF THE MSE WALL/WINGWALL JOINT.
5. LOCATIONS OF THE MSE WALL SOIL REINFORCEMENT MUST BE KNOWN TO AVOID CONFLICTS WITH FENCE POST FOUNDATIONS. FENCE POSTS ARE TO BE PLACED SUCH THAT THEY MISS MSE WALL SOIL REINFORCEMENT LOCATIONS.

Preliminary Plans - For Reference Only

WALL DETAILS (1 OF 3)
WALL N
UNDER BRIDGE 9 AND ALONG WEST SIDE OF RAMP A2 AND RAMP J2

SFN N/A
DESIGN AGENCY Michael Baker INTERNATIONAL
DESIGNER SSW | CHECKER MKB
REVIEWER LPC 05-09-24
PROJECT ID 82382
SUBSET 11 | TOTAL 13
SHEET 1280 | TOTAL 2696

CUY-90-16.28 (CCG3A)

MODEL: Sheet PAPERSIZE: 34x22 (in.) DATE: 3/27/2025 TIME: 11:12:43 PM USER: Julie.Ross
pw:\\mb-us-pw.bentley.com:mb-us-pw-03\Documents\Cleveland_OH01_Projects\ODOT\District12\82382400-Engineering\Structures\WALL_N\Sheets\82382_N_WD001.dgn

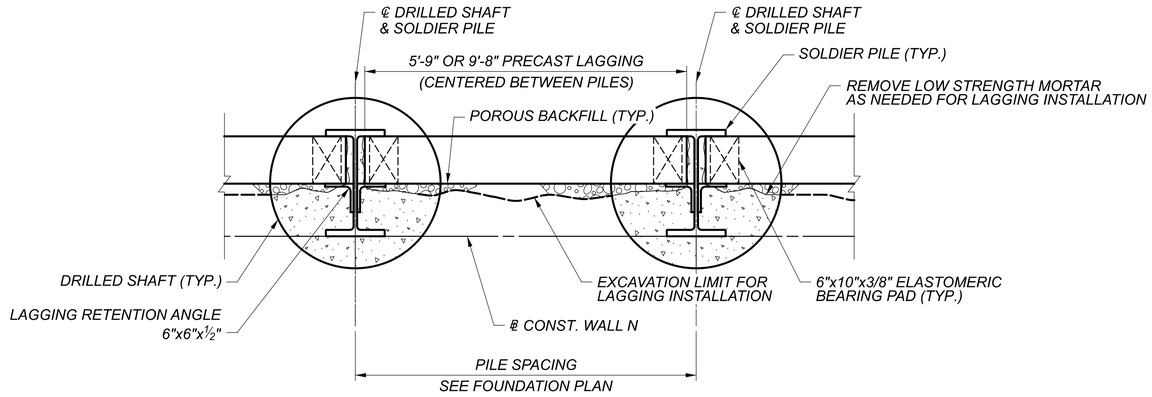

TYPICAL LAGGING PLAN DETAIL

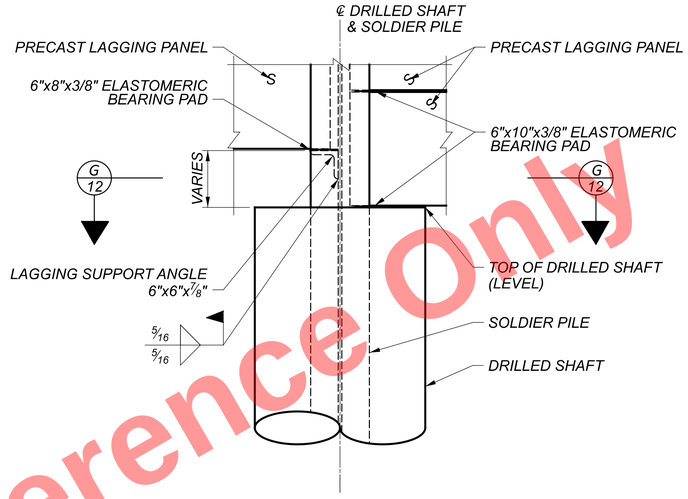

PANEL SUPPORT ANGLE DETAIL

LOW STRENGTH MORTAR NOT SHOWN FOR CLARITY

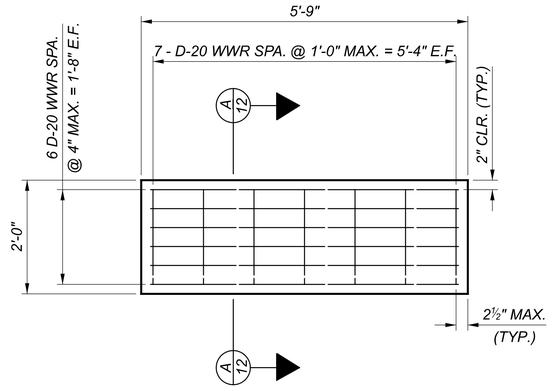

TYPE "A" PRECAST LAGGING ELEVATION

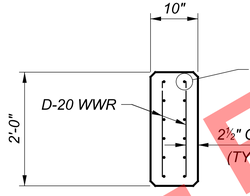

A 12 SECTION

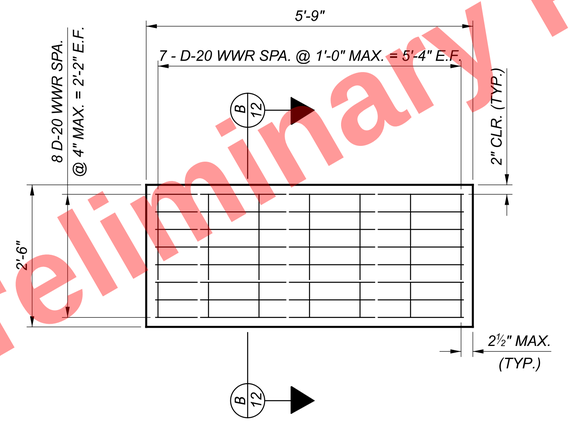

TYPE "B" PRECAST LAGGING ELEVATION

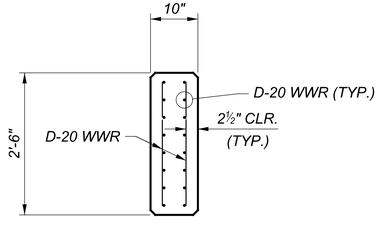

B 12 SECTION

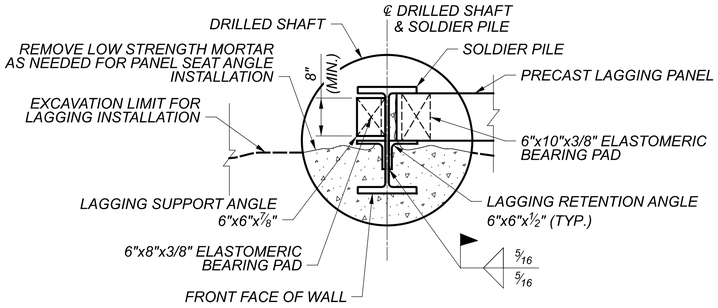

G 12 SECTION

NOTES:

1. ELASTOMERIC BEARING PADS SHALL BE PROVIDED AT ALL BOTTOM PANELS BETWEEN THE PANEL AND TOP OF CONCRETE DRILLED SHAFT AND/OR RAISED PANEL SEAT. THEY SHALL ALSO BE PROVIDED AT EACH END OF EACH PANEL BETWEEN PANELS.
2. ELASTOMERIC BEARING PADS SHALL BE NEOPRENE ELASTOMERIC PADS HAVING DUROMETER HARDNESS OF 55 ± 5, HIGH DENSITY POLYETHYLENE PADS WITH A MINIMUM DENSITY OF 59 LB/FT3 {0.946 G/CM3} OR EQUIVALENT. SUPPLY CERTIFIED TEST DATA TO THE ENGINEER UPON DELIVERY OF THE MATERIAL TO THE PROJECT. BEARING PADS WILL BE PAID FOR UNDER ITEM 516 ELASTOMERIC BEARING PAD, MISC.: 6"x8"x 3/8" THICK OR 6"x10"x 3/8" THICK.
3. REINFORCEMENT IN PRECAST LAGGING PANELS SHALL BE INCLUDED WITH ITEM 610 - RETAINING WALL MISC.: PRECAST CONCRETE LAGGING FOR PAYMENT.
4. PROVIDE 1" x 1" CHAMFER AT EXPOSED TOP AND BOTTOM OF LAGGING PANELS.
5. CENTER LAGGING PANELS BETWEEN PILE WEBS.
6. CONTRACTOR HAS THE OPTION TO REMOVE LOW STRENGTH MORTAR AS NEEDED FOR LAGGING INSTALLATION. USE WOOD BLOCKING AND/OR SHIMS TO ENSURE LAGGING PANEL REMAINS FLUSH AGAINST BACK OF SOLDIER PILE FLANGE / LAGGING RETENTION ANGLE AT THE FRONT FACE OF WALL.

Preliminary Plans - For Reference Only

WALL DETAILS (2 OF 3)
WALL N
UNDER BRIDGE 9 AND ALONG WEST SIDE OF RAMP A2 AND RAMP J2

SFN N/A

DESIGN AGENCY Michael Baker INTERNATIONAL

DESIGNER	CHECKER
SSW	MKB

REVIEWER LPC 05-09-24

PROJECT ID 82382

SUBSET	TOTAL
12	13

SHEET	TOTAL
1281	2696

CUY-90-16.28 (CCG3A)
MODEL: Sheet 1 PAPERSIZE: 34x22 (in.) DATE: 3/27/2025 TIME: 11:13:02 PM USER: Julie.Ross
pw:\\mb-us-pw.bentley.com:mb-us-pw-03\Documents\Cleveland_OH01_Projects\ODOTDistrict12\82382400-Engineering\Structures\WALL_N\Sheets\82382_N_WD002.dgn
_WD002.dgn

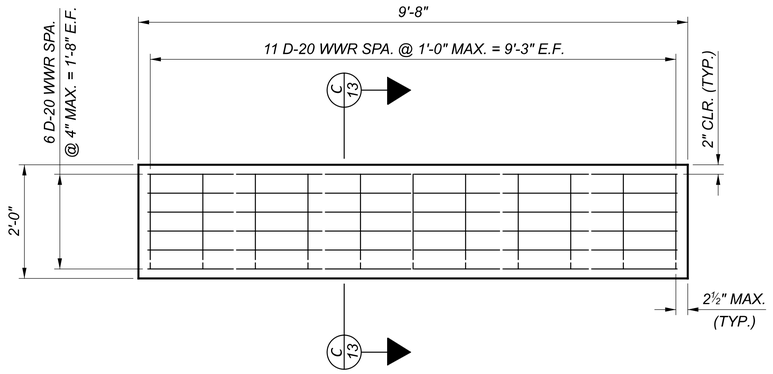

TYPE "C" PRECAST LAGGING ELEVATION

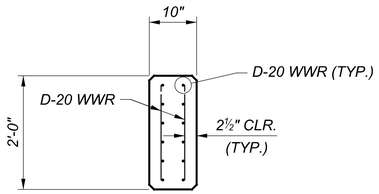

C 13 SECTION

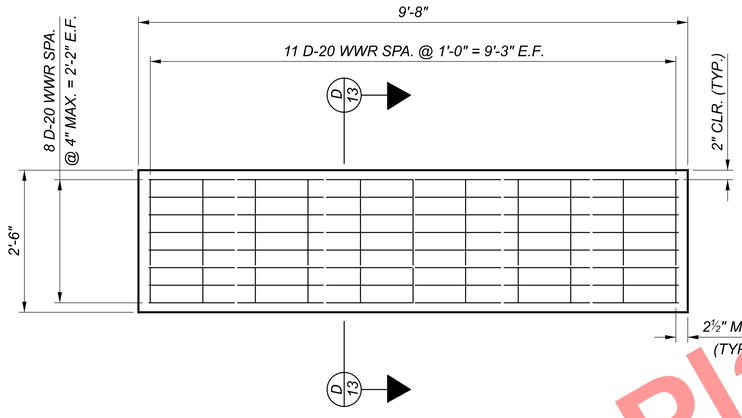

TYPE "D" PRECAST LAGGING ELEVATION

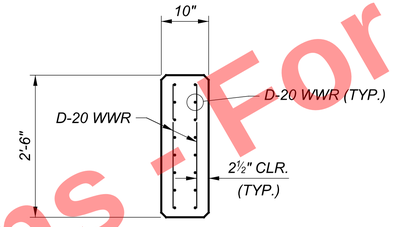

D 13 SECTION

NOTES:

1. ELASTOMERIC BEARING PADS SHALL BE PROVIDED AT ALL BOTTOM PANELS BETWEEN THE PANEL AND TOP OF CONCRETE DRILLED SHAFT AND/OR RAISED PANEL SEAT. THEY SHALL ALSO BE PROVIDED AT EACH END OF EACH PANEL BETWEEN PANELS.
2. ELASTOMERIC BEARING PADS SHALL BE NEOPRENE ELASTOMERIC PADS HAVING DUROMETER HARDNESS OF 55 ± 5, HIGH DENSITY POLYETHYLENE PADS WITH A MINIMUM DENSITY OF 59 LB/FT3 {0.946 G/CM3} OR EQUIVALENT. SUPPLY CERTIFIED TEST DATA TO THE ENGINEER UPON DELIVERY OF THE MATERIAL TO THE PROJECT. BEARING PADS WILL BE PAID FOR UNDER ITEM 516 ELASTOMERIC BEARING PAD, MISC.: 6"x10"x 3/8" THICK.
3. REINFORCEMENT IN PRECAST LAGGING PANELS SHALL BE INCLUDED WITH ITEM 610 - RETAINING WALL MISC.: PRECAST CONCRETE LAGGING FOR PAYMENT.
4. PROVIDE 1" x 1" CHAMFER AT EXPOSED TOP AND BOTTOM OF LAGGING PANELS.
5. CENTER LAGGING PANELS BETWEEN PILE WEBS.
6. CONTRACTOR HAS THE OPTION TO REMOVE LOW STRENGTH MORTAR AS NEEDED FOR LAGGING INSTALLATION. USE WOOD BLOCKING AND/OR SHIMS TO ENSURE LAGGING PANEL REMAINS FLUSH AGAINST BACK OF SOLDIER PILE FLANGE / LAGGING RETENTION ANGLE AT THE FRONT FACE OF WALL.

Preliminary Plans - For Reference Only

WALL DETAILS (3 OF 3)
WALL N
UNDER BRIDGE 9 AND ALONG WEST SIDE OF RAMP A2 AND RAMP J2

SFN N/A
DESIGN AGENCY
Michael Baker INTERNATIONAL
DESIGNER SSW | CHECKER MKB
REVIEWER LPC 05-09-24
PROJECT ID 82382
SUBSET 13 | TOTAL 13
SHEET 1282 | TOTAL 2696

CUY-90-16.28 (CCG3A)
MODEL: Sheet 2 PAPERSIZE: 34x22 (in.) DATE: 3/27/2025 TIME: 11:13:04 PM USER: Julie.Ross
pw:\\mb-us-pw.bentley.com:mb-us-pw-03\Documents\Cleveland_OH\01_Projects\ODOT\District12\82382\400-Engineering\Structures\WALL_N\Sheets\82382_N_WD002.dgn

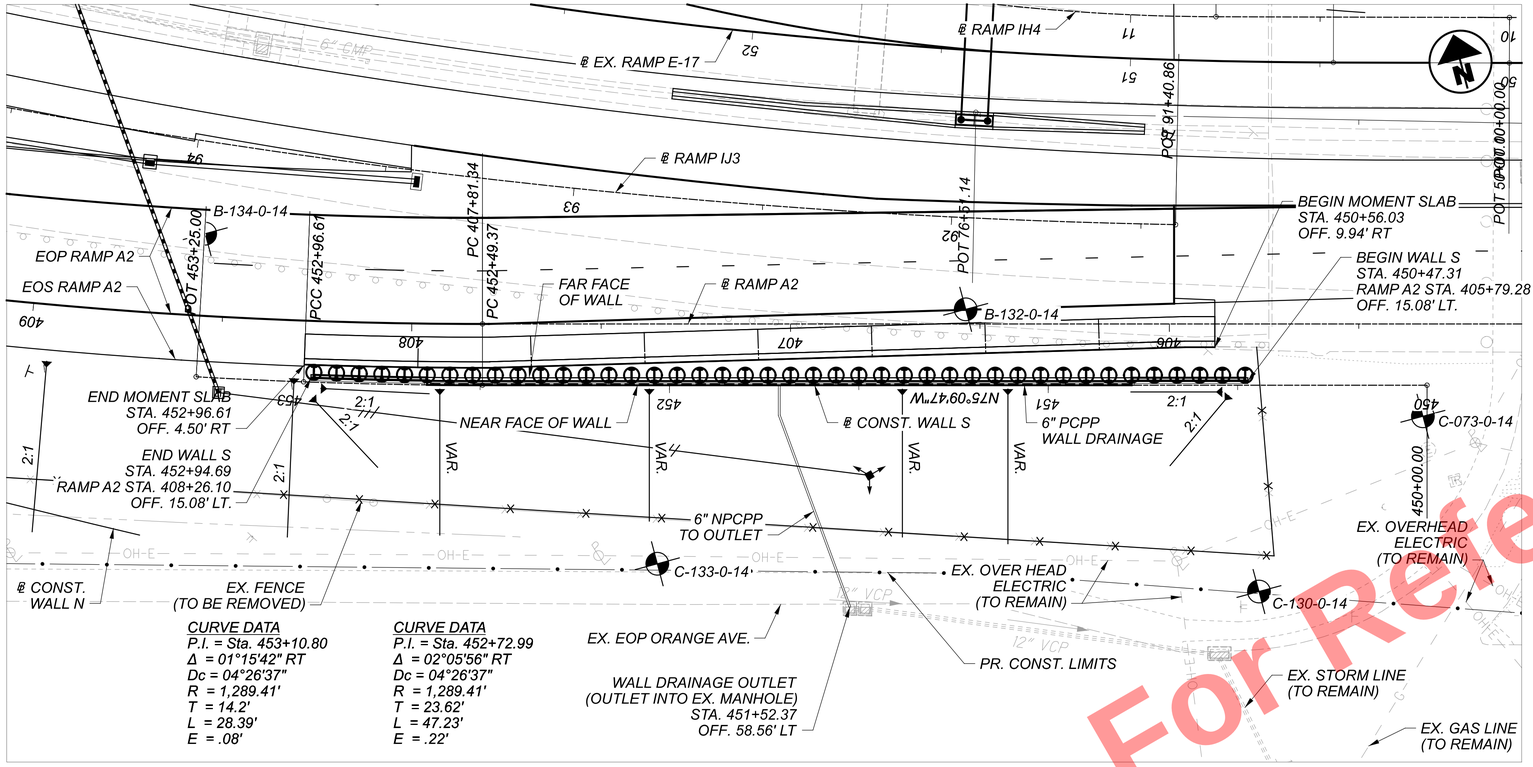

PLAN

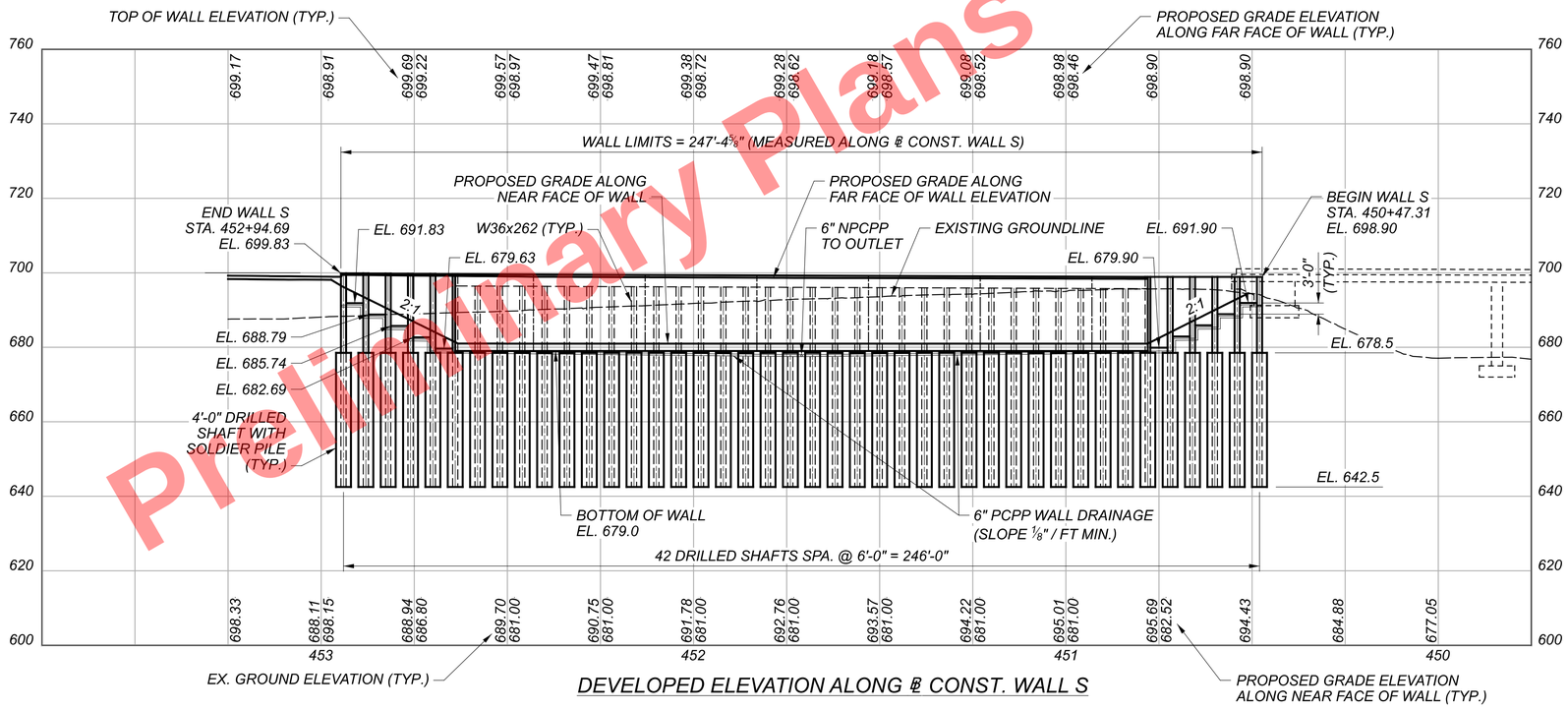

DEVELOPED ELEVATION ALONG ℄ CONST. WALL S

BENCHMARK DATA

BM-59 STA. 430+49.74, ELEV. 660.15 , OFFSET 458.93' RT.,
℄ RAMP A2, MAG NAIL AT NOSE OF DRAINAGE CHANNEL

BM-61 STA. 425+47.56, ELEV. 674.03 , OFFSET 381.20' LT.,
℄ RAMP A2, RAILROAD SPIKE IN NORTH FACE OF POWER/LIGHT POLE

BM-62 STA. 431+86.05, ELEV. 672.11 , OFFSET 388.05' LT.,
℄ RAMP A2, RAILROAD SPIKE IN EAST FACE OF POWER/LIGHT POLE

BM-66 STA. 421+92.16, ELEV. 671.90 , OFFSET 844.15' LT.,
℄ RAMP A2, CUT CROSS ON N-E BOLT OF CANTILEVER OVERHEAD SIGN

BM-67 STA. 418+24.32, ELEV. 674.82 , OFFSET 454.15' LT.,
℄ RAMP A2, CUT CROSS ON N-E BOLT OF EAST LEG OF JCT 422 SIGN

BM-68 STA. 411+16.80, ELEV. 678.92 , OFFSET 249.57' LT.,
℄ RAMP A2, CUT CROSS ON N-E BOLT OF TRAFFIC SIGNAL POLE

FOR ADDITIONAL BENCHMARK INFORMATION. SEE ROADWAY PLAN SHEET 4 / 2696

BORING LOCATION*

BORING	STATION	OFFSET	TOP OF ROCK EL.
B-132-0-14	406+53.76	3.85' RT.	-
B-134-0-14	408+55.86	21.67' RT.	-
C-073-0-14	405+33.05	24.39' LT	-
C-130-0-14	405+76.34	70.64' LT.	-
C-133-0-14	407+35.19	63.31' LT.	-

* = BORING STATION AND OFFSETS ARE FROM ℄ RAMP A2

PROPOSED WORK

THE PROPOSED WORK CONSISTS OF CONSTRUCTING A RETAINING WALL ALONG THE SOUTH SIDE OF RAMP A2. THE WALL IS TO BE TOP DOWN CONSTRUCTION CONSISTING OF SOLDIER PILES, PRECAST CONCRETE LAGGING, AND CAST-IN-PLACE CONCRETE FACING.

NOTES

1. EARTHWORK LIMITS SHOWN ARE APPROXIMATE. ACTUAL SLOPES SHALL CONFORM TO PLAN CROSS SECTIONS.
2. FOR WALL CROSS SECTIONS, SEE SHEETS 799 TO 804 / 2696
3. STATION AND WALL OFFSETS SHOWN AT NEAR FACE OF WALL.
4. PRECAST LAGGING PANELS AT THE START AND END OF WALL ARE A TEMPORARY CONDITION FOR INTERIM CONSTRUCTION. WALL IS TO BE FULL FULL HEIGHT IN FINAL CONDITION.

LEGEND

PROJECT BORING LOCATIONS

CONST. = CONSTRUCTION
EOP = EDGE OF PAVEMENT
EOS = EDGE OF SHOULDER

Preliminary Plans - For Reference Only

WALL PLAN AND PROFILE
WALL S
ALONG SOUTH SIDE OF I.R. 77

SFN N/A
DESIGN AGENCY
Michael Baker INTERNATIONAL
DESIGNER SSW | CHECKER YC
REVIEWER LPC 05-09-24
PROJECT ID 82382
SUBSET 1 | TOTAL 13
SHEET 1283 | TOTAL 2696

CUY-90-16.28 (CCG3A)

MODEL: BLP_Wall S - Wall S Plan PAPERSIZE: 34x22 (in.) DATE: 3/27/2025 TIME: 11:13:15 PM USER: Julie.Ross
pw:\\mb-us-pw.bentley.com:mb-us-pw-03\Documents\Cleveland_OH\01_Projects\ODOT\District12\82382\400-Engineering\Structures\WALL_S\Sheets\82382_S_WP001.dgn

STANDARD DRAWINGS AND SUPPLEMENTAL SPECIFICATIONS:

REFER TO THE FOLLOWING STANDARD CONSTRUCTION DRAWINGS:
VPF-1-90 REVISED 7/21/2023
DM-1.1 REVISED 1/17/2025

REFER TO THE FOLLOWING SUPPLEMENTAL SPECIFICATION:
800 DATED SEE TITLE SHEET

REFER TO THE FOLLOWING SUPPLEMENTS:
1073 DATED 4/21/2023
1083 DATED 1/20/2017

DESIGN SPECIFICATIONS:

THIS STRUCTURE CONFORMS TO THE "LRFD BRIDGE DESIGN SPECIFICATIONS", 9TH EDITION, ADOPTED BY THE AMERICAN ASSOCIATION OF STATE HIGHWAY AND TRANSPORTATION OFFICIALS, 2020 AND THE ODOT BRIDGE DESIGN MANUAL, 2020 (DATED 07-21-23).

DESIGN DATA:

CONCRETE CLASS QC1 - COMPRESSIVE STRENGTH 4.0 KSI
(CONCRETE FACING AND PRECAST LAGGING)
CONCRETE CLASS QC2 - COMPRESSIVE STRENGTH 4.5 KSI (MOMENT SLAB)
CONCRETE CLASS QC5 - COMPRESSIVE STRENGTH 4.5 KSI (DRILLED SHAFTS)
REINFORCING STEEL / WELDED WIRE REINFORCEMENT - MINIMUM YIELD STRENGTH 60 KSI
STEEL SOLDIER PILES - ASTM A572 - YIELD STRENGTH 50 KSI

SEQUENCE OF CONSTRUCTION:

CONSTRUCT WALL S DURING MOT PHASE 4.

SEE MAINTENANCE OF TRAFFIC NOTES FOR ADDITIONAL PHASES AND INFORMATION.

ITEM 507 - STEEL PILES, MISC.: W36X262, FURNISHED

THIS WORK CONSISTS OF FURNISHING AND PLACING STEEL SOLDIER PILES INTO DRILLED HOLES. FURNISH SOLDIER PILES CONSISTING OF STRUCTURAL STEEL MEMBERS THAT MEET THE PLAN REQUIREMENTS AND CONFORM TO ASTM A572, GRADE 50 IN ACCORDANCE WITH C&MS 711.01. GALVANIZE SOLDIER PILES AS SHOWN ON THE PLANS AND IN ACCORDANCE WITH C&MS 711.02. DO NOT FIELD WELD OR SPLICE STEEL SOLDIER PILES.

THE DEPARTMENT WILL MEASURE SOLDIER PILES ALONG THE AXIS OF THE SOLDIER PILE FROM THE TOP OF WALL ELEVATION TO THE BOTTOM OF THE DRILLED SHAFT, AS DETERMINED BY THE ENGINEER. THE DEPARTMENT WILL PAY FOR SOLDIER PILES AT THE CONTRACT UNIT PRICE PER FOOT FOR ITEM 507, STEEL PILES, MISC.: W36X262, FURNISHED.

ITEM 509 - WALL FACING REINFORCEMENT

THE CONTRACTOR MAY REPLACE THE REINFORCING BARS IN THE RETAINING WALL FACING WITH EPOXY COATED WELDED WIRE FABRIC CONFORMING TO C&MS 709.14. THE EPOXY COATED WELDED WIRE FABRIC MUST PROVIDE AN EQUIVALENT AREA OF STEEL IN EACH DIRECTION AS THE REINFORCING BARS SHOWN IN THE PLANS.

ITEM 512 - TYPE 2 WATERPROOFING, AS PER PLAN

PLACE WATERPROOFING MEMBRANE AT THE LOCATIONS OF THE PROPOSED JOINTS IN THE CONCRETE WALL FACING. PLACE THE WATERPROOFING MEMBRANE OVER THE PREFABRICATED GEOCOMPOSITE DRAIN AND SECURELY ATTACH TO THE TIMBER LAGGING WITH SCREWS AND 1-INCH OUTER DIAMETER FENDER WASHERS. PLACE THE MEMBRANE SO THAT THE ADHESIVE SIDE FACES THE CAST-IN-PLACE CONCRETE. THE SURFACE PREPARATION DESCRIBED IN C&MS 512.08 IS NOT REQUIRED.

ITEM 512 - SEALING OF CONCRETE SURFACES (EPOXY-URETHANE), AS PER PLAN

SEAL SURFACES OF THE CONCRETE FACING AND THE PRECAST CONCRETE LAGGING AS SHOWN IN THE PLANS WITH AN EPOXY-URETHANE SEALER ACCORDING TO C&MS 512. THE FOLLOWING COLORS SHALL BE USED FOR PAINTING AND SEALING STRUCTURAL ELEMENTS:

FACING AND LAGGING SEALER: "ALABASTER" 7008

ALL COLOR NAME AND NUMBER REFERENCES ARE TAKEN FROM THE SHERWIN WILLIAMS COLOR PALATE. THE CONTRACTOR MAY SUBSTITUTE SIMILAR COLORS FROM ALTERNATIVE SUPPLIER'S COLOR PALATE.

ITEM 513 - WELDED STUD SHEAR CONNECTORS

SOLDIER PILES WHICH REQUIRE HEADED STUDS ARE SHOWN IN THE TABLE ON THE TYPICAL SECTION SHEETS FOR EACH WALL. WELD HEADED STEEL STUDS TO THE FLANGES OF THE SOLDIER PILE IN ORDER TO CONNECT THE CONCRETE WALL FACING TO THE SOLDIER PILE. ATTACH HEADED STUDS ACCORDING TO C&MS 513.22 AND AS SHOWN IN THE PLANS. THE CONTRACTOR MAY ATTACH THE STUDS EITHER BEFORE PLACING THE SOLDIER PILE IN THE DRILLED HOLE OR AFTER EXCAVATING IN FRONT OF THE WALL. PROTECT THE HEADED STUDS FROM DAMAGE UNTIL THE CONCRETE WALL FACING IS POURED. REPAIR OR REPLACE DAMAGED HEADED STUDS AT NO EXPENSE TO THE DEPARTMENT.

ITEM 524 - DRILLED SHAFTS, 48" DIAMETER, ABOVE BEDROCK, AS PER PLAN

THIS WORK CONSISTS OF FURNISHING AND INSTALLING DRILLED SHAFTS FOR SOLDIER PILE WALLS. THE DRILLED SHAFTS ARE REINFORCED WITH SOLDIER PILES INSTEAD OF REINFORCING STEEL CAGES. THE SOLDIER PILES EXTEND ABOVE THE TOP OF THE DRILLED SHAFT. FURNISH AND INSTALL THE DRILLED SHAFTS ACCORDING TO C&MS 524 EXCEPT AS MODIFIED AND SUPPLEMENTED BELOW.

EXCAVATE THE HOLE FOR THE DRILLED SHAFT WITHIN 3 INCHES OF THE PLAN LOCATION. PLACE THE SOLDIER PILE WITHIN THE HOLE SO IT IS VERTICAL. PLACE THE SOLDIER PILE SO THAT THE FLANGES ARE PARALLEL TO THE CENTERLINE OF THE ROW OF DRILLED SHAFTS. DO NOT ALLOW THE ORIENTATION OF THE FLANGES TO VARY BY MORE THAN 10 DEGREES. SUPPORT THE SOLDIER PILE SO THAT IT DOES NOT MOVE DURING CONCRETE PLACEMENT.

USE CLASS QC5 CONCRETE ACCORDING TO C&MS 511. PLACE CONCRETE TO THE ELEVATION FOR THE TOP OF THE DRILLED SHAFT. THE CONTRACTOR MAY PLACE CONCRETE USING THE FREE FALL METHOD PROVIDED THE DEPTH OF WATER IS LESS THAN 6 INCHES AND THE CONCRETE FALLS WITHOUT STRIKING THE SIDES OF THE HOLE. POURING CONCRETE ALONG THE WEB OF THE SOLDIER PILE IS ACCEPTABLE.

CHECK THE POSITION, THE VERTICAL ALIGNMENT AND ORIENTATION OF THE SOLDIER PILE IMMEDIATELY AFTER CONCRETE PLACEMENT. MAKE CORRECTIONS AS NECESSARY TO MEET THE ABOVE TOLERANCES. FILL THE HOLE ABOVE THE CONCRETE TO THE EXISTING GROUND SURFACE WITH ITEM 613 LOW STRENGTH MORTAR BACKFILL (LSM).

REMOVE CONCRETE AND LSM AS NECESSARY FROM AROUND THE SOLDIER PILE IN ORDER TO PLACE THE LAGGING. PLACE LAGGING SO THAT THE SOLDIER PILE FLANGE OVERLAPS THE END OF THE LAGGING BY AT LEAST 3 INCHES AT BOTH ENDS OF THE LAGGING. WAIT AT LEAST 12 HOURS AFTER PLACING CONCRETE BEFORE PLACING LAGGING.WAIT AT LEAST 12 HOURS AFTER PLACING CONCRETE BEFORE PLACING LAGGING.

SEQUENCE OF INSTALLATION: THE INSTALLATION SEQUENCE SHALL BE SUCH THAT NO DRILLED SHAFT IS INSTALLED ADJACENT TO EITHER AN OPEN DRILLED SHAFT EXCAVATION OR A DRILLED SHAFT IN WHICH THE CONCRETE HAS LESS THAN A 48-HOUR CURE. INSTALLING THE SHAFTS IN AN ALTERNATING SEQUENCE OR ANY OTHER SEQUENCE THAT MEETS THESE CRITERIA IS PERMISSIBLE.

PROTECTION OF UNATTENDED OPEN SHAFTS: CARE SHALL BE EXERCISED AS TO COVER UNATTENDED OPEN SHAFTS. TEMPORARY COVERS SHALL BE OF ADEQUATE STRENGTH TO PREVENT A PERSON OR ANIMAL FROM FALLING IN. NO DRILLED SHAFT EXCAVATION SHALL BE LEFT UN-POURED OVERNIGHT.

THE CONTRACTOR SHALL BE RESPONSIBLE FOR THE MEANS AND METHODS USED TO CONSTRUCT THE DRILLED SHAFTS AND PLACE LAGGING. ANY TEMPORARY GRADING, EXCAVATION, EMBANKMENT, AGGREGATE, DRAINAGE, SHEETING, ETC. NEEDED TO COMPLETE THE WORK SHALL BE INCLUDED IN THE BID PRICE FOR THE DRILLED SHAFTS. THE COST OF ANY EXCAVATION AND SUBSEQUENT REPLACEMENT OF EMBANKMENT (PER ITEM 203 EMBANKMENT) SHALL BE INCLUDED IN THE VARIOUS BID ITEMS FOR THE DRILLED SHAFTS AND LAGGING, UNLESS SEPARATELY ITEMIZED. NO SEPARATE PAYMENT WILL BE MADE.

METHOD OF MEASUREMENT: THE DEPARTMENT WILL MEASURE DRILLED SHAFTS ABOVE BEDROCK, AS PER PLAN, ALONG THE AXIS OF THE DRILLED SHAFT FROM THE EXISTING GROUND SURFACE TO THE TOP OF BEDROCK, AS DETERMINED BY THE ENGINEER. THE DEPARTMENT WILL MEASURE DRILLED SHAFTS INTO BEDROCK, AS PER PLAN, ALONG THE AXIS OF THE DRILLED SHAFT FROM TOP OF BEDROCK TO THE BOTTOM OF THE DRILLED SHAFT, AS DETERMINED BY THE ENGINEER.

PAYMENT IS FULL COMPENSATION FOR CONSTRUCTING THE DRILLED SHAFTS, INCLUDING FURNISHING AND PLACING CONCRETE AND LSM, REMOVAL OF CONCRETE OR LSM FROM AROUND THE SOLDIER PILE IN ORDER TO PLACE LAGGING.

ITEM SPECIAL - RETAINING WALL, PRECAST CONCRETE LAGGING

THIS WORK CONSISTS OF FURNISHING AND PLACING PRECAST REINFORCED CONCRETE PANELS BETWEEN THE SOLDIER PILES TO FUNCTION AS LAGGING FOR THE RETAINING WALL. PROVIDE PRECAST CONCRETE LAGGING FROM A PRECAST CONCRETE MANUFACTURER CERTIFIED ACCORDING TO SUPPLEMENT 1073. PROVIDE CLASS QC1 CONCRETE ACCORDING TO C&MS 499. PROVIDE EPOXY COATED REINFORCING STEEL ACCORDING TO C&MS 709.00. IN LIEU OF EPOXY COATING, A CORROSION INHIBITING CONCRETE ADMIXTURE MAY BE USED AT THE SPECIFIED DOSAGE RATE. A QUALIFIED PRODUCT LIST OF CORROSION INHIBITING ADMIXTURES IS ON FILE AT THE LABORATORY. MANUFACTURERS SHOULD RECOGNIZE THAT THE CORROSION INHIBITOR MAY AFFECT THE STRENGTH, ENTRAINED AIR CONTENT, WORKABILITY, ETC. OF THEIR CONCRETE MIXES. THE MANUFACTURER'S CHOICE TO USE ONE OF THESE CORROSION INHIBITORS DOES NOT ALLEVIATE MEETING ALL DESIGN REQUIREMENTS. DO NOT ALLOW THE DIMENSIONS OF THE LAGGING OR LOCATION OF THE REINFORCING STEEL TO VARY BY MORE THAN ¼-INCH. CAST THREADED INSERTS INTO THE TOP OF EACH PANEL FOR LIFTING AND PLACEMENT.

FINISH THE FACES OF THE PRECAST CONCRETE LAGGING PANELS THAT WILL NOT BE EXPOSED TO A UNIFORM SURFACE, FREE OF OPEN POCKETS OF AGGREGATE. *FINISH THE EXPOSED FACE OF THE PANELS TO A SMOOTH SURFACE. SEAL THE FRONT (EXPOSED) FACE AND SIDES OF EACH CONCRETE PANEL WITH ITEM 512, SEALING OF CONCRETE SURFACES (EPOXY URETHANE). THE COLOR OF THE URETHANE SHALL BE SHERWIN WILLIAMS ALABASTER 7008 OR APPROVED EQUAL.

PERMANENTLY MARK EACH PRECAST CONCRETE LAGGING PANEL TO INDICATE WHICH FACE WILL BE PLACED AGAINST THE SOIL. PLACE THE PANEL BETWEEN THE FLANGES OF THE SOLDIER PILES AND BEARING AGAINST THE FLANGES ON THE EXPOSED SIDE OF THE WALL SO THAT THE SOLDIER PILE FLANGE OVERLAPS THE END OF THE LAGGING BY AT LEAST ONE INCH MORE THAN THE CONCRETE COVER OVER THE REINFORCING STEEL AT BOTH ENDS OF THE LAGGING.

HANDLE, STORE, AND SHIP THE PRECAST CONCRETE LAGGING PANELS TO AVOID CHIPPING, CRACKING AND FRACTURING THE PANELS. SUPPORT THE PANELS ON FIRM BLOCKING WHILE STORING AND SHIPPING. DO NOT SHIP PANELS UNTIL CONCRETE HAS ATTAINED THE REQUIRED COMPRESSIVE STRENGTH. SUBMIT SHIPMENT DOCUMENTATION TO THE ENGINEER AS THE PANELS ARE DELIVERED TO THE PROJECT, INCLUDING THE PRECASTER'S RECORD OF FINAL INSPECTION, THE MEASUREMENTS AND TOLERANCES, STRENGTH, AND DIMENSIONS OF EACH PANEL, ALONG WITH THE TE-24 SHIPPING DOCUMENT AND THE DAMAGE SURVEY REPORT FOR ALL WALL PANELS.

INSPECT ALL PRECAST CONCRETE LAGGING PANELS AND REJECT PANELS HAVING ANY OF THE FOLLOWING:
1. DEFECTS THAT INDICATE IMPERFECT MOLDING.
2. DEFECTS THAT INDICATE HONEYCOMBED OR OPEN TEXTURE CONCRETE.
3. DEFECTS IN THE PHYSICAL CHARACTERISTICS OF THE CONCRETE, OR DAMAGE TO THE AESTHETIC SURFACE TREATMENTS.
4. CONCRETE CHIPS OR SPALLS THAT ARE LARGER THAN 4 INCHES WIDE OR 2 INCHES DEEP. REPAIR ALL CHIPS AND SPALLS THAT ARE SMALLER.
5. STAINED FORM FACES, DUE TO FORM OIL, CURING OR OTHER CONTAMINANTS.
6. SIGNS OF AGGREGATE SEGREGATION.
7. CRACKS WIDER THAN 0.01 INCH OR PENETRATING MORE THAN 1 INCH OR LONGER THAN 20 PERCENT OF THE LENGTH OF THE FACE CONTAINING THE CRACK.
8. PANELS THAT DO NOT MEET THE SPECIFIED DIMENSIONAL TOLERANCES.
9. UNUSABLE LIFTING INSERTS.
10. EXPOSED REINFORCING STEEL.
11. INSUFFICIENT CONCRETE COMPRESSIVE STRENGTH.

EITHER REPLACE DAMAGED PRECAST CONCRETE LAGGING PANELS OR DOCUMENT THE DAMAGE AND PROPOSE TO THE ENGINEER A REPAIR METHOD FOR THE DAMAGED PANEL. PROVIDE ACCEPTABLE REPLACEMENT PANELS FOR ANY THAT ARE REJECTED.
WHEN INSTALLING THE PRECAST CONCRETE LAGGING PANELS, PLACE HARDWOOD WEDGES NEAR THE TOP AND BOTTOM ON EACH SIDE TO HOLD THE LAGGING PANELS AGAINST THE FRONT INSIDE FLANGE OF THE STEEL PILES.

PAYMENT FOR ALL LABOR, EQUIPMENT, AND MATERIAL REQUIRED TO FABRICATE, TRANSPORT, AND INSTALL THE PRECAST REINFORCED CONCRETE PANELS SHALL BE MADE AT THE CONTRACT UNIT PRICE PER SQUARE FOOT FOR ITEM SPECIAL - RETAINING WALL, PRECAST CONCRETE LAGGING.

Preliminary Plans - Not For Reference Only

WALL GENERAL NOTES (1 OF 2)
WALL S
ALONG SOUTH SIDE OF I.R. 77

SFN N/A
DESIGN AGENCY
Michael Baker INTERNATIONAL
DESIGNER SSW | CHECKER YC
REVIEWER LPC 05-09-24
PROJECT ID 82382
SUBSET 2 | TOTAL 13
SHEET 1284 | TOTAL 2696

CUY-90-16.28 (CCG3A)

MODEL: Sheet (1 of 2) PAPERSIZE: 34x22 (in.) DATE: 6/9/2025 TIME: 11:46:43 AM USER: Tolga.Feran
pw:\\mb-us-pw.bentley.com:mb-us-pw-03\Documents\Cleveland_OH\01_Projects\ODOT\District12\82382\400-Engineering\StructuresWALL_S\Sheets\82382_S_WN001.dgn

ITEM 512 - SEALING OF CONCRETE SURFACES, AS PER PLAN (PERMANENT GRAFFITI PROTECTION)

APPLY A PERMANENT GRAFFITI COATING QUALIFIED ACCORDING TO SUPPLEMENT 1083 THAT IS COMPATIBLE WITH THE CONCRETE SEALER OVER WHICH IT IS APPLIED. PROVIDE A COATING THAT MEETS THE REQUIREMENTS LISTED BELOW. APPLY THE GRAFFITI COATING IN ACCORDANCE WITH THE MANUFACTURER'S PRINTED INSTRUCTIONS.

A. THE MATERIAL SHALL BE A SINGLE COMPONENT, RTV (ROOM TEMPERATURE VULCANIZED), NEUTRAL MOISTURE CURE, PERMANENT (NON-SACRIFICIAL), TYPE III (WATER CLEANABLE) POLYSILOXANE (SILICONE) ANTI-GRAFFITI COATING, FREE OF ANY WAXES, EPOXIES, OR POLYURETHANE COMPONENTS.

B. THE COATING SHALL BE A ONE COAT SYSTEM (NO PRIMER) CAPABLE OF BEING SPRAY APPLIED TO A DRY FILM THICKNESS OF 15 MILS (375 MICRONS) WITHOUT RUNS OR SAGS (MULTIPLE COAT APPLICATION ACCEPTABLE FOR BRUSH/ROLLER USAGE AND PRIMER USAGE ACCEPTABLE FOR SPECIALTY SUBSTRATES SUCH AS GALVANIZED METAL).

C. THE COATING SHALL EMIT LESS THAN 300 G/L (2.5 POUNDS PER GALLON) OF VOLATILE ORGANIZE COMPOUNDS (EPA METHOD 24).

D. THE COATING SHALL MEET THE FOLLOWING PERFORMANCE REQUIREMENTS:
   1. CLEANABILITY LEVEL 1 (GRAFFITI COMPLETELY REMOVED WITH COLD WATER POWER WASH) AS PER ASTM D7089 WITH LOW PRESSURE (1200 PSI) COLD WATER WASH AFTER 2000 HOURS ACCELERATED UV-CONDENSATION EXPOSURE IN ACCORDANCE WITH ASTM D4587.
   2. GRAFFITI RESISTANCE LESS THAN 7.5 AS PER ASTM D6578 AFTER 2000 HOURS ACCELERATED UV-CONDENSATION EXPOSURE IN ACCORDANCE WITH ASTM 4578.
   3. NO SIGNS OF GRAFFITI OR GRAFFITI STAINING AND MUST BE INTACT AND EXHIBIT NO SIGNS OF STREAKING, CRACKING, PINHOLING, DISCOLORING, OR OTHER VISIBLE COATING DEGRADATION UPON CASUAL OBSERVATION WHEN TESTED IN ACCORDANCE WITH TXDOT TEX 890-B, TYPE III METHOD.
   4. BREATHABILITY OF 10 PERMS (+/- 3) PER ASTM D1653 USING "WET CUP METHOD".
   5. ELONGATION AT BREAK GREATER THAN 100% AS PER ASTM D412 (USING DIE "D").
   6. ADHESION RATING OF "8 - DIFFICULT TO REMOVE" AS PER ASTM D6677 (ADHESION BY KNIFE).

ITEM 518 - STRUCTURE DRAINAGE, MISC.: PREFABRICATED GEOCOMPOSITE DRAIN

THIS WORK CONSISTS OF FURNISHING AND PLACING PREFABRICATED GEOCOMPOSITE DRAIN (PGD) AGAINST THE TIMBER LAGGING OR AGAINST THE CONCRETE WALL FACING WHERE THE TIMBER LAGGING IS NOT REQUIRED.

FURNISH PGD CONSISTING OF A DRAINAGE CORE WITH A GEOTEXTILE FABRIC BONDED TO AT LEAST ONE SIDE. USE CORE MATERIAL THAT CONSISTS OF A STABLE, POLYMER PLASTIC MATERIAL WITH A CUSPATED OR GEONET STRUCTURE. THE CORE MATERIAL SHALL HAVE SUFFICIENT FLEXIBILITY TO WITHSTAND BENDING AND HANDLING DURING INSTALLATION WITHOUT DAMAGE. FURNISH GEOTEXTILE COMPOSED OF STRONG ROT-PROOF POLYMERIC FIBERS FORMED INTO A WOVEN OR NON-WOVEN FABRIC. FURNISH PGD CONFORMING TO THE FOLLOWING REQUIREMENTS. FURNISH MANUFACTURER'S CERTIFIED TEST DATA.

	PROPERTY	TEST METHOD	VALUE
CORE	THICKNESS	ASTM D 5199	0.4 INCH
	COMPRESSIVE STRENGTH	ASTM D 1621	13,650 PSF MIN.
	FLOW RATE	ASTM D 4716	9 TO 25 GPM/FT
FABRIC	APPARENT OPENING SIZE	ASTM D 4751	0.3 MM MAX.
	FLOW RATE	ASTM D 4491	40 GPM/SQ.FT. MIN.
	GRAB TENSILE STRENGTH	ASTM D 4632	90 LBS MIN.
	CBR PUNCTURE	ASTM D 6241	65 LBS MIN.

PLACE PGD BETWEEN THE SOLDIER PILES, INCLUDING THE CANTILEVER PORTION AT THE END OF THE WALL. PLACE THE SIDE FACED WITH GEOTEXTILE AGAINST THE TIMBER LAGGING, FACING TOWARDS THE RETAINED GROUND, AND SECURE THE PGD TO THE LAGGING. USE NAILS AND WASHERS AT LEAST 1-INCH DIAMETER IN SIZE TO SECURE THE PGD ALONG THE EDGES OF THE PGD AND AT A MAXIMUM SPACING OF 4 FEET.

SPLICE ABUTTING SECTIONS TOGETHER BY OVERLAPPING THE GEOTEXTILE FLAP (IF PROVIDED) ON ONE SECTION WITH THE ADJACENT SECTION OF PGD. OVERLAP THE GEOTEXTILE IN A SHINGLED OVERLAP SO THAT THE UPPER GEOTEXTILE IS ON TOP OF THE LOWER GEOTEXTILE. IF A GEOTEXTILE FLAP IS NOT PROVIDED, COVER THE SEAM WITH A 12-INCH WIDE STRIP OF GEOTEXTILE FABRIC CENTERED OVER THE SEAM AND SECURED IN PLACE USING 3-INCH WIDE WATERPROOF PLASTIC TAPE.

SEAL ALL EXPOSED EDGES OF THE CORE MATERIAL TO PREVENT SOIL INSTRUSION. SEAL EXPOSED EDGES BY FOLDING THE GEOTEXTILE FLAPS OVER AND AROUND THE PGD OR, IF A FLAP IS NOT PROVIDED, COVERING THE EXPOSED EDGE WITH A 12-INCH WIDE STRIP OF GEOTEXTILE FABRIC, TAPING THE STRIP TO THE PGD GEOTEXTILE 8 INCHES FROM THE EXPOSED EDGE, AND FOLDING THE REMAINING 4 INCHES OVER AND AROUND THE PGD. SECURE LOOSE EDGES OF THE GEOTEXTILE FABRIC WITH 3-INCH WIDE WATERPROOF PLASTIC TAPE.

REPAIR ANY DAMAGE TO THE GEOTEXTILE FABRIC BY COVERING WITH A PATCH WHICH OVERLAPS THE DAMAGED AREA AND EXTENDS AT LEAST 6 INCHES BEYOND THE EDGE OF THE DAMAGED AREA. TAPE THE EDGES OF THE PATCH IN PLACE USING 3-INCH WIDE WATERPROOF PLASTIC TAPE. IF THE CORE OF THE PGD IS DAMAGED, REPLACE IT WITH A NEW SECTION OF PGD AND SPLICE IT AS DESCRIBED ABOVE.

WHERE SHOWN ON THE PLANS, PLACE THE BOTTOM OF THE PGD ADJACENT TO A PERFORATED DRAINAGE COLLECTION PIPE AND POROUS BACKFILL AND COVER WITH GEOTEXTILE FABRIC. ENSURE A CONTINUOUS DRAINAGE PATH FROM THE PGD CORE TO THE PIPE. WHERE A WALL HAS WEEPHOLES FOR DRAINAGE, ENSURE WATER CAN DRAIN FROM THE PGD TO THE WEEPHOLE. IF NECESSARY, CUT A HOLE IN THE CORE TO ALLOW DRAINAGE OR USE A WEEPHOLE FITTING FROM THE PGD MANUFACTURER. DO NOT CUT GEOTEXTILE.

IF TIMBER LAGGING IS NOT REQUIRED BECAUSE THE PORTION OF THE WALL IS ABOVE THE EXISTING GROUND, ATTACH PGD TO THE BACK FACE OF CONCRETE WALL FACING UNTIL BACKFILL IS PLACED.

ITEM SPECIAL - RETAINING WALL, TIMBER LAGGING

THIS WORK CONSISTS OF FURNISHING AND PLACING TIMBER LAGGING BETWEEN THE SOLDIER PILES WHERE REQUIRED BELOW THE EXISTING GROUND SURFACE. FURNISH TIMBER LAGGING CONSISTING OF CONSTRUCTION GRADE, UNTREATED HARDWOOD WITH A MINIMUM THICKNESS OF 4 INCHES. TO PERMIT DRAINAGE, PROVIDE 1/4 TO 1/2-INCH SPACES BETWEEN LAGGING BOARDS USING 3/8-INCH THICK SPACER BLOCKS OR OTHER MEANS ACCEPTABLE TO THE ENGINEER.

ITEM 511 - CLASS QC2 CONCRETE MISC.: MOMENT SLAB AND BARRIER WITH QC/QA

ALL PORTIONS OF THE BARRIER MOMENT SLAB SHALL BE PAID FOR UNDER THIS ITEM, UNLESS NOTED OTHERWISE. THIS INCLUDES, BUT IS NOT LIMITED TO MOMENT SLAB CONCRETE, BARRIER CONCRETE, PEJF, SAWCUTTING, JOINT SEALER, SLEEVED DOWELS, TRANSVERSE AND LONGITUDINAL JOINT TREATMENT ADJACENT TO ROADWAY PAVEMENT AND SHOULDERS, COMPACTION AND PREPARATION OF SOIL UNDERNEATH THE SLABS, AND ANY OTHER INCIDENTALS REQUIRED TO COMPLETE THE BARRIER MOMENT SLABS.

PAYMENT FOR THE ABOVE COMPLETED AND ACCEPTED QUANTITIES WILL BE MADE AT THE CONTRACT BID PRICE PER CUBIC YARD FOR ITEM 511 - CLASS QC2 CONCRETE, MISC.: MOMENT SLAB AND BARRIER WITH QC/QA.

ITEM 511 - CONCRETE, MISC.: ARCHITECTURAL TREATMENT

THIS WORK CONSISTS OF ALL LABOR, MATERIALS, EQUIPMENT, AND INCIDENTALS TO CONSTRUCT THE ARCHITECTURAL TREATMENTS IN THE CONCRETE SURFACE OF THE RETAINING WALL.

THE DEPARTMENT WILL PAY FOR ACCEPTED QUANTITIES AT THE CONTRACT PRICE AS FOLLOWS: ITEM 511 CONCRETE, MISC.: ARCHITECTURAL TREATMENT.

SECTION/DETAIL/VIEW CALLOUTS

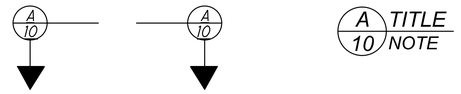

(SEE SECTION A ON SHEET 10) (SECTION A CUT FROM SHEET 10)

PLAN ABBREVIATIONS:

ABUT. = ABUTMENT
APPR. = APPROACH
B = BOTTOM
℄ = BASELINE
BM = BENCHMARK
BOT. OR BTM. = BOTTOM
℄ = CENTERLINE
C/C = CENTER TO CENTER
C.I.P. = CAST-IN-PLACE
C.J. = CONSTRUCTION JOINT
CLR. = CLEAR
CMS = CONSTRUCTION AND MATERIAL SPECIFICATIONS
CONC. = CONCRETE
CONST. = CONSTRUCTION
DIA. = DIAMETER
DIM. = DIMENSION
DTBD = DISPOSITION TO BE DETERMINED
DWG. = DRAWING
EB = EASTBOUND
E.F. = EACH FACE
EL. OR ELEV. = ELEVATION
EQ. = EQUAL
EST. = ESTIMATED
EX. = EXISTING
F.A. = FORWARD ABUTMENT
F/F = FACE TO FACE
F.F. = FAR FACE
FT. = FOOT OR FEET
FTG. = FOOTING
FWD. = FORWARD
IN. = INCH
JT. = JOINT
LT. = LEFT
MAX. = MAXIMUM
MIN. = MINIMUM
MISC. = MISCELLANEOUS
N = NORTH
NB = NORTHBOUND
N.F. = NEAR FACE
NO. = NUMBER
N.P.C.P.P. = NON-PERFORATED CORRUGATED PLASTIC PIPE
OHWM = ORDINARY HIGH WATER MARK
O/O = OUT TO OUT
P.C.P.P. = PERFORATED CORRUGATED PLASTIC PIPE
P.E.J.F. = PREFORMED EXPANSION JOINT FILLER
PROP. = PROPOSED
PSF = POUNDS PER SQUARE FOOT
R.A. = REAR ABUTMENT
S = SOUTH
SB = SOUTHBOUND
SER. = SERIES
SHLDR = SHOULDER
SPA. = SPACE OR SPACES
STA. = STATION
STD. = STANDARD
STR = STRAIGHT
T = TOP
T&B = TOP & BOTTOM
TBR = TO BE REMOVED
TBRBO = TO BE RELOCATED BY OTHERS
TEMP. = TEMPORARY
TYP. = TYPICAL
U.N.O. = UNLESS NOTED OTHERWISE
VAR. = VARIES
WB = WESTBOUND
WWR = WELDED WIRE REINFORCEMENT

Preliminary Plans - Not For Reference Only

WALL GENERAL NOTES (2 OF 2)
WALL S
ALONG SOUTH SIDE OF I.R. 77

SFN N/A

DESIGN AGENCY
Michael Baker INTERNATIONAL

DESIGNER	CHECKER
SSW	YC

REVIEWER LPC 05-09-24

PROJECT ID 82382

SUBSET	TOTAL
3	13

SHEET	TOTAL
1285	2696

CUY-90-16.28 (CCG3A)
MODEL: Sheet (2 of 2) PAPERSIZE: 34x22 (in.) DATE: 3/27/2025 TIME: 11:13:40 PM USER: Julie.Ross
pw:\\mb-us-pw.bentley.com:mb-us-pw-03\Documents\Cleveland_OH\01_Projects\ODOT\District12\82382\400-Engineering\Structures\WALL_S\Sheets\82382_S_WN002.dgn

ESTIMATED QUANTITIES

CALCULATED BY: ZES DATE: 04/24/24
CHECKED BY: SSW DATE: 05/14/24

PARTICIPATION	ITEM	ITEM EXT.	TOTAL	UNIT	DESCRIPTION	SHEET REF.
01/IMS/04	507	00400	2,290	FT	STEEL PILES, MISC.: W36x262, FURNISHED	2
01/IMS/04	509	10000	48,626	LB	EPOXY COATED STEEL REINFORCEMENT	
01/IMS/04	509	30020	3,660	FT	NO. 4 DEFORMED GFRP REINFORCEMENT	
01/IMS/04	511	46012	152	CY	CLASS QC1 CONCRETE WITH QC/QA, RETAINING/WINGWALL NOT INCLUDING FOOTING	
01/IMS/04	511	53012	138	CY	CLASS QC2 CONCRETE, MISC.: MOMENT SLAB AND BARRIER WITH QC/QA	3
01/IMS/04	511	71200	3,769	SF	CONCRETE, MISC.: ARCHITECTURAL TREATMENT	3
01/IMS/04	512	10001	275	SY	SEALING OF CONCRETE SURFACES, AS PER PLAN (PERMANENT GRAFFITI PROTECTION)	3
01/IMS/04	512	10101	496	SY	SEALING OF CONCRETE SURFACES (EPOXY-URETHANE), AS PER PLAN	2
01/IMS/04	512	33001	41	SY	TYPE 2 WATERPROOFING, AS PER PLAN	2
01/IMS/04	513	20000	1,116	EACH	WELDED STUD SHEAR CONNECTORS	
01/IMS/04	516	13600	231	SF	1" PREFORMED EXPANSION JOINT FILLER	
01/IMS/04	516	42000	120	EACH	ELASTOMERIC BEARING PAD, MISC.: 6" x 9" x $\frac{3}{8}$" THICK	8
01/IMS/04	518	20000	364	SY	PREFABRICATED GEOCOMPOSITE DRAIN	3
01/IMS/04	518	21200	168	CY	POROUS BACKFILL WITH GEOTEXTILE FABRIC	
01/IMS/04	518	40000	273	FT	6" PERFORATED CORRUGATED PLASTIC PIPE	
01/IMS/04	518	40010	62	FT	6" NON-PERFORATED CORRUGATED PLASTIC PIPE, INCLUDING SPECIALS	
01/IMS/04	524	94803	1,512	FT	DRILLED SHAFTS, 42" DIAMETER, ABOVE BEDROCK, AS PER PLAN	2
01/IMS/04	SPECIAL	530E51010	743	SF	RETAINING WALL, PRECAST CONCRETE LAGGING	2
01/IMS/04	SPECIAL	530E51020	3,273	SF	RETAINING WALL, TIMBER LAGGING	3
01/IMS/04	613	41200	363	CY	LOW STRENGTH MORTAR BACKFILL	

Preliminary Plans - For Reference Only

ESTIMATED QUANTITIES
WALL S
ALONG SOUTH SIDE OF I.R. 77

SFN
N/A

DESIGN AGENCY
Michael Baker INTERNATIONAL

DESIGNER	CHECKER
SSW	YC

REVIEWER
LPC 05-09-24

PROJECT ID
82382

SUBSET	TOTAL
4	13

SHEET	TOTAL
1286	2696

CUY-90-16.28 (CCG3A)

MODEL: Untitled Sheet PAPERSIZE: 34x22 (in.) DATE: 3/27/2025 TIME: 11:13:54 PM USER: Julie.Ross
pw:\\mb-us-pw.bentley.com:mb-us-pw-03\Documents\Cleveland_OH\01_Projects\ODOT\District12\82382\400-Engineering\Structures\WALL_S\Sheets\82382_S_WQ001.dgn

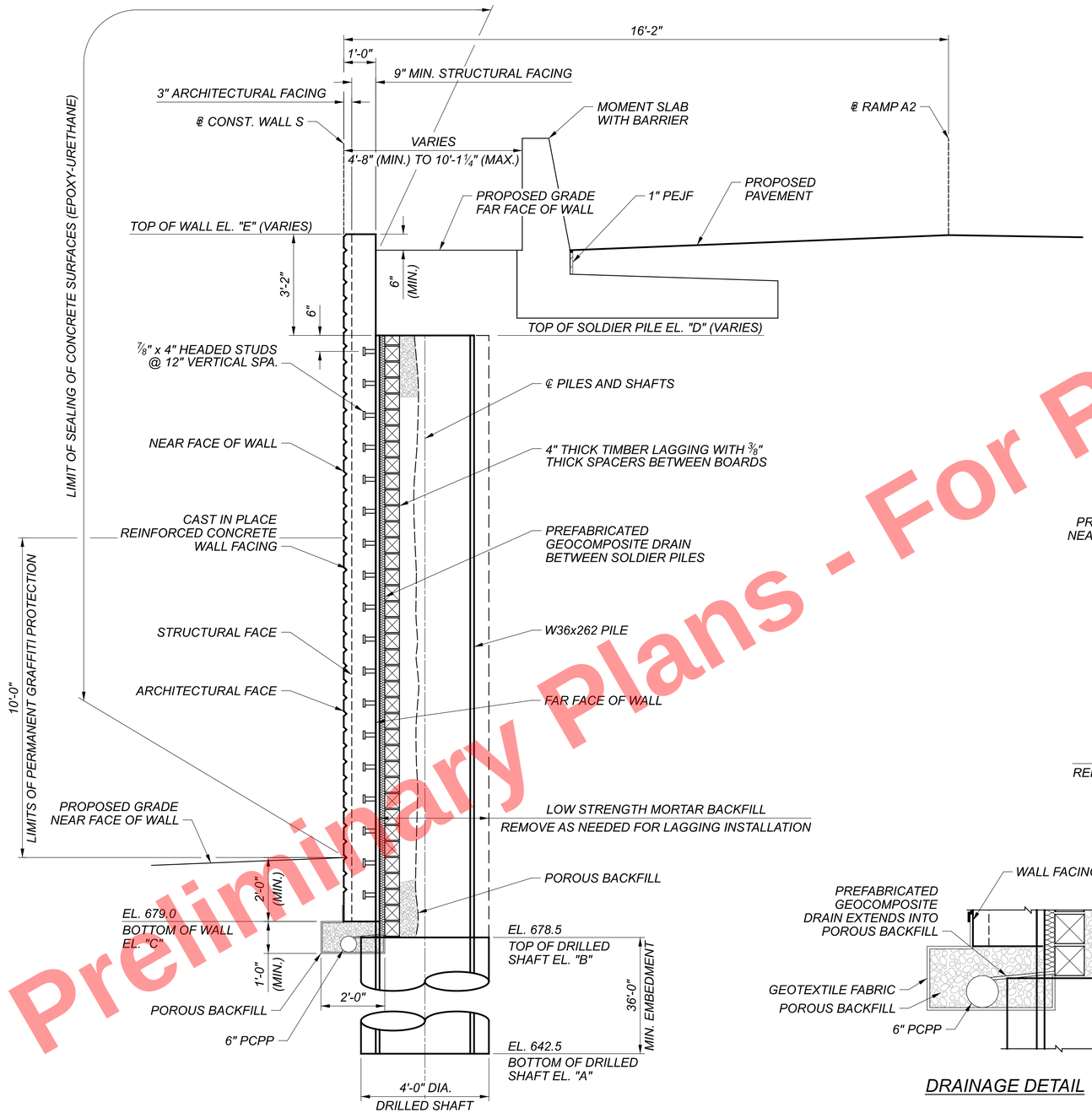

SOLDIER PILE AND LAGGING WALL TYP. SECTION 1

(CAST IN PLACE REINFORCED CONCRETE FACING)
(REINFORCING STEEL NOT SHOWN FOR CLARITY)

DRAINAGE DETAIL

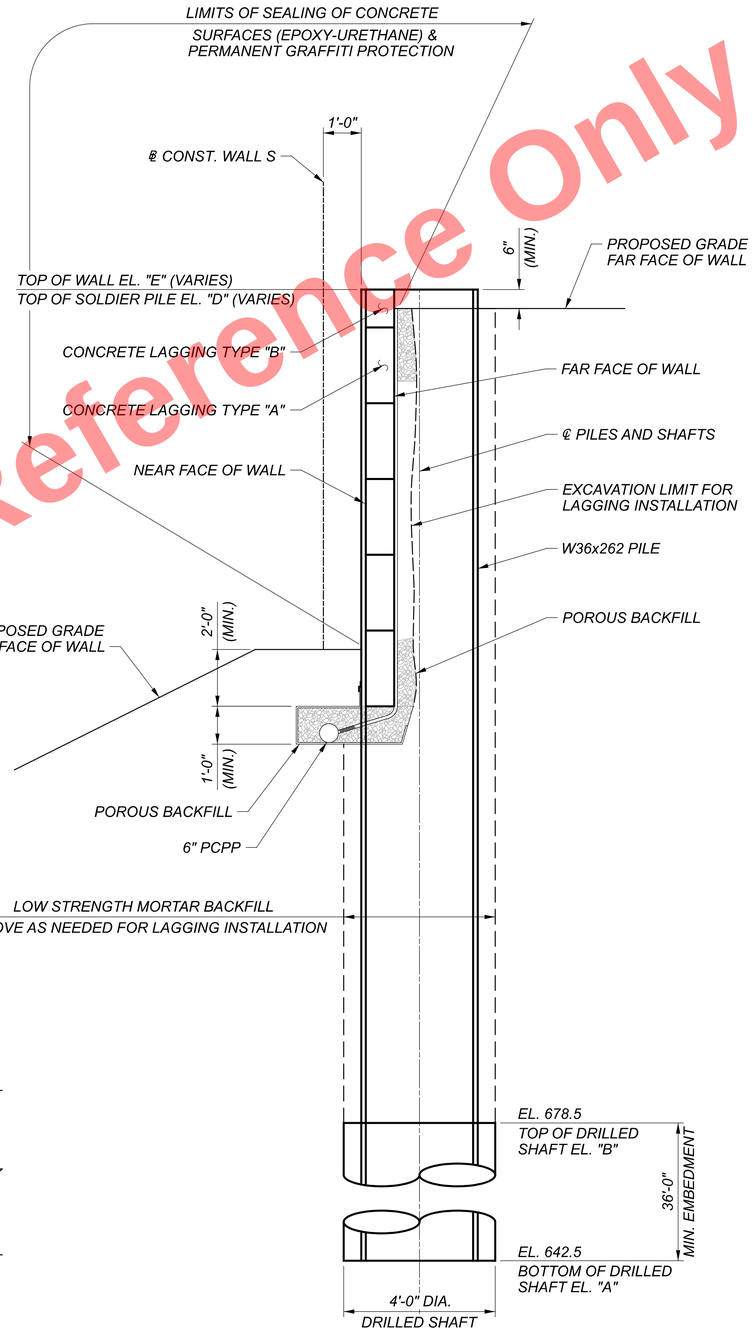

SOLDIER PILE AND LAGGING WALL TYP. SECTION 2

(PRECAST CONCRETE LAGGING PANELS)

Preliminary Plans - For Reference Only

WALL TYPICAL SECTION
WALL S
ALONG SOUTH SIDE OF I.R. 77

SFN	N/A
DESIGN AGENCY	Michael Baker INTERNATIONAL
DESIGNER	SSW
CHECKER	YC
REVIEWER	LPC 05-09-24
PROJECT ID	82382
SUBSET	5
TOTAL	13
SHEET	1287
TOTAL	2696

CUY-90-16.28 (CCG3A)

MODEL: Sheet PAPERSIZE: 34x22 (in.) DATE: 3/27/2025 TIME: 11:14:01 PM USER: Julie.Ross
pw:\\mb-us-pw.bentley.com:mb-us-pw-03\Documents\Cleveland_OH101_Projects\ODOT\District12\82382\400-Engineering\Structures\WALL_S\Sheets\82382_S_WY001.dgn

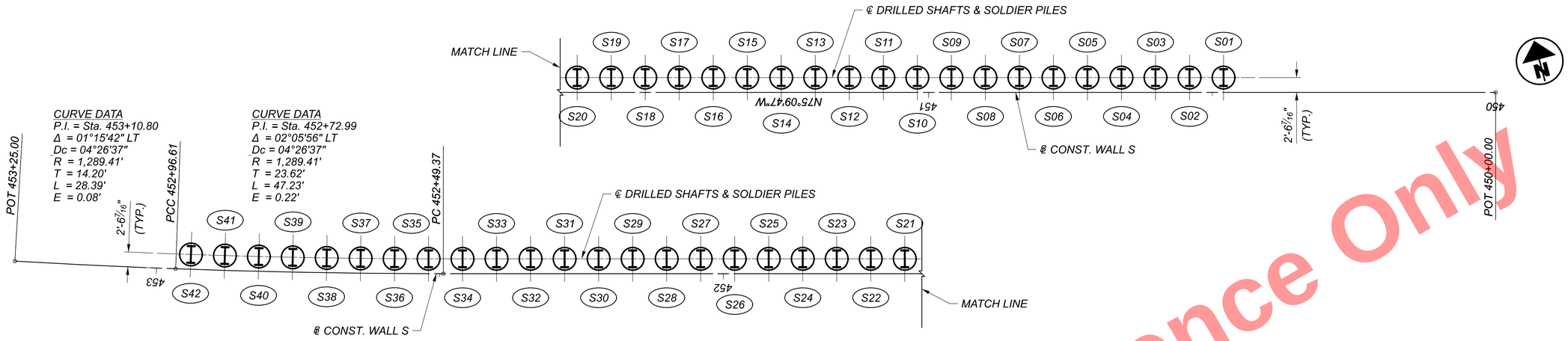

FOUNDATION PLAN

WALL S DRILLED SHAFT & SOLDIER PILE SCHEDULE

DESIGNATION	STATION BASELINE WALL S	CENTERLINE OFFSET FROM BASELINE WALL S (FT.)	DIAMETER (IN.)	SHEAR STUDS (YES/NO)	BOTTOM OF DRILLED SHAFT EL. "A"	TOP OF SHAFT CONCRETE EL. "B"	CONCRETE SHAFT LENGTH (FT.)	BOTTOM OF WALL EL. "C"	TOP OF SOLDIER PILE E. "D"	TOP OF WALL EL. "E"	ESTIMATED LENGTH OF SOLDIER PILE (FT.)	HEIGHT OF LAGGING / FACING (FT.)	SOLDIER PILE SIZE
S01	450+48.00	2.54 RT	48	NO	642.5	678.5	36.0	691.9	698.9	698.9	56.4	7.0	W36x262
S02	450+54.00	2.54 RT	48	NO	642.5	678.5	36.0	688.9	698.9	698.9	56.4	10.0	W36x262
S03	450+60.00	2.54 RT	48	NO	642.5	678.5	36.0	685.9	698.9	698.9	56.4	13.0	W36x262
S04	450+66.00	2.54 RT	48	NO	642.5	678.5	36.0	682.9	698.9	698.9	56.4	16.0	W36x262
S05	450+72.00	2.54 RT	48	NO	642.5	678.5	36.0	679.9	698.9	698.9	56.4	19.0	W36x262
S06	450+78.00	2.54 RT	48	YES	642.5	678.5	36.0	679.0	698.9	698.9	56.4	19.9	W36x262
S07	450+84.00	2.54 RT	48	YES	642.5	678.5	36.0	679.0	695.8	698.9	53.3	19.9	W36x262
S08	450+90.00	2.54 RT	48	YES	642.5	678.5	36.0	679.0	695.8	698.9	53.3	19.9	W36x262
S09	450+96.00	2.54 RT	48	YES	642.5	678.5	36.0	679.0	695.8	699.0	53.3	20.0	W36x262
S10	451+02.00	2.54 RT	48	YES	642.5	678.5	36.0	679.0	695.8	699.0	53.3	20.0	W36x262
S11	451+08.00	2.54 RT	48	YES	642.5	678.5	36.0	679.0	695.9	699.0	53.4	20.0	W36x262
S12	451+14.00	2.54 RT	48	YES	642.5	678.5	36.0	679.0	695.9	699.0	53.4	20.0	W36x262
S13	451+20.00	2.54 RT	48	YES	642.5	678.5	36.0	679.0	695.9	699.1	53.4	20.1	W36x262
S14	451+26.00	2.54 RT	48	YES	642.5	678.5	36.0	679.0	695.9	699.1	53.4	20.1	W36x262
S15	451+32.00	2.54 RT	48	YES	642.5	678.5	36.0	679.0	695.9	699.1	53.4	20.1	W36x262
S16	451+38.00	2.54 RT	48	YES	642.5	678.5	36.0	679.0	696.0	699.1	53.5	20.1	W36x262
S17	451+44.00	2.54 RT	48	YES	642.5	678.5	36.0	679.0	696.0	699.2	53.5	20.2	W36x262
S18	451+50.00	2.54 RT	48	YES	642.5	678.5	36.0	679.0	696.0	699.2	53.5	20.2	W36x262
S19	451+56.00	2.54 RT	48	YES	642.5	678.5	36.0	679.0	696.0	699.2	53.5	20.2	W36x262
S20	451+62.00	2.54 RT	48	YES	642.5	678.5	36.0	679.0	696.1	699.2	53.6	20.2	W36x262
S21	451+68.00	2.54 RT	48	YES	642.5	678.5	36.0	679.0	696.1	699.3	53.6	20.3	W36x262
S22	451+74.00	2.54 RT	48	YES	642.5	678.5	36.0	679.0	696.1	699.3	53.6	20.3	W36x262
S23	451+80.00	2.54 RT	48	YES	642.5	678.5	36.0	679.0	696.1	699.3	53.6	20.3	W36x262
S24	451+86.00	2.54 RT	48	YES	642.5	678.5	36.0	679.0	696.2	699.3	53.7	20.3	W36x262
S25	451+92.00	2.54 RT	48	YES	642.5	678.5	36.0	679.0	696.2	699.4	53.7	20.4	W36x262
S26	451+98.00	2.54 RT	48	YES	642.5	678.5	36.0	679.0	696.2	699.4	53.7	20.4	W36x262
S27	452+04.00	2.54 RT	48	YES	642.5	678.5	36.0	679.0	696.2	699.4	53.7	20.4	W36x262
S28	452+10.00	2.54 RT	48	YES	642.5	678.5	36.0	679.0	696.3	699.4	53.8	20.4	W36x262
S29	452+16.00	2.54 RT	48	YES	642.5	678.5	36.0	679.0	696.3	699.4	53.8	20.4	W36x262
S30	452+22.00	2.54 RT	48	YES	642.5	678.5	36.0	679.0	696.3	699.5	53.8	20.5	W36x262
S31	452+28.00	2.54 RT	48	YES	642.5	678.5	36.0	679.0	696.3	699.5	53.8	20.5	W36x262
S32	452+34.00	2.54 RT	48	YES	642.5	678.5	36.0	679.0	696.3	699.5	53.8	20.5	W36x262
S33	452+40.00	2.54 RT	48	YES	642.5	678.5	36.0	679.0	696.4	699.5	53.9	20.5	W36x262
S34	452+46.00	2.54 RT	48	YES	642.5	678.5	36.0	679.0	696.4	699.6	53.9	20.6	W36x262
S35	452+52.00	2.54 RT	48	YES	642.5	678.5	36.0	679.0	696.4	699.6	53.9	20.6	W36x262
S36	452+58.00	2.54 RT	48	YES	642.5	678.5	36.0	679.0	696.4	699.6	53.9	20.6	W36x262
S37	452+64.00	2.54 RT	48	YES	642.5	678.5	36.0	679.0	699.6	699.6	57.1	20.6	W36x262
S38	452+70.00	2.54 RT	48	NO	642.5	678.5	36.0	679.6	699.7	699.7	57.2	20.1	W36x262
S39	452+76.00	2.54 RT	48	NO	642.5	678.5	36.0	682.7	699.7	699.7	57.2	17.1	W36x262
S40	452+82.00	2.54 RT	48	NO	642.5	678.5	36.0	685.7	699.8	699.8	57.3	14.1	W36x262
S41	452+88.00	2.54 RT	48	NO	642.5	678.5	36.0	688.8	699.8	699.8	57.3	11.0	W36x262
S42	452+94.00	2.54 RT	48	NO	642.5	678.5	36.0	691.8	699.8	699.8	57.3	8.0	W36x262

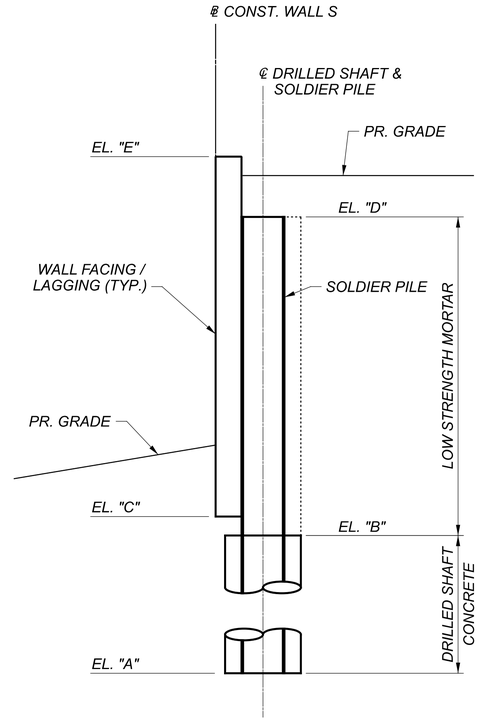

DRILLED SHAFT & SOLDIER PILE SCHEMATIC

LEGEND:

(#) - DENOTES SOLDIER PILE NUMBER

Preliminary Plans - For Reference Only

FOUNDATION PLAN
WALL S
ALONG SOUTH SIDE OF I.R. 77

SFN N/A

DESIGN AGENCY
Michael Baker INTERNATIONAL

DESIGNER	CHECKER
SSW	YC

REVIEWER LPC 05-09-24

PROJECT ID 82382

SUBSET	TOTAL
6	13

SHEET	TOTAL
1288	2696

CUY-90-16.28 (CCG3A)
MODEL: Untitled Sheet PAPERSIZE: 34x22 (in.) DATE: 3/27/2025 TIME: 11:14:08 PM USER: Julie.Ross
pw:\\mb-us-pw.bentley.com:mb-us-pw-03\Documents\Cleveland_OH\01_Projects\ODOT\District12\82382\400-Engineering\Structures\WALL_S\Sheets\82382_S_WT001.dgn

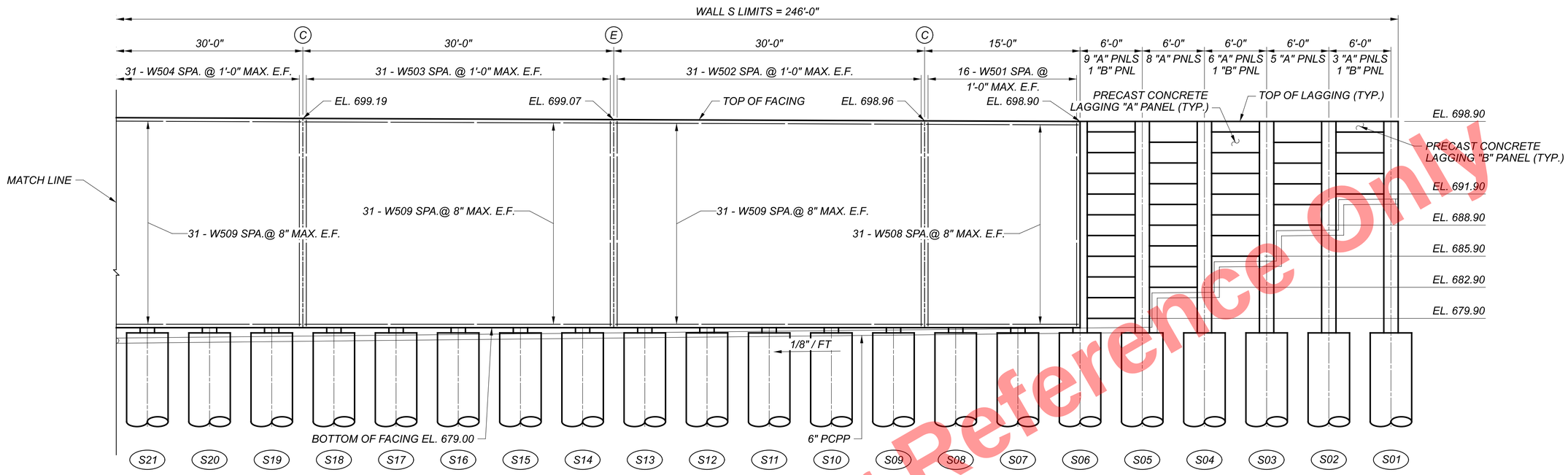

ELEVATION

(DIMENSIONS GIVEN ALONG ℄ CONST. WALL S)

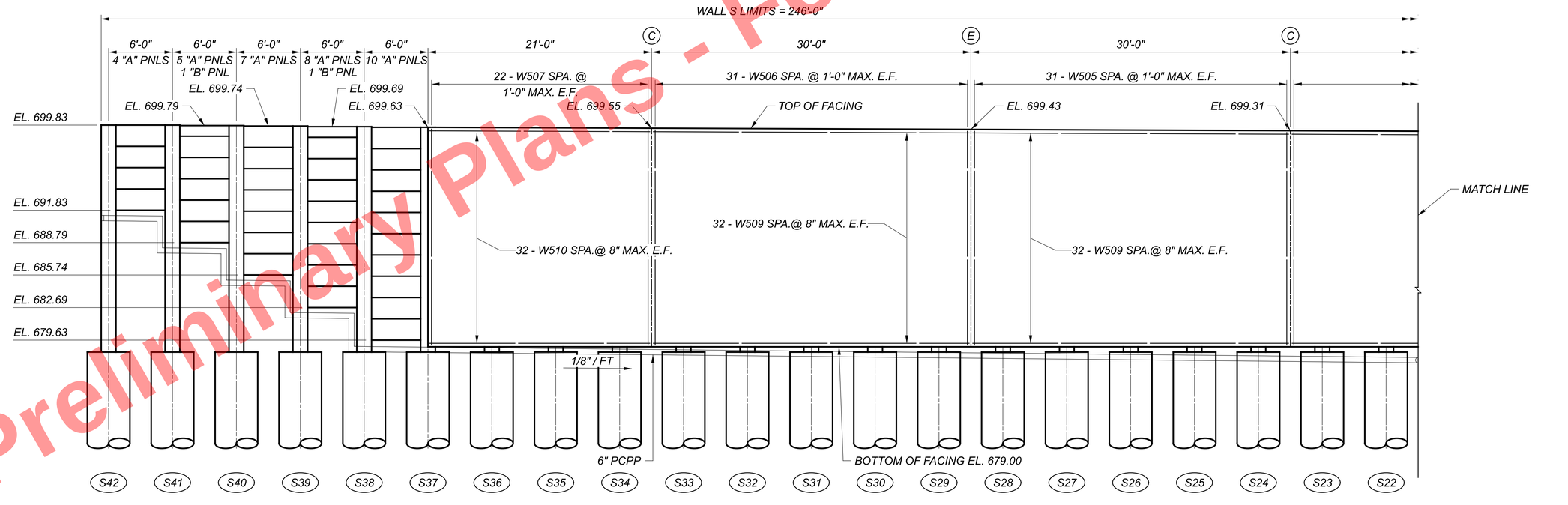

ELEVATION

(DIMENSIONS GIVEN ALONG ℄ CONST. WALL S)

LEGEND:

(#) - DENOTES SOLDIER PILE NUMBER

Preliminary Plans - Not For Reference Only

WALL ELEVATION
WALL S
ALONG SOUTH SIDE OF I.R. 77

SFN	N/A
DESIGN AGENCY	Michael Baker INTERNATIONAL
DESIGNER	SSW
CHECKER	YC
REVIEWER	LPC 05-09-24
PROJECT ID	82382
SUBSET	7
TOTAL	13
SHEET	1289
TOTAL	2696

CUY-90-16.28 (CCG3A)

MODEL: Untitled Sheet PAPERSIZE: 34x22 (in.) DATE: 3/27/2025 TIME: 11:14:20 PM USER: Julie.Ross
pw:\\mb-us-pw.bentley.com:mb-us-pw-03\Documents\Cleveland_OH01_Projects\ODOT\District12\82382\400-Engineering\Structures\WALL_S\Sheets\82382_S_WE001.dgn

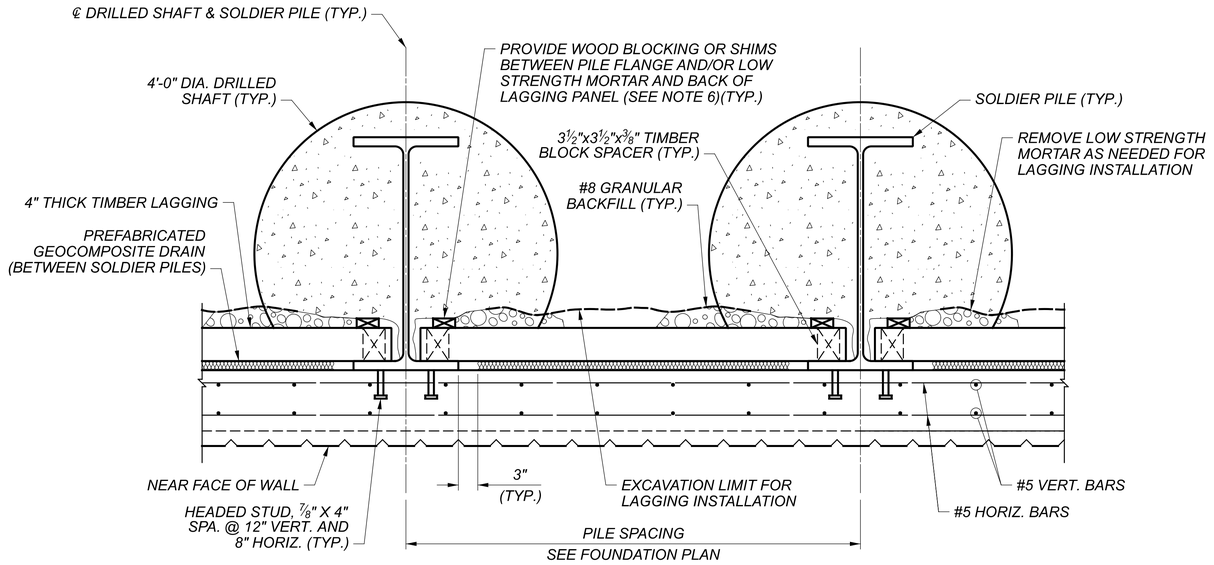

TYPICAL PLAN

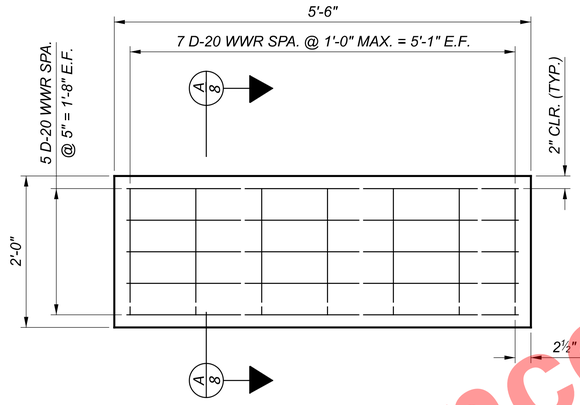

TYPE "A" PRECAST LAGGING ELEVATION

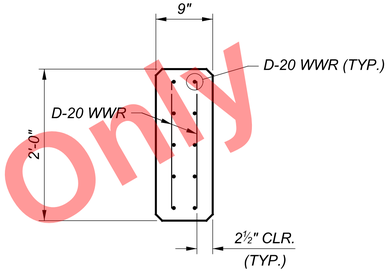

A 8 SECTION

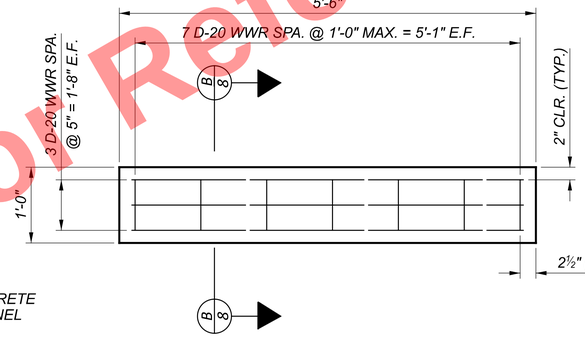

TYPE "B" PRECAST LAGGING ELEVATION

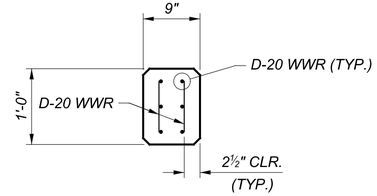

B 8 SECTION

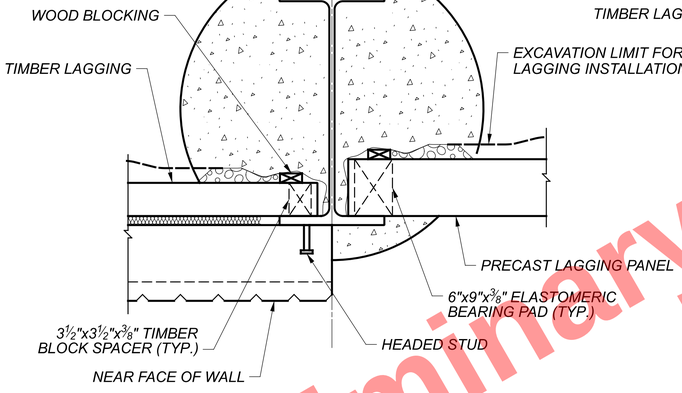

WALL TRANSITION PLAN DETAIL

(CAST-IN-PLACE CONCRETE FACING TO PRECAST CONCRETE LAGGING PANELS)

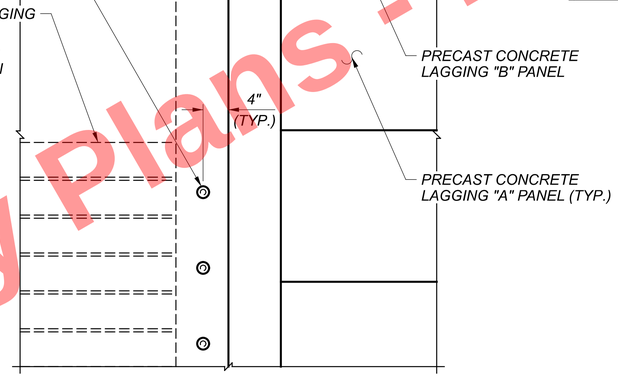

WALL TRANSITION ELEVATION DETAIL

(CAST-IN-PLACE CONCRETE FACING TO PRECAST CONCRETE LAGGING PANELS)

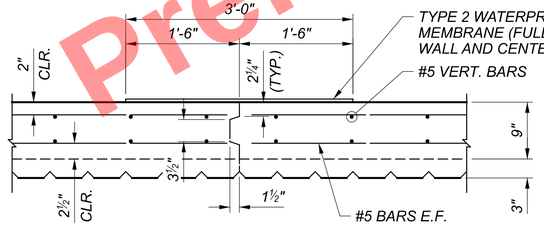

TYPICAL CONTRACTION JOINT DETAIL

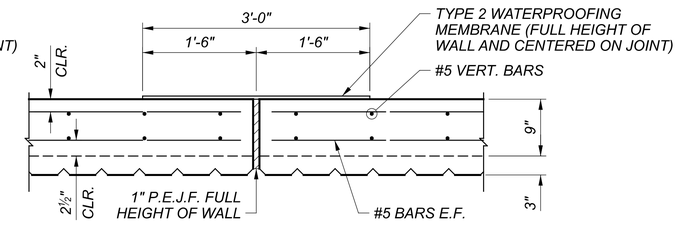

TYPICAL EXPANSION JOINT DETAIL

Preliminary Plans - For Reference Only

NOTES:

1. ELASTOMERIC BEARING PADS SHALL BE PROVIDED AT ALL BOTTOM PANELS BETWEEN THE PANEL AND TOP OF CONCRETE DRILLED SHAFT AND/OR RAISED PANEL SEAT. THEY SHALL ALSO BE PROVIDED AT EACH END OF EACH PANEL BETWEEN PANELS.
2. ELASTOMERIC BEARING PADS SHALL BE NEOPRENE ELASTOMERIC PADS HAVING DUROMETER HARDNESS OF 55 ± 5, HIGH DENSITY POLYETHYLENE PADS WITH A MINIMUM DENSITY OF 59 LB/FT3 {0.946 G/CM3} OR EQUIVALENT. SUPPLY CERTIFIED TEST DATA TO THE ENGINEER UPON DELIVERY OF THE MATERIAL TO THE PROJECT. BEARING PADS WILL BE PAID FOR UNDER ITEM 516 ELASTOMERIC BEARING PAD, MISC.: 6"x9"x 3/8" THICK.
3. REINFORCEMENT IN PRECAST LAGGING PANELS SHALL BE INCLUDED WITH ITEM 610 - RETAINING WALL MISC.: PRECAST CONCRETE LAGGING FOR PAYMENT.
4. PROVIDE 1" x 1" CHAMFER AT EXPOSED TOP AND BOTTOM OF LAGGING PANELS.
5. CENTER LAGGING PANELS BETWEEN PILE WEBS.
6. CONTRACTOR HAS THE OPTION TO REMOVE LOW STRENGTH MORTAR AS NEEDED FOR LAGGING INSTALLATION. USE WOOD BLOCKING AND/OR SHIMS TO ENSURE LAGGING PANEL REMAINS FLUSH AGAINST BACK OF SOLDIER PILE FLANGE AT THE FRONT FACE OF WALL.

WALL DETAILS
WALL S
ALONG SOUTH SIDE OF I.R. 77

SFN	N/A
DESIGN AGENCY	Michael Baker INTERNATIONAL
DESIGNER	SSW
CHECKER	YC
REVIEWER	LPC 05-09-24
PROJECT ID	82382
SUBSET	8
TOTAL	13
SHEET	1290
TOTAL	2696

CUY-90-16.28 (CCG3A)

MODEL: Sheet PAPERSIZE: 34x22 (in.) DATE: 3/27/2025 TIME: 11:14:42 PM USER: Julie.Ross
pw:\\mb-us-pw.bentley.com:mb-us-pw-03\Documents\Cleveland_OH\01_Projects\ODOT\District12\82382\400-Engineering\Structures\WALL_S\Sheets\82382_S_WD001.dgn

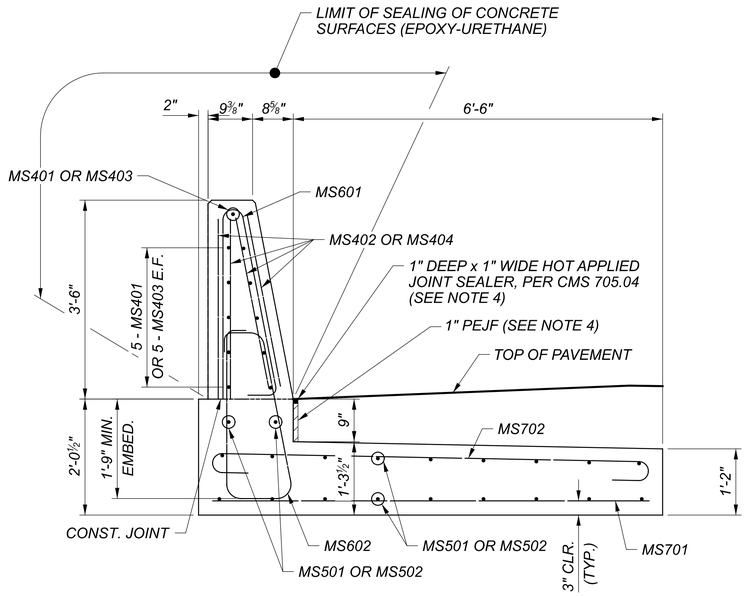

TYPICAL SECTION

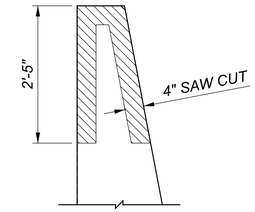

DETAIL A
(SECTION THROUGH SAWCUT)

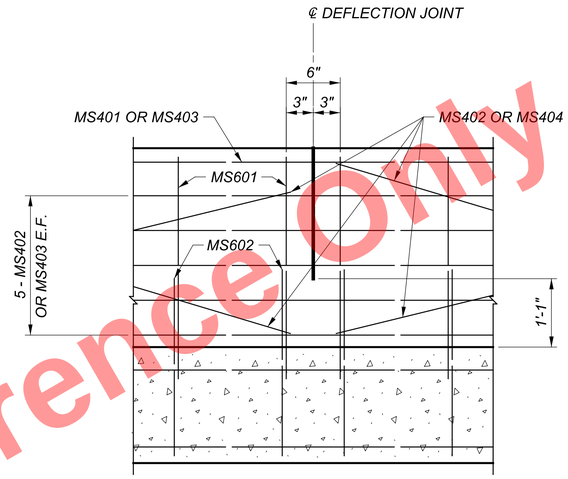

DEFLECTION JOINT ELEVATION DETAIL

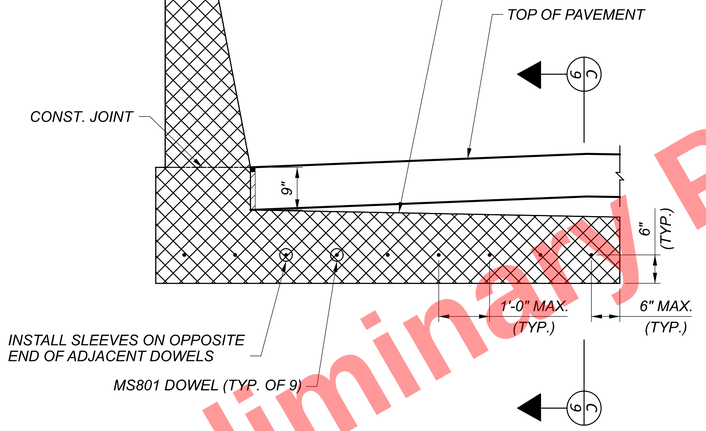

TYPICAL MOMENT SLAB SECTION AT EXPANSION JOINT

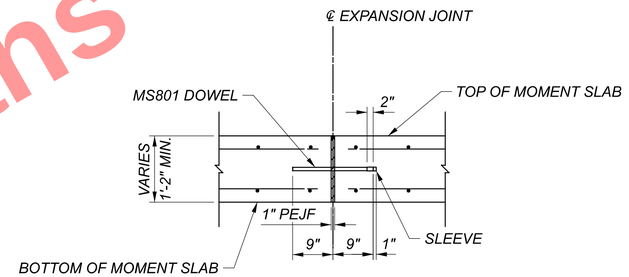

C / 9 SECTION

NOTES:

1. SEE ODOT STANDARD DRAWING SBR-1-20 FOR ADDITIONAL DETAILS.
2. EXPANSION JOINTS SHALL BE PLACED EVERY 30 FEET UNLESS NOTED OTHERWISE. 1" PEJF SHALL BE PLACED BETWEEN MOMENT SLABS AT EACH EXPANSION JOINT. REINFORCING STEEL SHALL NOT EXTEND THROUGH THE EXPANSION JOINT.
3. THE MINIMUM LENGTH OF THE MOMENT SLAB IS 30 FEET UNLESS NOTED OTHERWISE.
4. HOT APPLIED JOINT SEALER AND 1" PEJF TO BE PAID FOR WITH ITEM 511 - CLASS QC2 CONCRETE MISC.: CONCRETE MOMENT SLAB AND BARRIER WITH QC/QA.

Preliminary Plans - For Reference Only

MOMENT SLAB DETAILS (SHEET 1 OF 3)
WALL S
ALONG SOUTH SIDE OF I.R. 77

SFN N/A

DESIGN AGENCY
Michael Baker INTERNATIONAL

DESIGNER	CHECKER
SSW	YC

REVIEWER: LPC 05-09-24

PROJECT ID: 82382

SUBSET	TOTAL
9	13

SHEET	TOTAL
1291	2696

CUY-90-16.28 (CCG3A)

MODEL: Moment Slab Sheet 1 PAPERSIZE: 34x22 (in.) DATE: 3/27/2025 TIME: 11:14:51 PM USER: Julie.Ross
pw:\\mb-us-pw.bentley.com:mb-us-pw-03\Documents\Cleveland_OH\01_Projects\ODOT\District12\82382\400-Engineering\Structures\WALL_S\Sheets\82382_S_WD002.dgn

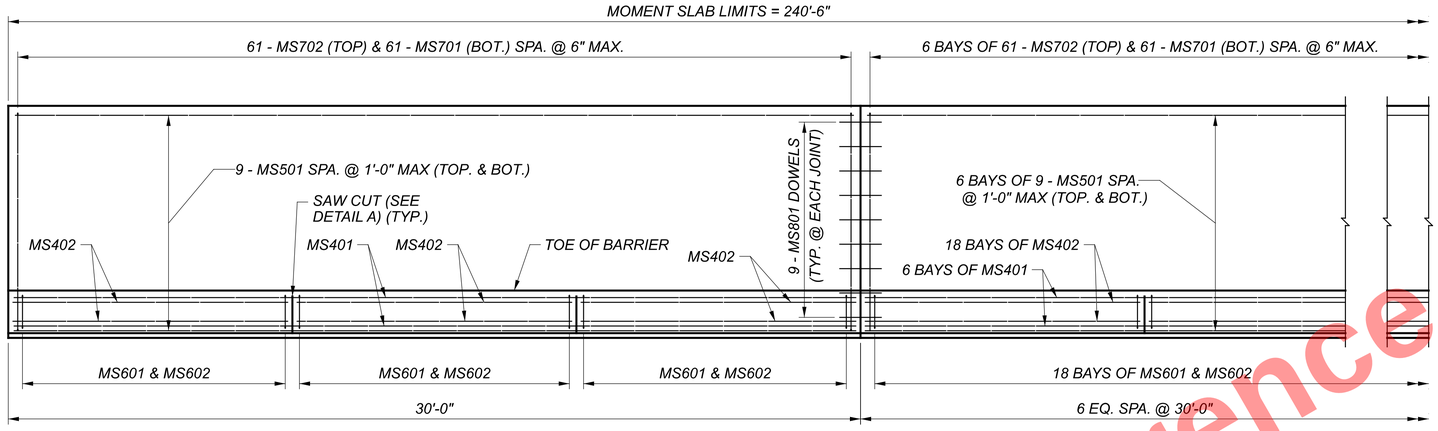

MOMENT SLAB PLAN

(TYPICAL 30'-0" SEGMENTS SHOWN,
DIMENSIONS GIVEN ALONG REAR FACE OF BARRIER)

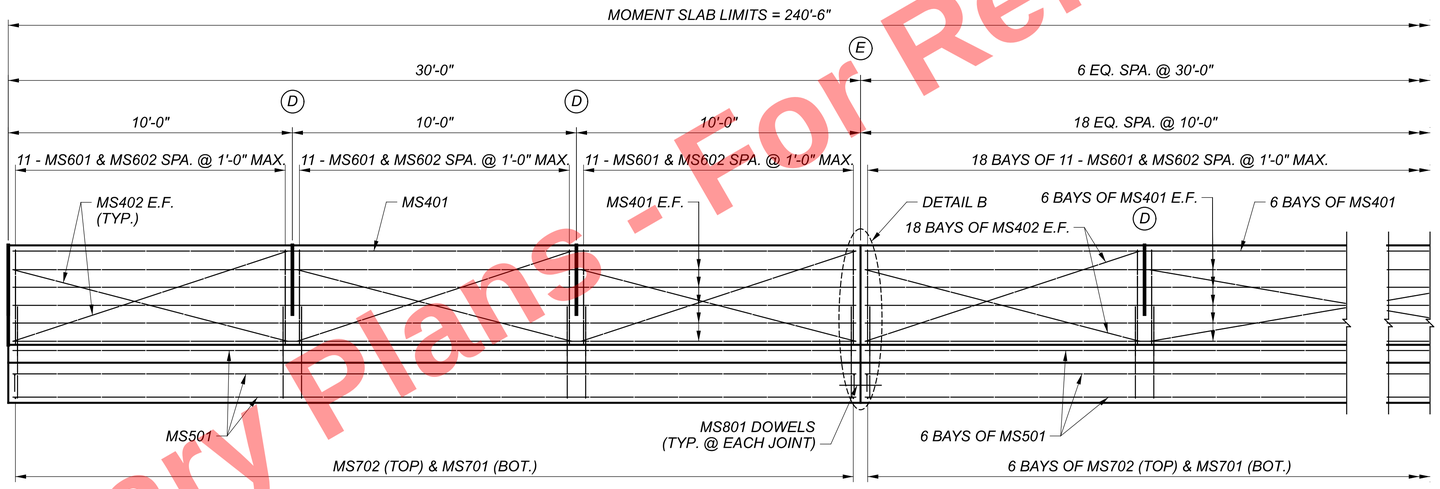

MOMENT SLAB ELEVATION

(TYPICAL 30'-0" SEGMENTS SHOWN,
DIMENSIONS GIVEN ALONG REAR FACE OF BARRIER)

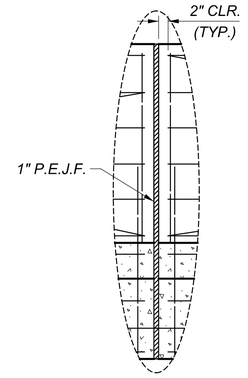

DETAIL B

(TYPICAL AT EXPANSION JOINTS)

LEGEND

(E) DESIGNATES EXPANSION JOINT

(D) DESIGNATES DEFLECTION JOINT

NOTES:

1. SEE ODOT STANDARD DRAWING SBR-1-20 FOR ADDITIONAL DETAILS.
2. EXPANSION JOINTS SHALL BE PLACED EVERY 30 FEET UNLESS NOTED OTHERWISE. 1" PEJF SHALL BE PLACED BETWEEN MOMENT SLABS AT EACH EXPANSION JOINT. REINFORCING STEEL SHALL NOT EXTEND THROUGH THE EXPANSION JOINT.
3. THE MINIMUM LENGTH OF THE MOMENT SLAB IS 30 FEET UNLESS NOTED OTHERWISE.

Preliminary Plans - For Reference Only

MOMENT SLAB DETAILS (SHEET 2 OF 3)
WALL S
ALONG SOUTH SIDE OF I.R. 77

SFN N/A

DESIGN AGENCY
Michael Baker INTERNATIONAL

DESIGNER	CHECKER
SSW	YC

REVIEWER LPC 05-09-24

PROJECT ID 82382

SUBSET	TOTAL
10	13

SHEET	TOTAL
1292	2696

CUY-90-16.28 (CCG3A)

MODEL: Moment Slab Sheet 2 PAPERSIZE: 34x22 (in.) DATE: 3/27/2025 TIME: 11:14:51 PM USER: Julie.Ross
pw:\\mb-us-pw.bentley.com:mb-us-pw-03\Documents\Cleveland_OH\01_Projects\ODOT\District12\82382\400-Engineering\Structures\WALL_S\Sheets\82382_S_WD002.dgn

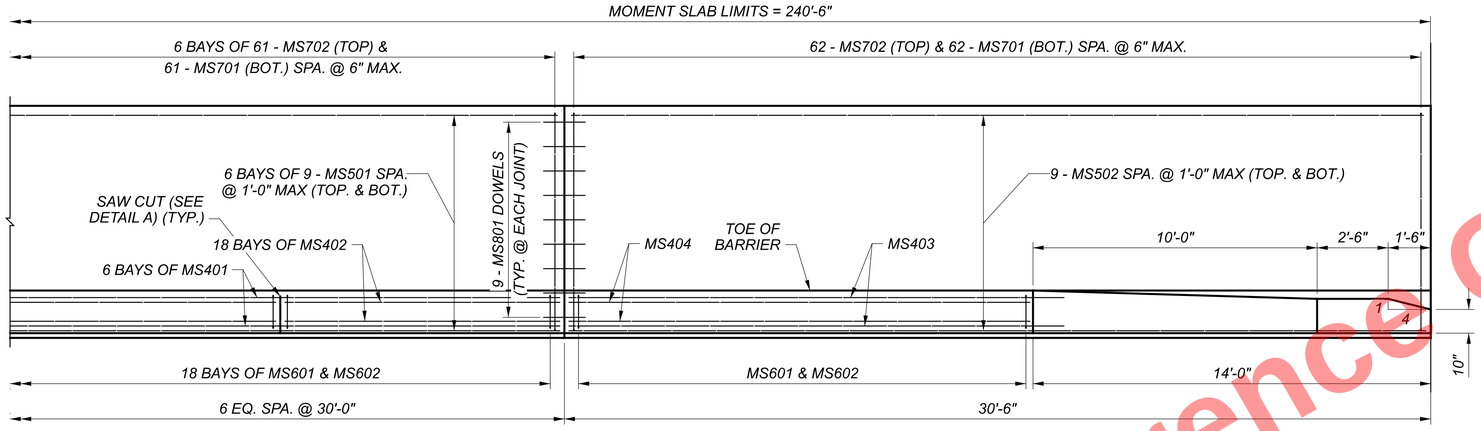

MOMENT SLAB PLAN

(DIMENSIONS GIVEN ALONG REAR FACE OF BARRIER)

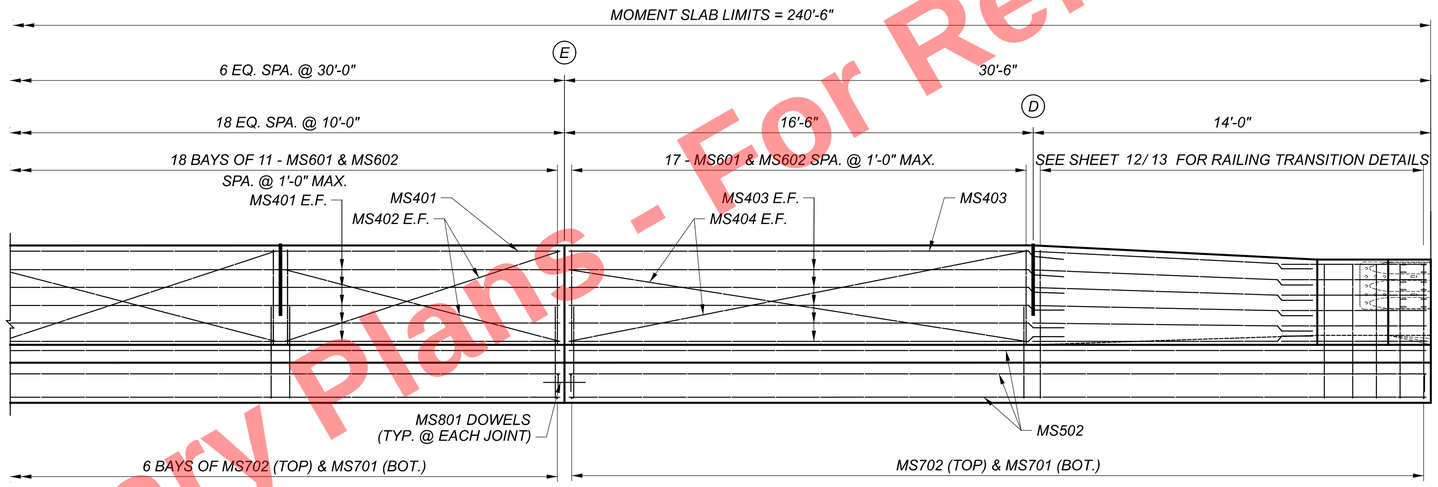

MOMENT SLAB ELEVATION

(DIMENSIONS GIVEN ALONG REAR FACE OF BARRIER)

Preliminary Plans - For Reference Only

LEGEND

(E) *DESIGNATES EXPANSION JOINT*

(D) *DESIGNATES DEFLECTION JOINT*

NOTES:

1. *SEE ODOT STANDARD DRAWING SBR-1-20 FOR ADDITIONAL DETAILS.*
2. *EXPANSION JOINTS SHALL BE PLACED EVERY 30 FEET UNLESS NOTED OTHERWISE. 1" PEJF SHALL BE PLACED BETWEEN MOMENT SLABS AT EACH EXPANSION JOINT. REINFORCING STEEL SHALL NOT EXTEND THROUGH THE EXPANSION JOINT.*
3. *THE MINIMUM LENGTH OF THE MOMENT SLAB IS 30 FEET UNLESS NOTED OTHERWISE.*

MOMENT SLAB DETAILS (SHEET 3 OF 3)
WALL S
ALONG SOUTH SIDE OF I.R. 77

SFN N/A

DESIGN AGENCY

Michael Baker INTERNATIONAL

DESIGNER	CHECKER
SSW	YC

REVIEWER LPC 05-09-24

PROJECT ID 82382

SUBSET	TOTAL
11	13

SHEET	TOTAL
1293	2696

CUY-90-16.28 (CCG3A)

MODEL: Moment Slab Sheet 3 PAPERSIZE: 34x22 (in.) DATE: 3/27/2025 TIME: 11:14:52 PM USER: Julie.Ross
pw:\\mb-us-pw.bentley.com:mb-us-pw-03\Documents\Cleveland_OH\01_Projects\ODOT\District12\82382\400-Engineering\Structures\WALL_S\Sheets\82382_S_WD002.dgn

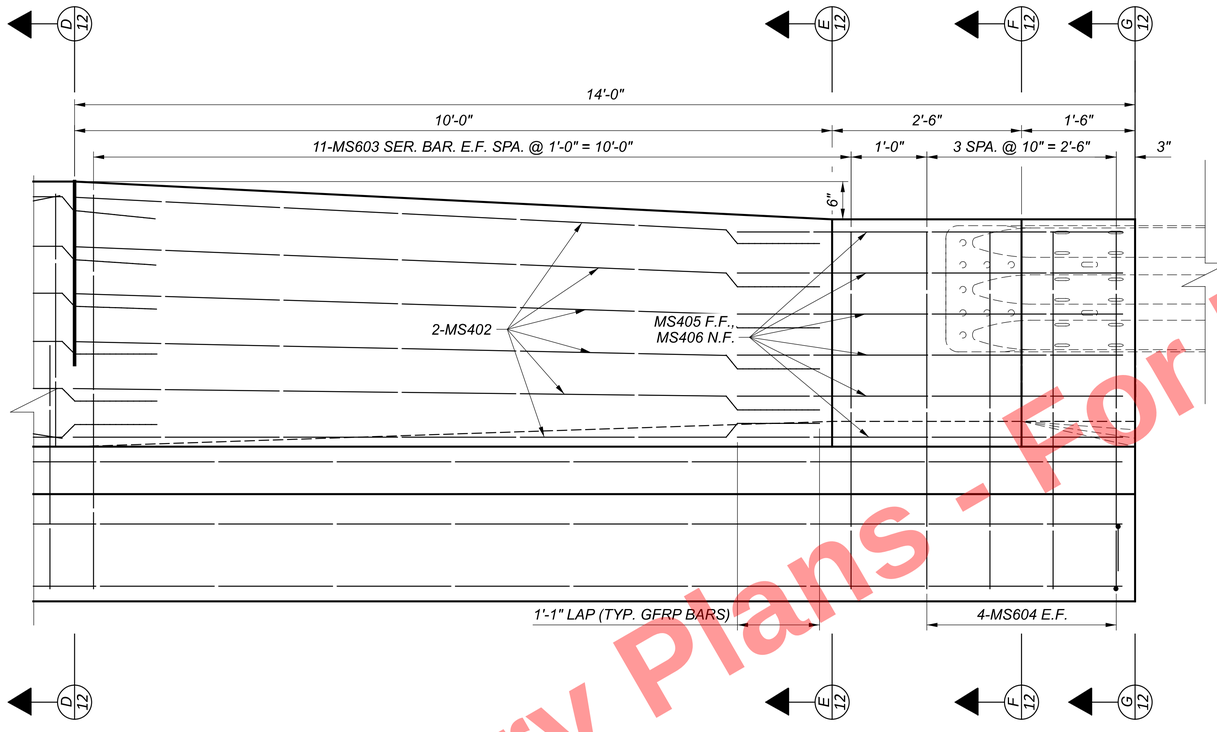

RAILING TRANSITION ELEVATION

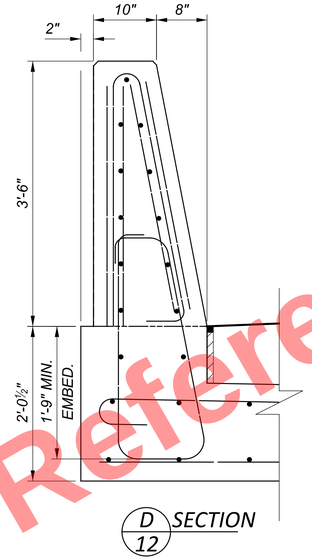

D SECTION 12

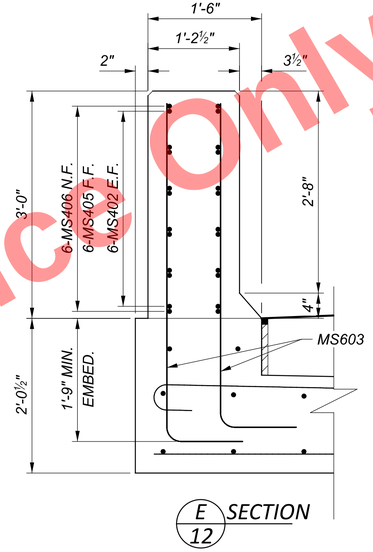

E SECTION 12

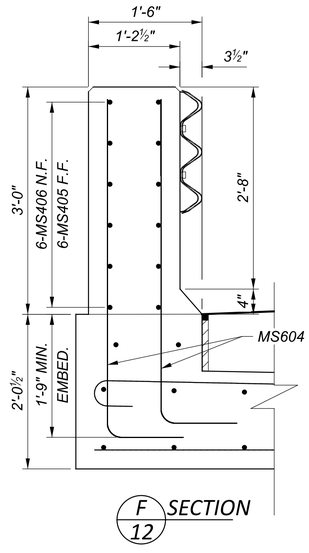

F SECTION 12

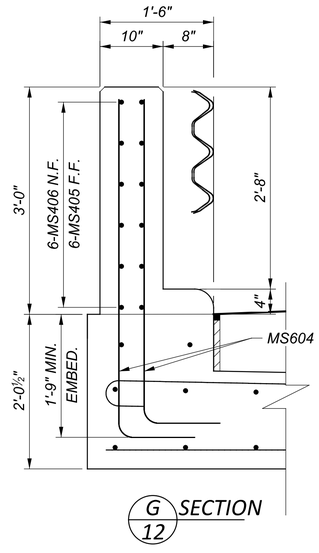

G SECTION 12

Preliminary Plans - Not For Reference Only

CUY-90-16.28 (CCG3A)

MODEL: Moment Slab Sheet 4 PAPERSIZE: 34x22 (in.) DATE: 3/28/2025 TIME: 9:03:52 AM USER: Julie.Ross
pw:\\mb-us-pw.bentley.com:mb-us-pw-03\Documents\Cleveland_OH01_Projects\ODOT\District12\82382\400-Engineering\Structures\WALL_S\Sheets\82382_S_WD002.dgn
_WD002.dgn

MOMENT SLAB TRANSITION DETAILS
WALL S
ALONG SOUTH SIDE OF I.R. 77

SFN N/A

DESIGN AGENCY
Michael Baker INTERNATIONAL

DESIGNER	CHECKER
DAF	SSW

REVIEWER LPC 05-09-24

PROJECT ID 82382

SUBSET	TOTAL
12	13

SHEET	TOTAL
1294	2696

MARK	MAT'RL TYPE	NUMBER REAR	NUMBER FWD.	NUMBER TOTAL	LENGTH	WEIGHT (LBS.)	TYPE	DIMENSIONS A	B	C	D	E	R	SER INC.
WALL FACING (EPOXY COATED STEEL REINFORCEMENT-ECSR)														
W501	ECSR			32	19'-7"	653	STR.							
W502	ECSR			62	19'-8"	1269	STR.							
W503	ECSR			62	19'-9"	1277	STR.							
W504	ECSR			62	19'-10"	1284	STR.							
W505	ECSR			62	20'-0"	1292	STR.							
W506	ECSR			62	20'-1"	1299	STR.							
W507	ECSR			44	20'-3"	928	STR.							
W508	ECSR			62	14'-8"	948	STR.							
W509	ECSR			314	29'-8"	9716	STR.							
W510	ECSR			64	20'-8"	1380	STR.							
WALL FACING ECSR SUBTOTAL						20046								

MARK	MAT'RL TYPE	NUMBER REAR	NUMBER FWD.	NUMBER TOTAL	LENGTH	WEIGHT (LBS.)	TYPE	DIMENSIONS A	B	C	D	E	R	SER INC.
MOMENT SLAB (EPOXY COATED STEEL REINFORCEMENT-ECSR)														
MS501	ECSR			140	29'-8"	4332	STR.							
MS502	ECSR			20	30'-2"	629	STR.							
MS601	ECSR			248	7'-1"	2639	23	0'-6"	3'-3"	3'-3"			0'-2"	
MS602	ECSR			248	9'-4"	3484	37	1'-9"	0'-9 1/2"	3'-2"	1'-0"	0'-7"		
				2	5'-5"				4'-7"					
MS603	ECSR			SER. OF	TO	187	1	1'-0"						0 5/8"
				11	5'-11"				5'-1"					
MS604	ESCR			8	5'-5"	65	1	1'-0"	4'-7"					
MS701	ECSR			489	7'-8"	7663	STR.							
MS702	ECSR			489	9'-4"	9329	17	7'-8"						
MS801	ECSR			63	1'-6"	252	STR.							
MOMENT SLAB ECSR SUBTOTAL						28580								

MARK	MAT'RL TYPE	NUMBER REAR	NUMBER FWD.	NUMBER TOTAL	LENGTH	TOTAL LENGTH	TYPE	DIMENSIONS A	B	C	D	E	R	SER INC.
MOMENT SLAB (GLASS FIBER REINFORCED POLYMER-GFRP)														
MS401	GFRP			80	29'-8"	2373'-4"	STR.							
MS402	GFRP			96	10'-0"	960'-0"	STR.							
MS403	GFRP			11	17'-7"	193'-5"	STR.							
MS404	GFRP			4	16'-0"	64'-0"	STR.							
MS405	GFRP			6	6'-4"	38'-0"	25	2'-6"	2'-5"	1'-5"	0'-11 1/2"	0'-5"		
MS406	GFRP			6	5'-1"	30'-6"	STR.							
MOMENT SLAB GFRP SUBTOTAL						3659'-3"								

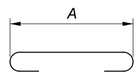

TYPE-17

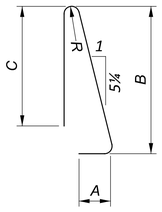

TYPE-23

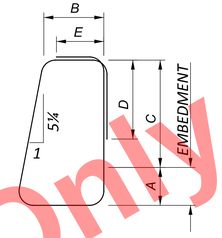

TYPE-37

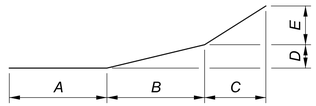

TYPE-25

Preliminary Plans - Not For Reference Only

NOTES:

1. SERIES BARS - EACH BAR VARIES BY TABULATED AMOUNT.
2. ALL DIMENSIONS ARE OUT TO OUT.
3. TYPE "STR." INDICATES STRAIGHT BAR.
4. THE BAR SIZE NUMBER IS SPECIFIED IN THE "MARK" COLUMN. THE FIRST DIGIT INDICATES THE BAR SIZE NUMBER. FOR EXAMPLE, EA501 IS A #5 BAR SIZE.
5. SUBTOTALS AND TOTAL WEIGHTS ARE FOR INFORMATIONAL PURPOSES ONLY. IF THE REINFORCING LIST PROVIDED IN THE PLANS IS USED IT SHALL BE VERIFIED BY THE CONTRACTOR. ANY REVISIONS IN THE REINFORCING STEEL LIST AS SHOWN IN THE PLANS WILL NOT BE REASON FOR ADJUSTMENT IN THE BID PRICE FOR STRUCTURAL CONCRETE.
6. USE STANDARD HOOKS FOR ENDS OF BARS NOT SPECIFICALLY DIMENSIONED IN DETAILS.

REINFORCING SCHEDULE
WALL S
ALONG SOUTH SIDE OF I.R. 77

SFN N/A

DESIGN AGENCY

Michael Baker INTERNATIONAL

DESIGNER	CHECKER
SSW	MKB

REVIEWER LPC 05-09-24

PROJECT ID 82382

SUBSET	TOTAL
13	13

SHEET	TOTAL
1295	2696

CUY-90-16.28 (CCG3A)

MODEL: Untitled Sheet PAPERSIZE: 34x22 (in.) DATE: 3/27/2025 TIME: 11:14:58 PM USER: Julie.Ross
pw:\\mb-us-pw.bentley.com:mb-us-pw-03\Documents\Cleveland_OH\01_Projects\ODOT\District12\82382\400-Engineering\Structures\WALL_S\Sheets\82382_S_WL001.dgn

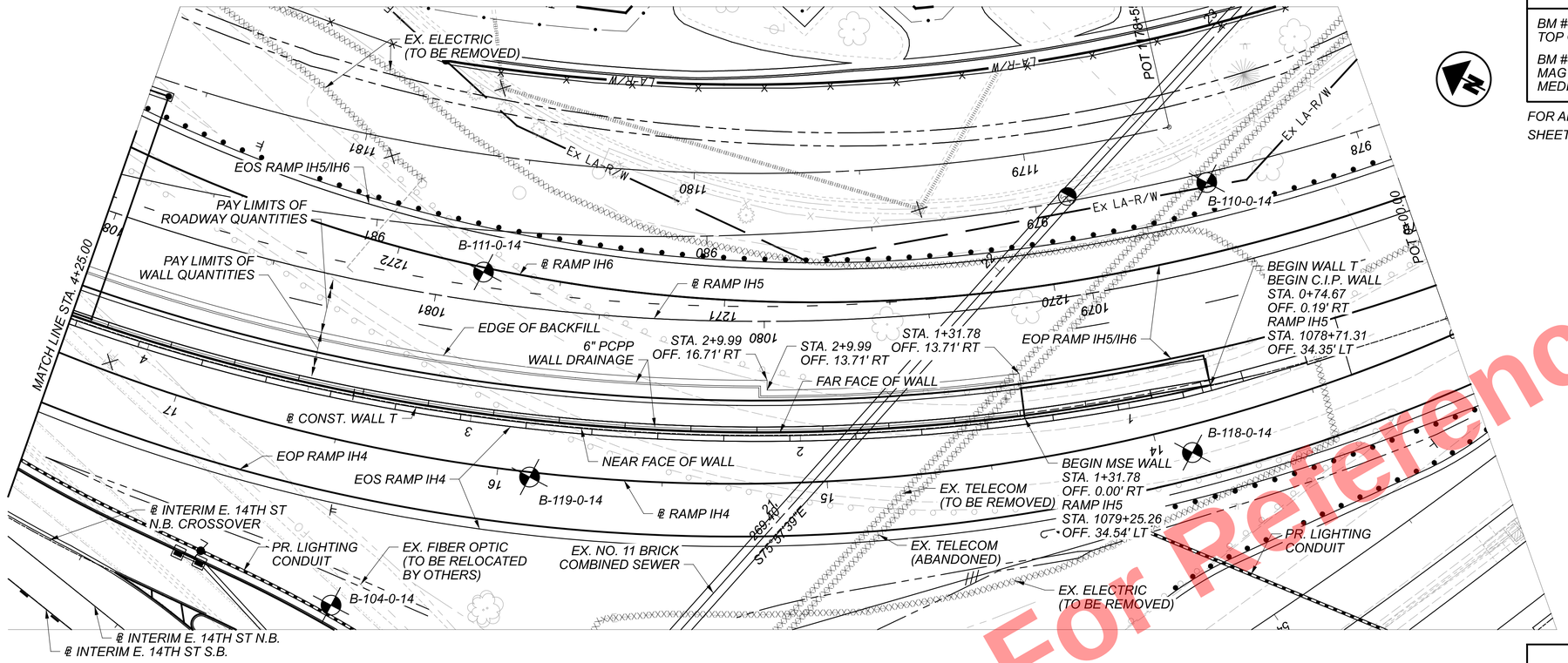

PLAN

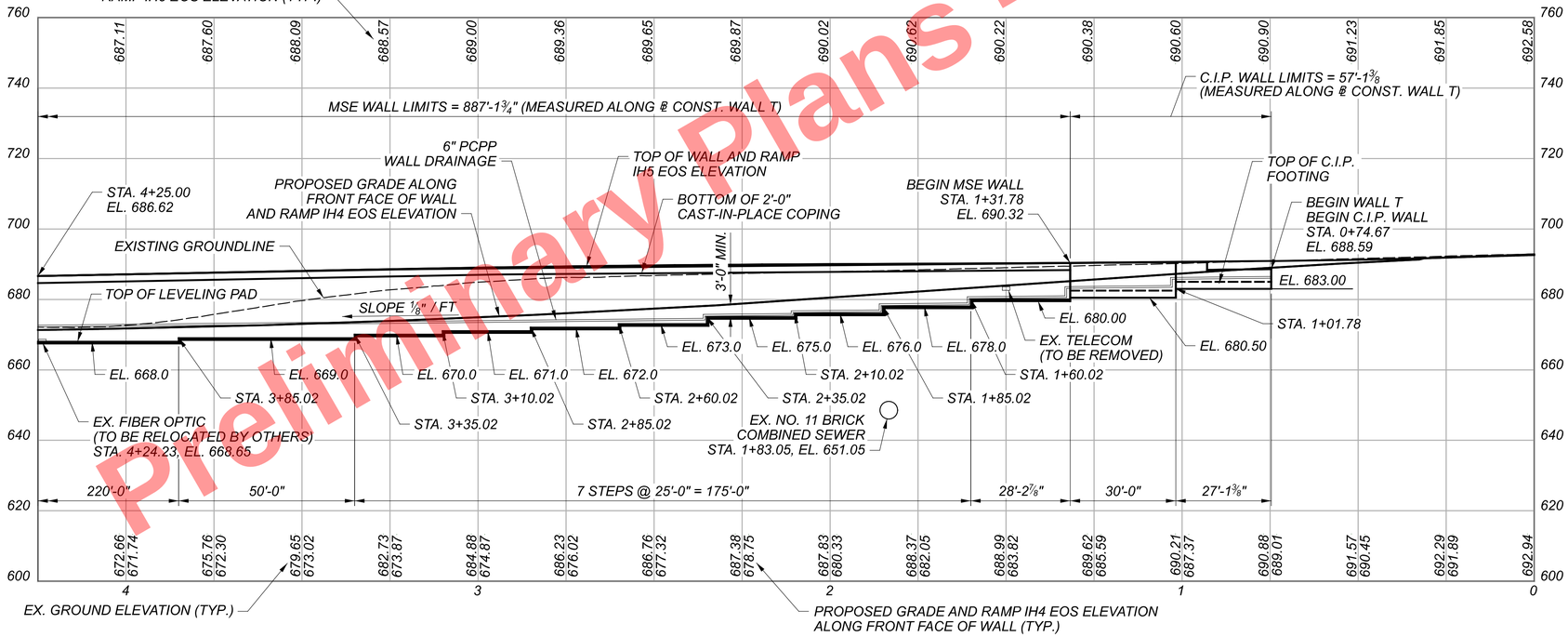

DEVELOPED ELEVATION ALONG ℄ CONST. WALL T

BENCHMARK DATA

BM #40 STA. 1074+07.49, ELEV. 681.08, OFFSET 290.61' LT., TOP OF "A" IN "AUTO" ON TOP OF FIRE STAND PIPE AT 2200 ORANGE AVE.

BM #59 STA. 989+08.56, ELEV. 660.15, OFFSET 1.35' RT., MAG NAIL SET AT NOSE OF CONCRETE DRAINAGE CHANNEL IN GRASS MEDIAN BETWEEN EAST 14TH STREET AND COMMUNITY COLLEGE AVE.

FOR ADDITIONAL BENCHMARK INFORMATION. SEE ROADWAY PLAN SHEET 4 / 2696

RAMP IH5

CURVE DATA
P.I. = Sta. 1080+20.78
Δ = 81°16'06" LT
Dc = 09°37'46"
R = 595.00'
T = 510.59'
L = 843.95'
E = 189.05'

WALL T

CURVE DATA
P.I. = Sta. 2+90.71
Δ = 49°34'23" LT
Dc = 09°06'04"
R = 629.54'
T = 290.71'
L = 544.69'
E = 63.88'

RAMP IH4

CURVE DATA
P.I. = Sta. 15+38.01
Δ = 80°19'38" LT
Dc = 10°30'00"
R = 545.67'
T = 460.54'
L = 765.02'
E = 168.37'

BORING LOCATION*

BORING	STATION	OFFSET	TOP OF ROCK EL.
B-104-0-14	1081+13.49	98.22' LT.	-
B-110-0-14	1078+58.44	25.70' RT.	-
B-111-0-14	1080+86.59	8.69' RT.	-
B-118-0-14	1078+80.22	53.16' LT.	-
B-119-0-14	1080+65.71	50.91' LT.	-

* = BORING STATION AND OFFSETS ARE FROM ℄ RAMP IH5

PROPOSED WORK

THE PROPOSED WORK CONSISTS OF CONSTRUCTING RETAINING WALLS BETWEEN RAMP IH4 AND RAMP IH5. THE WALL IS TO BE BOTTOM UP CONSTRUCTION WITH A PORTION UTILIZING A CAST-IN-PLACE REINFORCED CONCRETE GRAVITY WALL AND THE REMAINDER UTILIZING AN MSE TYPE WALL.

NOTES

1. EARTHWORK LIMITS SHOWN ARE APPROXIMATE. ACTUAL SLOPES SHALL CONFORM TO PLAN CROSS SECTIONS.
2. FOR MSE WALL CROSS SECTIONS, SEE SHEET 873 TO 882 / 2696
3. STATION AND WALL OFFSETS SHOWN AT FRONT FACE OF WALL.
4. SLIP JOINTS IN MSE WALL SHALL BE SPACED AT 20'-0" MAXIMUM. FOR SLIP JOINT DETAILS, SEE SHEET 10 / 14 .
5. FOR C.I.P. WALL DETAILS, SEE SHEET 11 / 14 .

LEGEND

PROJECT BORING LOCATIONS

CONST. = CONSTRUCTION
EOP = EDGE OF PAVEMENT
EOS = EDGE OF SHOULDER

Preliminary Plans - For Reference Only

WALL PLAN AND PROFILE (1 OF 3)
WALL T
BETWEEN RAMP IH4 AND RAMP IH5

SFN N/A
DESIGN AGENCY
Michael Baker INTERNATIONAL
DESIGNER SSW | CHECKER MKB
REVIEWER LPC 05-09-24
PROJECT ID 82382
SUBSET 1 | TOTAL 14
SHEET 1296 | TOTAL 2696

CUY-90-16.28 (CCG3A)

MODEL: CLP_Wall T - Plan 1 [Sheet] PAPERSIZE: 34x22 (in.) DATE: 3/27/2025 TIME: 11:15:10 PM USER: Julie.Ross
pw:\\mb-us-pw.bentley.com:mb-us-pw-03\Documents\Cleveland_OH\01_Projects\ODOT\District12\82382\400-Engineering\Structures\WALL_T\Sheets\82382_T_WP001.dgn

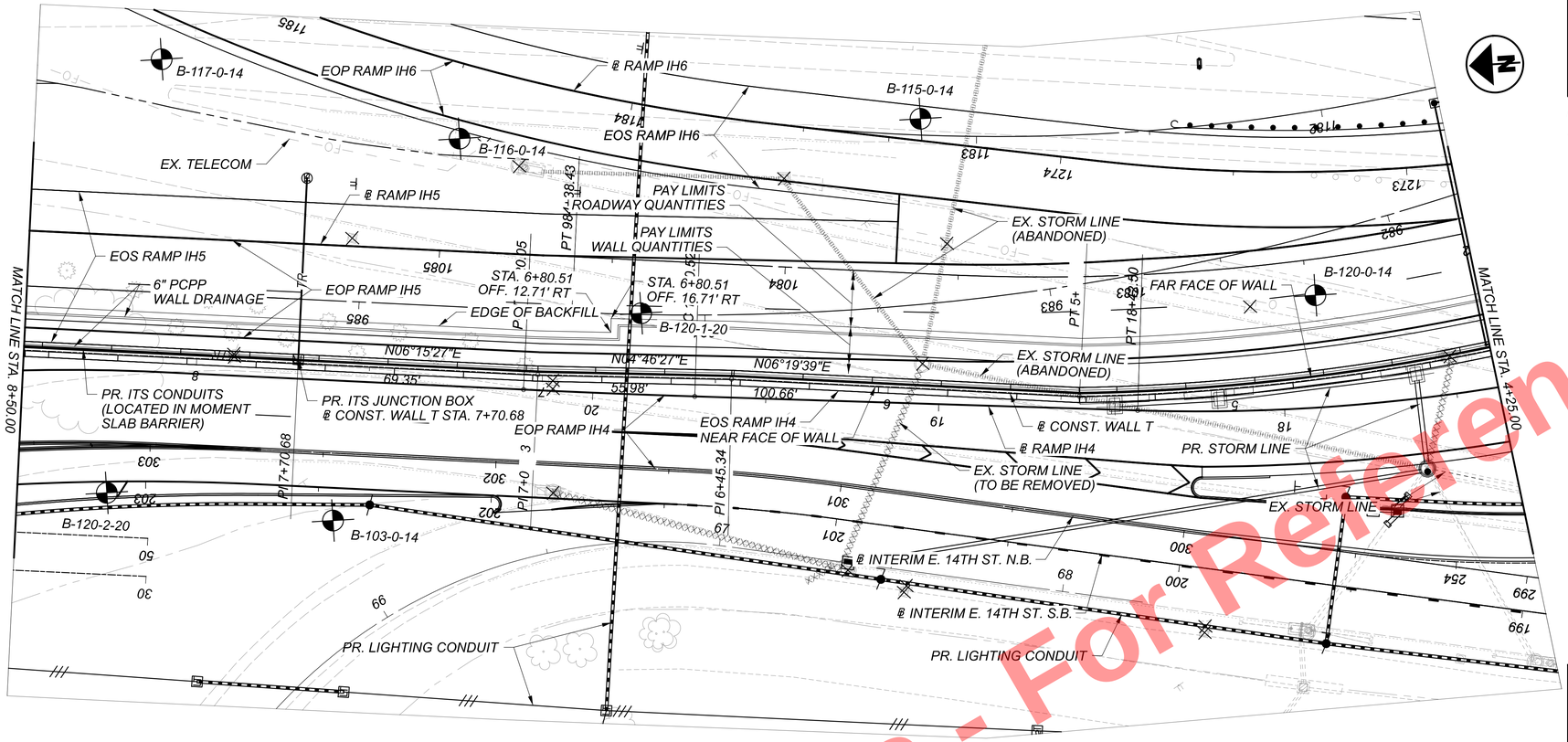

PLAN

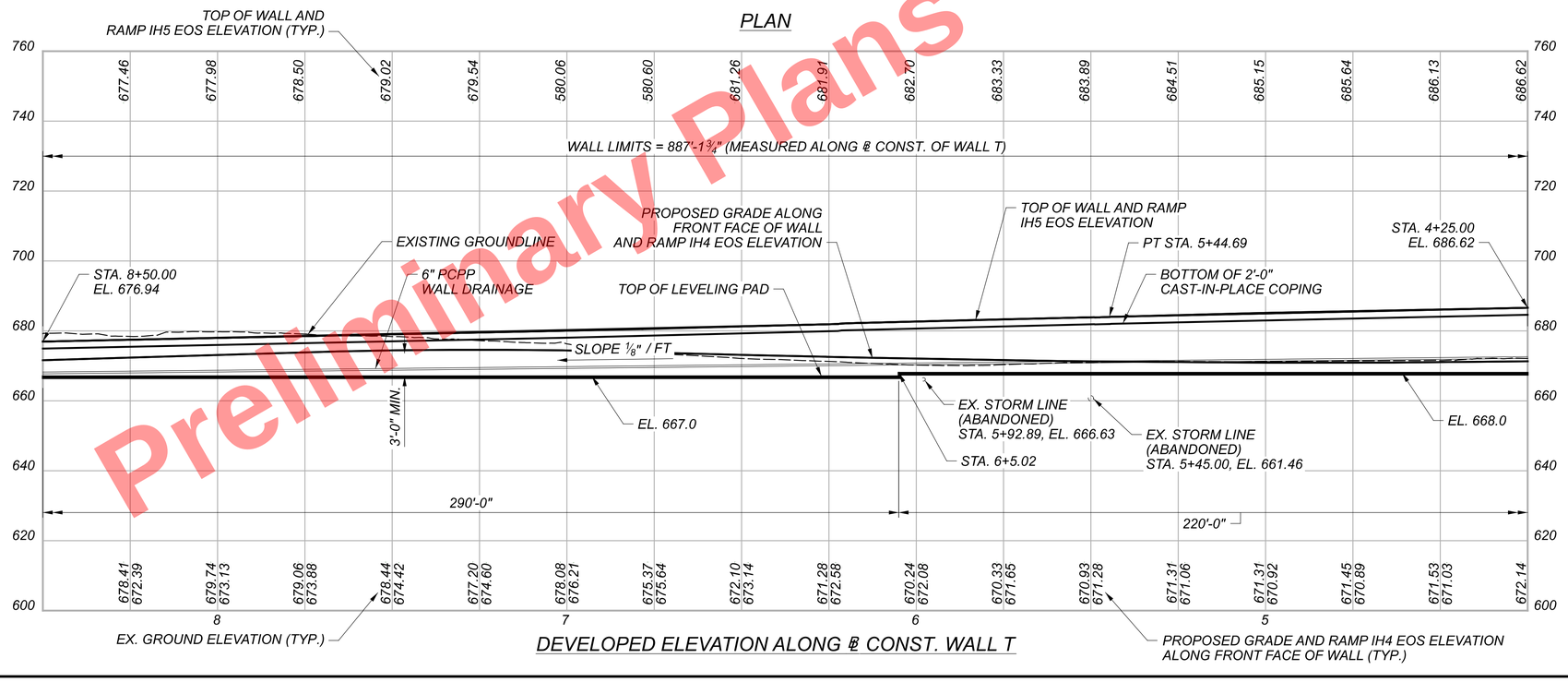

DEVELOPED ELEVATION ALONG ℄ CONST. WALL T

BENCHMARK DATA

BM #40 STA. 1074+07.49, ELEV. 681.08, OFFSET 290.61' LT.,
TOP OF "A" IN "AUTO" ON TOP OF FIRE STAND PIPE AT 2200 ORANGE AVE.

BM #59 STA. 989+08.56, ELEV. 660.15, OFFSET 1.35' RT.,
MAG NAIL SET AT NOSE OF CONCRETE DRAINAGE CHANNEL IN GRASS MEDIAN BETWEEN EAST 14TH STREET AND COMMUNITY COLLEGE AVE.

FOR ADDITIONAL BENCHMARK INFORMATION. SEE ROADWAY PLAN SHEET 4 / 2696

RAMP IH5

CURVE DATA
P.I. = Sta. 1080+20.78
Δ = 81°16'06" LT
Dc = 09°37'46"
R = 595.00'
T = 510.59'
L = 843.95'
E = 189.05'

WALL T

CURVE DATA
P.I. = Sta. 2+90.71
Δ = 49°34'23" LT
Dc = 09°06'04"
R = 629.54'
T = 290.71'
L = 544.69'
E = 63.88'

BORING LOCATION*

BORING	STATION	OFFSET	TOP OF ROCK EL.
B-103-0-14	1085+27.02	79.43' LT.	-
B-115-0-14	1083+63.04	44.67' RT.	-
B-116-0-14	1084+95.78	32.53' RT.	-
B-117-0-14	1085+87.87	51.29' RT.	-
B-120-0-14	1082+47.90	10.41' LT.	-
B-120-1-20	1084+40.95	15.35' LT.	-
B-120-2-20	1085+92.68	74.58' LT.	-

** = BORING STATION AND OFFSETS ARE FROM ℄ RAMP IH5*

PROPOSED WORK

THE PROPOSED WORK CONSISTS OF CONSTRUCTING RETAINING WALLS BETWEEN RAMP IH4 AND RAMP IH5. THE WALL IS TO BE BOTTOM UP CONSTRUCTION WITH A PORTION UTILIZING A CAST-IN-PLACE REINFORCED CONCRETE GRAVITY WALL AND THE REMAINDER UTILIZING AN MSE TYPE WALL.

NOTES

1. *EARTHWORK LIMITS SHOWN ARE APPROXIMATE. ACTUAL SLOPES SHALL CONFORM TO PLAN CROSS SECTIONS.*
2. *FOR MSE WALL CROSS SECTIONS, SEE SHEET 873 TO 882 / 2696*
3. *STATION AND WALL OFFSETS SHOWN AT FRONT FACE OF WALL.*
4. *SLIP JOINTS IN MSE WALL SHALL BE SPACED AT 20'-0" MAXIMUM. FOR SLIP JOINT DETAILS, SEE SHEET 10 / 14 .*

LEGEND

PROJECT BORING LOCATIONS

CONST. = CONSTRUCTION
EOP = EDGE OF PAVEMENT
EOS = EDGE OF SHOULDER

Preliminary Plans - For Reference Only

WALL PLAN AND PROFILE (2 OF 3)
WALL T
BETWEEN RAMP IH4 AND RAMP IH5

SFN N/A
DESIGN AGENCY
Michael Baker INTERNATIONAL
DESIGNER SSW | CHECKER MKB
REVIEWER LPC 05-09-24
PROJECT ID 82382
SUBSET 2 | TOTAL 14
SHEET 1297 | TOTAL 2696

CUY-90-16.28 (CCG3A)

MODEL: CLP_Wall T - Plan 2 [Sheet] PAPERSIZE: 34x22 (in.) DATE: 3/27/2025 TIME: 11:15:23 PM USER: Julie.Ross
pw:\\mb-us-pw.bentley.com:mb-us-pw-03\Documents\Cleveland_OH\01_Projects\ODOT\District12\82382\400-Engineering\Structures\WALL_T\Sheets\82382_T_WP001.dgn

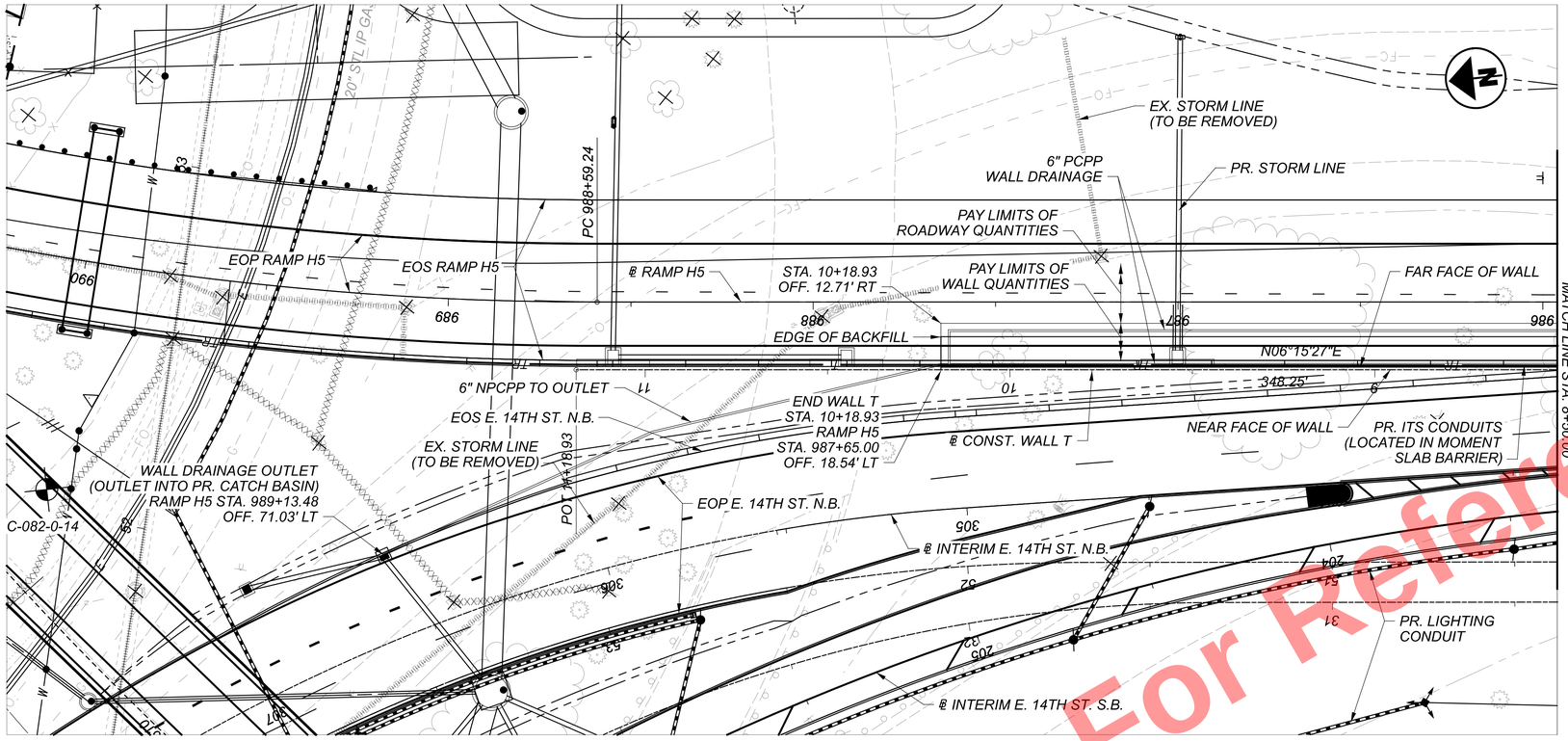

PLAN

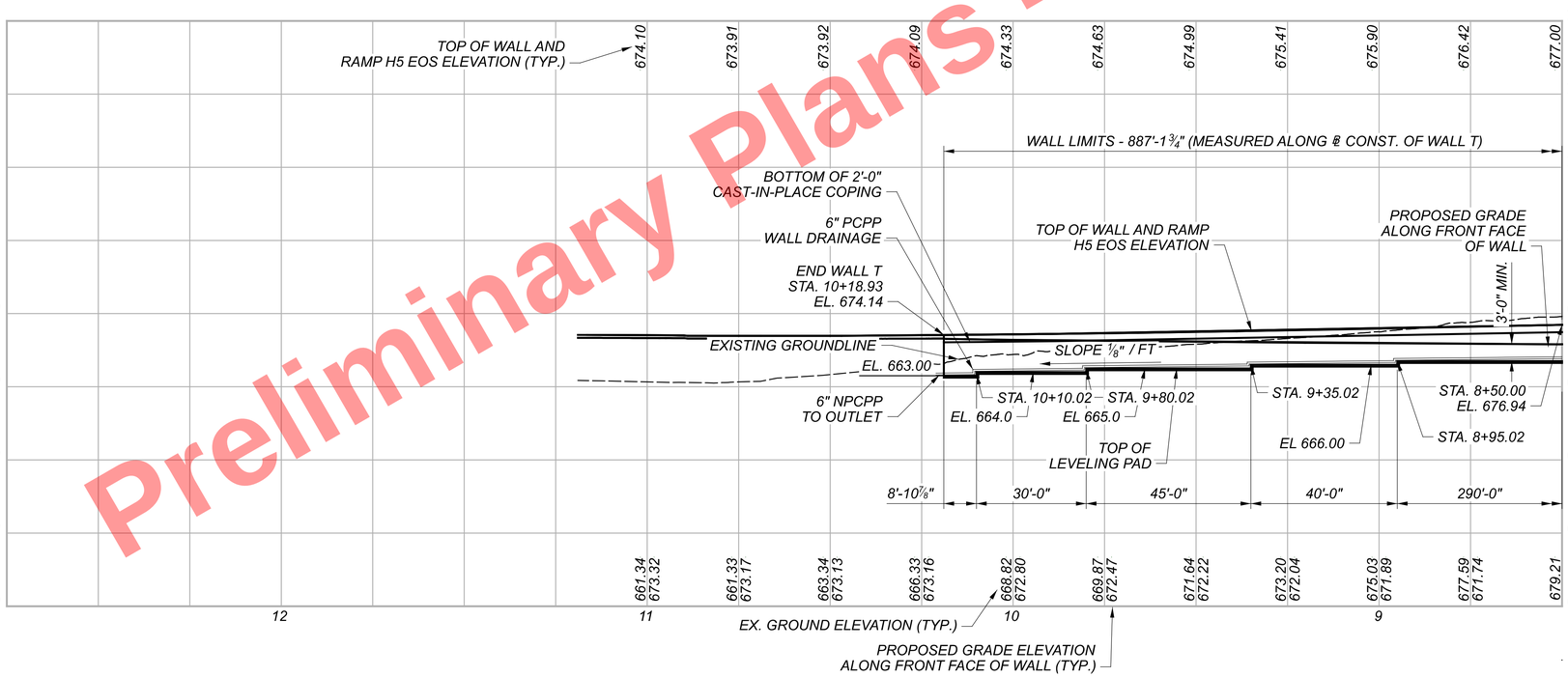

DEVELOPED ELEVATION ALONG ℄ CONST. WALL T

BENCHMARK DATA

BM #40 STA. 1074+07.49, ELEV. 681.08, OFFSET 290.61' LT.,
TOP OF "A" IN "AUTO" ON TOP OF FIRE STAND PIPE AT 2200 ORANGE AVE.

BM #59 STA. 989+08.56, ELEV. 660.15, OFFSET 1.35' RT.,
MAG NAIL SET AT NOSE OF CONCRETE DRAINAGE CHANNEL IN GRASS MEDIAN BETWEEN EAST 14TH STREET AND COMMUNITY COLLEGE AVE.

FOR ADDITIONAL BENCHMARK INFORMATION. SEE ROADWAY PLAN
SHEET 4 / 2696

BORING LOCATION*			
BORING	STATION	OFFSET	TOP OF ROCK EL.
C-082-0-14	990+00.59	63.47' LT.	-

* = BORING STATION AND OFFSETS ARE FROM ℄ RAMP IH5

PROPOSED WORK

THE PROPOSED WORK CONSISTS OF CONSTRUCTING RETAINING WALLS BETWEEN RAMP IH4 AND RAMP IH5. THE WALL IS TO BE BOTTOM UP CONSTRUCTION WITH A PORTION UTILIZING A CAST-IN-PLACE REINFORCED CONCRETE GRAVITY WALL AND THE REMAINDER UTILIZING AN MSE TYPE WALL.

NOTES

1. EARTHWORK LIMITS SHOWN ARE APPROXIMATE. ACTUAL SLOPES SHALL CONFORM TO PLAN CROSS SECTIONS.
2. FOR MSE WALL CROSS SECTIONS, SEE SHEET 873 TO 882 / 2696
3. STATION AND WALL OFFSETS SHOWN AT FRONT FACE OF WALL.
4. SLIP JOINTS IN MSE WALL SHALL BE SPACED AT 20'-0" MAXIMUM. FOR SLIP JOINT DETAILS, SEE SHEET 10 / 14 .

LEGEND

PROJECT BORING LOCATIONS

CONST. = CONSTRUCTION
EOP = EDGE OF PAVEMENT
EOS = EDGE OF SHOULDER

WALL PLAN AND PROFILE (3 OF 3)
WALL T
BETWEEN RAMP IH4 AND RAMP IH5

SFN	N/A
DESIGN AGENCY	Michael Baker INTERNATIONAL
DESIGNER	SSW
CHECKER	MKB
REVIEWER	LPC 05-09-24
PROJECT ID	82382
SUBSET	3
TOTAL	14
SHEET	1298
TOTAL	2696

CUY-90-16.28 (CCG3A)

MODEL: CLP_Wall T - Plan 3 [Sheet] PAPERSIZE: 34x22 (in.) DATE: 3/27/2025 TIME: 11:15:26 PM USER: Julie.Ross
pw:\\mb-us-pw.bentley.com:mb-us-pw-03\Documents\Cleveland_OH\01_Projects\ODOT\District12\82382\400-Engineering\Structures\WALL_T\Sheets\82382_T_WP001.dgn

Preliminary Plans - For Reference Only

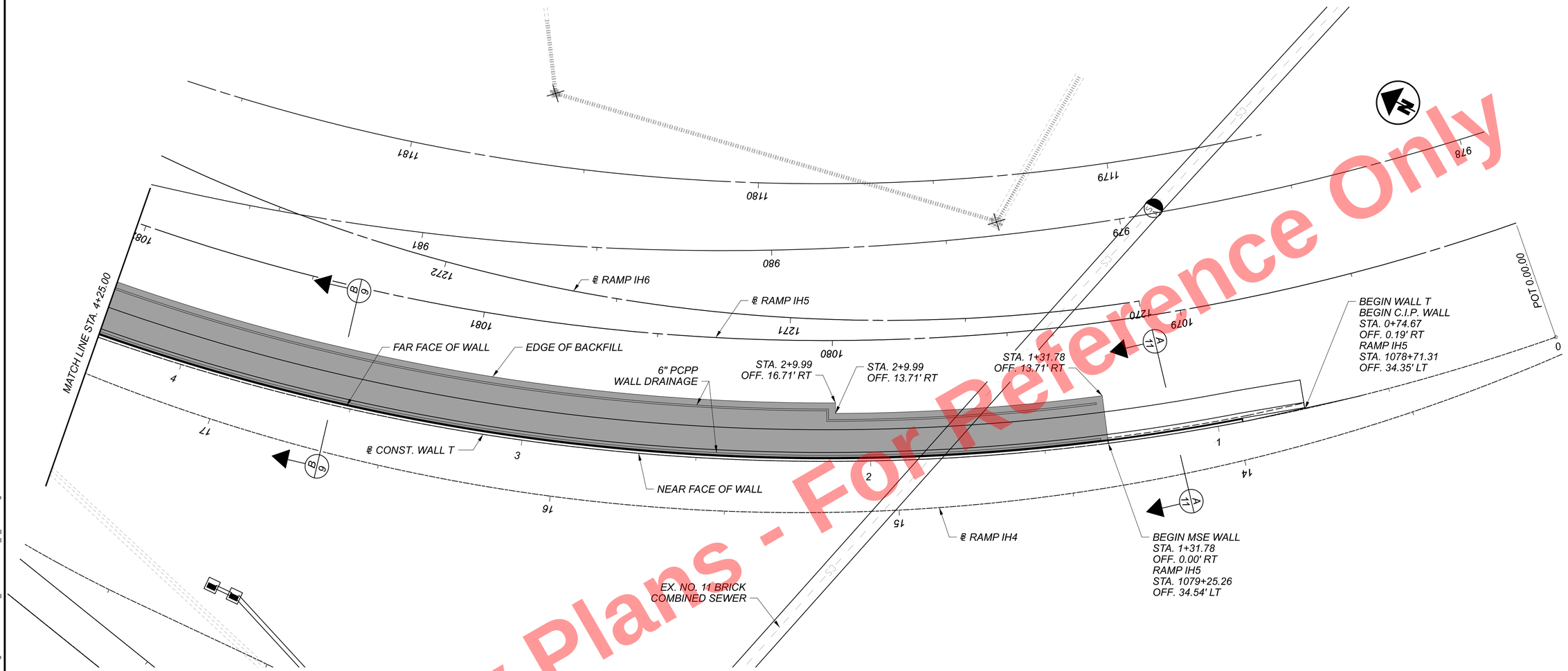

PLAN

RAMP IH5

CURVE DATA
P.I. = Sta. 1080+20.78
Δ = 81°16'06" LT
Dc = 09°37'46"
R = 595.00'
T = 510.59'
L = 843.95'
E = 189.05'

WALL T

CURVE DATA
P.I. = Sta. 2+90.71
Δ = 49°34'23" LT
Dc = 09°06'04"
R = 629.54'
T = 290.71'
L = 544.69'
E = 63.88'

RAMP IH4

CURVE DATA
P.I. = Sta. 15+38.01
Δ = 80°19'38" LT
Dc = 10°30'00"
R = 545.67'
T = 460.54'
L = 765.02'
E = 168.37'

WALL BASELINE GEOMETRY

	℄ WALL T STA.	℄ RAMP IH5	OFFSET
BEGIN WALL T (BEGIN C.I.P. WALL)	0+74.67	1078+71.31	34.35' LT
BEGIN MSE WALL (END C.I.P. WALL)	1+31.78	1079+25.26	34.54' LT
END WALL T	10+18.93	987+65.00	18.54' LT

NOTES

1. FOR MSE WALL CROSS SECTIONS, SEE SHEET 873 TO 882 / 2696
2. FOR C.I.P. WALL DETAILS SEE SHEET 11 / 14 .

LEGEND

LIMITS OF SELECT GRANULAR BACKFILL

Preliminary Plans - Not For Reference Only

HORIZONTAL SCALE IN FEET
0 7.5 15 30

SCHEMATIC PLAN (1 OF 3)
WALL T
BETWEEN RAMP IH4 AND RAMP IH5

SFN N/A

DESIGN AGENCY
Michael Baker INTERNATIONAL

DESIGNER	CHECKER
SSW	MKB

REVIEWER LPC 05-09-24

PROJECT ID 82382

SUBSET	TOTAL
4	14

SHEET	TOTAL
1299	2696

CUY-90-16.28 (CCG3A)

MODEL: CLP_Wall T - Schematic 1 [Sheet] PAPERSIZE: 34x22 (in.) DATE: 3/27/2025 TIME: 11:15:49 PM USER: Julie.Ross
pw:\\mb-us-pw.bentley.com:mb-us-pw-03\Documents\Cleveland_OH\01_Projects\ODOT\District12\82382400-Engineering\Structures\WALL_T\Sheets\82382_T_WB001.dgn

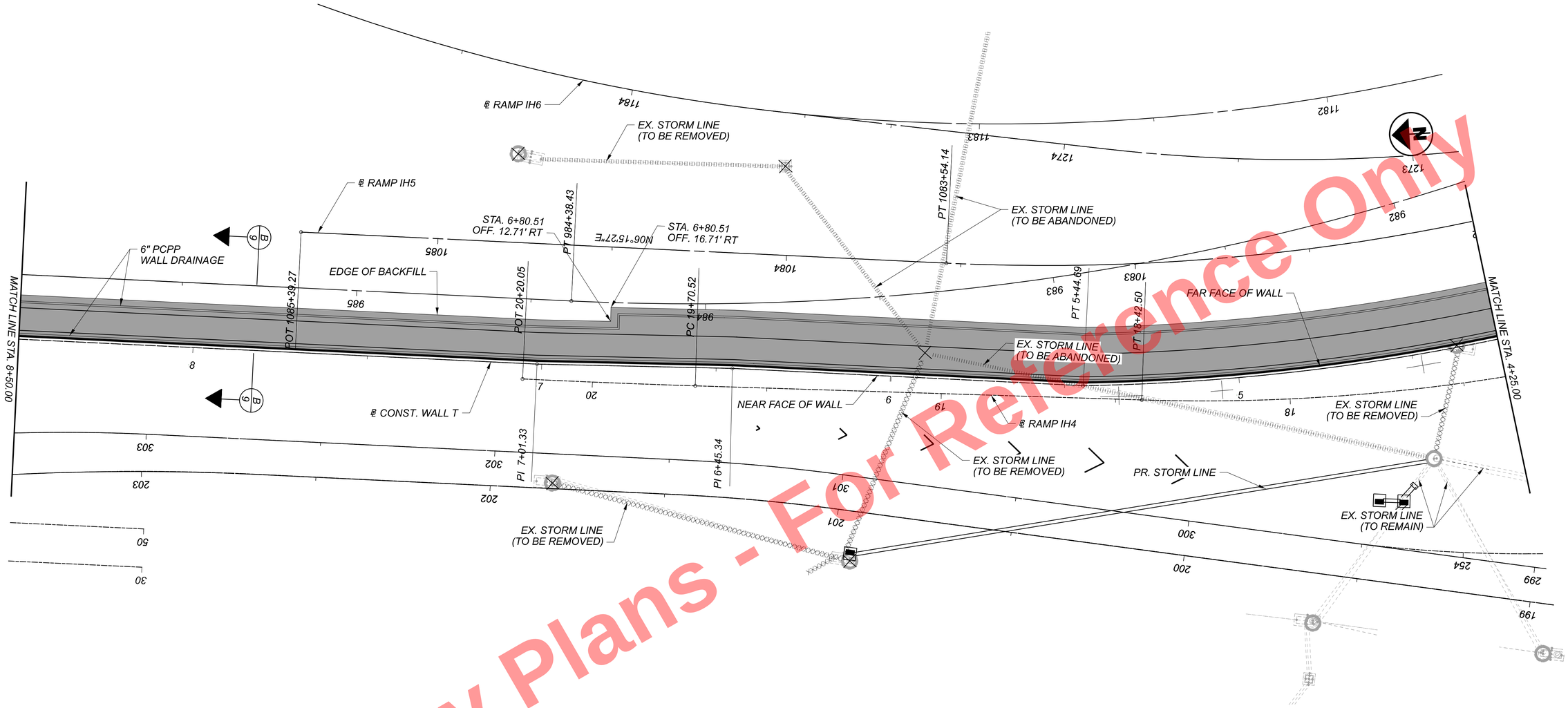

RAMP IH5

CURVE DATA
P.I. = Sta. 1080+20.78
Δ = 81°16'06" LT
Dc = 09°37'46"
R = 595.00'
T = 510.59'
L = 843.95'
E = 189.05'

WALL T

CURVE DATA
P.I. = Sta. 2+90.71
Δ = 49°34'23" LT
Dc = 09°06'04"
R = 629.54'
T = 290.71'
L = 544.69'
E = 63.88'

PLAN

WALL BASELINE GEOMETRY			
	℄ WALL T STA.	℄ RAMP IH5	OFFSET
BEGIN WALL T (BEGIN C.I.P. WALL)	0+74.67	1078+71.31	34.35' LT
BEGIN MSE WALL (END C.I.P. WALL)	1+31.78	1079+25.26	34.54' LT
END WALL T	10+18.93	987+65.00	18.54' LT

NOTES

1. FOR MSE WALL CROSS SECTIONS, SEE SHEET 873 TO 882 / 2696

LEGEND

LIMITS OF SELECT GRANULAR BACKFILL

Preliminary Plans - For Reference Only

HORIZONTAL SCALE IN FEET
0 7.5 15 30

SCHEMATIC PLAN (2 OF 3)
WALL T
BETWEEN RAMP IH4 AND RAMP IH5

SFN N/A

DESIGN AGENCY
Michael Baker INTERNATIONAL

DESIGNER	CHECKER
SSW	MKB

REVIEWER LPC 05-09-24

PROJECT ID 82382

SUBSET	TOTAL
5	14

SHEET	TOTAL
1300	2696

CUY-90-16.28 (CCG3A)

MODEL: CLP_Wall T - Schematic 2 [Sheet] PAPERSIZE: 34x22 (in.) DATE: 3/27/2025 TIME: 11:16:06 PM USER: Julie.Ross
pw:\\mb-us-pw.bentley.com:mb-us-pw-03\Documents\Cleveland_OH\01_Projects\ODOT\District12\82382\400-Engineering\Structures\WALL_T\Sheets\82382_T_WB001.dgn

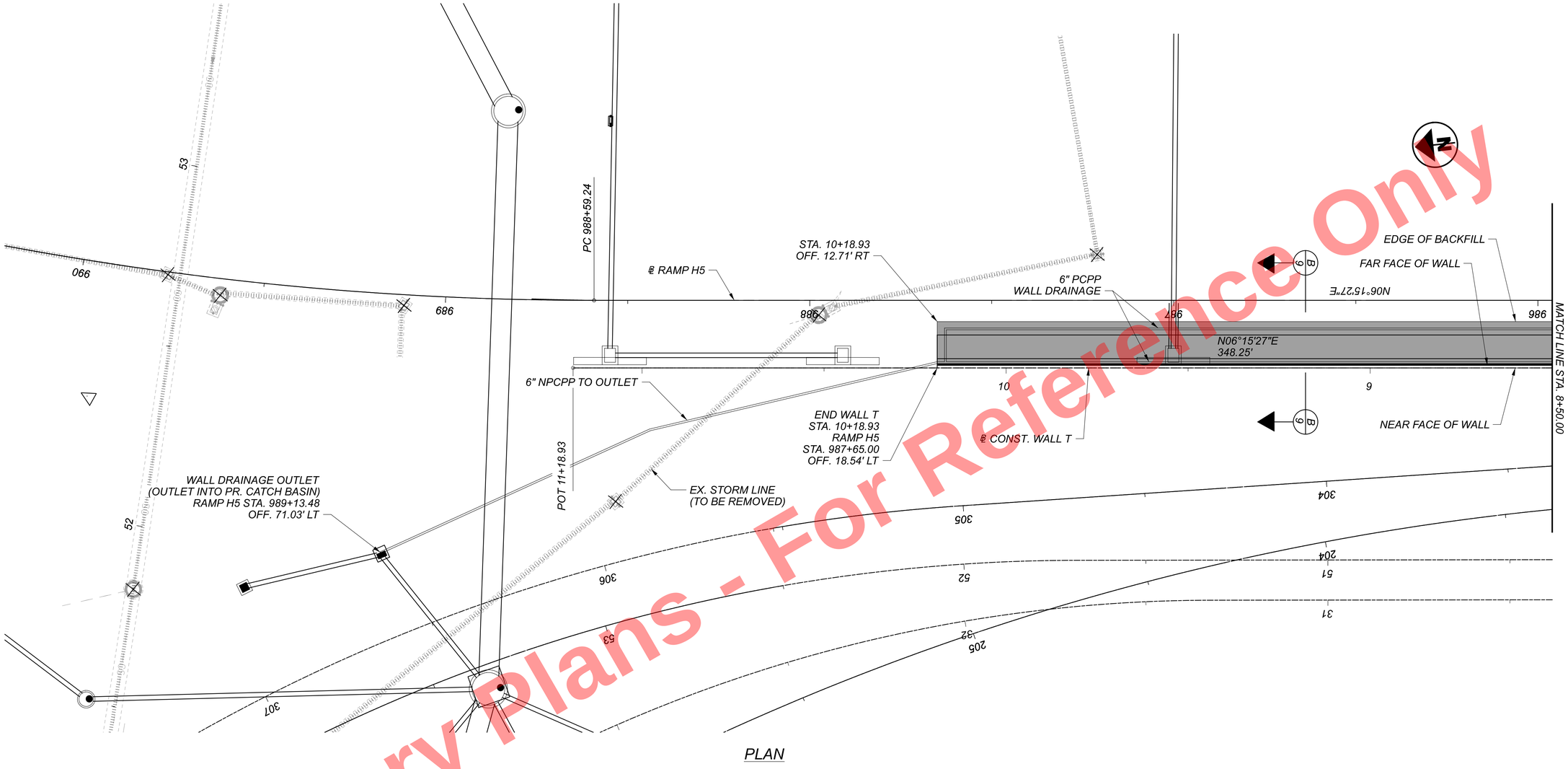

PLAN

WALL BASELINE GEOMETRY			
	℄ WALL T STA.	℄ RAMP IH5	OFFSET
BEGIN WALL T (BEGIN C.I.P. WALL)	0+74.67	1078+71.31	34.35' LT
BEGIN MSE WALL (END C.I.P. WALL)	1+31.78	1079+25.26	34.54' LT
END WALL T	10+18.93	987+65.00	18.54' LT

NOTES

1. FOR MSE WALL CROSS SECTIONS, SEE SHEET 873 TO 882 / 2696

LEGEND

LIMITS OF SELECT GRANULAR BACKFILL

Preliminary Plans - For Reference Only

HORIZONTAL SCALE IN FEET
0 7.5 15 30

SCHEMATIC PLAN (3 OF 3)
WALL T
BETWEEN RAMP IH4 AND RAMP IH5

SFN N/A

DESIGN AGENCY
Michael Baker INTERNATIONAL

DESIGNER SSW | CHECKER MKB
REVIEWER LPC 05-09-24
PROJECT ID 82382
SUBSET 6 | TOTAL 14
SHEET 1301 | TOTAL 2696

CUY-90-16.28 (CCG3A)

MODEL: CLP_Wall T - Schematic 3 [Sheet] PAPERSIZE: 34x22 (in.) DATE: 3/27/2025 TIME: 11:16:08 PM USER: Julie.Ross
pw:\\mb-us-pw.bentley.com:mb-us-pw-03\Documents\Cleveland_OH\01_Projects\ODOT\District12\82382\400-Engineering\Structures\WALL_T\Sheets\82382_T_WB001.dgn

STANDARD DRAWINGS AND SUPPLEMENTAL SPECIFICATIONS:

REFER TO THE FOLLOWING STANDARD CONSTRUCTION DRAWINGS:
DM-1.1 REVISED 1/17/2025

REFER TO THE FOLLOWING SUPPLEMENTAL SPECIFICATIONS:
800 DATED SEE TITLE SHEET
840 DATED 07/21/2023

REFER TO THE FOLLOWING SUPPLEMENT:
1083 DATED 1/20/2017

DESIGN SPECIFICATIONS:

THIS STRUCTURE CONFORMS TO THE "LRFD BRIDGE DESIGN SPECIFICATIONS", 9TH EDITION, ADOPTED BY THE AMERICAN ASSOCIATION OF STATE HIGHWAY AND TRANSPORTATION OFFICIALS AND THE ODOT BRIDGE DESIGN MANUAL, 2020 (DATED 07-21-23).

DESIGN DATA:

CONCRETE CLASS QC1 - COMPRESSIVE STRENGTH 4.0 KSI (CONCRETE COPING AND LEVELING PAD)
CONCRETE CLASS QC2 - COMPRESSIVE STRENGTH 4.5 KSI (BARRIER AND MOMENT SLAB)
REINFORCING STEEL - ASTM A615 OR A996 GRADE 60, MINIMUM YIELD STRENGTH 60 KSI.
- ALL REINFORCING STEEL SHALL BE EPOXY COATED PER CMS 709.00

REINFORCED FILL:
EFFECTIVE INTERNAL FRICTION ANGLE = 34°
UNIT WEIGHT = 120 pcf
EFFECTIVE COHESION = N/A
RETAINED FILL
EFFECTIVE INTERNAL FRICTION ANGLE = 30°
UNIT WEIGHT = 120 pcf
EFFECTIVE COHESION = N/A
FOUNDATION SOIL - DRAINED CONDITIONS
EFFECTIVE INTERNAL FRICTION ANGLE = 30°
UNIT WEIGHT = 115 pcf
EFFECTIVE COHESION = N/A
FOUNDATION SOIL - UNDRAINED CONDITIONS
EFFECTIVE INTERNAL FRICTION ANGLE = 30°
UNIT WEIGHT = 115 pcf
EFFECTIVE COHESION = N/A
SURCHARGE LOADS
LIVE LOAD SURCHARGE = 250 psf
THE DESIGN ASSUMES NO WATER PRESSURE ACT ON THE WALL

MSE WALL DESIGN PARAMETERS:

THE MINIMUM SOIL REINFORCEMENT LENGTH IS AT LEAST 8 FEET OR 70% OF THE WALL HEIGHT, WHICHEVER IS GREATER.

FACTORED BEARING RESISTANCE = 11.1 ksf

ITEM 511 - CLASS QC2 CONCRETE MISC.: MOMENT SLAB AND BARRIER WITH QC/QA

ALL PORTIONS OF THE BARRIER MOMENT SLAB SHALL BE PAID FOR UNDER THIS ITEM, UNLESS NOTED OTHERWISE. THIS INCLUDES, BUT IS NOT LIMITED TO MOMENT SLAB CONCRETE, BARRIER CONCRETE, PEJF, SAWCUTTING, JOINT SEALER, SLEEVED DOWELS, TRANSVERSE AND LONGITUDINAL JOINT TREATMENT ADJACENT TO ROADWAY PAVEMENT AND SHOULDERS, COMPACTION AND PREPARATION OF SOIL UNDERNEATH THE SLABS, AND ANY OTHER INCIDENTALS REQUIRED TO COMPLETE THE BARRIER MOMENT SLABS.

PAYMENT FOR THE ABOVE COMPLETED AND ACCEPTED QUANTITIES WILL BE MADE AT THE CONTRACT BID PRICE PER CUBIC YARD FOR ITEM 511 - CLASS QC2 CONCRETE, MISC.: MOMENT SLAB AND BARRIER WITH QC/QA.

ITEM 512 - SEALING OF CONCRETE SURFACES (EPOXY-URETHANE), AS PER PLAN

SEAL SURFACES OF THE C.I.P. WALL, MSE WALL PANELS, AND COPING AS SHOWN IN THE PLANS WITH AN EPOXY-URETHANE SEALER ACCORDING TO C&MS 512. THE FOLLOWING COLORS SHALL BE USED FOR PAINTING AND SEALING STRUCTURAL ELEMENTS:

COPING SEALER:	"DOVETAIL"	7018
MSE PANEL AND C.I.P. WALL SEALER:	"ALABASTER"	7008

ALL COLOR NAME AND NUMBER REFERENCES ARE TAKEN FROM THE SHERWIN WILLIAMS COLOR PALATE. THE CONTRACTOR MAY SUBSTITUTE SIMILAR COLORS FROM ALTERNATIVE SUPPLIER'S COLOR PALATE.

ITEM 512 - SEALING OF CONCRETE SURFACES, AS PER PLAN (PERMANENT GRAFFITI PROTECTION)

APPLY A PERMANENT GRAFFITI COATING QUALIFIED ACCORDING TO SUPPLEMENT 1083 THAT IS COMPATIBLE WITH THE CONCRETE SEALER OVER WHICH IT IS APPLIED. PROVIDE A COATING THAT MEETS THE REQUIREMENTS LISTED BELOW. APPLY THE GRAFFITI COATING IN ACCORDANCE WITH THE MANUFACTURER'S PRINTED INSTRUCTIONS.

A. THE MATERIAL SHALL BE A SINGLE COMPONENT, RTV (ROOM TEMPERATURE VULCANIZED), NEUTRAL MOISTURE CURE, PERMANENT (NON-SACRIFICIAL), TYPE III (WATER CLEANABLE) POLYSILOXANE (SILICONE) ANTI-GRAFFITI COATING, FREE OF ANY WAXES, EPOXIES, OR POLYURETHANE COMPONENTS.

B. THE COATING SHALL BE A ONE COAT SYSTEM (NO PRIMER) CAPABLE OF BEING SPRAY APPLIED TO A DRY FILM THICKNESS OF 15 MILS (375 MICRONS) WITHOUT RUNS OR SAGS (MULTIPLE COAT APPLICATION ACCEPTABLE FOR BRUSH/ROLLER USAGE AND PRIMER USAGE ACCEPTABLE FOR SPECIALTY SUBSTRATES SUCH AS GALVANIZED METAL).

C. THE COATING SHALL EMIT LESS THAN 300 G/L (2.5 POUNDS PER GALLON) OF VOLATILE ORGANIZE COMPOUNDS (EPA METHOD 24).

D. THE COATING SHALL MEET THE FOLLOWING PERFORMANCE REQUIREMENTS:
1. CLEANABILITY LEVEL 1 (GRAFFITI COMPLETELY REMOVED WITH COLD WATER POWER WASH) AS PER ASTM D7089 WITH LOW PRESSURE (1200 PSI) COLD WATER WASH AFTER 2000 HOURS ACCELERATED UV-CONDENSATION EXPOSURE IN ACCORDANCE WITH ASTM D4587.
2. GRAFFITI RESISTANCE LESS THAN 7.5 AS PER ASTM D6578 AFTER 2000 HOURS ACCELERATED UV-CONDENSATION EXPOSURE IN ACCORDANCE WITH ASTM 4578.
3. NO SIGNS OF GRAFFITI OR GRAFFITI STAINING AND MUST BE INTACT AND EXHIBIT NO SIGNS OF STREAKING, CRACKING, PINHOLING, DISCOLORING, OR OTHER VISIBLE COATING DEGRADATION UPON CASUAL OBSERVATION WHEN TESTED IN ACCORDANCE WITH TXDOT TEX 890-B, TYPE III METHOD.
4. BREATHABILITY OF 10 PERMS (+/- 3) PER ASTM D1653 USING "WET CUP METHOD".
5. ELONGATION AT BREAK GREATER THAN 100% AS PER ASTM D412 (USING DIE "D").
6. ADHESION RATING OF "8 - DIFFICULT TO REMOVE" AS PER ASTM D6677 (ADHESION BY KNIFE).

PROPRIETARY RETAINING WALL DATA:

THE PROPRIETARY WALL SUPPLIER SHALL DESIGN THE INTERNAL STABILITY OF A MECHANICALLY STABILIZED EARTH (MSE) WALL IN ACCORDANCE WITH SS840 TO RETAIN EARTH FILL BELOW ADJACENT ROADWAY.

CONSTRUCTION SEQUENCE:

1. EXCAVATE TO THE ELEVATION OF THE MSE WALL LEVELING PAD. EXCAVATE TO THE ELEVATION OF THE C.I.P. WALL FOOTING.

2. PLACE CONCRETE LEVELING PAD. PLACE FORMWORK AND CAST C.I.P. WALL.

3. INSTALL MSE WALL UP TO PROPOSED HEIGHT.

4. INSTALL CAST-IN-PLACE CONCRETE COPING ALONG TOP OF WALL.

SECTION/DETAIL/VIEW CALLOUTS

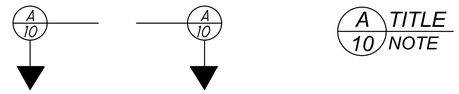

(SEE SECTION A ON SHEET 10) (SECTION A CUT FROM SHEET 10)

PLAN ABBREVIATIONS:

ABUT. = ABUTMENT
APPR. = APPROACH
B = BOTTOM
℄ = BASELINE
BM = BENCHMARK
BOT. OR BTM. = BOTTOM
℄ = CENTERLINE
C/C = CENTER TO CENTER
C.I.P. = CAST-IN-PLACE
C.J. = CONSTRUCTION JOINT
CLR. = CLEAR
CMS = CONSTRUCTION AND MATERIAL SPECIFICATIONS
CONC. = CONCRETE
CONST. = CONSTRUCTION
DIA. = DIAMETER
DIM. = DIMENSION
DTBD = DISPOSITION TO BE DETERMINED
DWG. = DRAWING
EB = EASTBOUND
E.F. = EACH FACE
EL. OR ELEV. = ELEVATION
EQ. = EQUAL
EST. = ESTIMATED
EX. = EXISTING
F.A. = FORWARD ABUTMENT
F/F = FACE TO FACE
F.F. = FAR FACE
FT. = FOOT OR FEET
FTG. = FOOTING
FWD. = FORWARD
IN. = INCH
JT. = JOINT
LT. = LEFT
MAX. = MAXIMUM
MIN. = MINIMUM
MISC. = MISCELLANEOUS
N = NORTH
NB = NORTHBOUND
N.F. = NEAR FACE
NO. = NUMBER
N.P.C.P.P. = NON-PERFORATED CORRUGATED PLASTIC PIPE
OHWM = ORDINARY HIGH WATER MARK
O/O = OUT TO OUT
P.C.P.P. = PERFORATED CORRUGATED PLASTIC PIPE
P.E.J.F. = PREFORMED EXPANSION JOINT FILLER
PROP. = PROPOSED
PSF = POUNDS PER SQUARE FOOT
R.A. = REAR ABUTMENT
S = SOUTH
SB = SOUTHBOUND
SER. = SERIES
SHLDR = SHOULDER
SPA. = SPACE OR SPACES
STA. = STATION
STD. = STANDARD
STR = STRAIGHT
T = TOP
T&B = TOP & BOTTOM
TBR = TO BE REMOVED
TBRBO = TO BE RELOCATED BY OTHERS
TEMP. = TEMPORARY
TYP. = TYPICAL
U.N.O. = UNLESS NOTED OTHERWISE
VAR. = VARIES
WB = WESTBOUND
WWR = WELDED WIRE REINFORCEMENT

Preliminary Plans - Not For Reference Only

WALL GENERAL NOTES
WALL T
BETWEEN RAMP IH4 AND RAMP IH5

SFN N/A

DESIGN AGENCY

Michael Baker INTERNATIONAL

DESIGNER	CHECKER
SSW	MKB

REVIEWER LPC 05-09-24

PROJECT ID 82382

SUBSET	TOTAL
7	14

SHEET	TOTAL
1302	2696

CUY-90-16.28 (CCG3A)
MODEL: Sheet PAPERSIZE: 34x22 (in.) DATE: 6/9/2025 TIME: 11:57:26 AM USER: Tolga.Feran
pw:\\mb-us-pw.bentley.com:mb-us-pw-03\Documents\Cleveland_OH\01_Projects\ODOT\District12\82382\400-Engineering\Structures\WALL_T\Sheets\82382_T_WN001.dgn

ESTIMATED QUANTITIES

CALCULATED BY: ZES DATE: 04/24/24
CHECKED BY: SSW DATE: 05/14/24

PARTICIPATION	ITEM	ITEM EXT.	TOTAL	UNIT	DESCRIPTION	SHEET REF.
01/IMS/04	203	35120	487	CY	GRANULAR MATERIAL, TYPE C	
01/IMS/04	509	10000	126,999	LB	EPOXY COATED STEEL REINFORCEMENT	
01/IMS/04	509	30020	15,914	FT	NO. 4 DEFORMED GFRP REINFORCEMENT	
01/IMS/04	511	46212	59	CY	CLASS QC1 CONCRETE WITH QC/QA, RETAINING/WINGWALL INCLUDING FOOTING	
01/IMS/04	511	53012	555	CY	CLASS QC2 CONCRETE, MISC.: MOMENT SLAB AND BARRIER WITH QC/QA	7
01/IMS/04	512	10001	905	SY	SEALING OF CONCRETE SURFACES, AS PER PLAN (PERMANENT GRAFFITI PROTECTION)	7
01/IMS/04	512	10101	1,902	SY	SEALING OF CONCRETE SURFACES (EPOXY-URETHANE), AS PER PLAN	7
01/IMS/04	516	13600	989	SF	1" PREFORMED EXPANSION JOINT FILLER	
01/IMS/04	516	13900	5,364	SF	2" PREFORMED EXPANSION JOINT FILLER	
01/IMS/04	840	20000	13,557	SF	MECHANICALLY STABILIZED EARTH WALL	
01/IMS/04	840	21000	4,343	CY	WALL EXCAVATION	
01/IMS/04	840	22000	1,391	SY	FOUNDATION PREPARATION	
01/IMS/04	840	23000	5,858	CY	SELECT GRANULAR BACKFILL	
01/IMS/04	840	25010	1,871	FT	6" DRAINAGE PIPE, PERFORATED	
01/IMS/04	840	25020	163	FT	6" DRAINAGE PIPE, NON-PERFORATED	
01/IMS/04	840	26000	888	FT	CONCRETE COPING	
01/IMS/04	840	26050	12,384	SF	AESTHETIC SURFACE TREATMENT	
01/IMS/04	840	27000	1	DAY	ON-SITE ASSISTANCE	
01/IMS/04	840	28000	LS		SGB INSPECTION AND COMPACTION TESTING	

Preliminary Plans - For Reference Only

ESTIMATED QUANITIES
WALL T
BETWEEN RAMP IH4 AND RAMP IH5

SFN
N/A

DESIGN AGENCY
Michael Baker INTERNATIONAL

DESIGNER	CHECKER
SSW	MKB

REVIEWER
LPC 05-09-24

PROJECT ID
82382

SUBSET	TOTAL
8	14

SHEET	TOTAL
1303	2696

CUY-90-16.28 (CCG3A)

MODEL: Sheet PAPERSIZE: 34x22 (in.) DATE: 3/27/2025 TIME: 11:16:30 PM USER: Julie.Ross
pw:\\mb-us-pw.bentley.com:mb-us-pw-03\Documents\Cleveland_OH\01_Projects\ODOT\District12\82382\400-Engineering\Structures\WALL_T\Sheets\82382_T_WQ001.dgn

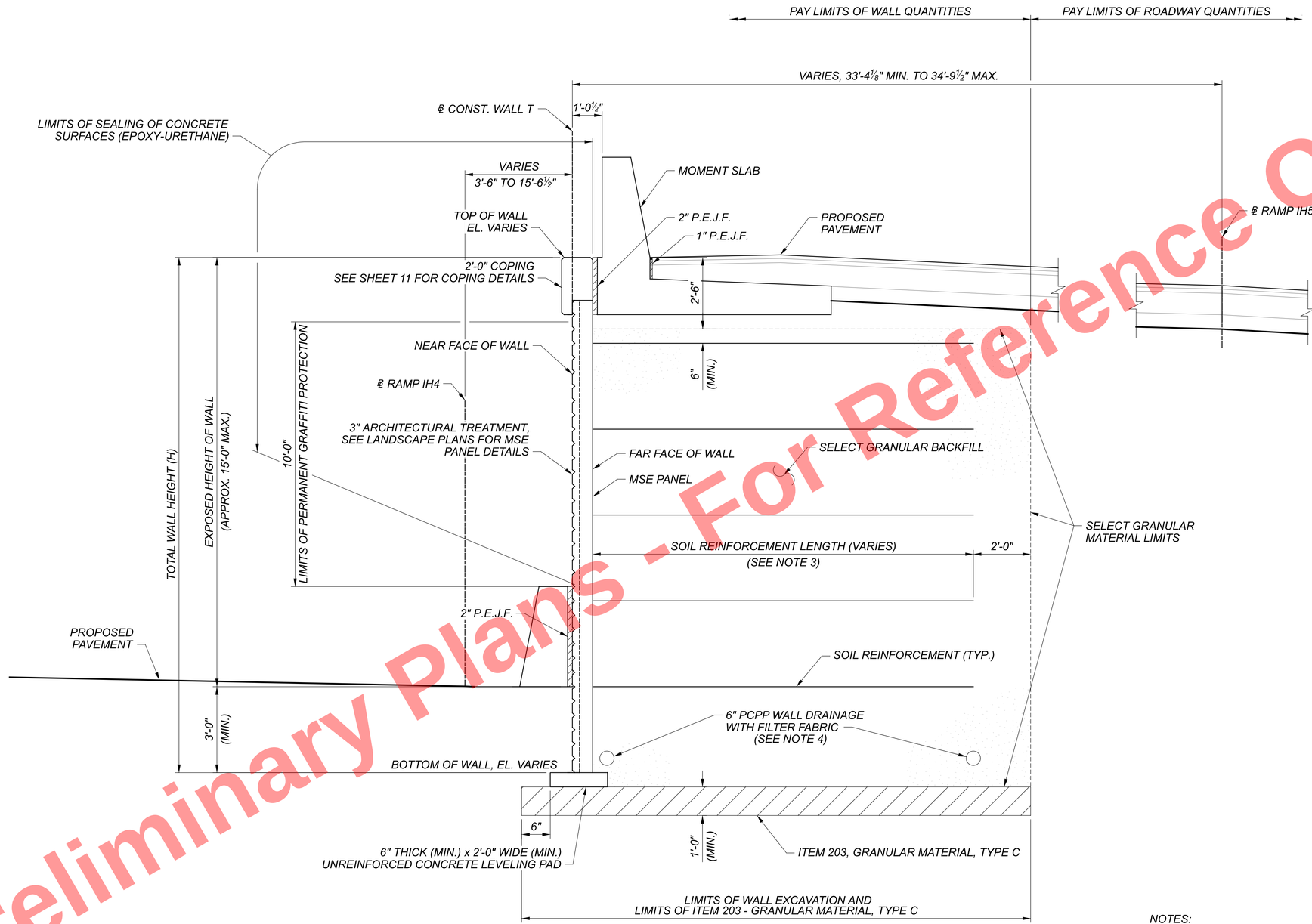

A 9 MSE WALL TYP. SECTION
VALID FOR EXPOSED WALL HEIGHTS H < 20'-0"

Preliminary Plans - For Reference Only

NOTES:

1. MSE WALL PANELS ARE TO BE 5'-0" x 5'-0", ARRANGED IN VERTICAL RUNNING BOND.
2. SEE LANDSCAPE DETAILS FOR MSE PANEL AESTHETIC TREATMENT DETAILS.
3. SOIL REINFORCEMENT LENGTH TO BE DETERMINED BY WALL SUPPLIER OF THE APPROVED WALL SYSTEM, BUT SHALL NOT BE LESS THAN 70 PERCENT OF THE DESIGN HEIGHT OF THE WALL OR 8 FT, WHICH EVER IS GREATER.
4. FILTER FABRIC US TO BE INCLUDED WITH ITEM 840 - 6" DRAINAGE PIPE, PERFORATED, FOR PAYMENT.

MSE WALL TYPICAL SECTION
WALL T
BETWEEN RAMP IH4 AND RAMP IH5

SFN	N/A
DESIGN AGENCY	Michael Baker INTERNATIONAL
DESIGNER	SSW
CHECKER	MKB
REVIEWER	LPC 05-09-24
PROJECT ID	82382
SUBSET	9
TOTAL	14
SHEET	1304
TOTAL	2696

CUY-90-16.28 (CCG3A)
MODEL: Sheet PAPERSIZE: 34x22 (in.) DATE: 3/27/2025 TIME: 11:16:36 PM USER: Julie.Ross
pw:\\mb-us-pw.bentley.com:mb-us-pw-03\Documents\Cleveland_OH\01_Projects\ODOT\District12\82382\400-Engineering\Structures\WALL_T\Sheets\82382_T_WY001.dgn

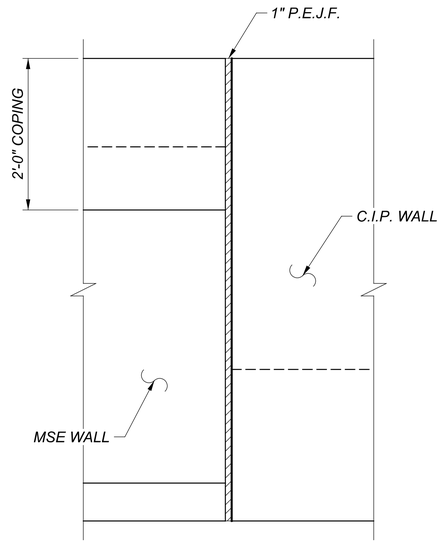

TYPICAL FRONT WALL VIEW OF JOINT ELEVATION
(AT C.I.P. WALL)

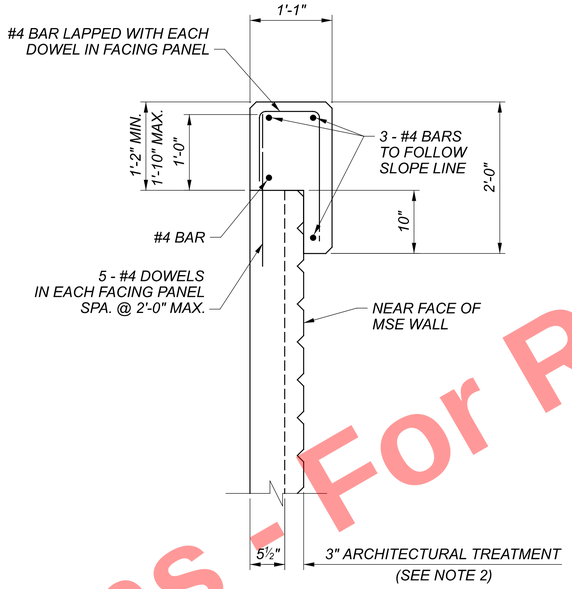

MSE WALL COPING DETAIL
(ALL REINFORCING STEEL TO BE EPOXY COATED)

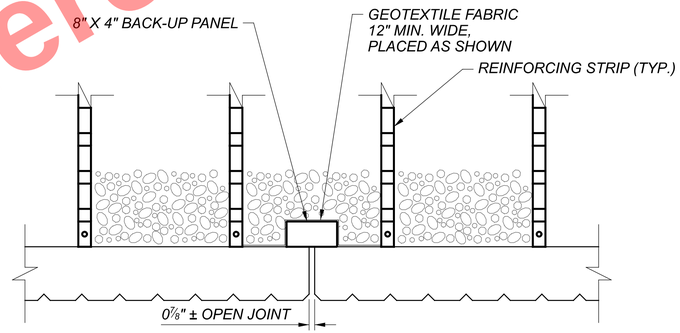

TYPICAL FRONT WALL VIEW OF JOINT ELEVATION
(AT MSE WALL)

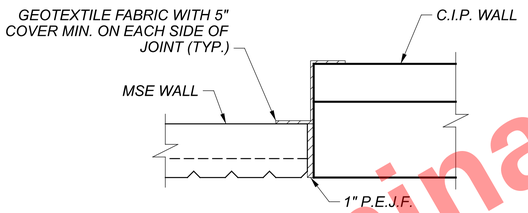

SLIP JOINT ELEMENT DETAIL
(AT C.I.P. WALL)

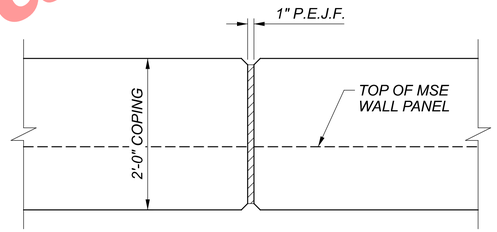

COPING EXPANSION JOINT - ELEVATION
(MAX JOINT SPACING IS 20'-0")

NOTES:

1. MSE WALL PANELS ARE TO BE 5'-0"x5'-0", ARRANGED IN VERTICAL RUNNING BOND.
2. SEE LANDSCAPE DETAILS FOR MSE PANEL AESTHETIC TREATMENT DETAILS.
3. DETAILS FOR ALL VERTICAL AND LONGITUDINAL REINFORCING STEEL IN THE COPING SHALL BE INCLUDED IN THE PROPRIETARY WALL MANUFACTURER'S SHOP DRAWINGS.
4. P.E.J.F. SHALL EXTEND THE FULL HEIGHT OF THE MSE WALL JOINT.

Preliminary Plans - For Reference Only

MSE WALL DETAILS
WALL T
BETWEEN RAMP IH4 AND RAMP IH5

SFN N/A

DESIGN AGENCY
Michael Baker INTERNATIONAL

DESIGNER	CHECKER
SSW	MKB

REVIEWER LPC 05-09-24

PROJECT ID 82382

SUBSET	TOTAL
10	14

SHEET	TOTAL
1305	2696

CUY-90-16.28 (CCG3A)

MODEL: Sheet PAPERSIZE: 34x22 (in.) DATE: 3/27/2025 TIME: 11:16:51 PM USER: Julie.Ross
pw:\\mb-us-pw.bentley.com:mb-us-pw-03\Documents\Cleveland_OH\01_Projects\ODOT\District12\82382\400-Engineering\Structures\WALL_T\Sheets\82382_T_WD001.dgn

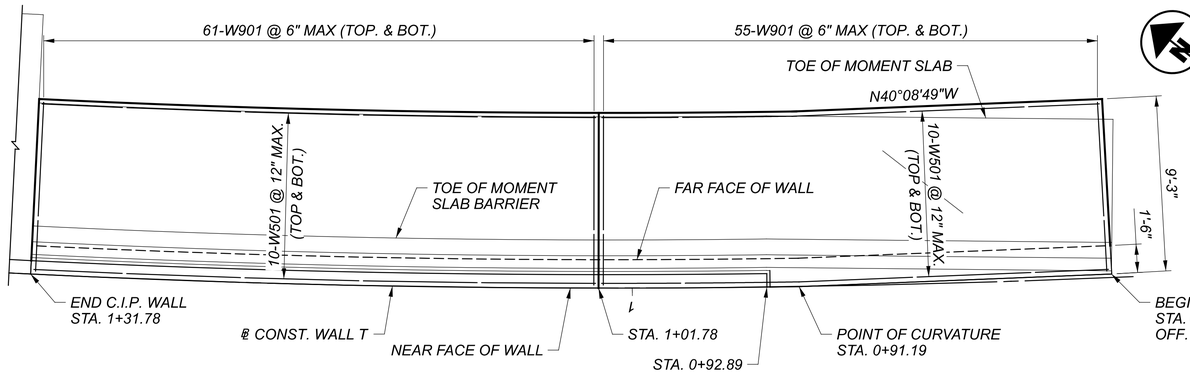

C.I.P. WALL PLAN

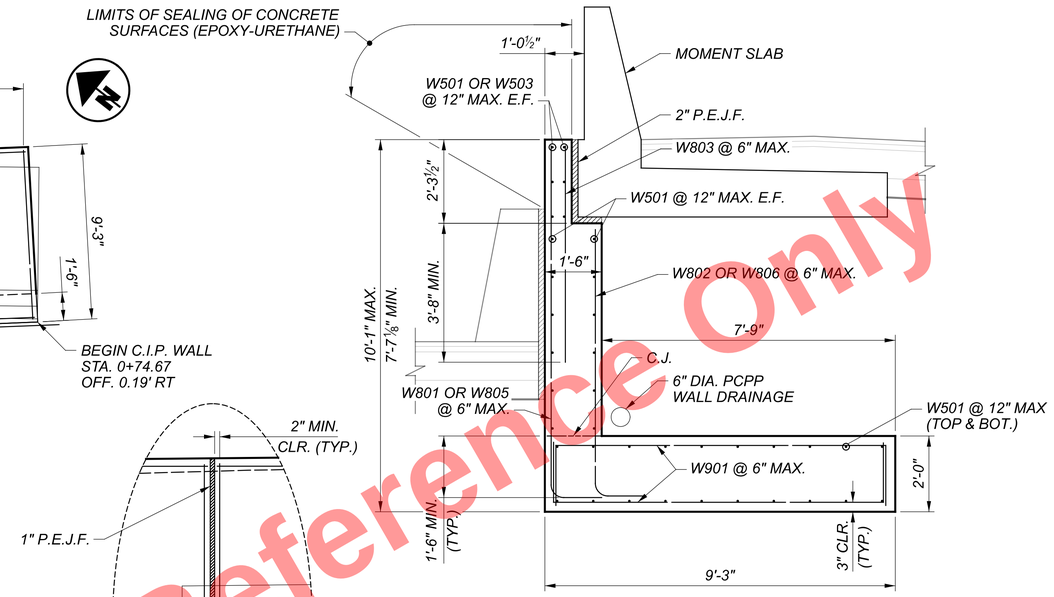

B / 11 SECTION
C.I.P. WALL TYP. SECTION

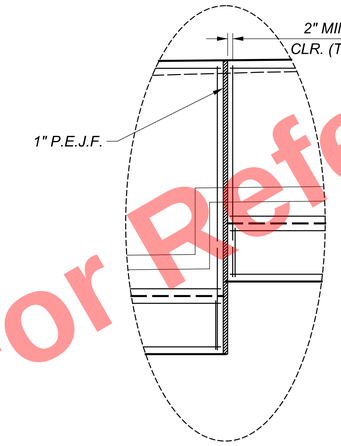

DETAIL A
TYPICAL @ EXPANSION JOINTS

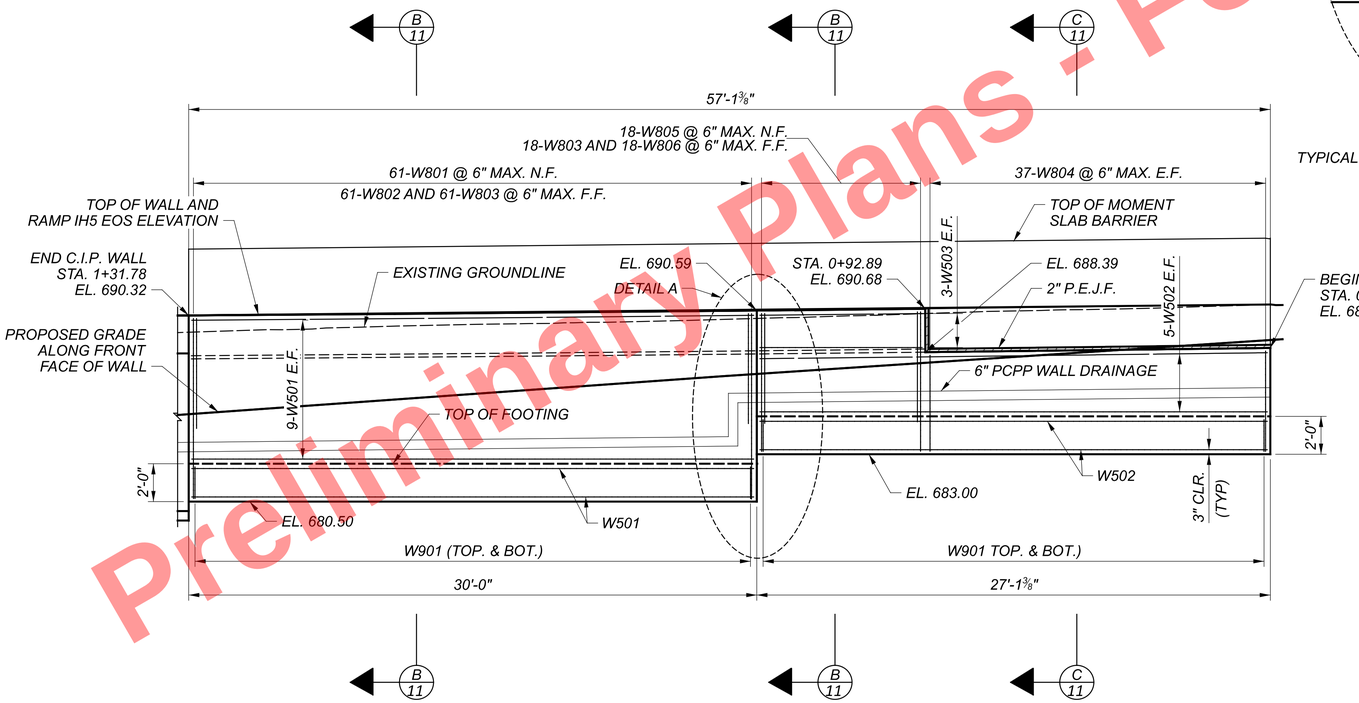

C.I.P. WALL ELEVATION

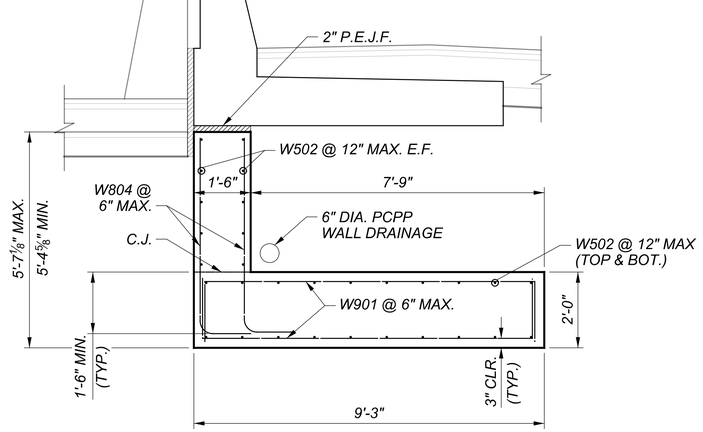

C / 11 SECTION
C.I.P. WALL TYP. SECTION

Preliminary Plans - For Reference Only

C.I.P. WALL DETAILS
WALL T
BETWEEN RAMP IH4 AND RAMP IH5

SFN	N/A
DESIGN AGENCY	Michael Baker INTERNATIONAL
DESIGNER	SSW
CHECKER	MKB
REVIEWER	LPC 05-09-24
PROJECT ID	82382
SUBSET	11
TOTAL	14
SHEET	1306
TOTAL	2696

CUY-90-16.28 (CCG3A)

MODEL: CLP_Wall T - Elevation 1 [Sheet] PAPERSIZE: 34x22 (in.) DATE: 3/27/2025 TIME: 11:17:17 PM USER: Julie.Ross
pw:\\mb-us-pw.bentley.com:mb-us-pw-03\Documents\Cleveland_OH\01_Projects\ODOT\District12\82382400-Engineering\Structures\WALL_T\Sheets\82382_T_WD004.dgn

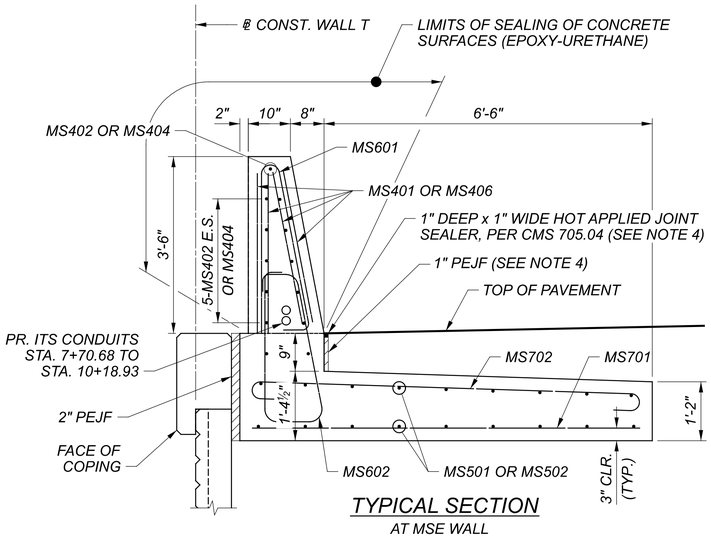

TYPICAL SECTION
AT MSE WALL

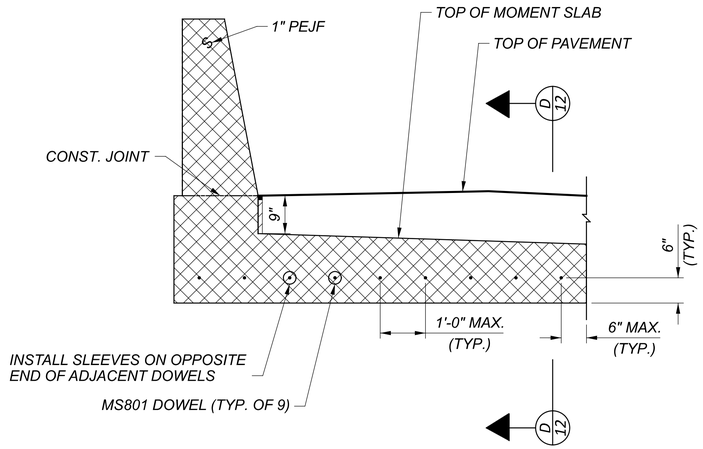

TYPICAL MOMENT SLAB SECTION AT EXPANSION JOINT

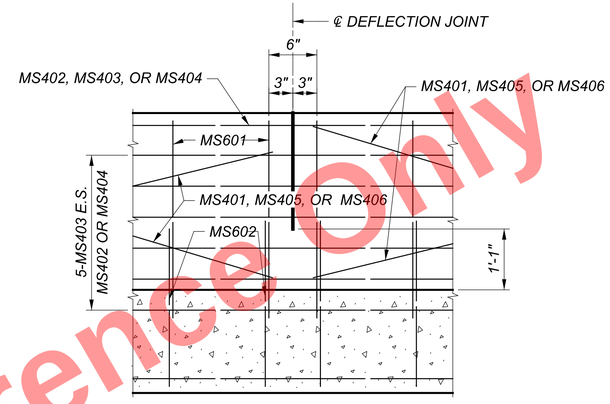

DEFLECTION JOINT ELEVATION DETAIL

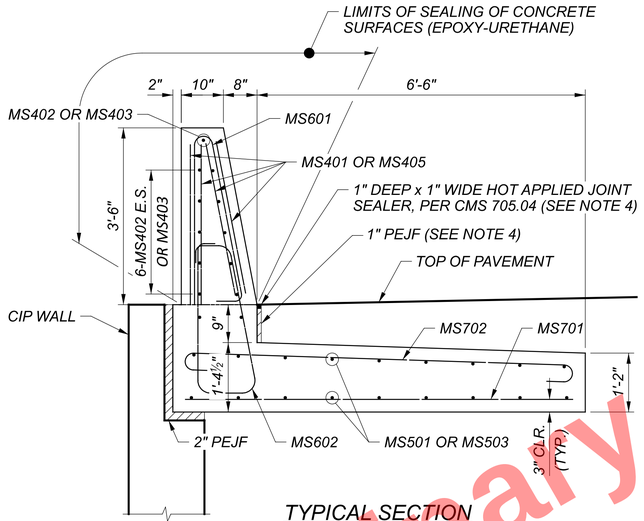

TYPICAL SECTION
AT C.I.P. WALL

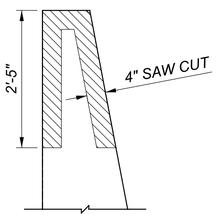

DETAIL A
SECTION THROUGH SAWCUT

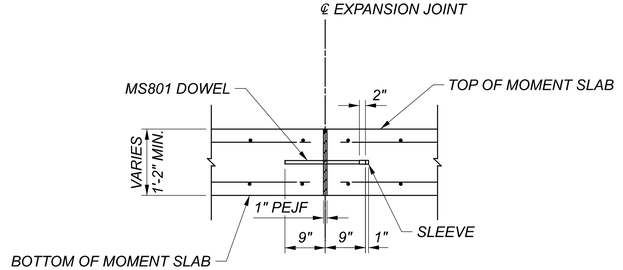

D 12 SECTION NOTE

NOTES:

1. SEE ODOT STANDARD DRAING SBR-1-20 FOR ADDITIONAL DETAILS.
2. EXPANSION JOINTS SHALL BE PLACED EVERY 30 FEET UNLESS NOTED OTHERWISE. 1" PEJF SHALL BE PLACED BETWEEN MOMENT SLABS AT EACH EXPANSION JOINT. REINFORCING STEEL SHALL NOT EXTEND THROUGH THE EXPANSION JOINT.
3. THE MINIMUM LENGTH OF THE MOMENT SLAB IS 30 FEET UNLESS NOTED OTHERWISE.
4. HOT APPLIED JOINT SEALER AND 1" PEJF TO BE PAID FOR WITH ITEM 511 - CLASS QC2 CONCRETE MISC.: CONCRETE MOMENT SLAB AND BARRIER WITH QC/QA.

Preliminary Plans - For Reference Only

MOMENT SLAB DETAILS (1 OF 2)
WALL T
BETWEEN RAMP IH4 AND RAMP IH5

SFN N/A
DESIGN AGENCY
Michael Baker INTERNATIONAL
DESIGNER SSW | CHECKER MKB
REVIEWER LPC 05-09-24
PROJECT ID 82382
SUBSET 12 | TOTAL 14
SHEET 1307 | TOTAL 2696

CUY-90-16.28 (CCG3A)

MODEL: Sheet PAPERSIZE: 34x22 (in.) DATE: 3/27/2025 TIME: 11:17:32 PM USER: Julie.Ross
pw:\\mb-us-pw.bentley.com:mb-us-pw-03\Documents\Cleveland_OH\01_Projects\ODOT\District12\82382\400-Engineering\Structures\WALL_T\Sheets\82382_T_WD002.dgn

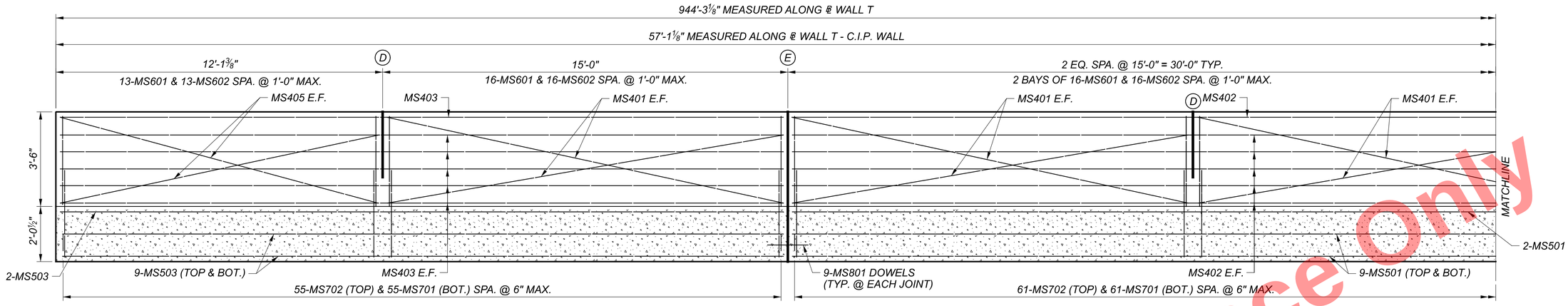

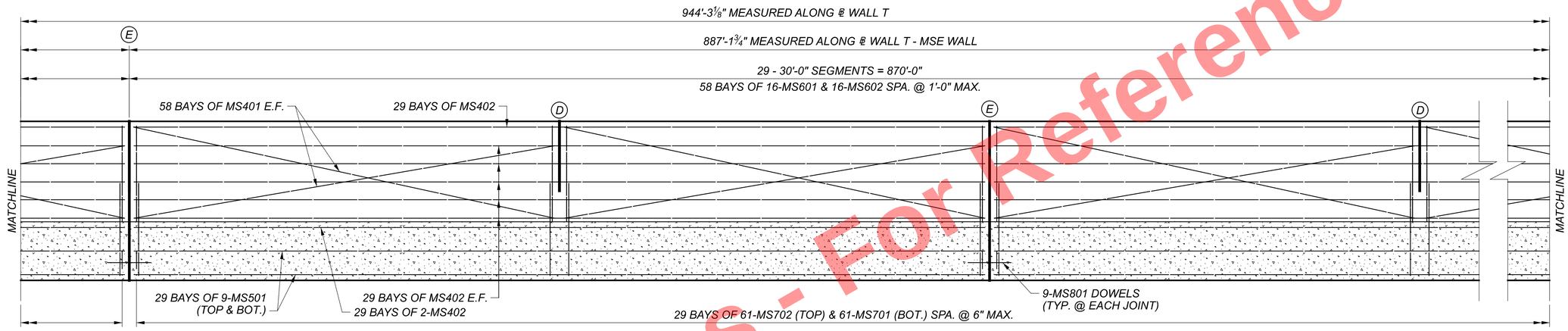

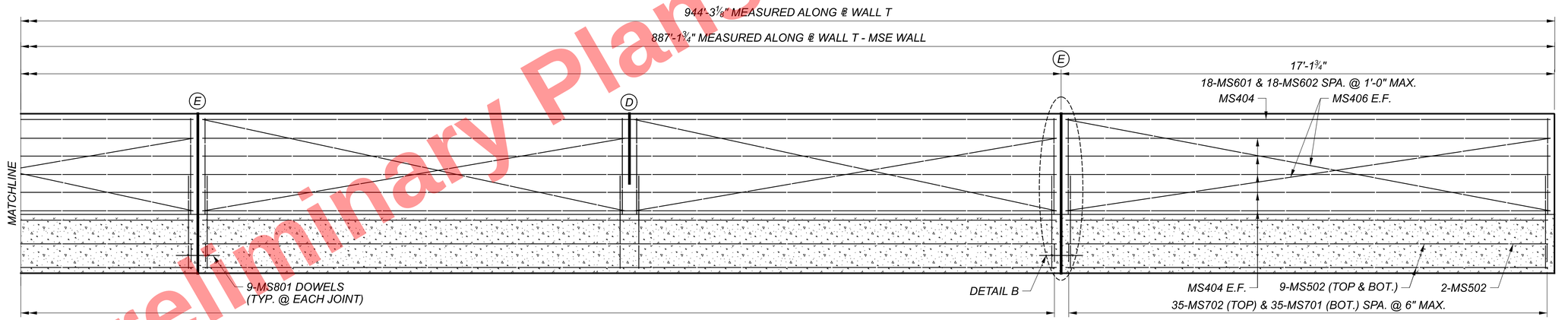

MOMENT SLAB ELEVATION

NOTES:

1. SEE ODOT STANDARD DRAWING SBR-1-20 FOR ADDITIONAL DETAILS.
2. PROVIDE MINIMUM 2" CONCRETE COVER, UNLESS SHOWN OTHERWISE. IF REQUIRED, INCREASE COVER THICKNESS FOR ARCHITECTURAL FEATURES OR FINISHES.
3. EXPANSION JOINTS SHALL BE PLACED EVERY 30 FEET UNLESS NOTED OTHERWISE. 1" PEJF SHALL BE PLACED BETWEEN MOMENT SLABS AT EACH EXPANSION JOINT. REINFORCING STEEL SHALL NOT EXTEND THROUGH THE EXPANSION JOINT.
4. THE MINIMUM LENGTH OF THE MOMENT SLAB IS 30 FEET UNLESS NOTED OTHERWISE.

LEGEND

(E) DESIGNATES EXPANSION JOINT

(D) DESIGNATES DEFLECTION JOINT

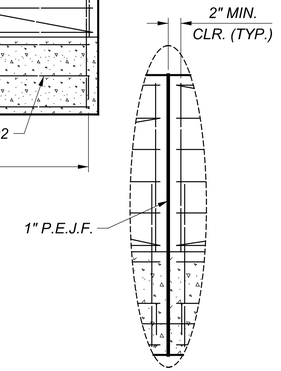

DETAIL B

TYPICAL AT EXPANSION JOINTS

MOMENT SLAB DETAILS (2 OF 2)
WALL T
BETWEEN RAMP IH4 AND RAMP IH5

SFN N/A

DESIGN AGENCY

Michael Baker INTERNATIONAL

DESIGNER	CHECKER
SSW	MKB

REVIEWER LPC 05-09-24

PROJECT ID 82382

SUBSET	TOTAL
13	14

SHEET	TOTAL
1308	2696

CUY-90-16.28 (CCG3A)

MODEL: Sheet PAPERSIZE: 34x22 (in.) DATE: 3/27/2025 TIME: 11:17:39 PM USER: Julie.Ross
pw:\\mb-us-pw.bentley.com:mb-us-pw-03\Documents\Cleveland_OH\01_Projects\ODOT\District12\82382400-Engineering\Structures\WALL_T\Sheets\82382_T_WD003.dgn

Preliminary Plans - For Reference Only

MARK	MAT'RL TYPE	NUMBER			LENGTH	WEIGHT (LBS.)	TYPE	DIMENSIONS						SER INC.
		REAR	FWD.	TOTAL				A	B	C	D	E	R	
CAST-IN-PLACE WALL (EPOXY COATED STEEL REINFORCEMENT-ECSR)														
W501	ECSR			38	29'-8"	1176	STR.							
W502	ECSR			30	26'-9"	837	STR.							
W503	ECSR			6	8'-7"	54	STR.							
W801	ECSR			61	10'-6"	1710	1	1'-4"	9'-4 7/8"					
W802	ECSR			61	8'-3"	1344	1	1'-4"	7'-1 3/8"					
W803	ECSR			79	5'-11"	1239	STR.							
W804	ECSR			74	6'-1"	1202	1	1'-4"	4'-11 5/8"					
W805	ECSR			18	8'-4"	401	1	1'-4"	7'-2 1/8"					
W806	ECSR			18	6'-0"	288	1	1'-4"	4'-10 5/8"					
W901	ECSR			232	11'-2"	8808	2	1'-6"	8'-9"	1'-6"				
CAST-IN-PLACE WALL ECSR SUBTOTAL						17059								

MARK	MAT'RL TYPE	NUMBER			LENGTH	WEIGHT (LBS.)	TYPE	DIMENSIONS						SER INC.
		REAR	FWD.	TOTAL				A	B	C	D	E	R	
MOMENT SLAB (EPOXY COATED STEEL REINFORCEMENT-ECSR)														
MS501	ECSR			540	29'-8"	16709	STR.							
MS502	ECSR			18	16'-10"	316	STR.							
MS503	ECSR			18	26'-9"	503	STR.							
MS601	ECSR			1007	7'-1"	10714	23	0'-6"	3'-3"	3'-3"			0'-2"	
MS602	ECSR			1007	9'-2"	13865	37	1'-8"	0'-9 1/2"	1'-7"	1'-0"	0'-7"		
MS701	ECSR			1920	7'-8"	30088	STR.							
MS702	ECSR			1920	9'-4"	36628	17	7'-8"						
MS801	ECSR			279	1'-6"	1117	STR							
MOMENT SLAB ECSR SUBTOTAL						109940								

MARK	MAT'RL TYPE	NUMBER			LENGTH	TOTAL LENGTH	TYPE	DIMENSIONS						SER INC.
		REAR	FWD.	TOTAL				A	B	C	D	E	R	
MOMENT SLAB (GLASS FIBER REINFORCED POLYMER-GFRP)														
MS401	GFRP			244	15'-0"	3660'-0"	STR.							
MS402	GFRP			390	29'-8"	11570'-0"	STR.							
MS403	GFRP			13	26'-9"	348'-2"	STR.							
MS404	GFRP			13	16'-10"	218'-7"	STR.							
MS405	GFRP			4	12'-1"	48'-6"	STR.							
MS406	GFRP			4	17'-2"	68'-7"	STR.							
MOMENT SLAB GFRP SUBTOTAL						15913'-9"								

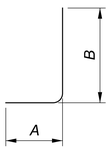

TYPE-1

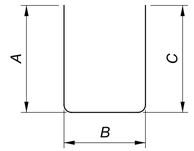

TYPE-2

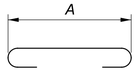

TYPE-17

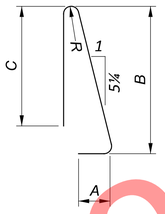

TYPE-23

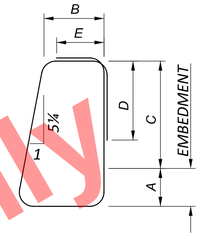

TYPE-37

Preliminary Plans - For Reference Only

NOTES:

1. *SERIES BARS - EACH BAR VARIES BY TABULATED AMOUNT.*
2. *ALL DIMENSIONS ARE OUT TO OUT.*
3. *TYPE "STR." INDICATES STRAIGHT BAR.*
4. *THE BAR SIZE NUMBER IS SPECIFIED IN THE "MARK" COLUMN. THE FIRST DIGIT INDICATES THE BAR SIZE NUMBER. FOR EXAMPLE, EA501 IS A #5 BAR SIZE.*
5. *SUBTOTALS AND TOTAL WEIGHTS ARE FOR INFORMATIONAL PURPOSES ONLY. IF THE REINFORCING LIST PROVIDED IN THE PLANS IS USED IT SHALL BE VERIFIED BY THE CONTRACTOR. ANY REVISIONS IN THE REINFORCING STEEL LIST AS SHOWN IN THE PLANS WILL NOT BE REASON FOR ADJUSTMENT IN THE BID PRICE FOR STRUCTURAL CONCRETE.*
6. *USE STANDARD HOOKS FOR ENDS OF BARS NOT SPECIFICALLY DIMENSIONED IN DETAILS.*

REINFORCING SCHEDULE
WALL T
BETWEEN RAMP IH4 AND RAMP IH5

SFN N/A

DESIGN AGENCY
Michael Baker INTERNATIONAL

DESIGNER	CHECKER
SSW	MKB

REVIEWER LPC 05-09-24

PROJECT ID 82382

SUBSET	TOTAL
14	14

SHEET	TOTAL
1309	2696

CUY-90-16.28 (CCG3A)

MODEL: Untitled Sheet PAPERSIZE: 34x22 (in.) DATE: 3/27/2025 TIME: 11:17:46 PM USER: Julie.Ross
pw:\\mb-us-pw.bentley.com:mb-us-pw-03\Documents\Cleveland_OH01_Projects\ODOT\District12\82382\400-Engineering\Structures\WALL_T\Sheets\82382_T_WL001.dgn

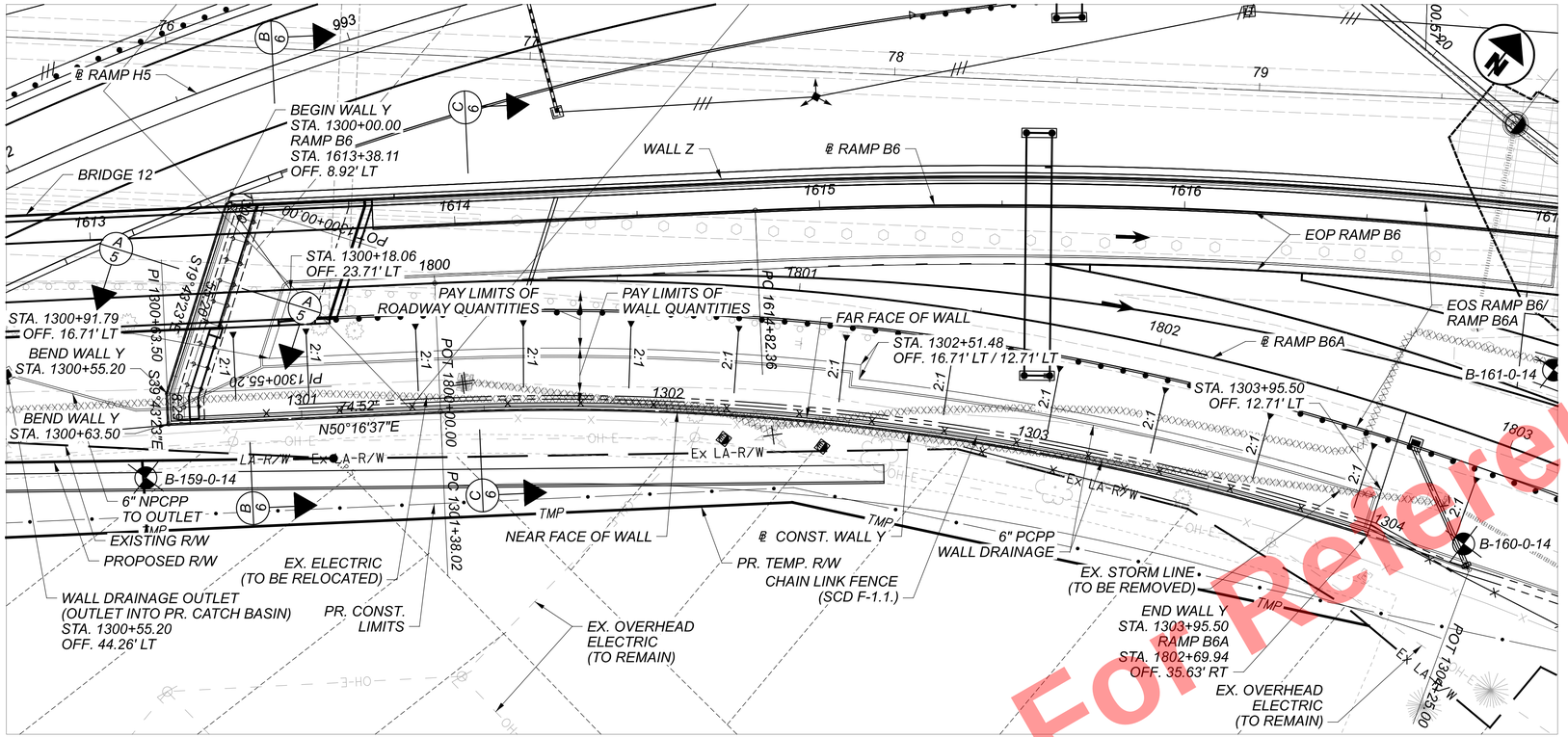

PLAN

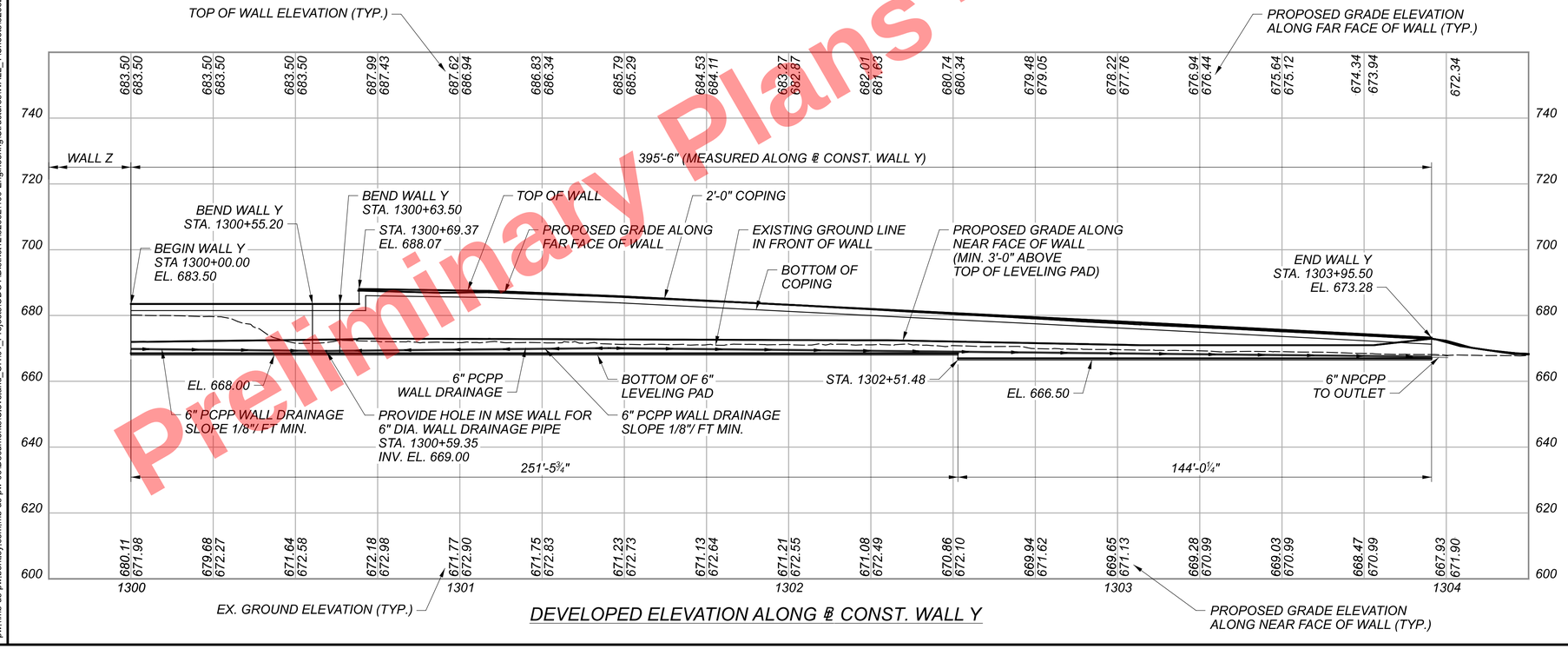

DEVELOPED ELEVATION ALONG ℄ CONST. WALL Y

BENCHMARK DATA

BM-59 STA. 1610+31.80, ELEV. 660.15, OFFSET 132.17 RT.
@ RAMP B6, MAG NAIL SET AT NOSE OF CONCRETE DRAINAGE CHANNEL, BTWN E. 14TH ST. AND COMMUNITY COLLEGE AVE.

BM-62 STA. 1612+77.43, ELEV. 672.11, OFFSET 690.58 LT.
@ RAMP B6, RAILROAD SPIKE IN EAST FACE OF POWER POLE NO. 121784 AT NORTHWEST CORNER OF E. 18TH ST. AND CARNEGIE AVE.

FOR ADDITIONAL BENCHMARK INFORMATION. SEE ROADWAY PLAN SHEET 4 / 2696

WALL Y	RAMP B6	RAMP B6A
CURVE DATA	CURVE DATA	CURVE DATA
P.I. = Sta. 1302+83.39	P.I. = Sta. 1618+11.29	P.I. = Sta. 1802+97.78
Δ = 22°33'54" RT	Δ = 25°51'58" LT	Δ = 42°35'27" LT
Dc = 07°51'46"	Dc = 04°00'00"	Dc = 07°30'00"
R = 728.69'	R = 1,432.39'	R = 763.94'
T = 145.38'	T = 328.93'	T = 297.78'
L = 286.98'	L = 646.65'	L = 567.88'
E = 14.36'	E = 37.28'	E = 55.98'

PROPOSED WORK

THE PROPOSED WORK CONSISTS OF CONSTRUCTING A RETAINING WALL AROUND THE BRIDGE 12 FORWARD ABUTMANT AND RAMP B6. THE WALL IS TO BE BOTTOM UP CONSTRUCTION UTILIZING AN MSE TYPE WALL.

BORING LOCATION*

BORING	STATION	OFFSET	TOP OF ROCK EL.
B-159-0-14	190+65.82	192.42' RT.	-
B-160-0-14	194+44.51	212.90' RT.	-
B-161-0-14	194+68.02	163.84' RT.	-

** = BORING STATION AND OFFSETS ARE FROM ℄ I.R. 90 EB*

NOTES

1. *EARTHWORK LIMITS SHOWN ARE APPROXIMATE. ACTUAL SLOPES SHALL CONFORM TO PLAN CROSS SECTIONS.*
2. *FOR MSE WALL CROSS SECTIONS, SEE SHEETS:*
   RAMP B6: 851 TO 854/ 2696
   RAMP B6A: 860 TO 861 / 2696
3. *STATION AND WALL OFFSETS SHOWN AT FRONT FACE OF WALL.*
4. *SLIP JOINTS IN MSE WALL SHALL BE SPACED AT 20'-0" MAXIMUM.*

LEGEND

HISTORIC BORING LOCATIONS

PROJECT BORING LOCATIONS

CONST. = CONSTRUCTION
EOP = EDGE OF PAVEMENT
EOS = EDGE OF SHOULDER

Preliminary Plans - For Reference Only

WALL PLAN AND PROFILE
WALL Y
UNDER BRIDGE 12 AND ALONG SOUTH SIDE OF RAMP B6

SFN N/A
DESIGN AGENCY
Michael Baker INTERNATIONAL
DESIGNER SSW | CHECKER MKB
REVIEWER LPC 05-09-24
PROJECT ID 82382
SUBSET 1 | TOTAL 7
SHEET 1310 | TOTAL 2696

CUY-90-16.28 (CCG3A)

MODEL: BL_P_Wall Y - Wall Y Plan PAPERSIZE: 34x22 (in.) DATE: 3/27/2025 TIME: 11:17:58 PM USER: Julie.Ross
pw:\\mb-us-pw.bentley.com:mb-us-pw-03\Documents\Cleveland_OH\01_Projects\ODOT\District12\82382\400-Engineering\Structures\WALL_Y\Sheets\82382_Y_WP001.dgn

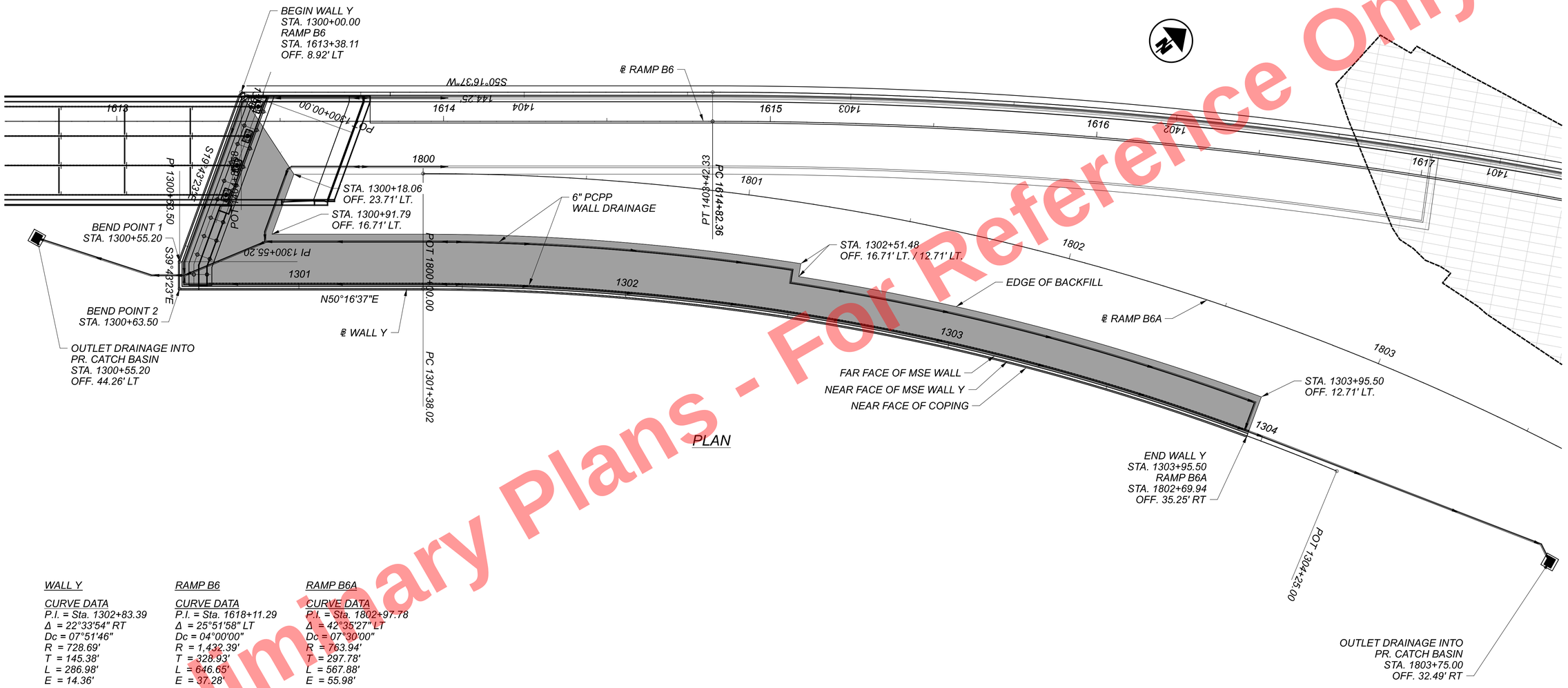

PLAN

WALL Y

CURVE DATA
P.I. = Sta. 1302+83.39
Δ = 22°33'54" RT
Dc = 07°51'46"
R = 728.69'
T = 145.38'
L = 286.98'
E = 14.36'

RAMP B6

CURVE DATA
P.I. = Sta. 1618+11.29
Δ = 25°51'58" LT
Dc = 04°00'00"
R = 1,432.39'
T = 328.93'
L = 646.65'
E = 37.28'

RAMP B6A

CURVE DATA
P.I. = Sta. 1802+97.78
Δ = 42°35'27" LT
Dc = 07°30'00"
R = 763.94'
T = 297.78'
L = 567.88'
E = 55.98'

WALL BASELINE GEOMETRY

	℄ WALL Y	℄ RAMP B6		℄ RAMP B6A	
	STATION	STATION	OFFSET	STATION	OFFSET
BEGIN WALL Y	1300+00.00	1613+38.11	8.92' LT.	-	-
BEND POINT 1 WALL Y	1300+55.20	1613+19.23	42.96' RT.	-	-
BEND POINT 2 WALL Y	1300+63.50	1613+19.23	51.25' RT.	-	-
END WALL Y	1303+95.50	1616+56.83	86.30' RT.	1802+69.94	35.25' RT.

NOTES:

1. *FOR MSE WALL CROSS SECTIONS, SEE SHEETS:*
   RAMP B6: 851 TO 854/ 2696
   RAMP B6A: 860TO 861/ 2696

LEGEND:

LIMITS OF SELECT GRANULAR BACKFILL

Preliminary Plans - For Reference Only

SCHEMATIC PLAN
WALL Y
UNDER BRIDGE 12 AND ALONG SOUTH SIDE OF RAMP B6

SFN N/A
DESIGN AGENCY Michael Baker INTERNATIONAL
DESIGNER DAF | CHECKER SSW
REVIEWER LPC 05-09-24
PROJECT ID 82382
SUBSET 2 | TOTAL 7
SHEET 1311 | TOTAL 2696

CUY-90-16.28 (CCG3A)

MODEL: Untitled Sheet PAPERSIZE: 34x22 (in.) DATE: 3/27/2025 TIME: 11:18:27 PM USER: Julie.Ross
pw:\\mb-us-pw.bentley.com:mb-us-pw-03\Documents\Cleveland_OH01_Projects\ODOT\District12\82382400-Engineering\Structures\WALL_Y\Sheets\82382_Y_WB001.dgn

STANDARD DRAWINGS AND SUPPLEMENTAL SPECIFICATIONS:

REFER TO THE FOLLOWING STANDARD CONSTRUCTION DRAWINGS:
F-1.1 REVISED 7/19/2013
DM-1.1 REVISED 1/17/2025

REFER TO THE FOLLOWING SUPPLEMENTAL SPECIFICATIONS:
800 DATED SEE TITLE SHEET
840 DATED 7/21/2023

REFER TO THE FOLLOWING SUPPLEMENT:
1083 DATED 1/20/2017

DESIGN SPECIFICATIONS:

THIS STRUCTURE CONFORMS TO THE "LRFD BRIDGE DESIGN SPECIFICATIONS", 9TH EDITION, ADOPTED BY THE AMERICAN ASSOCIATION OF STATE HIGHWAY AND TRANSPORTATION OFFICIALS AND THE ODOT BRIDGE DESIGN MANUAL, 2020 (DATED 07-21-23).

DESIGN DATA:

CONCRETE CLASS QC1 - COMPRESSIVE STRENGTH 4.0 KSI (CONCRETE COPING AND LEVELING PAD)
REINFORCING STEEL - ASTM A615 OR A996 GRADE 60, MINIMUM YIELD STRENGTH 60 KSI.
- ALL REINFORCING STEEL SHALL BE EPOXY COATED PER CMS 709.00

REINFORCED FILL:
EFFECTIVE INTERNAL FRICTION ANGLE = 34°
UNIT WEIGHT = 120 pcf
EFFECTIVE COHESION = N/A
RETAINED FILL
EFFECTIVE INTERNAL FRICTION ANGLE = 30°
UNIT WEIGHT = 120 pcf
EFFECTIVE COHESION = N/A
FOUNDATION SOIL - DRAINED CONDITIONS
EFFECTIVE INTERNAL FRICTION ANGLE = 30°
UNIT WEIGHT = 115 pcf
EFFECTIVE COHESION = N/A
FOUNDATION SOIL - UNDRAINED CONDITIONS
EFFECTIVE INTERNAL FRICTION ANGLE = 30°
UNIT WEIGHT = 115 pcf
EFFECTIVE COHESION = N/A
SURCHARGE LOADS
LIVE LOAD SURCHARGE = 250 psf
THE DESIGN ASSUMES NO WATER PRESSURE ACT ON THE WALL

MSE WALL DESIGN PARAMETERS:

THE MINIMUM SOIL REINFORCEMENT LENGTH IS AT LEAST 8 FEET OR 70% OF THE WALL HEIGHT, WHICHEVER IS GREATER. FOR WALL SECTIONS AROUND ABUTMENTS, THE STRAP LENGTH WILL NEED TO BE 70% OF THE DISTANCE BETWEEN THE TOP OF THE LEVELING PAD AND THE TOP OF THE PAVEMENT.

FACTORED BEARING RESISTANCE = 11.2 ksf

ITEM 512 - SEALING OF CONCRETE SURFACES (EPOXY-URETHANE), AS PER PLAN

SEAL SURFACES OF THE MSE WALL PANELS AND COPING AS SHOWN IN THE PLANS WITH AN EPOXY-URETHANE SEALER ACCORDING TO C&MS 512. THE FOLLOWING COLORS SHALL BE USED FOR PAINTING AND SEALING STRUCTURAL ELEMENTS:

COPING SEALER:	"DOVETAIL"	7018
MSE PANEL SEALER:	"ALABASTER"	7008

ALL COLOR NAME AND NUMBER REFERENCES ARE TAKEN FROM THE SHERWIN WILLIAMS COLOR PALATE. THE CONTRACTOR MAY SUBSTITUTE SIMILAR COLORS FROM ALTERNATIVE SUPPLIER'S COLOR PALATE.

ITEM 512 - SEALING OF CONCRETE SURFACES, AS PER PLAN (PERMANENT GRAFFITI PROTECTION)

APPLY A PERMANENT GRAFFITI COATING QUALIFIED ACCORDING TO SUPPLEMENT 1083 THAT IS COMPATIBLE WITH THE CONCRETE SEALER OVER WHICH IT IS APPLIED. PROVIDE A COATING THAT MEETS THE REQUIREMENTS LISTED BELOW. APPLY THE GRAFFITI COATING IN ACCORDANCE WITH THE MANUFACTURER'S PRINTED INSTRUCTIONS.

A. THE MATERIAL SHALL BE A SINGLE COMPONENT, RTV (ROOM TEMPERATURE VULCANIZED), NEUTRAL MOISTURE CURE, PERMANENT (NON-SACRIFICIAL), TYPE III (WATER CLEANABLE) POLYSILOXANE (SILICONE) ANTI-GRAFFITI COATING, FREE OF ANY WAXES, EPOXIES, OR POLYURETHANE COMPONENTS.

B. THE COATING SHALL BE A ONE COAT SYSTEM (NO PRIMER) CAPABLE OF BEING SPRAY APPLIED TO A DRY FILM THICKNESS OF 15 MILS (375 MICRONS) WITHOUT RUNS OR SAGS (MULTIPLE COAT APPLICATION ACCEPTABLE FOR BRUSH/ROLLER USAGE AND PRIMER USAGE ACCEPTABLE FOR SPECIALTY SUBSTRATES SUCH AS GALVANIZED METAL).

C. THE COATING SHALL EMIT LESS THAN 300 G/L (2.5 POUNDS PER GALLON) OF VOLATILE ORGANIZE COMPOUNDS (EPA METHOD 24).

D. THE COATING SHALL MEET THE FOLLOWING PERFORMANCE REQUIREMENTS:
1. CLEANABILITY LEVEL 1 (GRAFFITI COMPLETELY REMOVED WITH COLD WATER POWER WASH) AS PER ASTM D7089 WITH LOW PRESSURE (1200 PSI) COLD WATER WASH AFTER 2000 HOURS ACCELERATED UV-CONDENSATION EXPOSURE IN ACCORDANCE WITH ASTM D4587.
2. GRAFFITI RESISTANCE LESS THAN 7.5 AS PER ASTM D6578 AFTER 2000 HOURS ACCELERATED UV-CONDENSATION EXPOSURE IN ACCORDANCE WITH ASTM 4578.
3. NO SIGNS OF GRAFFITI OR GRAFFITI STAINING AND MUST BE INTACT AND EXHIBIT NO SIGNS OF STREAKING, CRACKING, PINHOLING, DISCOLORING, OR OTHER VISIBLE COATING DEGRADATION UPON CASUAL OBSERVATION WHEN TESTED IN ACCORDANCE WITH TXDOT TEX 890-B, TYPE III METHOD.
4. BREATHABILITY OF 10 PERMS (+/- 3) PER ASTM D1653 USING "WET CUP METHOD".
5. ELONGATION AT BREAK GREATER THAN 100% AS PER ASTM D412 (USING DIE "D").
6. ADHESION RATING OF "8 - DIFFICULT TO REMOVE" AS PER ASTM D6677 (ADHESION BY KNIFE).

PROPRIETARY RETAINING WALL DATA:

THE PROPRIETARY WALL SUPPLIER SHALL DESIGN THE INTERNAL STABILITY OF A MECHANICALLY STABILIZED EARTH (MSE) WALL IN ACCORDANCE WITH SS840 TO RETAIN EARTH FILL AROUND AND BELOW THE ABUTMENT. FOR LOADS AND NOTES PERTAINING TO THE ABUTMENT, SEE THE GENERAL NOTES SHEETS FOR BRIDGE 12, BRIDGE NUMBER CUY-90-1652S.

ITEM 607 - FENCE, TYPE CLT, AS PER PLAN

INSTALL CHAIN LINK FENCE ACCORDING TO STD. CONSTRUCTION DRAWING F-1.1 AND C&MS 607, EXCEPT AS MODIFIED BELOW.

POSTS, PLATES, TIE WIRES, CAULK AND ADDITIONAL VISIBLE HARDWARE SHALL BE COLOR BLACK (FEDERAL STD. 595C #17038). FENCE FABRIC SHALL BE BLACK VINYL-COATED, CHAIN LINK STYLE.

CONSTRUCTION SEQUENCE:

1. EXCAVATE TO THE ELEVATION OF THE MSE WALL LEVELING PAD.

2. DRIVE ABUTMENT PILES.

3. PLACE CONCRETE LEVELING PAD.

4. INSTALL MSE WALL UP TO BOTTOM OF FOOTING.

5. CONSTRUCT ABUTMENT FOOTING AFTER WAITING PERIOD (SEE BRIDGE 12 PLANS FOR DETAILS).

SECTION/DETAIL/VIEW CALLOUTS

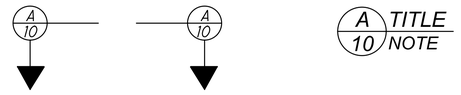

(SEE SECTION A ON SHEET 10) (SECTION A CUT FROM SHEET 10)

PLAN ABBREVIATIONS:

ABUT. = ABUTMENT
APPR. = APPROACH
B = BOTTOM
℄ = BASELINE
BM = BENCHMARK
BOT. OR BTM. = BOTTOM
℄ = CENTERLINE
C/C = CENTER TO CENTER
C.I.P. = CAST-IN-PLACE
C.J. = CONSTRUCTION JOINT
CLR. = CLEAR
CMS = CONSTRUCTION AND MATERIAL SPECIFICATIONS
CONC. = CONCRETE
CONST. = CONSTRUCTION
DIA. = DIAMETER
DIM. = DIMENSION
DTBD = DISPOSITION TO BE DETERMINED
DWG. = DRAWING
EB = EASTBOUND
E.F. = EACH FACE
EL. OR ELEV. = ELEVATION
EQ. = EQUAL
EST. = ESTIMATED
EX. = EXISTING
F.A. = FORWARD ABUTMENT
F/F = FACE TO FACE
F.F. = FAR FACE
FT. = FOOT OR FEET
FTG. = FOOTING
FWD. = FORWARD
IN. = INCH
JT. = JOINT
LT. = LEFT
MAX. = MAXIMUM
MIN. = MINIMUM
MISC. = MISCELLANEOUS
N = NORTH
NB = NORTHBOUND
N.F. = NEAR FACE
NO. = NUMBER
N.P.C.P.P. = NON-PERFORATED CORRUGATED PLASTIC PIPE
OHWM = ORDINARY HIGH WATER MARK
O/O = OUT TO OUT
P.C.P.P. = PERFORATED CORRUGATED PLASTIC PIPE
P.E.J.F. = PREFORMED EXPANSION JOINT FILLER
PROP. = PROPOSED
PSF = POUNDS PER SQUARE FOOT
R.A. = REAR ABUTMENT
S = SOUTH
SB = SOUTHBOUND
SER. = SERIES
SHLDR = SHOULDER
SPA. = SPACE OR SPACES
STA. = STATION
STD. = STANDARD
STR = STRAIGHT
T = TOP
T&B = TOP & BOTTOM
TBR = TO BE REMOVED
TBRBO = TO BE RELOCATED BY OTHERS
TEMP. = TEMPORARY
TYP. = TYPICAL
U.N.O. = UNLESS NOTED OTHERWISE
VAR. = VARIES
WB = WESTBOUND
WWR = WELDED WIRE REINFORCEMENT

Preliminary Plans - For Reference Only

WALL GENERAL NOTES
WALL Y
UNDER BRIDGE 12 AND ALONG SOUTH SIDE OF RAMP B6

SFN N/A

DESIGN AGENCY
Michael Baker INTERNATIONAL

DESIGNER	CHECKER
SSW	MKB

REVIEWER LPC 05-09-24

PROJECT ID 82382

SUBSET	TOTAL
3	7

SHEET	TOTAL
1312	2696

CUY-90-16.28 (CCG3A)

MODEL: Sheet PAPERSIZE: 34x22 (in.) DATE: 6/9/2025 TIME: 12:03:01 PM USER: Tolga.Feran
pw:\\mb-us-pw.bentley.com:mb-us-pw-03\Documents\Cleveland_OH\01_Projects\ODOT\District12\82382\400-Engineering\Structures\WALL_Y\Sheets\82382_Y_WN001.dgn

ESTIMATED QUANTITIES

CALCULATED BY: ZES DATE: 04/24/24
CHECKED BY: SSW DATE: 05/14/24

PARTICIPATION	ITEM	ITEM EXT.	TOTAL	UNIT	DESCRIPTION	SHEET REF.
01/IMS/04	203	35120	239	CY	GRANULAR MATERIAL, TYPE C	
01/IMS/04	512	10001	370	SY	SEALING OF CONCRETE SURFACES, AS PER PLAN (PERMANENT GRAFFITI PROTECTION)	3
01/IMS/04	512	10101	492	SY	SEALING OF CONCRETE SURFACES (EPOXY-URETHANE), AS PER PLAN	3
01/IMS/04	516	13600	251	SF	1" PREFORMED EXPANSION JOINT FILLER	
01/IMS/04	607	23001	325	FT	FENCE, TYPE CLT, AS PER PLAN	3
01/IMS/04	840	20000	5,681	SF	MECHANICALLY STABILIZED EARTH WALL	
01/IMS/04	840	21000	1,390	CY	WALL EXCAVATION	
01/IMS/04	840	22000	716	SY	FOUNDATION PREPARATION	
01/IMS/04	840	23000	2,377	CY	SELECT GRANULAR BACKFILL	
01/IMS/04	840	23050	741	CY	NATURAL SOIL	
01/IMS/04	840	25010	827	FT	6" DRAINAGE PIPE, PERFORATED	
01/IMS/04	840	25020	151	FT	6" DRAINAGE PIPE, NON-PERFORATED	
01/IMS/04	840	26000	401	FT	CONCRETE COPING	
01/IMS/04	840	26050	5,483	SF	AESTHETIC SURFACE TREATMENT	
01/IMS/04	840	27000	1	DAY	ON-SITE ASSISTANCE	
01/IMS/04	840	28000	LS		SGB INSPECTION AND COMPACTION TESTING	

Preliminary Plans - For Reference Only

ESTIMATED QUANTITIES
WALL Y
UNDER BRIDGE 12 AND ALONG SOUTH SIDE OF RAMP B6

SFN
N/A

DESIGN AGENCY
Michael Baker INTERNATIONAL

DESIGNER	CHECKER
ZES	SSW

REVIEWER
LPC 05-09-24

PROJECT ID
82382

SUBSET	TOTAL
4	7

SHEET	TOTAL
1313	2696

CUY-90-16.28 (CCG3A)

MODEL: Untitled Sheet PAPERSIZE: 34x22 (in.) DATE: 3/27/2025 TIME: 11:18:46 PM USER: Julie.Ross
pw:\\mb-us-pw.bentley.com:mb-us-pw-03\Documents\Cleveland_OH\01_Projects\ODOT\District12\82382\400-Engineering\Structures\WALL_Y\Sheets\82382_Y_WQ001.dgn

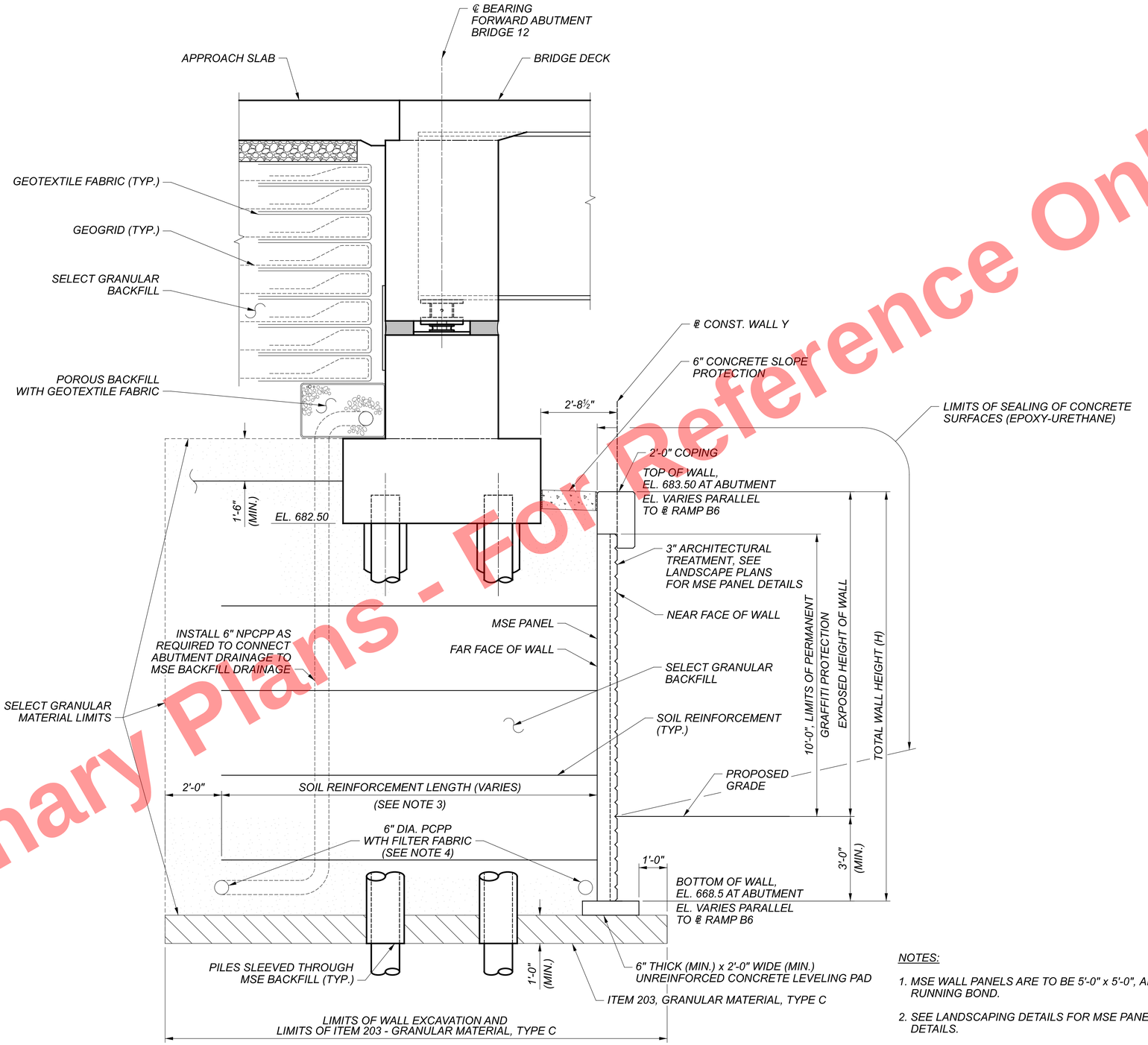

A/1 SECTION
TYPICAL SECTION @ BRIDGE 12 ABUTMENT

Preliminary Plans - For Reference Only

NOTES:

1. MSE WALL PANELS ARE TO BE 5'-0" x 5'-0", ARRANGED IN VERTICAL RUNNING BOND.
2. SEE LANDSCAPING DETAILS FOR MSE PANEL AESTHETIC TREATMENT DETAILS.
3. SOIL REINFORCEMENT LENGTH TO BE DETERMINED BY WALL SUPPLIER OF THE APPROVED WALL SYSTEM, BUT SHALL NOT BE LESS THAN 70 PERCENT OF THE DESIGN HEIGHT OF THE WALL OR 8 FT., WHICHEVER IS GREATER.
4. FILTER FABRIC IS TO BE INCLUDED WITH ITEM 840 - 6" DRAINAGE PIPE, PERFORATED, FOR PAYMENT.

WALL TYPICAL SECTIONS (1 OF 2)
WALL Y
UNDER BRIDGE 12 AND ALONG SOUTH SIDE OF RAMP B6

SFN	N/A
DESIGN AGENCY	Michael Baker INTERNATIONAL
DESIGNER	SSW
CHECKER	MKB
REVIEWER	LPC 05-09-24
PROJECT ID	82382
SUBSET	5
TOTAL	7
SHEET	1314
TOTAL	2696

CUY-90-16.28 (CCG3A)

MODEL: Sheet PAPERSIZE: 34x22 (in.) DATE: 3/27/2025 TIME: 11:18:53 PM USER: Julie.Ross
pw:\\mb-us-pw.bentley.com:mb-us-pw-03\Documents\Cleveland_OH101_Projects\ODOT\District12\82382\400-Engineering\Structures\WALL_Y\Sheets\82382_Y_WY001.dgn

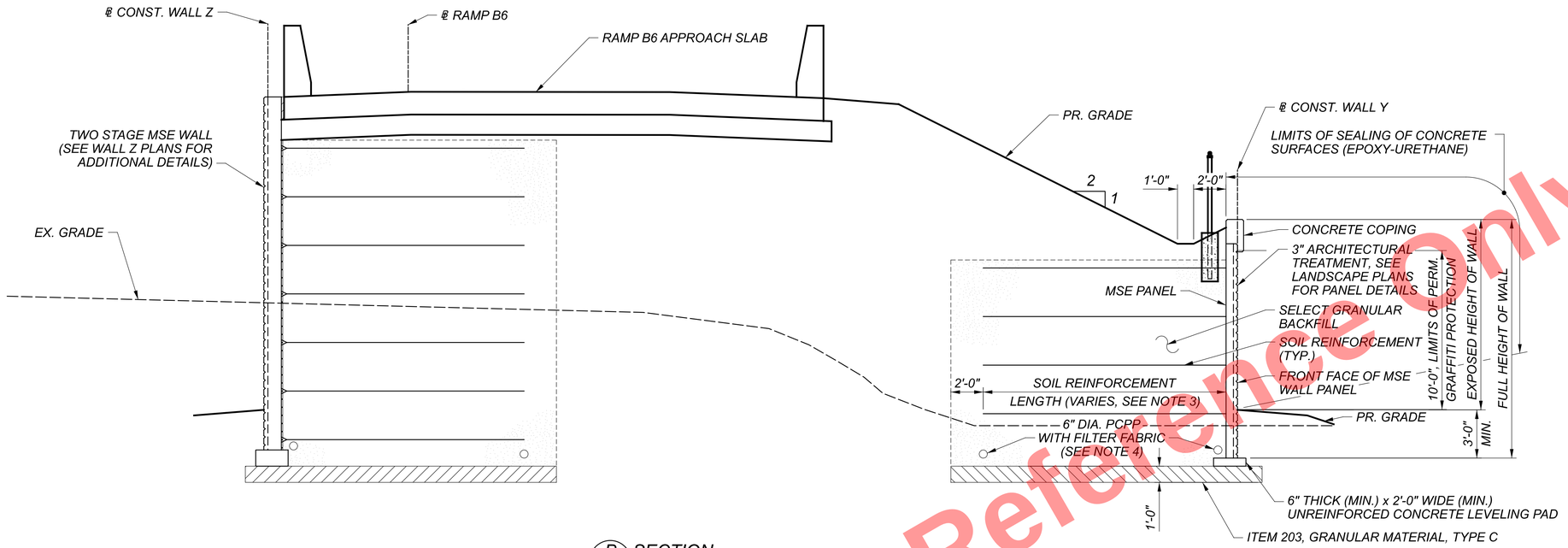

B/1 SECTION
ALONG ℄ RAMP B6 STA. 1613+50.00

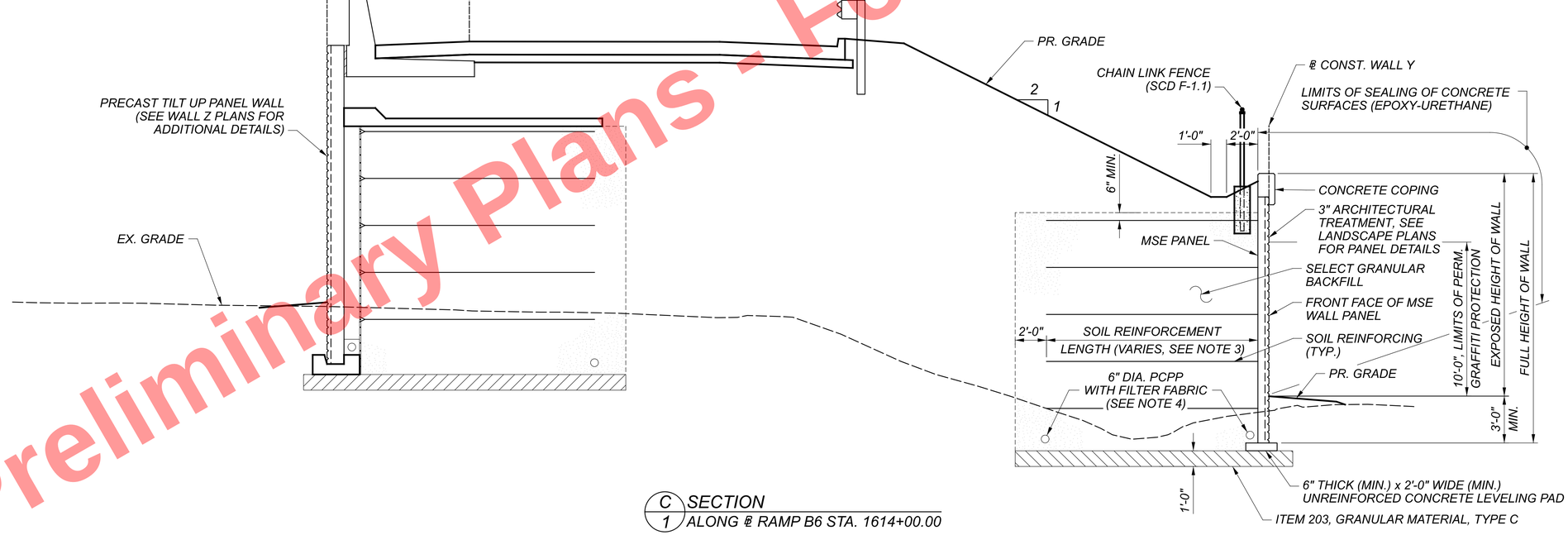

C/1 SECTION
ALONG ℄ RAMP B6 STA. 1614+00.00

NOTES:

1. MSE WALL PANELS ARE TO BE 5'-0" x 5'-0", ARRANGED IN VERTICAL RUNNING BOND.
2. SEE LANDSCAPING DETAILS FOR MSE PANEL AESTHETIC TREATMENT DETAILS.
3. SOIL REINFORCEMENT LENGTH TO BE DETERMINED BY WALL SUPPLIER OF THE APPROVED WALL SYSTEM, BUT SHALL NOT BE LESS THAN 70 PERCENT OF THE DESIGN HEIGHT OF THE WALL OR 8 FT., WHICHEVER IS GREATER.
4. FILTER FABRIC IS TO BE INCLUDED WITH ITEM 840 - 6" DRAINAGE PIPE, PERFORATED, FOR PAYMENT.

Preliminary Plans - For Reference Only

WALL TYPICAL SECTIONS (2 OF 2)
WALL Y
UNDER BRIDGE
RAMP B6 AND ALONG SOUTH SIDE OF RAMP B6

SFN N/A
DESIGN AGENCY
Michael Baker INTERNATIONAL
DESIGNER SSW | CHECKER MKB
REVIEWER LPC 05-09-24
PROJECT ID 82382
SUBSET 6 | TOTAL 7
SHEET 1315 | TOTAL 2696

CUY-90-16.28 (CCG3A)

MODEL: Sheet PAPERSIZE: 34x22 (in.) DATE: 3/27/2025 TIME: 11:19:09 PM USER: Julie.Ross
pw:\\mb-us-pw.bentley.com:mb-us-pw-03\Documents\Cleveland_OH\01_Projects\ODOT\District12\82382400-Engineering\Structures\WALL_Y\Sheets\82382_Y_WY002.dgn

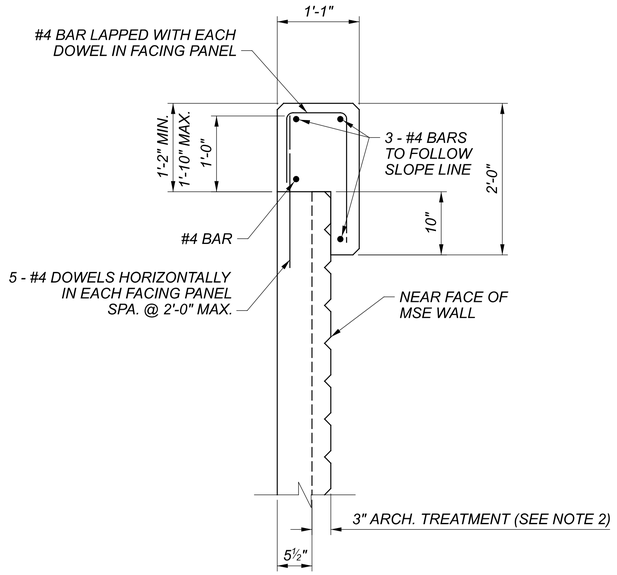

MSE WALL COPING DETAIL
(ALL REINFORCING STEEL TO BE EPOXY COATED)

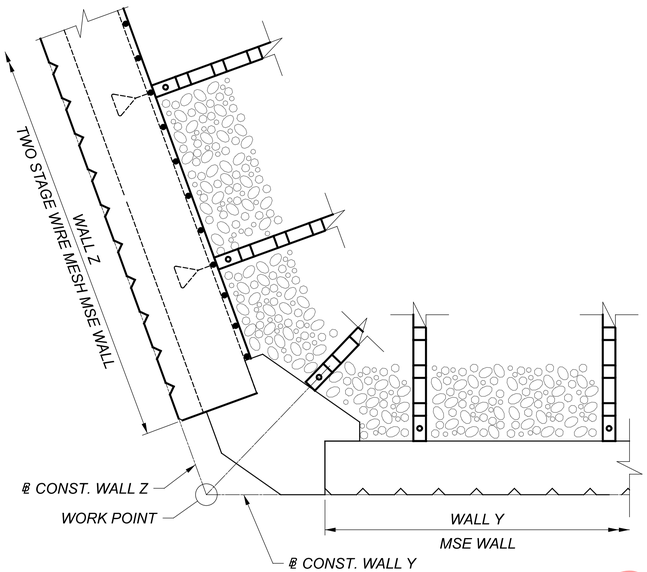

CORNER DETAIL AT WALL Y AND WALL Z INTERFACE
(FOR SCHEMATIC PURPOSES ONLY, CORNER INTERFACE DETAILS ARE TO BE DETERMINED BY THE WALL SUPPLIER)

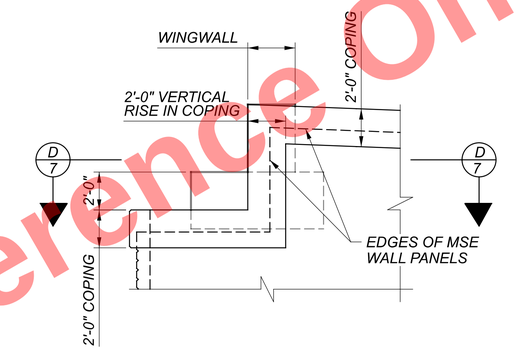

TYPICAL COPING DETAIL AT BRIDGE ABUTMENT

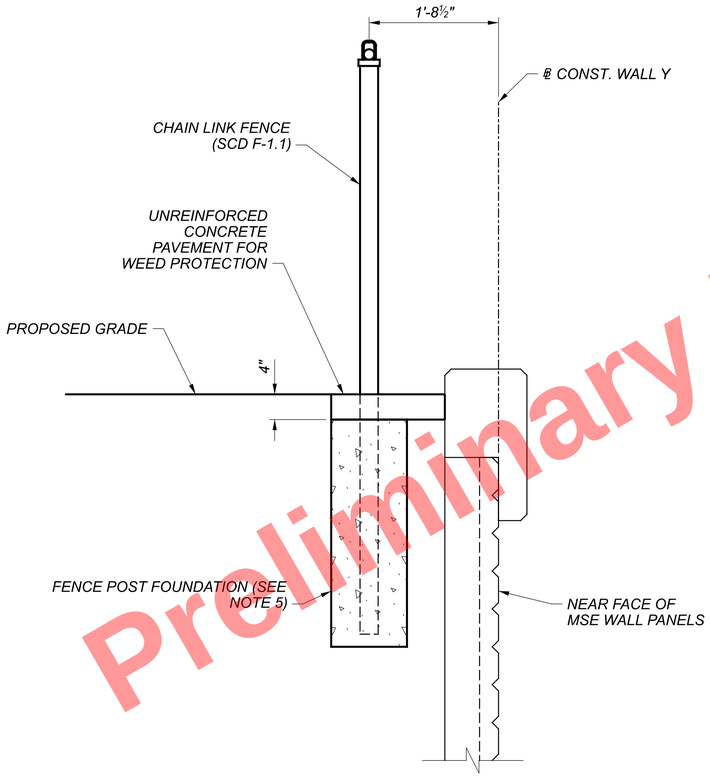

CHAIN LINK FENCE DETAIL
(SEE PLAN AND PROFILE SHEET FOR LOCATIONS)

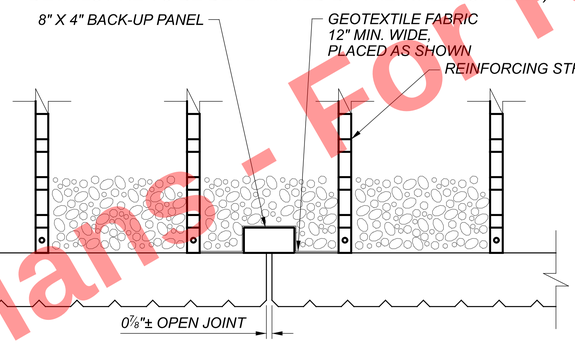

TYPICAL FRONT WALL VIEW OF JOINT ELEVATION
(AT MSE WALL)

D/7 SECTION

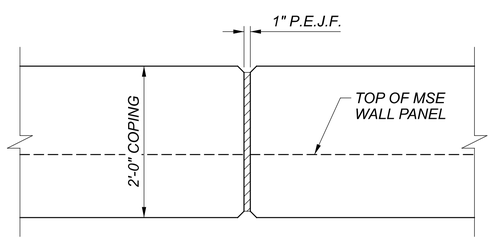

COPING EXPANSION JOINT - ELEVATION
(MAX JOINT SPACING IS 20'-0")

NOTES:

1. MSE WALL PANELS ARE TO BE 5'-0" x 5'-0", ARRANGED IN VERTICAL RUNNING BOND.
2. SEE LANDSCAPE DETAILS FOR MSE PANEL AESTHETIC TREATMENT DETAILS.
3. DETAILS FOR ALL VERTICAL AND LONGITUDINAL REINFORCING STEEL IN THE COPING SHALL BE INCLUDED IN THE PROPRIETARY WALL MANUFACTURER'S SHOP DRAWINGS.
4. PEJF SHALL EXTEND THE FULL HEIGHT OF THE MSE WALL/WINGWALL JOINT.
5. LOCATIONS OF THE MSE WALL SOIL REINFORCEMENT MUST BE KNOWN TO AVOID CONFLICTS WITH FENCE POST FOUNDATIONS. FENCE POSTS ARE TO BE PLACED SUCH THAT THEY MISS MSE WALL SOIL REINFORCEMENT LOCATIONS.

Preliminary Plans - For Reference Only

WALL DETAILS
WALL Y
UNDER BRIDGE 12 AND ALONG SOUTH SIDE OF RAMP B6

SFN N/A
DESIGN AGENCY
Michael Baker INTERNATIONAL
DESIGNER DAF | CHECKER SSW
REVIEWER LPC 05-09-24
PROJECT ID 82382
SUBSET 7 | TOTAL 7
SHEET 1316 | TOTAL 2696

CUY-90-16.28 (CCG3A)

MODEL: Untitled Sheet PAPERSIZE: 34x22 (in.) DATE: 3/27/2025 TIME: 11:19:21 PM USER: Julie.Ross
pw:\\mb-us-pw.bentley.com:mb-us-pw-03\Documents\Cleveland_OH\01_Projects\ODOT\District12\82382400-Engineering\Structures\WALL_Y\Sheets\82382_Y_WD001.dgn

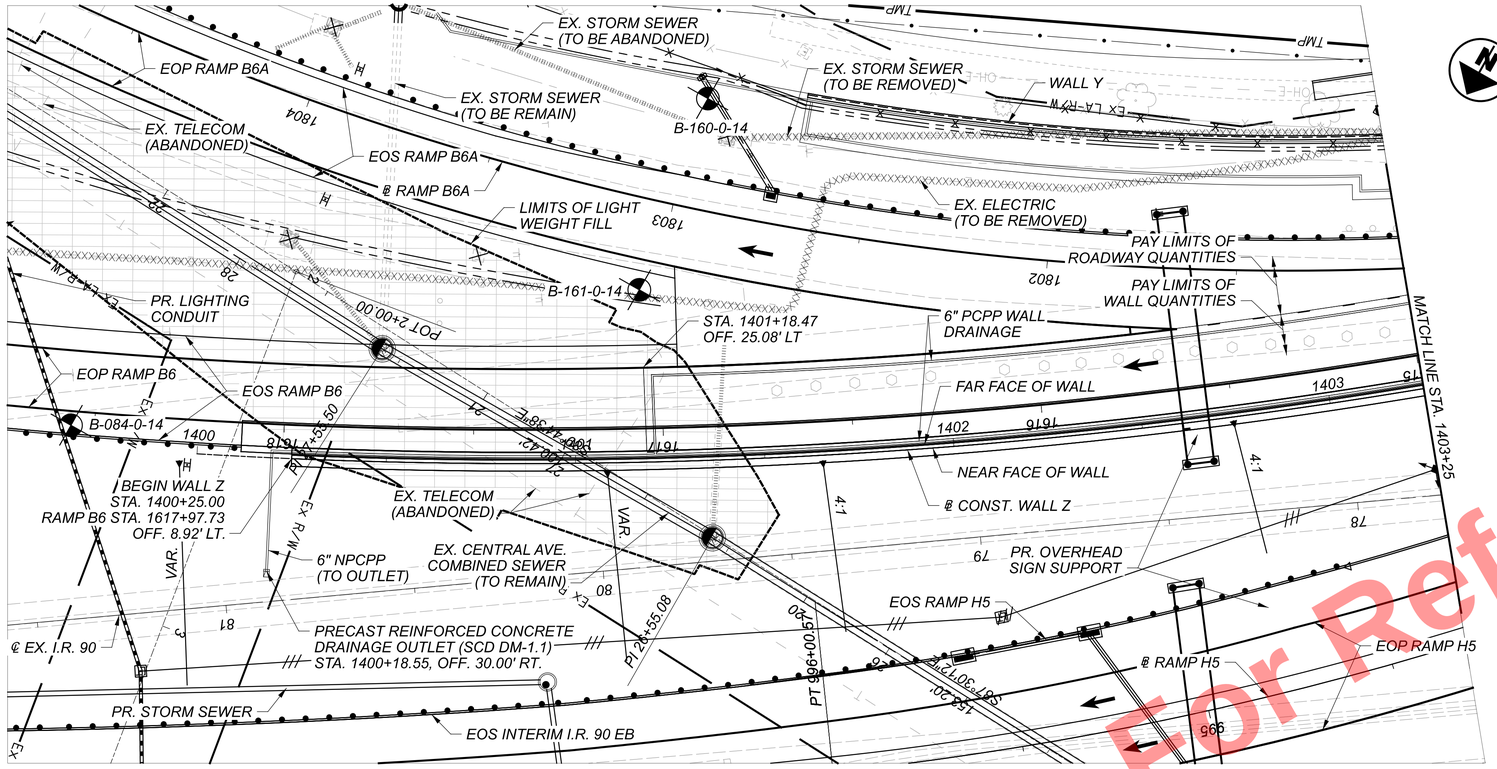

PLAN

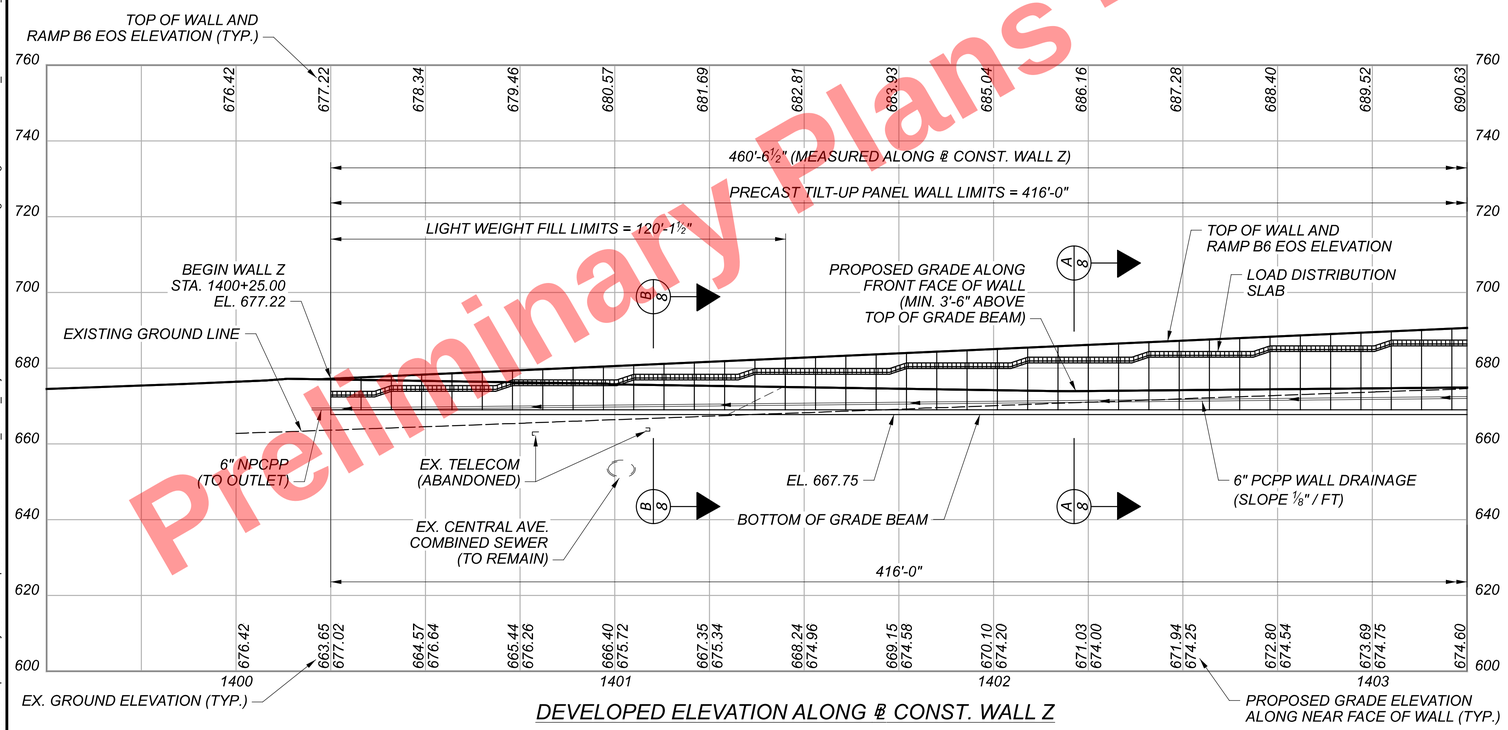

DEVELOPED ELEVATION ALONG ℄ CONST. WALL Z

BENCHMARK DATA

BM-59 STA. 1610+31.80, ELEV. 660.15, OFFSET 132.17 RT.
℄ RAMP B6, MAG NAIL SET AT NOSE OF CONCRETE DRAINAGE CHANNEL, BTWN E. 14TH ST. AND COMMUNITY COLLEGE AVE.

BM-62 STA. 1612+77.43, ELEV. 672.11, OFFSET 690.58 LT.
℄ RAMP B6, RAILROAD SPIKE IN EAST FACE OF POWER POLE NO. 121784 AT NORTHWEST CORNER OF E. 18TH ST. AND CARNEGIE AVE.

FOR ADDITIONAL BENCHMARK INFORMATION. SEE ROADWAY PLAN SHEET 4 / 2696

WALL Z

CURVE DATA
P.I. = Sta. 1401+71.97
Δ = 13°36'31" LT
Dc = 03°58'31"
R = 1,441.31'
T = 171.97'
L = 342.33'
E = 10.22'

RAMP B6

CURVE DATA
P.I. = Sta. 1618+11.29
Δ = 25°51'58" LT
Dc = 04°00'00"
R = 1,432.39'
T = 328.93'
L = 646.65'
E = 37.28'

RAMP B6A

CURVE DATA
P.I. = Sta. 1802+97.78
Δ = 42°35'27" LT
Dc = 07°30'00"
R = 763.94'
T = 297.78'
L = 567.88'
E = 55.98'

RAMP H5

CURVE DATA
P.I. = Sta. 992+53.42
Δ = 48°11'11" LT
Dc = 06°30'00"
R = 881.47'
T = 394.18'
L = 741.33'
E = 84.12'

BORING LOCATION*

BORING	STATION	OFFSET	TOP OF ROCK EL.
B-084-0-14	196+28.99	133.29' RT.	-
B-160-0-14	194+44.51	212.90' RT.	-
B-161-0-14	194+68.02	163.84' RT.	-

* = BORING STATION AND OFFSETS ARE FROM ℄ I.R. 90 EB

PROPOSED WORK

THE PROPOSED WORK CONSISTS OF CONSTRUCTING A RETAINING WALL ALONG THE RIGHT (SOUTH) SIDE OF I.R. 90 EB BETWEEN BRIDGES 12 AND 13. THE WALL UTILIZES BOTTOM UP CONSTRUCTION CONSISTING OF A TWO-STAGE WIRE MESH MSE WALL WITH A CAST-IN-PLACE CONCRETE FACING AND TILT UP PRECAST PANELS WITH A LOAD DISTRIBUTION SLAB.

NOTES

1. EARTHWORK LIMITS SHOWN ARE APPROXIMATE. ACTUAL SLOPES SHALL CONFORM TO PLAN CROSS SECTIONS.
2. FOR RAMP B6 CROSS SECTIONS, SEE SHEETS 842 TO 858 / 2696
3. STATION AND WALL OFFSETS SHOWN AT NEAR FACE OF WALL.

LEGEND

HISTORIC BORING LOCATIONS

PROJECT BORING LOCATIONS

CONST. = CONSTRUCTION
EOP = EDGE OF PAVEMENT
EOS = EDGE OF SHOULDER

LIMITS OF LIGHT WEIGHT FILL

Preliminary Plans - For Reference Only

WALL PLAN AND PROFILE (1 OF 2)
WALL Z
ALONG NORTH SIDE OF RAMP B6

SFN N/A
DESIGN AGENCY Michael Baker INTERNATIONAL
DESIGNER SSW | CHECKER MKB
REVIEWER LPC 05-09-24
PROJECT ID 82382
SUBSET 1 | TOTAL 17
SHEET 1317 | TOTAL 2696

CUY-90-16.28 (CCG3A)

MODEL: Plan Wall Z PAPERSIZE: 34x22 (in.) DATE: 3/27/2025 TIME: 11:19:39 PM USER: Julie.Ross
pw:\\mb-us-pw.bentley.com:mb-us-pw-03\Documents\Cleveland_OH01_Projects\ODOT\District12\82382\400-Engineering\Structures\WALL_Z\Sheets\82382_Z_WP001.dgn

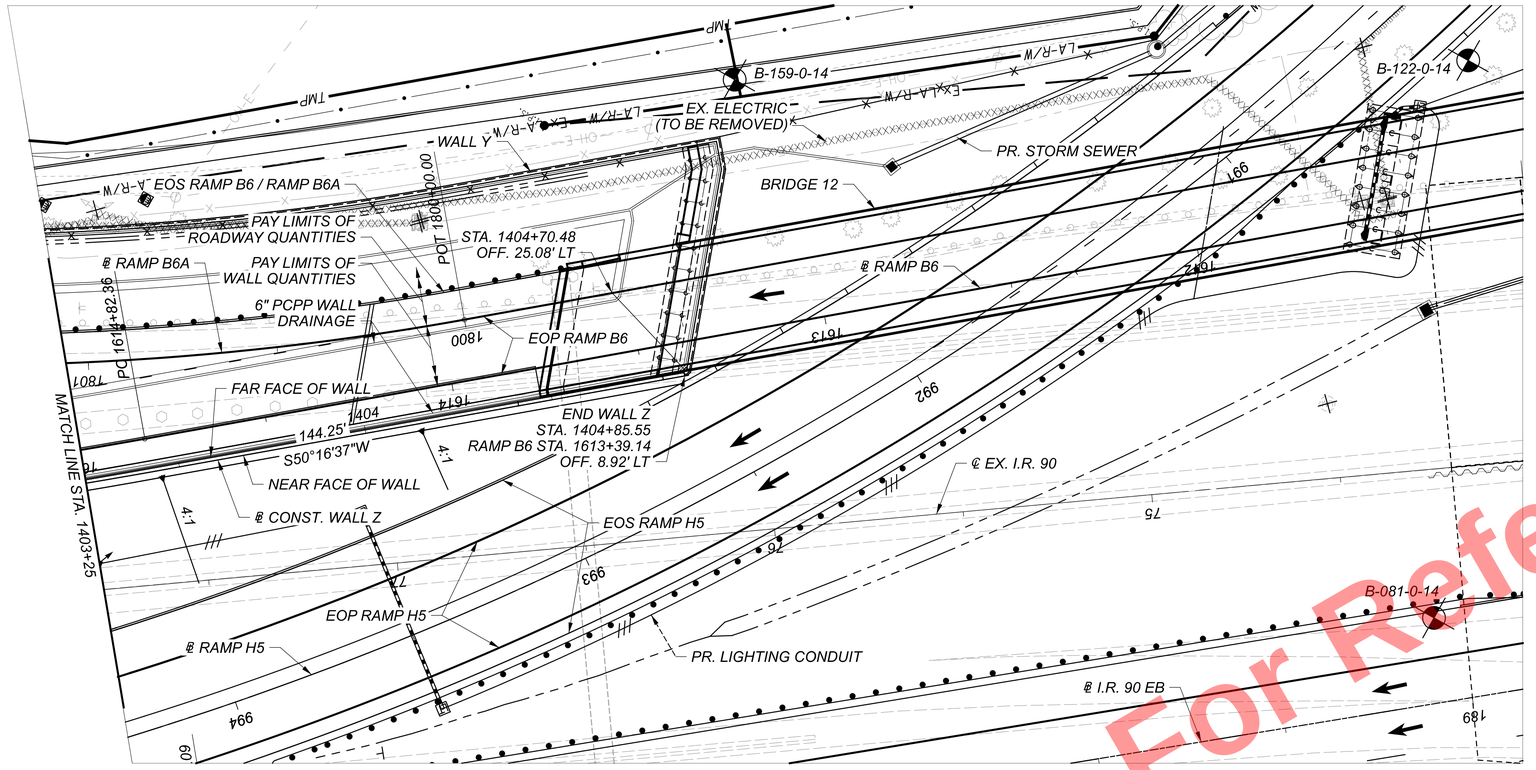

PLAN

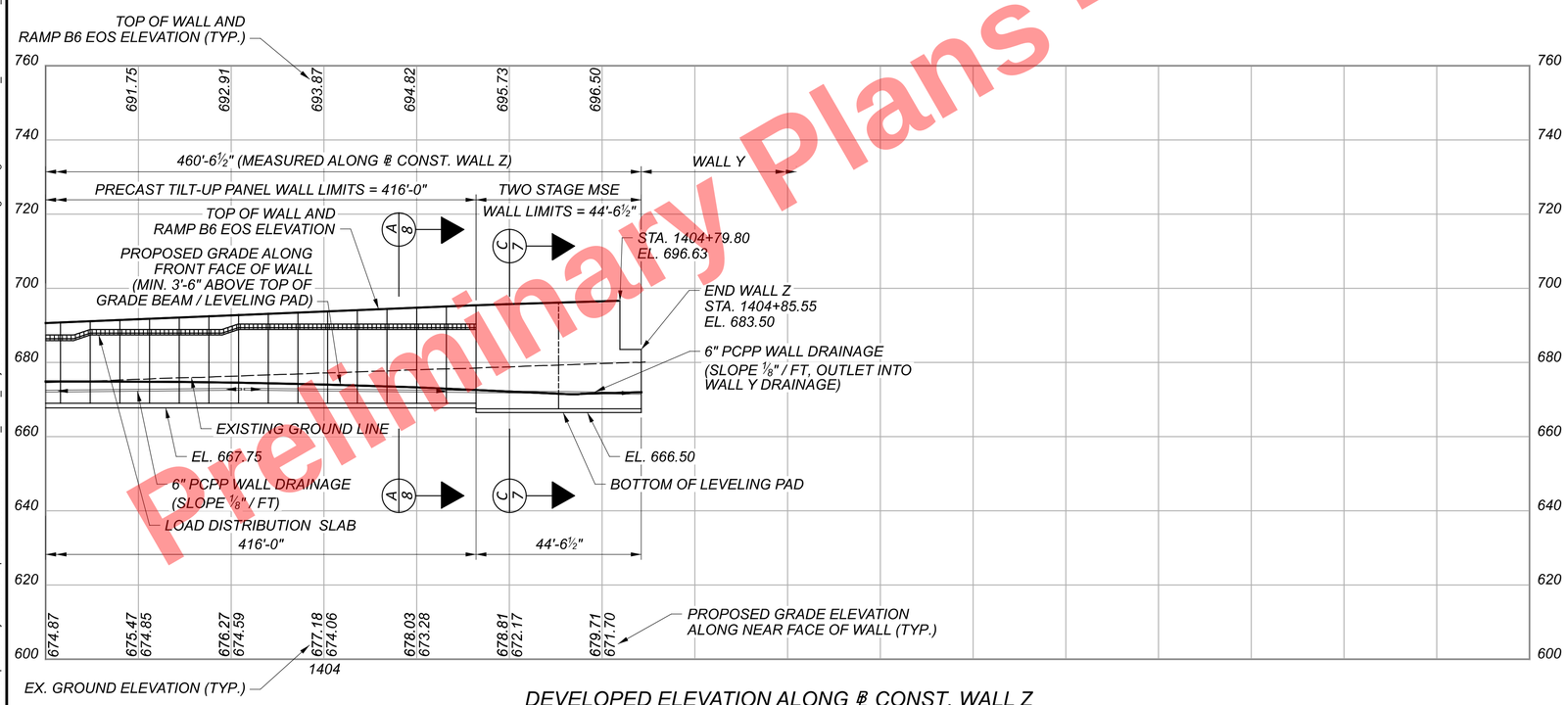

DEVELOPED ELEVATION ALONG ℄ CONST. WALL Z

BENCHMARK DATA

BM-59 STA. 1610+31.80, ELEV. 660.15, OFFSET 132.17 RT.
℄ RAMP B6, MAG NAIL SET AT NOSE OF CONCRETE DRAINAGE CHANNEL, BTWN E. 14TH ST. AND COMMUNITY COLLEGE AVE.

BM-62 STA. 1612+77.43, ELEV. 672.11, OFFSET 690.58 LT.
℄ RAMP B6, RAILROAD SPIKE IN EAST FACE OF POWER POLE NO. 121784 AT NORTHWEST CORNER OF E. 18TH ST. AND CARNEGIE AVE.

FOR ADDITIONAL BENCHMARK INFORMATION. SEE ROADWAY PLAN SHEET 4 / 2696

WALL Z

CURVE DATA
P.I. = Sta. 1401+71.97
Δ = 13°36'31" LT
Dc = 03°58'31"
R = 1,441.31'
T = 171.97'
L = 342.33'
E = 10.22'

RAMP B6

CURVE DATA
P.I. = Sta. 1618+11.29
Δ = 25°51'58" LT
Dc = 04°00'00"
R = 1,432.39'
T = 328.93'
L = 646.65'
E = 37.28'

RAMP B6A

CURVE DATA
P.I. = Sta. 1802+97.78
Δ = 42°35'27" LT
Dc = 07°30'00"
R = 763.94'
T = 297.78'
L = 567.88'
E = 55.98'

RAMP H5

CURVE DATA
P.I. = Sta. 992+53.42
Δ = 48°11'11" LT
Dc = 06°30'00"
R = 881.47'
T = 394.18'
L = 741.33'
E = 84.12'

BORING LOCATION*

BORING	STATION	OFFSET	TOP OF ROCK EL.
B-081-0-14	189+06.57	22.37' RT.	-
B-122-0-14	188+73.87	166.13' RT.	-
B-159-0-14	189+65.82	192.42' RT.	-

* = BORING STATION AND OFFSETS ARE FROM ℄ I.R. 90 EB

PROPOSED WORK

THE PROPOSED WORK CONSISTS OF CONSTRUCTING A RETAINING WALL ALONG THE RIGHT (SOUTH) SIDE OF I.R. 90 EB BETWEEN BRIDGES 12 AND 13. THE WALL UTILIZES BOTTOM UP CONSTRUCTION CONSISTING OF A TWO-STAGE WIRE MESH MSE WALL WITH A CAST-IN-PLACE CONCRETE FACING AND TILT UP PRECAST PANELS WITH A LOAD DISTRIBUTION SLAB.

NOTES

1. EARTHWORK LIMITS SHOWN ARE APPROXIMATE. ACTUAL SLOPES SHALL CONFORM TO PLAN CROSS SECTIONS.
2. FOR RAMP B6 CROSS SECTIONS, SEE SHEETS 842 TO 858 / 2696
3. STATION AND WALL OFFSETS SHOWN AT NEAR FACE OF WALL.

LEGEND

HISTORIC BORING LOCATIONS

PROJECT BORING LOCATIONS

CONST. = CONSTRUCTION
EOP = EDGE OF PAVEMENT
EOS = EDGE OF SHOULDER

WALL PLAN AND PROFILE (2 OF 2)
WALL Z
ALONG NORTH SIDE OF RAMP B6

SFN N/A
DESIGN AGENCY
Michael Baker INTERNATIONAL
DESIGNER SSW | CHECKER MKB
REVIEWER LPC 05-09-24
PROJECT ID 82382
SUBSET 2 | TOTAL 17
SHEET 1318 | TOTAL 2696

Preliminary Plans - For Reference Only

CUY-90-16.28 (CCG3A)
MODEL: Plan Wall Z-1 PAPERSIZE: 34x22 (in.) DATE: 3/27/2025 TIME: 11:20:16 PM USER: Julie Ross
pw:\\mb-us-pw.bentley.com:mb-us-pw-03\Documents\Cleveland_OH\01_Projects\ODOT\District12\82382\400-Engineering\Structures\WALL_Z\Sheets\82382_Z_WP002.dgn

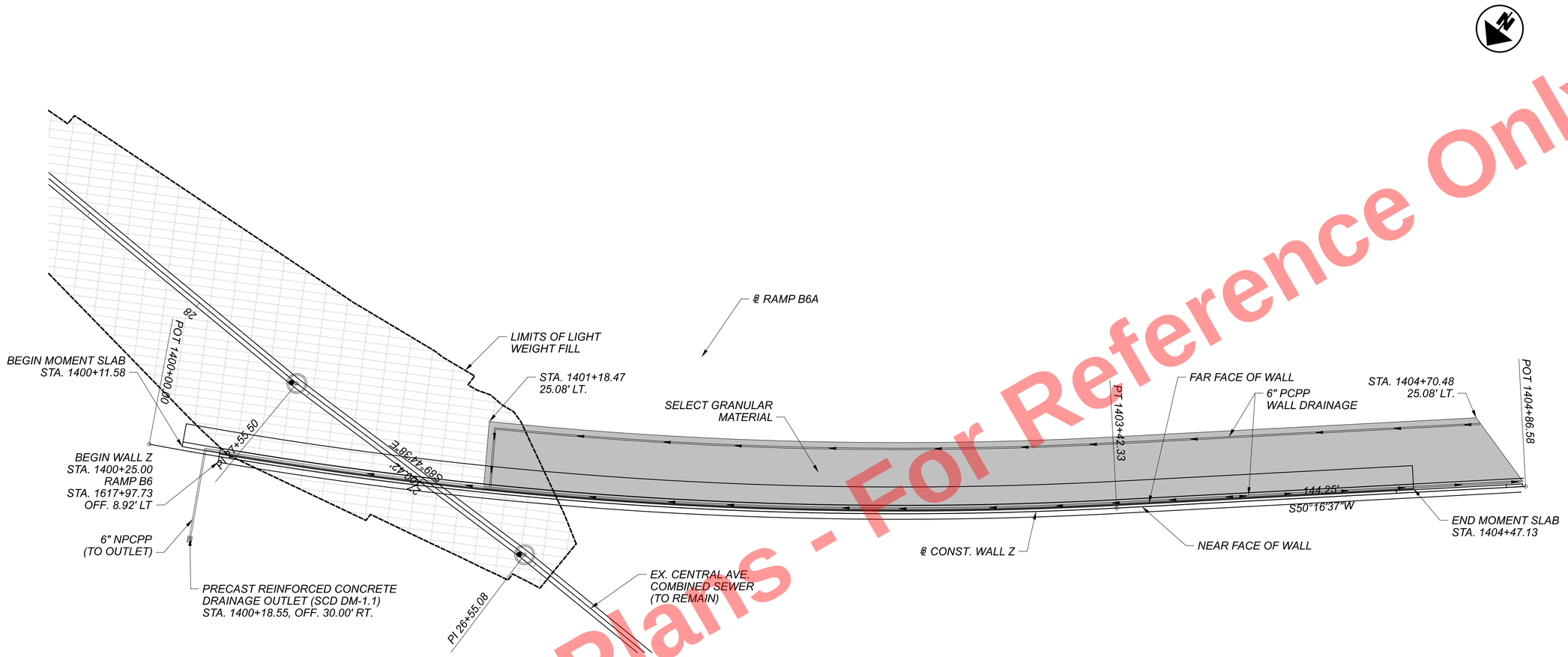

PLAN

WALL Z

CURVE DATA
P.I. = Sta. 1401+71.97
Δ = 13°36'31" LT
Dc = 03°58'31"
R = 1,441.31'
T = 171.97'
L = 342.33'
E = 10.22'

RAMP B6

CURVE DATA
P.I. = Sta. 1618+11.29
Δ = 25°51'58" LT
Dc = 04°00'00"
R = 1,432.39'
T = 328.93'
L = 646.65'
E = 37.28'

RAMP B6A

CURVE DATA
P.I. = Sta. 1802+97.78
Δ = 42°35'27" LT
Dc = 07°30'00"
R = 763.94'
T = 297.78'
L = 567.88'
E = 55.98'

RAMP H5

CURVE DATA
P.I. = Sta. 992+53.42
Δ = 48°11'11" LT
Dc = 06°30'00"
R = 881.47'
T = 394.18'
L = 741.33'
E = 84.12'

NOTES

1. FOR RAMP B6 CROSS SECTIONS, SEE SHEETS 842 TO 858 / 2696
2. FOR RAMP B6 PLAN AND PROFILE, SEE SHEETS 578 TO 589 / 2696
3. ℄ WALL Z IS CONCENTRIC WITH ℄ RAMP B6.

LEGEND

LIMITS OF SELECT GRANULAR BACKFILL

LIMITS OF LIGHT WEIGHT FILL

SCHEMATIC PLAN
WALL Z
ALONG NORTH SIDE OF RAMP B6

SFN	N/A
DESIGN AGENCY	Michael Baker INTERNATIONAL
DESIGNER	SSW
CHECKER	MKB
REVIEWER	LPC 05-09-24
PROJECT ID	82382
SUBSET	3
TOTAL	17
SHEET	1319
TOTAL	2696

Preliminary Plans - For Reference Only

CUY-90-16.28 (CCG3A)
MODEL: Untitled Sheet PAPERSIZE: 34x22 (in.) DATE: 3/27/2025 TIME: 11:20:56 PM USER: Julie.Ross
pw:\\mb-us-pw.bentley.com:mb-us-pw-03\Documents\Cleveland_OH\01_Projects\ODOT\District12\82382\400-Engineering\Structures\WALL_Z\Sheets\82382_Z_WB001.dgn

STANDARD DRAWINGS AND SUPPLEMENTAL SPECIFICATIONS:

REFER TO THE FOLLOWING STANDARD CONSTRUCTION DRAWINGS:
F-1.1 REVISED 7/19/2013
DM-1.1 REVISED 1/17/2025

REFER TO THE FOLLOWING SUPPLEMENTAL SPECIFICATIONS:
800 DATED SEE TITLE SHEET
840 DATED 7/21/2023

REFER TO THE FOLLOWING SUPPLEMENTS:
1073 DATED 4/21/2023
1083 DATED 1/20/2017

DESIGN SPECIFICATIONS:

THIS STRUCTURE CONFORMS TO THE "LRFD BRIDGE DESIGN SPECIFICATIONS", 9TH EDITION, ADOPTED BY THE AMERICAN ASSOCIATION OF STATE HIGHWAY AND TRANSPORTATION OFFICIALS AND THE ODOT BRIDGE DESIGN MANUAL, 2020 (DATED 07-21-23).

DESIGN DATA:

CONCRETE CLASS QC1 - COMPRESSIVE STRENGTH 4.0 KSI
(CONCRETE FACING, LEVELING PAD, LOAD DISTRIBUTION SLAB, GRADE BEAM)
CONCRETE CLASS QC2 - COMPRESSIVE STRENGTH 4.5 KSI (MOMENT SLAB)
REINFORCING STEEL / WELDED WIRE REINFORCEMENT - MINIMUM YIELD STRENGTH 60 KSI
RETAINED SOIL UNIT WEIGHT, γ = 120 pcf
ANGLE OF INTERNAL FRICTION, ϕ = 30°

SEQUENCE OF CONSTRUCTION:

CONSTRUCT WALL Z DURING MOT PHASE 10.

SEE MAINTENANCE OF TRAFFIC NOTES FOR ADDITIONAL PHASES AND INFORMATION.

MSE WALL DESIGN PARAMETERS:

THE MINIMUM SOIL REINFORCEMENT LENGTH IS AT LEAST 8 FEET OR 70% OF THE WALL HEIGHT, WHICHEVER IS GREATER. FOR WALL SECTIONS AROUND ABUTMENTS, THE STRAP LENGTH WILL NEED TO BE 70% OF THE DISTANCE BETWEEN THE TOP OF THE LEVELING PAD AND THE TOP OF THE PAVEMENT.

FACTORED BEARING RESISTANCE = 16.8 ksf

PROPRIETARY RETAINING WALL DATA:

THE PROPRIETARY WALL SUPPLIER SHALL DESIGN THE INTERNAL STABILITY OF A MECHANICALLY STABILIZED EARTH (MSE) WALL IN ACCORDANCE WITH SS840 TO RETAIN EARTH FILL FOR RAMP B6.

THE PROPRIETARY WALL SUPPLIER SHALL PROVIDE SLIP JOINTS LOCATED AS REQUIRED TO ACCOUNT FOR LONG TERM SETTLEMENT AS DESCRIBED IN THE STAGE 2 GEOTECHNICAL REPORT FOR THIS WALL. REFER TO "CUY-90-1652S_WallY-Z_SFE_062022_Stage2.pdf".

ITEM 509 - WALL FACING REINFORCEMENT

THE CONTRACTOR MAY REPLACE THE REINFORCING BARS IN THE RETAINING WALL FACING WITH EPOXY COATED WELDED WIRE FABRIC CONFORMING TO C&MS 709.14. THE EPOXY COATED WELDED WIRE FABRIC MUST PROVIDE AN EQUIVALENT AREA OF STEEL IN EACH DIRECTION AS THE REINFORCING BARS SHOWN IN THE PLANS.

ITEM 511 - CLASS QC1 CONCRETE MISC.: LOAD DISTRIBUTION SLAB WITH QC/QA

ALL PORTIONS OF THE LOAD DISTIBUTION SLAB SHALL BE PAID FOR UNDER THIS ITEM, UNLESS NOTED OTHERWISE. THIS INCLUDES, BUT IS NOT LIMITED TO LOAD DISTRIBUTION SLAB CONCRETE, JOINT SEALER, COMPACTION AND PREPARATION OF SOIL UNDERNEATH THE SLAB, FASTENERS AND UNISTRUT (OR EQUIVALENT) CHANNEL CONNECTORS, AND ANY OTHER INCIDENTALS REQUIRED TO COMPLETE THE LOAD DISTRIBUTION SLAB.

PAYMENT FOR THE ABOVE COMPLETED AND ACCEPTED QUANTITIES WILL BE MADE AT THE CONTRACT BID PRICE PER CUBIC YARD FOR ITEM 511 - CLASS QC1 CONCRETE, MISC.: LOAD DISTRIBUTION SLAB WITH QC/QA.

ITEM 511 - CLASS QC2 CONCRETE MISC.: MOMENT SLAB AND BARRIER WITH QC/QA

ALL PORTIONS OF THE BARRIER MOMENT SLAB SHALL BE PAID FOR UNDER THIS ITEM, UNLESS NOTED OTHERWISE. THIS INCLUDES, BUT IS NOT LIMITED TO MOMENT SLAB CONCRETE, BARRIER CONCRETE, PEJF, SAWCUTTING, JOINT SEALER, SLEEVED DOWELS, TRANSVERSE AND LONGITUDINAL JOINT TREATMENT ADJACENT TO ROADWAY PAVEMENT AND SHOULDERS, COMPACTION AND PREPARATION OF SOIL UNDERNEATH THE SLABS, AND ANY OTHER INCIDENTALS REQUIRED TO COMPLETE THE BARRIER MOMENT SLABS.

PAYMENT FOR THE ABOVE COMPLETED AND ACCEPTED QUANTITIES WILL BE MADE AT THE CONTRACT BID PRICE PER CUBIC YARD FOR ITEM 511 - CLASS QC2 CONCRETE, MISC.: MOMENT SLAB AND BARRIER WITH QC/QA.

ITEM 512 - SEALING OF CONCRETE SURFACES, AS PER PLAN (PERMANENT GRAFFITI PROTECTION)

APPLY A PERMANENT GRAFFITI COATING QUALIFIED ACCORDING TO SUPPLEMENT 1083 THAT IS COMPATIBLE WITH THE CONCRETE SEALER OVER WHICH IT IS APPLIED. PROVIDE A COATING THAT MEETS THE REQUIREMENTS LISTED BELOW. APPLY THE GRAFFITI COATING IN ACCORDANCE WITH THE MANUFACTURER'S PRINTED INSTRUCTIONS.

A. THE MATERIAL SHALL BE A SINGLE COMPONENT, RTV (ROOM TEMPERATURE VULCANIZED), NEUTRAL MOISTURE CURE, PERMANENT (NON-SACRIFICIAL), TYPE III (WATER CLEANABLE) POLYSILOXANE (SILICONE) ANTI-GRAFFITI COATING, FREE OF ANY WAXES, EPOXIES, OR POLYURETHANE COMPONENTS.

B. THE COATING SHALL BE A ONE COAT SYSTEM (NO PRIMER) CAPABLE OF BEING SPRAY APPLIED TO A DRY FILM THICKNESS OF 15 MILS (375 MICRONS) WITHOUT RUNS OR SAGS (MULTIPLE COAT APPLICATION ACCEPTABLE FOR BRUSH/ROLLER USAGE AND PRIMER USAGE ACCEPTABLE FOR SPECIALTY SUBSTRATES SUCH AS GALVANIZED METAL).

C. THE COATING SHALL EMIT LESS THAN 300 G/L (2.5 POUNDS PER GALLON) OF VOLATILE ORGANIZE COMPOUNDS (EPA METHOD 24).

D. THE COATING SHALL MEET THE FOLLOWING PERFORMANCE REQUIREMENTS:
1. CLEANABILITY LEVEL 1 (GRAFFITI COMPLETELY REMOVED WITH COLD WATER POWER WASH) AS PER ASTM D7089 WITH LOW PRESSURE (1200 PSI) COLD WATER WASH AFTER 2000 HOURS ACCELERATED UV-CONDENSATION EXPOSURE IN ACCORDANCE WITH ASTM D4587.
2. GRAFFITI RESISTANCE LESS THAN 7.5 AS PER ASTM D6578 AFTER 2000 HOURS ACCELERATED UV-CONDENSATION EXPOSURE IN ACCORDANCE WITH ASTM 4578.
3. NO SIGNS OF GRAFFITI OR GRAFFITI STAINING AND MUST BE INTACT AND EXHIBIT NO SIGNS OF STREAKING, CRACKING, PINHOLING, DISCOLORING, OR OTHER VISIBLE COATING DEGRADATION UPON CASUAL OBSERVATION WHEN TESTED IN ACCORDANCE WITH TXDOT TEX 890-B, TYPE III METHOD.
4. BREATHABILITY OF 10 PERMS (+/- 3) PER ASTM D1653 USING "WET CUP METHOD".
5. ELONGATION AT BREAK GREATER THAN 100% AS PER ASTM D412 (USING DIE "D").
6. ADHESION RATING OF "8 - DIFFICULT TO REMOVE" AS PER ASTM D6677 (ADHESION BY KNIFE).

ITEM 512 - SEALING OF CONCRETE SURFACES (EPOXY-URETHANE), AS PER PLAN

SEAL SURFACES OF THE MSE WALL PANELS, AND COPING AS SHOWN IN THE PLANS WITH AN EPOXY-URETHANE SEALER ACCORDING TO C&MS 512. THE FOLLOWING COLORS SHALL BE USED FOR PAINTING AND SEALING STRUCTURAL ELEMENTS:

COPING SEALER:	"DOVETAIL"	7018
SUBSTRUCTURE SEALER:	"ALABASTER"	7008

ALL COLOR NAME AND NUMBER REFERENCES ARE TAKEN FROM THE SHERWIN WILLIAMS COLOR PALATE. THE CONTRACTOR MAY SUBSTITUTE SIMILAR COLORS FROM ALTERNATIVE SUPPLIER'S COLOR PALATE.

ITEM 512 - TYPE 2 WATERPROOFING, AS PER PLAN

TYPE 2 WATERPROOFING SHALL BE ATTACHED TO THE WOOD LAGGING, CENTERED AT ALL EXPANSION AND CONTRACTION JOINTS VERTICALLY FROM THE TOP OF THE TIMBER LAGGING DOWN TO THE TOP OF THE POROUS BACKFILL. TYPE 2 WATERPROOFING SHALL ALSO BE ATTACHED TO THE BACK SIDE OF THE CAST IN PLACE CONCRETE FACING AND THE TIMBER LAGGING AT ALL EXPANSION AND CONTRACTION JOINTS.

PAYMENT FOR ALL LABOR, EQUIPMENT AND MATERIAL FOR THE WORK OUTLINED ABOVE SHALL BE INCLUDED IN THE PAYMENT PER SQUARE YARD CONTRACT PRICE FOR ITEM 512, TYPE 2 WATERPROOFING, AS PER PLAN.

ITEM 840 - MECHANICALLY STABILIZED EARTH WALL, AS PER PLAN: WIRE FACED WALL

GENERAL:

THIS WORK CONSISTS OF DESIGNING THE INTERNAL STABILITY OF THE WALL; PREPARING SHOP DRAWINGS; AND FABRICATING AND CONSTRUCTING THE WIRE FACED MSE WALLS.

ALL MSE WALL DESIGN, FABRICATION, ERECTION AND CONSTRUCTION SHALL CONFORM TO ODOT SUPPLEMENTAL SPECIFICATION 840 "MECHANICALLY STABILIZED EARTH WALLS" EXCEPT AS MODIFIED BELOW, AND AS SHOWN IN THE PLANS.

MATERIALS:

MATERIALS SHALL COMPLY WITH 840.03 EXCEPT THAT WIRE FACING AND SOIL RETENTION FABRIC SHALL BE PROVIDED INSTEAD OF PRECAST CONCRETE FACING PANELS.

A. WIRE FACING
THE WIRE FACING SHALL BE WELDED WIRE FABRIC (WWF) SATISFYING THE REQUIREMENTS OF CMS 709.10.

B. SOIL RETENTION FABRIC
THE INSIDE OF THE WIRE FACED MSE WALL SHALL HAVE RETENTION OR FILTER FABRIC PLACED WITHIN THE REINFORCED FILL AS SHOWN IN THE PLANS. RETENTION FABRIC SHALL BE A WOVEN POLYPOPYLENE FABRIC.

ITEM 840 - MECHANICALLY STABILIZED EARTH WALL, AS PER PLAN: 2 STAGE MSE WALL

GENERAL:

THIS WORK CONSISTS OF DESIGNING THE INTERNAL STABILITY OF THE WALL; PREPARING SHOP DRAWINGS; AND FABRICATING AND CONSTRUCTING THE 2 STAGE MSE WALLS.

ALL MSE WALL DESIGN, FABRICATION, ERECTION AND CONSTRUCTION SHALL CONFORM TO ODOT SUPPLEMENTAL SPECIFICATION 840 "MECHANICALLY STABILIZED EARTH WALLS" EXCEPT AS MODIFIED BELOW, AND AS SHOWN IN THE PLANS. AESTHETIC TREATMENT SHALL BE AS DEPICTED IN THE PLANS.

MATERIALS:

MATERIALS SHALL COMPLY WITH 840.03 EXCEPT THAT WIRE FACING AND SOIL RETENTION FABRIC SHALL BE PROVIDED INSTEAD OF PRECAST CONCRETE FACING PANELS.

A. WIRE FACING
THE WIRE FACING SHALL BE WELDED WIRE FABRIC (WWF) SATISFYING THE REQUIREMENTS OF CMS 709.10. THE DESIGN SHALL PROVIDE POSITIVE ANCHORAGE OF THE CAST IN PLACE REINFORCED CONCRETE FACING TO THE SOIL REINFORCEMENT.

B. SOIL RETENTION FABRIC
THE INSIDE OF THE WIRE FACED MSE WALL SHALL HAVE RETENTION OR FILTER FABRIC PLACED WITHIN THE REINFORCED FILL AS SHOWN IN THE PLANS. RETENTION FABRIC SHALL BE A WOVEN POLYPOPYLENE FABRIC.

C. LEVELING PAD
THE CONCRETE LEVELING PAD SHALL BE CONSTRUCTED PER THE REQUIREMENTS OF 840.03 EXCEPT THAT THE PAD SHALL BE REINFORCED AS SHOWN IN THESE PLANS.

D. CAST-IN-PLACE FACING
THE CAST-IN-PLACE CONCRETE FACING SHALL BE CONSTRUCTED ON THE FRONT SIDE OF THE WELDED WIRE FABRIC TO SERVE AS A PERMANENT FACING OVER THE WELDED WIRE WALL.

FORM LINERS (ARCHITECTURAL TRATMENT WITH AESTHETIC PATTERNS) SHALL BE PROVIDED AS SHOWN IN THE LANDSCAPING PLANS.

HORIZONTAL JOINTS ARE PROHIBITED IN THE CAST-IN-PLACE CONCRETE FACING.

PAYMENT SHALL INCLUDE ALL LABOR, MATERIALS AND INCIDENTALS NECESSARY TO FURNISH AND PLACE CONCRETE FOR THE CAST-IN-PLACE FACING. THIS INCLUDES, BUT IS NOT LIMITED TO NON-BITUMINOUS JOINT SEALER AT JOINTS AND FORM LINERS. .

Preliminary Plans - Not For Construction
For Reference Only

GENERAL NOTES (1 OF 2)
WALL Z
ALONG NORTH SIDE OF RAMP B6

SFN N/A
DESIGN AGENCY
Michael Baker INTERNATIONAL
DESIGNER SSW | CHECKER MKB
REVIEWER LPC 05-09-24
PROJECT ID 82382
SUBSET 4 | TOTAL 17
SHEET 1320 | TOTAL 2696

CUY-90-16.28 (CCG3A)

MODEL: Sheet PAPERSIZE: 34x22 (in.) DATE: 6/9/2025 TIME: 12:53:39 PM USER: Tolga.Feran
pw:\\mb-us-pw.bentley.com:mb-us-pw-03\Documents\Cleveland_OH\01_Projects\ODOT\District12\82382\400-Engineering\Structures\WALL_Z\Sheets\82382_Z_WN001.dgn

ITEM SPECIAL - RETAINING WALL, PRECAST WALL FACADE PANEL

THIS BID ITEM CONSISTS OF FURNISHING AND INSTALLING PRECAST PANELS MANUFACTURED AND CONSTRUCTED IN ACCORDANCE WITH THIS SPECIFICATION AND DESIGNED IN ACCORDANCE WITH THE "LRFD BRIDGE DESIGN SPECIFICATIONS", 9TH EDITION, ADOPTED BY THE AMERICAN ASSOCIATION OF STATE HIGHWAY AND TRANSPORTATION OFFICIALS AND THE ODOT BRIDGE DESIGN MANUAL, 2020 (DATED 07-16-21).

DESIGN DATA:

CONCRETE CLASS QC1 - COMPRESSIVE STRENGTH 4.0 KSI
REINFORCING STEEL / WELDED WIRE REINFORCEMENT - MINIMUM YIELD STRENGTH 60 KSI

MATERIALS - CONCRETE:

PROVIDE CONCRETE IN CONFORMANCE WITH CMS SECTION 511, CLASS QC1.

MATERIALS - REINFORCING AND HARDWARE:

REINFORCEMENT SHALL CONSIST OF WELDED WIRE FABRIC, OR FORMED BILLET-STEEL BARS CONFORMING TO CMS SECTION 509. ALL STEEL SHALL BE EPOXY COATED OR GALVANIZED. ALL INSERTS AND MISCELLANEOUS HARDWARE OR APPURTENANCES SHALL CONFORM TO PLAN REQUIREMENTS.

SHOP DRAWING REQUIREMENTS:

THE MANUFACTURER SHALL SUBMIT SHOP DRAWINGS FOR REVIEW AND APPROVAL PRIOR TO MANUFACTURE. THE SHOP DRAWINGS SHALL INCLUDE THE FOLLOWING:

- ALL STRUCTURAL DESIGN AND LOADING INFORMATION
- A PLAN VIEW
- ALL ELEVATION VIEWS
- ALL DIMENSIONS

MANUFACTURING SHALL NOT BEGIN UNTIL WRITTEN APPROVAL OF THE SUBMITTED SHOP DRAWINGS HAS BEEN RECEIVED.

TESTING AND INSPECTION:

ACCEPTABILITY OF THE CONCRETE FOR THE PRECAST PANELS WILL BE DETERMINED ON THE BASIS OF COMPRESSION TESTS, CERTIFICATIONS AND VISUAL INSPECTION. THE CONCRETE STRENGTH REQUIREMENTS FOR THE PRECAST PANELS SHALL BE CONSIDERED ATTAINED REGARDLESS OF CURING AGE WHEN COMPRESSION TEST RESULTS INDICATED STRENGTH WILL CONFORM TO 28-DAY SPECIFICATIONS AS STATED BELOW. THE MANUFACTURER SHALL FURNISH FACILITIES AND PERFORM ALL NECESSARY SAMPLING AND TESTING IN AN EXPEDITIOUS AND SATISFACTORY MANNER. PANELS UTILIZING TYPE I OR TYPE I CEMENT SHALL BE CONSIDERED ACCEPTABLE FOR PLACEMENT IN THE WALL WHEN 7-DAY INITIAL STRENGTHS EXCEED 85 PERCENT OF 28-DAY REQUIREMENTS. PANELS UTILIZING TYPE III CEMENT SHALL BE CONSIDERED ACCEPTABLE FOR PLACENT IN THE WALL PRIOR TO 28 DAY ONLY WHEN COMPRESSIVE STRENGTH EXCEEDS THE 28-DAY SPECIFICATION.

MANUFACTURE:

THE AGGREGATES, CEMENT AND WATER SHALL BE PROPORTIONED AND MIXED IN BATCH MIXER TO PRODUCE HOMOGENEOUS CONCRETE MEETING THE STRENGTH REQUIREMENTS OF THESE NOTES. THE PROPORTION OF PORTLAND CEMENT IN THE MIXTURE SHALL NOT BE LESS THAN 564 POUNDS PER CUBIC YARD OF CONCRETE

MANUFACTURE (CONT.):

THE WALL SECTIONS SHALL BE CURED FOR A SUFFICIENT LENGTH OF TIME SO THAT THE CONCRETE WILL DEVELOP THE SPECIFIED COMPRESSIVE STRENGTH IN 28 DAYS OR LESS. ANY ONE OF THE METHODS OF CURING OR COMBINATION THEREOF SHALL BE USED:

STEAM CURING - THE SECTIONS MAY BE LOW PRESSURE, STEAM CURED BY A SYSTEM THAT WILL MAINTAIN A MOIST ATMOSPHERE.

WATER CURING - THE SECTIONS MAY BE WATER CURED BY ANY METHOD THAT WILL KEEP THE SECTIONS MOIST.

THE FORMS USED IN MANUFACTURE SHALL BE SUFFICIENTLY RIGID AND ACCURATE TO MAINTAIN THE SECTION DIMENSIONS WITHIN THE PERMISSIBLE VARIATIONS GIVEN IN THESE NOTES.

THE WALL SECTIONS SHALL BE STORED IN SUCH A MANNER TO PREVENT CRACKING OR DAMAGE.

THE FRONT FACE OF THE REINFORCED CONCRETE PANELS SHALL HAVE A TEXTURED FINISH AS SHOWN IN THE PLANS. CAULKING BETWEEN PRECAST PANELS SHALL BE IN ACCORDANCE WITH THE PLAN DETAILS. THE BACK SIDE OF THE REINFORCED CONCRETE PANELS SHALL HAVE AN UNFORMED SURFACE FINISH AND SHALL BE ROUGH SCREEDED TO ELIMINATE OPEN POCKETS OF AGGREGATE AND SURFACE DISTORTIONS IN EXCESS OF ¼".

ALL PANELS SHALL BE MANUFACTURED WITH ALL PANEL DIMENSIONS WITHIN ¼".

COMPRESSIVE STRENGTH:

ACCEPTANCE OF THE CONCRETE PANELS WITH RESPECT TO COMPRESSIVE STRENGTH WILL BE DETERMINED ON THE BASIS OF PRODUCTION LOTS. A PRODUCTION LOT IS DEFINED AS A GROUP OF PANELS THAT WILL BE REPRESENTED BY A SINGLE COMPRESSIVE STRENGTH SAMPLE AND WILL CONSIST OF EITHER 6 PANELS OR A SINGLE DAY'S PRODUCTION, WHICHEVER IS LESS.

DURING THE PRODUCTION OF THE CONCRETE PANELS, THE MANUFACTURER WILL RANDOMLY SAMPLE THE CONCRETE IN ACCORDANCE WITH ASTM C 172. A SINGLE COMPRESSIVE STRENGTH SAMPLE, CONSISTING OF A MINIMUM OF FOUR CYLINDERS, WILL BE RANDOMLY SELECTED FOR EVERY PRODUCTION LOT.

CYLINDERS FOR COMPRESSIVE STRENGTH TESTS SHALL BE 6" DIA. x 12" OR 4" DIA. x 8" SPECIMENS PREPARED IN ACCORDANCE WITH ASTM C 31. FOR EVERY COMPRESSIVE STRENGTH SAMPLE, A MINIMUM OF 2 CYLINDERS WILL BE CURED IN THE SAME MANNER AS THE PANELS AND TESTED AT APPROXIMATELY 7 DAYS. THE AVERAGE COMPRESSIVE STRENGTH OF THESE CYLINDERS, WHEN TESTED IN ACCORDANCE WITH ASTM C 39, WILL PROVIDE A TEST RESULT WHICH WILL DETERMINE THE INITIAL STRENGTH OF THE CONCRETE. IN ADDITION, 2 CYLINDERS SHALL BE CURED IN ACCORDANCE WITH ASTM C 31 AND TESTED AT 28 DAYS. THE AVERAGE COMPRESSIVE STRENGTH OF THESE TWO CYLINDERS, WHEN TESTED IN ACCORDANCE WITH ASTM C 39, WILL PROVIDE A COMPRESSIVE STRENGTH TEST RESULT WHICH WILL DETERMINE THE COMPRESSIVE STRENGTH OF THE PRODUCTION LOT.

IF THE INITIAL STRENGTH TEST RESULTS INDICATE A COMPRESSIVE STRENGTH IN EXCESS OF 4000 PSI, THEN THESE TEST RESULTS WILL BE UTILIZED AS THE COMPRESSIVE STRENGTH TEST RESULT FOR THE PRODUCTION LOT AND THE REQUIREMENT FOR TESTING AT 28 DAYS WILL BE WAIVED FOR THAT PARTICULAR PRODUCTION LOT.

ACCEPTANCE OF A PRODUCTION LOT WILL BE MADE IF THE COMPRESSIVE STRENGTH TEST RESULT IS GREATER THAN OR EQUAL TO 4000 PSI. IF THE RESULT IS LESS THAN 4000 PSI, THE ACCEPTANCE OF THE PRODUCTION LOT WILL BE BASED ON ITS MEETING OR EXCEEDING THE FOLLOWING THREE ACCEPTANCE CRITERIA:

- 90% OF THE COMPRESSIVE STRENGTH TEST RESULTS FOR THE OVERALL PRODUCTION SHALL EXCEED 4000 PSI.

- THE AVERAGE OF ANY THREE CONSECUTIVE COMPRESSIVE STRENGTH TEST RESULTS SHALL EXCEED 4000 PSI.

- NO INDIVIDUAL COMPRESSIVE STRENGTH TEST RESULT SHALL FALL BELOW 3800 PSI.

IN THE EVENT THAT A PRODUCTION LOT FAILS TO MEET THE SPECIFIED COMPRESSIVE STRENGTH REQUIREMENTS, THE PRODUCTION LOT SHALL BE REJECTED. SUCH REJECTION SHALL PREVAIL UNLESS THE MANUFACTURER, AT HIS OWN EXPENSE, OBTAINS AND SUBMITS EVIDENCE ACCEPTABLE TO THE ENGINEER THAT THE STRENGTH AND QUALITY OF THE CONCRETE PLACED WITHIN THE PANELS OF THE PRODUCTION IS ACCEPTABLE. IF SUCH EVIDENCE CONSISTS OF TEST MADE ON CORES TAKEN FROM THE PANELS WITHIN THE PRODUCTION LOT, THE CORES SHALL BE OBTAINED AND TESTED IN ACCORDANCE WITH THE SPECIFICATIONS OF ASTM C 42.

REJECTION:

PANELS SHALL BE SUBJECT TO REJECTION BECAUSE OF FAILURE TO MEET ANY OF THE REQUIREMENTS SPECIFIED ABOVE. IN ADDITION, ANY OF ALL OF THE FOLLOWING DEFECTS MAY BE SUFFICIENT CAUSE FOR REJECTION:

- DEFECTS THAT INDICATE IMPERFECT MOLDING
- DEFECTS INDICATING HONEYCOMBED OR OPEN TEXTURED CONCRETE.
- DEFECTS IN THE PHYSICAL CHARACTERISTICS OF THE CONCRETE, SUCH AS BROKEN OR CHIPPED CONCRETE.
- STAINED FORM FACE, DUE TO EXCESS FORM OIL OR OTHER CONTAMINATIONS.
- SIGNS OF AGGREGATE SEGREGATION
- BROKEN OR CRACKED CORNERS
- LIFTING INSERTS NOT USABLE
- EXPOSED REINFORCING STEEL
- INSUFFICIENT CONCRETE COMPRESSIVE STRENGTH
- CRACKS WIDER THAN 0.01 INCH, PENTRATING MORE THAN 1 INCH, OR LONGER THAN 12 INCHES

THE ENGINEER WILL DECIDE IF AN ATTEMPT MAY BE MADE TO REPAIR A DEFECTIVE PANEL. THE CONTRACTOR OR MANUFACTURER SHALL MAKE THE REPAIRS. IF THE REPAIRS ARE MADE TO THE ENGINEER'S SATISFACTION, THE PANEL WILL BE ACCEPTABLE.

MARKING:

THE DATE OF MANUFACTURE, THE PRODUCTION LOT NUMBER AND THE PIECE OF MARK SHALL BE CLEARLY SCRIBED ON THE BACK SURFACE OF EACH PANEL.

WALL ERECTION:

PANELS ARE HANDLED BY MEANS OF A LIFTING DEVICE CONNECTED TO LIFTING INSERTS CAST INTO THE BACK SIDE OF THE PANELS. ALL PANELS SHALL BE BRACED TO RESIST THE TEMPORARY CONSTRUCTION LOADS INCLUDING WIND LOADS, PRIOR TO POURING THE THICKENED EDGE BEAM FOR THE LOAD DISTRIBUTION SLAB.

MEASUREMENT AND PAYMENT:

ACCEPTED PRECAST FACADE WALL PANELS SHALL BE PAID FOR AT THE CONTRACT UNIT PRICE BID PER SQUARE FOOT FOR ITEM 530 SPECIAL - RETAINING WALL, PRECAST WALL FACADE PANEL. WHICH PRICE SHALL CONSTITUTE FULL COMPENSATIONS FOR ALL LABOR, MATERIALS, EQUIPMENT, SHIPPING AND APPURTENANCES TO FABRICATE AND INSTALL THE PANELS IN ACCORDANCE WITH THESE SPECIFICATIONS.

ITEM SPECIAL - RETAINING WALL, GRADE BEAM

THIS BID ITEM CONSISTS OF FURNISHING AND INSTALLING A GRADE BEAM CONSTRUCTED IN ACCORDANCE WITH THIS SPECIFICATION AND DESIGNED IN ACCORDANCE WITH THE "LRFD BRIDGE DESIGN SPECIFICATIONS", 9TH EDITION, ADOPTED BY THE AMERICAN ASSOCIATION OF STATE HIGHWAY AND TRANSPORTATION OFFICIALS AND THE ODOT BRIDGE DESIGN MANUAL, 2020 (DATED 07-16-21).

DESIGN DATA:

CONCRETE CLASS QC1 - COMPRESSIVE STRENGTH 4.0 KSI
REINFORCING STEEL - MINIMUM YIELD STRENGTH 60 KSI

MATERIALS - CONCRETE:

PROVIDE CONCRETE IN CONFORMANCE WITH CMS SECTION 511, CLASS QC1.

MATERIALS - REINFORCING:

REINFORCEMENT SHALL BE EPOXY COATED GRADE 60 IN CONFORMANCE WITH CMS SECTION 509.

GENERAL:

ALL MATERIAL, LABOR AND INCIDENTALS NECESSARY TO FURNISH AND PLACE THE GRADE BEAM SHALL BE INCLUDED IN THE UNIT BID PRICE PER FOOT FOR THIS ITEM.

CONSTRUCTION TOLERANCES SHALL BE IN ACCORDANCE WITH THE REQUIREMENTS OF ODOT SS840, SECTION 840.06.E FOR LEVELING PAD CONSTRUCTION. THE GRADE BEAM SHALL BE REINFORCED AND CONSTRUCTED TO THE DIMENSIONS SHOWN IN THE PLANS.

Preliminary Plans - For Reference Only

GENERAL NOTES (2 OF 2)
WALL Z
ALONG NORTH SIDE OF RAMP B6

SFN N/A
DESIGN AGENCY
Michael Baker INTERNATIONAL
DESIGNER SSW | CHECKER MKB
REVIEWER LPC 05-09-24
PROJECT ID 82382
SUBSET 5 | TOTAL 17
SHEET 1321 | TOTAL 2696

CUY-90-16.28

MODEL: Untitled Sheet PAPERSIZE: 34x22 (in.) DATE: 3/27/2025 TIME: 11:21:22 PM USER: Julie.Ross
pw:\\mb-us-pw.bentley.com:mb-us-pw-03\Documents\Cleveland_OH\01_Projects\ODOT\District12\82382\400-Engineering\Structures\WALL_Z\Sheets\82382_Z_WN002.dgn

ESTIMATED QUANTITIES

CALCULATED BY: ZES DATE: 04/24/24
CHECKED BY: SSW DATE: 05/14/24

PARTICIPATION	ITEM	ITEM EXT.	TOTAL	UNIT	DESCRIPTION	SHEET REF.
01/IMS/04	203	35120	370	CY	GRANULAR MATERIAL, TYPE C	
01/IMS/04	509	10000	99,488	LB	EPOXY COATED STEEL REINFORCEMENT	
01/IMS/04	509	30020	6,162	FT	NO. 4 DEFORMED GFRP REINFORCEMENT	
01/IMS/04	511	53010	166	CY	CLASS QC1 CONCRETE, MISC.: LOAD DISTRIBUTION SLAB WITH QC/QA	4
01/IMS/04	511	53012	257	CY	CLASS QC2 CONCRETE, MISC.: MOMENT SLAB AND BARRIER WITH QC/QA	4
01/IMS/04	512	10001	423	SY	SEALING OF CONCRETE SURFACES, AS PER PLAN (PERMANENT GRAFFITI PROTECTION)	4
01/IMS/04	512	10101	727	SY	SEALING OF CONCRETE SURFACES (EPOXY-URETHANE), AS PER PLAN	4
01/IMS/04	516	13600	523	SF	1" PREFORMED EXPANSION JOINT FILLER	
01/IMS/04	516	13900	1,026	SF	2" PREFORMED EXPANSION JOINT FILLER	
01/IMS/04	SPECIAL	530E50020	416	FT	RETAINING WALL, GRADE BEAM	5
01/IMS/04	SPECIAL	530E51000	7,515	SF	RETAINING WALL, PRECAST WALL FACADE PANEL	5
01/IMS/04	840	20001	1,193	SF	MECHANICALLY STABILIZED EARTH WALL, AS PER PLAN: 2 STAGE MSE WALL	4
01/IMS/04	840	20001	4,964	SF	MECHANICALLY STABILIZED EARTH WALL, AS PER PLAN: WIRE FACED MSE WALL	4
01/IMS/04	840	21000	2,525	CY	WALL EXCAVATION	
01/IMS/04	840	22000	1,128	SY	FOUNDATION PREPARATION	
01/IMS/04	840	23000	6,486	CY	SELECT GRANULAR BACKFILL	
01/IMS/04	840	25010	825	FT	6" DRAINAGE PIPE, PERFORATED	
01/IMS/04	840	25020	38	FT	6" DRAINAGE PIPE, NON-PERFORATED	
01/IMS/04	840	26050	8,708	SF	AESTHETIC SURFACE TREATMENT	
01/IMS/04	840	27000	1	DAY	ON-SITE ASSISTANCE	
01/IMS/04	840	28000	LS		SGB INSPECTION AND COMPACTION TESTING	

SECTION/DETAIL/VIEW CALLOUTS

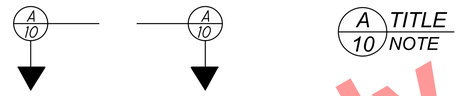

(SEE SECTION A ON SHEET 10) (SECTION A CUT FROM SHEET 10)

PLAN ABBREVIATIONS:

ABUT. = ABUTMENT
APPR. = APPROACH
B = BOTTOM
℄ = BASELINE
BM = BENCHMARK
BOT. OR BTM. = BOTTOM
℄ = CENTERLINE
C/C = CENTER TO CENTER
C.I.P. = CAST-IN-PLACE
C.J. = CONSTRUCTION JOINT
CLR. = CLEAR
CMS = CONSTRUCTION AND MATERIAL SPECIFICATIONS
CONC. = CONCRETE
CONST. = CONSTRUCTION
DIA. = DIAMETER
DIM. = DIMENSION
DTBD = DISPOSITION TO BE DETERMINED
DWG. = DRAWING
EB = EASTBOUND
E.F. = EACH FACE
EL. OR ELEV. = ELEVATION
EQ. = EQUAL
EST. = ESTIMATED
EX. = EXISTING
F.A. = FORWARD ABUTMENT
F/F = FACE TO FACE
F.F. = FAR FACE
FT. = FOOT OR FEET
FTG. = FOOTING
FWD. = FORWARD
IN. = INCH
JT. = JOINT
LT. = LEFT
MAX. = MAXIMUM
MIN. = MINIMUM
MISC. = MISCELLANEOUS
N = NORTH
NB = NORTHBOUND
N.F. = NEAR FACE
NO. = NUMBER
N.P.C.P.P. = NON-PERFORATED CORRUGATED PLASTIC PIPE
OHWM = ORDINARY HIGH WATER MARK
O/O = OUT TO OUT
P.C.P.P. = PERFORATED CORRUGATED PLASTIC PIPE
P.E.J.F. = PREFORMED EXPANSION JOINT FILLER
PROP. = PROPOSED
PSF = POUNDS PER SQUARE FOOT
R.A. = REAR ABUTMENT
S = SOUTH
SB = SOUTHBOUND
SER. = SERIES
SHLDR = SHOULDER
SPA. = SPACE OR SPACES
STA. = STATION
STD. = STANDARD
STR = STRAIGHT
T = TOP
T&B = TOP & BOTTOM
TBR = TO BE REMOVED
TBRBO = TO BE RELOCATED BY OTHERS
TEMP. = TEMPORARY
TYP. = TYPICAL
U.N.O. = UNLESS NOTED OTHERWISE
VAR. = VARIES
WB = WESTBOUND
WWR = WELDED WIRE REINFORCEMENT

Preliminary Plans - For Reference Only

ESTIMATED QUANTITIES
WALL Z
ALONG NORTH SIDE OF RAMP B6

SFN
N/A

DESIGN AGENCY
Michael Baker INTERNATIONAL

DESIGNER	CHECKER
SSW	MKB

REVIEWER
LPC 05-09-24

PROJECT ID
82382

SUBSET	TOTAL
6	17

SHEET	TOTAL
1322	2696

CUY-90-16.28 (CCG3A)

MODEL: Untitled Sheet PAPERSIZE: 34x22 (in.) DATE: 3/27/2025 TIME: 11:21:30 PM USER: Julie.Ross
pw:\\mb-us-pw.bentley.com:mb-us-pw-03\Documents\Cleveland_OH01_Projects\ODOT\District12\82382\400-Engineering\Structures\WALL_Z\Sheets\82382_Z_WQ001.dgn

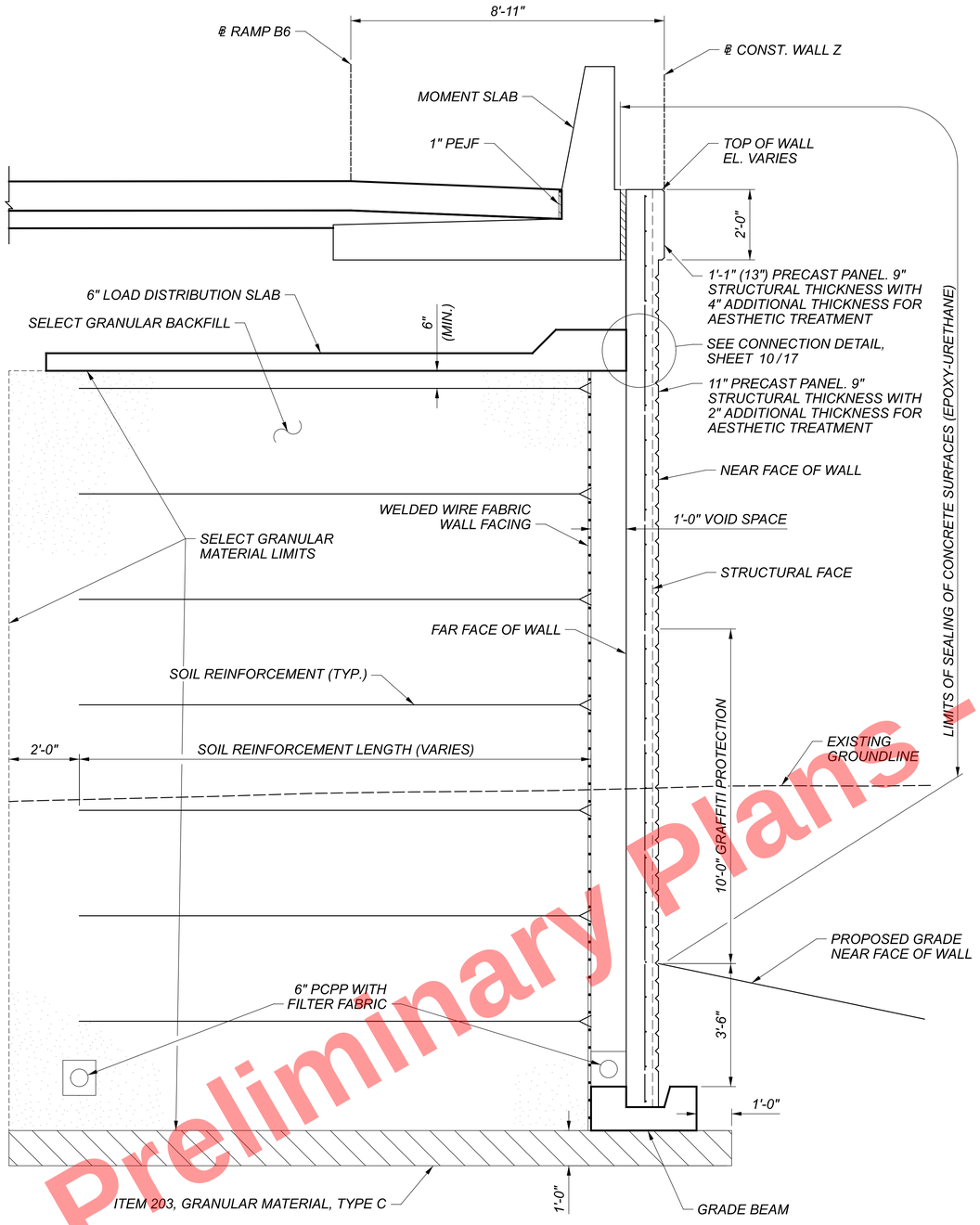

A/1 A/2 TILT-UP PANEL WALL TYP. SECTION

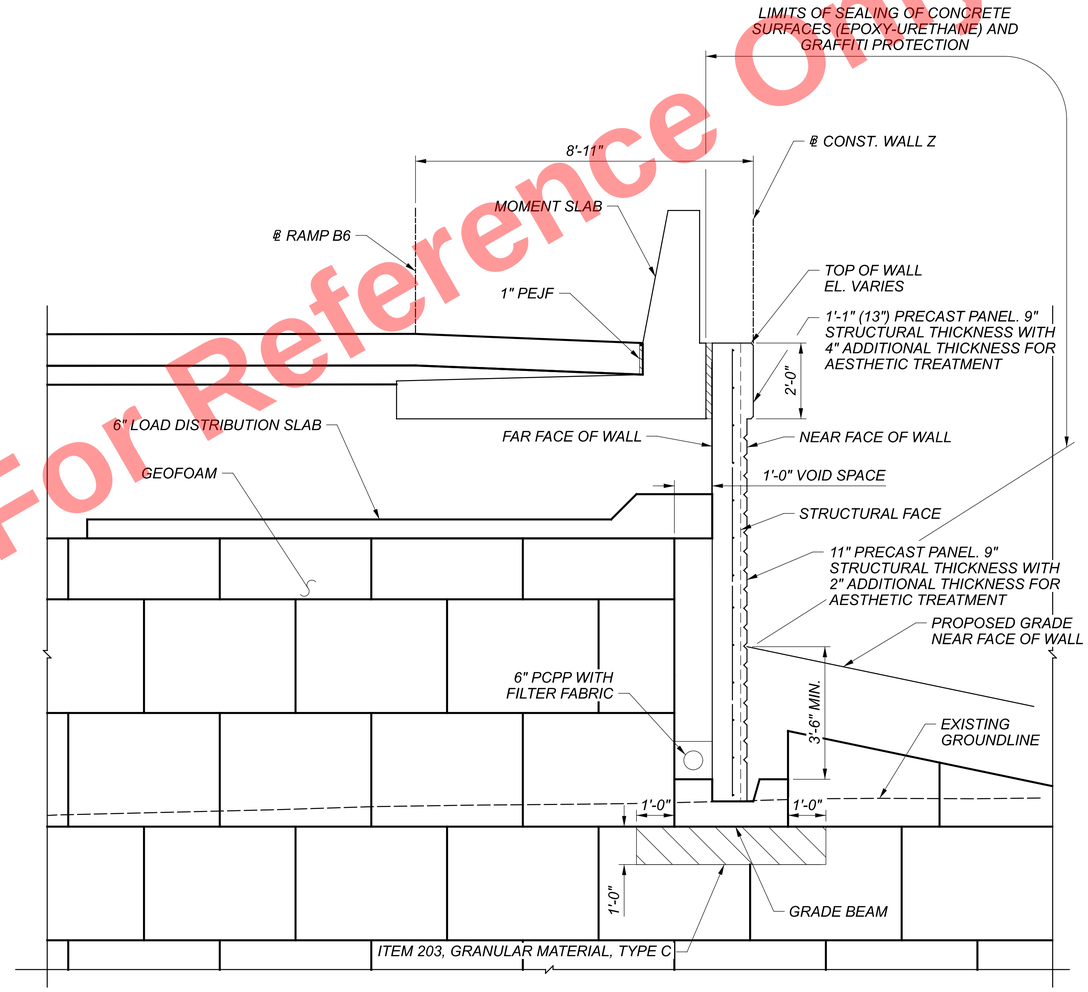

B/1 TILT-UP PANEL WALL TYP. SECTION
OVER EX. CENTRAL AVE. SEWER

Preliminary Plans - For Reference Only

NOTES:

1. SHIM BOTTOM OF WALL PANELS AS REQUIRED TO ALIGN VERTICAL WALL JOINTS.
2. SEE LANDSCAPING PLANS FOR WALL AESTHETIC TREATMENT DETAILS.

WALL TYPICAL SECTION (1 OF 2)
WALL Z
ALONG NORTH SIDE OF RAMP B6

SFN	N/A
DESIGN AGENCY	Michael Baker INTERNATIONAL
DESIGNER	SSW
CHECKER	MKB
REVIEWER	LPC 05-09-24
PROJECT ID	82382
SUBSET	7
TOTAL	17
SHEET	1323
TOTAL	2696

CUY-90-16.28 (CCG3A)
MODEL: Sheet (2 of 2) PAPERSIZE: 34x22 (In.) DATE: 3/27/2025 TIME: 11:21:39 PM USER: Julie.Ross
pw:\\mb-us-pw.bentley.com:mb-us-pw-03\Documents\Cleveland_OH\01_Projects\ODOT\District12\82382\400-Engineering\Structures\WALL_Z\Sheets\82382_Z_WY001.dgn

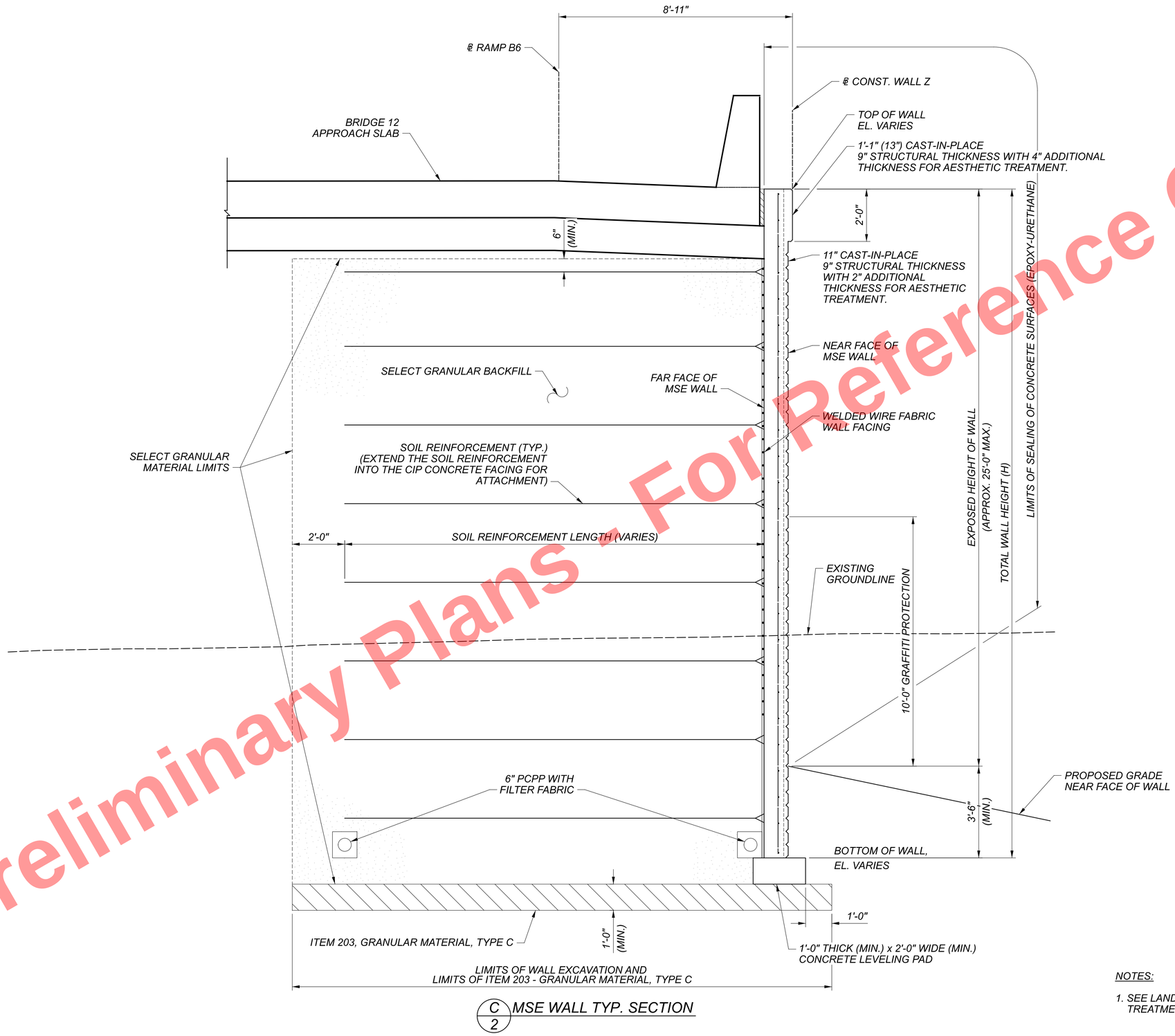

C/2 MSE WALL TYP. SECTION

NOTES:

1. SEE LANDSCAPING PLANS FOR WALL AESTHETIC TREATMENT DETAILS.

Preliminary Plans - For Reference Only

WALL TYPICAL SECTION (2 OF 2)
WALL Z
ALONG NORTH SIDE OF RAMP B6

SFN	N/A
DESIGN AGENCY	Michael Baker INTERNATIONAL
DESIGNER	SSW
CHECKER	MKB
REVIEWER	LPC 05-09-24
PROJECT ID	82382
SUBSET	8
TOTAL	17
SHEET	1324
TOTAL	2696

CUY-90-16.28 (CCG3A)
MODEL: Sheet PAPERSIZE: 34x22 (in.) DATE: 3/27/2025 TIME: 11:21:47 PM USER: Julie.Ross
pw:\\mb-us-pw.bentley.com:mb-us-pw-03\Documents\Cleveland_OH01_Projects\ODOT\District12\82382400-Engineering\Structures\WALL_Z\Sheets\82382_Z_WY001.dgn

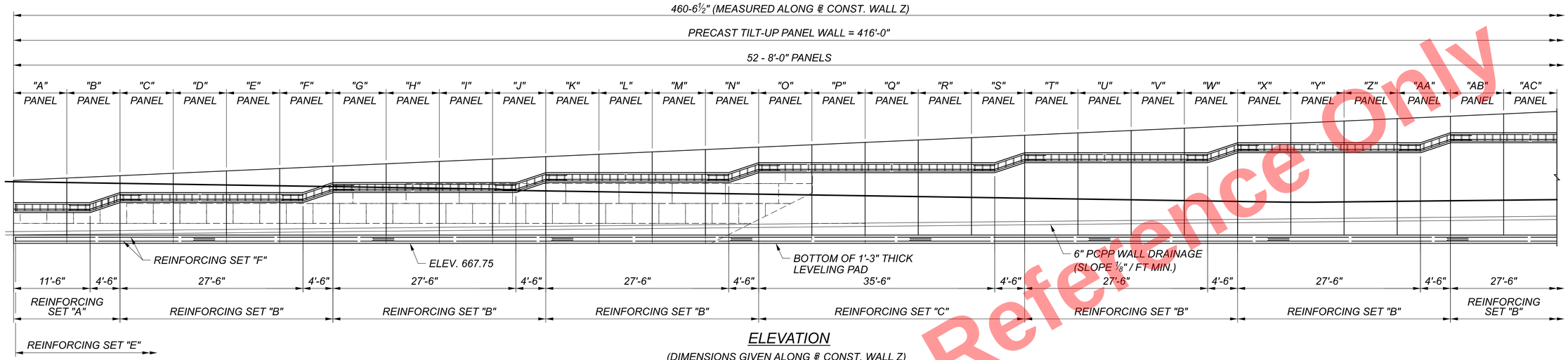

ELEVATION

(DIMENSIONS GIVEN ALONG ℄ CONST. WALL Z)

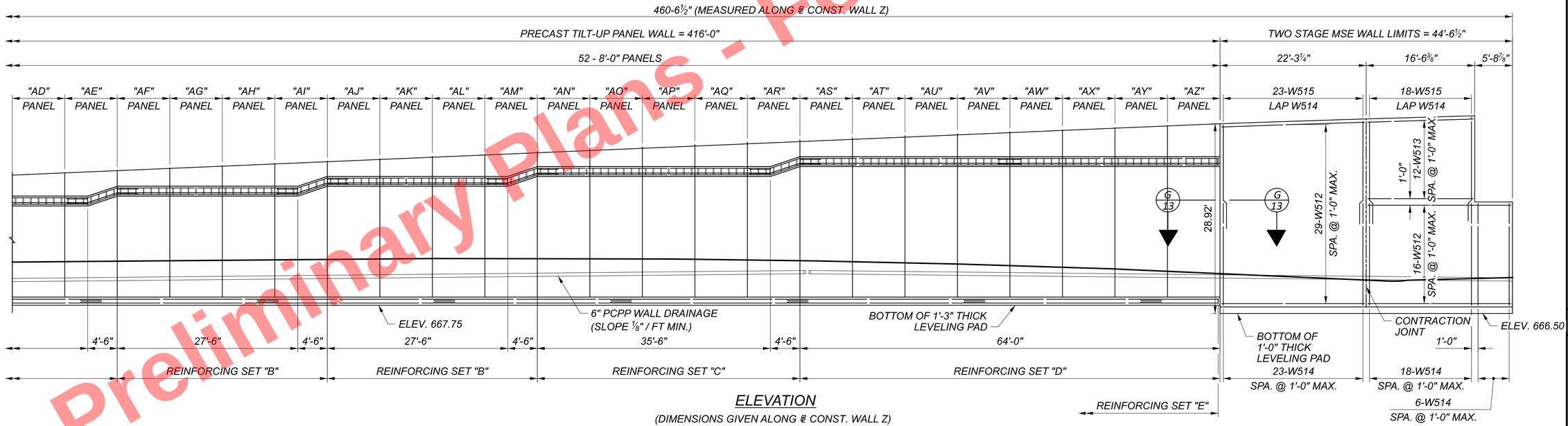

ELEVATION

(DIMENSIONS GIVEN ALONG ℄ CONST. WALL Z)

Preliminary Plans - For Reference Only

REINFORCING LEGEND:

LOAD DISTRIBUTION SLAB

"A" - 16 SETS OF 1-W505 AND 1-W510, 31 LENGTHS OF 1-W506 AND 1-W511

"B" - 32 SETS OF 1-W505 AND 1-W510, 31 LENGTHS OF 1-W507 AND 1-W511

"C" - 40 SETS OF 1-W505 AND 1-W510, 31 LENGTHS OF 1-W508 AND 1-W511

"D" - 65 SETS OF 1-W505 AND 1-W510, 31 LENGTHS OF 2-W509

GRADE BEAM

"E" - 501 SETS OF 1-W501 AND 1-W504 SPA. @ 10" MAX.

"F" - 6 LENGTHS OF 15-W502 AND 1-W503

NOTES:

1. LAP LENGTH FOR #5 BARS SHALL BE 3'-1" MINIMUM UNLESS NOTED OTHERWISE.

WALL ELEVATION
WALL Z
ALONG NORTH SIDE OF RAMP B6

SFN	N/A
DESIGN AGENCY	Michael Baker INTERNATIONAL
DESIGNER	SSW
CHECKER	MKB
REVIEWER	LPC 05-09-24
PROJECT ID	82382
SUBSET	9
TOTAL	17
SHEET	1325
TOTAL	2696

CUY-90-16.28 (CCG3A)

MODEL: Untitled Sheet PAPERSIZE: 34x22 (in.) DATE: 3/27/2025 TIME: 11:21:54 PM USER: Julie.Ross
pw:\\mb-us-pw.bentley.com:mb-us-pw-03\Documents\Cleveland_OH\01_Projects\ODOT\District12\82382\400-Engineering\Structures\WALL_Z\Sheets\82382_Z_WE001.dgn

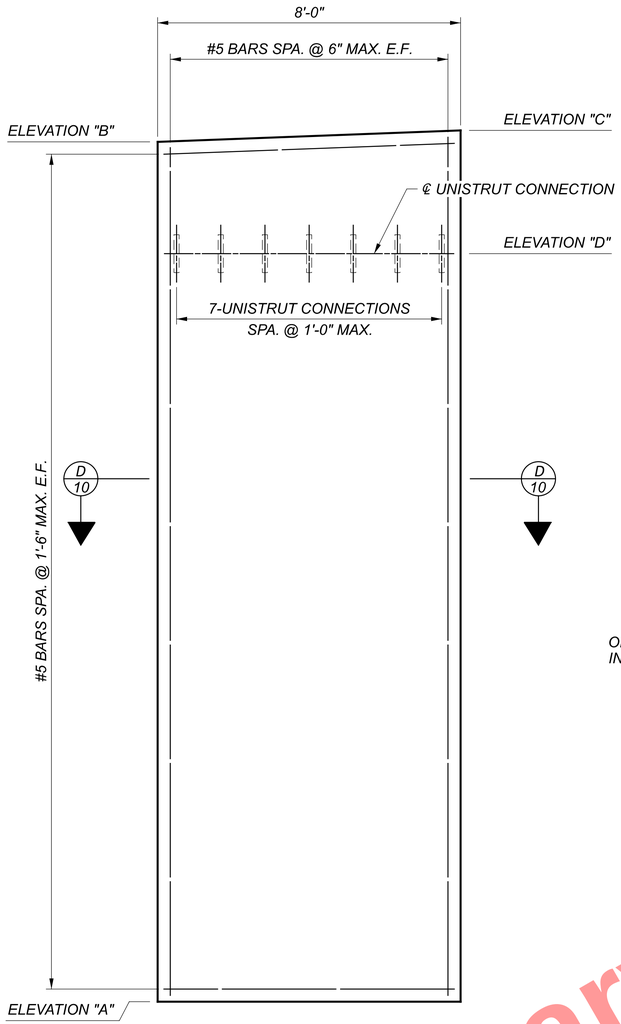

TYPICAL TILT UP PANEL ELEVATION

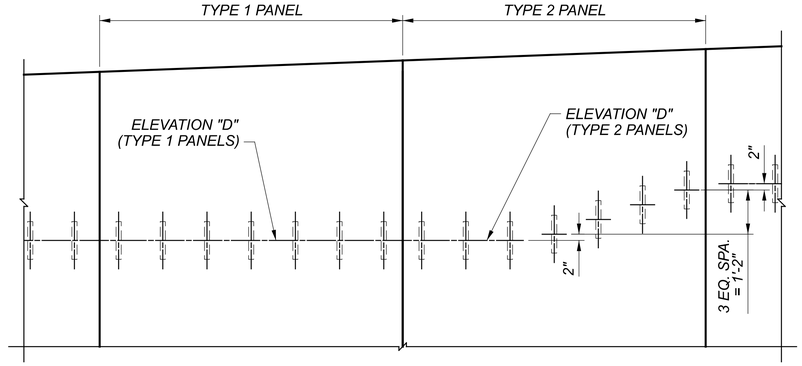

CONNECTION TRANSITION DETAIL

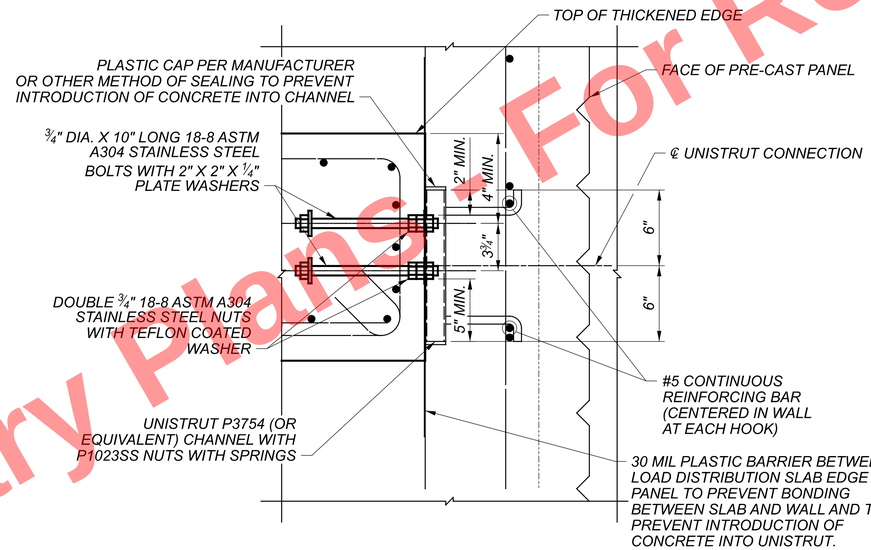

WALL Z PANEL TABLE					
PANEL DESIGNATION	PANEL TYPE	BOTTOM OF PANEL ELEV. "A"	TOP OF PANEL ELEV. "B"	TOP OF PANEL ELEV. "C"	CL OF UNISTRUT CONNECTION ELEV. "D"
A	1	668.42	677.22	677.58	673.14
B	2	668.42	677.58	677.94	673.14
C	1	668.42	677.94	678.29	674.64
D	1	668.42	678.29	678.65	674.64
E	1	668.42	678.65	679.01	674.64
F	2	668.42	679.01	679.37	674.64
G	1	668.42	679.37	679.73	676.14
H	1	668.42	679.73	680.08	676.14
I	1	668.42	680.08	680.44	676.14
J	2	668.42	680.44	680.80	676.14
K	1	668.42	680.80	681.16	677.64
L	1	668.42	681.16	681.51	677.64
M	1	668.42	681.51	681.87	677.64
N	2	668.42	681.87	682.23	677.64
O	1	668.42	682.23	682.59	679.14
P	1	668.42	682.59	682.94	679.14
Q	1	668.42	682.94	683.30	679.14
R	1	668.42	683.30	683.66	679.14
S	2	668.42	683.66	684.02	679.14
T	1	668.42	684.02	684.37	680.64
U	1	668.42	684.37	684.73	680.64
V	1	668.42	684.73	685.09	680.64
W	2	668.42	685.09	685.45	680.64
X	1	668.42	685.45	685.81	682.14
Y	1	668.42	685.81	686.16	682.14
Z	1	668.42	686.16	686.52	682.14
AA	2	668.42	686.52	686.88	682.14
AB	1	668.42	686.88	687.24	683.64
AC	1	668.42	687.24	687.59	683.64
AD	1	668.42	687.59	687.95	683.64
AE	2	668.42	687.95	688.31	683.64
AF	1	668.42	688.31	688.67	685.14
AG	1	668.42	688.67	689.02	685.14
AH	1	668.42	689.02	689.38	685.14
AI	2	668.42	689.38	689.74	685.14
AJ	1	668.42	689.74	690.10	686.64
AK	1	668.42	690.10	690.46	686.64
AL	1	668.42	690.46	690.81	686.64
AM	2	668.42	690.81	691.17	686.64
AN	1	668.42	691.17	691.53	688.14
AO	1	668.42	691.53	691.89	688.14
AP	1	668.42	691.89	692.26	688.14
AQ	1	668.42	692.26	692.63	688.14
AR	2	668.42	692.63	692.99	688.14
AS	1	668.42	692.99	693.29	689.64
AT	1	668.42	693.29	693.60	689.64
AU	1	668.42	693.60	693.91	689.64
AV	1	668.42	693.91	694.21	689.64
AW	1	668.42	694.21	694.52	689.64
AX	1	668.42	694.52	694.82	689.64
AY	1	668.42	694.82	695.12	689.64
AZ	1	668.42	695.12	695.42	689.64

UNISTRUT CONNECTION DETAILS

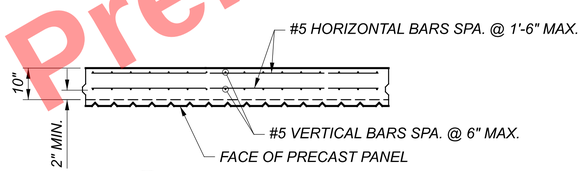

D
10
SECTION

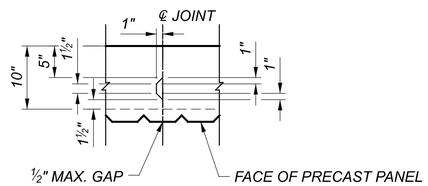

TYPICAL 10" WALL PANEL JOINT DETAIL

NOTES:

1. LIFTING INSERTS SHALL BE USED FOR THE TRANSPORTATION AND ERECTION OF THE TILT-UP PANELS. THE INSERTS SHALL BE SPACED NO MORE THAN 10'-0" APART AND NO MORE THAN 3'-0" FROM THE EDGE OF PANEL.
2. PANEL CONTRACTOR IS RESPONSIBLE FOR THE FINAL LOCATIONS OF THE LIFTING INSERTS AND VERIFYING THAT THE PANEL CAPACITY IS ADEQUATE THROUGH THE TRANSPORTATION AND INSTALLATION PROCESSES.
3. PANEL FABRICATOR IS RESPONSIBLE FOR THE PROPER PLACEMENT OF THE UNISTRUT CONNECTIONS.

Preliminary Plans - For Reference Only

TILT UP WALL DETAILS (1 OF 3)
WALL Z
ALONG NORTH SIDE OF RAMP B6

SFN N/A
DESIGN AGENCY Michael Baker INTERNATIONAL
DESIGNER SSW | CHECKER MKB
REVIEWER LPC 05-09-24
PROJECT ID 82382
SUBSET 10 | TOTAL 17
SHEET 1326 | TOTAL 2696

CUY-90-16.28 (CCG3A)

MODEL: Untitled Sheet PAPERSIZE: 34x22 (in.) DATE: 3/27/2025 TIME: 11:22:01 PM USER: Julie.Ross
pw:\\mb-us-pw.bentley.com:mb-us-pw-03\Documents\Cleveland_OH\01_Projects\ODOT\District12\82382\400-Engineering\Structures\WALL_Z\Sheets\82382_Z_WD002.dgn

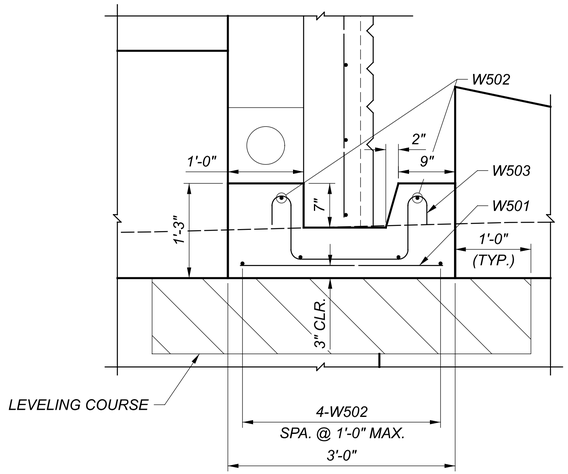

TYPICAL GRADE BEAM DETAIL

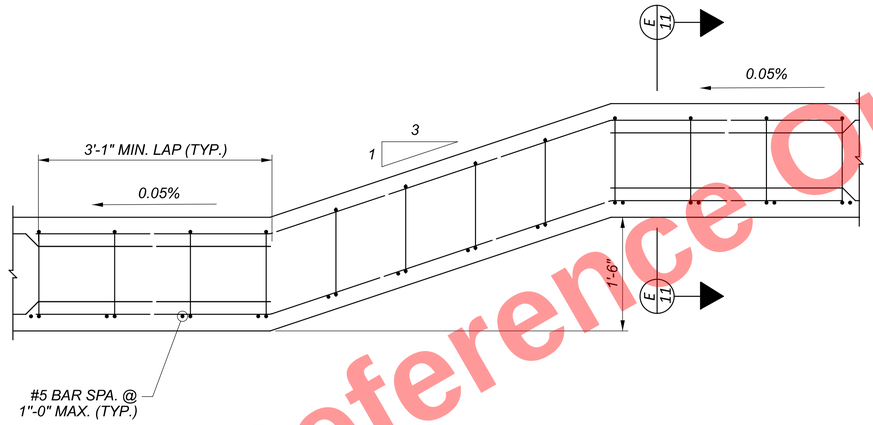

LOAD DISTRIBUTION SLAB DETAILS

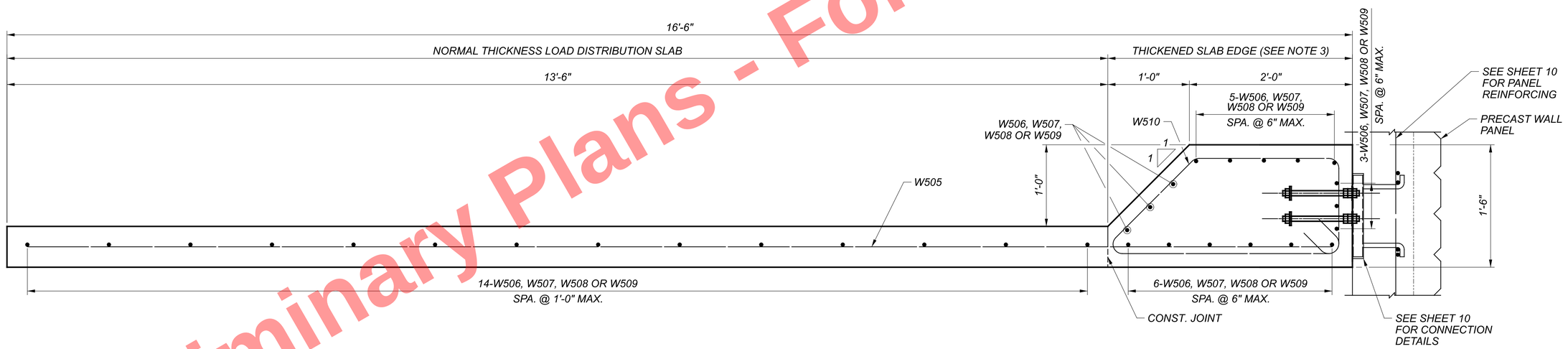

E/11 SECTION
GEOFOAM AND FILL NOT SHOWN FOR CLARITY

NOTES:

1. REINFORCEMENT SHALL HAVE 2" MINIMUM CLEAR COVER, UNLESS NOTED OTHERWISE.
2. PLACE AND COMPACT THE FILL OVER THE LOAD DISTRIBUTION SLAB PRIOR TO PLACING FILL AGAINST THE WALL. DO NOT PLACE FILL AGAINST THE WALL UNTIL REMAINDER IS PLACED AND COMPACTED.
3. THICKENED SLAB EDGE IS TO BE POURED BETWEEN THE LOAD DISTRIBUTION SLAB AND THE TILT-UP PANELS WHILE THE PANELS ARE TEMPORARILY SUPPORTED.
4. LOAD DISTRIBUTION SLAB THICKENED EDGE HEIGHT MAY BE ADJUSTED AS NEEDED, MAINTAING MINIMUM CLEARANCES AND COVER TO BOLTS AND REINFORCMEMENT, AND ADJUSTING GEOMETRY OF HOOPS TO MATCH. REQUIRED LONGITUDINAL STEEL DOES NOT CHANGE.

Preliminary Plans - For Reference Only

TILT UP WALL DETAILS (2 OF 3)
WALL Z
ALONG NORTH SIDE OF RAMP B6

SFN N/A
DESIGN AGENCY
Michael Baker INTERNATIONAL
DESIGNER SSW | CHECKER MKB
REVIEWER LPC 05-09-24
PROJECT ID 82382
SUBSET 11 | TOTAL 17
SHEET 1327 | TOTAL 2696

CUY-90-16.28 (CCG3A)
MODEL: Untitled Sheet PAPERSIZE: 34x22 (in.) DATE: 3/27/2025 TIME: 11:22:19 PM USER: Julie.Ross
pw:\\mb-us-pw.bentley.com:mb-us-pw-03\Documents\Cleveland_OH\01_Projects\ODOT\District12\82382\400-Engineering\Structures\WALL_Z\Sheets\82382_Z_WD005.dgn

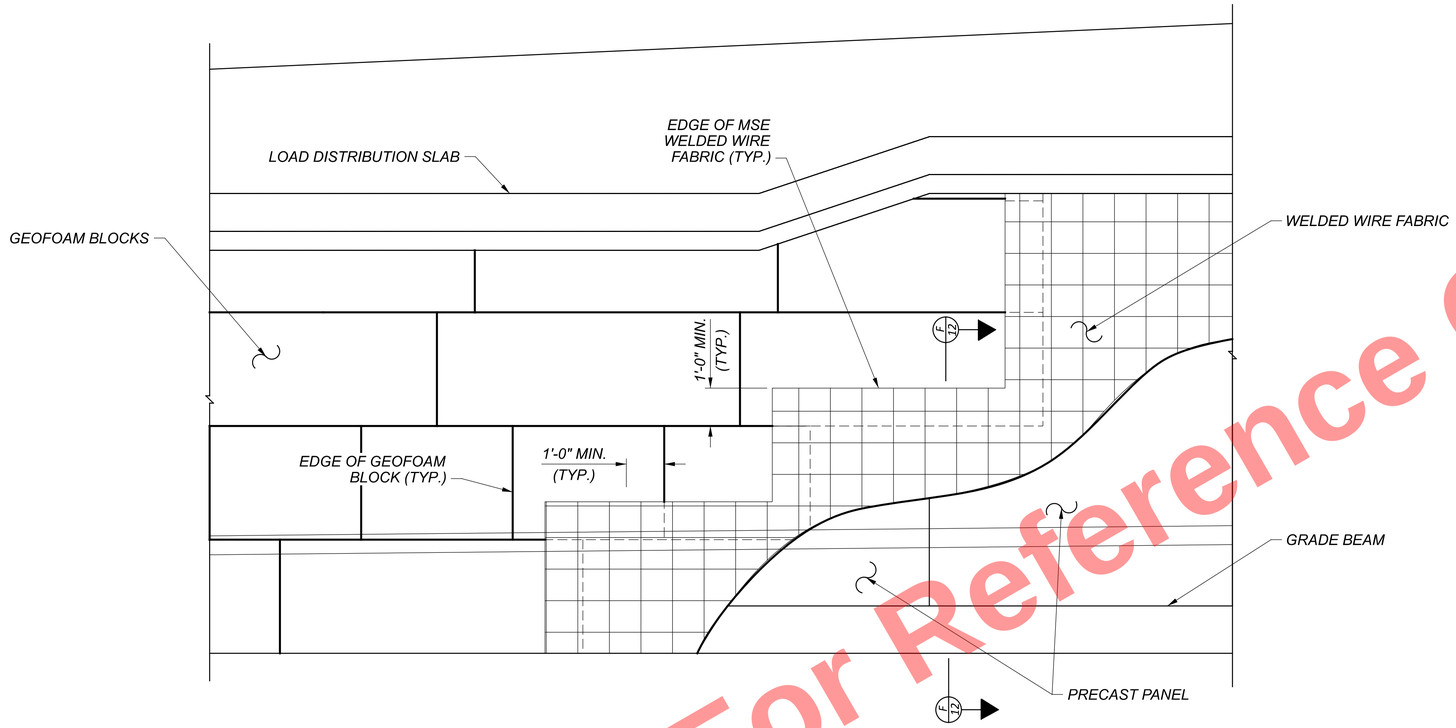

TYPICAL MSE/GEOFOAM TRANSITION DETAIL

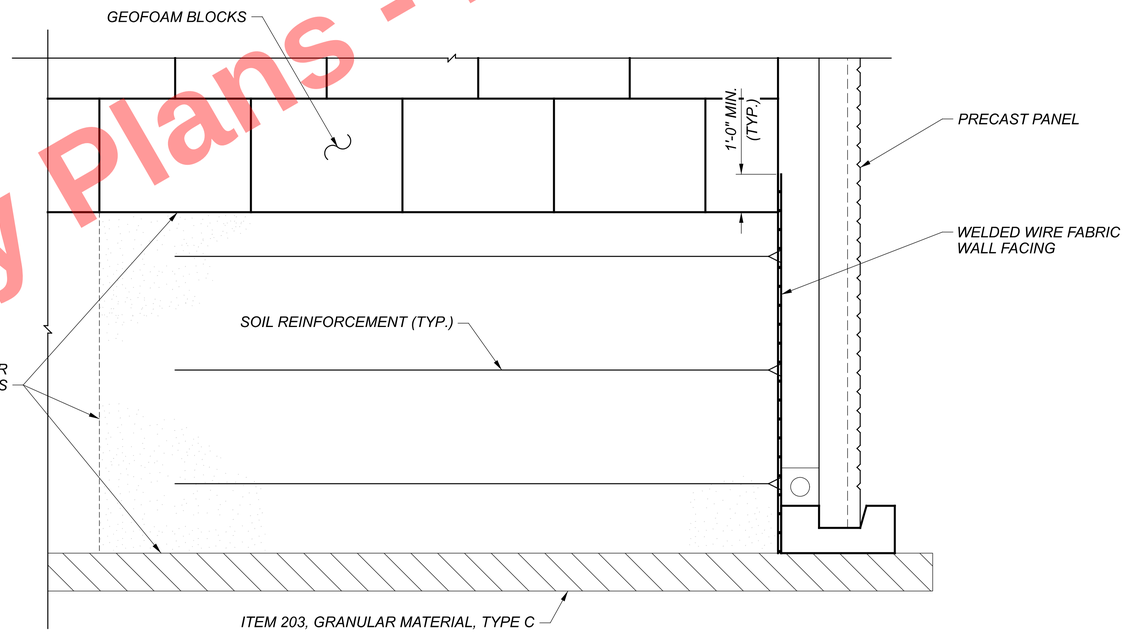

F 12 SECTION

Preliminary Plans - For Reference Only

TILT UP WALL DETAILS (3 OF 3)
WALL Z
ALONG NORTH SIDE OF RAMP B6

SFN N/A

DESIGN AGENCY
Michael Baker INTERNATIONAL

DESIGNER	CHECKER
SSW	MKB

REVIEWER LPC 05-09-24

PROJECT ID 82382

SUBSET	TOTAL
12	17

SHEET	TOTAL
1328	2696

CUY-90-16.28 (CCG3A)

MODEL: Sheet PAPERSIZE: 34x22 (in.) DATE: 3/27/2025 TIME: 11:22:40 PM USER: Julie.Ross
pw:\\mb-us-pw.bentley.com:mb-us-pw-03\Documents\Cleveland_OH\01_Projects\ODOT\District12\82382\400-Engineering\Structures\WALL_Z\Sheets\82382_Z_WD006.dgn

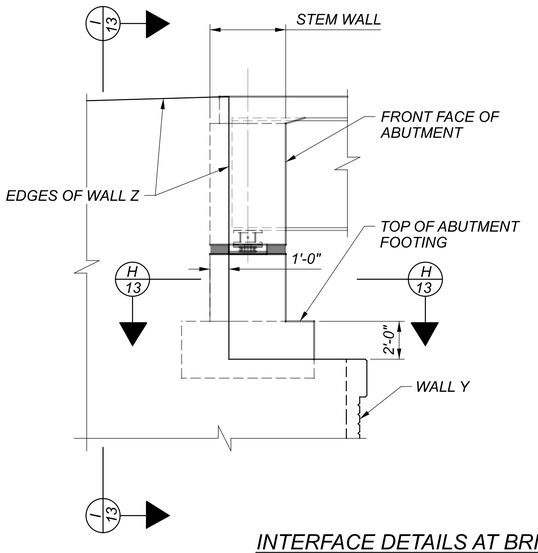

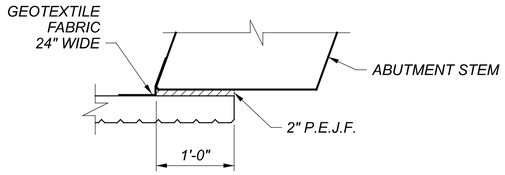

H 13 SECTION

INTERFACE DETAILS AT BRIDGE 12 FORWARD ABUTMENT

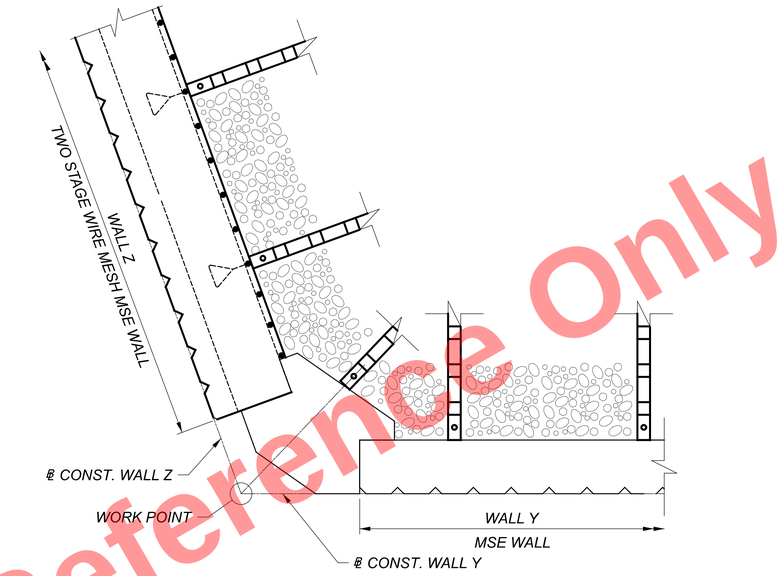

CORNER DETAIL AT WALL Y AND WALL Z INTERFACE

(FOR SCHEMATIC PURPOSES ONLY, CORNER INTERFACE DETAILS ARE TO BE DETERMINED BY THE WALL SUPPLIER)

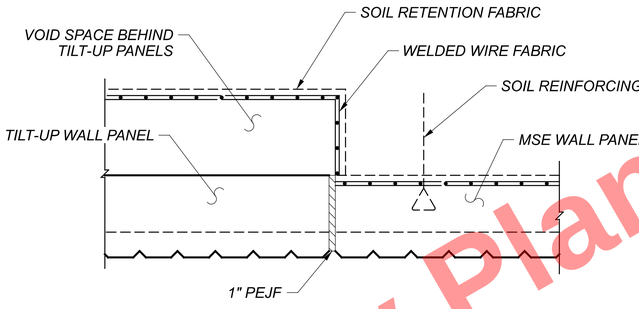

G 9 MSE TO TILT-UP WALL PANEL DETAILS

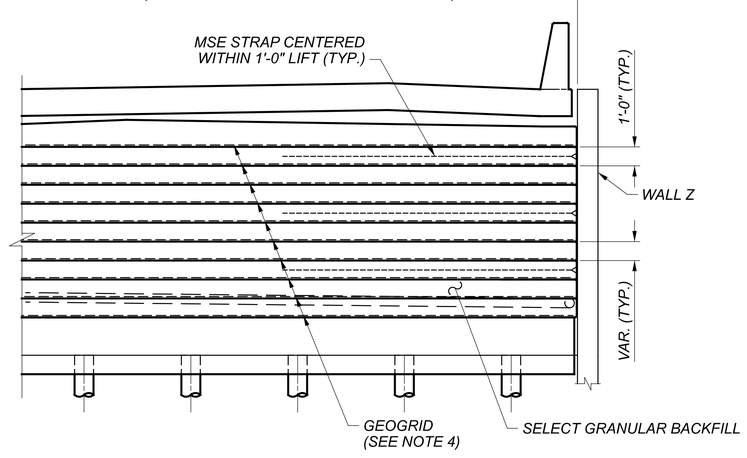

I 13 SECTION

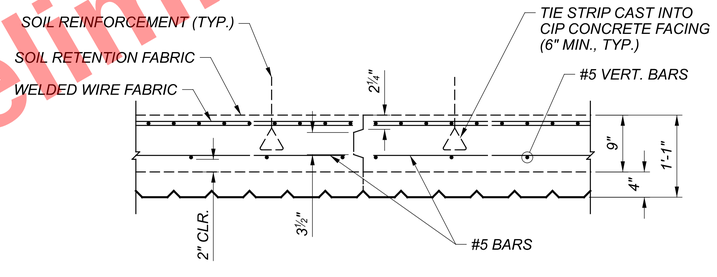

TYPICAL CONTRATION JOINT DETAIL

NOTES:

1. FOR WALL ELEVATION DETAILS, SEE SHEETS 9 TO 10 / 17
2. FOR WALL Y DETAILS, SEE SHEETS 1310 TO 1316 / 2696
3. FOR BRIDGE 12 DETAILS SEE SHEETS 2129 TO 2180 / 2696
4. GEOGRID LIFTS MAY HAVE TO VARY IN THICKNESS LEADING UP TO THE MSE STRAPS IN ORDER TO CENTER THE STRAP WITHIN A 1'-0" GEOGRID LIFT.

Preliminary Plans - For Reference Only

WALL DETAILS
WALL Z
ALONG NORTH SIDE OF RAMP B6

SFN N/A

DESIGN AGENCY
Michael Baker INTERNATIONAL

DESIGNER	CHECKER
SSW	MKB

REVIEWER LPC 05-09-24

PROJECT ID 82382

SUBSET	TOTAL
13	17

SHEET	TOTAL
1329	2696

CUY-90-16.28 (CCG3A)

MODEL: Untitled Sheet PAPERSIZE: 34x22 (in.) DATE: 3/27/2025 TIME: 11:22:48 PM USER: Julie.Ross
pw:\\mb-us-pw.bentley.com:mb-us-pw-03\Documents\Cleveland_OH\01_Projects\ODOT\District12\82382\400-Engineering\Structures\WALL_Z\Sheets\82382_Z_WD001.dgn

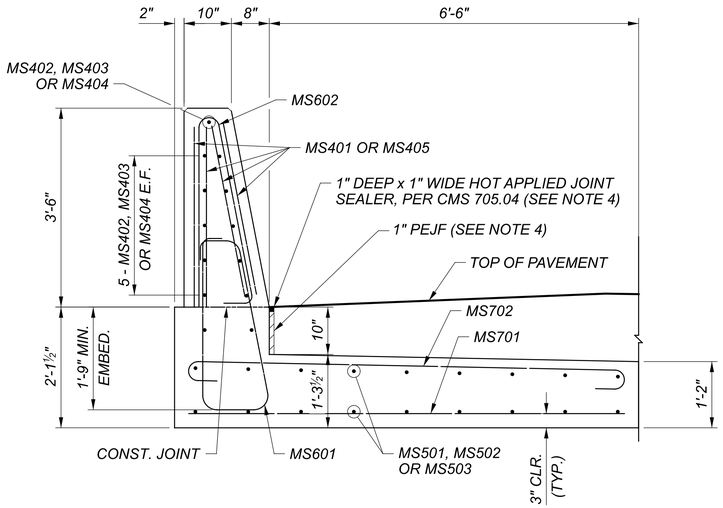

TYPICAL SECTION

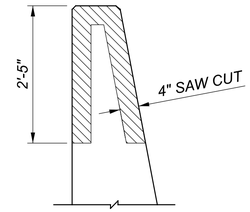

DETAIL A
(SECTION THROUGH SAWCUT)

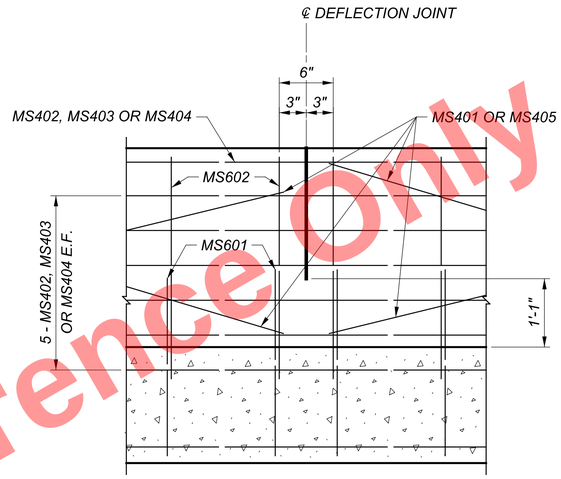

DEFLECTION JOINT ELEVATION DETAIL

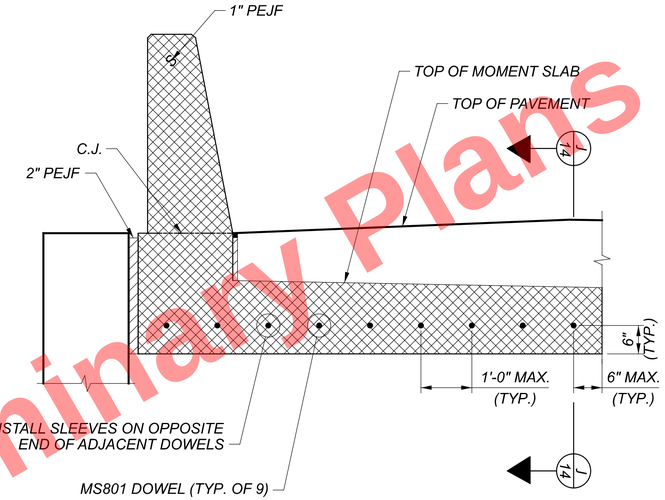

TYPICAL MOMENT SLAB SECTION AT EXPANSION JOINT

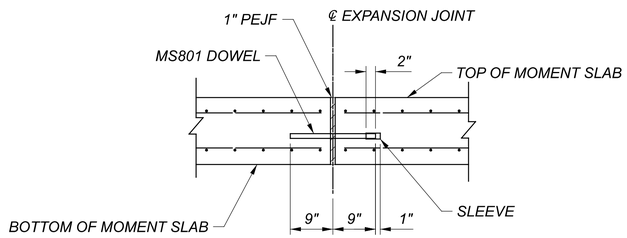

J / 14 SECTION NOTE

NOTES:

1. SEE ODOT STANDARD DRAWING SBR-1-20 FOR ADDITIONAL DETAILS.
2. EXPANSION JOINTS SHALL BE PLACED EVERY 30 FEET UNLESS NOTED OTHERWISE. 1" PEJF SHALL BE PLACED BETWEEN MOMENT SLABS AT EACH EXPANSION JOINT. REINFORCING STEEL SHALL NOT EXTEND THROUGH THE EXPANSION JOINT.
3. THE MINIMUM LENGTH OF THE MOMENT SLAB IS 30 FEET UNLESS NOTED OTHERWISE.
4. HOT APPLIED JOINT SEALER AND 1" PEJF TO BE PAID FOR WITH ITEM 511 - CLASS QC2 CONCRETE MISC.: CONCRETE MOMENT SLAB AND BARRIER WITH QC/QA.

Preliminary Plans - For Reference Only

MOMENT SLAB DETAILS (1 OF 3)
WALL Z
ALONG NORTH SIDE OF RAMP B6

SFN N/A
DESIGN AGENCY
Michael Baker INTERNATIONAL
DESIGNER DAF | CHECKER SSW
REVIEWER LPC 05-09-24
PROJECT ID 82382
SUBSET 14 | TOTAL 17
SHEET 1330 | TOTAL 2696

CUY-90-16.28 (CCG3A)

MODEL: Untitled Sheet PAPERSIZE: 34x22 (in.) DATE: 3/27/2025 TIME: 11:23:02 PM USER: Julie.Ross
pw:\\mb-us-pw.bentley.com:mb-us-pw-03\Documents\Cleveland_OH\01_Projects\ODOT\District12\82382\400-Engineering\Structures\WALL_Z\Sheets\82382_Z_WD003.dgn

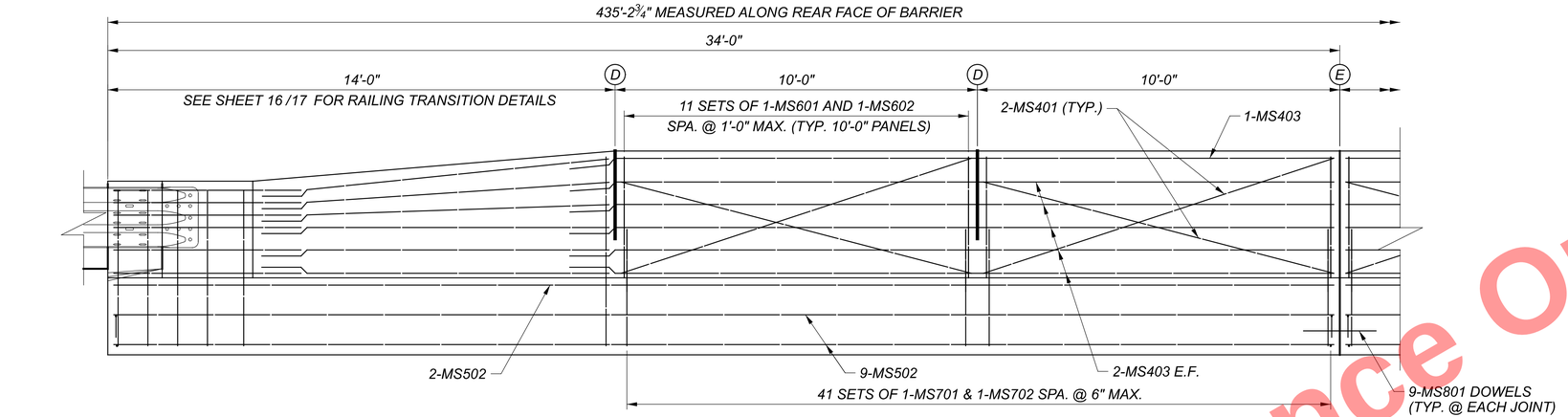

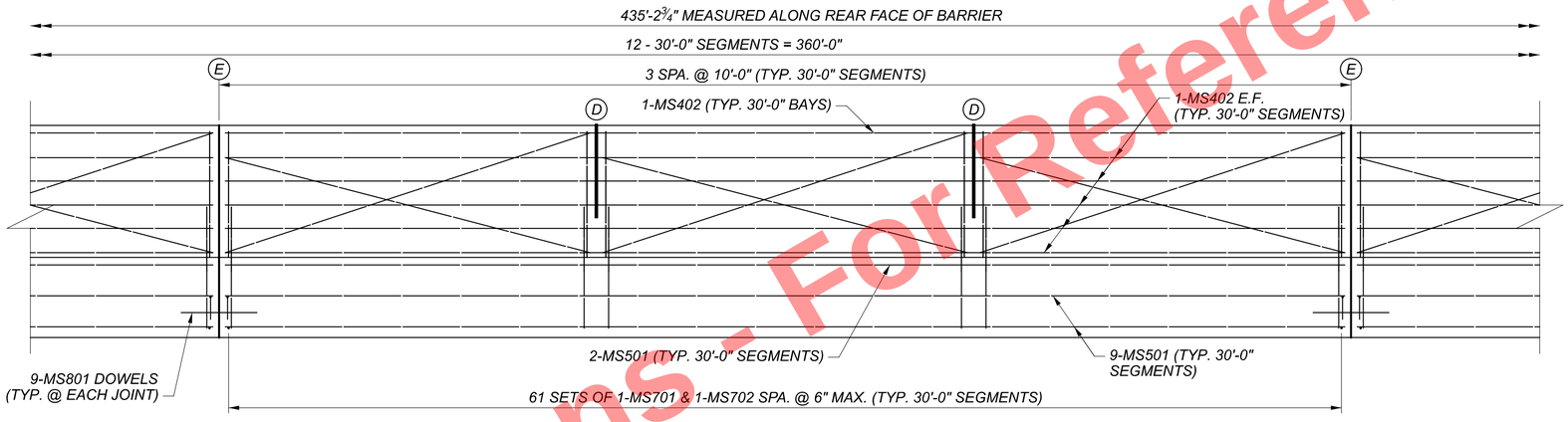

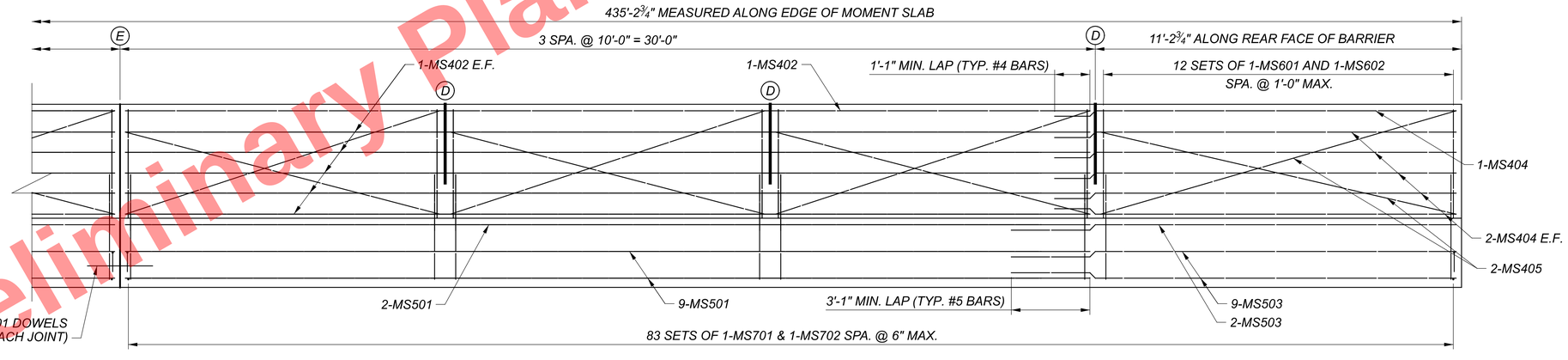

MOMENT SLAB ELEVATION

LEGEND

(E) DESIGNATES EXPANSION JOINT

(D) DESIGNATES DEFLECTION JOINT

NOTES:

1. SEE ODOT STANDARD DRAWING SBR-1-20 FOR ADDITIONAL DETAILS.
2. EXPANSION JOINTS SHALL BE PLACED EVERY 30 FEET UNLESS NOTED OTHERWISE. 2" PEJF SHALL BE PLACED BETWEEN MOMENT SLABS AT EACH EXPANSION JOINT. REINFORCING STEEL SHALL NOT EXTEND THROUGH THE EXPANSION JOINT.
3. THE MINIMUM LENGTH OF THE MOMENT SLAB IS 30 FEET UNLESS NOTED OTHERWISE.

Preliminary Plans - For Reference Only

MOMENT SLAB DETAILS (2 OF 3)
WALL Z
ALONG NORTH SIDE OF RAMP B6

SFN N/A

DESIGN AGENCY
Michael Baker INTERNATIONAL

DESIGNER	CHECKER
DAF	SSW

REVIEWER LPC 05-09-24

PROJECT ID 82382

SUBSET	TOTAL
15	17

SHEET	TOTAL
1331	2696

CUY-90-16.28 (CCG3A)

MODEL: Untitled Sheet PAPERSIZE: 34x22 (in.) DATE: 3/27/2025 TIME: 11:23:08 PM USER: Julie.Ross
pw:\\mb-us-pw.bentley.com:mb-us-pw-03\Documents\Cleveland_OH\01_Projects\ODOT\District12\82382\e00-Engineering\Structures\WALL_Z\Sheets\82382_Z_WD004.dgn

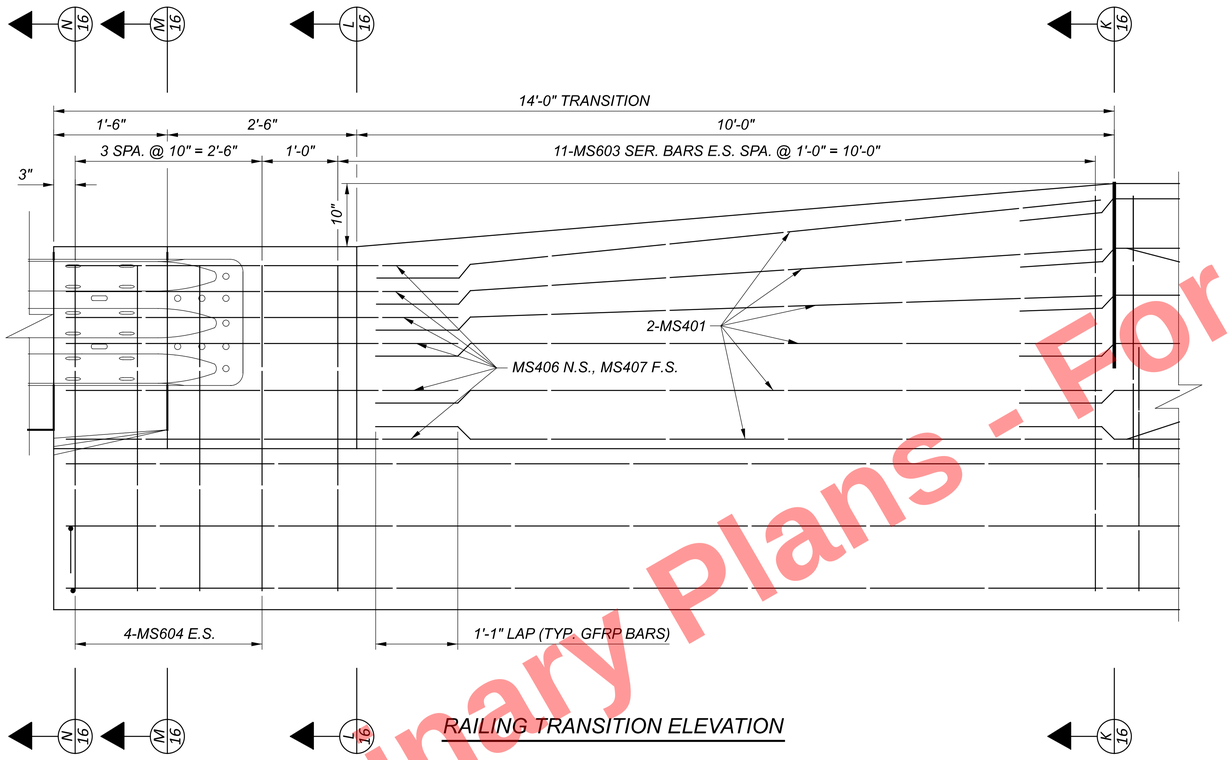

RAILING TRANSITION ELEVATION

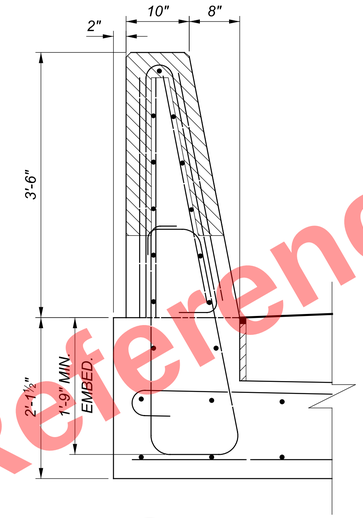

K 16 SECTION

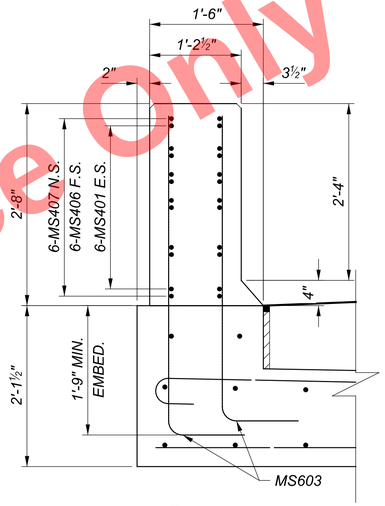

L 16 SECTION

FOR ADDITIONAL DETAILS, SEE SHEET 14 / 17 & 15 / 17

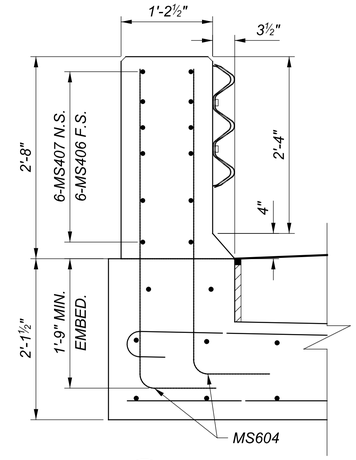

M 16 SECTION

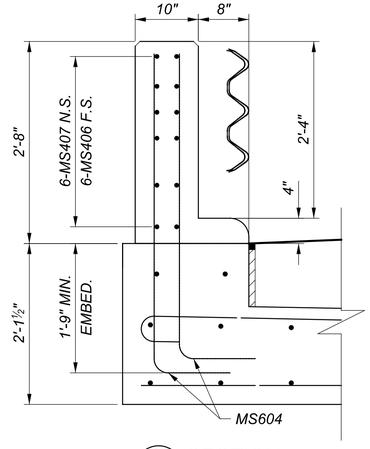

N 16 SECTION

Preliminary Plans - For Reference Only

MOMENT SLAB DETAILS (3 OF 3)
WALL Z
ALONG NORTH SIDE OF RAMP B6

SFN N/A

DESIGN AGENCY
Michael Baker INTERNATIONAL

DESIGNER	CHECKER
DAF	SSW

REVIEWER LPC 05-09-24

PROJECT ID 82382

SUBSET	TOTAL
16	17

SHEET	TOTAL
1332	2696

CUY-90-16.28 (CCG3A)

MODEL: Sheet PAPERSIZE: 34x22 (in.) DATE: 3/27/2025 TIME: 11:23:14 PM USER: Julie.Ross
pw:\\mb-us-pw.bentley.com:mb-us-pw-03\Documents\Cleveland_OH01_Projects\ODOTDistrict12\82382400-Engineering\Structures\WALL_Z\Sheets\82382_Z_WD007.dgn

MARK	MAT'RL TYPE	NUMBER			LENGTH	WEIGHT (LBS.)	TYPE	DIMENSIONS						SER INC.
		REAR	FWD.	TOTAL				A	B	C	D	E	R	
RETAINING WALL Z (EPOXY COATED STEEL REINFORCING ECSR)														
W501	ECSR			501	2'-8"	1393	STR.							
W502	ECSR			90	30'-0"	2816	STR.							
W503	ECSR			6	12'-6"	78	STR.							
W504	ECSR			501	3'-11"	2036	52	1'-10"	0'-10"					
W505	ECSR			417	16'-2"	7031	STR.							
W506	ECSR			31	11'-2"	361	STR.							
W507	ECSR			248	27'-2"	7027	STR.							
W508	ECSR			62	35'-2"	2274	STR.							
W509	ECSR			62	33'-8"	2177	STR.							
W510	ECSR			417	7'-3"	3169	50	2'-8"	1'-2"	1'-8"	1'-0"			
W511	ECSR			341	10'-10"	3858	51	3'-1"	4'-6"	3'-1"	1'-6"			
W512	ECSR			45	21'-11"	1029	STR.							
W513	ECSR			12	16'-2"	202	STR.							
W514	ECSR			47	15'-8"	768	STR.							
W515	ECSR			41	16'-6"	706	STR.							
RETAINING WALL ECSR SUBTOTAL						34925								

MARK	MAT'RL TYPE	NUMBER			LENGTH	WEIGHT (LBS.)	TYPE	DIMENSIONS						SER INC.
		REAR	FWD.	TOTAL				A	B	C	D	E	R	
MOMENT SLAB (EPOXY COATED STEEL REINFORCING ECSR)														
MS501	ECSR			260	29'-8"	8045	STR.							
MS502	ECSR			20	33'-8"	702	STR.							
MS503	ECSR			20	14'-5"	301	STR.							
MS601	ECSR			463	9'-7"	6636	37	1'-10"	0'-9 1/2"	1'-5"	1'-0"	0'-7"		
MS602	ECSR			463	27'-2"	18892	23	0'-6"	3'-3"	3'-3"			0'-2"	
				2	5'-1"			4'-3"						
MS603	ECSR			SER. OF	TO	182	1	TO	1'-0"					1"
				11	5'-11"			5'-1"						
MS604	ECSR			8	5'-1"	61	1	4'-3"	1'-0"					
MS701	ECSR			856	9'-4"	16330	17	7'-8"						
MS702	ECSR			856	7'-8"	13414	STR.							
MOMENT SLAB ECSR SUBTOTAL						64563								

MARK	MAT'RL TYPE	NUMBER			LENGTH	TOTAL LENGTH	TYPE	DIMENSIONS						SER INC.
		REAR	FWD.	TOTAL				A	B	C	D	E	R	
MOMENT SLAB (GLASS FIBER REINFORCED POLYMER-GFRP)														
MS401	GFRP			176	10'-0"	1760'-0"	STR.							
MS402	GFRP			132	29'-8"	3916'-0"	STR.							
MS403	GFRP			11	21'-1"	231'-11"	STR.							
MS404	GFRP			11	12'-9"	140'-3"	STR.							
MS405	GFRP			4	11'-3"	45'-0"	STR.							
MS406	GFRP			6	6'-4"	38'-0"	25	2'-6"	2'-5"	1'-5"	0'-11 1/2"	0'-5"		
MS407	GFRP			6	5'-1"	30'-6"	STR.							
MOMENT SLAB GFRP SUBTOTAL					6161'-8"									

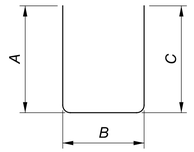

TYPE-2

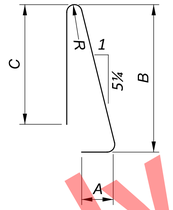

TYPE-23

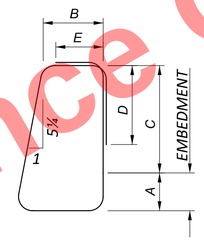

TYPE-37

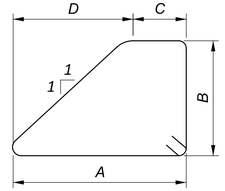

TYPE-50

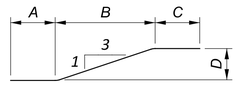

TYPE-51

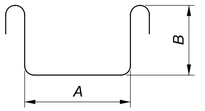

TYPE-52

NOTES:

1. SERIES BARS - EACH BAR VARIES BY TABULATED AMOUNT.
2. ALL DIMENSIONS ARE OUT TO OUT.
3. TYPE "STR" INDICATES STRAIGHT BAR.
4. THE BAR SIZE NUMBER IS SPECIFIED IN THE "MARK" COLUMN. THE FIRST DIGIT INDICATES THE BAR SIZE NUMBER.
5. ALL BARS SHALL BE EPOXY COATED UNLESS NOTED OTHERWISE.
6. SUBTOTALS AND TOTAL WEIGHTS ARE FOR INFORMATIONAL PURPOSES ONLY. IF THE REINFORCING LIST PROVIDED IN THE PLANS IS USED, IT SHALL BE VERIFIED BY THE CONTRACTOR. ANY REVISIONS IN THE REINFORCING STEEL LIST AS SHOWN IN THE PLANS WILL NOT BE REASON FOR ADJUSTMENT IN THE BID PRICE FOR STRUCTURAL CONCRETE.
7. USE STANDARD HOOKS FOR ENDS OF BARS NOT SPECIFICALLY DIMENSIONED IN DETAILS.

Preliminary Plans - For Reference Only

REINFORCING SCHEDULE
WALL Z
ALONG NORTH SIDE OF RAMP B6

SFN N/A

DESIGN AGENCY

Michael Baker INTERNATIONAL

DESIGNER	CHECKER
SSW	MKB

REVIEWER LPC 05-09-24

PROJECT ID 82382

SUBSET	TOTAL
17	17

SHEET	TOTAL
1333	2696

CUY-90-16.28 (CCG3A)
MODEL: Untitled Sheet PAPERSIZE: 34x22 (in.) DATE: 3/27/2025 TIME: 11:23:19 PM USER: Julie.Ross
pw:\\mb-us-pw.bentley.com:mb-us-pw-03\Documents\Cleveland_OH\01_Projects\ODOT\District12\82382\400-Engineering\Structures\WALL_Z\Sheets\82382_Z_Wl.001.dgn

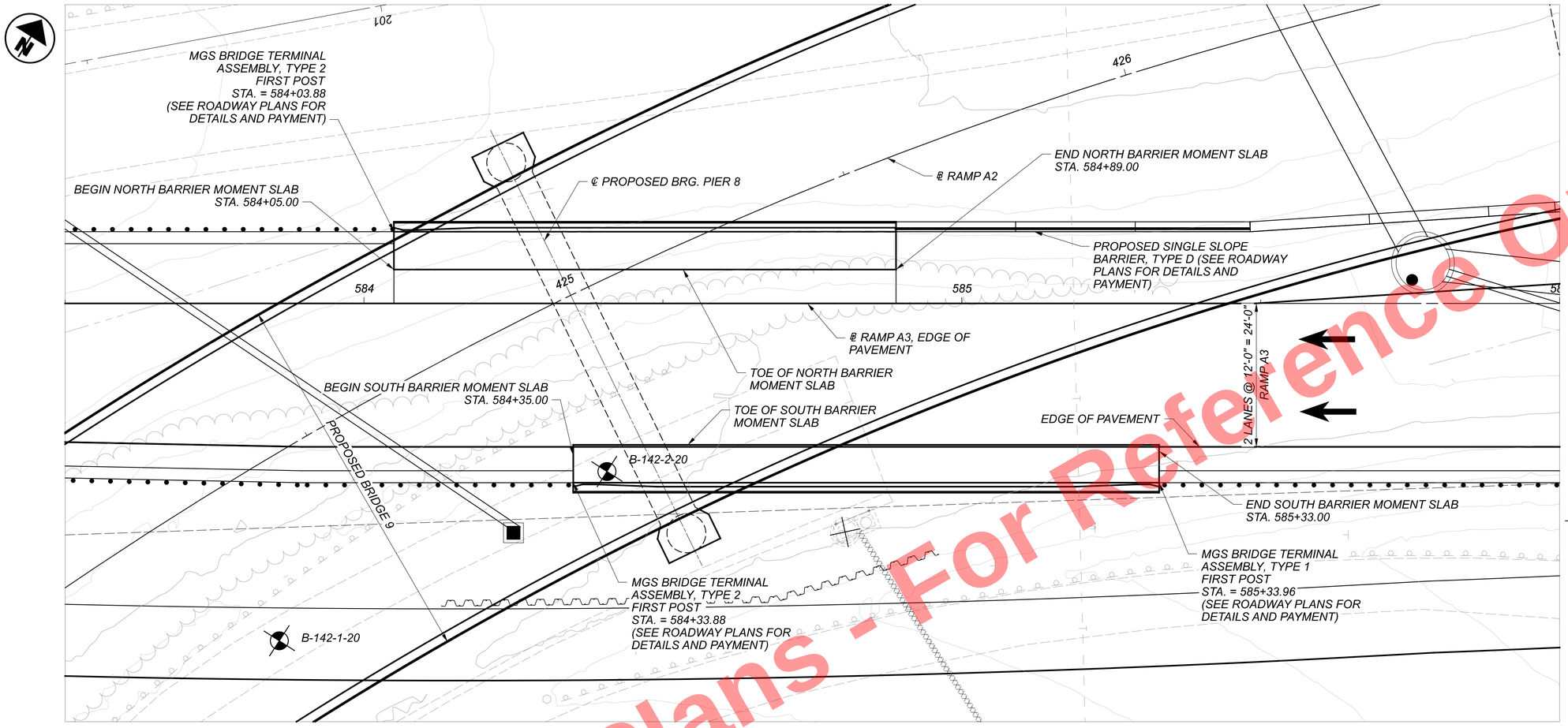

PLAN

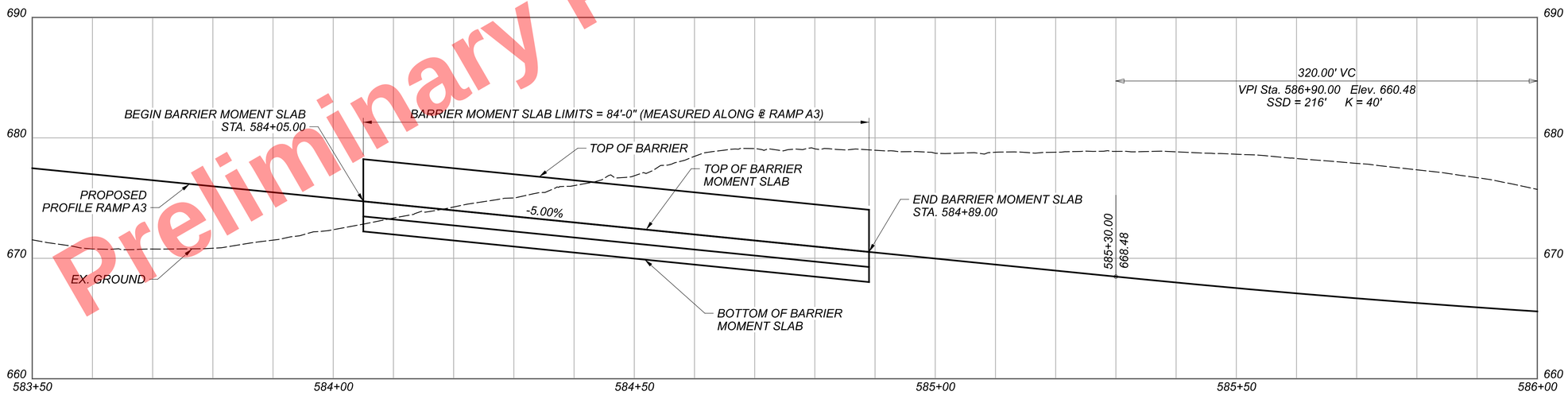

ELEVATION ALONG ℄ RAMP A3 (NORTH BARRIER MOMENT SLAB SHOWN, SOUTH SIMILAR)

BENCHMARK DATA

BM #59 STA. 587+24.05,
ELEV. 660.15,
OFFSET 493.45' RT.
MAG NAIL SET AT NOSE OF CONCRETE DRAINAGE CHANNEL IN GRASS MEDIAN BETWEEN EAST 14TH STREET AND COMMUNITY COLLEGE AVE.

BM #61 STA. 583+36.12,
ELEV. 674.03,
OFFSET 374.35' LT.
RAILROAD SPIKE IN NORTH FACE OF POWER/LIGHT POLE NO. 3-7-65 AT 1240 CARNEGIE AVE.

FOR ADDITIONAL BENCHMARK INFORMATION, SEE ROADWAY PLAN SHEET 4/2696

BORING LOCATION *,**

BORING	STATION	OFFSET
B-142-1-20	583+85.83	56.46' RT.
B-142-2-20	584+40.63	28.13' RT.

* = BORING STATION AND OFFSETS ARE FROM ℄ RAMP A3

** = ROCK WAS NOT ENCOUNTERED IN BORINGS

LEGEND:

PROJECT BORING LOCATION

NOTES:

1. SEE SHEET 6/6 FOR BARRIER MOMENT SLAB ELEVATIONS.

Preliminary Plans - For Reference Only

BARRIER MOMENT SLAB PLAN AND PROFILE
RAMP A3
ADJACENT TO BRIDGE 9 PIER 8

SFN N/A

DESIGN AGENCY B&N burgessniple.com

DESIGNER	CHECKER
KMA	MAB

REVIEWER DWL 06/21/22

PROJECT ID 82382

SUBSET	TOTAL
1	6

SHEET	TOTAL
1334	2696

CUY-90-16.28 (CCG3A)

MODEL: BL RAMP A3 - Plan 1 PAPERSIZE: 34x22 (in.) DATE: 3/27/2025 TIME: 11:23:57 PM USER: Julie.Ross
pw:\\mb-us-pw.bentley.com:mb-us-pw-03\Documents\Cleveland_OH\01_Projects\ODOT\District12\82382\400-Engineering\Structures\Ramp_A3_BM_Slabs\Sheets\82

STRUCTURE GENERAL NOTES:

REFER TO THE FOLLOWING STANDARD DRAWINGS:

SBR-1-20 DATED 07-21-23

AND TO THE FOLLOWING SUPPLEMENTAL SPECIFICATIONS:

800 DATED SEE TITLE SHEET

DESIGN SPECIFICATIONS:

THIS STRUCTURE CONFORMS TO THE 9TH EDITION OF THE "LRFD BRIDGE DESIGN SPECIFICATIONS" ADOPTED BY THE AMERICAN ASSOCIATION OF STATE HIGHWAY AND TRANSPORTATION OFFICIALS, 2019 AND THE ODOT BRIDGE DESIGN MANUAL, 2020.

DESIGN DATA:

CONCRETE CLASS QC2 - COMPRESSIVE STRENGTH 4.5 KSI (BARRIER AND MOMENT SLAB)

EPOXY COATED STEEL REINFORCEMENT - MINIMUM YIELD STRENGTH 60 KSI

GFRP REINFORCEMENT (BARRIER) - CMS 705.28 (MODULUS = 8700 KSI)

MAINTENANCE OF TRAFFIC:

SEE THE ROADWAY PLANS FOR MAINTENANCE OF TRAFFIC REQUIREMENTS.

SEQUENCE OF CONSTRUCTION:

CONSTRUCT THE NORTH AND SOUTH BARRIER MOMENT SLABS DURING MOT PHASE 4 OR 5.

SEE MAINTENANCE OF TRAFFIC NOTES FOR ADDITIONAL PHASES AND INFORMATION.

ITEM 511 - CLASS QC2 CONCRETE, MISC.: CONCRETE MOMENT SLAB AND BARRIER WITH QC/QA

ALL PORTIONS OF THE BARRIER MOMENT SLAB SHALL BE PAID FOR UNDER THIS ITEM, UNLESS NOTED OTHERWISE. THIS INCLUDES, BUT IS NOT LIMITED TO MOMENT SLAB CONCRETE, BARRIER CONCRETE, PEJF, SAWCUTTING, JOINT SEALER, SLEEVED DOWELS, TRANSVERSE AND LONGITUDINAL JOINT TREATMENT ADJACENT TO ROADWAY PAVEMENT AND SHOULDERS, COMPACTION AND PREPARATION OF SOIL UNDERNEATH THE SLABS, AND ANY OTHER INCIDENTALS REQUIRED TO COMPLETE THE BARRIER MOMENT SLABS.

PAYMENT FOR THE ABOVE COMPLETED AND ACCEPTED QUANTITIES WILL BE MADE AT THE CONTRACT BID PRICE PER CUBIC YARD FOR ITEM 511 - CLASS QC2 CONCRETE, MISC.: CONCRETE MOMENT SLAB AND BARRIER WITH QC/QA.

ITEM 512 - SEALING OF CONCRETE SURFACES (EPOXY-URETHANE)

SEAL SURFACES OF THE CAST-IN-PLACE CONCRETE BARRIERS AS SHOWN IN THE PLANS WITH AN EPOXY-URETHANE SEALER ACCORDING TO C&MS 512. COLOR SHALL BE ALPACA 7022 PER SHERWIN WILLIAMS PALATE.

Preliminary Plans - For Reference Only

ESTIMATED QUANTITIES

PARTICIPATION	ITEM	ITEM EXT.	TOTAL	UNIT	DESCRIPTION	REF. SHEET
01/IMS/04	509	10000	16584	LB	EPOXY COATED STEEL REINFORCEMENT	2/6
01/IMS/04	509	30020	2675	FT	NO. 4 DEFORMED GFRP REINFORCEMENT	
01/IMS/04	511	53012	116	CY	CLASS QC2 CONCRETE MISC.: CONCRETE MOMENT SLAB AND BARRIER WITH QC/QA	2/6
01/IMS/04	512	10100	155	SY	SEALING OF CONCRETE SURFACES (EPOXY-URETHANE)	2/6

BARRIER MOMENT SLAB GENERAL NOTES AND ESTIMATED QUANTITIES
RAMP A3
ADJACENT TO BRIDGE 9 PIER 8

SFN N/A

DESIGN AGENCY B&N burgessniple.com

DESIGNER	CHECKER
KMA	MAB

REVIEWER DWL 06/22/22

PROJECT ID 82382

SUBSET	TOTAL
2	6

SHEET	TOTAL
1335	2696

CUY-90-16.28 (CCG3A)

MODEL: Sheet PAPERSIZE: 34x22 (in.) DATE: 3/27/2025 TIME: 11:24:15 PM USER: Julie.Ross
pw:\\mb-us-pw.bentley.com:mb-us-pw-03\Documents\Cleveland_OH\01_Projects\ODOT\District12\82382\400-Engineering\Structures\Ramp_A3_BM_Slabs\Sheets\82382_A3_WN001.dgn

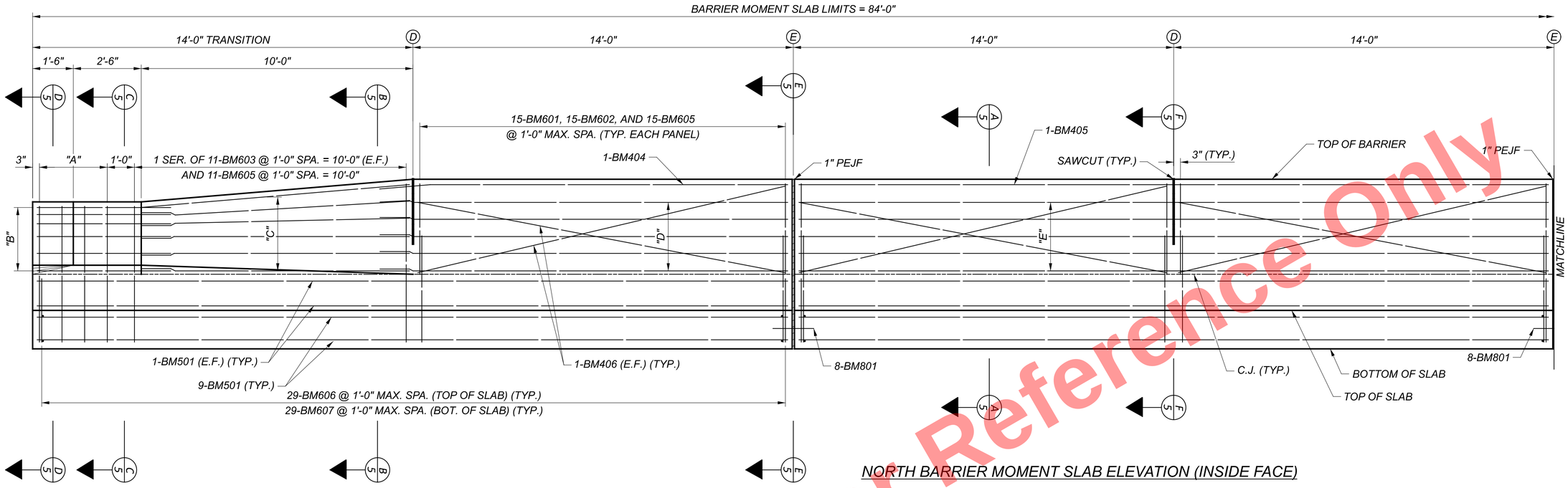

NORTH BARRIER MOMENT SLAB ELEVATION (INSIDE FACE)

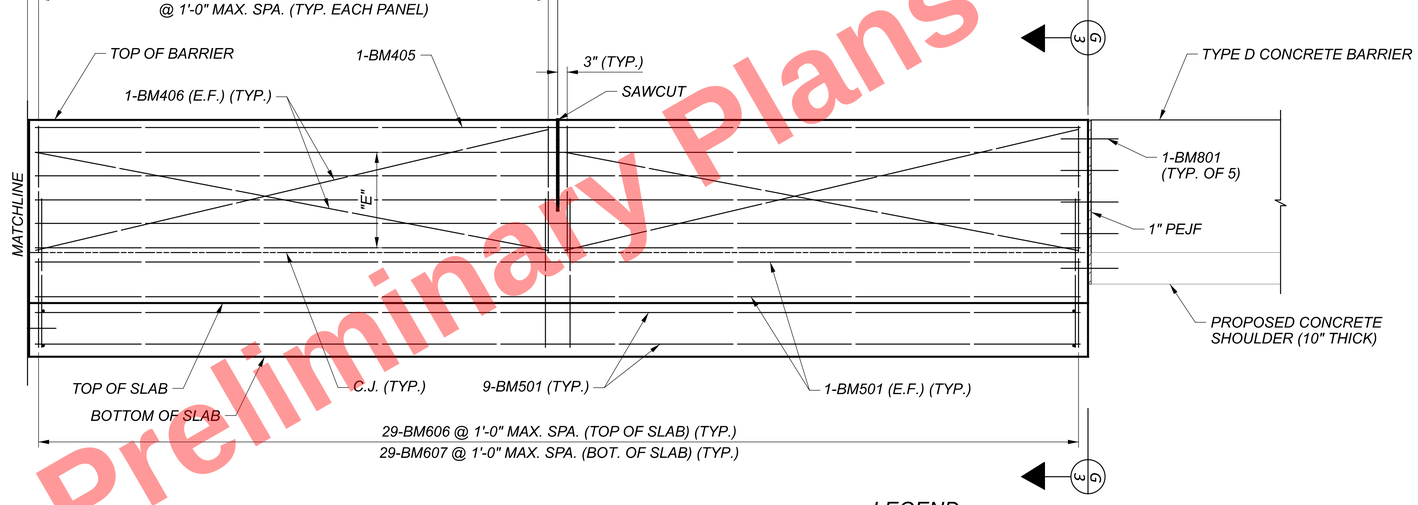

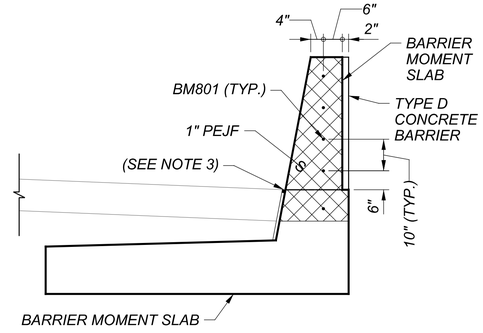

SECTION G-G

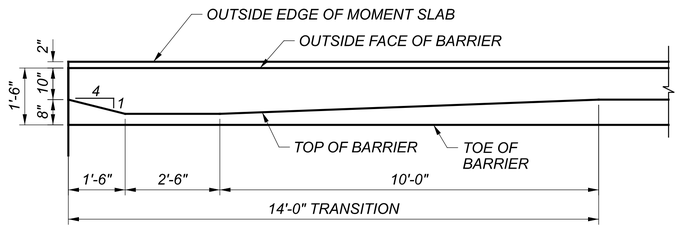

WEST BARRIER END DETAIL

NOTES:

1. SEE ODOT STANDARD BRIDGE DRAWING SBR-1-20 FOR ADDITIONAL DETAILS.
2. MINIMUM LAP LENGTHS:
   #4 GFRP BARS = 1'-1"
3. TREAT JOINT WITH 1"x1" SEALER PER ODOT CMS 705.04 CENTERED ON JOINT.

LEGEND:

(E) DESIGNATES EXPANSION JOINT

(D) DESIGNATES DEFLECTION JOINT

"A" = 4 SETS OF 1-BM604 (E.F.) AND 1-BM605 @ 10" = 2'-6"
"B" = 6 SETS OF 1-BM402 (N.F.) & 1-BM403 (F.F.)
"C" = 6 SETS OF 1-BM401 (E.F.)
"D" = 5 SETS OF 1-BM404 (E.F.)
"E" = 5 SETS OF 1-BM405 (E.F.) (TYP. EACH PANEL)

BOT. = BOTTOM

Preliminary Plans - For Reference Only

NORTH BARRIER MOMENT SLAB DETAILS
RAMP A3
ADJACENT TO BRIDGE 9 PIER 8

SFN	N/A
DESIGN AGENCY	B&N burgessniple.com
DESIGNER	KMA
CHECKER	MAB
REVIEWER	DWL 06/22/22
PROJECT ID	82382
SUBSET	3
TOTAL	6
SHEET	1336
TOTAL	2696

CUY-90-16.28 (CCG3A)

MODEL: Sheet PAPERSIZE: 34x22 (in.) DATE: 3/27/2025 TIME: 11:24:23 PM USER: Julie.Ross
pw:\\mb-us-pw.bentley.com:mb-us-pw-03\Documents\Cleveland_OH\01_Projects\ODOT\District12\82382\400-Engineering\Structures\Ramp_A3_BM_Slabs\Sheets\82382_A3_WD001.dgn

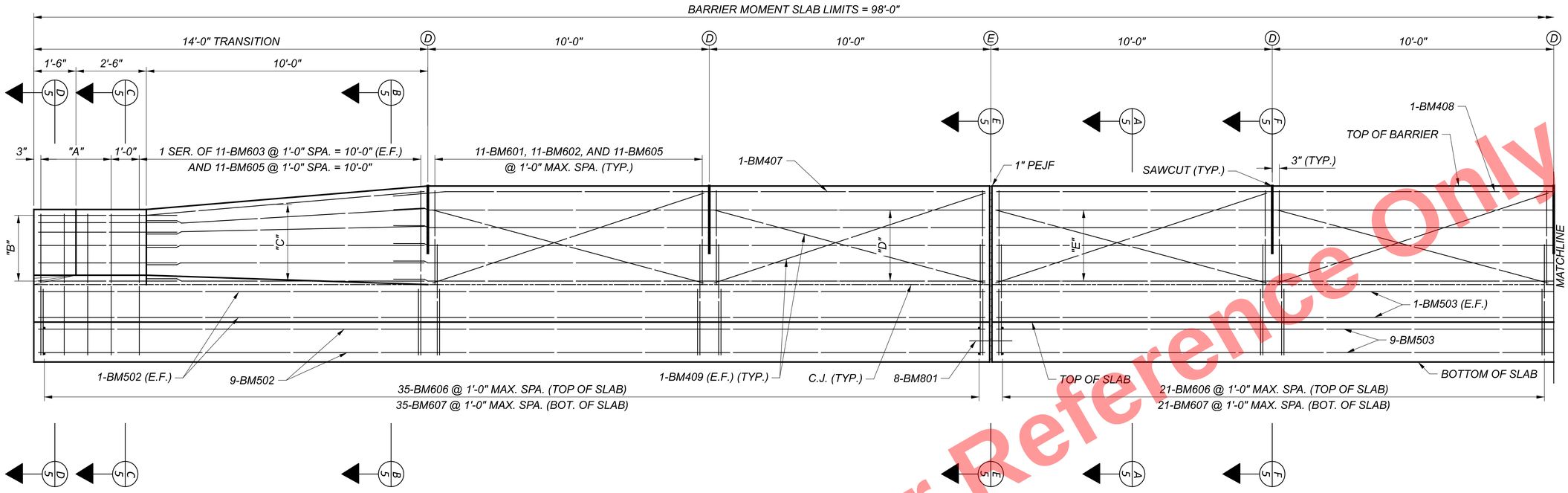

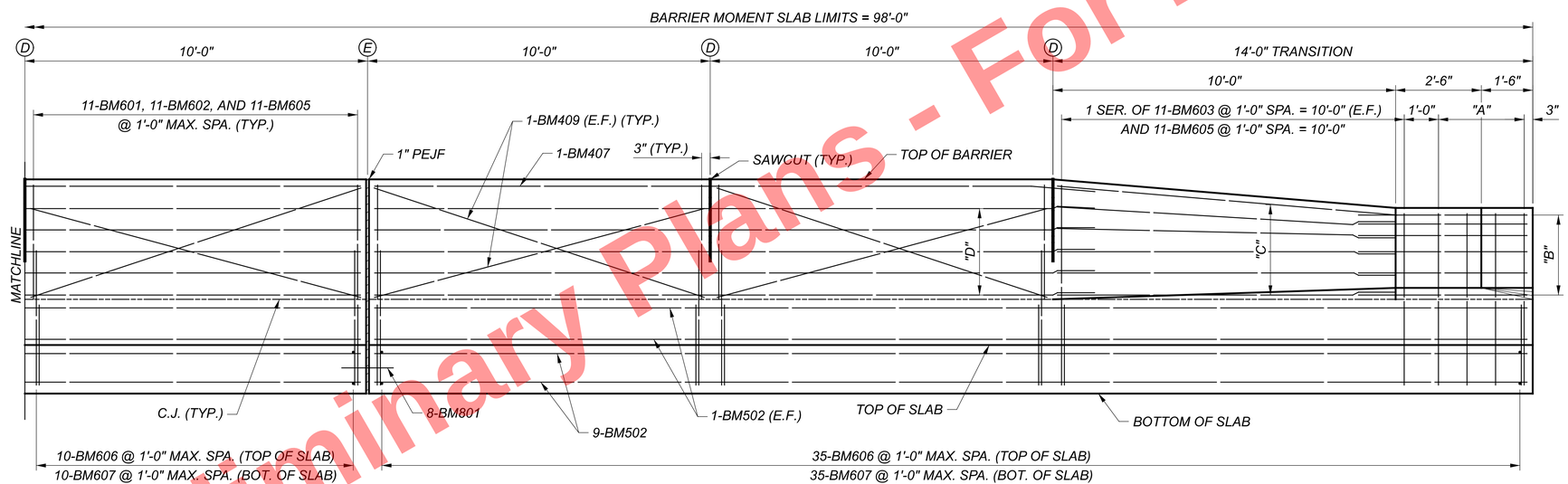

SOUTH BARRIER MOMENT SLAB ELEVATION (INSIDE FACE)

NOTES:

1. SEE ODOT STANDARD BRIDGE DRAWING SBR-1-20 FOR ADDITIONAL DETAILS.
2. MINIMUM LAP LENGTHS:
   #4 GFRP BARS = 1'-1"

LEGEND:

Ⓔ DESIGNATES EXPANSION JOINT

Ⓓ DESIGNATES DEFLECTION JOINT

"A" = 4 SETS OF 1-BM604 (E.F.) AND 1-BM605 @ 10" = 2'-6"
"B" = 6 SETS OF 1-BM402 (N.F.) & 1-BM403 (F.F.)
"C" = 6 SETS OF 1-BM401 (E.F.)
"D" = 5 SETS OF 1-BM407 (E.F.)
"E" = 5 SETS OF 1-BM408 (E.F.)

BOT. = BOTTOM

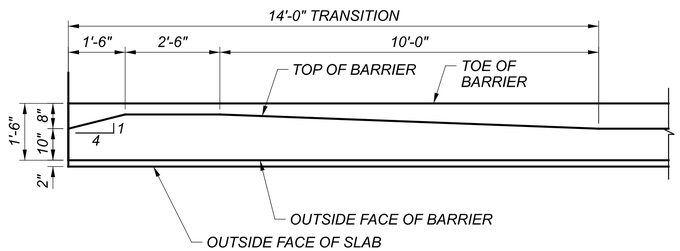

WEST BARRIER END DETAIL

(EAST END OPPOSITE HAND)

Preliminary Plans - Not For Reference Only

SOUTH BARRIER MOMENT SLAB DETAILS
RAMP A3
ADJACENT TO BRIDGE 9 PIER 8

SFN	N/A
DESIGN AGENCY	B&N burgessniple.com
DESIGNER	KMA
CHECKER	MAB
REVIEWER	DWL 06/22/22
PROJECT ID	82382
SUBSET	4
TOTAL	6
SHEET	1337
TOTAL	2696

CUY-90-16.28 (CCG3A)

MODEL: Sheet PAPERSIZE: 34x22 (in.) DATE: 3/27/2025 TIME: 11:24:30 PM USER: Julie.Ross
pw:\\mb-us-pw.bentley.com:mb-us-pw-03\Documents\Cleveland_OH\01_Projects\ODOT\District12\82382\400-Engineering\Structures\Ramp_A3_BM_Slabs\Sheets\82382_A3_WD002.dgn

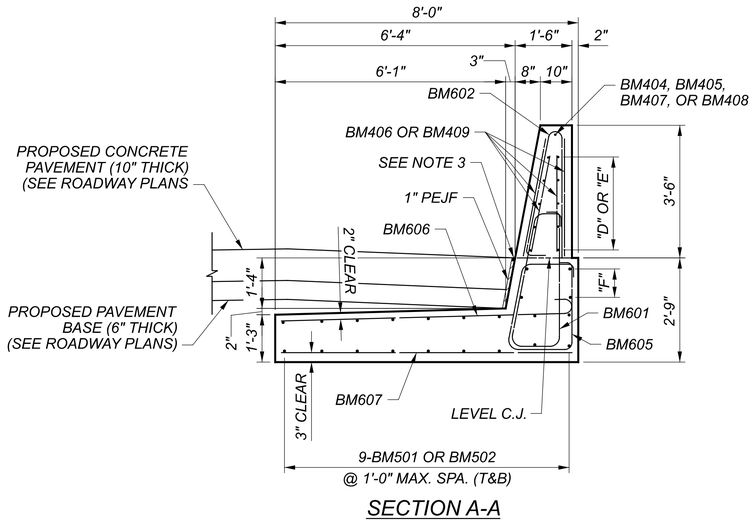

SECTION A-A

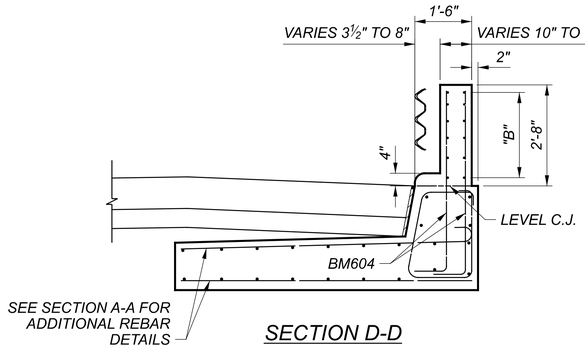

SECTION D-D

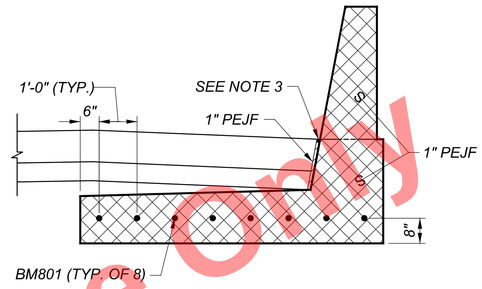

SECTION E-E

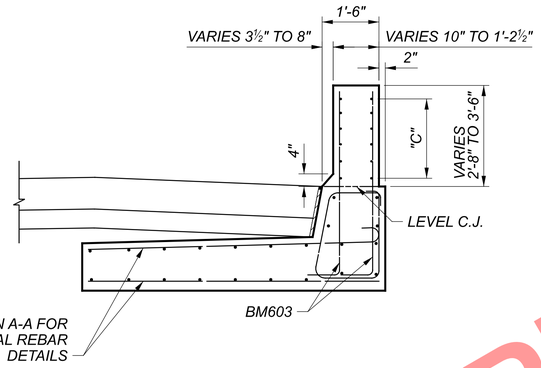

SECTION B-B

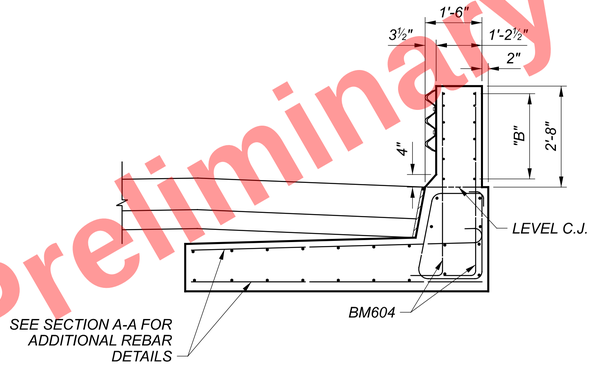

SECTION C-C

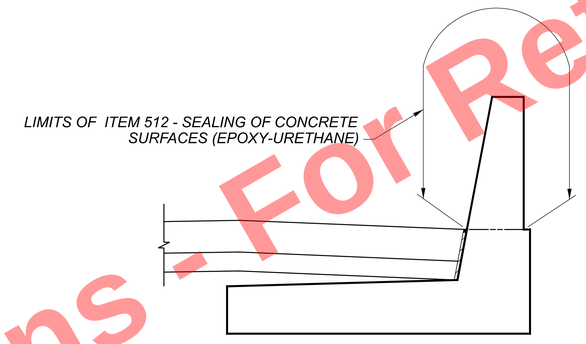

TYPICAL SEALING DETAIL

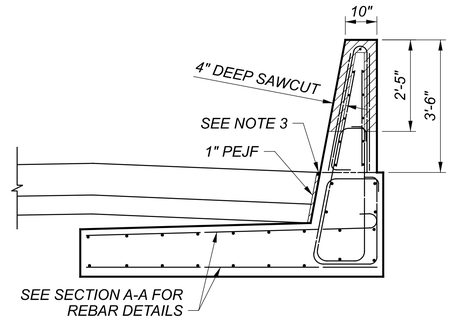

SECTION F-F

LEGEND:

"A" = (NOT USED)
"B" = 6-BM402 (INSIDE FACE) & 6-BM403 (OUTSIDE FACE) @ EQ. SPA.
"C" = 6-BM401 @ EQ. SPA. (E.F.)
"D" = 5-BM404 OR 5-BM405 @ EQ. SPA. (E.F.)
"E" = 5-BM407 OR BM408 @ EQ. SPA. (E.F.)
"F" = 2-BM501 OR BM502 @ EQ. SPA. (E.F.)

T&B = TOP AND BOTTOM

NOTES:

1. SEE ODOT STANDARD BRIDGE DRAWING SBR-1-20 FOR ADDITIONAL DETAILS.
2. SEE SHEETS 3/6 AND 4/6 FOR LOCATION OF SECTION CUTS.
3. TREAT JOINT WITH 1"x1" SEALER PER ODOT CMS 705.04 CENTERED ON JOINT.

Preliminary Plans - For Reference Only

TYPICAL BARRIER MOMENT SLAB DETAILS - 1
RAMP A3
ADJACENT TO BRIDGE 9 PIER 8

SFN N/A
DESIGN AGENCY B&N burgessniple.com
DESIGNER KMA | CHECKER MAB
REVIEWER DWL 06/22/22
PROJECT ID 82382
SUBSET 5 | TOTAL 6
SHEET 1338 | TOTAL 2696

CUY-90-16.28 (CCG3A)

MODEL: Sheet PAPERSIZE: 34x22 (in.) DATE: 3/27/2025 TIME: 11:24:37 PM USER: Julie.Ross
pw:\\mb-us-pw.bentley.com:mb-us-pw-03\Documents\Cleveland_OH\01_Projects\ODOT\District12\82382\400-Engineering\Structures\Ramp_A3_BM_Slabs\Sheets\82382_A3_WD003.dgn

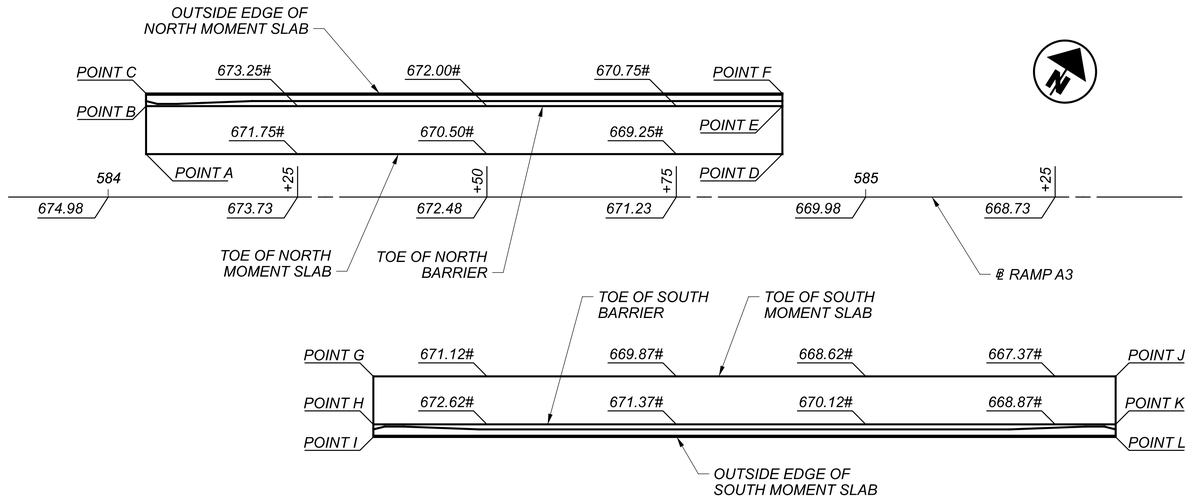

CRITICAL BARRIER MOMENT SLAB POINTS PLAN

NORTH BARRIER MOMENT SLAB ELEVATIONS				
LOCATION POINT	STATION	OFFSET	TOP OF SLAB EL.	BOTTOM OF SLAB EL.
A	584+05.00	5.67' LT	672.75	671.50
B	584+05.00	12' LT	674.25	671.50
C	584+05.00	13.67' LT	674.25	671.50
D	584+89.00	5.67' LT	668.55	667.30
E	584+89.00	12' LT	670.05	667.30
F	584+89.00	13.67' LT	670.05	667.30

SOUTH BARRIER MOMENT SLAB ELEVATIONS				
LOCATION POINT	STATION	OFFSET	TOP OF SLAB EL.	BOTTOM OF SLAB EL.
G	584+35.00	23.67' RT	671.87	670.62
H	584+35.00	30' RT	673.37	670.62
I	584+35.00	31.67' RT	673.37	670.62
J	585+33.00	23.67' RT	666.97	665.72
K	585+33.00	30' RT	668.47	665.72
L	585+33.00	31.67' RT	668.47	665.72

# INDICATES ELEVATION GIVEN AT TOP OF SLAB

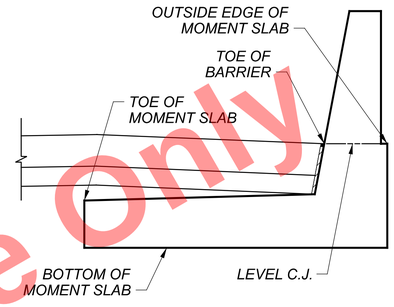

CRITICAL BARRIER MOMENT SLAB POINTS SECTION

NORTH BARRIER MOMENT SLAB REINFORCING SCHEDULE												
MARK	MAT. TYPE	NO.	LENGTH	WEIGHT (LBS)	TYPE	DIMENSIONS						
						A	B	C	D	RAD./E	INCR.	
BM401	GFRP	12	10'-0"		STR							
BM402	GFRP	6	6'-6"		11	2'-5"	1'-0 ½"	1'-4"	2'-6"	0'-5"		
BM403	GFRP	6	5'-1"		STR							
BM404	GFRP	11	14'-10"		STR							
BM405	GFRP	22	27'-6"		STR							
BM406	GFRP	20	13'-10"		STR							
BM501	ECSR	66	27'-6"	1893	STR							
BM601	ECSR	75	11'-0"	1239	41A	0'-9 ½"	3'-11"	1'-0"	0'-7"	0'-5 ¼"		
BM602	ECSR	75	6'-11"	779	2	3'-3"	3'-3"	0'-6"	0'-5 ¼"	0'-2"		
		2	5'-10"				5'-0"					
BM603	ECSR	SER.	TO	207	1	1'-0"	TO				0'-1"	
		11	6'-8"				5'-10"					
BM604	ECSR	8	5'-10"	70	1	1'-0"	5'-0"					
BM605	ECSR	90	9'-0"	1217	41A	1'-4"	2'-4"	1'-0"	1'-0"	0'-5 ¼"		
BM606	ECSR	87	8'-3"	1078	19	7'-7"						
BM607	ECSR	87	7'-7"	991	STR							
BM801*	ECSR	21	1'-6"	84	STR							
		ECSR TOTAL	WEIGHT	7558								
		GFRP TOTAL	LENGTH	1235								

SOUTH BARRIER MOMENT SLAB REINFORCING SCHEDULE												
MARK	MAT. TYPE	NO.	LENGTH	WEIGHT (LBS)	TYPE	DIMENSIONS						
						A	B	C	D	RAD./E	INCR.	
BM401	GFRP	24	10'-0"		STR							
BM402	GFRP	12	6'-6"		11	2'-5"	1'-0 ½"	1'-4"	2'-6"	0'-5"		
BM403	GFRP	12	5'-1"		STR							
BM407	GFRP	22	20'-10"		STR							
BM408	GFRP	11	29'-7"		STR							
BM409	GFRP	28	9'-11"		STR							
BM502	ECSR	44	33'-6"	1537	STR							
BM503	ECSR	22	29'-6"	677	STR							
BM601	ECSR	77	11'-0"	1272	41A	0'-9 ½"	3'-11"	1'-0"	0'-7"	0'-5 ¼"		
BM602	ECSR	77	6'-11"	800	2	3'-3"	3'-3"	0'-6"	0'-5 ¼"	0'-2"		
		4	5'-10"				5'-0"					
BM603	ECSR	SER.	TO	413	1	1'-0"	TO				0'-1"	
		11	6'-8"				5'-10"					
BM604	ECSR	16	5'-10"	140	1	1'-0"	5'-0"					
BM605	ECSR	107	9'-6"	1527	41A	1'-7"	2'-4"	1'-0"	1'-0"	0'-5 ¼"		
BM605	ECSR	107	9'-0"	1446	41A	1'-4"	2'-4"	1'-0"	1'-0"	0'-5 ¼"		
BM607	ECSR	101	7'-7"	1150	STR							
BM801*	ECSR	16	1'-6"	64	STR							
		ECSR TOTAL	WEIGHT	9026								
		GFRP TOTAL	LENGTH	1440								

* INDICATES SLEEVED DOWEL BARS
ESCR INDICATES EPOXY COATED STEEL REINFORCEMENT
GFRP INDICATES GLASS FIBER REINFORCED POLYMER REINFORCEMENT

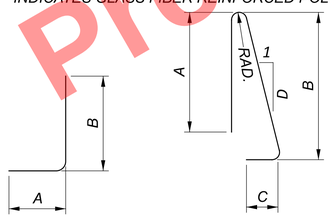

TYPE-1

TYPE-2

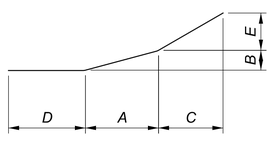

TYPE-11

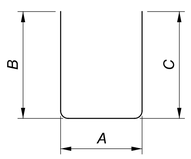

TYPE-18



TYPE-19

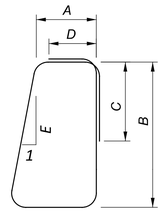

TYPE-41A

NOTES:

1. BAR SIZE: THE BAR SIZE IS INDICATED IN THE BAR MARK. THE MARK BEGINS WITH ONE OR TWO LETTERS THAT IDENTIFY THE BAR LOCATION. THE NEXT ONE OR TWO DIGITS ARE THE BAR SIZE. THE FINAL TWO DIGITS ARE THE SEQUENCE NUMBERS.

   EXAMPLE: A501
   A = ABUTMENT
   5 = #5 BAR
   01 = SEQUENCE NUMBER

2. BAR DIMENSIONS SHOWN ARE OUT TO OUT UNLESS NOTED OTHERWISE.
3. ALL STEEL REINFORCING IS TO BE EPOXY COATED UNLESS NOTED OTHERWISE.
4. STD. WRITTEN IN PLACE OF A DIMENSION INDICATES A STANDARD BEND AT THE END OF A BAR.
5. STR. IN THE BAR TYPE COLUMN INDICATES A STRAIGHT BAR.
6. RAD. INDICATES THE INSIDE RADIUS UNLESS OTHERWISE NOTED.
7. INCR. INDICATES THE LENGTH INCREMENT FOR SERIES BARS.
8. SER. INDICATES A SERIES OF BARS.

Preliminary Plans - For Reference Only

TYPICAL BARRIER MOMENT SLAB DETAILS - 2
RAMP A3
ADJACENT TO BRIDGE 9 PIER 8

SFN N/A

DESIGN AGENCY
B&N burgessniple.com

DESIGNER KMA | CHECKER MAB
REVIEWER DWL 06/22/22
PROJECT ID 82382
SUBSET 6 | TOTAL 6
SHEET 1339 | TOTAL 2696

CUY-90-16.28 (CCG3A)
MODEL: Sheet PAPERSIZE: 34x22 (in.) DATE: 3/27/2025 TIME: 11:24:44 PM USER: Julie.Ross
pw:\\mb-us-pw.bentley.com:mb-us-pw-03\Documents\Cleveland_OH\01_Projects\ODOT\District12\82382400-Engineering\Structures\Ramp_A3_BM_Slabs\Sheets\82382_A3_WD004.dgn

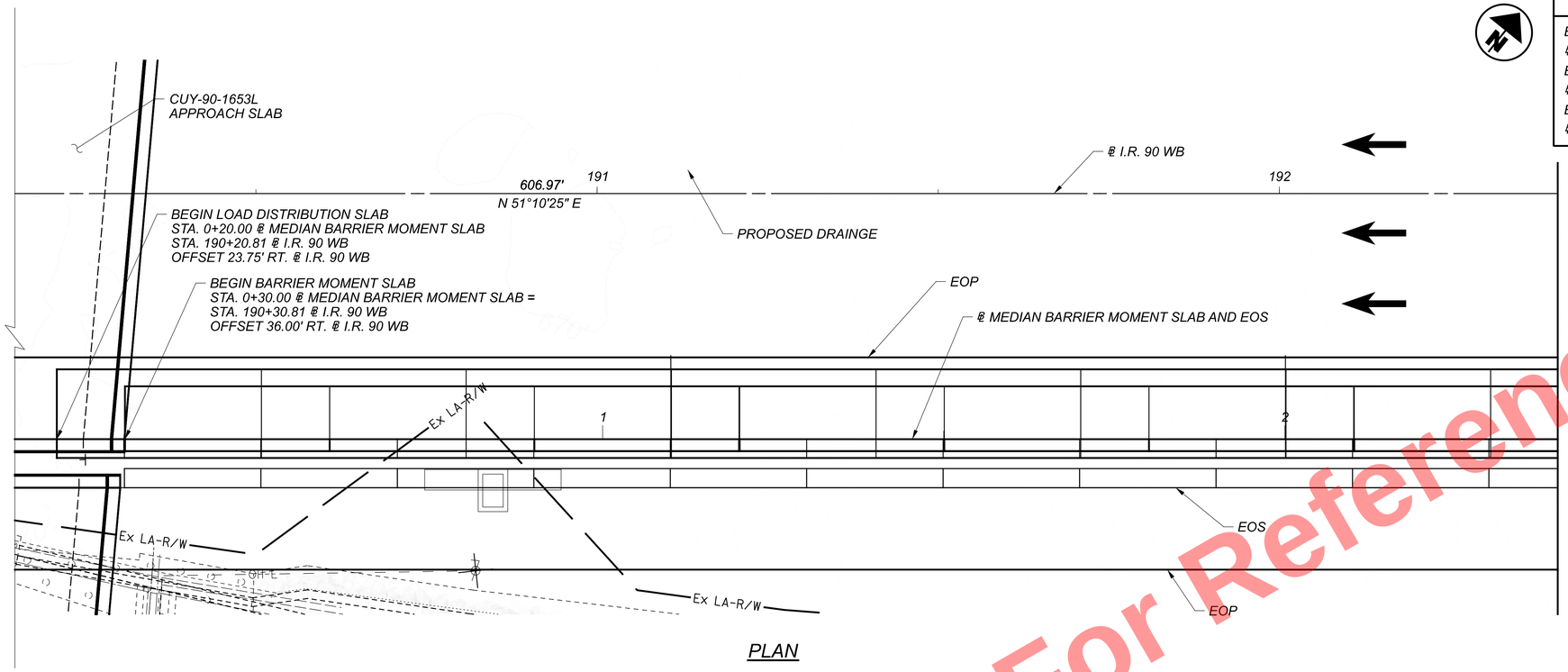

PLAN

TOP OF LOAD DIST. SLAB ELEVATION	681.06	680.57	679.94	679.28	678.57	677.82	677.03	676.20	675.33
TOP OF BARRIER MOMENT SLAB ELEVATION	684.32	683.69	683.03	682.32	681.57	680.78	679.94	679.08	
EXISTING GROUND ELEVATION	669.96	669.65	669.50	669.43	669.41	668.46	668.15	668.04	667.96

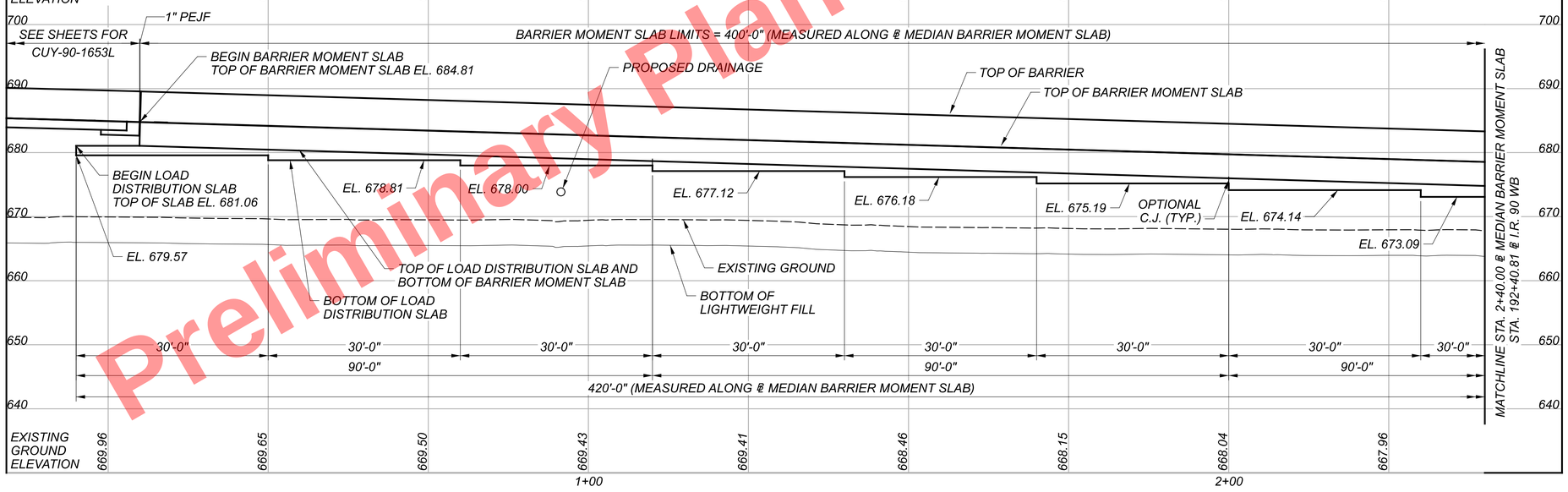

PROFILE

(ALONG ℄ MEDIAN BARRIER MOMENT SLAB)

BENCHMARK DATA

BM-59 STA. 189+46.10, ELEV. 660.15, OFFSET 342.36' RT.,
℄ I.R. 90 WB, MAG NAIL AT NOSE OF DRAINAGE CHANNEL
BM-62 STA. 191+78.83, ELEV. 672.11, OFFSET 484.13' LT.,
℄ I.R. 90 WB, RAILROAD SPIKE IN EAST FACE OF POWER/LIGHT POLE
BM-72 STA. 193+51.17, ELEV. 674.06, OFFSET 878.48' RT.,
℄ I.R. 90 WB, CUT CROSS ON BOLT OF TRAFFIC SIGNAL POLE

FOR ADDITIONAL BENCHMARK INFORMATION SEE ROADWAY PLANS.

LEGEND

EOP = EDGE OF PAVEMENT
EOS = EDGE OF SHOULDER

NOTES:

1. ℄ MEDIAN BARRIER MOMENT SLAB IS A CONSTANT 36.00' RT. OFFSET OF ℄ I.R. 90 WB.

Preliminary Plans - For Reference Only

PLAN AND PROFILE (1 OF 2)
I.R. 90 WB STA. 190+30.81 TO STA. 192+40.81
MEDIAN BARRIER MOMENT SLAB

SFN N/A
DESIGN AGENCY B&N burgessniple.com
DESIGNER BCS | CHECKER MES
REVIEWER DWL 01/09/24
PROJECT ID 82382
SUBSET 1 | TOTAL 14
SHEET 1340 | TOTAL 2696

CUY-90-16.28 (CCG3A)

MODEL: Sheet PAPERSIZE: 34x22 (in.) DATE: 3/27/2025 TIME: 11:25:37 PM USER: Julie.Ross
pw:\\mb-us-pw.bentley.com:mb-us-pw-03\Documents\Cleveland_OH101_Projects\ODOT\District12\82382\400-Engineering\Structures\Median_Barrier_WallSheets\82382_MB_WP001.dgn

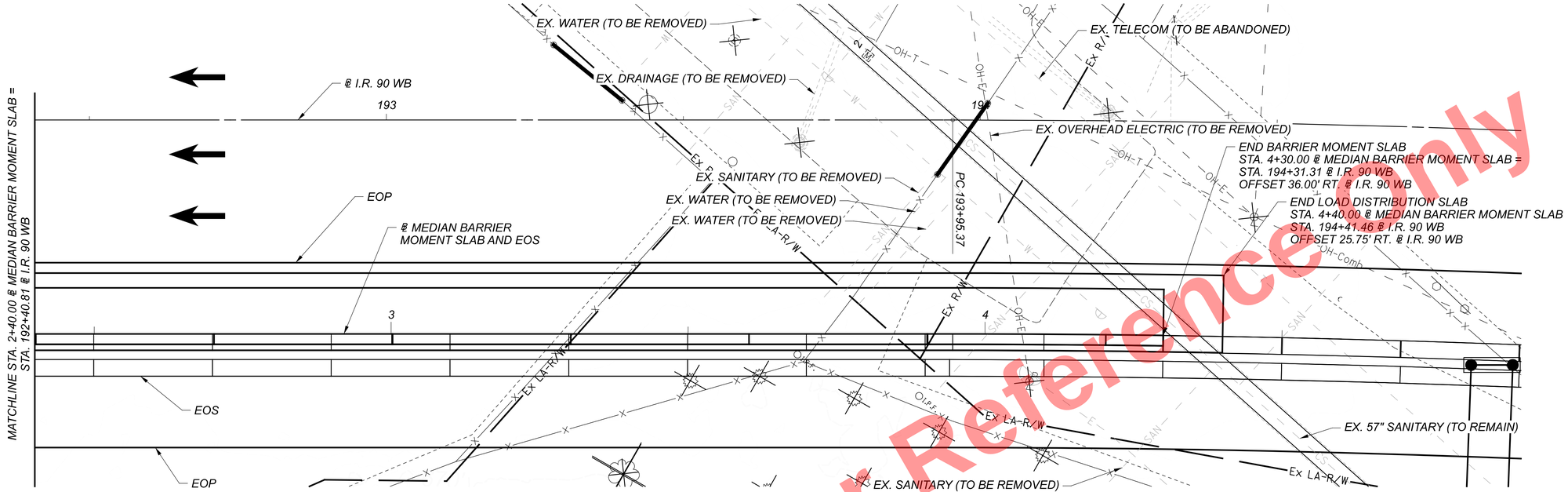

PLAN

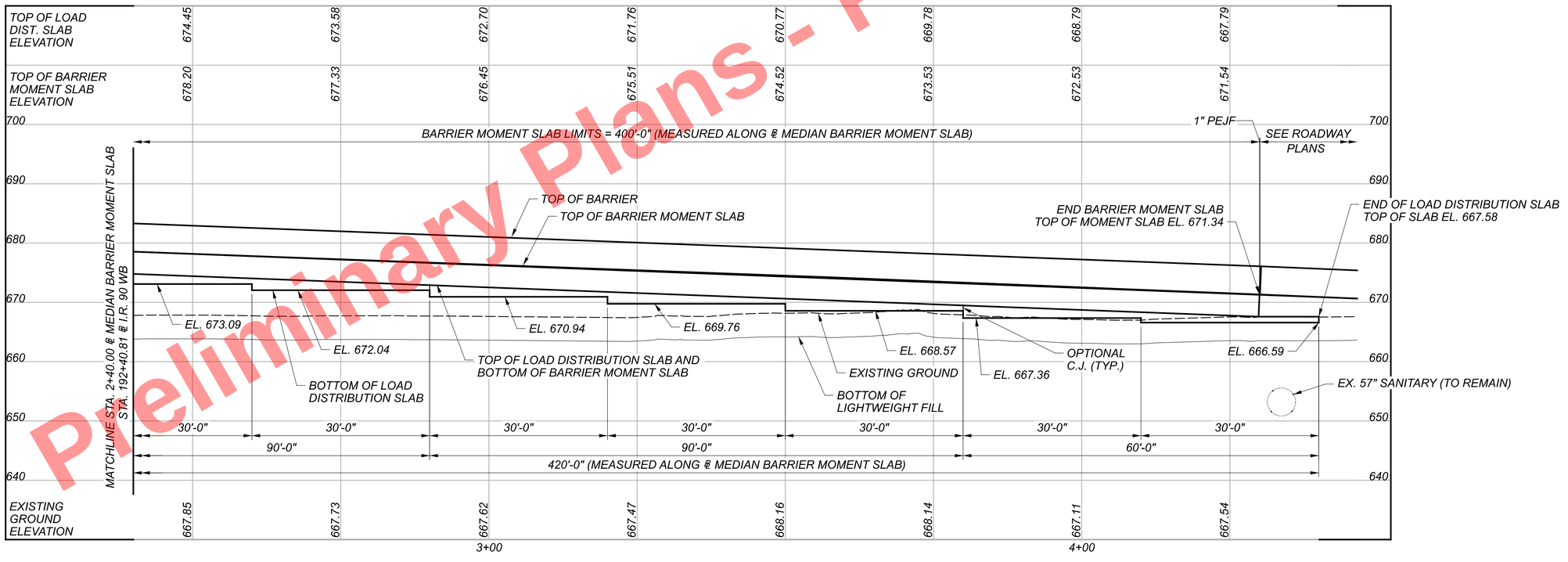

PROFILE

(ALONG ℄ MEDIAN BARRIER MOMENT SLAB)

Preliminary Plans - For Reference Only

PLAN AND PROFILE (2 OF 2)
I.R. 90 WB STA. 192+40.81 TO STA. 194+31.31
MEDIAN BARRIER MOMENT SLAB

SFN	N/A
DESIGN AGENCY	B&N burgessniple.com
DESIGNER	BCS
CHECKER	MES
REVIEWER	DWL 01/09/24
PROJECT ID	82382
SUBSET	2
TOTAL	14
SHEET	1341
TOTAL	2696

CUY-90-16.28 (CCG3A)

MODEL: Sheet PAPERSIZE: 34x22 (in.) DATE: 3/27/2025 TIME: 11:26:17 PM USER: Julie.Ross
pw:\\mb-us-pw.bentley.com:mb-us-pw-03\Documents\Cleveland_OH\01_Projects\ODOT\District12\82382\400-Engineering\Structures\Median_Barrier_WallSheets\82382_MB_WP002.dgn

STRUCTURE GENERAL NOTES:

REFER TO THE FOLLOWING STANDARD DRAWINGS:

SBR-2-20 DATED 07-21-23

AND TO THE FOLLOWING SUPPLEMENTAL SPECIFICATIONS:

800 DATED SEE TITLE SHEET

DESIGN SPECIFICATIONS:

THIS STRUCTURE CONFORMS TO THE 9TH EDITION OF THE "LRFD BRIDGE DESIGN SPECIFICATIONS" ADOPTED BY THE AMERICAN ASSOCIATION OF STATE HIGHWAY AND TRANSPORTATION OFFICIALS, 2019 AND THE ODOT BRIDGE DESIGN MANUAL, 2020.

DESIGN DATA:

CONCRETE CLASS QC2 - COMPRESSIVE STRENGTH 4.5 KSI (BARRIER AND MOMENT SLAB)

REINFORCING STEEL - MINIMUM YIELD STRENGTH 60 KSI

MAINTENANCE OF TRAFFIC:

SEE THE ROADWAY PLANS FOR MAINTENANCE OF TRAFFIC REQUIREMENTS.

LOAD DISTRIBUTION SLAB BEARING RESISTANCE:

THE LOAD DISTRIBUTION SLAB, AS DESIGNED, PRODUCES A MAXIMUM SERVICE LIMIT STATE BEARING PRESSURE OF 1.60 KSF AND A MAXIMUM STRENGTH LIMIT STATE BEARING PRESSURE OF 2.59 KSF.

THE EPS GEOFOAM FILL SHALL BE TYPE EPS46 WITH A MINIMUM COMPRESSIVE RESISTANCE AT 1% STRAIN OF 18.6 PSI WITHIN THE LIMITS OF THE MEDIAN BARRIER WALL AND LOAD DISTRIBUTION SLAB. THIS WILL PROVIDE A FACTORED BEARING RESISTANCE OF 2.68 KSF.

ITEM 511 - CLASS QC2 CONCRETE, MISC.: CONCRETE MOMENT SLAB AND BARRIER WITH QC/QA

ITEM 511 - CLASS QC2 CONCRETE, MISC.: CONCRETE LOAD DISTRIBUTION SLAB WITH QC/QA

ALL COARSE AGGREGATE SHALL HAVE AN ABSORPTION OF 1.00% OR GREATER AS DEFINED BY ASTM C127.

ALL PORTIONS OF THE BARRIER MOMENT SLAB AND LOAD DISTRIBUTION SLAB SHALL BE PAID FOR UNDER THESE ITEMS, UNLESS NOTED OTHERWISE. THIS INCLUDES, BUT IS NOT LIMITED TO MOMENT SLAB AND LOAD DISTRIBUTION SLAB CONCRETE, BARRIER CONCRETE, PEJF, SAWCUTTING, JOINT SEALER, SLEEVED DOWELS, TRANSVERSE AND LONGITUDINAL JOINT TREATMENT ADJACENT TO ROADWAY PAVEMENT AND SHOULDERS, AND ANY OTHER INCIDENTALS REQUIRED TO COMPLETE THE BARRIER MOMENT SLABS AND LOAD DISTRIBUTION SLABS.

PAYMENT FOR THE ABOVE COMPLETED AND ACCEPTED QUANTITIES WILL BE MADE AT THE CONTRACT BID PRICE PER CUBIC YARD FOR ITEM 511 - CLASS QC2 CONCRETE, MISC.: CONCRETE MOMENT SLAB AND BARRIER AND CLASS QC2 CONCRETE, MISC: CONCRETE LOAD DISTRIBUTION SLAB WITH QC/QA.

ITEM 512 - SEALING OF CONCRETE SURFACES (EPOXY-URETHANE)

SEAL SURFACES OF THE CAST-IN-PLACE CONCRETE BARRIERS AS SHOWN IN THE PLANS WITH AN EPOXY-URETHANE SEALER ACCORDING TO C&MS 512. COLOR SHALL BE ALPACA 7022 PER SHERWIN WILLIAMS PALATE.

ABBREVIATIONS

@	= BASELINE
BOT.	= BOTTOM
℄	= CENTERLINE
CLR.	= CLEAR SPACING
C.J.	= CONSTURCTION JOINT
CMS	= CONSTRUCTION AND MATERIALS SPECIFICATIONS
EL.	= ELEVATION
EX.	= EXISTING
MAX.	= MAXIMUM
MIN.	= MINIMUM
PEJF	= PREFORMED EXPANSION JOINT FILLER
STA.	= STATION
SPA.	= SPACING
T&B	= TOP AND BOTTOM
TYP.	= TYPICAL

ESTIMATED QUANTITIES

PARTICIPATION	ITEM	ITEM EXT.	TOTAL	UNIT	DESCRIPTION	GENERAL	REF. SHEET
01/IMS/04	509	10000	90643	LBS	EPOXY COATED STEEL REINFORCEMENT	90643	
01/IMS/04	509	30040	5944	FT	NO. 6 DEFORMED GFRP REINFORCEMENT	5944	
01/IMS/04	511	53012	370	CY	CLASS QC2 CONCRETE, MISC: CONCRETE MOMENT SLAB AND BARRIER WITH QC/QA	370	3 / 14
01/IMS/04	511	53012	300	CY	CLASS QC2 CONCRETE, MISC: CONCRETE LOAD DISTRIBUTION SLAB WITH QC/QA	300	3 / 14
01/IMS/04	512	10100	465	SY	SEALING OF CONCRETE SURFACES (EPOXY-URETHANE)	465	

Preliminary Plans - For Reference Only

GENERAL NOTES AND ESTIMATED QUANTITIES
I.R. 90 WB STA. 190+30.81 TO STA. 194+31.31
MEDIAN BARRIER MOMENT SLAB

SFN N/A

DESIGN AGENCY B&N burgessniple.com

DESIGNER	CHECKER
DBH	BCS

REVIEWER DWL 01/09/24

PROJECT ID 82382

SUBSET	TOTAL
3	14

SHEET	TOTAL
1342	2696

CUY-90-16.28 (CCG3A)

MODEL: Sheet PAPERSIZE: 34x22 (in.) DATE: 3/27/2025 TIME: 11:26:45 PM USER: Julie.Ross
pw:\\mb-us-pw.bentley.com:mb-us-pw-03\Documents\Cleveland_OH\01_Projects\ODOT\District12\82382\400-Engineering\Structures\Median_Barrier_WallSheets\82382_MB_WN001.dgn

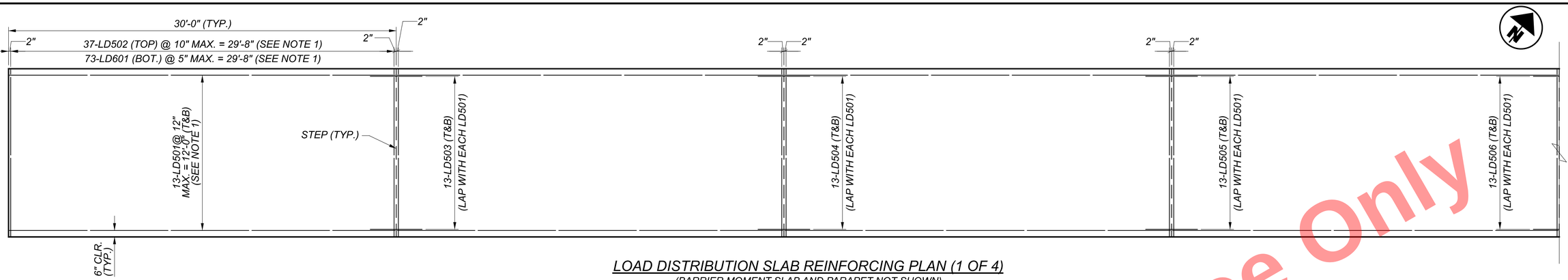

LOAD DISTRIBUTION SLAB REINFORCING PLAN (1 OF 4)

(BARRIER MOMENT SLAB AND PARAPET NOT SHOWN)

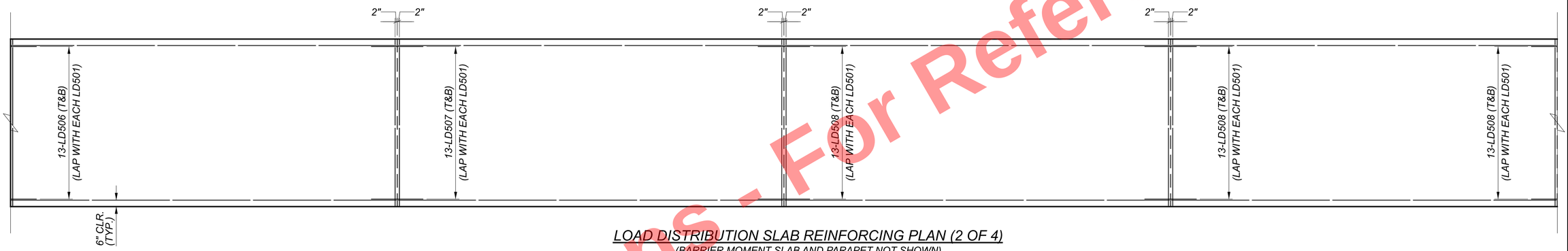

LOAD DISTRIBUTION SLAB REINFORCING PLAN (2 OF 4)

(BARRIER MOMENT SLAB AND PARAPET NOT SHOWN)

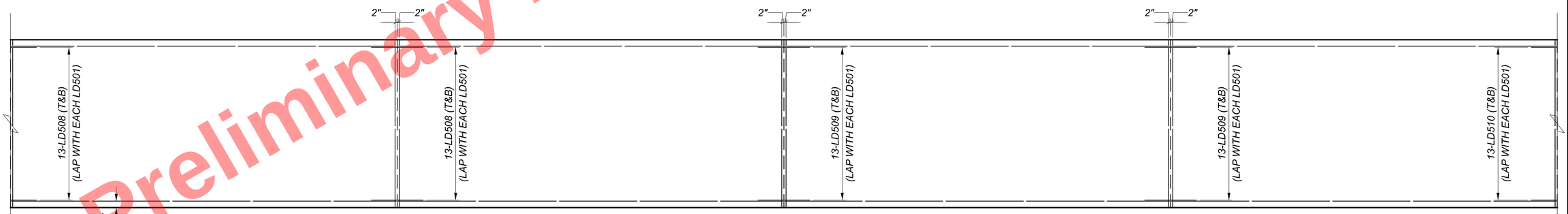

LOAD DISTRIBUTION SLAB REINFORCING PLAN (3 OF 4)

(BARRIER MOMENT SLAB AND PARAPET NOT SHOWN)

NOTES:

1. TYPICAL FOR EACH 30'-0" PANEL, 14 REQUIRED. PLACE TRANSVERSE BARS IN LOAD DISTRIBUTION SLAB RADIALLY TO I.R. 90 WB IN HORIZONTALLY CURVED PANELS.
2. SEE SHEET 5 / 14 FOR TYPICAL SECTION AND TYPICAL STEP DETAIL.
3. FIELD BEND THE LONGITUDINAL BARS AS NEEDED TO FOLLOW THE LOAD DISTRIBUTION SLAB CURVATURE.
4. LAP LENGTHS:
   #5 = 3'-2"

Preliminary Plans - For Reference Only

REINFORCING LAYOUT PLAN (1 OF 2)
I.R. 90 WB STA. 190+30.81 TO 194+31.31
MEDIAN BARRIER MOMENT SLAB

SFN	N/A
DESIGN AGENCY	B&N burgessniple.com
DESIGNER	DBH
CHECKER	BCS
REVIEWER	DWL 01/09/24
PROJECT ID	82382
SUBSET	4
TOTAL	14
SHEET	1343
TOTAL	2696

CUY-90-16.28 (CCG3A)

MODEL: Sheet PAPERSIZE: 34x22 (in.) DATE: 3/27/2025 TIME: 11:27:34 PM USER: Julie.Ross
pw:\\mb-us-pw.bentley.com:mb-us-pw-03\Documents\Cleveland_OH101_Projects\ODOT\District12\82382\400-Engineering\Structures\Median_Barrier_WallSheets\82382_MB_WD009.dgn

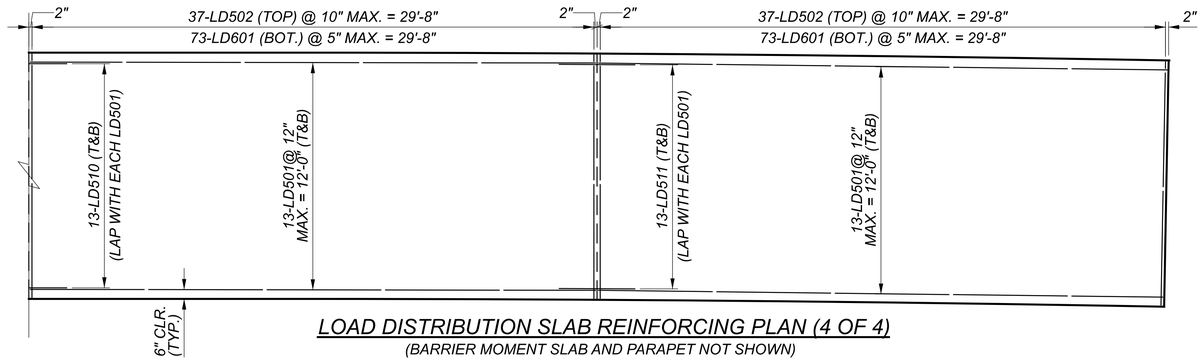

LOAD DISTRIBUTION SLAB REINFORCING PLAN (4 OF 4)

(BARRIER MOMENT SLAB AND PARAPET NOT SHOWN)

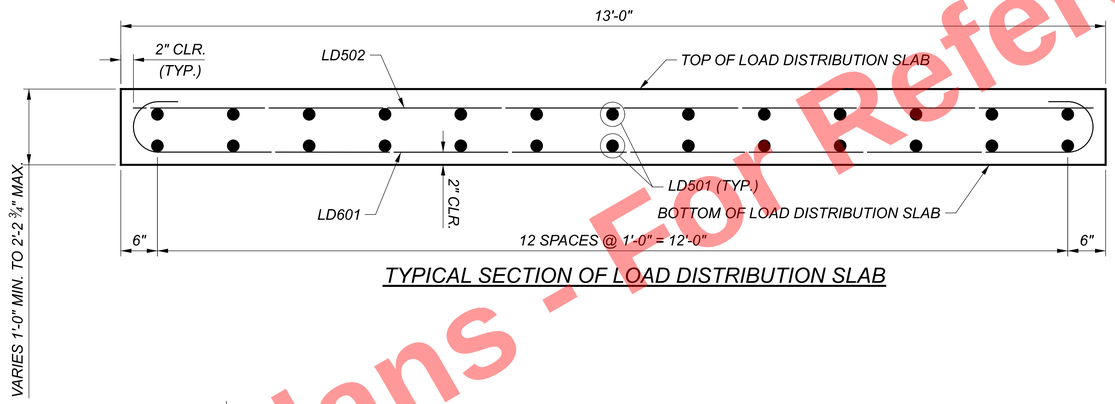

TYPICAL SECTION OF LOAD DISTRIBUTION SLAB

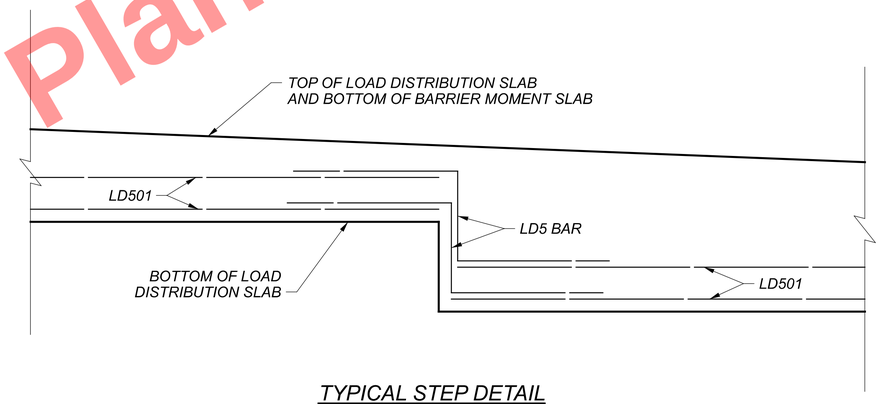

TYPICAL STEP DETAIL

(TRANSVERSE BARS NOT SHOWN)

NOTES:

1. LAP LENGTHS:
   #5 = 3'-2"

Preliminary Plans - For Reference Only

REINFORCING LAYOUT PLAN (2 OF 2) AND DETAILS
I.R. 90 WB STA. 190+30.81 TO STA. 194+31.31
MEDIAN BARRIER MOMENT SLAB

SFN	N/A
DESIGN AGENCY	B&N burgessniple.com
DESIGNER	DBH
CHECKER	BCS
REVIEWER	DWL 01/09/24
PROJECT ID	82382
SUBSET	5
TOTAL	14
SHEET	1344
TOTAL	2696

CUY-90-16.28 (CCG3A)

MODEL: Sheet PAPERSIZE: 34x22 (in.) DATE: 3/27/2025 TIME: 11:28:03 PM USER: Julie.Ross
pw:\\mb-us-pw.bentley.com:mb-us-pw-03\Documents\Cleveland_OH\01_Projects\ODOT\District12\82382\400-Engineering\Structures\Median_Barrier_WallSheets\82382_MB_WD010.dgn

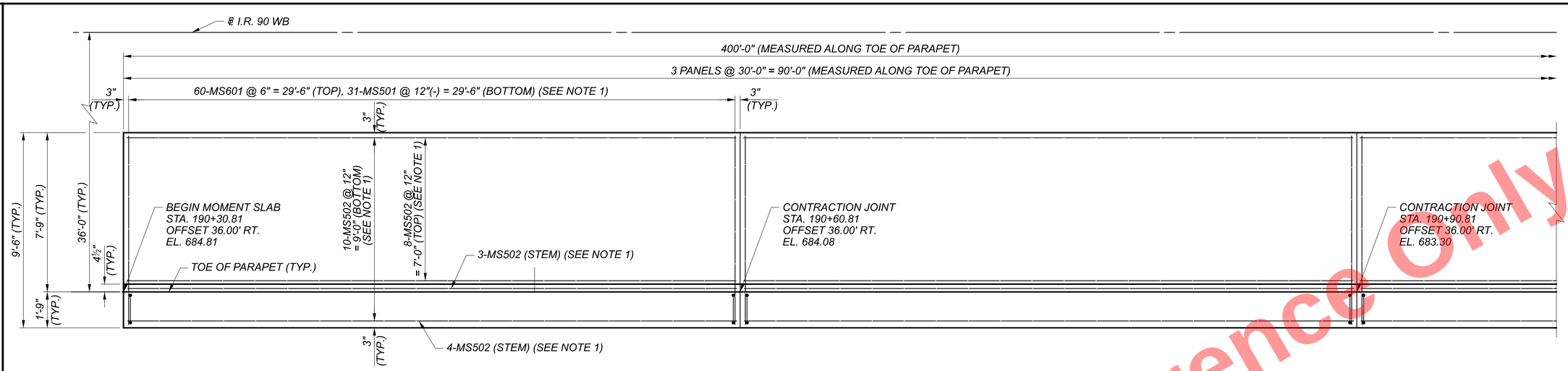

MOMENT SLAB PLAN 1 OF 6

(LOAD DISTRIBUTION SLAB AND PARAPET NOT SHOWN)

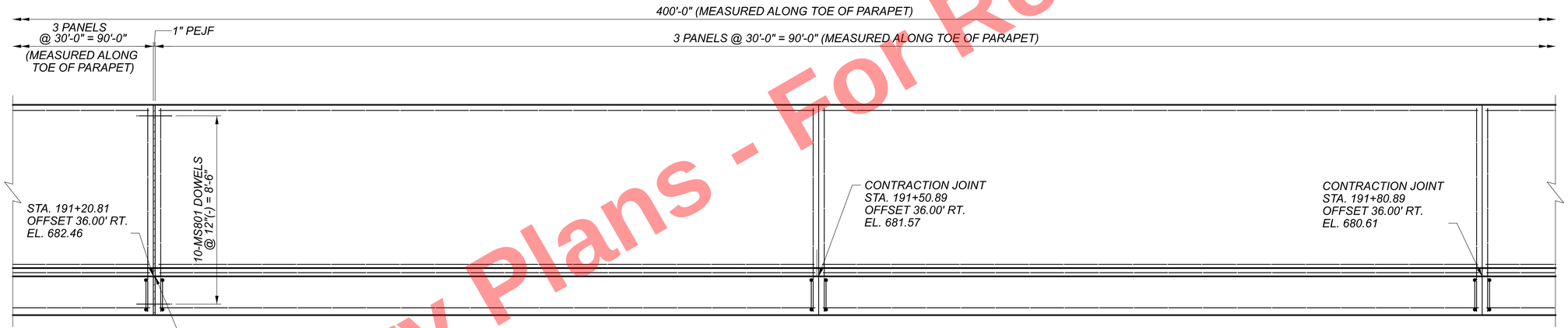

MOMENT SLAB PLAN 2 OF 6

(LOAD DISTRIBUTION SLAB AND PARAPET NOT SHOWN)

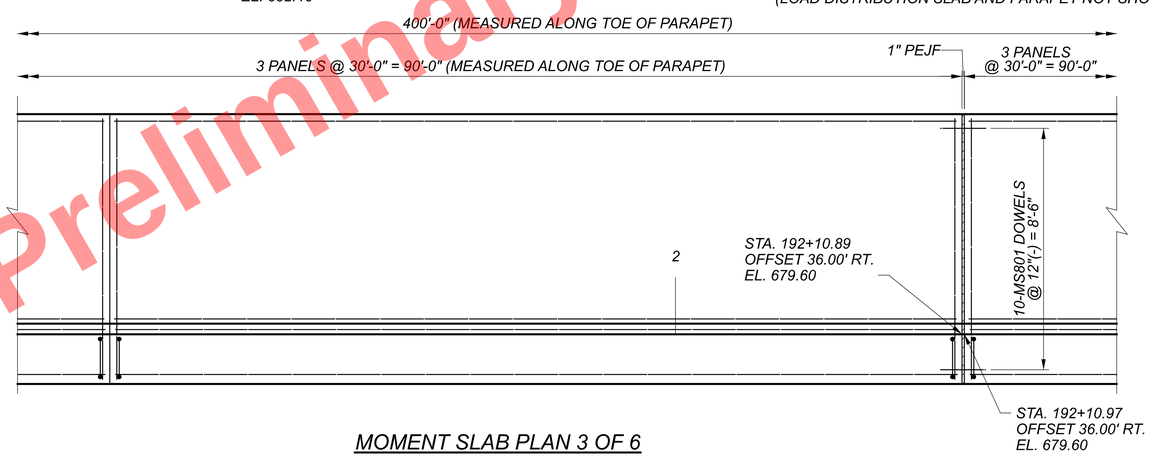

MOMENT SLAB PLAN 3 OF 6

(LOAD DISTRIBUTION SLAB AND PARAPET NOT SHOWN)

NOTES:

1. TYPICAL FOR ALL 30'-0" PANELS; 13 REQUIRED. PLACE TRANSVERSE BARS IN THE MOMENT SLAB RADIALLY TO ℄ I.R. 90 WB IN HORIZONTALLY CURVED PANELS. SEE SHEET 8/14 THRU 11/14 FOR BARS EXTENDING FROM MOMENT SLAB INTO PARAPET.
2. SEE SHEET 13/14 FOR MOMENT SLAB SECTIONS AND FOR LOCATION WHERE MOMENT SLAB STATION, OFFSET, AND ELEVATION ARE GIVEN.
3. FIELD BEND THE LONGITUDINAL BARS AS NEEDED TO FOLLOW THE MOMENT SLAB CURVATURE.

Preliminary Plans - For Reference Only

MOMENT SLAB PLAN SHEET 1 OF 2
I.R. 90 WB STA. 190+30.81 TO STA. 192+10.89
MEDIAN BARRIER MOMENT SLAB

SFN N/A
DESIGN AGENCY B&N burgessniple.com
DESIGNER BCS | CHECKER MES
REVIEWER DWL 01/09/24
PROJECT ID 82382
SUBSET 6 | TOTAL 14
SHEET 1345 | TOTAL 2696

CUY-90-16.28 (CCG3A)
MODEL: Sheet PAPERSIZE: 34x22 (in.) DATE: 3/27/2025 TIME: 11:28:26 PM USER: Julie.Ross
pw:\\mb-us-pw.bentley.com:mb-us-pw-03\Documents\Cleveland_OH\01_Projects\ODOT\District12\82382\400-Engineering\Structures\Median_Barrier_WallSheets\82382_MB_WD002.dgn

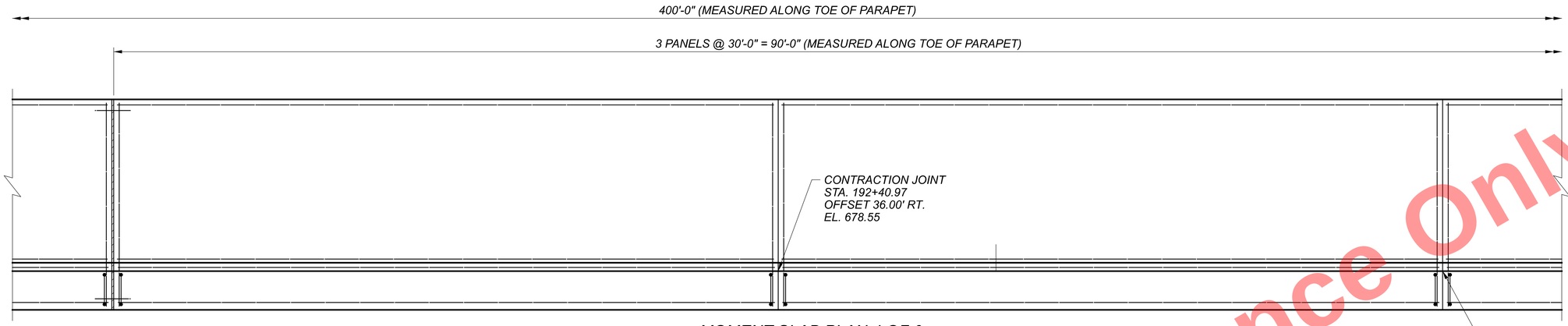

MOMENT SLAB PLAN 4 OF 6

(LOAD DISTRIBUTION SLAB AND PARAPET NOT SHOWN)

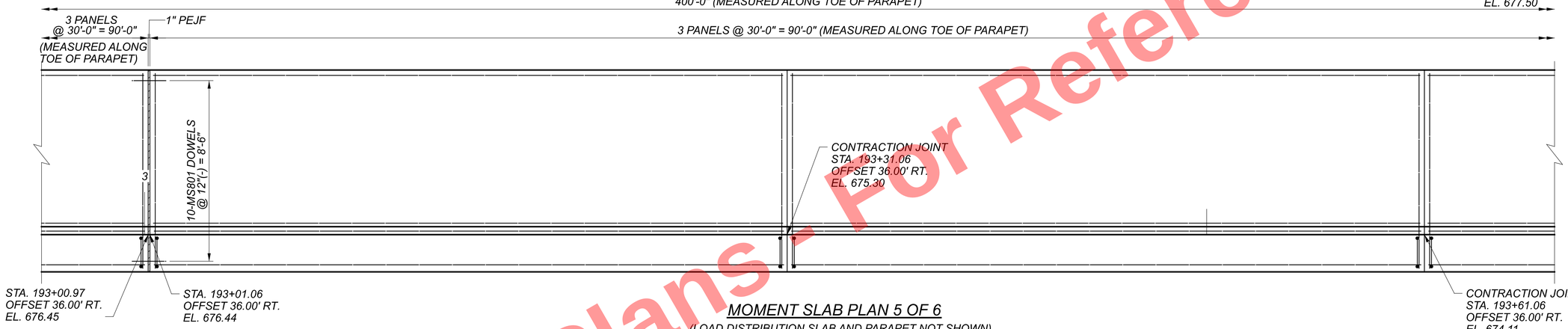

MOMENT SLAB PLAN 5 OF 6

(LOAD DISTRIBUTION SLAB AND PARAPET NOT SHOWN)

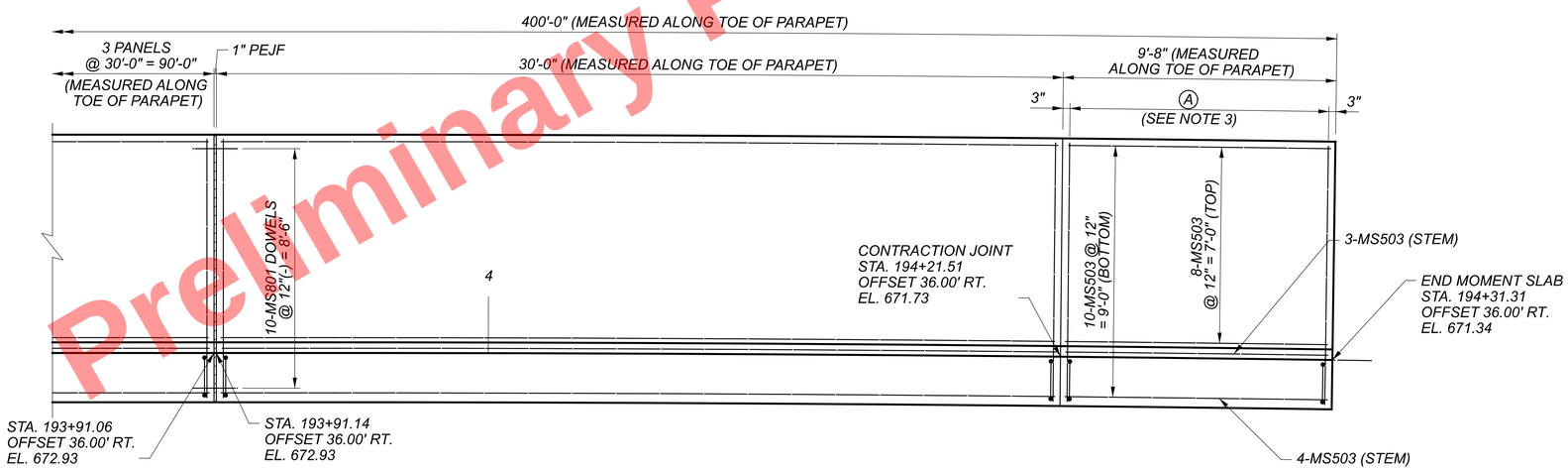

MOMENT SLAB PLAN 6 OF 6

(LOAD DISTRIBUTION SLAB AND PARAPET NOT SHOWN)

LEGEND:

(A) = 20-MS601 @ 6"(-) = 9'-2" (TOP), 11-MS501 @ 12"(-) = 9'-2" (BOT.)

NOTES:

1. SEE SHEET 13/14 FOR MOMENT SLAB SECTIONS AND FOR LOCATION WHERE MOMENT SLAB STATION, OFFSET, AND ELEVATION ARE GIVEN.
2. FIELD BEND THE LONGITUDINAL BARS AS NEEDED TO FOLLOW THE MOMENT SLAB CURVATURE.
3. PLACE TRANSVERSE BARS IN THE MOMENT SLAB RADIALLY TO ℄ I.R. 90 WB IN HORIZONTALLY CURVED PANELS. SEE SHEETS 8/14 THRU 11/14 FOR REINFORING EXTENDING FROM MOMENT SLAB INTO PARAPET.
4. SEE SHEET 6/14 FOR ADDITIONAL DETAILS.

Preliminary Plans - For Reference Only

MOMENT SLAB PLAN SHEET 2 OF 2
I.R. 90 WB STA. 192+10.89 TO STA. 194+31.31
MEDIAN BARRIER MOMENT SLAB

SFN N/A
DESIGN AGENCY B&N burgessniple.com
DESIGNER BCS | CHECKER MES
REVIEWER DWL 01/09/24
PROJECT ID 82382
SUBSET 7 | TOTAL 14
SHEET 1346 | TOTAL 2696

CUY-90-16.28 (CCG3A)

MODEL: Sheet PAPERSIZE: 34x22 (in.) DATE: 3/27/2025 TIME: 11:28:37 PM USER: Julie.Ross
pw:\\mb-us-pw.bentley.com:mb-us-pw-03\Documents\Cleveland_OH\01_Projects\ODOT\District12\82382\400-Engineering\Structures\Median_Barrier_WallSheets\82382_MB_WD003.dgn

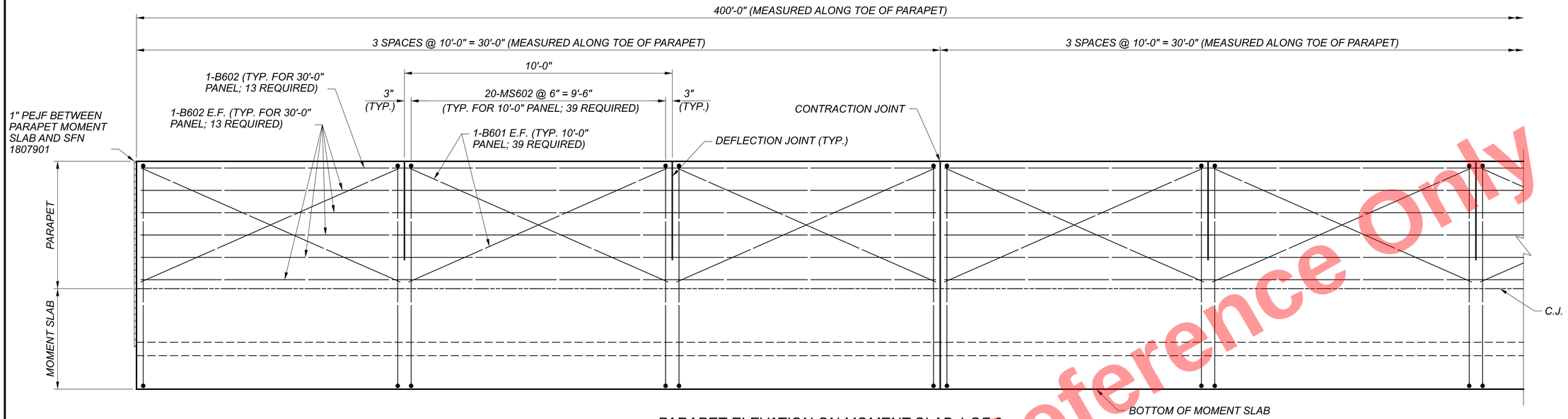

PARAPET ELEVATION ON MOMENT SLAB 1 OF 8

(SHOWN LOOKING AT BACKFACE)

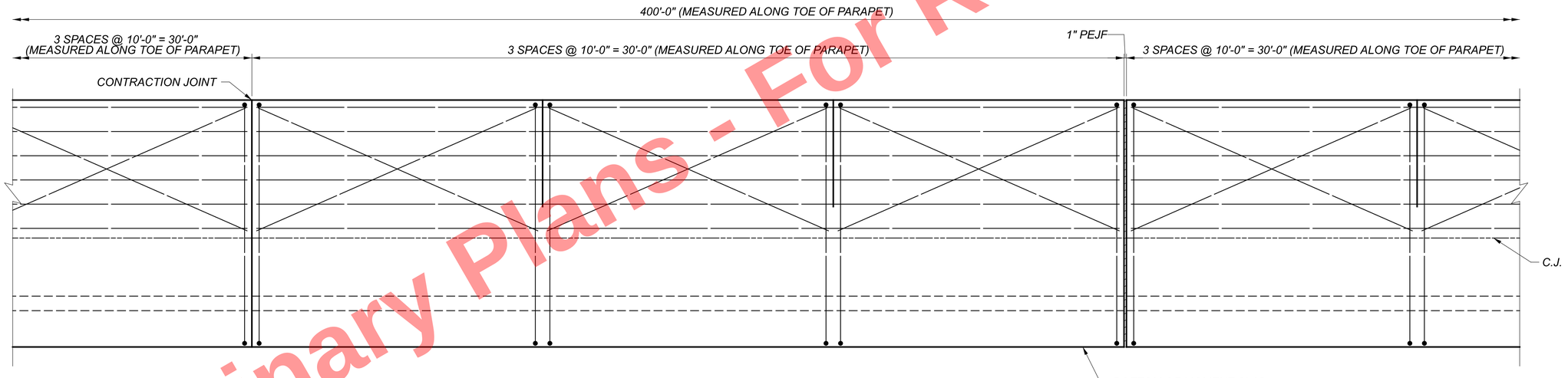

PARAPET ELEVATION ON MOMENT SLAB 2 OF 8

(SHOWN LOOKING AT BACKFACE)

Preliminary Plans - For Reference Only

NOTES:

1. SEE SHEET 13/14 FOR ADDITIONAL DETAILS.
2. FIELD BEND THE LONGITUDINAL BARS AS NEEDED TO FOLLOW THE PARAPET CURVATURE.
3. FOR ADDITIONAL DETAILS SEE STANDARD BRIDGE DRAWINGS SBR-2-20.

MOMENT SLAB PARAPET DETAILS SHEET 1 OF 4
I.R. 90 WB STA. 190+30.81 TO STA. 194+31.31
MEDIAN BARRIER MOMENT SLAB

SFN N/A

DESIGN AGENCY B&N burgessniple.com

DESIGNER	CHECKER
BCS	MES

REVIEWER DWL 01/09/24

PROJECT ID 82382

SUBSET	TOTAL
8	14

SHEET	TOTAL
1347	2696

CUY-90-16.28 (CCG3A)

MODEL: Sheet PAPERSIZE: 34x22 (in.) DATE: 3/27/2025 TIME: 11:26:45 PM USER: Julie.Ross
pw:\\mb-us-pw.bentley.com:mb-us-pw-03\Documents\Cleveland_OH\01_Projects\ODOT\District12\82382\400-Engineering\Structures\Median_Barrier_WallSheets\82382_MB_WD004.dgn

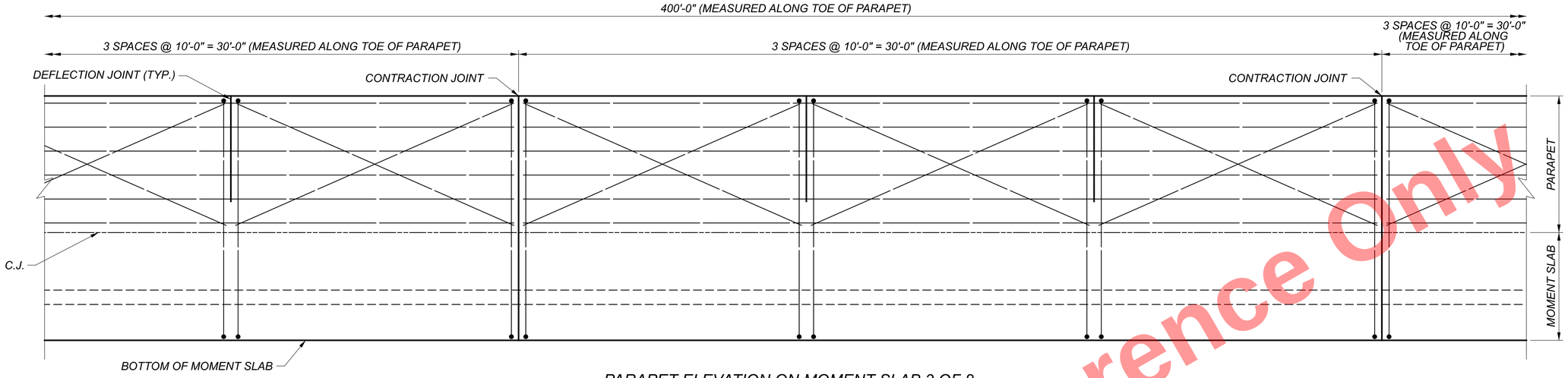

PARAPET ELEVATION ON MOMENT SLAB 3 OF 8

(LOOKING AT BACKFACE)

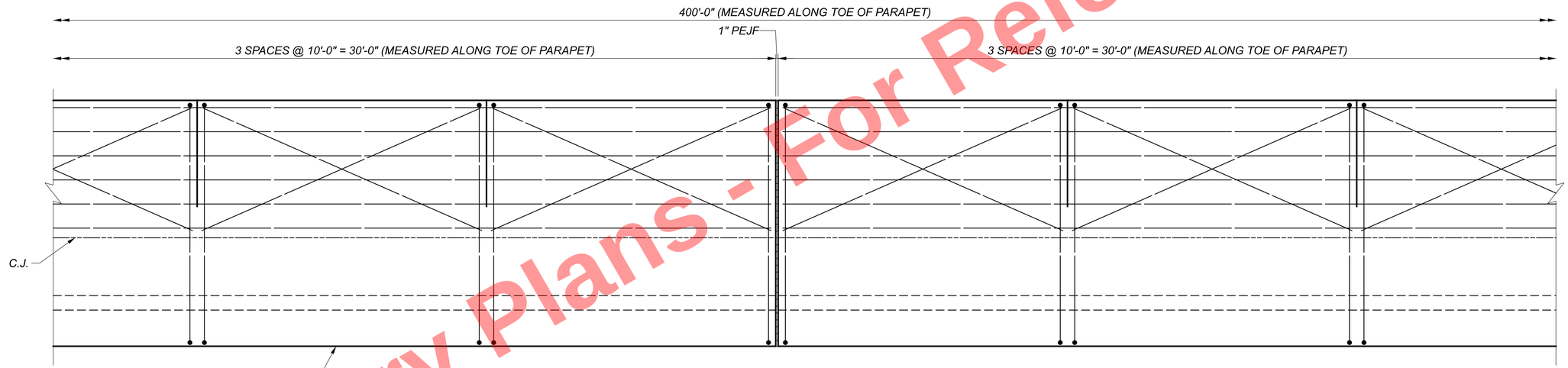

PARAPET ELEVATION ON MOMENT SLAB 4 OF 8

(LOOKING AT BACKFACE)

Preliminary Plans - For Reference Only

NOTES:

1. SEE SHEET 8/14 FOR ADDITIONAL DETAILS AND NOTES.

MOMENT SLAB PARAPET DETAILS SHEET 2 OF 4
I.R. 90 WB STA. 190+30.81 TO STA. 194+31.31
MEDIAN BARRIER MOMENT SLAB

SFN N/A

DESIGN AGENCY B&N burgessniple.com

DESIGNER	CHECKER
BCS	MES

REVIEWER DWL 01/09/24

PROJECT ID 82382

SUBSET	TOTAL
9	14

SHEET	TOTAL
1348	2696

CUY-90-16.28 (CCG3A)

MODEL: Sheet PAPERSIZE: 34x22 (in.) DATE: 3/27/2025 TIME: 11:28:52 PM USER: Julie.Ross
pw:\\mb-us-pw.bentley.com:mb-us-pw-03\Documents\Cleveland_OH\01_Projects\ODOT\District12\82382\400-Engineering\Structures\Median_Barrier_WallSheets\82382_MB_WD005.dgn

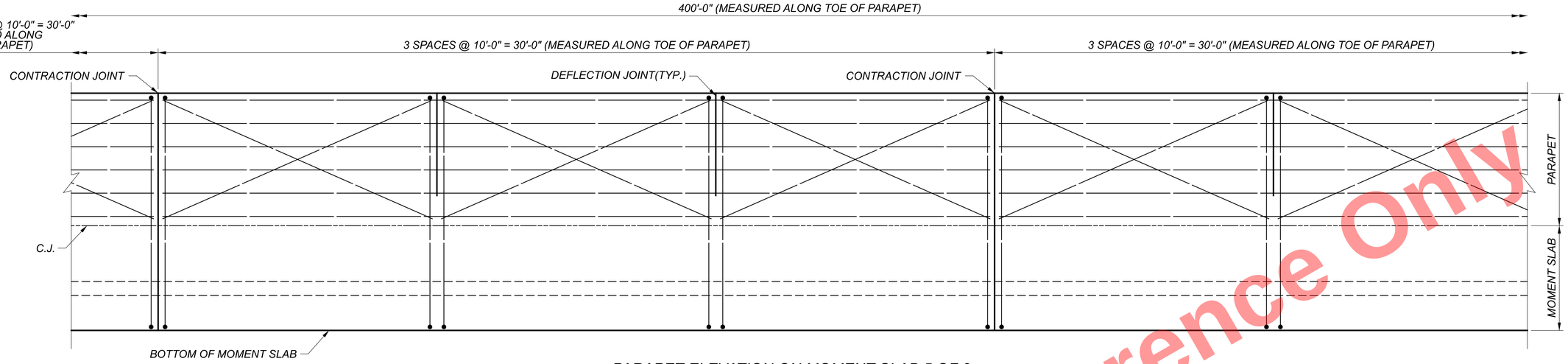

PARAPET ELEVATION ON MOMENT SLAB 5 OF 8

(LOOKING AT BACKFACE)

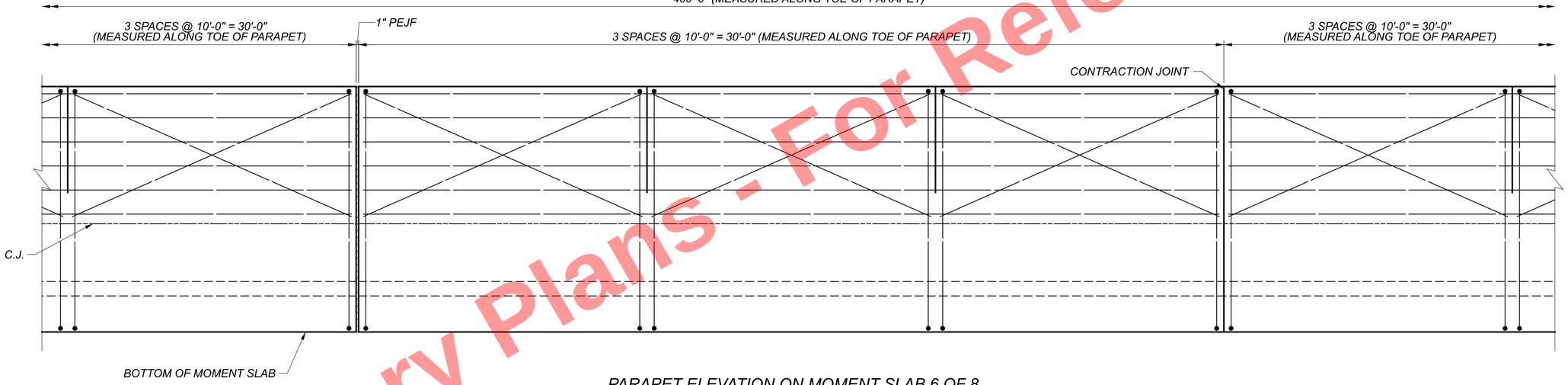

PARAPET ELEVATION ON MOMENT SLAB 6 OF 8

(LOOKING AT BACKFACE)

Preliminary Plans - For Reference Only

NOTES:

1. SEE SHEET 8/14 FOR ADDITIONAL DETAILS AND NOTES.

MOMENT SLAB PARAPET DETAILS SHEET 3 OF 4
I.R. 90 WB STA. 190+30.81 TO STA. 194+31.31
MEDIAN BARRIER MOMENT SLAB

SFN N/A

DESIGN AGENCY B&N burgessniple.com

DESIGNER	CHECKER
BCS	MES

REVIEWER DWL 01/09/24

PROJECT ID 82382

SUBSET	TOTAL
10	14

SHEET	TOTAL
1349	2696

CUY-90-16.28 (CCG3A)

MODEL: Sheet PAPERSIZE: 34x22 (in.) DATE: 3/27/2025 TIME: 11:29:01 PM USER: Julie.Ross
pw:\\mb-us-pw.bentley.com:mb-us-pw-03\Documents\Cleveland_OH\01_Projects\ODOT\District12\82382400-Engineering\Structures\Median_Barrier_WallSheets\82382_MB_WD006.dgn

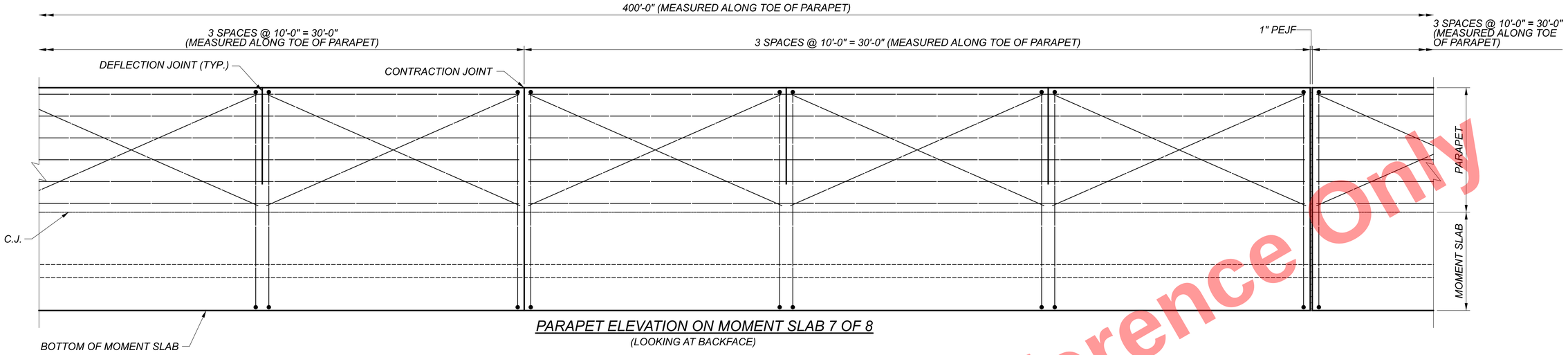

PARAPET ELEVATION ON MOMENT SLAB 7 OF 8

(LOOKING AT BACKFACE)

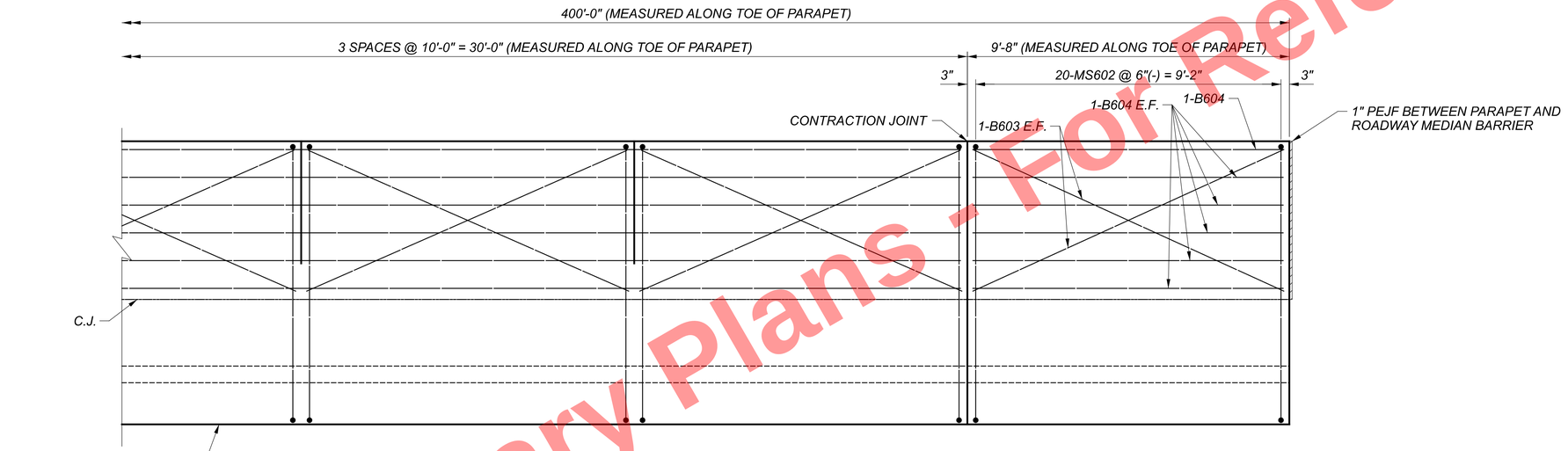

PARAPET ELEVATION ON MOMENT SLAB 8 OF 8

(LOOKING AT BACKFACE)

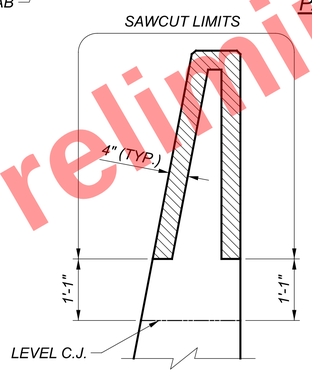

DEFLECTION JOINT DETAIL

NOTES:

1. SEE SHEET 8/14 FOR ADDITIONAL DETAILS AND NOTES.

Preliminary Plans - For Reference Only

MOMENT SLAB PARAPET DETAILS SHEET 4 OF 4
I.R. 90 WB STA. 190+30.81 TO STA. 194+31.31
MEDIAN BARRIER MOMENT SLAB

SFN	N/A
DESIGN AGENCY	B&N burgessniple.com
DESIGNER	BCS
CHECKER	MES
REVIEWER	DWL 01/09/24
PROJECT ID	82382
SUBSET	11
TOTAL	14
SHEET	1350
TOTAL	2696

CUY-90-16.28 (CCG3A)

MODEL: Sheet PAPERSIZE: 34x22 (in.) DATE: 3/27/2025 TIME: 11:29:09 PM USER: Julie.Ross
pw:\\mb-us-pw.bentley.com:mb-us-pw-03\Documents\Cleveland_OH01_Projects\ODOT\District12\82382400-Engineering\Structures\Median_Barrier_WallSheets\82382_MB_WD007.dgn

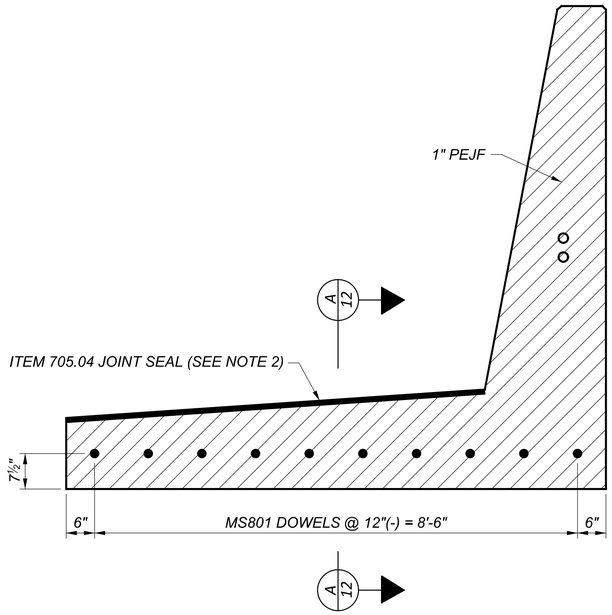

EXPANSION JOINT DETAIL

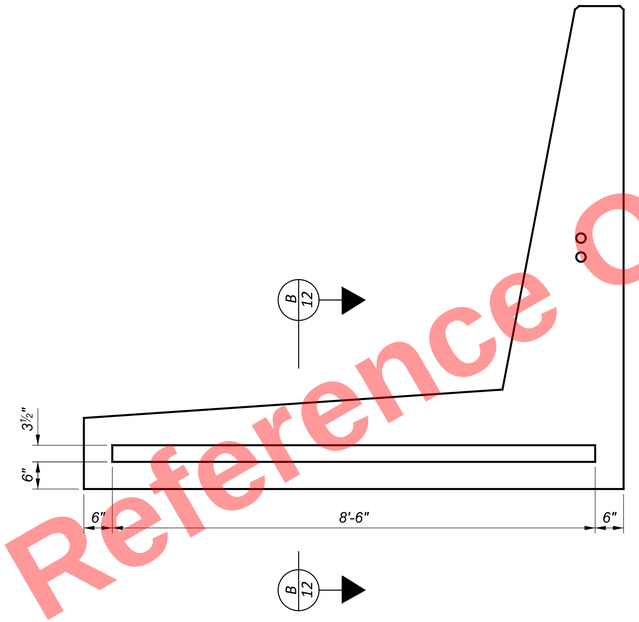

CONTRACTION JOINT DETAIL

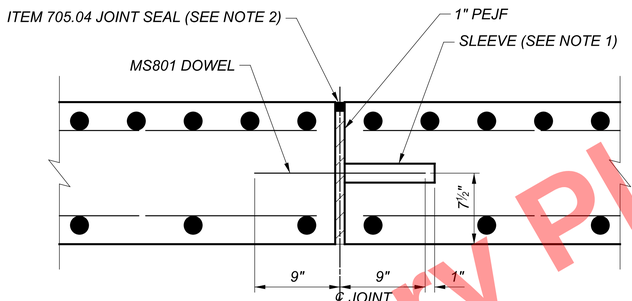

SECTION A-A

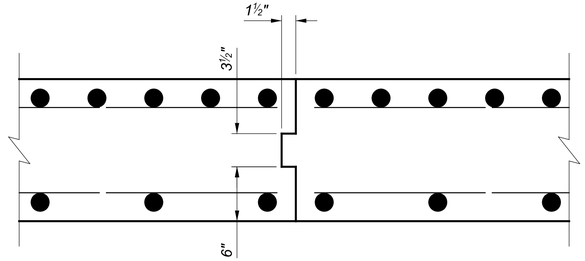

SECTION B-B

LEGEND:

= 1" PEJF

NOTES:

1. INSTALL SLEEVES ON OPPOSITE END OF ADJACENT DOWELS.
2. 1" DEEP x 1" WIDE HOT APPLIED JOINT SEALER 705.04, TO BE INCIDENTAL TO ITEM 516 - 1" PREFORMED EXPANSION JOINT FILLER.

Preliminary Plans - For Reference Only

CUY-90-16.28 (CCG3A)

MODEL: Sheet PAPERSIZE: 34x22 (in.) DATE: 3/27/2025 TIME: 11:29:16 PM USER: Julie.Ross
pw:\\mb-us-pw.bentley.com:mb-us-pw-03\Documents\Cleveland_OH\01_Projects\ODOT\District12\82382\400-Engineering\Structures\Median_Barrier_WallSheets\8

SLAB EXPANSION AND CONTRACTION JOINT DETAILS
I.R. 90 WB STA. 190+30.81 TO STA. 194+31.31
MEDIAN BARRIER MOMENT SLAB

SFN N/A

DESIGN AGENCY
B&N burgessniple.com

DESIGNER	CHECKER
BCS	MES

REVIEWER
DWL 01/09/24

PROJECT ID
82382

SUBSET	TOTAL
12	14

SHEET	TOTAL
1351	2696

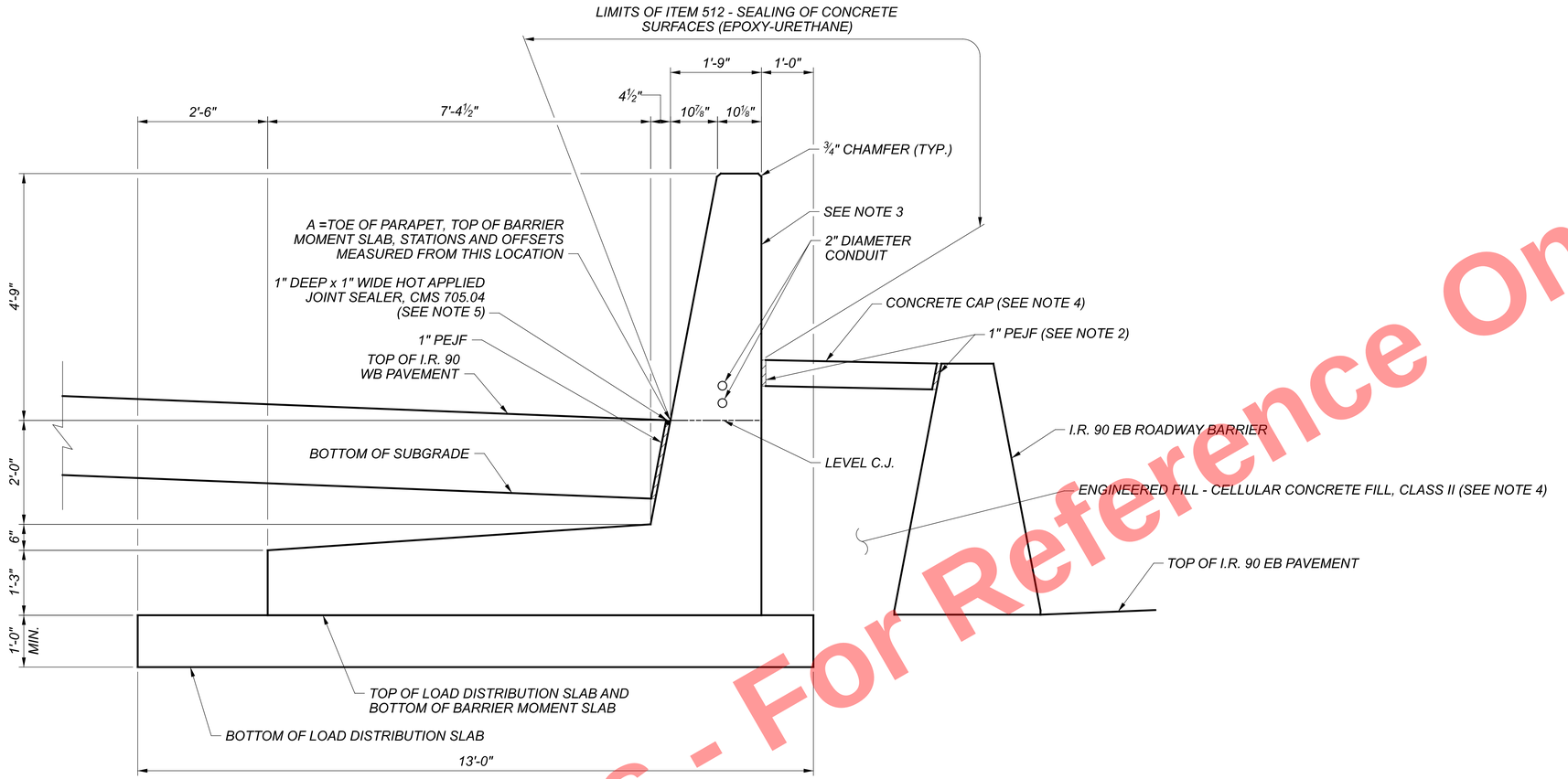

TYPICAL SECTION

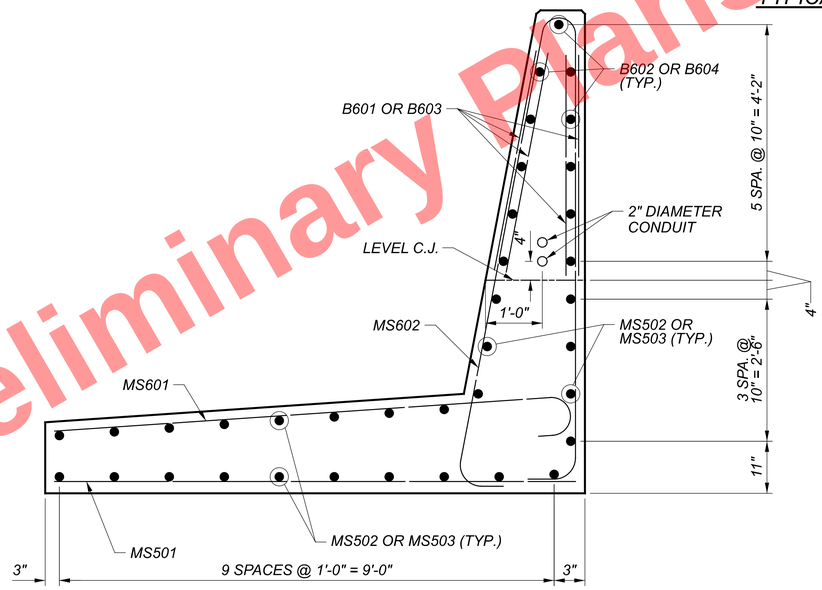

MOMENT SLAB REINFORCING SECTION

NOTES:

1. SEE SHEETS 6 THROUGH 12/14 FOR ADDITIONAL MOMENT SLAB DETAILS.
2. 1" PEJF SHALL EXTEND UP BETWEEN CAST-IN-PLACE MOMENT SLAB AND THE PAVEMENT TO THE ELEVATION OF 1" BELOW THE FINAL SURFACE OF THE PAVEMENT.
3. FOR ADDITIONAL PARAPET DETAILS , SEE STANDARD BRIDGE DRAWING SBR-2-20.
4. SEE THE ROADWAY PLANS FOR CONCRETE CAP, PEJF DETAILS, ENGINEERED FILL - CELLULAR CONCRETE FILL, CLASS II DETAILS, ROADWAY BARRIER DETAILS, AND PAYMENT INFORMATION.
5. HOT APPLIED JOINT SEALER TO BE PAID FOR WITH ITEM 511 - CLASS QC2 CONCRETE MISC.: CONCRETE MOMENT SLAB AND BARRIER WITH QA/QC.

Preliminary Plans - For Reference Only

MOMENT SLAB DETAILS
I.R. 90 WB STA. 190+30.81 TO STA. 194+31.31
MEDIAN BARRIER MOMENT SLAB

SFN N/A

DESIGN AGENCY B&N burgessniple.com

DESIGNER	CHECKER
BCS	MES

REVIEWER DWL 01/09/24

PROJECT ID 82382

SUBSET	TOTAL
13	14

SHEET	TOTAL
1352	2696

CUY-90-16.28 (CCG3A)

MODEL: Sheet PAPERSIZE: 34x22 (in.) DATE: 3/27/2025 TIME: 11:29:23 PM USER: Julie.Ross
pw:\\mb-us-pw.bentley.com:mb-us-pw-03\Documents\Cleveland_OH101_Projects\ODOT\District12\82382\400-Engineering\Structures\Median_Barrier_WallSheets\82382_MB_WD001.dgn

MEDIAN BARRIER MOMENT SLAB (EPOXY COATED STEEL REINFORCEMENT - ECSR)											
MARK	MAT. TYPE	NO.	LENGTH	WEIGHT (LBS.)	TYPE	DIMENSIONS					
						A	B	C	D	E/RAD.	INC.
MS501	ECSR	414	9'-2"	3958	STR						
MS502	ECSR	325	29'-8"	10056	STR						
MS503	ECSR	25	9'-4"	243	STR						
MS601	ECSR	800	9'-10"	11816	19	9'-2"					
MS602	ECSR	800	18'-5"	22129	37	0'-0"	8'-2"	1'-0"	1'-0"	0'-5 ¼"	
MS801	ECSR	40	1'-6"	160	STR						
LD501	ECSR	364	30'-0"	11390	STR						
LD502	ECSR	518	12'-8"	6843	STR						
LD503	ECSR	26	7'-0"	190	32	3'-3"	0'-9"	3'-3"			
LD504	ECSR	26	7'-1"	192	32	3'-3"	0'-10"	3'-3"			
LD505	ECSR	26	7'-2"	194	32	3'-3"	0'-10 ½"	3'-3"			
LD506	ECSR	26	7'-2"	194	32	3'-3"	0'-11"	3'-3"			
LD507	ECSR	26	7'-3"	197	32	3'-3"	1'-0"	3'-3"			
LD508	ECSR	104	7'-4"	795	32	3'-3"	1'-1"	3'-3"			
LD509	ECSR	52	7'-5"	402	32	3'-3"	1'-2"	3'-3"			
LD510	ECSR	26	7'-6"	203	32	3'-3"	1'-3"	3'-3"			
LD511	ECSR	26	7'-0"	190	32	3'-3"	0'-9"	3'-3"			
LD601	ECSR	1022	14'-0"	21491	22	12'-8"					
MEDIAN BARRIER ECSR TOTAL				90643							

MEDIAN BARRIER MOMENT SLAB (GLASS FIBER REINFORCED POLYMER - GFRP)											
MARK	MAT. TYPE	NO.	LENGTH	TOTAL LENGTH	TYPE	DIMENSIONS					
						A	B	C	D	E/RAD.	INC.
B601	GFRP	156	10'-0"	1560'-0"	STR						
B602	GFRP	143	29'-8"	4242'-4"	STR						
B603	GFRP	4	9'-8"	38'-8"	STR						
B604	GFRP	11	9'-4"	102'-8"	STR						
MEDIAN BARRIER GFRP TOTAL				5943'-8"							

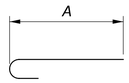

TYPE-19

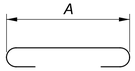

TYPE-22

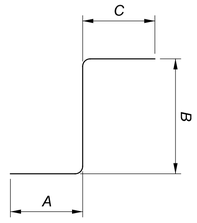

TYPE-32

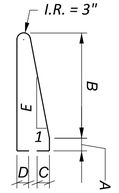

TYPE-37

Preliminary Plans - For Reference Only

NOTES:

1. BAR SIZE: THE BAR SIZE IS INDICATED IN THE BAR MARK. THE MARK BEGINS WITH ONE OR TWO LETTERS THAT IDENTIFY THE BAR LOCATION. THE NEXT ONE OR TWO DIGITS ARE THE BAR SIZE. THE FINAL TWO DIGITS ARE THE SEQUENCE NUMBERS.

   EXAMPLE: A501
   A = ABUTMENT
   5 = #5 BAR
   01 = SEQUENCE NUMBER

2. BAR DIMENSIONS SHOWN ARE OUT TO OUT UNLESS NOTED OTHERWISE.
3. ALL STEEL REINFORCING IT TO BE EPOXY COATED.
4. STD. WRITTEN IN PLACE OF A DIMENSION INDICATES A STANDARD BEND AT THE END OF A BAR.
5. STR. IN THE BAR TYPE COLUMN INDICATED A STRAIGHT BAR.
6. RAD. INDICATED THE INSIDE RADIUS UNLESS NOTED OTHERWISE.
7. INCR. INDICATED THE LENGTH INCREMENT FOR SERIES BARS.

REINFORCING STEEL LIST
I.R. 90 WB STA. 190+30.81 TO STA. 194+31.31
MEDIAN BARRIER MOMENT SLAB

SFN N/A

DESIGN AGENCY
B&N
burgessniple.com

DESIGNER	CHECKER
DBH	BCS

REVIEWER
DWL 01/09/24

PROJECT ID
82382

SUBSET	TOTAL
14	14

SHEET	TOTAL
1353	2696

CUY-90-16.28 (CCG3A)

MODEL: Sheet PAPERSIZE: 34x22 (in.) DATE: 3/27/2025 TIME: 11:29:33 PM USER: Julie.Ross
pw:\\mb-us-pw.bentley.com:mb-us-pw-03\Documents\Cleveland_OH\01_Projects\ODOT\District12\82382400-Engineering\Structures\Median_Barrier_WallSheets\82382_MB_WL001.dgn

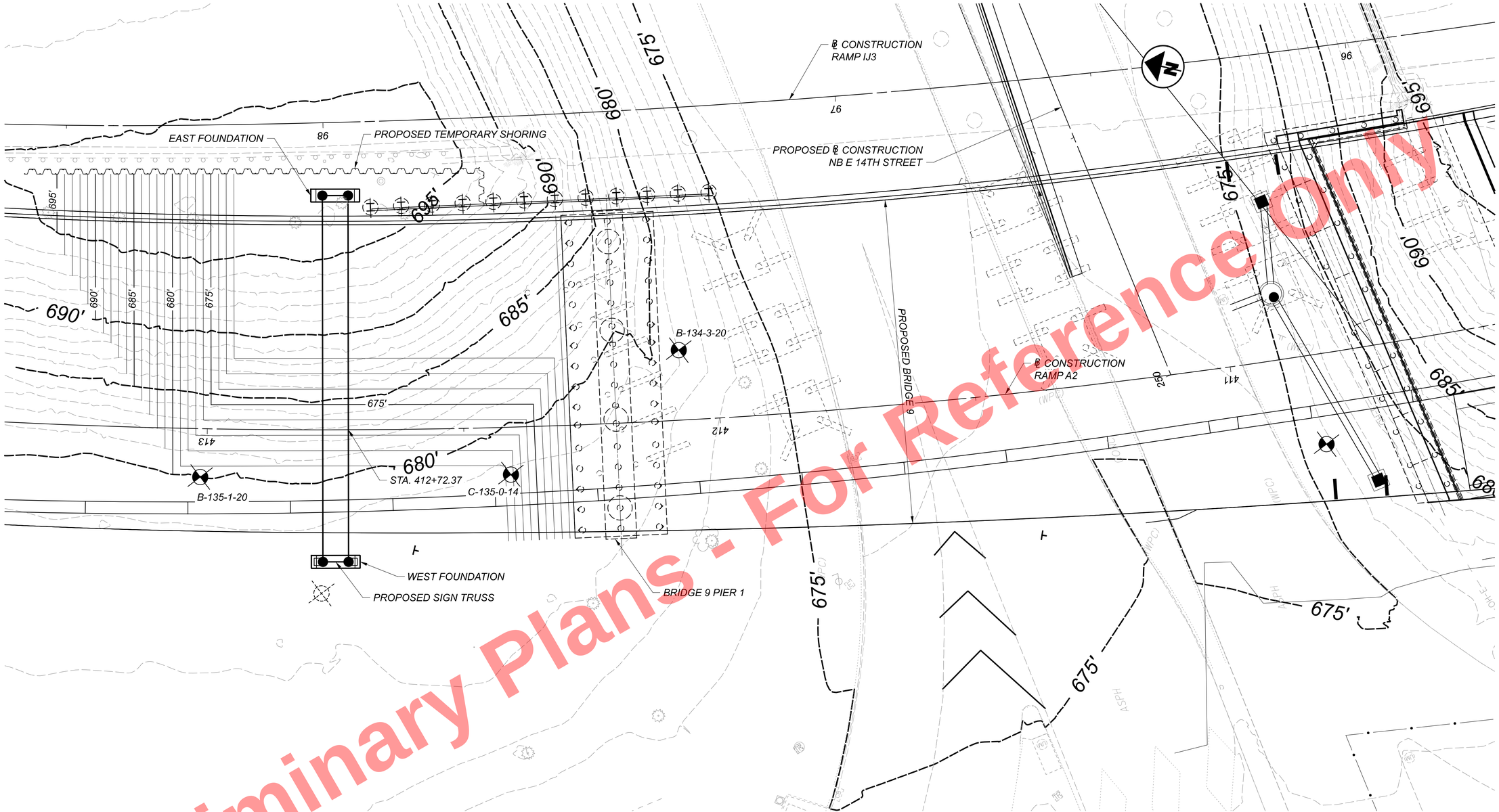

PLAN

LEGEND:

= BORING LOCATION

= HISTORIC BORING LOCATION

NOTES:

1. SEE SHEET 4/7 FOR SHORING PLAN.
2. SEE SHEET 5/7 FOR SHORING DETAILS.
3. SEE SHEETS 6 AND7/7 FOR SIGN TRUSS SUPPORT FOUNDATION DETAILS.

Preliminary Plans - For Reference Only

SITE PLAN
OVERHEAD SIGN TRUSS FOUNDATION
OVER I.R. 77 SB (BRIDGE 9) RAMP A2 STA. 412+72.37

SFN	N/A
DESIGN AGENCY	B&N burgessniple.com
DESIGNER	DBH
CHECKER	XAC
REVIEWER	DWL 01/09/24
PROJECT ID	82382
SUBSET	1
TOTAL	7
SHEET	1354
TOTAL	2696

CUY-90-16.28 (CCG3A)

MODEL: Shoring Layout Plan PAPERSIZE: 34x22 (in.) DATE: 6/12/2025 TIME: 12:20:37 PM USER: Joseph.Hogan
pw:\\mb-us-pw.bentley.com:mb-us-pw-03\Documents\Cleveland_OH\01_Projects\ODOT\District12\82382\400-Engineering\Structures\Ramp_A2_OST_Foundation\Sheets\82382_A2_SP001.dgn

STRUCTURE GENERAL NOTES:

BORING LOCATIONS		
BORING	STATION	OFFSET
B-135-1-20	413+01.20	9.44' LT.

BORING LOCATIONS ARE GIVEN FROM ℄ RAMP A2

REFER TO THE FOLLOWING SUPPLEMENTAL SPECIFICATIONS:

800 DATED SEE TITLE SHEET
866 DATED 04/21/17

DESIGN SPECIFICATIONS:

THIS STRUCTURE CONFORMS TO THE 9TH EDITION OF THE "LRFD BRIDGE DESIGN SPECIFICATIONS" ADOPTED BY THE AMERICAN ASSOCIATION OF STATE HIGHWAY AND TRANSPORTATION OFFICIALS, 2020 AND THE ODOT BRIDGE DESIGN MANUAL, 2020.

OPERATIONAL IMPORTANCE:

A LOAD MODIFIER OF 1.05 HAS BEEN ASSUMED FOR THE DESIGN OF THIS STRUCTURE IN ACCORDANCE WITH THE AASHTO LRFD BRIDGE DESIGN SPECIFICATIONS, ARTICLE 1.3.5 AND THE ODOT BRIDGE DESIGN MANUAL.

DESIGN DATA:

CONCRETE CLASS QC5 - COMPRESSIVE STRENGTH 4.0 KSI (SUBSTRUCTURE)

REINFORCING STEEL - MINIMUM YIELD STRENGTH 60 KSI

ADDITIONAL SOILS INFORMATION

IN ADDITION TO THE SOIL BORING INFORMATION GIVEN IN THE PLANS, THE STRUCTURE FOUNDATION EXPLORATION REPORT PREPARED BY NATIONAL ENGINEERING AND ARCHITECTURAL SERVICES (NEAS), INC. DATED 06/20/2022 HAS BEEN INCLUDED FOR REFERENCE.

ITEM 503 - COFFERDAMS AND EXCAVATION BRACING, AS PER PLAN:

THE DESIGN SHOWN ON THE PLANS FOR TEMPORARY SUPPORT OF EXCAVATION AT BRIDGE E8 ABUTMENTS IS ONE REPRESENTATIVE DESIGN THAT MAY BE USED TO CONSTRUCT THE PROJECT. THE CONTRACTOR MAY CONSTRUCT THE DESIGN SHOWN ON THE PLANS OR PREPARE AN ALTERNATE DESIGN TO SUPPORT THE SIDES OF EXCAVATIONS. IF CONSTRUCTING AN ALTERNATE DESIGN FOR TEMPORARY SUPPORT OF EXCAVATION, PREPARE AND PROVIDE PLANS IN ACCORDANCE WITH CMS 501.05. THE DEPARTMENT WILL PAY FOR THE TEMPORARY SUPPORT OF EXCAVATION AT THE CONTRACT LUMP SUM PRICE FOR COFFERDAMS AND EXCAVATION BRACING. THE DEPARTMENT WILL NOT MAKE ADDITIONAL PAYMENT FOR AN ALTERNATE DESIGN.

SEE SHEET 5/7 FOR TEMPORARY SHORING DETAILS .

ITEM 512 - SEALING OF CONCRETE SURFACES, AS PER PLAN, (PERMANENT GRAFFITI PROTECTION):

APPLY A PERMANENT GRAFFITI COATING QUALIFIED ACCORDING TO SUPPLEMENT 1083, THAT IS COMPATIBLE WITH THE CONCRETE SEALER OVER WHICH IT IS APPLIED. APPLY THE GRAFFITI COATING IN ACCORDANCE WITH THE MANUFACTUREER'S PRINTED INSTRUCTIONS.

ITEM 512 - SEALING OF CONCRETE SURFACES (EPOXY-URETHANE), AS PER PLAN:

THE FINAL COLOR OF SEALING SHALL BE SHERWIN-WILLIAMS ALPACA 7022.

ITEM 524 - DRILLED SHAFTS,30" DIAMETER, AS PER PLAN:

THE MAXIMUM FACTORED LOAD TO BE SUPPORTED BY EACH DRILLED SHAFT IS 130 KIPS. THIS LOAD IS RESISTED BY FRICTIONAL SIDE RESISTANCE ALONG THE LENGTH OF THE DRILLED SHAFT AND BY TIP RESISTANCE. THE FACTORED SIDE RESISTANCE IS 85 KIPS ASSUMED TO ACT ALONG THE BOTTOM 20 FEET OF THE DRILLED SHAFT, AND THE FACTORED TIP RESISTANCE IS 49 KIPS.

ABBREVIATIONS:

THE FOLLOWING ABBREVIATIONS HAVE BEEN USED THROUGHOUT THESE PLANS TO INDICATE THE DESIGNATIONS CONTAINED IN THE LEGEND BELOW:

℄ - BASELINE
BOT. - BOTTOM
BRG. - BEARING
BRGS. - BEARINGS
℄ - CENTERLINE
C/C - CENTER TO CENTER
CIP - CAST-IN-PLACE
C.J. - CONSTRUCTION JOINT
CLR. - CLEARANCE
CMS - CONSTRUCTION AND MATERIAL SPECIFICATIONS
CONC. - CONCRETE
CONST. - CONSTRUCTION
CU YD - CUBIC YARD
DIA. - DIAMETER
E.F. - EACH FACE
ELEV., EL. - ELEVATION
EQ. - EQUAL
MAX. - MAXIMUM
MIN. - MINIMUM
R/W - RIGHT OF WAY
SPA. - SPACES OR SPACING
STA. - STATION
STD. - STANDARD
STR. - STRAIGHT
TYP. - TYPICAL

Preliminary Plans - For Reference Only

GENERAL NOTES
OVERHEAD SIGN TRUSS FOUNDATION
OVER I.R. 77 SB (BRIDGE 9) RAMP A2 STA. 412+72.37

SFN N/A

DESIGN AGENCY
B&N burgessniple.com

DESIGNER	CHECKER
DBH	XAC

REVIEWER DWL 01/09/24

PROJECT ID 82382

SUBSET	TOTAL
2	7

SHEET	TOTAL
1355	2696

CUY-90-16.28 (CCG3A)

MODEL: Sheet PAPERSIZE: 34x22 (in.) DATE: 3/27/2025 TIME: 11:30:12 PM USER: Julie.Ross
pw:\\mb-us-pw.bentley.com:mb-us-pw-03\Documents\Cleveland_OH01_Projects\ODOT\District12\82382\400-Engineering\Structures\Ramp_A2_OST_Foundation\Sheets\82382_A2_SN001.dgn

ESTIMATED QUANTITIES								
PARTICIPATION	ITEM	ITEM EXT.	TOTAL	UNIT	DESCRIPTION	WALL	GENERAL	REF. SHEET
01/IMS/04	503	11101	LS	-	COFFERDAMS AND EXCAVATION BRACING, AS PER PLAN		LS	2/7
01/IMS/04	503	21300	LS	-	UNCLASSIFIED EXCAVATION		LS	
01/IMS/04	509	10000	14376	LB	EPOXY COATED STEEL REINFORCEMENT	14376		
01/IMS/04	511	42010	51	CY	CLASS QC1 CONCRETE, PIER ABOVE FOOTINGS	51		
01/IMS/04	511	46510	10	CY	CLASS QC1 CONCRETE, FOOTING	10		
01/IMS/04	512	10001	54	SY	SEALING OF CONCRETE SURFACES, AS PER PLAN, (PERMANENT GRAFFITI PROTECTION)	54		2/7
01/IMS/04	512	10101	147	SY	SEALING OF CONCRETE SURFACES (EPOXY-URETHANE), AS PER PLAN	147		2/7
01/IMS/04	524	94601	80	FT	DRILLED SHAFTS, 30" DIAMETER, AS PER PLAN	80		2/7
01/IMS/04	625	33000	1	EACH	STRUCTURE GROUNDING SYSTEM		1	

OVERHEAD SIGN TRUSS FOUNDATION (EPOXY COATED STEEL REINFORCEMENT - ECSR)											
MARK	MAT. TYPE	NO.	LENGTH	WEIGHT (LBS)	TYPE	DIMENSIONS					
						A	B	C	D	E	INC.
F401	ECSR	58	23'-2"	898	16	9'-2"	2'-2"				
F402	ECSR	290	2'-11"	283	99	2'-2"					
F801	ECSR	56	28'-4"	4236	STR						
F802	ECSR	56	8'-9"	1308	1	1'-4"	7'-8"				
F803	ECSR	8	15'-1"	322	18	10'-8"	2'-5"	2'-5"			
F804	ECSR	28	8'-5"	629	18	3'-8"	2'-7"	2'-7"			
DS401	ECSR	92	7'-6"	461	38	2'-0"	1'-3"				
DS1101	ECSR	52	22'-7"	6239	STR						
ECSR TOTAL			14376								

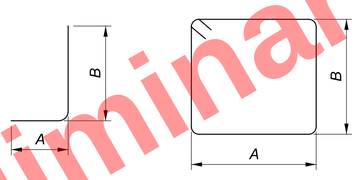

TYPE-1 TYPE-16

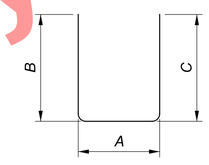

TYPE-18

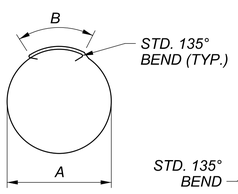

TYPE-38

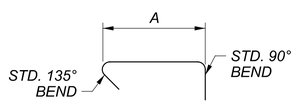

TYPE-99

NOTES:

1. BAR SIZE: THE BAR SIZE IS INDICATED IN THE BAR MARK. THE MARK BEGINS WITH ONE OR TWO LETTERS THAT IDENTIFY THE BAR LOCATION. THE NEXT ONE OR TWO DIGITS ARE THE BAR SIZE. THE FINAL TWO DIGITS ARE THE SEQUENCE NUMBERS.

   EXAMPLE: A501
   A = ABUTMENT
   5 = #5 BAR
   01 = SEQUENCE NUMBER

2. BAR DIMENSIONS SHOWN ARE OUT TO OUT UNLESS NOTED OTHERWISE.
3. ALL STEEL REINFORCING IT TO BE EPOXY COATED.
4. STD. WRITTEN IN PLACE OF A DIMENSION INDICATES A STANDARD BEND AT THE END OF A BAR.
5. STR. IN THE BAR TYPE COLUMN INDICATED A STRAIGHT BAR.
6. RAD. INDICATED THE INSIDE RADIUS UNLESS NOTED OTHERWISE.
7. INCR. INDICATED THE LENGTH INCREMENT FOR SERIES BARS.

Preliminary Plans - Not For Reference Only

ESTIMATED QUANTITIES AND REINFORCING LIST
OVERHEAD SIGN TRUSS FOUNDATION
OVER I.R. 77 SB (BRIDGE 9) RAMP A2 STA. 412+72.37

SFN N/A
DESIGN AGENCY
B&N burgessniple.com
DESIGNER DBH | CHECKER XAC
REVIEWER DWL 01/09/24
PROJECT ID 82382
SUBSET 3 | TOTAL 7
SHEET 1356 | TOTAL 2696

CUY-90-16.28 (CCG3A)

MODEL: Sheet PAPERSIZE: 34x22 (in.) DATE: 3/27/2025 TIME: 11:30:21 PM USER: Julie.Ross
pw:\\mb-us-pw.bentley.com:mb-us-pw-03\Documents\Cleveland_OH\01_Projects\ODOT\District12\82382\400-Engineering\Structures\Ramp_A2_OST_Foundation\Sheets\82382_A2_SQ001.dgn

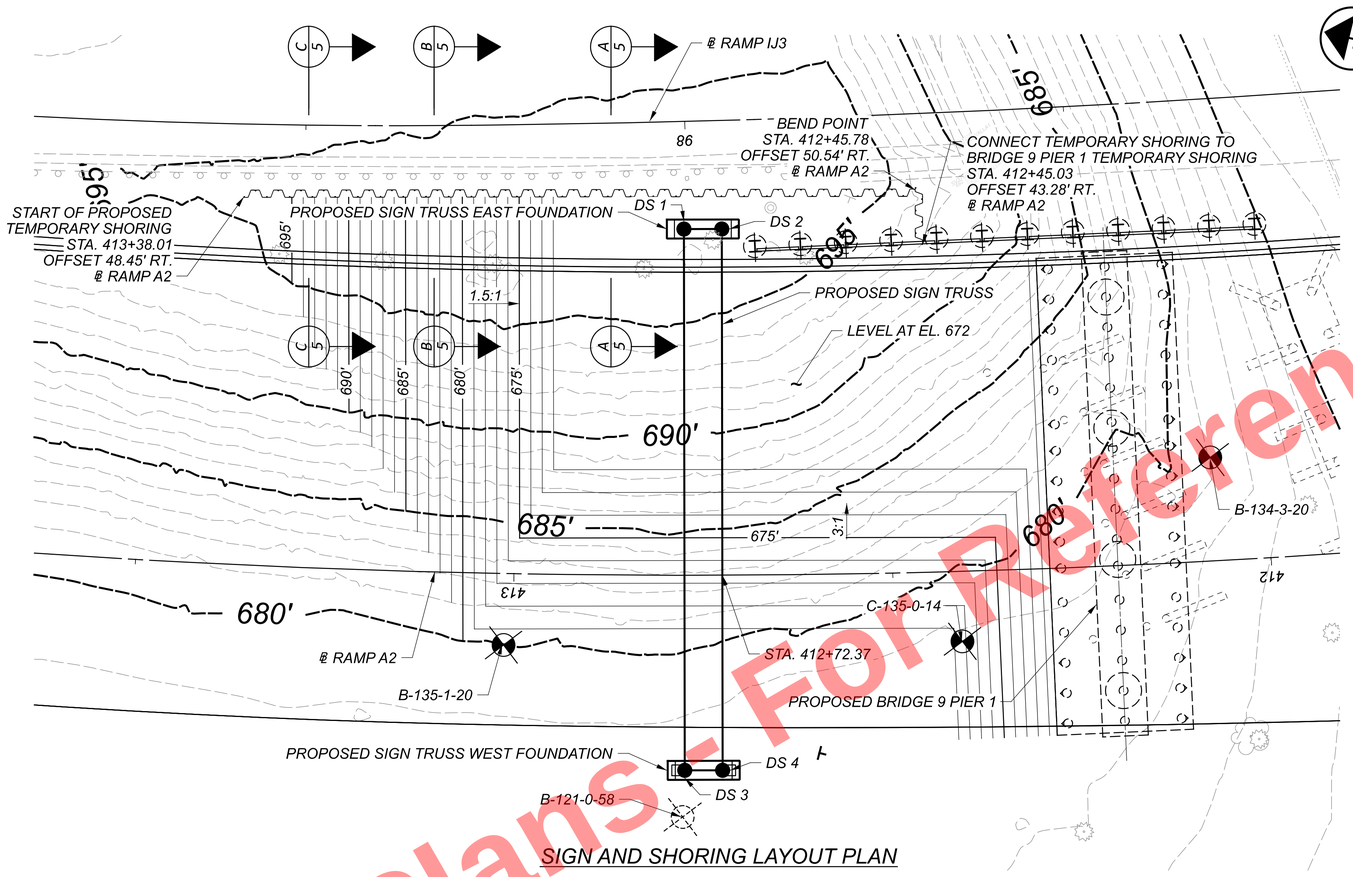

SIGN AND SHORING LAYOUT PLAN

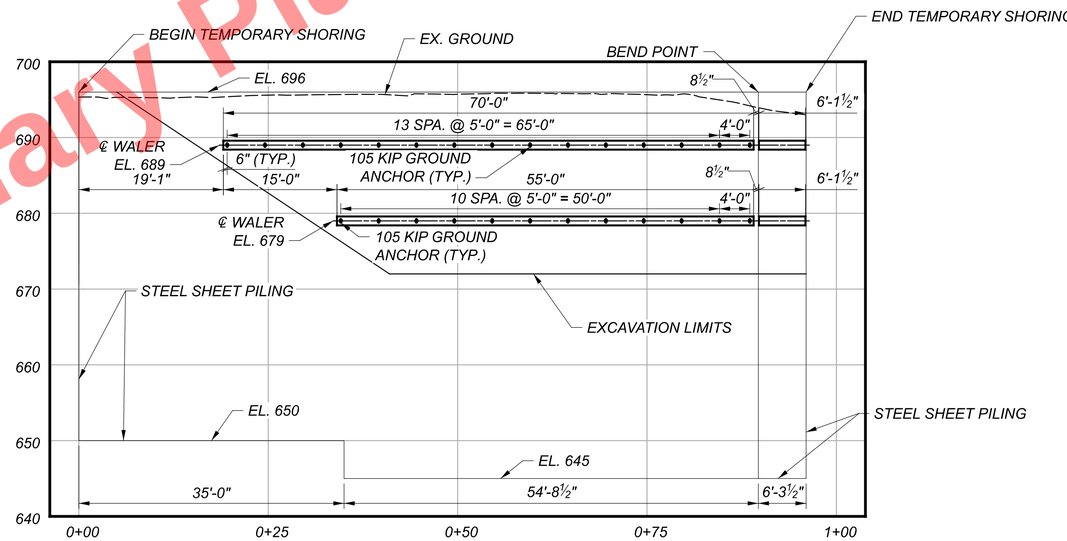

SHORING AND WALER DEVELOPED INSIDE ELEVATION

DRILLED SHAFT LOCATIONS		
DRILLED SHAFT	STATION	OFFSET
DS 1	412+77.59	45.70' RT.
DS 2	412+72.41	45.70' RT.
DS 3	412+77.45	25.75' LT.
DS 4	412+72.55	25.75' LT.

ALL DRILLED SHAFT OFFSETS ARE MEASURED FROM ℄ RAMP A2

LEGEND:

= BORING LOCATION

= HISTORIC BORING LOCATION

NOTES:

1. SEE SHEET 5/7 FOR SHORING DETAILS.
2. SEE SHEET 1896/2696 FOR BRIDGE 9 PIER 1 SHORING PLAN.
3. FOR DETAILS NOT SHOWN, SEE SHEET 1869/2696.

Preliminary Plans - Not For Reference Only

SIGN AND SHORING LAYOUT PLAN AND WALER ELEVATION OVERHEAD SIGN TRUSS FOUNDATION OVER I.R. 77 SB (BRIDGE 9) RAMP A2 STA. 412+72.37

SFN N/A

DESIGN AGENCY B&N burgessniple.com

DESIGNER	CHECKER
DBH	XAC

REVIEWER DWL 01/09/24

PROJECT ID 82382

SUBSET	TOTAL
4	7

SHEET	TOTAL
1357	2696

CUY-90-16.28 (CCG3A)

MODEL: Shoring Layout Plan PAPERSIZE: 34x22 (in.) DATE: 3/27/2025 TIME: 11:30:35 PM USER: Julie.Ross
pw:\\mb-us-pw.bentley.com:mb-us-pw-03\Documents\Cleveland_OH101_Projects\ODOT\District12\82382\400-Engineering\Structures\Ramp_A2_OST_Foundation\Sheets\82382_A2_SH001.dgn

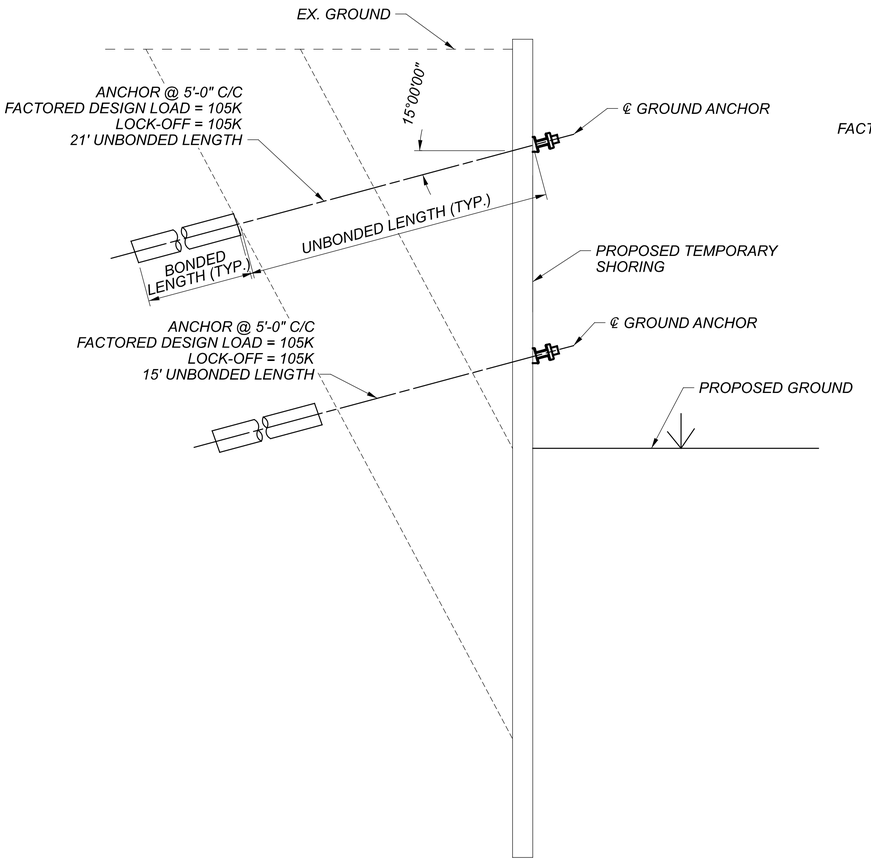

SECTION A-A

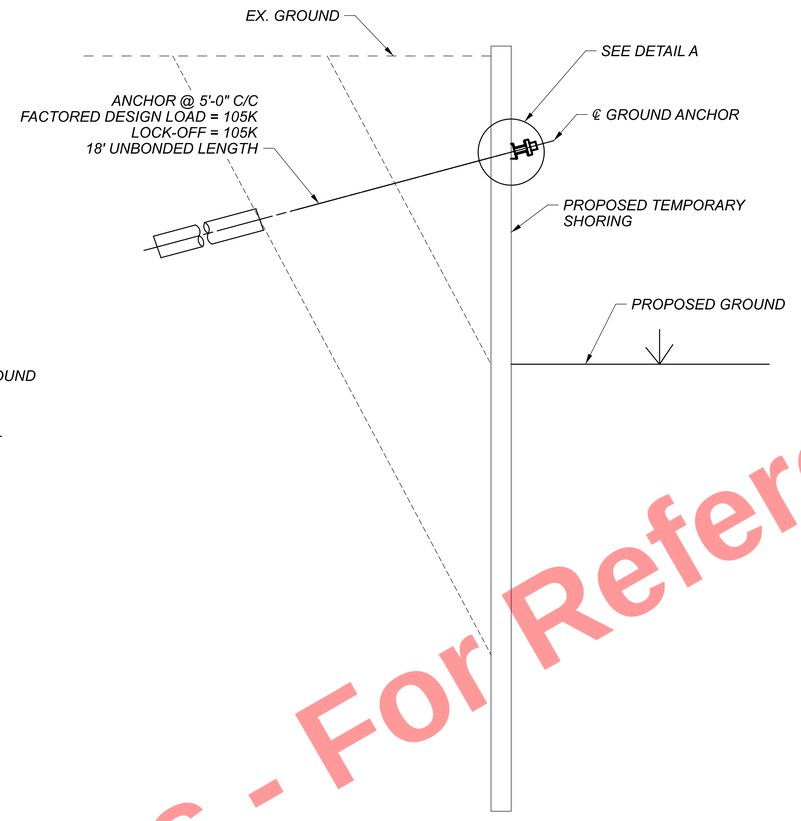

SECTION B-B

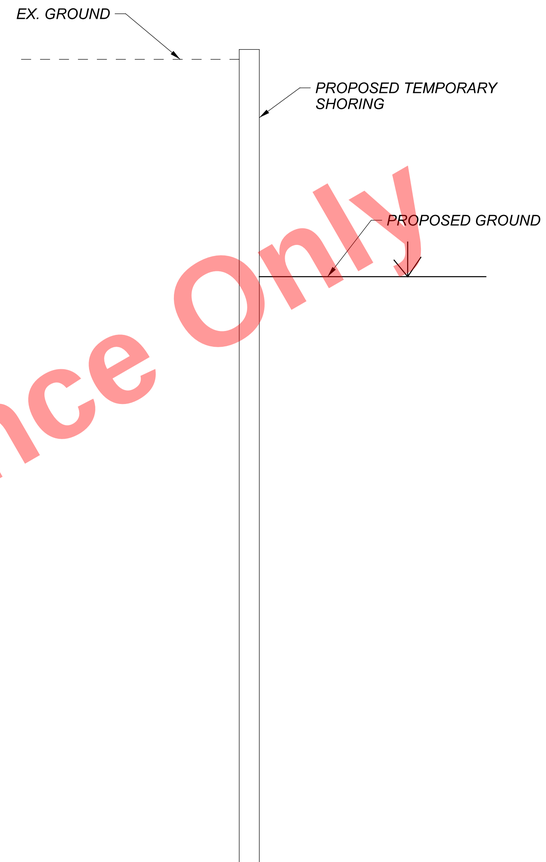

SECTION C-C

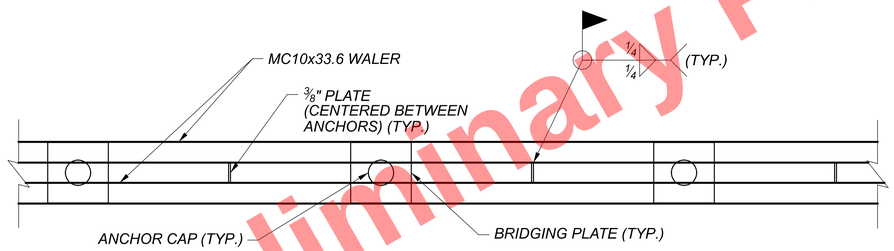

WALER ELEVATION

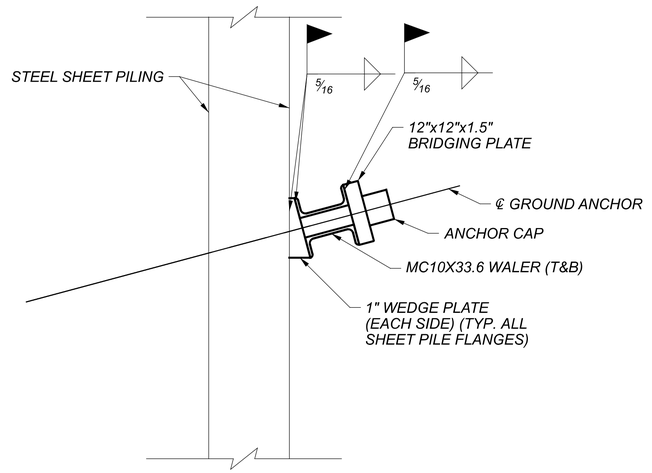

DETAIL A

NOTES:

1. SEE SHEET 4/7 FOR SHORING PLAN AND LOCATIONS OF SECTIONS A-A, B-B, AND C-C.
2. TEMPORARY STEEL SHEET PILE SHALL HAVE A MINIMUM STRENGTH OF 50 KSI AND SHALL HAVE A MINIMUM SECTION MODULUS OF 30 IN^3 AND A MINIMUM MOMENT OF INERTIA OF 184 IN^4. PAYMENT FOR SHEET PILING, INCLUDING REMOVAL OF ALL COMPONENT AFTER NO LONGER NECESSARY AND ALL OTHER ITEMS ASSOCIATED WITH TEMPORARY SHORING WILL BE INCLUDED IN THE CONTRACT LUMP SUM PRICE FOR ITEM 503 - COFFERDAMS AND EXCAVATION BRACING, AS PER PLAN.
3. THE BONDED LENGTH OF THE GROUND ANCHORS SHALL BE DESIGNED BY THE GROUND ANCHOR CONTRACTOR.
4. GROUND ANCHORS SHALL BE PER ODOT SUPPLEMENTAL SPECIFICATION 866.
5. ADJUST THE VERTICAL AND HORIZONTAL ANGLES OF THE SOIL ANCHORS TO ACCOMMODATE THE PROPOSED METHOD OF INSTALLATION AND TO AVOID ANY OBSTRUCTIONS.
6. TEMPORARY SOIL ANCHORS DO NOT REQUIRE CORROSION PROTECTION.

Preliminary Plans - For Reference Only

TEMPORARY SHORING DETAILS
OVERHEAD SIGN TRUSS FOUNDATION
OVER I.R. 77 SB (BRIDGE 9) RAMP A2 STA. 412+72.37

SFN	N/A
DESIGN AGENCY	B&N burgessniple.com
DESIGNER	DBH
CHECKER	XAC
REVIEWER	DWL 01/09/24
PROJECT ID	82382
SUBSET	5
TOTAL	7
SHEET	1358
TOTAL	2696

CUY-90-16.28 (CCG3A)

MODEL: Truss Foundation Site Plan PAPERSIZE: 34x22 (in.) DATE: 3/27/2025 TIME: 11:30:51 PM USER: Julie Ross
pw:\\mb-us-pw.bentley.com:mb-us-pw-03\Documents\Cleveland_OH\01_Projects\ODOT\District12\82382\400-Engineering\Structures\Ramp_A2_OST_Foundation\Sheets\82382_A2_SH002.dgn

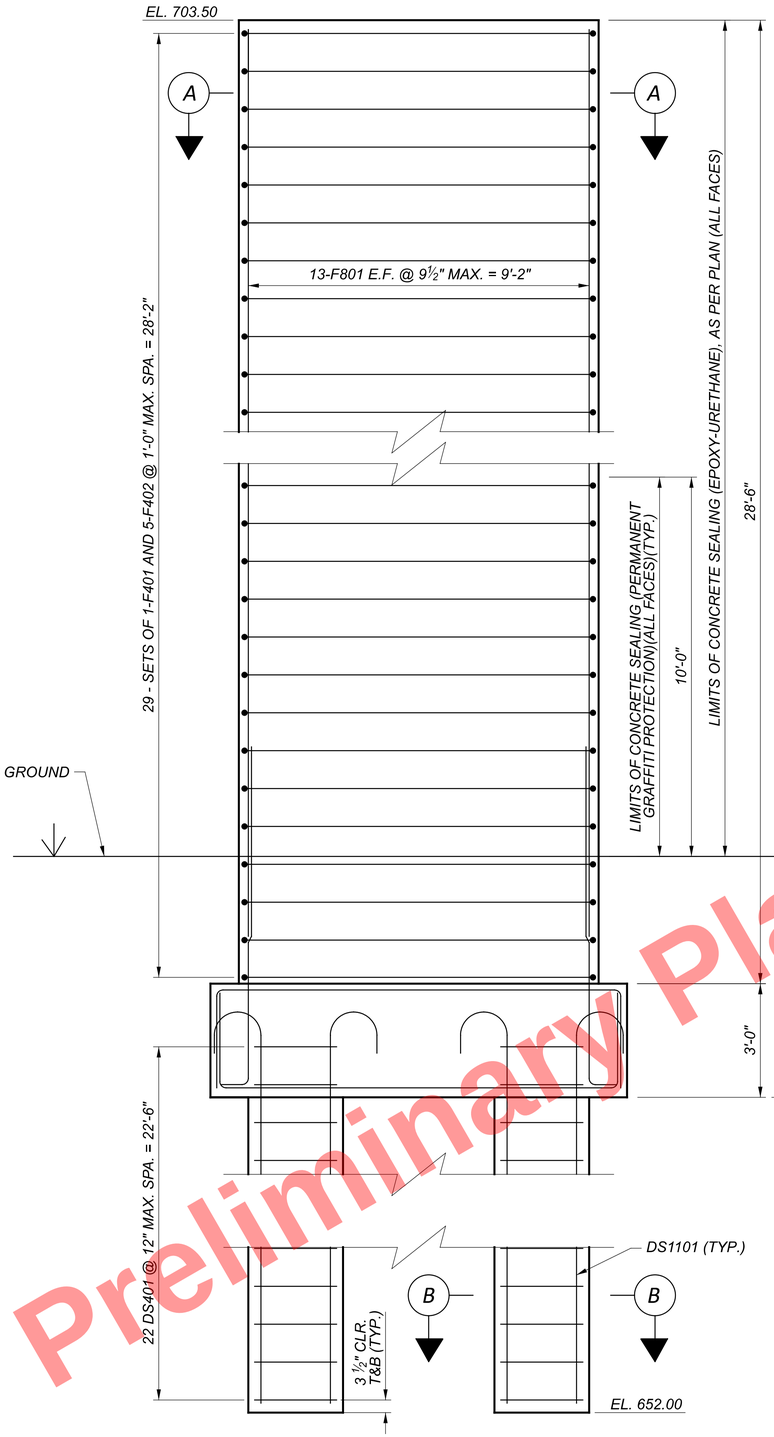

STEM WALL ELEVATION

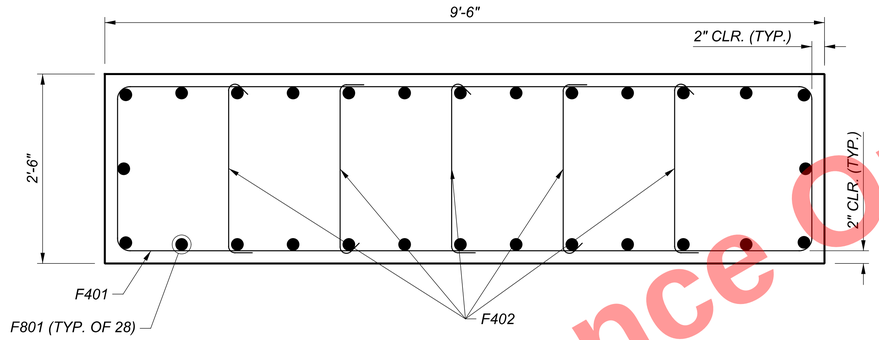

SECTION A-A

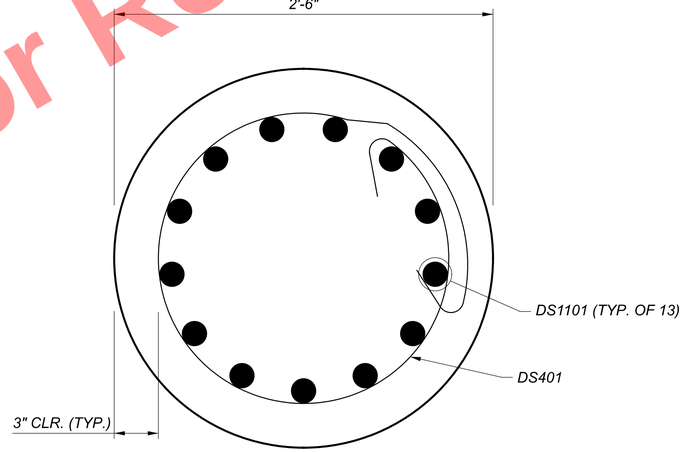

SECTION B-B

Preliminary Plans - For Reference Only

NOTES:

1. SEE SHEET 7/7 FOR FOOTING DETAILS.
2. ALTERNATE HOOKED END OF F402 BARS AT EACH LEVEL.
3. SEE SHEET 4/7 FOR TEMPORARY SHORING DETAILS.
4. STAGGER LAPS OF DS401 IN ADJACENT TIES
5. REFERENCE STANDARD DRAWING TC-21.11 FOR DETAILS NOT SHOWN ON THIS SHEET.
5. MINIMUM LAP LENGTHS:
   #8 (WALL) = 4'-11"

STEM WALL ELEVATION AND DETAILS
OVERHEAD SIGN TRUSS FOUNDATION
OVER I.R. 77 SB (BRIDGE 9) RAMP A2 STA. 412+72.37

SFN	N/A
DESIGN AGENCY	B&N burgessniple.com
DESIGNER	DBH
CHECKER	XAC
REVIEWER	DWL 01/09/24
PROJECT ID	82382
SUBSET	6
TOTAL	7
SHEET	1359
TOTAL	2696

CUY-90-16.28 (CCG3A)

MODEL: Truss Foundation Site Plan PAPERSIZE: 34x22 (in.) DATE: 3/27/2025 TIME: 11:31:01 PM USER: Julie.Ross
pw:\\mb-us-pw.bentley.com:mb-us-pw-03\Documents\Cleveland_OH\01_Projects\ODOT\District12\82382400-Engineering\Structures\Ramp_A2_OST_Foundation\Sheets\82382_A2_SI001.dgn

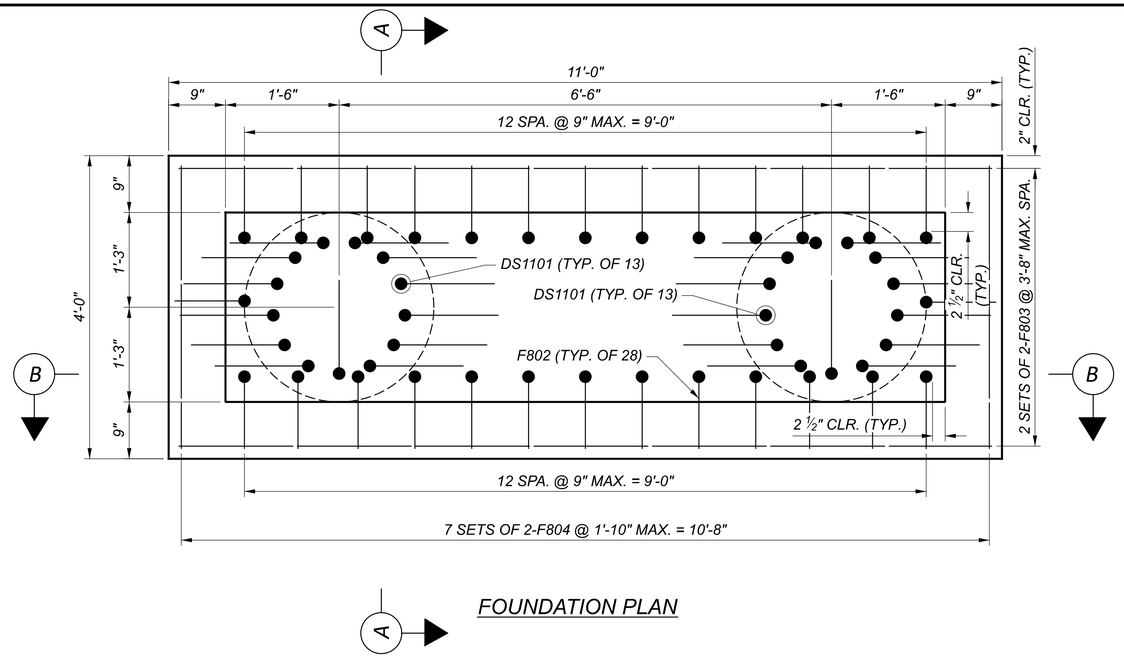

FOUNDATION PLAN

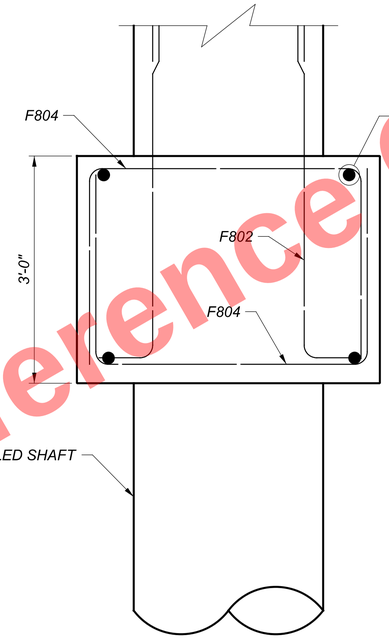

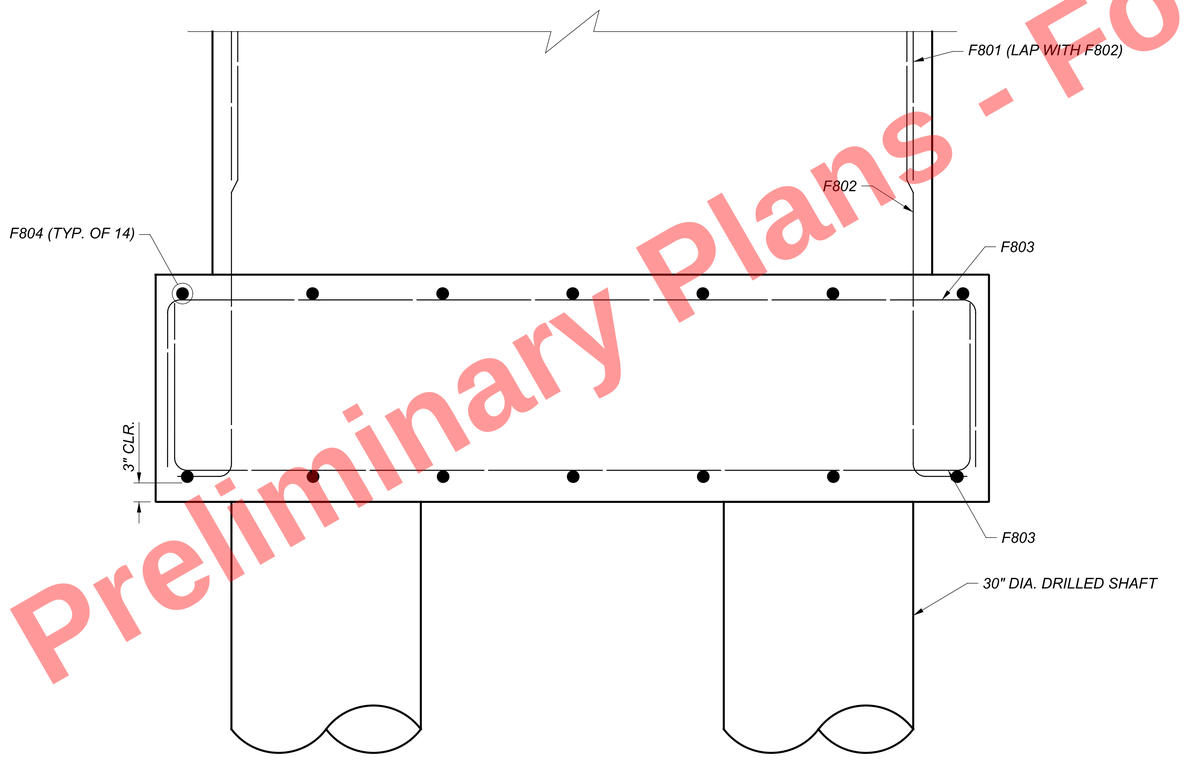

SECTION B-B

SECTION A-A

NOTES:
1. SEE SHEET 6/7 FOR ADDITIONAL DETAILS.
2. MOVE F802 BARS AS NECESSARY TO AVOID VERTICAL BARS FROM THE DRILLED SHAFT.

Preliminary Plans - For Reference Only

STEM WALL FOUNDATION PLAN AND DETAILS
OVERHEAD SIGN TRUSS FOUNDATION
OVER I.R. 77 SB (BRIDGE 9) RAMP A2 STA. 412+72.37

SFN N/A

DESIGN AGENCY
B&N
burgessniple.com

DESIGNER	CHECKER
DBH	XAC

REVIEWER DWL 01/09/24

PROJECT ID 82382

SUBSET	TOTAL
7	7

SHEET	TOTAL
1360	2696

CUY-90-16.28 (CCG3A)

MODEL: Foundation Plan PAPERSIZE: 34x22 (in.) DATE: 3/27/2025 TIME: 11:31:14 PM USER: Julie.Ross
pw:\\mb-us-pw.bentley.com:mb-us-pw-03\Documents\Cleveland_OH101_Projects\ODOT\District12\82382\400-Engineering\Structures\Ramp_A2_OST_Foundation\Sheets\82382_A2_SI002.dgn

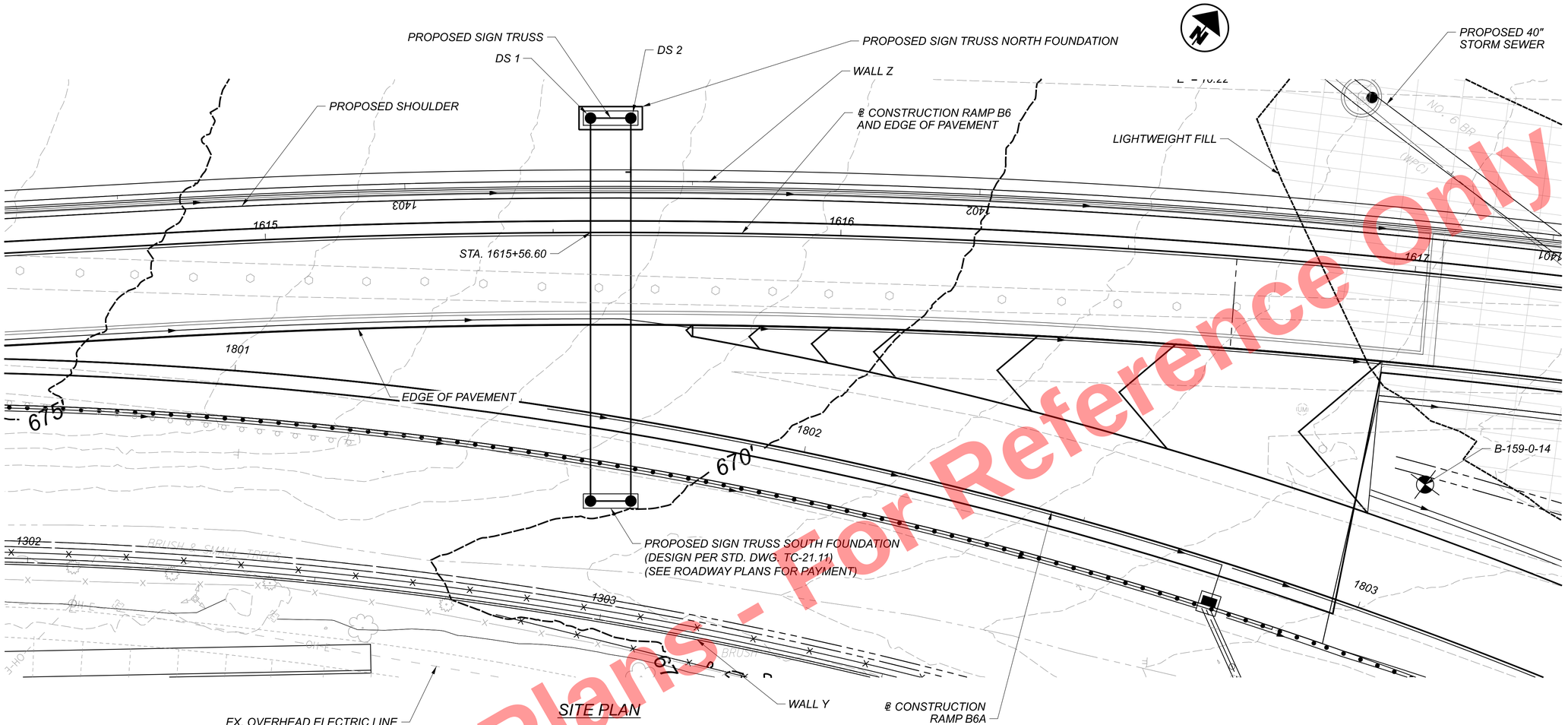

SITE PLAN

DRILLED SHAFT LOCATIONS		
DRILLED SHAFT	STATION	OFFSET
DS 1	1615+56.55	19.86' LT.
DS 2	1615+63.45	19.86' LT.

ALL DRILLED SHAFT OFFSETS ARE MEASURED FROM ℄ RAMP B6

LEGEND:

= BORING LOCATION

NOTES:

1. SEE SHEET 1355/2696 FOR GENERAL NOTES.

Preliminary Plans - For Reference Only

SITE PLAN
OVERHEAD SIGN TRUSS FOUNDATION
OVER RAMP B6 STA. 1615+56.60

CUY-90-16.28 (CCG3A)

MODEL: Shoring Layout Plan PAPERSIZE: 34x22 (in.) DATE: 3/27/2025 TIME: 11:31:38 PM USER: Julie.Ross
pw:\\mb-us-pw.bentley.com:mb-us-pw-03\Documents\Cleveland_OH101_Projects\ODOT\District12\82382\400-Engineering\Structures\Ramp_B6_OST_Foundation\Sheets\82382_B6_OST_Foundation\Sheets\82382_B6_SP001.dgn

SFN N/A

DESIGN AGENCY

B&N burgessniple.com

DESIGNER	CHECKER
DBH	XAC

REVIEWER DWL 01/09/24

PROJECT ID 82382

SUBSET	TOTAL
1	4

SHEET	TOTAL
1361	2696

ESTIMATED QUANTITIES								
PARTICIPATION	ITEM	ITEM EXT.	TOTAL	UNIT	DESCRIPTION	WALL	GENERAL	REF. SHEET
01/IMS/04	503	11101	LS	-	COFFERDAMS AND EXCAVATION BRACING, AS PER PLAN		LS	1355/2696
01/IMS/04	503	21300	LS	-	UNCLASSIFIED EXCAVATION		LS	
01/IMS/04	509	10000	5561	LB	EPOXY COATED STEEL REINFORCEMENT	5561		
01/IMS/04	511	42010	10	CY	CLASS QC1 CONCRETE, PIER ABOVE FOOTINGS	10		
01/IMS/04	511	46510	5	CY	CLASS QC1 CONCRETE, FOOTING	5		
01/IMS/04	512	10001	19	SY	SEALING OF CONCRETE SURFACES, AS PER PLAN, (PERMANENT GRAFFITI PROTECTION)	19		1355/2696
01/IMS/04	512	10101	19	SY	SEALING OF CONCRETE SURFACES (EPOXY-URETHANE), AS PER PLAN	19		1355/2696
01/IMS/04	524	94601	40	FT	DRILLED SHAFTS, 30" DIAMETER, AS PER PLAN	40		1355/2696
01/IMS/04	625	33000	1	EACH	STRUCTURE GROUNDING SYSTEM		1	

OVERHEAD SIGN TRUSS FOUNDATION (EPOXY COATED STEEL REINFORCEMENT - ECSR)											
MARK	MAT. TYPE	NO.	LENGTH	WEIGHT (LBS)	TYPE	DIMENSIONS					
						A	B	C	D	E	INC.
F401	ECSR	11	23'-2"	170	16	2'-2"	9'-2"				
F402	ECSR	55	2'-11"	107	99	2'-2"					
F801	ECSR	28	10'-9"	804	STR						
F802	ECSR	28	8'-9"	654	1	1'-4"	7'-8"				
F803	ECSR	4	15'-1"	161	18	10'-8"	2'-5"	2'-5"			
F804	ECSR	14	8'-5"	315	18	3'-8"	2'-7"	2'-7"			
DS401	ECSR	46	7'-6"	230	38	2'-0"	1'-3"				
DS1101	ECSR	26	22'-7"	3120	STR						
ECSR TOTAL				5561							

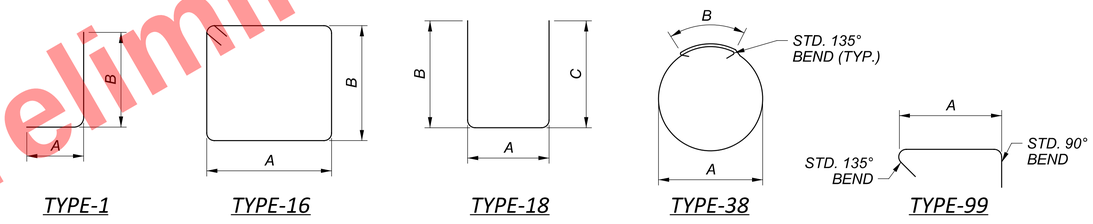

TYPE-1 TYPE-16 TYPE-18 TYPE-38 TYPE-99

NOTES:

1. BAR SIZE: THE BAR SIZE IS INDICATED IN THE BAR MARK. THE MARK BEGINS WITH ONE OR TWO LETTERS THAT IDENTIFY THE BAR LOCATION. THE NEXT ONE OR TWO DIGITS ARE THE BAR SIZE. THE FINAL TWO DIGITS ARE THE SEQUENCE NUMBERS.

   EXAMPLE: A501
   A = ABUTMENT
   5 = #5 BAR
   01 = SEQUENCE NUMBER

2. BAR DIMENSIONS SHOWN ARE OUT TO OUT UNLESS NOTED OTHERWISE.
3. ALL STEEL REINFORCING IT TO BE EPOXY COATED.
4. STD. WRITTEN IN PLACE OF A DIMENSION INDICATES A STANDARD BEND AT THE END OF A BAR.
5. STR. IN THE BAR TYPE COLUMN INDICATED A STRAIGHT BAR.
6. RAD. INDICATED THE INSIDE RADIUS UNLESS NOTED OTHERWISE.
7. INCR. INDICATED THE LENGTH INCREMENT FOR SERIES BARS.

Preliminary Plans - Not For Reference Only

ESTIMATED QUANTITIES AND REINFORCING LIST
OVERHEAD SIGN TRUSS FOUNDATION
OVER RAMP B6 STA. 1615+56.60

SFN N/A
DESIGN AGENCY
B&N burgessniple.com
DESIGNER DBH | CHECKER XAC
REVIEWER DWL 01/09/24
PROJECT ID 82382
SUBSET 2 | TOTAL 4
SHEET 1362 | TOTAL 2696

CUY-90-16.28 (CCG3A)

MODEL: Sheet PAPERSIZE: 34x22 (in.) DATE: 3/27/2025 TIME: 11:31:59 PM USER: Julie.Ross
pw:\\mb-us-pw.bentley.com:mb-us-pw-03\Documents\Cleveland_OH\01_Projects\ODOT\District12\82382\400-Engineering\Structures\Ramp_B6_OST_Foundation\Sheets\82382_B6_SQ001.dgn

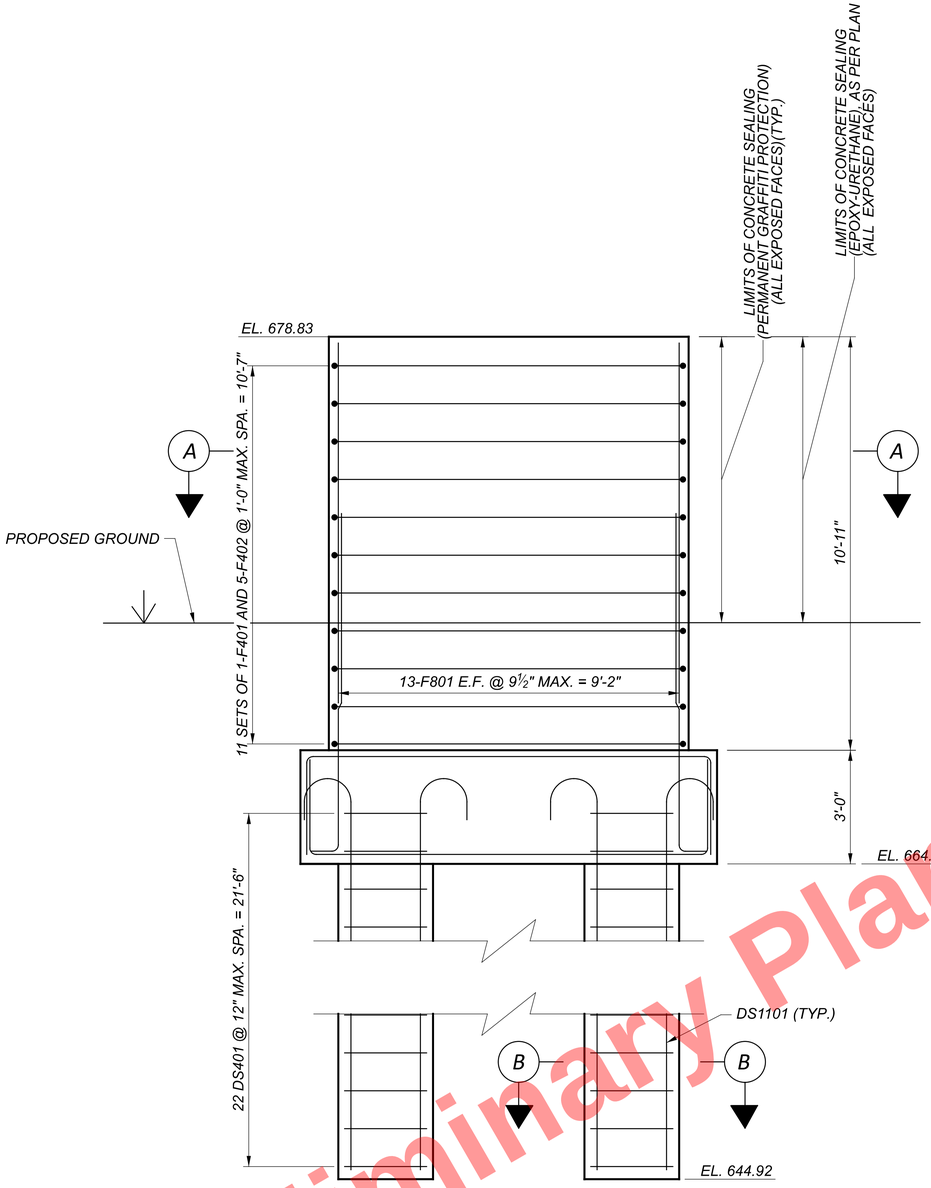

STEM WALL ELEVATION

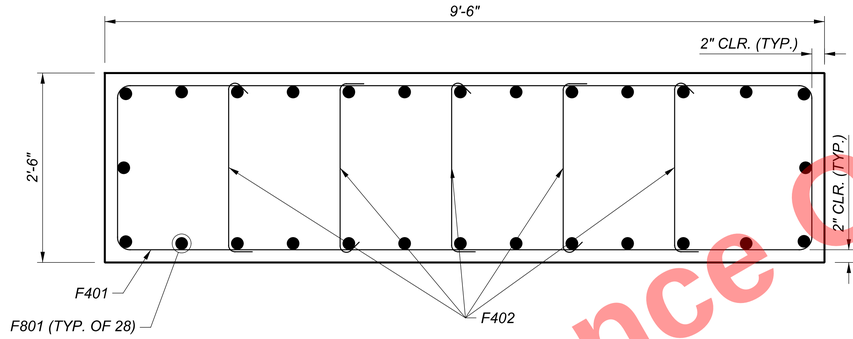

SECTION A-A

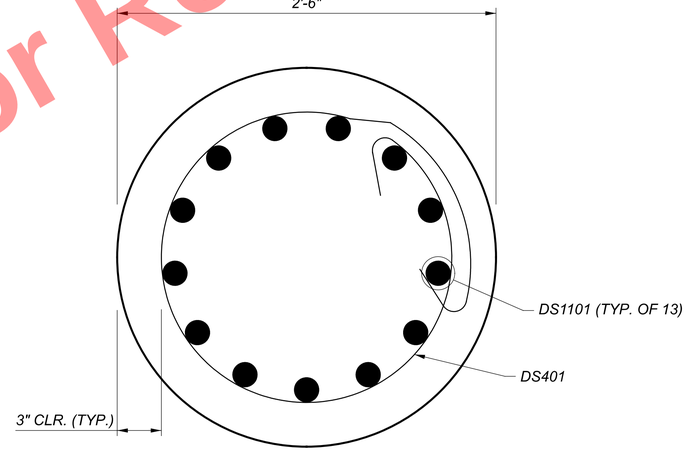

SECTION B-B

NOTES:

1. SEE SHEET 4/4 FOR FOOTING DETAILS.
2. ALTERNATE HOOKED END OF F402 BARS AT EACH LEVEL.
3. STAGGER LAPS OF DS401 IN ADJACENT TIES
4. SEE STANDARD DRAWING TC21.11 FOR DETAILS NOT SHOWN ON THIS SHEET.
5. MINIMUM LAP LENGTHS:
   #8 (WALL) = 4'-11"

Preliminary Plans - For Reference Only

STEM WALL ELEVATION AND DETAILS
OVERHEAD SIGN TRUSS FOUNDATION
OVER RAMP B6 STA. 1615+56.60

SFN N/A

DESIGN AGENCY B&N burgessniple.com

DESIGNER	CHECKER
DBH	XAC

REVIEWER DWL 01/09/24

PROJECT ID 82382

SUBSET	TOTAL
3	4

SHEET	TOTAL
1363	2696

CUY-90-16.28 (CCG3A)

MODEL: Truss Foundation Site Plan PAPERSIZE: 34x22 (in.) DATE: 3/27/2025 TIME: 11:32:10 PM USER: Julie.Ross
pw:\\mb-us-pw.bentley.com:mb-us-pw-03\Documents\Cleveland_OH\01_Projects\ODOT\District12\82382\400-Engineering\Structures\Ramp_B6_OST_Foundation\Sheets\82382_B6_SI001.dgn

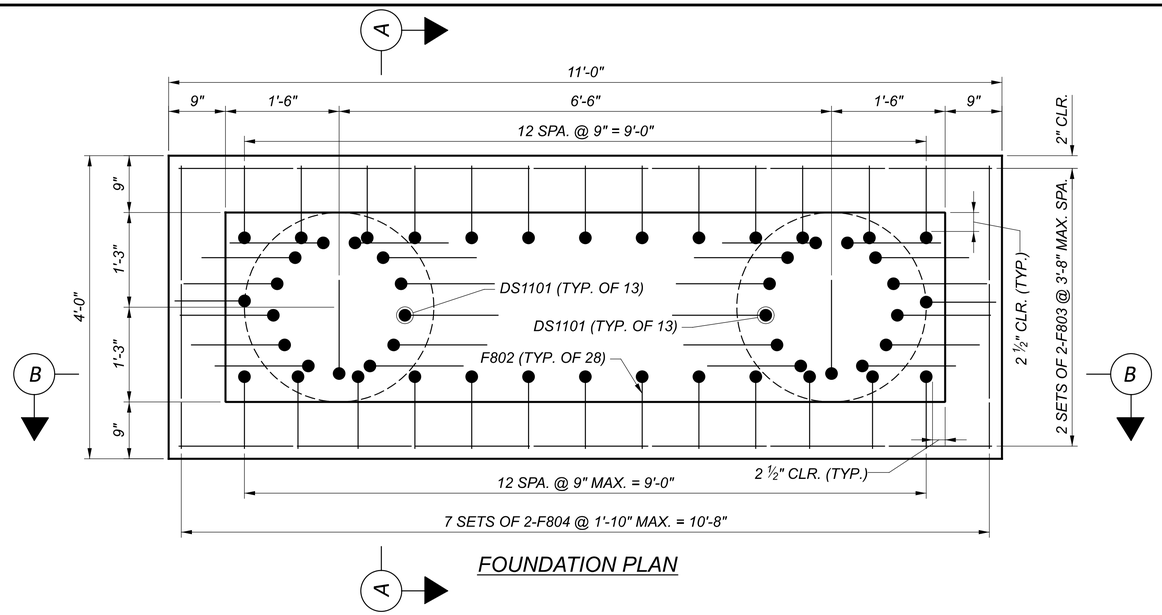

FOUNDATION PLAN

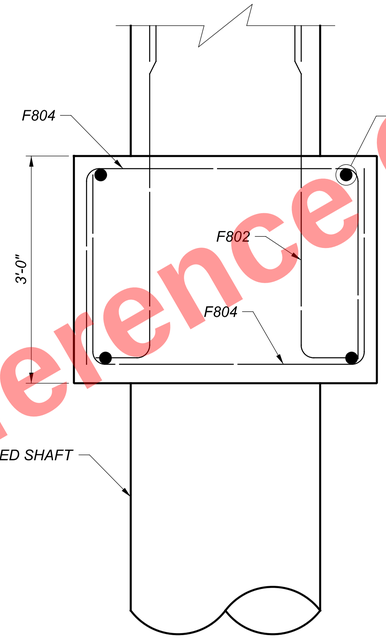

SECTION A-A

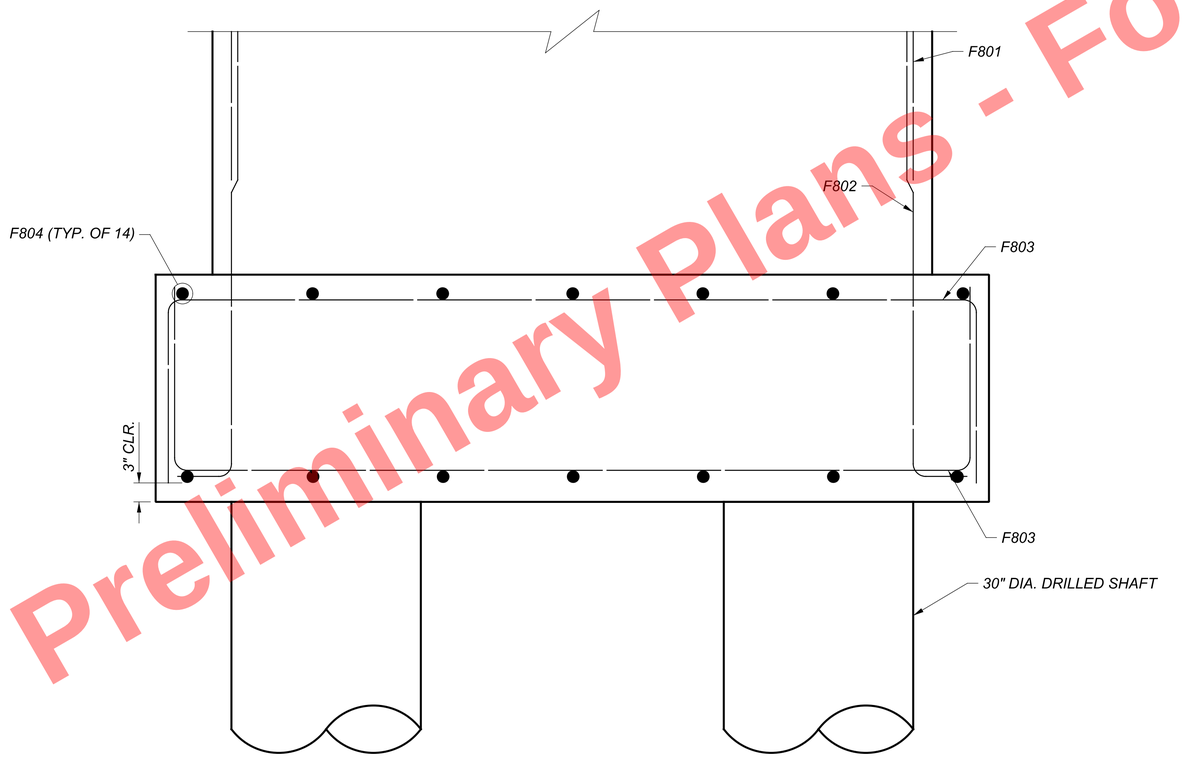

SECTION B-B

NOTES:
1. SEE SHEET 3/4 FOR ADDITIONAL DETAILS.
2. MOVE F802 BARS AS NECESSARY TO AVOID VERTICAL BARS FROM THE DRILLED SHAFT.

Preliminary Plans - For Reference Only

STEM WALL FOUNDATION PLAN AND DETAILS
OVERHEAD SIGN TRUSS FOUNDATION
OVER RAMP B6 STA. 1615+56.60

SFN N/A

DESIGN AGENCY B&N burgessniple.com

DESIGNER	CHECKER
DBH	XAC

REVIEWER DWL 01/09/24

PROJECT ID 82382

SUBSET	TOTAL
4	4

SHEET	TOTAL
1364	2696

CUY-90-16.28 (CCG3A)

MODEL: Foundation Plan PAPERSIZE: 34x22 (in.) DATE: 3/27/2025 TIME: 11:32:27 PM USER: Julie.Ross
pw:\\mb-us-pw.bentley.com:mb-us-pw-03\Documents\Cleveland_OH101_Projects\ODOT\District12\82382\400-Engineering\Structures\Ramp_B6_OST_Foundation\Sheets\82382_B6_SI002.dgn

ITEM 899 - CURED-IN-PLACE PIPE LINER, AS PER PLAN

899.01 DESCRIPTION. THIS WORK CONSISTS OF DESIGNING A CLOSE-FIT PIPE LINER FOR THICKNESS PER THE ASCE MOP-145, FURNISHING, AND INSTALLING A CURED-IN-PLACE PIPE (CIPP) LINER IN A HOST CONDUIT FOR GRAVITY COMBINED SEWER FLOW.

CIPP IS INSERTED INTO THE HOST CONDUIT USING HYDROSTATIC HEAD OR IS MECHANICALLY PULLED INTO PLACE. THE LINER IS THEN EXPANDED AND CURED WITH STEAM, HOT WATER, OR UV LIGHT. THE LINER MATERIAL USED FOR CIPP CAN BE A RESIN-IMPREGNATED FELT OR GLASS REINFORCED PLASTIC (GRP).

WHEN INSTALLED, THE CLOSE-FIT PIPE LINER EXTENDS THE LENGTH OF THE HOST CONDUIT IN A CONTINUOUS TIGHT-FITTING MANNER.

THIS WORK ALSO INCLUDES RESTORATION OF THE AREA USED FOR ACCESS. A NEW MANHOLE HAS BEEN INCLUDED IN THE PLANS FOR INSTALLATION AT BOTH OF THE LOCATIONS PROPOSED FOR ACCESS (SEE D-412 AND D-709).

899.02 MATERIALS. FURNISH CIPP TUBE MATERIALS THAT ARE EITHER NEEDLED FELT, REINFORCED NEEDLED FELT, OR GLASS FIBERS. USE THERMOSETTING RESINS THAT ARE EITHER POLYESTER, VINYL ESTER, OR EPOXY IN EITHER NEAT (WITHOUT INERT FILLER) OR FILLED (WITH INERT FILLER). USE MATERIALS CONFORMING TO:

TEST METHOD	TEST PROPERTY	NEEDLED FELT TUBE W/ NEAT RESIN	NEEDLED FELT TUBE W/ FILLED RESIN	REINFORCED FELT TUBE W/ NEAT RESIN	GLASS FIBER TUBE W/ NEAT RESIN
ASTM D-790	INITIAL FLEXURAL STRENGTH (PSI)	4,500 MIN	4,500 MIN	4,500 MIN - 12,000 MAX	20,000 MIN
ASTM D-790	INITIAL MODULUS OF ELASTICITY (PSI)	300,000 MIN	400,000 MIN	500,000 MIN-750,000 MAX	1,250,000 MIN-2,500,000 MAX
ASTM D-2990	CREEP RETENTION FACTOR (FLEXURAL MODULUS)	0.5	0.5	0.5-0.75	0.5-0.75

PROVIDE THE STRENGTH-REGRESSION CURVES USED TO DETERMINE THE TESTING VALUES. PROVIDE THE CREEP AND STRENGTH RETENTION FACTORS FOR A SERVICE LIFE OF 50 YEARS.

PROVIDE THE POISSON'S RATIO AS DETERMINED BY ASTM E132.

SUBMIT TO THE ENGINEER CERTIFIED TEST DATA AND A LETTER OF CERTIFICATION FROM THE MANUFACTURER THAT STATES THE MATERIAL CONFORMS TO THE SPECIFICATION REQUIREMENTS.

899.03 SHIPMENT AND STORAGE. FOLLOW THE MANUFACTURER'S RECOMMENDATIONS FOR SHIPMENT AND STORAGE FOR ALL MATERIALS. ENSURE THAT THE MATERIAL SAFETY DATA SHEET ACCOMPANIES THE MATERIAL.

899.04 SUBMITTALS. SUBMIT THE DETAILED LINER INSTALLATION PROCEDURES TO THE ENGINEER FOR ACCEPTANCE AT LEAST TEN WORKING DAYS BEFORE BEGINNING WORK INCLUDING THE FOLLOWING INFORMATION:

1. CALCULATIONS PERFORMED AND STAMPED BY A REGISTERED ENGINEER.

DESIGN THE LINER ACCORDING TO ASCE MANUAL OF PRACTICE NO. 145 "DESIGN OF CLOSE-FIT LINERS FOR THE REHABILITATION OF GRAVITY PIPES" (ASCE MOP-145) USING DESIGN STATE III. THE LOAD ON THE LINER INCLUDES GROUNDWATER PRESSURE, FULL SOIL OVERBURDEN PRESSURE, AND SURFACE LOADS. THE LINER IS ALSO SUBJECTED TO THE LOAD IMPOSED FROM DEFERRED OVALITY (PARALLEL PLATE LOADING) AT THE END OF THE LINER'S DESIGN LIFE OF 50 YEARS. THE LINER IS ASSUMED TO DEFLECT OVER THE SERVICE LIFE AND IS NOT COMPOSITE WITH THE HOST CONDUIT.

PROVIDE A LOAD RATING ANALYSIS FOR ANY LINER EQUAL TO OR EXCEEDING 10 FEET IN SPAN AS MEASURED PARALLEL TO THE ROADWAY CENTERLINE PER THE BRIDGE DESIGN MANUAL SECTION 900 TO THE DISTRICT BRIDGE ENGINEER.

USE VEHICULAR LIVE LOAD FROM THE ODOT BRIDGE DESIGN MANUAL.

DESIGN THE LINER USING THE FOLLOWING LOAD AND RESISTANCE FACTORS:

TABLE 899.04-1
DESIGN LOAD FACTORS

LOAD	LOAD FACTOR
GROUND WATER	1.6*
DEAD LOAD	1.2
LIVE LOAD	1.6

* VALUE OF 1.2 MAY BE USED IF SEASONAL GROUND WATER TABLE OBSERVATIONS ARE USED TO DETERMINE THE MAXIMUM GROUND WATER HEIGHT

TABLE 899.04-2
DESIGN RESISTANCE FACTORS

DESIGN PARAMETER	RESISTANCE FACTOR
LONG-TERM FLEXURAL STRENGTH	0.85-1.0**
LONG-TERM FLEXURAL MODULUS	0.80
LONG-TERM BUCKLING STABILITY	0.80
CONSTRAINED SOIL MODULUS OF REACTION FOR THE BACKFILL SOIL	0.80***

**0.85 FOR CIPP IMPREGNATED AND CURED ON SITE, 0.9 FOR CIPP IMPREGNATED OFF SITE AND CURED ON SITE, 1.0 FOR OTHER
***VALUE OF 0.9 MAY BE USED IF GEOTECHNICAL INVESTIGATIONS ARE PERFORMED TO VERIFY THE USE OF STRUCTURAL BACKFILL

USE THE FOLLOWING VARIABLES FOR STATE III LINER DESIGN:

TABLE 899.04-3
LINER DESIGN VARIABLES

VARIABLE	VALUE	UNITS
GROUND WATER HEIGHT	1.5 FEET ABOVE THE TOP OF THE PIPE AND 5 FEET FROM THE INVERT NOT TO EXCEED THE SURFACE ELEVATION ABOVE THE PIPE UNLESS SITE CONDITIONS OR PLANS INDICATE A HIGHER VALUE	FT
SOIL DENSITY	120 MINIMUM	LB/CF
LATERAL EARTH PRESSURE COEFFICIENT	0.5	N/A
CONSTRAINED MODULUS OF BACKFILL SOIL	1000 MAX	PSI
MODULUS OF SUBGRADE REACTION	300 MAX	PSI
SOIL POISSON'S RATIO	0.3	N/A
MINIMUM LINER IMPERFECTIONS	ANNULAR GAP, DEFERRED OVALITY	N/A
LINER SHRINKAGE	0.005 MINIMUM	%
DEFERRED OVALITY AND DEFERRED HINGE ROTATION ANGLE	2 (0.02) - 5 (0.05) MINIMUM+	% (~RADIANS)
MAXIMUM HOST PIPE DELFECTION	LESS THAN OR EQUAL TO 20++	%
DESIGN FOR OTHER OBSERVED IMPERFECTIONS SUCH AS HINGE ROTATION, FLATTENING OR INTRUSTIONS AS DEEMED NECESSARY BY THE REGISTERED ENGINEER. NONCIRCULAR SHAPES MAY REQUIRE ADDITIONAL DESIGN CONSIDERATIONS IN THE DESIGN (REFER TO MOP-145). DOCUMENT ALL ASSUMPTIONS AND ORIGIN OF ALL OTHER VARIABLES USED IN THE DESIGN.		

+ USE 2% FOR TYPICAL SOILS; FOR ALTERED SOILS USE 5%.
++USE HOST PIPE NOMINAL DIMENSION WHEN CALCULATING DEFLECTION.

2. THICKNESS OF PIPE LINER TO BE INSTALLED IN THE HOST PIPE ROUNDED TO THE NEXT COMMERCIALLY AVAILABLE THICKNESS.
3. NUMBER AND TYPE OF LINER IMPERFECTIONS USED IN THE DESIGN APPROACH BEYOND THE MINIMUM REQUIRED IN THE DESIGN VARIABLES.
4. METHODS OF CLEANING THE HOST PIPE.
5. PLAN TO BYPASS FLOW AROUND THE HOST PIPE.
6. METHODS OF REPAIRING EXISTING PIPE WALLS.
7. PIPE LINER CURING PLAN (CIPP).
8. METHODS FOR FINISHING LINER PIPE ENDS.
9. METHODS FOR COLLECTING PROCESS WATER (CIPP).
10. METHODS OF REPAIRING PIPE LINER AFTER INSTALLATION IF DEFECTIVE.
11. SITE SPECIFIC HEALTH AND SAFETY PLAN.
12. CERTIFICATION LETTER FROM THE MANUFACTURER STATING THAT THE CONTRACTOR IS AN APPROVED INSTALLER OF THE LINER SYSTEM.

ALLOW AT LEAST TEN WORKING DAYS FOR REVIEW. DO NOT BEGIN WORK UNTIL THE SUBMITTALS HAVE BEEN ACCEPTED BY THE ENGINEER. ANY CHANGES OR DEVIATIONS FROM THE ACCEPTED SUBMITTALS MUST BE RESUBMITTED. THE ENGINEER WILL NOT GRANT AN EXTENSION OF TIME BECAUSE OF INCOMPLETE SUBMITTALS.

899.05 CONSTRUCTION

A. PREPARATION. CLEAN AND REMOVE DEBRIS, INCLUDING ANY OBSTRUCTIONS, FROM THE HOST PIPE TO THE EXTENTS NECESSARY FOR PROPER INSTALLATION OF THE PIPE LINER PRIOR TO INSTALLATION.

B. FLOW BYPASS. PREVENT THE ACCUMULATION AND FLOW OF WATER THROUGH THE HOST PIPE AND LINER UNTIL AFTER THE WORK IS COMPLETE. WHERE NECESSARY TO ADEQUATELY COMPLETE THE WORK, BYPASS FLOWS AROUND THE HOST PIPE. ENSURE CONFORMANCE WITH ALL WATERWAY SPECIAL PROVISIONS REQUIREMENTS ASSOCIATED WITH THE PROJECT AND ALL APPLICABLE ENVIRONMENTAL LAWS. AFTER THE LINING PROCESS BEGINS, MAINTAIN THE BYPASS FLOW UNTIL THE LINING PROCESS IS COMPLETE.

C. PRE-INSTALLATION INSPECTION. AFTER CLEANING AND BEFORE BEGINNING THE LINING PROCESS, HAVE EXPERIENCED PERSONNEL INSPECT THE HOST PIPE TO ENSURE THERE ARE NO OBSTRUCTIONS THAT WOULD HINDER THE LINING PROCESS. NOTE THE LOCATIONS OF ALL LATERAL CONNECTIONS AND IMPERFECTIONS IN THE HOST PIPE. IF IMPERFECTIONS ARE IDENTIFIED, COORDINATE WITH THE REGISTERED ENGINEER TO ENSURE THEY ARE ACCOUNTED FOR IN THE DESIGN. PERFORM A PRE-INSTALLATION VIDEO SURVEY OF THE HOST PIPE AND PROVIDE A COPY OF THE VIDEO TO THE ENGINEER.

D. MATERIAL. INSPECT ALL PIPE LINER MATERIALS FOR DEFECTS IN THE PRESENCE OF THE ENGINEER PRIOR TO INSTALLATION. CIPP LINER MUST BE HOMOGENEOUS THROUGHOUT, UNIFORM IN COLOR, FREE OF TEARS, HOLES, FOREIGN MATERIALS, BLISTERS, OR OTHER DELETERIOUS FAULTS. ANY MATERIAL FOUND TO HAVE FLAWS OR DEFECTS WILL BE REJECTED AND MUST BE REPLACED. FOLLOW ALL PROCEDURES TO PREPARE THE MATERIAL FOR INSTALLATION IN COMPLIANCE WITH THE MANUFACTURER'S RECOMMENDATIONS. ANY MATERIAL NOT PROPERLY PREPARED WILL BE REJECTED.

E. INSTALLATION. INSTALL CIPP LINER PER ASTM F1216, ASTM F1743, ASTM F2019, OR ASTM D5813. HOT WATER, STEAM, OR UV CURING IS PERMITTED. SUBMIT A COPY OF THE CURE LOGS FOR EACH RUN. MANAGE ALL PROCESS WATER AND CONDENSATE FROM STEAM USED IN THE INSTALLATION AND CURING PROCESS AS A LIQUID WASTE PER CMS 107.19. DO NOT DISCHARGE ANY LIQUID WASTE FROM PROCESS WATER, CONDENSATE, OR CLEANING OF INSTALLED PIPE LINER WITHOUT APPROPRIATE REGULATORY PERMITS.

F. FINISH. CUT EXCESS LINER PIPE FLUSH WITH THE HOST PIPE OR AS RECOMMENDED IN THE MANUFACTURER'S INSTALLATION PROCEDURES. THE FINISHED PRODUCT MUST BE CONTINUOUS OVER THE LENGTH OF THE AREA OF THE PIPE RELINED AND BE WITHOUT DRY SPOTS, WRINKLING, LIFTS, DELAMINATION, SPLITTING AND RUPTURES. IF ANY UNSATISFACTORY CONDITION IS PRESENT IN THE LINED PIPE, PROVIDE A SUITABLE REPAIR AS ACCEPTED BY THE ENGINEER. COLLECT AND APPROPRIATELY DISPOSE OF ALL LINER SHAVINGS AND EXCESS MATERIALS CREATED DURING PROSECUTION OF THE WORK.

G. LINER THICKNESS. ENSURE THE FINAL INSTALLED LINER THICKNESS IS NOT LESS THAN THE SPECIFIED THICKNESS. ENSURE THE LINER THICKNESS IS NOT MORE THAN TEN (10) PERCENT THICKER THAN THE SPECIFIED THICKNESS. MEASURE FROM PIPE LINER SAMPLE COUPONS PREPARED PER ASTM F1216 SEC. 8.1.

H. AFTER INSTALLATION. RESTORE ALL ACTIVE LATERAL CONNECTIONS. PERFORM A POST-INSTALLATION VIDEO SURVEY OF THE PIPE AS PER SUPPLEMENTAL SPECIFICATION 902.1 AND PROVIDE A COPY OF THE VIDEO TO THE ENGINEER.

PROVIDE A WRITTEN ANALYSIS OF THE INSPECTION VIDEO IDENTIFYING ALL DEFECTS INCLUDING BUT NOT LIMITED TO DRY SPOTS, WRINKLING, LIFTS, DELAMINATION, SPLITTING, AND RUPTURES.

899.06 METHOD OF MEASUREMENT. THE DEPARTMENT WILL MEASURE PIPE LINER BY THE NUMBER OF FEET OF HOST PIPE LINED. HOST PIPES ARE CITY OF CLEVELAND WATER POLLUTION CONTROL COMBINED BRICK SEWERS. TABULAR DIMENSIONS FOR EGG SHAPED SEWERS CAN BE FOUND ON SHEET 1167 OF THESE PLANS.

899.07 BASIS OF PAYMENT. PAYMENT FOR PIPE LINER INCLUDES PIPE CLEANING, PIPE PREPARATION, FLOW BYPASS, LINER PIPE, LINER RESINS, WATER, EQUIPMENT, LABOR, TESTING, INSPECTIONS, CLEAN UP, PROPER DISPOSAL OF ANY WASTE.

THE DEPARTMENT WILL PAY FOR ACCEPTED QUANTITIES AT THE CONTRACT PRICE AS FOLLOWS:

ITEM	UNIT	DESCRIPTION
899	FOOT	NO. 6 EGG-SHAPED CURED-IN-PLACE-PIPE LINER, APP
899	FOOT	NO. 7 EGG-SHAPED CURED-IN-PLACE-PIPE LINER, APP
899	FOOT	NO. 10 EGG-SHAPED CURED-IN-PLACE-PIPE LINER, APP
899	FOOT	NO. 11 EGG-SHAPED CURED-IN-PLACE-PIPE LINER, APP
899	FOOT	NO. 12 EGG-SHAPED CURED-IN-PLACE-PIPE LINER, APP

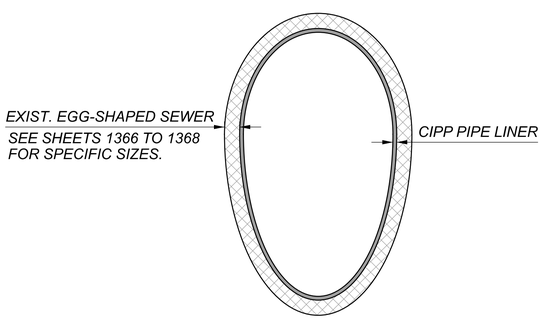

Preliminary Plans - Not For Reference

COMBINED SEWER NOTES

DESIGN AGENCY
Michael Baker INTERNATIONAL

DESIGNER JAR
REVIEWER KGJ 05/22/24
PROJECT ID 82382
SHEET 1365 TOTAL 2696

CUY-90-16.28 (CCG3A)

MODEL: Sheet PAPERSIZE: 34x22 (in.) DATE: 6/13/2025 TIME: 8:06:07 AM USER: Alexandria.Summers
pw:\\mb-us-pw.bentley.com:mb-us-pw-03\Documents\Cleveland_OH\01_Projects\ODOT\District12\82382\400-Engineering\Drainage\Sheets\82382_DN0001.dgn

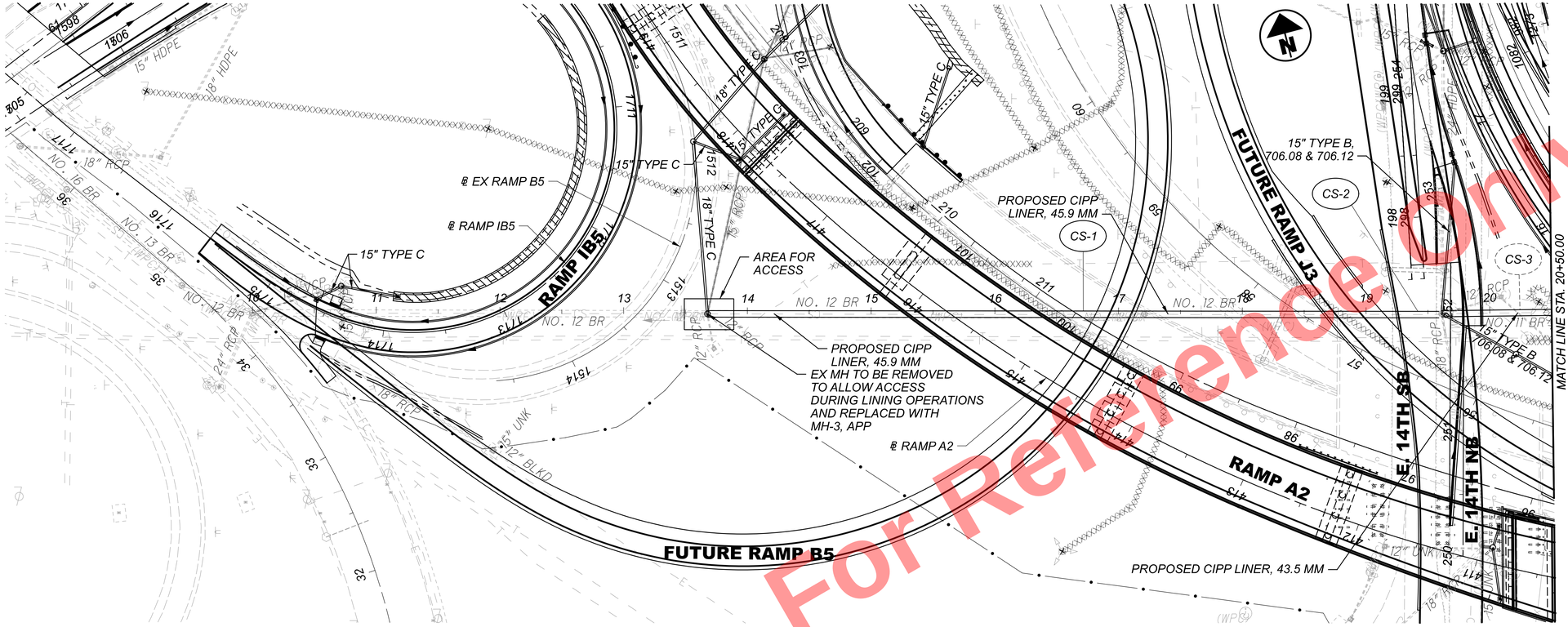

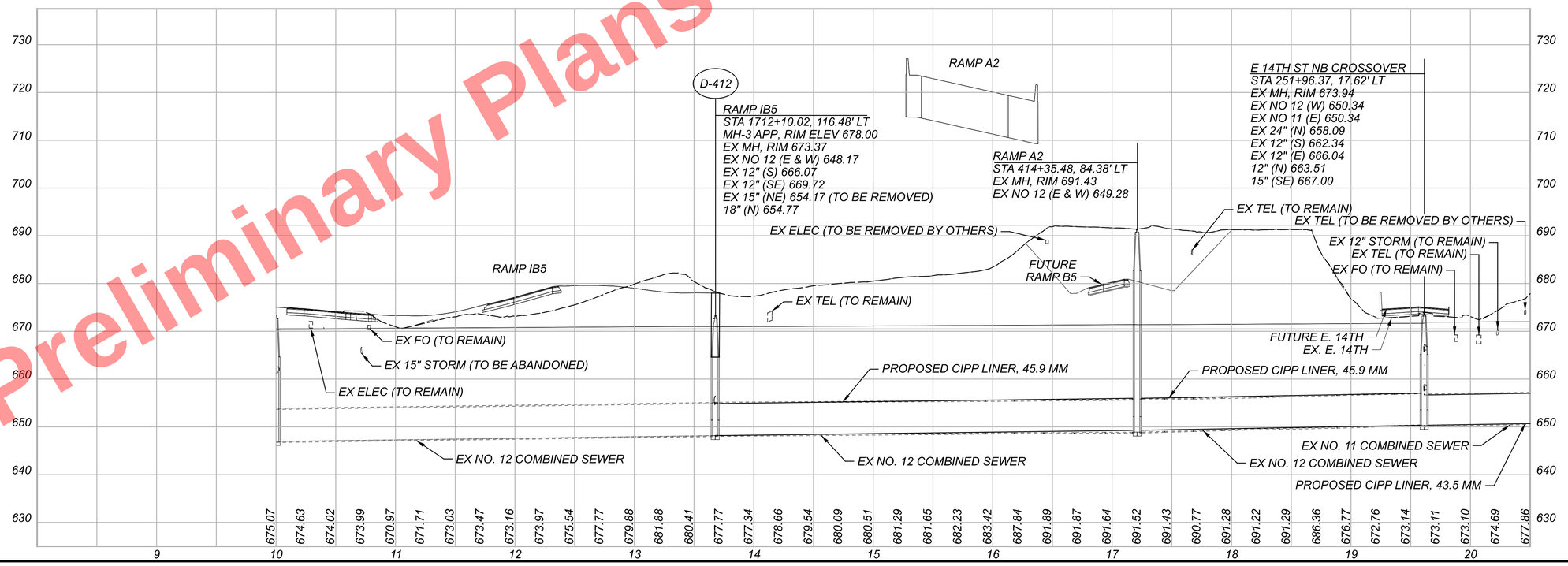

Preliminary Plans - For Reference Only

HORIZONTAL SCALE IN FEET
0 25 50 100

PLAN AND PROFILE - WOODLAND AVE. SEWER
SHEET 1 OF 2

DESIGN AGENCY
Michael Baker INTERNATIONAL

DESIGNER JAR
REVIEWER KGJ 05/22/24
PROJECT ID 82382
SHEET 1366 TOTAL 2696

CUY-90-16.28 (CCG3A)

MODEL: CL_WOODLAND - Woodland [Sheet] PAPERSIZE: 34x22 (In.) DATE: 6/13/2025 TIME: 8:10:14 AM USER: Alexandria.Summers
pw:\\mb-us-pw.bentley.com:mb-us-pw-03\Documents\Cleveland_OH\OL_Projects\ODOT\District#12\82382\400-Engineering\Drainage\Sheets\82382_DD1600.dgn

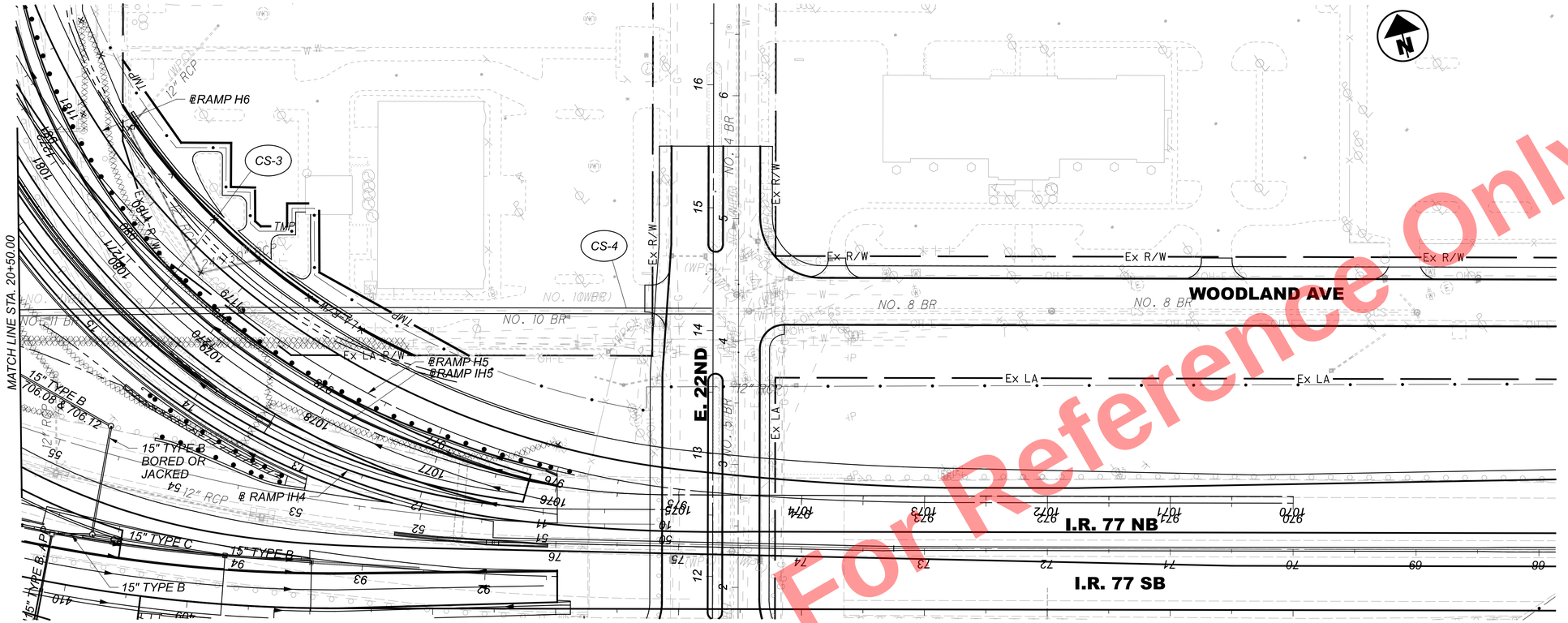

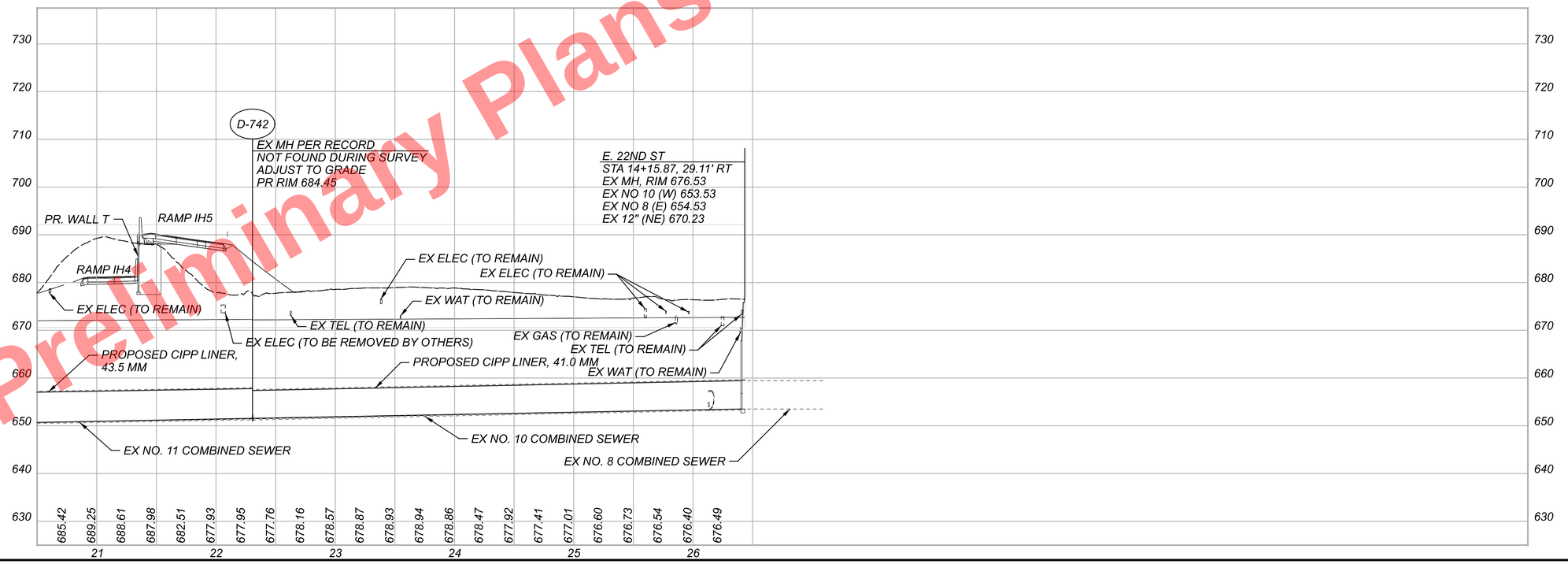

HORIZONTAL SCALE IN FEET
0 25 50 100

PLAN AND PROFILE - WOODLAND AVE. SEWER
SHEET 2 OF 2

DESIGN AGENCY
Michael Baker INTERNATIONAL

DESIGNER JAR
REVIEWER KGJ 05/22/24
PROJECT ID 82382
SHEET 1367 TOTAL 2696

CUY-90-16.28 (CCG3A)

MODEL: CL_WOODLAND - Woodland-l[Sheet] PAPERSIZE: 34x22 (in.) DATE: 3/28/2025 TIME: 5:10:28 AM USER: Julie.Ross
pw:\\mb-us-pw.bentley.com:mb-us-pw-03\Documents\Cleveland_OH\OL_Projects\ODOT\District#12\82382\400-Engineering\Drainage\Sheets\82382_DD1600.dgn


LIMIT OF LIGHTWEIGHT FILL
WALL AD
15" TYPE B
TMP
EX MH TO BE REMOVED TO ALLOW ACCESS DURING LINING OPERATIONS AND REPLACED WITH MH-3, APP
AREA FOR ACCESS
LIMIT OF LIGHTWEIGHT FILL
CS-7
CENTRAL AVE.
Ex R/W
12" TYPE B, 706.08 & 706.12
PROPOSED CIPP LINER, 33.4 MM
℄ RAMP A1
℄ RAMP A2
E. 18TH ST.
RAMP A1
RAMP A2
15" TYPE C, APP
CS-5
I.R. 90 WB
I.R. 90 EB
18" TYPE B, APP
℄ I.R. 90 WB
℄ I.R. 90 EB
℄ RAMP H5
RAMP H5
WALL Y
WALL Z
PROPOSED CIPP LINER, 33.4 MM
CS-6
CS-8
CS-9
RAMP B6
RAMP B6A
PROPOSED CIPP LINER, 30.7 MM
℄ E. 22ND ST.
LIMIT OF LIGHTWEIGHT FILL
E. 22ND ST.
15" TYPE B
15" TYPE C
18" TYPE B
Ex L.A-R/W
Ex R/W
TMP
600
1800
1805
1615
1620
1617
1625
1630
1635
1640
1645
1650
1655
1660
1665
1670
1675
1680
1685
1690
1695
1700
1705
1710
1715
1720
1725
1730
1735
1740
1745
1750
1755
1760
1765
1770
1775
1780
1785
1790
1795
1800
1805
1810
1815
1820

NOTE:

1. CORE DRILL HOLE WITH SUFFICIENT CLEARANCE FOR LATERAL PIPE. POSITION LATERAL CONNECTION IN WALL OF THE INTERCEPTOR SUCH THAT ALL RINGS OF BRICK REMAIN SUPPORTED. THE LATERAL SHALL NOT PROTRUDE INTO THE INTERCEPTOR MORE THEN ONE (1) INCH AT ANY POINT. THE CONTRACTOR SHALL TRIM THE CONNECTION END AS NEEDED, TO MEET BOTH OF THESE REQUIREMENTS. THE ANNULAR SPACE BETWEEN THE CORED HOLE AND THE LATERAL SHALL BE COMPLETELY FILLED TO THE INSIDE FACE OF THE INTERCEPTOR, WITH NON-SHRINK HYDRAULIC CEMENT.

2. IF THE CONNECTION IS TO A REINFORCED CONCRETE OR VITRIFIED CLAY PIPE THEN THE LATERAL SHALL BE CONNECTED TO THE SEWER USING A MANUFACTURED BOOT THAT MAKE A WATERTIGHT CONNECTION. IF THE CONNECTION IS TO A BRICK SEWER THEN THE LATERAL SHALL BE CONNECTED BY WRAPPING A WATERSTOP MATERIAL SUCH AS A VOLCLAY RX101 OR EQUAL AROUND THE LATERAL, 2 WRAPS MINIMUM IN ACCORDANCE WITH THE DETAIL. IF WATERSTOP MATERIAL IS USED, THE ANNULAR SPACE BETWEEN THE SEWER WALL AND THE LATERAL SHALL BE FILLED WITH HYDRAULIC CEMENT. EITHER TYPE OF CONNECTION SHALL THEN BE ENCASED IN CONCRETE CLASS QC1.

3. CONNECTIONS SHALL BE ABOVE PIPE SPRING LINE. CONNECTIONS SHALL BE ACCOMPLISHED BY MEANS OF DEFLECTION AT THE PIPE JOINT. THIS DEFLECTION SHALL NOT EXCEED 1/2" FOR 12" CONDUIT OR 3/8" FOR 15" CONDUIT OR THE MAXIMUM ALLOWABLE DEFLECTION AS RECOMMENDED BY THE MANUFACTURER. FOR CONNECTIONS NOT ABLE TO BE MADE BY DEFLECTIONS, CONNECTIONS SHALL BE ACHIEVED BY USING RADIUS CURVE FITTINGS OF 22.5, 30, 45, OR OTHER SUITABLE FITTINGS APPROVED BY THE ENGINEER. THE FITTINGS TO BE USED SHALL BE THAT WHICH MINIMIZES THE LENGTH OF CONNECTION REPLACMENT.

4. ALL NECESSARY BENDS, BRANCHES, COLLARS, CONCRETE ENCASEMENT SHALL BE INCLUDED IN PAYMENT FOR THE APPROPRIATE ITEM 611 - CONDUIT PAY ITEM.

5. SEE GENERAL NOTES FOR ADDITIONAL CONSTRUCTION AND COORDINATION REQUIREMENTS.

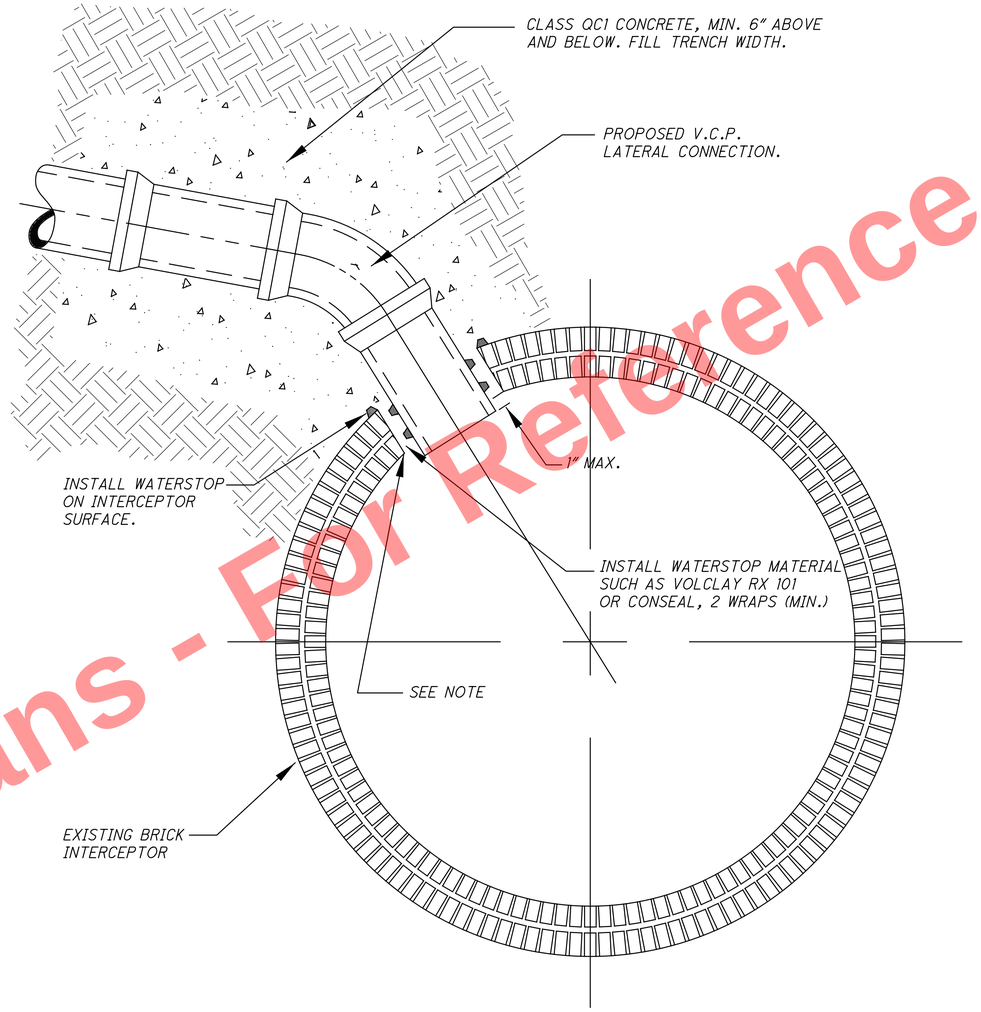

Preliminary Plans - For Reference Only

COMBINED SEWER DETAILS
BLIND CONNECTION

DESIGN AGENCY
Michael Baker INTERNATIONAL

DESIGNER JAR
REVIEWER KGJ 05/22/24
PROJECT ID 82382
SHEET 1369 TOTAL 2696

CUY-90-16.28 (CCG3A)

MODEL: SHEET-1 PAPERSIZE: 34x22 (in.) DATE: 3/28/2025 TIME: 5:11:22 AM USER: Julie.Ross
pw:\\mb-us-pw.bentley.com:mb-us-pw-03\Documents\Cleveland_OH\01_Projects\ODOT\District2\82382\400-Engineering\Drainage\Sheets\82382_DD0020.dgn

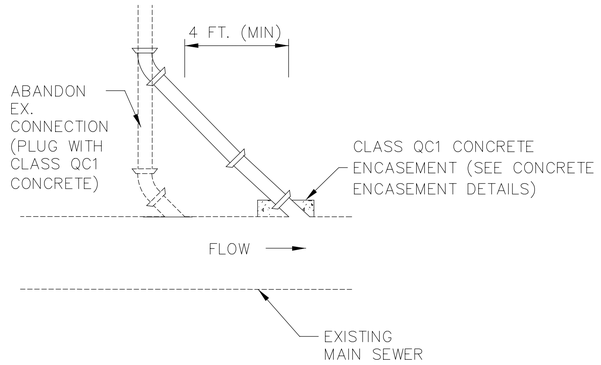

SANITARY CONNECTION LOWERING PLAN VIEW
NOT TO SCALE

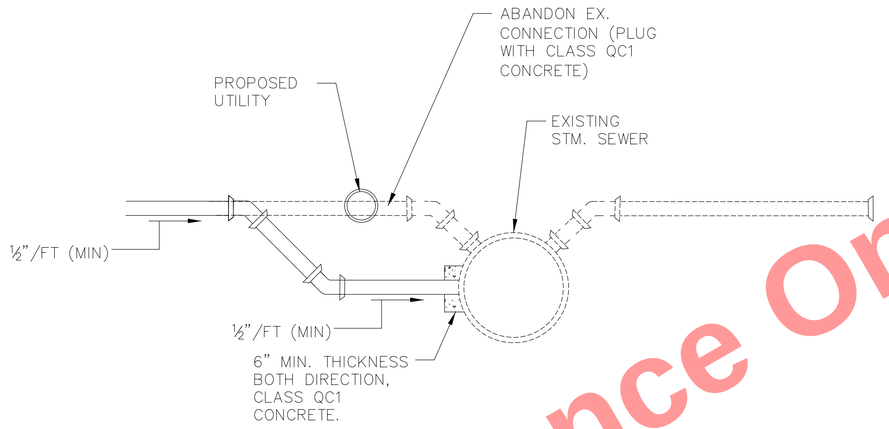

SEWER CONNECTION LOWERING SECTION VIEW
NOT TO SCALE

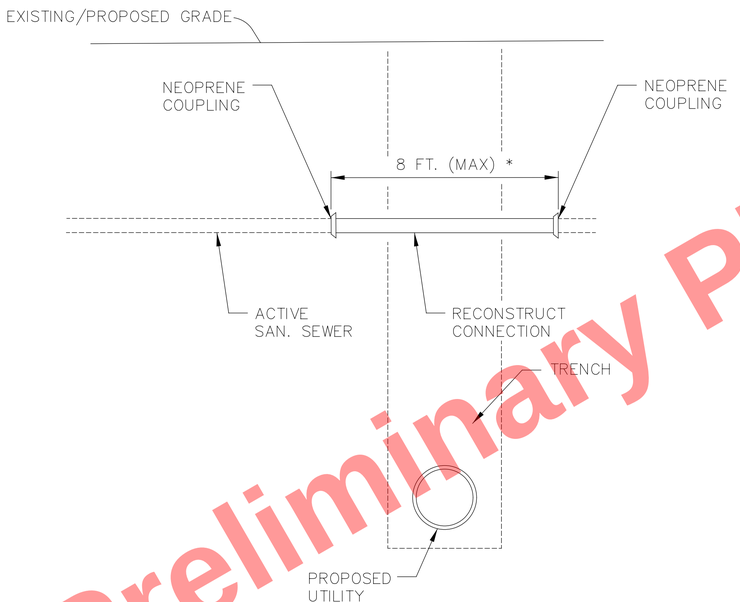

SANITARY CONNECTION TRENCH DETAIL
NOT TO SCALE

* ESTIMATED LENGTH OVER TRENCH.

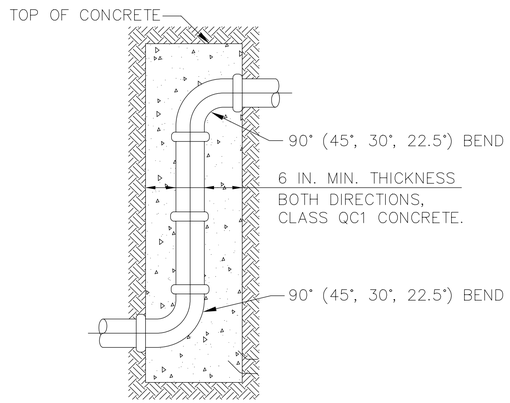

TYPICAL SEWER RISER DETAIL
NOT TO SCALE

NOTES

1.) ABANDON ALL INACTIVE STORM AND SANITARY CONNECTIONS IMPACTED BY CONSTRUCTION.

2.) EXISTING CONNECTIONS ARE ANTICIPATED TO RANGE FROM 5" TO 8". EXISTING 5" & 6" CONNECTIONS SHALL BE REPLACED WITH ITEM 611 – 6" CONDUIT, TYPE B(C), 706.08 WITH 706.12 JOINTS.

Preliminary Plans - For Reference Only

COMBINED SEWER DETAILS
SANITARY LOWERING

DESIGN AGENCY
Michael Baker INTERNATIONAL

DESIGNER JAR
REVIEWER KGJ 05/22/24
PROJECT ID 82382
SHEET 1370 TOTAL 2696

CUY-90-16.28 (CCG3A)

MODEL: SHEET-I PAPERSIZE: 34x22 (In.) DATE: 3/28/2025 TIME: 5:11:30 AM USER: Julie.Ross
pw:\\mb-us-pw.bentley.com:mb-us-pw-03\Documents\Cleveland.OH\01_Projects\ODOT\District2\82382\400-Engineering\Drainage\Sheets\82382_D0002I.dgn

CLEVELAND WATER NOTES FOR WATER MAIN INSTALLATION AND/OR REPLACEMENT

DEVELOPERS, ENGINEERS, AND CONTRACTORS ARE TO ABIDE BY THE MOST CURRENT VERSION OF THE CLEVELAND WATER NOTES AND DETAILS. THE MOST UP-TO-DATE VERSION CAN BE FOUND AT WWW.CLEVELANDWATER.COM/CONSTRUCTION/ OR AS PROVIDED BY CWD STAFF.

GENERAL:

1. ALL WATER WORK REQUIRED, WHETHER SHOWN ON THE PLANS OR AS DIRECTED BY CLEVELAND WATER, SHALL BE AT THE EXPENSE OF THE PROJECT UNLESS OTHERWISE AGREED TO IN WRITING BY THE COMMISSIONER OF THE CLEVELAND DIVISION OF WATER.

2. THE INFORMATION SHOWN ON THE CLEVELAND DIVISION OF WATER'S SUMMARY OF WORK/CHARGE LETTER, STRIP MAPS, AS BUILT DRAWINGS, AND GIS ARE TAKEN FROM EXISTING AVAILABLE RECORDS, AND THEIR ACCURACY IS NOT GUARANTEED.

3. CALL THE INSPECTION AND ENFORCEMENT UNIT AT 216-664-2342 TO SCHEDULE A PRECONSTRUCTION MEETING AT LEAST 1 WEEK PRIOR TO STARTING CONSTRUCTION. THE OPERATION OF ANY VALVE OR ALTERATION OF ANY PART OF THE WATER SYSTEM BY CONTRACTORS OR THEIR EMPLOYEES IS PROHIBITED WITHOUT THE SUPERVISION OF THE CLEVELAND DIVISION OF WATER INSPECTOR.

4. PRIOR TO REQUESTING CHLORINATION, THE CONTRACTOR SHALL SUPPLY THE CLEVELAND WATER INSPECTOR WITH REDLINE DRAWINGS SHOWING CHANGES MADE FROM THE APPROVED DESIGN DRAWINGS AND ACTUAL MEASUREMENTS. CHLORINATION SHALL NOT OCCUR BEFORE THESE DRAWINGS ARE SUBMITTED. IF THERE WERE NO CHANGES FROM THE APPROVED PLANS, YOU MUST STILL SUBMIT A HARDCOPY OF PLANS INDICATING NO DEVIATIONS WERE MADE ON EACH PLAN AND PROFILE PAGE CONTAINING WATER WORK. PLEASE NOTE THIS DOES NOT COUNT AS AN AS BUILT SUBMISSION (SEE NOTE 12).

5. FOR THE PURPOSES OF CHLORINATION AND BACTERIOLOGICAL TESTING OF THE WATER MAINS THE CONTRACTOR SHALL PROVIDE AND INSTALL, AT EACH OF THE CHLORINATION PIT LOCATIONS SHOWN AND AT OTHER LOCATIONS DETERMINED BY CLEVELAND WATER. FLUSHING / SAMPLING TAP SIZES ARE TO BE DETERMINED BY CLEVELAND WATER. CHLORINATION PITS SHALL BE SIX (6) FOOT SQUARE AND ARE TO MEET OSHA STANDARDS. NO CUSTOMER TAPS SHALL BE INSTALLED PRIOR TO CHLORINATION.

6. A TWO-YEAR WARRANTY, COMMENCING FROM THE DATE OF ACCEPTANCE OF THE FINAL CHLORINATION OF THE WATER MAIN INSTALLATION SHALL BE PROVIDED BY THE BUILDER/DEVELOPER AND/OR CONTRACTOR FOR ALL WATER MAINS AND SERVICE CONNECTION WORK PERFORMED BY THE CONTRACTOR, INCLUDING TAPS IF PERFORMED. SHOULD ANY LEAKS OCCUR AND REPAIRS BE REQUIRED DUE TO DEFECTIVE MATERIAL OR POOR WORKMANSHIP, REPARIS SHALL BE MADE AT THE CONTRACTORS EXPENSE. A LETTER INDICATING THE COMMENCEMENT DATE AND END DATE OF THE WARRANTY SHALL BE INCLUDE WITH THE AS-BUILT SUBMISSION IN NOTE 12.

7. USE BACKFILL MATERIAL AS SPECIFIED AND COMPACT SUFFICIENTLY IN THOSE AREAS WHERE EXISTING MAINS AND WATER SERVICE CONNECTIONS ARE EXPOSED. (SEE CLEVELAND WATER STANDARD DETAIL STD-001 AND PVC-001)

8. ALL MATERIALS, INCLUDING BUT NOT LIMITED TO WATER MAINS, FIRE HYDRANTS, VALVES, CONNECTION MATERIALS AND OTHER WATER APPURTENANCES, SHALL BE NEW AND UNUSED AND SHALL CONFORM TO THE MOST CURRENT CLEVELAND WATER SPECIFICATIONS. ALL MATERIAL SHALL BE INSTALLED IN ACCORDANCE WITH CLEVELAND WATER'S STANDARDS.

9. THE CONTRACTOR SHALL BE RESPONSIBLE FOR ANY DAMAGE TO EXISTING WATER MAINS AND APPURTENANCES THEREOF WHEN CONSTRUCTING OR CONNECTING THE NEW WATER MAIN. THIS SHALL INCLUDE LEADED JOINTS IN EXISTING FITTINGS WHICH MAY REQUIRE REPLACEMENT FITTINGS AT THE DISCRETION OF THE INSPECTOR IF IT IS DETERMINED THEY WERE DISTURBED. ALL REPAIRS TO DAMAGED EXISTING FACILITIES SHALL BE MADE BY THE CONTRACTOR, AT THE PROJECT'S EXPENSE, TO THE SATISFACTION OF CLEVELAND WATER.

10. ALL HYDROSTATIC PRESSURE TESTING SHALL BE DONE BY THE CONTRACTOR IN THE PRESENCE OF THE CLEVELAND WATER INSPECTOR. THE HYDROSTATIC TEST PRESSURE SHALL BE 75 PSI ABOVE THE STATIC PRESSURE PREVAILING AT THE SITE, BUT IN NO CASE LESS THAN 150 PSI. THE PRESSURE TEST SHALL BE FOR A DURATION OF TWO (2) HOURS WITH THE PRESSURE BEING MAINTAINED WITHIN 5 PSI OF THE REQUIRED TEST PRESSURE. SHOULD THE PRESSURE TEST FAIL THE CONTRACTOR SHALL FIND AND CORRECT THE DEFICIENCY(IES) TO THE SATISFACTION OF CLEVELAND WATER AND REPEAT THE TWO (2) HOUR PRESSURE TEST. MAKE UP WATER SHALL NOT BE PERMITTED

11. ALL DUCTILE IRON BURIED WATER MAINS, FITTINGS, VALVES, FIRE HYDRANT BRANCH PIPING, AND APPURTENANCES SHALL BE ENCASED WITH V-BIO® ENHANCED POLYETHYLENE ENCASEMENT INSTALLED IN ACCORDANCE WITH THE MOST CURRENT REVISION OF ANSI/AWWA C-105/A21.5 MODIFIED METHOD "A" AND ASTM A674.

12. THE PROJECT'S PROFESSIONAL ENGINEER OR A DESIGNATED PROFESSIONAL SURVEYOR SHALL OBTAIN ACTUAL FIELD MEASUREMENTS OF THE MAIN DURING INSTALLATION AND SHALL FURNISH THE CLEVELAND WATER INSPECTOR WITH AS-BUILT DRAWINGS MEETING CLEVELAND WATER STANDARDS WITHIN 60 DAYS OF THE WATER MAIN GOING INTO SERVICE AND ALL TAPS/RETAPS BEING MADE. ONE HARD COPY AND ONE PDF COPY SHALL BE PROVIDED. DRAWINGS SHALL BE SIGNED, DATED, AND STAMPED WITH THE ENGINEER OR SURVEYOR'S SEAL. REDLINE DRAWINGS ARE NOT SUFFICIENT. CLEVELAND WATER RESERVES THE RIGHT TO WITHHOLD PAYMENT AND/OR APPROVAL OF FUTURE WORK IF AS-BUILTS ARE NOT SUBMITTED.

THE CONTRACTOR SHALL PROVIDE A TABLE SHOWING ALL CONNECTIONS, IDENTIFIED BY CLEVELAND WATER CONNECTION NUMBER, SHOWING THE FOUND CONNECTION MATERIAL (IF A REPLACEMENT) FOR BOTH THE CITYSIDE AND OWNERSIDE CONNECTION, AS WELL AS THE NEW CONNECTION MATERIAL FOR ALL CONNECTIONS. THE TABLE SHALL ALSO NOTE ANY NEW OR REVISED CONNECTION MEASUREMENTS AND SIZES. A SAMPLE TABLE WILL BE PROVIDED. THE SUBMISSION SHALL BE IN MICROSOFT EXCEL FORMAT.

FAILURE TO PROVIDE AS BUILT DRAWINGS AND CONNECTION DATA MAY INCUR PENALTIES AND DELAYS ON FUTURE PROJECTS.

WATER MAINS:

13. ALL PIPE, SHALL BE AWWA C151 DUCTILE IRON, MINIMUM CLASS 52, WITH A CEMENT MORTAR LINING, HAVING PUSH-ON JOINTS WITH RADIALLY COMPRESSED RUBBER RING GASKET. MAINS 36" AND LARGER SHALL BE MINIMUM PRESSURE CLASS 350.

14. WITH THE WRITTEN AUTHORIZATION OF CWD, PRESSURE CLASS 235 PSI C900 (DR18) OR C909 PVC, CONFORMING TO THE LATEST AWWA STANDARDS MAY BE USED. DUCTILE IRON PIPE SHALL BE REQUIRED FOR SIZES LARGER THAN 12".

15. ALL DUCTILE IRON PIPE SHALL BE INSTALLED PER THE MOST CURRENT REVISION OF AWWA C600, AWWA MANUAL M41, DIPRA'S "INSTALLATION GUIDE FOR DUCTILE IRONT PIPE" (ISBN 0-9642194-0-9) AND "DIRECT TAPPING OF DUCTILE IRON PIPING ENCASED IN POLYETHYLENE", AS WELL AS THE MANUFACTURER'S INSTRUCTIONS.

16. ALL PVC PIPE SHALL BE INSTALLED PER UNI-PUB-09, UNI-PUB--08, ASTM D2774, ASTM F1668, AND MANUFACTURERS INSTRUCTIONS.

17. ONCE DELIVERED, ALL PVC PIPE MUST BE PROTECTED FROM DIRECT SUN EXPOSURE UNTIL THE PIPE IS INSTALLED AND BACKFILLED.

18. ALL PVC PIPE SHALL BE INSTALLED WITH A CONTINUOUS RUN OF 10 GAUGE COPPER CLAD STEEL TRACER WIRE WITH BREAKING LOAD OF AT LEAST 600 POUNDS AND AT LEAST 30 MILS OF BLUE HDPE INSULATION CERTIFIED FOR DIRECT BURIAL. CONNECTIONS SHALL BE WATERPROOF, CONTAINING DIELECTRIC SILICONE, AND RATED FOR DIRECT BURIAL. CONNECTIONS MUST BE MADE SO AS TO PREVENT UNINSULATED WIRE FROM BEING EXPOSED. LATERAL TRACER LINES ON HYDRANTS, TEES, AND CROSSES SHALL NOT CUT THE MAIN TRACER WIRE. NON-LOCKING FRICTION FIT, TWIST-ON, AND TAPED CONNECTIONS ARE NOT PERMITTED. MAGNESIUM GROUND ANODE RODS SHALL BE INSTALLED AT EACH DEAD END PER THE MANUFACTURER'S INSTRUCTIONS. TRACER LINES SHALL TERMINATE AT A DEDICATED AT-GRADE ACCESS POINT/TEST STATION IDENTIFIED WITH “WATER” ON THE CAP. AT LEAST 2 FEET OF SLACK WIRE SHALL BE PROVIDED AT EACH TERMINATION POINT.

19. ALL NEW TRACE WIRE INSTALLATIONS SHALL HAVE THEIR FUNCTION VERIFIED BY BEING LOCATED USING TYPICAL LOW REQUENCY (512HZ) LINE TRACING EQUIPMENT BY AN INDEPENDENT UTILITY LOCATING FIRM, WITH SUCH FIRM PROVIDING WRITTEN CERTIFICATION. CWD INSPECTORS SHALL BE INVITED TO WITNESS THIS VERIFICATION. THIS VERIFICATION SHALL BE PERFORMED UPON COMPLETION OF ROUGH GRADING AND AGAIN PRIOR TO FINAL ACCEPTANCE OF THE PROJECT. CONTINUITY TESTING IN LIEU OF ACTUAL LINE TRACING SHALL NOT BE ACCEPTED. CWD WILL REQUIRE COMPLETION OF THE FIRST VERIFICATION PRIOR TO CHLORINATION, WITH CERTIFICATION SUBMITTED ALONG WITH RED LINE DRAWINGS. CERTIFICATION OF THE SECOND VERIFICATION SHALL BE PROVIDED WITH AS-BUILT DRAWINGS.

20. TWO FEET ABOVE THE MAIN, DETECTABLE TRACER TAPE NOTING THE PRESENCE OF A WATER MAIN SHALL BE INSTALLED FOR THE ENTIRE LENGTH OF THE MAIN, INCLUDING HYDRANT LATERALS AND OPEN CUT INSTALLED SERVICE CONNECTIONS.

21. PVC PIPE JOINTS SHALL BE ASSEMBLED VIA THE BAR AND BLOCK METHOD. ANY PIPE JOINT THAT HAS BEEN OVER INSERTED SHALL HAVE BOTH THE BELL PIPE AND THE SPIGOT PIPE REMOVED AND DISCARDED.

22. ALL FITTINGS, UNLESS OTHERWISE CALLED FOR, SHALL BE APPROVED DUCTILE IRON, CLASS 350, CEMENT LINED OR FUSION BONDED EPOXY COATED. ALL FITTINGS AND PIPE CONNECTED TO FITTINGS SHALL BE RESTRAINED USING A "RETAINED" MECHANICAL JOINT CONFORMING TO THE MATERIAL AND PERFORMANCE REQUIRMENTS OF ANSI/AWWA C-110/A21.10 AND ANSI/AWWA C-111/A21.11, OR "COMPACT" FITTINGS IN ACCORDANCE WITH ANSI/AWWA C-153/A21.53. EXCEPT FOR ANCHOR TEES, REDUCERS OR OTHER SPECIAL CIRCUMSTANCES WHEN BY CLEVELAND WATER, ALL FITTINGS ARE TO HAVE BELL ENDS.

23. ALL BOLTS AND NUTS ON ALL "RETAINED" MECHANICAL JOINTS SHALL HAVE FIELD APPLIED ONE (1) COAT OF BITUMASTIC PAINTING.

24. WHERE SHOWN ON THE PLANS, OR WHEN OTHERWISE CALLED FOR, PIPE AND FITTINGS SHALL HAVE AN APPROVED "TYPE 1" OR "TYPE II" BOLTLESS RESTRANED PUSH-ON JOINT TO THE LIMITS SHOWN ON THE DRAWINGS.

25. AT THE END OF EACH WORKDAY, THE CONTRACTOR SHALL PLUG ALL OPEN PIPE ENDS WITH WATER TYPE PLUGS AS PER THE "PREVENTATIVE AND CORRECTIVE MEASURES DURING CONSTRUCTION" SECTION OF THE MOST CURRENT REVISION OF AWWA C-651 AS TO PREVENT THE INFILTRATION OR INTRUSION OF ANY FOREIGN OBJECTS OR MATERIALS. DATE STAMPED DIGITAL PHOTOS SHALL BE PROVIDED FOR EACH WORKDAY DEMONSTRATING THAT PROPER AWWA C-651 METHODS WERE USED TO PLUG ALL OPEN WATER MAIN ENDS. EACH PHOTO SHALL CLEARLY IDENTIFY THE STATION AT WHICH THE PIPE IS PLUGGED BY USE OF A STATION MARKER PLACED AT THE PLUGGED PIPE END. PHOTOS SHALL BE SUBMITTED ON A DAILY BASIS UNLESS OTHERWISE DEFINED BY THE CLEVELAND WATER INSPECTOR OR ENGINEER. ALL PHOTOS TAKEN OVER THE COURSE OF THE PROJECT SHALL BE SUBMITTED BY THE CONTRACTOR AS PART OF THE AS-BUILT SUBMITTAL. PHOTOS ARE TO INCLUDE STATIONING MARKERS. AS-BUILTS SHALL BE DEEMED INCOMPLETE WITHOUT SAID COLLECTION OF DIGITAL PHOTOS.

HYDRANTS:

26. IN ALL HYDRANT INSTALLATIONS THE CONTRACTOR SHALL FACE ALL HYDRANT'S 4" OR 4-1/2" (STEAMER) NOZZLE TOWARD THE PAVEMENT PRIOR TO TESTING AND CHLORINATION OF WATER MAINS. ONLY CLEVELAND WATER APPROVED HYDRANT MODELS SHALL BE INSTALLED. CONTRACTOR SHALL CONSULT WITH THE LOCAL MUNICIPALITY'S ENGINEERING OR SERVICE DEPARTMENT TO OBTAIN HYDRANT NOZZLE THREAD REQUIREMENTS AND STEAMER NOZZLE SIZE IF NOT INDICATED ON THE APPROVED PLANS. ALL HYDRANTS SHALL BE FACTORY EQUIPPED WITH THE APPROPRIATE HYDRANT NOZZLE, INCLUDING STORZ IF REQUESTED BY THE MUNICIPALITY.

HYDRANT BRANCHES SHALL BE FULLY RESTRAINED AND INSTALLED PER THE APPROPRIATE HYDRANT CLEVELAND WATER HYDRANT DETAIL. HYDRANT BRANCH VALVES SHALL BE PLACED DIRECTLY AFTER THE HYDRANT TEE UNLESS OTHERWISE APPROVED BY THE INSPECTOR IN WRITING.

VALVES:

27. ALL VALVES SHALL BE AN APPROVED MODEL RESILIENT SEATED GATE VALVES AS PER THE MOST CURRENT VERSION OF AWWA C509 OR C515. VALVE OPERATING NUTS SHALL BE TAPERED (1 7/8" TO 2" FROM TOP TO BOTTOM) AND 2" DEEP. ALL VALVES AT TIE IN POINTS TO EXISTING MAINS SHALL BE REPLACED AT THE PROJECT'S EXPENSE UNLESS OTHERWISE DIRECTED.

LEAD SERVICE CONNECTIONS:

28. IF A WATER MAIN IS SUSPECTED TO HAVE LEAD SERVICES OR WAS INSTALLED PRIOR TO 1954, THE OHIO EPA REQUIRES CWD TO PROVIDE A NOTICE TO ALL AFFECTED CUSTOMERS THAT THEIR WATER SERVICE LINE WILL BE DISTURBED A MINIMUM OF 45 DAYS IN ADVANCE OF CONSTRUCTION. TO AVOID PROJECT DELAYS, 60 DAYS PRIOR TO CONSTRUCTION, PLEASE CONTACT VIA EMAIL BRENDA CULLER BRENDA_CULLER@CLEVELANDWATER.COM AND FRED_ROBERTS@CLEVELANDWATER.COM TO VERIFY LETTERS WERE SENT OUT.

29. IF A CUSTOMER-OWNED LEAD SERVICE LINE IS ENCOUNTERED, IMMEDIATELY NOTIFY THE CWD INSPECTOR SO THAT APPROPRIATE NOTIFICATION CAN BE MADE AND ACTION CAN BE TAKEN. IF THE CWD INSPECTOR IS NOT AVAILABLE, CALL BRENDA CULLER AT (216) 664-2444, EXT. 75609 OR BRYAN RASK (216) 664-2444 EXT. 73733.

ANY CITY-OWNED LEAD SERVICE ENCOUNTERED AND DISTURBED SHALL BE REPLACED WITH TYPE K COPPER FROM THE CORPORATION STOP TO THE CURB STOP. THE REPLACEMENT SERVICE LINE SHALL BE 1-INCH MINIMUM DIAMETER, BUT MATCH ANY EXISTING CONNECTION SIZE IF LARGER (5/8" AND 3/4" CONNECTIONS SHALL NOT BE PERMITTED). CUSTOMERS WITH A CUSTOMER-OWNED LEAD SERVICE LINE SHALL NOT BE RECONNECTED TO THE NEW WATER MAIN WITHOUT EXPRESS WRITTEN APPROVAL FROM BRYAN RASK, OR HIS APPROVED REPRESENTATIVE AT CWD.

AS PART OF THIS CONTRACT, THE CONTRACTOR SHALL OFFER EACH CUSTOMER TO REPLACE LEAD SERVICES FROM THE CURB STOP TO THE INLET STOP & WASTE VALVE INSIDE THE CUSTOMER'S HOME. IF THE REPLACEMENT IS NOT COVERED UNDER THE BID ITEMS, THE CONTRACTOR SHALL PROVIDE CWD (AND THE LOCAL MUNICIPALITY IF OUTSIDE THE CITY OF CLEVELAND) WITH A CHANGE ORDER AND COST ESTIMATES FOR THE CUSTOMER-OWNED LEAD SERVICE LINE REPLACEMENT. UPON APPROVAL FROM CWD (AND THE LOCAL MUNICIPALITY IF OUTSIDE THE CITY OF CLEVELAND), THE CONTRACTOR SHALL PERFORM THE REPLACEMENT OF THE CUSTOMER-OWNED LEAD SERVICE LINE. AS STATED ABOVE, CUSTOMERS WITH CUSTOMER-OWNED LEAD SERVICE LINES SHALL NOT BE RECONNECTED TO THE NEW WATER MAIN WITHOUT EXPRESS WRITTEN APPROVAL FROM PAYTON HALL, OR HIS APPROVED REPRESENTATIVE AT CWD.

IN THE EVENT THAT A CWD WAIVER IS GRANTED SUCH THAT A CUSTOMER-OWNED LEAD SERVICE LINE IS NOT REPLACED, CWD SHALL SUPPLY THE CONTRACTOR WITH LEAD FILTERS AND PITCHERS THAT THE CONTRACTOR SHALL DISTRIBUTE TO EACH RESIDENCE WITHIN THE PROJECT AREA, INCLUDING TO ALL UNITS OF MULTI-UNIT HOUSING BUILDINGS. THE FILTERS SHALL BE POUR-THROUGH PITCHER TYPE LEAD FILTERS THAT ARE NSF/ANSI-53 CERTIFIED TO REMOVE LEAD. THE PITCHER, A 6-MONTH SUPPLY OF FILTERS, AND CWD-SUPPLIED USE INSTRUCTIONS AND OTHER APPLICABLE MATERIALS SHALL BE DISTRIBUTED. RECORDS OF RESIDENTS WHO RECEIVED AND WHO REFUSED THE FILTERS SHALL BE PROVIDED BY THE CONTRACTOR TO CWD (AND THE LOCAL MUNICIPALITY IF OUTSIDE THE CITY OF CLEVELAND).

AT THE END OF THE DAY BEFORE A CUSTOMER IS SCHEDULED TO BE CONNECTED TO THE NEW WATER MAIN, THE CONTRACTOR SHALL NOTIFY THE INSPECTOR SO NOTIFICATIONS AND OTHER APPLICABLE MATERIALS MAY BE PROVIDED AT THE TIME OF CONNECTION.

GENERAL SERVICE CONNECTIONS:

30. ALL SERVICE CONNECTIONS SHALL BE A MINIMUM OF 1". 1/2", 5/8" AND 3/4" CONNECTIONS SHALL NOT BE INSTALLED, EVEN IF REPLACING AN EXISTING CONNECTION SMALLER THAN 1". ALL REPLACEMENT SERVICE CONNECTIONS SHALL ALSO INCLUDE A NEW CURB STOP.

31. TYPE K COPPER SHALL BE USED ON ALL CONNECTIONS 2" OR SMALLER. CLASS 52 DUCTILE IRON WRAPPER IN V-BIO ENHANCED POLYETHYLENE EXCASEMENT SHALL BE USED ON ALL CONNECTIONS 3" AND LARGER. ALL CONNECTIONS SHALL COMPLY WITH CWD'S SERVICE CONNECTION REQUIREMENTS, AS POSTED ON OUR WEBSITE.

32. NEW WATER SERVICE CONNECTIONS LOCATIONS SHOWN ON THESE DRAWINGS ARE FOR REFERENCE ONLY AND ARE NOT PART OF THE WATER MAIN APPROVAL. THE SPECIFIC LOCATION FOR EACH CONNECTION WILL BE DETERMINED BY CLEVELAND WATER PRIOR TO THE TAPS BEING INSTALLED. ALL PERMITS FOR TAPS AND METERS FOR PARCELS ASSOCIATED WITH THE WATER MAINS INSTALLED ON THIS PROJECT ARE TO BE OBTAINED BY THE LAND OWNER OF SAID IMPROVEMENT PLANS. IT IS THE LAND OWNERS RESPONSIBILITY TO ARRANGE FOR OBTAINING PERMITS FOR ALL WATER SERVICE CONNECTIONS BEFORE ANY SERVICE CONNECTION WORK MAY PROCEED. ALL FEES CAN BE OBTAINED FROM THE CLEVELAND WATER PERMITS AND SALES SECTION AT 216-664-3130 PROMPT #2, THEN #6 OR 216-664-2444 X75209.

ACCOUNTS SHALL BE INITIATED IN THE LAND OWNER'S NAME AS PART OF THE PERMITTING PROCESS. ALL RESPONSIBILITIES ASSOCIATED WITH EACH WATER SERVICE, INCLUDING, THE OWNER SIDE INSPECTIONS, METER SET/METER PIPING INSPECTION AND THE METER INSTALLATION SHALL BE THE RESPONSIBILITY OF SAID OWNER.

Preliminary Plans - Not For Construction

CLEVELAND WATER DEPARTMENT
GENERAL NOTES FOR WATER MAIN INSTALLATION (STD-011)

DESIGN AGENCY
Michael Baker INTERNATIONAL

DESIGNER SMP
REVIEWER SM 05/15/24
PROJECT ID 82382
SHEET 1371 TOTAL 2696

CUY-90-16.28 (CCG3A)
MODEL: UNI20I PAPERSIZE: 34x22 (in.) DATE: 3/28/2025 TIME: 5:11:38 AM USER: Julie.Ross
pw:\\mb-us-pw.bentley.commb-us-pw-03\Documents\Cleveland_OH\01_Projects\000T\Distrlct2\82382\400-Engineering\Utilities\Sheets\82382_UNI20I.dgn

CLEVELAND WATER NOTES FOR WATER MAIN INSTALLATION AND/OR REPLACEMENT (CONT.)

32. (CONT.) METERS INSTALLATIONS WILL NOT BE AUTHORIZED TO BE INSTALLED UNTIL ALL INSPECTIONS HAVE BEEN COMPLETED. ESTIMATED BILLS MAY ENSUE IF A HOME IS IDENTIFIED AS HAVING WATER SERVICE BUT NO METER HAS BEEN INSTALLED. IF NEW OWNERS, ONCE PARCELS ARE SOLD OFF AND TRANSFER TITLE, DO NOT CONTACT CLEVELAND WATER TO ESTABLISH ACCOUNTS IN THEIR NAME, ACCOUNTS AND THEIR ASSOCIATED BILLS WILL REMAIN IN THE NAME OF OUR LAST OWNER OF RECORD WHICH MAY BE THE DEVELOPER OR BUILDER. IT IS THE RESPONSIBILITY OF THE NEW OWNER TO TRANSFER ACCOUNTS INTO THEIR NAME WHEN THE PROPERTIES LEGALLY TRANSFER. UPON TRANSFER OF PROPERTY, SELLER OF PROPERTY MUST COMMUNICATE ALL UNCOMPLETED PORTIONS OF THE REFERENCED RESPONSIBILITIES TO THE NEW OWNER.

33. ONE INCH SERVICE CONNECTIONS SHALL BE PERMITTED TO SERVICE NEW HOMES (AS SHOWN ON APPROVED WATER MAIN EXTENSION PLANS) BASED ON THE FOLLOWING CRITERIA:

A. PEAK FLOW DEMANDS DO NOT EXCEED 25 GPM FOR AN INDIVIDUAL HOME/UNIT. INCLUSIVE OF ALL USAGE (DOMESTIC AND/OR IRRIGATION),

B. LENGTH OF ONE INCH CONNECTION DOES NOT EXCEED 75 FEET AS MEASURED FROM THE MAIN TO THE POINT OF ENTRY INTO THE PROPOSED HOME/UNIT.

C. THE CONNECTIONS DO NOT INCLUDE LIMITED AREA OR NFPA 13D SPRINKLER SYSTEMS

ANY SERVICE REQUESTS DIFFERING FROM THE STATED CRITERIA SHALL REQUIRE THE SUBMITTAL OF A COMPLETE WATER SERVICE APPLICATION FOR EACH WATER SERVICE REQUESTED.

34. ALL CURB VALVE BOXES & METER VAULTS WILL BE INSTALLED IN GRASS AREAS WHEN POSSIBLE. CURB VALVES SHALL BE PLACED APPROXIMATELY 2 FEET OFF THE CURB. CURB VALVES IN EASEMENTS SHALL BE PLACED APPROXIMATELY 3 FEET OFF THE WATER MAIN. IF VALVE BOXES OR METER VAULTS ARE INSTALLED OUTSIDE OF A DEDICATED RIGHT OF WAY OR EASEMENT FOR THE PURPOSES OF WATER SUPPLY. A STANDARD CLEVELAND EASEMENT FOR A VAULT SHALL BE PROVIDED.

EMERGENCIES:

35. IF A WATER MAIN OR SERVICE CONNECTION BREAK OCCURS DURING CONSTRUCTION AND EMERGENCY ASSISTANCE IS REQUIRED, PLEASE NOTIFY CLEVELAND WATER AT 216-664-3060. THIS LINE IS AVAILABLE AT ALL TIMES.

NOTE:

THE PROJECT SHALL COMPLY WITH ALL APPLICABLE CLEVELAND WATER DEPARTMENT (CWD) STANDARDS, NOTES, AND DETAILS; EXCEPT AS MODIFIED WITHIN THIS PLAN.

FOR PROJECT SPECIFIC NOTES, SEE SHEETS 1373 - 1386
FOR PROJECT SPECIFIC DETAILS, SEE SHEETS 1417 - 1432

CLEVELAND WATER NOTES FOR WATER MAIN INSTALLATION ON BRIDGES

DRAWINGS

1. THE CONTRACTOR, THROUGH THE ENGINEER, SHALL SUBMIT TO THE CITY FOR APPROVAL A MINIMUM OF SIX (6) SETS OF PIPE ASSEMBLY LAYOUT DRAWINGS GENERATED BY THE PIPE OR STRUCTURAL FABRICATOR. PIPE ASSEMBLY LAYOUT DRAWINGS SHALL INCLUDE ALL OF THE FOLLOWING:
   a.) PIPE DIMENSIONS
   b.) FITTING DIMENSIONS
   c.) LOCATION AND ELEVATION OF ALL PIPES, FITTINGS, PIPE JOINTS, PIPE SUPPORTS, EXPANSION JOINTS AND ANY OTHER APPURTENANCES.
   d.) TYPE OF PIPE, FITTINGS, PIPE JOINTS, PIPE SUPPORTS, EXPANSION JOINTS AND ANY OTHER APPURTENANCES

2. THE CONTRACTOR SHALL SUBMIT TO THE CITY THROUGH THE ENGINEER FOR APPROVAL A MINIMUM OF SIX (6) SETS OF PRINTS OF ALL SHOP DRAWINGS GENERATED BY THE PIPE OR STRUCTURAL FABRICATOR. DRAWINGS SHALL INCLUDE ALL OF THE FOLLOWING.
   a.) PIPE
   b.) COUPLINGS
   c.) INSULATION
   d.) WATER STOP
   e.) EXPANSION JOINT ASSEMBLY
   f.) PIPE SUPPORTS

3. NO WORK SHALL BE PERFORMED IN THE SHOP OR IN THE FIELD UNTIL AFTER THE DRAWINGS HAVE BEEN APPROVED.

4. THE APPROVAL OF THE DRAWINGS BY THE CITY SHALL NOT RELIEVE THE CONTRACTOR OF ANY OF HIS OBLIGATIONS WITH THIS CONTRACT.

MATERIALS

5. CARRIER PIPE SHALL BE GALVANIZED STEEL ASTM A-53 GRADE B, HAVING A MINIMUM WORKING PRESSURE OF 350 PSI. CARRIER PIPE SHALL BE OF THE FOLLOWING DIMENSIONS:

a.) 12.75" OD. X 0.5" WALL THICKNESS.
b.) 16" OD. X 0.5" WALL THICKNESS.
c.) 24" OD. X 0.5" WALL THICKNESS.

INSULATION

6. JACKETING MATERIAL SHALL BE INTERNAL LOCK SEAL, 22 GAUGE, SPIRAL WOUND, GALVANIZED STEEL WITH A RUBBER "O" RING FORMED IN THE SEAM, FORMED INTO STEEL TUBES. (AT THE ENGINEERS OPTION, SPIRAL WOUND, LOCK SEAMED ALUMINUM JACKET .032" THICK OR STAINLESS STEEL 24 GAUGE MAY BE USED.)

7. ALL JOINTS ARE TO BE INSULATED USING POURED URETHANE OR SECTIONAL URETHANE FOAM TO THE THICKNESS SPECIFIED, COVERED WITH A METAL SLEEVE, SEALED WITH MASTIC OR SILICON, AND HELD IN PLACE WITH TWO 1/2" STAINLESS STEEL BANDS.

8. BURIED PIPE BEYOND THE BACK WALLS OF THE BRIDGE ABUTMENTS HAVING LESS THAN 4 1/2 FT OF COVER SHALL BE INSULATED WITH A MINIMUM OF A 1 FOOT INSULATION ENVELOPE EQUAL TO "WTTCOLITE" OR "GILSULATE 500XR."

VICTAULIC COUPLINGS

9. VICTAULIC TYPE COUPLINGS SHALL BE INSTALLED BY THE CONTRACTOR FOR THE CONNECTION OF PIPE ENDS,WHERE REQUIRED OR SHOWN ON DRAWINGS. VICTAULIC TYPE COUPLINGS ARE TO BE STYLE 77 OR "DEPEND-O-LOK" TYPE.

MEASUREMENT

10. THE NUMBER OF LINEAR FEET OF STEEL PIPE TO BE PAID FOR SHALL BE THE ACTUAL NUMBER OF LINEAR FEET FURNISHED AND PLACED IN ACCORDANCE WITH THESE SPECIFICATIONS AS MEASURED ALONG THE AXIS OF THE PIPING.

PAYMENT

11.
a.) THE FOOTAGE MEASURED AS PROVIDED ABOVE SHALL BE PAID FOR AT THE CONTRACT PRICE BID PER LINEAR FOOT FOR "ITEM SPECIAL - WATER MAIN EXTRA STRONG WELDED GALVANIZED STEEL PIPE ASTM A-53, GRADE B " CLASSIFIED AS TO SIZE AND TYPE, WHICH PRICE AND PAYMENT SHALL CONSTITUTE FULL COMPENSATION FOR FURNISHING, HAULING, PLACING, CUTTING INTO AND CONNECTING THE PIPE, INCLUDING ALL EXPANSION JOINTS, COUPLINGS, PIPE INSULATION, INSTALLING SUPPORT ASSEMBLIES, AND OTHER PIPE APPURTENANCE, FURNISHING AND COMPLETING THE SLEEVE PACKING DETAIL, INCLUDING THE SEAL, AND FOR ALL LABOR, EQUIPMENT, TOOLS AND INCIDENTALS NECESSARY TO COMPLETE THIS ITEM EXCEPT FOR THE ITEMS SPECIFICALLY LISTED AS SEPARATE PAY ITEMS.

b.) THE CONTRACTOR WILL BE ASSESSED A CWD LABOR CHARGE FOR THE CHLORINATION OR THE FLUSHING, TESTING AND SAMPLING OF THE NEWLY LAID WATER MAIN BY THE CITY OF CLEVELAND, DIVISION OF WATER. PAYMENT OF THE CWD LABOR CHARGE FOR CHLORINATION OR THE FLUSHING, TESTING AND SAMPLING SHALL BE MADE BY THE CONTRACTOR TO THE PERMITS AND SALES SECTION OF THE DIVISION OF WATER BEFORE ANY WATER WORK IS PERFORMED.

Preliminary Plans - For Reference Only

CLEVELAND WATER DEPARTMENT
BRIDGE NOTES FOR WATER MAIN INSTALLATION (STD-BR08)

DESIGN AGENCY
Michael Baker INTERNATIONAL

DESIGNER SMP
REVIEWER SM 05/15/24
PROJECT ID 82382
SHEET 1372 TOTAL 2696

CUY-90-16.28 (CCG3A)

MODEL: UNI202 PAPERSIZE: 34x22 (In.) DATE: 3/28/2025 TIME: 5:11:39 AM USER: Julie.Ross
pw:\\mb-us-pw.bentley.com:mb-us-pw-03\Documents\Cleveland_OH\01_Projects\ODOT\District2\82382\400-Engineering\Utilities\Sheets\82382_UNI201.dgn

WATER WORK NOTES GENERAL

SCOPE OF WORK

THE WORK CONTEMPLATED UNDER THIS CONTRACT COMPRISES OF THE FURNISHING AND INSTALLING COMPLETE WITH VALVES AND OTHER APPURTENANCES, WATER DISTRIBUTION MAIN, FIRE HYDRANT REPLACEMENT, APPURTENANCE ADJUSTMENTS AND PERFORMING OTHER INCIDENTAL WORK NECESSARY AS SHOWN IN THE PLANS.

GENERAL NOTES

THE FIELD TESTING HEAD SHALL BE 75 PSI PLUS THAT DUE TO THE STATIC HEAD PREVAILING AT THE SITE, BUT IN NO CASE LESS THAN 150 PSI. THE CONTRACTOR SHALL NOTIFY THE CLEVELAND WATER DEPARTMENT INSPECTION AND ENFORCEMENT THREE (3) WEEKS PRIOR TO STARTING ANY WATER WORKS CONSTRUCTION. CALL 216-664-2342.

AFTER AWARD OF CONTRACT, THE CONTRACTOR THROUGH THE ENGINEER SHALL SUBMIT TO THE CITY OF CLEVELAND WATER DEPARTMENT, INSPECTION AND ENFORCEMENT SECTION, A CONSTRUCTION SCHEDULE AND CONSTRUCTION SEQUENCE RELATING TO WATER WORK.

ALL WATER WORK SHALL BE IN ACCORDANCE WITH THE STANDARD SPECIFICATIONS AND DRAWINGS OF THE CITY OF CLEVELAND, DEPARTMENT OF PUBLIC UTILITIES, DIVISION OF WATER (C.W.D.), 1201 LAKESIDE AVENUE, CITY OF CLEVELAND, OHIO (AND THE NOTES & DETAILS CONTAINED HEREIN). THE COST OF ALL LABOR, MATERIAL, EQUIPMENT, TOOLS, EXCAVATION, BEDDING AND BACKFILL FOR THE WATER WORK SHALL BE INCLUDED IN THE CONTRACT UNIT PRICE BID FOR EACH WATER WORK ITEM. THE REPLACEMENT OF PAVEMENT, DRIVES, LANDSCAPING AND ALL OTHER WORK EXCEPTING THE "WATER WORK" ITSELF SHALL BE STIPULATED IN THE CONTRACT SPECIFICATIONS.

THE CONTRACTOR SHALL ALSO MAKE PAYMENT TO THE DIVISION OF WATER FOR ALL DIVISION OF WATER LABOR REQUIRED TO COMPLETE THE WORK REQUIRED HEREIN. THE CONTRACTOR SHALL MAKE ALL PAYMENT FOR DIVISION OF WATER LABOR BEFORE ANY WATER WORK IS PERFORMED. SEE ITEM 638 - WATER WORK, MISC.: CLEVELAND WATER DEPARTMENT CHARGES. ALL DIVISION OF WATER LABOR CHARGES SHALL BE THE RESPONSIBILITY OF THE CONTRACTOR AND SHALL BE INCLUDED IN THIS ITEM.

DEFINITIONS

WHEREVER IN THESE SPECIFICATIONS OR IN OTHER CONTRACT DOCUMENTS THE FOLLOWING TERMS OR PRONOUNS IN PLACE OF THEM ARE USED, THE INTENT AND MEANING SHALL BE INTERPRETED AS FOLLOWS:

THE STATE: THE STATE IS THE STATE OF OHIO ACTING THROUGH ITS AUTHORIZED REPRESENTATIVE.

ENGINEER: THE ENGINEER IS DISTRICT DEPUTY DIRECTOR OR DISTRICT ENGINEER, THE DISTRICT CONSTRUCTION ENGINEER OR THE DISTRICT MAINTENANCE ENGINEER OR THE PROJECT ENGINEER ASSIGNED TO ADMINISTER THE CONTRACT, OR THEIR DULY DESIGNATED DEPUTIES, AGENTS, OR REPRESENTATIVES.

THE CITY: THE CITY IS THE DIRECTOR OF THE DEPARTMENT OF PUBLIC UTILITIES OF THE CITY OF CLEVELAND, OR HIS DULY DESIGNATED REPRESENTATIVE(S), CITY INSPECTOR, AND/OR THE WATER DESIGN REVIEW ENGINEER OF THE DIVISION OF WATER.

STATUS OF CITY INSPECTORS

INSPECTORS AS DESIGNATED BY THE DIRECTOR OF PUBLIC UTILITIES ARE AUTHORIZED TO INSPECT ALL WORK DONE AND MATERIALS FURNISHED, SUCH INSPECTION MAY EXTEND TO ALL OR ANY PART OF THE WATER WORK, AND TO THE PREPARATION OR MANUFACTURE OF THE MATERIALS TO BE USED IN THE WATER WORK.

THE CITY INSPECTOR AS DESIGNATED BY THE DIRECTOR OF PUBLIC UTILITIES WILL MAKE WORK INSTRUCTIONS THROUGH THE ENGINEER. ARRANGEMENTS FOR CITY INSPECTORS ARE TO BE MADE BY NOTIFYING INSPECTION AND ENFORCEMENT DIVISION OF WATER (216-664-2342), WITHIN THE TIME SPECIFIED. NO WORK SHALL BE ACCEPTED UNLESS INSPECTED.

ACCESS TO WORK AND PLACE OF MANUFACTURE

THE CONTRACTOR SHALL NOTIFY THE ENGINEER AND CITY, AT LEAST SEVEN (7) DAYS PREVIOUS TO THE COMMENCEMENT OF THE MANUFACTURE OF ANY MATERIALS, OF THE TIME AND PLACE WHERE THE MANUFACTURE IS TO COMMENCE, IN ORDER THAT A REPRESENTATIVE OF THE ENGINEER AND THE CITY, OR HIS DESIGNEE, MAY BE PRESENT TO INSPECT THE MANUFACTURE.

THE CONTRACTOR SHALL PROVIDE, WITHOUT CHARGE OR EXPENSE TO THE STATE AND CITY, ALL NECESSARY ASSISTANCE TO THE ENGINEER AND THE CITY, OR HIS DESIGNEE, WHEN REQUIRED FOR INSPECTION OR VERIFICATION OF WORK DONE.

ADDITIONAL WORK

(A) ATTENTION IS CALLED TO THE FACT THAT THE WORK UNDER THIS CONTRACT INCLUDES CERTAIN PERFORMANCE AS INCIDENTAL TO THE ITEMIZED REQUIREMENTS HEREOF, THOUGH NOT EXCLUSIVE AS FOLLOWS: TO PERFORM ALL EXCAVATION, BACKFILLING, SHEETING, SHORING, AND TO TEST AND CHLORINATE THE INSTALLATION. THE STATE WILL MAKE NO SPECIFIC OR SEPARATE PAYMENT OR ALLOWANCE, BUT THE COST THERE SHALL BE INCLUDED IN THE PRICES STIPULATED TO BE PAID FOR UNDER THE VARIOUS WATER WORK ITEMS TO BE DONE UNDER THIS CONTRACT.

(B) PRELIMINARY FLUSHING: BEFORE BEING PLACED IN SERVICE, ALL DIRT AND FOREIGN MATTER SHALL BE REMOVED FROM THE NEW AND/OR RELOCATED WATER MAIN OR EXTENSIONS TO EXISTING MAINS BY A THOROUGH FLUSHING THROUGH THE HYDRANTS OR BY OTHER APPROVED MEANS. EACH VALVED SECTION OF NEWLY LAID PIPE SHALL BE FLUSHED INDEPENDENTLY. THIS SHALL BE DONE AFTER THE PRESSURE TEST AND MAY BE DONE BEFORE OR AFTER THE TRENCH SHALL HAVE BEEN BACKFILLED.

(C) FLUSH, TEST AND SAMPLE: THE CITY, DIVISION OF WATER, WILL CHARGE TO THE CONTRACTOR A "FLUSHING, TEST AND SAMPLE" FEE FOR DIVISION OF WATER LABOR INCURRED IN THE WORK, PAYABLE TO THE PERMITS AND SALES SECTION OF THE DIVISION OF WATER BEFORE ANY WORK IS PERFORMED. FLUSHING, TEST AND SAMPLING IS LIMITED TO 300' OF 12" MAIN. NEW AND/OR RELOCATED WATER MAINS OR EXTENSION OF WATER MAINS EXCEEDING 20' OF 30" MAIN AND/OR 20' OF 24" MAIN SHALL BE CHLORINATED. CHLORINATION FEES WILL BE CHARGED TO THE CONTRACTOR FOR CWD LABOR INCURRED IN THE CHLORINATION OF MAINS. FEE SCHEDULE FOR CHLORINATION OF WATER MAINS APPEARS ELSEWHERE IN THESE NOTES.

TESTING MAINS

(A) ALL PIPES, VALVES, FITTINGS, ETC., SHALL BE LAID IN SUCH A MANNER AS TO LEAVE ALL JOINTS WATERTIGHT. AFTER THE PIPE IS LAID, SUCH LENGTHS OF THE WATER MAIN AS THE CITY OR HIS DESIGNATE MAY DETERMINE, SHALL BE TESTED UNDER HYDROSTATIC PRESSURE INDICATED IN GENERAL NOTES.

(B) THE HYDROSTATIC TEST SHALL BE UNDER THE DIRECTION OF THE CITY, OR HIS DESIGNATE. THE CONTRACTOR MAY OBTAIN WATER FOR TESTING BY OBSERVING THE RULES AND REGULATIONS ENFORCED IN THE MUNICIPALITIES OR TOWNSHIPS IN WHICH THE WORK IS BEING DONE. THE CITY WILL FURNISH A PRESSURE GAUGE FOR MEASURING THE PRESSURE ON THE WATER MAIN, BUT THE CONTRACTOR SHALL FURNISH A SUITABLE PUMP, PIPES, TEST HEADS AND ALL APPLIANCES, LABOR, FUEL AND OTHER APPURTENANCES NECESSARY TO MAKE THESE TESTS.

(C) THE HYDROSTATIC TEST PRESSURE SHALL BE FOR A DURATION OF A MINIMUM OF TWO (2) HOURS WITH ALL VALVES CLOSED DURING WHICH TIME THE INTERNAL PRESSURE SHALL REMAIN WITHIN 5 PSI OF THE SPECIFIED TEST PRESSURE. SHOULD THE TEST PRESSURE DROP MORE THAN 5 PSI, THE CONTRACTOR SHALL RECHARGE THE WATER MAIN TO THE SPECIFIED TEST PRESSURE AND LOCATE AND REPAIR THE LEAK TO THE SATISFACTION OF THE CITY. ANY DAMAGED OR DEFECTIVE PIPE, PIPE JOINTS, FITTINGS, VALVES, HYDRANTS OR APPURTENANCES SHALL BE REPAIRED OR REPLACED WITH SOUND MATERIAL AND THE HYDROSTATIC PRESSURE TEST REPEATED.

(D) AFTER A SECTION OF THE WATER MAIN HAS BEEN TESTED, THE CONTRACTOR SHALL FLUSH THE SAME. IN THE CASE OF SUPPLY MAINS WHERE DRAINS ARE CONNECTED TO VALVE OR DRAIN VAULTS, THE CONTRACTOR SHALL, WITHIN A REASONABLE TIME AFTER THE TEST HAS BEEN COMPLETED, PUMP ALL WATER OUT OF THE VAULTS. FLUSHING SHALL BE DONE IN ACCORDANCE WITH THESE SPECIFICATIONS.

(E) IN COLD WEATHER IMMEDIATELY AFTER TESTING A SECTION OF THE WATER MAIN, THE CONTRACTOR SHALL OPEN ALL VALVES, AND IN THE CASE OF SUPPLY MAINS ALL AIR RELIEF VALVES, BYPASSES AND DRAINS AND PROPERLY DRAIN BONNETS OF ALL VALVES IN THE SECTION OF THE WATER MAIN, AND TAKE ALL OTHER PRECAUTIONS NECESSARY TO PREVENT INJURY TO WATER MAIN AND APPURTENANCES DUE TO FREEZING.

(F) IN ORDER TO BE ABLE TO MAKE PROPER ALLOWANCE FOR LEAKAGE AT VALVES, AIR RELIEF VALVES, BYPASSES, AND DRAINS, ONLY THOSE SECTIONS OF WATER MAIN MAY BE TESTED AS SHALL HAVE SUCH VALVES, TEST PLUGS AND CAPS ACCESSIBLE. THE PERMITTED LEAKAGE SHALL NOT EXCEED A RATE OF SEVENTY-FIVE (75) GALLONS PER TWENTY-FOUR (24) HOURS PER MILE OF PIPE PER INCH OF NOMINAL DIAMETER.

TESTING MAINS (CONTINUED)

(G) IN TESTING NEW MAINS, THE CONTRACTOR SHALL NOT BE PERMITTED TO USE ANY PART OF THE EXISTING MAINS IN HIS TEST UNLESS OTHERWISE SHOWN ON THE CONTRACT DRAWINGS. THE LIMITS OF THE HYDROSTATIC SHALL BE AS SHOWN ON THE PLANS. THE CONTRACTOR SHALL PROVIDE BLIND FLANGES, PLUGS OR CAPS, DEPENDING ON DESIGN, TO THE TESTED LENGTH OF THE PROPOSED MAIN SO THAT IT WILL BE COMPLETELY INDEPENDENT OF THE SAID EXISTING MAINS. PROPER RESTRAINT OF ALL BLIND FLANGES, PLUGS OR CAPS TO PREVENT BLOWOFF SHALL BE PROVIDED AND IN THE CASE OF DEAD END MAINS CONCRETE PIERS WILL BE REQUIRED. NO EXTRA PAYMENT WILL BE MADE AND THE ENTIRE COST SHALL BE DEEMED TO BE INCLUDED IN THE BID PRICE.

WATER MAIN DISINFECTION

WATER MAIN DISINFECTION SHALL CONSIST OF: PRELIMINARY FLUSHING WATER MAINS AFTER THE HYDROSTATIC TEST AND PRIOR TO THE CHLORINATION PROCEDURE, THE FINAL FLUSHING, AND SAMPLING. ALL CONTRACTOR LABOR AND MATERIAL REQUIRED TO ASSIST THE CITY IN THE DISINFECTION OF WATER MAINS SHALL BE INCLUDED IN THE PRICE PER FOOT OF WATER MAIN BID. THE CITY, DIVISION OF WATER WILL CHARGE TO THE CONTRACTOR A "CHLORINATION" FEE FOR DIVISION OF WATER LABOR INCURRED IN THE WORK, PAYABLE TO THE PERMITS AND SALES SECTION OF THE DIVISION OF WATER BEFORE ANY WORK IS PERFORMED.

(A) PRELIMINARY FLUSHING:
BEFORE DISINFECTION ALL DIRT AND FOREIGN MATTER SHALL BE REMOVED FROM THE NEW AND/OR RELOCATED WATER MAIN OR EXTENSIONS TO EXISTING MAINS BY A THOROUGH FLUSHING THROUGH THE HYDRANTS OR BY OTHER APPROVED MEANS BY THE CONTRACTOR. EACH VALVED SECTION OF THE NEWLY LAID PIPE SHALL BE FLUSHED INDEPENDENTLY. THIS SHALL BE DONE AFTER THE PRESSURE TEST. FLUSHING SHALL BE IN ACCORDANCE WITH ANSI/AWWA C-651 STANDARD FOR "DISINFECTING WATER MAINS." WHERE THE FLUSHING VELOCITY SPECIFIED THEREIN CANNOT BE ATTAINED FLUSHING RATES AS DETERMINED BY THE CITY TO BE SUFFICIENT WILL BE PERMITTED. IF IN THE OPINION OF THE CITY THE FLUSHING PRIOR TO THE CHLORINATION PROCEDURE DOES NOT REMOVE DIRT OR OTHER ACCUMULATIONS IN THE PIPE, THE PIPE SHALL BE CLEANED BY MECHANICAL MEANS BY THE CONTRACTOR AND THE FLUSHING SHALL BE REPEATED.

(B) CHLORINATION PROCEDURE:
SUCH LENGTHS OF THE WATER MAIN AS THE CITY MAY DETERMINE SHALL BE CHLORINATED; HOWEVER, IN NO CASE SHALL THE LENGTH EXCEED THAT WHICH CAN BE CHLORINATED SATISFACTORILY IN ONE (1) WORK DAY. SUCH MAXIMUM LENGTH IS GENERALLY UP TO THREE (3) MILES TOTAL, INCLUDING BRANCHES AND CONNECTING WATER MAIN(S), FOR SIXTEEN INCH (16") AND SMALLER; AND THREE (3) VALVE SECTIONS, OR TWO (2) MILES, FOR TWENTY INCH (20") OR LARGER WATER MAINS.

THE CONTRACTOR SHALL COOPERATE WITH THE CITY'S CHLORINATION CREW AND/OR INSPECTOR BY OPERATING ANY REQUIRED WATER MAIN APPURTENANCES TO ASSURE THE DISINFECTION OF SUCH APPURTENANCES AND OF ANY PIPE BRANCHES TO ASSURE CHLORINATION SOLUTION IS CONFINED TO WATER MAIN BEING DISINFECTED. NO OPERATION OF WATER MAIN APPURTENANCES BY THE CONTRACTOR SHALL BE PERFORMED WITHOUT THE CONSENT OF THE CITY.

THE CITY OF CLEVELAND, DIVISION OF WATER'S, CHLORINATION CREW WILL DETERMINE THE LENGTH OF TIME THE CHLORINE SOLUTION IS TO REMAIN IN THE WATER MAIN BEING DISINFECTED.

(C) FINAL FLUSHING:
1. THE FLUSHING OF THE CHLORINATION SOLUTION SHALL BE DONE BY THE CONTRACTOR UNTIL THE CHLORINE SOLUTION IS TOTALLY FLUSHED OUT OF THE SYSTEM BEING DISINFECTED. ALL FLUSHING SHALL BE UNDER THE CONTROL OF THE CITY, OR HIS DESIGNATE. THE CONTRACTOR SHALL OBTAIN WATER FOR FLUSHING IN THE SAME MANNER AS FOR TESTING.

2. IN FLUSHING, THE CONTRACTOR SHALL PROPERLY DISPOSE OF THE CHLORINATION SOLUTION. ONLY POINTS OF DISCHARGE APPROVED BY THE ENGINEER AND THE CITY'S CHLORINATION CREW SHALL BE UTILIZED WITHOUT ANY TREATMENT TO CHEMICALLY NEUTRALIZE THE SOLUTION. IN CASES WHERE DIRECT DISPOSAL IS NOT APPROVED, THE CONTRACTOR SHALL NEUTRALIZE THE CHLORINE SOLUTION AS PROVIDED IN APPENDIX B OF AWWA C-651. CONTRACTOR SHALL OBTAIN APPROVAL, IN WRITING, OF THE LOCAL SEWER AUTHORITY BEFORE DISPOSING TO A SANITARY SEWER. A COPY OF SUCH WRITTEN APPROVAL SHALL BE PROVIDED TO THE INSPECTOR AND CHLORINATION CREW BEFORE ANY FLUSHING IS BEGUN.

3. THE CITY'S CHLORINATION CREW WILL DETERMINE WHEN THE DISINFECTION SOLUTION HAS BEEN SATISFACTORILY FLUSHED FROM THE MAIN AND BRANCHES.

WATER MAIN DISINFECTION (CONTINUED)

(D) SAMPLING:
1. A TIME PERIOD AS DETERMINED BY THE CITY SHALL ELAPSE BEFORE WATER SAMPLES ARE TAKEN FROM THE WATER MAIN(S) AND BRANCH(ES) TO DETERMINE THE BACTERIOLOGICAL QUALITY OF THE WATER THEREIN. IN NO CASE, SHALL THE TIME PERIOD BE LESS THAN TWENTY-FOUR (24) HOURS. NO SAMPLES SHALL BE TAKEN FROM FIRE HYDRANTS. THE CONTRACTOR SHALL ASSIST THE CITY'S CHLORINATION CREW IN OBTAINING SAMPLES. THE CITY WILL FURNISH ALL CONTAINERS AND CONTROL PROCEDURES FOR OBTAINING SAMPLES. THE CITY WILL DETERMINE THE NUMBER AND LOCATIONS OF SAMPLES TO BE TAKEN FROM THE DISINFECTED SECTIONS.

2. IN CASES WHERE THE LENGTH OF WATER MAIN IS LESS THAN 350 FEET, AFTER HYDROSTATIC TESTING ONLY, PRELIMINARY FLUSHING AND SAMPLING WILL BE DONE; HOWEVER, IF THERE ARE TWO (2) POSITIVE SAMPLES, AFTER FLUSHING, THE ENTIRE PROCEDURE OF PRELIMINARY FLUSHING, CHLORINATION, FLUSHING AND SAMPLING SHALL BE REQUIRED. THE CITY'S CHLORINATION CREW WILL COMPLETE AND DISTRIBUTE THE CHLORINATION APPROVAL FORM.

THE CITY WILL DETERMINE THE BACTERIOLOGICAL QUALITY OF THE WATER SAMPLES. IF SAMPLING RESULTS IN TWO (2) CONSECUTIVE POSITIVE SAMPLES, THE PROCEDURE OF CHLORINATION, FLUSHING AND SAMPLING SHALL BE REPEATED. FIGURE 1, SUGGESTED COMBINATION AND SAMPLING TAP, TAKEN FROM AWWA C-651, IS HEREIN MADE A PART OF THESE SPECIFICATIONS.

CONTRACTOR'S LABOR

THE CONTRACTOR SHALL FURNISH AT LEAST TWO (2) TRAINED WORKMEN TO PERFORM ALL LABOR UNDER THE SUPERVISION AND DIRECTION OF THE CITY'S CHLORINATION CREW. THE CONTRACTOR'S LABORERS SHALL PERFORM ALL DUTIES SPECIFIED IN WATER MAIN DISINFECTION GENERAL NOTE. THE CONTRACTOR SHALL PROVIDE PROPER EQUIPMENT AND PROTECTIVE CLOTHING AS MAY BE REQUIRED BY THE LABORERS IN PERFORMING THE NEEDED TASK.

ACCESS PIT

(A) THE CONTRACTOR SHALL PROVIDE TIGHTLY WOOD SHEETED ACCESS PITS, CONFORMING TO THE REQUIREMENTS OF "THE SPECIFIC SAFETY REQUIREMENTS OF THE INDUSTRIAL COMMISSION OF OHIO RELATING TO CONSTRUCTION" RULE 4121:1-3-13, FOR ACCESS TO ALL WATER MAIN APPURTENANCES TO BE UTILIZED IN DISINFECTING WATER MAINS.

(B) THE CONTRACTOR SHALL HAVE ON HAND READY FOR USE, PUMPING EQUIPMENT TO DEWATER ANY AND ALL ACCESS PITS USED FOR DISINFECTING WATER MAINS AND SHALL DEWATER THE ACCESS PITS WHEN ORDERED BY THE CITY.

SUBSURFACE UTILITIES

EXISTING UTILITIES AND DEPTHS SHOWN HEREON ARE BASED ON BEST AVAILABLE DATA. WHILE THE LOCATIONS AND DEPTHS ARE PRESUMED CORRECT, IT IS THE RESPONSIBILITY OF THE CONTRACTOR TO FIELD VERIFY LOCATION AND DEPTHS OF ALL UTILITIES IN WORK AREA PRIOR TO COMMENCEMENT OF WORK. ANY DISCREPANCIES SHALL BE REPORTED TO THE ENGINEER.

FOREIGN STEEL (BUY AMERICAN ACT)

THIS PROJECT MAKES MINIMAL USE OF FOREIGN STEEL/IRON MATERIAL. PER THE THRESHOLD IN 23 CFR 635.410 (b) (4), THE CONTRACTOR IS ALLOWED TO USE UP TO 0.1% OF THE TOTAL CONTRACT COST FOR FOREIGN STEEL/IRON AND STILL MEET THE REQUIREMENTS OF 23 CFR 635.410.

$76,000 OF THE ESTIMATED $250,000 THRESHOLD IS RESERVED FOR WATERMAIN FITTINGS THAT MAY NOT BE AVAILABLE FROM A DOMESTIC SOURCE.

FLOODS AND FREEZING WEATHER

PROPER FACILITIES SHALL BE PROVIDED FOR PROTECTING THE WORK FROM DAMAGE BY FLOOD RAIN OR FROST, AND WORK DONE IN FREEZING WEATHER SHALL BE DONE IN SUCH MANNER AS THE ENGINEER MAY APPROVE. VALVES SHALL BE PROTECTED FROM FREEZING UNTIL BACKFILLED IN THE COMPLETED WORK.

Preliminary - Not for Construction - For Reference Only

DESIGN AGENCY
Michael Baker INTERNATIONAL
DESIGNER SMP
REVIEWER SM 05/15/24
PROJECT ID 82382
SHEET 1373 TOTAL 2696

CUY-90-16.28 (CCG3A)
MODEL: UN1203 PAPERSIZE: 34x22 (in.) DATE: 3/28/2025 TIME: 5:11:39 AM USER: Julie.Ross
pw:\\mb-us-pw.bentley.com:mb-us-pw-03\Documents\Cleveland_OH\01_Projects\ODOT\District12\82382\400-Engineering\Utilities\Sheets\82382_UN1201.dgn

CONNECTION OF NEW MAINS

WHEN THE NEW AND/OR RELOCATED WATER MAINS HAVE BEEN TESTED AND CHLORINATED AND ARE READY TO BE CONNECTED TO THE EXISTING MAIN, THE CONTRACTOR SHALL MAKE SUCH CONNECTIONS AT A TIME DESIGNATED BY THE CITY. PRIOR TO SHUTTING DOWN THE EXISTING MAINS, THE CONTRACTOR SHALL TAKE SUITABLE PRECAUTIONS TO ASSURE A MINIMUM INTERRUPTION TO SERVICE, INCLUDING THE FOLLOWING:

(A) PERFORM ALL NECESSARY EXCAVATION, INCLUDING BELL HOLES, EXPOSING THE EXISTING MAIN SUFFICIENTLY FOR THE OPERATION OF THE PIPE SAW BY THE CITY, OR PIPE CUTTING BY THE CONTRACTOR.

(B) REMOVE THE CAP OR PLUG FROM THE END OF THE NEW MAIN.

(C) SWAB THE INSIDE OF ALL PIPES, BENDS, SLEEVES, COUPLINGS AND OTHER FITTINGS TO BE USED IN CONNECTION THOROUGHLY WITH A CHLORINE SOLUTION OF AT LEAST 100 P.P.M.

(D) MAKE UP AS MUCH OF THE WATER MAIN CONNECTION AS POSSIBLE OUTSIDE THE DITCH TO ELIMINATE THE NEED FOR MAKING MOST OF THE NECESSARY JOINTS DURING THE SHUTDOWN. BY CAREFUL MEASUREMENT ALL PIPE CUTS MAY BE MADE BY THE CONTRACTOR PRIOR TO SHUTTING DOWN.

(E) HAVE SUFFICIENT MANPOWER AND EQUIPMENT ON THE SITE TO PERFORM THE OPERATION IN A MINIMUM AMOUNT OF TIME.

(F) PERFORM AS MUCH OF THE SERVICE AND HYDRANT CONNECTION WORK ALONG RELOCATED MAINS AS IS POSSIBLE.

(G) IN THE TIME PERIOD FROM APRIL 1, THRU TO NOVEMBER 1, NO SHUTDOWNS WILL BE PERMITTED DUE TO SEASONAL AND SYSTEM DEMANDS UNLESS OTHERWISE APPROVED BY THE CITY.

PAINTING

(A) IT IS THE INTENTION OF THESE SPECIFICATIONS TO PROVIDE THAT ALL METAL WORK SUBJECT TO CORROSION SHALL BE SATISFACTORILY PROTECTED BY A DURABLE COATING OF PAINT OR OTHER APPROVED MATERIAL AND THAT ALL METAL SURFACES NOT BURIED IN EARTH, OR IN CONCRETE SHALL BE LEFT CLEAN AND WELL PAINTED AT THE COMPLETION OF THE CONTRACT. UNLESS OTHERWISE SPECIFIED, THE PROTECTION SHALL BE AT LEAST THAT GIVEN BY THREE (3) COATS OF APPROVED PAINT. THE FIRST COAT IS TO BE APPLIED AT THE SHOP BEFORE THE METAL HAS RUSTED AND AFTER ALL GREASE, DIRT AND SCALE HAS BEEN REMOVED. BOLTS AND NUTS SHALL NOT BE SHOP COATED, BUT SHALL RECEIVE THREE (3) COATS OF APPROVED PAINT AFTER INSTALLATION.

(B) ALL METAL WORK WHICH HAS NOT BEEN COATED BEFORE THE ARRIVAL ON THE JOB SHALL BE GIVEN A TEMPORARY PROTECTIVE COATING OF SUCH A NATURE AS TO PERMIT THE READY ADHERENCE OF FUTURE COATINGS. THE TEMPORARY COATING SHALL BE A GOOD GRADE ASPHALTIC PAINT OR OTHER APPROVED MATERIAL. THE TEMPORARY PROTECTION SHALL APPLY PARTICULARLY TO THE VALVE BOXES AND COVERS, MANHOLE RINGS AND COVERS, LADDERS AND LADDER RUNGS, DRESSER TYPE/VICTAULIC TYPE COUPLINGS AND ELSEWHERE WHEN IN THE OPINION OF THE CITY, SUCH PROTECTION IS NECESSARY.

(C) ALL SURFACES OF METAL WHICH WILL BE IN CONTACT AFTER ASSEMBLING SHALL BE PAINTED, AT LEAST ONE (1) COAT, BEFORE ASSEMBLING. THE FINAL COAT OF PAINT ON ALL EXPOSED WORK SHALL BE GIVEN SHORTLY BEFORE THE COMPLETION OF THE CONTRACT.

(D) WHERE PAINTING CLAUSES APPEAR HEREINAFTER, THEY SHALL TAKE PRECEDENCE OVER THIS SECTION, EXCEPT THAT TEMPORARY PROTECTION HEREIN DESCRIBED MAY BE REQUIRED.

(E) ALL OF THIS WORK SHALL BE INCLUDED IN THE PRICE BID FOR THE PARTICULAR ITEM REQUIRING THE PAINTING.

TESTS, INSPECTION AND REPORTS

NOTWITHSTANDING THE REQUIREMENTS OF ANY OTHER PROVISIONS OF THESE SPECIFICATIONS, THE CONTRACTOR SHALL ARRANGE FOR AND PAY ALL COSTS INVOLVED FOR SHOP INSPECTION OF ALL MATERIALS FURNISHED, MANUFACTURE OF ALL PIPE, VALVES, FITTINGS, ETC., FIELD AND SHOP WELDS AND WELDING, AND FURNISH TO THE STATE AND THE CITY OF CLEVELAND COPIES OF ALL SHOP, FABRICATION, MANUFACTURE AND OTHER RELATED INSPECTION REPORTS OF MATERIALS FURNISHED. THIS INSPECTION SHALL BE DONE BY A RECOGNIZED INSPECTION LABORATORY APPROVED BY THE CITY OF CLEVELAND. IN THE CASE OF ANY ITEM NOT SPECIFICALLY MENTIONED IN THE "WATER WORK NOTES," OHIO DEPARTMENT OF TRANSPORTATION CONSTRUCTION AND MATERIAL SPECIFICATIONS - JANUARY 1, 2023 SHALL GOVERN.

HANDLING PIPE AND ACCESSORIES

(A) UNLOADING PIPE, FITTINGS, VALVES, HYDRANTS, AND OTHER ACCESSORIES SHALL, UNLESS OTHERWISE DIRECTED, BE UNLOADED AT THE POINT OF DELIVERY, HAULED TO AND DISTRIBUTED AT THE SITE OF THE PROJECT BY THE CONTRACTOR. THEY SHALL AT ALL TIMES BE HANDLED WITH CARE TO AVOID DAMAGE. IN LOADING AND UNLOADING, THEY SHALL BE LIFTED BY HOISTS OR SLID, OR ROLLED ON SKIDWAYS IN SUCH MANNER AS TO AVOID SHOCK. UNDER NO CIRCUMSTANCES SHALL THEY BE DROPPED. PIPE HANDLED ON SKIDWAYS MUST NOT BE SKIDDED OR ROLLED AGAINST PIPE ALREADY ON THE GROUND.

(B) AT SITE OF WORK: IN DISTRIBUTING THE MATERIAL AT THE SITE OF THE WORK, EACH PIECE SHALL BE UNLOADED OPPOSITE OR NEAR THE PLACE WHERE IT IS TO BE LAID IN THE TRENCH.

(C) PROTECTION OF PIPE COATING: PIPE SHALL BE HANDLED IN SUCH MANNER THAT A MINIMUM AMOUNT OF DAMAGE TO THE COATING WILL RESULT. ANY PIPE OR FITTING, THE COATING OF WHICH HAS BEEN DAMAGED IN SHIPPING OR HANDLING, SHALL HAVE THE DAMAGED PORTION WELL CLEANED AND COATED IN THE SHOP WITH A MATERIAL EQUAL TO THAT APPLIED TO THE PIPE AND FITTINGS AND APPROVED BY THE CITY BEFORE BEING PLACED IN THE WORK. THE CONTRACTOR SHALL THOROUGHLY COAT ALL EXPOSED PARTS OF BOLTS AND NUTS WITH AN APPROVED ASPHALT PAINT, AFTER ALL PIPE HAS BEEN LAID AND BEFORE BACKFILLING HAS BEEN PLACED. ALL FIELD COATINGS SHALL BE FURNISHED AND APPLIED BY THE CONTRACTOR.

(D) PROTECTION OF CONCRETE PIPE: IF, IN THE PROCESS OF MANUFACTURE, TRANSPORTATION, OR HANDLING, ANY CONCRETE PIPE, FITTING OR SPECIAL RECEIVES ANY INDENTATION OR DEFORMATION TO THE CONCRETE, STEEL ENDS OR CONNECTIONS, THE REMOVAL OF WHICH WILL IN ANY DEGREE INJURE IT, SUCH PIPE, FITTING OR SPECIAL SHALL BE REJECTED AND REPLACED WITH NEW MATERIAL TO THE SATISFACTION OF THE CITY AT THE CONTRACTOR'S EXPENSE.

(E) PIPE KEPT CLEAN: THE INTERIOR OF THE PIPE, FITTINGS, AND OTHER ACCESSORIES SHALL BE KEPT FREE FROM DIRT AND FOREIGN MATTER AT ALL TIMES.

(F) FROST PROTECTION: VALVES AND HYDRANTS BEFORE INSTALLATION SHALL BE DRAINED AND STORED IN A MANNER THAT WILL PROTECT THEM FROM DAMAGE BY FREEZING.

CHANGES IN WATER MAINS

WHEREVER IT BECOMES NECESSARY, IN THE OPINION OF THE ENGINEER OR THE CITY TO CHANGE THE LOCATION OR ELEVATION OF WATER MAINS AND HYDRANTS AND WHERE WATER MAIN CONNECTIONS ARE TO BE MADE BETWEEN EXISTING DISTRIBUTION MAINS AND WATER MAINS INSTALLED UNDER THIS CONTRACT, THE CONTRACTOR SHALL REMOVE AND DISPOSE OF ALL EXISTING LINE MATERIALS AS REQUIRED IN ORDER TO RECONNECT THE WATER MAIN AND SHALL FURNISH AND INSTALL COMPLETE, ALL NEW WATER MAIN MATERIALS INCLUDING PIPE, FITTINGS AND VALVES TO MAKE THE CONNECTIONS INDICATED, EXCEPT BRANCH SLEEVES AND VALVES WHICH SHALL BE FURNISHED BY THE CONTRACTOR BUT WILL BE INSTALLED BY THE CITY, EXCEPT WHERE OTHERWISE SPECIFIED UNDER THE SECTION ENTITLED "WORK TO BE DONE BY THE CITY."

THE CONTRACTOR SHALL ALSO FURNISH ALL NECESSARY LABOR, MATERIALS, TOOLS AND EQUIPMENT AND MAKE THE EXCAVATION, BACKFILL AND REPAVING FOR SUCH CONNECTIONS. PAYMENT FOR THIS SHALL BE INCLUDED IN PRICE BID UNDER THE APPROPRIATE ITEM FOR SIZE OF WATER MAIN OR CONNECTION TO BE INSTALLED. ALL WATER MAIN MATERIALS, VALVES, AND APPURTENANCES REMOVED SHALL BECOME THE PROPERTY OF THE CONTRACTOR. (SEE WORK TO BE DONE BY THE CITY).

WORK TO BE DONE BY THE CITY

(A) TAPPING MAINS: THE CONTRACTOR SHALL FURNISH ALL BRANCH SLEEVES, TAPPING SADDLES AND TAPPING VALVES OF THE SIZES AND TYPES INDICATED ON THE CONTRACT DRAWINGS. THE CONTRACTOR SHALL DO ALL THE NECESSARY EXCAVATION, BACKFILLING, SEEDING OR SODDING AND REPAVING REQUIRED THEREFORE. THE CONTRACTOR SHALL ALSO FURNISH ALL EQUIPMENT, TOOLS AND INCIDENTALS, INCLUDING AIR COMPRESSOR, REQUIRED TO DO THIS WORK.

1) THE CITY WILL INSTALL ALL BRANCH SLEEVES, TAPPING SLEEVES AND TAPPING VALVES ON ALL CAST IRON, DUCTILE IRON AND CONCRETE PIPE OF ALL SIZES.

2) THE CITY WILL MAKE THE PRESSURE TAPS ON CAST IRON OR DUCTILE IRON WATER MAINS FOR TAP SIZES UP TO AND INCLUDING 16-INCHES, AND ON CONCRETE WATER MAINS FOR TAP SIZES UP TO AND INCLUDING 12-INCHES.

WORK TO BE DONE BY THE CITY (CONTINUED)

3) THE CONTRACTOR SHALL ARRANGE FOR AND SHALL PAY FOR ALL PRESSURE TAPS OF 20-INCH AND LARGER ON CAST IRON OR DUCTILE IRON WATER MAINS AND FOR ALL PRESSURE TAPS OF 16-INCH AND LARGER ON CONCRETE AND STEEL WATER MAINS. THE CONTRACTOR'S COSTS FOR SUCH ARRANGEMENTS FOR PRESSURE TAPPING SHALL BE INCLUDED IN THE APPROPRIATE BID ITEM.

4) THE CITY WILL NOT OPERATE EQUIPMENT PROVIDED BY THE CONTRACTOR. HOWEVER, THE CITY WILL INSTALL ALL BRANCH SLEEVES, TAPPING SADDLES AND TAPPING VALVES AS INDICATED HEREIN AND WILL ASSIST IN MAKING THE PRESSURE TAP WHERE PRESSURE TAPPING IS PROVIDED BY THE CONTRACTOR. THE CITY WILL ONLY OPERATE EQUIPMENT BELONGING TO THE CITY. ALL LABOR COSTS INCURRED BY THE CITY FOR WORK REQUIRED TO BE DONE BY THE CITY IN THE TAPPING OF WATER MAINS WILL BE CHARGED TO THE CONTRACTOR IN ACCORDANCE WITH THE FEE SCHEDULE APPEARING ELSEWHERE IN THESE NOTES. THE CITY, DIVISION OF WATER, WILL CHARGE TO THE CONTRACTOR A "TAPPING FEE" FOR DIVISION OF WATER LABOR INCURRED IN THE WORK, PAYABLE TO THE PERMITS AND SALES SECTION OF THE DIVISION OF WATER BEFORE ANY WORK IS PERFORMED.

(B) PIPE CUTTING: IN LOCATIONS WHERE BRANCH SLEEVES AND VALVES CANNOT BE INSTALLED, THE CONTRACTOR WILL BE REQUIRED TO CUT IN TEES AND SLEEVE-IN THE REMAINDER OF THE CUT SECTION OF THE EXISTING MAIN, OR, WHEN OTHERWISE REQUIRED WHERE THE CONTRACTOR MUST MAKE PIPE CUTS, IT IS CALLED TO THE CONTRACTOR'S ATTENTION THAT THE DIVISION OF WATER HAS ON HAND AT HARVARD YARDS MOTOR OPERATED PIPE CUTTERS WHICH ARE AVAILABLE FOR CUTTING PIPE BY CITY FORCES.

THE COSTS CHARGED FOR PIPE CUTTING BY CITY FORCES MAY BE OBTAINED FROM THE PERMITS AND SALES SECTION OF THE DIVISION OF WATER, PUBLIC UTILITIES BUILDING, 1201 LAKESIDE AVENUE, CLEVELAND, OHIO 44114. THE CONTRACTOR SHALL DO ALL NECESSARY EXCAVATION, BACKFILLING AND REPAVING AND ALL AIR COMPRESSOR AND CRANE SERVICE SHALL BE FURNISHED BY THE CONTRACTOR. THE CITY, DIVISION OF WATER, WILL CHARGE TO THE CONTRACTOR A "PIPE CUTTING FEE" FOR DIVISION OF WATER LABOR INCURRED IN THE WORK, PAYABLE TO THE PERMITS AND SALES SECTION OF THE DIVISION OF WATER BEFORE ANY WORK IS PERFORMED.

ITEM 638 - WATER WORK, MISC.: CLEVELAND WATER DEPARTMENT CHARGES

THE CITY, DIVISION OF WATER, WILL CHARGE TO THE CONTRACTOR CERTAIN CHARGES PURSUANT TO SECTION 531.03(a) OF THE CODIFIED ORDINANCES OF THE DIVISION OF WATER, AS AMENDED BY ORDINANCE 1043-75 AND ADOPTED BY THE CITY OF CLEVELAND BOARD OF CONTROL RESOLUTION NO: 003-82, AND PER ORDINANCE NO: 2661-81, FOR DIVISION OF WATER LABOR REQUIRED IN THE WORK, PAYABLE TO THE PERMITS AND SALES SECTION OF THE DIVISION OF WATER BEFORE ANY WORK IS PERFORMED. NOTE THAT THE CHARGES INDICATED HEREIN ARE SUBJECT TO CHANGE AND THAT THE CONTRACTOR SHALL VERIFY THE LATEST PRICES WITH THE DIVISION OF WATER, PERMITS AND SALES SECTION.

NO CONTRACTOR'S MARKUP ALLOWED ON BID ITEM 638 - WATER WORK, MISC.: CLEVELAND WATER DEPARTMENT CHARGES. THIS IS AN ALLOWANCE SET UP FOR THE CONTRACTOR TO PAY FOR PERMITS, FEES, AND OTHER CHARGES TO BE REIMBURSED BY THE OHIO DEPARTMENT OF TRANSPORTATION THROUGH THIS PAY ITEM.

ALL PERMITS, FEES AND C.W.D. CHARGES AND THEIR ASSOCIATED COSTS SHALL BE INCLUDED IN THE CONTRACT ALLOWANCE FOR THIS COST. CITY OF CLEVELAND DIVISION OF WATER (C.W.D.) CHARGES AND FEES MAY BE OBTAINED FROM THE DIVISION OF WATER, PERMIT AND SALES SECTION AT (216)664-2444 X 5203

FOR CURRENT CWD SERVICES AND ASSOCIATED FEES SEE:
http://www.clevelandwater.com/construction/construction-fees

ITEM 638 - WATER WORK, MISC.: CLEVELAND WATER DEPARTMENT CHARGES 300,000 EACH

EXCAVATION

(A) THE CONTRACTOR SHALL REMOVE ALL EXISTING STRUCTURES, ROADWAYS, DRIVEWAYS AND OTHER SIMILAR MATERIALS AND MAKE ALL EXCAVATION NECESSARY FOR THE PROPER CONSTRUCTION OF THE WATER MAIN, PIPE CONNECTIONS AND APPURTENANT STRUCTURES, INCLUDING TUNNEL AND SHAFT EXCAVATION. THE EXCAVATION SHALL INCLUDE THE REMOVAL, HANDLING, REHANDLING AND DISPOSAL OF MATERIALS ENCOUNTERED IN THE WORK AND SHALL INCLUDE ALL PUMPING, BAILING, DRAINAGE, SHEETING AND BRACING. MOREOVER, THE CONTRACTOR MUST ASSUME ALL RESPONSIBILITY FOR ANY ADDED EXPENSE OR OTHER LIABILITY WHICH MAY ARISE BY MEANS OF QUICKSAND, OBSTACLES OR CONDITIONS FORESEEN AND UNFORESEEN OR ENCOUNTERED IN THE WORK OF THIS CONTRACT.

(B) TRENCHES SHALL IN EVERY CASE BE OF SUFFICIENT WIDTH TO PERMIT SOLID PACKING OF BACKFILL UNDER AND AROUND PIPES, AND SATISFACTORY CONSTRUCTION OF ALL APPURTENANCES AND FOR SUCH SHEETING AND SHORING, PUMPING AND DRAINING AS MAY BE NECESSARY.

(C) THE TRENCH SHALL BE DUG TO THE ALIGNMENT AND DEPTH REQUIRED AND ONLY SO FAR IN ADVANCE OF PIPE LAYING AS THE ENGINEER SHALL PERMIT. THE TRENCH SHALL BE SO BRACED AND DRAINED THAT WORKMEN MAY WORK THEREIN SAFELY AND EFFICIENTLY. IT IS ESSENTIAL THAT THE DISCHARGE FROM PUMPS BE LED TO NATURAL DRAINAGE CHANNELS, TO DRAINS, OR TO SEWERS.

(D) THE TRENCH WIDTH MAY VARY WITH AND DEPEND UPON THE DEPTH OF TRENCH AND THE NATURE OF THE EXCAVATED MATERIAL ENCOUNTERED, BUT IN ANY CASE SHALL BE OF AMPLE WIDTH TO PERMIT THE PIPE TO BE LAID AND JOINTED PROPERLY AND OF THE BACKFILL TO BE PLACED AND COMPACTED PROPERLY. THE MINIMUM WIDTH OF UNSHEETED TRENCH SHALL BE EIGHTEEN (18) INCHES LARGER THAN THE OUTSIDE DIAMETER OF THE PIPE EXCEPT BY CONSENT OF THE CITY; THE MAXIMUM CLEAR WIDTH OF TRENCH SHALL BE NOT MORE THAN TWO (2) FEET GREATER THAN THE OUTSIDE PIPE DIAMETER. WHEN SHEETING AND BRACING IS USED, THE TRENCH WIDTH SHALL BE INCREASED ACCORDINGLY.

(E) THE TRENCH, UNLESS OTHERWISE SPECIFIED, SHALL HAVE A FLAT BOTTOM CONFORMING TO THE GRADE TO WHICH THE PIPE IS TO BE LAID. THE PIPE SHALL BE LAID UPON SOUND SOIL CUT TRUE AND EVEN, SO THAT THE BARREL OF THE PIPE WILL HAVE A BEARING FOR ITS FULL LENGTH.

(F) ANY PART OF THE TRENCH EXCAVATED BELOW GRADE SHALL BE CORRECTED WITH APPROVED MATERIAL, THOROUGHLY COMPACTED.

(G) WHEN THE UNCOVERED TRENCH BOTTOM AT SUBGRADE IS SOFT AND IN THE OPINION OF THE ENGINEER CANNOT SUPPORT THE PIPE, A FURTHER DEPTH AND OR WIDTH SHALL BE EXCAVATED AND BACKFILLED TO PIPE FOUNDATION GRADE AS REQUIRED UNDER (F), OR OTHER APPROVED MEANS SHALL BE ADOPTED TO ASSURE A FIRM FOUNDATION FOR THE PIPE.

(H) LEDGE ROCK, BOULDERS, LARGE STONES, AND SHALE SHALL BE REMOVED TO PROVIDE A CLEARANCE OF AT LEAST SIX (6) INCHES BELOW ALL PARTS OF THE PIPE, VALVES, OR FITTINGS AND A CLEAR WIDTH OF NINE (9) INCHES ON EACH SIDE OF ALL IRON PIPE, CONCRETE PIPE, AND STEEL PIPE SHALL BE PROVIDED.

(I) EXCAVATION BELOW SUBGRADE IN ROCK, SHALE OR IN BOULDERS SHALL BE BACKFILLED TO SUBGRADE WITH APPROVED MATERIAL, THOROUGHLY COMPACTED.

(J) BELL HOLES OF AMPLE DIMENSIONS SHALL BE DUG IN EARTH TRENCHES AT EACH JOINT TO PERMIT THE JOINTING TO BE MADE PROPERLY. ADEQUATE CLEARANCE FOR PROPER JOINTING OF PIPE LAID IN ROCK SHALL BE PROVIDED AT BELL HOLES.

(K) THE USE OF EXCAVATING MACHINERY WILL BE PERMITTED EXCEPT IN PLACES WHERE ITS OPERATION WILL CAUSE DAMAGE TO TREES, BUILDINGS, OR EXISTING STRUCTURES ABOVE OR BELOW GROUND, IN WHICH CASE HAND METHODS SHALL BE EMPLOYED.

(L) TREES, FENCES, POLES AND ALL OTHER PROPERTY SHALL BE PROTECTED UNLESS THEIR REMOVAL IS AUTHORIZED. ANY PROPERTY DAMAGED SHALL BE SATISFACTORILY RESTORED BY THE CONTRACTOR.

(M) HYDRANTS UNDER PRESSURE, VALVE PIT COVERS, VALVE BOXES, CURB STOP BOXES FIRE OR POLICE CALL BOXES, OR OTHER UTILITY CONTROLS SHALL BE LEFT UNOBSTRUCTED AND ACCESSIBLE DURING THE CONSTRUCTION PERIOD.

(N) THE CONTRACTOR SHALL MAINTAIN ALL EXCAVATIONS IN GOOD ORDER DURING THE CONSTRUCTION, SO AS NOT TO HINDER OR INJURE THE PIPE LAYING, MASONRY OR OTHER WORK. HE SHALL TAKE ALL REASONABLE PRECAUTIONS TO PREVENT MOVEMENT OF THE SIDES OF SUCH EXCAVATION, AND SHALL REMOVE AT HIS OWN EXPENSE ANY MATERIAL SLIDING INTO THE EXCAVATION.

Preliminary / Not For Construction - For Reference Only

WATER WORK GENERAL NOTES

DESIGN AGENCY
Michael Baker INTERNATIONAL
DESIGNER SMP
REVIEWER SM 05/15/24
PROJECT ID 82382
SHEET 1374 TOTAL 2696

CUY-90-16.28 (CCG3A)
MODEL: UN1204 PAPERSIZE: 34x22 (in.) DATE: 3/28/2025 TIME: 5:11:40 AM USER: Julie.Ross
pw:\\mb-us-pw.bentley.com:mb-us-pw-03\Documents\Cleveland_OH\01_Projects\ODOT\District12\82382400-Engineering\Utilities\Sheets\82382_UN1201.dgn

SHEETING AND BRACING

(A) THE CONTRACTOR SHALL FURNISH AND PUT IN PLACE SUCH SHEETING AND BRACING AS MAY BE REQUIRED TO SUPPORT THE SIDES OF TRENCHES OR OTHER EXCAVATION AND SHALL REMOVE SUCH SHEETING AND BRACING, AS THE TRENCH OR EXCAVATION IS FILLED UP, UNLESS THE ENGINEER SHALL ORDER IT LEFT IN PLACE, IN WHICH CASE THE CONTRACTOR SHALL CUT THE PLANK OFF AT A HEIGHT AS ORDERED BY THE ENGINEER, OR AS CALLED FOR ON THE CONTRACT DRAWINGS. THAT PORTION OF THE TIMBER ORDERED TO BE LEFT IN PLACE WILL BE PAID FOR AT THE CONTRACT UNIT PRICE BID PER THOUSAND BOARD FEET MEASURE. NO PAYMENT WILL BE MADE FOR WASTED ENDS.

(B) FOR ALL EXCAVATIONS FOR THE WORK DESCRIBED HEREIN, THE CONTRACTOR SHALL FURNISH AND PLACE SHEETING AND BRACING SO AS TO REDUCE TO A MINIMUM THE POSSIBILITY OF INJURY OR DAMAGE TO THE SAME.

(C) IF THE ENGINEER IS OF THE OPINION THAT AT ANY POINT SUFFICIENT OR PROPER SUPPORTS, SHEETING, OR BRACING HAVE NOT BEEN PROVIDED, HE MAY ORDER ADDITIONAL SUPPORTS, SHEETING OR BRACING, AT THE EXPENSE OF THE CONTRACTOR, AND THE COMPLIANCE WITH SUCH ORDERS BY THE CONTRACTOR SHALL NOT RELIEVE OR RELEASE HIM FROM HIS RESPONSIBILITY FOR SUFFICIENCY OF SUCH SUPPORTS.

(D) SHEETING AND BRACING SHALL BE PROVIDED IN ACCORDANCE WITH RULE 4121:1-3-13 OF "THE SPECIFIC SAFETY REQUIREMENTS OF THE INDUSTRIAL COMMISSION OF OHIO RELATING TO CONSTRUCTION."

PREQUALIFICATIONS OF CONTRACTOR FOR TAPPING OF SERVICE CONNECTIONS ONE (1) INCH AND UNDER

FOR THE RETAPPING OF EXISTING SERVICE CONNECTIONS ONE (1) INCH AND UNDER THE COMMISSIONER OF WATER IS AUTHORIZED TO DEEM PERSONS OR FIRMS QUALIFIED TO TAP MAINS FOR SERVICE CONNECTION REINSTALLATION AFTER QUALIFICATIONS OF TAPPER, INSPECTION OF EQUIPMENT, AND PROVEN ABILITY AND WORKMANSHIP HAVE BEEN ESTABLISHED TO THE COMMISSIONER'S SATISFACTION. TO DETERMINE THE QUALIFICATIONS OF ANY PERSON OR FIRM TO TAP MAINS, THE COMMISSIONER, OR HIS DESIGNEE, SHALL WITNESS THE INSTALLATION OF A SERVICE CONNECTION IN A WATER MAIN UNDER PRESSURE AND INSPECT TAPPING EQUIPMENT TO BE USED BY TAPPER. UPON SUCCESSFUL COMPLETION OF A TAP, THE TAPPER SHALL BE CERTIFIED BY LETTER FROM THE COMMISSIONER TO THE ENGINEER INDICATING THE TAPPER'S COMPETENCE AND QUALIFICATIONS. THIS QUALIFICATION MAY BE REVOKED BY THE COMMISSIONER OF WATER IF IT IS DETERMINED THAT THE TAPPER'S COMPETENCY IS NOT MAINTAINED OR EQUIPMENT IS CHANGED. CERTIFICATION FOR TAPPING ONE (1) INCH AND UNDER SERVICE CONNECTIONS WILL BE REQUIRED ON A JOB BY JOB BASIS AND SUCH CERTIFICATION SHALL ONLY BE IN FORCE FOR THE PROJECT APPLIED FOR.

ALL TAPPING SHALL BE DONE UNDER THE INSPECTION OF THE DIVISION OF WATER'S INSPECTOR. FOR EACH SERVICE TAP TO BE MADE IN ORDER TO REINSTALL A WATER SERVICE CONNECTION, THE TAPPER SHALL OBTAIN AND COMPLETE A CITY OF CLEVELAND "CITY METER REPAIRS HY" FORM C OF C 101-130A FROM THE INSPECTOR. FAILURE TO PRESENT FORM AT TIME OF COMPLETION OF REINSTALLATION SHALL BE CAUSE FOR IMMEDIATE DISQUALIFICATION.

REMOVAL OF EXCAVATED MATERIAL

(A) ALL SURPLUS MATERIAL AND SUCH OTHER MATERIAL AS THE ENGINEER MAY DEEM UNFIT FOR USE AS BACKFILL SHALL BE DISPOSED OF BY THE CONTRACTOR SO AS TO GIVE A MINIMUM OF INCONVENIENCE TO THE PUBLIC. IN CASE OF SETTLEMENT AFTER BACKFILL, THE CONTRACTOR SHALL SUPPLY SUFFICIENT MATERIAL SATISFACTORY TO THE ENGINEER TO MAKE UP FOR THE DEFICIENCY.

(B) IN THE STORING OF EXCAVATED MATERIAL, WHICH IS TO BE USED AS A BACKFILL, THE CONTRACTOR SHALL EXERCISE CARE SO AS TO AVOID INCONVENIENCING THE PUBLIC. IF IN THE OPINION OF THE ENGINEER IT IS NECESSARY TO REMOVE THIS EXCAVATED MATERIAL FROM THE STREET OR LOTS, THE CONTRACTOR SHALL BE REQUIRED TO DO SO.

(C) ANY MATERIAL WHICH MAY SPILL OR DRIP FROM VEHICLES BY HAULING IN THE STREETS SHALL BE REMOVED AND THE STREETS CLEANED BY THE CONTRACTOR, TO THE SATISFACTION OF THE ENGINEER.

(D) WHEN SO DIRECTED BY THE ENGINEER, THE CONTRACTOR SHALL IMMEDIATELY REMOVE ALL EXCAVATED MATERIALS FROM THE SITE.

LAYING PIPE

(A) PROPER IMPLEMENTS, TOOLS, AND FACILITIES, SATISFACTORY TO THE ENGINEER, SHALL BE PROVIDED AND USED BY THE CONTRACTOR FOR THE SAFE AND CONVENIENT PROSECUTION OF THE WORK. ALL PIPE, FITTINGS, AND VALVES SHALL BE CAREFULLY LOWERED INTO THE TRENCH, PIECE BY PIECE, BY MEANS OF DERRICK, PROPER SLINGS, AND OTHER SUITABLE TOOLS OR EQUIPMENT, IN SUCH MANNER AS TO PREVENT DAMAGE TO PIPE OR COATING. UNDER NO CIRCUMSTANCES SHALL PIPE OR ACCESSORIES BE DROPPED OR DUMPED INTO THE TRENCH. IF ANY DEFECTIVE PIECE IS DISCOVERED WHILE PIPE IS SUSPENDED OR AFTER BEING LAID, A NEW PIECE SHALL BE FURNISHED AND INSTALLED BY THE CONTRACTOR.

(B) ALL FOREIGN MATTER OR DIRT SHALL BE REMOVED FROM THE INSIDE OF THE PIPE BEFORE IT IS LOWERED INTO ITS POSITION IN THE TRENCH, AND IT SHALL BE KEPT CLEAN BY APPROVED MEANS DURING AND AFTER LAYING.

(C) AT TIMES WHEN PIPE LAYING IS NOT IN PROGRESS, THE OPEN ENDS OF PIPE SHALL BE CLOSED BY APPROVED MEANS, AND NO TRENCH WATER SHALL BE PERMITTED TO ENTER THE PIPE. NO PIPE SHALL BE LAID IN WATER, OR WHEN THE TRENCH CONDITIONS OR THE WEATHER IS UNSUITABLE FOR SUCH WORK, EXCEPT BY PERMISSION OF THE ENGINEER.

(D) WHEREVER NECESSARY TO DEFLECT PIPE FROM A STRAIGHT LINE, EITHER IN THE VERTICAL OR HORIZONTAL PLANE TO AVOID OBSTRUCTIONS, TO PLUMB STEMS, OR FOR OTHER REASONS, THE DEGREE OF DEFLECTION SHALL BE APPROVED BY THE ENGINEER.

(E) BEFORE LAYING DUCTILE IRON PIPE, ALL LUMPS, BLISTERS AND EXCESS COAL TAR COATING SHALL BE REMOVED FROM THE BELL AND SPIGOT ENDS OF EACH PIPE. THE PIPE ENDS SHALL THEN BE KEPT CLEAN UNTIL JOINTS ARE MADE.

(F) BEFORE LAYING CONCRETE PIPE, THE PIPE ENDS SHALL BE MADE SMOOTH WITH EMERY CLOTH, FILE OR OTHER APPROVED MEANS, WIRE BRUSHED AND WIPED UNTIL CLEAN AND DRY. PIPE ENDS SHALL BE KEPT CLEAN UNTIL JOINTS ARE MADE. AFTER CLEANING AND DRYING, ALL CONTACT SURFACES OF THE GASKETS AND STEEL JOINT RINGS SHALL BE COATED WITH AN APPROVED FLAX SOAP BEFORE ENTERING THE SPIGOT ENDS INTO THE SOCKET. IMMEDIATELY AFTER THE JOINT IS PULLED TOGETHER, THE PIPE SHALL BE BLOCKED WITH WOOD BLOCKING. A SURCINGLE SHALL BE INSTALLED AROUND THE JOINT AND THE PIPE SHALL BE SECURED WITH EARTH OR SAND AS REQUIRED, CAREFULLY TAMPED UNDER AND ON EACH SIDE UP TO THE SPRING-LINE OF THE PIPE, INCLUDING THE BELL HOLES. ALL BLOCKING SHALL BE REMOVED WHEN BACKFILL HAS REACHED THE SPRING LINE FOR THE PIPE.

(G) BEFORE LAYING STEEL PIPE, THE PREPARATION OF PIPE ENDS FOR THE STEEL PIPE AND FITTINGS SHALL MADE IN ACCORDANCE WITH THE AWWA SPECIFICATIONS, C 200-86, "STEEL PIPE 6" AND LARGER," OR LATEST REVISION THEREOF.

FLOATING

THE CONTRACTOR SHALL TAKE EVERY PRECAUTION AGAINST THE FLOATING OF THE PIPE DUE TO WATER COMING INTO THE TRENCH, OR THROUGH CAVING IN, FLUSHING OR PUDDLING. IN CASE OF SUCH FLOATING THE CONTRACTOR SHALL REPLACE THE PIPE AT HIS OWN EXPENSE AND MAKE WHOLLY GOOD ANY INJURY OR DAMAGE WHICH MAY HAVE RESULTED.

PLUGGING DEAD ENDS

THE CONTRACTOR SHALL INSTALL STANDARD RESTRAINED PLUG WITH RODS CLAMPS INTO THE BELLS OF ALL DEAD ENDS OF PIPES, TEES, OR CROSSES, AND SHALL INSTALL STANDARD RESTRAINED CAP WITH RODS AND CLAMPS ONTO SPIGOT ENDS OF DEAD END MAINS WHERE INDICATED ON THE CONTRACT DRAWINGS OR AS ORDERED BY THE ENGINEER. CONCRETE PIERS SHALL BE PLACED BEHIND ALL PLUGS AND CAPS. THE COST OF FURNISHING AND INSTALLING THE PLUGS AND CAPS, COMPLETE WITH RODS AND CLAMPS AND CONCRETE PIER, SHALL BE INCLUDED IN THE PER FOOT PRICE BID FOR THE VARIOUS SIZES OF NEW/RELOCATED OR LOWERED WATER MAINS.

THE COST OF FURNISHING AND INSTALLING THE PLUG OR CAP, COMPLETE WITH RODS AND CLAMPS AND CONCRETE PIER, IN EXISTING WATER MAINS, SHALL BE INCLUDED IN THE UNIT PRICE BID FOR EACH "ITEM SPECIAL - PLUGGING EXISTING WATER MAINS AND BRANCHES," CLASSIFIED AS TO SIZE AS SHOWN ELSEWHERE IN THESE PLANS. PAYMENT FOR TEMPORARY PLUGS OR CAPS USED FOR PRESSURE TESTING AND/OR CHLORINATION SHALL BE INCLUDED IN THE UNIT PRICE BID PER FOOT OF WATER MAIN TO BE TESTED AND CHLORINATED.

CASING PIPE OR TUNNELING

THE INSTALLATION OF CASING PIPE OR TUNNELING WILL NOT BE PERMITTED WITHOUT PERMISSION OF THE CITY.

LISTS AND INVOICES

(A) THE CONTRACTOR SHALL FURNISH THE CITY WITH THE LIST IN DUPLICATE OF PIECES IN EACH SHIPMENT OF PIPE AND SPECIALS, GIVING THE SERIAL NUMBER AND DESIGNATION OF EACH PIPE AND SPECIAL SENT AT THAT TIME.

(B) THE MATERIAL SHALL BE SHIPPED IN SUCH SECTIONS AS THE STATE AND CITY MAY ORDER.

BACKFILLING

A. BACKFILLING SHALL CONSIST OF A SAND BEDDING BACKFILL AND BACKFILL, UNLESS OTHERWISE SPECIFIED, OR WHERE PREMIUM BACKFILL IS REQUIRED, MADE WITH MATERIAL EXCAVATED FROM THE TRENCHES, PROVIDING THE SAME IS SATISFACTORY TO THE ENGINEER AND THE CITY. IF, IN THE OPINION OF THE ENGINEER AND THE CITY, THE MATERIAL EXCAVATED IS UNSATISFACTORY, THEN THE CONTRACTOR SHALL FURNISH AT HIS OWN EXPENSE OTHER SUITABLE MATERIAL FOR BACKFILL.

ALL BACKFILL MATERIAL SHALL BE FREE FROM SLAG, CINDERS, RUBBISH, AND OTHER OBJECTIONABLE MATERIAL. BACKFILL SHALL BE PLACED INTO THE TRENCH AND NOT DOZED OR DUMPED FROM THE TOP OF THE TRENCH. THIS WORK INCLUDES ALL BACKFILLING, TOGETHER WITH RAMMING, PUDDLING, AND ROLLING, AS REQUIRED; THE FURNISHING OF SAND BEDDING BACKFILL, SUITABLE MATERIAL FOR BACKFILL, INCLUDING PREMIUM BACKFILL; AND ALL APPURTENANT WORK INCIDENTAL THERETO.

B. BEFORE LAYING THE PIPE, THE BOTTOM OF THE TRENCH SHALL BE BROUGHT TO THE GRADE OF THE BOTTOM OF THE PIPE, EXCEPT AT PIPE JOINTS, WHEREVER THE BOTTOM OF THE TRENCH HAS BEEN EXCAVATED BELOW THE BOTTOM OF THE PIPE, THE CONTRACTOR SHALL PLACE SAND BEDDING, OR OTHER APPROVED MATERIAL SATISFACTORY TO THE ENGINEER AND THE CITY, TO BRING THE BOTTOM OF THE TRENCH TO THE GRADE OF THE BOTTOM OF THE PIPE. THIS SAND BEDDING SHALL BE THOROUGHLY TAMPED BEFORE THE PIPE IS PLACED IN THE TRENCH.

C. THE BEDDING BACKFILL THREE (3) INCHES UNDER, AROUND AND TO A DEPTH OF ONE (1) FOOT ABOVE THE TOP OF ALL PIPE, SHALL BE MADE WITH SAND, WHICH MATERIAL SHALL BE FREE FROM STONE AND OTHER OBJECTIONABLE MATERIAL NOTED ABOVE IN PARAGRAPH (A) AND HEREIN. THE SAND USED FOR BEDDING BACKFILL SHALL BE A NATURAL BANK SAND, GRADED FROM FINE TO COARSE, NOT LUMPY OR FROZEN, AND FREE FROM SLAG, CINDERS, ASHES, RUBBISH, OR OTHER DELETERIOUS OR OBJECTIONABLE MATERIAL. THE SAND USED FOR BEDDING BACKFILL SHALL NOT CONTAIN A TOTAL OF MORE THAN 10% BY WEIGHT OF LOAM AND CLAY, AND ALL SUCH MATERIAL MUST BE CAPABLE OF BEING PASSED THROUGH A 3/4 INCH SIEVE. NOT MORE THAN 5% SHALL REMAIN ON A #4 SIEVE. THE CONTRACTOR MUST USE SPECIAL CARE IN PLACING THIS PORTION OF THE SAND BEDDING BACKFILL, SO AS TO AVOID SCRAPING OF THE EXTERIOR COATING, INJURING THE PIPE, AND DISTORTING OR MOVING THE PIPE WHEN COMPACTING THE SAME. THE SAND BEDDING BACKFILL SHALL BE TAMPED IN THIN LAYERS OF SIX (6) INCHES, SIMULTANEOUSLY ON EACH SIDE OF THE PIPE, AND THOROUGHLY COMPACTED SO AS TO PROVIDE A SOLID BACKING AGAINST THE EXTERNAL SURFACE OF THE PIPE.

D. BACKFILL ABOVE THE ONE (1) FOOT SAND BEDDING BACKFILL SHALL BE MADE WITH MATERIAL SPECIFIED HEREIN IN EITHER PARAGRAPH (A) OR AS SPECIFIED HEREIN FOR PREMIUM BACKFILL IN PARAGRAPH (G).

E. PREMIUM BACKFILL SHALL BE PLACED WHERE EXISTING AND FUTURE PERMANENT PAVEMENT, SIDEWALKS, DRIVEWAYS, SEWER PIPE CROSSINGS AND CURB CROSSINGS HAVE BEEN OPEN OR UNDERCUT. THE PLACEMENT OF PREMIUM BACKFILL ALSO APPLIES TO ALL EXCAVATION WITHIN THREE (3) FEET OF EXISTING OR FUTURE PERMANENT PAVEMENT, SIDEWALKS, DRIVEWAYS, SEWER PIPE CROSSINGS AND CURB CROSSINGS. IF PART OF THE TRENCH IS UNDER EXISTING OR FUTURE PAVEMENT, SIDEWALK, DRIVEWAY OR CURB THE ENTIRE TRENCH SHALL BE BACKFILLED WITH PREMIUM BACKFILL MATERIAL SPECIFIED HEREIN.

F. ONLY AFTER THE ONE (1) FOOT SAND BEDDING BACKFILL HAS BEEN SATISFACTORILY COMPACTED, MAY WORK PROCEED IN PLACING THE REMAINING BACKFILL WHICH MUST BE CAREFULLY PLACED AND COMPACTED BY TAMPING, PUDDLING, OR ROLLING. ALL PRECAUTIONS MUST BE TAKEN TO ELIMINATE FUTURE SETTLEMENT. THE NUMBER OF MEN TAMPING SHALL BE NOT LESS THAN THE NUMBER BACKFILLING, AND ADDITIONAL MEN SHALL BE KEPT IN THE TRENCH TO SPREAD THE MATERIAL.

BACKFILLING (CONTINUED)

G. PREMIUM BACKFILL CONSISTING OF CONTROLLED LOW STRENGTH MATERIAL CONTROLLED DENSITY FILL (CLSM-CDF) "FLOWABLE FILL" IS REQUIRED:

A: UNDER ALL EXISTING OR FUTURE PAVEMENTS, SIDEWALKS, AND DRIVES WITHIN MEETING THE FOLLOWING REQUIREMENTS:

B: AS SPECIFIED IN THE WATER MAIN TRENCH DETAIL FOUND ON SHEET 1417

WHEN PREMIUM BACKFILL IS REQUIRED BY THE LOCAL MUNICIPALITY FOR CASES OTHER THAN THOSE LISTED ABOVE, IT SHALL BE LIMESTONE GRADED PER ODOT 304.02 OR ODOT 411. NO SLAG IS PERMITTED.

SIEVE	% PASSING GRADING
2-INCH	100
1-INCH	70-100
3/4-INCH	50-90
NO. 4	30-60
NO. 30	9-33
NO. 200	0-13

THE FRACTION OF THESE MATERIALS PASSING A #40 SIEVE SHALL HAVE A LIQUID LIMIT NOT GREATER THAN 30 (THIRTY) AND A PLASTICITY INDEX NOT GREATER THAN 6 (SIX).

SLAG; NATURAL OR SYNTHETIC CRUSHED AGGREGATE SUCH AS BROKEN OR CRUSHED ROCK; CRUSHED CONCRETE; OR OTHER TYPE OF MATERIAL IN LIEU OF THE SAND BEDDING BACKFILL AND THE LIMESTONE SCREENING BACKFILL MATERIAL WILL NOT BE PERMITTED.

THE MINIMUM COMPACTION FOR ALL SAND BEDDING BACKFILL, BACKFILL AND PREMIUM BACKFILL SHALL BE 95% STANDARD PROCTER.

H. BACKFILLING SHALL NOT BE DONE IN FREEZING WEATHER, EXCEPT BY PERMISSION OF THE ENGINEER AND THE CITY, AND IT SHALL NOT BE MADE WITH FROZEN MATERIAL, NOR SHALL ANY FILL BE MADE WHERE THE MATERIAL ALREADY IN THE DITCH IS FROZEN.

I. SPECIAL TREATMENT OF THE TRENCH WILL BE REQUIRED WHERE CINDER EXCAVATION, EXCEEDING ONE (1) FOOT MEASURED FROM THE GROUND OR PAVEMENT SURFACE IS ENCOUNTERED. BEFORE LAYING THE PIPE, THE BOTTOM OF THE TRENCH SHALL BE DUG EIGHT (8) INCHES BELOW PIPE GRADE AND THEN BROUGHT TO THE GRADE OF THE PIPE IN THE FOLLOWING MANNER. A FOUR (4) INCH LAYER OF CRUSHED LIMESTONE SHALL BE PLACED ON THE ENTIRE WIDTH OF THE BOTTOM OF THE TRENCH, FOLLOWED BY A FILLER OF HYDRATED LIME AND A LAYER OF SAND BEDDING TO SIX (6) INCHES ABOVE THE TOP OF THE PIPE. THE FOUR (4) INCH CRUSHED LIMESTONE SHALL BE WELL GRADED FROM FINE TO COARSE, AND FREE FROM SLAG, CINDERS, ASHES, RUBBISH OR OTHER OBJECTIONABLE MATERIAL. ALL LIMESTONE MUST BE CAPABLE OF BEING PASSED THROUGH A 3/4 INCH SIEVE. ON TOP OF THIS LAYER OF CRUSHED LIMESTONE, HYDRATED LIME SHALL BE SUPPLIED IN THE AMOUNT OF 3/8 OF A POUND PER SQUARE FOOT OF TRENCH.

THIS BED OF CRUSHED LIMESTONE, WITH FILLER OF HYDRATED LIME IN PLACE, SHALL BE THOROUGHLY TAMPED BEFORE THE PIPE IS LAID IN THE TRENCH AND THE SAND BEDDING BACKFILL IS PLACED. THE SAND BEDDING BACKFILL SHALL BE FOR THREE (3) INCHES UNDER, AROUND AND TO A DEPTH OF SIX (6) INCHES ABOVE THE TOP OF THE PIPE. THE CONTRACTOR MUST USE SPECIAL CARE IN PLACING THIS PORTION OF THE BACKFILL SO AS TO AVOID SCRAPING OF THE EXTERIOR COATING, INJURING THE PIPE, AND DISTORTING OR MOVING THE PIPE WHEN COMPACTING THE SAME. ON TOP OF THE SAND BEDDING BACKFILL THE CONTRACTOR SHALL PLACE ANOTHER LAYER OF CRUSHED LIMESTONE SIX (6) INCHES THICK FOR THE ENTIRE WIDTH OF THE TRENCH. ON TOP OF THIS SIX (6) INCH LAYER OF COMPACTED LIMESTONE A SECOND FILLER OF HYDRATED LIME SHALL THEN BE APPLIED IN THE AMOUNT OF 3/4 OF A POUND PER SQUARE FOOT OF TRENCH. THE REMAINING BACKFILL SHALL BE MADE WITH LIMESTONE SCREENINGS AS ELSEWHERE SPECIFIED HEREIN, CAREFULLY PLACED AND COMPACTED BY TAMPING, OR ROLLING. ALL PRECAUTIONS SHALL BE TAKEN TO ELIMINATE FUTURE SETTLEMENT. THE TREATMENT OF THE TRENCH BOTTOM PREVIOUSLY DESCRIBED MAY BE OMITTED WHERE THE CINDER DEPTH, MEASURED FROM THE TOP SURFACE DOES NOT EXCEED 2'-6".

PAYMENT OF BACKFILL SHALL BE INCIDENTAL TO THE COST OF THE PIPE.

Preliminary Plans - For Reference Only

WATER WORK GENERAL NOTES

DESIGN AGENCY
Michael Baker INTERNATIONAL

DESIGNER
SMP

REVIEWER
SM 05/15/24

PROJECT ID
82382

SHEET 1375 TOTAL 2696

CUY-90-16.28 (CCG3A)
MODEL: UN1205 PAPERSIZE: 34x22 (in.) DATE: 3/28/2025 TIME: 5:11:41 AM USER: Julie.Ross
pw:\\mb-us-pw.bentley.com:mb-us-pw-03\Documents\Cleveland_OH\01_Projects\ODOT\District12\82382400-Engineering\Utilities\Sheets\82382_UN1201.dgn

PROVISIONS FOR PROTECTING WORK

THE CONTRACTOR SHALL FURNISH ALL THE NECESSARY EQUIPMENT, SHALL TAKE ALL NECESSARY PRECAUTIONS AND SHALL ASSUME THE ENTIRE COST OF HANDLING ANY SEWAGE, SEEPAGE, STORM SURFACE AND FLOOD FLOWS OR ICE, WHICH MAY BE ENCOUNTERED AT ANY TIME DURING THE CONSTRUCTION OF THE WORK. THE MANNER OF PROVIDING FOR THESE OCCURRENCES SHALL MEET WITH THE APPROVAL OF THE ENGINEER. AFTER INSTALLATION, THE CONTRACTOR SHALL FURNISH AND MAINTAIN SATISFACTORY PROTECTION TO ALL EQUIPMENT WHETHER OF THIS OR OTHER CONTRACT AGAINST INJURY BY WEATHER, FLOODING OR BY DIRECT OR INCIDENTAL DAMAGE FROM HIS OWN OPERATIONS, LEAVING ALL WORK IN A PERFECT CONDITION AT THE COMPLETION OF THE CONTRACT. NO EXTRA PAYMENT WILL BE MADE FOR THIS WORK BUT THE ENTIRE COST OF THE SAME SHALL BE INCLUDED IN THE WORK TO BE DONE IN THIS CONTRACT.

DRAWINGS

(A) THE CONTRACTOR SHALL SUBMIT TO THE CITY THROUGH THE ENGINEER FOR APPROVAL, SIX (6) SETS OF PRINTS OF ALL SHOP DRAWINGS. SHOP DRAWINGS SHALL BE FULLY DIMENSIONED LEGIBLE DRAWINGS AS DEVELOPED BY THE MATERIALS FABRICATOR. SHOP DRAWINGS SHALL BE SUBMITTED FOR ALL BOLTLESS RESTRAINED IRON PIPE AND FITTINGS, PRESTRESSED CONCRETE PIPE AND FITTINGS, STEEL PIPE AND FITTINGS, SPECIAL FITTINGS, COUPLINGS, SPECIALS, AND MISCELLANEOUS DETAILS, SUCH AS VALVES, DRAIN FORGINGS, PRECAST VAULTS, CASTINGS, ETC. DRAWINGS SHALL INCLUDE DETAILS, LAYOUTS AND LAYING SCHEDULE FOR ALL PIECES FURNISHED REQUIRING DRAWING SUBMITTAL.

(B) TWO (2) SETS OF PRINTS OF EACH OF THE DRAWINGS SUBMITTED WILL BE RETURNED TO THE CONTRACTOR THROUGH THE ENGINEER WITH THE CRITICISMS OR APPROVAL OF THE CITY NOTED THEREON. IN CASE THE DRAWINGS ARE NOT APPROVED, THE CONTRACTOR SHALL AGAIN SEND FOR APPROVAL SIX (6) SETS OF REVISED PRINTS OF EACH OF THE DRAWINGS TO TAKE CARE OF THE CRITICISMS NOTED. NO WORK SHALL BE DONE IN THE SHOP UNTIL AFTER THE DRAWINGS HAVE BEEN FINALLY APPROVED.

(C) AFTER THE DRAWINGS HAVE BEEN FINALLY APPROVED, THE CONTRACTOR SHALL FURNISH THE CITY THROUGH THE ENGINEER WITH ONE (1) COMPLETE SET OF REPRODUCIBLE TRACINGS ON MYLAR OF EACH OF THE FINAL SHOP DRAWINGS. MYLAR SHALL BE OF MINIMUM 4-MIL THICKNESS, SHALL BE OF A SINGLE BASE STOCK WITH AN ETCHED SURFACE TO PROVIDE A MATTE FINISH ON THE FRONT AND SHALL BE OF A PERMANENT NON-ERASABLE, "WASH-OFF" TYPE, OF WHICH THE IMAGE ON THE MYLAR MEDIUM CANNOT BE REMOVED BY ERASURE. ALL SHOP DRAWINGS SHALL BE REPRODUCED FROM THEIR FULL SIZED ORIGINAL TRACINGS AND NOT AS REDUCED SIZES AS MAY HAVE BEEN SUBMITTED DURING THE REVIEW PROCESS. SMALL SIZED DRAWINGS PERTAINING TO A GIVEN ITEM SHALL BE GROUPED FOR REPRODUCTION SO THAT ALL TRACINGS SHALL BE 24" X 36" OVERALL. TRACINGS NOT 24" X 36" IN SIZE WILL NOT BE ACCEPTED.

(D) THE APPROVAL OF THE DRAWINGS BY THE ENGINEER AND THE CITY SHALL NOT RELIEVE THE CONTRACTOR OF ANY OF HIS OBLIGATIONS IN CONNECTION WITH THIS CONTRACT.

PAVEMENTS, ROAD SURFACES, BERMS, SIDEWALKS, DRIVEWAYS, CURBING, AND UNDERDRAINS

(A) THE CONTRACTOR SHALL REMOVE ALL PAVEMENTS AND ROAD SURFACES INCLUDING BERMS, SIDEWALKS, DRIVEWAYS, CURBING, AND UNDERDRAINS WITHIN THE LINES OF EXCAVATION. AFTER THE PIPE HAS BEEN LAID, ALL APPURTENANT WORK CONSTRUCTED AND BACKFILL COMPLETED, HE SHALL FURNISH, PLACE AND MAINTAIN, WHEREVER THE PAVEMENT OR ROAD SURFACE INCLUDING BERMS, SIDEWALKS, DRIVEWAYS, CURBING, AND UNDERDRAINS HAS BEEN REMOVED OR DAMAGED BY HIM, A TEMPORARY PAVEMENT IN THE PAVED PORTION OF STREETS, OR A TEMPORARY ROAD SURFACE IN THE UNPAVED PORTION OF STREETS, SO AS TO PROVIDE A SAFE AND PASSABLE ROADWAY UNTIL SUCH TIME AS THE FINAL PAVEMENT OR ROAD SURFACE INCLUDING BERMS, SIDEWALKS, DRIVEWAYS, CURBING, AND UNDERDRAINS IS COMPLETED.

(B) WHEN ONLY A PORTION OF THE STREET IS PAVED AND THE LINES OF EXCAVATION ARE IN THE UNPAVED PORTION OF SAME, THE CONTRACTOR SHALL USE THE UTMOST CARE IN PREVENTING INJURY TO THE PAVEMENT. IF, IN MAKING THE EXCAVATION OR FOR ANY OTHER CAUSE, THE PAVEMENT IS REMOVED OR INJURED BY THE CONTRACTOR, HE SHALL FURNISH, PLACE AND MAINTAIN A TEMPORARY PAVEMENT WHEREVER THE PAVEMENT HAS BEEN REMOVED OR DAMAGED, SO AS TO PROVIDE A SAFE AND PASSABLE ROADWAY UNTIL SUCH TIME AS THE FINAL PAVEMENT IS COMPLETED.

PAVEMENTS, ROAD SURFACES, BERMS, SIDEWALKS, DRIVEWAYS, CURBING, AND UNDERDRAINS (CONTINUED)

(C) ALL FINAL PAVING OF ROAD SURFACE, INCLUDING BASE PAVEMENT, BERMS, SIDEWALKS, DRIVEWAYS, CURBING, AND UNDERDRAINS SHALL BE DONE BY THE CONTRACTOR IN CONFORMITY TO ODOT SPECIFICATIONS DATED 2023 OR APPLICABLE STANDARD CUYAHOGA COUNTY DRAWINGS. THE CONTRACTOR SHALL BEAR THE ENTIRE COST OF WORK. THE BASE OF PAVEMENT CONCRETE SHALL BE INSTALLED ON A CAREFULLY PREPARED BED (LEVEL WITH THE BOTTOM OF THE ABUTTING BASE) OVER DISTURBED AREAS AND SHALL BE OF THE THICKNESS SPECIFIED, BUT IN NO CASE LESS THAN 7" THICK. WHERE PAVEMENT OR BASE OF PAVEMENT HAS BEEN DAMAGED BY CAVE-IN, OR BY TRENCH CUT LEAVING A PORTION OR PORTIONS OF PAVEMENT 18 INCHES OR LESS IN WIDTH (BETWEEN SUCH CUT OR DAMAGE) TO CURB OR OTHER SUBSTRUCTURE, THAT REMAINING PORTION OF PAVEMENT SHALL BE REMOVED AND RESTORED MONOLITHIC WITH THE TYPE AND KIND OF PAVEMENT SPECIFIED FOR THE ADJACENT TRENCH AREA. THE WEARING COURSE OVER TRENCH OR OTHER DISTURBED AREAS SHALL BE RESTORED TO MATCH EXISTING PAVEMENT UNLESS OTHERWISE SPECIFIED.
ASPHALTIC CONCRETE WEARING COURSE OVER SUCH AREAS SHALL BE NEATLY AND SQUARELY CUT, NOT LESS THAN 3 FEET WIDE, BEFORE THE INSTALLATION OF A CAREFULLY TOOTHED-IN TO ADJACENT PAVEMENT, UNLESS OTHERWISE SPECIFIED. EXPANSION JOINTS SHALL BE INSTALLED BETWEEN BRICK WEARING COURSE (IF GROUTED) AND CURB OR OTHER SUBSTRUCTURE, WHERE SUCH RESTORATION IS REQUIRED BY THESE SPECIFICATIONS.

(D) ALL DAMAGED OR DISPLACED CURB AND UNDERDRAIN SHALL BE RENEWED, OR REPLACED OR RESET TO THE SATISFACTION OF THE ENGINEER. NO FAULTY CURB OR CURB LESS THAN 30" LONG WILL BE PERMITTED FOR REUSE.

(E) AT LOCATIONS NOT SPECIFICALLY MENTIONED, THE CONTRACTOR SHALL RESTORE THE SAME TYPE OF PAVEMENT INCLUDING BERMS, SIDEWALKS, DRIVEWAYS, CURBING, AND UNDERDRAIN AS ENCOUNTERED. IF THE THICKNESS OF THE CONCRETE BASE IS GREATER THAN THE RECORD CALLS FOR, THE CONTRACTOR SHALL RESTORE THE THICKNESS GIVEN IN THE RECORD. IF RECORDS ARE NOT AVAILABLE, THE CONTRACTOR SHALL MATCH EXISTING THICKNESSES WHICH HAS BEEN DONE BY THE CONTRACTOR, THEN HE SHALL RELAY SAME AFTER ALL WORK, INCLUDING BACKFILLING HAS BEEN COMPLETED.

(F) IF PRIOR TO THE EXPIRATION OF THIS CONTRACT, ANY OF THE PAVEMENTS, OR ROAD SURFACES, WITHIN THE LINES OF EXCAVATION OR ADJACENT THERETO, SHALL HAVE BEEN DAMAGED OR INJURED, DUE TO UNDERMINING, OR FOR ANY OTHER CAUSE WHICH MAY BE ATTRIBUTED TO THE WORK WHICH IS BEING DONE BY THE CONTRACTOR, THEN THE CONTRACTOR SHALL REMOVE SUCH DAMAGED OR INJURED PAVEMENTS OR ROAD SURFACES, FOUNDATIONS OF SAME AND ALL LOOSE EARTH. HE SHALL THEN BACKFILL WITH MATERIAL SPECIFIED HEREIN, PROPERLY COMPACTED AND REPLACE THE FINAL PAVEMENT, ROAD SURFACE INCLUDING BERMS, SIDEWALKS, DRIVEWAYS, CURBING, AND UNDERDRAINS.

(G) IF ANY SIDEWALKS, DRIVEWAYS, CURBS, OR UNDERDRAINS ARE REMOVED OR INJURED BY THE CONTRACTOR IN THE COURSE OF MAKING EXCAVATION OR HANDLING MATERIALS, OR FOR ANY REASON WHICH MAY BE ATTRIBUTED TO WORK WHICH HAS BEEN DONE BY THE CONTRACTOR, THEN HE SHALL RELAY SAME AFTER ALL WORK, INCLUDING BACKFILLING HAS BEEN COMPLETED. IF ANY STONE SIDEWALKS, DRIVEWAYS, OR CURBS WHICH HAVE BEEN REMOVED OR INJURED, ARE UNFIT TO BE RELAID, THEN THE CONTRACTOR SHALL FURNISH NEW MATERIAL AND RELAY SAME. ALL CONCRETE OR CEMENT SIDEWALKS, DRIVEWAYS OR CURBS, WHICH ARE REMOVED OR INJURED BY THE CONTRACTOR SHALL BE BROKEN UP BY HIM AND HE SHALL FURNISH ALL LABOR AND MATERIALS AND CONSTRUCT NEW SIDEWALKS, DRIVEWAYS OR CURBS, TO REPLACE THOSE REMOVED OR INJURED. AT INTERSECTING WALKS, DRIVE, ETC., ADDITIONAL CONCRETE SLABS BEYOND THE EXCAVATION LIMITS SHALL BE REMOVED AND REPLACED WITH NEW MATERIAL, IN ORDER TO AVOID HAVING MORE JOINTS THAN IN THE ORIGINAL WORK. ALL SLABS REPLACED SHALL BE OF FULL WIDTH. THE CONTRACTOR SHALL FURNISH, PLACE AND MAINTAIN, WHEREVER THE SIDEWALK HAS BEEN REMOVED OR DAMAGED BY HIM, A TEMPORARY SIDEWALK SO AS TO PROVIDE A SAFE AND PASSABLE SIDEWALK UNTIL SUCH TIME AS THE FINAL SIDEWALK IS COMPLETED.

(H) ALL PAVEMENTS, BASE PAVEMENTS, ROAD SURFACES, BERMS, SIDEWALKS, DRIVEWAYS, CURBS, OR UNDERDRAINS WHICH THE CONTRACTOR IS REQUIRED TO REPLACE OR TO HAVE REPLACED, SHALL, AT THE EXPIRATION OF THE PERIOD OF MAINTENANCE, BE IN AT LEAST AS GOOD CONDITION AS AT THE TIME OF AWARDING THE CONTRACT.

PAVEMENTS, ROAD SURFACES, BERMS, SIDEWALKS, DRIVEWAYS, CURBING, AND UNDERDRAINS (CONTINUED)

(I) ALL WORK WHICH THE CONTRACTOR MAY DO IN CONNECTION WITH THE OPENING UP OR REPLACING OF PAVEMENTS, ROAD SURFACES, BERMS, SIDEWALKS, DRIVEWAYS, CURBS, OR UNDERDRAINS AS WELL AS THE FINAL REPAVING, SHALL BE DONE AT HIS EXPENSE, IN ACCORDANCE WITH THE RULES AND REQUIREMENTS OF THE STREET OR SIDEWALK DEPARTMENTS OF THE CITY OF CLEVELAND, MUNICIPALITY OR TOWNSHIP IN WHICH THE WORK IS BEING DONE, AND IN ACCORDANCE WITH THE ADDITIONAL REQUIREMENTS OF THESE SPECIFICATIONS AND CONTRACT DRAWINGS. THE CONTRACTOR SHALL FURNISH EVIDENCE TO THE ENGINEER THAT THE WORK HAS BEEN COMPLETED TO THEIR SATISFACTION.

(J) THE CONTRACTOR SHALL MAKE ALL PAVEMENT CUTS BY CHANNELING MACHINE, HAND-OPERATED PNEUMATIC TOOLS OR BY SUCH OTHER METHODS AS WILL FURNISH A CLEAN CUT IN THE PAVEMENT AND PAVEMENT BASE WITHOUT UNDUE SHATTERING. THE USE OF BALL OR WEIGHT TO BREAK PAVEMENT WILL NOT BE PERMITTED.

(K) NO SPECIFIC OR SEPARATE PAYMENT WILL BE MADE FOR ALL OF THIS WORK, BUT THE COST OF ALL PAVEMENT REPLACEMENT, BOTH TEMPORARY AND PERMANENT INCLUDING PAVEMENT, BASE PAVEMENTS, ROAD SURFACES, BERMS, SIDEWALKS, CURBING, DRIVEWAYS, AND UNDERDRAINS SHALL BE INCLUDED IN THE PRICES BID FOR THE VARIOUS ITEMS OF WORK TO BE DONE UNDER THIS CONTRACT.

PAVEMENT SAW CUTS

WHERE "VERMEER" TYPE SAW, OR ANY OTHER TYPE OF MACHINERY OR MEANS IS USED TO CUT THE EXISTING PAVEMENT IN ADVANCE OF THE PAVEMENT REMOVAL, THE CONTRACTOR SHALL IMMEDIATELY FILL THE SAW-CUT GAP WITH ASPHALT. THE CONTRACTOR SHALL BE RESPONSIBLE FOR, AND AT HIS EXPENSE, MAINTAIN, THE SAW-CUT GAPS AND SHALL REPAIR AND/OR REPLACE ASPHALT AS NECESSARY.

PAVEMENT DAMAGE - CONTRACTOR'S RESPONSIBILITY

THE CONTRACTOR SHALL BE RESPONSIBLE FOR, AND AT HIS EXPENSE, MAINTAIN, REPAIR AND/OR REPLACE ANY PAVEMENT, ROADWAYS, DRIVEWAYS, BERMS, CURBS, SIDEWALKS AND TREELAWNS OR OTHER AREAS WITHIN THE LIMITS OF THIS PROJECT, THAT MAY BE DAMAGED BY HIM OR BY THOSE IN HIS EMPLOY DUE TO MANEUVERING OF CONSTRUCTION EQUIPMENT, OR DAMAGED BY VEHICULAR TRAFFIC REROUTED DUE TO CONSTRUCTION AND TRAFFIC MAINTENANCE.

THE CONTRACTOR SHALL MAINTAIN, REPAIR AND/OR REPLACE ALL DAMAGED OR INJURED PAVEMENT, ROADWAYS, DRIVEWAYS, BERMS, CURBS, SIDEWALKS AND TREELAWNS, BOTH TEMPORARY AND PERMANENT, IN ACCORDANCE WITH THESE SPECIFICATIONS, CONTRACT DRAWINGS OR APPLICABLE CONSTRUCTION AND MATERIAL SPECIFICATIONS OF THE CUYAHOGA COUNTY ENGINEER OR STATE OF OHIO DEPARTMENT OF TRANSPORTATION (O.D.O.T.).

REMOVED ITEMS

ALL MATERIALS CONSISTING OF PIPE, FITTINGS, VALVES, CASTINGS AND OTHER WATER MAIN STRUCTURES, UNLESS SPECIFICALLY INDICATED OTHERWISE HEREIN, WHICH ARE DESIGNATED FOR REMOVAL BY THE CONTRACTOR SHALL BECOME THE PROPERTY OF THE CONTRACTOR AND BE REMOVED AND DISPOSED BY HIM.

ITEM 202 - REMOVAL MISC.: WATER MAIN REMOVED (24" AND UNDER/OVER 24")

ALL WATER MAINS AND APPURTENANCES WHICH ARE NOT TO REMAIN IN SERVICE SHALL BE REMOVED. ALL SUCH WATER WORK SHALL BECOME THE PROPERTY OF THE CONTRACTOR AND SHALL BE DISPOSED OF BY HIM.

ALL WATER MAINS AND APPURTENANCES WHICH WOULD NORMALLY BE REMOVED WITH ROADWAY EXCAVATION OR OTHER ITEMS OF WORK CALLED FOR IN THESE PLANS SHALL NOT BE PAID FOR SEPARATELY.

VALVE AND VALVE BOX REMOVAL

REMOVAL AND DISPOSAL OF EXISTING WATERMAIN AND WATER SERVICE CONNECTION VALVES AND VALVE BOXES, WHEN PERFORMED IN CONJUNCTION WITH SERVICE CONNECTION AND WATERMAIN REMOVALS SHALL BE CONSIDERED INCIDENTAL TO THE RESPECTIVE "SERVICE CONNECTION REMOVED" AND "WATERMAIN REMOVED" PAY ITEMS. NO SEPARATE PAYMENT SHALL BE MADE.

ITEM 638 - FIRE HYDRANT REMOVED AND DISPOSED OF, AS PER PLAN

ALL REMOVED HYDRANTS SHALL HAVE THE SERVICE BRANCH AND ANY VALVES REMOVED. THE TEE SHALL BE REMOVED AND A SPOOL PIECE INSTALLED. NO SEPARATE PAYMENT SHALL BE MADE.

ITEM SPECIAL - DUCTILE IRON PIPE AND FITTINGS - 20" AND SMALLER

WORK INCLUDED

(A) THE CONTRACTOR SHALL, UNDER ITEM SPECIAL - DUCTILE IRON PIPE AND FITTINGS - 20" AND SMALLER, FURNISH ALL THE MATERIALS FOR AND SHALL PROPERLY CONSTRUCT AND CONNECT IN PLACE AT THE LOCATIONS SHOWN ON THE DRAWINGS OR AS DIRECTED, ALL DUCTILE IRON PIPE AND FITTINGS, INCLUDING ALL EXCAVATION WORK, THE CUTTING INTO AND REMOVAL OF EXISTING PIPE, BACKFILLING, SAND BEDDING AND PREMIUM BACKFILL, AND REPAVING (BOTH TEMPORARY AND PERMANENT), ALL AS REQUIRED FOR THE PROPER COMPLETION OF THE WORK INCLUDED UNDER THIS CONTRACT. IN GENERAL THIS WORK SHALL INCLUDE THE FURNISHING, LAYING, CONNECTING, PAINTING, TESTING OF PIPE AND FITTINGS, THE EXCAVATION, REMOVAL AND RESTORATION OF MISCELLANEOUS ITEMS, SHEETING AND SHORING, BACKFILLING, SAND BEDDING AND PREMIUM BACKFILL, SEEDING AND SODDING, THE PERMANENT REPAVING, IF SO NOTED ON THE CONTRACT DRAWINGS, THE CUTTING INTO, REMOVAL AND STORAGE OF EXISTING MAINS, AND THE FURNISHING OF ALL LABOR, MATERIALS, TOOLS AND EQUIPMENT TO COMPLETE THE WORK AS SPECIFIED, SHOWN OR ORDERED.

(B) IN MAKING THE CONNECTION TO EXISTING MAINS WHERE BRANCH SLEEVES CAN BE USED, THE CONTRACTOR SHALL SUPPLY THE SAME. THE DIVISION OF WATER WILL INSTALL THE BRANCH SLEEVE AND WILL MAKE THE PRESSURE TAP (IF APPLICABLE) IN ACCORDANCE WITH THE REQUIREMENTS INDICATED UNDER "WORK TO BE DONE BY CITY." IF THE INSTALLATION OF BRANCH SLEEVES AND VALVES CANNOT BE ACCOMPLISHED, THE CONTRACTOR WILL BE REQUIRED TO FURNISH AND INSTALL TEES WITH SLEEVES OR COUPLINGS TO COMPLETE THE CONNECTION. THE CONTRACTOR WILL BE REQUIRED TO MAKE THE NECESSARY EXCAVATION, BACKFILL AND REPAVING (IF NOT PAID FOR SEPARATELY AS PART OF THIS CONTRACT).

DUTILE IRON PIPE AND FITTINGS - 20" AND SMALLER

(A) ALL PIPE AND FITTINGS SHALL BE MANUFACTURED IN ACCORDANCE WITH AND IN ALL RESPECTS WITH THE REQUIREMENTS OF THE LATEST SPECIFICATIONS OF THE "AMERICAN NATIONAL STANDARD" FOR ANSI/AWWA C151/A21.51-86, "DUCTILE IRON PIPE CENTRIFUGALLY CAST IN METAL MOLDS OR SAND-LINED MOLDS, AND DUCTILE IRON FITTINGS FOR WATER AND OTHER LIQUIDS," AND ANSI/AWWA C111/A21.11-85, "RUBBER-GASKET JOINTS FOR DUCTILE-IRON PIPE AND GRAY-IRON PRESSURE PIPE AND FITTINGS," ADOPTED BY THE AMERICAN WATER WORKS ASSOCIATION; WHICH STANDARDS EXCEPT AS HEREIN MODIFIED ARE MADE A PART OF THESE SPECIFICATIONS. PIPE AND FITTINGS UP TO AND INCLUDING 20-INCHES SHALL HAVE RETAINED MECHANICAL JOINTS EXCEPT WHERE BOLTLESS RESTRAINED PUSH-ON JOINT PIPE AND FITTINGS IS CALLED FOR ON THE CONTRACT DRAWINGS OR DIRECTLY SPECIFIED.

(B) ALL PIPE AND FITTINGS SHALL BE CEMENT LINED AND OF THE SIZE AND THICKNESS AND PRESSURE CLASSES NOTED ON THE RESPECTIVE CONTRACT DRAWINGS OR DIRECTLY SPECIFIED. FITTINGS ON PIPE SIZES UP TO AND INCLUDING 12-INCHES MAY BE OF THE SHORT BODIED (COMPACT) TYPE.

(C) ALL DUCTILE IRON FITTINGS SHALL BE MANUFACTURED IN ACCORDANCE WITH AMERICAN NATIONAL STANDARD, ANSI/AWWA C110/A21.10-87, "DUCTILE IRON AND GRAY-IRON FITTINGS, 3-INCH THROUGH 48-INCH, FOR WATER OTHER LIQUIDS," AND ALL SUBSEQUENT AMENDMENTS THERETO. METAL FOR FITTINGS SHALL CONFORM TO AMERICAN NATIONAL STANDARD ANSI A21.10-87. FITTINGS ON PIPE SIZE UP TO AND INCLUDING 12" MAY BE OF THE SHORT BODIED TYPE IN ACCORDANCE WITH ANSI/AWWA C153/A21.53-88, "DUCTILE IRON COMPACT FITTINGS, 3" THROUGH 16" FOR WATER AND OTHER LIQUIDS," AND ALL SUBSEQUENT AMENDMENTS THERETO.

Preliminary Plans - For Reference Only

WATER WORK GENERAL NOTES

DESIGN AGENCY
Michael Baker INTERNATIONAL

DESIGNER SMP
REVIEWER SM 05/15/24
PROJECT ID 82382
SHEET 1376 TOTAL 2696

CUY-90-16.28 (CCG3A)

MODEL: UN1206 PAPERSIZE: 34x22 (in.) DATE: 3/28/2025 TIME: 5:11:42 AM USER: Julie.Ross
pw:\\mb-us-pw.bentley.com:mb-us-pw-03\Documents\Cleveland_OH\01_Projects\ODOT\District12\82382\400-Engineering\Utilities\Sheets\82382_UN1201.dgn

ITEM SPECIAL - DUCTILE IRON PIPE AND FITTINGS - 20" AND SMALLER (CONTINUED)

DUCTILE IRON PIPE AND FITTINGS - 20" AND SMALLER (CONTINUED)

(D) THE CONTRACTOR SHALL FURNISH CENTRIFUGAL CAST DUCTILE IRON CEMENT LINED PIPE. DUCTILE IRON METAL SHALL HAVE A MINIMUM TENSILE STRENGTH OF 60,000 PSI, MINIMUM YIELD STRENGTH OF 42,000 PSI AND MINIMUM ELONGATION OF 10 PERCENT AND SHALL BE FOR THE THICKNESS CLASS NOTED ON THE CONTRACT DRAWINGS OR DIRECTLY SPECIFIED. PIPE MAY BE FURNISHED IN 18 OR 20 FEET NOMINAL LAYING LENGTHS. THE CENTRIFUGALLY CAST DUCTILE SHALL CONFORM TO THE AMERICAN NATIONAL STANDARD ANSI/AWWA C151/A21.51-86, "DUCTILE IRON PIPE CENTRIFUGALLY CAST IN METAL MOLDS OR SAND-LINED MOLDS, AND DUCTILE IRON FITTINGS FOR WATER AND OTHER LIQUIDS," AND ALL SUBSEQUENT AMENDMENTS THERETO. PIPE ON STRAIGHT RUNS SHALL HAVE PUSH-ON SINGLE RUBBER-GASKET COMPRESSION JOINTS, ALL IN ACCORDANCE WITH AMERICAN NATIONAL STANDARD, ANSI/AWWA C111/A21.11-85, "RUBBER-GASKET JOINTS FOR DUCTILE-IRON PIPE AND GRAY-IRON PRESSURE PIPE AND FITTINGS," AND ALL SUBSEQUENT AMENDMENTS THERETO. FOR PIPE SIZES UP TO AND INCLUDING 20-INCHES RETAINED MECHANICAL JOINTS SHALL BE FURNISHED AT BENDS, TEES, CROSSES, SPECIAL FITTINGS AND BETWEEN VERTICAL OFFSETS OR BENDS, ON HYDRANT BRANCHES AND SHALL BE RETAINED AS SPECIFIED IN SECTION "JOINTS", (B),"MECHANICAL JOINTS/RETAINED MECHANICAL JOINTS."

(E) STANDARD THICKNESS AND PIPE CLASS TABLES THE THICKNESS OF THE CENTRIFUGALLY CAST DUCTILE IRON PIPE SHALL CONFORM TO THE FOLLOWING TABLE: STANDARD THICKNESS OF CENTRIFUGALLY CAST, DUCTILE IRON PIPE

STANDARD PIPE SIZE	WORKING PRESSURE (PSI)	THICKNESS CLASS 52 53 54 56	FITTINGS PSI
4"	350	.29 .32 .35 .41	350
6"	350	.31 .34 .37 .43	350
8"	350	.33 .36 .39 .45	350
10"	350	.35 .38 .41 .47	350
12"	350	.37 .40 .43 .49	350
16"	350	.40 .43 .46 .52	350
20"	350	.42 .45 .48 .54	350

(F) ALL FITTINGS, UNLESS OTHERWISE NOTED ON THE CONTRACT DRAWINGS, SUCH AS BENDS, TEES, CROSSES, HYDRANT BRANCHES, ETC. SHALL HAVE BELL AND BELL, BELL AND PLAIN ENDS OF THE MECHANICAL BOLTED STUFFING-BOX TYPE WITH PIPE OR FITTING PLAIN END SEALING GASKET AND BOLTED FOLLOWER GLAND. MECHANICAL JOINT FITTINGS SHALL BE THE MECHANICAL JOINTED BOLTED STUFFING-BOX TYPE IN ACCORDANCE WITH AMERICAN NATIONAL STANDARD, ANSI/AWWA C111/A21.11-85, "RUBBER-GASKET JOINTS FOR DUCTILE-IRON PIPE AND GRAY-IRON PRESSURE PIPE AND FITTINGS," AND ALL SUBSEQUENT AMENDMENTS THERETO. ALL FITTINGS SHALL BE CEMENT LINED. ALL MECHANICAL JOINTS SHALL BE RETAINED AS SPECIFIED IN SECTION, "JOINTS", (B) "RETAINED MECHANICAL JOINTS".

(G) WHERE CALLED FOR ON THE CONTRACT DRAWINGS OR DIRECTLY SPECIFIED, PIPE AND FITTINGS HAVING BOLTLESS RESTRAINED TYPE JOINTS SHALL BE FURNISHED. BOLTLESS RESTRAINED TYPE JOINTS SHALL BE AS SPECIFIED IN SECTION "JOINTS", (D) "BOLTLESS RESTRAINED SLIP-ON JOINTS."

(H) GLANDS FOR ALL MECHANICAL JOINT PIPE AND FITTINGS SHALL BE DUCTILE IRON. BOLTS AND NUTS SHALL BE CORROSION RESISTANT, HIGH-STRENGTH, LOW ALLOY STEEL IN ACCORDANCE WITH AMERICAN NATIONAL STANDARD, ANSI/AWWA C111/A21.11-85, "RUBBER-GASKET JOINTS FOR DUCTILE-IRON PIPE AND GRAY-IRON PRESSURE PIPE AND FITTINGS," AND ALL SUBSEQUENT AMENDMENTS THERETO.

GASKETS SHALL BE OF RUBBER OR OTHER EQUALLY EFFECTIVE PROTECTION AGAINST UNEVEN DISTORTION OF GASKET.

(I) WHERE FITTINGS ARE SHOWN WHICH ARE NOT COVERED BY THE ABOVE SPECIFICATIONS, THEY IN SUCH PARTICULARS AS ARE LACKING THEREON SHALL CONFORM TO THE DIMENSIONS AND OTHERWISE MEET THE SPECIFICATIONS FOR THE RESPECTIVE TYPE WHICH ARE CARRIED IN THE LATEST REVISIONS TO THE CURRENT EDITION OF THE DUCTILE IRON PIPE RESEARCH ASSOCIATION "HANDBOOK OF DUCTILE IRON PIPE" OR WHICH ARE OTHERWISE SHOWN ON THE CONTRACT DRAWINGS.

(J) WHEREVER CHANGES IN LINE AND GRADES OF THE MAIN AS SHOWN ON THE DRAWINGS ARE NOT STANDARD FITTING DEFLECTIONS, THE CONTRACTOR WILL BE PERMITTED TO SUBMIT DETAILS USING COMBINATIONS OF STANDARD FITTINGS AND SMALL DEFLECTIONS (NOT TO EXCEED THE MANUFACTURER'S MAXIMUM SUGGESTED JOINT OPENING) IN THE ADJOINING LENGTHS OF PIPE.

DUTILE IRON PIPE AND FITTINGS - 20" AND SMALLER (CONTINUED)

(K) ON NEW AND/OR RELOCATED OR EXTENDED WATER MAINS, UP TO AND INCLUDING 20-INCH DIAMETER, WHERE WATER MAINS END OR TERMINATE AND ARE NOT CONNECTED TO EXISTING MAINS, RETAINED MECHANICAL BELL JOINT PLUGS ARE TO BE INSTALLED. PLUGS CAPS SHALL BE FURNISHED WITH TWO (2) PLUGGED TWO (2")-INCH TAPS FOR DRAIN AND AIR RELIEF CONNECTIONS.

(L) CLOSURE PIECES SHALL BE ACCURATELY MEASURED AND CUT IN THE FIELD AND INSTALLED USING SOLID SHORT PATTERN SLEEVES HAVING MECHANICAL BELL JOINTS. MECHANICAL BELL JOINT SLEEVES SHALL BE OF THE RETAINED TYPE AS SPECIFIED IN SECTION, "JOINTS", (B) "MECHANICAL JOINTS/RETAINED MECHANICAL JOINTS."

(M) TESTS, INSPECTION, REPORTS AND ANALYSES OF TESTS OF SAMPLES FOR ALL MATERIALS SHALL BE FURNISHED IN ACCORDANCE WITH PARAGRAPH "TEST, INSPECTION AND REPORTS" OF THE GENERAL NOTES.

(N) BITUMASTIC COATING SHALL BE APPLIED ON THE EXTERIOR OF ALL DUCTILE IRON PIPE AND FITTINGS IN ACCORDANCE WITH AWWA SPECIFICATIONS.

CEMENT LINING

ALL PIPE FITTINGS, SHALL BE GIVEN A CEMENT MORTAR LINING AT THE POINT OF MANUFACTURE. THE LINING SHALL CONFORM TO THE AMERICAN NATIONAL STANDARD, ANSI/AWWA C104/A21.4-1990, "CEMENT-MORTAR LINING FOR DUCTILE-IRON PIPE AND FITTINGS," AND ALL SUBSEQUENT AMENDMENTS THERETO.

MARKING

ALL PIPE AND FITTINGS SHALL BE SUITABLY MARKED TO DENOTE THE MANUFACTURER, CLASS, DATE, WEIGHT AND OTHER ELEMENTS OF IDENTIFICATION.

FACING AND DRILLING

ALL FLANGES SHALL BE CAST SOLID AND FACED ACCURATELY AT RIGHT ANGLES TO THE AXIS OF THE PIPE. ALL FLANGES SHALL BE SHOP COATED WITH A COAT OF COAL TAR EPOXY, EXCEPT THE FACE OF THE FLANGE WHICH SHALL RECEIVE ONE (1) COAT OF A ZINC RICH PRIMER AT THE SHOP IMMEDIATELY AFTER THEY HAVE BEEN FACED AND DRILLED. ALL FLANGED PIPE AND FITTINGS SHALL BE FACED AND DRILLED TO ANSI B16-1, 125 LB. DRILLING, UNLESS SPECIAL DRILLING IS CALLED FOR. WHERE TAP OR STUD BOLTS ARE REQUIRED, FLANGES SHALL ALSO BE TAPPED.

LAYING

(A) PROPER AND SUITABLE TOOLS AND APPLIANCES FOR THE SAFE AND CONVENIENT HANDLING AND LAYING OF THE PIPE AND FITTINGS SHALL BE USED. GREAT CARE SHALL BE TAKEN TO PREVENT THE PIPE COATING AND FITTINGS FROM BEING DAMAGED PARTICULARLY ON THE INSIDE OF THE PIPES AND FITTINGS AND ANY SUCH DAMAGE SHALL BE REMEDIED AS DIRECTED. ALL PIPES AND FITTINGS SHALL BE CAREFULLY EXAMINED BY THE CONTRACTOR FOR DEFECTS JUST BEFORE LAYING AND NO PIPE OR FITTINGS SHALL BE LAID WHICH IS KNOWN TO BE DEFECTIVE.

(B) IF ANY DEFECTIVE PIPE IS DISCOVERED AFTER HAVING BEEN LAID, IT SHALL BE REMOVED AND REPLACED WITH A SOUND PIPE OR FITTING IN A SATISFACTORY MANNER, BY THE CONTRACTOR AT HIS OWN EXPENSE. ALL PIPES AND FITTINGS SHALL BE THOROUGHLY CLEANED BEFORE THEY ARE LAID, SHALL BE KEPT CLEAN UNTIL THEY ARE USED IN THE COMPLETED WORK, AND WHEN LAID, SHALL CONFORM TO THE LINES AND GRADES GIVEN BY THE ENGINEER. OPEN ENDS OF PIPES SHALL BE KEPT PLUGGED WITH A BULK HEAD DURING CONSTRUCTION.

(C) PIPE LAID IN TRENCH SHALL BE LAID TO A FIRM AND EVEN BEARING FOR ITS FULL LENGTH. PRECAUTIONS SHALL BE TAKEN AGAINST FLOATING.

(D) IT IS THE INTENTION OF THESE SPECIFICATIONS TO SECURE FIRST CLASS WORKMANSHIP IN THE PLACING OF PIPE AND ACCESSORIES. IN SUCH DETAILS AS ARE NOT SPECIFICALLY MENTIONED HEREIN OR CALLED FOR ON THE DRAWINGS, THE CONTRACTOR WILL BE REQUIRED TO CONFORM WITH THE APPLICABLE SECTIONS OF THE LATEST AMERICAN NATIONAL STANDARD, ANSI/AWWA C 600-87, INSTALLATION OF GRAY AND DUCTILE CAST IRON WATER MAINS AND APPURTENANCES," AS ADOPTED BY THE AMERICAN WATER WORKS ASSOCIATION.

PROTECTION OF UTILITIES

CONTRACTOR SHALL TAKE ALL PRECAUTIONS NECESSARY TO SUPPORT, MAINTAIN, OR OTHERWISE PROTECT EXISTING UTILITIES AND OTHER FACILITIES AT ALL TIMES DURING CONSTRUCTION.

CUTTING PIPE

WHENEVER THE PIPES REQUIRE CUTTING TO FIT INTO THE LINES, THE WORK SHALL BE DONE IN A SATISFACTORY MANNER SO AS TO LEAVE A SMOOTH END AT RIGHT ANGLES TO THE AXIS OF THE PIPE. WHEN A PIECE OF PIPE IS CUT TO FIT INTO THE LINE, NO PAYMENT WILL BE MADE FOR THE PORTION CUT OFF AND NOT USED IN THE LINE. THE CONTRACTOR'S ATTENTION IS CALLED TO THE PARAGRAPH "WORK TO BE DONE BY THE CITY."

PIPE SUPPORT ASSEMBLIES

PIPE SUPPORT ASSEMBLIES SHALL BE FABRICATED AS DETAILED ON THE PLANS AND SHALL BE COMPLETE IN ALL RESPECTS INCLUDING ALL MATERIALS, CADMIUM PLATED SHOULDER AND CLAMP BOLTS, FASTENERS AND NUTS. THE SUPPORT ASSEMBLY CLAMP, SEAT PLATE ("LUBRITE" PLATE) AND SHIMS SHALL ALL BE HOT-DIPPED GALVANIZED AFTER FABRICATION PER ASTM A-123, LATEST REVISION THEREOF. NO FIELD WELDING OF GALVANIZED STEEL PIPE WILL BE PERMITTED. THERE SHALL BE A MINIMUM OF TWO (2) PIPE SUPPORTS FOR EACH PIPE LENGTH.

JOINTS

(A) SLIP-ON JOINTS:

ALL PIPE UNLESS OTHERWISE REQUIRED, SHOWN ON CONTRACT DRAWINGS, DIRECTLY SPECIFIED OR CONNECTED TO FITTINGS, VALVES AND HYDRANTS SHALL HAVE SOCKET BY PLAIN END RUBBER-GASKET PUSH-ON JOINTS WITH RADIALLY COMPRESSED LOCKED IN PLACE RUBBER RING GASKETS APPROVED BY THE COMMISSIONER OF WATER. SLIP-ON COMPRESSION JOINTS SHALL CONFORM TO THE REGULAR AND SPECIAL REQUIREMENT FOR PUSH-ON JOINTS IN AMERICAN NATIONAL STANDARD, ANSI/AWWA C111/A21.11-85, "RUBBER GASKET JOINTS FOR DUCTILE-IRON AND GRAY-IRON PRESSURE PIPE AND FITTINGS," AND ALL SUBSEQUENT AMENDMENTS THERETO.

(B) MECHANICAL JOINTS/RETAINED MECHANICAL JOINTS:

1. ALL FITTINGS AND PIPE BELL ENDS CONNECTED TO FITTINGS, UNLESS OTHERWISE REQUIRED, SHOWN ON CONTRACT DRAWINGS, OR DIRECTLY SPECIFIED SHALL HAVE BELL OR PLAIN END JOINTS OF THE MECHANICAL BOLTED STUFFING-BOX TYPE WITH SEALING GASKET AND BOLTED DUCTILE IRON FOLLOWER GLAND AND SHALL BE OF THE SPECIFIED RETAINED TYPE. BOLTS AND NUTS FOR MECHANICAL JOINTS SHALL BE CORROSION RESISTANT, HIGH STRENGTH, LOW ALLOY STEEL.

2. MECHANICAL JOINTS SHALL CONFORM TO THE REGULAR AND SPECIAL REQUIREMENT THAT ALL GLANDS SHALL BE DUCTILE IRON WITH JOINT DIMENSIONS AND TOLERANCES, BOLT HOLES AND SLOTS, GASKETS, RUBBER, QUALITY CONTROL, BOLTS AND NUTS AND MARKING BE IN CONFORMANCE WITH AMERICAN NATIONAL STANDARD, ANSI/AWWA C111/A21.11-85, "RUBBER GASKET JOINTS FOR DUCTILE IRON AND GRAY IRON PRESSURE PIPE AND FITTINGS." ON ALL PIPE AND FITTINGS AT BENDS, TEES, CROSSES, SPECIAL FITTINGS, BETWEEN VERTICAL OFFSETS OR BENDS, ON HYDRANT BRANCHES, ON VALVES AND HYDRANT BASE ELBOWS, UP TO AND INCLUDING 16-INCH SIZE, THE CONTRACTOR SHALL FURNISH AND INSTALL RETAINED TYPE MECHANICAL JOINTS.

3. ON ALL PIPE AND FITTINGS AT BENDS, TEES, CROSSES, SPECIAL FITTINGS, BETWEEN VERTICAL OFFSETS OR BENDS, ON HYDRANT BRANCHES, ON VALVES AND HYDRANT BASE ELBOWS, UP TO AND INCLUDING 16-INCH SIZE, THE CONTRACTOR SHALL FURNISH AND INSTALL RETAINED TYPE MECHANICAL JOINTS.

4. PIPE AND FITTING BELL JOINT AND GASKETS SHALL BE FURNISHED AS SPECIFIED. GLANDS FOR RETAINED MECHANICAL JOINTS SHALL BE BOLTED TYPE OF DUCTILE-IRON MATERIAL CONFORMING TO AMERICAN NATIONAL STANDARD, ANSI/AWWA C111/A21.11-85, "RUBBER-GASKET JOINTS FOR DUCTILE-IRON AND GRAY-IRON PRESSURE PIPE AND FITTINGS," AND/OR CONFORMING WITH ASTM A 536-84, "SPECIFICATION FOR DUCTILE-IRON CASTINGS." RETAINED MECHANICAL JOINT FOLLOWER GLANDS SHALL BE EQUAL TO THE "MEG-A-LUG" AS MANUFACTURED BY EBAA IRON SALES, INC., THE "SUPER-LUG" AS MANUFACTURED BY THE SIGMA CORPORATION OR THE "UNI-FLANGE SERIES 1400" AS MANUFACTURED BY THE FORD METER BOX COMPANY, INC. PROPER TORQUE SHALL BE THAT AS RECOMMENCED BY THE RETAINER GLAND MANUFACTURER. WHERE JOINT DEFLECTION IS NECESSARY FOR ALIGNMENT SUCH DEFLECTION SHALL BE LIMITED TO MANUFACTURER'S MAXIMUM JOINT OPENING. ALL RETAINED JOINTS SHALL BE RATED FOR MINIMUM 250 PSI PRESSURE. ALL RETAINED JOINTS SHALL BE POLYETHYLENE ENCASED AS SPECIFIED IN SECTION, "JOINTS", (C), EXCEPT WHERE SUCH RETAINED MECHANICAL JOINTS ARE BONDED JOINTS WHERE NO POLYETHYLENE ENCASEMENT WILL BE REQUIRED.

JOINTS (CONTINUED)

5. RETAINER GLANDS USING PERPENDICULAR SET SCREWS AS A MEANS RESTRAINT WILL NOT BE PERMITTED.

(C) POLYETHYLENE ENCASEMENT:

1. ALL BURIED WATER MAINS, FITTINGS, VALVES, FIRE HYDRANT BRANCH PIPING AND APPURTENANCES SHALL BE ENCASED WITH "V-Bio" POLYETHYLENE WRAPPING IN ACCORDANCE WITH THE MOST CURRENT REVISION OF ANSI/AWWA C-105/A21.5 INSTALLATION METHOD A. ALTERNATE INSTALLATION METHOD A FOR WET TRENCH CONDITIONS SHALL BE USED WHEN WATER MAIN ARE INSTALLED IN UNPAVED LOCATIONS SUCH AS TREE LAWNS AND EASEMENTS TRAVERSING PRIVATE PROPERTY.

2. ALL BOLTS AND NUTS ON ALL MECHANICAL JOINTS, RETAINED MECHANICAL JOINTS, FLANGES, VICTAULIC AND COMPRESSION TYPE BOLTED SLEEVED COUPLINGS, SHALL HAVE FIELD APPLIED THREE (3) COATS OF BITUMASTIC COATING PRIOR TO POLYETHYLENE ENCASEMENT.

(D) BOLTLESS RESTRAINED SLIP-ON JOINTS:

1) WHERE CALLED FOR ON THE CONTRACT DRAWINGS OR DIRECTLY SPECIFIED ALL JOINT RESTRAINT SHALL BE OF THE BOLTLESS RESTRAINED SLIP-ON JOINT DESIGN DESIGNATED AS EITHER "TYPE I" OR "TYPE II" AS SPECIFIED HEREIN. VALVES AND VALVE JOINT TYPE WITHIN THE LIMITS OF THE BOLTLESS RESTRAINED PIPE AND FITTINGS SHALL BE OF THE TYPE INDICATED ON THE CONTRACT DRAWINGS OR AS SPECIFIED.

2) TYPE I - BOLTLESS RESTRAINED PUSH-ON JOINT PIPE AND FITTINGS DESIGNATED AS "TYPE I" SHALL BE OF A DESIGN CONSISTING OF A SHOP WELDED RETAINER RING OR SEGMENT ON THE SPIGOT END OF THE PIPE THAT WHEN THE JOINT IS FULLY ASSEMBLED "LOCKS" INTO THE BELL OF THE ADJACENT PIPE OR FITTING PROVIDING A POSITIVE RESTRAINED JOINT. NO FIELD WELDED RESTRAINED JOINTS ARE PERMITTED EXCEPT ON LENGTHS OF PIPE LESS THAN NOMINAL LENGTH NEED TO CLOSE THE LINE. BOLTLESS RESTRAINED JOINTS SHALL BE OF A DESIGN THAT PROVIDES RESTRAINED ACTION BETWEEN THE SPIGOT AND BELL OF THE PIPE OR FITTING INDEPENDENT OF THE GASKET. "TYPE I" BOLTLESS RETRAINED PUSH-ON JOINTS SHALL BE EQUAL TO: "FLEX-RING" AS MANUFACTURED BY AMERICAN CAST IRON PIPE COMPANY; "SUPER-LOCK" AS MANUFACTURED BY CLOW CORPORATION (MCWANE, INC.); OR "TR-FLEX" AS MANUFACTURED BY U. S. PIPE AND FOUNDRY.

3) TYPE II - BOLTLESS RESTRAINED PUSH-ON JOINT PIPE AND FITTINGS DESIGNATED AS "TYPE II" SHALL BE OF A DESIGN IN WHICH A PUSH-ON BELL JOINT PIPE END OR PUSH-ON BELL FITTING JOINTS UTILIZE A WEDGING TYPE APPROVED GASKET TO PROVIDE RESTRAINT. THE "TYPE II" BOLTLESS RESTRAINED JOINT SHALL EQUAL TO THE "FIELD-LOK" GASKET AS MANUFACTURED BY U.S.PIPE AND FOUNDRY OR THE "FAST-GRIP" GASKET AS MANUFACTURED BY THE AMERICAN CAST IRON COMPANY. THE GASKET SHALL COMPLY WITH THE MATERIAL REQUIREMENTS OF ANSI/AWWA C111/A21.11, "RUBBER-GASKET JOINTS FOR DUCTILE-IRON PIPE AND GRAY-IRON PRESSURE PIPE AND FITTINGS". THE PUSH-ON JOINT USED IN THE "TYPE II" BOLTLESS RESTRAINED JOINT PIPE AND FITTINGS SHALL BE MANUFACTURED IN ACCORDANCE WITH ANSI/AWWA C110/A21.10-87, "DUCTILE IRON AND GRAY-IRON FITTINGS, 3-INCH THROUGH 48-INCH, FOR WATER AND OTHER LIQUIDS," OR ANSI/AWWA C153/A21.53, "DUCTILE IRON COMPACT FITTINGS, 3" THROUGH 16" FOR WATER AND OTHER LIQUIDS".

(E) COMPRESSION COUPLINGS:

1. ALL PIPE COMPRESSION COUPLINGS SHALL BE OF A GASKETED, SLEEVE TYPE WITH DIAMETERS TO PROPERLY FIT PLAIN END IRON PIPE. EACH COUPLING SHALL CONSIST OF ONE (1) MIDDLE RING WITH STOPS REMOVED; TWO (2) FOLLOWER GLANDS; TWO (2) RUBBER-COMPOUND, BUNA-N BLEND, WEDGE SECTION GASKETS; AND SUFFICIENT TRACKHEAD STAINLESS STEEL BOLTS AND NUTS (ASTM A276-89A, TYPE 304) TO PROPERLY COMPRESS THE GASKETS. THE MIDDLE RING AND FOLLOWER GLANDS SHALL BE OF EITHER STEEL OR DUCTILE IRON (ASTM-A536). THE COMPRESSION COUPLING SHALL HAVE A MINIMUM WORKING PRESSURE RATING OF 250 PSI AND SHALL BE EQUAL TO THE DRESSER STYLE NOS: 38, 138, OR 162 (TRANSITION TYPE), OR SMITH-BLAIR 441 STRAIGHT AND TRANSITION COUPLINGS. ALL COMPRESSION COUPLINGS SHALL BE FURNISHED WITH ELECTROLIC INSULATION.

2. ALL COMPRESSION COUPLINGS SHALL BE COATED IN THE SHOP WITH A FACTORY COATING COMPATIBLE WITH FIELD APPLIED PRIMER AND ENAMEL COATINGS. COMPRESSION COUPLINGS SHALL BE CLEANED AND PAINTED WITH THREE (3) FIELD COATS OF KOPPERS BITUMASTIC SUPER TANK SOLUTION OR EQUIVALENT.

Preliminary Plans - Not For Construction

WATER WORK GENERAL NOTES

DESIGN AGENCY
Michael Baker INTERNATIONAL

DESIGNER SMP
REVIEWER SM 05/15/24
PROJECT ID 82382
SHEET 1377 TOTAL 2696

CUY-90-16.28 (CCG3A)
MODEL: UN1207 PAPERSIZE: 34x22 (in.) DATE: 3/28/2028 TIME: 5:11:43 AM USER: Julie.Ross
pw:\\mb-us-pw.bentley.com:mb-us-pw-03\Documents\Cleveland_OH101_Projects\ODOT\District12\82382\400-Engineering\Utilities\Sheets\82382_UN1201.dgn

ITEM SPECIAL - DUCTILE IRON PIPE AND FITTINGS - 20" AND SMALLER (CONTINUED)

JOINTS (CONTINUED)

(F) FLANGED JOINTS:

1. FLANGED JOINTS SHALL BE INSTALLED AS SHOWN ON THE DRAWINGS OR AS SPECIFIED. FLANGES SHALL BE EITHER CAST STEEL, FORGED OR ROLLED STEEL, OR PROPERLY WELDED AND MACHINED FABRICATED STEEL PLATES, WELDED TO PIPE WITH TWO CONTINUOUS WELDS. THEY SHALL HAVE PLAIN FACES AND SHALL BE FACED TRUE AND SMOOTH AT RIGHT ANGLES TO THE AXIS OF THE PIPE AND SHALL BE SPOT FACED ON THE BACK. DRILLING SHALL CONFORM TO ANSI B16.1, 125 LBS. EACH BLIND FLANGE SHALL BE CAST IRON AND HAVE BOSSES TAPPED AT TOP AND BOTTOM FOR TWO (2) INCH STANDARD PIPE AND FURNISHED WITH PLUGS.

2. ALL MACHINED STEEL SURFACES AT THE ENDS OF PIPE AND/OR FITTINGS TO RECEIVE VICTAULIC TYPE COUPLINGS OR PIPE ENDS HAVING FLANGES (FACE OF FLANGE) SHALL BE COATED WITH ONE (1) SHOP COAT OF AN APPROVED ZINC RICH PAINT.

3. ALL BOLTS AND NUTS USED IN THE FINISHED WORK FOR FLANGES SHALL BE MADE OF SILICON BRONZE (ASTM B 98-84, ALLOY A, "SPECIFICATION FOR COPPER-SILICON ALLOY ROD, BARS, AND SHAPES") OR STAINLESS STEEL (ASTM A 276-89A, TYPE 304, "SPECIFICATION FOR STAINLESS AND HEAT-RESISTING STEEL BARS AND SHAPES"). THE ENDS OF ALL BOLTS MUST BE FINISHED TO STANDARD RADIUS IN ACCEPTABLE MANNER. ALL SCREW THREADS SHALL BE AMERICAN STANDARD COARSE THREAD (N.C.). STUD BOLTS DOUBLE END (ROD) SHALL BE USED TO MAKE THE FLANGED JOINTS ON PIPE. ALL DIMENSIONS TO BE ACCORDING TO AMERICAN STANDARD HEAVY. BOLTS AND NUTS SHALL BE DELIVERED TO THE FIELD FREE FROM GREASE, RUST AND DIRT AND SHALL BE PROPERLY PROTECTED FROM MOISTURE AND DIRT IN THE FIELD. GASKETS FOR FLANGED PIPE SHALL BE 5X MANILA ROPE PATTERN OR OTHER APPROVED TYPE.

(G) TRANSITION COUPLINGS:

THE CONTRACTOR SHALL PROVIDE SHOP DRAWINGS TO THE CITY THROUGH THE ENGINEER FOR APPROVAL OF THE TRANSITION COUPLING ASSEMBLY. THE TRANSITION COUPLING SHALL BE "DRESSER STYLE 63/39, TYPE 1" SLIP TYPE WITH ELECTROLIC INSULATION, OR APPROVED EQUAL, WITH MINIMUM 1/2" THICK BODY AND SLIP, WITH AN 8-IN, TRAVERSE. THE TRANSITION COUPLING SHALL INCLUDE ALL MATERIALS, BOLTS, NUTS AND WASHERS, WELDED NECK FLANGES A.S.A. 150# AND GASKETS. ALL BOLTS AND NUTS SHALL BE MADE OF STAINLESS STEEL: ASTM A 276-89A, TYPE 304, "SPECIFICATION FOR STAINLESS AND HEAT-RESISTING SHEET BARS AND SHAPES." NO FIELD WELDING OF GALVANIZED STEEL PIPE WILL BE PERMITTED. THE TRANSITION COUPLING SHALL BE GALVANIZED EXCEPT SLIP PIPE. THE TRANSITION COUPLING SHALL HAVE FIELD APPLIED INSULATION AS PER DETAILS ON THE CONTRACT DRAWINGS.

(H) EXPANSION JOINT

THE EXPANSION JOINT ASSEMBLY SHALL BE, "DRESSER STYLE 63, TYPE I" SLIP TYPE, OR APPROVED EQUAL, WITH MINIMUM 1/2" THICK BODY AND SLIP, WITH A 10-IN, TRAVERSE. THE EXPANSION JOINT ASSEMBLY SHALL INCLUDE ALL MATERIALS, BOLTS, NUTS AND WASHERS, WELDED NECK FLANGES A.S.A. 150# AND GASKETS. ALL BOLTS AND NUTS SHALL BE MADE OF STAINLESS STEEL: ASTM A 276-89A, TYPE 304, "SPECIFICATION FOR STAINLESS AND HEAT-RESISTING SHEET BARS AND SHAPES." NO FIELD WELDING OF POLYURETHANE COATED STEEL PIPE WILL BE PERMITTED. THE EXPANSION JOINT SHALL BE GALVANIZED EXCEPT SLIP PIPE. THE EXPANSION JOINT SHALL HAVE FIELD APPLIED INSULATION AS PER DETAILS ON THE CONTRACT DRAWINGS.

PAINTING

AFTER INSTALLATION AND BEFORE POLYETHYLENE ENCASEMENT, ALL EXPOSED OR DAMAGED COATING AND ALL BOLTS FOR MECHANICAL JOINTS, RETAINED MECHANICAL JOINTS, FLANGES AND VICTAULIC OR COMPRESSION TYPE BOLTED SLEEVED COUPLINGS SHALL BE CLEANED AND PAINTED WITH THREE (3) FIELD COATS OF KOPPERS BITUMASTIC SUPER TANK SOLUTION OR EQUIVALENT.

DRAWINGS

(A) THE CONTRACTOR SHALL SUBMIT TO THE CITY THROUGH THE ENGINEER FOR APPROVAL SIX (6) SETS OF PRINTS OF ALL SHOP DRAWINGS FOR PIPE AND FITTINGS AND MISCELLANEOUS OR SPECIAL DETAILS OF PIPE AND FITTING JOINTS WHICH ARE NOT STANDARD CONSTRUCTION OR FULLY DETAILED IN THE REGULAR CATALOGUE OF THE COMPANY FURNISHING THE PIPE, FITTINGS AND SPECIALS. NO WORK SHALL BE DONE IN THE SHOP UNTIL AFTER THE DRAWINGS HAVE BEEN APPROVED.

(B) THE APPROVAL OF THE DRAWINGS BY THE CITY SHALL NOT RELIEVE THE CONTRACTOR OF ANY OF HIS OBLIGATIONS IN CONNECTION WITH THIS CONTRACT.

MEASUREMENTS

THE NUMBER OF FEET OF DUCTILE IRON PIPE AND FITTINGS TO BE PAID FOR SHALL BE THE ACTUAL NUMBER OF FEET FURNISHED AND PLACED IN ACCORDANCE WITH THE CONTRACT DRAWINGS AND THESE SPECIFICATIONS AS MEASURED ALONG THE AXIS OF THE PIPING, INCLUDING FITTINGS AND VALVES CONNECTED UP IN PLACE. FOR CONNECTIONS BETWEEN NEW AND/OR EXISTING WATER MAINS THE NUMBER OF FEET OF DUCTILE IRON PIPE AND FITTINGS, INCLUDING CONNECTIONS THERETO, TO BE PAID FOR SHALL BE ACTUAL NUMBER OF FEET FURNISHED AND PLACED IN ACCORDANCE WITH THE CONTRACT DRAWINGS AND THESE SPECIFICATIONS AS MEASURED ALONG THE AXIS OF THE PIPING FROM CENTER TO CENTER OF EXISTING MAINS.

ITEM SPECIAL - DUCTILE IRON PIPE AND FITTINGS - 24" AND LARGER

WORK INCLUDED

(A) THE CONTRACTOR SHALL UNDER ITEM SPECIAL - DUCTILE IRON PIPE AND FITTINGS - 24" AND LARGER, FURNISH ALL THE MATERIALS FOR AND SHALL PROPERLY CONSTRUCT AND CONNECT IN PLACE AT THE LOCATIONS SHOWN ON THE DRAWINGS OR AS DIRECTED, ALL DUCTILE IRON PIPE AND FITTINGS, INCLUDING ALL EXCAVATION WORK, THE CUTTING INTO AND REMOVAL OF EXISTING PIPE, BACKFILLING, SAND BEDDING AND PREMIUM BACKFILL, AND REPAVING (BOTH TEMPORARY AND PERMANENT), ALL AS REQUIRED FOR THE PROPER COMPLETION OF THE WORK INCLUDED UNDER THIS CONTRACT. IN GENERAL THIS WORK SHALL INCLUDE THE FURNISHING, LAYING, CONNECTING, PAINTING, SPECIAL EXTERIOR COATING, JOINT BONDING, AND TESTING OF PIPE AND FITTINGS, THE EXCAVATION, REMOVAL AND RESTORATION OF MISCELLANEOUS ITEMS, SHEETING AND SHORING, BACKFILLING, SAND BEDDING AND PREMIUM BACKFILL, SEEDING AND SODDING, THE PERMANENT REPAVING, IF SO NOTED ON THE CONTRACT DRAWINGS, THE CUTTING INTO, REMOVAL AND STORAGE OF EXISTING MAINS, AND THE FURNISHING OF ALL LABOR, MATERIALS, TOOLS AND EQUIPMENT TO COMPLETE THE WORK AS SPECIFIED, SHOWN OR ORDERED.

(B) IN MAKING THE CONNECTION TO EXISTING MAINS WHERE BRANCH SLEEVES CAN BE USED, THE CONTRACTOR SHALL SUPPLY THE SAME. THE DIVISION OF WATER WILL INSTALL THE BRANCH SLEEVE AND WILL MAKE THE PRESSURE TAP (IF APPLICABLE) IN ACCORDANCE WITH THE REQUIREMENTS INDICATED UNDER "WORK TO BE DONE BY THE CITY." IF THE INSTALLATION OF BRANCH SLEEVES AND VALVES CANNOT BE ACCOMPLISHED, THE CONTRACTOR WILL BE REQUIRED TO FURNISH AND INSTALL TEES WITH SLEEVES OR COUPLINGS TO COMPLETE THE CONNECTION. THE CONTRACTOR WILL BE REQUIRED TO MAKE THE NECESSARY EXCAVATION, BACKFILL AND REPAVING (IF NOT PAID FOR SEPARATELY AS PART OF THIS CONTRACT).

LAYOUT OF DUCTILE IRON PIPE AND FITTINGS 24" AND LARGER

(A) AS ONE (1) OF THE ALTERNATE MATERIALS THE CONTRACTOR SHALL FURNISH, UNDER ITEM SPECIAL - DUCTILE IRON PIPE AND FITTINGS - 24" AND LARGER. CLASS OF PIPE SHALL BE MINIMUM CLASS 52 OR HIGHER AS SPECIFIED HEREIN UNDER PARAGRAPHS F, G AND H. CLASS OF FITTINGS SHALL BE AS SPECIFIED IN PARAGRAPH E. VALVE ASSEMBLIES, PLAIN ANCHORS, ACCESS MANHOLES, DRAIN ASSEMBLIES, AIR RELIEF OUTLETS, PITOMETER OUTLETS AND JOINT BONDING AND CATHODIC TEST STATION ASSEMBLIES SHALL BE CONSTRUCTED IN ACCORDANCE WITH STANDARD DETAIL DRAWINGS. THE PLANS, THE DUCTILE IRON PIPE AND FITTINGS FURNISHED UNDER THIS ITEM SHALL HAVE A SPECIAL EXTERIOR PIPE COATING AS SPECIFIED IN PARAGRAPH I. ALL TEES SHALL HAVE FLANGED OUTLETS EXCEPT AS OTHERWISE SPECIFIED HEREIN. ALL RESTRAINED JOINTS SHALL BE OF THE BOLTLESS TYPE AS SPECIFIED HEREIN.

(B) PIPE LAYOUT INDICATED ON THE CONTRACT DRAWINGS IS BASED UPON GEOMETRIC DESIGN THAT WILL ALLOW INSTALLATION OF EITHER DUCTILE IRON PIPE AND FITTINGS OR STEEL PIPE AND FITTINGS. IN ORDER TO ACHIEVE THE HORIZONTAL AND VERTICAL DEFLECTIONS SHOWN ON THE CONTRACT DRAWINGS STANDARD BENDS OF 5- 5/8, 11-1/4, 22-1/2, OR 45 DEGREES SHALL BE USED (45 DEGREE BENDS SHALL NOT BE USED FOR VERTICAL DEFLECTIONS). JOINT OPENINGS AS REQUIRED, NOT TO EXCEED THE MANUFACTURER'S MAXIMUM SUGGESTED JOINT OPENING, SHALL BE USED TO MEET THE HORIZONTAL AND VERTICAL DEFLECTIONS SHOWN ON THE DRAWINGS. THE MAXIMUM PIPE LENGTH SHALL BE 20'-0". IN SOME CASES DUE TO RESTRAINED JOINTS ON CURVES, LENGTHS LESS THAN 20'-0" MAY BE USED. THESE SHALL BE INCLUDED IN THE BID PRICE PER FEET OF PIPE. CONTRACTOR SHALL MAINTAIN ALL HORIZONTAL POINTS OF INTERSECTION (HPI), AND AS CLOSE AS POSSIBLE, THE VERTICAL POINTS OF INTERSECTION (VPI), AS SHOWN ON THE CONTRACT DRAWINGS.

(C) WHERE "RESTRAINED DISTANCE" IS SHOWN ON THE CONTRACT DRAWINGS AND STANDARD FITTINGS ARE USED TO OBTAIN THE REQUIRED LINE AND GRADE, THE CONTRACTOR SHALL FURNISH DUCTILE IRON MINIMUM CLASS 52 (SEE PARAGRAPHS F, G, AND H) CEMENT LINED BOLTLESS RESTRAINED PUSH-ON JOINT FITTINGS TO THE LIMITS OF THE "RESTRAINED DISTANCE" SHOWN ON THE CONTRACT DRAWINGS. ALL RESTRAINED JOINTS SHALL BE DESIGNED FOR A BULKHEAD THRUST WITH A PRESSURE OF MINIMUM 225 PSI

LAYOUT OF DUCTILE IRON PIPE AND FITTINGS 24" AND LARGER

(D) IN VALVE ASSEMBLIES ALL PIPE JOINTS, FITTINGS, AND VALVE JOINTS, BETWEEN THE TWO PLAIN ANCHORS OR ACCESS MANHOLES AND ANCHORAGES WHETHER WITHIN "RESTRAINED DISTANCE" OR WHERE NO "RESTRAINED DISTANCE" IS SHOWN ON THE DRAWINGS SHALL HAVE JOINTS DESIGNED FOR A BULKHEAD THRUST WITH A PRESSURE OF MINIMUM 225 PSI. VALVE ENDS SHALL BE OF THE TYPE CALLED FOR ON THE CONTRACT DRAWINGS OR AS SPECIFIED HEREIN.

(E) SUPPLEMENTAL CONNECTIONS, WHERE CALLED FOR ON THE PLANS, SHALL BE CONSTRUCTED WITH STANDARD FULL BODIED FITTINGS FOR THOSE CONNECTIONS 16-INCHES AND LARGER; SHORT BODIED FITTINGS MAY BE USED FOR THOSE SUPPLEMENTAL CONNECTIONS 12-INCHES IN SIZE. OUTLET FOR SUPPLEMENTAL CONNECTIONS ON SUPPLY MAINS SHALL BE FURNISHED BY PROVIDING INSULATED FLANGED OUTLET TEES; SEE SECTION ENTITLED "JOINTS, PARAGRAPH (E)(4). THE TEES WHERE FALLING WITHIN "RESTRAINED DISTANCE" SHOWN ON THE DRAWINGS SHALL BE A FULL BODIED BOLTLESS RESTRAINED FITTING. WHERE THE SUPPLEMENTAL CONNECTION FALLS OUTSIDE THE LIMITS OF RESTRAINED DISTANCE THE TEE MAY BE A RETAINED MECHANICAL JOINT FITTING IF SUCH IS AVAILABLE OTHERWISE THE TEE SHALL BE A BOLTLESS RESTRAINED FITTING. THE RESTRAINED JOINTS AND RETAINED MECHANICAL SHALL BE DESIGNED FOR BULKHEAD THRUST WITH A PRESSURE OF MINIMUM 225 PSI.

(F) WHERE DEPTH OF COVER FOR 30-INCH, 36-INCH, 42-INCH AND 48-INCH DUCTILE IRON PIPE EXCEEDS TWENTY (20) FEET, PIPE THICKNESS SHALL BE INCREASED TO MINIMUM CLASS 53. WHERE DEPTH OF COVER EXCEEDS TWENTY-FOUR (24) FEET, PIPE THICKNESS SHALL BE INCREASED TO MINIMUM CLASS 54.

(G) WHERE DEPTH OF COVER FOR 24-INCH DUCTILE IRON PIPE EXCEEDS TWENTY-FOUR (24) FEET, PIPE THICKNESS SHALL BE INCREASED TO MINIMUM CLASS 54.

(H) WHERE DEPTH OF COVER FOR 20-INCH DUCTILE IRON PIPE EXCEEDS TWENTY-EIGHT (28) FEET, PIPE THICKNESS SHALL BE INCREASED TO MINIMUM CLASS 54.

(I) SPECIAL EXTERIOR COATING:

DUCTILE IRON PIPE AND FITTINGS (24" AND LARGER) SHALL HAVE SHOP APPLIED A 16 MIL THICKNESS OF AN APPROVED COAL TAR EPOXY EXTERIOR COATING. THE COATING SHALL BE APPLIED IN TWO (2) COATS IN ACCORDANCE WITH THE MANUFACTURER'S INSTRUCTIONS AND SHALL HAVE A DRY FILM THICKNESS (DFT) OF 16 MILS.

(J) BONDED JOINTS:

1. GENERAL: ALL DUCTILE IRON PIPE JOINTS AND PIPE FITTING JOINTS ON DUCTILE IRON PIPE SHALL HAVE APPROVED TYPE BONDED JOINTS. THE BONDED TYPE JOINTS SHALL BE OF A TYPE THAT CAN BE USED IN CONJUNCTION WITH A CATHODIC PROTECTION SYSTEM AND BE OF A TYPE THAT WILL PROVIDE POSITIVE ELECTRICAL CONTINUITY ACROSS THE JOINTS OF ALL PUSH-ON JOINT PIPE; ALL RESTRAINED MECHANICAL JOINT FITTINGS; ALL BOLTLESS RESTRAINED JOINT PIPE AND FITTINGS; ALL FLANGED JOINTS, EXCEPT WHERE INSULATED FLANGED JOINTS ARE REQUIRED OR ORDERED; ALL COMPRESSION TYPE COUPLING JOINTS, EXCEPT WHERE INSULATED COMPRESSION COUPLINGS ARE REQUIRED OR ORDERED; ALL VICTAULIC TYPE JOINTS; AND ANY OTHER SPECIALS. CATHODIC TEST STATIONS SHALL BE FURNISHED AND INSTALLED WHERE SHOWN ON THE CONTRACT DRAWINGS. THE BONDING WIRE, CONNECTORS, AND TEST STATION ASSEMBLIES SHALL BE FURNISHED AND INSTALLED IN ACCORDANCE WITH THE DETAILED DRAWINGS EXCEPT THAT BONDING CONNECTORS SHALL BE INSTALLED AT EACH PIPE JOINT AT THE ELEVEN (11) AND ONE (1) O'CLOCK POSITIONS ON PIPE SIZES 30", 36", 42", AND 48". AFTER THE JOINT BONDING HAS BEEN INSTALLED THE CONTRACTOR SHALL COMPLETE THE EXTERIOR JOINT PER CONTRACT DRAWING DETAILS INCLUDING EXTERIOR COATING REPAIR.

2. CATHODIC TEST STATIONS: WHERE SHOWN ON THE PLANS OR WHERE ORDERED THE CONTRACTOR SHALL FURNISH AND INSTALL CATHODIC TEST STATION ASSEMBLIES. ALL MATERIALS REQUIRED FOR THE CATHODIC TEST STATION ASSEMBLIES SHALL CONFORM WITH THE DETAILS SHOWN ON THE DETAIL DRAWINGS OR AS SPECIFIED ELSEWHERE IN THESE SPECIFICATIONS.

3. PAYMENT: PAYMENT FOR FURNISHING AND INSTALLING BONDED JOINTS AND CATHODIC TEST STATIONS SHALL BE INCLUDED IN THE COST PER FOOT OF DUCTILE IRON PIPE AND FITTINGS FURNISHED AND INSTALLED IN THE WORK. ADDITIONAL JOINT BONDING AND TEST STATIONS REQUIRED AS A RESULT OF CATHODIC PROTECTION REQUIREMENTS SHALL BE FURNISHED, INSTALLED AND PAID FOR UNDER THAT ITEM.

DRAWINGS - WATER MAINS 24" AND LARGER

(A) THE CONTRACTOR SHALL SUBMIT TO THE CITY THROUGH THE ENGINEER FOR REVIEW AND/OR APPROVAL, SIX (6) COMPLETE SETS OF ALL SHOP DRAWINGS FOR FITTINGS AND SPECIALS, AND MISCELLANEOUS DETAILS, SUCH AS AIR RELIEF AND DRAIN OUTLETS, BONDING OF JOINTS, ANCHORS, PITOMETER OPENING, RESTRAINED JOINT, ACCESS OPENINGS, DRAIN PIPE ASSEMBLY, PIPING FOR GATE VALVE ASSEMBLY, ETC.

(B) THE CONTRACTOR SHALL ALSO INITIALLY FURNISH TO THE CITY THROUGH THE ENGINEER A MINIMUM OF SIX (6) SETS OF A COMPLETE ASSEMBLY PLAN FOR THE ENTIRE LENGTH OF THE PIPE LINE INCLUDING A DETAILED TABULATED LAYING SCHEDULE. THIS ASSEMBLY PLAN SHALL ALSO SHOW THE CORRECT LOCATION OF ALL FITTINGS TO BE FURNISHED, INCLUDING AIR RELIEF VALVES, DRAINS, ANCHORS, MANHOLES, PITOMETER VAULTS, VALVE VAULTS, RESTRAINED JOINTS, ACCESS MANHOLES, CATHODIC TEST STATIONS, VALVES, ETC.

(C) AT LEAST TWO (2) SETS OF EACH OF THE SHOP DRAWINGS AND ASSEMBLY PLAN SUBMITTED WILL BE RETURNED TO THE CONTRACTOR WITH THE CRITICISMS OR APPROVAL OF THE ENGINEER. IN CASE THE DRAWINGS ARE NOT APPROVED, THE CONTRACTOR SHALL AGAIN SUBMIT FOR APPROVAL, SIX (6) COMPLETE SETS OF REVISED SHOP DRAWINGS AND ASSEMBLY PLAN REQUIRED FOR REVIEW AND/OR APPROVAL. AFTER THE DRAWINGS HAVE BEEN FINALLY APPROVED, THE CONTRACTOR SHALL AGAIN FURNISH TO THE CITY, THROUGH THE ENGINEER, A SUFFICIENT NUMBER OF ADDITIONAL SETS OF SHOP DRAWINGS AND ASSEMBLY PLAN ON PAPER FOR HIS USE AND FOR THE CITY'S INTERNAL DISTRIBUTION AND FINALLY ONE (1) MYLAR OR REPRODUCIBLE CLOTH TRACING OF EACH DRAWING AS PREVIOUSLY SPECIFIED. NO WORK SHALL BE DONE IN THE SHOP OR IN THE FIELD UNTIL ALL THE DRAWINGS HAVE BEEN FINALLY APPROVED. MYLAR TRACINGS SHALL BE SUBMITTED AS SPECIFIED IN THE GENERAL NOTES "DRAWINGS."

(D) THE APPROVAL OF THE DRAWINGS BY THE CITY SHALL NOT RELIEVE THE CONTRACTOR OF ANY OF HIS OBLIGATIONS IN CONNECTION WITH THIS CONTRACT.

MATERIALS DATA WITH PROPOSAL

EACH BIDDER SHALL SUBMIT WITH HIS PROPOSAL, AND IN FORM PROVIDED, THE INFORMATION CALLED FOR BELOW:

A. NAME OF PIPE MANUFACTURER AND LOCATION OF PLANT.

B. NAME OF COUPLING MANUFACTURER AND LOCATION OF PLANT.

C. NAME OF EXTERIOR PIPE COATING MANUFACTURER.

D. NAME OF PIPE INSULATION MANUFACTURER.

Preliminary Plans - For Reference Only

WATER WORK GENERAL NOTES

DESIGN AGENCY
Michael Baker INTERNATIONAL

DESIGNER SMP
REVIEWER SM 05/15/24
PROJECT ID 82382
SHEET 1378 TOTAL 2696

CUY-90-16.28 (CCG3A)
MODEL: UN1208 PAPERSIZE: 34x22 (in.) DATE: 3/28/2025 TIME: 5:11:44 AM USER: Julie Ross
pw:\\mb-us-pw.bentley.com:mb-us-pw-03\Documents\Cleveland_OH\01_Projects\ODOT\District12\82382\400-Engineering\Utilities\Sheets\82382_UN1201.dgn

ITEM SPECIAL - DUCTILE IRON PIPE AND FITTINGS - 24" AND LARGER (CONTINUED)

CONNECTING TO EXISTING WATER MAINS

(A) THE CONTRACTOR SHALL LOCATE ALL PIPE ENDS AND/OR ALL EXISTING PIPE JOINTS WHERE CONNECTIONS ARE TO MADE, INCLUDING WHERE EXISTING MAINS ARE TO BE TAPPED, ALONG WITH THE NEXT EXISTING PIPE JOINT TO DETERMINE THE EXACT LOCATION AND ELEVATION (LINE AND GRADE) OF THE EXISTING WATER MAIN. THE CONTRACTOR SHALL ALSO EXPOSE THE EXISTING PIPE JOINTS WHERE CONNECTIONS ARE TO MADE TO DETERMINE THE TYPE OF EXISTING JOINT AND THE DIRECTION OF THE EXISTING JOINT. NO PIPE FABRICATION DRAWING WILL BE APPROVED UNTIL THIS INFORMATION IS SUBMITTED TO THE ENGINEER AND TO THE CITY. ALL FIELD DATA SHALL BE OBTAINED IN THE PRESENCE OF THE DIVISION OF WATER'S RESIDENT INSPECTOR.

(B) IT IS THE RESPONSIBILITY OF THE CONTRACTOR TO VERIFY ALL FIELD DIMENSIONS PRIOR TO PREPARING THE VARIOUS SHOP DRAWING SUBMITTALS. AT THE TIME OF EACH SUBMISSION, THE CONTRACTOR SHALL GIVE THE CITY SPECIFIC WRITTEN NOTICE OF EACH VARIATION THAT THE SHOP DRAWINGS MAY HAVE FROM THE REQUIREMENTS OF THE CONTRACT DOCUMENTS. IN ADDITION, THE CONTRACTOR SHALL CAUSE A SPECIFIC NOTATION TO BE MADE ON EACH SHOP DRAWING SUBMITTED TO THE ENGINEER FOR REVIEW AND APPROVAL OF EACH SUCH VARIATION. THE CITY'S REVIEW AND APPROVAL OF SHOP DRAWINGS SHALL NOT RELIEVE THE CONTRACTOR FROM RESPONSIBILITY FOR ANY VARIATION FROM THE REQUIREMENTS OF THE CONTRACT DRAWINGS. THE CITY'S APPROVAL SHALL NOT EXTEND TO ANY SUCH VARIATION UNLESS CONTRACTOR HAS, IN WRITING, CONSPICUOUSLY CALLED THE CITY'S ATTENTION TO EACH SUCH VARIATION AT THE TIME OF SUBMITTAL, AS REQUIRED BY THIS PARAGRAPH, AND THE CITY HAS GIVEN WRITTEN APPROVAL OF THAT PARTICULAR VARIATION BY A SPECIFIC WRITTEN NOTATION THEREOF INCORPORATED IN OR ACCOMPANYING THE SHOP DRAWING APPROVAL.

(C) THE FIELD DATA SHALL BE OBTAINED IN SUFFICIENT TIME IN ADVANCE OF THE PROPOSED CONNECTION IN ORDER TO DETERMINE IF ANY ADJUSTMENTS TO THE LINE AND GRADE OF THE PROPOSED WATER MAIN IS REQUIRED DUE TO THE INFORMATION OBTAINED IN THE FIELD DATA. THE INFORMATION OBTAINED IN THE FIELD DATA SHALL ALSO BE FORWARDED TO THE PIPE FABRICATOR WITH SUFFICIENT TIME TO ALLOW FOR THE PREPARATION OF REVISED SHOP DRAWINGS AND FOR FABRICATION OF THOSE PIPE AND FITTINGS REQUIRED TO MAKE THE CONNECTION. NO EXTRA COMPENSATION TO THE CONTRACTOR WILL BE ALLOWED FOR ANY DELAYS AND/OR ADDITIONAL PIPE AND FITTINGS FOR FAILURE TO HAVING PROPERLY OBTAINED FORWARDED THE REQUIRED FIELD INFORMATION DATA.

DUCTILE - IRON PIPE AND FITTINGS - GENERAL

(A) ALL PIPE AND FITTINGS SHALL BE MANUFACTURED IN ACCORDANCE WITH AND IN ALL RESPECTS WITH THE REQUIREMENTS OF THE LATEST SPECIFICATIONS OF THE "AMERICAN NATIONAL STANDARD" FOR ANSI/AWWA C151/A21.51-86, "DUCTILE IRON PIPE CENTRIFUGALLY CAST IN METAL MOLDS OR SAND-LINED MOLDS, AND DUCTILE IRON FITTINGS FOR WATER AND OTHER LIQUIDS," AND ANSI/AWWA C111/A21.11-85, "RUBBER-GASKET JOINTS FOR DUCTILE-IRON PIPE AND GRAY-IRON PRESSURE PIPE AND FITTINGS," ADOPTED BY THE AMERICAN WATER WORKS ASSOCIATION; WHICH STANDARDS EXCEPT AS HEREIN MODIFIED ARE MADE A PART OF THESE SPECIFICATIONS. PIPE AND FITTINGS ON 24-INCH AND LARGER WATER MAIN INSTALLATIONS SHALL HAVE BOLTLESS RESTRAINED PUSH-ON JOINT PIPE AND FITTINGS WITHIN "RESTRAINED DISTANCE" SHOWN ON THE CONTRACT DRAWINGS AND WHERE CALLED OUT TO BE RESTRAINED.

(B) ALL PIPE AND FITTINGS SHALL BE CEMENT LINED AND OF THE SIZE AND THICKNESS AND PRESSURE CLASSES NOTED ON THE RESPECTIVE CONTRACT DRAWING OR DIRECTLY SPECIFIED.

(C) ALL DUCTILE IRON FITTINGS SHALL BE MANUFACTURED IN ACCORDANCE WITH AMERICAN NATIONAL STANDARD, ANSI/AWWA C110/A21.10-87, "DUCTILE IRON AND GRAY-IRON FITTINGS, 3-INCH THROUGH 48-INCH, FOR WATER OTHER LIQUIDS," AND ALL SUBSEQUENT AMENDMENTS THERETO. METAL FOR FITTINGS SHALL CONFORM TO AMERICAN NATIONAL STANDARD ANSI A21.10-87.

DUCTILE - IRON PIPE AND FITTINGS - GENERAL (CONTINUED)

(D) THE CONTRACTOR SHALL FURNISH CENTRIFUGAL CAST DUCTILE IRON CEMENT LINED PIPE. DUCTILE IRON METAL SHALL HAVE A MINIMUM TENSILE STRENGTH OF 60,000 PSI, MINIMUM YIELD STRENGTH OF 42,000 PSI AND MINIMUM ELONGATION OF 10 PERCENT AND SHALL BE FOR THE THICKNESS CLASS NOTED ON THE CONTRACT DRAWINGS OR DIRECTLY SPECIFIED. PIPE MAY BE FURNISHED IN 18 OR 20 FEET NOMINAL LAYING LENGTHS. THE CENTRIFUGALLY CAST DUCTILE SHALL CONFORM TO THE AMERICAN NATIONAL STANDARD ANSI/AWWA C151/A21.51-86, "DUCTILE IRON PIPE CENTRIFUGALLY CAST IN METAL MOLDS OR SAND-LINED MOLDS, AND DUCTILE IRON FITTINGS FOR WATER AND OTHER LIQUIDS," AND ALL SUBSEQUENT AMENDMENTS THERETO. PIPE ON STRAIGHT RUNS SHALL HAVE PUSH-ON SINGLE RUBBER-GASKET COMPRESSION JOINTS, ALL IN ACCORDANCE WITH AMERICAN NATIONAL STANDARD, ANSI/AWWA C111/A21.11-85, "RUBBER-GASKET JOINTS FOR DUCTILE-IRON PIPE AND GRAY-IRON PRESSURE PIPE AND FITTINGS," AND ALL SUBSEQUENT AMENDMENTS THERETO.

(E) STANDARD THICKNESS AND PIPE CLASS TABLES

THE THICKNESS OF THE CENTRIFUGALLY CAST DUCTILE IRON PIPE SHALL CONFORM TO THE FOLLOWING TABLE:

STANDARD PIPE SIZE	WORKING PRESSURE (PSI)	THICKNESS CLASS 52 53 54 56				FITTINGS PSI
24"	350	.44	.47	.50	.56	350
30"	350	.47	.51	.55	.63	250
36"	350	.53	.58	.63	.73	250
42"	350	.59	.65	.71	.83	250
48"	350	.65	.72	.79	.93	250

(F) WHERE "RESTRAINED DISTANCES" ARE SHOWN ON THE PLANS OR DIRECTLY SPECIFIED, PIPE AND FITTINGS HAVING BOLTLESS RESTRAINED TYPE JOINTS SHALL BE FURNISHED. BOLTLESS RESTRAINED TYPE JOINTS SHALL BE AS SPECIFIED IN SECTION "JOINTS, D: "BOLTLESS RESTRAINED SLIP-ON JOINTS."

(G) WHERE FITTINGS ARE SHOWN WHICH ARE NOT COVERED BY THE ABOVE SPECIFICATIONS, THEY IN SUCH PARTICULARS AS ARE LACKING THEREON SHALL CONFORM TO THE DIMENSIONS AND OTHERWISE MEET THE SPECIFICATIONS FOR THE RESPECTIVE TYPE WHICH ARE CARRIED IN THE LATEST REVISIONS TO THE CURRENT EDITION OF THE DUCTILE IRON PIPE RESEARCH ASSOCIATION "HANDBOOK OF DUCTILE IRON PIPE" OR WHICH ARE OTHERWISE SHOWN ON THE CONTRACT DRAWINGS.

(H) WHEREVER CHANGES IN LINE AND GRADES OF THE MAIN AS SHOWN ON THE DRAWINGS ARE NOT STANDARD FITTING DEFLECTIONS, THE CONTRACTOR WILL BE PERMITTED TO SUBMIT DETAILS USING COMBINATIONS OF STANDARD FITTINGS AND SMALL DEFLECTIONS (NOT TO EXCEED THE MANUFACTURER'S MAXIMUM SUGGESTED JOINT OPENING) IN THE ADJOINING LENGTHS OF PIPE.

(I) ON NEW AND/OR RELOCATED OR EXTENDED WATER MAINS, 24-INCH DIAMETER AND LARGER, WHERE WATER MAINS END OR TERMINATE AND ARE NOT CONNECTED TO EXISTING MAINS, AN APPROVED TYPE D BOLTLESS RESTRAINED CAP/PLUG SHALL BE FURNISHED AND INSTALLED. PLUGS AND CAPS SHALL BE FURNISHED WITH TWO (2) PLUGGED TWO (2")-INCH TAPS FOR DRAIN AND AIR RELIEF CONNECTIONS.

(J) CLOSURE PIECES SHALL BE ACCURATELY MEASURED AND CUT IN THE FIELD AND INSTALLED USING SOLID SHORT PATTERN SLEEVES HAVING RETAINED MECHANICAL BELL JOINTS OR APPROVED COMPRESSION TYPE COUPLINGS. RETAINED MECHANICAL BELL JOINT SLEEVES AND COMPRESSION TYPE COUPLINGS SHALL BE AS SPECIFIED ELSEWHERE IN THESE SPECIFICATIONS.

(K) TESTS, INSPECTION, REPORTS AND ANALYSES OF TESTS OF SAMPLES FOR ALL MATERIALS SHALL BE FURNISHED IN ACCORDANCE WITH THE PARAGRAPH "TEST, INSPECTION AND REPORTS" OF THE GENERAL NOTES.

CEMENT LINING

ALL PIPE FITTINGS, SHALL BE GIVEN A CEMENT MORTAR LINING AT THE POINT OF MANUFACTURE. THE LINING SHALL CONFORM TO THE AMERICAN NATIONAL STANDARD, ANSI/AWWA C104/A21.4-1990, "CEMENT-MORTAR LINING FOR DUCTILE-IRON PIPE AND FITTINGS," AND ALL SUBSEQUENT AMENDMENTS THERETO.

MARKING

ALL PIPE AND FITTINGS SHALL BE SUITABLY MARKED TO DENOTE THE MANUFACTURER, CLASS, DATE, WEIGHT AND OTHER ELEMENTS OF IDENTIFICATION.

FACING AND DRILLING

ALL FLANGES SHALL BE CAST SOLID AND FACED ACCURATELY AT RIGHT ANGLES TO THE AXIS OF THE PIPE. ALL FLANGES SHALL BE SHOP COATED WITH A COAT OF COAL TAR EPOXY, EXCEPT THE FACE OF THE FLANGE WHICH SHALL RECEIVE ONE (1) COAT OF A ZINC RICH PRIMER AT THE SHOP IMMEDIATELY AFTER THEY HAVE BEEN FACED AND DRILLED. ALL FLANGED PIPE AND FITTINGS SHALL BE FACED AND DRILLED TO ANSI B16-1, 125 LB. DRILLING, UNLESS SPECIAL DRILLING IS CALLED FOR. WHERE TAP OR STUD BOLTS ARE REQUIRED, FLANGES SHALL ALSO BE TAPPED.

LAYING

(A) PROPER AND SUITABLE TOOLS AND APPLIANCES FOR THE SAFE AND CONVENIENT HANDLING AND LAYING OF THE PIPE AND FITTINGS SHALL BE USED. GREAT CARE SHALL BE TAKEN TO PREVENT THE PIPE COATING AND FITTINGS FROM BEING DAMAGED PARTICULARLY ON THE INSIDE OF THE PIPES AND FITTINGS AND ANY SUCH DAMAGE SHALL BE REMEDIED AS DIRECTED. ALL PIPES AND FITTINGS SHALL BE CAREFULLY EXAMINED BY THE CONTRACTOR FOR DEFECTS JUST BEFORE LAYING AND NO PIPE OR FITTINGS SHALL BE LAID WHICH IS KNOWN TO BE DEFECTIVE.

(B) IF ANY DEFECTIVE PIPE IS DISCOVERED AFTER HAVING BEEN LAID, IT SHALL BE REMOVED AND REPLACED WITH A SOUND PIPE OR FITTING IN A SATISFACTORY MANNER, BY THE CONTRACTOR AT HIS OWN EXPENSE. ALL PIPES AND FITTINGS SHALL BE THOROUGHLY CLEANED BEFORE THEY ARE LAID, SHALL BE KEPT CLEAN UNTIL THEY ARE USED IN THE COMPLETED WORK, AND WHEN LAID, SHALL CONFORM TO THE LINES AND GRADES GIVEN BY THE ENGINEER. OPEN ENDS OF PIPES SHALL BE KEPT PLUGGED WITH A BULK HEAD DURING CONSTRUCTION.

(C) PIPE LAID IN TRENCH SHALL BE LAID TO A FIRM AND EVEN BEARING FOR ITS FULL LENGTH. PRECAUTIONS SHALL BE TAKEN AGAINST FLOATING.

(D) IT IS THE INTENTION OF THESE SPECIFICATIONS TO SECURE FIRST CLASS WORKMANSHIP IN THE PLACING OF PIPE AND ACCESSORIES. IN SUCH DETAILS AS ARE NOT SPECIFICALLY MENTIONED HEREIN OR CALLED FOR ON THE DRAWINGS, THE CONTRACTOR WILL BE REQUIRED TO CONFORM WITH THE APPLICABLE SECTIONS OF THE LATEST AMERICAN NATIONAL STANDARD, ANSI/AWWA C 600-87, INSTALLATION OF GRAY AND DUCTILE CAST IRON WATER MAINS AND APPURTENANCES," AS ADOPTED BY THE AMERICAN WATER WORKS ASSOCIATION.

PROTECTION OF UTILITIES

CONTRACTOR SHALL TAKE ALL PRECAUTIONS NECESSARY TO SUPPORT, MAINTAIN, OR OTHERWISE PROTECT EXISTING UTILITIES AND OTHER FACILITIES AT ALL TIMES DURING CONSTRUCTION.

CUTTING PIPE

WHENEVER THE PIPES REQUIRE CUTTING TO FIT INTO THE LINES, THE WORK SHALL BE DONE IN A SATISFACTORY MANNER SO AS TO LEAVE A SMOOTH END AT RIGHT ANGLES TO THE AXIS OF THE PIPE. WHEN A PIECE OF PIPE IS CUT TO FIT INTO THE LINE, NO PAYMENT WILL BE MADE FOR THE PORTION CUT OFF AND NOT USED IN THE LINE. THE CONTRACTOR'S ATTENTION IS CALLED TO PARAGRAPH "WORK TO BE DONE BY THE CITY."

JOINTS

(A) SLIP-ON JOINTS:

ALL PIPE UNLESS OTHERWISE REQUIRED, SHOWN ON CONTRACT DRAWINGS, DIRECTLY SPECIFIED SHALL HAVE SOCKET BY PLAIN END RUBBER-GASKET PUSH-ON JOINTS WITH RADIALLY COMPRESSED LOCKED IN PLACE RUBBER RING GASKETS APPROVED BY THE COMMISSIONER OF WATER. SLIP-ON COMPRESSION JOINTS SHALL CONFORM TO THE REGULAR AND SPECIAL REQUIREMENT FOR PUSH-ON JOINTS IN AMERICAN NATIONAL STANDARD, ANSI/AWWA C111/A21.11-85, "RUBBER GASKET JOINTS FOR DUCTILE-IRON AND GRAY-IRON PRESSURE PIPE AND FITTINGS," AND ALL SUBSEQUENT AMENDMENTS THERETO.

JOINTS (CONTINUED)

(B) MECHANICAL JOINTS/RESTRAINED MECHANICAL JOINTS:

1. ALL FITTINGS AND PIPE BELL ENDS CONNECTED TO FITTINGS, UNLESS OTHERWISE REQUIRED, SHOWN ON CONTRACT DRAWINGS, OR DIRECTLY SPECIFIED SHALL HAVE BELL OR PLAIN END JOINTS OF THE MECHANICAL BOLTED STUFFING-BOX TYPE WITH SEALING GASKET AND BOLTED DUCTILE IRON FOLLOWER GLAND AND SHALL BE OF THE SPECIFIED RETAINED TYPE. BOLTS AND NUTS FOR MECHANICAL JOINTS SHALL BE CORROSION RESISTANT, HIGH STRENGTH, LOW ALLOY STEEL.

2. MECHANICAL JOINTS SHALL CONFORM TO THE REGULAR AND SPECIAL REQUIREMENT THAT ALL GLANDS SHALL BE DUCTILE IRON WITH JOINT DIMENSIONS AND TOLERANCES, BOLT HOLES AND SLOTS, GASKETS, RUBBER, QUALITY CONTROL, BOLTS AND NUTS AND MARKING BE IN CONFORMANCE WITH AMERICAN NATIONAL STANDARD, ANSI/AWWA C111/A21.11-85, "RUBBER GASKET JOINTS FOR DUCTILE IRON AND GRAY IRON PRESSURE PIPE AND FITTINGS." ON ALL PIPE AND FITTINGS AT BENDS, TEES, CROSSES, SPECIAL FITTINGS, BETWEEN VERTICAL OFFSETS OR BENDS, ON HYDRANT BRANCHES, ON VALVES AND HYDRANT BASE ELBOWS, UP TO AND INCLUDING 16-INCH SIZE, THE CONTRACTOR SHALL FURNISH AND INSTALL RESTRAINED TYPE MECHANICAL JOINTS.

3. ON ALL PIPE AND FITTINGS AT BENDS, TEES, CROSSES, SPECIAL FITTINGS, BETWEEN VERTICAL OFFSETS OR BENDS, ON HYDRANT BRANCHES, ON VALVES AND HYDRANT BASE ELBOWS, UP TO AND INCLUDING 16-INCH SIZE, THE CONTRACTOR SHALL FURNISH AND INSTALL RETAINED TYPE MECHANICAL JOINTS.

4. PIPE AND FITTING BELL JOINT AND GASKETS SHALL BE FURNISHED AS SPECIFIED. GLANDS FOR RETAINED MECHANICAL JOINTS SHALL BE BOLTED TYPE OF DUCTILE-IRON MATERIAL CONFORMING TO AMERICAN NATIONAL STANDARD, ANSI/AWWA C111/A21.11-85, "RUBBER-GASKET JOINTS FOR DUCTILE-IRON AND GRAY-IRON PRESSURE PIPE AND FITTINGS," AND/OR CONFORMING WITH ASTM A 536-84, "SPECIFICATION FOR DUCTILE-IRON CASTINGS." RETAINED MECHANICAL JOINT FOLLOWER GLANDS SHALL BE EQUAL TO THE "MEG-A-LUG" AS MANUFACTURED BY EBAA IRON SALES, INC., THE "SUPER-LUG" AS MANUFACTURED BY THE SIGMA CORPORATION OR THE "UNI-FLANGE SERIES 1400" AS MANUFACTURED BY THE FORD METER BOX COMPANY, INC. PROPER TORQUE SHALL BE THAT AS RECOMMENCED BY THE RETAINER GLAND MANUFACTURER. WHERE JOINT DEFLECTION IS NECESSARY FOR ALIGNMENT SUCH DEFLECTION SHALL BE LIMITED TO MANUFACTURER'S MAXIMUM JOINT OPENING. ALL RETAINED JOINTS SHALL BE RATED FOR MINIMUM 250 PSI PRESSURE. ALL RETAINED JOINTS SHALL BE POLYETHYLENE ENCASED AS SPECIFIED IN SECTION, "JOINTS", (C), EXCEPT WHERE SUCH RETAINED MECHANICAL JOINTS ARE BONDED JOINTS WHERE NO POLYETHYLENE ENCASEMENT WILL BE REQUIRED.

5. RETAINER GLANDS USING PERPENDICULAR SET SCREWS AS A MEANS OF RESTRAINT WILL NOT BE PERMITTED.

(C) POLYETHYLENE ENCASEMENT:

1. ALL FLANGES, VICTAULIC AND COMPRESSION TYPE BOLTED SLEEVED COUPLINGS, AND ALL PIPE AND FITTINGS HAVING BOLTS OR OTHER TYPE OF FASTENERS IN JOINT CONSTRUCTION AND PIPE AND FITTINGS AS SHOWN ON THE CONTRACT DRAWINGS OR WHERE REQUIRED SHALL BE "V-Bio" POLYETHYLENE ENCASED. PIPE, FITTING AND OTHER JOINTS THAT ARE BONDED JOINTS NEED NOT BE POLYETHYLENE ENCASED. POLYETHYLENE ENCASEMENT SHALL BE WRAPPED IN ACCORDANCE WITH AMERICAN NATIONAL STANDARD, ANSI/AWWA C105/A21.5-88, "POLYETHYLENE ENCASEMENT FOR DUCTILE-IRON PIPING FOR WATER AND OTHER LIQUIDS," AND ALL SUBSEQUENT AMENDMENTS THERETO AND SHALL HAVE DOUBLE POLYETHYLENE ENCASEMENT OF CLASS "C" (BLACK) FILM, METHOD "C" DOUBLING SHEET AND PROVIDING ONE FOOT (1') MINIMUM OVERLAP ON PIPE OR FITTING ON BOTH SIDES OF JOINT.

2. ALL BOLTS AND NUTS ON ALL RETAINED MECHANICAL JOINTS, FLANGES, VICTAULIC AND COMPRESSION TYPE BOLTED SLEEVED COUPLINGS, SHALL HAVE FIELD APPLIED THREE (3) COATS OF BITUMASTIC COATING PRIOR TO POLYETHYLENE ENCASEMENT.

Preliminary Plans - For Reference Only

WATER WORK GENERAL NOTES

DESIGN AGENCY
Michael Baker INTERNATIONAL

DESIGNER
SMP

REVIEWER
SM 05/15/24

PROJECT ID
82382

SHEET 1379 TOTAL 2696

CUY-90-16.28 (CCG3A)
MODEL: UN1209 PAPERSIZE: 34x22 (in.) DATE: 3/28/2025 TIME: 5:11:45 AM USER: Julie.Ross
pw:\\mb-us-pw.bentley.com:mb-us-pw-03\Documents\Cleveland_OH01_Projects\ODOT\District12\82382400-Engineering\Utilities\Sheets\82382_UN1201.dgn

ITEM SPECIAL - DUCTILE IRON PIPE AND FITTINGS - 24" AND LARGER (CONTINUED)

JOINTS (CONTINUED)

(D) BOLTLESS RESTRAINED SLIP-ON JOINTS:

WHERE SHOWN ON THE CONTRACT DRAWINGS ON ALL DUCTILE IRON PIPE AND FITTINGS, 24-INCHES OR LARGER, WHERE "RESTRAINED DISTANCE" IS REQUIRED OR SHOWN ALL RESTRAINT SHALL BE OF THE BOLTLESS RESTRAINED SLIP-ON JOINT TYPE. VALVES WITHIN "RESTRAINED DISTANCES" SHALL BE OF THE TYPE INDICATED ON THE CONTRACT DRAWINGS OR AS SPECIFIED. BOLTLESS RESTRAINED SLIP-ON JOINTS SHALL BE OF A DESIGN CONSISTING OF A SHOP WELDED RETAINER RING OR SEGMENT ON THE SPIGOT END OF THE PIPE THAT WHEN THE JOINT IS FULLY ASSEMBLED "LOCKS" INTO THE BELL OF THE ADJACENT PIPE OR FITTING PROVIDING A POSITIVE RESTRAINED JOINT. NO FIELD WELDED RESTRAINED JOINTS ARE PERMITTED EXCEPT ON LENGTHS OF PIPE LESS THAN NOMINAL LENGTH NEED TO CLOSE THE LINE. BOLTLESS RESTRAINED JOINTS SHALL BE OF A DESIGN THAT PROVIDES RESTRAINED ACTION BETWEEN THE SPIGOT AND BELL OF THE PIPE OR FITTING INDEPENDENT OF THE GASKET.

(E) COMPRESSION COUPLINGS:

1. ALL PIPE COMPRESSION COUPLINGS SHALL BE OF A GASKETED, SLEEVE TYPE WITH DIAMETERS TO PROPERLY FIT PLAIN END IRON PIPE. EACH COUPLING SHALL CONSIST OF ONE (1) MIDDLE RING WITH STOPS REMOVED; TWO (2) FOLLOWER GLANDS; TWO (2) RUBBER-COMPOUND, BUNA-N BLEND, WEDGE SECTION GASKETS; AND SUFFICIENT TRACKHEAD STAINLESS STEEL BOLTS AND NUTS (ASTM A276-89A, TYPE 304) TO PROPERLY COMPRESS THE GASKETS. THE MIDDLE RING AND FOLLOWER GLANDS SHALL BE OF EITHER STEEL OR DUCTILE IRON (ASTM-A536). THE COMPRESSION COUPLING SHALL HAVE STOPS REMOVED AND BE RATED FOR A MINIMUM WORKING PRESSURE OF 250 PSI AND SHALL BE EQUAL TO THE DRESSER STYLE NOS: 39, OR 39-62 (TRANSITION TYPE), ROMAC IC400 OR SMITH-BLAIR 416 STRAIGHT AND TRANSITION COUPLINGS. ALL COMPRESSION COUPLINGS SHALL HAVE ELETROLIC INSULATION.

2. ALL COMPRESSION COUPLINGS SHALL BE COATED IN THE SHOP WITH A FACTORY COATING COMPATIBLE WITH FIELD APPLIED PRIMER AND ENAMEL COATINGS. COMPRESSION COUPLINGS SHALL BE CLEANED AND PAINTED WITH THREE (3) FIELD COATS OF KOPPERS BITUMASTIC SUPER TANK SOLUTION OR EQUIVALENT.

(F) PIPE TIEANCHOR HARNESS:

1. ALL COMPRESSION COUPLINGS SHALL INCLUDE TIEANCHOR-TO-TIEANCHOR HARNESSES AS MANUFACTURED BY STAR NATIONAL PRODUCTS, INC. THE HARNESS TIE RODS SHALL BE INSTALLED WITH INSULATING BUSHINGS FOR ELETROLIC INSULATION. PRESSURE RATING, MATERIAL FOR ROD AND NUTS SHALL MATCH COMPRESSION COUPLINGS.

(G) FLANGED JOINTS:

1. FLANGED JOINTS SHALL BE INSTALLED AS SHOWN ON THE DRAWINGS OR AS SPECIFIED. FLANGES SHALL BE EITHER CAST STEEL, FORGED OR ROLLED STEEL, OR PROPERLY WELDED AND MACHINED FABRICATED STEEL PLATES, WELDED TO PIPE WITH TWO CONTINUOUS WELDS. THEY SHALL HAVE PLAIN FACES AND SHALL BE FACED TRUE AND SMOOTH AT RIGHT ANGLES TO THE AXIS OF THE PIPE AND SHALL BE SPOT FACED ON THE BACK. DRILLING SHALL CONFORM TO ANSI B16.1, 125 LBS. EACH BLIND FLANGE SHALL BE CAST IRON AND HAVE BOSSES TAPPED AT TOP AND BOTTOM FOR TWO (2) INCH STANDARD PIPE AND FURNISHED WITH PLUGS.

2. ALL MACHINED STEEL SURFACES AT THE ENDS OF PIPE AND/OR FITTINGS TO RECEIVE VICTAULIC TYPE COUPLINGS OR PIPE ENDS HAVING FLANGES (FACE OF FLANGE) SHALL BE COATED WITH ONE (1) SHOP COAT OF AN APPROVED ZINC RICH PAINT.

3. ALL BOLTS AND NUTS USED IN THE FINISHED WORK FOR FLANGES SHALL BE MADE OF SILICON BRONZE (ASTM B 98-84, ALLOY A, "SPECIFICATION FOR COPPER-SILICON ALLOY ROD, BARS, AND SHAPES") OR STAINLESS STEEL (ASTM A 276-89A, TYPE 304, "SPECIFICATION FOR STAINLESS AND HEAT-RESISTING STEEL BARS AND SHAPES"). THE ENDS OF ALL BOLTS MUST BE FINISHED TO STANDARD RADIUS IN ACCEPTABLE MANNER. ALL SCREW THREADS SHALL BE AMERICAN STANDARD COARSE THREAD (N.C.). STUD BOLTS DOUBLE END (ROD) SHALL BE USED TO MAKE THE FLANGED JOINTS ON PIPE. ALL DIMENSIONS TO BE ACCORDING TO AMERICAN STANDARD HEAVY. BOLTS AND NUTS SHALL BE DELIVERED TO THE FIELD FREE FROM GREASE, RUST AND DIRT AND SHALL BE PROPERLY PROTECTED FROM MOISTURE AND DIRT IN THE FIELD. GASKETS FOR FLANGED PIPE SHALL BE 5X MANILA ROPE PATTERN OR OTHER APPROVED TYPE.

4. WHERE FLANGED VALVE INSULATORS ARE REQUIRED AT SUPPLEMENTAL CONNECTIONS, OR WHERE ORDERED, EACH OF THE FLANGE BOLT HOLES SHALL BE INCREASED BY 1/16" TO ACCEPT A BOLT INSULATOR SLEEVE.

JOINTS (CONTINUED)

(H) VICTAULIC TYPE COUPLINGS:

1. WHERE SHOWN ON THE DRAWINGS, SPECIFIED OR WHERE REQUIRED, THE CONTRACTOR SHALL FURNISH AND INSTALL VICTAULIC TYPE COUPLINGS FOR CONNECTION OF DUCTILE IRON PIPE ENDS TO VALVES. SHOULDERED PIPE ENDS SHALL BE DESIGNED FOR NOT LESS THAN THE WORKING PRESSURE NOTED ON THE CONTRACT DRAWINGS. COUPLINGS SHALL BE COMPOSED OF MALLEABLE IRON HOUSINGS HELD TOGETHER WITH STEEL BOLTS HEAT TREATED AND "HOT-DIP" GALVANIZED AND WITH A CONTINUOUS HOLLOW, MOLDED RUBBER SEALING RING, OF SUCH TYPE THAT THE SEAL BECOMES TIGHT AS THE PRESSURE WITHIN THE PIPE INCREASES. THE JOINTS SHALL BE CONSTRUCTED AND INSTALLED AND SHALL BE EQUAL IN ALL RESPECTS TO THOSE MANUFACTURED BY THE VICTAULIC COMPANY OF AMERICA. MALLEABLE HOUSINGS SHALL CONFORM TO THE "STANDARD SPECIFICATIONS FOR FERRITIC MALLEABLE IRON CASTINGS," ASTM DESIGNATION A 47-84; OR TO THE "STANDARD SPECIFICATIONS FOR DUCTILE IRON CASTINGS," ASTM DESIGNATION A 536, LATEST REVISION. BOLTS AND NUTS SHALL BE MANUFACTURED BY THE COUPLING MANUFACTURER AND SHALL BE HEAT TREATED STEEL BOLTS HAVING 100,000 PSI. TENSILE STRENGTH CONFORMING TO ASTM A 183-83, OR LATEST REVISION, STANDARD SPECIFICATION FOR "CARBON STEEL TRACK BOLTS AND NUTS." ALL BOLTS AND NUTS SHALL BE ZINC COATED BY THE "HOT-DIP" METHOD ACCORDING TO ASTM DESIGNATION A 123-89A, "SPECIFICATION FOR ZINC (HOT-DIP GALVANIZED) COATINGS ON IRON AND STEEL PRODUCTS."

2. ALL METAL PARTS OF THE COUPLINGS SHALL BE COATED AT THE SHOP WITH ONE COAT OF BITUMINOUS PRIMER FURNISHED BY THE SAME MANUFACTURER WHO FURNISHES THE COATINGS AS SPECIFIED UNDER PARAGRAPH "PAINTING."

I) TRANSITION COUPLINGS:

THE CONTRACTOR SHALL PROVIDE SHOP DRAWINGS TO THE CITY THROUGH THE ENGINEER FOR APPROVAL OF THE TRANSITION COUPLING ASSEMBLY. THE TRANSITION COUPLING SHALL BE "DRESSER STYLE 63/39, TYPE 1" SLIP TYPE WITH ELECTROLIC INSULATION, OR APPROVED EQUAL, WITH MINIMUM 1/2" THICK BODY AND SLIP, WITH AN 10-IN, TRAVERSE. THE TRANSITION COUPLING SHALL INCLUDE ALL MATERIALS, BOLTS, NUTS AND WASHERS, WELDED NECK FLANGES A.S.A. 150# AND GASKETS. ALL BOLTS AND NUTS SHALL BE MADE OF STAINLESS STEEL: ASTM A 276-89A, TYPE 304, "SPECIFICATION FOR STAINLESS AND HEAT-RESISTING SHEET BARS AND SHAPES." NO FIELD WELDING OF HEAT-RESISTING SHEET BARS AND SHAPES." NO FIELD WELDING OF GALVANIZED STEEL PIPE WILL BE PERMITTED. THE TRANSITION COUPLING SHALL BE GALVANIZED EXCEPT SLIP PIPE. THE TRANSITION COUPLING SHALL HAVE FIELD APPLIED INSULATION AS PER DETAILS ON THE CONTRACT DRAWINGS.

PAINTING

AFTER INSTALLATION AND BEFORE POLYETHYLENE ENCASEMENT, ALL EXPOSED OR DAMAGED COATING AND ALL BOLTS FOR RETAINED MECHANICAL JOINTS, FLANGES AND VICTAULIC OR COMPRESSION TYPE BOLTED SLEEVED COUPLINGS SHALL BE CLEANED AND PAINTED WITH THREE (3) FIELD COATS OF KOPPERS BITUMASTIC SUPER TANK SOLUTION OR EQUIVALENT.

DRAWINGS

(A) THE CONTRACTOR SHALL SUBMIT TO THE CITY THROUGH THE ENGINEER FOR APPROVAL SIX (6) SETS OF PRINTS OF ALL SHOP DRAWINGS FOR PIPE AND FITTINGS AND MISCELLANEOUS OR SPECIAL DETAILS OF PIPE AND FITTING JOINTS WHICH ARE NOT STANDARD CONSTRUCTION OR FULLY DETAILED IN THE REGULAR CATALOGUE OF THE COMPANY FURNISHING THE PIPE, FITTINGS AND SPECIALS. NO WORK SHALL BE DONE IN THE SHOP UNTIL AFTER THE DRAWINGS HAVE BEEN APPROVED.

(B) THE APPROVAL OF THE DRAWINGS BY THE CITY SHALL NOT RELIEVE THE CONTRACTOR OF ANY OF HIS OBLIGATIONS IN CONNECTION WITH THIS CONTRACT.

PIPE SUPPORT ASSEMBLIES

PIPE SUPPORT ASSEMBLIES SHALL BE FABRICATED AS DETAILED ON THE PLANS AND SHALL BE COMPLETE IN ALL RESPECTS INCLUDING ALL MATERIALS, CADMIUM PLATED SHOULDER AND CLAMP BOLTS, FASTENERS AND NUTS. THE SUPPORT ASSEMBLY CLAMP, SEAT PLATE ("LUBRITE" PLATE) AND SHIMS SHALL ALL BE HOT-DIPPED GALVANIZED AFTER FABRICATION PER ASTM A-123, LATEST REVISION THEREOF. NO FIELD WELDING OF GALVANIZED STEEL PIPE WILL BE PERMITTED. THERE SHALL BE A MINIMUM OF TWO (2) PIPE SUPPORTS FOR EACH PIPE LENGTH.

MEASUREMENT

THE NUMBER OF FEET OF DUCTILE IRON PIPE AND FITTINGS TO BE PAID FOR UNDER ITEM SPECIAL - DUCTILE IRON PIPE AND FITTINGS - 20" AND LARGER, SHALL BE THAT ACTUALLY FURNISHED AND PLACED IN ACCORDANCE WITH THESE SPECIFICATIONS ALONG THE AXIS OF THE PIPING, INCLUDING FITTINGS AND VALVES CONNECTED UP IN PLACE.

ITEM MISC. - POLYURETHANE COATED CEMENT LINED STEEL

(A) WELDED STEEL PIPE SHALL BE 24" O.D. X 0.50" WALL ASTM A-53 GRADE B, HAVING A MINIMUM WORKING PRESSURE OF 350 PSI AND MEETING THE REQUIREMENTS OF AWWA C200-97.

(B) THE INTERIOR OF ALL STEEL PIPE SHALL BE TOTALLY COATED WITH CEMENT-MORTAR PROTECTIVE LINING FOR THE FULL DISTANCE OF THE PIPE.

DRAWINGS - WELDED STEEL PIPE AND APPURTENANCES

(A) THE CONTRACTOR SHALL SUBMIT TO THE CITY THROUGH THE ENGINEER FOR APPROVAL A MINIMUM OF SIX (6) SETS OF PRINTS OF ALL SHOP DRAWINGS GENERATED BY THE PIPE OR STRUCTURAL FABRICATOR OF ALL PIPE, FITTINGS AND MISCELLANEOUS OR SPECIAL DETAILS OF PIPE AND FITTING JOINTS INCLUDING LINE AND ASSEMBLY LAYOUT, FLANGE DETAILS, VICTAULIC GROOVING, VICTAULIC COUPLINGS, EXPANSION JOINTS, WELDING DETAILS, FACTORY APPLIED INSULATION, FIELD APPLIED INSULATION, JACKET, SLEEVE PACKING DETAILS, PIPE SUPPORT DETAILS INCLUDING CLAMP, SHIMS AND "LUBRITE" PLATE, AND ANY OTHER PIPE APPURTENANCES. THE LINE AND ASSEMBLY LAYOUT SHALL INCLUDE ALL PIPE AND FITTING DIMENSIONS, LOCATION OF ALL PIPE JOINT AND TYPE, ALL PIPE SUPPORTS, ELEVATIONS OF PIPE AT SUPPORTS, EXPANSION JOINTS AND LOCATION OF ANY OTHER PIPE APPURTENANCES. NO WORK SHALL BE DONE IN THE SHOP UNTIL AFTER THE DRAWINGS HAVE BEEN APPROVED.

(B) THE APPROVAL OF THE DRAWINGS BY THE CITY SHALL NOT RELIEVE THE CONTRACTOR OF ANY OF HIS OBLIGATIONS IN CONNECTION WITH THIS CONTRACT.

JOINTS

(A) FLANGED JOINTS:
FLANGED JOINTS SHALL BE INSTALLED AS SHOWN ON THE DRAWINGS. FLANGES SHALL STRADDLE VERTICAL AND HORIZONTAL CENTERLINES. FLANGES FOR 12" AND 16" STEEL PIPE SHALL BE CLASS "D" OR WELDED NECK CLASS "D" FLANGES. FLANGES FOR 24" STEEL PIPE SHALL BE CLASS "E" OR WELDED NECK CLASS "E" FLANGES. FLANGES SHALL BE OF EITHER CAST STEEL, FORGED OR ROLLED STEEL, OR PROPERLY WELDED AND MACHINED FABRICATED STEEL PLATES, WELDED TO PIPE WITH TWO (2) CONTINUOUS WELDS. THEY SHALL HAVE PLAIN FACES AND SHALL BE FACED TRUE AND SMOOTH AT RIGHT ANGLES TO THE AXIS OF THE PIPE AND SHALL BE SPOT FACED ON THE BACK. DRILLING SHALL CONFORM TO "AMERICAN 1928 STANDARD" DRILLING 150 POUND TEMPLATE. BLIND FLANGES, WHERE REQUIRED, SHALL BE RIBBED STEEL OR SHALL BE DISHED CAST IRON HAVING BOSSES TAPPED AT TOP AND BOTTOM FOR TWO (2) INCH STANDARD PIPE AND FURNISHED WITH MALLEABLE IRON PLUGS. ALL BOLTS AND NUTS FOR FLANGES AND OTHER TYPES OF BOLTING SHALL BE MADE OF STAINLESS STEEL: ASTM A 276-89A, "SPECIFICATION FOR STAINLESS AND HEAT-RESISTING STEEL BARS AND SHAPES," TYPE 304, AND ASTM A 193/A L93M-89, "SPECIFICATION FOR ALLOY-STEEL AND STAINLESS STEEL BOLTING MATERIALS FOR HIGH TEMPERATURE SERVICE", HEAVY HEX.

(B) THE EXPANSION JOINT ASSEMBLY SHALL BE, "DRESSER STYLE 63, TYPE I" SLIP TYPE, OR APPROVED EQUAL, WITH MINIMUM 1/2" THICK BODY AND SLIP, WITH A 10-IN, TRAVERSE. THE EXPANSION JOINT ASSEMBLY SHALL INCLUDE ALL MATERIALS, BOLTS, NUTS AND WASHERS, WELDED NECK FLANGES A.S.A. 150# AND GASKETS. ALL BOLTS AND NUTS SHALL BE MADE OF STAINLESS STEEL: ASTM A 276-89A, TYPE 304, "SPECIFICATION FOR STAINLESS AND HEAT-RESISTING SHEET BARS AND SHAPES." NO FIELD WELDING OF POLYURETHANE COATED STEEL PIPE WILL BE PERMITTED. THE EXPANSION JOINT SHALL BE GALVANIZED EXCEPT SLIP PIPE. THE EXPANSION JOINT SHALL HAVE FIELD APPLIED INSULATION AS PER DETAILS ON THE CONTRACT DRAWINGS.

(C) VICTAULIC TYPE COUPLINGS:
THE CONTRACTOR SHALL PROVIDE SHOP DRAWINGS TO THE CITY THROUGH THE ENGINEER FOR APPROVAL OF THE VICTAULIC COUPLING.

(1) WHERE SHOWN ON THE DRAWINGS, OR WHERE REQUIRED, THE CONTRACTOR SHALL FURNISH AND INSTALL VICTAULIC TYPE JOINTS, INCLUDING COUPLINGS, FOR CONNECTION OF PIPE ENDS. STEEL PIPE ENDS SHALL BE FABRICATED AND GROOVED, AS SHOWN ON THE DRAWINGS, ADAPTED FOR INSTALLATION OF A STYLE 77 JOINT AND COUPLING.

JOINTS (CONTINUED)

VICTAULIC COUPLINGS SHALL BE STYLE 77 AND SHALL BE COMPOSED OF MALLEABLE IRON HOUSINGS HELD TOGETHER WITH STEEL BOLTS HEAT TREATED AND "HOT-DIP" GALVANIZED ACCORDING TO ASTM A 123-89A, "SPECIFICATION FOR ZINC (HOT-DIP GALVANIZED) COATINGS ON IRON AND STEEL PRODUCTS," AND WITH A CONTINUOUS, HOLLOW, MOLDED RUBBER SEALING RING OF SUCH TYPE THAT THE SEAL BECOMES TIGHT AS THE PRESSURE WITHIN THE PIPE INCREASES. THE JOINTS SHALL BE CONSTRUCTED AND INSTALLED AND BE EQUAL IN ALL RESPECTS TO THOSE MANUFACTURED BY THE "VICTAULIC COMPANY OF AMERICA." MALLEABLE HOUSINGS SHALL CONFORM TO ASTM A 47-89, "SPECIFICATION FOR FERRITIC MALLEABLE IRON CASTINGS," OR TO THE REQUIREMENTS OF ASTM A 536-84, "SPECIFICATION FOR DUCTILE-IRON CASTINGS."

BOLTS AND NUTS SHALL BE MANUFACTURED BY THE COUPLING MANUFACTURER AND SHALL COMPLY IN MATERIAL WITH THE REQUIREMENTS ASTM A 183-83, "SPECIFICATION FOR CARBON STEEL TRACK BOLTS AND NUTS."

(2) ALL METAL PARTS OF THE COUPLINGS SHALL BE COATED AT THE SHOP WITH ONE COAT OF BITUMINOUS PRIMER FURNISHED BY THE SAME MANUFACTURER WHO FURNISHES THE COATINGS AS SPECIFIED UNDER "COATINGS."

PIPE SUPPORT ASSEMBLIES

PIPE SUPPORT ASSEMBLIES SHALL BE FABRICATED AS DETAILED ON THE PLANS AND SHALL BE COMPLETE IN ALL RESPECTS INCLUDING ALL MATERIALS, CADMIUM PLATED SHOULDER AND CLAMP BOLTS, FASTENERS AND NUTS. THE SUPPORT ASSEMBLY CLAMP, SEAT PLATE ("LUBRITE" PLATE) AND SHIMS SHALL ALL BE HOT-DIPPED GALVANIZED AFTER FABRICATION PER ASTM A-123, LATEST REVISION THEREOF. NO FIELD WELDING OF GALVANIZED STEEL PIPE WILL BE PERMITTED. THERE SHALL BE A MINIMUM OF TWO (2) PIPE SUPPORTS FOR EACH PIPE LENGTH.

PIPE EXTERIOR AND INTERIOR COATINGS

EXTERIOR PIPE COATING ON 12" O.D., OR LARGER, STEEL WATER MAINS SHALL BE APPLIED IN ACCORDANCE WITH ANSI/AWWA C222-08, "POLYURETHANE COATINGS FOR THE INTERIOR AND EXTERIOR OF WATER PIPE AND FITTINGS" CONSISTING OF THE FOLLOWING:

1) COATING SYSTEM - ASTM D16 TYPE V, MINIMUM APPLIED DRY FILM EXTERIOR THICKNESS SHALL BE 25 MILS.

INTERIOR PIPE LINING ON 4" O.D., OR LARGER, STEEL WATER MAINS SHALL BE APPLIED IN ACCORDANCE WITH ANSI/AWWA C205-07, "CEMENT-MORTAR PROTECTIVE LINING AND COATINGS FOR STEEL WATER PIPE - 4 IN. (100 MM) AND LARGER - SHOP APPLIED".

MEASUREMENT

THE NUMBER OF LINEAR FEET OF STEEL PIPE TO BE PAID FOR SHALL BE THE ACTUAL NUMBER OF LINEAR FEET FURNISHED AND PLACED IN ACCORDANCE WITH THESE SPECIFICATIONS AS MEASURED ALONG THE AXIS OF THE PIPING.

PAYMENT

(A) THE FOOTAGE MEASURED AS PROVIDED ABOVE SHALL BE PAID FOR A T THE CONTRACT PRICE BID PER LINEAR FOOT FOR 'ITEM 638 - WATER MAIN POLYURETHANE COATED CEMENT LINED STEEL PIPE" CLASSIFIED AS TO SIZE AND TYPE, WHICH PRICE AND PAYMENT SHALL CONSTITUTE FULL COMPENSATION FOR FURNISHING, HAULING, PLACING, CUTTING INTO AND CONNECTING THE PIPE, INCLUDING ALL EXPANSION JOINTS, COUPLINGS, PIPE INSULATION, INSTALLING SUPPORT ASSEMBLIES, AND OTHER PIPE APPURTENANCE, FURNISHING AND COMPLETING THE SLEEVE PACKING DETAIL, INCLUDING THE SEAL, AND FOR ALL LABOR, EQUIPMENT, TOOLS AND INCIDENTALS NECESSARY TO COMPLETE THIS ITEM EXCEPT FOR THE ITEMS SPECIFICALLY LISTED AS SEPARATE PAY ITEMS.

(B) THE CONTRACTOR WILL BE ASSESSED A CWD LABOR CHARGE FOR THE CHLORINATION OR THE FLUSHING, TESTING AND SAMPLING OF THE NEWLY LAID WATER MAIN BY THE CITY OF CLEVELAND, DIVISION OF WATER. PAYMENT OF THE CWD LABOR CHARGE FOR CHLORINATION OR THE FLUSHING, TESTING AND SAMPLING SHALL BE MADE BY THE CONTRACTOR TO THE PERMITS AND SALES SECTION OF THE DIVISION OF WATER BEFORE ANY WATER WORK IS PERFORMED

Preliminary Plans - For Reference Only

WATER WORK GENERAL NOTES

DESIGN AGENCY
Michael Baker INTERNATIONAL

DESIGNER SMP
REVIEWER SM 05/15/24
PROJECT ID 82382
SHEET 1380 TOTAL 2696

CUY-90-16.28 (CCG3A)
MODEL: UN1210 PAPERSIZE: 34x22 (in.) DATE: 3/28/2025 TIME: 5:11:45 AM USER: Julie.Ross
pw:\\mb-us-pw.bentley.com:mb-us-pw-03\Documents\Cleveland_OH01_Projects\ODOT\District12\82382400-Engineering\Utilities\Sheets\82382_UN1201.dgn

ITEM SPECIAL - INSULATION AND OUTER PROTECTIVE JACKET

THE INSULATION SHALL BE FOAMGLAS AS MANUFACTURED BY PITTSBURGH CORNING CORPORATION OR APPROVED EQUAL THAT IS CERTIFIED TO MEET THE REQUIREMENTS OF ISO 9002. INSULATION SHALL BE MINIMUM TWO (2") CELLULAR GLASS MANUFACTURED IN ACCORDANCE WITH ASTM C552, "STANDARD SPECIFICATION FOR CELLULAR GLASS THERMAL INSULATION", FOR 12" O.D. PIPE AND LARGER AND HAVING A MINIMUM DENSITY OF 8 POUNDS PER CUBIC FOOT AND COMPRESSIVE STRENGTH OF 100 PSI. THE CELLULAR INSULATION SHALL BE FABRICATED IN MINIMUM CURVED 24" LONG SIDEWALL SEGMENTS EMPLOYING TAPERED GROOVES THAT CLOSE COMPLETELY FILLING THE SPACE BETWEEN THE PIPE AND THE OUTER WEATHERPROOF JACKET. SEGMENTS SHALL BE JOINED WITH LONGITUDINAL AND BUTT JOINTS THAT ARE TIGHTLY FITTED TO ELIMINATE VOIDS. BUTT JOINTS SHOULD BE STAGGERED. THE OUTER JACKET SHALL BE PITTWRAP CW PLUS OR APPROVED EQUAL FOR DIRECT-BURIAL. THE BURIED JACKETING SHALL BE 50 MIL THICK SELF-SEALING, MODIFIED BITUMINOUS MEMBRANE FOR PROTECTING UNDERGROUND INSULATION SYSTEMS. EXPOSED JACKETING SHALL BE ALUMINUM JACKETING, 0.016" THICKNESS, AND INSTALLED WITH ALL LAPS POSITIONED TO SHED WATER. ALL LAPS SHALL BE A MINIMUM OF 2". JACKETING SHALL BE SECURED USING BANDS AND SEALS FOR BURIED AND EXPOSED JACKETING. JOINT SEALANT SHALL BE PITTSEAL 727 (A STYRENE-BUTADIENE RUBBER SEALANT) AVAILABLE FROM PITTSBURGH CORNING CORPORATION OR EQUAL. BAND SPACING SHALL BE TWO BANDS EQUALLY SPACED PER SECTION OF INSULATION OR 12" ON CENTER AND 6" FROM EACH END. BANDING SHALL BE ALUMINUM OR STAINLESS STEEL BANDS, 1/2" WIDE X 0.010" THICK WITH MATCHING SEALS. JACKETING SHALL BE FACTORY-APPLIED ON THE INSULATION. ALL SURFACES TO BE INSULATED SHALL BE CLEANED OF ALL SCALE, RUST, OIL, AND FOREIGN MATTER AND SHOULD BE DRY AND FREE OF FROST BEFORE AND DURING THE APPLICATION OF THE INSULATION. CLEANING, SUCH AS SAND BLASTING AND PRIMING OF SURFACES TO BE INSULATED IS REQUIRED. WHEN PRIMED THE PRIMER MUST BE THOROUGHLY DRY BEFORE APPLICATION OF ANY INSULATION MATERIALS.

PIPE JOINTS, INCLUDING EXPANSION JOINTS AND SUPPORT AREAS, AND PIPE BETWEEN THE BACKWALLS OF THE BRIDGE ABUTMENTS SHALL BE FIELD INSULATED WITH PREFORMED POLYURETHANE FOAM (OR FRP IF APPLICABLE) OR CELLULAR GLASS AND JACKETING CUT IN SHAPES TO FIT, OR WITH A FIVE LAYER APPLICATION OF PITTCOTE 300 FINISH AND REINFORCING FABRIC. FOLLOW CELLULAR GLASS MANUFACTURES RECOMMENDATIONS FOR COVERING IRREGULAR SHAPES. ALL FIELD APPLIED INSULATION SHALL BE INSTALLED TO FULLY FILL ANY VOIDS.

FIELD PLACED INSULATION AND JACKET SHALL BE REMOVABLE IN ORDER TO PERFORM MAINTENANCE OR MAKE ADJUSTMENTS TO THE PACKING GLAND OF THE EXPANSION JOINT(S).

BURIED PIPE 15 FEET BEYOND THE BACKWALLS OF THE PROPOSED BRIDGE ABUTMENTS HAVING LESS THAN FOUR AND ONE-HALF (4-1/2') FEET OF COVER SHALL BE INSULATED WITH A MINIMUM OF A ONE (1) FOOT INSULATION ENVELOPE EQUAL TO "WITCOLITE" OR "GILSULATE 500XR", OR INSULATE WITH DIRECT-BURIAL CELLULAR GLASS INSULATION.

THE VOID BETWEEN THE SPLIT SLEEVE AND THE STEEL WATER MAIN THROUGH EACH BRIDGE ABUTMENT WALL SHALL BE FILLED WITH JUTE PACKING OR BACKER ROD AND SEALED AT BOTH ENDS WITH THREE (3") INCHES OF NON-SHRINKING GROUT.

PIPE SUPPORTS

STEEL WATER MAIN SHALL BE SUPPORTED ON THE INSULATION EXTERIOR USING A HANGER SYSTEM SHOWN ON THE PLANS. ROLLED STEEL PIPE CRADLES OF ONE-HALF (1/2) THE CIRCUMFERENCE OF THE INSULATED PIPING, INCLUDING THE INSULATION JACKETING OR FINISH. HIGH DENSITY MOLDED RIGID POLYURETHANE FOAM SADDLE SHALL BE MONOLITHICALLY MOLDED IN 180 DEGREE SEAMLESS SECTIONS AND FACTORY OR SHOP SECURED TO THE STEEL CRADLES PER THE SADDLE MANUNFACTURER'S RECOMMENDATIONS. THE DENSITY OF THE MOLDED RIGID POLYURETHANE FOAM SHALL BE 20 POUNDS PER CUBIC FOOT HAVING AN ULTIMATE COMPRESSIVE STRENGTH OF 1322 PSI WITH A DESIGN COMPRESSIVE STRENGTH OF 264.4 PSI. TYPICAL MANUFACTURES FOR FOAM PIPE SADDLES ARE POWER PIPING, BERGEN POWER, AND PIPE SHIELDS, INC.

GATE VALVES - 20 INCH AND LARGER

(A) BYPASSES:

BYPASSES ON GATE VALVES SHALL BE PROVIDED ON VALVES 20-INCH AND LARGER. THE BYPASSES SHALL BE LOCATED ON OR BELOW THE HORIZONTAL CENTERLINE OF THE VALVES. BYPASS VALVES SHALL BE OF THE SAME SIZE AS THE BYPASS AND SHALL CONFORM TO THE REQUIREMENT OF THESE SPECIFICATIONS FOR THE SPECIFIC VALVE USED. THE SIZE REQUIREMENTS OF BYPASSES SHALL BE AS FOLLOWS: 20-INCH VALVES SHALL BE PROVIDED WITH 3-INCH BYPASSES; VALVES 24-INCH THRU 30-INCH INCLUSIVE, SHALL BE PROVIDED WITH 4-INCH BYPASSES; VALVES 36-INCH THRU 42-INCH INCLUSIVE SHALL BE PROVIDED WITH 6-INCH BYPASSES; AND 48-INCH VALVES SHALL BE PROVIDED WITH 8-INCH BYPASSES.

(B) INDICATORS:

ALL VALVES 20-INCHES IN DIAMETER AND OVER SHALL BE EQUIPPED WITH INDICATORS DENOTING THE POSITIONS OF THE GATE. THE MOVING PARTS AND BEARINGS TO BE OF BRONZE OR BRONZE-LINED.

(C) GREASE CASES:

ALL VALVES 20-INCHES IN DIAMETER AND LARGER SHALL HAVE WATERTIGHT GREASE CASES INSTALLED. THE GREASE CASES SHALL BE OF THE EXTENDED TYPE AND SHALL BE MADE OF CAST IRON CONFORMING TO ASTM A 126-84, CLASS B, "SPECIFICATIONS FOR GRAY-IRON CASTINGS FOR VALVES, FLANGES, AND PIPE FITTINGS" OR ANY SUBSEQUENT AMENDMENTS THERETO. BEARING SURFACES FOR VALVE STEM AND PINION SHAFT SHALL BE BRONZED BUSHED WITH GRADE ONE BRONZE. THE GREASE CASES SHALL BE SECURELY BOLTED TO THE VALVE BONNET THROUGH A HEAVY CAST IRON YOKE. THE YOKE SHALL BE OF SUFFICIENT LENGTH TO PROVIDE SPACE FOR REPACKING VALVE AND GREASE CASE STUFFING BOXES. ALL GREASE CASES SHALL BE PROVIDED WITH A REMOVABLE COVER SECURELY BOLTED IN PLACE TO ALLOW EASY ACCESS TO THE GEARS.

THERE SHALL ALSO BE PROVIDED CONVENIENT FILLING AND DRAINING PLUGS AND SUFFICIENT OIL TO FULLY SUBMERGE THE PINION GEAR. THE VALVES SHALL BE DELIVERED WITH THE GREASE CASES FILLED WITH THE PROPER OIL AS RECOMMENDED BY THE MANUFACTURER.

(D) ROLLERS AND SCRAPERS:

IN ALL VALVES 20-INCHES IN DIAMETER AND LARGER, DESIGNED TO LIE HORIZONTALLY, EACH GATE OR DISC SHALL BE PROVIDED WITH TWO (2) BRONZE ROLLERS TRAVELLING ON BRONZE TRACKS AND PROVIDED WITH SUITABLE BRONZE SCRAPER; OR TWO STAINLESS STEEL ROLLERS TRAVELLING ON STAINLESS STEEL FACED TRACKS AND PROVIDED WITH SUITABLE STAINLESS STEEL SCRAPERS.

(E) GEARING:

ALL VALVES 20-INCHES IN DIAMETER AND LARGER SHALL BE EQUIPPED WITH ENCLOSED CUT-TOOTH STEEL GEARS. GEARS, SHAFTS AND BEARINGS SHALL BE SUCH AS TO PRODUCE EASY OPERATING WITHOUT BENDING OR TWISTING.

ITEM SPECIAL - VALVES

WORK INCLUDED

THE CONTRACTOR SHALL FURNISH ALL MATERIALS FOR AND SHALL PROPERLY SET IN PLACE AND CONNECT AT THE LOCATIONS SHOWN ON THE DRAWINGS OR AS DIRECTED, ALL GATE VALVES WITH VALVE BOX COMPLETE, CHECK VALVES, DOUBLE CHECK BACKFLOW ASSEMBLIES OF THE VARIOUS SIZES AND TYPE SPECIFIED.

IN GENERAL, THIS WORK SHALL INCLUDE THE FURNISHING, PLACING, TESTING, AND PAINTING OF THE GATE VALVES, INCLUDING BYPASS VALVES, CHECK VALVES, BACKFLOW ASSEMBLIES COMPLETE, OPERATING NUTS AND OTHER ACCESSORIES AND APPURTENANCES AND THE FURNISHING OF ALL LABOR, TOOLS AND APPLIANCES NECESSARY TO COMPLETE THE WORK AS SPECIFIED OR AS SHOWN.

THE CONTRACTOR SHALL, UNDER THIS ITEM, ALSO FURNISH TAPPING VALVES WITH VALVE BOX COMPLETE OF THE VARIOUS SIZES AND TYPE SPECIFIED. TAPPING VALVES SHALL CONFORM WITH THESE SPECIFICATIONS BUT SHALL BE FURNISHED, INSTALLED AND PAID FOR UNDER THE APPROPRIATE TAPPING VALVE ITEM. SEE PARAGRAPH "WORK TO BE DONE BY THE CITY".

GATE VALVES AND CHECK VALVES

(A) STRENGTH OF VALVES:

THE GATE VALVES, 3" TO 12", SHALL BE DESIGNED FOR 200 PSI WORKING PRESSURE AND GATE VALVES 16" AND ABOVE FOR 150 PSI WORKING PRESSURE; AND SHALL WITHSTAND AN INTERNALLY APPLIED HYDROSTATIC PRESSURE AT ALL POINTS OF AT LEAST TWICE THE RATED WORKING PRESSURE, EXCEPT AS SPECIFIED UNDER PARAGRAPH I, "HYDROSTATIC TESTS AT SHOP", SHOULD TESTS REVEAL ANY WEAKNESS, THE VALVES FROM THAT DESIGN SHALL BE REJECTED AND A NEW DESIGN MADE.

(B) PARTS TO BE INTERCHANGEABLE:

ALL PARTS OF VALVES OF THE SAME SIZE AND MAKE MUST BE PERFECTLY INTERCHANGEABLE AND ALL WORK DONE IN A THOROUGH AND WORKMANLIKE MANNER.

(C) VALVE BODY:

THE VALVE BODY SHALL BE OF SHORT BODY DESIGN. THE VALVE BODY SHALL HAVE CAST THEREON IN A CONSPICUOUS PLACE THE MANUFACTURER'S NAME OR INITIALS, RATED WORKING PRESSURE, AND THE YEAR OF MANUFACTURE. THESE LETTERS SHALL BE 1/8-INCH IN RELIEF AND OF AN APPROVED HEIGHT.

(D) CASTINGS:

ALL CASTINGS, WHETHER OF BRONZE, IRON, OR STEEL, SHALL BE SOUND AND SMOOTH WITHOUT COLD SHUTS, SWELLS, LUMPS, SCABS, BLISTERS, SAND HOLES OR OTHER IMPERFECTIONS, AND SHALL BE MADE IN ACCORDANCE WITH THE BEST MODERN FOUNDRY PRACTICE TO OBTAIN CASTINGS OF THE BEST QUALITY AND OF UNIFORM THICKNESS. NO WELDING, PLUGGING OR FILLING OF HOLES OR OTHER DEFECT WILL BE PERMITTED. FOR PARTS WHOSE THICKNESS IS LESS THAN ONE (1") INCH, CASTINGS BEING THINNER THAN THE SPECIFIED THICKNESS BY .06 INCH OR MORE SHALL BE REJECTED; AND FOR PARTS FOR WHOSE THICKNESS IS ONE (1") INCH OR MORE, CASTINGS BEING THINNER THAN SPECIFIED BY .08 INCH OR MORE SHALL BE REJECTED.

(E) MECHANICAL JOINT ENDS:

ALL VALVES REQUIRING MECHANICAL JOINT ENDS SHALL BE FURNISHED WITH RETAINED MECHANICAL JOINT ENDS COMPLETE WITH GASKETS AND RETAINER TYPE GLANDS AND SHALL FIT THE PLAIN-END OF ALL DUCTILE IRON PIPE, CLASSES 150, 200 AND 250 MANUFACTURED TO SPECIFICATIONS ASA A21.8, OR LATEST REVISION, INCLUDING THE PLAIN-END OF ALL MAKES OF DUCTILE IRON PIPE OF THE SLIP-ON CONNECTION TYPE.

(F) VICTAULIC ENDS:

VICTAULIC ENDS, WHEN REQUIRED, SHALL CONFORM TO THE DIMENSIONS GIVEN ON THE CONTRACT DRAWINGS OR AS SPECIFIED. VICTAULIC COUPLINGS TO BE FURNISHED AND INSTALLED TO CONNECT THE VICTAULIC VALVE END TO THE VICTAULIC PIPE END SHALL BE INCLUDED AND PAID FOR UNDER THE APPROPRIATE PIPE ITEM.

GATE VALVES AND CHECK VALVES (CONTINUED)

(G) FLANGED ENDS:

WHEN FLANGED VALVES ARE REQUIRED, THE FLANGES SHALL BE FACED AND DRILLED. BOLT HOLES SHALL BE SPOT FACED ON THE BACK WHEN NECESSARY TO SECURE AN EVEN BEARING. SPOT FACING SHALL BE REQUIRED ON THE BACK OF VALVE FLANGES WHERE SUCH IS NOT PARALLEL TO THE FACE OF THE FLANGE WITHIN THREE (3) DEGREES AS SPECIFIED IN ASME/ANSI B16.1. ALL SPOT FACING, WHEN REQUIRED SHALL BE IN ACCORDANCE WITH THE MANUFACTURERS STANDARDIZATION SOCIETY (MSS) STANDARD PRACTICES, SP-9. ALL BOLT HOLES SHALL BE OF THE SIZE SHOWN ON THE DRAWINGS OR AS SPECIFIED TO BE SUBMITTED AND APPROVED, AND SHALL BE ACCURATELY DRILLED FROM TEMPLATES, SPACED EQUAL DISTANCES APART AND SHALL STRADDLE HORIZONTAL AND VERTICAL AXIS, ALL AS SHOWN ON THE DRAWINGS. FLANGED ENDS SHALL BE RATED FOR THE TEST PRESSURE OF 225 PSI AND WORKING PRESSURE OF 150 PSI.

THE DIMENSIONS AND DRILLING OF ALL END FLANGES SHALL CONFORM TO THE SPACING INDICATED ON THE DRAWINGS OR AS SPECIFIED, WHICH SHALL BE AMERICAN 125 LB. CAST IRON FLANGE STANDARD. FLANGES SHALL BE PLAIN FACE WITH A SMOOTH FINISH.

WHERE FLANGED VALVE INSULATORS ARE REQUIRED AT SUPPLEMENTAL CONNECTIONS, CONNECTING TO EXISTING MAINS, OR WHERE ORDERED, EACH OF THE FLANGE BOLT HOLES SHALL BE INCREASED BY 1/16" TO ACCEPT A BOLT INSULATOR SLEEVE. CONTRACTOR'S ATTENTION IS DIRECTED TO THE PARAGRAPH "FLANGED VALVE INSULATORS" OF THIS SPECIFICATION. IN LIEU OF INSULATED FLANGED CONNECTIONS, INCLUDING THE FLANGED END VALVE, AT SUPPLEMENTAL CONNECTIONS THE CONTRACTOR MAY FURNISH RETAINED MECHANICAL JOINT BELL END GATE VALVE AND INSTALL AN INSULATED COUPLING EQUAL TO THAT MANUFACTURED BY SMITH-BLAIR COUPLING NO: 438.

(H) HUB ENDS:

WHERE SPECIFICALLY CALLED FOR ON THE CONTRACT DRAWINGS THE DIMENSIONS OF HUB BELLS ON THE VALVES UP TO AND INCLUDING 24-INCH IN DIAMETER, SHALL CONFORM TO THOSE FOR CLASS D PRESSURE FITTINGS, AS REQUIRED BY AWWA C-100. ON VALVES 30-INCH AND LARGER IN SIZE, THE BELL DIMENSIONS SHALL BE FOR THE CLASSES ORDERED.

(I) SLIP-ON JOINT ENDS:

ALL VALVES 4" UP TO AND INCLUDING 12" IN DIAMETER WHEN SPECIFICALLY ORDERED SHALL BE FURNISHED WITH SLIP-ON JOINT ENDS COMPLETE WITH GASKETS WHICH WILL FIT THE PLAIN-END OF ALL DUCTILE IRON PIPE CLASSES 150, 200, AND 250 MANUFACTURED TO SPECIFICATIONS ASA A21.8, OR LATEST REVISION THEREOF, INCLUDING THE PLAIN-END OF ALL MAKES OF DUCTILE IRON PIPE OF THE SLIP-ON CONNECTION TYPE.

THE DESIGN OF THE MECHANICAL WEDGING ACTION SHALL BE SUCH THAT SEATING FORCE IS APPLIED EQUALLY TO TWO OR MORE CONTACT POINTS NEAR THE OUTER EDGE OF EACH DISC AT OR ABOVE AND BELOW THE HORIZONTAL CENTERLINE OF DISC. THE MECHANISM SHALL BE DESIGNED SO THAT ALL WEDGING MEMBERS ARE ACTIVATED AT ONE TIME. IT SHOULD BE OF THE TYPE WHICH WILL ELIMINATE UNBALANCED SEATING PRESSURE AND MINIMIZE DISTORTION OF THE DISCS.

Preliminary Plans - For Reference Only

WATER WORK GENERAL NOTES

DESIGN AGENCY
Michael Baker INTERNATIONAL

DESIGNER SMP
REVIEWER SM 05/15/24
PROJECT ID 82382
SHEET 1381 TOTAL 2696

CUY-90-16.28 (CCG3A)
MODEL: UN1211 PAPERSIZE: 34x22 (in.) DATE: 3/28/2025 TIME: 5:11:46 AM USER: Julie.Ross
pw:\\mb-us-pw.bentley.com:mb-us-pw-03\Documents\Cleveland_OH\01_Projects\ODOT\District12\82382\400-Engineering\Utilities\Sheets\82382_UN1201.dgn

GATE VALVES GENERAL

(A) TYPE OF VALVES:

THE GATE VALVES SHALL BE MANUFACTURED IN FULL COMPLIANCE WITH THE STANDARD SPECIFICATIONS FOR "GATE VALVES FOR WATER AND SEWERAGE SYSTEMS" OF THE AMERICAN WATER WORKS ASSOCIATION AWWA C 500-86, OR LATEST REVISION THEREOF, AND IN ADDITION SHALL COMPLY WITH THE FOLLOWING SUPPLEMENTARY REQUIREMENTS. ALL GATE VALVES SHALL BE OF THE DOUBLE-DISC PARALLEL SEAT BOTTOM WEDGE OR SIDE WEDGE TYPE OR DOUBLE REVOLVING DISC PARALLEL SEAT BOTTOM WEDGE OR SIDE WEDGE TYPE. ALL GATE VALVES 20-INCHES AND OVER IN SIZE SHALL INCLUDE BYPASS VALVES ATTACHED THERETO. IN OPENING OR CLOSING THE VALVE, THE GATES SHALL BE FORCED TO ASCENT OR DESCENT BY REASON OF THE THRUST EXERTED UPON THE GATES DIRECTLY BY THE VALVE STEM WRENCH NUT, THIS THRUST BEING GENERATED BY THE ROTATION OF THE VALVE STEM. IN CLOSING THE VALVE, THE DISCS, WHEN OPPOSITE THE PORTS, SHALL BE PRESSED FIRMLY AGAINST THE BODY SEATS BY WEDGES OR SOME OTHER DEVICE EQUALLY SUITABLE AND APPROVED BY THE COMMISSIONER OF WATER.

THE DESIGN OF THE MECHANICAL WEDGING ACTION SHALL BE SUCH THAT SEATING FORCE IS APPLIED EQUALLY TO TWO OR MORE CONTACT POINTS NEAR THE OUTER EDGE OF EACH DISC AT OR ABOVE AND BELOW THE HORIZONTAL CENTERLINE OF DISC. THE MECHANISM SHALL BE DESIGNED SO THAT ALL WEDGING MEMBERS ARE ACTIVATED AT ONE TIME. IT SHOULD BE OF THE TYPE WHICH WILL ELIMINATE UNBALANCED SEATING PRESSURE AND MINIMIZE DISTORTION OF THE DISCS.

(B) CAST IRON PARTS:

THE VALVE BODIES, COVERS, DISCS, FRAMES, ETC., OF ALL GATE VALVES 3-INCH AND OVER, SHALL BE CAST IRON.

(C) VERTICAL AND HORIZONTAL VALVES:

ALL GATE VALVES, 16-INCH AND UNDER, SHALL BE CONSTRUCTED TO WORK VERTICALLY. VALVES HAVING 20-INCH AND OVER WATERWAY SHALL BE CONSTRUCTED TO WORK HORIZONTALLY.

(D) WATERWAY OPENING:

WITH THE GATE VALVE OPEN, AN UNOBSTRUCTED WATERWAY SHALL BE AFFORDED; THE DIAMETER OF WHICH IS NOT TO BE LESS THAN THE FULL NOMINAL DIAMETER OF THE VALVE, EXCEPT WHERE LUGS ARE PROVIDED FOR INSERTING OR REMOVING THE BODY-SEAT RINGS. THE LUGS NEED NOT BE REMOVED AFTER THE VALVE IS ASSEMBLED.

(E) STUFFING BOXES:

THE STUFFING BOX ON EACH GATE VALVE 3-INCH OR OVER, MUST BE SEPARATE FROM THE DOME AND FASTENED TO IT BY BOLTS. FOR 2-INCH VALVES AND UNDER, THE STUFFING BOXES MAY BE FORMED IN THE DOME OF THE VALVE. WHEN REQUIRED BY THE CITY, VALVES 16-INCH AND SMALLER, SHALL BE FURNISHED WITH "O" RING TYPE SEALS. THE SEALS SHALL BE FITTED WITH AT LEAST TWO (2) "O" RINGS; THE LOWER "O" RING SERVING AS THE PRESSURE SEAL AND THE UPPER "O" RING AS A COMBINED DIRT AND MOISTURE SEAL. THE "O" RING SHALL BE COMPOUNDED TO MEET ASTM D 2000-86, "CLASSIFICATION SYSTEM FOR RUBBER PRODUCTS IN AUTOMOTIVE APPLICATIONS," AND HAVE PHYSICAL PROPERTIES SUITABLE FOR THE APPLICATION.

THE DIMENSIONS OF THE STUFFING BOX FLANGES SHALL BE OF A THICKNESS AND UNIFORMITY PROPORTIONED TO FIT THE VARIOUS EXTERNALLY APPLIED TORQUE AND INTERNAL THRUST PRESSURE. BOLT HOLES SHALL BE FITTED AND OF A NUMBER SUCH THAT WILL LEAVE A SUFFICIENT CROSS SECTIONAL AREA OF METAL THEREBY PROVIDING SATISFACTORY STRENGTH TO THE UPPER AND LOWER STUFFING BOX FLANGE.

(F) VALVE STEMS:

THE STEM SHALL BE OF SUFFICIENT LENGTH TO ALLOW THE REMOVAL OF PACKING WITHOUT NECESSITATING THE REMOVAL OF THE OPERATING NUT. THE STEM OPENING AND THRUST BEARING RECESS SHALL BE BRONZE BUSHED WITH TWO (2) "O" RINGS LOCATED ABOVE THE THRUST COLLAR AND ONE (1) "O" RING BELOW FORMING A LUBRICANT CHAMBER. THE NUMBER OF THREADS PER INCH SHALL BE AS INDICATED IN AWWA C 500-86.

(G) VALVES WITH STATIONARY STEMS:

ALL GATE VALVES, UNLESS OTHERWISE ORDERED, SHALL BE MADE WITH SINGLE, NON-RISING STEMS.

(H) VALVES TO OPEN CLOCKWISE, EXCEPT 2-INCH AND UNDER:

ALL GATE VALVES 3-INCH AND OVER, INCLUDING BYPASS VALVES, SHALL BE MADE TO OPEN BY TURNING IN A CLOCKWISE DIRECTION. VALVES 2-INCH AND UNDER SHALL BE MADE TO OPEN BY TURNING IN A COUNTERCLOCKWISE DIRECTION. ALL VALVES TO BE MADE SO THAT THEY CAN BE EASILY OPERATED.

GATE VALVES GENERAL (CONTINUED)

(I) WRENCH CAPS:

THE WRENCH CAPS (OPERATING NUTS) AND RETAINING NUTS ON HEADS OF VALVE STEMS AND PINION SHAFTS SHALL BE OF BRONZE OR DUCTILE IRON SPECIFICATION A-536. ON VALVES 24-INCH AND OVER, WRENCH CAPS SHALL BE 2-INCH SQUARE AND 2-INCH DEEP. ON VALVES 3-INCH THRU 20-INCH INCLUSIVE, THEY SHALL BE 1-3/4 INCH SQUARE ON TOP, 1-7/8 INCH SQUARE AT BASE AND 1-3/4 INCH DEEP. ON 2-INCH VALVES AND UNDER, THEY SHALL BE 1-1/4 INCH SQUARE ON TOP, 1-3/8 INCH SQUARE AT BASE AND 1-1/2 INCH DEEP. MACHINED WRENCH CAPS FOR VALVES 3-INCH TO 48-INCH INCLUSIVE SHALL BE FITTED TO A MACHINED SQUARE STEM OR PINION SHAFT AND HELD IN PLACE BY A RETAINING NUT OF BRONZE, ASTM B 584-90, C.A. 867, "SPECIFICATION FOR COPPER ALLOY SAND CASTINGS FOR GENERAL APPLICATIONS." ON 1-1/2 INCH AND 2-INCH VALVES THE WRENCH CAP SHALL BE SECURED TO THE SHAFT WITH A BRASS PIN. WRENCH CAPS SHALL HAVE A CUT-AWAY SKIRT TO PERMIT EASY ACCESS TO GLAND BOLTS.

(J) FACING OF GATES:

ALL DISCS OF GATES AND THREADS FOR SEAT RINGS IN THE BODY SHALL BE MACHINED TRUE AND ANY GROOVE OR GROOVES SHALL BE MACHINED IN EACH DISC OR GATE FOR THE RECEPTION OF THE FACE RING. THE DISC AND SEAT RINGS SHALL BE SECURELY AND RIGIDLY ATTACHED TO THE DISCS OR BODY SEATS IN A MANNER APPROVED BY THE CITY; THE RINGS ARE TO BE FINISHED TO A TRUE SURFACE.

(K) OUTSIDE SCREW AND YOKE VALVES:

GATE VALVES WITH OUTSIDE SCREW AND YOKES, SHALL BE MADE WITH SINGLE RISING STEMS. ALL OUTSIDE SCREW AND YOKE VALVES SHALL BE EQUIPPED WITH WHEELS FOR OPERATING SAME. WHEELS ARE TO BE OF CAST IRON OR DUCTILE IRON. WHEELS SHALL HAVE CAST ON THEM AN ARROW INDICATING THE DIRECTION OF TURNING FOR OPENING THE VALVE. OUTSIDE SCREW AND YOKE GATE VALVES 6-INCH AND LARGER IN SIZE SHALL BE PROVIDED WITH TWO BOSSES ON ONE SIDE OF THE BODY, LOCATED ON THE HORIZONTAL CENTERLINE OF GATE VALVES, TO PERMIT THE INSTALLATION OF BYPASS AROUND THE GATE. BOSSES ARE TO BE LEFT SOLID AND OF AMPLE SIZE TO PERMIT DRILLING AND TAPPING FOR BYPASSES.

(L) MARKING:

ALL GATE VALVES 3-INCH AND OVER SHALL HAVE THE IDENTITY OF THE MAKER, SIZE AND YEAR WHEN MADE AND ALSO THE LETTERS "C.W.D." CAST UPON ITS BODY OR DOME IN RAISED LETTERS OR HAVE AN PERMANENT BRONZE TAG OF SUFFICIENT SIZE AFFIXED TO THE BODY OF THE VALVE WITH THE IDENTITY OF THE MAKER, SIZE AND YEAR WHEN MADE AND THE LETTERS "C.W.D." INDICATED THEREON.

GATE VALVES MATERIAL SPECIFICATIONS

(A) BOLTS AND NUTS:

ALL BOLTS AND NUTS ON THE EXTERNAL VALVE BODIES OF ALL GATE, CHECK AND BACKFLOW DEVICES SHALL BE MADE OF STAINLESS STEEL: ASTM A 276-89A, TYPE 304, "SPECIFICATION FOR STAINLESS AND HEAT-RESISTING SHEET BARS AND SHAPES."

(B) BRONZE PARTS:

ALL GRADES OF BRONZE SHALL BE IN ACCORDANCE WITH AWWA C 500-86 UNLESS OTHERWISE SPECIFIED HEREIN.

(C) CAST IRON:

CAST IRON SHALL CONFORM TO ASTM SPECIFICATION A 126-84, CLASS B, "SPECIFICATION FOR GRAY IRON CASTINGS FOR VALVES, FLANGES, AND PIPE FITTINGS," OR LATEST REVISION THEREOF. ALL IRON CASTINGS SHALL BE TOUGH AND WITHOUT BRITTLENESS, SUCH AS MAY BE CUT, DRILLED AND CHIPPED BY HAND WITH DUE EASE. A BLOW FROM A HAMMER SHALL PRODUCE AN INDENTATION ON THE EDGE OF THE CASTING WITHOUT FLAKING THE METAL.

(D) SILICON BRONZE:

THIS BRONZE SHALL CONFORM TO ASTM SPECIFICATION B 98-84, ALLOY 655, "SPECIFICATION FOR COPPER-SILICON ALLOY ROD, BAR AND SHAPES;

(E) STAINLESS STEEL:

THE STAINLESS STEEL SHALL CONFORM TO ASTM SPECIFICATION A 276-89A, TYPE 304 AND TYPE 316, "SPECIFICATION FOR STAINLESS AND HEAT-RESISTING SHEET BARS AND SHAPES.

GATE VALVES MATERIAL SPECIFICATIONS (CONTINUED)

(F) OTHER MATERIALS:

ALL OTHER MATERIALS USED IN THE MANUFACTURE OF THESE VALVES AND NOT SPECIFIED IN THE SPECIFICATIONS, SHALL BE OF THE BEST QUALITY OF THEIR RESPECTIVE KINDS, AND SUBJECT TO INSPECTION, TESTS, AND APPROVAL BY THE CITY.

(G) CHEMICAL ANALYSIS:

CHEMICAL ANALYSIS OF THE MATERIAL USED SHALL BE FURNISHED BY THE CONTRACTOR WHENEVER REQUIRED BY THE ENGINEER OR THE CITY.

(H) CLEANING OF CASTINGS:

ALL IRON CASTINGS SHALL BE THOROUGHLY CLEANED ON THE OUTSIDE AND INSIDE SURFACES AND PROTECTED FROM RAIN OR MOISTURE UNTIL THEY ARE PAINTED.

(I) HYDROSTATIC TESTS AT SHOP:

ALL GATE VALVES SHALL BE TESTED IN THE SHOP BY HYDROSTATIC PRESSURE, BY CLOSING THE VALVE AND APPLYING THE REQUIRED TEST PRESSURE IN THE BODY AND DOME OF THE VALVE AS SPECIFIED BELOW.

3" THROUGH 12" ... 400 PSI. - NO TIME REQUIREMENT
14" THROUGH 20" ..300 PSI. - FOR 15 MINUTES, DROP PRESSURE TO 150 PSI, THEN ELEVATE AGAIN TO 300 PSI FOR 15 MIN. - A TOTAL OF 1/2 HOUR.

24" THROUGH 48" .. 300 PSI - FOR 30 MIN., DROP PRESSURE TO 150 PSI, THEN ELEVATE AGAIN TO 300 PSI FOR 30 MIN. - A TOTAL OF 1 HR.

THIS IS MODIFICATION OF SECTION 5.1 OF THE STANDARD SPECIFICATIONS, AWWA DESIGNATION: C 500-86. ALL LEAKS, FLAWS OR OTHER DEFECTS DEVELOPED IN MAKING THESE TESTS SHALL BE CORRECTED TO THE SATISFACTION OF THE ENGINEER AND/OR THE CITY OR THE ENTIRE PIECE SHALL BE REJECTED. AFTER TESTING, ALL VALVES SHALL BE THOROUGHLY DRAINED. ALL EQUIPMENT FOR TESTING AND ALL TESTS SHALL BE MADE AT THE CONTRACTOR'S EXPENSE.

THE CONTRACTOR SHALL INCLUDE WITH EACH VALVE THREE (3) CERTIFIED COPIES OF REPORTS SHOWING THE RESULTS OF ALL SHOP TESTS, AND A BRIEF DESCRIPTION OF HOW THE TESTS WERE PERFORMED.

(J) PERFORMANCE TESTS:

EACH VALVE SHALL BE OPERATED IN THE POSITION THAT IT WILL ASSUME IN SERVICE AND FOR THE FULL LENGTH OF GATE TRAVEL IN BOTH DIRECTION, TO DEMONSTRATE THE FREE AND PERFECT FUNCTIONING OF ALL PARTS IN THE INTENDED MANNER. ANY DEFECTS OF WORKMANSHIP SHALL BE CORRECTED AND THE TEST REPEATED UNTIL SATISFACTORY PERFORMANCE IS DEMONSTRATED.

PLACING AND TESTING

(A) ALL VALVES SHALL BE TESTED ACCURATELY AND CAREFULLY TO THE LINES AND GRADES GIVEN. ALL CONNECTIONS TO PIPE SHALL HAVE THE NECESSARY MECHANICAL JOINT, FLANGED, SCREWED, VICTAULIC OR SOLDERED ENDS AS REQUIRED.

(B) AFTER THE VALVES ARE SET IN PLACE AND READY TO OPERATE, THE CONTRACTOR SHALL TEST THEM UNDER THE TEST PRESSURE AND CONDITIONS HEREIN SPECIFIED ELSEWHERE IN THESE SPECIFICATIONS AND ANY VALVE FOUND TO LEAK SHALL BE MADE WATERTIGHT AND, IF FOUND TO BE OF FAULTY DESIGN, SHALL BE SATISFACTORILY REPAIRED OR REPLACED BY THE CONTRACTOR.

(C) ALL BURIED VALVES SHALL COME COMPLETE WITH VALVE BOXES TO GRADE. THIS SHALL INCLUDE MAIN VALVE OPERATION AND THE BYPASS VALVE.

VALVE BOXES AND COVERS

(A) THE CONTRACTOR SHALL FURNISH AND INSTALL, OVER EACH VERTICALLY SET VALVE AT THE LOCATIONS SHOWN ON THE DRAWINGS, OR AS REQUIRED, VALVE BOXES WITH COVERS OF THE ASSEMBLED TYPES AND SIZES INDICATED ON THE CONTRACT PLANS. ASSEMBLED TYPE VALVE BOXES SHALL EXTEND FROM THE VALVE BONNET TO THE FINISHED GRADE OR THE ELEVATION REQUIRED, BEING CAREFULLY LOCATED OVER THE VALVE OPERATING NUT(S) AND SHALL BE SET PLUMB AND TRUE AS REQUIRED.

(B) VALVE BOXES AND COVER ASSEMBLIES SHALL BE COMPLETED AND THEIR PARTS SHALL COMPLY WITH THOSE PARTS SHOWN ON STANDARD DETAIL DRAWINGS.

PAINTING

(A) IRON BODY VALVES SHALL EITHER BE DIPPED IN ASPHALT PAINT AND ALL BRONZE AND PLASTIC COATED INTERNAL PARTS CLEANED, OR AFTER PASSING THE HYDRAULIC TEST, SHALL BE GIVEN AT LEAST TWO (2) COATS OF APPROVED PAINT OUTSIDE.

(B) ALL INTERIOR OR EXTERIOR FERROUS METAL SURFACES, EXCEPT MACHINE SURFACES, SHALL BE THOROUGHLY CLEANED OF ALL RUST, WIRE BRUSHED AND WASHED WITH BENZENE BEFORE PAINTING OR COATING.

(C) AFTER INSTALLATION, ALL EXPOSED METAL SURFACES OF VALVES EXCEPT BRASS OR BRONZE SHALL BE PAINTED WITH TWO (2) FIELD COATS OF COAL TAR PITCH PAINT EQUAL TO KOPPERS BITUMASTIC SUPER TANK SOLUTION.

INSPECTIONS

THE ENGINEER, CITY, OR HIS AUTHORIZED DESIGNATE, WILL INSPECT THE MATERIAL AND WORK DONE, AS THE INTEREST OF THE CITY MAY REQUIRE. SUCH OFFICER SHALL HAVE UNRESTRICTED ACCESS TO THE CONTRACTOR'S PLANT, AND TO ALL PARTS OF THE WORK AND OTHER PLACES AT WHICH THE PREPARATION OF THE MATERIAL AND THE CONSTRUCTION OF THE DIFFERENT PARTS OF THE WORK TO BE DONE UNDER THESE SPECIFICATIONS ARE CARRIED ON, AND HE SHALL RECEIVE ALL FACILITIES AND ASSISTANCE TO CARRY OUT HIS WORK OF INSPECTION AND TESTING, IN A MANNER SATISFACTORY TO THE CITY. SUCH INSPECTION SHALL NOT RELIEVE THE CONTRACTOR FROM ANY OBLIGATION TO PERFORM SAID WORK STRICTLY IN ACCORDANCE WITH THE SPECIFICATIONS, OR ANY MODIFICATIONS THEREOF, AS HEREIN PROVIDED, AND WORK NOT SO CONSTRUCTED SHALL BE REMOVED AND MADE GOOD BY THE CONTRACTOR, AT HIS OWN EXPENSE.

DATA WITH PROPOSALS

PROPOSALS SHALL BE ACCOMPANIED BY DRAWINGS FURNISHED BY THE MANUFACTURER, FULLY AND DISTINCTLY ILLUSTRATING, DESCRIBING AND GIVING THE WEIGHT OF EACH OF THE VALVES PROPOSED TO BE FURNISHED. VALVE DRAWINGS PREVIOUSLY APPROVED AND ON FILE WITH DIVISION OF WATER NEED NOT BE FURNISHED IN PROPOSAL BUT WILL BE REQUIRED AS SUBMITTAL FOR APPROVAL AS INDICATED IN THE PARAGRAPH "DRAWINGS".

FLANGED VALVE INSULATORS

THE CONTRACTOR SHALL FURNISH, WHERE REQUIRED, FLANGED VALVE INSULATORS. ALL OF THE FLANGED BOLT HOLES ON EACH OF THE TWO (2) FLANGES OF THE VALVE SHALL BE INCREASED BY 1/16 INCH IN DIAMETER TO ACCEPT THE BOLT INSULATOR SLEEVES. THE BOLT INSULATOR SLEEVE SHALL EXTEND FOR THE FULL THICKNESS OF THE TWO (2) MATING FLANGES. THE DRILLING OF THE ENLARGED FLANGE BOLT HOLES SHALL BE DONE BY THE VALVE MANUFACTURER IN THE SHOP.

FLANGE INSULATING MATERIALS FOR EACH FLANGE SHALL BE PROVIDED AT EACH OF THE SUPPLEMENTAL CONNECTIONS, OR WHERE ORDERED, AND SHALL INCLUDE THE FOLLOWING:

1) TWO (2) FULL FACED INSULATING FLANGE GASKETS OF PYROX IE GLASS REINFORCED EPOXY, 1/8 INCH THICK;

2) ONE FULL LENGTH MYLAR BOLT INSULATING SLEEVE, 1/32 INCH THICK, FOR EACH FLANGE BOLT ON EACH OF THE TWO (2) VALVE FLANGES;

3) TWO (2) FLAT PHENOLIC LAMINATE INSULATING WASHERS, 1/8 INCH THICK, FOR EACH FLANGE BOLT ON EACH OF THE TWO (2) VALVE FLANGES;

4) TWO (2) FLAT STEEL WASHERS, 1/8 INCH THICK, FOR EACH FLANGE BOLT ON EACH OF THE TWO (2) VALVE FLANGES. THE STEEL WASHER OUTSIDE DIAMETER SHALL NOT BE LARGER THAN THE OUTSIDE DIAMETER OF THE INSULATING WASHER.

FLANGE INSULATOR SIZES SHALL BE AS REQUIRED FOR THE TYPE AND SIZE FLANGES SPECIFIED HEREIN OR AS INDICATED ON THE DRAWINGS FOR EACH OF THE INSULATED FLANGE LOCATIONS REQUIRED.

TEST TO VERIFY ACCEPTABLE INSULATED FLANGED VALVE INSTALLATIONS SHALL BE PERFORMED BY THE CONTRACTOR. THE CONTRACTOR SHALL PROVIDE ALL NECESSARY EQUIPMENT, MATERIALS, AND LABOR FOR THE PERFORMANCE OF THE TESTS. IF THE TESTS INDICATE THAT AN INSULATING FLANGED CONNECTION IS NOT PROVIDING SATISFACTORY ISOLATION OF CONNECTING PIPING, THE CONTRACTOR SHALL PERFORM ADDITIONAL TESTS AND WORK AS REQUIRED TO LOCATE AND CORRECT ANY SUCH DEFICIENCIES THAT MAY EXIST.

PAYMENT FOR THE FURNISHING AND INSTALLATION OF THE FLANGED VALVE INSULATORS SHALL BE INCLUDED, UNDER THIS ITEM, WITH THE APPROPRIATE INSULATED FLANGED VALVE TO BE BID AS INDICATED IN THE SCHEDULE OF BID ITEMS. PAYMENT FOR THE PERFORMANCE AND ALL NECESSARY EQUIPMENT, MATERIALS AND LABOR FOR THE TESTING FOR THE ACCEPTABILITY OF THE INSULATED FLANGED VALVE CONNECTIONS SHALL BE INCLUDED.

Preliminary Plans - For Reference Only

WATER WORK GENERAL NOTES

DESIGN AGENCY
Michael Baker INTERNATIONAL

DESIGNER SMP
REVIEWER SM 05/15/24
PROJECT ID 82382
SHEET 1382 TOTAL 2696

CUY-90-16.28 (CCG3A)
MODEL: UN1212 PAPERSIZE: 34x22 (in.) DATE: 3/28/2025 TIME: 5:11:47 AM USER: Julie.Ross
pw:\\mb-us-pw.bentley.com:mb-us-pw-03\Documents\Cleveland_Off\01_Projects\ODOT\District12\82382\400-Engineering\Utilities\Sheets\82382_UN1201.dgn

ITEM SPECIAL - VALVES (CONTINUED)

DRAWINGS

(A) PRIOR TO THE MANUFACTURE OF ANY VALVES, THE CONTRACTOR SHALL SUBMIT TO THE CITY THROUGH THE ENGINEER FOR APPROVAL OF THE CITY, SIX (6) COMPLETE WORKING, DETAIL, AND DIMENSION DRAWINGS SHOWING THICKNESSES AND KINDS OF MATERIAL AND SIMILAR INFORMATION.

(B) TWO (2) PRINTS OF EACH OF THE DRAWINGS SUBMITTED WILL BE RETURNED WITH THE CRITICISMS OR APPROVAL OF THE CITY. IN CASE THE DRAWINGS ARE NOT APPROVED, THE CONTRACTOR SHALL AGAIN SEND FOR APPROVAL, SIX (6) REVISED PRINTS OF THE DRAWINGS TO TAKE CARE OF THE CRITICISMS NOTED, AND AFTER THE DRAWINGS HAVE BEEN FINALLY APPROVED, THE CONTRACTOR SHALL FURNISH TO THE CITY SIX (6) ADDITIONAL PRINTS, AND ONE (1) MYLAR OR REPRODUCIBLE CLOTH TRACING OF EACH DRAWING. MYLAR TRACINGS SHALL BE SUBMITTED AS SPECIFIED IN THE GENERAL NOTES "DRAWINGS." NO WORK SHALL BE DONE IN THE SHOP UNTIL AFTER THE DRAWINGS HAVE BEEN FINALLY APPROVED.

ITEM SPECIAL - CUT-IN-SLEEVES, COMPLETE

THE CONTRACTOR SHALL FURNISH AND INSTALL AT THE LOCATION(S) NOTED ON THE CONTRACT DRAWINGS OR WHERE ORDERED ALL CUT-IN-SLEEVE ASSEMBLIES. THE DIVISION OF WATER WILL SET THE TIME OF INSTALLATION OF THE CUT-IN-SLEEVE AND THE CONTRACTOR SHALL DO ALL PIPE CUTTING AND INSTALLATION. THE INSTALLATION OF THE CUT-IN-SLEEVE SHALL BE DONE UNDER THE SUPERVISION OF THE DIVISION OF WATER. THE CONTRACTOR SHALL FURNISH ALL MATERIALS AND DO ALL NECESSARY EXCAVATION, SHEETING, SHORING, BACKFILLING, MISCELLANEOUS REMOVAL AND RESTORATION, SEEDING AND/OR SODDING, REPAVING AND REPLACEMENT OF SIDEWALK REQUIRED TO COMPLETE THE WORK AS HEREIN SPECIFIED.

ITEM SPECIAL - CUT-IN-VALVE ASSEMBLY WITH VALVE BOX, COMPLETE

THE CONTRACTOR SHALL FURNISH AND INSTALL AT THE LOCATION(S) NOTED ON THE CONTRACT DRAWINGS OR WHERE ORDERED ALL CUT-IN-VALVE ASSEMBLIES WITH VALVE BOX COMPLETE INCLUDING THE FURNISHING AND INSTALLATION OF A VALVE STEM EXTENSION IF SO REQUIRED. THE DIVISION OF WATER WILL SET THE TIME OF INSTALLATION OF THE CUT-IN-VALVE AND THE CONTRACTOR SHALL DO ALL PIPE CUTTING AND INSTALLATION. THE INSTALLATION OF THE CUT-IN-VALVE SHALL BE DONE UNDER THE SUPERVISION OF THE DIVISION OF WATER. THE CONTRACTOR SHALL FURNISH AND DELIVER TO AND INSTALL AT THE LOCATION(S) SHOWN ON THE PLANS A RETAINED MECHANICAL JOINT BELL END GATE VALVE, VALVE BOX COMPLETE, STAR NATIONAL TIEANCHOR HARNESSES AND COMPRESSION COUPLINGS (WITH STOPS REMOVED) EQUAL TO DRESSER STYLE NO. 38, 138 OR 162 OR SMITH-BLAIR NO. 441, HAVING STAINLESS STEEL BOLTS AND NUTS (ASTM A276-89A, TYPE 304), DUCTILE IRON PIPE SHORTS AND, IF REQUIRED, A VALVE STEM EXTENSION. COMPRESSION COUPLINGS SHALL HAVE A MINIMUM PRESSURE RATING OF 250 PSI. THE CONTRACTOR SHALL FURNISH ALL MATERIALS AND DO ALL NECESSARY EXCAVATION, SHEETING, SHORING, BACKFILLING, MISCELLANEOUS REMOVAL AND RESTORATION, SEEDING AND/OR SODDING, REPAVING AND REPLACEMENT OF SIDEWALK REQUIRED TO COMPLETE THE WORK AS HEREIN SPECIFIED.

QUALITY OF VALVES

THE GATE VALVES FURNISHED AND INSTALLED AS PART OF THE CUT-IN-VALVE ASSEMBLY SHALL CONFORM WITH THE REQUIREMENTS OF THE "ITEM SPECIAL - VALVES" OF THESE SPECIFICATIONS, INSOFAR AS THEY APPLY.

ITEM SPECIAL - FURNISHING AND SETTING 6" HYDRANT COMPLETE

WORK INCLUDED

THE CONTRACTOR SHALL FURNISH ALL HYDRANTS, HYDRANT BRANCH PIPE AND FITTINGS, TAPPING, VALVES, VALVE BOXES AND COVERS, CAULKING MATERIAL, LABOR, TOOLS, AND EQUIPMENT FOR AND SHALL PROPERLY CONNECT AT THE LOCATION SHOWN ON THE CONTRACT DRAWINGS, 6" HYDRANTS, COMPLETE, AS REQUIRED FOR THE PROPER COMPLETION OF THE WORK INCLUDED UNDER THIS CONTRACT.

HYDRANTS

THE 6" HYDRANT DETAILS SHOWN IN THE PLANS IS A CITY OF CLEVELAND STANDARD IN ADDITION TO THE 6" HYDRANT DETAILS IN THE PLANS, THE CITY OF CLEVELAND HAS APPROVED THREE ADDITIONAL 6" HYDRANT DETAILS ON FILE AT 1201 LAKESIDE AVENUE, CLEVELAND, OHIO 44114. THE DRAWING NOS. ARE D525, D526, AND D530.

SETTING

(A) GENERAL LOCATION; THE HYDRANT SHALL BE LOCATED IN A MANNER TO PROVIDE COMPLETE ACCESSIBILITY, AND IN SUCH MANNER THAT THE POSSIBILITY OF DAMAGE FROM VEHICLES OR INJURY TO PEDESTRIANS WILL BE MINIMIZED.

(B) LOCATION REGARDING CURB LINES: WHEN PLACED BEHIND CURB THE HYDRANT BARREL SHALL BE SET SO THAT NO PORTION OF THE HYDRANT WILL BE LESS THAN TWO (2) FEET FROM THE FACE OF THE CURB EXCEPT BY CONSENT OF THE ENGINEER.

HYDRANT SETTING (CONTINUED)

(C) LOCATION REGARDING SIDEWALK: WHEN SET IN THE LAWN SPACE BETWEEN THE CURB AND THE SIDEWALK, OR BETWEEN THE SIDEWALK AND THE PROPERTY LINE, NO PORTION OF THE HYDRANT OR NOZZLE CAP SHALL BE WITHIN 6 INCHES OF THE SIDEWALK.

(D) POSITION OF NOZZLE: THE HYDRANT SHALL STAND PLUMB WITH THE NOZZLES POINTING TOWARD THE ROAD AT AN ANGLE OF FORTY-FIVE DEGREES THEREFROM. WHERE HYDRANT BRANCH PIPING IS PARALLEL WITH OR NOT AT RIGHT ANGLES TO THE CURB, THE CONTRACTOR SHALL RELEASE SWIVEL HEAD BOLTS AND ADJUST THE HYDRANT NOZZLES TO FACE THE ROAD AT THE PROPER ANGLE. A HYDRANT WITHOUT SWIVEL HEADS WILL BE ADJUSTED BY THE CITY WHERE NECESSARY TO CORRECT THE ANGLE OF NOZZLES. THE ELEVATION SHALL CONFORM TO THE ESTABLISHED GRADE WITH TOPS OF FROST CASING AT LEAST FOUR (4) INCHES ABOVE THE GRADE.

(E) CONNECTION TO MAIN: THE HYDRANT SHALL BE CONNECTED TO THE MAIN PIPE WITH A BRANCH CONTROLLED BY THE INDEPENDENT GATE VALVES OF THE SAME SIZE AS THE HYDRANT, EXCEPT AS OTHERWISE DIRECTED.

(F) DRAINAGE AT HYDRANT: DRAINAGE SHALL BE PROVIDED AT THE BASE OF THE HYDRANT BY FILLING AROUND THE ELBOW WITH COURSE GRAVEL OR CRUSHED STONE TO AT LEAST SIX (6) INCHES ABOVE THE WASTE OPENING. WHEREVER A HYDRANT IS SET IN ROCK, CLAY OR OTHER IMPERVIOUS SOIL, THE TRENCH SHALL BE WIDENED AND DEEPENED ON EACH SIDE OF THE HYDRANT BASE AND THE SPACE SHALL BE FILLED COMPACTLY WITH COARSE GRAVEL OR BROKEN STONE MIXED WITH COARSE SAND OF SUFFICIENT QUANTITY TO ABSORB ALL WATER TO BE DRAINED FROM THE HYDRANT WHEN THE VALVE IS CLOSED.

(G) ANCHORAGE FOR HYDRANT: THE HYDRANT SHALL BE SET ON A STONE SLAB OR A SIMILAR FOUNDATION AND THE BASE OF THE HYDRANT AND THE HYDRANT TEE SHALL BE WELL BRACED AGAINST UNEXCAVATED EARTH AT THE END OF THE TRENCH WITH CONCRETE BACKING, OR IT SHALL BE TIED TO THE PIPE WITH SUITABLE RODS OR CLAMPS, TIED WITH MECHANICAL JOINT FITTING OR AS DIRECTED BY THE ENGINEER.

(H) CLEANING: THE HYDRANT SHALL BE THOROUGHLY CLEANED OF DIRT OR FOREIGN MATTER BEFORE SETTING.

ITEM 638 - WATER WORK MISC.: FURNISHING AND SETTING 6" HYDRANT, COMPLETE WITH 6" x X" CUT IN TEE

IN ADDITION TO THE REQUIREMENTS OF NOTE "ITEM SPECIAL - FURNISHING AND SETTING 6" HYDRANT, COMPLETE", THIS ITEM SHALL INCLUDE CUTTING A NEW HYDRANT BRANCH TEE AND SPOOL PIECES INTO EXISTING WATERMAINS, PER "CUT-IN TEE DETAIL METHOD NO. 1" WITHIN THE WATERLINE DETAILS.

ITEM SPECIAL - VAULTS, MANHOLES OR CHAMBERS

WORK INCLUDED

UNDER THESE ITEMS THE CONTRACTOR SHALL FURNISH ALL NECESSARY LABOR, MATERIALS, INCLUDING FRAMES, COVERS AND STEPS, TOOLS AND EQUIPMENT FOR THE CONSTRUCTION, COMPLETE, OF ALL MISCELLANEOUS MASONRY STRUCTURES AND INCLUDING ALL WATER MAIN DRAIN AND PITOMETER VAULTS, METER AND FIRE SERVICE VAULTS, AND APPURTENANT WORK TOGETHER WITH THE HAULING, MIXING, PLACING, FORMING, SCAFFOLDING, SHEETING AND BRACING, GROUTING, PLASTERING, CURING, ETC., AS SPECIFIED, REQUIRED OR SHOWN ON THE CONTRACT DRAWINGS.

BRICK AND MASONRY MATERIAL

THE MATERIAL FURNISHED BY THE CONTRACTOR FOR THE VARIOUS KINDS OF MASONRY CONSTRUCTION TO BE CONSTRUCTED SHALL CONFORM TO THE FOLLOWING OHIO DEPARTMENT OF TRANSPORTATION (ODOT) SPECIFICATIONS:

(A) ALL BRICK FURNISHED AND USED SHALL BE NO. 2 SHALE BRICK AND SHALL COMPLY WITH THE REQUIREMENTS FOR "GRADE SA" ASTM C 32, OR ODOT 704.02 CONCRETE BRICK.

(B) PORTLAND CEMENT SHALL CONFORM TO THE REQUIREMENTS OF 701.04 (ASTM C 150 TYPE 1) ODOT.

(C) FINE AGGREGATE FOR MORTAR OR GROUT SHALL CONFORM TO THE REQUIREMENTS OF 703.03 ODOT.

(D) AGGREGATE FOR PORTLAND CEMENT CONCRETE SHALL CONFORM TO THE REQUIREMENTS OF 703.02 ODOT.

(E) ALL WATER SHALL BE CLEAN AND ACCURATELY MEASURED FOR EACH BATCH OF CONCRETE.

(F) ALL PLAIN CONCRETE SHALL BE THE ODOT 499 CLASS "QC 1".

(G) ALL REINFORCING STEEL SHALL BE ODOT ITEM 509.

(H) ALL CEMENT MORTAR SHALL BE MIXED IN THE PROPORTION OF ONE (1) PART OF CEMENT TO THREE (3) PARTS OF SAND, EXCEPT THE MORTAR FOR BRICK CATCH BASINS AND SEWER MANHOLES WHICH SHALL BE 1 TO 2 MIX.

ITEM SPECIAL - VAULTS, MANHOLES OR CHAMBERS (CONTINUED)

BRICK AND MASONRY MATERIAL (CONTINUED)

(I) PRECAST MASONRY VAULT SECTIONS MAY BE FURNISHED IF THEY MEET THE REQUIREMENTS OF THE DRAWINGS AND SPECIFICATIONS ON FILE WITH THE CLEVELAND DIVISION OF WATER OR APPROVED BY THE ENGINEER.

VAULT, MANHOLE, AND CHAMBER CONSTRUCTION

(A) ALL VAULTS, MANHOLES, CHAMBERS, BRICK NECKS & EXTENSION, AND TEMPORARY EXTENSIONS SHALL BE BUILT IN ACCORDANCE WITH THE CONTRACT DRAWINGS.

(B) THE WALLS OF CIRCULAR STRUCTURES SHALL BE BUILT OF NO. 2 SHALE BRICK OR CONCRETE BRICK LAID IN 1:3 PORTLAND CEMENT MORTAR, WITH BRICK ARRANGED RADIALLY AS HEADERS, FORMING A WALL NINE (9) INCHES THICK. IN DEEP MANHOLES, THE WALL SHALL BE THIRTEEN (13) INCHES THICK BELOW A POINT 12 FEET FROM THE SURFACE, ALL OF THE BRICK COMPOSING SAID STRUCTURES SHALL BE LAID IN FULL MORTAR BEDS AND JOINTS, WITH NO MORTAR JOINTS APPEARING ON THE INNER SURFACE OF THE MANHOLE EXCEEDING THREE-EIGHTS (3/8) INCHES THICK.

(C) THE TOP OF THE WALL OF THE STRUCTURES SHALL BE PROPERLY LEVELED OFF WITH MORTAR SO AS TO FORM A FLAT SURFACE UPON WHICH THE CAST IRON MANHOLE RING IS TO REST, AND THE STRUCTURE SHALL BE BUILT TO PROPER HEIGHT AS INDICATED BY THE CONTRACT DRAWINGS.

(D) THE ENTIRE OUTER SURFACE OF ALL BRICK STRUCTURES SHALL BE PLASTERED WITH A SMOOTH COATING OF 1:3 PORTLAND CEMENT MORTAR, AT LEAST ONE-HALF (1/2) INCH THICK.

(E) PRECAST OR CAST IN PLACE CONCRETE MASONRY CONSTRUCTION SHALL FOLLOW THE APPLICABLE SECTION OF ITEM 611 ODOT SPECIFICATION.

ITEM SPECIAL - 2" AIR RELIEF VALVE WITH VALVE BOX, COMPLETE

WORK INCLUDED

THE CONTRACTOR SHALL FURNISH PIPE WITH A 2" AIR RELIEF CONNECTION AND FURNISH AND INSTALL THE 2" AIR RELIEF COMPLETE, INCLUDING VALVE BOXES, AS SHOWN IN THE "WATER WORK DETAILS" AT THE LOCATIONS SHOWN IN THE PLANS.

AIR RELIEF VALVE ASSEMBLY COMPLETE WITH VALVE BOXES COMPLETE

EACH "2" AIR RELIEF/FLUSHING OUTLET VALVE ASSEMBLY COMPLETE" SHALL CONSIST OF A 2-INCH BRONZE BALL ANGLE METER VALVE (F.I.P. X METER FLANGE), 2-INCH IRON PIPE THREADED METER COMPANION FLANGE, AND A 2-INCH EXTRA HEAVY BRASS "CLOSE" (2-INCH LONG) NIPPLE, TAPERED AT EACH END. THE BRONZE 2-INCH AIR RELIEF BALL ANGLE METER VALVE SHALL BE RATED FOR MINIMUM 300 PSI WORKING PRESSURE AND BE EQUAL IN ALL RESPECTS TO THE 2-INCH BALL ANGLE METER VALVE MANUFACTURED BY FORD METER BOX CO. NO: BFA13-777W; A.Y. MCDONALD MFG. CO. NO: 4604B; OR MUELLER CO. NO: B-24286. THE THREADED METER COMPANION FLANGE SHALL ALSO BE RATED FOR MINIMUM 300 PSI WORKING PRESSURE. THE AIR RELIEF/FLUSHING OUTLET VALVE ASSEMBLY SHALL ALSO INCLUDE ALL 2" GALVANIZED BLACK IRON PIPE AND BRASS PIPE AS REQUIRED AND SPECIFIED UNDER "2-INCH GALVANIZED BLACK IRON AND BRASS PIPE" AND ALL VALVE BOXES AS REQUIRED AND SPECIFIED UNDER "MISCELLANEOUS METAL." THE AIR RELIEF/FLUSHING OUTLET VALVE ASSEMBLY WITH VALVE BOXES COMPLETE SHALL CONFORM WITH THE DETAILS SHOWN ON THE CONTRACT DRAWINGS.

THE FRAME AND GRATE FOR THE 2" AIR RELIEF VALVE WITHIN THE BRIDGE DECK SHALL BE EAST JORDAN IRON WORKS 3718ZPT A2 ASSEMBLY OR APPROVED EQUAL AND SHALL BE BOLTED.

2" GALVANIZED BLACK IRON PIPE AND BRASS PIPE

THE CONTRACTOR SHALL ALSO UNDER "ITEM SPECIAL - 2" AIR RELIEF VALVE ASSEMBLY WITH VALVE BOX, COMPLETE" FURNISH ALL THE MATERIALS FOR AND SHALL PROPERLY CONNECT IN PLACE AT THE LOCATIONS SHOWN ON THE DRAWINGS OR AS ORDERED, ALL 2-INCH EXTRA STRONG BRASS PIPE AND FITTINGS AND ALL 2-INCH EXTRA HEAVY GALVANIZED BLACK IRON PIPE AND FITTINGS RESPECTIVELY, WHICH ARE NECESSARY FOR THE PROPER COMPLETION OF THE WORK INCLUDED UNDER THIS CONTRACT.

BRASS PIPE AND FITTINGS

ALL BRASS PIPE AND FITTINGS SHALL BE EXTRA STRONG 2-INCH PIPE SIZE RATED FOR MINIMUM 150 PSI WORKING PRESSURE AND 225 PSI TEST PRESSURE AND SHALL CONFORM TO ASTM B 43-88, "SPECIFICATION FOR SEAMLESS RED BRASS PIPE, STANDARD SIZES," AND BE EQUAL TO REVERE RED BRASS PIPE AS MANUFACTURED BY REVERE COPPER AND BRASS, INCORPORATED. FITTINGS SHALL BE EXTRA STRONG WEIGHT AND SHALL HAVE SOUND WELL-FITTING THREADS.

ITEM SPECIAL - 2" AIR RELIEF VALVE WITH VALVE BOX, COMPLETE (CONTINUED)

GALVINIZED BLACK IRON PIPE AND BRASS FITTINGS

ALL GALVANIZED BLACK IRON PIPE, NIPPLES AND FITTINGS SHALL BE EXTRA HEAVY BLACK IRON PIPE RATED FOR MINIMUM 150 PSI WORKING PRESSURE AND 225 PSI TEST PRESSURE AND SHALL CONFORM TO ASTM DESIGNATION A 53-89A, "SPECIFICATION FOR PIPE, STEEL, BLACK AND HOT-DIPPED, ZINC COATED WELDED AND SEAMLESS," OR EQUAL. THE FITTINGS SHALL BE BEADED, OR MALLEABLE IRON EXTRA HEAVY WEIGHT. ALL PIPE AND FITTINGS SHALL BE HOT-DIPPED GALVANIZED INSIDE AND OUTSIDE, AND SHALL HAVE SOUND, WELL-FITTING THREADS.

ITEM SPECIAL - MISCELLANEOUS METAL WORK

WORK INCLUDED

(A) THE CONTRACTOR SHALL FURNISH AND INSTALL ALL MISCELLANEOUS METAL WORK WHICH IS REQUIRED UNDER THIS CONTRACT AND IS NOT SPECIFICALLY INCLUDED UNDER THE OTHER ITEMS OF THESE SPECIFICATIONS.

(B) IN GENERAL, THE WORK SHALL INCLUDE THE REPLACEMENT OF ANY VALVE BOXES, COVERS, MANHOLE RINGS AND COVERS, WATER SERVICE STOP BOXES. BRONZE BOLTS, MANHOLE STEPS, EXTENSION STEMS, BRACE STRUCTURAL MEMBERS AND OTHER SIMILAR ITEMS DETERMINED BY THE ENGINEER AS BEING UNSUITABLE.

MATERIALS

ALL CASTINGS SHALL CONFORM TO THE REQUIREMENTS OF ITEM 611 OF THE OHIO DEPARTMENT OF TRANSPORTATION CONSTRUCTION AND MATERIALS SPECIFICATIONS. ALL STRUCTURAL STEEL SHALL MEET THE REQUIREMENTS OF THE ASTM SPECIFICATIONS A 36. ALL BRONZE BOLTS AND NUTS SHALL CONFORM TO THE U.S. STANDARDS SIZES, AND SHALL BE CLEAN CUT AND HAVE WELL FITTED THREADS. ALL BRONZE BOLTS AND NUTS SHALL BE TOBIN OR MANGANESE BRONZE, OR OF SIMILAR APPROVED MATERIAL.

ALUMINUM, EXCEPT AS OTHERWISE REQUIRED, SHALL BE ALUMINUM ALLOY EQUIVALENT TO SPECIFICATION 6063; RIVETS AND SCREWS SHALL BE 2017 ALLOY; ALUMINUM PLATE AND STRUCTURAL SHAPES SHALL BE 2017 ALLOY; ALUMINUM PLATE AND STRUCTURAL SHAPES SHALL BE 6061-T6 AND EXTRUDED SHAPES SHALL BE 6063-T5; ALL AS MANUFACTURED BY THE ALUMINUM COMPANY OF AMERICA, OR EQUAL.

BRASS SHALL BE OF A COMMERCIAL GRADE CONFORMING TO THE "STANDARD SPECIFICATIONS FOR BRASS PLATE, SHEET, STRIP AND ROLLED BAR", ASTM DESIGNATION B 36-71, ALLOY NO. 3.

COPPER-SILICON ALLOY OR "EVERDUR" SHALL CONFORM TO THE "STANDARD SPECIFICATIONS FOR COPPER-SILICON ALLOY PLATE, SHEET, STRIP AND ROLLED BAR FOR GENERAL PURPOSES", ASTM DESIGNATION B97-70, TYPE B.

STAINLESS STEEL RODS AND FASTENERS SHALL CONFORM TO THE REQUIREMENTS OF "SPECIFICATIONS FOR HOT ROLLED AND COLD-FINISHED STAINLESS AND HEAT-RESISTANT BARS". ASTM DESIGNATION A 276-72, TYPE 304. ALL WROUGHT IRON SHALL MEET THE REQUIREMENTS OF "SPECIFICATION FOR ROLLED WROUGHT IRON SHAPES AND BARS", ASTM DESIGNATION A 207-68, OR THE "SPECIFICATIONS FOR WROUGHT IRON PLATES", ASTM DESIGNATION A42-66.

CAST IRON VALVE BOXES AND COVERS SHALL BE GRAY IRON CASTINGS, IN WHICH APPEARANCE AND DIMENSION TOLERANCES ARE PRIMARY CONSIDERATIONS AND STRENGTH IS NOT A PRIMARY OR MAJOR CONSIDERATION. VALVE BOXES AND COVERS SHALL BE ASTM DESIGNATION A-48 WITH NO SPECIFIC REQUIREMENT AS TO CLASS. CHEMICAL COMPOSITION SHALL NOT BE CONSIDERED, BUT THE MATERIAL SHALL BE OF GOOD QUALITY AND OF SUCH CHARACTER AS SHALL MAKE THE METAL OF THE CASTINGS STRONG, TOUGH AND OF EVEN GRAIN. THE METAL SHALL BE MADE WITHOUT ANY ADMIXTURE AND SURFACE SMOOTHNESS IN COMPARISON WITH SAMPLES ACCEPTED AS STANDARD.

Preliminary Plans - For Reference Only

DESIGN AGENCY
Michael Baker INTERNATIONAL
DESIGNER SMP
REVIEWER SM 05/15/24
PROJECT ID 82382
SHEET 1383 TOTAL 2696

CUY-90-16.28 (CCG3A)
MODEL: UN1213 PAPERSIZE: 34x22 (in.) DATE: 3/28/2025 TIME: 5:11:48 AM USER: Julie.Ross
pw:\\mb-us-pw.bentley.com:mb-us-pw-03\Documents\Cleveland_OH\01_Projects\ODOT\District12\82382\400-Engineering\Utilities\Sheets\82382_UN1201.dgn

ITEM SPECIAL - MISCELLANEOUS METAL WORK (CONTINUED)

CLEANING AND TESTING

ALL CASTINGS SHALL BE THOROUGHLY CLEANED AND SUBJECTED TO A CAREFUL HAMMER TEST.

NO CASTINGS SHALL BE COATED UNLESS CLEAN AND FREE FROM RUST, AND APPROVED IN THESE RESPECTS BY THE ENGINEER OR HIS AUTHORIZED INSPECTOR IMMEDIATELY BEFORE BEING DIPPED.

SAMPLE CASTINGS FROM EACH PATTERN, WHEN REQUIRED BY THE ENGINEER, SHALL BE SUBMITTED BY THE MANUFACTURER FOR THE PURPOSE OF ESTABLISHING STANDARDS OF APPEARANCE AND DIMENSIONAL TOLERANCES. THE MANUFACTURER SHALL CERTIFY THAT HIS PRODUCT CONFORMS TO THESE SPECIFICATIONS. EACH CERTIFICATION SO FURNISHED SHALL BE SIGNED BY AN AUTHORIZED AGENT OF THE MANUFACTURER.

COATING

EACH COATING SHALL BE SPRAYED OR BRUSHED INSIDE AND OUT WITH ONE COAT OF ASPHALTIC COMPOUND VARNISH. THE VARNISH SHALL BE MADE OF HIGH GRADE ASPHALT FLUXED AND BLENDED WITH PROPERLY TREATED DRYING OILS AND TINNED TO A PROPER CONSISTENCY WITH A VOLATILE SOLVENT. THE VARNISH SHALL BE MADE TO COMPLY WITH FEDERAL SPECIFICATION 77-V-51A OR JOINT ARMY-NAVY SPECIFICATION JAN-P- 450. OTHER METHODS OF COATING AND TYPES OR COATING MATERIAL SHALL BE SUBJECT TO THE APPROVAL OF THE ENGINEER. IN ADDITION TO THE SHOP COAT, THE CASTINGS SHALL RECEIVE TWO (2) COATS OF APPROVED PAINT.

INSPECTION

THE ENGINEER OR HIS AUTHORIZED REPRESENTATIVE SHALL HAVE THE RIGHT TO INSPECT THE MATERIAL AND WORK DONE, AS THE INTERESTS OF THE CITY OR STATE MAY REQUIRE. SUCH INSPECTION SHALL NOT RELIEVE THE CONTRACTOR FROM ANY OBLIGATION TO PERFORM SAID WORK STRICTLY IN ACCORDANCE WITH THE SPECIFICATIONS, AND ANY MODIFICATION THEREOF, AS HEREIN PROVIDED, AND WORK NOT SO CONSTRUCTED SHALL BE REMOVED AND MADE GOOD BY THE CONTRACTOR AT HIS EXPENSE. ALL MANHOLE RINGS AND COVERS MUST BE SOUND AND SHALL CONFORM TO THESE SPECIFICATIONS, AND ANY DEFECTIVE CASTINGS WHICH MAY HAVE PASSED THE INSPECTOR AT THE WORKS, OR ELSEWHERE, SHALL BE AT ALL TIMES LIABLE TO REJECTION WHEN DISCOVERED, UNTIL THE DATE OF FINAL PAYMENT UNDER THIS CONTRACT.

STEPS AND LADDERS

DUCTILE IRON STEPS AND LADDERS OF THE SIZE AND SHAPE SHOWN ON THE CONTRACT DRAWINGS SHALL BE BUILT INTO THE BRICK AND CONCRETE MASONRY OF THE MANHOLES AS INDICATED ON THE DRAWINGS.

RIMS AND COVERS

(A) ALL CAST IRON MANHOLE RIMS AND COVERS OF THE FORMS, DIMENSIONS AND DETAILS SHOWN ON THE CONTRACT DRAWINGS SHALL BE FURNISHED AND INSTALLED AS DIRECTED.

(B) THE RIMS SHALL BE PROPERLY SET IN PLACE IN A FULL BED OF MORTAR OR POURED MONOLITHIC IN THE MASONRY, AT SUCH ELEVATION AS TO MAKE THE TOP OF THE RIM CONFORM TO THE FINISHED SURFACES OF THE STRUCTURES OR THE FINISHED GRADE AS ESTABLISHED BY THE ENGINEER.

DETAIL DRAWINGS

COMPLETE DETAIL DRAWINGS OF MISCELLANEOUS METAL WORK SHALL BE SUBMITTED TO THE ENGINEER FOR APPROVAL, PRIOR TO THE MANUFACTURE OF ANY WORK TO BE FURNISHED UNDER THIS ITEM IN ACCORDANCE WITH THESE SPECIFICATIONS.

PAINTING

ALL MISCELLANEOUS METAL WORK NOT GALVANIZED SHALL BE THOROUGHLY CLEANED AND GIVEN THREE (3) COATS OF COAL TAR PITCH, USING INTERTOL 50 OR BITUMASTIC 50, OR APPROVED EQUAL.

MEASUREMENT

THE MISCELLANEOUS METAL WORK SHALL BE THE METAL WORK ACTUALLY FURNISHED AND PLACED IN ACCORDANCE WITH THESE SPECIFICATIONS AND THE DETAILED DRAWINGS APPROVED BY THE DIRECTOR. IN THE COMPUTING OF WEIGHTS, IF NOT DETERMINED BY WEIGHING, ONE (1) CUBIC FOOT OF CAST IRON SHALL BE ASSUMED TO WEIGH FOUR HUNDRED AND FIFTY (450) POUNDS, AND ONE (1) CUBIC FOOT OF STEEL SHALL BE ASSUMED TO WEIGH FOUR HUNDRED AND NINETY (490) POUNDS. THE WEIGHT OF CAST IRON SHALL BE USED FOR CAST IRON VALVE BOXES AND COVERS AND ANY CAST IRON SECTIONS OF THE VALVE BOXES AND COVERS. WHERE PLASTIC PIPE IS USED AS THE EXTENSION, THE PIPE SHALL BE INCLUDED IN THE CAST IRON WEIGHT WITH NO SEPARATE ALLOWANCE FOR LENGTH OR WEIGHT.

ITEM SPECIAL - WATER SERVICE CONNECTIONS

GENERAL

ALL NEW AND UNUSED MATERIALS SHALL BE USED IN THE FOLLOWING SITUATION(S) INVOLVING WATER SERVICE CONNECTIONS.

(A) WHERE A GENERAL SUPPLY WATER SERVICE CONNECTION OR FIRE SERVICE CONNECTION IS DAMAGED OR IS DISTURBED FOR LOWERING, RAISING, EXTENDING, OR RELOCATING BETWEEN THE WATER MAIN AT THE "CORPORATION SHUTOFF VALVE" AND THE "CURB SHUTOFF VALVE", IT SHALL BE TOTALLY REPLACED WITH NEW AND UNUSED MATERIALS FROM THE "CORPORATION SHUTOFF VALVE" TO "CURB SHUTOFF VALVE."

(B) WHERE AN EXISTING CONNECTION REQUIRES TOTAL REPLACEMENT AND IS FOUND TO HAVE A FERRULE TYPE "TAP" THE CONNECTION SHALL BE REINSTALLED BY THE CONTRACTOR WITH A BRONZE DOUBLE STRAP TAP SADDLE. REPLACEMENT OF EXISTING 5/8" AND 3/4" WATER SERVICE CONNECTIONS SHALL INCLUDE ALL FITTINGS, ADAPTERS, CORPORATIONS AND STRAP SADDLES AS REQUIRED TO INSTALL A 3/4" COPPER WATER SERVICE CONNECTION COMPLETE. EXISTING ONE (1") INCH WATER SERVICE CONNECTIONS, WHEN REQUIRED TO BE TOTALLY REPLACED, SHALL BE REPLACED AS A ONE (1") INCH COPPER WATER SERVICE CONNECTION COMPLETE INCLUDING ALL FITTINGS, CORPORATIONS AND ADAPTERS. WHEN REPLACING EXISTING LEAD OR GALVANIZED 5/8" WATER SERVICE CONNECTIONS THE REPLACEMENT SHALL ALSO INCLUDE A NEW CURB SHUT-OFF VALVE AND CURB VALVE BOX COMPLETE.

(C) WHERE AN EXISTING COPPER GENERAL SUPPLY WATER SERVICE CONNECTION OR FIRE SERVICE CONNECTION IS DAMAGED OR IS DISTURBED FOR LOWERING, RAISING, EXTENDING BETWEEN THE "CORPORATION SHUTOFF VALVE" AND THE "CURB SHUTOFF VALVE", IT MAY BE RECONNECTED USING APPROVED COMPRESSION COUPLING. NO MORE THAN TWO (2) SUCH COMPRESSION COUPLINGS SHALL BE USED ON ONE (1) WATER SERVICE CONNECTION.

(D) WHERE A GENERAL SUPPLY WATER SERVICE CONNECTION OR FIRE SERVICE CONNECTION IS DISTURBED ON THE "PROPERTY SIDE" OF THE CURB SHUT-OFF VALVE, FOR LOWERING, RAISING AND/OR EXTENDING, OR NEEDS REPLACEMENT BECAUSE IT IS OF LEAD OR GALVANIZED PIPING MATERIAL, THE PIPING MATERIALS AND FITTINGS SHALL BE TOTALLY REPLACED WITH NEW AND UNUSED MATERIALS FROM THE EXISTING CURB SHUT-OFF VALVE TO THE NEW CURB SHUT-OFF VALVE REQUIRED AS A RESULT OF THE EXTENSION LOWERING, RAISING OR REPLACEMENT.

(E) WHERE A GENERAL SUPPLY WATER SERVICE CONNECTION OR FIRE SERVICE CONNECTION IS DISTURBED FOR LOWERING, RAISING AND/OR EXTENDING, IT SHALL BE EXTENDED IN A STRAIGHT PROLONGATION OF THE EXISTING CONNECTION. WHERE THE "PROPERTY SIDE" CONNECTION PIPING IS NOT IMMEDIATELY CONTIGUOUS TO THE EXTENDED CONNECTION CURB SHUTOFF, ALL LABOR, MATERIALS AND EQUIPMENT REQUIRED TO RECONNECT SHALL BE PROVIDED AS PROJECT WORK. ALL RECONNECTION ON THE "PROPERTY SIDE" OF THE CURB SHUT-OFF MUST BE PARALLEL TO THE STREET CENTERLINE OR RIGHT-OF-WAY FROM THE CURB SHUT-OFF. IF UPON INSPECTION OF THE "PROPERTY SIDE" PIPING IT IS FOUND UNSUITABLE FOR SUCH RECONNECTION, THE CONNECTION SHALL NOT BE DISTURBED UNTIL SUCH TIME AS THE ENGINEER HAS ARRANGED FOR REPLACEMENT.

(F) WHERE A CONNECTION IS INADVERTENTLY DAMAGED OR BROKEN WHICH WAS NOT TO BE DISTURBED, ONLY THE DAMAGED PORTION NEEDS TO BE REPLACED. IF THE EXTENT OF DAMAGE CANNOT BE FULLY ASSESSED, THE CONNECTION SHALL BE REPLACED AS NOTED IN PARAGRAPH A AT THE CONTRACTOR'S EXPENSE.

(G) ANY CLEVELAND WATER DEPARTMENT VALVE BOXES, CURB SHUT-OFF VALVE BOXES OR OTHER CASTINGS DAMAGED DURING CONSTRUCTION OR FOUND UNSUITABLE FOR REUSE SHALL BE REPLACED WITH NEW AND UNUSED MATERIAL IN ACCORDANCE WITH THE SPECIFICATION, MISCELLANEOUS METAL WORK. PAYMENT FOR ADDITIONAL REQUIRED VALVE BOXES, CURB SHUT-OFF VALVE BOXES OR OTHER CASTINGS WILL BE MADE UNDER "ITEM SPECIAL, MISCELLANEOUS METAL WORK".

(H) ALL GENERAL SUPPLY WATER SERVICE CONNECTIONS AND FIRE SERVICE CONNECTIONS SHALL BE LAID NOT LESS THAN SIX (6) FEET BELOW ESTABLISHED STREET GRADE AND NOT LESS THAN FIVE AND ONE-HALF (5-1/2) FEET BELOW GROUND SURFACE.

WORK INCLUDED

IN ADDITION TO THE WORK DESCRIBED ABOVE, THE CONTRACTOR SHALL INSTALL NEW AND/OR RECONSTRUCT GENERAL SUPPLY WATER SERVICE CONNECTIONS AND FIRE LINE SERVICE CONNECTIONS AS DETAILED IN THE PLANS.

ITEM SPECIAL - WATER SERVICE CONNECTIONS (CONTINUED)

PIPE MATERIAL FOR SERVICE CONNECTIONS

THE FOLLOWING PIPE MATERIAL SHALL BE USED FOR THE SERVICE CONNECTIONS ON THIS PROJECT:

COPPER WATER TUBING, TYPE K, ASTM B88-74, 3/4" TO 2" DIAMETER

DUCTILE IRON PIPE AND FITTINGS, ANSI CLASS 52 (NEW); ANSI CLASS 56 (RECONSTRUCT), CEMENT LINED, 3" DIAMETER AND UP UNLESS OTHERWISE NOTED.

MATERIALS REQUIRED FOR INSTALLATION

GENERAL SUPPLY WATER SERVICE CONNECTIONS ON DUCTILE/CAST IRON WATER MAINS SHALL BE PER CLEVELAND WATER DEPARTMENT SPECIFICATIONS AND STANDARD DETAILS. MATCH EXISTING SIZES.

WATER MAIN DUCTILE IRON PIPE WITH BOLTLESS RESTRAINED JOINTS AND FITTINGS, ANSI CLASS 52

WHERE INDICATED ON THE CONTRACT DRAWINGS OR WHERE ORDERED, THE CONTRACTOR SHALL PROVIDE ALL MATERIALS, LABOR AND EQUIPMENT TO TRANSFER AND TO EXTEND EXISTING GENERAL SUPPLY WATER SERVICE CONNECTIONS, FIRE SERVICE CONNECTIONS AND COMBINATION SERVICE CONNECTIONS WITH NEW PIPING MATERIAL FROM THE EXISTING WATER MAIN TO THE REPLACEMENT OR RELOCATED WATER MAIN TO AND INCLUDING A NEW RELOCATED SERVICE CURB SHUT-OFF VALVE AND CURB VALVE BOX. WHERE EXTENDING CONNECTION CONTRACTOR SHALL REMOVE THE EXISTING CURB VALVE BOX AND ABANDON EXISTING CURB VALVE IN-PLACE. ALL WORK AND MATERIALS REQUIRED FOR CONNECTIONS TO BE TRANSFERRED SHALL CONFORM TO THE GENERAL REQUIREMENTS SPECIFIED HEREIN.

THE CONTRACTOR SHALL ARRANGE WITH THE DIVISION OF WATER FOR THE DIVISION OF WATER TO MAKE THE PRESSURE TAPS ON ALL GENERAL SUPPLY WATER SERVICE CONNECTIONS AND FIRE LINE CONNECTIONS. THE DIVISION OF WATER WILL NOT FURNISH ANY MATERIALS. THE CONTRACTOR SHALL FURNISH ALL MATERIALS AND DO ALL NECESSARY EXCAVATION, SHEETING, SHORING, BACKFILLING, MISCELLANEOUS REMOVAL AND RESTORATION, SEEDING AND/OR SODDING, REPAVING AND REPLACEMENT OF SIDEWALK REQUIRED TO COMPLETE THE WORK. THE COST OF BORING AND/OR JACKING AND EXCAVATION FOR SERVICE CONNECTIONS SHALL BE AS HEREIN SPECIFIED TO COMPLETE THE WORK.

SEE LISTS FOR MATERIALS REQUIRED FOR GENERAL SUPPLY AND FIRE SERVICE CONNECTIONS INSTALLATIONS IN THE CONTRACT DRAWINGS.

ITEM 611 - MANHOLE ADJUSTED TO GRADE, AS PER PLAN

THE CONTRACTOR SHALL ADJUST THE EXISTING MANHOLE FRAME AND COVER TO FIT THE REVISED GRADE BY EXCAVATING AROUND THE FRAME AND RAISING OR LOWERING THE FRAME AND COVER BY ADDING TO OR REMOVING THE EXISTING BRICKS AND MORTAR. USE OF ADJUSTING RINGS SHALL NOT BE PERMITTED. IF REQUIRED BY THE ENGINEER, NEW FRAMES AND/OR COVERS WILL BE PAID FOR UNDER "ITEM SPECIAL-MISCELLANEOUS METAL WORK".

ITEM 638 - VALVE BOX ADJUSTED TO GRADE, AS PER PLAN

THE CONTRACTOR SHALL RESET EXISTING VALVE BOXES OR EXISTING CURB SHUT-OFF VALVE BOXES TO ESTABLISHED GRADE BY RAISING OR LOWERING THE EXISTING CASTINGS OR BY EITHER ADDING, DELETING OR CUTTING THE APPROPRIATE VALVE BOX STEM SECTIONS. IN RAISING OF THE CASTINGS, NO INSERTS WILL BE PERMITTED. ANY VALVE BOXES OR CURB SHUT-OFF VALVE BOXES FOUND TO BE DAMAGED OR UNSUITABLE FOR REUSE SHALL BE REPLACED BY THE CONTRACTOR AND PAID FOR UNDER ITEM SPECIAL - MISCELLANEOUS METAL. THE CONTRACTOR SHALL PERFORM ALL WORK NECESSARY AS REQUIRED OR AS ORDERED TO COMPLETE THE ITEM.

ITEM SPECIAL - MAINTENANCE OF WATER SERVICE

(A) THE CONTRACTOR SHALL PROVIDE, INSTALL, MAINTAIN AND REMOVE ALL TEMPORARY WATER MAINS AND TEMPORARY SERVICE CONNECTIONS, INCLUDING NECESSARY VALVES AND TEMPORARY HYDRANTS FOR FIRE PROTECTION ON THE TEMPORARY WATER MAINS, TO ALL AFFECTED PREMISES WHERE THE RELOCATIONS OF THE EXISTING WATER MAIN AND CONSTRUCTION OF NEW SERVICE CONNECTIONS WILL RESULT IN THE INTERRUPTION OF SERVICE FOR PERIODS LONGER THAN FOUR (4) HOURS BETWEEN 6:00 A.M. AND MIDNIGHT. BETWEEN MIDNIGHT AND 6:00 A.M. SERVICES MAY BE INTERRUPTED FOR THE ENTIRE SIX (6) HOUR PERIOD. THE PROVIDING OF TEMPORARY WATER MAINS SHALL ALSO INCLUDE FLUSHING, TESTING, SAMPLING AND, IF REQUIRED, CHLORINATION; ALL AS SPECIFIED ELSEWHERE IN THESE SPECIFICATIONS.

THE FAILURE OF THE CONTRACTOR TO INSTALL TEMPORARY MAINS OF SUFFICIENT SIZE MAY MAKE THE CONTRACTOR LIABLE WHERE CONFLAGRATION DUE TO LACK OF WATER FOR FIRE PROTECTION MAY GIVE RISE TO ACTIONABLE CLAIMS FOR DAMAGES CHARGEABLE TO THE CONTRACTOR BY REASON OF SAID FAILURE.

(B) THE CONTRACTOR SHALL SUBMIT A PLAN FOR MAINTAINING WATER SERVICE IN CONFORMANCE WITH THE REQUIREMENTS HEREIN STIPULATED 2 WEEKS PRIOR TO INSTALLATION. THE PLAN SHALL ALSO SPECIFY ALL CONSTRUCTION METHODS, MATERIALS UTILIZED, VALVE LOCATIONS AND MEET THE APPROVAL OF THE ENGINEER, LOCAL FIRE DEPARTMENT AND THE CLEVELAND WATER DEPARTMENT BEFORE THE CONTRACTOR BEGINS ANY OF THE WATERWORK. APPROVAL OF SUCH A PLAN FOR TEMPORARY WATER MAINS SHALL NOT RELIEVE THE CONTRACTOR RESPONSIBILITY FOR PROVIDING SUFFICIENT SUPPLY. THE CONTRACTOR SHALL AT HIS OWN EXPENSE INCREASE THE SIZES OF THE TEMPORARY WATER MAINS BEYOND THE SIZES INDICATED HEREIN IF THE SIZES AS NOTED IN THESE SPECIFICATIONS ARE FOUND TO BE INSUFFICIENT.

(C) TEMPORARY WATER MAINS SHALL BE PLACED ON ONE OR BOTH SIDES OF THE STREET. CONNECTIONS ARE PERMISSIBLE ONLY ON THE SIDE OF THE STREET ON WHICH THE PARTICULAR TEMPORARY MAIN IS LOCATED. THE TEMPORARY MAINS SHALL NOT OBSTRUCT ANY STREETS, SIDEWALKS OR DRIVEWAYS. TRENCHING OR RAMPING SHALL BE PERFORMED AS REQUIRED TO PROVIDE PROTECTION FOR THE TEMPORARY WATER MAINS AND TO PROVIDE FOR THE SAFE MOVEMENT OF VEHICULAR AND PEDESTRIAN TRAFFIC. TEMPORARY WATER MAINS THAT CROSS DRIVEWAYS AND SIDEWALKS SHALL BE RAMPED WITH RUBBERIZED/NEOPRENE TYPE RAMPING; NO ASPHALT OR STONE RAMPING SHALL BE ALLOWED FOR THIS PURPOSE. ALL LINES CROSSING STREETS SHALL BE TRENCHED ACROSS TO ALLOW BYPASS PIPE TO LIE FLUSH WITH THE PAVEMENT SURFACE. NO RAMPING WILL BE ALLOWED ON STREET CROSSINGS EXCEPT FOR SIDE STREETS APPROVED BY THE CITY. THE CONTRACTOR SHALL PROVIDE SUPPLEMENTARY CONNECTIONS WHERE VALVES WITH NIPPLES HAVE BEEN REMOVED, WHERE ADJACENT WATER MAINS CONNECT, OR WHERE ORDERED BY THE CITY.

Preliminary - Not for Construction

WATER WORK GENERAL NOTES

DESIGN AGENCY
Michael Baker INTERNATIONAL

DESIGNER SMP
REVIEWER SM 05/15/24
PROJECT ID 82382
SHEET 1384 TOTAL 2696

CUY-90-16.28 (CCG3A)

MODEL: UN1214 PAPERSIZE: 34x22 (in.) DATE: 5/14/2025 TIME: 3:13:39 PM USER: Scott.Pruzin
pw:\\mb-us-pw.bentley.com:mb-us-pw-03\Documents\Cleveland_OH\01_Projects\ODOT\District12\82382\400-Engineering\Utilities\Sheets\82382_UN1201.dgn

ITEM SPECIAL - MAINTENANCE OF WATER SERVICE (CONTINUED)

(D) SIZES FOR TEMPORARY WATER MAINS SHALL BE AS FOLLOWS:

1. WHERE IT IS NOT POSSIBLE TO HAVE BOTH RELOCATED/ NEW AND EXISTING WATER MAINS SIMULTANEOUSLY IN SERVICE IN ORDER TO TRANSFER AND RECONNECT EXISTING SERVICE CONNECTIONS TO THE RELOCATED/NEW WATER MAIN, OR WHEN THE TIME REQUIRED TO PUT THE RELOCATED/NEW WATER MAIN, EXCLUDING SERVICE CONNECTIONS, INTO SERVICE EXCEEDS THE RATIONS SPECIFIED IN PARAGRAPH "A", THE SIZES FOR TEMPORARY WATER MAINS SHALL BE AS FOLLOWS:

   A. WHEN WITHIN THE LIMITS OF THE WATER MAIN RELOCATION NO SERVICE CONNECTIONS EXIST, OR SERVICE CONNECTIONS EXIST ON ONLY ONE SIDE OF THE STREET, THE TEMPORARY WATER MAIN SHALL NOT BE LESS THAN TWO (2) NOMINAL PIPE DIAMETERS SMALLER THAN EXISTING PIPE BUT IN NO CASE LESS THAN FOUR (4) INCHES IN DIAMETER AND SUCH TEMPORARY WATER MAIN SHALL BE PLACED ON ONLY ONE SIDE OF THE STREET. FOR EXAMPLE, IF EXISTING WATER MAIN IS TWELVE (12) INCH NOMINAL DIAMETER, TEMPORARY WATER MAIN SHALL NOT BE LESS THAN EIGHT (8) INCH NOMINAL DIAMETER.

   B. WHEN THE LIMITS OF THE WATER MAIN RELOCATION SERVICE CONNECTIONS EXIST ON BOTH SIDES OF THE STREET, THE TEMPORARY WATER MAINS SHALL NOT BE LESS THAN ONE (1) NOMINAL PIPE DIAMETER SMALLER THAN THE EXISTING PIPE BUT IN NO CASE LESS THAN SIX (6) INCHES IN DIAMETER AND SUCH TEMPORARY WATER MAINS SHALL BE PLACED ON BOTH SIDES OF THE STREET.

   FOR EXAMPLE, IF EXISTING WATER MAIN IS TWELVE (12) INCH NOMINAL DIAMETER, TEMPORARY WATER MAINS SHALL NOT BE LESS THAN TEN (10) INCH NOMINAL DIAMETER, ON EACH SIDE.

2. WHEN TEMPORARY WATERLINES AS DESCRIBED IN PARAGRAPH D-1 ARE NOT REQUIRED, BUT THE INTERRUPTION IN WATER SERVICE EXCEEDS THE DURATION SPECIFIED IN PARAGRAPH "A" BECAUSE OF THE TIME REQUIRED TO CONNECT NEW/RELOCATED WATER MAINS TO EXISTING MAINS AND/OR TO RE-CONNECT EXISTING SERVICE CONNECTIONS TO THE NEW/RELOCATED MAIN, THE SIZES FOR TEMPORARY WATER MAINS, ON ONE OR BOTH SIDES OF THE STREET, AS REQUIRED, SHALL NOT BE LESS THAN THAT INDICATED BELOW PROVIDED THAT THESE SIZES ARE APPROVED BY THE FIRE DEPARTMENT OF THE MUNICIPALITY IN WHICH THE WORK IS BEING PERFORMED.

3. THE SIZE OF THE TEMPORARY CONNECTION SHALL BE OF AT LEAST THE SAME SIZE AS THE PERMANENT CONNECTION THAT HAS GONE TO THE BUILDING UNLESS THE CONNECTION IS LARGER THAN THE BYPASS PIPING. IF THE PERMANENT CONNECTION IS LARGER THAN THE BYPASS PIPING, THEN THE TEMPORARY CONNECTION WILL BE OF THE SAME SIZE AS THE BYPASS PIPING.

THE CONTRACTOR SHALL PROVIDE ENOUGH ISOLATION VALVES IN THE TEMPORARY WATER MAIN SYSTEM SUCH THAT PIPE SEGMENTS ON EACH SIDE OF THE STREET OF EACH STREET BLOCK CAN BE ISOLATED. IN NO CASE SHALL SEGMENTS OF PIPE BETWEEN VALVES BE LONGER THAN 1000 FEET.

MINIMUM FLOWS THAT SHALL BE AVAILABLE FROM TEMPORARY BYPASS WATER LINES, 4-INCHES IN DIAMETER OR LARGER, SHALL BE:

1. ON RESIDENTIAL DEAD END AND SIDE STREETS WHICH MUST BE OR ARE SUPPLIED FROM THE EXISTING WATER LINE BEING CLEANED AND LINED, A MINIMUM OF 600 GALLONS PER MINUTE (GPM) AT A 20 POUND PER SQUARE INCH (PSI) RESIDUAL PRESSURE AT ANY POINT ALONG SAID TEMPORARY BYPASS WATER LINE.

2. ON RESIDENTIAL MAIN OR THROUGH STREETS CONNECTING TWO (2) OR MORE DEAD END OR SIDE STREETS WHICH MUST BE OR ARE SUPPLIED FROM THE EXISTING WATER LINE BEING CLEANED AND LINED, A MINIMUM OF 1,000 GPM AT A 20 PSI RESIDUAL PRESSURE AT ANY POINT ALONG SAID TEMPORARY BYPASS WATERLINE.

3. ON A STREET IN COMMERCIAL, INDUSTRIAL OR MULTI-FAMILY COMPLEX AREAS, WHICH MUST BE OR ARE SUPPLIED FROM THE EXISTING WATER LINE BEING CLEANED AND LINED, A MINIMUM OF 1,300 GPM AT 20 PSI RESIDUAL PRESSURE AT ANY POINT ALONG SAID TEMPORARY BYPASS WATERLINE.

ITEM SPECIAL - MAINTENANCE OF WATER SERVICE (CONTINUED)

THE CONTRACTOR SHALL FURNISH NECESSARY HOSES, VALVES, PIPE AND FITTINGS FOR WATER SERVICE CONNECTIONS. THE CONTRACTOR SHALL ONLY CONNECT TO AN OUTSIDE HOSE BIB OR SILL COCK, UNLESS OTHERWISE APPROVED BY THE CITY. ALL CONNECTIONS TO OUTSIDE HOSE BIBS OR SILL COCKS SHALL BE SUPPLIED WITH Y CONNECTORS.

THE CONTRACTOR SHALL MAKE A REASONABLE EFFORT TO SHUT OFF CONNECTIONS AT THE SERVICE STOP BOX WHERE POSSIBLE. IF A SERVICE STOP BOX IS NOT AVAILABLE, THE CONTRACTOR SHALL SHUT OFF THE CONNECTIONS INSIDE THE RESIDENCE OR BUILDING, AND SHALL CLEAR SERVICE CONNECTIONS USING INTERNAL PLUMBING.

THE CONTRACTOR SHALL NOT BE PAID ANY EXTRA ALLOWANCE IF REQUIRED TO SHUT A CONNECTION WITHIN A BUILDING OR CLEAR SERVICE CONNECTIONS USING INTERNAL PLUMBING. ALL SUCH COSTS SHALL BE INCLUDED IN THE BID.

(E) THE CONTRACTOR SHALL BE RESPONSIBLE FOR ANY REQUIRED REPAIRS TO, OR REPLACEMENT OF, DAMAGED TEMPORARY WATER MAINS AND APPURTENANCES. THE CONTRACTOR SHALL ALSO BE RESPONSIBLE FOR MAINTAINING AND REPAIRING ANY DAMAGED PAVEMENT, SIDEWALKS, CURBS, TREE LAWNS OR OTHER AREAS DISTURBED BY THE INSTALLATION; AND FOR MAINTENANCE OR REPAIR OF THE TEMPORARY WATER MAINS, TEMPORARY SERVICE CONNECTIONS AND APPURTENANCES THERETO. PAYMENT FOR THIS WORK SHALL BE INCLUDED IN THE CONTRACT LUMP SUM PRICE BID FOR "ITEM SPECIAL - MAINTENANCE OF WATER SERVICE".

(F) THE CONTRACTOR SHALL NOT PUT ANY TEMPORARY WATER MAINS INTO SERVICE WITHOUT AN APPROVED PLAN AS INDICATED IN PARAGRAPH B.

(G) THE TEMPORARY WATER MAIN AND ALL APPURTENANCES SHALL BE FURNISHED, MAINTAINED AND REMOVED BY THE CONTRACTOR. THE TEMPORARY WATER MAIN PIPE AND APPURTENANCES FURNISHED SHALL BE CLEAN AND IN SUCH CONDITION THAT THEY MAY BE TESTED, FLUSHED, CHLORINATED AND PRODUCE SATISFACTORY WATER SAMPLES AS REQUIRED BY THE CITY. ANY NECESSARY CHLORINATION SHALL BE DONE BY THE CITY AS STIPULATED ELSEWHERE IN THESE SPECIFICATIONS AND SHALL BE DONE AT THE CONTRACTOR'S EXPENSE. ALL CONNECTIONS TO THE TEMPORARY WATER MAIN SHALL BE MADE BY THE CONTRACTOR UNDER THE SUPERVISION OF THE CITY.

(H) THE CONTRACTOR SHALL PROVIDE TEMPORARY FOUR (4) INCH FIRE HYDRANTS ON THE TEMPORARY WATERLINE IN ACCORDANCE WITH THE "TEMPORARY WATER MAIN & HYDRANT CONNECTION ASSEMBLY" DETAIL, SEE CWD STANDARD DETAILS. THE CONTRACTOR SHALL PROVIDE A SUFFICIENT NUMBER OF VALVES ON THE TEMPORARY WATER MAIN AS TO ALLOW PROPER SEQUENCING OF THE NEW/RELOCATED WATER MAIN WORK WITHOUT UNDUE DELAY. WATER TO THE TEMPORARY WATER MAIN WILL BE PROVIDED FROM THE EXISTING PERMANENT HYDRANTS THROUGH THE TEMPORARY HYDRANTS JUST BEYOND THE LIMITS OF THE SHUTDOWN AND/OR FROM ADJACENT WATER MAINS.

(I) THE CONTRACTOR SHALL MINIMALLY INSTALL TEMPORARY FOUR (4) INCH FIRE HYDRANTS AT EACH LOCATION WHERE A PERMANENT FIRE HYDRANT IS TAKEN OUT OF SERVICE OR USED TO SUPPLY A TEMPORARY WATER MAIN

PAYMENT

THE DIVISION OF WATER WILL REQUIRE THAT THE CONTRACTOR PAY ALL DIVISION OF LABOR CHARGES FOR "FLUSHING AND SAMPLING" OF TEMPORARY WATER MAINS. CHARGES OR FEES FOR CHLORINATION WORK OR ANY WORK PERFORMED BY THE CITY MAY BE OBTAINED FROM THE PERMITS AND SALES UNIT OF THE DIVISION OF WATER AND HEAT. PAYMENT FOR DIVISION OF WATER LABOR SHALL BE MADE TO THE PERMITS AND SALES SECTION PRIOR TO ANY WATER WORK BEING PERFORMED.

ITEM SPECIAL - CATHODIC PROTECTION FOR WATER MAINS

TEST STATIONS

CATHODIC TEST STATIONS SHALL BE INSTALLED WHERE SHOWN ON THE CONTRACT DRAWING AND SHALL BE OF THE FLUSH-TO-GRADE TYPE AS SHOWN ON THE CONTRACT DRAWINGS.

GALVANIC ANODE SYSTEM

MATERIALS AND EQUIPMENT FURNISHED AND INSTALLED TO PROVIDE A GALVANIC ANODE CATHODIC PROTECTION SYSTEM SHALL BE NEW AND AS SPECIFIED IN THE DETAILS PROVIDED HEREIN.

PAYMENT

PAYMENT FOR CATHODIC PROTECTION UNDER "ITEM 638 WATERWORK MISC.: CATHODIC PROTECTION FOR WATER MAINS" SHALL BE FOR EACH ENTIRE SYSTEM INSTALLED INCLUDING ALL MATERIALS AND EQUIPMENT

ITEM SPECIAL - 48" STEEL PIPE ENCASEMENT, BORED OR JACKED

WORK INCLUDED

THE CONTRACTOR SHALL, UNDER ITEM SPECIAL - 48" STEEL PIPE ENCASEMENT, BORED OR JACKED, CASINGS, FURNISH ALL THE MATERIALS FOR AND SHALL PROPERLY CONSTRUCT AT THE LOCATIONS SHOWN ON THE DRAWINGS, OR AS DIRECTED, ALL STEEL PIPE CASING TOGETHER WITH ALL EXCAVATIONS, JACKING, GROUT, SHEETING AND BRACING AND ALL OTHER APPURTENANCES WHICH ARE NECESSARY FOR THE PROPER INSTALLATION OF THE ENCASEMENTS WHICH ARE REQUIRED FOR THE PROPER COMPLETION OF THE WORK INCLUDED IN THIS CONTRACT.

STEEL PIPE CASING

THE STEEL PIPE CASING TO BE JACKED INTO POSITION WHERE SHOWN ON THE DRAWINGS, SHALL BE OF THE SIZES HEREIN SPECIFIED. THE STEEL PIPE CASING SHALL MEET THE REQUIREMENTS OF ASTM SPECIFICATIONS A 53, GRADE B, "PIPE, STEEL, BLACK AND HOT-DIPPED, ZINC-COATED WELDED AND SEAMLESS", WITH MINIMUM WALL THICKNESS AND NOMINAL UNCOATED WEIGHT PER FOTT AS SPECIFIED HEREIN. THE PIPE SHALL BE FABRICATED OF BUTT-WELDED STEEL SHEETS WITH STRAIGHT OR SPRIAL SEAMS. THE ENDS OF EACH PIPE SECTION SHALL BE PROPERLY BEVELD FOR FIELD WELDING. COATING AND LINING OF THE STEEL CASING PIPE WILL NOT BE REQUIRED, BUT THE PIPE SHALL BE PROPERLY PROTECTED PRIOR TO ITS INSTALLATION. THE CONTACTOR SHALL VERIFY MANUFACTURE'S OUTSIDE DIAMETER OF BELL OF PIPE AND INCREASE INSIDE DIAMETER OF STEEL PIPE CASING IF REQUIRED

NOMINAL PIPE	CARRIER PIPE	CASING WEIGHT/FOOT (APPROX.) (UNCOATED-LBS.)
8"	16" O.D. X 0.375"	62.59
12"	20" O.D. X 0.375"	78.61
16"	24" O.D. X 0.500"	125.51
20"	36" O.D. X 0.500"	189.59
20" (URT)	36" O.D. X 0.532"	201.27
24"	42" O.D. X 0.500"	221.64
24" (URT)	42" O.D. X 0.625"	276.42
30"	48" O.D. X 0.500"	253.62
30" (URT)	48" O.D. X 0.688"	347.44
36"	54" O.D. X 0.563"	321.07
36" (URT)	54" O..D. X 0.781"	444.11
42"	60" O.D. X 0.625"	363.38
42" (URT)	60" O.D. X 0.844"	533.15
48"	66" O.D. X 0.688"	479.62
48" (URT)	66" O.D. X 0.938"	651.53

(URT = UNDER RAIL TRACKS)

JACKING OPERATION

FOR BORINGS GREATER THAN 20 FEET, A BORING MACHINE SHALL BE USED. FOR BORINGS LESS THAN 20 FEET, THE CASING MAY BE PUSHED INTO PLACE WITH THE EXCAVATOR OR OTHER SIMILAR METHOD. CASINGS SHALL BE TO THE LENGTHS AS SHOWN ON THE CONTRACT DRAWINGS AND IF NOT DESIGNATED, SHALL EXTEND 5 FEET BEYOND EACH SIDE OF THE CULVERT OR PIPE BEING CROSSED.

THE JACKING EQUIPMENT SHALL BE SET UP IN A TRENCH WITH A BACKSTOP ERECTED TO TAKE THE THRUST DEVELOPED BY THE JACKS. THE BACKSTOP SHALL BE CONSTRUCTED OF HEAVY TIMBERS, RAILS OR STRUCTURAL SHAPES AND SHALL BE SECURELY ANCHORED TO PREVENT ANY APPRECIABLE LATERAL DISPLACEMENT WHICH WILL CAUSE MISALIGNMENT OF THE PIPE DURING JACKING OPERATIONS.

THE FIRST SECTION OF CASING PIPE SHALL BE PLACED ON THE GUIDES AND THE HEADFRAME SET FOR THE REQUIRED DIRECTION OF TRAVEL. PRESSURE SHALL BE APPLIED BY THE JACKS IN SUCH A MANNER THAT THE RESULTING THRUST WILL BE COAXIAL WITH THE CASING PIPE. WHEN THE REAR OF A SECTION HAS REACHED THE FACE OF THE JACKING TRENCH, PRESSURE SHALL BE RELIEVED ON THE JACKS AND THE BLOCKING SHALL BE REMOVED.

EACH SECTION OF PIPE CASING SHALL BE JACKED IN PLACE UNTIL THE END OF THE SECTION PROTRUDES FROM THE HEADING OF THE JACKING PIT A SUFFICIENT DISTANCE TO PROPERLY CONNECT THE FOLLOWING SECTION OF PIPE CASING. THIS CONNECTION SHALL BE MADE BY FIELD WELDING AND ALL WELDING SHALL BE DONE BY WORKERS WHO ARE PROPERLY QUALIFIED FOR THIS TYPE OF WORK. INSTALLATION PROCEDURE OF THE CASING SHALL BE PERFORMED TO PERMIT THE REMOVAL OF ANY ENCOUNTERED GROUND WATER. THE JACKING OPERATION SHALL BE CARRIED ON WITHOUT THE DISTURBANCE OF EMBANKMENT, ROADWAY OR SUBSURFACE STRUCTURES AND MUST BE SUBORDINATE TO THE FREE AND UNOBSTRUCTED USE OF THE ROADWAY FOR THE PASSAGE OF TRAFFIC WITHOUT DELAY OR DANGER TO LIFE, EQUIPMENT OR PROPERTY.

JACKING OPERATION - CONTINUED

THE JACKING-BORING METHOD SHALL CONSIST OF PUSHING THE CASING WITH A BORING AUGER ROTATING WITHIN THE CASING PIPE TO REMOVE THE SPOIL. WHEN AUGERS, OR SIMILAR DEVICES, ARE USED FOR CASING EMPLACEMENT, THE FRONT OF THE CASING SHALL BE PROVIDED WITH MECHANICAL ARRANGEMENTS OR DEVICES THAT WILL POSITIVELY PREVENT THE AUGER AND CUTTING HEAD FROM LEADING THE CASING WITH NO UNSUPPORTED EXCAVATION AHEAD OF THE CASING. ALL AUGER LEADS SHALL BE OF THE PROPER SIZE. THE AUGER AND CUTTING HEAD ARRANGEMENT SHALL BE REMOVABLE FROM WITHIN THE CASING IN THE EVENT AN OBSTRUCTION IS ENCOUNTERED. THE FACE OF THE CUTTING HEAD SHALL BE ARRANGED TO PROVIDE REASONABLE OBSTRUCTION TO THE FREE FLOW OF SOFT OR POOR MATERIAL.

AFTER CASING IS PLACE, THE PIPE SHALL BE INSERTED ON SKIDS AS REQUIRED WITH JOINTS PROPERLY MADE AND SO PULLED INTO PLACE AS TO TIGHTEN THE JOINTS WHICH ARE TO BE MADE AS SPECIFIED, AND WITH PROPER PROVISIONS FOR CONNECTING TO THE PIPE AT EACH END OF THE ENCASED SECTIONS.

AFTER THE PIPE IS IN PLACE, THE SPACE BETWEEN THE OUTSIDE OF THE PIPE AND THE INSIDE OF THE CASING SHALL BE COMPLETELY FILLED BY PRESSURE GROUTING WITH PORTLAND CEMENT GROUT CONSISTING OF ONE (1) PART CEMENT TO NOT MORE THAN THREE (3) PARTS FINE SAND, FORCED INTO PLACE BY MEANS OF A GROUTING MACHINE TO THE FULL SATISFACTION OF THE CITY. WHEN THE BORED OR AUGURED HOLE IS OVERSIZED, THE CONTRACTOR SHALL CAREFUL PRESSURE GROUT THE ENTIRE VOID AROUND THE OUTSIDE OF THE CASING PIPE.

IF, IN THE OPINION OF THE ENGINEER, THE INSTALLATION OF THE CASING IS BEING CONDUCTED IN AN UNSAFE MANNER, OF IS NOT SUCH AS TO MINIMIZE SETTLEMENT OR PERMIT CLOSE ADHERENCE TO LINE AND GRADE, THE ENGINEER MAY REQUIRE THE CONTRACTOR TO REVISE THEIR PROCEDURE TO COMPLY WITH METHODS WHICH ARE KNOWN TO GIVE SATISFACTORY RESULTS.

JACKING, ONCE STARTED, SHALL BE CONTINUED WITHOUT STOPPING UNTIL FINISHED. HOWEVER, SHOULD THE JACKING STOP, AND FOR ANY REASON WHATEVER SHOULD NOT BE ABLE TO GET STARTED AGAIN, THE CONTRACTOR SHALL, AT HIS OWN EXPENSE, TUNNEL THE REMAINING DISTANCE USING TUNNEL PLATED. THE CASING SHALL BE INSTALLED INSIDE THE TUNNEL LINER AND THE ANNULAR SPACE BETWEEN THE CASING AND THE LINER SHALL BE PRESSURE GROUTED. IN ANY CASE, THE METHOD AND MATERIALS TO BE USED SHALL BE SUBMITTED TO THE CITY THROUGH THE ENGINEER AND APPROVED BY THE CITY BEFORE WORK PROCEEDS WITH THE INSTALLATION OF THE ENCASEMENT.

THE CONTRACTOR AND/OR ANY SUBCONTRACTORS MUST BE FULLY EQUIPPED AND EXPERIENCED IN THE INSTALLATION OF PIPES BY JACKING , SHIELD JACKING, OR TUNNELING METHODS. THE CONTRACTOR AND/OR ANY SUBCONTRACTORS SHALL SUBMIT TO THE ENGINEER AND TO THE CITY EVIDENCE OF SUCCESSFUL INSTALLATION BY THEM OF SIMILAR PROJECTS UNDER SIMILAR CIRCUMSTANCES.

EXCAVATION

ALL MATERIAL ENCOUNTERED IN THE JACKING OR BORING AND JACKING OR THE PIPE CASING SHALL BE EXCAVATED REGARDLESS OF THE NATURE THEREOF BY APPROVED TUNNELING OR BORING METHODS. ALL PIPE CASING EXCAVATED MATERIAL MUST BE REMOVED AND DISPOSED OF AS SPECIFIED. EXCAVATION SHALL BE CONFINED WITHIN THE LIMITS OF THE CASING. IN DRY AND STABLE SOIL EXCAVATION, IF APPROVED BY THE ENGINEER AND THE CITY, MAY BE CARRIED AHEAD OF THE JACKING A DISTANCE NOT TO EXCEED 18-INCHES. IN SAND, GRAVEL AND ANY SOFT OR WET MATERIAL, EXCAVATION AHEAD OF THE PIPE CASING WILL NOT BE PERMITTED. OPEN CUT WILL NOT BE PERMITTED UNLESS THE CONTRACT DRAWINGS OR DETAIL DRAWINGS INDICATED OTHERWISE.

Preliminary Plans - For Reference Only

WATER WORK GENERAL NOTES

DESIGN AGENCY
Michael Baker INTERNATIONAL

DESIGNER SMP
REVIEWER SM 05/15/24
PROJECT ID 82382
SHEET 1385 TOTAL 2696

CUY-90-16.28 (CCG3A)
MODEL: UN1215 PAPERSIZE: 34x22 (in.) DATE: 3/28/2025 TIME: 5:11:50 AM USER: Julie.Ross
pw:\\mb-us-pw.bentley.com:mb-us-pw-03\Documents\Cleveland_OH01_Projects\ODOT\District12\82382\400-Engineering\Utilities\Sheets\82382_UN1201.dgn

ITEM SPECIAL - 48" STEEL PIPE ENCASEMENT, BORED OR JACKED, CONTINUED

INSTALLTION OF CARRIER PIPE

(A) WOODEN SKIDS: UPON COMPLETION OF THE INSTALLATION OF THE STEEL PIPE ENCASEMENT, THE CONTRACTOR SHALL STRAP THE WOODEN SKIDS TO THE CARRIER PIPE. THREE (3) SETS OF TREATED HARDWOOD BLOCS PER EIGHTEEN (18) FOOT LENGTHS OF PIPE OR FOUR (4) SETS OF TREATED HARDWOOD BLOCKS PER TWENTY (20) FOOT LENGTHS WILL BE REQUIRED. A SET OF BLOCKS SHALL BE PLACED NOT MORE THAN 2-1/2 FEET FROM EACH PIPE JOINT WITH ADDITIONAL BLOCKS EVENLY SPACED. INSTALLATION OF THE CARRIER PIPE WITHIN THE ENCASEMENT WILL BE PAID FOR UNDER THE APPROPRIATE ITEM SPECIAL FOR WATERMAINS.

(B) CASING SPACERS/CHOCKS: THE CONTRACTOR MAY, IN LIEU OF WOODEN SKIDS STRAPPED TO THE CARRIER PIPE, FURNISH AND INSTALL A BOLTED STYLE STAINLESS STEEL (TYPE 304) RUBBER OR PVC LINED SHELL WITH SPACE/CHOCK MADE OF ULTRA HIGH MOLECULAR WEIGHT (UHMW) POLYETHYLENE HAVING A HIGH ABRASIVE RESISTANT AND LOW FRICTION PROPERTIES. ALL BOLTS AND NUTS USED TO FASTEN THE SHELL TO THE CARRIER PIPE SHALL BE MADE OF STAINLESS STEEL, TYPE 304. THE SPACERSE/CHOCKS SHALL BE EQUAL TO THAT MANUFACTURED BY CASCADE WATERWORKS MANUFACTURING COMPANY, OR POWER SEAL PIPE LINE PRODUCTS CORPORATION. THREE (3) SETS OF SPACERS/CHOCKS PER EIGHTEEN (18) FOOT LENGTHS OF PIPE OR FOUR (4) SETS OF SPACERS/CHOCKS PER TWENTY (20) FOOT LENGTHS WILL BE REQUIRED. A SET OF SPACER/CHOCKS SHALL BE PLACED NOT MORE THAN 2-1/2 FEET FROM EACH PIPE JOINT WITH ADDITIONAL BLOCKS EVENLY SPACED. CARRIER PIPE SHALL BE INSTALLED USING THE "STANDARD CONFIGURATION" AND THE CASING VOIDS SHALL BE FILLED WITH GROUT. INSTALLATION OF THE CARRIER PIPE WITHIN THE ENCASEMENT WILL BE PAID FOR UNDER THE APPROPRIATE ITEM SPECIAL FOR WATERMAINS.

BULKHEADS AND GROUT FILL

AFTER THE WATER MAIN HAS BEEN INSTALLED IN ITS FINAL POSITION INSIDE THE CASING AND HAS BEEN TESTED, A BRICK BULKHEAD AT LEAST SIX (6) INCHES THICK SHALL BE BUILT IN ONE END OF THE CASING COMPLETELY FILLING THE SPACE BETWEEN THE WATER MAIN AND THE CASING. FOLLOWING THE COMPLETION OF THE BULKHEAD, GROUT SHALL BE PUMPED INTO THE CASING COMPLETELY FILLING THE SPACE BETWEEN IT AND THE WATER MAIN. THE METHOD USED FOR PLACING THIS GROUT SHALL BE SUCH THAT IT WILL NOT DAMAGE THE COATING ON THE WATER MAIN. AFTER THE GROUT FILL IS COMPLETED, ANOTHER BRICK BULKHEAD SHALL BE INSTALLED AT THE OPPOSITE END OF THE CASING TO PREVENT ESCAPE OF BACKFILL MATERIAL. THE VOIDS BETWEEN THE CASING AND BORE SHALL BE PRESSURE GROUT FILLED.

BEFORE STARTING THE BACKFILLING, THE CONTRACTOR SHALL SUBMIT FULL DETAILS OF THE METHOD OF BACKFILLING THAT THEY PROPOSE TO USE, TO THE CITY, AND NO WORK SHALL BE STARTED UNTIL APPROVAL OF THE METHOD HAS BEEN GRANTED

CONTRACTORS RESPONSIBILITY

THE CONTRACTOR SHALL CONDUCT THEIR OPERATIONS IN SUCH A MANNER THAT STANDARD ROADWAY CLEARANCES WILL BE MAINTAINED AT ALL TIMES. ALL WORKING OPERATIONS OF THE CONTRACTOR, OR ANY SUBCONTRACTORS MUST BE SUBORDINATE TO THE FREE AND UNOBSTRUCTED USE OF THE ROADWAY.

THE CONTRACTOR SHALL ALSO BE RESPONSIBLE FOR ALL COST OS THE FLAGMEN AND INSPECTION AS WELL AS OTHER COSTS INCURRED IN CONNECTION WITH THIS WORK. SUCH COSTS WILL BE CONSIDERED AS HAVING BEEN INCLUDED IN THE PRICE BID FOR JACKED ENCASEMENTS UNDER ITEM SPECIAL - 48" STEEL PIPE ENCASEMENT, BORED OR JACKED.

AGREEMENTS/PERMITS

ALL JACKED ENCASEMENTS SHALL BE BUILT IN FULL ACCORDANCE WITH THE REQUIREMENTS OF THE STATE, COUNTY, RAILROAD COMPANY, AND/OR LOCAL REGULATIONS AND ORDINANCES PERTAINING TO SUCH CONSTRUCTION AND SHALL BE SUBJECT TO INSPECTION AND CONTROL BY THE VARIOUS OFFICIALS HAVING JURISDICTION OVER THE SAME. PERMITS FOR THE JACKING CASING ACROSS INTERSTATE FREEWAYS OR RAILROAD CROSSINGS ARE MADE PART OF THESE SPECIFICATIONS, IF SO APPLICABLE, AND IF AVAILABLE. PERMITS NOT AVAILABLE AT THE TIME OF BIDDING WILL BE MADE AVAILABLE TO THE CONTRACTOR AS SOON AS POSSIBLE AFTER AWARD OF THE CONTRACT. THE PERMIT, ITS TERMS AND CONDITIONS SET FORTH IN THE PERMIT BY THE ISSUING AGENCY, SHALL HAVE THE FULL FORCE AS THOUGH BEING MADE PART OF THESE SPECIFICATIONS.

TEST BORINGS

THE CONTRACTOR SHALL BE RESPONSIBLE FOR MAKING THEIR OWN TEST BORINGS AND FOR DETERMINING THE MATERIALS THEY WILL ENCOUNTER IN CONSTRUCTION OF THE WORK UNDER THIS ITEM.

SUBMITTED DATA

PRIOR TO CONSTRUCTION OF THE WORK UNDER ITEM SPECIAL - 48" STEEL PIPE ENCASEMENT, BORED OR JACKED, THE CONTRACTOR SHALL SUBMIT SHOP DRAWINGS AND OTHER DATA ON MATERIALS TO BE FURNISHED HEREUNDER FOR APPROVAL OF THE CITY IN ACCORDANCE WITH THE SHOP DRAWING PROVISIONS OF THESE SPECIFICATIONS.

MEASUREMENT

THE LENGTH OF JACKED ENCASEMENT TO BE PAID FOR UNDER ITEM SPECIAL - 48" STEEL PIPE ENCASEMENT, BORED OR JACKED SHALL BE THE NUMBER OF LINEAL FEET OF STEEL PIPE ENCASEMENT, CLASSIFIED AS TO THE SIZE AND THICKNESS, ACTUALLY FURNISHED AND PLACED IN ACCORDANCE WITH THESE SPECIFICATIONS AS MEASURED ALONG THE AXIS OF THE PIPE AFTER THEY HAVE BEEN INSTALLED AND CONNECTED UP IN PLACE.

PAYMENT

THE UNIT PRICE STIPULATED PER LINEAL FOOT FOR STEEL PIPE ENCASEMENTS SPECIFIED UNDER ITEM SPECIAL - 48" STEEL PIPE ENCASEMENT, BORED OR JACKED, SHALL BE IN FULL COMPENSATION 2FOR FURNISHING OF ALL MATERIALS FOR AND THE PROPER INSTALLATION OF THE STEEL PIPE ENCASEMENTS INCLUDING ALL EXCAVATION, BORING, JACKING, SHEETING AND BRACING, WOOD BLOCKING, SKIDS AND STRAPPING, GROUT AND THE FURNISHING OF ALL LABOR, MATERIALS AND TOOLS AND APPLIANCES NECESSARY TO PROPERLY COMPLETE THE WORK AS SPECIFIED OR AS SHOWN ON THE CONTRACT DRAWINGS.

NO EXTRA PAYMENT SHALL BE MADE FOR TUNNEL CONSTRUCTION, LINEAR PLATES, BRICK BULKHEADS, CONCRETE PIERS OR GROUT IF REQUIRED TO COMPLETE ANY JACKED ENCASEMENT, AS SUCH COST WILL BE ASSUMED TO BE INCLUDED IN THE UNIT PRICE STIPULATED FOR JACKED ENCASEMENTS.

THE CARRIER PIPE AND FITTINGS WILL BE PAID FOR UNDER THE APPROPRIATE ITEM SPECIAL FOR WATERMAN;

Preliminary Plans - For Reference Only

WATER WORK GENERAL NOTES

CUY-90-16.28 (CCG3A)
MODEL: UN1216 PAPERSIZE: 34x22 (in.) DATE: 3/28/2025 TIME: 5:11:51 AM USER: Julie.Ross
pw:\\mb-us-pw.bentley.com:mb-us-pw-03\Documents\Cleveland_OH\01_Projects\ODOT\District12\82382\400-Engineering\Utilities\Sheets\82382_UN1201.dgn

DESIGN AGENCY
Michael Baker INTERNATIONAL

DESIGNER SMP
REVIEWER SM 05/15/24
PROJECT ID 82382
SHEET 1386 TOTAL 2696

| REF NO. | SHEET NO. | STATION FROM | STATION TO | SIDE | 202 REMOVAL MISC.: WATER MAIN REMOVED 24" AND UNDER (FT) | 202 REMOVAL MISC.: WATER MAIN REMOVED OVER 24" (FT) | 203 ROADWAY, MISC.: REINFORCED TURF (SY) | 611 MANHOLE ADJUSTED TO GRADE, AS PER PLAN, WATER MANHOLE (EACH) | 638 FIRE HYDRANT REMOVED AND DISPOSED OF, AS PER PLAN (EACH) | 638 VALVE BOX ADJUSTED TO GRADE, AS PER PLAN (EACH) | 638 METER, SETTING, STOP AND CHAMBER, AS PER PLAN (CLEVELAND WATER) (EACH) | 638 SPECIAL - 12" WATER MAIN DIP CLASS 52 BOLTLESS RESTRAINED JOINTS AND FITTINGS (CLEVELAND WATER) (FT) | 638 SPECIAL - 12" WATER MAIN DIP CLASS 52 PUSH ON JOINTS AND FITTINGS (CLEVELAND WATER) (FT) | 638 SPECIAL - 24" WATER MAIN DIP CLASS 52 BOLTLESS RESTRAINED JOINTS AND FITTINGS (CLEVELAND WATER) (FT) | 638 SPECIAL - 24" WATER MAIN DIP CLASS 52 PUSH ON JOINTS AND FITTINGS (CLEVELAND WATER) (FT) | 638 SPECIAL - 30" WATER MAIN DIP CLASS 52 BOLTLESS RESTRAINED JOINTS AND FITTINGS (CLEVELAND WATER) (FT) | 638 SPECIAL - 30" WATER MAIN DIP CLASS 52 PUSH ON JOINTS AND FITTINGS (CLEVELAND WATER) (FT) | 638 SPECIAL - 48" STEEL PIPE ENCASEMENT, BORED OR JACKED (CLEVELAND WATER) (FT) | 638 SPECIAL - 10" CUTTING IN SLEEVE (CLEVELAND WATER) (EACH) | 638 SPECIAL - 12" GATE VALVE WITH VALVE BOX (CLEVELAND WATER) (EACH) | 638 SPECIAL - 12" CUTTING IN SLEEVE (CLEVELAND WATER) (EACH) | 638 SPECIAL - 12" CUTTING IN SLEEVE, VALVE WITH VALVE BOX (CLEVELAND WATER) (EACH) | 638 SPECIAL - 2" AIR RELEASE VALVE WITH VALVE BOX (CLEVELAND WATER) (EACH) | 638 SPECIAL - 6" FIRE HYDRANT, COMPLETE (CLEVELAND WATER) (EACH) | 638 SPECIAL - FIRE HYDRANT SERVICE LINE EXTENDED AND ADJUSTED TO GRADE (CLEVELAND WATER) (EACH) | 638 SPECIAL - 1" COPPER WATER SERVICE LINE (CLEVELAND WATER) (FT) | 638 SPECIAL - REMOVE WATER SERVICE CONNECTION (CLEVELAND WATER) (FT) | 638 SPECIAL - EXTEND 1-1/2" COPPER WATER SERVICE CONNECTION (CLEVELAND WATER) (FT) | 638 SPECIAL - INSTALL 1-1/2" COPPER WATER SERVICE CONNECTION (CLEVELAND WATER) (FT) | 638 SPECIAL - 1" CORPORATION STOP (CLEVELAND WATER) (EACH) | 638 SPECIAL - 1-1/2" CORPORATION STOP (CLEVELAND WATER) (EACH) | 638 SPECIAL - INSTALL 1" METER SETTING, COMPLETE (CLEVELAND WATER) (EACH) | 638 WATER WORK, MISC.: 12" EXPANSION VALVE (BRIDGE) (EACH) | 638 WATER WORK, MISC.: 24" EXPANSION VALVE (BRIDGE) (EACH) | 638 WATER WORK, MISC.: 24" VALVE ASSEMBLY COMPLETE (CLEVELAND WATER) (EACH) | 638 WATER WORK, MISC.: 30" CUTTING IN SLEEVE (CLEVELAND WATER) (EACH) | 638 WATER WORK, MISC.: 30" VALVE ASSEMBLY COMPLETE (CLEVELAND WATER) (EACH) | 638 WATER WORK, MISC.: CONCRETE PIER (EACH) | 638 WATER WORK, MISC.: SLEEVE FOR ABUTMENT WALL - 12" DIP LINE (CLEVELAND WATER) (EACH) | 638 WATER WORK, MISC.: SLEEVE FOR ABUTMENT WALL - 24" STEEL LINE (CLEVELAND WATER) (EACH) | 638 WATER WORK, MISC.: STEEL TO DIP TRANSITION (CLEVELAND WATER) (EACH) | 638 WATER WORK, MISC.: 12" INSULATION FOR BRIDGE (CLEVELAND WATER) (FT) |
|---|---|---

REF NO.	SHEET NO.	STATION FROM	STATION TO	SIDE	638 WATER WORK, MISC.: 24" INSULATION FOR BRIDGE (CLEVELAND WATER)	638 WATER WORK, MISC.:; 24" POLYURETHANE COATED CEMENT LINED STEEL	BENDS AND BRANCHES FOR INFORMATION ONLY: 12" X 10" REDUCER	12" X 11.25° BEND	12" X 12" TEE	12" X 22.5° BEND	12" X 45° BEND	20" X 12" REDUCER	24" X 11.25° BEND	24" X 12" TEE	24" X 22.5° BEND	24" X 24" TEE	24" X 45° BEND	24" X 6" REDUCING TEE	30" X 11.25° BEND	30" X 20" REDUCING TEE	30" X 22.5° BEND	30" X 24" REDUCER	30" X 30" CUT IN TEE	30" X 45° BEND	30" X 5.625° BEND	36" X 30" CUT IN TEE	COUPON TEST STATION	ISOLATION TEST STATION	THRUST BLOCK
					FT	FT	EACH	EACH	EACH	EACH	EACH	EACH	EACH	EACH	EACH	EACH	EACH	EACH	EACH	EACH	EACH	EACH	EACH	EACH	EACH	EACH	EACH	EACH	EACH
		CARNEGIE AVE.																											
W-1	628	48+08.43	48+08.43	RT																									
W-2	628	49+45.49	49+45.49	RT																									
W-3	628	49+64.93	49+64.93	LT																									
W-4	628	49+82.74	49+82.74	LT																									
W-5	628	49+86.44	49+86.44	LT																									
W-6	628	50+02.29	50+02.29	RT																									
W-7	628	50+34.55	50+34.55	RT																									
RW-1	630	51+72.68	51+72.68	RT																									
W-8	630	53+16.55	53+16.55	LT																									
W-9	630	53+33.71	53+33.71	LT																									
RW-2	630	53+34.17	53+46.54	LT																									
W-10	630	53+52.39	53+52.39	LT																									
RW-3	630	54+37.50	54+37.50	RT																									
W-11	630	54+65.98	54+65.98	LT																									
W-12	630	55+13.99	55+13.99	RT																									
W-13	630	55+42.24	55+42.24	RT																									
W-14	630	55+45.95	55+45.95	LT																									
W-15	636	66+08.73	66+08.73	RT																									
W-16	636	67+36.95	67+36.95	RT																									
W-17	636	67+51.53	67+51.53	RT																									
W-18	636	68+13.06	68+13.06	RT																									
W-19	636	68+43.98	68+43.98	RT																									
W-20	636	68+65.50	68+65.50	LT																									
W-21	636	68+68.79	68+68.79	LT																									
W-22	636	69+04.59	69+04.59	RT																									
W-23	636	69+18.34	69+18.34	RT																									
W-24	665	37+47.12	37+47.12	RT																									
W-25	665	37+86.66	37+86.66	RT																									
RW-4	665	37+91.64	37+91.64	RT																									
W-26	665	39+31.16	39+31.16	RT																									
W-27	665	39+45.02	39+45.02	RT																									
		12" WATER - CROSSOVER																											
W-28	1401	140+00.00	140+23.55	CL						2	1	1																	
W-29	1401	140+23.55	140+32.31	CL					1																			1	
W-30	1401	140+29.31	140+29.31	CL																									
		30" WATER																											
W-31	1401	103+00.00	103+63.66	CL																						1		1	
W-32	1401	103+63.66	104+01.66	CL														1	2										
W-33	1401	104+01.66	104+32.99	CL																									
W-34	1401	104+32.99	104+75.21	CL															3										
TOTALS CARRIED TO SHEET		1400			-	-	-	-	1	2	1	1	-	-	-	-	-	-	-	1	5	-	-	-	-	1	-	1	1

Preliminary Plans - Not For Reference Only

CUY-90-16.28 (CCG3A)

MODEL: Sheet-01 PAPERSIZE: 34x22 (in.) DATE: 5/14/2025 TIME: 5:26:31 PM USER: Joseph.Hogan
pw:\\mb-us-pw.bentley.com:mb-us-pw-03\Documents\Cleveland_OH101_Projects\ODOT\District12\82382\400-Engineering\Utilities\Sheets\82382_US251.dgn

WATER WORK SUBSUMMARY - 1R

DESIGN AGENCY
Michael Baker INTERNATIONAL

DESIGNER
SMP

REVIEWER
SM 05/15/24

PROJECT ID
82382

SHEET 1388 | TOTAL 2696

| REF NO. | SHEET NO. | STATION FROM | STATION TO | SIDE | 202 REMOVAL MISC.: WATER MAIN REMOVED 24" AND UNDER FT | 202 REMOVAL MISC.: WATER MAIN REMOVED OVER 24" FT | 203 ROADWAY, MISC.: REINFORCED TURF SY | 611 MANHOLE ADJUSTED TO GRADE, AS PER PLAN, WATER MANHOLE EACH | 638 FIRE HYDRANT REMOVED AND DISPOSED OF, AS PER PLAN EACH | 638 VALVE BOX ADJUSTED TO GRADE, AS PER PLAN EACH | 638 METER, SETTING, STOP AND CHAMBER, AS PER PLAN (CLEVELAND WATER) EACH | 638 SPECIAL - 12" WATER MAIN DIP CLASS 52 BOLTLESS RESTRAINED JOINTS AND FITTINGS (CLEVELAND WATER) FT | 638 SPECIAL - 12" WATER MAIN DIP CLASS 52 PUSH ON JOINTS AND FITTINGS (CLEVELAND WATER) FT | 638 SPECIAL - 24" WATER MAIN DIP CLASS 52 BOLTLESS RESTRAINED JOINTS AND FITTINGS (CLEVELAND WATER) FT | 638 SPECIAL - 24" WATER MAIN DIP CLASS 52 PUSH ON JOINTS AND FITTINGS (CLEVELAND WATER) FT | 638 SPECIAL - 30" WATER MAIN DIP CLASS 52 BOLTLESS RESTRAINED JOINTS AND FITTINGS (CLEVELAND WATER) FT | 638 SPECIAL - 30" WATER MAIN DIP CLASS 52 PUSH ON JOINTS AND FITTINGS (CLEVELAND WATER) FT | 638 SPECIAL - 48" STEEL PIPE ENCASEMENT, BORED OR JACKED (CLEVELAND WATER) FT | 638 SPECIAL - 10" CUTTING IN SLEEVE (CLEVELAND WATER) EACH | 638 SPECIAL - 12" GATE VALVE WITH VALVE BOX (CLEVELAND WATER) EACH | 638 SPECIAL - 12" CUTTING IN SLEEVE (CLEVELAND WATER) EACH | 638 SPECIAL - 12" CUTTING IN SLEEVE, VALVE WITH VALVE BOX (CLEVELAND WATER) EACH | 638 SPECIAL - 2" AIR RELEASE VALVE WITH VALVE BOX (CLEVELAND WATER) EACH | 638 SPECIAL - 6" FIRE HYDRANT, COMPLETE (CLEVELAND WATER) EACH | 638 SPECIAL - FIRE HYDRANT SERVICE LINE EXTENDED AND ADJUSTED TO GRADE (CLEVELAND WATER) EACH | 638 SPECIAL - 1" COPPER WATER SERVICE LINE (CLEVELAND WATER) FT | 638 SPECIAL - REMOVE WATER SERVICE CONNECTION (CLEVELAND WATER) FT | 638 SPECIAL - EXTEND 1-1/2" COPPER WATER SERVICE CONNECTION (CLEVELAND WATER) FT | 638 SPECIAL - INSTALL 1-1/2" COPPER WATER SERVICE CONNECTION (CLEVELAND WATER) FT | 638 SPECIAL - 1" CORPORATION STOP (CLEVELAND WATER) EACH | 638 SPECIAL - 1-1/2" CORPORATION STOP (CLEVELAND WATER) EACH | 638 SPECIAL - INSTALL 1" METER SETTING, COMPLETE (CLEVELAND WATER) EACH | 638 WATER WORK, MISC.: 12" EXPANSION VALVE (BRIDGE) EACH | 638 WATER WORK, MISC.: 24" EXPANSION VALVE (BRIDGE) EACH | 638 WATER WORK, MISC.: 24" VALVE ASSEMBLY COMPLETE (CLEVELAND WATER) EACH | 638 WATER WORK, MISC.: 30" CUTTING IN SLEEVE (CLEVELAND WATER) EACH | 638 WATER WORK, MISC.: 30" VALVE ASSEMBLY COMPLETE (CLEVELAND WATER) EACH | 638 WATER WORK, MISC.: CONCRETE PIER EACH | 638 WATER WORK, MISC.: SLEEVE FOR ABUTMENT WALL - 12" DIP LINE (CLEVELAND WATER) EACH | 638 WATER WORK, MISC.: SLEEVE FOR ABUTMENT WALL - 24" STEEL LINE (CLEVELAND WATER) EACH | 638 WATER WORK, MISC.: STEEL TO DIP TRANSITION (CLEVELAND WATER) EACH | 638 WATER WORK, MISC.: 12" INSULATION FOR BRIDGE (CLEVELAND WATER) FT |
|---|---|---

REF NO.	SHEET NO.	STATION FROM	STATION TO	SIDE	638 WATER WORK, MISC.: 24" INSULATION FOR BRIDGE (CLEVELAND WATER) FT	638 WATER WORK, MISC.; 24" POLYURETHANE COATED CEMENT LINED STEEL FT	BENDS AND BRANCHES FOR INFORMATION ONLY 12" X 10" REDUCER EACH	12" X 11.25° BEND EACH	12" X 12" TEE EACH	12" X 22.5° BEND EACH	12" X 45° BEND EACH	20" X 12" REDUCER EACH	24" X 11.25° BEND EACH	24" X 12" TEE EACH	24" X 22.5° BEND EACH	24" X 24" TEE EACH	24" X 45° BEND EACH	24" X 6" REDUCING TEE EACH	30" X 11.25° BEND EACH	30" X 20" REDUCING TEE EACH	30" X 22.5° BEND EACH	30" X 24" REDUCER EACH	30" X 30" CUT IN TEE EACH	30" X 45° BEND EACH	30" X 5.625° BEND EACH	36" X 30" CUT IN TEE EACH	COUPON TEST STATION EACH	ISOLATION TEST STATION EACH	THRUST BLOCK EACH
		30" WATER (CONT.)																											
W-35	1401	104+75.21	105+03.00	CL																									
W-36	1401	104+95.68	104+95.68	CL																									
W-37	1401	105+03.00	105+41.00	CL																	2								
W-38	1402	105+41.00	105+53.74	CL																									
W-39	1402	105+53.74	105+65.74	CL																	1								
W-40	1402	105+65.74	105+81.47	CL																									
W-41	1402	105+81.47	105+87.47	CL														1											
W-42	1402	105+87.47	109+04.36	CL																							2		
W-43	1402	109+04.36	109+28.36	CL																				1					
W-44	1402	109+28.36	110+06.81	CL																									
W-45	1402	110+06.81	110+44.81	CL																	3						1		
W-46	1403	110+44.81	110+55.59	CL																									
W-47	1403	110+55.59	110+67.59	CL																	1								
W-48	1403	110+67.59	111+29.46	CL																									
W-49	1403	111+29.46	111+35.46	CL																					1				
W-50	1403	111+35.46	114+80.05	CL																							2		
W-51	1403	114+80.05	114+86.05	CL																					1				
W-52	1403	114+86.05	115+68.44	CL																									
W-53	1403	115+07.70	115+07.70	CL																									
W-54	1404	115+68.44	115+80.44	CL																	1						1		
W-55	1404	115+80.44	116+78.32	CL																									
W-56	1404	116+78.32	116+90.32	CL																	1								
W-57	1404	116+90.32	117+03.61	CL																									
W-58	1404	117+03.61	117+09.61	CL														1											
W-59	1404	117+09.61	117+51.50	CL																								1	
W-60	1404	117+51.50	117+57.50	CL														1											
W-61	1404	117+57.50	117+82.65	CL																									
W-62	1404	117+82.65	118+15.95	CL																	2		1						
		12" WATER - E. 18TH ST.																											
W-63	1405	132+00.00	132+29.00	CL			1		2																				
RW-5	1405	132+00.00	133+53.83	CL/RT																									
W-64	1405	132+00.42	132+00.42	LT																									
W-65	1405	132+29.00	132+44.77	CL																									
W-66	1405	132+44.77	132+66.77	CL					2																				
W-67	1405	132+66.77	132+90.69	CL																									
W-68	1405	132+90.69	132+94.69	CL			1																						
RW-6	1405	132+91.58	132+91.58	RT																									
W-69	1405	132+94.69	133+24.80	CL																									
W-70	1405	133+24.80	133+53.80	CL																									
W-71	1405	133+50.80	133+50.80	CL																									
		TOTALS CARRIED TO SHEET 1400			-	-	-	2	-	4	-	-	-	-	-	-	-	-	3	-	11	-	1	1	2	-	6	1	-

Preliminary Plans - Not For Reference Only

WATER WORK SUBSUMMARY - 2R

CUY-90-16.28 (CCG3A)

MODEL: Sheet-02 PAPERSIZE: 34x22 (in.) DATE: 5/14/2025 TIME: 5:26:38 PM USER: Joseph.Hogan
pw:\\tmb-us-pw.bentley.com:tmb-us-pw-03\Documents\Cleveland_OH\01_Projects\ODOT\District12\82382\400-Engineering\Utilities\Sheets\82382_US251.dgn

DESIGN AGENCY
Michael Baker INTERNATIONAL

DESIGNER SMP

REVIEWER SM 05/15/24

PROJECT ID 82382

SHEET 1390 TOTAL 2696

WATER WORK SUBSUMMARY - 3L

| REF NO. | SHEET NO. | STATION FROM | STATION TO | SIDE | 202 REMOVAL MISC.: WATER MAIN REMOVED 24" AND UNDER (FT) | 202 REMOVAL MISC.: WATER MAIN REMOVED OVER 24" (FT) | 203 ROADWAY, MISC.: REINFORCED TURF (SY) | 611 MANHOLE ADJUSTED TO GRADE, AS PER PLAN, WATER MANHOLE (EACH) | 638 FIRE HYDRANT REMOVED AND DISPOSED OF, AS PER PLAN (EACH) | 638 VALVE BOX ADJUSTED TO GRADE, AS PER PLAN (EACH) | 638 METER, SETTING, STOP AND CHAMBER, AS PER PLAN (CLEVELAND WATER) (EACH) | 638 SPECIAL - 12" WATER MAIN DIP CLASS 52 BOLTLESS RESTRAINED JOINTS AND FITTINGS (CLEVELAND WATER) (FT) | 638 SPECIAL - 12" WATER MAIN DIP CLASS 52 PUSH ON JOINTS AND FITTINGS (CLEVELAND WATER) (FT) | 638 SPECIAL - 24" WATER MAIN DIP CLASS 52 BOLTLESS RESTRAINED JOINTS AND FITTINGS (CLEVELAND WATER) (FT) | 638 SPECIAL - 24" WATER MAIN DIP CLASS 52 PUSH ON JOINTS AND FITTINGS (CLEVELAND WATER) (FT) | 638 SPECIAL - 30" WATER MAIN DIP CLASS 52 BOLTLESS RESTRAINED JOINTS AND FITTINGS (CLEVELAND WATER) (FT) | 638 SPECIAL - 30" WATER MAIN DIP CLASS 52 PUSH ON JOINTS AND FITTINGS (CLEVELAND WATER) (FT) | 638 SPECIAL - 48" STEEL PIPE ENCASEMENT, BORED OR JACKED (CLEVELAND WATER) (FT) | 638 SPECIAL - 10" CUTTING IN SLEEVE (CLEVELAND WATER) (EACH) | 638 SPECIAL - 12" GATE VALVE WITH VALVE BOX (CLEVELAND WATER) (EACH) | 638 SPECIAL - 12" CUTTING IN SLEEVE (CLEVELAND WATER) (EACH) | 638 SPECIAL - 12" CUTTING IN SLEEVE, VALVE WITH VALVE BOX (CLEVELAND WATER) (EACH) | 638 SPECIAL - 2" AIR RELEASE VALVE WITH VALVE BOX (CLEVELAND WATER) (EACH) | 638 SPECIAL - 6" FIRE HYDRANT, COMPLETE (CLEVELAND WATER) (EACH) | 638 SPECIAL - FIRE HYDRANT SERVICE LINE EXTENDED AND ADJUSTED TO GRADE (CLEVELAND WATER) (EACH) | 638 SPECIAL - 1" COPPER WATER SERVICE LINE (CLEVELAND WATER) (FT) | 638 SPECIAL - REMOVE WATER SERVICE CONNECTION (CLEVELAND WATER) (FT) | 638 SPECIAL - EXTEND 1-1/2" COPPER WATER SERVICE CONNECTION (CLEVELAND WATER) (FT) | 638 SPECIAL - INSTALL 1-1/2" COPPER WATER SERVICE CONNECTION (CLEVELAND WATER) (FT) | 638 SPECIAL - 1" CORPORATION STOP (CLEVELAND WATER) (EACH) | 638 SPECIAL - 1-1/2" CORPORATION STOP (CLEVELAND WATER) (EACH) | 638 SPECIAL - INSTALL 1" METER SETTING, COMPLETE (CLEVELAND WATER) (EACH) | 638 WATER WORK, MISC.: 12" EXPANSION VALVE (BRIDGE) (EACH) | 638 WATER WORK, MISC.: 24" EXPANSION VALVE (BRIDGE) (EACH) | 638 WATER WORK, MISC.: 24" VALVE ASSEMBLY COMPLETE (CLEVELAND WATER) (EACH) | 638 WATER WORK, MISC.: 30" CUTTING IN SLEEVE (CLEVELAND WATER) (EACH) | 638 WATER WORK, MISC.: 30" VALVE ASSEMBLY COMPLETE (CLEVELAND WATER) (EACH) | 638 WATER WORK, MISC.: CONCRETE PIER (EACH) | 638 WATER WORK, MISC.: SLEEVE FOR ABUTMENT WALL - 12" DIP LINE (CLEVELAND WATER) (EACH) | 638 WATER WORK, MISC.: SLEEVE FOR ABUTMENT WALL - 24" STEEL LINE (CLEVELAND WATER) (EACH) | 638 WATER WORK, MISC.: STEEL TO DIP TRANSITION (CLEVELAND WATER) (EACH) | 638 WATER WORK, MISC.: 12" INSULATION FOR BRIDGE (CLEVELAND WATER) (FT) |
|---|---|---

REF NO.	SHEET NO.	STATION FROM	STATION TO	SIDE	638 WATER WORK, MISC.: 24" INSULATION FOR BRIDGE (CLEVELAND WATER)	638 WATER WORK, MISC.:; 24" POLYURETHANE COATED CEMENT LINED STEEL	BENDS AND BRANCHES FOR INFORMATION ONLY: 12" X 10" REDUCER	12" X 11.25° BEND	12" X 12" TEE	12" X 22.5° BEND	12" X 45° BEND	20" X 12" REDUCER	24" X 11.25° BEND	24" X 12" TEE	24" X 22.5° BEND	24" X 24" TEE	24" X 45° BEND	24" X 6" REDUCING TEE	30" X 11.25° BEND	30" X 20" REDUCING TEE	30" X 22.5° BEND	30" X 24" REDUCER	30" X 30" CUT IN TEE	30" X 45° BEND	30" X 5.625° BEND	36" X 30" CUT IN TEE	COUPON TEST STATION	ISOLATION TEST STATION	THRUST BLOCK
					FT	FT	EACH	EACH	EACH	EACH	EACH	EACH	EACH	EACH	EACH	EACH	EACH	EACH	EACH	EACH	EACH	EACH	EACH	EACH	EACH	EACH	EACH	EACH	EACH
		CENTRAL AVE. CONNECTOR																											
RW-7	1406	601+41.73	604+20.07	RT																									
RW-8	1406	601+51.69	601+51.69	RT																									
W-72	1406	601+58.00	601+58.00	RT																									
RW-9	1406	601+65.96	601+65.96	RT																									
RW-10	1406	601+73.55	601+73.55	RT																									
RW-11	1406	601+92.84	601+92.84	RT																									
RW-12	1406	601+96.90	601+96.90	RT																									
RW-13	1406	602+24.47	602+24.47	RT																									
RW-14	1406	602+34.12	602+34.12	RT																									
RW-15	1406	602+35.88	602+35.88	RT																									
RW-16	1406	602+39.31	602+39.31	RT																									
		12" WATER - CENTRAL AVE.																											
W-73	1406	150+00.00	150+15.97	CL			1			2																			
RW-17	1406	150+00.00	151+59.81	CL																									
W-74	1406	150+02.50	150+02.50	CL																									
W-75	1406	150+15.97	150+95.56	CL																									
W-76	1406	150+95.56	151+59.81	CL			1		1	2																			
W-77	1406	151+27.56	151+27.56	CL																									
		CENTRAL AVE. CONNECTOR																											
RW-18	1407	602+74.91	602+74.91	RT																									
RW-19	1407	603+34.97	603+34.97	RT																									
RW-20	1407	603+76.65	603+76.65	RT																									
RW-21	1407	603+79.25	603+79.25	RT																									
		E. 19TH ST.																											
RW-22	1407	1+93.03	3+85.00	LT/RT																									
RW-23	1407	2+35.69	2+35.69	RT																									
W-78	1407	3+85.00	3+85.00	LT																									
W-79	1407	3+94.49	3+94.49	RT																									
		CENTRAL AVE. CONNECTOR																											
W-80	1408	220+00.00	220+66.54	CL											1		2												
W-81	1408	220+16.50	220+16.50	CL																									
W-82	1408	220+66.54	221+30.01	CL																							1		
		E. 22ND ST.																											
RW-24	1408	29+59.91	32+40.16	LT																									
RW-25	1408	30+48.84	37+06.74	RT/LT																									
RW-26	1408	30+72.93	36+96.29	RT/LT																									
W-83	1408	202+15.50	202+71.50	LT						4																			
W-84	1408	203+00.00	203+39.00	CL																		1					1		
W-85	1408	203+38.50	203+38.50	CL																									
TOTALS CARRIED TO SHEET			1400		-	-	2	-	1	8	-	-	-	-	1	-	2	-	-	-	-	1	-	-	-	-	-	2	-

Preliminary Plans - Not For Reference Only

WATER WORK SUBSUMMARY - 3R

DESIGN AGENCY
Michael Baker INTERNATIONAL

DESIGNER
SMP

REVIEWER
SM 05/15/24

PROJECT ID
82382

SHEET 1392 TOTAL 2696

CUY-90-16.28 (CCG3A)

MODEL: Sheet-03 PAPERSIZE: 34x22 (in.) DATE: 5/14/2025 TIME: 5:26:45 PM USER: Joseph.Hogan
pw:\\mb-us-pw.bentley.com:mb-us-pw-03\Documents\Cleveland_OH101_Projects\ODOT\District12\82382\400-Engineering\Utilities\Sheets\82382_US251.dgn

WATER WORK SUBSUMMARY - 4L

| REF NO. | SHEET NO. | STATION FROM | STATION TO | SIDE | 202 REMOVAL MISC.: WATER MAIN REMOVED 24" AND UNDER FT | 202 REMOVAL MISC.: WATER MAIN REMOVED OVER 24" FT | 203 ROADWAY, MISC.: REINFORCED TURF SY | 611 MANHOLE ADJUSTED TO GRADE, AS PER PLAN, WATER MANHOLE EACH | 638 FIRE HYDRANT REMOVED AND DISPOSED OF, AS PER PLAN EACH | 638 VALVE BOX ADJUSTED TO GRADE, AS PER PLAN EACH | 638 METER, SETTING, STOP AND CHAMBER, AS PER PLAN (CLEVELAND WATER) EACH | 638 SPECIAL - 12" WATER MAIN DIP CLASS 52 BOLTLESS RESTRAINED JOINTS AND FITTINGS (CLEVELAND WATER) FT | 638 SPECIAL - 12" WATER MAIN DIP CLASS 52 PUSH ON JOINTS AND FITTINGS (CLEVELAND WATER) FT | 638 SPECIAL - 24" WATER MAIN DIP CLASS 52 BOLTLESS RESTRAINED JOINTS AND FITTINGS (CLEVELAND WATER) FT | 638 SPECIAL - 24" WATER MAIN DIP CLASS 52 PUSH ON JOINTS AND FITTINGS (CLEVELAND WATER) FT | 638 SPECIAL - 30" WATER MAIN DIP CLASS 52 BOLTLESS RESTRAINED JOINTS AND FITTINGS (CLEVELAND WATER) FT | 638 SPECIAL - 30" WATER MAIN DIP CLASS 52 PUSH ON JOINTS AND FITTINGS (CLEVELAND WATER) FT | 638 SPECIAL - 48" STEEL PIPE ENCASEMENT, BORED OR JACKED (CLEVELAND WATER) FT | 638 SPECIAL - 10" CUTTING IN SLEEVE (CLEVELAND WATER) EACH | 638 SPECIAL - 12" GATE VALVE WITH VALVE BOX (CLEVELAND WATER) EACH | 638 SPECIAL - 12" CUTTING IN SLEEVE (CLEVELAND WATER) EACH | 638 SPECIAL - 12" CUTTING IN SLEEVE, VALVE WITH VALVE BOX (CLEVELAND WATER) EACH | 638 SPECIAL - 2" AIR RELEASE VALVE WITH VALVE BOX (CLEVELAND WATER) EACH | 638 SPECIAL - 6" FIRE HYDRANT, COMPLETE (CLEVELAND WATER) EACH | 638 SPECIAL - FIRE HYDRANT SERVICE LINE EXTENDED AND ADJUSTED TO GRADE (CLEVELAND WATER) EACH | 638 SPECIAL - 1" COPPER WATER SERVICE LINE (CLEVELAND WATER) FT | 638 SPECIAL - REMOVE WATER SERVICE CONNECTION (CLEVELAND WATER) FT | 638 SPECIAL - EXTEND 1-1/2" COPPER WATER SERVICE CONNECTION (CLEVELAND WATER) FT | 638 SPECIAL - INSTALL 1-1/2" COPPER WATER SERVICE CONNECTION (CLEVELAND WATER) FT | 638 SPECIAL - 1" CORPORATION STOP (CLEVELAND WATER) EACH | 638 SPECIAL - 1-1/2" CORPORATION STOP (CLEVELAND WATER) EACH | 638 SPECIAL - INSTALL 1" METER SETTING, COMPLETE (CLEVELAND WATER) EACH | 638 WATER WORK, MISC.: 12" EXPANSION VALVE (BRIDGE) EACH | 638 WATER WORK, MISC.: 24" EXPANSION VALVE (BRIDGE) EACH | 638 WATER WORK, MISC.: 24" VALVE ASSEMBLY COMPLETE (CLEVELAND WATER) EACH | 638 WATER WORK, MISC.: 30" CUTTING IN SLEEVE (CLEVELAND WATER) EACH | 638 WATER WORK, MISC.: 30" VALVE ASSEMBLY COMPLETE (CLEVELAND WATER) EACH | 638 WATER WORK, MISC.: CONCRETE PIER EACH | 638 WATER WORK, MISC.: SLEEVE FOR ABUTMENT WALL - 12" DIP LINE (CLEVELAND WATER) EACH | 638 WATER WORK, MISC.: SLEEVE FOR ABUTMENT WALL - 24" STEEL LINE (CLEVELAND WATER) EACH | 638 WATER WORK, MISC.: STEEL TO DIP TRANSITION (CLEVELAND WATER) EACH | 638 WATER WORK, MISC.: 12" INSULATION FOR BRIDGE (CLEVELAND WATER) FT |
|---|---|---

REF NO.	SHEET NO.	STATION FROM	STATION TO	SIDE	638 WATER WORK, MISC.: 24" INSULATION FOR BRIDGE (CLEVELAND WATER) FT	638 WATER WORK, MISC.: 24" POLYURETHANE COATED CEMENT LINED STEEL FT	BENDS AND BRANCHES FOR INFORMATION ONLY 12" X 10" REDUCER EACH	12" X 11.25° BEND EACH	12" X 12" TEE EACH	12" X 22.5° BEND EACH	12" X 45° BEND EACH	20" X 12" REDUCER EACH	24" X 11.25° BEND EACH	24" X 12" TEE EACH	24" X 22.5° BEND EACH	24" X 24" TEE EACH	24" X 45° BEND EACH	24" X 6" REDUCING TEE EACH	30" X 11.25° BEND EACH	30" X 20" REDUCING TEE EACH	30" X 22.5° BEND EACH	30" X 24" REDUCER EACH	30" X 30" CUT IN TEE EACH	30" X 45° BEND EACH	30" X 5.625° BEND EACH	36" X 30" CUT IN TEE EACH	COUPON TEST STATION EACH	ISOLATION TEST STATION EACH	THRUST BLOCK EACH
		E. 22ND ST. (CONT.)																												
W-86	1408	203+39.00	203+51.83	CL																										
W-87	1408	203+51.83	203+57.83	CL									1																	
W-88	1408	203+57.83	203+73.02	CL																										
W-89	1408	203+73.02	204+63.02	CL												1	2													
W-90	1408	204+63.02	205+58.96	CL																										
W-91	1408	204+83.11	204+83.11	CL																										
W-92	1408	205+58.96	205+68.96	CL											1															
W-93	1408	205+68.96	206+01.50	CL																							1			
		CARNEGIE AVE.																												
W-94	1409	52+26.84	52+26.84	RT																										
W-95	1409	53+48.33		LT																										
W-96	1409	53+71.99		RT																										
RW-27	1409	53+85.01		RT																										
W-97	1409	54+16.77		RT																										
W-98	1409	54+16.77		RT																										
W-99	1409	54+16.77		RT																										
W-100	1409	54+16.77	54+16.77	RT																										
W-101	1409	58+28.14		RT																										
		E. 22ND ST.																												
RW-28	1409	32+40.16	35+00.16	LT																										
RW-29	1409	33+02.71	33+02.71	RT																										
RW-30	1409	35+00.16	36+96.24	LT																										
W-102	1409	37+08.06	37+08.06	LT																										
W-103	1409	37+43.23	37+43.23	LT																										
W-104	1409	206+01.50	209+55.00	CL	354	354									3															
W-105	1409	206+12.29	206+12.29	RT														1												
W-106	1409	206+77.20	206+77.20	CL																										
W-107	1409	206+83.26	206+83.26	CL																										
W-108	1409	208+94.81	208+94.81	CL																										
W-109	1409	209+50.00	209+83.53	CL											1		2										1			
W-110	1409	209+83.53	210+15.60	CL																										
W-111	1409	210+15.60	210+58.90	CL										1			2											1		
W-112	1409	210+36.71	210+36.71	CL																										
W-113	1409	230+00.00	230+25.00	CL			1			1	1																			
W-114	1409	230+20.00	230+20.00	CL																										
		CARNEGIE AVE.																												
RW-31	1411	56+46.00		LT																										
W-115	1411	56+48.59	56+48.59	RT																										
TOTALS CARRIED TO SHEET				1400	354	354	1	-	-	1	1	-	1	1	5	1	6	1	-	-	-	-	-	-	-	-	2	1	-

Preliminary Plans - Not For Reference Only

WATER WORK SUBSUMMARY - 4R

DESIGN AGENCY
Michael Baker INTERNATIONAL

DESIGNER SMP

REVIEWER SM 05/15/24

PROJECT ID 82382

SHEET 1394 TOTAL 2696

CUY-90-16.28 (CCG3A)

MODEL: Sheet-04 PAPERSIZE: 34x22 (in.) DATE: 5/14/2025 TIME: 5:26:53 PM USER: Joseph.Hogan
pw:\\mb-us-pw.bentley.com:mb-us-pw-03\Documents\Cleveland_OH101_Projects\ODOT\District12\82382\400-Engineering\Utilities\Sheets\82382_US251.dgn

REF NO.	SHEET NO.	STATION FROM	STATION TO	SIDE	202 REMOVAL MISC.: WATER MAIN REMOVED 24" AND UNDER	202 REMOVAL MISC.: WATER MAIN REMOVED OVER 24"	203 ROADWAY, MISC.: REINFORCED TURF	611 MANHOLE ADJUSTED TO GRADE, AS PER PLAN, WATER MANHOLE	638 FIRE HYDRANT REMOVED AND DISPOSED OF, AS PER PLAN	638 VALVE BOX ADJUSTED TO GRADE, AS PER PLAN	638 METER, SETTING, STOP AND CHAMBER, AS PER PLAN (CLEVELAND WATER)	638 SPECIAL - 12" WATER MAIN DIP CLASS 52 BOLTLESS RESTRAINED JOINTS AND FITTINGS (CLEVELAND WATER)	638 SPECIAL - 12" WATER MAIN DIP CLASS 52 PUSH ON JOINTS AND FITTINGS (CLEVELAND WATER)	638 SPECIAL - 24" WATER MAIN DIP CLASS 52 BOLTLESS RESTRAINED JOINTS AND FITTINGS (CLEVELAND WATER)	638 SPECIAL - 24" WATER MAIN DIP CLASS 52 PUSH ON JOINTS AND FITTINGS (CLEVELAND WATER)	638 SPECIAL - 30" WATER MAIN DIP CLASS 52 BOLTLESS RESTRAINED JOINTS AND FITTINGS (CLEVELAND WATER)	638 SPECIAL - 30" WATER MAIN DIP CLASS 52 PUSH ON JOINTS AND FITTINGS (CLEVELAND WATER)	638 SPECIAL - 48" STEEL PIPE ENCASEMENT, BORED OR JACKED (CLEVELAND WATER)	638 SPECIAL - 10" CUTTING IN SLEEVE (CLEVELAND WATER)	638 SPECIAL - 12" GATE VALVE WITH VALVE BOX (CLEVELAND WATER)	638 SPECIAL - 12" CUTTING IN SLEEVE (CLEVELAND WATER)	638 SPECIAL - 12" CUTTING IN SLEEVE, VALVE WITH VALVE BOX (CLEVELAND WATER)	638 SPECIAL - 2" AIR RELEASE VALVE WITH VALVE BOX (CLEVELAND WATER)	638 SPECIAL - 6" FIRE HYDRANT, COMPLETE (CLEVELAND WATER)	638 SPECIAL - FIRE HYDRANT SERVICE LINE EXTENDED AND ADJUSTED TO GRADE (CLEVELAND WATER)	638 SPECIAL - 1" COPPER WATER SERVICE LINE (CLEVELAND WATER)	638 SPECIAL - REMOVE WATER SERVICE CONNECTION (CLEVELAND WATER)	638 SPECIAL - EXTEND 1-1/2" COPPER WATER SERVICE CONNECTION (CLEVELAND WATER)	638 SPECIAL - INSTALL 1-1/2" COPPER WATER SERVICE CONNECTION (CLEVELAND WATER)	638 SPECIAL - 1" CORPORATION STOP (CLEVELAND WATER)	638 SPECIAL - 1-1/2" CORPORATION STOP (CLEVELAND WATER)	638 SPECIAL - INSTALL 1" METER SETTING, COMPLETE (CLEVELAND WATER)	638 WATER WORK, MISC.: 12" EXPANSION VALVE (BRIDGE)	638 WATER WORK, MISC.: 24" EXPANSION VALVE (BRIDGE)	638 WATER WORK, MISC.: 24" VALVE ASSEMBLY COMPLETE (CLEVELAND WATER)	638 WATER WORK, MISC.: 30" CUTTING IN SLEEVE (CLEVELAND WATER)	638 WATER WORK, MISC.: 30" VALVE ASSEMBLY COMPLETE (CLEVELAND WATER)	638 WATER WORK, MISC.: CONCRETE PIER	638 WATER WORK, MISC.: SLEEVE FOR ABUTMENT WALL - 12" DIP LINE (CLEVELAND WATER)	638 WATER WORK, MISC.: SLEEVE FOR ABUTMENT WALL - 24" STEEL LINE (CLEVELAND WATER)	638 WATER WORK, MISC.: STEEL TO DIP TRANSITION (CLEVELAND WATER)	638 WATER WORK, MISC.: 12" INSULATION FOR BRIDGE (CLEVELAND WATER)
					FT	FT	SY	EACH	EACH	EACH	EACH	FT	FT	FT	FT	FT	FT	FT	EACH	EACH	EACH	EACH	EACH	EACH	EACH	FT	FT	FT	FT	EACH	EACH	EACH	EACH	EACH	EACH	EACH	EACH	EACH	EACH	EACH	EACH	EACH	FT
		12" WATER - CARNEGIE AVE.																																								
W-116	1411	401+20.00	401+20.00	CL																			1																			
W-117	1411	401+20.00	401+31.72	CL								12																															
RW-32	1411	401+20.00	402+71.84	CL/LT	152																																					
W-118	1411	401+31.72	402+04.00	CL									72																													
RW-33	1411	401+42.50		LT																								43													
W-119	1411	401+42.50	401+42.50	LT																							43				1										
W-120	1411	401+51.28	401+51.28	RT																					1																
RW-34	1411	401+85.72		LT																								43													
W-121	1411	401+85.72	401+85.72	LT																							43				1										
W-122	1411	402+04.00	402+20.01	CL								16																														
W-123	1411	402+20.00	402+20.00	CL																						1																
W-124	1411	402+20.01	402+50.00	CL									30																													
RW-35	1411	402+23.28		LT																								46													
W-125	1411	402+23.28	402+23.28	LT																							46				1										
W-126	1411	402+50.00	407+57.00	CL								507																													2			507
RW-36	1411	402+54.08		LT																								45													
W-127	1411	402+54.08	402+54.08	LT																							45				1		1								
RW-37	1411	402+71.84	405+86.75	LT	315																																					
W-128	1411	402+93.00	402+93.00	CL																																				1			
W-129	1411	403+28.22	403+28.22	LT						1																																
		CARNEGIE AVE.																																								
W-130	1412	65+19.86	65+19.86	RT						1																																
W-131	1412	65+45.75	65+45.75	RT						1																																
W-132	1412	65+86.65	65+86.65	RT						1																																
		12" WATER - CARNEGIE AVE.																																								
W-133	1412	405+13.00	405+13.00	CL																																				1		
RW-38	1412	405+86.45	405+86.45	RT					1																																
RW-39	1412	405+86.75	408+90.52	LT/CL	301																																				
W-134	1412	407+12.00	407+12.00	CL																																				1		
W-135	1412	407+57.00	408+16.72	CL									60																													
W-136	1412	408+16.72	408+58.72	CL								42																														
W-137	1412	408+58.72	408+79.52	CL									21																													
W-138	1412	408+69.82	408+69.82	RT																																						
RW-40	1412	408+75.63	408+75.63	RT					1																																
W-139	1412	408+79.52	408+85.52	CL								6																														
W-140	1412	408+85.52	408+90.52	CL									5																													
W-141	1412	408+90.52	408+90.52	CL																			1																			
		MIDTOWN CONNECTOR																																								
RW-41	1414	503+11.08	504+01.15	LT	107																																					
RW-42	1414	503+31.27	503+60.06	LT																								48													
TOTALS CARRIED TO SHEET 1399					875	-	-	-	2	4	-	583	188	-	-	-	-	-	-	-	-	2	1	2	-	177	225	-	-	4	-	1	3	-	-	-	-	-	2	-	-	507

Preliminary Plans - Not For Reference Only

WATER WORK SUBSUMMARY - 5L

CUY-90-16.28 (CCG3A)

MODEL: Sheet-05 PAPERSIZE: 34x22 (in.) DATE: 5/14/2025 TIME: 5:26:57 PM USER: Joseph.Hogan
pw:\\mb-us-pw.bentley.com:mb-us-pw-03\Documents\Cleveland_Off\01_Projects\ODOT\District12\82382\400-Engineering\Utilities\Sheets\82382_US201.dgn

DESIGN AGENCY
Michael Baker INTERNATIONAL

DESIGNER SMP

REVIEWER SM 05/15/24

PROJECT ID 82382

SHEET 1395 | TOTAL 2696

REF NO.	SHEET NO.	STATION FROM	STATION TO	SIDE	638 WATER WORK, MISC.: 24" INSULATION FOR BRIDGE (CLEVELAND WATER)	638 WATER WORK, MISC.:; 24" POLYURETHANE COATED CEMENT LINED STEEL	BENDS AND BRANCHES FOR INFORMATION ONLY: 12" X 10" REDUCER	12" X 11.25° BEND	12" X 12" TEE	12" X 22.5° BEND	12" X 45° BEND	20" X 12" REDUCER	24" X 11.25° BEND	24" X 12" TEE	24" X 22.5° BEND	24" X 24" TEE	24" X 45° BEND	24" X 6" REDUCING TEE	30" X 11.25° BEND	30" X 20" REDUCING TEE	30" X 22.5° BEND	30" X 24" REDUCER	30" X 30" CUT IN TEE	30" X 45° BEND	30" X 5.625° BEND	36" X 30" CUT IN TEE	COUPON TEST STATION	ISOLATION TEST STATION	THRUST BLOCK
					FT	FT	EACH	EACH	EACH	EACH	EACH	EACH	EACH	EACH	EACH	EACH	EACH	EACH	EACH	EACH	EACH	EACH	EACH	EACH	EACH	EACH	EACH	EACH	EACH
		12" WATER - CARNEGIE AVE.																											
W-116	1411	401+20.00	401+20.00	CL																									
W-117	1411	401+20.00	401+31.72	CL						2																			
RW-32	1411	401+20.00	402+71.84	CL/LT																									
W-118	1411	401+31.72	402+04.00	CL																									
RW-33	1411	401+42.50		LT																									
W-119	1411	401+42.50	401+42.50	LT																									
W-120	1411	401+51.28	401+51.28	RT																									
RW-34	1411	401+85.72		LT																									
W-121	1411	401+85.72	401+85.72	LT																									
W-122	1411	402+04.00	402+20.01	CL							2																		
W-123	1411	402+20.00	402+20.00	CL																									
W-124	1411	402+20.01	402+50.00	CL																									
RW-35	1411	402+23.28		LT																									
W-125	1411	402+23.28	402+23.28	LT																									
W-126	1411	402+50.00	407+57.00	CL																									
RW-36	1411	402+54.08		LT																									
W-127	1411	402+54.08	402+54.08	LT																									
RW-37	1411	402+71.84	405+86.75	LT																									
W-128	1411	402+93.00	402+93.00	CL																									
W-129	1411	403+28.22	403+28.22	LT																									
		CARNEGIE AVE.																											
W-130	1412	65+19.86	65+19.86	RT																									
W-131	1412	65+45.75	65+45.75	RT																									
W-132	1412	65+86.65	65+86.65	RT																									
		12" WATER - CARNEGIE AVE.																											
W-133	1412	405+13.00	405+13.00	CL																									
RW-38	1412	405+86.45	405+86.45	RT																									
RW-39	1412	405+86.75	408+90.52	LT/CL																									
W-134	1412	407+12.00	407+12.00	CL																									
W-135	1412	407+57.00	408+16.72	CL																									
W-136	1412	408+16.72	408+58.72	CL						5																			
W-137	1412	408+58.72	408+79.52	CL																									
W-138	1412	408+69.82	408+69.82	RT																									
RW-40	1412	408+75.63	408+75.63	RT																									
W-139	1412	408+79.52	408+85.52	CL						1																			
W-140	1412	408+85.52	408+90.52	CL																									
W-141	1412	408+90.52	408+90.52	CL																									
		MIDTOWN CONNECTOR																											
RW-41	1414	503+11.08	504+01.15	LT																									
RW-42	1414	503+31.27	503+60.06	LT																									
TOTALS CARRIED TO SHEET		1400			-	-	-	-	-	8	2	-	-	-	-	-	-	-	-	-	-	-	-	-	-	-	-	-	-

Preliminary Plans - Not For Reference Only

WATER WORK SUBSUMMARY - 5R

DESIGN AGENCY
Michael Baker INTERNATIONAL
DESIGNER SMP
REVIEWER SM 05/15/24
PROJECT ID 82382
SHEET 1396 TOTAL 2696

CUY-90-16.28 (CCG3A)
MODEL: Sheet-05 PAPERSIZE: 34x22 (in.) DATE: 5/14/2025 TIME: 5:27:01 PM USER: Joseph.Hogan
pw:\\mb-us-pw.bentley.com:mb-us-pw-03\Documents\Cleveland_OH101_Projects\ODOT\District12\82382\400-Engineering\Utilities\Sheets\82382_US251.dgn

WATER WORK SUBSUMMARY - 6L

| REF NO. | SHEET NO. | STATION FROM | STATION TO | SIDE | 202 REMOVAL MISC.: WATER MAIN REMOVED 24" AND UNDER | 202 REMOVAL MISC.: WATER MAIN REMOVED OVER 24" | 203 ROADWAY, MISC.: REINFORCED TURF | 611 MANHOLE ADJUSTED TO GRADE, AS PER PLAN, WATER MANHOLE | 638 FIRE HYDRANT REMOVED AND DISPOSED OF, AS PER PLAN | 638 VALVE BOX ADJUSTED TO GRADE, AS PER PLAN | 638 METER, SETTING, STOP AND CHAMBER, AS PER PLAN (CLEVELAND WATER) | 638 SPECIAL - 12" WATER MAIN DIP CLASS 52 BOLTLESS RESTRAINED JOINTS AND FITTINGS (CLEVELAND WATER) | 638 SPECIAL - 12" WATER MAIN DIP CLASS 52 PUSH ON JOINTS AND FITTINGS (CLEVELAND WATER) | 638 SPECIAL - 24" WATER MAIN DIP CLASS 52 BOLTLESS RESTRAINED JOINTS AND FITTINGS (CLEVELAND WATER) | 638 SPECIAL - 24" WATER MAIN DIP CLASS 52 PUSH ON JOINTS AND FITTINGS (CLEVELAND WATER) | 638 SPECIAL - 30" WATER MAIN DIP CLASS 52 BOLTLESS RESTRAINED JOINTS AND FITTINGS (CLEVELAND WATER) | 638 SPECIAL - 30" WATER MAIN DIP CLASS 52 PUSH ON JOINTS AND FITTINGS (CLEVELAND WATER) | 638 SPECIAL - 48" STEEL PIPE ENCASEMENT, BORED OR JACKED (CLEVELAND WATER) | 638 SPECIAL - 10" CUTTING IN SLEEVE (CLEVELAND WATER) | 638 SPECIAL - 12" GATE VALVE WITH VALVE BOX (CLEVELAND WATER) | 638 SPECIAL - 12" CUTTING IN SLEEVE (CLEVELAND WATER) | 638 SPECIAL - 12" CUTTING IN SLEEVE, VALVE WITH VALVE BOX (CLEVELAND WATER) | 638 SPECIAL - 2" AIR RELEASE VALVE WITH VALVE BOX (CLEVELAND WATER) | 638 SPECIAL - 6" FIRE HYDRANT, COMPLETE (CLEVELAND WATER) | 638 SPECIAL - FIRE HYDRANT SERVICE LINE EXTENDED AND ADJUSTED TO GRADE (CLEVELAND WATER) | 638 SPECIAL - 1" COPPER WATER SERVICE LINE (CLEVELAND WATER) | 638 SPECIAL - REMOVE WATER SERVICE CONNECTION (CLEVELAND WATER) | 638 SPECIAL - EXTEND 1-1/2" COPPER WATER SERVICE CONNECTION (CLEVELAND WATER) | 638 SPECIAL - INSTALL 1-1/2" COPPER WATER SERVICE CONNECTION (CLEVELAND WATER) | 638 SPECIAL - 1" CORPORATION STOP (CLEVELAND WATER) | 638 SPECIAL - 1-1/2" CORPORATION STOP (CLEVELAND WATER) | 638 SPECIAL - INSTALL 1" METER SETTING, COMPLETE (CLEVELAND WATER) | 638 WATER WORK, MISC.: 12" EXPANSION VALVE (BRIDGE) | 638 WATER WORK, MISC.: 24" EXPANSION VALVE (BRIDGE) | 638 WATER WORK, MISC.: 24" VALVE ASSEMBLY COMPLETE (CLEVELAND WATER) | 638 WATER WORK, MISC.: 30" CUTTING IN SLEEVE (CLEVELAND WATER) | 638 WATER WORK, MISC.: 30" VALVE ASSEMBLY COMPLETE (CLEVELAND WATER) | 638 WATER WORK, MISC.: CONCRETE PIER | 638 WATER WORK, MISC.: SLEEVE FOR ABUTMENT WALL - 12" DIP LINE (CLEVELAND WATER) | 638 WATER WORK, MISC.: SLEEVE FOR ABUTMENT WALL - 24" STEEL LINE (CLEVELAND WATER) | 638 WATER WORK, MISC.: STEEL TO DIP TRANSITION (CLEVELAND WATER) | 638 WATER WORK, MISC.: 12" INSULATION FOR BRIDGE (CLEVELAND WATER) |
|---|---|---

REF NO.	SHEET NO.	STATION FROM	STATION TO	SIDE	638 WATER WORK, MISC.: 24" INSULATION FOR BRIDGE (CLEVELAND WATER) FT	638 WATER WORK, MISC.:; 24" POLYURETHANE COATED CEMENT LINED STEEL FT	BENDS AND BRANCHES FOR INFORMATION ONLY 12" X 10" REDUCER EACH	12" X 11.25° BEND EACH	12" X 12" TEE EACH	12" X 22.5° BEND EACH	12" X 45° BEND EACH	20" X 12" REDUCER EACH	24" X 11.25° BEND EACH	24" X 12" TEE EACH	24" X 22.5° BEND EACH	24" X 24" TEE EACH	24" X 45° BEND EACH	24" X 6" REDUCING TEE EACH	30" X 11.25° BEND EACH	30" X 20" REDUCING TEE EACH	30" X 22.5° BEND EACH	30" X 24" REDUCER EACH	30" X 30" CUT IN TEE EACH	30" X 45° BEND EACH	30" X 5.625° BEND EACH	36" X 30" CUT IN TEE EACH	COUPON TEST STATION EACH	ISOLATION TEST STATION EACH	THRUST BLOCK EACH
		MIDTOWN CONNECTOR (CONT)																												
RW-43	1414	503+37.30	503+95.17	LT																										
RW-44	1414	503+37.66	503+37.66	LT																										
W-142	1414	503+97.62	503+97.62	LT																										
RW-45	1415	505+51.83	505+51.83	LT																										
W-143	1415	506+71.80	506+71.80	LT																										
W-144	1415	508+11.81	508+11.81	RT																										
W-145	1415	508+13.65	508+13.65	LT																										
W-146	1415	508+13.81	508+13.81	RT																										
RW-46	1415	508+17.17	508+17.17	LT																										
W-147	1415	508+34.24	508+34.24	LT																										
W-148	1415	508+60.47	508+60.47	LT																										
W-149	1415	509+52.79	509+52.79	LT																										
W-150	1415	509+80.89	509+80.89	LT																										
W-151	1415	509+81.22	509+81.22	LT																										
W-152	1416	401+03.41	401+03.41	LT																										
W-153	1416	401+04.62	401+04.62	LT																										
W-154	1416	402+05.64	402+05.64	LT																										
W-155	1416	510+32.55	510+32.55	LT																										
W-156	1416	510+33.31	510+33.31	LT																										
RW-47	1416	510+63.49	510+72.98	RT																										
RW-48	1416	510+77.10	510+86.80	RT																										
RW-49	1416	510+78.68	510+78.68	RT																										
		CEDAR AVE.																												
RW-50	1416	400+45.42	401+67.57	RT/LT																										
RW-51	1416	402+52.77	402+52.77	LT																										
W-157	1416	402+71.61	402+71.61	LT																										
W-158	1416	402+96.77	402+96.77	LT																										
W-159	1416	402+96.83	402+96.83	LT																										
W-160	1416	403+26.60	403+26.60	LT																										
W-161	1416	403+26.62	403+26.62	LT																										
		12" WATER - CEDAR AVE.																												
W-162	1416	303+00.00	303+06.00	CL																										
W-163	1416	303+06.00	303+25.07	CL							2																			
W-164	1416	303+25.07	303+97.75	CL																										
W-165	1416	303+97.75	304+36.07	CL						2	2																			
W-166	1416	303+98.75	303+98.75	LT																										
W-167	1416	304+36.07	304+37.07	CL																										
		TOTALS CARRIED TO SHEET		1400	-	-	-	-	-	2	4	-	-	-	-	-	-	-	-	-	-	-	-	-	-	-	-	-	-	-

Preliminary Plans - Not For Reference Only

MODEL: Sheet-06 PAPERSIZE: 34x22 (in.) DATE: 5/14/2025 TIME: 5:27:09 PM USER: Joseph.Hogan
pw:\\mb-us-pw.bentley.com:mb-us-pw-03\Documents\Cleveland_OH101_Projects\ODOT\District12\82382\400-Engineering\Utilities\Sheets\82382_US251.dgn

WATER WORK SUBSUMMARY - 6R

DESIGN AGENCY
Michael Baker INTERNATIONAL

DESIGNER
SMP

REVIEWER
SM 05/15/24

PROJECT ID
82382

SHEET 1398 | TOTAL 2696

WATER WORK SUBSUMMARY - 7L

| REF NO. | SHEET NO. | STATION FROM | STATION TO | SIDE | 202 REMOVAL MISC.: WATER MAIN REMOVED 24" AND UNDER FT | 202 REMOVAL MISC.: WATER MAIN REMOVED OVER 24" FT | 203 ROADWAY, MISC.: REINFORCED TURF SY | 611 MANHOLE ADJUSTED TO GRADE, AS PER PLAN, WATER MANHOLE EACH | 638 FIRE HYDRANT REMOVED AND DISPOSED OF, AS PER PLAN EACH | 638 VALVE BOX ADJUSTED TO GRADE, AS PER PLAN EACH | 638 METER, SETTING, STOP AND CHAMBER, AS PER PLAN (CLEVELAND WATER) EACH | 638 SPECIAL - 12" WATER MAIN DIP CLASS 52 BOLTLESS RESTRAINED JOINTS AND FITTINGS (CLEVELAND WATER) FT | 638 SPECIAL - 12" WATER MAIN DIP CLASS 52 PUSH ON JOINTS AND FITTINGS (CLEVELAND WATER) FT | 638 SPECIAL - 24" WATER MAIN DIP CLASS 52 BOLTLESS RESTRAINED JOINTS AND FITTINGS (CLEVELAND WATER) FT | 638 SPECIAL - 24" WATER MAIN DIP CLASS 52 PUSH ON JOINTS AND FITTINGS (CLEVELAND WATER) FT | 638 SPECIAL - 30" WATER MAIN DIP CLASS 52 BOLTLESS RESTRAINED JOINTS AND FITTINGS (CLEVELAND WATER) FT | 638 SPECIAL - 30" WATER MAIN DIP CLASS 52 PUSH ON JOINTS AND FITTINGS (CLEVELAND WATER) FT | 638 SPECIAL - 48" STEEL PIPE ENCASEMENT, BORED OR JACKED (CLEVELAND WATER) FT | 638 SPECIAL - 10" CUTTING IN SLEEVE (CLEVELAND WATER) EACH | 638 SPECIAL - 12" GATE VALVE WITH VALVE BOX (CLEVELAND WATER) EACH | 638 SPECIAL - 12" CUTTING IN SLEEVE (CLEVELAND WATER) EACH | 638 SPECIAL - 12" CUTTING IN SLEEVE, VALVE WITH VALVE BOX (CLEVELAND WATER) EACH | 638 SPECIAL - 2" AIR RELEASE VALVE WITH VALVE BOX (CLEVELAND WATER) EACH | 638 SPECIAL - 6" FIRE HYDRANT, COMPLETE (CLEVELAND WATER) EACH | 638 SPECIAL - FIRE HYDRANT SERVICE LINE EXTENDED AND ADJUSTED TO GRADE (CLEVELAND WATER) EACH | 638 SPECIAL - 1" COPPER WATER SERVICE LINE (CLEVELAND WATER) FT | 638 SPECIAL - REMOVE WATER SERVICE CONNECTION (CLEVELAND WATER) FT | 638 SPECIAL - EXTEND 1-1/2" COPPER WATER SERVICE CONNECTION (CLEVELAND WATER) FT | 638 SPECIAL - INSTALL 1-1/2" COPPER WATER SERVICE CONNECTION (CLEVELAND WATER) FT | 638 SPECIAL - 1" CORPORATION STOP (CLEVELAND WATER) EACH | 638 SPECIAL - 1-1/2" CORPORATION STOP (CLEVELAND WATER) EACH | 638 SPECIAL - INSTALL 1" METER SETTING, COMPLETE (CLEVELAND WATER) EACH | 638 WATER WORK, MISC.: 12" EXPANSION VALVE (BRIDGE) EACH | 638 WATER WORK, MISC.: 24" EXPANSION VALVE (BRIDGE) EACH | 638 WATER WORK, MISC.: 24" VALVE ASSEMBLY COMPLETE (CLEVELAND WATER) EACH | 638 WATER WORK, MISC.: 30" CUTTING IN SLEEVE (CLEVELAND WATER) EACH | 638 WATER WORK, MISC.: 30" VALVE ASSEMBLY COMPLETE (CLEVELAND WATER) EACH | 638 WATER WORK, MISC.: CONCRETE PIER EACH | 638 WATER WORK, MISC.: SLEEVE FOR ABUTMENT WALL - 12" DIP LINE (CLEVELAND WATER) EACH | 638 WATER WORK, MISC.: SLEEVE FOR ABUTMENT WALL - 24" STEEL LINE (CLEVELAND WATER) EACH | 638 WATER WORK, MISC.: STEEL TO DIP TRANSITION (CLEVELAND WATER) EACH | 638 WATER WORK, MISC.: 12" INSULATION FOR BRIDGE (CLEVELAND WATER) FT |
|---|---|---

REF NO.	SHEET NO.	STATION FROM	STATION TO	SIDE	638 WATER WORK, MISC.: 24" INSULATION FOR BRIDGE (CLEVELAND WATER) FT	638 WATER WORK, MISC.; 24" POLYURETHANE COATED CEMENT LINED STEEL FT	BENDS AND BRANCHES FOR INFORMATION ONLY 12" X 10" REDUCER EACH	12" X 11.25° BEND EACH	12" X 12" TEE EACH	12" X 22.5° BEND EACH	12" X 45° BEND EACH	20" X 12" REDUCER EACH	24" X 11.25° BEND EACH	24" X 12" TEE EACH	24" X 22.5° BEND EACH	24" X 24" TEE EACH	24" X 45° BEND EACH	24" X 6" REDUCING TEE EACH	30" X 11.25° BEND EACH	30" X 20" REDUCING TEE EACH	30" X 22.5° BEND EACH	30" X 24" REDUCER EACH	30" X 30" CUT IN TEE EACH	30" X 45° BEND EACH	30" X 5.625° BEND EACH	36" X 30" CUT IN TEE EACH	COUPON TEST STATION EACH	ISOLATION TEST STATION EACH	THRUST BLOCK EACH
TOTALS FROM THIS SHEET					-	-	-	-	-	-	-	-	-	-	-	-	-	-	-	-	-	-	-	-	-	-	-	-	-	-
TOTALS FROM SHEET	1388				-	-	-	-	1	2	1	1	-	-	-	-	-	-	-	1	5	-	-	-	-	1	-	1	1
TOTALS FROM SHEET	1390				-	-	-	2	-	4	-	-	-	-	-	-	-	-	3	-	11	-	1	1	2	-	6	1	-
TOTALS FROM SHEET	1392				-	-	2	-	1	8	-	-	-	-	1	-	2	-	-	-	-	1	-	-	-	-	-	2	-
TOTALS FROM SHEET	1394				354	354	1	-	-	1	1	-	1	1	5	1	6	1	-	-	-	-	-	-	-	-	2	1	-
TOTALS FROM SHEET	1396				-	-	-	-	-	8	2	-	-	-	-	-	-	-	-	-	-	-	-	-	-	-	-	-	-	-
TOTALS FROM SHEET	1398				-	-	-	-	-	2	4	-	-	-	-	-	-	-	-	-	-	-	-	-	-	-	-	-	-	-
TOTALS CARRIED TO GENERAL SUMMARY					354	354	3	2	2	25	8	1	1	1	6	1	8	1	3	1	16	1	1	1	2	1	8	5	1

Preliminary Plans - For Reference Only

WATER WORK SUBSUMMARY - 7R

CUY-90-16.28 (CCG3A)

MODEL: Sheet-07 PAPERSIZE: 34x22 (in.) DATE: 5/14/2025 TIME: 5:27:16 PM USER: Joseph.Hogan
pw:\\mb-us-pw.bentley.com:mb-us-pw-03\Documents\Cleveland_OH\01_Projects\ODOT\District12\82382\400-Engineering\Utilities\Sheets\82382_US251.dgn

DESIGN AGENCY
Michael Baker INTERNATIONAL

DESIGNER SMP

REVIEWER SM 05/15/24

PROJECT ID 82382

SHEET 1400 TOTAL 2696

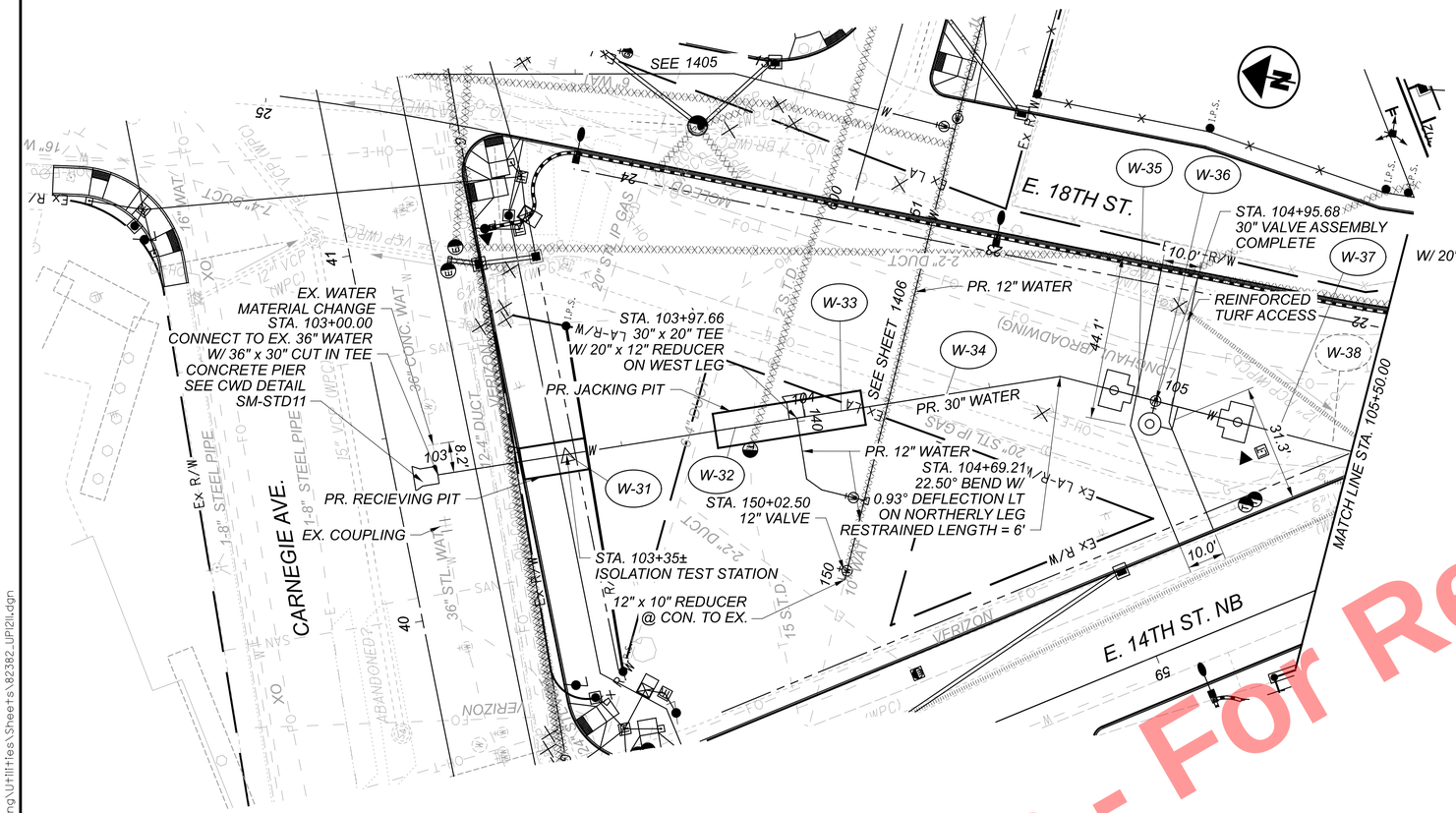

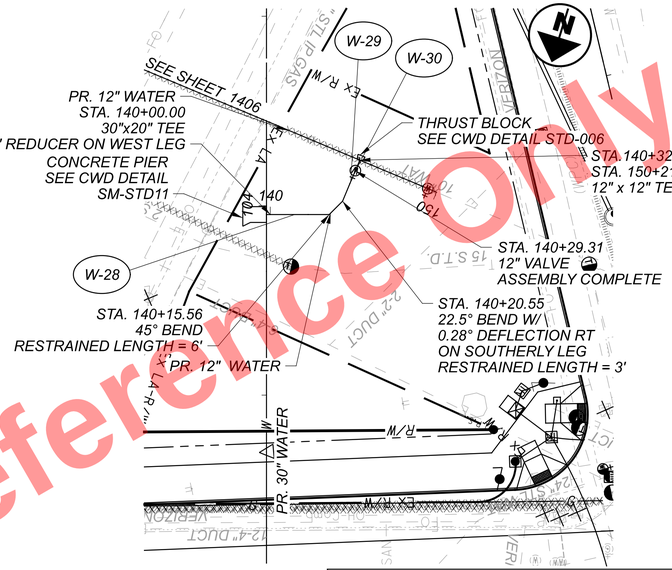

WATER LEGEND

WATER REMOVED

WATER STRUCTURE

HORIZONTAL SCALE IN FEET
0 10 20 40

RESTRAINED LENGTH SHOWN IS THE MINIMUM RESTRAINED LENGTH FOR EACH SIDE OF BEND.

CONTRACTOR TO FIELD VERIFY LOCATION AND ELEVATION OF EX. SANITARY LATERALS WITHIN WORK LIMITS.

LATERALS DEEMED IN CONFLICT WILL BE ABANDONED OR RECONSTRUCTED PER DETAILS IN THE DRAINAGE PLANS AT THE DIRECTION OF THE ENGINEER.

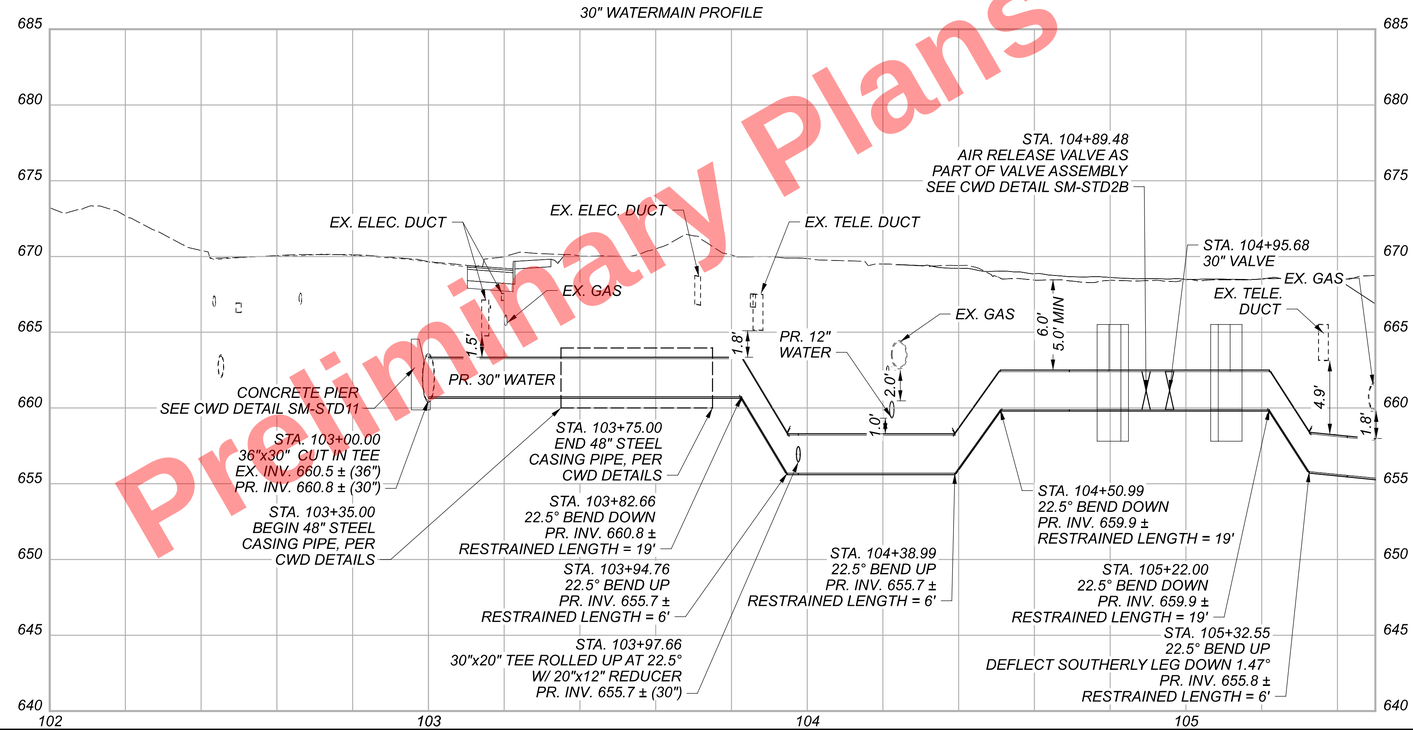

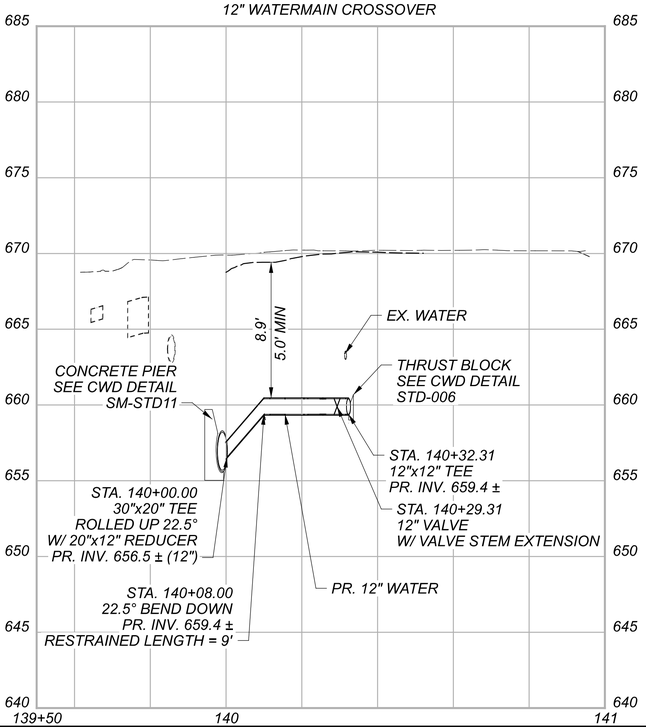

Preliminary Plans - For Reference Only

30" WATERLINE PLAN AND PROFILE (E. 18TH ST./COMMUNITY COLLEGE AVE.) BEGIN TO STA. 105+50.00

DESIGN AGENCY
Michael Baker INTERNATIONAL

DESIGNER SMP
REVIEWER SM 05/15/24
PROJECT ID 82382
SHEET 1401 TOTAL 2696

CUY-90-16.28 (CCG3A)

MODEL: 82382_UPI2ll PAPERSIZE: 34x22 (in.) DATE: 6/9/2025 TIME: 2:36:46 PM USER: Julie.Ross
pw:\\mb-us-pw.bentley.com:mb-us-pw-03\Documents\Cleveland_OH\Oil_Projects\ODOT\District2\82382\400-Engineering\Utilities\Sheets\82382_UPI2ll.dgn

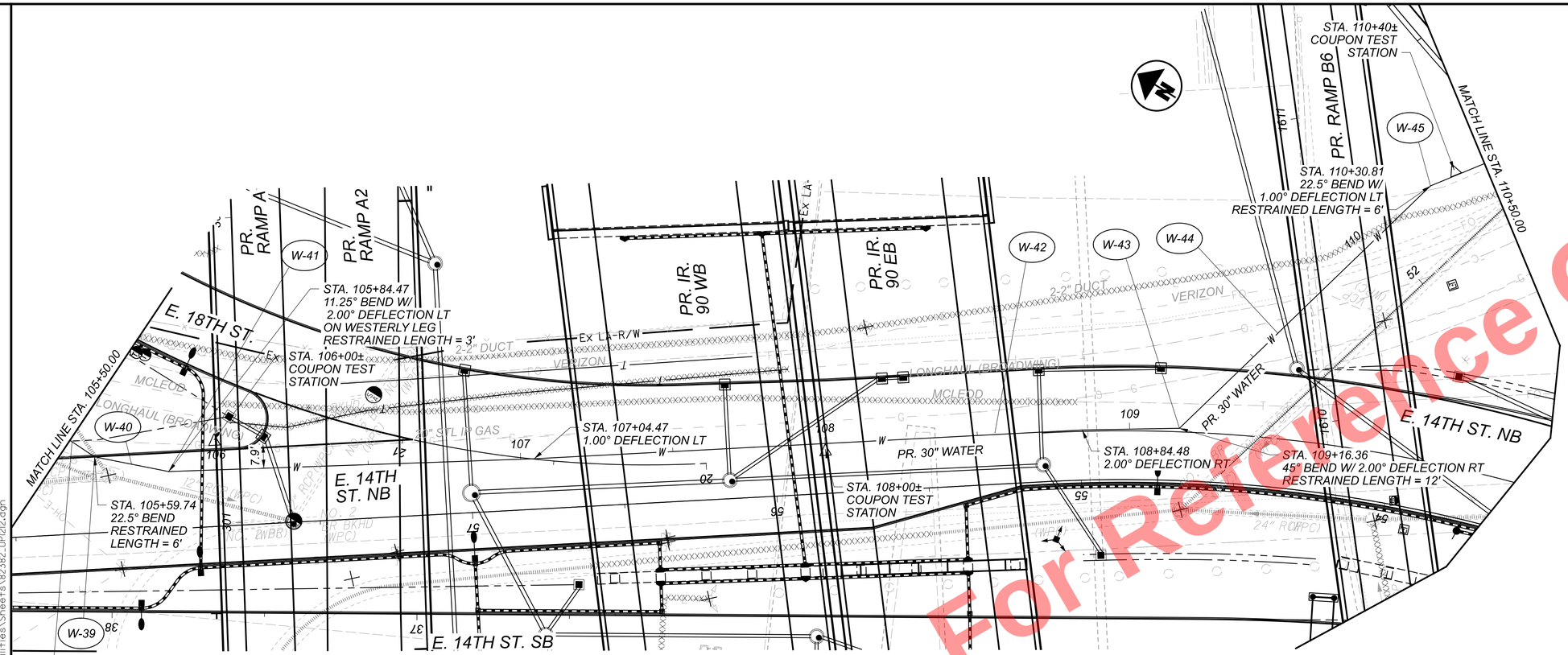

Preliminary Plans - For Reference Only

WATER LEGEND

- WATER REMOVED
- WATER STRUCTURE

HORIZONTAL SCALE IN FEET
0 10 20 40

RESTRAINED LENGTH SHOWN IS THE MINIMUM RESTRAINED LENGTH FOR EACH SIDE OF BEND.

CONTRACTOR TO FIELD VERIFY LOCATION AND ELEVATION OF EX. SANITARY LATERALS WITHIN WORK LIMITS.

LATERALS DEEMED IN CONFLICT WILL BE ABANDONED OR RECONSTRUCTED PER DETAILS IN THE DRAINAGE PLANS AT THE DIRECTION OF THE ENGINEER.

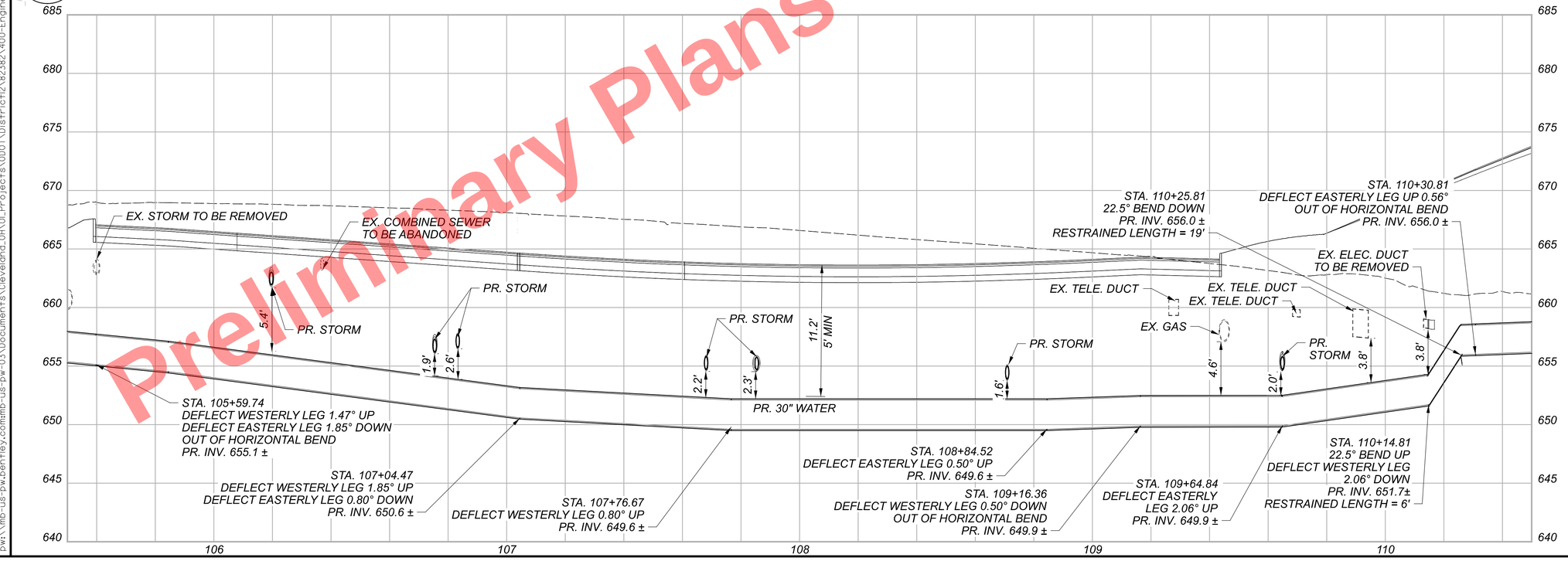

30" WATERLINE PLAN AND PROFILE (E. 18TH ST./COMMUNITY COLLEGE AVE.) STA. 105+50.00 TO STA. 110+50.00

DESIGN AGENCY
Michael Baker INTERNATIONAL

DESIGNER	SMP
REVIEWER	SM 05/15/24
PROJECT ID	82382
SHEET	1402
TOTAL	2696

CUY-90-16.28 (CCG3A)

MODEL: 82382_UPI2I2 PAPERSIZE: 34x22 (In.) DATE: 6/9/2025 TIME: 2:37:10 PM USER: Julie.Ross
pw:\\mb-us-pw.bentley.commb-us-pw-03\Documents\Cleveland_OHIO\Projects\ODOT\District2\82382\400-Engineering\Utilities\Sheets\82382_UPI2I2.dgn

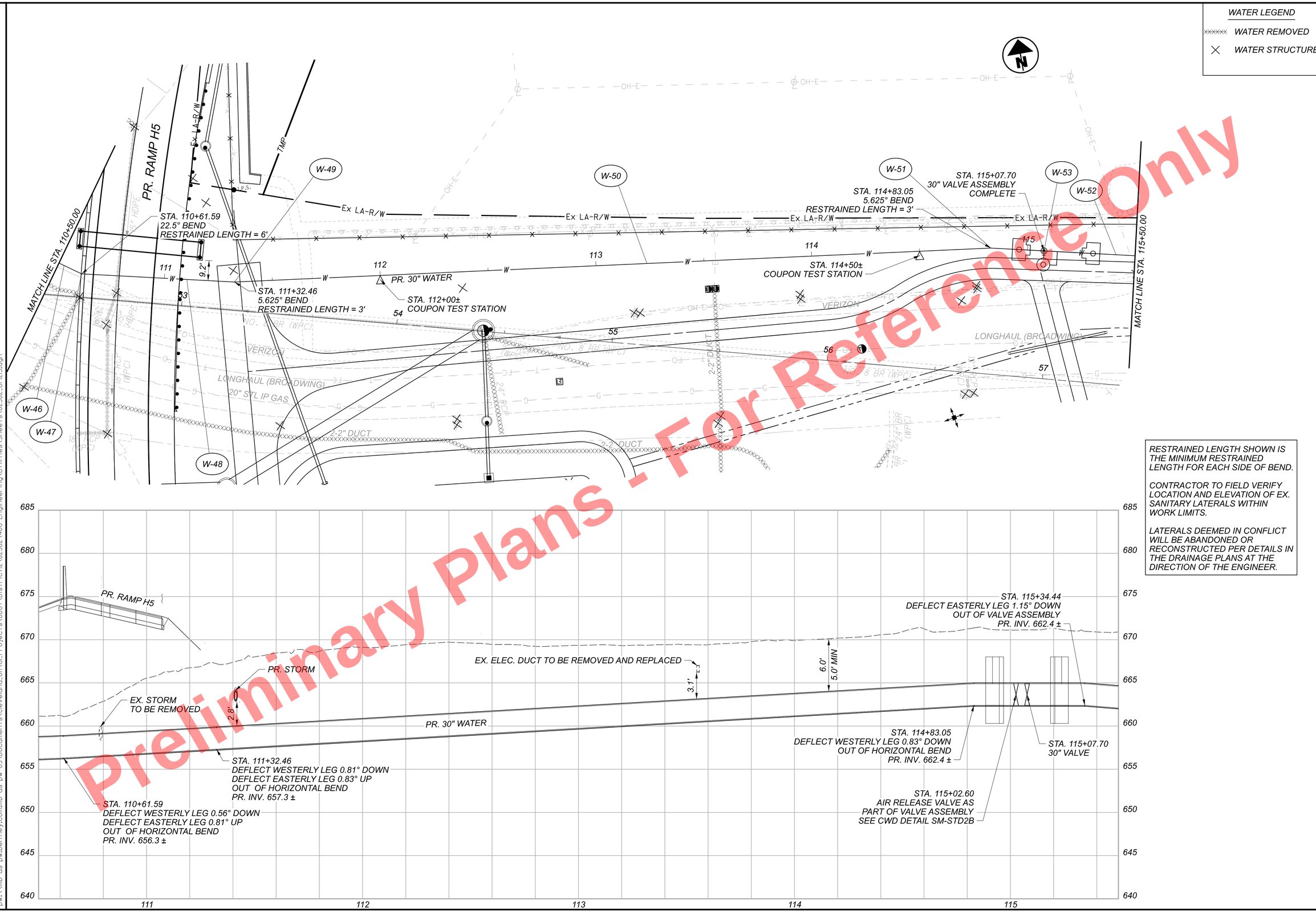

RESTRAINED LENGTH SHOWN IS THE MINIMUM RESTRAINED LENGTH FOR EACH SIDE OF BEND.

CONTRACTOR TO FIELD VERIFY LOCATION AND ELEVATION OF EX. SANITARY LATERALS WITHIN WORK LIMITS.

LATERALS DEEMED IN CONFLICT WILL BE ABANDONED OR RECONSTRUCTED PER DETAILS IN THE DRAINAGE PLANS AT THE DIRECTION OF THE ENGINEER.

Preliminary Plans - For Reference Only

30" WATERLINE PLAN AND PROFILE (E.18TH ST./COMMUNITY COLLEGE AVE.)
STA. 110+50.00 TO STA. 115+50.00

CUY-90-16.28 (CCG3A)

MODEL: 82382_UPI213 PAPERSIZE: 34x22 (in.) DATE: 6/9/2025 TIME: 2:37:31 PM USER: Julie.Ross
pw:\\mb-us-pw.bentley.com:mb-us-pw-03\Documents\Cleveland_OH\01_Projects\ODOT\District12\82382\400-Engineering\Utilities\Sheets\82382_UPI213.dgn

DESIGN AGENCY
Michael Baker INTERNATIONAL

DESIGNER
SMP

REVIEWER
SM 05/15/24

PROJECT ID
82382

SHEET 1403 TOTAL 2696

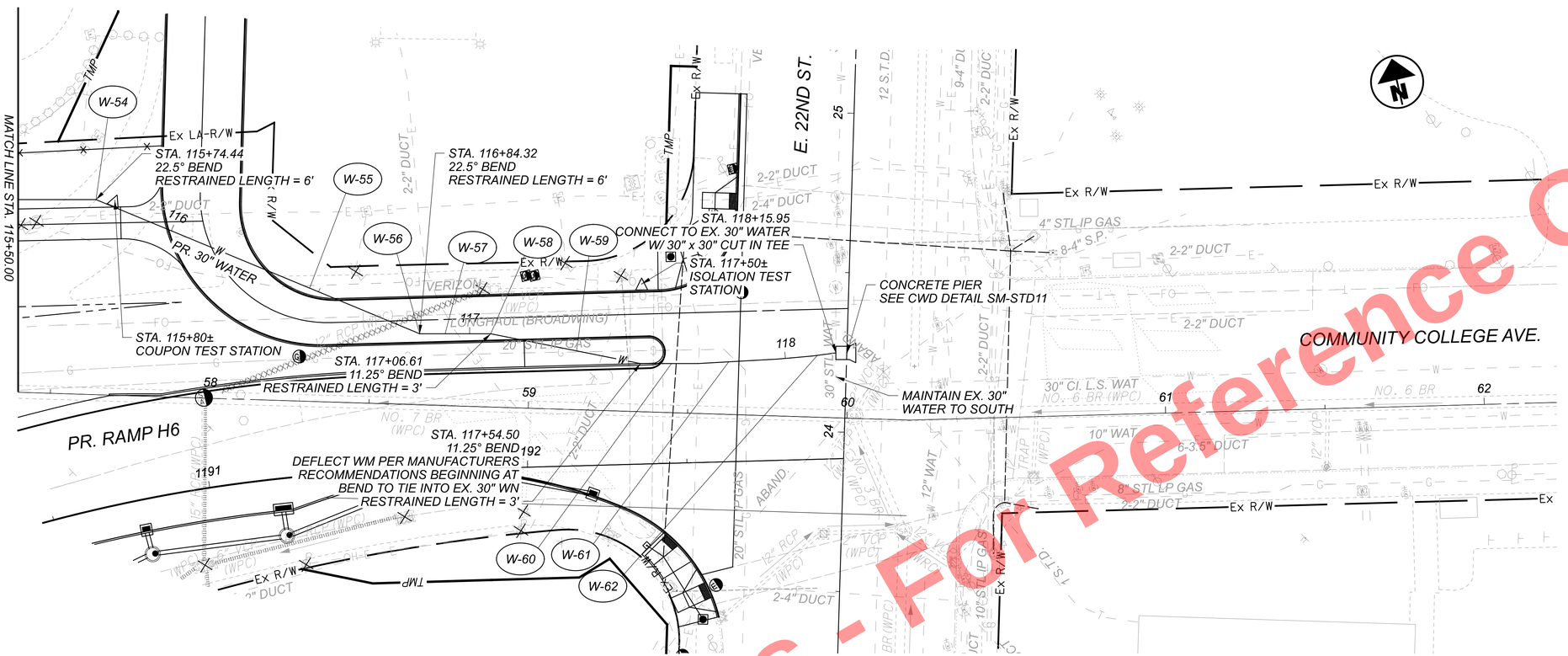

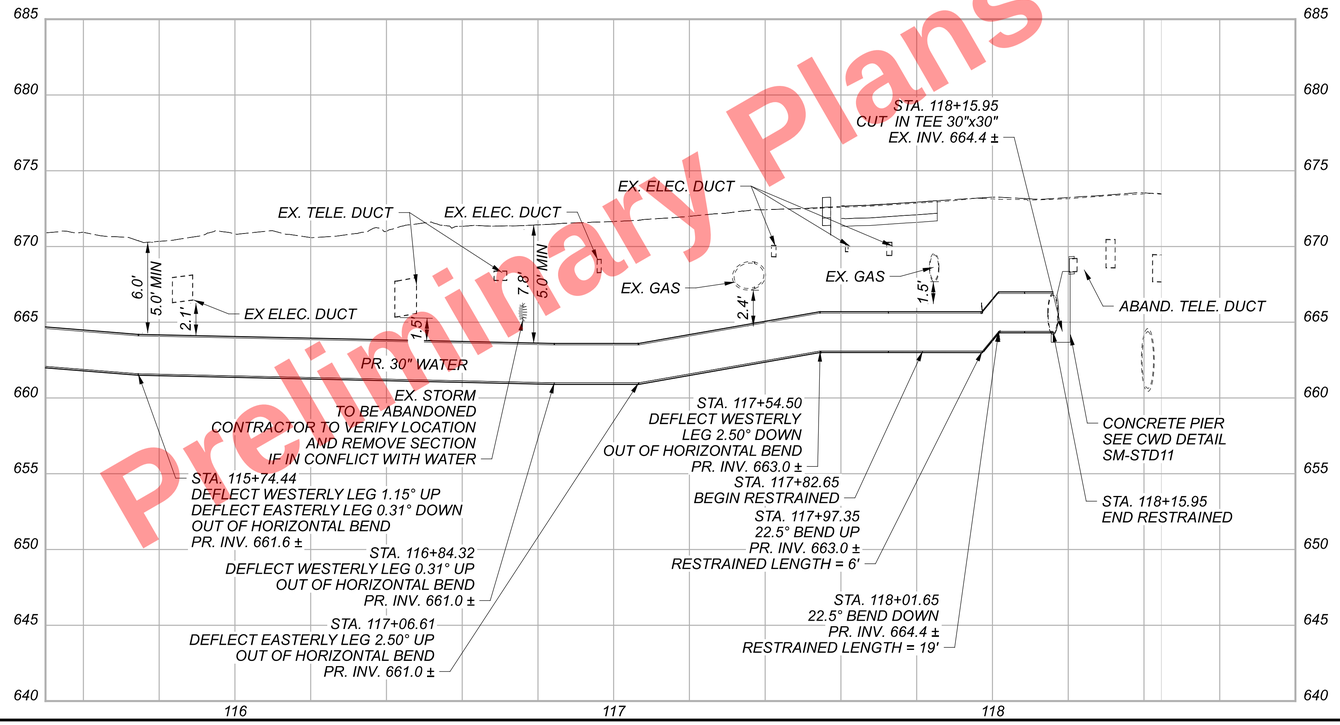

WATER LEGEND

WATER REMOVED

WATER STRUCTURE

HORIZONTAL SCALE IN FEET

0 10 20 40

RESTRAINED LENGTH SHOWN IS THE MINIMUM RESTRAINED LENGTH FOR EACH SIDE OF BEND.

CONTRACTOR TO FIELD VERIFY LOCATION AND ELEVATION OF EX. SANITARY LATERALS WITHIN WORK LIMITS.

LATERALS DEEMED IN CONFLICT WILL BE ABANDONED OR RECONSTRUCTED PER DETAILS IN THE DRAINAGE PLANS AT THE DIRECTION OF THE ENGINEER.

30" WATERLINE PLAN AND PROFILE (E.18TH ST./COMMUNITY COLLEGE AVE.)
STA. 115+50.00 TO END

DESIGN AGENCY

Michael Baker INTERNATIONAL

DESIGNER SMP

REVIEWER SM 05/15/24

PROJECT ID 82382

SHEET 1404 TOTAL 2696

CUY-90-16.28 (CCG3A)

MODEL: 82382_UPI214 PAPERSIZE: 34x22 (in.) DATE: 6/9/2025 TIME: 2:37:50 PM USER: Julie.Ross
pw:\\mb-us-pw.bentley.com:mb-us-pw-03\Documents\Cleveland_OH\OI_Projects\ODOT\District2\82382\400-Engineering\Utilities\Sheets\82382_UPI214.dgn

Preliminary Plans - For Reference Only

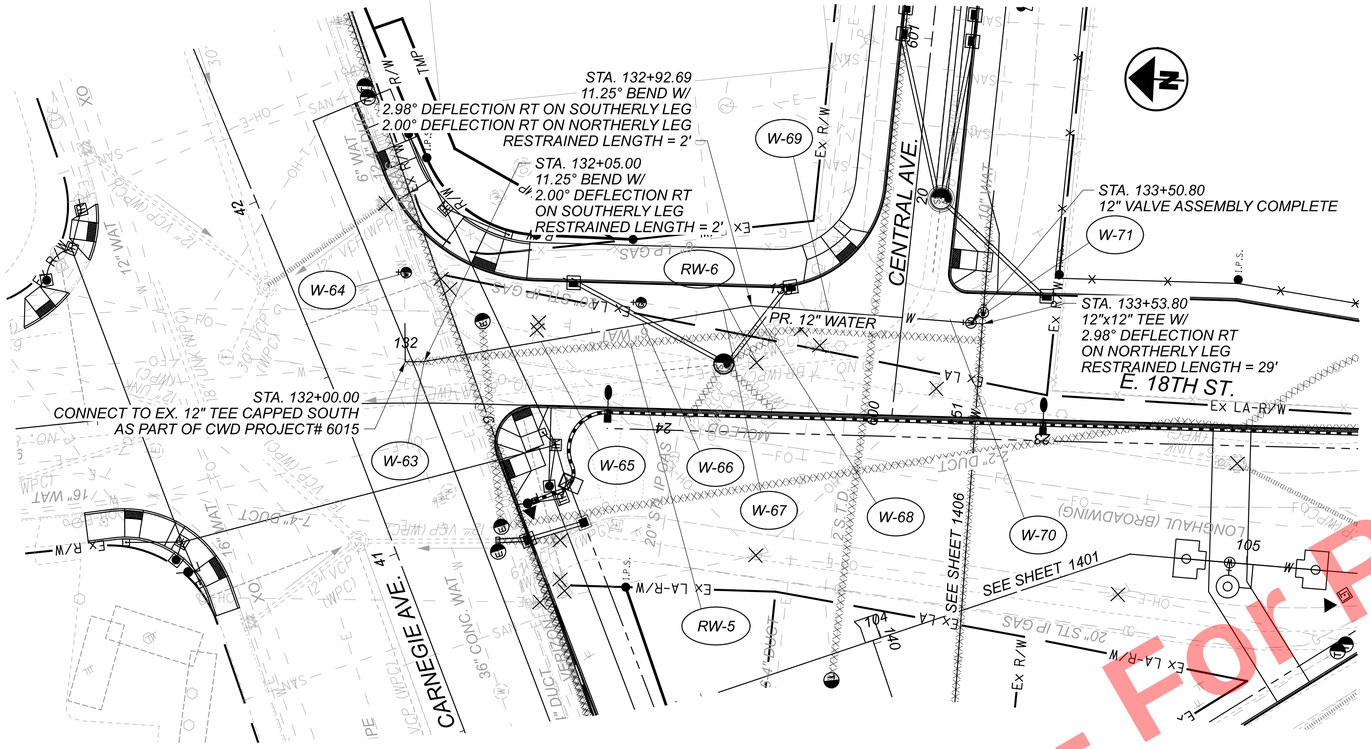

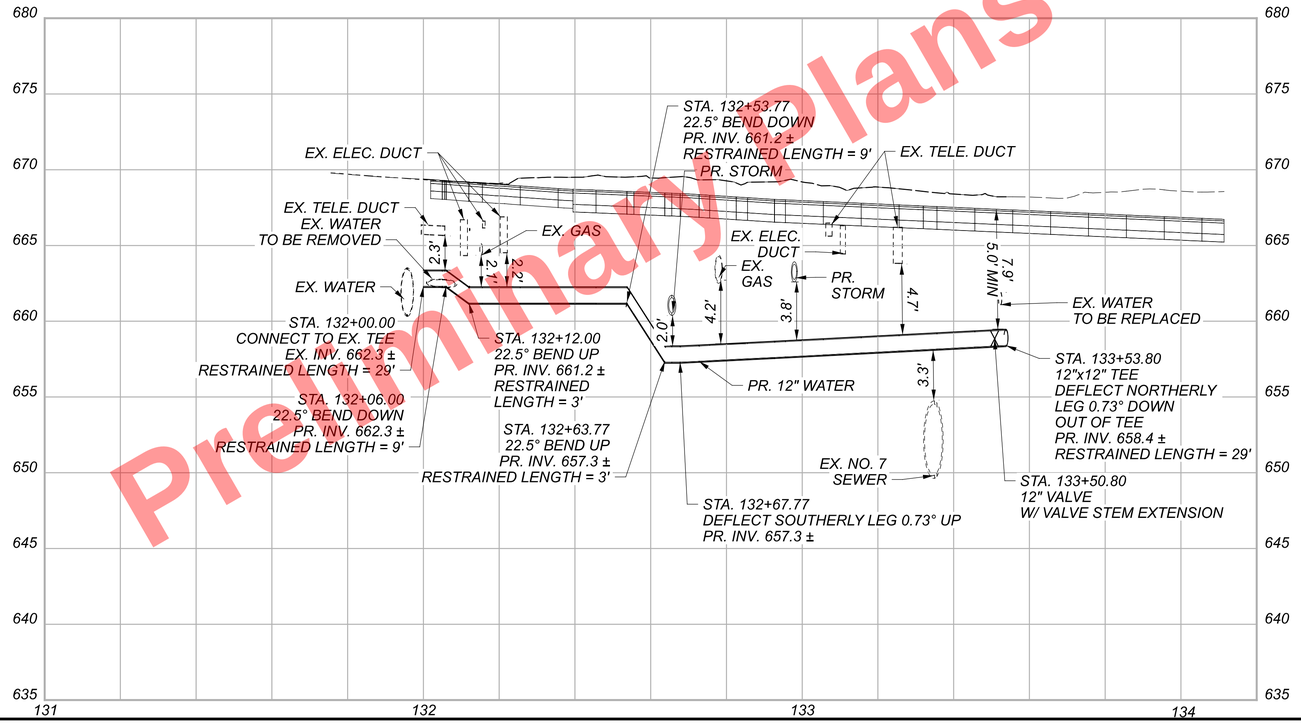

Preliminary Plans - For Reference Only

WATER LEGEND

WATER REMOVED

WATER STRUCTURE

HORIZONTAL SCALE IN FEET
0 10 20 40

12" WATERLINE PLAN AND PROFILE (E. 18TH ST./CENTRAL AVE.) STA. 132+00.00 TO STA. 133+53.80

RESTRAINED LENGTH SHOWN IS THE MINIMUM RESTRAINED LENGTH FOR EACH SIDE OF BEND.

CONTRACTOR TO FIELD VERIFY LOCATION AND ELEVATION OF EX. SANITARY LATERALS WITHIN WORK LIMITS.

LATERALS DEEMED IN CONFLICT WILL BE ABANDONED OR RECONSTRUCTED PER DETAILS IN THE DRAINAGE PLANS AT THE DIRECTION OF THE ENGINEER.

DESIGN AGENCY
Michael Baker INTERNATIONAL

DESIGNER SMP
REVIEWER SM 05/15/24
PROJECT ID 82382
SHEET 1405 TOTAL 2696

CUY-90-16.28 (CCG3A)

MODEL: 82382_UPI2I5 PAPERSIZE: 34x22 (In.) DATE: 6/9/2025 TIME: 2:38:19 PM USER: Julie.Ross
pw:\\mb-us-pw.bentley.com\mb-us-pw-03\Documents\Cleveland_OH\01_Projects\0007\District2\82382\400-Engineering\Utilities\Sheets\82382_UPI2I5.dgn

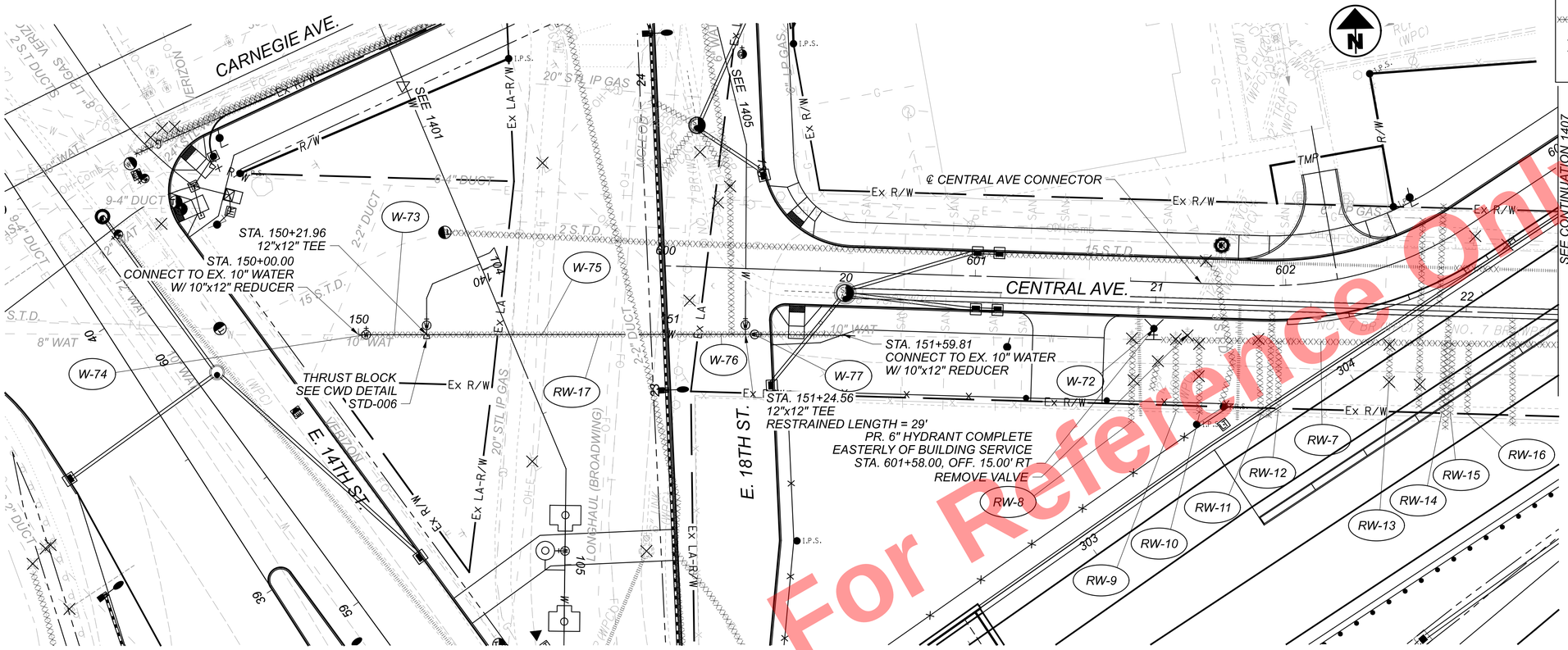

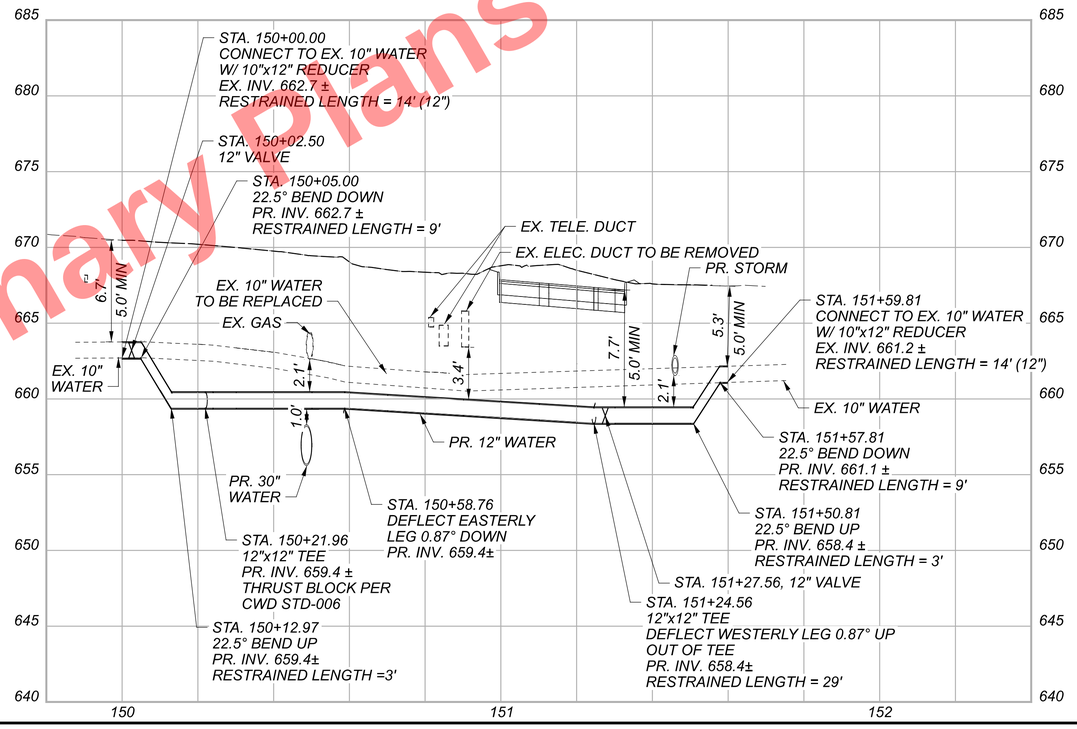

RESTRAINED LENGTH SHOWN IS THE MINIMUM RESTRAINED LENGTH FOR EACH SIDE OF BEND.

CONTRACTOR TO FIELD VERIFY LOCATION AND ELEVATION OF EX. SANITARY LATERALS WITHIN WORK LIMITS.

LATERALS DEEMED IN CONFLICT WILL BE ABANDONED OR RECONSTRUCTED PER DETAILS IN THE DRAINAGE PLANS AT THE DIRECTION OF THE ENGINEER.

Preliminary Plans - For Reference Only

12" WATERLINE PLAN AND PROFILE (CENTRAL AVE. AT E. 18TH ST.)
STA. 150+00.00 TO STA. 151+59.81

DESIGN AGENCY
Michael Baker INTERNATIONAL

DESIGNER SMP
REVIEWER SM 05/15/24
PROJECT ID 82382
SHEET 1406 TOTAL 2696

CUY-90-16.28 (CCG3A)
MODEL: 82382_UPI2I6 PAPERSIZE: 34x22 (In.) DATE: 6/9/2025 TIME: 2:38:50 PM USER: Julie.Ross
pw:\\mb-us-pw.bentley.com:mb-us-pw-03\Documents\Cleveland_OHIO\Projects\ODOT\District2\82382\400-Engineering\Utilities\Sheets\82382_UPI2I6.dgn

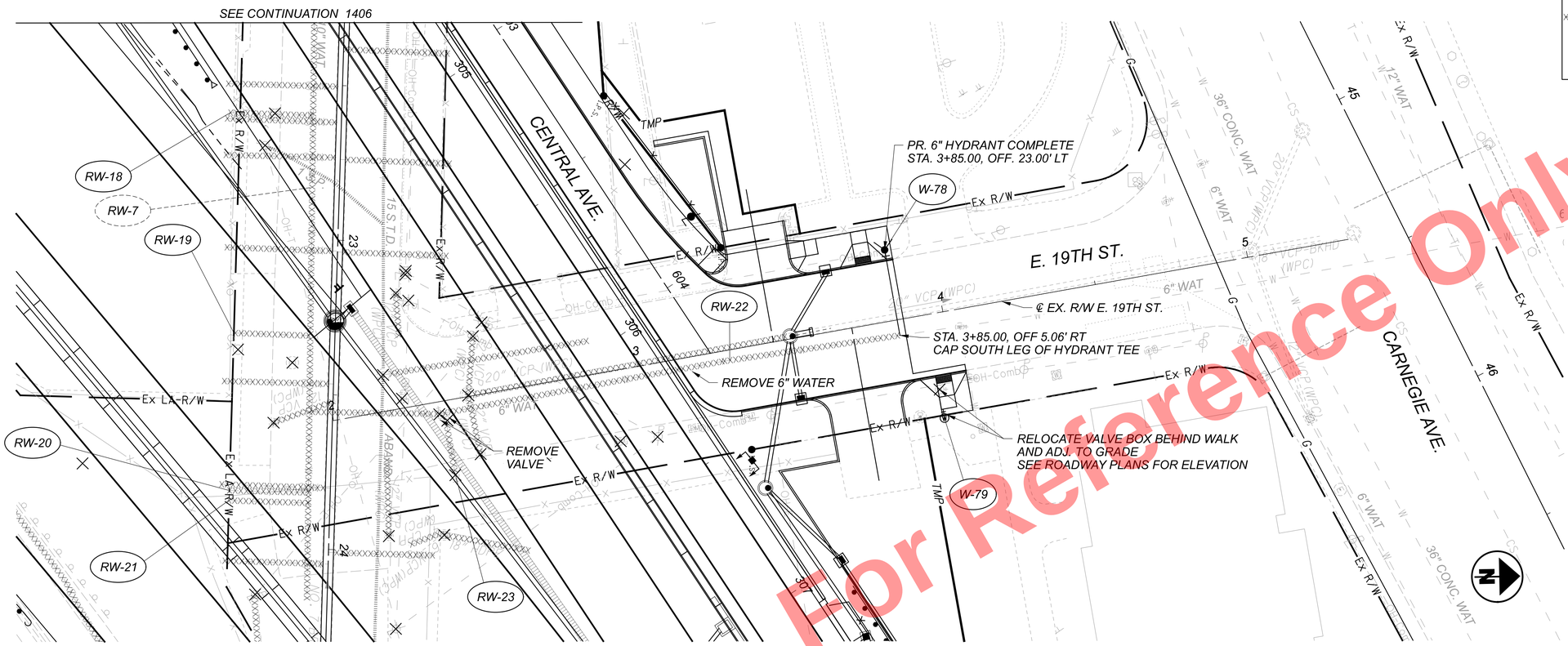

Preliminary Plans - For Reference Only

RESTRAINED LENGTH SHOWN IS THE MINIMUM RESTRAINED LENGTH FOR EACH SIDE OF BEND.

CONTRACTOR TO FIELD VERIFY LOCATION AND ELEVATION OF EX. SANITARY LATERALS WITHIN WORK LIMITS.

LATERALS DEEMED IN CONFLICT WILL BE ABANDONED OR RECONSTRUCTED PER DETAILS IN THE DRAINAGE PLANS AT THE DIRECTION OF THE ENGINEER.

WATERLINE REMOVAL PLAN (E. 19TH ST.)
STA. 1+92.82 TO STA. 3+85.00

DESIGN AGENCY
Michael Baker INTERNATIONAL

DESIGNER: SMP
REVIEWER: SM 05/15/24
PROJECT ID: 82382
SHEET: 1407 TOTAL: 2696

CUY-90-16.28 (CCG3A)

MODEL: 82382_UP1217 PAPERSIZE: 34x22 (In) DATE: 3/28/2025 TIME: 5:17:4 AM USER: Julie.Ross
pw:\\mb-us-pw.bentley.com:mb-us-pw-03\Documents\Cleveland.OH\OI_Projects\ODOT\District2\82382\400-Engineering\Utilities\Sheets\82382_UP1217.dgn

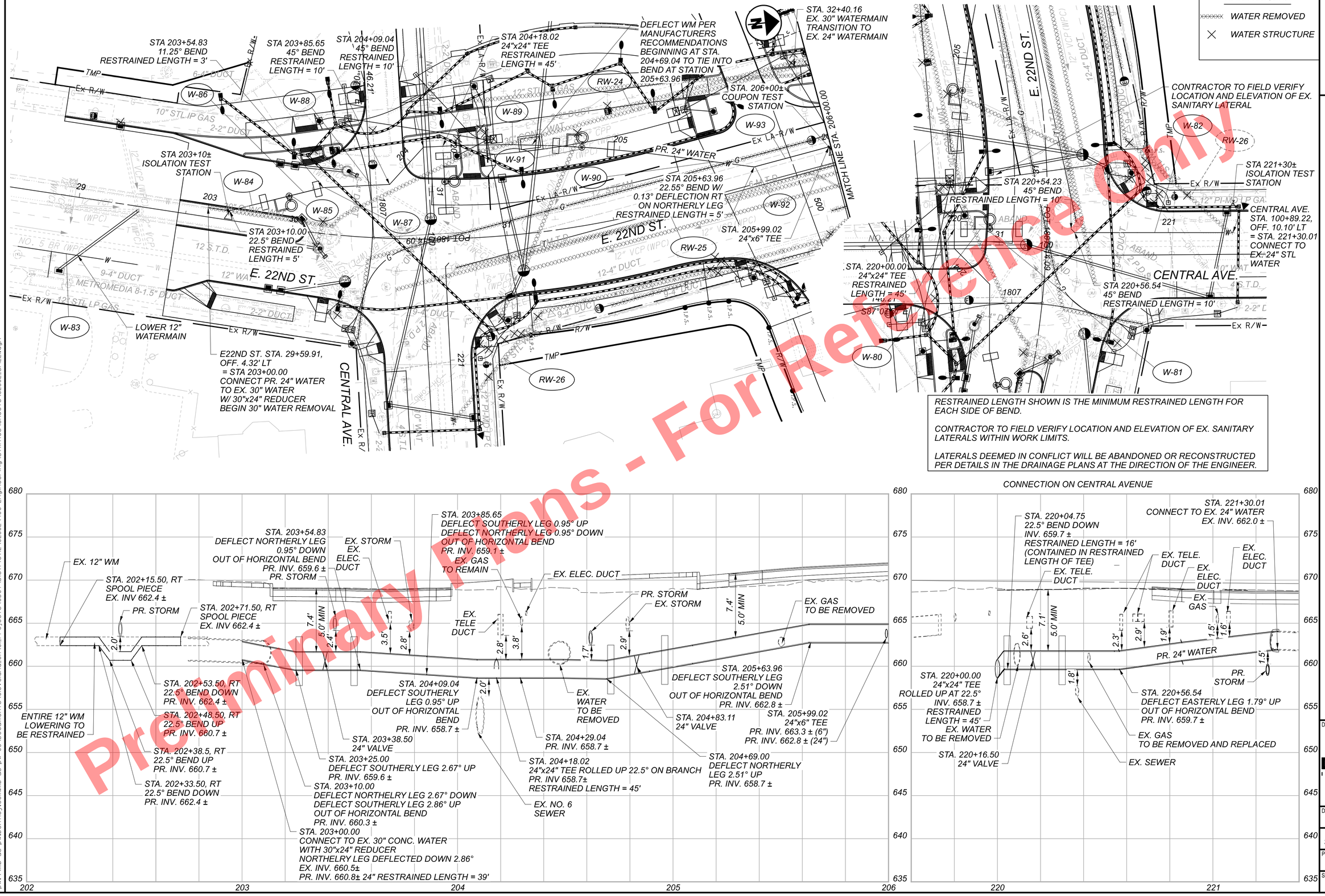

RESTRAINED LENGTH SHOWN IS THE MINIMUM RESTRAINED LENGTH FOR EACH SIDE OF BEND.

CONTRACTOR TO FIELD VERIFY LOCATION AND ELEVATION OF EX. SANITARY LATERALS WITHIN WORK LIMITS.

LATERALS DEEMED IN CONFLICT WILL BE ABANDONED OR RECONSTRUCTED PER DETAILS IN THE DRAINAGE PLANS AT THE DIRECTION OF THE ENGINEER.

Preliminary Plans - For Reference Only

24" WATERLINE PLAN AND PROFILE (E. 22ND ST. / CENTRAL AVE.) STA. 202+50.00 TO STA. 206+00.00

CUY-90-16.28 (CCG3A)

DESIGN AGENCY	Michael Baker INTERNATIONAL
DESIGNER	SMP
REVIEWER	SM 05/15/24
PROJECT ID	82382
SHEET	1408
TOTAL	2696

MODEL: 82382_UP22I PAPERSIZE: 34x22 (in.) DATE: 3/28/2025 TIME: 5:17:51 AM USER: Julie.Ross
pw:\\mb-us-pw.bentley.com\mb-us-pw-03\Documents\Cleveland_OH\01_Projects\0007\District2\82382\400-Engineering\Utilities\Sheets\82382_UP22I.dgn

RESTRAINED LENGTH SHOWN IS THE MINIMUM RESTRAINED LENGTH FOR EACH SIDE OF BEND.

CONTRACTOR TO FIELD VERIFY LOCATION AND ELEVATION OF EX. SANITARY LATERALS WITHIN WORK LIMITS.

LATERALS DEEMED IN CONFLICT WILL BE ABANDONED OR RECONSTRUCTED PER DETAILS IN THE DRAINAGE PLANS AT THE DIRECTION OF THE ENGINEER.

WATER LEGEND
WATER REMOVED
WATER STRUCTURE

HORIZONTAL SCALE IN FEET
0 10 20 40

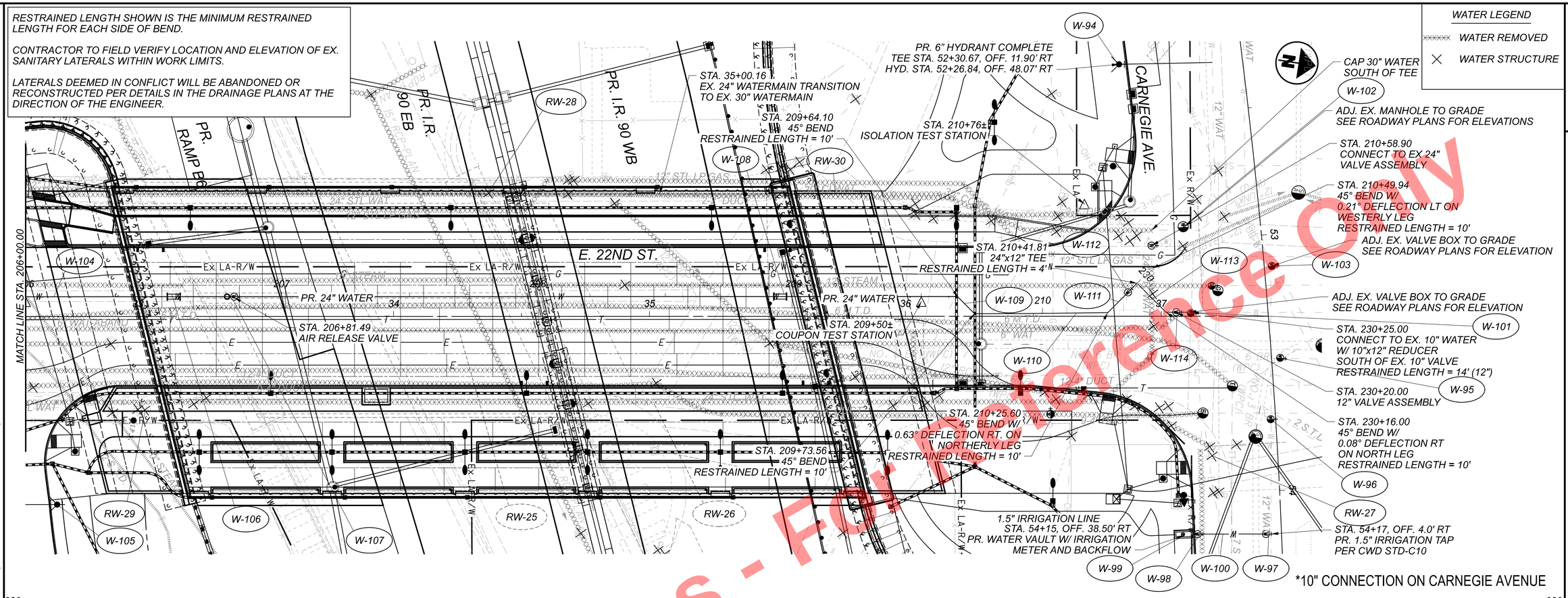

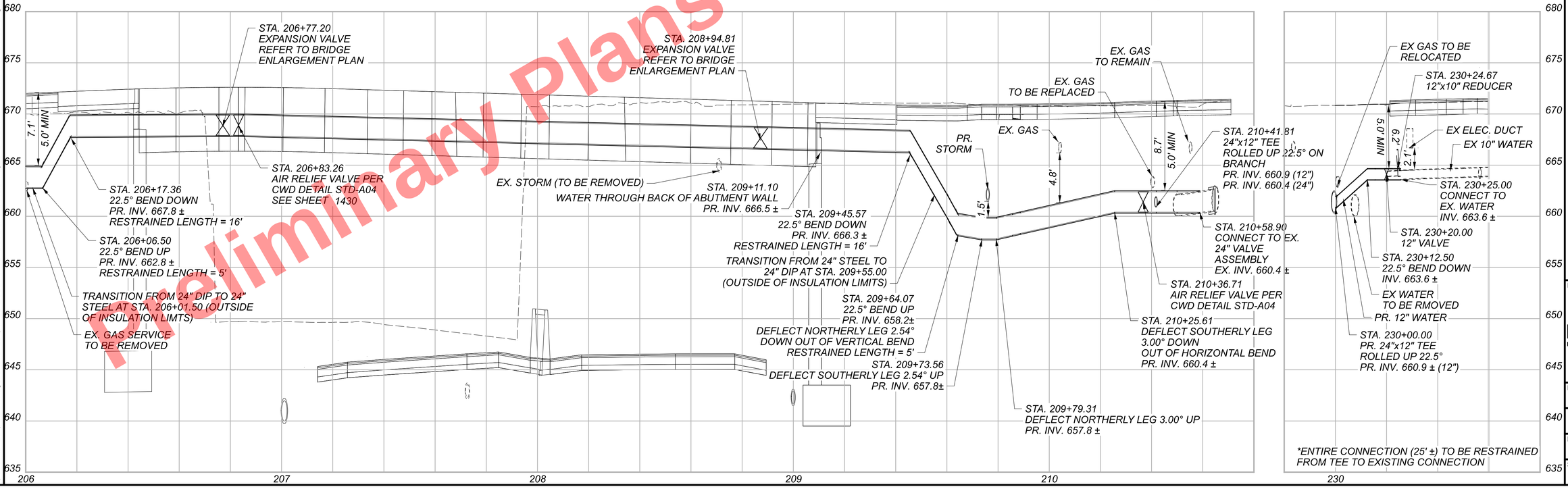

Preliminary Plans - For Reference Only

24" WATERLINE PLAN AND PROFILE (E. 22ND ST. / CARNEGIE AVE.)
STA. 206+00.00 TO STA. 210+47.22

DESIGN AGENCY
Michael Baker INTERNATIONAL

DESIGNER SMP
REVIEWER SM 05/15/24
PROJECT ID 82382
SHEET 1409 TOTAL 2696

CUY-90-16.28 (CCG3A)

MODEL: 82382_UP1222 PAPERSIZE: 34x22 (in.) DATE: 3/28/2025 TIME: 5:18:31 AM USER: Julie.Ross
pw:\\mb-us-pw.bentley.com:mb-us-pw-03\Documents\Cleveland_OH\01_Projects\00DT\District2\82382\400-Engineering\Utilities\Sheets\82382_UP1222.dgn

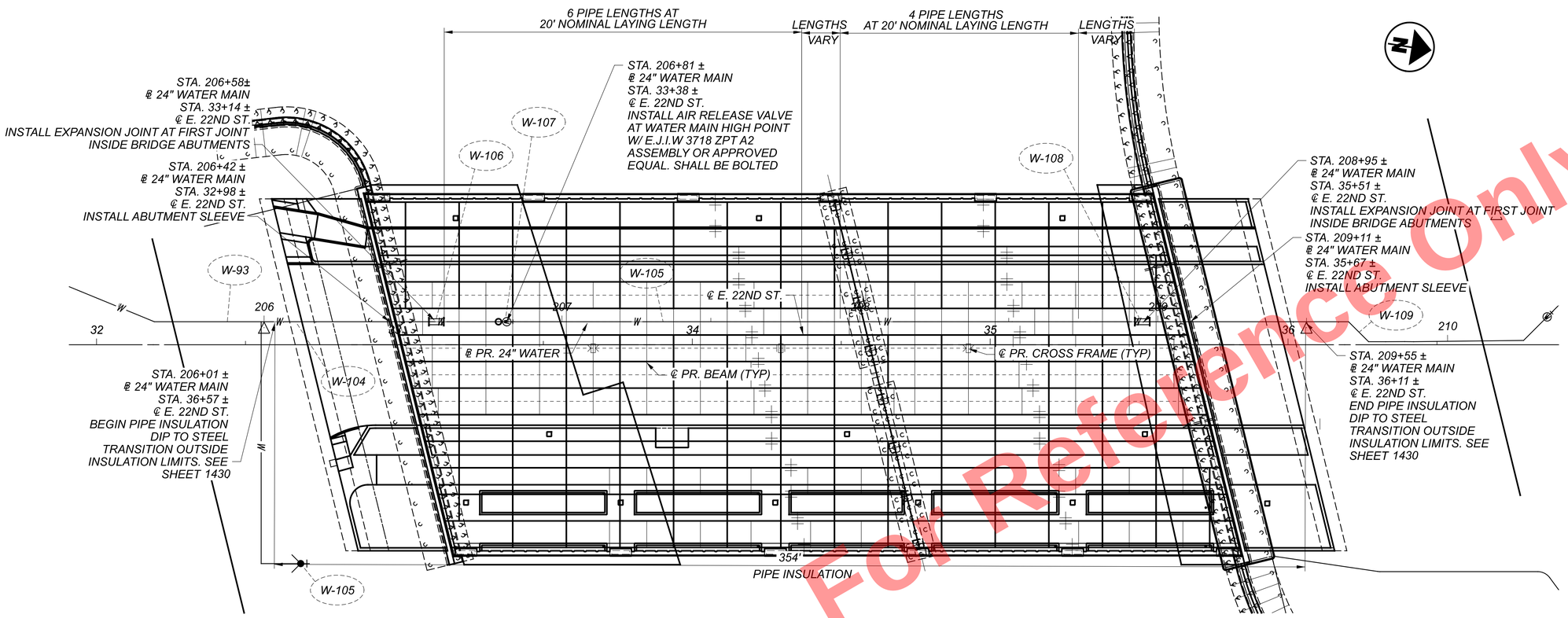

Preliminary Plans - For Reference Only

NOTE:
CONTRACTOR TO PROVIDE A LAYOUT PLAN FOR THE WATERMAIN PRIOR TO COMMENCING WORK ON THE BRIDGE

HORIZONTAL SCALE IN FEET
0 10 20 40

WATER WORK PLAN - E. 22ND ST. BRIDGE 13 ENLARGEMENT PLAN

DESIGN AGENCY
Michael Baker INTERNATIONAL

DESIGNER SMP
REVIEWER SM 05/15/24
PROJECT ID 82382
SHEET 1410 TOTAL 2696

CUY-90-16.28

MODEL: 82382_UPI223 PAPERSIZE: 34x22 (in.) DATE: 3/28/2025 TIME: 5:18:55 AM USER: Julie.Ross
pw:\\mb-us-pw.bentley.com:mb-us-pw-03\Documents\Cleveland.OH\OI_Projects\ODOT\District2\82382\400-Engineering\Utilities\Sheets\82382_UPI223.dgn

Preliminary Plans - For Reference Only

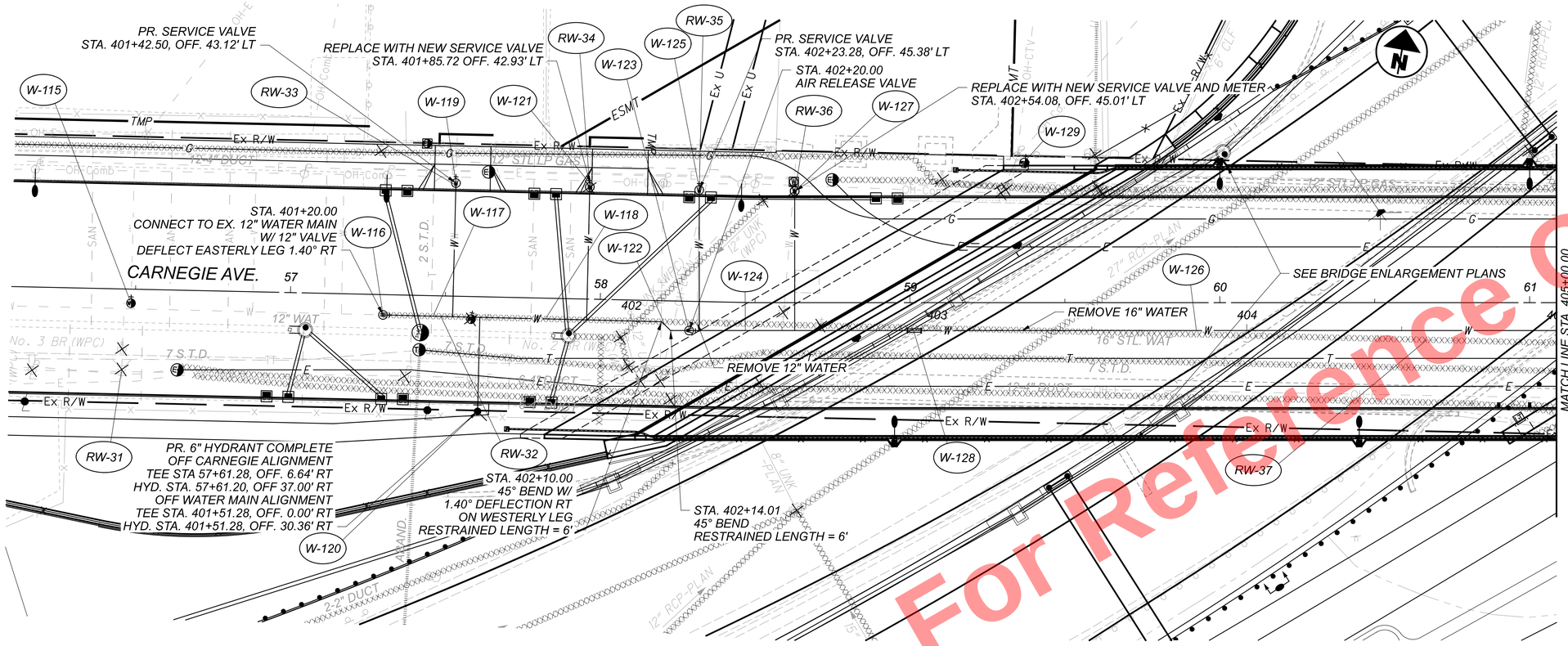

WATER LEGEND

- WATER REMOVED
- WATER STRUCTURE

HORIZONTAL SCALE IN FEET
0 10 20 40

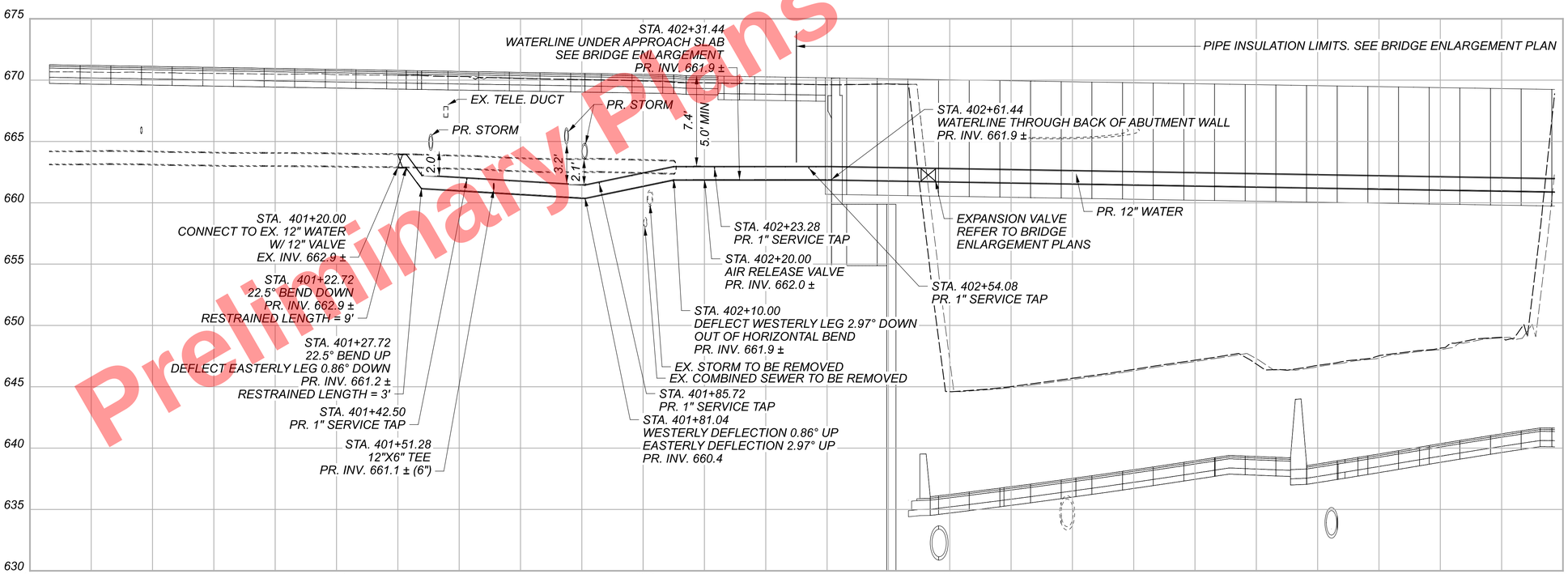

RESTRAINED LENGTH SHOWN IS THE MINIMUM RESTRAINED LENGTH FOR EACH SIDE OF BEND.

CONTRACTOR TO FIELD VERIFY LOCATION AND ELEVATION OF EX. SANITARY LATERALS WITHIN WORK LIMITS.

LATERALS DEEMED IN CONFLICT WILL BE ABANDONED OR RECONSTRUCTED PER DETAILS IN THE DRAINAGE PLANS AT THE DIRECTION OF THE ENGINEER.

12" WATERLINE PLAN AND PROFILE (CARNEGIE AVE.) STA. 400+00.00 TO STA. 405+00.00

DESIGN AGENCY
Michael Baker INTERNATIONAL

DESIGNER SMP
REVIEWER SM 05/15/24
PROJECT ID 82382
SHEET 1411 TOTAL 2696

CUY-90-16.28 (CCG3A)

MODEL: 82382_UPI23I PAPERSIZE: 34x22 (in.) DATE: 3/28/2025 TIME: 5:19:18 AM USER: Julie.Ross
pw:\\mb-us-pw.bentley.com:mb-us-pw-03\Documents\Cleveland_OHIO\Projects\DOOT\District2\82382\400-Engineering\Utilities\Sheets\82382_UPI23I.dgn

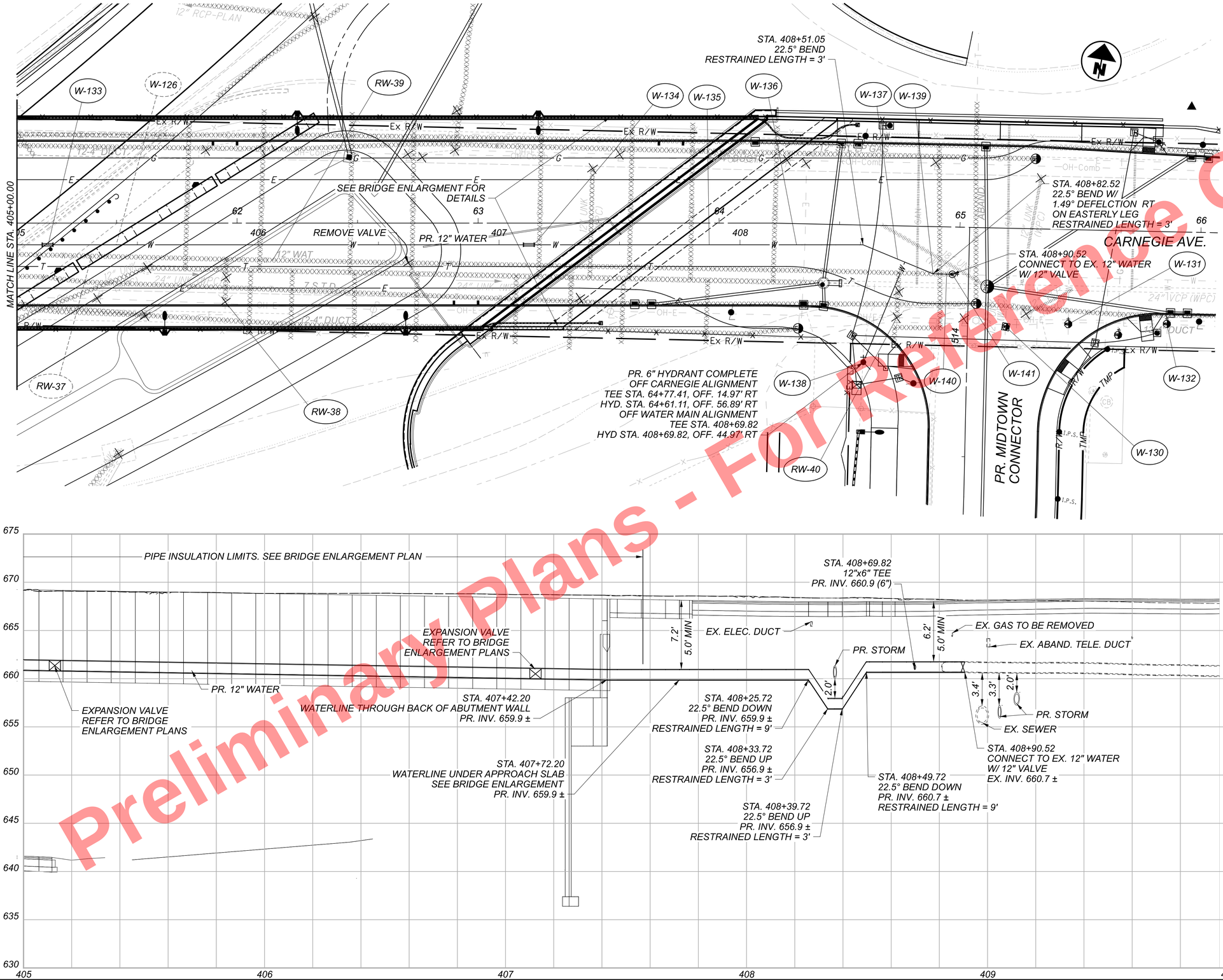

RESTRAINED LENGTH SHOWN IS THE MINIMUM RESTRAINED LENGTH FOR EACH SIDE OF BEND.

CONTRACTOR TO FIELD VERIFY LOCATION AND ELEVATION OF EX. SANITARY LATERALS WITHIN WORK LIMITS.

LATERALS DEEMED IN CONFLICT WILL BE ABANDONED OR RECONSTRUCTED PER DETAILS IN THE DRAINAGE PLANS AT THE DIRECTION OF THE ENGINEER.

Preliminary Plans - For Reference Only

12" WATERLINE PLAN AND PROFILE (CARNEGIE AVE.) STA. 405+00.00 TO STA. 408+90.52

DESIGN AGENCY
Michael Baker INTERNATIONAL

DESIGNER SMP
REVIEWER SM 05/15/24
PROJECT ID 82382
SHEET 1412 TOTAL 2696

CUY-90-16.28 (CCG3A)

MODEL: 82382_UPI232 PAPERSIZE: 34x22 (in.) DATE: 3/28/2025 TIME: 5:19:44 AM USER: Julie.Ross
pw:\\mb-us-pw.bentley.com\mb-us-pw-03\Documents\Cleveland.OHIO\Projects\0007\District2\82382\400-Engineering\Utilities\Sheets\82382_UPI232.dgn

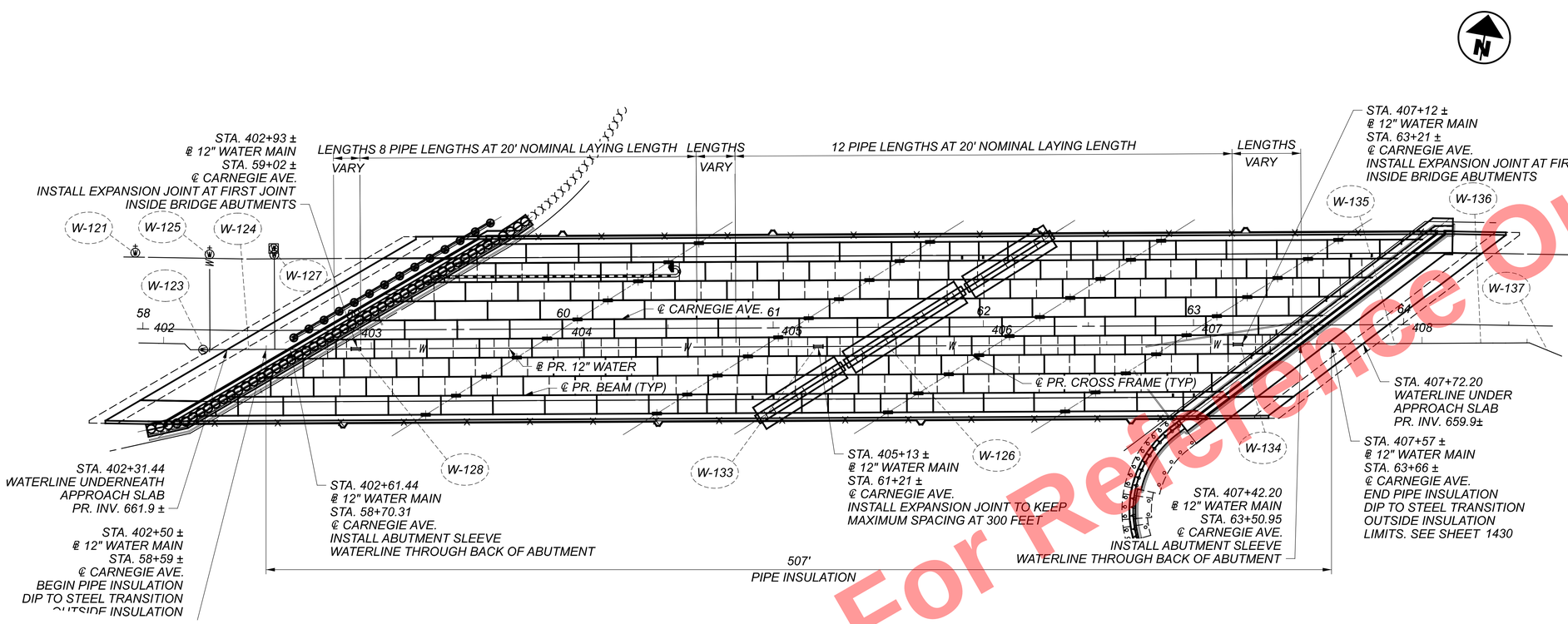

Preliminary Plans - For Reference Only

NOTE:
CONTRACTOR TO PROVIDE A LAYOUT PLAN FOR THE WATERMAIN PRIOR TO COMMENCING WORK ON THE BRIDGE

HORIZONTAL SCALE IN FEET
0 15 30 60

WATER WORK PLAN - CARNEGIE AVE. BRIDGE 14 ENLARGEMENT PLAN

DESIGN AGENCY
Michael Baker INTERNATIONAL

DESIGNER SMP
REVIEWER SM 05/15/24
PROJECT ID 82382
SHEET 1413 TOTAL 2696

CUY-90-16.28

MODEL: 82382_UPI233 PAPERSIZE: 34x22 (in.) DATE: 3/28/2025 TIME: 5:20:02 AM USER: Julie.Ross
pw:\\mb-us-pw.bentley.com:mb-us-pw-03\Documents\Cleveland.OH\OI_Projects\ODOT\District2\82382\400-Engineering\U

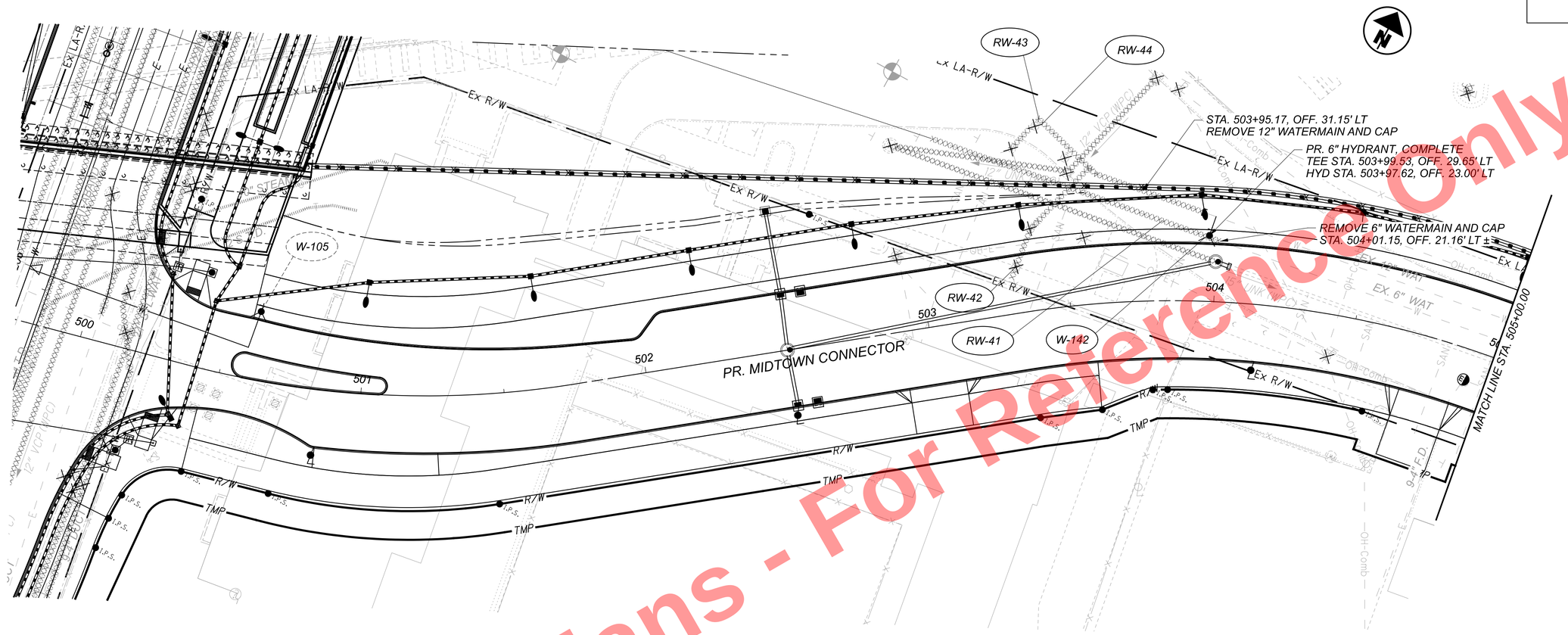

Preliminary Plans - For Reference Only

RESTRAINED LENGTH SHOWN IS THE MINIMUM RESTRAINED LENGTH FOR EACH SIDE OF BEND.

CONTRACTOR TO FIELD VERIFY LOCATION AND ELEVATION OF EX. SANITARY LATERALS WITHIN WORK LIMITS.

LATERALS DEEMED IN CONFLICT WILL BE ABANDONED OR RECONSTRUCTED PER DETAILS IN THE DRAINAGE PLANS AT THE DIRECTION OF THE ENGINEER.

12" WATERLINE PLAN AND PROFILE (MIDTOWN CONNECTOR) BEGIN TO STA. 505+00.00

DESIGN AGENCY
Michael Baker INTERNATIONAL

DESIGNER SMP

REVIEWER SM 05/15/24

PROJECT ID 82382

SHEET 1414 TOTAL 2696

CUY-90-16.28

MODEL: 82382_UPI244 PAPERSIZE: 34x22 (in.) DATE: 3/28/2025 TIME: 5:20:15 AM USER: Julie.Ross
pw:\\mb-us-pw.bentley.com:mb-us-pw-03\Documents\Cleveland_OH\OL_Projects\ODOT\District 12\82382\400-Engineering\Utilities\Sheets\82382_UPI244.dgn

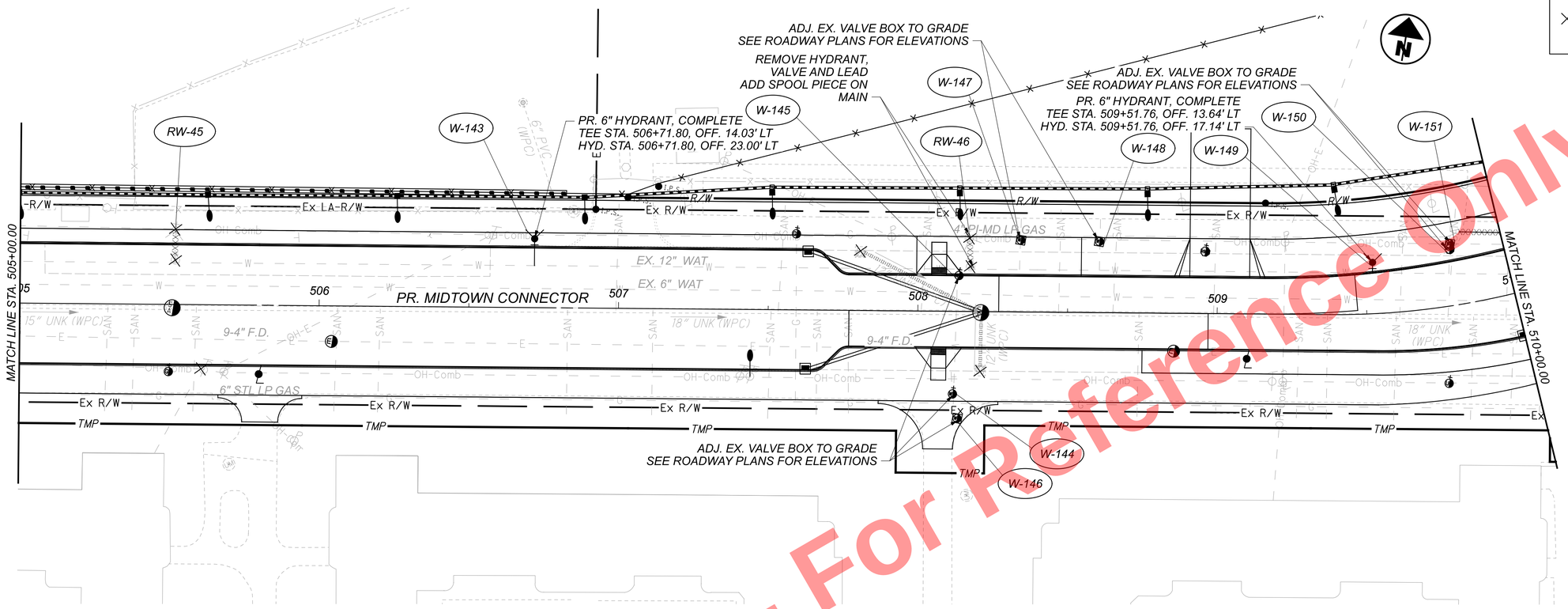

Preliminary Plans - For Reference Only

RESTRAINED LENGTH SHOWN IS THE MINIMUM RESTRAINED LENGTH FOR EACH SIDE OF BEND.

CONTRACTOR TO FIELD VERIFY LOCATION AND ELEVATION OF EX. SANITARY LATERALS WITHIN WORK LIMITS.

LATERALS DEEMED IN CONFLICT WILL BE ABANDONED OR RECONSTRUCTED PER DETAILS IN THE DRAINAGE PLANS AT THE DIRECTION OF THE ENGINEER.

12" WATERLINE PLAN AND PROFILE (MIDTOWN CONNECTOR) STA. 505+00.00 TO STA. 510+00.00

DESIGN AGENCY

Michael Baker INTERNATIONAL

DESIGNER	SMP
REVIEWER	SM 05/15/24
PROJECT ID	82382
SHEET	1415
TOTAL	2696

CUY-90-16.28

MODEL: 82382_UPI245 PAPERSIZE: 34x22 (In.) DATE: 3/28/2025 TIME: 5:20:38 AM USER: Julie.Ross
pw:\\mb-us-pw.bentley.com:mb-us-pw-03\Documents\Cleveland_OHIO\Projects\ODOT\District2\82382\400-Engineering\Utilities\Sheets\82382_UPI245.dgn

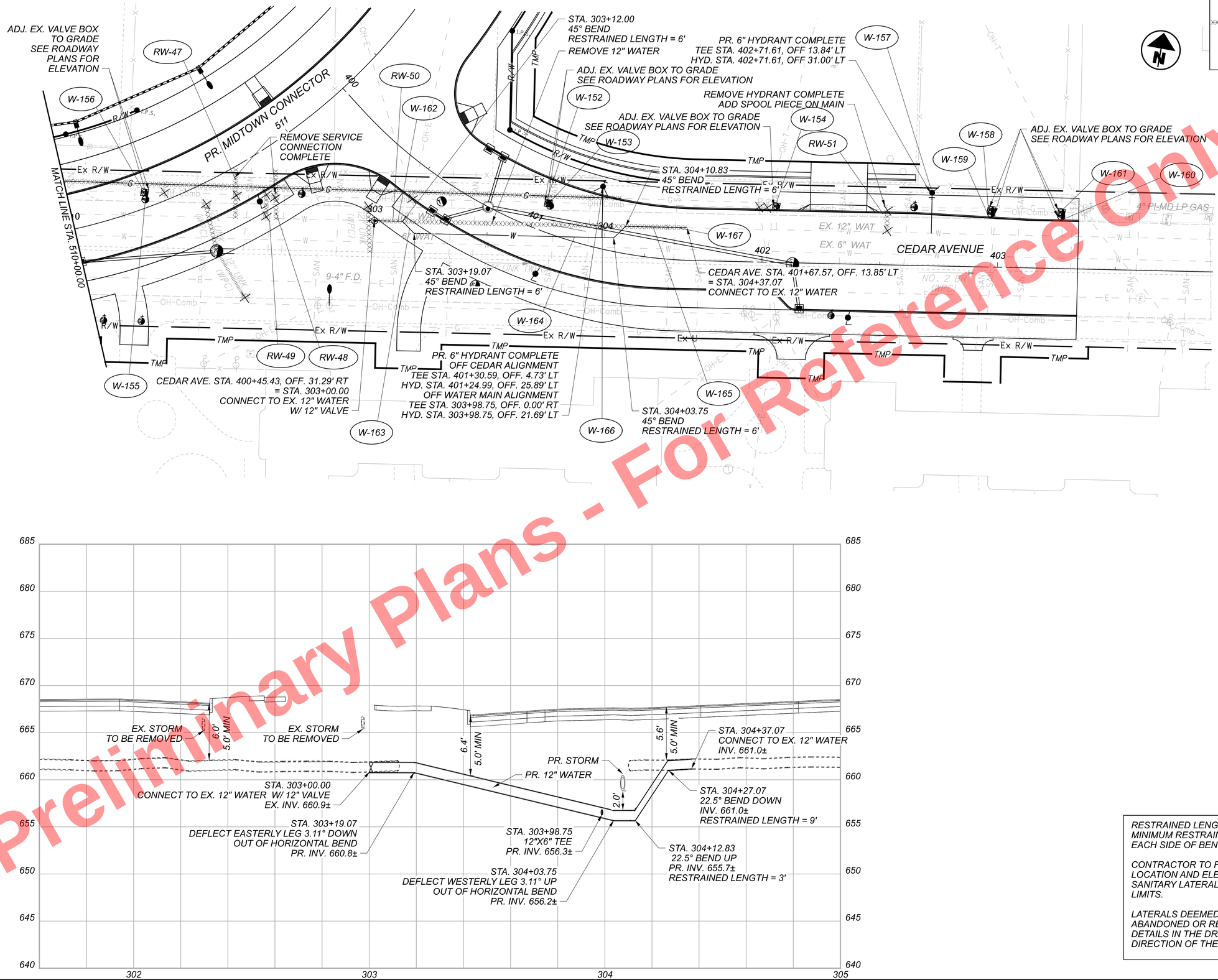

Preliminary Plans - For Reference Only

RESTRAINED LENGTH SHOWN IS THE MINIMUM RESTRAINED LENGTH FOR EACH SIDE OF BEND.

CONTRACTOR TO FIELD VERIFY LOCATION AND ELEVATION OF EX. SANITARY LATERALS WITHIN WORK LIMITS.

LATERALS DEEMED IN CONFLICT WILL BE ABANDONED OR RECONSTRUCTED PER DETAILS IN THE DRAINAGE PLANS AT THE DIRECTION OF THE ENGINEER.

12" WATERLINE PLAN AND PROFILE (CEDAR AVE. BEGIN TO END) MIDTOWN CONNECTOR STA. 510+00.00 TO END

DESIGN AGENCY
Michael Baker INTERNATIONAL

DESIGNER: SMP
REVIEWER: SM 05/15/24
PROJECT ID: 82382
SHEET: 1416 TOTAL: 2696

CUY-90-16.28

MODEL: 82382_UPI246 PAPERSIZE: 34x22 (in.) DATE: 3/28/2025 TIME: 5:21:07 AM USER: Julie.Ross
pw:\\mb-us-pw.bentley.com:mb-us-pw-03\Documents\Cleveland_OH\01_Projects\000T\District2\82382\400-Engineering\Utilities\Sheets\82382_UPI246.dgn

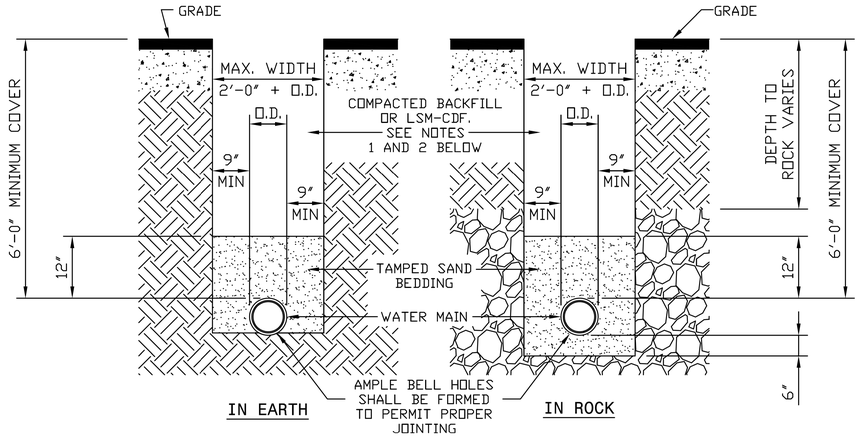

WATER MAIN TRENCH DETAILS

- NOT TO SCALE -

NOTES:
1) PREMIUM BACKFILL CONSISTING OF LOW STRENGTH MORTAR - CONTROLLED DENSITY FILL (LSM-CDF) 'FLOWABLE FILL' IS REQUIRED:
   A) UNDER ALL EXISTING OR FUTURE PAVEMENTS, SIDEWALKS AND DRIVES WITHIN THE CITY OF CLEVELAND CORPORATION LIMITS.
   B) AS SPECIFIED IN LOCAL MUNICIPALITIES SERVED BY CWD (SEE LOCAL REQUIREMENTS)
2) WHEN PREMIUM BACKFILL IS REQUIRED BY THE LOCAL MUNICIPALITY FOR CASES OTHER THAN THOSE LISTED IN NOTE 1 ABOVE, IT SHALL BE LIMESTONE GRADED PER ODOT 304.02 OR ODOT 411. NO SLAG IS PERMITTED.
3) CONTRACTOR SHALL USE SPECIAL CARE IN PLACING THE SAND BEDDING, SO AS TO AVOID SCRAPING OF THE EXTERIOR COATING, INJURING THE PIPE, DISTORTING OR MOVING THE PIPE WHEN COMPACTING THE SAME. THE SAND BEDDING SHALL BE TAMPED IN SIX (6) INCH LAYERS, SIMULTANEOUSLY ON EACH SIDE OF THE PIPE, AND THOROUGHLY COMPACTED SO AS TO PROVIDE A SOLID BACKING AGAINST THE EXTERNAL SURFACE OF THE PIPE.
4) MINIMUM COMPACTION FOR ALL SAND BEDDING, BACKFILL AND PREMIUM BACKFILL SHALL BE 95% STANDARD PROCTOR.
5) PAVEMENT, SIDEWALK OR DRIVES TO BE INSTALLED IN ACCORDANCE WITH LOCAL MUNICIPALITY'S SPECIFICATIONS.

STD-001 | DATE: 6-21-2012

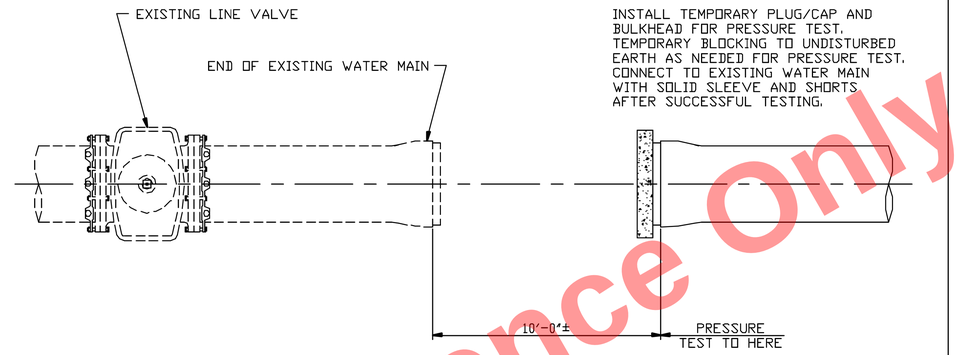

NOTE:
PRESSURE TESTING OF WATER MAINS:
WHERE NEW/EXTENDED WATER MAINS ARE CONNECTED TO AN EXISTING WATER MAIN FOR PRESSURE TEST, RESULTING IN FAILURE OF THE PRESSURE TEST OR ANY DAMAGE TO THE EXISTING WATER MAIN , OR ITS APPURTENANCES, THE REPAIR THEREOF SHALL BE THE SOLE RESPONSIBILITY OF THE CONTRACTOR. ALL REPAIRS SHALL BE DONE TO THE SATISFACTION OF THE DIVISION OF WATER.

ALTERNATE PRESSURE TESTING DETAIL

- NOT TO SCALE -

STD-002 | DATE: 10-1-97 | BY: RSK

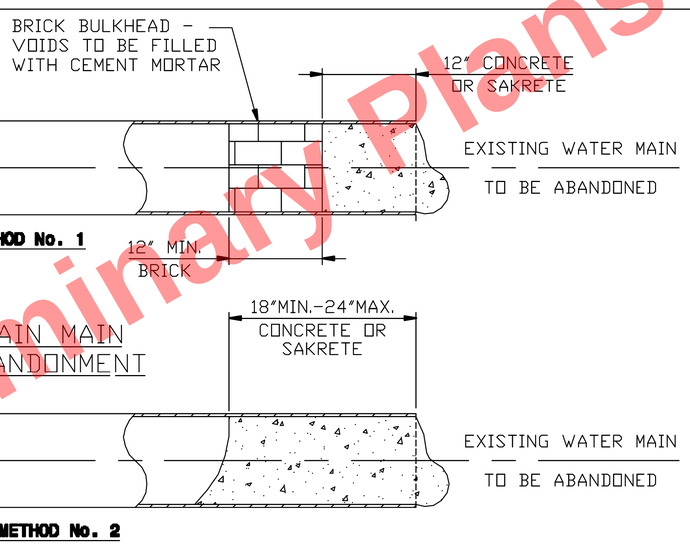

PLUGGING ABANDONED WATER MAIN ENDS

- NOT TO SCALE -

STD-004 | DATE: 10-1-97 | BY: RSK

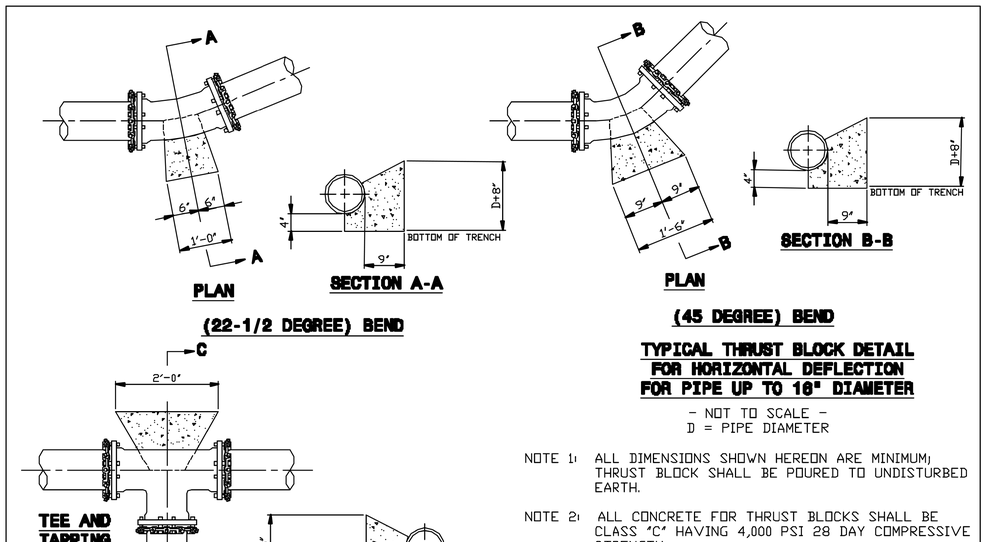

TYPICAL THRUST BLOCK DETAIL FOR HORIZONTAL DEFLECTION FOR PIPE UP TO 16" DIAMETER

- NOT TO SCALE -
D = PIPE DIAMETER

NOTE 1: ALL DIMENSIONS SHOWN HEREON ARE MINIMUM; THRUST BLOCK SHALL BE POURED TO UNDISTURBED EARTH.

NOTE 2: ALL CONCRETE FOR THRUST BLOCKS SHALL BE CLASS "C" HAVING 4,000 PSI 28 DAY COMPRESSIVE STRENGTH.

NOTE 3: DO NOT COVER BOLTS WITH CONCRETE ON MECHANICAL JOINTS.

NOTE 4: USE FORMS WHEN POURING CONCRETE TO MAINTAIN SHAPE AND DIMENSIONS OF THRUST BLOCKS.

STD-006 | DATE: 1-15-98 | BY: RSK

Preliminary Plans - For Reference Only

WATER WORK DETAILS

DESIGN AGENCY
Michael Baker INTERNATIONAL

DESIGNER SMP
REVIEWER SM 05/15/24
PROJECT ID 82382
SHEET 1417 TOTAL 2696

CUY-90-16.28 (CCG3A)

MODEL: UD1201 PAPERSIZE: 34x22 (in.) DATE: 3/28/2025 TIME: 5:21:38 AM USER: Julie.Ross
pw:\\mb-us-pw.bentley.com:mb-us-pw-03\Documents\Cleveland_OH\01_Projects\ODOT\District12\82382\400-Engineering\Utilities\Sheets\82382_UD1201.dgn

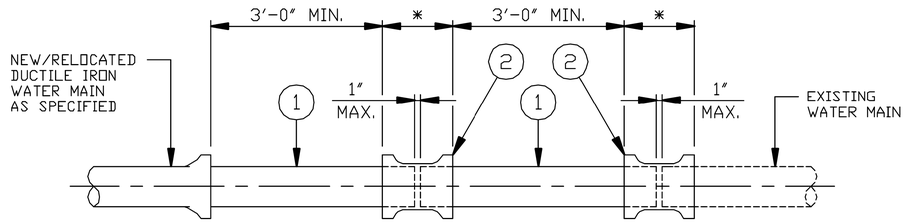

SLEEVE-IN INSTALLATION DETAIL

- NOT TO SCALE -

1) PLAIN END x PLAIN END DUCTILE IRON PIPE AS SPECIFIED (CUT TO SUIT).

2) *CONNECTION SHALL BE MADE WITH RETAINED MECHANICAL JOINT SOLID SLEEVES (SHORT OR LONG PATTERN) DUCTILE IRON CLASS 350 OR CAST IRON CLASS 250 OR COMPRESSION COUPLINGS.

COMPRESSION COUPLINGS SHALL BE OF A GASKETED, SLEEVE TYPE WITH DIAMETERS TO PROPERLY FIT PLAIN END IRON PIPE. EACH COUPLING SHALL CONSIST OF ONE (1) MIDDLE RING, WITHOUT STOPS; TWO (2) FOLLOWER GLANDS; TWO (2) RUBBER-COMPOUND BUNA-N BLEND, WEDGE SECTION GASKETS; AND SUFFICIENT TRACKHEAD STAINLESS STEEL BOLTS AND NUTS (ASTM A276/A193/194, TYPE 304, EXTRA HEAVY HEX) TO PROPERLY COMPRESS THE GASKETS.

MIDDLE RING AND FOLLOWER GLANDS SHALL BE OF EITHER STEEL OR DUCTILE IRON (ASTM-A536).

THE COMPRESSION COUPLING SHALL BE WITHOUT STOPS AND BE RATED FOR A MINIMUM WORKING PRESSURE OF 250 PSI AND SHALL BE EQUAL TO THE DRESSER STYLE No's 38, 138 OR 162 (TRANSITION TYPE), OR SMITH-BLAIR 441 STRAIGHT AND TRANSITION COUPLINGS.

3) ALL BOLTS AND NUTS ON ALL MECHANICAL JOINTS, INCLUDING THOSE ON THE 'RETAINED' TYPE, SHALL HAVE FIELD APPLIED ONE (1) COAT OF BITUMASTIC PAINTING FOLLOWED BY AN ENCASEMENT OF POLYETHYLENE WRAPPING IN ACCORDANCE WITH ANSI/AWWA C-105/A21.5-88, CLASS 'C', METHOD 'B'.

STD-007 | DATE: 10-1-97 | BY: RSK

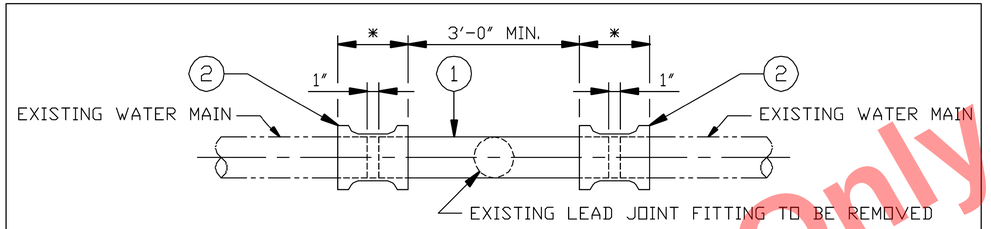

SPOOL PIECE INSTALLATION DETAIL

NOT TO SCALE

1) PLAIN END x PLAIN END DUCTILE IRON PIPE AS SPECIFIED (CUT TO SUIT).

2) *CONNECTION SHALL BE MADE WITH RETAINED MECHANICAL JOINT SOLID SLEEVES (SHORT OR LONG PATTERN) DUCTILE IRON CLASS 350 OR CAST IRON CLASS 250 OR COMPRESSION COUPLINGS.

COMPRESSION COUPLINGS SHALL BE OF A GASKETED, SLEEVE TYPE WITH DIAMETERS TO PROPERLY FIT PLAIN END IRON PIPE. EACH COUPLING SHALL CONSIST OF ONE (1) MIDDLE RING, WITHOUT STOPS; TWO (2) FOLLOWER GLANDS; TWO (2) RUBBER-COMPOUND BUNA-N BLEND, WEDGE SECTION GASKETS; AND SUFFICIENT TRACKHEAD STAINLESS STEEL BOLTS AND NUTS (ASTM A276/A193/194, TYPE 304, EXTRA HEAVY HEX) TO PROPERLY COMPRESS THE GASKETS.

MIDDLE RING AND FOLLOWER GLANDS SHALL BE OF EITHER STEEL OR DUCTILE IRON (ASTM-A536).

THE COMPRESSION COUPLING SHALL BE WITHOUT STOPS AND BE RATED FOR A MINIMUM WORKING PRESSURE OF 250 PSI AND SHALL BE EQUAL TO THE DRESSER STYLE No's 38, 138 OR 162 (TRANSITION TYPE), OR SMITH-BLAIR 441 STRAIGHT AND TRANSITION COUPLINGS.

3) ALL BOLTS AND NUTS ON ALL MECHANICAL JOINTS, INCLUDING THOSE ON THE 'RETAINED' TYPE, SHALL HAVE FIELD APPLIED ONE (1) COAT OF BITUMASTIC PAINTING FOLLOWED BY AN ENCASEMENT OF POLYETHYLENE WRAPPING IN ACCORDANCE WITH ANSI/AWWA C-105/A21.5-88, CLASS 'C', METHOD 'B'.

STD-008 | DATE: 10-1-97 | BY: RSK

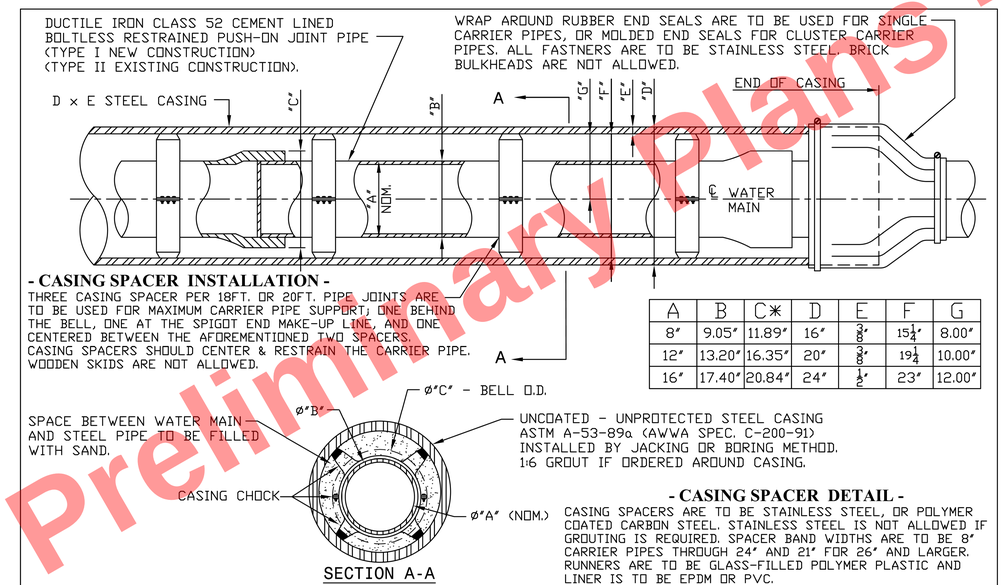

- CASING SPACER INSTALLATION -

THREE CASING SPACER PER 18FT. OR 20FT. PIPE JOINTS ARE TO BE USED FOR MAXIMUM CARRIER PIPE SUPPORT; ONE BEHIND THE BELL, ONE AT THE SPIGOT END MAKE-UP LINE, AND ONE CENTERED BETWEEN THE AFOREMENTIONED TWO SPACERS. CASING SPACERS SHOULD CENTER & RESTRAIN THE CARRIER PIPE. WOODEN SKIDS ARE NOT ALLOWED.

A	B	C*	D	E	F	G
8"	9.05"	11.89"	16"	3/8"	15 1/4"	8.00"
12"	13.20"	16.35"	20"	3/8"	19 1/4"	10.00"
16"	17.40"	20.84"	24"	1/2"	23"	12.00"

- CASING SPACER DETAIL -

CASING SPACERS ARE TO BE STAINLESS STEEL, OR POLYMER COATED CARBON STEEL. STAINLESS STEEL IS NOT ALLOWED IF GROUTING IS REQUIRED. SPACER BAND WIDTHS ARE TO BE 8" CARRIER PIPES THROUGH 24" AND 21" FOR 26" AND LARGER. RUNNERS ARE TO BE GLASS-FILLED POLYMER PLASTIC AND LINER IS TO BE EPDM OR PVC.

NOTES:
1. CONTRACTOR'S FAILURE TO MAINTAIN THE CASING PIPE ON THE LINE AND GRADE AS SHOWN OR DIRECTED, RESULTING IN THE USE OF ADDITIONAL PIPE AND/OR FITTINGS TO MAKE CONNECTIONS TO EXISTING WATER MAIN WILL BE CAUSE FOR REJECTION OF CASING INSTALLATION.

*2. OUTSIDE DIAMETER OF BELL OF BOLTLESS RESTRAINED PIPE MAY VARY WITH MANUFACTURE, THEREFORE, CONTRACTOR SHALL VERIFY O.D. OF BELL AND INCREASE SIZE OF STEEL CASING AS REQUIRED.

STD-016 | CASING DETAIL No. 2 END OF CASING AND CASING CHOCK DETAIL | DATE: 1-21-2010 | BY: RSK

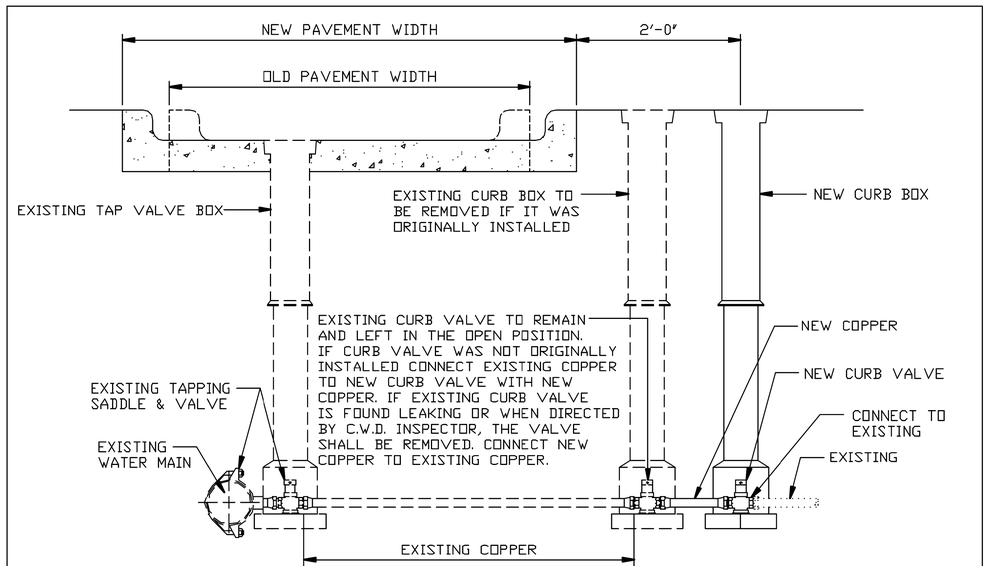

NOTE: IF EXISTING SERVICE CONNECTION IS FOUND TO BE GALVANIZED OR LEAD REPLACE FROM TAP VALVE TO CURB VALVE.

WATER SERVICE CONNECTION EXTENSION FOR 1 1/2" & 2"

- NOT TO SCALE -

STD-C02 | DATE: 10-1-97 | BY: RSK

Preliminary Plans - For Reference Only

WATER WORK DETAILS

DESIGN AGENCY
Michael Baker INTERNATIONAL

DESIGNER SMP
REVIEWER SM 05/15/24
PROJECT ID 82382
SHEET 1418 TOTAL 2696

CUY-90-16.28 (CCG3A)

MODEL: UD1202 PAPERSIZE: 34x22 (in.) DATE: 3/28/2025 TIME: 5:21:51 AM USER: Julie.Ross
pw:\\mb-us-pw.bentley.com:mb-us-pw-03\Documents\Cleveland_OH\01_Projects\ODOT\District12\82382400-Engineering\Utilities\Sheets\82382_UD1201.dgn

*CONNECTION SHALL BE MADE WITH RETAINED MECHANICAL JOINT SOLID SLEEVES (SHORT OR LONG PATTERN) DUCTILE IRON CLASS 350 OR CAST IRON CLASS 250 OR COMPRESSION COUPLINGS. COMPRESSION COUPLINGS SHALL BE OF A GASKETED, SLEEVE TYPE WITH DIAMETERS TO PROPERLY FIT PLAIN END IRON PIPE. EACH COUPLING SHALL CONSIST OF ONE (1) MIDDLE RING, WITHOUT STOPS; TWO (2) FOLLOWER GLANDS; TWO (2) RUBBER-COMPOUND BUNA-N BLEND, WEDGE SECTION GASKETS; AND SUFFICIENT TRACKHEAD STAINLESS STEEL BOLTS AND NUTS (ASTM A276/A193/194, TYPE 304, EXTRA HEAVY HEX) TO PROPERLY COMPRESS THE GASKETS.
MIDDLE RING AND FOLLOWER GLANDS SHALL BE OF EITHER STEEL OR DUCTILE IRON (ASTM-A536).
THE COMPRESSION COUPLING SHALL BE WITHOUT STOPS AND BE RATED FOR A MINIMUM WORKING PRESSURE OF 250 PSI AND SHALL BE EQUAL TO THE DRESSER STYLE No's 38, 138 OR 162 (TRANSITION TYPE), OR SMITH-BLAIR 441 STRAIGHT AND TRANSITION COUPLINGS. ROD AND CLAMP COMPRESSION COUPLING AS DIRECTED BY C.W.D. INSPECTOR.
ALL BOLTS AND NUTS ON ALL MECHANICAL JOINTS, INCLUDING THOSE ON THE 'RETAINED' TYPE, SHALL HAVE FIELD APPLIED ONE (1) COAT OF BITUMASTIC PAINTING FOLLOWED BY AN ENCASEMENT OF POLYETHYLENE WRAPPING IN ACCORDANCE WITH ANSI/AWWA C-105/A21.5-88, CLASS 'C', METHOD 'B'.

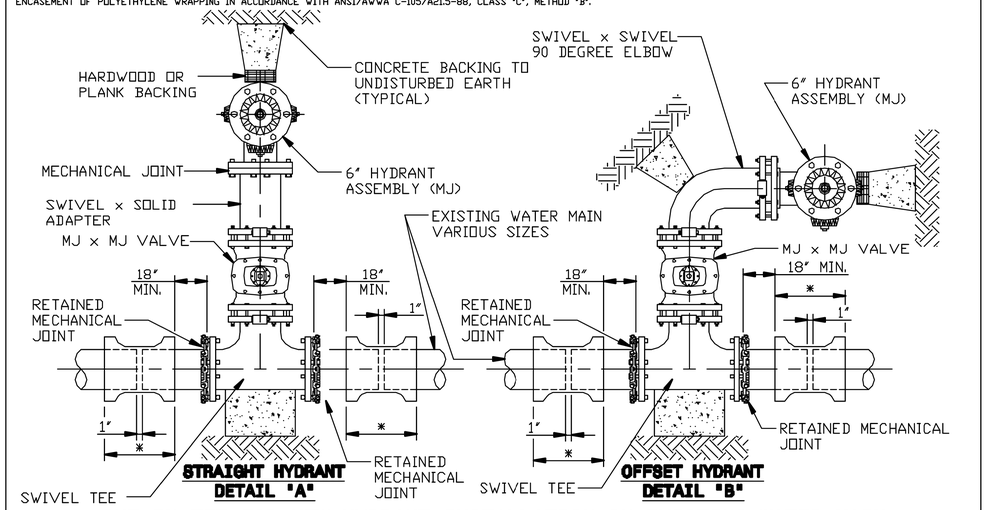

CUT-IN TEE FOR NEW HYDRANT INSTALLATION ON EXISTING WATER MAIN

FOR EXPLODED VIEW OF HYDRANT BRANCH SEE (STD-H09 OR STD-H10).

- NOT TO SCALE -

STD-H08 | DATE: 10-1-97 | BY: RSK

NOTE:
IN LIEU OF SWIVEL BRANCH TEES AND ADAPTERS CONTRACTORS MAY FURNISH HYDRANT BRANCHES HAVING RETAINED MECHANICAL JOINTS INCLUDING HYDRANT SHOE. ALL MECHANICAL JOINTS SHALL HAVE FIELD APPLIED ONE (1) COAT OF BITUMASTIC PAINT. ALL MECHANICAL JOINTS SHALL BE POLYETHYLENE WRAPPED IN ACCORDANCE WITH AWWA C-105/A21.5-88 CLASS 'C' METHOD 'B'.

ALL BOLTS AND NUTS FURNISHED WITH RETAINED MECHANICAL JOINTS INCLUDING RETAINER OR WEDGE ACTION TYPE GLANDS SHALL BE COPPER-BEARING DUCTILE IRON, OR EQUIVALENT HIGH STRENGTH, LOW ALLOY CORROSION RESISTANT STEEL.

ALL FIRE HYDRANTS AND VALVE BOXES SHALL BE SECURELY BRACED WHEN SET AND BACKFILLED. ALL FIRE HYDRANTS, VALVES, VALVE BOXES AND FITTINGS SHALL MEET THE LATEST STANDARD SPECIFICATIONS FOR CONSTRUCTING WATER MAINS AND APPURTENANCES OF THE CLEVELAND WATER DEPARTMENT.

NOTE:
SEE TYPICAL NEW HYDRANT INSTALLATION STD-H09, STD-H10 OR STD-H11

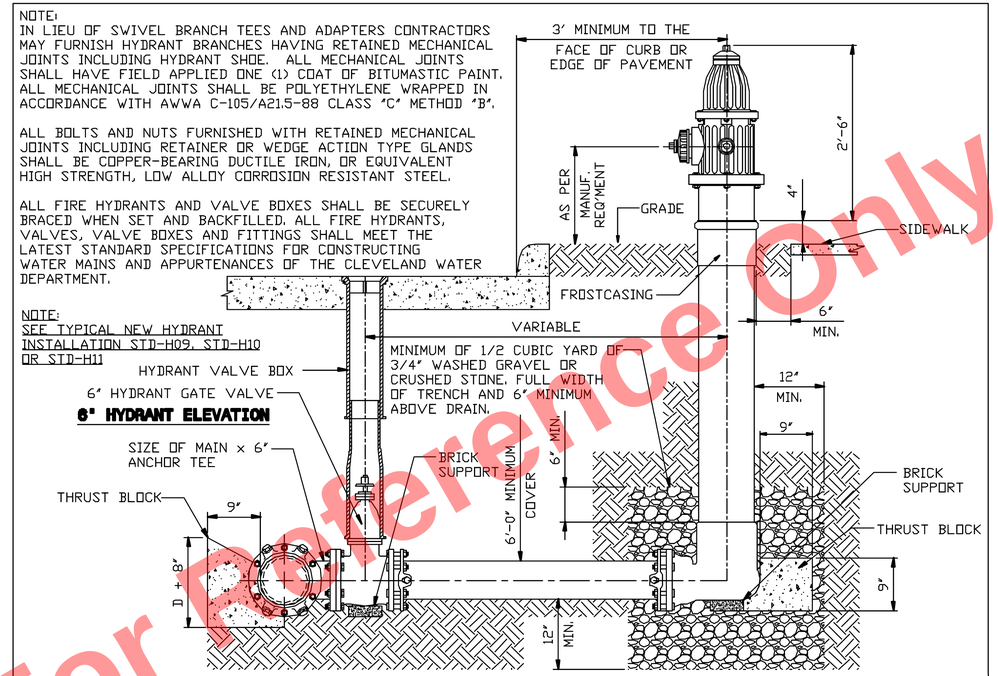

STD-H13 | DATE: 2-23-2005 | BY: RSK

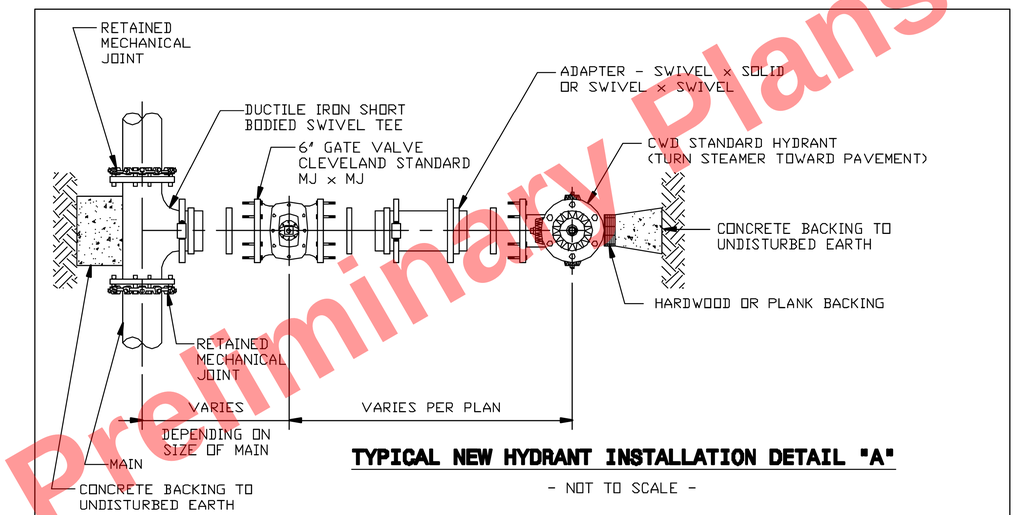

TYPICAL NEW HYDRANT INSTALLATION DETAIL "A"

- NOT TO SCALE -

NOTE: IN LIEU OF SWIVEL BRANCH TEES AND ADAPTERS CONTRACTORS MAY FURNISH HYDRANT BRANCHES HAVING RETAINED MECHANICAL JOINTS INCLUDING HYDRANT SHOE. ALL MECHANICAL JOINTS SHALL HAVE FIELD APPLIED ONE (1) COAT OF BITUMASTIC PAINT. ALL MECHANICAL JOINTS SHALL BE POLYETHYLENE WRAPPED IN ACCORDANCE WITH AWWA C-1-5/A21.5-88 CLASS "C" METHOD 'B'.

ALL BOLTS AND NUTS FURNISHED WITH RETAINED MECHANICAL JOINTS INCLUDING RETAINER OR WEDGE ACTION TYPE GLANDS SHALL BE COPPER-BEARING DUCTILE IRON, OR EQUIVALENT HIGH STRENGTH, LOW ALLOY CORROSION RESISTANT STEEL.

STD-H09 | DATE: 3-4-2002 | BY: RSK

INSTALL NEW 6" MECHANICAL JOINT HYDRANT. ADJUST HYDRANT TO GRADE TO MEET FIELD CONDITIONS TURN STEAMER NOZZLE TOWARD PAVEMENT.

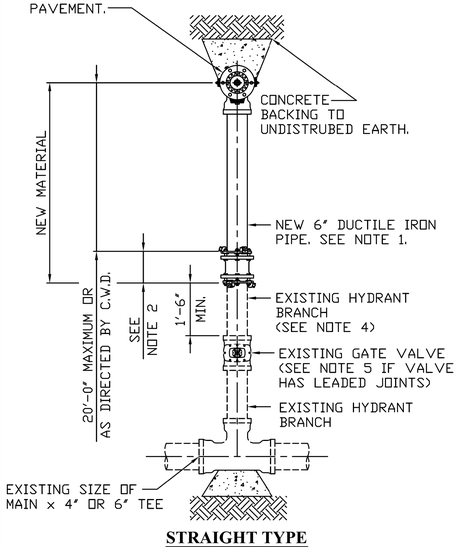

STRAIGHT TYPE

1) PLAIN END x PLAIN END DUCTILE IRON PIPE AS SPECIFIED (CUT TO SUIT).

2) CONNECTION SHALL BE MADE WITH RETAINED MECHANICAL JOINT SOLID SLEEVES (SHORT OR LONG PATTERN) DUCTILE IRON CLASS 350 OR CAST IRON CLASS 250, RETAINED MECHANICAL JOINT REDUCERS WHERE EXISTING PIPE IS 4" IN DIAMETER, OR COMPRESSION COUPLINGS WITH ROD AND CLAMPS AS DIRECTED BY C.W.D. INSPECTOR.

COMPRESSION COUPLINGS SHALL BE OF A GASKETED, SLEEVE TYPE WITH DIAMETERS TO PROPERLY FIT PLAIN END IRON PIPE. EACH COUPLING SHALL CONSIST OF ONE (1) MIDDLE RING, WITHOUT STOPS; TWO (2) FOLLOWER GLANDS; TWO (2) RUBBER-COMPOUND BUNA-N BLEND, WEDGE SECTION GASKETS; AND SUFFICIENT TRACKHEAD STAINLESS STEEL BOLTS AND NUTS (ASTM A276/A193/194, TYPE 304, EXTRA HEAVY HEX) TO PROPERLY COMPRESS THE GASKETS. MIDDLE RING AND FOLLOWER GLANDS SHALL BE OF EITHER STEEL OR DUCTILE IRON (ASTM-A536). THE COMPRESSION COUPLING SHALL BE WITHOUT STOPS AND BE RATED FOR A MINIMUM WORKING PRESSURE OF 250 PSI AND SHALL BE EQUAL TO THE DRESSER STYLE No's 38, 138 (STRAIGHT TYPE), 162 (TRANSITION TYPE), 253 (REDUCING TYPE); OR SMITH-BLAIR 441 (STRAIGHT AND TRANSITION TYPE), R441 (REDUCING TYPE); OR ROMAC STYLE 501 (STRAIGHT AND TRANSITION TYPE), STYLE RC501 (REDUCING TYPE).

IF THE BRANCH IS TO BE SHORTENED, NO NEW IS PIPE REQUIRED.

3) ALL BOLTS AND NUTS ON ALL MECHANICAL JOINTS, INCLUDING THOSE ON THE 'RETAINED' TYPE, SHALL HAVE FIELD APPLIED ONE (1) COAT OF BITUMASTIC PAINTING FOLLOWED BY AN ENCASEMENT OF POLYETHYLENE WRAPPING IN ACCORDANCE WITH ANSI/AWWA C-105/A21.5-88, CLASS 'C', METHOD 'B'.

4) IF EXISTING PIPING IS 4" USE 4" TO 6" REDUCING MJ REDUCER OR REDUCING TRANSITION COUPLING WITH ROD & CLAMP IF APPROVED BY CWD.

5) IN HIGH PRESSURE AREAS THE EXISTING VALVE MAY NEED TO BE RESTRAINED TO EXISTING TEE OR FITTING USING ROD & CLAMP AS DIRECTED BY CWD. SEE STD-H01 FOR EXISTING LEAD JOINT REQUIREMENTS.

EXTEND, SHORTEN AND ADJUST HYDRANT TO GRADE, STRAIGHT TYPE

- NOT TO SCALE -

STD-H02 | DATE: 8-20-2012 | BY: RSK

Preliminary Plans - For Reference Only

WATER WORK DETAILS

DESIGN AGENCY
Michael Baker INTERNATIONAL
DESIGNER SMP
REVIEWER SM 05/15/24
PROJECT ID 82382
SHEET 1419 TOTAL 2696

CUY-90-16.28 (CCG3A)
MODEL: UD1203 PAPERSIZE: 34x22 (in.) DATE: 3/28/2025 TIME: 5:22:04 AM USER: Julie.Ross
pw:\\mb-us-pw.bentley.com:mb-us-pw-03\Documents\Cleveland_OH\01_Projects\ODOT\District12\82382400-Engineering\Utilities\Sheets\82382_UD1201.dgn

* CONNECTION SHALL BE MADE WITH RETAINED MECHANICAL JOINT SOLID SLEEVES (SHORT OR LONG PATTERN) DUCTILE IRON CLASS 350 OR CAST IRON CLASS 250 OR COMPRESSION COUPLINGS.

COMPRESSION COUPLINGS SHALL BE OF A GASKETED, SLEEVE TYPE WITH DIAMETERS TO PROPERLY FIT PLAIN END IRON PIPE. EACH COUPLING SHALL CONSIST OF ONE (1) MIDDLE RING, WITHOUT STOPS; TWO (2) FOLLOWER GLANDS; TWO (2) RUBBER-COMPOUND BUNA-N BLEND, WEDGE SECTION GASKETS; AND SUFFICIENT TRACKHEAD STAINLESS STEEL BOLTS AND NUTS (ASTM A276/A193/A194, TYPE 304, EXTRA HEAVY HEX) TO PROPERLY COMPRESS THE GASKETS.

MIDDLE RING AND FOLLOWER GLANDS SHALL BE OF EITHER STEEL OR DUCTILE IRON (ASTM-A536).

THE COMPRESSION COUPLING SHALL BE WITHOUT STOPS AND BE RATED FOR A MINIMUM WORKING PRESSURE OF 250 PSI AND SHALL BE EQUAL TO THE DRESSER STYLE No's 38, 138 OR 162 (TRANSITION TYPE), OR SMITH-BLAIR 441 STRAIGHT AND TRANSITION COUPLINGS.

ALL BOLTS AND NUTS ON ALL MECHANICAL JOINTS, INCLUDING THOSE ON THE "RETAINED" TYPE, SHALL HAVE FIELD APPLIED ONE (1) COAT OF BITUMASTIC PAINTING FOLLOWED BY AN ENCASEMENT OF POLYETHYLENE WRAPPING IN ACCORDANCE WITH ANSI/AWWA C-105/A21.5-88, CLASS 'C', METHOD 'B'.

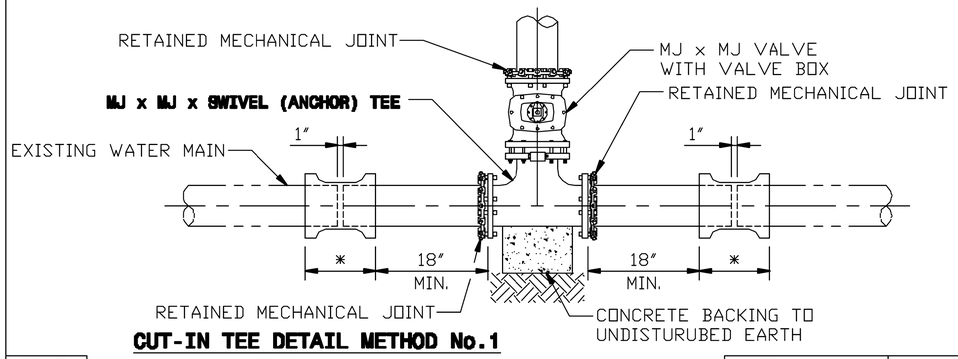

CUT-IN TEE DETAIL METHOD No.1

NOT TO SCALE

STD-T01 | DATE: 10-1-97 | BY: RSK

* CONNECTION SHALL BE MADE WITH RETAINED MECHANICAL JOINT SOLID SLEEVES (SHORT OR LONG PATTERN) DUCTILE IRON CLASS 350 OR CAST IRON CLASS 250 OR COMPRESSION COUPLINGS.

COMPRESSION COUPLINGS SHALL BE OF A GASKETED, SLEEVE TYPE WITH DIAMETERS TO PROPERLY FIT PLAIN END IRON PIPE. EACH COUPLING SHALL CONSIST OF ONE (1) MIDDLE RING, WITHOUT STOPS; TWO (2) FOLLOWER GLANDS; WO (2) RUBBER-COMPOUND BUNA-N BLEND, WEDGE SECTION GASKETS; AND SUFFICIENT TRACKHEAD STAINLESS STEEL BOLTS AND NUTS (ASTM A276/A193/194, TYPE 304, EXTRA HEAVY HEX) TO PROPERLY COMPRESS THE GASKETS.

MIDDLE RING AND FOLLOWER GLANDS SHALL BE OF EITHER STEEL OR DUCTILE IRON (ASTM-A536).

THE COMPRESSION COUPLING SHALL BE WITHOUT STOPS AND BE RATED FOR A MINIMUM WORKING PRESSURE OF 250 PSI AND SHALL BE EQUAL TO THE DRESSER STYLE No's 38, 138 OR 162 (TRANSITION TYPE), OR SMITH-BLAIR 441 STRAIGHT AND TRANSITION COUPLINGS.

ALL BOLTS AND NUTS ON ALL MECHANICAL JOINTS, INCLUDING THOSE ON THE 'RETAINED' TYPE, SHALL HAVE FIELD APPLIED ONE (1) COAT OF BITUMASTIC PAINTING FOLLOWED BY AN ENCASEMENT OF POLYETHYLENE WRAPPING IN ACCORDANCE WITH ANSI/AWWA C-105/A21.5-88, CLASS 'C', METHOD 'B'.

CUT-IN TEE DETAIL METHOD No. 2

NOT TO SCALE

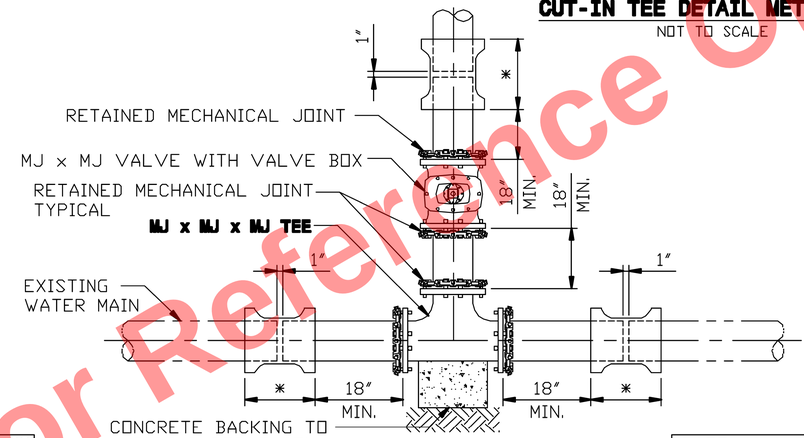

STD-T02 | DATE: 10-1-97 | BY: RSK

* CONNECTION SHALL BE MADE WITH RETAINED MECHANICAL JOINT SOLID SLEEVES (SHORT OR LONG PATTERN) DUCTILE IRON CLASS 350 OR CAST IRON CLASS 250 OR COMPRESSION COUPLINGS.

COMPRESSION COUPLINGS SHALL BE OF A GASKETED, SLEEVE TYPE WITH DIAMETERS TO PROPERLY FIT PLAIN END IRON PIPE. EACH COUPLING SHALL CONSIST OF ONE (1) MIDDLE RING, WITHOUT STOPS; TWO (2) FOLLOWER GLANDS; WO (2) RUBBER-COMPOUND BUNA-N BLEND, WEDGE SECTION GASKETS; AND SUFFICIENT TRACKHEAD STAINLESS STEEL BOLTS AND NUTS (ASTM A276/A193/194, TYPE 304, EXTRA HEAVY HEX) TO PROPERLY COMPRESS THE GASKETS.

MIDDLE RING AND FOLLOWER GLANDS SHALL BE OF EITHER STEEL OR DUCTILE IRON (ASTM-A536).

THE COMPRESSION COUPLING SHALL BE WITHOUT STOPS AND BE RATED FOR A MINIMUM WORKING PRESSURE OF 250 PSI AND SHALL BE EQUAL TO THE DRESSER STYLE No's 38, 138 OR 162 (TRANSITION TYPE), OR SMITH-BLAIR 441 STRAIGHT AND TRANSITION COUPLINGS.

ALL BOLTS AND NUTS ON ALL MECHANICAL JOINTS, INCLUDING THOSE ON THE 'RETAINED' TYPE, SHALL HAVE FIELD APPLIED ONE (1) COAT OF BITUMASTIC PAINTING FOLLOWED BY AN ENCASEMENT OF POLYETHYLENE WRAPPING IN ACCORDANCE WITH ANSI/AWWA C-105/A21.5-88, CLASS 'C', METHOD 'B'.

CUT-IN TEE DETAIL METHOD No. 3

NOT TO SCALE

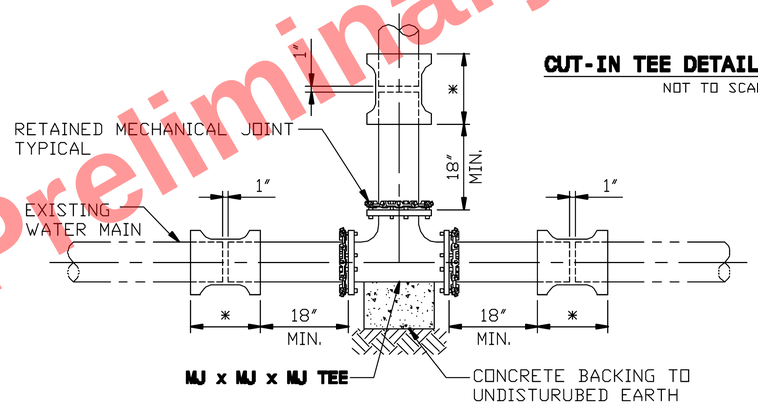

STD-T03 | DATE: 10-1-97 | BY: RSK

*CONNECTION SHALL BE MADE WITH RETAINED MECHANICAL JOINT SOLID SLEEVES (SHORT OR LONG PATTERN) DUCTILE IRON CLASS 350 OR CAST IRON CLASS 250 OR COMPRESSION COUPLINGS.

COMPRESSION COUPLINGS SHALL BE OF A GASKETED, SLEEVE TYPE WITH DIAMETERS TO PROPERLY FIT PLAIN END IRON PIPE. EACH COUPLING SHALL CONSIST OF ONE (1) MIDDLE RING, WITHOUT STOPS; TWO (2) FOLLOWER GLANDS; TWO (2) RUBBER-COMPOUND BUNA-N BLEND, WEDGE SECTION GASKETS; AND SUFFICIENT TRACKHEAD STAINLESS STEEL BOLTS AND NUTS (ASTM A276/A193/194, TYPE 304, EXTRA HEAVY HEX) TO PROPERLY COMPRESS THE GASKETS.

MIDDLE RING AND FOLLOWER GLANDS SHALL BE OF EITHER STEEL OR DUCTILE IRON (ASTM-A536).

THE COMPRESSION COUPLING SHALL BE WITHOUT STOPS AND BE RATED FOR A MINIMUM WORKING PRESSURE OF 250 PSI AND SHALL BE EQUAL TO THE DRESSER STYLE No's 38, 138 OR 162 (TRANSITION TYPE), OR SMITH-BLAIR 441 STRAIGHT AND TRANSITION COUPLINGS.

ALL BOLTS AND NUTS ON ALL MECHANICAL JOINTS, INCLUDING THOSE ON THE 'RETAINED' TYPE, SHALL HAVE FIELD APPLIED ONE (1) COAT OF BITUMASTIC PAINTING FOLLOWED BY AN ENCASEMENT OF POLYETHYLENE WRAPPING IN ACCORDANCE WITH ANSI/AWWA C-105/A21.5-88, CLASS 'C', METHOD 'B'.

THE DIVISION OF WATER WILL DETERMINE THE FIELD LOCATION OF THE CUT-IN-VALVE ASSEMBLY. THE DIVISION OF WATER WILL ALSO SET THE TIME OF INSTALLATION OF THE CUT-IN-VALVE ASSEMBLY.

THE CONTRACTOR SHALL DO ALL PIPE CUTTING AND INSTALLATION. HOWEVER, THE INSTALLATION OF THE CUT-IN-VALVE ASSEMBLY SHALL BE DONE UNDER THE SUPERVISION OF THE DIVISION OF WATER.

CUT-IN-VALVE DETAIL

- NOT TO SCALE -

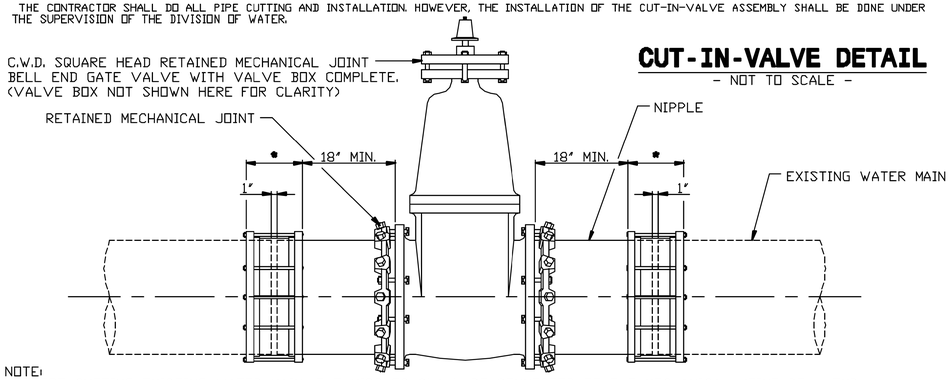

NOTE:
BEFORE CUTTING EXISTING WATER MAIN, THE NIPPLES SHALL BE CONNECTED TO THE MECHANICAL JOINT BELL END GATE VALVE. AFTER CUTTING PIPE, FINAL CONNECTIONS SHALL BE MADE WITH COUPLINGS/SOLID SLEEVES AS SPECIFIED.

STD-005 | DATE: 10-1-97 | BY: RSK

Preliminary Plans - For Reference Only

WATER WORK DETAILS

DESIGN AGENCY
Michael Baker INTERNATIONAL

DESIGNER SMP
REVIEWER SM 05/15/24
PROJECT ID 82382
SHEET 1420 TOTAL 2696

CUY-90-16.28 (CCG3A)
MODEL: UD1204 PAPERSIZE: 34x22 (in.) DATE: 3/28/2025 TIME: 5:22:20 AM USER: Julie Ross
pw:\\mb-us-pw.bentley.com:mb-us-pw-03\Documents\Cleveland_OH\01_Projects\ODOT\District12\82382400-Engineering\Utilities\Sheets\82382_UD1201.dgn

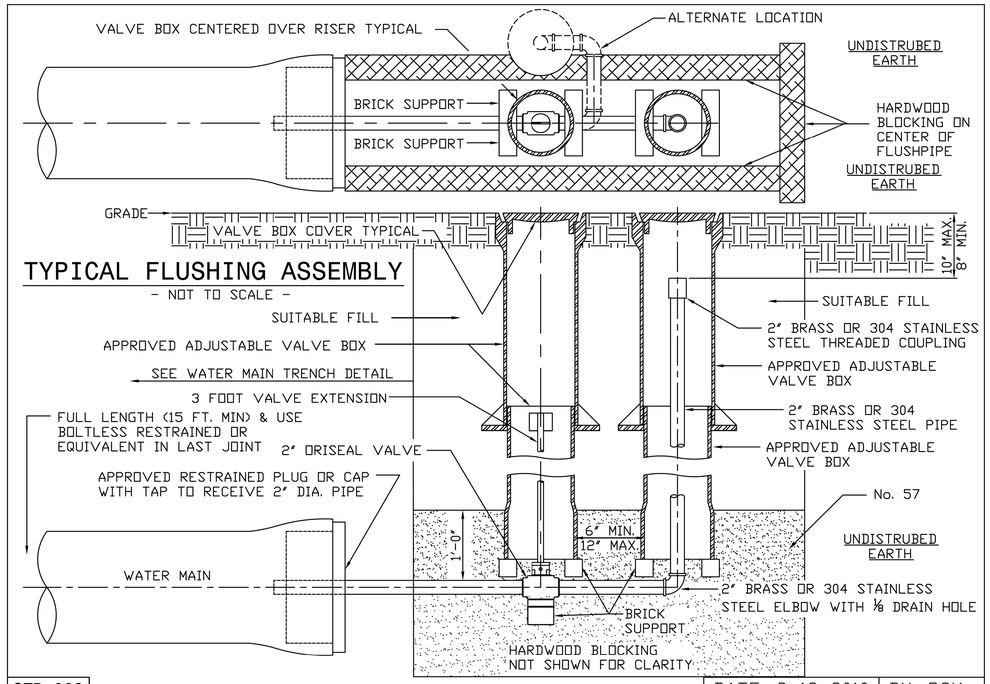

TYPICAL FLUSHING ASSEMBLY

- NOT TO SCALE -

STD-003 | DATE: 8-19-2010 | BY: RSK

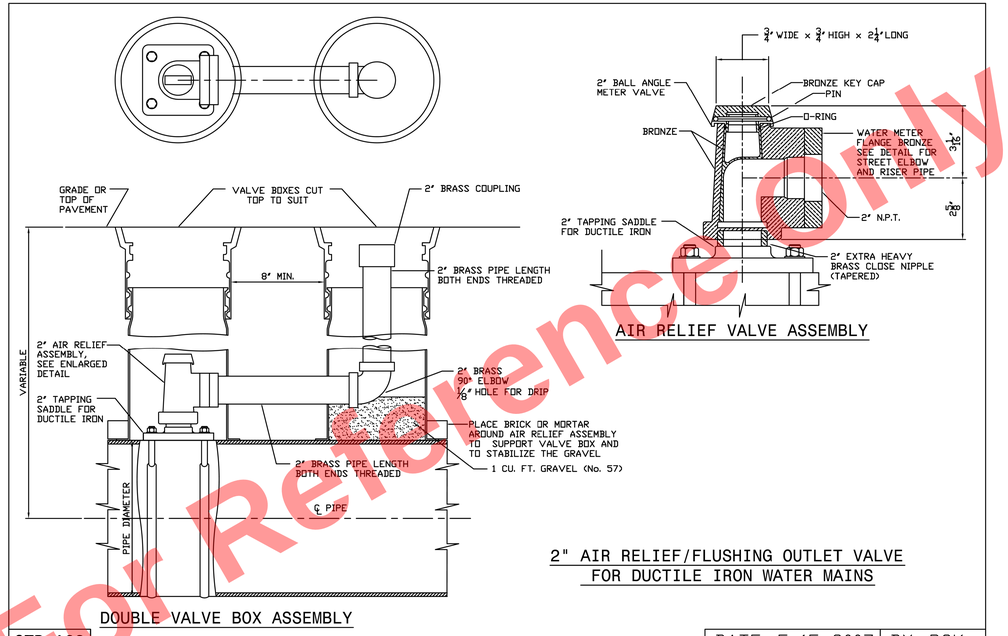

DOUBLE VALVE BOX ASSEMBLY

AIR RELIEF VALVE ASSEMBLY

2" AIR RELIEF/FLUSHING OUTLET VALVE FOR DUCTILE IRON WATER MAINS

STD-A03 | DATE: 5-15-2007 | BY: RSK

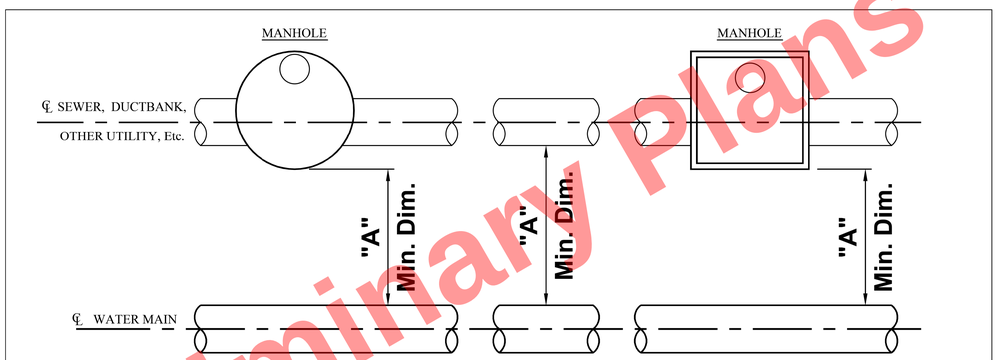

PLAN VIEW

- SEE STD-018 FOR PROFILE VIEW -

HORIZONTAL CLEARANCE	STORM SEWER	SANITARY SEWER	GAS, DUCTBANK, OTHER UTILITY, Etc.
"A"	10'-0" MIN.	10-0" MIN.	5'-0" MIN.

HORIZONTAL CLEARANCE FOR UTILITIES

NOT TO SCALE

STD-017 | DATE: 7-02-2014 | BY: MTA

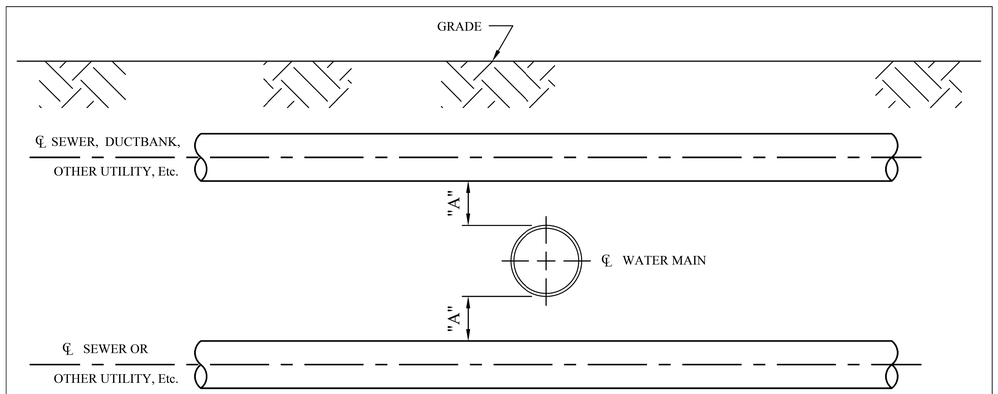

PROFILE VIEW

- SEE STD-017 FOR PLAN VIEW -

VERTICAL CLEARANCE	SANITARY SEWER LESS THAN 24"	SANITARY SEWER 24" & LARGER	STORM SEWER, DUCTBANK, GAS, OTHER UTILITY LESS THAN 24"	STORM SEWER, DUCTBANK, GAS, OTHER UTILITY 24" & LARGER	REMARKS
"A"	18" Min.	18" Min.	18" Min.	18" Min.	IF CANNOT ACHIEVE MIN. CLEARANCE WATER MAIN TO BE LOWERED

VERTICAL CLEARANCE FOR UTILITIES

NOT TO SCALE

STD-018 | DATE: 7-02-2014 | BY: MTA

Preliminary Plans - For Reference Only

WATER WORK DETAILS

DESIGN AGENCY
Michael Baker INTERNATIONAL

DESIGNER SMP
REVIEWER SM 05/15/24
PROJECT ID 82382
SHEET 1421 TOTAL 2696

CUY-90-16.28 (CCG3A)

MODEL: UD1205 PAPERSIZE: 34x22 (in.) DATE: 3/28/2025 TIME: 5:22:34 AM USER: Julie.Ross
pw:\\mb-us-pw.bentley.com:mb-us-pw-03\Documents\Cleveland_OH\01_Projects\ODOT\District12\82382\400-Engineering\Utilities\Sheets\82382_UD1201.dgn

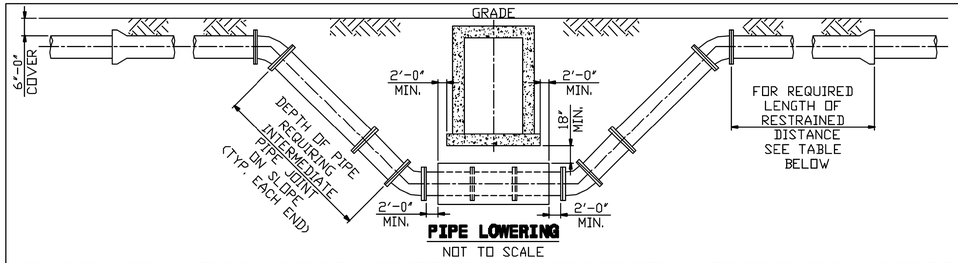

PIPE LOWERING

NOT TO SCALE

TO LOWER WATER MAIN TO CLEAR OBSTACLE WHERE DEPTH OF PIPE LOWERING REQUIRES AN INTERMEDIATE JOINT ON SLOPE THE ENTIRE OFFSET SHALL HAVE BOLTLESS RESTRAINED PUSH-ON JOINT PIPE AND FITTINGS AS SPECIFIED. JOINT RESTRAINT SHALL EXTEND BEYOND TOP VERTICAL BEND TO THE LIMITS SHOWN IN TABLE.

① CALCULATIONS FOR RESTRAINED LENGTHS INCLUDE 75 PSI FOR TESTING.

DIAMETER	BEND	STATIC PRESSURE ①	* RESTRAINED LENGTHS
8"	11°15'	0 to 275 PSI	ONE (1)
	22°30'	0 to 250 PSI	ONE (1)
		251 to 275 PSI	TWO (2)
	45°	0 to 125 PSI	ONE (1)
		126 to 275 PSI	TWO (2)
12"	11°15'	0 to 275 PSI	ONE (1)
	22°30'	0 to 165 PSI	ONE (1)
		166 to 275 PSI	TWO (2)
	45°	0 to 65 PSI	ONE (1)
		66 to 215 PSI	TWO (2)
		166 to 275 PSI	THREE (3)
16"	11°15'	0 to 275 PSI	ONE (1)
	22°30'	0 to 115 PSI	ONE (1)
		116 to 275 PSI	TWO (2)
	45°	0 to 45 PSI	ONE (1)
		46 to 165 PSI	TWO (2)
		166 to 275 PSI	THREE (3)

STD-L01 | DATE: 11-24-2003 | BY: RSK

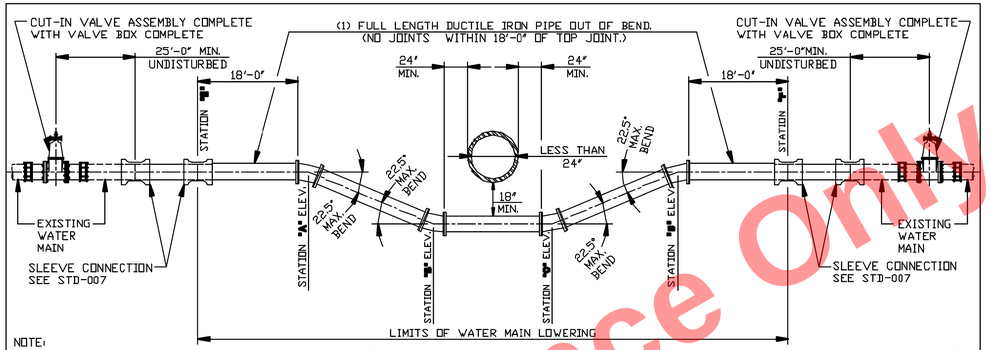

NOTE:

1) WATER MAIN SHALL BE DUCTILE IRON, MINIMUM CLASS 52, CEMENT LINED PUSH-ON JOINT PIPE WITH RETAINED MECHANICAL JOINT DUCTILE IRON CLASS 350, CEMENT LINED OR FUSION BONDED EPOXY COATED RETAINED MECHANICAL JOINT FITTINGS.

2) WHERE DEPTH OF LOWERING REQUIRES AN INTERMEDIATE JOINT BETWEEN STATIONS **"A"** & **"B"** AND/OR **"C"** & **"D"** THE ENTIRE LOWERING SHALL BE MADE WITH DUCTILE IRON, MINIMUM CLASS 52, CEMENT LINED PIPE AND DUCTILE IRON CLASS 350, CEMENT LINED FITTINGS **ALL** HAVING BOLTLESS RESTRAINED PUSH-ON JOINTS, TYPE II.

3) WHERE LENGTH OF LOWERING UNDER OBSTRUCTION(S) REQUIRES AN INTERMEDIATE JOINT **ONLY** BETWEEN STATIONS **"B"** & **"C"**, THAT INTERMEDIATE JOINT(S) SHALL BE MADE WITH A BOLTLESS RESTRAINED PUSH-ON JOINT, TYPE II.

4) WHERE EXISTING WATER MAIN IS SIX (6)-INCHES IN DIAMETER THE PIPE LOWERING SHALL BE MADE WITH PIPE AND FITTINGS NO LESS THAN EIGHT (8)-INCH IN DIAMETER WITH REDUCERS INSTALLED AT STATIONS **"B"** AND **"C"**. THE REDUCERS SHALL BE RETAINED MECHANICAL JOINT WITH SMALL END OF REDUCER PLAIN END FOR CONNECTION WITH SLEEVES OR COMPRESSION COUPLINGS.

5) ALL EXISTING WATER SERVICE CONNECTIONS BETWEEN THE CUT-IN-VALVE ASSEMBLIES SHALL BE MAINTAINED BY 'TEMPORARY SERVICE CONNECTIONS' PROVIDED AND MAINTAINED BY THE CONTRACTOR.

6) EXISTING WATER SERVICE CONNECTIONS NEEDED TO BE RETAPPED AND RECONNECTED WILL ONLY BE PERMITTED BETWEEN STATIONS **"A"** AND **"B"** AND STATIONS **"C"** AND **"D"**. NO RETAPPING OF SERVICE CONNECTIONS WILL BE ALLOWED BETWEEN STATIONS **"A"** AND **"D"**.

DETAIL FOR WATER MAIN LOWERING UNDER OBSTRUCTIONS LESS THAN 24" IN DIAMETER OR WIDTH FOR "EXISTING CONSTRUCTION"

- NOT TO SCALE -

STD-L02 | DATE: 3-4-2002 | BY: RSK

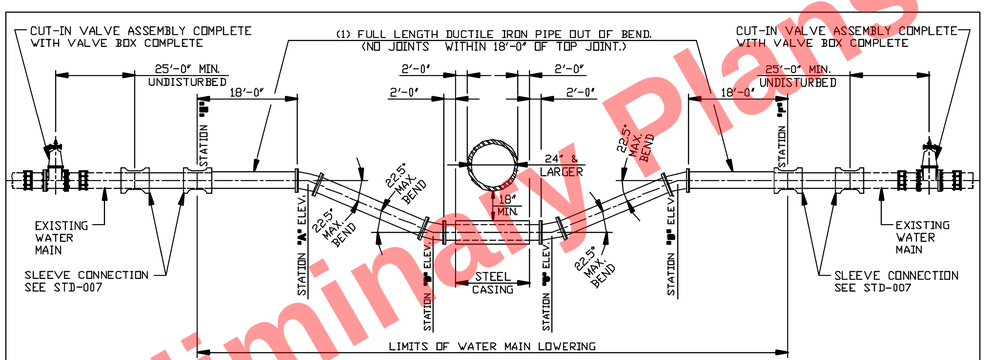

NOTE:

1) WATER MAIN SHALL BE DUCTILE IRON, MINIMUM CLASS 52, CEMENT LINED PUSH-ON JOINT PIPE WITH RETAINED MECHANICAL JOINT DUCTILE IRON CLASS 350, CEMENT LINED OR FUSION BONDED EPOXY COATED RETAINED MECHANICAL JOINT FITTINGS.

2) WHERE DEPTH OF LOWERING REQUIRES AN INTERMEDIATE JOINT BETWEEN STATIONS **"A"** & **"B"** AND/OR **"C"** & **"D"** THE ENTIRE LOWERING SHALL BE MADE WITH DUCTILE IRON, MINIMUM CLASS 52, CEMENT LINED PIPE AND DUCTILE IRON CLASS 350, CEMENT LINED FITTINGS **ALL** HAVING BOLTLESS RESTRAINED PUSH-ON JOINTS, TYPE II.

3) WHERE LENGTH OF LOWERING UNDER OBSTRUCTIONS) REQUIRES AN INTERMEDIATE JOINT **ONLY** BETWEEN STATIONS **"B"** & **"C"**, THAT INTERMEDIATE JOINT(S) SHALL BE MADE WITH A BOLTLESS RESTRAINED PUSH-ON JOINT, TYPE II.

4) WHERE EXISTING WATER MAIN IS SIX (6)-INCHES IN DIAMETER THE PIPE LOWERING SHALL BE MADE WITH PIPE AND FITTINGS NO LESS THAN EIGHT (8)-INCH IN DIAMETER WITH REDUCERS INSTALLED AT STATIONS **"B"** AND **"C"**. THE REDUCERS SHALL BE RETAINED MECHANICAL JOINT WITH SMALL END OF REDUCER PLAIN END FOR CONNECTION WITH SLEEVES OR COMPRESSION COUPLINGS.

5) ALL EXISTING WATER SERVICE CONNECTIONS BETWEEN THE CUT-IN-VALVE ASSEMBLIES SHALL BE MAINTAINED BY 'TEMPORARY SERVICE CONNECTIONS' PROVIDED AND MAINTAINED BY THE CONTRACTOR.

6) EXISTING WATER SERVICE CONNECTIONS NEEDED TO BE RETAPPED AND RECONNECTED WILL ONLY BE PERMITTED BETWEEN STATIONS **"A"** AND **"E"** AND STATIONS **"D"** AND **"F"**. NO RETAPPING OF SERVICE CONNECTIONS WILL BE ALLOWED BETWEEN STATIONS **"A"** AND **"D"**.

DETAIL FOR WATER MAIN LOWERING UNDER OBSTRUCTIONS 24" & LARGER IN DIAMETER OR WIDTH FOR "EXISTING CONSTRUCTION"

- NOT TO SCALE -

STD-L03 | DATE: 3-4-2002 | BY: RSK

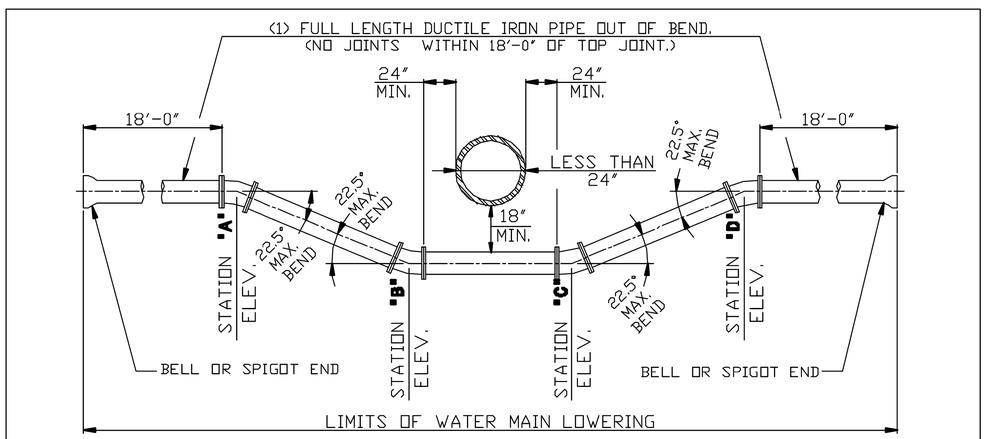

NOTE:

1) WATER MAIN SHALL BE DUCTILE IRON, MINIMUM CLASS 52, CEMENT LINED PUSH-ON JOINT PIPE WITH RETAINED MECHANICAL JOINT DUCTILE IRON CLASS 350, CEMENT LINED RETAINED MECHANICAL JOINT FITTINGS.

2) WHERE DEPTH OF LOWERING REQUIRES AN INTERMEDIATE JOINT BETWEEN STATIONS **"A"** & **"B"** AND/OR **"C"** & **"D"** THE ENTIRE LOWERING SHALL BE MADE WITH DUCTILE IRON, MINIMUM CLASS 52, CEMENT LINED PIPE AND DUCTILE IRON CLASS 350, CEMENT LINED FITTINGS **ALL** HAVING BOLTLESS RESTRAINED PUSH-ON JOINTS, TYPE I.

3) WHERE LENGTH OF LOWERING UNDER OBSTRUCTIONS) REQUIRES AN INTERMEDIATE JOINT **ONLY** BETWEEN STATIONS **"B"** & **"C"**, AND PIPE JOINTS ARE AS INDICATED IN NOTE **"1"** ABOVE, THAT INTERMEDIATE JOINT(S) SHALL BE MADE WITH A BOLTLESS RESTRAINED PUSH-ON JOINT, TYPE II.

4) WHERE LENGTH OF LOWERING UNDER OBSTRUCTIONS) REQUIRES AN INTERMEDIATE JOINT **ONLY** BETWEEN **"B"** AND **"C"** AND PIPE JOINTS ARE AS INDICATED IN NOTE **"2"** ABOVE, THAT INTERMEDIATE JOINT(S) SHALL BE MADE WITH A BOLTLESS RESTRAINED PUSH-ON JOINT, TYPE I.

DETAIL FOR WATER MAIN LOWERING UNDER OBSTRUCTIONS LESS THAN 24" IN DIAMETER OR WIDTH FOR "NEW CONSTRUCTION"

- NOT TO SCALE -

STD-L04 | DATE: 10-1-97 | BY: RSK

Preliminary Plans - For Reference Only

WATER WORK DETAILS

DESIGN AGENCY
Michael Baker INTERNATIONAL

DESIGNER SMP
REVIEWER SM 05/15/24
PROJECT ID 82382
SHEET 1422 TOTAL 2696

CUY-90-16.28 (CCG3A)

MODEL: UD1206 PAPERSIZE: 34x22 (in.) DATE: 3/28/2025 TIME: 5:22:46 AM USER: Julie.Ross
pw:\\mb-us-pw.bentley.com:mb-us-pw-03\Documents\Cleveland_OH\01_Projects\ODOT\District12\82382400-EngineeringUtilities\Sheets\82382_UD1201.dgn

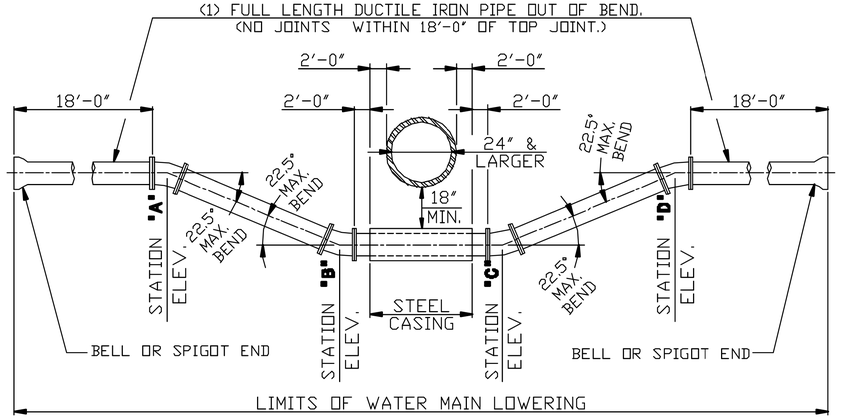

NOTE:
1) WATER MAIN SHALL BE DUCTILE IRON, MINIMUM CLASS 52, CEMENT LINED PUSH-ON JOINT PIPE WITH RETAINED MECHANICAL JOINT DUCTILE IRON CLASS 350, CEMENT LINED RETAINED MECHANICAL JOINT FITTINGS.

2) WHERE DEPTH OF LOWERING REQUIRES AN INTERMEDIATE JOINT BETWEEN STATIONS "A" & "B" AND/OR "C" & "D" THE ENTIRE LOWERING SHALL BE MADE WITH DUCTILE IRON, MINIMUM CLASS 52, CEMENT LINED PIPE AND DUCTILE IRON CLASS 350, CEMENT LINED FITTINGS **ALL** HAVING BOLTLESS RESTRAINED PUSH-ON JOINTS, TYPE I.

3) WHERE LENGTH OF LOWERING UNDER OBSTRUCTION(S) REQUIRES AN INTERMEDIATE JOINT **ONLY** BETWEEN STATIONS "B" & "C", AND PIPE JOINTS ARE AS INDICATED IN NOTE "1" ABOVE, THAT INTERMEDIATE JOINT(S) SHALL BE MADE WITH A BOLTLESS RESTRAINED PUSH-ON JOINT, TYPE II.

4) WHERE LENGTH OF LOWERING UNDER OBSTRUCTION(S) REQUIRES AN INTERMEDIATE JOINT **ONLY** BETWEEN "B" AND "C" AND PIPE JOINTS ARE AS INDICATED IN NOTE "2" ABOVE, THAT INTERMEDIATE JOINT(S) SHALL BE MADE WITH A BOLTLESS RESTRAINED PUSH-ON JOINT, TYPE I.

DETAIL FOR WATER MAIN LOWERING UNDER OBSTRUCTIONS
24" & LARGER IN DIAMETER OR WIDTH FOR "NEW CONSTRUCTION"

STD-L05	- NOT TO SCALE -	DATE: 10-1-97	BY: RSK

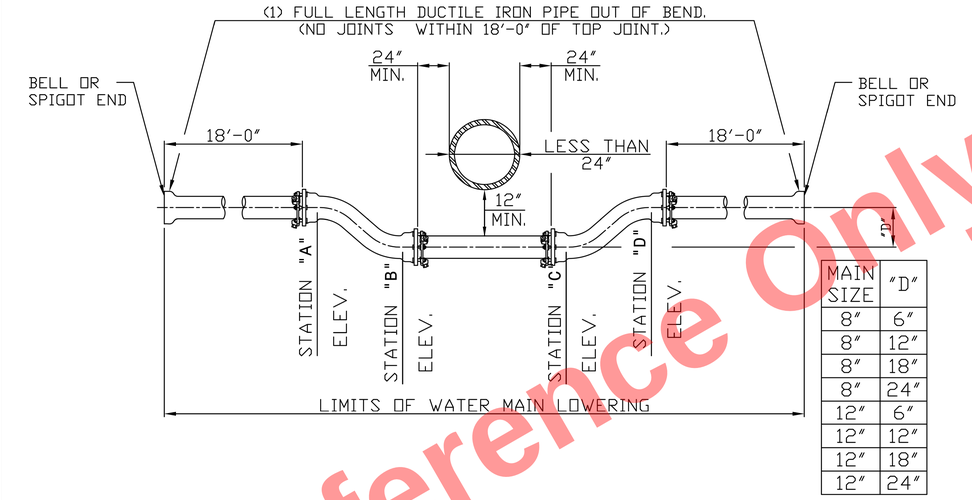

MAIN SIZE	"D"
8"	6"
8"	12"
8"	18"
8"	24"
12"	6"
12"	12"
12"	18"
12"	24"

NOTE:

1) WATER MAIN SHALL BE DUCTILE IRON, MINIMUM CLASS 52, CEMENT LINED PUSH-ON JOINT PIPE WITH RETAINED MECHANICAL JOINT DUCTILE IRON CLASS 350, CEMENT LINE RETAINED MECHANICAL JOINT FITTINGS.
   * ALL FITTINGS MUST FOLLOW ANSI/AWWA C110/A21.10 FOR FULL BODY FITTINGS AND ANSI/AWWA C153/A221.5 FOR COMPACT FITTINGS.
   ALL FITTINGS ARE NOT AVAILABLE FROM ALL APPROVED MANUFACTURES.

2) WHERE LENGTH OF LOWERING UNDER OBSTRUCTION(S) REQUIRES AN INTERMEDIATE JOINT ONLY BETWEEN STATIONS "B" & "C", AND PIPE JOINTS ARE AS INDICATED IN NOTE "1" ABOVE, THAT INTERMEDIATE JOINT(S) SHALL BE MADE WITH A BOLTLESS RESTRAINED PUSH-ON JOINT, TYPE II.

DETAIL FOR WATER MAIN LOWERING USING MECHANICAL JOINT OFFSETS
UNDER OBSTRUCTIONS LESS THAN 24" IN DIAMETER OR WIDTH FOR "NEW CONSTRUCTION"

STD-L06	- NOT TO SCALE -	DATE: 12-3-2009	BY: RSK

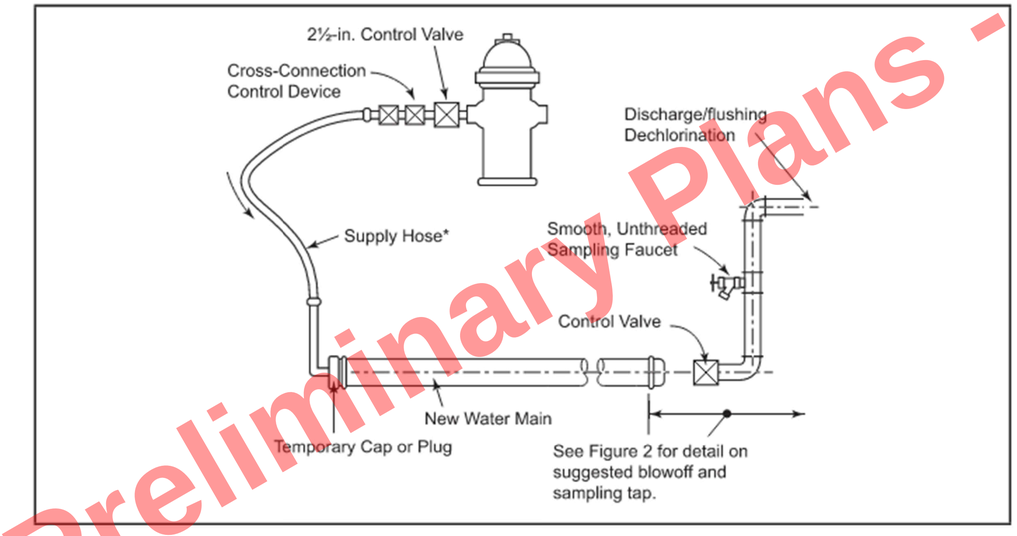

NOTE: Figure 1 applies to pipes with diameters 4 in. (100 mm) through 12 in. (300 mm). Larger sizes must be handled on a case-by-case basis.

*Clean potable-water hose only. Size and number of taps per Table 3. This hose must be removed during the hydrostatic pressure test.

Figure 1 Suggested temporary flushing/testing connection

SOURCE: AWWA C-651 – DISINFECTING WATER MAINS

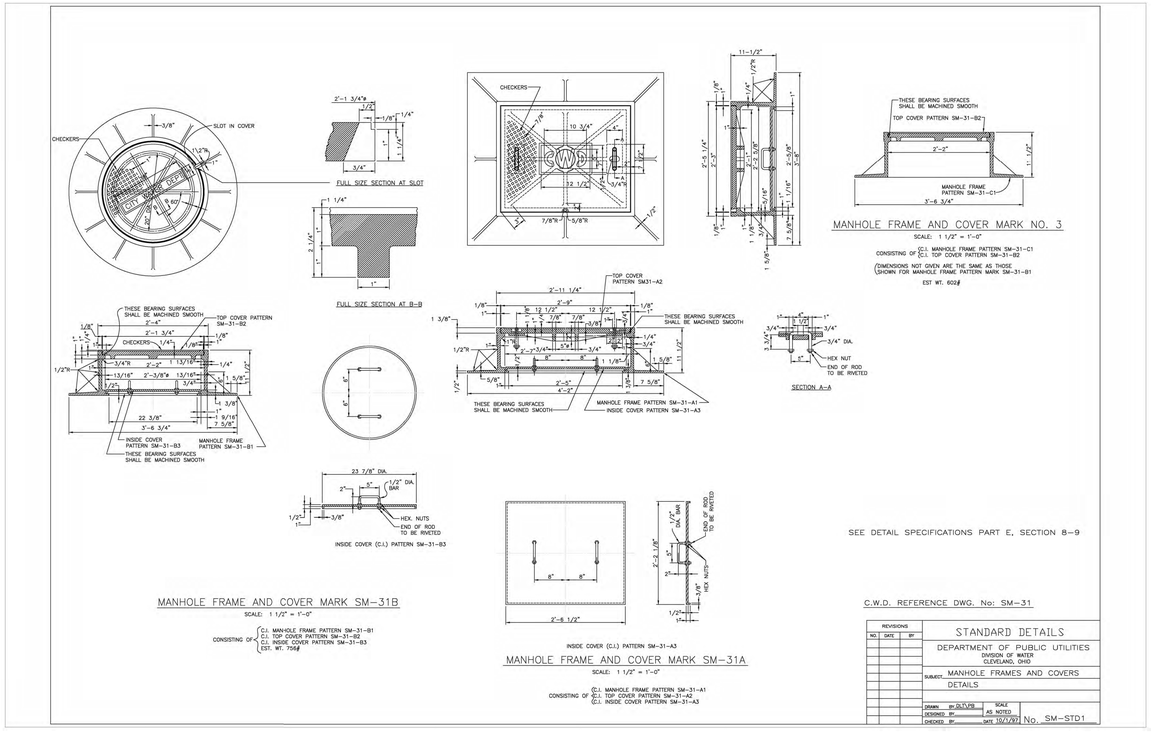

Preliminary Plans - Not For Reference Only

WATER WORK DETAILS

DESIGN AGENCY
Michael Baker INTERNATIONAL

DESIGNER
SMP

REVIEWER
SM 05/15/24

PROJECT ID
82382

SHEET 1423 | TOTAL 2696

CUY-90-16.28 (CCG3A)
MODEL: UD1207 PAPERSIZE: 34x22 (in.) DATE: 3/28/2025 TIME: 5:23:01 AM USER: Julie.Ross
pw:\\mb-us-pw.bentley.com:mb-us-pw-03\Documents\Cleveland_OH\01_Projects\ODOT\District12\82382400-Engineering\Utilities\Sheets\82382_UD1201.dgn

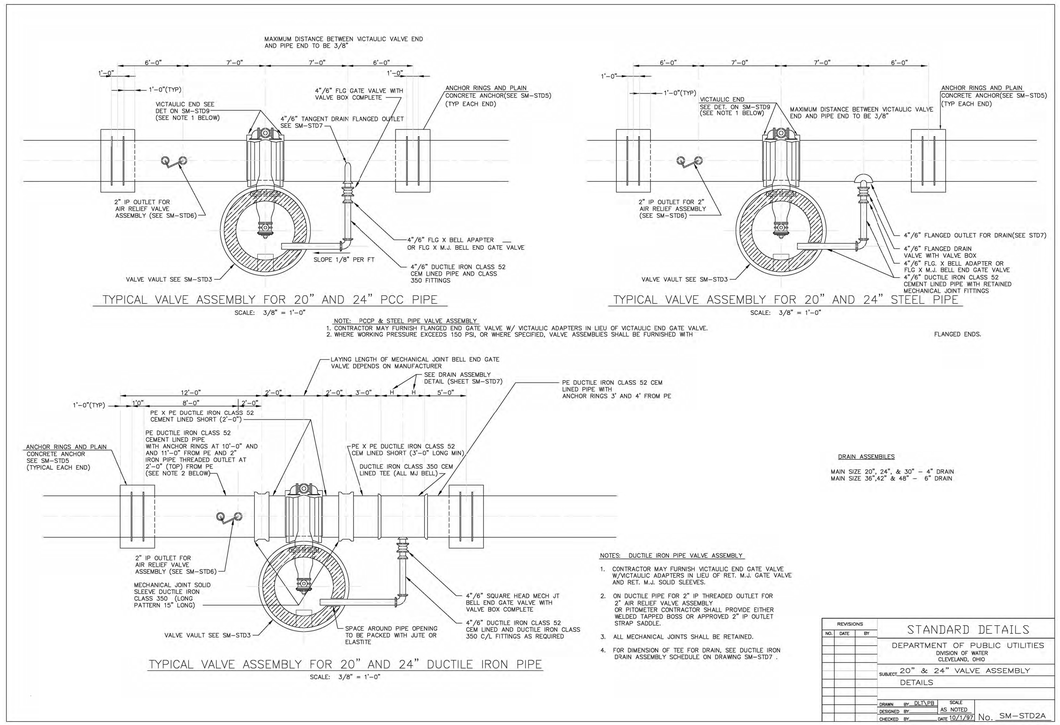

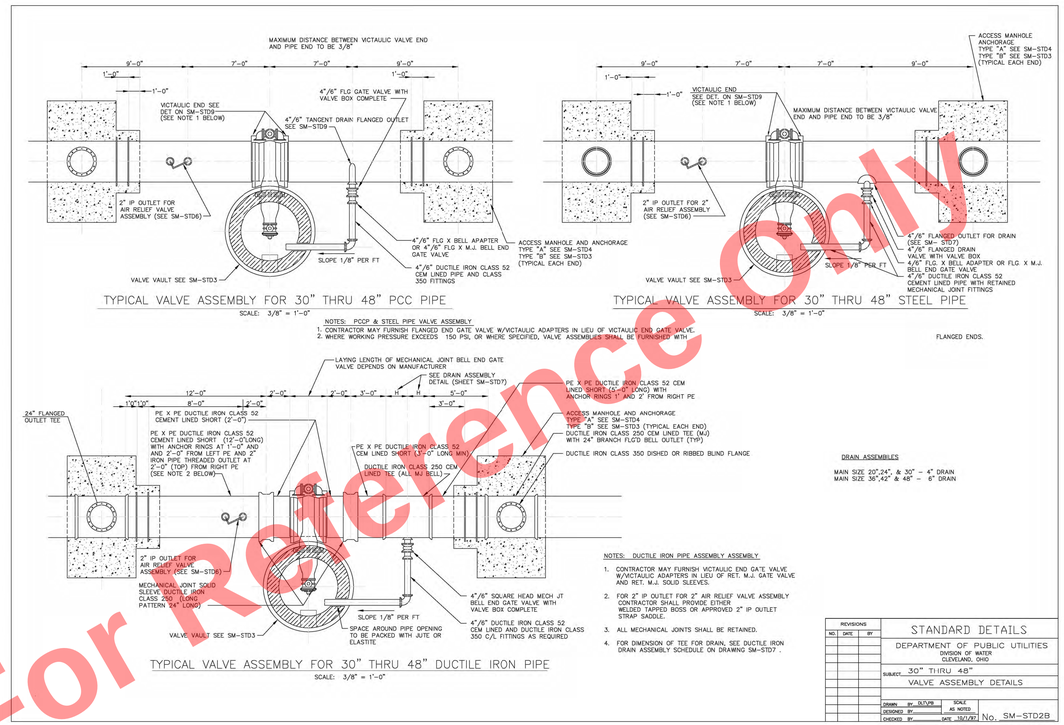

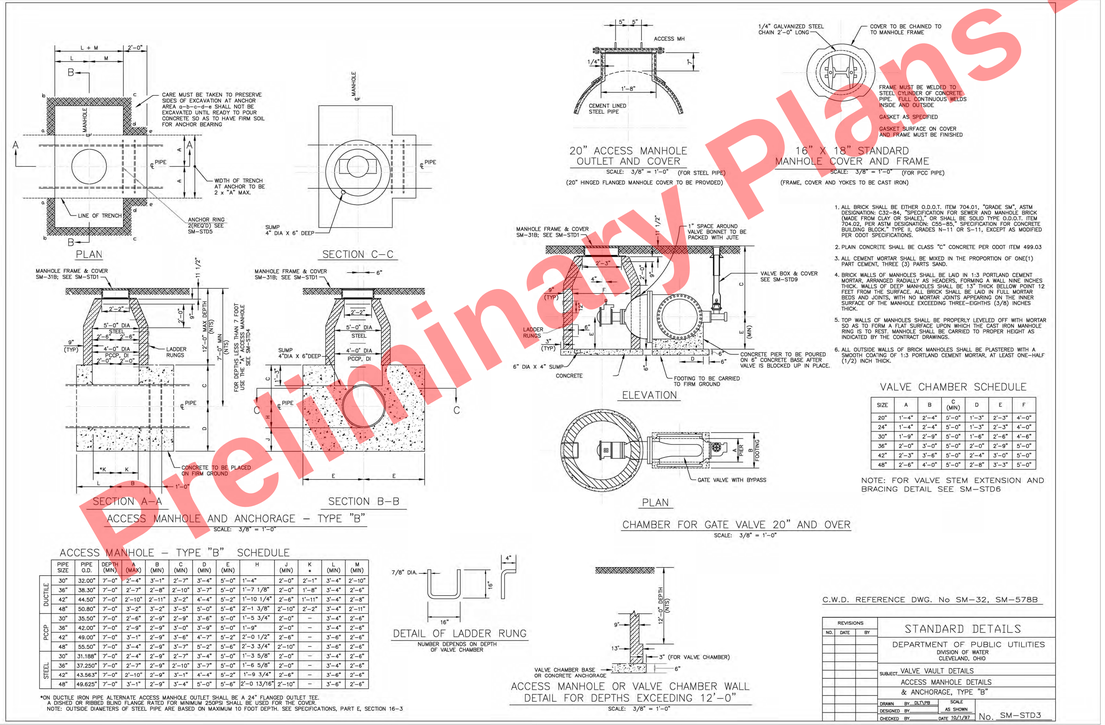

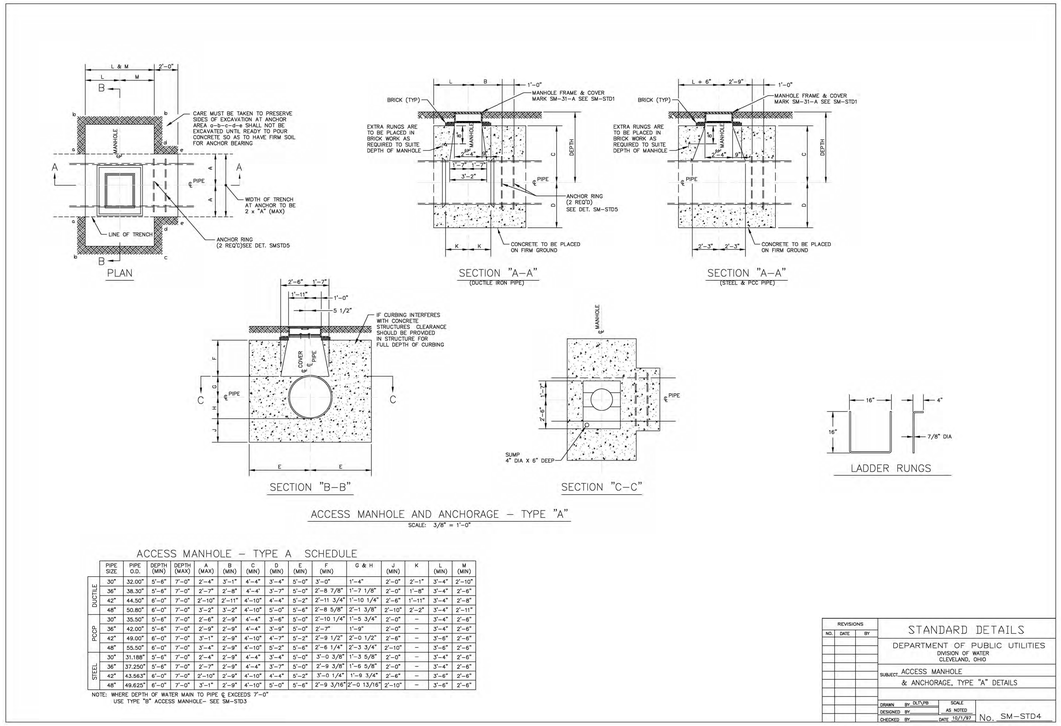

Preliminary Plans - Not For Reference Only

WATER WORK DETAILS

DESIGN AGENCY
Michael Baker INTERNATIONAL
DESIGNER SMP
REVIEWER SM 05/15/24
PROJECT ID 82382
SHEET 1424 TOTAL 2696

CUY-90-16.28 (CCG3A)
MODEL: UD1208 PAPERSIZE: 34x22 (in.) DATE: 3/28/2025 TIME: 5:23:18 AM USER: Julie.Ross
pw:\\mb-us-pw.bentley.com:mb-us-pw-03\Documents\Cleveland_OH\01_Projects\ODOT\District12\82382400-Engineering\Utilities\Sheets\82382_UD1201.dgn

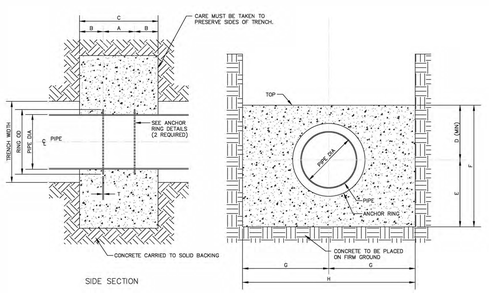

PLAIN ANCHOR AND ANCHORAGE DETAIL

NOTES:

1. ALL PIPE AND FITTING THICKNESSES SHALL BE AS SPECIFIED.
2. ALL PIPE JOINTS SHALL BE OF THE TYPE SPECIFIED OR AS SHOWN ON APPROVED DETAILED SHOP DRAWINGS.
3. ALL WELDS, REINFORCEMENT PLATES AND OTHER PERTINENT INFORMATION SHALL BE OF THE TYPE AND SIZE SHOWN ON APPROVED SHOP DRAWINGS.
4. ALL WELDS SHALL BE SHOP WELDS AND SHALL BE FULL AND CONTINUOUS.
5. ALL JOINTS NOT WELDED SHALL BE BONDED TO MAKE THE ENTIRE STRUCTURE ELECTRICALLY CONTINUOUS.

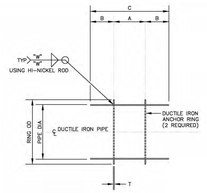

DUCTILE IRON PIPE

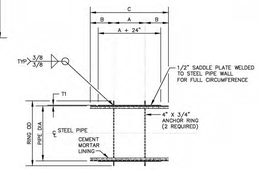

STEEL PIPE

T1: FOR THICKNESS OF STEEL PIPE SEE DETAILED SPECIFICATIONS, PART E, SECTION 3-6

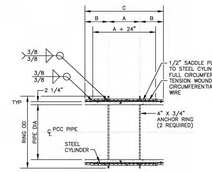

PCC PIPE

ANCHOR RING DETAILS

NOTE: RING DIAMETERS AND RING THICKNESS ARE MINIMUMS. DIAMETERS ARE FOR THICKNESS SHALL BE INCREASED WHEN WORKING PRESSURES EXCEED 150PSI

ANCHOR AND FLANGE SCHEDULE

DIA	A	B	C **	D (MIN)	E (MIN)	F (MIN)	G (MIN)	H (MIN)	TRENCH WIDTH (MAX)	RING OD (MIN)	T (MIN)	W
										DUCTILE IRON PIPE		
20"	1'-0"	1'-0"	3'-0"	2'-3"	2'-3"	4'-6"	3'-6"	7'-0"	4'-0"	25.20"	1/2"	3/8"
24"	1'-0"	1'-0"	3'-0"	2'-8"	3'-0"	5'-8"	4'-0"	8'-0"	4'-6"	30.25"	1/2"	7/16"
* 30"	1'-0"	1'-3"	3'-6"	3'-0"	3'-6"	6'-8"	5'-0"	10'-0"	5'-0"	36.50"	5/8"	1/2"
* 36"	1'-0"	1'-3"	3'-6"	3'-3"	3'-9"	7'-0"	5'-6"	11'-0"	5'-6"	43.40"	5/8"	1/2"
* 42"	2'-0"	1'-6"	5'-0"	3'-6"	4'-6"	8'-0"	6'-0"	12'-0"	6'-0"	49.50"	3/4"	5/8"
* 48"	2'-0"	1'-6"	5'-0"	4'-0"	5'-0"	9'-0"	6'-6"	13'-0"	6'-8"	56.50"	3/4"	5/8"

NOTES: 1.) RING DIAMETERS AND RING THICKNESS ARE MINIMUMS. DIAMETER AND/ OR THICKNESS SHALL BE INCREASED WHEN WORKING PRESSURES EXCEED 150PSI

* 2.) FOR ANCHORAGE ON ACCESS MANHOLES, "TYPE A" AND "TYPE B", ON 42" AND 48" PIPE, DIMENSION "A" IS 1'-0".

* 3.) FOR ANCHORAGE ON ACCESS MANHOLES, TYPE "A" AND TYPE "B", DIMENSION "B" IS 1'-0".

** 4.) FOR PLAIN ANCHORS ONLY.

REVISIONS		
NO.	DATE	BY

STANDARD DETAILS

DEPARTMENT OF PUBLIC UTILITIES
DIVISION OF WATER
CLEVELAND, OHIO

SUBJECT: ANCHOR RING AND PLAIN CONCRETE ANCHOR DETAILS

DRAWN BY: DLT/VB — SCALE
DESIGNED BY: — 1" = 1'-0"
CHECKED BY: — DATE 10/1/97 — No. SM-STD5

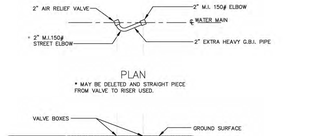

PLAN

* MAY BE DELETED AND STRAIGHT PIECE FROM VALVE TO RISER USED.

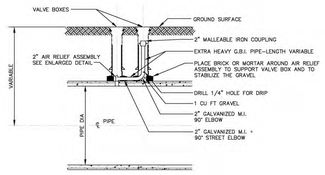

DOUBLE VALVE BOX ASSEMBLY

2" AIR RELIEF VALVE INSTALLATION DETAIL

NOT TO SCALE

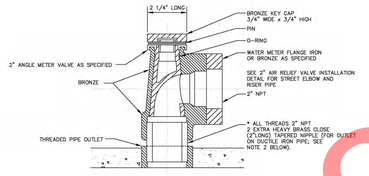

2" AIR RELIEF ASSEMBLY

NOT TO SCALE

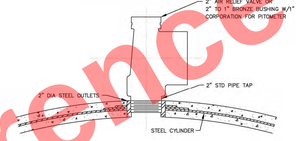

ENLARGED DETAIL SHOWING CONNECTION FOR AIR RELIEF VALVE OR PITOMETER

NOT TO SCALE

P.C.C. PIPE

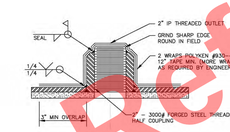

2" IRON PIPE THREADED OUTLET FOR AIR RELIEF VALVE OR PITOMETER

NOT TO SCALE

STEEL PIPE

NOTES:

1. ALL THREADED OUTLETS SHALL BE FURNISHED AND SHIPPED WITH MALLEABLE IRON PLUGS IN PLACE.
2. ON DUCTILE IRON PIPE, FOR 2" I.P. THREADED OUTLET FOR 2" AIR RELIEF ASSEMBLY OR 2" PITOMETER TAP CONTRACTOR SHALL FURNISH PIPE WITH EITHER WELDED TAPPED BOSS OR APPROVED 2" I.P. OUTLET DOUBLE STRAP SADDLE.
3. 2" I.P. OUTLET FOR PITOMETERS SHALL BE FURNISHED WITH 2" TO 1" BRONZE BUSHING AND 1" BRONZE CORPORATION VALVE.
4. FOR PITOMETER VAULT DETAILS SEE DETAIL DWG. SM-ST08

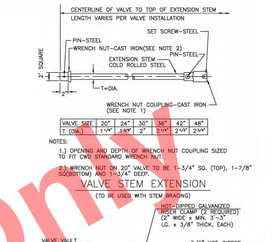

VALVE STEM EXTENSION

(TO BE USED WITH STEM BRACING)

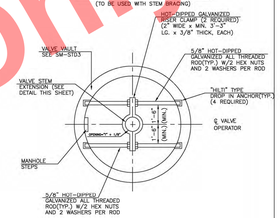

VALVE STEM EXTENSION AND STEM BRACING DETAIL

NOTES:

1) VALVE STEM EXTENSION AND BRACING REQUIRED WHERE TOP OF VALVE WRENCH NUT IS GREATER THAN 4 FEET BELOW FINISHED GRADE.

2) ARRANGEMENT OF THREADED RODS AND RISER CLAMPS SHALL BE SET VERTICALLY OVER VALVE WRENCH NUT.

3) IN LIEU OF "HILTI" TYPE ANCHORS THREADED ROD MAY BE BEST SET IN 4" DEEP x 3/4" DIAMETER HOLES FILLED WITH EPOXY GROUT.

4) ALL THREADED RODS, NUTS AND WASHERS, AND RISER CLAMPS SHALL BE FIELD COATED WITH BITUMASTIC PAINT AS SPECIFIED.

C.W.D. REFERENCE No. SM-292A

REVISIONS		
NO.	DATE	BY

STANDARD DETAILS

DEPARTMENT OF PUBLIC UTILITIES
DIVISION OF WATER
CLEVELAND, OHIO

SUBJECT: 2" AIR RELIEF DETAILS, 2" OUTLET DETAILS FOR AIR RELIEF/PITOMETER

DRAWN BY: DLT/VB — SCALE
DESIGNED BY: — NONE
CHECKED BY: — DATE 10/1/97 — No. SM-STD6

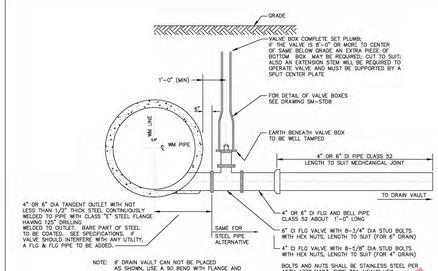

4" OR 6" DRAIN ASSEMBLY FOR PCC PIPE DETAIL

NOT TO SCALE

4" ASSEMBLIES REQUIRED ON 20", 24", & 30", PIPE
6" ASSEMBLIES REQUIRED ON 36", 42", & 48", PIPE

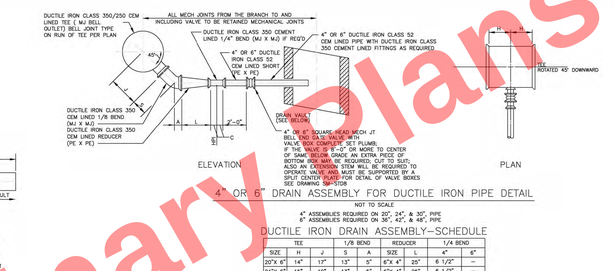

4" OR 6" DRAIN ASSEMBLY FOR DUCTILE IRON PIPE DETAIL

NOT TO SCALE

4" ASSEMBLIES REQUIRED ON 20", 24", & 30", PIPE
6" ASSEMBLIES REQUIRED ON 36", 42", & 48", PIPE

DUCTILE IRON DRAIN ASSEMBLY-SCHEDULE

	TEE			1/8 BEND		REDUCER	1/4 BEND	
SIZE	H	J	S	A	SIZE	L	4"	6"
20"X 6"	14"	17"	13"	5"	6"X 4"	25"	6 1/2"	–
24"X 6"	15"	19"	13"	5"	6"X 4"	25"	6 1/2"	–
30"X 6"	18"	23"	13"	5"	6"X 4"	25"	6 1/2"	–
36"X 8"	20"	26"	13.5"	5.5"	8"X 4"	27"	6 1/2"	–
36"X 6"	20"	26"	13.5"	5.5"	8"X 6"	27"	–	8"
42"X12"	23"	30"	15.5"	7.5"	12"X 6"	30"	–	8"
48"X12"	26"	34"	15.5"	7.5"	12"X 6"	30"	–	8"

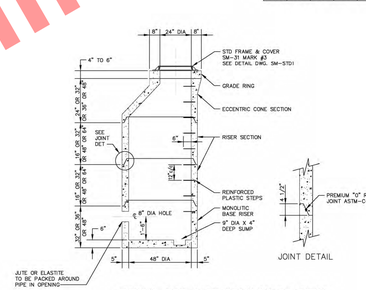

TYPICAL PRE-CAST DRAIN VAULT DETAIL

NOT TO SCALE

NOTES:

REINFORCING TO CONSIST OF WELDED STEEL WIRE, 9 GAUGE WIRE AT 12" c/c VERTICALLY AND 4 GAUGE WIRE AT 4" c/c HORIZONTALLY PLACED IN CENTER OF WALL.

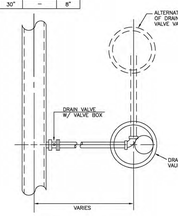

PLAN VIEW

TYPICAL DRAIN ASSEMBLY

N.T.S.

REVISIONS		
NO.	DATE	BY

STANDARD DETAILS

DEPARTMENT OF PUBLIC UTILITIES
DIVISION OF WATER
CLEVELAND, OHIO

SUBJECT: DRAIN ASSEMBLY DETAILS OUTLET/ DRAIN/ VAULT DETAILS

DRAWN BY: DLT/VB — SCALE
DESIGNED BY: — NONE
CHECKED BY: — DATE 10/1/97 — No. SM-STD7

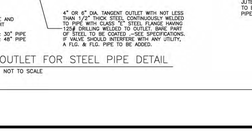

4" OR 6" TANGENTIAL OUTLET FOR STEEL PIPE DETAIL

NOT TO SCALE

BASE NO.	VALVE SIZE	A	B	C	D	E
2 & 3	3", 4", 6" & 8"	7 1/2"	10 3/4"	4 1/4"	3'-1 1/4"	4'-6"
4	10", 12" & 16"	11"	14 1/4"	6 1/4"	3'-5 1/4"	4'-0"

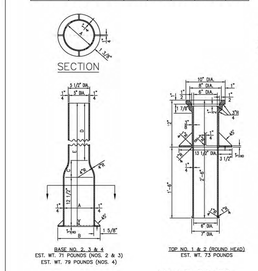

VALVE BOXES

SCALE: 1 1/2" = 1'-0"

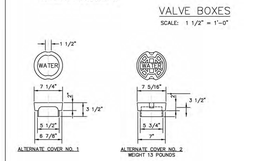

LONG STYLE VALVE BOX ROUND TOP AND COVER DETAIL

SCALE: 1 1/2" = 1'-0"

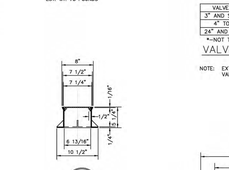

SHORT STYLE VALVE BOX ROUND TOP AND COVER DETAIL

SCALE: 1 1/2" = 1'-0"

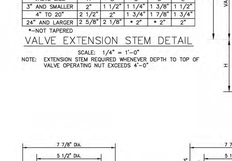

VALVE BOX COVER DETAIL

N T S

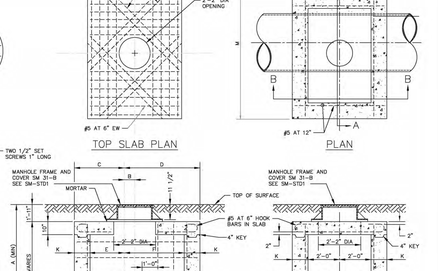

NOTE: VALVE NUTS TO BE CONTERSUNK 1/8" TO RECEIVE SET SCREWS

VALVE SIZE	A	B	C	D	E
3" AND SMALLER	2"	1 1/2"	1 1/4"	1 3/8"	1 1/2"
4" TO 20"	2 1/2"	2"	1 3/4"	1 7/8"	1 3/4"
24" AND LARGER	2 5/8"	2 1/8"	* 2"	* 2"	2"

*-NOT TAPERED

VALVE EXTENSION STEM DETAIL

SCALE: 1/4" = 1'-0"

NOTE: EXTENSION STEM REQUIRED WHENEVER DEPTH TO TOP OF VALVE OPERATING NUT EXCEEDS 4'-0"

PITOMETER VAULT DETAIL

NOT TO SCALE

PITOMETER VAULT – SCHEDULE

PIPE SIZE	A (MIN)	B	C	D	E	F	G	H	J	K	L	M
20"	6'-0"	7"	2'-5"	4'-0"	1'-7"	3'-2"	8"	2'-0"	7"	10"	5'-8"	6'-5"
24"	5'-0"	7"	2'-5"	4'-0"	1'-7"	3'-2"	10"	2'-3"	10"	10"	5'-8"	6'-5"
30"	4'-3"	7"	2'-5"	4'-2"	1'-7"	3'-4"	1'-1"	2'-4"	1'-2"	10"	5'-8"	6'-7"
36"	5'-0"	8"	2'-10"	4'-6"	1'-10"	3'-8"	1'-3"	3'-0"	1'-4"	1'-0"	5'-0"	7'-4"
42"	5'-3"	8"	3'-2"	4'-10"	2'-2"	3'-10"	1'-6"	3'-4"	1'-6"	1'-0"	5'-0"	8'-0"
48"	5'-6"	8"	3'-6"	5'-0"	2'-6"	4'-0"	1'-10"	3'-8"	1'-9"	1'-0"	5'-0"	8'-6"

CWD REFERENCE No. SM-292, SM-292A & SM-723

REVISIONS		
NO.	DATE	BY

STANDARD DETAILS

DEPARTMENT OF PUBLIC UTILITIES
DIVISION OF WATER
CLEVELAND, OHIO

SUBJECT: VALVE BOX, STEM & PITOMETER DETAILS

DRAWN BY: DLT/VB — SCALE
DESIGNED BY: — AS NOTED
CHECKED BY: — DATE 10/1/97 — No. SM-STD8

Preliminary Plans - For Reference Only

WATER WORK DETAILS

DESIGN AGENCY

Michael Baker INTERNATIONAL

DESIGNER SMP

REVIEWER SM 05/15/24

PROJECT ID 82382

SHEET 1425 TOTAL 2696

CUY-90-16.28 (CCG3A)
MODEL: UD1209 PAPERSIZE: 34x22 (in.) DATE: 3/28/2025 TIME: 8:05:17 AM USER: Julie.Ross
pw:\\mb-us-pw.bentley.com:mb-us-pw-03\Documents\Cleveland_OH\01_Projects\ODOT\District12\82382400-Engineering\Utilities\Sheets\82382_UD1201.dgn

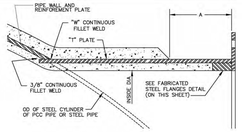

FLANGED OUTLET ON PRESTRESSED CONCRETE CYLINDER PIPE

AND STEEL PIPE

NOTE: DIMENSIONS SHOWN HEREON ARE MINIMUM AND SHALL BE INCREASED ACCORDINGLY PER DESIGN AND PRESSURE REQUIREMENTS.

WHERE "INSULATED T" FLANGES ARE REQUIRED OR CALLED FOR THE FLANGE BOLT HOLE SHALL BE DRILLED 1/16" LARGER TO ACCOMODATE THE BOLT INSULATED SLEEVES.

NOTES:

1. CAST FORGED OR ROLLED STEEL FLANGES MAY BE USED INSTEAD OF FABRICATED STEEL.
2. FLANGES SHALL BE CLASS "E" (RING) ALL FLANGES SHALL BE DRILLED TO AMERICAN 125 LB CAST IRON FLANGE STANDARD.
3. ALL BOLTS AND NUTS SHALL BE STAINLESS STEEL , ASTM A 276/A193/A194 TYPE 304, HEAVY HEX

FABRICATED STEEL FLANGES DETAIL

FABRICATED STEEL FLANGES—SCHEDULE

INSIDE DIA	A	B	C	"T"	W	BC	OD	HOLE NO.	HOLE SIZE	BOLT SIZE
12"	8"	1 3/4"	1 7/8"	1/4"	1/4"	17"	15"	12	1"	7/8"
16"	8"	2"	2 1/8"	1/4"	1/4"	21 1/4"	23 1/2"	16	1 1/8"	1"
20"	8"	2 3/8"	2 1/2"	1/4"	1/4"	25"	27 1/2"	20	1 1/4"	1 1/8"
24"	8"	2 5/8"	2 3/4"	5/16"	5/16"	29 1/2"	32"	20	1 3/8"	1 1/4"
30"	8"	2 7/8"	3"	3/8"	3/8"	36"	38 3/4"	28	1 3/8"	1 1/4"
36"	8"	3 1/4"	3 3/8"	3/8"	3/8"	42 3/4"	46"	32	1 5/8"	1 1/2"
42"	8"	3 3/8"	3 1/2"	7/16"	7/16"	49 1/2"	53"	36	1 5/8"	1 1/2"
48"	8"	3 1/2"	3 5/8"	1/2"	1/2"	56"	59 1/2"	44	1 5/8"	1 1/2"

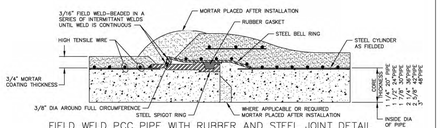

FIELD WELD PCC PIPE WITH RUBBER AND STEEL JOINT DETAIL

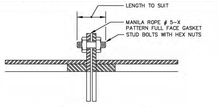

FLANGE CONNECTIONS DETAIL

(SECTIONS THROUGH C)

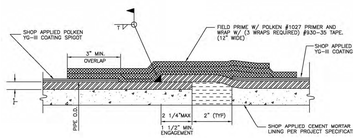

NOTES:

1. FOR STEEL PIPE THICKNESS "T" AND PIPE O.D. SEE DETAILED SPECIFICATIONS
2. FOR PIPE SIZES 20" THRU 30" ONE(1) FULL AND CONTINUOUS FILLET WELD ON OUTSIDE OF LAP JOINT FOR FULL JOINT CIRCUMFERENCE IS REQUIRED.
3. FOR PIPE SIZES 36" THRU 48" ONE(1) FULL AND CONTINUOUS FILLET WELD ON OUTSIDE AND ONE (1) FULL AND CONTINUOUS FILLET WELD ON INSIDE OF LAP JOINT, EACH FOR FULL JOINT CIRCUMFERENCE, IS REQUIRED.

STEEL PIPE FIELD WELDED JOINT DETAIL

GENERAL NOTE: FOR FIELD WELD JOINTS ALL SUCH WELDS SHALL BE FILLET WELDS MADE FOR THE FULL JOINT CIRCUMFERENCE. WELDS MAY BE MADE WITH A "DOUBLE PASS."

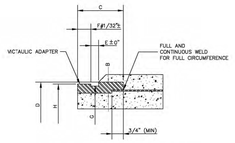

SHOULDERED PIPE END FOR VICTAULIC COUPLING

(PCC PIPE) (STYLE 44)

VICTAULIC ADAPTER—SCHEDULE

SIZE	B	C	D	E	F	G	H
20"	1"	4"	23 1/4"	3/4"	1 3/16"	22.34"	22.87"
24"	1"	4"	27 1/2"	3/4"	1 3/16"	26.59"	27.13"
30"	1 1/4"	4 1/2"	34 1/8"	1"	1 3/4"	33.00"	33.70"
36"	1 1/4"	4 1/2"	40 7/8"	1"	1 3/4"	39.43"	40.19"
42"	1 1/4"	4 1/2"	47 1/8"	1 1/4"	1 3/4"	45.87"	46.83"
48"	1 1/2"	4 1/2"	53 7/8"	1 1/4"	1 3/4"	52.19"	53.13"

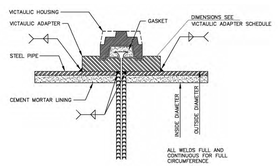

VICTAULIC COUPLING—STYLE 44

(STEEL PIPE)

NOTE: DUCTILE IRON-PIPE ENDS SHALL BE SHOULDERED JOINTS OF EITHER CAST PIPE OR WITH WELDED END RING, ADAPTED FOR INSTALLATION OF A STYLE 44 JOINT AND COUPLING CONFORMING TO THE DIMENSIONS SHOWN HEREON.

REVISIONS			
NO.	DATE	BY	

STANDARD DETAILS

DEPARTMENT OF PUBLIC UTILITIES
DIVISION OF WATER
CLEVELAND, OHIO

SUBJECT: FLANGE AND VICTAULIC DETAILS; PCCP AND STEEL PIPE WELDED JOINTS

DRAWN BY: DUTUPS | SCALE: NONE
DESIGNED BY: | DATE: 10/1/97
CHECKED BY:

No. SM-STD9

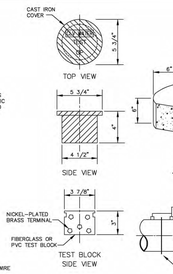

ELECTROLYSIS BOND DETAIL FOR VICTAULIC OR MECHANICAL COUPLING FLANGE JOINT AND VALVE BODY

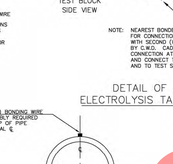

BONDED PIPE JOINT

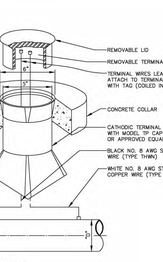

NOTE: NEAREST BONDED PIPE JOINT TO BE USED FOR CONNECTION TO TEST STATION BOX. IF NONE EXISTS ONE SHALL BE DETERMINED IN FIELD BY C.W.D. CADWELD SECOND CONNECTION AT PIPE JOINT (BLACK WIRE) AND CONNECT TO CADWELD AT PIPE JOINT AND TO TEST STATION BOX.

DETAIL OF ASSEMBLY FOR ELECTROLYSIS TAP FOR TEST STATION

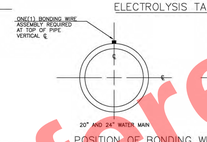

POSITION OF BONDING WIRE/CONNECTORS

DUCTILE IRON, CONCRETE AND STEEL PIPE ALTERNATES

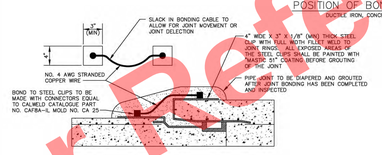

CONCRETE PIPE BONDED JOINT DETAIL

"THERMITE WELDS"

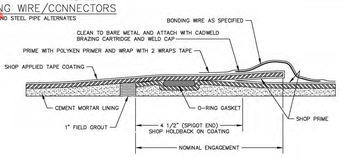

STEEL PIPE BELL AND SPIGOT TYPICAL BONDED JOINT DETAIL

NOTES:

TEST BOX SHALL BE CAST IRON PER FSI, No. 55, DRIP BOX AS MANUFACTURED BY BINGHAM-TAYLOR LID SHALL HAVE THE WORDS "CP TEST" CAST IN RAISED LETTERS.

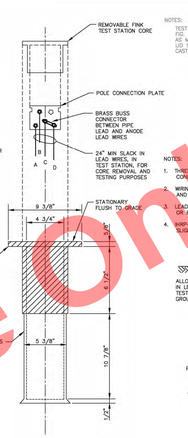

NOTES:

1. THREE WIRES NO. 10 AWG TW SOLID COPPER CABLE-SINGLE CONDUCTOR
2. WIRING CODE: LEAD WIRES (B) AND (C) WHITE,LEAD WIRES (A) AND (D) BLACK
3. LEAD WIRES CONNECTED TO PIPE BY THE CADWELDING METHOD OR EQUAL AND COATED WITH BITUMASTIC #50 OR EQUAL.
4. WRP-802 PERMACELL TO BE INSTALLED ADJACENT TO OR SLIGHTLY BELOW PROTECTED PIPE

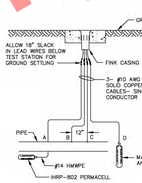

ELECTROLYSIS TEST STATION DETAIL

REVISIONS			
NO.	DATE	BY	

STANDARD DETAILS

DEPARTMENT OF PUBLIC UTILITIES
DIVISION OF WATER
CLEVELAND, OHIO

SUBJECT:

WATER WORK DETAILS

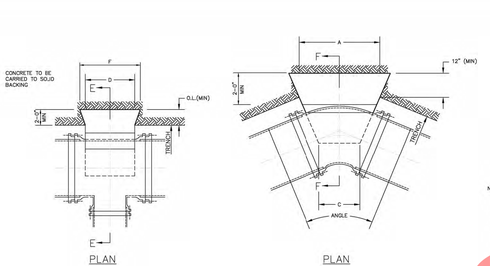

CONCRETE PIERS FOR TEES

NOT TO SCALE

CONCRETE PIERS FOR BENDS

NOT TO SCALE

CONCRETE PIERS—SCHEDULE

PIPE SIZE	D (APPROX.)	E (MIN)	F (MIN)
8"-6"	1'-6"	1'-6"	3'-6"
12"	2'-0"	1'-10"	4'-0"
16"	2'-6"	2'-2"	5'-0"
20"	3'-0"	3'-2"	5'-0"
24"	3'-8"	3'-8"	5'-8"
30"	4'-2"	4'-2"	6'-2"
36"	4'-8"	4'-8"	6'-8"
42"	5'-2"	5'-4"	7'-2"
48"	5'-8"	5'-10"	7'-8"

NOTE: DIMENSIONS HEREON FOR CONCRETE PIER ARE APPROXIMATE AND FOR AND FOR REFERENCE ONLY. ALL CONCRETE SHALL BE FORMED AND POURED TO UNDISTURBED EARTH.

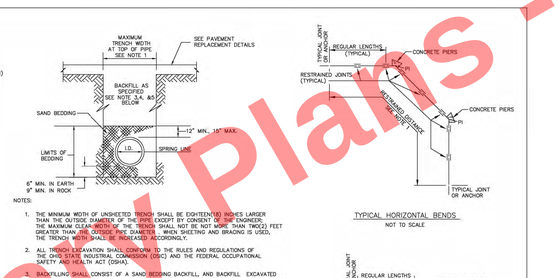

NOTES:

1. THE MINIMUM WIDTH OF UNSHEETED TRENCH SHALL BE EIGHTEEN(18) INCHES LARGER THAN THE OUTSIDE DIAMETER OF THE PIPE EXCEPT BY CONSENT OF THE ENGINEER. THE MAXIMUM CLEAR WIDTH OF THE TRENCH SHALL NOT BE NOT MORE THAN TWO(2) FEET GREATER THAN THE OUTSIDE PIPE DIAMETER WHEN SHEETING AND BRACING IS USED, THE TRENCH WIDTH SHALL BE INCREASED ACCORDINGLY.
2. ALL TRENCH EXCAVATION SHALL CONFORM TO THE RULES AND REGULATIONS OF THE OHIO STATE INDUSTRIAL COMMISSION (OSIC) AND THE FEDERAL OCCUPATIONAL SAFETY AND HEALTH ACT (OSHA).
3. BACKFILLING SHALL CONSIST OF A SAND BEDDING BACKFILL AND BACKFILL EXCAVATED FROM THE TRENCHES, OR WHERE REQUIRED, PREMIUM BACKFILL MATERIAL. BACKFILL ABOVE THE ONE (1) FOOT SAND BEDDING BACKFILL MAY BE MADE WITH MATERIAL EXCAVATED FROM THE TRENCHES, PROVIDING SAME IS SATISFACTORY TO THE ENGINEER. IF, IN THE OPINION OF THE ENGINEER, THE MATERIAL EXCAVATED IS UN SATISFACTORY, THE CONTRACTOR SHALL FURNISH, AT HIS EXPENSE, PREMIUM BACKFILL AS SPECIFIED. BACKFILL SHALL BE CAREFULLY PLACED INTO TRENCH AND NOT DUMPED OR DUMPED FROM THE TOP OF THE TRENCH.
4. PREMIUM BACKFILL SHALL BE PLACED WHERE EXISTING AND FUTURE PERMANENT PAVEMENT, SIDEWALKS, DRIVEWAYS, SEWER PIPE CROSSINGS AND CURB CROSSINGS HAVE BEEN OPEN OR UNDER-MINED BY THE CONTRACTOR'S OPERATIONS. PREMIUM BACKFILL SHALL BE PLACED UNDER ALL OF EXISTING OR FUTURE PERMANENT PAVEMENT, SIDEWALKS, DRIVEWAYS, DRIVEWAY APRONS, SEWER PIPE CROSSINGS AND CURB CROSSINGS. IF PART OF THE TRENCH IS UNDER EXISTING OR FUTURE PAVEMENT, SIDEWALK, DRIVEWAY, DRIVEWAY APRONS, OR CURB THE ENTIRE TRENCH SHALL BE BACKFILLED WITH PREMIUM BACKFILL.
5. PREMIUM BACKFILL SHALL CONSIST OF CRUSHED LIMESTONE. THE PREMIUM BACKFILL SHALL BE AS SUCH THAT CAN BE READILY INCORPORATED IN AN 8-INCH LAYER AND SHALL BE IN ACCORDANCE WITH OHIO DEPARTMENT OF TRANS-PORTATION CONSTRUCTION AND MATERIALS SPECIFICATIONS, ITEM 304, "AGGREGATE BASE", SECTION304.02, "AGGREGATE", SEE DETAIL SPECIFICATIONS, PART 0, SECTION D-27, PARAGRAPH H.

TRENCH & BEDDING DETAILS

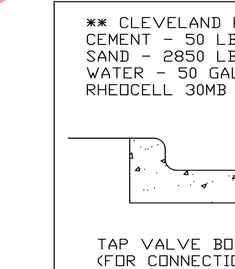

TYPICAL HORIZONTAL BENDS

NOT TO SCALE

TYPICAL HORIZONTAL BEND

NOT TO SCALE

TYPICAL VERTICAL BENDS

NOT TO SCALE

RESTRAINED DISTANCE

NOTES:

1. THE HORIZONTAL AND VERTICAL BENDS LAYOUTS SHOW TYPICAL ARRANGEMENT FOR BOTH HORIZONTAL AND VERTICAL BENDS. IN SPECIAL CASES MAY REQUIRE A COMBINATION OF HORIZONTAL AND VERTICAL "RESTRAINED DISTANCES," OR THE TIED DISTANCE MAY END AT A VALVE OR TEE RATHER THAN AT A BEND. THE PLAN AND PROFILE DRAWINGS GIVE DETAILS "RESTRAINED DISTANCES" AT ALL REQUIRED POINTS. THE STRAIGHT LENGTHS OF PIPE DESIGNATED AS "REGULAR LENGTHS" SHALL BE MINIMUM 20'-0" LONG.

CONCRETE PIERS—SCHEDULE

PIPE SIZE	A (MIN)	B (MIN)	C (APPROX.)
8"-6"	2'-8"	1'-6"	0'-8"
12"	3'-0"	1'-10"	1'-0"
16"	3'-2"	2'-2"	1'-0"
20"	3'-10"	3'-2"	1'-3"
24"	4'-3"	3'-8"	1'-6"
30"	5'-0"	4'-2"	2'-0"
36"	5'-6"	4'-8"	2'-6"
42"	6'-0"	5'-4"	3'-0"
48"	7'-2"	5'-10"	3'-6"

REVISIONS			
NO.	DATE	BY	

STANDARD DETAILS

DEPARTMENT OF PUBLIC UTILITIES
DIVISION OF WATER
CLEVELAND, OHIO

SUBJECT: THRUST BLOCK, RESTRAINT & AND TRENCH DETAILS

DRAWN BY: DUTUPS | SCALE: NONE
DESIGNED BY: | DATE: 10/1/97
CHECKED BY:

No. SM-STD11

** CLEVELAND REQUIRED MIX DESIGN -
CEMENT - 50 LBS. PER CUBIC YARD
SAND - 2850 LBS. PER CUBIC YARD
WATER - 50 GALLONS PER CUBIC YARD
RHEOCELL 30MB - 3 OZ. PER CUBIC YARD

* CONTROLLED LOW STRENGTH MATERIAL-
CONTROLLED DENSITY FILL (CLSM-CDF)
"FLOWABLE FILL" IS REQUIRED WITHIN THE CITY OF CLEVELAND CORPORATION LIMITS AND PERMITTED IN ALL COMMUNITIES SERVICED BY CWD. CHECK LOCAL REQUIREMENTS.

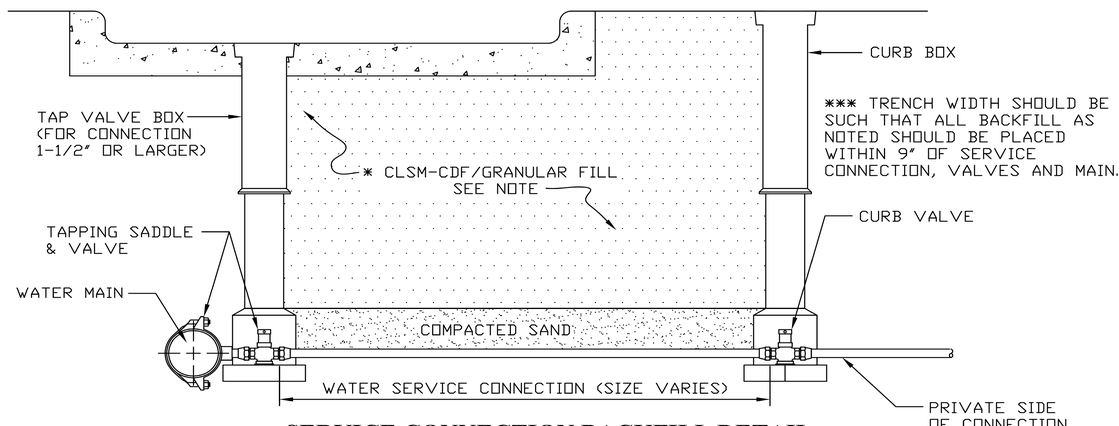

SERVICE CONNECTION BACKFILL DETAIL

- NOT TO SCALE -

NOTES:

1) CONTRACTOR SHALL USE SPECIAL CARE IN PLACING THE SAND BEDDING BACKFILL, SO AS TO AVOID SCRAPING OF THE EXTERIOR COATING, INJURING THE PIPE, DISTORTING OR MOVING THE PIPE WHEN COMPACTING THE SAME. THE SAND BEDDING BACKFILL SHALL BE TAMPED IN SIX (6) INCH LAYERS, SIMULTANEOUSLY ON EACH SIDE OF THE PIPE, AND THOROUGHLY COMPACTED SO AS TO PROVIDE A SOLID BACKING AGAINST THE EXTERNAL SURFACE OF THE PIPE.
2) MINIMUM COMPACTION FOR ALL SAND BEDDING BACKFILL, BACKFILL AND PREMIUM BACKFILL SHALL BE 95% STANDARD PROCTOR.

STD-023

DATE: 10-7-2008 | BY: RSK

Preliminary Plans - For Reference Only

DESIGN AGENCY

Michael Baker INTERNATIONAL

DESIGNER SMP

REVIEWER SM 05/15/24

PROJECT ID 82382

SHEET 1426 | TOTAL 2696

CUY-90-16.28 (CCG3A)
MODEL: UD1210 PAPERSIZE: 34x22 (in.) DATE: 3/28/2025 TIME: 8:05:52 AM USER: Julie.Ross
pw:\\mb-us-pw.bentley.com:mb-us-pw-03\Documents\Cleveland_OH\01_Projects\ODOT\District12\82382400-Engineering\Utilities\Sheets\82382_UD1201.dgn

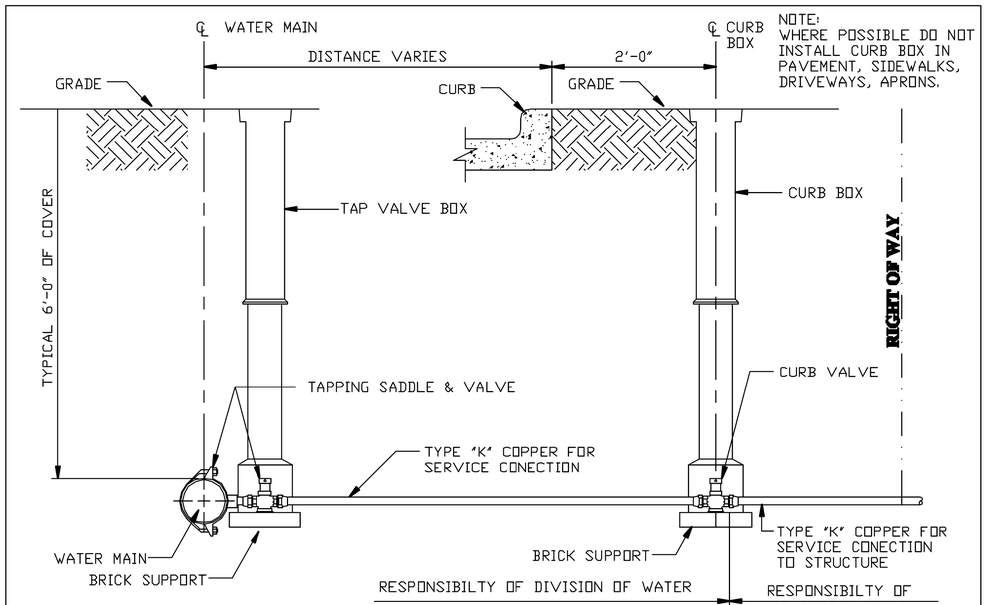

NEW WATER SERVICE CONNECTION FOR $1\frac{1}{2}$" & 2"

- NOT TO SCALE -

STD-C10 | DATE: 6-21-2000 | BY: RSK

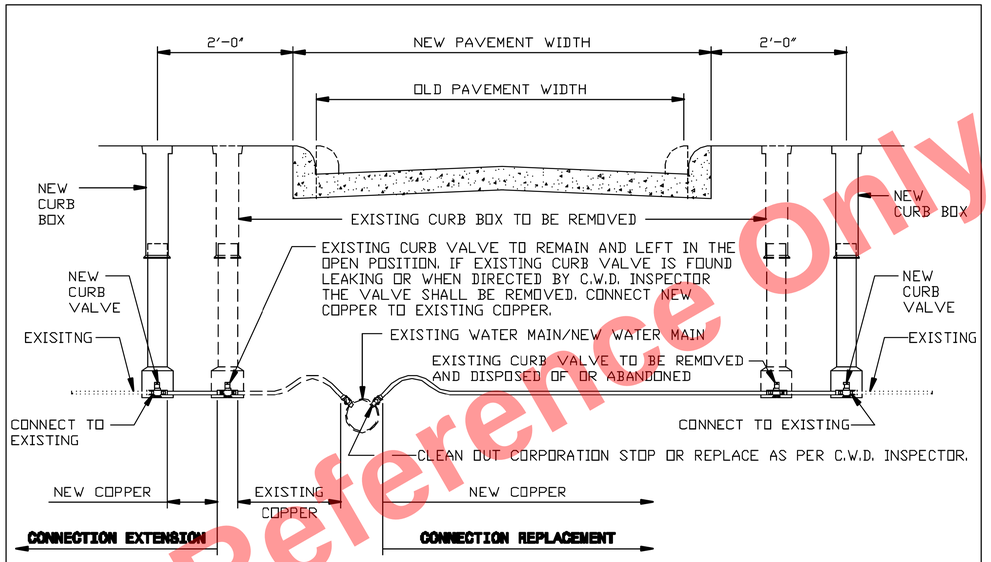

NOTE: IF EXISTING SERVICE CONNECTION IS FOUND TO BE GALVANIZED OR LEAD REPLACE FROM CORPORATION STOP TO CURB VALVE.

WATER SERVICE CONNECTION EXTENSION OR REPLACEMENT FOR 1" & SMALLER

- NOT TO SCALE -

STD-C01 | DATE: 5-11-98 | BY: RSK

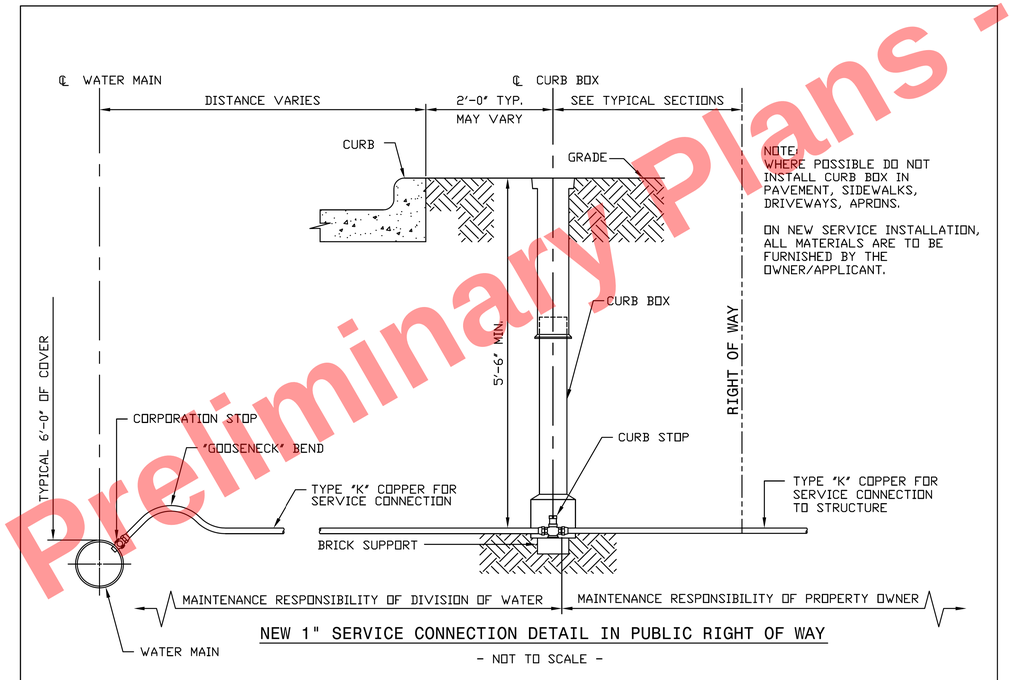

NEW 1" SERVICE CONNECTION DETAIL IN PUBLIC RIGHT OF WAY

- NOT TO SCALE -

STD-C04 | DATE: 8-1-2011 | BY: RSK

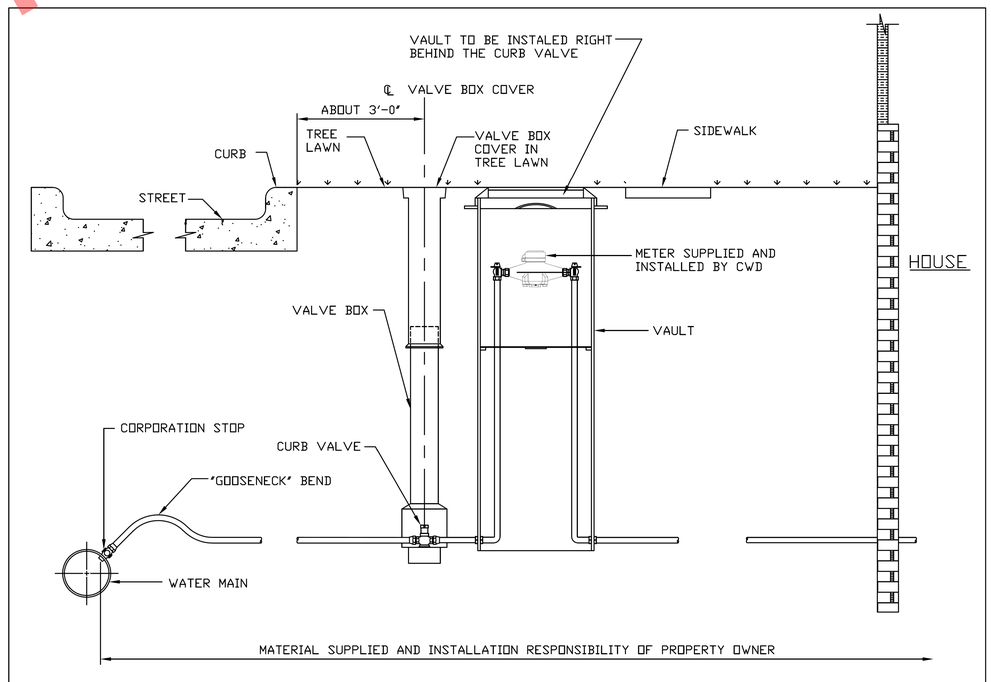

RESIDENTIAL SERVICE CONNECTION INSTALLATION DETAIL WITH METER IN VAULT

- NOT TO SCALE -

STD-C14 | DATE: 9-28-2011 | BY: RSK

Preliminary Plans - For Reference Only

WATER WORK DETAILS

DESIGN AGENCY
Michael Baker INTERNATIONAL

DESIGNER
SMP

REVIEWER
SM 05/15/24

PROJECT ID
82382

SHEET 1427 | TOTAL 2696

CUY-90-16.28 (CCG3A)

MODEL: UD1211 PAPERSIZE: 34x22 (in.) DATE: 3/28/2025 TIME: 8:06:22 AM USER: Julie.Ross
pw:\\mb-us-pw.bentley.com:mb-us-pw-03\Documents\Cleveland_OH\01_Projects\ODOT\District12\82382400-Engineering\Utilities\Sheets\82382_UD1201.dgn

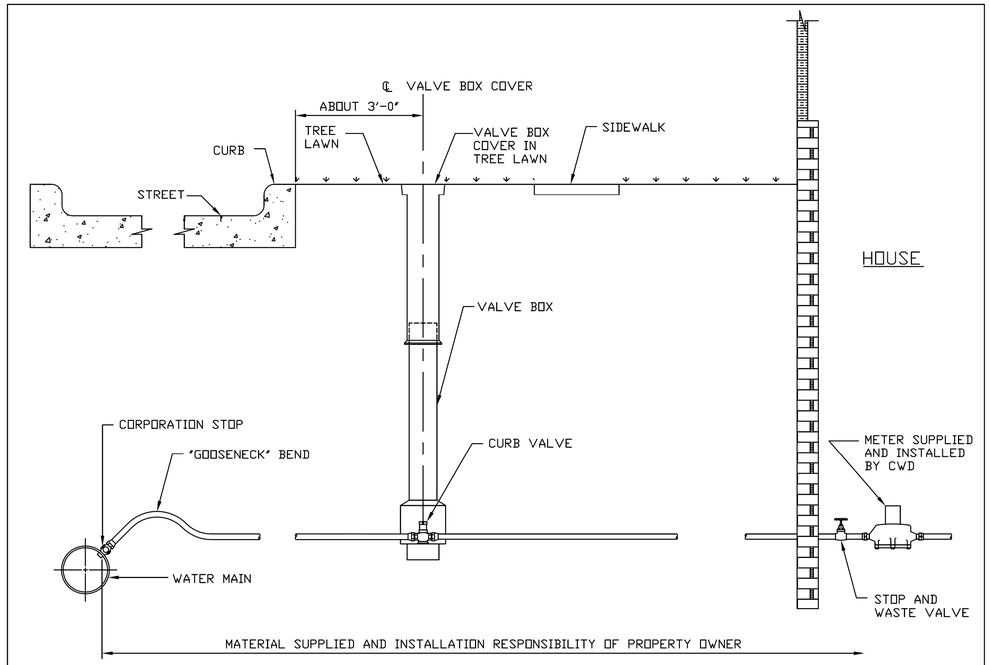

RESIDENTIAL SERVICE CONNECTION INSTALLATION DETAIL WITH METER IN HOUSE

- NOT TO SCALE -

STD-C15 | DATE: 9-28-2011 | BY: RSK

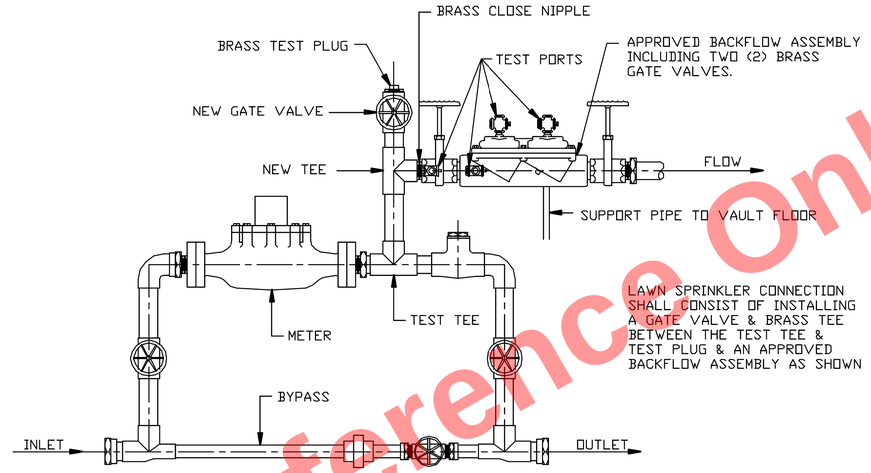

ELEVATION

* FOR TYPE AND MODEL OF BACKFLOW DEVICE REQUIRED CONTACT THE BACKFLOW UNIT AT (216) 664-3944.

STANDARD DETAILS

DEPARTMENT OF PUBLIC UTILITIES
DIVISION OF WATER
CLEVELAND, OHIO

SUBJECT TYPICAL 1½" AND 2" METER SETTING WITH 1" AND 1½" LAWN SPRINKLER CONNECTION

DRAWN BY RSK | SCALE NONE
DATE 10-1-1997
CHECKED BY MJS DATE 10-1-97

STD-M16

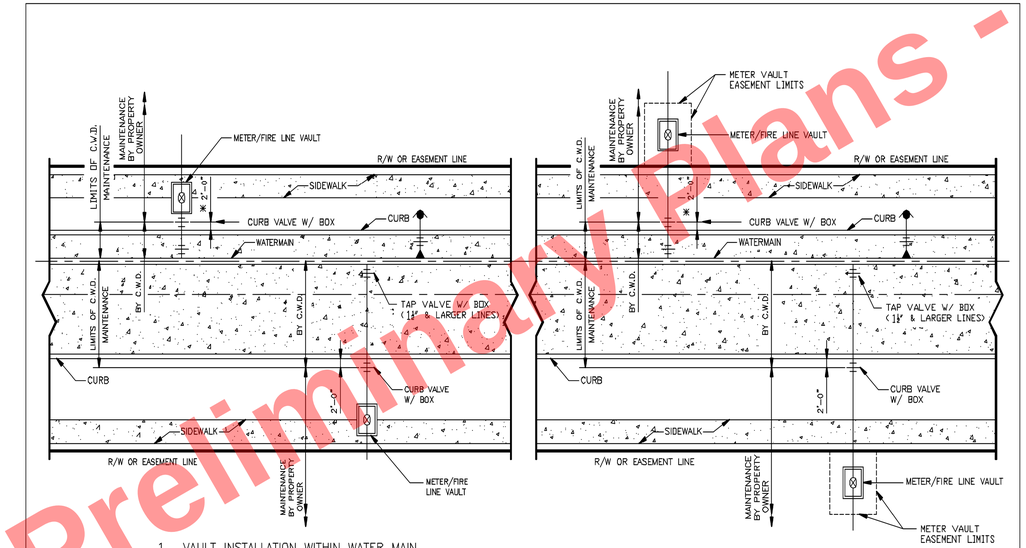

1. VAULT INSTALLATION WITHIN WATER MAIN EASEMENT OR DEDICATED R/W

2. VAULT INSTALLATION IN PRIVATE PROPERTY

VAULT AND CURB VALVE ARRANGEMENT

1. ALL DOMESTIC SERVICE CONNECTIONS (THAT IS ALL CONNECTIONS USED FOR DRINKING, SANITATION OR IRRIGATION PURPOSES) UTILIZING A VAULT FOR THE PLACEMENT OF THE METER SHALL MATCH ONE OF THE TWO STANDARD DRAWINGS ABOVE.
2. IF ONLY THE BACKFLOW PREVENTION DEVICE FOR THE FIRE SERVICE CONNECTION IS TO BE PLACED IN A VAULT (THAT IS THE DOMESTIC SERVICE CONNECTION WILL BE METERED INSIDE THE BUILDING WITH A REMOTE REGISTER), THEN THAT VAULT MAY BE PLACED AS SHOWN IN DRAWING No. 2 ABOVE AND A METER VAULT EASEMENT WILL NOT BE REQUIRED.
3. SINGLE FAMILY RESIDENTIAL DOMESTIC SERVICE CONNECTIONS IN EASEMENTS, WITHOUT METER VAULTS, SHALL HAVE THE CURB VALVE PLACED NO MORE THAN FIVE (5) FEET FROM THE MAIN. THE CURB VALVE WILL STILL MARK THE CHANGE IN RESPONSIBILITY FOR MAINTENANCE.
4. VAULT AND VAULT COVERS SHALL BE PLACED OUTSIDE OF SIDEWALKS AND DRIVEWAYS WHEN POSSIBLE. VAULT COVERS IN PAVEMENT SHALL BE FLUSH TO THE SURFACE.

* 5. IN THE CASE WHEN THE WATERMAIN IS IN THE TREE LAWN IN A DEDICATED RIGHT OF WAY, NOT UNDER THE PAVEMENT, THE SHORT SIDE SHALL HAVE THE CURB VALVE 3'-0" FROM THE WATERMAIN.

REVISIONS

No.	DATE	BY

STANDARD DETAILS

DEPARTMENT OF PUBLIC UTILITIES
DIVISION OF WATER
CLEVELAND, OHIO

SUBJECT VAULT AND VALVE ARRANGEMENT

DRAWN BY RSK | -SCALE- NONE
DATE 10-1-97
CHECKED BY MJS DATE 10-1-97

STD-V01

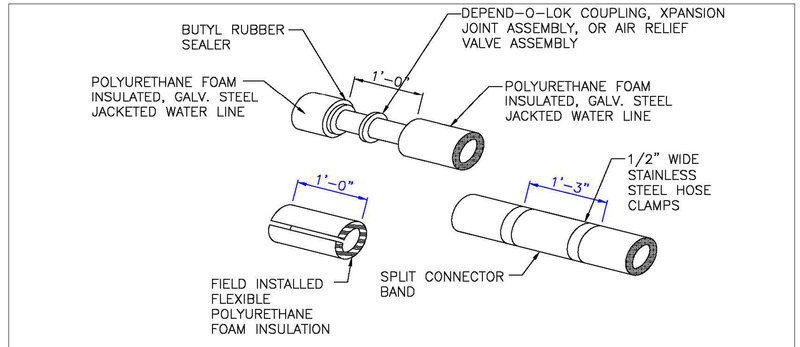

FIELD JOINT SEQUENCE

1. SLIDE SPLIT CONNECTOR BAND ON TO UNIT. MAKE JOINT AND TEST.
2. WRAP FLEXIBLE POLYURETHANE FOAM AROUND EXPOSED PIPE AND COUPLING AND TAPE INTO PLACE.
3. APPLY BUTYL RUBBER SEALER TO BOTH SIDES OF JOINT.
4. CENTER SPLIT CONNECTOR BAND OVER JOINT AND DRAW DOWN TIGHT WITH HOSE CLAMPS. SECURE SPLIT CONNECTOR BAND TO JACKET WITH SHEET METAL SCREWS (4 SCREWS PER END).

* ADJUST DIMENSIONS FOR EXPANSION JOINT ASSEMBLY

FIELD JOINT DETAILS
SCALE: NONE

STD-BR01 | DATE: 6-22-2009 | BY: DCR

Preliminary Plans - For Reference Only

CUY-90-16.28 (CCG3A)
MODEL: UD1212 PAPERSIZE: 34x22 (in.) DATE: 3/28/2025 TIME: 8:06:35 AM USER: Julie.Ross
pw:\\mb-us-pw.bentley.com:mb-us-pw-03\Documents\Cleveland_OH\01_Projects\ODOT\District12\82382400-Engineering\Utilities\Sheets\82382_UD1201.dgn

DESIGN AGENCY
Michael Baker INTERNATIONAL

DESIGNER
SMP

REVIEWER
SM 05/15/24

PROJECT ID
82382

SHEET 1428 | TOTAL 2696

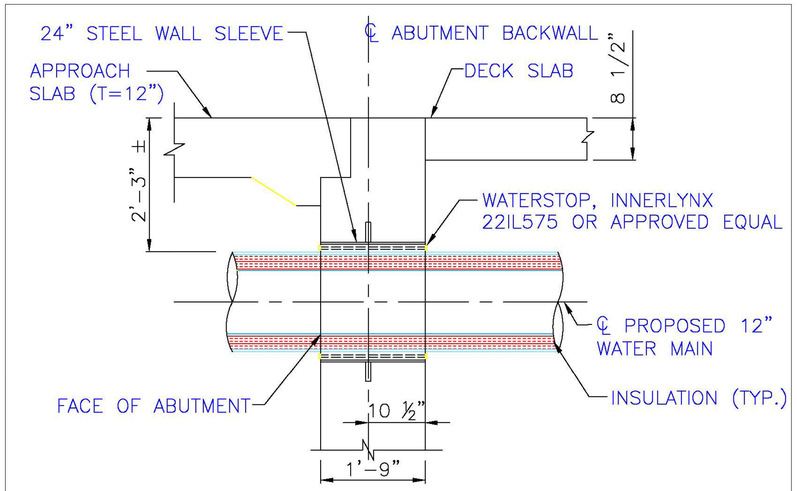

SLEEVE FOR WATER MAIN AT ABUTMENTS DETAIL
(REAR ABUTMENT SHOWN, FORWARD ABUTMENT SIMILAR)
SCALE: NONE

STD-BR02 | DATE: 6-22-2009 | BY: DCR

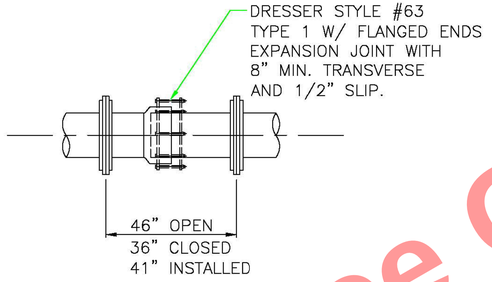

NOTE:
ALL ACTUAL DIMENSIONS TO BE VERIFIED WITH MANUFACTURE.

1. Expansion joints are to be installed at the first joint inside the bridge abutments on both sides.
2. Expansion joints should be installed every 300 feet thereafter.
3. Expansion joint assembly must be "Dresser Style 63, Type 1," Slip Type, or approved equal.
4. The expansion joint shall be galvanized steel, except for the slip pipe.
5. The expansion joint must have a minimum ½" thick body, and a slip with an 8" traverse.
6. The expansion joint assembly is to include all materials, bolts, nuts and washers, welded neck flanges A.S.A. #150 and gaskets.
7. All bolts and nuts must be stainless steel ASTM A 276-89A, Type 304.

EXPANSION JOINT DETAIL
SCALE: NONE

STD-BR03 | DATE: 6-22-2009 | BY: DCR

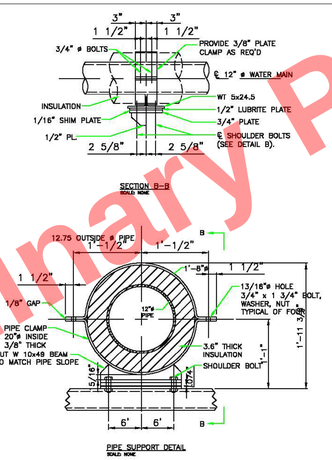

1. PIPE SUPPORTS ARE TO BE FABRICATED AS DETAILED IN THE SHOP DRAWINGS.
2. THERE SHALL BE A MINIMUM OF TWO (2) PIPE SUPPORTS FOR EACH PIPE LENGTH. NO MORE THAN 20' OF PIPE SHALL BE UNSUPPORTED.
3. PIPE SUPPORTS ARE REQUIRED TO ALLOW MOVEMENT ONLY IN THE AXIAL DIRECTION. ALL OTHER MOVEMENT IS TO BE RESTRICTED.
4. PIPE SUPPORTS SHALL NOT CRUSH THE PIPE INSULATION.

STD-BR04 | DATE: 6-22-2009 | BY: DCR

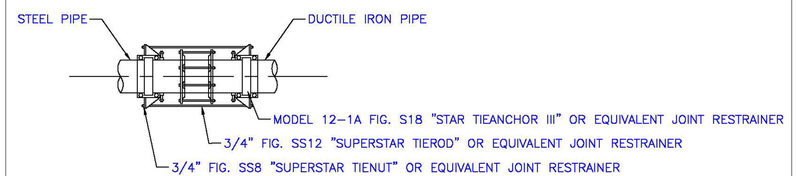

"SS" DENOTES "SUPERSTAR" ITEMS MADE OF HIGH-STRENGTH CORROSION-RESISTANT STEEL.
2 "SUPERSTAR TIEROD" JOINT RESTRAINERS ARE REQUIRED ON 12" PIPE AT 150 PSI.

STEEL TO DUCTILE IRON PIPE CONNECTION DETAIL
SCALE: NONE

STD-BR05 | DATE: 6-22-2009 | BY: DCR

Preliminary Plans - For Reference Only

WATER WORK DETAILS

DESIGN AGENCY
Michael Baker INTERNATIONAL

DESIGNER SMP
REVIEWER SM 05/15/24
PROJECT ID 82382
SHEET 1429 TOTAL 2696

CUY-90-16.28 (CCG3A)

MODEL: UD1213 PAPERSIZE: 34x22 (in.) DATE: 3/28/2025 TIME: 8:06:52 AM USER: Julie Ross
pw:\\mb-us-pw.bentley.com:mb-us-pw-03\Documents\Cleveland_OH01_Projects\ODOT\District12\82382400-Engineering\Utilities\Sheets\82382_UD1201.dgn

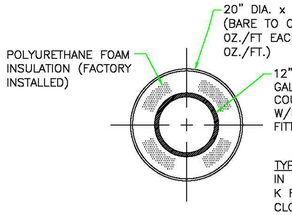

TYPICAL PHYSICAL DATA
IN PLACE DENSITY (CORE), PCF–1.9–2.1
K FACTOR (INITIAL), BTU–IN./HR.–FT2–F–11
CLOSED CELL CONTENT, IT (BARE TO CONFORM TO ASTM A653/A653M–1.25 OZ./FT EACH SIDE FOR A TOTAL OF 2.50 OZ./FT.

Note:

Insulation shall be rigid, 90-95% closed cell polyurethane with a 2.0 to 3.0 pounds per cubic foot density and coefficient of thermal conductivity (K-factor) of 0.14 and shall conform to ASTM C-591. Insulation thickness shall be as follows:

a.) A minimum of 3.5" for 12.75" O.D. Steel Pipe
b.) A minimum of 3" for 16" O.D. Steel Pipe

12"ø PIPE INSULATION DETAIL
SCALE: NONE

STD-BR06 | DATE: 6-22-2009 BY: DCR

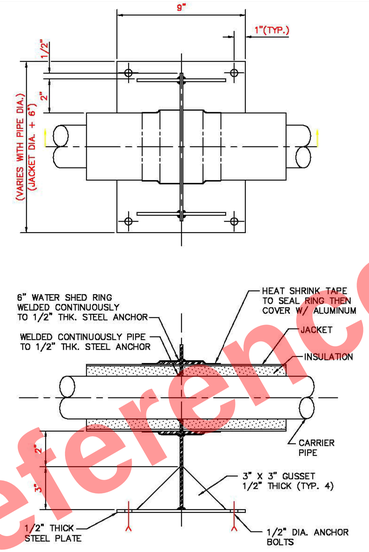

STD-BR07 | ABOVE GROUND ANCHOR DETAIL | DATE: 6-22-2009 BY: DCR

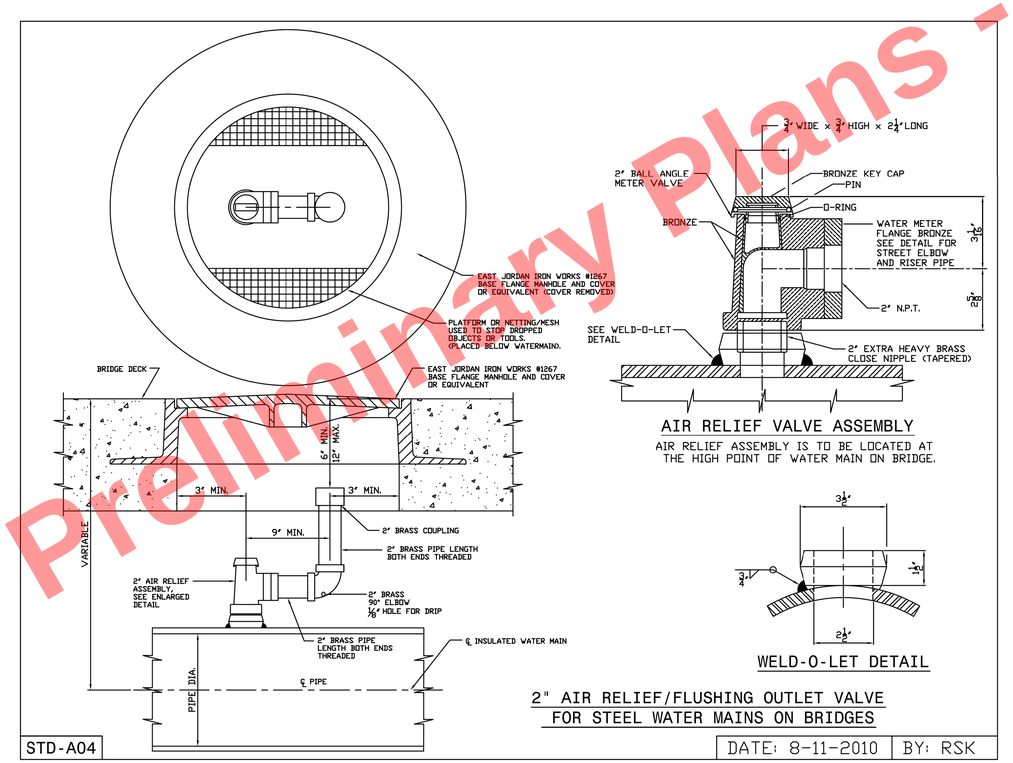

2" AIR RELIEF/FLUSHING OUTLET VALVE FOR STEEL WATER MAINS ON BRIDGES

STD-A04 | DATE: 8-11-2010 | BY: RSK

AIR RELIEF VALVE ASSEMBLY

AIR RELIEF ASSEMBLY IS TO BE LOCATED AT THE HIGH POINT OF WATER MAIN ON BRIDGE.

WELD-O-LET DETAIL

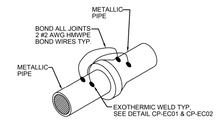

REQUIRED AT MECHANICAL JOINTS

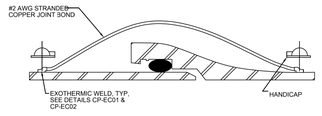

NOTES:
1. PUSH ON JOINT SHOWN. BOND INSTALLATION SIMILAR FOR MECHANICAL OR RESTRAINED PIPE JOINTS.
2. INSTALL 2 BOND WIRES AT EACH JOINT, UNLESS OTHERWISE SPECIFIED. TEST WELDS WITH HAMMER AND REMOVE ANY SLAG PRESENT, THEN COAT WITH ROYSTON HANDI-CAPS.

MECHANICAL/DUCTILE IRON PIPE JOINT BOND
NOT TO SCALE

CP-B01	CORROSION PROTECTION DETAILS BONDING	N.T.S.	DATE: 11-19-2019

TWO (2) SETS OF BONDING WIRES REQUIRED. ONE (1) EACH AT 3-INCHES FROM VERTICAL CENTERLNE AS SHOWN.

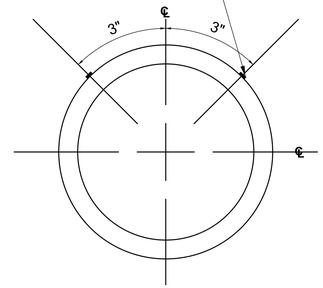

24", 30", 36", 42", & 48" WATER MAIN

POSITION OF BONDING WIRE/CONNECTORS

DUCTILE IRON, CONCRETE AND STEEL PIPE ALTERNATES

Preliminary Plans - For Reference Only

DESIGN AGENCY
Michael Baker INTERNATIONAL

DESIGNER SMP
REVIEWER SM 05/15/24
PROJECT ID 82382
SHEET 1430 TOTAL 2696

CUY-90-16.28 (CCG3A)
MODEL: UD1214 PAPERSIZE: 34x22 (in.) DATE: 3/28/2025 TIME: 8:07:04 AM USER: Julie.Ross
pw:\\mb-us-pw.bentley.com:mb-us-pw-03\Documents\Cleveland_OH\01_Projects\ODOT\District 12\82382400-Engineering\Utilities\Sheets\82382_UD1201.dgn

ANODES AND ISOLATION TEST STATION

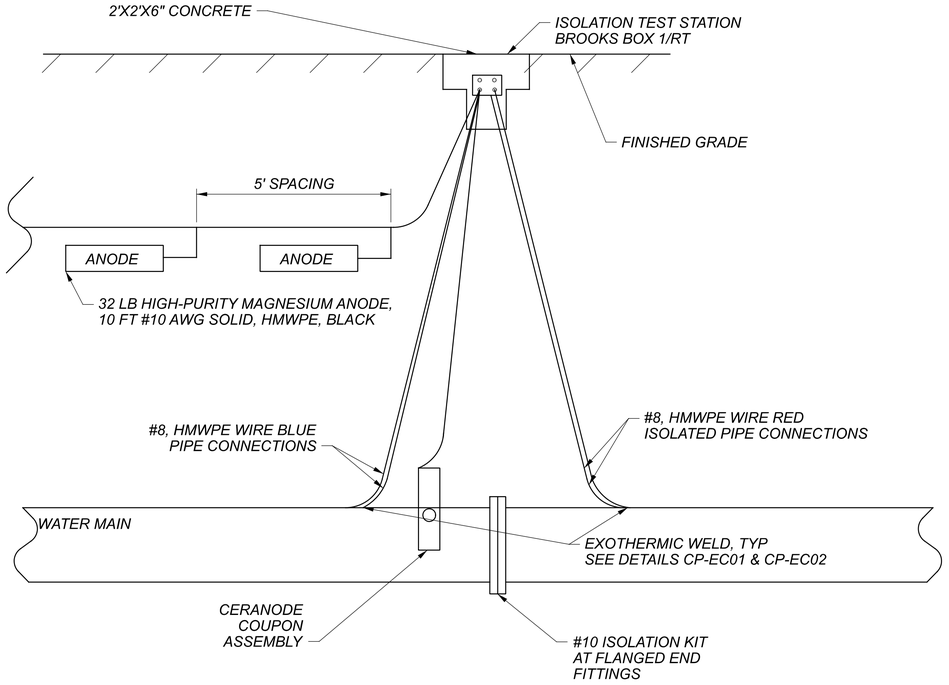

ISOLATION TEST STATION BOARD

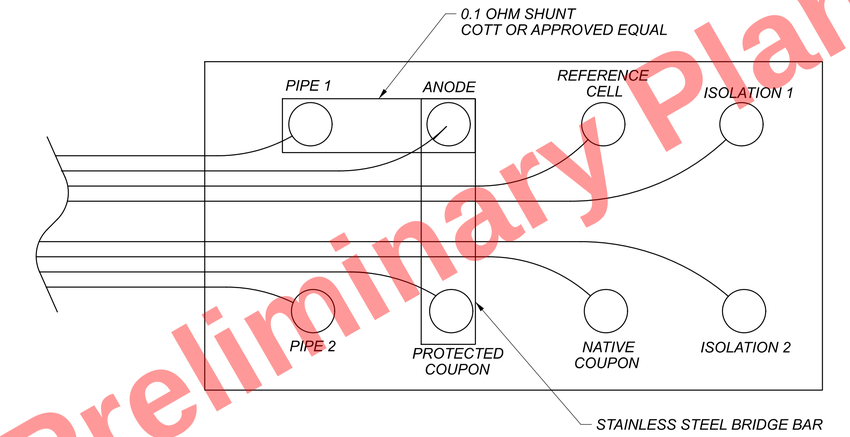

NOTE:

1) ALL HARDWARE SHALL BE STAINLESS STEEL. 1/4"-20 BOLTS. PE BOARD.

2) WIRE CONNECTIONS WITH ONE-HOLE LUG COMPRESSION CONNECTOR, COPPER, BURNDY YA8CLBOX, OR APPROVED EQUAL.

ANODES AND COUPON TEST STATION

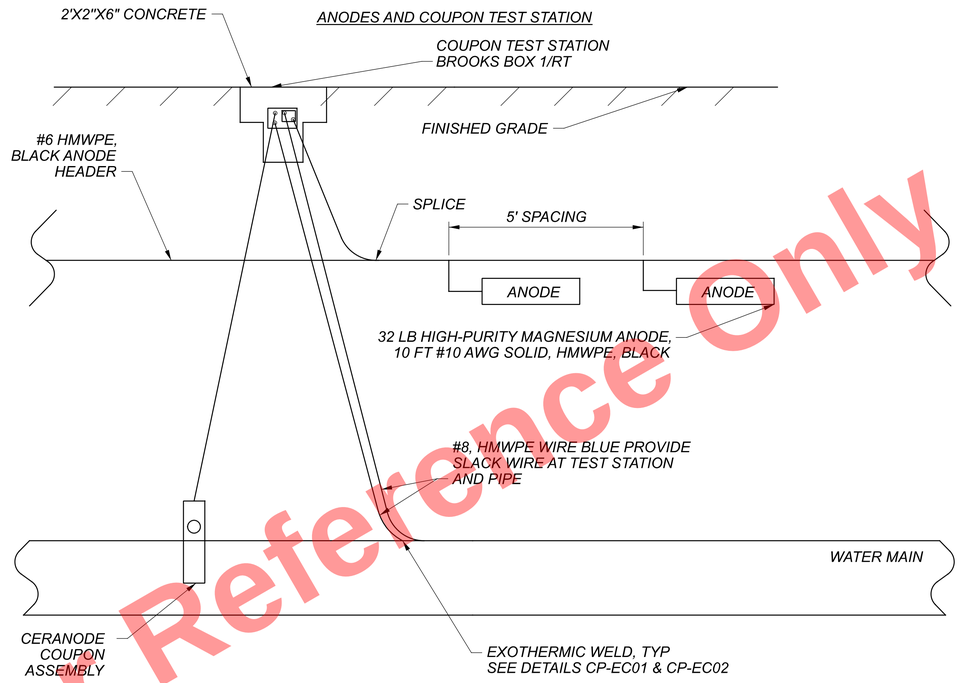

COUPON TEST STATION BOARD

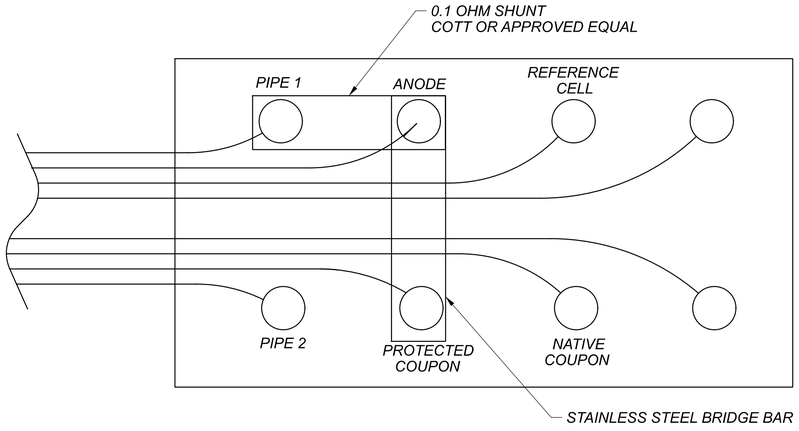

NOTE:

1) ALL HARDWARE SHALL BE STAINLESS STEEL.

2) WIRE CONNECTIONS WITH ONE-HOLE LUG COMPRESSION CONNECTOR, COPPER, BURNDY YA8CLBOX, OR APPROVED EQUAL.

Preliminary Plans - For Reference Only

WATER WORK DETAILS

DESIGN AGENCY
Michael Baker INTERNATIONAL

DESIGNER SMP
REVIEWER SM 05/15/24
PROJECT ID 82382
SHEET 1431 TOTAL 2696

CUY-90-16.28 (CCG3A)

MODEL: UD1215 PAPERSIZE: 34x22 (in.) DATE: 3/28/2025 TIME: 8:07:16 AM USER: Julie.Ross
pw:\\mb-us-pw.bentley.com:mb-us-pw-03\Documents\Cleveland_OH\01_Projects\ODOT\District12\82382\400-Engineering\Utilities\Sheets\82382_UD1201.dgn

ANODE PLACEMENT

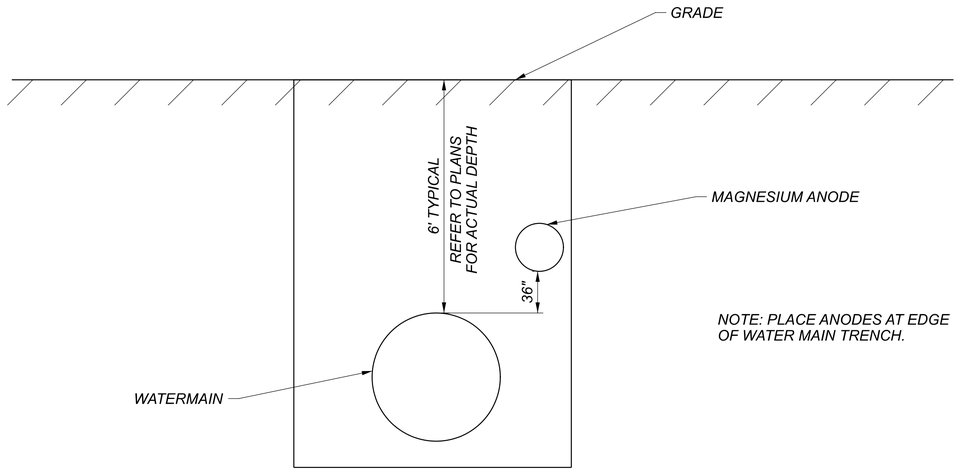

NOTE: PLACE ANODES AT EDGE OF WATER MAIN TRENCH.

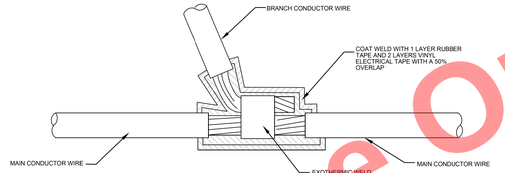

NOTES:
1. MAKE NO MECHANICAL CONNECTIONS BELOW GRADE.
2. ALL TAPE WRAP SHALL HAVE A MINIMUM A 50% OVERLAP.
3. FOR POSITIVE WIRING PLACE SPLICE IN 3M WYE EPOXY SPLICE KIT.
4. ALL BELOW GRADE OR SUBMERGED CONNECTIONS SHALL BE MADE WITH PIN BRAZING OR EXOTHERMIC WELDING, SEE DETAILS CP-EC01, CP-EC02, AND CP-EC03.

EXOTHERMIC WELD WIRE SPLICE
NOT TO SCALE

CP-EC03	CORROSION PROTECTION DETAILS BELOW GRADE ELECTRICAL CONNECTIONS	N.T.S.	DATE: 11-19-2019

COUPON ASSEMBLY PLACEMENT

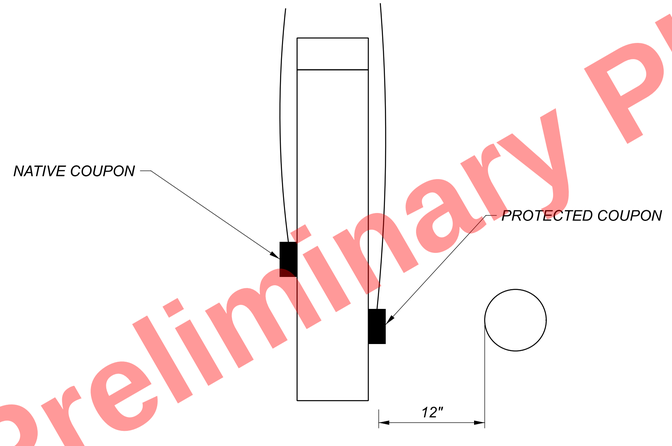

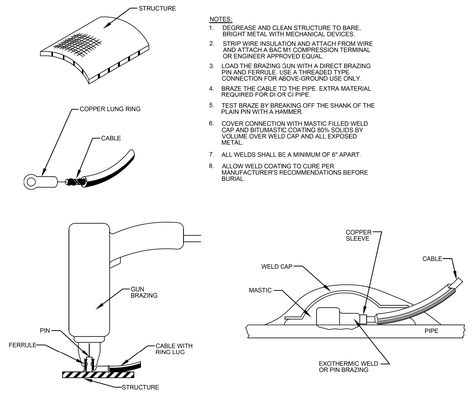

NOTES:
1. DEGREASE AND CLEAN STRUCTURE TO BARE, BRIGHT METAL WITH MECHANICAL DEVICES.
2. STRIP WIRE INSULATION AND ATTACH FROM WIRE AND ATTACH A 6AC/M1 COMPRESSION TERMINAL OR ENGINEER APPROVED EQUAL.
3. LOAD THE BRAZING GUN WITH A DIRECT BRAZING PIN AND FERRULE. USE A THREADED TYPE CONNECTION FOR ABOVE-GROUND USE ONLY.
4. BRAZE THE CABLE TO THE PIPE. EXTRA MATERIAL REQUIRED FOR DI OR CI PIPE.
5. TEST BRAZE BY BREAKING OFF THE SHANK OF THE PLAIN PIN WITH A HAMMER.
6. COVER CONNECTION WITH MASTIC FILLED WELD CAP AND BITUMASTIC COATING 80% SOLIDS BY VOLUME OVER WELD CAP AND ALL EXPOSED METAL.
7. ALL WELDS SHALL BE A MINIMUM OF 6" APART.
8. ALLOW WELD COATING TO CURE PER MANUFACTURER'S RECOMMENDATIONS BEFORE BURIAL.

NOTE:
1. ALL BELOW GRADE OR SUBMERGED CONNECTIONS SHALL BE MADE WITH PIN BRAZING OR EXOTHERMIC WELDING, SEE DETAILS CP-EC01, CP-EC02, & CP-EC03.

PIN BRAZING
NOT TO SCALE

CP-EC01	CORROSION PROTECTION DETAILS BELOW GRADE ELECTRICAL CONNECTIONS	N.T.S.	DATE: 11-19-2019

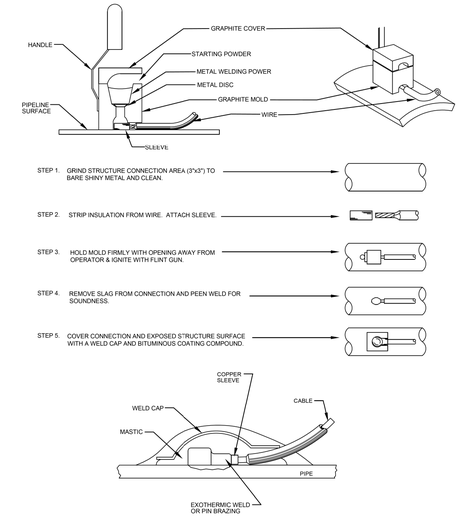

NOTES
1. PROCEDURE SHOWN ABOVE IS TO BE USED AS A GENERAL GUIDE ONLY. CONSULT MANUFACTURER'S LITERATURE FOR SPECIFIC INSTALLATION INSTRUCTIONS. ALL WELDS SHALL BE A MINIMUM OF 6-INCHES APART. EXOTHERMIC WELDS ARE NOT PERMITTED ON STEEL, WITH A THICKNESS LESS THAN 0.110 INCHES.
2. ALL BELOW GRADE OR SUBMERGED CONNECTIONS SHALL BE MADE WITH PIN BRAZING OR EXOTHERMIC WELDING, SEE DETAILS CP-EC01, CP-EC02, AND CP-EC03.

EXOTHERMIC WELD WIRE CONNECTION
NOT TO SCALE

CP-EC02	CORROSION PROTECTION DETAILS BELOW GRADE ELECTRICAL CONNECTIONS	N.T.S.	DATE: 11-19-2019

Preliminary Plans - For Reference Only

WATER WORK DETAILS

DESIGN AGENCY
Michael Baker INTERNATIONAL

DESIGNER
SMP

REVIEWER
SM 05/15/24

PROJECT ID
82382

SHEET 1432 | TOTAL 2696

CUY-90-16.28 (CCG3A)

MODEL: UD1216 PAPERSIZE: 34x22 (in.) DATE: 3/28/2025 TIME: 8:07:17 AM USER: Julie.Ross
pw:\\mb-us-pw.bentley.com:mb-us-pw-03\Documents\Cleveland_OH01_Projects\ODOT\District12\82382400-Engineering\Utilities\Sheets\82382_UD1201.dgn

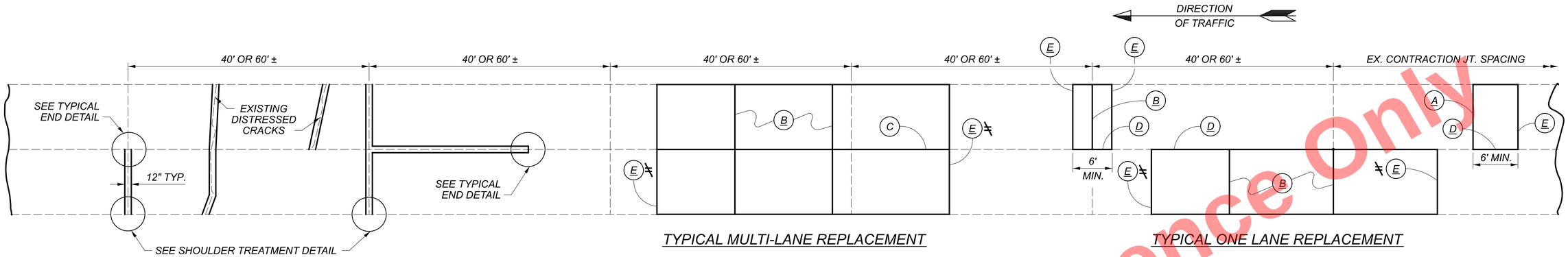

PARTIAL DEPTH JOINT OR CRACK REPAIR

TYPICAL MULTI-LANE REPLACEMENT

TYPICAL ONE LANE REPLACEMENT

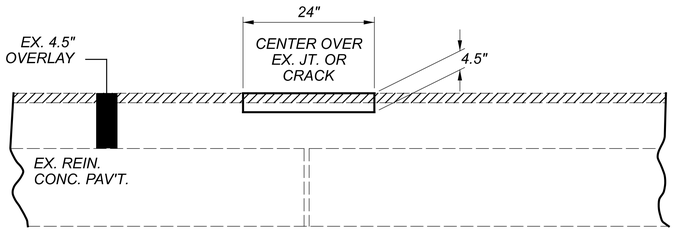

ITEM 251 - PARTIAL DEPTH PAVEMENT REPAIR (442)

CRACK REPAIRS (NO JOINT WITHIN REPAIR) - A

JOINT REPAIRS (LESS THAN 10 FEET) - E

PANEL REPAIRS (GREATER THAN 10 FEET) - E

USE A JOINT IF EITHER ADJACENT (EXISTING OR PROPOSED) CONTRACTION JOINT IS FARTHER THAN 20 FEET.

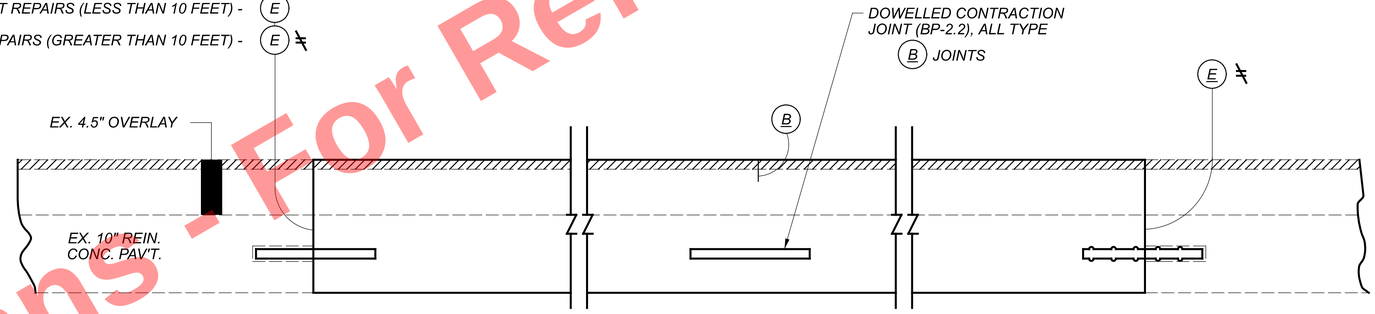

ITEM 255 - FULL DEPTH RIGID PAVEMENT REMOVAL AND RIGID REPLACEMENT

SEE GENERAL NOTES FOR ADDITIONAL INFORMATION.

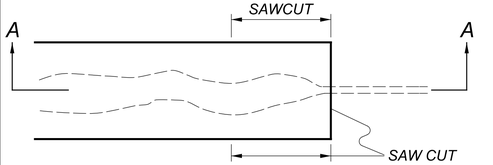

DISTRESSED JOINT-PLAN VIEW

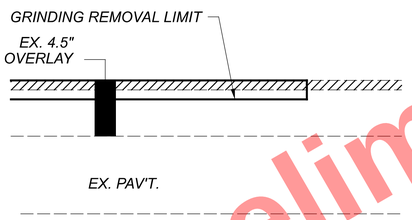

SECTION A-A

TYPICAL END DETAIL

NO SEPARATE PAYMENT WILL BE MADE FOR THESE SAW CUTS

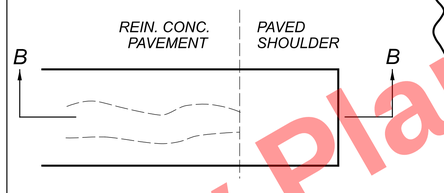

DISTRESSED JOINT-PLAN VIEW

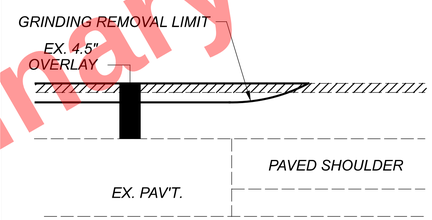

SECTION B-B

SHOULDER TREATMENT DETAIL

MEASURED QUANTITY SHALL NOT INCLUDE THE PAVED SHOULDER AREA

LEGEND

PAVEMENT PLANING, ASPHALT CONCRETE, 1.5"

A TYPE Y DOWELLED REPAIR JOINTS, AS PER BP-2.5

B SAWED CONTRACTION JOINT AS PER BP-2.2, WITH DOWELS, MAX. SPACING 20' C/C FOR ONE LANE REPLACEMENTS ALIGN JOINT WITH EXISTING CRACKS IN THE ADJACENT LANE WHENEVER POSSIBLE. (EX. CRACKS OCCUR APPROX. 15' C/C)

C LONGITUDINAL BUTT JOINT AS PER BP-2.1 (USING HOOK BOLTS)

D TYPE D JOINT AS PER BP-2.1 FOR PATCHES 10' OR GREATER IN LENGTH

E TYPE T TIED REPAIR JOINT, AS PER BP-2.5

FOR ADDITIONAL INFORMATION SEE GENERAL NOTES SHEET 80

Preliminary Plans - For Reference Only

CUY-90-16.28 (CCG3A)

MODEL: Sheet-01 PAPERSIZE: 34x22 (in.) DATE: 5/14/2025 TIME: 11:30:27 AM USER: Maia.Gallagher
pw:\\mb-us-pw.bentley.com:mb-us-pw-03\Documents\Cleveland_OH\01_Projects\ODOT\District12\82382\400-Engineering\Roadway\Sheets\82382_GM0005.dgn

OFFICE OF ROADWAY ENGINEERING

REVISION DATE 01-28-2025

ODOT PLAN INSERT SHEET
PAVEMENT REPAIR DETAIL

DESIGN AGENCY

DESIGNER MZG

REVIEWER DJJ 05/14/25

PROJECT ID 82382

SUBSET 1 | TOTAL 1

SHEET 1432A | TOTAL 2696

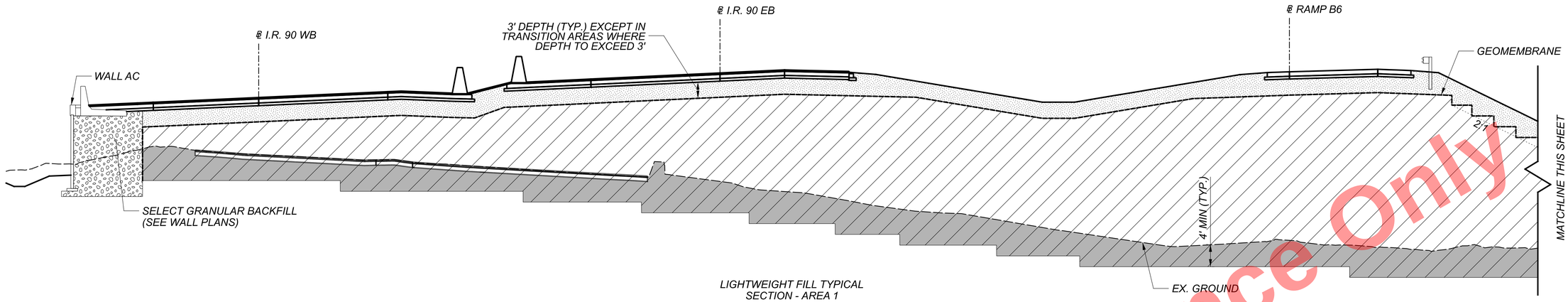

LIGHTWEIGHT FILL TYPICAL SECTION - AREA 1

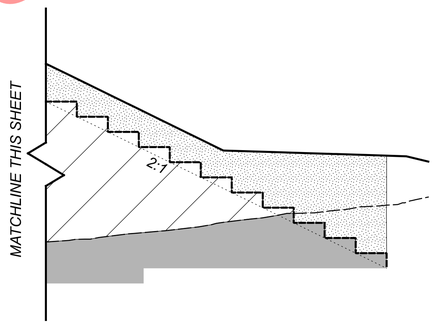

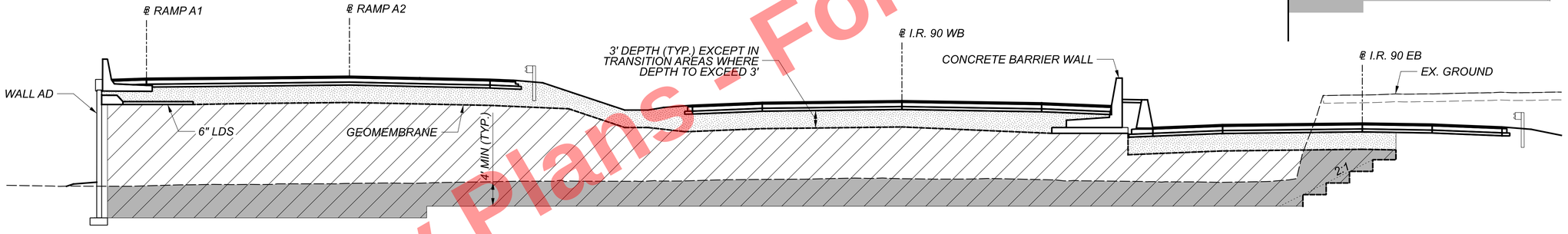

LIGHTWEIGHT FILL TYPICAL SECTION - AREA 2

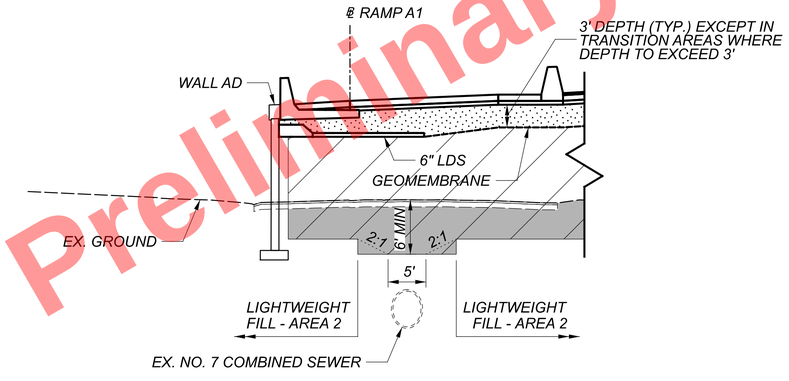

LIGHTWEIGHT FILL TYPICAL SECTION - AREA 3

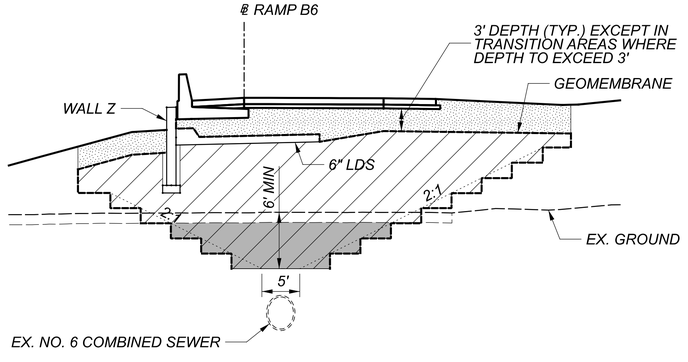

LIGHTWEIGHT FILL TYPICAL SECTION - AREA 4

NOTES

1. SEE ROADWAY TYPICAL SECTION, PLAN, PROFILE, AND CROSS SECTION SHEETS FOR LIGHTWEIGHT FILL LIMITS.
2. SEE GENERAL NOTES SHEETS FOR NOTES CONCERNING LIGHTWEIGHT FILL.
3. GEOMEMBRANE SHALL COVER TOP AND EDGES OF LIGHTWEIGHT FILL.

LEGEND

ITEM 203 - EMBANKMENT, AS PER PLAN

ITEM 203 - ROADWAY MISC.: EPS GEOFOAM FILL

ITEM 203 - EXCAVATION, AS PER PLAN

For Reference Only
Preliminary Plans - For

LIGHTWEIGHT FILL DETAILS

DESIGN AGENCY

DESIGNER TJS

REVIEWER BMV 04/30/24

PROJECT ID 82382

SHEET 1433 TOTAL 2696

CUY-90-16.28 (CCG3A)

MODEL: Sheet PAPERSIZE: 34x22 (in.) DATE: 3/28/2025 TIME: 8:07:57 AM USER: Julie.Ross
pw:\\mb-us-pw.bentley.com:mb-us-pw-03\Documents\Cleveland_OH\01_Projects\ODOT\District12\82382\400-Engineering\Roadway\Sheets\82382_GM0001.dgn

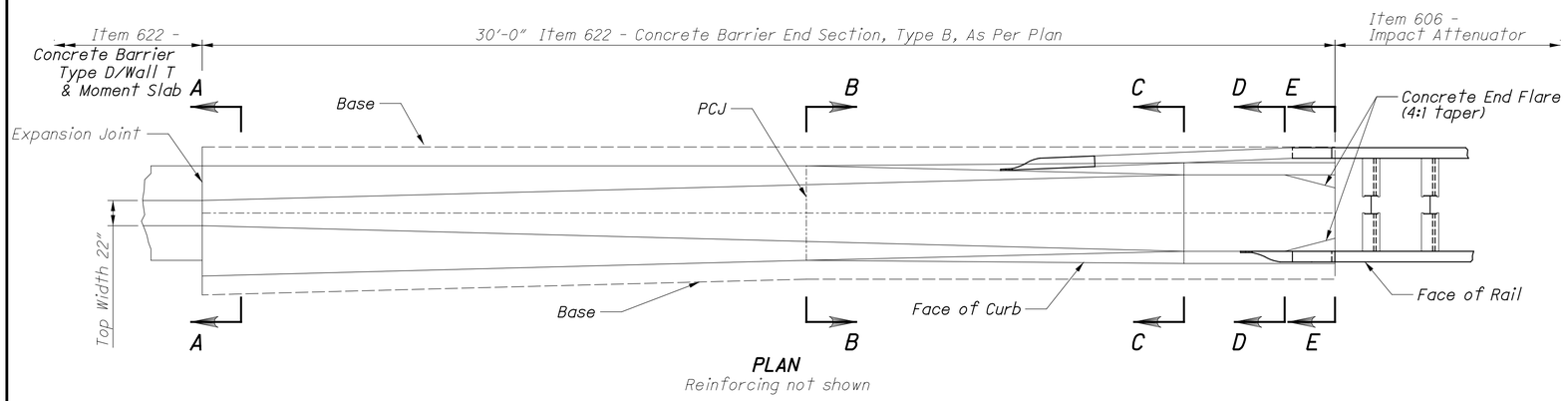

PLAN
Reinforcing not shown

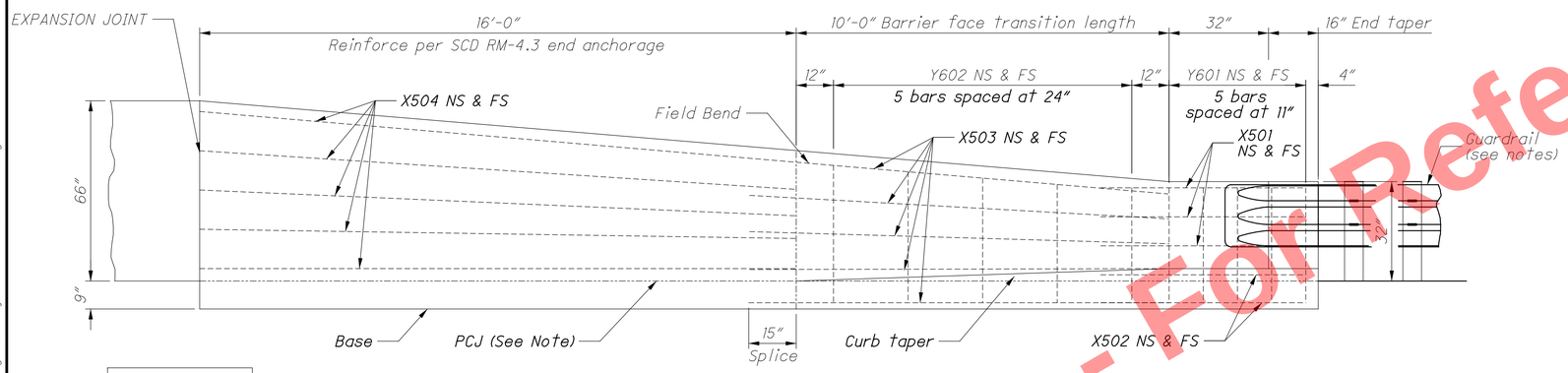

NS = Near Side
FS = Far Side

ELEVATION

BARRIER END SECTION TYPE B, AS PER PLAN

NOTES

GENERAL: *This End Section is to be used between ramps IH4 and IH5, preceeding wall T. See* ***SCD RM-4.3*** *for single slope barrier details and materials. Provide 2" concrete cover over rebars, except as noted.*

GUARDRAIL: *For Bridge Terminal Assembly and attachment details see* ***SCD MGS-1.1****. Information on Impact Attenuators is found in the* ***Location and Design Manual, Volume 1,*** *Section 603.*

BARRIER FACE TRANSITIONS: *To prevent vehicle snagging, smooth transitions from vertical faces to the single slope faces are made over a 10' distance.*

PCJ: *Permissible Construction Joint. In the unreinforced base section, barrier may be placed on top of concrete base if doweled as shown on* ***SCD RM-4.3****.*

PAYMENT: *Payment for the Concrete End Section shall be made at the unit price for* ***Item 622 - Concrete Barrier End Section, Type B, As Per Plan, Each****, and shall include all materials, labor, and reinforcing steel required to construct the barrier end section as shown.*

TYPE B STEEL LIST

Mark	Bar	Shape	No.	Length
X501	#5	Bent	6	5'-6"
X502	#5	Straight	4	5'-6"
X503	#5	Straight	10	11'-1"
X504	#5	Straight	10	17'-2"
Y601	#6	Bent	10	4'-2"
Y602	#6	Bent	2 series of 5	Varies 4'-3" to 5'-3"

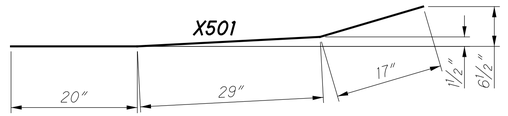

BENDING DIAGRAMS

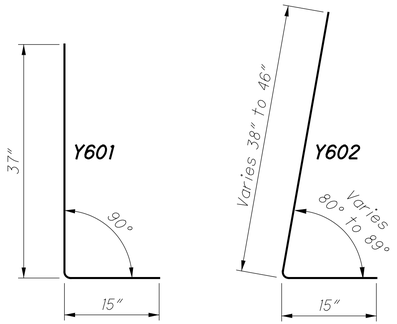

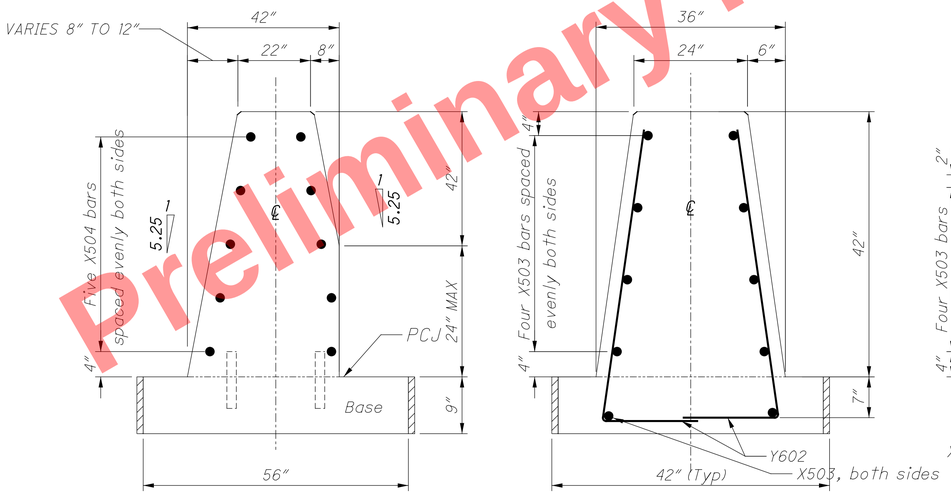

SECTION A-A

SECTION B-B

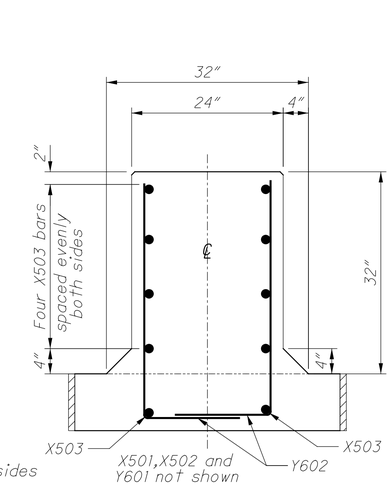

SECTION C-C

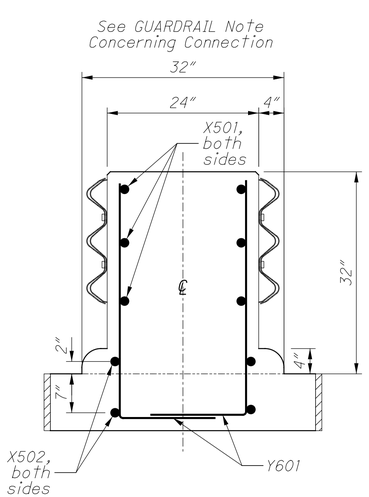

SECTION D-D

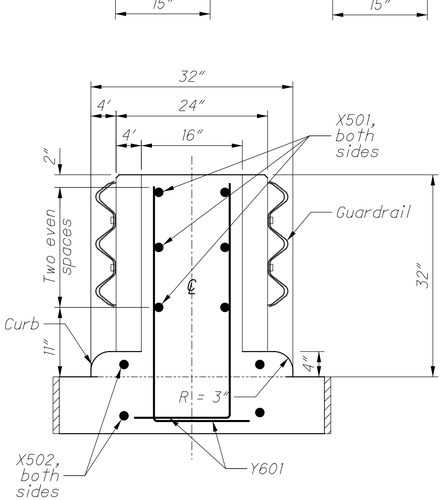

SECTION E-E

Preliminary Plans - For Reference Only

ITEM 622 - CONCRETE BARRIER END SECTION
TYPE B, AS PER PLAN

DESIGN AGENCY	Michael Baker INTERNATIONAL
DESIGNER	KJM
REVIEWER	KGJ 05/22/24
PROJECT ID	82382
SHEET	1434
TOTAL	2696

CUY-90-16.28 (CCG3A)

MODEL: Sheet PAPERSIZE: 34x22 (In.) DATE: 3/28/2025 TIME: 8:08:08 AM USER: Julie.Ross
pw:\\mb-us-pw.bentley.com\mb-us-pw-03\Documents\Cleveland_OH\OI_Projects\ODOT\District2\82382\400-Engineering\Roadway\Sheets\82382_GM1000.dgn

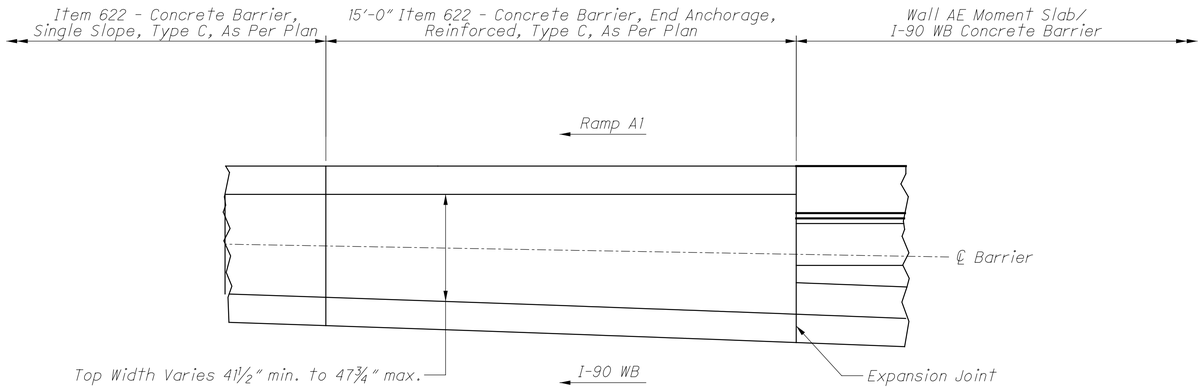

PLAN

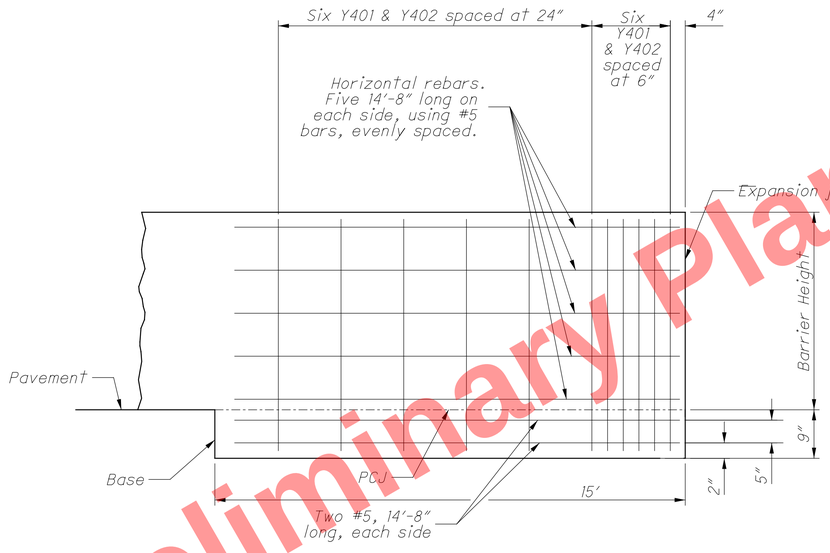

ELEVATION

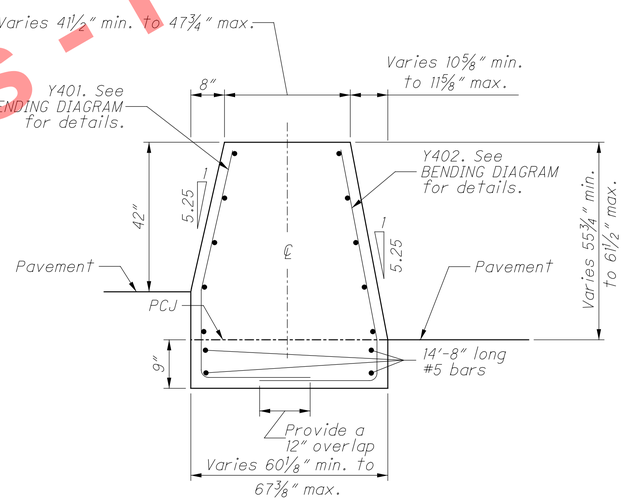

SECTION

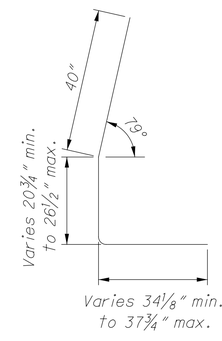

BENDING DIAGRAM
Y401 #4

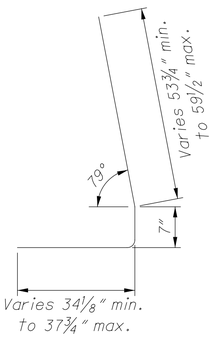

BENDING DIAGRAM
Y402 #4

NOTES

CONCRETE BARRIER, END ANCHORAGE, REINFORCED, TYPE C, AS PER PLAN is required where Concrete Barrier, Single Slope, Type C, As Per Plan abuts Wall AE moment slab and the I-90 WB concrete barrier with a 1" gap for P.E.J.F per the Wall AE plans. See Location Table for more information.

MATERIALS: Construct using concrete with a minimum design strength of 4000 psi conforming to the requirements of CMS 499. Construct top and end edges with either a 1" radius or ¾" chamfer, except at light pole foundations.

ADJOINING PAVEMENT: When the barrier is constructed in conjunction with new asphalt pavement, place it directly on the intermediate course. Construct the surface course directly against the barrier.

SEALING JOINTS: Use a butt longitudinal joint between the barrier and adjoining concrete pavement sealed with CMS 705.04 joint sealer. See detail on Sheet 2 of SCD RM-4.3.

STATION MARKINGS: Impress markings in the "green" concrete on both sides at the top of the barrier. The cost is incidental to the unit cost bid for this barrier.

PAYMENT: will be made at the unit price bid per Each for ITEM 622 - Concrete Barrier, End Anchorage, Reinforced, Type C, As Per Plan. This includes all materials, labor, and other incidentals necessary to construct this anchor.

LOCATION TABLE		
ALIGNMENT	STATION RANGE	OFFSET
RAMP A1	308+30.00 TO 308+45.00	RT

Preliminary Plans - For Reference Only

Item 622 - Concrete Barrier, End Anchorage, Reinforced, Type C, As Per Plan

CUY-90-16.28 (CCG3A)
MODEL: Sheet PAPERSIZE: 34x22 (in.) DATE: 3/28/2025 TIME: 8:08:17 AM USER: Julie.Ross
pw:\\mb-us-pw.bentley.com:mb-us-pw-03\Documents\Cleveland_OH\01_Projects\000T\District2\82382\400-Engineering\Roadway\Sheets\82382_GM0002.dgn

CONCRETE BARRIER DETAIL
CONCRETE BARRIER, END ANCHORAGE, REINFORCED, TYPE C, AS PER PLAN

DESIGN AGENCY
HDR

DESIGNER TJS
REVIEWER BMV 04/30/24
PROJECT ID 82382
SHEET 1435 TOTAL 2696

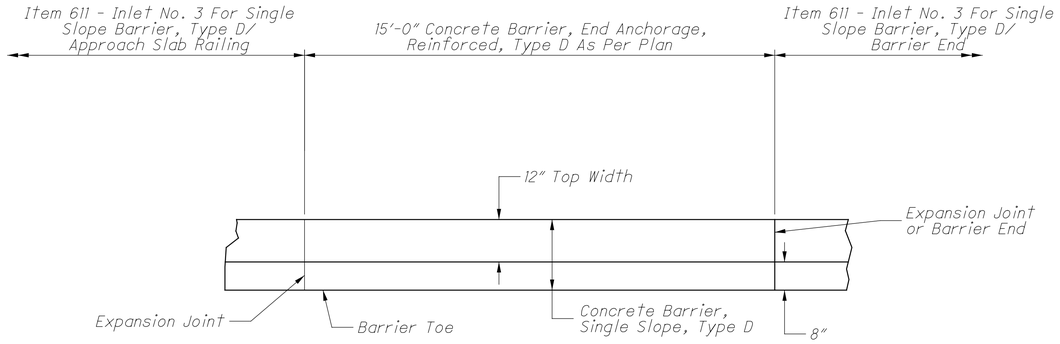

PLAN

NOTES

CONCRETE BARRIER, END ANCHORAGE, REINFORCED, TYPE D, AS PER PLAN *are required where 15 LF of Concrete Barrier, Single Slope, Type D is placed between an Approach Slab Railing and an Inlet No. 3 for Single Slope Barrier, Type D, or between an Inlet No. 3 for Single Slope Barrier, Type D and the barrier end with a gap of ¾" and 2" for the open expansion joints at the Inlet and Approach Slab Railing respectively. See Location Table for more information.*

MATERIALS: *Construct using concrete with a minimum design strength of 4000 psi conforming to the requirements of CMS 499. Construct top and end edges with either a 1" radius or ¾" chamfer, except at light pole foundations.*

ADJOINING PAVEMENT: *When the barrier is constructed in conjunction with new asphalt pavement, place it directly on the intermediate course. Construct the surface course directly against the barrier.*

STATION MARKINGS: *Impress markings in the "green" concrete on both sides at the top of the barrier. The cost is incidental to the unit cost bid for this barrier.*

PAYMENT: *will be made at the unit price bid per Each for ITEM 622 - Concrete Barrier, End Anchorage, Reinforced, Type D, As Per Plan. This includes all materials, labor, and other incidentals necessary to construct this anchor.*

LOCATION TABLE		
ALIGNMENT	STATION RANGE	OFFSET
Ramp A2	409+92.70 TO 410+08.19	RT
Ramp A2	410+28.84 TO 410+44.32	RT

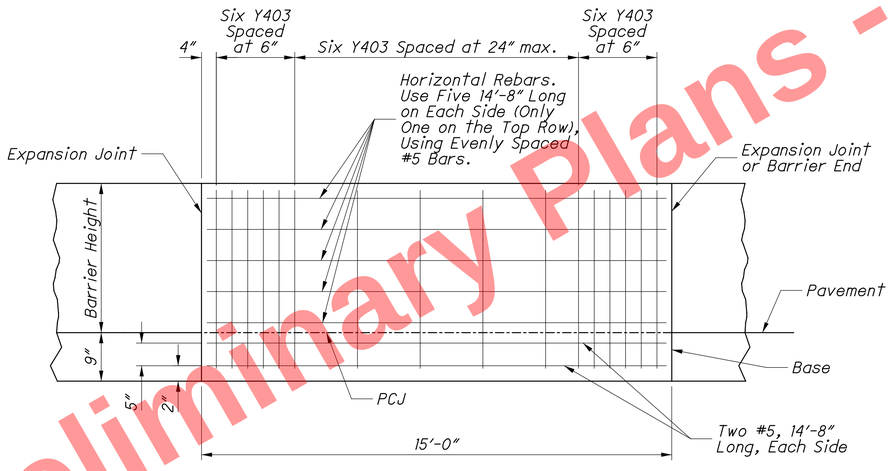

ELEVATION

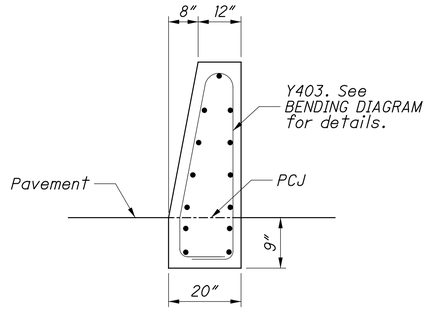

SECTION

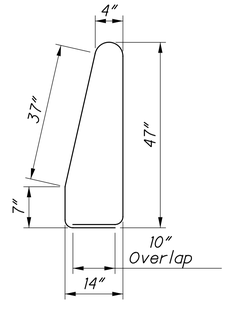

BENDING DIAGRAM
Y403 #4

Item 622 - Concrete Barrier, End Anchorage, Reinforced, Type D, As Per Plan

Preliminary Plans - For Reference Only

CONCRETE BARRIER DETAIL
CONCRETE BARRIER, END ANCHORAGE, REINFORCED, TYPE D, AS PER PLAN

DESIGN AGENCY
HDR

DESIGNER TJS
REVIEWER BMV 04/30/24
PROJECT ID 82382
SHEET 1436 TOTAL 2696

CUY-90-16.28 (CCG3A)

MODEL: Sheet PAPERSIZE: 34x22 (in.) DATE: 3/28/2025 TIME: 8:08:33 AM USER: Julie.Ross
pw:\\mb-us-pw.bentley.com:mb-us-pw-03\Documents\Cleveland_0H10_Projects\ODOT\District2\82382\400-Engineering\Roadway\Sheets\82382_GM0003.dgn

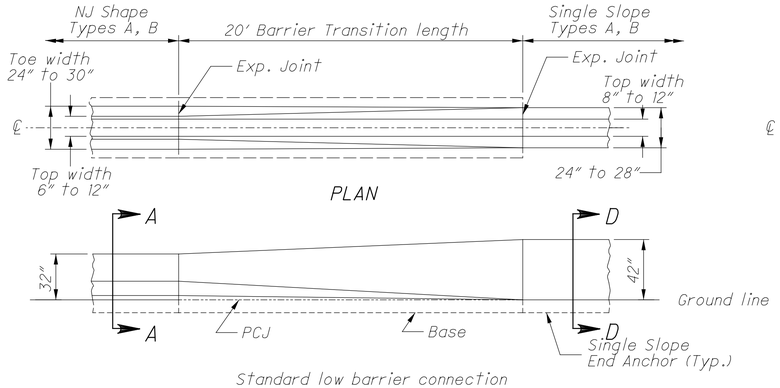

Standard low barrier connection

ELEVATION

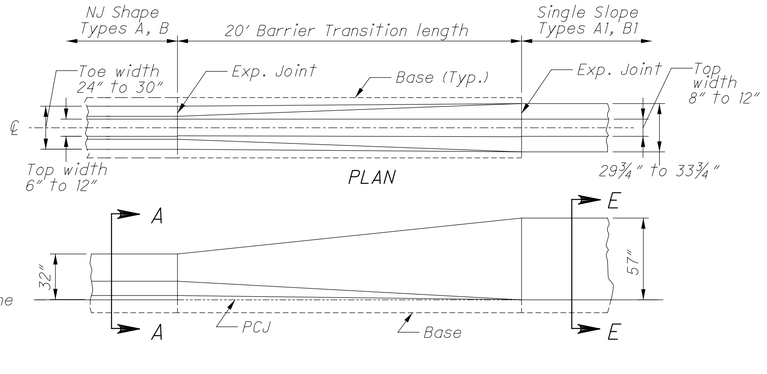

Atypical use

ELEVATION

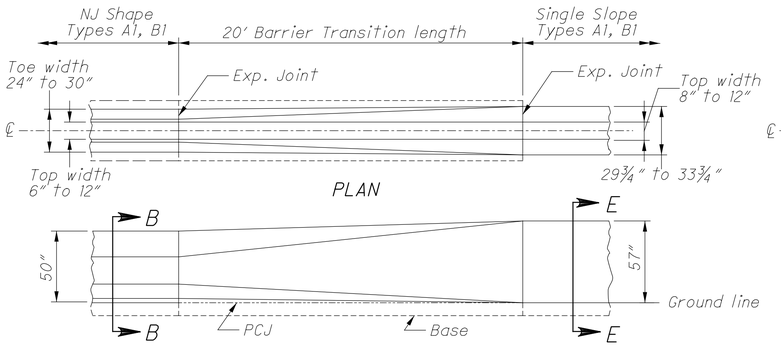

Standard tall barrier connection

ELEVATION

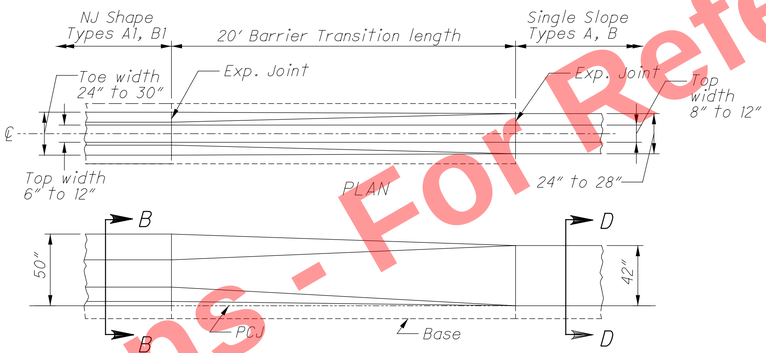

Atypical use

ELEVATION

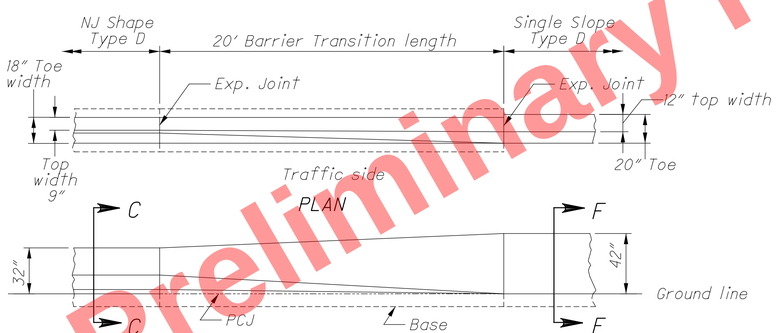

Standard Roadside barrier connection

ELEVATION

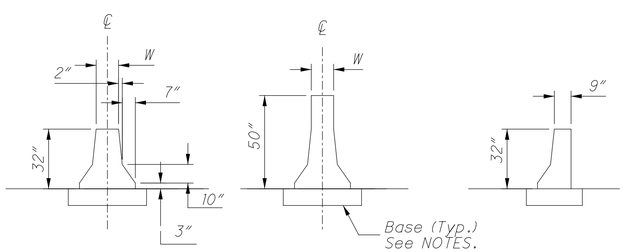

NJ SHAPE SECTIONS

See Plan Insert sheets for specific NJ Shape Concrete barrier details.

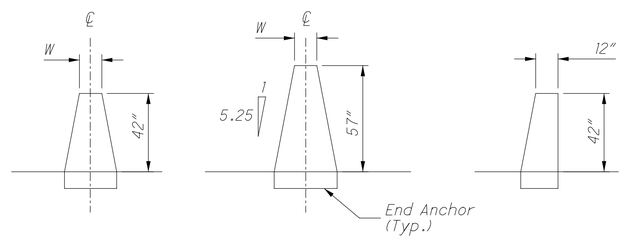

SINGLE SLOPE SECTIONS

See SCD RM-4.3 and RM-4.5 for specific Single Slope concrete barrier details.

NOTES

GENERAL: This insert details the Barrier Transition, to connect existing NJ Concrete Barrier (safety shape) to a new run of Single Slope Concrete Barrier at locations shown on the plans. For NJ barrier shape and other details see the respective plan insert sheets. For Single Slope barrier details, see SCD RM-4.3 (RM-4.5 for Type D).

ADJACENT CONCRETE BARRIER RUNS: Remove any tapered end sections, Impact attenuators, or other guardrail hardware from existing barrier end. The barrier to barrier transition is not intended to be used at transition sections (those shown on SCD RM-4.4), Inlets, or on Type C or C1 Barrier. If proposed adjacent single slope barrier is Type A or A1, the Barrier Transiton should contain horizontal reinforcing steel similiar to that required in the respective single slope barrier. Reinforcement is not shown and should be detailed separately. The adjacent single slope end should be terminated with a reinforced End Anchor as detailed on the SCDs.

BARRIER FACE TRANSITION: To prevent vehicle snagging, a smooth transition from the safety shape face to the single slope face is made over a 20' length. The actual shape of the Transition is dependent on both the adjacent NJ barrier and the single slope barrier Types, as detailed on the plans. The contractor and Engineer will agree on a construction method to ensure a smooth barrier face.

MATERIALS: Materials are same for those shown on RM-4.3 and RM-4.5, except that cast-in-place is the only acceptable method. Edges may be chamfered or radiused as shown on those drawings.

CONCRETE BASE: Construct base as shown on the NJ shape insert sheets, including the methods detailing the footing joint, Permissible Construction Joint (PCJ), and Dowelling requirements. The width of the base matches the existing NJ barrier.

JOINTS: Construct joints as shown on respective barrier drawings.

RACEWAYS: When specified, place raceway(s) to match raceway elevation in adjoining segments. Place to obtain maximum concrete cover.

METRIC UNITS: Refer to respective barrier drawings or inserts for metric dimensions.

PAYMENT: This Barrier Transiton shall include all material and labor needed to construct this 20' section, including any raceways, reinforcing steel, dowels and other necessary incidentals. Payment shall be made at the unit price for Item 622 - Barrier Transition, Each.

Preliminary Plans - For Reference Only

OFFICE OF ROADWAY ENGINEERING

REVISION DATE
10-20-2006

ODOT PLAN INSERT SHEET
NJ SHAPE TO SINGLE SLOPE BARRIER TRANSITION

DESIGN AGENCY

DESIGNER
TJS

REVIEWER
BMV 08/14/24

PROJECT ID
82382

SHEET 1437 TOTAL 2696

CUY-90-16.28 (CCG3A)

MODEL: Sheet PAPERSIZE: 34x22 (In.) DATE: 3/28/2025 TIME: 8:08:48 AM USER: Julie.Ross
pw:\\mb-us-pw.bentley.com:mb-us-pw-03\Documents\Cleveland_OHIO_Projects\ODOT\District2\82382\400-Engineering\Roadway\Sheets\82382_GM0004.dgn

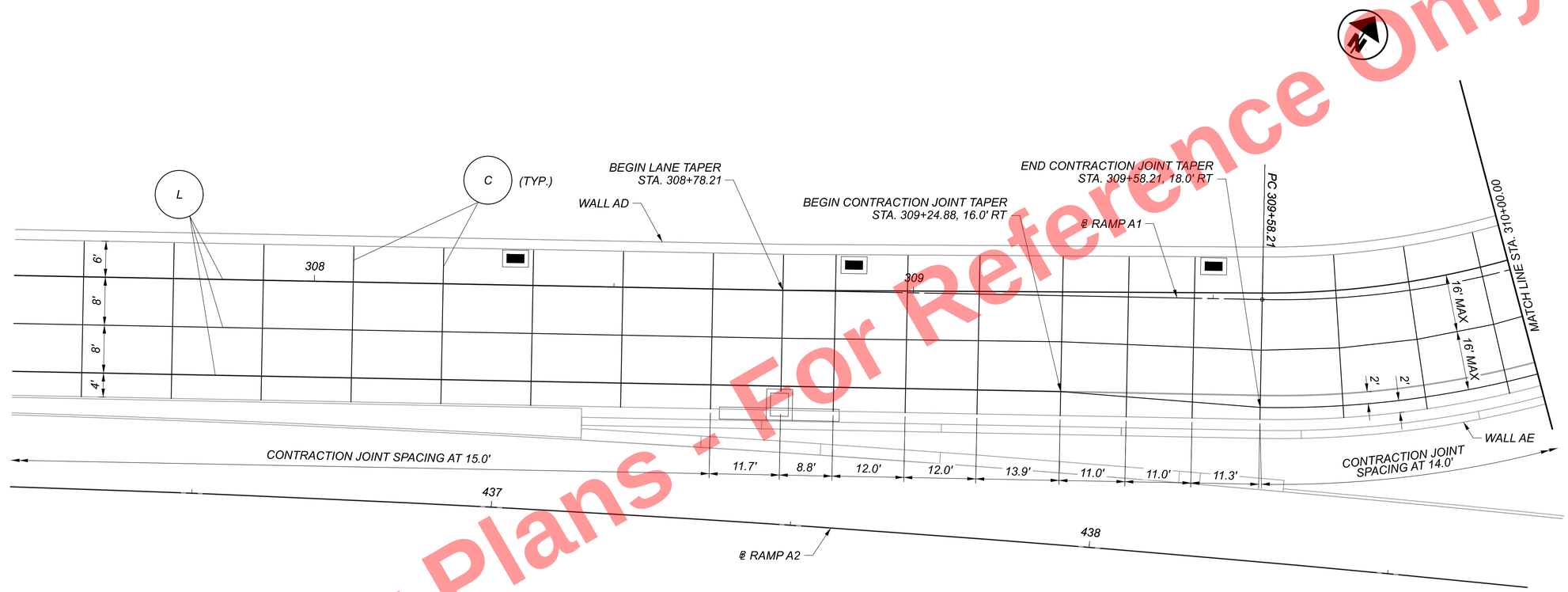

LEGEND

- (L) STANDARD LONGITUDINAL JOINT AS PER BP-2.1
- (C) CONTRACTION JOINT AS PER BP-2.2
- (S) STANDARD LONGITUDINAL JOINT AS PER BP-2.1 WITHOUT TIE BARS
- (E) EXPANSION JOINT AS PER BP-2.2
- (W) EXPANSION JOINT (WITHOUT DOWELS) AS PER BP-2.2
- (A) PRESSURE RELIEF JOINT TYPE A AS PER BP-2.3
- (Y) BUTT JOINT BETWEEN EXISTING PAVEMENT AND PROPOSED PAVEMENT AS PER BP-2.5

Preliminary Plans - For Reference Only

HORIZONTAL SCALE IN FEET
0 5 10 20

JOINT DETAIL - RAMP A1
STA. 307+50.00 TO SAT. 310+00.00

DESIGN AGENCY
HDR

DESIGNER TJS
REVIEWER BMV 04/30/24
PROJECT ID 82382
SHEET 1438 TOTAL 2696

CUY-90-16.28 (CCG3A)

MODEL: 82382_GA3I01 PAPERSIZE: 34x22 (in.) DATE: 3/28/2025 TIME: 8:08:59 AM USER: Julie.Ross
pw:\\mb-us-pw.bentley.com:mb-us-pw-03\Documents\Cleveland_OH\01_Projects\ODOT\District2\82382\400-Engineering\Roadway\Sheets\82382_GA3I01.dgn

Preliminary Plans - For Reference Only

LEGEND

(L) STANDARD LONGITUDINAL JOINT AS PER BP-2.1

(C) CONTRACTION JOINT AS PER BP-2.2

(S) STANDARD LONGITUDINAL JOINT AS PER BP-2.1 WITHOUT TIE BARS

(E) EXPANSION JOINT AS PER BP-2.2

(W) EXPANSION JOINT (WITHOUT DOWELS) AS PER BP-2.2

(A) PRESSURE RELIEF JOINT TYPE A AS PER BP-2.3

(Y) BUTT JOINT BETWEEN EXISTING PAVEMENT AND PROPOSED PAVEMENT AS PER BP-2.5

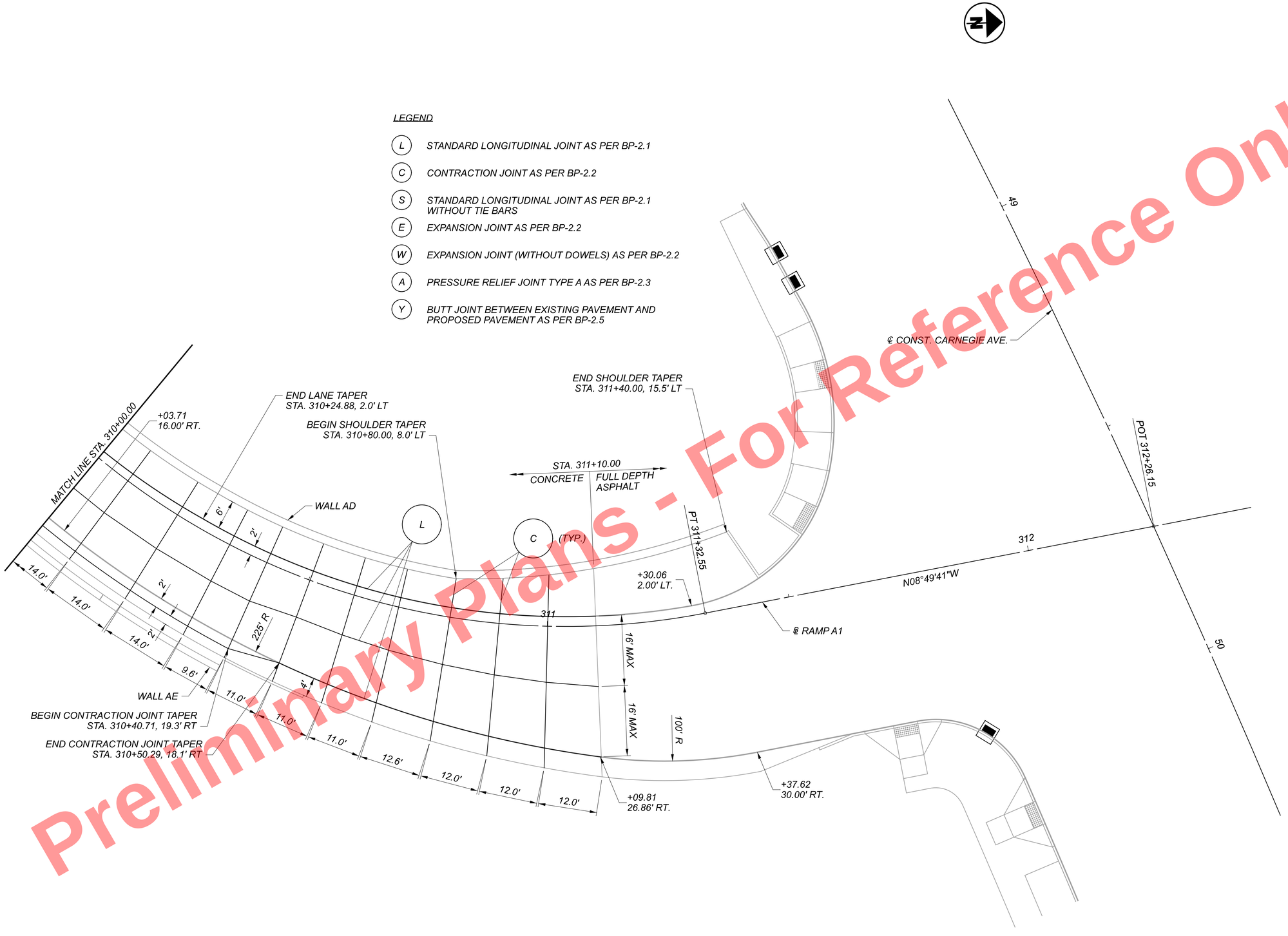

HORIZONTAL SCALE IN FEET
0 5 10 20

JOINT DETAIL - RAMP A1 STA. 310+00.00 TO END

DESIGN AGENCY

DESIGNER TJS

REVIEWER BMV 04/30/24

PROJECT ID 82382

SHEET 1439 TOTAL 2696

CUY-90-16.28 (CCG3A)

MODEL: 82382_GA3102 PAPERSIZE: 34x22 (In.) DATE: 3/28/2025 TIME: 8:09:14 AM USER: Julie.Ross
pw:\\mb-us-pw.bentley.com:mb-us-pw-03\Documents\Cleveland_OH\OI_Projects\ODOT\District 12\82382\400-Engineering\Roadway\Sheets\82382_GA3102.dgn

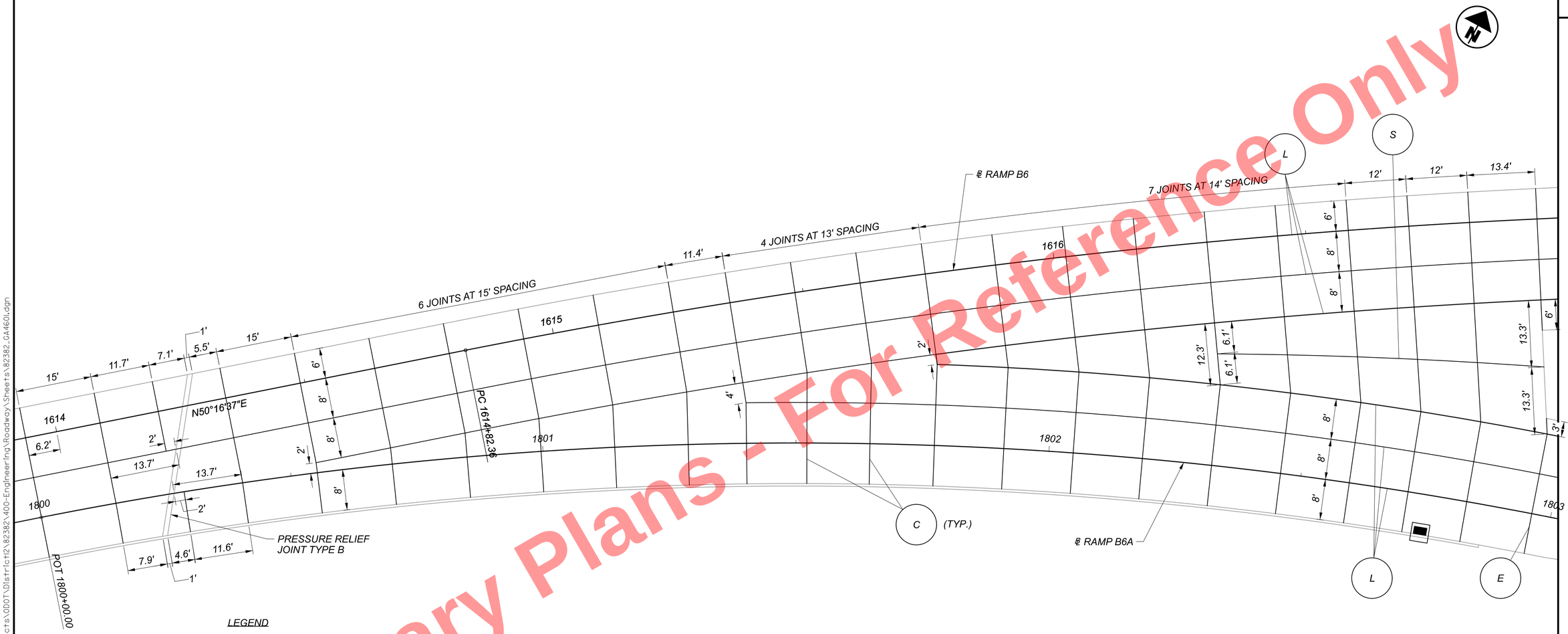

LEGEND

- (L) *STANDARD LONGITUDINAL JOINT AS PER BP-2.1*
- (C) *CONTRACTION JOINT AS PER BP-2.2*
- (S) *STANDARD LONGITUDINAL JOINT AS PER BP-2.1 WITHOUT TIE BARS*
- (E) *EXPANSION JOINT AS PER BP-2.2*
- (W) *EXPANSION JOINT (WITHOUT DOWELS) AS PER BP-2.2*
- (A) *PRESSURE RELIEF JOINT TYPE A AS PER BP-2.3*
- (Y) *BUTT JOINT BETWEEN EXISTING PAVEMENT AND PROPOSED PAVEMENT AS PER BP-2.5*

Preliminary Plans - For Reference Only

HORIZONTAL SCALE IN FEET
0 5 10 20

JOINT DETAIL - RAMP B6
STA. 1614+00.00 TO STA. 1617+00.00

DESIGN AGENCY
HDR

DESIGNER TJS
REVIEWER BMV 04/30/24
PROJECT ID 82382
SHEET 1440 TOTAL 2696

CUY-90-16.28 (CCG3A)

MODEL: 82382_GA460I - 82382_GA460I[Sheet] PAPERSIZE: 34x22 (in.) DATE: 3/28/2025 TIME: 8:09:30 AM USER: Julie.Ross
pw:\\mb-us-pw.bentley.com:mb-us-pw-03\Documents\Cleveland_OH\01_Projects\000T\Distrfct2\82382\400-Engineering\Roadway\Sheets\82382_GA460I.dgn

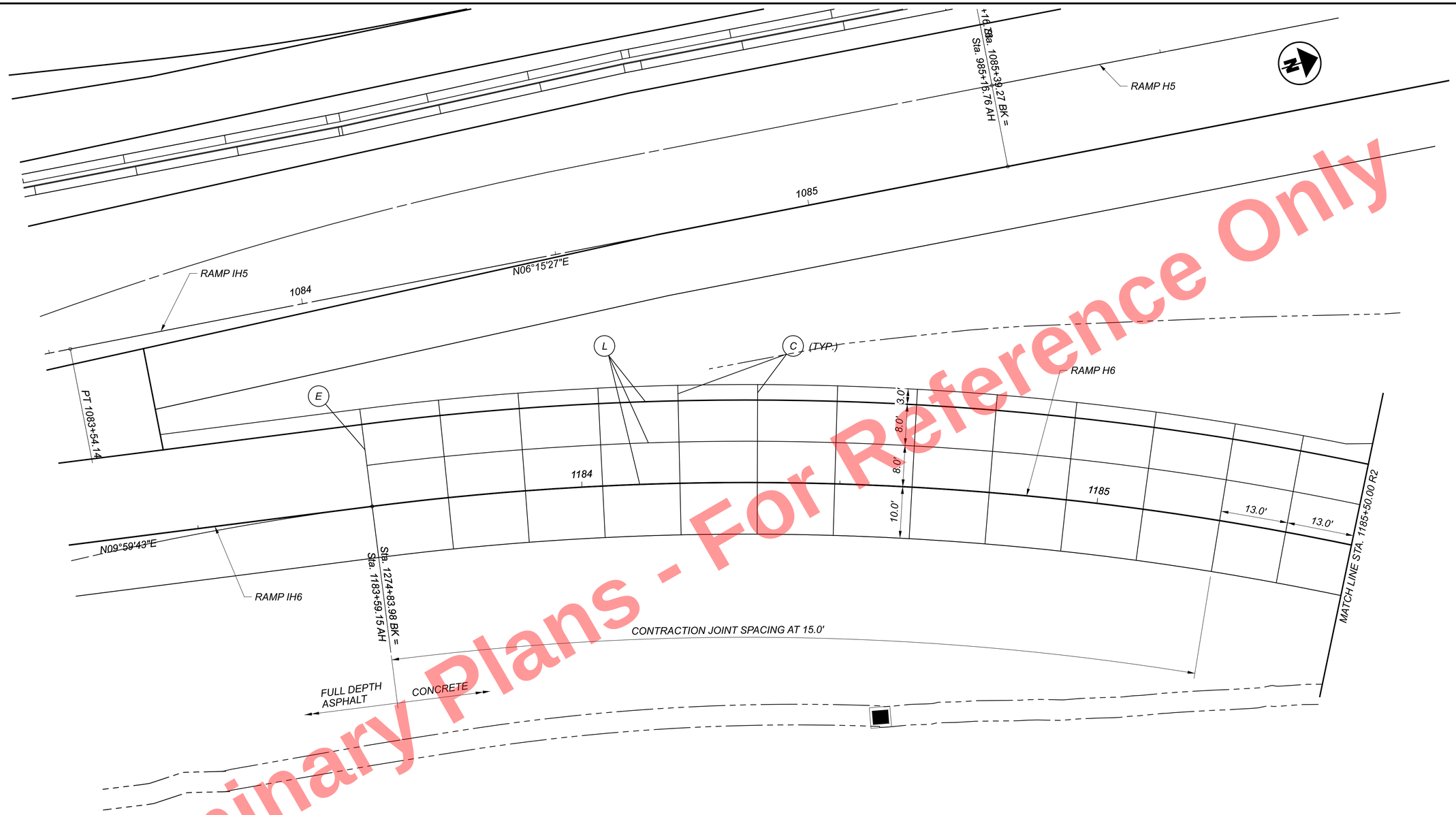

Preliminary Plans - For Reference Only

LEGEND

- (L) STANDARD LONGITUDINAL JOINT AS PER BP-2.1
- (C) CONTRACTION JOINT AS PER BP-2.2
- (S) STANDARD LONGITUDINAL JOINT AS PER BP-2.1 WITHOUT TIE BARS
- (E) EXPANSION JOINT AS PER BP-2.2
- (W) EXPANSION JOINT (WITHOUT DOWELS) AS PER BP-2.2
- (A) PRESSURE RELIEF JOINT TYPE A AS PER BP-2.3
- (Y) BUTT JOINT BETWEEN EXISTING PAVEMENT AND PROPOSED PAVEMENT AS PER BP-2.5

HORIZONTAL SCALE IN FEET
0 5 10 20

JOINT DETAIL - RAMP H6
BEGIN TO STA. 1185+50.00

DESIGN AGENCY
Michael Baker INTERNATIONAL

DESIGNER KJM
REVIEWER KGJ 05/22/24
PROJECT ID 82382
SHEET 1441 TOTAL 2696

CUY-90-16.28 (CCG3A)

MODEL: 82382_GA5601 PAPERSIZE: 34x22 (in.) DATE: 3/28/2025 TIME: 8:09:50 AM USER: JulieRoss
pw:\\mb-us-pw.bentley.com:mb-us-pw-03\Documents\Cleveland_OH\01_Projects\ODOT\District2\82382\400-Engineering\Roadway\Sheets\82382_GA5601.dgn

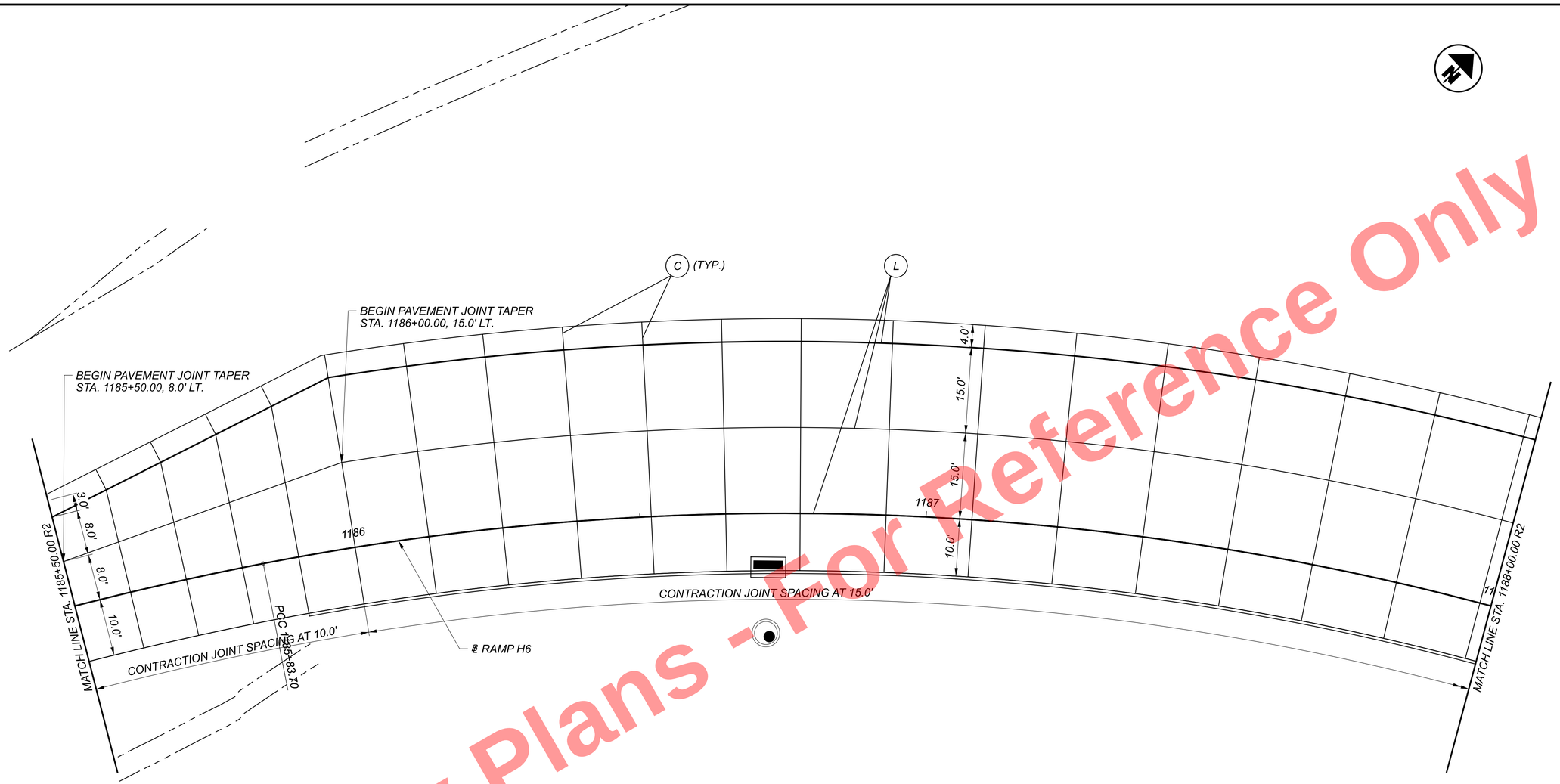

Preliminary Plans - For Reference Only

LEGEND

- (L) *STANDARD LONGITUDINAL JOINT AS PER BP-2.1*
- (C) *CONTRACTION JOINT AS PER BP-2.2*
- (S) *STANDARD LONGITUDINAL JOINT AS PER BP-2.1 WITHOUT TIE BARS*
- (E) *EXPANSION JOINT AS PER BP-2.2*
- (W) *EXPANSION JOINT (WITHOUT DOWELS) AS PER BP-2.2*
- (A) *PRESSURE RELIEF JOINT TYPE A AS PER BP-2.3*
- (Y) *BUTT JOINT BETWEEN EXISTING PAVEMENT AND PROPOSED PAVEMENT AS PER BP-2.5*

HORIZONTAL SCALE IN FEET
0 5 10 20

JOINT DETAIL - RAMP H6
STA. 1185+50.00 TO STA. 1188+00.00

DESIGN AGENCY
Michael Baker INTERNATIONAL

DESIGNER KJM
REVIEWER KGJ 05/22/24
PROJECT ID 82382
SHEET 1442 TOTAL 2696

CUY-90-16.28 (CCG3A)

MODEL: 82382_GA5602 PAPERSIZE: 34x22 (in.) DATE: 3/28/2025 TIME: 8:00:04 AM USER: Julie.Ross
pw:\\mb-us-pw.bentley.com:mb-us-pw-03\Documents\Cleveland_OH\01_Projects\ODOT\District2\82382\400-Engineering\Roadway\Sheets\82382_GA5602.dgn

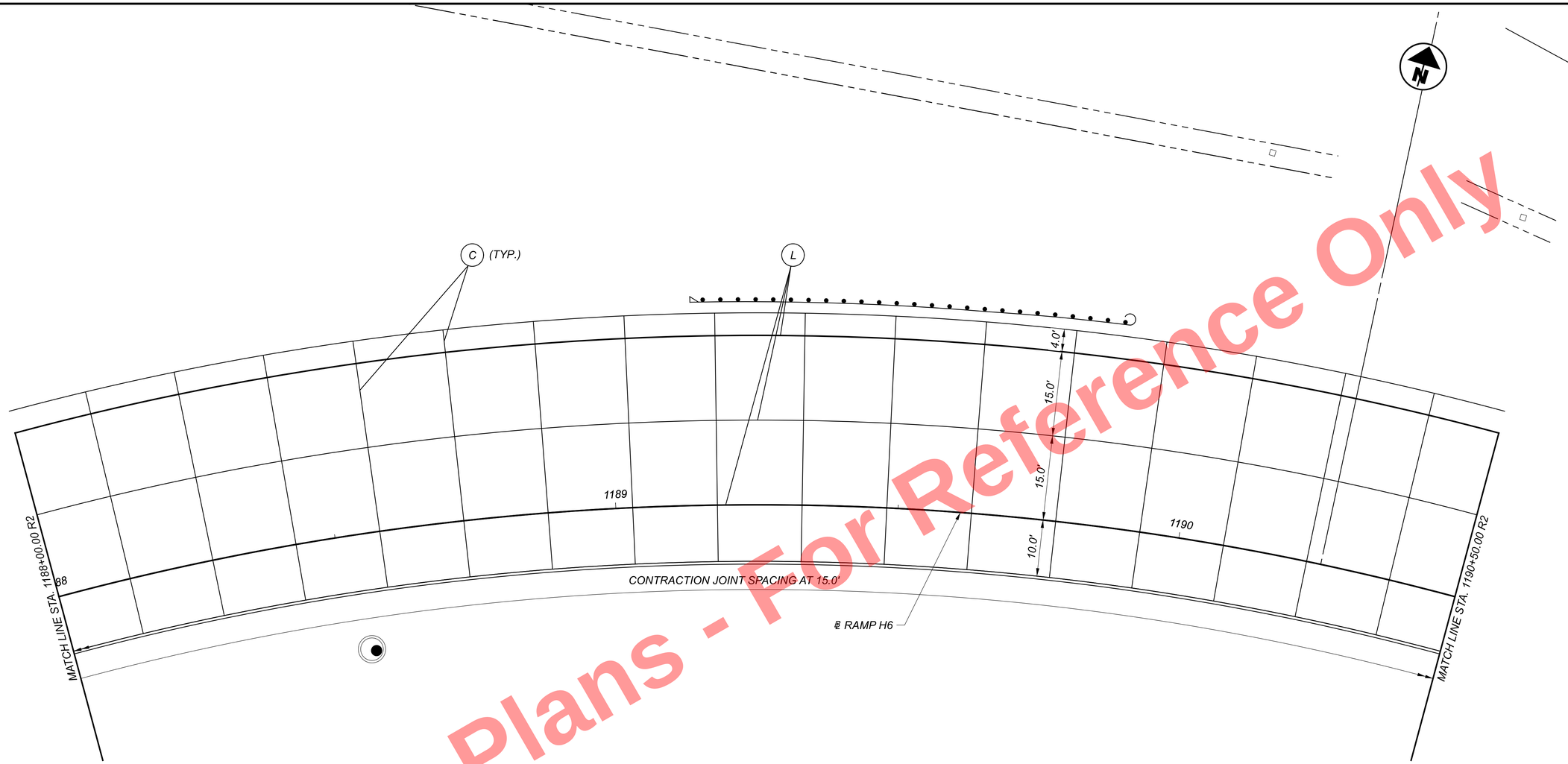

Preliminary Plans - For Reference Only

HORIZONTAL SCALE IN FEET
0 5 10 20

JOINT DETAIL - RAMP H6
STA. 1188+00.00 TO STA. 1190+50.00

LEGEND

- (L) *STANDARD LONGITUDINAL JOINT AS PER BP-2.1*
- (C) *CONTRACTION JOINT AS PER BP-2.2*
- (S) *STANDARD LONGITUDINAL JOINT AS PER BP-2.1 WITHOUT TIE BARS*
- (E) *EXPANSION JOINT AS PER BP-2.2*
- (W) *EXPANSION JOINT (WITHOUT DOWELS) AS PER BP-2.3*
- (A) *PRESSURE RELIEF JOINT TYPE A AS PER BP-2.3*
- (Y) *BUTT JOINT BETWEEN EXISTING PAVEMENT AND PROPOSED PAVEMENT AS PER BP-2.5*

DESIGN AGENCY
Michael Baker INTERNATIONAL

DESIGNER KJM
REVIEWER KGJ 05/22/24
PROJECT ID 82382
SHEET 1443 TOTAL 2696

CUY-90-16.28 (CCG3A)

MODEL: 82382_GA5603 PAPERSIZE: 34x22 (in.) DATE: 3/28/2025 TIME: 8:08 AM USER: Julie.Ross
pw:\\mb-us-pw.bentley.com:mb-us-pw-03\Documents\Cleveland.OH\OI_Projects\ODOT\District2\82382\400-Engineering\Roadway\Sheets\82382_GA5603.dgn

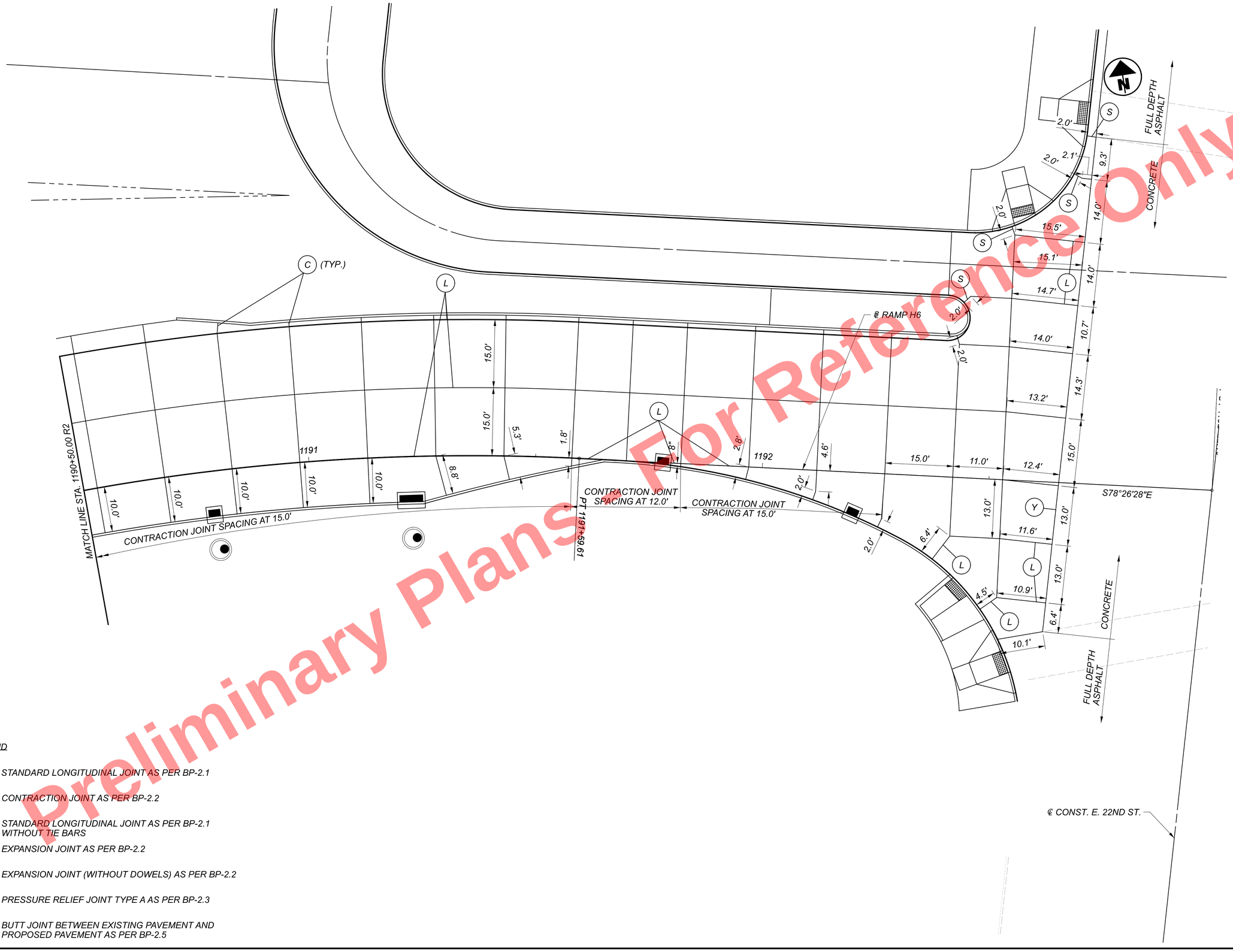

Preliminary Plans For Reference Only

LEGEND

- (L) *STANDARD LONGITUDINAL JOINT AS PER BP-2.1*
- (C) *CONTRACTION JOINT AS PER BP-2.2*
- (S) *STANDARD LONGITUDINAL JOINT AS PER BP-2.1 WITHOUT TIE BARS*
- (E) *EXPANSION JOINT AS PER BP-2.2*
- (W) *EXPANSION JOINT (WITHOUT DOWELS) AS PER BP-2.2*
- (A) *PRESSURE RELIEF JOINT TYPE A AS PER BP-2.3*
- (Y) *BUTT JOINT BETWEEN EXISTING PAVEMENT AND PROPOSED PAVEMENT AS PER BP-2.5*

HORIZONTAL SCALE IN FEET
0 5 10 20

JOINT DETAIL - RAMP H6
STA. 1190+50.00 TO END

DESIGN AGENCY
Michael Baker INTERNATIONAL

DESIGNER KJM
REVIEWER KGJ 05/22/24
PROJECT ID 82382
SHEET 1444 TOTAL 2696

CUY-90-16.28 (CCG3A)

MODEL: 82382_GA5604 PAPERSIZE: 34x22 (in) DATE: 3/28/2025 TIME: 8:10:33 AM USER: Julie.Ross
pw:\\mb-us-pw.bentley.commb-us-pw-03\Documents\Cleveland_OH\01_Projects\000T\District2\82382\400-Engineering\Roadway\Sheets\8238

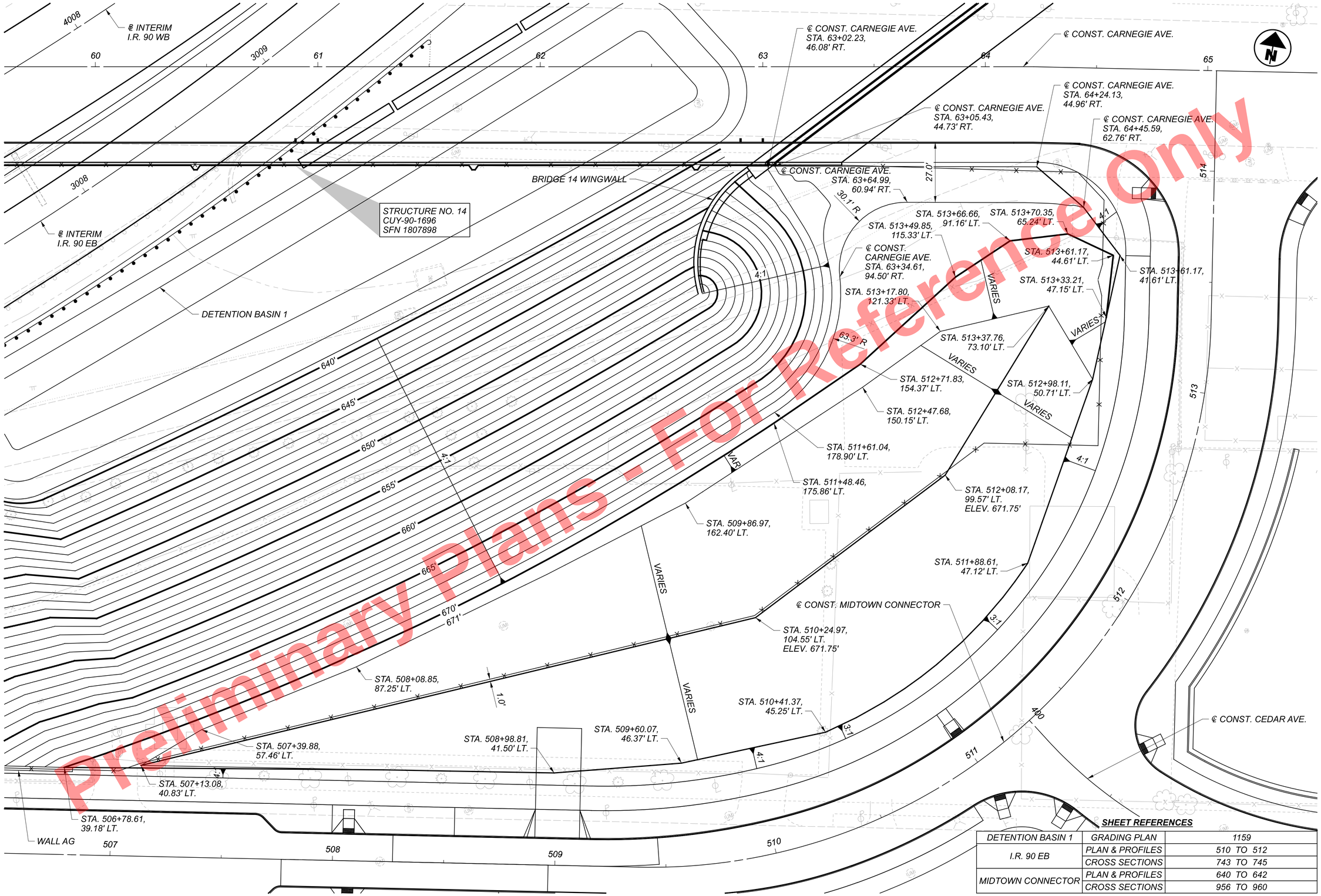

Preliminary Plans - For Reference Only

SHEET REFERENCES

DETENTION BASIN 1	GRADING PLAN	1159
I.R. 90 EB	PLAN & PROFILES	510 TO 512
	CROSS SECTIONS	743 TO 745
MIDTOWN CONNECTOR	PLAN & PROFILES	640 TO 642
	CROSS SECTIONS	956 TO 960

NOTE: ALL STATION-OFFSETS FROM ℄ CONST. MIDTOWN CONNECTOR UNLESS NOTED OTHERWISE.

HORIZONTAL SCALE IN FEET 0 10 20 40

GRADING PLAN
MIDTOWN CONNECTOR, I.R. 90 EB & WALL AG

DESIGN AGENCY
Michael Baker INTERNATIONAL

DESIGNER MZG
REVIEWER DJJ 05/13/25
PROJECT ID 82382
SHEET 1444A TOTAL 2696

CUY-90-16.28 (CCG3A)

MODEL: Sheet-01 PAPERSIZE: 34x22 (in.) DATE: 5/13/2025 TIME: 4:10:41 PM USER: Maia.Gallagher
pw:\\mb-us-pw.bentley.com:mb-us-pw-03\Documents\Cleveland_OH\01_Projects\ODOT\District12\82382\400-Engineering\Roadway\Sheets\82382_XG7901.dgn

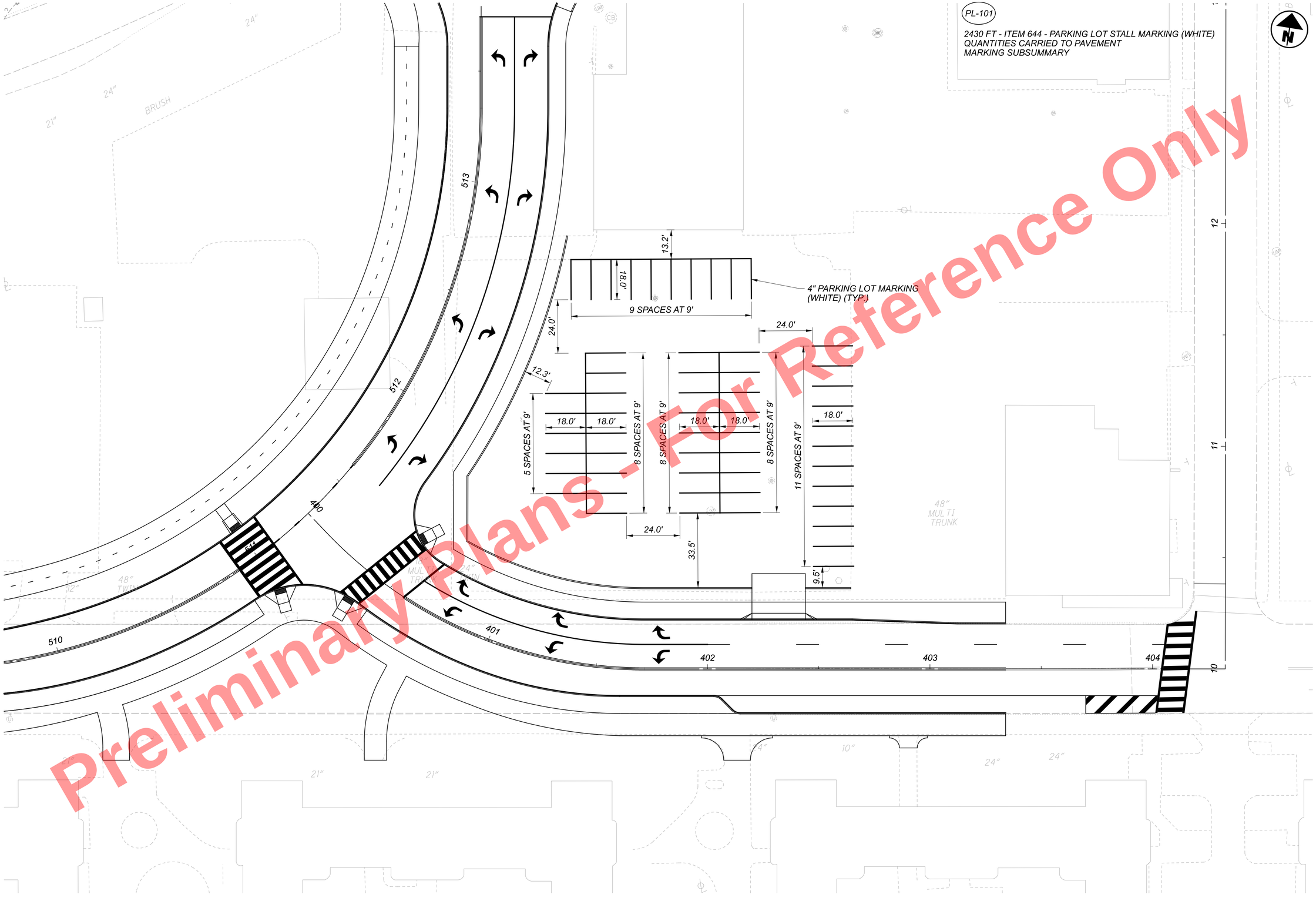

Preliminary Plans - For Reference Only

HORIZONTAL SCALE IN FEET
0 10 20 40

PARKING LOT DETAIL
2640 CARNEGIE AVE

DESIGN AGENCY
Michael Baker INTERNATIONAL

DESIGNER
KJM

REVIEWER
KGJ 05/22/24

PROJECT ID
82382

SHEET 1445 TOTAL 2696

CUY-90-16.28 (CCG3A)

MODEL: 82382_TP7902 PAPERSIZE: 34x22 (in.) DATE: 3/28/2025 TIME: 8:10:47 AM USER: Julie.Ross
pw:\\mb-us-pw.bentley.com:mb-us-pw-03\Documents\Cleveland_OH\OI_Projects\ODOT\District12\82382\400-Engineering\Roadway\Sheets\82382_GI5001.dgn

C-161

51 FT - ITEM 609 - COMBINATION CURB AND GUTTER,
TYPE 2 QUANTITIES CARRED TO PAVEMENT SUBSUMMARY

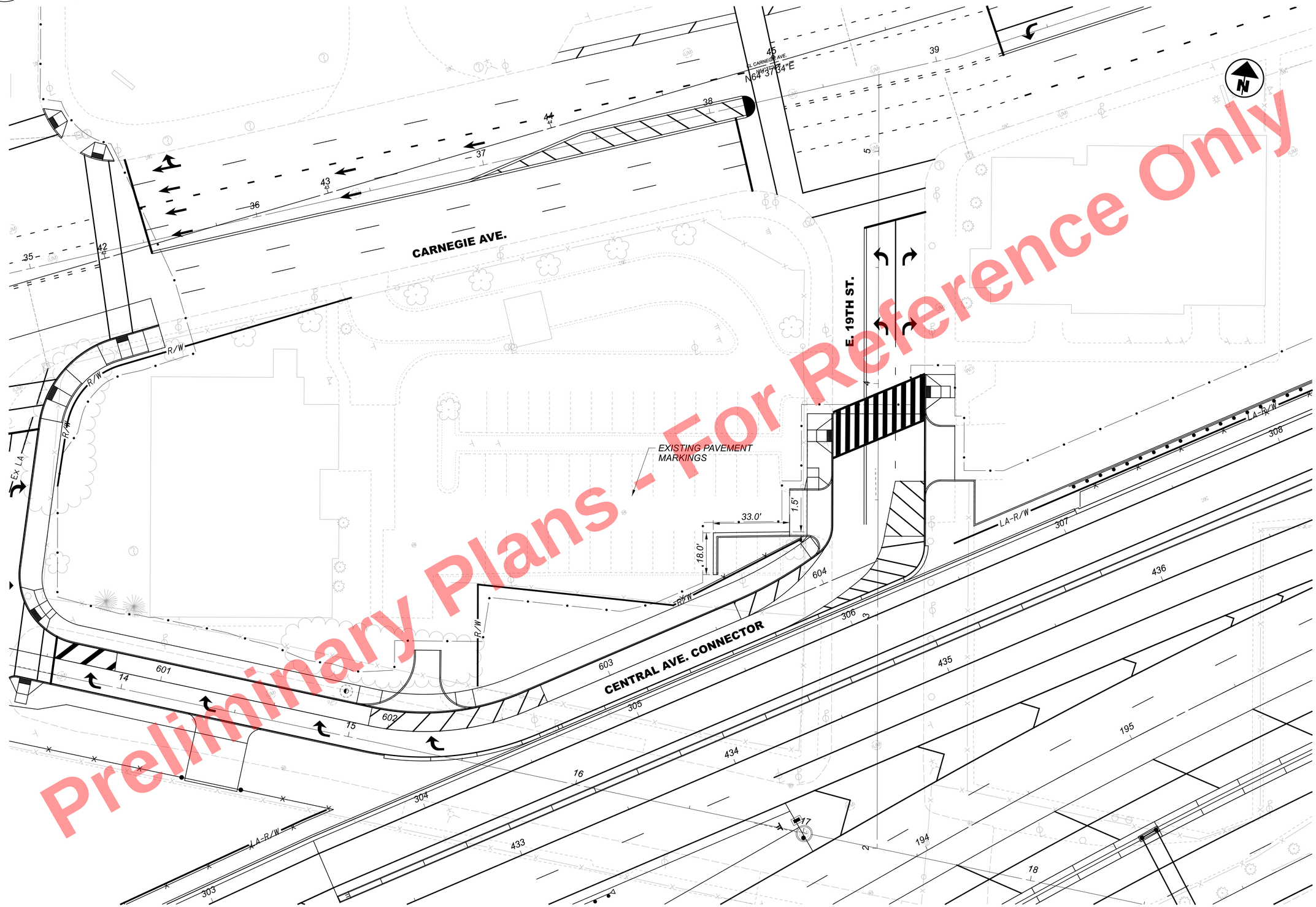

Preliminary Plans - Not For Reference Only

HORIZONTAL SCALE IN FEET
0 10 20 40

PARKING LOT DETAIL
1800 CARNEGIE AVE.

DESIGN AGENCY
Michael Baker INTERNATIONAL

DESIGNER KJM
REVIEWER KGJ 05/22/24
PROJECT ID 82382
SHEET 1446 TOTAL 2696

CUY-90-16.28 (CCG3A)

MODEL: 82382_TP7902 PAPERSIZE: 34x22 (in.) DATE: 3/28/2025 TIME: 8:11:00 AM USER: Julie.Ross
pw:\\mb-us-pw.bentley.commb-us-pw-03\Documents\Cleveland.OH\OI_Projects\OOOT\District2\82382\400-Engineering\Roadway\Sheets\82382_GI5003.dgn

PL-102

762 FT - ITEM 644 - PARKING LOT STALL MARKING (WHITE) QUANTITIES CARRIED TO PAVEMENT MARKING SUBSUMMARY

C-162

492 FT - ITEM 609 - CURB TYPE 6 QUANTITIES CARRED TO PAVEMENT SUBSUMMARY

SEE PAVEMENT SUBSUMMARY FOR PARKING LOT PAVEMENT QUANTITIES

4" PARKING LOT STALL MARKING (WHITE) (TYP.)

CURB TYPE 6

SAWCUT 2' OFF EXISTING CURB OF PARKING LOT ISLANDS AND PLACE PAVEMENT PER TYPICAL SECTION ON SHEET 72. CONTRACTOR IS RESPONSIBLE FOR FIXING DAMAGED PAVEMENT.

EX. LIGHT POLE (TO BE REMOVED)

℄ RAMP IH5

EX. LIGHT POLE (TO BE REMOVED)

CONST. LIMITS

2' OF FULL DEPTH PAVEMENT REMOVAL AND REPLACEMENT BEHIND CURB

2.0'

9.0'

18.0'

19 SPACES AT 9'

TMP

Ex LA-R/W

1081

1080

1079

1078

16

15

Preliminary Plans - Not For Reference Only

HORIZONTAL SCALE IN FEET
0 10 20 40

PARKING DETAIL
2554 CARNEGIE AVE.

DESIGN AGENCY
Michael Baker INTERNATIONAL

DESIGNER KJM
REVIEWER KGJ 05/22/24
PROJECT ID 82382
SHEET 1447 TOTAL 2696

CUY-90-16.28 (CCG3A)

MODEL: 82382_TP7902 PAPERSIZE: 34x22 (in.) DATE: 6/13/2025 TIME: 7:48:46 AM USER: Alexandria.Summers
pw:\\mb-us-pw.bentley.commb-us-pw-03\Documents\Cleveland_OH\01_Projects\000TYDistrict2\82382\400-Engineering\Roadway\Sheets\82382_GI5004.dgn

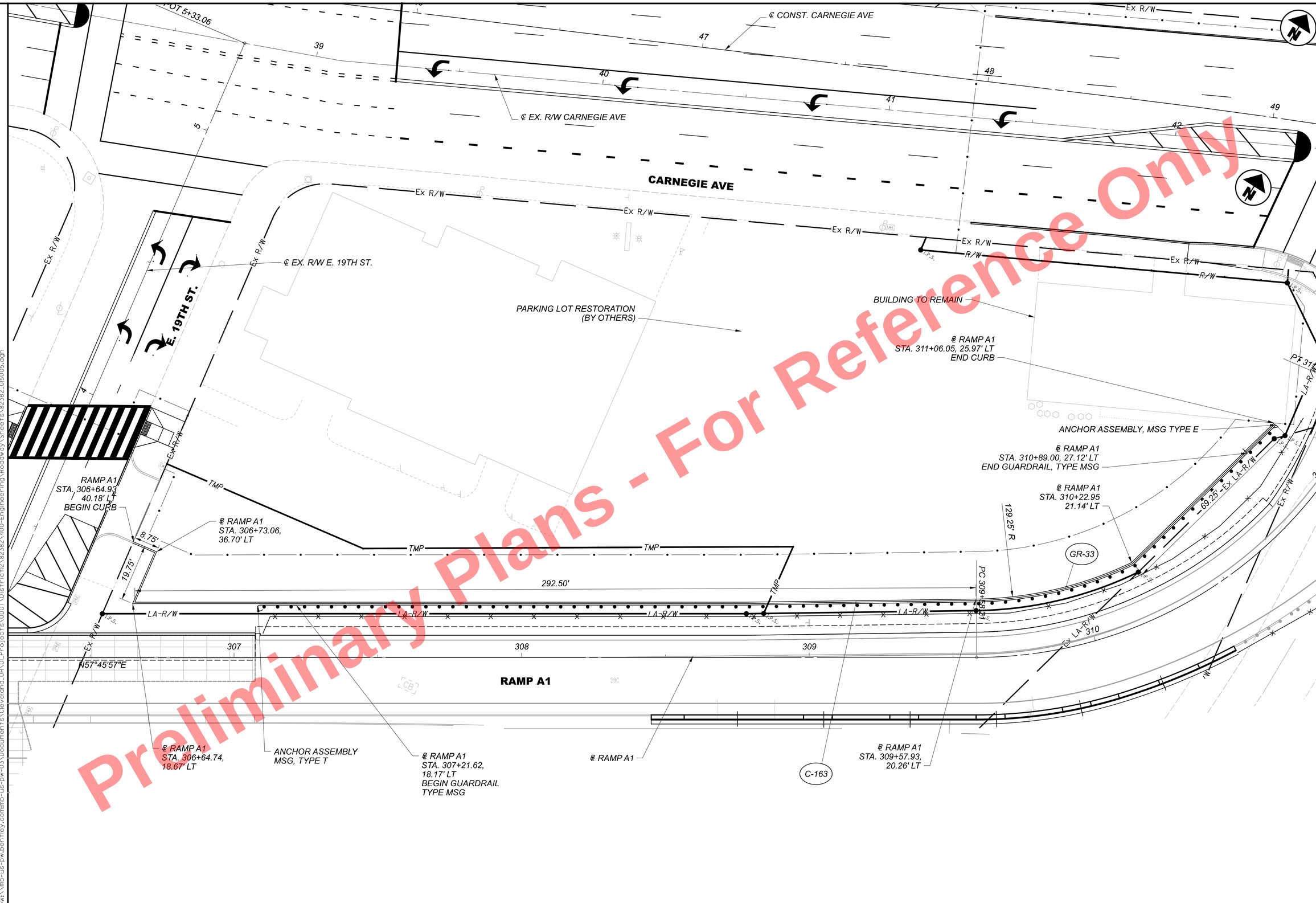

Preliminary Plans - For Reference Only

HORIZONTAL SCALE IN FEET
0 10 20 40

PARKING LOT DETAIL
2322 E. 22 ST.

DESIGN AGENCY
Michael Baker INTERNATIONAL

DESIGNER
CRK

REVIEWER
GSH 05/22/24

PROJECT ID
82382

SHEET 1448 TOTAL 2696

CUY-90-16.28 (CCG3A)

MODEL: 82382_TP7902 PAPERSIZE: 34x22 (in.) DATE: 3/28/2025 TIME: 8:11:41 AM USER: Julie.Ross
pw:\\mb-us-pw.bentley.com:mb-us-pw-03\Documents\Cleveland_OH\01_Projects\ODOT\District2\82382\400-Engineering\Roadway\Sheets\82382_GI5005.dgn

TRAFFIC CONTROL GENERAL NOTES

ITEM 630 - SIGN, DOUBLE-FACED, STREET NAME, AS PER PLAN

THIS ITEM SHALL MEET ALL THE REQUIREMENTS OF ITEM 630 IN THE CMS AND THE FOLLOWING:

DOUBLE-FACED STREET NAME SIGNS SHALL USE CITY OF CLEVELAND SPECIFICATIONS.

ITEM 630 - SIGN, DOUBLE-FACED, STREET NAME, AS PER PLAN EACH

ITEM 644 - CROSSWALK LINE, 12", AS PER PLAN

THIS ITEM SHALL MEET ALL THE REQUIREMENTS OF ITEM 644 IN THE CMS AND THE FOLLOWING:

CROSSWALK SHALL BE LADDER STYLE. SEE LADDER STYLE CROSSWALK DETAIL ON THIS SHEET FOR DIMENSIONS OF LONGITUDINAL AND TRANSVERSE LINES. LADDER MARKING SHALL BE PLACED FOR THE FULL WIDTH OF THE CROSSWALK.

PAYMENT FOR LADDER MARKINGS SHALL BE CONSIDERED INCIDENTAL TO AND INCLUDED WITH PAYMENT FOR ITEM 644 - CROSSWALK LINE, 12", AS PER PLAN. PAYMENT SHALL BE FULL COMPENSATION FOR ALL LABOR, MATERIALS, EQUIPMENT, AND INCIDENTALS NEEDED TO COMPLETE THE WORK.

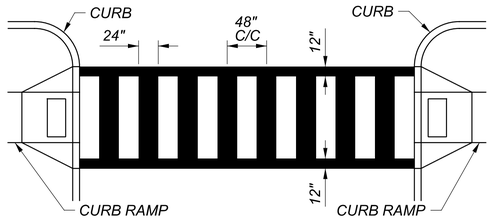

LADDER STYLE CROSSWALK DETAIL

ITEM 644 - PAVEMENT MARKING, MISC.: BIKE LANE CROSSWALK

THIS ITEM SHALL MEET ALL THE REQUIREMENTS OF ITEM 644 IN THE CMS AND THE FOLLOWING:

BIKE LANE CROSSWALK SHALL BE LADDER STYLE. THE CROSSWALK LADDER LINES SHALL BE GREEN-COLORED PAVEMENT WITH WHITE DASHED LINES ON BOTH ENDS OF THE CROSSWALK LADDER LINES. BIKE LANE CROSSWALK LADDER MARKINGS SHALL BE PARALLEL TO THE ADJACENT VEHICULAR LANES. PLACEMENT OF BIKE LANE CROSSWALK LINES SHALL BE PLACED TO AVOID MOTORIST WHEEL PATHS AND IMPROVE LONGEVITY OF MARKINGS.

SEE BIKE LANE CROSSWALK DETAIL ON THIS SHEET FOR DIMENSIONS.

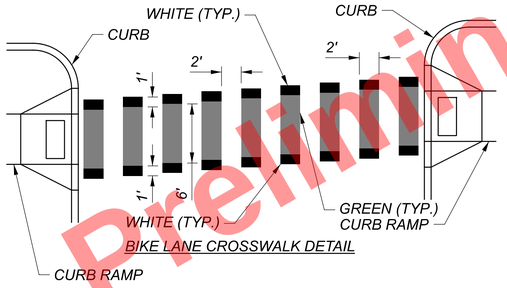

BIKE LANE CROSSWALK DETAIL

ITEM 644 - BIKE LANE SYMBOL
ITEM 644 - GREEN COLORED PAVEMENT FOR BIKE LANES

THIS ITEM SHALL MEET ALL THE REQUIREMENTS OF ITEM 644 IN THE CMS AND THE FOLLOWING:

BIKE LANE SYMBOL SHALL BE WHITE ON GREEN COLORED PAVEMENT.

SEE BIKE LANE SYMBOL DETAIL ON THIS SHEET FOR DIMENSIONS. WIDTH OF GREEN COLORED PAVEMENT SHALL BE ENTIRE WIDTH OF BIKE LANE.

PAYMENT SHALL BE FULL COMPENSTATION FOR ALL LABOR, MATERIALS, EQUIPMENT, AND INCIDENTALS NEEDED TO COMPLETE THE WORK FOR:

ITEM 644 - BIKE LANE SYMBOL EACH
ITEM 644 - GREEN COLORED PAVEMENT FOR BIKE LANES SF

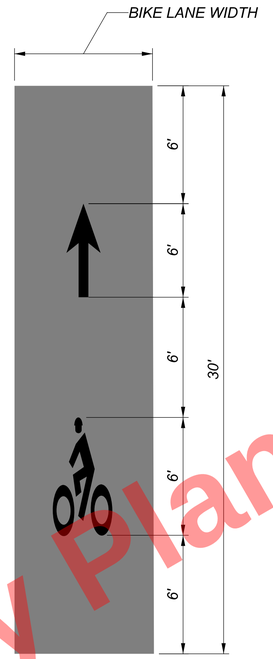

BIKE LANE SYMBOL DETAIL

UNLESS NOTED OTHERWISE

ITEM 630 - GROUND MOUNTED SUPPORT, NO. 4 POST, AS PER PLAN

ALL NO. 4 POSTS SHALL BE TYPE S. TYPE P AND TYPE F POSTS ARE PROHIBITED.

Preliminary Plans - For Reference Only

MODEL: Sheet PAPERSIZE: 34x22 (in.) DATE: 5/9/2025 TIME: 3:59:04 PM USER: Maia.Gallagher
pw:\\mb-us-pw.bentley.com:mb-us-pw-03\Documents\Cleveland_OH01_Projects\ODOT\District12\82382400-Engineering\Traffic\Sheets\82382_TN0001.dgn

TRAFFIC CONTROL GENERAL NOTES

DESIGN AGENCY
Michael Baker INTERNATIONAL

DESIGNER
GSH

REVIEWER
CRK 05/22/24

PROJECT ID
82382

SHEET 1449 TOTAL 2696

REF NO.	SHEET NO.	STATION FROM	STATION TO	SIDE	COLOR	620 DELINEATOR, POST GROUND MOUNTED EACH	621 RPM EACH	626 BARRIER REFLECTOR, TYPE 1 (BI-DIRECTIONAL) EACH	626 BARRIER REFLECTOR, TYPE 1 (ONE-WAY) EACH	626 BARRIER REFLECTOR, TYPE 2 (BI-DIRECTIONAL) EACH	626 BARRIER REFLECTOR, TYPE 2 (ONE-WAY) EACH	644 EDGE LINE, 6" MILE	644 LANE LINE, 6" MILE	644 CENTER LINE MILE	644 CHANNELIZING LINE, 12" FT	644 CROSSWALK LINE, 12" FT	644 TRANSVERSE/DIAGONAL LINE FT	644 CHEVRON MARKING FT	644 LANE ARROW EACH	644 WRONG WAY ARROW EACH	644 DOTTED LINE, 6" FT	644 DOTTED LINE, 12" FT	646 EDGE LINE, 6" MILE	646 LANE LINE, 6" MILE	646 CHANNELIZING LINE, 12" FT	646 TRANSVERSE/DIAGONAL LINE FT	646 CHEVRON MARKING FT	646 DOTTED LINE, 6" FT
		I.R. 90 EB																											
EY-1	1495	165+49.00	199+20.18	LT	YELLOW							0.51												0.12					
LL-1	1495	165+50.00	199+20.18	LT	WHITE		28						0.51												0.12				
LL-2	1495	165+54.00	199+20.18	RT/CL	WHITE		28						0.51												0.13				
DW-1	1495	165+59.00	170+10.54	RT	WHITE		6														452							196	
EW-1	1495	165+61.02	1715+60.00	RT	WHITE							0.29												0.07					
EY-2	1495	165+72.27	167+22.86	RT	YELLOW							0.03																	
EW-2	1495	165+78.25	167+34.70	RT	WHITE							0.03																	
CH-1	1496	170+10.54	1600+66.78	RT	WHITE										670											174			
	1497	175+22.65	199+20.18	LT				24																					
CH-2	1497	175+50.84	177+88.99	RT	WHITE		6								238														
CV-1	1497	175+50.84	178+88.99	RT	WHITE													120											
EW-3	1497	177+88.99	192+44.14	RT	WHITE							0.22												0.06					
		INTERIM I.R. 90 EB																											
	1497	3000+00.00	3014+30.64	LT				14																					
		RAMP IB5																											
CH-3	1497	1706+63.85	1708+30.54	LT	WHITE		4								167														
	1497	1707+28.66	1714+29.51	RT		14																							
EY-3	1497	1708+30.54	1714+40.00	LT	YELLOW		8					0.12																	
	1497	1708+41.55	1710+72.41	LT							5																		
		RAMP B6																											
CH-4	1497	1597+61.23	1600+00.00	CL	WHITE		6								239														
CV-2	1497	1599+05.37	1600+37.90	RT	WHITE													38											
EY-4	1497	1600+00.00	1620+92.10	CL	YELLOW							0.29												0.11					
	1497	1600+21.82	1602+09.41	LT							3																		
EW-4	1497	1600+66.78	1619+94.00	RT	WHITE		274					0.26												0.11					
	1497	1600+77.33	1613+93.75	RT					6		8																		
		I.R. 90 EB																											
	1499	178+11.34	192+08.11	RT					3		11																		
CH-5	1500	192+44.14	196+59.89	RT	WHITE		10								416														
CH-6	1500	192+44.14	196+59.89	RT	WHITE		10								416														
	1500	192+81.76	198+94.56	RT							7																		
		RAMP IH5																											
TW-1	1500	985+98.41	3002+55.23	RT	WHITE												1023												
		RAMP H5																											
EW-5	1500	199+20.18	985+16.76	RT	WHITE							0.30																	
EY-5	1500	985+16.76	994+24.16	LT	YELLOW		11					0.17																	
		I.R. 90 EB																											
DW-2	1501	196+59.89	199+20.18	RT	WHITE		3														260								
		INTERIM I.R. 90 EB																											
	1502	3000+00.00	3004+35.00	RT		5																							
DW-3	1502	3000+00.00	3007+54.90	RT	WHITE		9														755								
EW-6	1502	3000+00.00	3013+08.43	RT	WHITE							0.25																	
EY-6	1502	3000+00.00	3014+30.69	LT	YELLOW							0.27																	
LL-3	1502	3000+00.00	3014+30.69	CL	WHITE		12						0.27																
TOTALS CARRIED TO SHEET 1455						19	415	38	9	-	34	2.74	1.29	-	2146	-	1023	158	-	-	1467	-	0.47	0.25	174	-	-	196		

Preliminary Plans - For Reference Only

INTERSTATE / RAMP PAVEMENT MARKING SUBSUMMARY - 1

CUY-90-16.28 (CCG3A)

MODEL: Sheet-01 PAPERSIZE: 34x22 (in.) DATE: 3/27/2025 TIME: 7:02:15 PM USER: Mala.Gallagher
pw:\\mb-us-pw.bentley.com:mb-us-pw-03\Documents\Cleveland_OH\01_Projects\ODOT\District12\82382\400-Engineering\Traffic\Sheets\82382_TS401.dgn

DESIGN AGENCY
B&N
burgessniple.com

DESIGNER AJS
REVIEWER KEH 05/17/24
PROJECT ID 82382
SHEET 1450 TOTAL 2696

REF NO.	SHEET NO.	STATION FROM	STATION TO	SIDE	COLOR	620 DELINEATOR, POST GROUND MOUNTED EACH	621 RPM EACH	626 BARRIER REFLECTOR, TYPE 1 (BI-DIRECTIONAL) EACH	626 BARRIER REFLECTOR, TYPE 1 (ONE-WAY) EACH	626 BARRIER REFLECTOR, TYPE 2 (BI-DIRECTIONAL) EACH	626 BARRIER REFLECTOR, TYPE 2 (ONE-WAY) EACH	644 EDGE LINE, 6" MILE	644 LANE LINE, 6" MILE	644 CENTER LINE MILE	644 CHANNELIZING LINE, 12" FT	644 CROSSWALK LINE, 12" FT	644 TRANSVERSE/DIAGONAL LINE FT	644 CHEVRON MARKING FT	644 LANE ARROW EACH	644 WRONG WAY ARROW EACH	644 DOTTED LINE, 6" FT	644 DOTTED LINE, 12" FT	646 EDGE LINE, 6" MILE	646 LANE LINE, 6" MILE	646 CHANNELIZING LINE, 12" FT	646 TRANSVERSE/DIAGONAL LINE FT	646 CHEVRON MARKING FT	646 DOTTED LINE, 6" FT
		INTERIM I.R. 90 EB (CONT.)																											
LL-4	1502	3000+00.00	3014+30.69	RT	WHITE		12						0.27																
	1503	3004+33.61	3009+62.01	LT/RT							6																		
		I.R. 90 EB																											
DW-4	1504	3013+80.79	3014+30.69	RT	WHITE		1														50								
		INTERIM I.R. 90 EB																											
CV-3	1504	3013+08.43	3013+80.78	RT	WHITE													45											
CH-7	1504	3013+08.43	3013+80.79	RT	WHITE		2								72														
		RAMP 4																											
EY-7	1504	903+30.00	905+38.99	LT	YELLOW		3					0.04																	
	1504	903+30.00	905+39.00	LT		5																							
EW-7	1504	903+30.00	906+64.81	CL	WHITE							0.06																	
CH-8	1504	905+38.99	906+15.27	LT	WHITE		2								76														
		I.R. 90 WB																											
DW-5	1506	149+53.96	157+54.35	LT	WHITE																								800
EW-8	1506	149+53.96	163+62.20	LT	WHITE																			0.27					
LL-5	1506	149+53.96	171+78.65	LT	WHITE		19						0.06												0.36				
CH-9	1507	157+54.35	163+62.20	LT	WHITE		15																			608			
CH-10	1507	157+54.35	163+62.20	LT	WHITE		15																			608			
CV-4	1507	157+54.35	163+62.20	LT	WHITE																								130
LL-6	1508	163+23.70	201+13.67	CL/LT	WHITE		32						0.54												0.18				
LL-7	1508	163+23.70	201+13.67	RT/CL	WHITE		32						0.54												0.18				
EY-8	1508	163+23.70	201+13.67	RT	YELLOW							0.54												0.18					
EW-9	1508	163+62.20	179+90.78	LT	WHITE							0.18												0.13					
CV-5	1510	171+78.65	179+55.37	LT	WHITE													121											41
CH-11	1510	171+78.65	179+90.78	LT	WHITE		20								642											170			
CH-12	1510	171+78.65	179+90.78	LT	WHITE		20								642											170			
	1511	177+48.54	201+13.67	RT					24																				
		RAMP A3																											
	1511	577+30.22	587+36.67	LT					3		8																		
		I.R. 90 WB																											
EW-10	1512	179+90.78	193+56.81	LT	WHITE							0.20												0.06					
TW-2	1512	180+38.98	192+06.60	LT	WHITE												477									150			
	1512	181+00.68	191+41.90	LT					9		2																		
		RAMP A3																											
DW-6	1512	579+88.59	583+89.59	CL/RT	WHITE		5														401								
EW-11	1512	579+88.59	588+55.45	CL/LT	WHITE							0.16																	
EY-9	1512	579+88.59	588+55.45	RT	YELLOW							0.16																	
	1512	580+98.32	588+57.15	RT					3		5																		
		I.R. 90 WB																											
TY-1	1513	185+00.00	201+14.46	RT	YELLOW												714									160			
	1514	191+41.90	193+56.81	LT		5																							
CH-13	1514	193+56.81	196+54.37	LT	WHITE		7								298														
CV-6	1514	193+56.81	196+54.37	LT	WHITE													105											
		RAMP A1																											
EW-12	1514	300+00.00	311+30.06	CL/LT	WHITE							0.17												0.05					
TOTALS CARRIED TO SHEET 1455						10	185	-	39	-	21	1.51	1.41	-	1730	-	1191	271	-	-	451	-	0.69	0.72	1556	310	171	800

Preliminary Plans - For Reference Only

INTERSTATE / RAMP PAVEMENT MARKING SUBSUMMARY - 2

DESIGN AGENCY
B&N
burgessniple.com

DESIGNER AJS
REVIEWER KEH 05/17/24
PROJECT ID 82382
SHEET 1451 TOTAL 2696

CUY-90-16.28 (CCG3A)

MODEL: Sheet-02 PAPERSIZE: 34x22 (in.) DATE: 3/27/2025 TIME: 7:02:16 PM USER: Mala.Gallagher
pw:\\mb-us-pw.bentley.com:mb-us-pw-03\Documents\Cleveland_OH\01_Projects\ODOT\District12\82382\400-Engineering\Traffic\Sheets\82382_TS401.dgn

REF NO.	SHEET NO.	STATION FROM	STATION TO	SIDE	COLOR	620 DELINEATOR, POST GROUND MOUNTED	621 RPM	626 BARRIER REFLECTOR, TYPE 1 (BI-DIRECTIONAL)	626 BARRIER REFLECTOR, TYPE 1 (ONE-WAY)	626 BARRIER REFLECTOR, TYPE 2 (BI-DIRECTIONAL)	626 BARRIER REFLECTOR, TYPE 2 (ONE-WAY)	644 EDGE LINE, 6"	644 LANE LINE, 6"	644 CENTER LINE	644 CHANNELIZING LINE, 12"	644 CROSSWALK LINE, 12"	644 TRANSVERSE/DIAGONAL LINE	644 CHEVRON MARKING	644 LANE ARROW	644 WRONG WAY ARROW	644 DOTTED LINE, 6"	644 DOTTED LINE, 12"	646 EDGE LINE, 6"	646 LANE LINE, 6"	646 CHANNELIZING LINE, 12"	646 TRANSVERSE/DIAGONAL LINE	646 CHEVRON MARKING	646 DOTTED LINE, 6"
						EACH	EACH	EACH	EACH	EACH	EACH	MILE	MILE	MILE	FT	FT	FT	FT	EACH	EACH	FT	FT	MILE	MILE	FT	FT	FT	FT
		RAMP A1 (CONT.)																										
	1514	300+00.00	311+39.71	LT					12																			
	1514	303+49.84	311+15.06	RT					6		2																	
EY-10	1514	303+49.91	311+57.62	RT	YELLOW		10					0.15																
		RAMP A2																										
	1514	405+88.00	428+69.88	LT					21																			
LL-8	1514	408+02.36	434+12.92	RT	WHITE		22						0.10										0.39					
EY-11	1514	408+02.36	434+12.92	RT	YELLOW							0.10											0.39					
	1514	409+92.70	433+28.61	RT					21		2																	
CH-14	1514	424+84.88	432+19.88	CL	WHITE										91										644			
CV-7	1514	424+84.88	432+19.88	CL	WHITE													141									51	
CH-15	1514	424+84.88	432+20.11	CL/LT	WHITE										91										644			
EW-13	1514	432+19.88	441+81.20	CL	WHITE							0.18																
	1514	432+20.19	441+81.20	LT					7		4																	
CH-16	1514	434+12.92	437+15.72	RT	WHITE		8								303													
CH-17	1514	434+12.92	441+81.20	RT	WHITE		19								768													
		INTERIM I.R. 90 WB																										
	1516	4000+00.00	4013+51.81	LT					3		11																	
EW-14	1516	4000+00.00	4013+65.00	LT	WHITE							0.26																
DW-7	1516	4000+00.00	4013+65.00	LT	WHITE		17															1365						
LL-9	1516	4000+00.00	4013+65.00	CL	WHITE		11						0.26															
LL-10	1516	4000+00.00	4013+65.00	RT	WHITE		11						0.26															
EY-12	1516	4000+00.00	4013+65.00	RT	YELLOW							0.26																
	1516	4000+00.00	4013+72.92	RT					14																			
TY-2	1516	4000+18.00	4006+50.89	RT	YELLOW												380											
		I.R. 77																										
CH-18	1521	61+95.28	75+10.19	RT	WHITE		33								1315													
CL-1	1521	66+25.00	75+34.59	LT	WHITE		23							0.17														
LL-11	1521	66+50.00	75+10.19	RT	WHITE		7						0.16															
EY-13	1522	73+00.00	75+97.83	LT	YELLOW							0.06																
		RAMP A2																										
DW-8	1522	403+00.00	408+02.36	RT	WHITE		6														502							
CH-19	1523	405+35.00	407+99.83	RT	WHITE		7								265													
CH-20	1523	405+35.00	408+02.36	RT	WHITE		7								267													
CV-8	1523	405+35.00	408+02.36	RT	WHITE													141										
		RAMP IH4																										
CH-21	1523	11+36.30	12+91.52	CL/LT	WHITE		4								155													
CV-9	1523	11+36.30	13+37.28	LT	WHITE													43										
CH-22	1523	11+36.30	13+37.28	CL	WHITE		5								201													
EY-14	1523	12+91.52	18+05.00	LT	YELLOW		6					0.10																
	1523	13+05.43	14+37.57	LT							3																	
EY-15	1523	50+00.00	63+00.00	LT	YELLOW		16					0.25																
EW-15	1523	52+96.31	63+00.00	CL	WHITE							0.19																
		RAMP IH5																										
	1523	1075+86.54	1082+84.58	RT							12																	
CH-23	1523	1076+42.18	1078+31.57	LT	WHITE		5								189													
CV-10	1523	1076+42.18	1078+31.57	LT	WHITE													88										
TOTALS CARRIED TO SHEET 1455						-	217	-	84	-	34	1.55	0.78	0.17	3645	-	380	413	-	-	502	1365	0.39	0.39	1288	-	51	-

Preliminary Plans - For Reference Only

INTERSTATE / RAMP PAVEMENT MARKING SUBSUMMARY - 3

CUY-90-16.28 (CCG3A)

MODEL: Sheet-03 PAPERSIZE: 34x22 (in.) DATE: 3/27/2025 TIME: 7:02:16 PM USER: Mala.Gallagher
pw:\\mb-us-pw.bentley.com:mb-us-pw-03\Documents\Cleveland_OH\01_Projects\ODOT\District12\82382\400-Engineering\Traffic\Sheets\82382_TS401.dgn

DESIGN AGENCY
B&N
burgessniple.com

DESIGNER AJS
REVIEWER KEH 05/17/24
PROJECT ID 82382
SHEET 1452 TOTAL 2696

REF NO.	SHEET NO.	STATION FROM	STATION TO	SIDE	COLOR	620 DELINEATOR, POST GROUND MOUNTED EACH	621 RPM EACH	626 BARRIER REFLECTOR, TYPE 1 (BI-DIRECTIONAL) EACH	626 BARRIER REFLECTOR, TYPE 1 (ONE-WAY) EACH	626 BARRIER REFLECTOR, TYPE 2 (BI-DIRECTIONAL) EACH	626 BARRIER REFLECTOR, TYPE 2 (ONE-WAY) EACH	644 EDGE LINE, 6" MILE	644 LANE LINE, 6" MILE	644 CENTER LINE MILE	644 CHANNELIZING LINE, 12" FT	644 CROSSWALK LINE, 12" FT	644 TRANSVERSE/DIAGONAL LINE FT	644 CHEVRON MARKING FT	644 LANE ARROW EACH	644 WRONG WAY ARROW EACH	644 DOTTED LINE, 6" FT	644 DOTTED LINE, 12" FT	646 EDGE LINE, 6" MILE	646 LANE LINE, 6" MILE	646 CHANNELIZING LINE, 12" FT	646 TRANSVERSE/DIAGONAL LINE FT	646 CHEVRON MARKING FT	646 DOTTED LINE, 6" FT
		RAMP H5																											
EW-16	1523	1075+10.19	1079+11.22	CL/RT	WHITE							0.08																	
LL-12	1523	1075+10.19	1085+39.27	LT	WHITE		9						0.19																
		RAMP IJ3																											
EY-16	1523	91+40.86	110+56.45	RT	YELLOW		24					0.36																	
EW-17	1523	93+43.07	110+56.45	RT/CL	WHITE							0.32																	
	1523	94+00.92	100+88.40	RT/LT																									
		EX. RAMP E-17																											
CH-24	1523	50+00.00	52+96.31	CL	WHITE		7								296														
	1523	53+13.05	54+25.28	RT							3																		
TW-3	1523	53+63.62	55+20.63	RT/CL	WHITE												93												
		RAMP A2																											
DW-9	1524	411+00.00	417+30.00	CL	WHITE		8																						630
LL-13	1525	417+30.00	424+84.88	CL	WHITE		6																	0.04					
		RAMP IJ3																											
	1525	101+40.00	102+33.77	RT						2																			
	1525	101+89.00	109+25.00	LT		8																							
		RAMP A2																											
EW-18	1527	403+00.00	428+69.88	RT/LT	WHITE							0.14												0.35					
		RAMP A3																											
LL-14	1528	583+90.00	588+55.45	RT	WHITE		4																		0.04				
		RAMP IB5																											
XW-1	1529	1714+50.00	1714+50.00	LT/RT	WHITE											53													
CH-25	1529	1714+53.77	1715+60.50	LT/RT	WHITE										107														
CH-26	1529	1714+53.77	1715+60.50	LT	WHITE										107														
		RAMP B6																											
	1530	1602+09.41	1606+69.28	LT		7																							
	1531	1606+69.28	1620+83.80	LT					10		5																		
DW-10	1532	1613+94.00	1615+62.00	RT	WHITE																								168
CH-27	1532	1615+62.00	1616+96.00	RT	WHITE		3								134														
WA-1	1532	1616+00.00		RT	WHITE																1								
		RAMP B6A																											
CV-11	1532	1800+00.00	1802+96.00	CL	WHITE													111											
	1532	1800+00.00	1804+74.60	RT							6																		
EW-19	1532	1800+00.00	1806+41.00	CL	WHITE		8					0.12																	
CH-28	1532	1801+65.00	1802+96.00	LT	WHITE		3								131														
WA-2	1532	1802+00.00		LT	WHITE																1								
		RAMP B6																											
EW-20	1533	1616+96.00	1620+90.85	RT	WHITE							0.07																	
WA-3	1533	1618+72.00		RT	WHITE																1								
LA-1	1533	1619+38.00		RT	WHITE														1										
LA-2	1533	1620+04.00		RT	WHITE														1										
LA-3	1533	1620+70.00		RT	WHITE														1										
		RAMP B6A																											
EY-17	1533	1802+96.00	1806+42.01	LT	YELLOW		4					0.07																	
WA-4	1533	1804+24.00		LT	WHITE																1								
TOTALS CARRIED TO SHEET 1455						15	76	-	10	2	14	1.16	0.19	-	775	53	93	111	3	4	-	-	0.35	0.08	-	-	-	798

Preliminary Plans - For Reference Only

INTERSTATE / RAMP PAVEMENT MARKING SUBSUMMARY - 4

CUY-90-16.28 (CCG3A)

MODEL: Sheet-04 PAPERSIZE: 34x22 (in.) DATE: 3/27/2025 TIME: 7:02:17 PM USER: Mala.Gallagher
pw:\\mb-us-pw.bentley.com:mb-us-pw-03\Documents\Cleveland_OH\01_Projects\ODOT\District12\82382\400-Engineering\Traffic\Sheets\82382_TS401.dgn

DESIGN AGENCY
B&N
burgessniple.com

DESIGNER AJS
REVIEWER KEH 05/17/24
PROJECT ID 82382
SHEET 1453 TOTAL 2696

REF NO.	SHEET NO.	STATION FROM	STATION TO	SIDE	COLOR	620 DELINEATOR, POST GROUND MOUNTED EACH	621 RPM EACH	626 BARRIER REFLECTOR, TYPE 1 (BI-DIRECTIONAL) EACH	626 BARRIER REFLECTOR, TYPE 1 (ONE-WAY) EACH	626 BARRIER REFLECTOR, TYPE 2 (BI-DIRECTIONAL) EACH	626 BARRIER REFLECTOR, TYPE 2 (ONE-WAY) EACH	644 EDGE LINE, 6" MILE	644 LANE LINE, 6" MILE	644 CENTER LINE MILE	644 CHANNELIZING LINE, 12" FT	644 CROSSWALK LINE, 12" FT	644 TRANSVERSE/DIAGONAL LINE FT	644 CHEVRON MARKING FT	644 LANE ARROW EACH	644 WRONG WAY ARROW EACH	644 DOTTED LINE, 6" FT	644 DOTTED LINE, 12" FT	646 EDGE LINE, 6" MILE	646 LANE LINE, 6" MILE	646 CHANNELIZING LINE, 12" FT	646 TRANSVERSE/DIAGONAL LINE FT	646 CHEVRON MARKING FT	646 DOTTED LINE, 6" FT
		RAMP B6A (CONT.)																											
LA-4	1533	1804+90.00		LT	WHITE														1										
LA-5	1533	1805+56.00		LT	WHITE														1										
LA-6	1533	1806+22.00		LT	WHITE														1										
		RAMP IH4																											
EW-21	1534	13+37.28	18+05.00	CL	WHITE							0.09																	
	1534	13+48.95	20+16.10	RT					8																				
WA-5	1534	16+50.00		RT	WHITE															1									
WA-6	1534	18+25.00		RT	WHITE															1									
		RAMP IH5																											
EY-18	1534	1078+31.57	1085+39.27	LT	YELLOW		9					0.13																	
	1534	1078+42.90	1085+39.27	LT					8																				
DW-11	1534	1079+11.22	1082+04.39	RT	WHITE		4																						293
CH-29	1534	1082+04.39	1083+68.08	RT	WHITE		4								164														
CV-12	1534	1082+04.39	1083+68.08	RT	WHITE													73											
		RAMP IH6																											
CH-30	1534	1272+87.17	1274+45.18	LT	WHITE		4								158														
		RAMP H6																											
EW-22	1534	1270+00.00	1274+83.98	CL	WHITE							0.09																	
		RAMP IH5																											
EW-23	1535	1083+68.08	1085+39.27	RT/CL	WHITE							0.03																	
		RAMP H5																											
LL-15	1535	985+16.76	986+00.00	RT	WHITE		1						0.02																
	1535	985+16.76	993+95.18	LT					5	4																			
DW-12	1535	986+00.00	992+00.00	RT	WHITE		8																						600
		RAMP IH6																											
EW-24	1535	1183+59.15	1191+65.00	CL	WHITE							0.15																	
		RAMP H6																											
EY-19	1535	1183+21.46	1192+37.94	LT	YELLOW		11					0.17																	
WA-7	1535	1185+56.00		LT	WHITE															1									
LL-16	1535	1186+20.00	1188+35.26	LT	WHITE		2																0.04						
		RAMP H5																											
	1536	989+21.86	992+70.00	LT					3	2																			
		RAMP H6																											
CH-31	1537	1188+35.26	1192+36.90	LT	WHITE		10								402														
WA-8	1537	1188+50.00		LT	WHITE															1									
WA-9	1537	1188+50.00		LT	WHITE															1									
LA-7	1537	1189+22.00		LT	WHITE														1										
LA-8	1538	1190+22.00		LT	WHITE														1										
LA-9	1538	1191+22.00		LT	WHITE														1										
WA-10	1538	1192+00.00		LT	WHITE															1									
WA-11	1538	1192+00.00		LT	WHITE															1									
LA-10	1538	1192+22.00		LT	WHITE														1										
		RAMP IJ3																											
	1540	106+01.41	108+55.41	RT						3																			
TOTALS CARRIED TO SHEET 1455						-	53	-	24	9	-	0.66	0.02	-	724	-	-	73	7	7	-	-	-	0.04	-	-	-	893																		

REF NO.	SHEET NO.	STATION FROM	STATION TO	SIDE	COLOR	620 DELINEATOR, POST GROUND MOUNTED	621 RPM	626 BARRIER REFLECTOR, TYPE 1 (BI-DIRECTIONAL)	626 BARRIER REFLECTOR, TYPE 1 (ONE-WAY)	626 BARRIER REFLECTOR, TYPE 2 (BI-DIRECTIONAL)	626 BARRIER REFLECTOR, TYPE 2 (ONE-WAY)	644 EDGE LINE, 6"	644 LANE LINE, 6"	644 CENTER LINE	644 CHANNELIZING LINE, 12"	644 CROSSWALK LINE, 12"	644 TRANSVERSE/DIAGONAL LINE	644 CHEVRON MARKING	644 LANE ARROW	644 WRONG WAY ARROW	644 DOTTED LINE, 6"	644 DOTTED LINE, 12"	646 EDGE LINE, 6"	646 LANE LINE, 6"	646 CHANNELIZING LINE, 12"	646 TRANSVERSE/DIAGONAL LINE	646 CHEVRON MARKING	646 DOTTED LINE, 6"
						EACH	EACH	EACH	EACH	EACH	EACH	MILE	MILE	MILE	FT	FT	FT	FT	EACH	EACH	FT	FT	MILE	MILE	FT	FT	FT	FT
		EX. RAMP E-17																										
	1540	62+58.51	63+97.79	LT						3																		
TOTALS FROM THIS SHEET						-	-	-	-	3	-	-	-	-	-	-	-	-	-	-	-	-	-	-	-	-	-	-
TOTALS FROM SHEET 1450						19	415	38	9	-	34	2.74	1.29	-	2146	-	1023	158	-	-	1467	-	0.47	0.25	174	-	-	196
TOTALS FROM SHEET 1451						10	185	-	39	-	21	1.51	1.41	-	1730	-	1191	271	-	-	451	-	0.69	0.72	1556	310	171	800
TOTALS FROM SHEET 1452						-	217	-	84	-	34	1.55	0.78	0.17	3645	-	380	413	-	-	502	1365	0.39	0.39	1288	-	51	-
TOTALS FROM SHEET 1453						15	76	-	10	2	14	1.16	0.19	-	775	53	93	111	3	4	-	-	0.35	0.08	-	-	-	798
TOTALS FROM SHEET 1454						-	53	-	24	9	-	0.66	0.02	-	724	-	-	73	7	7	-	-	-	0.04	-	-	-	893
TOTALS CARRIED TO GENERAL SUMMARY						44	946	38	166	14	103	7.62	3.69	0.17	9020	53	2687	1026	10	11	2420	1365	1.90	1.48	3018	310	222	2687

Preliminary Plans - For Reference Only

INTERSTATE / RAMP PAVEMENT MARKING SUBSUMMARY - 6

CUY-90-16.28 (CCG3A)

MODEL: Sheet-06 PAPERSIZE: 34x22 (in.) DATE: 3/27/2025 TIME: 7:02:18 PM USER: Mala.Gallagher
pw:\\mb-us-pw.bentley.com:mb-us-pw-03\Documents\Cleveland_OH\01_Projects\ODOT\District12\82382\400-Engineering\Traffic\Sheets\82382_TS401.dgn

DESIGN AGENCY
B&N
burgessniple.com

DESIGNER AJS
REVIEWER KEH 05/17/24
PROJECT ID 82382
SHEET 1455 TOTAL 2696

LOCAL STREET PAVEMENT MARKING SUBSUMMARY - 1

REF NO.	SHEET NO.	STATION FROM	STATION TO	SIDE	COLOR	644 EDGE LINE, 4"	644 LANE LINE, 4"	644 CENTER LINE	644 CHANNELIZING LINE, 8"	644 STOP LINE	644 CROSSWALK LINE, 12"	644 CROSSWALK LINE, 12", AS PER PLAN	644 TRANSVERSE/DIAGONAL LINE	644 CHEVRON MARKING	644 ISLAND MARKING	644 PARKING LOT STALL MARKING	644 LANE ARROW	644 LANE REDUCTION ARROW	644 TWO WAY LEFT TURN ARROW	644 DOTTED LINE, 4"	644 DOTTED LINE, 8"	644 BIKE LANE SYMBOL MARKING	644 SHARED LANE MARKING	644 PAVEMENT MARKING, MISC.: BIKE LANE CROSSWALK	644 GREEN COLORED PAVEMENT FOR BIKE LANES	646 EDGE LINE, 4"	646 LANE LINE, 4"	646 CENTER LINE	646 CHANNELIZING LINE, 8"	646 STOP LINE	646 CROSSWALK LINE, 12"	646 TRANSVERSE/DIAGONAL LINE	646 LANE ARROW	646 BIKE LANE SYMBOL MARKING	646 SHARED LANE MARKING	646 GREEN COLORED PAVEMENT FOR BIKE LANES
						MILE	MILE	MILE	FT	FT	FT	FT	FT	FT	SF	FT	EACH	EACH	EACH	FT	FT	EACH	EACH	FT	SF	MILE	MILE	MILE	FT	FT	FT	FT	EACH	EACH	EACH	SF
		MIDTOWN CONNECTOR																																	
PL-101	1445			RT	WHITE											2430																			
		E. 22ND ST.																																	
PL-102	1447			LT	WHITE											530																			
		CARNEGIE AVE.																																	
CH-101	1542	35+55.73	36+42.15	LT	WHITE				86																										
DW-101	1542	35+55.73	36+92.87	LT	WHITE																138														
LL-101	1542	35+55.73	44+80.92	RT	WHITE		0.17																												
LL-102	1542	35+55.73	58+19.20	RT	WHITE		0.43																												
CL-101	1542	35+55.73	58+37.33	RT/LT	YELLOW			0.43																											
LL-103	1542	35+55.73	58+93.81	LT	WHITE		0.44																												
LA-101	1542	35+66.00	35+73.81	LT	WHITE												1																		
LA-102	1542	36+16.00	36+23.81	LT	WHITE												1																		
CH-102	1542	37+13.02	38+27.40	RT/LT	WHITE				116																										
CH-103	1542	37+13.02	38+27.40	RT/LT	WHITE				114																										
LA-103	1542	37+21.80	37+28.79	LT	WHITE												1																		
CV-101	1542	37+23.34	38+14.68	RT/LT	WHITE									55																					
EW-101	1542	37+26.23	38+27.49	RT	WHITE	0.02																													
LA-104	1542	37+60.21	37+68.15	LT	WHITE												1																		
TW-101	1542	37+83.01	38+27.49	RT	WHITE								29																						
LA-105	1543	38+00.91	38+08.79	LT	WHITE												1																		
SL-101	1543	38+27.35	38+27.38	LT	WHITE					12																									
IW-101	1543	38+27.39	38+31.99	LT	WHITE										30																				
SL-102	1543	38+27.40	38+27.50	LT/RT	WHITE					42																									
DS-101	1543	38+27.40	38+37.15	LT	WHITE															10															
XW-101	1543	38+37.01	38+37.77	LT/RT	WHITE						94																								
XW-102	1543	38+46.72	38+48.11	LT/RT	WHITE						100																								
DS-102	1543	38+46.97	39+43.80	LT	WHITE															98															
DS-103	1543	38+47.55	39+52.85	RT	WHITE															105															
DS-104	1543	38+47.71	39+55.13	RT	WHITE															106															
EW-102	1543	38+47.92	38+73.61	RT	WHITE	0.01																													
TW-102	1543	38+48.11	38+73.49	RT	WHITE								29																						
XW-103	1543	39+40.43	39+58.50	LT/RT	WHITE						90																								
XW-104	1543	39+50.53	39+68.07	LT/RT	WHITE						85																								
DS-105	1543	39+58.41	39+68.57	LT	WHITE															10															
SL-103	1543	39+60.44	39+70.89	LT/CL	WHITE					50																									
CH-104	1543	39+66.09	40+97.53	LT	WHITE				131																										
CH-105	1543	39+68.48	40+97.08	LT	WHITE				129																										
LA-106	1543	39+80.00	39+89.41	LT	WHITE												1																		
LA-107	1543	39+81.00	39+89.41	LT	WHITE												1																		
LA-108	1543	40+31.00	40+38.31	LT	WHITE												1																		
LA-109	1543	40+31.00	40+38.61	LT	WHITE												1																		
LA-110	1543	40+81.00	40+89.00	LT	WHITE												1																		
LA-111	1543	40+81.00	40+89.00	LT	WHITE												1																		
SL-104	1543	40+95.23	40+96.63	RT/CL	WHITE					34																									
XW-105	1543	41+05.24	41+08.43	LT/RT	WHITE						78																								
XW-106	1543	41+15.25	41+18.51	LT/RT	WHITE						79																								
TOTALS CARRIED TO SHEET 1468						0.03	1.04	0.43	576	138	526	-	58	55	30	2960	11	-	-	329	138	-	-	-	-	-	-	-	-	-	-	-	-	-	-

Preliminary Plans - Not For Reference Only

CUY-90-16.28 (CCG3A)

MODEL: Sheet-01 PAPERSIZE: 34x22 (in.) DATE: 3/27/2025 TIME: 7:02:23 PM USER: Maia.Gallagher
pw:\\mb-us-pw.bentley.com:mb-us-pw-03\Documents\Cleveland_OH101_Projects\ODOT\District12\82382400-Engineering\Traffic\Sheets\82382_TS501.dgn

DESIGN AGENCY
Michael Baker INTERNATIONAL

DESIGNER RBK

REVIEWER GSH 05/22/24

PROJECT ID 82382

SHEET 1456 TOTAL 2696

LOCAL STREET PAVEMENT MARKING SUBSUMMARY - 2

REF NO.	SHEET NO.	STATION FROM	STATION TO	SIDE	COLOR	644 EDGE LINE, 4" MILE	644 LANE LINE, 4" MILE	644 CENTER LINE MILE	644 CHANNELIZING LINE, 8" FT	644 STOP LINE FT	644 CROSSWALK LINE, 12" FT	644 CROSSWALK LINE, 12", AS PER PLAN FT	644 TRANSVERSE/DIAGONAL LINE FT	644 CHEVRON MARKING FT	644 ISLAND MARKING SF	644 PARKING LOT STALL MARKING FT	644 LANE ARROW EACH	644 LANE REDUCTION ARROW EACH	644 TWO WAY LEFT TURN ARROW EACH	644 DOTTED LINE, 4" FT	644 DOTTED LINE, 8" FT	644 BIKE LANE SYMBOL MARKING EACH	644 SHARED LANE MARKING EACH	644 PAVEMENT MARKING, MISC.: BIKE LANE CROSSWALK FT	644 GREEN COLORED PAVEMENT FOR BIKE LANES SF	646 EDGE LINE, 4" MILE	646 LANE LINE, 4" MILE	646 CENTER LINE MILE	646 CHANNELIZING LINE, 8" FT	646 STOP LINE FT	646 CROSSWALK LINE, 12" FT	646 TRANSVERSE/DIAGONAL LINE FT	646 LANE ARROW EACH	646 BIKE LANE SYMBOL MARKING EACH	646 SHARED LANE MARKING EACH	646 GREEN COLORED PAVEMENT FOR BIKE LANES SF
		CARNEGIE AVE. (CONT.)																																	
CD-101	1543	41+16.64	41+96.88	RT	YELLOW			0.02																											
DS-106	1543	41+17.08	41+98.36	LT	WHITE															81															
DS-107	1543	41+17.53	41+99.84	LT	WHITE															82															
XW-107	1543	41+92.25	42+03.83	RT/LT	WHITE						80																								
XW-108	1543	42+02.36	42+13.14	RT/LT	WHITE						74																								
SL-105	1543	42+20.00	42+20.00	LT/RT	WHITE					41																									
LL-104	1543	42+20.00	43+63.45	LT/RT	WHITE		0.03																												
DW-102	1543	42+20.00	44+88.45	LT/RT	WHITE																269														
LA-112	1543	42+30.00	42+36.51	LT	WHITE												1																		
LA-113	1543	42+30.00	42+36.52	LT	WHITE												1																		
LA-114	1543	42+30.00	42+36.81	LT	WHITE												1																		
LA-115	1543	42+30.00	42+39.75	LT	WHITE												1																		
		E. 14TH ST.																																	
LA-116	1543	59+97.25	60+10.00	RT	WHITE												1																		
LA-117	1543	60+00.50	60+10.00	RT	WHITE												1																		
LA-118	1543	60+01.99	60+10.00	LT	WHITE												1																		
IY-101	1543	60+05.00	60+30.00	LT	YELLOW										77																				
SL-106	1543	60+20.35	60+22.65	RT/LT	WHITE					37																									
XW-109	1543	60+30.37	60+35.46	RT/LT	WHITE						91																								
XW-110	1543	60+40.25	60+45.89	RT/LT	WHITE						82																								
DS-108	1543	60+43.52	60+99.34	LT/RT	WHITE															89															
DS-109	1543	60+43.64	61+53.98	LT	WHITE															110															
XW-111	1543	61+49.00	61+55.63	RT/LT	WHITE						68																								
XW-112	1543	61+59.21	61+65.07	RT/LT	WHITE						60																								
SL-107	1543	61+75.00	61+75.00	LT	WHITE					31																									
CH-106	1543	61+75.00	62+85.00	LT	WHITE				1																										
CH-107	1543	61+75.00	62+85.00	LT	WHITE				1																										
CL-102	1543	61+75.00	62+85.00	LT	YELLOW			0.02																											
LL-105	1543	61+75.00	62+85.00	RT	WHITE		0.02																												
LA-119	1543	61+95.00	62+03.00	LT	WHITE												1																		
LA-120	1543	61+95.00	62+04.50	LT	WHITE												1																		
LA-121	1543	61+95.00	62+07.75	LT	WHITE												1																		
LA-122	1543	62+35.00	62+43.00	LT	WHITE												1																		
LA-123	1543	62+35.00	62+44.50	LT	WHITE												1																		
LA-124	1543	62+35.00	62+47.75	LT	WHITE												1																		
LA-125	1543	62+75.00	62+83.00	LT	WHITE												1																		
LA-126	1543	62+75.00	62+84.50	LT	WHITE												1																		
LA-127	1543	62+75.00	62+87.75	LT	WHITE												1																		
		E. 18TH ST.																																	
LA-128	1543	23+97.26	24+10.00	RT	WHITE												1																		
LA-129	1543	24+00.50	24+10.00	RT	WHITE												1																		
LA-130	1543	24+02.00	24+10.00	RT	WHITE												1																		
SL-108	1543	24+22.82	24+32.57	CL/RT	WHITE					34																									
XW-113	1543	24+33.25	24+43.25	CL/RT	WHITE						35																								
XW-114	1543	24+42.28	24+54.43	LT/RT	WHITE						44																								
DS-110	1543	24+46.82	25+47.49	RT	WHITE															103															
XW-115	1543	25+36.97	25+55.57	LT/RT	WHITE						61																								
TOTALS CARRIED TO SHEET 1468						-	0.05	0.04	2	143	595	-	-	-	77	-	19	-	-	465	269	-	-	-	-	-	-	-	-	-	-	-	-	-	-

Preliminary Plans - Not For Reference Only

CUY-90-16.28 (CCG3A)

MODEL: Sheet-02 PAPERSIZE: 34x22 (in.) DATE: 3/27/2025 TIME: 7:02:24 PM USER: Maia.Gallagher
pw:\\mb-us-pw.bentley.com:mb-us-pw-03\Documents\Cleveland_Oh\01_Projects\ODOT\District12\82382\400-Engineering\Traffic\Sheets\82382_TS601.dgn

DESIGN AGENCY
Michael Baker INTERNATIONAL

DESIGNER RBK
REVIEWER GSH 05/22/24
PROJECT ID 82382
SHEET 1457 TOTAL 2696

REF NO.	SHEET NO.	STATION FROM	STATION TO	SIDE	COLOR	644 EDGE LINE, 4" MILE	644 LANE LINE, 4" MILE	644 CENTER LINE MILE	644 CHANNELIZING LINE, 8" FT	644 STOP LINE FT	644 CROSSWALK LINE, 12" FT	644 CROSSWALK LINE, 12", AS PER PLAN FT	644 TRANSVERSE/DIAGONAL LINE FT	644 CHEVRON MARKING FT	644 ISLAND MARKING SF	644 PARKING LOT STALL MARKING FT	644 LANE ARROW EACH	644 LANE REDUCTION ARROW EACH	644 TWO WAY LEFT TURN ARROW EACH	644 DOTTED LINE, 4" FT	644 DOTTED LINE, 8" FT	644 BIKE LANE SYMBOL MARKING EACH	644 SHARED LANE MARKING EACH	644 PAVEMENT MARKING, MISC.: BIKE LANE CROSSWALK FT	644 GREEN COLORED PAVEMENT FOR BIKE LANES SF	646 EDGE LINE, 4" MILE	646 LANE LINE, 4" MILE	646 CENTER LINE MILE	646 CHANNELIZING LINE, 8" FT	646 STOP LINE FT	646 CROSSWALK LINE, 12" FT	646 TRANSVERSE/DIAGONAL LINE FT	646 LANE ARROW EACH	646 BIKE LANE SYMBOL MARKING EACH	646 SHARED LANE MARKING EACH	646 GREEN COLORED PAVEMENT FOR BIKE LANES SF
		E. 18TH ST. (CONT.)																																	
XW-116	1543	25+51.83	25+64.21	LT/RT	WHITE						53																								
SL-109	1543	25+55.91	25+64.82	LT/CL	WHITE					25																									
CH-108	1543	25+60.72	26+30.00	LT/RT	WHITE				67																										
CL-103	1543	25+64.82	26+30.00	CL	YELLOW			0.01																											
LA-131	1543	25+82.07	25+90.02	LT	WHITE												1																		
LA-132	1543	25+82.07	25+90.10	LT	WHITE												1																		
		CARNEGIE AVE.																																	
LA-133	1544	43+04.19	43+13.67	RT	WHITE												1																		
LA-134	1544	43+04.79	43+14.30	LT	WHITE												1																		
CL-104	1544	43+59.65	44+82.46	RT	YELLOW			0.02																											
LA-135	1544	43+61.25	43+70.73	LT	WHITE												1																		
TY-101	1544	43+72.83	44+80.77	RT	YELLOW								88																						
EW-103	1544	44+08.10	44+89.77	LT	WHITE	0.02																													
EW-104	1544	44+12.06	44+90.01	LT	WHITE	0.01																													
TW-103	1544	44+18.78	44+72.71	LT	WHITE								17																						
SL-110	1544	44+80.21	44+81.97	RT	WHITE					32																									
IY-102	1544	44+82.23	44+87.00	RT	YELLOW										36																				
XW-117	1544	44+85.20	44+90.64	RT/LT	WHITE						91																								
XW-118	1544	44+96.03	45+02.55	RT/LT	WHITE						93																								
DS-111	1544	44+97.27	45+96.40	RT	WHITE															99															
DS-112	1544	44+97.97	45+96.10	RT	WHITE															98															
CD-102	1544	44+98.67	45+95.54	RT	YELLOW			0.02																											
DS-113	1544	44+99.98	45+94.71	RT	WHITE															94															
DS-114	1544	45+00.69	45+94.30	LT	WHITE															93															
EW-105	1544	45+01.53	47+93.66	LT	WHITE	0.06																													
EW-106	1544	45+01.81	47+88.30	LT	WHITE	0.05																													
TW-104	1544	45+03.20	47+82.97	LT	WHITE								69																						
SL-111	1544	45+93.80	45+95.56	LT/RT	WHITE					43																									
LL-106	1544	45+94.71	58+74.76	RT/LT	WHITE		0.24																												
CH-109	1544	45+95.13	48+17.63	RT	WHITE				223																										
DW-103	1544	45+96.40	49+02.74	RT	WHITE																306														
LA-136	1544	46+05.36	46+13.35	RT	WHITE												1																		
LA-137	1544	46+71.33	46+79.23	RT	WHITE												1																		
		E. 19TH ST.																																	
CH-110	1544	4+18.87	4+70.55	RT	WHITE				52																										
LA-138	1544	4+20.85	4+28.85	RT	WHITE												1																		
LA-139	1544	4+20.89	4+28.89	RT	WHITE												1																		
LA-140	1544	4+50.84	4+58.50	RT	WHITE												1																		
LA-141	1544	4+50.86	4+58.86	RT	WHITE												1																		
SL-112	1544	4+67.12	4+73.92	LT/RT	WHITE					27																									
XW-119	1544	4+71.43	4+84.26	LT/RT	WHITE						50																								
XW-120	1544	4+81.99	4+96.64	LT/RT	WHITE						59																								
		CARNEGIE AVE.																																	
LA-142	1545	47+37.31	47+45.21	RT	WHITE												1																		
LA-143	1545	48+03.28	48+11.18	RT	WHITE												1																		
CL-105	1545	48+27.93	49+09.01	RT	YELLOW			0.02																											
TOTALS CARRIED TO SHEET 1468						0.14	0.24	0.07	342	127	346	-	174	-	36	-	13	-	-	384	306	-	-	-	-	-	-	-	-	-	-	-	-	-	-

Preliminary Plans - For Reference Only

LOCAL STREET PAVEMENT MARKING SUBSUMMARY - 3

DESIGN AGENCY
Michael Baker INTERNATIONAL

DESIGNER
RBK

REVIEWER
GSH 05/22/24

PROJECT ID
82382

SHEET 1458 TOTAL 2696

CUY-90-16.28 (CCG3A)

MODEL: Sheet-03 PAPERSIZE: 34x22 (in.) DATE: 3/27/2025 TIME: 7:02:25 PM USER: Mala.Gallagher
pw:\\mb-us-pw.bentley.com:mb-us-pw-03\Documents\Cleveland_OH\01_Projects\ODOT\District12\82382\400-Engineering\Traffic\Sheets\82382_TS501.dgn

LOCAL STREET PAVEMENT MARKING SUBSUMMARY - 4

REF NO.	SHEET NO.	STATION FROM	STATION TO	SIDE	COLOR	644 EDGE LINE, 4"	644 LANE LINE, 4"	644 CENTER LINE	644 CHANNELIZING LINE, 8"	644 STOP LINE	644 CROSSWALK LINE, 12"	644 CROSSWALK LINE, 12", AS PER PLAN	644 TRANSVERSE/DIAGONAL LINE	644 CHEVRON MARKING	644 ISLAND MARKING	644 PARKING LOT STALL MARKING	644 LANE ARROW	644 LANE REDUCTION ARROW	644 TWO WAY LEFT TURN ARROW	644 DOTTED LINE, 4"	644 DOTTED LINE, 8"	644 BIKE LANE SYMBOL MARKING	644 SHARED LANE MARKING	644 PAVEMENT MARKING, MISC.: BIKE LANE CROSSWALK	644 GREEN COLORED PAVEMENT FOR BIKE LANES	646 EDGE LINE, 4"	646 LANE LINE, 4"	646 CENTER LINE	646 CHANNELIZING LINE, 8"	646 STOP LINE	646 CROSSWALK LINE, 12"	646 TRANSVERSE/DIAGONAL LINE	646 LANE ARROW	646 BIKE LANE SYMBOL MARKING	646 SHARED LANE MARKING	646 GREEN COLORED PAVEMENT FOR BIKE LANES
						MILE	MILE	MILE	FT	FT	FT	FT	FT	FT	SF	FT	EACH	EACH	EACH	FT	FT	EACH	EACH	FT	SF	MILE	MILE	MILE	FT	FT	FT	FT	EACH	EACH	EACH	SF
		CARNEGIE AVE. (CONT.)																																	
TY-102	1545	48+43.87	49+09.02	RT	YELLOW								45																						
SL-113	1545	48+99.57	49+09.15	RT	WHITE					32																									
IY-103	1545	49+09.02	49+14.54	RT	YELLOW										48																				
XW-121	1545	49+10.21	49+32.15	RT/LT	WHITE						78																								
XW-122	1545	49+20.12	49+43.77	RT/LT	WHITE						86																								
DS-115	1545	49+24.38	50+13.30	RT	WHITE															88															
DS-116	1545	49+27.36	50+14.23	RT	WHITE															86															
CD-103	1545	49+30.22	50+15.12	RT	YELLOW			0.02																											
DS-117	1545	49+36.04	50+16.93	LT	WHITE															81															
XW-123	1545	49+37.50	49+90.03	RT	WHITE						51																								
DS-118	1545	49+38.98	50+17.90	LT	WHITE															79															
XW-124	1545	49+44.83	49+87.45	RT	WHITE						41																								
XW-125	1545	50+12.08	50+20.38	RT/LT	WHITE						93																								
XW-126	1545	50+22.32	50+30.00	RT/LT	WHITE						90																								
IY-104	1545	50+30.32	50+36.05	RT	YELLOW										44																				
CH-111	1545	50+33.24	52+50.68	RT	WHITE				216																										
TY-103	1545	50+36.03	50+88.52	RT	YELLOW								26																						
CL-106	1545	50+36.09	50+99.89	RT	YELLOW			0.01																											
SL-114	1545	50+36.10	50+39.00	RT/LT	WHITE					47																									
EW-107	1545	50+38.98	52+78.98	LT	WHITE	0.05																													
TW-105	1545	50+39.09	50+69.74	LT	WHITE								46																						
LA-144	1545	50+49.84	50+62.56	LT	WHITE												1																		
EW-108	1545	50+69.73	50+69.76	LT	WHITE	0.01																													
LA-145	1545	50+74.87	50+80.00	RT	WHITE												1																		
LA-146	1545	50+99.85	51+12.54	LT	WHITE												1																		
CH-112	1545	51+10.03	52+56.75	RT	WHITE				150																										
LA-147	1545	51+21.87	51+30.00	RT	WHITE												1																		
LA-148	1545	51+21.87	51+30.00	RT	WHITE												1																		
EW-109	1545	51+50.00	51+50.00	LT	WHITE	0.01																													
LA-149	1545	51+50.28	51+62.96	LT	WHITE												1																		
LA-150	1545	51+72.00	51+80.00	RT	WHITE												1																		
LA-151	1545	51+72.00	51+80.00	RT	WHITE												1																		
		E. 21ST ST.																																	
XW-127	1545	100+34.06	100+61.16	LT/RT	WHITE						69																								
XW-128	1545	100+47.83	100+70.26	LT/RT	WHITE						56																								
SL-115	1545	100+60.10	100+80.21	LT/RT	WHITE					50																									
TW-106	1545	100+62.22	101+10.02	LT	WHITE								53																						
EW-110	1545	100+64.22	101+16.06	LT	WHITE	0.01																													
CH-113	1545	100+69.58	101+48.88	RT	WHITE				80																										
CH-114	1545	100+74.50	101+48.88	RT	WHITE				75																										
LA-152	1545	100+88.00	100+96.00	LT	WHITE												1																		
LA-153	1545	100+88.00	100+96.00	RT	WHITE												1																		
LA-154	1545	100+88.00	100+97.50	RT	WHITE												1																		
LA-155	1545	101+44.00	101+52.00	LT	WHITE												1																		
LA-156	1545	101+44.00	101+52.00	RT	WHITE												1																		
LA-157	1545	101+44.00	101+53.50	RT	WHITE												1																		
LA-158	1545	101+89.00	101+97.00	LT	WHITE												1																		
TOTALS CARRIED TO SHEET 1468						0.08	-	0.03	521	129	564	-	170	-	92	-	15	-	-	334	-	-	-	-	-	-	-	-	-	-	-	-	-	-	-

Preliminary Plans - Not For Reference Only

CUY-90-16.28 (CCG3A)

MODEL: Sheet-04 PAPERSIZE: 34x22 (in.) DATE: 3/27/2025 TIME: 7:02:27 PM USER: Maia.Gallagher
pw:\\mb-us-pw.bentley.com:mb-us-pw-03\Documents\Cleveland_Oh\01_Projects\ODOT\District12\82382\400-Engineering\Traffic\Sheets\82382_TS501.dgn

DESIGN AGENCY
Michael Baker INTERNATIONAL

DESIGNER RBK

REVIEWER GSH 05/22/24

PROJECT ID 82382

SHEET 1459 | TOTAL 2696

LOCAL STREET PAVEMENT MARKING SUBSUMMARY - 5

REF NO.	SHEET NO.	STATION FROM	STATION TO	SIDE	COLOR	644 EDGE LINE, 4" MILE	644 LANE LINE, 4" MILE	644 CENTER LINE MILE	644 CHANNELIZING LINE, 8" FT	644 STOP LINE FT	644 CROSSWALK LINE, 12" FT	644 CROSSWALK LINE, 12", AS PER PLAN FT	644 TRANSVERSE/DIAGONAL LINE FT	644 CHEVRON MARKING	644 ISLAND MARKING SF	644 PARKING LOT STALL MARKING FT	644 LANE ARROW EACH	644 LANE REDUCTION ARROW EACH	644 TWO WAY LEFT TURN ARROW EACH	644 DOTTED LINE, 4" FT	644 DOTTED LINE, 8" FT	644 BIKE LANE SYMBOL MARKING EACH	644 SHARED LANE MARKING EACH	644 PAVEMENT MARKING, MISC.: BIKE LANE CROSSWALK FT	644 GREEN COLORED PAVEMENT FOR BIKE LANES SF	646 EDGE LINE, 4" MILE	646 LANE LINE, 4" MILE	646 CENTER LINE MILE	646 CHANNELIZING LINE, 8" FT	646 STOP LINE FT	646 CROSSWALK LINE, 12" FT	646 TRANSVERSE/DIAGONAL LINE FT	646 LANE ARROW EACH	646 BIKE LANE SYMBOL MARKING EACH	646 SHARED LANE MARKING EACH	646 GREEN COLORED PAVEMENT FOR BIKE LANES SF
		E. 21ST ST. (CONT.)																																	
LA-159	1545	101+89.00	101+97.00	RT	WHITE												1																		
LA-160	1545	101+89.00	101+98.50	RT	WHITE												1																		
LA-161	1545	102+54.00	102+62.00	LT	WHITE												1																		
LA-162	1545	102+54.00	102+62.00	RT	WHITE												1																		
LA-163	1545	102+54.00	102+63.50	RT	WHITE												1																		
		CARNEGIE AVE.																																	
LA-164	1546	52+00.00	52+12.55	LT	WHITE												1																		
LA-165	1546	52+21.87	52+30.00	RT	WHITE												1																		
LA-166	1546	52+21.87	52+30.00	RT	WHITE												1																		
SL-116	1546	52+47.83	52+64.71	RT/CL	WHITE					48																									
XW-129	1546	52+58.49	52+92.55	RT/LT	WHITE						96																								
EW-111	1546	52+60.00	52+60.00	LT	WHITE	0.01																													
TW-107	1546	52+60.00	52+79.56	LT	WHITE								38																						
DS-119	1546	52+68.69	52+79.27	LT	WHITE															11															
XW-130	1546	52+69.54	53+04.00	RT/LT	WHITE						99																								
DS-120	1546	52+72.71	52+83.23	LT	WHITE															11															
DS-121	1546	52+80.24	53+83.72	RT	WHITE															102															
DS-122	1546	52+91.82	53+31.55	LT/RT	WHITE															93															
DS-123	1546	52+91.82	53+85.20	LT	WHITE															94															
XB-101	1546	52+95.21	53+32.82	RT/LT	GREEN																			28											
DS-124	1546	52+95.72	53+85.69	LT	WHITE															91															
EW-112	1546	53+00.77	53+25.30	LT	WHITE	0.01																													
TW-108	1546	53+04.84	53+13.75	LT	WHITE								13																						
XW-131	1546	53+24.48	53+70.49	LT	WHITE						47																								
XW-132	1546	53+29.06	53+67.90	LT	WHITE						40																								
GM-101	1546	53+30.05	53+32.40	LT	GREEN																				236										
SL-117	1546	53+30.05	53+39.21	LT	WHITE					10																									
BL-101	1546	53+34.61	53+35.69	LT	WHITE																	1													
CL-107	1546	53+38.73	53+41.02	LT	YELLOW			0.01																											
DS-125	1546	53+43.58	53+47.43	RT/LT	WHITE															112															
LL-107	1546	53+48.79	53+51.13	LT	WHITE		0.01																												
EW-113	1546	53+57.97	53+61.25	LT	WHITE	0.01																													
EW-114	1546	53+57.97	53+63.82	LT	WHITE	0.01																													
GM-102	1546	53+58.30	53+65.89	LT	GREEN																				173										
BL-102	1546	53+62.18	53+62.54	LT	WHITE																	1													
TW-109	1546	53+66.44	53+67.85	LT	WHITE								22																						
XW-133	1546	53+84.07	53+87.44	RT/LT	WHITE						76																								
XW-134	1546	53+94.33	53+97.20	RT/LT	WHITE						71																								
DS-126	1546	53+94.83	54+29.61	RT	WHITE															33															
SL-118	1546	54+05.74	54+07.04	CL/LT	WHITE					36																									
CH-115	1546	54+05.74	58+50.01	CL	WHITE				442																										
SL-119	1546	54+29.58	54+29.98	RT/CL	WHITE					12																									
LA-167	1546	54+49.86	54+57.84	RT	WHITE												1																		
LA-168	1546	55+10.00	55+18.00	RT	WHITE												1																		
LA-169	1546	55+70.00	55+78.00	RT	WHITE												1																		
LA-170	1546	56+30.00	56+38.00	RT	WHITE												1																		
LA-171	1546	56+90.00	56+98.00	RT	WHITE												1																		
TOTALS CARRIED TO SHEET 1468						0.04	0.01	0.01	442	106	429	-	73	-	-	-	13	-	-	547	-	2	-	28	409	-	-	-	-	-	-	-	-	-	-	-

Preliminary Plans - Not For Reference Only

CUY-90-16.28 (CCG3A)

MODEL: Sheet-05 PAPERSIZE: 34x22 (in.) DATE: 3/27/2025 TIME: 7:02:28 PM USER: Maia.Gallagher
pw:\\mb-us-pw.bentley.com:mb-us-pw-03\Documents\Cleveland_Oh\01_Projects\ODOT\District12\82382\400-Engineering\Traffic\Sheets\82382_TS501.dgn

DESIGN AGENCY
Michael Baker INTERNATIONAL

DESIGNER RBK
REVIEWER GSH 05/22/24
PROJECT ID 82382
SHEET 1460 TOTAL 2696

LOCAL STREET PAVEMENT MARKING SUBSUMMARY - 6

REF NO.	SHEET NO.	STATION FROM	STATION TO	SIDE	COLOR	644 EDGE LINE, 4" MILE	644 LANE LINE, 4" MILE	644 CENTER LINE MILE	644 CHANNELIZING LINE, 8" FT	644 STOP LINE FT	644 CROSSWALK LINE, 12" FT	644 CROSSWALK LINE, 12", AS PER PLAN FT	644 TRANSVERSE/DIAGONAL LINE FT	644 CHEVRON MARKING FT	644 ISLAND MARKING SF	644 PARKING LOT STALL MARKING FT	644 LANE ARROW EACH	644 LANE REDUCTION ARROW EACH	644 TWO WAY LEFT TURN ARROW EACH	644 DOTTED LINE, 4" FT	644 DOTTED LINE, 8" FT	644 BIKE LANE SYMBOL MARKING EACH	644 SHARED LANE MARKING EACH	644 PAVEMENT MARKING, MISC.: BIKE LANE CROSSWALK FT	644 GREEN COLORED PAVEMENT FOR BIKE LANES SF	646 EDGE LINE, 4" MILE	646 LANE LINE, 4" MILE	646 CENTER LINE MILE	646 CHANNELIZING LINE, 8" FT	646 STOP LINE FT	646 CROSSWALK LINE, 12" FT	646 TRANSVERSE/DIAGONAL LINE FT	646 LANE ARROW EACH	646 BIKE LANE SYMBOL MARKING EACH	646 SHARED LANE MARKING EACH	646 GREEN COLORED PAVEMENT FOR BIKE LANES SF
		E. 22ND ST.																																	
LL-108	1546	36+02.57	36+63.50	RT	WHITE		0.01																												
GM-103	1546	36+12.29	36+70.90	LT	GREEN																														357
BL-103	1546	36+17.15	36+31.25	LT	WHITE																												1		
SB-101	1546	36+37.49	36+50.00	RT	WHITE																		1												
LA-172	1546	36+42.00	36+50.00	RT	WHITE												1																		
SL-120	1546	36+63.04	36+63.79	LT/RT	WHITE					34																									
XW-135	1546	36+73.00	36+73.40	RT/LT	WHITE						64																								
XW-136	1546	36+84.15	36+85.88	LT/RT	WHITE						78																								
		CARNEGIE AVE.																																	
LA-173	1547	57+50.00	57+58.00	RT	WHITE												1																		
LA-174	1547	58+10.00	58+18.00	RT	WHITE												1																		
LL-109	1547	58+19.20	63+63.35	RT	WHITE																					0.10									
CL-108	1547	58+37.33	63+77.95	RT	YELLOW																						0.10								
CL-109	1547	58+60.00	63+92.55	RT/CL	YELLOW																						0.10								
TY-104	1547	58+72.42	63+77.50	RT	YELLOW																										188				
LL-110	1547	58+74.76	64+07.15	LT	WHITE																					0.10									
LL-111	1547	58+93.81	64+21.74	LT	WHITE																					0.10									
LL-112	1548	63+63.35	69+25.00	RT	WHITE		0.10																												
CL-110	1548	63+77.95	68+15.00	RT	YELLOW			0.08																											
TY-105	1548	63+91.50	64+38.03	RT	YELLOW								57																						
CL-111	1548	63+92.55	64+39.01	CL	YELLOW			0.01																											
LL-113	1548	64+07.15	64+39.00	LT	WHITE		0.01																												
LL-114	1548	64+21.74	69+25.00	LT	WHITE		0.09																												
SL-121	1548	64+39.00	64+39.00	RT	WHITE					22																									
IY-105	1548	64+39.00	64+45.00	RT	YELLOW										57																				
DS-127	1548	64+39.00	65+72.53	LT	WHITE															131															
DS-128	1548	64+39.00	65+72.54	LT	WHITE															131															
DS-129	1548	64+39.00	65+72.57	RT	WHITE															134															
XW-137	1548	65+72.52	65+72.58	LT/RT	WHITE						68																								
XW-138	1548	65+82.52	65+82.58	LT/RT	WHITE						66																								
IW-102	1548	65+85.64	65+92.54	LT	WHITE										52																				
SL-122	1548	65+92.52	65+92.54	LT	WHITE					23																									
CH-116	1548	65+92.54	68+15.00	LT/CL	WHITE				223																										
SL-123	1548	65+92.55	65+92.56	LT/RT	WHITE					12																									
CH-117	1548	65+92.55	68+15.00	CL	WHITE				222																										
CV-102	1548	65+95.32	67+92.06	LT	WHITE									76																					
LA-175	1548	66+10.00	66+18.00	RT	WHITE												1																		
LA-176	1548	66+60.00	66+68.00	RT	WHITE												1																		
		MIDTOWN CONNECTOR																																	
LA-177	1548	513+00.00	513+08.00	RT	WHITE												1																		
LA-178	1548	513+00.00	513+08.00	RT	WHITE												1																		
LA-179	1548	513+60.00	513+68.00	RT	WHITE												1																		
LA-180	1548	513+60.00	513+68.00	RT	WHITE												1																		
SL-124	1548	513+74.37	513+74.39	RT/LT	WHITE					32																									
XW-139	1548	513+84.37	513+84.41	RT/LT	WHITE						56																								
XW-140	1548	513+94.36	513+94.42	RT/LT	WHITE						70																								
TOTALS CARRIED TO SHEET 1468						-	0.21	0.09	445	123	402	-	57	76	109	-	9	-	-	396	-	-	1	-	-	-	0.30	0.20	-	-	-	188	-	1	-	357

Preliminary Plans - Not For Reference Only

CUY-90-16.28 (CCG3A)

MODEL: Sheet-06 PAPERSIZE: 34x22 (in.) DATE: 3/27/2025 TIME: 7:02:29 PM USER: Maia.Gallagher
pw:\\mb-us-pw.bentley.com:mb-us-pw-03\Documents\Cleveland_Oh\01_Projects\ODOT\District12\82382\400-Engineering\Traffic\Sheets\82382_TS601.dgn

DESIGN AGENCY
Michael Baker INTERNATIONAL

DESIGNER RBK
REVIEWER GSH 05/22/24
PROJECT ID 82382
SHEET 1461 TOTAL 2696

LOCAL STREET PAVEMENT MARKING SUBSUMMARY - 7

REF NO.	SHEET NO.	STATION FROM	STATION TO	SIDE	COLOR	644 EDGE LINE, 4" MILE	644 LANE LINE, 4" MILE	644 CENTER LINE MILE	644 CHANNELIZING LINE, 8" FT	644 STOP LINE FT	644 CROSSWALK LINE, 12" FT	644 CROSSWALK LINE, 12", AS PER PLAN FT	644 TRANSVERSE/DIAGONAL LINE FT	644 CHEVRON MARKING FT	644 ISLAND MARKING SF	644 PARKING LOT STALL MARKING FT	644 LANE ARROW EACH	644 LANE REDUCTION ARROW EACH	644 TWO WAY LEFT TURN ARROW EACH	644 DOTTED LINE, 4" FT	644 DOTTED LINE, 8" FT	644 BIKE LANE SYMBOL MARKING EACH	644 SHARED LANE MARKING EACH	644 PAVEMENT MARKING, MISC.: BIKE LANE CROSSWALK FT	644 GREEN COLORED PAVEMENT FOR BIKE LANES SF	646 EDGE LINE, 4" MILE	646 LANE LINE, 4" MILE	646 CENTER LINE MILE	646 CHANNELIZING LINE, 8" FT	646 STOP LINE FT	646 CROSSWALK LINE, 12" FT	646 TRANSVERSE/DIAGONAL LINE FT	646 LANE ARROW EACH	646 BIKE LANE SYMBOL MARKING EACH	646 SHARED LANE MARKING EACH	646 GREEN COLORED PAVEMENT FOR BIKE LANES SF
		CARNEGIE AVE.																																	
LA-181	1549	67+20.00	67+28.00	RT	WHITE												1																		
LA-182	1549	67+80.00	67+88.00	RT	WHITE												1																		
CP-101	1549	68+69.96	68+70.00	CL	YELLOW			0.02																											
CP-102	1549	68+70.00	69+99.80	RT	YELLOW			0.02																											
LA-183	1549	69+32.00	69+40.00	RT	WHITE														1																
LA-184	1549	69+55.00	69+63.00	RT	WHITE														1																
		E. 28TH ST.																																	
SL-125	1549	13+03.18	13+03.18	LT/RT	WHITE					14																									
LA-185	1549	13+09.27	13+09.84	RT	WHITE												1																		
LA-186	1549	13+09.83	13+09.90	RT	WHITE												1																		
XW-141	1549	13+13.24	13+13.27	LT/RT	WHITE						28																								
XW-142	1549	13+23.24	13+23.28	LT/RT	WHITE						33																								
		E. 14TH ST. NB XOVER																																	
DL-101	1550	248+89.18	251+82.50	RT/CL	WHITE															293															
SL-126	1550	248+89.21	248+89.27	LT	WHITE					32																									
CH-118	1550	248+89.23	249+53.23	LT	WHITE				64																										
LL-115	1550	248+89.25	253+18.67	LT	WHITE		0.08																												
EW-115	1550	248+89.27	249+50.59	LT	WHITE	0.01																													
LA-187	1550	249+09.22	249+17.22	LT	WHITE												1																		
LA-188	1550	249+09.24	249+18.74	LT	WHITE												1																		
LA-189	1550	249+09.26	249+18.76	LT	WHITE												1																		
XW-143	1550	249+15.16	249+39.21	LT	WHITE						35																								
XW-144	1550	249+23.75	249+47.15	LT	WHITE						35																								
LR-101	1550	249+29.00	249+40.12	LT	WHITE													1																	
TW-110	1550	249+31.06	249+49.85	LT	WHITE															42															
SL-127	1550	249+41.97	249+52.94	LT	WHITE					17																									
CH-119	1550	249+41.97	250+52.26	LT	WHITE				124																										
CV-103	1550	249+49.26	249+87.65	LT	WHITE									61																					
CH-120	1550	249+50.59	252+48.38	LT	WHITE				291																										
LA-190	1550	249+59.93	249+66.26	LT	WHITE												1																		
LA-191	1550	249+69.24	249+78.74	LT	WHITE												1																		
LA-192	1550	249+69.26	249+78.76	LT	WHITE												1																		
LR-102	1550	250+09.59	250+28.47	LT	WHITE													1																	
LA-193	1550	250+29.23	250+38.73	LT	WHITE												1																		
LA-194	1550	250+29.25	250+38.75	LT	WHITE												1																		
LA-195	1550	250+29.28	250+36.71	LT	WHITE												1																		
LA-196	1550	250+89.23	250+98.73	LT	WHITE												1																		
LA-197	1550	250+89.25	250+98.75	LT	WHITE												1																		
LA-198	1550	250+89.28	250+96.71	LT	WHITE												1																		
LA-199	1550	251+49.28	251+56.72	LT	WHITE												1																		
LA-200	1550	252+12.79	252+21.77	LT	WHITE												1																		
		INTERIM E. 14TH ST. NB																																	
DW-104	1550	297+68.39	301+47.27	LT	WHITE																378														
LA-201	1551	298+00.00	298+08.00	LT	WHITE												1																		
CL-112	1551	298+30.36	298+75.44	RT	YELLOW			0.01																											
CL-113	1551	298+31.17	298+75.44	RT	YELLOW			0.01																											
TY-106	1551	298+34.53	298+58.52	RT	YELLOW								9																						
TOTALS CARRIED TO SHEET 1468						0.01	0.08	0.06	479	63	131	-	51	61	-	-	19	2	2	293	378	-	-	-	-	-	-	-	-	-	-	-	-	-	-

Preliminary Plans - Not For Reference Only

CUY-90-16.28 (CCG3A)

MODEL: Sheet-07 PAPERSIZE: 34x22 (in.) DATE: 3/27/2025 TIME: 7:02:31 PM USER: Maia.Gallagher
pw:\\mb-us-pw.bentley.com:mb-us-pw-03\Documents\Cleveland_Oh\01_Projects\ODOT\District12\82382\400-Engineering\Traffic\Sheets\82382_TS601.dgn

DESIGN AGENCY
Michael Baker INTERNATIONAL

DESIGNER RBK

REVIEWER GSH 05/22/24

PROJECT ID 82382

SHEET 1462 | TOTAL 2696

LOCAL STREET PAVEMENT MARKING SUBSUMMARY - 8

REF NO.	SHEET NO.	STATION FROM	STATION TO	SIDE	COLOR	644 EDGE LINE, 4" MILE	644 LANE LINE, 4" MILE	644 CENTER LINE MILE	644 CHANNELIZING LINE, 8" FT	644 STOP LINE FT	644 CROSSWALK LINE, 12" FT	644 CROSSWALK LINE, 12", AS PER PLAN FT	644 TRANSVERSE/DIAGONAL LINE FT	644 CHEVRON MARKING FT	644 ISLAND MARKING SF	644 PARKING LOT STALL MARKING FT	644 LANE ARROW EACH	644 LANE REDUCTION ARROW EACH	644 TWO WAY LEFT TURN ARROW EACH	644 DOTTED LINE, 4" FT	644 DOTTED LINE, 8" FT	644 BIKE LANE SYMBOL MARKING EACH	644 SHARED LANE MARKING EACH	644 PAVEMENT MARKING, MISC.: BIKE LANE CROSSWALK FT	644 GREEN COLORED PAVEMENT FOR BIKE LANES SF	646 EDGE LINE, 4" MILE	646 LANE LINE, 4" MILE	646 CENTER LINE MILE	646 CHANNELIZING LINE, 8" FT	646 STOP LINE FT	646 CROSSWALK LINE, 12" FT	646 TRANSVERSE/DIAGONAL LINE FT	646 LANE ARROW EACH	646 BIKE LANE SYMBOL MARKING EACH	646 SHARED LANE MARKING EACH	646 GREEN COLORED PAVEMENT FOR BIKE LANES SF
		INTERIM E. 14TH ST. NB (CONT)																																	
CL-114	1551	298+75.44	308+97.00	RT/CL	YELLOW			0.10																											
EY-101	1551	299+78.09	299+97.33	RT	YELLOW	0.01																													
EW-116	1551	299+80.80	307+07.57	RT	WHITE	0.14																													
CH-121	1551	299+96.53	301+80.33	RT	WHITE				184																										
CH-122	1551	299+97.33	301+80.06	RT	WHITE				184																										
CV-104	1551	300+00.35	301+25.74	RT	WHITE									51																					
CH-123	1551	301+47.27	301+83.08	LT	WHITE				36																										
CH-124	1551	301+47.27	301+99.03	LT	WHITE				52																										
LL-116	1551	301+80.06	305+48.79	RT	WHITE		0.07																												
CL-115	1551	302+68.21	303+97.00	CL/LT	YELLOW			0.02																											
		INTERIM E. 14TH ST. SB																																	
EW-117	1551	201+98.18	206+29.98	CL	WHITE	0.08																													
		INTERIM E. 14TH ST. NB																																	
TY-107	1552	303+16.84	303+93.06	LT	YELLOW								17																						
IY-106	1552	303+93.80	304+07.04	LT	YELLOW										62																				
		E. 14TH ST. NB																																	
DW-105	1552	52+50.00	55+50.00	RT	WHITE																317														
LL-117	1552	52+50.00	60+21.16	RT	WHITE		0.15																												
		INTERIM E. 14TH ST. SB																																	
TW-111	1552	203+05.26	206+10.76	CL/LT	WHITE								57																						
CH-125	1552	206+29.98	206+94.66	LT/CL	WHITE				67																										
CH-126	1552	206+29.98	206+94.66	CL	WHITE				65																										
EW-118	1552	206+35.68	210+73.13	LT	WHITE	0.08																													
TW-112	1552	207+60.72	210+70.00	LT	WHITE								87																						
CV-105	1552	210+10.80	211+19.92	RT	WHITE									74																					
		RAMP A3																																	
CH-127	1553	588+55.45	589+24.06	RT	WHITE				76																										
CH-128	1553	588+55.45	590+84.87	RT	WHITE				235																										
EW-119	1553	588+55.45	590+84.89	LT/RT	WHITE	0.05																													
TW-113	1553	588+64.59	590+84.91	LT	WHITE								160																						
		E. 14TH ST. NB																																	
CH-129	1553	55+79.44	60+21.91	CL	WHITE				442																										
LA-202	1553	55+82.00	55+90.00	LT	WHITE												1																		
LA-203	1553	56+42.00	56+50.00	LT	WHITE												1																		
LA-204	1553	57+02.00	57+10.00	LT	WHITE												1																		
CH-130	1553	57+18.48	57+75.36	RT	WHITE				56																										
LA-205	1553	57+62.00	57+70.00	LT	WHITE												1																		
LA-206	1553	58+22.00	58+30.00	LT	WHITE												1																		
LA-207	1553	58+82.00	58+90.00	LT	WHITE												1																		
CL-116	1553	59+24.34	60+05.00	LT	YELLOW			0.02																											
TY-108	1553	59+24.81	59+99.65	LT	YELLOW								47																						
LA-208	1553	59+42.00	59+50.00	LT	WHITE												1																		
		E. 14TH ST. SB																																	
CV-106	1553	37+76.98	38+48.83	LT	WHITE									110																					
CH-131	1553	37+77.17	38+48.83	LT	WHITE				72																										
TOTALS CARRIED TO SHEET 1468						0.36	0.22	0.14	1469	-	-	-	368	235	62	-	7	-	-	-	317	-	-	-	-	-	-	-	-	-	-	-	-	-	-

Preliminary Plans - Not For Reference Only

CUY-90-16.28 (CCG3A)

MODEL: Sheet-08 PAPERSIZE: 34x22 (in.) DATE: 3/27/2025 TIME: 7:02:32 PM USER: Maia.Gallagher
pw:\\mb-us-pw.bentley.com:mb-us-pw-03\Documents\Cleveland_Oh!01_Projects\ODOT\District12\82382\400-Engineering\Traffic\Sheets\82382_TS501.dgn

DESIGN AGENCY
Michael Baker INTERNATIONAL

DESIGNER RBK

REVIEWER GSH 05/22/24

PROJECT ID 82382

SHEET 1463 TOTAL 2696

LOCAL STREET PAVEMENT MARKING SUBSUMMARY - 9

REF NO.	SHEET NO.	STATION FROM	STATION TO	SIDE	COLOR	644 EDGE LINE, 4" MILE	644 LANE LINE, 4" MILE	644 CENTER LINE MILE	644 CHANNELIZING LINE, 8" FT	644 STOP LINE FT	644 CROSSWALK LINE, 12" FT	644 CROSSWALK LINE, 12", AS PER PLAN FT	644 TRANSVERSE/DIAGONAL LINE FT	644 CHEVRON MARKING FT	644 ISLAND MARKING SF	644 PARKING LOT STALL MARKING FT	644 LANE ARROW EACH	644 LANE REDUCTION ARROW EACH	644 TWO WAY LEFT TURN ARROW EACH	644 DOTTED LINE, 4" FT	644 DOTTED LINE, 8" FT	644 BIKE LANE SYMBOL MARKING EACH	644 SHARED LANE MARKING EACH	644 PAVEMENT MARKING, MISC.: BIKE LANE CROSSWALK FT	644 GREEN COLORED PAVEMENT FOR BIKE LANES SF	646 EDGE LINE, 4" MILE	646 LANE LINE, 4" MILE	646 CENTER LINE MILE	646 CHANNELIZING LINE, 8" FT	646 STOP LINE FT	646 CROSSWALK LINE, 12" FT	646 TRANSVERSE/DIAGONAL LINE FT	646 LANE ARROW EACH	646 BIKE LANE SYMBOL MARKING EACH	646 SHARED LANE MARKING EACH	646 GREEN COLORED PAVEMENT FOR BIKE LANES SF
		E. 14TH ST. SB (CONT.)																																	
CL-117	1553	39+05.20	39+85.51	LT	YELLOW			0.02																											
		E. 18TH ST.																																	
CH-132	1553	19+27.39	21+85.59	RT	WHITE				252																										
CH-133	1553	20+97.04	21+50.49	CL	WHITE				57																										
CV-107	1553	21+11.24	21+48.58	LT/CL	WHITE									46																					
LL-118	1553	21+85.59	24+26.07	RT	WHITE		0.05																												
LL-119	1553	22+60.00	23+27.00	RT	WHITE		0.01																												
CH-134	1553	23+56.68	24+29.32	RT	WHITE				73																										
LA-209	1553	23+59.00	23+67.00	RT	WHITE												1																		
		CENTRAL AVE. CONNECTOR																																	
XW-145	1553	600+35.47	600+37.98	LT/RT	WHITE						32																								
XW-146	1553	600+46.25	600+48.00	LT/RT	WHITE						23																								
TW-114	1553	600+49.33	600+79.75	LT	WHITE								27																						
SL-128	1553	600+52.46	600+54.02	LT/RT	WHITE					20																									
LA-210	1553	600+67.41	600+75.52	RT	WHITE												1																		
EW-120	1553	600+79.25	600+79.87	LT/CL	WHITE	0.01																													
		E. 22ND ST.																																	
CL-118	1554	21+70.83	22+25.00	RT	YELLOW			0.01																											
TY-109	1554	21+75.18	22+25.00	RT	YELLOW								76																						
CL-119	1554	21+86.15	22+25.00	LT	YELLOW			0.01																											
CP-103	1554	22+25.00	23+50.00	LT	YELLOW			0.02																											
CP-104	1554	22+25.00	23+50.00	RT	YELLOW			0.02																											
LA-211	1554	22+72.01	22+80.01	CL	WHITE												1																		
LA-212	1554	22+90.00	22+98.00	CL	WHITE												1																		
XW-147	1554	23+43.40	23+65.84	LT/RT	WHITE						78																								
SL-129	1554	23+50.00	23+50.00	LT/RT	WHITE					42																									
XW-148	1554	23+53.96	23+78.45	LT/RT	WHITE						88																								
XW-149	1554	23+58.99	24+52.17	LT	WHITE						93																								
XW-150	1554	23+68.55	24+43.75	LT	WHITE						75																								
SL-130	1554	23+74.12	24+17.85	LT	WHITE					44																									
IY-107	1554	24+23.34	24+23.41	LT	YELLOW										84																				
XW-151	1554	24+61.99	24+65.38	RT/LT	WHITE						76																								
XW-152	1554	24+72.76	24+76.34	RT/LT	WHITE						75																								
		COMMUNITY COLLEGE AVE.																																	
XW-153	1554	60+42.19	60+51.51	RT/LT	WHITE						67																								
XW-154	1554	60+51.50	60+60.24	RT/LT	WHITE						63																								
EW-121	1554	60+53.31	62+09.00	RT	WHITE	0.03																													
EW-122	1554	60+54.16	62+09.00	RT	WHITE	0.03																													
SL-131	1554	60+66.00	60+66.00	LT/RT	WHITE					39																									
TW-115	1554	60+66.00	60+95.89	LT	WHITE								46																						
TW-116	1554	60+66.00	61+05.00	RT	WHITE								31																						
CH-135	1554	60+66.00	61+36.00	LT	WHITE				72																										
CH-136	1554	60+66.00	61+36.00	LT	WHITE				72																										
CL-120	1554	60+66.00	61+37.94	RT	YELLOW			0.01																											
EW-123	1554	60+66.00	62+09.00	LT	WHITE	0.03																													
TOTALS CARRIED TO SHEET 1468						0.10	0.06	0.09	526	145	670	-	180	46	84	-	4	-	-	-	-	-	-	-	-	-	-	-	-	-	-	-	-	-	-

Preliminary Plans - Not For Reference Only

CUY-90-16.28 (CCG3A)

MODEL: Sheet-09 PAPERSIZE: 34x22 (in.) DATE: 3/27/2025 TIME: 7:02:33 PM USER: Maia.Gallagher
pw:\\mb-us-pw.bentley.com:mb-us-pw-03\Documents\Cleveland_Oh!01_Projects\ODOT\District12\82382\400-Engineering\Traffic\Sheets\82382_TS601.dgn

DESIGN AGENCY
Michael Baker INTERNATIONAL

DESIGNER RBK
REVIEWER GSH 05/22/24
PROJECT ID 82382
SHEET 1464 TOTAL 2696

LOCAL STREET PAVEMENT MARKING SUBSUMMARY - 10

REF NO.	SHEET NO.	STATION FROM	STATION TO	SIDE	COLOR	644 EDGE LINE, 4" MILE	644 LANE LINE, 4" MILE	644 CENTER LINE MILE	644 CHANNELIZING LINE, 8" FT	644 STOP LINE FT	644 CROSSWALK LINE, 12" FT	644 CROSSWALK LINE, 12", AS PER PLAN FT	644 TRANSVERSE/DIAGONAL LINE FT	644 CHEVRON MARKING	644 ISLAND MARKING SF	644 PARKING LOT STALL MARKING FT	644 LANE ARROW EACH	644 LANE REDUCTION ARROW EACH	644 TWO WAY LEFT TURN ARROW EACH	644 DOTTED LINE, 4" FT	644 DOTTED LINE, 8" FT	644 BIKE LANE SYMBOL MARKING EACH	644 SHARED LANE MARKING EACH	644 PAVEMENT MARKING, MISC.: BIKE LANE CROSSWALK FT	644 GREEN COLORED PAVEMENT FOR BIKE LANES SF	646 EDGE LINE, 4" MILE	646 LANE LINE, 4" MILE	646 CENTER LINE MILE	646 CHANNELIZING LINE, 8" FT	646 STOP LINE FT	646 CROSSWALK LINE, 12" FT	646 TRANSVERSE/DIAGONAL LINE FT	646 LANE ARROW EACH	646 BIKE LANE SYMBOL MARKING EACH	646 SHARED LANE MARKING EACH	646 GREEN COLORED PAVEMENT FOR BIKE LANES SF
	COMMUNITY COLLEGE AVE. (CONT.)																																		
LA-213	1554	60+76.00	60+84.00	LT	WHITE												1																		
LA-214	1554	60+76.00	60+84.00	RT/LT	WHITE												1																		
BL-104	1554	60+80.90	60+96.16	RT	WHITE																1														
EW-124	1554	60+96.00	60+96.00	LT	WHITE	0.01																													
TW-117	1554	60+96.00	62+09.00	LT	WHITE								28																						
EW-125	1554	60+96.00	62+09.00	LT	WHITE	0.02																													
EW-126	1554	61+05.12	61+05.12	RT	WHITE	0.01																													
LA-215	1554	61+26.00	61+34.33	LT	WHITE												1																		
LA-216	1554	61+26.00	61+34.33	RT/LT	WHITE												1																		
EW-127	1554	62+09.00	62+09.00	LT	WHITE	0.01																													
		CENTRAL AVE.																																	
XW-155	1555	100+43.06	100+43.25	RT/LT	WHITE						46																								
XW-156	1555	100+54.07	100+54.24	RT/LT	WHITE						40																								
SL-132	1555	100+65.12	100+65.23	RT/LT	WHITE					26																									
CL-121	1555	100+65.12	101+25.18	RT	YELLOW			0.01																											
CH-137	1555	100+65.18	101+25.18	LT	WHITE				60																										
LA-217	1555	100+75.16	100+83.16	LT	WHITE												1																		
LA-218	1555	100+75.21	100+83.22	LT	WHITE												1																		
LA-219	1555	101+15.15	101+23.15	LT	WHITE												1																		
LA-220	1555	101+15.15	101+23.17	LT	WHITE												1																		
		E. 22ND ST.																																	
EW-128	1555	27+20.00	28+15.27	RT	WHITE	0.02																													
SB-102	1555	28+02.75	28+15.27	RT	WHITE																		1												
DB-101	1555	28+15.27	29+65.00	RT	WHITE															150															
EW-129	1555	28+30.00	29+78.25	LT	WHITE	0.02																													
LL-120	1555	28+88.00	31+85.75	LT	WHITE		0.04																												
LL-121	1555	28+88.00	31+85.75	RT	WHITE		0.04																												
GM-104	1555	29+00.00	29+28.21	LT	GREEN																				163										
SB-103	1555	29+05.82	29+15.27	RT	WHITE																		1												
BL-105	1555	29+06.00	29+22.22	LT	WHITE																	1													
XA-101	1555	29+95.88	30+09.70	LT	WHITE							38																							
SL-133	1555	29+97.40	29+97.52	RT	WHITE					23																									
DS-130	1555	29+97.46	31+04.02	RT	WHITE															88															
XW-157	1555	30+00.00	30+11.83	LT/RT	WHITE						61																								
XW-158	1555	30+12.36	30+23.36	LT/RT	WHITE						65																								
DS-131	1555	30+15.56	30+80.03	LT	WHITE															67															
SL-134	1555	30+26.78	30+46.23	LT	WHITE					16																									
XB-102	1555	30+28.34	30+49.36	LT	WHITE																			5											
XW-159	1555	30+28.42	30+47.46	LT	WHITE						16																								
XW-160	1555	30+28.98	30+48.62	LT	WHITE						17																								
XA-102	1555	30+77.46	30+89.41	LT	WHITE							36																							
XW-161	1555	30+78.91	30+84.81	LT/RT	WHITE						68																								
XW-162	1555	30+90.70	30+97.37	LT/RT	WHITE						58																								
EW-130	1555	31+00.51	31+96.77	LT	WHITE	0.02																													
SL-135	1555	31+00.52	31+00.96	LT	WHITE					8																									
GM-105	1555	31+00.96	31+34.82	LT	GREEN																				231										
SL-136	1555	31+02.45	31+03.77	LT/RT	WHITE					33																									
TOTALS CARRIED TO SHEET 1468						0.11	0.08	0.01	60	106	371	74	28	-	-	-	8	-	-	305	-	2	2	5	394	-	-	-	-	-	-	-	-	-	-	-

Preliminary Plans - Not For Reference Only

CUY-90-16.28 (CCG3A)

MODEL: Sheet-10 PAPERSIZE: 34x22 (in.) DATE: 3/27/2025 TIME: 7:02:35 PM USER: Maia.Gallagher
pw:\\mb-us-pw.bentley.com:mb-us-pw-03\Documents\Cleveland_Oh\01_Projects\ODOT\District12\82382\400-Engineering\Traffic\Sheets\82382_TS501.dgn

DESIGN AGENCY
Michael Baker INTERNATIONAL

DESIGNER RBK

REVIEWER GSH 05/22/24

PROJECT ID 82382

SHEET 1465 TOTAL 2696

LOCAL STREET PAVEMENT MARKING SUBSUMMARY - 11

REF NO.	SHEET NO.	STATION FROM	STATION TO	SIDE	COLOR	644 EDGE LINE, 4"	644 LANE LINE, 4"	644 CENTER LINE	644 CHANNELIZING LINE, 8"	644 STOP LINE	644 CROSSWALK LINE, 12"	644 CROSSWALK LINE, 12", AS PER PLAN	644 TRANSVERSE/DIAGONAL LINE	644 CHEVRON MARKING	644 ISLAND MARKING	644 PARKING LOT STALL MARKING	644 LANE ARROW	644 LANE REDUCTION ARROW	644 TWO WAY LEFT TURN ARROW	644 DOTTED LINE, 4"	644 DOTTED LINE, 8"	644 BIKE LANE SYMBOL MARKING	644 SHARED LANE MARKING	644 PAVEMENT MARKING, MISC.: BIKE LANE CROSSWALK	644 GREEN COLORED PAVEMENT FOR BIKE LANES	646 EDGE LINE, 4"	646 LANE LINE, 4"	646 CENTER LINE	646 CHANNELIZING LINE, 8"	646 STOP LINE	646 CROSSWALK LINE, 12"	646 TRANSVERSE/DIAGONAL LINE	646 LANE ARROW	646 BIKE LANE SYMBOL MARKING	646 SHARED LANE MARKING	646 GREEN COLORED PAVEMENT FOR BIKE LANES
						MILE	MILE	MILE	FT	FT	FT	FT	FT	FT	SF	FT	EACH	EACH	EACH	FT	FT	EACH	EACH	FT	SF	MILE	MILE	MILE	FT	FT	FT	FT	EACH	EACH	EACH	SF
		E. 22ND ST. (CONT.)																																	
CH-138	1555	31+03.36	31+85.75	LT	WHITE				82																										
CL-122	1555	31+03.75	31+85.75	RT	YELLOW			0.02																											
BC-101	1555	31+07.41	31+83.44	RT	YELLOW																						0.02								
BL-106	1555	31+08.76	31+28.08	LT	WHITE																	1													
LA-221	1555	31+12.00	31+20.00	CL/LT	WHITE												1																		
SB-104	1555	31+38.07	31+50.00	RT	WHITE																		1												
GM-106	1555	31+60.45	31+91.05	LT	GREEN																				231										
LA-222	1555	31+62.00	31+70.00	CL/LT	WHITE												1																		
BL-107	1555	31+67.66	31+85.77	LT	WHITE																	1													
SL-137	1555	31+85.75	31+85.75	RT	WHITE					23																									
XW-163	1555	31+95.75	31+95.75	LT/RT	WHITE						60																								
XA-103	1555	31+96.76	32+06.76	LT	WHITE							36																							
EW-131	1555	32+90.22	36+50.10	LT	WHITE	0.02																													
XW-164	1556	32+07.75	32+07.75	LT/RT	WHITE						61																								
SL-138	1556	32+13.34	32+29.72	LT	WHITE					17																									
XW-165	1556	32+14.68	32+37.14	LT	WHITE						23																								
XW-166	1556	32+15.92	32+38.34	LT	WHITE						23																								
XB-103	1556	32+20.13	32+38.67	LT	WHITE																			5											
XA-104	1556	32+60.44	32+73.27	LT	WHITE							47																							
XW-167	1556	32+62.15	32+75.32	LT/RT	WHITE						62																								
XW-168	1556	32+73.43	32+85.46	LT/RT	WHITE																									56					
SL-139	1556	32+84.68	32+91.78	LT	WHITE																								33						
LL-122	1556	32+87.08	35+94.70	LT	WHITE																						0.06								
CH-139	1556	32+89.48	34+50.00	LT	WHITE																								151						
SL-140	1556	32+90.22	32+91.05	LT	WHITE					6																									
GM-107	1556	32+90.22	33+20.49	LT	GREEN																														173
EW-132	1556	32+90.22	36+57.93	LT	WHITE																					0.07									
EW-133	1556	32+91.05	36+70.90	LT	WHITE																					0.07									
CL-123	1556	32+91.67	35+97.66	RT/LT	YELLOW																							0.06							
BC-102	1556	32+94.00	36+65.00	RT	YELLOW																							0.07							
LL-123	1556	32+94.07	36+02.57	RT	WHITE																						0.06								
BL-108	1556	32+96.22	33+20.48	LT	WHITE																											1			
SB-105	1556	33+00.00	35+00.00	RT	WHITE																												1		
LA-223	1556	33+03.50	33+11.50	CL/LT	WHITE																										1				
SB-106	1556	33+37.49	33+50.00	RT	WHITE																												1		
LA-224	1556	33+54.00	33+62.00	CL/LT	WHITE																										1				
LA-225	1556	34+06.40	34+14.38	CL/LT	WHITE																										1				
GM-108	1556	34+06.98	34+35.83	LT	GREEN																														173
BL-109	1556	34+12.98	34+17.73	LT	WHITE																											1			
GM-109	1556	35+09.55	35+38.44	LT	GREEN																														173
CH-140	1556	35+10.00	35+99.87	RT	WHITE																								90						
BL-110	1556	35+15.55	35+32.44	LT	WHITE																											1			
LA-226	1556	35+42.00	35+50.00	RT/CL	WHITE																										1				
LA-227	1556	35+92.00	36+00.00	RT/CL	WHITE																										1				
LL-124	1556	35+94.70	36+64.02	LT	WHITE		0.01																												
CL-124	1556	35+97.66	36+63.05	LT	YELLOW			0.01																											
CH-141	1556	35+99.87	36+63.52	RT	WHITE				63																										
TOTALS CARRIED TO SHEET 1468						0.02	0.01	0.03	145	46	229	83	-	-	-	-	2	-	-	-	-	2	1	5	231	0.14	0.12	0.15	241	33	56	-	5	3	2	519

Preliminary Plans - Not For Reference Only

CUY-90-16.28 (CCG3A)

MODEL: Sheet-11 PAPERSIZE: 34x22 (in.) DATE: 3/27/2025 TIME: 7:02:36 PM USER: Mata.Gallagher
pw:\\mb-us-pw.bentley.com:mb-us-pw-03\Documents\Cleveland_OH101_Projects\ODOT\District12\82382\400-Engineering\Traffic\Sheets\82382_TS501.dgn

DESIGN AGENCY
Michael Baker INTERNATIONAL

DESIGNER RBK

REVIEWER GSH 05/22/24

PROJECT ID 82382

SHEET 1466 TOTAL 2696

LOCAL STREET PAVEMENT MARKING SUBSUMMARY - 12

REF NO.	SHEET NO.	STATION FROM	STATION TO	SIDE	COLOR	644 EDGE LINE, 4" MILE	644 LANE LINE, 4" MILE	644 CENTER LINE MILE	644 CHANNELIZING LINE, 8" FT	644 STOP LINE FT	644 CROSSWALK LINE, 12" FT	644 CROSSWALK LINE, 12", AS PER PLAN FT	644 TRANSVERSE/DIAGONAL LINE FT	644 CHEVRON MARKING	644 ISLAND MARKING SF	644 PARKING LOT STALL MARKING FT	644 LANE ARROW EACH	644 LANE REDUCTION ARROW EACH	644 TWO WAY LEFT TURN ARROW EACH	644 DOTTED LINE, 4" FT	644 DOTTED LINE, 8" FT	644 BIKE LANE SYMBOL MARKING EACH	644 SHARED LANE MARKING EACH	644 PAVEMENT MARKING, MISC.: BIKE LANE CROSSWALK FT	644 GREEN COLORED PAVEMENT FOR BIKE LANES SF	646 EDGE LINE, 4" MILE	646 LANE LINE, 4" MILE	646 CENTER LINE MILE	646 CHANNELIZING LINE, 8" FT	646 STOP LINE FT	646 CROSSWALK LINE, 12" FT	646 TRANSVERSE/DIAGONAL LINE FT	646 LANE ARROW EACH	646 BIKE LANE SYMBOL MARKING EACH	646 SHARED LANE MARKING EACH	646 GREEN COLORED PAVEMENT FOR BIKE LANES SF
		MIDTOWN CONNECTOR																																	
XW-169	1557	500+25.03	500+28.06	RT/LT	WHITE						47																								
XW-170	1557	500+36.40	500+38.84	RT/LT	WHITE						38																								
IY-108	1557	500+46.13	500+57.23	LT	YELLOW										68																				
SL-141	1557	500+49.37	500+50.59	LT	WHITE					12																									
BC-103	1557	500+58.54	513+61.17	LT	YELLOW			0.24																											
LA-228	1557	500+60.48	500+68.63	LT	WHITE												1																		
EW-134	1557	500+61.34	507+77.00	RT	WHITE	0.14																													
CL-125	1557	501+06.02	510+89.40	CL	YELLOW			0.18																											
IY-109	1557	501+06.03	501+09.05	LT	YELLOW										23																				
CL-126	1557	501+06.21	501+96.60	LT/CL	YELLOW			0.02																											
LA-229	1557	501+10.00	501+18.09	LT	WHITE												1																		
TY-110	1557	501+10.76	501+59.45	LT	YELLOW								13																						
LA-230	1557	501+60.00	501+68.01	LT	WHITE												1																		
EW-135	1557	501+96.62	507+77.00	LT	WHITE	0.11																													
XA-105	1558	507+97.00	508+17.00	LT/RT	WHITE							168																							
CD-104	1559	510+10.00	511+60.00	CL	YELLOW			0.01																											
XA-106	1559	510+90.00	511+10.00	LT/RT	WHITE							228																							
CL-127	1559	511+60.45	513+74.40	CL	YELLOW			0.04																											
LA-231	1559	511+74.65	511+82.00	RT	WHITE												1																		
LA-232	1559	511+74.65	511+82.00	RT	WHITE												1																		
LA-233	1559	512+34.00	512+42.00	RT	WHITE												1																		
LA-234	1559	512+34.00	512+42.00	RT	WHITE												1																		
CH-142	1559	512+60.00	513+74.00	RT	WHITE				225																										
		CEDAR AVE.																																	
XA-107	1559	400+33.60	400+43.39	RT/LT	WHITE							193																							
SL-142	1559	400+57.29	400+65.32	CL/LT	WHITE					23																									
CL-128	1559	400+57.29	403+34.00	CL	YELLOW			0.05																											
CH-143	1559	400+61.05	402+00.00	LT	WHITE				133																										
LA-235	1559	400+75.00	400+83.00	LT	WHITE												1																		
LA-236	1559	400+75.00	400+83.00	LT	WHITE												1																		
LA-237	1559	401+25.00	401+33.00	LT	WHITE												1																		
LA-238	1559	401+25.00	401+33.00	LT	WHITE												1																		
LA-239	1559	401+75.00	401+83.00	LT	WHITE												1																		
LA-240	1559	401+75.00	401+83.00	LT	WHITE												1																		
LL-125	1560	402+00.00	404+05.22	LT	WHITE		0.04																												
EW-136	1560	402+02.98	404+03.40	RT	WHITE	0.04																													
EW-137	1560	403+70.00	403+70.00	RT	WHITE	0.01																													
TW-118	1560	403+70.00	404+02.08	RT	WHITE								47																						
XA-108	1560	404+01.26	404+20.19	RT/LT	WHITE							187																							
		CENTRAL AVE. CONNECTOR																																	
EW-138	1561	600+53.15	604+08.42	CL/LT	WHITE	0.07																													
LA-241	1561	601+17.85	601+25.96	RT	WHITE												1																		
LA-242	1561	601+68.10	601+76.21	RT	WHITE												1																		
EW-139	1561	601+91.38	601+91.39	CL/LT	WHITE	0.01																													
TW-119	1561	601+91.39	602+70.69	LT	WHITE								78																						
LA-243	1561	602+16.16	602+23.73	RT	WHITE												1																		
EW-140	1561	602+70.69	602+70.69	LT/CL	WHITE	0.01																													
TOTALS CARRIED TO SHEET 1468						0.39	0.04	0.54	358	35	85	776	138	-	91	-	16	-	-	-	-	-	-	-	-	-	-	-	-	-	-	-	-	-	-

Preliminary Plans - Not For Reference Only

CUY-90-16.28 (CCG3A)

MODEL: Sheet-12 PAPERSIZE: 34x22 (in.) DATE: 3/27/2025 TIME: 7:02:37 PM USER: Maia.Gallagher
pw:\\mb-us-pw.bentley.com:mb-us-pw-03\Documents\Cleveland_Oh\01_Projects\ODOT\District12\82382\400-Engineering\Traffic\Sheets\82382_TS501.dgn

DESIGN AGENCY
Michael Baker INTERNATIONAL

DESIGNER RBK

REVIEWER GSH 05/22/24

PROJECT ID 82382

SHEET 1467 | TOTAL 2696

REF NO.	SHEET NO.	STATION FROM	STATION TO	SIDE	COLOR	644 EDGE LINE, 4" MILE	644 LANE LINE, 4" MILE	644 CENTER LINE MILE	644 CHANNELIZING LINE, 8" FT	644 STOP LINE FT	644 CROSSWALK LINE, 12" FT	644 CROSSWALK LINE, 12", AS PER PLAN FT	644 TRANSVERSE/DIAGONAL LINE FT	644 CHEVRON MARKING	644 ISLAND MARKING SF	644 PARKING LOT STALL MARKING FT	644 LANE ARROW EACH	644 LANE REDUCTION ARROW EACH	644 TWO WAY LEFT TURN ARROW EACH	644 DOTTED LINE, 4" FT	644 DOTTED LINE, 8" FT	644 BIKE LANE SYMBOL MARKING EACH	644 SHARED LANE MARKING EACH	644 PAVEMENT MARKING, MISC.: BIKE LANE CROSSWALK FT	644 GREEN COLORED PAVEMENT FOR BIKE LANES SF	646 EDGE LINE, 4" MILE	646 LANE LINE, 4" MILE	646 CENTER LINE MILE	646 CHANNELIZING LINE, 8" FT	646 STOP LINE FT	646 CROSSWALK LINE, 12" FT	646 TRANSVERSE/DIAGONAL LINE FT	646 LANE ARROW EACH	646 BIKE LANE SYMBOL MARKING EACH	646 SHARED LANE MARKING EACH	646 GREEN COLORED PAVEMENT FOR BIKE LANES SF
	CENTRAL AVE. CONNECTOR (CONT.)																																		
EW-141	1561	603+61.38	603+61.38	LT/CL	WHITE	0.01																													
TW-120	1561	603+61.38	603+83.85	LT	WHITE								27																						
		E. 19TH ST.																																	
EY-102	1561	2+91.91	3+34.34	LT/RT	YELLOW	0.01																													
TY-111	1561	3+04.63	3+34.34	LT/RT	YELLOW								81																						
EW-142	1561	3+34.34	3+34.34	RT	WHITE	0.01																													
TW-121	1561	3+34.34	3+57.99	RT	WHITE								61																						
EW-143	1561	3+34.34	3+58.00	RT	WHITE	0.01																													
CL-129	1561	3+55.79	3+72.01	LT	YELLOW			0.01																											
EW-144	1561	3+57.99	3+58.01	RT	WHITE	0.01																													
DW-106	1561	3+58.00	3+78.60	RT	WHITE																21														
XA-109	1561	3+67.30	3+83.87	LT/RT	WHITE							286																							
CL-130	1561	3+92.88	4+68.57	LT	YELLOW			0.01																											
DW-107	1561	3+99.41	4+18.87	RT	WHITE																19														

SIGNING SUBSUMMARY - 1

REF NO.	SHEET NO.	STATION	SIDE	CODE	SIZE	625 GROUND ROD	630 GROUND MOUNTED SUPPORT, NO. 2 POST	630 GROUND MOUNTED SUPPORT, NO. 3 POST	630 GROUND MOUNTED SUPPORT, NO. 4 POST, AS PER PLAN	630 GROUND MOUNTED STRUCTURAL BEAM SUPPORT, S4X7.7	630 GROUND MOUNTED STRUCTURAL BEAM SUPPORT, W6X9	630 GROUND MOUNTED STRUCTURAL BEAM SUPPORT, W8X18	630 GROUND MOUNTED STRUCTURAL BEAM SUPPORT, W10X22	630 GROUND MOUNTED STRUCTURAL BEAM SUPPORT, W10X12	630 ONE WAY SUPPORT, NO. 2 POST	630 ONE WAY SUPPORT, NO. 4 POST	630 SIGN POST REFLECTOR	630 BREAKAWAY STRUCTURAL BEAM CONNECTION	630 OVERHEAD SIGN SUPPORT, TYPE TC-12.31, DESIGN 12	630 OVERHEAD SIGN SUPPORT, TYPE TC-15.116, DESIGN 1	630 OVERHEAD SIGN SUPPORT, TYPE TC-15.116, DESIGN 2	630 OVERHEAD SIGN SUPPORT, TYPE TC-15.116, DESIGN 3	630 OVERHEAD SIGN SUPPORT, TYPE TC-16.22, DESIGN 13	630 SIGN ATTACHMENT ASSEMBLY	630 SIGN HANGER ASSEMBLY, MAST ARM	630 SIGN SUPPORT ASSEMBLY, POLE MOUNTED	630 SIGN SUPPORT ASSEMBLY, BRIDGE MOUNTED, TYPE 2	630 SIGN, FLAT SHEET	630 SIGN, GROUND MOUNTED EXTRUSHEET	630 SIGN, OVERHEAD EXTRUSHEET	630 SIGN, DOUBLE FACED, STREET NAME, AS PER PLAN	630 CONCRETE BARRIER MEDIAN OVERHEAD SIGN SUPPORT FOUNDATION, TYPE TC-21.50	630 GROUND MOUNTED STRUCTURAL BEAM SUPPORT FOUNDATION	630 RIGID OVERHEAD SIGN SUPPORT FOUNDATION
					IN	EACH	FT	FT	FT	FT	FT	FT	FT	FT	FT	FT	FT	EACH	EACH	EACH	EACH	EACH	EACH	EACH	EACH	EACH	EACH	EACH	SF	SF	SF	EACH	EACH	EACH	EACH
		I.R. 90 EB																																	
S-1	1494	3+05.00	CL	LEVEL 1	132 X 108																			3					99.0				
S-1	1494	3+05.00	CL	LEVEL 1	156 X 96																			3					104.0				
S-1	1494	3+05.00	CL	E1-H5P-120	120 X 30																								25.0				
S-2	1494	29+08.00	CL	LEVEL 1	132 X 108																			3					99.0				
S-2	1494	29+08.00	CL	LEVEL 1	156 X 96																			3					104.0				
S-2	1494	29+08.00	CL	E1-H5P-120	120 X 30																								25.0				
S-3	1494	46+16.00	CL	LEVEL 1	144 X 108																			3					108.0				
S-3	1494	46+16.00	CL	LEVEL 1	144 X 72																			3					72.0				
S-3	1494	46+16.00	CL	E1-H5P-120	120 X 30																			2					25.0				
S-3	1494	46+16.00	CL	LEVEL 1	156 X 96																			3					104.0				
S-3	1494	46+16.00	CL	E1-H5P-120	120 X 30																			2					25.0				
S-4	1497	177+29.00	CL	LEVEL 1	204 X 96	2																1							136.0			2	
S-4	1497	177+29.00	CL	E1-H5P-120	120 X 30																								25.0				
S-4	1497	177+29.00	CL	LEVEL 1	192 X 72																								96.0				
S-4	1497	177+29.00	CL	E1-H5P-120	120 X 30																								25.0				
S-4	1497	177+29.00	CL	LEVEL 1	204 X 108																								153.0				
S-4	1497	177+29.00	CL	E1-H5P-120	120 X 30																								25.0				
S-4	1497	177+29.00	CL	LEVEL 1	168 X 144																								168.0				
S-4	1497	177+29.00	CL	E1-H5P-120	120 X 30																								25.0				
		RAMP IB5																																	
S-5	1497	1708+00.00	RT	W13-6-48	48 X 84			35.0										2									28.0							
S-6	1497	1708+70.00	LT	W1-8R-36	36 X 48			29.0										2									12.0							
		RAMP B6																																	
S-7	1497	1600+12.00	LT	E5-H1c-48	48 X 84					36.0																	28.0							
S-8	1497	1600+97.00	RT	E5-H1a-108	108 X 84							40.0																63.0						
		I.R. 90 EB																																	
S-9	1499	184+50.00	LT	D10-5-18	18 X 60		15.6																				7.5							
S-10	1499	185+72.00	RT	I-H25a-12	12 X 12		14.6																				1.0							
S-10	1499	185+72.00	RT	OM-3R-12	12 X 36																						3.0							
S-11	1499	185+76.00	LT	OM-3L-12	12 X 36		13.5																				3.0							
S-12	1499	188+65.00	LT	OM-3L-12	12 X 36		13.5																				3.0							
S-13	1500	191+86.00	RT	W4-1R-48	48 X 48			32.4																			16.0							
S-14	1500	193+25.00	CL	LEVEL 1	144 X 108	2															1								108.0			2	
S-14	1500	193+25.00	CL	LEVEL 1	192 X 96																								128.0				
S-14	1500	193+25.00	CL	E1-H5P-120	120 X 30																								25.0				
S-14	1500	193+25.00	CL	LEVEL 1	180 X 72																								90.0				
S-14	1500	193+25.00	CL	E1-H5P-120	120 X 30																								25.0				
S-15	1501	198+00.00	RT	R1-2-60	30 X 51.96			33.4																			10.8							
		INTERIM I.R. 90 EB																																	
S-16	1503	3007+59.00	LT	M1-1-36-2	36 X 36																				1		9.0							
S-16	1503	3007+59.00	LT	M3-2-30	30 X 15																				1		3.1							
S-17	1503	3007+59.00	CL	LEVEL 1	192 X 72	2															1								96.0		1		1	
S-17	1503	3007+59.00	CL	E1-H5P-120	120 X 30																								25.0				
S-17	1503	3007+59.00	CL	LEVEL 1	192 X 96																								128.0				
S-17	1503	3007+59.00	CL	E1-H5P-120	120 X 30																								25.0				
S-17	1503	3007+59.00	CL	LEVEL 1	180 X 72																								90.0				
TOTALS CARRIED TO SHEET 1485						6	57.2	129.8	-	36.0	-	40.0	-	-	-	-	4	-	-	-	2	1	-	25	-	2	-	124.4	63.0	2183.0	-	1	-	5

Preliminary Plans - For Reference Only

DESIGN AGENCY
Michael Baker INTERNATIONAL

DESIGNER RBK
REVIEWER GSH 05/22/24
PROJECT ID 82382
SHEET 1469 TOTAL 2696

CUY-90-16.28 (CCG3A)

MODEL: Sheet-01 PAPERSIZE: 34x22 (in.) DATE: 5/23/2025 TIME: 11:06:13 AM USER: Joseph.Hogan
pw:\\mb-us-pw.bentley.com:mb-us-pw-03\Documents\Cleveland_OH\01_Projects\ODOT\District12\82382\400-Engineering\Traffic\Sheets\82382_TS101.dgn
TS101.dgn

REF NO.	SHEET NO.	STATION	SIDE	CODE	SIZE	625 GROUND ROD	630 GROUND MOUNTED SUPPORT, NO. 2 POST	630 GROUND MOUNTED SUPPORT, NO. 3 POST	630 GROUND MOUNTED SUPPORT, NO. 4 POST, AS PER PLAN	630 GROUND MOUNTED STRUCTURAL BEAM SUPPORT, S4X7.7	630 GROUND MOUNTED STRUCTURAL BEAM SUPPORT, W6X9	630 GROUND MOUNTED STRUCTURAL BEAM SUPPORT, W8X18	630 GROUND MOUNTED STRUCTURAL BEAM SUPPORT, W10X22	630 GROUND MOUNTED STRUCTURAL BEAM SUPPORT, W10X12	630 ONE WAY SUPPORT, NO. 2 POST	630 ONE WAY SUPPORT, NO. 4 POST	630 SIGN POST REFLECTOR	630 BREAKAWAY STRUCTURAL BEAM CONNECTION	630 OVERHEAD SIGN SUPPORT, TYPE TC-12.31, DESIGN 12	630 OVERHEAD SIGN SUPPORT, TYPE TC-15.116, DESIGN 1	630 OVERHEAD SIGN SUPPORT, TYPE TC-15.116, DESIGN 2	630 OVERHEAD SIGN SUPPORT, TYPE TC-15.116, DESIGN 3	630 OVERHEAD SIGN SUPPORT, TYPE TC-16.22, DESIGN 13	630 SIGN ATTACHMENT ASSEMBLY	630 SIGN HANGER ASSEMBLY, MAST ARM	630 SIGN SUPPORT ASSEMBLY, POLE MOUNTED	630 SIGN SUPPORT ASSEMBLY, BRIDGE MOUNTED, TYPE 2	630 SIGN, FLAT SHEET	630 SIGN, GROUND MOUNTED EXTRUSHEET	630 SIGN, OVERHEAD EXTRUSHEET	630 SIGN, DOUBLE FACED, STREET NAME, AS PER PLAN	630 CONCRETE BARRIER MEDIAN OVERHEAD SIGN SUPPORT FOUNDATION, TYPE TC-21.50	630 GROUND MOUNTED STRUCTURAL BEAM SUPPORT FOUNDATION	630 RIGID OVERHEAD SIGN SUPPORT FOUNDATION
					IN	EACH	FT	FT	FT	FT	FT	FT	FT	FT	FT	FT	EACH	EACH	EACH	EACH	EACH	EACH	EACH	EACH	EACH	EACH	SF	SF	SF	EACH	EACH	EACH	EACH
	INTERIM I.R. 90 EB (CONT.)																																		
S-17	1503	3007+59.00	CL	E1-H5P-120	120 X 30																							25.0					
S-18	1503	3007+59.00	RT	R2-1-48	48 X 60																				1		20.0							
S-19	1503	3007+75.00	LT	D10-5-18	18 X 60			15.6																			7.5							
S-19	1503	3007+75.00	LT	D10-5-18	18 X 60																						7.5							
S-20	1503	3007+75.00	RT	D10-5-18	18 X 60		15.6																				7.5							
S-20	1503	3007+75.00	RT	D10-5-18	18 X 60																						7.5							
	I.R. 90 WB																																		
S-21	1507	157+50.00	LT	R1-2-60	30 X 51.96			33.4																			10.8							
S-22	1509	167+12.00	CL	LEVEL 1	192 X 108																				3				144.0					
S-22	1509	167+12.00	CL	E1-H5bP-132	132 X 54																				3				49.5					
S-22	1509	167+12.00	CL	I-5-30	30 X 30																						6.3							
S-22	1509	167+12.00	CL	LEVEL 1	132 X 108																				3				99.0					
S-22	1509	167+12.00	CL	LEVEL 1	168 X 96																				3				112.0					
S-22	1509	167+12.00	CL	E1-H5P-120	120 X 30																				3				25.0					
S-22	1509	167+12.00	CL	D9-H2a	60 X 30																						12.5							
S-23	1509	167+86.00	LT	W4-1R-48	48 X 48			32.4																			16.0							
S-24	1512	581+65.00	LT	W4-3R-48	48 X 48			32.4																			16.0							
S-25	1514	190+32.00	LT	I-H25a-12	12 X 12		13.6																				1.0							
S-25	1514	190+32.00	LT	OM-3R-12	12 X 36		13.6																				3.0							
S-26	1514	191+00.00	LT	LEVEL 1	132 X 84									56.2			2											77.0			2			
S-26	1514	191+00.00	LT	E1-H5P-96	30 X 96																						20.0							
S-27	1514	193+50.00	LT	E5-H1c-48	48 X 84					36.0																	28.0							
	RAMP A2																																		
S-28	1514	430+80.00	LT	W13-3-24	24 X 30																					1	5.0							
S-28	1514	430+80.00	LT	W1-2L-36	36 X 36																						9.0							
S-29	1514	430+80.00	RT	W13-3-24	24 X 30																					1	5.0							
S-29	1514	430+80.00	RT	W1-2L-36	36 X 36																						9.0							
S-30	1514	431+25.00	RT	OM-3L-12	12 X 36		13.5																				3.0							
S-31	1514	431+29.00	LT	I-H25a-12	12 X 12		13.6																				1.0							
S-31	1514	431+29.00	LT	OM-3R-12	12 X 36		13.6																				3.0							
S-32	1514	432+22.00	LT	W4-1R-48	48 X 48			32.4																			16.0							
	I.R. 90 WB																																		
S-33	1515	196+68.00	RT	D10-5-18	18 X 60		15.6																				7.5							
S-33	1515	196+68.00	RT	D10-5-18	18 X 60																						7.5							
S-34	1515	197+65.00	CL	LEVEL 1	168 X 108	2																	1						126.0			2		
S-34	1515	197+65.00	CL	E1-H5bP-132	132 X 54																								49.5					
S-34	1515	197+65.00	CL	LEVEL 1	132 X 108																								99.0					
S-34	1515	197+65.00	CL	LEVEL 1	192 X 132																								176.0					
S-34	1515	197+65.00	CL	E1-H5P-120	120 X 30																								25.0					
S-34	1515	197+65.00	CL	I-5-30	30 X 30																						6.3							
	INTERIM I.R. 90 WB																																		
S-35	1517	4003+17.00	CL	LEVEL 1	132 X 108	2																	1						99.0		1		1	
S-35	1517	4003+17.00	CL	LEVEL 1	192 X 132																								176.0					
S-35	1517	4003+17.00	CL	E1-H5P-120	120 X 30																								25.0					
S-36	1518	4009+25.00	LT	R2-1-48	48 X 60																				1		20.0							
S-37	1518	4009+25.00	CL	LEVEL 1	132 X 108	2																	1						99.0		1		1	
TOTALS CARRIED TO SHEET 1485						6	71.9	146.2	-	36.0	-	-	-	56.2	-	-	-	2	-	-	3	-	-	15	-	2	2	255.9	77.0	1329.0	-	2	2	4

Preliminary Plans - For Reference Only

SIGNING SUBSUMMARY - 2

CUY-90-16.28 (CCG3A)

MODEL: Sheet-02 PAPERSIZE: 34x22 (in.) DATE: 5/23/2025 TIME: 11:06:15 AM USER: Joseph.Hogan
pw:\\mb-us-pw.bentley.com:mb-us-pw-03\Documents\Cleveland_OH\01_Projects\ODOT\District12\82382\400-Engineering\Traffic\Sheets\82382_TS101.dgn
TS101.dgn

DESIGN AGENCY
Michael Baker INTERNATIONAL

DESIGNER RBK

REVIEWER GSH 05/22/24

PROJECT ID 82382

SHEET 1470 | TOTAL 2696

REF NO.	SHEET NO.	STATION	SIDE	CODE	SIZE	625 GROUND ROD	630 GROUND MOUNTED SUPPORT, NO. 2 POST	630 GROUND MOUNTED SUPPORT, NO. 3 POST	630 GROUND MOUNTED SUPPORT, NO. 4 POST, AS PER PLAN	630 GROUND MOUNTED STRUCTURAL BEAM SUPPORT, S4X7.7	630 GROUND MOUNTED STRUCTURAL BEAM SUPPORT, W6X9	630 GROUND MOUNTED STRUCTURAL BEAM SUPPORT, W8X18	630 GROUND MOUNTED STRUCTURAL BEAM SUPPORT, W10X22	630 GROUND MOUNTED STRUCTURAL BEAM SUPPORT, W10X12	630 ONE WAY SUPPORT, NO. 2 POST	630 ONE WAY SUPPORT, NO. 4 POST	630 SIGN POST REFLECTOR	630 BREAKAWAY STRUCTURAL BEAM CONNECTION	630 OVERHEAD SIGN SUPPORT, TYPE TC-12.31, DESIGN 12	630 OVERHEAD SIGN SUPPORT, TYPE TC-15.116, DESIGN 1	630 OVERHEAD SIGN SUPPORT, TYPE TC-15.116, DESIGN 2	630 OVERHEAD SIGN SUPPORT, TYPE TC-15.116, DESIGN 3	630 OVERHEAD SIGN SUPPORT, TYPE TC-16.22, DESIGN 13	630 SIGN ATTACHMENT ASSEMBLY	630 SIGN HANGER ASSEMBLY, MAST ARM	630 SIGN SUPPORT ASSEMBLY, POLE MOUNTED	630 SIGN SUPPORT ASSEMBLY, BRIDGE MOUNTED, TYPE 2	630 SIGN, FLAT SHEET	630 SIGN, GROUND MOUNTED EXTRUSHEET	630 SIGN, OVERHEAD EXTRUSHEET	630 SIGN, DOUBLE FACED, STREET NAME, AS PER PLAN	630 CONCRETE BARRIER MEDIAN OVERHEAD SIGN SUPPORT FOUNDATION, TYPE TC-21.50	630 GROUND MOUNTED STRUCTURAL BEAM SUPPORT FOUNDATION	630 RIGID OVERHEAD SIGN SUPPORT FOUNDATION
					IN	EACH	FT	FT	FT	FT	FT	FT	FT	FT	FT	FT	EACH	EACH	EACH	EACH	EACH	EACH	EACH	EACH	EACH	EACH	SF	SF	SF	EACH	EACH	EACH	EACH
	INTERIM I.R. 90 WB (CONT.)																																		
S-37	1518	4009+25.00	CL	LEVEL 1	192 X 132																							176.0					
S-37	1518	4009+25.00	CL	E1-H5P-120	120 X 30																							25.0					
	RAMP A1																																		
S-38	1520	309+00.00	LT	D10-H5a-30	30 X 30			13.0																		6.3								
S-39	1520	311+29.00	LT	LEVEL 3	60 X 96	1													1							40.0							1	
S-40	1520	311+50.00	LT	R5-10a-30	30 X 36			13.5																		7.5								
	RAMP A2																																		
S-41	1522	403+25.00	RT	R2-1-48	48 X 60		31.0																			20.0								
S-42	1522	403+50.00	LT	R2-1-48	48 X 60		31.0																			20.0								
S-43	1523	409+00.00	LT	W1-8L-36	36 X 48			29.0									2									12.0								
	RAMP IJ3																																		
S-44	1523	91+95.00	CL	LEVEL 1	132 X 132	2															1							121.0		1		1		
S-44	1523	91+95.00	CL	E1-H5bP-132	132 X 54																							49.5						
S-44	1523	91+95.00	CL	LEVEL 1	132 X 132																							121.0						
S-44	1523	91+95.00	CL	E1-H5bP-132	132 X 54																							49.5						
S-44	1523	91+95.00	CL	LEVEL 1	204 X 120																							170.0						
S-44	1523	91+95.00	CL	LEVEL 1	120 X 72																							60.0						
S-44	1523	91+95.00	CL	E1-H5P-120	120 X 30																							25.0						
	EX. RAMP E-17																																		
S-45	1523	53+30.00	RT	E5-H1c-48	48 X 84					36.0																28.0								
	RAMP A2																																		
S-46	1524	410+20.00	LT	W1-8L-36	36 X 48			29.0									2									12.0								
S-47	1524	411+40.00	LT	W1-8L-36	36 X 48												1								1	12.0								
S-48	1524	412+60.00	LT	W1-8L-36	36 X 48												1								1	12.0								
S-49	1524	412+75.00	CL	LEVEL 1	144 X 108	2														1								108.0					2	
S-49	1524	412+75.00	CL	LEVEL 1	132 X 84																							77.0						
S-49	1524	412+75.00	CL	E1-H5P-108	108 X 30																							22.5						
S-49	1524	412+75.00	CL	LEVEL 1	180 X 108																							135.0						
S-49	1524	412+75.00	CL	E1-H5P-120	120 X 30																							25.0						
S-50	1524	412+77.00	LT	D10-5-18	18 X 60																				1	7.5								
S-51	1524	413+80.00	LT	W1-8L-36	36 X 48												1								1	12.0								
S-52	1524	415+00.00	LT	W1-8L-36	36 X 48												1								1	12.0								
	RAMP IJ3																																		
S-53	1524	95+65.00	RT	LEVEL 1	168 X 120	1													1								140.0					1	
S-54	1524	95+65.00	RT	W4-3L-48(MOD)	48 X 48																			1		16.0								
	RAMP A2																																		
S-55	1525	416+20.00	LT	W1-8L-36	36 X 48												1								1	12.0								
S-56	1525	417+40.00	LT	W1-8L-36	36 X 48												1								1	12.0								
S-57	1525	418+60.00	LT	W1-8L-36	36 X 48												1								1	12.0								
S-58	1525	419+80.00	LT	W1-8L-36	36 X 48												1								1	12.0								
	RAMP IJ3																																		
S-59	1525	102+30.00	LT	W1-8L-36	36 X 48			29.0									2									12.0								
S-60	1525	103+10.00	LT	W1-8L-36	36 X 48			29.0									2									12.0								
S-61	1525	103+50.00	LT	D10-H5a-30	30 X 30			13.0																		6.3								
S-62	1525	103+90.00	LT	W1-8L-36	36 X 48			29.0									2									12.0								
TOTALS CARRIED TO SHEET 1485						6	62.0	184.5	-	36.0	-	-	-	-	-	-	18	-	2	1	1	-	-	-	-	2	8	307.6	140.0	1164.5	-	1	-	5	

Preliminary Plans - For Reference Only

SIGNING SUBSUMMARY - 3

CUY-90-16.28 (CCG3A)

MODEL: Sheet-03 PAPERSIZE: 34x22 (in.) DATE: 5/23/2025 TIME: 11:06:17 AM USER: Joseph.Hogan
pw:\\mb-us-pw.bentley.com:mb-us-pw-03\Documents\Cleveland_OH\01_Projects\ODOT\District12\82382\400-Engineering\Traffic\Sheets\82382_TS101.dgn

DESIGN AGENCY
Michael Baker INTERNATIONAL

DESIGNER RBK

REVIEWER GSH 05/22/24

PROJECT ID 82382

SHEET 1471 TOTAL 2696

REF NO.	SHEET NO.	STATION	SIDE	CODE	SIZE	625 GROUND ROD	630 GROUND MOUNTED SUPPORT, NO. 2 POST	630 GROUND MOUNTED SUPPORT, NO. 3 POST	630 GROUND MOUNTED SUPPORT, NO. 4 POST, AS PER PLAN	630 GROUND MOUNTED STRUCTURAL BEAM SUPPORT, S4X7.7	630 GROUND MOUNTED STRUCTURAL BEAM SUPPORT, W6X9	630 GROUND MOUNTED STRUCTURAL BEAM SUPPORT, W8X18	630 GROUND MOUNTED STRUCTURAL BEAM SUPPORT, W10X22	630 GROUND MOUNTED STRUCTURAL BEAM SUPPORT, W10X12	630 ONE WAY SUPPORT, NO. 2 POST	630 ONE WAY SUPPORT, NO. 4 POST	630 SIGN POST REFLECTOR	630 BREAKAWAY STRUCTURAL BEAM CONNECTION	630 OVERHEAD SIGN SUPPORT, TYPE TC-12.31, DESIGN 12	630 OVERHEAD SIGN SUPPORT, TYPE TC-15.116, DESIGN 1	630 OVERHEAD SIGN SUPPORT, TYPE TC-15.116, DESIGN 2	630 OVERHEAD SIGN SUPPORT, TYPE TC-15.116, DESIGN 3	630 OVERHEAD SIGN SUPPORT, TYPE TC-16.22, DESIGN 13	630 SIGN ATTACHMENT ASSEMBLY	630 SIGN HANGER ASSEMBLY, MAST ARM	630 SIGN SUPPORT ASSEMBLY, POLE MOUNTED	630 SIGN SUPPORT ASSEMBLY, BRIDGE MOUNTED, TYPE 2	630 SIGN, FLAT SHEET	630 SIGN, GROUND MOUNTED EXTRUSHEET	630 SIGN, OVERHEAD EXTRUSHEET	630 SIGN, DOUBLE FACED, STREET NAME, AS PER PLAN	630 CONCRETE BARRIER MEDIAN OVERHEAD SIGN SUPPORT FOUNDATION, TYPE TC-21.50	630 GROUND MOUNTED STRUCTURAL BEAM SUPPORT FOUNDATION	630 RIGID OVERHEAD SIGN SUPPORT FOUNDATION
					IN	EACH	FT	FT	FT	FT	FT	FT	FT	FT	FT	FT	EACH	EACH	EACH	EACH	EACH	EACH	EACH	EACH	EACH	EACH	EACH	SF	SF	SF	EACH	EACH	EACH	EACH
		RAMP A2																																
S-63	1526	421+00.00	LT	W1-8L-36	36 X 48												1									1	12.0							
		RAMP A3																																
S-64	1526	422+20.00	LT	W1-8L-36	36 X 48												1									1	12.0							
S-65	1526	423+40.00	LT	W1-8L-36	36 X 48												1									1	12.0							
S-65	1526	423+40.00	LT	D10-5-18	18 X 60																						7.5							
S-66	1526	424+60.00	LT	W1-8L-36	36 X 48												1									1	12.0							
		RAMP A2																																
S-67	1527	425+00.00	CL	LEVEL 1	132 X 120	2															1								110.0					2
S-67	1527	425+00.00	CL	LEVEL 1	180 X 96																								120.0					
S-67	1527	425+00.00	CL	E1-H5P-120	120 X 30																								25.0					
S-67	1527	425+00.00	CL	W9-H4R-192	192 X 60																								80.0					
S-68	1527	425+80.00	LT	W1-8L-36	36 X 48												1									1	12.0							
S-69	1527	427+00.00	LT	W1-8L-36	36 X 48												1									1	12.0							
S-70	1527	428+20.00	LT	W1-8L-36	36 X 48												1									1	12.0							
S-71	1527	429+40.00	LT	W1-8L-36	36 X 48												1									1	12.0							
		RAMP A3																																
S-72	1528	40+00.00	LT	R5-10a-30	30 X 36			13.5																			7.5							
S-73	1528	585+00.00	LT	W4-2R-48	48 X 48			32.4																			16.0							
S-74	1528	588+00.00	LT	W16-2aP-30	30 X 18			33.6																			3.8							
S-74	1528	588+00.00	LT	W9-1R-48	48 X 48																						16.0							
S-75	1528	589+55.00	CL	LEVEL 1	108 X 108	2															1								81.0					2
S-75	1528	589+55.00	CL	LEVEL 1	192 X 96																								128.0					
S-75	1528	589+55.00	CL	M1-1-36-2	36 X 36																						9.0							
S-75	1528	589+55.00	CL	M4-5-30	30 X 15																						3.1							
		RAMP IB5																																
S-76	1529	1709+10.00	LT	W1-8R-36	36 X 48			29.0									2										12.0							
S-77	1529	1709+50.00	LT	W1-8R-36	36 X 48			29.0									2										12.0							
S-78	1529	1709+90.00	LT	W1-8R-36	36 X 48			29.0									2										12.0							
S-79	1529	1710+00.00	RT	D10-H5a-30	30 X 30		13.0																				6.3							
S-80	1529	1710+30.00	LT	W1-8R-36	36 X 48			29.0									2										12.0							
S-81	1529	1710+70.00	LT	W1-8R-36	36 X 48			29.0									2										12.0							
S-82	1529	1711+10.00	LT	W1-8R-36	36 X 48			29.0									2										12.0							
S-83	1529	1711+50.00	LT	W1-8R-36	36 X 48			29.0									2										12.0							
S-84	1529	1711+90.00	LT	W1-8R-36	36 X 48			29.0									2										12.0							
S-85	1529	1712+00.00	RT	W16-9P-24	24 X 12		29.8																				2.0							
S-86	1529	1712+30.00	LT	W1-8R-36	36 X 48			29.0									2										12.0							
S-87	1529	1712+70.00	LT	W1-8R-36	36 X 48			29.0									2										12.0							
S-88	1529	1713+10.00	LT	W1-8R-36	36 X 48			29.0									2										12.0							
S-89	1529	1713+50.00	LT	W1-8R-36	36 X 48			29.0									2										12.0							
S-90	1529	1713+90.00	LT	W1-8R-36	36 X 48			29.0									2										12.0							
S-91	1529	1714+30.00	LT	W1-8R-36	36 X 48			29.0									2										12.0							
S-92	1529	1714+40.00	LT	W16-7PL-24	24 X 12		29.8																				2.0							
S-92	1529	1714+40.00	LT	W11-2-36	36 X 36																						9.0							
S-93	1529	1714+40.00	RT	W16-7PR-24	24 X 12		29.8																				2.0							
S-93	1529	1714+40.00	RT	W11-2-36	36 X 36																						9.0							
TOTALS CARRIED TO SHEET 1485						4	102.4	485.5	-	-	-	-	-	-	-	-	36	-	-	2	-	-	-	-	-	-	8	357.2	-	544.0	-	-	-	4	

Preliminary Plans - For Reference Only

SIGNING SUBSUMMARY - 4

CUY-90-16.28 (CCG3A)

MODEL: Sheet-04 PAPERSIZE: 34x22 (in.) DATE: 5/23/2025 TIME: 11:06:19 AM USER: Joseph.Hogan
pw:\\mb-us-pw.bentley.com:mb-us-pw-03\Documents\Cleveland_OH\01_Projects\ODOT\District12\82382\400-Engineering\Traffic\Sheets\82382_TS101.dgn
TS101.dgn

DESIGN AGENCY
Michael Baker INTERNATIONAL

DESIGNER RBK

REVIEWER GSH 05/22/24

PROJECT ID 82382

SHEET 1472 TOTAL 2696

REF NO.	SHEET NO.	STATION	SIDE	CODE	SIZE	625 GROUND ROD	630 GROUND MOUNTED SUPPORT, NO. 2 POST	630 GROUND MOUNTED SUPPORT, NO. 3 POST	630 GROUND MOUNTED SUPPORT, NO. 4 POST, AS PER PLAN	630 GROUND MOUNTED STRUCTURAL BEAM SUPPORT, S4X7.7	630 GROUND MOUNTED STRUCTURAL BEAM SUPPORT, W6X9	630 GROUND MOUNTED STRUCTURAL BEAM SUPPORT, W8X18	630 GROUND MOUNTED STRUCTURAL BEAM SUPPORT, W10X22	630 GROUND MOUNTED STRUCTURAL BEAM SUPPORT, W10X12	630 ONE WAY SUPPORT, NO. 2 POST	630 ONE WAY SUPPORT, NO. 4 POST	630 SIGN POST REFLECTOR	630 BREAKAWAY STRUCTURAL BEAM CONNECTION	630 OVERHEAD SIGN SUPPORT, TYPE TC-12.31, DESIGN 12	630 OVERHEAD SIGN SUPPORT, TYPE TC-15.116, DESIGN 1	630 OVERHEAD SIGN SUPPORT, TYPE TC-15.116, DESIGN 2	630 OVERHEAD SIGN SUPPORT, TYPE TC-15.116, DESIGN 3	630 OVERHEAD SIGN SUPPORT, TYPE TC-16.22, DESIGN 13	630 SIGN ATTACHMENT ASSEMBLY	630 SIGN HANGER ASSEMBLY, MAST ARM	630 SIGN SUPPORT ASSEMBLY, POLE MOUNTED	630 SIGN SUPPORT ASSEMBLY, BRIDGE MOUNTED, TYPE 2	630 SIGN, FLAT SHEET	630 SIGN, GROUND MOUNTED EXTRUSHEET	630 SIGN, OVERHEAD EXTRUSHEET	630 SIGN, DOUBLE FACED, STREET NAME, AS PER PLAN	630 CONCRETE BARRIER MEDIAN OVERHEAD SIGN SUPPORT FOUNDATION, TYPE TC-21.50	630 GROUND MOUNTED STRUCTURAL BEAM SUPPORT FOUNDATION	630 RIGID OVERHEAD SIGN SUPPORT FOUNDATION
					IN	EACH	FT	FT	FT	FT	FT	FT	FT	FT	FT	FT	EACH	EACH	EACH	EACH	EACH	EACH	EACH	EACH	EACH	EACH	EACH	SF	SF	SF	EACH	EACH	EACH	EACH
	E. 9TH ST.																																		
S-94	1529	33+60.00	RT	W4-3R-36	36 X 36		29.6																				9.0							
	RAMP B6																																		
S-95	1530	1605+50.00	CL	LEVEL 1	144 X 84	1													1									84.0					1	
S-95	1530	1605+50.00	CL	LEVEL 1	156 X 84																							91.0						
S-96	1530	1606+59.00	RT	D10-H5a-30	30 X 30		13.0																				6.3							
S-97	1531	1607+84.00	RT	I-H25a-12	12 X 12		13.6																				1.0							
S-97	1531	1607+84.00	RT	OM-3R-12	12 X 36																						3.0							
S-98	1531	1607+95.00	LT	OM-3L-12	12 X 36		13.5																				3.0							
	RAMP IJ3																																		
S-99	1531	111+21.00	LT	W13-3-48	48 X 60																				1		20.0							
S-99	1531	111+21.00	LT	W1-2L-36	48 X 48																				1		16.0							
	E. 14TH ST. SB																																		
S-100	1531	207+00.00	CL	LEVEL 3	108 X 48	2													1										36.0				2	
S-100	1531	207+00.00	CL	LEVEL 3	120 X 60																								50.0					
	RAMP B6																																		
S-101	1532	1615+50.00	CL	LEVEL 1	156 X 72	2														1									78.0				2	
S-101	1532	1615+50.00	CL	LEVEL 1	144 X 72																								72.0					
S-102	1532	1615+60.00	LT	R5-1a-42	42 X 30																				1		8.8							
S-102	1532	1615+60.00	LT	R5-1-48	48 X 48																				1		16.0							
S-103	1532	1615+60.00	RT	R5-1a-42	42 X 30																				1		8.8							
S-103	1532	1615+60.00	RT	R5-1-48	48 X 48																				1		16.0							
S-104	1533	1618+25.00	LT	D10-H5a-30	30 X 30			29.0									2										6.3							
S-104	1533	1618+25.00	LT	R5-1a-42	42 X 30																						8.8							
S-104	1533	1618+25.00	LT	R5-1-48	48 X 48																						16.0							
S-105	1533	1618+25.00	RT	R3-6L-36	36 X 42			29.0									2										10.5							
S-105	1533	1618+25.00	RT	R5-1a-42	42 X 30																						8.8							
S-105	1533	1618+25.00	RT	R5-1-48	48 X 48																						16.0							
S-106	1533	1619+00.00	RT	D3-H6a-72	72 X 12				27.4																		6.0							
S-106	1533	1619+00.00	RT	D3-H6a-72	72 X 12																						6.0							
S-106	1533	1619+00.00	RT	D3-H6a-72	72 X 24																						12.0							
S-107	1533	1620+82.00	LT	R5-1-48	48 X 48				30.0								2										16.0							
S-107	1533	1620+82.00	LT	R6-1R-54	54 X 18																						6.8							
S-107	1533	1620+82.00	LT	R6-1L-54	54 X 18																						6.8							
S-108	1533	1620+82.00	RT	R3-6L-36	36 X 42				29.0																		10.5							
S-108	1533	1620+82.00	RT	R5-1-48	48 X 48																						16.0							
S-108	1533	1620+82.00	RT	R6-1R-54	54 X 18																						6.8							
S-108	1533	1620+82.00	RT	R6-1L-54	54 X 18																						6.8							
	RAMP B6A																																		
S-109	1533	1803+90.00	LT	D10-H5a-30	30 X 30			29.0									2										6.3							
S-109	1533	1803+90.00	LT	R5-1a-42	42 X 30																						8.8							
S-109	1533	1803+90.00	LT	R5-1-48	48 X 48																						16.0							
S-110	1533	1803+90.00	RT	R3-6R-36	36 X 42			29.0									2										10.5							
S-110	1533	1803+90.00	RT	R5-1a-42	42 X 30																						8.8							
S-110	1533	1803+90.00	RT	R5-1-48	48 X 48																						16.0							
S-111	1533	1804+80.00	RT	D3-H6a-72	72 X 12				27.4																		6.0							
TOTALS CARRIED TO SHEET 1485						5	69.7	116.0	113.8	-	-	-	-	-	-	-	10	-	2	1	-	-	-	-	-	6	-	340.4	175.0	236.0	-	-	-	5

Preliminary Plans - For Reference Only

SIGNING SUBSUMMARY - 5

CUY-90-16.28 (CCG3A)

MODEL: Sheet-05 PAPERSIZE: 34x22 (in.) DATE: 6/16/2025 TIME: 6:44:57 PM USER: Mala.Gallagher
pw:\\mb-us-pw.bentley.com:mb-us-pw-03\Documents\Cleveland_OH\01_Projects\ODOT\District12\82382\400-Engineering\Traffic\Sheets\82382_TS101.dgn
TS101.dgn

DESIGN AGENCY
Michael Baker INTERNATIONAL

DESIGNER RBK
REVIEWER GSH 05/22/24
PROJECT ID 82382
SHEET 1473 TOTAL 2696

REF NO.	SHEET NO.	STATION	SIDE	CODE	SIZE	625 GROUND ROD	630 GROUND MOUNTED SUPPORT, NO. 2 POST	630 GROUND MOUNTED SUPPORT, NO. 3 POST	630 GROUND MOUNTED SUPPORT, NO. 4 POST, AS PER PLAN	630 GROUND MOUNTED STRUCTURAL BEAM SUPPORT, S4X7.7	630 GROUND MOUNTED STRUCTURAL BEAM SUPPORT, W6X9	630 GROUND MOUNTED STRUCTURAL BEAM SUPPORT, W8X18	630 GROUND MOUNTED STRUCTURAL BEAM SUPPORT, W10X22	630 GROUND MOUNTED STRUCTURAL BEAM SUPPORT, W10X12	630 ONE WAY SUPPORT, NO. 2 POST	630 ONE WAY SUPPORT, NO. 4 POST	630 SIGN POST REFLECTOR	630 BREAKAWAY STRUCTURAL BEAM CONNECTION	630 OVERHEAD SIGN SUPPORT, TYPE TC-12.31, DESIGN 12	630 OVERHEAD SIGN SUPPORT, TYPE TC-15.116, DESIGN 1	630 OVERHEAD SIGN SUPPORT, TYPE TC-15.116, DESIGN 2	630 OVERHEAD SIGN SUPPORT, TYPE TC-15.116, DESIGN 3	630 OVERHEAD SIGN SUPPORT, TYPE TC-16.22, DESIGN 13	630 SIGN ATTACHMENT ASSEMBLY	630 SIGN HANGER ASSEMBLY, MAST ARM	630 SIGN SUPPORT ASSEMBLY, POLE MOUNTED	630 SIGN SUPPORT ASSEMBLY, BRIDGE MOUNTED, TYPE 2	630 SIGN, FLAT SHEET	630 SIGN, GROUND MOUNTED EXTRUSHEET	630 SIGN, OVERHEAD EXTRUSHEET	630 SIGN, DOUBLE FACED, STREET NAME, AS PER PLAN	630 CONCRETE BARRIER MEDIAN OVERHEAD SIGN SUPPORT FOUNDATION, TYPE TC-21.50	630 GROUND MOUNTED STRUCTURAL BEAM SUPPORT FOUNDATION	630 RIGID OVERHEAD SIGN SUPPORT FOUNDATION
					IN	EACH	FT	FT	FT	FT	FT	FT	FT	FT	FT	FT	EACH	EACH	EACH	EACH	EACH	EACH	EACH	EACH	EACH	EACH	EACH	SF	SF	SF	EACH	EACH	EACH	EACH
	RAMP B6A (CONT.)																																		
S-111	1533	1804+80.00	RT	D3-H6a-72	72 X 12																						6.0							
S-111	1533	1804+80.00	RT	D3-H6a-72	72 X 24																						12.0							
S-112	1533	1806+40.00	LT	R5-1-48	48 X 48				30.0								2										16.0							
S-112	1533	1806+40.00	LT	R6-1R-54	54 X 18																						6.8							
S-112	1533	1806+40.00	LT	R6-1L-54	54 X 18																						6.8							
S-113	1533	1806+40.00	RT	R3-6R-36	36 X 42				29.0																		10.5							
S-113	1533	1806+40.00	RT	R5-1-48	48 X 48																						16.0							
S-113	1533	1806+40.00	RT	R6-1R-54	54 X 18																						6.8							
S-113	1533	1806+40.00	RT	R6-1L-54	54 X 18																						6.8							
	RAMP IH4																																		
S-114	1534	13+83.00	RT	E5-H1c-48	48 X 84					36.0																	28.0							
S-115	1534	16+00.00	LT	D10-H5a-30	30 X 30		13.0																				6.3							
S-116	1534	16+50.00	LT	R5-1a-42	42 X 30			24.0									2										8.8							
S-117	1534	16+50.00	RT	R5-1a-42	42 X 30			24.0									2										8.8							
S-118	1534	17+90.00	LT	W4-3R-48	48 X 48			32.4																			16.0							
S-119	1534	18+00.00	LT	R5-1a-42	36 X 36			13.5									1										9.0							
	RAMP H6																																		
S-120	1534	1181+50.00	RT	W13-2-48	48 X 60			40.6																			20.0							
S-120	1534	1181+50.00	RT	W1-2R-48	48 X 48																						16.0							
S-121	1534	1272+85.00	CL	LEVEL 1	120 X 96	2														1									80.0		1		1	
S-121	1534	1272+85.00	CL	LEVEL 1	144 X 84																								84.0					
S-121	1534	1272+85.00	CL	LEVEL 1	168 X 72																								84.0					
	RAMP H5																																		
S-122	1535	986+00.00	RT	W4-2R-48	48 X 48			32.4																			16.0							
S-123	1535	1085+25.00	RT	W16-2aP-30	30 X 18			33.6																			3.8							
S-123	1535	1085+25.00	RT	W9-1R-48	48 X 48																						16.0							
	RAMP IH6																																		
S-124	1535	1184+00.00	RT	W3-3-48	48 X 48			32.4																			16.0							
S-125	1535	1184+10.00	LT	E5-H1c-48	48 X 84					36.0																	28.0							
S-126	1535	1185+50.00	RT	R3-H8bh-36	36 X 30			26.0																			7.5							
S-127	1535	1186+00.00	LT	R5-1a-42	42 X 30			24.0									2										8.8							
S-128	1535	1186+00.00	RT	R5-1a-42	42 X 30			24.0									2										8.8							
	RAMP H5																																		
S-129	1536	990+00.00	CL	LEVEL 1	120 X 96	2														1									80.0				2	
S-129	1536	990+00.00	CL	LEVEL 1	192 X 72																								96.0					
S-129	1536	990+00.00	CL	E1-H5P-120	120 X 30																								25.0					
	RAMP H6																																		
S-130	1537	1186+59.00	LT	D7-H17	216 X 72									38.0														108.0						
S-131	1537	1187+50.00	RT	D10-H5a-30	30 X 30			13.0																			6.3							
S-132	1537	1188+50.00	LT	R5-1a-42	42 X 30			29.2									2										8.8							
S-132	1537	1188+50.00	LT	R3-H8bh-36	36 X 30																						7.5							
S-133	1537	1188+50.00	RT	R5-1a-42	42 X 30			29.2									2										8.8							
S-133	1537	1188+50.00	RT	R3-H8bh-36	36 X 30																						7.5							
S-134	1538	1191+00.00	LT	R3-8b-48	48 X 30			26.0																			10.0							
S-135	1538	1192+00.00	LT	R5-1-48	48 X 48				30.0								2										16.0							
S-135	1538	1192+00.00	LT	R6-1R-54	54 X 18																						6.8							
S-135	1538	1192+00.00	LT	R6-1L-54	54 X 18																						6.8							
TOTALS CARRIED TO SHEET 1485						4	13.0	404.3	89.0	72.0	-	-	-	38.0	-	-	17	-	-	2	-	-	-	-	-	-	-	384.0	108.0	449.0	-	1	-	3

Preliminary Plans - For Reference Only

SIGNING SUBSUMMARY - 6

CUY-90-16.28 (CCG3A)

MODEL: Sheet-06 PAPERSIZE: 34x22 (in.) DATE: 5/23/2025 TIME: 11:06:23 AM USER: Joseph.Hogan
pw:\\mb-us-pw.bentley.com:mb-us-pw-03\Documents\Cleveland_OH\01_Projects\ODOT\District12\82382\400-Engineering\Traffic\Sheets\82382_TS101.dgn

DESIGN AGENCY
Michael Baker INTERNATIONAL

DESIGNER RBK

REVIEWER GSH 05/22/24

PROJECT ID 82382

SHEET 1474 TOTAL 2696

REF NO.	SHEET NO.	STATION	SIDE	CODE	SIZE	625 GROUND ROD	630 GROUND MOUNTED SUPPORT, NO. 2 POST	630 GROUND MOUNTED SUPPORT, NO. 3 POST	630 GROUND MOUNTED SUPPORT, NO. 4 POST, AS PER PLAN	630 GROUND MOUNTED STRUCTURAL BEAM SUPPORT, S4X7.7	630 GROUND MOUNTED STRUCTURAL BEAM SUPPORT, W6X9	630 GROUND MOUNTED STRUCTURAL BEAM SUPPORT, W8X18	630 GROUND MOUNTED STRUCTURAL BEAM SUPPORT, W10X22	630 GROUND MOUNTED STRUCTURAL BEAM SUPPORT, W10X12	630 ONE WAY SUPPORT, NO. 2 POST	630 ONE WAY SUPPORT, NO. 4 POST	630 SIGN POST REFLECTOR	630 BREAKAWAY STRUCTURAL BEAM CONNECTION	630 OVERHEAD SIGN SUPPORT, TYPE TC-12.31, DESIGN 12	630 OVERHEAD SIGN SUPPORT, TYPE TC-15.116, DESIGN 1	630 OVERHEAD SIGN SUPPORT, TYPE TC-15.116, DESIGN 2	630 OVERHEAD SIGN SUPPORT, TYPE TC-15.116, DESIGN 3	630 OVERHEAD SIGN SUPPORT, TYPE TC-16.22, DESIGN 13	630 SIGN ATTACHMENT ASSEMBLY	630 SIGN HANGER ASSEMBLY, MAST ARM	630 SIGN SUPPORT ASSEMBLY, POLE MOUNTED	630 SIGN SUPPORT ASSEMBLY, BRIDGE MOUNTED, TYPE 2	630 SIGN, FLAT SHEET	630 SIGN, GROUND MOUNTED EXTRUSHEET	630 SIGN, OVERHEAD EXTRUSHEET	630 SIGN, DOUBLE FACED, STREET NAME, AS PER PLAN	630 CONCRETE BARRIER MEDIAN OVERHEAD SIGN SUPPORT FOUNDATION, TYPE TC-21.50	630 GROUND MOUNTED STRUCTURAL BEAM SUPPORT FOUNDATION	630 RIGID OVERHEAD SIGN SUPPORT FOUNDATION
					IN	EACH	FT	FT	FT	FT	FT	FT	FT	FT	FT	FT	EACH	EACH	EACH	EACH	EACH	EACH	EACH	EACH	EACH	EACH	EACH	SF	SF	SF	EACH	EACH	EACH	EACH
	RAMP H6 (CONT.)																																			
S-136	1538	1192+00.00	RT	R5-1-48	48 X 48				30.0								2										16.0								
S-136	1538	1192+00.00	RT	R6-1R-54	54 X 18																						6.8								
S-136	1538	1192+00.00	RT	R6-1L-54	54 X 18																						6.8								
	I.R. 77																																			
S-137	1539			E1-H5bP-132	132 X 54																				1				49.5						
S-138	1539	29+05.00	CL	E1-H5bP-132	132 X 54																								49.5						
S-138	1539	29+05.00	CL	E1-H5bP-132	132 X 54																								49.5						
S-138	1539	29+05.00	CL	E1-H5P-120	120 X 30																								25.0						
S-138	1539	29+05.00	CL	E1-H5P-120	120 X 30																								25.0						
S-138	1539	40+16.00	CL	LEVEL 1	132 X 132																				3				121.0						
S-138	1539	40+16.00	CL	LEVEL 1	132 X 132																				2				121.0						
S-138	1539	40+16.00	CL	LEVEL 1	120 X 108																				2				90.0						
S-138	1539	40+16.00	CL	LEVEL 1	120 X 72																				2				60.0						
S-138	1539	40+16.00	CL	LEVEL 1	168 X 108																				3				126.0						
S-139	1539	45+85.00	RT	LEVEL 1	180 X 108								54.8															135.0					2		
S-139	1539	45+85.00	RT	E1-H5bP-132	132 X 54																							49.5							
S-140	1539	56+63.00	CL	LEVEL 1	132 X 132																				3				121.0						
S-140	1539	56+63.00	CL	LEVEL 1	132 X 132																				1				121.0						
S-140	1539	56+63.00	CL	LEVEL 1	120 X 108																				1				90.0						
S-140	1539	56+63.00	CL	LEVEL 1	120 X 72																				1				60.0						
S-140	1539	56+63.00	CL	LEVEL 1	120 X 72																				1				60.0						
S-140	1539	56+75.00	CL	E1-H5bP-132	132 X 54																								49.5						
S-140	1539	56+75.00	CL	E1-H5bP-132	132 X 54																								49.5						
S-140	1539	56+75.00	CL	E1-H5P-120	120 X 30																								25.0						
	RAMP IJ3																																			
S-141	1540	104+70.00	LT	W1-8L-36	36 X 48			29.0									2										12.0								
S-142	1540	105+50.00	LT	W1-8L-36	36 X 48			29.0									2										12.0								
S-143	1540	107+00.00	LT	W1-1L-36	36 X 36		32.8																				9.0								
S-143	1540	107+00.00	LT	W13-1P-30	30 X 30																						6.3								
	EX. RAMP E-17																																			
S-144	1540	61+00.00	RT	D10-H5a-30	30 X 30		13.0																				6.3								
S-145	1540	62+25.00	LT	W1-8R-36	36 X 48			29.0									2										12.0								
S-146	1540	62+65.00	LT	W1-8R-36	36 X 48			29.0									2										12.0								
S-147	1540	63+05.00	LT	W1-8R-36	36 X 48			29.0									2										12.0								
S-148	1540	63+45.00	LT	W1-8R-36	36 X 48			29.0									2										12.0								
S-149	1540	63+85.00	LT	W1-8R-36	36 X 48			29.0									2										12.0								
S-150	1540	64+25.00	LT	W1-8R-36	36 X 48			29.0									2										12.0								
	RAMP IJ3																																			
S-151	1541	108+10.00	RT	W1-8R-36	36 X 48			29.0									2										12.0								
S-152	1541	108+90.00	RT	W1-8R-36	36 X 48			29.0									2										12.0								
S-153	1541	109+70.00	RT	W1-8R-36	36 X 48			29.0									2										12.0								
S-154	1541	110+50.00	RT	W1-8R-36	36 X 48			29.0									2										12.0								
	CARNEGIE AVE.																																			
S-155	1562	36+00.00	RT	SPECIAL-48	48 X 144																					1		48.0								
S-156	1562	37+81.00	RT	R7-5-12	12 X 18		14.2																				1.5								
S-156	1562	37+81.00	RT	R7-H2b-12	12 X 18																						1.5								
S-156	1562	37+81.00	RT	R7-4-12	12 X 18																						1.5								
S-157	1563	38+19.00	RT	R7-4-12	12 X 18																					1		1.5								
TOTALS CARRIED TO SHEET 1485						-	60.0	348.0	30.0	-	-	-	54.8	-	-	-	26	-	-	-	-	-	-	19	-	2	-	249.2	184.5	1232.5	-	-	2	-

Preliminary Plans - For Reference Only

SIGNING SUBSUMMARY - 7

CUY-90-16.28 (CCG3A)

MODEL: Sheet-07 PAPERSIZE: 34x22 (in.) DATE: 5/23/2025 TIME: 11:06:25 AM USER: Joseph.Hogan
pw:\\mb-us-pw.bentley.com:mb-us-pw-03\Documents\Cleveland_OH\01_Projects\ODOT\District12\82382\400-Engineering\Traffic\Sheets\82382_TS101.dgn

DESIGN AGENCY
Michael Baker INTERNATIONAL

DESIGNER RBK

REVIEWER GSH 05/22/24

PROJECT ID 82382

SHEET 1475 TOTAL 2696

REF NO.	SHEET NO.	STATION	SIDE	CODE	SIZE	625 GROUND ROD	630 GROUND MOUNTED SUPPORT, NO. 2 POST	630 GROUND MOUNTED SUPPORT, NO. 3 POST	630 GROUND MOUNTED SUPPORT, NO. 4 POST, AS PER PLAN	630 GROUND MOUNTED STRUCTURAL BEAM SUPPORT, S4X7.7	630 GROUND MOUNTED STRUCTURAL BEAM SUPPORT, W6X9	630 GROUND MOUNTED STRUCTURAL BEAM SUPPORT, W8X18	630 GROUND MOUNTED STRUCTURAL BEAM SUPPORT, W10X22	630 GROUND MOUNTED STRUCTURAL BEAM SUPPORT, W10X12	630 ONE WAY SUPPORT, NO. 2 POST	630 ONE WAY SUPPORT, NO. 4 POST	630 SIGN POST REFLECTOR	630 BREAKAWAY STRUCTURAL BEAM CONNECTION	630 OVERHEAD SIGN SUPPORT, TYPE TC-12.31, DESIGN 12	630 OVERHEAD SIGN SUPPORT, TYPE TC-15.116, DESIGN 1	630 OVERHEAD SIGN SUPPORT, TYPE TC-15.116, DESIGN 2	630 OVERHEAD SIGN SUPPORT, TYPE TC-15.116, DESIGN 3	630 OVERHEAD SIGN SUPPORT, TYPE TC-16.22, DESIGN 13	630 SIGN ATTACHMENT ASSEMBLY	630 SIGN HANGER ASSEMBLY, MAST ARM	630 SIGN SUPPORT ASSEMBLY, POLE MOUNTED	630 SIGN SUPPORT ASSEMBLY, BRIDGE MOUNTED, TYPE 2	630 SIGN, FLAT SHEET	630 SIGN, GROUND MOUNTED EXTRUSHEET	630 SIGN, OVERHEAD EXTRUSHEET	630 SIGN, DOUBLE FACED, STREET NAME, AS PER PLAN	630 CONCRETE BARRIER MEDIAN OVERHEAD SIGN SUPPORT FOUNDATION, TYPE TC-21.50	630 GROUND MOUNTED STRUCTURAL BEAM SUPPORT FOUNDATION	630 RIGID OVERHEAD SIGN SUPPORT FOUNDATION
					IN	EACH	FT	FT	FT	FT	FT	FT	FT	FT	FT	FT	EACH	EACH	EACH	EACH	EACH	EACH	EACH	EACH	EACH	EACH	EACH	SF	SF	SF	EACH	EACH	EACH	EACH
	CARNEGIE AVE. (CONT.)																																	
S-157	1563	38+19.00	RT	SPECIAL-48	48 X 144																			1		48.0							
S-158	1563	39+94.00	RT	R7-4-12	12 X 18		12.0																			1.5							
S-159	1563	40+42.00	LT	SPECIAL-90	90 X 36	1																1						22.5			1		
S-159	1563	40+42.00	LT	SPECIAL-90	90 X 36																							22.5					
S-159	1563	40+42.00	LT	R3-Ha-30	30 X 36																		1			7.5							
S-159	1563	40+42.00	LT	R3-6R-30	30 X 36																		1			7.5							
S-160	1563	40+73.00	RT	R7-4-12	12 X 18		12.0																			1.5							
S-161	1563	42+85.00	RT	SPECIAL-48	48 X 108																			1		36.0							
		E. 14TH ST. SB																																
S-162	1563	40+05.00	RT	R7-1-12	12 X 18																			1		1.5							
S-163	1563	40+18.00	LT	SPECIAL-48	48 X 144																			1		48.0							
S-164	1563	59+80.00	RT	R3-H8cg-48	48 X 30		26.0																			10.0							
		E. 18TH ST.																																
S-165	1563	24+15.00	LT	SPECIAL-48	48 X 108																			1		36.0							
S-165	1563	24+15.00	LT	R5-1-48	48 X 48																			1		16.0							
S-165	1563	24+15.00	LT	R6-1L-36	36 X 12																			1		3.0							
S-165	1563	24+15.00	LT	R6-1R-36	36 X 12																			1		3.0							
S-166	1563	24+26.00	RT	M2-H3-48	48 X 72				16.6																	24.0							
S-166	1563	24+26.00	RT	R5-1-48	48 X 48										1.0	16.6										16.0							
S-166	1563	24+26.00	RT	R6-1L-36	36 X 12																					3.0							
S-166	1563	24+26.00	RT	R6-1R-36	36 X 12																					3.0							
S-167	1563	25+58.00	LT	SPECIAL-48	48 X 108																			1		36.0							
S-167	1563	25+58.00	LT	M2-H3-48	48 X 72																			1		24.0							
S-168	1563	26+56.00	LT	R3-H8bd-30	30 X 30																			1		6.3							
S-169	1563	29+05.00	LT	SPECIAL-48	48 X 108																			1		36.0							
S-169	1563	29+05.00	LT	M2-H3-48	48 X 72																			1		24.0							
		CARNEGIE AVE.																																
S-170	1564	46+29.00	RT	M2-H3-48	48 X 72																			1		24.0							
S-171	1564	46+81.00	RT	R2-1-24	24 X 30		13.0																			5.0							
		EX. E. 19TH ST.																																
S-172	1564	4+23.00	LT	R7-1-12	12 X 18																			1		1.5							
S-173	1564	4+23.00	RT	R7-1-12	12 X 18																			1		1.5							
S-174	1564	4+75.00	RT	R7-1-12	12 X 18		27.2																			1.5							
S-174	1564	4+75.00	RT	R3-H8bd-30	30 X 30																					6.3							
		CARNEGIE AVE.																																
S-175	1565	47+70.00	RT	M2-H3-48	48 X 72																			1		24.0							
S-176	1565	48+97.00	RT	R7-1-12	12 X 18																			1		1.5							
S-177	1565	49+12.00	RT	M2-H3-48	48 X 72																			1		24.0							
S-178	1565	49+28.00	LT	SPECIAL-48	48 X 108																			1		36.0							
S-179	1565	50+05.00	RT	M2-H3-48	48 X 72																			1		24.0							
S-180	1565	50+24.00	LT	R5-1-36	36 X 36				13.6								1									9.0							
S-180	1565	50+24.00	LT	R6-1L-36	36 X 12																					3.0							
S-180	1565	50+24.00	LT	R6-1R-36	36 X 12																					3.0							
S-181	1565	50+37.00	RT	M2-H3-48	48 X 72					34.0																24.0							
S-182	1565	50+40.00	LT	R7-1-12	12 X 18																			1		1.5							
S-182	1565	50+40.00	LT	M2-H3-48	48 X 72																			1		24.0							
TOTALS CARRIED TO SHEET 1485						1	90.2	-	30.2	34.0	-	-	-	-	1.0	16.6	1	-	-	-	-	-	1	-	2	23	-	605.6	-	45.0	-	-	-	1

Preliminary Plans - For Reference Only

SIGNING SUBSUMMARY - 8

DESIGN AGENCY
Michael Baker INTERNATIONAL

DESIGNER RBK

REVIEWER GSH 05/22/24

PROJECT ID 82382

SHEET 1476 TOTAL 2696

CUY-90-16.28 (CCG3A)

MODEL: Sheet-08 PAPERSIZE: 34x22 (in.) DATE: 5/23/2025 TIME: 11:06:27 AM USER: Joseph.Hogan
pw:\\mb-us-pw.bentley.com:mb-us-pw-03\Documents\Cleveland_OH\01_Projects\ODOT\District12\82382\400-Engineering\Traffic\Sheets\82382_TS101.dgn
1.dgn

REF NO.	SHEET NO.	STATION	SIDE	CODE	SIZE	625 GROUND ROD	630 GROUND MOUNTED SUPPORT, NO. 2 POST	630 GROUND MOUNTED SUPPORT, NO. 3 POST	630 GROUND MOUNTED SUPPORT, NO. 4 POST, AS PER PLAN	630 GROUND MOUNTED STRUCTURAL BEAM SUPPORT, S4X7.7	630 GROUND MOUNTED STRUCTURAL BEAM SUPPORT, W6X9	630 GROUND MOUNTED STRUCTURAL BEAM SUPPORT, W8X18	630 GROUND MOUNTED STRUCTURAL BEAM SUPPORT, W10X22	630 GROUND MOUNTED STRUCTURAL BEAM SUPPORT, W10X12	630 ONE WAY SUPPORT, NO. 2 POST	630 ONE WAY SUPPORT, NO. 4 POST	630 SIGN POST REFLECTOR	630 BREAKAWAY STRUCTURAL BEAM CONNECTION	630 OVERHEAD SIGN SUPPORT, TYPE TC-12.31, DESIGN 12	630 OVERHEAD SIGN SUPPORT, TYPE TC-15.116, DESIGN 1	630 OVERHEAD SIGN SUPPORT, TYPE TC-15.116, DESIGN 2	630 OVERHEAD SIGN SUPPORT, TYPE TC-15.116, DESIGN 3	630 OVERHEAD SIGN SUPPORT, TYPE TC-16.22, DESIGN 13	630 SIGN ATTACHMENT ASSEMBLY	630 SIGN HANGER ASSEMBLY, MAST ARM	630 SIGN SUPPORT ASSEMBLY, POLE MOUNTED	630 SIGN SUPPORT ASSEMBLY, BRIDGE MOUNTED, TYPE 2	630 SIGN, FLAT SHEET	630 SIGN, GROUND MOUNTED EXTRUSHEET	630 SIGN, OVERHEAD EXTRUSHEET	630 SIGN, DOUBLE FACED, STREET NAME, AS PER PLAN	630 CONCRETE BARRIER MEDIAN OVERHEAD SIGN SUPPORT FOUNDATION, TYPE TC-21.50	630 GROUND MOUNTED STRUCTURAL BEAM SUPPORT FOUNDATION	630 RIGID OVERHEAD SIGN SUPPORT FOUNDATION
					IN	EACH	FT	FT	FT	FT	FT	FT	FT	FT	FT	FT	EACH	EACH	EACH	EACH	EACH	EACH	EACH	EACH	EACH	EACH	EACH	SF	SF	SF	EACH	EACH	EACH	EACH
	CARNEGIE AVE. (CONT.)																																			
S-183	1565	51+00.00	RT	R3-H8da-54	54 X 30		26.0																				11.3							
S-184	1565	51+25.00	RT	R7-1-12	12 X 18																				1		1.5							
S-184	1565	51+25.00	RT	R7-107-12	12 X 18																				1		1.5							
S-185	1565	51+50.00	LT	R7-5-12	12 X 18		12.6																				1.5							
S-185	1565	51+50.00	LT	R7-1-12	12 X 18																						1.5							
S-186	1565	52+00.00	RT	R3-H8da-54	54 X 30		26.0																				11.3							
	E. 21ST ST.																																			
S-187	1565	100+64.00	RT	M2-H3-48	48 X 72																				1		24.0							
	CARNEGIE AVE.																																			
S-188	1566	52+50.00	RT	R7-107-12	12 X 18																				1		1.5							
S-188	1566	52+50.00	RT	R7-1-12	12 X 18																				1		1.5							
S-189	1566	52+61.00	LT	R7-1-12	12 X 18					38.4																	1.5							
S-189	1566	52+61.00	LT	R7-5-12	12 X 18																						1.5							
S-189	1566	52+61.00	LT	M2-H3-48	48 X 72																						24.0							
S-190	1566	53+05.00	LT	M2-H3-48	48 X 72																				1		24.0							
S-191	1566	53+99.00	LT	M2-H3-48	48 X 72																				1		24.0							
S-192	1566	54+00.00	LT	R7-1-12	12 X 18																				1		1.5							
S-193	1566	54+70.00	RT	R7-1-12	12 X 18																				1		1.5							
S-194	1566	55+55.00	LT	M2-H3-48	48 X 72																				1		24.0							
S-195	1566	56+17.00	LT	R2-1-24	24 X 30																				1		5.0							
S-196	1566	56+17.00	RT	R2-1-24	24 X 30																				1		5.0							
	E. 22ND ST.																																			
S-197	1566	28+53.00	RT	R7-107-12	12 X 18																				1		1.5							
S-197	1566	28+53.00	RT	R7-107-12	12 X 18																				1		1.5							
S-198	1566	29+13.00	RT	R7-107-12	12 X 18		12.6																				1.5							
S-198	1566	29+13.00	RT	R7-1-12	12 X 18																						1.5							
S-199	1566	36+10.00	RT	R3-H8cg-48	48 X 30			13.0																			10.0							
S-200	1566	36+34.00	LT	R7-1-12	12 X 18		12.6																				1.5							
S-200	1566	36+34.00	LT	R3-17-24	24 X 18																						3.0							
S-201	1566	36+45.00	RT	R7-1-12	12 X 18																				1		1.5							
S-202	1566	36+65.00	RT	R1-1-18	18 X 18		12.0										1										2.3							
	CARNEGIE AVE.																																			
S-203	1567	57+04.00	LT	SPECIAL-48	48 X 108																				1		36.0							
S-204	1567	57+30.00	LT	R7-1-12	12 X 18																				1		1.5							
S-205	1567	57+45.00	RT	R7-1-12	12 X 18																				1		1.5							
S-206	1567	58+50.00	LT	M2-H3-48	48 X 72																				1		24.0							
S-207	1567	59+29.00	LT	W3-5-36	36 X 36																				1		9.0							
S-208	1567	60+45.00	RT	R7-1-12	12 X 18																				1		1.5							
S-209	1567	61+00.00	LT	R7-1-12	12 X 18																				1		1.5							
S-210	1568	64+05.00	RT	R7-1-12	12 X 18																				1		1.5							
S-211	1568	64+60.00	LT	R7-1-12	12 X 18																				1		1.5							
S-212	1568	66+38.00	LT	R7-1-12	12 X 18		12.0																				1.5							
	MIDTOWN CONNECTOR																																			
S-213	1568	512+60.00	LT	W16-9P-24	24 X 12			14.2									1										2.0							
S-213	1568	512+60.00	LT	W11-2-30	30 X 30																						6.3							
S-214	1568	512+94.00	RT	R7-1-12	12 X 18		12.0																				1.5							
TOTALS CARRIED TO SHEET 1485						-	125.8	27.2	-	38.4	-	-	-	-	-	-	2	-	-	-	-	-	-	-	24	-	281.2	-	-	-	-	-	-	

Preliminary Plans - For Reference Only

SIGNING SUBSUMMARY - 9

CUY-90-16.28 (CCG3A)

MODEL: Sheet-09 PAPERSIZE: 34x22 (in.) DATE: 5/23/2025 TIME: 11:06:29 AM USER: Joseph.Hogan
pw:\\mb-us-pw.bentley.com:mb-us-pw-03\Documents\Cleveland_OH\01_Projects\ODOT\District12\82382\400-Engineering\Traffic\Sheets\82382_TS101.dgn

DESIGN AGENCY
Michael Baker INTERNATIONAL

DESIGNER RBK

REVIEWER GSH 05/22/24

PROJECT ID 82382

SHEET 1477 TOTAL 2696

REF NO.	SHEET NO.	STATION	SIDE	CODE	SIZE	625 GROUND ROD	630 GROUND MOUNTED SUPPORT, NO. 2 POST	630 GROUND MOUNTED SUPPORT, NO. 3 POST	630 GROUND MOUNTED SUPPORT, NO. 4 POST, AS PER PLAN	630 GROUND MOUNTED STRUCTURAL BEAM SUPPORT, S4X7.7	630 GROUND MOUNTED STRUCTURAL BEAM SUPPORT, W6X9	630 GROUND MOUNTED STRUCTURAL BEAM SUPPORT, W8X18	630 GROUND MOUNTED STRUCTURAL BEAM SUPPORT, W10X22	630 GROUND MOUNTED STRUCTURAL BEAM SUPPORT, W10X12	630 ONE WAY SUPPORT, NO. 2 POST	630 ONE WAY SUPPORT, NO. 4 POST	630 SIGN POST REFLECTOR	630 BREAKAWAY STRUCTURAL BEAM CONNECTION	630 OVERHEAD SIGN SUPPORT, TYPE TC-12.31, DESIGN 12	630 OVERHEAD SIGN SUPPORT, TYPE TC-15.116, DESIGN 1	630 OVERHEAD SIGN SUPPORT, TYPE TC-15.116, DESIGN 2	630 OVERHEAD SIGN SUPPORT, TYPE TC-15.116, DESIGN 3	630 OVERHEAD SIGN SUPPORT, TYPE TC-16.22, DESIGN 13	630 SIGN ATTACHMENT ASSEMBLY	630 SIGN HANGER ASSEMBLY, MAST ARM	630 SIGN SUPPORT ASSEMBLY, POLE MOUNTED	630 SIGN SUPPORT ASSEMBLY, BRIDGE MOUNTED, TYPE 2	630 SIGN, FLAT SHEET	630 SIGN, GROUND MOUNTED EXTRUSHEET	630 SIGN, OVERHEAD EXTRUSHEET	630 SIGN, DOUBLE FACED, STREET NAME, AS PER PLAN	630 CONCRETE BARRIER MEDIAN OVERHEAD SIGN SUPPORT FOUNDATION, TYPE TC-21.50	630 GROUND MOUNTED STRUCTURAL BEAM SUPPORT FOUNDATION	630 RIGID OVERHEAD SIGN SUPPORT FOUNDATION
					IN	EACH	FT	FT	FT	FT	FT	FT	FT	FT	FT	FT	EACH	EACH	EACH	EACH	EACH	EACH	EACH	EACH	EACH	EACH	EACH	SF	SF	SF	EACH	EACH	EACH	EACH
	MIDTOWN CONNECTOR (CONT.)																																		
S-215	1568	513+25.00	LT	R7-1-12	12 X 18																			1		1.5								
S-215	1568	513+25.00	LT	R2-1-24	24 X 30																			1		5.0								
S-216	1568	513+58.00	RT	R3-H8bd-30	30 X 30		13.0																			6.3								
S-217	1568	513+61.00	LT	R1-1-18	18 X 18		12.0										1									2.3								
	CARNEGIE AVE.																																		
S-218	1569	67+43.00	RT	R7-1-12	12 X 18																			1		1.5								
S-219	1569	68+76.00	LT	R9-5-12	12 X 18																			1		1.5								
S-220	1569	68+80.00	RT	D3-1-30	30 X 12																			1					1					
S-220	1569	68+80.00	RT	D3-1-30	30 X 12																			1					1					
	E. 28TH ST.																																		
S-221	1569	13+03.00	RT	R1-1-36	36 X 36			13.5									1									9.0								
	E. 14TH ST. NB XOVER																																		
S-222	1570	250+58.00	LT	R3-7-36	36 X 36			13.5																		9.0								
S-223	1570	251+50.00	RT	R7-1-12	12 X 18		12.0																			1.5								
S-224	1570	251+75.00	LT	R3-7-36	36 X 36			13.5																		9.0								
S-225	1570	252+05.00	LT	R7-1-12	12 X 18																			1		1.5								
S-226	1570	252+45.00	RT	R2-1-30	30 X 36			13.5																		7.5								
	INTERIM E. 14TH ST. SB																																		
S-227	1570	197+92.00	LT	D7-H1-96	96 X 24									40.0													16.0							
S-227	1570	197+92.00	LT	D7-H1-96	96 X 24																						16.0							
S-227	1570	197+92.00	LT	D7-H1-96	96 X 24																						16.0							
S-227	1570	197+92.00	LT	D7-H1-96	96 X 24																						16.0							
	E. 14TH ST.																																		
S-228	1570	15+33.00	RT	W9-1L-36	36 X 36			13.5																		9.0								
S-229	1570	15+35.00	RT	OM1-3-18	18 X 18				15.8																	2.3								
S-229	1570	15+35.00	RT	R4-7b-36	36 X 48																					12.0								
S-230	1570	15+62.00	LT	M6-2R-21	21 X 15																			1		2.2								
S-230	1570	15+62.00	LT	M1-5-24-2	24 X 24																			1		4.0								
S-230	1570	15+62.00	LT	M1-4-30-3	30 X 30																			1		6.3								
S-230	1570	15+62.00	LT	M3-4-24	24 X 12																			1		2.0								
S-231	1570	16+35.00	RT	W4-2L-36	36 X 36			14.8																		9.0								
S-232	1570	16+35.00	RT	W4-2L-36	36 X 36			14.8																		9.0								
	EX. RAMP E-17																																		
S-233	1571	65+00.00	RT	W4-3R-36	36 X 36			14.8																		9.0								
	E. 14TH ST. NB XOVER																																		
S-234	1571	253+00.00	RT	R7-1-12	12 X 18		12.0																			1.5								
S-235	1571	253+08.00	LT	OM1-3-18	18 X 18				15.8																	2.3								
S-235	1571	253+08.00	LT	R4-7b-36	36 X 48																					12.0								
	INTERIM E. 14TH ST. SB																																		
S-236	1571	198+65.00	LT	R4-H3a-36	36 X 48				14.5																	12.0								
S-237	1571	199+30.00	LT	R7-1-12	12 X 18		12.0																			1.5								
S-238	1571	199+85.00	LT	D3-H6a-96	96 X 24						34.0																16.0							
S-239	1571	200+87.00	LT	M2-H6-66	66 X 24			27.0																		11.0								
S-239	1571	200+87.00	LT	M2-H6-66	66 X 24																					11.0								
S-240	1571	201+30.00	LT	R7-1-12	12 X 18		12.0																			1.5								
S-241	1571	202+97.00	LT	W4-3R-36	36 X 36			14.8																		9.0								
TOTALS CARRIED TO SHEET 1485						-	73.0	153.7	46.1	-	34.0	-	-	40.0	-	-	2	-	-	-	-	-	-	-	11	-	182.2	80.0	-	2	-	-	-			

Preliminary Plans - For Reference Only

SIGNING SUBSUMMARY - 10

DESIGN AGENCY
Michael Baker INTERNATIONAL

DESIGNER RBK
REVIEWER GSH 05/22/24
PROJECT ID 82382
SHEET 1478 TOTAL 2696

CUY-90-16.28 (CCG3A)

MODEL: Sheet-10 PAPERSIZE: 34x22 (in.) DATE: 5/23/2025 TIME: 11:06:31 AM USER: Joseph.Hogan
pw:\\mb-us-pw.bentley.com:mb-us-pw-03\Documents\Cleveland_OH\01_Projects\ODOT\District12\82382\400-Engineering\Traffic\Sheets\82382_TS101.dgn
TS101.dgn

REF NO.	SHEET NO.	STATION	SIDE	CODE	SIZE	625 GROUND ROD	630 GROUND MOUNTED SUPPORT, NO. 2 POST	630 GROUND MOUNTED SUPPORT, NO. 3 POST	630 GROUND MOUNTED SUPPORT, NO. 4 POST, AS PER PLAN	630 GROUND MOUNTED STRUCTURAL BEAM SUPPORT, S4X7.7	630 GROUND MOUNTED STRUCTURAL BEAM SUPPORT, W6X9	630 GROUND MOUNTED STRUCTURAL BEAM SUPPORT, W8X18	630 GROUND MOUNTED STRUCTURAL BEAM SUPPORT, W10X22	630 GROUND MOUNTED STRUCTURAL BEAM SUPPORT, W10X12	630 ONE WAY SUPPORT, NO. 2 POST	630 ONE WAY SUPPORT, NO. 4 POST	630 SIGN POST REFLECTOR	630 BREAKAWAY STRUCTURAL BEAM CONNECTION	630 OVERHEAD SIGN SUPPORT, TYPE TC-12.31, DESIGN 12	630 OVERHEAD SIGN SUPPORT, TYPE TC-15.116, DESIGN 1	630 OVERHEAD SIGN SUPPORT, TYPE TC-15.116, DESIGN 2	630 OVERHEAD SIGN SUPPORT, TYPE TC-15.116, DESIGN 3	630 OVERHEAD SIGN SUPPORT, TYPE TC-16.22, DESIGN 13	630 SIGN ATTACHMENT ASSEMBLY	630 SIGN HANGER ASSEMBLY, MAST ARM	630 SIGN SUPPORT ASSEMBLY, POLE MOUNTED	630 SIGN SUPPORT ASSEMBLY, BRIDGE MOUNTED, TYPE 2	630 SIGN, FLAT SHEET	630 SIGN, GROUND MOUNTED EXTRUSHEET	630 SIGN, OVERHEAD EXTRUSHEET	630 SIGN, DOUBLE FACED, STREET NAME, AS PER PLAN	630 CONCRETE BARRIER MEDIAN OVERHEAD SIGN SUPPORT FOUNDATION, TYPE TC-21.50	630 GROUND MOUNTED STRUCTURAL BEAM SUPPORT FOUNDATION	630 RIGID OVERHEAD SIGN SUPPORT FOUNDATION
					IN	EACH	FT	FT	FT	FT	FT	FT	FT	FT	FT	FT	EACH	EACH	EACH	EACH	EACH	EACH	EACH	EACH	EACH	EACH	SF	SF	SF	EACH	EACH	EACH	EACH
	E. 14TH ST. NB																																		
S-242	1572	52+75.00	LT	R7-1-12	12 X 18																				1		1.5								
S-243	1572	52+75.00	RT	R7-1-12	12 X 18		12.0																				1.5								
S-244	1572	53+04.00	LT	R5-1a-42	42 X 30			32.2									2										8.8								
S-244	1572	53+04.00	LT	R5-1-48	48 X 48																						16.0								
S-245	1572	53+04.00	RT	R5-1a-42	42 X 30			32.2									2										8.8								
S-245	1572	53+04.00	RT	R5-1-48	48 X 48																						16.0								
S-246	1572	54+00.00	LT	M2-H3-48	48 X 72					34.0																	24.0								
S-247	1572	54+00.00	RT	M2-H3-48	48 X 72					34.0																	24.0								
S-248	1572	54+75.00	LT	R7-1-12	12 X 18																				1		1.5								
S-249	1572	54+75.00	RT	R7-1-12	12 X 18		12.0																				1.5								
	INTERIM E. 14TH ST. SB																																		
S-250	1572	204+02.00	RT	OM1-3-18	18 X 18				15.8																		2.3								
S-250	1572	204+02.00	RT	R4-7b-36	36 X 48																						12.0								
S-251	1572	206+00.00	LT	R7-1-12	12 X 18																				1		1.5								
	E. 14TH ST. NB																																		
S-252	1573	55+50.00	RT	D3-H6a-96	96 X 24									42.0														16.0								
S-252	1573	55+50.00	RT	D3-H6a-96	96 X 24																							16.0								
S-252	1573	55+50.00	RT	D7-H1-96	96 X 24																							16.0								
S-252	1573	55+50.00	RT	D3-H5-96	96 X 36																							24.0								
S-253	1573	55+60.00	LT	R5-1a-42	42 X 30			32.2									2										8.8								
S-253	1573	55+60.00	LT	R5-1a-42	42 X 30			32.2									2										8.8								
S-253	1573	55+60.00	LT	R5-1-48	48 X 48																						16.0								
S-254	1573	55+60.00	RT	R5-1a-42	42 X 30			32.2									2										8.8								
S-254	1573	55+60.00	RT	R5-1-48	48 X 48																						16.0								
S-255	1573	57+00.00	LT	R7-1-12	12 X 18																				1		1.5								
S-256	1573	57+71.00	RT	W12-1-36	36 X 36			13.5																			9.0								
S-257	1573	58+67.00	RT	R7-1-12	12 X 18				37.4								2										1.5								
S-257	1573	58+67.00	RT	R5-1a-42	42 X 30												2										8.8								
S-257	1573	58+67.00	RT	R5-1-48	48 X 48																						16.0								
S-258	1573	58+76.00	LT	R5-1a-42	42 X 30			34.2									2										8.8								
S-258	1573	58+76.00	LT	R5-1-48	48 X 48																						16.0								
S-259	1573	58+90.00	LT	R7-1-12	12 X 18																				1		1.5								
S-260	1573	59+16.00	LT	OM1-3-18	18 X 18				15.8																		2.3								
S-260	1573	59+16.00	LT	R4-7b-36	36 X 48																						12.0								
	E. 14TH ST. SB																																		
S-261	1573	36+80.00	LT	R7-1-12	12 X 18																				1		1.5								
S-261	1573	36+80.00	LT	R2-1-30	30 X 36																				1		7.5								
	E. 18TH ST.																																		
S-262	1573	20+80.00	RT	R7-1-12	12 X 18		12.0																				1.5								
S-263	1573	22+55.00	LT	M5-1-21	21 X 15					33.0							2										2.2								
S-263	1573	22+55.00	LT	M1-1-24-2	24 X 24																						4.0								
S-263	1573	22+55.00	LT	M3-2-24	24 X 12																						2.0								
S-263	1573	22+55.00	LT	M4-5-24	24 X 12																						2.0								
S-263	1573	22+55.00	LT	M5-1-21	21 X 15																						2.2								
S-263	1573	22+55.00	LT	M1-1-24-2	24 X 24																						4.0								
S-263	1573	22+55.00	LT	M3-1-24	24 X 12																						2.0								
S-263	1573	22+55.00	LT	M4-5-24	24 X 12																						2.0								
S-263	1573	22+55.00	LT	R5-1a-42	42 X 30																						8.8								
TOTALS CARRIED TO SHEET 1485						-	36.0	176.5	69.0	101.0	-	-	-	42.0	-	-	14	-	-	-	-	-	-	-	-	7	-	286.1	72.0	-	-	-	-	-				

Preliminary Plans - For Reference Only

SIGNING SUBSUMMARY - 11

CUY-90-16.28 (CCG3A)

MODEL: Sheet-11 PAPERSIZE: 34x22 (in.) DATE: 5/23/2025 TIME: 11:06:33 AM USER: Joseph.Hogan
pw:\\mb-us-pw.bentley.com:mb-us-pw-03\Documents\Cleveland_OH\01_Projects\ODOT\District12\82382\400-Engineering\Traffic\Sheets\82382_TS101.dgn
1.dgn

DESIGN AGENCY
Michael Baker INTERNATIONAL

DESIGNER RBK

REVIEWER GSH 05/22/24

PROJECT ID 82382

SHEET 1479 | TOTAL 2696

REF NO.	SHEET NO.	STATION	SIDE	CODE	SIZE	625 GROUND ROD	630 GROUND MOUNTED SUPPORT, NO. 2 POST	630 GROUND MOUNTED SUPPORT, NO. 3 POST	630 GROUND MOUNTED SUPPORT, NO. 4 POST, AS PER PLAN	630 GROUND MOUNTED STRUCTURAL BEAM SUPPORT, S4X7.7	630 GROUND MOUNTED STRUCTURAL BEAM SUPPORT, W6X9	630 GROUND MOUNTED STRUCTURAL BEAM SUPPORT, W8X18	630 GROUND MOUNTED STRUCTURAL BEAM SUPPORT, W10X22	630 GROUND MOUNTED STRUCTURAL BEAM SUPPORT, W10X12	630 ONE WAY SUPPORT, NO. 2 POST	630 ONE WAY SUPPORT, NO. 4 POST	630 SIGN POST REFLECTOR	630 BREAKAWAY STRUCTURAL BEAM CONNECTION	630 OVERHEAD SIGN SUPPORT, TYPE TC-12.31, DESIGN 12	630 OVERHEAD SIGN SUPPORT, TYPE TC-15.116, DESIGN 1	630 OVERHEAD SIGN SUPPORT, TYPE TC-15.116, DESIGN 2	630 OVERHEAD SIGN SUPPORT, TYPE TC-15.116, DESIGN 3	630 OVERHEAD SIGN SUPPORT, TYPE TC-16.22, DESIGN 13	630 SIGN ATTACHMENT ASSEMBLY	630 SIGN HANGER ASSEMBLY, MAST ARM	630 SIGN SUPPORT ASSEMBLY, POLE MOUNTED	630 SIGN SUPPORT ASSEMBLY, BRIDGE MOUNTED, TYPE 2	630 SIGN, FLAT SHEET	630 SIGN, GROUND MOUNTED EXTRUSHEET	630 SIGN, OVERHEAD EXTRUSHEET	630 SIGN, DOUBLE FACED, STREET NAME, AS PER PLAN	630 CONCRETE BARRIER MEDIAN OVERHEAD SIGN SUPPORT FOUNDATION, TYPE TC-21.50	630 GROUND MOUNTED STRUCTURAL BEAM SUPPORT FOUNDATION	630 RIGID OVERHEAD SIGN SUPPORT FOUNDATION
					IN	EACH	FT	FT	FT	FT	FT	FT	FT	FT	FT	FT	EACH	EACH	EACH	EACH	EACH	EACH	EACH	EACH	EACH	EACH	EACH	SF	SF	SF	EACH	EACH	EACH	EACH
	E. 18TH ST. (CONT.)																																			
S-263	1573	22+55.00	LT	R5-1-48	48 X 48																						16.0							
S-264	1573	22+55.00	RT	M5-1-21	21 X 15					33.0							2										2.2							
S-264	1573	22+55.00	RT	M1-1-24-2	24 X 24																						4.0							
S-264	1573	22+55.00	RT	M3-2-24	24 X 12																						2.0							
S-264	1573	22+55.00	RT	M4-5-24	24 X 12																						2.0							
S-264	1573	22+55.00	RT	M5-1-21	21 X 15																						2.2							
S-264	1573	22+55.00	RT	M1-1-24-2	24 X 24																						4.0							
S-264	1573	22+55.00	RT	M3-1-24	24 X 12																						2.0							
S-264	1573	22+55.00	RT	M4-5-24	24 X 12																						2.0							
S-264	1573	22+55.00	RT	R5-1a-42	42 X 30																						8.8							
S-264	1573	22+55.00	RT	R5-1-48	48 X 48																						16.0							
S-265	1573	23+30.00	LT	R6-1R-54	54 X 18		12.0																				6.8							
S-266	1573	23+55.00	LT	R5-1a-42	42 X 30			34.2									4										8.8							
S-266	1573	23+55.00	LT	R5-1-48	48 X 48																						16.0							
S-267	1573	23+70.00	RT	R3-7-30	30 X 30																						6.3							
	CENTRAL AVE. CONNECTOR																																			
S-268	1573	600+21.00	LT	R7-1-12	12 X 18		12.0																				1.5							
S-269	1573	600+42.00	LT	R3-1-30	30 X 30			12.0																			6.3							
S-270	1573	600+51.00	RT	R5-1-30	30 X 30			12.0									2										6.3							
S-270	1573	600+51.00	RT	R6-1L-36	36 X 12																						3.0							
S-270	1573	600+51.00	RT	R3-2-30	30 X 30																						6.3							
S-271	1573	600+54.00	LT	R1-1-36	36 X 36				19.5								4										9.0							
S-271	1573	600+54.00	LT	R6-1R-36	36 X 12											19.5											3.0							
S-271	1573	600+54.00	LT	R5-1-30	30 X 30																						6.3							
S-271	1573	600+54.00	LT	D3-1-30	30 X 12																									1				
S-271	1573	600+54.00	LT	D3-1-48	48 X 12																									1				
S-271	1573	600+54.00	LT	R6-1L-36	36 X 12																						3.0							
	E. 14TH ST.																																			
S-272	1574	65+02.00	LT	SPECIAL-90	90 X 84																				2				52.5						
	E. 22ND ST.																																			
S-273	1575	24+23.00	LT	OM1-3-18	18 X 18				15.8																		2.3							
S-273	1575	24+23.00	LT	R4-7b-36	36 X 48																						12.0							
	COMMUNITY COLLEGE AVE.																																			
S-274	1575	61+02.00	LT	R3-H8bd-30	30 X 30																					1	6.3							
S-275	1575	62+05.00	LT	R3-H8bd-30	30 X 30																					1	6.3							
	CENTRAL AVE. CONNECTOR																																			
S-276	1576	100+86.00	RT	R3-H8bd-30	30 X 30		13.0																				6.3							
S-277	1576	101+76.00	RT	R3-H8bd-30	30 X 30		13.0																				6.3							
	E. 22ND ST.																																			
S-278	1576	27+99.00	RT	R3-17bp-24	24 X 8																					1	1.3							
S-278	1576	27+99.00	RT	R3-17-24	24 X 18																					1	3.0							
S-279	1576	29+01.00	LT	R7-1-12	12 X 18																					1	1.5							
S-279	1576	29+01.00	LT	R3-17-24	24 X 18																					1	3.0							
S-280	1576	29+01.00	RT	R4-11-30	30 X 30																					1	6.3							
S-281	1576	29+68.00	RT	R9-6-12	12 X 18		12.0																				1.5							
TOTALS CARRIED TO SHEET 1485						-	62.0	58.2	35.3	33.0	-	-	-	-	-	19.5	12	-	-	-	-	-	-	2	-	7	-	199.9	-	52.5	2	-	-	-	-	-

Preliminary Plans - For Reference Only

SIGNING SUBSUMMARY - 12

CUY-90-16.28 (CCG3A)

MODEL: Sheet-12 PAPERSIZE: 34x22 (in.) DATE: 5/23/2025 TIME: 11:06:35 AM USER: Joseph.Hogan
pw:\\mb-us-pw.bentley.com:mb-us-pw-03\Documents\Cleveland_OH\01_Projects\ODOT\District12\82382\400-Engineering\Traffic\Sheets\82382_TS101.dgn
1.dgn

DESIGN AGENCY
Michael Baker INTERNATIONAL

DESIGNER RBK

REVIEWER GSH 05/22/24

PROJECT ID 82382

SHEET 1480 | TOTAL 2696

REF NO.	SHEET NO.	STATION	SIDE	CODE	SIZE	625 GROUND ROD	630 GROUND MOUNTED SUPPORT, NO. 2 POST	630 GROUND MOUNTED SUPPORT, NO. 3 POST	630 GROUND MOUNTED SUPPORT, NO. 4 POST, AS PER PLAN	630 GROUND MOUNTED STRUCTURAL BEAM SUPPORT, S4X7.7	630 GROUND MOUNTED STRUCTURAL BEAM SUPPORT, W6X9	630 GROUND MOUNTED STRUCTURAL BEAM SUPPORT, W8X18	630 GROUND MOUNTED STRUCTURAL BEAM SUPPORT, W10X22	630 GROUND MOUNTED STRUCTURAL BEAM SUPPORT, W10X12	630 ONE WAY SUPPORT, NO. 2 POST	630 ONE WAY SUPPORT, NO. 4 POST	630 SIGN POST REFLECTOR	630 BREAKAWAY STRUCTURAL BEAM CONNECTION	630 OVERHEAD SIGN SUPPORT, TYPE TC-12.31, DESIGN 12	630 OVERHEAD SIGN SUPPORT, TYPE TC-15.116, DESIGN 1	630 OVERHEAD SIGN SUPPORT, TYPE TC-15.116, DESIGN 2	630 OVERHEAD SIGN SUPPORT, TYPE TC-15.116, DESIGN 3	630 OVERHEAD SIGN SUPPORT, TYPE TC-16.22, DESIGN 13	630 SIGN ATTACHMENT ASSEMBLY	630 SIGN HANGER ASSEMBLY, MAST ARM	630 SIGN SUPPORT ASSEMBLY, POLE MOUNTED	630 SIGN SUPPORT ASSEMBLY, BRIDGE MOUNTED, TYPE 2	630 SIGN, FLAT SHEET	630 SIGN, GROUND MOUNTED EXTRUSHEET	630 SIGN, OVERHEAD EXTRUSHEET	630 SIGN, DOUBLE FACED, STREET NAME, AS PER PLAN	630 CONCRETE BARRIER MEDIAN OVERHEAD SIGN SUPPORT FOUNDATION, TYPE TC-21.50	630 GROUND MOUNTED STRUCTURAL BEAM SUPPORT FOUNDATION	630 RIGID OVERHEAD SIGN SUPPORT FOUNDATION
					IN	EACH	FT	FT	FT	FT	FT	FT	FT	FT	FT	FT	EACH	EACH	EACH	EACH	EACH	EACH	EACH	EACH	EACH	EACH	EACH	SF	SF	SF	EACH	EACH	EACH	EACH
	E. 22ND ST. (CONT.)																																			
S-282	1576	30+00.00	RT	OM1-3-18	18 X 18				15.8																		2.3							
S-282	1576	30+00.00	RT	R4-7b-36	24 X 30																						5.0							
S-283	1576	30+06.00	LT	R10-40a-24	24 X 36																				1		6.0							
S-284	1576	30+06.00	RT	R7-1-12	12 X 18																				1		1.5							
S-285	1576	30+31.00	RT	R9-5-12	12 X 18																				1		1.5							
S-286	1576	30+88.00	LT	R10-40a-24	24 X 36																				1		6.0							
S-287	1576	30+97.00	RT	R9-5-12	12 X 18																				1		1.5							
S-288	1576	31+07.00	RT	R1-1-18	18 X 18		12.0										1										2.3							
S-289	1576	31+10.00	LT	R7-107-12	12 X 18																				1		1.5							
S-289	1576	31+10.00	LT	R7-1-12	12 X 18																				1		1.5							
S-290	1576	31+10.00	RT	R7-1-12	12 X 18																				1		1.5							
S-290	1576	31+10.00	RT	M6-3-21	21 X 15																				1		2.2							
S-290	1576	31+10.00	RT	M1-1-24-2	24 X 24																				1		4.0							
S-290	1576	31+10.00	RT	M4-5-24	24 X 12																				1		2.0							
S-291	1576	31+80.00	RT	R7-1-12	12 X 18		12.0																				1.5							
S-292	1576	31+82.00	RT	R1-1-18	18 X 18		12.0										1										2.3							
S-293	1576	31+84.00	LT	R7-1-12	12 X 18		12.6																				1.5							
S-293	1576	31+84.00	LT	R7-107-12	12 X 18																						1.5							
S-294	1576	31+93.00	LT	R3-17-24	24 X 18		12.0																				3.0							
	MIDTOWN CONNECTOR																																			
S-295	1577	500+46.00	RT	R1-1-24	24 X 24		12.5										1								1		4.0							
S-296	1577	500+50.00	RT	R7-1-12	12 X 18		12.6																				1.5							
S-296	1577	500+50.00	RT	R7-107-12	12 X 18																						1.5							
S-297	1577	500+58.00	LT	OM1-3-18	18 X 18			14.3																			2.3							
S-297	1577	500+58.00	LT	R4-7b-24	24 X 30																						5.0							
S-298	1577	500+59.00	LT	R3-H6a-30	30 X 36			13.5																			7.5							
S-299	1577	500+59.00	LT	R1-1-18	18 X 18		12.0										1										2.3							
S-300	1577	501+01.00	LT	OM1-3-18	18 X 18			14.3																			2.3							
S-300	1577	501+01.00	LT	R4-7b-24	24 X 30																						5.0							
S-301	1577	501+18.00	LT	R7-1-12	12 X 18		12.0																				1.5							
S-302	1577	501+50.00	RT	R7-107-12	12 X 18		11.0																				1.5							
S-303	1577	501+97.00	LT	R7-1-12	12 X 18			14.1																			1.5							
S-303	1577	501+97.00	RT	R3-H6a-30	30 X 36																						7.5							
	E. 22ND ST.																																			
S-304	1577	32+13.00	RT	R7-1-12	12 X 18																				1		1.5							
S-305	1577	32+56.00	LT	R10-40a-24	24 X 36																				1		6.0							
S-306	1577	32+79.00	RT	R9-5-12	12 X 18																				1		1.5							
S-307	1577	32+93.00	RT	R7-1-12	12 X 18		12.6																				1.5							
S-307	1577	32+93.00	RT	R7-107-12	12 X 18																						1.5							
S-308	1577	32+94.00	RT	R1-1-18	18 X 18		12.0										1										2.3							
S-309	1577	33+26.00	LT	R7-1-12	12 X 18		12.0																				1.5							
S-310	1577	33+52.00	RT	R7-107-12	12 X 18																				1		1.5							
S-310	1577	33+52.00	RT	R7-1-12	12 X 18																				1		1.5							
S-311	1577	34+87.00	LT	R7-1-12	12 X 18			13.6																			1.5							
S-311	1577	34+87.00	LT	R2-1-4	24 X 30																						5.0							
S-312	1577	34+99.00	RT	R7-1-12	12 X 18			13.6																			1.5							
TOTALS CARRIED TO SHEET 1485						-	157.3	83.4	15.8	-	-	-	-	-	-	-	5	-	-	-	-	-	-	-	16	-	118.8	-	-	-	-	-	-	

Preliminary Plans - For Reference Only

SIGNING SUBSUMMARY - 13

CUY-90-16.28 (CCG3A)

MODEL: Sheet-13 PAPERSIZE: 34x22 (in.) DATE: 5/23/2025 TIME: 11:06:37 AM USER: Joseph.Hogan
pw:\\mb-us-pw.bentley.com:mb-us-pw-03\Documents\Cleveland_OH\01_Projects\ODOT\District12\82382\400-Engineering\Traffic\Sheets\82382_TS101.dgn

DESIGN AGENCY
Michael Baker INTERNATIONAL

DESIGNER RBK

REVIEWER GSH 05/22/24

PROJECT ID 82382

SHEET 1481 TOTAL 2696

REF NO.	SHEET NO.	STATION	SIDE	CODE	SIZE	625 GROUND ROD	630 GROUND MOUNTED SUPPORT, NO. 2 POST	630 GROUND MOUNTED SUPPORT, NO. 3 POST	630 GROUND MOUNTED SUPPORT, NO. 4 POST, AS PER PLAN	630 GROUND MOUNTED STRUCTURAL BEAM SUPPORT, S4X7.7	630 GROUND MOUNTED STRUCTURAL BEAM SUPPORT, W6X9	630 GROUND MOUNTED STRUCTURAL BEAM SUPPORT, W8X18	630 GROUND MOUNTED STRUCTURAL BEAM SUPPORT, W10X22	630 GROUND MOUNTED STRUCTURAL BEAM SUPPORT, W10X12	630 ONE WAY SUPPORT, NO. 2 POST	630 ONE WAY SUPPORT, NO. 4 POST	630 SIGN POST REFLECTOR	630 BREAKAWAY STRUCTURAL BEAM CONNECTION	630 OVERHEAD SIGN SUPPORT, TYPE TC-12.31, DESIGN 12	630 OVERHEAD SIGN SUPPORT, TYPE TC-15.116, DESIGN 1	630 OVERHEAD SIGN SUPPORT, TYPE TC-15.116, DESIGN 2	630 OVERHEAD SIGN SUPPORT, TYPE TC-15.116, DESIGN 3	630 OVERHEAD SIGN SUPPORT, TYPE TC-16.22, DESIGN 13	630 SIGN ATTACHMENT ASSEMBLY	630 SIGN HANGER ASSEMBLY, MAST ARM	630 SIGN SUPPORT ASSEMBLY, POLE MOUNTED	630 SIGN SUPPORT ASSEMBLY, BRIDGE MOUNTED, TYPE 2	630 SIGN, FLAT SHEET	630 SIGN, GROUND MOUNTED EXTRUSHEET	630 SIGN, OVERHEAD EXTRUSHEET	630 SIGN, DOUBLE FACED, STREET NAME, AS PER PLAN	630 CONCRETE BARRIER MEDIAN OVERHEAD SIGN SUPPORT FOUNDATION, TYPE TC-21.50	630 GROUND MOUNTED STRUCTURAL BEAM SUPPORT FOUNDATION	630 RIGID OVERHEAD SIGN SUPPORT FOUNDATION
					IN	EACH	FT	FT	FT	FT	FT	FT	FT	FT	FT	FT	EACH	EACH	EACH	EACH	EACH	EACH	EACH	EACH	EACH	EACH	EACH	SF	SF	SF	EACH	EACH	EACH	EACH
	MIDTOWN CONNECTOR																																			
S-313	1578	502+50.00	RT	R2-1-24	24 X 30																				1		5.0							
S-314	1578	505+50.00	RT	W11-2-30	30 X 30																						6.3							
S-314	1578	506+50.00	RT	W16-9P-24	24 X 12			14.2																			2.0							
S-315	1579	507+97.00	LT	R7-107-12	12 X 18		12.0																				1.5							
S-316	1579	507+97.00	RT	W16-7PL-24	24 X 12			14.2																			2.0							
S-316	1579	507+97.00	RT	W11-2-30	30 X 30																						6.3							
S-317	1579	508+18.00	LT	W16-7PL-24	24 X 12			14.2																			2.0							
S-317	1579	508+18.00	LT	W11-2-30	30 X 30																						6.3							
S-318	1579	508+18.00	RT	R7-107-12	12 X 18		12.0																				1.5							
S-319	1579	509+10.00	RT	R7-107-12	12 X 18																				1		1.5							
S-319	1579	509+10.00	RT	R7-1-12	12 X 18																				1		1.5							
S-320	1579	509+17.00	LT	R7-1-12	12 X 18		12.6																				1.5							
S-320	1579	509+17.00	LT	R7-107-12	12 X 18																						1.5							
S-321	1579	509+40.00	RT	W16-9P-24	24 X 12			14.2																			2.0							
S-321	1579	509+40.00	RT	W11-2-30	30 X 30																						6.3							
S-322	1579	509+70.00	LT	W16-9P-24	24 X 12			14.2																			2.0							
S-322	1579	509+70.00	LT	W11-2-30	30 X 30																						6.3							
S-323	1579	510+73.00	RT	R7-1-12	12 X 18																				1		1.5							
S-323	1579	510+73.00	RT	R10-H7-24	24 X 24																				1		4.0							
S-324	1579	510+75.00	LT	R7-1-12	12 X 18		12.0																				1.5							
S-325	1579	510+92.00	RT	W16-7PL-24	24 X 12			14.2																			2.0							
S-325	1579	510+92.00	RT	W11-2-30	30 X 30																						6.3							
S-325	1579	510+92.00	RT	W16-7PR-24	24 X 12																						2.0							
S-325	1579	510+92.00	RT	W11-2-30	30 X 30																						6.3							
S-326	1579	511+08.00	LT	W16-7PL-24	24 X 12			14.2																			2.0							
S-326	1579	511+08.00	LT	W11-2-30	30 X 30																						6.3							
S-326	1579	511+08.00	LT	W16-7PR-24	24 X 12																						2.0							
S-326	1579	511+08.00	LT	W11-2-30	30 X 30																						6.3							
S-327	1579	511+50.00	LT	D3-H6a-72	72 X 12			11.5																			6.0							
S-327	1579	511+50.00	LT	D3-H6a-72	72 X 12																						6.0							
S-328	1579	511+65.00	LT	R9-3bp-18	18 X 12		12.1																				1.5							
S-328	1579	511+65.00	LT	R9-3-18	18 X 18																						2.3							
S-329	1579	511+65.00	RT	R9-3bp-18	18 X 12		12.1																				1.5							
S-329	1579	511+65.00	RT	R9-3-18	18 X 18																						2.3							
S-330	1579	512+40.00	RT	R7-1-12	12 X 18			13.6																			1.5							
S-330	1579	512+40.00	RT	R3-H8bd-30	30 X 30																						6.3							
		CEDAR AVE.																																
S-331	1579	400+58.00	RT	R7-1-12	12 X 18		12.0																				1.5							
S-332	1579	400+69.00	RT	R1-1-36	36 X 36				13.4								1										9.0							
S-332	1579	400+69.00	RT	D3-1-36	36 X 12																									1				
S-332	1579	400+69.00	RT	D3-1-36	36 X 12																									1				
S-333	1579	401+00.00	RT	R2-1-24	24 X 30																				1		5.0							
S-334	1579	401+90.00	RT	R7-1-12	12 X 18			14.6																			1.5							
S-334	1579	401+90.00	RT	R3-H8bd-31	30 X 30																						6.3							
S-335	1579	401+93.00	RT	W16-9P-24	24 X 12			14.2																			2.0							
S-335	1579	401+93.00	RT	W11-2-30	30 X 30																						6.3							
S-336	1580	402+06.00	RT	R7-1-12	12 X 18		12.0																				1.5							
TOTALS CARRIED TO SHEET 1485						-	96.8	153.3	13.4	-	-	-	-	-	-	-	1	-	-	-	-	-	-	-	6	-	156.2	-	-	2	-	-	-	-	-

Preliminary Plans - For Reference Only

SIGNING SUBSUMMARY - 14

CUY-90-16.28 (CCG3A)

MODEL: Sheet-14 PAPERSIZE: 34x22 (in.) DATE: 5/23/2025 TIME: 11:06:39 AM USER: Joseph.Hogan
pw:\\mb-us-pw.bentley.com:mb-us-pw-03\Documents\Cleveland_OH\01_Projects\ODOT\District12\82382\400-Engineering\Traffic\Sheets\82382_TS101.dgn

DESIGN AGENCY
Michael Baker INTERNATIONAL

DESIGNER RBK

REVIEWER GSH 05/22/24

PROJECT ID 82382

SHEET 1482 TOTAL 2696

REF NO.	SHEET NO.	STATION	SIDE	CODE	SIZE	625 GROUND ROD	630 GROUND MOUNTED SUPPORT, NO. 2 POST	630 GROUND MOUNTED SUPPORT, NO. 3 POST	630 GROUND MOUNTED SUPPORT, NO. 4 POST, AS PER PLAN	630 GROUND MOUNTED STRUCTURAL BEAM SUPPORT, S4X7.7	630 GROUND MOUNTED STRUCTURAL BEAM SUPPORT, W6X9	630 GROUND MOUNTED STRUCTURAL BEAM SUPPORT, W8X18	630 GROUND MOUNTED STRUCTURAL BEAM SUPPORT, W10X22	630 GROUND MOUNTED STRUCTURAL BEAM SUPPORT, W10X12	630 ONE WAY SUPPORT, NO. 2 POST	630 ONE WAY SUPPORT, NO. 4 POST	630 SIGN POST REFLECTOR	630 BREAKAWAY STRUCTURAL BEAM CONNECTION	630 OVERHEAD SIGN SUPPORT, TYPE TC-12.31, DESIGN 12	630 OVERHEAD SIGN SUPPORT, TYPE TC-15.116, DESIGN 1	630 OVERHEAD SIGN SUPPORT, TYPE TC-15.116, DESIGN 2	630 OVERHEAD SIGN SUPPORT, TYPE TC-15.116, DESIGN 3	630 OVERHEAD SIGN SUPPORT, TYPE TC-16.22, DESIGN 13	630 SIGN ATTACHMENT ASSEMBLY	630 SIGN HANGER ASSEMBLY, MAST ARM	630 SIGN SUPPORT ASSEMBLY, POLE MOUNTED	630 SIGN SUPPORT ASSEMBLY, BRIDGE MOUNTED, TYPE 2	630 SIGN, FLAT SHEET	630 SIGN, GROUND MOUNTED EXTRUSHEET	630 SIGN, OVERHEAD EXTRUSHEET	630 SIGN, DOUBLE FACED, STREET NAME, AS PER PLAN	630 CONCRETE BARRIER MEDIAN OVERHEAD SIGN SUPPORT FOUNDATION, TYPE TC-21.50	630 GROUND MOUNTED STRUCTURAL BEAM SUPPORT FOUNDATION	630 RIGID OVERHEAD SIGN SUPPORT FOUNDATION
					IN	EACH	FT	FT	FT	FT	FT	FT	FT	FT	FT	FT	EACH	EACH	EACH	EACH	EACH	EACH	EACH	EACH	EACH	EACH	EACH	SF	SF	SF	EACH	EACH	EACH	EACH
	CEDAR AVE. (CONT.)																																		
S-337	1580	402+80.00	LT	R7-1-12	12 X 18				15.4																		1.5						
S-337	1580	402+80.00	LT	W3-1-36	36 X 36																						9.0						
S-338	1581	601+91.00	LT	R7-1-12	12 X 18		12.0																				1.5						
S-339	1581	602+72.00	LT	R7-1-12	12 X 18		12.0																				1.5						
S-340	1581	603+59.00	LT	R7-1-12	12 X 18		12.0																				1.5						
S-341	1581	604+00.00	LT	R7-1-12	12 X 18		12.0																				1.5						
	EX. E. 19TH ST.																																		
S-342	1581	3+39.00	RT	R7-1-12	12 X 18																				1		1.5						
S-343	1581	3+64.00	LT	R7-1-12	12 X 18		12.0																				1.5						
	E. 21ST ST.																																		
S-344	1582	101+20.00	LT	R3-H8B-48	48 X 30			13.0																			10.0						
S-345	1582	101+26.00	RT	R3-H8B-48	48 X 30																				1		10.0						
S-346	1582	102+25.00	RT	M2-H3-48	48 X 72				33.0																		24.0						
S-347	1582	102+88.00	RT	R3-H8B-48	48 X 30																				1		10.0						
S-348	1582	103+30.00	LT	R3-H8B-48	48 X 30																				1		10.0						
	RAMP A1																																		
S-349	1808	311+11.50	RT	R24-H2-12	12 X 18		12.0																				1.5						
	INTERIM I.R. 90 WB																																		
S-350	1809	4002+27.00	LT	R24-H2-12	12 X 18		12.0																				1.5						
S-351	1809	4003+45.00	LT	R24-H2-12	12 X 18		12.0																				1.5						
S-352	1809	4004+64.00	LT	R24-H2-12	12 X 18		12.0																				1.5						
	INTERIM I.R. 90 EB																																		
S-353	1810	3001+01.00	RT	R24-H2-12	12 X 18		12.0																				1.5						
S-354	1810	3001+33.76	RT	R24-H2-12	12 X 18		12.0																				1.5						
	RAMP B6																																		
S-355	1810	1620+86.50	LT	R24-H2-12	12 X 18		12.0																				1.5						
	INTERIM I.R. 90 EB																																		
S-356	1812	3006+97.00	RT	R24-H2-12	12 X 18		12.0																				1.5						
S-357	1812	3007+20.00	RT	R24-H2-12	12 X 18		12.0																				1.5						
S-358	1812	3008+13.00	RT	R24-H2-12	12 X 18		12.0																				1.5						
S-359	1812	3009+04.00	RT	R24-H2-12	12 X 18		12.0																				1.5						
S-360	1812	3009+92.64	RT	R24-H2-12	12 X 18		12.0																				1.5						
S-361	1814	3002+51.00	RT	R24-H2-12	12 X 18		12.0																				1.5						
S-362	1814	3003+61.00	RT	R24-H2-12	12 X 18		12.0																				1.5						
S-363	1814	3004+73.00	RT	R24-H2-12	12 X 18		12.0																				1.5						
S-364	1814	3005+85.00	RT	R24-H2-12	12 X 18		12.0																				1.5						
	I.R. 90 EB																																		
S-365	1817	196+43.50	RT	R24-H2-12	12 X 18		12.0																				1.5						
S-366	1817	196+44.50	RT	R24-H2-12	12 X 18		12.0																				1.5						
S-367	1817	197+56.00	RT	R24-H2-12	12 X 18		12.0																				1.5						
S-368	1817	197+97.00	RT	R24-H2-12	12 X 18		12.0																				1.5						
	RAMP A2																																		
S-369	1817	439+09.00	LT	R24-H2-12	12 X 18		12.0																				1.5						
S-370	1817	440+18.50	LT	R24-H2-12	12 X 18		12.0																				1.5						
TOTALS CARRIED TO SHEET 1485						-	324.0	13.0	48.4	-	-	-	-	-	-	-	-	-	-	-	-	-	-	-	4	-	116.5	-	-	-	-	-	-

Preliminary Plans - For Reference Only

SIGNING SUBSUMMARY - 15

CUY-90-16.28 (CCG3A)

MODEL: Sheet-15 PAPERSIZE: 34x22 (in.) DATE: 5/23/2025 TIME: 11:06:41 AM USER: Joseph.Hogan
pw:\\mb-us-pw.bentley.com:mb-us-pw-03\Documents\Cleveland_OH\01_Projects\ODOT\District12\82382\400-Engineering\Traffic\Sheets\82382_TS101.dgn
TS101.dgn

DESIGN AGENCY
Michael Baker INTERNATIONAL

DESIGNER RBK

REVIEWER GSH 05/22/24

PROJECT ID 82382

SHEET 1483 TOTAL 2696

REF NO.	SHEET NO.	STATION	SIDE	CODE	SIZE	625 GROUND ROD	630 GROUND MOUNTED SUPPORT, NO. 2 POST	630 GROUND MOUNTED SUPPORT, NO. 3 POST	630 GROUND MOUNTED SUPPORT, NO. 4 POST, AS PER PLAN	630 GROUND MOUNTED STRUCTURAL BEAM SUPPORT, S4X7.7	630 GROUND MOUNTED STRUCTURAL BEAM SUPPORT, W6X9	630 GROUND MOUNTED STRUCTURAL BEAM SUPPORT, W8X18	630 GROUND MOUNTED STRUCTURAL BEAM SUPPORT, W10X22	630 GROUND MOUNTED STRUCTURAL BEAM SUPPORT, W10X12	630 ONE WAY SUPPORT, NO. 2 POST	630 ONE WAY SUPPORT, NO. 4 POST	630 SIGN POST REFLECTOR	630 BREAKAWAY STRUCTURAL BEAM CONNECTION	630 OVERHEAD SIGN SUPPORT, TYPE TC-12.31, DESIGN 12	630 OVERHEAD SIGN SUPPORT, TYPE TC-15.116, DESIGN 1	630 OVERHEAD SIGN SUPPORT, TYPE TC-15.116, DESIGN 2	630 OVERHEAD SIGN SUPPORT, TYPE TC-15.116, DESIGN 3	630 OVERHEAD SIGN SUPPORT, TYPE TC-16.22, DESIGN 13	630 SIGN ATTACHMENT ASSEMBLY	630 SIGN HANGER ASSEMBLY, MAST ARM	630 SIGN SUPPORT ASSEMBLY, POLE MOUNTED	630 SIGN SUPPORT ASSEMBLY, BRIDGE MOUNTED, TYPE 2	630 SIGN, FLAT SHEET	630 SIGN, GROUND MOUNTED EXTRUSHEET	630 SIGN, OVERHEAD EXTRUSHEET	630 SIGN, DOUBLE FACED, STREET NAME, AS PER PLAN	630 CONCRETE BARRIER MEDIAN OVERHEAD SIGN SUPPORT FOUNDATION, TYPE TC-21.50	630 GROUND MOUNTED STRUCTURAL BEAM SUPPORT FOUNDATION	630 RIGID OVERHEAD SIGN SUPPORT FOUNDATION
					IN	EACH	FT	FT	FT	FT	FT	FT	FT	FT	FT	FT	EACH	EACH	EACH	EACH	EACH	EACH	EACH	EACH	EACH	EACH	EACH	SF	SF	SF	EACH	EACH	EACH	EACH
		RAMP A3																																
S-371	1819	579+04.50	LT	R24-H2-12	12 X 18		12.0																				1.5						
S-372	1819	580+16.50	LT	R24-H2-12	12 X 18		12.0																				1.5						
S-373	1819	581+29.50	LT	R24-H2-12	12 X 18		12.0																				1.5						
S-374	1819	582+43.50	LT	R24-H2-12	12 X 18		12.0																				1.5						
S-375	1819	583+53.50	LT	R24-H2-12	12 X 18		12.0																				1.5						
S-376	1820	584+52.00	LT	R24-H2-12	12 X 18		12.0																				1.5						
S-377	1820	587+81.50	LT	R24-H2-12	12 X 18		12.0																				1.5						
S-378	1820	589+40.50	LT	R24-H2-12	12 X 18		12.0																				1.5						
S-379	1820	590+61.00	LT	R24-H2-12	12 X 18		12.0																				1.5						
		RAMP B6																																
S-380	1821	1602+85.50	RT	R24-H2-12	12 X 18		12.0																				1.5						
S-381	1821	1603+87.00	RT	R24-H2-12	12 X 18		12.0																				1.5						
S-382	1821	1604+92.50	RT	R24-H2-12	12 X 18		12.0																				1.5						
S-383	1821	1605+82.00	RT	R24-H2-12	12 X 18		12.0																				1.5						
		RAMP IJ3																																
S-384	1821	101+18.50	RT	R24-H2-12	12 X 18		12.0																				1.5						
S-385	1821	101+22.00	RT	R24-H2-12	12 X 18		12.0																				1.5						
S-386	1821	101+43.50	RT	R24-H2-12	12 X 18		12.0																				1.5						
S-387	1821	102+52.00	RT	R24-H2-12	12 X 18		12.0																				1.5						
S-388	1821	102+79.50	LT	R24-H2-12	12 X 18		12.0																				1.5						
S-389	1821	102+86.50	RT	R24-H2-12	12 X 18		12.0																				1.5						
S-390	1821	103+59.50	LT	R24-H2-12	12 X 18		12.0																				1.5						
S-391	1821	104+37.00	RT	R24-H2-12	12 X 18		12.0																				1.5						
S-392	1821	104+39.50	RT	R24-H2-12	12 X 18		12.0																				1.5						
S-393	1821	104+47.00	LT	R24-H2-12	12 X 18		12.0																				1.5						
S-394	1821	105+15.00	RT	R24-H2-12	12 X 18		12.0																				1.5						
S-395	1821	105+34.50	LT	R24-H2-12	12 X 18		12.0																				1.5						
S-396	1821	105+90.00	RT	R24-H2-12	12 X 18		12.0																				1.5						
S-397	1821	105+92.50	RT	R24-H2-12	12 X 18		12.0																				1.5						
S-398	1821	106+24.50	LT	R24-H2-12	12 X 18		12.0																				1.5						
S-399	1821	106+45.00	RT	R24-H2-12	12 X 18		12.0																				1.5						
S-400	1821	107+24.50	LT	R24-H2-12	12 X 18		12.0																				1.5						
S-401	1821	107+41.50	RT	R24-H2-12	12 X 18		12.0																				1.5						
		INTERIM E. 14TH ST. SB																																
S-402	1821	200+56.13	LT	R24-H2-12	12 X 18		12.0																				1.5						
		RAMP IJ3																																
S-403	1822	108+13.50	RT	R24-H2-12	12 X 18		12.0																				1.5						
S-404	1822	108+15.00	RT	R24-H2-12	12 X 18		12.0																				1.5						
S-405	1822	108+22.50	LT	R24-H2-12	12 X 18		12.0																				1.5						
S-406	1822	108+59.00	LT	R24-H2-12	12 X 18		12.0																				1.5						
S-407	1822	109+82.00	LT	R24-H2-12	12 X 18		12.0																				1.5						
S-408	1822	109+86.00	LT	R24-H2-12	12 X 18		12.0																				1.5						
		INTERIM E. 14TH ST. SB																																
S-409	1822	201+61.00	LT	R24-H2-12	12 X 18		12.0																				1.5						
S-410	1822	202+42.00	LT	R24-H2-12	12 X 18		12.0																				1.5						
S-411	1822	203+02.00	LT	R24-H2-12	12 X 18		12.0																				1.5						
TOTALS CARRIED TO SHEET 1485						-	492.0	-	-	-	-	-	-	-	-	-	-	-	-	-	-	-	-	-	-	-	61.5	-	-	-	-	-	-

Preliminary Plans - For Reference Only

SIGNING SUBSUMMARY - 16

DESIGN AGENCY
Michael Baker INTERNATIONAL

DESIGNER RBK
REVIEWER GSH 05/22/24
PROJECT ID 82382
SHEET 1484 TOTAL 2696

CUY-90-16.28 (CCG3A)

MODEL: Sheet-16 PAPERSIZE: 34x22 (in.) DATE: 5/23/2025 TIME: 11:06:43 AM USER: Joseph.Hogan
pw:\\mb-us-pw.bentley.com:mb-us-pw-03\Documents\Cleveland_OH\01_Projects\ODOT\District12\82382\400-Engineering\Traffic\Sheets\82382_TS101.dgn
TS101.dgn

REF NO.	SHEET NO.	STATION	SIDE	CODE	SIZE	625 GROUND ROD	630 GROUND MOUNTED SUPPORT, NO. 2 POST	630 GROUND MOUNTED SUPPORT, NO. 3 POST	630 GROUND MOUNTED SUPPORT, NO. 4 POST, AS PER PLAN	630 GROUND MOUNTED STRUCTURAL BEAM SUPPORT, S4X7.7	630 GROUND MOUNTED STRUCTURAL BEAM SUPPORT, W6X9	630 GROUND MOUNTED STRUCTURAL BEAM SUPPORT, W8X18	630 GROUND MOUNTED STRUCTURAL BEAM SUPPORT, W10X22	630 GROUND MOUNTED STRUCTURAL BEAM SUPPORT, W10X12	630 ONE WAY SUPPORT, NO. 2 POST	630 ONE WAY SUPPORT, NO. 4 POST	630 SIGN POST REFLECTOR	630 BREAKAWAY STRUCTURAL BEAM CONNECTION	630 OVERHEAD SIGN SUPPORT, TYPE TC-12.31, DESIGN 12	630 OVERHEAD SIGN SUPPORT, TYPE TC-15.116, DESIGN 1	630 OVERHEAD SIGN SUPPORT, TYPE TC-15.116, DESIGN 2	630 OVERHEAD SIGN SUPPORT, TYPE TC-15.116, DESIGN 3	630 OVERHEAD SIGN SUPPORT, TYPE TC-16.22, DESIGN 13	630 SIGN ATTACHMENT ASSEMBLY	630 SIGN HANGER ASSEMBLY, MAST ARM	630 SIGN SUPPORT ASSEMBLY, POLE MOUNTED	630 SIGN SUPPORT ASSEMBLY, BRIDGE MOUNTED, TYPE 2	630 SIGN, FLAT SHEET	630 SIGN, GROUND MOUNTED EXTRUSHEET	630 SIGN, OVERHEAD EXTRUSHEET	630 SIGN, DOUBLE FACED, STREET NAME, AS PER PLAN	630 CONCRETE BARRIER MEDIAN OVERHEAD SIGN SUPPORT FOUNDATION, TYPE TC-21.50	630 GROUND MOUNTED STRUCTURAL BEAM SUPPORT FOUNDATION	630 RIGID OVERHEAD SIGN SUPPORT FOUNDATION
					IN	EACH	FT	FT	FT	FT	FT	FT	FT	FT	FT	FT	EACH	EACH	EACH	EACH	EACH	EACH	EACH	EACH	EACH	EACH	EACH	SF	SF	SF	EACH	EACH	EACH	EACH
	INTERIM E. 14TH ST. SB (CONT.)																																	
S-412	1822	203+09.00	LT	R24-H2-12	12 X 18		12.0																				1.5						
S-413	1822	204+05.00	LT	R24-H2-12	12 X 18		12.0																				1.5						
S-414	1822	205+05.50	LT	R24-H2-12	12 X 18		12.0																				1.5						
S-415	1822	205+07.00	LT	R24-H2-12	12 X 18		12.0																				1.5						
	RAMP IJ3																																	
S-416	1823	100+20.50	RT	R24-H2-12	12 X 18		12.0																				1.5						
S-417	1823	100+21.50	RT	R24-H2-12	12 X 18		12.0																				1.5						
	INTERIM E. 14TH ST. SB																																	
S-418	1823	197+51.00	LT	R24-H2-12	12 X 18		12.0																				1.5						
S-419	1823	197+56.50	LT	R24-H2-12	12 X 18		12.0																				1.5						
S-420	1823	198+00.00	LT	R24-H2-12	12 X 18		12.0																				1.5						
S-421	1823	198+57.00	LT	R24-H2-12	12 X 18		12.0																				1.5						
S-422	1823	198+75.00	LT	R24-H2-12	12 X 18		12.0																				1.5						
S-423	1823	199+57.00	LT	R24-H2-12	12 X 18		12.0																				1.5						
TOTALS FROM THIS SHEET						-	144.0	-	-	-	-	-	-	-	-	-	-	-	-	-	-	-	-	-	-	-	18.0	-	-	-	-	-	-
TOTALS FROM SHEET	1469					6	57.2	129.8	-	36.0	-	40.0	-	-	-	-	4	-	-	-	2	1	-	25	-	2	-	124.4	63.0	2183.0	-	1	-	5
TOTALS FROM SHEET	1470					6	71.9	146.2	-	36.0	-	-	-	56.2	-	-	-	2	-	-	3	-	-	15	-	2	2	255.9	77.0	1329.0	-	2	2	4
TOTALS FROM SHEET	1471					6	62.0	184.5	-	36.0	-	-	-	-	-	-	18	-	2	1	1	-	-	-	-	2	8	307.6	140.0	1164.5	-	1	-	5
TOTALS FROM SHEET	1472					4	102.4	485.5	-	-	-	-	-	-	-	-	36	-	-	2	-	-	-	-	-	-	8	357.2	-	544.0	-	-	-	4
TOTALS FROM SHEET	1473					5	69.7	116.0	113.8	-	-	-	-	-	-	-	10	-	2	1	-	-	-	-	-	6	-	340.4	175.0	236.0	-	-	-	5
TOTALS FROM SHEET	1474					4	13.0	404.3	89.0	72.0	-	-	-	38.0	-	-	17	-	-	2	-	-	-	-	-	-	-	384.0	108.0	449.0	-	1	-	3
TOTALS FROM SHEET	1475					-	60.0	348.0	30.0	-	-	-	54.8	-	-	-	26	-	-	-	-	-	-	19	-	2	-	249.2	184.5	1232.5	-	-	2	-
TOTALS FROM SHEET	1476					1	90.2	-	30.2	34.0	-	-	-	-	1.0	16.6	1	-	-	-	-	-	-	1	-	2	23	-	605.6	-	45.0	-	-	-	1
TOTALS FROM SHEET	1477					-	125.8	27.2	-	38.4	-	-	-	-	-	-	2	-	-	-	-	-	-	-	-	-	24	-	281.2	-	-	-	-	-	-
TOTALS FROM SHEET	1478					-	73.0	153.7	46.1	-	34.0	-	-	40.0	-	-	2	-	-	-	-	-	-	-	-	-	11	-	182.2	80.0	-	2	-	-	-
TOTALS FROM SHEET	1479					-	36.0	176.5	69.0	101.0	-	-	-	42.0	-	-	14	-	-	-	-	-	-	-	-	-	7	-	286.1	72.0	-	-	-	-	-
TOTALS FROM SHEET	1480					-	62.0	58.2	35.3	33.0	-	-	-	-	-	19.5	12	-	-	-	-	-	-	2	-	7	-	199.9	-	52.5	2	-	-	-
TOTALS FROM SHEET	1481					-	157.3	83.4	15.8	-	-	-	-	-	-	-	5	-	-	-	-	-	-	-	-	16	-	118.8	-	-	-	-	-	-
TOTALS FROM SHEET	1482					-	96.8	153.3	13.4	-	-	-	-	-	-	-	1	-	-	-	-	-	-	-	-	6	-	156.2	-	-	2	-	-	-
TOTALS FROM SHEET	1483					-	324.0	13.0	48.4	-	-	-	-	-	-	-	-	-	-	-	-	-	-	-	-	4	-	116.5	-	-	-	-	-	-
TOTALS FROM SHEET	1484					-	492.0	-	-	-	-	-	-	-	-	-	-	-	-	-	-	-	-	-	-	-	-	61.5	-	-	-	-	-	-
TOTALS CARRIED TO GENERAL SUMMARY						32	2037.3	2479.6	491.0	386.4	34.0	40.0	54.8	176.2	1.0	36.1	148	2	4	6	6	1	1	61	2	112	18	4044.7	899.5	7235.5	6	5	4	27

Preliminary Plans - For Reference Only

SIGNING SUBSUMMARY - 17

CUY-90-16.28 (CCG3A)

MODEL: Sheet-17 PAPERSIZE: 34x22 (in.) DATE: 5/23/2025 TIME: 11:06:44 AM USER: Joseph.Hogan
pw:\\mb-us-pw.bentley.com:mb-us-pw-03\Documents\Cleveland_OH\01_Projects\ODOT\District12\82382\400-Engineering\Traffic\Sheets\82382_TS101.dgn
1.dgn

DESIGN AGENCY
Michael Baker INTERNATIONAL

DESIGNER RBK

REVIEWER GSH 05/22/24

PROJECT ID 82382

SHEET 1485 | TOTAL 2696

REF NO.	SHEET NO.	STATION	SIDE	630 REMOVAL OF GROUND MOUNTED SIGN AND DISPOSAL EACH	630 REMOVAL OF GROUND MOUNTED SIGN AND STORAGE EACH	630 REMOVAL OF GROUND MOUNTED SIGN AND REERECTION EACH	630 REMOVAL OF GROUND MOUNTED MAJOR SIGN AND DISPOSAL EACH	630 REMOVAL OF GROUND MOUNTED POST SUPPORT AND DISPOSAL EACH	630 REMOVAL OF GROUND MOUNTED POST SUPPORT AND REERECTION EACH	630 REMOVAL OF GROUND MOUNTED STRUCTURAL BEAM SUPPORT AND DISPOSAL EACH	630 REMOVAL OF GROUND MOUNTED PIPE SUPPORT AND STORAGE EACH	630 REMOVAL OF OVERHEAD MOUNTED SIGN AND DISPOSAL EACH	630 REMOVAL OF POLE MOUNTED SIGN AND DISPOSAL EACH	630 REMOVAL OF POLE MOUNTED SIGN AND STORAGE EACH	630 REMOVAL OF POLE MOUNTED SIGN AND REERECTION EACH	630 REMOVAL OF OVERHEAD SIGN SUPPORT AND DISPOSAL EACH	630 REMOVAL OF OVERHEAD SIGN SUPPORT AND DISPOSAL, TYPE TC-15.115 EACH
		I.R. 90 EB																
SR-1	1494	3+05.00	CL									1						
SR-2	1494	29+08.00	CL									1						
SR-3	1494	46+16.00	CL									2						
SR-4	1496	169+50.63	LT									1					1	
SR-5	1497	170+13.00	CL									2					1	
		RAMP IB5																
SR-6	1497	1708+14.32	RT	1				2										
		RAMP B6																
SR-7	1497	1600+75.00	RT				1			2								
SR-8	1497	1600+89.00	RT	1				2										
		I.R. 90 EB																
SR-9	1499	184+78.00	RT									1					1	
SR-10	1499	184+89.00	LT				1			2								
SR-11	1499	185+23.00	RT	1				2										
SR-12	1499	185+34.00	RT	1				1										
SR-13	1500	191+30.00	RT									5					1	
SR-14	1500	191+30.00	RT										1					
SR-15	1501											3					1	
SR-16	1501	195+33.00	RT	1													1	
SR-17	1501	197+12.00	RT	2				1										
SR-18	1501	197+31.00	RT	1				1										
SR-19	1501	198+06.00	RT	1				2										
		INTERIM I.R. 90 EB																
SR-20	1503	3006+35.00	RT	2				2										
SR-21	1503	3006+48.00	RT	2				2										
SR-22	1503	3007+15.00	RT				1			2								
SR-23	1503	3007+72.00	LT	2				1										
SR-24	1503	3007+82.00	LT									1					1	
SR-25	1503	3008+29.00	RT				1			2								
SR-26	1503	3008+45.00	RT	1				2										
SR-27	1503	3008+65.00	RT	1				2										
SR-28	1504	3009+31.00	RT	1				1										
SR-29	1504	3009+72.00	RT	3				2										
SR-30	1504	3009+92.00	RT	3				2										
SR-31	1504	3010+31.00	RT	5				2										
SR-32	1504	3010+77.00	RT										1					
SR-33	1504	3010+83.00	RT	4				2										
SR-34	1504	3011+01.00	RT	1				1										
SR-35	1504	3012+29.00	RT	1				2										
		I.R. 90 WB																
SR-36	1509	167+12.00	CL									7						
SR-37	1509	167+66.00	LT	1				2										
SR-38	1512	180+80.00	RT									1					1	
SR-39	1513	184+56.00	LT	1				1										
SR-40	1513	185+17.00	LT	1				1										
TOTALS CARRIED TO SHEET 1493				38	-	-	4	36	-	8	-	25	2	-	-	8	-	

Preliminary Plans - For Reference Only

SIGNING REMOVALS SUBSUMMARY - 1

CUY-90-16.28 (CCG3A)

MODEL: Sheet-01 PAPERSIZE: 34x22 (in.) DATE: 3/27/2025 TIME: 7:03:17 PM USER: Mala.Gallagher
pw:\\mb-us-pw.bentley.com:mb-us-pw-03\Documents\Cleveland_OH\01_Projects\ODOT\District12\82382\400-Engineering\Traffic\Sheets\82382_TS201.dgn

DESIGN AGENCY
Michael Baker INTERNATIONAL

DESIGNER RBK

REVIEWER GSH 05/22/24

PROJECT ID 82382

SHEET 1486 TOTAL 2696

REF NO.	SHEET NO.	STATION	SIDE	630 REMOVAL OF GROUND MOUNTED SIGN AND DISPOSAL EACH	630 REMOVAL OF GROUND MOUNTED SIGN AND STORAGE EACH	630 REMOVAL OF GROUND MOUNTED SIGN AND REERECTION EACH	630 REMOVAL OF GROUND MOUNTED MAJOR SIGN AND DISPOSAL EACH	630 REMOVAL OF GROUND MOUNTED POST SUPPORT AND DISPOSAL EACH	630 REMOVAL OF GROUND MOUNTED POST SUPPORT AND REERECTION EACH	630 REMOVAL OF GROUND MOUNTED STRUCTURAL BEAM SUPPORT AND DISPOSAL EACH	630 REMOVAL OF GROUND MOUNTED PIPE SUPPORT AND STORAGE EACH	630 REMOVAL OF OVERHEAD MOUNTED SIGN AND DISPOSAL EACH	630 REMOVAL OF POLE MOUNTED SIGN AND DISPOSAL EACH	630 REMOVAL OF POLE MOUNTED SIGN AND STORAGE EACH	630 REMOVAL OF POLE MOUNTED SIGN AND REERECTION EACH	630 REMOVAL OF OVERHEAD SIGN SUPPORT AND DISPOSAL EACH	630 REMOVAL OF OVERHEAD SIGN SUPPORT AND DISPOSAL, TYPE TC-15.115 EACH
		I.R. 90 WB (CONT.)																
SR-41	1513	185+34.00	LT	1						2								
SR-42	1513	185+77.00	LT	1				1										
SR-43	1513	185+80.00	RT	1				1										
SR-44	1513	187+25.00	RT	2				2										
SR-45	1513	187+35.00	LT	2				2										
		INTERIM I.R. 90 WB																
SR-46	1517	4002+89.00	RT									2				1		
SR-47	1518	4007+36.00	RT	1				1										
SR-48	1518	4008+80.00	LT	1				2										
SR-49	1518	4011+68.00	LT									2				1		
		RAMP A1																
SR-50	1520	311+28.00	LT									1				1		
		I.R. 77																
SR-51	1521	67+41.00	CL	1														
SR-52	1521	67+53.00	RT	1				1										
SR-53	1521	67+73.00	RT									2				1		
		RAMP IH4																
SR-54	1523	11+58.00	RT	2				1										
SR-55	1523	11+67.00	CL									5				1		
		EX. RAMP E-17																
SR-56	1523	54+62.00	RT				1			2								
SR-57	1524	57+21.00	LT	2				1										
SR-58	1524	57+60.00	LT										2					
SR-59	1524	57+71.00	CL									3				1		
SR-60	1524	57+71.00	RT										1					
SR-61	1524	58+02.00	LT				1	1			1							
		RAMP A2																
SR-62	1525	416+76.00	RT									2				1		
SR-63	1525	417+33.00	RT	1				2										
SR-64	1525	418+75.00	RT	1				2										
SR-65	1525	419+77.00	RT	1				2										
SR-66	1526	420+85.00	RT	1				1										
		RAMP A3																
SR-67	1528	588+22.00	LT	1				1										
SR-68	1528	590+02.00	LT										5					
SR-69	1528	590+02.00	LT									1				1		
SR-70	1528	590+22.00	LT										1					
		RAMP IB5																
SR-71	1529	1709+17.00	LT	1				2										
SR-72	1529	1711+15.00	LT		1			2										
SR-73	1529	1711+41.00	LT	1				2										
SR-74	1529	1712+15.00	LT	1				2										
SR-75	1529	1712+56.00	LT	1				2										
SR-76	1529	1713+00.00	LT	1				2										
SR-77	1529	1713+46.00	LT	1				2										
SR-78	1529	1714+15.00	LT	2				1										
TOTALS CARRIED TO SHEET 1493				28	1	-	2	36	-	4	1	18	9	-	-	8	-	

Preliminary Plans - For Reference Only

SIGNING REMOVALS SUBSUMMARY - 2

CUY-90-16.28 (CCG3A)

MODEL: Sheet-02 PAPERSIZE: 34x22 (in.) DATE: 3/27/2025 TIME: 7:03:18 PM USER: Mala.Gallagher
pw:\\mb-us-pw.bentley.com:mb-us-pw-03\Documents\Cleveland_OH\01_Projects\ODOT\District12\82382\400-Engineering\Traffic\Sheets\82382_TS201.dgn

DESIGN AGENCY
Michael Baker INTERNATIONAL

DESIGNER RBK

REVIEWER GSH 05/22/24

PROJECT ID 82382

SHEET 1487 TOTAL 2696

REF NO.	SHEET NO.	STATION	SIDE	630 REMOVAL OF GROUND MOUNTED SIGN AND DISPOSAL	630 REMOVAL OF GROUND MOUNTED SIGN AND STORAGE	630 REMOVAL OF GROUND MOUNTED SIGN AND REERECTION	630 REMOVAL OF GROUND MOUNTED MAJOR SIGN AND DISPOSAL	630 REMOVAL OF GROUND MOUNTED POST SUPPORT AND DISPOSAL	630 REMOVAL OF GROUND MOUNTED POST SUPPORT AND REERECTION	630 REMOVAL OF GROUND MOUNTED STRUCTURAL BEAM SUPPORT AND DISPOSAL	630 REMOVAL OF GROUND MOUNTED PIPE SUPPORT AND STORAGE	630 REMOVAL OF OVERHEAD MOUNTED SIGN AND DISPOSAL	630 REMOVAL OF POLE MOUNTED SIGN AND DISPOSAL	630 REMOVAL OF POLE MOUNTED SIGN AND STORAGE	630 REMOVAL OF POLE MOUNTED SIGN AND REERECTION	630 REMOVAL OF OVERHEAD SIGN SUPPORT AND DISPOSAL	630 REMOVAL OF OVERHEAD SIGN SUPPORT AND DISPOSAL, TYPE TC-15.115
				EACH	EACH	EACH	EACH	EACH	EACH	EACH	EACH	EACH	EACH	EACH	EACH	EACH	EACH	
		RAMP IB5 (CONT.)																
SR-79	1529	1714+26.00	LT	1				1										
		RAMP B6A																
SR-80	1532	1801+01.00	RT	1				2										
		RAMP B6																
SR-81	1533	1618+56.00	RT		1			1										
		RAMP B6A																
SR-82	1533	1802+68.00	RT	1				2										
SR-83	1533	1803+27.00	LT				1			2								
SR-84	1533	1803+36.00	LT	1				2										
SR-85	1533	1803+37.00	RT	1				2										
SR-86	1533	1804+40.00	RT	2			1			2								
SR-87	1533	1804+84.00	LT	3				2										
SR-88	1533	1804+90.00	RT	3				2										
SR-89	1533	1805+50.00	LT		1			1										
SR-90	1533	1806+34.00	RT	1				1										
SR-91	1533	1806+47.00	LT	4				2										
SR-92	1533	1806+47.00	LT	4				1										
SR-93	1533	1806+60.00	RT	1				1										
		RAMP IH4																
SR-94	1534	13+81.00	LT				1	2										
SR-95	1534	14+19.00	LT	2				2										
SR-96	1534	14+27.00	RT	1				1										
SR-97	1534	14+30.00	RT	2				2										
		RAMP H5																
SR-98	1534	980+86.00	RT										2					
SR-99	1534	980+95.00	CL									2				1		
		RAMP H6																
SR-100	1535	1183+30.00	LT	1				2										
SR-101	1535	1183+58.00	RT	2			1			2								
SR-102	1535	1183+75.00	LT	1				2										
SR-103	1535	1183+91.00	RT	1				2										
SR-104	1535	1183+92.00	RT	1				2										
SR-105	1535	1184+03.00	RT	2				2										
SR-106	1535	1184+04.00	RT	2				2										
SR-107	1535	1185+41.00	LT	2				2										
SR-108	1537	1188+47.00	LT	1				1										
SR-109	1537	1188+48.00	LT	2				2										
SR-110	1537	1188+80.00	RT	1				1										
SR-111	1537	1188+83.00	RT	2				2										
SR-112	1538	1190+41.00	LT	1				1										
SR-113	1538	1190+59.00	LT	1				1										
SR-114	1538	1191+03.00	LT	1				2										
SR-115	1538	1191+25.00	RT		1			1										
SR-116	1538	1192+00.00	RT		1			1										
SR-117	1538	1192+10.00	RT	3				2										
TOTALS CARRIED TO SHEET 1493				52	4	-	4	55	-	6	-	2	2	-	-	1	-	

Preliminary Plans - For Reference Only

SIGNING REMOVALS SUBSUMMARY - 3

CUY-90-16.28 (CCG3A)

MODEL: Sheet-03 PAPERSIZE: 34x22 (in.) DATE: 3/27/2025 TIME: 7:03:19 PM USER: Mala.Gallagher
pw:\\mb-us-pw.bentley.com:mb-us-pw-03\Documents\Cleveland_OH\01_Projects\ODOT\District12\82382\400-Engineering\Traffic\Sheets\82382_TS201.dgn

DESIGN AGENCY
Michael Baker INTERNATIONAL

DESIGNER RBK

REVIEWER GSH 05/22/24

PROJECT ID 82382

SHEET 1488 TOTAL 2696

REF NO.	SHEET NO.	STATION	SIDE	630 REMOVAL OF GROUND MOUNTED SIGN AND DISPOSAL	630 REMOVAL OF GROUND MOUNTED SIGN AND STORAGE	630 REMOVAL OF GROUND MOUNTED SIGN AND REERECTION	630 REMOVAL OF GROUND MOUNTED MAJOR SIGN AND DISPOSAL	630 REMOVAL OF GROUND MOUNTED POST SUPPORT AND DISPOSAL	630 REMOVAL OF GROUND MOUNTED POST SUPPORT AND REERECTION	630 REMOVAL OF GROUND MOUNTED STRUCTURAL BEAM SUPPORT AND DISPOSAL	630 REMOVAL OF GROUND MOUNTED PIPE SUPPORT AND STORAGE	630 REMOVAL OF OVERHEAD MOUNTED SIGN AND DISPOSAL	630 REMOVAL OF POLE MOUNTED SIGN AND DISPOSAL	630 REMOVAL OF POLE MOUNTED SIGN AND STORAGE	630 REMOVAL OF POLE MOUNTED SIGN AND REERECTION	630 REMOVAL OF OVERHEAD SIGN SUPPORT AND DISPOSAL	630 REMOVAL OF OVERHEAD SIGN SUPPORT AND DISPOSAL, TYPE TC-15.115
				EACH	EACH	EACH	EACH	EACH	EACH	EACH	EACH	EACH	EACH	EACH	EACH	EACH	EACH	
		RAMP H6 (CONT.)																
SR-118	1538	1192+21.00	LT	2				1										
		I.R. 77																
SR-119	1539		CL									1						
SR-120	1539	40+16.00	CL									7						
SR-121	1539	45+93.00	RT				1			2								
SR-122	1539	56+63.00	CL									5						
		EX. RAMP E-17																
SR-123	1540	62+48.41	CL									3					1	
SR-124	1540	62+52.37	RT										2					
SR-125	1540	62+59.76	LT	1				2										
SR-126	1540	63+45.83	LT	1				2										
SR-127	1540	64+14.04	LT	1				1										
SR-128	1540	64+39.16	LT	1				1										
		CARNEGIE AVE.																
SR-129	1562	35+45.50	RT										4					
SR-130	1562	36+00.00	RT										4					
SR-131	1562	37+75.00	RT	3				1										
SR-132	1562	37+93.00	RT										3					
SR-133	1563	37+48.00	LT										1					
SR-134	1563	37+99.78	LT			1												
SR-135	1563	38+05.00	RT										1					
SR-136	1563	38+42.00	RT	4				1										
SR-137	1563	38+48.00	LT												1			
SR-138	1563	38+50.00	RT										1					
SR-139	1563	39+08.50	LT									1						
SR-140	1563	39+15.00	RT	2				1										
SR-141	1563	39+46.00	RT	2				2										
SR-142	1563	39+55.00	RT	4				1										
SR-143	1563	39+58.00	LT										2					
SR-144	1563	39+63.00	RT										1					
SR-145	1563	40+56.00	RT			1			2									
SR-146	1563	40+74.50	RT										1					
SR-147	1563	41+07.00	LT										2					
SR-148	1563	42+22.00	RT										1					
SR-149	1563	42+82.00	RT										4					
		E. 14TH ST. NB																
SR-150	1563	61+64.00	RT												1			
		E. 14TH ST. SB																
SR-151	1563	40+30.00	LT										6					
		E. 18TH ST.																
SR-152	1563	24+06.00	LT	4				2										
SR-153	1563	24+25.00	RT	4				2										
SR-154	1563	24+33.00	RT										2					
SR-155	1563	25+58.00	LT										5					
SR-156	1563	27+91.00	LT										4					
TOTALS CARRIED TO SHEET 1493				29	-	2	1	17	2	2	-	17	44	-	2	1	-	

Preliminary Plans - For Reference Only

SIGNING REMOVALS SUBSUMMARY - 4

DESIGN AGENCY
Michael Baker INTERNATIONAL

DESIGNER RBK
REVIEWER GSH 05/22/24
PROJECT ID 82382
SHEET 1489 TOTAL 2696

CUY-90-16.28 (CCG3A)

MODEL: Sheet-04 PAPERSIZE: 34x22 (in.) DATE: 3/27/2025 TIME: 7:03:20 PM USER: Mala.Gallagher
pw:\\mb-us-pw.bentley.com:mb-us-pw-03\Documents\Cleveland_OH\01_Projects\ODOT\District12\82382\400-Engineering\Traffic\Sheets\82382_TS201.dgn

REF NO.	SHEET NO.	STATION	SIDE	630 REMOVAL OF GROUND MOUNTED SIGN AND DISPOSAL	630 REMOVAL OF GROUND MOUNTED SIGN AND STORAGE	630 REMOVAL OF GROUND MOUNTED SIGN AND REERECTION	630 REMOVAL OF GROUND MOUNTED MAJOR SIGN AND DISPOSAL	630 REMOVAL OF GROUND MOUNTED POST SUPPORT AND DISPOSAL	630 REMOVAL OF GROUND MOUNTED POST SUPPORT AND REERECTION	630 REMOVAL OF GROUND MOUNTED STRUCTURAL BEAM SUPPORT AND DISPOSAL	630 REMOVAL OF GROUND MOUNTED PIPE SUPPORT AND STORAGE	630 REMOVAL OF OVERHEAD MOUNTED SIGN AND DISPOSAL	630 REMOVAL OF POLE MOUNTED SIGN AND DISPOSAL	630 REMOVAL OF POLE MOUNTED SIGN AND STORAGE	630 REMOVAL OF POLE MOUNTED SIGN AND REERECTION	630 REMOVAL OF OVERHEAD SIGN SUPPORT AND DISPOSAL	630 REMOVAL OF OVERHEAD SIGN SUPPORT AND DISPOSAL, TYPE TC-15.115
				EACH	EACH	EACH	EACH	EACH	EACH	EACH	EACH	EACH	EACH	EACH	EACH	EACH	EACH	EACH
		CARNEGIE AVE.																
SR-157	1564	44+89.00	RT										3					
SR-158	1564	44+95.00	RT										1					
SR-159	1564	45+60.00	RT										1					
SR-160	1564	46+29.00	RT										2					
SR-161	1564	46+81.00	RT	2				1										
		E. 19TH ST.																
SR-162	1564	4+22.50	RT										3					
		CARNEGIE AVE.																
SR-163	1565	47+70.00	RT										5					
SR-164	1565	49+08.00	RT										7					
SR-165	1565	49+28.00	LT												1			
SR-166	1565	50+03.00	RT										3					
SR-167	1565	50+11.00	RT										2					
SR-168	1565	50+28.50	LT	5				1										
SR-169	1565	51+03.00	RT										2					
SR-170	1565	51+48.00	LT										4					
SR-171	1565	51+69.00	RT	1				2										
		E. 21ST ST.																
SR-172	1565	100+63.00	LT										3					
		CARNEGIE AVE.																
SR-173	1566	52+73.00	RT										2					
SR-174	1566	52+87.00	LT										9					
SR-175	1566	53+89.00	LT										1					
SR-176	1566	53+99.00	RT										5					
SR-177	1566	54+00.00	LT										2					
SR-178	1566	55+20.00	RT										3					
SR-179	1566	55+53.00	LT										4					
SR-180	1566	56+17.00	RT										1					
		E. 22ND ST.																
SR-181	1566	36+01.00	LT	2				1										
SR-182	1566	36+13.00	RT										3					
SR-183	1566	36+18.00	LT	2				1										
SR-184	1566	36+20.00	LT										1					
SR-185	1566	36+38.00	LT	1				1										
SR-186	1566	36+84.00	LT	1				1										
SR-187	1566	36+86.00	RT										1					
		EX. E. 22ND ST. NB																
SR-188	1566	28+52.86	RT										1					
		CARNEGIE AVE.																
SR-189	1567	57+03.00	LT										5					
SR-190	1567	57+30.35	LT										1					
SR-191	1567	57+37.00	RT										1					
SR-192	1567	58+20.00	LT									2						
SR-193	1567	59+61.00	LT										2					
SR-194	1567	61+42.00	RT										1					
TOTALS CARRIED TO SHEET 1493				14	-	-	-	8	-	-	-	2	79	-	1	-	-	

Preliminary Plans - For Reference Only

SIGNING REMOVALS SUBSUMMARY - 5

DESIGN AGENCY
Michael Baker INTERNATIONAL

DESIGNER RBK
REVIEWER GSH 05/22/24
PROJECT ID 82382
SHEET 1490 TOTAL 2696

CUY-90-16.28 (CCG3A)

MODEL: Sheet-05 PAPERSIZE: 34x22 (in.) DATE: 3/27/2025 TIME: 7:03:20 PM USER: Mala.Gallagher
pw:\\mb-us-pw.bentley.com:mb-us-pw-03\Documents\Cleveland_OH\01_Projects\ODOT\District12\82382\400-Engineering\Traffic\Sheets\82382_TS201.dgn

REF NO.	SHEET NO.	STATION	SIDE	630 REMOVAL OF GROUND MOUNTED SIGN AND DISPOSAL EACH	630 REMOVAL OF GROUND MOUNTED SIGN AND STORAGE EACH	630 REMOVAL OF GROUND MOUNTED SIGN AND REERECTION EACH	630 REMOVAL OF GROUND MOUNTED MAJOR SIGN AND DISPOSAL EACH	630 REMOVAL OF GROUND MOUNTED POST SUPPORT AND DISPOSAL EACH	630 REMOVAL OF GROUND MOUNTED POST SUPPORT AND REERECTION EACH	630 REMOVAL OF GROUND MOUNTED STRUCTURAL BEAM SUPPORT AND DISPOSAL EACH	630 REMOVAL OF GROUND MOUNTED PIPE SUPPORT AND STORAGE EACH	630 REMOVAL OF OVERHEAD MOUNTED SIGN AND DISPOSAL EACH	630 REMOVAL OF POLE MOUNTED SIGN AND DISPOSAL EACH	630 REMOVAL OF POLE MOUNTED SIGN AND STORAGE EACH	630 REMOVAL OF POLE MOUNTED SIGN AND REERECTION EACH	630 REMOVAL OF OVERHEAD SIGN SUPPORT AND DISPOSAL EACH	630 REMOVAL OF OVERHEAD SIGN SUPPORT AND DISPOSAL, TYPE TC-15.115 EACH
		CARNEGIE AVE. (CONT.)																
SR-195	1567	61+87.00	LT										1					
SR-196	1568	62+56.00	RT										1					
SR-197	1568	64+28.00	LT										1					
SR-198	1568	65+02.00	RT										1					
SR-199	1568	66+16.00	LT										2					
SR-200	1568	66+36.00	RT											1				
SR-201	1569	67+42.00	RT										1					
SR-202	1569	68+55.00	RT	1				1										
SR-203	1569	68+65.00	RT										2					
SR-204	1569	68+76.00	LT										2					
		E. 14TH ST. NB XOVER																
SR-205	1570	250+62.00	LT	1				1										
SR-206	1570	252+22.00	LT	1				1										
SR-207	1570	252+28.00	LT										1					
		INTERIM E. 14TH ST. SB																
SR-208	1570	197+63.00	LT	2									1					
SR-209	1570	197+89.00	LT	3						2								
		FUTURE BUILD E. 14TH																
SR-210	1570	15+34.00	RT	3				1										
SR-211	1570	15+63.00	LT										5					
		INTERIM E. 14TH ST. SB																
SR-212	1571	199+92.00	LT										4					
SR-213	1571	199+95.00	LT				1			2								
SR-214	1571	201+18.00	RT	4				1										
SR-215	1571	201+85.00	RT										3					
SR-216	1571	202+54.00	RT	1				1										
SR-217	1571	202+55.00	RT	1				1										
		E. 14TH ST. NB																
SR-218	1572	53+72.00	RT	2				2										
SR-219	1572	53+84.00	RT	2				2										
		INTERIM E. 14TH ST. SB																
SR-220	1572	205+51.00	LT				1			2								
SR-221	1572	206+58.00	LT	2				1										
		E. 14TH ST. NB																
SR-222	1573	58+26.00	RT	1				1										
SR-223	1573	58+98.00	RT				1			2								
SR-224	1573	59+00.00	RT	2				2										
		INTERIM E. 14TH ST. SB																
SR-225	1573	209+00.00	LT								2						1	
		E. 14TH ST. SB																
SR-226	1573	37+03.00	LT										1					
SR-227	1573	37+73.00	LT	2				1										
		E. 18TH ST.																
SR-228	1573	22+78.00	LT										3					
TOTALS CARRIED TO SHEET 1493				28	-	-	3	16	-	8	-	2	29	1	-	-	1															

REF NO.	SHEET NO.	STATION	SIDE	630 REMOVAL OF GROUND MOUNTED SIGN AND DISPOSAL EACH	630 REMOVAL OF GROUND MOUNTED SIGN AND STORAGE EACH	630 REMOVAL OF GROUND MOUNTED SIGN AND REERECTION EACH	630 REMOVAL OF GROUND MOUNTED MAJOR SIGN AND DISPOSAL EACH	630 REMOVAL OF GROUND MOUNTED POST SUPPORT AND DISPOSAL EACH	630 REMOVAL OF GROUND MOUNTED POST SUPPORT AND REERECTION EACH	630 REMOVAL OF GROUND MOUNTED STRUCTURAL BEAM SUPPORT AND DISPOSAL EACH	630 REMOVAL OF GROUND MOUNTED PIPE SUPPORT AND STORAGE EACH	630 REMOVAL OF OVERHEAD MOUNTED SIGN AND DISPOSAL EACH	630 REMOVAL OF POLE MOUNTED SIGN AND DISPOSAL EACH	630 REMOVAL OF POLE MOUNTED SIGN AND STORAGE EACH	630 REMOVAL OF POLE MOUNTED SIGN AND REERECTION EACH	630 REMOVAL OF OVERHEAD SIGN SUPPORT AND DISPOSAL EACH	630 REMOVAL OF OVERHEAD SIGN SUPPORT AND DISPOSAL, TYPE TC-15.115 EACH
		E. 18TH ST. (CONT.)																
SR-229	1573	23+28.00	RT										3					
SR-230	1573	23+75.00	LT										2					
		CENTRAL AVE. CONNECTOR																
SR-231	1573	600+27.00	RT	2				1										
SR-232	1573	600+52.00	RT	2				1										
SR-233	1573	600+58.00	LT	1				1										
		E. 14TH ST. SB																
SR-234	1574												2					
		E. 14TH ST.																
SR-235	1574	20+50.50	LT									3						
		E. 22ND ST.																
SR-236	1575	23+53.00	RT										2					
SR-237	1575	24+23.00	LT					2					3					
SR-238	1575	24+80.00	LT										2					
		CENTRAL AVE.																
SR-239	1576	25+46.00	LT										1					
SR-240	1576	101+56.58	LT										1					
		E. 22ND ST.																
SR-241	1576	27+92.55	LT										2					
SR-242	1576	29+01.00	LT										2					
SR-243	1576	30+05.00	RT										1					
SR-244	1576	30+18.37	RT	1				1										
SR-245	1576	30+84.00	RT										3					
SR-246	1576	31+00.00	RT										1					
SR-247	1576	31+23.00	LT	1				1										
SR-248	1576	31+51.62	RT										1					
SR-249	1576	31+59.00	LT										2					
SR-250	1576	31+67.00	RT	3				1										
SR-251	1576	31+72.00	LT	1				1										
SR-252	1577	32+50.50	LT										4					
SR-253	1577	33+26.00	RT										2					
SR-254	1577	34+06.00	RT	2				1										
SR-255	1577	34+68.00	LT										2					
SR-256	1577	35+03.00	RT										1					
SR-257	1577	35+13.00	LT	1				1										
SR-258	1577	35+51.00	RT										1					
SR-259	1577	35+70.00	LT	3				1										
SR-260	1577	35+75.00	RT										2					
SR-261	1577	35+80.00	LT										2					
SR-262	1577	35+82.00	RT	1				1										
		MIDTOWN CONNECTOR																
SR-263	1578	502+35.07	LT	1				1										
SR-264	1578	502+51.15	LT	1				1										
SR-265	1578	502+73.04	LT	2				1										
SR-266	1578	502+91.08	LT	1				1										
TOTALS CARRIED TO SHEET 1493				23	-	-	-	17	-	-	-	3	42	-	-	-	-	

Preliminary Plans - For Reference Only

SIGNING REMOVALS SUBSUMMARY - 7

CUY-90-16.28 (CCG3A)

MODEL: Sheet-07 PAPERSIZE: 34x22 (in.) DATE: 3/27/2025 TIME: 7:03:22 PM USER: Mala.Gallagher
pw:\\mb-us-pw.bentley.com:mb-us-pw-03\Documents\Cleveland_OH\01_Projects\ODOT\District12\82382\400-Engineering\Traffic\Sheets\82382_TS201.dgn

DESIGN AGENCY
Michael Baker INTERNATIONAL

DESIGNER RBK

REVIEWER GSH 05/22/24

PROJECT ID 82382

SHEET 1492 TOTAL 2696

REF NO.	SHEET NO.	STATION	SIDE	630 REMOVAL OF GROUND MOUNTED SIGN AND DISPOSAL	630 REMOVAL OF GROUND MOUNTED SIGN AND STORAGE	630 REMOVAL OF GROUND MOUNTED SIGN AND REERECTION	630 REMOVAL OF GROUND MOUNTED MAJOR SIGN AND DISPOSAL	630 REMOVAL OF GROUND MOUNTED POST SUPPORT AND DISPOSAL	630 REMOVAL OF GROUND MOUNTED POST SUPPORT AND REERECTION	630 REMOVAL OF GROUND MOUNTED STRUCTURAL BEAM SUPPORT AND DISPOSAL	630 REMOVAL OF GROUND MOUNTED PIPE SUPPORT AND STORAGE	630 REMOVAL OF OVERHEAD MOUNTED SIGN AND DISPOSAL	630 REMOVAL OF POLE MOUNTED SIGN AND DISPOSAL	630 REMOVAL OF POLE MOUNTED SIGN AND STORAGE	630 REMOVAL OF POLE MOUNTED SIGN AND REERECTION	630 REMOVAL OF OVERHEAD SIGN SUPPORT AND DISPOSAL	630 REMOVAL OF OVERHEAD SIGN SUPPORT AND DISPOSAL, TYPE TC-15.115
				EACH	EACH	EACH	EACH	EACH	EACH	EACH	EACH	EACH	EACH	EACH	EACH	EACH	EACH	EACH
	MIDTOWN CONNECTOR (CONT.)																	
SR-267	1578	503+03.70	LT										1					
SR-268	1578	503+06.59	LT	1				1										
SR-269	1578	503+27.25	LT	1				1										
SR-270	1578	503+65.18	LT	1				1										
SR-271	1578	503+87.47	LT										3					
SR-272	1578	504+05.65	RT	1				1										
SR-273	1578	504+42.31	RT										1					
SR-274	1578	504+47.62	LT										1					
SR-275	1578	505+02.59	LT	1				1										
SR-276	1578	505+93.01	LT	1				1										
SR-277	1578	506+57.42	RT										1					
SR-278	1579	507+91.05	LT										1					
SR-279	1579	508+11.40	RT	1				1										
SR-280	1579	509+22.12	RT										1					
SR-281	1579	509+22.48	LT										1					
SR-282	1579	510+33.45	LT	1				1										
SR-283	1579	510+42.46	LT										1					
SR-284	1579	510+94.49	RT	1				1										
		CEDAR AVE.																
SR-285	1579	400+52.00	RT										1					
SR-286	1579	401+93.00	RT										1					
SR-287	1579	401+98.00	LT										1					
SR-288	1580	403+36.32	LT										1					
		CENTRAL AVE. CONNECTOR																
SR-289	1581	601+94.00	LT	1				1										
SR-290	1581	602+70.00	RT										1					
SR-291	1581	602+90.00	RT										2					
SR-292	1581	603+49.78	RT										1					
SR-293	1581	603+57.43	RT										2					
SR-294	1581	603+76.23	RT										3					
SR-295	1581	604+00.07	LT	2				1										
SR-296	1581	604+10.05	LT	2				1										
SR-297	1581	604+18.57	RT	3				1										
		E. 19TH ST.																
SR-298	1581	3+39.00	RT										3					
		E. 21ST ST.																
SR-299	1582	101+26.10	RT										4					
SR-300	1582	101+95.58	LT										4					
SR-301	1582	102+85.89	RT										2					
SR-302	1582	103+29.12	LT										4					
TOTALS FROM THIS SHEET				17	-	-	-	13	-	-	-	-	41	-	-	-	-	
TOTALS FROM SHEET			1486	38	-	-	4	36	-	8	-	25	2	-	-	8	-	
TOTALS FROM SHEET			1487	28	1	-	2	36	-	4	1	18	9	-	-	8	-	
TOTALS FROM SHEET			1488	52	4	-	4	55	-	6	-	2	2	-	-	1	-	
TOTALS FROM SHEET			1489	29	-	2	1	17	2	2	-	17	44	-	2	1	-	
TOTALS FROM SHEET			1490	14	-	-	-	8	-	-	-	2	79	-	1	-	-	
TOTALS FROM SHEET			1491	28	-	-	3	16	-	8	-	2	29	1	-	-	1	
TOTALS FROM SHEET			1492	23	-	-	-	17	-	-	-	3	42	-	-	-	-	
TOTALS TO GENERAL SUMMARY				229	5	2	14	198	2	28	1	69	248	1	3	18	1	

Preliminary Plans - For Reference Only

SIGNING REMOVALS SUBSUMMARY - 8

CUY-90-16.28 (CCG3A)

MODEL: Sheet-08 PAPERSIZE: 34x22 (in.) DATE: 3/27/2025 TIME: 7:03:23 PM USER: Mala.Gallagher
pw:\\mb-us-pw.bentley.com:mb-us-pw-03\Documents\Cleveland_OH\01_Projects\ODOT\District12\82382\400-Engineering\Traffic\Sheets\82382_TS201.dgn

DESIGN AGENCY
Michael Baker INTERNATIONAL

DESIGNER RBK

REVIEWER GSH 05/22/24

PROJECT ID 82382

SHEET 1493 TOTAL 2696

SIGNING & PAVEMENT MARKING PLAN - I.R. 90 EB
STA. 44+00.00 TO 47+00.00

HORIZONTAL SCALE IN FEET
0 10 20 40

TRAFFIC CONTROL LEGEND

ELW	EDGE LINE, WHITE
ELY	EDGE LINE, YELLOW
LL	LANE LINE
DL	DOTTED LINE, WHITE
CHL	CHANNELIZING LINE
C	CHEVRON
TW	TRANSVERSE / DIAGONAL LINES, WHITE
TY	TRANSVERSE / DIAGONAL LINES, YELLOW
LA	LANE ARROW
WWA	WRONG WAY ARROW

TRAFFIC DIRECTION

PROPOSED SIGN

EXISTING SIGN TO REMAIN (RELOCATIONS NOTED IN PLANS)

EXISTING SIGN TO BE REMOVED

Preliminary Plans - For Reference Only

S-3
E1-H5P-120
EXIT 173 B
Chester Ave
1 MILE
EXIT 172 B
Carnegie Ave
E 22nd St
¼ MILE
EXIT 172 A
E 9th St
Downtown
EXIT 171
Ontario St
Orange Ave
EXIT 25 MPH ONLY
EXIT 35 ONLY
EXIT ONLY
STA. 46+16

SR-3
EXIT 172 A
E 9th St
Downtown
¼ MILE
EXIT ONLY
EXIT 171
Orange Ave
Ontario St
EXIT 35 ONLY
EXIT ONLY

S-2
E1-H5P-120
EXIT 172 B
Carnegie Ave
E 22nd St
¾ MILE
EXIT 172 A
E 9th St
Downtown
¾ MILE
EXIT ONLY
EXIT 171
Ontario St
Orange Ave
½ MILE
EXIT ONLY
STA. 29+08

SR-2

S-1
E1-H5P-120
EXIT 172 B
Carnegie Ave
E 22nd St
1 ¼ MILES
EXIT 172 A
E 9th St
Downtown
1 ¼ MILE
EXIT ONLY
EXIT 171
Ontario St
Orange Ave
1 MILE
EXIT ONLY
STA. 3+05

SR-1

EAST

℄ EX. I.R. 90

I.R. 90 EB

EXIT 171

29

46

47

DESIGN AGENCY
B&N
burgessniple.com

DESIGNER	KEH
REVIEWER	JTP 05/01/24
PROJECT ID	82382
SHEET	1494
TOTAL	2696

CUY-90-16.28 (CCG3A)

MODEL: 82382_TP2253 PAPERSIZE: 34x22 (in.) DATE: 5/22/2025 TIME: 9:37:51 PM USER: slsson
pw:\\mb-us-pw.bentley.com:mb-us-pw-03\Documents\Cleveland.OH\OI_Projects\ODOT\District2\82382\400-Engineering\Traffic\Sheets\82382_TP2212.dgn

SIGNING & PAVEMENT MARKING PLAN - I.R. 90 EB
STA. 164+00.00 TO STA. 169+00.00

HORIZONTAL SCALE IN FEET
0 10 20 40

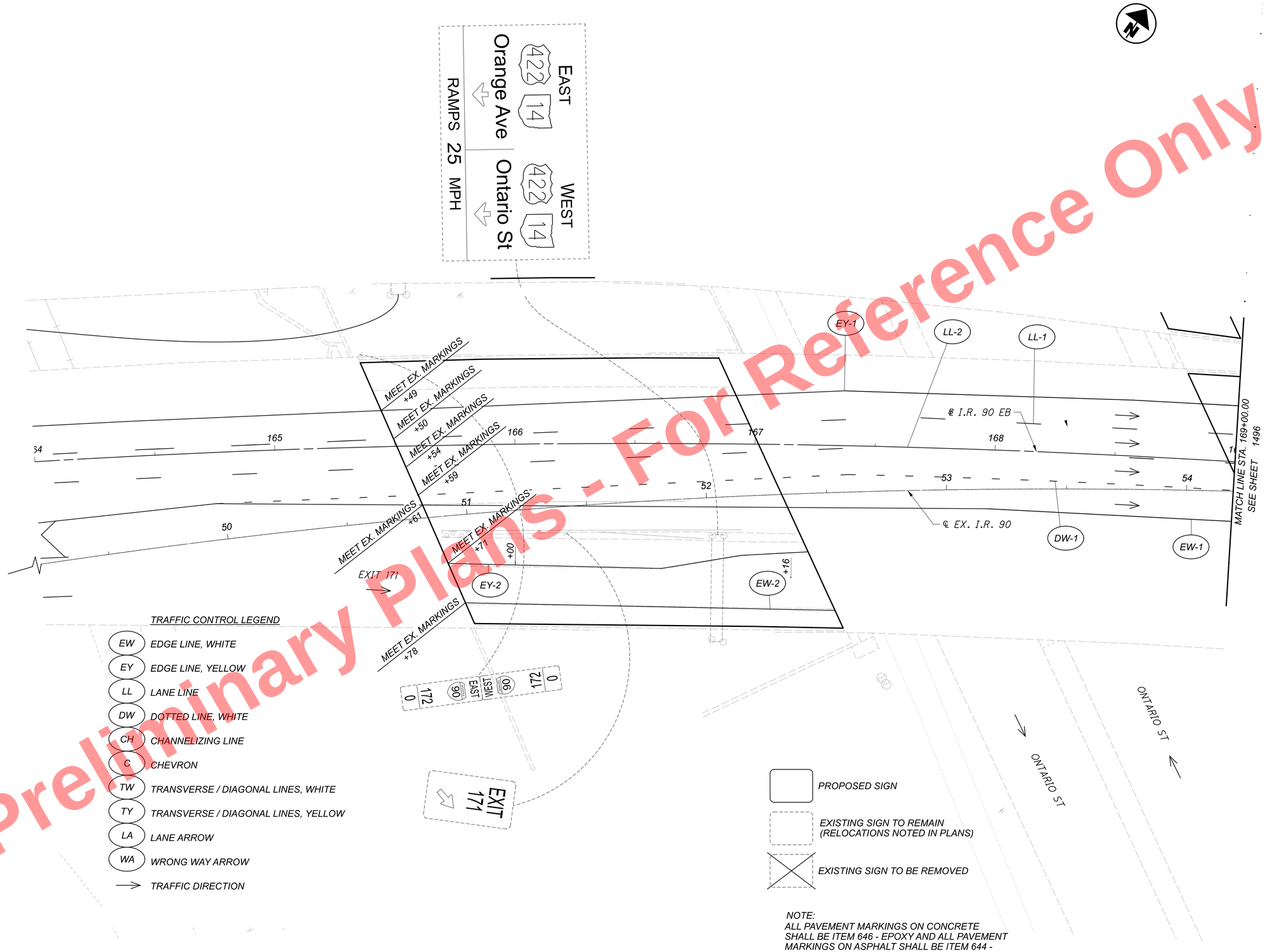

TRAFFIC CONTROL LEGEND

EW	EDGE LINE, WHITE
EY	EDGE LINE, YELLOW
LL	LANE LINE
DW	DOTTED LINE, WHITE
CH	CHANNELIZING LINE
C	CHEVRON
TW	TRANSVERSE / DIAGONAL LINES, WHITE
TY	TRANSVERSE / DIAGONAL LINES, YELLOW
LA	LANE ARROW
WA	WRONG WAY ARROW
→	TRAFFIC DIRECTION

PROPOSED SIGN

EXISTING SIGN TO REMAIN (RELOCATIONS NOTED IN PLANS)

EXISTING SIGN TO BE REMOVED

NOTE:
ALL PAVEMENT MARKINGS ON CONCRETE SHALL BE ITEM 646 - EPOXY AND ALL PAVEMENT MARKINGS ON ASPHALT SHALL BE ITEM 644 - THERMOPLASTIC

Preliminary Plans - For Reference Only

DESIGN AGENCY
B&N
burgessniple.com

DESIGNER	KEH
REVIEWER	JTP 05/01/24
PROJECT ID	82382
SHEET	1495
TOTAL	2696

CUY-90-16.28 (CCG3A)

MODEL: 82382_TP2201 PAPERSIZE: 34x22 (in.) DATE: 5/22/2025 TIME: 9:38:19 PM USER: slsson
pw:\\mb-us-pw.bentley.com:mb-us-pw-03\Documents\Cleveland.OH\DgnProjects\ODOT\District2\82382\400-Engineering\Traffic\Sheets\82382_TP2201.dgn

TRAFFIC CONTROL LEGEND

EW	EDGE LINE, WHITE
EY	EDGE LINE, YELLOW
LL	LANE LINE
DW	DOTTED LINE, WHITE
CL	CHANNELIZING LINE
CV	CHEVRON
TW	TRANSVERSE / DIAGONAL LINES, WHITE
TY	TRANSVERSE / DIAGONAL LINES, YELLOW
LA	LANE ARROW
WA	WRONG WAY ARROW
→	TRAFFIC DIRECTION

PROPOSED SIGN

EXISTING SIGN TO REMAIN (RELOCATIONS NOTED IN PLANS)

EXISTING SIGN TO BE REMOVED

NOTE:
ALL PAVEMENT MARKINGS ON CONCRETE SHALL BE ITEM 646 - EPOXY AND ALL PAVEMENT MARKINGS ON ASPHALT SHALL BE ITEM 644 - THERMOPLASTIC

Preliminary Plans - For Reference Only

HORIZONTAL SCALE IN FEET
0 10 20 40

SIGNING & PAVEMENT MARKING PLAN - I.R. 90 EB
STA. 169+00.00 TO STA. 174+00.00

CUY-90-16.28 (CCG3A)

MODEL: 82382_TP2202 PAPERSIZE: 34x22 (in.) DATE: 5/22/2025 TIME: 9:38:43 PM USER: sisson
pw:\\mb-us-pw.bentley.com:mb-us-pw-03\Documents\Cleveland_OH\OiL_Projects\ODOT\District2\82382\400-Engineering\Traffic\Sheets\82382_TP2202.dgn

DESIGN AGENCY
B&N burgessniple.com

DESIGNER	KEH
REVIEWER	JTP 05/01/24
PROJECT ID	82382
SHEET	1496
TOTAL	2696

Preliminary Plans - For Reference Only

SIGNING & PAVEMENT MARKING PLAN - I.R. 90 EB
STA. 174+00.00 TO STA. 179+00.00

HORIZONTAL SCALE IN FEET
0 10 20 40

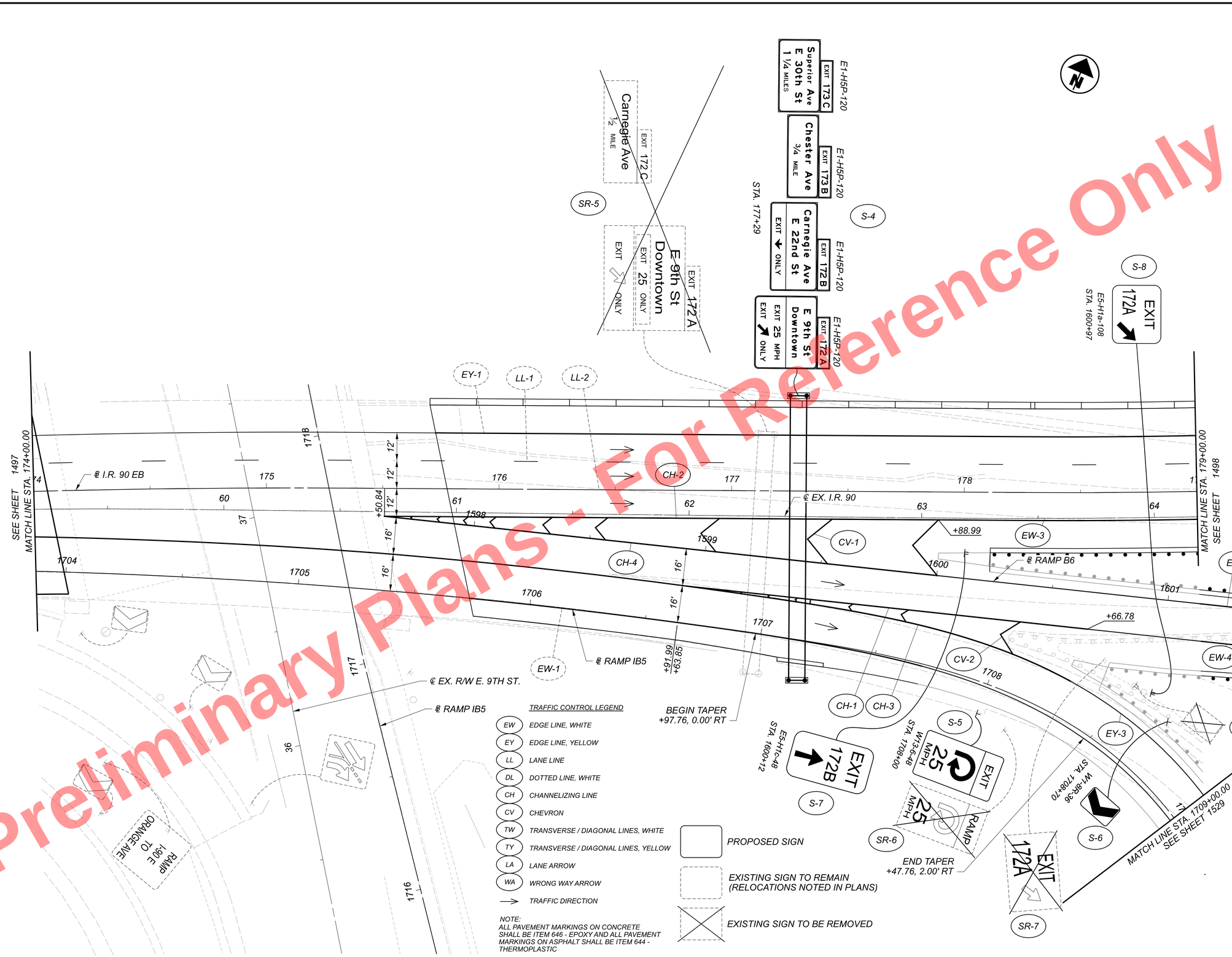

TRAFFIC CONTROL LEGEND

EW	EDGE LINE, WHITE
EY	EDGE LINE, YELLOW
LL	LANE LINE
DL	DOTTED LINE, WHITE
CH	CHANNELIZING LINE
CV	CHEVRON
TW	TRANSVERSE / DIAGONAL LINES, WHITE
TY	TRANSVERSE / DIAGONAL LINES, YELLOW
LA	LANE ARROW
WA	WRONG WAY ARROW
→	TRAFFIC DIRECTION

NOTE:
ALL PAVEMENT MARKINGS ON CONCRETE SHALL BE ITEM 646 - EPOXY AND ALL PAVEMENT MARKINGS ON ASPHALT SHALL BE ITEM 644 - THERMOPLASTIC

PROPOSED SIGN

EXISTING SIGN TO REMAIN (RELOCATIONS NOTED IN PLANS)

EXISTING SIGN TO BE REMOVED

DESIGN AGENCY
B&N
burgessniple.com

DESIGNER KEH
REVIEWER JTP 05/01/24
PROJECT ID 82382
SHEET 1497 TOTAL 2696

CUY-90-16.28 (CCG3A)

MODEL: 82382_TP2203 PAPERSIZE: 34x22 (in.) DATE: 5/22/2025 TIME: 9:39:09 PM USER: slsson
pw:\\vmb-us-pw.bentley.com:mb-us-pw-03\Documents\Cleveland_OH\01_Projects\000T\District2\82382\400-Engineering\Traffic\Sheets\82382_TP2203.dgn

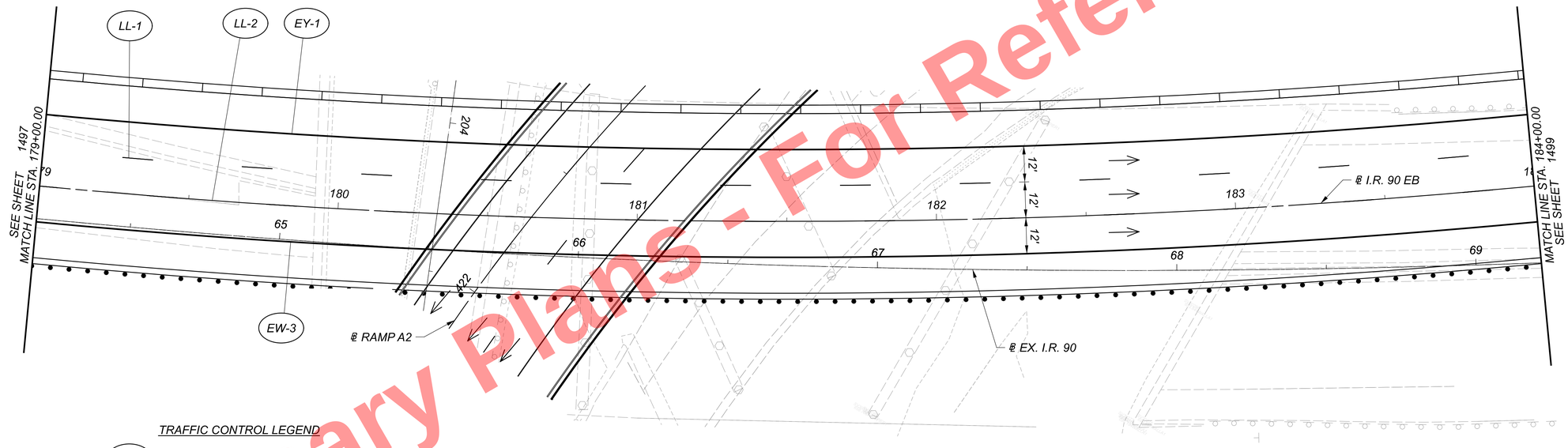

TRAFFIC CONTROL LEGEND

EW	EDGE LINE, WHITE
EY	EDGE LINE, YELLOW
LL	LANE LINE
DW	DOTTED LINE, WHITE
CH	CHANNELIZING LINE
CV	CHEVRON
TW	TRANSVERSE / DIAGONAL LINES, WHITE
TY	TRANSVERSE / DIAGONAL LINES, YELLOW
LA	LANE ARROW
WA	WRONG WAY ARROW
→	TRAFFIC DIRECTION

NOTE:
ALL PAVEMENT MARKINGS ON CONCRETE SHALL BE ITEM 646 - EPOXY AND ALL PAVEMENT MARKINGS ON ASPHALT SHALL BE ITEM 644 - THERMOPLASTIC

PROPOSED SIGN

EXISTING SIGN TO REMAIN (RELOCATIONS NOTED IN PLANS)

EXISTING SIGN TO BE REMOVED

Preliminary Plans - For Reference Only

HORIZONTAL SCALE IN FEET
0 10 20 40

SIGNING & PAVEMENT MARKING PLAN - I.R. 90 EB
STA. 179+00.00 TO STA. 184+00.00

DESIGN AGENCY
B&N
burgessniple.com

DESIGNER KEH
REVIEWER JTP 05/01/24
PROJECT ID 82382
SHEET 1498 TOTAL 2696

CUY-90-16.28 (CCG3A)

MODEL: 82382_TP2204 PAPERSIZE: 34x22 (in.) DATE: 5/22/2025 TIME: 9:39:44 PM USER: slsson
pw:\\mb-us-pw.bentley.com:mb-us-pw-03\Documents\Cleveland_OH\01_Projects\0DOT\District2\82382\400-Engineering\Traffic\Sheets\82382_TP2204.dgn

PROPOSED SIGN

EXISTING SIGN TO REMAIN
(RELOCATIONS NOTED IN PLANS)

EXISTING SIGN TO BE REMOVED

TRAFFIC CONTROL LEGEND

EW	EDGE LINE, WHITE
EY	EDGE LINE, YELLOW
LL	LANE LINE
DW	DOTTED LINE, WHITE
CH	CHANNELIZING LINE
CV	CHEVRON
TW	TRANSVERSE / DIAGONAL LINES, WHITE
TY	TRANSVERSE / DIAGONAL LINES, YELLOW
LA	LANE ARROW
WA	WRONG WAY ARROW

TRAFFIC DIRECTION

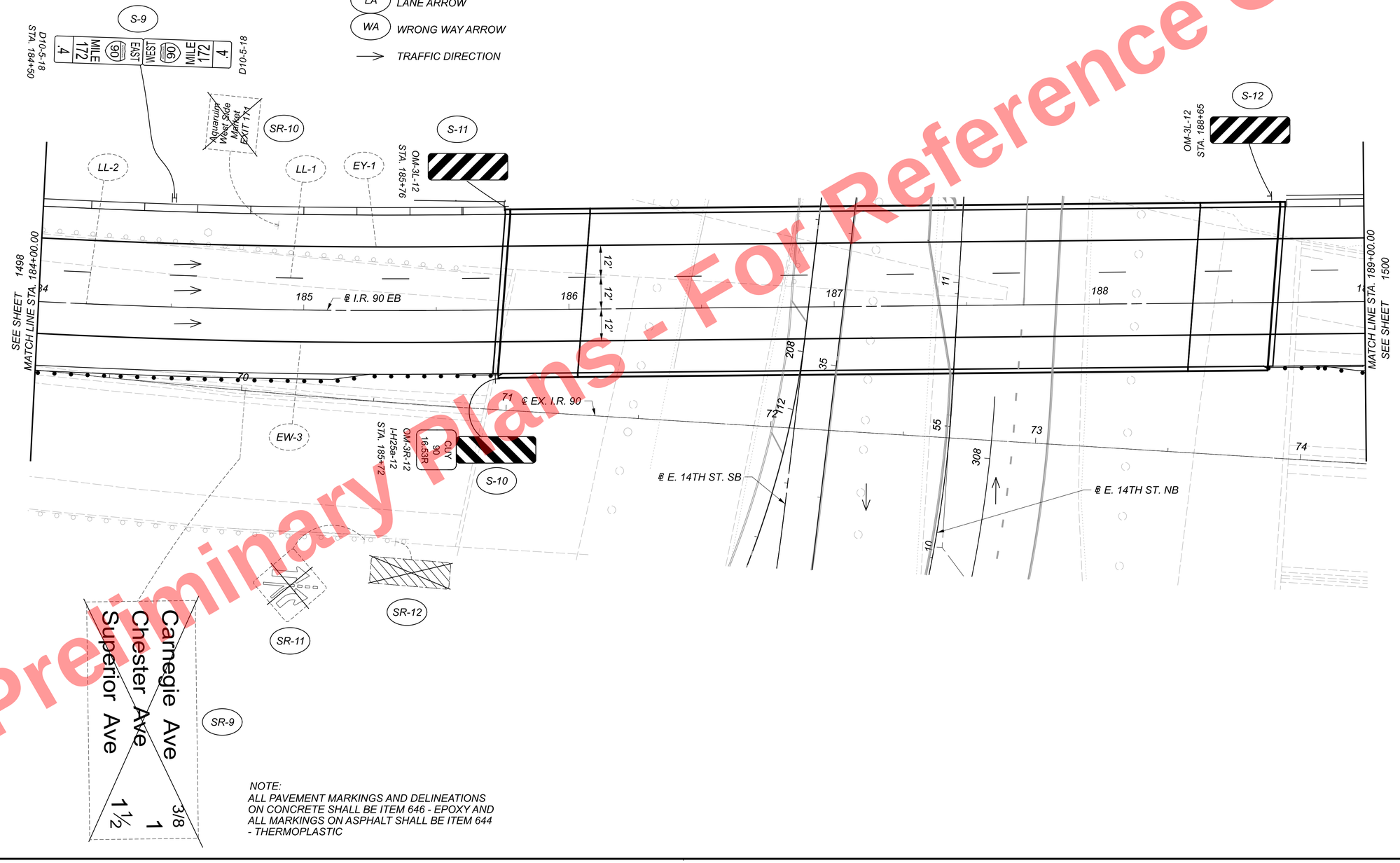

NOTE:
ALL PAVEMENT MARKINGS AND DELINEATIONS ON CONCRETE SHALL BE ITEM 646 - EPOXY AND ALL MARKINGS ON ASPHALT SHALL BE ITEM 644 - THERMOPLASTIC

Preliminary Plans - For Reference Only

HORIZONTAL SCALE IN FEET
0 10 20 40

SIGNING & PAVEMENT MARKING PLAN - I.R. 90 EB
STA. 184+00.00 TO STA. 189+00.00

DESIGN AGENCY
B&N
burgessniple.com

DESIGNER KEH
REVIEWER JTP 05/01/24
PROJECT ID 82382
SHEET 1499 TOTAL 2696

CUY-90-16.28 (CCG3A)
MODEL: 82382_TP2205 PAPERSIZE: 34x22 (in.) DATE: 5/22/2025 TIME: 9:40:24 PM USER: sisson
pw:\\mb-us-pw.bentley.com:mb-us-pw-03\Documents\Cleveland.OH\DgnProjects\ODOT\District2\82382\400-Engineering\Traffic\Sheets\82382_TP2205.dgn

Preliminary Plans - For Reference Only

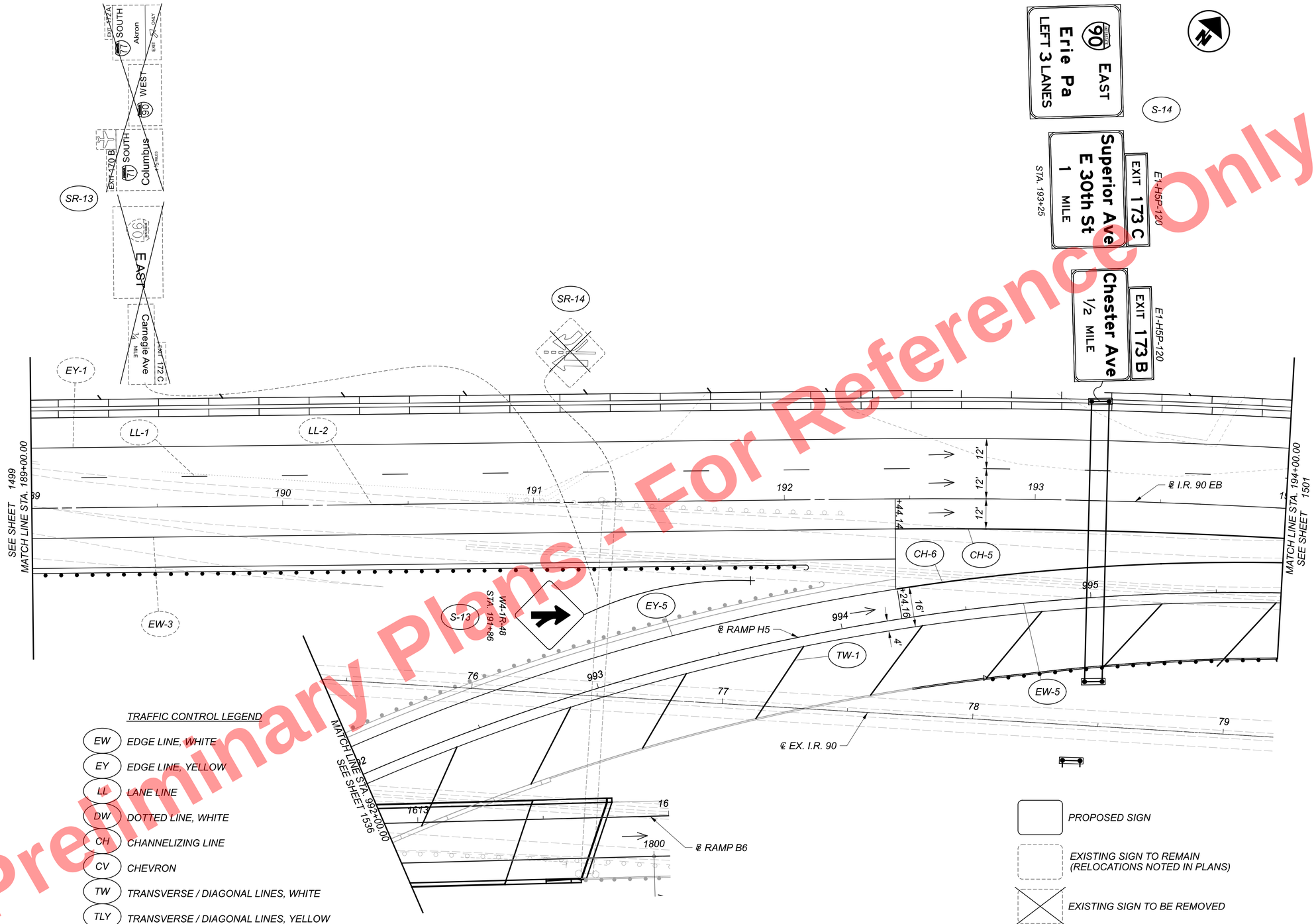

TRAFFIC CONTROL LEGEND

EW	EDGE LINE, WHITE
EY	EDGE LINE, YELLOW
LL	LANE LINE
DW	DOTTED LINE, WHITE
CH	CHANNELIZING LINE
CV	CHEVRON
TW	TRANSVERSE / DIAGONAL LINES, WHITE
TLY	TRANSVERSE / DIAGONAL LINES, YELLOW
LA	LANE ARROW
WA	WRONG WAY ARROW
→	TRAFFIC DIRECTION

PROPOSED SIGN

EXISTING SIGN TO REMAIN (RELOCATIONS NOTED IN PLANS)

EXISTING SIGN TO BE REMOVED

NOTE:
ALL PAVEMENT MARKINGS ON CONCRETE SHALL BE ITEM 646 - EPOXY AND ALL PAVEMENT MARKINGS ON ASPHALT SHALL BE ITEM 644 - THERMOPLASTIC

HORIZONTAL SCALE IN FEET
0 10 20 40

SIGNING & PAVEMENT MARKING PLAN - I.R. 90 EB
STA. 189+00.00 TO STA. 194+00.00

DESIGN AGENCY
B&N
burgessniple.com

DESIGNER KEH
REVIEWER JTP 05/01/24
PROJECT ID 82382
SHEET 1500 TOTAL 2696

CUY-90-16.28 (CCG3A)

MODEL: 82382_TP2206 PAPERSIZE: 34x22 (in.) DATE: 5/22/2025 TIME: 9:41:05 PM USER: sisson
pw:\\mb-us-pw.bentley.com:mb-us-pw-03\Documents\Cleveland.OH\DgnProjects\ODOT\District2\82382\400-Engineering\Traffic\Sheets\82382_TP2206.dgn

Preliminary Plans - For Reference Only

TRAFFIC CONTROL LEGEND

- EW — EDGE LINE, WHITE
- EY — EDGE LINE, YELLOW
- LL — LANE LINE
- DW — DOTTED LINE, WHITE
- CH — CHANNELIZING LINE
- CV — CHEVRON
- TW — TRANSVERSE / DIAGONAL LINES, WHITE
- TY — TRANSVERSE / DIAGONAL LINES, YELLOW
- LA — LANE ARROW
- WA — WRONG WAY ARROW

→ TRAFFIC DIRECTION

PROPOSED SIGN

EXISTING SIGN TO REMAIN (RELOCATIONS NOTED IN PLANS)

EXISTING SIGN TO BE REMOVED

NOTE:
ALL PAVEMENT MARKINGS ON CONCRETE SHALL BE ITEM 646 - EPOXY AND ALL PAVEMENT MARKINGS ON ASPHALT SHALL BE ITEM 644 - THERMOPLASTIC

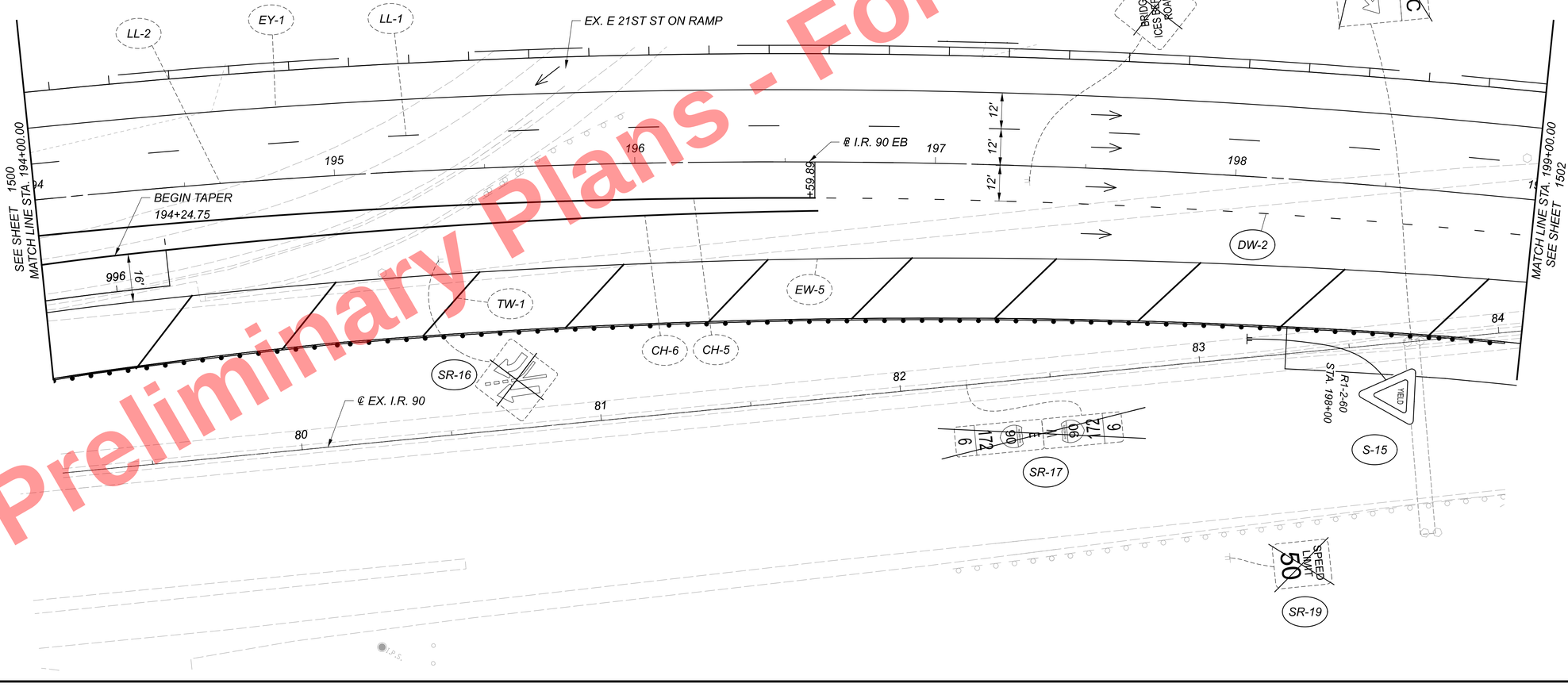

HORIZONTAL SCALE IN FEET
0 10 20 40

SIGNING & PAVEMENT MARKING PLAN - I.R. 90 EB
STA. 194+00.00 TO STA. 199+00.00

DESIGN AGENCY
B&N
burgessniple.com

DESIGNER	KEH
REVIEWER	JTP 05/01/24
PROJECT ID	82382
SHEET	1501
TOTAL	2696

CUY-90-16.28 (CCG3A)

MODEL: 82382_TP2207 PAPERSIZE: 34x22 (in.) DATE: 5/22/2025 TIME: 9:41:48 PM USER: slsson
pw:\\vmb-us-pw.bentley.com:vmb-us-pw-03\Documents\Cleveland_OH\01_Projects\ODOT\District2\82382\400-Engineering\Traffic\Sheets\82382_TP2207.dgn

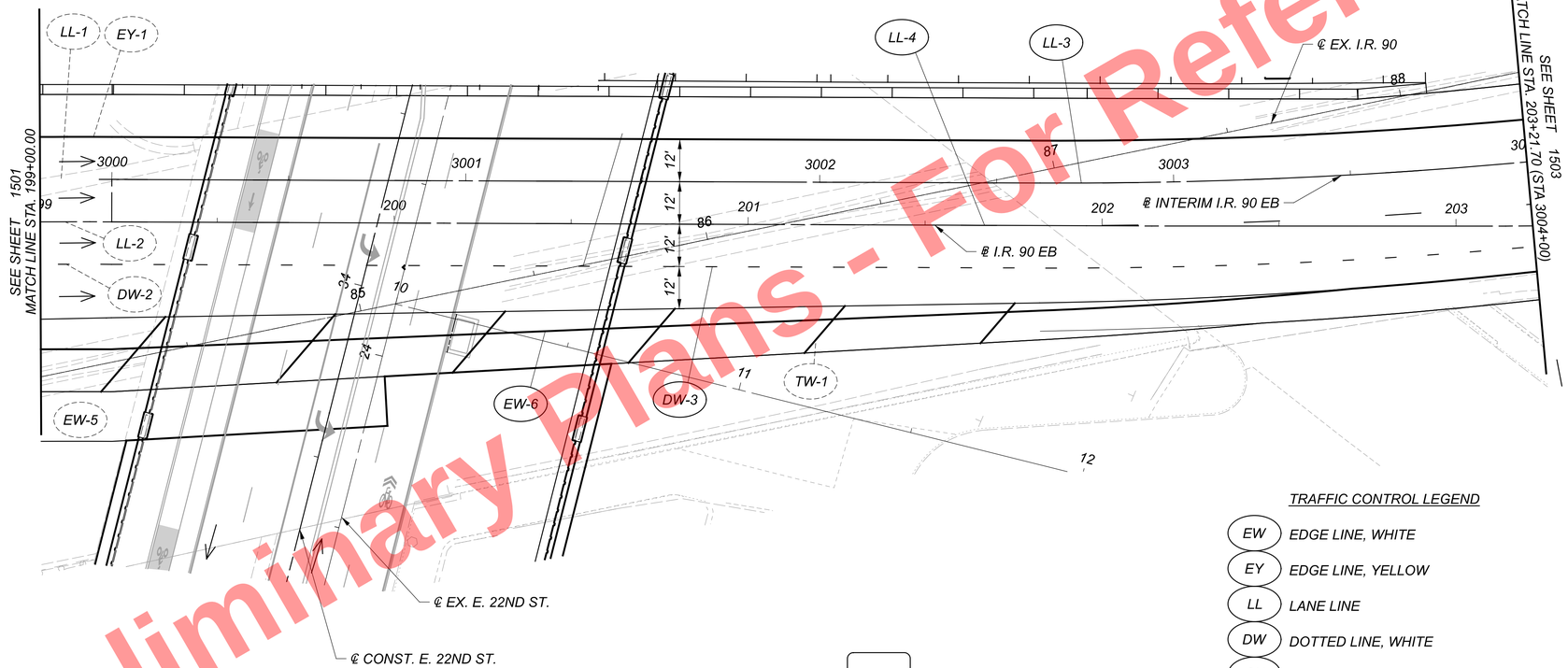

PROPOSED SIGN

EXISTING SIGN TO REMAIN
(RELOCATIONS NOTED IN PLANS)

EXISTING SIGN TO BE REMOVED

NOTE:
ALL PAVEMENT MARKINGS ON CONCRETE SHALL BE ITEM 646 - EPOXY AND ALL PAVEMENT MARKINGS ON ASPHALT SHALL BE ITEM 644 - THERMOPLASTIC

TRAFFIC CONTROL LEGEND

EW	EDGE LINE, WHITE
EY	EDGE LINE, YELLOW
LL	LANE LINE
DW	DOTTED LINE, WHITE
CH	CHANNELIZING LINE
CV	CHEVRON
TW	TRANSVERSE / DIAGONAL LINES, WHITE
TY	TRANSVERSE / DIAGONAL LINES, YELLOW
LA	LANE ARROW
WA	WRONG WAY ARROW

TRAFFIC DIRECTION

Preliminary Plans - For Reference Only

HORIZONTAL SCALE IN FEET
0 10 20 40

SIGNING & PAVEMENT MARKING PLAN - I.R. 90 EB
STA. 199+00.00 TO STA. 203+21.70 (3004+00.00)

DESIGN AGENCY
B&N
burgessniple.com

DESIGNER	KEH
REVIEWER	JTP 05/01/24
PROJECT ID	82382
SHEET	1502
TOTAL	2696

CUY-90-16.28 (CCG3A)

MODEL: 82382_TP2208 PAPERSIZE: 34x22 (in.) DATE: 5/22/2025 TIME: 9:42:27 PM USER: sisson
pw:\\mb-us-pw.bentley.com:mb-us-pw-03\Documents\Cleveland.OH\OI_Projects\ODOT\District2\82382\400-Engineering\Traffic\Sheets\82382_TP2208.dgn

Preliminary Plans - For Reference Only

TRAFFIC CONTROL LEGEND

- EW — EDGE LINE, WHITE
- EY — EDGE LINE, YELLOW
- LL — LANE LINE
- DW — DOTTED LINE, WHITE
- CH — CHANNELIZING LINE
- CV — CHEVRON
- TW — TRANSVERSE / DIAGONAL LINES, WHITE
- TY — TRANSVERSE / DIAGONAL LINES, YELLOW
- LA — LANE ARROW
- WA — WRONG WAY ARROW
- TRAFFIC DIRECTION

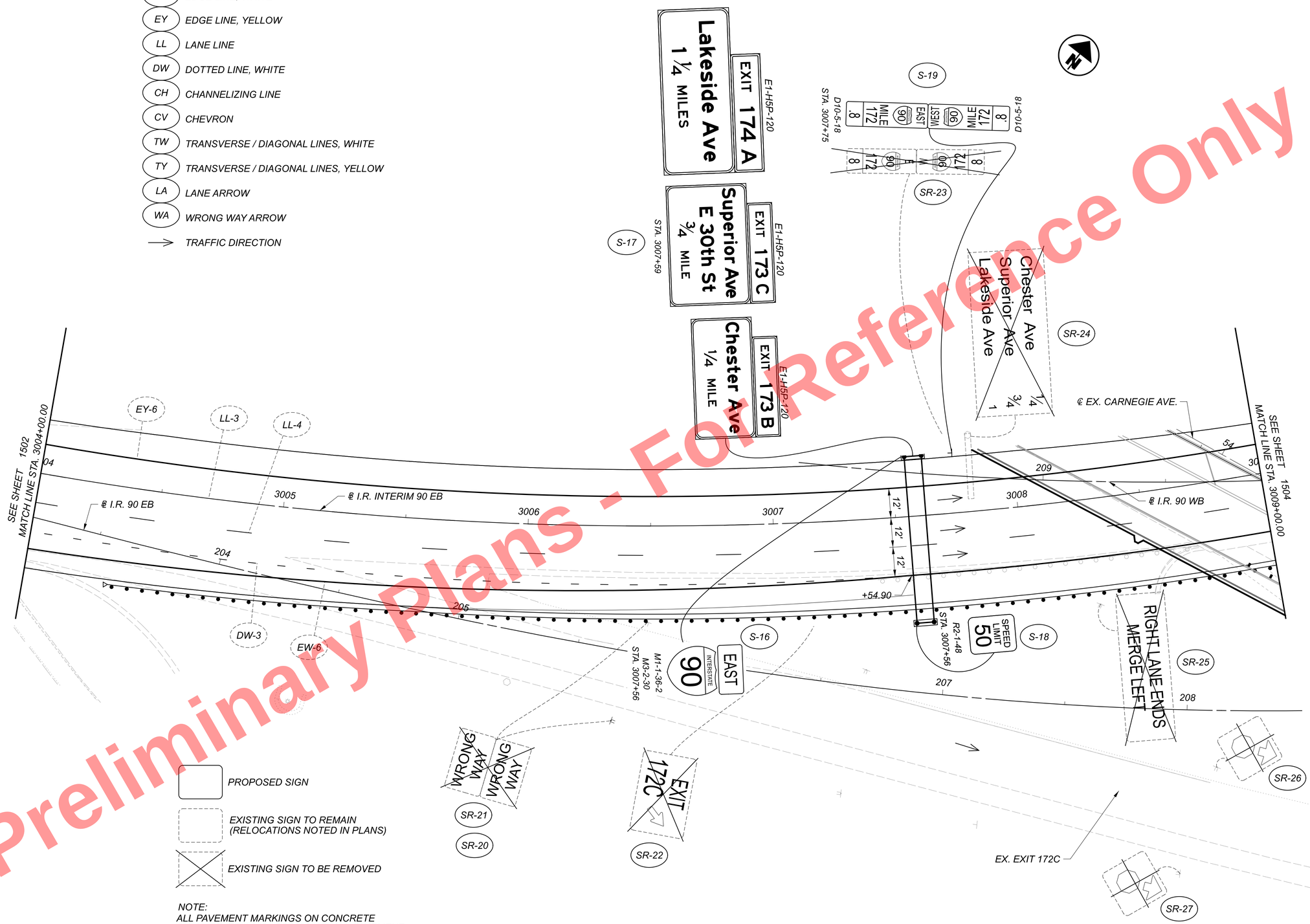

PROPOSED SIGN

EXISTING SIGN TO REMAIN
(RELOCATIONS NOTED IN PLANS)

EXISTING SIGN TO BE REMOVED

NOTE:
ALL PAVEMENT MARKINGS ON CONCRETE SHALL BE ITEM 646 - EPOXY AND ALL PAVEMENT MARKINGS ON ASPHALT SHALL BE ITEM 644 - THERMOPLASTIC

HORIZONTAL SCALE IN FEET
0 10 20 40

SIGNING & PAVEMENT MARKING PLAN - I.R. 90 EB
STA. 3004+00.00 TO STA. 3009+00.00

CUY-90-16.28 (CCG3A)

MODEL: 82382_TP2209 PAPERSIZE: 34x22 (in.) DATE: 5/22/2025 TIME: 9:43:07 PM USER: sisson
pw:\\mb-us-pw.bentley.commb-us-pw-03\Documents\Cleveland.OH\DgnProjects\ODOT\District2\82382\400-Engineering\Traffic\Sheets\82382_TP2209.dgn

DESIGN AGENCY
B&N
burgessniple.com

DESIGNER	KEH
REVIEWER	JTP 05/01/24
PROJECT ID	82382
SHEET	1503
TOTAL	2696

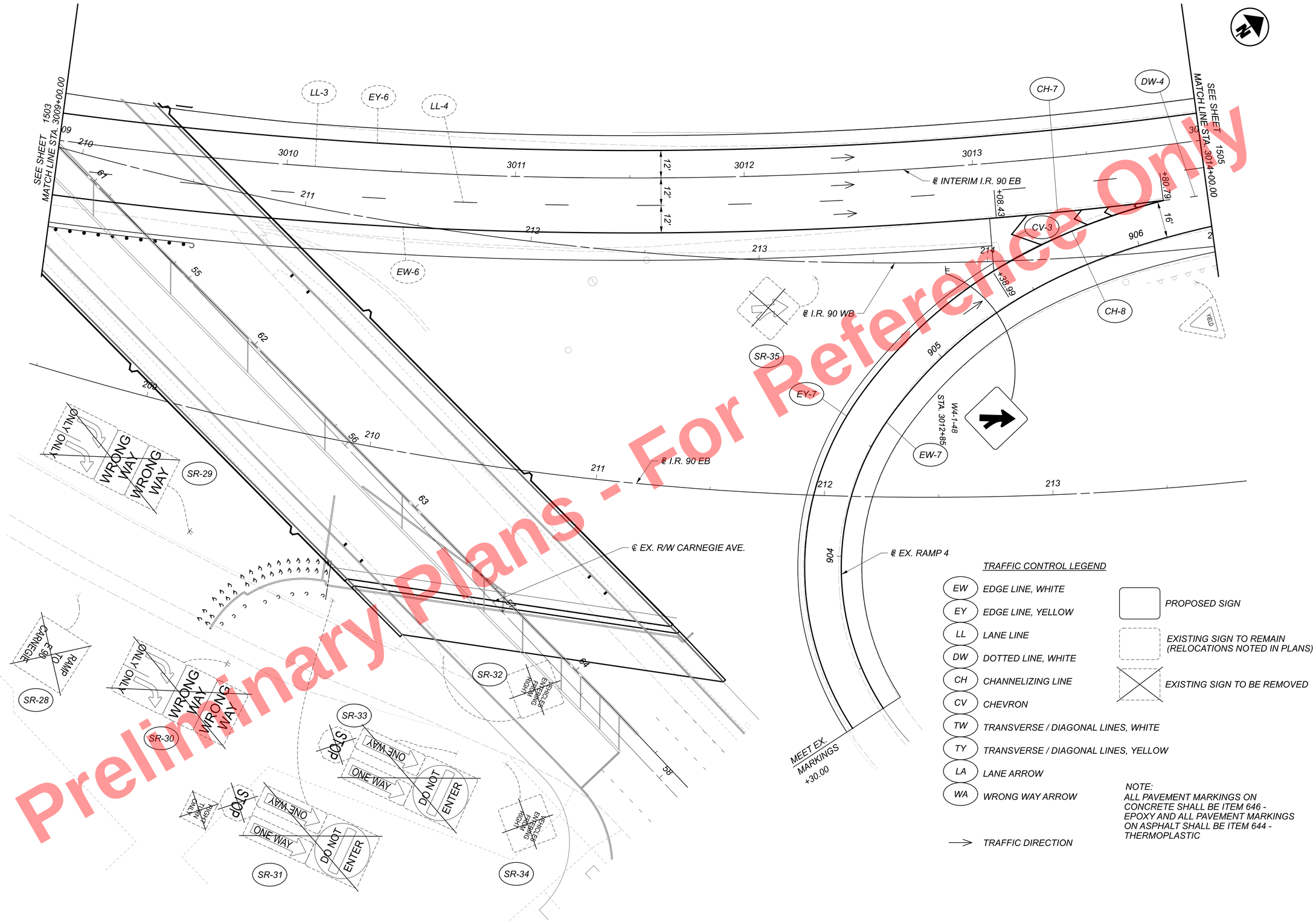

Preliminary Plans - For Reference Only

HORIZONTAL SCALE IN FEET
0 10 20 40

SIGNING & PAVEMENT MARKING PLAN - I.R. 90 EB
STA. 3009+00.00 TO STA. 3014+00.00

DESIGN AGENCY
B&N
burgessniple.com

DESIGNER KEH
REVIEWER JTP 05/01/24
PROJECT ID 82382
SHEET 1504 TOTAL 2696

CUY-90-16.28 (CCG3A)

MODEL: 82382_TP2210 PAPERSIZE: 34x22 (in.) DATE: 5/22/2025 TIME: 9:43:51PM USER: slsson
pw:\\mb-us-pw.bentley.com:mb-us-pw-03\Documents\Cleveland.OH\OI_Projects\ODOT\District2\82382\400-Engineering\Traffic\Sheets\82382_TP2210.dgn

TRAFFIC CONTROL LEGEND

- EW — EDGE LINE, WHITE
- EY — EDGE LINE, YELLOW
- LL — LANE LINE
- DW — DOTTED LINE, WHITE
- CH — CHANNELIZING LINE
- CV — CHEVRON
- TW — TRANSVERSE / DIAGONAL LINES, WHITE
- TY — TRANSVERSE / DIAGONAL LINES, YELLOW
- LA — LANE ARROW
- WA — WRONG WAY ARROW

TRAFFIC DIRECTION

PROPOSED SIGN

EXISTING SIGN TO REMAIN (RELOCATIONS NOTED IN PLANS)

EXISTING SIGN TO BE REMOVED

NOTE:
ALL PAVEMENT MARKINGS ON CONCRETE SHALL BE ITEM 646 - EPOXY AND ALL PAVEMENT MARKINGS ON ASPHALT SHALL BE ITEM 644 - THERMOPLASTIC

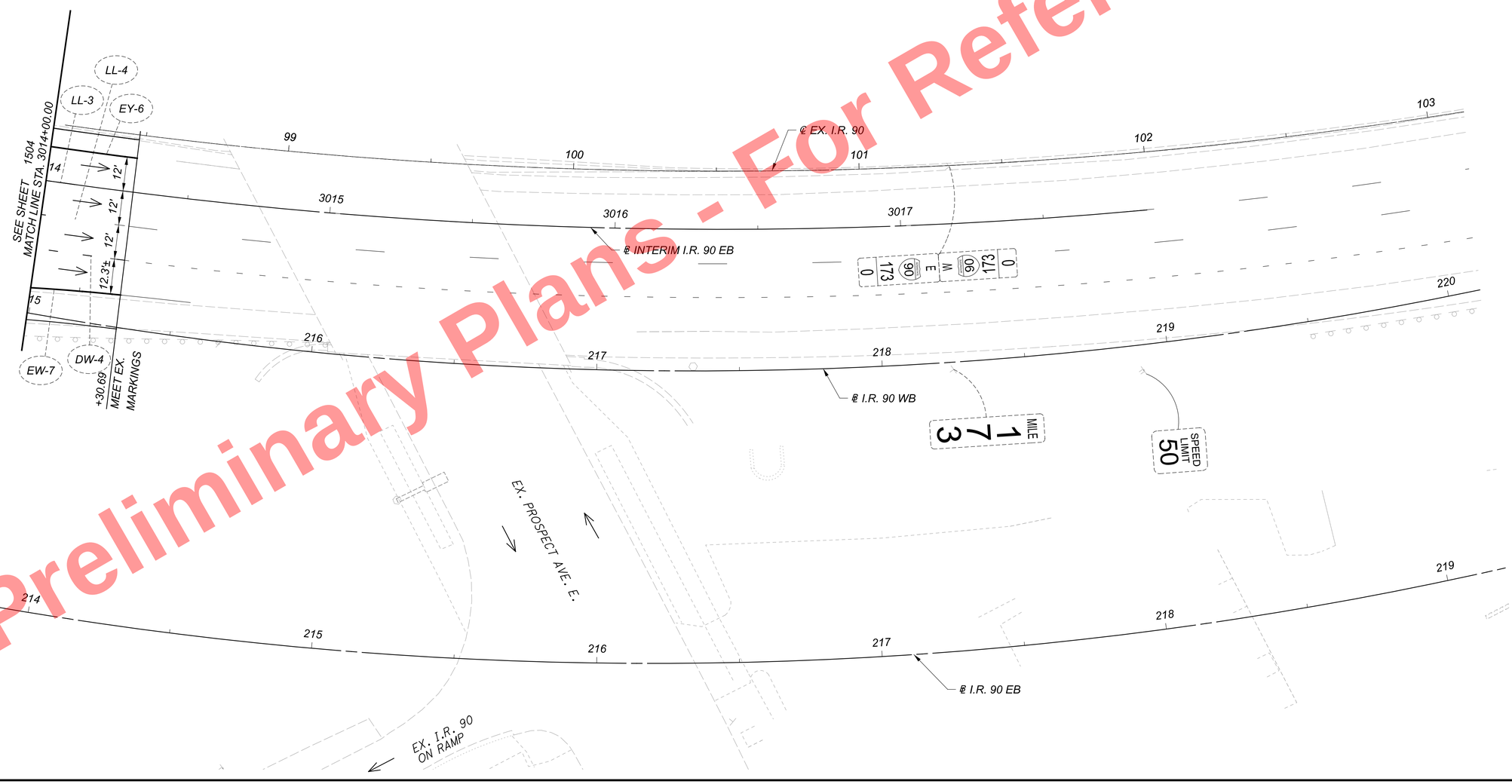

Preliminary Plans - Not For Reference Only

HORIZONTAL SCALE IN FEET
0 10 20 40

SIGNING & PAVEMENT MARKING PLAN - I.R. 90 EB
STA. 3014+00.00 TO STA. 3019+00.00

CUY-90-16.28 (CCG3A)

MODEL: 82382_TP22ll PAPERSIZE: 34x22 (in.) DATE: 5/22/2025 TIME: 9:44:35 PM USER: sisson
pw:\\mb-us-pw.bentley.commb-us-pw-03\Documents\Cleveland_OH\OL_Projects\ODOT\District2\82382\400-EngineeringTraffic\Sheets\82382_TP22ll.dgn

DESIGN AGENCY
B&N burgessniple.com

DESIGNER KEH
REVIEWER JTP 05/01/24
PROJECT ID 82382
SHEET 1505 TOTAL 2696

TRAFFIC CONTROL LEGEND

EW	EDGE LINE, WHITE
EY	EDGE LINE, YELLOW
LL	LANE LINE
DW	DOTTED LINE, WHITE
CH	CHANNELIZING LINE
CV	CHEVRON
TW	TRANSVERSE / DIAGONAL LINES, WHITE
TY	TRANSVERSE / DIAGONAL LINES, YELLOW
LA	LANE ARROW
WA	WRONG WAY ARROW
→	TRAFFIC DIRECTION

NOTE:
ALL PAVEMENT MARKINGS ON CONCRETE SHALL BE ITEM 646 - EPOXY AND ALL PAVEMENT MARKINGS ON ASPHALT SHALL BE ITEM 644 - THERMOPLASTIC

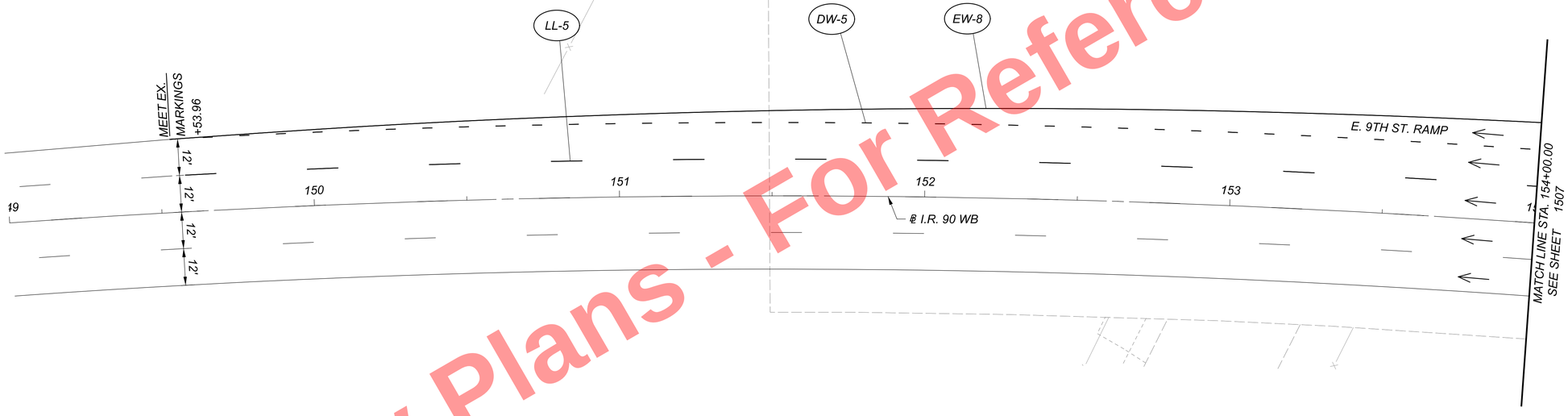

Preliminary Plans - For Reference Only

HORIZONTAL SCALE IN FEET
0 10 20 40

SIGNING & PAVEMENT MARKING PLAN - I.R. 90 WB
STA. 149+00.00 TO STA. 154+00.00

DESIGN AGENCY
B&N
burgessniple.com

DESIGNER
KEH

REVIEWER
JTP 05/01/24

PROJECT ID
82382

SHEET 1506 | TOTAL 2696

CUY-90-16.28 (CCG3A)

MODEL: 82382_TP225I PAPERSIZE: 34x22 (in) DATE: 5/22/2025 TIME: 9:45:07 PM USER: alsson
pw:\\mb-us-pw.bentley.commb-us-pw-03\Documents\Cleveland_OHIO_Projects\ODOT\District2\82382\400-Engineering\Traffic\Sheets\82382_TP225I.dgn

NOTE:
ALL PAVEMENT MARKINGS ON CONCRETE SHALL BE ITEM 646 - EPOXY AND ALL PAVEMENT MARKINGS ON ASPHALT SHALL BE ITEM 644 - THERMOPLASTIC

TRAFFIC CONTROL LEGEND

EW	EDGE LINE, WHITE
EY	EDGE LINE, YELLOW
LL	LANE LINE
DW	DOTTED LINE, WHITE
CH	CHANNELIZING LINE
CV	CHEVRON
TW	TRANSVERSE / DIAGONAL LINES, WHITE
TY	TRANSVERSE / DIAGONAL LINES, YELLOW
LA	LANE ARROW
WA	WRONG WAY ARROW
→	TRAFFIC DIRECTION

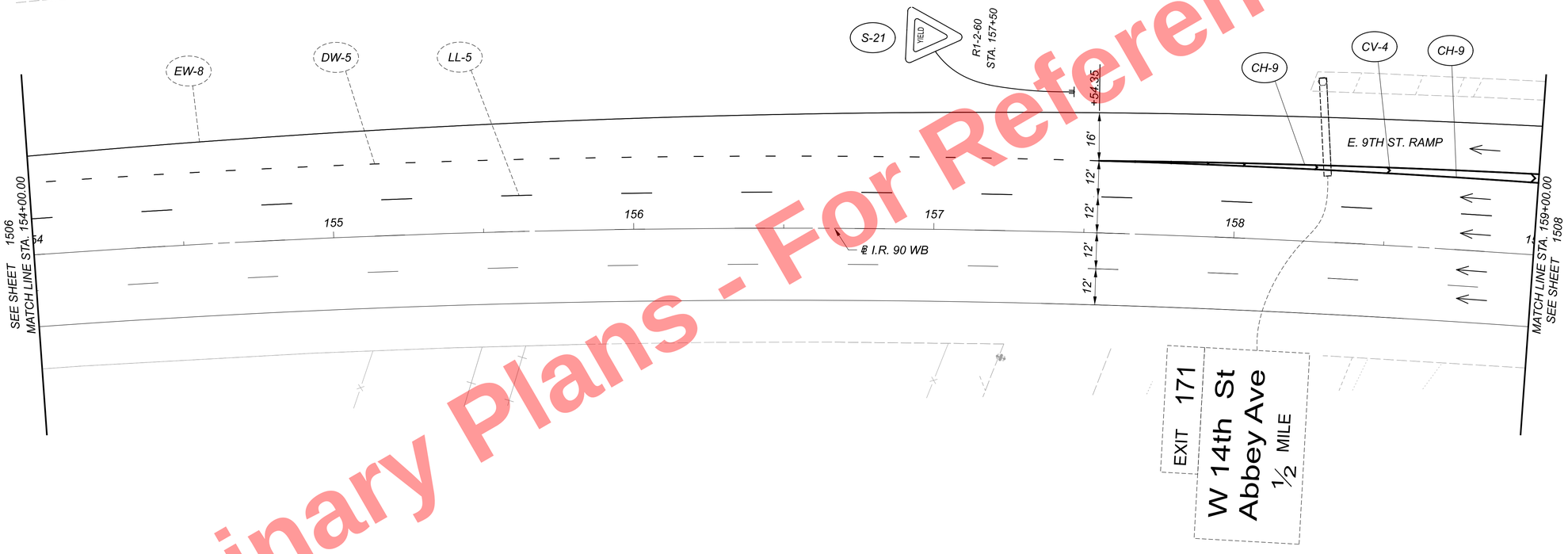

Preliminary Plans - For Reference Only

HORIZONTAL SCALE IN FEET
0 10 20 40

SIGNING & PAVEMENT MARKING PLAN - I.R. 90 WB
STA. 154+00.00 TO 159+00.00

DESIGN AGENCY
B&N
burgessniple.com

DESIGNER KEH
REVIEWER JTP 05/01/24
PROJECT ID 82382
SHEET 1507 TOTAL 2696

CUY-90-16.28 (CCG3A)

MODEL: 82382_TP2252 PAPERSIZE: 34x22 (in) DATE: 5/22/2025 TIME: 9:45:34 PM USER: alsson
pw:\\mb-us-pw.bentley.commb-us-pw-03\Documents\Cleveland_OH\01_Projects\ODOT\District2\82382\400-Engineering\Traffic\Sheets\82382_TP2252.dgn

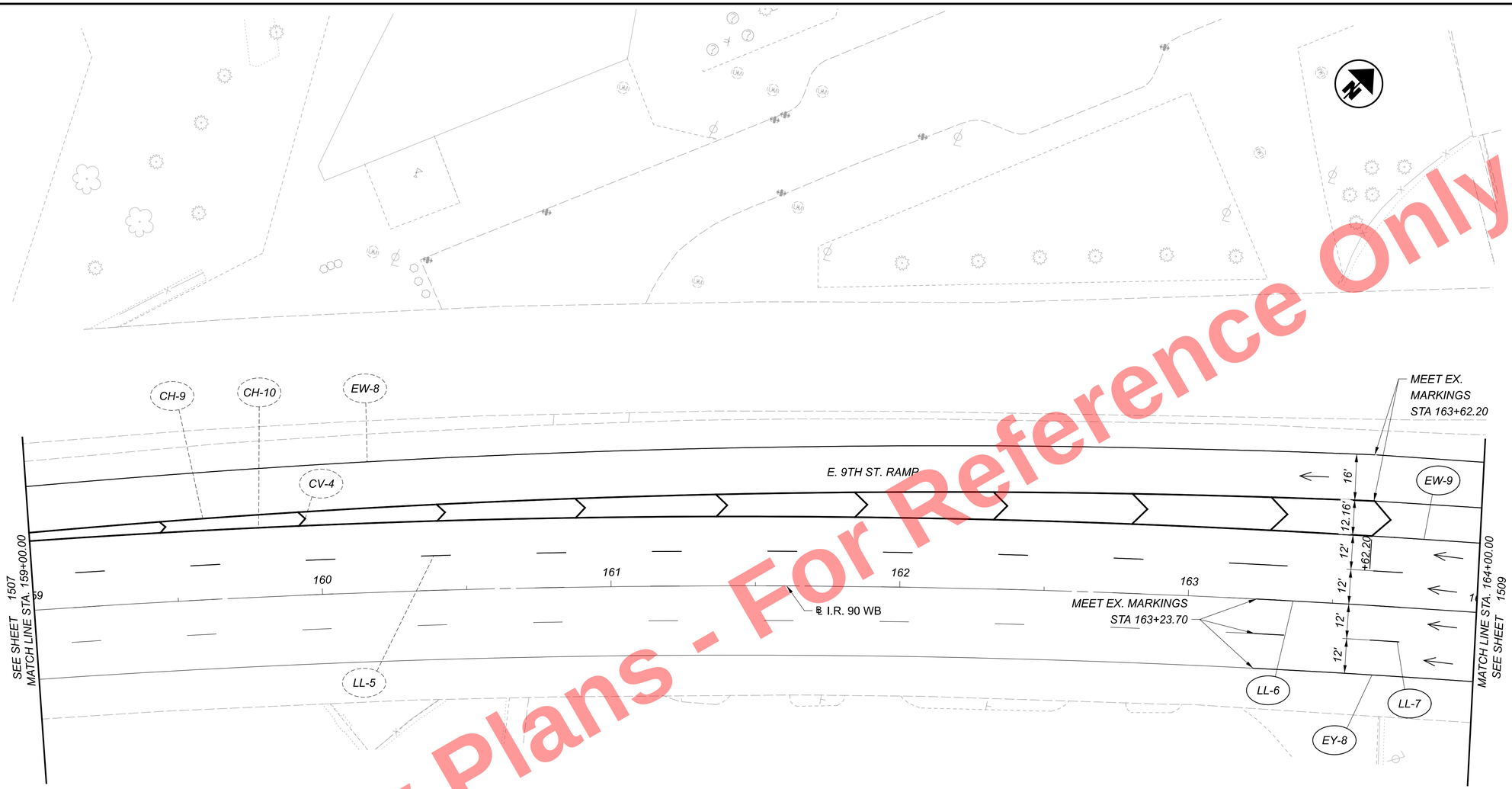

TRAFFIC CONTROL LEGEND

EW	EDGE LINE, WHITE
EY	EDGE LINE, YELLOW
LL	LANE LINE
DW	DOTTED LINE, WHITE
CH	CHANNELIZING LINE
CV	CHEVRON
TW	TRANSVERSE / DIAGONAL LINES, WHITE
TY	TRANSVERSE / DIAGONAL LINES, YELLOW
LA	LANE ARROW
WA	WRONG WAY ARROW
→	TRAFFIC DIRECTION

NOTE:
ALL PAVEMENT MARKINGS ON CONCRETE SHALL BE ITEM 646 - EPOXY AND ALL PAVEMENT MARKINGS ON ASPHALT SHALL BE ITEM 644 - THERMOPLASTIC

Preliminary Plans - For Reference Only

HORIZONTAL SCALE IN FEET
0 10 20 40

SIGNING & PAVEMENT MARKING PLAN - I.R. 90 WB
STA. 159+00.00 TO 164+00.00

DESIGN AGENCY
B&N
burgessniple.com

DESIGNER KEH
REVIEWER JTP 05/01/24
PROJECT ID 82382
SHEET 1508 TOTAL 2696

CUY-90-16.28 (CCG3A)

MODEL: 82382_TP2253 PAPERSIZE: 34x22 (in) DATE: 5/22/2025 TIME: 9:46:02 PM USER: alsson
pw:\\vmb-us-pw.bentley.com:vmb-us-pw-03\Documents\Cleveland_OH\01_Projects\ODOT\District2\82382\400-Engineering\Traffic\Sheets\82382_TP2253.dgn

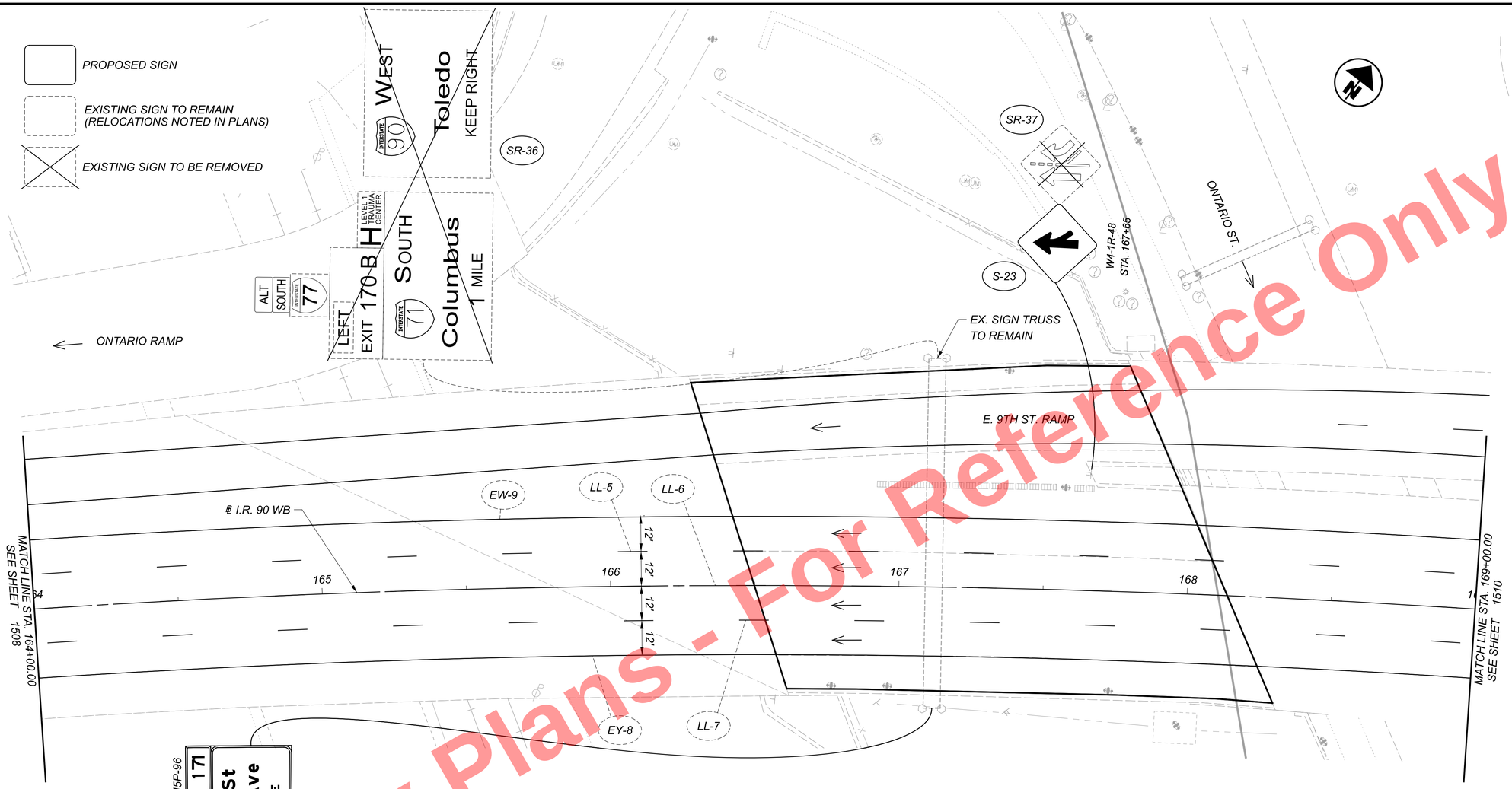

Preliminary Plans - For Reference Only

TRAFFIC CONTROL LEGEND

EW	EDGE LINE, WHITE
EY	EDGE LINE, YELLOW
LL	LANE LINE
DW	DOTTED LINE, WHITE
CH	CHANNELIZING LINE
CV	CHEVRON
TW	TRANSVERSE / DIAGONAL LINES, WHITE
TY	TRANSVERSE / DIAGONAL LINES, YELLOW
LA	LANE ARROW
WA	WRONG WAY ARROW
→	TRAFFIC DIRECTION

NOTE:
ALL PAVEMENT MARKINGS ON CONCRETE SHALL BE ITEM 646 - EPOXY AND ALL PAVEMENT MARKINGS ON ASPHALT SHALL BE ITEM 644 - THERMOPLASTIC

HORIZONTAL SCALE IN FEET
0 10 20 40

SIGNING & PAVEMENT MARKING PLAN - I.R. 90 WB
STA. 164+00.00 TO STA. 169+00.00

DESIGN AGENCY
B&N
burgessniple.com

DESIGNER KEH
REVIEWER JTP 05/01/24
PROJECT ID 82382
SHEET 1509 TOTAL 2696

CUY-90-16.28 (CCG3A)

MODEL: 82382_TP2254 PAPERSIZE: 34x22 (in) DATE: 5/22/2025 TIME: 9:46:35 PM USER: slsson
pw:\\vmb-us-pw.bentley.com:vmb-us-pw-03\Documents\Cleveland_OH\01_Projects\ODOT\District2\82382\400-Engineering\Traffic\Sheets\82382_TP2254.dgn

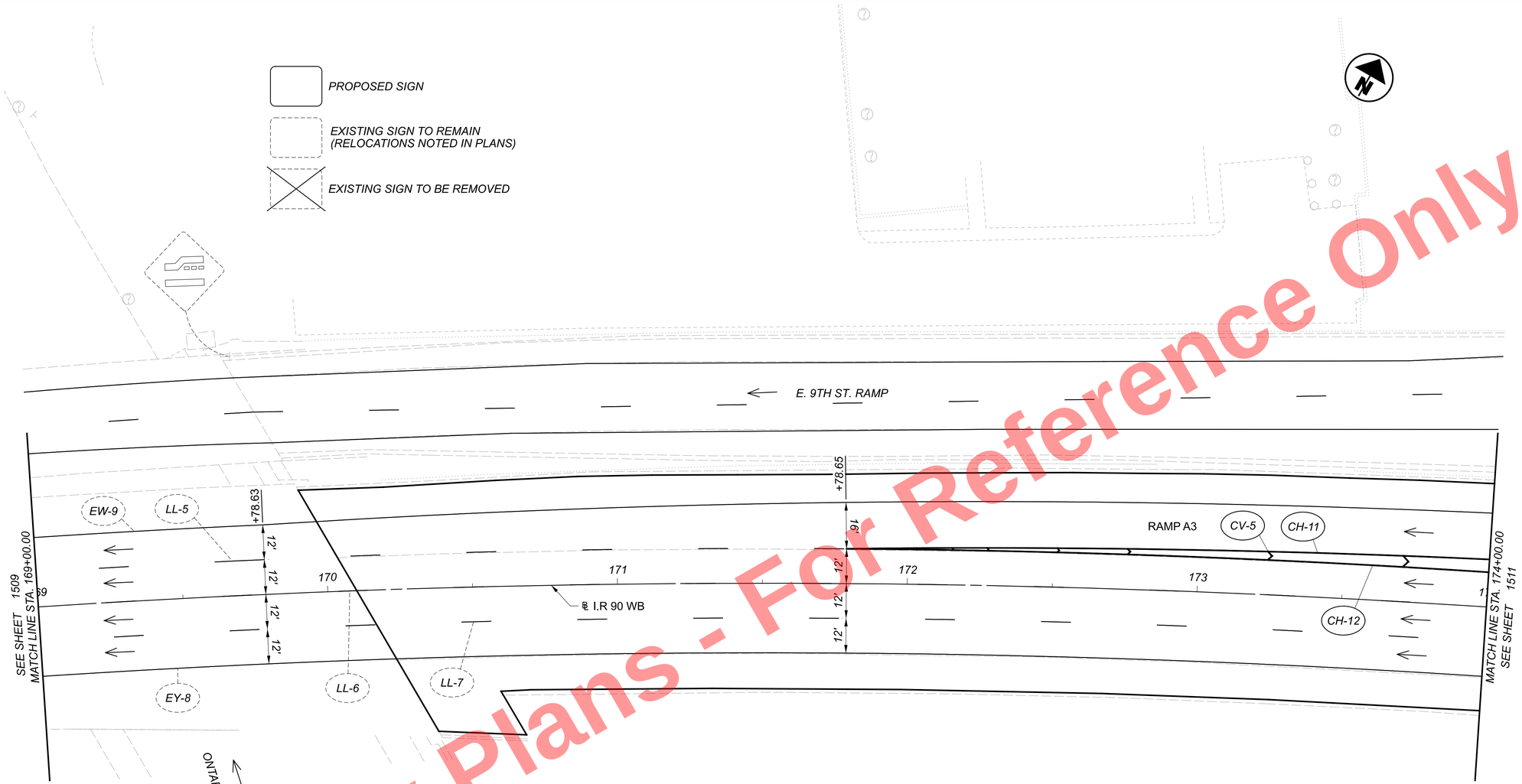

TRAFFIC CONTROL LEGEND

EW	EDGE LINE, WHITE
EY	EDGE LINE, YELLOW
LL	LANE LINE
DW	DOTTED LINE, WHITE
CH	CHANNELIZING LINE
CV	CHEVRON
TW	TRANSVERSE / DIAGONAL LINES, WHITE
TY	TRANSVERSE / DIAGONAL LINES, YELLOW
LA	LANE ARROW
WA	WRONG WAY ARROW
→	TRAFFIC DIRECTION

NOTE:
ALL PAVEMENT MARKINGS ON CONCRETE SHALL BE ITEM 646 - EPOXY AND ALL PAVEMENT MARKINGS ON ASPHALT SHALL BE ITEM 644 - THERMOPLASTIC

Preliminary Plans - For Reference Only

HORIZONTAL SCALE IN FEET
0 10 20 40

SIGNING & PAVEMENT MARKING PLAN - I.R. 90 WB
STA. 169+00.00 TO STA. 174+00.00

DESIGN AGENCY
B&N
burgessniple.com

DESIGNER KEH
REVIEWER JTP 05/01/24
PROJECT ID 82382
SHEET 1510 TOTAL 2696

CUY-90-16.28 (CCG3A)

MODEL: 82382_TP2255 PAPERSIZE: 34x22 (in) DATE: 5/22/2025 TIME: 9:47:07 PM USER: slsson
pw:\\vmb-us-pw.bentley.com:vmb-us-pw-03\Documents\Cleveland_OH\01_Projects\ODOT\District2\82382\400-Engineering\Traffic\Sheets\82382_TP2255.dgn

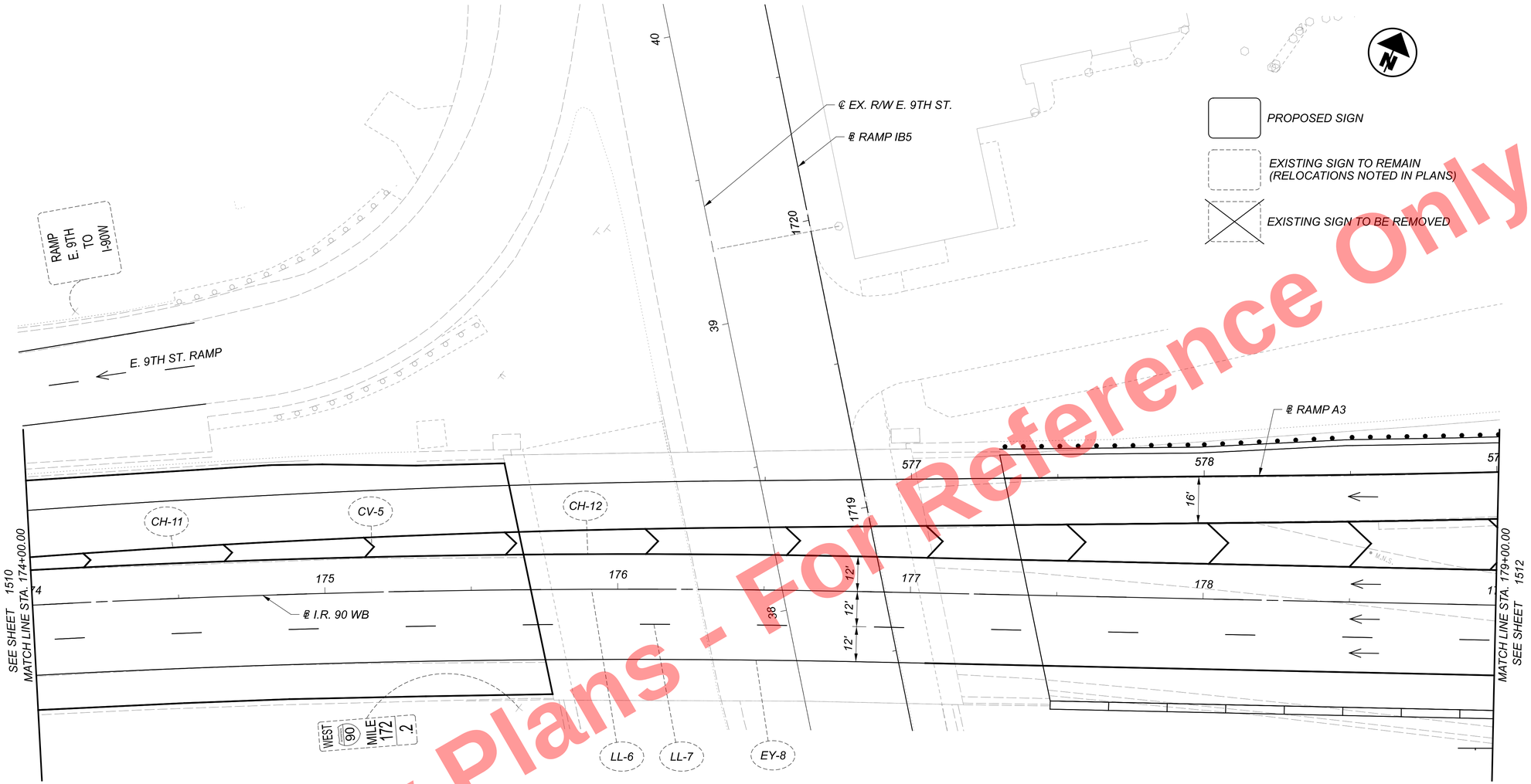

Preliminary Plans - For Reference Only

TRAFFIC CONTROL LEGEND

EW	EDGE LINE, WHITE
EY	EDGE LINE, YELLOW
LL	LANE LINE
DW	DOTTED LINE, WHITE
CH	CHANNELIZING LINE
CV	CHEVRON
TW	TRANSVERSE / DIAGONAL LINES, WHITE
TY	TRANSVERSE / DIAGONAL LINES, YELLOW
LA	LANE ARROW
WA	WRONG WAY ARROW
→	TRAFFIC DIRECTION

NOTE:
ALL PAVEMENT MARKINGS ON CONCRETE SHALL BE ITEM 646 - EPOXY AND ALL PAVEMENT MARKINGS ON ASPHALT SHALL BE ITEM 644 - THERMOPLASTIC

SIGNING & PAVEMENT MARKING PLAN - I.R. 90 WB
STA. 174+00.00 TO 179+00.00

DESIGN AGENCY
B&N
burgessniple.com

DESIGNER KEH
REVIEWER JTP 05/01/24
PROJECT ID 82382
SHEET 1511 TOTAL 2696

CUY-90-16.28 (CCG3A)

MODEL: 82382_TP2256 PAPERSIZE: 34x22 (in.) DATE: 5/22/2025 TIME: 9:47:39 PM USER: slsson
pw:\\mb-us-pw.bentley.com:mb-us-pw-03\Documents\Cleveland_OH\01_Projects\ODOT\District2\82382\400-Engineering\Traffic\Sheets\82382_TP2256.dgn

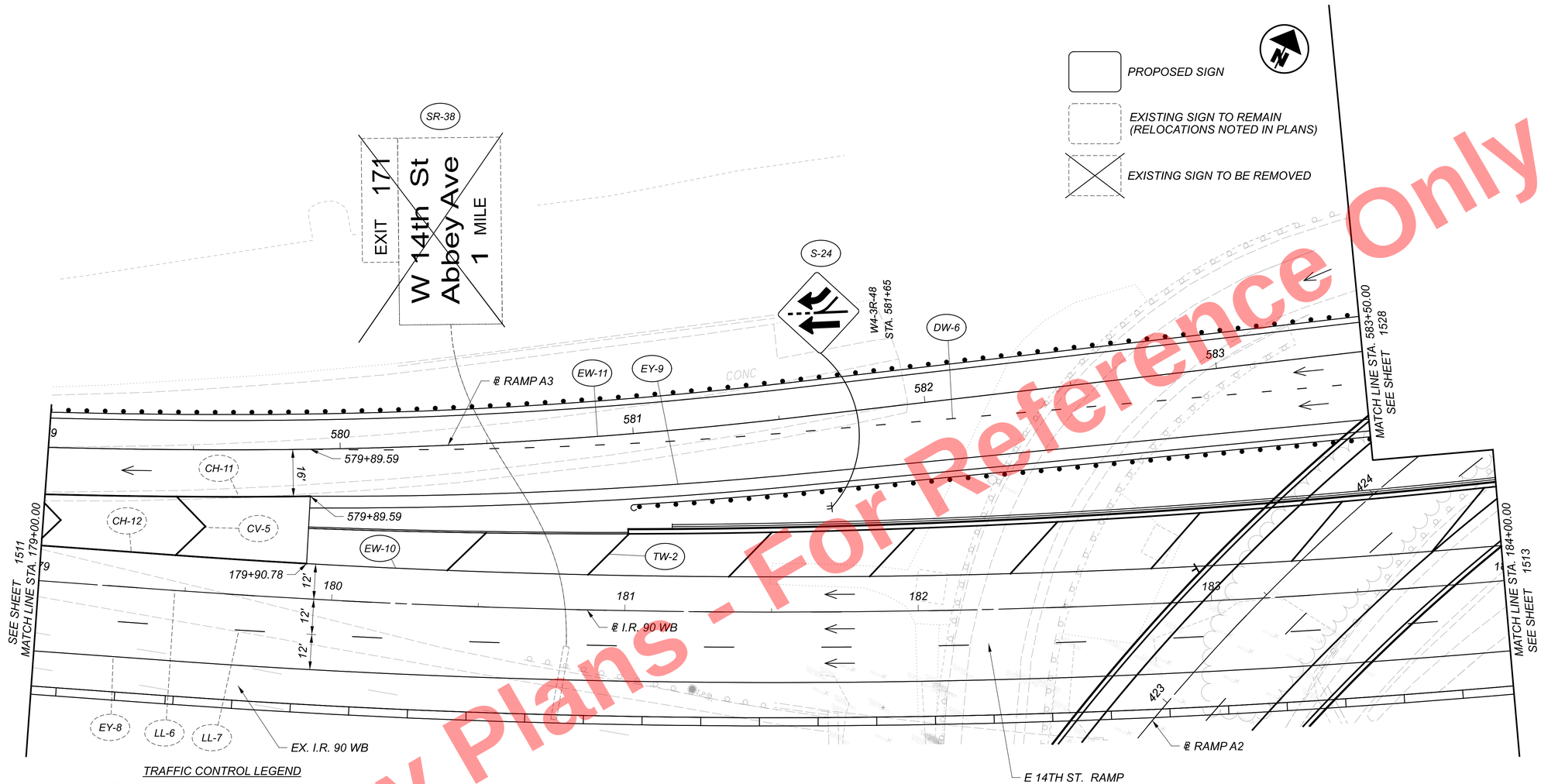

TRAFFIC CONTROL LEGEND

EW	EDGE LINE, WHITE
EY	EDGE LINE, YELLOW
LL	LANE LINE
DW	DOTTED LINE, WHITE
CH	CHANNELIZING LINE
CV	CHEVRON
TW	TRANSVERSE / DIAGONAL LINES, WHITE
TY	TRANSVERSE / DIAGONAL LINES, YELLOW
LA	LANE ARROW
WA	WRONG WAY ARROW
→	TRAFFIC DIRECTION

NOTE:
ALL PAVEMENT MARKINGS ON CONCRETE SHALL BE ITEM 646 - EPOXY AND ALL PAVEMENT MARKINGS ON ASPHALT SHALL BE ITEM 644 - THERMOPLASTIC

Preliminary Plans - For Reference Only

HORIZONTAL SCALE IN FEET
0 10 20 40

SIGNING & PAVEMENT MARKING PLAN - I.R. 90 WB
STA. 179+00.00 TO STA. 184+00.00

CUY-90-16.28 (CCG3A)

MODEL: 82382_TP2257 PAPERSIZE: 34x22 (in.) DATE: 5/22/2025 TIME: 9:48:4 PM USER: slsson
pw:\\mb-us-pw.bentley.com\mb-us-pw-03\Documents\Cleveland_OH\01_Projects\000T\District2\82382\400-Engineering\Traffic\Sheets\82382_TP2257.dgn

DESIGN AGENCY
B&N
burgessniple.com

DESIGNER	KEH
REVIEWER	JTP 05/01/24
PROJECT ID	82382
SHEET	1512
TOTAL	2696

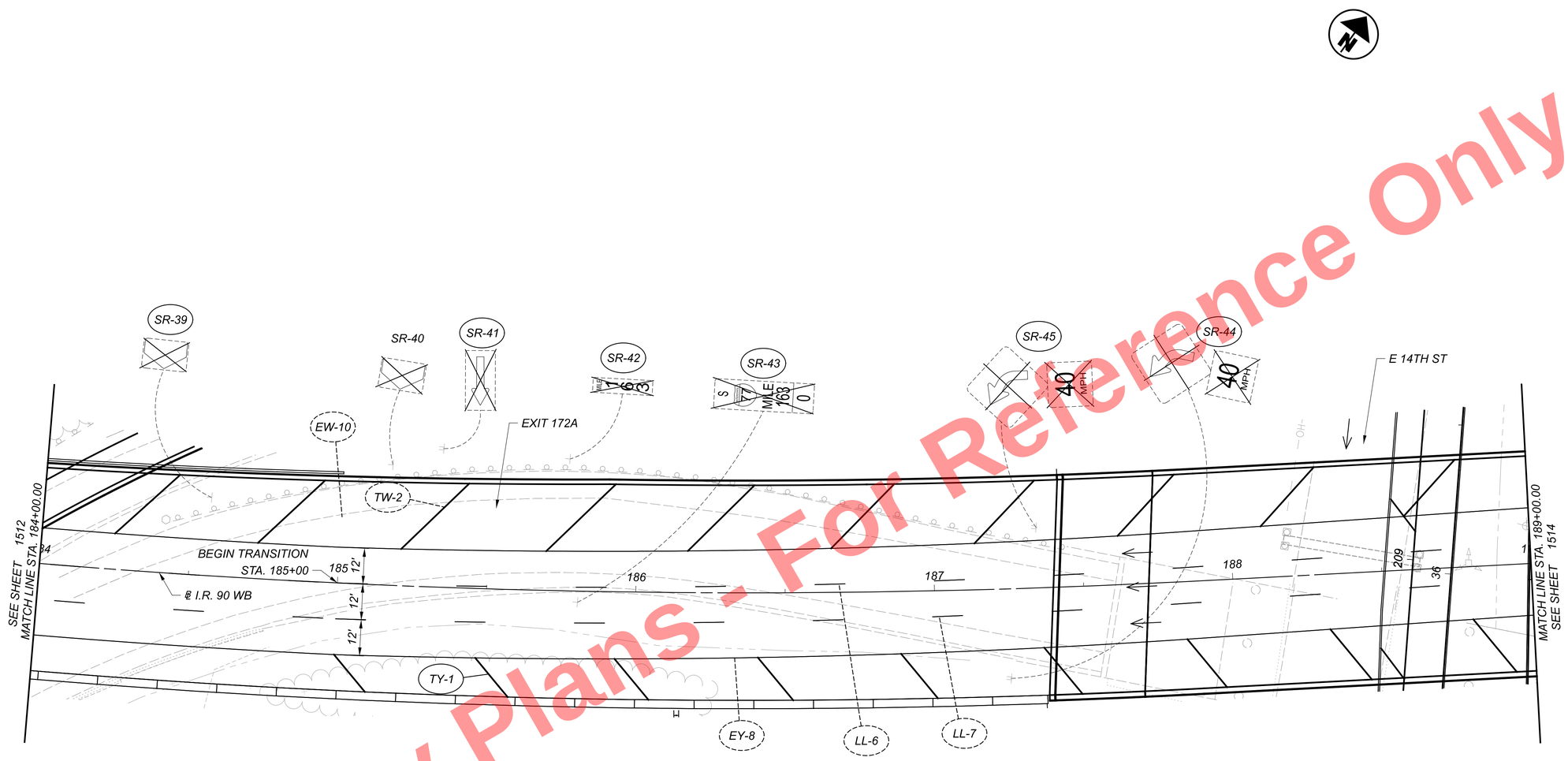

TRAFFIC CONTROL LEGEND

EW	EDGE LINE, WHITE
EY	EDGE LINE, YELLOW
LL	LANE LINE
DW	DOTTED LINE, WHITE
CH	CHANNELIZING LINE
CV	CHEVRON
TW	TRANSVERSE / DIAGONAL LINES, WHITE
TY	TRANSVERSE / DIAGONAL LINES, YELLOW
LA	LANE ARROW
WA	WRONG WAY ARROW
→	TRAFFIC DIRECTION

PROPOSED SIGN

EXISTING SIGN TO REMAIN (RELOCATIONS NOTED IN PLANS)

EXISTING SIGN TO BE REMOVED

NOTE:
ALL PAVEMENT MARKINGS ON CONCRETE SHALL BE ITEM 646 - EPOXY AND ALL PAVEMENT MARKINGS ON ASPHALT SHALL BE ITEM 644 - THERMOPLASTIC

Preliminary Plans - For Reference Only

HORIZONTAL SCALE IN FEET
0 10 20 40

SIGNING & PAVEMENT MARKING PLAN - I.R. 90 WB
STA. 184+00.00 TO STA. 189+00.00

DESIGN AGENCY
B&N
burgessniple.com

DESIGNER KEH
REVIEWER JTP 05/01/24
PROJECT ID 82382
SHEET 1513 TOTAL 2696

CUY-90-16.28 (CCG3A)

MODEL: 82382_TP2258 PAPERSIZE: 34x22 (n.) DATE: 5/22/2025 TIME: 9:48:47 PM USER: sisson
pw:\\mb-us-pw.bentley.com:mb-us-pw-03\Documents\Cleveland.OH\DgnLibrary\Traffic\Sheets\82382_TP2258.dgn

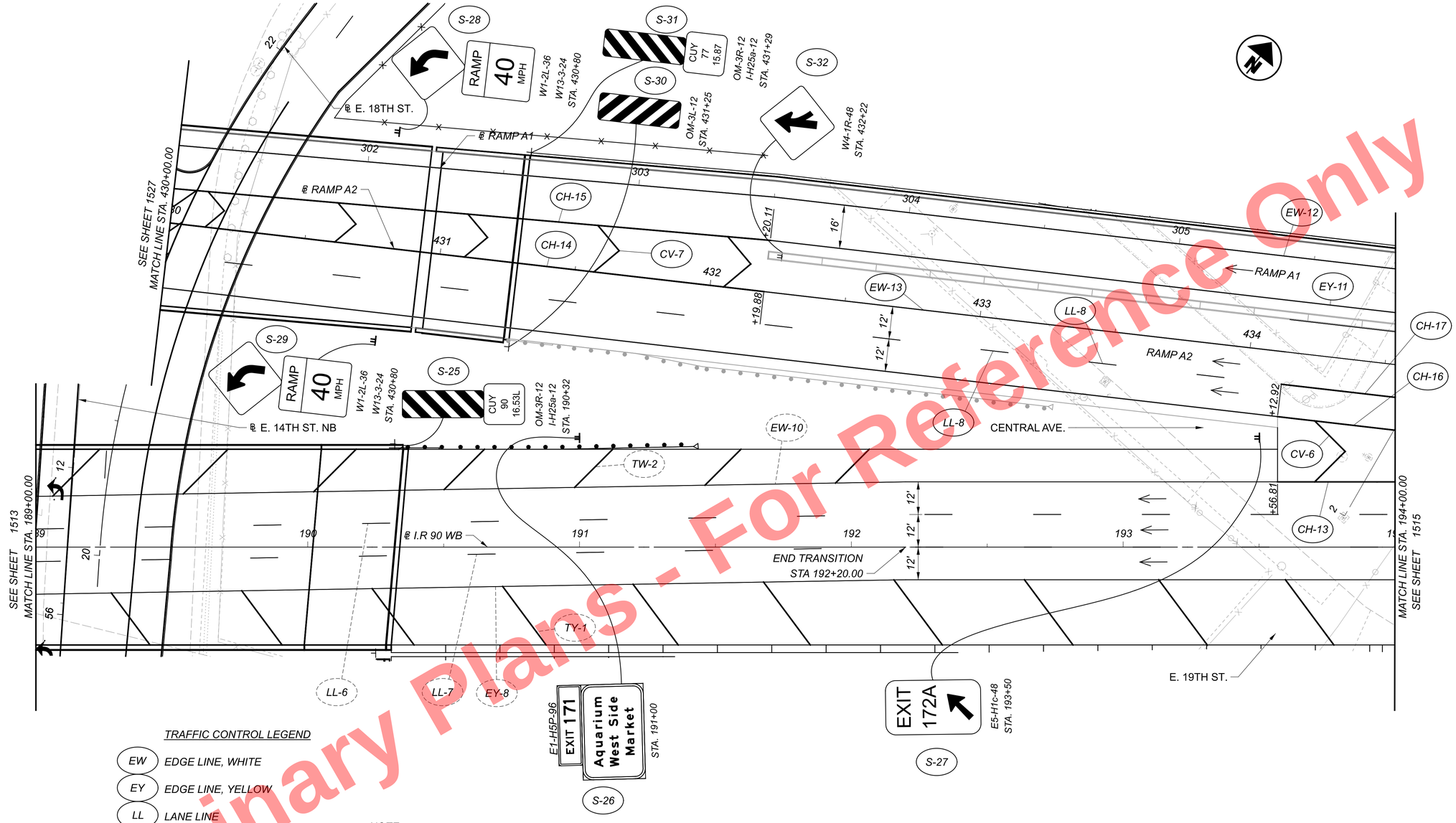

TRAFFIC CONTROL LEGEND

EW	EDGE LINE, WHITE
EY	EDGE LINE, YELLOW
LL	LANE LINE
DW	DOTTED LINE, WHITE
CH	CHANNELIZING LINE
CV	CHEVRON
TW	TRANSVERSE / DIAGONAL LINES, WHITE
TY	TRANSVERSE / DIAGONAL LINES, YELLOW
LA	LANE ARROW
WA	WRONG WAY ARROW
→	TRAFFIC DIRECTION

PROPOSED SIGN

EXISTING SIGN TO REMAIN (RELOCATIONS NOTED IN PLANS)

EXISTING SIGN TO BE REMOVED

NOTE:
ALL PAVEMENT MARKINGS ON CONCRETE SHALL BE ITEM 646 - EPOXY AND ALL PAVEMENT MARKINGS ON ASPHALT SHALL BE ITEM 644 - THERMOPLASTIC

Preliminary Plans - For Reference Only

HORIZONTAL SCALE IN FEET
0 10 20 40

SIGNING & PAVEMENT MARKING PLAN - I.R. 90 WB
STA. 189+00.00 TO 194+00.00

DESIGN AGENCY
B&N
burgessniple.com

DESIGNER KEH
REVIEWER JTP 05/01/24
PROJECT ID 82382
SHEET 1514 TOTAL 2696

CUY-90-16.28 (CCG3A)

MODEL: 82382_TP2259 PAPERSIZE: 34x22 (ln.) DATE: 5/22/2025 TIME: 9:49:30 PM USER: slsson
pw:\\mb-us-pw.bentley.com:mb-us-pw-03\Documents\Cleveland_OH\DL_Projects\ODOT\District2\82382\400-Engineering\Traffic\Sheets\82382_TP2259.dgn

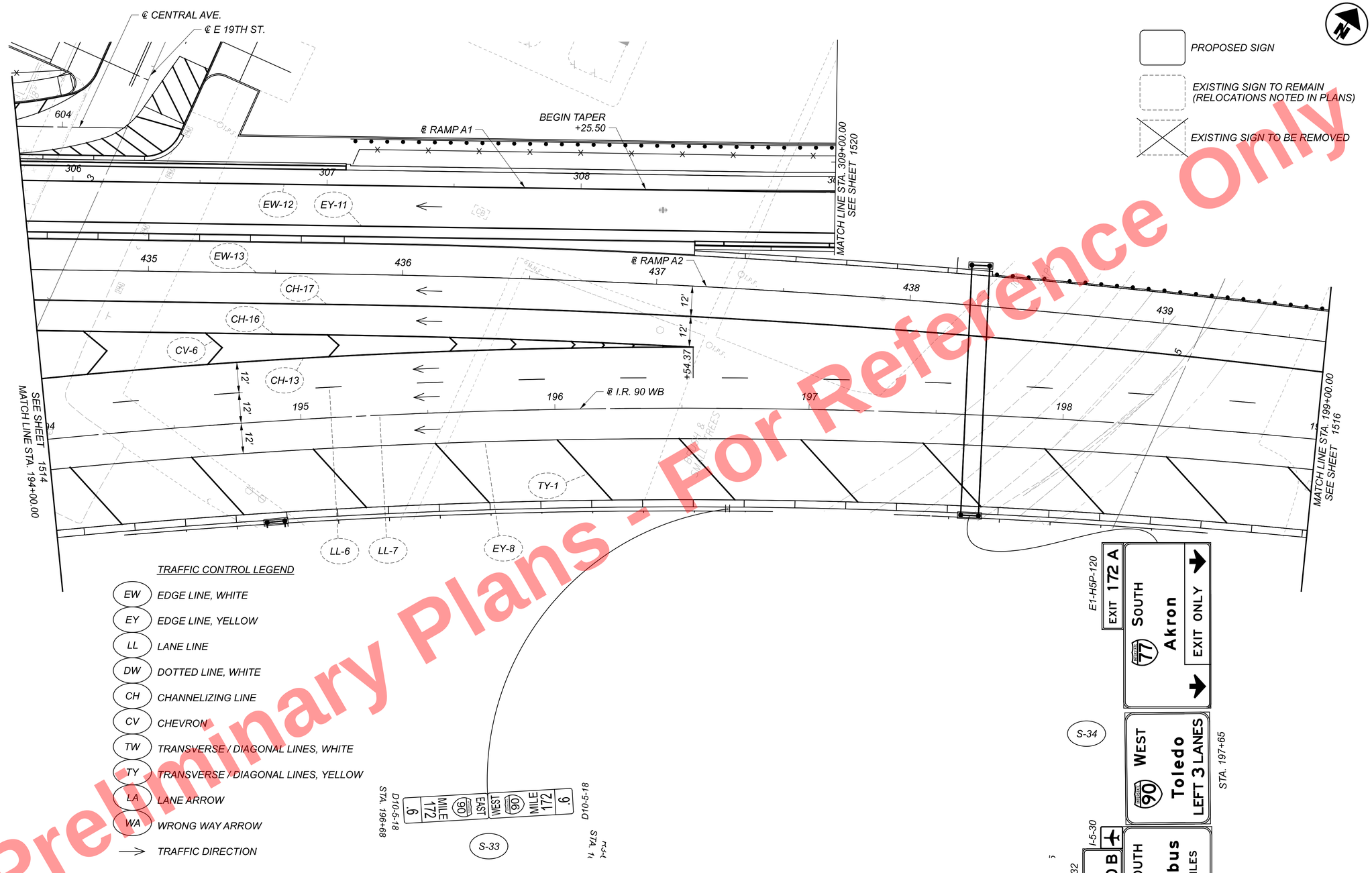

TRAFFIC CONTROL LEGEND

EW	EDGE LINE, WHITE
EY	EDGE LINE, YELLOW
LL	LANE LINE
DW	DOTTED LINE, WHITE
CH	CHANNELIZING LINE
CV	CHEVRON
TW	TRANSVERSE / DIAGONAL LINES, WHITE
TY	TRANSVERSE / DIAGONAL LINES, YELLOW
LA	LANE ARROW
WA	WRONG WAY ARROW
→	TRAFFIC DIRECTION

NOTE:
ALL PAVEMENT MARKINGS ON CONCRETE SHALL BE ITEM 646 - EPOXY AND ALL PAVEMENT MARKINGS ON ASPHALT SHALL BE ITEM 644 - THERMOPLASTIC

For Reference Only
Preliminary Plans - Not for Construction

HORIZONTAL SCALE IN FEET
0 10 20 40

SIGNING & PAVEMENT MARKING PLAN - I.R. 90 WB
STA. 194+00.00 TO STA. 199+00.00

DESIGN AGENCY
B&N
burgessniple.com

DESIGNER KEH
REVIEWER JTP 05/01/24
PROJECT ID 82382
SHEET 1515 TOTAL 2696

CUY-90-16.28 (CCG3A)

MODEL: 82382_TP2260 PAPERSIZE: 34x22 (in) DATE: 5/22/2025 TIME: 9:50:10 PM USER: slsson
pw:\\vmb-us-pw.bentley.com:vmb-us-pw-03\Documents\Cleveland_OH\01_Projects\ODOT\District2\82382\400-Engineering\Traffic\Sheets\82382_TP2260.dgn

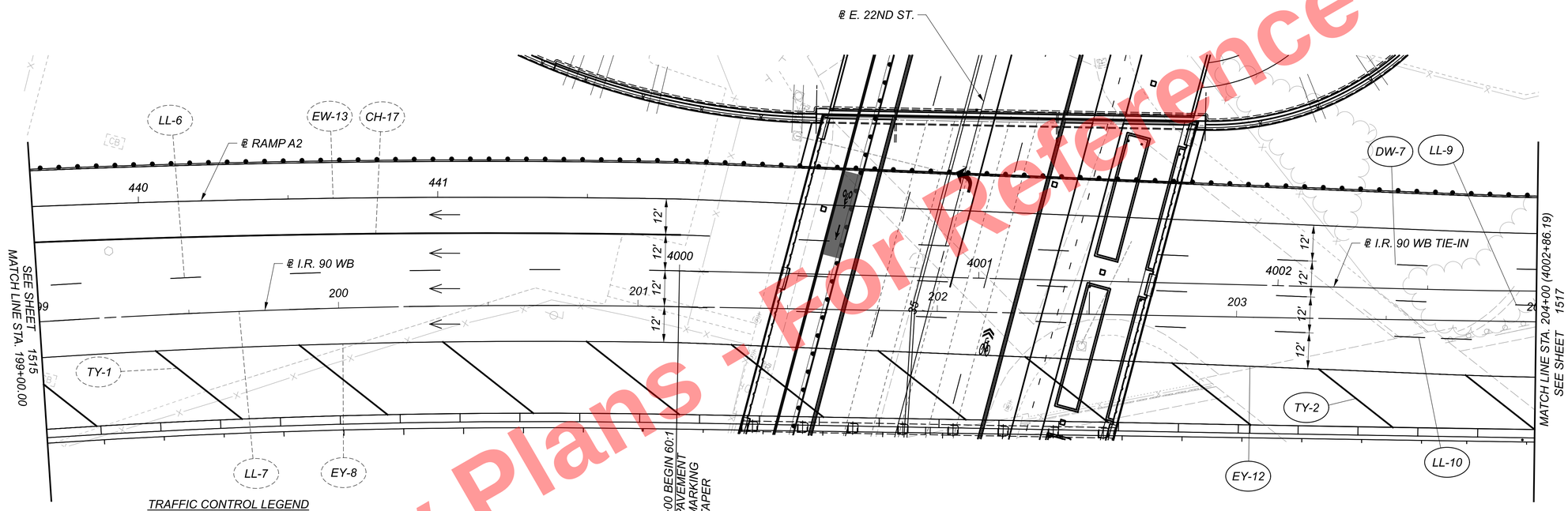

TRAFFIC CONTROL LEGEND

EW	EDGE LINE, WHITE
EY	EDGE LINE, YELLOW
LL	LANE LINE
DW	DOTTED LINE, WHITE
CH	CHANNELIZING LINE
CV	CHEVRON
TW	TRANSVERSE / DIAGONAL LINES, WHITE
TY	TRANSVERSE / DIAGONAL LINES, YELLOW
LA	LANE ARROW
WA	WRONG WAY ARROW
→	TRAFFIC DIRECTION

PROPOSED SIGN

EXISTING SIGN TO REMAIN (RELOCATIONS NOTED IN PLANS)

EXISTING SIGN TO BE REMOVED

NOTE:
ALL PAVEMENT MARKINGS ON CONCRETE SHALL BE ITEM 646 - EPOXY AND ALL PAVEMENT MARKINGS ON ASPHALT SHALL BE ITEM 644 - THERMOPLASTIC

Preliminary Plans - For Reference Only

HORIZONTAL SCALE IN FEET
0 10 20 40

SIGNING & PAVEMENT MARKING PLAN - I.R. 90 WB STA. 199+00.00 TO STA. 204+00.00 (4002+86.19)

DESIGN AGENCY
B&N burgessniple.com

DESIGNER KEH
REVIEWER JTP 05/01/24
PROJECT ID 82382
SHEET 1516 TOTAL 2696

CUY-90-16.28 (CCG3A)

MODEL: 82382_TP226l PAPERSIZE: 34x22 (in) DATE: 5/22/2025 TIME: 9:50:56 PM USER: alsson
pw:\\vmb-us-pw.bentley.com:mb-us-pw-03\Documents\Cleveland_OH\01_Projects\000T\District2\82382\400-Engineering\Traffic\Sheets\82382_TP226l.dgn

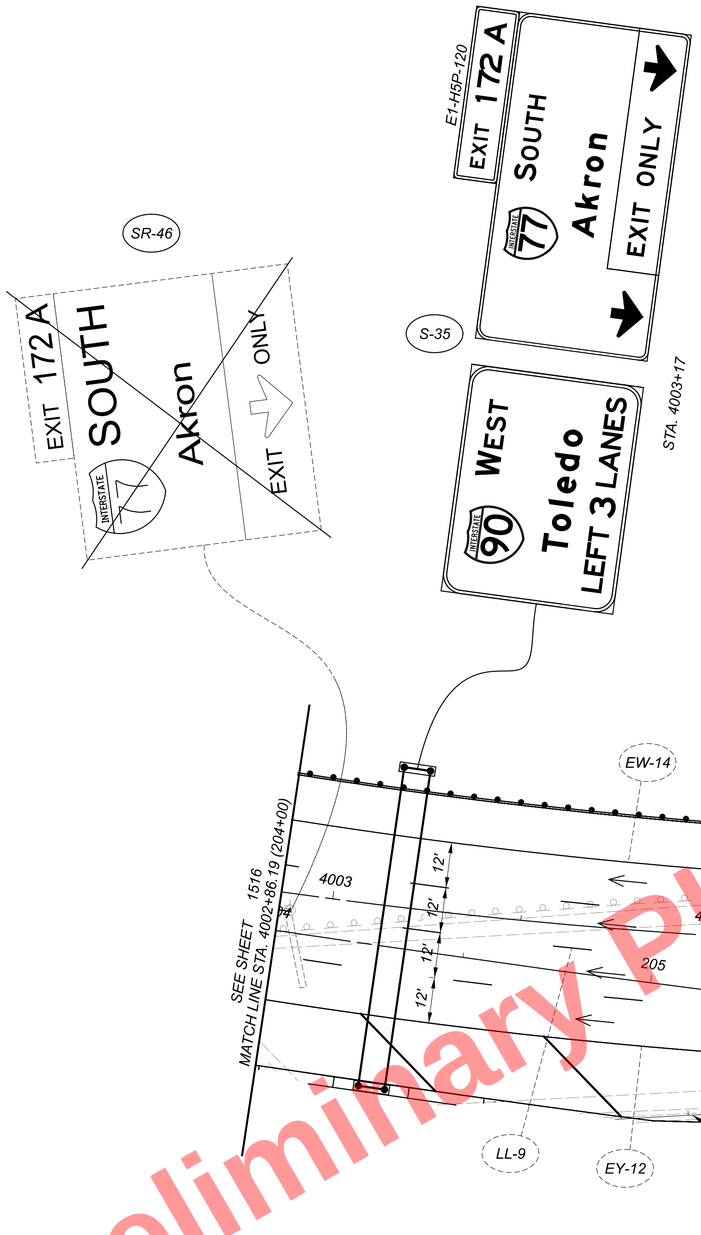

TRAFFIC CONTROL LEGEND

- EW — EDGE LINE, WHITE
- EY — EDGE LINE, YELLOW
- LL — LANE LINE
- DW — DOTTED LINE, WHITE
- CH — CHANNELIZING LINE
- CV — CHEVRON
- TW — TRANSVERSE / DIAGONAL LINES, WHITE
- TY — TRANSVERSE / DIAGONAL LINES, YELLOW
- LA — LANE ARROW
- WA — WRONG WAY ARROW

→ TRAFFIC DIRECTION

PROPOSED SIGN

EXISTING SIGN TO REMAIN (RELOCATIONS NOTED IN PLANS)

EXISTING SIGN TO BE REMOVED

N

NOTE:
ALL PAVEMENT MARKINGS ON CONCRETE SHALL BE ITEM 646 - EPOXY AND ALL PAVEMENT MARKINGS ON ASPHALT SHALL BE ITEM 644 - THERMOPLASTIC

Preliminary Plans - For Reference Only

HORIZONTAL SCALE IN FEET
0 10 20 40

SIGNING & PAVEMENT MARKING PLAN - I.R. 90 WB
STA. 4002+86.19 (204+00) TO STA. 4007+00.00

DESIGN AGENCY
B&N
burgessniple.com

DESIGNER	KEH
REVIEWER	JTP 05/01/24
PROJECT ID	82382
SHEET	1517
TOTAL	2696

CUY-90-16.28 (CCG3A)

MODEL: 82382_TP2262 PAPERSIZE: 34x22 (In.) DATE: 5/22/2025 TIME: 9:51:39 PM USER: slsson
pw:\\mb-us-pw.bentley.com:mb-us-pw-03\Documents\Cleveland.OH\OI_Projects\ODOT\District2\82382\400-Engineering\Traffic\Sheets\82382_TP2262.dgn

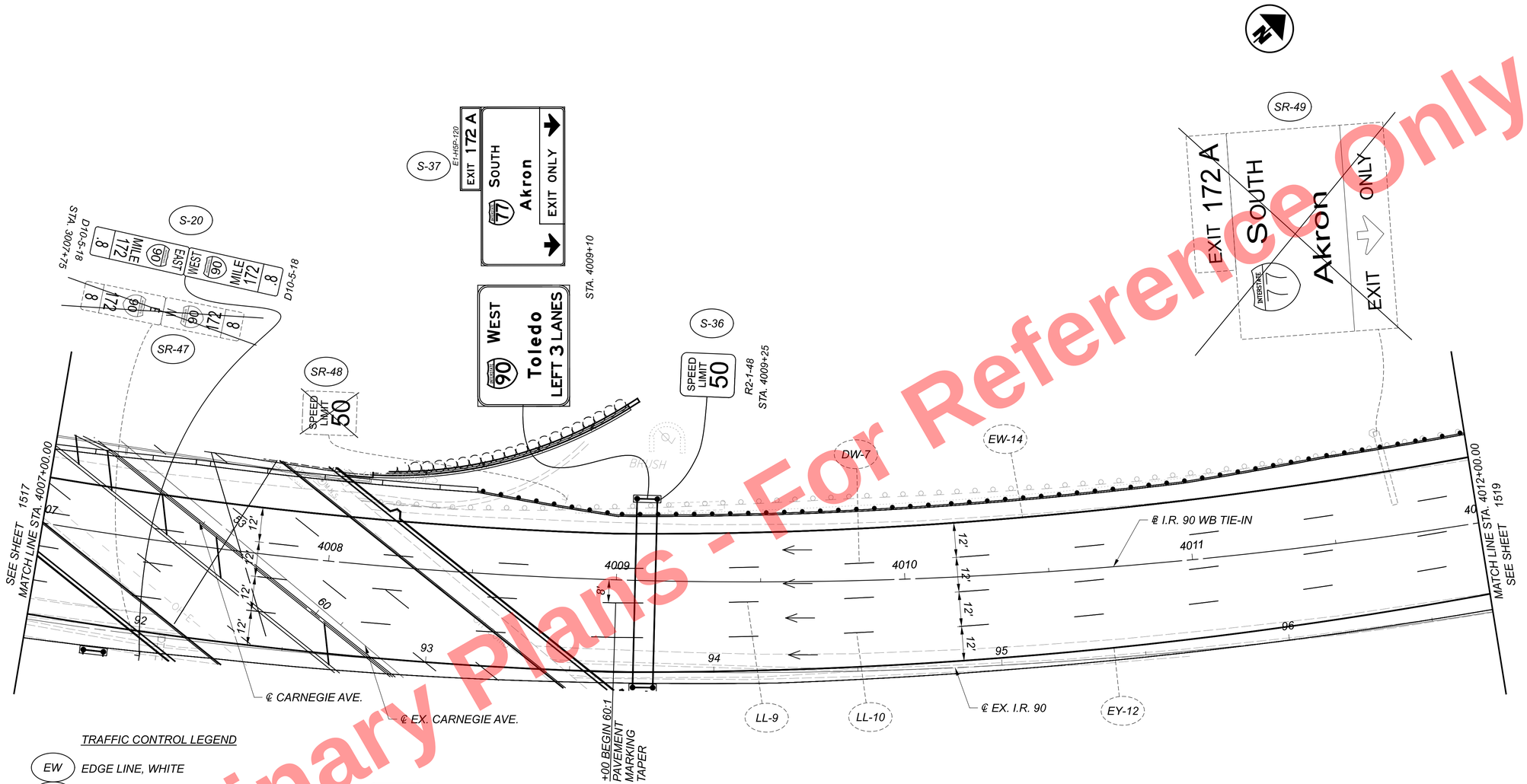

TRAFFIC CONTROL LEGEND

EW	EDGE LINE, WHITE
EY	EDGE LINE, YELLOW
LL	LANE LINE
DW	DOTTED LINE, WHITE
CH	CHANNELIZING LINE
CV	CHEVRON
TW	TRANSVERSE / DIAGONAL LINES, WHITE
TY	TRANSVERSE / DIAGONAL LINES, YELLOW
LA	LANE ARROW
WA	WRONG WAY ARROW

PROPOSED SIGN

EXISTING SIGN TO REMAIN (RELOCATIONS NOTED IN PLANS)

EXISTING SIGN TO BE REMOVED

TRAFFIC DIRECTION

NOTE:
ALL PAVEMENT MARKINGS ON CONCRETE SHALL BE ITEM 646 - EPOXY AND ALL PAVEMENT MARKINGS ON ASPHALT SHALL BE ITEM 644 - THERMOPLASTIC

Preliminary Plans - For Reference Only

HORIZONTAL SCALE IN FEET
0 10 20 40

SIGNING & PAVEMENT MARKING PLAN - I.R. 90 WB
STA. 4007+00.00 TO STA. 4012+00.00

DESIGN AGENCY
B&N burgessniple.com

DESIGNER KEH
REVIEWER JTP 05/01/24
PROJECT ID 82382
SHEET 1518 TOTAL 2696

CUY-90-16.28 (CCG3A)

MODEL: 82382_TP2263 PAPERSIZE: 34x22 (in.) DATE: 5/22/2025 TIME: 9:52:23 PM USER: sisson
pw:\\mb-us-pw.bentley.com:mb-us-pw-03\Documents\Cleveland.OH\DgnProjects\000T\District2\82382\400-Engineering\Traffic\Sheets\82382_TP2263.dgn

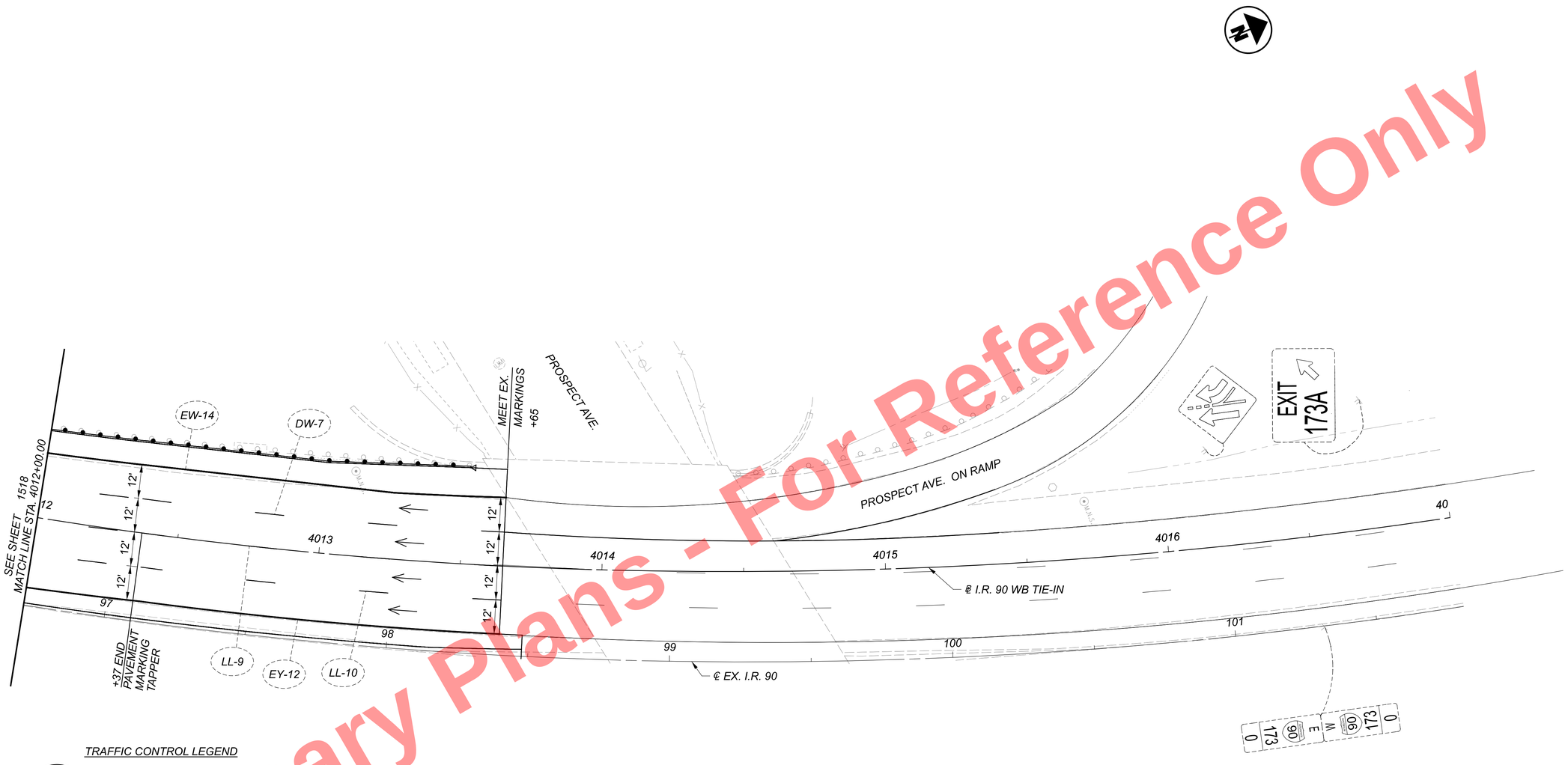

Preliminary Plans - For Reference Only

TRAFFIC CONTROL LEGEND

EW	EDGE LINE, WHITE
ET	EDGE LINE, YELLOW
LL	LANE LINE
DW	DOTTED LINE, WHITE
CH	CHANNELIZING LINE
CV	CHEVRON
TW	TRANSVERSE / DIAGONAL LINES, WHITE
TY	TRANSVERSE / DIAGONAL LINES, YELLOW
LA	LANE ARROW
WA	WRONG WAY ARROW

TRAFFIC DIRECTION

PROPOSED SIGN

EXISTING SIGN TO REMAIN (RELOCATIONS NOTED IN PLANS)

EXISTING SIGN TO BE REMOVED

NOTE:
ALL PAVEMENT MARKINGS ON CONCRETE SHALL BE ITEM 646 - EPOXY AND ALL PAVEMENT MARKINGS ON ASPHALT SHALL BE ITEM 644 - THERMOPLASTIC

HORIZONTAL SCALE IN FEET
0 10 20 40

SIGNING & PAVEMENT MARKING PLAN - I.R. 90 WB
STA. 4012+00.00 TO STA. 4017+00.00

DESIGN AGENCY
B&N
burgessniple.com

DESIGNER KEH
REVIEWER JTP 05/01/24
PROJECT ID 82382
SHEET 1519 TOTAL 2696

CUY-90-16.28 (CCG3A)

MODEL: 82382_TP2264 PAPERSIZE: 34x22 (in.) DATE: 5/22/2025 TIME: 9:53:04 PM USER: slsson
pw:\\mb-us-pw.bentley.com:mb-us-pw-03\Documents\Cleveland_OH\DL_Projects\ODOT\District2\82382\400-Engineering\Traffic\Sheets\82382_TP2264.dgn

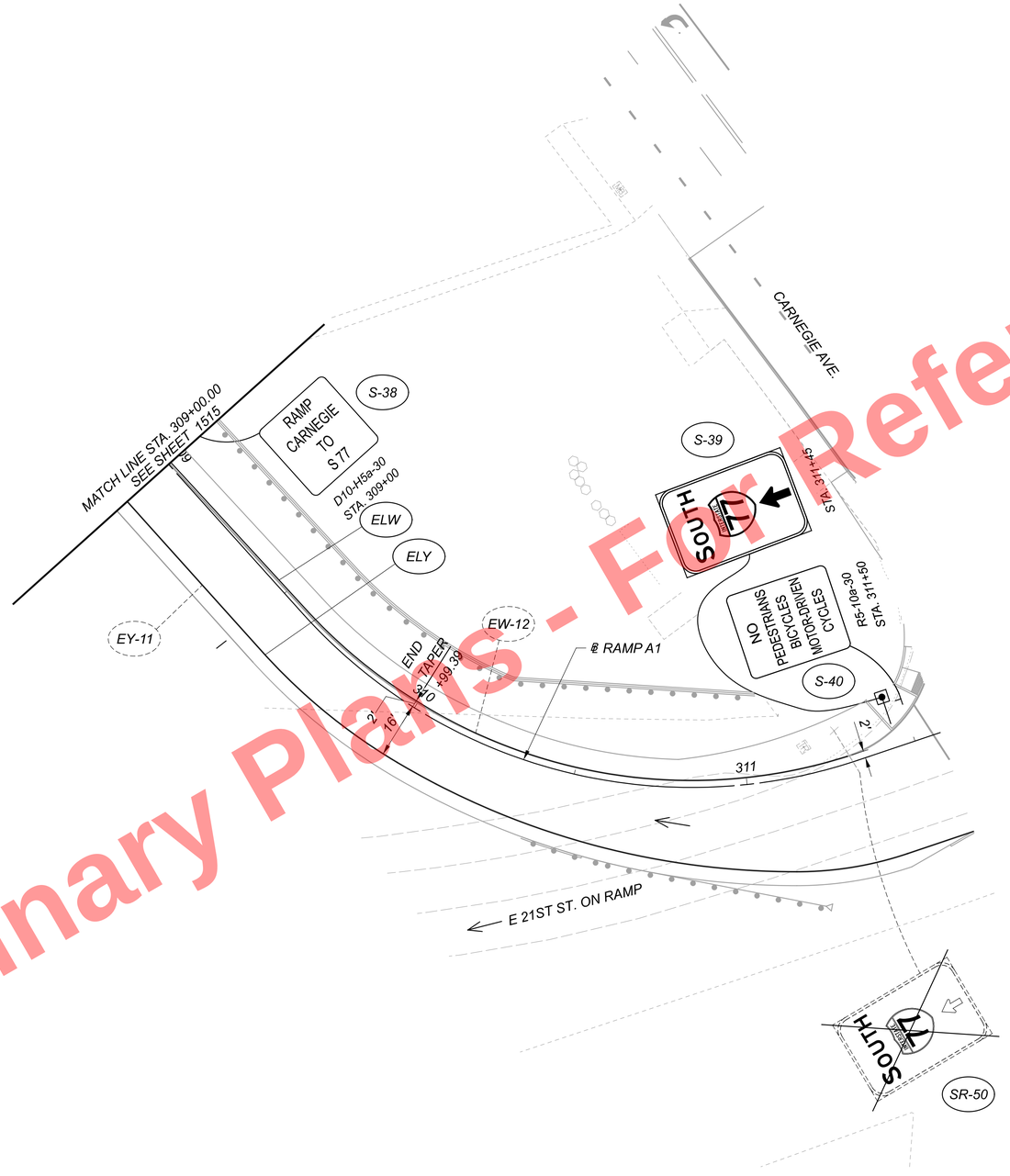

Preliminary Plans - For Reference Only

TRAFFIC CONTROL LEGEND

EW	EDGE LINE, WHITE
EY	EDGE LINE, YELLOW
LL	LANE LINE
DW	DOTTED LINE, WHITE
CH	CHANNELIZING LINE
CV	CHEVRON
TW	TRANSVERSE / DIAGONAL LINES, WHITE
TY	TRANSVERSE / DIAGONAL LINES, YELLOW
LA	LANE ARROW
WA	WRONG WAY ARROW
→	TRAFFIC DIRECTION

PROPOSED SIGN

EXISTING SIGN TO REMAIN (RELOCATIONS NOTED IN PLANS)

EXISTING SIGN TO BE REMOVED

NOTE:
ALL PAVEMENT MARKINGS ON CONCRETE SHALL BE ITEM 646 - EPOXY AND ALL PAVEMENT MARKINGS ON ASPHALT SHALL BE ITEM 644 - THERMOPLASTIC

HORIZONTAL SCALE IN FEET
0 10 20 40

SIGNING & PAVEMENT MARKING PLAN - RAMP A1
STA. 309+00.00 TO STA. 311+57.62

DESIGN AGENCY
B&N
burgessniple.com

DESIGNER KEH
REVIEWER JTP 05/01/24
PROJECT ID 82382
SHEET 1520 TOTAL 2696

CUY-90-16.28 (CCG3A)

MODEL: 82382_TP3101 PAPERSIZE: 34x22 (in.) DATE: 5/22/2025 TIME: 9:53:34 PM USER: slsson
pw:\\vmb-us-pw.bentley.commb-us-pw-03.Documents\Cleveland_OH\01_Projects\ODOT\District2\82382\400-Engineering\Traffic\Sheets\82382_TP3101.dgn

Preliminary Plans - For Reference Only

TRAFFIC CONTROL LEGEND

- EW — EDGE LINE, WHITE
- EY — EDGE LINE, YELLOW
- LL — LANE LINE
- CL — CENTER LINE, WHITE
- CH — CHANNELIZING LINE
- CV — CHEVRON
- TW — TRANSVERSE / DIAGONAL LINES, WHITE
- TY — TRANSVERSE / DIAGONAL LINES, YELLOW
- LA — LANE ARROW
- WA — WRONG WAY ARROW
- → — TRAFFIC DIRECTION

NOTE:
ALL PAVEMENT MARKINGS ON CONCRETE SHALL BE ITEM 646 - EPOXY AND ALL PAVEMENT MARKINGS ON ASPHALT SHALL BE ITEM 644 - THERMOPLASTIC

- PROPOSED SIGN
- EXISTING SIGN TO REMAIN (RELOCATIONS NOTED IN PLANS)
- EXISTING SIGN TO BE REMOVED

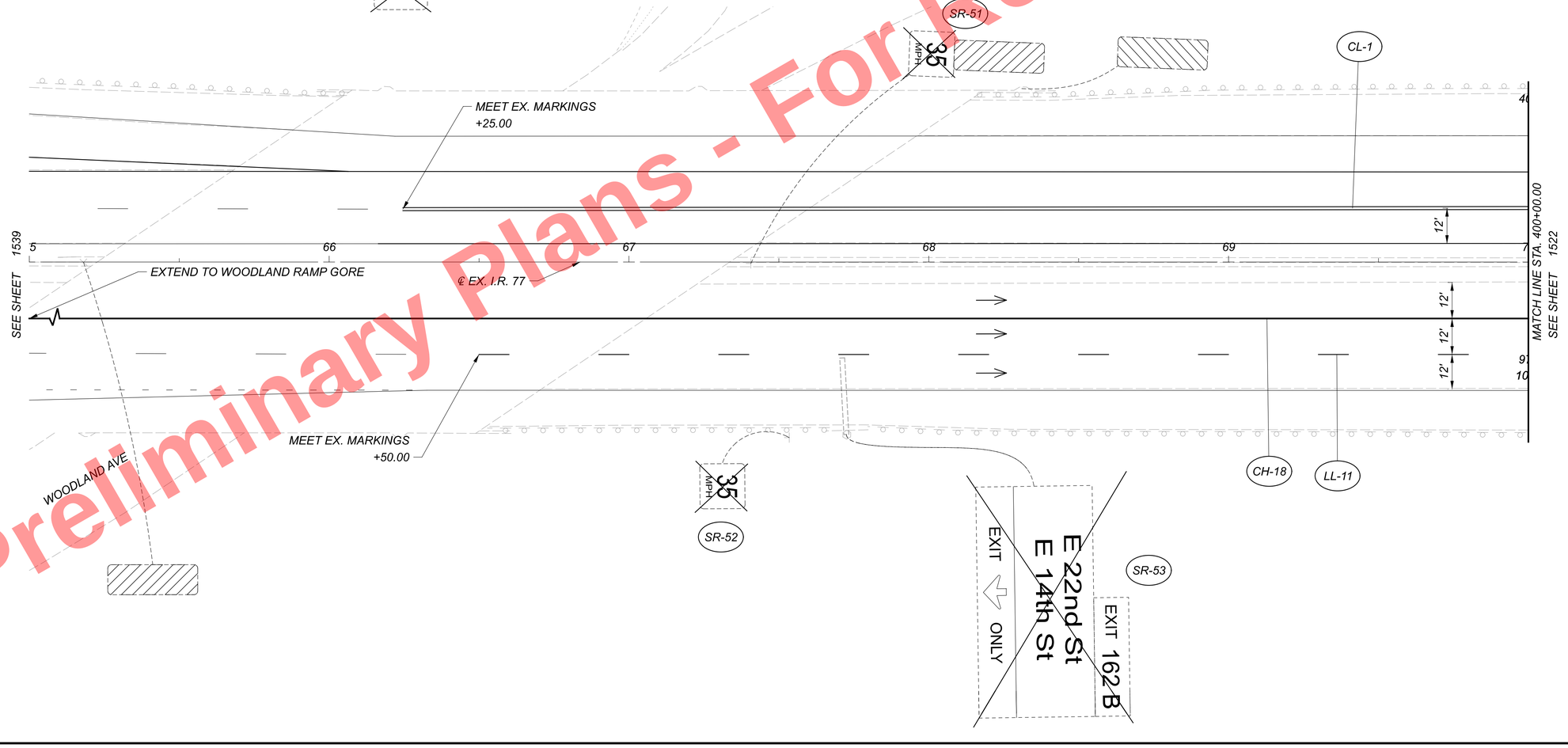

HORIZONTAL SCALE IN FEET
0 10 20 40

SIGNING & PAVEMENT MARKING PLAN - RAMP A2
STA. 395+00.00 TO STA. 400+00.00

CUY-90-16.28 (CCG3A)

MODEL: 82382_TP320I PAPERSIZE: 34x22 (in.) DATE: 5/22/2025 TIME: 9:54:4 PM USER: sisson
pw:\\mb-us-pw.bentley.com:mb-us-pw-03\Documents\Cleveland_OHIO\Projects\ODOT\District2\82382\400-Engineering\Traffic\Sheets\82382_TP320I.dgn

DESIGN AGENCY
B&N
burgessniple.com

DESIGNER	KEH
REVIEWER	JTP 05/01/24
PROJECT ID	82382
SHEET	1521
TOTAL	2696

TRAFFIC CONTROL LEGEND

EW	EDGE LINE, WHITE
WY	EDGE LINE, YELLOW
LL	LANE LINE
CL	DOTTED LINE, WHITE
CHL	CHANNELIZING LINE
DW	CENTER LINE, WHITE
TW	TRANSVERSE / DIAGONAL LINES, WHITE
TY	TRANSVERSE / DIAGONAL LINES, YELLOW
LA	LANE ARROW
WA	WRONG WAY ARROW
→	TRAFFIC DIRECTION

PROPOSED SIGN

EXISTING SIGN TO REMAIN (RELOCATIONS NOTED IN PLANS)

EXISTING SIGN TO BE REMOVED

NOTE:
ALL PAVEMENT MARKINGS ON CONCRETE SHALL BE ITEM 646 - EPOXY AND ALL PAVEMENT MARKINGS ON ASPHALT SHALL BE ITEM 644 - THERMOPLASTIC

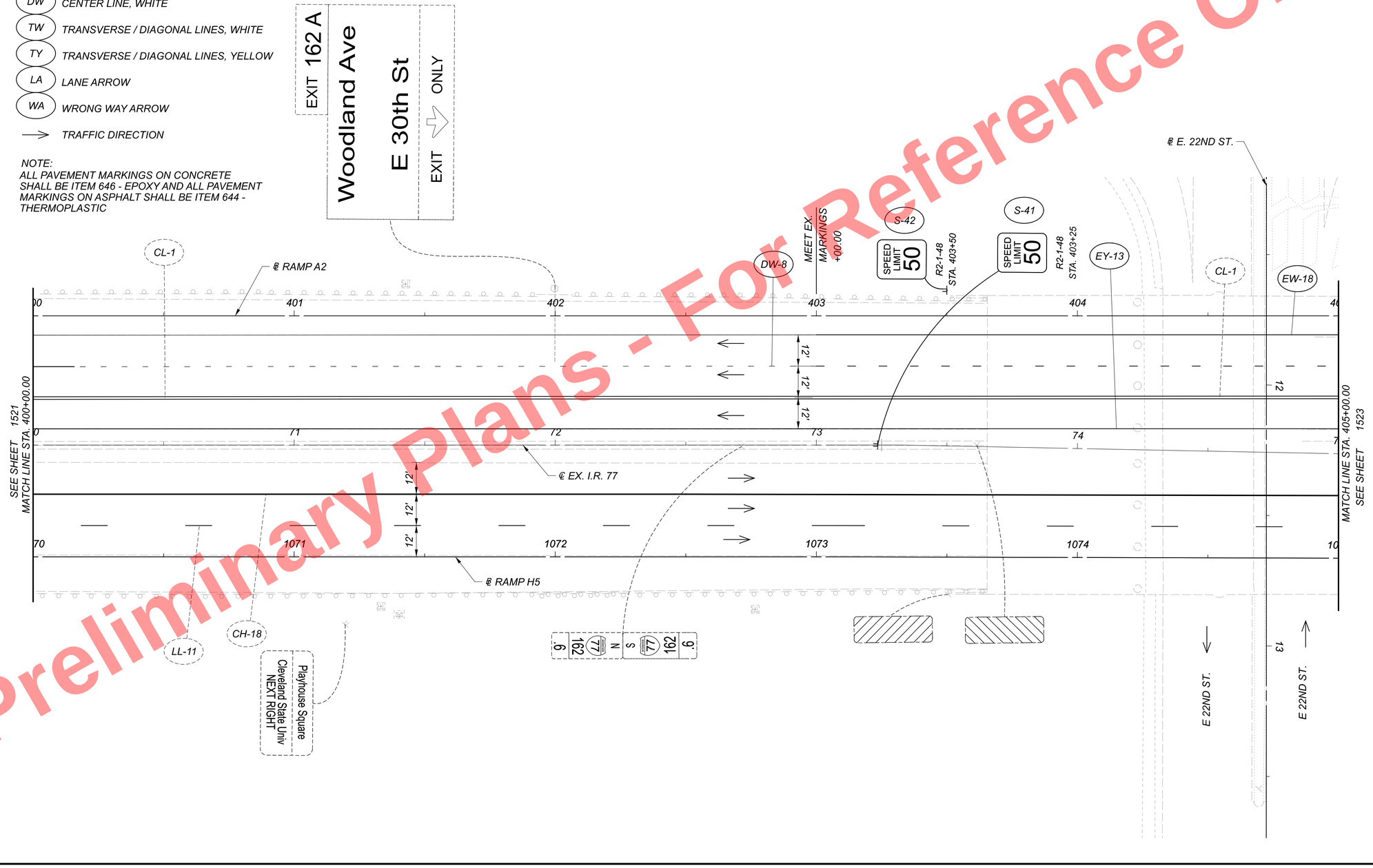

Preliminary Plans - For Reference Only

HORIZONTAL SCALE IN FEET
0 10 20 40

SIGNING & PAVEMENT MARKING PLAN - RAMP A2
STA. 400+00.00 TO STA. 405+00.00

CUY-90-16.28 (CCG3A)

MODEL: 82382_TP3202 PAPERSIZE: 34x22 (in.) DATE: 5/22/2025 TIME: 9:54:39 PM USER: slsson
pw:\\mb-us-pw.bentley.com:mb-us-pw-03\Documents\Cleveland_OH\01_Projects\ODOT\District2\82382\400-Engineering\Traffic\Sheets\82382_TP3202.dgn

DESIGN AGENCY
B&N burgessniple.com

DESIGNER	KEH
REVIEWER	JTP 05/01/24
PROJECT ID	82382
SHEET	1522
TOTAL	2696

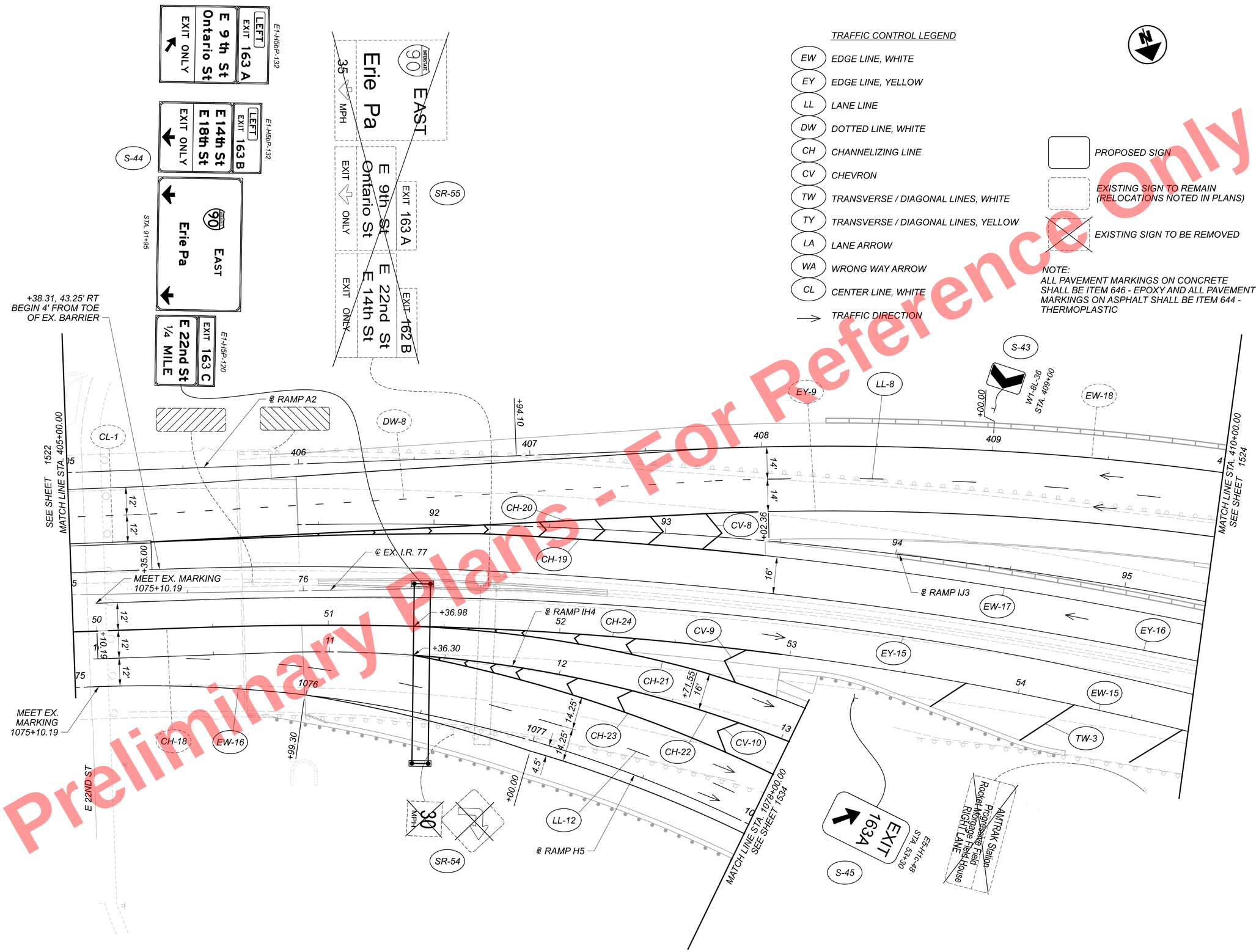

Preliminary Plans - For Reference Only

HORIZONTAL SCALE IN FEET
0 10 20 40

SIGNING & PAVEMENT MARKING PLAN - RAMP A2
STA. 405+00.00 TO STA. 410+00.00

DESIGN AGENCY
B&N
burgessniple.com

DESIGNER	KEH
REVIEWER	JTP 05/01/24
PROJECT ID	82382
SHEET	1523
TOTAL	2696

CUY-90-16.28 (CCG3A)

MODEL: 82382_TP3203 PAPERSIZE: 34x22 (in.) DATE: 5/22/2025 TIME: 9:55:19 PM USER: slsson
pw:\\vmb-us-pw.bentley.com:mb-us-pw-03\Documents\Cleveland_OH\01_Projects\ODOT\District2\82382\400-Engineering\Traffic\Sheets\82382_TP3203.dgn

NOTE:
ALL PAVEMENT MARKINGS ON CONCRETE SHALL BE ITEM 646 - EPOXY AND ALL PAVEMENT MARKINGS ON ASPHALT SHALL BE ITEM 644 - THERMOPLASTIC

PROPOSED SIGN

EXISTING SIGN TO REMAIN (RELOCATIONS NOTED IN PLANS)

EXISTING SIGN TO BE REMOVED

TRAFFIC CONTROL LEGEND

- EW — EDGE LINE, WHITE
- EY — EDGE LINE, YELLOW
- LL — LANE LINE
- DW — DOTTED LINE, WHITE
- CH — CHANNELIZING LINE
- CV — CHEVRON
- TW — TRANSVERSE / DIAGONAL LINES, WHITE
- TY — TRANSVERSE / DIAGONAL LINES, YELLOW
- LA — LANE ARROW
- WA — WRONG WAY ARROW
- TRAFFIC DIRECTION

HORIZONTAL SCALE IN FEET
0 10 20 40

SIGNING & PAVEMENT MARKING PLAN - RAMP A2
STA. 410+00.00 TO STA. 415+00.00

Preliminary Plans - For Reference Only

MODEL: 82382_TP3204 PAPERSIZE: 34x22 (in.) DATE: 5/22/2025 TIME: 9:55:56 PM USER: sisson
pw:\\mb-us-pw.bentley.commb-us-pw-03\Documents\Cleveland_OHIO_Projects\0007\District2\82382\400-Engineering\Traffic\Sheets\82382_TP3204.dgn

CUY-90-16.28 (CCG3A)

DESIGN AGENCY
B&N
burgessniple.com

DESIGNER KEH
REVIEWER JTP 05/01/24
PROJECT ID 82382
SHEET 1524 TOTAL 2696

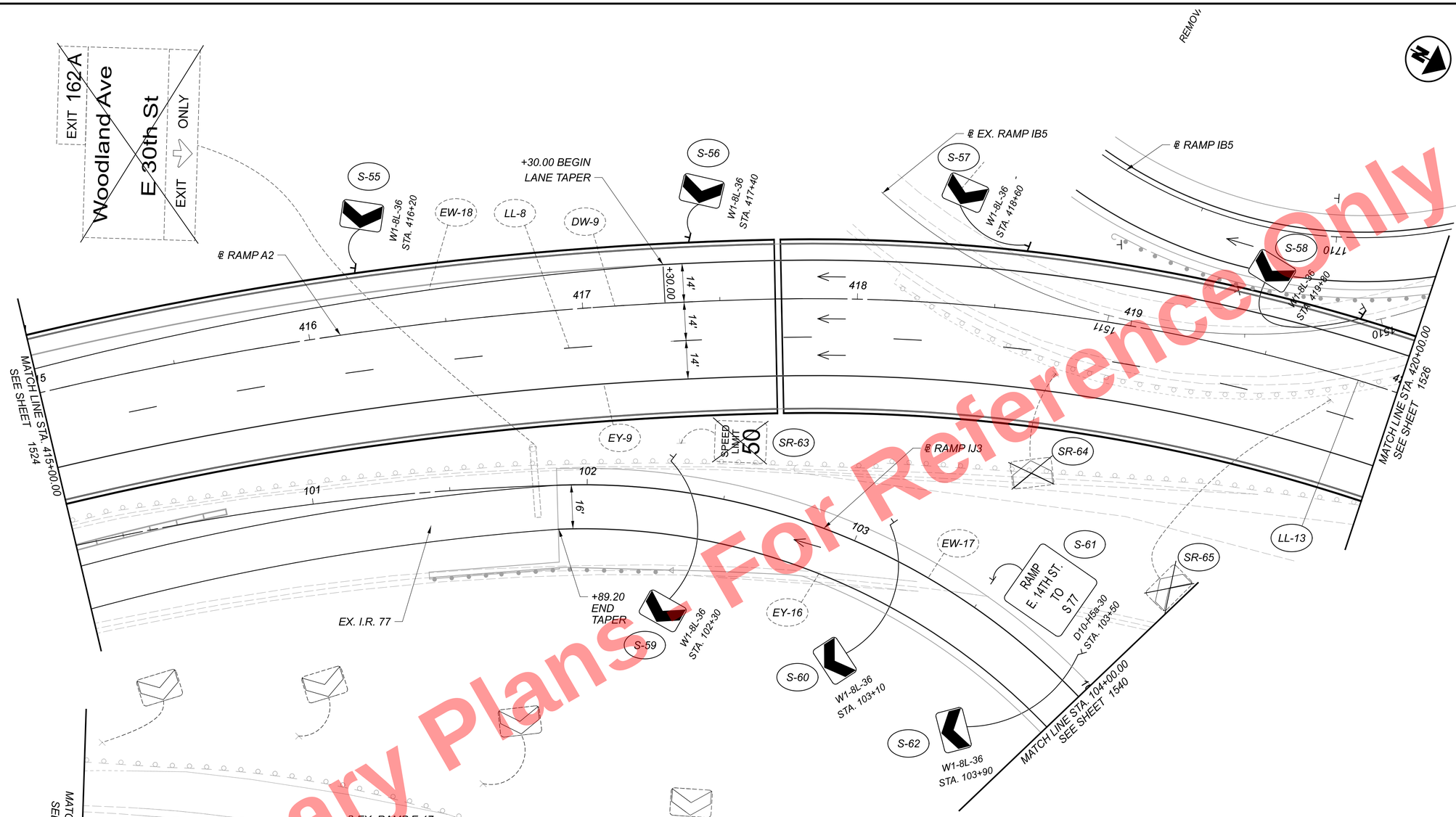

TRAFFIC CONTROL LEGEND

EW	EDGE LINE, WHITE
EY	EDGE LINE, YELLOW
LL	LANE LINE
DW	DOTTED LINE, WHITE
CH	CHANNELIZING LINE
CV	CHEVRON
TW	TRANSVERSE / DIAGONAL LINES, WHITE
TY	TRANSVERSE / DIAGONAL LINES, YELLOW
LA	LANE ARROW
WA	WRONG WAY ARROW
→	TRAFFIC DIRECTION

PROPOSED SIGN

EXISTING SIGN TO REMAIN
(RELOCATIONS NOTED IN PLANS)

EXISTING SIGN TO BE REMOVED

NOTE:
ALL PAVEMENT MARKINGS ON CONCRETE SHALL BE ITEM 646 - EPOXY AND ALL PAVEMENT MARKINGS ON ASPHALT SHALL BE ITEM 644 - THERMOPLASTIC

Preliminary Plans - Not For Reference Only

HORIZONTAL SCALE IN FEET
0 10 20 40

SIGNING & PAVEMENT MARKING PLAN - RAMP A2
STA. 415+00.00 TO STA. 420+00.00

DESIGN AGENCY
B&N
burgessniple.com

DESIGNER KEH
REVIEWER JTP 05/01/24
PROJECT ID 82382
SHEET 1525 TOTAL 2696

CUY-90-16.28 (CCG3A)

MODEL: 82382_TP3205 PAPERSIZE: 34x22 (in.) DATE: 5/22/2025 TIME: 9:56:36 PM USER: slsson
pw:\\mb-us-pw.bentley.com:mb-us-pw-03\Documents\Cleveland_OH\OL_Projects\ODOT\District2\82382\400-Engineering\Traffic\Sheets\82382_TP3205.dgn

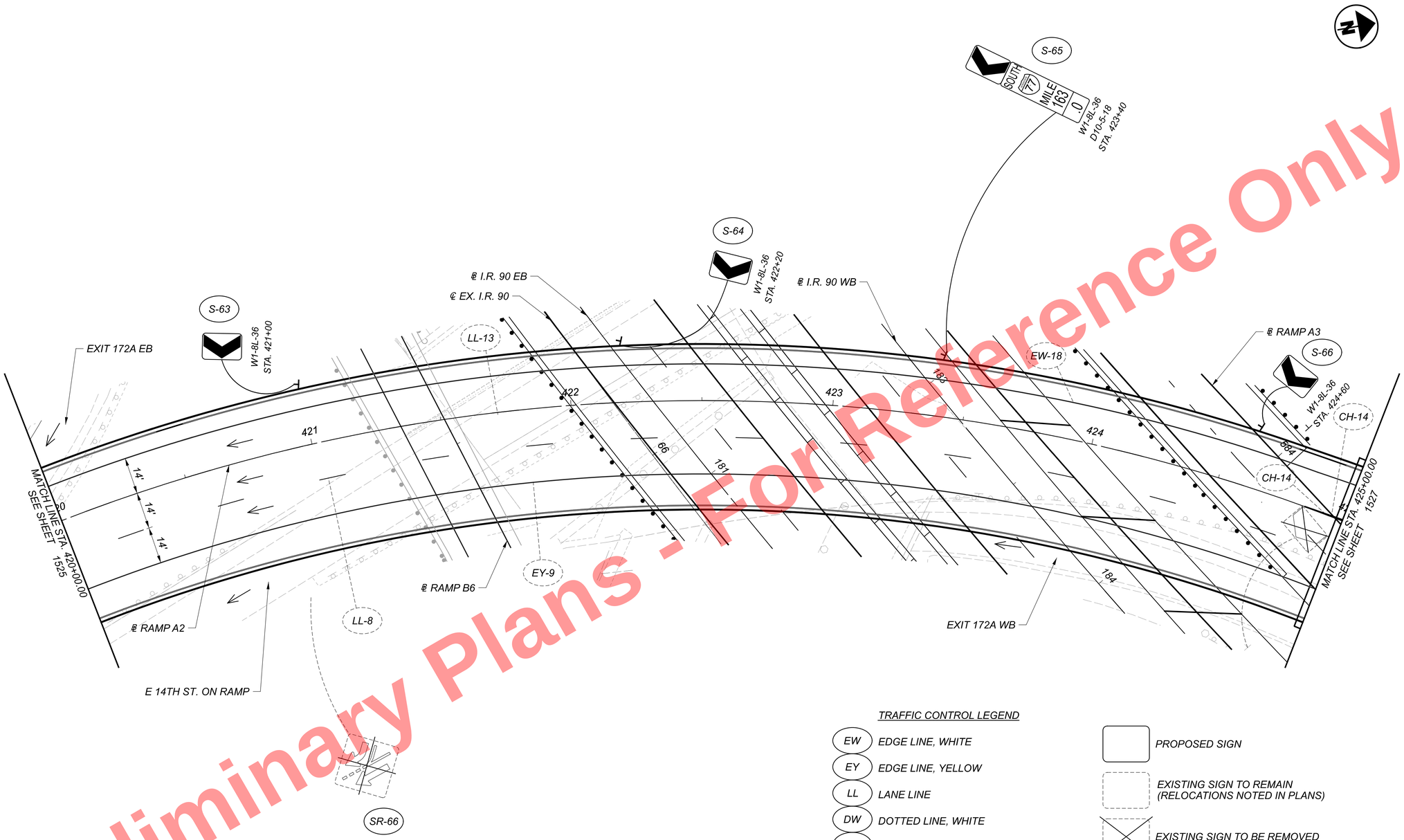

Preliminary Plans - For Reference Only

TRAFFIC CONTROL LEGEND

EW	EDGE LINE, WHITE
EY	EDGE LINE, YELLOW
LL	LANE LINE
DW	DOTTED LINE, WHITE
CH	CHANNELIZING LINE
CV	CHEVRON
TW	TRANSVERSE / DIAGONAL LINES, WHITE
TY	TRANSVERSE / DIAGONAL LINES, YELLOW
LA	LANE ARROW
WA	WRONG WAY ARROW
→	TRAFFIC DIRECTION

PROPOSED SIGN

EXISTING SIGN TO REMAIN (RELOCATIONS NOTED IN PLANS)

EXISTING SIGN TO BE REMOVED

NOTE:
ALL PAVEMENT MARKINGS ON CONCRETE SHALL BE ITEM 646 - EPOXY AND ALL PAVEMENT MARKINGS ON ASPHALT SHALL BE ITEM 644 - THERMOPLASTIC

HORIZONTAL SCALE IN FEET
0 10 20 40

SIGNING & PAVEMENT MARKING PLAN - RAMP A2
STA. 420+00.00 TO STA. 425+00.00

DESIGN AGENCY
B&N
burgessniple.com

DESIGNER KEH
REVIEWER JTP 05/01/24
PROJECT ID 82382
SHEET 1526 TOTAL 2696

CUY-90-16.28 (CCG3A)

MODEL: 82382_TP3206 PAPERSIZE: 34x22 (in.) DATE: 5/22/2025 TIME: 9:57:06 PM USER: sisson
pw:\\mb-us-pw.bentley.com:mb-us-pw-03\Documents\Cleveland_OH\01_Projects\0001\District2\82382\400-Engineering\Traffic\Sheets\82382_TP3206.dgn

Preliminary Plans - For Reference Only

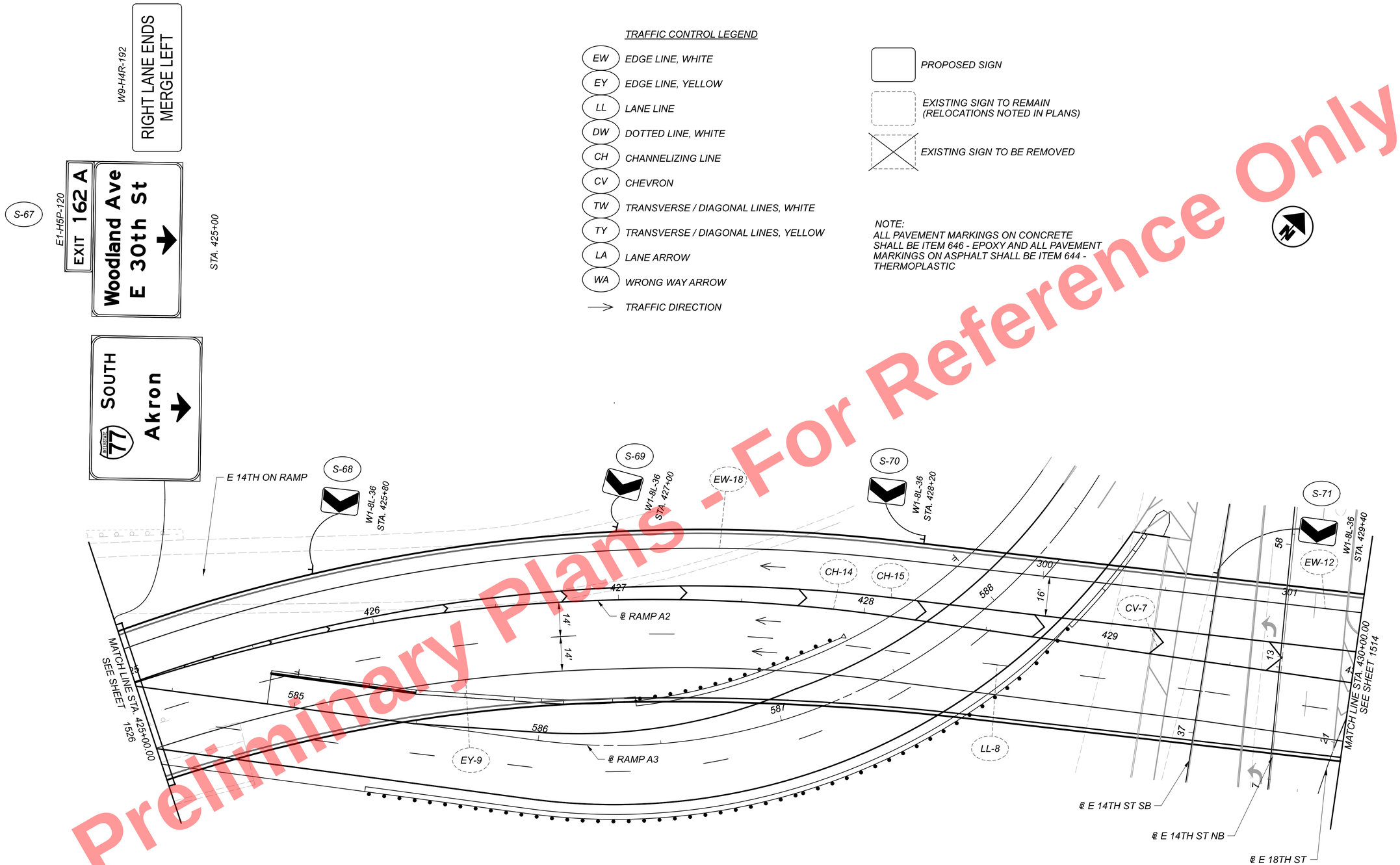

TRAFFIC CONTROL LEGEND

- EW — *EDGE LINE, WHITE*
- EY — *EDGE LINE, YELLOW*
- LL — *LANE LINE*
- DW — *DOTTED LINE, WHITE*
- CH — *CHANNELIZING LINE*
- CV — *CHEVRON*
- TW — *TRANSVERSE / DIAGONAL LINES, WHITE*
- TY — *TRANSVERSE / DIAGONAL LINES, YELLOW*
- LA — *LANE ARROW*
- WA — *WRONG WAY ARROW*
- *TRAFFIC DIRECTION*

- *PROPOSED SIGN*
- *EXISTING SIGN TO REMAIN (RELOCATIONS NOTED IN PLANS)*
- *EXISTING SIGN TO BE REMOVED*

NOTE:
ALL PAVEMENT MARKINGS ON CONCRETE SHALL BE ITEM 646 - EPOXY AND ALL PAVEMENT MARKINGS ON ASPHALT SHALL BE ITEM 644 - THERMOPLASTIC

HORIZONTAL SCALE IN FEET
0 10 20 40

SIGNING & PAVEMENT MARKING PLAN - RAMP A2
STA. 425+00.00 TO STA. 430+00.00

CUY-90-16.28 (CCG3A)

MODEL: 82382_TP3207 PAPERSIZE: 34x22 (in.) DATE: 5/22/2025 TIME: 9:57:50 PM USER: sisson
pw:\\mb-us-pw.bentley.com:mb-us-pw-03\Documents\Cleveland_OH\OiL_Projects\ODOT\District2\82382\400-Engineering\Traffic\Sheets\82382_TP3207.dgn

DESIGN AGENCY
B&N burgessniple.com

DESIGNER	KEH
REVIEWER	JTP 05/01/24
PROJECT ID	82382
SHEET	1527
TOTAL	2696

TRAFFIC CONTROL LEGEND

ELW	EDGE LINE, WHITE
ELY	EDGE LINE, YELLOW
LL	LANE LINE
DL	DOTTED LINE, WHITE
CHL	CHANNELIZING LINE
C	CHEVRON
TLW	TRANSVERSE / DIAGONAL LINES, WHITE
TLY	TRANSVERSE / DIAGONAL LINES, YELLOW
LA	LANE ARROW
WWA	WRONG WAY ARROW
→	TRAFFIC DIRECTION

PROPOSED SIGN

EXISTING SIGN TO REMAIN (RELOCATIONS NOTED IN PLANS)

EXISTING SIGN TO BE REMOVED

NOTE:
ALL PAVEMENT MARKINGS ON CONCRETE SHALL BE ITEM 646 - EPOXY AND ALL PAVEMENT MARKINGS ON ASPHALT SHALL BE ITEM 644 - THERMOPLASTIC

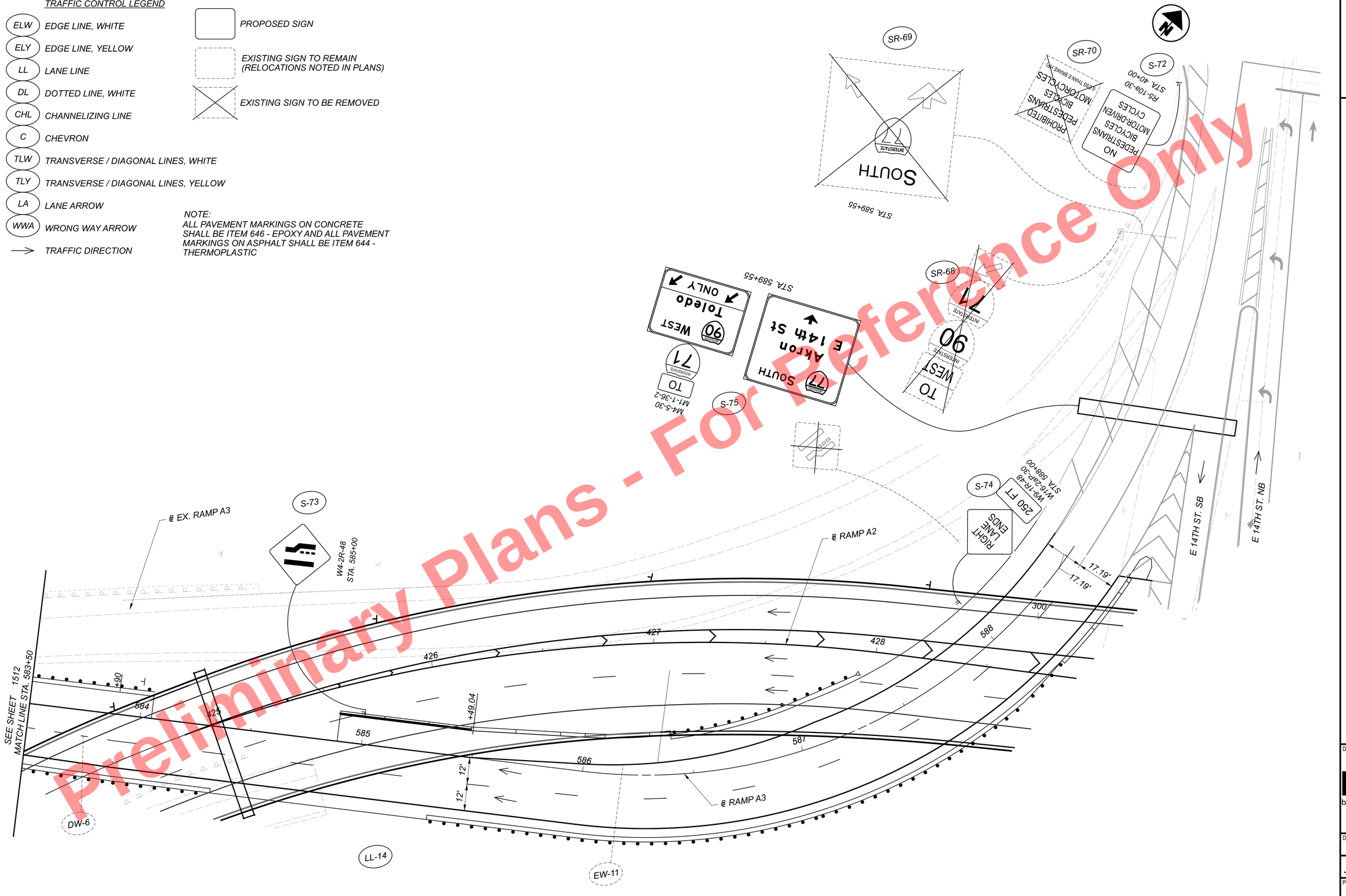

Preliminary Plans - For Reference Only

HORIZONTAL SCALE IN FEET
0 10 20 40

SIGNING & PAVEMENT MARKING PLAN - RAMP A3
STA. 583+50.00 TO STA. 588+55.45

DESIGN AGENCY
B&N
burgessniple.com

DESIGNER KEH
REVIEWER JTP 05/01/24
PROJECT ID 82382
SHEET 1528 TOTAL 2696

CUY-90-16.28 (CCG3A)

MODEL: 82382_TP330I PAPERSIZE: 34x22 (in.) DATE: 5/22/2025 TIME: 9:58:29 PM USER: slsson
pw:\\mb-us-pw.bentley.com:mb-us-pw-03\Documents\Cleveland_OH\01_Projects\ODOT\District2\82382\400-Engineering\Traffic\Sheets\82382_TP330I.dgn

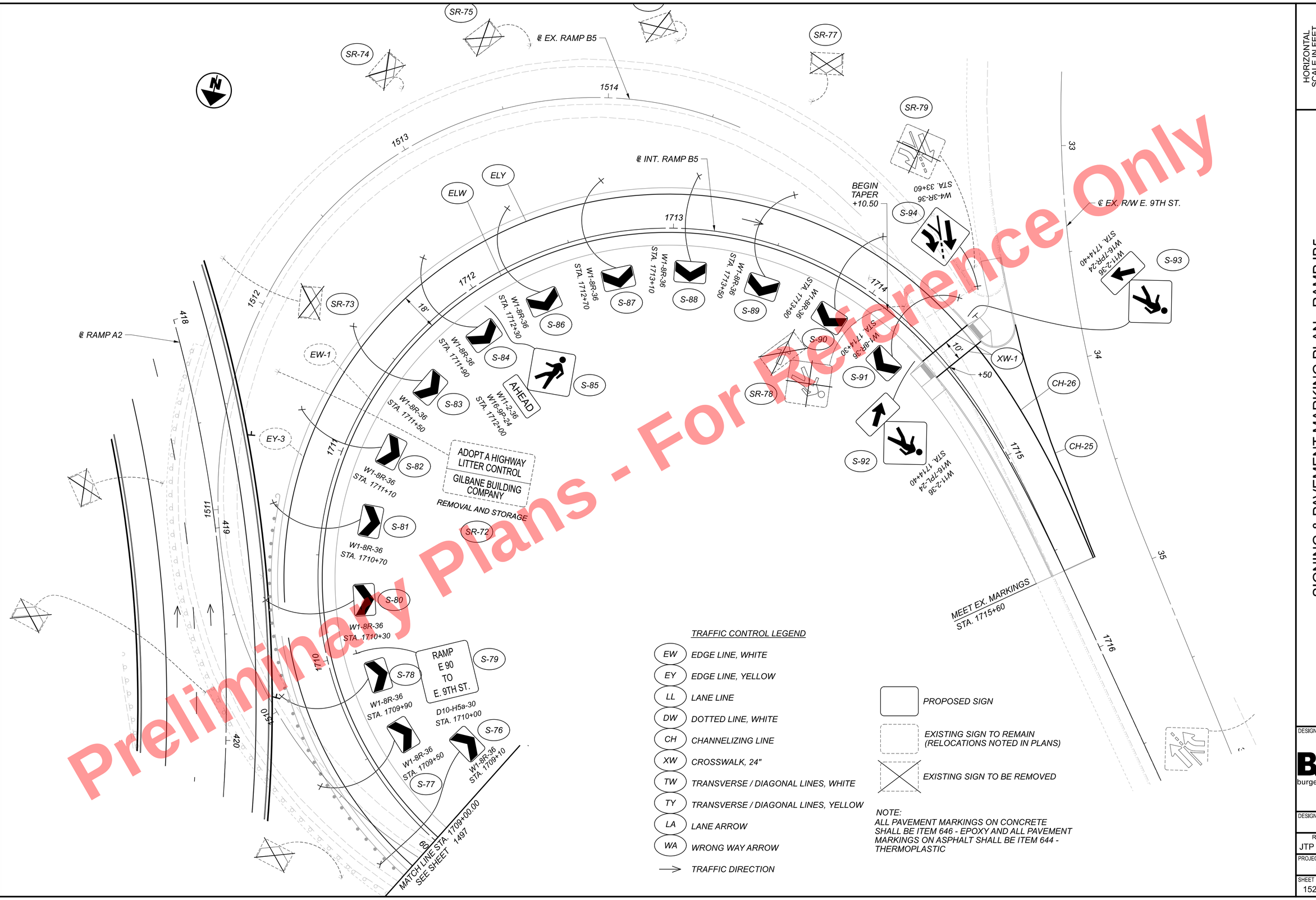

TRAFFIC CONTROL LEGEND

- EW — EDGE LINE, WHITE
- EY — EDGE LINE, YELLOW
- LL — LANE LINE
- DW — DOTTED LINE, WHITE
- CH — CHANNELIZING LINE
- XW — CROSSWALK, 24"
- TW — TRANSVERSE / DIAGONAL LINES, WHITE
- TY — TRANSVERSE / DIAGONAL LINES, YELLOW
- LA — LANE ARROW
- WA — WRONG WAY ARROW
- → TRAFFIC DIRECTION

PROPOSED SIGN

EXISTING SIGN TO REMAIN (RELOCATIONS NOTED IN PLANS)

EXISTING SIGN TO BE REMOVED

NOTE:
ALL PAVEMENT MARKINGS ON CONCRETE SHALL BE ITEM 646 - EPOXY AND ALL PAVEMENT MARKINGS ON ASPHALT SHALL BE ITEM 644 - THERMOPLASTIC

Preliminary Plans - For Reference Only

HORIZONTAL SCALE IN FEET
0 10 20 40

SIGNING & PAVEMENT MARKING PLAN - RAMP IB5
STA. 1709+00.00 TO STA. 1717+00.00

DESIGN AGENCY
B&N burgessniple.com

DESIGNER KEH
REVIEWER JTP 05/01/24
PROJECT ID 82382
SHEET 1529 TOTAL 2696

CUY-90-16.28 (CCG3A)

MODEL: 82382_TP46I2 PAPERSIZE: 34x22 (in.) DATE: 5/22/2025 TIME: 9:59:10 PM USER: slsson
pw:\\mb-us-pw.bentley.com:mb-us-pw-03\Documents\Cleveland_OH\OL_Projects\ODOT\District2\82382\400-Engineering\Traffic\Sheets\82382_TP46I2.dgn

Preliminary Plans - For Reference Only

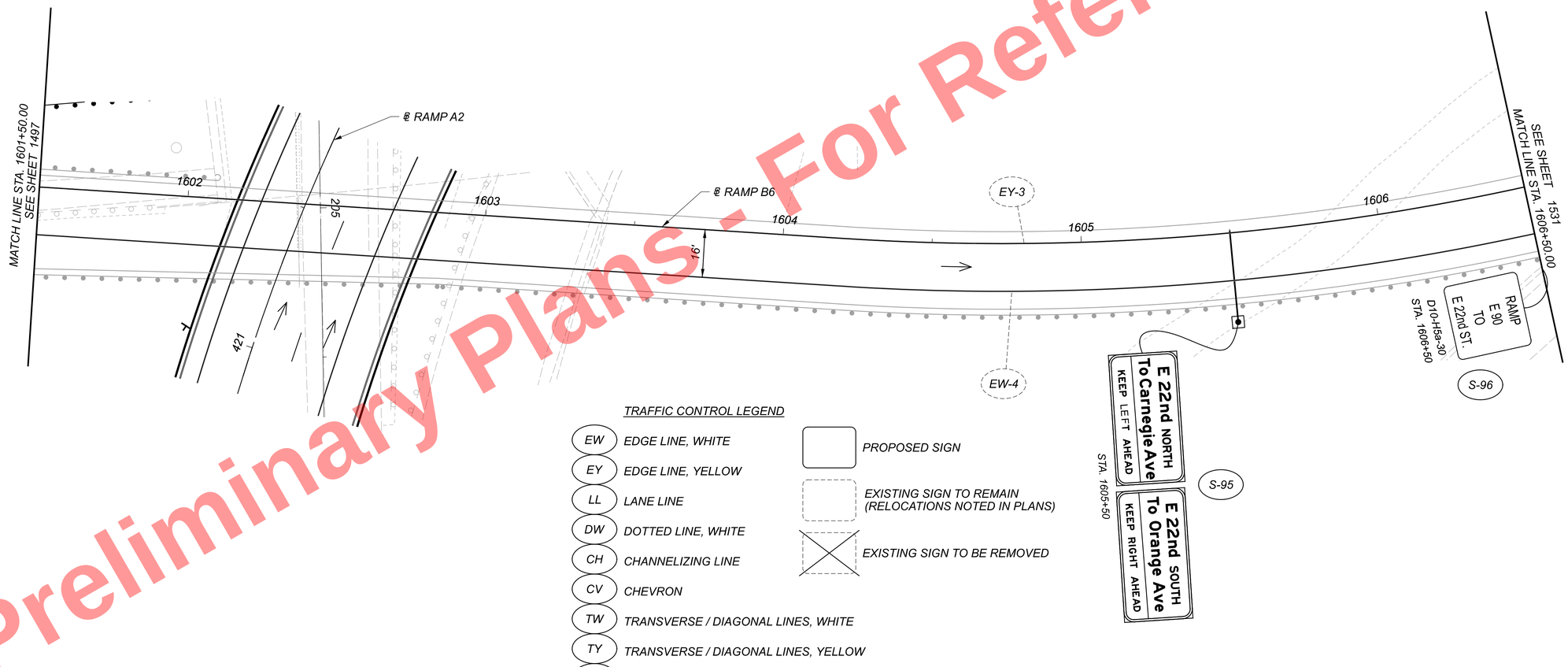

TRAFFIC CONTROL LEGEND

EW	EDGE LINE, WHITE
EY	EDGE LINE, YELLOW
LL	LANE LINE
DW	DOTTED LINE, WHITE
CH	CHANNELIZING LINE
CV	CHEVRON
TW	TRANSVERSE / DIAGONAL LINES, WHITE
TY	TRANSVERSE / DIAGONAL LINES, YELLOW
LA	LANE ARROW
WA	WRONG WAY ARROW
→	TRAFFIC DIRECTION

PROPOSED SIGN

EXISTING SIGN TO REMAIN (RELOCATIONS NOTED IN PLANS)

EXISTING SIGN TO BE REMOVED

NOTE:
ALL PAVEMENT MARKINGS ON CONCRETE SHALL BE ITEM 646 - EPOXY AND ALL PAVEMENT MARKINGS ON ASPHALT SHALL BE ITEM 644 - THERMOPLASTIC

HORIZONTAL SCALE IN FEET
0 10 20 40

SIGNING & PAVEMENT MARKING PLAN - RAMP B6
STA. 1601+50.00 TO STA. 1606+50.00

DESIGN AGENCY
B&N
burgessniple.com

DESIGNER	KEH
REVIEWER	JTP 05/01/24
PROJECT ID	82382
SHEET	1530
TOTAL	2696

CUY-90-16.28 (CCG3A)

MODEL: 82382_TP4601 PAPERSIZE: 34x22 (in.) DATE: 5/22/2025 TIME: 9:59:39 PM USER: sisson
pw:\\mb-us-pw.bentley.com:mb-us-pw-03\Documents\Cleveland_OH\01_Projects\0007\District2\82382\400-Engineering\Traffic\Sheets\82382_TP4601.dgn

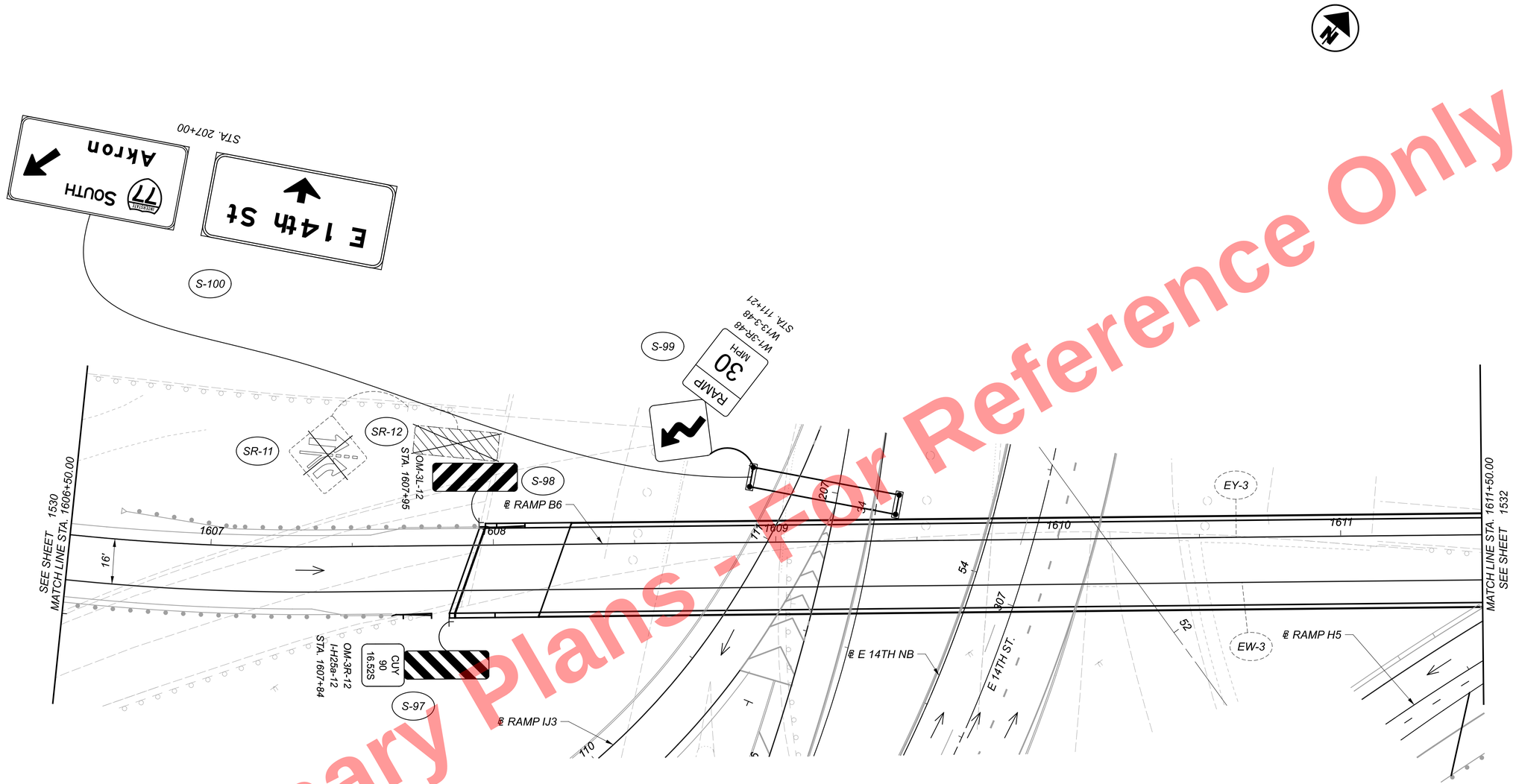

TRAFFIC CONTROL LEGEND

EW	EDGE LINE, WHITE
EY	EDGE LINE, YELLOW
LL	LANE LINE
DW	DOTTED LINE, WHITE
CH	CHANNELIZING LINE
CV	CHEVRON
TW	TRANSVERSE / DIAGONAL LINES, WHITE
TY	TRANSVERSE / DIAGONAL LINES, YELLOW
LA	LANE ARROW
WA	WRONG WAY ARROW
→	TRAFFIC DIRECTION

PROPOSED SIGN

EXISTING SIGN TO REMAIN (RELOCATIONS NOTED IN PLANS)

EXISTING SIGN TO BE REMOVED

NOTE:
ALL PAVEMENT MARKINGS ON CONCRETE SHALL BE ITEM 646 - EPOXY AND ALL PAVEMENT MARKINGS ON ASPHALT SHALL BE ITEM 644 - THERMOPLASTIC

Preliminary Plans - Not For Reference Only

HORIZONTAL SCALE IN FEET
0 10 20 40

SIGNING & PAVEMENT MARKING PLAN - RAMP B6
STA. 1606+50.00 TO STA. 1611+50.00

DESIGN AGENCY
B&N
burgessniple.com

DESIGNER KEH
REVIEWER JTP 05/01/24
PROJECT ID 82382
SHEET 1531 TOTAL 2696

CUY-90-16.28 (CCG3A)

MODEL: 82382_TP4602 PAPERSIZE: 34x22 (in.) DATE: 5/22/2025 TIME: 10:00:20 PM USER: slsson
pw:\\mb-us-pw.bentley.com\mb-us-pw-03\Documents\Cleveland_OH\01_Projects\ODOT\District2\82382\400-Engineering\Traffic\Sheets\82382_TP4602.dgn

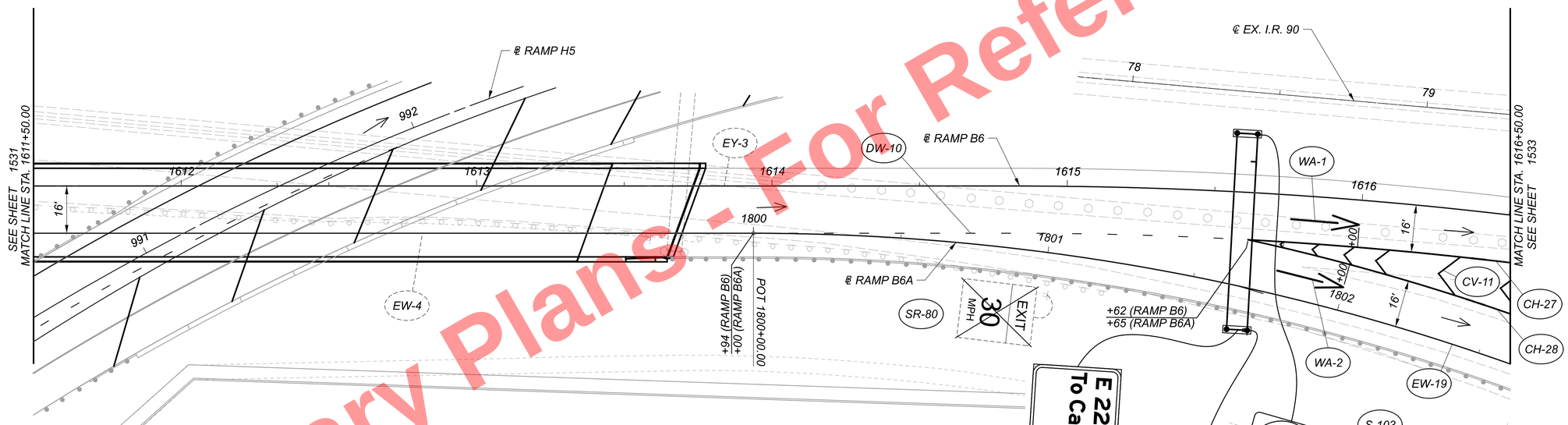

Preliminary Plans - For Reference Only

TRAFFIC CONTROL LEGEND

- EW — EDGE LINE, WHITE
- EY — EDGE LINE, YELLOW
- LL — LANE LINE
- DW — DOTTED LINE, WHITE
- CH — CHANNELIZING LINE
- CV — CHEVRON
- TW — TRANSVERSE / DIAGONAL LINES, WHITE
- TY — TRANSVERSE / DIAGONAL LINES, YELLOW
- LA — LANE ARROW
- WA — WRONG WAY ARROW
- → — TRAFFIC DIRECTION

- PROPOSED SIGN
- EXISTING SIGN TO REMAIN (RELOCATIONS NOTED IN PLANS)
- EXISTING SIGN TO BE REMOVED

NOTE:
ALL PAVEMENT MARKINGS ON CONCRETE SHALL BE ITEM 646 - EPOXY AND ALL PAVEMENT MARKINGS ON ASPHALT SHALL BE ITEM 644 - THERMOPLASTIC

HORIZONTAL SCALE IN FEET
0 10 20 40

SIGNING & PAVEMENT MARKING PLAN - RAMP B6
STA. 1611+50.00 TO STA. 1616+50.00

CUY-90-16.28 (CCG3A)

MODEL: 82382_TP4603 PAPERSIZE: 34x22 (in.) DATE: 5/22/2025 TIME: 10:01:00 PM USER: sisson
pw:\\mb-us-pw.bentley.commb-us-pw-03\Documents\Cleveland_OH\OI_Projects\000T\District2\82382\400-Engineering\Traffic\Sheets\82382_TP4603.dgn

DESIGN AGENCY
B&N
burgessniple.com

DESIGNER KEH
REVIEWER JTP 05/01/24
PROJECT ID 82382
SHEET 1532 TOTAL 2696

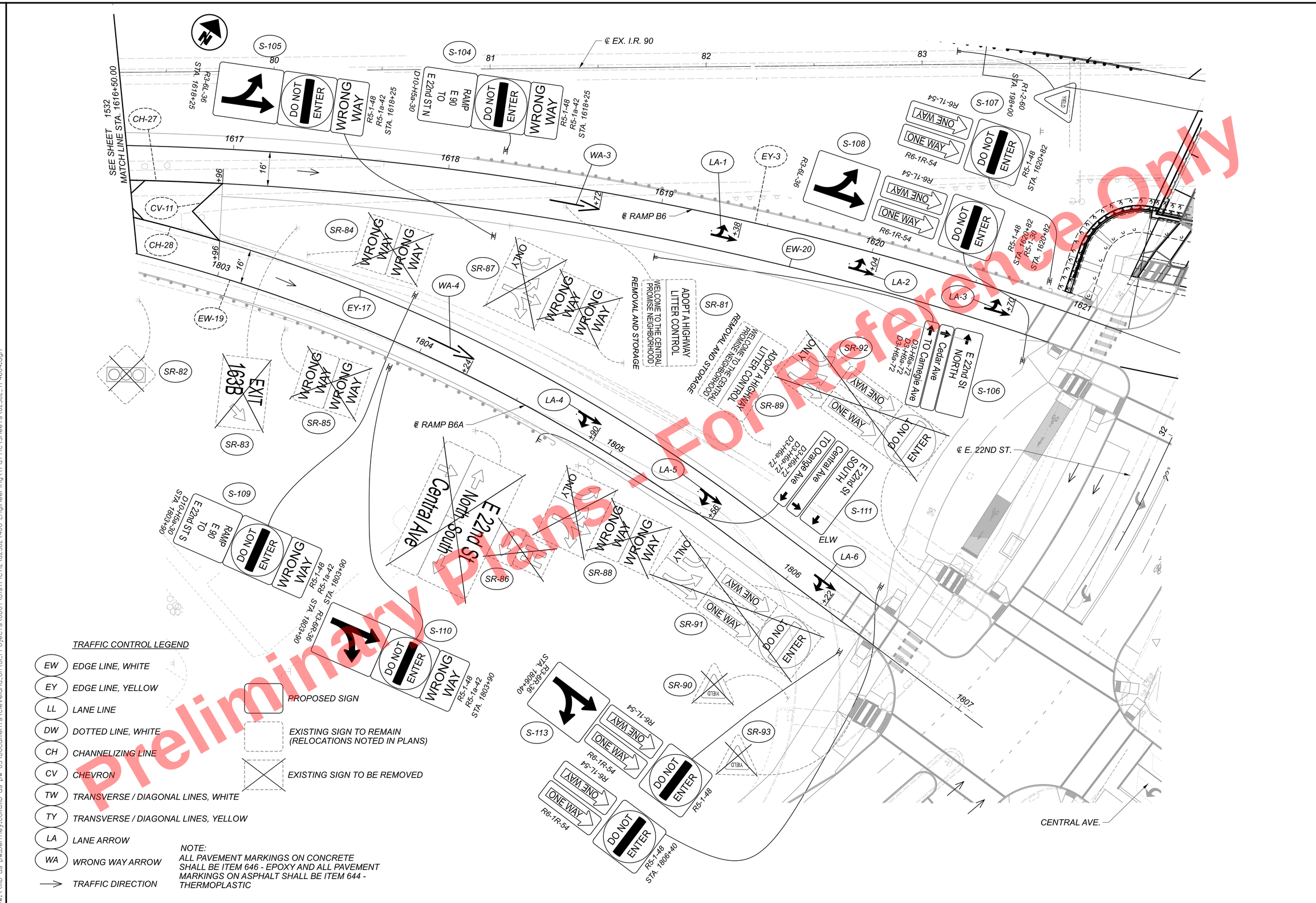

Preliminary Plans - For Reference Only

TRAFFIC CONTROL LEGEND

EW	EDGE LINE, WHITE
EY	EDGE LINE, YELLOW
LL	LANE LINE
DW	DOTTED LINE, WHITE
CH	CHANNELIZING LINE
CV	CHEVRON
TW	TRANSVERSE / DIAGONAL LINES, WHITE
TY	TRANSVERSE / DIAGONAL LINES, YELLOW
LA	LANE ARROW
WA	WRONG WAY ARROW
→	TRAFFIC DIRECTION

PROPOSED SIGN

EXISTING SIGN TO REMAIN (RELOCATIONS NOTED IN PLANS)

EXISTING SIGN TO BE REMOVED

NOTE:
ALL PAVEMENT MARKINGS ON CONCRETE SHALL BE ITEM 646 - EPOXY AND ALL PAVEMENT MARKINGS ON ASPHALT SHALL BE ITEM 644 - THERMOPLASTIC

HORIZONTAL SCALE IN FEET 0 10 20 40

SIGNING & PAVEMENT MARKING PLAN - RAMP B6
STA. 1616+50.00 TO STA. 1621+16.00

DESIGN AGENCY
B&N burgessniple.com

DESIGNER KEH
REVIEWER JTP 05/01/24
PROJECT ID 82382
SHEET 1533 TOTAL 2696

CUY-90-16.28 (CCG3A)

MODEL: 82382_TP4604 PAPERSIZE: 34x22 (in.) DATE: 6/16/2025 TIME: 3:53:44 PM USER: sisson
pw:\\mb-us-pw.bentley.com:mb-us-pw-03\Documents\Cleveland_OH\OI_Projects\ODOT\District12\82382\400-Engineering\Traffic\Sheets\82382_TP4604.dgn

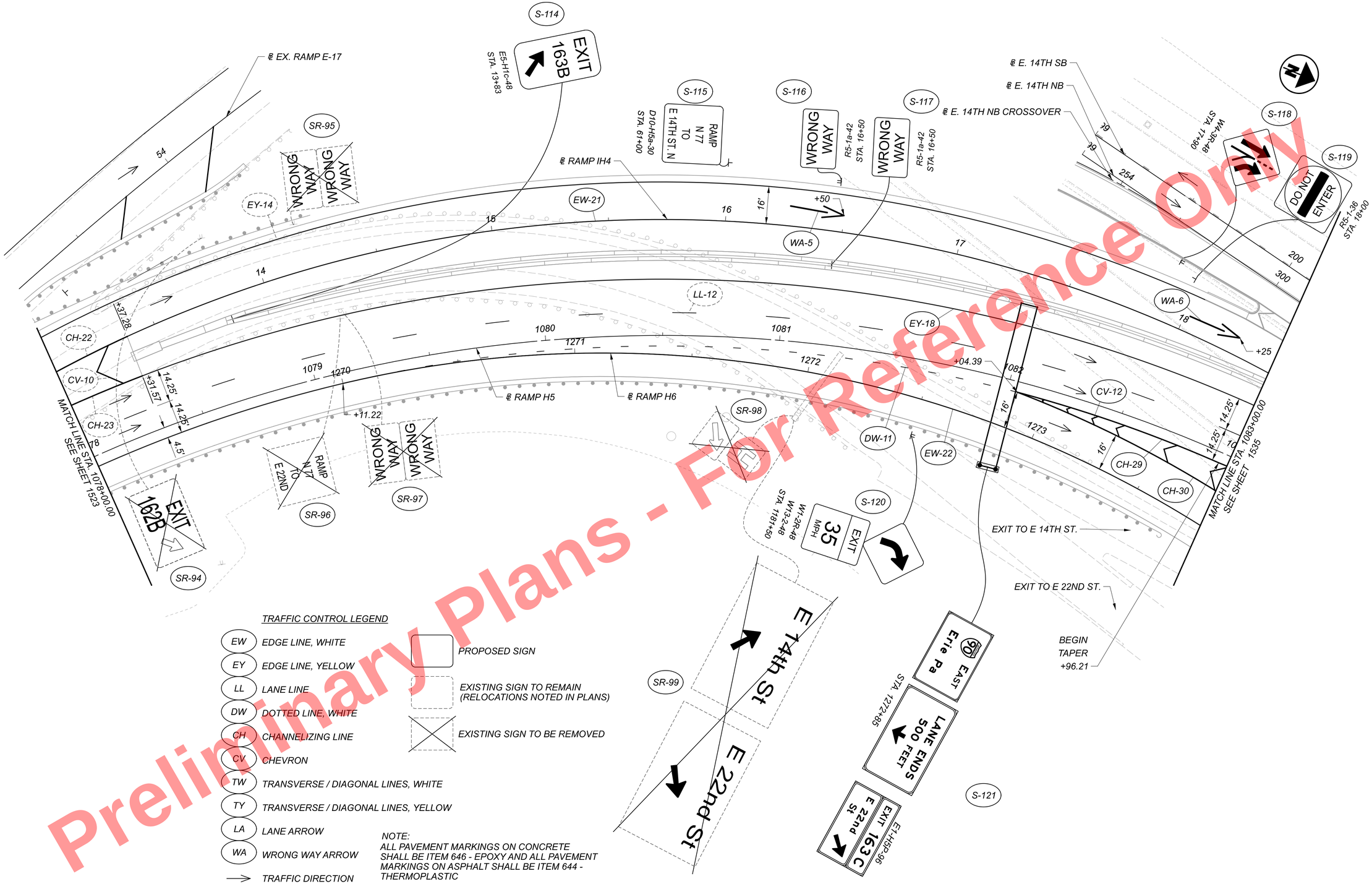

Preliminary Plans - Not For Reference Only

HORIZONTAL SCALE IN FEET
0 10 20 40

SIGNING & PAVEMENT MARKING PLAN - RAMP H5
STA. 1078+00.00 TO STA. 1083+00.00

DESIGN AGENCY
B&N
burgessniple.com

DESIGNER KEH
REVIEWER JTP 05/01/24
PROJECT ID 82382
SHEET 1534 TOTAL 2696

CUY-90-16.28 (CCG3A)

MODEL: 82382_TP550I PAPERSIZE: 34x22 (in.) DATE: 5/29/2025 TIME: 11:50:00 AM USER: slsson
pw:\\mb-us-pw.bentley.com:mb-us-pw-03\Documents\Cleveland_OH\01_Projects\0DOT\Dist7\ct12\82382\400-Engineering\Traffic\Sheets\82382_TP550I.dgn

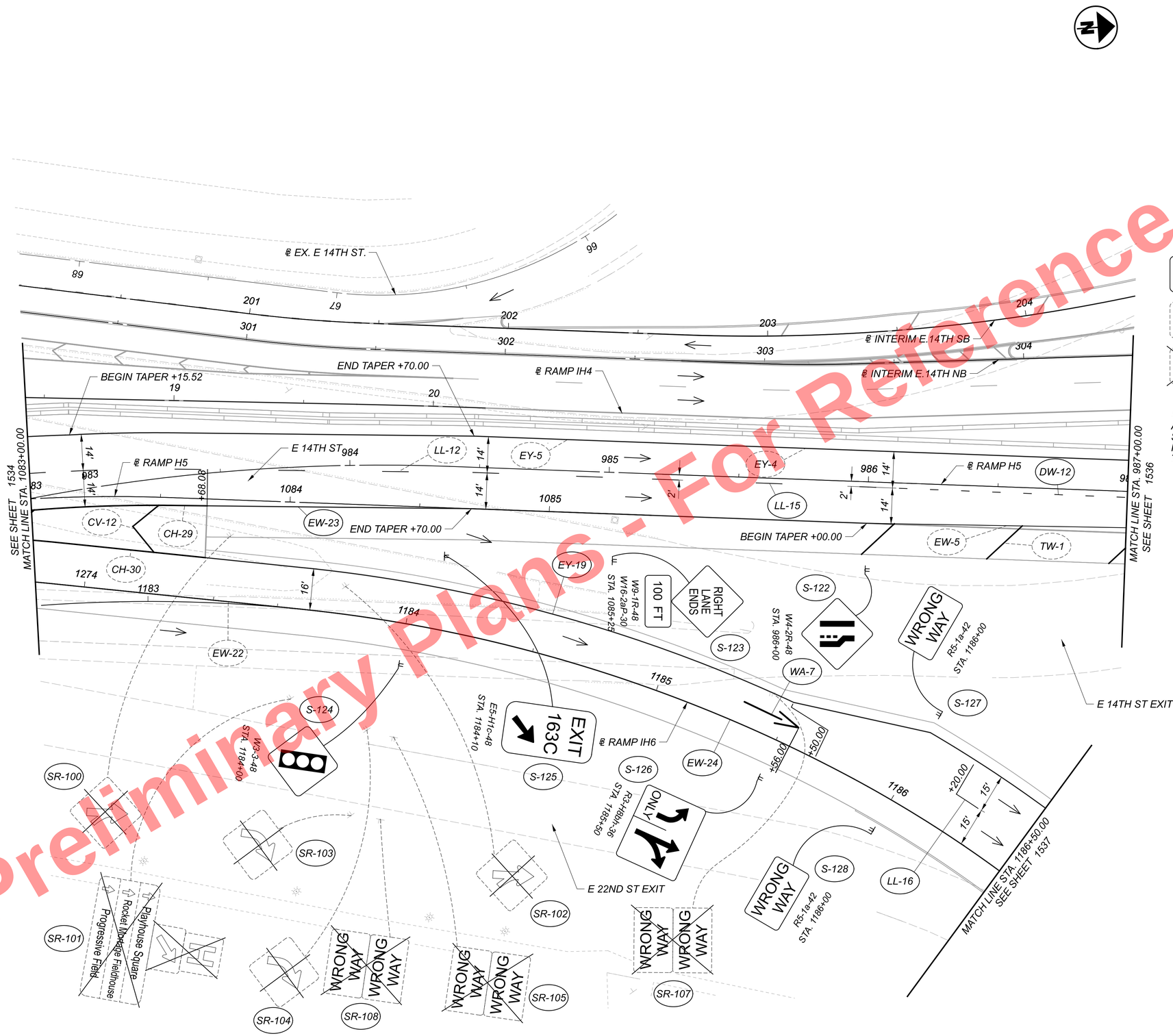

PROPOSED SIGN

EXISTING SIGN TO REMAIN (RELOCATIONS NOTED IN PLANS)

EXISTING SIGN TO BE REMOVED

NOTE:
ALL PAVEMENT MARKINGS ON CONCRETE SHALL BE ITEM 646 - EPOXY AND ALL PAVEMENT MARKINGS ON ASPHALT SHALL BE ITEM 644 - THERMOPLASTIC

TRAFFIC CONTROL LEGEND

- EW — EDGE LINE, WHITE
- EY — EDGE LINE, YELLOW
- LL — LANE LINE
- DW — DOTTED LINE, WHITE
- CH — CHANNELIZING LINE
- CV — CHEVRON
- TW — TRANSVERSE / DIAGONAL LINES, WHITE
- TY — TRANSVERSE / DIAGONAL LINES, YELLOW
- LA — LANE ARROW
- WA — WRONG WAY ARROW
- TRAFFIC DIRECTION

HORIZONTAL SCALE IN FEET
0 10 20 40

SIGNING & PAVEMENT MARKING PLAN - RAMP H5
STA. 1083+00.00 TO STA. 987+00.00

DESIGN AGENCY
B&N burgessniple.com

DESIGNER KEH
REVIEWER JTP 05/01/24
PROJECT ID 82382
SHEET 1535 TOTAL 2696

CUY-90-16.28 (CCG3A)

MODEL: 82382_TP5502 PAPERSIZE: 34x22 (in.) DATE: 5/22/2025 TIME: 10:02:54 PM USER: slsson
pw:\\mb-us-pw.bentley.com:mb-us-pw-03\Documents\Cleveland_OH\OL_Projects\ODOT\District2\82382\400-Engineering\Traffic\Sheets\82382_TP5502.dgn

Preliminary Plans - For Reference Only

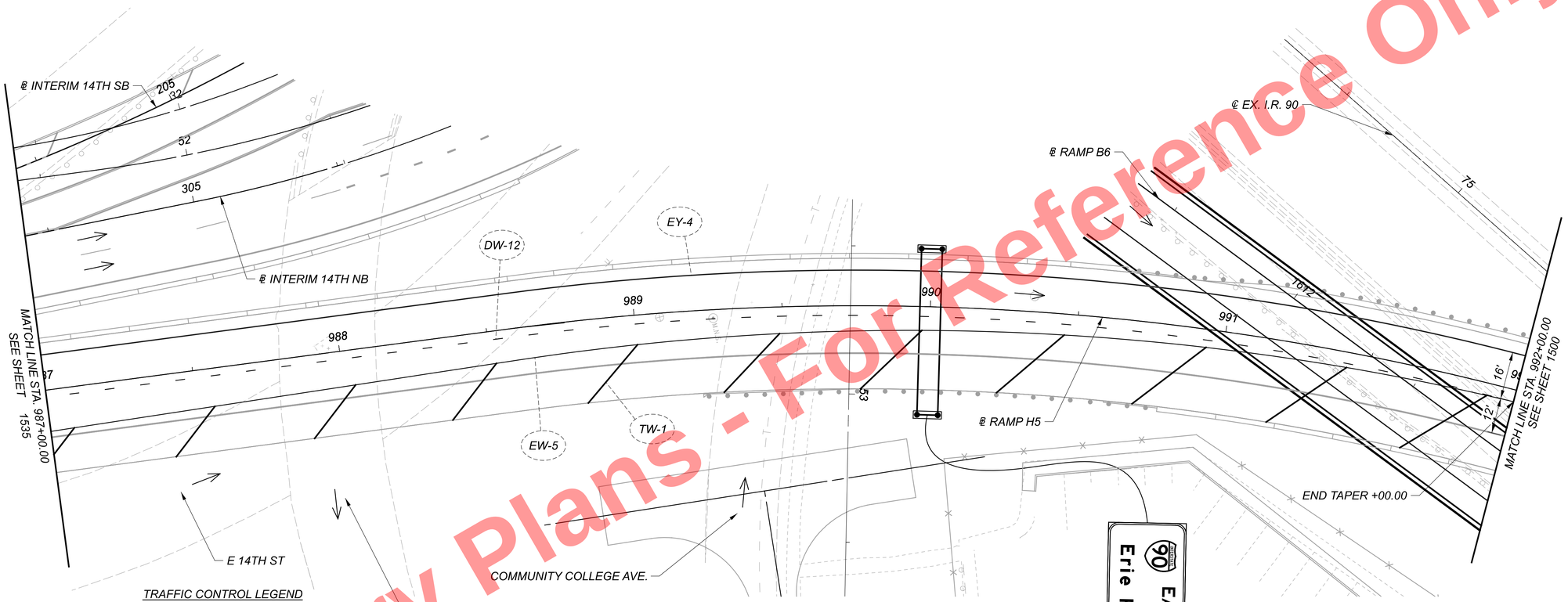

TRAFFIC CONTROL LEGEND

EW	EDGE LINE, WHITE
EY	EDGE LINE, YELLOW
LL	LANE LINE
DW	DOTTED LINE, WHITE
CH	CHANNELIZING LINE
CV	CHEVRON
TW	TRANSVERSE / DIAGONAL LINES, WHITE
TY	TRANSVERSE / DIAGONAL LINES, YELLOW
LA	LANE ARROW
WA	WRONG WAY ARROW
→	TRAFFIC DIRECTION

NOTE:
ALL PAVEMENT MARKINGS ON CONCRETE SHALL BE ITEM 646 - EPOXY AND ALL PAVEMENT MARKINGS ON ASPHALT SHALL BE ITEM 644 - THERMOPLASTIC

PROPOSED SIGN

EXISTING SIGN TO REMAIN (RELOCATIONS NOTED IN PLANS)

EXISTING SIGN TO BE REMOVED

Preliminary Plans - For Reference Only

HORIZONTAL SCALE IN FEET
0 10 20 40

SIGNING & PAVEMENT MARKING PLAN - RAMP H5
STA. 987+00.00 TO STA. 992+00.00

DESIGN AGENCY
B&N
burgessniple.com

DESIGNER KEH
REVIEWER JTP 05/01/24
PROJECT ID 82382
SHEET 1536 TOTAL 2696

CUY-90-16.28 (CCG3A)

MODEL: 82382_TP5503 PAPERSIZE: 34x22 (in.) DATE: 5/22/2025 TIME: 10:03:25 PM USER: slsson
pw:\\mb-us-pw.bentley.com:mb-us-pw-03\Documents\Cleveland.OH\OI_Projects\ODOT\District2\82382\400-Engineering\Traffic\Sheets\82382_TP5503.dgn

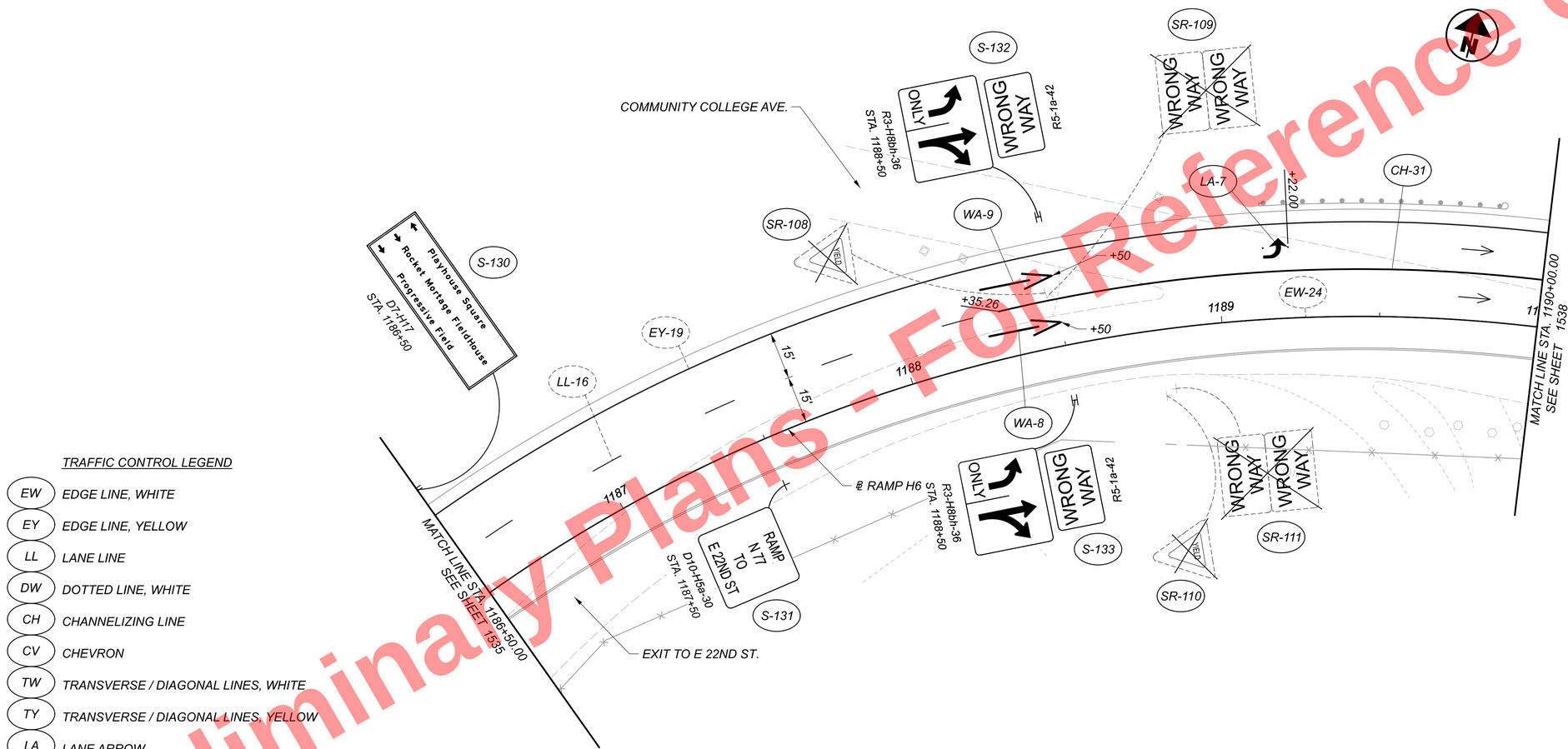

TRAFFIC CONTROL LEGEND

EW	EDGE LINE, WHITE
EY	EDGE LINE, YELLOW
LL	LANE LINE
DW	DOTTED LINE, WHITE
CH	CHANNELIZING LINE
CV	CHEVRON
TW	TRANSVERSE / DIAGONAL LINES, WHITE
TY	TRANSVERSE / DIAGONAL LINES, YELLOW
LA	LANE ARROW
WA	WRONG WAY ARROW
→	TRAFFIC DIRECTION

PROPOSED SIGN

EXISTING SIGN TO REMAIN (RELOCATIONS NOTED IN PLANS)

EXISTING SIGN TO BE REMOVED

NOTE:
ALL PAVEMENT MARKINGS ON CONCRETE SHALL BE ITEM 646 - EPOXY AND ALL PAVEMENT MARKINGS ON ASPHALT SHALL BE ITEM 644 - THERMOPLASTIC

Preliminary Plans - For Reference Only

HORIZONTAL SCALE IN FEET
0 10 20 40

SIGNING & PAVEMENT MARKING PLAN - RAMP H6
STA. 1186+50.00 TO STA. 1190+00.00

DESIGN AGENCY
B&N
burgessniple.com

DESIGNER KEH
REVIEWER JTP 05/01/24
PROJECT ID 82382
SHEET 1537 TOTAL 2696

CUY-90-16.28 (CCG3A)

MODEL: 82382_TP560I PAPERSIZE: 34x22 (in.) DATE: 5/22/2025 TIME: 10:03:57 PM USER: sisson
pw:\\vmb-us-pw.bentley.com:mb-us-pw-03\Documents\Cleveland_OH\01_Projects\000T\District2\82382\400-Engineering\Traffic\Sheets\82382_TP560I.dgn

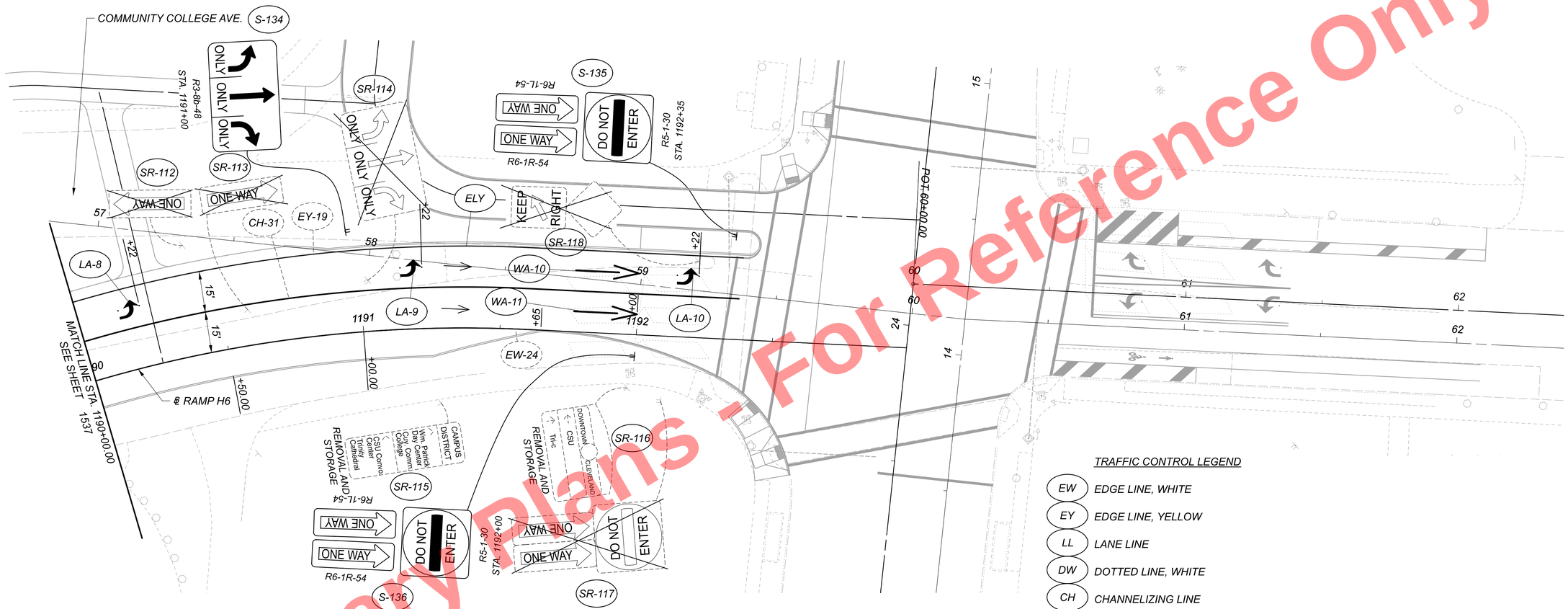

Preliminary Plans - Pending
For Reference Only

TRAFFIC CONTROL LEGEND

EW	EDGE LINE, WHITE
EY	EDGE LINE, YELLOW
LL	LANE LINE
DW	DOTTED LINE, WHITE
CH	CHANNELIZING LINE
CV	CHEVRON
TW	TRANSVERSE / DIAGONAL LINES, WHITE
TY	TRANSVERSE / DIAGONAL LINES, YELLOW
LA	LANE ARROW
WA	WRONG WAY ARROW
→	TRAFFIC DIRECTION

PROPOSED SIGN

EXISTING SIGN TO REMAIN (RELOCATIONS NOTED IN PLANS)

EXISTING SIGN TO BE REMOVED

NOTE:
ALL PAVEMENT MARKINGS ON CONCRETE SHALL BE ITEM 646 - EPOXY AND ALL PAVEMENT MARKINGS ON ASPHALT SHALL BE ITEM 644 - THERMOPLASTIC

HORIZONTAL SCALE IN FEET
0 10 20 40

SIGNING & PAVEMENT MARKING PLAN - RAMP H6
STA. 1190+00.00 TO END

DESIGN AGENCY
B&N
burgessniple.com

DESIGNER
KEH

REVIEWER
JTP 05/01/24

PROJECT ID
82382

SHEET 1538 | TOTAL 2696

CUY-90-16.28 (CCG3A)

MODEL: 82382_TP5602 PAPERSIZE: 34x22 (in) DATE: 5/22/2025 TIME: 10:04:30 PM USER: sisson
pw:\\mb-us-pw.bentley.commb-us-pw-03\Documents\Cleveland_OH\01_Projects\000TYDistrict2\82382\400-Engineering\Traffic\Sheets\82382_TP5602.dgn

Preliminary Plans - Not For Reference Only

HORIZONTAL SCALE IN FEET
0 10 20 40

SIGNING & PAVEMENT MARKING PLAN - I.R. 77
STA.38+00.00 TO 58+00.00

DESIGN AGENCY
B&N
burgessniple.com

DESIGNER KEH
REVIEWER JTP 05/01/24
PROJECT ID 82382
SHEET 1539 TOTAL 2696

CUY-90-16.28 (CCG3A)

MODEL: CLX_IR-77 - Plan 2 PAPERSIZE: 34x22 (in.) DATE: 5/22/2025 TIME: 03:05:00 PM USER: sisson
pw:\\mb-us-pw.bentley.com:mb-us-pw-03\Documents\Cleveland_OH\OI_Projects\ODOT\District2\82382\400-Engineering\Traffic\Sheets\82382_TP5603.dgn

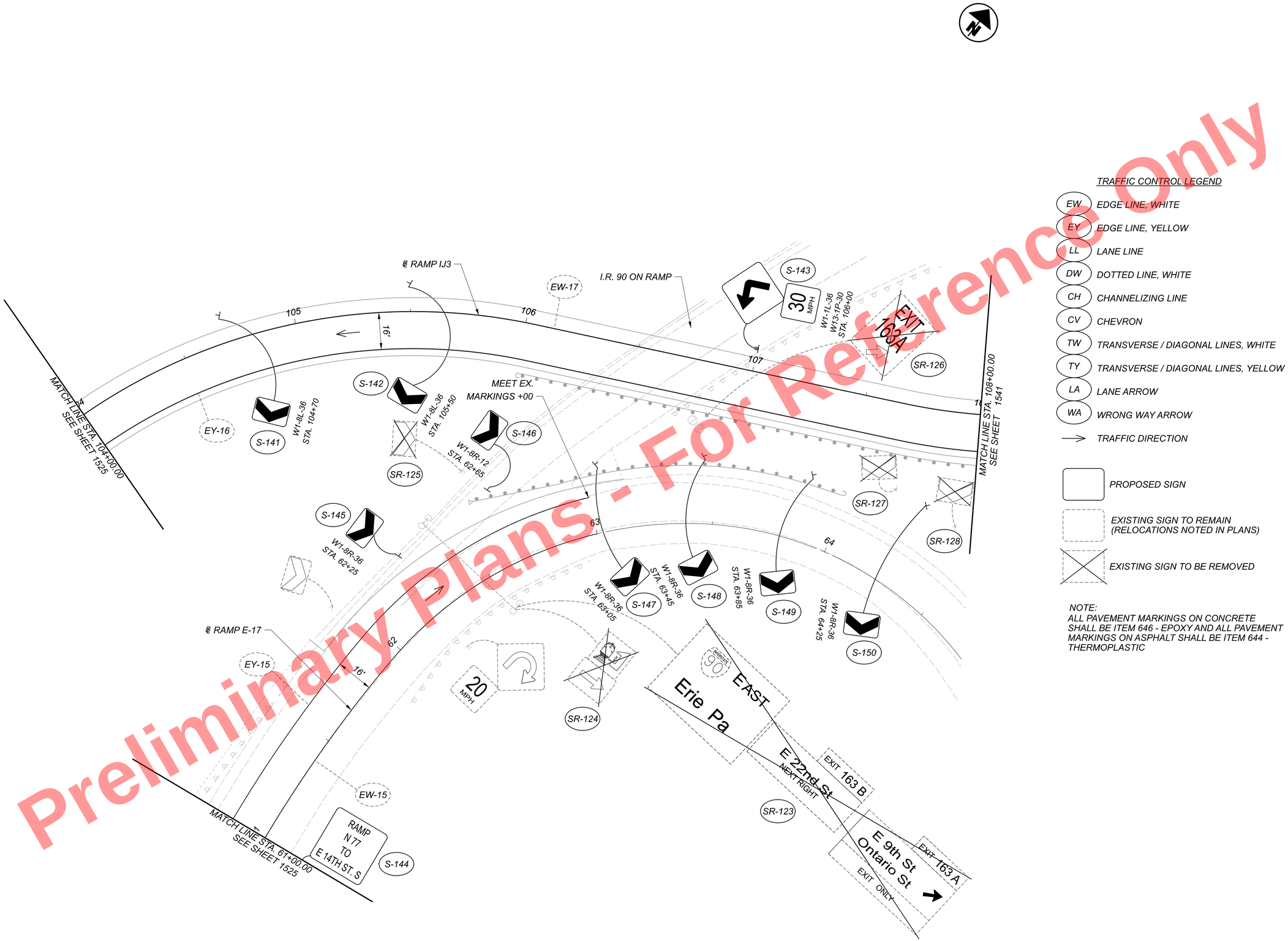

Preliminary Plans - For Reference Only

TRAFFIC CONTROL LEGEND

EW	EDGE LINE, WHITE
EY	EDGE LINE, YELLOW
LL	LANE LINE
DW	DOTTED LINE, WHITE
CH	CHANNELIZING LINE
CV	CHEVRON
TW	TRANSVERSE / DIAGONAL LINES, WHITE
TY	TRANSVERSE / DIAGONAL LINES, YELLOW
LA	LANE ARROW
WA	WRONG WAY ARROW
→	TRAFFIC DIRECTION

PROPOSED SIGN

EXISTING SIGN TO REMAIN
(RELOCATIONS NOTED IN PLANS)

EXISTING SIGN TO BE REMOVED

NOTE:
ALL PAVEMENT MARKINGS ON CONCRETE SHALL BE ITEM 646 - EPOXY AND ALL PAVEMENT MARKINGS ON ASPHALT SHALL BE ITEM 644 - THERMOPLASTIC

HORIZONTAL SCALE IN FEET
0 10 20 40

SIGNING & PAVEMENT MARKING PLAN - RAMP IJ3
STA. 104+00.00 TO STA. 108+00.00

DESIGN AGENCY
B&N
burgessniple.com

DESIGNER	KEH
REVIEWER	JTP 05/01/24
PROJECT ID	82382
SHEET	1540
TOTAL	2696

CUY-90-16.28 (CCG3A)

MODEL: 82382_TP630I PAPERSIZE: 34x22 (in.) DATE: 5/22/2025 TIME: 10:05:28 PM USER: slsson
pw:\\mb-us-pw.bentley.com:mb-us-pw-03\Documents\Cleveland_OH\01_Projects\ODOT\District2\82382\400-Engineering\Traffic\Sheets\82382_TP630I.dgn

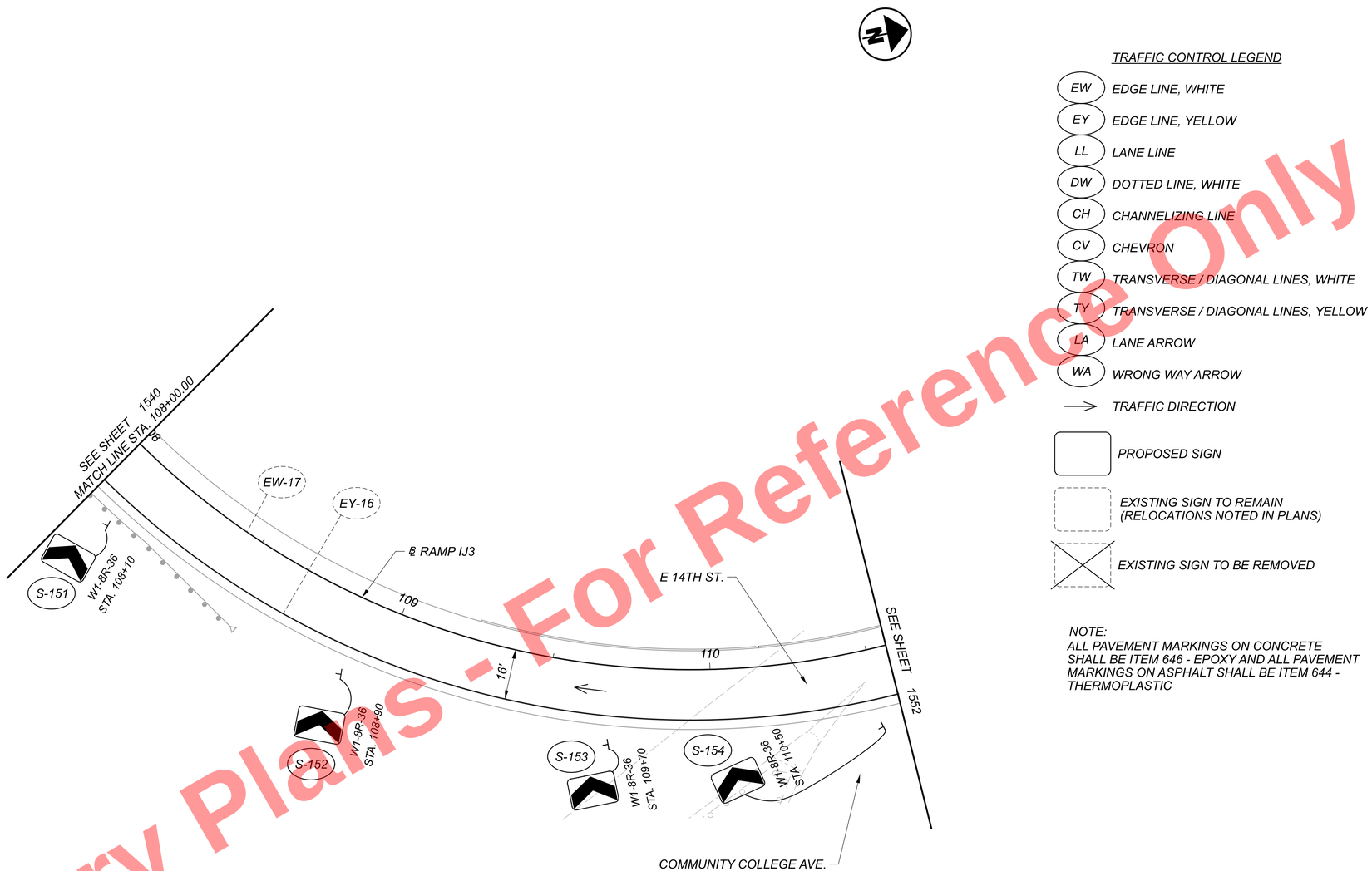

TRAFFIC CONTROL LEGEND

- EW — EDGE LINE, WHITE
- EY — EDGE LINE, YELLOW
- LL — LANE LINE
- DW — DOTTED LINE, WHITE
- CH — CHANNELIZING LINE
- CV — CHEVRON
- TW — TRANSVERSE / DIAGONAL LINES, WHITE
- TY — TRANSVERSE / DIAGONAL LINES, YELLOW
- LA — LANE ARROW
- WA — WRONG WAY ARROW
- TRAFFIC DIRECTION
- PROPOSED SIGN
- EXISTING SIGN TO REMAIN (RELOCATIONS NOTED IN PLANS)
- EXISTING SIGN TO BE REMOVED

NOTE:
ALL PAVEMENT MARKINGS ON CONCRETE SHALL BE ITEM 646 - EPOXY AND ALL PAVEMENT MARKINGS ON ASPHALT SHALL BE ITEM 644 - THERMOPLASTIC

HORIZONTAL SCALE IN FEET
0 10 20 40

SIGNING & PAVEMENT MARKING PLAN - RAMP IJ3
STA. 108+00.00 TO STA. 110+56.45

Preliminary Plans - For Reference Only

DESIGN AGENCY
B&N burgessniple.com

DESIGNER	KEH
REVIEWER	JTP 05/01/24
PROJECT ID	82382
SHEET	1541
TOTAL	2696

CUY-90-16.28 (CCG3A)

MODEL: 82382_TP6302 PAPERSIZE: 34x22 (in.) DATE: 5/22/2025 TIME: 10:05:57 PM USER: slsson
pw:\\mb-us-pw.bentley.com:mb-us-pw-03\Documents\Cleveland.OH\OI_Projects\ODOT\District2\82382\400-Engineering\Traffic\Sheets\82382_TP6302.dgn

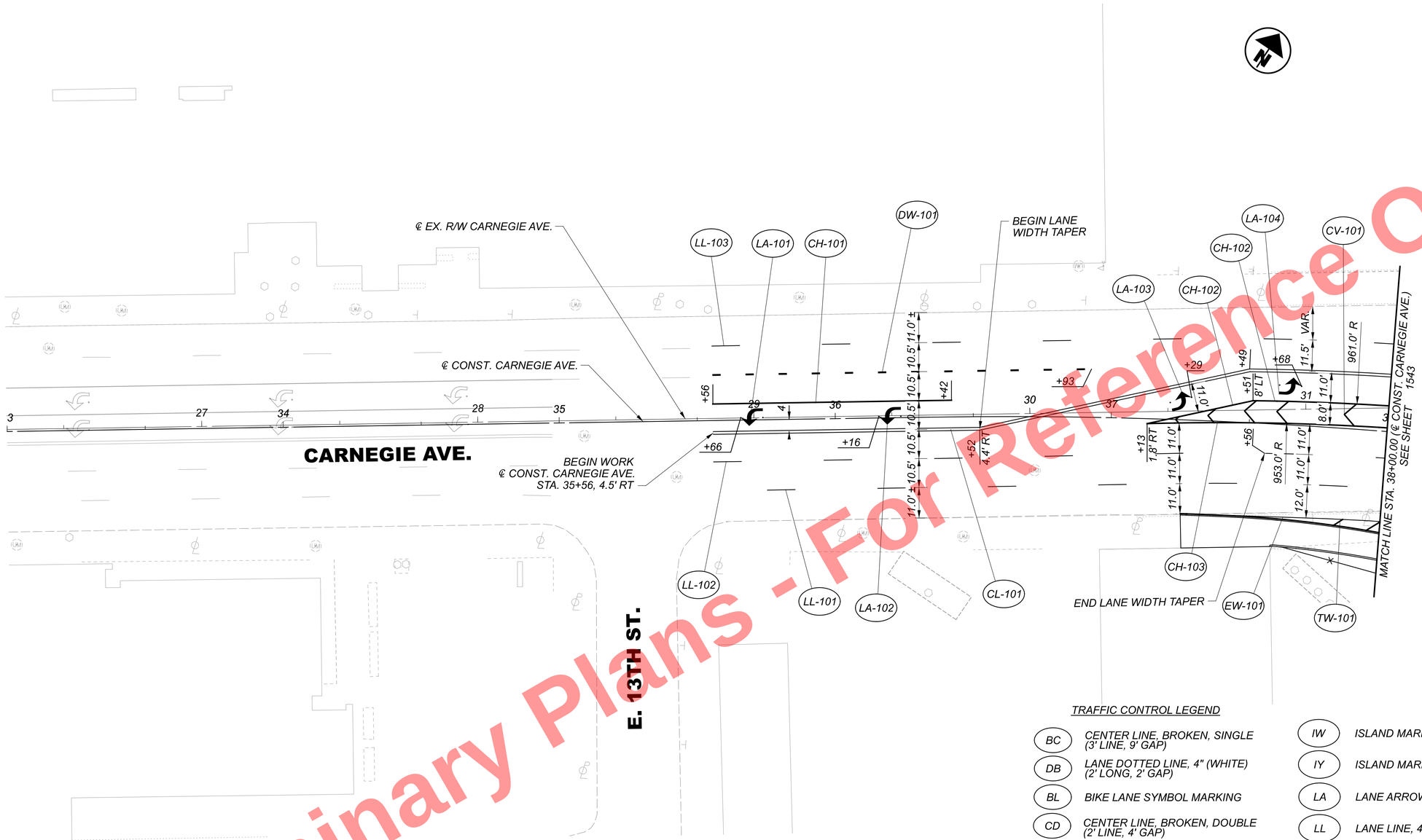

Preliminary Plans - For Reference Only

NOTE:
ALL PAVEMENT MARKINGS ON CONCRETE SHALL BE ITEM 646 - EPOXY AND ALL PAVEMENT MARKINGS ON ASPHALT SHALL BE ITEM 644 - THERMOPLASTIC.

PAVEMENT MARKINGS FOR CARNEGIE AVE. LANES ARE DIMENSIONED OFF ℄ CONST. CARNEGIE AVE.

TRAFFIC CONTROL LEGEND

BC	CENTER LINE, BROKEN, SINGLE (3' LINE, 9' GAP)
DB	LANE DOTTED LINE, 4" (WHITE) (2' LONG, 2' GAP)
BL	BIKE LANE SYMBOL MARKING
CD	CENTER LINE, BROKEN, DOUBLE (2' LINE, 4' GAP)
CH	CHANNELIZING LINE, 8"
CL	CENTER LINE, SOLID, DOUBLE
CP	CENTER LINE, BROKEN AND SOLID, DOUBLE
CV	CHEVRON MARKING
DL	DOTTED LINE, 4" (WHITE) (3' LINE, 9' GAP)
DS	DOTTED LINE, 4" (WHITE) (2' LINE, 4' GAP)
DW	DOTTED LINE, 8" (WHITE) (3' LINE, 9' GAP)
EW	EDGE LINE, 4" (WHITE)
EY	EDGE LINE, 4" (YELLOW)
GM	GREEN COLORED PAVEMENT FOR BIKE LANES
IW	ISLAND MARKING (WHITE)
IY	ISLAND MARKING (YELLOW)
LA	LANE ARROW
LL	LANE LINE, 4" (WHITE)
LR	LANE REDUCTION ARROW
PL	PARKING LOT STALL MARKING
SB	SHARED LANE MARKING
SL	STOP LINE, 24"
TW	TRANSVERSE/DIAGONAL LINE (24") (WHITE)
TY	TRANSVERSE/DIAGONAL LINE (24") (YELLOW)
XW	CROSSWALK LINE, 12"
XA	CROSSWALK LINE, 12", AS PER PLAN
XB	PAVEMENT MARKING, MISC.: BIKE LANE CROSSWALK

HORIZONTAL SCALE IN FEET
0 10 20 40

PAVEMENT MARKING PLAN - CARNEGIE AVE. BEGIN TO STA. 38+00.00

DESIGN AGENCY
Michael Baker INTERNATIONAL

DESIGNER RBK
REVIEWER GSH 05/22/24
PROJECT ID 82382
SHEET 1542 TOTAL 2696

CUY-90-16.28 (CCG3A)

MODEL: 82382_TP710I PAPERSIZE: 34x22 (in.) DATE: 3/27/2025 TIME: 7:17:13 PM USER: MaiaGallagher
pw:\\mb-us-pw.bentley.com\mb-us-pw-03\Documents\Cleveland_OH\01_Projects\0007\District2\82382\400-Engineering\Traffic\Sheets\82382_TP710I.dgn

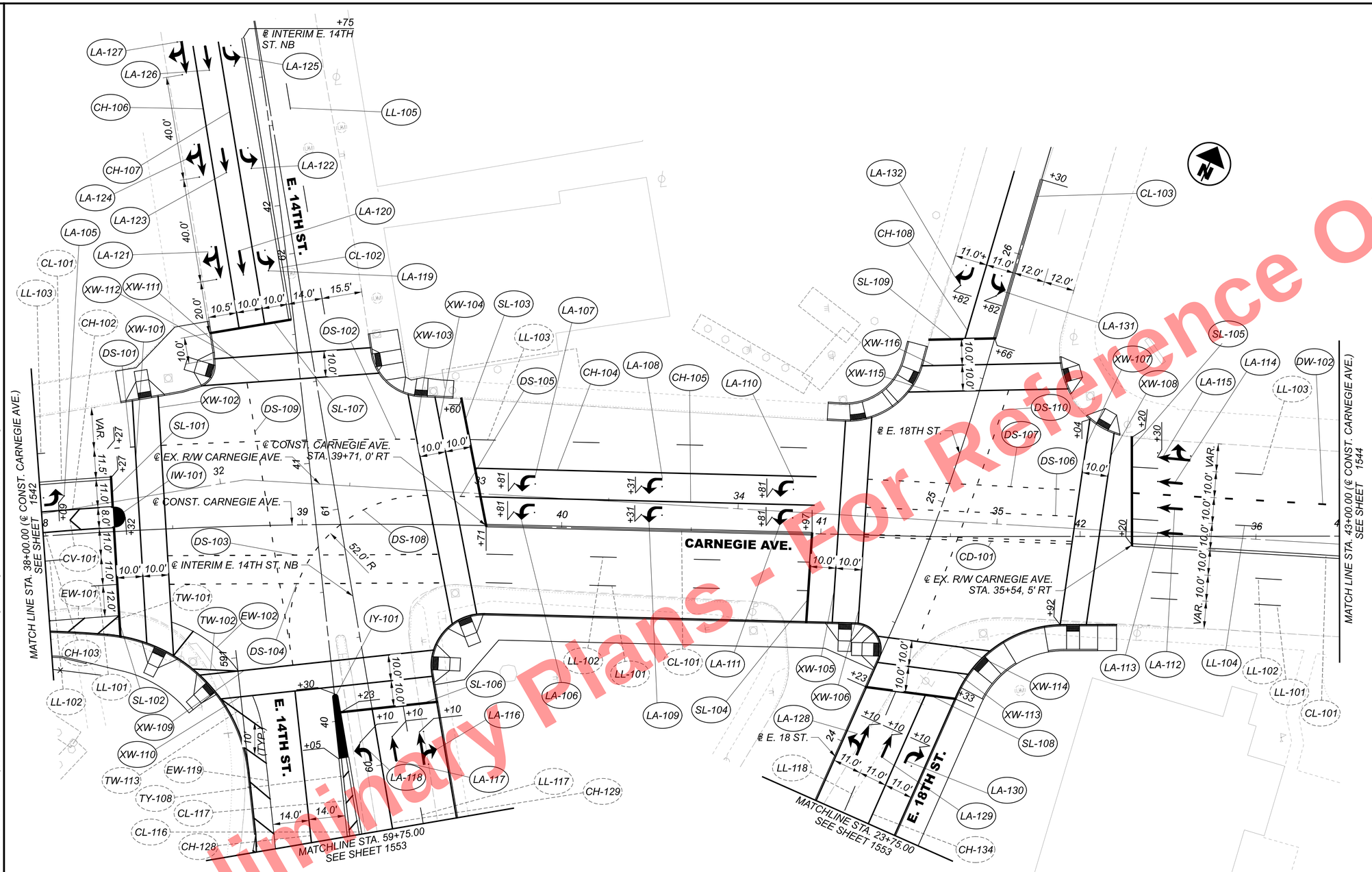

Preliminary Plans - Not For Reference Only

NOTE:
ALL PAVEMENT MARKINGS ON CONCRETE SHALL BE ITEM 646 - EPOXY AND ALL PAVEMENT MARKINGS ON ASPHALT SHALL BE ITEM 644 - THERMOPLASTIC.

TRAFFIC CONTROL LEGEND

BC	CENTER LINE, BROKEN, SINGLE (3' LINE, 9' GAP)
DB	LANE DOTTED LINE, 4" (WHITE) (2' LONG, 2' GAP)
BL	BIKE LANE SYMBOL MARKING
CD	CENTER LINE, BROKEN, DOUBLE (2' LINE, 4' GAP)
CH	CHANNELIZING LINE, 8"
CL	CENTER LINE, SOLID, DOUBLE
CP	CENTER LINE, BROKEN AND SOLID, DOUBLE
CV	CHEVRON MARKING
DL	DOTTED LINE, 4" (WHITE) (3' LINE, 9' GAP)
DS	DOTTED LINE, 4" (WHITE) (2' LINE, 4' GAP)
DW	DOTTED LINE, 8" (WHITE) (3' LINE, 9' GAP)
EW	EDGE LINE, 4" (WHITE)
EY	EDGE LINE, 4" (YELLOW)
GM	GREEN COLORED PAVEMENT FOR BIKE LANES
IW	ISLAND MARKING (WHITE)
IY	ISLAND MARKING (YELLOW)
LA	LANE ARROW
LL	LANE LINE, 4" (WHITE)
LR	LANE REDUCTION ARROW
PL	PARKING LOT STALL MARKING
SB	SHARED LANE MARKING
SL	STOP LINE, 24"
TW	TRANSVERSE/DIAGONAL LINE (24") (WHITE)
TY	TRANSVERSE/DIAGONAL LINE (24") (YELLOW)
XW	CROSSWALK LINE, 12"
XA	CROSSWALK LINE, 12", AS PER PLAN
XB	PAVEMENT MARKING, MISC.: BIKE LANE CROSSWALK

HORIZONTAL SCALE IN FEET
0 10 20 40

PAVEMENT MARKING PLAN - CARNEGIE AVE.
STA. 38+00.00 TO STA. 43+00.00

CUY-90-16.28 (CCG3A)

MODEL: 82382_TP7102 PAPERSIZE: 34x22 (in.) DATE: 3/27/2025 TIME: 7:17:33 PM USER: Mala.Gallagher
pw:\\mb-us-pw.bentley.commb-us-pw-03\Documents\Cleveland.OH\OI_Projects\0007\District2\82382\400-Engineering\Traffic\Sheets\82382_TP7102.dgn

DESIGN AGENCY
Michael Baker INTERNATIONAL

DESIGNER RBK
REVIEWER GSH 05/22/24
PROJECT ID 82382
SHEET 1543 TOTAL 2696

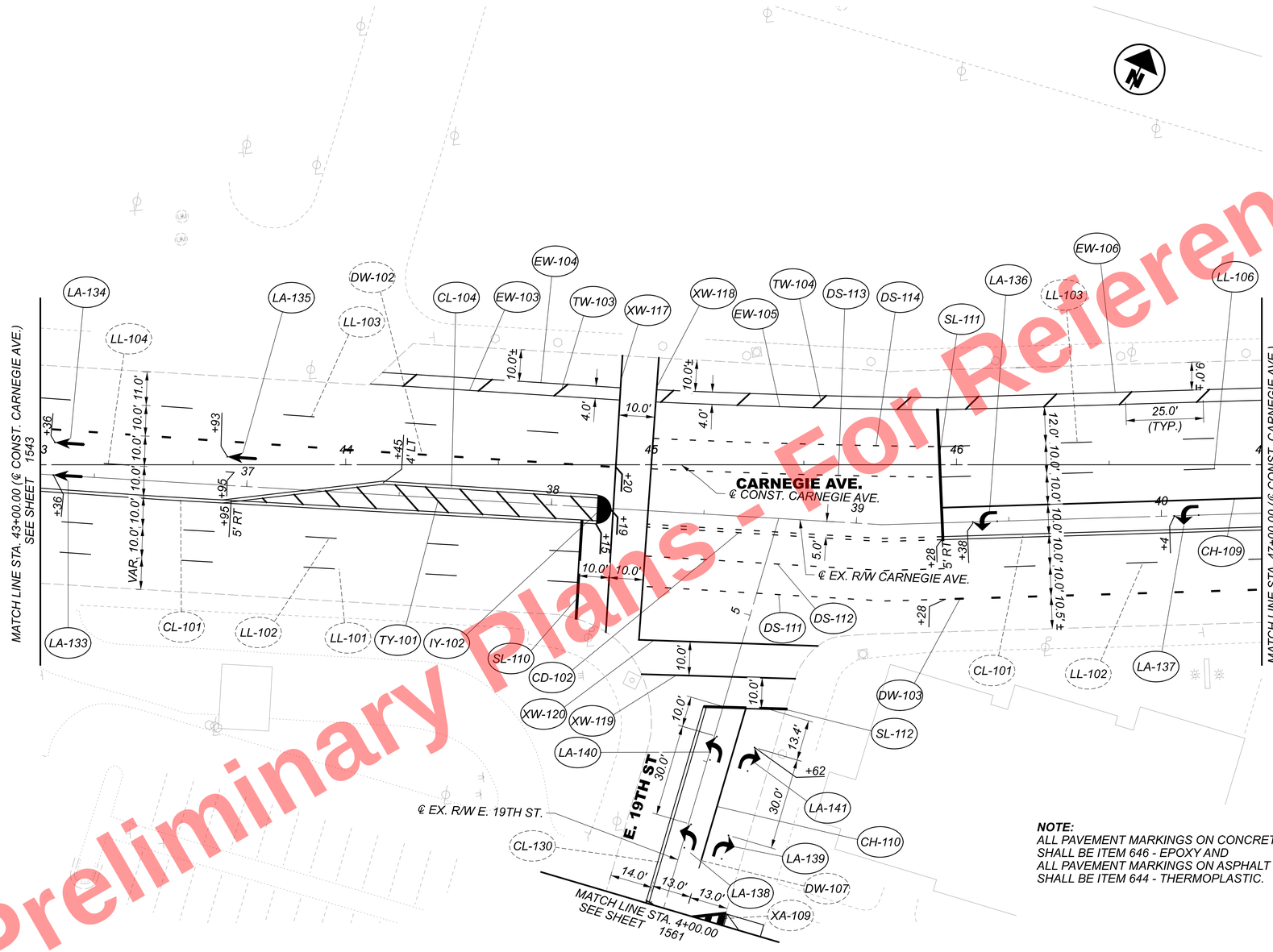

Preliminary Plans - Not For Reference Only

NOTE:
ALL PAVEMENT MARKINGS ON CONCRETE SHALL BE ITEM 646 - EPOXY AND ALL PAVEMENT MARKINGS ON ASPHALT SHALL BE ITEM 644 - THERMOPLASTIC.

PAVEMENT MARKINGS FOR CARNEGIE AVE. LANES ARE DIMENSIONED OFF ℄ EX. R/W CARNEGIE AVE.

TRAFFIC CONTROL LEGEND

BC	CENTER LINE, BROKEN, SINGLE (3' LINE, 9' GAP)
DB	LANE DOTTED LINE, 4" (WHITE) (2' LONG, 2' GAP)
BL	BIKE LANE SYMBOL MARKING
CD	CENTER LINE, BROKEN, DOUBLE (2' LINE, 4' GAP)
CH	CHANNELIZING LINE, 8"
CL	CENTER LINE, SOLID, DOUBLE
CP	CENTER LINE, BROKEN AND SOLID, DOUBLE
CV	CHEVRON MARKING
DL	DOTTED LINE, 4" (WHITE) (3' LINE, 9' GAP)
DS	DOTTED LINE, 4" (WHITE) (2' LINE, 4' GAP)
DW	DOTTED LINE, 8" (WHITE) (3' LINE, 9' GAP)
EW	EDGE LINE, 4" (WHITE)
EY	EDGE LINE, 4" (YELLOW)
GM	GREEN COLORED PAVEMENT FOR BIKE LANES
IW	ISLAND MARKING (WHITE)
IY	ISLAND MARKING (YELLOW)
LA	LANE ARROW
LL	LANE LINE, 4" (WHITE)
LR	LANE REDUCTION ARROW
PL	PARKING LOT STALL MARKING
SB	SHARED LANE MARKING
SL	STOP LINE, 24"
TW	TRANSVERSE/DIAGONAL LINE (24") (WHITE)
TY	TRANSVERSE/DIAGONAL LINE (24") (YELLOW)
XW	CROSSWALK LINE, 12"
XA	CROSSWALK LINE, 12", AS PER PLAN
XB	PAVEMENT MARKING, MISC.: BIKE LANE CROSSWALK

HORIZONTAL SCALE IN FEET
0 10 20 40

PAVEMENT MARKING PLAN - CARNEGIE AVE.
STA. 43+00.00 TO STA. 47+00.00

DESIGN AGENCY
Michael Baker INTERNATIONAL

DESIGNER RBK
REVIEWER GSH 05/22/24
PROJECT ID 82382
SHEET 1544 TOTAL 2696

CUY-90-16.28 (CCG3A)

MODEL: 82382_TP7103 PAPERSIZE: 34x22 (in.) DATE: 3/27/2025 TIME: 7:17:50 PM USER: Mata.Gallagher
pw:\\mb-us-pw.bentley.com:mb-us-pw-03\Documents\Cleveland.OH\01_Projects\000T\District2\82382\400-Engineering\Traffic\Sheets\82382_TP7103.dgn

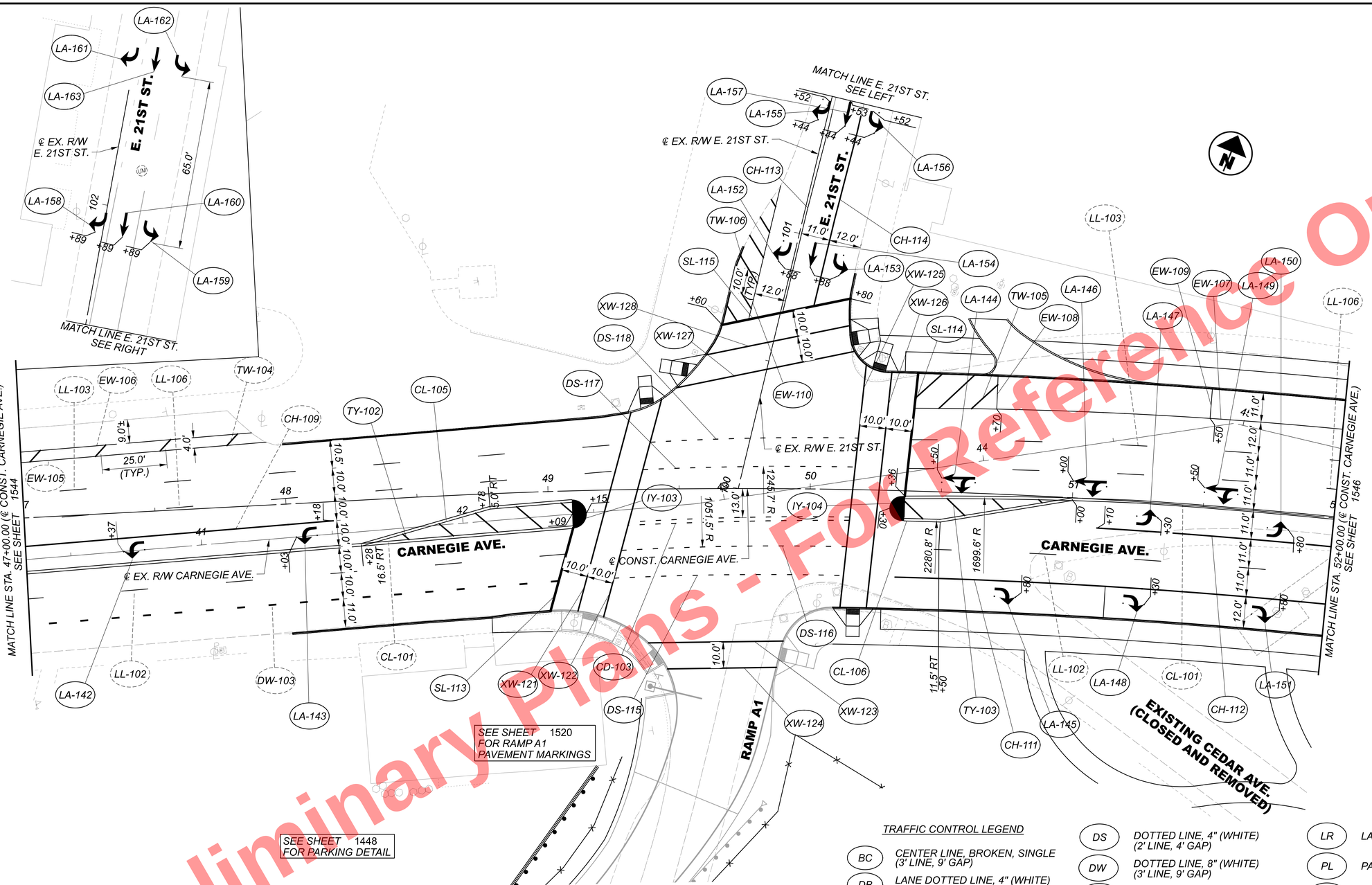

Preliminary Plans - For Reference Only

NOTE:
ALL PAVEMENT MARKINGS ON CONCRETE SHALL BE ITEM 646 - EPOXY AND ALL PAVEMENT MARKINGS ON ASPHALT SHALL BE ITEM 644 - THERMOPLASTIC.

PAVEMENT MARKINGS FOR CARNEGIE AVE. LANES ARE DIMENSIONED OFF ℄ CONST. CARNEGIE AVE.

TRAFFIC CONTROL LEGEND

BC	CENTER LINE, BROKEN, SINGLE (3' LINE, 9' GAP)
DB	LANE DOTTED LINE, 4" (WHITE) (2' LONG, 2' GAP)
BL	BIKE LANE SYMBOL MARKING
CD	CENTER LINE, BROKEN, DOUBLE (2' LINE, 4' GAP)
CH	CHANNELIZING LINE, 8"
CL	CENTER LINE, SOLID, DOUBLE
CP	CENTER LINE, BROKEN AND SOLID, DOUBLE
CV	CHEVRON MARKING
DL	DOTTED LINE, 4" (WHITE) (3' LINE, 9' GAP)
DS	DOTTED LINE, 4" (WHITE) (2' LINE, 4' GAP)
DW	DOTTED LINE, 8" (WHITE) (3' LINE, 9' GAP)
EW	EDGE LINE, 4" (WHITE)
EY	EDGE LINE, 4" (YELLOW)
GM	GREEN COLORED PAVEMENT FOR BIKE LANES
IW	ISLAND MARKING (WHITE)
IY	ISLAND MARKING (YELLOW)
LA	LANE ARROW
LL	LANE LINE, 4" (WHITE)
LR	LANE REDUCTION ARROW
PL	PARKING LOT STALL MARKING
SB	SHARED LANE MARKING
SL	STOP LINE, 24"
TW	TRANSVERSE/DIAGONAL LINE (24") (WHITE)
TY	TRANSVERSE/DIAGONAL LINE (24") (YELLOW)
XW	CROSSWALK LINE, 12"
XA	CROSSWALK LINE, 12", AS PER PLAN
XB	PAVEMENT MARKING, MISC.: BIKE LANE CROSSWALK

HORIZONTAL SCALE IN FEET
0 10 20 40

PAVEMENT MARKING PLAN - CARNEGIE AVE. STA. 47+00.00 TO STA. 52+00.00

CUY-90-16.28 (CCG3A)

DESIGN AGENCY
Michael Baker INTERNATIONAL

DESIGNER RBK
REVIEWER GSH 05/22/24
PROJECT ID 82382
SHEET 1545 TOTAL 2696

MODEL: 82382_TP1104 PAPERSIZE: 34x22 (in.) DATE: 3/28/2025 TIME: 9:18:00 AM USER: Rohit.Bk
pw:\\mb-us-pw.bentley.com:mb-us-pw-03\Documents\Cleveland_OH\01_Projects\ODOT\District2\82382\400-Engineering\Traffic\Sheets\82382_TP1104.dgn

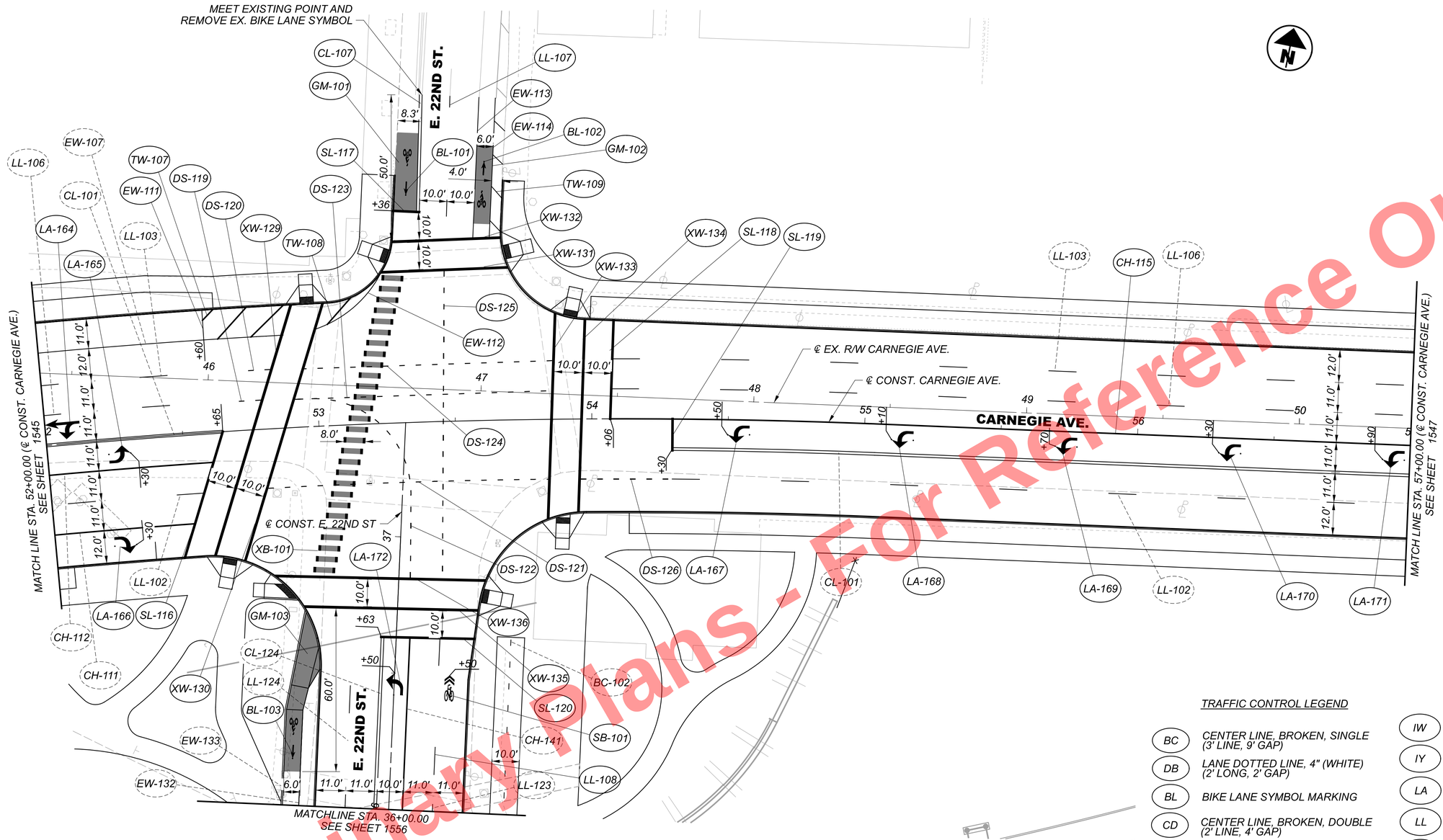

Preliminary Plans - For Reference Only

NOTE:
ALL PAVEMENT MARKINGS ON CONCRETE SHALL BE ITEM 646 - EPOXY AND ALL PAVEMENT MARKINGS ON ASPHALT SHALL BE ITEM 644 - THERMOPLASTIC.

PAVEMENT MARKINGS FOR CARNEGIE AVE. LANES ARE DIMENSIONED OFF ℄ CONST. CARNEGIE AVE. AND ℄ CONST. E. 22TH ST.

TRAFFIC CONTROL LEGEND

BC	CENTER LINE, BROKEN, SINGLE (3' LINE, 9' GAP)
DB	LANE DOTTED LINE, 4" (WHITE) (2' LONG, 2' GAP)
BL	BIKE LANE SYMBOL MARKING
CD	CENTER LINE, BROKEN, DOUBLE (2' LINE, 4' GAP)
CH	CHANNELIZING LINE, 8"
CL	CENTER LINE, SOLID, DOUBLE
CP	CENTER LINE, BROKEN AND SOLID, DOUBLE
CV	CHEVRON MARKING
DL	DOTTED LINE, 4" (WHITE) (3' LINE, 9' GAP)
DS	DOTTED LINE, 4" (WHITE) (2' LINE, 4' GAP)
DW	DOTTED LINE, 8" (WHITE) (3' LINE, 9' GAP)
EW	EDGE LINE, 4" (WHITE)
EY	EDGE LINE, 4" (YELLOW)
GM	GREEN COLORED PAVEMENT FOR BIKE LANES
IW	ISLAND MARKING (WHITE)
IY	ISLAND MARKING (YELLOW)
LA	LANE ARROW
LL	LANE LINE, 4" (WHITE)
LR	LANE REDUCTION ARROW
PL	PARKING LOT STALL MARKING
SB	SHARED LANE MARKING
SL	STOP LINE, 24"
TW	TRANSVERSE/DIAGONAL LINE (24") (WHITE)
TY	TRANSVERSE/DIAGONAL LINE (24") (YELLOW)
XW	CROSSWALK LINE, 12"
XA	CROSSWALK LINE, 12", AS PER PLAN
XB	PAVEMENT MARKING, MISC.: BIKE LANE CROSSWALK

HORIZONTAL SCALE IN FEET
0 10 20 40

PAVEMENT MARKING PLAN - CARNEGIE AVE. STA. 52+00.00 TO STA. 57+00.00

DESIGN AGENCY
Michael Baker INTERNATIONAL

DESIGNER RBK
REVIEWER GSH 05/22/24
PROJECT ID 82382
SHEET 1546 TOTAL 2696

CUY-90-16.28 (CCG3A)

MODEL: 82382_TP7105 PAPERSIZE: 34x22 (in.) DATE: 3/27/2025 TIME: 7:18:26 PM USER: MaLaGallagher
pw:\\mb-us-pw.bentley.commb-us-pw-03\Documents\Cleveland_OH\01_Projects\0007\District2\82382\400-Engineering\Traffic\Sheets\82382_TP7105.dgn

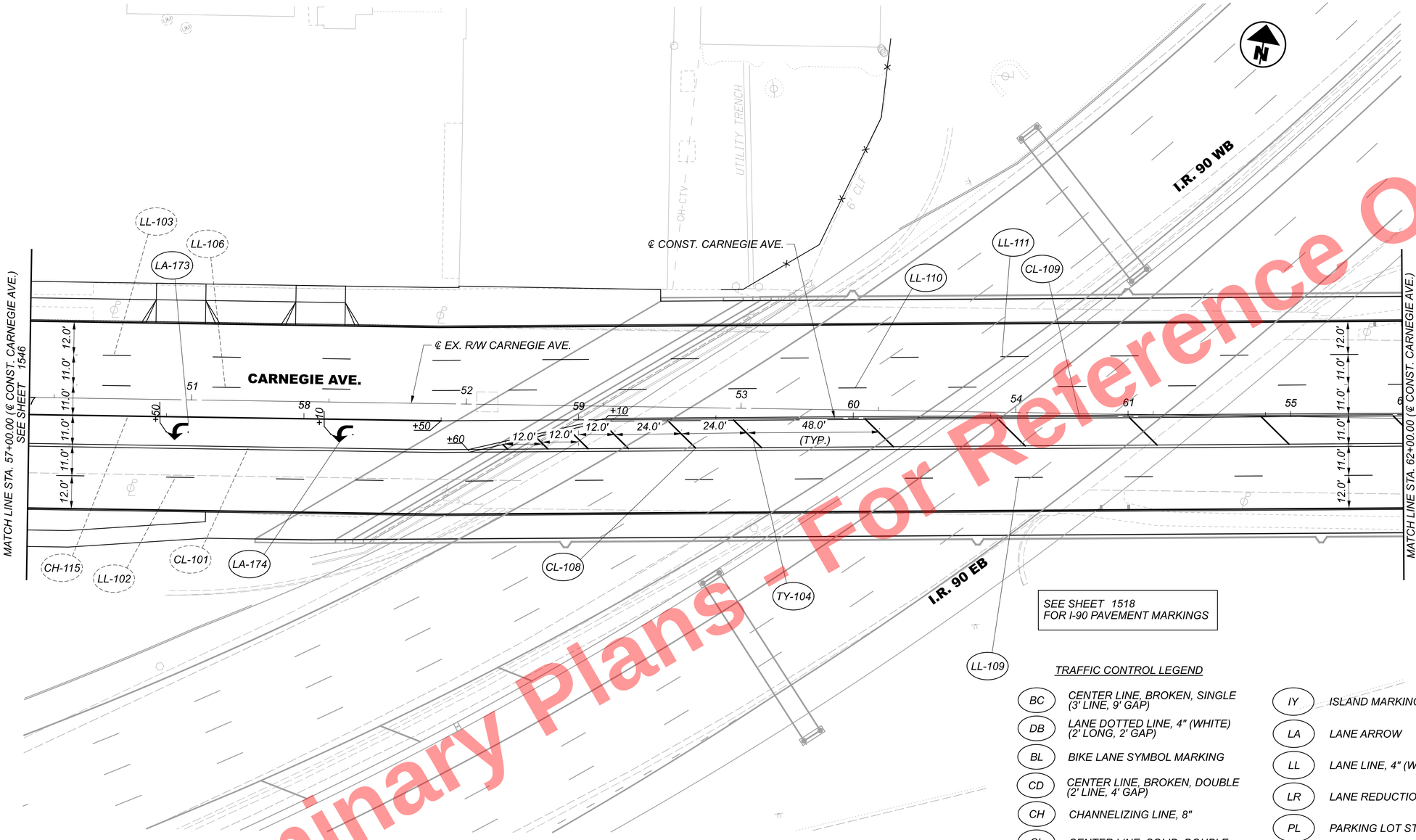

SEE SHEET 1518
FOR I-90 PAVEMENT MARKINGS

TRAFFIC CONTROL LEGEND

BC	CENTER LINE, BROKEN, SINGLE (3' LINE, 9' GAP)
DB	LANE DOTTED LINE, 4" (WHITE) (2' LONG, 2' GAP)
BL	BIKE LANE SYMBOL MARKING
CD	CENTER LINE, BROKEN, DOUBLE (2' LINE, 4' GAP)
CH	CHANNELIZING LINE, 8"
CL	CENTER LINE, SOLID, DOUBLE
CP	CENTER LINE, BROKEN AND SOLID, DOUBLE
CV	CHEVRON MARKING
DL	DOTTED LINE, 4" (WHITE) (3' LINE, 9' GAP)
DS	DOTTED LINE, 4" (WHITE) (2' LINE, 4' GAP)
DW	DOTTED LINE, 8" (WHITE) (3' LINE, 9' GAP)
EW	EDGE LINE, 4" (WHITE)
EY	EDGE LINE, 4" (YELLOW)
GM	GREEN COLORED PAVEMENT FOR BIKE LANES
IW	ISLAND MARKING (WHITE)
IY	ISLAND MARKING (YELLOW)
LA	LANE ARROW
LL	LANE LINE, 4" (WHITE)
LR	LANE REDUCTION ARROW
PL	PARKING LOT STALL MARKING
SB	SHARED LANE MARKING
SL	STOP LINE, 24"
TW	TRANSVERSE/DIAGONAL LINE (24") (WHITE)
TY	TRANSVERSE/DIAGONAL LINE (24") (YELLOW)
XW	CROSSWALK LINE, 12"
XA	CROSSWALK LINE, 12", AS PER PLAN
XB	PAVEMENT MARKING, MISC.: BIKE LANE CROSSWALK

NOTE:
ALL PAVEMENT MARKINGS ON CONCRETE SHALL BE ITEM 646 - EPOXY AND ALL PAVEMENT MARKINGS ON ASPHALT SHALL BE ITEM 644 - THERMOPLASTIC.

PAVEMENT MARKINGS FOR CARNEGIE AVE. LANES ARE DIMENSIONED OFF ℄ CONST. CARNEGIE AVE.

Preliminary Plans - For Reference Only

HORIZONTAL SCALE IN FEET
0 10 20 40

PAVEMENT MARKING PLAN - CARNEGIE AVE.
STA. 57+00.00 TO STA. 62+00.00

DESIGN AGENCY
Michael Baker INTERNATIONAL

DESIGNER RBK
REVIEWER GSH 05/22/24
PROJECT ID 82382
SHEET 1547 TOTAL 2696

CUY-90-16.28 (CCG3A)

MODEL: 82382_TP7106 PAPERSIZE: 34x22 (in.) DATE: 3/27/2025 TIME: 7:18:46 PM USER: MaLaGallagher
pw:\\mb-us-pw.bentley.commb-us-pw-03\Documents\Cleveland_OH\01_Projects\ODOT\District2\82382\400-Engineering\Traffic\Sheets\82382_TP7106.dgn

PAVEMENT MARKING PLAN - CARNEGIE AVE.
STA. 62+00.00 TO STA. 67+00.00

HORIZONTAL SCALE IN FEET
0 10 20 40

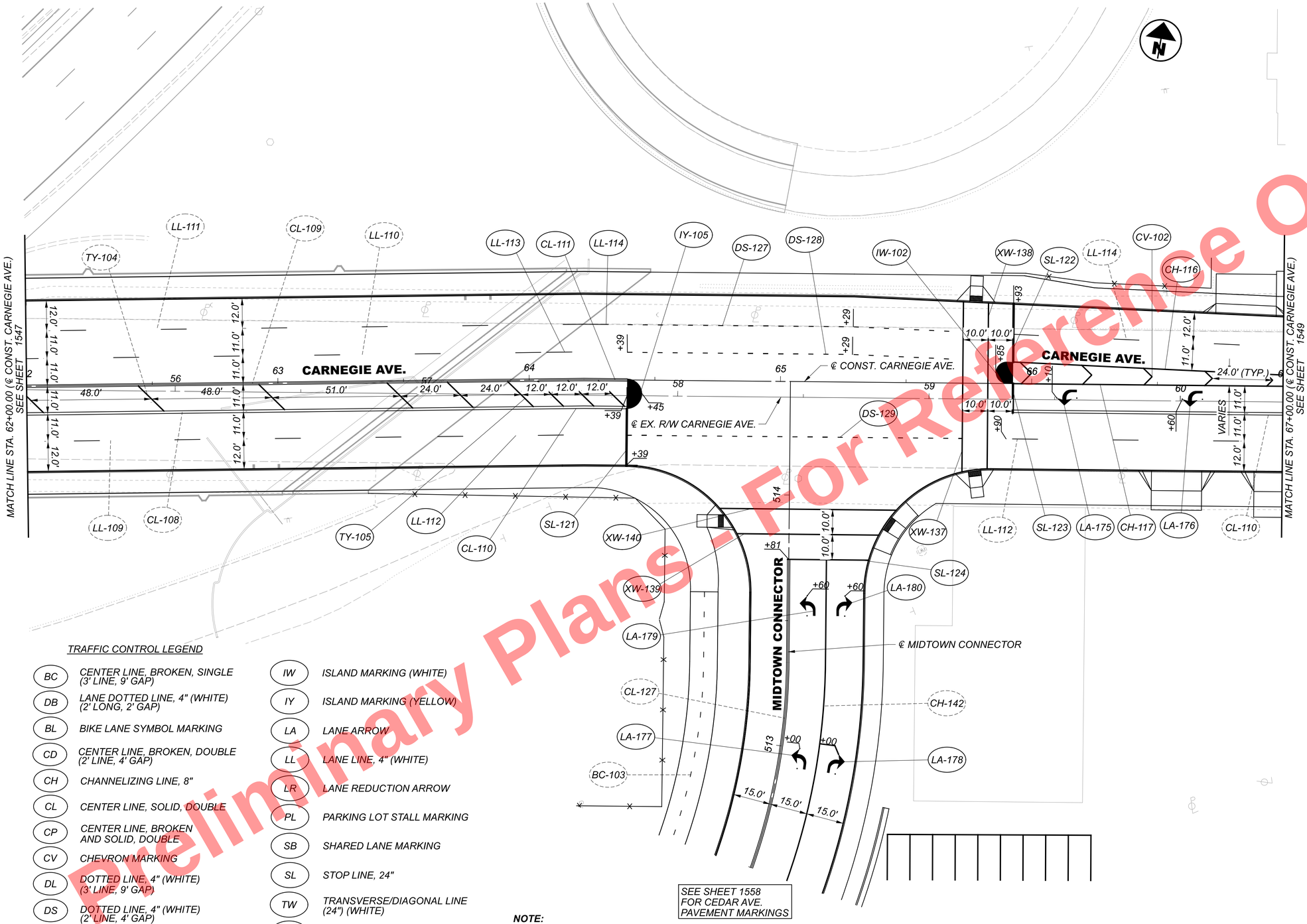

SEE SHEET 1558
FOR CEDAR AVE.
PAVEMENT MARKINGS

TRAFFIC CONTROL LEGEND

BC	CENTER LINE, BROKEN, SINGLE (3' LINE, 9' GAP)
DB	LANE DOTTED LINE, 4" (WHITE) (2' LONG, 2' GAP)
BL	BIKE LANE SYMBOL MARKING
CD	CENTER LINE, BROKEN, DOUBLE (2' LINE, 4' GAP)
CH	CHANNELIZING LINE, 8"
CL	CENTER LINE, SOLID, DOUBLE
CP	CENTER LINE, BROKEN AND SOLID, DOUBLE
CV	CHEVRON MARKING
DL	DOTTED LINE, 4" (WHITE) (3' LINE, 9' GAP)
DS	DOTTED LINE, 4" (WHITE) (2' LINE, 4' GAP)
DW	DOTTED LINE, 8" (WHITE) (3' LINE, 9' GAP)
EW	EDGE LINE, 4" (WHITE)
EY	EDGE LINE, 4" (YELLOW)
GM	GREEN COLORED PAVEMENT FOR BIKE LANES
IW	ISLAND MARKING (WHITE)
IY	ISLAND MARKING (YELLOW)
LA	LANE ARROW
LL	LANE LINE, 4" (WHITE)
LR	LANE REDUCTION ARROW
PL	PARKING LOT STALL MARKING
SB	SHARED LANE MARKING
SL	STOP LINE, 24"
TW	TRANSVERSE/DIAGONAL LINE (24") (WHITE)
TY	TRANSVERSE/DIAGONAL LINE (24") (YELLOW)
XW	CROSSWALK LINE, 12"
XA	CROSSWALK LINE, 12", AS PER PLAN
XB	PAVEMENT MARKING, MISC.: BIKE LANE CROSSWALK

NOTE:
ALL PAVEMENT MARKINGS ON CONCRETE SHALL BE ITEM 646 - EPOXY AND ALL PAVEMENT MARKINGS ON ASPHALT SHALL BE ITEM 644 - THERMOPLASTIC.

PAVEMENT MARKINGS FOR CARNEGIE AVE. LANES ARE DIMENSIONED OFF ℄ CONST. CARNEGIE AVE.

Preliminary Plans - For Reference Only

DESIGN AGENCY
Michael Baker INTERNATIONAL

DESIGNER RBK
REVIEWER GSH 05/22/24
PROJECT ID 82382
SHEET 1548 TOTAL 2696

CUY-90-16.28 (CCG3A)

MODEL: 82382_TP7107 PAPERSIZE: 34x22 (in.) DATE: 3/27/2025 TIME: 7:19:03 PM USER: Mala.Gallagher
pw:\\mb-us-pw.bentley.com:mb-us-pw-03\Documents\Cleveland.OH\OI_Projects\ODOT\District2\82382\400-Engineering\Traffic\Sheets\82382_TP7107.dgn

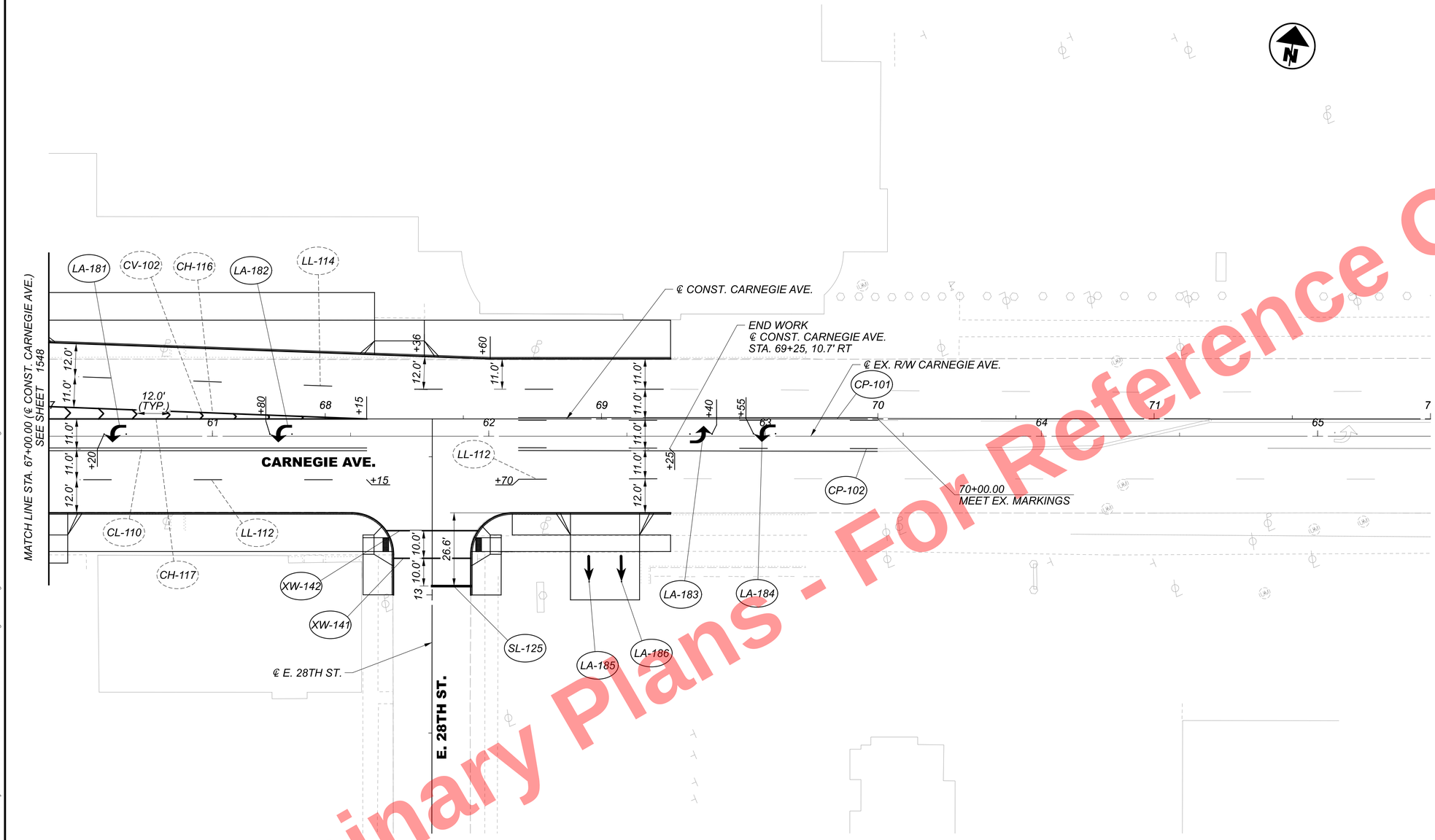

Preliminary Plans - For Reference Only

NOTE:
ALL PAVEMENT MARKINGS ON CONCRETE SHALL BE ITEM 646 - EPOXY AND ALL PAVEMENT MARKINGS ON ASPHALT SHALL BE ITEM 644 - THERMOPLASTIC.

PAVEMENT MARKINGS FOR CARNEGIE AVE. LANES ARE DIMENSIONED OFF℄ CONST. CARNEGIE AVE.

TRAFFIC CONTROL LEGEND

BC	CENTER LINE, BROKEN, SINGLE (3' LINE, 9' GAP)
DB	LANE DOTTED LINE, 4" (WHITE) (2' LONG, 2' GAP)
BL	BIKE LANE SYMBOL MARKING
CD	CENTER LINE, BROKEN, DOUBLE (2' LINE, 4' GAP)
CH	CHANNELIZING LINE, 8"
CL	CENTER LINE, SOLID, DOUBLE
CP	CENTER LINE, BROKEN AND SOLID, DOUBLE
CV	CHEVRON MARKING
DL	DOTTED LINE, 4" (WHITE) (3' LINE, 9' GAP)
DS	DOTTED LINE, 4" (WHITE) (2' LINE, 4' GAP)
DW	DOTTED LINE, 8" (WHITE) (3' LINE, 9' GAP)
EW	EDGE LINE, 4" (WHITE)
EY	EDGE LINE, 4" (YELLOW)
GM	GREEN COLORED PAVEMENT FOR BIKE LANES
IW	ISLAND MARKING (WHITE)
IY	ISLAND MARKING (YELLOW)
LA	LANE ARROW
LL	LANE LINE, 4" (WHITE)
LR	LANE REDUCTION ARROW
PL	PARKING LOT STALL MARKING
SB	SHARED LANE MARKING
SL	STOP LINE, 24"
TW	TRANSVERSE/DIAGONAL LINE (24") (WHITE)
TY	TRANSVERSE/DIAGONAL LINE (24") (YELLOW)
XW	CROSSWALK LINE, 12"
XA	CROSSWALK LINE, 12", AS PER PLAN
XB	PAVEMENT MARKING, MISC.: BIKE LANE CROSSWALK

HORIZONTAL SCALE IN FEET
0 10 20 40

PAVEMENT MARKING PLAN - CARNEGIE AVE. STA. 67+00.00 TO END

DESIGN AGENCY
Michael Baker INTERNATIONAL

DESIGNER RBK
REVIEWER GSH 05/22/24
PROJECT ID 82382
SHEET 1549 TOTAL 2696

CUY-90-16.28 (CCG3A)

MODEL: 82382_TP7108 PAPERSIZE: 34x22 (in.) DATE: 3/27/2025 TIME: 7:19:20 PM USER: MaiaGallagher
pw:\\mb-us-pw.bentley.com:mb-us-pw-03\Documents\Cleveland_OH\01_Projects\ODOT\District2\82382\400-Engineering\Traffic\Sheets\82382_TP7108.dgn

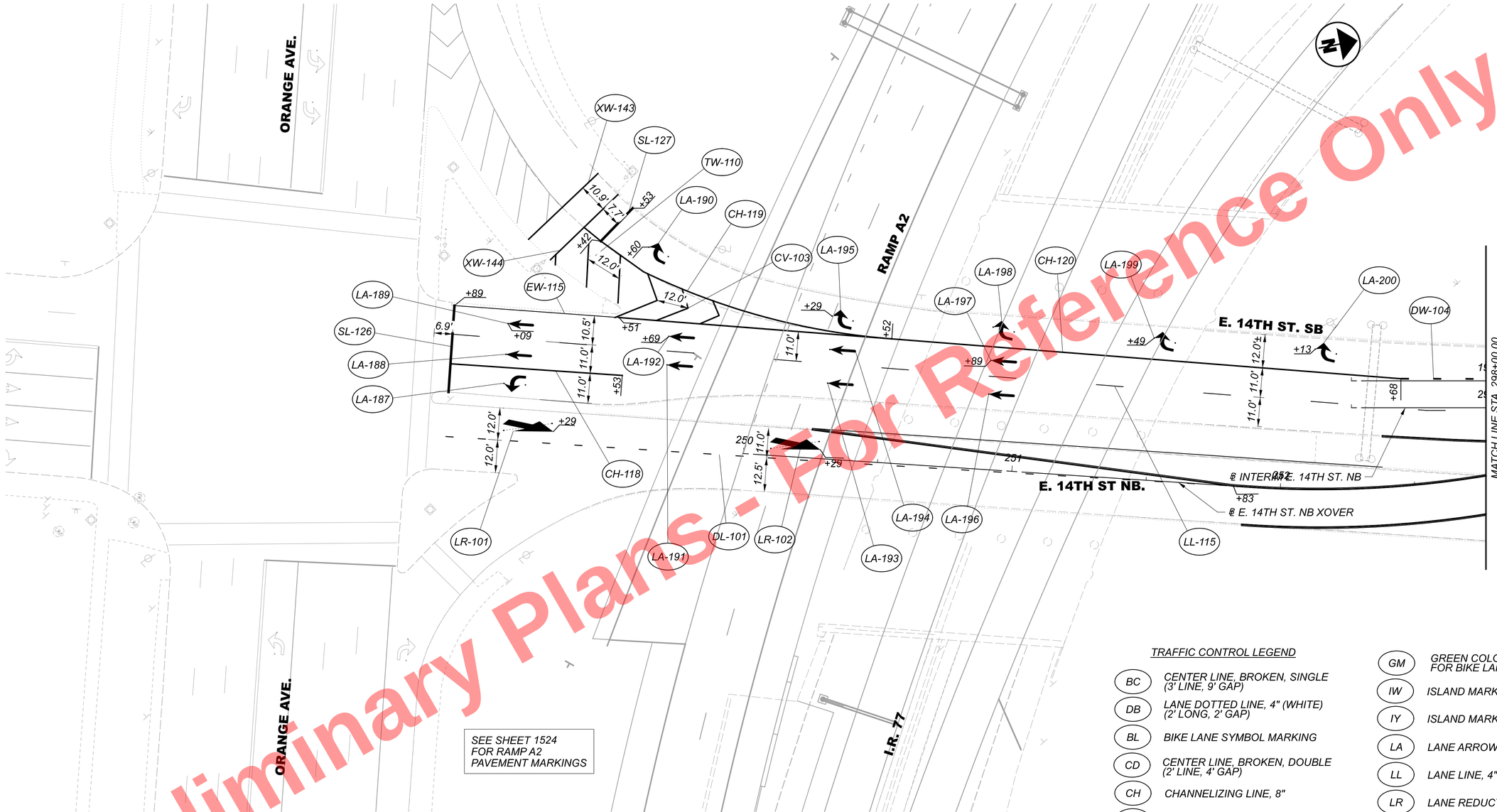

Preliminary Plans - For Reference Only

TRAFFIC CONTROL LEGEND

BC	CENTER LINE, BROKEN, SINGLE (3' LINE, 9' GAP)
DB	LANE DOTTED LINE, 4" (WHITE) (2' LONG, 2' GAP)
BL	BIKE LANE SYMBOL MARKING
CD	CENTER LINE, BROKEN, DOUBLE (2' LINE, 4' GAP)
CH	CHANNELIZING LINE, 8"
CL	CENTER LINE, SOLID, DOUBLE
CP	CENTER LINE, BROKEN AND SOLID, DOUBLE
CV	CHEVRON MARKING
DL	DOTTED LINE, 4" (WHITE) (3' LINE, 9' GAP)
DS	DOTTED LINE, 4" (WHITE) (2' LINE, 4' GAP)
DW	DOTTED LINE, 8" (WHITE) (3' LINE, 9' GAP)
EW	EDGE LINE, 4" (WHITE)
EY	EDGE LINE, 4" (YELLOW)
GM	GREEN COLORED PAVEMENT FOR BIKE LANES
IW	ISLAND MARKING (WHITE)
IY	ISLAND MARKING (YELLOW)
LA	LANE ARROW
LL	LANE LINE, 4" (WHITE)
LR	LANE REDUCTION ARROW
PL	PARKING LOT STALL MARKING
SB	SHARED LANE MARKING
SL	STOP LINE, 24"
TW	TRANSVERSE/DIAGONAL LINE (24") (WHITE)
TY	TRANSVERSE/DIAGONAL LINE (24") (YELLOW)
XW	CROSSWALK LINE, 12"
XA	CROSSWALK LINE, 12", AS PER PLAN
XB	PAVEMENT MARKING, MISC.: BIKE LANE CROSSWALK

NOTE:
ALL PAVEMENT MARKINGS ON CONCRETE SHALL BE ITEM 646 - EPOXY AND ALL PAVEMENT MARKINGS ON ASPHALT SHALL BE ITEM 644 - THERMOPLASTIC.

HORIZONTAL SCALE IN FEET
0 10 20 40

PAVEMENT MARKING PLAN - E. 14TH ST. E. 14TH ST NB - BEGIN TO STA. 298+00.00

DESIGN AGENCY
Michael Baker INTERNATIONAL

DESIGNER RBK
REVIEWER GSH 05/22/24
PROJECT ID 82382
SHEET 1550 TOTAL 2696

CUY-90-16.28 (CCG3A)

MODEL: 82382_TP720I PAPERSIZE: 34x22 (in.) DATE: 3/27/2025 TIME: 7:19:36 PM USER: Mala.Gallagher
pw:\\mb-us-pw.bentley.com:mb-us-pw-03\Documents\Cleveland_OH\01_Projects\0007\District2\82382\400-Engineering\Traffic\Sheets\82382_TP720I.dgn

* PARTIAL STATION CALLOUTS OFF OF ℄ INTERIM E. 14TH ST. NB

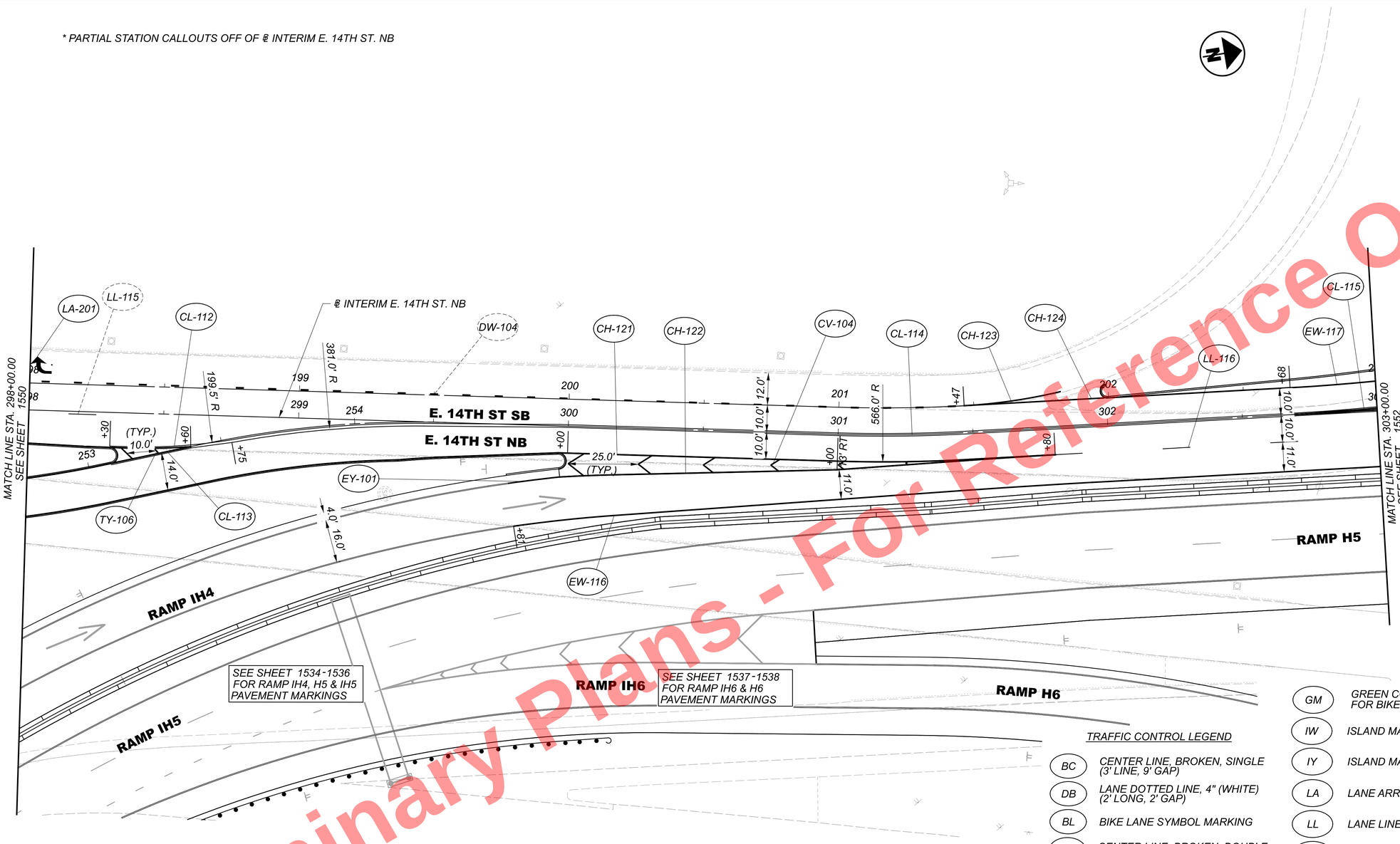

NOTE:
ALL PAVEMENT MARKINGS ON CONCRETE SHALL BE ITEM 646 - EPOXY AND
ALL PAVEMENT MARKINGS ON ASPHALT SHALL BE ITEM 644 - THERMOPLASTIC.

TRAFFIC CONTROL LEGEND

BC	CENTER LINE, BROKEN, SINGLE (3' LINE, 9' GAP)
DB	LANE DOTTED LINE, 4" (WHITE) (2' LONG, 2' GAP)
BL	BIKE LANE SYMBOL MARKING
CD	CENTER LINE, BROKEN, DOUBLE (2' LINE, 4' GAP)
CH	CHANNELIZING LINE, 8"
CL	CENTER LINE, SOLID, DOUBLE
CP	CENTER LINE, BROKEN AND SOLID, DOUBLE
CV	CHEVRON MARKING
DL	DOTTED LINE, 4" (WHITE) (3' LINE, 9' GAP)
DS	DOTTED LINE, 4" (WHITE) (2' LINE, 4' GAP)
DW	DOTTED LINE, 8" (WHITE) (3' LINE, 9' GAP)
EW	EDGE LINE, 4" (WHITE)
EY	EDGE LINE, 4" (YELLOW)
GM	GREEN COLORED PAVEMENT FOR BIKE LANES
IW	ISLAND MARKING (WHITE)
IY	ISLAND MARKING (YELLOW)
LA	LANE ARROW
LL	LANE LINE, 4" (WHITE)
LR	LANE REDUCTION ARROW
PL	PARKING LOT STALL MARKING
SB	SHARED LANE MARKING
SL	STOP LINE, 24"
TW	TRANSVERSE/DIAGONAL LINE (24") (WHITE)
TY	TRANSVERSE/DIAGONAL LINE (24") (YELLOW)
XW	CROSSWALK LINE, 12"
XA	CROSSWALK LINE, 12", AS PER PLAN
XB	PAVEMENT MARKING, MISC.: BIKE LANE CROSSWALK

Preliminary Plans - For Reference Only

HORIZONTAL SCALE IN FEET
0 10 20 40

PAVEMENT MARKING PLAN - E. 14TH ST.
STA. 298+00.00 TO STA. 303+00.00

DESIGN AGENCY
Michael Baker INTERNATIONAL

DESIGNER RBK
REVIEWER GSH 05/22/24
PROJECT ID 82382
SHEET 1551 TOTAL 2696

CUY-90-16.28 (CCG3A)

MODEL: 82382_TP7202 PAPERSIZE: 34x22 (in.) DATE: 3/27/2025 TIME: 7:19:55 PM USER: MaloGallagher
pw:\\mb-us-pw.bentley.com:mb-us-pw-03\Documents\Cleveland_OH\01_Projects\ODOT\District2\82382\400-Engineering\Traffic\Sheets\82382_TP7202.dgn

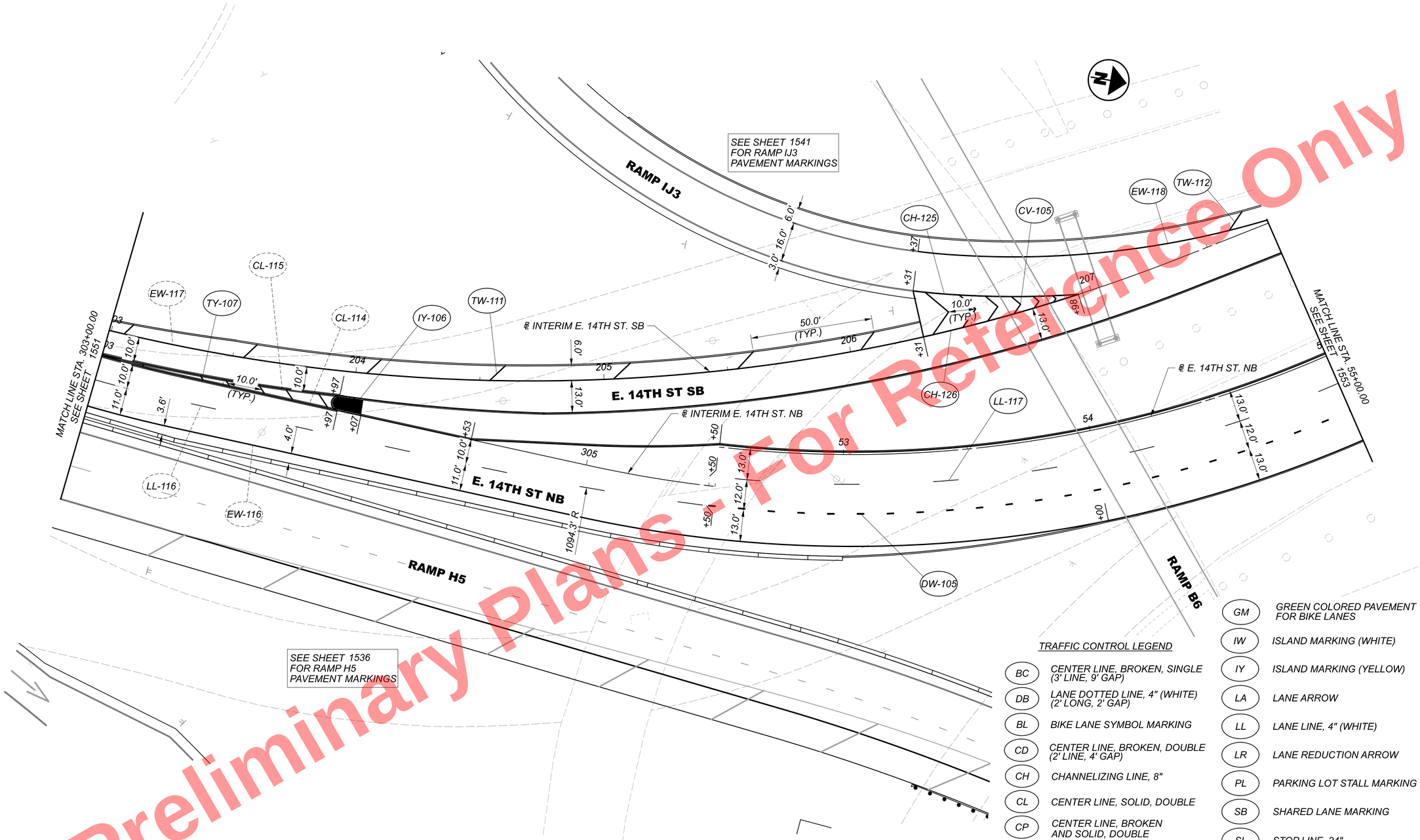

Preliminary Plans - For Reference Only

NOTE:
ALL PAVEMENT MARKINGS ON CONCRETE SHALL BE ITEM 646 - EPOXY AND ALL PAVEMENT MARKINGS ON ASPHALT SHALL BE ITEM 644 - THERMOPLASTIC.

TRAFFIC CONTROL LEGEND

BC	CENTER LINE, BROKEN, SINGLE (3' LINE, 9' GAP)
DB	LANE DOTTED LINE, 4" (WHITE) (2' LONG, 2' GAP)
BL	BIKE LANE SYMBOL MARKING
CD	CENTER LINE, BROKEN, DOUBLE (2' LINE, 4' GAP)
CH	CHANNELIZING LINE, 8"
CL	CENTER LINE, SOLID, DOUBLE
CP	CENTER LINE, BROKEN AND SOLID, DOUBLE
CV	CHEVRON MARKING
DL	DOTTED LINE, 4" (WHITE) (3' LINE, 9' GAP)
DS	DOTTED LINE, 4" (WHITE) (2' LINE, 4' GAP)
DW	DOTTED LINE, 8" (WHITE) (3' LINE, 9' GAP)
EW	EDGE LINE, 4" (WHITE)
EY	EDGE LINE, 4" (YELLOW)
GM	GREEN COLORED PAVEMENT FOR BIKE LANES
IW	ISLAND MARKING (WHITE)
IY	ISLAND MARKING (YELLOW)
LA	LANE ARROW
LL	LANE LINE, 4" (WHITE)
LR	LANE REDUCTION ARROW
PL	PARKING LOT STALL MARKING
SB	SHARED LANE MARKING
SL	STOP LINE, 24"
TW	TRANSVERSE/DIAGONAL LINE (24") (WHITE)
TY	TRANSVERSE/DIAGONAL LINE (24") (YELLOW)
XW	CROSSWALK LINE, 12"
XA	CROSSWALK LINE, 12", AS PER PLAN
XB	PAVEMENT MARKING, MISC.: BIKE LANE CROSSWALK

HORIZONTAL SCALE IN FEET
0 10 20 40

PAVEMENT MARKING PLAN - E. 14TH ST.
STA. 303+00.00 TO STA. 55+00.00

CUY-90-16.28 (CCG3A)

DESIGN AGENCY
Michael Baker INTERNATIONAL

DESIGNER RBK
REVIEWER GSH 05/22/24
PROJECT ID 82382
SHEET 1552 TOTAL 2696

MODEL: 82382_TP7203 PAPERSIZE: 34x22 (in.) DATE: 3/27/2025 TIME: 7:20:11 PM USER: Maia.Gallagher
pw:\\vmb-us-pw.bentley.com:vmb-us-pw-03\Documents\Cleveland_OH\01_Projects\000T\District2\82382\400-Engineering\Traffic\Sheets\82382_TP7203.dgn

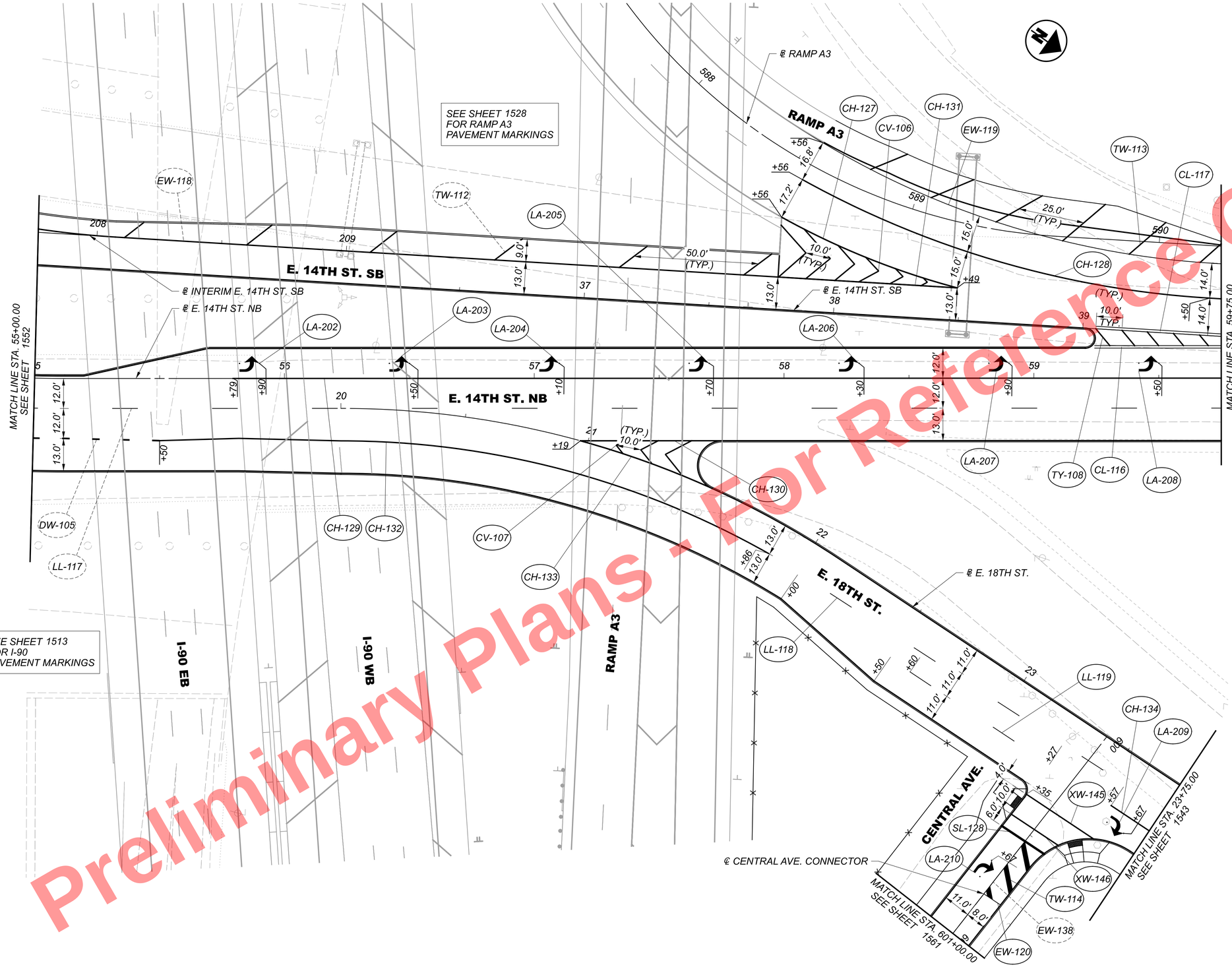

Preliminary Plans - Not For Reference Only

TRAFFIC CONTROL LEGEND

BC	CENTER LINE, BROKEN, SINGLE (3' LINE, 9' GAP)
DB	LANE DOTTED LINE, 4" (WHITE) (2' LONG, 2' GAP)
BL	BIKE LANE SYMBOL MARKING
CD	CENTER LINE, BROKEN, DOUBLE (2' LINE, 4' GAP)
CH	CHANNELIZING LINE, 8"
CL	CENTER LINE, SOLID, DOUBLE
CP	CENTER LINE, BROKEN AND SOLID, DOUBLE
CV	CHEVRON MARKING
DL	DOTTED LINE, 4" (WHITE) (3' LINE, 9' GAP)
DS	DOTTED LINE, 4" (WHITE) (2' LINE, 4' GAP)
DW	DOTTED LINE, 8" (WHITE) (3' LINE, 9' GAP)
EW	EDGE LINE, 4" (WHITE)
EY	EDGE LINE, 4" (YELLOW)
GM	GREEN COLORED PAVEMENT FOR BIKE LANES
IW	ISLAND MARKING (WHITE)
IY	ISLAND MARKING (YELLOW)
LA	LANE ARROW
LL	LANE LINE, 4" (WHITE)
LR	LANE REDUCTION ARROW
PL	PARKING LOT STALL MARKING
SB	SHARED LANE MARKING
SL	STOP LINE, 24"
TW	TRANSVERSE/DIAGONAL LINE (24") (WHITE)
TY	TRANSVERSE/DIAGONAL LINE (24") (YELLOW)
XW	CROSSWALK LINE, 12"
XA	CROSSWALK LINE, 12", AS PER PLAN
XB	PAVEMENT MARKING, MISC.: BIKE LANE CROSSWALK

NOTE:
ALL PAVEMENT MARKINGS ON CONCRETE SHALL BE ITEM 646 - EPOXY AND ALL PAVEMENT MARKINGS ON ASPHALT SHALL BE ITEM 644 - THERMOPLASTIC.

HORIZONTAL SCALE IN FEET
0 10 20 40

PAVEMENT MARKING PLAN - E. 14TH ST. STA. 55+00.00 TO STA. 59+75.00

DESIGN AGENCY
Michael Baker INTERNATIONAL

DESIGNER RBK
REVIEWER GSH 05/22/24
PROJECT ID 82382
SHEET 1553 TOTAL 2696

CUY-90-16.28 (CCG3A)

MODEL: 82382_TP7206 PAPERSIZE: 34x22 (in.) DATE: 3/28/2025 TIME: 9:8:58 AM USER: RohlfsBK
pw:\\mb-us-pw.bentley.com:mb-us-pw-03\Documents\Cleveland.OH\DgnProjects\ODOT\District2\82382\400-Engineering\Traffic\Sheets\82382_TP7204.dgn

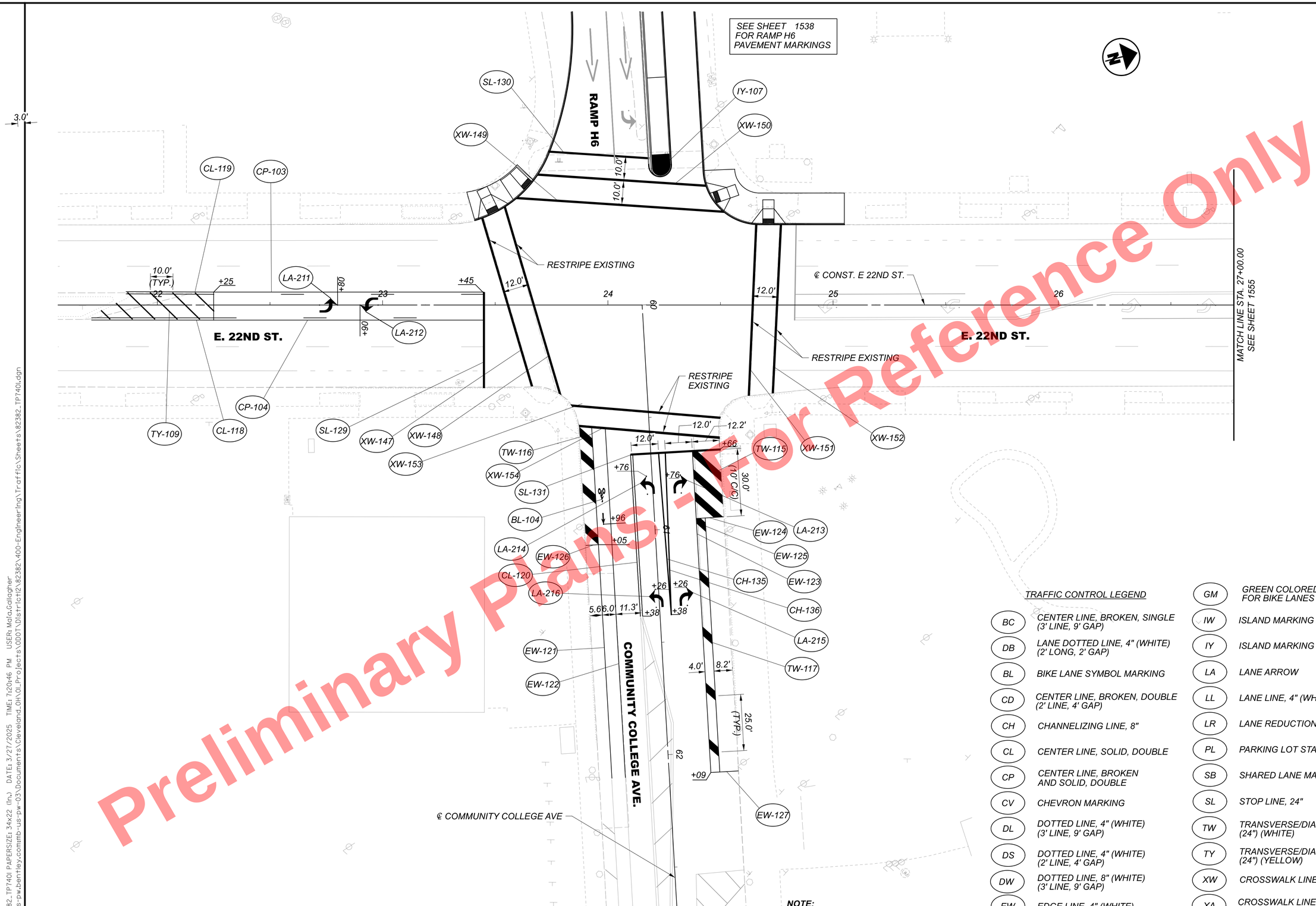

Preliminary Plans - Not For Reference Only

NOTE:
ALL PAVEMENT MARKINGS ON CONCRETE SHALL BE ITEM 646 - EPOXY AND ALL PAVEMENT MARKINGS ON ASPHALT SHALL BE ITEM 644 - THERMOPLASTIC.

TRAFFIC CONTROL LEGEND

BC	CENTER LINE, BROKEN, SINGLE (3' LINE, 9' GAP)
DB	LANE DOTTED LINE, 4" (WHITE) (2' LONG, 2' GAP)
BL	BIKE LANE SYMBOL MARKING
CD	CENTER LINE, BROKEN, DOUBLE (2' LINE, 4' GAP)
CH	CHANNELIZING LINE, 8"
CL	CENTER LINE, SOLID, DOUBLE
CP	CENTER LINE, BROKEN AND SOLID, DOUBLE
CV	CHEVRON MARKING
DL	DOTTED LINE, 4" (WHITE) (3' LINE, 9' GAP)
DS	DOTTED LINE, 4" (WHITE) (2' LINE, 4' GAP)
DW	DOTTED LINE, 8" (WHITE) (3' LINE, 9' GAP)
EW	EDGE LINE, 4" (WHITE)
EY	EDGE LINE, 4" (YELLOW)
GM	GREEN COLORED PAVEMENT FOR BIKE LANES
IW	ISLAND MARKING (WHITE)
IY	ISLAND MARKING (YELLOW)
LA	LANE ARROW
LL	LANE LINE, 4" (WHITE)
LR	LANE REDUCTION ARROW
PL	PARKING LOT STALL MARKING
SB	SHARED LANE MARKING
SL	STOP LINE, 24"
TW	TRANSVERSE/DIAGONAL LINE (24") (WHITE)
TY	TRANSVERSE/DIAGONAL LINE (24") (YELLOW)
XW	CROSSWALK LINE, 12"
XA	CROSSWALK LINE, 12", AS PER PLAN
XB	PAVEMENT MARKING, MISC.: BIKE LANE CROSSWALK

HORIZONTAL SCALE IN FEET
0 10 20 40

PAVEMENT MARKING PLAN - E. 22ND ST. BEGIN TO STA. 27+00.00

DESIGN AGENCY
Michael Baker INTERNATIONAL

DESIGNER RBK
REVIEWER GSH 05/22/24
PROJECT ID 82382
SHEET 1554 TOTAL 2696

CUY-90-16.28 (CCG3A)

MODEL: 82382_TP740I PAPERSIZE: 34x22 (In) DATE: 3/27/2025 TIME: 1:20:46 PM USER: MaloGallagher
pw:\\mb-us-pw.bentley.com\mb-us-pw-03\Documents\Cleveland_OH\OiL_Projects\ODOT\District2\82382\400-Engineering\TP740I.dgn

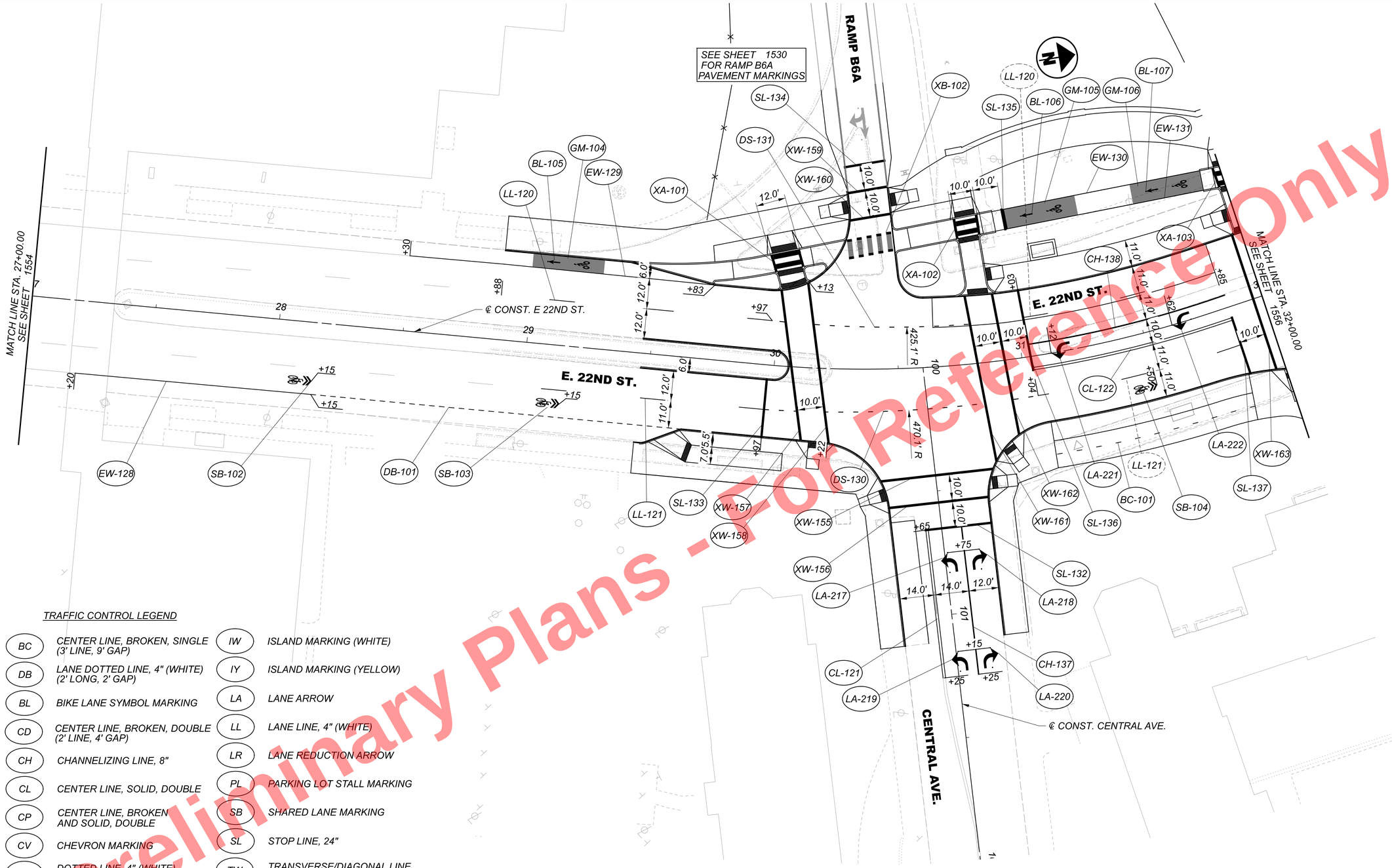

Preliminary Plans - For Reference Only

TRAFFIC CONTROL LEGEND

BC	CENTER LINE, BROKEN, SINGLE (3' LINE, 9' GAP)
DB	LANE DOTTED LINE, 4" (WHITE) (2' LONG, 2' GAP)
BL	BIKE LANE SYMBOL MARKING
CD	CENTER LINE, BROKEN, DOUBLE (2' LINE, 4' GAP)
CH	CHANNELIZING LINE, 8"
CL	CENTER LINE, SOLID, DOUBLE
CP	CENTER LINE, BROKEN AND SOLID, DOUBLE
CV	CHEVRON MARKING
DL	DOTTED LINE, 4" (WHITE) (3' LINE, 9' GAP)
DS	DOTTED LINE, 4" (WHITE) (2' LINE, 4' GAP)
DW	DOTTED LINE, 8" (WHITE) (3' LINE, 9' GAP)
EW	EDGE LINE, 4" (WHITE)
EY	EDGE LINE, 4" (YELLOW)
GM	GREEN COLORED PAVEMENT FOR BIKE LANES
IW	ISLAND MARKING (WHITE)
IY	ISLAND MARKING (YELLOW)
LA	LANE ARROW
LL	LANE LINE, 4" (WHITE)
LR	LANE REDUCTION ARROW
PL	PARKING LOT STALL MARKING
SB	SHARED LANE MARKING
SL	STOP LINE, 24"
TW	TRANSVERSE/DIAGONAL LINE (24") (WHITE)
TY	TRANSVERSE/DIAGONAL LINE (24") (YELLOW)
XW	CROSSWALK LINE, 12"
XA	CROSSWALK LINE, 12", AS PER PLAN
XB	PAVEMENT MARKING, MISC.: BIKE LANE CROSSWALK

NOTE:
ALL PAVEMENT MARKINGS ON CONCRETE SHALL BE ITEM 646 - EPOXY AND ALL PAVEMENT MARKINGS ON ASPHALT SHALL BE ITEM 644 - THERMOPLASTIC.

HORIZONTAL SCALE IN FEET
0 10 20 40

PAVEMENT MARKING PLAN - E. 22ND ST. STA. 27+00.00 TO STA. 32+00.00

DESIGN AGENCY	Michael Baker INTERNATIONAL
DESIGNER	RBK
REVIEWER	GSH 05/22/24
PROJECT ID	82382
SHEET	1555
TOTAL	2696

CUY-90-16.28 (CCG3A)

MODEL: 82382_TP7402 PAPERSIZE: 34x22 (in.) DATE: 3/27/2025 TIME: 7:26:05 PM USER: Mala.Gallagher
pw:\\mb-us-pw.bentley.com:mb-us-pw-03\Documents\Cleveland_OH\01_Projects\000T\District2\82382\400-Engineering\Traffic\Sheets\82382_TP7402.dgn

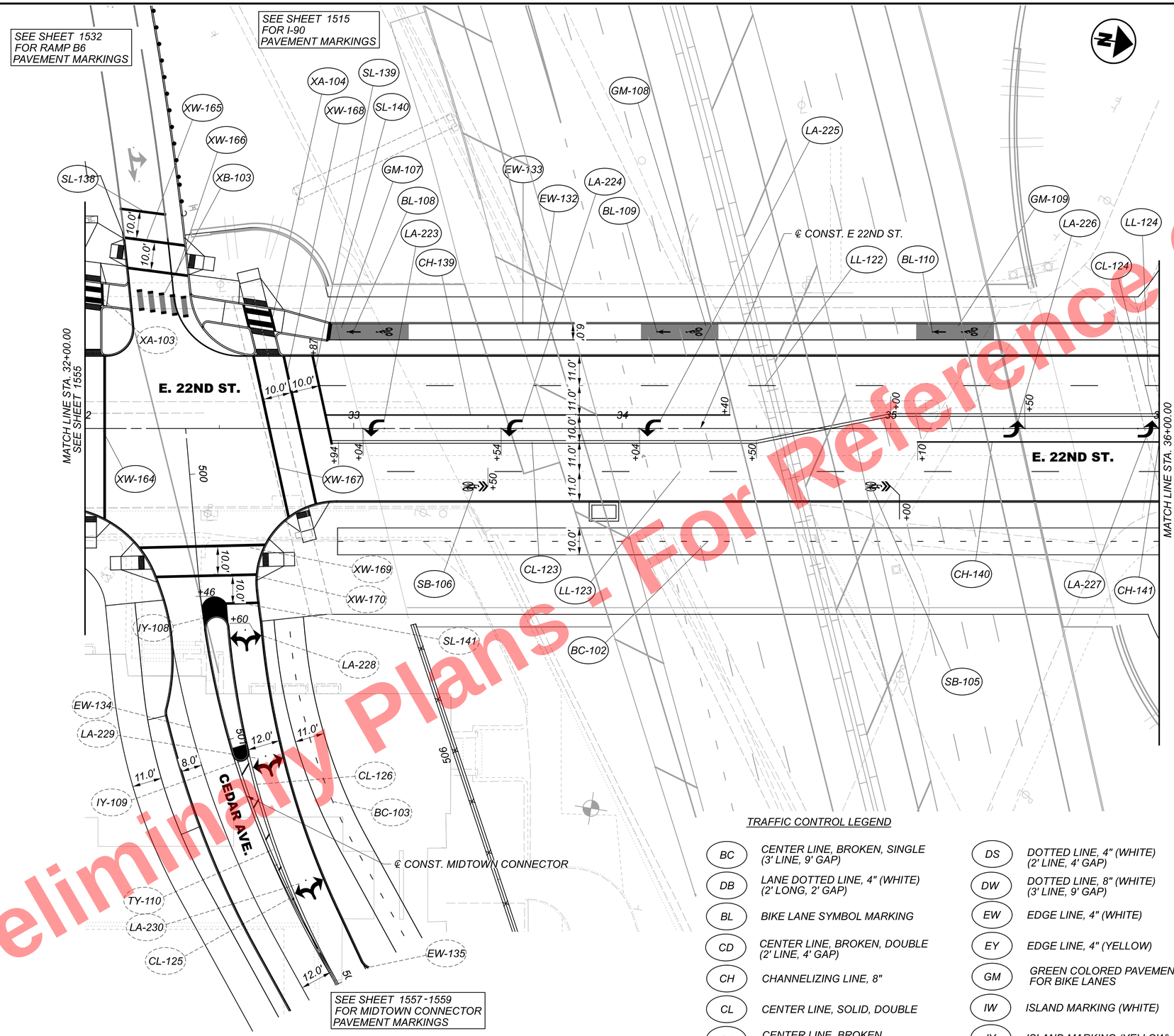

TRAFFIC CONTROL LEGEND

BC	CENTER LINE, BROKEN, SINGLE (3' LINE, 9' GAP)	DS	DOTTED LINE, 4" (WHITE) (2' LINE, 4' GAP)	LR	LANE REDUCTION ARROW
DB	LANE DOTTED LINE, 4" (WHITE) (2' LONG, 2' GAP)	DW	DOTTED LINE, 8" (WHITE) (3' LINE, 9' GAP)	PL	PARKING LOT STALL MARKING
BL	BIKE LANE SYMBOL MARKING	EW	EDGE LINE, 4" (WHITE)	SB	SHARED LANE MARKING
CD	CENTER LINE, BROKEN, DOUBLE (2' LINE, 4' GAP)	EY	EDGE LINE, 4" (YELLOW)	SL	STOP LINE, 24"
CH	CHANNELIZING LINE, 8"	GM	GREEN COLORED PAVEMENT FOR BIKE LANES	TW	TRANSVERSE/DIAGONAL LINE (24") (WHITE)
CL	CENTER LINE, SOLID, DOUBLE	IW	ISLAND MARKING (WHITE)	TY	TRANSVERSE/DIAGONAL LINE (24") (YELLOW)
CP	CENTER LINE, BROKEN AND SOLID, DOUBLE	IY	ISLAND MARKING (YELLOW)	XW	CROSSWALK LINE, 12"
CV	CHEVRON MARKING	LA	LANE ARROW	XA	CROSSWALK LINE, 12", AS PER PLAN
DL	DOTTED LINE, 4" (WHITE) (3' LINE, 9' GAP)	LL	LANE LINE, 4" (WHITE)	XB	PAVEMENT MARKING, MISC.: BIKE LANE CROSSWALK

NOTE:
- PAVEMENT MARKINGS FOR E. 22ND ST. LANES ARE DIMENSIONED OFF ℄ CONST. 22ND ST.
- PAVEMENT MARKINGS FOR MIDTOWN CONNECTOR ARE DIMENSIONED OFF ℄ MIDTOWN CONNECTOR

NOTE:
ALL PAVEMENT MARKINGS ON CONCRETE SHALL BE ITEM 646 - EPOXY AND ALL PAVEMENT MARKINGS ON ASPHALT SHALL BE ITEM 644 - THERMOPLASTIC.

Preliminary Plans - For Reference Only

HORIZONTAL SCALE IN FEET 0 10 20 40

PAVEMENT MARKING PLAN - E. 22ND ST.
STA. 32+00.00 TO STA. 37+00.00

DESIGN AGENCY
Michael Baker INTERNATIONAL

DESIGNER RBK
REVIEWER GSH 05/22/24
PROJECT ID 82382
SHEET 1556 TOTAL 2696

CUY-90-16.28 (CCG3A)

MODEL: 82382_TP7403 PAPERSIZE: 34x22 (in.) DATE: 3/27/2025 TIME: 7:21:22 PM USER: Maia.Gallagher
pw:\\mb-us-pw.bentley.com:mb-us-pw-03\Documents\Cleveland_OH\OI_Projects\0001\District12\82382\400-Engineering\Traffic\Sheets\82382_TP7403.dgn

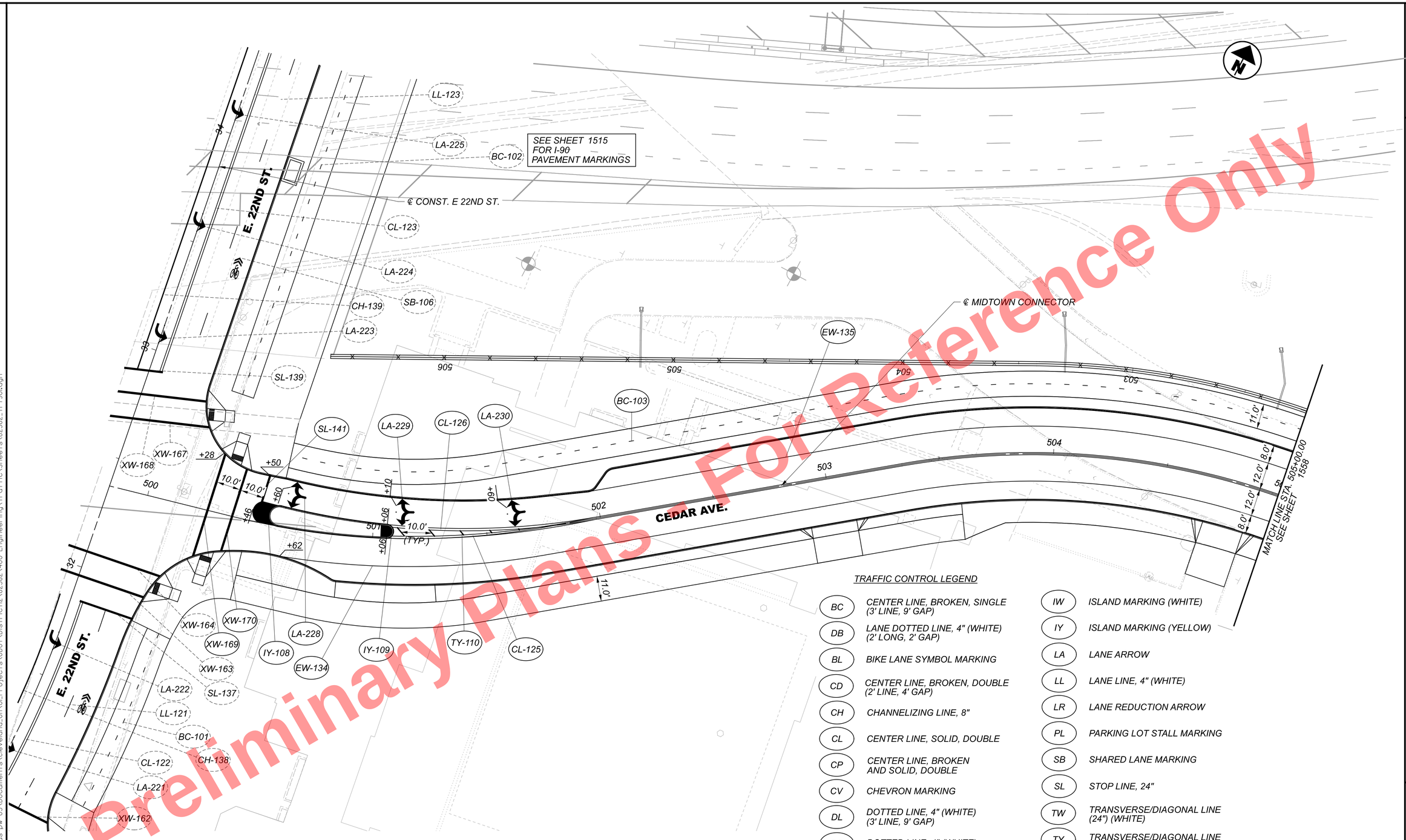

Preliminary Plans - For Reference Only

NOTE:
ALL PAVEMENT MARKINGS ON CONCRETE SHALL BE ITEM 646 - EPOXY AND ALL PAVEMENT MARKINGS ON ASPHALT SHALL BE ITEM 644 - THERMOPLASTIC.

TRAFFIC CONTROL LEGEND

BC	CENTER LINE, BROKEN, SINGLE (3' LINE, 9' GAP)
DB	LANE DOTTED LINE, 4" (WHITE) (2' LONG, 2' GAP)
BL	BIKE LANE SYMBOL MARKING
CD	CENTER LINE, BROKEN, DOUBLE (2' LINE, 4' GAP)
CH	CHANNELIZING LINE, 8"
CL	CENTER LINE, SOLID, DOUBLE
CP	CENTER LINE, BROKEN AND SOLID, DOUBLE
CV	CHEVRON MARKING
DL	DOTTED LINE, 4" (WHITE) (3' LINE, 9' GAP)
DS	DOTTED LINE, 4" (WHITE) (2' LINE, 4' GAP)
DW	DOTTED LINE, 8" (WHITE) (3' LINE, 9' GAP)
EW	EDGE LINE, 4" (WHITE)
EY	EDGE LINE, 4" (YELLOW)
GM	GREEN COLORED PAVEMENT FOR BIKE LANES
IW	ISLAND MARKING (WHITE)
IY	ISLAND MARKING (YELLOW)
LA	LANE ARROW
LL	LANE LINE, 4" (WHITE)
LR	LANE REDUCTION ARROW
PL	PARKING LOT STALL MARKING
SB	SHARED LANE MARKING
SL	STOP LINE, 24"
TW	TRANSVERSE/DIAGONAL LINE (24") (WHITE)
TY	TRANSVERSE/DIAGONAL LINE (24") (YELLOW)
XW	CROSSWALK LINE, 12"
XA	CROSSWALK LINE, 12", AS PER PLAN
XB	PAVEMENT MARKING, MISC.: BIKE LANE CROSSWALK

HORIZONTAL SCALE IN FEET
0 10 20 30

PAVEMENT MARKING PLAN - MIDTOWN CONNECTOR BEGIN TO STA. 505+00.00

DESIGN AGENCY
Michael Baker INTERNATIONAL

DESIGNER RBK
REVIEWER GSH 05/22/24
PROJECT ID 82382
SHEET 1557 TOTAL 2696

CUY-90-16.28 (CCG3A)

MODEL: CLP_Midtown Connector - Plan IO PAPERSIZE: 34x22 (in.) DATE: 3/27/2025 TIME: 7:2h:40 PM USER: Mata,Gallagher
pw:\\mb-us-pw.bentley.com:mb-us-pw-03\Documents\Cleveland_OH\01_Projects\ODOT\District2\82382\400-Engineering\Traffic\Sheets\82382_TP7901.dgn

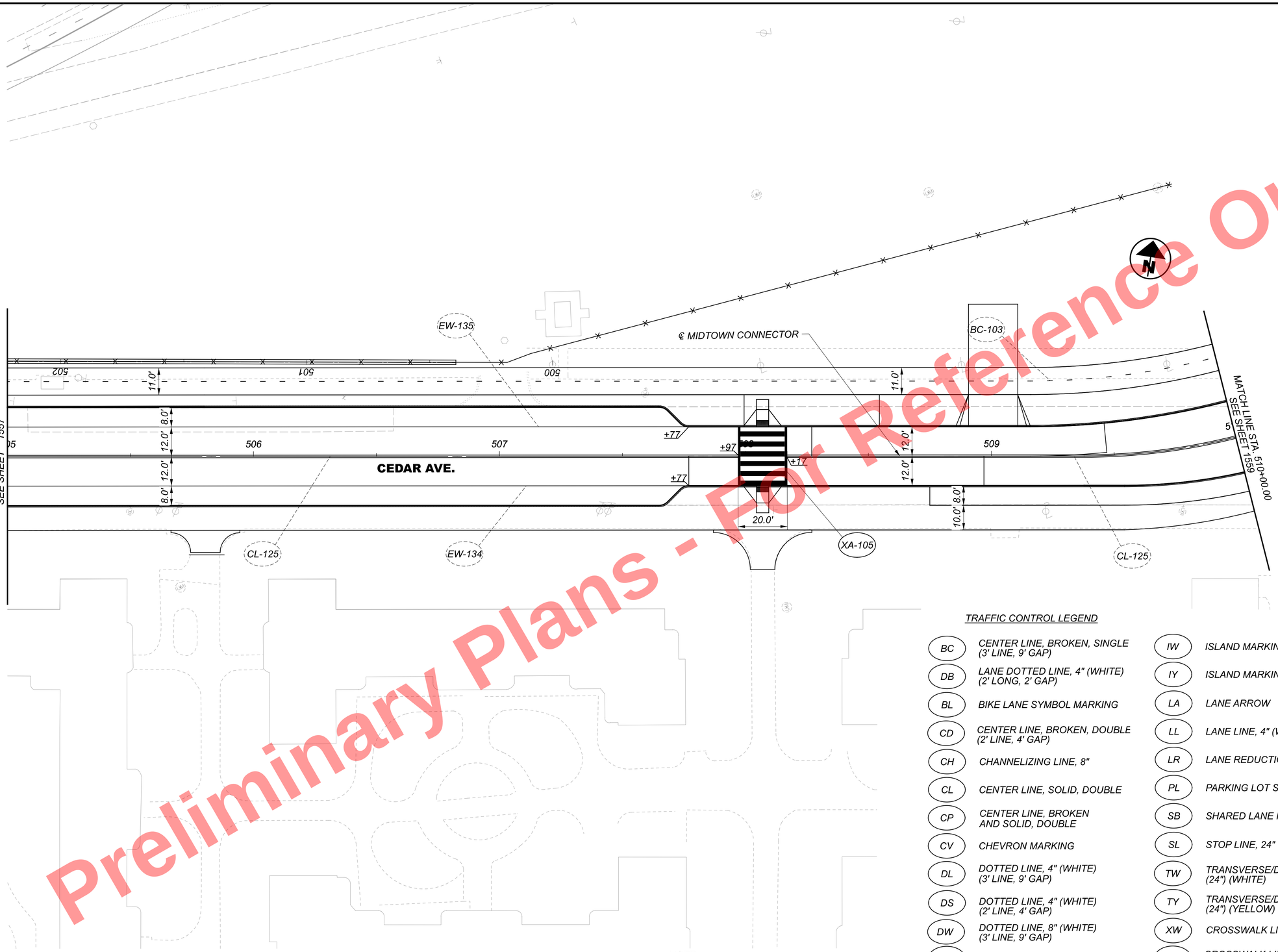

Preliminary Plans - For Reference Only

NOTE:
ALL PAVEMENT MARKINGS ON CONCRETE SHALL BE ITEM 646 - EPOXY AND ALL PAVEMENT MARKINGS ON ASPHALT SHALL BE ITEM 644 - THERMOPLASTIC.

TRAFFIC CONTROL LEGEND

BC	CENTER LINE, BROKEN, SINGLE (3' LINE, 9' GAP)
DB	LANE DOTTED LINE, 4" (WHITE) (2' LONG, 2' GAP)
BL	BIKE LANE SYMBOL MARKING
CD	CENTER LINE, BROKEN, DOUBLE (2' LINE, 4' GAP)
CH	CHANNELIZING LINE, 8"
CL	CENTER LINE, SOLID, DOUBLE
CP	CENTER LINE, BROKEN AND SOLID, DOUBLE
CV	CHEVRON MARKING
DL	DOTTED LINE, 4" (WHITE) (3' LINE, 9' GAP)
DS	DOTTED LINE, 4" (WHITE) (2' LINE, 4' GAP)
DW	DOTTED LINE, 8" (WHITE) (3' LINE, 9' GAP)
EW	EDGE LINE, 4" (WHITE)
EY	EDGE LINE, 4" (YELLOW)
GM	GREEN COLORED PAVEMENT FOR BIKE LANES
IW	ISLAND MARKING (WHITE)
IY	ISLAND MARKING (YELLOW)
LA	LANE ARROW
LL	LANE LINE, 4" (WHITE)
LR	LANE REDUCTION ARROW
PL	PARKING LOT STALL MARKING
SB	SHARED LANE MARKING
SL	STOP LINE, 24"
TW	TRANSVERSE/DIAGONAL LINE (24") (WHITE)
TY	TRANSVERSE/DIAGONAL LINE (24") (YELLOW)
XW	CROSSWALK LINE, 12"
XA	CROSSWALK LINE, 12", AS PER PLAN
XB	PAVEMENT MARKING, MISC.: BIKE LANE CROSSWALK

HORIZONTAL SCALE IN FEET
0 10 20 40

PAVEMENT MARKING PLAN - MIDTOWN CONNECTOR
STA. 505+00.00 TO STA. 510+00.00

DESIGN AGENCY
Michael Baker INTERNATIONAL

DESIGNER RBK
REVIEWER GSH 05/22/24
PROJECT ID 82382
SHEET 1558 TOTAL 2696

CUY-90-16.28 (CCG3A)

MODEL: 82382_TP7902 PAPERSIZE: 34x22 (in.) DATE: 3/27/2025 TIME: 12:58 PM USER: Mala.Gallagher
pw:\\mb-us-pw.bentley.com:mb-us-pw-03\Documents\Cleveland.OH\OI_Projects\ODOT\District2\82382\400-Engineering\Traffic\Sheets\82382_TP7902.dgn

PAVEMENT MARKING PLAN - MIDTOWN CONNECTOR
STA. 510+00.00 TO END

HORIZONTAL SCALE IN FEET
0 10 20 40

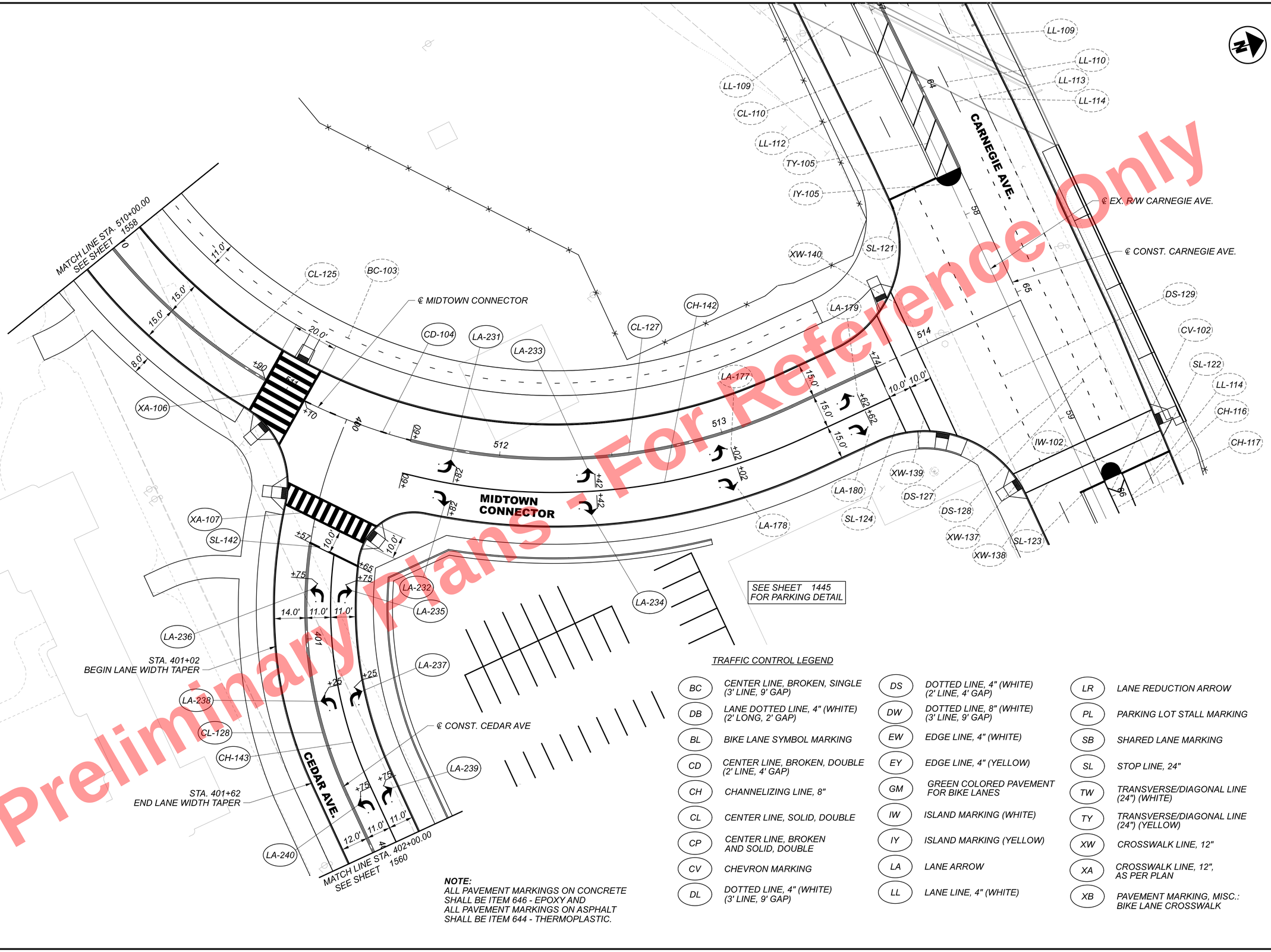

Preliminary Plans - For Reference Only

TRAFFIC CONTROL LEGEND

BC	CENTER LINE, BROKEN, SINGLE (3' LINE, 9' GAP)	DS	DOTTED LINE, 4" (WHITE) (2' LINE, 4' GAP)	LR	LANE REDUCTION ARROW
DB	LANE DOTTED LINE, 4" (WHITE) (2' LONG, 2' GAP)	DW	DOTTED LINE, 8" (WHITE) (3' LINE, 9' GAP)	PL	PARKING LOT STALL MARKING
BL	BIKE LANE SYMBOL MARKING	EW	EDGE LINE, 4" (WHITE)	SB	SHARED LANE MARKING
CD	CENTER LINE, BROKEN, DOUBLE (2' LINE, 4' GAP)	EY	EDGE LINE, 4" (YELLOW)	SL	STOP LINE, 24"
CH	CHANNELIZING LINE, 8"	GM	GREEN COLORED PAVEMENT FOR BIKE LANES	TW	TRANSVERSE/DIAGONAL LINE (24") (WHITE)
CL	CENTER LINE, SOLID, DOUBLE	IW	ISLAND MARKING (WHITE)	TY	TRANSVERSE/DIAGONAL LINE (24") (YELLOW)
CP	CENTER LINE, BROKEN AND SOLID, DOUBLE	IY	ISLAND MARKING (YELLOW)	XW	CROSSWALK LINE, 12"
CV	CHEVRON MARKING	LA	LANE ARROW	XA	CROSSWALK LINE, 12", AS PER PLAN
DL	DOTTED LINE, 4" (WHITE) (3' LINE, 9' GAP)	LL	LANE LINE, 4" (WHITE)	XB	PAVEMENT MARKING, MISC.: BIKE LANE CROSSWALK

NOTE:
ALL PAVEMENT MARKINGS ON CONCRETE SHALL BE ITEM 646 - EPOXY AND ALL PAVEMENT MARKINGS ON ASPHALT SHALL BE ITEM 644 - THERMOPLASTIC.

DESIGN AGENCY
Michael Baker INTERNATIONAL

DESIGNER RBK
REVIEWER GSH 05/22/24
PROJECT ID 82382
SHEET 1559 TOTAL 2696

CUY-90-16.28 (CCG3A)

MODEL: 82382_TP7903 PAPERSIZE: 34x22 (in.) DATE: 3/27/2025 TIME: 7:22:18 PM USER: MaLaGallagher
pw:\\mb-us-pw.bentley.com:mb-us-pw-03\Documents\Cleveland_OH\01_Projects\000TO\District2\82382\400-Engineering\Traffic\Sheets\82382_TP7903.dgn

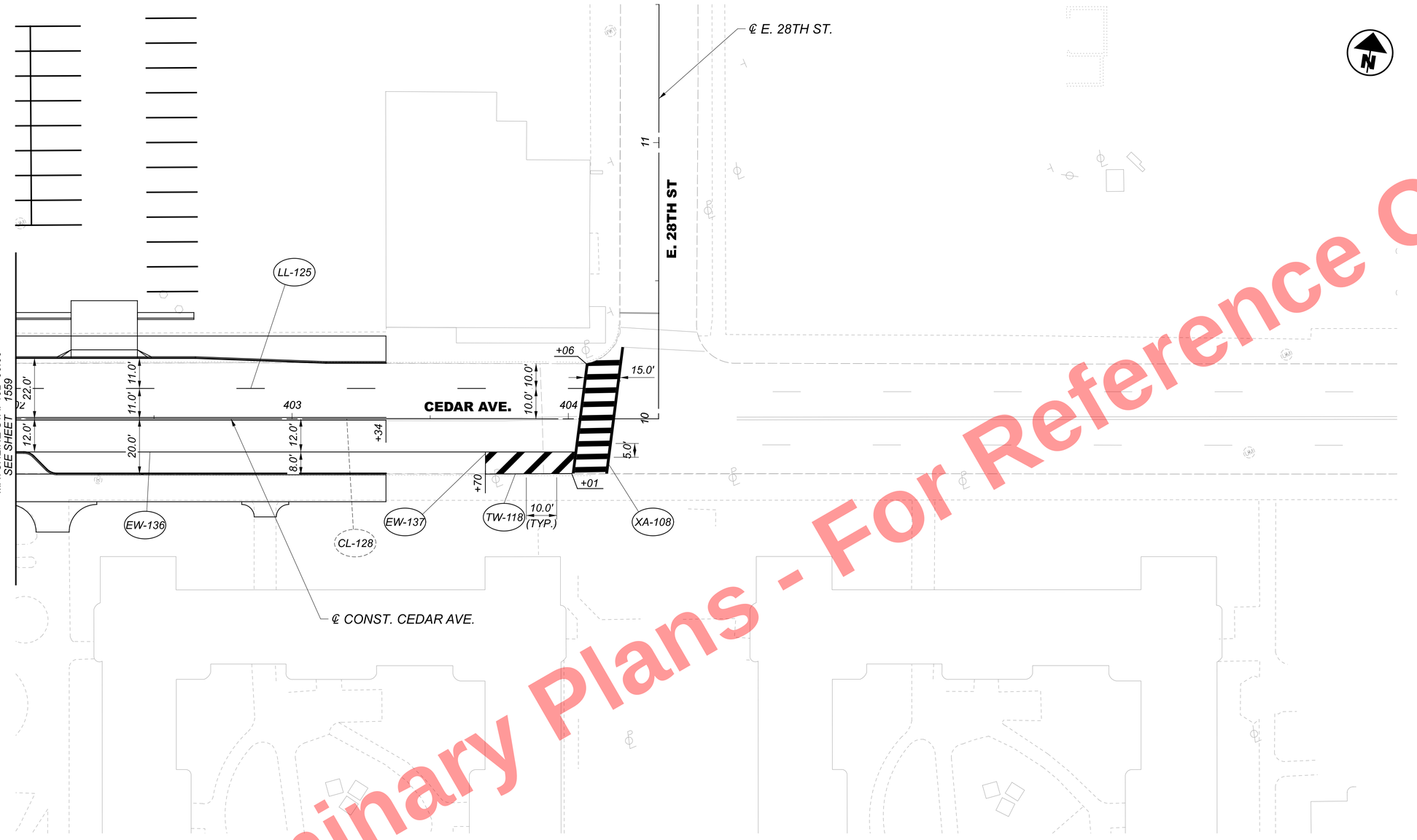

Preliminary Plans - For Reference Only

NOTE:
ALL PAVEMENT MARKINGS ON CONCRETE SHALL BE ITEM 646 - EPOXY AND ALL PAVEMENT MARKINGS ON ASPHALT SHALL BE ITEM 644 - THERMOPLASTIC.

TRAFFIC CONTROL LEGEND

BC	CENTER LINE, BROKEN, SINGLE (3' LINE, 9' GAP)
DB	LANE DOTTED LINE, 4" (WHITE) (2' LONG, 2' GAP)
BL	BIKE LANE SYMBOL MARKING
CD	CENTER LINE, BROKEN, DOUBLE (2' LINE, 4' GAP)
CH	CHANNELIZING LINE, 8"
CL	CENTER LINE, SOLID, DOUBLE
CP	CENTER LINE, BROKEN AND SOLID, DOUBLE
CV	CHEVRON MARKING
DL	DOTTED LINE, 4" (WHITE) (3' LINE, 9' GAP)
DS	DOTTED LINE, 4" (WHITE) (2' LINE, 4' GAP)
DW	DOTTED LINE, 8" (WHITE) (3' LINE, 9' GAP)
EW	EDGE LINE, 4" (WHITE)
EY	EDGE LINE, 4" (YELLOW)
GM	GREEN COLORED PAVEMENT FOR BIKE LANES
IW	ISLAND MARKING (WHITE)
IY	ISLAND MARKING (YELLOW)
LA	LANE ARROW
LL	LANE LINE, 4" (WHITE)
LR	LANE REDUCTION ARROW
PL	PARKING LOT STALL MARKING
SB	SHARED LANE MARKING
SL	STOP LINE, 24"
TW	TRANSVERSE/DIAGONAL LINE (24") (WHITE)
TY	TRANSVERSE/DIAGONAL LINE (24") (YELLOW)
XW	CROSSWALK LINE, 12"
XA	CROSSWALK LINE, 12", AS PER PLAN
XB	PAVEMENT MARKING, MISC.: BIKE LANE CROSSWALK

HORIZONTAL SCALE IN FEET
0 10 20 40

PAVEMENT MARKING PLAN - CEDAR AVE.
STA. 402+00.00 TO END

DESIGN AGENCY
Michael Baker INTERNATIONAL

DESIGNER
RBK

REVIEWER
GSH 05/22/24

PROJECT ID
82382

SHEET 1560 TOTAL 2696

CUY-90-16.28 (CCG3A)

MODEL: 82382_TP7904 PAPERSIZE: 34x22 (in.) DATE: 3/27/2025 TIME: 7:22:36 PM USER: Maia.Gallagher
pw:\\mb-us-pw.bentley.com:mb-us-pw-03\Documents\Cleveland_OH\01_Projects\ODOT\District12\82382\400-Engineering\Traffic\Sheets\82382_TP7904.dgn

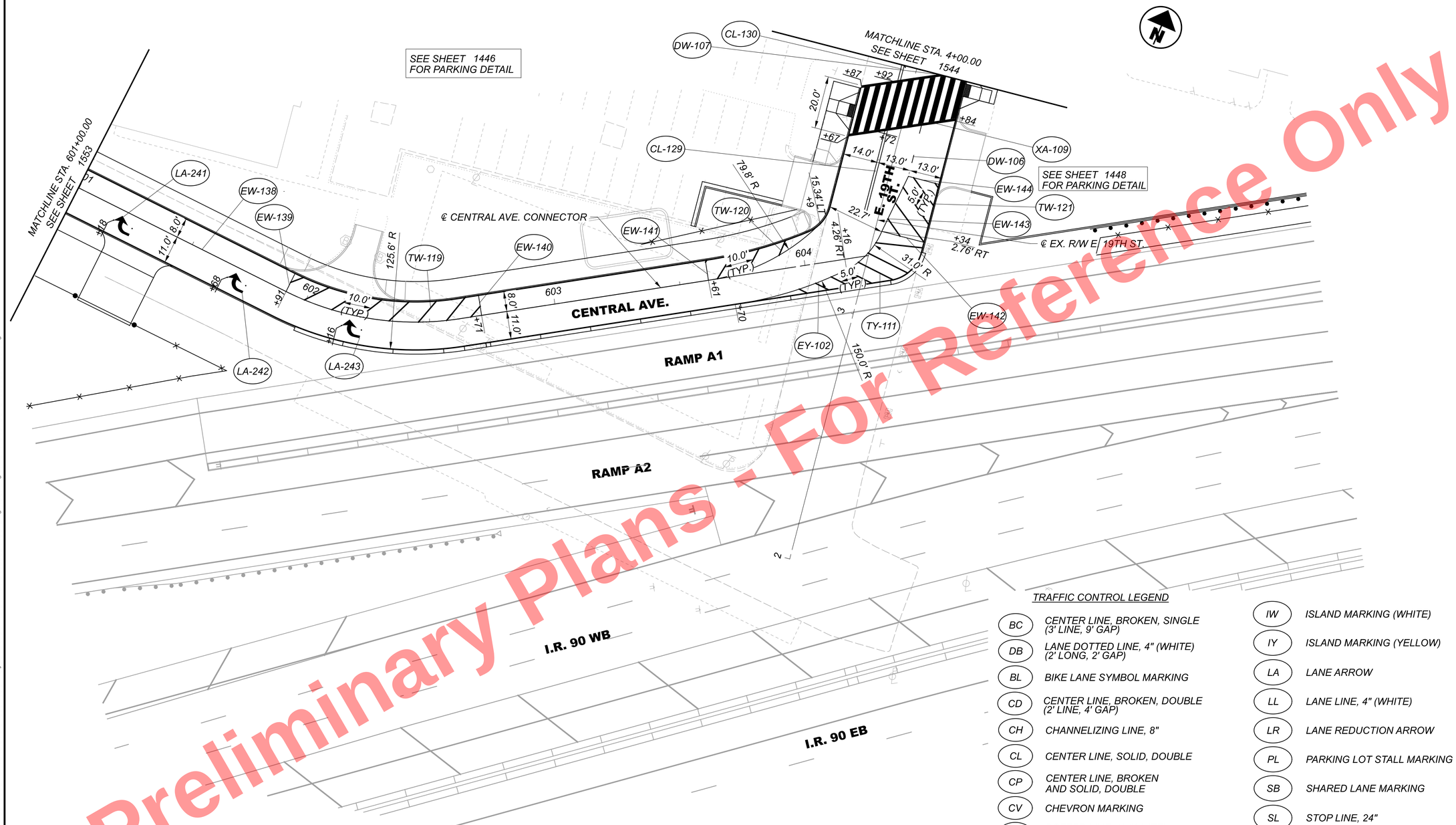

Preliminary Plans - For Reference Only

NOTE:
ALL PAVEMENT MARKINGS ON CONCRETE SHALL BE ITEM 646 - EPOXY AND ALL PAVEMENT MARKINGS ON ASPHALT SHALL BE ITEM 644 - THERMOPLASTIC.

PAVEMENT MARKINGS FOR CENTRAL AVENUE LANES ARE DIMENSIONED OFF ℄ CENTRAL AVE. CONNECTOR
PAVEMENT MARKINGS FOR E. 19TH ST. ARE DIMENSIONED OFF ℄ EX. R/W E. 19TH ST.

TRAFFIC CONTROL LEGEND

BC	CENTER LINE, BROKEN, SINGLE (3' LINE, 9' GAP)
DB	LANE DOTTED LINE, 4" (WHITE) (2' LONG, 2' GAP)
BL	BIKE LANE SYMBOL MARKING
CD	CENTER LINE, BROKEN, DOUBLE (2' LINE, 4' GAP)
CH	CHANNELIZING LINE, 8"
CL	CENTER LINE, SOLID, DOUBLE
CP	CENTER LINE, BROKEN AND SOLID, DOUBLE
CV	CHEVRON MARKING
DL	DOTTED LINE, 4" (WHITE) (3' LINE, 9' GAP)
DS	DOTTED LINE, 4" (WHITE) (2' LINE, 4' GAP)
DW	DOTTED LINE, 8" (WHITE) (3' LINE, 9' GAP)
EW	EDGE LINE, 4" (WHITE)
EY	EDGE LINE, 4" (YELLOW)
GM	GREEN COLORED PAVEMENT FOR BIKE LANES
IW	ISLAND MARKING (WHITE)
IY	ISLAND MARKING (YELLOW)
LA	LANE ARROW
LL	LANE LINE, 4" (WHITE)
LR	LANE REDUCTION ARROW
PL	PARKING LOT STALL MARKING
SB	SHARED LANE MARKING
SL	STOP LINE, 24"
TW	TRANSVERSE/DIAGONAL LINE (24") (WHITE)
TY	TRANSVERSE/DIAGONAL LINE (24") (YELLOW)
XW	CROSSWALK LINE, 12"
XA	CROSSWALK LINE, 12", AS PER PLAN
XB	PAVEMENT MARKING, MISC.: BIKE LANE CROSSWALK

HORIZONTAL SCALE IN FEET
0 10 20 40

PAVEMENT MARKING PLAN - CENTRAL AVE. CONNECTOR STA. 601+00.00 TO END

DESIGN AGENCY
Michael Baker INTERNATIONAL

DESIGNER RBK
REVIEWER GSH 05/22/24
PROJECT ID 82382
SHEET 1561 TOTAL 2696

CUY-90-16.28 (CCG3A)

MODEL: 82382_TP80II PAPERSIZE: 34x22 (in.) DATE: 3/28/2025 TIME: 9:32:54 AM USER: RohlfBK
pw:\\mb-us-pw.bentley.com:mb-us-pw-03\Documents\Cleveland.OH\OI_Projects\0007\District2\82382\400-Engineering\Traffic\Sheets\82382_TP80II.dgn

TRAFFIC CONTROL LEGEND

- EXISTING SIGN TO REMAIN
- EXISTING SIGN TO BE REMOVED
- PROPOSED SIGN

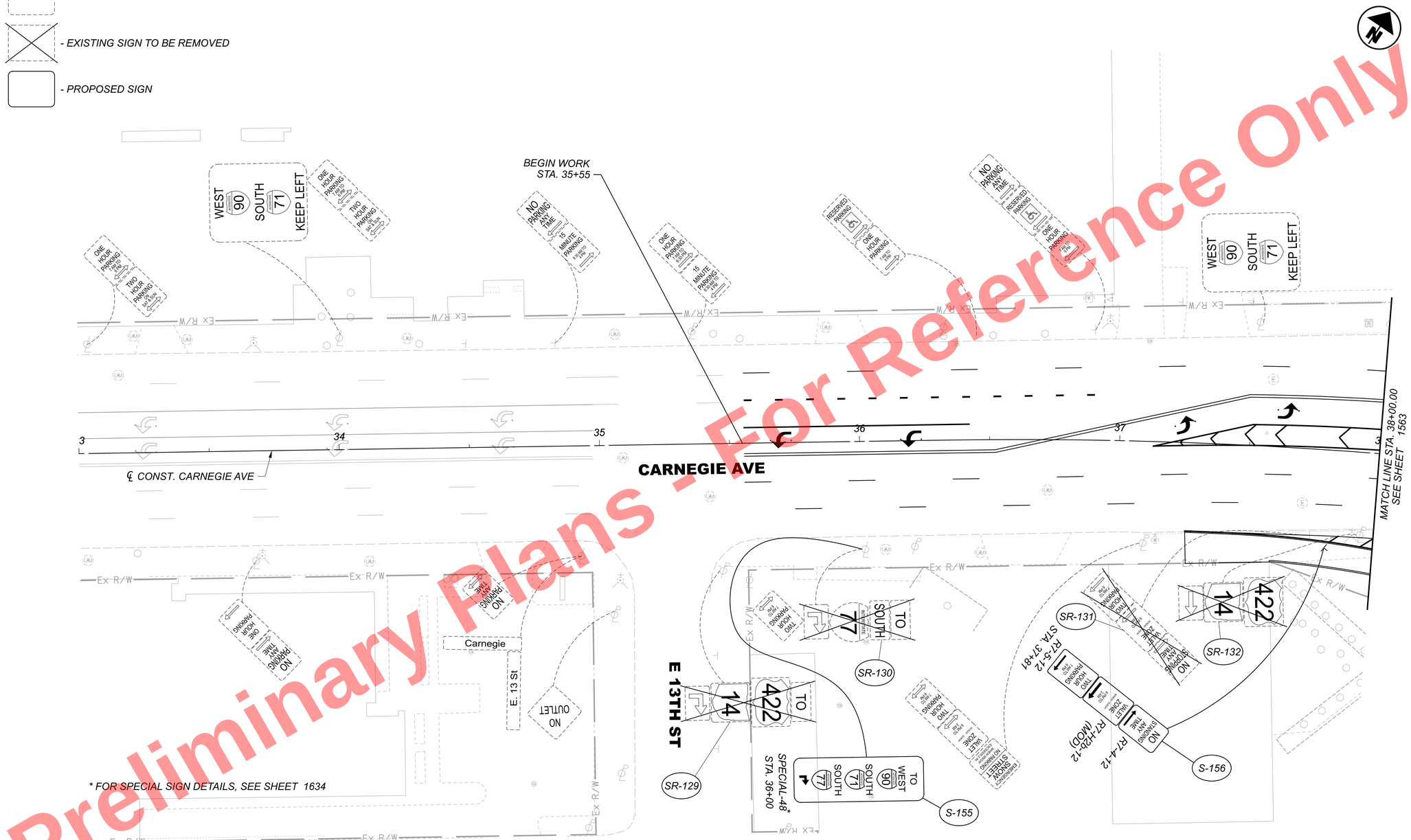

Preliminary Plans - For Reference Only

HORIZONTAL SCALE IN FEET
0 10 20 40

SIGNING PLAN - CARNEGIE AVE. BEGIN TO STA. 38+00.00

DESIGN AGENCY
Michael Baker INTERNATIONAL

DESIGNER RBK
REVIEWER GSH 05/22/24
PROJECT ID 82382
SHEET 1562 TOTAL 2696

CUY-90-16.28 (CCG3A)

MODEL: Carnegie - Plan | PAPERSIZE: 34x22 (In.) DATE: 5/23/2025 TIME: 11:11:41 AM USER: Joseph.Hogan
pw:\\mb-us-pw.bentley.com:mb-us-pw-03\Documents\Cleveland_OH\OL_Projects\ODOT\Distrfct#12\82382\400-Engineering\Traffic\Sheets\82382_TP7ill.dgn

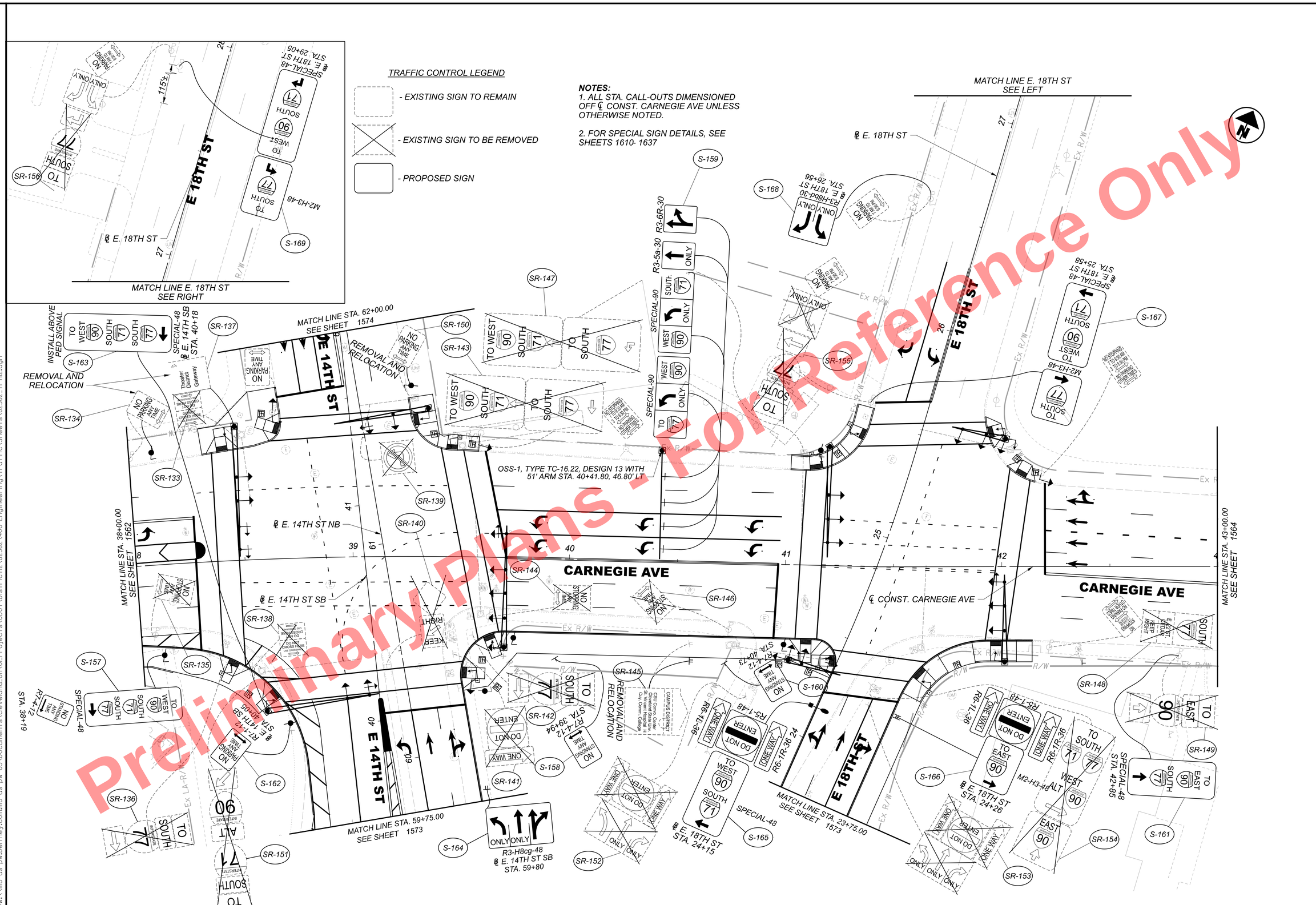

Preliminary Plans - For Reference Only

HORIZONTAL SCALE IN FEET
0 10 20 40

SIGNING PLAN - CARNEGIE AVE.
STA. 38+00.00 TO STA. 43+00.00

DESIGN AGENCY
Michael Baker INTERNATIONAL

DESIGNER RBK
REVIEWER GSH 05/22/24
PROJECT ID 82382
SHEET 1563 TOTAL 2696

CUY-90-16.28 (CCG3A)

MODEL: Carnegie - Plan 2 PAPERSIZE: 34x22 (in.) DATE: 5/23/2025 TIME: 11:11:55 AM USER: Joseph.Hogan
pw:\\mb-us-pw.bentley.com:mb-us-pw-03\Documents\Cleveland_OH\OI_Projects\ODOT\District12\82382\400-Engineering\Traffic\Sheets\82382_TP7112.dgn

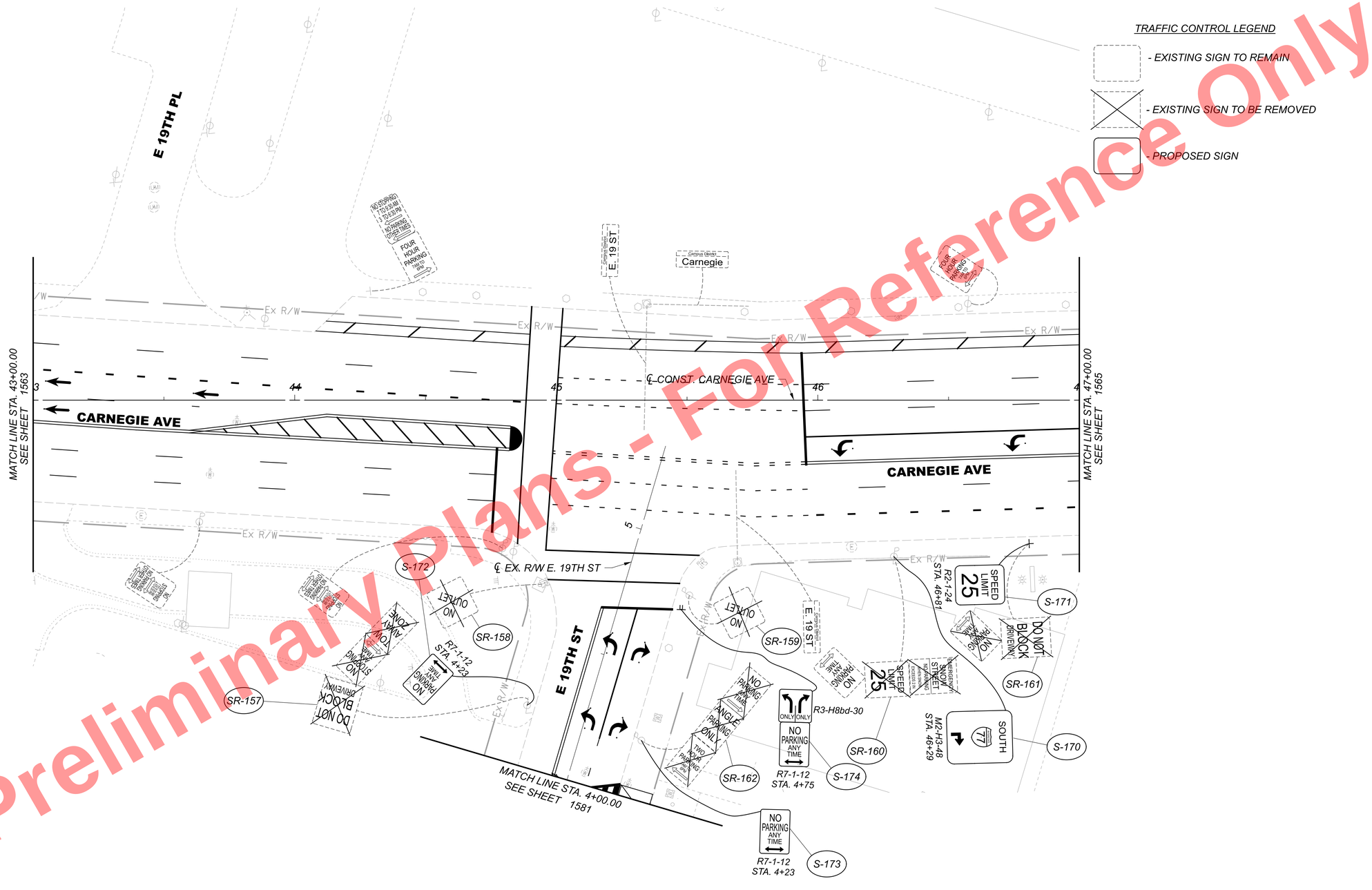

Preliminary Plans - For Reference Only

HORIZONTAL SCALE IN FEET
0 10 20 40

SIGNING PLAN - CARNEGIE AVE. STA. 43+00.00 TO STA. 47+00.00

CUY-90-16.28 (CCG3A)

DESIGN AGENCY
Michael Baker INTERNATIONAL

DESIGNER RBK
REVIEWER GSH 05/22/24
PROJECT ID 82382
SHEET 1564 TOTAL 2696

MODEL: Carnegie - Plan 3 PAPERSIZE: 34x22 (in.) DATE: 5/23/2025 TIME: 11:21:13 AM USER: Joseph.Hogan
pw:\\mb-us-pw.bentley.com:mb-us-pw-03\Documents\Cleveland_OH_OL_Projects\ODOT\District 12\82382\400-Engineering\Traffic\Sheets\82382_TP713.dgn

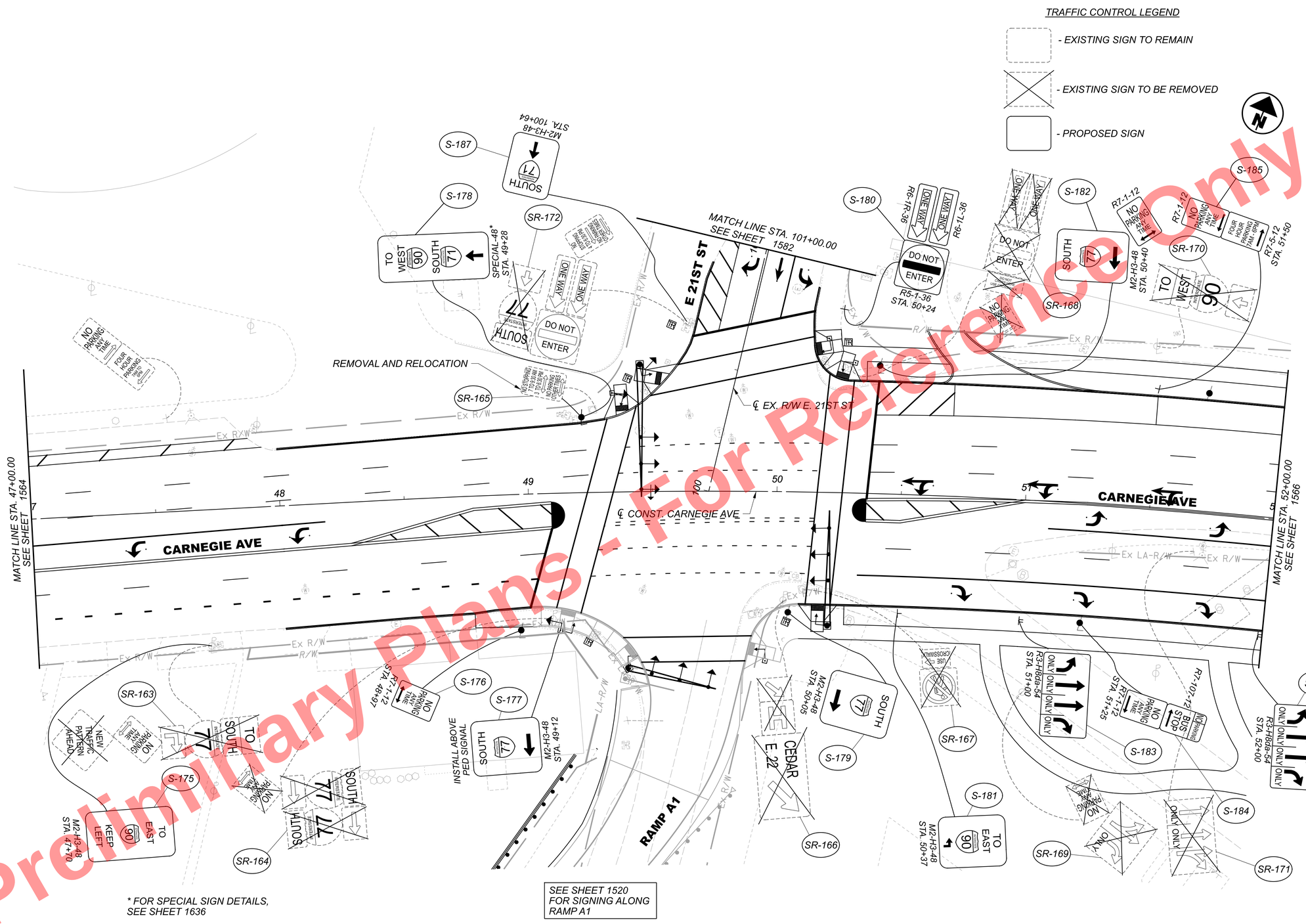

Preliminary Plans - For Reference Only

HORIZONTAL SCALE IN FEET
0 10 20 40

SIGNING PLAN - CARNEGIE AVE.
STA. 47+00.00 TO STA. 52+00.00

DESIGN AGENCY
Michael Baker INTERNATIONAL

DESIGNER
RBK

REVIEWER
GSH 05/22/24

PROJECT ID
82382

SHEET 1565 TOTAL 2696

CUY-90-16.28 (CCG3A)

MODEL: Carnegie - Plan 4 PAPERSIZE: 34x22 (in.) DATE: 5/23/2025 TIME: 11:12:28 AM USER: Joseph.Hogan
pw:\\mb-us-pw.bentley.com:mb-us-pw-03\Documents\Cleveland_OH\OI_Projects\ODOT\District2\82382\400-Engineering\Traffic\Sheets\82382_TP7114.dgn

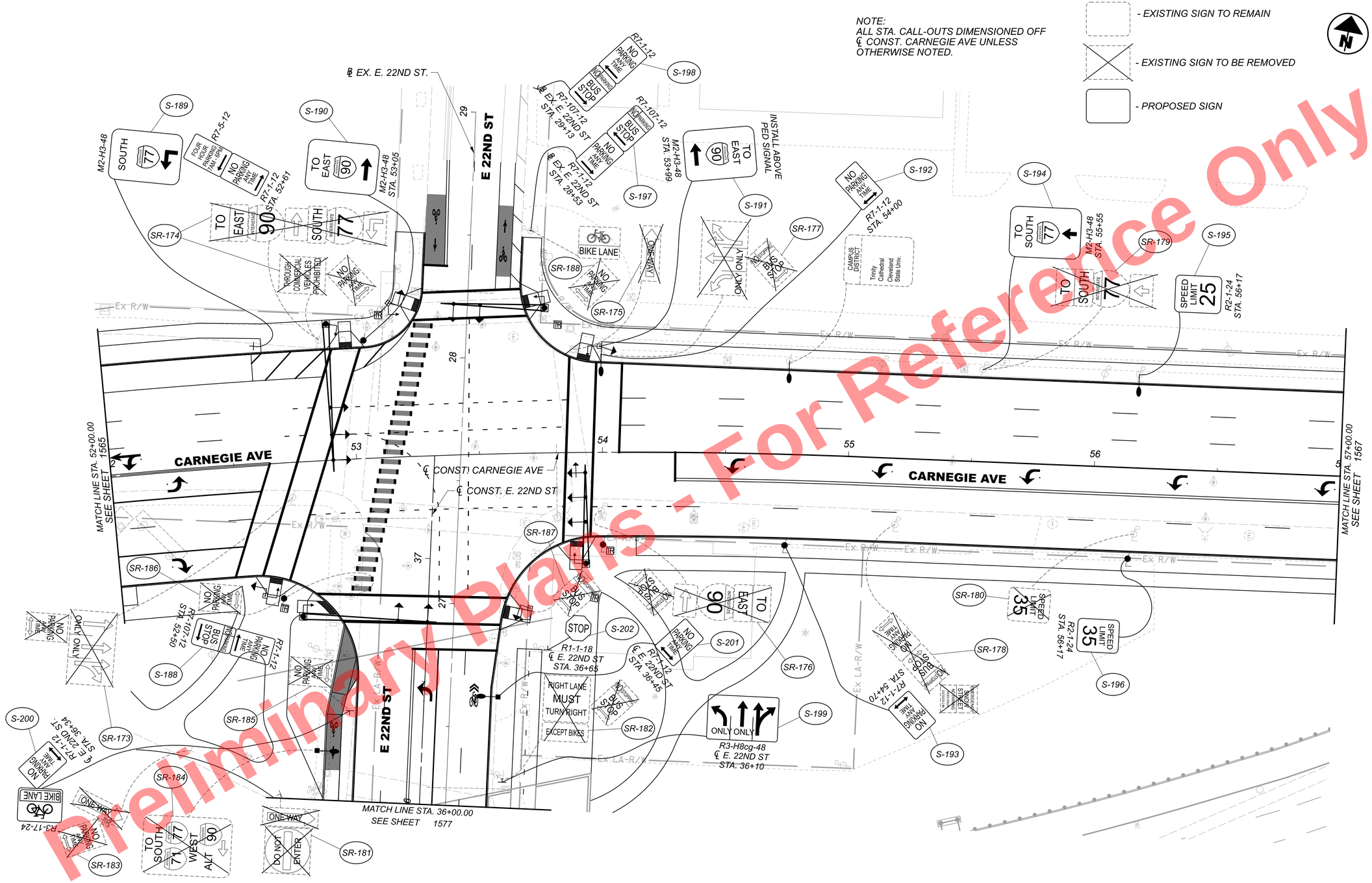

HORIZONTAL SCALE IN FEET
0 10 20 40

SIGNING PLAN - CARNEGIE AVE.
STA. 52+00.00 TO STA. 57+00.00

DESIGN AGENCY
Michael Baker INTERNATIONAL

DESIGNER
RBK

REVIEWER
GSH 05/22/24

PROJECT ID
82382

SHEET 1566 TOTAL 2696

CUY-90-16.28 (CCG3A)

MODEL: Carnegie - Plan 5 PAPERSIZE: 34x22 (in.) DATE: 5/23/2025 TIME: 11:12:41 AM USER: Joseph.Hogan
pw:\\mb-us-pw.bentley.com:mb-us-pw-03\Documents\Cleveland_OH\OI_Projects\ODOT\District12\82382\400-Engineering\Traffic\Sheets\82382_TP7115.dgn

TRAFFIC CONTROL LEGEND

- EXISTING SIGN TO REMAIN
- EXISTING SIGN TO BE REMOVED
- PROPOSED SIGN

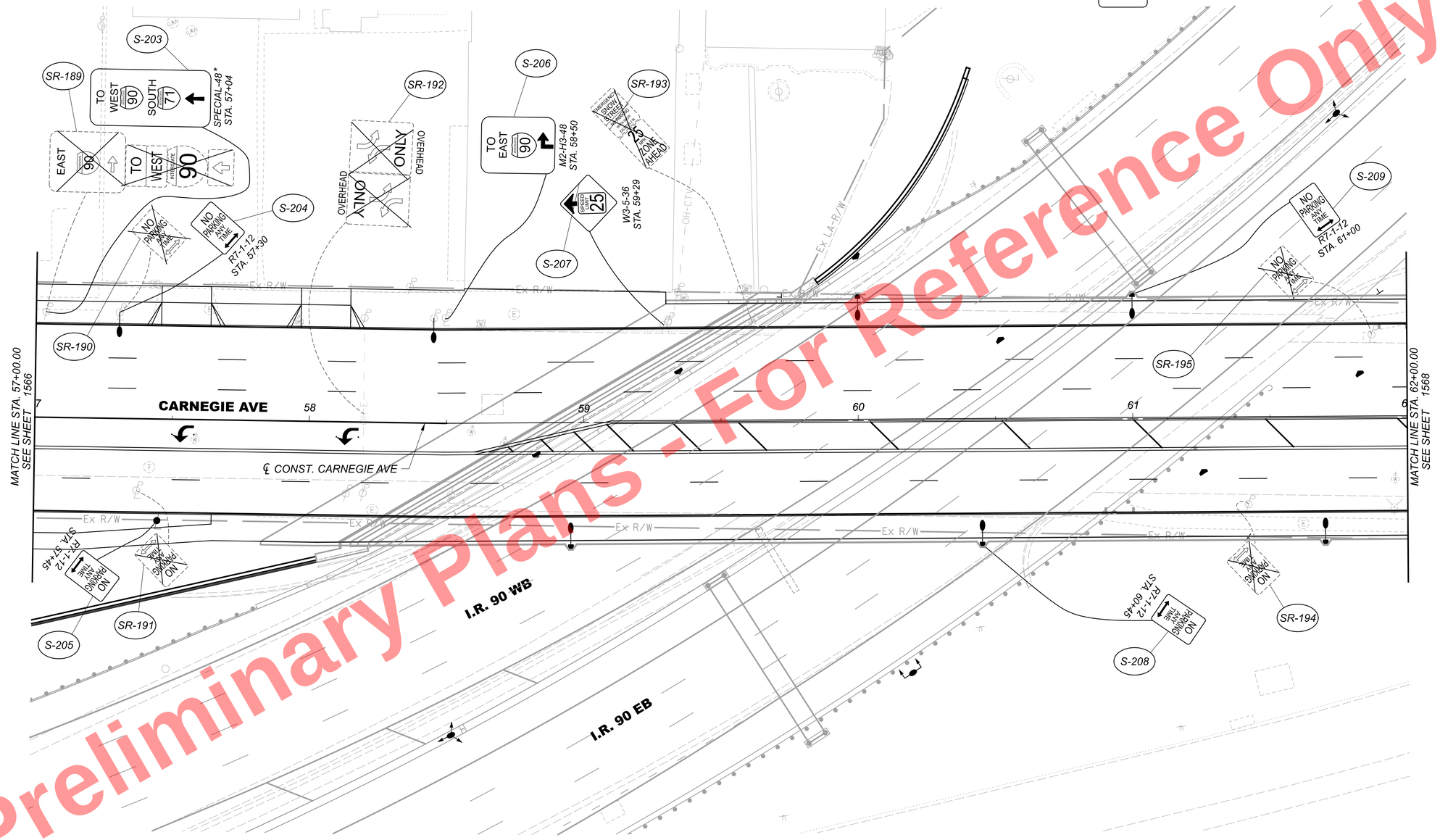

* FOR SPECIAL SIGN DETAILS, SEE SHEET 1636

Preliminary Plans - For Reference Only

HORIZONTAL SCALE IN FEET
0 10 20 40

SIGNING PLAN - CARNEGIE AVE. STA. 57+00.00 TO STA. 62+00.00

CUY-90-16.28 (CCG3A)

DESIGN AGENCY
Michael Baker INTERNATIONAL

DESIGNER RBK
REVIEWER GSH 05/22/24
PROJECT ID 82382
SHEET 1567 TOTAL 2696

MODEL: Carnegie - Plan 6 PAPERSIZE: 34x22 (In.) DATE: 5/23/2025 TIME: 11:12:56 AM USER: Joseph.Hogan
pw:\\mb-us-pw.bentley.com:mb-us-pw-03\Documents\Cleveland_OH\01_Projects\000T\District2\82382\400-Engineering\Traffic\Sheets\82382_TP716.dgn

Preliminary Plans - For Reference Only

TRAFFIC CONTROL LEGEND

- EXISTING SIGN TO REMAIN
- EXISTING SIGN TO BE REMOVED
- PROPOSED SIGN

NOTE:
ALL STA. CALL-OUTS DIMENSIONED OFF ℄ CONST. CARNEGIE AVE UNLESS OTHERWISE NOTED.

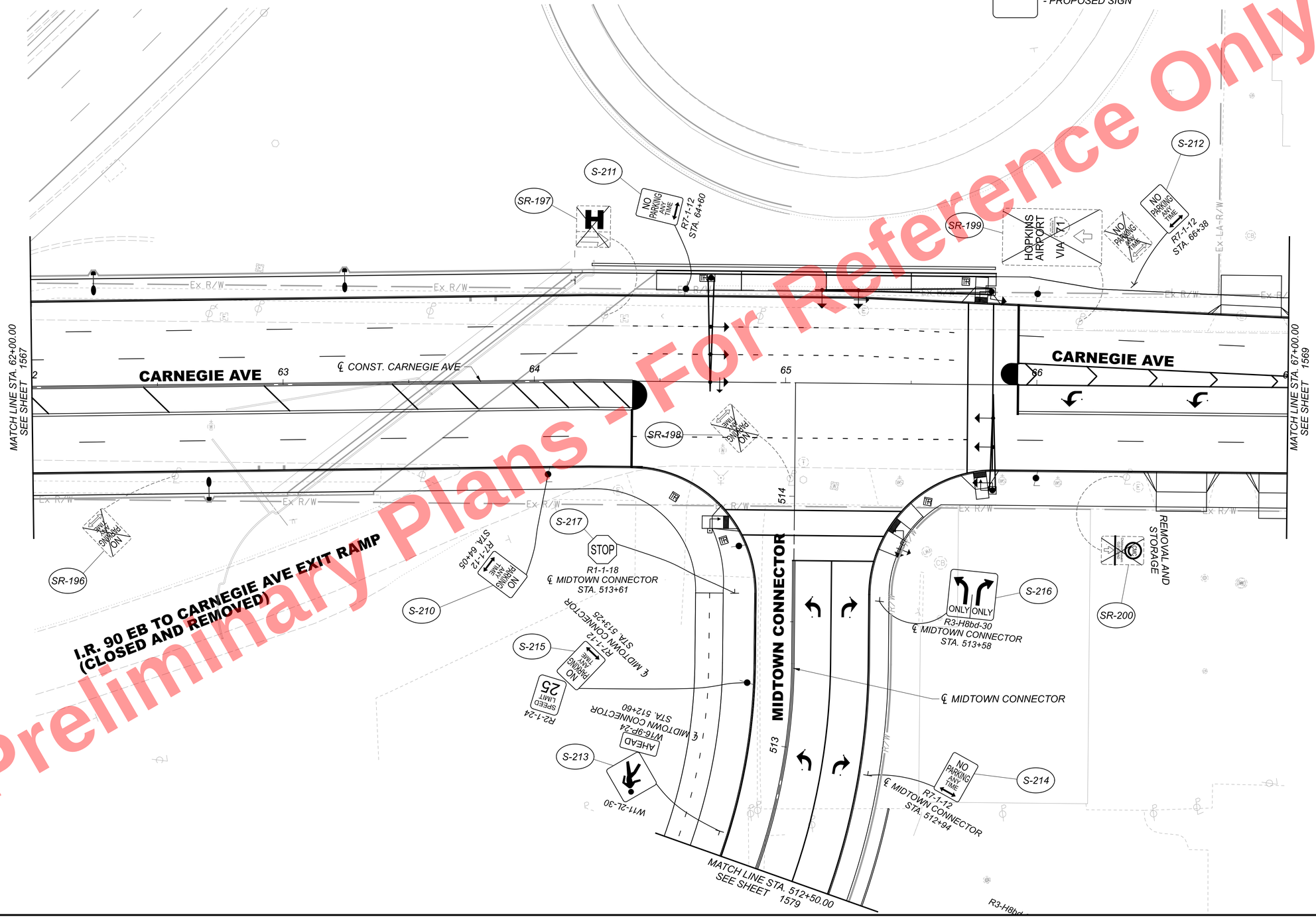

HORIZONTAL SCALE IN FEET
0 10 20 40

SIGNING PLAN - CARNEGIE AVE. STA. 62+00.00 TO STA. 67+00.00

CUY-90-16.28 (CCG3A)

MODEL: Carnegie - Plan 7 PAPERSIZE: 34x22 (In.) DATE: 5/23/2025 TIME: 11:51:11 AM USER: Joseph.Hogan
pw:\\mb-us-pw.bentley.com:mb-us-pw-03\Documents\Cleveland_OH\01_Projects\ODOT\District2\82382\400-Engineering\Traffic\Sheets\82382_TP7IT.dgn

DESIGN AGENCY
Michael Baker INTERNATIONAL

DESIGNER	RBK
REVIEWER	GSH 05/22/24
PROJECT ID	82382
SHEET	1568
TOTAL	2696

Preliminary Plans - For Reference Only

TRAFFIC CONTROL LEGEND

- EXISTING SIGN TO REMAIN
- EXISTING SIGN TO BE REMOVED
- PROPOSED SIGN

HORIZONTAL SCALE IN FEET
0 10 20 40

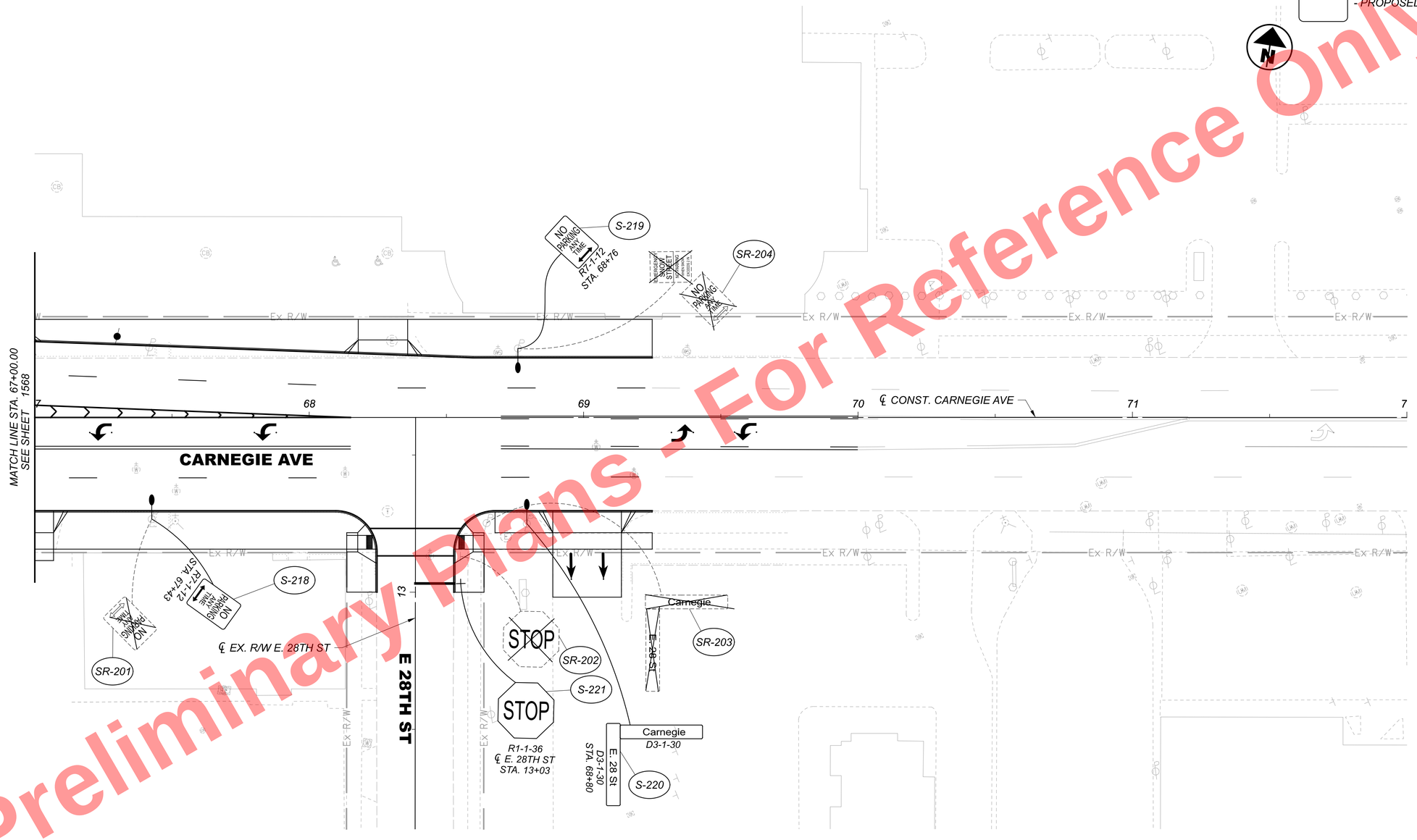

SIGNING PLAN - CARNEGIE AVE. STA. 67+00.00 TO END

DESIGN AGENCY	Michael Baker INTERNATIONAL
DESIGNER	RBK
REVIEWER	GSH 05/22/24
PROJECT ID	82382
SHEET	1569
TOTAL	2696

CUY-90-16.28 (CCG3A)

MODEL: Carnegie - Plan 8 PAPERSIZE: 34x22 (in.) DATE: 5/23/2025 TIME: 11:35:25 AM USER: Joseph.Hogan
pw:\\mb-us-pw.bentley.commb-us-pw-03\Documents\Cleveland_OH\01_Projects\ODOT\District2\82382\400-Engineering\Traffic\Sheets\82382_TP718.dgn

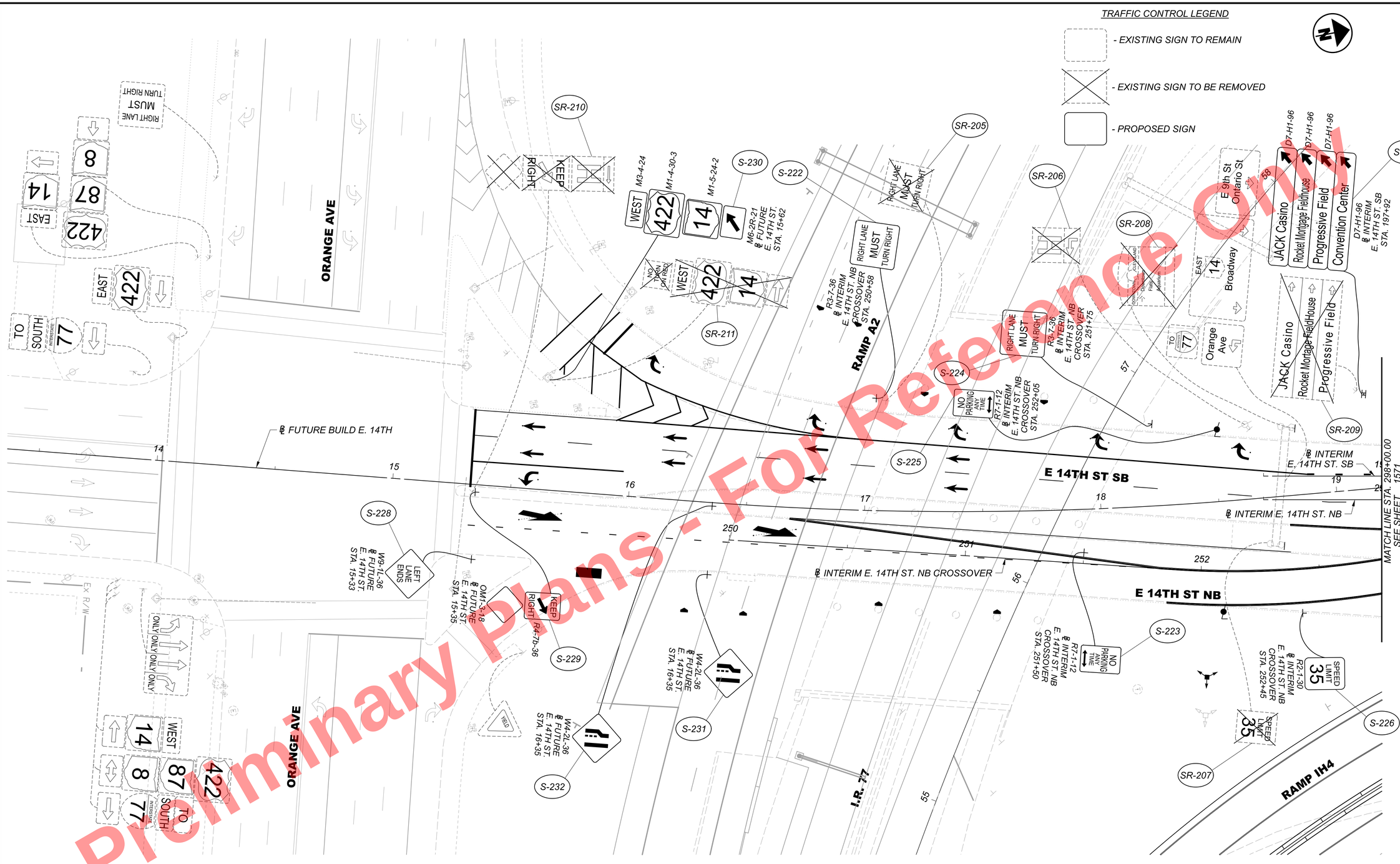

HORIZONTAL SCALE IN FEET
0 10 20 40

SIGNING PLAN - E. 14TH ST. NB
BEGIN TO STA. 298+00.00

CUY-90-16.28 (CCG3A)

MODEL: 82382_TP726 PAPERSIZE: 34x22 (in.) DATE: 5/23/2025 TIME: 11:39 AM USER: Joseph.Hogan
pw:\\mb-us-pw.bentley.com:mb-us-pw-03\Documents\Cleveland_OH\DL_Projects\ODOT\District2\82382\400-Engineering\Traffic\Sheets\82382_TP726.dgn

DESIGN AGENCY
Michael Baker INTERNATIONAL

DESIGNER RBK
REVIEWER GSH 05/22/24
PROJECT ID 82382
SHEET 1570 TOTAL 2696

TRAFFIC CONTROL LEGEND

- EXISTING SIGN TO REMAIN
- EXISTING SIGN TO BE REMOVED
- PROPOSED SIGN

HORIZONTAL SCALE IN FEET
0 10 20 40

SIGNING PLAN - E. 14TH ST. NB
STA. 298+00.00 TO STA. 303+00.00

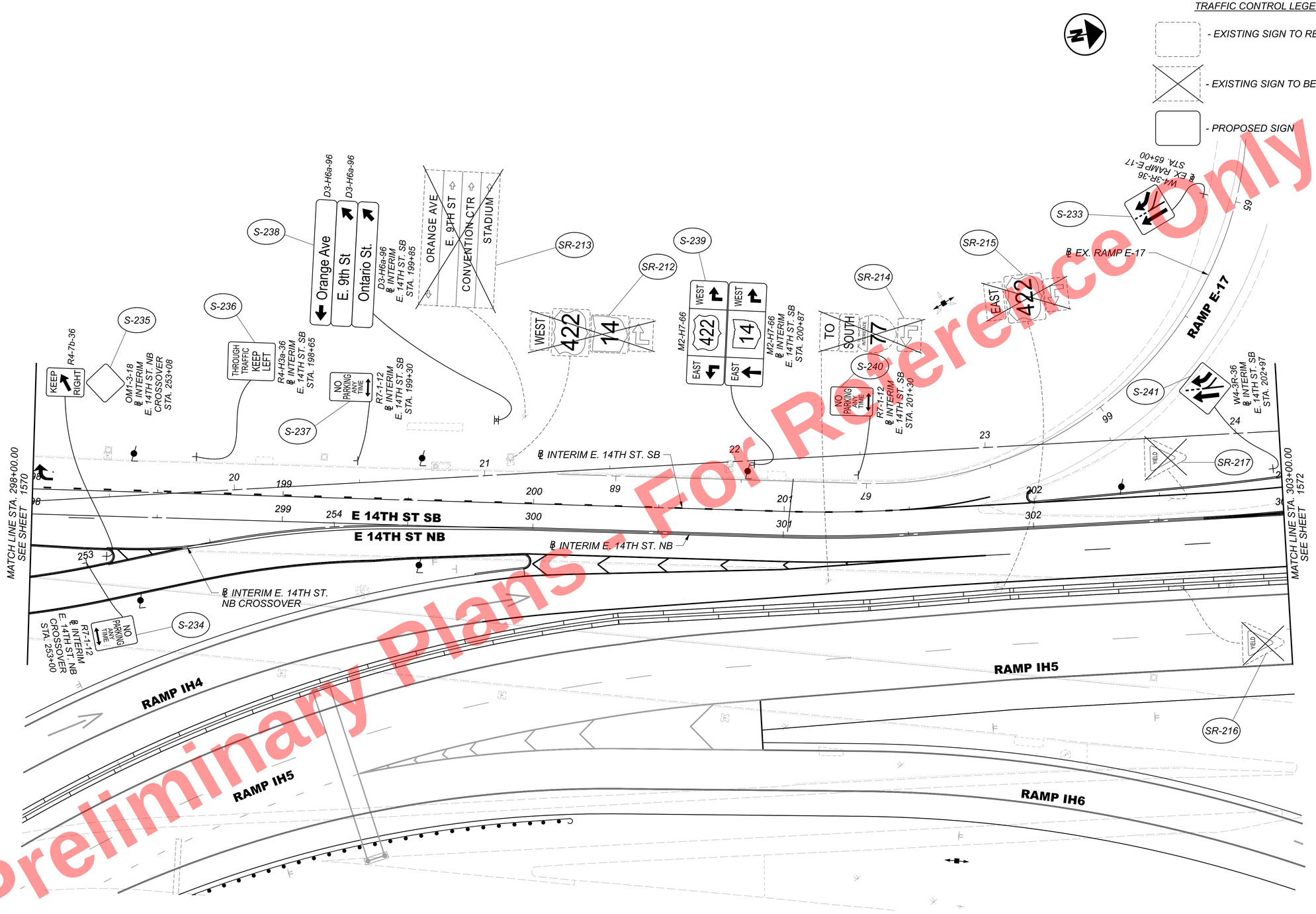

Preliminary Plans - For Reference Only

DESIGN AGENCY
Michael Baker INTERNATIONAL

DESIGNER RBK
REVIEWER GSH 05/22/24
PROJECT ID 82382
SHEET 1571 TOTAL 2696

CUY-90-16.28 (CCG3A)

MODEL: 82382_TP72I7 PAPERSIZE: 34x22 (in.) DATE: 5/23/2025 TIME: 11:53:53 AM USER: Joseph.Hogan
pw:\\mb-us-pw.bentley.com:mb-us-pw-03\Documents\Cleveland_OH\01_Projects\000T\Dist#1c#12\82382\400-Engineering\Traffic\Sheets\82382_TP72I2.dgn

TRAFFIC CONTROL LEGEND

- EXISTING SIGN TO REMAIN
- EXISTING SIGN TO BE REMOVED
- PROPOSED SIGN

HORIZONTAL SCALE IN FEET
0 10 20 40

SEE SHEET 1531 FOR OVERHEAD GORE SIGNS AND SIGNING ALONG RAMP IJ3

RAMP IJ3

E 14TH ST SB

E 14TH ST NB

RAMP H5

RAMP B6

℄ INTERIM E. 14TH ST. SB

℄ INTERIM E. 14TH ST. NB

℄ E. 14TH ST. NB

OM1-3-18
℄ INTERIM E. 14TH ST. SB
STA. 204+02

S-250 — KEEP RIGHT — R4-7b-36

SR-220 — Broadway — E 22nd St — E 9th St

S-251 — NO PARKING ANY TIME — R7-1-12 STA. 206+00

S-244 — R5-1-48 DO NOT ENTER — WRONG WAY — R5-1a-42 STA. 53+04

SR-221

S-248 — NO PARKING ANY TIME — R7-1-12 STA. 54+75

S-242 — NO PARKING ANY TIME — R7-1-12 STA. 52+75

SR-218 — WRONG WAY

S-243 — NO PARKING ANY TIME — R7-1-12 STA. 52+75

R5-1-48 DO NOT ENTER — WRONG WAY — R5-1a-42 STA. 53+04

S-245

SR-219 — WRONG WAY

S-249 — TO KEEP RIGHT (90) — M2-H3-48 STA. 54+00

S-246

S-247 — TO KEEP RIGHT (90) — M2-H3-48 STA. 54+00

NO PARKING ANY TIME — R7-1-12 STA. 54+75

MATCH LINE STA. 303+00.00 SEE SHEET 1571

MATCH LINE STA. 55+00.00 R2 SEE SHEET 1573

1609 207 206 205 204 203 1571 53 54 305 1610 1611

Preliminary Plans - For Reference Only

SIGNING PLAN - E. 14TH ST. NB
STA. 303+00.00 TO STA. 55+00.00

DESIGN AGENCY
Michael Baker INTERNATIONAL

DESIGNER RBK
REVIEWER GSH 05/22/24
PROJECT ID 82382
SHEET 1572 TOTAL 2696

CUY-90-16.28 (CCG3A)

MODEL: 82382_TP7218 PAPERSIZE: 34x22 (in.) DATE: 5/23/2025 TIME: 11:40:09 AM USER: Joseph.Hogan
pw:\\mb-us-pw.bentley.com:mb-us-pw-03\Documents\Cleveland_OH_OL_Projects\ODOT\Districts\12\82382\400-Engineering\Traffic\Sheets\82382_TP7213.dgn

NOTE:
ALL STA. CALL-OUTS DIMENSIONED OFF
℄ E. 14TH ST NB UNLESS OTHERWISE NOTED.

SEE SHEET 1528
FOR OVERHEAD GORE
SIGNS AND SIGNING
ALONG RAMP A3

TRAFFIC CONTROL LEGEND

- EXISTING SIGN TO REMAIN
- EXISTING SIGN TO BE REMOVED
- PROPOSED SIGN

HORIZONTAL
SCALE IN FEET
0 10 20 40

SIGNING PLAN - E. 14TH ST. NB
STA. 55+00.00 TO STA. 59+75.00

Preliminary Plans - For Reference Only

MATCH LINE STA. 55+00.00 R2
SEE SHEET 1572

MATCH LINE STA. 59+75.00
SEE SHEET 1563

MATCH LINE STA. 23+75.00
SEE SHEET 1563

MATCH LINE STA 601+00.00
SEE SHEET 1581

E 14TH ST SB

E 14TH ST NB

℄ INTERIM E. 14TH ST. SB

℄ E. 14TH ST. SB

℄ E. 14TH ST. NB

RAMP A3

RAMP A1

E 18TH ST

CENTRAL AVE

℄ CENTRAL AVE. CONNECTOR

I.R. 90 EB

I.R. 90 WB

E. 22 nd St

Broadway Ave TO 14

Carnegie Ave

E 18th St

E 14th St

Playhouse Sq

SR-225 SR-226 SR-227 SR-222 SR-224 SR-228 SR-230 SR-232 SR-231 SR-233

S-252 S-253 S-254 S-255 S-256 S-257 S-258 S-259 S-260 S-261 S-262 S-263 S-264 S-265 S-266 S-267 S-268 S-269 S-270 S-271

R5-1-48 DO NOT ENTER
WRONG WAY R5-1a-42 STA. 55+60
STA. 56+67
STA. 58+76
STA. 59+16
STA. 59+90
STA. 60+71
STA. 61+54

R2-1-30 SPEED LIMIT 35

R7-1-12 ℄ E. 14TH ST SB STA. 36+80
R7-1-12 STA. 57+00
R7-1-12 ℄ E. 18TH ST STA. 20+80
R7-1-12 ℄ E. 18TH ST STA. 22+55
R7-1-12 ℄ E. 18TH ST STA. 23+55
R7-1-12 ℄ CENTRAL AVE. CONNECTOR STA 600+79
R7-1-12 ℄ E. 18TH ST STA. 23+70

NO PARKING ANY TIME
NO PARKING ANY TIME ℄ E. 18TH ST STA. 22+65

R4-7b-36 KEEP RIGHT
OM1-3-18 STA. 59+16

M1-1-24-2 TO EAST 90
M1-1-24-2 TO WEST 90
M1-2-24 TO EAST 90
M1-2-24 TO WEST 90
M1-2-24 ℄ E. 18TH ST STA. 22+55
M1-2-24 ℄ E. 18TH ST STA. 23+30
M1-2-24 ℄ E. 18TH ST STA. 23+55
M1-2-24 ℄ E. 18TH ST STA. 23+70
M1-2-24 ℄ CENTRAL AVE. CONNECTOR STA 600+54
M1-2-24 ℄ CENTRAL AVE. CONNECTOR STA 600+79
M1-2-24 ℄ E. 18TH ST STA. 22+65
M1-2-24 ℄ E. 18TH ST STA. 23+55
M1-2-24 ℄ E. 18TH ST STA. 23+70
M1-2-24 ℄ CENTRAL AVE. CONNECTOR STA 600+54
M1-2-24 ℄ CENTRAL AVE. CONNECTOR STA 600+79
M1-2-24 ℄ E. 18TH ST STA. 22+55
M1-2-24 ℄ E. 18TH ST STA. 23+30

Preliminary Plans - For Reference Only

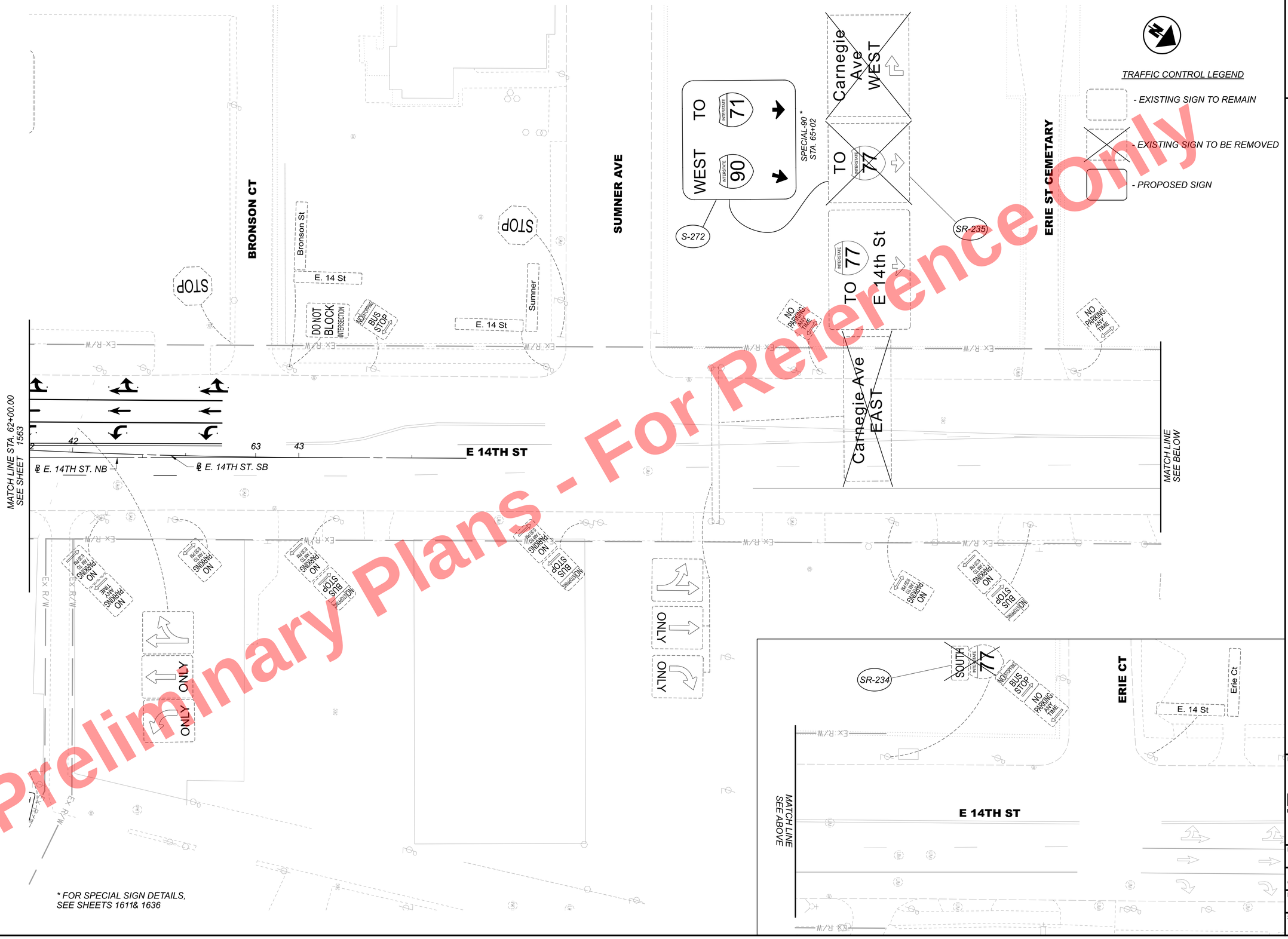

* FOR SPECIAL SIGN DETAILS, SEE SHEETS 1611& 1636

SIGNING PLAN - E. 14TH ST. NB STA. 62+00.00 TO END

CUY-90-16.28 (CCG3A)

MODEL: 82382_TP7215 PAPERSIZE: 34x22 (in.) DATE: 5/23/2025 TIME: 11:14:40 AM USER: Joseph.Hogan
pw:\\mb-us-pw.bentley.com:mb-us-pw-03\Documents\Cleveland.OH\OI_Projects\ODOT\District2\82382\400-Engineering\Traffic\Sheets\82382_TP7215.dgn

DESIGN AGENCY
Michael Baker INTERNATIONAL

DESIGNER	RBK
REVIEWER	GSH 05/22/24
PROJECT ID	82382
SHEET	1574
TOTAL	2696

SEE SHEET 1538
FOR SIGNING
ALONG RAMP H6

SR-237

RAMP H6

R4-7b-36
KEEP RIGHT

S-273

SR-238

OM1-3-18
STA. 24+23

E 22ND ST

℄ CONST. E. 22ND ST.

MATCH LINE STA. 27+00.00
SEE SHEET 1576

SR-236

S-274

R3-H8bd-30
℄ COMMUNITY COLLEGE AVE.
STA. 61+02

℄ COMMUNITY COLLEGE AVE.

COMMUNITY COLLEGE AVE

S-275

R3-H8bd-30
℄ COMMUNITY COLLEGE AVE.
STA. 62+05

NOTE:
ALL STA. CALL-OUTS DIMENSIONED OFF ℄ E. 22ND ST. UNLESS OTHERWISE NOTED.

TRAFFIC CONTROL LEGEND

- EXISTING SIGN TO REMAIN
- EXISTING SIGN TO BE REMOVED
- PROPOSED SIGN

Preliminary Plans - Not For Reference Only

HORIZONTAL SCALE IN FEET
0 10 20 40

SIGNING PLAN - E. 22ND ST. BEGIN TO STA. 27+00.00

DESIGN AGENCY
Michael Baker INTERNATIONAL

DESIGNER RBK
REVIEWER GSH 05/22/24
PROJECT ID 82382
SHEET 1575 TOTAL 2696

CUY-90-16.28 (CCG3A)

MODEL: 82382_TP74ll PAPERSIZE: 34x22 (in.) DATE: 5/23/2025 TIME: 11:14:49 AM USER: Joseph.Hogan
pw:\\mb-us-pw.bentley.com:mb-us-pw-03\Documents\Cleveland.OH\Oi_Projects\ODOT\District2\82382\400-Engineering\Traffic\Sheets\82382_TP74ll.dgn

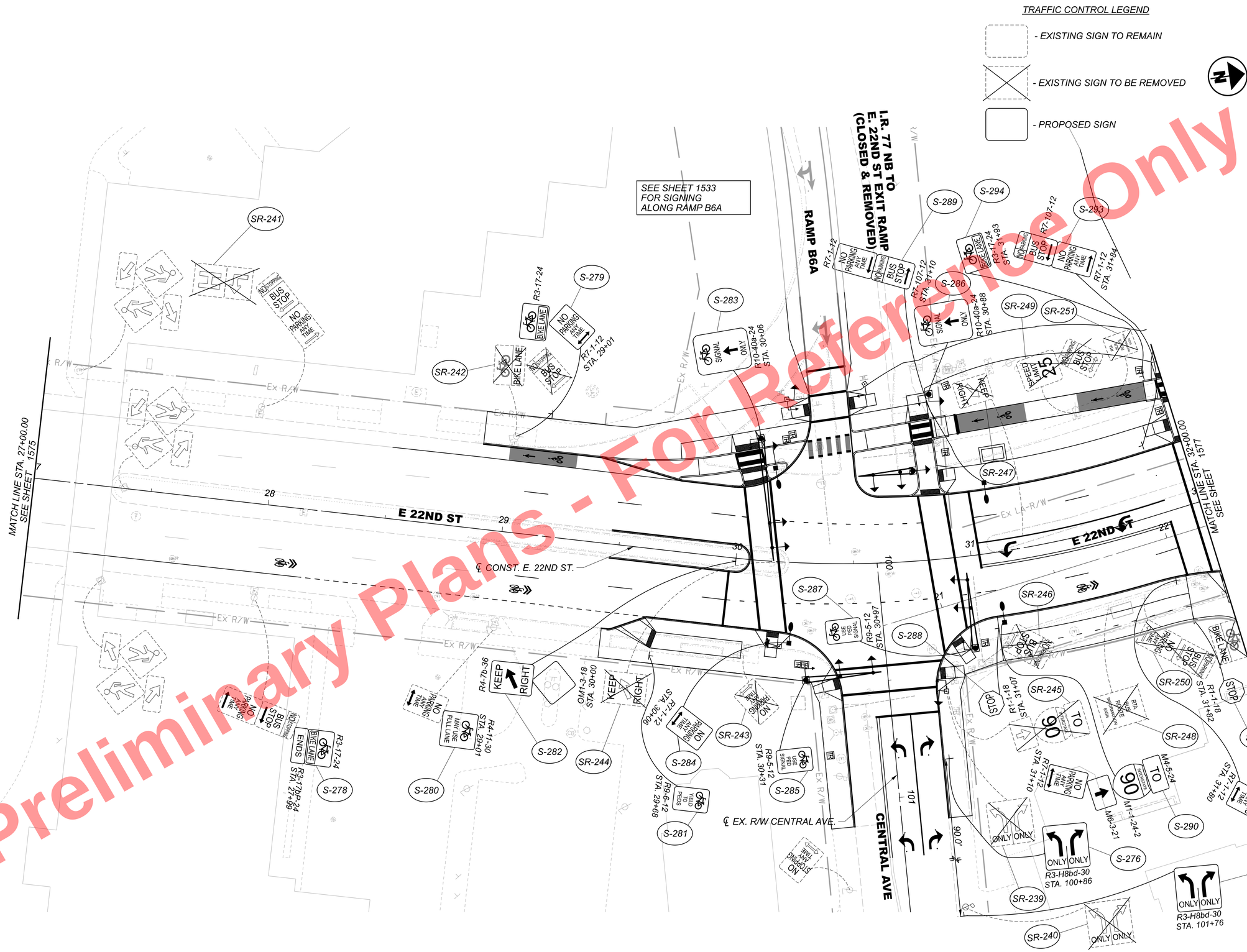

Preliminary Plans - For Reference Only

HORIZONTAL SCALE IN FEET
0 10 20 40

SIGNING PLAN - E. 22ND ST. STA. 27+00.00 TO STA. 32+00.00

DESIGN AGENCY
Michael Baker INTERNATIONAL

DESIGNER RBK
REVIEWER GSH 05/22/24
PROJECT ID 82382
SHEET 1576 TOTAL 2696

CUY-90-16.28 (CCG3A)

MODEL: 82382_TP7412 PAPERSIZE: 34x22 (in.) DATE: 5/23/2025 TIME: 11:15:03 AM USER: Joseph.Hogan
pw:\\mb-us-pw.bentley.commb-us-pw-03\Documents\Cleveland.OH\OI_Projects\OOOT\District2\82382\400-Engineering\Traffic\Sheets\82382_TP7412.dgn

SEE SHEET 1533
FOR SIGNING
ALONG RAMP B6

℄ RAMP B6

RAMP B6

SR-252

BUS STOP

NO PARKING ANY TIME

S-305

SIGNAL ONLY

R10-40a-24
STA. 32+56

I.R. 90 EB

I.R. 90 WB

SR-261

ONLY

NO PARKING ANY TIME

SR-259

ONE WAY

DO NOT ENTER

ONE WAY

S-311

SR-257

SR-255

S-309

NO PARKING ANY TIME

R7-1-12
STA. 33+26

BIKE LANE

NO PARKING ANY TIME

R2-1-24

SPEED LIMIT 25

NO PARKING ANY TIME

R7-1-12
STA. 34+87

KEEP RIGHT

MATCH LINE STA. 32+00.00
SEE SHEET 1576

Ex LA-R/W

S-306

33

34

35

3

2

23

24

25

26

E 22ND ST

℄ CONST. E. 22ND ST.

MATCH LINE STA. 36+00.00
SEE SHEET 1566

500

S-304

R9-5-12
STA. 32+13
SIGNAL ONLY USE PED SIGNAL

STOP

R1-1-18
STA. 32+94

R9-5-12
STA. 32+79
SIGNAL ONLY USE PED SIGNAL

S-308

℄ MIDTOWN CONNECTOR

S-299

STOP

R1-1-18
℄ MIDTOWN CONNECTOR
STA. 500+59

R7-1-12
STA. 32+93

NO PARKING ANY TIME

BUS STOP

NO PARKING

SR-256

S-295

STOP

R1-1-24
℄ MIDTOWN CONNECTOR
STA. 500+46

CEDAR AVE

S-298

R3-H6a-30
℄ MIDTOWN CONNECTOR
STA. 500+59

S-307

R7-107-12

R7-1-12
STA. 32+99

NO PARKING ANY TIME

MAY USE FULL LANE

R4-11-30

S-312

R7-1-12
℄ MIDTOWN CONNECTOR
STA. 500+60

S-253

R7-107-12
STA. 33+52

BUS STOP

NO PARKING

NO PARKING ANY TIME

MAY USE FULL LANE

NO PARKING ANY TIME

S-296

R7-107-12

S-301

S-310

R7-1-12
℄ MIDTOWN CONNECTOR
STA. 501+18

ONLY

ONLY

SR-258

SR-260

℄ MIDTOWN CONNECTOR
STA. 500+58

OM1-3-18

R4-7b-24

KEEP RIGHT

NO PARKING ANY TIME

TOW AWAY ZONE

SR-254

S-297

R4-7b-24

KEEP RIGHT

SR-262

OM1-3-18
℄ MIDTOWN CONNECTOR
STA. 501+01

S-300

R3-H6a-30

℄ MIDTOWN CONNECTOR
STA. 501+50

R7-107-12

MATCH LINE STA. 502+00.00
SEE SHEET 1578

S-302

BUS STOP

NO PARKING

NO PARKING ANY TIME

S-303

R7-1-12
℄ MIDTOWN CONNECTOR
STA. 501+97

Preliminary Plans - For Reference Only

N

TRAFFIC CONTROL LEGEND

- EXISTING SIGN TO REMAIN
- EXISTING SIGN TO BE REMOVED
- PROPOSED SIGN

NOTE:
ALL STA. CALL-OUTS DIMENSIONED OFF ℄ CONST. E. 22ND ST. UNLESS OTHERWISE NOTED.

HORIZONTAL SCALE IN FEET
0 10 20 40

SIGNING PLAN - E. 22ND ST.
STA. 32+00.00 TO STA. 36+00.00

CUY-90-16.28 (CCG3A)

MODEL: 82382_TP7413 PAPERSIZE: 34x22 (in.) DATE: 5/23/2025 TIME: 11:15:20 AM USER: Joseph.Hogan
pw:\\mb-us-pw.bentley.com:mb-us-pw-03\Documents\Cleveland_OH\01_Projects\0001\District2\82382\400-Engineering\Traffic\Sheets\82382_TP7413.dgn

DESIGN AGENCY
Michael Baker INTERNATIONAL

DESIGNER
RBK

REVIEWER
GSH 05/22/24

PROJECT ID
82382

SHEET 1577 | TOTAL 2696

TRAFFIC CONTROL LEGEND

- EXISTING SIGN TO REMAIN
- EXISTING SIGN TO BE REMOVED
- PROPOSED SIGN

HORIZONTAL SCALE IN FEET
0 10 20 40

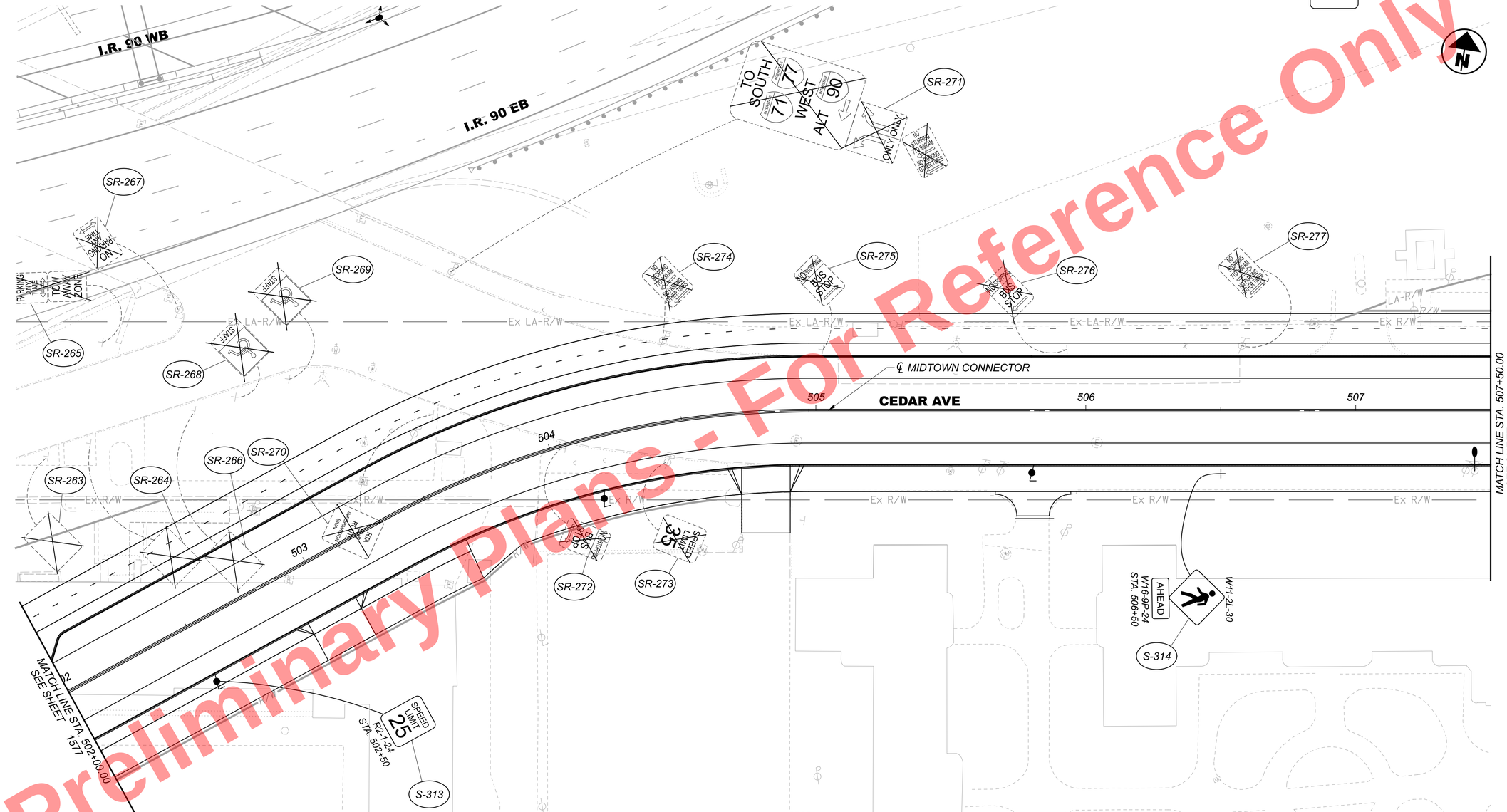

Preliminary Plans - For Reference Only

SIGNING PLAN - MIDTOWN CONNECTOR STA. 502+00.00 TO STA. 507+50.00

CUY-90-16.28 (CCG3A)

MODEL: 82382_TP79i3 PAPERSIZE: 34x22 (in.) DATE: 5/23/2025 TIME: 11:35:35 AM USER: Joseph.Hogan
pw:\\mb-us-pw.bentley.com:mb-us-pw-03\Documents\Cleveland_OH\OI_Projects\ODOT\District12\82382\400-Engineering\Traffic\Sheets\82382_TP79i.dgn

DESIGN AGENCY
Michael Baker INTERNATIONAL

DESIGNER	RBK
REVIEWER	GSH 05/22/24
PROJECT ID	82382
SHEET	1578
TOTAL	2696

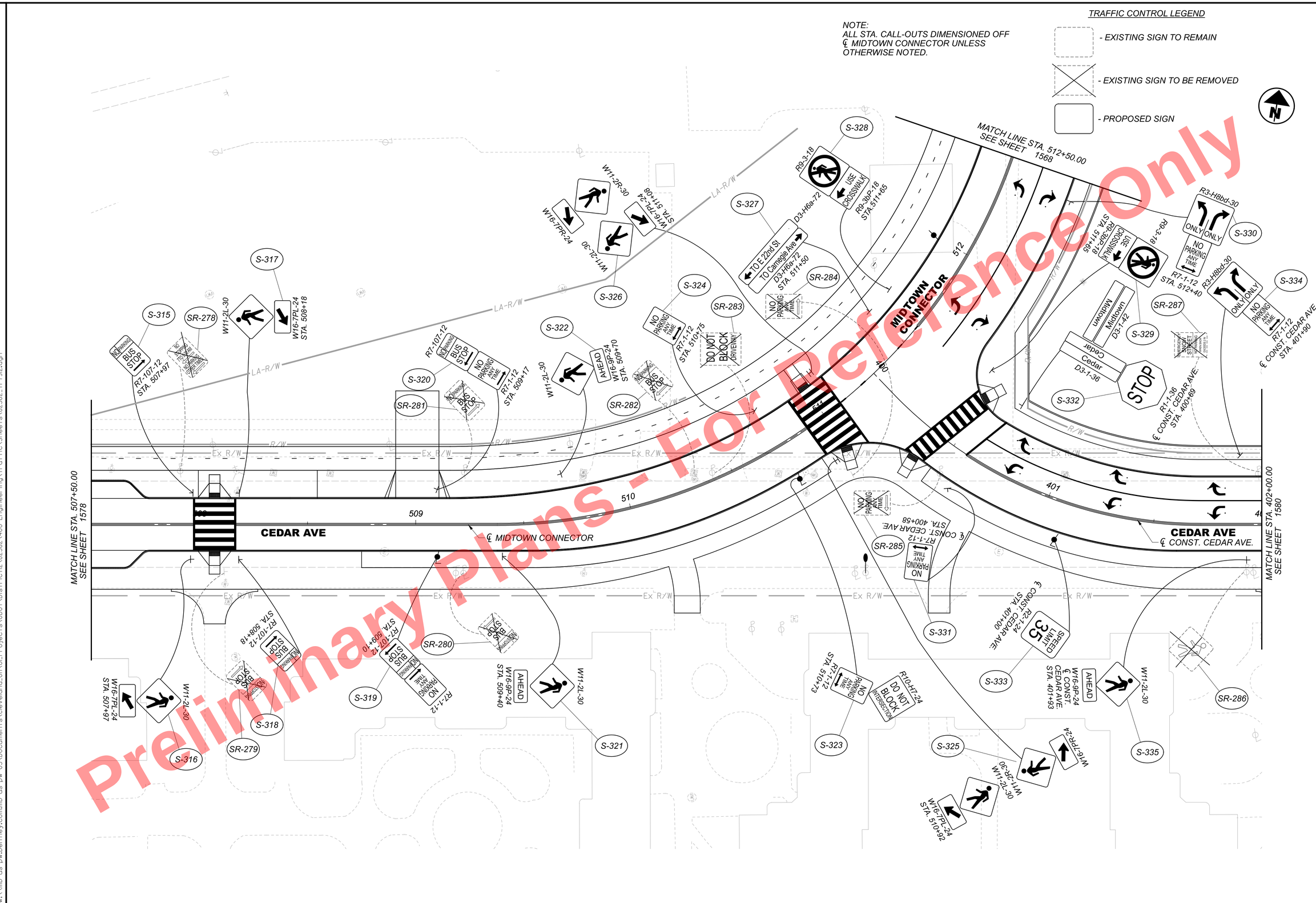

Preliminary Plans - For Reference Only

HORIZONTAL SCALE IN FEET
0 10 20 40

SIGNING PLAN - MIDTOWN CONNECTOR
STA. 507+50.00 TO STA. 512+50.00

DESIGN AGENCY
Michael Baker INTERNATIONAL

DESIGNER
RBK

REVIEWER
GSH 05/22/24

PROJECT ID
82382

SHEET 1579 TOTAL 2696

CUY-90-16.28 (CCG3A)

MODEL: 82382_TP79II PAPERSIZE: 34x22 (in.) DATE: 5/23/2025 TIME: 11:15:50 AM USER: Joseph.Hogan
pw:\\mb-us-pw.bentley.com:mb-us-pw-03\Documents\Cleveland_OH\OI_Projects\ODOT\District12\82382\400-Engineering\Traffic\Sheets\82382_TP79I2.dgn

TRAFFIC CONTROL LEGEND

- EXISTING SIGN TO REMAIN
- EXISTING SIGN TO BE REMOVED
- PROPOSED SIGN

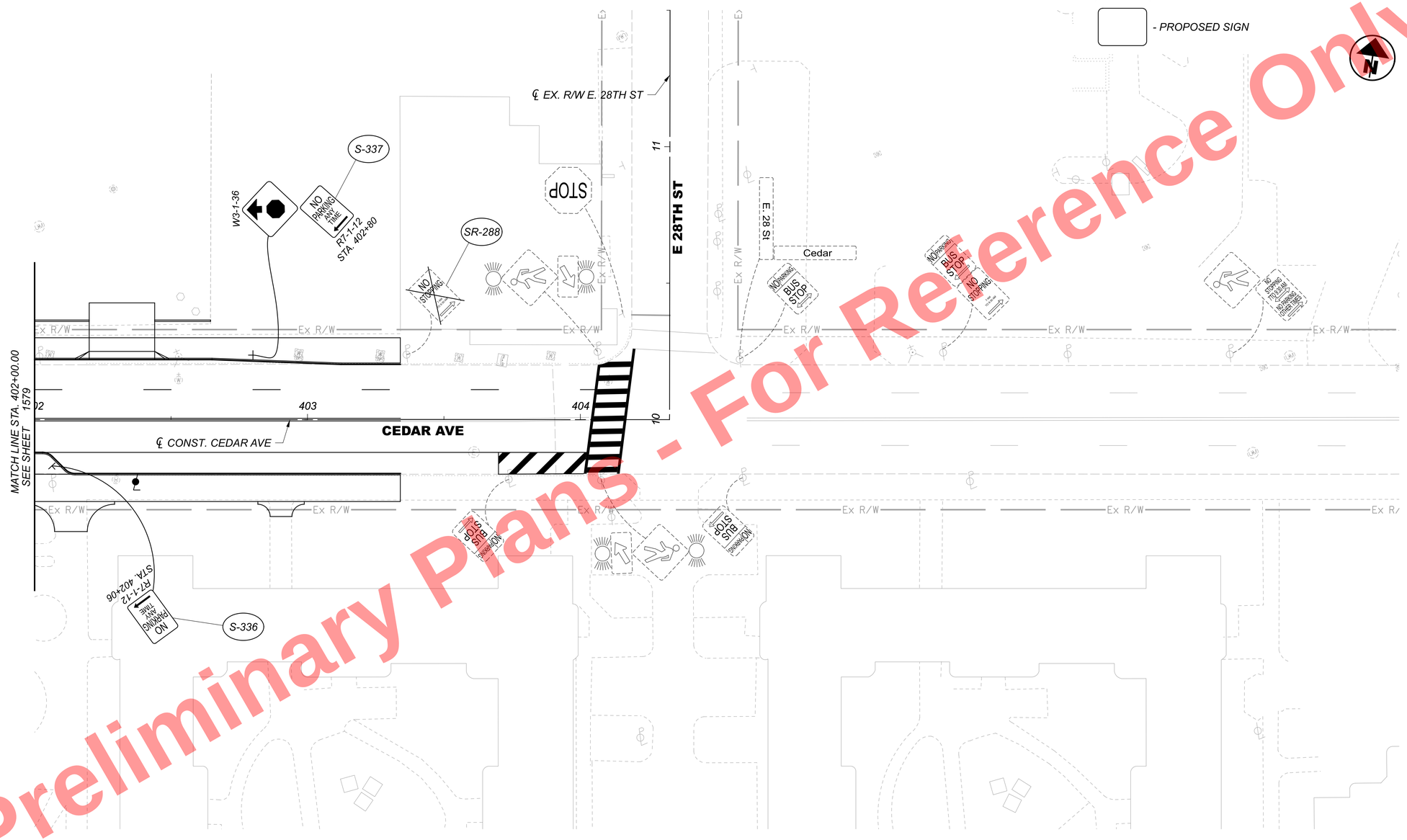

Preliminary Plans - For Reference Only

HORIZONTAL SCALE IN FEET
0 10 20 40

SIGNING PLAN - CEDAR AVE. STA. 402+00.00 TO END

DESIGN AGENCY
Michael Baker INTERNATIONAL

DESIGNER RBK
REVIEWER GSH 05/22/24
PROJECT ID 82382
SHEET 1580 TOTAL 2696

CUY-90-16.28 (CCG3A)

MODEL: 82382_TP7912 PAPERSIZE: 34x22 (in.) DATE: 5/23/2025 TIME: 11:16:06 AM USER: Joseph.Hogan
pw:\\mb-us-pw.bentley.com:mb-us-pw-03\Documents\Cleveland_OH\01_Projects\ODOT\District2\82382\400-Engineering\Traffic\Sheets\82382_TP7913.dgn

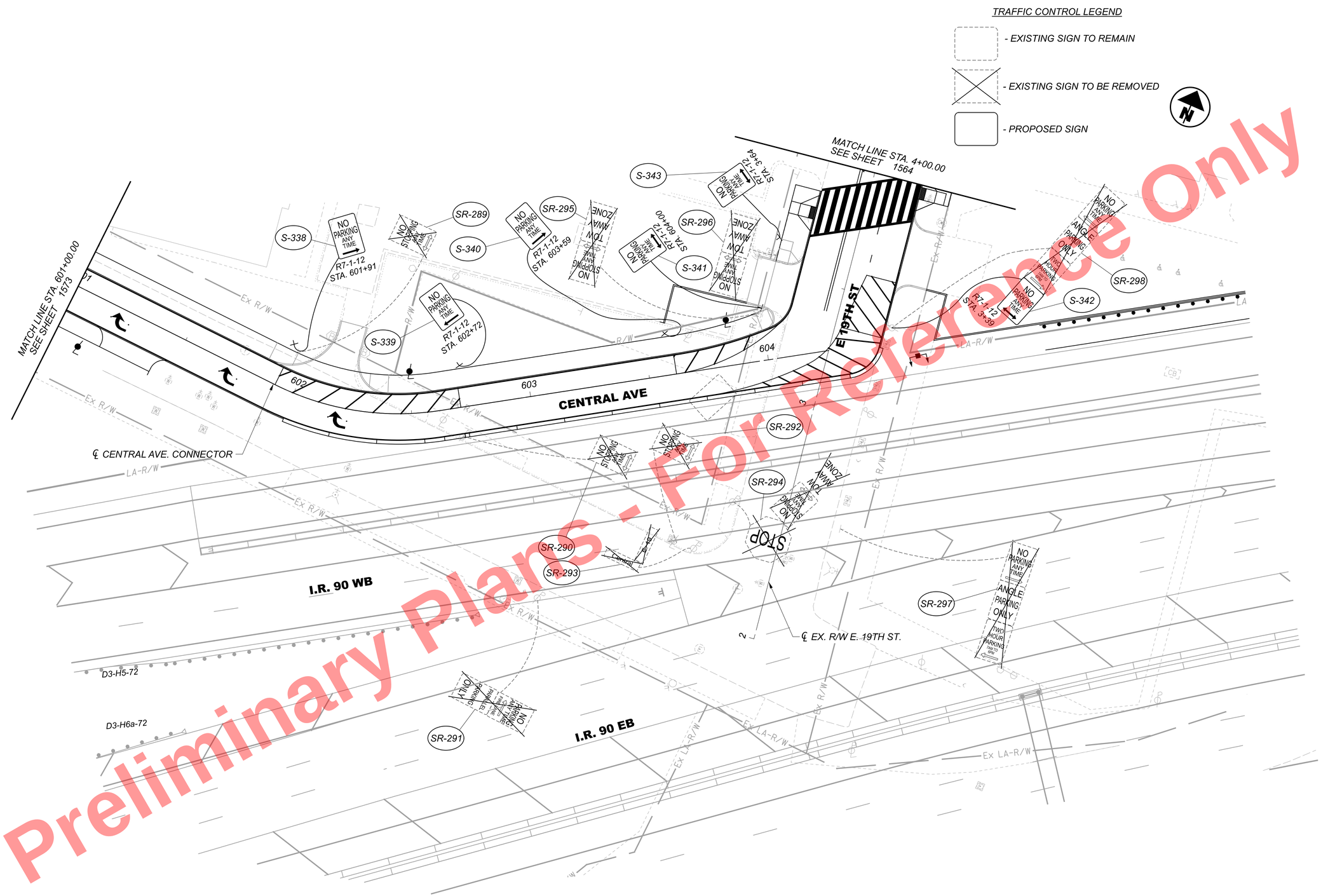

Preliminary Plans - For Reference Only

HORIZONTAL SCALE IN FEET
0 10 20 40

SIGNING PLAN - CENTRAL AVE. CONNECTOR
STA. 601+00.00 TO END

DESIGN AGENCY
Michael Baker INTERNATIONAL

DESIGNER
RBK

REVIEWER
GSH 05/22/24

PROJECT ID
82382

SHEET 1581 TOTAL 2696

CUY-90-16.28 (CCG3A)

MODEL: CL Central Ave. Connector-I- Plan 9 PAPERSIZE: 34x22 (in.) DATE: 5/23/2025 TIME: 11:16:21 AM USER: Joseph.Hogan
pw:\\mb-us-pw.bentley.com:mb-us-pw-03\Documents\Cleveland_OH\OI_Projects\ODOT\District12\82382\400-Engineering\Traffic\Sheets\82382_TP8III.dgn

TRAFFIC CONTROL LEGEND

- EXISTING SIGN TO REMAIN
- EXISTING SIGN TO BE REMOVED
- PROPOSED SIGN

S-344
R3-H8b-48
STA. 101+20

SR-300
S-346
M2-H3-48
STA. 102+25

S-348
R3-H8b-48
STA. 103+30

SR-302

SR-299
R3-H8b-48
STA. 101+26

SR-301
R3-H8b-48
STA. 102+88

S-345

S-347

℄ EX. R/W E. 21ST ST

Ex R/W

E 21ST ST

MATCH LINE STA. 101+00.00
SEE SHEET 1565

PROSPECT AVE

PROSPECT AVE

HORIZONTAL SCALE IN FEET
0 10 20 40

SIGNING PLAN - E. 21ST ST.
STA. 101+00.00 TO END

Preliminary Plans - For Reference Only

CUY-90-16.28 (CCG3A)

MODEL: 82382_TP82ll PAPERSIZE: 34x22 (In) DATE: 5/23/2025 TIME: 11:16:36 AM USER: Joseph.Hogan
pw:\\mb-us-pw.bentley.com:mb-us-pw-03\Documents\Cleveland.OH\Oi_Projects\ODOT\District2\82382\400-Engineering\Traffic\Sheets\82382_TP82ll.dgn

DESIGN AGENCY
Michael Baker INTERNATIONAL

DESIGNER
RBK

REVIEWER
GSH 05/22/24

PROJECT ID
82382

SHEET 1582 | TOTAL 2696

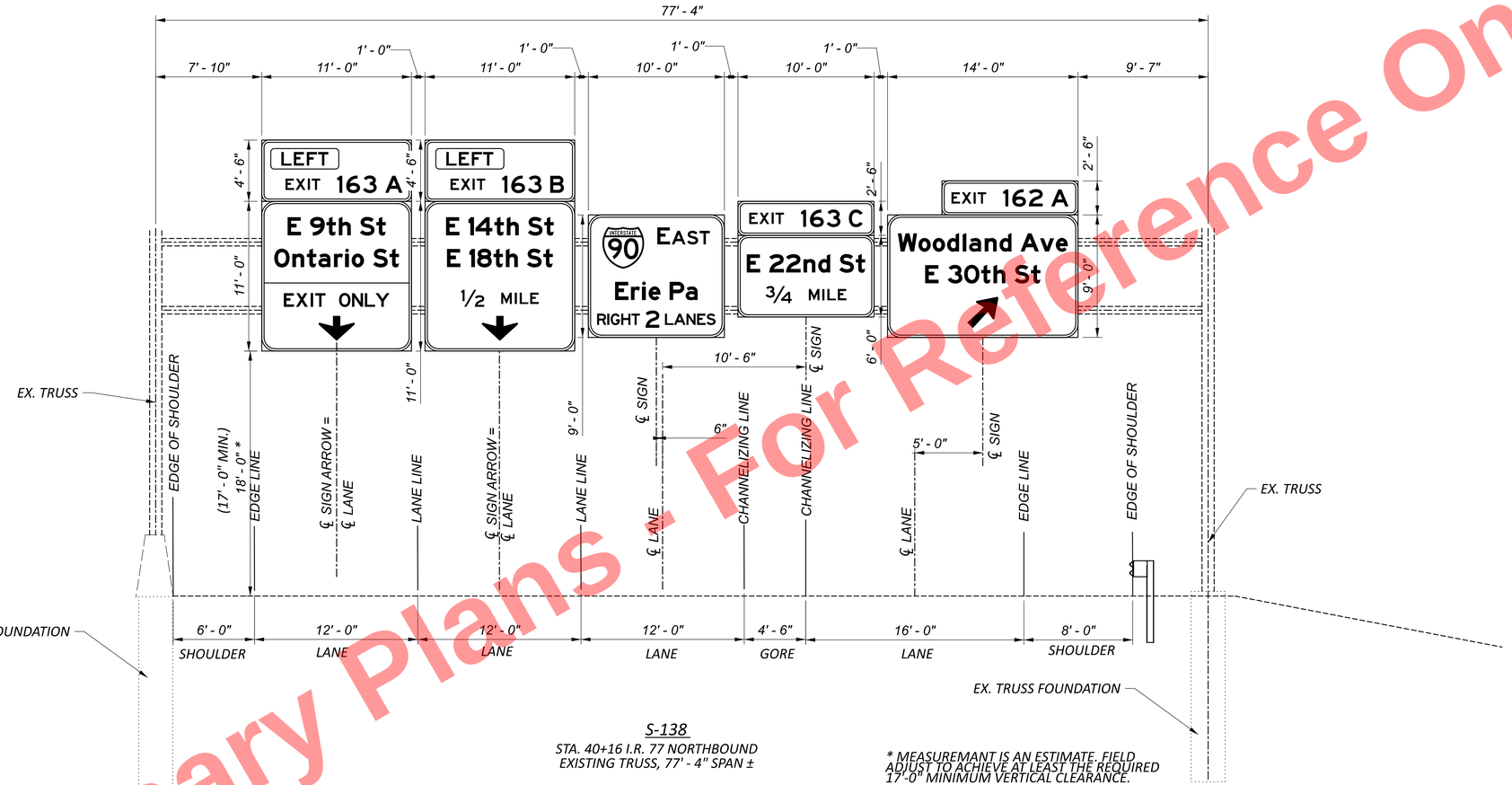

S-138

STA. 40+16 I.R. 77 NORTHBOUND
EXISTING TRUSS, 77' - 4" SPAN ±

* MEASUREMANT IS AN ESTIMATE. FIELD ADJUST TO ACHIEVE AT LEAST THE REQUIRED 17'-0" MINIMUM VERTICAL CLEARANCE.

Preliminary Plans - For Reference Only

HORIZONTAL SCALE IN FEET
0 2.5 5 10

OVERHEAD SIGN ELEVATION DETAILS

CTY-RTE-SECTION

MODEL: I77 - 40+16 SH PAPERSIZE: 34x22 (in.) DATE: 5/23/2025 TIME: 11:17:01 AM USER: Joseph.Hogan
pw:\\mb-us-pw.bentley.com:mb-us-pw-03\Documents\Cleveland_OH\01_Projects\ODOT\District12\82382\400-Engineering\Traffic\Sheets\82382_TE1000.dgn

DESIGN AGENCY
B&N
burgessniple.com

DESIGNER AJS
REVIEWER KEH 05/01/24
PROJECT ID 82382
SHEET 1583 TOTAL 2696

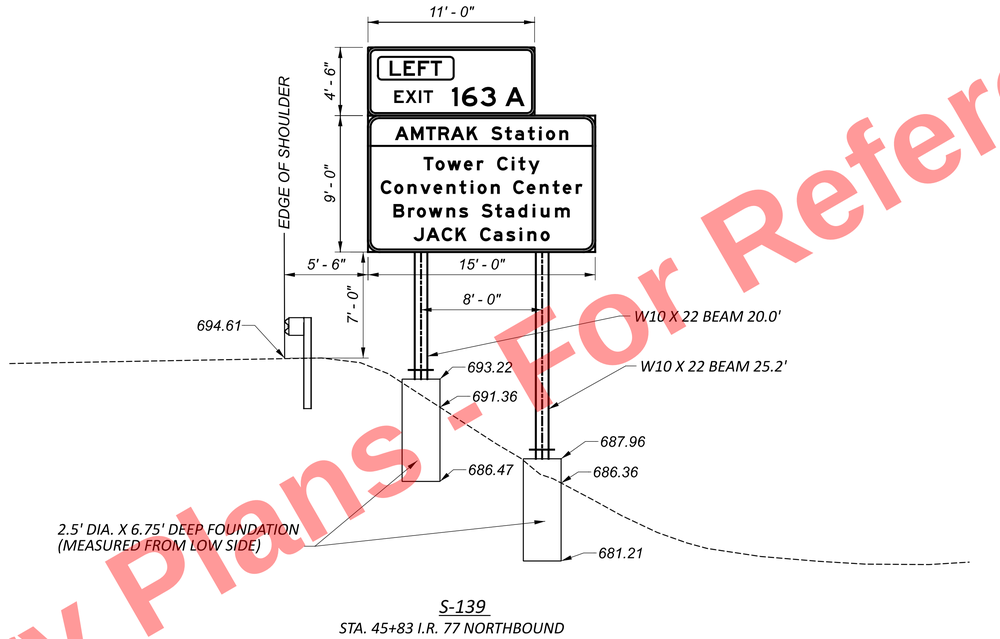

S-139

STA. 45+83 I.R. 77 NORTHBOUND

Preliminary Plans - For Reference Only

CTY-RTE-SECTION

MODEL: I77 - 45+82 SH PAPERSIZE: 34x22 (in.) DATE: 5/23/2025 TIME: 11:17:03 AM USER: Joseph.Hogan
pw:\\mb-us-pw.bentley.com:mb-us-pw-03\Documents\Cleveland_OH\01_Projects\ODOT\District12\82382\400-Engineering\Traffic\Sheets\82382_TE1000.dgn

HORIZONTAL SCALE IN FEET
0 2.5 5 10

OVERHEAD SIGN ELEVATION DETAILS

DESIGN AGENCY
B&N
burgessniple.com

DESIGNER
AJS

REVIEWER
KEH 05/01/24

PROJECT ID
82382

SHEET 1584 | TOTAL 2696

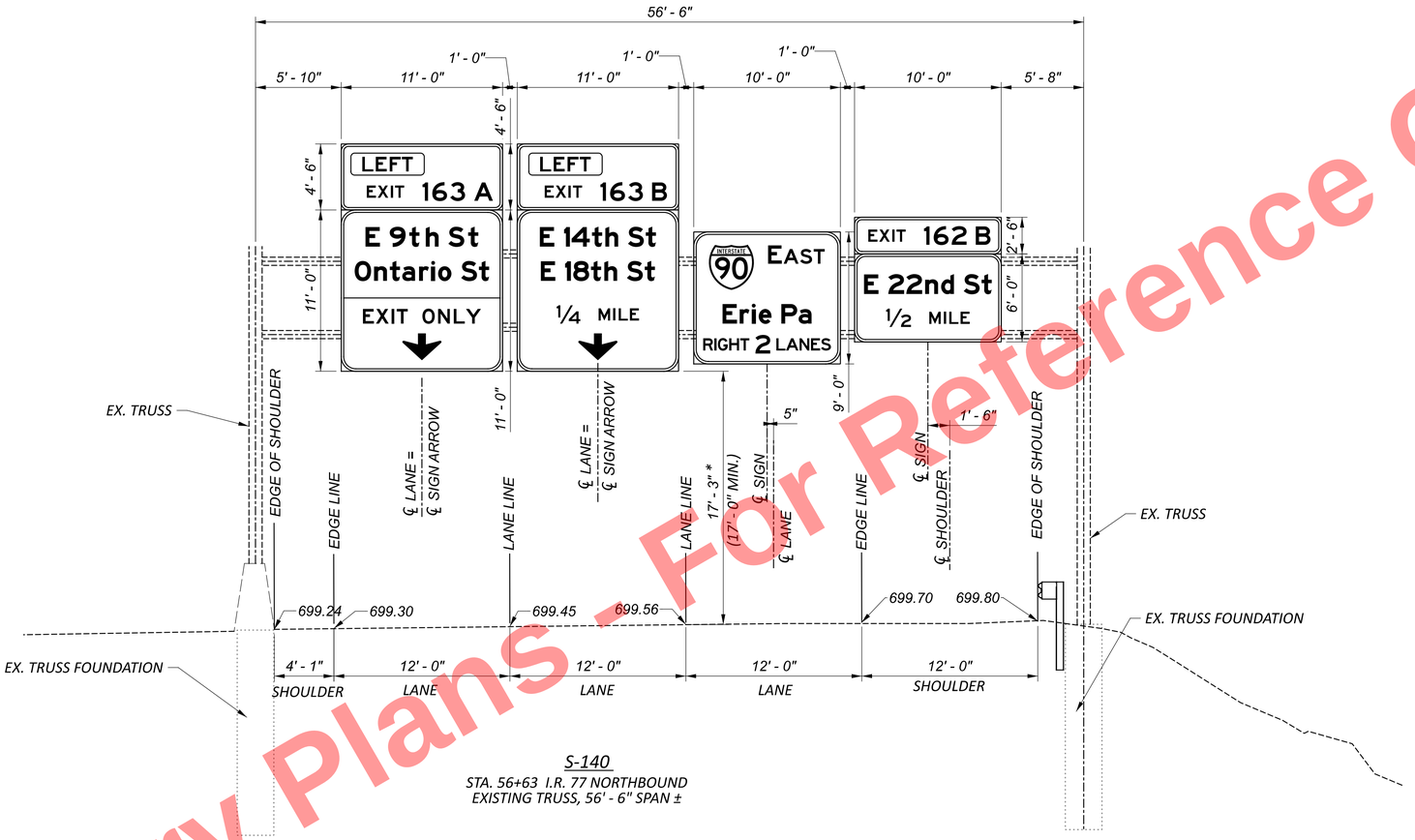

S-140

STA. 56+63 I.R. 77 NORTHBOUND
EXISTING TRUSS, 56' - 6" SPAN ±

* MEASUREMANT IS AN ESTIMATE. FIELD ADJUST TO ACHIEVE AT LEAST THE REQUIRED 17'-0" MINIMUM VERTICAL CLEARANCE.

Preliminary Plans - For Reference Only

CTY-RTE-SECTION

MODEL: I77 - 56+63 SH PAPERSIZE: 34x22 (in.) DATE: 5/23/2025 TIME: 11:17:04 AM USER: Joseph.Hogan
pw:\\mb-us-pw.bentley.com:mb-us-pw-03\Documents\Cleveland_OH01_Projects\ODOT\District12\82382400-Engineering\Traffic\Sheets\82382_TE1000.dgn

HORIZONTAL SCALE IN FEET
0 2.5 5 10

OVERHEAD SIGN ELEVATION DETAILS

DESIGN AGENCY
B&N
burgessniple.com

DESIGNER
AJS

REVIEWER
KEH 05/01/24

PROJECT ID
82382

SHEET 1585 | TOTAL 2696

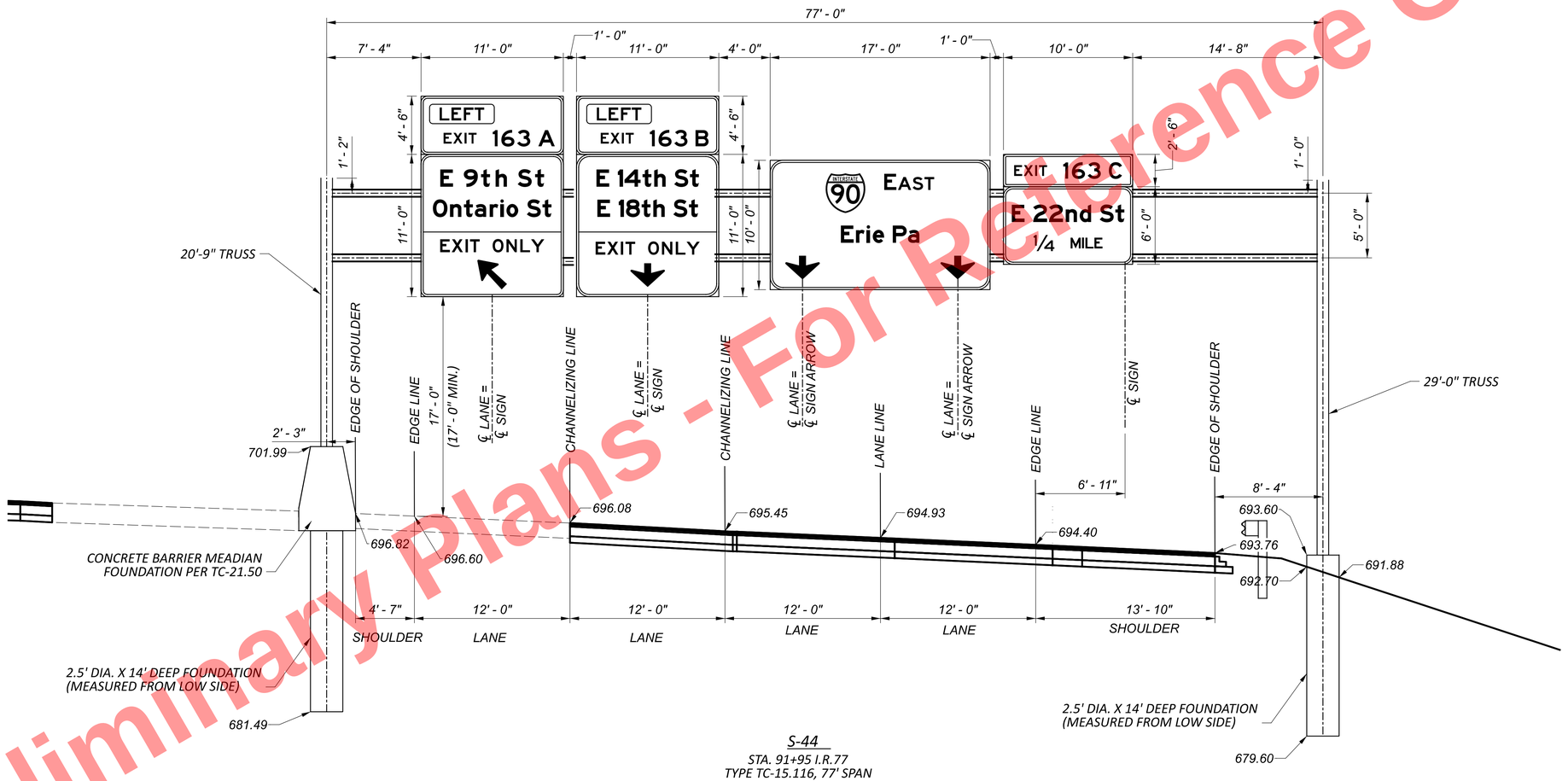

S-44

STA. 91+95 I.R.77
TYPE TC-15.116, 77' SPAN

Preliminary Plans - For Reference Only

HORIZONTAL SCALE IN FEET
0 2.5 5 10

OVERHEAD SIGN ELEVATION DETAILS

CTY-RTE-SECTION

MODEL: I77 - 91+95 SH PAPERSIZE: 34x22 (in.) DATE: 5/23/2025 TIME: 11:17:10 AM USER: Joseph.Hogan
pw:\\tnb-us-pw.bentley.com:tnb-us-pw-03\Documents\Cleveland_OH\01_Projects\ODOT\District12\82382\400-Engineering\Traffic\Sheets\82382_TE1000.dgn

DESIGN AGENCY
B&N
burgessniple.com

DESIGNER	AJS
REVIEWER	KEH 05/01/24
PROJECT ID	82382
SHEET	1586
TOTAL	2696

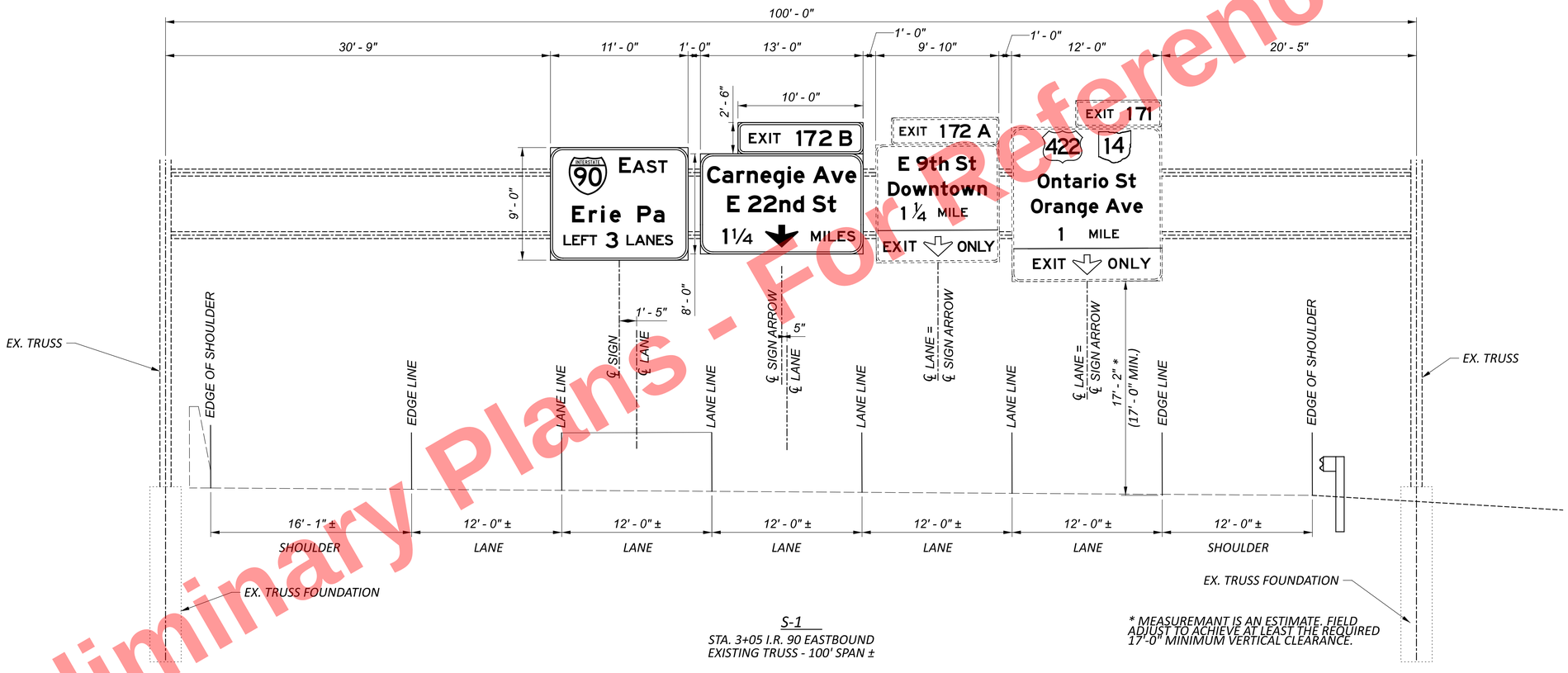

S-1

STA. 3+05 I.R. 90 EASTBOUND
EXISTING TRUSS - 100' SPAN ±

* MEASUREMANT IS AN ESTIMATE. FIELD ADJUST TO ACHIEVE AT LEAST THE REQUIRED 17'-0" MINIMUM VERTICAL CLEARANCE.

Preliminary Plans - For Reference Only

HORIZONTAL SCALE IN FEET
0 2.5 5 10

OVERHEAD SIGN ELEVATION DETAILS

CTY-RTE-SECTION

MODEL: I90EB - 3+05 SH PAPERSIZE: 34x22 (in.) DATE: 5/23/2025 TIME: 11:17:14 AM USER: Joseph.Hogan
pw:\\mb-us-pw.bentley.com:mb-us-pw-03\Documents\Cleveland_OH01_Projects\ODOTDistrict12\82382\400-Engineering\Traffic\Sheets\82382_TE1000.dgn

DESIGN AGENCY
B&N
burgessniple.com

DESIGNER AJS
REVIEWER KEH 05/01/24
PROJECT ID 82382
SHEET 1587 TOTAL 2696

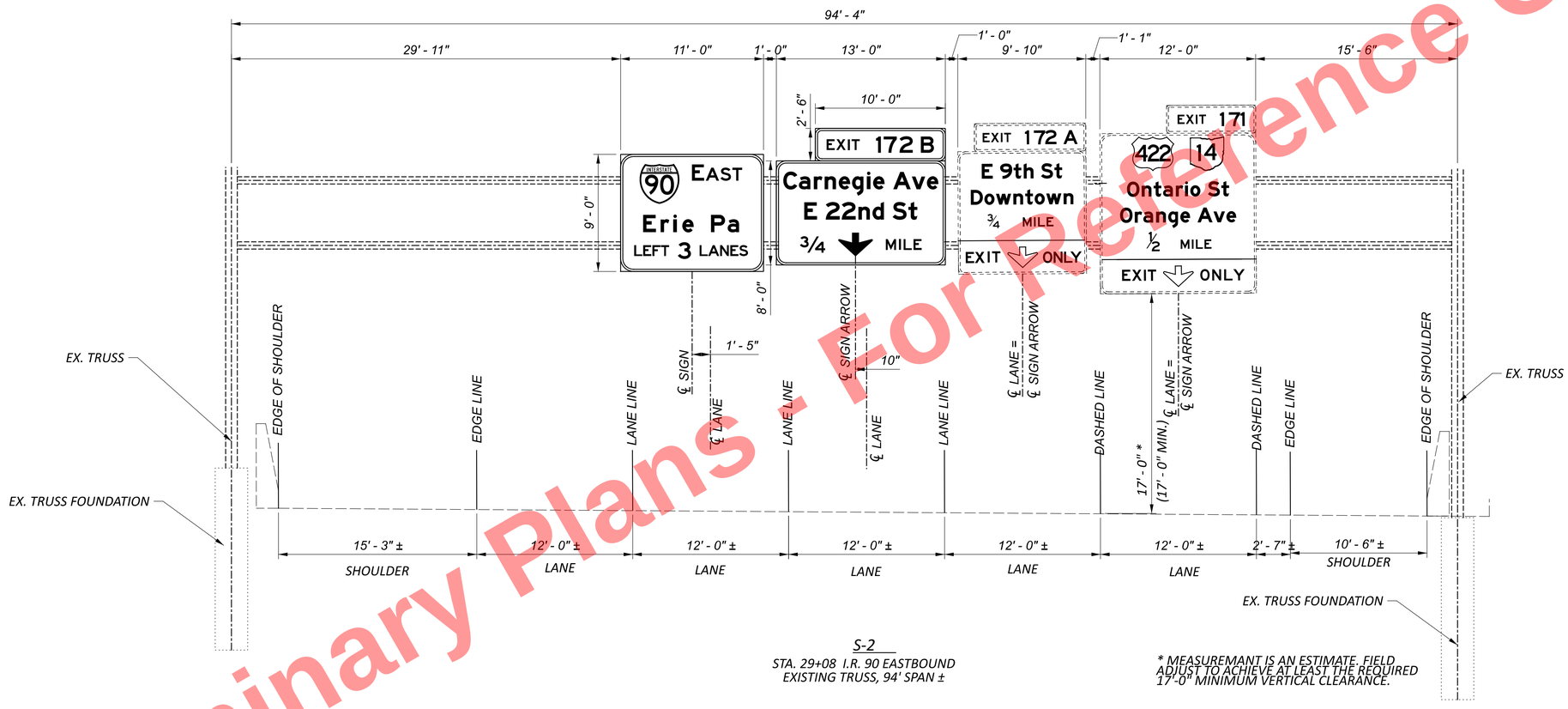

S-2

STA. 29+08 I.R. 90 EASTBOUND
EXISTING TRUSS, 94' SPAN ±

* MEASUREMANT IS AN ESTIMATE. FIELD ADJUST TO ACHIEVE AT LEAST THE REQUIRED 17'-0" MINIMUM VERTICAL CLEARANCE.

Preliminary Plans - For Reference Only

HORIZONTAL SCALE IN FEET
0 2.5 5 10

OVERHEAD SIGN ELEVATION DETAILS

CTY-RTE-SECTION

MODEL: I90EB - 29+08 SH PAPERSIZE: 34x22 (in.) DATE: 5/23/2025 TIME: 11:17:15 AM USER: Joseph.Hogan
pw:\\mb-us-pw.bentley.com:mb-us-pw-03\Documents\Cleveland_OH\01_Projects\ODOT\District12\82382400-Engineering\Traffic\Sheets\82382_TE1000.dgn

DESIGN AGENCY
B&N
burgessniple.com

DESIGNER AJS
REVIEWER KEH 05/01/24
PROJECT ID 82382
SHEET 1588 TOTAL 2696

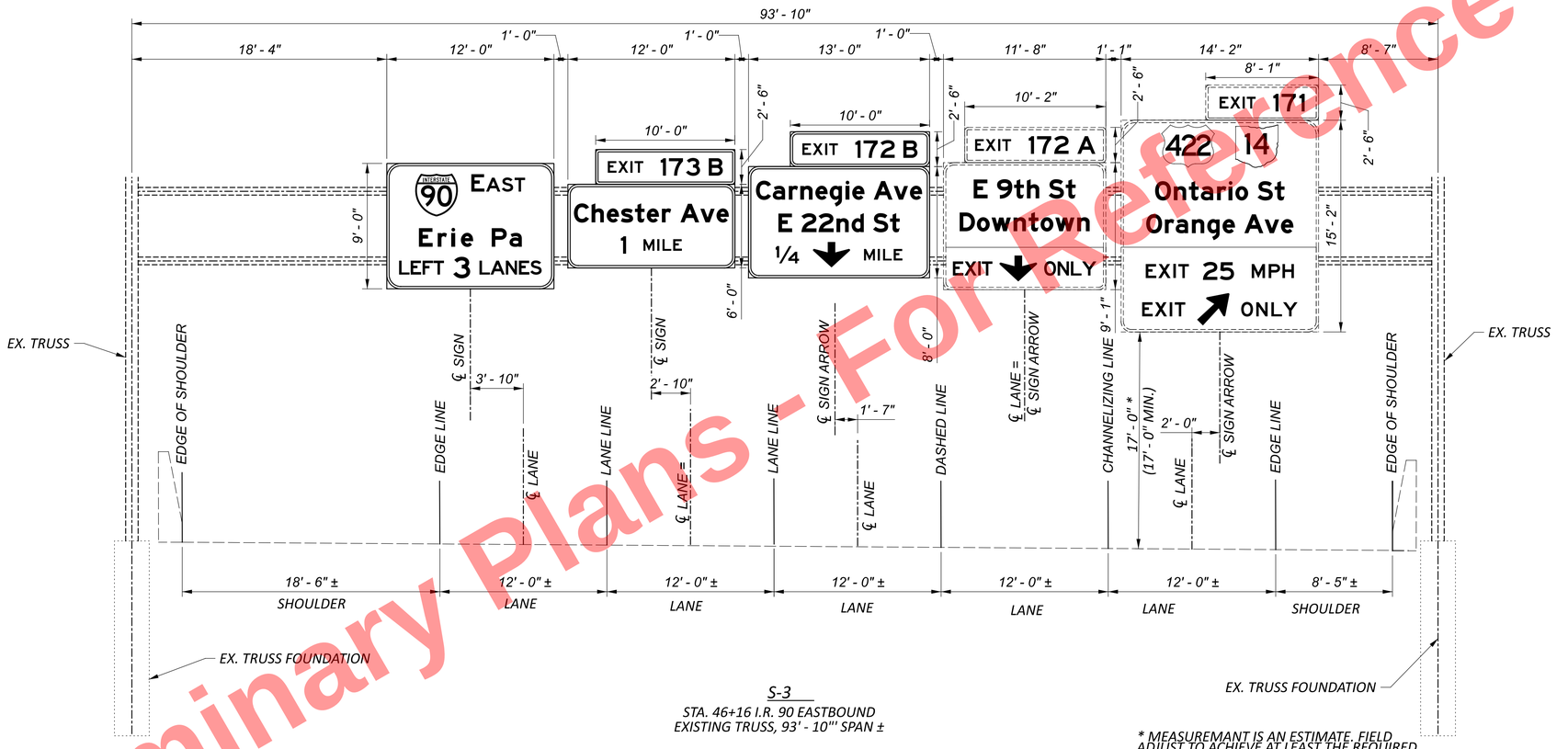

S-3

STA. 46+16 I.R. 90 EASTBOUND
EXISTING TRUSS, 93' - 10" SPAN ±

* MEASUREMENT IS AN ESTIMATE. FIELD ADJUST TO ACHIEVE AT LEAST THE REQUIRED 17'-0" MINIMUM VERTICAL CLEARANCE.

Preliminary Plans - For Reference Only

CTY-RTE-SECTION

MODEL: I90EB - 46+16 SH PAPERSIZE: 34x22 (in.) DATE: 5/23/2025 TIME: 11:17:17 AM USER: Joseph.Hogan
pw:\\mb-us-pw.bentley.com:mb-us-pw-03\Documents\Cleveland_OH01_Projects\ODOTDistrict12\82382400-Engineering\Traffic\Sheets\82382_TE1000.dgn

HORIZONTAL SCALE IN FEET
0 2.5 5 10

OVERHEAD SIGN ELEVATION DETAILS

DESIGN AGENCY
B&N
burgessniple.com

DESIGNER
AJS

REVIEWER
KEH 05/01/24

PROJECT ID
82382

SHEET 1589 | TOTAL 2696

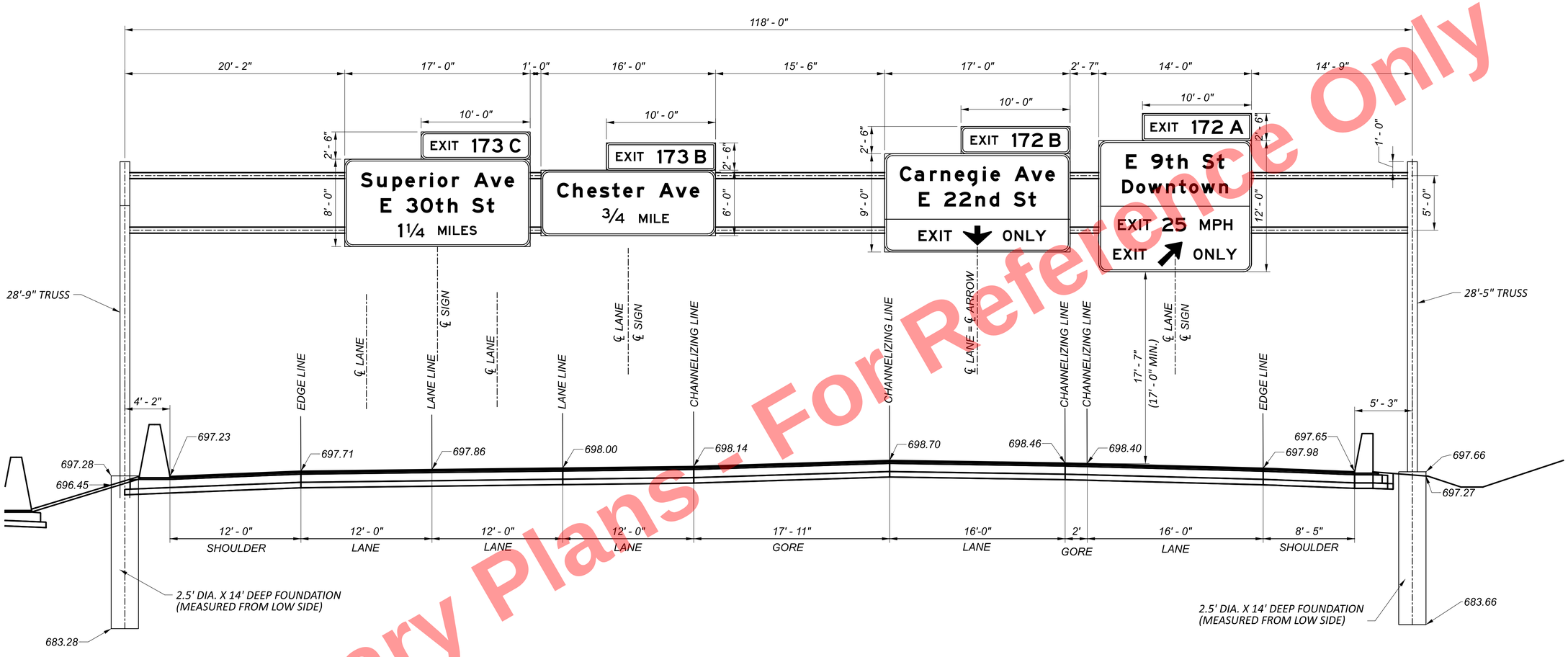

S-4

STA. 177+29 I.R. 90 EASTBOUND
TYPE TC-15.116, 118' SPAN

Preliminary Plans - For Reference Only

HORIZONTAL SCALE IN FEET
0 2.5 5 10

OVERHEAD SIGN ELEVATION DETAILS

CTY-RTE-SECTION

MODEL: I90EB - 177+29 SH PAPERSIZE: 34x22 (in.) DATE: 5/23/2025 TIME: 11:17:18 AM USER: Joseph.Hogan
pw:\\mb-us-pw.bentley.com:mb-us-pw-03\Documents\Cleveland_OH\01_Projects\ODOT\District12\82382\400-Engineering\Traffic\Sheets\82382_TE1000.dgn

DESIGN AGENCY
B&N
burgessniple.com

DESIGNER	
AJS	
REVIEWER	
KEH	05/01/24
PROJECT ID	
82382	
SHEET	TOTAL
1590	2696

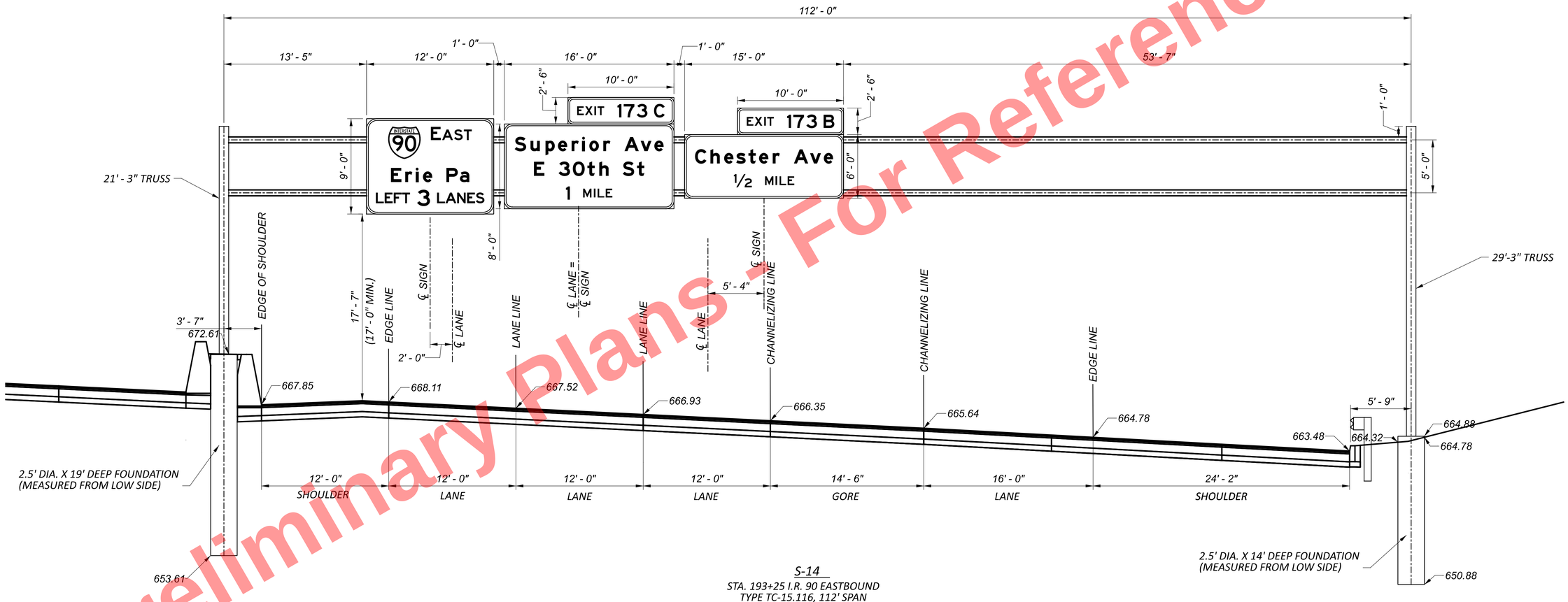

S-14

STA. 193+25 I.R. 90 EASTBOUND
TYPE TC-15.116, 112' SPAN

Preliminary Plans - For Reference Only

HORIZONTAL SCALE IN FEET
0 2.5 5 10

OVERHEAD SIGN ELEVATION DETAILS

CTY-RTE-SECTION

MODEL: I90EB - 193+25 SH PAPERSIZE: 34x22 (in.) DATE: 5/23/2025 TIME: 11:17:29 AM USER: Joseph.Hogan
pw:\\mb-us-pw.bentley.com:mb-us-pw-03\Documents\Cleveland_OH\01_Projects\ODOT\District12\82382\400-Engineering\Traffic\Sheets\82382_TE1000.dgn

DESIGN AGENCY
B&N
burgessniple.com

DESIGNER	AJS
REVIEWER	KEH 05/01/24
PROJECT ID	82382
SHEET	1591
TOTAL	2696

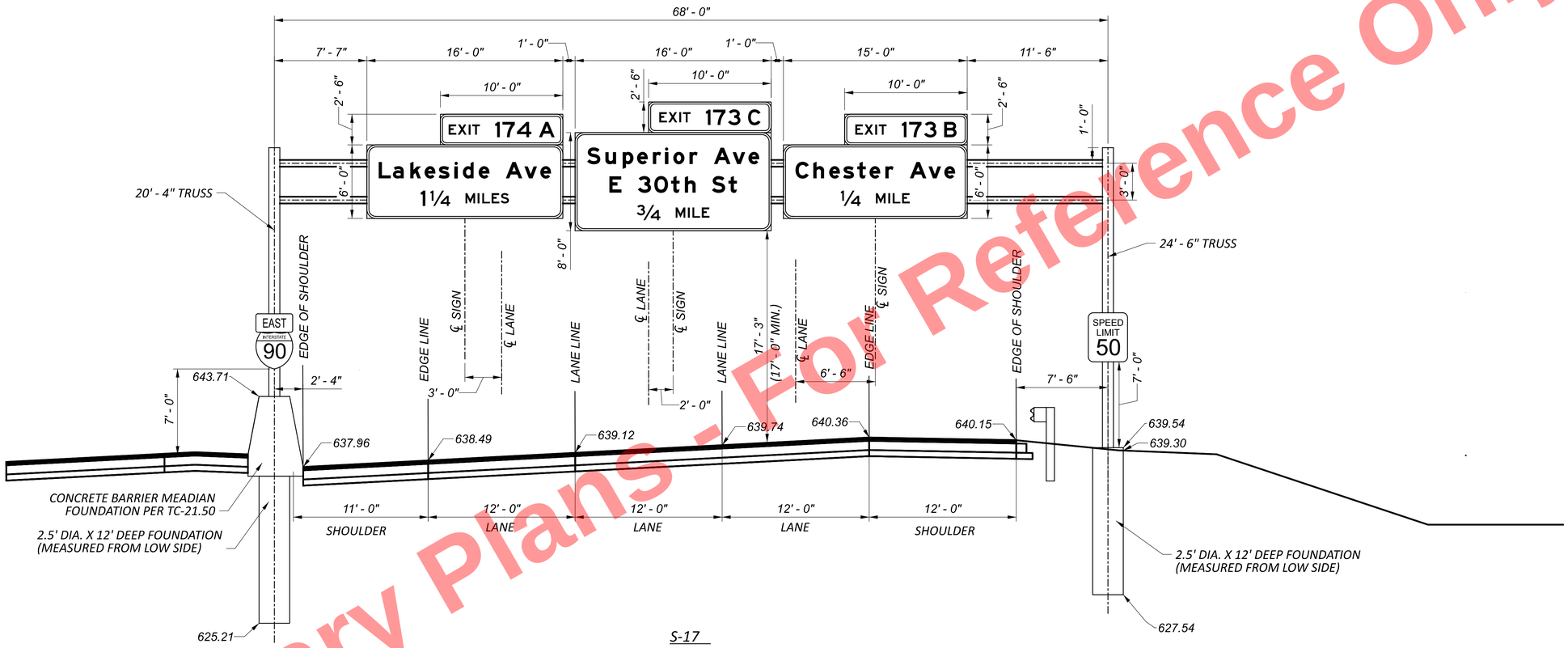

S-17

STA. 3007+59 INTERIM I.R. 90 EASTBOUND
TYPE TC-15.116, 68' SPAN

Preliminary Plans - For Reference Only

HORIZONTAL SCALE IN FEET
0 2.5 5 10

OVERHEAD SIGN ELEVATION DETAILS

CTY-RTE-SECTION

MODEL: INT IR90EB - 3007+59 SH PAPERSIZE: 34x22 (in.) DATE: 5/23/2025 TIME: 11:17:40 AM USER: Joseph.Hogan
pw:\\mb-us-pw.bentley.com:mb-us-pw-03\Documents\Cleveland_OH\01_Projects\ODOT\District12\82382\400-Engineering\Traffic\Sheets\82382_TE1000.dgn

DESIGN AGENCY
B&N
burgessniple.com

DESIGNER AJS
REVIEWER KEH 05/01/24
PROJECT ID 82382
SHEET 1592 TOTAL 2696

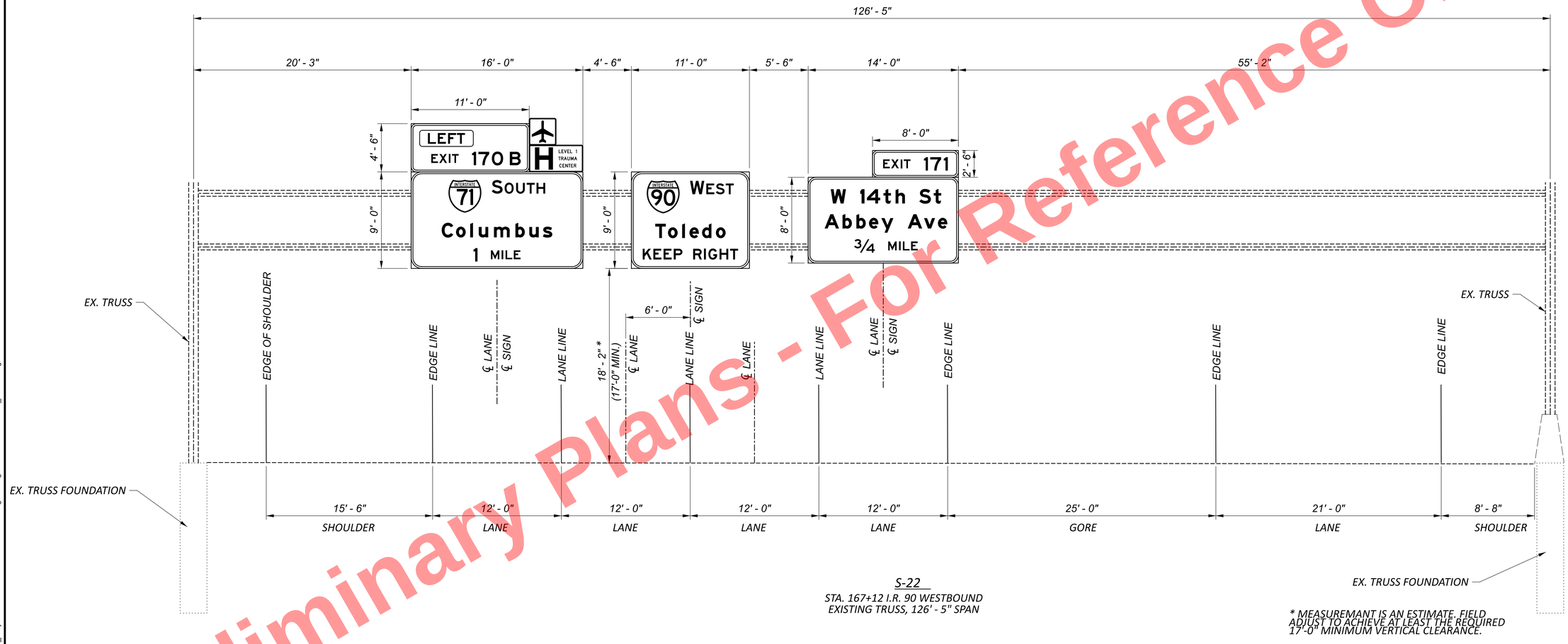

S-22

STA. 167+12 I.R. 90 WESTBOUND
EXISTING TRUSS, 126' - 5" SPAN

* MEASUREMANT IS AN ESTIMATE. FIELD ADJUST TO ACHIEVE AT LEAST THE REQUIRED 17'-0" MINIMUM VERTICAL CLEARANCE.

Preliminary Plans - For Reference Only

HORIZONTAL SCALE IN FEET
0 2.5 5 10

OVERHEAD SIGN ELEVATION DETAILS

CTY-RTE-SECTION

MODEL: I90 WB - 167+12 SH PAPERSIZE: 34x22 (in.) DATE: 5/23/2025 TIME: 11:17:47 AM USER: Joseph.Hogan
pw:\\mb-us-pw.bentley.com:mb-us-pw-03\Documents\Cleveland_OH\01_Projects\ODOT\District12\82382\400-Engineering\Traffic\Sheets\82382_TE1000.dgn

DESIGN AGENCY
B&N
burgessniple.com

DESIGNER
AJS

REVIEWER
KEH 05/01/24

PROJECT ID
82382

SHEET 1593 | TOTAL 2696

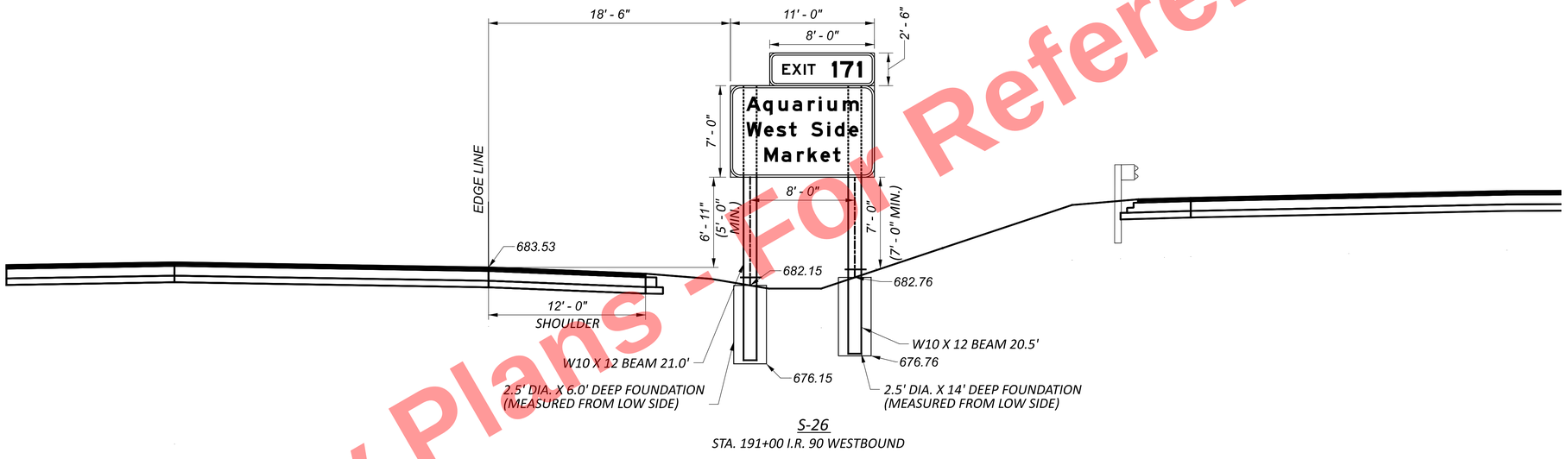

S-26

STA. 191+00 I.R. 90 WESTBOUND

Preliminary Plans - For Reference Only

CTY-RTE-SECTION

MODEL: IR90WB - 191+00 SH PAPERSIZE: 34x22 (in.) DATE: 5/23/2025 TIME: 11:17:48 AM USER: Joseph.Hogan
pw:\\mb-us-pw.bentley.com:mb-us-pw-03\Documents\Cleveland_OH\01_Projects\ODOT\District12\82382\400-Engineering\Traffic\Sheets\82382_TE1000.dgn

HORIZONTAL
SCALE IN FEET
0 2.5 5 10

OVERHEAD SIGN ELEVATION DETAILS

DESIGN AGENCY
B&N
burgessniple.com

DESIGNER
AJS

REVIEWER
KEH 05/01/24

PROJECT ID
82382

SHEET 1594 | TOTAL 2696

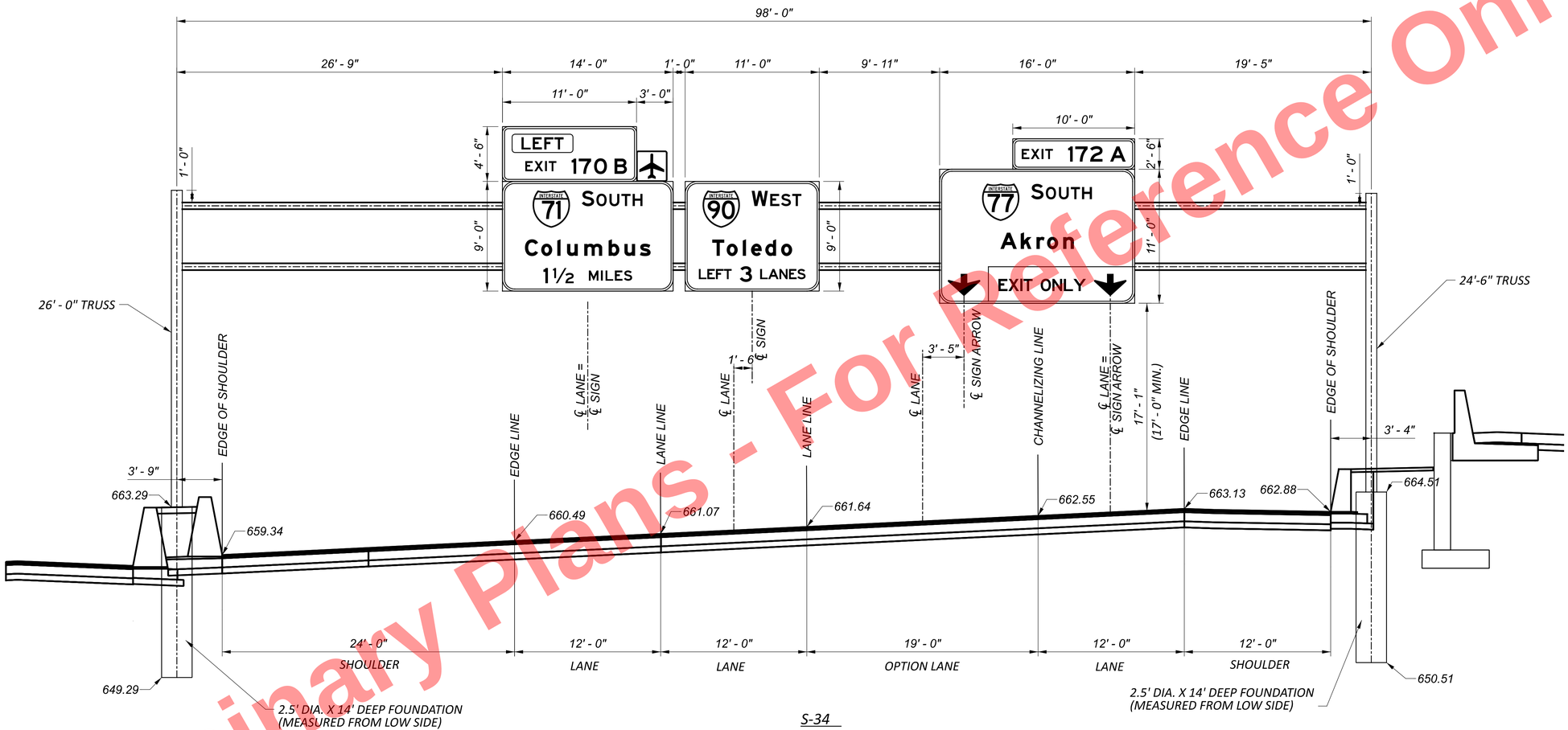

S-34

STA. 197+65 I.R. 90 WESTBOUND
TYPE TC-15.116, 98' SPAN

Preliminary Plans - For Reference Only

HORIZONTAL SCALE IN FEET
0 2.5 5 10

OVERHEAD SIGN ELEVATION DETAILS

CTY-RTE-SECTION

MODEL: IR90WB - 197+65 SH PAPERSIZE: 34x22 (in.) DATE: 5/23/2025 TIME: 11:17:56 AM USER: Joseph.Hogan
pw:\\mb-us-pw.bentley.com:mb-us-pw-03\Documents\Cleveland_OH\01_Projects\ODOT\District12\82382\400-Engineering\Traffic\Sheets\82382_TE1000.dgn

DESIGN AGENCY
B&N
burgessniple.com

DESIGNER AJS
REVIEWER KEH 05/01/24
PROJECT ID 82382
SHEET 1595 TOTAL 2696

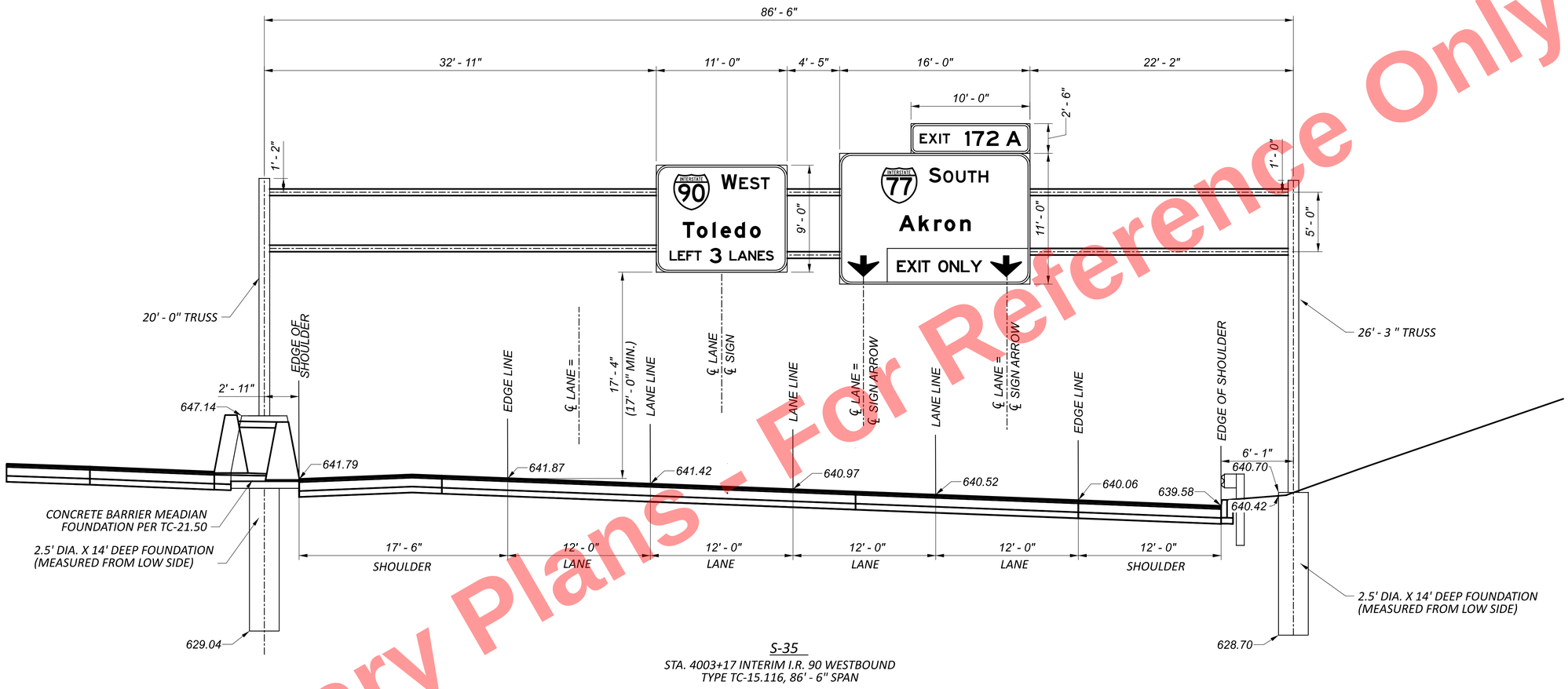

S-35

STA. 4003+17 INTERIM I.R. 90 WESTBOUND
TYPE TC-15.116, 86' - 6" SPAN

Preliminary Plans - Not For Reference Only

HORIZONTAL SCALE IN FEET
0 2.5 5 10

OVERHEAD SIGN ELEVATION DETAILS

CTY-RTE-SECTION

MODEL: INT IR90WB - 4003+17 SH PAPERSIZE: 34x22 (in.) DATE: 5/23/2025 TIME: 11:18:02 AM USER: Joseph.Hogan
pw:\\mb-us-pw.bentley.com:mb-us-pw-03\Documents\Cleveland_OH\01_Projects\ODOT\District12\82382\400-Engineering\Traffic\Sheets\82382_TE1000.dgn

DESIGN AGENCY
B&N
burgessniple.com

DESIGNER AJS
REVIEWER KEH 05/01/24
PROJECT ID 82382
SHEET 1596 TOTAL 2696

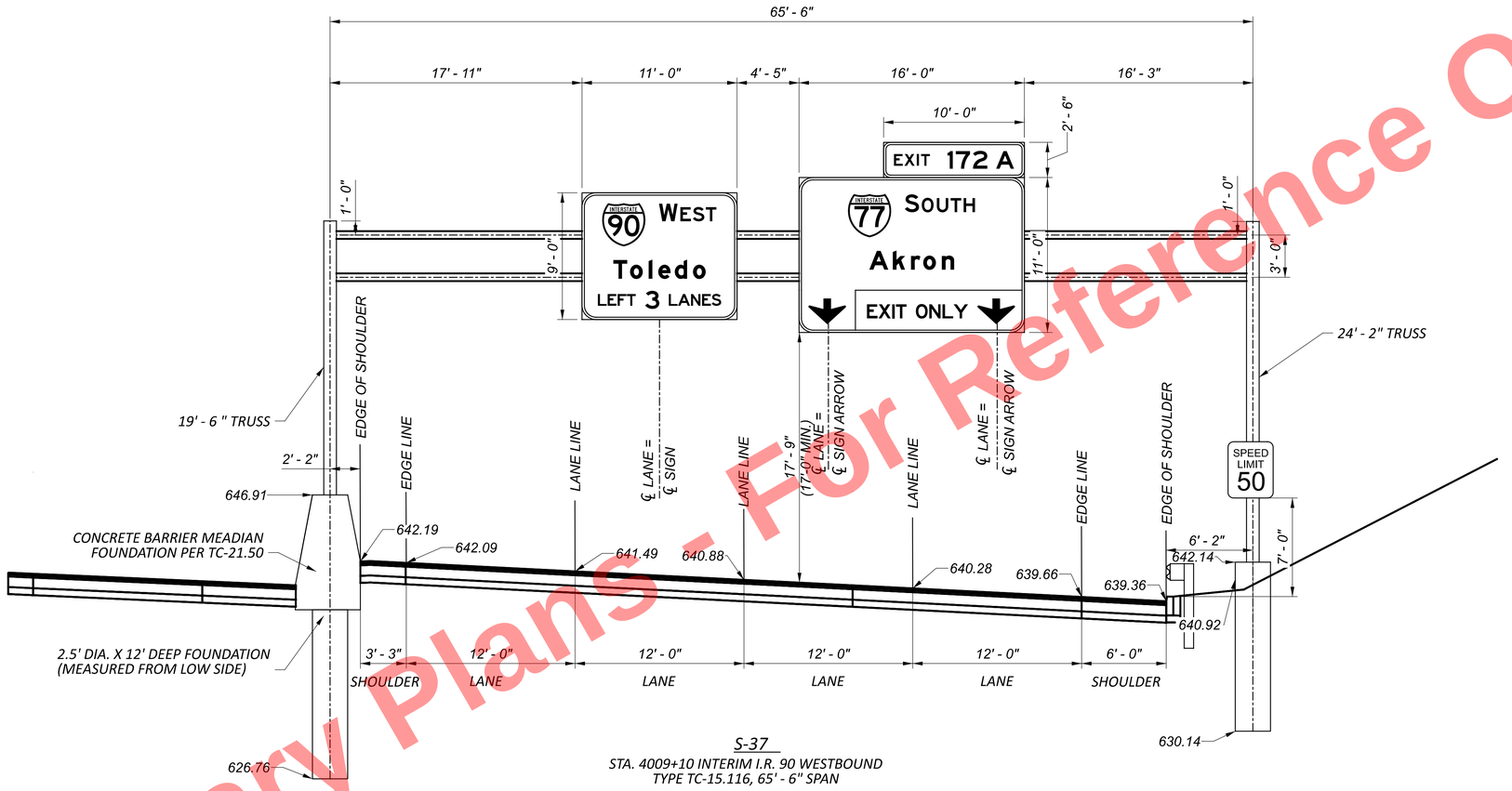

Preliminary Plans - For Reference Only

HORIZONTAL SCALE IN FEET
0 2.5 5 10

OVERHEAD SIGN ELEVATION DETAILS

CTY-RTE-SECTION

MODEL: INT IR90WB - 4009+10 SH PAPERSIZE: 34x22 (in.) DATE: 5/23/2025 TIME: 11:18:06 AM USER: Joseph.Hogan
pw:\\mb-us-pw.bentley.com:mb-us-pw-03\Documents\Cleveland_OH01_Projects\ODOT\District12\82382400-Engineering\Traffic\Sheets\82382_TE1000.dgn

DESIGN AGENCY
B&N
burgessniple.com

DESIGNER
AJS

REVIEWER
KEH 05/01/24

PROJECT ID
82382

SHEET 1597 | TOTAL 2696

Preliminary Plans - For Reference Only

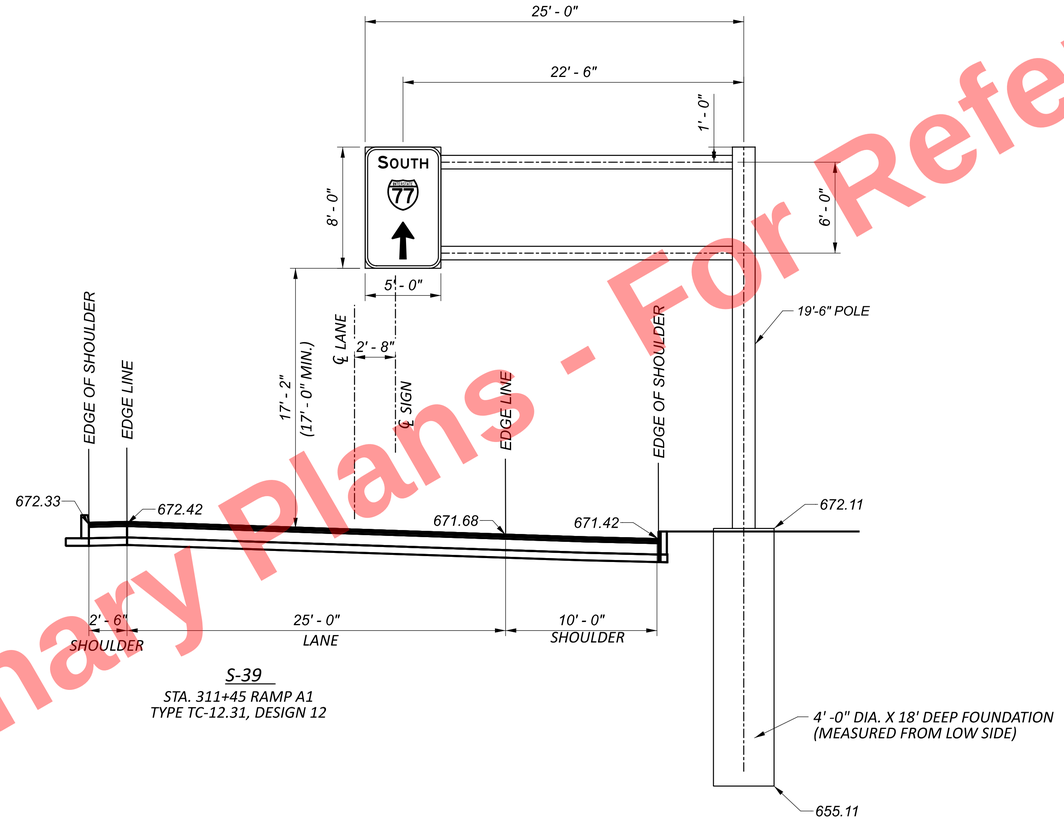

S-39

STA. 311+45 RAMP A1
TYPE TC-12.31, DESIGN 12

CTY-RTE-SECTION

MODEL: RAMP A1 - 311+29 SH PAPERSIZE: 34x22 (in.) DATE: 5/23/2025 TIME: 11:18:11 AM USER: Joseph.Hogan
pw:\\mb-us-pw.bentley.com:mb-us-pw-03\Documents\Cleveland_OH01_Projects\ODOT\District12\82382400-Engineering\Traffic\Sheets\82382_TE1000.dgn

HORIZONTAL
SCALE IN FEET
0 2.5 5 10

OVERHEAD SIGN ELEVATION DETAILS

DESIGN AGENCY
B&N
burgessniple.com

DESIGNER
AJS

REVIEWER
KEH 05/01/24

PROJECT ID
82382

SHEET 1598 | TOTAL 2696

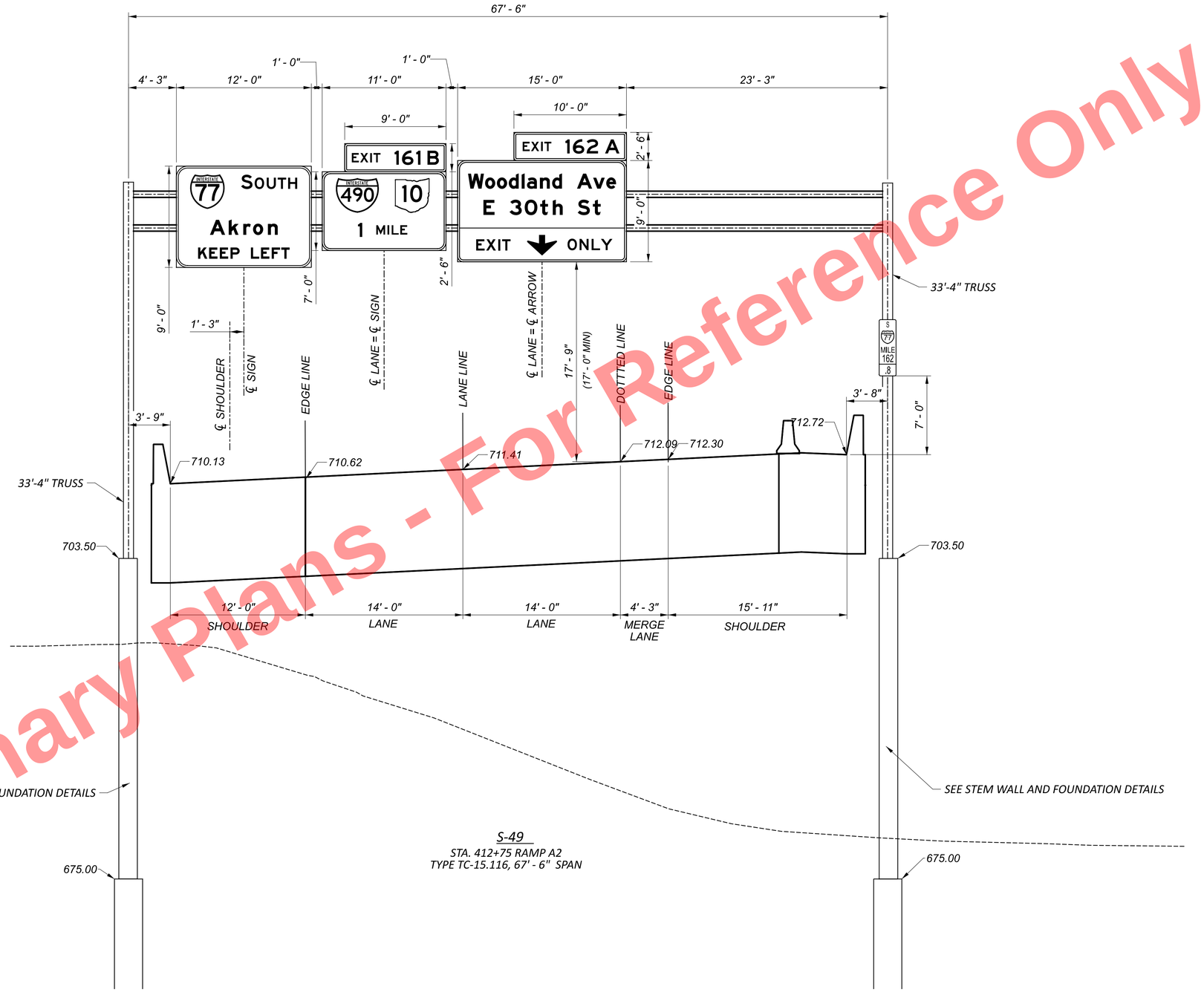

S-49

STA. 412+75 RAMP A2
TYPE TC-15.116, 67' - 6" SPAN

Preliminary Plans - For Reference Only

HORIZONTAL SCALE IN FEET
0 2.5 5 10

OVERHEAD SIGN ELEVATION DETAILS

CTY-RTE-SECTION

MODEL: RAMP A2 - 412+75 SH PAPERSIZE: 34x22 (in.) DATE: 5/23/2025 TIME: 11:18:13 AM USER: Joseph.Hogan
pw:\\mb-us-pw.bentley.com:mb-us-pw-03\Documents\Cleveland_OH\01_Projects\ODOT\District12\82382\400-Engineering\Traffic\Sheets\82382_TE1000.dgn

DESIGN AGENCY
B&N
burgessniple.com

DESIGNER
AJS

REVIEWER
KEH 05/01/24

PROJECT ID
82382

SHEET 1599 | TOTAL 2696

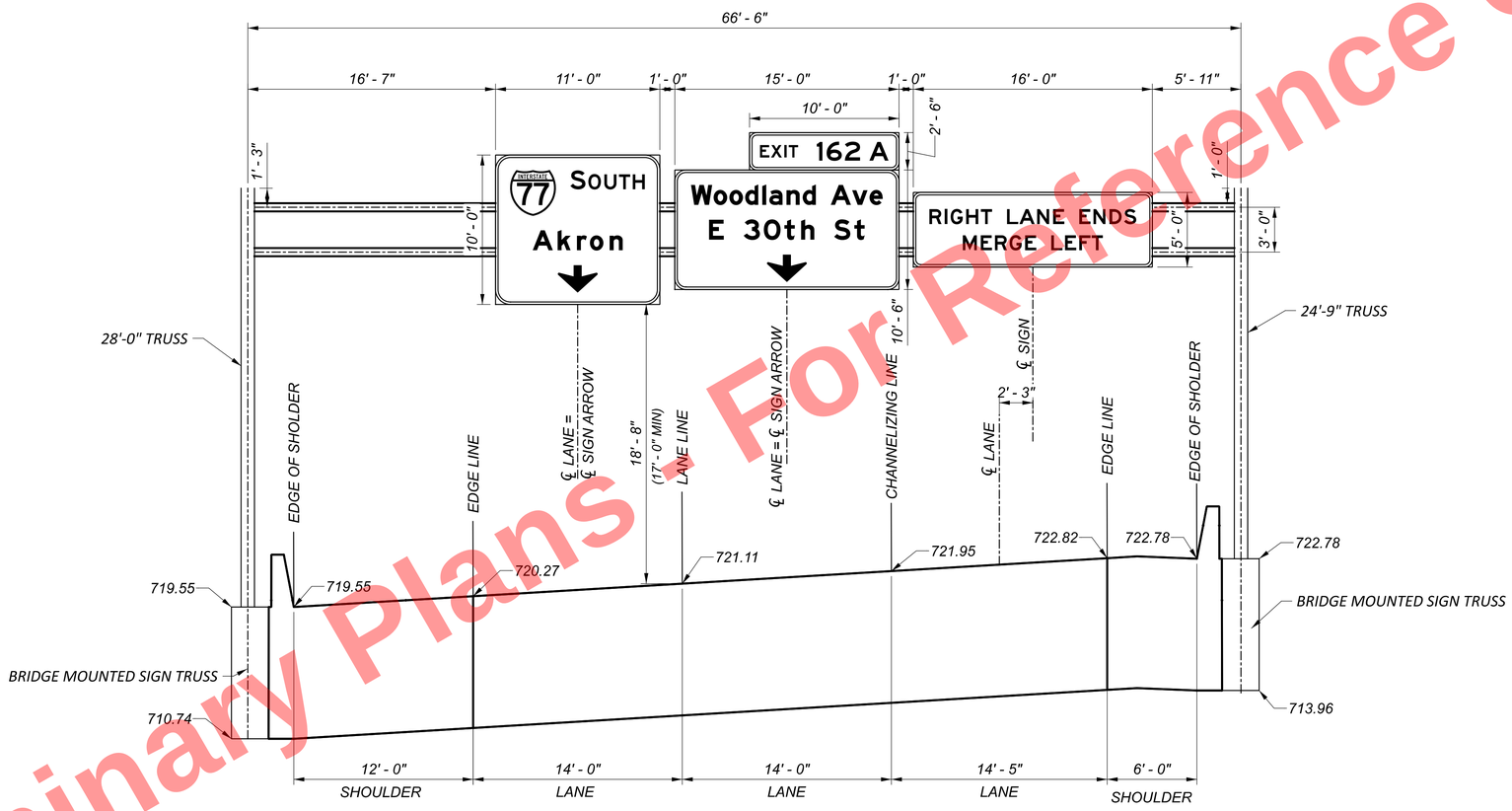

S-67

STA. 425+00 RAMP A2
TYPE TC-15.116, 66' - 6" SPAN

Preliminary Plans - For Reference Only

HORIZONTAL SCALE IN FEET
0 2.5 5 10

OVERHEAD SIGN ELEVATION DETAILS

CTY-RTE-SECTION

MODEL: RAMP A2 - 425+00 SH PAPERSIZE: 34x22 (in.) DATE: 5/23/2025 TIME: 11:18:16 AM USER: Joseph.Hogan
pw:\\mb-us-pw.bentley.com:mb-us-pw-03\Documents\Cleveland_OH\01_Projects\ODOT\District12\82382\400-Engineering\Traffic\Sheets\82382_TE1000.dgn

DESIGN AGENCY
B&N
burgessniple.com

DESIGNER AJS
REVIEWER KEH 05/01/24
PROJECT ID 82382
SHEET 1600 TOTAL 2696

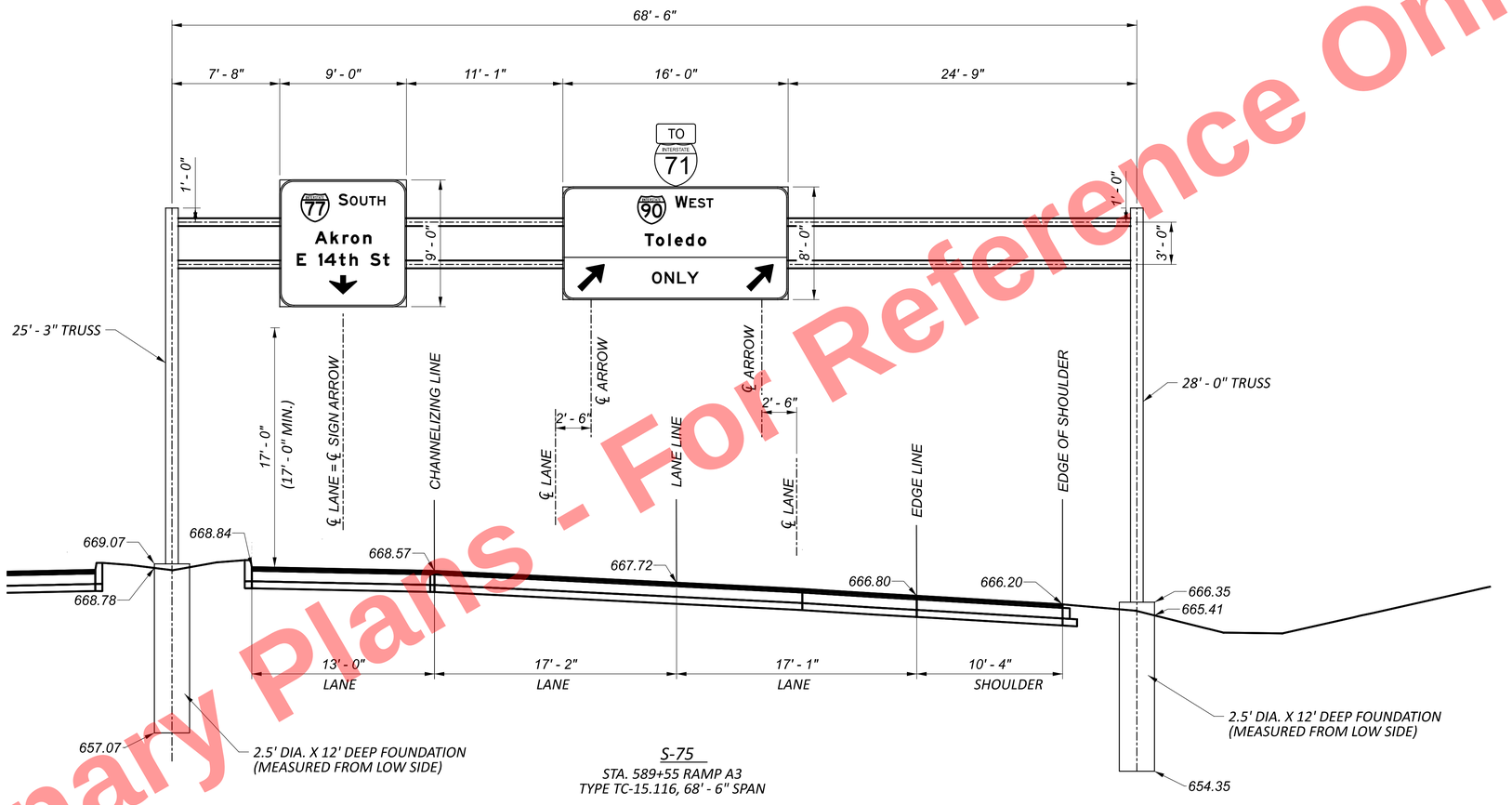

S-75

STA. 589+55 RAMP A3
TYPE TC-15.116, 68' - 6" SPAN

Preliminary Plans - For Reference Only

HORIZONTAL SCALE IN FEET
0 2.5 5 10

OVERHEAD SIGN ELEVATION DETAILS

CTY-RTE-SECTION

MODEL: RAMP A3 - 589+00 SH PAPERSIZE: 34x22 (in.) DATE: 5/23/2025 TIME: 11:18:19 AM USER: Joseph.Hogan
pw:\\mb-us-pw.bentley.com:mb-us-pw-03\Documents\Cleveland_OH01_Projects\ODOTDistrict12\82382400-Engineering\Traffic\Sheets\82382_TE1000.dgn

DESIGN AGENCY
B&N
burgessniple.com

DESIGNER
AJS

REVIEWER
KEH 05/01/24

PROJECT ID
82382

SHEET 1601 | TOTAL 2696

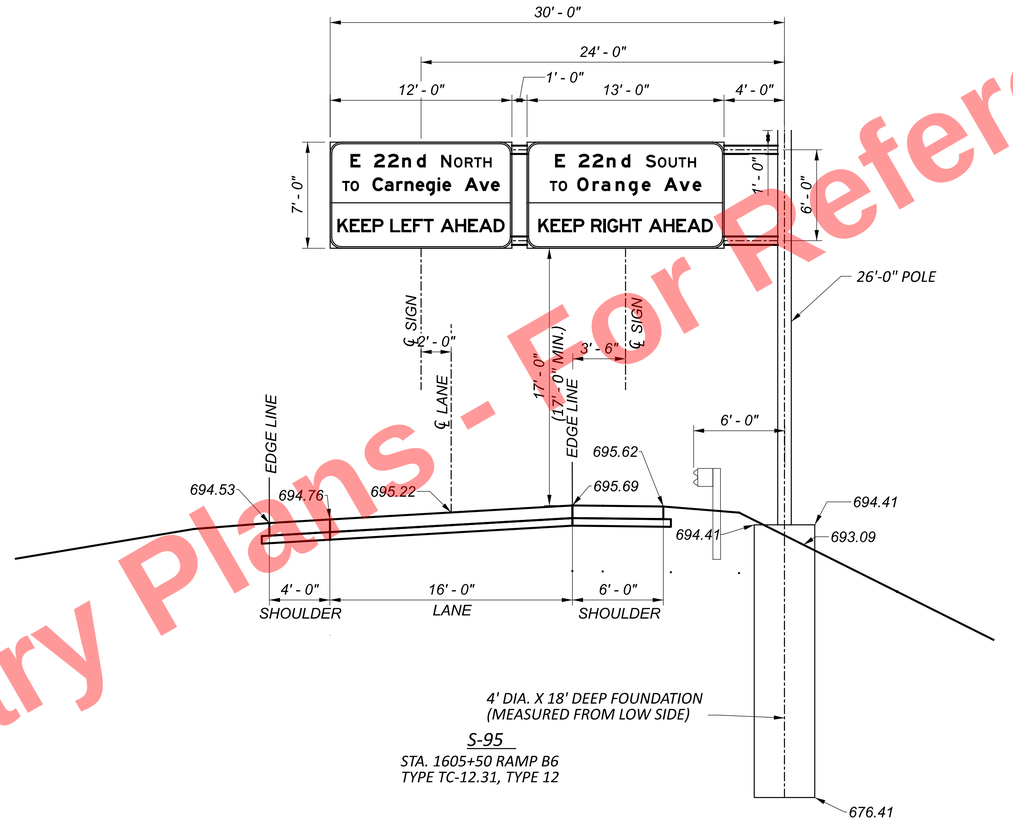

Preliminary Plans - For Reference Only

HORIZONTAL SCALE IN FEET
0 2.5 5 10

OVERHEAD SIGN ELEVATION DETAILS

DESIGN AGENCY
B&N
burgessniple.com

DESIGNER
AJS

REVIEWER
KEH 05/01/24

PROJECT ID
82382

SHEET 1602 TOTAL 2696

CTY-RTE-SECTION

MODEL: RAMP B6 - 1605+50 SH PAPERSIZE: 34x22 (in.) DATE: 5/23/2025 TIME: 11:18:24 AM USER: Joseph.Hogan
pw:\\mb-us-pw.bentley.com:mb-us-pw-03\Documents\Cleveland_OH\01_Projects\ODOT\District12\82382\400-Engineering\Traffic\Sheets\82382_TE1000.dgn

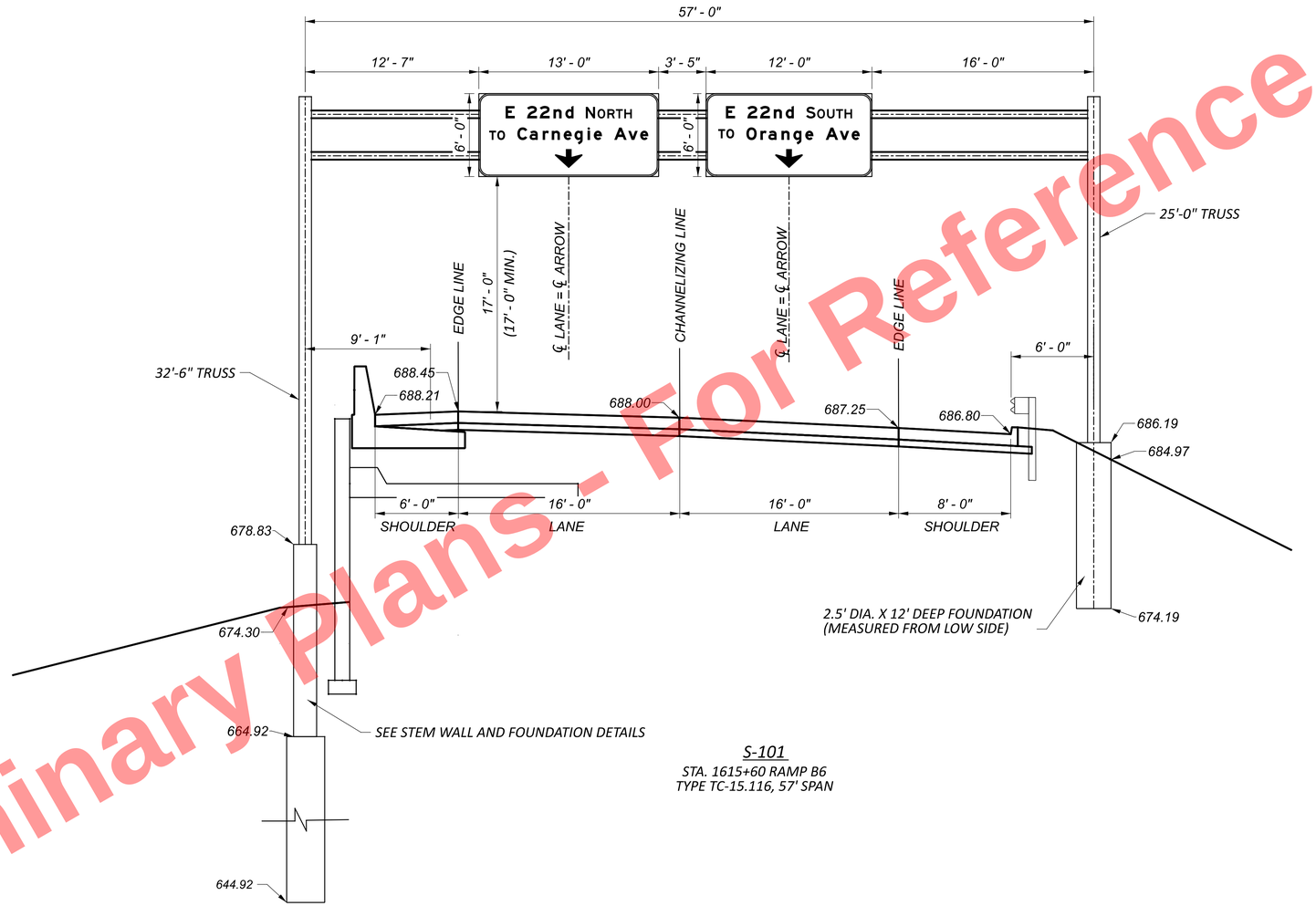

S-101

STA. 1615+60 RAMP B6
TYPE TC-15.116, 57' SPAN

Preliminary Plans - For Reference Only

HORIZONTAL SCALE IN FEET
0 2.5 5 10

OVERHEAD SIGN ELEVATION DETAILS

CTY-RTE-SECTION

MODEL: RAMP B6 - 1615+65 SH PAPERSIZE: 34x22 (in.) DATE: 5/23/2025 TIME: 11:18:30 AM USER: Joseph.Hogan
pw:\\mb-us-pw.bentley.com:mb-us-pw-03\Documents\Cleveland_OH\01_Projects\ODOT\District12\82382\400-Engineering\Traffic\Sheets\82382_TE1000.dgn

DESIGN AGENCY
B&N
burgessniple.com

DESIGNER AJS
REVIEWER KEH 05/01/24
PROJECT ID 82382
SHEET 1603 TOTAL 2696

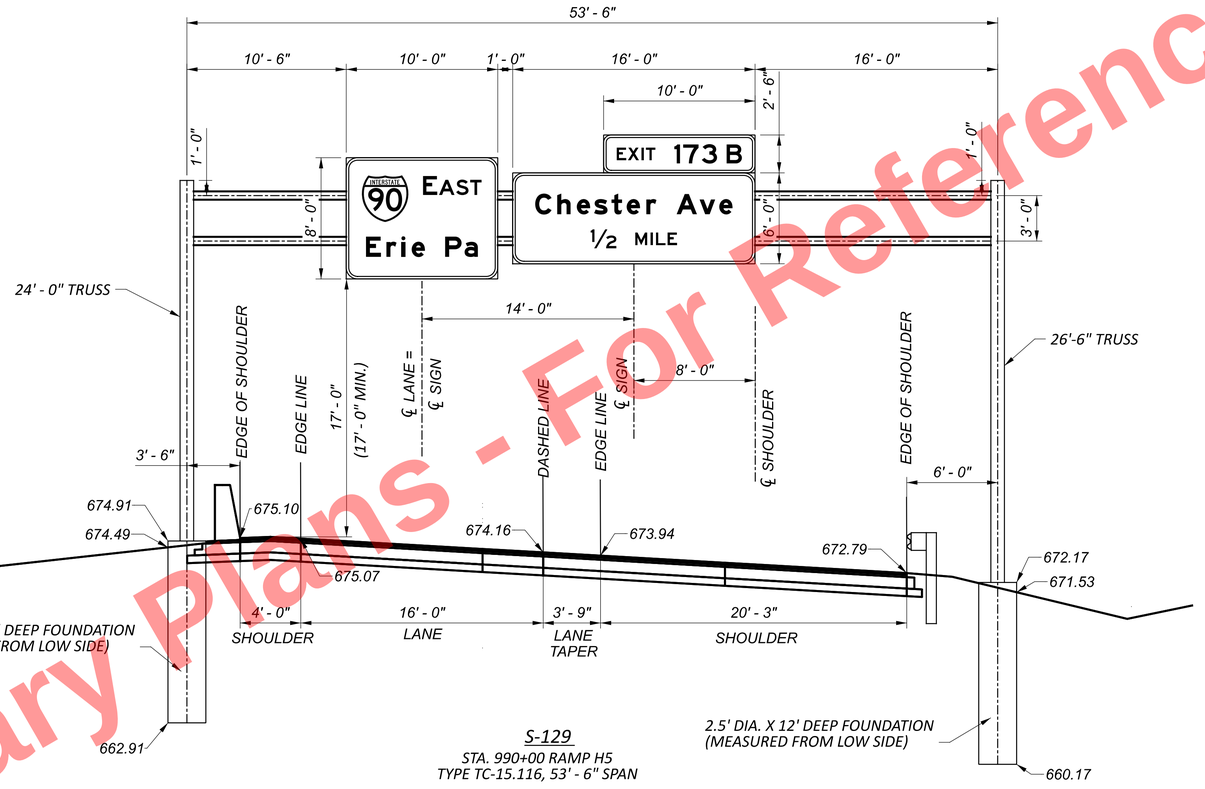

S-129

STA. 990+00 RAMP H5
TYPE TC-15.116, 53' - 6" SPAN

Preliminary Plans - For Reference Only

CTY-RTE-SECTION

MODEL: RAMP H5 - 990+00 SH PAPERSIZE: 34x22 (in.) DATE: 5/23/2025 TIME: 11:18:35 AM USER: Joseph.Hogan
pw:\\mb-us-pw.bentley.com:mb-us-pw-03\Documents\Cleveland_OH\01_Projects\ODOT\District12\82382\400-Engineering\Traffic\Sheets\82382_TE1000.dgn

HORIZONTAL SCALE IN FEET
0 2.5 5 10

OVERHEAD SIGN ELEVATION DETAILS

DESIGN AGENCY
B&N
burgessniple.com

DESIGNER
AJS

REVIEWER
KEH 05/01/24

PROJECT ID
82382

SHEET 1604 TOTAL 2696

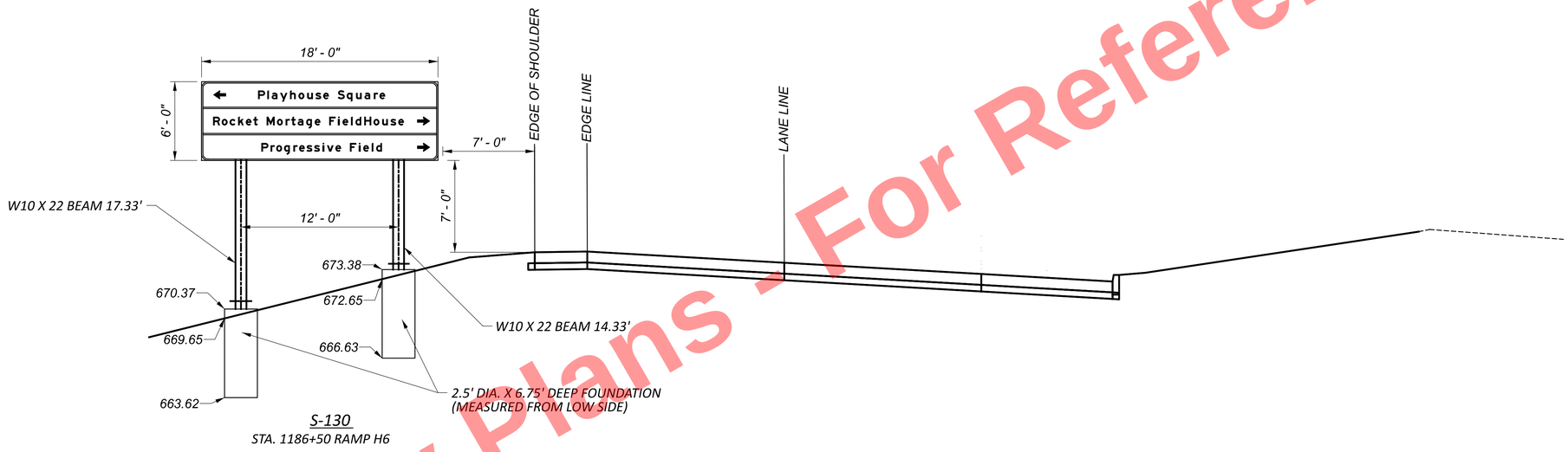

S-130

STA. 1186+50 RAMP H6

Preliminary Plans - For Reference Only

HORIZONTAL SCALE IN FEET
0 2.5 5 10

OVERHEAD SIGN ELEVATION DETAILS

CTY-RTE-SECTION

MODEL: RAMP H6 - 1186+50 SH PAPERSIZE: 34x22 (in.) DATE: 5/23/2025 TIME: 11:18:41 AM USER: Joseph.Hogan
pw:\\mb-us-pw.bentley.com:mb-us-pw-03\Documents\Cleveland_OH\01_Projects\ODOT\District12\82382\400-Engineering\Traffic\Sheets\82382_TE1000.dgn

DESIGN AGENCY
B&N
burgessniple.com

DESIGNER AJS
REVIEWER KEH 05/01/24
PROJECT ID 82382
SHEET 1605 TOTAL 2696

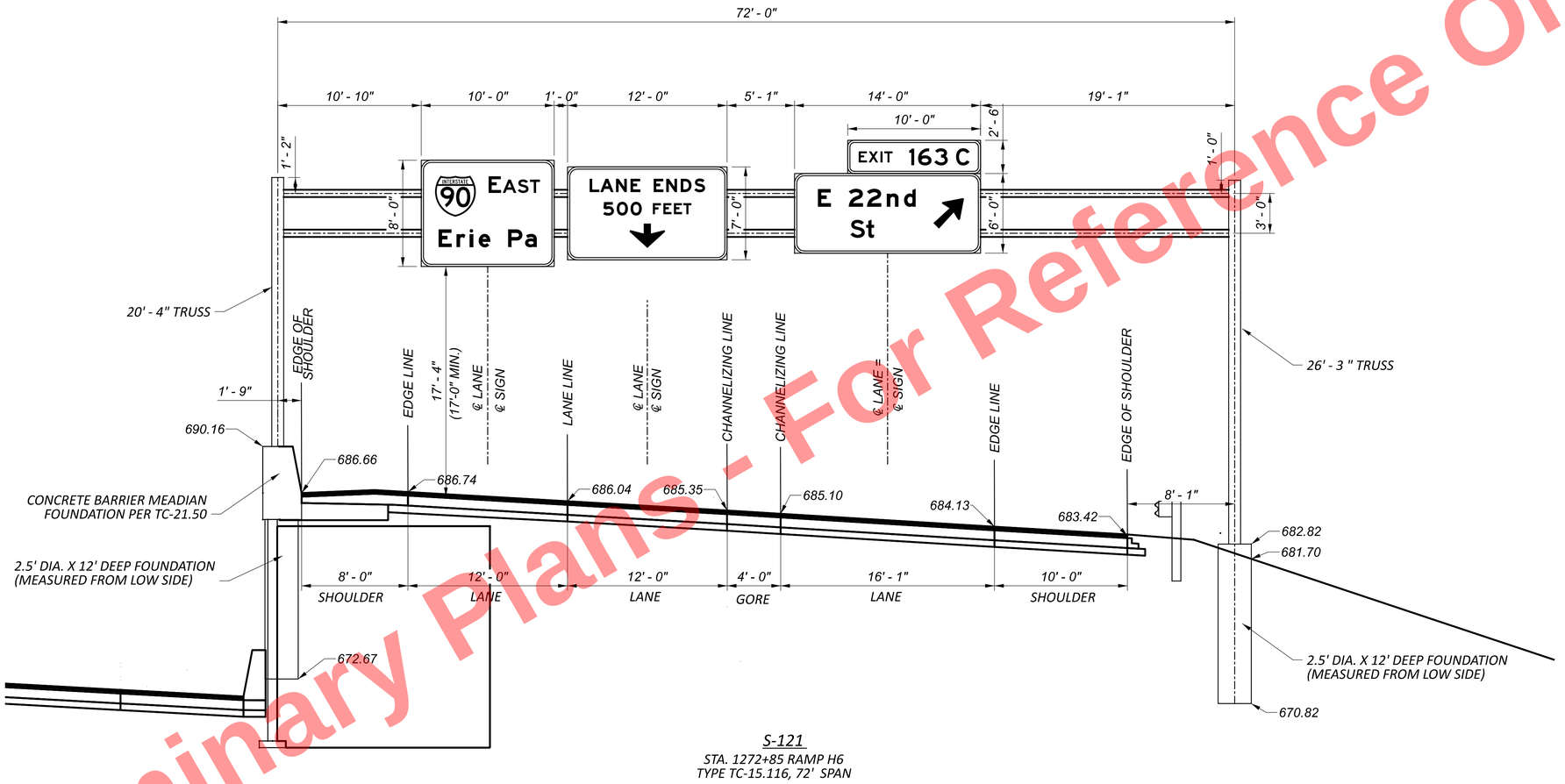

S-121

STA. 1272+85 RAMP H6
TYPE TC-15.116, 72' SPAN

Preliminary Plans - For Reference Only

HORIZONTAL SCALE IN FEET
0 2.5 5 10

OVERHEAD SIGN ELEVATION DETAILS

CTY-RTE-SECTION

MODEL: RAMP H6 - 1272+85 SH PAPERSIZE: 34x22 (in.) DATE: 5/29/2025 TIME: 11:51:47 AM USER: sisson
pw:\\mb-us-pw.bentley.com:mb-us-pw-03\Documents\Cleveland_OH\01_Projects\ODOT\District12\82382\400-Engineering\Traffic\Sheets\82382_TE1000.dgn

DESIGN AGENCY
B&N
burgessniple.com

DESIGNER AJS
REVIEWER KEH 05/01/24
PROJECT ID 82382
SHEET 1606 TOTAL 2696

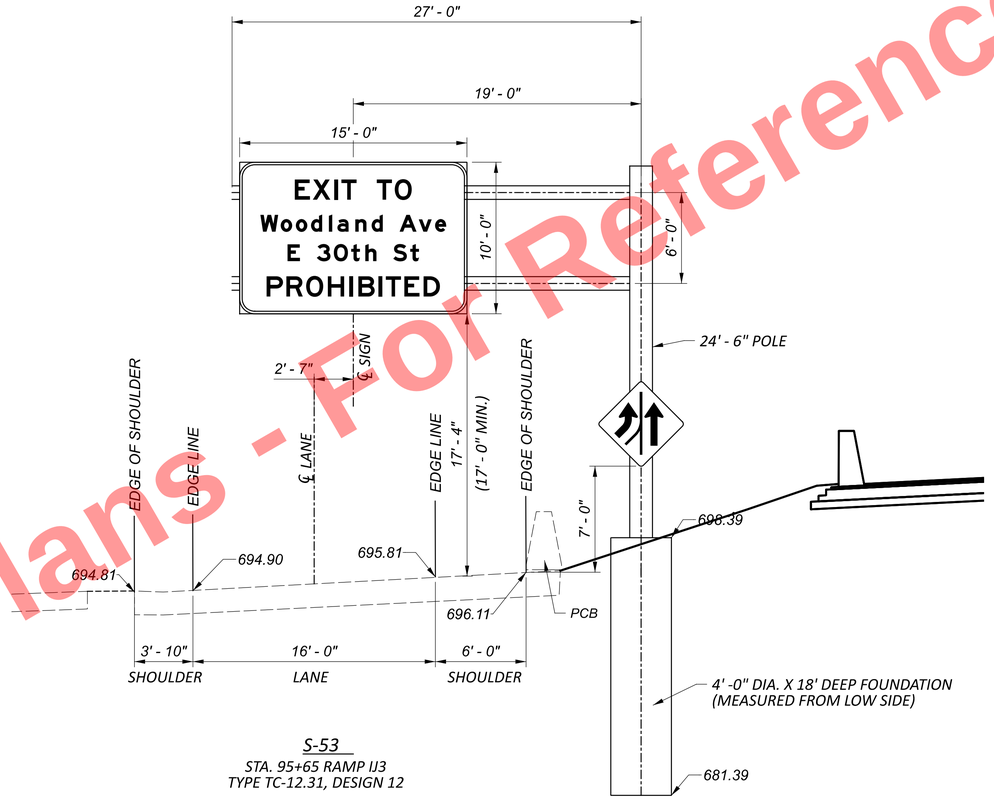

S-53

STA. 95+65 RAMP IJ3
TYPE TC-12.31, DESIGN 12

Preliminary Plans - For Reference Only

CTY-RTE-SECTION

MODEL: RAMP IJ3 - 95+65 SH PAPERSIZE: 34x22 (in.) DATE: 5/23/2025 TIME: 11:18:54 AM USER: Joseph.Hogan
pw:\\mb-us-pw.bentley.com:mb-us-pw-03\Documents\Cleveland_OH\01_Projects\ODOT\District12\82382\400-Engineering\Traffic\Sheets\82382_TE1000.dgn

HORIZONTAL SCALE IN FEET
0 2.5 5 10

OVERHEAD SIGN ELEVATION DETAILS

DESIGN AGENCY
B&N
burgessniple.com

DESIGNER AJS
REVIEWER KEH 05/01/24
PROJECT ID 82382
SHEET 1607 TOTAL 2696

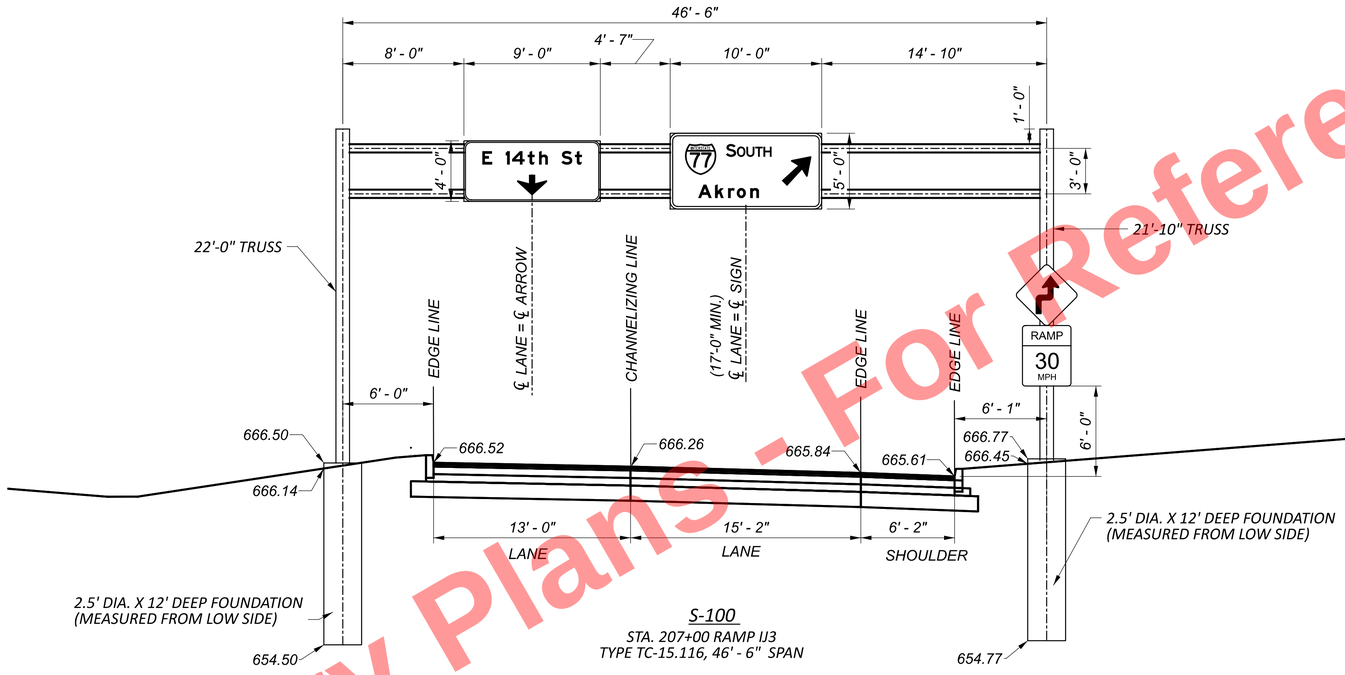

S-100

STA. 207+00 RAMP IJ3
TYPE TC-15.116, 46' - 6" SPAN

Preliminary Plans - For Reference Only

CTY-RTE-SECTION

MODEL: RAMP IJ3 - 207+00 SH PAPERSIZE: 34x22 (in.) DATE: 5/23/2025 TIME: 11:18:59 AM USER: Joseph.Hogan
pw:\\mb-us-pw.bentley.com:mb-us-pw-03\Documents\Cleveland_OH01_Projects\ODOT\District12\82382400-Engineering\Traffic\Sheets\82382_TE1000.dgn

HORIZONTAL SCALE IN FEET
0 2.5 5 10

OVERHEAD SIGN ELEVATION DETAILS

DESIGN AGENCY
B&N
burgessniple.com

DESIGNER
AJS

REVIEWER
KEH 05/01/24

PROJECT ID
82382

SHEET 1608 | TOTAL 2696

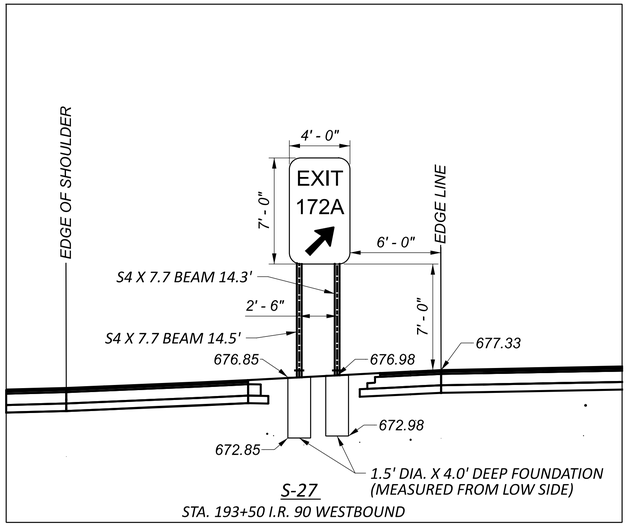

S-27

STA. 193+50 I.R. 90 WESTBOUND

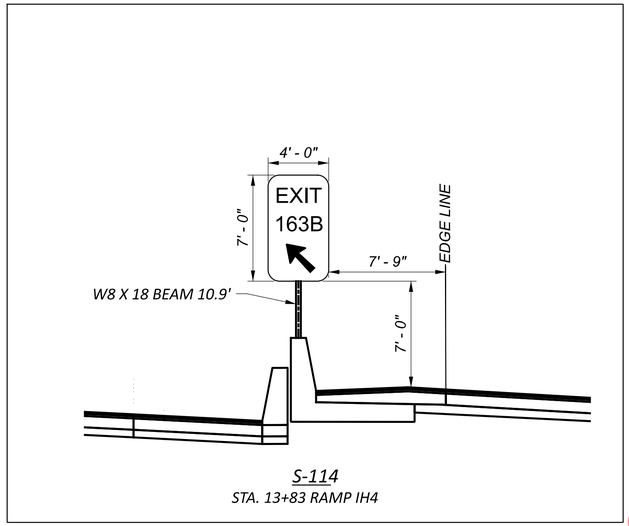

S-114

STA. 13+83 RAMP IH4

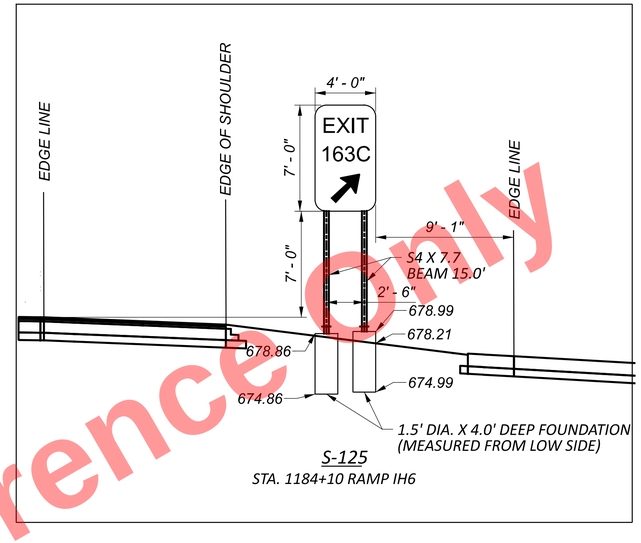

S-125

STA. 1184+10 RAMP IH6

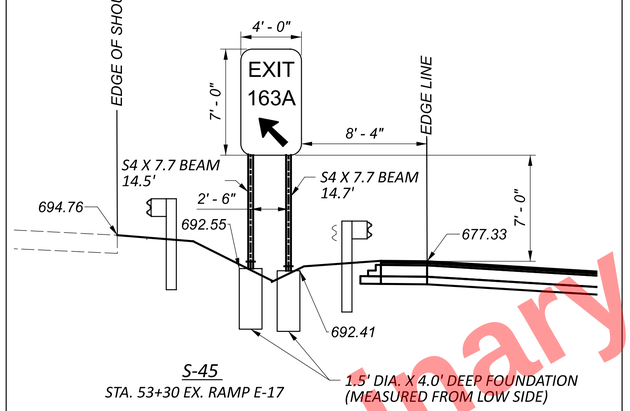

S-45

STA. 53+30 EX. RAMP E-17

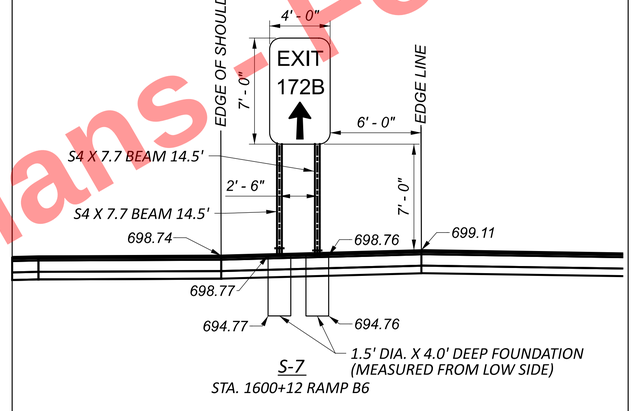

S-7

STA. 1600+12 RAMP B6

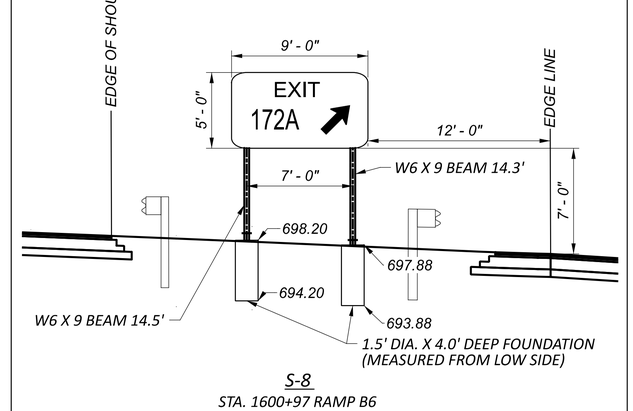

S-8

STA. 1600+97 RAMP B6

Preliminary Plans - For Reference Only

HORIZONTAL SCALE IN FEET
0 2.5 5 10

OVERHEAD SIGN ELEVATION DETAILS

CTY-RTE-SECTION

MODEL: EXIT SIGNS SH PAPERSIZE: 34x22 (in.) DATE: 5/23/2025 TIME: 11:19:05 AM USER: Joseph.Hogan
pw:\\mb-us-pw.bentley.com:mb-us-pw-03\Documents\Cleveland_OH101_Projects\ODOT\District12\82382\400-Engineering\Traffic\Sheets\82382_TE1000.dgn

DESIGN AGENCY
B&N
burgessniple.com

DESIGNER AJS
REVIEWER KEH 05/01/24
PROJECT ID 82382
SHEET 1609 TOTAL 2696

Preliminary Plans - For Reference Only

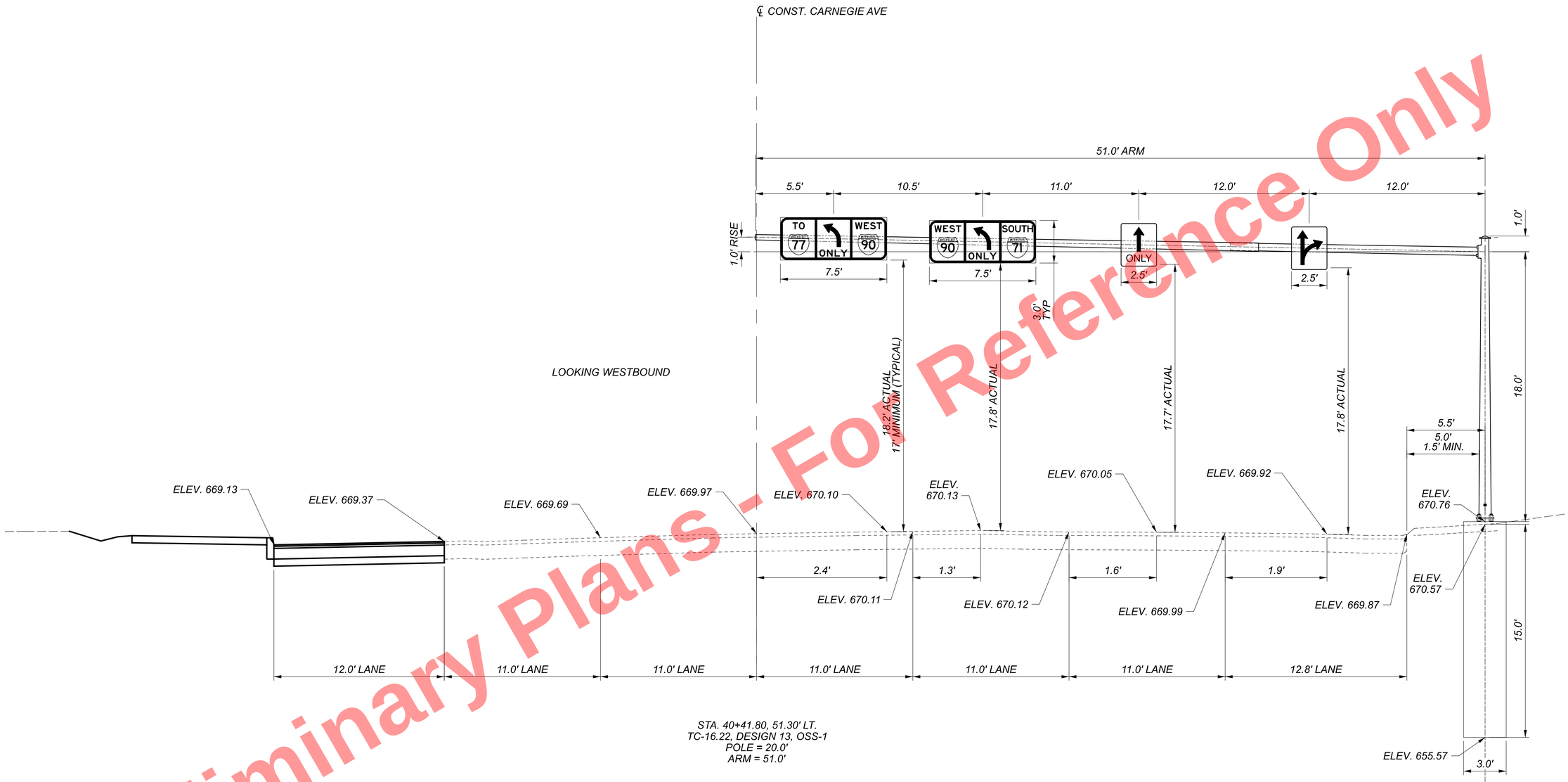

STA. 40+41.80, 51.30' LT.
TC-16.22, DESIGN 13, OSS-1
POLE = 20.0'
ARM = 51.0'

SIGNING PLAN
ELEVATION VIEW

CUY-90-16.28 (CCG3A)

MODEL: Sheet-5 PAPERSIZE: 34x22 (in) DATE: 5/23/2025 TIME: 11:20:10 AM USER: Joseph.Hogan
pw:\\mb-us-pw.bentley.commb-us-pw-03\Documents\Cleveland_0H\01_Projects\0D0T\District2\82382\400-Engineering\Traffic\Sheets\82382_TPI101.dgn

DESIGN AGENCY
Michael Baker INTERNATIONAL

DESIGNER
CRK

REVIEWER
GSH 05/22/24

PROJECT ID
82382

SHEET 1610 | TOTAL 2696

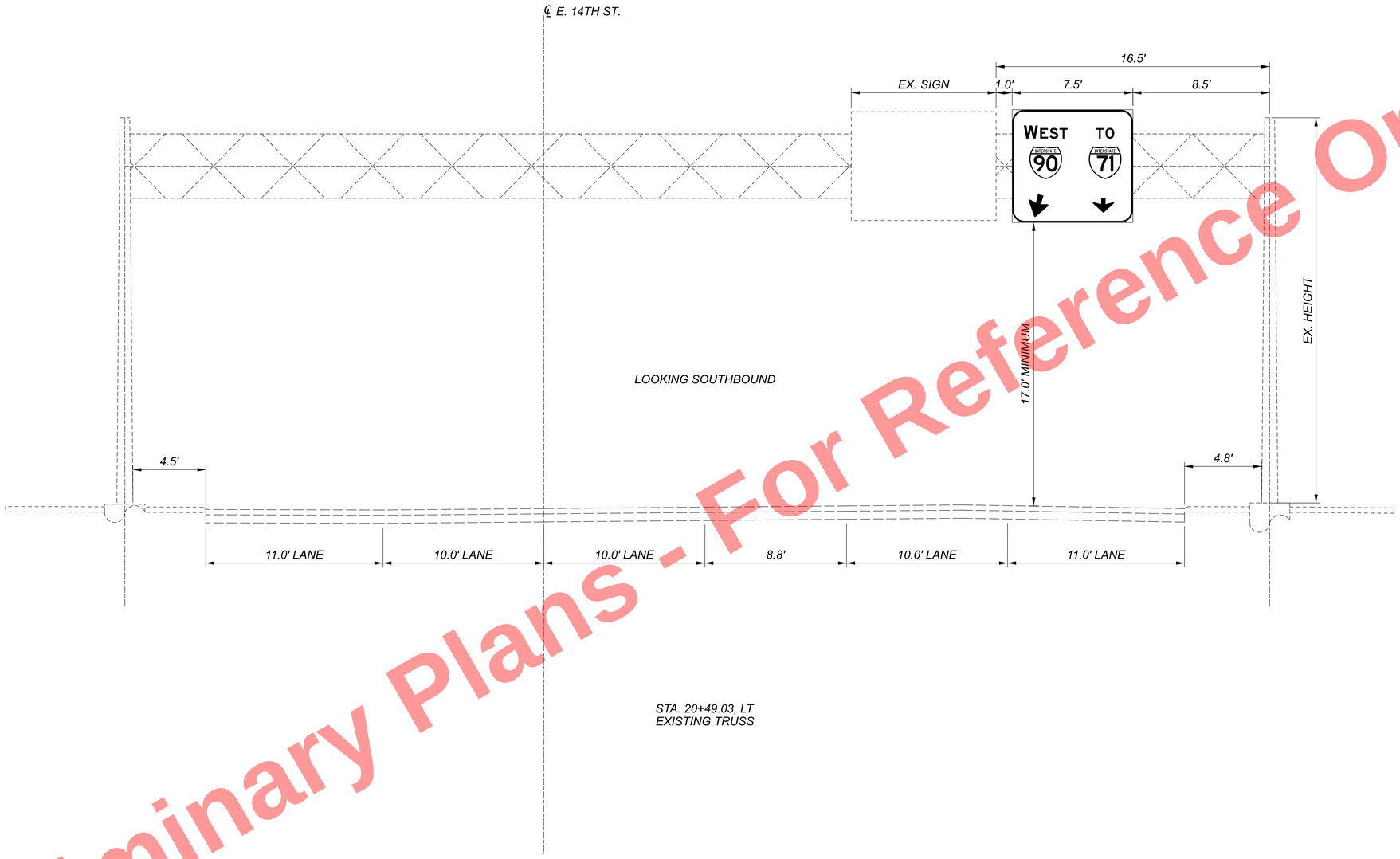

Preliminary Plans - For Reference Only

SIGNING PLAN
ELEVATION VIEW

CUY-90-16.28 (CCG3A)

MODEL: Sheet-6 PAPERSIZE: 34x22 (in.) DATE: 5/23/2025 TIME: 11:20:13 AM USER: Joseph.Hogan
pw:\\mb-us-pw.bentley.com:mb-us-pw-03\Documents\Cleveland_OH\OiL_Projects\ODOT\District2\82382\400-Engineering\Traffic\Sheets\82382_TPI101.dgn

DESIGN AGENCY
Michael Baker INTERNATIONAL

DESIGNER
CRK

REVIEWER
GSH 05/22/24

PROJECT ID
82382

SHEET 1611 | TOTAL 2696



6.0" Radius, 2.0" Border, White on Green;
Rounded Rectangle 3.0" Radius Fluorescent Yellow;
"EXIT", E 2K; "163", E 2K; "A", E 2K;

12.0" Radius, 2.0" Border, White on Green;
"E 9th St", E Mod 2K 50% spacing;
"Ontario St", E Mod 2K 50% spacing;

12.0" Radius, 2.0" Border, Black on Yellow;
"EXIT", E 2K; "ONLY", E 2K 50% spacing;
Down Arrow C-1 - 22.0" 270°;
Table of widths and spaces

| | | |

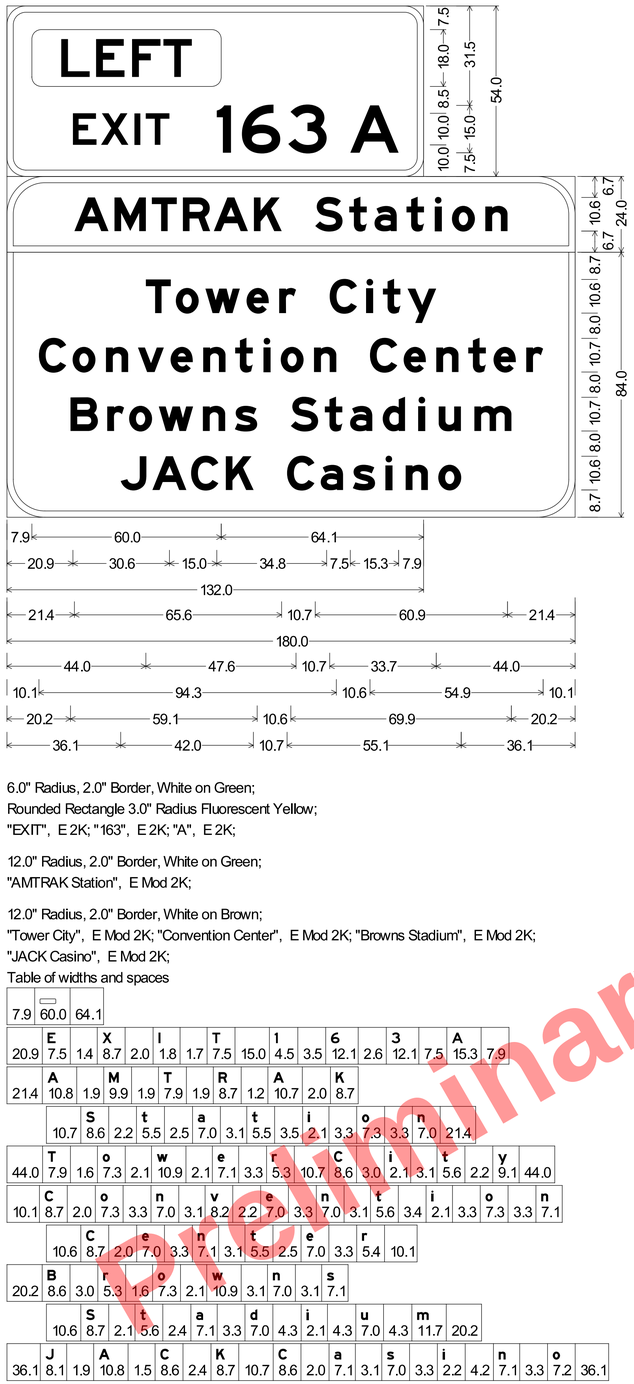

6.0" Radius, 2.0" Border, White on Green;
Rounded Rectangle 3.0" Radius Fluorescent Yellow;
"EXIT", E 2K; "163", E 2K; "A", E 2K;

12.0" Radius, 2.0" Border, White on Green;
"AMTRAK Station", E Mod 2K;

12.0" Radius, 2.0" Border, White on Brown;
"Tower City", E Mod 2K; "Convention Center", E Mod 2K; "Browns Stadium", E Mod 2K;
"JACK Casino", E Mod 2K;
Table of widths and spaces

| | | |

S-140 SEE SHEET 1585



6.0" Radius, 2.0" Border, White on Green;
Rounded Rectangle 3.0" Radius Fluorescent Yellow;
"EXIT", E 2K; "163", E 2K; "A", E 2K;

12.0" Radius, 2.0" Border, White on Green;
"E 9th St", E Mod 2K 50% spacing; "Ontario St", E Mod 2K 50% spacing;

12.0" Radius, 2.0" Border, Black on Yellow;
"EXIT ONLY", E 2K; Down Arrow C-1 - 22.0" 270°;
Table of widths and spaces

| | | |

S-44 SEE SHEET 1586



| | | |

S-49 SEE SHEET 1599



12.0" Radius, 2.0" Border, White on Green;
Interstate 77 M1-1; "SOUTH", E 2K; "Akron", E Mod 2K;
"KEEP LEFT", E 2K;
Table of widths and spaces

	77		S		O		U		T		H			
18.1	36.0	12.0	12.1	2.3	10.1	2.8	9.7	2.0	9.0	2.1	9.7	18.1		
35.8	A 16.2	3.8	k 10.6	5.0	r 8.0	2.4	o 10.8	5.0	n 10.6	35.8				
23.1	K 10.0	1.9	E 9.0	2.4	E 9.0	2.4	P 9.7							
		12.0	L 9.0	2.0	E 9.0	2.4	F 9.0	1.0	T 9.0	23.1				

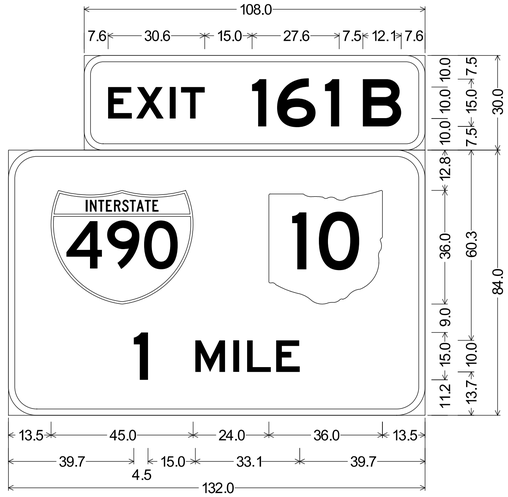

6.0" Radius, 2.0" Border, White on Green;
"EXIT", E 2K; "161", E 2K; "B", E 2K;

9.0" Radius, 2.0" Border, White on Green;
Interstate 490 M1-1; State Highway 10 M1-H5-36-2; "1 MILE", E 2K;
Table of widths and spaces

7.6	E 7.5	1.4	X 8.7	2.0	I 1.8	1.7	T 7.5	15.0	1 4.5	3.4	6 12.2	3.0	1 4.5	
			B 7.5	12.1	7.6									
	490			10										
13.5	45.0	24.0	36.0	13.5										
39.7	1 4.5	15.0	M 9.4	2.6	I 1.8	2.6	L 7.5	1.7	E 7.5	39.7				



6.0" Radius, 2.0" Border, White on Green;
"EXIT", E 2K; "162", E 2K; "A", E 2K;

12.0" Radius, 2.0" Border, White on Green;
"Woodland Ave", E Mod 2K 50% spacing; "E 30th St", E Mod 2K 50% spacing;

12.0" Radius, 2.0" Border, Black on Yellow;
"EXIT", E 2K; Down Arrow C-1 - 22.0" 270°; "ONLY", E 2K;
Table of widths and spaces

8.4	E 7.5	1.4	X 8.7	2.0	I 1.8	1.7	T 7.5	15.0	1 4.5	3.5	6 12.1	2.6	2 12.1	7.5	A 15.3	8.4	
9.0	W 17.0	1.2	o 10.9	1.7	o 10.9	1.8	d 10.5	3.2	l 3.2	2.5	a 10.6	3.2	n 10.5	2.5	d 10.6		
	8.0	A 16.1	1.1	v 12.3	1.6	e 10.6	9.0										
33.2	E 11.8	8.0	3 13.0	1.6	O 13.4	1.5	t 8.3	2.6	h 10.6	8.0	S 12.9	1.6	t 8.3	33.2			
19.3	E 9.0	1.7	X 10.4	2.4	I 2.2	2.0	T 9.0	12.0	32.0								
	12.0	O 10.1	2.8	N 9.7	3.1	L 9.0	1.0	Y 12.2	8.1								

Preliminary Plans - For Reference Only

SIGN DETAILS

DESIGN AGENCY
B&N
burgessniple.com

DESIGNER AJS
REVIEWER KEH 5-1-24
PROJECT ID 82382
SHEET 1616 TOTAL 2696

CUY-90-16.28 (CCG3A)

MODEL: 5 - SIGN DETAILS PAPERSIZE: 34x22 (in.) DATE: 5/23/2025 TIME: 11:20:21 AM USER: Joseph.Hogan
pw:\\mb-us-pw.bentley.com:mb-us-pw-03\Documents\Cleveland_OH101_Projects\ODOT\District12\82382\400-Engineering\Traffic\Sheets\82382_TD100.dgn
TD100.dgn

S-1 SEE SHEET 1587

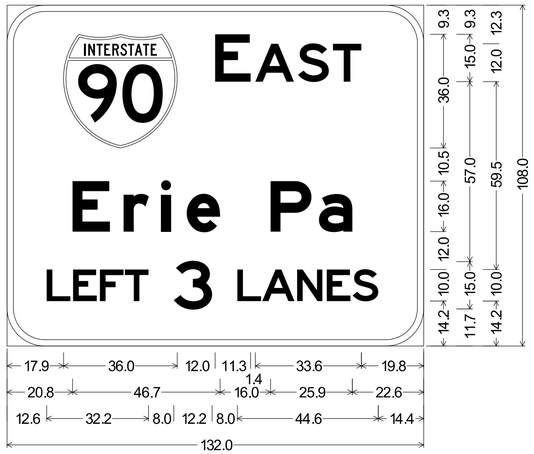

12.0" Radius, 2.0" Border, White on Green;
Interstate 90 M1-1; "EAST", E 2K; "Erie Pa", E Mod 2K;
"LEFT 3 LANES", E 2K 50% spacing;
Table of widths and spaces

| | | |



12.0" Radius, 2.0" Border, White on Green;
Interstate 90 M1-1; "EAST", E 2K; "Erie Pa", E Mod 2K; "LEFT 3 LANES", E 2K 50% spacing;
Table of widths and spaces

| | | |

S-3 SEE SHEET 1589



12.0" Radius, 2.0" Border, White on Green;
Interstate 90 M1-1; "EAST", E 2K; "Erie Pa", E Mod 2K; "LEFT 3 LANES", E 2K 50% spacing;
Table of widths and spaces

| | | |

S-4 SEE SHEET 1590

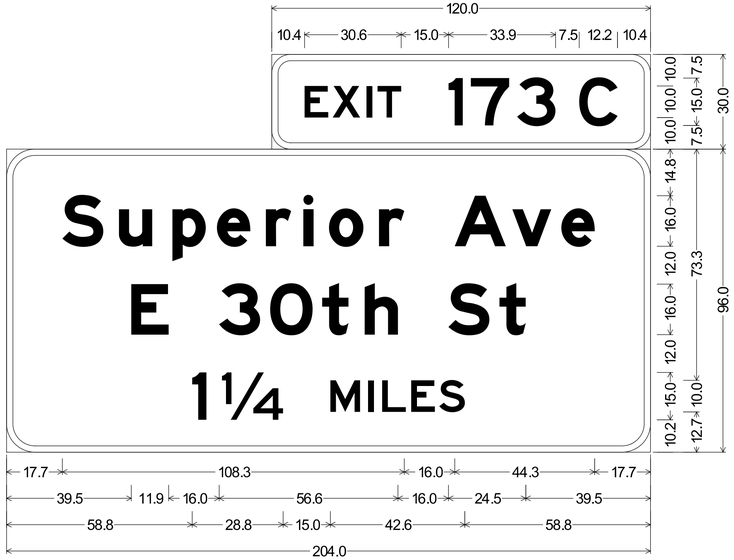

6.0" Radius, 2.0" Border, White on Green;
"EXIT", E 2K; "173", E 2K; "C", E 2K;

9.0" Radius, 2.0" Border, White on Green;
"Superior Ave", E Mod 2K; "E 30th St", E Mod 2K; "1¼ MILES", E 2K;
Table of widths and spaces

| | | |

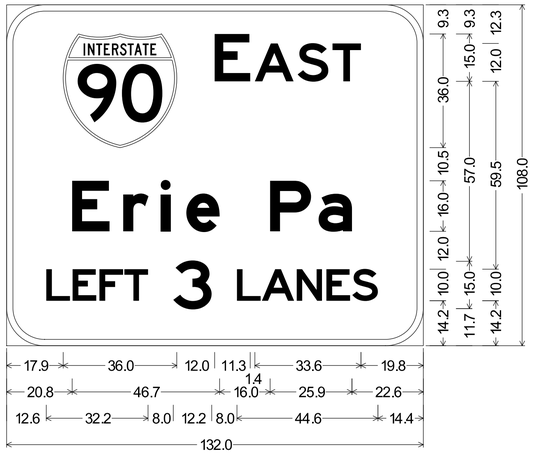

12.0" Radius, 2.0" Border, White on Green;
Interstate 90 M1-1; "EAST", E 2K; "Erie Pa", E Mod 2K;
"LEFT 3 LANES", E 2K 50% spacing;
Table of widths and spaces

17.9	90 36.0	12.0	E 11.3	1.4	A 12.3	1.3	S 9.7	1.3	T 9.0	19.8
20.8	E 11.8	4.3	r 8.0	3.9	i 3.2	4.9	e 10.6	16.0	P 12.9	2.4	a 10.6	22.6
12.6	L 7.5	0.8	E 7.5	1.0	F 7.5	0.4	T 7.5	8.0	3 12.2			
	8.0	L 7.5	0.4	A 10.2	0.8	N 8.1	1.3	E 7.5	0.7	S 8.1	14.4	

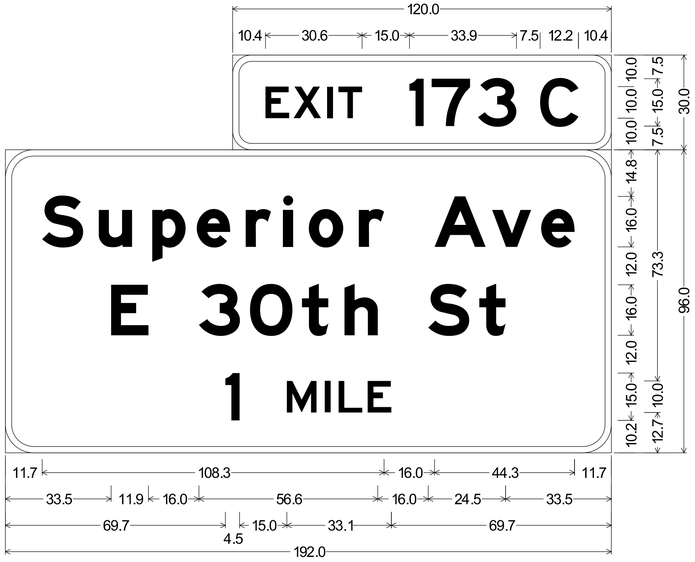

6.0" Radius, 2.0" Border, White on Green;
"EXIT", E 2K; "173", E 2K; "C", E 2K;

9.0" Radius, 2.0" Border, White on Green;
"Superior Ave", E Mod 2K; "E 30th St", E Mod 2K; "1 MILE", E 2K;
Table of widths and spaces

10.4	E 7.5	1.4	X 8.7	2.0	l 1.8	1.7	T 7.5	15.0	1 4.5	2.6	7 12.1	2.6	3 12.1	7.5	C 12.2	10.4				
11.7	S 12.9	5.0	u 10.6	6.4	p 10.5	3.5	e 10.6	5.0	r 8.0	3.8	i 3.2	5.0	o 10.8	5.0	r 8.0					
16.0	A 16.2	2.0	v 12.4	3.2	e 10.5	11.7														
33.5	E 11.9	16.0	3 12.9	3.2	O 13.5	3.0	t 8.3	5.1	h 10.6	16.0	S 13.0	3.2	t 8.3	33.5						
69.7	1 4.5	15.0	M 9.4	2.6	I 1.8	2.6	L 7.5	1.7	E 7.5	69.7										



6.0" Radius, 2.0" Border, White on Green;
"EXIT", E 2K; "173", E 2K; "B", E 2K;

9.0" Radius, 2.0" Border, White on Green;
"Chester Ave", E Mod 2K; "½", E 2K; "MILE", E 2K;
Table of widths and spaces

10.4	E 7.5	1.4	X 8.7	2.0	l 1.8	1.7	T 7.5	15.0	1 4.5	2.6	7 12.1	2.6	3 12.1	7.5	B 12.2	10.4				
11.8	C 13.0	4.5	h 10.5	5.0	e 10.6	3.2	s 10.5	3.2	t 8.3	3.7	e 10.6	4.9	r 8.0							
16.0	A 16.2	2.1	v 12.3	3.2	e 10.6	11.8														
55.8	½ 20.3	15.0	M 9.4	2.6	l 1.8	2.6	L 7.5	1.7	E 7.5	55.8										

Preliminary Plans - For Reference Only

SIGN DETAILS

DESIGN AGENCY
B&N
burgessniple.com

DESIGNER AJS
REVIEWER KEH 5-1-24
PROJECT ID 82382
SHEET 1621 TOTAL 2696

CUY-90-16.28 (CCG3A)

MODEL: 10 - SIGN DETAILS PAPERSIZE: 34x22 (in.) DATE: 5/23/2025 TIME: 11:20:24 AM USER: Joseph.Hogan
pw:\\mb-us-pw.bentley.com:mb-us-pw-03\Documents\Cleveland_OH\01_Projects\ODOT\District12\82382\400-Engineering\Traffic\Sheets\82382_TD100.dgn

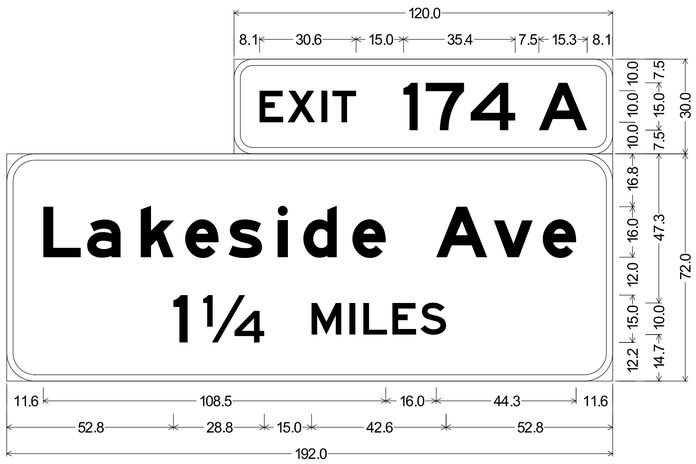

6.0" Radius, 2.0" Border, White on Green;
"EXIT", E 2K; "174", E 2K; "A", E 2K;

9.0" Radius, 2.0" Border, White on Green;
"Lakeside Ave", E Mod 2K; "1¼ MILES", E 2K;
Table of widths and spaces

8.1	E 7.5	1.4	X 8.7	2.0	I 1.8	1.7	T 7.5	15.0	1 4.5	2.6	7 12.1	2.1	4 14.1	7.5	A 15.3	8.1				
11.6	L 11.8	2.1	a 10.6	6.4	k 10.5	3.6	e 10.5	3.2	s 10.6	4.9	i 3.2	5.0	d 10.6	4.9	e 10.6					
	16.0	A 16.1	2.1	v 12.3	3.2	e 10.6	11.6													
52.8	I 4.5	5.0	¼ 19.3	15.0	M 9.4	2.6	I 1.8	2.6	L 7.5	1.7	E 7.5	1.4	S 8.1	52.8						

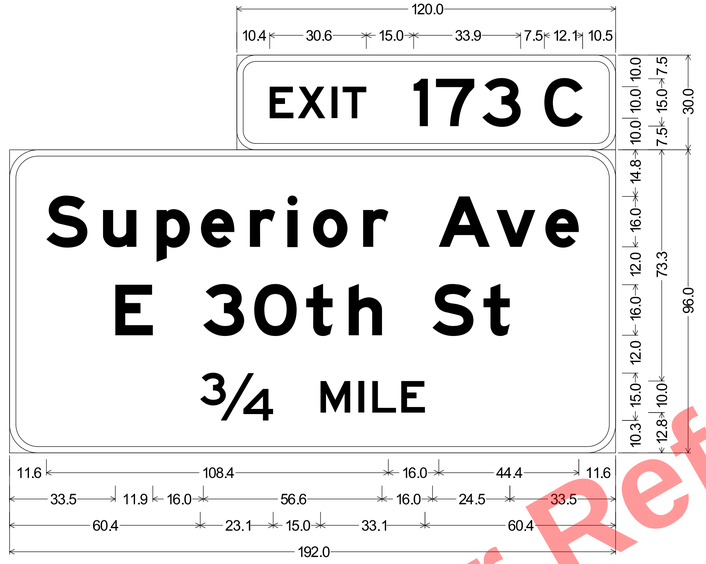

6.0" Radius, 2.0" Border, White on Green;
"EXIT", E 2K; "173", E 2K; "C", E 2K;

9.0" Radius, 2.0" Border, White on Green;
"Superior Ave", E Mod 2K; "E 30th St", E Mod 2K; "¾ MILE", E 2K;
Table of widths and spaces

10.4	E 7.5	1.4	X 8.8	1.9	I 1.9	1.6	T 7.5	15.0	1 4.5	2.6	7 12.1	2.6	3 12.1	7.5	C 12.1	10.5				
11.6	S 13.0	5.0	u 10.5	6.5	p 10.5	3.5	e 10.6	5.0	r 8.0	3.8	i 3.3	4.9	o 10.9	4.9	r 8.0					
16.0	A 16.1	2.1	v 12.4	3.1	e 10.6	11.8														
33.5	E 11.9	16.0	3 12.9	3.3	O 13.4	3.0	t 8.4	5.0	h 10.6	16.0	S 13.0	3.1	t 8.4	33.5						
60.4	¾ 23.1	15.0	M 9.4	2.6	I 1.8	2.6	L 7.5	1.8	E 7.4	60.4										

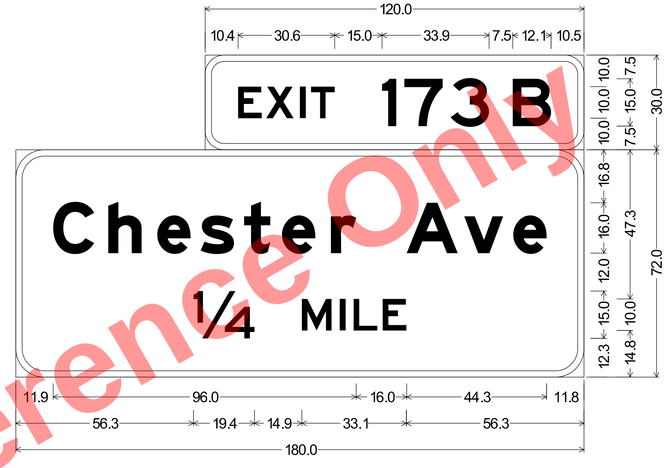

6.0" Radius, 2.0" Border, White on Green;
"EXIT", E 2K; "173", E 2K; "B", E 2K;

9.0" Radius, 2.0" Border, White on Green;
"Chester Ave", E Mod 2K; "¼ MILE", E 2K;
Table of widths and spaces

10.4	E 7.5	1.4	X 8.8	1.9	I 1.9	1.6	T 7.5	15.0	1 4.5	2.6	7 12.1	2.6	3 12.1	7.5	B 12.1	10.5				
11.9	C 12.9	4.5	h 10.5	5.0	e 10.5	3.3	s 10.5	3.3	t 8.3	3.6	e 10.6	5.0	r 8.0							
16.0	A 16.1	2.1	v 12.3	3.3	e 10.5	11.8														
56.3	¼ 19.4	14.9	M 9.4	2.6	I 1.9	2.5	L 7.5	1.8	E 7.4	56.3										

Preliminary Plans - Not For Reference Only

SIGN DETAILS

CUY-90-16.28 (CCG3A)
MODEL: 11 - SIGN DETAILS PAPERSIZE: 34x22 (in.) DATE: 5/23/2025 TIME: 11:20:25 AM USER: Joseph.Hogan
pw:\\mb-us-pw.bentley.com:mb-us-pw-03\Documents\Cleveland_OH\01_Projects\ODOT\District12\82382\400-Engineering\Traffic\Sheets\82382_TD100.dgn

DESIGN AGENCY
B&N
burgessniple.com

DESIGNER AJS
REVIEWER KEH 5-1-24
PROJECT ID 82382
SHEET 1622 TOTAL 2696

S-22 SEE SHEET 1593

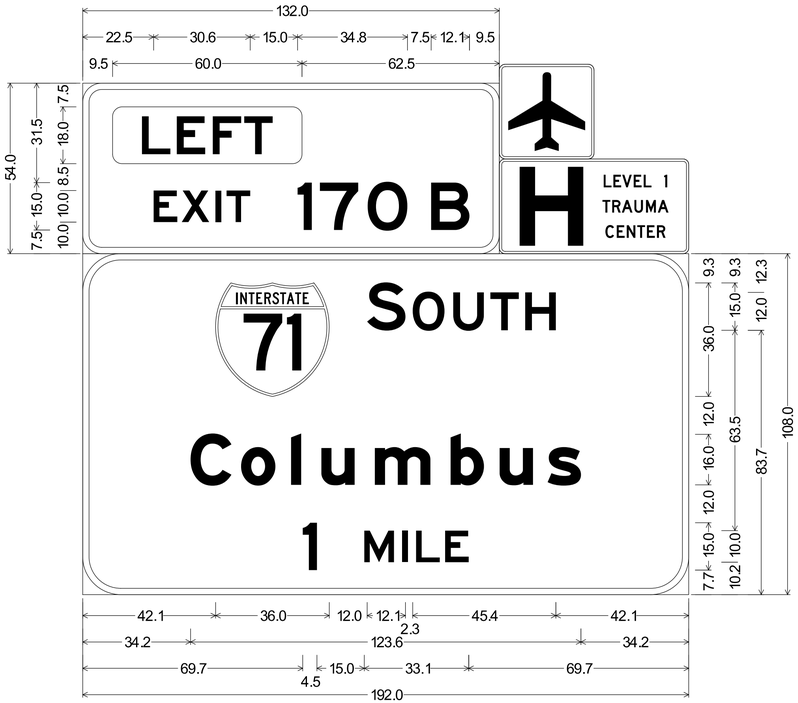

6.0" Radius, 2.0" Border, White on Green;
Rounded Rectangle 3.0" Radius Fluorescent Yellow;
"EXIT", E 2K; "170", E 2K; "B", E 2K;

12.0" Radius, 2.0" Border, White on Green;
Interstate 71 M1-1; "SOUTH", E 2K; "Columbus", E Mod 2K; "1 MILE", E 2K;

Table of widths and spaces

9.5	60.0	62.5

22.5	E 7.5	1.4	X 8.7	2.0	I 1.8	1.7	T 7.5	15.0	1 4.5	2.5	7 12.2	3.0	O 12.6	7.5	B 12.1	9.5				
42.1	71 36.0	12.0	S 12.1	2.3	O 10.1	2.8	U 9.7	2.0	T 9.0	2.1	H 9.7	42.1								
34.2	C 12.9	3.1	o 10.8	5.0	l 3.2	6.4	u 10.6	6.4	m 17.6	6.4	b 10.5	5.0	u 10.5	4.7	s 10.5	34.2				
69.7	1 4.5	15.0	M 9.4	2.6	I 1.8	2.6	L 7.5	1.7	E 7.5	69.7										

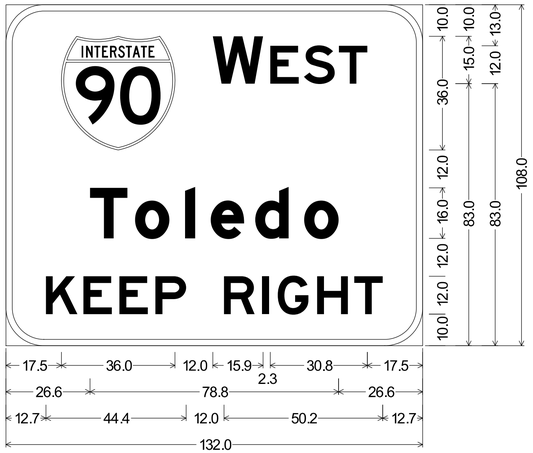

12.0" Radius, 2.0" Border, White on Green;
Interstate 90 M1-1; "WEST", E 2K; "Toledo", E Mod 2K;
"KEEP RIGHT", E 2K;
Table of widths and spaces

17.5	90 36.0	12.0	W 15.9	2.3	E 9.0	1.7	S 9.7	1.4	T 9.0	17.5										
26.6	T 11.9	2.4	o 10.9	4.9	l 3.2	5.0	e 10.5	3.6	d 10.5	5.0	o 10.9	26.6								
12.7	K 9.9	1.9	E 9.0	2.4	E 9.0	2.4	P 9.8													
12.0	R 9.7	2.4	I 2.1	2.8	G 9.7	2.8	H 9.7	2.0	T 9.0	12.7										

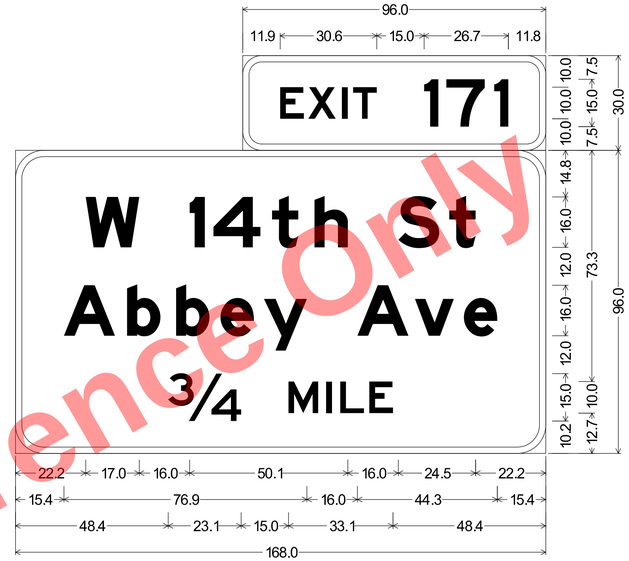

6.0" Radius, 2.0" Border, White on Green;
"EXIT", E 2K; "171", E 2K;

9.0" Radius, 2.0" Border, White on Green;
"W 14th St", E Mod 2K; "Abbey Ave", E Mod 2K; "¾ MILE", E 2K;
Table of widths and spaces

11.9	E 7.5	1.4	X 8.7	2.0	I 1.8	1.7	T 7.5	15.0	1 4.5	2.5	7 12.2	3.0	1 4.5	11.8						
22.2	W 17.0	16.0	l 4.8	2.7	4 14.9	3.7	t 8.3	5.1	h 10.6	16.0	S 12.9	3.2	t 8.4	22.2						
15.4	A 16.1	3.9	b 10.5	5.0	b 10.5	3.6	e 10.5	3.2	y 13.6	16.0	A 16.2	2.1	v 12.3	3.2	e 10.5	15.4				
48.4	¾ 23.1	15.0	M 9.4	2.6	I 1.8	2.6	L 7.5	1.7	E 7.5	48.4										

Preliminary Plans - Not For Reference Only

CUY-90-16.28 (CCG3A)
MODEL: 12 - SIGN DETAILS PAPERSIZE: 34x22 (in.) DATE: 5/23/2025 TIME: 11:20:26 AM USER: Joseph.Hogan
pw:\\mb-us-pw.bentley.com:mb-us-pw-03\Documents\Cleveland_OH01_Projects\ODOT\District12\82382400-Engineering\Traffic\Sheets\82382_TD100.dgn

DESIGN AGENCY
B&N
burgessniple.com
DESIGNER
AJS
REVIEWER
KEH 5-1-24
PROJECT ID
82382
SHEET 1623
TOTAL 2696

S-34 SEE SHEET 1595

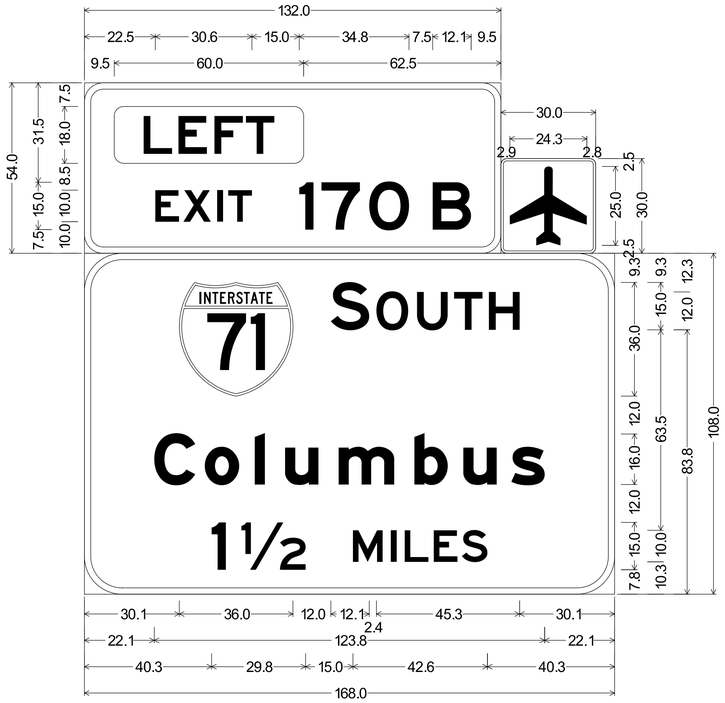

6.0" Radius, 2.0" Border, White on Green;
Rounded Rectangle 3.0" Radius Fluorescent Yellow;
"EXIT", E 2K; "170", E 2K; "B", E 2K;

I-5_30x30;
1.9" Radius, 0.8" Border, White on Green;
Symbol RA010;

12.0" Radius, 2.0" Border, White on Green;
Interstate 71 M1-1; "SOUTH", E 2K; "Columbus", E Mod 2K; "1½ MILES", E 2K;
Table of widths and spaces

| | | |

S-35 SEE SHEET 1596

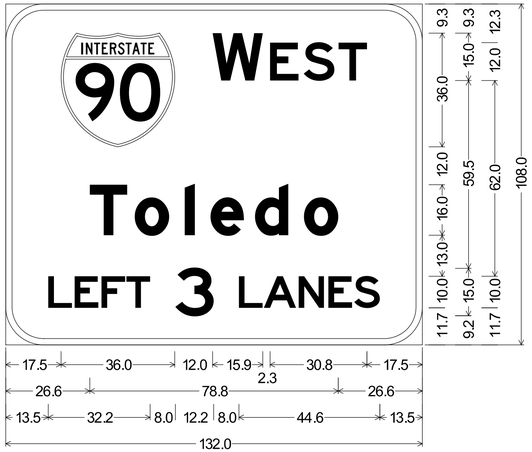

12.0" Radius, 2.0" Border, White on Green;
Interstate 90 M1-1; "WEST", E 2K; "Toledo", E Mod 2K;
"LEFT 3 LANES", E 2K 50% spacing;
Table of widths and spaces

17.5	90 36.0	12.0	W 15.9	2.3	E 9.0	1.7	S 9.7	1.4	T 9.0	17.5

26.6	T 11.9	2.4	o 10.9	4.9	l 3.2	5.0	e 10.5	3.6	d 10.5	5.0	o 10.9	26.6

13.5	L 7.5	0.8	E 7.5	1.0	F 7.5	0.4	T 7.5	8.0	3 12.2

8.0	L 7.5	0.4	A 10.2	0.8	N 8.1	1.3	E 7.5	0.7	S 8.1	13.5

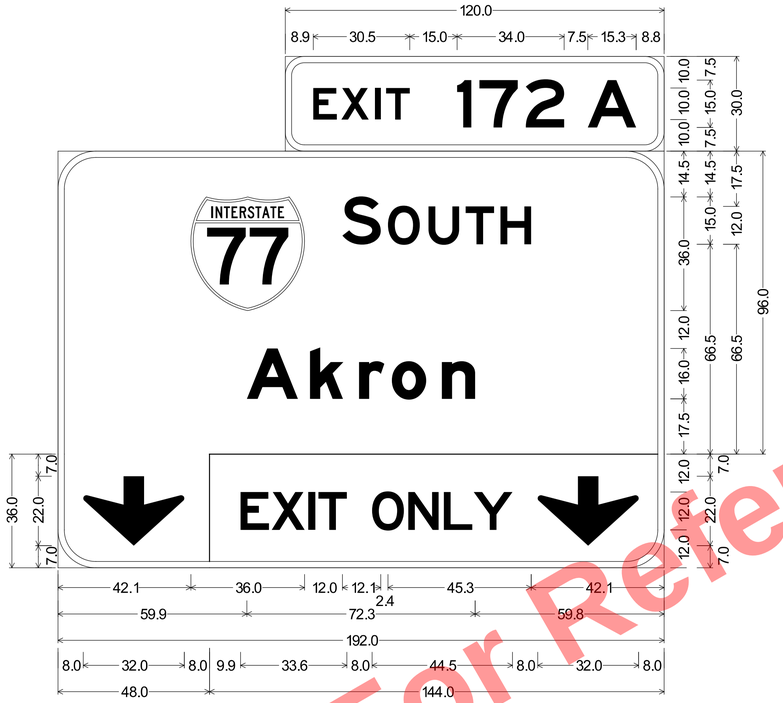

6.0" Radius, 2.0" Border, White on Green;
"EXIT", E 2K; "172", E 2K; "A", E 2K;

12.0" Radius, 2.0" Border, White on Green;
Interstate 77 M1-1; "SOUTH", E 2K; "Akron", E Mod 2K;

12.0" Radius, 2.0" Border, White on Green;
Down Arrow C-1 - 22.0" 270°;

12.0" Radius, 2.0" Border, Black on Yellow;
"EXIT ONLY", E 2K 50% spacing; Down Arrow C-1 - 22.0" 270°;
Table of widths and spaces

8.9	E 7.5	1.4	X 8.6	2.0	I 1.9	1.6	T 7.5	15.0	1 4.5	2.6	7 12.1	2.6	2 12.1	7.5	A 15.4	8.8

42.1	77 36.0	12.0	S 12.1	2.4	O 10.0	2.8	U 9.8	2.0	T 9.0	2.0	H 9.8	42.0

59.9	A 16.1	3.9	k 10.5	5.0	r 8.0	2.4	o 10.9	4.9	n 10.5	59.9

8.0	⇩ 32.0	8.0

9.9	E 9.0	0.8	X 10.4	1.3	I 2.1	1.0	T 9.0	8.0	O 10.1	1.4	N 9.6	1.6	L 9.0	0.5	Y 12.3	8.0	⇩ 32.0	8.0

Preliminary Plans - For Reference Only

SIGN DETAILS

DESIGN AGENCY
B&N
burgessniple.com

DESIGNER
AJS

REVIEWER
KEH 5-1-24

PROJECT ID
82382

SHEET 1625 TOTAL 2696

CUY-90-16.28 (CCG3A)

MODEL: 14 - SIGN DETAILS PAPERSIZE: 34x22 (in.) DATE: 5/23/2025 TIME: 11:20:27 AM USER: Joseph.Hogan
pw:\\mb-us-pw.bentley.com:mb-us-pw-03\Documents\Cleveland_OH\01_Projects\ODOT\District12\82382\400-Engineering\Traffic\Sheets\82382_TD100.dgn

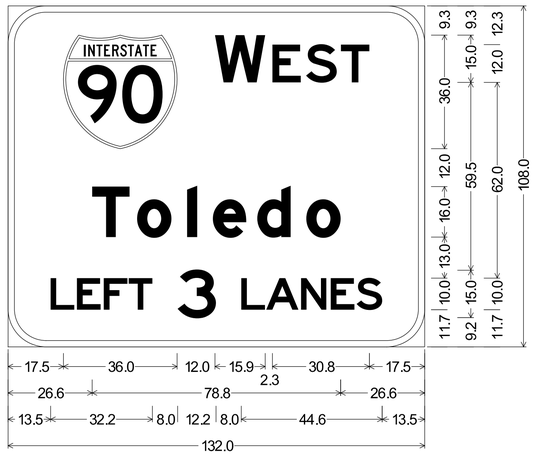

12.0" Radius, 2.0" Border, White on Green;
Interstate 90 M1-1; "WEST", E 2K; "Toledo", E Mod 2K;
"LEFT 3 LANES", E 2K 50% spacing;
Table of widths and spaces

| | | |

S-67 SEE SHEET 1600

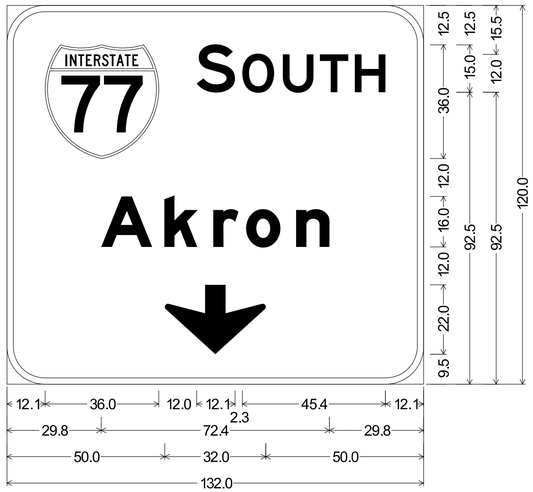

12.0" Radius, 2.0" Border, White on Green;
Interstate 77 M1-1; "SOUTH", E 2K; "Akron", E Mod 2K;
Down Arrow C-1 - 22.0" 270°;
Table of widths and spaces

12.1	77 36.0	12.0	S 12.1	2.3	O 10.1	2.8	U 9.7	2.0	T 9.0	2.1	H 9.7	12.1

29.8	A 16.2	3.8	k 10.6	5.0	r 8.0	2.4	o 10.8	5.0	n 10.6	29.8

50.0	32.0	50.0



6.0" Radius, 2.0" Border, White on Green;
"EXIT", E 2K; "162", E 2K; "A", E 2K;

9.0" Radius, 2.0" Border, White on Green;
"Woodland Ave", E Mod 2K 50% spacing; "E 30th St", E Mod 2K 50% spacing;
Down Arrow C-1 - 22.0" 270°;
Table of widths and spaces

8.4	E 7.5	1.4	X 8.7	2.0	I 1.8	1.7	T 7.5	15.0	1 4.5	3.5	6 12.1	2.6	2 12.1	7.5	A 15.3	8.4					
9.0	W 17.0	1.2	o 10.9	1.7	o 10.9	1.8	d 10.5	3.2	l 3.2	2.5	a 10.6	3.2	n 10.5	2.5	d 10.6						
	8.0	A 16.1	1.1	v 12.3	1.6	e 10.6	9.0														
33.2	E 11.8	8.0	3 13.0	1.6	O 13.4	1.5	t 8.3	2.6	h 10.6	8.0	S 12.9	1.6	t 8.3	33.2							

68.0	32.0	68.0

Preliminary Plans - For Reference Only

SIGN DETAILS

CUY-90-16.28 (CCG3A)
MODEL: 16 - SIGN DETAILS PAPERSIZE: 34x22 (in.) DATE: 5/23/2025 TIME: 11:20:28 AM USER: Joseph.Hogan
pw:\\mb-us-pw.bentley.com:mb-us-pw-03\Documents\Cleveland_OH01_Projects\ODOT\District12\82382400-Engineering\Traffic\Sheets\82382_TD100.dgn

DESIGN AGENCY
B&N burgessniple.com

DESIGNER AJS
REVIEWER KEH 5-1-24
PROJECT ID 82382
SHEET 1627 TOTAL 2696

S-75 SEE SHEET 1599

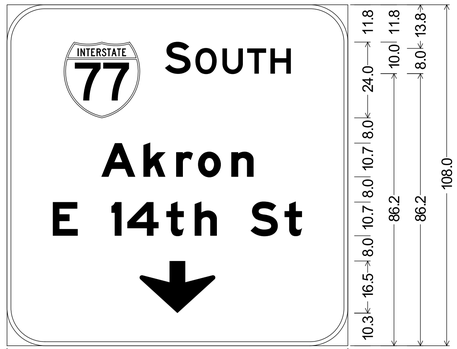

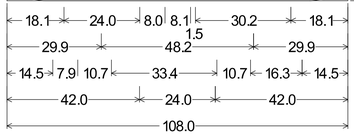

12.0" Radius, 1.3" Border, White on Green;
Interstate 77 M1-1; "SOUTH", E 2K; "Akron", E Mod 2K;
"E 14th St", E Mod 2K;
Down Arrow C-2 & C-3 - 16.0" 270°;
Table of widths and spaces

18.1	77 24.0	8.0	S 8.1	1.5	O 6.7	1.9	U 6.4	1.4	T 6.0	1.4	H 6.4	18.1		
29.9	A 10.8	2.5	k 7.1	3.3	r 5.3	1.6	o 7.3	3.3	n 7.0	29.9				
14.5	E 7.9	10.7	l 3.2	1.8	4 9.9	2.5	t 5.5	3.4	h 7.1					
10.7	S 8.6	2.1	t 5.6	14.5										
42.0	⇩ 24.0	42.0												

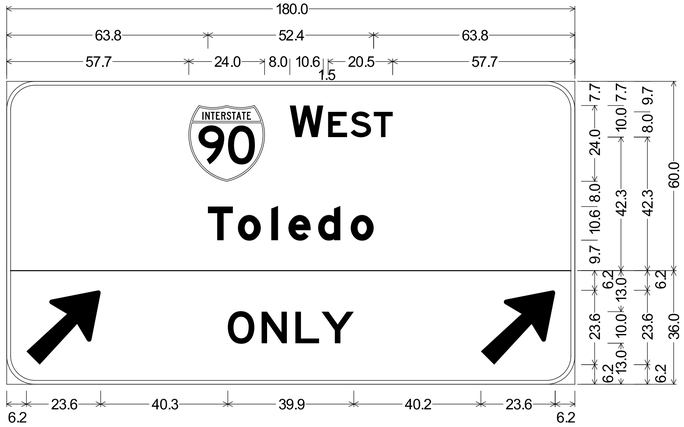

9.0" Radius, 1.3" Border, White on Green;
Interstate 90 M1-1; "WEST", E 2K; "Toledo", E Mod 2K;

9.0" Radius, 1.3" Border, Black on Yellow;
Arrow A-3 - 30.0" 45°; "ONLY", E 2K; Arrow A-3 - 30.0" 45°;
Table of widths and spaces

57.7	90 24.0	8.0	W 10.6	1.5	E 6.0	1.1	S 6.5	0.9	T 6.0	57.7				
63.8	T 7.8	1.6	o 7.3	3.3	l 2.1	3.4	e 7.0	2.3	d 7.1	3.3	o 7.2	63.8		
6.2	⇗ 23.6	40.3	O 8.4	2.3	N 8.1	2.6	L 7.5	0.8	Y 10.2	40.2	⇗ 23.6	6.2		

Preliminary Plans - For Reference Only

SIGN DETAILS

CUY-90-16.28 (CCG3A)

MODEL: 17 - SIGN DETAILS PAPERSIZE: 34x22 (in.) DATE: 5/23/2025 TIME: 11:20:29 AM USER: Joseph.Hogan
pw:\\mb-us-pw.bentley.com:mb-us-pw-03\Documents\Cleveland_OH\01_Projects\ODOT\District12\82382\400-Engineering\Traffic\Sheets\82382_TD100.dgn

DESIGN AGENCY
B&N
burgessniple.com

DESIGNER AJS
REVIEWER KEH 5-1-24
PROJECT ID 82382
SHEET 1628 TOTAL 2696



9.0" Radius, 1.3" Border, White on Green;
"E 22nd " E Mod 2K "NORTH", E 2K;
"TO" E 2K " Carnegie Ave", E Mod 2K 50% spacing;

9.0" Radius, 1.3" Border, Black on Yellow;
"KEEP LEFT AHEAD", E 2K 50% spacing;
Table of widths and spaces

17.3	E 7.8	10.7	2 8.7	2.3	2 8.6	3.4	n 7.0	3.3	d 7.0	
	10.7	N 8.1	2.1	O 6.7	1.8	R 6.5	0.9	T 6.0	1.4	H 6.4	17.3
9.6	T 6.0	0.6	O 6.7							
	10.7	C 8.6	1.0	a 7.1	2.1	r 5.3	1.3	n 7.0	1.7	e 7.0	1.2	g 7.1	2.1	i 2.1	1.7	e 7.0
	10.7	A 10.8	0.7	v 8.2	1.0	e 7.1	9.6									
5.8	K 8.8	0.9	E 8.0	1.1	E 8.0	1.0	P 8.7	5.3	L 8.0	0.9	E 8.0	1.1	F 8.0	0.4	T 8.0	
	5.4	A 10.8	1.0	H 8.6	1.4	E 8.0	0.6	A 10.9	0.9	D 8.6	5.8					

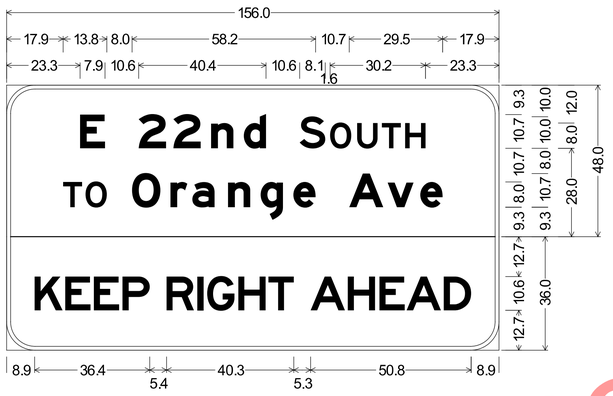

9.0" Radius, 1.3" Border, White on Green;
"E 22nd " E Mod 2K "SOUTH", E 2K; "TO" E 2K " Orange Ave", E Mod 2K;

9.0" Radius, 1.3" Border, Black on Yellow;
"KEEP RIGHT AHEAD", E 2K 50% spacing;
Table of widths and spaces

23.3	E 7.9	10.6	2 8.7	2.3	2 8.7	3.3	n 7.0	3.3	d 7.1	
	10.6	S 8.1	1.6	O 6.7	1.8	U 6.5	1.4	T 6.0	1.3	H 6.5	23.3
17.9	T 6.0	1.1	O 6.7	8.0	O 9.0	3.2	r 5.3	1.6	a 7.1	4.2	n 7.1	3.3	g 7.0	3.3	e 7.1	
	10.7	A 10.7	1.4	v 8.2	2.2	e 7.0	17.9									
8.9	K 8.8	0.9	E 8.0	1.0	E 8.0	1.1	P 8.6	5.4	R 8.6	1.1	I 1.9	1.2	G 8.7	1.2	H 8.7	0.9	T 8.0
	5.3	A 10.9	0.9	H 8.6	1.4	E 8.0	0.6	A 10.9	0.9	D 8.6	8.9					

Preliminary Plans - For Reference Only

SIGN DETAILS

CUY-90-16.28 (CCG3A)

MODEL: 18 - SIGN DETAILS PAPERSIZE: 34x22 (in.) DATE: 5/23/2025 TIME: 11:20:29 AM USER: Joseph.Hogan
pw:\\mb-us-pw.bentley.com:mb-us-pw-03\Documents\Cleveland_OH\01_Projects\ODOT\District12\82382\400-Engineering\Traffic\Sheets\82382_TD100.dgn

DESIGN AGENCY
B&N
burgessniple.com

DESIGNER
AJS

REVIEWER
KEH 5-1-24

PROJECT ID
82382

SHEET 1629 TOTAL 2696

S-101 SEE SHEET 1603

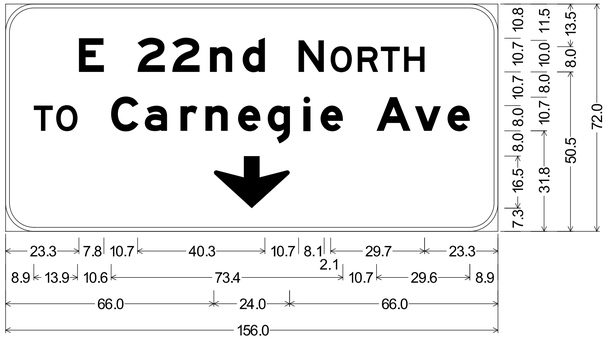

9.0" Radius, 1.3" Border, White on Green;
"E 22nd " E Mod 2K "NORTH", E 2K; "TO" E 2K " Carnegie Ave", E Mod 2K;
Down Arrow C-2 & C-3 - 16.0" 270°;
Table of widths and spaces

| | | |

S-129 SEE SHEET 1604

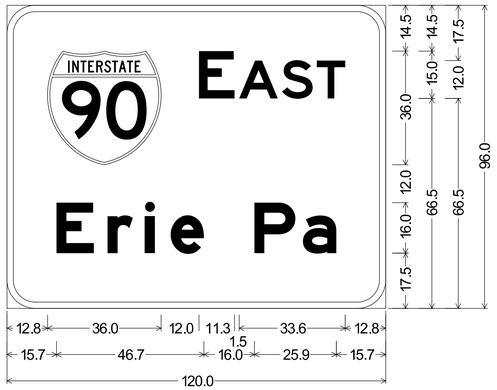

9.0" Radius, 2.0" Border, White on Green;
Interstate 90 M1-1; "EAST", E 2K; "Erie Pa", E Mod 2K;
Table of widths and spaces

12.8	90 36.0	12.0	E 11.3	1.5	A 12.2	1.3	S 9.7	1.4	T 9.0	12.8	

15.7	E 11.8	4.3	r 8.0	3.9	i 3.2	4.9	e 10.6	16.0	P 13.0	2.4	a 10.5	15.7	



6.0" Radius, 2.0" Border, White on Green;
"EXIT", E 2K; "173", E 2K; "B", E 2K;

9.0" Radius, 2.0" Border, White on Green;
"Chester Ave", E Mod 2K; "½ MILE", E 2K;
Table of widths and spaces

10.4	E 7.5	1.4	X 8.7	2.0	I 1.8	1.7	T 7.5	15.0	1 4.5	2.6	7 12.1	2.6	3 12.1	7.5	B 12.2	10.4		

17.8	C 13.0	4.5	h 10.5	5.0	e 10.6	3.2	s 10.5	3.2	t 8.3	3.7	e 10.6	4.9	r 8.0		

16.0	A 16.2	2.1	v 12.3	3.2	e 10.6	17.8

61.8	½ 20.3	15.0	M 9.4	2.6	I 1.8	2.6	L 7.5	1.7	E 7.5	61.8

Preliminary Plans - For Reference Only

SIGN DETAILS

DESIGN AGENCY
B&N
burgessniple.com

DESIGNER AJS
REVIEWER KEH 5-1-24
PROJECT ID 82382
SHEET 1631 TOTAL 2696

CUY-90-16.28 (CCG3A)

MODEL: 20 - SIGN DETAILS PAPERSIZE: 34x22 (in.) DATE: 5/23/2025 TIME: 11:20:31 AM USER: Joseph.Hogan
pw:\\mb-us-pw.bentley.com:mb-us-pw-03\Documents\Cleveland_OH\01_Projects\ODOT\District12\82382\400-Engineering\Traffic\Sheets\82382_TD100.dgn

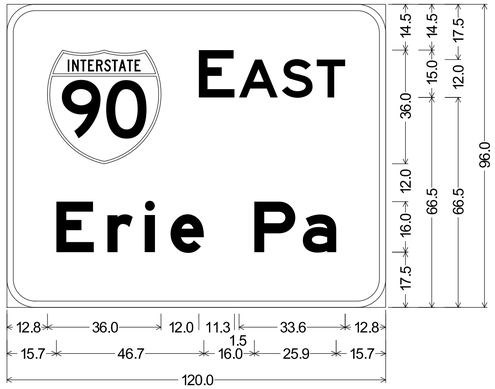

9.0" Radius, 2.0" Border, White on Green;
Interstate 90 M1-1; "EAST", E 2K; "Erie Pa", E Mod 2K;
Table of widths and spaces

	90		E		A		S		T		
12.8	36.0	12.0	11.3	1.5	12.2	1.3	9.7	1.4	9.0	12.8	

	E		r		i		e		P		a	
15.7	11.8	4.3	8.0	3.9	3.2	4.9	10.6	16.0	13.0	2.4	10.5	15.7

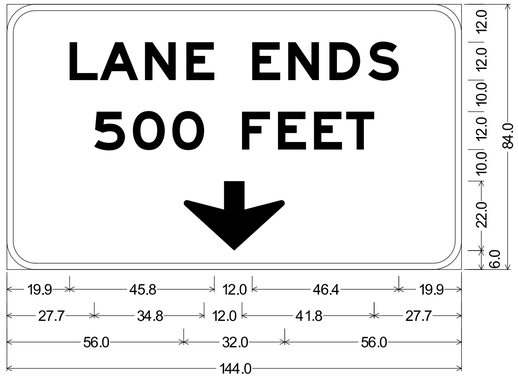

9.0" Radius, 2.0" Border, Black on Yellow;
"LANE ENDS", E Mod 2K; "500 FEET", E Mod 2K;
Down Arrow C-1 - 22.0" 270°;
Table of widths and spaces

	L		A		N		E		
19.9	8.8	0.8	12.1	2.1	9.8	3.3	8.9		

	E		N		D		S			
12.0	8.9	2.5	9.7	3.4	9.7	2.5	9.7	19.9		

	5		O		O		F		E		E		T	
27.7	9.7	2.5	10.1	2.4	10.1	12.0	8.8	2.6	8.8	2.6	8.8	1.4	8.8	27.7

56.0	32.0	56.0

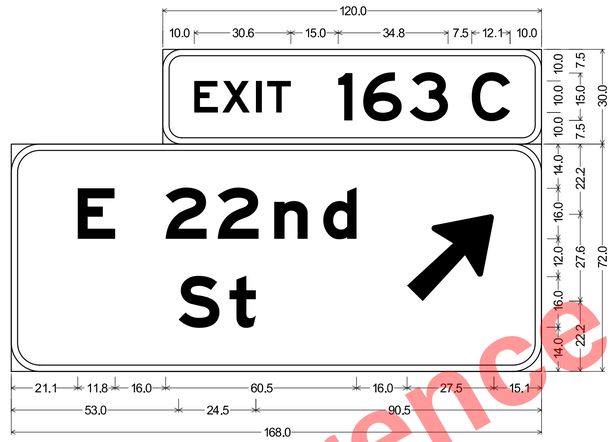

6.0" Radius, 2.0" Border, White on Green;
"EXIT", E 2K; "163", E 2K; "C", E 2K;

9.0" Radius, 2.0" Border, White on Green;
"E 22nd", E Mod 2K; "St", E Mod 2K; Arrow A-1 - 35.0" 45°;
Table of widths and spaces

	E		X		I		T		1		6		3		C	
10.0	7.5	1.4	8.7	2.0	1.8	1.7	7.5	15.0	4.5	3.4	12.2	2.5	12.2	7.5	12.1	10.0

	E		2		2		n		d			
21.1	11.8	16.0	13.0	3.5	13.0	4.9	10.6	4.9	10.6	16.0	27.5	15.1

	S		t	
53.0	13.0	3.2	8.3	90.5

Preliminary Plans - For Reference Only

SIGN DETAILS

DESIGN AGENCY
B&N
burgessniple.com

DESIGNER AJS
REVIEWER KEH 5-1-24
PROJECT ID 82382
SHEET 1632 TOTAL 2696

CUY-90-16.28 (CCG3A)

MODEL: 21 - SIGN DETAILS PAPERSIZE: 34x22 (in.) DATE: 5/29/2025 TIME: 11:58:04 AM USER: sisson
pw:\\mb-us-pw.bentley.com:mb-us-pw-03\Documents\Cleveland_OH\01_Projects\ODOT\District12\82382\400-Engineering\Traffic\Sheets\82382_TD100.dgn

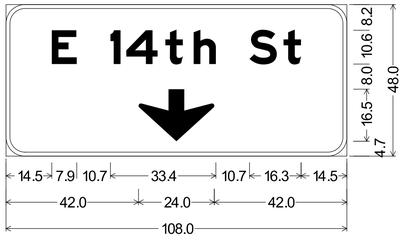

6.0" Radius, 1.3" Border, White on Green;
"E 14th St", E Mod 2K;
Down Arrow C-2 & C-3 - 16.0" 270°;
Table of widths and spaces

14.5	**E** 7.9	10.7	**1** 3.2	1.8	**4** 9.9	2.5	**t** 5.5	3.4	**h** 7.1

10.7	**S** 8.6	2.1	**t** 5.6	14.5

42.0	24.0	42.0

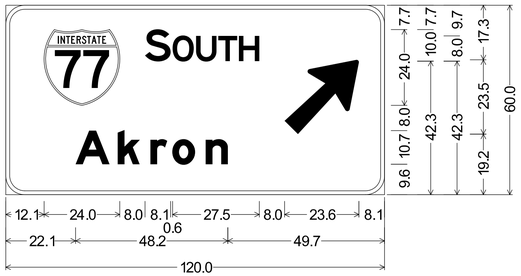

6.0" Radius, 1.3" Border, White on Green;
Interstate 77 M1-1; "SOUTH", E 2K 40% spacing;
"Akron", E Mod 2K; Arrow A-3 - 30.0" 45°;
Table of widths and spaces

12.1	77 24.0	8.0	**S** 8.1	0.6	**O** 6.8	0.7	**U** 6.5	0.5	**T** 6.0	0.6	**H** 6.4

8.0	23.6	8.1

22.1	**A** 10.8	2.6	**k** 7.0	3.3	**r** 5.3	1.6	**o** 7.3	3.3	**n** 7.0	49.7

Preliminary Plans - For Reference Only

SIGN DETAILS

CUY-90-16.28 (CCG3A)

MODEL: 22 - SIGN DETAILS PAPERSIZE: 34x22 (in.) DATE: 5/23/2025 TIME: 11:20:32 AM USER: Joseph.Hogan
pw:\\mb-us-pw.bentley.com:mb-us-pw-03\Documents\Cleveland_OH\01_Projects\ODOT\District12\82382\400-Engineering\Traffic\Sheets\82382_TD100.dgn

DESIGN AGENCY
B&N
burgessniple.com

DESIGNER
AJS

REVIEWER
KEH 5-1-24

PROJECT ID
82382

SHEET 1633 | TOTAL 2696

S-155 SEE SHEET 1562

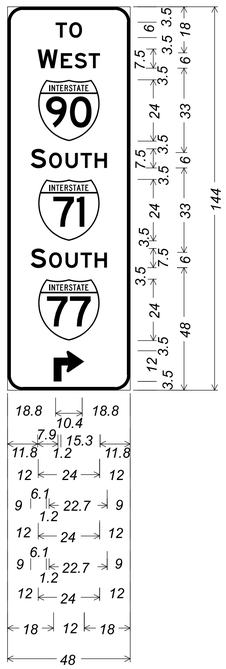

6.0" Radius, 1.3" Border, White on Green;
"TO", E 2K;
"WEST", E 2K;
Interstate 90 M1-1;
"SOUTH", E 2K;
Interstate 71 M1-1;
"SOUTH", E 2K;
Interstate 77 M1-1;
90 Deg Advance Turn Arrow Custom 12.0" X 12.0";
Table of widths and spaces

18.8	T	4.5	0.8	O	5.1	18.8																
11.8	W	7.9	1.2	E	4.5	0.8	S	4.9	0.6	T	4.5	11.8										
12.0	90	24.0	12.0																			
9.0	S	6.1	1.2	O	5.0	1.4	U	4.9	1.0	T	4.5	1.0	H	4.9	9.0							
12.0	71	24.0	12.0																			
9.0	S	6.1	1.2	O	5.0	1.4	U	4.9	1.0	T	4.5	1.0	H	4.9	9.0							
12.0	77	24.0	12.0																			
18.0		12.0	18.0																			

PANEL STYLE: ODOT LEVEL 1 (REFLECTIVE)
DIMENSIONS ARE IN INCHES
LETTER LOCATIONS ARE PANEL EDGE TO LOWER LEFT CORNER

S-157 SEE SHEET 1563

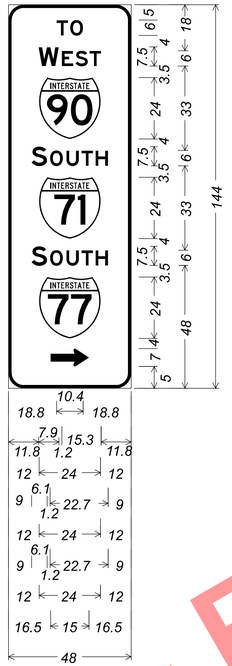

6.0" Radius, 1.3" Border, White on Green;
"TO", E 2K;
"WEST", E 2K;
Interstate 90 M1-1;
"SOUTH", E 2K;
Interstate 71 M1-1;
"SOUTH", E 2K;
Interstate 77 M1-1;
Standard Arrow Custom 15.0" X 7.0" 0°;
Table of widths and spaces

18.8	T	4.5	0.8	O	5.1	18.8																
11.8	W	7.9	1.2	E	4.5	0.8	S	4.9	0.6	T	4.5	11.8										
12.0	90	24.0	12.0																			
9.0	S	6.1	1.2	O	5.0	1.4	U	4.9	1.0	T	4.5	1.0	H	4.9	9.0							
12.0	71	24.0	12.0																			
9.0	S	6.1	1.2	O	5.0	1.4	U	4.9	1.0	T	4.5	1.0	H	4.9	9.0							
12.0	77	24.0	12.0																			
16.5	→	15.0	16.5																			

PANEL STYLE: ODOT LEVEL 1 (REFLECTIVE)
DIMENSIONS ARE IN INCHES
LETTER LOCATIONS ARE PANEL EDGE TO LOWER LEFT CORNER

S-163 SEE SHEET 1563

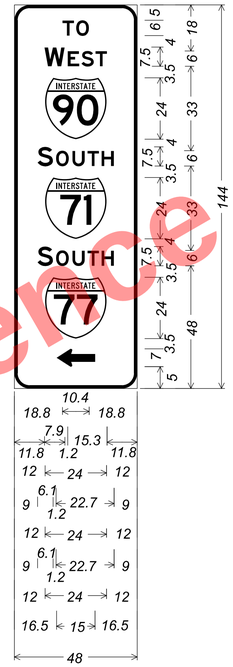

6.0" Radius, 1.3" Border, White on Green;
"TO", E 2K;
"WEST", E 2K;
Interstate 90 M1-1;
"SOUTH", E 2K;
Interstate 71 M1-1;
"SOUTH", E 2K;
Interstate 77 M1-1;
Standard Arrow Custom 15.0" X 7.0" 180°;
Table of widths and spaces

18.8	T	4.5	0.8	O	5.1	18.8																
11.8	W	7.9	1.2	E	4.5	0.8	S	4.9	0.6	T	4.5	11.8										
12.0	90	24.0	12.0																			
9.0	S	6.1	1.2	O	5.0	1.4	U	4.9	1.0	T	4.5	1.0	H	4.9	9.0							
12.0	71	24.0	12.0																			
9.0	S	6.1	1.2	O	5.0	1.4	U	4.9	1.0	T	4.5	1.0	H	4.9	9.0							
12.0	77	24.0	12.0																			
16.5	←	15.0	16.5																			

PANEL STYLE: ODOT LEVEL 1 (REFLECTIVE)
DIMENSIONS ARE IN INCHES
LETTER LOCATIONS ARE PANEL EDGE TO LOWER LEFT CORNER

Preliminary Plans - For Reference Only

SIGNING PLAN
SIGN DETAILS

CUY-90-16.28 (CCG3A)
MODEL: Sheet PAPERSIZE: 34x22 (in.) DATE: 5/23/2025 TIME: 11:20:38 AM USER: Joseph.Hogan
pw:\\mb-us-pw.bentley.com:mb-us-pw-03\Documents\Cleveland_OH\OL_Projects\ODOT\District12\82382\400-Engineering\Traffic\Sheets\82382_TPI101.dgn

DESIGN AGENCY
Michael Baker INTERNATIONAL

DESIGNER CRK
REVIEWER GSH 05/22/24
PROJECT ID 82382
SHEET 1634 TOTAL 2696

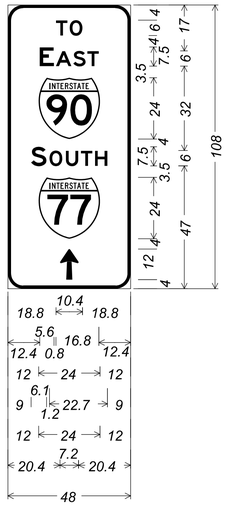

6.0" Radius, 1.3" Border, White on Green;
"TO", E 2K;
"EAST", E 2K;
Interstate 90 M1-1;
"SOUTH", E 2K;
Interstate 77 M1-1;
Arrow Custom - 12.0" 90□;
Table of widths and spaces

18.8	T 4.5	0.9	O 5.0	18.8

12.4	E 5.6	0.8	A 6.1	0.7	S 4.8	0.7	T 4.5	12.4

12.0	90 24.0	12.0

9.0	S 6.1	1.2	O 5.0	1.4	U 4.9	1.0	T 4.5	1.0	H 4.9	9.0

12.0	77 24.0	12.0

20.4	↑ 7.2	20.4

PANEL STYLE: ODOT LEVEL 1 (REFLECTIVE)
DIMENSIONS ARE IN INCHES
LETTER LOCATIONS ARE PANEL EDGE TO LOWER LEFT CORNER

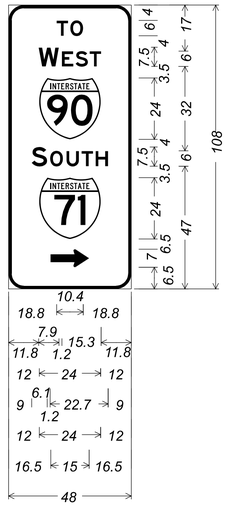

6.0" Radius, 1.3" Border, White on Green;
"TO", E 2K;
"WEST", E 2K;
Interstate 90 M1-1;
"SOUTH", E 2K;
Interstate 71 M1-1;
Standard Arrow Custom 15.0" X 7.0" 0□;
Table of widths and spaces

18.8	T 4.5	0.9	O 5.0	18.8

11.8	W 7.9	1.2	E 4.5	0.8	S 4.9	0.6	T 4.5	11.8

12.0	90 24.0	12.0

9.0	S 6.1	1.2	O 5.0	1.4	U 4.9	1.0	T 4.5	1.0	H 4.9	9.0

12.0	71 24.0	12.0

16.5	→ 15.0	16.5

PANEL STYLE: ODOT LEVEL 1 (REFLECTIVE)
DIMENSIONS ARE IN INCHES
LETTER LOCATIONS ARE PANEL EDGE TO LOWER LEFT CORNER

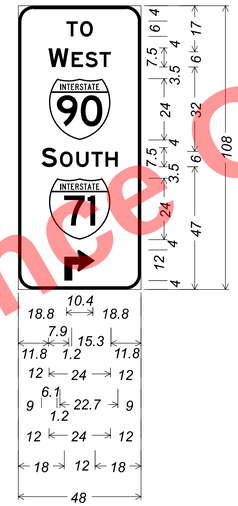

6.0" Radius, 1.3" Border, White on Green;
"TO", E 2K;
"WEST", E 2K;
Interstate 90 M1-1;
"SOUTH", E 2K;
Interstate 71 M1-1;
90 Deg Advance Turn Arrow Custom 12.0" X 12.0";
Table of widths and spaces

18.8	T 4.5	0.9	O 5.0	18.8

11.8	W 7.9	1.2	E 4.5	0.8	S 4.9	0.6	T 4.5	11.8

12.0	90 24.0	12.0

9.0	S 6.1	1.2	O 5.0	1.4	U 4.9	1.0	T 4.5	1.0	H 4.9	9.0

12.0	77 24.0	12.0

18.0	↱ 12.0	18.0

PANEL STYLE: ODOT LEVEL 1 (REFLECTIVE)
DIMENSIONS ARE IN INCHES
LETTER LOCATIONS ARE PANEL EDGE TO LOWER LEFT CORNER

For Reference Only
Preliminary Plans

SIGNING PLAN
SIGN DETAILS

CUY-90-16.28 (CCG3A)

MODEL: Sheet-2 PAPERSIZE: 34x22 (in.) DATE: 5/23/2025 TIME: 11:20:39 AM USER: Joseph.Hogan
pw:\\mb-us-pw.bentley.com:mb-us-pw-03\Documents\Cleveland_OH\Oi_Projects\ODOT\District2\82382\400-Engineering\Traffic\Sheets\82382_TPI101.dgn

DESIGN AGENCY
Michael Baker INTERNATIONAL

DESIGNER CRK
REVIEWER GSH 05/22/24
PROJECT ID 82382
SHEET 1635 TOTAL 2696

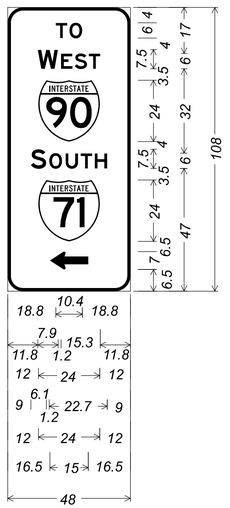

6.0" Radius, 1.3" Border, White on Green;
"TO", E 2K;
"WEST", E 2K;
Interstate 90 M1-1;
"SOUTH", E 2K;
Interstate 71 M1-1;
Standard Arrow Custom 15.0" X 7.0" 180°;
Table of widths and spaces

18.8	T 4.5	0.9	O 5.0	18.8

11.8	W 7.9	1.2	E 4.5	0.8	S 4.9	0.6	T 4.5	11.8

12.0	90 24.0	12.0

9.0	S 6.1	1.2	O 5.0	1.4	U 4.9	1.0	T 4.5	1.0	H 4.9	9.0

12.0	71 24.0	12.0

16.5	← 15.0	16.5

PANEL STYLE: ODOT LEVEL 1 (REFLECTIVE)
DIMENSIONS ARE IN INCHES
LETTER LOCATIONS ARE PANEL EDGE TO LOWER LEFT CORNER

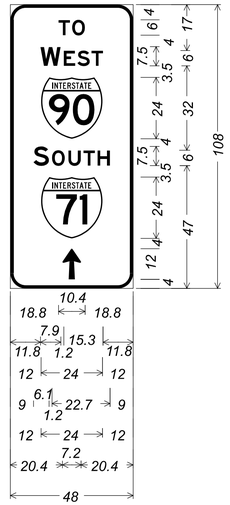

6.0" Radius, 1.3" Border, White on Green;
"TO", E 2K;
"WEST", E 2K;
Interstate 90 M1-1;
"SOUTH", E 2K;
Interstate 71 M1-1;
Arrow Custom - 12.0" 90°;
Table of widths and spaces

18.8	T 4.5	0.9	O 5.0	18.8

11.8	W 7.9	1.2	E 4.5	0.8	S 4.9	0.6	T 4.5	11.8

12.0	90 24.0	12.0

9.0	S 6.1	1.2	O 5.0	1.4	U 4.9	1.0	T 4.5	1.0	H 4.9	9.0

12.0	71 24.0	12.0

20.4	↑ 7.2	20.4

PANEL STYLE: ODOT LEVEL 1 (REFLECTIVE)
DIMENSIONS ARE IN INCHES
LETTER LOCATIONS ARE PANEL EDGE TO LOWER LEFT CORNER

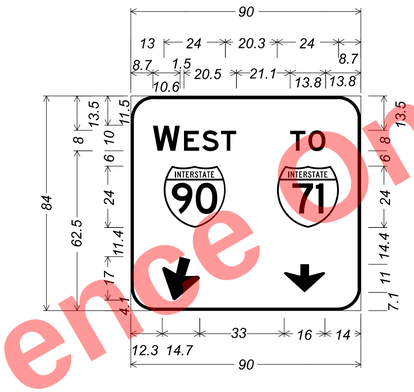

9.0" Radius, 1.3" Border, White on Green;
"WEST", E 2K;
Interstate 90 M1-1;

9.0" Radius, 1.3" Border, White on Green;
"T0", E 2K;
Interstate 71 M1-1;

9.0" Radius, 1.3" Border, White on Green;
Arrow B-4 - 17.0" 255°;

9.0" Radius, 1.3" Border, White on Green;
Down Arrow C-4 - 11.0" 270°;
Table of widths and spaces

8.7	W 10.6	1.5	E 6.0	1.1	S 6.5	0.9	T 6.0	10.7

13.0	90 24.0	15.0

10.4	T 6.0	1.1	O 6.7	13.8

5.3	71 24.0	8.7

12.3	↓ 14.7	33.0	↓ 16.0	14.0

PANEL STYLE: ODOT LEVEL 1 (REFLECTIVE)
DIMENSIONS ARE IN INCHES
LETTER LOCATIONS ARE PANEL EDGE TO LOWER LEFT CORNER

Preliminary Plans - For Reference Only

SIGNING PLAN
SIGN DETAILS

DESIGN AGENCY
Michael Baker INTERNATIONAL

DESIGNER CRK
REVIEWER GSH 05/22/24
PROJECT ID 82382
SHEET 1636 TOTAL 2696

CUY-90-16.28 (CCG3A)

MODEL: Sheet+3 PAPERSIZE: 34x22 (in.) DATE: 5/23/2025 TIME: 11:20:39 AM USER: Joseph.Hogan
pw:\\vmb-us-pw.bentley.commb-us-pw-03\Documents\Cleveland_OH\01_Projects\ODOT\District2\82382\400-Engineering\Traffic\Traffic\Sheets\82382_TPI101.dgn

S-159 SEE SHEET 1563

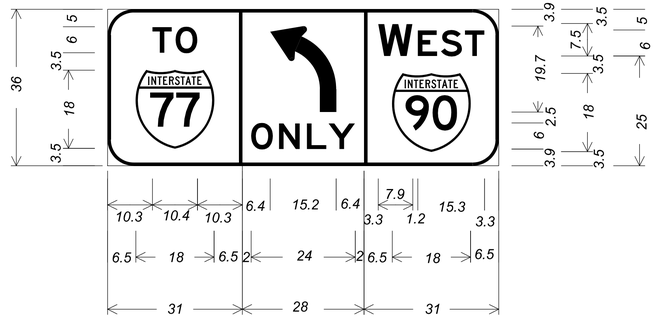

6.0" Radius, 0.8" Border, White on Green;
"TO", E 2K;
Interstate 77 M1-1;

6.0" Radius, 0.8" Border, Black on White;
Turn Arrow Custom;
"ONLY", E 2K;

6.0" Radius, 0.8" Border, White on Green;
"WEST", E 2K;
Interstate 90 M1-1;
Table of widths and spaces

10.3	T 4.5	0.9	O 5.0	10.3					
6.5	77 18.0	6.5							
6.4	15.2	6.4							
2.0	O 5.1	1.4	N 4.8	1.6	L 4.5	0.5	Y 6.1	2.0	
3.3	W 7.9	1.2	E 4.5	0.8	S 4.9	0.6	T 4.5	3.3	
6.5	90 18.0	6.5							

PANEL STYLE: ODOT LEVEL 1 (REFLECTIVE)
DIMENSIONS ARE IN INCHES
LETTER LOCATIONS ARE PANEL EDGE TO LOWER LEFT CORNER

S-169 SEE SHEET 1563

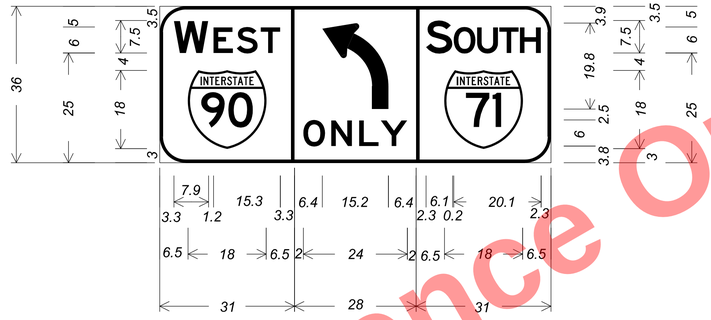

6.0" Radius, 0.8" Border, White on Green;
"WEST", E 2K;
Interstate 90 M1-1;

6.0" Radius, 0.8" Border, Black on White;
Turn Arrow Custom;
"ONLY", E 2K;

6.0" Radius, 0.8" Border, White on Green;
"SOUTH", E 2K 24% spacing;
Interstate 71 M1-1;
Table of widths and spaces

3.3	W 7.9	1.2	E 4.5	0.8	S 4.9	0.6	T 4.5	3.3	
6.5	90 18.0	6.5							
6.4	15.2	6.4							
2.0	O 5.1	1.4	N 4.8	1.6	L 4.5	0.5	Y 6.1	2.0	
2.3	S 6.1	0.2	O 5.1	0.3	U 4.9	0.2	T 4.5	0.3	H 4.8	2.3
6.5	71 18.0	6.5							

PANEL STYLE: ODOT LEVEL 1 (REFLECTIVE)
DIMENSIONS ARE IN INCHES
LETTER LOCATIONS ARE PANEL EDGE TO LOWER LEFT CORNER

Preliminary Plans - For Reference Only

SIGNING PLAN
SIGN DETAILS

CUY-90-16.24 (CCG3A)

MODEL: Sheet-4 PAPERSIZE: 34x22 (in.) DATE: 5/23/2025 TIME: 11:20:40 AM USER: Joseph.Hogan
pw:\\mb-us-pw.bentley.com:mb-us-pw-03\Documents\Cleveland_OH\01_Projects\ODOT\District2\82382\400-Engineering\Traffic\Sheets\82382_TPI101.dgn

DESIGN AGENCY
Michael Baker INTERNATIONAL

DESIGNER
CRK

REVIEWER
GSH 05/22/24

PROJECT ID
82382

SHEET 1637 | TOTAL 2696

GUARANTEE

THE CONTRACTOR SHALL GUARANTEE THAT THE TRAFFIC CONTROL SYSTEM INSTALLED AS PART OF THIS CONTRACT SHALL OPERATE SATISFACTORILY FOR A PERIOD OF 90 DAYS FOLLOWING COMPLETION OF THE 10-DAY PERFORMANCE TEST. IN THE EVENT OF UNSATISFACTORY OPERATION, THE CONTRACTOR SHALL CORRECT FAULTY INSTALLATIONS, MAKE REPAIRS AND REPLACE DEFECTIVE PARTS WITH NEW PARTS OF EQUAL OR BETTER QUALITY.

EQUIPMENT, MATERIAL AND LABOR COSTS INCURRED IN CORRECTING AN UNSATISFACTORY OPERATION SHALL BE BORNE BY THE CONTRACTOR.

THE GUARANTEE SHALL COVER THE FOLLOWING ITEMS OF THE TRAFFIC CONTROL SYSTEM: CONTROLLER, CABINET AND ASSOCIATED EQUIPMENT, VEHICLE DETECTION EQUIPMENT, LED LAMP UNITS, AND COMMUNICATION EQUIPMENT.

CUSTOMARY MANUFACTURER'S GUARANTEES FOR THE FOREGOING ITEMS SHALL BE TURNED OVER TO THE CITY OF CLEVELAND FOLLOWING ACCEPTANCE OF THE EQUIPMENT.

THE COST OF GUARANTEEING THE TRAFFIC CONTROL SYSTEM WILL BE INCIDENTAL TO AND INCLUDED IN THE CONTRACT UNIT PRICE OF THE VARIOUS ITEMS MAKING UP THE SYSTEM.

WORK INSPECTION

THE CONTRACTOR SHALL PROVIDE THE PROJECT ENGINEER AND CITY OF CLEVELAND TRAFFIC ENGINEER WITH 72-HOUR NOTICE OF ANY SIGNAL WORK TO BE PERFORMED AT THE INTERSECTION SITE(S) SO THAT INSPECTION SERVICES CAN BE SUPPLIED.

SIGNAL ACTIVATION

PRIOR TO ACTIVATING THE NEW TRAFFIC SIGNAL TO STOP-AND-GO MODE AND/OR REMOVING THE EXISTING TRAFFIC SIGNAL FROM SERVICE, ALL ITEMS IN THE PROPOSED SIGNAL PLAN SHALL BE FULLY COMPLETED, (I.E., VEHICLE DETECTION, PEDESTRIAN SIGNAL HEADS, ETC). IF THERE ARE CONSTRUCTABILITY ISSUES (I.E., ROADWAY WIDENING, ETC.) THAT PREVENT THE SIGNAL FROM BEING COMPLETED PRIOR TO ACTIVATION, IT SHALL BE BROUGHT TO THE ATTENTION OF THE PROJECT ENGINEER AND CITY OF CLEVELAND TRAFFIC ENGINEER. THE CITY OF CLEVELAND TRAFFIC ENGINEER WILL THEN REVIEW, APPROVE OR REJECT PROPOSALS TO ACTIVATE THE TRAFFIC SIGNAL PRIOR TO COMPLETION.

THE CONTRACTOR SHALL NOTIFY THE PROJECT ENGINEER AND CITY OF CLEVELAND TRAFFIC ENGINEER AT LEAST 10 WORKING DAYS PRIOR TO SCHEDULING THE FINAL INSPECTION OF THE SIGNAL INSTALLATION. FINAL INSPECTION IS NOT CONSIDERED COMPLETE UNTIL DESIGNATED CITY OF CLEVELAND TRAFFIC PERSONNEL INSPECT THE TRAFFIC SIGNAL AND ISSUE WRITTEN APPROVAL. IF ISSUES ARE FOUND DURING THE FINAL INSPECTION THAT EFFECT THE SAFETY OF THE TRAVELING PUBLIC AND/OR THE EFFICIENCY OF THE INTERSECTION, THE SIGNAL SHALL NOT BE ACTIVATED ON THE PROPOSED DATE. ANY PUNCH LIST ITEMS THAT ARE FOUND SHALL BE CORRECTED AND REINSPECTED BY CITY TRAFFIC PERSONNEL PRIOR TO FINAL ACCEPTANCE. CITY FORCES SHALL ONLY ASSUME DAY TO DAY MAINTENANCE OF THE TRAFFIC SIGNAL AFTER FINAL WRITTEN ACCEPTANCE HAS BEEN ISSUED.

DETECTION MAINTENANCE

IF VEHICLE DETECTION BECOMES UNEXPECTEDLY DISABLED, REQUIRES MODIFICATION, OR IS SCHEDULED TO BE TEMPORARILY REMOVED DURING THE CONSTRUCTION PROJECT, THE CONTRACTOR SHALL IMMEDIATELY NOTIFY THE PROJECT ENGINEER AND CITY OF CLEVELAND TRAFFIC ENGINEER.

IF THE LOSS OF VEHICLE DETECTION IS KNOWN PRIOR TO THE START OF CONSTRUCTION, IT SHALL BE DISCUSSED AT THE PRECONSTRUCTION MEETING. AT SUCH TIME, THE CITY OF CLEVELAND TRAFFIC ENGINEER SHALL ADVISE THE PROJECT ENGINEER AND CONTRACTOR ON THE APPROPRIATE ACTION TO RECTIFY ANY LOSS OF VEHICLE DETECTION. THIS MAY INCLUDE PLACING THE TRAFFIC SIGNAL ON MINIMUM OR MAXIMUM RECALL, MODIFYING THE MINIMUM GREEN TIMES, AND REMOVING THE MALFUNCTIONING DETECTION FROM SERVICE. WHERE NON-INTRUSIVE DETECTION (I.E. VIDEO, RADAR) ALREADY EXISTS, THE CONTRACTOR SHALL INSURE THAT DETECTION IS OPERATING AND MAINTAINED BY RECONFIGURING THE DETECTION UNITS ACCORDINGLY DURING ALL CONSTRUCTION PHASES. THIS IS TO AVOID THE SIGNAL FROM MAXING OUT THE AFFECTED SIGNAL PHASE AND CREATING UNNECESSARY DELAYS.

LOCATIONS WHERE NON-INTRUSIVE DETECTION IS PROPOSED AND THE EXISTING VEHICLE DETECTION IS TO BE ABANDONED, THE NON-INTRUSIVE VEHICLE DETECTION SHALL BE INSTALLED, CONFIGURED AND MADE FULLY FUNCTIONAL PRIOR TO THE EXISTING DETECTION BEING DISABLED. THE CONTRACTOR SHALL CONTINUE TO MAINTAIN AND MODIFY THE DETECTION UNTIL FINAL ACCEPTANCE OF THE TRAFFIC SIGNAL. THIS IS TO ENSURE VEHICLE DETECTION REMAINS FULLY FUNCTIONAL THROUGHOUT CONSTRUCTION.

632 REMOVAL OF TRAFFIC SIGNAL INSTALLATION, AS PER PLAN

TRAFFIC SIGNAL INSTALLATIONS, INCLUDING SIGNAL HEADS, CABLE, MESSENGER WIRE, STRAIN POLES, CABINET, CONTROLLER, ETC., SHALL BE REMOVED IN ACCORDANCE WITH C&MS 632.26 AND AS INDICATED ON THE PLANS. REMOVED ITEMS SHALL BE REUSED AS PART OF A NEW INSTALLATION ON THE PROJECT OR STORED ON THE PROJECT FOR SALVAGE BY THE CITY OF CLEVELAND IN ACCORDANCE WITH THE LISTING GIVEN HEREIN.

ITEMS TO BE STORE AND RETURNED SHALL INCLUDE CONTROLLERS, CABINETS, TRAFFIC SIGNAL HEADS, PEDESTRIAN PUSH BUTTONS, PEDESTRIAN SIGNAL HEADS, PEDESTRIAN POLES, AND LUMINAIRES.

THE CONTRACTOR SHALL NOTIFY THE CITY OF CLEVELAND TRAFFIC ENGINEER AND STORE THE ITEMS ON SITE, SUITABLY PROTECTED, AT THE DESIGNATED LOCATION FOR INSPECTION BY CITY STAFF WITHIN FIVE (5) BUSINESS DAYS OF NOTIFICATION. CITY STAFF WILL INDICATE WHICH REMOVED ITEMS SHALL BE SALVAGED AND DELIVERED TO THE NEAREST CITY FACILITY LOCATED AT THE FOLLOWING ADDRESS:

TRAFFIC SIGNAL UNIT
4150 E. 49TH ST BLDG. #4
CLEVELAND, OH 44105

IN THE EVENT THE ITEMS STORED ON THE PROJECT FOR SALVAGE BY THE CITY OF CLEVELAND ARE NOT REMOVED, THE CONTRACTOR SHALL, WHEN DIRECTED BY THE ENGINEER IN WRITING, REMOVE AND DISPOSE OF THE ITEMS AT NO ADDITIONAL COST TO THE PROJECT.

630 SIGN, STREET NAME, AS PER PLAN

OVERHEAD MOUNTED STREET NAME SIGNS SUPPLIED UNDER THIS ITEM SHALL MEET THE REQUIREMENTS OF C&MS 630, WITH THE FOLLOWING EXCEPTIONS:

1. THE BACKGROUND COLOR OF THE SIGN SHALL BE BLUE. THE TOP 6 INCHES OF THE SIGN SHALL HAVE A PURPLE BACKGROUND COLOR AND INCLUDE TEXT AS SHOWN ON THE PLANS.
2. TYPE G SHEETING SHALL BE USED FOR THE BACKGROUND, BORDER, AND LEGEND.
3. THE LEGEND SHALL BE FORMED FROM UPPER AND LOWER CASE LETTERS USING THE UNIVERSE 65 FONT, 12 INCHES HIGH FOR ONE LINE MESSAGES, AND 7 INCHES HIGH FOR TWO LINE MESSAGES.
4. THE BACKING MATERIAL SHALL BE A FLAT SHEET PLATE 26 INCHES HIGH.
5. THE BORDER SHALL BE 1/4 INCH WIDE, INSET 1/2 INCH FROM THE EDGE OF THE PLATE. THE BORDER SHALL BE PRESENT BETWEEN THE BLUE AND PURPLE BACKGROUND COLORS.
6. SHOP DRAWINGS MUST BE SUBMITTED TO THE CITY OF CLEVELAND AND APPROVED PRIOR TO INSTALLATION.

PAYMENT FOR ITEM 630 SIGN, STREET NAME, AS PER PLAN, WILL BE MADE AT THE CONTRACT UNIT PRICE BID FOR EACH.

630 SIGN HANGER ASSEMBLY, MAST ARM, AS PER PLAN

IN ADDITION TO THE REQUIREMENTS OF C&MS 630 SIGNS MOUNTED ON THE PROPOSED TRAFFIC SIGNAL MAST ARMS SHALL BE RIGIDLY ATTACHED TO THE ARM AND CENTERED VERTICALLY ON THE ARM. THE CONTRACTOR MAY USE THE METHOD OF ATTACHMENT SHOWN IN THE STANDARD CONSTRUCTION DRAWING TC-16.22 OR ANOTHER METHOD OF RIGID ATTACHMENT AS APPROVED BY THE ENGINEER.

THE CONTRACTOR SHALL ENSURE THE SIGN FACE IS MOUNTED PERPENDICULAR (90 DEGREES) TO THE DIRECTION OF TRAVEL.

PAYMENT FOR ITEM 630 SIGN HANGER ASSEMBLY, MAST ARM, AS PER PLAN SHALL BE MADE AT THE CONTRACT UNIT PRICE BID FOR EACH. PAYMENT SHALL BE FULL COMPENSATION FOR ALL MATERIALS, LABOR, TOOLS, EQUIPMENT, AND ALL PARTS NECESSARY TO ERECT ONE INDIVIDUAL SIGN.

625 UNDERGROUND WARNING/MARKING TAPE, AS PER PLAN

IN ADDITION TO THE REQUIREMENTS OF 625.20 AND 725.22, THE UNDERGROUND WARNING/MARKING TAPE SHALL HAVE THE WORDS "TRAFFIC - ELECTRIC" IN BLACK CAPITAL LETTERS, ONE SIDE ONLY.

809 STOP LINE RADAR DETECTION, AS PER PLAN

THE DETECTION UNIT SHALL INCLUDE THE FOLLOWING:

1. POWER SHALL BE PROVIDED FROM THE TRAFFIC CABINET.
2. ALL REQUIRED INPUTS CARDS SHALL BE INCLUDED IN THE TRAFFIC CABINET AND SHALL BE COMPATIBLE WITH CALTRANS, NEMA TS1 AND NEMA TS2 DETECTOR RACKS. THE CARDS SHALL PROVIDE TRUE PRESENCE DETECTOR CALLS OR CONTACT CLOSURE TO THE TRAFFIC CONTROLLER.
3. THE UNIT SHALL BE MOUNTED DIRECTLY TO A POLE OR MAST ARM, AS RECOMMENDED BY THE MANUFACTURER. CABLE(S) SHALL BE PROVIDED AS REQUIRED AND RECOMMENDED BY THE MANUFACTURER.
4. SURGE PROTECTION DEVICES, AS RECOMMENDED BY THE MANUFACTURER SHALL BE INCLUDED BOTH AT THE POLE WHERE THE UNIT IS LOCATED TO PROTECT THE UNIT AND IN THE TRAFFIC CABINET TO PROTECT THE CABINET ELECTRONICS.
5. THE MANUFACTURER'S REPRESENTATIVE SHALL BE ON SITE DURING INSTALLATION AND TESTING AND SHALL PROVIDE ONSITE TRAINING ON THE SETUP, OPERATION AND MAINTENANCE OF THE UNIT.
6. A SERIAL TO ETHERNET COMMUNICATIONS MODULE AND ETHERNET CABLE (MINIMUM 7 FEET).
7. THE POWER SUPPLY AND COMMUNICATION MODULES SHALL BE SECURED TO A SINGLE PANEL THAT CAN BE MOUNTED INTERIOR TO THE TRAFFIC CABINET. THE PANEL SHALL INCLUDE MODULAR-PLUG STYLE CONNECTIONS FOR UP TO FOUR (4) SENSOR CABLES. ADDITIONAL SENSORS MAY BE HARD-WIRED TO THE COMMUNICATION MODULES, AS NECESSARY.
8. THE CONTRACTOR SHALL INSTALL THE RADAR DETECTION PRIOR TO MILLING/DISABLING EXISTING LOOPS.
9. THE INSTALLATION SHALL INCLUDE ALL CONTROLLER PROGRAMMING FOR COMPLETE INSTALLATION, WHICH INCLUDES MODIFICATIONS FOR REMOVAL OF EXISTING DETECTION.

PAYMENT FOR ITEM 809 STOP LINE RADAR DETECTION, AS PER PLAN SHALL BE MADE AT THE CONTRACT UNIT PRICE FOR EACH UNIT, COMPLETE AND IN PLACE INCLUDING ALL REQUIRED CABINET HARDWARE, MOUNTING BRACKETS, CABLES, CONDUIT AND CONNECTIONS TESTED AND ACCEPTED.

809 STOP LINE RADAR DETECTION, AS PER PLAN - ALTERNATE BID

IN ADDITION TO MEETING THE REQUIREMENTS OF THE BASE BID ITEM, THE STOP LINE RADAR UNIT SHALL BE AN ITERIS VANTAGE VECTOR DETECTION SENSOR.

Preliminary Plans - For Reference Only

TRAFFIC SIGNAL GENERAL NOTES

DESIGN AGENCY
Michael Baker INTERNATIONAL

DESIGNER
SED

REVIEWER
RMG 05/22/24

PROJECT ID
82382

SHEET 1638 TOTAL 2696

CUY-90-16.28 (CCG3A)

MODEL: Sheet PAPERSIZE: 34x22 (in.) DATE: 6/13/2025 TIME: 7:47:35 AM USER: Joseph.Hogan
pw:\\mb-us-pw.bentley.com:mb-us-pw-03\Documents\Cleveland_OH\01_Projects\ODOT\District12\82382\400-Engineering\Signals\Sheets\82382_CN001.dgn

GROUNDING AND BONDING

THE REQUIREMENTS OF THE CONSTRUCTION AND MATERIAL SPECIFICATIONS (C&MS) AND THE TC SERIES OF STANDARD CONSTRUCTION DRAWINGS ARE MODIFIED AS FOLLOWS:

1. ALL METALLIC PARTS CONTAINING ELECTRICAL CONDUCTORS SHALL BE PERMANENTLY JOINED TO FORM AN EFFECTIVE GROUND FAULT CURRENT PATH BACK TO THE GROUNDED CONDUCTOR IN THE POWER SERVICE DISCONNECT SWITCH.

   A. PROVIDE AN EQUIPMENT GROUNDING CONDUCTOR IN METALLIC CONDUITS (725.04) IN ADDITION TO THE CONDUCTORS SPECIFIED AND BOND THE CONDUIT TO THIS GROUNDING CONDUCTOR.

   B. WHEN AN EQUIPMENT GROUNDING CONDUCTOR IS REQUIRED IN PLASTIC CONDUIT (725.05), THE INSTALLATION SHALL INCLUDE A SEPARATE EQUIPMENT GROUNDING CONDUCTOR IN ADDITION TO THE CONDUCTORS SPECIFIED.

   C. METALLIC CONDUIT CARRYING THE LOOP WIRES FROM IN THE PAVEMENT TO THE PULL BOX SPLICE LOCATION WILL ONLY BE BONDED AT THE PULL BOX END, AND WILL NOT CONTAIN AN EQUIPMENT GROUNDING CONDUCTOR.

   D. IF MULTIPLE CONDUIT RUNS BEGIN AND END AT THE SAME POINTS, ONLY ONE EQUIPMENT GROUNDING CONDUCTOR IS REQUIRED.

   E. IF AN EQUIPMENT GROUNDING CONDUCTOR IS NEEDED IN CONDUIT BETWEEN SIGNALIZED INTERSECTIONS FOR UNDERGROUND INTERCONNECT CABLE, THE GROUNDING SYSTEM FOR EACH SIGNALIZED INTERSECTION WILL BE SEPARATED ABOUT MIDWAY BETWEEN THE INTERSECTIONS.

   F. THE MESSENGER WIRE AT SIGNALIZED INTERSECTIONS WILL BE USED AS THE CONDUCTIVE PATH FROM CORNER TO CORNER IF CONDUIT IS NOT PROVIDED UNDER THE ROADWAY. WHEN CONDUIT CONNECTS THE CORNERS OF AN INTERSECTION, AN EQUIPMENT GROUNDING CONDUCTOR SHALL BE USED IN THE CONDUIT.

2. CONDUITS.

   A. THE 725.04 CONDUIT SHALL HAVE GROUNDING BUSHINGS INSTALLED AT ALL TERMINATION POINTS. THE BUSHING MATERIAL SHALL BE COMPATIBLE WITH GALVANIZED STEEL CONDUIT AND THE GROUNDING LUG MATERIAL SHALL BE COMPATIBLE FOR USE WITH COPPER WIRE. THREADED OR COMPRESSION TYPE BUSHINGS MAY BE USED.

   B. THE 725.05 CONDUIT SHALL HAVE THE INSIDE AND OUTSIDE DIAMETERS OF THE CONDUIT DEBURRED AT ALL TERMINATION POINTS.

   C. BOTH ENDS OF METALLIC CONDUIT SHALL BE BONDED TO THE EQUIPMENT GROUNDING CONDUCTOR.

   D. METALLIC CONDUIT MAY BE BONDED TO METALLIC BOXES THROUGH THE USE OF CONDUIT FITTINGS UL APPROVED FOR THIS TYPE OF CONNECTION, WITH THE BOX BONDED TO THE EQUIPMENT GROUNDING CONDUCTOR.

GROUNDING AND BONDING (CONTINUED)

3. WIRE FOR GROUNDING AND BONDING.

   A. USE INSULATED, COPPER WIRE FOR THE EQUIPMENT GROUNDING CONDUCTOR. BONDING JUMPERS IN BOXES AND ENCLOSURES MAY BE BARE OR INSULATED COPPER WIRE. WIRE SIZE SHALL BE AS FOLLOWS:

      I. USE 4 AWG BETWEEN THE POWER SERVICE AND SUPPORTS, POLES, PEDESTALS, CONTROLLER OR FLASHER CABINETS.

      II. USE A MINIMUM 8 AWG BETWEEN LOOP DETECTOR PULL BOXES AND THE FIRST CONDUIT THAT REQUIRES A LARGER SIZE AS SPECIFIED IN 3.A.I ABOVE.

      III. USE A MINIMUM 8 AWG BETWEEN THE "PREPARE TO STOP WHEN FLASHING" INSTALLATION (INCLUDING SUPPORT) AND THE FIRST CONDUIT THAT REQUIRES A LARGER SIZE AS SPECIFIED IN 3.A.I ABOVE.

      IV. THE INSULATION SHALL BE GREEN OR GREEN WITH YELLOW STRIPE(S). FOR 4 AWG OR LARGER, INSULATION MAY ALSO BE BLACK WITH GREEN TAPE/LABELS INSTALLED AT ALL ACCESS POINTS.

   B. IN A HIGHWAY LIGHTING SYSTEM, THE EQUIPMENT GROUNDING CONDUCTOR SHALL BE THE SAME WIRE SIZE AS THE DUCT CABLE OR DISTRIBUTION CABLE CIRCUIT CONDUCTORS, WITH THE MINIMUM CONDUCTOR SIZE OF 4 AWG. BONDING JUMPERS WILL BE MINIMUM SIZE 4 AWG.

4. GROUND ROD.

   A. A 3/4-INCH SCHEDULE 40 PVC CONDUIT WILL BE USED IN FOUNDATIONS AND CONCRETE WALLS FOR THE GROUNDING CONDUCTOR (GROUND WIRE) RACEWAY TO THE GROUND ROD. SHOULD METALLIC CONDUIT BE USED, BOTH ENDS OF THE CONDUIT SHALL BE BONDED TO THE GROUNDING CONDUCTOR.

   B. THE TYPICAL GROUNDING CONDUCTOR (GROUND WIRE) SHALL BE 4 AWG INSULATED, COPPER.

5. THE GREEN CONDUCTOR IN SIGNAL CABLES (CONDUCTOR #4) SHALL NOT BE USED TO SUPPLY POWER TO A SIGNAL INDICATION. IT WILL BE CONNECTED TO THE SIGNAL BODY AS AN EQUIPMENT GROUND IN ALUMINUM HEADS AND IT WILL BE UNUSED IN PLASTIC HEADS. UNUSED CONDUCTORS SHALL BE GROUNDED IN THE CABINET. TYPICAL USE OF CONDUCTORS IS AS FOLLOWS:

COND. NO.	COLOR	VEHICLE SIGNAL	PEDESTRIAN SIGNAL
1	BLACK	GREEN BALL	#1 WALK
2	WHITE	AC NEUTRAL	AC NEUTRAL
3	RED	RED BALL	#1 DW/FDW
4	GREEN	EQUIPMENT GROUND	EQUIPMENT GROUND
5	ORANGE	YELLOW BALL	#2 DW/FDW
6	BLUE	GREEN ARROW	#2 WALK
7	WHITE/ BLACK STRIPE	YELLOW ARROW	NOT USED

GROUNDING AND BONDING (CONTINUED)

6. POWER SERVICE AND DISCONNECT SWITCH.

   A. AT THE POWER SERVICE LOCATION, THE GROUNDING CONDUCTOR (GROUND WIRE) FROM THE DISCONNECT SWITCH NEUTRAL (AC-) BAR TO THE GROUND ROD SHALL BE A CONTINUOUS, UNSPLICED CONDUCTOR. IF SPLICED, IT SHALL BE AN EXOTHERMIC WELD BUTT SPLICE.

   B. THE SERVICE NEUTRAL (AC-) SHALL ONLY BE CONNECTED TO GROUND AT THE PRIMARY POWER SERVICE DISCONNECT SWITCH.

      I. NEMA CONTROLLER CABINETS: IF A POWER SERVICE DISCONNECT SWITCH IS LOCATED BEFORE THE CONTROLLER CABINET, THE NEUTRAL (AC-) AND THE GROUNDING BARS IN THE CONTROLLER CABINET SHALL NOT BE CONNECTED TOGETHER AS SHOWN IN NEMA TS-2, FIGURE 5-4.

      II. IF SECONDARY DISCONNECT SWITCHES ARE CONNECTED AFTER THE PRIMARY DISCONNECT SWITCH, THE NEUTRAL (AC-) SHALL ONLY BE GROUNDED AT THE PRIMARY SWITCH. EQUIPMENT GROUNDING CONDUCTORS SHALL BE BROUGHT TO THE PRIMARY SWITCH, BUT SHALL BE GROUNDED AT BOTH SECONDARY AND PRIMARY SWITCHES.

7. PAYMENT - ALL MATERIALS AND WORK REQUIRED TO COMPLETE THE EFFECTIVE GROUND FAULT CURRENT PATH SYSTEM ARE INCIDENTAL TO THE CONDUCTORS INSTALLED BY CONTRACT.

632 POWER SERVICE, AS PER PLAN 2

ELECTRIC POWER SHALL BE OBTAINED FROM CLEVELAND PUBLIC POWER (CPP) AT THE LOCATION INDICATED ON THE PLANS. POWER SUPPLIED SHALL BE 120 VOLTS.

CITY OF CLEVELAND
DIVISION OF CLEVELAND
PUBLIC POWER (MELP)
1300 LAKESIDE AVE
CLEVELAND, OHIO 44114
ATTN: CHRIS HIRZEL
PHONE: (216) 563-7212

THE CONTRACTOR WILL BE RESPONSIBLE FOR REQUESTING AND SCHEDULING ANY INSPECTIONS THE POWER COMPANY MAY REQUIRE FOR THE POWER SERVICE HOOK UP. THE CONTRACTOR SHALL BE RESPONSIBLE FOR CONTACTING THE POWER COMPANY FOR THE ELECTRICAL SERVICE CONNECTION. UNDER NO CIRCUMSTANCES SHALL THE CONTRACTOR SPLICE POWER CABLE INTO THE POWER COMPANY'S CIRCUITS. THE CONTRACTOR IS RESPONSIBLE FOR OBTAINING ANY NECESSARY PERMITS AND THE PAYING OF ALL FEES. THE CONTRACTOR SHALL PAY ALL POWER CHARGES UNTIL THE SIGNALS ARE ACCEPTED BY THE CITY OF CLEVELAND.

ALL POWER CABLES SHALL BE RATED FOR 600 VOLTS. ALL CONNECTIONS OF POWER CABLE TO EQUIPMENT SHALL BE BY MEANS OF APPROVED SOLDERLESS TYPE CONNECTORS. THE SOLDERLESS CONNECTIONS ARE TO BE TAPED.

A METER BASE IS TO BE INSTALLED ON THE SIDE OF EACH SIGNAL CABINET AND SHALL BE TWO (2) FEET FROM THE BOTTOM OF THE CABINET AND THREE (3) FEET FROM THE TOP OF THE CONCRETE PAD (WHEN ACCOUNTING FOR THE CABINET RISER). THE HOLES FOR THE METER BASE ARE TO BE FIELD DRILLED AND LOCATED BASED ON THE CONFIGURATION OF THE PANELS INSIDE THE CABINET.

THE CONTRACTOR SHALL MEET ON SITE WITH CPP THREE (3) DAYS PRIOR TO CONSTRUCTION. THE CONTRACTOR SHALL CONTACT CPP TO MAKE THE NECESSARY ARRANGEMENTS.

TEST HOLE PERFORMED

IT IS ANTICIPATED THAT THE CONTRACTOR WILL ENCOUNTER UNDERGROUND UTILITIES WHILE EXCAVATING FOR SIGNAL SUPPORT FOUNDATIONS OR SIMILAR FOUNDATIONS. AFTER ACCURATELY IDENTIFYING THE PROPOSED LOCATION OF THE FOUNDATION, AS SHOWN IN THE PLANS AND AFTER MODIFYING THAT LOCATION, IF NECESSARY, BASED ON THE FIELD MARKING OF UNDERGROUND UTILITY LOCATION, THE CONTRACTOR DISCOVERS A UTILITY CONFLICT DURING THE EXCAVATION OPERATION, THE CONTRACTOR WILL BE COMPENSATED FOR EACH PARTIAL FOUNDATION EXCAVATION ACCORDING TO THE BID PRICE.

BEFORE THE CONTRACTOR BEGINS THE EXCAVATION AT THE MODIFIED LOCATION, THE CONTRACTOR SHALL VERIFY THAT THERE WILL BE NO OVERHEAD UTILITY CONFLICTS RESULTING FROM THE NEW SIGNAL SUPPORT LOCATION. NEW SUPPORT LOCATIONS ARE TO BE APPROVED BY THE ENGINEER.

THE WORK WILL INCLUDE BACKFILLING, COMPACTING, AND RESTORATION OF THE EXCAVATION TO THE SITE'S ORIGINAL CONDITION.

EXCAVATIONS SHALL NOT BE LEFT OPEN OVERNIGHT.

PAYMENT FOR THIS ITEM SHALL BE AT THE UNIT PRICE BID PER EACH ITEM 632 TEST HOLE PERFORMED TO BE USED AT THE DIRECTION OF THE ENGINEER.

Preliminary Plans - For Reference Only

TRAFFIC SIGNAL GENERAL NOTES

DESIGN AGENCY
Michael Baker INTERNATIONAL

DESIGNER SED
REVIEWER RMG 05/22/24
PROJECT ID 82382
SHEET 1639 TOTAL 2696

CUY-90-16.28 (CCG3A)

MODEL: Sheet 2 PAPERSIZE: 34x22 (in.) DATE: 3/27/2025 TIME: 7:34:00 PM USER: Maia.Gallagher
pw:\\mb-us-pw.bentley.com:mb-us-pw-03\Documents\Cleveland_OH\01_Projects\ODOT\District12\82382\400-Engineering\Signals\Sheets\82382_CN001.dgn

632 SIGNAL SUPPORT FOUNDATION

PRIOR TO ORDERING THE SIGNAL SUPPORTS, THE CONTRACTOR SHALL CONTACT OUPS TO HAVE ALL THE UTILITIES LOCATED IN THE FIELD. THEN THE CONTRACTOR SHALL MEET THE PROJECT ENGINEER TO LOCATE THE PROPOSED SUPPORT LOCATIONS TO ENSURE THERE ARE NO CONFLICTS WITH UTILITIES. IF THERE ARE ISSUES, THE PROJECT ENGINEER SHALL PROVIDE GUIDANCE AS TO THE RELOCATION OF THE SUPPORTS.

DUE TO THE FURTHER POSSIBILITY OF CONFLICT WITH EXISTING OR PROPOSED UNDERGROUND OBSTRUCTIONS (INCLUDING THE POSSIBILITY OF UNRECORDED OBSTRUCTIONS) WHICH COULD AFFECT THE LOCATION OF THE FOUNDATION FOR THIS ITEM, AND CONSEQUENTLY, THE DESIGN OF THE SUPPORT AND/OR ARMS, THE CONTRACTOR SHALL NOT PLACE FINAL ORDERS FOR THE ITEM UNTIL THE FOUNDATIONS HAVE BEEN INSTALLED, AT FINAL GRADE, AND THE CONTRACTOR HAS RECEIVED, FROM ENGINEER, WRITTEN NOTICE TO PROCEED WITH THE ORDERS FOR THE ITEM.

IF ANY FOUNDATION LOCATIONS MUST BE ADJUSTED, THE CONTRACTOR SHALL NOTIFY THE ENGINEER AND CITY OF CLEVELAND, WHO WILL DETERMINE THE REVISED LOCATION AND IF NEEDED, THE SUPPORT DESIGN. THE CONTRACTOR WILL NOT BE RESPONSIBLE FOR DETERMINING THE REVISED DESIGN. THE ENGINEER WILL INFORM THE CONTRACTOR OF ANY CHANGES NECESSARY AND AUTHORIZE THE CONTRACTOR TO ORDER THE SUPPORT.

THE CONTRACTOR SHALL, WHEN DEVELOPING THE PROGRESS SCHEDULE, AND THOSE OF SUBCONTRACTORS, ENSURE THAT THE FOUNDATIONS ARE INSTALLED AT THE EARLIEST TIME AS IS FEASIBLE AND PRACTICAL, AND SHALL INCLUDE SUFFICIENT TIME IN THE PROGRESS SCHEDULE FOR ORDERING, MANUFACTURING, DELIVERY, AND INSTALLATION OF THE SUPPORT ITEMS AFTER THE FOUNDATIONS ARE IN PLACE.

NO PAYMENTS FOR DELIVERED MATERIALS FOR THE FOUNDATION OR SUPPORT ITEMS SHALL BE MADE UNTIL THE FOUNDATIONS ARE IN PLACE, AND IF CHANGES IN THE DESIGN OF THIS ITEM ARE REQUIRED, NO PAYMENT SHALL BE MADE FOR THE ITEMS MANUFACTURED TO THE ORIGINAL DESIGN.

PAYMENT WILL BE AT THE CONTRACT UNIT PRICE AND WILL BE FULL COMPENSATION FOR ALL LABOR, MATERIALS, TOOLS, EQUIPMENT AND OTHER INCIDENTALS NECESSARY FOR EACH SUPPORT FURNISHED, IN PLACE, COMPLETE AND ACCEPTED.

632 SIGNAL SUPPORT, TYPE TC-81.22, DESIGN 4, AS PER PLAN
632 SIGNAL SUPPORT, TYPE TC-81.22, DESIGN 12, AS PER PLAN
632 SIGNAL SUPPORT, TYPE TC-81.22, DESIGN 13, AS PER PLAN
632 SIGNAL SUPPORT, TYPE TC-81.22, DESIGN 14, AS PER PLAN
632 STRAIN POLE, TYPE TC-81.11, DESIGN 8, AS PER PLAN
632 PEDESTAL, 8', TRANSFORMER BASE, AS PER PLAN
632 PEDESTAL, MISC.: PEDESTAL 15', TRANSFORMER BASE

FURNISH SIGNAL SUPPORTS AND PEDESTALS WHICH COMPLY WITH C&MS 632 AND 732 AND CITY OF CLEVELAND DETAIL SPECIFICATIONS, PART D, D-64. ALL POLES SHALL BE CIRCULAR AND CONSTRUCTED AS CONTINUOUS TAPERED TUBES, POLES HAVING STRAIGHT SECTIONS WITH A TAPERED EFFECT ACCOMPLISHED BY THE USE OF REDUCERS WILL NOT BE PERMITTED.

SIGNAL SUPPORTS AND PEDESTALS SHALL BE PAINTED DARK BRONZE, FEDERAL COLOR NUMBER F-283. IN ADDITION TO THE REQUIREMENTS AND THE SPECIFICATIONS NOTED ABOVE, SIGNAL SUPPORTS AND PEDESTALS SHALL BE PAINTED IN ACCORDANCE WITH THE FOLLOWING:

1. POWDER COATING - DARK BRONZE
   A. SURFACE PREPARATION - THE EXTERIOR STEEL SURFACE SHALL BE BLAST CLEANED TO STEEL STRUCTURES PAINTING COUNCIL SURFACE PREPARATION SPECIFICATION NO. 6 (SSPC-SP6) REQUIREMENTS UTILIZING CAST STEEL ABRASIVES CONFORMING TO THE SOCIETY OF AUTOMOTIVE ENGINEERS (SAE) RECOMMENDED PRACTICE J827. THE BLAST METHOD USED IS A RECIRCULATING, CLOSED CYCLE CENTRIFUGAL WHEEL SYSTEM WITH ABRASIVE CONFORMING TO SAE SHOT NUMBER S280.

   B. INTERIOR COATING - INTERIOR SURFACES (POLE SHAFTS ONLY) AT THE BASE END FOR A LENGTH OF APPROXIMATELY 2.0 FEET SHALL BE MECHANICALLY CLEANED AND COATED WITH A ZINC RICH EPOXY POWDER. THE COATING SHALL BE ELECTROSTATICALLY APPLIED AND CURED IN A GAS FIRED CONVECTION OVEN BY HEATING THE STEEL SUBSTRATE TO A MINIMUM OF 350 DEGREES FAHRENHEIT AND A MAXIMUM OF 400 DEGREES FAHRENHEIT.

   C. EXTERIOR COATING - ALL THE EXTERIOR SURFACES SHALL BE COATED WITH A URETHANE OR TRIGLYCIDYL ISOCYANURATE (TGIC) POLYESTER POWDER TO A MINIMUM FILM THICKNESS OF 2.0 MILS (0.0029#32)

2. COMBINATION COATING GALVANIZED - POWDER TOP COAT COLOR: DARK BRONZE
   A. SURFACE PREPARATION - PRIOR TO BEING INCORPORATED INTO AN ASSEMBLED PRODUCT, STEEL PLATES 3/4 INCHES OR MORE IN THICKNESS SHALL BE BLAST CLEANED WHEN REQUIRED TO REMOVE ROLLED-IN MILL SCALE, IMPURITIES AND NON-METALLIC FOREIGN MATERIALS. AFTER ASSEMBLY, ALL WELD FLUX SHALL BE MECHANICALLY REMOVED. THE IRON OR STEEL PRODUCT SHALL BE DEGREASED BY IMMERSION IN AN AGITATED 4.5% - 6.0% CONCENTRATED CAUSTIC SOLUTION ELEVATED TO A TEMPERATURE RANGING FROM 150 DEGREES FAHRENHEIT TO 190 DEGREES FAHRENHEIT. IT SHALL NEXT BE RINSED CLEAN FROM ANY RESIDUAL EFFECTS OF THE CAUSTIC OR ACID SOLUTIONS BY IMMERSION IN A CIRCULATING FRESH WATER BATH. FINAL PREPARATION SHALL BE ACCOMPLISHED BY IMMERSION IN CONCENTRATED ZINC AMMONIUM CHLORIDE FLUX SOLUTION HEATED TO 130 DEGREES FAHRENHEIT. THE SOLUTION'S ACIDITY CONTENT SHALL BE MAINTAINED BETWEEN 4.5-5.0 pH. THE ASSEMBLY SHALL BE AIR-DRIED TO REMOVE ANY MOISTURE REMAINING IN THE FLUX COAT AND/OR TRAPPED WITHIN THE PRODUCT.

(CONTINUED)

   B. ZINC COATING - THE PRODUCT SHALL BE HOT-DIP GALVANIZED TO THE REQUIREMENTS OF EITHER ASTM A123 (FABRICATED PRODUCTS) OR ASTM A153 (HARDWARE ITEMS) BY IMMERSION IN A MOLTEN BATH OF PRIME WESTERN GRADE ZINC MAINTAINED BETWEEN 810 DEGREES FAHRENHEIT AND 850 DEGREES FAHRENHEIT. THE ENTIRE PRODUCT SHALL BE TOTALLY IMMERSED WITH NO PART OF IT PROTRUDING OUT OF THE ZINC (NO DOUBLE DIPPING). THIS IS TO LIMIT A RISK OF TRAPPED CONTAMINATES CONTAINING CHLORIDES AND REDUCE THE RISK OF BARE SPOTS (BARE SPOTS CAN OCCUR WHEN FLUX ON THE STEEL SURFACE IS BURNED AWAY BY HEAT OF THE FIRST DIP). MAXIMUM ALUMINUM CONTENT OF THE BATH SHALL BE 0.01%. FLUX ASH SHALL BE SKIMMED FROM THE BATH SURFACE PRIOR TO IMMERSION AND EXTRACTION OF THE PRODUCT TO ASSURE A DEBRIS FREE ZINC COATING.

   C. EXTERIOR COATING - ALL GALVANIZED EXTERIOR SURFACES SHALL BE COATED WITH A URETHANE OR TRIGLYCIDYL ISOCYANURATE (TGIC) POLYESTER POWDER TO A MINIMUM FILM THICKNESS OF 2.0 MILS (.002"). PRIOR TO APPLICATION, THE SURFACES TO BE POWDER COATED SHALL BE MECHANICALLY ETCHED BY BRUSH BLASTING (REF. SSPC-SP7) AND THE ZINC COATED SUBSTRATE PREHEATED TO 450 DEGREES FAHRENHEIT FOR A MINIMUM OF ONE HOUR IN A GLASS FIRED CONVECTION OVEN. THE COATING SHALL BE ELECTROSTATICALLY APPLIED AND CURED IN A GAS FIRE CONVECTION OVEN BY HEATING THE ZINC COATED SUBSTRATE TO A MINIMUM OF 350 DEGREES FAHRENHEIT AND A MAXIMUM OF 400 DEGREES FAHRENHEIT. THE THERMOSETTING POWDER RESIN SHALL PROVIDE BOTH INTERCOAT AS WELL AS SUBSTRATE FUSION ADHESION THAT MEETS 5A OR 5B CLASSIFICATION OF ASTM D3559.

MINIMUM CLEARANCE FROM OVERHEAD ELECTRIC WIRES SHALL COMPLY WITH REQUIREMENTS OF THE NATIONAL ELECTRIC SAFETY CODE, RULE 232, AND THE REQUIREMENTS OF THE LOCAL POWER COMPANIES PROVIDING ELECTRICAL SERVICE.

THE CONTRACTOR SHALL PROTECT PEDESTRIANS AND VEHICLES FROM EXPOSED ANCHOR BOLTS UNTIL THE ASSOCIATED SIGNAL SUPPORT OR PEDESTAL IS ERECTED. THE METHOD OF COVERING THE ANCHOR BOLTS SHALL BE APPROVED BY THE ENGINEER.

ALL COSTS ASSOCIATED WITH THE PROCEDURES AS OUTLINED ABOVE SHALL BE CONSIDERED INCIDENTAL TO THE COST OF THE UNIT PRICE BID (EACH) FOR:

SIGNAL SUPPORT, TYPE TC-81.22, DESIGN 4, AS PER PLAN
SIGNAL SUPPORT, TYPE TC-81.22, DESIGN 12, AS PER PLAN
SIGNAL SUPPORT, TYPE TC-81.22, DESIGN 13, AS PER PLAN
SIGNAL SUPPORT, TYPE TC-81.22, DESIGN 14, AS PER PLAN
STRAIN POLE, TYPE TC-81.11, DESIGN 8, AS PER PLAN
PEDESTAL, 8', TRANSFORMER BASE, AS PER PLAN
PEDESTAL, MISC.: PEDESTAL 15', TRANSFORMER BASE

632 VEHICULAR SIGNAL HEAD, MISC.: (LED), 3-SECTION, 8" LENS, 1-WAY, POLYCARBONATE, YELLOW (BICYCLE)

IN ADDITION TO THE REQUIREMENTS OF C&MS 632, THIS ITEM SHALL INCLUDE SIGNAL INDICATIONS THAT PROVIDE A BICYCLE SIGNAL FACE AND CONFORM TO ALL REQUIREMENTS OF FHWA INTERIM APPROVAL IA-16.

PAYMENT WILL BE AT THE CONTRACT UNIT PRICE AND WILL BE FULL COMPENSATION FOR ALL LABOR, MATERIALS, TOOLS, EQUIPMENT, AND OTHER INCIDENTALS NECESSARY FOR EACH BICYCLE SIGNAL HEAD INSTALLED.

632 PEDESTRIAN SIGNAL HEAD (LED), (COUNTDOWN), TYPE D2, AS PER PLAN

IN ADDITION TO THE REQUIREMENTS OF C&MS 632 AND 732 THE FOLLOWING SHALL APPLY:

1. SIGNAL HEADS AND VISORS SHALL BE CONSTRUCTED OF BLACK POLYCARBONATE PLASTIC AND MEET ITE SPECIFICATIONS.

2. PROPER EXTERIOR COLORS SHALL BE OBTAINED BY USE OF COLORED PLASTIC MATERIAL RATHER THAN PAINTING.

3. PIPE, SPACERS AND FITTINGS CONSTRUCTED OF POLYCARBONATE PLASTIC MAY BE USED IN LIEU OF GALVANIZED STEEL OR ALUMINUM.

4. THE PEDESTRIAN SIGNAL HEAD SHALL BE OF THE LED COUNTDOWN TYPE.

5. NEW ATTACHMENT HARDWARE AND FITTINGS SHALL BE USED.

6. THE LIGHT EMITTING DIODE (LED) MODULES SHALL MEET THE REQUIREMENTS OF C&MS 732.04. THE CONTRACTOR SHALL PROVIDE THE CITY, IN WRITING, WITH THE LED MANUFACTURER NAME, SERIAL NUMBER, PART NUMBER, DESCRIPTION OF LAMP, AND DATE OF MANUFACTURE FOR ALL LED UNITS THAT ARE TO BE USED IN THE SIGNAL HEAD PRIOR TO INSTALLATION, FOR ACCEPTANCE AND WARRANTY PURPOSES.

PAYMENT FOR ITEM 632 PEDESTRIAN SIGNAL HEAD (LED), (COUNTDOWN), TYPE D2, AS PER PLAN SHALL BE MADE FOR THE NUMBER OF COMPLETE SIGNAL HEAD FURNISHED AND INSTALLED, INCLUDING ALL LABOR, EQUIPMENT, MATERIALS AND NEW ATTACHMENT HARDWARE.

Preliminary Plans - For Reference Only

TRAFFIC SIGNAL GENERAL NOTES

DESIGN AGENCY
Michael Baker INTERNATIONAL

DESIGNER
SED

REVIEWER
RMG 05/22/24

PROJECT ID
82382

SHEET 1640 | TOTAL 2696

CUY-90-16.28 (CCG3A)
MODEL: Sheet 3 PAPERSIZE: 34x22 (in.) DATE: 3/27/2025 TIME: 7:34:01 PM USER: Maia.Gallagher
pw:\\mb-us-pw.bentley.com:mb-us-pw-03\Documents\Cleveland_OH\01_Projects\ODOT\District12\82382\400-Engineering\Signals\Sheets\82382_CN001.dgn

633 CABINET, TYPE TS-2, AS PER PLAN

IN ADDITION TO THE REQUIREMENTS OF 633.08 AND 733.03, THE FOLLOWING REQUIREMENTS SHALL APPLY:

CABINETS SHALL BE TS-2, TYPE 1 AND SHALL INCLUDE THE FOLLOWING FEATURES:

1. *THE FOLLOWING SWITCHES SHALL BE MOUNTED ON THE SWITCH PANEL IN THE CABINET:*
   - *A. RUN / STOP TIME*
   - *B. CONTROLLER TIME POWER*
   - *C. COORDINATION / FREE*
   - *D. DETECTOR TEST*
   - *E. FLASH CONTROL*

2. *THE FOLLOWING SWITCHES SHALL BE ACCESSIBLE VIA A POLICE PANEL DOOR:*
   - *A. SIGNAL SHUTDOWN*
   - *B. FLASH CONTROL*
   - *C. MANUAL PUSH BUTTON AND 10-FOOT EXTENSION CORD*
   - *D. AUTOMATIC / MANUAL TRANSFER*

3. *A SERVICE LAMP WITH DOOR ACTIVATED ON / OFF SWITCH.*

4. *A RISER WITH A MINIMUM HEIGHT OF 12 INCHES SHALL BE INSTALLED AT THE BASE OF THE CONTROLLER CABINET IN ACCORDANCE WITH C&MS 733.04, PART A. THE RISER SHALL BE INCIDENTAL TO THIS ITEM.*

5. *THE CABINET DOOR SHALL BE KEYED WITH A CORBIN #2 LOCK.*

6. *LIGHTNING PROTECTION SHALL BE PROVIDED.*

7. *THE CONTROLLERS SHALL BE PRE-PROGRAMMED WITH ALL CURRENT SETTINGS AS NOTED IN THE PLANS.*

8. *ALL CONTROLLER CABINETS SHALL BE CAPABLE OF RUNNING A MINIMUM OF EIGHT (8) VEHICLE PHASES WITH FOUR (4) PEDESTRIAN PHASES AND FOUR (4) OVERLAPS WITH A MINIMUM OF 16 LOAD SWITCH BAYS.*

9. *TRAFFIC CONTROL EQUIPMENT SHALL COMPLY WITH C&MS 633 AND 733.*

10. *CABINETS AND CABINET RISERS SHALL BE PAINTED DARK BRONZE, FEDERAL COLOR NUMBER F-283 USING THE PROCESS DESCRIBED IN ITEM 632 - SIGNAL SUPPORT, TYPE TC-81.22, AS PER PLAN.*

11. *ALL TRAFFIC SIGNAL INSTALLATIONS SHALL BE DESIGNED AND EQUIPPED FOR APPROACH MONITORING. IF A TWO-PHASE SIGNAL IS USED, A DUAL RING CONTROLLER AND CABINET WIRING UTILIZING PHASES 2+6 AND 4+8 SHALL BE FURNISHED AND INSTALLED.*

12. *THE CONTRACTOR SHALL FURNISH A CABINET PLAN SHOWING COMPONENT PLACEMENT FOR APPROVAL BY THE ENGINEER AND THE CITY OF CLEVELAND.*

PAYMENT SHALL BE MADE AT THE UNIT BID PRICE UNDER ITEM 633 CABINET, TYPE TS-2, AS PER PLAN FOR EACH INSTALLED AND SHALL INCLUDE ALL LABOR, EQUIPMENT, MATERIAL, AND INCIDENTALS TO COMPLETE THE WORK.

809 ATC CONTROLLER, AS PER PLAN

THE CONTROLLER UNIT SHALL BE FURNISHED AND INSTALLED PER SS809 AND BE LISTED ON THE TRAFFIC AUTHORIZED PRODUCTS (TAP) LIST.

THE CONTROLLER SHALL BE A YUNEX M60 AND COMPATIBLE WITH THE CABINET TYPE BEING INSTALLED.

633 GPS (GLOBAL POSITIONING SYSTEM) CLOCK ASSEMBLY, AS PER PLAN

THE CONTRACTOR SHALL PROVIDE A GPS CLOCK ASSEMBLY IN EACH CABINET. THIS ITEM INCLUDES A GPS ANTENNA AND THE GPS CONTACT CLOSURE OUTPUT MODULE WITH OUTPUT INTERFACE CABLE FOR AN ATC CONTROLLER WITH SEPAC-SUPPORTED FIRMWARE, CONNECTORS, MOUNTING HARDWARE, AND POWER PIGTAIL FOR 12 TO 24 VOLT VDC CABINET POWER SUPPLY.

633 GPS (GLOBAL POSITIONING SYSTEM) CLOCK ASSEMBLY, AS PER PLAN - ALTERNATE BID

IN ADDITION TO MEETING THE REQUIREMENTS OF THE BASE BID ITEM, THE GPS CLOCK ASSEMBLY SHALL BE AN ELTEC TIMESYNC1-GPS.

Preliminary Plans - For Reference Only

TRAFFIC SIGNAL GENERAL NOTES

DESIGN AGENCY
Michael Baker INTERNATIONAL

DESIGNER
SED

REVIEWER
RMG 05/22/24

PROJECT ID
82382

SHEET 1641 TOTAL 2696

CUY-90-16.28 (CCG3A)

MODEL: Sheet 4 PAPERSIZE: 34x22 (in.) DATE: 3/27/2025 TIME: 7:34:01 PM USER: Maia.Gallagher
pw:\\mb-us-pw.bentley.com:mb-us-pw-03\Documents\Cleveland_OH\01_Projects\ODOT\District12\82382400-Engineering\Signals\Sheets\82382_CN001.dgn

SHEET NO.	625 CONNECTION, UNFUSED PERMANENT	625 CONDUIT, 2", 725.051	625 CONDUIT, 3", 725.051	625 CONDUIT, 4", 725.051	625 CONDUIT, CONCRETE ENCASED, 4", 725.051	625 CONDUIT CLEANED AND CABLES REMOVED	625 TRENCH	625 TRENCH IN PAVED AREA	625 PULL BOX, 725.06, SIZE 4	625 PULL BOX, 725.06, SIZE 18	625 GROUND ROD	625 UNDERGROUND WARNING/MARKING TAPE, AS PER PLAN	630 SIGN HANGER ASSEMBLY, MAST ARM, AS PER PLAN	630 SIGN SUPPORT ASSEMBLY, POLE MOUNTED	630 SIGN, FLAT SHEET	630 SIGN, STREET NAME, AS PER PLAN	632 VEHICULAR SIGNAL HEAD, MISC.: (LED), 3-SECTION, 8" LENS, 1-WAY, POLYCARBONATE YELLOW (BICYCLE)	632 VEHICULAR SIGNAL HEAD, (LED), 3-SECTION, 12" LENS, 1-WAY, POLYCARBONATE, YELLOW	632 VEHICULAR SIGNAL HEAD, (LED), 5-SECTION, 12" LENS, 1-WAY, POLYCARBONATE, YELLOW	632 PEDESTRIAN SIGNAL HEAD (LED), TYPE D2, COUNTDOWN, AS PER PLAN	632 ACCESSIBLE PEDESTRIAN PUSHBUTTON	632 COVERING OF VEHICULAR SIGNAL HEAD	632 COVERING OF PEDESTRIAN SIGNAL HEAD	632 SIGNAL CABLE, 3 CONDUCTOR, NO. 14 AWG	632 SIGNAL CABLE, 5 CONDUCTOR, NO. 14 AWG	632 SIGNAL CABLE, 7 CONDUCTOR, NO. 14 AWG	632 SIGNAL SUPPORT FOUNDATION	632 PEDESTAL FOUNDATION	632 TEST HOLE PERFORMED	632 POWER CABLE, 2 CONDUCTOR, NO. 6 AWG	632 POWER CABLE, 2 CONDUCTOR, NO. 4 AWG	632 POWER SERVICE, AS PER PLAN 2	632 CONDUIT RISER, 1" DIAMETER
	EACH	FT	FT	FT	FT	FT	FT	FT	EACH	EACH	EACH	FT	EACH	EACH	SF	EACH	EACH	EACH	EACH	EACH	EACH	EACH	EACH	FT	FT	FT	EACH	EACH	EACH	FT	FT	EACH	EACH
1643		75	52	24	602		249	191	2	4	8	440	10		42.5	4		13	3	8	8	16	8	1225	1275	1650	4	3	1	75		1	3
1647		78	50	22	508		196	197	2	4	9	393	8		34.5	4		12	2	8	8	14	8	1125	1175	1075	4	4	1	75		1	2
1651		80	45	38	558		364	59	1	4	9	423	5		18.0	3		11	1	8	8	12	8	1250	1300	950	3	5	1	100		1	1
1655		93	55	12	628		468		1	4	9	468	6		15.0	4		13	1	8	8	14	8	1225	1275	1525	4	4	1	100		1	1
1659		65	41	42	558		406		1	4	6	406	4		7.5	3		7	3	4	4	10	4	675	700	1250	3	2	1	100		1	1
1663	2	166	65	8	482		476		1	4	10	476	9	2	55.5	4	2	10	2	8	9	14	8	975	1025	1100	5	4	1		125	1	
1667	2	181	106	6	674		613		4	4	10	613	9	2	55.5	4	2	12		8	9	14	8	1100	1150	1425	5	4	1		325	1	1
1671		18	34			675	52				4	52	7		25.5	4		9		4	8	9	4	1200	875	1275	2	2	1				
TOTALS CARRIED TO GENERAL SUMMARY	4	756	448	152	4010	675	2824	447	12	28	65	3271	58	4	254.0	30	4	87	12	56	62	103	56	8775	8775	10250	30	28	8	450	450	7	9

SHEET NO.	632 SIGNAL SUPPORT, TYPE TC-81.22, DESIGN 4, AS PER PLAN	632 SIGNAL SUPPORT, TYPE TC-81.22, DESIGN 12, AS PER PLAN	632 SIGNAL SUPPORT, TYPE TC-81.22, DESIGN 13, AS PER PLAN	632 SIGNAL SUPPORT, TYPE TC-81.22, DESIGN 14, AS PER PLAN	632 STRAIN POLE, TYPE TC-81.11, DESIGN 8, AS PER PLAN	632 PEDESTAL, 8'; TRANSFORMER BASE, AS PER PLAN	632 PEDESTAL, MISC.; PEDESTAL 15'; TRANSFORMER BASE	632 REMOVAL OF TRAFFIC SIGNAL INSTALLATION, AS PER PLAN	633 GPS (GLOBAL POSITIONING SYSTEM) CLOCK ASSEMBLY, AS PER PLAN	633 CABINET, TYPE TS-2, AS PER PLAN	633 CABINET FOUNDATION	633 CONTROLLER WORK PAD	809 STOP LINE RADAR DETECTION, AS PER PLAN	809 ATC CONTROLLER, AS PER PLAN
	EACH	EACH	EACH	EACH	EACH	EACH	EACH	EACH	EACH	EACH	EACH	EACH	EACH	EACH
1643		1	2	1		2	1	1	1	1	1	1	4	1
1647	2	1	1			4		1	1	1	1	1	2	1
1651	1	1	1			3	2	1	1	1	1		2	1
1655		2	2				4	1	1	1	1	1	3	1
1659	1	1		1		1	1	1	1	1	1	1	2	1
1663	3	1			1	3	1	1	1	1	1	1	3	1
1667	3	1	1		1	1	3	1	1	1	1	1	2	1
1671		1	1				2	1					2	
TOTALS CARRIED TO GENERAL SUMMARY	10	8	8	2	2	14	14	8	7	7	7	6	20	7

Preliminary Plans - Not For Reference Only

TRAFFIC SIGNALS SUBSUMMARY - 1

CUY-90-16.28 (CCG3A)

MODEL: Sheet-01 PAPERSIZE: 34x22 (in.) DATE: 3/27/2025 TIME: 7:34:07 PM USER: Maia.Gallagher
pw:\\mb-us-pw.bentley.com:mb-us-pw-03\Documents\Cleveland_OH101_Projects\ODOT\District12\82382\400-Engineering\Signals\Sheets\82382_CS001.dgn

DESIGN AGENCY
Michael Baker INTERNATIONAL

DESIGNER
SED

REVIEWER
RMG 05/22/24

PROJECT ID
82382

SHEET 1642 | TOTAL 2696

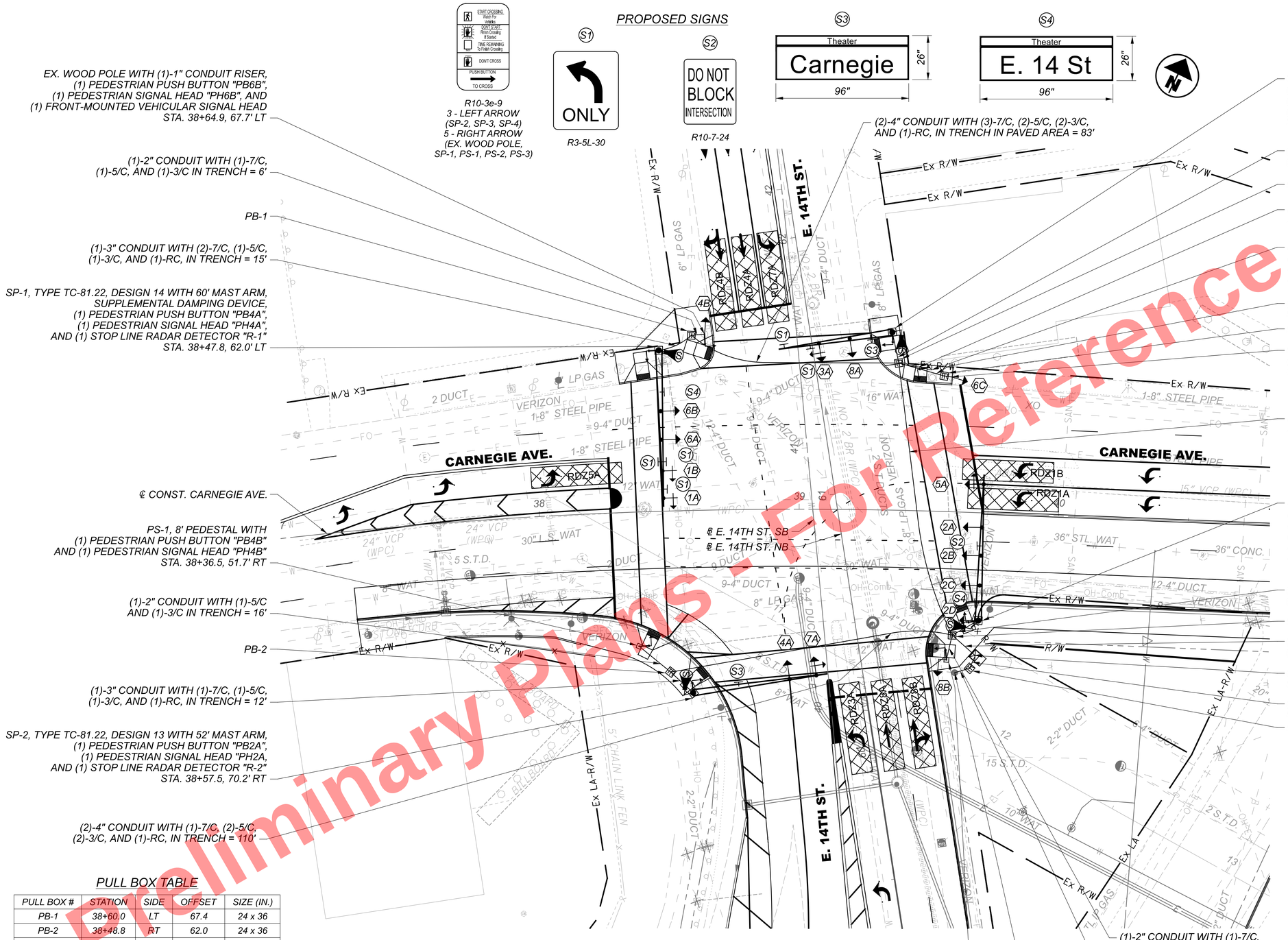

Preliminary Plans - Not For Reference Only

PULL BOX TABLE

PULL BOX #	STATION	SIDE	OFFSET	SIZE (IN.)
PB-1	38+60.0	LT	67.4	24 x 36
PB-2	38+48.8	RT	62.0	24 x 36
PB-3	39+37.2	LT	56.7	24 x 36
PB-4	39+54.3	LT	52.1	13 x 24
PB-5	39+60.6	RT	47.5	24 x 36
PB-6	39+68.0	RT	60.0	13 x 24

NOTE:
1. RADAR DETECTION LOCATION IS FOR REFERENCE ONLY, ACTUAL PLACEMENT WILL BE RECOMMENDED BY MANUFACTURER.

PROPOSED SIGNALS

VEHICULAR SIGNAL HEADS (12" LENS, LED, YELLOW, W/ REFLECTIVE BACKPLATES)

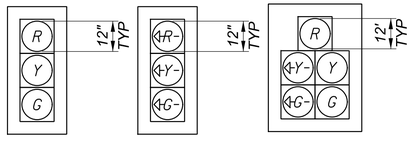



PEDESTRIAN HEADS (LED, COUNTDOWN, TYPE D2)

TRAFFIC SIGNAL LEGEND

- TRAFFIC SIGNAL, 3 UNIT HEAD, 12"
- TRAFFIC SIGNAL, 3 UNIT HEAD, 12" WITH ARROWS
- TRAFFIC SIGNAL, 4 OR 5 UNIT HEAD, 12"
- CONTROLLER CABINET
- CONTROLLER CABINET WITH WORKPAD
- SIGNAL SUPPORT POLE
- PEDESTRIAN SIGNAL
- PEDESTRIAN PUSH BUTTON
- PEDESTAL SUPPORT
- TRAFFIC PULL BOX
- SIGNAL CONDUIT
- RADAR DETECTION ZONE
- RADAR DETECTOR

HORIZONTAL SCALE IN FEET
0 10 20 40

TRAFFIC SIGNAL PLAN
CARNEGIE AVE. & E. 14TH ST.

CUY-90-16.28 (CCG3A)

DESIGN AGENCY
Michael Baker INTERNATIONAL

DESIGNER SED
REVIEWER RMG 05/22/24
PROJECT ID 82382
SHEET 1643 TOTAL 2696

MODEL: 82382_CP1000 PAPERSIZE: 34x22 (in.) DATE: 3/27/2025 TIME: 7:34:24 PM USER: MaLaGallagher
pw:\\mb-us-pw.bentley.com:mb-us-pw-03\Documents\Cleveland_OH\OL_Projects\0DOT\D1&TrTc1%2\82382\400-Engineering\Signal

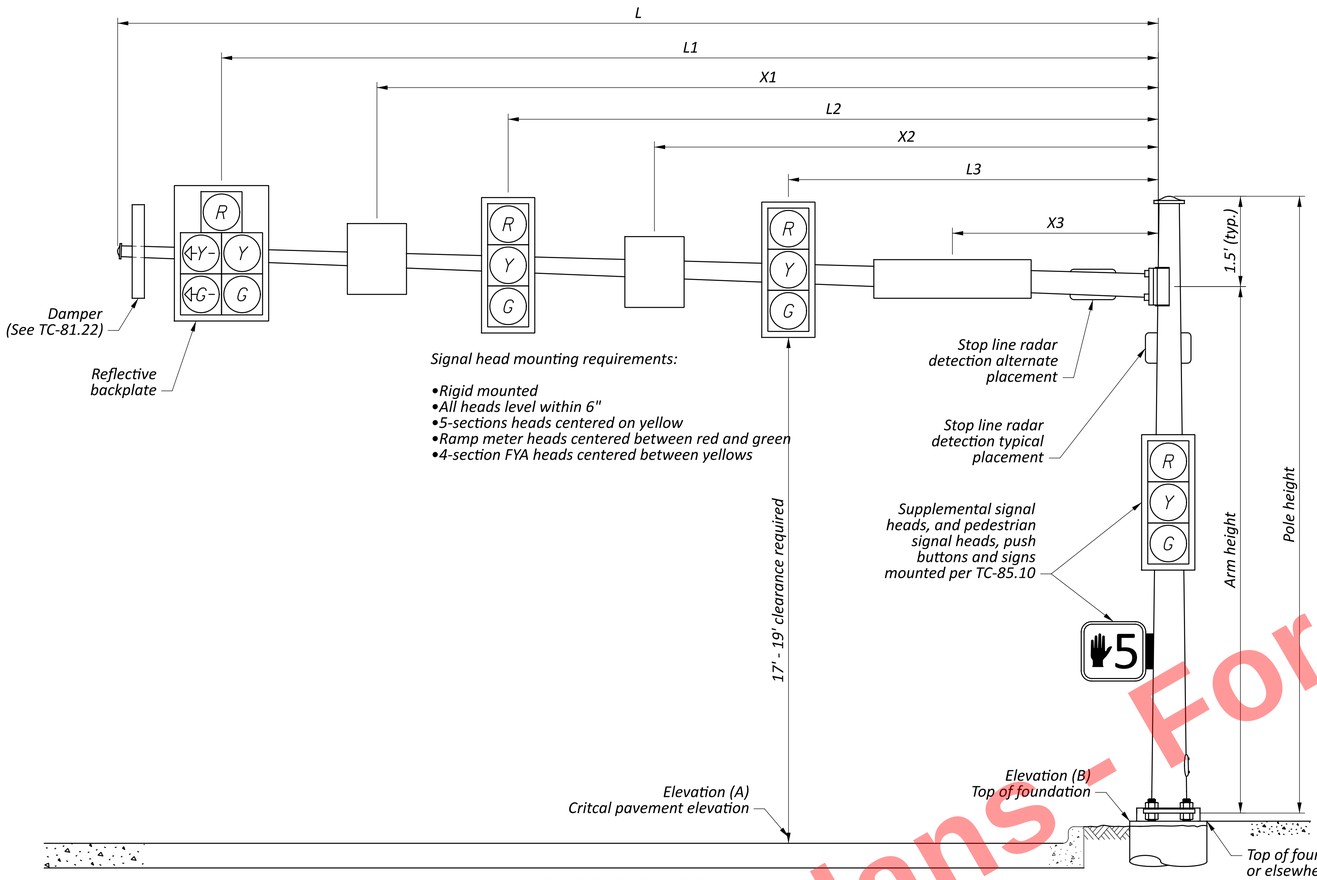

SIGNAL SUPPORT ELEVATION

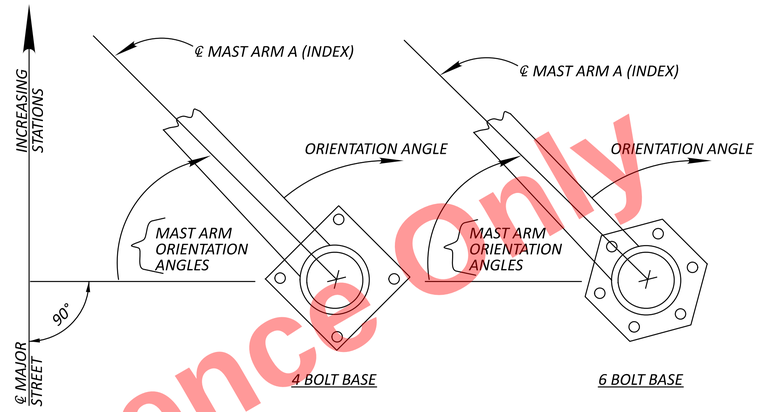

POLE ORIENTATION

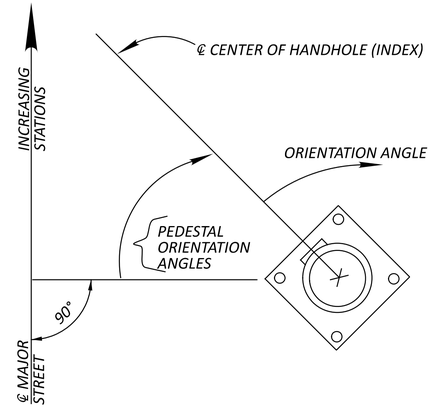

PEDESTAL ORIENTATION

MAST ARM TABLE

SUPPORT NO.	STATION	OFFSET	ELEVATION A (PAVEMENT ELEVATION)	ELEVATION B (TOP OF FOUNDATION)	SIGNAL SUPPORT DETAILS: DESIGN TYPE	DESIGN NO.	POLE HEIGHT	ARM HEIGHT	L	L1	L2	L3	L4	X1	X2	X3	X4	ORIENTATION ANGLES FROM MAST ARM A OR PEDESTAL HANDHOLE: MAST ARM A ANGLE	PEDESTRIAN SIGNAL	PEDESTRIAN PUSH BUTTON	PEDESTAL HANDHOLE ANGLE	SUPPLEMENTAL VEHICULAR SIGNAL
							FT	FT	FT	FT	FT	FT	FT	FT	FT	FT	FT	DEG	DEG	DEG	DEG	DEG
SP-1	38+47.8	62.0 LT	671.49	671.54	TC-81.22	14	21	19.5	60	57	46.5	34.5	23.5	53.5	43	16	–	0	90	90	–	–
SP-2	38+57.5	70.2 RT	670.50	670.83	TC-81.22	13	21	19.5	52	48	37.5	–	–	18	–	–	–	85	275	275	–	–
SP-3	39+34.6	68.5 LT	670.77	670.96	TC-81.22	12	22	20.5	44	28.5	16.5	–	–	42	32	8.5	–	80	275	275	–	–
SP-4	39+70.7	41.5 RT	670.58	670.56	TC-81.22	13	22	20.5	56	52.5	36	25	13.5	29	7	–	–	0	260	260	–	270
EX. WOOD	38+64.9	67.7 LT	–	–	–	–	–	–	–	–	–	–	–	–	–	–	–	–	0	0	0*	185
PS-1	38+36.5	51.7 RT	–	–	–	–	8	–	–	–	–	–	–	–	–	–	–	–	245	245	205	–
PS-2	39+48.7	55.3 LT	–	–	–	–	8	–	–	–	–	–	–	–	–	–	–	–	165	165	270	–
EX. WOOD	39+57.0	51.9 LT	–	–	–	–	–	–	–	–	–	–	–	–	–	–	–	–	–	–	0*	285
PS-3	39+58.6	57.1 RT	–	–	–	–	15	–	–	–	–	–	–	–	–	–	–	–	260	260	90	180

* EXISTING POLE INDEX LINE PERPENDICULAR TO MAJOR STREET CENTER LINE.

Preliminary Plans - For Reference Only

TRAFFIC SIGNAL PLAN DETAILS
CARNEGIE AVE. & E. 14TH ST.

DESIGN AGENCY
Michael Baker INTERNATIONAL

DESIGNER SED
REVIEWER RMG 05/22/24
PROJECT ID 82382
SHEET 1644 TOTAL 2696

CUY-90-16.28 (CCG3A)

MODEL: Sheet PAPERSIZE: 34x22 (in.) DATE: 3/27/2025 TIME: 1:34:53 PM USER: MalaGallagher
pw:\\mb-us-pw.bentley.commb-us-pw-03\Documents\Cleveland_OH\OL_Projects\ODOT\District12\82382\400-Engineering\Signals\Sheets\82382_CP100i.dgn

SIGNAL TIMING CHART

INTERSECTION: CARNEGIE AVE & E. 14TH ST									
MAINTAINING AGENCY: CITY OF CLEVELAND									
START UP		DUAL ENTRY: YES		PHASES:		1, 2, 4, 5, 6, 8			
		REST IN RED:		RING 1 -			RING 2 -		
START IN: ALL RED		OVERLAP			A	B	C	D	
TIME FOR FLASH, ALL RED: 5									
FIRST PHASE(S): 2 + 6		PHASES			-	-	-	-	
COLOR DISPLAYED: GREEN									
INTERVAL OR FEATURE		CONTROLLER MOVEMENT NO.							
INTERSECTION MOVEMENT (PHASE)		1	2	3	4	5	6	7	8
DIRECTION		WBL	EBT	NBL	SBT	EBL	WBT	SBL	NBT
MINIMUM GREEN (INITIAL)	(SEC.)	7	20	7	10	7	20	7	10
ADDED INITIAL	*(SEC./ACTUATION)	-	-	-	-	-	-	-	-
MAXIMUM INITIAL	*(SEC.)	-	-	-	-	-	-	-	-
PASSAGE TIME (PRESET GAP)	(SEC.)	3.0	-	3.0	3.0	3.0	-	3.0	3.0
TIME BEFORE REDUCTION	*(SEC.)	-	-	-	-	-	-	-	-
MINIMUM GAP	*(SEC.)	-	-	-	-	-	-	-	-
TIME TO REDUCE	*(SEC.)	-	-	-	-	-	-	-	-
MAXIMUM GREEN I	(SEC.)	30	60	20	60	20	60	20	60
MAXIMUM GREEN II	(SEC.)	-	-	-	-	-	-	-	-
YELLOW CHANGE	(SEC.)	3.0	3.4	3.2	4.1	3.0	3.4	3.2	4.1
ALL RED CLEARANCE	(SEC.)	2.4	1.9	2.8	1.9	2.4	1.9	2.8	1.9
DELAYED GREEN (LPI) #	(SEC.)	-	-	-	-	-	-	-	-
WALK	(SEC.)	-	7	-	8	-	7	-	8
FLASHING YELLOW ARROW DELAY °		-	-	-	-	-	-	-	-
PEDESTRIAN CLEARANCE	(SEC.)	-	21	-	24	-	15	-	21
RECALL	MAXIMUM (ON/OFF)	OFF	OFF	OFF	OFF	OFF	OFF	OFF	OFF
	MINIMUM (ON/OFF)	ON	ON	OFF	ON	ON	ON	OFF	ON
	PEDESTRIAN (ON/OFF)	OFF	OFF	OFF	OFF	OFF	OFF	OFF	OFF
MEMORY	(ON/OFF)	ON	OFF	OFF	OFF	OFF	OFF	OFF	OFF

NOTES:

- THE PRIMARY THRU MOVEMENT SHOULD HAVE MIN RECALL ACTIVE TO REST IN GREEN.
- ENABLE ϕ3 AND ϕ7 DETECTOR SWITCHING TO ALLOW ϕ3 & ϕ7 TO EXTEND ϕ4 & ϕ8, RESPECTIVELY, WHEN ALLOCATED GREEN TIME FOR LEFT TURN PHASES ARE EXHAUSTED.
- COUNTDOWN PEDESTRIAN SIGNALS SHALL GO TO ZERO ON YELLOW PER OMUTCD FIGURE 4E-2.
- ALL DETECTOR DELAYS SHALL BE PLACED IN THE CONTROLLER.

PHASING DIAGRAM

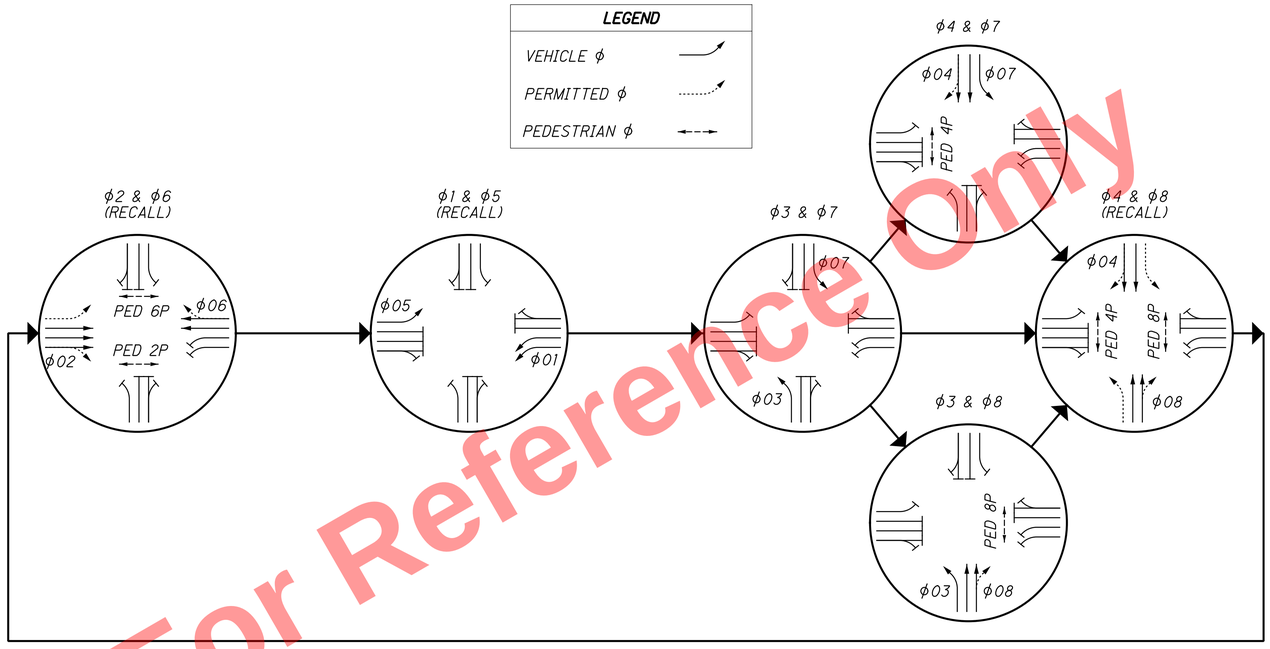

RADAR DETECTION CHART

DETECTION ZONE	MOVEMENT	WIDTH	ASSOCIATED PHASE	DELAY PROGRAMMED IN CONTROLLER (SEC)	EXTENSION PROGRAMMED IN CONTROLLER (SEC)	DETECTOR NUMBER	PURPOSE	DETECTION ZONE LENGTH (FT)
RDZ1A	WBL	8	ϕ1	0	3	R-1	STOP LINE	35
RDZ1B	WBL	8	ϕ1	0	3	R-1	STOP LINE	35
RDZ7A	SBL	8	ϕ4 & ϕ7	0	3	R-2	STOP LINE	35
RDZ4A	SBT	8	ϕ4	0	3	R-2	STOP LINE	35
RDZ4B	SBT	8	ϕ4	8	3	R-2	STOP LINE	35
RDZ3A	NBL	8	ϕ3 & ϕ8	0	3	R-3	STOP LINE	35
RDZ8A	NBT	8	ϕ8	0	3	R-3	STOP LINE	35
RDZ8B	NBT	8	ϕ8	8	3	R-3	STOP LINE	35
RDZ5A	EBL	8	ϕ5	0	3	R-4	STOP LINE	35

Preliminary Plans - For Reference Only

TRAFFIC SIGNAL PLAN DETAILS
CARNEGIE AVE. & E. 14TH ST.

DESIGN AGENCY
Michael Baker INTERNATIONAL

DESIGNER SED
REVIEWER RMG 05/22/24
PROJECT ID 82382
SHEET 1645 TOTAL 2696

CUY-90-16.28 (CCG3A)

MODEL: Sheet PAPERSIZE: 34x22 (in.) DATE: 3/27/2025 TIME: 7:34:59 PM USER: Maia.Gallagher
pw:\\mb-us-pw.bentley.com:mb-us-pw-03\Documents\Cleveland.OH\01_Projects\ODOT\District12\82382\400-Engineering\Signals\Sheets\82382_CP1002.dgn

WIRING DIAGRAM

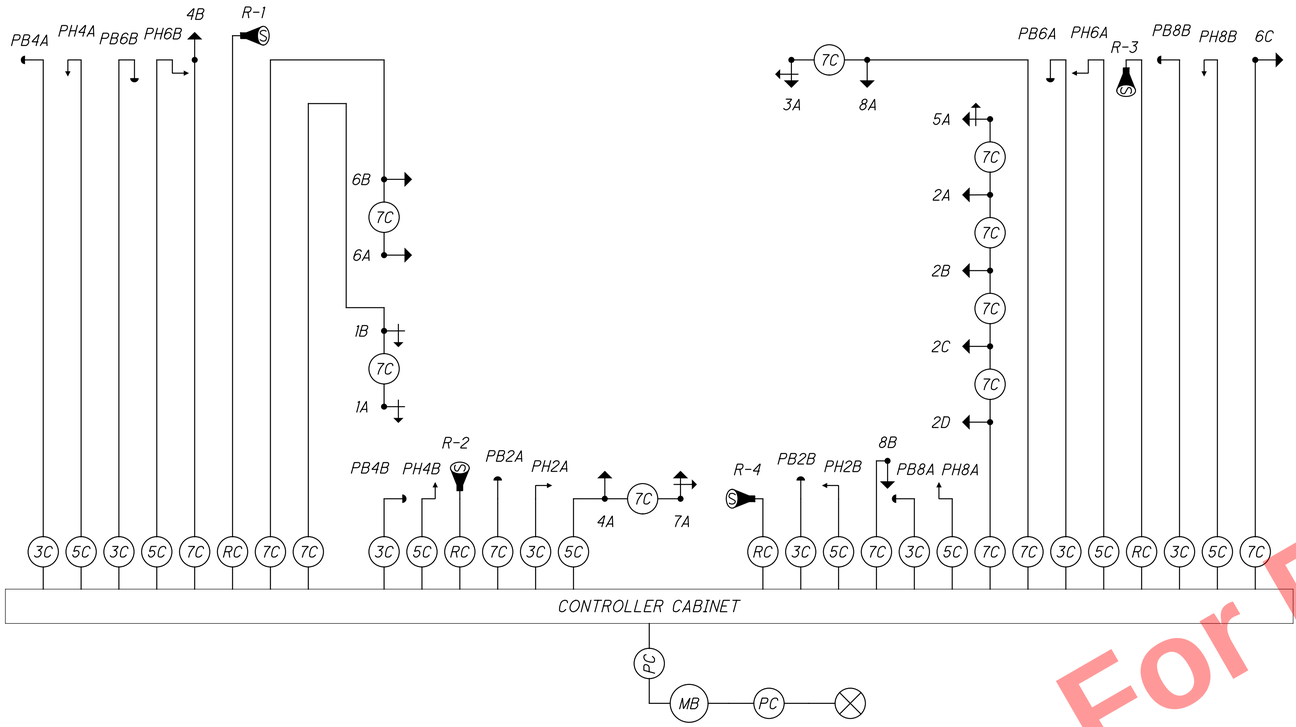

FIELD WIRING HOOK-UP CHART

SIGNAL HEAD	INDICATION	FIELD TERMINAL	FLASH
1A, 1B (WB LT)	<--R--	ϕ1 R	R
	<--Y--	ϕ1 Y	
	<--G--	ϕ1 G	
2A, 2B, 2C, 2D (EB)	R	ϕ2 R	R
	Y	ϕ2 Y	
	G	ϕ2 G	
3A (NB LT)	R	ϕ8 R	R
	Y	ϕ8 Y	
	G	ϕ8 G	
	<--Y--	ϕ3 Y	
	<--G--	ϕ3 G	
4A (SB)	R	ϕ4 R	R
	Y	ϕ4 Y	
	G	ϕ4 G	
4B (SB)	R	ϕ4 R	R
	Y	ϕ4 Y	
	G	ϕ4 G	
5A (EB LT)	R	ϕ2 R	R
	Y	ϕ2 Y	
	G	ϕ2 G	
	<--Y--	ϕ5 Y	
	<--G--	ϕ5 G	
6A, 6B (WB)	R	ϕ6 R	R
	Y	ϕ6 Y	
	G	ϕ6 G	

SIGNAL HEAD	INDICATION	FIELD TERMINAL	FLASH
6C (WB)	R	ϕ6 R	R
	Y	ϕ6 Y	
	G	ϕ6 G	
7A (SB LT)	R	ϕ4 R	R
	Y	ϕ4 Y	
	G	ϕ4 G	
	<--Y--	ϕ7 Y	
	<--G--	ϕ7 G	
8A (NB)	R	ϕ8 R	R
	Y	ϕ8 Y	
	G	ϕ8 G	
8B (NB)	R	ϕ8 R	R
	Y	ϕ8 Y	
	G	ϕ8 G	
PEDESTRIAN MOVEMENTS			
PED 2P	W	ϕ2 PED/LS 9 G	OUT
	DW	ϕ2 PED/LS 9 R	
PED 4P	W	ϕ4 PED/LS 10 G	OUT
	DW	ϕ4 PED/LS 10 R	
PED 6P	W	ϕ6 PED/LS 11 G	OUT
	DW	ϕ6 PED/LS 11 R	
PED 8P	W	ϕ8 PED/LS 12 G	OUT
	DW	ϕ8 PED/LS 12 R	

LS = LOAD SWITCH

LEGEND

- TRAFFIC SIGNAL, 4 OR 5 UNIT HEAD, 12"
- TRAFFIC SIGNAL, 2 UNIT, 3 UNIT, OR PHB HEAD 12"
- TRAFFIC SIGNAL, 3 UNIT HEAD, 12" WITH ARROWS
- PEDESTRIAN SIGNAL
- PEDESTRIAN PUSH BUTTON
- STOP LINE RADAR DETECTION UNIT
- 3C — SIGNAL CABLE, 3 CONDUCTOR, NO. 14 AWG
- 5C — SIGNAL CABLE, 5 CONDUCTOR, NO. 14 AWG
- 7C — SIGNAL CABLE, 7 CONDUCTOR, NO. 14 AWG
- RC — RADAR DETECTION CABLE
- POWER SOURCE
- PC — POWER CABLE, 2 CONDUCTOR, NO. 6 AWG
- MB — METER BASE

Preliminary Plans - For Reference Only

TRAFFIC SIGNAL PLAN DETAILS
CARNEGIE AVE. & E. 14TH ST.

DESIGN AGENCY
Michael Baker INTERNATIONAL

DESIGNER SED
REVIEWER RMG 05/22/24
PROJECT ID 82382
SHEET 1646 TOTAL 2696

CUY-90-16.28 (CCG3A)

MODEL: Sheet PAPERSIZE: 34x22 (in.) DATE: 3/27/2025 TIME: 7:35:04 PM USER: Maia.Gallagher
pw:\\mb-us-pw.bentley.com:mb-us-pw-03\Documents\Cleveland.OH\Oi_Projects\ODOT\District2\82382\400-Engineering\Signals\Sheets\82382_CPI003.dgn

Preliminary Plans - For Reference Only

PROPOSED SIGNS

S1 — R3-2-36

S2 — R3-1-36

S3 — R3-27-36

S4 — R3-5R-30

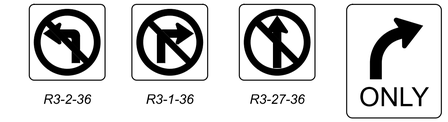

S5

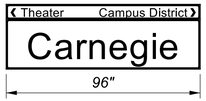

S6

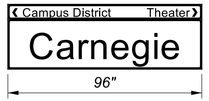

S7

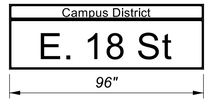

S8

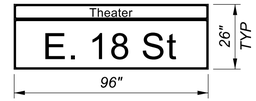



R10-3e-9

3 - LEFT ARROW (PS-2, PS-3, SP-4)
5 - RIGHT ARROW (PS-1, SP-2, SP-3, EX. LIGHT POLE, PS-4)

PS-1, 8' PEDESTAL WITH (1) PEDESTRIAN PUSH BUTTON "PB6B" AND (1) PEDESTRIAN SIGNAL HEAD "PH6B" STA. 41+28.2, 65.7' LT

(2)-4" CONDUIT WITH (2)-7/C, (2)-5/C, (2)-3/C, AND (1)-RC IN TRENCH IN PAVED AREA = 83'

(1)-2" CONDUIT WITH (1)-5/C AND (1)-3/C, IN TRENCH = 15'

PB-1

(1)-3" CONDUIT WITH (1)-7/C IN TRENCH = 5'

SP-1, TYPE TC-81.22, DESIGN 13 WITH 51' MAST ARM, STA. 41+19.2, 55.0' LT

(1)-2" CONDUIT WITH (1)-5/C AND (1)-3/C, IN TRENCH = 13'

PS-2, 8' PEDESTAL WITH (1) PEDESTRIAN PUSH BUTTON "PB4A" AND (1) PEDESTRIAN SIGNAL HEAD "PH4A" STA. 41+10.9, 51.3' LT

(2)-4" CONDUIT WITH (3)-7/C, (4)-5/C, (4)-3/C, AND (1)-RC, IN TRENCH IN PAVED AREA = 102'

SP-2, TYPE TC-81.22, DESIGN 4 WITH 25' MAST ARM, (1) PEDESTRIAN PUSH BUTTON "PB4B", (1) PEDESTRIAN SIGNAL HEAD "PH4B", (2) FRONT-MOUNTED VEHICULAR SIGNAL HEADS, AND (1) STOP LINE RADAR DETECTOR "R-1" STA. 41+02.2, 44.0' RT

PROPOSED POWER SOURCE WITH (1)-1" CONDUIT RISER STA. 41+00.0, 37.0' RT

(1)-2" CONDUIT WITH (1)-POWER IN TRENCH = 10'

PB-6

(1)-2" CONDUIT WITH (1)-POWER IN TRENCH = 5'

CONTROLLER CABINET STA. 41+01.8, 48.6' RT

(2)-4" CONDUIT WITH (6)-7/C, (8)-5/C, (8)-3/C, AND (2)-RC, IN TRENCH = 11'

(1)-3" CONDUIT WITH (2)-7/C, (1)-5/C, (1)-3/C, AND (1)-RC, IN TRENCH = 11'

PB-2

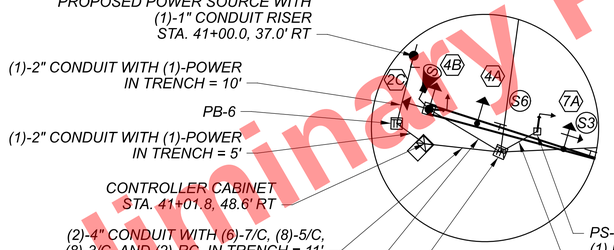

DETAIL A
NOT TO SCALE

SEE DETAIL A

PS-3, 8' PEDESTAL WITH (1) PEDESTRIAN PUSH BUTTON "PB2A" AND (1) PEDESTRIAN SIGNAL HEAD "PH2A" STA. 41+16.1, 47.4' RT

(1)-2" CONDUIT WITH (1)-5/C AND (1)-3/C, IN TRENCH = 5'

(2)-4" CONDUIT WITH (1)-7/C, (2)-5/C, AND (2)-3/C, IN TRENCH = 69'

PS-4, 8' PEDESTAL WITH (1) PEDESTRIAN PUSH BUTTON "PB2B" AND (1) PEDESTRIAN SIGNAL HEAD "PH2B" STA. 41+66.5, 58.3' RT

(1)-2" CONDUIT WITH (1)-5/C AND (1)-3/C, IN TRENCH = 19'

PB-5

(1)-3" CONDUIT WITH (1)-7/C, (1)-5/C, AND (1)-3/C, IN TRENCH = 22'

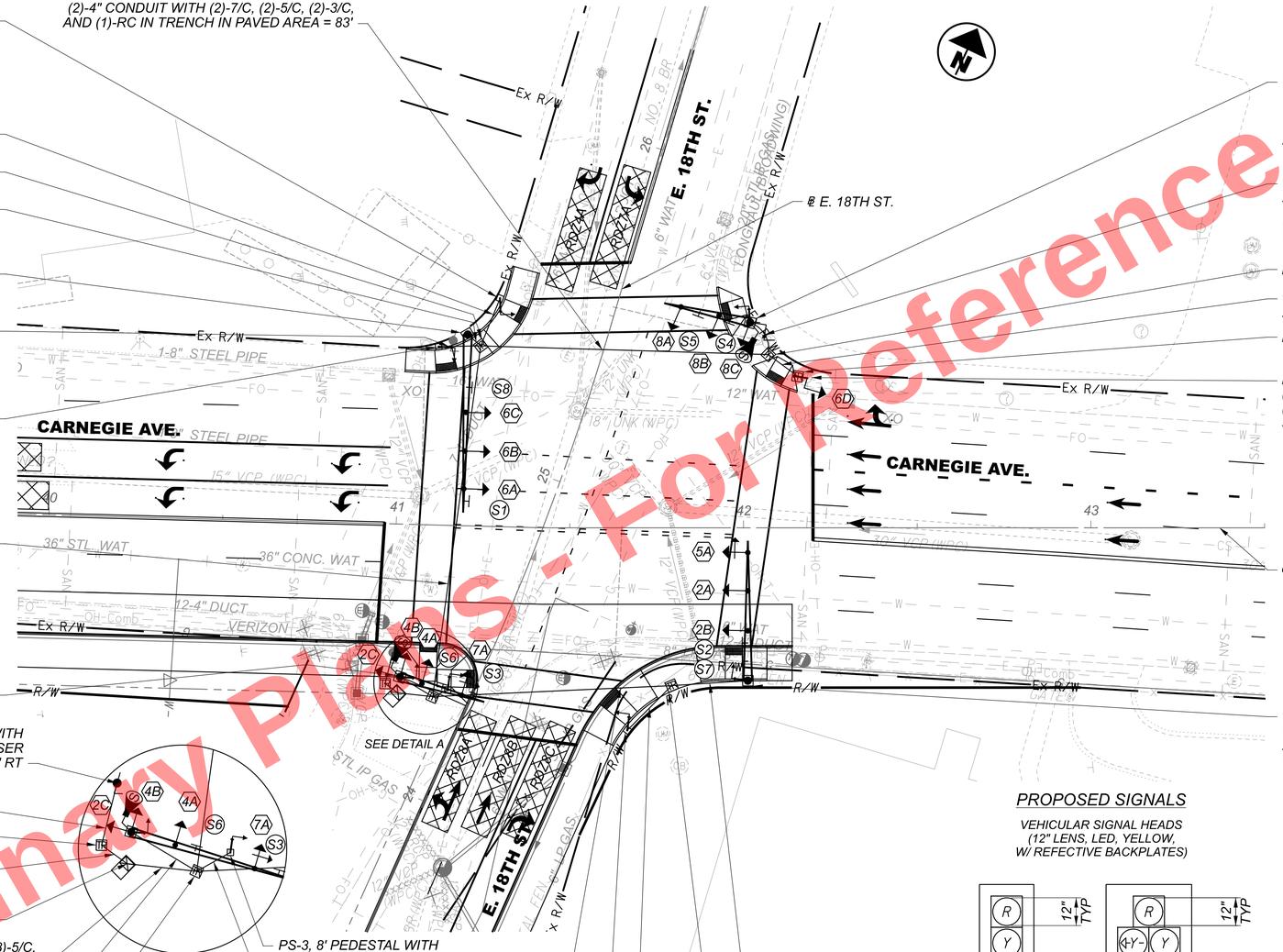

SP-3, TYPE TC-81.22, DESIGN 4 WITH 25' MAST ARM, (1) PEDESTRIAN PUSH BUTTON "PB6A", (2) PEDESTRIAN SIGNAL HEADS "PH6A" & "PH8B", (1) FRONT-MOUNTED VEHICULAR SIGNAL HEAD, AND (1) STOP LINE RADAR DETECTOR "R-2" STA. 42+01.9, 59.1' LT

(1)-3" CONDUIT WITH (1)-7/C, (2)-5/C, (1)-3/C, AND (1)-RC IN TRENCH IN PAVED AREA = 12' COORDINATE WITH CROWN CASTLE TO REMOVE EXISTING UTILITY CABINET BEFORE INSTALLING CONDUIT

PB-3

(1)-2" CONDUIT WITH (1)-7/C AND (1)-3/C IN TRENCH = 11'

PB-4

EX. LIGHT POLE WITH (1)-1" CONDUIT RISER, (1) PEDESTRIAN PUSH BUTTON "PB8B" AND (1) SIDE-MOUNTED VEHICULAR SIGNAL HEAD STA. 42+18.3, 43.1' LT

SP-4, TYPE TC-81.22, DESIGN 12 WITH 40' MAST ARM, (1) PEDESTRIAN PUSH BUTTON "PB8A", AND (1) PEDESTRIAN SIGNAL HEAD "PH8A" STA. 42+01.2, 44.0' RT

PROPOSED SIGNALS

VEHICULAR SIGNAL HEADS (12" LENS, LED, YELLOW, W/ REFECTIVE BACKPLATES)

2A, 2B, 2C, 4A, 4B, 6A, 6B, 6C, 6D, 8A, 8B, 8C

5A, 7A



PEDESTRIAN HEADS (LED, COUNTDOWN, TYPE D2)

TRAFFIC SIGNAL LEGEND

- TRAFFIC SIGNAL, 3 UNIT HEAD, 12"
- TRAFFIC SIGNAL, 3 UNIT HEAD, 12" WITH ARROWS
- TRAFFIC SIGNAL, 4 OR 5 UNIT HEAD, 12"
- CONTROLLER CABINET
- CONTROLLER CABINET WITH WORKPAD
- SIGNAL SUPPORT POLE
- PEDESTRIAN SIGNAL
- PEDESTRIAN PUSH BUTTON
- PEDESTAL SUPPORT
- TRAFFIC PULL BOX
- SIGNAL CONDUIT
- RADAR DETECTION ZONE
- RADAR DETECTOR

PULL BOX TABLE

PULL BOX #	STATION	SIDE	OFFSET	SIZE (IN.)
PB-1	41+23.0	LT	51.9	24 x 36
PB-2	41+11.8	RT	49.4	24 x 36
PB-3	42+07.1	LT	49.9	24 x 36
PB-4	42+15.6	LT	43.6	13 x 24
PB-5	41+79.3	RT	45.4	24 x 36
PB-6	40+98.0	RT	46.0	13 x 24

NOTE:

1. RADAR DETECTION LOCATION IS FOR REFRENCE ONLY. ACTUAL PLACEMENT WILL BE RECOMMENDED BY MANUFACTURER.

HORIZONTAL SCALE IN FEET
0 10 20 40

TRAFFIC SIGNAL PLAN
CARNEGIE AVE. & E. 18TH ST.

DESIGN AGENCY
Michael Baker INTERNATIONAL

DESIGNER SED
REVIEWER RMG 05/22/24
PROJECT ID 82382
SHEET 1647 TOTAL 2696

CUY-90-16.28 (CCG3A)

MODEL: 82382_CP2000 PAPERSIZE: 34x22 (In.) DATE: 3/27/2025 TIME: 7:35:21 PM USER: Mala.Gallagher
pw:\\mb-us-pw.bentley.commb-us-pw-03\Documents\Cleveland.OH\01_Projects\0007\District2\82382\400-Engineering\Signals\Sheets\82382_CP2000.dgn

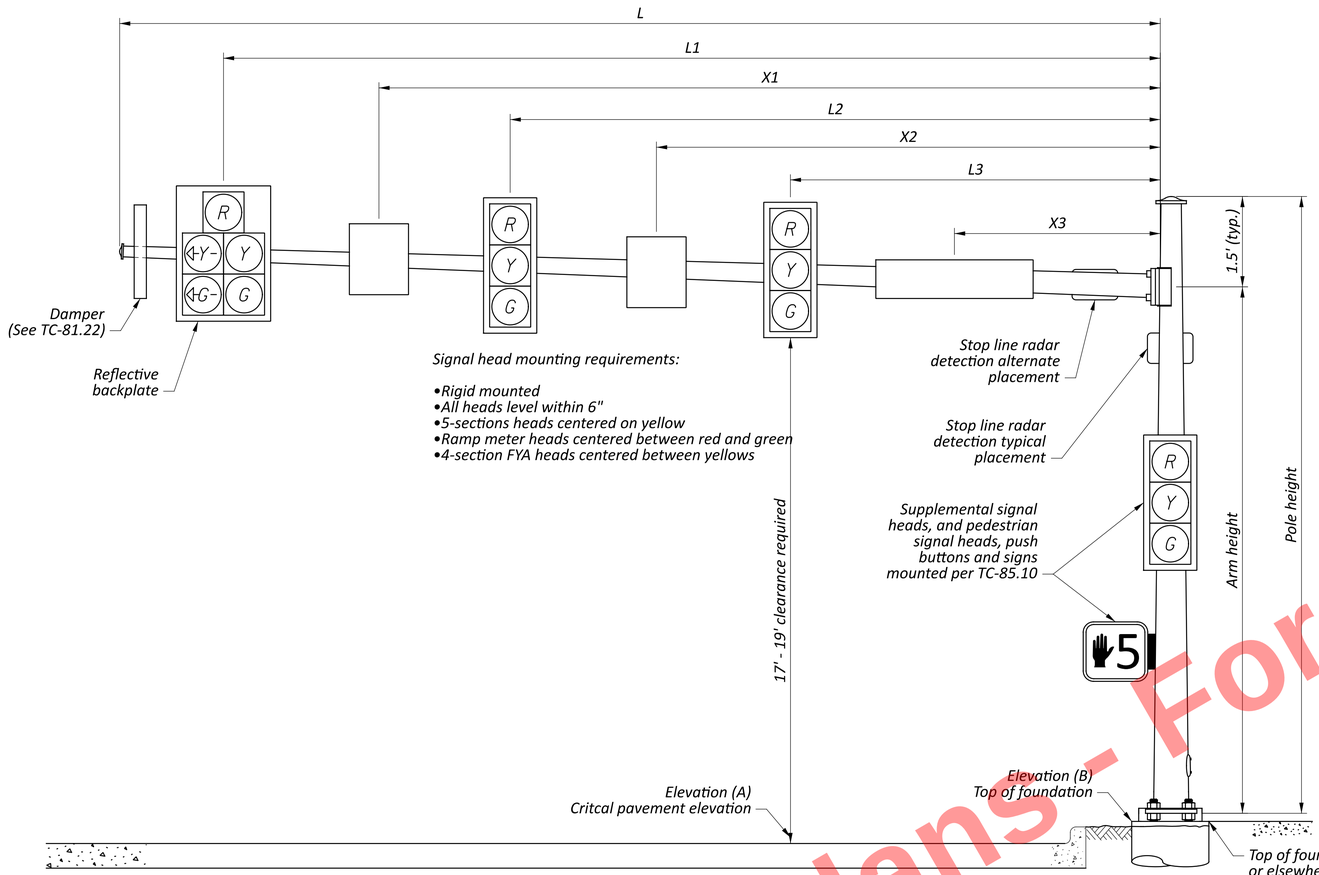

SIGNAL SUPPORT ELEVATION

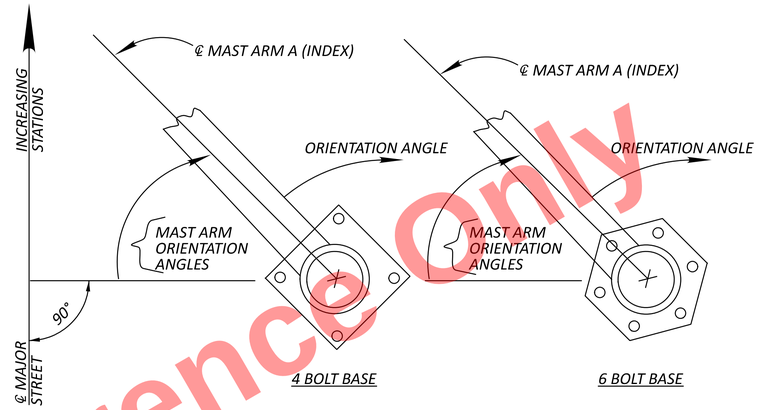

POLE ORIENTATION

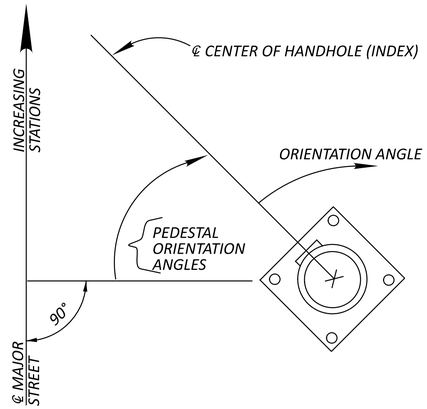

PEDESTAL ORIENTATION

MAST ARM TABLE

SUPPORT NO.	STATION	OFFSET	ELEVATION A (PAVEMENT ELEVATION)	ELEVATION B (TOP OF FOUNDATION)	SIGNAL SUPPORT DETAILS: DESIGN TYPE	DESIGN NO.	POLE HEIGHT	ARM HEIGHT	L	L1	L2	L3	L4	X1	X2	X3	X4	ORIENTATION ANGLES FROM MAST ARM A OR PEDESTAL HANDHOLE: MAST ARM A ANGLE	PEDESTRIAN SIGNAL	PEDESTRIAN PUSH BUTTON	PEDESTAL HANDHOLE ANGLE	SUPPLEMENTAL VEHICULAR SIGNAL
							FT	FT	FT	FT	FT	FT	FT	FT	FT	FT	FT	DEG	DEG	DEG	DEG	DEG
SP-1	41+19.2	55.0 LT	669.63	670.30	TC-81.22	13	21	19.5	51	44.5	33.5	22.5	-	48	15	-	-	0	-	-	-	-
SP-2	41+02.2	44.0 RT	669.54	669.53	TC-81.22	4	22	20.5	25	18.5	6.5	-	-	22	12.5	-	-	105	345	345	-	180 & 270
SP-3	42+01.9	59.1 LT	670.23	670.60	TC-81.22	4	21	19.5	25	20.5	9	-	-	14.5	5.5	-	-	105	75 & 175	75	-	280
SP-4	42+01.2	44.0 RT	669.51	669.87	TC-81.22	12	21	19.5	40	37	26	14.5	-	11	5.5	-	-	0	280	280	-	-
PS-1	41+28.2	65.7 LT	-	-	-	-	8	-	-	-	-	-	-	-	-	-	-	-	245	245	110	-
PS-2	41+10.9	51.3 LT	-	-	-	-	8	-	-	-	-	-	-	-	-	-	-	-	100	100	170	-
PS-3	41+16.1	47.4 RT	-	-	-	-	8	-	-	-	-	-	-	-	-	-	-	-	95	95	270	-
EX. LIGHT	42+18.3	43.1 LT	-	-	-	-	-	-	-	-	-	-	-	-	-	-	-	-	-	100	0*	15
PS-4	41+66.5	58.3 RT	-	-	-	-	8	-	-	-	-	-	-	-	-	-	-	-	240	240	125	-

* EXISTING POLE INDEX LINE PERPENDICULAR TO MAJOR STREET CENTER LINE.

Preliminary Plans - For Reference Only

CUY-90-16.28 (CCG3A)
MODEL: Sheet PAPERSIZE: 34x22 (in.) DATE: 3/27/2025 TIME: 7:35:48 PM USER: Mata.Gallagher
pw:\\mb-us-pw.bentley.com:mb-us-pw-03\Documents\Cleveland_OH\01_Projects\ODOT\District2\82382\400-Engineering\Signals\Sheets\82382_CP2001.dgn

TRAFFIC SIGNAL PLAN DETAILS
CARNEGIE AVE. & E. 18TH ST.

DESIGN AGENCY
Michael Baker INTERNATIONAL

DESIGNER SED
REVIEWER RMG 05/22/24
PROJECT ID 82382
SHEET 1648 TOTAL 2696

SIGNAL TIMING CHART

INTERSECTION: CARNEGIE AVE & E. 18TH ST									
MAINTAINING AGENCY: CITY OF CLEVELAND									
START UP		DUAL ENTRY: YES		PHASES:		2, 4, 6, 8			
		REST IN RED:		RING 1	-		RING 2	-	
START IN: ALL RED		OVERLAP			A	B	C	D	
TIME FOR FLASH, ALL RED: 5									
FIRST PHASE(S): 2 + 6		PHASES			-	-	-	-	
COLOR DISPLAYED: GREEN									
INTERVAL OR FEATURE		CONTROLLER MOVEMENT NO.							
INTERSECTION MOVEMENT (PHASE)		1	2	3	4	5	6	7	8
DIRECTION		-	EBT	-	SBT	EBL	WBT	SBL	NBT
MINIMUM GREEN (INITIAL)	(SEC.)	-	20	-	10	7	20	7	10
ADDED INITIAL	*(SEC./ACTUATION)	-	-	-	-	-	-	-	-
MAXIMUM INITIAL	*(SEC.)	-	-	-	-	-	-	-	-
PASSAGE TIME (PRESET GAP)	(SEC.)	-	-	-	3.0	-	-	3.0	3.0
TIME BEFORE REDUCTION	*(SEC.)	-	-	-	-	-	-	-	-
MINIMUM GAP	*(SEC.)	-	-	-	-	-	-	-	-
TIME TO REDUCE	*(SEC.)	-	-	-	-	-	-	-	-
MAXIMUM GREEN I	(SEC.)	-	60	-	60	10	60	20	60
MAXIMUM GREEN II	(SEC.)	-	-	-	-	-	-	-	-
YELLOW CHANGE	(SEC.)	-	3.4	-	4.1	3.4	3.4	3.0	4.1
ALL RED CLEARANCE	(SEC.)	-	1.4	-	1.1	1.4	1.4	1.9	1.1
DELAYED GREEN (LPI) #	(SEC.)	-	-	-	-	-	-	-	-
WALK	(SEC.)	-	7	-	8	-	7	-	7
FLASHING YELLOW ARROW DELAY °		-	-	-	-	-	-	-	-
PEDESTRIAN CLEARANCE	(SEC.)	-	8	-	19	-	13	-	18
RECALL	MAXIMUM (ON/OFF)	-	OFF	-	OFF	OFF	OFF	OFF	OFF
	MINIMUM (ON/OFF)	-	ON	-	OFF	ON	ON	OFF	OFF
	PEDESTRIAN (ON/OFF)	-	OFF	-	OFF	OFF	OFF	OFF	OFF
MEMORY	(ON/OFF)	-	OFF	-	OFF	OFF	OFF	OFF	OFF

NOTES:

- THE PRIMARY THRU MOVEMENT SHOULD HAVE MIN RECALL ACTIVE TO REST IN GREEN.
- ENABLE ϕ7 DETECTOR SWITCHING TO ALLOW ϕ7 TO EXTEND ϕ4, WHEN ALLOCATED GREEN TIME FOR LEFT TURN PHASE IS EXHAUSTED.
- COUNTDOWN PEDESTRIAN SIGNALS SHALL GO TO ZERO ON YELLOW PER OMUTCD FIGURE 4E-2.
- ALL DETECTOR DELAYS SHALL BE PLACED IN THE CONTROLLER.

PHASING DIAGRAM

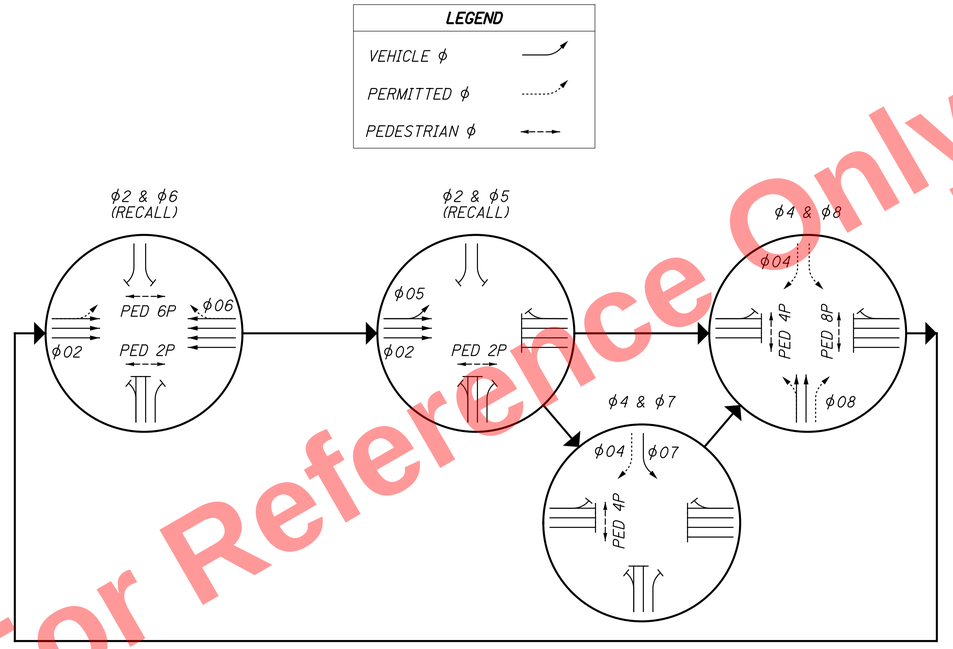

RADAR DETECTION CHART

DETECTION ZONE	MOVEMENT	WIDTH	ASSOCIATED PHASE	DELAY PROGRAMMED IN CONTROLLER (SEC)	EXTENSION PROGRAMMED IN CONTROLLER (SEC)	DETECTOR NUMBER	PURPOSE	DETECTION ZONE LENGTH (FT)
RDZ7A	SBL	8	ϕ7	0	3	R-1	STOP LINE	35
RDZ4A	SBT	8	ϕ4	8	3	R-1	STOP LINE	35
RDZ8A	NBT	8	ϕ8	0	3	R-2	STOP LINE	35
RDZ8B	NBT	8	ϕ8	0	3	R-2	STOP LINE	35
RDZ8C	NBT	8	ϕ8	8	3	R-2	STOP LINE	35

Preliminary Plans - For Reference Only

MODEL: Sheet PAPERSIZE: 34x22 (in.) DATE: 3/27/2025 TIME: 7:35:53 PM USER: Mala.Gallagher
pw:\\mb-us-pw.bentley.com:mb-us-pw-03\Documents\Cleveland.OH\OI_Projects\ODOT\District12\82382\400-Engineering\Signals\Sheets\82382_CP2002.dgn

CUY-90-16.28 (CCG3A)

TRAFFIC SIGNAL PLAN DETAILS
CARNEGIE AVE. & E. 18TH ST.

DESIGN AGENCY
Michael Baker INTERNATIONAL

DESIGNER SED
REVIEWER RMG 05/22/24
PROJECT ID 82382
SHEET 1649 TOTAL 2696

WIRING DIAGRAM

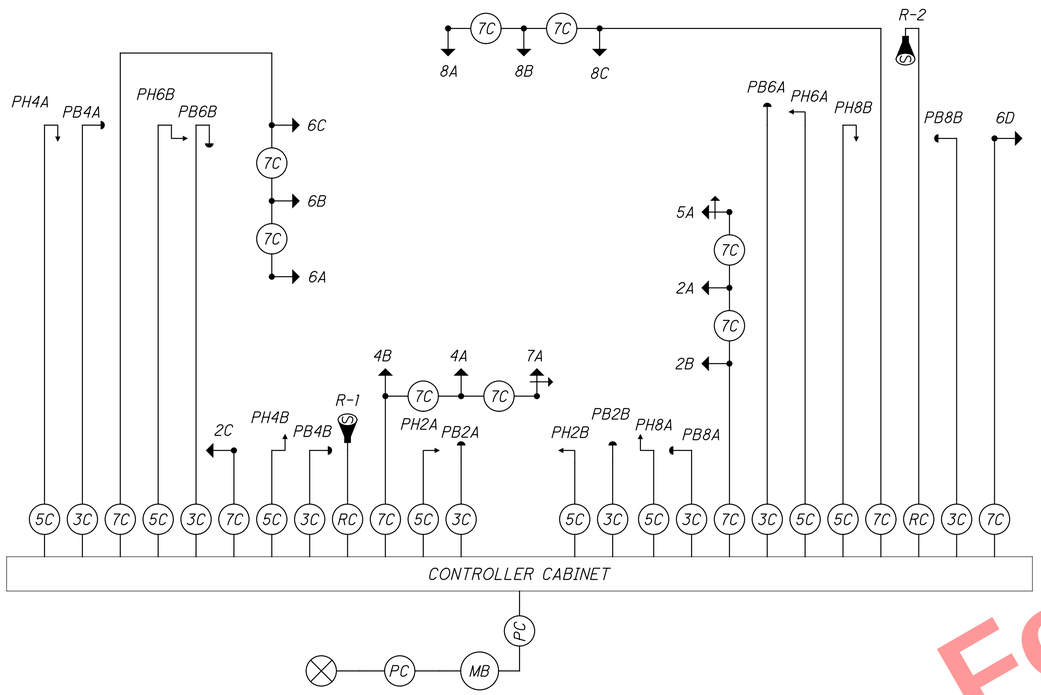

FIELD WIRING HOOK-UP CHART

SIGNAL HEAD	INDICATION	FIELD TERMINAL	FLASH
2A, 2B (EB)	R	ϕ2 R	R
	Y	ϕ2 Y	
	G	ϕ2 G	
2C (EB)	R	ϕ2 R	R
	Y	ϕ2 Y	
	G	ϕ2 G	
4A, 4B (SB)	R	ϕ4 R	R
	Y	ϕ4 Y	
	G	ϕ4 G	
5A (EB LT)	R	ϕ2 R	R
	Y	ϕ2 Y	
	G	ϕ2 G	
	<--Y--	ϕ5 Y	
	<--G--	ϕ5 G	
6A, 6B, 6C (WB)	R	ϕ6 R	R
	Y	ϕ6 Y	
	G	ϕ6 G	

SIGNAL HEAD	INDICATION	FIELD TERMINAL	FLASH
6D (WB)	R	ϕ6 R	R
	Y	ϕ6 Y	
	G	ϕ6 G	
7A (SB LT)	R	ϕ4 R	R
	Y	ϕ4 Y	
	G	ϕ4 G	
	<--Y--	ϕ7 Y	
	<--G--	ϕ7 G	
8A, 8B, 8C (NB)	R	ϕ8 R	R
	Y	ϕ8 Y	
	G	ϕ8 G	
PEDESTRIAN MOVEMENTS			
PED 2P	W	ϕ2 PED/LS 9 G	OUT
	DW	ϕ2 PED/LS 9 R	
PED 4P	W	ϕ4 PED/LS 10 G	OUT
	DW	ϕ4 PED/LS 10 R	
PED 6P	W	ϕ6 PED/LS 11 G	OUT
	DW	ϕ6 PED/LS 11 R	
PED 8P	W	ϕ8 PED/LS 12 G	OUT
	DW	ϕ8 PED/LS 12 R	

LS = LOAD SWITCH

LEGEND

- TRAFFIC SIGNAL, 4 OR 5 UNIT HEAD, 12"
- TRAFFIC SIGNAL, 2 UNIT, 3 UNIT, OR PHB HEAD 12"
- TRAFFIC SIGNAL, 3 UNIT HEAD, 12" WITH ARROWS
- PEDESTRIAN SIGNAL
- PEDESTRIAN PUSH BUTTON
- STOP LINE RADAR DETECTION UNIT
- 3C — SIGNAL CABLE, 3 CONDUCTOR, NO. 14 AWG
- 5C — SIGNAL CABLE, 5 CONDUCTOR, NO. 14 AWG
- 7C — SIGNAL CABLE, 7 CONDUCTOR, NO. 14 AWG
- RC — RADAR DETECTION CABLE
- POWER SOURCE
- PC — POWER CABLE, 2 CONDUCTOR, NO. 6 AWG
- MB — METER BASE

Preliminary Plans - For Reference Only

TRAFFIC SIGNAL PLAN DETAILS
CARNEGIE AVE. & E. 18TH ST.

DESIGN AGENCY
Michael Baker INTERNATIONAL

DESIGNER SED
REVIEWER RMG 05/22/24
PROJECT ID 82382
SHEET 1650 TOTAL 2696

CUY-90-16.28 (CCG3A)

MODEL: Sheet PAPERSIZE: 34x22 (in.) DATE: 3/27/2025 TIME: 7:35:58 PM USER: MaloGallagher
pw:\\mb-us-pw.bentley.com:mb-us-pw-03\Documents\Cleveland.OH\OI_Projects\ODOT\District2\82382\400-Engineering\Signals\Sheets\82382_CP2003.dgn

PROPOSED SIGNALS

VEHICULAR SIGNAL HEADS
(12" LENS, LED, YELLOW,
W/ REFLECTIVE BACKPLATES)

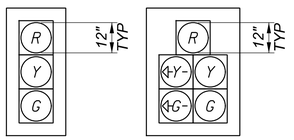

2A, 2B, 2C, 2D,
4A, 4B, 4C, 4D,
6A, 6B, 6C

1A



PEDESTRIAN HEADS
(LED, COUNTDOWN,
TYPE D2)

PROPOSED POWER SOURCE WITH
(1)-1" CONDUIT RISER
STA. 49+64.0, 68.3' LT

(1)-2" CONDUIT WITH (1)-POWER
IN TRENCH IN PAVED AREA = 7'

PB-5

(1)-2" CONDUIT WITH (1)-POWER
IN TRENCH IN PAVED AREA = 16'

CONTROLLER CABINET
STA. 49+43.5, 64.0' LT



R10-3e-9
4 - LEFT ARROW
(PS-1, SP-2, PS-3, SP-3)
4 - RIGHT ARROW
(SP-1, PS-2, PS-4, PS-5)

PROPOSED SIGNS



R3-2-36



R3-1-36

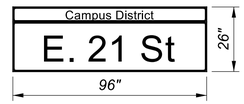

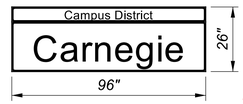

(2)-4" CONDUIT WITH (6)-7/C, (8)-5/C, (8)-3/C,
AND (2)-RC, IN TRENCH IN PAVED AREA = 19'

SP-1, TYPE TC-81.22, DESIGN 13 WITH, 53' MAST ARM,
(1) PEDESTRIAN PUSH BUTTON "PB6B",
(1) PEDESTRIAN SIGNAL HEAD "PH6B",
(1) SIDE-MOUNTED VEHICULAR SIGNAL HEAD
AND (1) STOP LINE RADAR DETECTOR "R-1"
STA. 49+45.4, 51.1' LT

(1)-3" CONDUIT WITH (2)-7/C, (1)-5/C, (1)-3/C,
AND (1)-RC, IN TRENCH IN PAVED AREA = 8'

PB-1

(1)-2" CONDUIT WITH (1)-7/C, (1)-5/C, AND
(1)-3/C, IN TRENCH IN PAVED AREA = 9'

PS-1, 15' PEDESTAL WITH
(1) PEDESTRIAN PUSH BUTTON "PB4A",
(1) PEDESTRIAN SIGNAL HEAD "PH4A", AND
(1) FRONT MOUNTED VEHICULAR SIGNAL HEAD
STA. 49+34.4, 39.8' LT

℄ CONST. CARNEGIE AVE.

(2)-4" CONDUIT WITH (3)-7/C, (4)-5/C,
(4)-3/C, AND (1)-RC, IN TRENCH = 108'

PS-2, 15' PEDESTAL WITH
(1) PEDESTRIAN PUSH BUTTON "PB4B",
(1) PEDESTRIAN SIGNAL HEAD "PH4B", AND
(1) SIDE-MOUNTED VEHICULAR SIGNAL HEAD
STA. 49+11.4, 55.1' RT

(1)-2" CONDUIT WITH (1)-7/C, (1)-5/C,
AND (1)-3/C, IN TRENCH = 13'

PB-2

(1)-3" CONDUIT WITH (1)-7/C, (1)-5/C,
(1)-3/C, AND (1)-RC, IN TRENCH = 20'

SP-2, TYPE TC-81.22, DESIGN 4 WITH 36' MAST ARM,
(1) PEDESTRIAN PUSH BUTTON "PB2A",
(1) PEDESTRIAN SIGNAL HEAD "PH2A",
AND (1) STOP LINE RADAR DETECTOR "R-2"
STA. 49+39.1, 70.8' RT

℄ E. 21ST ST.

(2)-4" CONDUIT WITH (2)-5/C
AND (2)-3/C, IN TRENCH = 91'

PS-3, 8' PEDESTAL WITH
(1) PEDESTRIAN PUSH BUTTON "PB6A"
AND (1) PEDESTRIAN SIGNAL HEAD "PH6A"
STA. 50+19.8, 61.9' LT

(1)-2" CONDUIT WITH (1)-5/C
AND (1)-3/C, IN TRENCH = 8'

PB-3

(1)-2" CONDUIT WITH (1)-5/C
AND (1)-3/C, IN TRENCH = 9'

PS-4, 8' PEDESTAL WITH
(1) PEDESTRIAN PUSH BUTTON "PB4D" AND
(1) PEDESTRIAN SIGNAL HEAD "PH4D"
STA. 50+30.3, 52.4' LT

SP-3, TYPE TC-81.22, DESIGN 12 WITH 46' MAST ARM,
(1) PEDESTRIAN PUSH BUTTON "PB4C"
AND (1) PEDESTRIAN SIGNAL HEAD "PH4C"
STA. 50+21.3, 53.5' RT

(2)-4" CONDUIT WITH (1)-7/C, (2)-5/C,
AND (2)-3/C, IN TRENCH = 80'

PS-5, 8' PEDESTAL WITH
(1) PEDESTRIAN PUSH BUTTON "PB2B"
AND (1) PEDESTRIAN SIGNAL HEAD "PH2B"
STA. 49+95.8, 68.1' RT

PB-4

(1)-3" CONDUIT WITH (1)-7/C, (1)-5/C,
AND (1)-3/C, IN TRENCH = 17'

(1)-2" CONDUIT WITH (1)-5/C
AND (1)-3/C, IN TRENCH = 18'

TRAFFIC SIGNAL LEGEND

- TRAFFIC SIGNAL, 3 UNIT HEAD, 12"
- TRAFFIC SIGNAL, 3 UNIT HEAD, 12" WITH ARROWS
- TRAFFIC SIGNAL, 4 OR 5 UNIT HEAD, 12"
- CONTROLLER CABINET
- CONTROLLER CABINET WITH WORKPAD
- SIGNAL SUPPORT POLE
- PEDESTRIAN SIGNAL
- PEDESTRIAN PUSH BUTTON
- PEDESTAL SUPPORT
- TRAFFIC PULL BOX
- SIGNAL CONDUIT
- RADAR DETECTION ZONE
- RADAR DETECTOR

PULL BOX TABLE

PULL BOX #	STATION	SIDE	OFFSET	SIZE (IN.)
PB-1	49+40.5	LT	45.6	24 x 36
PB-2	49+23.0	RT	60.0	24 x 36
PB-3	50+27.3	LT	60.5	24 x 36
PB-4	50+04.2	RT	52.2	24 x 36
PB-5	49+58.0	LT	67.0	13 x 24

NOTE:

1. RADAR DETECTION LOCATION IS FOR REFERENCE ONLY, ACTUAL PLACEMENT WILL BE RECOMMENDED BY MANUFACTURER

Preliminary Plans - For Reference Only

HORIZONTAL
SCALE IN FEET
0 10 20 40

TRAFFIC SIGNAL PLAN
CARNEGIE AVE. & E. 21ST ST.

DESIGN AGENCY
Michael Baker INTERNATIONAL

DESIGNER SED
REVIEWER RMG 05/22/24
PROJECT ID 82382
SHEET 1651 TOTAL 2696

CUY-90-16.28 (CCG3A)

MODEL: 82382_CP3000 PAPERSIZE: 34x22 (in.) DATE: 3/27/2025 TIME: 7:36:18 PM USER: Mala.Gallagher
pw:\\mb-us-pw.bentley.com:mb-us-pw-03\Documents\Cleveland.OH\Oi_Projects\ODOT\District2\82382\400-Engineering\Signals\Sheets\82382_CP3000.dgn

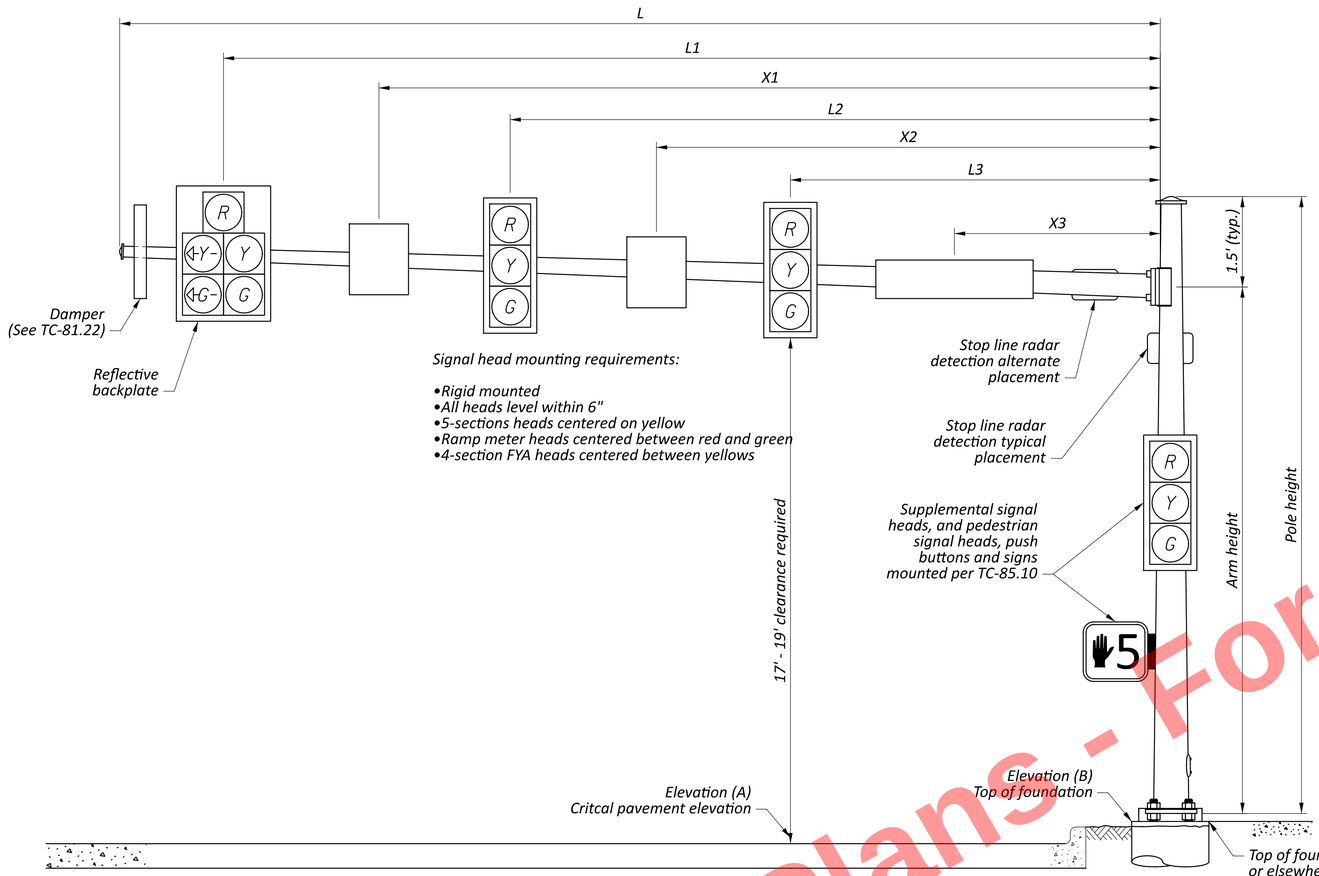

SIGNAL SUPPORT ELEVATION

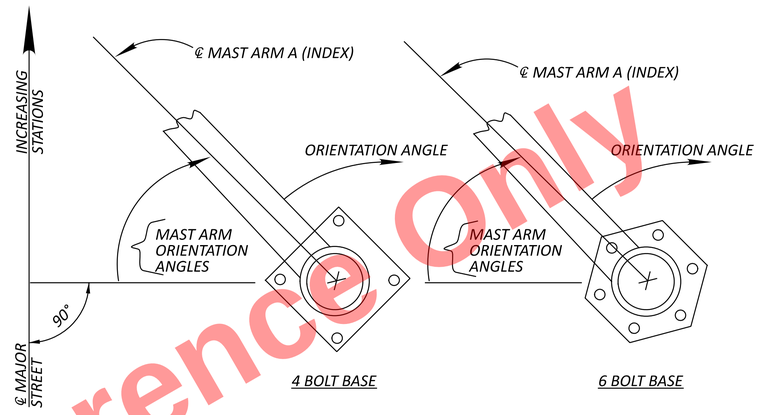

POLE ORIENTATION

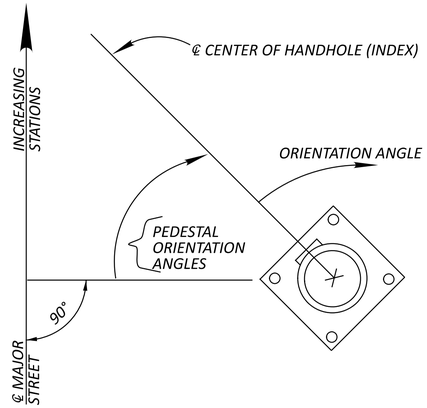

PEDESTAL ORIENTATION

MAST ARM TABLE

SUPPORT NO.	STATION	OFFSET	ELEVATION A (PAVEMENT ELEVATION)	ELEVATION B (TOP OF FOUNDATION)	SIGNAL SUPPORT DETAILS: DESIGN TYPE	DESIGN NO.	POLE HEIGHT	ARM HEIGHT	L	L1	L2	L3	L4	X1	X2	X3	X4	ORIENTATION ANGLES FROM MAST ARM A OR PEDESTAL HANDHOLE: MAST ARM A ANGLE	PEDESTRIAN SIGNAL	PEDESTRIAN PUSH BUTTON	PEDESTAL HANDHOLE ANGLE	SUPPLEMENTAL VEHICULAR SIGNAL
							FT	FT	FT	FT	FT	FT	FT	FT	FT	FT	FT	DEG	DEG	DEG	DEG	DEG
SP-1	49+45.4	51.1 LT	671.83	671.44	TC-81.22	13	22	20.5	53	50	40	29	-	25.5	15	-	-	0	350	350	-	315
SP-2	49+39.1	70.8 RT	671.87	672.00	TC-81.22	4	22	20.5	36	33	21.5	10	-	5	-	-	-	105	255	255	-	-
SP-3	50+21.3	53.5 RT	672.29	672.60	TC-81.22	12	22	20.5	46	39	28.5	18	-	42.5	10.5	-	-	0	275	275	-	-
PS-1	49+34.4	39.8 LT	-	-	-	-	15	-	-	-	-	-	-	-	-	-	-	-	110	110	175	100
PS-2	49+11.4	55.1 RT	-	-	-	-	15	-	-	-	-	-	-	-	-	-	-	-	275	275	190	180
PS-3	50+19.8	61.9 LT	-	-	-	-	8	-	-	-	-	-	-	-	-	-	-	-	90	90	260	-
PS-4	50+30.3	52.4 LT	-	-	-	-	8	-	-	-	-	-	-	-	-	-	-	-	260	260	195	-
PS-5	49+95.8	68.1 RT	-	-	-	-	8	-	-	-	-	-	-	-	-	-	-	-	255	255	105	-

Preliminary Plans - For Reference Only

CUY-90-16.28 (CCG3A)
MODEL: Sheet PAPERSIZE: 34x22 (in.) DATE: 3/27/2025 TIME: 7:36:45 PM USER: Maia.Gallagher
pw:\\mb-us-pw.bentley.com:mb-us-pw-03\Documents\Cleveland.OH\OI_Projects\ODOT\District2\82382\400-Engineering\Signals\Sheets\82382_CP300i.dgn

TRAFFIC SIGNAL PLAN DETAILS
CARNEGIE AVE. & E. 21ST ST.

DESIGN AGENCY
Michael Baker INTERNATIONAL

DESIGNER
SED

REVIEWER
RMG 05/22/24

PROJECT ID
82382

SHEET 1652 | TOTAL 2696

SIGNAL TIMING CHART

INTERSECTION: CARNEGIE AVE & E. 21ST ST									
MAINTAINING AGENCY: CITY OF CLEVELAND									
START UP		DUAL ENTRY: YES		PHASES:		2, 6			
		REST IN RED:		RING 1	-		RING 2	-	
START IN: ALL RED		OVERLAP			A	B	C	D	
TIME FOR FLASH, ALL RED: 5									
FIRST PHASE(S): 2 + 6		PHASES			-	-	-	-	
COLOR DISPLAYED: GREEN									
INTERVAL OR FEATURE		CONTROLLER MOVEMENT NO.							
INTERSECTION MOVEMENT (PHASE)		1	2	3	4	5	6	7	8
DIRECTION		WBL	EBT	-	SBT	-	WBT	-	-
MINIMUM GREEN (INITIAL)	(SEC.)	7	20	-	10	-	20	-	-
ADDED INITIAL	*(SEC./ACTUATION)	-	-	-	-	-	-	-	-
MAXIMUM INITIAL	*(SEC.)	-	-	-	-	-	-	-	-
PASSAGE TIME (PRESET GAP)	(SEC.)	3.0	-	-	3.0	-	-	-	-
TIME BEFORE REDUCTION	*(SEC.)	-	-	-	-	-	-	-	-
MINIMUM GAP	*(SEC.)	-	-	-	-	-	-	-	-
TIME TO REDUCE	*(SEC.)	-	-	-	-	-	-	-	-
MAXIMUM GREEN I	(SEC.)	30	60	-	60	-	60	-	-
MAXIMUM GREEN II	(SEC.)	-	-	-	-	-	-	-	-
YELLOW CHANGE	(SEC.)	3.0	3.4	-	3.4	-	3.4	-	-
ALL RED CLEARANCE	(SEC.)	2.1	1.4	-	2.0	-	1.4	-	-
DELAYED GREEN (LPI) #	(SEC.)	-	-	-	-	-	-	-	-
WALK	(SEC.)	-	7	-	8	-	7	-	-
FLASHING YELLOW ARROW DELAY °		-	-	-	-	-	-	-	-
PEDESTRIAN CLEARANCE	(SEC.)	-	10	-	23	-	15	-	-
RECALL	MAXIMUM (ON/OFF)	OFF	OFF	-	OFF	-	OFF	-	-
	MINIMUM (ON/OFF)	OFF	ON	-	OFF	-	ON	-	-
	PEDESTRIAN (ON/OFF)	OFF	OFF	-	OFF	-	OFF	-	-
MEMORY	(ON/OFF)	OFF	OFF	-	OFF	-	OFF	-	-

NOTES:

- THE PRIMARY THRU MOVEMENT SHOULD HAVE MIN RECALL ACTIVE TO REST IN GREEN.
- COUNTDOWN PEDESTRIAN SIGNALS SHALL GO TO ZERO ON YELLOW PER OMUTCD FIGURE 4E-2.
- ALL DETECTOR DELAYS SHALL BE PLACED IN THE CONTROLLER.

PHASING DIAGRAM

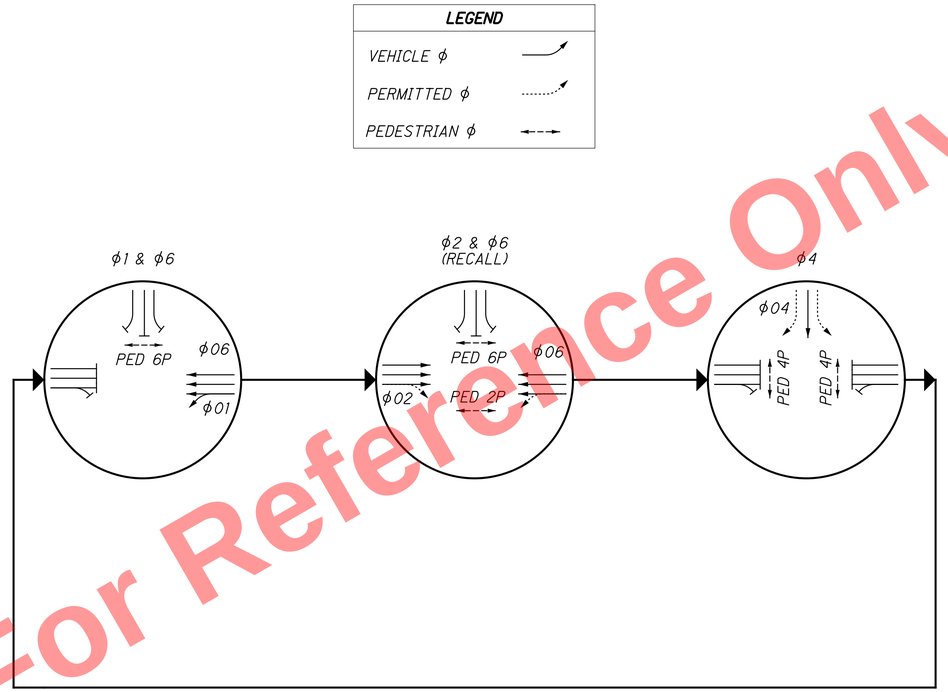

RADAR DETECTION CHART

DETECTION ZONE	MOVEMENT	WIDTH	ASSOCIATED PHASE	DELAY PROGRAMMED IN CONTROLLER (SEC)	EXTENSION PROGRAMMED IN CONTROLLER (SEC)	DETECTOR NUMBER	PURPOSE	DETECTION ZONE LENGTH (FT)
RDZ1A	WBL	8	ϕ1	0	3	R-1	STOP LINE	35
RDZ4A	SBT	8	ϕ4	0	3	R-2	STOP LINE	35
RDZ4B	SBT	8	ϕ4	0	3	R-2	STOP LINE	35
RDZ4C	SBT	8	ϕ4	8	3	R-2	STOP LINE	35

Preliminary Plans - For Reference Only

TRAFFIC SIGNAL PLAN DETAILS
CARNEGIE AVE. & E. 21ST ST.

DESIGN AGENCY
Michael Baker INTERNATIONAL

DESIGNER SED
REVIEWER RMG 05/22/24
PROJECT ID 82382
SHEET 1653 TOTAL 2696

CUY-90-16.28 (CCG3A)

MODEL: Sheet PAPERSIZE: 34x22 (in.) DATE: 3/27/2025 TIME: 7:36:51 PM USER: Mala.Gallagher
pw:\\mb-us-pw.bentley.com:mb-us-pw-03\Documents\Cleveland.OH\Oi_Projects\ODOT\District2\82382\400-Engineering\Signals\Sheets\82382_CP3002.dgn

WIRING DIAGRAM

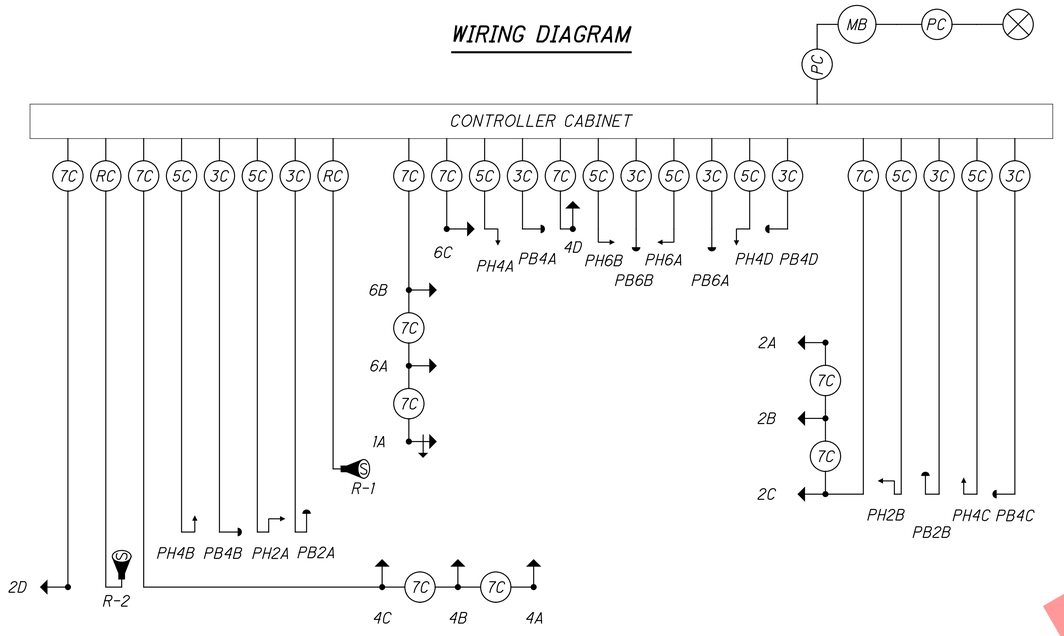

FIELD WIRING HOOK-UP CHART

SIGNAL HEAD	INDICATION	FIELD TERMINAL	FLASH
1A (WB LT)	R	ϕ6 R	R
	Y	ϕ6 Y	
	G	ϕ6 G	
	<--Y--	ϕ1 Y	
	<--G--	ϕ1 G	
2A, 2B, 2C (EB)	R	ϕ2 R	R
	Y	ϕ2 Y	
	G	ϕ2 G	
2D (EB)	R	ϕ2 R	R
	Y	ϕ2 Y	
	G	ϕ2 G	
4A, 4B, 4C (SB)	R	ϕ4 R	R
	Y	ϕ4 Y	
	G	ϕ4 G	
4D (SB)	R	ϕ4 R	R
	Y	ϕ4 Y	
	G	ϕ4 G	

SIGNAL HEAD	INDICATION	FIELD TERMINAL	FLASH
6A, 6B (WB)	R	ϕ6 R	R
	Y	ϕ6 Y	
	G	ϕ6 G	
6C (WB)	R	ϕ6 R	R
	Y	ϕ6 Y	
	G	ϕ6 G	
PEDESTRIAN MOVEMENTS			
PED 2P	W	ϕ2 PED/LS 9 G	OUT
	DW	ϕ2 PED/LS 9 R	
PED 4P	W	ϕ4 PED/LS 10 G	OUT
	DW	ϕ4 PED/LS 10 R	
PED 6P	W	ϕ6 PED/LS 11 G	OUT
	DW	ϕ6 PED/LS 11 R	

LS = LOAD SWITCH

LEGEND

- TRAFFIC SIGNAL, 4 OR 5 UNIT HEAD, 12"
- TRAFFIC SIGNAL, 2 UNIT, 3 UNIT, OR PHB HEAD 12"
- TRAFFIC SIGNAL, 3 UNIT HEAD, 12" WITH ARROWS
- PEDESTRIAN SIGNAL
- PEDESTRIAN PUSH BUTTON
- STOP LINE RADAR DETECTION UNIT
- 3C — SIGNAL CABLE, 3 CONDUCTOR, NO. 14 AWG
- 5C — SIGNAL CABLE, 5 CONDUCTOR, NO. 14 AWG
- 7C — SIGNAL CABLE, 7 CONDUCTOR, NO. 14 AWG
- RC — RADAR DETECTION CABLE
- POWER SOURCE
- PC — POWER CABLE, 2 CONDUCTOR, NO. 6 AWG
- MB — METER BASE

Preliminary Plans - For Reference Only

TRAFFIC SIGNAL PLAN DETAILS
CARNEGIE AVE. & E. 21ST ST.

DESIGN AGENCY
Michael Baker INTERNATIONAL

DESIGNER SED
REVIEWER RMG 05/22/24
PROJECT ID 82382
SHEET 1654 TOTAL 2696

CUY-90-16.28 (CCG3A)

MODEL: Sheet PAPERSIZE: 34x22 (in.) DATE: 3/27/2025 TIME: 7:36:57 PM USER: Mala.Gallagher
pw:\\mb-us-pw.bentley.com:mb-us-pw-03\Documents\Cleveland.OH\Oi_Projects\ODOT\District2\82382\400-Engineering\Signals\Sheets\82382_CP3003.dgn

PROPOSED SIGNALS

VEHICULAR SIGNAL HEADS
(12" LENS, LED, YELLOW,
W/ REFLECTIVE BACKPLATES)

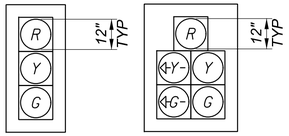

2A, 2B, 2C, 4A,
4B, 4C, 6A, 6B,
6C, 6D, 8A, 8B, 8C

5A



PEDESTRIAN HEADS
(LED, COUNTDOWN,
TYPE D2)

PROPOSED SIGNS



R10-3e-9
4 - LEFT ARROW
(SP-1, SP-2, SP-4, PS-4)
4 - RIGHT ARROW
(PS-1, PS-2, SP-3, PS-3)

S1



R3-5R-30

S2



R10-12-30

S3

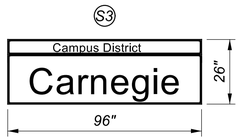

S4

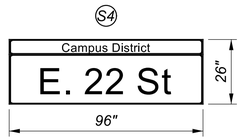

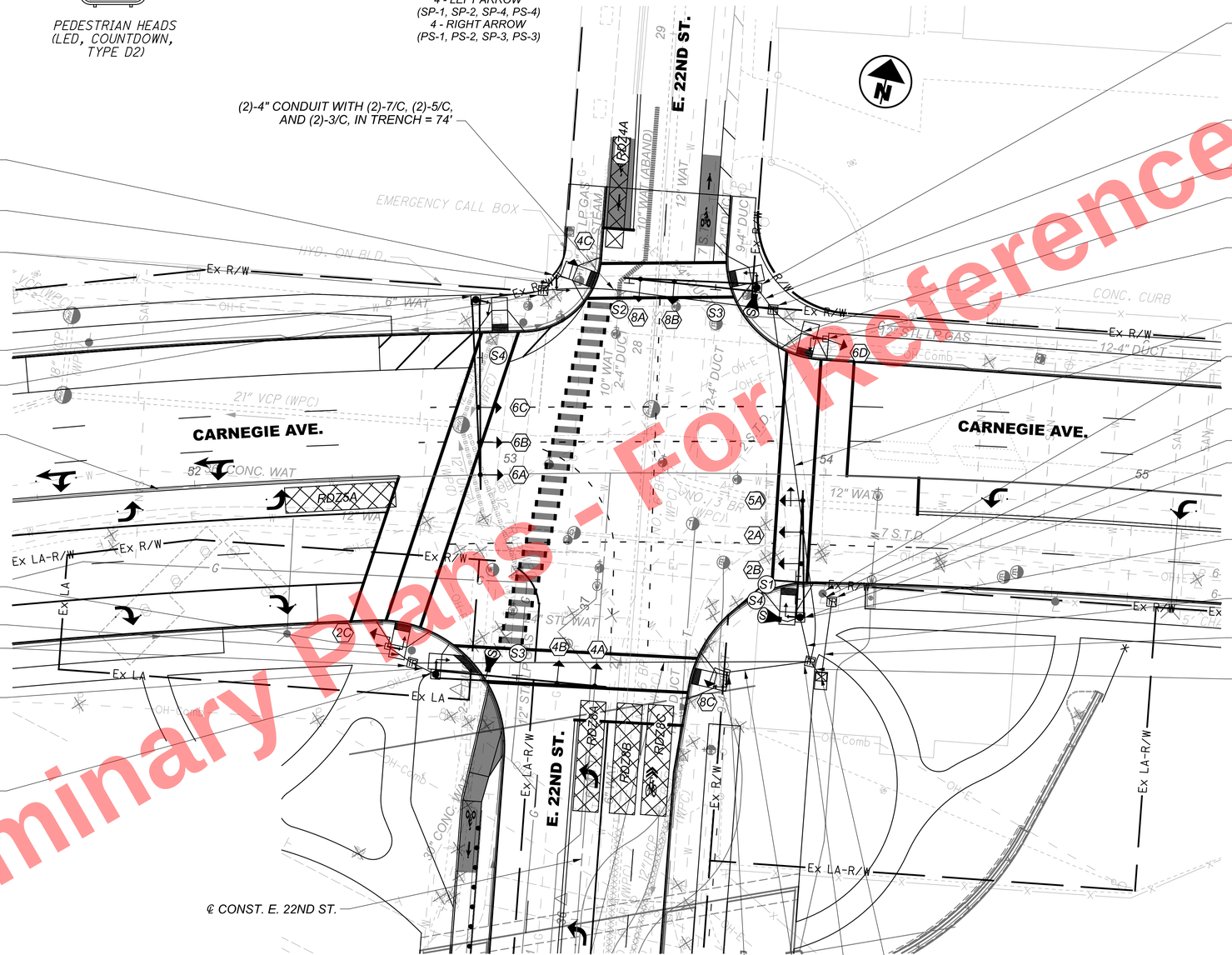
E. 22ND ST.
CARNEGIE AVE.
CARNEGIE AVE.
E. 22ND ST.
(2)-4" CONDUIT WITH (2)-7/C, (2)-5/C, AND (2)-3/C, IN TRENCH = 74'
PS-1, 15' PEDESTAL WITH (1) PEDESTRIAN PUSH BUTTON "PB6B", (1) PEDESTRIAN SIGNAL HEAD "PH6B", AND (1) SIDE-MOUNTED VEHICULAR SIGNAL HEAD STA. 53+15.5, 62.7' LT
(1)-2" CONDUIT WITH (1)-7/C, (1)-5/C, AND (1)-3/C, IN TRENCH = 7'
(1)-3" CONDUIT WITH (1)-7/C, (1)-5/C, AND (1)-3/C, IN TRENCH = 22'
SP-1, TYPE TC-81.22, DESIGN 13 WITH 60' MAST ARM, SUPPLEMENTAL DAMPING DEVICE, (1) PEDESTRIAN PUSH BUTTON "PB4A", (1) PEDESTRIAN SIGNAL HEAD "PH4A", AND STA. 52+90.4, 55.5' LT
PB-1
℄ CONST. CARNEGIE AVE.
PS-2, 15' PEDESTAL WITH (1) PEDESTRIAN PUSH BUTTON "PB4B", (1) PEDESTRIAN SIGNAL HEAD "PH4B", AND (1) SIDE-MOUNTED VEHICULAR SIGNAL HEAD STA. 52+59.3, 53.5' RT
(1)-2" CONDUIT WITH (1)-7/C, (1)-5/C, AND (1)-3/C, IN TRENCH = 10'
PB-2
(1)-3" CONDUIT WITH (1)-7/C, (1)-5/C, (1)-3/C, AND (1)-RC, IN TRENCH = 9'
SP-2, TYPE TC-81.22, DESIGN 13 WITH 54' MAST ARM, (1) PEDESTRIAN PUSH BUTTON "PB2A", (1) PEDESTRIAN SIGNAL HEAD "PH2A", AND (1) STOP LINE RADAR DETECTOR "R-1" STA. 52+74.5, 62.8' RT
℄ CONST. E. 22ND ST.
(2)-4" CONDUIT WITH (2)-7/C, (2)-5/C, (2)-3/C, AND (1)-RC, IN TRENCH = 127'
SP-3, TYPE TC-81.22, DESIGN 12 WITH 42' MAST ARM, (1) PEDESTRIAN PUSH BUTTON "PB6A", (1) PEDESTRIAN SIGNAL HEAD "PH6A", AND (1) STOP LINE RADAR DETECTOR "R-2" STA. 53+77.3, 58.9' LT
(1)-3" CONDUIT WITH (1)-7/C, (1)-5/C, (1)-3/C AND (1)-RC, IN TRENCH = 9'
PB-3
(1)-2" CONDUIT WITH (1)-7/C, (1)-5/C, AND (1)-3/C IN TRENCH = 20'
PS-3, 15' PEDESTAL WITH (1) PEDESTRIAN PUSH BUTTON "PB8B", (1) PEDESTRIAN SIGNAL HEAD "PH8B", AND (1) FRONT-MOUNTED VEHICULAR SIGNAL HEAD STA. 53+99.0, 43.1' LT
(2)-4" CONDUIT WITH (4)-7/C, (4)-5/C, (4)-3/C, AND (1)-RC, IN TRENCH = 113'
PROPOSED POWER SOURCE WITH (1)-1" CONDUIT RISER STA. 54+00.0, 37.5' RT
(1)-2" CONDUIT WITH (1)-POWER IN TRENCH = 4'
PB-5
SP-4, TYPE TC-81.22, DESIGN 12 WITH 40' MAST ARM, (1) PEDESTRIAN PUSH BUTTON "PB8A", (1) PEDESTRIAN SIGNAL HEAD "PH8A", AND (1) STOP LINE RADAR DETECTOR "R-3" STA. 53+92.9, 45.2' RT
PROPOSED LOCATION OF CITY OF CLEVELAND DPS BLUE LIGHT SURVEILLANCE CAMERA SYSTEM (TO BE RELOCATED AND INSTALLED BY OTHERS)
(1)-3" CONDUIT WITH (1)-7/C, (1)-5/C, (1)-3/C, AND (1)-RC, IN TRENCH = 15'
(1)-2" CONDUIT WITH (1)-POWER IN TRENCH = 25'
(2)-4" CONDUIT WITH (8)-7/C, (8)-5/C, (8)-3/C, AND (3)-RC, IN TRENCH = 6'
CONTROLLER CABINET STA. 54+00.2, 63.9' RT
PB-4
(1)-2" CONDUIT WITH (1)-7/C, (1)-5/C, AND (1)-3/C, IN TRENCH = 27'
PS-4, 15' PEDESTAL WITH (1) PEDESTRIAN PUSH BUTTON "PB2B", (1) PEDESTRIAN SIGNAL HEAD "PH2B", AND (1) SIDE-MOUNTED VEHICULAR SIGNAL HEAD STA. 53+69.4, 63.0' RT
Ex R/W
Ex LA-R/W
Ex LA
Ex R/W
Ex LA-R/W
Ex LA
Ex R/W
Ex LA-R/W
Ex R/W
Ex LA-R/W
Ex R/W
Ex LA-R/W

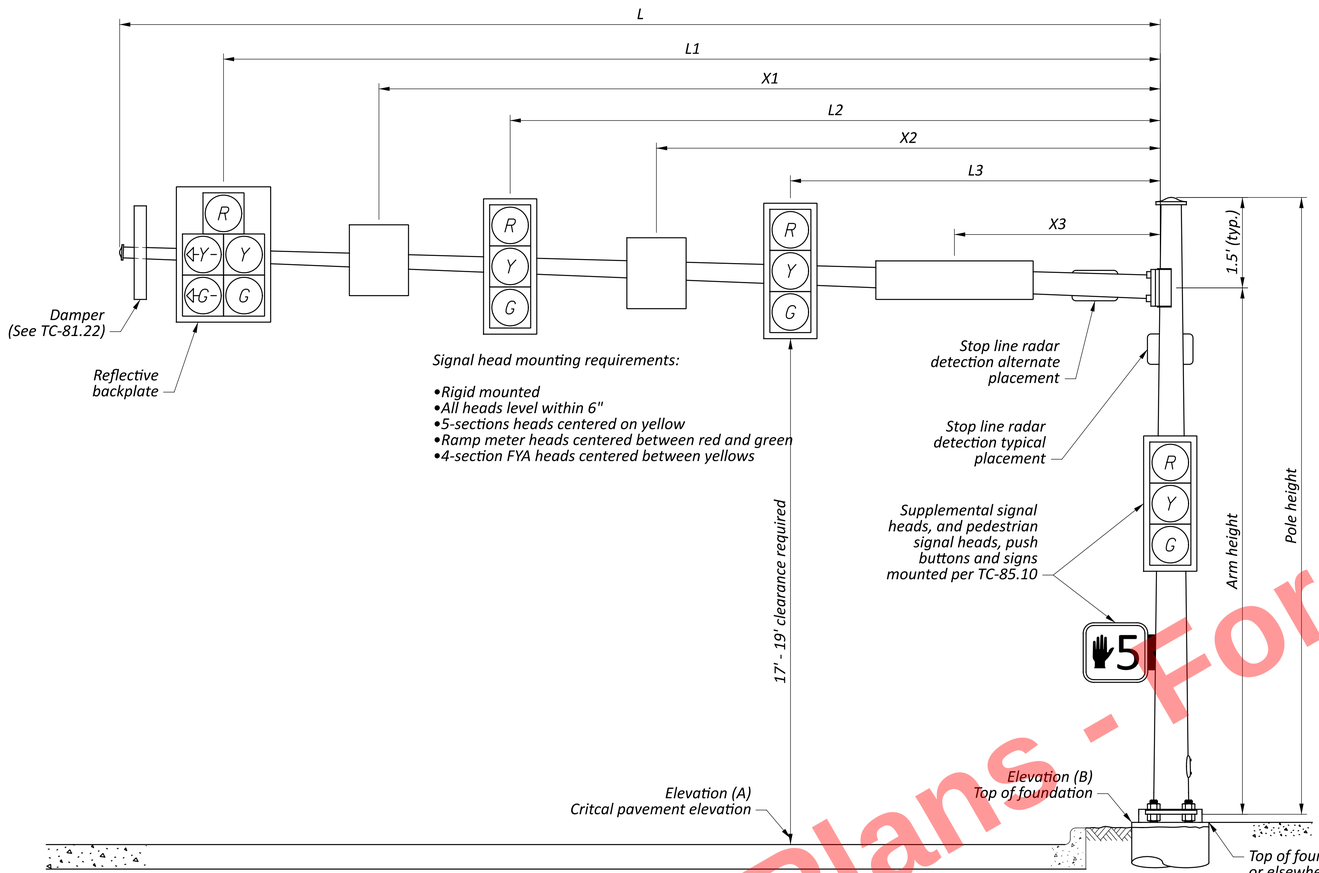

SIGNAL SUPPORT ELEVATION

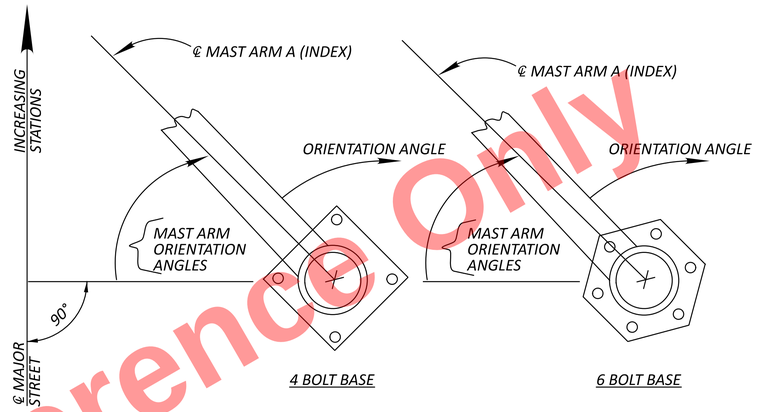

POLE ORIENTATION

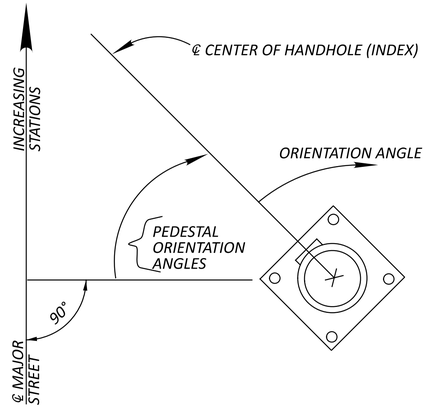

PEDESTAL ORIENTATION

MAST ARM TABLE

SUPPORT NO.	STATION	OFFSET	ELEVATION A (PAVEMENT ELEVATION)	ELEVATION B (TOP OF FOUNDATION)	SIGNAL SUPPORT DETAILS: DESIGN TYPE	DESIGN NO.	POLE HEIGHT	ARM HEIGHT	L	L1	L2	L3	L4	X1	X2	X3	X4	ORIENTATION ANGLES FROM MAST ARM A OR PEDESTAL HANDHOLE: MAST ARM A ANGLE	PEDESTRIAN SIGNAL	PEDESTRIAN PUSH BUTTON	PEDESTAL HANDHOLE ANGLE	SUPPLEMENTAL VEHICULAR SIGNAL
							FT	FT	FT	FT	FT	FT	FT	FT	FT	FT	FT	DEG	DEG	DEG	DEG	DEG
SP-1	52+90.4	55.5 LT	671.56	671.95	TC-81.22	13	21	19.5	60	55.5	45	34	-	18.5	-	-	-	0	285	285	-	-
SP-2	52+74.5	62.8 RT	671.00	671.81	TC-81.22	13	21	19.5	54	50.5	38.5	-	-	26	-	-	-	95	270	270	-	-
SP-3	53+77.3	58.9 LT	670.77	671.58	TC-81.22	12	21	19.5	42	37	26	-	-	40.5	13	-	-	95	85	85	-	-
SP-4	53+92.9	45.2 RT	671.08	671.55	TC-81.22	12	21	19.5	40	37	27	17	-	13	6	-	-	0	270	270	-	-
PS-1	53+15.5	62.7 LT	-	-	-	-	15	-	-	-	-	-	-	-	-	-	-	-	140	140	220	65
PS-2	52+59.3	53.5 RT	-	-	-	-	15	-	-	-	-	-	-	-	-	-	-	-	270	270	195	180
PS-3	53+99.0	43.1 LT	-	-	-	-	15	-	-	-	-	-	-	-	-	-	-	-	270	270	185	105
PS-4	53+69.4	63.0 RT	-	-	-	-	15	-	-	-	-	-	-	-	-	-	-	-	80	80	100	190

Preliminary Plans - For Reference Only

DESIGN AGENCY
Michael Baker INTERNATIONAL

DESIGNER
SED

REVIEWER
RMG 05/22/24

PROJECT ID
82382

SHEET 1656 | TOTAL 2696

CUY-90-16.28 (CCG3A)
MODEL: Sheet PAPERSIZE: 34x22 (In.) DATE: 3/27/2025 TIME: 7:37:44 PM USER: Maia.Gallagher
pw:\\mb-us-pw.bentley.com\mb-us-pw-03\Documents\Cleveland.OH\01_Projects\ODOT\District2\82382\400-Engineering\Signals\Sheets\82382_CP400i.dgn

SIGNAL TIMING CHART

INTERSECTION: CARNEGIE AVE & E. 22ND ST								
MAINTAINING AGENCY: CITY OF CLEVELAND								
START UP	DUAL ENTRY: YES	PHASES: 2, 4, 6, 8						
	REST IN RED:	RING 1 -				RING 2 -		
START IN: ALL RED	OVERLAP			A	B	C	D	
TIME FOR FLASH, ALL RED: 5								
FIRST PHASE(S): 2 + 6	PHASES			-	-	-	-	
COLOR DISPLAYED: GREEN								
INTERVAL OR FEATURE	CONTROLLER MOVEMENT NO.							
INTERSECTION MOVEMENT (PHASE)	1	2	3	4	5	6	7	8
DIRECTION	-	EBT	-	SBT	EBL	WBT	-	NBT
MINIMUM GREEN (INITIAL) (SEC.)	-	20	-	10	7	20	-	10
ADDED INITIAL *(SEC./ACTUATION)	-	-	-	-	-	-	-	-
MAXIMUM INITIAL *(SEC.)	-	-	-	-	-	-	-	-
PASSAGE TIME (PRESET GAP) (SEC.)	-	-	-	3.0	3.0	-	-	3.0
TIME BEFORE REDUCTION *(SEC.)	-	-	-	-	-	-	-	-
MINIMUM GAP *(SEC.)	-	-	-	-	-	-	-	-
TIME TO REDUCE *(SEC.)	-	-	-	-	-	-	-	-
MAXIMUM GREEN I (SEC.)	-	60	-	60	20	60	-	60
MAXIMUM GREEN II (SEC.)	-	-	-	-	-	-	-	-
YELLOW CHANGE (SEC.)	-	3.4	-	3.4	3.0	3.4	-	3.4
ALL RED CLEARANCE (SEC.)	-	1.7	-	1.9	2.9	1.7	-	1.9
DELAYED GREEN (LPI) # (SEC.)	-	-	-	-	-	-	-	-
WALK (SEC.)	-	8	-	9	-	7	-	8
FLASHING YELLOW ARROW DELAY °	-	-	-	-	-	-	-	-
PEDESTRIAN CLEARANCE (SEC.)	-	17	-	25	-	9	-	18
RECALL MAXIMUM (ON/OFF)	-	OFF	-	OFF	OFF	OFF	-	OFF
RECALL MINIMUM (ON/OFF)	-	ON	-	ON	OFF	ON	-	ON
RECALL PEDESTRIAN (ON/OFF)	-	OFF	-	OFF	OFF	OFF	-	OFF
MEMORY (ON/OFF)	-	OFF	-	OFF	OFF	OFF	-	OFF

NOTES:

- CONTROLLER TO UTILIZE THE RED PROTECT FUNCTION TO PROVIDE AN ADDITIONAL 3.0 SECONDS OF ALL RED CLEARANCE TIME TO PHASE 4 & 8 UPON DETECTION OF A BICYCLIST ON THE SB APPROACH DURING THE YELLOW CLEARANCE INTERVAL.
- THE PRIMARY THRU MOVEMENT SHOULD HAVE MIN RECALL ACTIVE TO REST IN GREEN.
- COUNTDOWN PEDESTRIAN SIGNALS SHALL GO TO ZERO ON YELLOW PER OMUTCD FIGURE 4E-2.
- ALL DETECTOR DELAYS SHALL BE PLACED IN THE CONTROLLER.

PHASING DIAGRAM

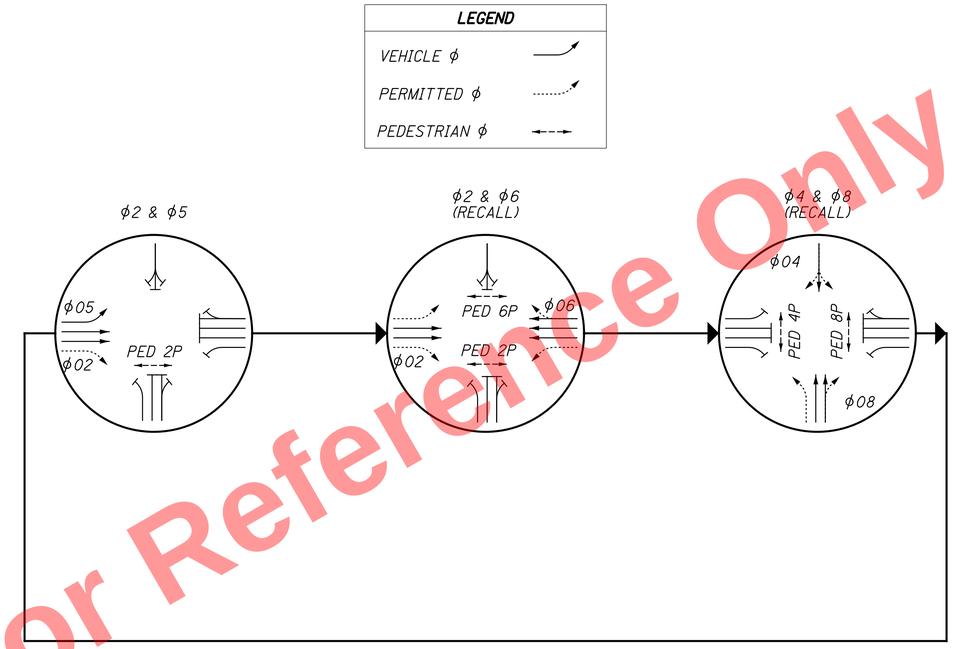

RADAR DETECTION CHART

DETECTION ZONE	MOVEMENT	WIDTH	ASSOCIATED PHASE	DELAY PROGRAMMED IN CONTROLLER (SEC)	EXTENSION PROGRAMMED IN CONTROLLER (SEC)	DETECTOR NUMBER	PURPOSE	DETECTION ZONE LENGTH (FT)
RDZ4A	SBT	6	ϕ4	0	3	R-1	STOP LINE	35
RDZ8A	NBT	8	ϕ8	0	3	R-2	STOP LINE	35
RDZ8B	NBT	8	ϕ8	0	3	R-2	STOP LINE	35
RDZ8C	NBT	8	ϕ8	8	3	R-2	STOP LINE	35
RDZ5A	EBL	8	ϕ5	0	3	R-3	STOP LINE	35

Preliminary Plans - For Reference Only

TRAFFIC SIGNAL PLAN DETAILS
CARNEGIE AVE. & E. 22ND ST.

DESIGN AGENCY
Michael Baker INTERNATIONAL

DESIGNER SED
REVIEWER RMG 05/22/24
PROJECT ID 82382
SHEET 1657 TOTAL 2696

CUY-90-16.28 (CCG3A)

MODEL: Sheet PAPERSIZE: 34x22 (in.) DATE: 3/27/2025 TIME: 7:37:50 PM USER: Mala.Gallagher
pw:\\mb-us-pw.bentley.com:mb-us-pw-03\Documents\Cleveland.OH\01_Projects\000T\District2\82382\400-Engineering\Signals\Sheets\82382_CP4002.dgn

WIRING DIAGRAM

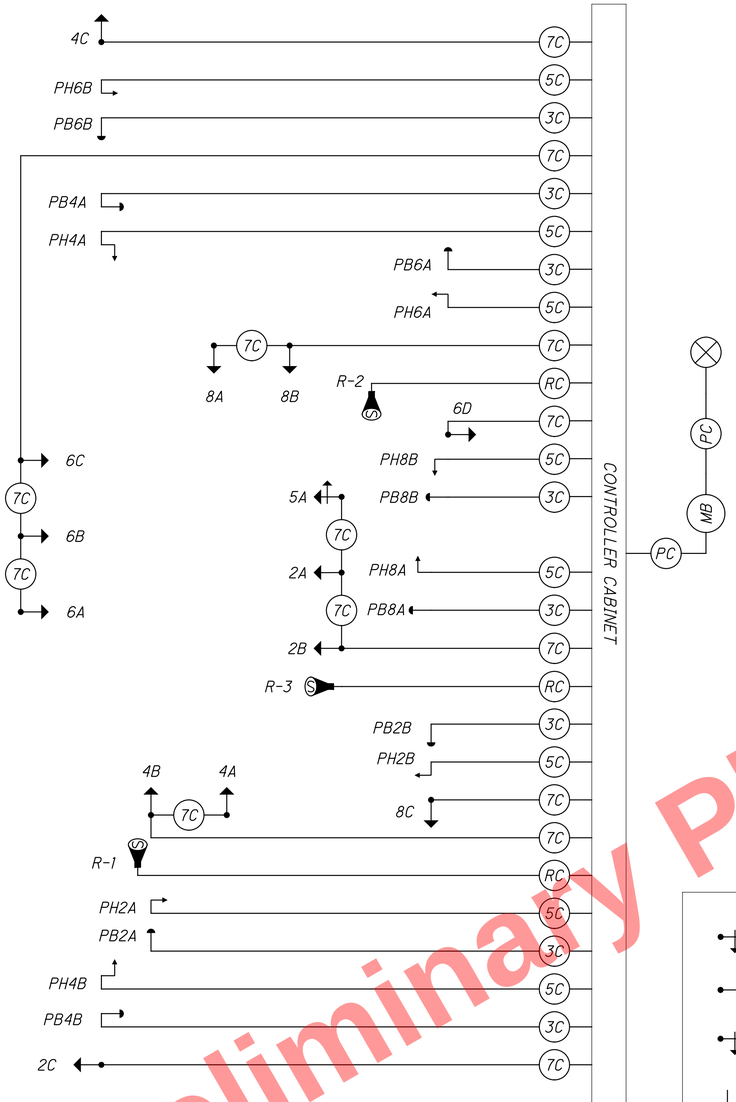

FIELD WIRING HOOK-UP CHART

SIGNAL HEAD	INDICATION	FIELD TERMINAL	FLASH
2A, 2B, (EB)	R	ϕ2 R	R
	Y	ϕ2 Y	
	G	ϕ2 G	
2C (EB)	R	ϕ2 R	R
	Y	ϕ2 Y	
	G	ϕ2 G	
4A, 4B (SB)	R	ϕ4 R	R
	Y	ϕ4 Y	
	G	ϕ4 G	
4C (SB)	R	ϕ4 R	R
	Y	ϕ4 Y	
	G	ϕ4 G	
5A (EB LT)	R	ϕ2 R	R
	Y	ϕ2 Y	
	G	ϕ2 G	
	<--Y--	ϕ5 Y	
	<--G--	ϕ5 G	
6A, 6B, 6C (WB)	R	ϕ6 R	R
	Y	ϕ6 Y	
	G	ϕ6 G	

SIGNAL HEAD	INDICATION	FIELD TERMINAL	FLASH
6D (WB)	R	ϕ6 R	R
	Y	ϕ6 Y	
	G	ϕ6 G	
8A, 8B (NB)	R	ϕ8 R	R
	Y	ϕ8 Y	
	G	ϕ8 G	
8C (NB)	R	ϕ8 R	R
	Y	ϕ8 Y	
	G	ϕ8 G	
PEDESTRIAN MOVEMENTS			
PED 2P	W	ϕ2 PED/LS 9 G	OUT
	DW	ϕ2 PED/LS 9 R	
PED 4P	W	ϕ4 PED/LS 10 G	OUT
	DW	ϕ4 PED/LS 10 R	
PED 6P	W	ϕ6 PED/LS 11 G	OUT
	DW	ϕ6 PED/LS 11 R	
PED 8P	W	ϕ8 PED/LS 12 G	OUT
	DW	ϕ8 PED/LS 12 R	

LS = LOAD SWITCH

LEGEND

- TRAFFIC SIGNAL, 4 OR 5 UNIT HEAD, 12″
- TRAFFIC SIGNAL, 2 UNIT, 3 UNIT, OR PHB HEAD 12″
- TRAFFIC SIGNAL, 3 UNIT HEAD, 12″ WITH ARROWS
- PEDESTRIAN SIGNAL
- PEDESTRIAN PUSH BUTTON
- STOP LINE RADAR DETECTION UNIT
- 3C — SIGNAL CABLE, 3 CONDUCTOR, NO. 14 AWG
- 5C — SIGNAL CABLE, 5 CONDUCTOR, NO. 14 AWG
- 7C — SIGNAL CABLE, 7 CONDUCTOR, NO. 14 AWG
- RC — RADAR DETECTION CABLE
- POWER SOURCE
- PC — POWER CABLE, 2 CONDUCTOR, NO. 6 AWG
- MB — METER BASE

Preliminary Plans - For Reference Only

TRAFFIC SIGNAL PLAN DETAILS
CARNEGIE AVE. & E. 22ND ST.

DESIGN AGENCY
Michael Baker INTERNATIONAL

DESIGNER SED
REVIEWER RMG 05/22/24
PROJECT ID 82382
SHEET 1658 TOTAL 2696

CUY-90-16.28 (CCG3A)

MODEL: Sheet PAPERSIZE: 34x22 (in.) DATE: 3/27/2025 TIME: 7:37:55 PM USER: Mala.Gallagher
pw:\\mb-us-pw.bentley.com:mb-us-pw-03\Documents\Cleveland.OH\OI_Projects\ODOT\District2\82382\400-Engineering\Sheets\82382_CP4003.dgn

PROPOSED SIGNS

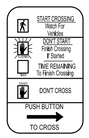

R10-3e-9
2 - LEFT ARROW
(PS-1, SP-3)
2 - RIGHT ARROW
(SP-2, PS-2)

(S1)



R3-5L-30

(S2)

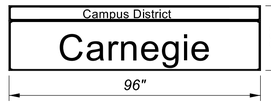

(S3)

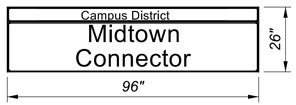

PROPOSED SIGNALS

VEHICULAR SIGNALS HEADS
(12" LENS, LED, YELLOW,
W/ REFLECTIVE BACKPLATES)

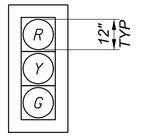

2A, 2B, 2C,
6A, 6B, 6C,
8A

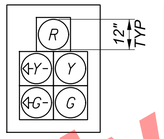

1A

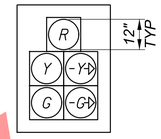

8B, 8C



PEDESTRIAN HEADS
(LED, COUNTDOWN,
TYPE D2)

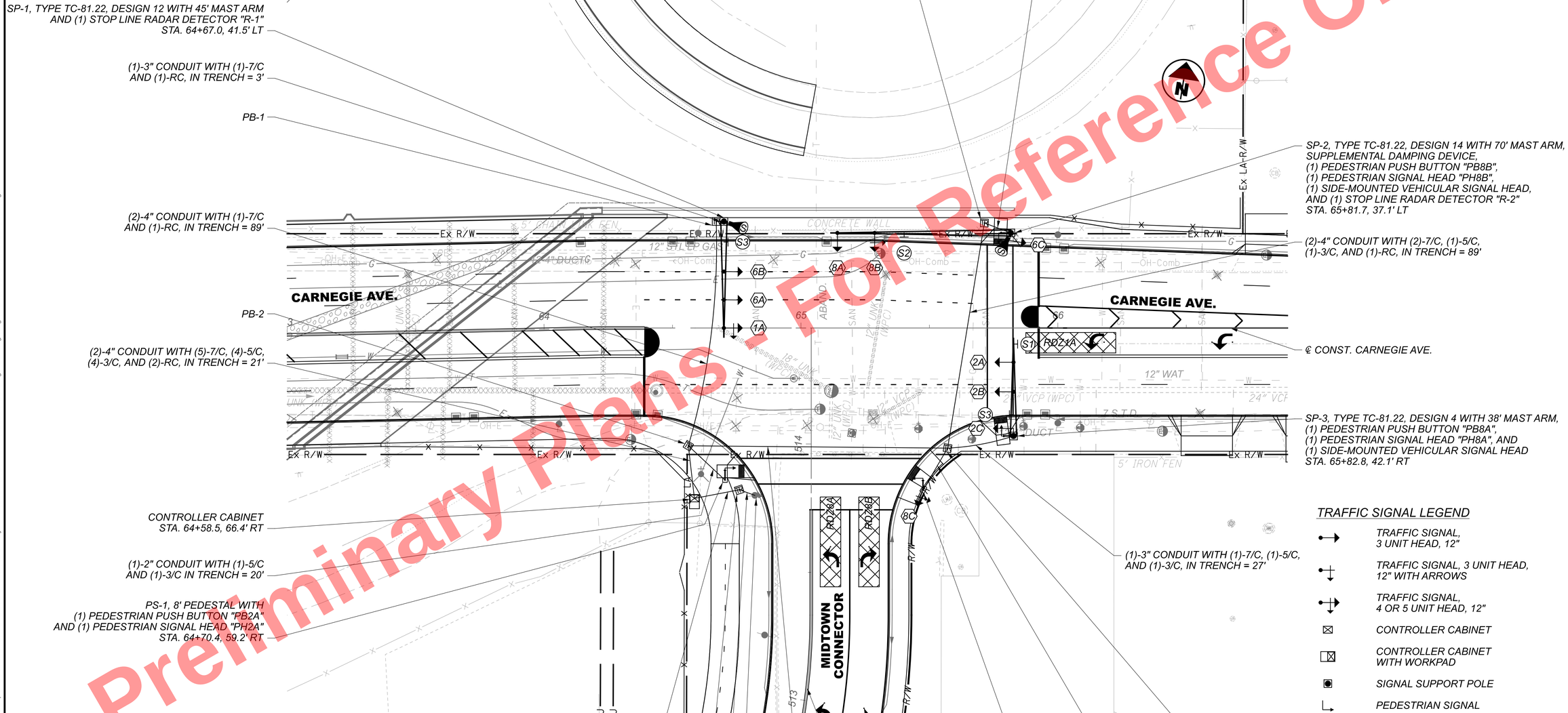

TRAFFIC SIGNAL LEGEND

- TRAFFIC SIGNAL, 3 UNIT HEAD, 12"
- TRAFFIC SIGNAL, 3 UNIT HEAD, 12" WITH ARROWS
- TRAFFIC SIGNAL, 4 OR 5 UNIT HEAD, 12"
- CONTROLLER CABINET
- CONTROLLER CABINET WITH WORKPAD
- SIGNAL SUPPORT POLE
- PEDESTRIAN SIGNAL
- PEDESTRIAN PUSH BUTTON
- PEDESTAL SUPPORT
- TRAFFIC PULL BOX
- SIGNAL CONDUIT
- RADAR DETECTION ZONE
- RADAR DETECTOR

PULL BOX TABLE

PULL BOX #	STATION	SIDE	OFFSET	SIZE (IN.)
PB-1	67+70.0	LT	41.5	24 x 36
PB-2	64+56.2	RT	45.9	24 x 36
PB-3	65+71.4	LT	40.9	24 x 36
PB-4	65+57.1	RT	46.8	24 x 36
PB-5	64+76.0	RT	63.0	13 x 24

NOTE:

1. RADAR DETECTION LOCATION IS FOR REFERENCE ONLY, ACTUAL PLACEMENT WILL BE RECOMMENDED BY MANUFACTURER.

Preliminary Plans - Not For Reference Only

HORIZONTAL SCALE IN FEET
0 10 20 40

TRAFFIC SIGNAL PLAN
CARNEGIE AVE. & MIDTOWN CONNECTOR

DESIGN AGENCY
Michael Baker INTERNATIONAL

DESIGNER SED
REVIEWER RMG 05/22/24
PROJECT ID 82382
SHEET 1659 TOTAL 2696

CUY-90-16.28 (CCG3A)
MODEL: 82382_CP5000 PAPERSIZE: 34x22 (In.) DATE: 3/27/2025 TIME: 7:38:15 PM USER: MaLaGallagher
pw:\\mb-us-pw.bentley.com:mb-us-pw-03\Documents\Cleveland_OH\OI_Projects\ODOT\District2\82382\400-Engineering\Signals\Sheets\82382_CP5000.dgn

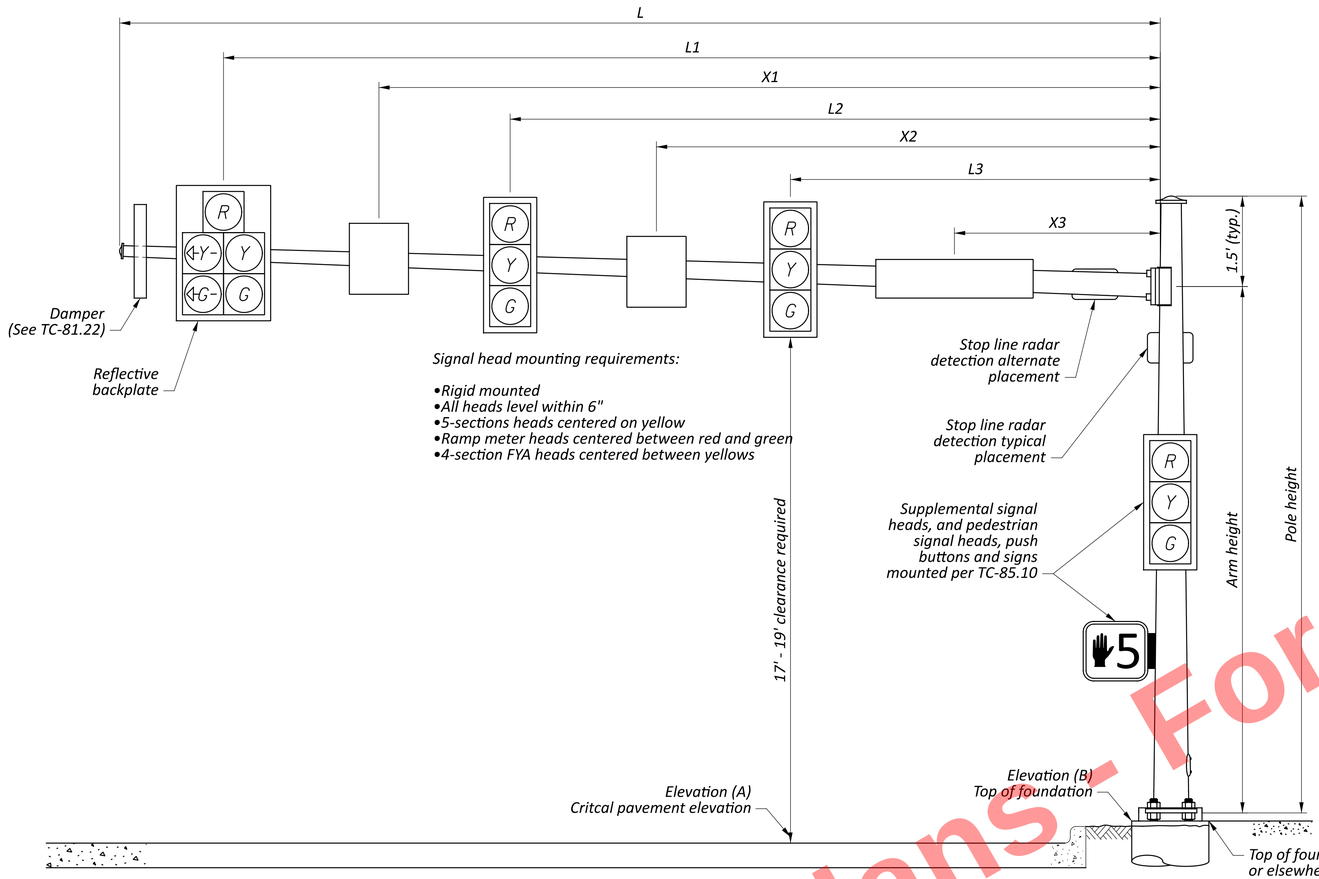

SIGNAL SUPPORT ELEVATION

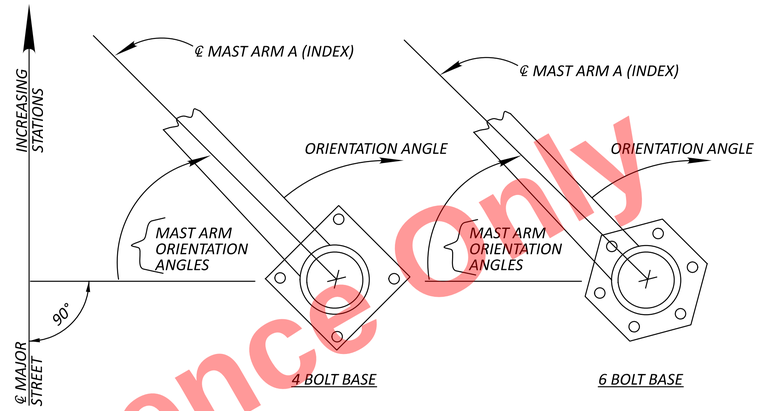

POLE ORIENTATION

PEDESTAL ORIENTATION

MAST ARM TABLE

SUPPORT NO.	STATION	OFFSET	ELEVATION A (PAVEMENT ELEVATION)	ELEVATION B (TOP OF FOUNDATION)	SIGNAL SUPPORT DETAILS: DESIGN TYPE	DESIGN NO.	POLE HEIGHT	ARM HEIGHT	L	L1	L2	L3	L4	X1	X2	X3	X4	ORIENTATION ANGLES FROM MAST ARM A OR PEDESTAL HANDHOLE: MAST ARM A ANGLE	PEDESTRIAN SIGNAL	PEDESTRIAN PUSH BUTTON	PEDESTAL HANDHOLE ANGLE	SUPPLEMENTAL VEHICULAR SIGNAL
							FT	FT	FT	FT	FT	FT	FT	FT	FT	FT	FT	DEG	DEG	DEG	DEG	DEG
SP-1	67+70.0	41.5 LT	668.15	668.41	TC-81.22	12	22	20.5	45	41.5	30.5	19.5	-	8	-	-	-	0	-	-	-	-
SP-2	65+81.7	37.1 LT	668.68	668.62	TC-81.22	14	22	20.5	70	67.5	53	-	-	41.5	-	-	-	90	0	0	-	280
SP-3	65+82.8	42.1 RT	668.30	668.63	TC-81.22	4	22	20.5	38	28.5	17	-	-	36	8.5	-	-	0	270	270	-	0
PS-1	64+70.4	59.2 RT	-	-	-	-	8	-	-	-	-	-	-	-	-	-	-	-	90	90	270	-
PS-2	65+47.5	63.2 RT	-	-	-	-	15	-	-	-	-	-	-	-	-	-	-	-	240	240	120	90

Preliminary Plans - For Reference Only

TRAFFIC SIGNAL PLAN DETAILS
CARNEGIE AVE. & MIDTOWN CONNECTOR

DESIGN AGENCY
Michael Baker INTERNATIONAL

DESIGNER
SED

REVIEWER
RMG 05/22/24

PROJECT ID
82382

SHEET 1660 | TOTAL 2696

CUY-90-16.28 (CCG3A)

MODEL: Sheet PAPERSIZE: 34x22 (in.) DATE: 3/27/2025 TIME: 7:38:44 PM USER: Mala.Gallagher
pw:\\mb-us-pw.bentley.com:mb-us-pw-03\Documents\Cleveland_OH\01_Projects\ODOT\District2\82382\400-Engineering\Signals\Sheets\82382_CP5001.dgn

SIGNAL TIMING CHART

INTERSECTION: CARNEGIE AVE & MIDTOWN CONNECTOR									
MAINTAINING AGENCY: CITY OF CLEVELAND									
START UP			DUAL ENTRY: YES		PHASES:		2, 6		
			REST IN RED:		RING 1	-		RING 2	-
START IN: ALL RED			OVERLAP			A	B	C	D
TIME FOR FLASH, ALL RED: 5									
FIRST PHASE(S): 2 + 6			PHASES			1	-	-	-
COLOR DISPLAYED: GREEN									
INTERVAL OR FEATURE			CONTROLLER MOVEMENT NO.						
INTERSECTION MOVEMENT (PHASE)			1	2	3	4	5	6	7	8
DIRECTION			WBL	EBT	-	-	-	WBT	-	NBT
MINIMUM GREEN (INITIAL)		(SEC.)	7	20	-	-	-	20	-	10
ADDED INITIAL		*(SEC./ACTUATION)	-	-	-	-	-	-	-	-
MAXIMUM INITIAL		*(SEC.)	-	-	-	-	-	-	-	-
PASSAGE TIME (PRESET GAP)		(SEC.)	3.0	-	-	-	-	-	-	3.0
TIME BEFORE REDUCTION		*(SEC.)	-	-	-	-	-	-	-	-
MINIMUM GAP		*(SEC.)	-	-	-	-	-	-	-	-
TIME TO REDUCE		*(SEC.)	-	-	-	-	-	-	-	-
MAXIMUM GREEN I		(SEC.)	20	60	-	-	-	60	-	60
MAXIMUM GREEN II		(SEC.)	-	-	-	-	-	-	-	-
YELLOW CHANGE		(SEC.)	3.2	4.1	-	-	-	4.1	-	3.0
ALL RED CLEARANCE		(SEC.)	2.5	1.1	-	-	-	1.1	-	2.1
DELAYED GREEN (LPI) #		(SEC.)	-	-	-	-	-	-	-	-
WALK		(SEC.)	-	7	-	-	-	-	-	7
FLASHING YELLOW ARROW DELAY °			-	-	-	-	-	-	-	-
PEDESTRIAN CLEARANCE		(SEC.)	-	14	-	-	-	-	-	17
RECALL	MAXIMUM	(ON/OFF)	OFF	OFF	-	-	-	OFF	-	OFF
	MINIMUM	(ON/OFF)	OFF	ON	-	-	-	ON	-	OFF
	PEDESTRIAN	(ON/OFF)	OFF	OFF	-	-	-	OFF	-	OFF
MEMORY		(ON/OFF)	OFF	OFF	-	-	-	OFF	-	OFF

NOTES:

- THE PRIMARY THRU MOVEMENT SHOULD HAVE MIN RECALL ACTIVE TO REST IN GREEN.
- COUNTDOWN PEDESTRIAN SIGNALS SHALL GO TO ZERO ON YELLOW PER OMUTCD FIGURE 4E-2.
- ALL DETECTOR DELAYS SHALL BE PLACED IN THE CONTROLLER.

PHASING DIAGRAM

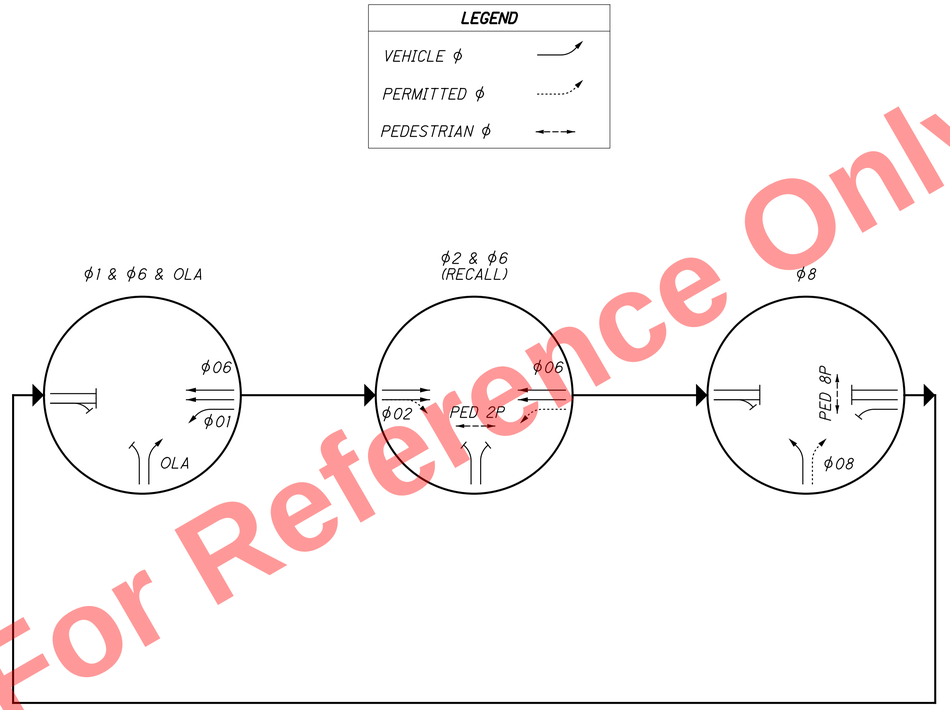

RADAR DETECTION CHART

DETECTION ZONE	MOVEMENT	WIDTH	ASSOCIATED PHASE	DELAY PROGRAMMED IN CONTROLLER (SEC)	EXTENSION PROGRAMMED IN CONTROLLER (SEC)	DETECTOR NUMBER	PURPOSE	DETECTION ZONE LENGTH (FT)
RDZ1A	WBL	8	ϕ1	0	3	R-1	STOP LINE	35
RDZ8A	NBT	8	ϕ8	0	3	R-2	STOP LINE	35
RDZ8B	NBT	8	ϕ8	8	3	R-2	STOP LINE	35

Preliminary Plans - For Reference Only

TRAFFIC SIGNAL PLAN DETAILS
CARNEGIE AVE. & MIDTOWN CONNECTOR

DESIGN AGENCY
Michael Baker INTERNATIONAL

DESIGNER SED
REVIEWER RMG 05/22/24
PROJECT ID 82382
SHEET 1661 TOTAL 2696

CUY-90-16.28 (CCG3A)

MODEL: Sheet PAPERSIZE: 34x22 (in.) DATE: 3/27/2025 TIME: 7:38:50 PM USER: MaiaGallagher
pw:\\mb-us-pw.bentley.com:mb-us-pw-03\Documents\Cleveland.OH\01_Projects\ODOT\District2\82382\400-Engineering\Signals\Sheets\82382_CP5002.dgn

WIRING DIAGRAM

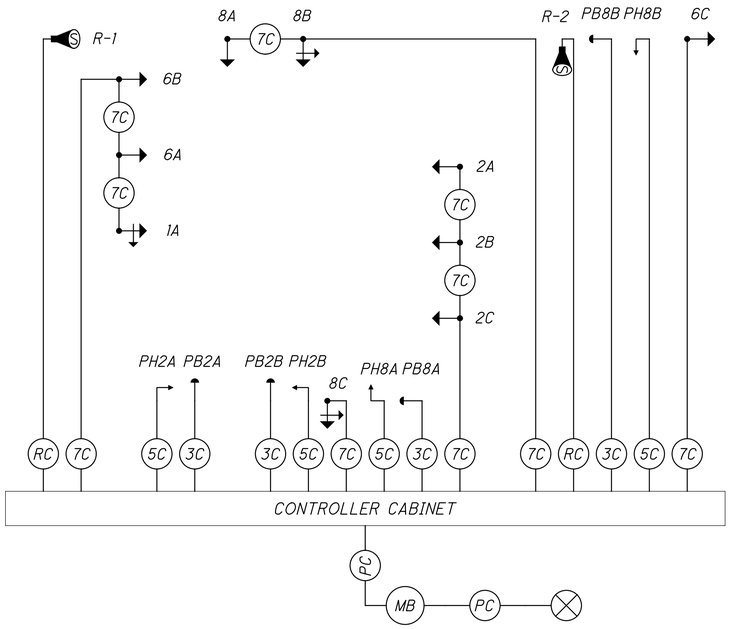

FIELD WIRING HOOK-UP CHART

SIGNAL HEAD	INDICATION	FIELD TERMINAL	FLASH
1A (WB LT)	R	ϕ6 R	R
	Y	ϕ6 Y	
	G	ϕ6 G	
	<--Y--	ϕ1 Y	
	<--G--	ϕ1 G	
2A, 2B, 2C (EB)	R	ϕ2 R	R
	Y	ϕ2 Y	
	G	ϕ2 G	
6A, 6B (WB)	R	ϕ6 R	R
	Y	ϕ6 Y	
	G	ϕ6 G	
6C (WB)	R	ϕ6 R	R
	Y	ϕ6 Y	
	G	ϕ6 G	
8A (NB)	R	ϕ8 R	R
	Y	ϕ8 Y	
	G	ϕ8 G	

SIGNAL HEAD	INDICATION	FIELD TERMINAL	FLASH
8B (NB)	R	ϕ8 R	R
	Y	ϕ8 Y	
	G	ϕ8 G	
	--Y-->	ϕ1 Y/LS 13 Y	
	--G-->	ϕ1 G/LS 13 G	
8C (NB)	R	ϕ8 R	R
	Y	ϕ8 Y	
	G	ϕ8 G	
	--Y-->	ϕ1 Y/LS 13 Y	
	--G-->	ϕ1 G/LS 13 G	
PEDESTRIAN MOVEMENTS			
PED 2P	W	ϕ2 PED/LS 9 G	OUT
	DW	ϕ2 PED/LS 9 R	
PED 8P	W	ϕ8 PED/LS 12 G	OUT
	DW	ϕ8 PED/LS 12 R	
OVERLAPS			
OLA	--Y-->	ϕ1 Y/LS 13 Y	OUT
	--G-->	ϕ1 G/LS 13 G	

LS = LOAD SWITCH OLA = LS 13

LEGEND

	TRAFFIC SIGNAL, 4 OR 5 UNIT HEAD, 12"	3C	SIGNAL CABLE, 3 CONDUCTOR, NO. 14 AWG	PC	POWER CABLE, 2 CONDUCTOR, NO. 6 AWG
	TRAFFIC SIGNAL, 2 UNIT, 3 UNIT, OR PHB HEAD 12"	5C	SIGNAL CABLE, 5 CONDUCTOR, NO. 14 AWG	MB	METER BASE
	TRAFFIC SIGNAL, 3 UNIT HEAD, 12" WITH ARROWS	7C	SIGNAL CABLE, 7 CONDUCTOR, NO. 14 AWG		
	PEDESTRIAN SIGNAL	RC	RADAR DETECTION CABLE		
	PEDESTRIAN PUSH BUTTON		POWER SOURCE		
	STOP LINE RADAR DETECTION UNIT				

Preliminary Plans - For Reference Only

TRAFFIC SIGNAL PLAN DETAILS
CARNEGIE AVE. & MIDTOWN CONNECTOR

DESIGN AGENCY
Michael Baker INTERNATIONAL

DESIGNER SED
REVIEWER RMG 05/22/24
PROJECT ID 82382
SHEET 1662 TOTAL 2696

CUY-90-16.28 (CCG3A)

MODEL: Sheet PAPERSIZE: 34x22 (in.) DATE: 3/27/2025 TIME: 7:38:57 PM USER: MaLaGallagher
pw:\\mb-us-pw.bentley.com:mb-us-pw-03\Documents\Cleveland_OH\01_Projects\ODOT\District2\82382\400-Engineering\Signals\Sheets\82382_CP5003.dgn

PROPOSED SIGNALS

VEHICULAR SIGNAL HEADS
(8" OR 12" LENS, LED, YELLOW,
W/ REFLECTIVE BACKPLATES)

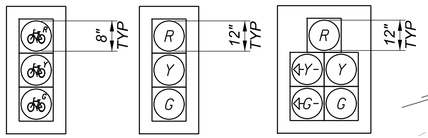

6C, 6D — 2A, 2B, 2C, 4A, 4B, 6A, 6B, 8A, 8B, 8C — 1A, 7A

PROPOSED SIGNS



PEDESTRIAN HEADS
(LED, COUNTDOWN,
TYPE D2)

S1  R3-27-36

S2  R3-2-36

S3  R3-1-36

S4 

R3-5L-30

S5 

R10-40a-24
(MOUNT ABOVE BICYCLE SIGNAL)

S6 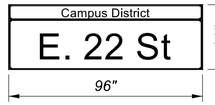

S7 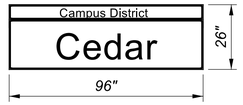



R10-3e-9
4 - LEFT ARROW
(SP-1, PS-1, SP-4, PS-5)
4 - RIGHT ARROW
(PS-2, PS-3, SP-3, PS-4)
1 - LEFT-RIGHT ARROW
(SP-2)

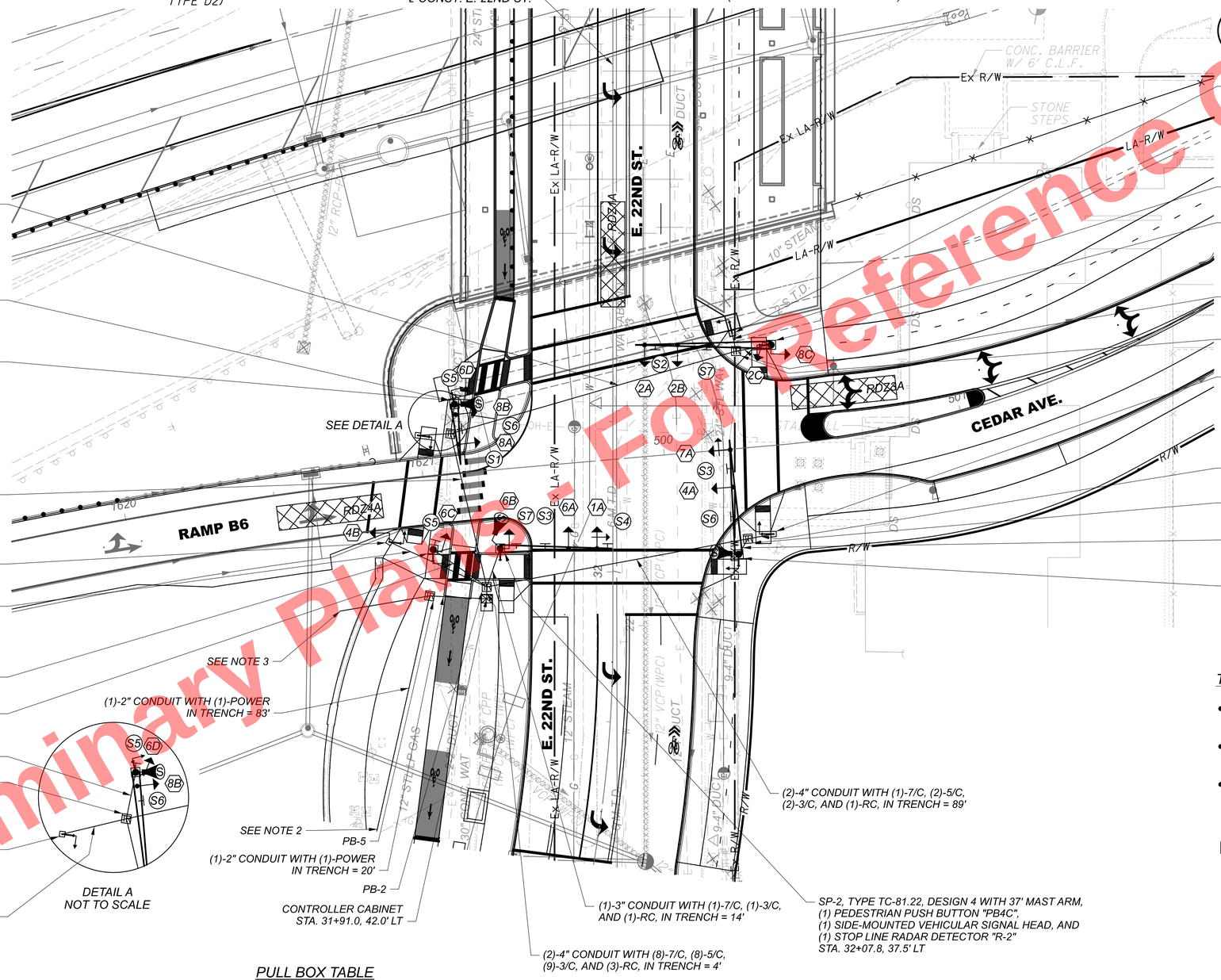

(2)-4" CONDUIT WITH (2)-7/C, (2)-5/C, AND (2)-3/C, IN TRENCH = 99'

SP-1, TYPE TC-81.22, DESIGN 4 WITH 20' MAST ARM, (1) PEDESTRIAN PUSH BUTTON "PB3B", (1) PEDESTRIAN SIGNAL HEAD "PH3B", (1) SIDE-MOUNTED BICYCLE SIGNAL HEAD AND (1) STOP LINE RADAR DETECTOR "R-1" STA. 32+55.8, 52.8' LT

PROPOSED LOCATION OF CITY OF CLEVELAND DPS BLUE LIGHT SURVEILLANCE CAMERA SYSTEM (TO BE RELOCATED AND INSTALLED BY OTHERS)

(2)-4" CONDUIT WITH (4)-7/C, (4)-5/C, (4)-3/C, AND (1)-RC, IN TRENCH = 53'

PS-2, 15' PEDESTAL WITH (1) PEDESTRIAN PUSH BUTTON "PB6B", (1) PEDESTRIAN SIGNAL HEAD "PH6B", AND (1) SIDE-MOUNTED VEHICULAR SIGNAL HEAD STA. 32+10.0, 74.4' LT

(1)-2" CONDUIT WITH (1)-7/C, (1)-5/C, AND (1)-3/C, IN TRENCH = 36'

PS-3, TYPE TC-81.11, DESIGN 8, 20' POLE WITH (1) PEDESTRIAN PUSH BUTTON "PB4A", (1) PEDESTRIAN SIGNAL HEAD "PH4A", AND (1) SIDE-MOUNTED BICYCLE SIGNAL HEAD STA. 32+07.4, 59.9' LT

(1)-3" CONDUIT WITH (1)-7/C, (1)-5/C, AND (1)-3/C, IN TRENCH = 22'

(1)-3" CONDUIT WITH (2)-7/C, (1)-5/C, (1)-3/C, AND (1)-RC, IN TRENCH = 10'

PB-1

PS-1, 8' PEDESTAL WITH (1) PEDESTRIAN PUSH BUTTON "PB6A" AND (1) PEDESTRIAN SIGNAL HEAD "PH6A" STA. 32+45.4, 64.9' LT

(1)-2" CONDUIT WITH (1)-5/C AND (1)-3/C, IN TRENCH = 11'

DETAIL A
NOT TO SCALE

(1)-2" CONDUIT WITH (1)-POWER IN TRENCH = 83'

PB-5

(1)-2" CONDUIT WITH (1)-POWER IN TRENCH = 20'

PB-2

CONTROLLER CABINET STA. 31+91.0, 42.0' LT

(2)-4" CONDUIT WITH (8)-7/C, (8)-5/C, (9)-3/C, AND (3)-RC, IN TRENCH = 4'

(1)-3" CONDUIT WITH (1)-7/C, (1)-3/C, AND (1)-RC, IN TRENCH = 14'

SP-2, TYPE TC-81.22, DESIGN 4 WITH 37' MAST ARM, (1) PEDESTRIAN PUSH BUTTON "PB4C", (1) SIDE-MOUNTED VEHICULAR SIGNAL HEAD, AND (1) STOP LINE RADAR DETECTOR "R-2" STA. 32+07.8, 37.5' LT

(2)-4" CONDUIT WITH (1)-7/C, (2)-5/C, (2)-3/C, AND (1)-RC, IN TRENCH = 89'

PS-4, 8' PEDESTAL WITH (1) PEDESTRIAN PUSH BUTTON "PB3A" AND (1) PEDESTRIAN SIGNAL HEAD "PH3A" STA. 32+79.5, 39.7' RT

(1)-2" CONDUIT WITH (1)-5/C AND (1)-3/C IN TRENCH = 7'

SP-3, TYPE TC-81.22, DESIGN 12 WITH 45' MAST ARM, (1) PEDESTRIAN PUSH BUTTON "PB2B", (1) PEDESTRIAN SIGNAL HEAD "PH2B", AND (2) SIDE-MOUNTED VEHICULAR SIGNAL HEADS STA. 32+75.6, 52.7' RT

(1)-3" CONDUIT WITH (2)-7/C, (1)-5/C, AND (1)-3/C, IN TRENCH = 12'

PB-3

PS-5, 8' PEDESTAL WITH (1) PEDESTRIAN PUSH BUTTON "PB2A" AND (1) PEDESTRIAN SIGNAL HEAD "PH2A" STA. 32+12.6, 53.5' RT

(1)-2" CONDUIT WITH (1)-5/C, AND (1)-3/C, IN TRENCH = 9'

PB-4

(1)-3" CONDUIT WITH (1)-7/C, (1)-5/C, (1)-3/C, AND (1)-RC, IN TRENCH = 7'

SP-4, TYPE TC-81.22, DESIGN 4 WITH 38' MAST ARM, (1) PEDESTRIAN PUSH BUTTON "PB4B", (1) PEDESTRIAN SIGNAL HEAD "PH4B", AND (1) STOP LINE RADAR DETECTOR "R-3" STA. 32+05.8, 41.9' RT

TRAFFIC SIGNAL LEGEND

- TRAFFIC SIGNAL, 3 UNIT HEAD, 12"
- TRAFFIC SIGNAL, 3 UNIT HEAD, 12" WITH ARROWS
- TRAFFIC SIGNAL, 4 OR 5 UNIT HEAD, 12"
- CONTROLLER CABINET
- CONTROLLER CABINET WITH WORKPAD
- SIGNAL SUPPORT POLE
- PEDESTRIAN SIGNAL
- PEDESTRIAN PUSH BUTTON
- PEDESTAL SUPPORT
- TRAFFIC PULL BOX
- SIGNAL CONDUIT
- RADAR DETECTION ZONE
- RADAR DETECTOR

NOTE:

1. RADAR DETECTION LOCATION IS FOR REFERENCE ONLY, ACTUAL PLACEMENT WILL BE RECOMMENDED BY MANUFACTURER.

2. CONDUIT AND POWER CABLE CONTINUES TO PULL BOX AT STA. 30+98.0, 73' LT ON SHEET 1667

3. CONDUIT AND POWER CABLE CONTINUES TO PULL BOX AT ℄ RAMP B6 STA. 1620+66.9, 41' RT ON SHEET 1681

PULL BOX TABLE

PULL BOX #	STATION	SIDE	OFFSET	SIZE (IN.)
PB-1	32+46.0	LT	54.0	24 x 36
PB-2	31+95.0	LT	42.0	24 x 36
PB-3	32+73.5	RT	41.0	24 x 36
PB-4	32+11.0	RT	45.0	24 x 36
PB-5	31+92.0	LT	61.0	13 x 24

Preliminary Plans - Not For Construction
For Reference Only

HORIZONTAL SCALE IN FEET
0 10 20 40

TRAFFIC SIGNAL PLAN
E. 22ND ST. & CEDAR AVE.

DESIGN AGENCY
Michael Baker INTERNATIONAL

DESIGNER SED
REVIEWER RMG 05/22/24
PROJECT ID 82382
SHEET 1663 TOTAL 2696

CUY-90-16.28 (CCG3A)

MODEL: 82382_CP8000 PAPERSIZE: 34x22 (In.) DATE: 3/27/2025 TIME: 7:39:15 PM USER: Maia.Gallagher
pw:\\mb-us-pw.bentley.com:mb-us-pw-03\Documents\Cleveland.OH\OL_Projects\ODOT\District2\82382\400-Engineering\Signals\Sheets\82382_CP8000.dgn

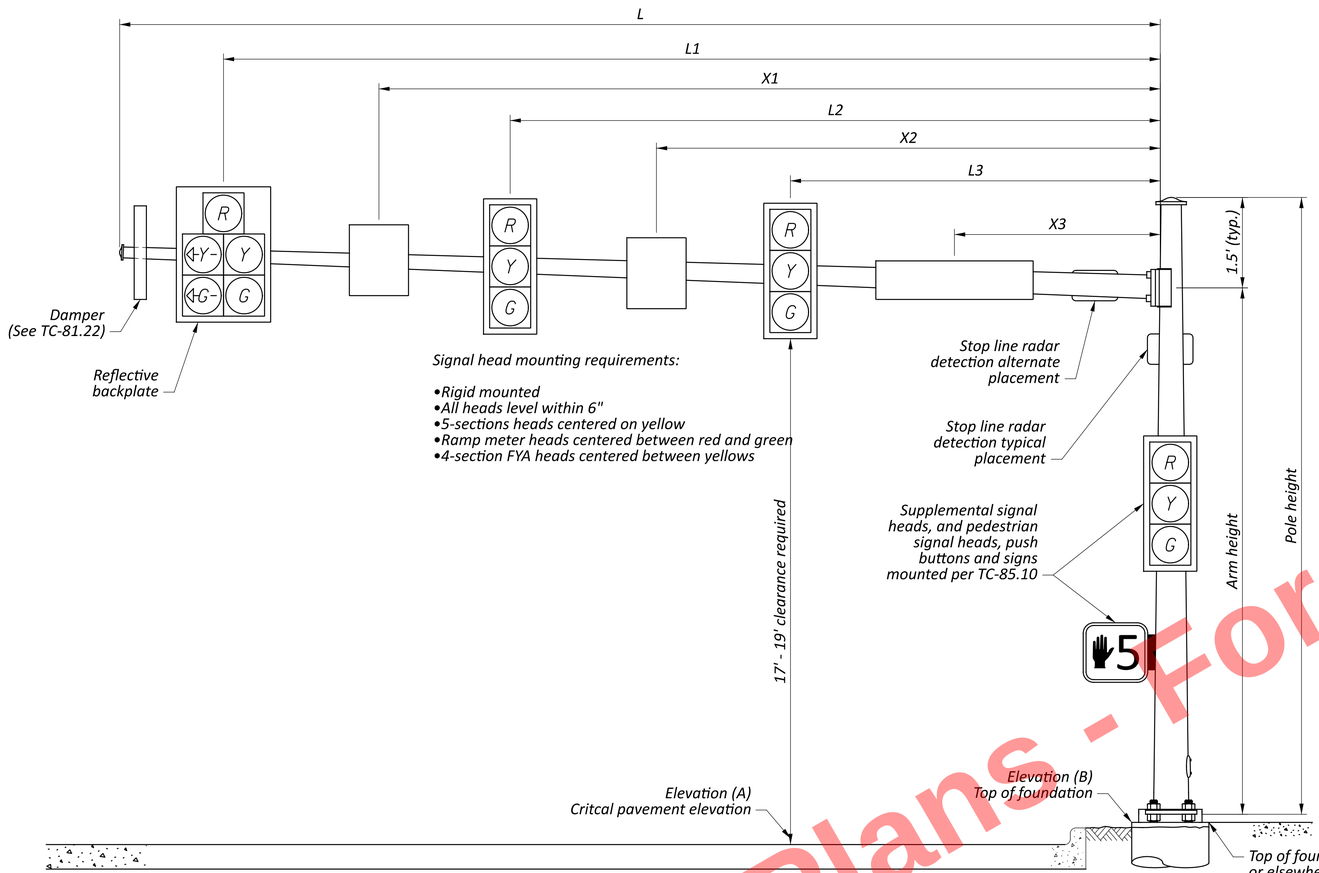

SIGNAL SUPPORT ELEVATION

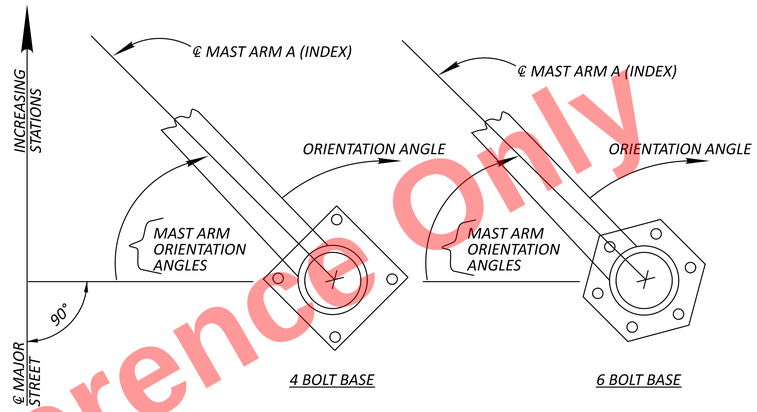

POLE ORIENTATION

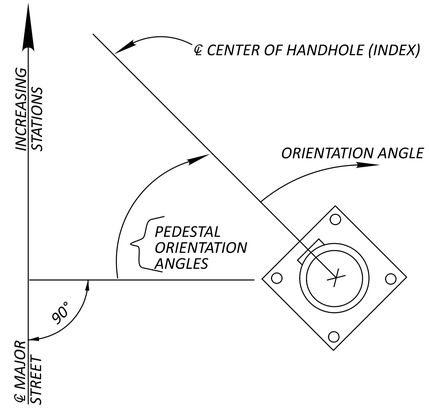

PEDESTAL ORIENTATION

MAST ARM TABLE

SUPPORT NO.	STATION	OFFSET	ELEVATION A (PAVEMENT ELEVATION)	ELEVATION B (TOP OF FOUNDATION)	SIGNAL SUPPORT DETAILS: DESIGN TYPE	DESIGN NO.	POLE HEIGHT	ARM HEIGHT	L	L1	L2	L3	L4	X1	X2	X3	X4	ORIENTATION ANGLES FROM MAST ARM A OR PEDESTAL HANDHOLE: MAST ARM A ANGLE	PEDESTRIAN SIGNAL	PEDESTRIAN PUSH BUTTON	PEDESTAL HANDHOLE ANGLE	SUPPLEMENTAL VEHICULAR SIGNAL
							FT	FT	FT	FT	FT	FT	FT	FT	FT	FT	FT	DEG	DEG	DEG	DEG	DEG
SP-1	32+55.8	52.8 LT	672.25	672.31	TC-81.22	4	22	20.5	20	13.5	3.5	-	-	17	8.5	-	-	85	170	170	-	285
SP-2	32+07.8	37.5 LT	671.44	671.69	TC-81.22	4	22	20.5	37	32	22.5	-	-	35.5	15	5.5	-	0	-	90	-	0
SP-3	32+75.6	52.7 RT	672.19	672.03	TC-81.22	12	22	20.5	45	42	31	-	-	38.5	21.5	-	-	0	0	0	-	15 & 270
SP-4	32+05.8	41.9 RT	671.62	671.33	TC-81.22	4	22.5	21	38	35	22.5	-	-	28.5	12.5	-	-	85	185	185	-	-
PS-1	32+45.4	64.9 LT	-	-	-	-	8	-	-	-	-	-	-	-	-	-	-	-	180	180	185	-
PS-2	32+10.0	74.4 LT	-	-	-	-	15	-	-	-	-	-	-	-	-	-	-	-	245	245	120	150
PS-3	32+07.4	59.9 LT	-	-	TC-81.11	8	20	-	-	-	-	-	-	-	-	-	-	-	265	265	190	190
PS-4	32+79.5	39.7 RT	-	-	-	-	8	-	-	-	-	-	-	-	-	-	-	-	270	270	165	-
PS-5	32+12.6	53.5 RT	-	-	-	-	8	-	-	-	-	-	-	-	-	-	-	-	180	180	180	-

Preliminary Plans - For Reference Only

CUY-90-16.28 (CCG3A)
MODEL: Sheet PAPERSIZE: 34x22 (in.) DATE: 3/27/2025 TIME: 7:39:41 PM USER: MalaGallagher
pw:\\mb-us-pw.bentley.com\mb-us-pw-03\Documents\Cleveland.OH\OL_Projects\ODOT\District2\82382\400-Engineering\Signals\Sheets\82382_CP600l.dgn

TRAFFIC SIGNAL PLAN DETAILS
E. 22ND ST. & CEDAR AVE.

DESIGN AGENCY
Michael Baker INTERNATIONAL

DESIGNER
SED

REVIEWER
RMG 05/22/24

PROJECT ID
82382

SHEET 1664 TOTAL 2696

SIGNAL TIMING CHART

INTERSECTION: E. 22ND ST & CEDAR AVE									
MAINTAINING AGENCY: CITY OF CLEVELAND									
START UP			DUAL ENTRY: YES		PHASES:		2, 4, 6, 8		
			REST IN RED:		RING 1	-		RING 2	-
START IN: ALL RED			OVERLAP			A	B	C	D
TIME FOR FLASH, ALL RED: 5									
FIRST PHASE(S): 2 + 6			PHASES			2	6	-	-
COLOR DISPLAYED: GREEN									
INTERVAL OR FEATURE			CONTROLLER MOVEMENT NO.						
INTERSECTION MOVEMENT (PHASE)			1	2	3	4	5	6	7	8
DIRECTION			SBL	NBT	-	EBT	-	SBT	EBL	WBT
MINIMUM GREEN (INITIAL)		(SEC.)	7	20	-	10	-	20	7	10
ADDED INITIAL		*(SEC./ACTUATION)	-	-	-	-	-	-	-	-
MAXIMUM INITIAL		*(SEC.)	-	-	-	-	-	-	-	-
PASSAGE TIME (PRESET GAP)		(SEC.)	3.0	-	-	3.0	-	-	3.0	3.0
TIME BEFORE REDUCTION		*(SEC.)	-	-	-	-	-	-	-	-
MINIMUM GAP		*(SEC.)	-	-	-	-	-	-	-	-
TIME TO REDUCE		*(SEC.)	-	-	-	-	-	-	-	-
MAXIMUM GREEN I		(SEC.)	20	60	-	40	-	60	20	40
MAXIMUM GREEN II		(SEC.)	-	-	-	-	-	-	-	-
YELLOW CHANGE		(SEC.)	3.0	3.0	-	4.1	-	3.0	3.2	4.1
ALL RED CLEARANCE		(SEC.)	1.4	3.6	-	1.7	-	3.6	2.4	1.7
DELAYED GREEN (LPI) #		(SEC.)	-	-	-	-	-	-	-	-
WALK		(SEC.)	-	7	-	8	-	7	-	7
FLASHING YELLOW ARROW DELAY °			-	-	-	-	-	-	-	-
PEDESTRIAN CLEARANCE		(SEC.)	-	9	-	21	-	9	-	19
RECALL	MAXIMUM	(ON/OFF)	OFF	OFF	-	OFF	-	OFF	OFF	OFF
	MINIMUM	(ON/OFF)	OFF	ON	-	OFF	-	ON	OFF	OFF
	PEDESTRIAN	(ON/OFF)	OFF	OFF	-	OFF	-	OFF	OFF	OFF
MEMORY		(ON/OFF)	OFF	OFF	-	ON	-	OFF	OFF	OFF

NOTES:

- CONTROLLER SHALL BE PROGRAMMED SUCH THAT OLA AND OLB RECEIVE 2.2 SECONDS OF TRAILING GREEN TIME, 3.4 SECONDS OF YELLOW CLEARANCE, AND 1.0 SECONDS OF ALL RED CLEARANCE.
- THE PRIMARY THRU MOVEMENT SHOULD HAVE MIN RECALL ACTIVE TO REST IN GREEN.
- COUNTDOWN PEDESTRIAN SIGNALS SHALL GO TO ZERO ON YELLOW PER OMUTCD FIGURE 4E-2.
- ALL DETECTOR DELAYS SHALL BE PLACED IN THE CONTROLLER.

PHASING DIAGRAM

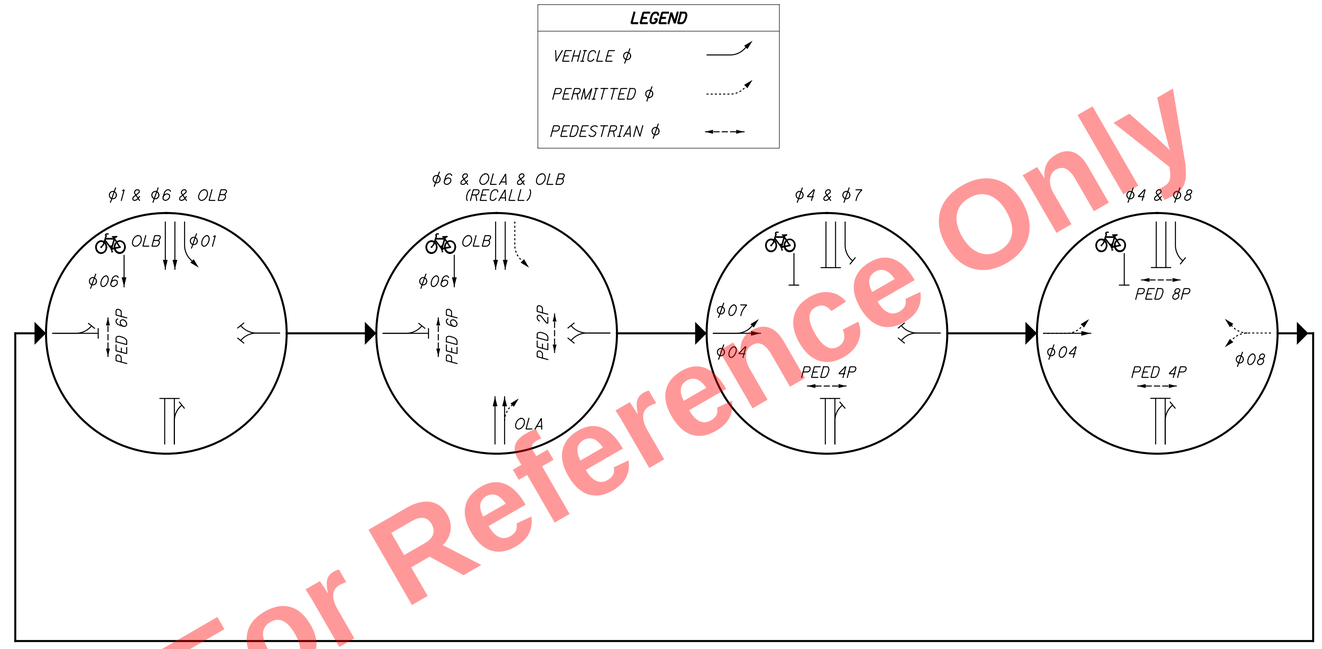

RADAR DETECTION CHART

DETECTION ZONE	MOVEMENT	WIDTH	ASSOCIATED PHASE	DELAY PROGRAMMED IN CONTROLLER (SEC)	EXTENSION PROGRAMMED IN CONTROLLER (SEC)	DETECTOR NUMBER	PURPOSE	DETECTION ZONE LENGTH (FT)
RDZ3A	WBT	8	ϕ3	8	3	R-1	STOP LINE	35
RDZ1A	SBL	8	ϕ1	0	3	R-2	STOP LINE	35
RDZ4A	EBLT	8	ϕ4 & ϕ7	0	3	R-3	STOP LINE	35

Preliminary Plans - For Reference Only

TRAFFIC SIGNAL PLAN DETAILS
E. 22ND ST. & CEDAR AVE.

DESIGN AGENCY
Michael Baker INTERNATIONAL

DESIGNER SED
REVIEWER RMG 05/22/24
PROJECT ID 82382
SHEET 1665 TOTAL 2696

CUY-90-16.28 (CCG3A)

MODEL: Sheet PAPERSIZE: 34x22 (in.) DATE: 3/27/2025 TIME: 7:39:47 PM USER: Mala.Gallagher
pw:\\mb-us-pw.bentley.com:mb-us-pw-03\Documents\Cleveland.OH\OI_Projects\ODOT\District2\82382\400-Engineering\Signals\Sheets\82382_CP6002.dgn

WIRING DIAGRAM

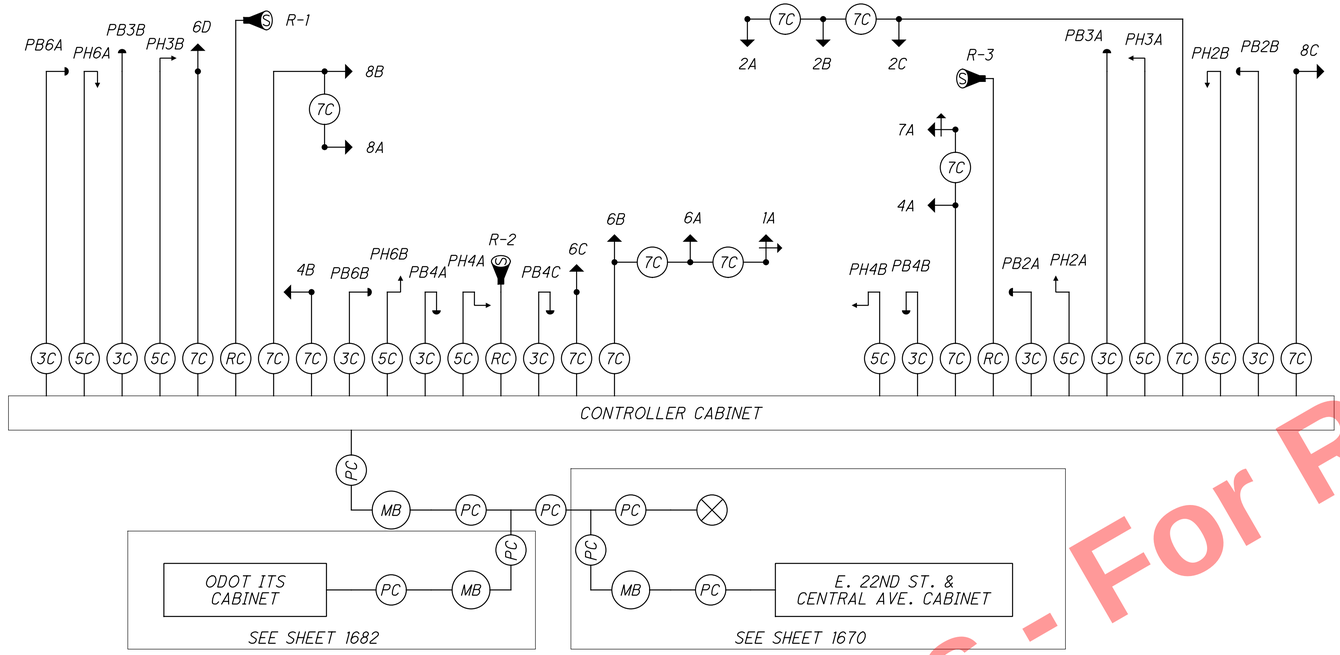

FIELD WIRING HOOK-UP CHART

SIGNAL HEAD	INDICATION	FIELD TERMINAL	FLASH
1A (SB LT)	R	ϕ6 R/LS 14 R	R
	Y	ϕ6 Y/LS 14 Y	
	G	ϕ6 G/LS 14 G	
	<--Y--	ϕ1 Y	
	<--G--	ϕ1 G	
2A, 2B, 2C (NB)	R	ϕ2 R/LS 13 R	R
	Y	ϕ2 Y/LS 13 Y	
	G	ϕ2 G/LS 13 G	
4A (EB)	R	ϕ4 R	R
	Y	ϕ4 Y	
	G	ϕ4 G	
4B (EB)	R	ϕ4 R	R
	Y	ϕ4 Y	
	G	ϕ4 G	
6A, 6B (SB)	R	ϕ6 R/LS 14 R	R
	Y	ϕ6 Y/LS 14 Y	
	G	ϕ6 G/LS 14 G	
6C (SB BIKE)	R	ϕ6 R	R
	Y	ϕ6 Y	
	G	ϕ6 G	
6D (SB BIKE)	R	ϕ6 R	R
	Y	ϕ6 Y	
	G	ϕ6 G	
7A (EB)	R	ϕ4 R	R
	Y	ϕ4 Y	
	G	ϕ4 G	
	<--Y--	ϕ7 Y	
	<--G--	ϕ7 G	

SIGNAL HEAD	INDICATION	FIELD TERMINAL	FLASH
8A, 8B (WB)	R	ϕ8 R	R
	Y	ϕ8 Y	
	G	ϕ8 G	
8C (WB)	R	ϕ8 R	R
	Y	ϕ8 Y	
	G	ϕ8 G	
PEDESTRIAN MOVEMENTS			
PED 2P	W	ϕ2 PED/LS 9 G	OUT
	DW	ϕ2 PED/LS 9 R	
PED 4P	W	ϕ4 PED/LS 10 G	OUT
	DW	ϕ4 PED/LS 10 R	
PED 6P	W	ϕ6 PED/LS 11 G	OUT
	DW	ϕ6 PED/LS 11 R	
PED 8P	W	ϕ8 PED/LS 12 G	OUT
	DW	ϕ8 PED/LS 12 R	
OVERLAPS			
OLA	R	ϕ2 R/LS 13 R	OUT
	Y	ϕ2 Y/LS 13 Y	
	G	ϕ2 G/LS 13 G	
OLB	R	ϕ6 R/LS 14 R	OUT
	Y	ϕ6 Y/LS 14 Y	
	G	ϕ6 G/LS 14 G	

LS = LOAD SWITCH OLA = LS 13 OLB = LS 14

LEGEND

- TRAFFIC SIGNAL, 4 OR 5 UNIT HEAD, 12″
- TRAFFIC SIGNAL, 2 UNIT, 3 UNIT, OR PHB HEAD 12″
- TRAFFIC SIGNAL, 3 UNIT HEAD, 12″ WITH ARROWS
- PEDESTRIAN SIGNAL
- PEDESTRIAN PUSH BUTTON
- STOP LINE RADAR DETECTION UNIT
- 3C — SIGNAL CABLE, 3 CONDUCTOR, NO. 14 AWG
- 5C — SIGNAL CABLE, 5 CONDUCTOR, NO. 14 AWG
- 7C — SIGNAL CABLE, 7 CONDUCTOR, NO. 14 AWG
- RC — RADAR DETECTION CABLE
- POWER SOURCE
- PC — POWER CABLE, 2 CONDUCTOR, NO. 4 AWG
- MB — METER BASE

Preliminary Plans - For Reference Only

TRAFFIC SIGNAL PLAN DETAILS
E. 22ND ST. & CEDAR AVE.

DESIGN AGENCY
Michael Baker INTERNATIONAL

DESIGNER SED
REVIEWER RMG 05/22/24
PROJECT ID 82382
SHEET 1666 TOTAL 2696

CUY-90-16.28 (CCG3A)

MODEL: Sheet PAPERSIZE: 34x22 (in.) DATE: 3/27/2025 TIME: 7:39:53 PM USER: Mala.Gallagher
pw:\\mb-us-pw.bentley.com:mb-us-pw-03\Documents\Cleveland_OH\OI_Projects\ODOT\District2\82382\400-Engineering\Signals\Sheets\82382_CP6003.dgn

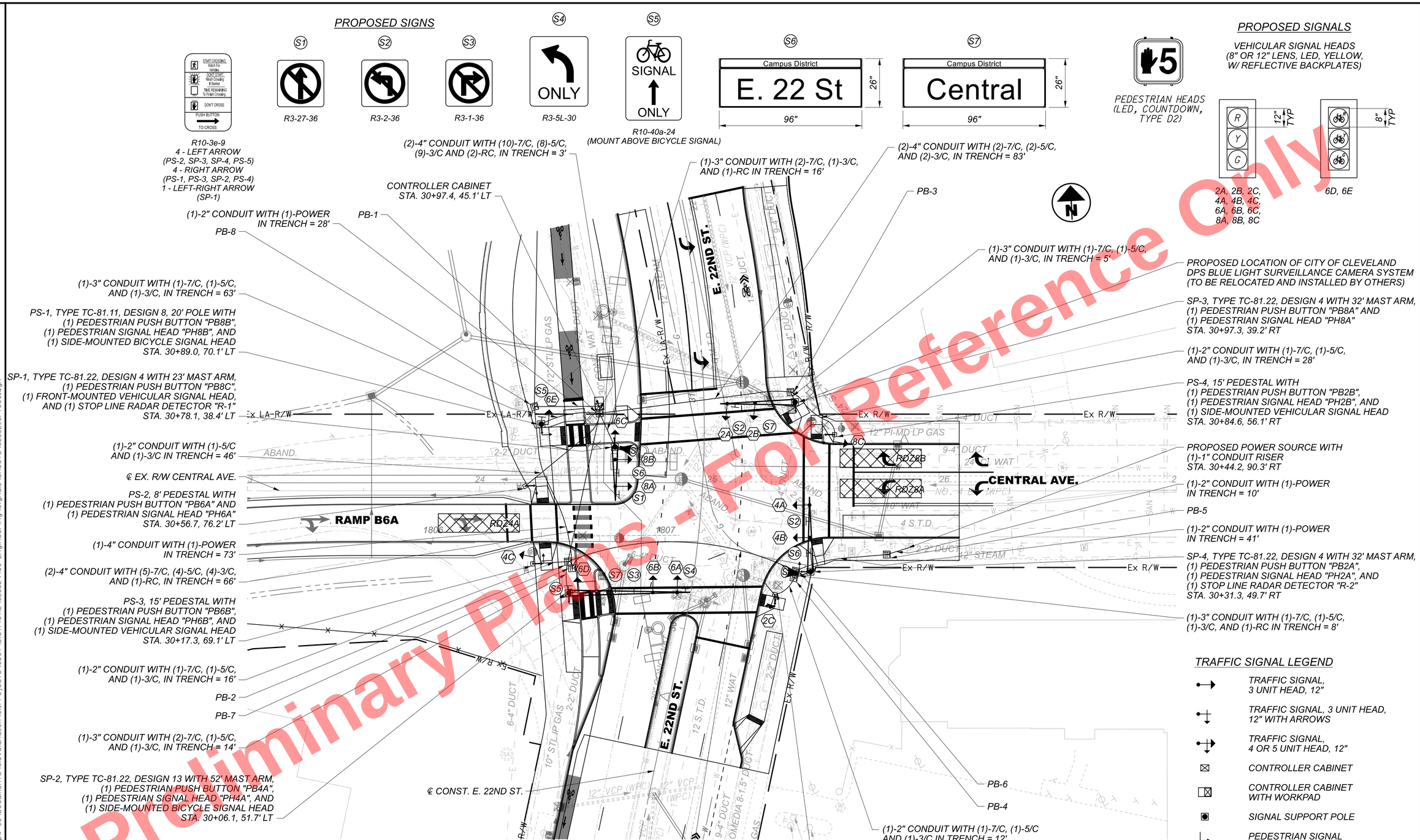

Preliminary Plans - For Reference Only

TRAFFIC SIGNAL LEGEND

- TRAFFIC SIGNAL, 3 UNIT HEAD, 12"
- TRAFFIC SIGNAL, 3 UNIT HEAD, 12" WITH ARROWS
- TRAFFIC SIGNAL, 4 OR 5 UNIT HEAD, 12"
- CONTROLLER CABINET
- CONTROLLER CABINET WITH WORKPAD
- SIGNAL SUPPORT POLE
- PEDESTRIAN SIGNAL
- PEDESTRIAN PUSH BUTTON
- PEDESTAL SUPPORT
- TRAFFIC PULL BOX
- SIGNAL CONDUIT
- RADAR DETECTION ZONE
- RADAR DETECTOR

PULL BOX TABLE

PULL BOX #	STATION	SIDE	OFFSET	SIZE (IN.)
PB-1	30+94.0	LT	45.0	24 x 36
PB-2	30+21.1	LT	54.3	24 x 36
PB-3	31+01.4	RT	37.4	24 x 36
PB-4	30+28.1	RT	43.0	24 x 36
PB-5	30+41.0	RT	81.5	13 x 24
PB-6	30+30.8	RT	43.2	13 x 24
PB-7	30+18.2	LT	52.2	13 x 24
PB-8	30+98.0	LT	73.0	13 x 24

NOTE:

1. RADAR DETECTION LOCATION IS FOR REFERENCE ONLY, ACTUAL PLACEMENT WILL BE RECOMMENDED BY MANUFACTURER.

TRAFFIC SIGNAL PLAN
E. 22ND ST. & CENTRAL AVE.

DESIGN AGENCY
Michael Baker INTERNATIONAL

DESIGNER SED
REVIEWER RMG 05/22/24
PROJECT ID 82382
SHEET 1667 TOTAL 2696

CUY-90-16.28 (CCG3A)

MODEL: 82382_CP7000 PAPERSIZE: 34x22 (in.) DATE: 3/27/2025 TIME: 7:40:19 PM USER: Mala.Gallagher
pw:\\mb-us-pw.bentley.com:mb-us-pw-03\Documents\Cleveland.OH\01_Projects\ODOT\District2\82382\400-Engineering\Signals\Sheets\82382_CP7000.dgn

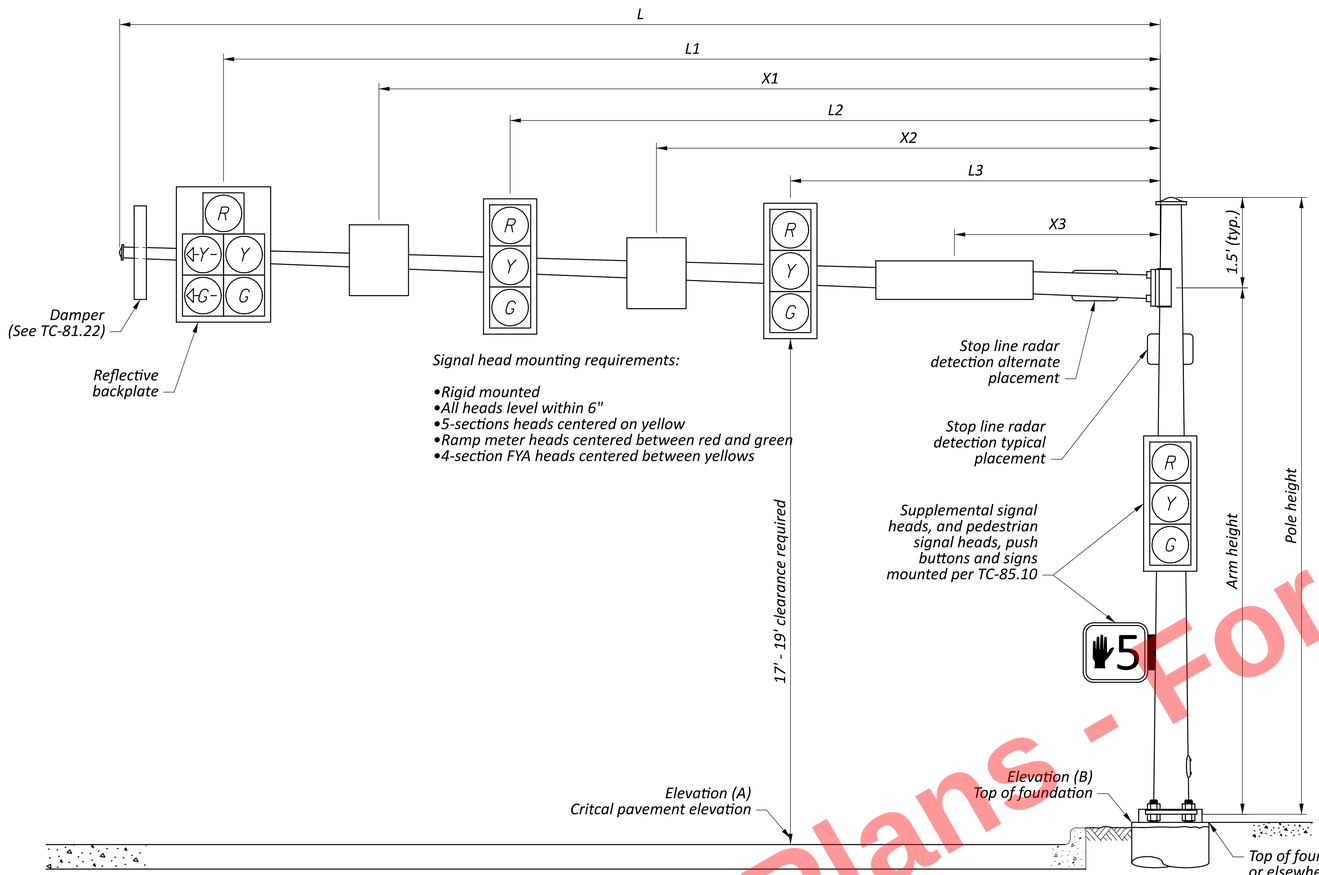

SIGNAL SUPPORT ELEVATION

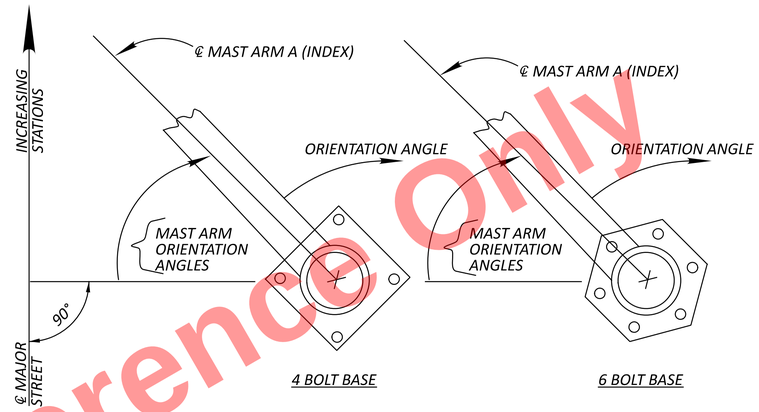

POLE ORIENTATION

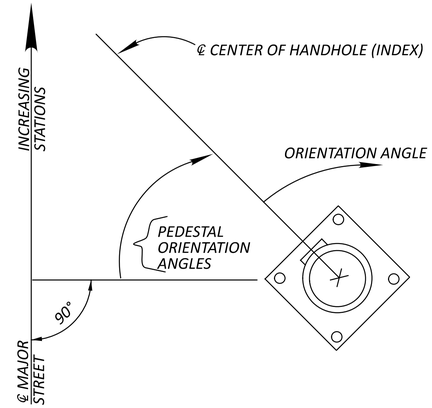

PEDESTAL ORIENTATION

MAST ARM TABLE

SUPPORT NO.	STATION	OFFSET	ELEVATION A (PAVEMENT ELEVATION)	ELEVATION B (TOP OF FOUNDATION)	SIGNAL SUPPORT DETAILS: DESIGN TYPE	DESIGN NO.	POLE HEIGHT	ARM HEIGHT	L	L1	L2	L3	L4	X1	X2	X3	X4	ORIENTATION ANGLES FROM MAST ARM A OR PEDESTAL HANDHOLE: MAST ARM A ANGLE	PEDESTRIAN SIGNAL	PEDESTRIAN PUSH BUTTON	PEDESTAL HANDHOLE ANGLE	SUPPLEMENTAL VEHICULAR SIGNAL
							FT	FT	FT	FT	FT	FT	FT	FT	FT	FT	FT	DEG	DEG	DEG	DEG	DEG
SP-1	30+78.1	38.4 LT	669.92	670.02	TC-81.22	4	22	20.5	23	17	5.5	-	-	20.5	11	-	-	90	-	175	-	180
SP-2	30+06.1	51.7 LT	669.06	669.66	TC-81.22	13	21	19.5	52	46.5	36	-	-	50	28	20	-	350	90	90	-	355
SP-3	30+97.3	39.2 RT	669.78	669.47	TC-81.22	4	22	20.5	32	29	17	-	-	25.5	9.5	-	-	0	265	265	-	-
SP-4	30+31.3	49.7 RT	668.84	669.38	TC-81.22	4	22	20.5	32	28.5	14.5	-	-	21.5	8	-	-	80	270	270	-	-
PS-1	30+89.0	70.1 LT	-	-	TC-81.11	8	20	-	-	-	-	-	-	-	-	-	-	-	270	270	175	190
PS-2	30+56.7	76.2 LT	-	-	-	-	8	-	-	-	-	-	-	-	-	-	-	-	115	115	235	-
PS-3	30+17.3	69.1 LT	-	-	-	-	15	-	-	-	-	-	-	-	-	-	-	-	180	180	165	105
PS-4	30+84.6	56.1 RT	-	-	-	-	15	-	-	-	-	-	-	-	-	-	-	-	270	270	90	190
PS-5	30+20.5	35.9 RT	-	-	-	-	15	-	-	-	-	-	-	-	-	-	-	-	75	75	185	95

Preliminary Plans - For Reference Only

MODEL: Sheet PAPERSIZE: 34x22 (In.) DATE: 3/27/2025 TIME: 7:40:49 PM USER: Mala.Gallagher
pw:\\mb-us-pw.bentley.com:mb-us-pw-03\Documents\Cleveland.OH\01_Projects\ODOT\District2\82382\400-Engineering\Signals\Sheets\82382_CP7001.dgn

TRAFFIC SIGNAL PLAN DETAILS
E. 22ND ST. & CENTRAL AVE.

DESIGN AGENCY
Michael Baker INTERNATIONAL
DESIGNER SED
REVIEWER RMG 05/22/24
PROJECT ID 82382
SHEET 1668 TOTAL 2696

SIGNAL TIMING CHART

INTERSECTION: E. 22ND ST & CENTRAL AVE									
MAINTAINING AGENCY: CITY OF CLEVELAND									
START UP		DUAL ENTRY: YES		PHASES:		2, 4, 6, 8			
		REST IN RED:		RING 1	-		RING 2	-	
START IN: ALL RED		OVERLAP			A	B	C	D	
TIME FOR FLASH, ALL RED: 5									
FIRST PHASE(S): 2 + 6		PHASES			2	6	-	-	
COLOR DISPLAYED: GREEN									
INTERVAL OR FEATURE		CONTROLLER MOVEMENT NO.							
INTERSECTION MOVEMENT (PHASE)		1	2	3	4	5	6	7	8
DIRECTION		-	NBT	-	EBT	-	SBT	-	WBT
MINIMUM GREEN (INITIAL)	(SEC.)	-	20	-	10	-	20	-	10
ADDED INITIAL	*(SEC./ACTUATION)	-	-	-	-	-	-	-	-
MAXIMUM INITIAL	*(SEC.)	-	-	-	-	-	-	-	-
PASSAGE TIME (PRESET GAP)	(SEC.)	-	-	-	3.0	-	-	-	3.0
TIME BEFORE REDUCTION	*(SEC.)	-	-	-	-	-	-	-	-
MINIMUM GAP	*(SEC.)	-	-	-	-	-	-	-	-
TIME TO REDUCE	*(SEC.)	-	-	-	-	-	-	-	-
MAXIMUM GREEN I	(SEC.)	-	60	-	60	-	60	-	60
MAXIMUM GREEN II	(SEC.)	-	-	-	-	-	-	-	-
YELLOW CHANGE	(SEC.)	-	3.0	-	4.1	-	3.0	-	4.1
ALL RED CLEARANCE	(SEC.)	-	3.6	-	1.2	-	3.6	-	1.2
DELAYED GREEN (LPI) #	(SEC.)	-	-	-	-	-	-	-	-
WALK	(SEC.)	-	7	-	7	-	7	-	9
FLASHING YELLOW ARROW DELAY °		-	-	-	-	-	-	-	-
PEDESTRIAN CLEARANCE	(SEC.)	-	9	-	18	-	9	-	23
RECALL	MAXIMUM (ON/OFF)	-	OFF	-	OFF	-	OFF	-	OFF
	MINIMUM (ON/OFF)	-	ON	-	OFF	-	ON	-	OFF
	PEDESTRIAN (ON/OFF)	-	OFF	-	OFF	-	OFF	-	OFF
MEMORY	(ON/OFF)	-	OFF	-	OFF	-	OFF	-	OFF

NOTES:

- CONTROLLER SHALL BE PROGRAMMED SUCH THAT OLA AND OLB RECEIVE 1.9 SECONDS OF TRAILING GREEN TIME, 3.4 SECONDS OF YELLOW CLEARANCE, AND 1.3 SECONDS OF ALL RED CLEARANCE.
- THE PRIMARY THRU MOVEMENT SHOULD HAVE MIN RECALL ACTIVE TO REST IN GREEN.
- COUNTDOWN PEDESTRIAN SIGNALS SHALL GO TO ZERO ON YELLOW PER OMUTCD FIGURE 4E-2.
- ALL DETECTOR DELAYS SHALL BE PLACED IN THE CONTROLLER.

PHASING DIAGRAM

LEGEND

VEHICLE ϕ

PERMITTED ϕ

PEDESTRIAN ϕ

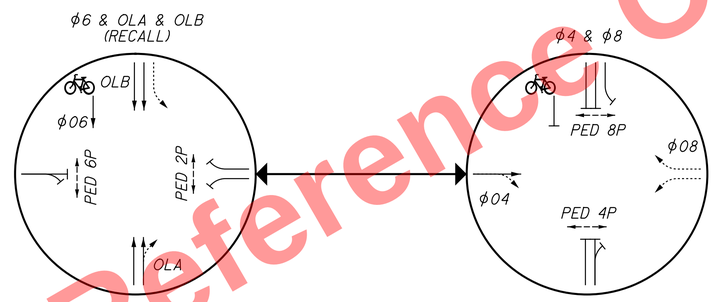

RADAR DETECTION CHART

DETECTION ZONE	MOVEMENT	WIDTH	ASSOCIATED PHASE	DELAY PROGRAMMED IN CONTROLLER (SEC)	EXTENSION PROGRAMMED IN CONTROLLER (SEC)	DETECTOR NUMBER	PURPOSE	DETECTION ZONE LENGTH (FT)
RDZ8A	WBT	8	ϕ8	0	3	R-1	STOP LINE	35
RDZ8B	WBT	8	ϕ8	8	3	R-1	STOP LINE	35
RDZ4A	EBT	8	ϕ4	8	3	R-2	STOP LINE	35

Preliminary Plans - For Reference Only

TRAFFIC SIGNAL PLAN DETAILS
E. 22ND ST. & CENTRAL AVE.

DESIGN AGENCY
Michael Baker INTERNATIONAL

DESIGNER SED
REVIEWER RMG 05/22/24
PROJECT ID 82382
SHEET 1669 TOTAL 2696

CUY-90-16.28 (CCG3A)

MODEL: Sheet PAPERSIZE: 34x22 (in.) DATE: 3/27/2025 TIME: 7:40:55 PM USER: Mala.Gallagher
pw:\\mb-us-pw.bentley.com\mb-us-pw-03\Documents\Cleveland.OH\OI_Projects\ODOT\District2\82382\400-Engineering\Signals\Sheets\82382_CP7002.dgn

WIRING DIAGRAM

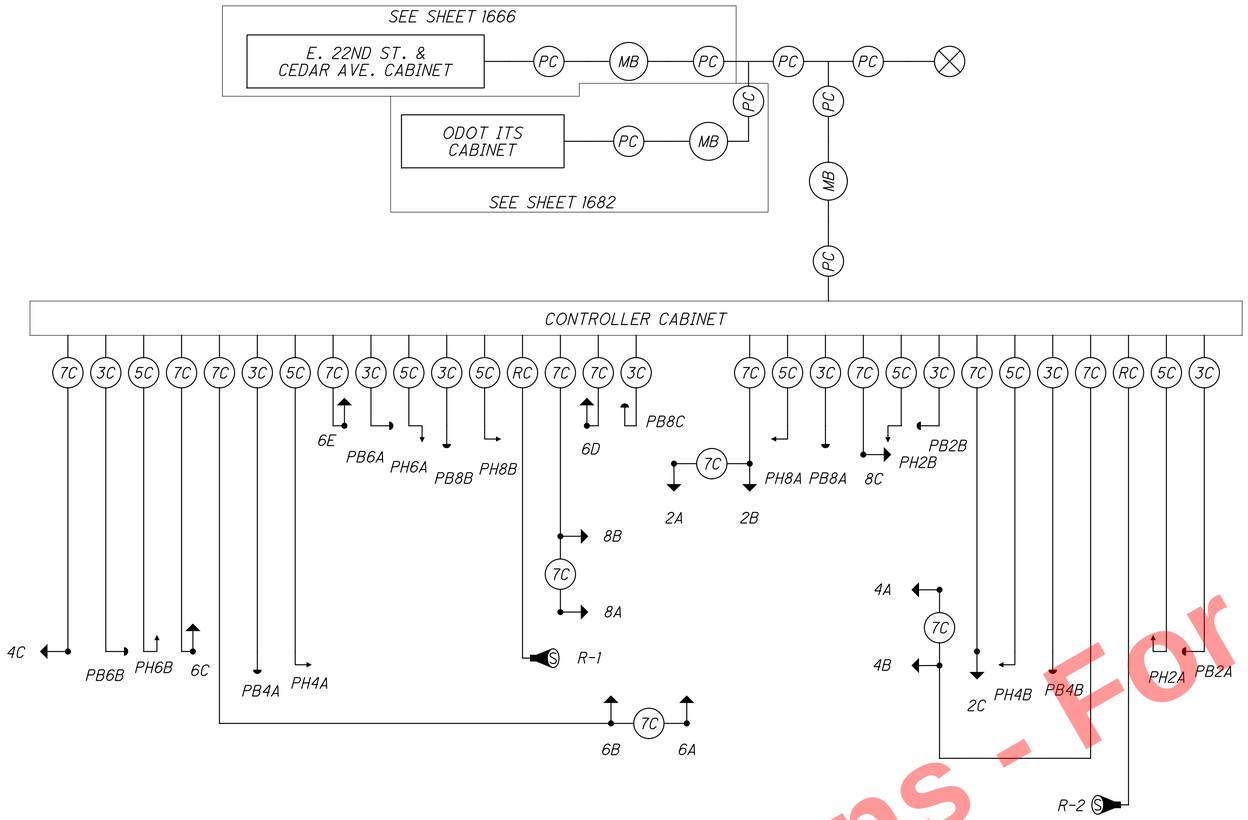

FIELD WIRING HOOK-UP CHART

SIGNAL HEAD	INDICATION	FIELD TERMINAL	FLASH
2A, 2B (NB)	R	ϕ2 R/LS 13 R	R
	Y	ϕ2 Y/LS 13 Y	
	G	ϕ2 G/LS 13 G	
2C (NB)	R	ϕ2 R/LS 13 R	R
	Y	ϕ2 Y/LS 13 Y	
	G	ϕ2 G/LS 13 G	
4A, 4B (EB)	R	ϕ4 R	R
	Y	ϕ4 Y	
	G	ϕ4 G	
4C (EB)	R	ϕ4 R	R
	Y	ϕ4 Y	
	G	ϕ4 G	
6A, 6B (SB)	R	ϕ6 R/LS 14 R	R
	Y	ϕ6 Y/LS 14 Y	
	G	ϕ6 G/LS 14 G	
6C (SB)	R	ϕ6 R/LS 14 R	R
	Y	ϕ6 Y/LS 14 Y	
	G	ϕ6 G/LS 14 G	
6D (SB BIKE)	R	ϕ6 R	R
	Y	ϕ6 Y	
	G	ϕ6 G	
6E (SB BIKE)	R	ϕ6 R	R
	Y	ϕ6 Y	
	G	ϕ6 G	

SIGNAL HEAD	INDICATION	FIELD TERMINAL	FLASH
8A, 8B (WB)	R	ϕ8 R	R
	Y	ϕ8 Y	
	G	ϕ8 G	
8C (WB)	R	ϕ8 R	R
	Y	ϕ8 Y	
	G	ϕ8 G	
PEDESTRIAN MOVEMENTS			
PED 2P	W	ϕ2 PED/LS 9 G	OUT
	DW	ϕ2 PED/LS 9 R	
PED 4P	W	ϕ4 PED/LS 10 G	OUT
	DW	ϕ4 PED/LS 10 R	
PED 6P	W	ϕ6 PED/LS 11 G	OUT
	DW	ϕ6 PED/LS 11 R	
PED 8P	W	ϕ8 PED/LS 12 G	OUT
	DW	ϕ8 PED/LS 12 R	
OVERLAPS			
OLA	R	ϕ2 R/LS 13 R	OUT
	Y	ϕ2 Y/LS 13 Y	
	G	ϕ2 G/LS 13 G	
OLB	R	ϕ6 R/LS 14 R	OUT
	Y	ϕ6 Y/LS 14 Y	
	G	ϕ6 G/LS 14 G	

LS = LOAD SWITCH OLA = LS 13 OLB = LS 14

LEGEND

- TRAFFIC SIGNAL, 4 OR 5 UNIT HEAD, 12"
- TRAFFIC SIGNAL, 2 UNIT, 3 UNIT, OR PHB HEAD 12"
- TRAFFIC SIGNAL, 3 UNIT HEAD, 12" WITH ARROWS
- PEDESTRIAN SIGNAL
- PEDESTRIAN PUSH BUTTON
- STOP LINE RADAR DETECTION UNIT
- 3C — SIGNAL CABLE, 3 CONDUCTOR, NO. 14 AWG
- 5C — SIGNAL CABLE, 5 CONDUCTOR, NO. 14 AWG
- 7C — SIGNAL CABLE, 7 CONDUCTOR, NO. 14 AWG
- RC — RADAR DETECTION CABLE
- POWER SOURCE
- PC — POWER CABLE, 2 CONDUCTOR, NO. 4 AWG
- MB — METER BASE

Preliminary Plans - For Reference Only

TRAFFIC SIGNAL PLAN DETAILS
E. 22ND ST. & CENTRAL AVE.

DESIGN AGENCY
Michael Baker INTERNATIONAL

DESIGNER SED
REVIEWER RMG 05/22/24
PROJECT ID 82382
SHEET 1670 TOTAL 2696

CUY-90-16.28 (CCG3A)

MODEL: Sheet PAPERSIZE: 34x22 (in.) DATE: 3/27/2025 TIME: 7:41:00 PM USER: Mala.Gallagher
pw:\\mb-us-pw.bentley.com:mb-us-pw-03\Documents\Cleveland.OH\OL_Projects\ODOT\District2\82382\400-Engineering\Sheets\82382_CP7003.dgn

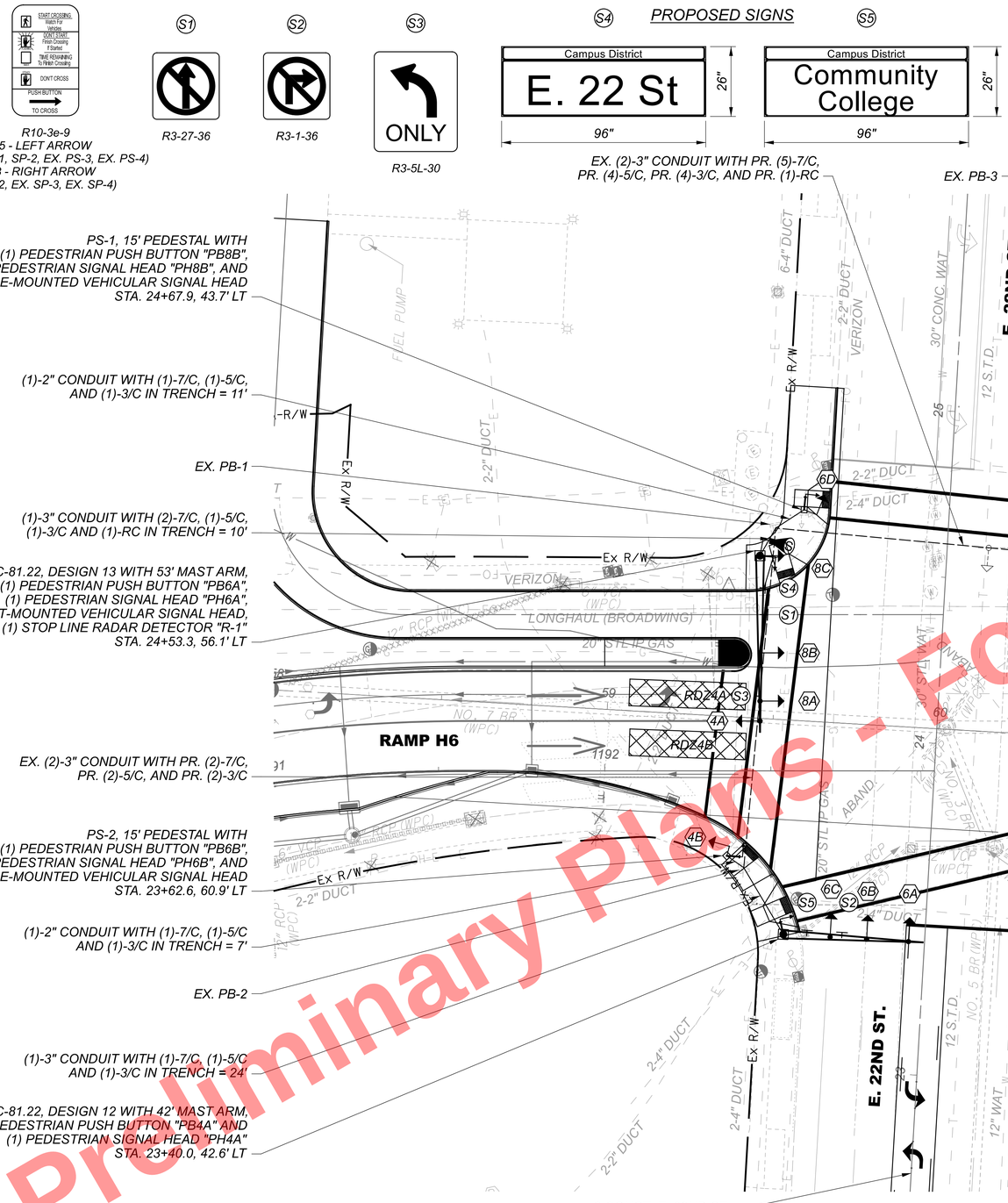

PULL BOX TABLE

PULL BOX #	STATION	SIDE	OFFSET	SIZE (IN.)
EX. PB-1	24+61.9	LT	51.9	17 x 30
EX. PB-2	23+59.3	LT	55.6	17 x 30
EX. PB-3	24+58.3	RT	50.4	24 x 36
EX. PB-4	23+79.5	RT	50.9	17 x 30

NOTE:
RADAR DETECTION LOCATION IS FOR REFERENCE ONLY, ACTUAL PLACEMENT WILL BE RECOMMENDED BY MANUFACTURER.

TRAFFIC SIGNAL LEGEND

- TRAFFIC SIGNAL, 3 UNIT HEAD, 12"
- TRAFFIC SIGNAL, 3 UNIT HEAD, 12" WITH ARROWS
- TRAFFIC SIGNAL, 4 OR 5 UNIT HEAD, 12"
- CONTROLLER CABINET
- CONTROLLER CABINET WITH WORKPAD
- SIGNAL SUPPORT POLE
- PEDESTRIAN SIGNAL
- PEDESTRIAN PUSH BUTTON
- PEDESTAL SUPPORT
- TRAFFIC PULL BOX
- SIGNAL CONDUIT
- RADAR DETECTION ZONE
- RADAR DETECTOR

Preliminary Plans - For Reference Only

HORIZONTAL SCALE IN FEET
0 10 20 40

TRAFFIC SIGNAL PLAN
E. 22ND ST. & COMMUNITY COLLEGE AVE.

DESIGN AGENCY
Michael Baker INTERNATIONAL
DESIGNER SED
REVIEWER RMG 05/22/24
PROJECT ID 82382
SHEET 1671 TOTAL 2696

CUY-90-16.28 (CCG3A)

MODEL: 82382_CP6000 PAPERSIZE: 34x22 (in.) DATE: 6/9/2025 TIME: 2:39:17 PM USER: Julie.Ross
pw:\\mb-us-pw.bentley.com:mb-us-pw-03\Documents\Cleveland.OH\OI_Projects\ODOT\District2\82382\400-Engineering\Signals\Sheets\82382_CP8000.dgn

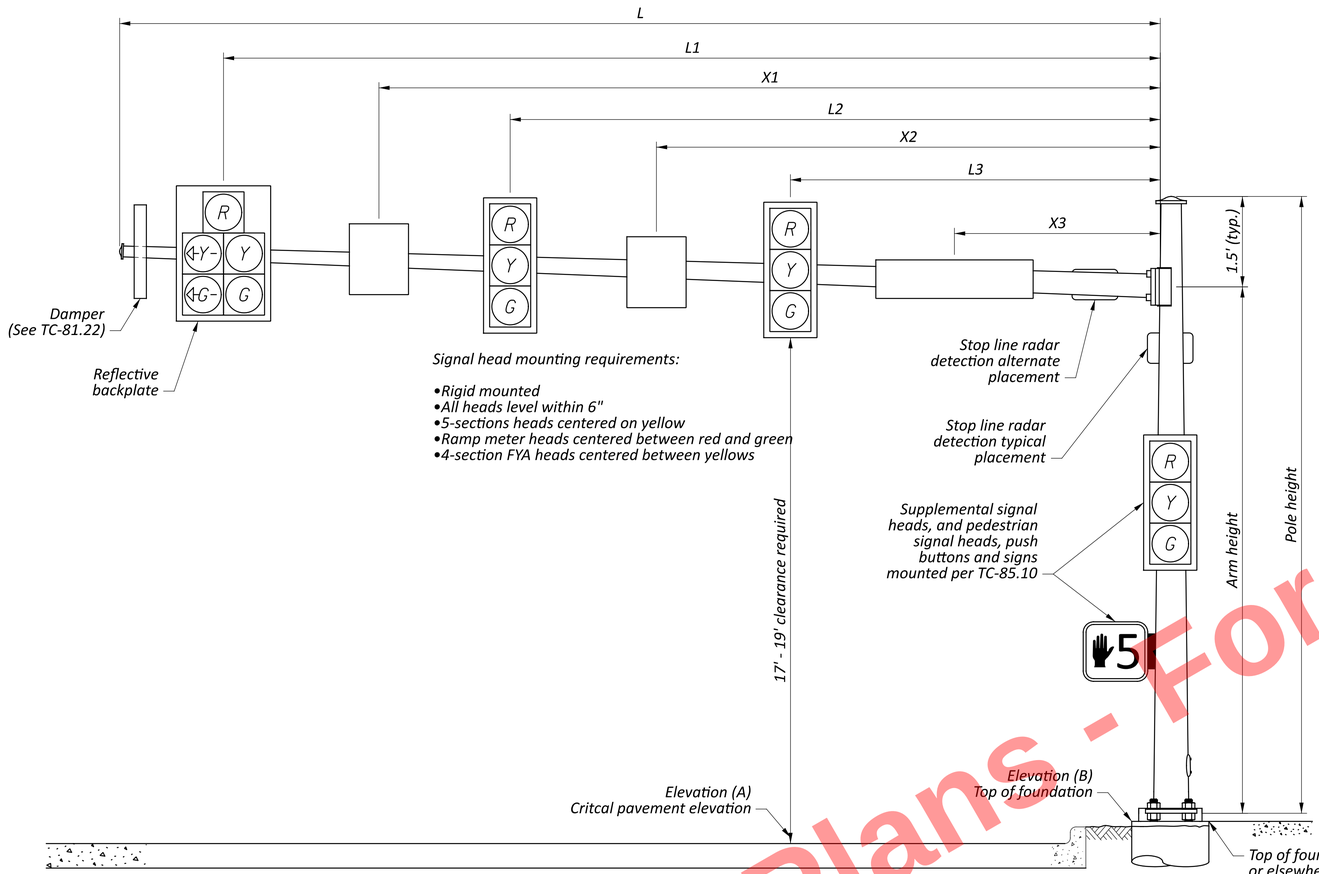

SIGNAL SUPPORT ELEVATION

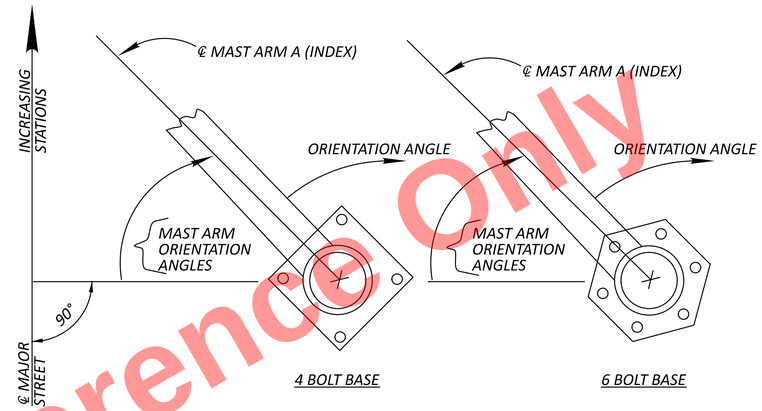

POLE ORIENTATION

PEDESTAL ORIENTATION

MAST ARM TABLE

SUPPORT NO.	STATION	OFFSET	ELEVATION		SIGNAL SUPPORT DETAILS												ORIENTATION ANGLES FROM MAST ARM A OR PEDESTAL HANDHOLE				
			A (PAVEMENT ELEVATION)	B (TOP OF FOUNDATION)	DESIGN TYPE	DESIGN NO.	POLE HEIGHT	ARM HEIGHT	L	L1	L2	L3	L4	X1	X2	X3	X4	MAST ARM A ANGLE	PEDESTRIAN SIGNAL	PEDESTRIAN PUSH BUTTON	PEDESTAL HANDHOLE ANGLE	SUPPLEMENTAL VEHICULAR SIGNAL
							FT	FT	FT	FT	FT	FT	FT	FT	FT	FT	FT	DEG	DEG	DEG	DEG	DEG
SP-1	24+53.3	56.1 LT	672.81	673.03	TC-81.22	13	22	20.5	53	43.5	29	-	-	42	17.5	9.5	-	85	275	275	-	270
SP-2	23+40.0	42.6 LT	673.47	673.59	TC-81.22	12	22	20.5	42	37.5	25	14	-	17.5	7	-	-	0	255	255	-	-
EX. SP-3	24+63.2	57.6 RT	EX.	EX.	EX.	EX.	EX.	EX.	EX.	EX.	EX.	EX.	-	17	-	-	-	EX.	EX.	10	-	EX.
EX. SP-4	23+63.4	47.9 RT	EX.	EX.	EX.	EX.	EX.	EX.	EX.	EX.	EX.	-	-	24	-	-	-	EX.	EX.	345	-	295
PS-1	24+67.9	43.7 LT	-	-	-	-	15	-	-	-	-	-	-	-	-	-	-	-	90	90	180	200
PS-2	23+62.6	60.9 LT	-	-	-	-	15	-	-	-	-	-	-	-	-	-	-	-	225	225	135	150
EX. PS-3	24+76.3	47.6 RT	-	-	-	-	EX.	-	-	-	-	-	-	-	-	-	-	-	-	95	EX.	-
EX. PS-4	23+77.9	61.4 RT	-	-	-	-	EX.	-	-	-	-	-	-	-	-	-	-	-	EX.	100	EX.	-

Preliminary Plans - For Reference Only

CUY-90-16.28 (CCG3A)

MODEL: Sheet PAPERSIZE: 34x22 (in.) DATE: 3/27/2025 TIME: 7:41:50 PM USER: Mala.Gallagher
pw:\\mb-us-pw.bentley.com:mb-us-pw-03\Documents\Cleveland_OH\01_Projects\00DT\District2\82382\400-Engineering\Signals\Sheets\82382_CP800i.dgn

TRAFFIC SIGNAL PLAN DETAILS
E. 22ND ST. & COMMUNITY COLLEGE AVE.

DESIGN AGENCY
Michael Baker INTERNATIONAL

DESIGNER
SED

REVIEWER
RMG 05/22/24

PROJECT ID
82382

SHEET 1672 | TOTAL 2696

SIGNAL TIMING CHART

INTERSECTION: E. 22ND ST & COMMUNITY COLLEGE AVE									
MAINTAINING AGENCY: CITY OF CLEVELAND									
START UP			DUAL ENTRY: YES		PHASES:		2, 4, 6, 8		
			REST IN RED:		RING 1	-	RING 2	-	
START IN: ALL RED			OVERLAP			A	B	C	D
TIME FOR FLASH, ALL RED: 5									
FIRST PHASE(S): 2 + 6			PHASES			-	-	-	-
COLOR DISPLAYED: GREEN									
INTERVAL OR FEATURE			CONTROLLER MOVEMENT NO.						
INTERSECTION MOVEMENT (PHASE)			1	2	3	4	5	6	7	8
DIRECTION			-	NBT	-	EBT	-	SBT	-	WBT
MINIMUM GREEN (INITIAL)		(SEC.)	-	20	-	10	-	20	-	10
ADDED INITIAL		*(SEC./ACTUATION)	-	-	-	-	-	-	-	-
MAXIMUM INITIAL		*(SEC.)	-	-	-	-	-	-	-	-
PASSAGE TIME (PRESET GAP)		(SEC.)	-	-	-	-	-	-	-	-
TIME BEFORE REDUCTION		*(SEC.)	-	-	-	-	-	-	-	-
MINIMUM GAP		*(SEC.)	-	-	-	-	-	-	-	-
TIME TO REDUCE		*(SEC.)	-	-	-	-	-	-	-	-
MAXIMUM GREEN I		(SEC.)	-	60	-	60	-	60	-	60
MAXIMUM GREEN II		(SEC.)	-	-	-	-	-	-	-	-
YELLOW CHANGE		(SEC.)	-	3.4	-	4.1	-	3.4	-	4.1
ALL RED CLEARANCE		(SEC.)	-	1.6	-	1.1	-	1.6	-	1.1
DELAYED GREEN (LPI) #		(SEC.)	-	-	-	-	-	-	-	-
WALK		(SEC.)	-	8	-	9	-	8	-	8
FLASHING YELLOW ARROW DELAY °			-	-	-	-	-	-	-	-
PEDESTRIAN CLEARANCE		(SEC.)	-	15	-	20	-	21	-	18
RECALL	MAXIMUM	(ON/OFF)	-	OFF	-	OFF	-	OFF	-	OFF
	MINIMUM	(ON/OFF)	-	ON	-	OFF	-	ON	-	OFF
	PEDESTRIAN	(ON/OFF)	-	OFF	-	OFF	-	OFF	-	OFF
MEMORY		(ON/OFF)	-	OFF	-	OFF	-	OFF	-	OFF

NOTES:

- THE PRIMARY THRU MOVEMENT SHOULD HAVE MIN RECALL ACTIVE TO REST IN GREEN.
- COUNTDOWN PEDESTRIAN SIGNALS SHALL GO TO ZERO ON YELLOW PER OMUTCD FIGURE 4E-2.
- ALL DETECTOR DELAYS SHALL BE PLACED IN THE CONTROLLER.

PHASING DIAGRAM

LEGEND	
VEHICLE ϕ	
PERMITTED ϕ	
PEDESTRIAN ϕ	

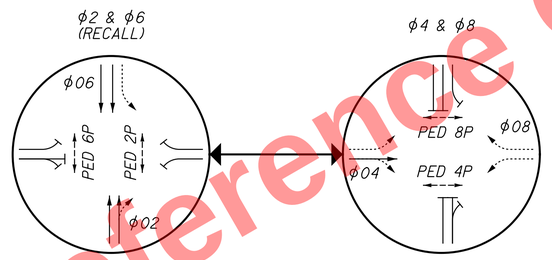

RADAR DETECTION CHART

DETECTION ZONE	MOVEMENT	WIDTH	ASSOCIATED PHASE	DELAY PROGRAMMED IN CONTROLLER (SEC)	EXTENSION PROGRAMMED IN CONTROLLER (SEC)	DETECTOR NUMBER	PURPOSE	DETECTION ZONE LENGTH (FT)
RDZ8A	WBT	8	8	0	3	R-1	STOP LINE	35
RDZ8B	WBT	8	8	8	3	R-1	STOP LINE	35
RDZ4A	EBT	8	4	0	3	R-2	STOP LINE	35
RDZ4B	EBT	8	4	8	3	R-2	STOP LINE	35

Preliminary Plans - For Reference Only

TRAFFIC SIGNAL PLAN DETAILS
E. 22ND ST. & COMMUNITY COLLEGE AVE.

DESIGN AGENCY
Michael Baker INTERNATIONAL

DESIGNER SED
REVIEWER RMG 05/22/24
PROJECT ID 82382
SHEET 1673 TOTAL 2696

CUY-90-16.28 (CCG3A)

MODEL: Sheet PAPERSIZE: 34x22 (In.) DATE: 3/27/2025 TIME: 7:41:57 PM USER: MollyGallagher
pw:\\mb-us-pw.bentley.com:mb-us-pw-03\Documents\Cleveland_OH\01_Projects\ODOT\District2\82382\400-Engineering\Signals\Sheets\82382_CP8002.dgn

WIRING DIAGRAM

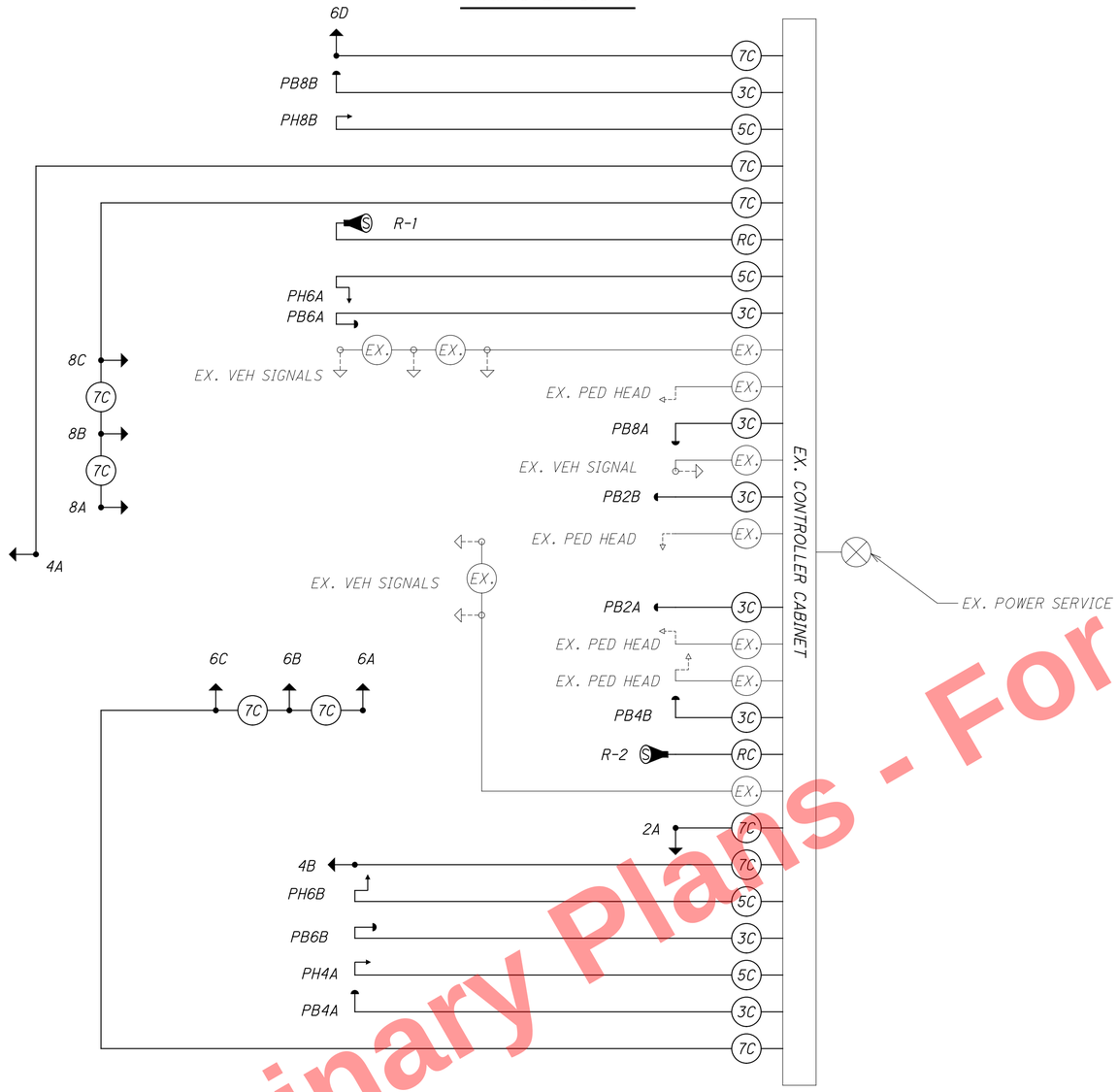

FIELD WIRING HOOK-UP CHART

SIGNAL HEAD	INDICATION	FIELD TERMINAL	FLASH
2A (NB)	R	ϕ2 R	R
	Y	ϕ2 Y	
	G	ϕ2 G	
EX. (NB)	R	ϕ2 R	R
	Y	ϕ2 Y	
	G	ϕ2 G	
4A (EB)	R	ϕ4 R	R
	Y	ϕ4 Y	
	G	ϕ4 G	
4B (EB)	R	ϕ4 R	R
	Y	ϕ4 Y	
	G	ϕ4 G	
EX. (EB)	R	ϕ4 R	R
	Y	ϕ4 Y	
	G	ϕ4 G	
6A, 6B, 6C (SB)	R	ϕ6 R	R
	Y	ϕ6 Y	
	G	ϕ6 G	

SIGNAL HEAD	INDICATION	FIELD TERMINAL	FLASH
6D (SB)	R	ϕ6 R	R
	Y	ϕ6 Y	
	G	ϕ6 G	
8A, 8B, 8C (WB)	R	ϕ8 R	R
	Y	ϕ8 Y	
	G	ϕ8 G	
EX. (WB)	R	ϕ8 R	R
	Y	ϕ8 Y	
	G	ϕ8 G	
PEDESTRIAN MOVEMENTS			
PED 2P	W	ϕ2 PED/LS 9 G	OUT
	DW	ϕ2 PED/LS 9 R	
PED 4P	W	ϕ4 PED/LS 10 G	OUT
	DW	ϕ4 PED/LS 10 R	
PED 6P	W	ϕ6 PED/LS 11 G	OUT
	DW	ϕ6 PED/LS 11 R	
PED 8P	W	ϕ8 PED/LS 12 G	OUT
	DW	ϕ8 PED/LS 12 R	

LS = LOAD SWITCH

LEGEND

- TRAFFIC SIGNAL, 4 OR 5 UNIT HEAD, 12″
- TRAFFIC SIGNAL, 2 UNIT, 3 UNIT, OR PHB HEAD 12″
- TRAFFIC SIGNAL, 3 UNIT HEAD, 12″ WITH ARROWS
- PEDESTRIAN SIGNAL
- PEDESTRIAN PUSH BUTTON
- STOP LINE RADAR DETECTION UNIT
- 3C — SIGNAL CABLE, 3 CONDUCTOR, NO. 14 AWG
- 5C — SIGNAL CABLE, 5 CONDUCTOR, NO. 14 AWG
- 7C — SIGNAL CABLE, 7 CONDUCTOR, NO. 14 AWG
- RC — RADAR DETECTION CABLE
- POWER SOURCE
- PC — POWER CABLE, 2 CONDUCTOR, NO. 6 AWG
- MB — METER BASE

Preliminary Plans - For Reference Only

TRAFFIC SIGNAL PLAN DETAILS
E. 22ND ST. & COMMUNITY COLLEGE AVE.

DESIGN AGENCY
Michael Baker INTERNATIONAL

DESIGNER SED
REVIEWER RMG 05/22/24
PROJECT ID 82382
SHEET 1674 TOTAL 2696

CUY-90-16.28 (CCG3A)

MODEL: Sheet PAPERSIZE: 34x22 (in.) DATE: 3/27/2025 TIME: 7:42:02 PM USER: Maia.Gallagher
pw:\\mb-us-pw.bentley.com:mb-us-pw-03\Documents\Cleveland.OH\Oi_Projects\ODOT\District2\82382\400-Engineering\Signals\Sheets\82382_CP8003.dgn

COORDINATION TIMING CHART - PROPOSED TIMING

CARNEGIE AVE. & E. 14TH ST.									
PHASE	1	2	3	4	5	6	7	8	OFFSET (SEC)
DIRECTION	-	-	-	-	-	-	-	-	
C/S/O	SPLITS (G+Y+AR) IN SECONDS								
1/1/1	28	34	-	38	28	34	-	38	55
2/2/2	28	34	-	38	28	34	-	38	25
3/3/3	28	34	-	38	28	34	-	38	50

CARNEGIE AVE. & E. 18TH ST.									
PHASE	1	2	3	4	5	6	7	8	OFFSET (SEC)
DIRECTION	-	-	-	-	-	-	-	-	
C/S/O	SPLITS (G+Y+AR) IN SECONDS								
1/1/1	-	50	-	50	12	38	18	32	60
2/2/2	-	50	-	50	12	38	18	32	30
3/3/3	-	50	-	50	12	38	18	32	70

CARNEGIE AVE. & E. 19TH ST. *									
PHASE	1	2	3	4	5	6	7	8	OFFSET (SEC)
DIRECTION	-	-	-	-	-	-	-	-	
C/S/O	SPLITS (G+Y+AR) IN SECONDS								
1/1/1	-	70	-	30	-	-	-	-	80
2/2/2	-	70	-	30	-	-	-	-	50
3/3/3	-	70	-	30	-	-	-	-	90

* UPDATED COORDINATION TIMINGS TO BE PROGRAMMED BY THE CITY OF CLEVELAND

CARNEGIE AVE. & E. 21ST ST.									
PHASE	1	2	3	4	5	6	7	8	OFFSET (SEC)
DIRECTION	-	-	-	-	-	-	-	-	
C/S/O	SPLITS (G+Y+AR) IN SECONDS								
1/1/1	20	40	-	40	-	60	-	-	70
2/2/2	20	40	-	40	-	60	-	-	40
3/3/3	30	30	-	40	-	60	-	-	65

CARNEGIE AVE. & E. 22ND ST.									
PHASE	1	2	3	4	5	6	7	8	OFFSET (SEC)
DIRECTION	-	-	-	-	-	-	-	-	
C/S/O	SPLITS (G+Y+AR) IN SECONDS								
1/1/1	-	60	-	40	-	60	-	40	65
2/2/2	-	60	-	40	20	40	-	40	75
3/3/3	-	60	-	40	-	60	-	40	70

CARNEGIE AVE. & MIDTOWN CONNECTOR									
PHASE	1	2	3	4	5	6	7	8	OFFSET (SEC)
DIRECTION	-	-	-	-	-	-	-	-	
C/S/O	SPLITS (G+Y+AR) IN SECONDS								
1/1/1	15	55	-	-	-	70	-	30	45
2/2/2	-	40	-	-	-	40	-	60	60
3/3/3	15	55	-	-	-	70	-	30	50

E. 22ND ST. & CEDAR AVE.									
PHASE	1	2	3	4	5	6	7	8	OFFSET (SEC)
DIRECTION	-	-	-	-	-	-	-	-	
C/S/O	SPLITS (G+Y+AR) IN SECONDS								
1/1/1	15	35	-	50	-	50	15	35	0
2/2/2	15	30	-	55	-	45	15	40	0
3/3/3	15	35	-	50	-	50	15	35	15

E. 22ND ST. & CENTRAL AVE.									
PHASE	1	2	3	4	5	6	7	8	OFFSET (SEC)
DIRECTION	-	-	-	-	-	-	-	-	
C/S/O	SPLITS (G+Y+AR) IN SECONDS								
1/1/1	-	60	-	40	-	60	-	40	0
2/2/2	-	60	-	40	-	60	-	40	0
3/3/3	-	60	-	40	-	60	-	40	15

E. 22ND ST. & COMMUNITY COLLEGE AVE.									
PHASE	1	2	3	4	5	6	7	8	OFFSET (SEC)
DIRECTION	-	-	-	-	-	-	-	-	
C/S/O	SPLITS (G+Y+AR) IN SECONDS								
1/1/1	-	60	-	40	-	60	-	40	20
2/2/2	-	50	-	50	-	50	-	50	15
3/3/3	-	60	-	40	-	60	-	40	35

CORRIDOR LAYOUT

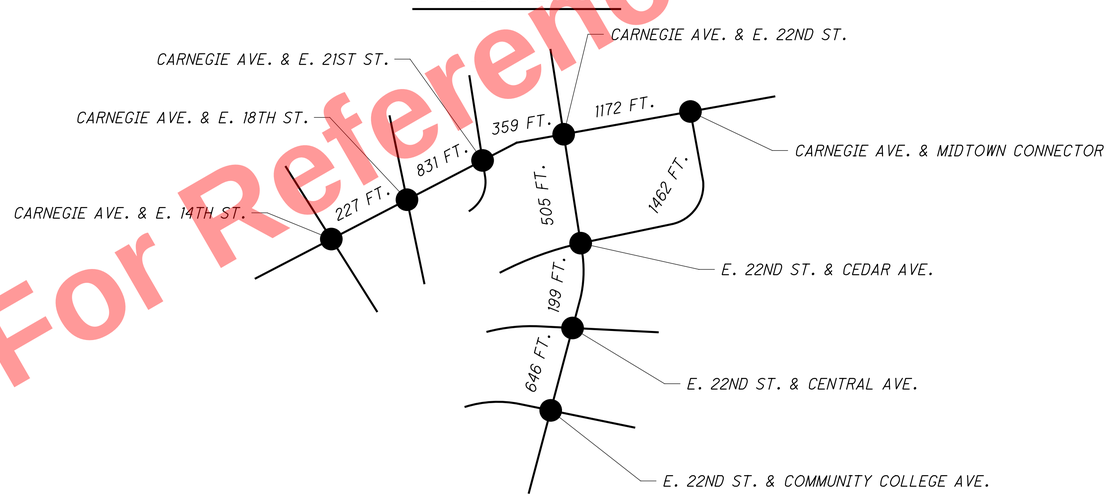

COORDINATION TIMING PLANS

DAY(S) OF THE WEEK	PLAN NAME	HOURS	CYCLE/SPLIT/OFFSET	CYCLE LENGTH (SEC)
1	AVERAGE	0:00 - 24:00	1/1/1	100
2-6	AVERAGE	0:00 - 6:00	1/1/1	100
2-6	AM PEAK	6:00 - 9:00	2/2/2	100
2-6	AVERAGE	9:00 - 15:00	1/1/1	100
2-6	PM PEAK	15:00 - 18:00	3/3/3	100
2-6	AVERAGE	18:00 - 24:00	1/1/1	100
7	AVERAGE	0:00 - 24:00	1/1/1	100

SIEMENS COORD SETTINGS

OPERATION	AUTO
MODE (NORMAL)	PERMISSIVE
MAXIMUM	INHIBIT
CORRECTION	SHORT WAY PLUS
OFFSET MODE	END OF GREEN
FORCE MODE	PLAN
MAX DWELL TIME	20
YIELD PERIOD	10
MANUAL CONTROL: DIAL	1
MANUAL CONTROL: SPLIT	1
MANUAL CONTROL: OFFSET	1

Preliminary Plans - For Reference Only

TRAFFIC SIGNAL COORDINATION PLAN

DESIGN AGENCY
Michael Baker INTERNATIONAL

DESIGNER SED
REVIEWER RMG 05/22/24
PROJECT ID 82382
SHEET 1675 TOTAL 2696

CUY-90-16.28 (CCG3A)

MODEL: Sheet PAPERSIZE: 34x22 (in.) DATE: 3/27/2025 TIME: 7:42:08 PM USER: Maia.Gallagher
pw:\\mb-us-pw.bentley.com:mb-us-pw-03\Documents\Cleveland_OH01_Projects\ODOT\District12\82382\400-Engineering\Signals\Sheets\82382_CP9000.dgn

MAINTAINING ITS DURING CONSTRUCTION

THE CONTRACTOR SHALL MAINTAIN ALL PREEXISTING OR NEWLY INSTALLED PERMANENT ITS/TRAFFIC DEVICES AND INFRASTRUCTURE DURING CONSTRUCTION ACCORDING TO ODOT SUPPLEMENTAL SPECIFICATION 809.

ITEM 632 - POWER SERVICE, AS PER PLAN 3

THE CONTRACTOR SHALL FURNISH AND INSTALL ALL MATERIALS NECESSARY FOR A POWER SERVICE PER ODOT C&MS 625.15. THE POWER SERVICE SHALL BE A 120 / 240 VOLT SERVICE, GROUND MOUNTED, WITH UNDERGROUND POWER COMPANY FEED PER ODOT STANDARD CONSTRUCTION DRAWING ITS 15.10.

THE CCTV ITS RELATED POWER SERVICES SHALL BE MARKED WITH "ITS". DISCONNECT SWITCHES SHALL BE FUSIBLE, RATED FOR 60 AMPS WITH A NEMA 4X ENCLOSURE, AND SHALL BE FUSED AT 30 AMPS. THIS SERVICE SHALL PROVIDE 120 VOLTS TO EACH RELATED SITE.

THE CONTRACTOR SHALL COORDINATE WITH THE POWER COMPANY AND PROVIDE APPROPRIATE INSPECTIONS AND/OR SELF INSPECTION FORMS TO POWER COMPANY IN ORDER TO ENERGIZE SERVICE.

ITEM 633 - CONTROLLER WORK PAD, AS PER PLAN

THE CONTRACTOR SHALL INSTALL A WORK PAD FOR A "TYPICAL CCTV CAMERA POLE WITH GROUND MOUNTED CABINET" AS PER ODOT STANDARD CONSTRUCTION DRAWING ITS-10.11. THE CONTRACTOR SHALL GRADE THE SURROUNDING AREA SLIGHTLY AND/OR POUR A SMALL CURB RETAINING WALL AND/OR STONE/GRAVEL AROUND THE PAD AS NEEDED IN ORDER TO CONSTRUCT A LEVEL WORK PAD WITH APPROPRIATE PROTECTION AND RUNOFF. THE WORK PAD AND SITE RESTORATION SHALL BE PERFORMED AS APPROVED BY THE PROJECT ENGINEER.

PAYMENT FOR ALL OF THE ABOVE WORK SHALL BE INCIDENTAL TO THE UNIT BID PRICE FOR ITEM 633 - CONTROLLER WORK PAD, AS PER PLAN AND SHALL INCLUDE ALL LABOR, MATERIALS, AND EQUIPMENT NECESSARY TO CONSTRUCT THE ITEM.

ITEM 809 - ITS DEVICE, MISC.: REMOVAL OF EXISTING POLE-MOUNTED ITS CABINET

EXISTING POLE-MOUNTED ITS CABINETS SHALL BE REMOVED AS INDICATED ON THE PLANS. REMOVED ITEMS SHALL BE STORED ON THE PROJECT FOR SALVAGE BY ODOT. THE CONTRACTOR SHALL CONTACT BRYAN COMER, STATEWIDE ITS ENGINEER WITH THE ODOT OFFICE OF TRAFFIC OPERATIONS AT (614) 387-1253 TO ARRANGE A MUTUALLY AGREEABLE TIME TO DELIVER THE EQUIPMENT TO A LOCATION AS DIRECTED BY ODOT.

IN THE EVENT THE ITEMS STORED ON THE PROJECT FOR DELIVERY TO ODOT ARE NOT ACCEPTED, THE CONTRACTOR SHALL, WHEN DIRECTED BY THE ENGINEER IN WRITING, REMOVE AND DISPOSE OF THE ITEMS AT NO ADDITIONAL COST TO THE PROJECT.

PAYMENT FOR ITEM 809 - ITS DEVICE, MISC.: REMOVAL OF EXISTING POLE-MOUNTED ITS CABINET SHALL BE MADE AT THE CONTRACT UNIT PRICE PER EACH AND SHALL INCLUDE ALL LABOR, EQUIPMENT AND MATERIALS NECESSARY TO REMOVE, STORE AND DELIVER THE CABINET.

ITEM 809 - ITS DEVICE, MISC.: REMOVAL OF EXISTING CCTV AND LOWERING UNIT

EXISTING CCTV AND LOWERING UNIT SHALL BE REMOVED AS INDICATED ON THE PLANS. REMOVED ITEMS SHALL BE STORED ON THE PROJECT FOR SALVAGE BY ODOT. THE CONTRACTOR SHALL CONTACT BRYAN COMER, STATEWIDE ITS ENGINEER WITH THE ODOT OFFICE OF TRAFFIC OPERATIONS AT (614) 387-1253 TO ARRANGE A MUTUALLY AGREEABLE TIME TO DELIVER THE EQUIPMENT TO A LOCATION AS DIRECTED BY ODOT.

IN THE EVENT THE ITEMS STORED ON THE PROJECT FOR DELIVERY TO ODOT ARE NOT ACCEPTED, THE CONTRACTOR SHALL, WHEN DIRECTED BY THE ENGINEER IN WRITING, REMOVE AND DISPOSE OF THE ITEMS AT NO ADDITIONAL COST TO THE PROJECT.

PAYMENT FOR ITEM 809 - ITS DEVICE, MISC.: REMOVAL OF EXISTING CCTV AND LOWERING UNIT SHALL BE MADE AT THE CONTRACT UNIT PRICE PER EACH AND SHALL INCLUDE ALL LABOR, EQUIPMENT AND MATERIALS NECESSARY TO REMOVE, STORE AND DELIVER THE CABINET.

ITEM 809 - ITS DEVICE, MISC.: REMOVAL OF EXISTING CCTV POLE

EXISTING CCTV POLE SHALL BE REMOVED AS INDICATED ON THE PLANS. REMOVED ITEMS SHALL BE STORED ON THE PROJECT FOR SALVAGE BY ODOT. THE CONTRACTOR SHALL CONTACT BRYAN COMER, STATEWIDE ITS ENGINEER WITH THE ODOT OFFICE OF TRAFFIC OPERATIONS AT (614) 387-1253 TO ARRANGE A MUTUALLY AGREEABLE TIME TO DELIVER THE EQUIPMENT TO A LOCATION AS DIRECTED BY ODOT.

IN THE EVENT THE ITEMS STORED ON THE PROJECT FOR DELIVERY TO ODOT ARE NOT ACCEPTED, THE CONTRACTOR SHALL, WHEN DIRECTED BY THE ENGINEER IN WRITING, REMOVE AND DISPOSE OF THE ITEMS AT NO ADDITIONAL COST TO THE PROJECT.

PAYMENT FOR ITEM 809 - ITS DEVICE, MISC.: REMOVAL OF EXISTING CCTV POLE SHALL BE MADE AT THE CONTRACT UNIT PRICE PER EACH AND SHALL INCLUDE ALL LABOR, EQUIPMENT AND MATERIALS NECESSARY TO REMOVE, STORE AND DELIVER THE CABINET.

ITEM 809 - CCTV POLE, 70' TALL, CONCRETE (ALTERNATIVE 1)

THE CONTRACTOR SHALL FURNISH AND INSTALL THIS ITEM ACCORDING TO ODOT SUPPLEMENTAL SPECIFICATION 809, AS WELL AS ANY STANDARD CONSTRUCTION DRAWINGS NOTED ON THE PLANS. THE CONTRACTOR SHALL PROVIDE AND INSTALL ONE COMPLETE LOWERING UNITY TOOL ASSEMBLY PER CAMERA FOR LOWERING CAMERAS PER SUPPLEMENTAL SPECIFICATION 809 (PAID SEPARATELY).

FOR THIS SITE, THE POLE HEIGHT SHALL BE 70 FT ABOVE GROUND. THE EMBEDMENT DEPTH FOR A CONCRETE POLE SHALL BE 25 FT.

THE FOUNDATION SOILS ARE MOIST TO SATURATED SANDS, AND HOLE EXCAVATION BY EITHER THE WET CONSTRUCTION METHOD OR THE TEMPORARY CASING CONSTRUCTION METHOD IN ACCORDANCE WITH C&MS 524.04 SHOULD BE ANTICIPATED.

THE CONTRACTOR SHALL FURNISH/INSTALL POLES WITH THE CORRECT LENGTH/EMBEDMENT AND ALL COUPLINGS, HANDHOLES, ETC., IN THE APPROPRIATE LOCATION ABOVE GROUND ACCORDING TO SCD ITS-12.10.

THE CONTRACTOR MAY FURNISH/INSTALL LONGER OVERALL LENGTH CONCRETE POLES AT A DEEPER EMBEDMENT DEPTH IF IT IS MORE BENEFICIAL FOR MANUFACTURING, SHIPPING, ETC, AS LONG AS ALL ABOVE GROUND COMPONENTS MAINTAIN APPROPRIATE HEIGHT LEVEL.

THE CONTRACTOR SHALL SUBMIT ALL POLE MANUFACTURER FABRICATION DRAWING SUBMITTALS, AS WELL AS INSTALLATION PROCEDURES AND BACKFILL MATERIAL, TO THE ENGINEER FOR ACCEPTANCE BEFORE ORDERING.

PAYMENT FOR EACH POLE COMPLETE, INSTALLED, AND ACCEPTED SHALL BE MADE AT THE UNIT BID PRICE FOR ITEM 809 - CCTV POLE, 70 FEET, CONCRETE (ALTERNATIVE 1).

ITEM 809 - CCTV POLE, 70' TALL, STEEL (ALTERNATIVE 2)

THE CONTRACTOR SHALL FURNISH AND INSTALL THIS ITEM ACCORDING TO ODOT SUPPLEMENTAL SPECIFICATION 809, AS WELL AS ANY STANDARD CONSTRUCTION DRAWINGS NOTED ON THE PLANS. THE CONTRACTOR SHALL PROVIDE AND INSTALL ONE COMPLETE LOWERING UNITY TOOL ASSEMBLY PER CAMERA FOR LOWERING CAMERAS PER SUPPLEMENTAL SPECIFICATION 809 (PAID SEPARATELY).

FOR THIS SITE, THE POLE HEIGHT SHALL BE 70 FT ABOVE GROUND. A FOUNDATION FOR A STEEL POLE SHALL BE: 16 FT DRILLED SHAFT FOUNDATION, 42-INCH DIAMETER, WITH CONCRETE AND REINFORCING IN ACCORDANCE WITH TC-21.21, DESIGN NO. 10 FOR THE "TC-12.31 TYPE SUPPORTS", WITH THE EXCEPTION THAT THE LENGTH IS 16 FT INSTEAD OF 17 FT.

THE FOUNDATION SOILS ARE MOIST TO SATURATED SANDS, AND HOLE EXCAVATION BY EITHER THE WET CONSTRUCTION METHOD OR THE TEMPORARY CASING CONSTRUCTION METHOD IN ACCORDANCE WITH C&MS 524.04 SHOULD BE ANTICIPATED.

THE CONTRACTOR SHALL FURNISH/INSTALL POLES WITH THE CORRECT LENGTH AND ALL COUPLINGS, HANDHOLES, ETC., IN THE APPROPRIATE LOCATION ABOVE GROUND ACCORDING TO SCD ITS-12.11.

THE CONTRACTOR SHALL SUBMIT ALL POLE MANUFACTURER FABRICATION DRAWING SUBMITTALS, AS WELL AS INSTALLATION PROCEDURES AND BACKFILL MATERIAL, TO THE ENGINEER FOR ACCEPTANCE BEFORE ORDERING.

PAYMENT FOR EACH POLE COMPLETE, INSTALLED, AND ACCEPTED SHALL BE MADE AT THE UNIT BID PRICE FOR ITEM 809 - CCTV POLE, 70 FEET, STEEL (ALTERNATIVE 2).

Preliminary Plans - For Reference Only

ITS GENERAL NOTES

CUY-90-16.28 (CCG3A)
MODEL: Sheet PAPERSIZE: 34x22 (in.) DATE: 5/28/2025 TIME: 5:00:25 PM USER: Joseph.Hogan
pw:\\mb-us-pw.bentley.com:mb-us-pw-03\Documents\Cleveland_OH\01_Projects\ODOT\District12\82382\400-Engineering\Traffic\Sheets\82382_TP9020.dgn

DESIGN AGENCY
Michael Baker INTERNATIONAL

DESIGNER SED
REVIEWER RMG 05/22/24
PROJECT ID 82382
SHEET 1676 TOTAL 2696

SHEET NO.	625 CONDUIT, 2", 725.051 FT	625 CONDUIT, 2", 725.052 FT	625 CONDUIT, 3", 725.051 FT	625 CONDUIT, JACKED OR DRILLED, 725.052, 2" FT	625 TRENCH FT	625 PULL BOX, 725.08, 18" EACH	625 GROUND ROD EACH	625 UNDERGROUND WARNING/MARKING TAPE FT	632 POWER CABLE, 3 CONDUCTOR, NO. 6 AWG FT	632 POWER CABLE, 3 CONDUCTOR, NO. 4 AWG FT	632 POWER SERVICE, AS PER PLAN 3 EACH	633 CABINET FOUNDATION EACH	633 CONTROLLER WORK PAD, AS PER PLAN EACH	809 ITS JUNCTION BOX, 17x24x6 INCHES EACH	809 32" ITS PULL BOX WITH PAD AND STANDARD LID ASSEMBLY, TYPE 2 EACH	809 MICRO-DUCT INNERDUCT, 14 / 10 FT	809 CCTV IP-CAMERA SYSTEM, PTZ EACH	809 CCTV IP-CAMERA SYSTEM, WRONG WAY DETECTION EACH	809 CCTV POLE, 70' TALL EACH	809 CCTV LOWERING UNIT EACH	809 ETHERNET CABLE, OUTDOOR-RATED FT	809 ITS CABINET - GROUND MOUNTED EACH	809 ITS DEVICE, MISC.: REMOVAL OF EXISTING POLE-MOUNTED ITS CABINET EACH	809 ITS DEVICE, MISC.: REMOVAL OF EXISTING CCTV AND LOWERING UNIT EACH	809 ITS DEVICE, MISC.: REMOVAL OF EXISTING CCTV POLE EACH	809 MAINTAINING ITS DURING CONSTRUCTION LS
1676																											LS
1679		2472		438	419		1	419				1		1	4	5820							1	2			
1680		4484		148	360			360						5	2	5336											
1681	61	1152	32	398	210	1	2	210	70	500	1	1	1	2	3	972	1	2	1	1	350	1	2	1	1		
TOTALS CARRIED TO GENERAL SUMMARY	61	8108	32	984	989	1	3	989	70	500	1	2	1	8	9	12128	1	2	1	1	350	2	4	1	1	LS	

Preliminary Plans - Not For Reference Only

TRAFFIC SURVEILLANCE SUBSUMMARY - 1

CUY-90-16.28 (CCG3A)

MODEL: Sheet-01 PAPERSIZE: 34x22 (in.) DATE: 5/28/2025 TIME: 5:00:29 PM USER: Joseph.Hogan
pw:\\mb-us-pw.bentley.com:mb-us-pw-03\Documents\Cleveland_OH101_Projects\ODOT\District12\82382400-Engineering\Traffic\Sheets\82382_TS301.dgn

DESIGN AGENCY
Michael Baker INTERNATIONAL

DESIGNER
SED

REVIEWER
RMG 05/22/24

PROJECT ID
82382

SHEET 1678 TOTAL 2696

PROPOSED ITS CABINET - GROUND MOUNTED
(INTERCEPT POWER RUN AND COMMUNICATIONS RUN TO CCTV POLE)
℄ INTERIM I.R. 90 WB
STA. 175+44.7, 55.2' LT

EX. ITS PULL BOX TO REMAIN

63', (1)-2" CONDUIT WITH
(4) MICRO-DUCT INNERDUCT, 14/10
(CONTINUOUS RUN #1)
AND (1)-2" CONDUIT
IN TRENCH

ITS JUNCTION BOX
℄ INTERIM I.R. 90 WB
STA. 178+80.9, 37.4' RT

129', (1)-2" CONDUIT WITH
(4) MICRO-DUCT INNERDUCT, 14/10
(CONTINUOUS RUN #2)
AND (1)-2" CONDUIT
JACKED OR DRILLED

817', (1)-2" CONDUIT WITH
(4) MICRO-DUCT INNERDUCT, 14/10
(CONTINUOUS RUN #2)
AND (1)-2" CONDUIT
IN MEDIAN BARRIER

EXISTING POLE-MOUNTED ITS CABINETS (2) TO BE REMOVED.
EXISTING CCTV STEEL POLE, CCTV IP-CAMERA SYSTEM, CCTV LOWERING UNIT, AND WIRELESS RADIO TO REMAIN.
℄ INTERIM I.R. 90 WB
STA. 175+37.4, 53.7' LT

ITS PULL BOX, 32"
℄ INTERIM I.R. 90 WB
STA. 176+06.0, 51.4' LT

℄ INTERIM I.R. 90 WB

℄ INTERIM I.R. 90 EB

I.R. 90 WB

I.R. 90 EB

TR

E. 9TH ST.

I-77 SB

MATCH LINE STA. 183+50.00

CLP

N63°40'54"E

221', (1)-2" CONDUIT WITH
(4) MICRO-DUCT INNERDUCT, 14/10
(CONTINUOUS RUN #1)
AND (1)-2" CONDUIT
IN TRENCH

ITS PULL BOX, 32"
℄ INTERIM I.R. 90 EB
STA. 174+69.9, 70.8' RT

ITS PULL BOX, 32"
℄ INTERIM I.R. 90 EB
STA. 176+94.8, 77.7' RT

135', (1)-2" CONDUIT WITH
(4) MICRO-DUCT INNERDUCT, 14/10
(CONTINUOUS RUN #1)
AND (1)-2" CONDUIT
IN TRENCH

ITS PULL BOX, 32"
℄ INTERIM I.R. 90 EB
STA. 175+60.0, 69.7' RT

90', (1)-2" CONDUIT WITH
(4) MICRO-DUCT INNERDUCT, 14/10
(CONTINUOUS RUN #1)
AND (1)-2" CONDUIT
JACKED OR DRILLED

LEGEND

—TR—	CONDUIT
ITS	ITS PULL BOX
TR	ITS JUNCTION BOX
E	ELECTRIC PULL BOX

For Reference Only
Preliminary Plans - Not

HORIZONTAL SCALE IN FEET
0 25 50 100

ITS PLANS
BEGIN TO STA. 183+50.00

CUY-90-16.28 (CCG3A)

MODEL: BLP_IR90_EB-I- Plan | PAPERSIZE: 34x22 (in.) DATE: 5/28/2025 TIME: 5:06:06 PM USER: Joseph.Hogan
pw:\\mb-us-pw.bentley.com:mb-us-pw-03\Documents\Cleveland.OH\OI_Projects\ODOT\District2\82382\400-Engineering\Traffic\Sheets\82382_TP902I.dgn

DESIGN AGENCY
Michael Baker INTERNATIONAL

DESIGNER SED
REVIEWER RMG 05/22/24
PROJECT ID 82382
SHEET 1679 TOTAL 2696

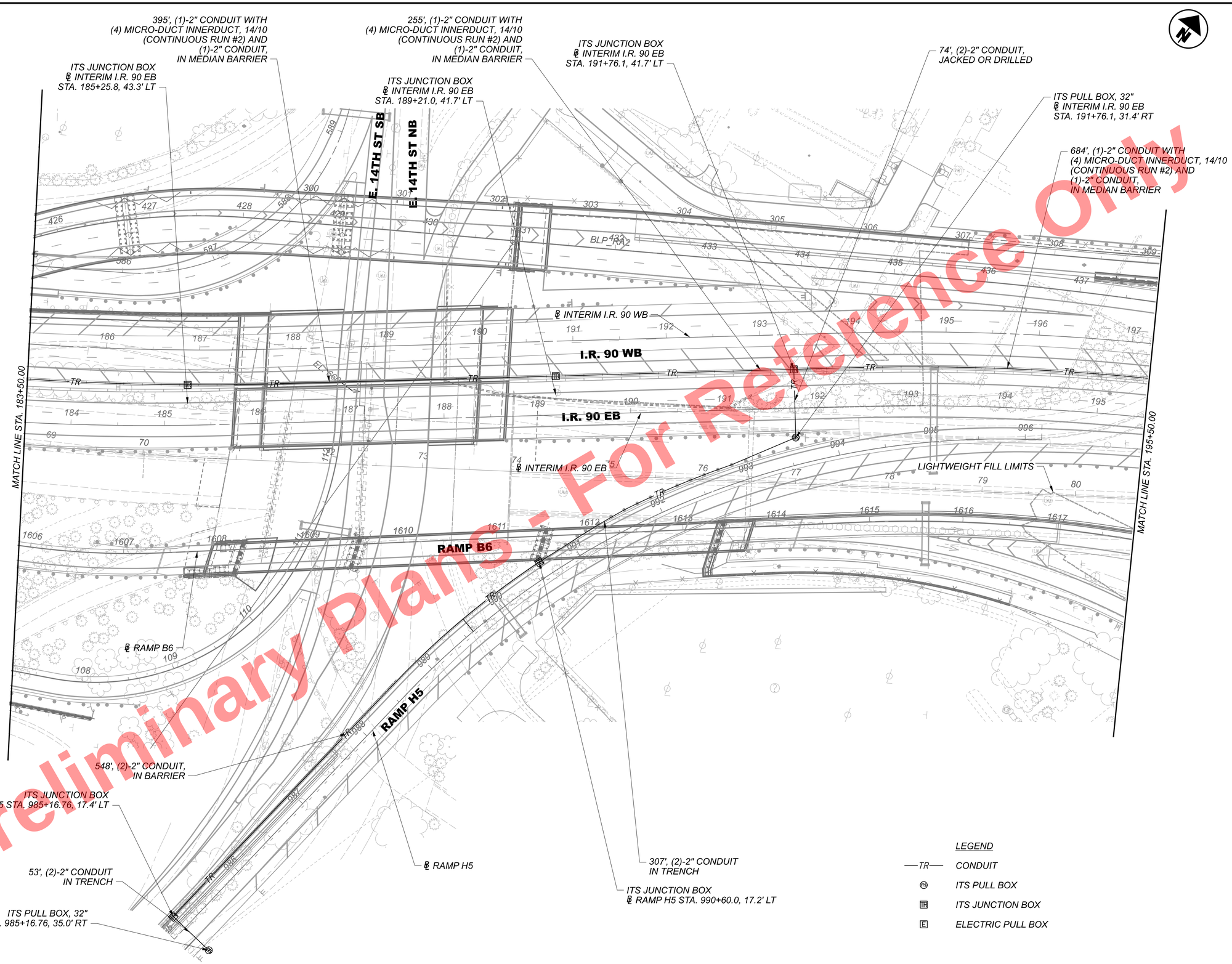

Preliminary Plans - For Reference Only

ITS PLANS
STA. 183+50.00 TO STA. 195+50.00

DESIGN AGENCY
Michael Baker INTERNATIONAL

DESIGNER SED
REVIEWER RMG 05/22/24
PROJECT ID 82382
SHEET 1680 TOTAL 2696

CUY-90-16.28 (CCG3A)

MODEL: BLP_IR90_EB-1 - Plan 2 PAPERSIZE: 34x22 (in.) DATE: 5/28/2025 TIME: 50%20 PM USER: Joseph.Hogan
pw:\\mb-us-pw.bentley.com:mb-us-pw-03\Documents\Cleveland_OH\OL_Projects\ODOT\District2\82382\400-Engineering\Traffic\Sheets\82382_TP9022.dgn

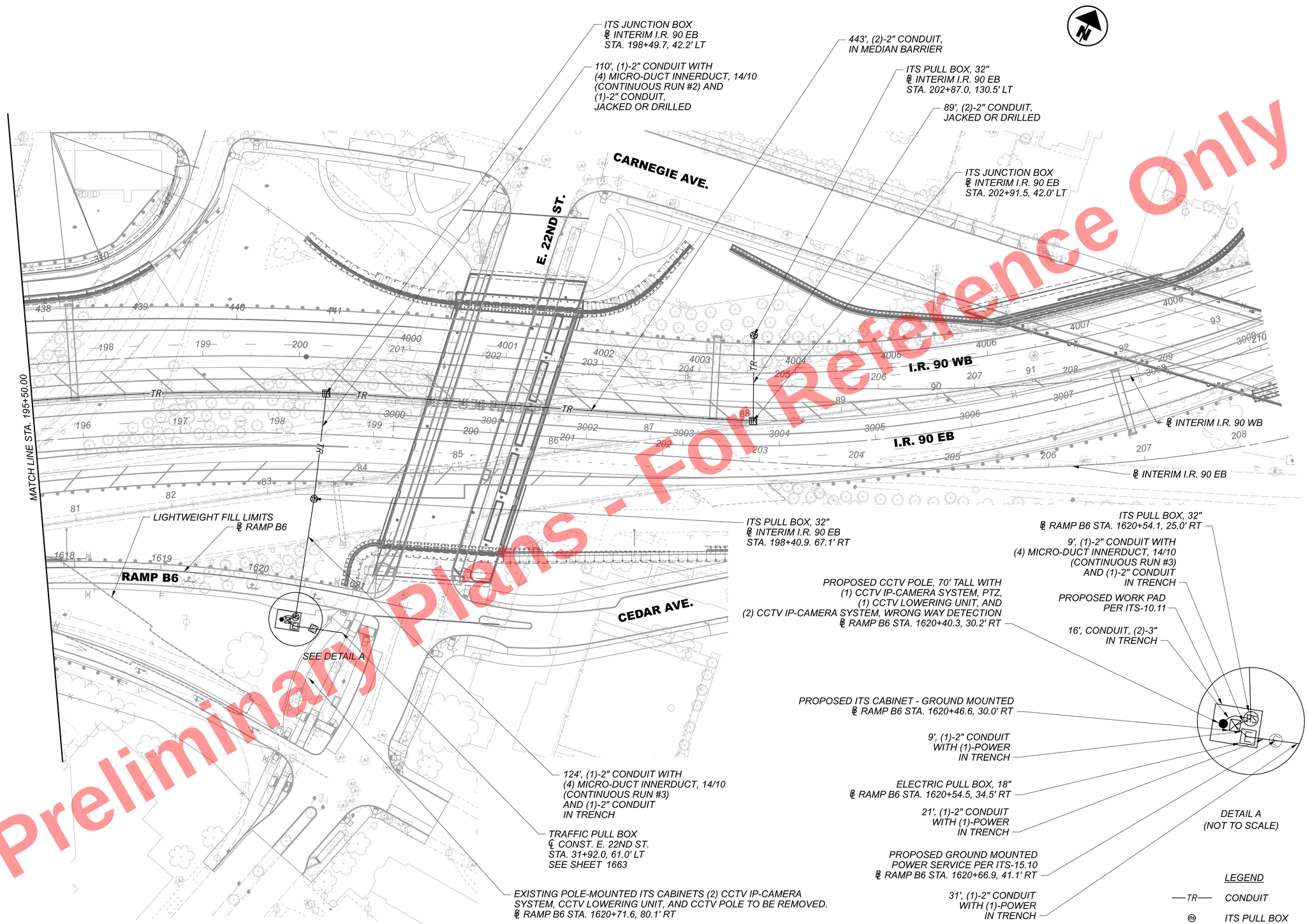

Preliminary Plans - For Reference Only

HORIZONTAL SCALE IN FEET
0 25 50 100

ITS PLANS
STA. 195+50.00 TO END

DESIGN AGENCY
Michael Baker INTERNATIONAL

DESIGNER SED
REVIEWER RMG 05/22/24
PROJECT ID 82382
SHEET 1681 TOTAL 2696

CUY-90-16.28 (CCG3A)

MODEL: BLP_IR90_EB-I- Plan 3 PAPERSIZE: 34x22 (In) DATE: 5/28/2025 TIME: 5:01:32 PM USER: Joseph.Hogan
pw:\\vmb-us-pw.bentley.commb-us-pw-03\Documents\Cleveland_OH\01_Projects\ODOT\District2\82382\400-Engineering\Traffic\Sheets\82382_TP9023.dgn

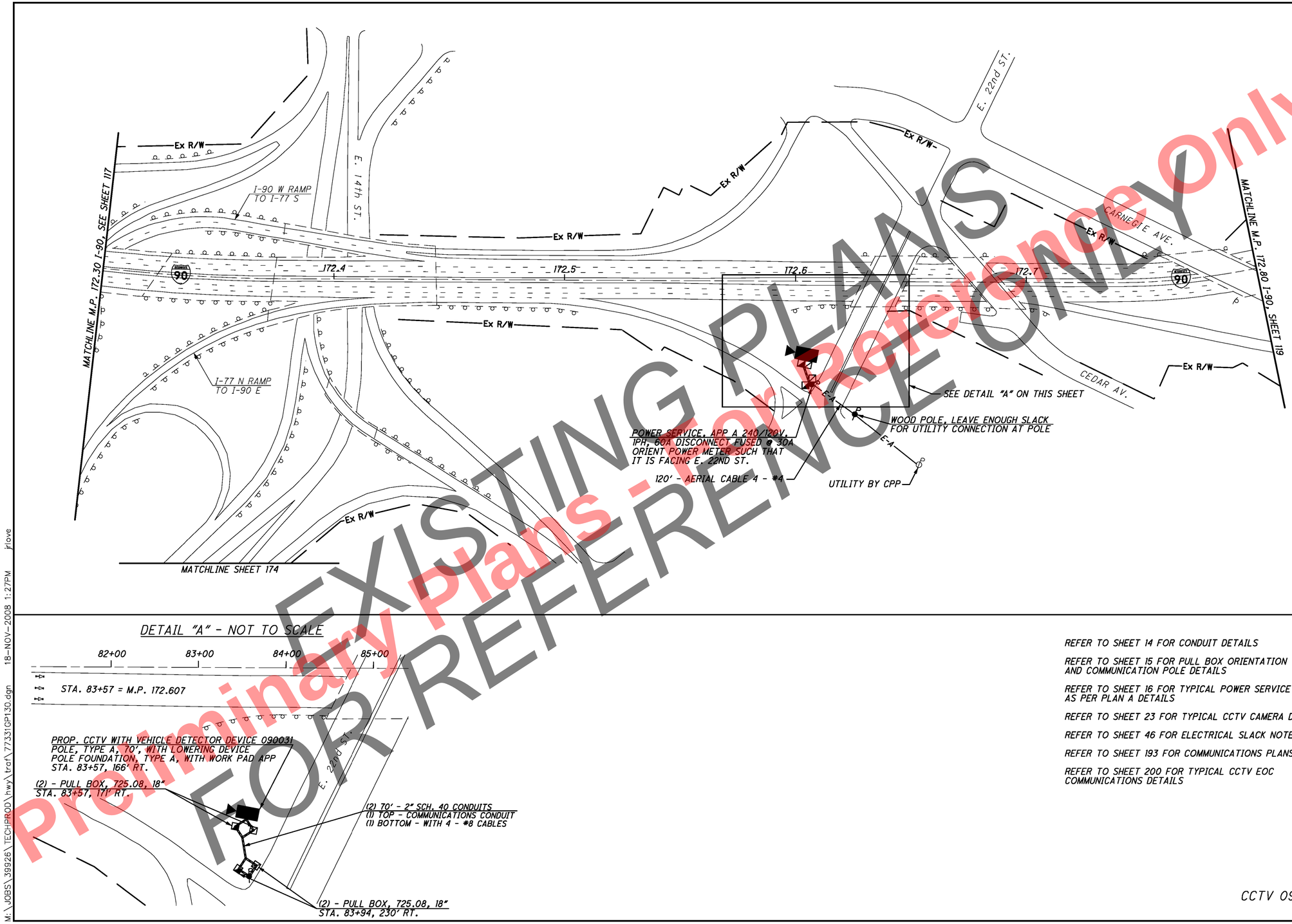

DETAIL "A" - NOT TO SCALE

REFER TO SHEET 14 FOR CONDUIT DETAILS

REFER TO SHEET 15 FOR PULL BOX ORIENTATION AND COMMUNICATION POLE DETAILS

REFER TO SHEET 16 FOR TYPICAL POWER SERVICE AS PER PLAN A DETAILS

REFER TO SHEET 23 FOR TYPICAL CCTV CAMERA DETAILS

REFER TO SHEET 46 FOR ELECTRICAL SLACK NOTES

REFER TO SHEET 193 FOR COMMUNICATIONS PLANS

REFER TO SHEET 200 FOR TYPICAL CCTV EOC COMMUNICATIONS DETAILS

CCTV 090031

EXISTING PLANS FOR REFERENCE ONLY
Preliminary Plans - Not for Reference

HORIZONTAL SCALE IN FEET: 0, 50, 100, 200

CALCULATED: STS
CHECKED: JDG

I-90 AT E. 22ND ST. (MP 172.30 TO MP 172.80)
CITY OF CLEVELAND, CUYAHOGA COUNTY

VAR-CLEVELAND FREEWAY MANAGEMENT SYSTEM

118
207

EXISTING ITS PLANS

DESIGN AGENCY: Michael Baker INTERNATIONAL
DESIGNER: SED
REVIEWER: RMG 05/22/24
PROJECT ID: 82382
SHEET: 1683 TOTAL: 2696

CUY-90-16.28 (CCG3A)
MODEL: Sheet PAPERSIZE: 34x22 (in.) DATE: 5/28/2025 TIME: 5:01:44 PM USER: Joseph.Hogan
pw:\\mb-us-pw.bentley.com:mb-us-pw-03\Documents\Cleveland_OH\01_Projects\ODOT\District12\82382\400-Engineering\Traffic\Sheets\82382_TP9033.dgn
M:\JOBS\39926\TECHPROD\hwy\traf\77331GP130.dgn 18-NOV-2008 1:27PM jriove

PROPOSED WORK

REFER TO THE PROJECT TITLE SHEET AND SCHEMATIC PLANS FOR GENERAL INFORMATION AND LIMITS OF WORK.

EXISTING LIGHTING ITEMS, SIGNS, CONDUIT, CABLE AND POWER CENTERS

THE LOCATIONS OF EXISTING LIGHTING ITEMS, SIGNS, CONDUIT, CABLE AND POWER CENTERS SHOWN ON THE PLANS AND DESCRIBED BY NOTATION HAVE BEEN OBTAINED BY FIELD CHECKS AND INFORMATION FROM EXISTING LIGHTING PLANS PROVIDED BY ODOT AND THE CITY OF CLEVELAND. IT IS BELIEVED THAT THE INFORMATION IS ESSENTIALLY CORRECT; HOWEVER, ODOT AND THE CITY OF CLEVELAND CANNOT GUARANTEE THE ACCURACY OR COMPLETENESS. NOT ALL EXISTING LIGHTING EQUIPMENT WITHIN THE PROJECT LIMITS IS SHOWN. THE CONTRACTOR SHALL FIELD VERIFY ALL CONDITIONS.

PRIOR TO REMOVAL AND/OR RELOCATION OF EXISTING CLEVELAND PUBLIC POWER (CPP) STREET LIGHTING EQUIPMENT, CONTACT CPP A MINIMUM OF ONE WEEK PRIOR TO BEGINNING CONSTRUCTION TO SCHEDULE ARRANGEMENTS TO HAVE A CPP REPRESENTATIVE ON SITE TO COORDINATE THE REQUIRED ACTIVITIES. ANY DAMAGE TO CPP FACILITIES DUE TO A FAILURE TO CONTACT CPP WILL RESULT IN REPAIRS TO CPP FACILITIES AT CONTRACTOR'S EXPENSE.

CONFLICTS WITH EXISTING UTILITIES

PRIOR TO INSTALLING ANY OF THE PROPOSED LIGHTING EQUIPMENT, PULLBOXES, CONDUIT AND CONDUIT DUCTBANKS, THE CONTRACTOR IS RESPONSIBLE FOR MAKING THEIR OWN DETERMINATION AS TO TYPE AND LOCATION OF ALL UNDERGROUND UTILITIES AS MAY BE NECESSARY TO AVOID ANY DAMAGE. ALL REPAIRS TO ANY DAMAGE TO EXISTING UTILITIES CAUSED BY THE FAILURE TO COORDINATE WITH THE RESPECTIVE UTILITY COMPANIES AND EXCAVATING APPROPRIATE UTILITY TEST HOLES WILL BE PAID FOR BY THE CONTRACTOR.

THE CONTRACTOR SHALL VERIFY THE LOCATIONS OF ALL UNDERGROUND PIPE LINES, DRAINAGE, ELECTRICAL CONDUIT AND DUCT BANKS, WATERLINES, COMMUNICATION DUCTS, AND OTHER STRUCTURES BY CONTACTING OWNERS OF UNDERGROUND UTILITIES AND BY EXCAVATING APPROPRIATE UTILITY TEST HOLES. REFER TO PROJECT GENERAL NOTES FOR A LISTING OF KNOWN UTILITY COMPANIES WITH SERVICES IN THE PROJECT AREA.

THE CONTRACTOR SHALL COORDINATE THE LIGHTING PLANS WITH THE ROADWAY CONSTRUCTION PLANS AND CROSS-SECTIONS. ALL LIGHTING EQUIPMENT SYMBOLS SHOWN ON THE LIGHTING PLANS ARE NOT DRAWN TO SCALE, ARE SHOWN DIAGRAMMATICALLY AND MAY NOT BE IN THE EXACT LOCATION REQUIRED. THE CONTRACTOR SHALL COORDINATE LOCATIONS AND VARIOUS NOTES ON EACH LIGHTING PLAN AND DETAIL SHEET.

THE CONTRACTOR SHALL COORDINATE WITH THE PROJECT ENGINEER, ODOT, AND CPP IN ADVANCE OF ANY WORK, IF THE LOCATION OF ANY LIGHT TOWER OR LIGHT POLE NEEDS TO BE ADJUSTED GREATER THAN TWO FEET FROM THEIR INTENDED LOCATION.

THE CONTRACTOR SHALL MAINTAIN PROPER CLEARANCE FROM ALL OVERHEAD AND UNDERGROUND UTILITIES AND SHALL CONTACT EACH UTILITY FOR SPECIFIC REQUIREMENTS.

EXISTING LIGHTING CIRCUITS

PRIOR TO BEGINNING ANY WORK ON THE REMOVAL OR MODIFICATION ON ANY OF THE EXISTING LIGHTING SYSTEM CIRCUITRY, FIELD VERIFY ALL EXISTING LIGHTING CIRCUITRY. CONTACT ODOT AND CPP REPRESENTATIVES FOR ASSISTANCE IN THE COORDINATION OF THE EXISTING LIGHTING CIRCUITRY AND TO CONFIRM ALL REMOVAL OR MODIFICATION WORK TO BE PERFORMED ON THE EXISTING LIGHTING SYSTEM.

REMOVAL OF LIGHTING ITEMS

EXISTING LIGHTING FOUNDATIONS, PULL BOXES, AND MISCELLANEOUS ITEMS NO LONGER IN SERVICE SHALL BE REMOVED AND DISPOSED OF BY THE CONTRACTOR, EXCEPT FOR EXISTING DUCTS AND CONDUITS, WHICH CAN BE ABANDONED IN PLACE. PRIOR TO REMOVAL, THE CONTRACTOR SHALL CONTACT ODOT AND CPP REPRESENTATIVES TO CONFIRM REMOVAL. EXISTING LIGHT TOWERS AND LIGHT POLES, LUMINAIRES, AND CONDUCTORS REMOVED ON THE PROJECT SHALL BE RETURNED TO THE PROPER AGENCY. THE CONTRACTOR SHALL NOTIFY ODOT AND CPP AND STORE THE MATERIALS ON SITE, SUITABLY PROTECTED, AT A DESIGNATED LOCATION FOR PICK UP BY ODOT AND / OR CPP STAFF WITHIN 30 WORKDAYS OF NOTIFICATION BY THE CONTRACTOR. THE CONTRACTOR MAY DISPOSE OF MATERIALS NOT PICKED UP WITHIN THE 30 WORKDAY TIMEFRAME. ALL OTHER EQUIPMENT AND MATERIALS NO LONGER IN SERVICE SHALL BE REMOVED AND DISPOSED OF BY THE CONTRACTOR.

FIELD CONDITION REQUIREMENTS

UNLESS OTHERWISE INDICATED, ALL EXISTING CONDUIT, CABLE, AND DUCT CABLE WILL BE ABANDONED IN PLACE. TRENCHING FOR NEW CONDUIT / CABLE RUNS IN AREAS WHERE EXISTING CIRCUITS HAVE BEEN ABANDONED MAY RESULT IN UPROOTING THE EXISTING CONDUIT. CONDUIT MAY REMAIN IN PLACE UNLESS IT BECOMES AN OBSTACLE TO THE INSTALLATION OF THE NEW CONDUITS / DUCT CABLE. REMOVAL OF ANY CONDUIT WILL BE INCIDENTAL TO THE APPROPRIATE PAY ITEM 625 - TRENCH.

ITEM 625 - STRUCTURE GROUNDING SYSTEM

THE CONTRACTOR SHALL GROUND ALL NEW STRUCTURES. THE GROUNDING SYSTEM SHALL GROUND ALL METAL ITEMS AND APPURTENANCES ON ALL NEW STRUCTURES, INCLUDING ANY AND ALL DECORATIVE ITEMS. THE GROUNDING SYSTEM SHALL INCLUDE PARALLELS FOR REDUNDANCY. THE GROUNDING SYSTEM SHALL BE CONSTRUCTED IN ACCORDANCE WITH ODOT SCD HL-50.21, WITH ADDITIONAL ITEMS AS NEEDED TO PROVIDE A COMPLETE AND ACCEPTABLE GROUNDING SYSTEM.

ONCE THE STRUCTURE GROUNDING SYSTEM HAS BEEN INSTALLED, THIS ITEM OF WORK SHALL INCLUDE TYING ANY LIGHT POLES PROPOSED ON THE STRUCTURE INTO THE STRUCTURE GROUNDING SYSTEM.

PAYMENT WILL BE MADE AT THE UNIT BID PRICE UNDER ODOT C&MS ITEM 625 - STRUCTURE GROUNDING SYSTEM, FOR EACH NEW STRUCTURE, WHICH SHALL BE FULL COMPENSATION FOR ALL LABOR, MATERIALS, AND INCIDENTALS REQUIRED TO COMPLETE THIS ITEM IN A SATISFACTORY AND WORKMANLIKE MANNER.

ITEM 625 - POWER SERVICE, AS PER PLAN

IN ADDITION TO THE REQUIREMENTS OF THE SPECIFICATIONS, THE FOLLOWING IS ADDED.

THE POWER SUPPLYING AGENCY FOR THIS PROJECT IS:

POWER COMPANY: CLEVELAND PUBLIC POWER
ADDRESS: 1300 LAKESIDE AVE
CLEVELAND, OH 44114

CONTACT: MR. CHRIS HIRZEL
PHONE: 216-563-7212
EMAIL: CHIRZEL@CPP.ORG

CONTACT: MR. PATRICK YORK
PHONE: 216-563-7239
EMAIL: PATRICK_YORK@CPP.ORG

THE ENGINEER SHALL ENSURE THAT EACH POWER SERVICE ELECTRICAL ENERGY ACCOUNT IS IN THE NAME OF AND THAT THE BILLING ADDRESS IS TO THE MAINTAINING AGENCY NOTED IN THE PLANS. THIS SHALL BE DONE NOT ONLY FOR EACH NEW POWER SERVICE ESTABLISHED BY THIS PROJECT BUT ALSO FOR EACH EXISTING POWER SERVICE, SINCE THERE MAY BE A REASSIGNMENT OF THE RESPONSIBILITY FOR AN EXISTING SERVICE AS A RESULT OF THE WORK PERFORMED BY THIS PROJECT.

THE CONTRACTOR SHALL BE RESPONSIBLE FOR ANY CHARGES MADE BY THE POWER COMPANY FOR WORK BY THE POWER COMPANY IN CONJUNCTION WITH THE ESTABLISHMENT OF THE REQUIRED SERVICE.

ELECTRICAL ENERGY FROM EXISTING POWER SERVICES SHALL CONTINUE TO BE CHARGED TO THE MAINTAINING AGENCY. THE CONTRACTOR SHALL PAY ELECTRICAL ENERGY CHARGES FOR NEW POWER SERVICES ESTABLISHED BY THIS PROJECT. AFTER ACCEPTANCE OF THE LIGHTING, THE POWER SERVICE ELECTRICAL ENERGY ACCOUNT SHALL BE TRANSFERRED TO THE MAINTAINING AGENCY NOTED IN THE PLANS.

THIS ITEM SHALL INCLUDE NEW POWER SERVICES ESTABLISHED BY THIS PROJECT AS WELL AS REASSIGNMENT OF EXISTING SERVICE DUE TO WORK PERFORMED BY THIS PROJECT. SUBMIT SHOP DRAWINGS (CATALOG CUTS) TO THE ENGINEER/ CPP FOR THEIR APPROVAL.

PAYMENT SHALL BE MADE AT THE UNIT BID PRICE FOR ODOT C&MS ITEM 625 - POWER SERVICE, AS PER PLAN, WHICH SHALL BE FULL COMPENSATION FOR ALL LABOR, MATERIALS AND INCIDENTALS REQUIRED TO COMPLETE THIS ITEM IN A SATISFACTORY AND WORKMANLIKE MANNER.

ITEM 625 - SERVICE TO UNDERPASS LIGHTING, AS PER PLAN

THIS ITEM SHALL CONSIST OF PROVIDING COMPLETE ELECTRICAL SERVICE, EXCEPT FOR LUMINAIRES AND STRUCTURE GROUNDING, FOR UNDERPASS LIGHTING SYSTEMS PROPOSED ON THE VARIOUS BRIDGE UNDERPASSES AND RETAINING WALLS SHOWN IN THE PLANS.

THE WORK SHALL INCLUDE DISCONNECT SWITCH WITH ENCLOSURE, CONDUIT GROUNDING, MOUNTINGS, FITTINGS, JUNCTION BOXES, CONDUITS AND CABLES NOT QUANTIFIED IN THE LIGHTING SUBSUMMARY, AND ALL INCIDENTALS NECESSARY TO COMPLETE, READY FOR USE, THE SERVICE AS SHOWN IN THE LIGHTING PLANS.

PAYMENT WILL BE MADE AT THE UNIT BID PRICE FOR ODOT C&MS ITEM 625 - SERVICE TO UNDERPASS LIGHTING, AS PER PLAN, WHICH SHALL BE FULL COMPENSATION FOR ALL LABOR, MATERIALS AND INCIDENTALS REQUIRED TO COMPLETE THIS ITEM IN A SATISFACTORY AND WORKMANLIKE MANNER. COMPONENT PARTS NOT SPECIFICALLY MENTIONED BUT REQUIRED FOR SATISFACTORY OPERATION OF THIS ITEM SHALL BE FURNISHED AND CONSIDERED PAID FOR AS PART OF THIS ITEM.

ITEM 625 - LIGHTING, MISC.: TEST NEW CIRCUIT

UPON COMPLETION OF THE INSTALLATION OF NEW LIGHT POLES, TOWERS, UNDERPASS LUMINAIRES, ART PANELS, IRRIGATION, AND CIRCUITRY, THE CONTRACTOR SHALL TEST EACH NEW CIRCUIT TO VERIFY THAT POWER IS SUPPLIED TO ALL LIGHT FIXTURES AND THAT NO CIRCUIT COMPONENTS HAVE BEEN DAMAGED. REPRESENTATIVES OF ODOT, THE CITY OF CLEVELAND, CPP, AND THE CONTRACTOR SHALL BE PRESENT FOR THE INSPECTION OF EACH CIRCUIT.

EACH CIRCUIT SHALL BE CHECKED AT EACH PROPOSED POWER SERVICE LOCATION THAT WILL SERVE ALL OR PORTIONS OF NEW LIGHTING. TESTING SHALL COMPLY WITH ODOT C&MS 625.

PAYMENT WILL BE MADE AT THE UNIT PRICE BID FOR ODOT C&MS ITEM 625 - LIGHTING MISC.: TEST NEW CIRCUIT FOR EACH CIRCUIT AT A PROPOSED POWER SERVICE INSTALLATION, WHICH SHALL BE FULL COMPENSATION FOR ALL LABOR, MATERIALS AND INCIDENTALS REQUIRED TO COMPLETE THIS ITEM IN A SATISFACTORY AND WORKMANLIKE MANNER.

CONDUIT EXPANSION AND DEFLECTION

EXPANSION FITTINGS SHALL BE OZ TYPE AX, CROUSE HINDS TYPE XJG, OR EQUAL APPROVED BY THE ENGINEER. EACH EXPANSION FITTING SHALL PROVIDE EITHER 4 OR 8 INCHES TOTAL MOVEMENT AS SPECIFIED BY THE PLAN DETAILS AND SHALL HAVE AN EXTERNAL COPPER BONDING JUMPER, UNLESS SPECIFIED OTHERWISE BY THE PLAN DETAILS.

DEFLECTION COUPLINGS SHALL BE OZ TYPE DX, CROUSE HINDS TYPE XD, OR EQUAL APPROVED BY THE ENGINEER. EACH DEFLECTION COUPLING SHALL HAVE AN EXTERNAL COPPER BONDING JUMPER, UNLESS SPECIFIED OTHERWISE BY THE PLAN DETAILS. MINIMUM DEFLECTION CAPABILITY: 25°.

EXPANSION AND DEFLECTION FITTINGS FULLY OR PARTIALLY EMBEDDED IN CONCRETE, SOIL, OR SIMILAR MATERIAL SHALL BE COMPLETELY WRAPPED IN A NEOPRENE SLEEVE OR SHEET OF 1/2-INCH MINIMUM THICKNESS.

SECURE NEOPRENE WRAP WITH TIE-WRAPS PRIOR TO EMBEDMENT OF THE FITTING.

ITEM SPECIAL - MAINTAIN EXISTING LIGHTING

EXISTING ROADWAYS WHICH ARE TO REMAIN OPEN TO TRAFFIC DURING CONSTRUCTION OF THIS PROJECT AND ARE LIGHTED SHALL HAVE THE LIGHTING MAINTAINED AS DESCRIBED HEREIN.

BEFORE ANY WORK IS STARTED IN THE IMMEDIATE VICINITY OF THE EXISTING LIGHTING CIRCUITS, REPRESENTATIVES OF ODOT, THE CITY OF CLEVELAND, CPP, AND THE CONTRACTOR SHALL MAKE A VISUAL INSPECTION OF THE EXISTING ROADWAY LIGHTING CIRCUITS TO BE MAINTAINED. DURING THIS INSPECTION A WRITTEN RECORD OF THE CONDITION OF THE EXISTING LIGHTING SHALL BE MADE BY ODOT'S REPRESENTATIVE. THIS WRITTEN REPORT SHALL NOTE INDIVIDUAL LUMINAIRES WHICH ARE NOT IN WORKING ORDER, INDIVIDUAL POLES WHICH ARE NOT STANDING, AND INDIVIDUAL CIRCUITS WHICH ARE NOT IN WORKING ORDER. THE COMPLETED REPORT SHALL BE SIGNED BY THE REPRESENTATIVES OF ODOT, THE CITY OF CLEVELAND, CPP, AND THE CONTRACTOR.

ITEM SPECIAL - MAINTAIN EXISTING LIGHTING CONTINUED

IF, AS A RESULT OF THIS INSPECTION, IT IS DETERMINED THAT THE CONDITION OF THE EXISTING SYSTEM IS BELOW THAT REQUIRED FOR THE SAFETY OF THE TRAVELING PUBLIC, THEN THE MAINTAINING AGENCY SHALL MAKE THE REPAIRS NECESSARY TO RETURN THE SYSTEM TO AN ACCEPTABLE CONDITION. FOLLOWING THESE REPAIRS, THE SYSTEM SHALL AGAIN BE INSPECTED AND A REPORT SHALL BE MADE AND SIGNED AS OUTLINED HEREIN.

WHEN THE EXISTING SYSTEM IS IN AN ACCEPTABLE CONDITION, IT SHALL BE TURNED OVER TO THE CONTRACTOR WHO SHALL THEN BE REQUIRED TO MAINTAIN THE EXISTING LIGHTING TO THE CONDITION OUTLINED IN THIS REPORT WITH THE EXCEPTION OF KNOCKDOWNS DUE TO TRAFFIC ACCIDENTS.

REPLACEMENT OF KNOCKED DOWN UNITS SHALL BE DONE ONLY WHEN THE ENGINEER HAS DETERMINED THAT THE REPLACEMENT OF THE KNOCKED DOWN UNIT IS NECESSARY AND SHALL BE PAID SEPARATELY ON A UNIT BASIS.

BETTERMENTS SHALL BE COVERED IN ITEMS OF WORK PERTAINING TO THE CONSTRUCTION OF PERMANENT IMPROVEMENT.

WHEN THE SEQUENCE OF CONSTRUCTION ACTIVITIES REQUIRES, OR SHOULD THE CONTRACTOR DESIRE, THE REMOVAL OF THE EXISTING LIGHTING BEFORE THE NEW LIGHTING IS OPERATIONAL, THE CONTRACTOR SHALL BE RESPONSIBLE FOR PROVIDING TEMPORARY LIGHTING OF THE PORTION OF THE ROADWAY AFFECTED BY THE REMOVAL OF THE EXISTING LIGHTING.

PRIOR TO INSTALLING SUCH LIGHTING, THE CONTRACTOR SHALL PREPARE AND SUBMIT FOUR (4) SETS OF THE TEMPORARY LIGHTING PLANS TO THE ENGINEER FOR REVIEW AND APPROVAL.

THIS PLAN SHALL SHOW LOCATION OF POLES, LENGTH OF BRACKET ARMS, STYLE OF LUMINAIRES, MOUNTING HEIGHTS, WIRING METHODS AND OTHER PERTINENT INFORMATION. THE TEMPORARY LIGHTING SHALL PROVIDE AN AVERAGE INITIAL INTENSITY OF 1.2 FOOTCANDLES WITH AN AVERAGE TO MINIMUM UNIFORMITY NOT TO EXCEED 3:1. MOUNTING HEIGHT FOR TEMPORARY LUMINAIRES SHALL NOT BE LESS THAN 30 FEET, AND THE MINIMUM OVERHEAD CONDUCTOR CLEARANCE SHALL BE 20 FEET. TEMPORARY OVERHEAD CONSTRUCTION SHALL NOT BE LESS THAN GRADE "B" FOR STRENGTH REQUIREMENTS AS DEFINED BY THE NATIONAL ELECTRIC SAFETY CODE. WOOD POLES WITH OVERHEAD WIRING MAY BE USED. HOWEVER, TEMPORARY LIGHTING SHALL MEET FEDERAL AND STATE SAFETY CRITERIA. IF BREAKAWAY POLES ARE USED TO MEET THESE CRITERIA, THEN UNDERGROUND WIRING SHALL BE USED. RECONDITIONED OR USED MATERIALS MAY BE FURNISHED FOR TEMPORARY LIGHTING. ALL MATERIALS NECESSARY TO COMPLETE THE TEMPORARY LIGHTING SHALL BE FURNISHED AND INSTALLED BY THE CONTRACTOR. WHEN NO LONGER NEEDED, THE TEMPORARY LIGHTING INSTALLATION SHALL BE REMOVED AND PROPERLY DISPOSED OF BY THE CONTRACTOR.

WHEN THE PROJECT BEGINS AND THE CONTRACTOR HAS TAKEN OVER MAINTENANCE OF THE EXISTING FACILITIES, THE CONTRACTOR IS RESPONSIBLE FOR ALL REQUIRED LAYOUTS AND LOCATIONS OF THE EXISTING AND PROPOSED ELECTRICAL CIRCUITS AND RELATED ITEMS WITHIN THE PROJECT LIMITS. THE CONTRACTOR SHALL LOCATE AND MARK ALL UNDERGROUND ELECTRICAL CIRCUITS (INCLUDING TRAFFIC LOOPS AND LOOP LEAD-INS) FOR THE DURATION OF THE PROJECT.

THE MAINTAINING AGENCY WILL PAY FOR ELECTRICAL ENERGY CONSUMED BY EXISTING POWER SERVICES AND BY PROPOSED PERMANENT POWER SERVICES AFTER ACCEPTANCE OF THE LIGHTING WORK. THE CONTRACTOR WILL PAY FOR ELECTRICAL ENERGY, INSTALLATION, REMOVAL AND MAINTENANCE OF ANY TEMPORARY POWER SERVICES.

THE LUMP SUM PRICE BID FOR ITEM SPECIAL - MAINTAIN EXISTING LIGHTING SHALL INCLUDE PAYMENT FOR ALL LABOR, EQUIPMENT, MATERIALS AND INCIDENTALS NECESSARY TO MAINTAIN THE EXISTING LIGHTING AS SPECIFIED HEREIN.

THE UNIT PRICE BID FOR ITEM SPECIAL - REPLACEMENT OF EXISTING LIGHTING UNIT SHALL BE FULL PAYMENT FOR THE REPLACEMENT OF AN EXISTING LIGHTING UNIT WHICH HAS BEEN KNOCKED DOWN AFTER THE AFOREMENTIONED INSPECTION AND SHALL INCLUDE ALL LABOR, EQUIPMENT, MATERIALS AND INCIDENTALS NECESSARY TO PROVIDE A REPLACEMENT FOR SUCH UNIT.

ITEM SPECIAL - MAINTAIN EXISTING LIGHTING	LS
ITEM SPECIAL - REPLACEMENT OF EXISTING LIGHTING UNIT	20 EACH

For Reference Only
Preliminary Plans - Not

LIGHTING GENERAL NOTES

DESIGN AGENCY
Michael Baker INTERNATIONAL

DESIGNER JLD
REVIEWER SM 05/22/24
PROJECT ID 82382
SHEET 1684 TOTAL 2696

CUY-90-16.28 (CCG3A)

MODEL: Sheet-1 PAPERSIZE: 34x22 (in.) DATE: 3/27/2025 TIME: 7:50:04 PM USER: Mala.Gallagher
pw:\\mb-us-pw.bentley.com:mb-us-pw-03\Documents\Cleveland_OH\01_Projects\ODOT\District12\82382\400-Engineering\Lighting\Sheets\82382_LN1001.dgn

LIGHTING ITEMS

ALL MATERIAL AND CONSTRUCTION METHODS FURNISHED FOR FREEWAY / RAMP LIGHTING WORK SHALL COMPLY WITH ODOT C&MS 625.

EXISTING PLANS AND CONSTRUCTION PROJECT NUMBER

CUY / GEA - LG - FY2019

PADLOCKS AND KEYS

PADLOCKS FURNISHED SHALL BE EITHER BRASS OR BRONZE, EQUAL TO MASTER NO. 4BKA OR WILSON BOHANNAN 660A, AND SHALL BE KEYED IN ACCORDANCE WITH C&MS 631.06. PAYMENT SHALL BE INCLUDED IN THE BID FOR THE ITEM(S) BEING LOCKED.

LABELING LIGHT POLES / TOWER

PRIOR TO THE CONCLUSION OF THE PROJECT, THE CONTRACTOR SHALL PROVIDE LIGHT POLE / TOWER LABELS ON ALL LIGHT POLES / TOWERS REFERENCED IN THE PLAN PACKAGE. THE LABELS SHALL BE CREATED AND APPLIED IN CONFORMANCE WITH ODOT SCD HL-10.12.

PAYMENT FOR THIS ITEM OF WORK IS INCIDENTAL TO THE INSTALLATION OF THE LIGHT POLE / TOWER

ITEM 625 - LIGHT TOWER FOUNDATION, MISC.: 42" X 20' DEEP

LIGHT TOWER FOUNDATION SHALL ADHERE TO THE REQUIREMENTS OF ODOT C&MS 625 AND ODOT SCD HL-20.21 AND SHALL HAVE A DIAMETER OF 42" AND A DEPTH OF 20'.

PAYMENT WILL BE MADE AT THE UNIT PRICE BID FOR ODOT C&MS ITEM 625 - LIGHT TOWER FOUNDATION, MISC.: 42" X 20' DEEP, WHICH SHALL BE FULL COMPENSATION FOR ALL LABOR, MATERIALS AND INCIDENTALS REQUIRED TO COMPLETE THIS ITEM IN A SATISFACTORY AND WORKMANLIKE MANNER.

ITEM 625 - LIGHT TOWER FOUNDATION, MISC.: 48" X 25' DEEP

LIGHT TOWER FOUNDATION SHALL ADHERE TO THE REQUIREMENTS OF ODOT C&MS 625 AND ODOT SCD HL-20.21 AND SHALL HAVE A DIAMETER OF 48" AND A DEPTH OF 25'.

PAYMENT WILL BE MADE AT THE UNIT PRICE BID FOR ODOT C&MS ITEM 625 - LIGHT TOWER FOUNDATION, MISC.: 48" X 25' DEEP, WHICH SHALL BE FULL COMPENSATION FOR ALL LABOR, MATERIALS AND INCIDENTALS REQUIRED TO COMPLETE THIS ITEM IN A SATISFACTORY AND WORKMANLIKE MANNER.

ITEM 625 - LIGHT TOWER, MISC.: TOWER LIGHTING RING WITH 4 LUMINAIRE MOUNTS

THIS ITEM OF WORK SHALL INCLUDE FURNISHING AND INSTALLING A NEW LIGHT TOWER RING ON THE EXISTING LIGHT TOWER LOCATED INSIDE THE LOOP OF RAMP 4 AT INTERIM I.R. 90 EASTBOUND STATION 3013+30, 127' RIGHT. THE NEW TOWER LIGHTING RING SHALL HAVE 4 MOUNTS FOR HIGH MAST LUMINAIRES SPACED AT 90 DEGREE INTERVALS.

PAYMENT SHALL BE MADE AT THE UNIT BID PRICE FOR ODOT C&MS ITEM 625 - LIGHT TOWER, MISC.: TOWER LIGHTING RING WITH 4 LUMINAIRE MOUNTS, WHICH SHALL BE FULL COMPENSATION FOR ALL LABOR, MATERIALS AND INCIDENTALS REQUIRED TO COMPLETE THIS ITEM IN A SATISFACTORY AND WORKMANLIKE MANNER.

ITEM 625 - MEDIAN LIGHT POLE FOUNDATION, 10' DEEP, AS PER PLAN

FOUNDATIONS FOR MEDIAN MOUNTED LOW MAST LIGHT POLES SHALL ADHERE TO THE REQUIREMENTS OF ODOT C&MS 622 AND 625 AND ODOT SCD HL-20.13 EXCEPT AS MODIFIED HEREIN.

MEDIAN LIGHT POLE FOUNDATIONS SHALL BE MODIFIED TO BE COMPATIBLE WITH SINGLE SLOPE, TYPE C1 CONCRETE BARRIER AS SPECIFIED IN ITEM 622 - CONCRETE BARRIER, SINGLE SLOPE, TYPE C1, AS PER PLAN. REFER TO THE ROADWAY GENERAL NOTES FOR ADDITIONAL DETAIL REGARDING ITEM 622 - CONCRETE BARRIER, SINGLE SLOPE, TYPE C1, AS PER PLAN.

PAYMENT WILL BE MADE AT THE UNIT PRICE BID FOR ODOT C&MS ITEM 625 - MEDIAN LIGHT POLE FOUNDATION, 10' DEEP, AS PER PLAN FOR EACH MEDIAN MOUNTED LOW MAST LIGHT POLE INCLUDED IN THE PLANS, WHICH SHALL BE FULL COMPENSATION FOR ALL LABOR, MATERIALS AND INCIDENTALS REQUIRED TO COMPLETE THIS ITEM IN A SATISFACTORY AND WORKMANLIKE MANNER.

ITEM 625 - LUMINAIRE, HIGH MAST, SOLID STATE (LED), AS PER PLAN (480V)

IN ADDITION TO THE REQUIREMENTS OF ODOT C&MS 625 & 725, LUMINAIRES SHALL BE ONE OF THE FOLLOWING PRODUCTS:

HOLOPHANE HMLED4-P3-30K-XVOLT-HGR-AW
GE EVOLVE ERHM-03-5-70-VW-7-30-N-1-4B-GRAY-R
COOPER STREETWORKS CELESTEON CST-CA8-430-730-8-T5-AP

ALL FIXTURES SHALL COMPLY WITH ODOT SUPPLEMENTAL SPECIFICATION 813 AND 913.

ITEM 625 - LUMINAIRE, LOW MAST, SOLID STATE (LED), AS PER PLAN (480V)

IN ADDITION TO THE REQUIREMENTS OF ODOT C&MS 625 & 725, LUMINAIRES SHALL BE ONE OF THE FOLLOWING PRODUCTS:

FOR ASYMMETRIC FIXTURES:
HOLOPHANE HMLED4-P3-30K-XVOLT-HGR-AW-HMLED4D180
GE EVOLVE ERHM-03-5-40-C6-7-30-N-1-4B-GRAY-R
COOPER STREETWORKS CELESTEON CST-CA8-330-730-8-T3-AP

FOR SYMMETRIC FIXTURES:
HOLOPHANE HMLED4-P3-30K-XVOLT-HGR-AW
GE EVOLVE ERHM-03-5-70-VW-7-30-N-1-4B-GRAY-R
COOPER STREETWORKS CELESTEON CST-CA8-430-730-8-T5-AP

ALL FIXTURES SHALL COMPLY WITH ODOT SUPPLEMENTAL SPECIFICATION 813 AND 913.

ITEM 625 - LUMINAIRE, UNDERPASS, SOLID STATE (LED), AS PER PLAN (480V)

IN ADDITION TO THE REQUIREMENTS OF ODOT C&MS 625 & 725, UNDERPASS LUMINAIRES SHALL BE ONE OF THE FOLLOWING PRODUCTS:

HOLOPHANE W4GLED-10C1000-30K-T3S-480-SPD
GE EVOLVE EWAS-01-5-B3-AW-7-30-N-1-FM-GRAY-F
COOPER STREETWORKS WAL-PAK-WKP-6B-LED-E-8-GL-AP-10K-7030-B

ALL FIXTURES SHALL COMPLY WITH ODOT SUPPLEMENTAL SPECIFICATION 813 AND 913.

ITEM 625 - LUMINAIRE, UNDERPASS, SOLID STATE (LED), AS PER PLAN (480V, CROSS FRAME MOUNTED)

IN ADDITION TO THE REQUIREMENTS OF ODOT C&MS 625 & 725, THE UNDERPASS LUMINAIRE MOUNTED ON THE CROSS FRAME OF BRIDGE 14 (CARNEGIE AVE) SHALL BE ELECTRO-MATIC LE3T2M090GF2G02S-OH OR EQUAL AS APPROVED BY THE ENGINEER. THE FIXTURE SHALL COMPLY WITH ODOT SUPPLEMENTAL SPECIFICATION 813 AND 913.

PAYMENT FOR UNDERPASS LUMINAIRE SHALL ALSO INCLUDE COST FOR FURNISHING AND INSTALLING THE MOUNTING PLATE, A MOUNTING BRACKET TO ORIENT THE LUMINAIRE AS NOTED ON SHEET 2339 AND ALL NECESSARY EQUIPMENT, LABOR AND MATERIALS. THIS ITEM SHALL ALSO INCLUDE GALVANIZING OF THE LUMINAIRE MOUNTING BRACKET AND ATTACHMENT HARDWARE AS DETAILED IN THE PLANS AND ANY FASTENERS, ANCHORS AND BRACKETS NECESSARY BASED ON THE MANUFACTURER'S REQUIREMENTS.

PAYMENT WILL BE MADE AT THE UNIT PRICE BID UNDER ODOT C&MS ITEM 625 - LUMINAIRE, UNDERPASS, SOLID STATE (LED), AS PER PLAN (480V, CROSS FRAME MOUNTED) FOR EACH LUMINAIRE, WHICH SHALL BE FULL COMPENSATION FOR ALL LABOR, MATERIALS AND INCIDENTALS REQUIRED TO COMPLETE THIS ITEM IN A SATISFACTORY AND WORKMANLIKE MANNER.

ITEM 625 - 1-1/2" DUCT CABLE WITH THREE NO. 4 AWG 2400 VOLT CABLES

IN ADDITION TO THE QUANTITY CALCULATED IN THE LIGHTING SUBSUMMARY SHEETS, THE FOLLOWING CONTINGENCY QUANTITY HAS BEEN CARRIED TO THE LIGHTING GENERAL SUMMARY FOR THIS ITEM:

ITEM 625 - 1-1/2" DUCT CABLE WITH THREE NO. 4 AWG 2400 VOLT CABLES	175 FT

ITEM 625 - PULL BOX REMOVED, AS PER PLAN

THIS ITEM OF WORK SHALL INCLUDE THE REMOVAL OF AN EXISTING PULL BOX AND PROPER DISPOSAL OFF OF THE PROJECT SITE. THE RESULTANT OPENING SHALL BE BACKFILLED TO GRADE WITH SUITABLE COMPACTED SOIL AND RESTORED TO MATCH THE SURROUNDING AREA.

WHERE A PROPOSED PULL BOX WILL BE PLACED IN THE SAME AREA AS AN EXISTING PULL BOX, THE REMOVAL COST OF THE EXISTING PULL BOX WILL BE INCIDENTAL TO ITEM 625 - PULLBOX.

PAYMENT SHALL BE MADE AT THE UNIT BID PRICE FOR ODOT C&MS ITEM 625 - PULL BOX REMOVED, AS PER PLAN, WHICH SHALL BE FULL COMPENSATION FOR ALL LABOR, MATERIALS AND INCIDENTALS REQUIRED TO COMPLETE THIS ITEM IN A SATISFACTORY AND WORKMANLIKE MANNER.

ITEM 625 - PULL BOX, 725.08, 48", TYPE 1, AS PER PLAN

THE CONTRACTOR SHALL FURNISH AND INSTALL A 48" ROUND PULL BOX, TYPE 1, WITH CONCRETE PAD PER ODOT SCD ITS-14.20.

PAYMENT WILL BE MADE AT THE UNIT BID PRICE UNDER ODOT C&MS ITEM 625 - PULL BOX, 725.08, 48", TYPE 1, AS PER PLAN FOR EACH 48" PULL BOX PROPOSED IN THE PLANS, WHICH SHALL INCLUDE FULL COMPENSATION FOR ALL LABOR, MATERIALS, AND INCIDENTALS REQUIRED TO COMPLETE THIS ITEM IN A SATISFACTORY AND WORKMANLIKE MANNER.

ITEM 625 - PULL BOX, MISC.: 18" PULL BOX ADJUSTED TO GRADE

THIS ITEM OF WORK SHALL INCLUDE THE ADJUSTMENT TO GRADE OF THE EXISTING PULL BOX LOCATED IN THE GORE OF I-90 AND RAMP 4 (PROSPECT AVENUE TO I-90 EASTBOUND) AT INTERIM I.R. 90 EASTBOUND STATION 3013+05, 39' RIGHT.

PAYMENT SHALL BE MADE AT THE UNIT BID PRICE FOR ODOT C&MS ITEM 625 - PULL BOX, MISC.: 18" PULL BOX ADJUSTED TO GRADE, WHICH SHALL BE FULL COMPENSATION FOR ALL LABOR, MATERIALS AND INCIDENTALS REQUIRED TO COMPLETE THIS ITEM IN A SATISFACTORY AND WORKMANLIKE MANNER.

ITEM 625 - LIGHTING, MISC.: RELOCATE EX. CONTROL CENTER

THIS ITEM OF WORK SHALL CONSIST OF RELOCATING THE EXISTING CONTROL CENTER "CAR" AT INTERIM I.R. 90 EASTBOUND STATION 3010+87, 106' RIGHT TO THE PROPOSED LOCATION AT INTERIM I.R. 90 EASTBOUND STATION 3012+77, 326' RIGHT, AS INDICATED ON THE PLANS. THIS WORK SHALL BE PERFORMED WHILE MAINTAINING LIGHTING TO REMAIN ON THE EXISTING CONTROL CENTER. SEE CUY / GEA - LG - FY2019 RECORD PLANS FOR CIRCUIT SCHEMATICS AND A PLAN LAYOUT FOR CONTROL CENTER "CAR".

INSTALL A NEW FOUNDATION AT THE PROPOSED LOCATION FOR CONTROL CENTER "CAR" PER ODOT SCD HL-40.20. FEED AND CONNECT NEW CONDUIT AND NO. 4 AWG CIRCUIT WIRE TO RE-ESTABLISH THE PORTIONS OF THE EXISTING CIRCUITS TO REMAIN.

ITEMS REMOVED, WITH THE EXCEPTION OF EXISTING CONTROL CENTER "CAR", SHALL BECOME THE PROPERTY OF THE CONTRACTOR AND SHALL BE PROPERLY DISPOSED OF OFF THE PROJECT SITE.

PAYMENT SHALL BE MADE AT THE UNIT BID PRICE FOR ODOT C&MS ITEM 625 - LIGHTING, MISC.: RELOCATION OF EXISTING CONTROL CENTER AND FOUNDATION, WHICH SHALL BE FULL COMPENSATION FOR ALL LABOR, MATERIALS AND INCIDENTALS REQUIRED TO COMPLETE THIS ITEM IN A SATISFACTORY AND WORKMANLIKE MANNER.

Preliminary Plans - For Reference Only

LIGHTING GENERAL NOTES (ODOT LIGHTING)

DESIGN AGENCY
Michael Baker INTERNATIONAL

DESIGNER JLD
REVIEWER SM 05/22/24
PROJECT ID 82382
SHEET 1685 TOTAL 2696

CUY-90-16.28 (CCG3A)
MODEL: Sheet-2 PAPERSIZE: 34x22 (in.) DATE: 3/27/2025 TIME: 7:50:05 PM USER: Mala.Gallagher
pw:\\mb-us-pw.bentley.com:mb-us-pw-03\Documents\Cleveland_OH\01_Projects\ODOT\District12\82382\400-Engineering\Lighting\Sheets\82382_LN1001.dgn

PROPOSED LIGHTING CIRCUITS

ALL NEW CITY STREETLIGHTING MAINTAINED BY CLEVELAND PUBLIC POWER (CPP), NEW PEDESTRIAN LIGHTING MAINTAINED BY THE CITY OF CLEVELAND, AND MODIFIED EXISTING LIGHTING CIRCUITS WILL BE SERVICED FROM 120/240 VOLT, SINGLE PHASE POWER SUPPLIES. ALL PROPOSED LIGHTING CIRCUITS WILL BE 240 VOLT, (PHASE TO PHASE CONNECTION), WITH A MARKED GROUND CONDUCTOR.

BOTH PHASE CONDUCTORS TO LIGHT POLES SHALL BE FUSED WITH INLINE KTK IN EACH LIGHT PULL BOX.

CONNECTOR KITS AND CABLE SPLICE KITS

CONNECTOR KITS FOR POLES AND PULL BOXES SHALL COMPLY WITH ODOT REQUIREMENTS.

ITEM 625 - LIGHT POLE, MISC.: 30' ROUND TAPERED FIBERGLASS STREETLIGHT
ITEM 625 - LIGHT POLE, MISC.: 15' ROUND TAPERED FIBERGLASS STREETLIGHT

IN ADDITION TO THE REQUIREMENTS OF ODOT C&MS 725, LIGHT POLES FOR DECORATIVE STYLE LUMINAIRES SHALL BE AS FOLLOWS:

ALL POLES SHALL BE A HOLLOW, TRUNCATED CONE OF SUITABLE WALL THICKNESS AND TAPER. THE TAPER SHALL BE UNIFORM FROM TOP TO BOTTOM (ANY SECTION SHALL BE CIRCULAR).

ANY POLE PROVIDED SHALL NOT WEIGH LESS THAN 95% OF THE MANUFACTURER'S ADVERTISED OR SPECIFIED WEIGHTS.

FIBERGLASS POLES FURNISHED AS PART OF THIS SPECIFICATION SHALL BE MANUFACTURED PER THE CUT SHEETS INCLUDED ON SHEET 1742 COLOR OF POLE SHALL MATCH LUMINAIRE.

CAPABLE OF BEING FITTED AS FOLLOWS:

DECORATIVE LUMINAIRE STREETLIGHT POLES

DECORATIVE LUMINAIRE AT NOMINAL MOUNTING HEIGHT (30' FOR ITEM 625 - LIGHT POLE, MISC.: 30' ROUND TAPERED FIBERGLASS STREETLIGHT AND 15' FOR ITEM 625 - LIGHT POLE, MISC.: 15' ROUND TAPERED FIBERGLASS STREETLIGHT) ABOVE THE PAVEMENT SURFACE. ADJUSTMENTS MAY BE REQUIRED IN THE POLE SHAFT LENGTH TO PROVIDE THE PROPER LUMINAIRE MOUNTING HEIGHT.

BASE PLATE AND COVER FOR ANCHOR BASE POLE

DETAILS FOR BASE PLATE AND COVER INCLUDED ON SHEET 1742.

ANCHOR RODS FOR ANCHOR BASE POLES

ONE SET OF FOUR (4) GALVANIZED 1 INCH ANCHOR RODS 40 (36 + 4) INCHES IN LENGTH, EACH WITH TWO NUTS AND TWO WASHERS, SHALL BE FURNISHED WITH EACH POLE ASSEMBLY. ANCHOR BOLTS SHALL CONFORM TO LATEST ASTM SPECIFICATION FOR HIGH STRENGTH, GALVANIZED ANCHOR BOLTS, 50,000 PSI MINIMUM.

SHIPPING

EACH POLE SHALL BE INDIVIDUALLY WRAPPED WITH PLASTIC SHRINK FILM OR POLY-BAGGED FOR PROTECTION DURING SHIPPING AND STORAGE.

POLES SHALL INCLUDE A DUPLEX RECEPTACLE BOX WITH WET LOCATION WHILE-IN-USE COVER.

WIND LOADING

THE POLES FURNISHED AS PART OF THIS SPECIFICATION SHALL BE DESIGNED IN ACCORDANCE WITH 90 MPH (30% GUST FACTOR) AASHTO WIND LOADING. CERTIFIED MATHEMATICAL WIND LOAD CALCULATIONS MUST BE SUBMITTED WITH THE BID.

LOADING TEST

THE MANUFACTURER SHALL PROVIDE ONE (1) SET OF SHOP DRAWINGS FOR THE POLE WITH CERTIFIED TEST DATA FOR DEFLECTION AND ULTIMATE STRENGTH. THIS INFORMATION SHALL ALSO BE SUBMITTED WITH THE BID. ALL TESTING IS TO BE PERFORMED ON THE POLE WITH THE APPROPRIATE SIZE HAND HOLE LOCATED ON THE COMPRESSION SIDE.

1. A HORIZONTAL LOAD IS TO BE APPLIED IN 100 POUND INCREMENTS AT A POINT 12 INCHES FROM THE TOP UNTIL AN ULTIMATE TOP LOAD OF 1,400 POUNDS HAS BEEN APPLIED. THE POLE SHALL WITHSTAND A MINIMUM OF 1400 POUNDS OF HORIZONTAL LOAD BEFORE FAILURE. UNDER THE SAME TEST PROCEDURE, THE MAXIMUM DEFLECTION UNDER 100 POUND LOADING SHALL BE 4% OF THE ABOVE GROUND LENGTH OF THE POLE.

ITEM 625 - LIGHT POLE, MISC.: 30' ROUND TAPERED FIBERGLASS STREETLIGHT CONTINUED
ITEM 625 - LIGHT POLE, MISC.: 15' ROUND TAPERED FIBERGLASS STREETLIGHT CONTINUED

LOADING TEST CONTINUED

2. A HORIZONTAL LOAD IS TO BE APPLIED IN 100 POUND INCREMENTS AT A POINT 12 INCHES FROM THE TOP OF THE POLE. THE LOAD IS TO BE HELD FOR FIVE (5) MINUTES WITHOUT POLE FAILURE AND THE POLE IS TO HAVE NO MORE THAN 1% PERMANENT DEFLECTION AFTER UNLOADING.

INVENTORY IDENTIFICATION

ALL POLE ARMS AND BASES SHALL BE PERMANENTLY MARKED WITH INVENTORY CODES SUPPLIED AT TIME OF ORDER. MARKING SHALL BE SUCH THAT THEY CANNOT BE REMOVED BY HAND OR FADED OR OTHERWISE MADE ILLEGIBLE BY RAIN, SNOW, WIND, SUN OR OTHER WEATHER CONDITIONS ENCOUNTERED IN OUTDOOR STORAGE.

SHOP DRAWINGS

SUBMIT SHOP DRAWINGS OF MANUFACTURER CATALOG CUTS TO THE ENGINEER/CPP FOR THEIR APPROVAL PRIOR TO ORDERING MATERIALS.

PAYMENT

PAYMENT SHALL BE MADE AT THE UNIT PRICE BID FOR ODOT C&MS ITEM 625 - LIGHT POLE, MISC.: 30' ROUND TAPERED FIBERGLASS STREETLIGHT FOR EACH PROPOSED STREETLIGHT POLE IN THE PLANS. PAYMENT SHALL BE MADE AT THE UNIT PRICE BID FOR ODOT C&MS ITEM 625 - LIGHT POLE, MISC.: 15' ROUND TAPERED FIBERGLASS STREETLIGHT FOR EACH PROPOSED PEDESTRIAN POLE IN THE PLANS. THE UNIT PRICE BID SHALL INCLUDE FULL COMPENSATION FOR ALL LABOR, MATERIALS AND INCIDENTALS REQUIRED TO COMPLETE THIS ITEM IN A SATISFACTORY AND WORKMAN LIKE MANNER.

ITEM 625 - LIGHT POLE ANCHOR BOLTS ON STRUCTURE

WHEN A LIGHT POLE IS MOUNTED ON A PILASTER ON A BRIDGE PARAPET, INTO A BRIDGE DECK, OR ON A RETAINING WALL, THE REQUIRED ANCHOR BOLTS MAY DIFFER IN LENGTH AND / OR SHAPE FROM THOSE REQUIRED WHEN THE POLE IS MOUNTED ON A CAST-IN-PLACE DRILLED SHAFT FOUNDATION. THE COST DIFFERENTIAL FOR FURNISHING SUCH BOLTS IS INCLUDED HEREIN.

IN ADDITION, THERE IS NO FOUNDATION CONSTRUCTION ITEM IN WHICH TO INCLUDE THE SETTING OF THE ANCHOR BOLTS. THUS, THE SETTING OF THE ANCHOR BOLTS INTO THE PILASTER OR DECK LOCATIONS IS ALSO PART OF THIS WORK.

PAYMENT WILL BE MADE AT EACH SUCH POLE LOCATION AT THE UNIT PRICE BID FOR EACH CMS ITEM 625 - LIGHT POLE ANCHOR BOLTS ON STRUCTURE AND SHALL BE FULL COMPENSATION FOR FURNISHING AND PLACING THE SET OF ANCHOR BOLTS REQUIRED.

ITEM 625 - DISTRIBUTION CABLE, MISC.: NO. 4/0 AWG 2400 VOLT DISTRIBUTION CABLE

DISTRIBUTION CABLE SHALL ADHERE TO THE REQUIREMENTS OF ODOT C&MS 625 AND SHALL BE 4/0 AWG IN SIZE.

PAYMENT WILL BE MADE AT THE UNIT PRICE BID FOR ODOT C&MS ITEM 625 - DISTRIBUTION CABLE, MISC.: NO. 4/0 AWG 2400 VOLT DISTRIBUTION CABLE WHICH SHALL BE FULL COMPENSATION FOR ALL LABOR, MATERIALS AND INCIDENTALS TO COMPLETE THIS ITEM IN A SATISFACTORY AND WORKMANLIKE MANNER.

ITEM 625 - CONDUIT, CONCRETE ENCASED, AS PER PLAN (2-2" CONDUIT, 725.051)
ITEM 625 - CONDUIT, CONCRETE ENCASED, AS PER PLAN (4-2" CONDUIT, 725.051)

THIS ITEMS OF WORK CONSIST OF THE INSTALLATION OF EITHER 2-2" CONDUIT DUCT BANK, 4-2" CONDUIT DUCT BANK, OR 6-2" CONDUIT DUCT BANK BETWEEN PULLBOXES AND UNDER PAVED ROADWAYS. REFER TO LIGHTING PLANS FOR LOCATIONS. PROVIDE A MINIMUM OF 2" BETWEEN CONDUITS AND A MINIMUM OF 3" OF CONCRETE ENCASEMENT ON ALL SIDES OF THE CONDUIT. PROVIDE A MINIMUM COVER OF 30" FROM FINISHED GRADE TO THE TOP OF CONCRETE ENCASEMENT.

A RUGGED POLYETHYLENE MATERIAL WARNING TAPE CAPABLE OF RESISTING HIGH OR LOW PH CONDITIONS SHALL BE PLACED ABOVE THE ELECTRICAL CONDUIT BANK. THIS WARNING TAPE IS TO BE 6" WIDE, RED IN COLOR AND IMPRINTED WITH THE WORDS, "DANGER - BURIED HIGH VOLTAGE CABLES BELOW." THIS TAPE IS TO BE PLACED 6" ABOVE THE NEWLY INSTALLED DUCT BANK. THIS SHALL CONFORM WITH THE STANDARDS AS SET BY THE OHIO UTILITIES PROTECTION SERVICE (OUPS). WARNING TAPE IS NOT INCIDENTAL TO THIS ITEM AND SHALL BE PAID FOR SEPARATELY.

PAYMENT WILL BE MADE AT THE UNIT PRICE BID FOR ODOT C&MS ITEM 625 - CONDUIT, CONCRETE ENCASED, AS PER PLAN (X-2" CONDUIT, 725.051) FOR EACH FOOT OF X-2" CONDUITS INSTALLED, WHICH SHALL BE FULL COMPENSATION FOR ALL LABOR, MATERIALS AND INCIDENTALS TO COMPLETE THIS ITEM IN A SATISFACTORY AND WORKMANLIKE MANNER.

PULL WIRE

PULL WIRE SHALL BE WOVEN KEVLAR WITH A TENSILE RATING OF 1,200 LBS, EQUAL TO (OR EXCEEDING) HERCULINE A1250W PULL TAPE. THE QUANTITY SHALL BE SUFFICIENT TO RUN THE ENTIRE LENGTH OF THE PROJECT THROUGH EACH PULL BOX LOCATED ON BOTH SIDES OF THE RIGHT OF WAY. PULL WIRES SHALL BE SUPPLIED IN ALL EMPTY CONDUITS. THIS MATERIAL WILL BE INCLUDED AS INCIDENTAL TO THE CONDUIT AS INSTALLED.

ITEM 625 - LUMINAIRE, CONVENTIONAL, SOLID STATE (LED), AS PER PLAN (CPP LED COBRA HEAD)

LUMINAIRES MOUNTED TO CPP WOOD POLES SHALL BE GENERAL ELECTRIC, CATALOG NUMBER:

ERLH-0-13-C3-40-A-GRAY-I-L (250 WATT EQUIVALENT) OR ERL2-0-23-C3-40-A-GRAY-I-L (400 WATT EQUIVALENT)

PROVIDE 250 WATT EQUIVALENT FIXTURES ON EAST 14TH STREET SOUTH OF RAMP B6, CENTRAL AVENUE CONNECTOR, MIDTOWN CONNECTOR AND CEDAR AVENUE. PROVIDE 400 WATT EQUIVALENT FIXTURES ON CARNEGIE AVENUE.

ITEM 625 - LUMINAIRE, UNDERPASS, SOLID STATE (LED), AS PER PLAN (CPP LED WALLPACK)

UNDERPASS LUMINAIRES FOR STREET LIGHTING SHALL BE VERSALED LIGHTING WP3-Q, CODE WP3-Q-41L-QT-40K.

ITEM 625 - LUMINAIRE, DECORATIVE, AS PER PLAN (30' POLES)

30' ROUND TAPERED FIBERGLASS STREETLIGHT LUMINAIRES:

LUMINAIRES FOR STREET LIGHTING ALONG EAST 22ND STREET, EAST 18TH STREET AND EAST 14TH STREET NORTH OF RAMP B6 SHALL BE MANUFACTURED BY COOPER LIGHTING SOLUTIONS, STREETWORKS, THE USSL LED COLLECTION, WITH 96 WATT, 4000K, 2 LIGHT SQUARE LUMINAIRE WITH PHOTOMETRIC DISTRIBUTION OF TYPE III OPTICS.

PROVIDE TENON ADAPTOR MA1020-BZ FOR STREETLIGHT POLE, INCIDENTAL TO PAYMENT OF THE LUMINAIRE.

CATALOG NO. USSL-C027-D-U-T3-SA-BZ-10MSP-4N7-TH

PAYMENT SHALL BE MADE AT THE UNIT PRICE BID FOR ODOT C&MS ITEM 625 - LUMINAIRE, DECORATIVE, AS PER PLAN (STREETLIGHT FIXTURE FOR 30' FIBERGLASS POLES) FOR EACH PROPOSED STREETLIGHT LUMINAIRE ALONG EAST 22ND STREET, EAST 18TH STREET AND EAST 14TH STREET NORTH OF RAMP B6 IN THE PLANS. THE UNIT PRICE BID SHALL INCLUDE FULL COMPENSATION FOR ALL LABOR, MATERIALS AND INCIDENTALS REQUIRED TO COMPLETE THIS ITEM IN A SATISFACTORY AND WORKMAN LIKE MANNER.

ITEM 625 - LUMINAIRE, DECORATIVE, AS PER PLAN (15' POLES)

15' ROUND TAPERED FIBERGLASS STREETLIGHT LUMINAIRES:

LUMINAIRES FOR PEDESTRIAN LIGHTING ALONG EAST 22ND STREET AND MIDTOWN CONNECTOR SHALL BE MANUFACTURED BY COOPER LIGHTING SOLUTIONS, STREETWORKS, THE USSL LED COLLECTION, WITH 35 WATT, 4000K, 1 LIGHT SQUARE LUMINAIRE WITH PHOTOMETRIC DISTRIBUTION OF TYPE III OPTICS.

PROVIDE TENON ADAPTOR MA1020-BZ FOR STREETLIGHT POLE WITH ONE MOUNTED LUMINAIRE AND PROVIDE TENON ADAPTOR MA1034-BZ FOR STREETLIGHT POLE WITH TWO LUMINAIRES MOUNTED AT 180 DEGREES. TENON ADAPTOR SHALL BE INCIDENTAL TO PAYMENT OF THE LUMINAIRE.

CATALOG NO. BAA-USSL-P-C014-D-U-T3-SA-BZ-10MSP-4N7-TH

PAYMENT SHALL BE MADE AT THE UNIT PRICE BID FOR ODOT C&MS ITEM 625 - LUMINAIRE, DECORATIVE, AS PER PLAN (PEDESTRIAN FIXTURE FOR 15' FIBERGLASS POLES) FOR EACH PROPOSED PEDESTRIAN LUMINAIRE ALONG EAST 22ND STREET AND MIDTOWN CONNECTOR IN THE PLANS. THE UNIT PRICE BID SHALL INCLUDE FULL COMPENSATION FOR ALL LABOR, MATERIALS AND INCIDENTALS REQUIRED TO COMPLETE THIS ITEM IN A SATISFACTORY AND WORKMAN LIKE MANNER.

For Reference Only
Preliminary Plans - Not

LIGHTING GENERAL NOTES (CPP/PEDESTRIAN LIGHTING)

DESIGN AGENCY
Michael Baker INTERNATIONAL

DESIGNER JLD

REVIEWER SM 05/22/24

PROJECT ID 82382

SHEET 1686 TOTAL 2696

CUY-90-16.28 (CCG3A)
MODEL: Sheet-3 PAPERSIZE: 34x22 (in.) DATE: 3/27/2025 TIME: 7:50:06 PM USER: Maia.Gallagher
pw:\\mb-us-pw.bentley.com:mb-us-pw-03\Documents\Cleveland_OH\01_Projects\ODOT\District12\82382\400-Engineering\Lighting\Sheets\82382_LN1001.dgn

ITEM 625 - PULL BOX, MISC.: 6" X 6" PULL BOX

THE CONTRACTOR SHALL SELECT, FURNISH, AND INSTALL A 6" LONG, 6" WIDE & 4" DEEP CAST ALUMINUM OR CAST IRON PULL BOX FROM THE ODOT QUALIFIED PRODUCTS LIST FOR ODOT C&MS 725.10 PRODUCTS. PULL BOX PRODUCT AND INSTALLATION SHALL ADHERE TO ODOT C&MS 625 & 725.10.

PAYMENT SHALL BE MADE AT THE UNIT BID PRICE FOR ODOT C&MS ITEM 625 - PULL BOX, MISC.: 6" X 6" PULL BOX FOR EACH PULL BOX, WHICH SHALL BE FULL COMPENSATION FOR ALL LABOR, MATERIALS AND INCIDENTALS REQUIRED TO COMPLETE THIS ITEM IN A SATISFACTORY AND WORKMANLIKE MANNER.

ITEM 625 - CONTROL CENTER CABINET, COMPLETE, AS PER PLAN

THIS ITEM CONSISTS OF FURNISHING AND INSTALLING A CONTROL CENTER CABINET FOR THE PEDESTRIAN AND AESTHETIC LIGHTING ALONG E. 22ND STREET, IDENTIFIED AS "CC-E" IN THE LIGHTING PLANS. THIS CONTROL CENTER CABINET SHALL ADHERE TO THE REQUIREMENTS OF ODOT C&MS 625 AND ODOT SCD HL-40.20. WIRING OF THE CONTROL CENTER SHALL ADHERE TO THE DETAIL INCLUDED ON SHEET 1744

PAYMENT SHALL BE MADE AT THE UNIT BID PRICE FOR ODOT C&MS ITEM 625 - CONTROL CENTER CABINET, COMPLETE, AS PER PLAN AND SHALL BE FULL COMPENSATION FOR ALL LABOR, MATERIALS AND INCIDENTALS REQUIRED TO COMPLETE THIS ITEM IN A SATISFACTORY AND WORKMANLIKE MANNER.

ITEM 625 - DISCONNECT CIRCUIT, AS PER PLAN

THIS ITEM OF WORK SHALL CONSIST OF THE DISCONNECTION OF AN EXISTING POWER SERVICE FEED TO A WOOD UTILITY POLE, STEEL LIGHT POLE, LIGHT TOWER, A PULL BOX OR A LIGHT POLE JUNCTION BOX.

FOR SAFETY PURPOSES, CPP MUST BE THE ONES WHO ENERGIZE AND/OR DE-ENERGIZE ANY CPP EQUIPMENT, INCLUDING BUT NOT LIMITED TO CIRCUITS. THE CONTRACTOR SHALL COORDINATE WITH CPP TO DISCONNECT EXISTING ELECTRICAL SERVICE FEEDS TO THE DESIGNATED WOOD UTILITY POLE, STEEL LIGHT POLE, LIGHT TOWER, PULL BOX OR JUNCTION BOX IDENTIFIED FOR REMOVAL BY THE CONTRACTOR AS SHOWN ON THE LIGHTING PLANS.

DISCONNECTION AT A PULLBOX SHALL INVOLVE CUTTING THE EXISTING CIRCUIT AND REMOVING ALL SPLICE KITS. ANY CABLE THAT IS TO BE ABANDONED SHALL BE PROPERLY TERMINATED. DISCONNECTION AT A LIGHT POLE SHALL ALSO INVOLVE DISCONNECTION OF THE CIRCUIT AT THE ADJACENT JUNCTION BOX, PULLBOX, ETC.

PAYMENT SHALL BE MADE AT THE UNIT BID PRICE FOR ODOT C&MS ITEM 625 - DISCONNECT EXISTING CIRCUIT, AS PER PLAN AT EACH LOCATION WHERE DISCONNECTION IS REQUIRED, WHICH SHALL BE FULL COMPENSATION FOR ALL LABOR, MATERIALS AND INCIDENTALS REQUIRED TO COMPLETE THIS ITEM IN A SATISFACTORY AND WORKMANLIKE MANNER.

ITEM 625 - PULL BOX, MISC.: 13" X 24" PULL BOX

IN LIEU OF THE REQUIREMENTS OF ODOT CMS 725.08, PULL BOXES SHALL MEET THE CITY OF CLEVELAND REQUIREMENTS AS FOLLOWS:

SIZE: 13" x 24":

1. *THE EXTERIOR DIMENSIONS AT THE TOP SHALL BE 13" x 24" (NOMINAL)*
2. *THE BOX SHALL BE 1'-6" DEEP (NOMINAL) AND SHALL TAPER OUTWARD FROM THE TOP TO THE OPEN BOTTOM.*
3. *THE INSIDE DIMENSIONS AT THE BOTTOM SHALL BE 11-3/4" x 1'-9-1/4" (MINIMUM).*
4. *THE BOX (WITHOUT COVER) SHALL WEIGH APPROXIMATELY 64 LBS.*
5. *THE COVER SHALL BE 1'-1-3/4" x 1'-11-1/4" x 2", AND SHALL WEIGH APPROXIMATELY 34 LBS.*

LOAD CAPACITY: - THE PULL BOX AND COVER SHALL BE COMPLIANT WITH THE LOADING REQUIREMENTS SPECIFIED WITHIN ANSI/SCTE 77 "SPECIFICATIONS FOR UNDERGROUND ENCLOSURE INTEGRITY" FOR TIER 22 APPLICATIONS. FOR ADDITIONAL DETAIL ON THE LOADING REQUIREMENTS FOR TIER 22, SEE TABLE 1 - DESIGN/TEST LOADS ON THIS SHEET.

MATERIAL AND CONSTRUCTION: - PULL BOX MATERIAL AND CONSTRUCTION SHALL BE PER THE STANDARDS INCLUDED UNDER SECTION D.1 - POLYMER CONCRETE BOXES AND COVERS ON THIS SHEET.

CONDUIT OPENINGS - OPENINGS IN THE SIDE OF THE PULL BOX, IF REQUIRED TO INSERT CONDUIT (INTO THE PULL BOX), SHALL BE DRILLED OR SAWN IN THE FIELD, ONCE THESE LOCATIONS HAVE BEEN DETERMINED. THE OPENINGS SHALL NOT EXCEED THE OUTSIDE DIAMETER OF THE CONDUIT BY MORE THAN FIVE PERCENT (5%). ALL OPENINGS IN THE SIDE OF THE PULL BOX SHALL BE THOROUGHLY GROUTED WITH CEMENT MORTAR AFTER PLACING THE CONDUIT.

NOTE - THE EXACT LOCATIONS OF PULL BOXES ARE TO BE STAKED AND CHECKED PRIOR TO PLACEMENT TO VERIFY CLEARANCE OF UNDERGROUND FACILITIES AND ANY ABOVE GROUND OBSTRUCTIONS. IF THERE ARE ANY CONFLICTS, THEY ARE TO BE ADJUSTED AS DIRECTED BY THE ENGINEER. SUBMIT SHOP DRAWINGS (CATALOG CUTS) TO THE ENGINEER / CPP FOR THEIR APPROVAL.

PAYMENT WILL BE MADE AT THE UNIT PRICE BID FOR ODOT C&MS ITEM 625 - PULL BOX, MISC.: 13" X 24" PULL BOX FOR EACH PULL BOX, WHICH SHALL BE FULL COMPENSATION FOR ALL LABOR, MATERIALS, AND INCIDENTALS REQUIRED TO COMPLETE THESE ITEMS IN A SATISFACTORY AND WORKMANLIKE MANNER.

D.1 POLYMER CONCRETE BOXES AND COVERS

Materials used to manufacture the polymer concrete boxes and covers shall consist of an aggregate matrix bound together with polymer resin. Internal reinforcement may be provided by means of steel, fiberglass, or a combination of the two. Material shall be chemically resistant to sulfuric acid, sodium chloride, motor oils, gasoline and road salts. Finished products shall have a compressive strength of 11,000 psi minimum. Boxes and covers which do not conform to the respective examples or approved equivalent shall be rejected. All covers must lie true in their boxes without tipping or rocking when pressure is brought to bear upon them.

Enclosures, boxes & covers are required to be compliant with ASTM C857 (AASHTO) A-16 (HS20-44) and ASTM C857 (AASHTO) A-8 (H10-44) as well as to conform to all test provisions of ANSI/SCTE 77 "Specifications for Underground Enclosure Integrity" for Tier 22 applications. In no assembly can the cover design load exceed the design load of the box. All components in an assembly (box & cover) are manufactured using matched surface tooling. All covers are required to have a minimum coefficient of friction of 0.05 in accordance with ASTM C1028 and the corresponding Tier level embossed on the top surface. Independent third party verification or test reports stamped by a registered Professional Engineer certifying that all test provisions of this specification have been met are required with each submittal.

Material and Construction: The Box shall be constructed of Fiberglass Reinforced Polymer (FRP) with Isopthalit Polyester using the spray-up and roll construction method. The material shall have stabilizers to resist Ultraviolet (UV) Degradation in accordance with ASTM D-790 and ASTM D11501-71, Section 6, Procedure B. the top ring of the box shall be made of Polymer Concrete using a Polyester Binder with Aggregate Fillers and Chopped Fiberglass with a minimum tensile strength of 1900 PSI. The ring shall have the same UV resistance as the FRP material. The threaded inserts for the cover bolts shall be Stainless Steel. The cover shall be made with a Thick Molding Compound (TMC) using the Compression Molding Method. The TMC shall consist of a minimum of then percent (10%) fiberglass in a Calcium Carbonate and Polyester Resin Matrix. The cover shall be marked with the word "CPP" in 2" Letters, Embossed into the TMC, and shall have a Non-Skid surface and the same UV resistance as the FRP material.

The cover shall be secured to the box using two Hex Head stainless steel bolts and washers which shall attach to threaded inserts in the body of the box.

13 x 24 x 18 Pull-box (Body):
(Quazite PG1324BA18 or Approved Equivalent)

13 x 24 Pull-box (Cover):
(Quazite PG1324HH00C6 or Approved Equivalent)

APPLICATION	LOADING REQUIREMENTS			
Light Duty Pedestrian Traffic Only	Vertical	Test Load	13.3kN	3000 pounds
TIER 5 Sidewalk applications with a safety factor for occasional non-deliberate vehicular traffic	Vertical	Design Load Test Load	22.2 kN 33.3 kN	5000 pounds 7500 pounds
	Lateral	Design Load Test Load	28.7 kPa 43.1 kPa	600 pounds/sq.ft. 900 pounds/sq.ft. (1800/2700 pounds/ lateral load plate)
TIER 8 Sidewalk applications with a safety factor for non-deliberate vehicular traffic	Vertical	Design Load Test Load	35.6 kN 53.4 kN	8000 pounds 12000 pounds
	Lateral	Design Load Test Load	28.7 kPa 43.1 kPa	600 pounds/sq.ft. 900 pounds/sq.ft. (1800/2700 pounds/ lateral load plate)
TIER 15 Driveway, parking lot, and off-roadway applications subject to occasional non-deliberate heavy vehicular traffic	Vertical	Design Load Test Load	66.7 kN 100.1 kN	15000 pounds 22500 pounds
	Lateral	Design Load Test Load	38.3 kPa 57.5 kPa	800 pounds/sq.ft. 1200 pounds/sq.ft. (2400/3600 pounds/ lateral load plate)
TIER 22 Driveway, parking lot, and off-roadway applications subject to occasional non-deliberate heavy vehicular traffic	Vertical	Design Load Test Load	100.1 kN 150.1 kN	22500 pounds 33750 pounds
	Lateral	Design Load Test Load	38.3 kPa 57.5 kPa	800 pounds/sq.ft. 1200 pounds/sq.ft. (2400/3600 pounds/ lateral load plate)
AASHTO H-20 Deliberate vehicular traffic applications.	Certified precast concrete, cast iron, or AASHTO-recognized materials.			

Table 1 – Design / Test Loads

Preliminary Plans - Not For Reference Only

CUY-90-16.28 (CCG3A)
MODEL: Sheet-4 PAPERSIZE: 34x22 (in.) DATE: 6/13/2025 TIME: 7:52:30 AM USER: Joseph.Hogan
pw:\\mb-us-pw.bentley.com:mb-us-pw-03\Documents\Cleveland_OH\01_Projects\ODOT\District12\82382\400-Engineering\Lighting\Sheets\82382_LN1001.dgn

DESIGN AGENCY
Michael Baker INTERNATIONAL
DESIGNER JLD
REVIEWER SM 05/22/24
PROJECT ID 82382
SHEET 1687 TOTAL 2696

SHEET NUMBER																						ITEM	CARRIED TO GENERAL SUMMARY	UNIT	DESCRIPTION
1684	1685	1692	1693	1694	1695	1696	1697	1698	1699	1700	1701	1702	1703												
																									LIGHTING
				1		1																202	2	EACH	REMOVAL OF EXISTING CONTROL CENTER AND FOUNDATION
				1		1																202	2	EACH	DISCONNECT EXISTING CIRCUIT
						2		8		2												625	12	EACH	CONNECTION, FUSED PULL APART
		3				6		6														625	15	EACH	CONNECTION, UNFUSED BOLTED
		24		33		12		12		27		15										625	123	EACH	CONNECTION, UNFUSED PERMANENT
						1		3														625	4	EACH	LIGHT POLE, LOW MAST, ALM50
								1		1												625	2	EACH	LIGHT POLE, LOW MAST, ATLM50
												1										625	1	EACH	LIGHT TOWER, BB80
				1								1										625	2	EACH	LIGHT TOWER, BB100
		1																				625	1	EACH	LIGHT TOWER, BB110
		2																				625	2	EACH	LIGHT TOWER, BBB80
		1		1		2		1		2		1										625	8	EACH	LIGHT TOWER, BBB100
										1												625	1	EACH	LIGHT TOWER, BBB120
		1		1																		625	2	EACH	LIGHT TOWER, BBB130
										1												625	1	EACH	LIGHT TOWER, BBBB90
										1		1										625	2	EACH	LIGHT TOWER, BBBB100
										1												625	1	EACH	LIGHT TOWER, MISC.: TOWER LIGHTING RING WITH 4 LUMINAIRE MOUNTS
								1		1												625	2	EACH	LIGHT POLE FOUNDATION, 24" X 10' DEEP
						1		3														625	4	EACH	MEDIAN LIGHT POLE FOUNDATION, 10' DEEP, AS PER PLAN
		2																				625	2	EACH	LIGHT TOWER FOUNDATION, 36" X 15' DEEP
		1		2		2				3		2										625	10	EACH	LIGHT TOWER FOUNDATION, 36" X 20' DEEP
								1		1		2										625	4	EACH	LIGHT TOWER FOUNDATION, 36" X 25' DEEP
										1												625	1	EACH	LIGHT TOWER FOUNDATION, 42" X 25' DEEP
		1																				625	1	EACH	LIGHT TOWER FOUNDATION, MISC.: 42" X 20' DEEP
		1		1																		625	2	EACH	LIGHT TOWER FOUNDATION, MISC.: 48" X 25' DEEP
		3111		7047		8286		6228		4930		954										625	30556	FT	NO. 4 AWG 2400 VOLT DISTRIBUTION CABLE
						150		600		150												625	900	FT	NO. 10 AWG POLE AND BRACKET CABLE
	175	2078		1861		795		497		1642		396										625	7444	FT	1-1/2" DUCT CABLE WITH THREE NO. 4 AWG 2400 VOLT CABLES
			383		160		179		554		28											625	1304	FT	CONDUIT, 1-1/2", 725.04
									116													625	116	FT	CONDUIT, 2-1/2", 725.04
											712											625	712	FT	CONDUIT, 3", 725.051
			544		939		668		406		1074		245									625	3876	FT	CONDUIT, JACKED OR DRILLED, 725.04, 3"
			14		8		6		3		21		11									625	63	EACH	LUMINAIRE, HIGH MAST, SOLID STATE (LED), AS PER PLAN (480V)
							1		4		1											625	6	EACH	LUMINAIRE, LOW MAST, SOLID STATE (LED), AS PER PLAN (480V)
			6		2		5		9		1											625	23	EACH	LUMINAIRE, UNDERPASS, SOLID STATE (LED), AS PER PLAN (480V)
									1													625	1	EACH	LUMINAIRE, UNDERPASS, SOLID STATE (LED), AS PER PLAN (480V, CROSS FRAME MOUNTED)
			1968		1000		755		296		1696		275									625	5990	FT	TRENCH
			1				3															625	4	EACH	MEDIAN JUNCTION BOX
			8		4		5		4		4		1									625	26	EACH	PULL BOX, 725.08, 18"
			1		3						2		2									625	8	EACH	PULL BOX, 725.08, 24"
					4																	625	4	EACH	PULL BOX, 725.08, 48", TYPE 1, AS PER PLAN
			1		1		5				6		4									625	17	EACH	PULL BOX REMOVED, AS PER PLAN
											1											625	1	EACH	PULL BOX, MISC.: 18" PULL BOX ADJUSTED TO GRADE
			10		6		5		6		11		8									625	46	EACH	GROUND ROD
			1		2		1		2													625	6	EACH	STRUCTURE GROUNDING SYSTEM
					1				1													625	2	EACH	POWER SERVICE, AS PER PLAN
					1				1													625	2	EACH	CONTROL CENTER CABINET, COMPLETE
			1968		1000		755		296		1696		275									625	5990	FT	UNDERGROUND WARNING/MARKING TAPE
			3		2		2		3		1											625	11	EACH	SERVICE TO UNDERPASS LIGHTING, AS PER PLAN
LS																						SPECIAL	LS		MAINTAIN EXISTING LIGHTING
20																						SPECIAL	20	EACH	REPLACEMENT OF EXISTING LIGHTING UNIT
					6		3		3		7		2									625	21	EACH	LIGHT TOWER REMOVED
					1		1															625	2	EACH	POWER SERVICE REMOVED
					6		3		3		7		2									625	21	EACH	LIGHT TOWER FOUNDATION REMOVED
									1													625	1	EACH	LIGHTING, MISC.: RELOCATE EX. CONTROL CENTER
					4				3													625	7	EACH	LIGHTING, MISC.: TEST NEW CIRCUIT

Preliminary Plans - For Reference Only

COMBINED ODOT LIGHTING SUBSUMMARY

DESIGN AGENCY

Michael Baker INTERNATIONAL

DESIGNER JLD

REVIEWER SM 05/22/24

PROJECT ID 82382

SHEET 1688 TOTAL 2696

CUY-90-16.28 (CCG3A)
MODEL: Sheet-01 PAPERSIZE: 34x22 (in.) DATE: 5/23/2025 TIME: 11:25:07 AM USER: Joseph.Hogan
pw:\\mb-us-pw.bentley.com:mb-us-pw-03\Documents\Cleveland_OH\01_Projects\ODOT\District12\82382\400-Engineering\Lighting\Sheets\82382_LG001.dgn
...G001.dgn

SHEET NUMBER																							ITEM	CARRIED TO GENERAL SUMMARY	UNIT	DESCRIPTION
1704	1705	1706	1707	1708	1709	1710	1711	1712	1713	1714																
																										LIGHTING
8	8		12	10	20	24	20	26	26														625	154	EACH	CONNECTION, FUSED PULL APART
4	4		6	5	10	12	10	13	13														625	77	EACH	CONNECTION, UNFUSED PULL APART
		12	51	21																			625	84	EACH	CONNECTION, UNFUSED PERMANENT
					6	2	10	13	13														625	44	EACH	LIGHT POLE, MISC.: 15' ROUND TAPERED FIBERGLASS STREETLIGHT
4	4		6	5	4	10																	625	33	EACH	LIGHT POLE, MISC.: 30' ROUND TAPERED FIBERGLASS STREETLIGHT
16	16																						625	32	EACH	LIGHT POLE ANCHOR BOLTS ON STRUCTURE
			6	5	10	6	5	13	13														625	58	EACH	LIGHT POLE FOUNDATION, 24" X 6' DEEP
	932	1353	6395	2784	1434	3477																	625	16375	FT	NO. 4 AWG 2400 VOLT DISTRIBUTION CABLE
					17907	7239	14634	3978	5313														625	49071	FT	NO. 8 AWG 600 VOLT DISTRIBUTION CABLE
					159																		625	159	FT	DISTRIBUTION CABLE, MISC.: NO. 4 / 0 AWG 2400 VOLT DISTRIBUTION CABLE
360	360		540	450	630	990	450	585	585														625	4950	FT	NO. 12 AWG POLE AND BRACKET CABLE
					94	558	1144																625	1796	FT	CONDUIT, 3/4", 725.051
	253	30	810	30																			625	1123	FT	CONDUIT, 1-1/2", 725.04
1172	1087				2074	1844	1010	563	791														625	8541	FT	CONDUIT, 2", 725.051
					43																		625	43	FT	CONDUIT, CONCRETE ENCASED, 2", 725.051
						30	102																625	132	FT	CONDUIT, CONCRETE ENCASED, AS PER PLAN (2-2" CONDUIT, 725.051)
		198	502	481	428	365																	625	1974	FT	CONDUIT, CONCRETE ENCASED, AS PER PLAN (4-2" CONDUIT, 725.051)
17	8	14		8				2	11	3													625	63	EACH	LUMINAIRE, CONVENTIONAL, SOLID STATE (LED), AS PER PLAN (CPP LED COBRA HEAD)
	6	2	9																				625	17	EACH	LUMINAIRE, UNDERPASS, SOLID STATE (LED), AS PER PLAN (CPP LED WALLPACK)
					6	2	17	13	13														625	51	EACH	LUMINAIRE, DECORATIVE, AS PER PLAN (15' POLES)
4	4		6	5	4	10																	625	33	EACH	LUMINAIRE, DECORATIVE, AS PER PLAN (30' POLES)
14	12	198	502	481	1165	523	442	563	791														625	4691	FT	TRENCH
4	4																						625	8	EACH	JUNCTION BOX
					3		1																625	4	EACH	PULL BOX, 725.08, 24"
1		5		4																			625	10	EACH	PULL BOX REMOVED
					2	1	10																625	13	EACH	PULL BOX, MISC.: 6" X 6" PULL BOX
2	2	1	12	7	15	15	7	13	13														625	87	EACH	PULL BOX, MISC.: 13" X 24" PULL BOX
14	5	14	6	13	10	6	5	15	22	3													625	113	EACH	GROUND ROD
1				1	1																		625	3	EACH	POWER SERVICE, AS PER PLAN
					1																		625	1	EACH	CONTROL CENTER CABINET, COMPLETE, AS PER PLAN
14	12	198	502	481	1165	523	442	563	791														625	4691	FT	UNDERGROUND WARNING/MARKING TAPE
	2	2	3																				625	7	EACH	SERVICE TO UNDERPASS LIGHTING, AS PER PLAN
17	13	3	3	16	3	2		21	9	9													625	96	EACH	LIGHT POLE REMOVED
1		7	4	7	1																		625	20	EACH	LIGHT POLE FOUNDATION REMOVED
5	3								2														625	10	EACH	LUMINAIRE REMOVED
5	3								2														625	10	EACH	DISCONNECT CIRCUIT, AS PER PLAN
1				2	16																		625	19	EACH	LIGHTING, MISC.: TEST NEW CIRCUIT
		1503																					632	1503	FT	POWER CABLE, 3 CONDUCTOR, NO. 4 AWG
12	5	14		8				2	9	3													632	53	EACH	WOOD POLE

Preliminary Plans - Not For Reference Only

COMBINED CPP LIGHTING SUBSUMMARY

DESIGN AGENCY
Michael Baker INTERNATIONAL

DESIGNER JLD

REVIEWER SM 05/22/24

PROJECT ID 82382

SHEET 1689 TOTAL 2696

CUY-90-16.28 (CCG3A)
MODEL: Sheet-02 PAPERSIZE: 34x22 (in.) DATE: 5/23/2025 TIME: 11:25:08 AM USER: Joseph.Hogan
pw:\\mb-us-pw.bentley.com:mb-us-pw-03\Documents\Cleveland_OH\01_Projects\ODOT\District12\82382\400-Engineering\Lighting\Sheets\82382_LG001.dgn

SHEET NO.	STATION FROM		STATION TO		SIDE	POLE/PULL BOX NO.	202 REMOVAL OF EXISTING CONTROL CENTER AND FOUNDATION EACH	202 DISCONNECT EXISTING CIRCUIT EACH	625 CONNECTION, FUSED PULL APART EACH	625 CONNECTION, UNFUSED BOLTED EACH	625 CONNECTION, UNFUSED PERMANENT EACH	625 LIGHT POLE, LOW MAST, ALM50 EACH	625 LIGHT POLE, LOW MAST, ATLM50 EACH	625 LIGHT TOWER, BB80 EACH	625 LIGHT TOWER, BB100 EACH	625 LIGHT TOWER, BB110 EACH	625 LIGHT TOWER, BBB80 EACH	625 LIGHT TOWER, BBB100 EACH	625 LIGHT TOWER, BBB120 EACH	625 LIGHT TOWER, BBB130 EACH	625 LIGHT TOWER, BBBB90 EACH	625 LIGHT TOWER, BBBB100 EACH	625 LIGHT TOWER, MISC.: TOWER LIGHTING RING WITH 4 LUMINAIRE MOUNTS EACH	625 LIGHT POLE FOUNDATION, 24" X 10' DEEP EACH	625 MEDIAN LIGHT POLE FOUNDATION, 10' DEEP, AS PER PLAN EACH	625 LIGHT TOWER FOUNDATION, 36" X 15' DEEP EACH	625 LIGHT TOWER FOUNDATION, 36" X 20' DEEP EACH	625 LIGHT TOWER FOUNDATION, 36" X 25' DEEP EACH	625 LIGHT TOWER FOUNDATION, 42" X 25' DEEP EACH	625 LIGHT TOWER FOUNDATION, MISC.: 42" X 20' DEEP EACH	625 LIGHT TOWER FOUNDATION, MISC.: 48" X 25' DEEP EACH	625 NO. 4 AWG 2400 VOLT DISTRIBUTION CABLE FT	625 NO. 10 AWG POLE AND BRACKET CABLE FT	625 1-1/2" DUCT CABLE WITH THREE NO. 4 AWG 2400 VOLT CABLES FT
1716	I.R. 90 EB	176+09	RAMP IB5	1711+72	RT	CN4-5 TO CN4-4																										311
1716	I.R. 90 EB	179+82			RT	CN2-2										1														1			
1716	I.R. 90 EB	179+82	I.R. 90 EB	180+55	RT	CN2-2 TO PB-CN8																										85
1716	I.R. 90 EB	180+32			RT	CN2-7																										
1716	I.R. 90 EB	180+35			RT	PB-CN24					3																					
1716	I.R. 90 EB	180+35	RAMP IJ3	106+10	RT/LT	PB-CN24 TO PB-CN16																									807	
1716	I.R. 90 EB	180+35	I.R. 90 EB	180+32	RT	PB-CN24 TO CN2-7																									123	
1716	I.R. 90 EB	180+55			RT	PB-CN8					6																					
1716	I.R. 90 EB	180+55	I.R. 90 EB	180+35	RT	PB-CN8 TO PB-CN24																									264	
1716	I.R. 90 EB	180+55	I.R. 90 EB	183+50	RT	PB-CN8 TO CN2-1																										310
1716	I.R. 90 EB	180+70			LT	CN2-6																										
1716	I.R. 90 EB	180+70			LT	CN2-3																										
1716	I.R. 90 EB	180+70			LT	PB-CN23				3																						
1716	I.R. 90 EB	180+70	I.R. 90 EB	180+55	LT/RT	PB-CN23 TO PB-CN8																									273	
1716	I.R. 90 EB	180+70	I.R. 90 EB	180+70	LT	CN2-3 TO PB-CN23																									90	
1716	I.R. 90 EB	180+70	I.R. 90 EB	181+55	LT	CN2-6 TO CN2-5																									465	
1716	I.R. 90 EB	181+55			LT	CN2-5																										
1716	I.R. 90 EB	181+55			LT	CN2-4																										
1716	I.R. 90 EB	181+55	I.R. 90 EB	180+70	LT	CN2-4 TO CN2-3																									465	
1716	I.R. 90 EB	181+55	I.R. 90 EB	181+55	LT	CN2-5 TO CN2-4																									84	
1716	I.R. 90 EB	183+50			RT	CN2-1													1								1					
1716	I.R. 90 EB	183+50	I.R. 90 EB	186+12	RT	CN2-1 TO PB-CN7																										280
1716	I.R. 90 WB	175+03			LT	CN1-7														1										1		
1716	I.R. 90 WB	175+03	I.R. 90 WB	176+10	LT	CN1-7 TO PB-CN1																										119
1716	I.R. 90 WB	176+10			LT	PB-CN1					3																					
1716	I.R. 90 WB	176+10	I.R. 90 WB	176+98	LT	PB-CN1 TO PB-CN2																									300	
1716	I.R. 90 WB	176+98			LT	PB-CN2					3																					
1716	I.R. 90 WB	176+98	I.R. 90 WB	179+94	LT	PB-CN2 TO PB-CN21																										310
1716	I.R. 90 WB	179+92			LT	CN1-6											1											1				
1716	I.R. 90 WB	179+94			LT	PB-CN21					3																					
1716	I.R. 90 WB	179+94	I.R. 90 WB	179+92	LT	PB-CN21 TO CN1-6																										19
1716	I.R. 90 WB	179+94	I.R. 90 WB	182+42	LT	PB-CN21 TO PB-CN3																										250
1716	I.R. 90 WB	182+42			LT	PB-CN3																										
1716	I.R. 90 WB	182+42	I.R. 90 WB	185+07	LT	PB-CN3 TO PB-CN22																										260
1716	I.R. 90 WB	185+06			LT	CN1-5											1											1				
1716	I.R. 90 WB	185+07			LT	PB-CN22					3																					
1716	I.R. 90 WB	185+07	I.R. 90 WB	185+06	LT	PB-CN22 TO CN1-5																										22
1716	I.R. 90 WB	185+07	I.R. 90 WB	186+15	LT	PB-CN22 TO PB-CN4																										112
1716	RAMP A2					CUY-77-1587																										
1716	RAMP IJ3	106+10			LT	PB-CN16																										
1716	RAMP IJ3	106+10			RT	PB-CN25					3																					
1716	RAMP IJ3	106+10			RT	CN2-8																										
1716	RAMP IJ3	106+10	RAMP IJ3	106+10	LT/RT	PB-CN16 TO PB-CN25																									138	
1716	RAMP IJ3	106+10	RAMP IJ3	106+10	RT	PB-CN25 TO CN2-8																									102	
1716	I.R. 90 EB	181+77			RT	RL-1																										
TOTALS CARRIED TO GENERAL SUMMARY							-	-	-	3	24	-	-	-	-	1	2	1	-	1	-	-	-	-	-	2	1	-	-	1	1	3111	-	2078

Preliminary Plans - Not For Reference Only

ODOT LIGHTING SUBSUMMARY - 1L

DESIGN AGENCY
Michael Baker INTERNATIONAL

DESIGNER CRK

REVIEWER SED 05/22/24

PROJECT ID 82382

SHEET 1692 TOTAL 2696

CUY-90-16.28 (CCG3A)

MODEL: Sheet-01 PAPERSIZE: 34x22 (in.) DATE: 3/27/2025 TIME: 7:50:49 PM USER: Maia.Gallagher
pw:\\mb-us-pw.bentley.com:mb-us-pw-03\Documents\Cleveland_Oh\01_Projects\ODOT\District12\82382\400-Engineering\Lighting\Sheets\82382_LS001.dgn

SHEET NO.	STATION FROM		STATION TO		SIDE	POLE/PULL BOX NO.	625 CONDUIT, 1-1/2", 725.04	625 CONDUIT, 2-1/2", 725.04	625 CONDUIT, 3", 725.051	625 CONDUIT, JACKED OR DRILLED, 725.04, 3"	625 LUMINAIRE, HIGH MAST, SOLID STATE (LED), AS PER PLAN (480V)	625 LUMINAIRE, LOW MAST, SOLID STATE (LED), AS PER PLAN (480V)	625 LUMINAIRE, UNDERPASS, SOLID STATE (LED), AS PER PLAN (480V)	625 LUMINAIRE, UNDERPASS, SOLID STATE (LED), AS PER PLAN (480V, CROSS FRAME MOUNTED)	625 TRENCH	625 MEDIAN JUNCTION BOX	625 PULL BOX, 725.08, 18"	625 PULL BOX, 725.08, 24"	625 PULL BOX, 725.08, 48", TYPE 1, AS PER PLAN	625 PULL BOX REMOVED, AS PER PLAN	625 PULL BOX, MISC.: 18" PULL BOX ADJUSTED TO GRADE	625 GROUND ROD	625 STRUCTURE GROUNDING SYSTEM	625 POWER SERVICE, AS PER PLAN	625 CONTROL CENTER CABINET, COMPLETE	625 UNDERGROUND WARNING/MARKING TAPE	625 SERVICE TO UNDERPASS LIGHTING, AS PER PLAN	625 LIGHT TOWER REMOVED	625 POWER SERVICE REMOVED	625 LIGHT TOWER FOUNDATION REMOVED	625 LIGHTING, MISC.: RELOCATE EX. CONTROL CENTER	625 LIGHTING, MISC.: TEST NEW CIRCUIT		
							FT	FT	FT	FT	EACH	EACH	EACH	EACH	FT	EACH	EACH	EACH	EACH	EACH	EACH	EACH	EACH	EACH	EACH	FT	EACH	EACH	EACH	EACH	EACH	EACH		
1716	I.R. 90 EB	176+09	RAMP IB5	1711+72	RT	CN4-5 TO CN4-4									301											301								
1716	I.R. 90 EB	179+82			RT	CN2-2					2											2											
1716	I.R. 90 EB	179+82	I.R. 90 EB	180+55	RT	CN2-2 TO PB-CN8									75											75								
1716	I.R. 90 EB	180+32			RT	CN2-7							1																				
1716	I.R. 90 EB	180+35			RT	PB-CN24											1										1							
1716	I.R. 90 EB	180+35	RAMP IJ3	106+10	RT/LT	PB-CN24 TO PB-CN16				259																							
1716	I.R. 90 EB	180+35	I.R. 90 EB	180+32	RT	PB-CN24 TO CN2-7	31																										
1716	I.R. 90 EB	180+55			RT	PB-CN8												1															
1716	I.R. 90 EB	180+55	I.R. 90 EB	180+35	RT	PB-CN8 TO PB-CN24				78																							
1716	I.R. 90 EB	180+55	I.R. 90 EB	183+50	RT	PB-CN8 TO CN2-1									300											300							
1716	I.R. 90 EB	180+70			LT	CN2-6							1																				
1716	I.R. 90 EB	180+70			LT	CN2-3							1																				
1716	I.R. 90 EB	180+70			LT	PB-CN23										1																	
1716	I.R. 90 EB	180+70	I.R. 90 EB	180+55	LT/RT	PB-CN23 TO PB-CN8				81																							
1716	I.R. 90 EB	180+70	I.R. 90 EB	180+70	LT	CN2-3 TO PB-CN23	20																										
1716	I.R. 90 EB	180+70	I.R. 90 EB	181+55	LT	CN2-6 TO CN2-5	145																										
1716	I.R. 90 EB	181+55			LT	CN2-5							1																				
1716	I.R. 90 EB	181+55			LT	CN2-4							1																				
1716	I.R. 90 EB	181+55	I.R. 90 EB	180+70	LT	CN2-4 TO CN2-3	145																										
1716	I.R. 90 EB	181+55	I.R. 90 EB	181+55	LT	CN2-5 TO CN2-4	18																										
1716	I.R. 90 EB	183+50			RT	CN2-1					3											2											
1716	I.R. 90 EB	183+50	I.R. 90 EB	186+12	RT	CN2-1 TO PB-CN7									270											270							
1716	I.R. 90 WB	175+03			LT	CN1-7					3											2											
1716	I.R. 90 WB	175+03	I.R. 90 WB	176+10	LT	CN1-7 TO PB-CN1									109											109							
1716	I.R. 90 WB	176+10			LT	PB-CN1											1																
1716	I.R. 90 WB	176+10	I.R. 90 WB	176+98	LT	PB-CN1 TO PB-CN2				90																							
1716	I.R. 90 WB	176+98			LT	PB-CN2											1																
1716	I.R. 90 WB	176+98	I.R. 90 WB	179+94	LT	PB-CN2 TO PB-CN21									300											300							
1716	I.R. 90 WB	179+92			LT	CN1-6					3											2											
1716	I.R. 90 WB	179+94			LT	PB-CN21											1																
1716	I.R. 90 WB	179+94	I.R. 90 WB	179+92	LT	PB-CN21 TO CN1-6									9											9							
1716	I.R. 90 WB	179+94	I.R. 90 WB	182+42	LT	PB-CN21 TO PB-CN3									240											240							
1716	I.R. 90 WB	182+42			LT	PB-CN3											1																
1716	I.R. 90 WB	182+42	I.R. 90 WB	185+07	LT	PB-CN3 TO PB-CN22									250											250							
1716	I.R. 90 WB	185+06			LT	CN1-5					3											2											
1716	I.R. 90 WB	185+07			LT	PB-CN22											1																
1716	I.R. 90 WB	185+07	I.R. 90 WB	185+06	LT	PB-CN22 TO CN1-5									12											12							
1716	I.R. 90 WB	185+07	I.R. 90 WB	186+15	LT	PB-CN22 TO PB-CN4									102											102							
1716	RAMP A2					CUY-77-1587																	1										
1716	RAMP IJ3	106+10			LT	PB-CN16											1																
1716	RAMP IJ3	106+10			RT	PB-CN25											1											1					
1716	RAMP IJ3	106+10			RT	CN2-8							1																				
1716	RAMP IJ3	106+10	RAMP IJ3	106+10	LT/RT	PB-CN16 TO PB-CN25				36																							
1716	RAMP IJ3	106+10	RAMP IJ3	106+10	RT	PB-CN25 TO CN2-8	24																										
1716	I.R. 90 EB	181+77			RT	RL-1															1												
TOTALS CARRIED TO GENERAL SUMMARY							383	-	-	544	14	-	6	-	1968	1	8	1	-	1	-	10	1	-	-	1968	3	-	-	-	-	-		

Preliminary Plans - Not For Reference Only

ODOT LIGHTING SUBSUMMARY - 1R

CUY-90-16.28 (CCG3A)
MODEL: Sheet-01 PAPERSIZE: 34x22 (in.) DATE: 3/27/2025 TIME: 7:50:54 PM USER: Maia.Gallagher
pw:\\mb-us-pw.bentley.com:mb-us-pw-03\Documents\Cleveland_OH101_Projects\ODOT\District12\82382400-Engineering\Lighting\Sheets\82382_LS051.dgn

DESIGN AGENCY
Michael Baker INTERNATIONAL

DESIGNER CRK
REVIEWER SED 05/22/24
PROJECT ID 82382
SHEET 1693 TOTAL 2696

SHEET NO.	STATION FROM		STATION TO		SIDE	POLE/PULL BOX NO.	202 REMOVAL OF EXISTING CONTROL CENTER AND FOUNDATION	202 DISCONNECT EXISTING CIRCUIT	625 CONNECTION, FUSED PULL APART	625 CONNECTION, UNFUSED BOLTED	625 CONNECTION, UNFUSED PERMANENT	625 LIGHT POLE, LOW MAST, ALM50	625 LIGHT POLE, LOW MAST, ATLM50	625 LIGHT TOWER, BB80	625 LIGHT TOWER, BB100	625 LIGHT TOWER, BB110	625 LIGHT TOWER, BBB80	625 LIGHT TOWER, BBB100	625 LIGHT TOWER, BBB120	625 LIGHT TOWER, BBB130	625 LIGHT TOWER, BBBB90	625 LIGHT TOWER, BBBB100	625 LIGHT TOWER, MISC.: TOWER LIGHTING RING WITH 4 LUMINAIRE MOUNTS	625 LIGHT POLE FOUNDATION, 24" X 10' DEEP	625 MEDIAN LIGHT POLE FOUNDATION, 10' DEEP, AS PER PLAN	625 LIGHT TOWER FOUNDATION, 36" X 15' DEEP	625 LIGHT TOWER FOUNDATION, 36" X 20' DEEP	625 LIGHT TOWER FOUNDATION, 36" X 25' DEEP	625 LIGHT TOWER FOUNDATION, 42" X 25' DEEP	625 LIGHT TOWER FOUNDATION, MISC.: 42" X 20' DEEP	625 LIGHT TOWER FOUNDATION, MISC.: 48" X 25' DEEP	625 NO. 4 AWG 2400 VOLT DISTRIBUTION CABLE	625 NO. 10 AWG POLE AND BRACKET CABLE	625 1-1/2" DUCT CABLE WITH THREE NO. 4 AWG 2400 VOLT CABLES
							EACH	EACH	EACH	EACH	EACH	EACH	EACH	EACH	EACH	EACH	EACH	EACH	EACH	EACH	EACH	EACH	EACH	EACH	EACH	EACH	EACH	EACH	EACH	EACH	EACH	FT	FT	FT
1716	I.R. 90 WB	175+03			LT	RL-2																												
1716	I.R. 90 WB	179+92			LT	RL-3																												
1716	I.R. 90 WB	180+94			LT	RL-4																												
1716	I.R. 90 WB	181+31			LT	RL-5	1	1																										
1716	I.R. 90 WB	185+06			LT	RL-6																												
1716	RAMP A2	420+67			RT	RL-7																												
1716	RAMP IB5	1711+18			RT	RL-8																												
1716	RAMP B6	1605+80			LT	RL-9																												
1717	I.R. 90 EB	186+12			RT	PB-CN7																												
1717	I.R. 90 EB	186+12	I.R. 90 WB	188+40	RT/LT	PB-CN7 TO PB-CN6																												996
1717	I.R. 90 WB	186+15			LT	PB-CN4					3																							
1717	I.R. 90 WB	186+15	I.R. 90 WB	186+24	LT	PB-CN4 TO CN1-4																										405		
1717	I.R. 90 WB	186+15	I.R. 90 WB	187+97	LT	PB-CN4 TO PB-CN5																												183
1717	I.R. 90 WB	186+24			LT	CN1-4																												
1717	I.R. 90 WB	187+97			LT	PB-CN5					3																							
1717	I.R. 90 WB	187+97	I.R. 90 WB	188+33	LT	PB-CN5 TO PB-CN27																										924		
1717	I.R. 90 WB	187+97	I.R. 90 WB	188+40	LT	PB-CN5 TO PB-CN6																										852		
1717	I.R. 90 WB	188+33			LT	PB-CN27																												
1717	I.R. 90 WB	188+33	I.R. 90 WB	189+67	LT	PB-CN27 TO PB-CN15																										1740		
1717	I.R. 90 WB	188+40			LT	PB-CN6					9																							
1717	I.R. 90 WB	188+40	I.R. 90 WB	188+54	LT	PB-CN6 TO CN1-3																										135		
1717	I.R. 90 WB	188+54			LT	CN1-3																												
1717	I.R. 90 WB	189+67			LT	CC-CN																												
1717	I.R. 90 WB	189+67			LT	PB-CN15					3																							
1717	I.R. 90 WB	189+67	I.R. 90 WB	189+67	LT	PB-CN15 TO CC-CN																										180		
1717	I.R. 90 WB	189+67	I.R. 90 WB	190+28	LT	PB-CN15 TO CN1-1																										309		
1717	I.R. 90 WB	190+28			LT	CN1-1											1												1					
1717	I.R. 90 WB	190+28	I.R. 90 WB	191+80	LT	CN1-1 TO PB-CN14																												164
1717	I.R. 90 WB	191+80			LT	PB-CN14					3																							
1717	I.R. 90 WB	191+80	I.R. 90 WB	194+75	LT	PB-CN14 TO CN1-2																										930		
1717	I.R. 90 WB	194+75			LT	CN1-2									1														1					
1717	RAMP B6					CUY-90-1652S																												
1717	RAMP IJ3	109+85			LT	PB-CN17					6																							
1717	RAMP IJ3	109+85			RT	PB-CN18																												
1717	RAMP IJ3	109+85	RAMP IJ3	109+85	LT/RT	PB-CN17 TO PB-CN18																										270		
1717	RAMP IJ3	109+85	I.R. 90 EB	186+12	LT/RT	PB-CN17 TO PB-CN7																												284
1717	RAMP IJ3	109+85	RAMP H5	986+32	RT/LT	PB-CN18 TO CN3-1																										1026		
1717	I.R. 90 EB					CUY-90-1653R																												
1717	I.R. 90 EB	187+14			RT	PB-CR11					3																							
1717	I.R. 90 EB	187+14	I.R. 90 EB	187+92	RT	PB-CR11 TO PB-CR1																										276		
1717	I.R. 90 EB	187+25			RT	CR1-7												1													1			
1717	I.R. 90 EB	187+25	I.R. 90 EB	187+14	RT	CR1-7 TO PB-CR11																												125
1717	I.R. 90 EB	187+92			RT	PB-CR1					3																							
1717	I.R. 90 EB	187+92	I.R. 90 EB	188+88	RT	PB-CR1 TO PB-CR3																												109
TOTALS CARRIED TO GENERAL SUMMARY							1	1	-	-	33	-	-	-	1	-	-	1	-	1	-	-	-	-	-	-	2	-	-	-	1	7047	-	1861

Preliminary Plans - Not For Reference Only

ODOT LIGHTING SUBSUMMARY - 2L

DESIGN AGENCY
Michael Baker INTERNATIONAL

DESIGNER CRK

REVIEWER SED 05/22/24

PROJECT ID 82382

SHEET 1694 TOTAL 2696

CUY-90-16.28 (CCG3A)

MODEL: Sheet-02 PAPERSIZE: 34x22 (in.) DATE: 3/27/2025 TIME: 7:51:00 PM USER: Maia.Gallagher
pw:\\mb-us-pw.bentley.com:mb-us-pw-03\Documents\Cleveland_OH\01_Projects\ODOT\District12\82382\400-Engineering\Lighting\Sheets\82382_LS001.dgn

SHEET NO.	STATION FROM		STATION TO		SIDE	POLE/PULL BOX NO.	625 CONDUIT, 1-1/2", 725.04 FT	625 CONDUIT, 2-1/2", 725.04 FT	625 CONDUIT, 3", 725.051 FT	625 CONDUIT, JACKED OR DRILLED, 725.04, 3" FT	625 LUMINAIRE, HIGH MAST, SOLID STATE (LED), AS PER PLAN (480V) EACH	625 LUMINAIRE, LOW MAST, SOLID STATE (LED), AS PER PLAN (480V) EACH	625 LUMINAIRE, UNDERPASS, SOLID STATE (LED), AS PER PLAN (480V) EACH	625 LUMINAIRE, UNDERPASS, SOLID STATE (LED), AS PER PLAN (480V, CROSS FRAME MOUNTED) EACH	625 TRENCH FT	625 MEDIAN JUNCTION BOX EACH	625 PULL BOX, 725.08, 18" EACH	625 PULL BOX, 725.08, 24" EACH	625 PULL BOX, 725.08, 48", TYPE 1, AS PER PLAN EACH	625 PULL BOX REMOVED, AS PER PLAN EACH	625 PULL BOX, MISC.: 18" PULL BOX ADJUSTED TO GRADE EACH	625 GROUND ROD EACH	625 STRUCTURE GROUNDING SYSTEM EACH	625 POWER SERVICE, AS PER PLAN EACH	625 CONTROL CENTER CABINET, COMPLETE EACH	625 UNDERGROUND WARNING/MARKING TAPE FT	625 SERVICE TO UNDERPASS LIGHTING, AS PER PLAN EACH	625 LIGHT TOWER REMOVED EACH	625 POWER SERVICE REMOVED EACH	625 LIGHT TOWER FOUNDATION REMOVED EACH	625 LIGHTING, MISC.: RELOCATE EX. CONTROL CENTER EACH	625 LIGHTING, MISC.: TEST NEW CIRCUIT EACH		
1716	I.R. 90 WB	175+03			LT	RL-2																							1							
1716	I.R. 90 WB	179+92			LT	RL-3																							1		1					
1716	I.R. 90 WB	180+94			LT	RL-4													1																	
1716	I.R. 90 WB	181+31			LT	RL-5																										1				
1716	I.R. 90 WB	185+06			LT	RL-6																							1		1					
1716	RAMP A2	420+67			RT	RL-7																							1		1					
1716	RAMP IB5	1711+18			RT	RL-8																							1		1					
1716	RAMP B6	1605+80			LT	RL-9																							1		1					
1717	I.R. 90 EB	186+12			RT	PB-CN7										1																				
1717	I.R. 90 EB	186+12	I.R. 90 WB	188+40	RT/LT	PB-CN7 TO PB-CN6									322											322										
1717	I.R. 90 WB	186+15			LT	PB-CN4										1												1								
1717	I.R. 90 WB	186+15	I.R. 90 WB	186+24	LT	PB-CN4 TO CN1-4	125																													
1717	I.R. 90 WB	186+15	I.R. 90 WB	187+97	LT	PB-CN4 TO PB-CN5									173											173										
1717	I.R. 90 WB	186+24			LT	CN1-4							1																							
1717	I.R. 90 WB	187+97			LT	PB-CN5													1																	
1717	I.R. 90 WB	187+97	I.R. 90 WB	188+33	LT	PB-CN5 TO PB-CN27				67																										
1717	I.R. 90 WB	187+97	I.R. 90 WB	188+40	LT	PB-CN5 TO PB-CN6				61																										
1717	I.R. 90 WB	188+33			LT	PB-CN27													1																	
1717	I.R. 90 WB	188+33	I.R. 90 WB	189+67	LT	PB-CN27 TO PB-CN15				135																										
1717	I.R. 90 WB	188+40			LT	PB-CN6													1																	
1717	I.R. 90 WB	188+40	I.R. 90 WB	188+54	LT	PB-CN6 TO CN1-3	35																													
1717	I.R. 90 WB	188+54			LT	CN1-3							1																							
1717	I.R. 90 WB	189+67			LT	CC-CN																									1	1			4	
1717	I.R. 90 WB	189+67			LT	PB-CN15													1																	
1717	I.R. 90 WB	189+67	I.R. 90 WB	189+67	LT	PB-CN15 TO CC-CN				5					5											5										
1717	I.R. 90 WB	189+67	I.R. 90 WB	190+28	LT	PB-CN15 TO CN1-1				93																										
1717	I.R. 90 WB	190+28			LT	CN1-1					3														2											
1717	I.R. 90 WB	190+28	I.R. 90 WB	191+80	LT	CN1-1 TO PB-CN14									154											154										
1717	I.R. 90 WB	191+80			LT	PB-CN14											1																			
1717	I.R. 90 WB	191+80	I.R. 90 WB	194+75	LT	PB-CN14 TO CN1-2				300																										
1717	I.R. 90 WB	194+75			LT	CN1-2					2														2											
1717	RAMP B6					CUY-90-1652S																								1							
1717	RAMP IJ3	109+85			LT	PB-CN17												1																		
1717	RAMP IJ3	109+85			RT	PB-CN18												1																		
1717	RAMP IJ3	109+85	RAMP IJ3	109+85	LT/RT	PB-CN17 TO PB-CN18				35																										
1717	RAMP IJ3	109+85	I.R. 90 EB	186+12	LT/RT	PB-CN17 TO PB-CN7									132											132										
1717	RAMP IJ3	109+85	RAMP H5	986+32	RT/LT	PB-CN18 TO CN3-1				161																										
1717	I.R. 90 EB					CUY-90-1653R																								1							
1717	I.R. 90 EB	187+14			RT	PB-CR11											1																			
1717	I.R. 90 EB	187+14	I.R. 90 EB	187+92	RT	PB-CR11 TO PB-CR1				82																										
1717	I.R. 90 EB	187+25			RT	CR1-7					3														2											
1717	I.R. 90 EB	187+25	I.R. 90 EB	187+14	RT	CR1-7 TO PB-CR11									115											115										
1717	I.R. 90 EB	187+92			RT	PB-CR1											1																			
1717	I.R. 90 EB	187+92	I.R. 90 EB	188+88	RT	PB-CR1 TO PB-CR3									99											99										
TOTALS CARRIED TO GENERAL SUMMARY							160	-	-	939	8	-	2	-	1000	-	4	3	4	1	-	6	2	1	1	1000	2	6	1	6	-	4				

Preliminary Plans - Not For Reference Only

ODOT LIGHTING SUBSUMMARY - 2R

DESIGN AGENCY
Michael Baker INTERNATIONAL

DESIGNER CRK

REVIEWER SED 05/22/24

PROJECT ID 82382

SHEET 1695 TOTAL 2696

CUY-90-16.28 (CCG3A)

MODEL: Sheet-02 PAPERSIZE: 34x22 (in.) DATE: 3/27/2025 TIME: 7:51:12 PM USER: Mala.Gallagher
pw:\\mb-us-pw.bentley.com:mb-us-pw-03\Documents\Cleveland_OH\01_Projects\ODOT\District12\82382400-Engineering\Lighting\Sheets\82382_LS051.dgn

SHEET NO.	STATION FROM		STATION TO		SIDE	POLE/PULL BOX NO.	202 REMOVAL OF EXISTING CONTROL CENTER AND FOUNDATION	202 DISCONNECT EXISTING CIRCUIT	625 CONNECTION, FUSED PULL APART	625 CONNECTION, UNFUSED BOLTED	625 CONNECTION, UNFUSED PERMANENT	625 LIGHT POLE, LOW MAST, ALM50	625 LIGHT POLE, LOW MAST, ATLM50	625 LIGHT TOWER, BB80	625 LIGHT TOWER, BB100	625 LIGHT TOWER, BB110	625 LIGHT TOWER, BBB80	625 LIGHT TOWER, BBB100	625 LIGHT TOWER, BBB120	625 LIGHT TOWER, BBB130	625 LIGHT TOWER, BBBB90	625 LIGHT TOWER, BBBB100	625 LIGHT TOWER, MISC.: TOWER LIGHTING RING WITH 4 LUMINAIRE MOUNTS	625 LIGHT POLE FOUNDATION, 24" X 10' DEEP	625 MEDIAN LIGHT POLE FOUNDATION, 10' DEEP, AS PER PLAN	625 LIGHT TOWER FOUNDATION, 36" X 15' DEEP	625 LIGHT TOWER FOUNDATION, 36" X 20' DEEP	625 LIGHT TOWER FOUNDATION, 36" X 25' DEEP	625 LIGHT TOWER FOUNDATION, 42" X 25' DEEP	625 LIGHT TOWER FOUNDATION, MISC.: 42" X 20' DEEP	625 LIGHT TOWER FOUNDATION, MISC.: 48" X 25' DEEP	625 NO. 4 AWG 2400 VOLT DISTRIBUTION CABLE	625 NO. 10 AWG POLE AND BRACKET CABLE	625 1-1/2" DUCT CABLE WITH THREE NO. 4 AWG 2400 VOLT CABLES
							EACH	EACH	EACH	EACH	EACH	EACH	EACH	EACH	EACH	EACH	EACH	EACH	EACH	EACH	EACH	EACH	EACH	EACH	EACH	EACH	EACH	EACH	EACH	EACH	EACH	FT	FT	FT
1717	I.R. 90 EB	187+92	RAMP IH6	1188+48	RT/LT	PB-CR1 TO PB-CR2																										855		
1717	I.R. 90 EB	188+88			RT	PB-CR3					3																							
1717	I.R. 90 EB	188+88	I.R. 90 EB	188+95	RT	PB-CR3 TO CR1-4																										126		
1717	I.R. 90 EB	188+88	I.R. 90 EB	191+69	RT	PB-CR3 TO PB-CR12																												343
1717	I.R. 90 EB	188+95			RT	CR1-4																												
1717	I.R. 90 EB	188+95	I.R. 90 EB	188+99	RT	CR1-4 TO CR1-5																										48		
1717	I.R. 90 EB	188+99			RT	CR1-5																												
1717	I.R. 90 EB	188+99	I.R. 90 EB	189+08	RT	CR1-5 TO CR1-6																										120		
1717	I.R. 90 EB	189+08			RT	CR1-6																												
1717	I.R. 90 EB	191+69			RT	PB-CR12					3																							
1717	I.R. 90 EB	191+69	I.R. 90 EB	191+81	RT	PB-CR12 TO PB-CR4																										198		
1717	I.R. 90 EB	191+81			RT	PB-CR4					3																							
1717	I.R. 90 EB	191+81	I.R. 90 EB	192+53	RT	PB-CR4 TO CR1-3																												82
1717	I.R. 90 EB	192+53			RT	CR1-3													1											1				
1717	I.R. 90 EB	192+53	I.R. 90 EB	193+76	RT	CR1-3 TO PB-CR5																												132
1717	I.R. 90 EB	193+76			RT	PB-CR5																												
1717	I.R. 90 EB	193+76	I.R. 90 EB	196+10	RT	PB-CR5 TO PB-CR13																												238
1717	I.R. 90 WB					CUY-90-1653L																												
1717	I.R. 90 EB	186+91			RT	RL-10																												
1717	I.R. 90 EB	187+19			RT	RL-11																												
1717	I.R. 90 EB	187+76			RT	RL-12																												
1717	I.R. 90 EB	188+25			RT	RL-13																												
1717	I.R. 90 EB	192+38			RT	RL-14																												
1717	I.R. 90 EB	192+84			LT	RL-15	1	1																										
1717	I.R. 90 EB	192+96			LT	RL-16																												
1717	I.R. 90 WB	187+36			LT	RL-17																												
1717	I.R. 90 WB	188+79			LT	RL-18																												
1718	I.R. 90 EB	196+10			LT	PB-CR6																												
1718	I.R. 90 EB	196+10			RT	PB-CR13					3																							
1718	I.R. 90 EB	196+10	I.R. 90 EB	196+10	RT/LT	PB-CR13 TO PB-CR6																										348		
1718	I.R. 90 EB	196+10	I.R. 90 EB	196+50	RT	PB-CR13 TO CR1-2																										399		
1718	I.R. 90 EB	196+10	I.R. 90 EB	197+73	LT	PB-CR6 TO PB-CR7																										528		
1718	I.R. 90 EB	196+50			RT	CR1-2													1											1				
1718	I.R. 90 EB	197+73			LT	PB-CR7				3																								
1718	I.R. 90 EB	197+73	I.R. 90 WB	199+50	LT	PB-CR7 TO CR1-1																										1062		
1718	I.R. 90 EB	197+73	I.R. 90 EB	199+58	LT	PB-CR7 TO PB-CR8																										1773		
1718	I.R. 90 EB	199+58			LT	PB-CR8				3																								
1718	I.R. 90 EB	199+58	I.R. 90 EB	199+74	RT/LT	PB-CR8 TO CR1-11																										81		
1718	I.R. 90 EB	199+58	I.R. 90 EB	201+30	LT	PB-CR8 TO CR2-1																										1098		
1718	I.R. 90 EB	199+58	I.R. 90 WB	201+56	LT/RT	PB-CR8 TO CR1-13																										162		
1718	I.R. 90 EB	199+74			LT	CR1-11																												
1718	I.R. 90 EB	199+74	I.R. 90 EB	200+24	LT	CR1-11 TO CR1-12																										180		
1718	I.R. 90 EB	200+24			LT	CR1-12																												
1718	I.R. 90 EB	201+30			LT	CR2-1			2			1															1						150	
1718	I.R. 90 EB	201+30	INTERIM I.R. 90 EB	3004+20	LT	CR2-1 TO CR2-2																										1308		
TOTALS CARRIED TO GENERAL SUMMARY							1	1	2	6	12	1	-	-	-	-	-	2	-	-	-	-	-	-	1	-	2	-	-	-	-	8286	150	795

Preliminary Plans - Not For Reference Only

CUY-90-16.28 (CCG3A)

MODEL: Sheet-03 PAPERSIZE: 34x22 (in.) DATE: 3/27/2025 TIME: 7:51:17 PM USER: Maia.Gallagher
pw:\\mb-us-pw.bentley.com:mb-us-pw-03\Documents\Cleveland_Oh\01_Projects\ODOT\District12\82382\400-Engineering\Lighting\Sheets\82382_LS001.dgn

ODOT LIGHTING SUBSUMMARY - 3L

DESIGN AGENCY
Michael Baker INTERNATIONAL

DESIGNER
CRK

REVIEWER
SED 05/22/24

PROJECT ID
82382

SHEET 1696 | TOTAL 2696

SHEET NO.	STATION FROM		STATION TO		SIDE	POLE/PULL BOX NO.	625 CONDUIT, 1-1/2", 725.04 FT	625 CONDUIT, 2-1/2", 725.04 FT	625 CONDUIT, 3", 725.051 FT	625 CONDUIT, JACKED OR DRILLED, 725.04, 3" FT	625 LUMINAIRE, HIGH MAST, SOLID STATE (LED), AS PER PLAN (480V) EACH	625 LUMINAIRE, LOW MAST, SOLID STATE (LED), AS PER PLAN (480V) EACH	625 LUMINAIRE, UNDERPASS, SOLID STATE (LED), AS PER PLAN (480V) EACH	625 LUMINAIRE, UNDERPASS, SOLID STATE (LED), AS PER PLAN (480V, CROSS FRAME MOUNTED) EACH	625 TRENCH FT	625 MEDIAN JUNCTION BOX EACH	625 PULL BOX, 725.08, 18" EACH	625 PULL BOX, 725.08, 24" EACH	625 PULL BOX, 725.08, 48", TYPE 1, AS PER PLAN EACH	625 PULL BOX REMOVED, AS PER PLAN EACH	625 PULL BOX, MISC.: 18" PULL BOX ADJUSTED TO GRADE EACH	625 GROUND ROD EACH	625 STRUCTURE GROUNDING SYSTEM EACH	625 POWER SERVICE, AS PER PLAN EACH	625 CONTROL CENTER CABINET, COMPLETE EACH	625 UNDERGROUND WARNING/MARKING TAPE FT	625 SERVICE TO UNDERPASS LIGHTING, AS PER PLAN EACH	625 LIGHT TOWER REMOVED EACH	625 POWER SERVICE REMOVED EACH	625 LIGHT TOWER FOUNDATION REMOVED EACH	625 LIGHTING, MISC.: RELOCATE EX. CONTROL CENTER EACH	625 LIGHTING, MISC.: TEST NEW CIRCUIT EACH		
1717	I.R. 90 EB	187+92	RAMP IH6	1188+48	RT/LT	PB-CR1 TO PB-CR2				275																										
1717	I.R. 90 EB	188+88			RT	PB-CR3											1										1								
1717	I.R. 90 EB	188+88	I.R. 90 EB	188+95	RT	PB-CR3 TO CR1-4	32																												
1717	I.R. 90 EB	188+88	I.R. 90 EB	191+69	RT	PB-CR3 TO PB-CR12									333											333								
1717	I.R. 90 EB	188+95			RT	CR1-4							1																						
1717	I.R. 90 EB	188+95	I.R. 90 EB	188+99	RT	CR1-4 TO CR1-5	6																												
1717	I.R. 90 EB	188+99			RT	CR1-5							1																						
1717	I.R. 90 EB	188+99	I.R. 90 EB	189+08	RT	CR1-5 TO CR1-6	30																												
1717	I.R. 90 EB	189+08			RT	CR1-6							1																						
1717	I.R. 90 EB	191+69			RT	PB-CR12											1																		
1717	I.R. 90 EB	191+69	I.R. 90 EB	191+81	RT	PB-CR12 TO PB-CR4				56																										
1717	I.R. 90 EB	191+81			RT	PB-CR4											1																		
1717	I.R. 90 EB	191+81	I.R. 90 EB	192+53	RT	PB-CR4 TO CR1-3									72											72								
1717	I.R. 90 EB	192+53			RT	CR1-3					3												2												
1717	I.R. 90 EB	192+53	I.R. 90 EB	193+76	RT	CR1-3 TO PB-CR5									122											122								
1717	I.R. 90 EB	193+76			RT	PB-CR5											1																		
1717	I.R. 90 EB	193+76	I.R. 90 EB	196+10	RT	PB-CR5 TO PB-CR13									228											228								
1717	I.R. 90 WB					CUY-90-1653L																			1										
1717	I.R. 90 EB	186+91			RT	RL-10																							1		1				
1717	I.R. 90 EB	187+19			RT	RL-11													1																
1717	I.R. 90 EB	187+76			RT	RL-12													1																
1717	I.R. 90 EB	188+25			RT	RL-13													1																
1717	I.R. 90 EB	192+38			RT	RL-14																							1		1				
1717	I.R. 90 EB	192+84			LT	RL-15																								1					
1717	I.R. 90 EB	192+96			LT	RL-16													1																
1717	I.R. 90 WB	187+36			LT	RL-17													1																
1717	I.R. 90 WB	188+79			LT	RL-18																							1		1				
1718	I.R. 90 EB	196+10			LT	PB-CR6										1																			
1718	I.R. 90 EB	196+10			RT	PB-CR13											1																		
1718	I.R. 90 EB	196+10	I.R. 90 EB	196+10	RT/LT	PB-CR13 TO PB-CR6				106																										
1718	I.R. 90 EB	196+10	I.R. 90 EB	196+50	RT	PB-CR13 TO CR1-2				123																										
1718	I.R. 90 EB	196+10	I.R. 90 EB	197+73	LT	PB-CR6 TO PB-CR7																														
1718	I.R. 90 EB	196+50			RT	CR1-2					3												2												
1718	I.R. 90 EB	197+73			LT	PB-CR7										1																			
1718	I.R. 90 EB	197+73	I.R. 90 WB	199+50	LT	PB-CR7 TO CR1-1				108																										
1718	I.R. 90 EB	197+73	I.R. 90 EB	199+58	LT	PB-CR7 TO PB-CR8																														
1718	I.R. 90 EB	199+58			LT	PB-CR8										1																1				
1718	I.R. 90 EB	199+58	I.R. 90 EB	199+74	RT/LT	PB-CR8 TO CR1-11	17																												
1718	I.R. 90 EB	199+58	I.R. 90 EB	201+30	LT	PB-CR8 TO CR2-1																														
1718	I.R. 90 EB	199+58	I.R. 90 WB	201+56	LT/RT	PB-CR8 TO CR1-13	44																													
1718	I.R. 90 EB	199+74			LT	CR1-11							1																						
1718	I.R. 90 EB	199+74	I.R. 90 EB	200+24	LT	CR1-11 TO CR1-12	50																													
1718	I.R. 90 EB	200+24			LT	CR1-12							1																							
1718	I.R. 90 EB	201+30			LT	CR2-1						1											1												
1718	I.R. 90 EB	201+30	INTERIM I.R. 90 EB	3004+20	LT	CR2-1 TO CR2-2																														
TOTALS CARRIED TO GENERAL SUMMARY							179	-	-	668	6	1	5	-	755	3	5	-	-	5	-	5	1	-	-	755	2	3	1	3	-	-				

ODOT LIGHTING SUBSUMMARY - 3R

Preliminary Plans - Not For Reference Only

DESIGN AGENCY
Michael Baker INTERNATIONAL

DESIGNER CRK
REVIEWER SED 05/22/24
PROJECT ID 82382
SHEET 1697 TOTAL 2696

CUY-90-16.28 (CCG3A)

MODEL: Sheet-03 PAPERSIZE: 34x22 (in.) DATE: 3/27/2025 TIME: 7:51:23 PM USER: Maia.Gallagher
pw:\\mb-us-pw.bentley.com:mb-us-pw-03\Documents\Cleveland_OH101_Projects\ODOT\District12\82382\400-Engineering\Lighting\Sheets\82382_LS051.dgn

SHEET NO.	STATION FROM		STATION TO		SIDE	POLE/PULL BOX NO.	202 REMOVAL OF EXISTING CONTROL CENTER AND FOUNDATION	202 DISCONNECT EXISTING CIRCUIT	625 CONNECTION, FUSED PULL APART	625 CONNECTION, UNFUSED BOLTED	625 CONNECTION, UNFUSED PERMANENT	625 LIGHT POLE, LOW MAST, ALM50	625 LIGHT POLE, LOW MAST, ATLM50	625 LIGHT TOWER, BB80	625 LIGHT TOWER, BB100	625 LIGHT TOWER, BB110	625 LIGHT TOWER, BBB80	625 LIGHT TOWER, BBB100	625 LIGHT TOWER, BBB120	625 LIGHT TOWER, BBB130	625 LIGHT TOWER, BBBB90	625 LIGHT TOWER, BBBB100	625 LIGHT TOWER, MISC.: TOWER LIGHTING RING WITH 4 LUMINAIRE MOUNTS	625 LIGHT POLE FOUNDATION, 24" X 10' DEEP	625 MEDIAN LIGHT POLE FOUNDATION, 10' DEEP, AS PER PLAN	625 LIGHT TOWER FOUNDATION, 36" X 15' DEEP	625 LIGHT TOWER FOUNDATION, 36" X 20' DEEP	625 LIGHT TOWER FOUNDATION, 36" X 25' DEEP	625 LIGHT TOWER FOUNDATION, 42" X 25' DEEP	625 LIGHT TOWER FOUNDATION, MISC.: 42" X 20' DEEP	625 LIGHT TOWER FOUNDATION, MISC.: 48" X 25' DEEP	625 NO. 4 AWG 2400 VOLT DISTRIBUTION CABLE	625 NO. 10 AWG POLE AND BRACKET CABLE	625 1-1/2" DUCT CABLE WITH THREE NO. 4 AWG 2400 VOLT CABLES
							EACH	EACH	EACH	EACH	EACH	EACH	EACH	EACH	EACH	EACH	EACH	EACH	EACH	EACH	EACH	EACH	EACH	EACH	EACH	EACH	EACH	EACH	EACH	EACH	EACH	FT	FT	FT
1718	I.R. 90 WB	198+89			LT	CC-CR																												
1718	I.R. 90 WB	199+50			LT	CR1-1													1									1						
1718	I.R. 90 WB	199+50	I.R. 90 WB	198+89	LT	CR1-1 TO CC-CR																												270
1718	I.R. 90 WB	199+50	I.R. 90 WB	201+60	LT	CR1-1 TO PB-CR14																												227
1718	I.R. 90 WB	201+56			RT	CR1-13																												
1718	I.R. 90 WB	201+56	I.R. 90 WB	202+23	RT	CR1-13 TO CR1-14																										231		
1718	I.R. 90 WB	201+60			LT	PB-CR14					3																							
1718	I.R. 90 WB	201+60	I.R. 90 WB	201+75	LT	PB-CR14 TO CR1-9																										138		
1718	I.R. 90 WB	201+75			LT	CR1-9																												
1718	I.R. 90 WB	201+75	I.R. 90 WB	202+35	LT	CR1-9 TO CR1-10																										210		
1718	I.R. 90 WB	202+23			RT	CR1-14																												
1718	I.R. 90 WB	202+35			LT	CR1-10																												
1718	E. 22ND ST.					CUY-90-1678																												
1718	I.R. 90 EB	197+02			RT	RL-19																												
1718	I.R. 90 WB	200+72			RT	RL-20																												
1718	RAMP A2	438+45			LT	RL-21																												
1719	INTERIM I.R. 90 EB	3004+20			LT	CR2-2			2			1														1						150		
1719	INTERIM I.R. 90 EB	3004+20	INTERIM I.R. 90 EB	3006+45	LT	CR2-2 TO CR2-3																										1392		
1719	INTERIM I.R. 90 EB	3006+25			RT	PB-CR9																												
1719	INTERIM I.R. 90 EB	3006+25	INTERIM I.R. 90 EB	3008+00	RT	PB-CR9 TO CR2-4																										510		
1719	INTERIM I.R. 90 EB	3006+45			LT	CR2-3			2	6		1														1						150		
1719	INTERIM I.R. 90 EB	3006+45	INTERIM I.R. 90 EB	3006+25	LT/RT	CR2-3 TO PB-CR9																										228		
1719	INTERIM I.R. 90 EB	3006+45	INTERIM I.R. 90 EB	3010+46	LT	CR2-3 TO CR3-5																										1218		
1719	INTERIM I.R. 90 EB	3006+45	INTERIM I.R. 90 WB	4005+78	LT	CR2-3 TO PB-CR10																										285		
1719	INTERIM I.R. 90 EB	3008+00			RT	CR2-4			2				1												1						150		
1719	INTERIM I.R. 90 EB	3008+00	INTERIM I.R. 90 EB	3008+92	RT	CR2-4 TO PB-CR15																										315		
1719	INTERIM I.R. 90 EB	3008+92			RT	PB-CR15					3																							
1719	INTERIM I.R. 90 EB	3008+92	INTERIM I.R. 90 EB	3009+25	RT	PB-CR15 TO CR2-5																										183		
1719	INTERIM I.R. 90 EB	3009+25			RT	CR2-5																												
1719	INTERIM I.R. 90 EB	3009+25	INTERIM I.R. 90 EB	3009+90	RT	CR2-5 TO CR2-6																										234		
1719	INTERIM I.R. 90 EB	3009+90			RT	CR2-6																												
1719	INTERIM I.R. 90 EB	3010+46			LT	CR3-5			2			1														1						150		
1719	INTERIM I.R. 90 WB	4005+78			LT	PB-CR10					3																							
1719	INTERIM I.R. 90 WB	4005+78	INTERIM I.R. 90 WB	4006+90	LT	PB-CR10 TO CR3-1																										432		
1719	INTERIM I.R. 90 WB	4006+90			LT	CR3-1																												
1719	INTERIM I.R. 90 WB	4006+90	INTERIM I.R. 90 WB	4007+51	LT	CR3-1 TO CR3-2																										210		
1719	INTERIM I.R. 90 WB	4007+51			LT	CR3-2																												
1719	INTERIM I.R. 90 WB	4007+51	INTERIM I.R. 90 WB	4008+30	LT	CR3-2 TO CR3-3																										264		
1719	INTERIM I.R. 90 WB	4007+51	INTERIM I.R. 90 WB	4008+56	LT/RT	CR3-2 TO CR3-4					3																					378		
1719	INTERIM I.R. 90 WB	4008+30			LT	CR3-3																												
1719	INTERIM I.R. 90 WB	4008+56			RT	CR3-4																												
1719	CARNEGIE AVE.					CUY-90-1696																												
1719	INTERIM I.R. 90 EB	3012+77			RT	CC-CAR																												
TOTALS CARRIED TO GENERAL SUMMARY							-	-	8	6	12	3	1	-	-	-	-	1	-	-	-	-	-	1	3	-	-	1	-	-	-	6228	600	497

Preliminary Plans - Not For Reference Only

ODOT LIGHTING SUBSUMMARY - 4L

CUY-90-16.28 (CCG3A)

MODEL: Sheet-04 PAPERSIZE: 34x22 (in.) DATE: 3/27/2025 TIME: 7:51:28 PM USER: Maia.Gallagher
pw:\\mb-us-pw.bentley.com:mb-us-pw-03\Documents\Cleveland_OH\01_Projects\ODOT\District12\82382\400-Engineering\Lighting\Sheets\82382_LS001.dgn

DESIGN AGENCY
Michael Baker INTERNATIONAL

DESIGNER
CRK

REVIEWER
SED 05/22/24

PROJECT ID
82382

SHEET 1698 | TOTAL 2696

SHEET NO.	STATION FROM		STATION TO		SIDE	POLE/PULL BOX NO.	625 CONDUIT, 1-1/2", 725.04	625 CONDUIT, 2-1/2", 725.04	625 CONDUIT, 3", 725.051	625 CONDUIT, JACKED OR DRILLED, 725.04, 3"	625 LUMINAIRE, HIGH MAST, SOLID STATE (LED), AS PER PLAN (480V)	625 LUMINAIRE, LOW MAST, SOLID STATE (LED), AS PER PLAN (480V)	625 LUMINAIRE, UNDERPASS, SOLID STATE (LED), AS PER PLAN (480V)	625 LUMINAIRE, UNDERPASS, SOLID STATE (LED), AS PER PLAN (480V, CROSS FRAME MOUNTED)	625 TRENCH	625 MEDIAN JUNCTION BOX	625 PULL BOX, 725.08, 18"	625 PULL BOX, 725.08, 24"	625 PULL BOX, 725.08, 48", TYPE 1, AS PER PLAN	625 PULL BOX REMOVED, AS PER PLAN	625 PULL BOX, MISC.: 18" PULL BOX ADJUSTED TO GRADE	625 GROUND ROD	625 STRUCTURE GROUNDING SYSTEM	625 POWER SERVICE, AS PER PLAN	625 CONTROL CENTER CABINET, COMPLETE	625 UNDERGROUND WARNING/MARKING TAPE	625 SERVICE TO UNDERPASS LIGHTING, AS PER PLAN	625 LIGHT TOWER REMOVED	625 POWER SERVICE REMOVED	625 LIGHT TOWER FOUNDATION REMOVED	625 LIGHTING, MISC.: RELOCATE EX. CONTROL CENTER	625 LIGHTING, MISC.: TEST NEW CIRCUIT		
							FT	FT	FT	FT	EACH	EACH	EACH	EACH	FT	EACH	EACH	EACH	EACH	EACH	EACH	EACH	EACH	EACH	EACH	FT	EACH	EACH	EACH	EACH	EACH	EACH		
1718	I.R. 90 WB	198+89			LT	CC-CR																		1	1						3		
1718	I.R. 90 WB	199+50			LT	CR1-1					3											2											
1718	I.R. 90 WB	199+50	I.R. 90 WB	198+89	LT	CR1-1 TO CC-CR									79											79							
1718	I.R. 90 WB	199+50	I.R. 90 WB	201+60	LT	CR1-1 TO PB-CR14									217											217							
1718	I.R. 90 WB	201+56			RT	CR1-13							1																			
1718	I.R. 90 WB	201+56	I.R. 90 WB	202+23	RT	CR1-13 TO CR1-14	67																										
1718	I.R. 90 WB	201+60			LT	PB-CR14											1										1						
1718	I.R. 90 WB	201+60	I.R. 90 WB	201+75	LT	PB-CR14 TO CR1-9	36																										
1718	I.R. 90 WB	201+75			LT	CR1-9							1																			
1718	I.R. 90 WB	201+75	I.R. 90 WB	202+35	LT	CR1-9 TO CR1-10	60																										
1718	I.R. 90 WB	202+23			RT	CR1-14							1																			
1718	I.R. 90 WB	202+35			LT	CR1-10							1																			
1718	E. 22ND ST.					CUY-90-1678																	1										
1718	I.R. 90 EB	197+02			RT	RL-19																						1		1			
1718	I.R. 90 WB	200+72			RT	RL-20																						1		1			
1718	RAMP A2	438+45			LT	RL-21																						1		1			
1719	INTERIM I.R. 90 EB	3004+20			LT	CR2-2						1										1											
1719	INTERIM I.R. 90 EB	3004+20	INTERIM I.R. 90 EB	3006+45	LT	CR2-2 TO CR2-3																											
1719	INTERIM I.R. 90 EB	3006+25			RT	PB-CR9											1																
1719	INTERIM I.R. 90 EB	3006+25	INTERIM I.R. 90 EB	3008+00	RT	PB-CR9 TO CR2-4				160																							
1719	INTERIM I.R. 90 EB	3006+45			LT	CR2-3						1										1											
1719	INTERIM I.R. 90 EB	3006+45	INTERIM I.R. 90 EB	3006+25	LT/RT	CR2-3 TO PB-CR9				66																							
1719	INTERIM I.R. 90 EB	3006+45	INTERIM I.R. 90 EB	3010+46	LT	CR2-3 TO CR3-5																											
1719	INTERIM I.R. 90 EB	3006+45	INTERIM I.R. 90 WB	4005+78	LT	CR2-3 TO PB-CR10				85																							
1719	INTERIM I.R. 90 EB	3008+00			RT	CR2-4						1										1											
1719	INTERIM I.R. 90 EB	3008+00	INTERIM I.R. 90 EB	3008+92	RT	CR2-4 TO PB-CR15				95																							
1719	INTERIM I.R. 90 EB	3008+92			RT	PB-CR15											1										1						
1719	INTERIM I.R. 90 EB	3008+92	INTERIM I.R. 90 EB	3009+25	RT	PB-CR15 TO CR2-5	51																										
1719	INTERIM I.R. 90 EB	3009+25			RT	CR2-5							1																			
1719	INTERIM I.R. 90 EB	3009+25	INTERIM I.R. 90 EB	3009+90	RT	CR2-5 TO CR2-6	68																										
1719	INTERIM I.R. 90 EB	3009+90			RT	CR2-6							1																			
1719	INTERIM I.R. 90 EB	3010+46			LT	CR3-5						1										1											
1719	INTERIM I.R. 90 WB	4005+78			LT	PB-CR10											1										1						
1719	INTERIM I.R. 90 WB	4005+78	INTERIM I.R. 90 WB	4006+90	LT	PB-CR10 TO CR3-1	134																										
1719	INTERIM I.R. 90 WB	4006+90			LT	CR3-1							1																			
1719	INTERIM I.R. 90 WB	4006+90	INTERIM I.R. 90 WB	4007+51	LT	CR3-1 TO CR3-2	60																										
1719	INTERIM I.R. 90 WB	4007+51			LT	CR3-2							1																			
1719	INTERIM I.R. 90 WB	4007+51	INTERIM I.R. 90 WB	4008+30	LT	CR3-2 TO CR3-3	78																										
1719	INTERIM I.R. 90 WB	4007+51	INTERIM I.R. 90 WB	4008+56	LT/RT	CR3-2 TO CR3-4		116																									
1719	INTERIM I.R. 90 WB	4008+30			LT	CR3-3							1																			
1719	INTERIM I.R. 90 WB	4008+56			RT	CR3-4								1																			
1719	CARNEGIE AVE.					CUY-90-1696																		1									
1719	INTERIM I.R. 90 EB	3012+77			RT	CC-CAR																										1	
TOTALS CARRIED TO GENERAL SUMMARY							554	116	-	406	3	4	9	1	296	-	4	-	-	-	-	6	2	1	1	296	3	3	-	3	1	3		

Preliminary Plans - Not For Reference Only

ODOT LIGHTING SUBSUMMARY - 4R

CUY-90-16.28 (CCG3A)

MODEL: Sheet-04 PAPERSIZE: 34x22 (in.) DATE: 3/27/2025 TIME: 7:51:35 PM USER: Mala.Gallagher
pw:\\mb-us-pw.bentley.com:mb-us-pw-03\Documents\Cleveland_OH\01_Projects\ODOT\District12\82382\400-Engineering\Lighting\Sheets\82382_LS051.dgn

DESIGN AGENCY
Michael Baker INTERNATIONAL

DESIGNER CRK

REVIEWER SED 05/22/24

PROJECT ID 82382

SHEET 1699 | TOTAL 2696

ODOT LIGHTING SUBSUMMARY - 5L

SHEET NO.	STATION FROM		STATION TO		SIDE	POLE/PULL BOX NO.	202 REMOVAL OF EXISTING CONTROL CENTER AND FOUNDATION EACH	202 DISCONNECT EXISTING CIRCUIT EACH	625 CONNECTION, FUSED PULL APART EACH	625 CONNECTION, UNFUSED BOLTED EACH	625 CONNECTION, UNFUSED PERMANENT EACH	625 LIGHT POLE, LOW MAST, ALM50 EACH	625 LIGHT POLE, LOW MAST, ATLM50 EACH	625 LIGHT TOWER, BB80 EACH	625 LIGHT TOWER, BB100 EACH	625 LIGHT TOWER, BB110 EACH	625 LIGHT TOWER, BBB80 EACH	625 LIGHT TOWER, BBB100 EACH	625 LIGHT TOWER, BBB120 EACH	625 LIGHT TOWER, BBB130 EACH	625 LIGHT TOWER, BBBB90 EACH	625 LIGHT TOWER, BBBB100 EACH	625 LIGHT TOWER, MISC.: TOWER LIGHTING RING WITH 4 LUMINAIRE MOUNTS EACH	625 LIGHT POLE FOUNDATION, 24" X 10' DEEP EACH	625 MEDIAN LIGHT POLE FOUNDATION, 10' DEEP, AS PER PLAN EACH	625 LIGHT TOWER FOUNDATION, 36" X 15' DEEP EACH	625 LIGHT TOWER FOUNDATION, 36" X 20' DEEP EACH	625 LIGHT TOWER FOUNDATION, 36" X 25' DEEP EACH	625 LIGHT TOWER FOUNDATION, 42" X 25' DEEP EACH	625 LIGHT TOWER FOUNDATION, MISC.: 42" X 20' DEEP EACH	625 LIGHT TOWER FOUNDATION, MISC.: 48" X 25' DEEP EACH	625 NO. 4 AWG 2400 VOLT DISTRIBUTION CABLE FT	625 NO. 10 AWG POLE AND BRACKET CABLE FT	625 1-1/2" DUCT CABLE WITH THREE NO. 4 AWG 2400 VOLT CABLES FT
1719	INTERIM I.R. 90 EB	3013+05			RT	EX. PB																													
1719	INTERIM I.R. 90 EB	3013+05	INTERIM I.R. 90 EB	3012+77	RT	EX. PB TO CC-CAR																												1444		
1719	INTERIM I.R. 90 EB	3013+30			RT	EX. 100' TOWER																		1											
1719	INTERIM I.R. 90 EB	3005+09			RT	RL-22																													
1719	INTERIM I.R. 90 EB	3009+39			RT	RL-23																													
1719	INTERIM I.R. 90 WB	4009+16			LT	RL-24																													
1721	RAMP A2	406+79			LT	CN3-6													1									1							
1721	RAMP A2	406+79	RAMP A2	408+50	LT	CN3-6 TO PB-CN12																													184
1721	RAMP A2	408+50			LT	PB-CN12					3																								
1721	RAMP A2	408+50	RAMP IH4	14+10	LT	PB-CN12 TO CN3-5																												594		
1721	RAMP H5	1076+04			RT	RL-25																													
1721	RAMP H5	1076+93			RT	RL-26																													
1722	RAMP A2	414+02			LT	CN4-2																1									1				
1722	RAMP A2	414+02	RAMP A2	414+09	LT/RT	CN4-2 TO PB-CN26																													169
1722	RAMP A2	414+02	RAMP A2	416+84	LT	CN4-2 TO PB-CN11																													319
1722	RAMP A2	414+09			RT	PB-CN26					3																								
1722	RAMP A2	414+09	RAMP A2	414+20	RT	PB-CN26 TO CN4-3																												114		
1722	RAMP A2	414+20			RT	CN4-3																													
1722	RAMP A2	416+84			LT	PB-CN11					3																								
1722	RAMP A2	416+84	RAMP A2	417+00	LT/RT	PB-CN11 TO CN4-1																												690		
1722	RAMP A2	416+84	RAMP IB5	1711+72	LT/RT	PB-CN11 TO CN4-4																												798		
1722	RAMP A2	417+00			RT	CN4-1																	1					1							
1722	RAMP A2	417+00	RAMP IH4	18+69	RT/LT	CN4-1 TO PB-CN10																												924		
1722	RAMP IB5	1711+72			RT	CN4-4													1									1							
1722	RAMP IH4	14+10			LT	CN3-5			2		3		1												1								150		
1722	RAMP IH4	14+10	RAMP IH4	15+67	LT	CN3-5 TO CN3-4																													184
1722	RAMP IH4	15+67			LT	CN3-4					3									1									1					
1722	RAMP IH4	15+67	RAMP IH4	16+23	LT	CN3-4 TO PB-CN13																												366		
1722	RAMP IH4	16+23			LT	PB-CN13					3																								
1722	RAMP IH4	16+23	RAMP IH4	18+69	LT	PB-CN13 TO PB-CN10																													310
1722	RAMP A2	414+02			LT	RL-27																													
1722	RAMP A2	416+51			RT	RL-28																													
1722	RAMP IB5	1711+48			LT	RL-29																													
1722	RAMP IB5	1711+56			LT	RL-30																													
1722	RAMP IH4	15+58			LT	RL-31																													
1722	RAMP IJ3	99+30			RT	RL-32																													
1722	RAMP IJ3	101+10			RT	RL-33																													
1722	RAMP IJ3	101+36			RT	RL-34																													
1723	RAMP IH4	18+69			LT	PB-CN10					3																								
1723	RAMP IH4	18+69	RAMP IH4	19+93	LT	PB-CN10 TO PB-CN9																													270
1723	RAMP IH4	19+93			LT	PB-CN9					6																								
1723	RAMP IH4	19+93	RAMP IH4	19+97	LT	PB-CN9 TO CN3-2																													32
1723	RAMP IH4	19+93	RAMP H5	984+99	LT	PB-CN9 TO PB-CN20																													174
TOTALS CARRIED TO GENERAL SUMMARY							-	-	2	-	27	-	1	-	-	-	-	2	1	-	1	1	1	1	-	-	3	1	1	-	-	4930	150	1642

Preliminary Plans - Not For Reference Only

DESIGN AGENCY
Michael Baker INTERNATIONAL

DESIGNER CRK

REVIEWER SED 05/22/24

PROJECT ID 82382

SHEET 1700 TOTAL 2696

CUY-90-16.28 (CCG3A)

MODEL: Sheet-05 PAPERSIZE: 34x22 (in.) DATE: 3/27/2025 TIME: 7:51:44 PM USER: Maia.Gallagher
pw:\\mb-us-pw.bentley.com:mb-us-pw-03\Documents\Cleveland_OH\01_Projects\ODOT\District12\82382\400-Engineering\Lighting\Sheets\82382_LS001.dgn

SHEET NO.	STATION FROM		STATION TO		SIDE	POLE/PULL BOX NO.	625 CONDUIT, 1-1/2", 725.04	625 CONDUIT, 2-1/2", 725.04	625 CONDUIT, 3", 725.051	625 CONDUIT, JACKED OR DRILLED, 725.04, 3"	625 LUMINAIRE, HIGH MAST, SOLID STATE (LED), AS PER PLAN (480V)	625 LUMINAIRE, LOW MAST, SOLID STATE (LED), AS PER PLAN (480V)	625 LUMINAIRE, UNDERPASS, SOLID STATE (LED), AS PER PLAN (480V)	625 LUMINAIRE, UNDERPASS, SOLID STATE (LED), AS PER PLAN (480V, CROSS FRAME MOUNTED)	625 TRENCH	625 MEDIAN JUNCTION BOX	625 PULL BOX, 725.08, 18"	625 PULL BOX, 725.08, 24"	625 PULL BOX, 725.08, 48", TYPE 1, AS PER PLAN	625 PULL BOX REMOVED, AS PER PLAN	625 PULL BOX, MISC.: 18" PULL BOX ADJUSTED TO GRADE	625 GROUND ROD	625 STRUCTURE GROUNDING SYSTEM	625 POWER SERVICE, AS PER PLAN	625 CONTROL CENTER CABINET, COMPLETE	625 UNDERGROUND WARNING/MARKING TAPE	625 SERVICE TO UNDERPASS LIGHTING, AS PER PLAN	625 LIGHT TOWER REMOVED	625 POWER SERVICE REMOVED	625 LIGHT TOWER FOUNDATION REMOVED	625 LIGHTING, MISC.: RELOCATE EX. CONTROL CENTER	625 LIGHTING, MISC.: TEST NEW CIRCUIT		
							FT	FT	FT	FT	EACH	EACH	EACH	EACH	FT	EACH	EACH	EACH	EACH	EACH	EACH	EACH	EACH	EACH	EACH	FT	EACH	EACH	EACH	EACH	EACH	EACH		
1719	INTERIM I.R. 90 EB	3013+05			RT	EX. PB															1													
1719	INTERIM I.R. 90 EB	3013+05	INTERIM I.R. 90 EB	3012+77	RT	EX. PB TO CC-CAR			712						356										356								
1719	INTERIM I.R. 90 EB	3013+30			RT	EX. 100' TOWER					4																						
1719	INTERIM I.R. 90 EB	3005+09			RT	RL-22																				1		1					
1719	INTERIM I.R. 90 EB	3009+39			RT	RL-23																				1		1					
1719	INTERIM I.R. 90 WB	4009+16			LT	RL-24																				1		1					
1721	RAMP A2	406+79			LT	CN3-6					3													2									
1721	RAMP A2	406+79	RAMP A2	408+50	LT	CN3-6 TO PB-CN12									174										174								
1721	RAMP A2	408+50			LT	PB-CN12											1																
1721	RAMP A2	408+50	RAMP IH4	14+10	LT	PB-CN12 TO CN3-5				188																							
1721	RAMP H5	1076+04			RT	RL-25																				1		1					
1721	RAMP H5	1076+93			RT	RL-26														1													
1722	RAMP A2	414+02			LT	CN4-2					4											2											
1722	RAMP A2	414+02	RAMP A2	414+09	LT/RT	CN4-2 TO PB-CN26									159										159								
1722	RAMP A2	414+02	RAMP A2	416+84	LT	CN4-2 TO PB-CN11									309										309								
1722	RAMP A2	414+09			RT	PB-CN26											1										1						
1722	RAMP A2	414+09	RAMP A2	414+20	RT	PB-CN26 TO CN4-3	28																										
1722	RAMP A2	414+20			RT	CN4-3							1																				
1722	RAMP A2	416+84			LT	PB-CN11											1																
1722	RAMP A2	416+84	RAMP A2	417+00	LT/RT	PB-CN11 TO CN4-1				220																							
1722	RAMP A2	416+84	RAMP IB5	1711+72	LT/RT	PB-CN11 TO CN4-4				256																							
1722	RAMP A2	417+00			RT	CN4-1					4											2											
1722	RAMP A2	417+00	RAMP IH4	18+69	RT/LT	CN4-1 TO PB-CN10				298																							
1722	RAMP IB5	1711+72			RT	CN4-4					3											2											
1722	RAMP IH4	14+10			LT	CN3-5						1										1											
1722	RAMP IH4	14+10	RAMP IH4	15+67	LT	CN3-5 TO CN3-4									174										174								
1722	RAMP IH4	15+67			LT	CN3-4					3											2											
1722	RAMP IH4	15+67	RAMP IH4	16+23	LT	CN3-4 TO PB-CN13				112																							
1722	RAMP IH4	16+23			LT	PB-CN13											1																
1722	RAMP IH4	16+23	RAMP IH4	18+69	LT	PB-CN13 TO PB-CN10									300										300								
1722	RAMP A2	414+02			LT	RL-27																				1		1					
1722	RAMP A2	416+51			RT	RL-28														1													
1722	RAMP IB5	1711+48			LT	RL-29														1													
1722	RAMP IB5	1711+56			LT	RL-30														1													
1722	RAMP IH4	15+58			LT	RL-31																				1		1					
1722	RAMP IJ3	99+30			RT	RL-32														1													
1722	RAMP IJ3	101+10			RT	RL-33														1													
1722	RAMP IJ3	101+36			RT	RL-34																				1		1					
1723	RAMP IH4	18+69			LT	PB-CN10												1															
1723	RAMP IH4	18+69	RAMP IH4	19+93	LT	PB-CN10 TO PB-CN9									125										125								
1723	RAMP IH4	19+93			LT	PB-CN9												1															
1723	RAMP IH4	19+93	RAMP IH4	19+97	LT	PB-CN9 TO CN3-2									22										22								
1723	RAMP IH4	19+93	RAMP H5	984+99	LT	PB-CN9 TO PB-CN20									77										77								
TOTALS CARRIED TO GENERAL SUMMARY							28	-	712	1074	21	1	1	-	1696	-	4	2	-	6	1	11	-	-	-	1696	1	7	-	7	-	-		

Preliminary Plans - For Reference Only

ODOT LIGHTING SUBSUMMARY - 5R

DESIGN AGENCY
Michael Baker INTERNATIONAL

DESIGNER
CRK

REVIEWER
SED 05/22/24

PROJECT ID
82382

SHEET 1701 TOTAL 2696

CUY-90-16.28 (CCG3A)

MODEL: Sheet-05 PAPERSIZE: 34x22 (in.) DATE: 3/27/2025 TIME: 7:51:49 PM USER: Mala.Gallagher
pw:\\mb-us-pw.bentley.com:mb-us-pw-03\Documents\Cleveland_OH\01_Projects\ODOT\District12\82382400-Engineering\Lighting\Sheets\82382_LS051.dgn

SHEET NO.	STATION FROM		STATION TO		SIDE	POLE/PULL BOX NO.	202 REMOVAL OF EXISTING CONTROL CENTER AND FOUNDATION EACH	202 DISCONNECT EXISTING CIRCUIT EACH	625 CONNECTION, FUSED PULL APART EACH	625 CONNECTION, UNFUSED BOLTED EACH	625 CONNECTION, UNFUSED PERMANENT EACH	625 LIGHT POLE, LOW MAST, ALM50 EACH	625 LIGHT POLE, LOW MAST, ATLM50 EACH	625 LIGHT TOWER, BB80 EACH	625 LIGHT TOWER, BB100 EACH	625 LIGHT TOWER, BB110 EACH	625 LIGHT TOWER, BBB80 EACH	625 LIGHT TOWER, BBB100 EACH	625 LIGHT TOWER, BBB120 EACH	625 LIGHT TOWER, BBB130 EACH	625 LIGHT TOWER, BBBB90 EACH	625 LIGHT TOWER, BBBB100 EACH	625 LIGHT TOWER, MISC.: TOWER LIGHTING RING WITH 4 LUMINAIRE MOUNTS EACH	625 LIGHT POLE FOUNDATION, 24" X 10' DEEP EACH	625 MEDIAN LIGHT POLE FOUNDATION, 10' DEEP, AS PER PLAN EACH	625 LIGHT TOWER FOUNDATION, 36" X 15' DEEP EACH	625 LIGHT TOWER FOUNDATION, 36" X 20' DEEP EACH	625 LIGHT TOWER FOUNDATION, 36" X 25' DEEP EACH	625 LIGHT TOWER FOUNDATION, 42" X 25' DEEP EACH	625 LIGHT TOWER FOUNDATION, MISC.: 42" X 20' DEEP EACH	625 LIGHT TOWER FOUNDATION, MISC.: 48" X 25' DEEP EACH	625 NO. 4 AWG 2400 VOLT DISTRIBUTION CABLE FT	625 NO. 10 AWG POLE AND BRACKET CABLE FT	625 1-1/2" DUCT CABLE WITH THREE NO. 4 AWG 2400 VOLT CABLES FT
1723	RAMP IH4	19+93	RAMP IH6	1184+00	LT/RT	PB-CN9 TO CN3-3																										636		
1723	RAMP IH4	19+97			LT	CN3-2								1														1						
1723	RAMP H5	984+99			LT	PB-CN20					6																							
1723	RAMP H5	984+99	RAMP H5	985+41	LT	PB-CN20 TO PB-CN19																										318		
1723	RAMP H5	985+41			LT	PB-CN19					6																							
1723	RAMP H5	985+41	RAMP H5	986+32	LT	PB-CN19 TO CN3-1																												202
1723	RAMP H5	986+32			LT	CN3-1													1									1						
1723	RAMP IH6	1184+00			RT	CN3-3									1													1						
1723	RAMP IH6	1188+48			LT	PB-CR2					3																							
1723	RAMP IH6	1188+48	RAMP IH6	1189+75	LT	PB-CR2 TO CR1-8																												194
1723	RAMP IH6	1189+75			LT	CR1-8																	1						1					
1723	RAMP IH4	19+97			LT	RL-35																												
1723	RAMP IH6	1188+89			LT	RL-36																												
1723	RAMP IH6	1188+91			LT	RL-37																												
1723	RAMP IH6	1189+01			LT	RL-38																												
1723	RAMP IH6	1189+62			LT	RL-39																												
1723	RAMP IH6	1189+63			RT	RL-40																												
TOTALS CARRIED TO GENERAL SUMMARY							-	-	-	-	15	-	-	1	1	-	-	1	-	-	-	1	-	-	-	-	2	2	-	-	-	954	-	396

Preliminary Plans - Not For Reference Only

ODOT LIGHTING SUBSUMMARY - 6L

DESIGN AGENCY
Michael Baker INTERNATIONAL

DESIGNER
CRK

REVIEWER
SED 05/22/24

PROJECT ID
82382

SHEET 1702 TOTAL 2696

CUY-90-16.28 (CCG3A)

MODEL: Sheet-06 PAPERSIZE: 34x22 (in.) DATE: 3/27/2025 TIME: 7:51:55 PM USER: Maia.Gallagher
pw:\\mb-us-pw.bentley.com:mb-us-pw-03\Documents\Cleveland_OH\01_Projects\ODOT\District12\82382\400-Engineering\Lighting\Sheets\82382_LS001.dgn

SHEET NO.	STATION FROM		STATION TO		SIDE	POLE/PULL BOX NO.	625 CONDUIT, 1-1/2", 725.04	625 CONDUIT, 2-1/2", 725.04	625 CONDUIT, 3", 725.051	625 CONDUIT, JACKED OR DRILLED, 725.04, 3"	625 LUMINAIRE, HIGH MAST, SOLID STATE (LED), AS PER PLAN (480V)	625 LUMINAIRE, LOW MAST, SOLID STATE (LED), AS PER PLAN (480V)	625 LUMINAIRE, UNDERPASS, SOLID STATE (LED), AS PER PLAN (480V)	625 LUMINAIRE, UNDERPASS, SOLID STATE (LED), AS PER PLAN (480V, CROSS FRAME MOUNTED)	625 TRENCH	625 MEDIAN JUNCTION BOX	625 PULL BOX, 725.08, 18"	625 PULL BOX, 725.08, 24"	625 PULL BOX, 725.08, 48", TYPE 1, AS PER PLAN	625 PULL BOX REMOVED, AS PER PLAN	625 PULL BOX, MISC.: 18" PULL BOX ADJUSTED TO GRADE	625 GROUND ROD	625 STRUCTURE GROUNDING SYSTEM	625 POWER SERVICE, AS PER PLAN	625 CONTROL CENTER CABINET, COMPLETE	625 UNDERGROUND WARNING/MARKING TAPE	625 SERVICE TO UNDERPASS LIGHTING, AS PER PLAN	625 LIGHT TOWER REMOVED	625 POWER SERVICE REMOVED	625 LIGHT TOWER FOUNDATION REMOVED	625 LIGHTING, MISC.: RELOCATE EX. CONTROL CENTER	625 LIGHTING, MISC.: TEST NEW CIRCUIT		
							FT	FT	FT	FT	EACH	EACH	EACH	EACH	FT	EACH	EACH	EACH	EACH	EACH	EACH	EACH	EACH	EACH	EACH	FT	EACH	EACH	EACH	EACH	EACH	EACH		
1723	RAMP IH4	19+93	RAMP IH6	1184+00	LT/RT	PB-CN9 TO CN3-3				202																								
1723	RAMP IH4	19+97			LT	CN3-2					2											2												
1723	RAMP H5	984+99			LT	PB-CN20												1																
1723	RAMP H5	984+99	RAMP H5	985+41	LT	PB-CN20 TO PB-CN19				43																								
1723	RAMP H5	985+41			LT	PB-CN19												1																
1723	RAMP H5	985+41	RAMP H5	986+32	LT	PB-CN19 TO CN3-1									91											91								
1723	RAMP H5	986+32			LT	CN3-1					3										2												
1723	RAMP IH6	1184+00			RT	CN3-3					2										2												
1723	RAMP IH6	1188+48			LT	PB-CR2											1																
1723	RAMP IH6	1188+48	RAMP IH6	1189+75	LT	PB-CR2 TO CR1-8									184											184								
1723	RAMP IH6	1189+75			LT	CR1-8					4										2												
1723	RAMP IH4	19+97			LT	RL-35																					1		1				
1723	RAMP IH6	1188+89			LT	RL-36														1													
1723	RAMP IH6	1188+91			LT	RL-37														1													
1723	RAMP IH6	1189+01			LT	RL-38																					1		1				
1723	RAMP IH6	1189+62			LT	RL-39														1													
1723	RAMP IH6	1189+63			RT	RL-40														1													
TOTALS CARRIED TO GENERAL SUMMARY							-	-	-	245	11	-	-	-	275	-	1	2	-	4	-	8	-	-	-	275	-	2	-	2	-	-		

Preliminary Plans - For Reference Only

ODOT LIGHTING SUBSUMMARY - 6R

DESIGN AGENCY
Michael Baker INTERNATIONAL

DESIGNER
CRK

REVIEWER
SED 05/22/24

PROJECT ID
82382

SHEET 1703 TOTAL 2696

CUY-90-16.28 (CCG3A)

MODEL: Sheet-06 PAPERSIZE: 34x22 (in.) DATE: 3/27/2025 TIME: 7:52:01 PM USER: Mala.Gallagher
pw:\\mb-us-pw.bentley.com:mb-us-pw-03\Documents\Cleveland_OH\01_Projects\ODOT\District 12\82382400-Engineering\Lighting\Sheets\82382_LS051.dgn

| SHEET NO. | STATION FROM | STATION TO | SIDE | POLE/PULL BOX NO. | 625 CONNECTION, FUSED PULL APART EACH | 625 CONNECTION, UNFUSED PULL APART EACH | 625 CONNECTION, UNFUSED PERMANENT EACH | 625 LIGHT POLE, MISC.: 15' ROUND TAPERED FIBERGLASS STREETLIGHT EACH | 625 LIGHT POLE, MISC.: 30' ROUND TAPERED FIBERGLASS STREETLIGHT EACH | 625 LIGHT POLE ANCHOR BOLTS ON STRUCTURE EACH | 625 LIGHT POLE FOUNDATION, 24" X 6' DEEP EACH | 625 NO. 4 AWG 2400 VOLT DISTRIBUTION CABLE FT | 625 NO. 8 AWG 600 VOLT DISTRIBUTION CABLE FT | 625 DISTRIBUTION CABLE, MISC.: NO. 4 AWG 2400 VOLT DISTRIBUTION CABLE FT | 625 NO. 12 AWG POLE AND BRACKET CABLE FT | 625 CONDUIT, 3/4", 725.051 FT | 625 CONDUIT, 1-1/2", 725.04 FT | 625 CONDUIT, 2", 725.051 FT | 625 CONDUIT, CONCRETE ENCASED, 2", 725.051 FT | 625 CONDUIT, CONCRETE ENCASED, AS PER PLAN (2-2" CONDUIT, 725.051) FT | 625 CONDUIT, CONCRETE ENCASED, AS PER PLAN (4-2" CONDUIT, 725.051) FT | 625 LUMINAIRE, CONVENTIONAL, SOLID STATE (LED), AS PER PLAN (CPP LED COBRA HEAD) EACH | 625 LUMINAIRE, UNDERPASS, SOLID STATE (LED), AS PER PLAN (CPP LED WALLPACK) EACH | 625 LUMINAIRE, DECORATIVE, AS PER PLAN (15' POLES) EACH | 625 LUMINAIRE, DECORATIVE, AS PER PLAN (30' POLES) EACH | 625 TRENCH FT | 625 JUNCTION BOX EACH | 625 PULL BOX, 725.08, 24" EACH | 625 PULL BOX REMOVED EACH | 625 PULL BOX, MISC.: 6" X 6" PULL BOX EACH | 625 PULL BOX, MISC.: 13" X 24" PULL BOX EACH | 625 GROUND ROD EACH | 625 POWER SERVICE, AS PER PLAN EACH | 625 CONTROL CENTER CABINET, COMPLETE, AS PER PLAN EACH | 625 UNDERGROUND WARNING/MARKING TAPE FT | SERVICE TO UNDERPASS LIGHTING, AS PER PLAN EACH | 625 LIGHT POLE REMOVED EACH | 625 LIGHT POLE FOUNDATION REMOVED EACH | 625 LUMINAIRE REMOVED EACH | 625 DISCONNECT CIRCUIT, AS PER PLAN EACH | 625 LIGHTING, MISC.: TEST NEW CIRCUIT EACH | 632 POWER CABLE, 3 CONDUCTOR, NO. 4 AWG FT | 632 WOOD POLE EACH |
|---|---|---

SHEET NO.	STATION FROM	STATION TO	SIDE	POLE/PULL BOX NO.	625 CONNECTION, FUSED PULL APART	625 CONNECTION, UNFUSED PULL APART	625 CONNECTION, UNFUSED PERMANENT	625 LIGHT POLE, MISC.: 15' ROUND TAPERED FIBERGLASS STREETLIGHT	625 LIGHT POLE, MISC.: 30' ROUND TAPERED FIBERGLASS STREETLIGHT	625 LIGHT POLE ANCHOR BOLTS ON STRUCTURE	625 LIGHT POLE FOUNDATION, 24" X 6' DEEP	625 NO. 4 AWG 2400 VOLT DISTRIBUTION CABLE	625 NO. 8 AWG 600 VOLT DISTRIBUTION CABLE	625 DISTRIBUTION CABLE, MISC.: NO. 4/0 AWG 2400 VOLT DISTRIBUTION CABLE	625 NO. 12 AWG POLE AND BRACKET CABLE	625 CONDUIT, 3/4", 725.051	625 CONDUIT, 1-1/2", 725.04	625 CONDUIT, 2", 725.051	625 CONDUIT, CONCRETE ENCASED, 2", 725.051	625 CONDUIT, CONCRETE ENCASED, AS PER PLAN (2-2" CONDUIT, 725.051)	625 CONDUIT, CONCRETE ENCASED, AS PER PLAN (4-2" CONDUIT, 725.051)	625 LUMINAIRE, CONVENTIONAL, SOLID STATE (LED), AS PER PLAN (CPP LED COBRA HEAD)	625 LUMINAIRE, UNDERPASS, SOLID STATE (LED), AS PER PLAN (CPP LED WALLPACK)	625 LUMINAIRE, DECORATIVE, AS PER PLAN (15' POLES)	625 LUMINAIRE, DECORATIVE, AS PER PLAN (30' POLES)	625 TRENCH	625 JUNCTION BOX	625 PULL BOX, 725.08, 24"	625 PULL BOX REMOVED	625 PULL BOX, MISC.: 6" X 6" PULL BOX	625 PULL BOX, MISC.: 13" X 24" PULL BOX	625 GROUND ROD	625 POWER SERVICE, AS PER PLAN	625 CONTROL CENTER CABINET, COMPLETE, AS PER PLAN	625 UNDERGROUND WARNING/MARKING TAPE	625 SERVICE TO UNDERPASS LIGHTING, AS PER PLAN	625 LIGHT POLE REMOVED	625 LIGHT POLE FOUNDATION REMOVED	625 LUMINAIRE REMOVED	625 DISCONNECT CIRCUIT, AS PER PLAN	625 LIGHTING, MISC.: TEST NEW CIRCUIT	632 POWER CABLE, 3 CONDUCTOR, NO. 4 AWG	632 WOOD POLE	
					EACH	EACH	EACH	EACH	EACH	EACH	EACH	FT	FT	FT	FT	FT	FT	FT	FT	FT	FT	EACH	EACH	EACH	EACH	FT	EACH	EACH	EACH	EACH	EACH	EACH	EACH	EACH	FT	EACH	EACH	EACH	EACH	EACH	EACH	FT	EACH	
	CARNEGIE AVE. (CONT.)																																										
1727	61+00	62+25	LT	LT-119 TO LT-121														250																										
1727	61+42		RT	RL-19																																				1				
1727	61+70		RT	LT-120	2	1			1	4						90									1		1																
1727	61+70	62+70	RT	LT-120 TO LT-122														200																										
1727	61+87		LT	RL-20																																		1					
1727	62+25		LT	LT-121	2	1			1	4						90									1		1																
1727	62+25	63+25	LT	LT-121 TO LT-123														200																										
1727	62+57		RT	RL-21																																		1					
1727	62+70		RT	LT-122	2	1			1	4						90									1		1																
1727	62+70	63+51	RT	LT-122 TO PB-3														163								7		1																
1727	62+71		LT	RL-22																																		1					
1727	62+90		LT	RL-23																																		1					
1727	63+25		LT	LT-123	2	1			1	4						90									1		1																
1727	63+25	64+57	LT	LT-123 TO PB-4														274								5																		
1727	63+51		RT	PB-3																														1										
1727	63+55		RT	RL-24																																		1					
1727	63+59		LT	RL-25																																		1					
1727	64+05		RT	LT-124																				1										1								1	
1727	64+28		LT	RL-26																																		1					
1727	64+57		LT	PB-4																														1									
1727	64+60		LT	LT-125																				1										1								1	
1727	64+89		LT	RL-27																																		1					
1727	65+02		RT	RL-28																																		1					
1727	66+00		LT	LT-127																				1										1								1	
1727	66+00		RT	LT-126																				1										1								1	
1728	66+17		LT	RL-29																																		1					
1728	67+30		LT	LT-128																				1										1								1	
1728	67+42		LT	RL-30																																		1					
1728	67+43		RT	LT-129																				1																1	1			
1728	68+65		RT	RL-31																																		1					
1728	68+76		LT	LT-130																				1																1	1			
1728	68+79		RT	LT-131																				1																1	1			
	RAMP A2																																										
1729	250+08	410+78	RT/LT	C1-2 TO C1-1								105						25																										
1729	410+78		LT	C1-1																								1																
	E. 14TH ST. NB XOVER																																										
1729	250+08		RT	C1-2																								1											1				
1729	250+08	250+65	RT	C1-2 TO C1-3								215						62																										
1729	250+32		LT	C1-8																								1																
1729	250+32	250+48	LT	C1-8 TO C1-9								82						18																										
1729	250+48		LT	C1-9																								1											1				
1729	250+48	250+78	LT	C1-9 TO C1-10								167						46																										
1729	250+65		RT	C1-3																								1																
1729	250+65	251+15	RT	C1-3 TO C1-4								181						51																										
1729	250+78		LT	C1-10																								1																
1729	250+78	251+29	LT	C1-10 TO C1-11								182						51																										
TOTALS TO GENERAL SUMMARY					8	4	-	-	4	16	-	932	-	-	360	-	253	1087	-	-	-	8	6	-	4	12	4	-	-	-	2	5	-	-	12	2	13	-	3	3	-	-	5	

Preliminary Plans - For Reference Only

CPP LIGHTING SUBSUMMARY - 2

CUY-90-16.28 (CCG3A)

MODEL: Sheet-02 PAPERSIZE: 34x22 (in.) DATE: 3/27/2025 TIME: 7:52:09 PM USER: Maia.Gallagher
pw:\\mb-us-pw.bentley.com:mb-us-pw-03\Documents\Cleveland_OH\01_Projects\ODOT\District12\82382\400-Engineering\Lighting\Sheets\82382_LS101.dgn

DESIGN AGENCY
Michael Baker INTERNATIONAL

DESIGNER CRK
REVIEWER JLD 05/22/24
PROJECT ID 82382
SHEET 1705 TOTAL 2696

SHEET NO.	STATION FROM	STATION TO	SIDE	POLE/PULL BOX NO.	625 CONNECTION, FUSED PULL APART EACH	625 CONNECTION, UNFUSED PULL APART EACH	625 CONNECTION, UNFUSED PERMANENT EACH	625 LIGHT POLE, MISC.: 15' ROUND TAPERED FIBERGLASS STREETLIGHT EACH	625 LIGHT POLE, MISC.: 30' ROUND TAPERED FIBERGLASS STREETLIGHT EACH	625 LIGHT POLE ANCHOR BOLTS ON STRUCTURE EACH	625 LIGHT POLE FOUNDATION, 24" X 6' DEEP EACH	625 NO. 4 AWG 2400 VOLT DISTRIBUTION CABLE FT	625 NO. 8 AWG 600 VOLT DISTRIBUTION CABLE FT	625 DISTRIBUTION CABLE, MISC.: NO. 4/0 AWG 2400 VOLT DISTRIBUTION CABLE FT	625 NO. 12 AWG POLE AND BRACKET CABLE FT	625 CONDUIT, 3/4", 725.051 FT	625 CONDUIT, 1-1/2", 725.04 FT	625 CONDUIT, 2", 725.051 FT	625 CONDUIT, CONCRETE ENCASED, 2", 725.051 FT	625 CONDUIT, CONCRETE ENCASED, AS PER PLAN (2-2" CONDUIT, 725.051) FT	625 CONDUIT, CONCRETE ENCASED, AS PER PLAN (4-2" CONDUIT, 725.051) FT	625 LUMINAIRE, CONVENTIONAL, SOLID STATE (LED), AS PER PLAN (CPP LED COBRA HEAD) EACH	625 LUMINAIRE, UNDERPASS, SOLID STATE (LED), AS PER PLAN (CPP LED WALLPACK) EACH	625 LUMINAIRE, DECORATIVE, AS PER PLAN (15' POLES) EACH	625 LUMINAIRE, DECORATIVE, AS PER PLAN (30' POLES) EACH	625 TRENCH FT	625 JUNCTION BOX EACH	625 PULL BOX, 725.08, 24" EACH	625 PULL BOX REMOVED EACH	625 PULL BOX, MISC.: 6" X 6" PULL BOX EACH	625 PULL BOX, MISC.: 13" X 24" PULL BOX EACH	625 GROUND ROD EACH	625 POWER SERVICE, AS PER PLAN EACH	625 CONTROL CENTER CABINET, COMPLETE, AS PER PLAN EACH	625 UNDERGROUND WARNING/MARKING TAPE FT	625 SERVICE TO UNDERPASS LIGHTING, AS PER PLAN EACH	625 LIGHT POLE REMOVED EACH	625 LIGHT POLE FOUNDATION REMOVED EACH	625 LUMINAIRE REMOVED EACH	625 DISCONNECT CIRCUIT, AS PER PLAN EACH	625 LIGHTING, MISC.: TEST NEW CIRCUIT EACH	632 POWER CABLE, 3 CONDUCTOR, NO. 4 AWG FT	632 WOOD POLE EACH
	E. 14TH ST. NB XOVER (CONT.)																																													
1729	251+15		RT	C1-4																				1													1								
1729	251+15	252+10	RT	C1-4 TO C1-5																																							96	
1729	251+29		LT	C1-11																				1													1								
1729	251+29	252+05	LT	C1-11 TO C1-12																																							75	
1730	252+05		LT	C1-12																				1													1								1
1730	252+05	298+40	LT	C1-12 TO C1-13																																							110	
1730	252+10		RT	C1-5																				1													1								1
1730	252+10	298+44	RT	C1-5 TO C1-6																																							113	
	INTERIM E. 14TH ST. NB																																													
1730	298+40		LT	C1-13																				1													1								1
1730	298+40	299+55	LT	C1-13 TO C1-14																																							115	
1730	298+44		RT	C1-6																				1													1								1
1730	298+44	299+55	RT	C1-6 TO C1-7																																							113	
1730	299+55		LT	C1-14			3																	1													1								1
1730	299+55		RT	C1-7																				1													1								1
1730	299+55	299+55	LT/RT	C1-14 TO C1-7																																								43	
1730	299+55	300+85	LT	C1-14 TO C1-15																																							130	
1730	300+85		LT	C1-15																				1													1								1
1730	300+85	302+36	LT	C1-15 TO C1-16																																							150	
	E. 14TH ST. NB XOVER																																													
1730	252+19		LT	RL-32																																					1	1					
	INTERIM E. 14TH ST. NB																																													
1730	298+30		LT	RL-33																																	1					1					
1730	299+16		LT	RL-34																																	1					1					
1730	299+90		LT	RL-35																																	1					1	1				
1730	300+78		LT	RL-36																																	1					1					
1730	301+85		RT	RL-37																																	1					1	1				
1731	53+01	304+73	LT	C1-20 TO C1-19																																							124	
1731	302+36		LT	C1-16																				1													1								1
1731	302+36	303+51	LT	C1-16 TO C1-17																																							115	
1731	303+51		LT	C1-17																				1													1								1
1731	303+51	304+73	LT	C1-17 TO C1-19																																							124	
1731	304+50		LT	C1-18																				1													1								1
1731	304+50	304+73	LT	C1-18 TO C1-19																																							42	
1731	304+73		LT	C1-19			3																	1													1								1
	E. 14TH ST. NB																																													
1731	52+75		LT	C1-21			3																	1													1								1
1731	52+75	52+77	LT	C1-21 TO PB-C1								105					30																											
1731	52+75	53+01	LT	C1-21 TO C1-20																																							53	
1731	52+75	53+75	LT	C1-21 TO C1-22																																							100	
1731	52+77		LT	PB-C1			3																															1								
1731	52+77	54+75	LT	PB-C1 TO C2-1								1248										198						198				198												
1731	53+01		LT	C1-20																				1													1								1
1731	53+75		LT	C1-22																				1													1								1
	INTERIM E. 14TH ST. NB																																													
1731	302+45		RT	RL-38																																						1					
	TOTALS TO GENERAL SUMMARY				-	-	12	-	-	-	-	1353	-	-	-	-	30	-	-	-	198	14	2	-	-	198	-	-	5	-	1	14	-	-	198	2	3	7	-	-	-	1503	14

Preliminary Plans - For Reference Only

CUY-90-16.28 (CCG3A)

MODEL: Sheet-03 PAPERSIZE: 34x22 (in.) DATE: 3/27/2025 TIME: 7:52:10 PM USER: Maia.Gallagher
pw:\\mb-us-pw.bentley.com:mb-us-pw-03\Documents\Cleveland_OH\01_Projects\ODOT\District12\82382\400-Engineering\Lighting\Sheets\82382_LS101.dgn

CPP LIGHTING SUBSUMMARY - 3

DESIGN AGENCY
Michael Baker INTERNATIONAL

DESIGNER CRK

REVIEWER JLD 05/22/24

PROJECT ID 82382

SHEET 1706 | TOTAL 2696

| SHEET NO. | STATION FROM | STATION TO | SIDE | POLE/PULL BOX NO. | 625 CONNECTION, FUSED PULL APART EACH | 625 CONNECTION, UNFUSED PULL APART EACH | 625 CONNECTION, UNFUSED PERMANENT EACH | 625 LIGHT POLE, MISC.: 15' ROUND TAPERED FIBERGLASS STREETLIGHT EACH | 625 LIGHT POLE, MISC.: 30' ROUND TAPERED FIBERGLASS STREETLIGHT EACH | 625 LIGHT POLE ANCHOR BOLTS ON STRUCTURE EACH | 625 LIGHT POLE FOUNDATION, 24" X 6' DEEP EACH | 625 NO. 4 AWG 2400 VOLT DISTRIBUTION CABLE FT | 625 NO. 8 AWG 600 VOLT DISTRIBUTION CABLE FT | 625 DISTRIBUTION CABLE, MISC.: NO. 4 AWG 2400 VOLT DISTRIBUTION CABLE FT | 625 NO. 12 AWG POLE AND BRACKET CABLE FT | 625 CONDUIT, 3/4", 725.051 FT | 625 CONDUIT, 1-1/2", 725.04 FT | 625 CONDUIT, 2", 725.051 FT | 625 CONDUIT, CONCRETE ENCASED, 2", 725.051 FT | 625 CONDUIT, CONCRETE ENCASED, AS PER PLAN (2-2" CONDUIT, 725.051) FT | 625 CONDUIT, CONCRETE ENCASED, AS PER PLAN (4-2" CONDUIT, 725.051) FT | 625 LUMINAIRE, CONVENTIONAL, SOLID STATE (LED), AS PER PLAN (CPP LED COBRA HEAD) EACH | 625 LUMINAIRE, UNDERPASS, SOLID STATE (LED), AS PER PLAN (CPP LED WALLPACK) EACH | 625 LUMINAIRE, DECORATIVE, AS PER PLAN (15' POLES) EACH | 625 LUMINAIRE, DECORATIVE, AS PER PLAN (30' POLES) EACH | 625 TRENCH FT | 625 JUNCTION BOX EACH | 625 PULL BOX, 725.08, 24" EACH | 625 PULL BOX REMOVED EACH | 625 PULL BOX, MISC.: 6" X 6" PULL BOX EACH | 625 PULL BOX, MISC.: 13" X 24" PULL BOX EACH | 625 GROUND ROD EACH | 625 POWER SERVICE, AS PER PLAN EACH | 625 CONTROL CENTER CABINET, COMPLETE, AS PER PLAN EACH | 625 UNDERGROUND WARNING/MARKING TAPE FT | 625 SERVICE TO UNDERPASS LIGHTING, AS PER PLAN EACH | 625 LIGHT POLE REMOVED EACH | 625 LIGHT POLE FOUNDATION REMOVED EACH | 625 LUMINAIRE REMOVED EACH | 625 DISCONNECT CIRCUIT, AS PER PLAN EACH | 625 LIGHTING, MISC.: TEST NEW CIRCUIT EACH | 632 POWER CABLE, 3 CONDUCTOR, NO. 4 AWG FT | 632 WOOD POLE EACH |
|---|---|---

SHEET NO.	STATION FROM	STATION TO	SIDE	POLE/PULL BOX NO.	625 CONNECTION, FUSED PULL APART EACH	625 CONNECTION, UNFUSED PULL APART EACH	625 CONNECTION, UNFUSED PERMANENT EACH	625 LIGHT POLE, MISC.: 15' ROUND TAPERED FIBERGLASS STREETLIGHT EACH	625 LIGHT POLE, MISC.: 30' ROUND TAPERED FIBERGLASS STREETLIGHT EACH	625 LIGHT POLE ANCHOR BOLTS ON STRUCTURE EACH	625 LIGHT POLE FOUNDATION, 24" X 6' DEEP EACH	625 NO. 4 AWG 2400 VOLT DISTRIBUTION CABLE FT	625 NO. 8 AWG 600 VOLT DISTRIBUTION CABLE FT	625 DISTRIBUTION CABLE, MISC.: NO. 4 AWG 2400 VOLT DISTRIBUTION CABLE FT	625 NO. 12 AWG POLE AND BRACKET CABLE FT	625 CONDUIT, 3/4", 725.051 FT	625 CONDUIT, 1-1/2", 725.04 FT	625 CONDUIT, 2", 725.051 FT	625 CONDUIT, CONCRETE ENCASED, 2", 725.051 FT	625 CONDUIT, CONCRETE ENCASED, AS PER PLAN (2-2" CONDUIT, 725.051) FT	625 CONDUIT, CONCRETE ENCASED, AS PER PLAN (4-2" CONDUIT, 725.051) FT	625 LUMINAIRE, CONVENTIONAL, SOLID STATE (LED), AS PER PLAN (CPP LED COBRA HEAD) EACH	625 LUMINAIRE, UNDERPASS, SOLID STATE (LED), AS PER PLAN (CPP LED WALLPACK) EACH	625 LUMINAIRE, DECORATIVE, AS PER PLAN (15' POLES) EACH	625 LUMINAIRE, DECORATIVE, AS PER PLAN (30' POLES) EACH	625 TRENCH FT	625 JUNCTION BOX EACH	625 PULL BOX, 725.08, 24" EACH	625 PULL BOX REMOVED EACH	625 PULL BOX, MISC.: 6" X 6" PULL BOX EACH	625 PULL BOX, MISC.: 13" X 24" PULL BOX EACH	625 GROUND ROD EACH	625 POWER SERVICE, AS PER PLAN EACH	625 CONTROL CENTER CABINET, COMPLETE, AS PER PLAN EACH	625 UNDERGROUND WARNING/MARKING TAPE FT	625 SERVICE TO UNDERPASS LIGHTING, AS PER PLAN EACH	625 LIGHT POLE REMOVED EACH	625 LIGHT POLE FOUNDATION REMOVED EACH	625 LUMINAIRE REMOVED EACH	625 DISCONNECT CIRCUIT, AS PER PLAN EACH	625 LIGHTING, MISC.: TEST NEW CIRCUIT EACH	632 POWER CABLE, 3 CONDUCTOR, NO. 4 AWG FT	632 WOOD POLE EACH
	E. 14TH ST. NB (CONT.)																																														
1732	58+10	58+90	LT	C2-17 TO C2-16								276									82					82								82												
1732	58+90		LT	C2-16	2	1	3		1		1				90								1						1	1														
	E. 14TH ST. SB																																													
1732	38+67		LT	PB-C8																									1															
1732	38+67	58+90	LT	PB-C8 TO C2-16								210									60					60								60												
1732	38+67	59+50	LT	PB-C8 TO C2-15								216									62					62								62												
	E. 18TH ST.																																													
1732	21+75		LT	C2-18	2	1	3		1		1				90								1						1	1														
1732	21+75	23+00	LT	C2-18 TO C2-19								816									126					126								126												
1732	23+00		LT	C2-19	2	1	3		1		1				90								1						1	1														
	E. 14TH ST. NB																																													
1732	56+37		LT	RL-43																												1								1	1				
1732	56+41		LT	RL-44																																					1	1				
1732	57+25		LT	RL-45																												1								1	1				
1732	57+26		LT	RL-46																												1								1	1				
1732	58+16		LT	RL-47																																					1	1				
	CARNEGIE AVE.																																													
1733	41+00		RT	CC-C			6					240						30				1																		1	1	1			2		1
	E. 14TH ST. NB																																													
1733	59+50		LT	C2-15	2	1	3		1		1				90								1						1	1														
	E. 18TH ST.																																													
1733	23+00	24+15	LT	C2-19 TO C2-20								750									115					115								115												
1733	24+15		LT	C2-20	2	1	3		1		1				90								1						1	1														
1733	24+15	41+00	LT/RT	C2-20 TO CC-C								276									36					36								36												
	CARNEGIE AVE.																																													
1733	37+95		RT	RL-48																																				1					
1733	38+06		RT	RL-49																																				1					
1733	38+10		LT	LT-132																																								1	
1733	38+10		RT	LT-133																																								1	
1733	38+48		LT	RL-50																																				1					
1733	39+63		RT	RL-51																																				1					
1733	39+75		RT	LT-136																																								1	
1733	40+74		RT	RL-52																																				1					
1733	41+15		LT	LT-138																																								1	
	E. 14TH ST. NB																																													
1733	59+00		LT	RL-53																																				1					
1733	59+03		RT	RL-54																																				1					
1733	59+73		LT	RL-55																												1								1	1				
1733	60+25		LT	LT-134																																								1	
1733	60+25		RT	LT-135																																								1	
1733	61+70		RT	LT-137																																								1	
	E. 18TH ST.																																													
1733	23+28		RT	RL-56																																				1					
1733	23+60		RT	RL-57																																				1					
1733	23+75		LT	RL-58																																				1	1				
TOTALS TO GENERAL SUMMARY					10	5	21	-	5	-	5	2784	-	-	450	-	30	-	-	-	481	8	-	-	5	481	-	-	4	-	7	13	1	-	481	-	16	7	-	-	2	-	8

Preliminary Plans - For Reference Only

CPP LIGHTING SUBSUMMARY - 5

DESIGN AGENCY
Michael Baker INTERNATIONAL

DESIGNER CRK
REVIEWER JLD 05/22/24
PROJECT ID 82382
SHEET 1708 TOTAL 2696

CUY-90-16.28 (CCG3A)

MODEL: Sheet-05 PAPERSIZE: 34x22 (in.) DATE: 3/27/2025 TIME: 7:52:12 PM USER: Maia.Gallagher
pw:\\mb-us-pw.bentley.com:mb-us-pw-03\Documents\Cleveland_OH\01_Projects\ODOT\District12\82382\400-Engineering\Lighting\Sheets\82382_LS101.dgn

SHEET NO.	STATION FROM	STATION TO	SIDE	POLE/PULL BOX NO.	625 CONNECTION, FUSED PULL APART EACH	625 CONNECTION, UNFUSED PULL APART EACH	625 CONNECTION, UNFUSED PERMANENT EACH	625 LIGHT POLE, MISC.: 15' ROUND TAPERED FIBERGLASS STREETLIGHT EACH	625 LIGHT POLE, MISC.: 30' ROUND TAPERED FIBERGLASS STREETLIGHT EACH	625 LIGHT POLE ANCHOR BOLTS ON STRUCTURE EACH	625 LIGHT POLE FOUNDATION, 24" X 6' DEEP EACH	625 NO. 4 AWG 2400 VOLT DISTRIBUTION CABLE FT	625 NO. 8 AWG 600 VOLT DISTRIBUTION CABLE FT	625 DISTRIBUTION CABLE, MISC.: NO. 4 AWG 2400 VOLT DISTRIBUTION CABLE FT	625 NO. 12 AWG POLE AND BRACKET CABLE FT	625 CONDUIT, 3/4", 725.051 FT	625 CONDUIT, 1-1/2", 725.04 FT	625 CONDUIT, 2", 725.051 FT	625 CONDUIT, CONCRETE ENCASED, 2", 725.051 FT	625 CONDUIT, CONCRETE ENCASED, AS PER PLAN (2-2" CONDUIT, 725.051) FT	625 CONDUIT, CONCRETE ENCASED, AS PER PLAN (4-2" CONDUIT, 725.051) FT	625 LUMINAIRE, CONVENTIONAL, SOLID STATE (LED), AS PER PLAN (CPP LED COBRA HEAD) EACH	625 LUMINAIRE, UNDERPASS, SOLID STATE (LED), AS PER PLAN (CPP LED WALLPACK) EACH	625 LUMINAIRE, DECORATIVE, AS PER PLAN (15' POLES) EACH	625 LUMINAIRE, DECORATIVE, AS PER PLAN (30' POLES) EACH	625 TRENCH FT	625 JUNCTION BOX EACH	625 PULL BOX, 725.08, 24" EACH	625 PULL BOX REMOVED EACH	625 PULL BOX, MISC.: 6" X 6" PULL BOX EACH	625 PULL BOX, MISC.: 13" X 24" PULL BOX EACH	625 GROUND ROD EACH	625 POWER SERVICE, AS PER PLAN EACH	625 CONTROL CENTER CABINET, COMPLETE, AS PER PLAN EACH	625 UNDERGROUND WARNING/MARKING TAPE FT	625 SERVICE TO UNDERPASS LIGHTING, AS PER PLAN EACH	625 LIGHT POLE REMOVED EACH	625 LIGHT POLE FOUNDATION REMOVED EACH	625 LUMINAIRE REMOVED EACH	625 DISCONNECT CIRCUIT, AS PER PLAN EACH	625 LIGHTING, MISC.: TEST NEW CIRCUIT EACH	632 POWER CABLE, 3 CONDUCTOR, NO. 4 AWG FT	632 WOOD POLE EACH
	E. 18TH ST. (CONT.)																																														
1733	24+34		RT	RL-59																																											
	RAMP H6																																														
1734	1191+49		LT	RL-60																																						1					
1734	1192+14		LT	RL-61																																						1					
	E. 22ND ST.																																														
1735	30+12		LT	D1-1	2	1			1		1				90												1					1	1													
1735	30+12	30+66	LT	D1-1 TO PB-D6								183											51					51									51									
1735	30+23		RT	D1-8	2	1			1		1				90												1					1	1													
1735	30+23	31+15	RT	D1-8 TO D1-9								306											92					92									92									
1735	30+66		LT	PB-D6																													1													
1735	30+66	31+10	LT	PB-D6 TO D1-2								159											43					43									43									
1735	31+10		LT	D1-2	2	1			1		1				90											1					1	1													
1735	31+10	32+14	LT	D1-2 TO D1-3								363											111					111									111									
1735	31+15		RT	D1-9	2	1			1		1				90											1					1	1													
1735	31+15	32+21	RT	D1-9 TO D1-10								423											131					131									131									
1735	29+64		LT	E1-1	2	1		1			1				45											1					1	1													
1735	29+64	29+96	LT	E1-1 TO E2-2									156					42										42									42									
1735	29+96		LT	E2-2	2	1		1			1				45											1					1	1													
1735	29+96	30+07	LT	E2-2 TO PB-E8									102					7										7									7									
1735	30+07		LT	PB-E8																													1													
1735	30+07	30+19	LT	PB-E8 TO PB-E3									891					90										23									23									
1735	30+07	30+94	LT/RT	PB-E8 TO PB-E1									3456					470										118									118									
1735	30+18		LT	E1-3	2	1		1			1				45											1					1	1													
1735	30+18	30+19	LT	E1-3 TO PB-E3									87					19										19									19									
1735	30+19	30+52	LT	PB-E3 TO PB-E2									1377					124										41									41									
1735	30+22		LT	PB-E3																													1													
1735	30+47		RT	PB-E28																															1											
1735	30+47	30+91	RT	PB-E28 TO PB-E27										159					43									43									43									
1735	30+52		LT	PB-E2																													1													
1735	30+52	30+71	LT	PB-E2 TO E2-4									1491					61										61									61									
1735	30+52	30+78	LT	PB-E2 TO PB-E26									306				41											41									41									
1735	30+71		LT	E2-4	2	1		1			1				45											1					1	1													
1735	30+71	31+09	LT	E2-4 TO E1-5									1176					181										46									46									
1735	30+78		LT	PB-E26																																1										
1735	30+78	31+28	LT	PB-E26 TO PB-E25									189				53																														
1735	30+91		RT	CC-E																																									16		
1735	30+91		RT	PB-E27																															1											
1735	30+91	30+94	RT	CC-E TO PB-E1									2880					300										50									50									
1735	30+94		RT	PB-E1																															1											
1735	30+94	31+15	RT	PB-E1 TO PB-E9									777					106										27									27									
1735	31+09		LT	E1-5	2	1		1			1				45											1					1	1													
1735	31+09	31+31	LT	E1-5 TO E2-6									1344					54										54									54									
1735	31+15		RT	PB-E9																																											
1735	31+15	32+15	RT	PB-E9 TO PB-E4									3675					620										165									165									
1735	31+28		LT	PB-E25																																1										
1735	31+31		LT	E2-6	2	1		1			1				45											1					1	1													
TOTALS TO GENERAL SUMMARY					20	10	-	6	4	-	10	1434	17907	159	630	94	-	2074	43	-	428	-	-	6	4	1165	-	3	-	2	15	10	1	1	1165	-	3	1	-	-	16	-	-

Preliminary Plans - For Reference Only

CPP LIGHTING SUBSUMMARY - 6

CUY-90-16.28 (CCG3A)

MODEL: Sheet-06 PAPERSIZE: 34x22 (in.) DATE: 3/27/2025 TIME: 7:52:14 PM USER: Mala.Gallagher
pw:\\mb-us-pw.bentley.com:mb-us-pw-03\Documents\Cleveland_OH\01_Projects\ODOT\District12\82382\400-Engineering\Lighting\Sheets\82382_LS101.dgn

DESIGN AGENCY
Michael Baker INTERNATIONAL

DESIGNER JTP
REVIEWER MMC 05/22/24
PROJECT ID 82382
SHEET 1709 TOTAL 2696

SHEET NO.	STATION FROM	STATION TO	SIDE	POLE/PULL BOX NO.	625 CONNECTION, FUSED PULL APART EACH	625 CONNECTION, UNFUSED PULL APART EACH	625 CONNECTION, UNFUSED PERMANENT EACH	625 LIGHT POLE, MISC.: 15' ROUND TAPERED FIBERGLASS STREETLIGHT EACH	625 LIGHT POLE, MISC.: 30' ROUND TAPERED FIBERGLASS STREETLIGHT EACH	625 LIGHT POLE ANCHOR BOLTS ON STRUCTURE EACH	625 LIGHT POLE FOUNDATION, 24" X 6' DEEP EACH	625 NO. 4 AWG 2400 VOLT DISTRIBUTION CABLE FT	625 NO. 8 AWG 600 VOLT DISTRIBUTION CABLE FT	625 DISTRIBUTION CABLE, MISC.: NO. 4 AWG 2400 VOLT DISTRIBUTION CABLE FT	625 NO. 12 AWG POLE AND BRACKET CABLE FT	625 CONDUIT, 3/4", 725.051 FT	625 CONDUIT, 1-1/2", 725.04 FT	625 CONDUIT, 2", 725.051 FT	625 CONDUIT, CONCRETE ENCASED, 2", 725.051 FT	625 CONDUIT, CONCRETE ENCASED, AS PER PLAN (2-2" CONDUIT, 725.051) FT	625 CONDUIT, CONCRETE ENCASED, AS PER PLAN (4-2" CONDUIT, 725.051) FT	625 LUMINAIRE, CONVENTIONAL, SOLID STATE (LED), AS PER PLAN (CPP LED COBRA HEAD) EACH	625 LUMINAIRE, UNDERPASS, SOLID STATE (LED), AS PER PLAN (CPP LED WALLPACK) EACH	625 LUMINAIRE, DECORATIVE, AS PER PLAN (15' POLES) EACH	625 LUMINAIRE, DECORATIVE, AS PER PLAN (30' POLES) EACH	625 TRENCH FT	625 JUNCTION BOX EACH	625 PULL BOX, 725.08, 24" EACH	625 PULL BOX REMOVED EACH	625 PULL BOX, MISC.: 6" X 6" PULL BOX EACH	625 PULL BOX, MISC.: 13" X 24" PULL BOX EACH	625 GROUND ROD EACH	625 POWER SERVICE, AS PER PLAN EACH	625 CONTROL CENTER CABINET, COMPLETE, AS PER PLAN EACH	625 UNDERGROUND WARNING/MARKING TAPE FT	625 SERVICE TO UNDERPASS LIGHTING, AS PER PLAN EACH	625 LIGHT POLE REMOVED EACH	625 LIGHT POLE FOUNDATION REMOVED EACH	625 LUMINAIRE REMOVED EACH	625 DISCONNECT CIRCUIT, AS PER PLAN EACH	625 LIGHTING, MISC.: TEST NEW CIRCUIT EACH	632 POWER CABLE, 3 CONDUCTOR, NO. 4 AWG FT	632 WOOD POLE EACH
	E. 22ND ST. (CONT.)																																													
1735	31+31	31+73	LT	E2-6 TO E1-7									924					133								34									34											
1735	31+73		LT	E1-7	2	1		1			1				45									1					1	1													
1735	31+73	31+90	LT	E1-7 TO E2-8									798					109								28									28											
1735	31+90		LT	E2-8	2	1		1			1				45									1					1	1													
1735	31+90	32+12	LT	E2-8 TO PB-E23									924					136								34									34											
1735	30+81		RT	RL-62																																		1							
1735	31+60		LT	RL-63																																		1							
1736	32+14		LT	D1-3	2	1			1		1				90									1					1	1													
1736	32+14	32+54	LT	D1-3 TO PB-D5								147										39						39								39											
1736	32+21		RT	D1-10	2	1			1		1				90									1					1	1													
1736	32+21	32+89	RT	D1-10 TO PB-D2								180										50						50								50											
1736	32+54		LT	PB-D5																																		1							
1736	32+54	33+19	LT	PB-D5 TO D1-4								228						131																											
1736	32+89		RT	PB-D2																																		1							
1736	32+89	33+50	RT	PB-D2 TO D1-11								288						172								8									8											
1736	33+19		LT	D1-4	2	1			1						90									1																					
1736	33+19	34+16	LT	D1-4 TO D1-5								336						204																											
1736	33+50		RT	D1-11	2	1			1						90									1																					
1736	33+50	34+51	RT	D1-11 TO D1-12								330						200																											
1736	34+16		LT	D1-5	2	1			1						90									1																					
1736	34+16	35+17	LT	D1-5 TO D1-6								336						204																											
1736	34+51		RT	D1-12	2	1			1						90									1																					
1736	34+51	35+51	RT	D1-12 TO D1-13								330						200																											
1736	35+17		LT	D1-6	2	1			1						90									1																					
1736	35+17	36+08	LT	D1-6 TO PB-D1								258						152								8									8											
1736	35+51		RT	D1-13	2	1			1						90									1																					
1736	35+51	36+10	RT	D1-13 TO PB-D3								234						136																											
1736	36+08		LT	PB-D1																																		1							
1736	36+08	36+17	LT	PB-D1 TO D1-7								93										21						21								21											
1736	36+10		RT	PB-D3																																		1							
1736	36+10	36+17	RT/LT	PB-D3 TO D1-7								240										70						70								70											
1736	36+10	36+46	RT	PB-D3 TO D1-14								105										25						25								25											
1736	36+11		RT	PB-D4																																		1							
1736	36+17		LT	D1-7	2	1			1		1				90									1																					
1736	36+46		RT	D1-14	2	1			1		1				90									1																					
1736	36+46	54+00	RT	D1-14 TO CC-D								372										114						114								114											
1736	29+95	32+40	LT	PB-E21 TO PB-E22									840				230											46								46											
1736	29+95	33+51	LT	PB-E21 TO PB-E20									888				255																											
1736	32+12		LT	PB-E23																																		1							
1736	32+12	32+40	LT	PB-E23 TO PB-E22									840							30																											
1736	32+15		RT	PB-E4																																		1							
1736	32+15	32+68	RT	PB-E4 TO PB-E5									1176									46						46								46											
1736	32+40		LT	PB-E22																																		1							
1736	32+40	32+65	LT	PB-E22 TO PB-E24									282				73																											
1736	32+65		LT	PB-E24																																			1						
1736	32+68		RT	PB-E5																																		1							
1736	32+68	32+79	RT	PB-E5 TO PB-E10									567					67																											
TOTALS TO GENERAL SUMMARY					24	12	-	2	10	-	6	3477	7239	-	990	558	-	1844	-	30	365	-	-	2	10	523	-	-	-	1	15	6	-	-	523	-	2	-	-	-	-	-	-			

Preliminary Plans - For Reference Only

CPP LIGHTING SUBSUMMARY - 7

CUY-90-16.28 (CCG3A)

MODEL: Sheet-07 PAPERSIZE: 34x22 (in.) DATE: 3/27/2025 TIME: 7:52:15 PM USER: Maia.Gallagher
pw:\\mb-us-pw.bentley.com:mb-us-pw-03\Documents\Cleveland_OH\01_Projects\ODOT\District12\82382\400-Engineering\Lighting\Sheets\82382_LS101.dgn

DESIGN AGENCY
Michael Baker INTERNATIONAL

DESIGNER JTP

REVIEWER MMC 05/22/24

PROJECT ID 82382

SHEET 1710 TOTAL 2696

SHEET NO.	STATION FROM	STATION TO	SIDE	POLE/PULL BOX NO.	625 CONNECTION, FUSED PULL APART EACH	625 CONNECTION, UNFUSED PULL APART EACH	625 CONNECTION, UNFUSED PERMANENT EACH	625 LIGHT POLE, MISC.: 15' ROUND TAPERED FIBERGLASS STREETLIGHT EACH	625 LIGHT POLE, MISC.: 30' ROUND TAPERED FIBERGLASS STREETLIGHT EACH	625 LIGHT POLE ANCHOR BOLTS ON STRUCTURE EACH	625 LIGHT POLE FOUNDATION, 24" X 6' DEEP EACH	625 NO. 4 AWG 2400 VOLT DISTRIBUTION CABLE FT	625 NO. 8 AWG 600 VOLT DISTRIBUTION CABLE FT	625 DISTRIBUTION CABLE, MISC.: NO. 4 AWG 2400 VOLT DISTRIBUTION CABLE FT	625 NO. 12 AWG POLE AND BRACKET CABLE FT	625 CONDUIT, 3/4", 725.051 FT	625 CONDUIT, 1-1/2", 725.04 FT	625 CONDUIT, 2", 725.051 FT	625 CONDUIT, CONCRETE ENCASED, 2", 725.051 FT	625 CONDUIT, CONCRETE ENCASED, AS PER PLAN (2-2" CONDUIT, 725.051) FT	625 CONDUIT, CONCRETE ENCASED, AS PER PLAN (4-2" CONDUIT, 725.051) FT	625 LUMINAIRE, CONVENTIONAL, SOLID STATE (LED), AS PER PLAN (CPP LED COBRA HEAD) EACH	625 LUMINAIRE, UNDERPASS, SOLID STATE (LED), AS PER PLAN (CPP LED WALLPACK) EACH	625 LUMINAIRE, DECORATIVE, AS PER PLAN (15' POLES) EACH	625 LUMINAIRE, DECORATIVE, AS PER PLAN (30' POLES) EACH	625 TRENCH FT	625 JUNCTION BOX EACH	625 PULL BOX, 725.08, 24" EACH	625 PULL BOX REMOVED EACH	625 PULL BOX, MISC.: 6" X 6" PULL BOX EACH	625 PULL BOX, MISC.: 13" X 24" PULL BOX EACH	625 GROUND ROD EACH	625 POWER SERVICE, AS PER PLAN EACH	625 CONTROL CENTER CABINET, COMPLETE, AS PER PLAN EACH	625 UNDERGROUND WARNING/MARKING TAPE FT	SERVICE TO UNDERPASS LIGHTING, AS PER PLAN EACH	LIGHT POLE REMOVED EACH	LIGHT POLE FOUNDATION REMOVED EACH	LUMINAIRE REMOVED EACH	DISCONNECT CIRCUIT, AS PER PLAN EACH	LIGHTING, MISC.: TEST NEW CIRCUIT EACH	632 POWER CABLE, 3 CONDUCTOR, NO. 4 AWG FT	632 WOOD POLE EACH
	E. 22ND ST. (CONT.)																																															
1736	32+79		RT	PB-E10																																												
1736	32+79	33+28	RT	PB-E10 TO PB-E11									1155			334																																	
1736	32+83	33+22	RT	PB-E10 TO E1-9									492						72																														
1736	33+00		LT	PB-E21																																												
1736	33+22		RT	E1-9	2	1		1							45											2																					
1736	33+22	33+75	RT	E1-9 TO E2-10									684						104																													
1736	33+28		RT	PB-E11																																												
1736	33+28	33+80	RT	PB-E11 TO PB-E12									2604			207																																	
1736	33+51		LT	PB-E20																																												
1736	33+51	34+00	LT	PB-E20 TO PB-E19									531			146																																	
1736	33+75		RT	E2-10	2	1		1							45											2																					
1736	33+75	34+28	RT	E2-10 TO E1-11									684						104																													
1736	33+80		RT	PB-E12																																												
1736	33+80	34+29	RT	PB-E12 TO PB-E13									1395			145																																	
1736	34+00		LT	PB-E19																																												
1736	34+00	34+50	LT	PB-E19 TO PB-E18									744			104																																	
1736	34+28		RT	E1-11	2	1		1							45											2																					
1736	34+28	34+74	RT	E1-11 TO E2-12									636						96																													
1736	34+29		RT	PB-E13																																												
1736	34+29	34+80	RT	PB-E13 TO PB-E14									684			104																																	
1736	34+50		LT	PB-E18																																												
1736	34+50	35+03	LT	PB-E18 TO PB-E17									186			52																																	
1736	34+74		RT	E2-12	2	1		1							45											2																					
1736	34+74	35+28	RT	E2-12 TO E1-13									684						104																													
1736	34+80		RT	PB-E14																																												
1736	34+80	35+32	RT	PB-E14 TO PB-E15									372			52																																	
1736	35+03		LT	PB-E17																																												
1736	35+28		RT	E1-13	2	1		1							45											2																					
1736	35+28	35+91	RT	E1-13 TO E2-14									846						131																													
1736	35+32		RT	PB-E15																																												
1736	35+91		RT	E2-14	2	1		1			1				45											2																	1	1					
1736	35+91	36+27	RT	E2-14 TO PB-E6									480						70											11															11			
1736	36+16		LT	E2-22	2	1		1			1				45											1																	1	1					
1736	36+16	36+31	LT	E2-22 TO E1-21									342						47											47															47			
1736	36+16	36+35	LT	E2-22 TO E1-23									153						41											41															41			
1736	36+19		RT	E1-17	2	1		1			1				45											1																	1	1					
1736	36+19	36+68	RT	E2-16 TO E2-18									177						49											49															49			
1736	36+19	36+78	RT	E1-17 TO E2-16									204						58											58															58			
1736	36+27		LT	PB-E7																																												
1736	36+27		RT	PB-E6																																												
1736	36+27		RT	PB-E6 TO IR. CONTROLLER									135						35											35															35			
1736	36+27	36+27	LT/RT	PB-E7 TO PB-E6									672							102									102															102			
1736	36+27	36+34	LT	PB-E7 TO E1-19									264						34											34															34			
1736	36+27	36+56	RT	PB-E6 TO E1-15									264						34											34															34			
1736	36+31		LT	E1-21	2	1		1			1				45											1																	1	1					
1736	36+31	36+62	LT	E1-21 TO E2-20									246						31											31															31			
1736	36+34		LT	E1-19	2	1		1			1				45											2																	1	1					
TOTALS TO GENERAL SUMMARY					20	10	-	10	-	-	5	-	14634	-	450	1144	-	1010	-	102	-	-	-	17	-	442	-	1	-	10	7	5	-	-	442	-	-	-	-	-	-	-	-					

Preliminary Plans - For Reference Only

CPP LIGHTING SUBSUMMARY - 8

DESIGN AGENCY
Michael Baker INTERNATIONAL

DESIGNER JTP

REVIEWER MMC 05/22/24

PROJECT ID 82382

SHEET 1711 TOTAL 2696

CUY-90-16.28 (CCG3A)

MODEL: Sheet-08 PAPERSIZE: 34x22 (in.) DATE: 3/27/2025 TIME: 7:52:16 PM USER: Maia.Gallagher
pw:\\mb-us-pw.bentley.com:mb-us-pw-03\Documents\Cleveland_OH\01_Projects\ODOT\District12\82382\400-Engineering\Lighting\Sheets\82382_LS101.dgn

| SHEET NO. | STATION FROM | STATION TO | SIDE | POLE/PULL BOX NO. | 625 CONNECTION, FUSED PULL APART EACH | 625 CONNECTION, UNFUSED PULL APART EACH | 625 CONNECTION, UNFUSED PERMANENT EACH | 625 LIGHT POLE, MISC.: 15' ROUND TAPERED FIBERGLASS STREETLIGHT EACH | 625 LIGHT POLE, MISC.: 30' ROUND TAPERED FIBERGLASS STREETLIGHT EACH | 625 LIGHT POLE ANCHOR BOLTS ON STRUCTURE EACH | 625 LIGHT POLE FOUNDATION, 24" X 6' DEEP EACH | 625 NO. 4 AWG 2400 VOLT DISTRIBUTION CABLE FT | 625 NO. 8 AWG 600 VOLT DISTRIBUTION CABLE FT | 625 DISTRIBUTION CABLE, MISC.: NO. 4 AWG 2400 VOLT DISTRIBUTION CABLE FT | 625 NO. 12 AWG POLE AND BRACKET CABLE FT | 625 CONDUIT, 3/4", 725.051 FT | 625 CONDUIT, 1-1/2", 725.04 FT | 625 CONDUIT, 2", 725.051 FT | 625 CONDUIT, CONCRETE ENCASED, 2", 725.051 FT | 625 CONDUIT, CONCRETE ENCASED, AS PER PLAN (2-2" CONDUIT, 725.051) FT | 625 CONDUIT, CONCRETE ENCASED, AS PER PLAN (4-2" CONDUIT, 725.051) FT | 625 LUMINAIRE, CONVENTIONAL, SOLID STATE (LED), AS PER PLAN (CPP LED COBRA HEAD) EACH | 625 LUMINAIRE, UNDERPASS, SOLID STATE (LED), AS PER PLAN (CPP LED WALLPACK) EACH | 625 LUMINAIRE, DECORATIVE, AS PER PLAN (15' POLES) EACH | 625 LUMINAIRE, DECORATIVE, AS PER PLAN (30' POLES) EACH | 625 TRENCH FT | 625 JUNCTION BOX EACH | 625 PULL BOX, 725.08, 24" EACH | 625 PULL BOX REMOVED EACH | 625 PULL BOX, MISC.: 6" X 6" PULL BOX EACH | 625 PULL BOX, MISC.: 13" X 24" PULL BOX EACH | 625 GROUND ROD EACH | 625 POWER SERVICE, AS PER PLAN EACH | 625 CONTROL CENTER CABINET, COMPLETE, AS PER PLAN EACH | 625 UNDERGROUND WARNING/MARKING TAPE FT | SERVICE TO UNDERPASS LIGHTING, AS PER PLAN EACH | LIGHT POLE REMOVED EACH | LIGHT POLE FOUNDATION REMOVED EACH | LUMINAIRE REMOVED EACH | DISCONNECT CIRCUIT, AS PER PLAN EACH | LIGHTING, MISC.: TEST NEW CIRCUIT EACH | 632 POWER CABLE, 3 CONDUCTOR, NO. 4 AWG FT | 632 WOOD POLE EACH |
|---|---|---

SHEET NO.	STATION FROM	STATION TO	SIDE	POLE/PULL BOX NO.	625 CONNECTION, FUSED PULL APART EACH	625 CONNECTION, UNFUSED PULL APART EACH	625 CONNECTION, UNFUSED PERMANENT EACH	625 LIGHT POLE, MISC.: 15' ROUND TAPERED FIBERGLASS STREETLIGHT EACH	625 LIGHT POLE, MISC.: 30' ROUND TAPERED FIBERGLASS STREETLIGHT EACH	625 LIGHT POLE ANCHOR BOLTS ON STRUCTURE EACH	625 LIGHT POLE FOUNDATION, 24" X 6' DEEP EACH	625 NO. 4 AWG 2400 VOLT DISTRIBUTION CABLE FT	625 NO. 8 AWG 600 VOLT DISTRIBUTION CABLE FT	625 DISTRIBUTION CABLE, MISC.: NO. 4 AWG 2400 VOLT DISTRIBUTION CABLE FT	625 NO. 12 AWG POLE AND BRACKET CABLE FT	625 CONDUIT, 3/4", 725.051 FT	625 CONDUIT, 1-1/2", 725.04 FT	625 CONDUIT, 2", 725.051 FT	625 CONDUIT, CONCRETE ENCASED, 2", 725.051 FT	625 CONDUIT, CONCRETE ENCASED, AS PER PLAN (2-2" CONDUIT, 725.051) FT	625 CONDUIT, CONCRETE ENCASED, AS PER PLAN (4-2" CONDUIT, 725.051) FT	625 LUMINAIRE, CONVENTIONAL, SOLID STATE (LED), AS PER PLAN (CPP LED COBRA HEAD) EACH	625 LUMINAIRE, UNDERPASS, SOLID STATE (LED), AS PER PLAN (CPP LED WALLPACK) EACH	625 LUMINAIRE, DECORATIVE, AS PER PLAN (15' POLES) EACH	625 LUMINAIRE, DECORATIVE, AS PER PLAN (30' POLES) EACH	625 TRENCH FT	625 JUNCTION BOX EACH	625 PULL BOX, 725.08, 24" EACH	625 PULL BOX REMOVED EACH	625 PULL BOX, MISC.: 6" X 6" PULL BOX EACH	625 PULL BOX, MISC.: 13" X 24" PULL BOX EACH	625 GROUND ROD EACH	625 POWER SERVICE, AS PER PLAN EACH	625 CONTROL CENTER CABINET, COMPLETE, AS PER PLAN EACH	625 UNDERGROUND WARNING/MARKING TAPE FT	SERVICE TO UNDERPASS LIGHTING, AS PER PLAN EACH	LIGHT POLE REMOVED EACH	LIGHT POLE FOUNDATION REMOVED EACH	LUMINAIRE REMOVED EACH	DISCONNECT CIRCUIT, AS PER PLAN EACH	LIGHTING, MISC.: TEST NEW CIRCUIT EACH	632 POWER CABLE, 3 CONDUCTOR, NO. 4 AWG FT	632 WOOD POLE EACH
	MIDTOWN CONNECTOR (CONT)																																															
1737	504+20		RT	LT-202																				1										1													1
1737	504+45		RT	RL-85																																												
1738	505+00	505+64	LT	E1-31 TO E2-32									432						62																													
1738	505+64		LT	E2-32	2	1		1			1				45										1										1	1										
1738	505+64	506+26	LT	E2-32 TO E1-33									444						64																													
1738	506+26		LT	E1-33	2	1		1			1				45										1										1	1										
1738	506+26	506+89	LT	E1-33 TO E2-34									438						63																													
1738	506+89		LT	E2-34	2	1		1			1				45										1										1	1										
1738	506+89	507+52	LT	E2-34 TO E1-35									438						63																													
1738	507+52		LT	E1-35	2	1		1			1				45										1										1	1										
1738	507+52	508+15	LT	E1-35 TO E2-36									438						63																													
1738	508+15		LT	E2-36	2	1		1			1				45										1										1	1										
1738	508+15	508+77	LT	E2-36 TO E1-37									438						63																													
1738	508+77		LT	E1-37	2	1		1			1				45										1										1	1										
1738	508+77	509+44	LT	E1-37 TO E2-38									432						62																													
1738	509+44		LT	E2-38	2	1		1			1				45										1										1	1										
1738	509+44	510+13	LT	E2-38 TO E1-39									426						61																													
1738	505+62		RT	RL-86																																												
1738	505+80		RT	LT-203																				1										1													1
1738	507+44		RT	LT-204																				1																							
1738	509+10		RT	LT-205																				1										1													1
1739	510+13		LT	E1-39	2	1		1			1				45										1										1	1										
1739	510+13	510+82	LT	E1-39 TO E2-40									408						58																													
1739	510+82		LT	E2-40	2	1		1			1				45										1										1	1										
1739	510+82	511+50	LT	E2-40 TO E1-41									402						57																													
1739	511+50		LT	E1-41	2	1		1			1				45										1										1	1										
1739	511+50	512+21	LT	E1-41 TO E2-42									402						57																													
1739	512+21		LT	E2-42	2	1		1			1				45										1										1	1										
1739	512+21	512+90	LT	E2-42 TO E1-43									402						57																													
1739	512+90		LT	E1-43	2	1		1			1				45										1										1	1										
1739	512+90	513+60	LT	E1-43 TO E2-44									213						61																													
1739	513+60		LT	E2-44	2	1		1			1				45										1										1	1										
1739	510+41		LT	RL-87																																												
1739	510+75		RT	LT-206																				1										1													1
1739	512+00		RT	LT-208																				1										1													1
1739	512+71		LT	RL-88																																												
1739	512+72		RT	RL-89																																												
1739	512+73		LT	RL-90																																												
1739	513+25		RT	LT-209																				1										1													1
1739	513+80		LT	LT-210																				1										1													1
	CEDAR AVE.																																															
1739	400+51		RT	LT-207																				1																							
1739	400+52		RT	RL-91																																												
1740	401+01		RT	LT-211																				1										1													1
1740	401+98		LT	RL-92																																												
1740	402+02		LT	RL-93																																												
1740	402+37		RT	LT-212																				1										1													1
TOTALS TO GENERAL SUMMARY					26	13	-	13	-	-	13	-	5313	-	585	-	-	791	-	-	-	11	-	13	-	791	-	-	-	-	13	22	-	-	791	-	9	-	2	2	-	-	9	

Preliminary Plans - For Reference Only

CPP LIGHTING SUBSUMMARY - 10

DESIGN AGENCY
Michael Baker INTERNATIONAL

DESIGNER JTP

REVIEWER MMC 05/22/24

PROJECT ID 82382

SHEET 1713 TOTAL 2696

CUY-90-16.28 (CCG3A)

MODEL: Sheet-10 PAPERSIZE: 34x22 (in.) DATE: 3/27/2025 TIME: 7:52:19 PM USER: Maia.Gallagher
pw:\\mb-us-pw.bentley.com:mb-us-pw-03\Documents\Cleveland_Oh\01_Projects\ODOT\District12\82382\400-Engineering\Lighting\Sheets\82382_LS101.dgn

SHEET NO.	STATION FROM	STATION TO	SIDE	POLE/PULL BOX NO.	625 CONNECTION, FUSED PULL APART EACH	625 CONNECTION, UNFUSED PULL APART EACH	625 CONNECTION, UNFUSED PERMANENT EACH	625 LIGHT POLE, MISC.: 15' ROUND TAPERED FIBERGLASS STREETLIGHT EACH	625 LIGHT POLE, MISC.: 30' ROUND TAPERED FIBERGLASS STREETLIGHT EACH	625 LIGHT POLE ANCHOR BOLTS ON STRUCTURE EACH	625 LIGHT POLE FOUNDATION, 24" X 6' DEEP EACH	625 NO. 4 AWG 2400 VOLT DISTRIBUTION CABLE FT	625 NO. 8 AWG 600 VOLT DISTRIBUTION CABLE FT	625 DISTRIBUTION CABLE, MISC.: NO. 4 AWG 2400 VOLT DISTRIBUTION CABLE FT	625 NO. 12 AWG POLE AND BRACKET CABLE FT	625 CONDUIT, 3/4", 725.051 FT	625 CONDUIT, 1-1/2", 725.04 FT	625 CONDUIT, 2", 725.051 FT	625 CONDUIT, CONCRETE ENCASED, 2", 725.051 FT	625 CONDUIT, CONCRETE ENCASED, AS PER PLAN (2-2" CONDUIT, 725.051) FT	625 CONDUIT, CONCRETE ENCASED, AS PER PLAN (4-2" CONDUIT, 725.051) FT	625 LUMINAIRE, CONVENTIONAL, SOLID STATE (LED), AS PER PLAN (CPP LED COBRA HEAD) EACH	625 LUMINAIRE, UNDERPASS, SOLID STATE (LED), AS PER PLAN (CPP LED WALLPACK) EACH	625 LUMINAIRE, DECORATIVE, AS PER PLAN (15' POLES) EACH	625 LUMINAIRE, DECORATIVE, AS PER PLAN (30' POLES) EACH	625 TRENCH FT	625 JUNCTION BOX EACH	625 PULL BOX, 725.08, 24" EACH	625 PULL BOX REMOVED EACH	625 PULL BOX, MISC.: 6" X 6" PULL BOX EACH	625 PULL BOX, MISC.: 13" X 24" PULL BOX EACH	625 GROUND ROD EACH	625 POWER SERVICE, AS PER PLAN EACH	625 CONTROL CENTER CABINET, COMPLETE, AS PER PLAN EACH	625 UNDERGROUND WARNING/MARKING TAPE FT	625 SERVICE TO UNDERPASS LIGHTING, AS PER PLAN EACH	625 LIGHT POLE REMOVED EACH	625 LIGHT POLE FOUNDATION REMOVED EACH	625 LUMINAIRE REMOVED EACH	625 DISCONNECT CIRCUIT, AS PER PLAN EACH	625 LIGHTING, MISC.: TEST NEW CIRCUIT EACH	632 POWER CABLE, 3 CONDUCTOR, NO. 4 AWG FT	632 WOOD POLE EACH
	I.R. 90 WB																																															
1741	194+09		RT	RL-94																																											1				
1741	194+46		RT	RL-95																																										1				
	RAMP A1																																																
1741	306+34		RT	RL-96																																										1				
	RAMP A2																																																
1741	433+55		RT	RL-97																																										1				
1741	434+15		RT	RL-98																																										1				
1741	434+23		RT	RL-99																																										1				
1741	434+42		CL	RL-100																																										1				
	CENTRAL AVE. CONNECTOR																																																
1741	601+11		RT	LT-139																																													1		
1741	602+50		LT	LT-140																																													1		
1741	602+63		RT	RL-101																																											1				
1741	602+70		RT	RL-102																																											1				
1741	603+85		LT	LT-141																																													1		
	TOTALS TO GENERAL SUMMARY				-	-	-	-	-	-	-	-	-	-	-	-	-	-	-	-	-	-	3	-	-	-	-	-	-	-	-	-	3	-	-	-	-	9	-	-	-	-	-	3		

Preliminary Plans - For Reference Only

CPP LIGHTING SUBSUMMARY - 11

DESIGN AGENCY
Michael Baker INTERNATIONAL

DESIGNER
CRK

REVIEWER
JLD 05/22/24

PROJECT ID
82382

SHEET 1714 | TOTAL 2696

CUY-90-16.28 (CCG3A)

MODEL: Sheet-11 PAPERSIZE: 34x22 (in.) DATE: 3/27/2025 TIME: 7:52:20 PM USER: Maia.Gallagher
pw:\\mb-us-pw.bentley.com:mb-us-pw-03\Documents\Cleveland_OH101_Projects\ODOT\District12\82382\400-Engineering\Lighting\Sheets\82382_LS101.dgn

PLAN LEGEND (ODOT - MAINLINE & RAMPS)

EX.	PR.	ITEM
		LIGHT POLE OR TOWER, EXISTING
		HIGH MAST UNIT W/ 2, 3 OR 4 LED LUMINAIRES (SYMMETRIC), SEE PLANS FOR HEIGHT
		LOW MAST UNIT W/ 1 LED LUMINAIRE, 50' HEIGHT, MOUNTED ON MEDIAN BARRIER WITH ANCHOR BOLTS, (SYMMETRIC)
		LOW MAST UNIT W/ 1 LED LUMINAIRE, 50' HEIGHT, ALUMINUM TRANSFORMER, (ASYMMETRIC)
		UNDERPASS LED LUMINAIRE
		CONTROL CENTER
		PULL BOX / JUNCTION BOX (SEE PLANS)
		CONDUIT (REFER TO CONDUIT CODE FOR ADDITIONAL DETAIL)
		1 1/2" DUCT CABLE WITH THREE NO. 4 AWG 2400 VOLT CABLES (REFER TO DUCT CABLE CODE FOR ADDITIONAL DETAIL)
		STRUCTURE GROUND
R		LIGHT POLE / TOWER TO BE REMOVED
R-P		PULL BOX / JUNCTION BOX TO BE REMOVED

LIGHT FIXTURE IDENTIFICATION NO.

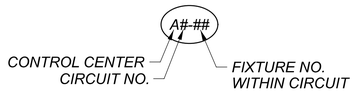

PULL BOX / JUNCTION BOX IDENTIFICATION NO.

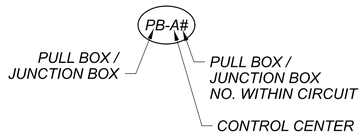

TYPICAL CONDUIT CALL-OUTS

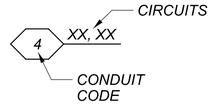

CIRCUIT NOTES:

ALL DISTRIBUTION CABLE IN CONDUIT SHALL BE NO. 4 AWG 2400 VOLT DISTRIBUTION CABLE, UNLESS NOTED OTHERWISE.

ALL ODOT CIRCUITS SHALL BE 3-WIRE, 3-CONDUCTOR, 240/480V/GROUNDED NEUTRAL, UNLESS NOTED OTHERWISE.

ALL CPP CIRCUITS SHALL BE 3-WIRE, 3-CONDUCTOR, 240V/120V/GROUNDED NEUTRAL, UNLESS NOTED OTHERWISE.

ALL PROPOSED ODOT CONTROL CENTERS SHALL BE METERED SERVICE.

PLAN LEGEND (CITY STREETS)

EX.	PR.	ITEM
		WOOD POLE, EXISTING W/ 1 NEW LED LUMINAIRE, 30' HEIGHT
		WOOD POLE W/ 1 LED LUMINAIRE, 30' HEIGHT
		BRONZE SHOEBOX POLE W/ 1 LED LUMINAIRE, SEE PLANS FOR HEIGHT
		BRONZE SHOEBOX POLE W/ 2 LED LUMINAIRE, SEE PLANS FOR HEIGHT
		UNDERPASS LED LUMINAIRE
		CONTROL CENTER / TRANSFORMER
		PULL BOX / JUNCTION BOX (SEE PLANS)
		CONDUIT (REFER TO CONDUIT CODE FOR ADDITIONAL DETAIL)
R		LIGHT POLE TO BE REMOVED
R-P		PULL BOX / JUNCTION BOX TO BE REMOVED

CONDUIT CODE

1A	1 1/2" CONDUIT, 725.04, STRUCTURE MOUNTED (ODOT LIGHTING)
2A	2 1/2" CONDUIT, 725.04, STRUCTURE MOUNTED (ODOT LIGHTING)
3A	3" CONDUIT, 725.051, IN 24" MIN. DEEP TRENCH (ODOT LIGHTING)
3B	3" CONDUIT, 725.04, JACK OR DRILLED (ODOT LIGHTING)
4	4" CONDUIT, 725.051 IN BARRIER (ODOT LIGHTING)
1/34	1-3/4" CONDUITS, (CPP/PED LIGHTING)
2/34	2-3/4" CONDUITS, (CPP/PED LIGHTING)
3/34	3-3/4" CONDUITS, (CPP/PED LIGHTING)
4/34	4-3/4" CONDUITS, (CPP/PED LIGHTING)
5/34	5-3/4" CONDUITS, (CPP/PED LIGHTING)
1/1A	OVERHEAD POWER CABLE, 3 CONDUCTOR, NO. 4 AWG (CPP/PED LIGHTING)
1/1S	1 1/2" CONDUIT, 725.04, STRUCTURE MOUNTED (CPP/PED LIGHTING)
2C	1-2" CONDUITS, CONCRETE ENCASED (CPP/PED LIGHTING)
2	1-2" CONDUITS, (CPP/PED LIGHTING)
2/2	2-2" CONDUITS, (CPP/PED LIGHTING)
2/2C	2-2" CONDUITS, CONCRETE ENCASED (CPP/PED LIGHTING)
3/2	3-2" CONDUITS, (CPP/PED LIGHTING)
4/2	4-2" CONDUITS, (CPP/PED LIGHTING)
4/2C	4-2" CONDUITS, CONCRETE ENCASED (CPP/PED LIGHTING)
6/2	6-2" CONDUITS, (CPP/PED LIGHTING)
6/2C	6-2" CONDUITS, CONCRETE ENCASED (CPP/PED LIGHTING)

DUCT CABLE CODE

1/1	1 - 1 1/2" DUCT CABLE WITH THREE NO. 4 AWG 2400 VOLT DISTRIBUTION CABLES
1/2	2 - 1 1/2" DUCT CABLE WITH THREE NO. 4 AWG 2400 VOLT DISTRIBUTION CABLES
1/3	3 - 1 1/2" DUCT CABLE WITH THREE NO. 4 AWG 2400 VOLT DISTRIBUTION CABLES
1/4	4 - 1 1/2" DUCT CABLE WITH THREE NO. 4 AWG 2400 VOLT DISTRIBUTION CABLES

ABBREVIATIONS

PB = PULL BOX

JB = JUNCTION BOX

UP = UNDERPASS

PED = PEDESTRIAN

Preliminary Plans - For Reference Only

LIGHTING PLAN LEGEND

CUY-90-16.28 (CCG3A)

MODEL: Sheet PAPERSIZE: 34x22 (in.) DATE: 3/27/2025 TIME: 7:52:27 PM USER: Maia.Gallagher
pw:\\mb-us-pw.bentley.com:mb-us-pw-03\Documents\Cleveland_OH01_Projects\ODOTDistrict12\82382400-Engineering\Lighting\Sheets\82382_LN2001.dgn

DESIGN AGENCY

Michael Baker INTERNATIONAL

DESIGNER JLD

REVIEWER SM 05/22/24

PROJECT ID 82382

SHEET 1715 TOTAL 2696

Preliminary Plans - For Reference Only

PB-CN1 @ I.R. 90 WB STA. 176+10, 61' LT 18" PB (3 SPLICES)

PB-CN2 @ I.R. 90 WB STA. 176+98, 58' LT 18" PB (3 SPLICES)

CN1-6 @ I.R. 90 WB STA. 179+92, 126' LT EX. TOWER TO REMOVE BBB80

RL-3

PB-CN21 @ I.R. 90 WB STA. 179+94, 118' LT 18" PB (3 SPLICES)

RL-5 @ I.R. 90 WB STA. 181+31, 143' LT EX. CONTROL CENTER TO REMOVE

RL-4 @ I.R. 90 WB STA. 180+94, 135' LT

PB-CN3 @ I.R. 90 WB STA. 182+42, 157' LT 18" PB

RL-6

CN1-5 @ I.R. 90 WB STA. 185+06, 187' LT EX. TOWER TO REMOVE BBB80

PB-CN22 @ I.R. 90 WB STA. 185+07, 176' LT 18" PB (3 SPLICES)

1/1 CN1

RL-2

CN1-7 @ I.R. 90 WB STA. 175+03, 59' LT EX. TOWER TO REMOVE BBB130

3B CN1

RAMP A3

@ RAMP A3

CN2-6 @ I.R. 90 EB STA. 180+70, 48' LT UP LUMINAIRE

RAMP A2

CN2-3 @ I.R. 90 EB STA. 180+70, 42' LT UP LUMINAIRE

PB-CN23 @ I.R. 90 EB STA. 180+70, 37' LT MEDIAN JB (3 SPLICES)

I.R. 90 WB

@ I.R. 90 EB

CN2-5 @ I.R. 90 EB STA. 181+55, 47' LT UP LUMINAIRE

@ I.R. 90 EB STA. 181+55, 41' LT UP LUMINAIRE

CN2-4

1A CN2

CN2 1/1

CN2 3B

I.R. 90 EB

MATCH LINE STA. 184+00.00 I.R. 90 EB

@ I.R. 90 EB CN2-2 STA. 179+82, 44' RT BB110

@ RAMP B6

PB-CN8 @ I.R. 90 EB STA. 180+55, 42' RT 24" PB (6 SPLICES)

@ I.R. 90 EB STA. 183+50, 52' RT BBB100

CN2-1

RL-9 @ RAMP B6 STA. 1605+80, 4' LT

RAMP B6

CN4-5 @ I.R. 90 EB STA. 176+09, 85' RT EX. TOWER TO REMAIN

1/1 CN4

@ RAMP IB5

@ RAMP A2

RL-1 @ I.R. 90 EB STA. 181+77, 63' RT

LIMITS OF LIGHTWEIGHT FILL

PB-CN24 @ I.R. 90 EB STA. 180+35, 117' RT 18" PB (3 SPLICES)

PB-CN16 @ RAMP IJ3 STA. 106+10, 11' LT 18" PB

CN2-7 @ I.R. 90 EB STA. 180+32, 125' RT UP LUMINAIRE

RL-7 @ RAMP A2 STA. 420+67, 16' RT

STRUCTURE NO. 9 CUY-77-1587

@ RAMP IB5 STA. 1711+18, 104' RT

RL-8

RAMP IB5

RAMP IJ3

@ RAMP IJ3

SEE RAMP A2 LIGHTING PLAN SHEETS

@ RAMP IJ3 STA. 106+10, 25' RT PB-CN25 18" PB (3 SPLICES)

@ RAMP IJ3 STA. 106+10, 33' RT CN2-8 UP LUMINAIRE

E. 97TH ST.

NOTES:
1. FOR LEGEND SEE SHEET 1715 .

HORIZONTAL SCALE IN FEET
0 20 40 80

ODOT LIGHTING PLAN - I.R. 90 EB BEGIN TO STA. 184+00.00

CUY-90-16.28 (CCG3A)

DESIGN AGENCY
Michael Baker INTERNATIONAL

DESIGNER JLD
REVIEWER SM 05/22/24
PROJECT ID 82382
SHEET 1716 TOTAL 2696

MODEL: 82382_LP20I_SHEET PAPERSIZE: 34x22 (in.) DATE: 3/27/2025 TIME: 7:52:48 PM USER: Mala.Gallagher
pw:\\mb-us-pw.bentley.com:mb-us-pw-03\Documents\Cleveland_OH\01_Projects\ODOT\District2\82382\400-Engineering\Lighting\Sheets\82382_LP20I.dgn

ODOT LIGHTING PLAN - I.R. 90 EB
STA. 184+00.00 TO STA. 194+00.00

HORIZONTAL SCALE IN FEET
0 20 40 80

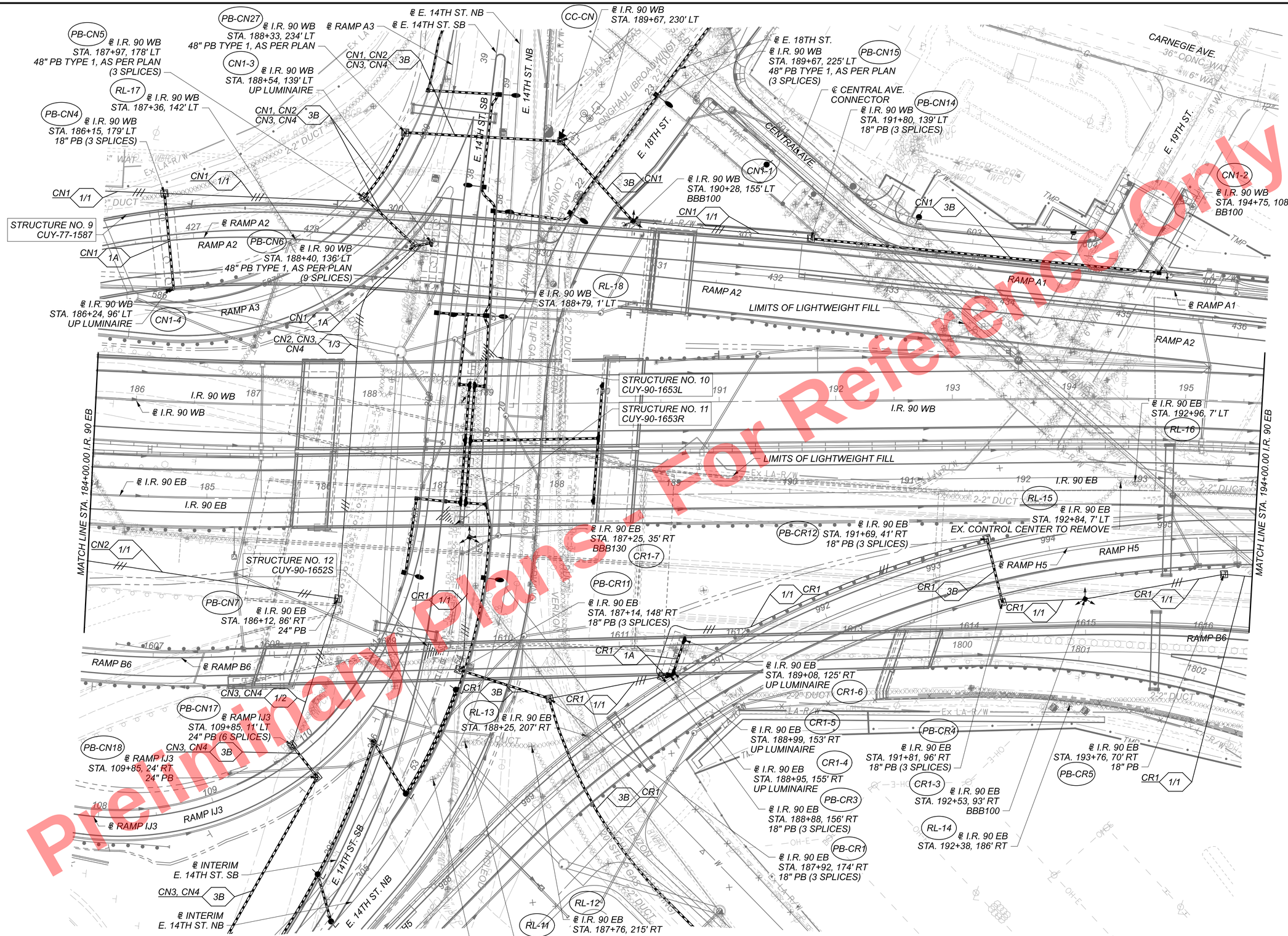

NOTES:
1. FOR LEGEND SEE SHEET 1715 .

Preliminary Plans - For Reference Only

CUY-90-16.28 (CCG3A)

DESIGN AGENCY
Michael Baker INTERNATIONAL

DESIGNER JLD
REVIEWER SM 05/22/24
PROJECT ID 82382
SHEET 1717 TOTAL 2696

MODEL: 82382_LP2IOL_SHEET-I PAPERSIZE: 34x22 (in.) DATE: 6/9/2025 TIME: 2:39:41PM USER: Julie.Ross
pw:\\mb-us-pw.bentley.com:mb-us-pw-03\Documents\Cleveland_OH\OL_Projects\ODOT\District2\82382\400-Engineering\Lighting\Sheets\82382_LP2I02.dgn

ODOT LIGHTING PLAN - I.R. 90 EB/INTERIM I.R. 90 EB
STA. 194+00.00 TO STA. 3004+00.00

HORIZONTAL SCALE IN FEET
0 20 40 80

CARNEGIE AVE.
℄ CONST. CARNEGIE AVE.
℄ CONST. E. 22ND ST.
℄ RAMP A1
℄ RAMP A2
℄ RAMP B6
℄ RAMP B6A
℄ INTERIM I.R. 90 WB
℄ INTERIM I.R. 90 EB
℄ I.R. 90 WB
℄ I.R. 90 EB
I.R. 90 WB
I.R. 90 EB
RAMP A1
RAMP A2
RAMP B6
RAMP B6A
MATCH LINE STA. 194+00.00 I.R. 90 EB
MATCH LINE STA. 3004+00.00 INTERIM I.R. 90 EB
LIMITS OF LIGHTWEIGHT FILL
STRUCTURE NO. 13 CUY-90-1678
℄ MIDTOWN CONNECTOR

RL-21 ℄ RAMP A2 STA. 438+45.0, 24.4' LT
CC-CR ℄ I.R. 90 WB STA. 198+89, 112' LT
CR1-1 ℄ I.R. 90 WB STA. 199+50, 65' LT BBB100 (9 SPLICES)
CR1-9 ℄ I.R. 90 WB STA. 201+75, 61' LT UP LUMINAIRE
PB-CR14 ℄ I.R. 90 WB STA. 201+60, 57' LT 18" PB (3 SPLICES)
CR1-10 ℄ I.R. 90 WB STA. 202+35, 61' LT UP LUMINAIRE
RL-20 ℄ I.R. 90 WB STA.200+72, 3' RT
CR1-14 ℄ I.R. 90 WB STA. 202+23, 37' RT UP LUMINAIRE
PB-CR6 ℄ I.R. 90 EB STA. 196+10, 37' LT MEDIAN JB
CR1-13 ℄ I.R. 90 WB STA. 201+56, 37' RT UP LUMINAIRE
CR2-1 ℄ I.R. 90 EB STA. 201+30, 37' LT ALM50
PB-CR7 ℄ I.R. 90 EB STA. 197+73, 37' LT MEDIAN JB (3 SPLICES)
PB-CR13 ℄ I.R. 90 EB STA. 196+10, 68' RT 18" PB (3 SPLICES)
CR1-12 ℄ I.R. 90 EB STA. 200+24, 38' LT UP LUMINAIRE
PB-CR8 ℄ I.R. 90 EB STA. 199+58, 37' LT MEDIAN JB (3 SPLICES)
CR1-11 ℄ I.R. 90 EB STA. 199+74, 38' LT UP LUMINAIRE
CR1-2 ℄ I.R. 90 EB STA. 196+50, 185' RT BBB100
RL-19 ℄ I.R. 90 EB STA. 197+02, 196' RT

1/1 CR1
CR1, CR2 CR3 1/3
CR1 4
CR1, CR2 CR3 3B
CR1, CR2 CR3 4
3B CR1
1A CR1
CR2, CR3 4

NOTES:
1. FOR LEGEND SEE SHEET 1715 .

Preliminary Plans - For Reference Only

DESIGN AGENCY	Michael Baker INTERNATIONAL
DESIGNER	JLD
REVIEWER	SM 05/22/24
PROJECT ID	82382
SHEET	1718
TOTAL	2696

CUY-90-16.28 (CCG3A)

MODEL: 82382_LP210L_SHEET-2 PAPERSIZE: 34x22 (in.) DATE: 3/27/2025 TIME: 7:53:29 PM USER: MaloGallagher
pw:\\mb-us-pw.bentley.com:mb-us-pw-03\Documents\Cleveland_OH\OiL_Projects\ODOT\District12_82382\400-Engineering\Lighting\Sheets\82382_LP2103.dgn

Preliminary Plans - Not For Reference Only

HORIZONTAL SCALE IN FEET
0 20 40 80

ODOT LIGHTING PLAN - INTERIM I.R. 90 EB
STA. 3004+00.00 TO STA. 3014+00.00

℄ CONST. CARNEGIE AVE.
CARNEGIE AVE.
MATCH LINE STA. 3004+00.00 INTERIM I.R. 90 EB
MATCH LINE STA. 3014+00.00 INTERIM I.R. 90 EB
I.R. 90 WB
I.R. 90 EB
℄ I.R. 90 WB
℄ I.R. 90 EB
℄ INTERIM I.R. 90 WB STA. 4005+78, 31' LT 18" PB (3 SPLICES)
PB-CR10
℄ INTERIM I.R. 90 EB STA. 3006+45, 25' LT ALM50 (6 SPLICES)
CR2-3
℄ INTERIM I.R. 90 EB STA. 3004+20, 24' LT ALM50
CR2-2
℄ INTERIM I.R. 90 WB STA. 4006+90, 31' LT UP LUMINAIRE
CR3-1
STRUCTURE NO. 14 CUY-90-1696
℄ INTERIM I.R. 90 WB STA. 4007+51, 31' LT UP LUMINAIRE
CR3-2
℄ INTERIM I.R. 90 WB STA. 4008+30, 31' LT UP LUMINAIRE
CR3-3
℄ INTERIM I.R. 90 WB STA. 4009+16, 50' LT
RL-24
℄ INTERIM I.R. 90 WB STA. 4008+56, 24' RT UP LUMINAIRE
CR3-4
℄ INTERIM I.R. 90 EB STA. 3010+46, 20' LT ALM50
CR3-5
RL-22
℄ INTERIM I.R. 90 EB STA. 3005+09, 79' RT
PB-CR9
℄ INTERIM I.R. 90 EB STA. 3006+25, 41' RT 18" PB
℄ INTERIM I.R. 90 EB STA.3009+90, 56' RT UP LUMINAIRE
CR2-6
℄ INTERIM I.R. 90 EB STA. 3010+87, 106' RT EX. CONTROL CENTER TO BE RELOCATED
℄ INTERIM I.R. 90 EB STA. 3013+05, 39' RT EX. PULLBOX, 18" ADJUSTED TO GRADE (SEE NOTE 2)
℄ INTERIM I.R. 90 EB STA. 3013+30, 127' RT EX. 100' TOWER TO REMAIN (SEE NOTE 3)
CAR-2 3A
CAR-1 3A
CR2-4
℄ INTERIM I.R. 90 EB STA. 3008+00, 43' RT ATLM50
CR2-5
℄ INTERIM I.R. 90 EB STA. 3009+25, 47' RT UP LUMINAIRE
PB-CR15
℄ INTERIM I.R. 90 EB STA. 3008+92, 44' RT 18" PB (3 SPLICES)
RL-23
℄ INTERIM I.R. 90 EB STA. 3009+39, 226' RT
℄ INTERIM I.R. 90 EB STA. 3012+77, 326' RT RELOCATED CONTROL CENTER
CC-CAR
℄ MIDTOWN CONNECTOR
MIDTOWN CONNECTOR
CARNEGIE AVE
EX 6" WAT
EX 12" WAT
EX 6" WAT
EX 8" WAT
EX 9" WAT
EX 9" WAT
EX 9

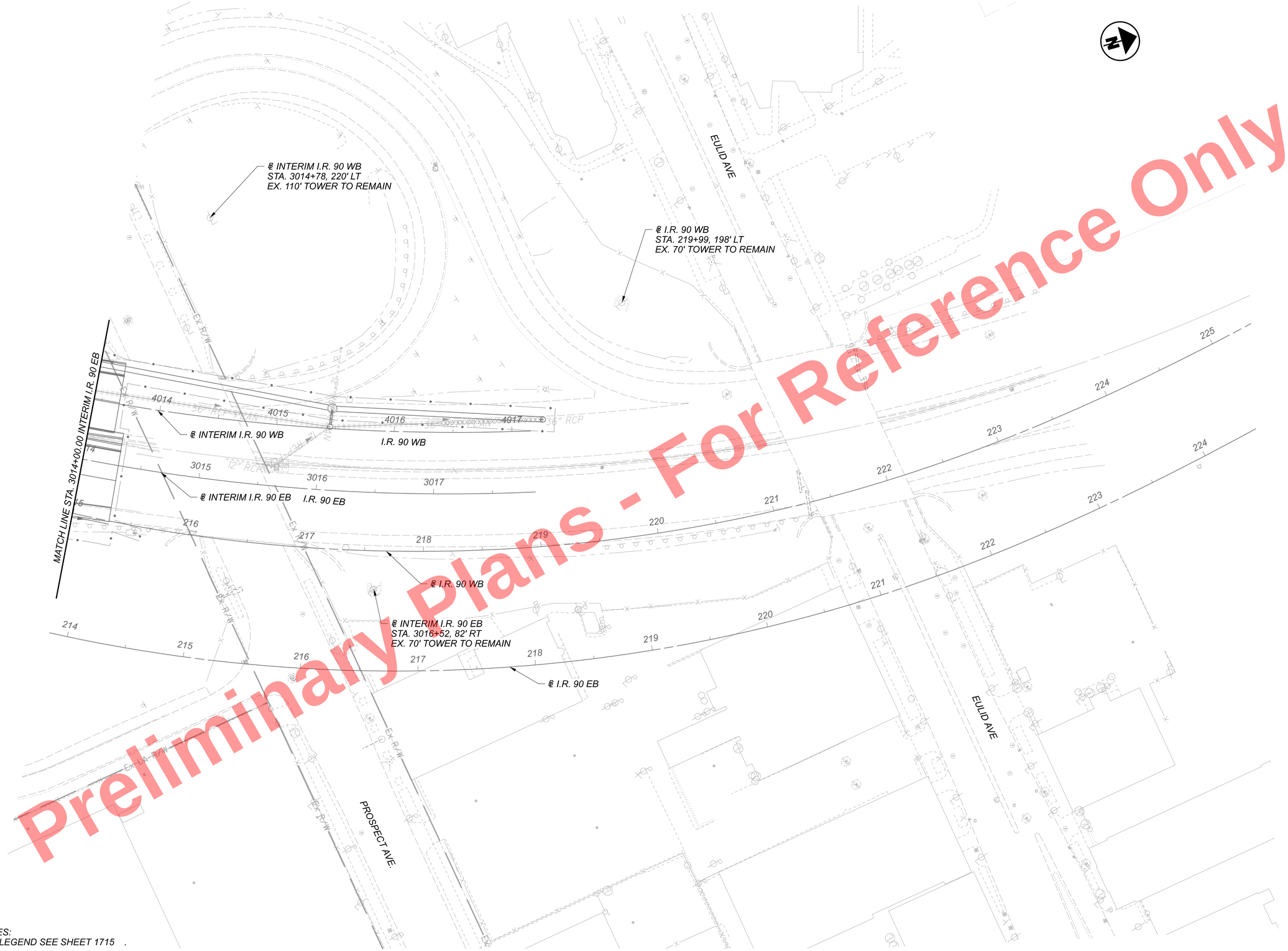

NOTES:
1. FOR LEGEND SEE SHEET 1715 .

Preliminary Plans - For Reference Only

HORIZONTAL SCALE IN FEET
0 20 40 80

ODOT LIGHTING PLAN - INTERIM I.R. 90 EB
STA. 3014+00.00 TO END

DESIGN AGENCY
Michael Baker INTERNATIONAL

DESIGNER JLD
REVIEWER SM 05/22/24
PROJECT ID 82382
SHEET 1720 TOTAL 2696

CUY-90-16.28 (CCG3A)

MODEL: 82382_LP2301_SHEET-1 PAPERSIZE: 34x22 (in.) DATE: 3/27/2025 TIME: 7:54:15 PM USER: MalaGallagher
pw:\\mb-us-pw.bentley.com:mb-us-pw-03\Documents\Cleveland.OH\01_Projects\ODOT\District2\82382\400-Engineering\Lighting\Sheets\82382_LP2302.dgn

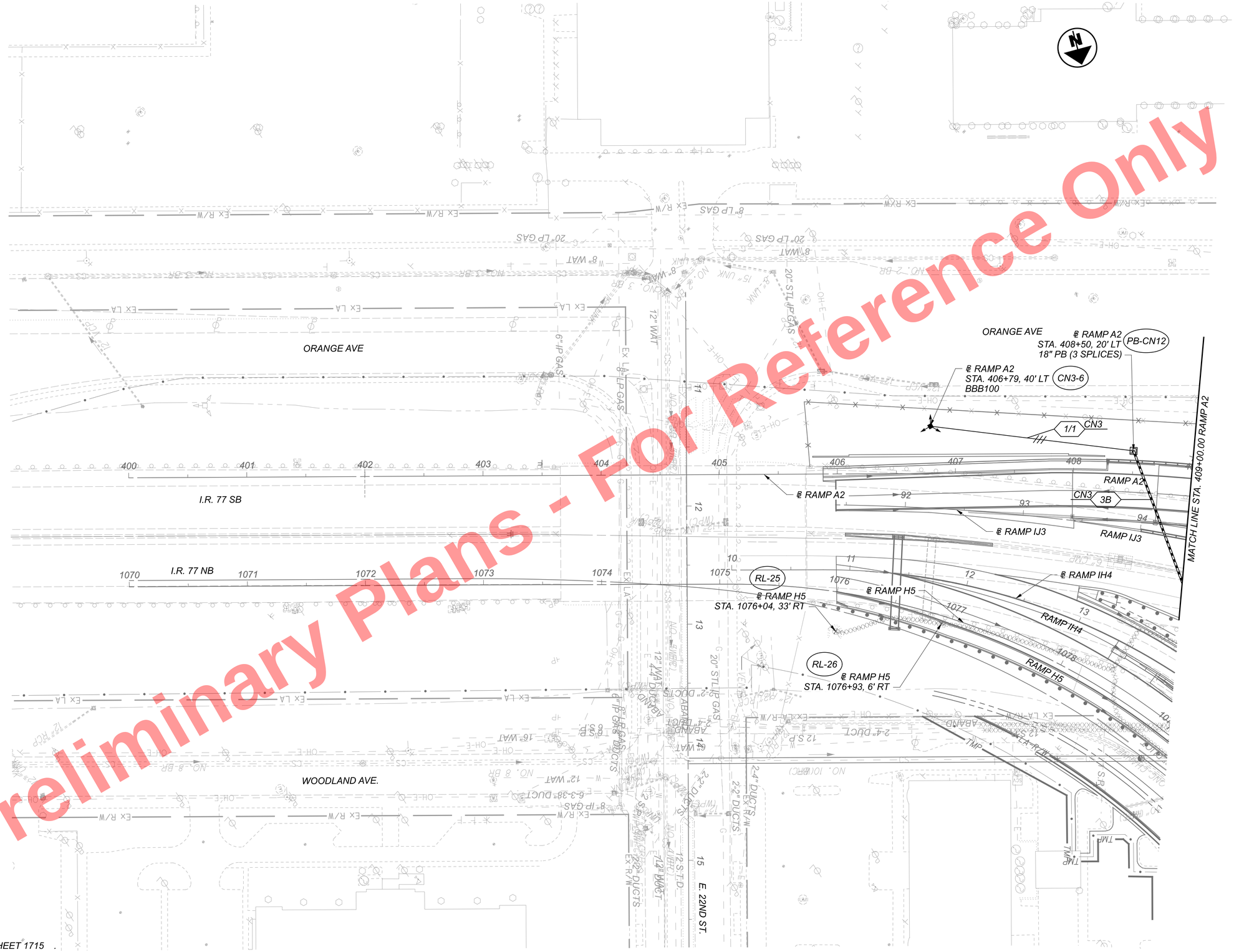

Preliminary Plans - For Reference Only

NOTES:
1. FOR LEGEND SEE SHEET 1715 .

HORIZONTAL SCALE IN FEET
0 20 40 80

ODOT LIGHTING PLAN - RAMP A2
BEGIN TO STA. 409+00.00

DESIGN AGENCY
Michael Baker INTERNATIONAL

DESIGNER JLD
REVIEWER SM 05/22/24
PROJECT ID 82382
SHEET 1721 TOTAL 2696

CUY-90-16.28 (CCG3A)

MODEL: 82382_LP320L_SHEET PAPERSIZE: 34x22 (in.) DATE: 3/27/2025 TIME: 1:54:32 PM USER: MaloGallagher
pw:\\mb-us-pw.bentley.commb-us-pw-03\Documents\Cleveland_OH\DL_Projects\ODOT\District2\82382\400-Engineering\Lighting\Sheets\82382_LP320L.dgn

Preliminary Plans - For Reference Only

ORANGE AVE

@ RAMP A2
STA. 414+02, 116' LT
EX. TOWER TO REMOVE
BBBB90
CN4-2
RL-27

PB-CN26
@ RAMP A2
STA. 414+09, 42' RT
18" PB (3 SPLICES)

1/1 CN4
CN4 1/1

@ RAMP A2
STA. 414+20, 42' RT
UP LUMINAIRE
CN4-3

STRUCTURE NO. 9
CUY-77-1587

@ RAMP IB5
STA. 1711+72, 81' RT
BBB100 (3 SPLICES)
CN4-4

PB-CN11
@ RAMP A2
STA. 416+84, 39' LT
18" PB (3 SPLICES)
CN4 3B
CN4 1/1

@ RAMP IB5

@ RAMP A2
@ RAMP IB5
STA. 1711+56, 54' LT
RL-30

@ RAMP IB5
STA. 1711+48, 93' LT
RL-29

RL-28
@ RAMP A2
STA. 416+51, 49' RT

@ RAMP IJ3
RL-32
@ RAMP IJ3
STA. 99+30, 119' RT

@ RAMP IH4
STA. 15+58, 51' LT
RL-31

RL-33
@ RAMP IJ3
STA. 101+10, 89' RT

CN4 3B

@ RAMP IJ3

MATCH LINE STA. 409+00.00 RAMP A2

SEE I.R. 90 EB LIGHTING PLAN SHEETS

3B CN3
CN3-5
@ RAMP IH4
STA. 14+10, 27' LT
ATLM50 (3 SPLICES)

CN3 3B
@ RAMP IH4
STA. 16+23, 153' LT
18" PB (3 SPLICES)
PB-CN13

1/1 CN3
@ RAMP IH4
STA. 15+67, 63' LT
BBB120 (3 SPLICES)
CN3-4

@ INTERIM E. 14TH ST. SB

E. 14TH ST. NB

E. 14TH ST. SB

@ INTERIM E. 14TH ST. NB

1/1 CN3

@ RAMP IH4

@ RAMP H5

@ RAMP H6

RAMP A2
RAMP IJ3
RAMP IH4
RAMP H5
RAMP H6

CN4-1
@ RAMP A2
STA. 417+00, 180' RT
BBBB100

CN4 3B
@ RAMP IJ3
STA. 101+36, 228' RT
RL-34

NOTES:
1. FOR LEGEND SEE SHEET 1715 .

HORIZONTAL
SCALE IN FEET
0 20 40 80

ODOT LIGHTING PLAN - RAMP A2
STA. 409+00.00 TO END

DESIGN AGENCY
Michael Baker INTERNATIONAL

DESIGNER JLD
REVIEWER SM 05/22/24
PROJECT ID 82382
SHEET 1722 TOTAL 2696

CUY-90-16.28 (CCG3A)

MODEL: 82382_LP320L_SHEET-I PAPERSIZE: 34x22 (in.) DATE: 3/27/2025 TIME: 7:54:50 PM USER: MalaGallagher
pw:\\mb-us-pw.bentley.com:mb-us-pw-03\Documents\Cleveland_OH\DL_Projects\ODOT\District2\82382\400-Engineering\Lighting\Sheets\82382_LP3202.dgn

CUY-90-16.28 (CCG3A)

MODEL: 82382_LP56I0_SHEET PAPERSIZE: 34x22 (in.) DATE: 6/9/2025 TIME: 2:40:06 PM USER: Julie.Ross
pw:\\mb-us-pw.bentley.com:mb-us-pw-03\Documents\Cleveland_OH\01_Projects\ODOT\District12\82382\400-Engineering\Lighting\Sheets\82382_LP56I1.dgn

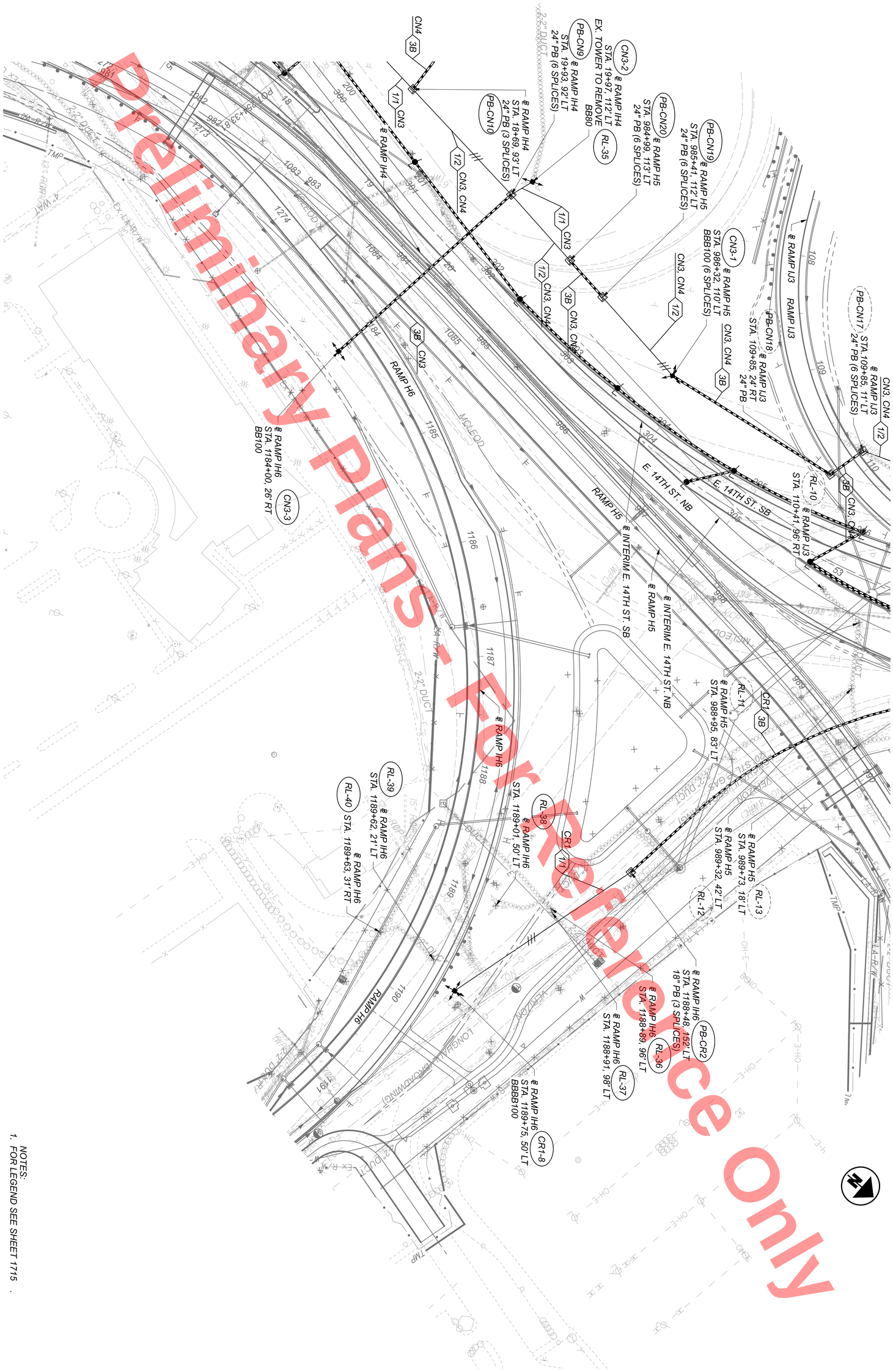

NOTES:
1. FOR LEGEND SEE SHEET 1715 .

DESIGN AGENCY: Michael Baker INTERNATIONAL	DESIGNER: JLD	REVIEWER: SM 05/22/24	PROJECT ID: 82382
SHEET: 1723	TOTAL: 2696		

ODOT LIGHTING PLAN - RAMP H6
BEGIN TO END

HORIZONTAL SCALE IN FEET
0 40 20 80

Preliminary Plans - For Reference Only

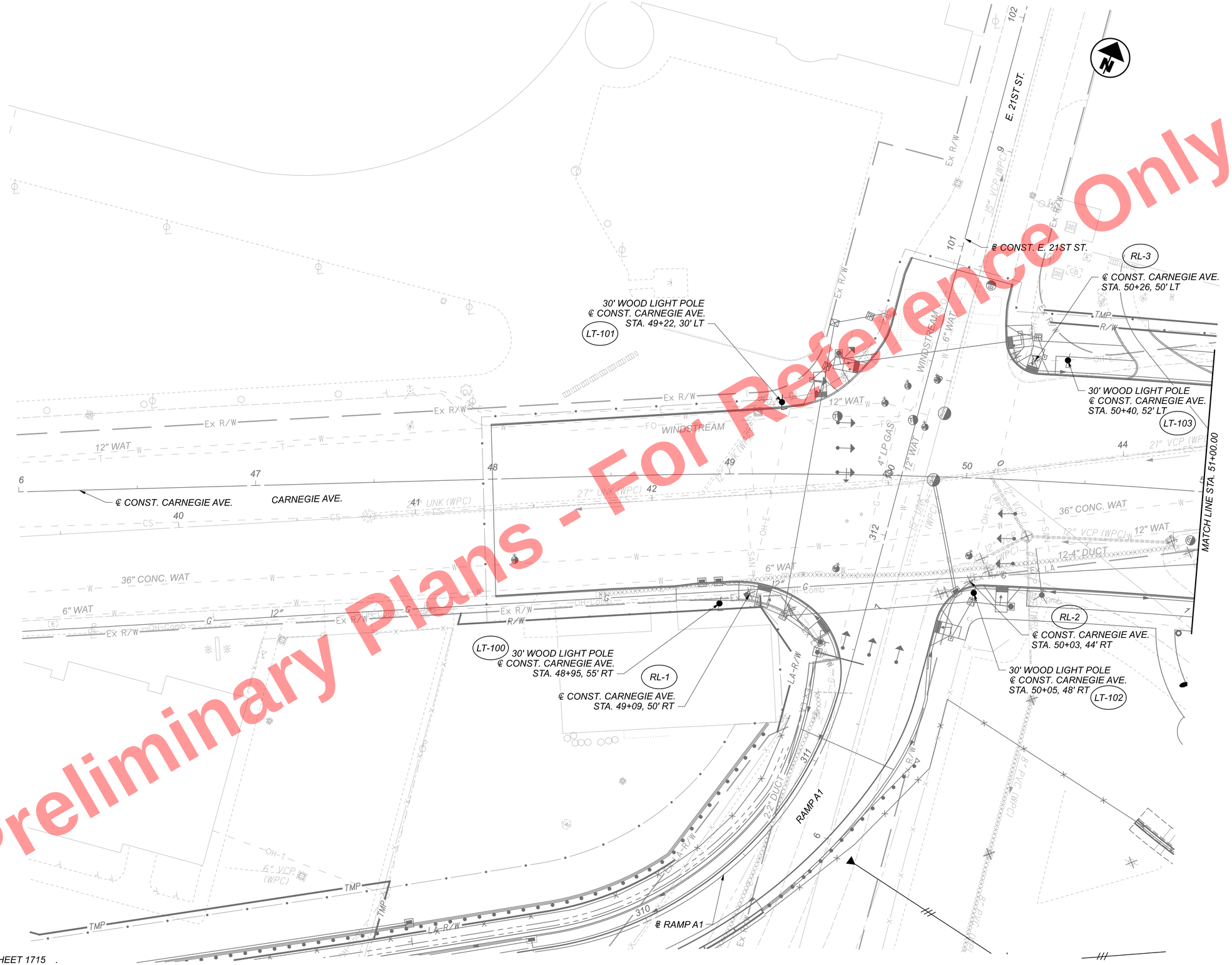

NOTES:
1. FOR LEGEND SEE SHEET 1715 .

HORIZONTAL SCALE IN FEET
0 10 20 40

CPP LIGHTING PLAN - CARNEGIE AVE. BEGIN TO STA. 51+00.00

DESIGN AGENCY
Michael Baker INTERNATIONAL

DESIGNER JLD
REVIEWER SM 05/22/24
PROJECT ID 82382
SHEET 1724 TOTAL 2696

CUY-90-16.28 (CCG3A)

MODEL: 82382_LP710I_SHEET PAPERSIZE: 34x22 (In.) DATE: 3/27/2025 TIME: 7:55:38 PM USER: MaLaGallagher
pw:\\mb-us-pw.bentley.com\mb-us-pw-03\Documents\Cleveland_OH\01_Projects\000T\District2\82382\400-Engineering\Lighting\Sheets\82382_LP710i.dgn

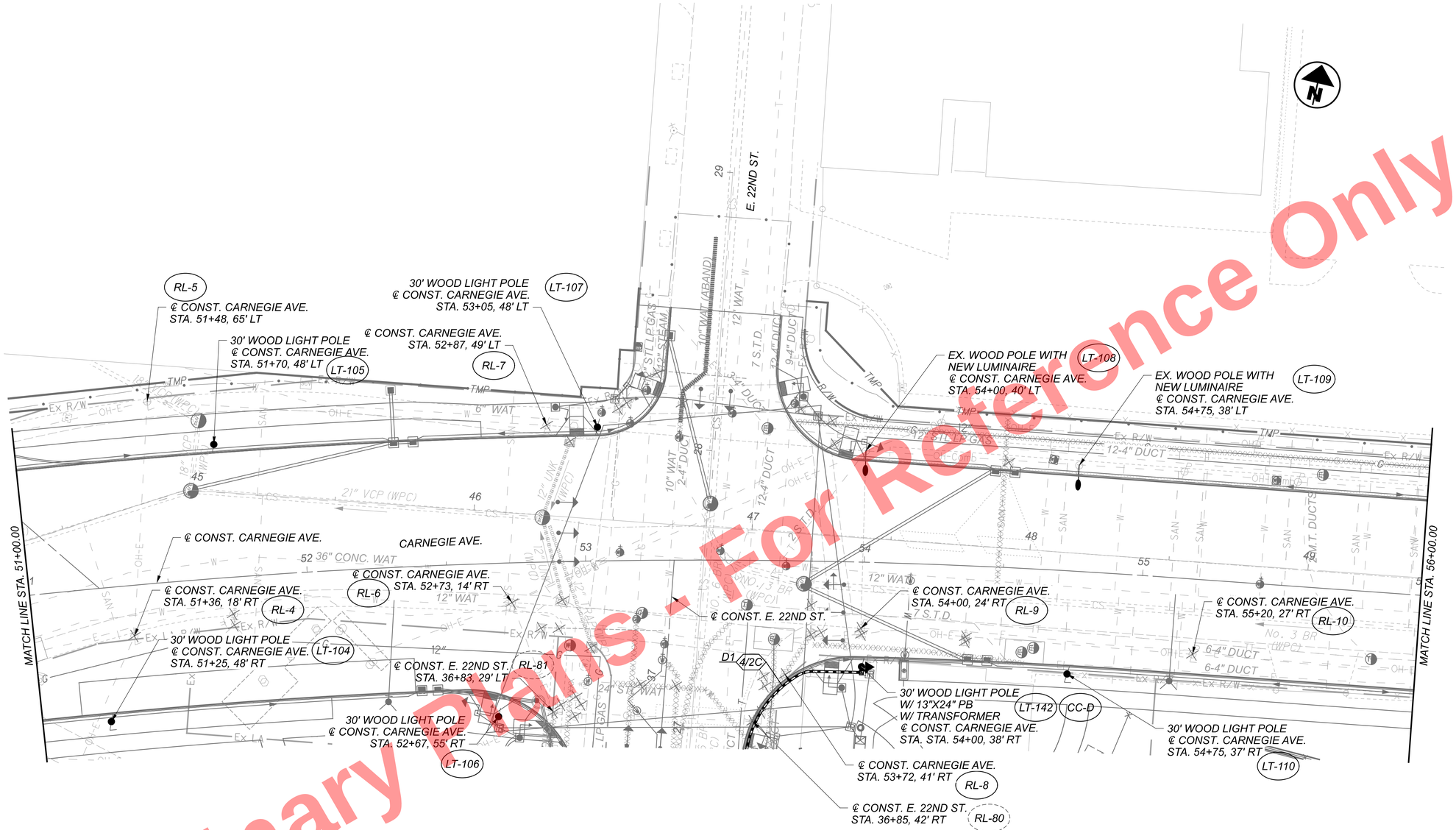

Preliminary Plans - For Reference Only

NOTES:
1. FOR LEGEND SEE SHEET 1715 .
2. SEE SHEET1736 FOR ADDITIONAL DETAIL ON LIGHTING ALONG E. 22ND STREET AND THE ADJACENT PEDESTRIAN AREAS.

HORIZONTAL SCALE IN FEET
0 10 20 40

CPP LIGHTING PLAN - CARNEGIE AVE. STA. 51+00.00 TO STA. 56+00.00

CUY-90-16.28 (CCG3A)

MODEL: 82382_LP7101_SHEET-1 PAPERSIZE: 34x22 (in.) DATE: 3/27/2025 TIME: 7:56:00 PM USER: Mala.Gallagher
pw:\\mb-us-pw.bentley.com:mb-us-pw-03\Documents\Cleveland_OH\01_Projects\0007\District2\82382\400-Engineering\Lighting\Sheets\82382_LP7102.dgn

DESIGN AGENCY
Michael Baker INTERNATIONAL

DESIGNER JLD
REVIEWER SM 05/22/24
PROJECT ID 82382
SHEET 1725 TOTAL 2696

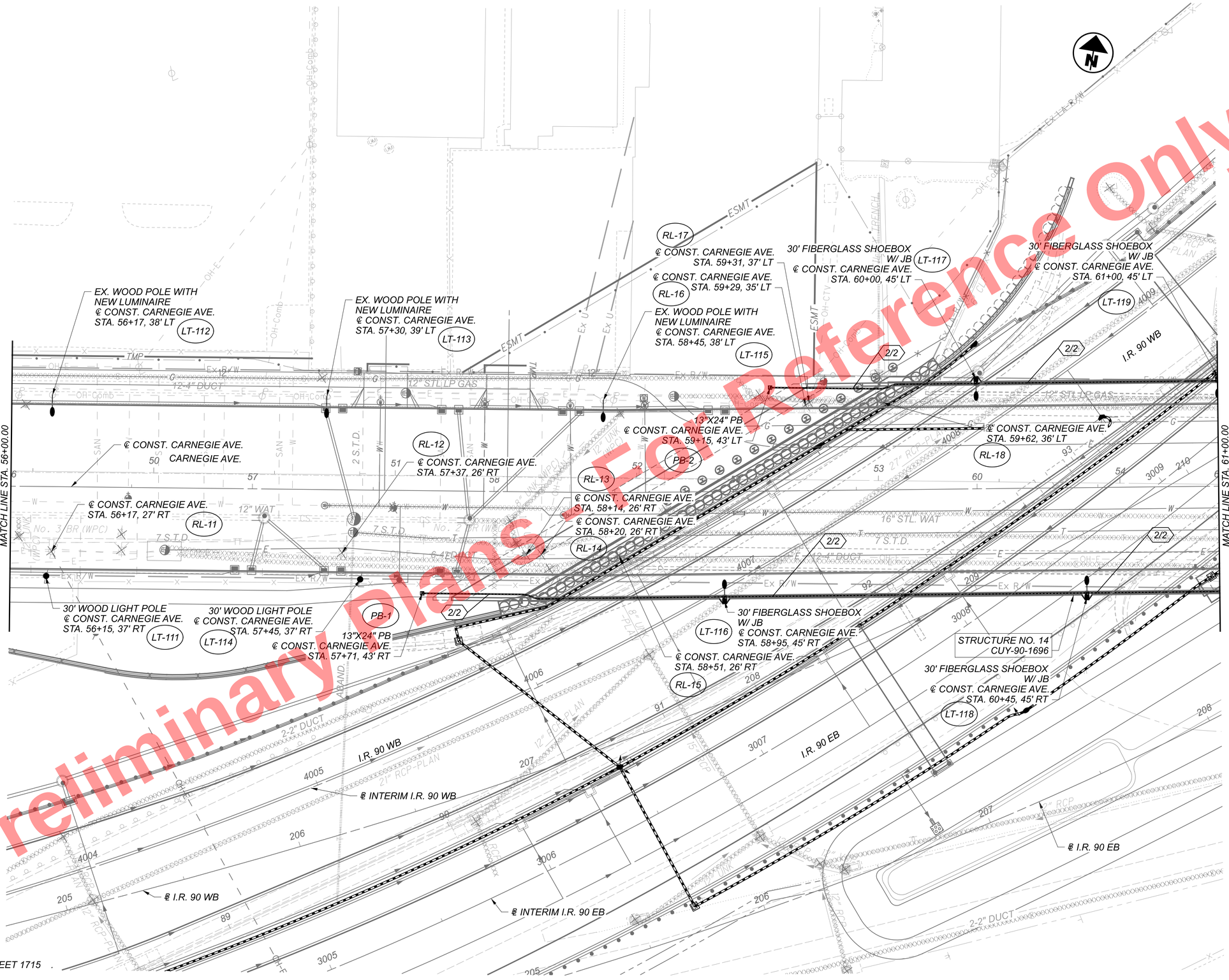
EX. WOOD POLE WITH NEW LUMINAIRE ℄ CONST. CARNEGIE AVE. STA. 56+17, 38' LT
LT-112
EX. WOOD POLE WITH NEW LUMINAIRE ℄ CONST. CARNEGIE AVE. STA. 57+30, 39' LT
LT-113
RL-17
℄ CONST. CARNEGIE AVE. STA. 59+31, 37' LT
℄ CONST. CARNEGIE AVE. STA. 59+29, 35' LT
RL-16
EX. WOOD POLE WITH NEW LUMINAIRE ℄ CONST. CARNEGIE AVE. STA. 58+45, 38' LT
LT-115
30' FIBERGLASS SHOEBOX W/ JB ℄ CONST. CARNEGIE AVE. STA. 60+00, 45' LT
LT-117
30' FIBERGLASS SHOEBOX W/ JB ℄ CONST. CARNEGIE AVE. STA. 61+00, 45' LT
LT-119
I.R. 90 WB
I.R. 90 EB
12" STL LP GAS
12"x4" DUCT
ESMT
Ex R/W
TMP
OH-Comb
OH-CTV
MATCH LINE STA. 56+00.00
MATCH LINE STA. 61+00.00
℄ CONST. CARNEGIE AVE.
CARNEGIE AVE.
℄ CONST. CARNEGIE AVE. STA. 56+17, 27' RT
RL-11
℄ CONST. CARNEGIE AVE. STA. 57+37, 26' RT
RL-12
℄ CONST. CARNEGIE AVE. STA. 58+14, 26' RT
℄ CONST. CARNEGIE AVE. STA. 58+20, 26' RT
RL-13
RL-14
℄ CONST. CARNEGIE AVE. STA. 59+62, 36' LT
RL-18
13"X24" PB ℄ CONST. CARNEGIE AVE. STA. 59+15, 43' LT
PB-2
30' WOOD LIGHT POLE ℄ CONST. CARNEGIE AVE. STA. 56+15, 37' RT
LT-111
30' WOOD LIGHT POLE ℄ CONST. CARNEGIE AVE. STA. 57+45, 37' RT
LT-114
13"X24" PB ℄ CONST. CARNEGIE AVE. STA. 57+71, 43' RT
PB-1
℄ CONST. CARNEGIE AVE. STA. 58+51, 26' RT
RL-15
30' FIBERGLASS SHOEBOX W/ JB ℄ CONST. CARNEGIE AVE. STA. 58+95, 45' RT
LT-116
STRUCTURE NO. 14 CUY-90-1696
30' FIBERGLASS SHOEBOX W/ JB ℄ CONST. CARNEGIE AVE. STA. 60+45, 45' RT
LT-118
℄ INTERIM I.R. 90 WB
℄ I.R. 90 WB
℄ INTERIM I.R. 90 EB
℄ I.R. 90 EB
2/2
2 S.T.D.
7 S.T.D.
16" STL. WAT
12" WAT
27" RCP-PLAN
21" RCP-PLAN
12" RCP-PLAN
2-2" DUCT
4-4" DUCT
4-6" DUCT
12" RCP
18" RCP
24" RCP
4" CONC. SIDEWALK
4" CONC. PAVEMENT
4" CONC. APPROACH
4" CONC. PLAN
4" CONC. RAMP
4" CONC. MEDIAN
4" CONC. CURB
4" CONC. GUTTER
4" CONC. CURB RAMP
4" CONC. CURB & GUTTER
4" CONC. CURB RAMP PLAN
4" CONC. CURB & GUTTER PLAN

Preliminary Plans - Not for Construction
For Reference Only

HORIZONTAL SCALE IN FEET
0 10 20 40

CPP LIGHTING PLAN - CARNEGIE AVE.
STA. 61+00.00 TO STA. 66+00.00

MATCH LINE STA. 61+00.00

MATCH LINE STA. 66+00.00

℄ INTERIM I.R. 90 EB

℄ INTERIM I.R. 90 WB

℄ I.R. 90 WB

I.R. 90 WB

I.R. 90 EB

2-2" DUCT

12" RCP-PLAN

12" WAT

12-4" DUCT

7 STD

12" GAS

24" VCP (WP)

CARNEGIE AVE.

Ex R/W

R/W

30' FIBERGLASS SHOEBOX W/ JB
℄ CONST. CARNEGIE AVE.
STA. 61+00, 45' LT
LT-119

30' FIBERGLASS SHOEBOX W/ JB
℄ CONST. CARNEGIE AVE.
STA. 62+25, 45' LT
LT-121

30' FIBERGLASS SHOEBOX W/ JB
℄ CONST. CARNEGIE AVE.
STA. 63+25, 45' LT
LT-123

30' WOOD LIGHT POLE
℄ CONST. CARNEGIE AVE.
STA. 64+60, 37' LT
LT-125

30' WOOD LIGHT POLE
℄ CONST. CARNEGIE AVE.
STA. 66+00, 36' LT
LT-127

℄ CONST. CARNEGIE AVE.
STA. 61+87, 30' LT
RL-20

℄ CONST. CARNEGIE AVE.
STA. 62+71, 29' LT
RL-22

℄ CONST. CARNEGIE AVE.
STA. 63+59, 29' LT
RL-25

℄ CONST. CARNEGIE AVE.
STA. 64+28, 26' LT
RL-26

℄ CONST. CARNEGIE AVE.
STA. 64+89, 26' LT
RL-27

℄ CONST. CARNEGIE AVE.
STA. 62+90, 30' LT
RL-23

13"X24" PB
℄ CONST. CARNEGIE AVE.
STA. 63+51, 42' RT
PB-3

13"X24" PB
℄ CONST. CARNEGIE AVE.
STA. 64+57, 42' LT
PB-4

℄ CONST. CARNEGIE AVE.
STA. 63+55, 37' RT
RL-24

STRUCTURE NO. 14
CUY-90-1696

30' FIBERGLASS SHOEBOX W/ JB
℄ CONST. CARNEGIE AVE.
STA. 61+70, 45' RT
LT-120

℄ CONST. CARNEGIE AVE.
STA. 61+42, 31' RT
RL-19

30' FIBERGLASS SHOEBOX W/ JB
℄ CONST. CARNEGIE AVE.
STA. 62+70, 45' RT
LT-122

℄ CONST. CARNEGIE AVE.
STA. 62+57, 36' RT
RL-21

30' WOOD LIGHT POLE
℄ CONST. CARNEGIE AVE.
STA. 64+05, 37' RT
LT-124

30' WOOD LIGHT POLE
℄ CONST. CARNEGIE AVE.
STA. 64+82, 65' RT
RL-28

30' WOOD LIGHT POLE
℄ CONST. CARNEGIE AVE.
STA. 66+00, 37' RT
LT-126

℄ CONST. CARNEGIE AVE.
STA. 65+02, 38' RT

℄ MIDTOWN CONNECTOR

Ex LA

Ex U

OH-T

2/2

NOTES:
1. FOR LEGEND SEE SHEET 1715 .
2. SEE SHEET 1739 FOR ADDITIONAL DETAIL ON LIGHTING ALONG MIDTOWN CONNECTOR AND THE ADJACENT SHARED-USE PATH.

DESIGN AGENCY
Michael Baker INTERNATIONAL

DESIGNER
JLD

REVIEWER
SM 05/22/24

PROJECT ID
82382

SHEET 1727 TOTAL 2696

CUY-90-16.28 (CCG3A)

MODEL: 82382_LP7101_SHEET-3 PAPERSIZE: 34x22 (in.) DATE: 3/27/2025 TIME: 7:56:40 PM USER: Maia.Gallagher
pw:\\mb-us-pw.bentley.com:mb-us-pw-03\Documents\Cleveland_OH\01_Projects\000T\District2\82382\400-Engineering\Lighting\Sheets\82382_LP7104.dgn

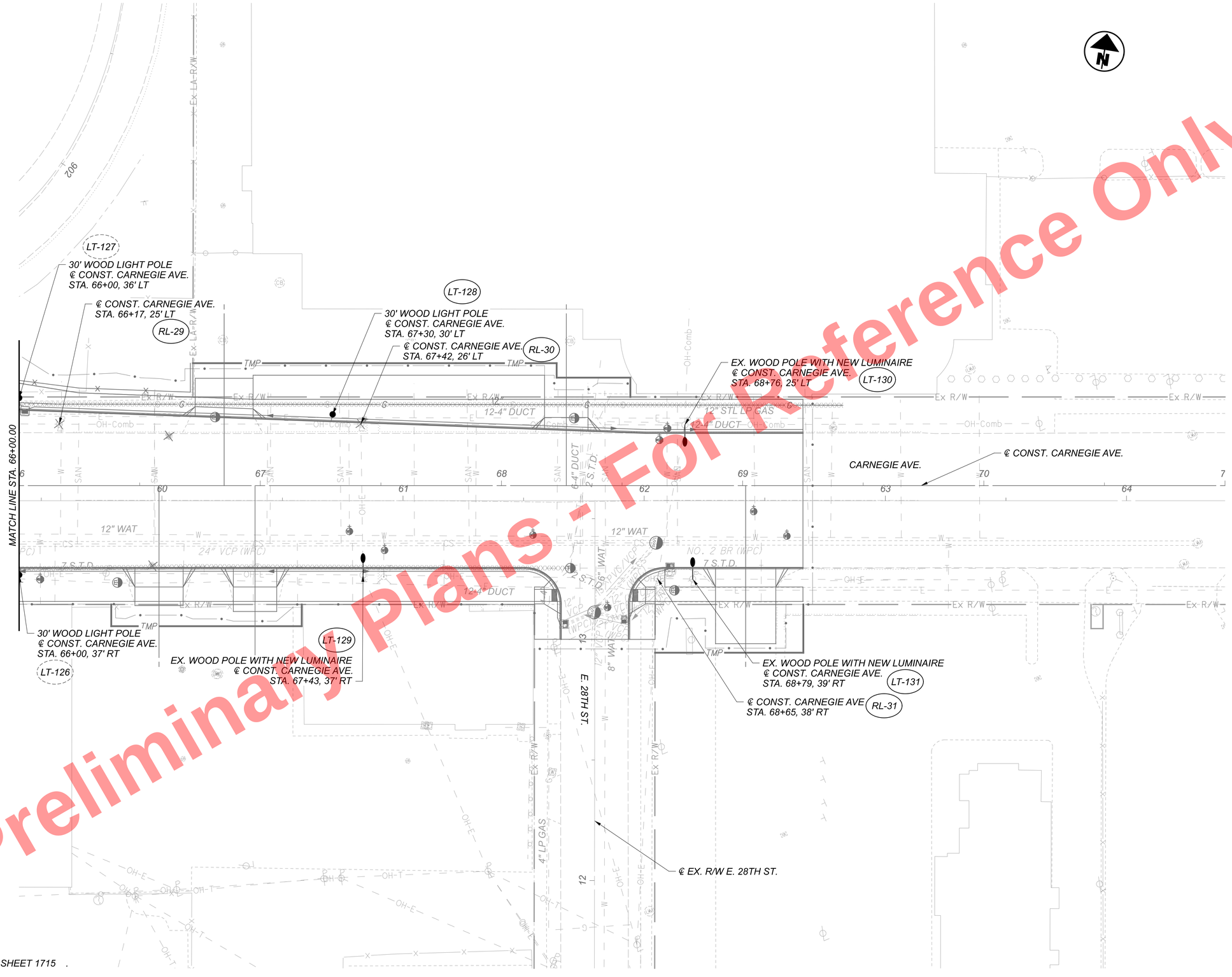

Preliminary Plans - For Reference Only

NOTES:
1. FOR LEGEND SEE SHEET 1715 .

HORIZONTAL SCALE IN FEET
0 10 20 40

CPP LIGHTING PLAN - CARNEGIE AVE.
STA. 66+00.00 TO END

DESIGN AGENCY
Michael Baker INTERNATIONAL

DESIGNER JLD
REVIEWER SM 05/22/24
PROJECT ID 82382
SHEET 1728 TOTAL 2696

CUY-90-16.28 (CCG3A)

MODEL: 82382_LP7101_SHEET-4 PAPERSIZE: 34x22 (in.) DATE: 3/27/2025 TIME: 7:57:03 PM USER: Mala.Gallagher
pw:\\mb-us-pw.bentley.com:mb-us-pw-03\Documents\Cleveland_OH\01_Projects\0DOT\District12\82382\400-Engineering\Lighting\Sheets\82382_LP7105.dgn

Preliminary Plans - For Reference Only

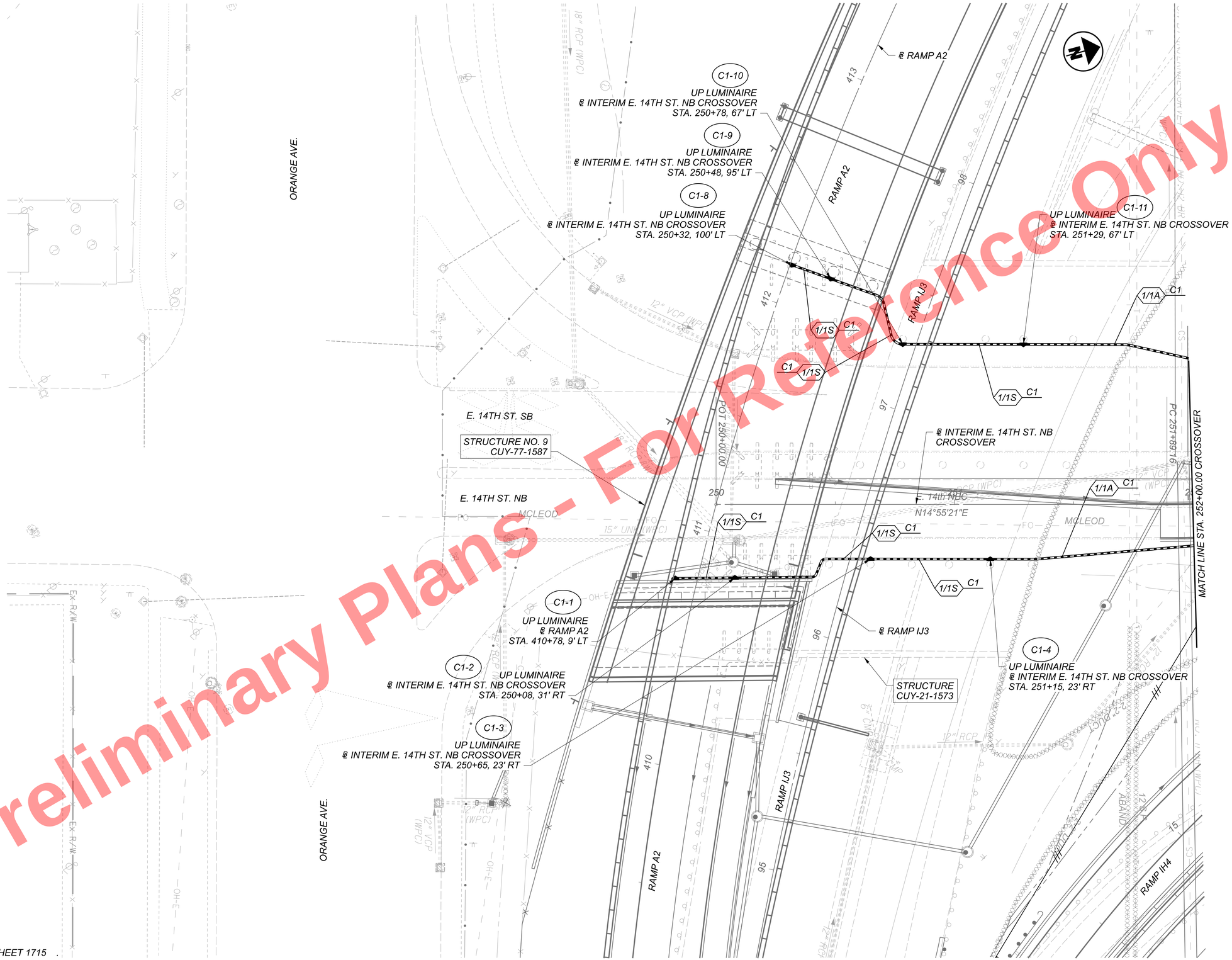

NOTES:
1. FOR LEGEND SEE SHEET 1715 .

HORIZONTAL SCALE IN FEET
0 10 20 40

CPP LIGHTING PLAN - E. 14TH ST. NB CROSSOVER BEGIN TO STA. 252+00.00

CUY-90-16.28 (CCG3A)

DESIGN AGENCY
Michael Baker INTERNATIONAL

DESIGNER JLD
REVIEWER SM 05/22/24
PROJECT ID 82382
SHEET 1729 TOTAL 2696

MODEL: 82382_LP17270_SHEET PAPERSIZE: 34x22 (in.) DATE: 3/27/2025 TIME: 7:51:20 PM USER: Maia.Gallagher
pw:\\mb-us-pw.bentley.com:mb-us-pw-03\Documents\Cleveland_OH\01_Projects\000T\District2\82382\400-Engineering\Lighting\Sheets\82382_LP17271.dgn

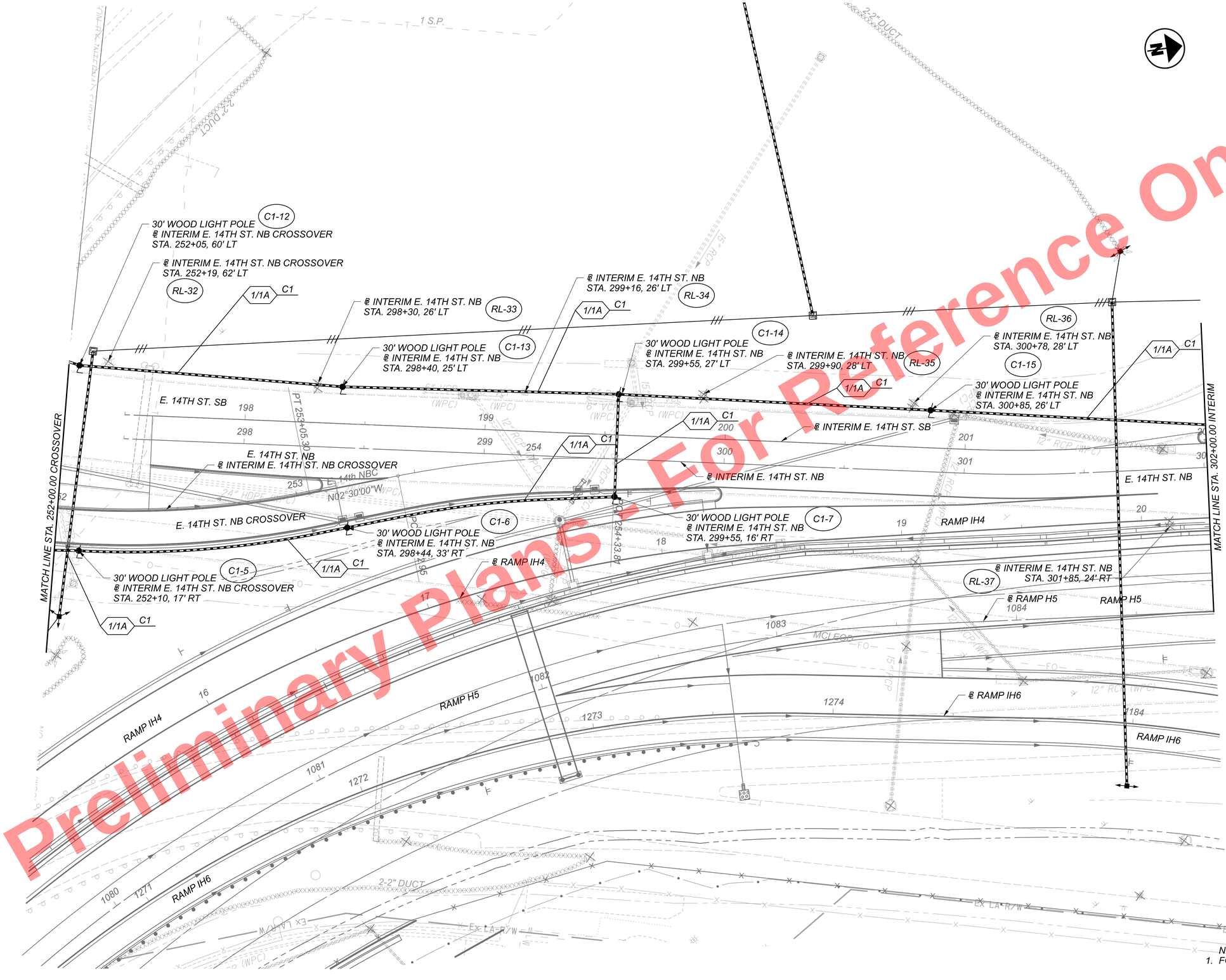

Preliminary Plans - Not for Construction
For Reference Only

NOTES:
1. FOR LEGEND SEE SHEET 1715 .

HORIZONTAL SCALE IN FEET
0 10 20 40

CPP LIGHTING PLAN - E. 14TH ST. NB CROSSOVER/INTERIM E. 14TH ST. NB STA. 252+00.00 TO STA. 302+00.00

DESIGN AGENCY
Michael Baker INTERNATIONAL

DESIGNER JLD
REVIEWER SM 05/22/24
PROJECT ID 82382
SHEET 1730 TOTAL 2696

CUY-90-16.28 (CCG3A)

MODEL: 82382_LP7270_SHEET-I PAPERSIZE: 34x22 (In.) DATE: 3/27/2025 TIME: 7:57:43 PM USER: MaLaGallagher
pw:\\mb-us-pw.bentley.com:mb-us-pw-03\Documents\Cleveland_OH\OL_Projects\ODOT\District2\82382\400-Engineering\Lighting\Sheets\82382_LP7272.dgn

Preliminary Plans - Not For Reference Only

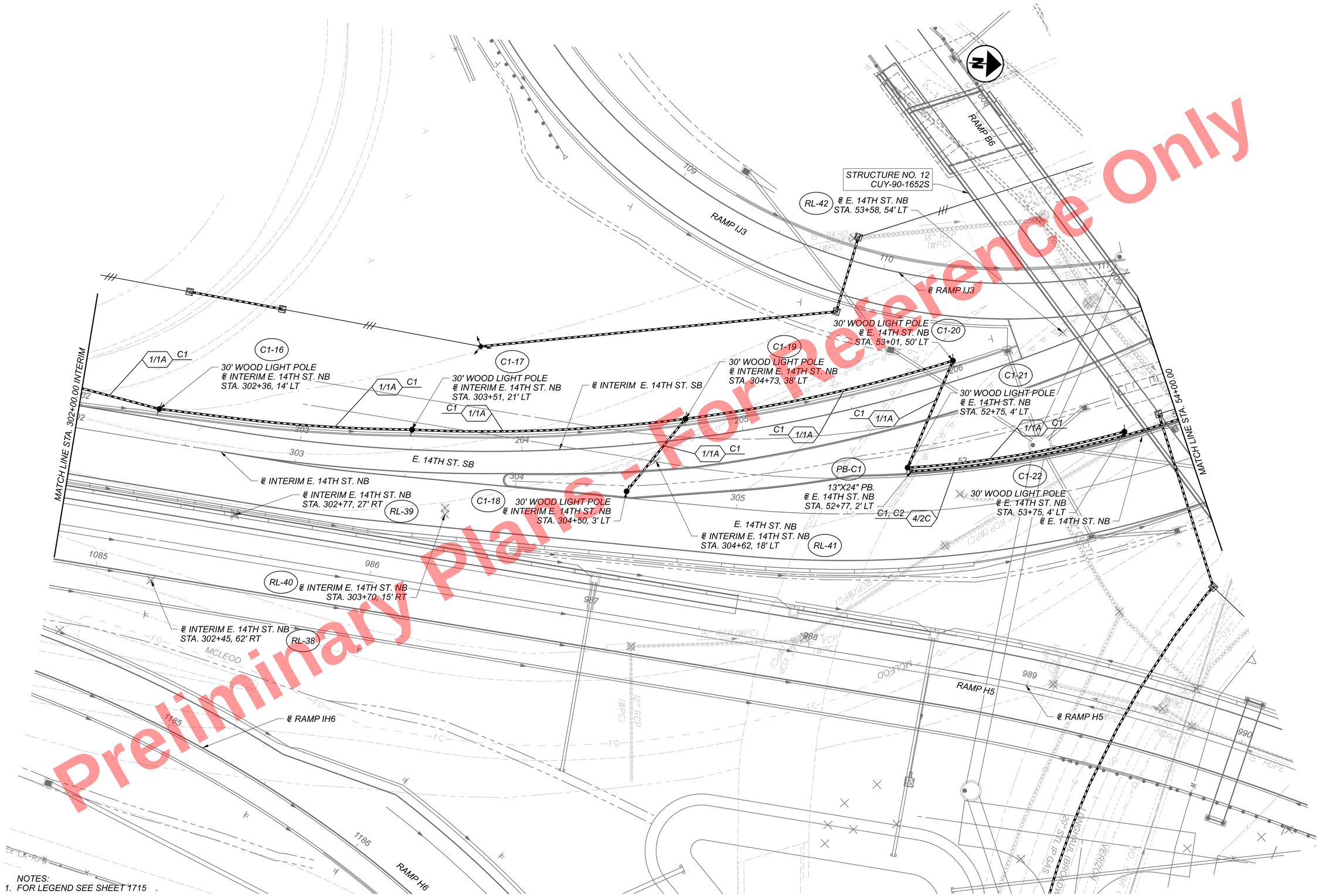

NOTES:
1. FOR LEGEND SEE SHEET 1715 .

HORIZONTAL SCALE IN FEET
0 10 20 40

CPP LIGHTING PLAN - INTERIM E. 14TH ST. NB/E. 14TH ST. NB STA. 302+00.00 TO STA. 54+00.00

DESIGN AGENCY
Michael Baker INTERNATIONAL

DESIGNER JLD
REVIEWER SM 05/22/24
PROJECT ID 82382
SHEET 1731 TOTAL 2696

CUY-90-16.28 (CCG3A)

MODEL: 82382_LP722L_SHEET PAPERSIZE: 34x22 (in.) DATE: 6/9/2025 TIME: 2:40:28 PM USER: Julie.Ross
pw:\\vmb-us-pw.bentley.commb-us-pw-03\Documents\Cleveland_OH\01_Projects\000T\District2\82382\400-Engineering\Lighting\Sheets\82382_LP722L.dgn

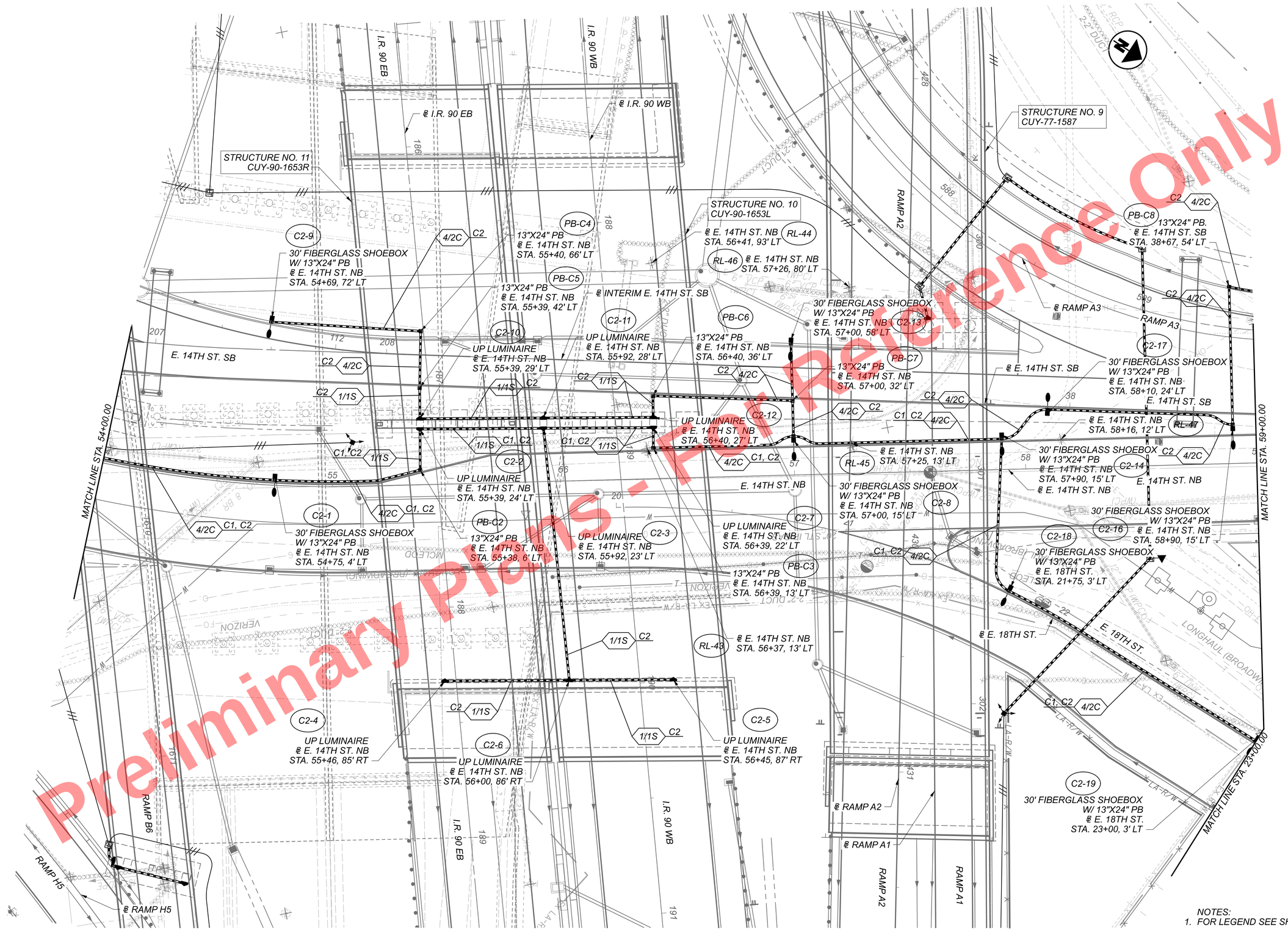

NOTES:
1. FOR LEGEND SEE SHEET 1715 .

HORIZONTAL SCALE IN FEET
0 10 20 40

CPP LIGHTING PLAN - E. 14TH ST. NB
STA. 54+00.00 TO STA. 59+00.00

DESIGN AGENCY
Michael Baker INTERNATIONAL

DESIGNER JLD
REVIEWER SM 05/22/24
PROJECT ID 82382
SHEET 1732 TOTAL 2696

CUY-90-16.28 (CCG3A)

MODEL: 82382_LP722L SHEET-1 PAPERSIZE: 34x22 (in.) DATE: 6/9/2025 TIME: 2:40:48 PM USER: JulieRoss
pw:\\mb-us-pw.bentley.com:mb-us-pw-03\Documents\Cleveland_OHIO\Projects\0007\District2\82382\400-Engineering\Lighting\Sheets\82382_LP722.dgn

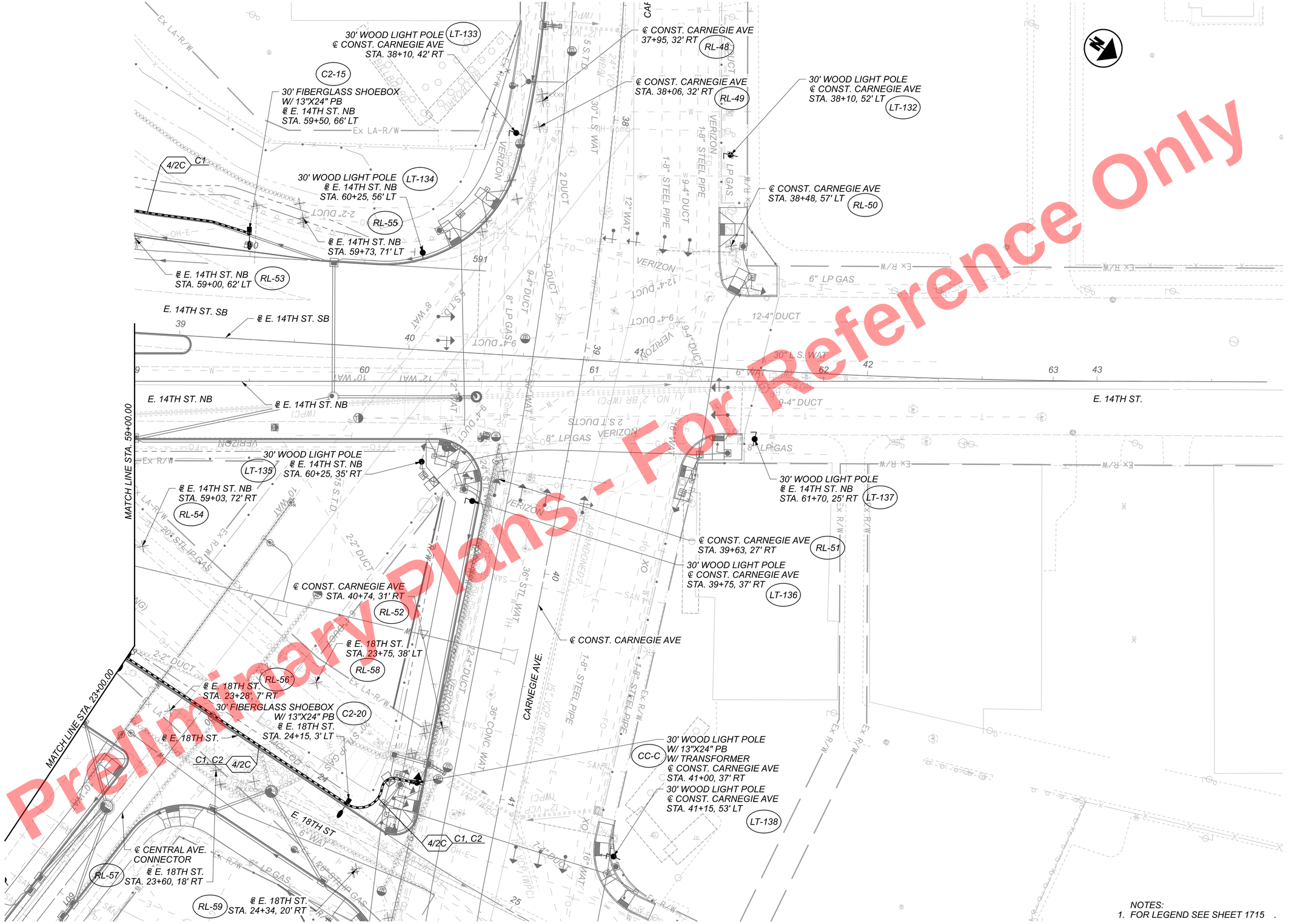

Preliminary Plans - For Reference Only

HORIZONTAL SCALE IN FEET
0 10 20 40

CPP LIGHTING PLAN - E. 14TH ST. NB
STA. 59+00.00 TO END

CUY-90-16.28 (CCG3A)

DESIGN AGENCY
Michael Baker INTERNATIONAL

DESIGNER JLD
REVIEWER SM 05/22/24
PROJECT ID 82382
SHEET 1733 TOTAL 2696

MODEL: 82382_LP7221_SHEET-2 PAPERSIZE: 34x22 (In.) DATE: 6/9/2025 TIME: 2:4:09 PM USER: Julie.Ross
pw:\\mb-us-pw.bentley.com\mb-us-pw-03\Documents\Cleveland_OH\01_Projects\00DT\District2\82382\400-Engineering\Lighting\Sheets\82382_LP7243.dgn

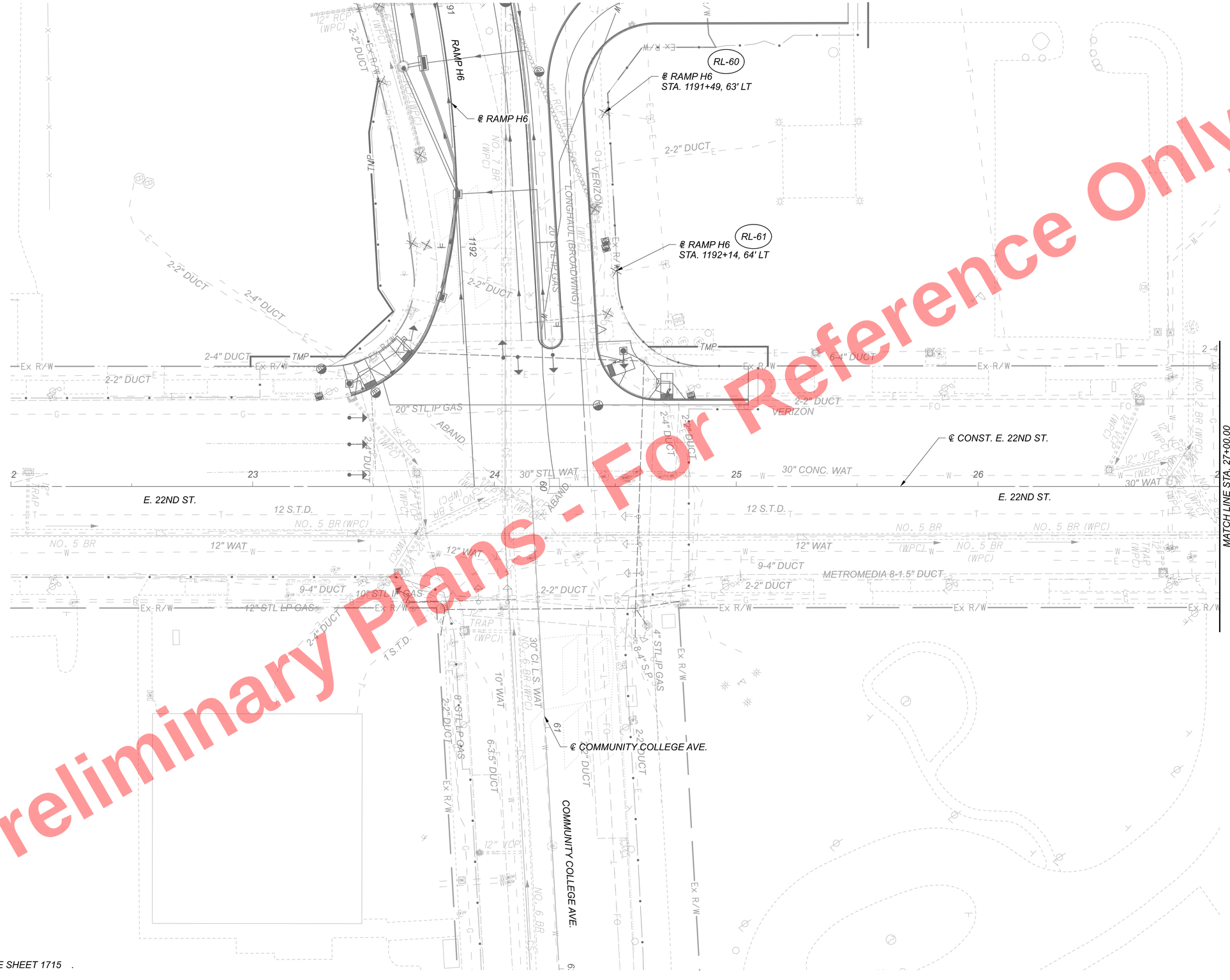

Preliminary Plans - For Reference Only

NOTES:
1. FOR LEGEND SEE SHEET 1715 .

HORIZONTAL SCALE IN FEET
0 10 20 40

CPP LIGHTING PLAN - E. 22ND ST.
BEGIN TO STA. 27+00.00

CUY-90-16.28 (CCG3A)

MODEL: 82382_LP7404_SHEET PAPERSIZE: 34x22 (in.) DATE: 6/9/2025 TIME: 2:4h:29 PM USER: Julie.Ross
pw:\\mb-us-pw.bentley.com:mb-us-pw-03\Documents\Cleveland_OH\OI_Projects\ODOT\District2\82382\400-Engineering\Lighting\Sheets\82382_LP7404.dgn

DESIGN AGENCY
Michael Baker INTERNATIONAL

DESIGNER
JTP

REVIEWER
MMC 05/22/24

PROJECT ID
82382

SHEET 1734 TOTAL 2696

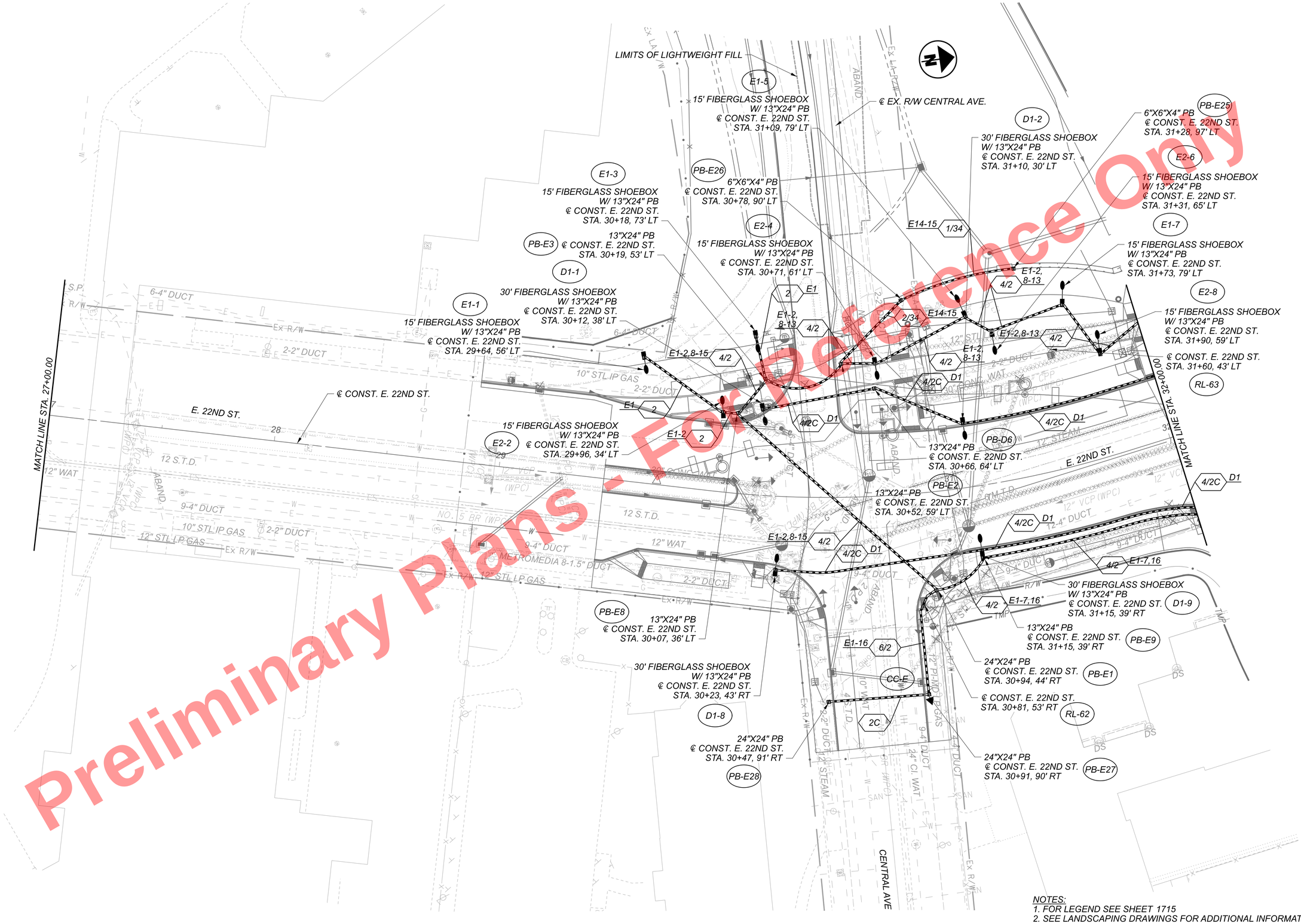

Preliminary Plans - For Reference Only

NOTES:
1. FOR LEGEND SEE SHEET 1715
2. SEE LANDSCAPING DRAWINGS FOR ADDITIONAL INFORMATION.

HORIZONTAL SCALE IN FEET
0 10 20 40

CPP LIGHTING PLAN - E. 22ND ST. STA. 27+00.00 TO STA. 32+00.00

CUY-90-16.28 (CCG3A)

DESIGN AGENCY
Michael Baker INTERNATIONAL

DESIGNER JTP
REVIEWER MMC 05/22/24
PROJECT ID 82382
SHEET 1735 TOTAL 2696

MODEL: 82382_LP7400_SHEET PAPERSIZE: 34x22 (In) DATE: 3/27/2025 TIME: 7:59:39 PM USER: Mala.Gallagher
pw:\\mb-us-pw.bentley.commb-us-pw-03\Documents\Cleveland_OH\01_Projects\ODOT\District2\82382\400-Engineering\Lighting\Sheets\82382_LP7402.dgn

NOTES:
1. FOR LEGEND SEE SHEET1715
2. SEE LANDSCAPING DRAWINGS FOR ADDITIONAL INFORMATION.
3. SEE STRUCTURAL DRAWINGS FOR ADDITIONAL INFORMATION.
4. PULLBOXES INSTALLED IN BRIDGE RAILING TO BE 6"x6"x4" TYPICAL.
5. SEE SHEET 1725 . FOR ADDITIONAL DETAIL ON LIGHTING ALONG CARNEGIE AVENUE.

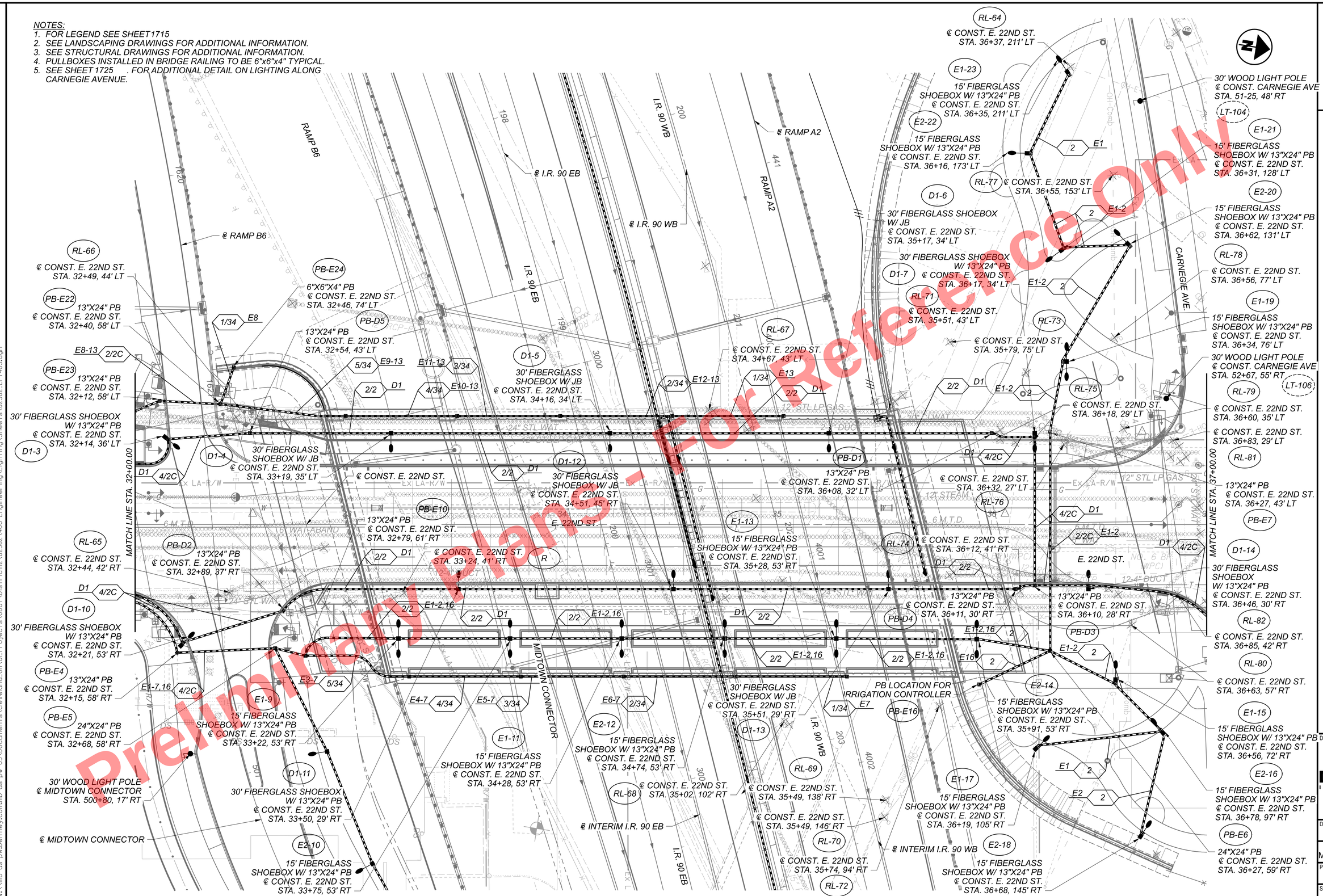

HORIZONTAL SCALE IN FEET
0 10 20 40

CPP LIGHTING PLAN - E. 22ND ST.
STA. 32+00.00 TO STA. 37+00.00

DESIGN AGENCY
Michael Baker INTERNATIONAL

DESIGNER	JTP
REVIEWER	MMC 05/22/24
PROJECT ID	82382
SHEET	1736
TOTAL	2696

CUY-90-16.28 (CCG3A)

MODEL: 82382_LP7400_SHEET-I PAPERSIZE: 34x22 (in.) DATE: 3/27/2025 TIME: 8:00:01 PM USER: Mata,Gallagher
pw:\\mb-us-pw.bentley.com:mb-us-pw-03\Documents\Cleveland.OH\OI_Projects\ODOT\District2\82382\400-Engineering\Lighting\Sheets\82382_LP7403.dgn

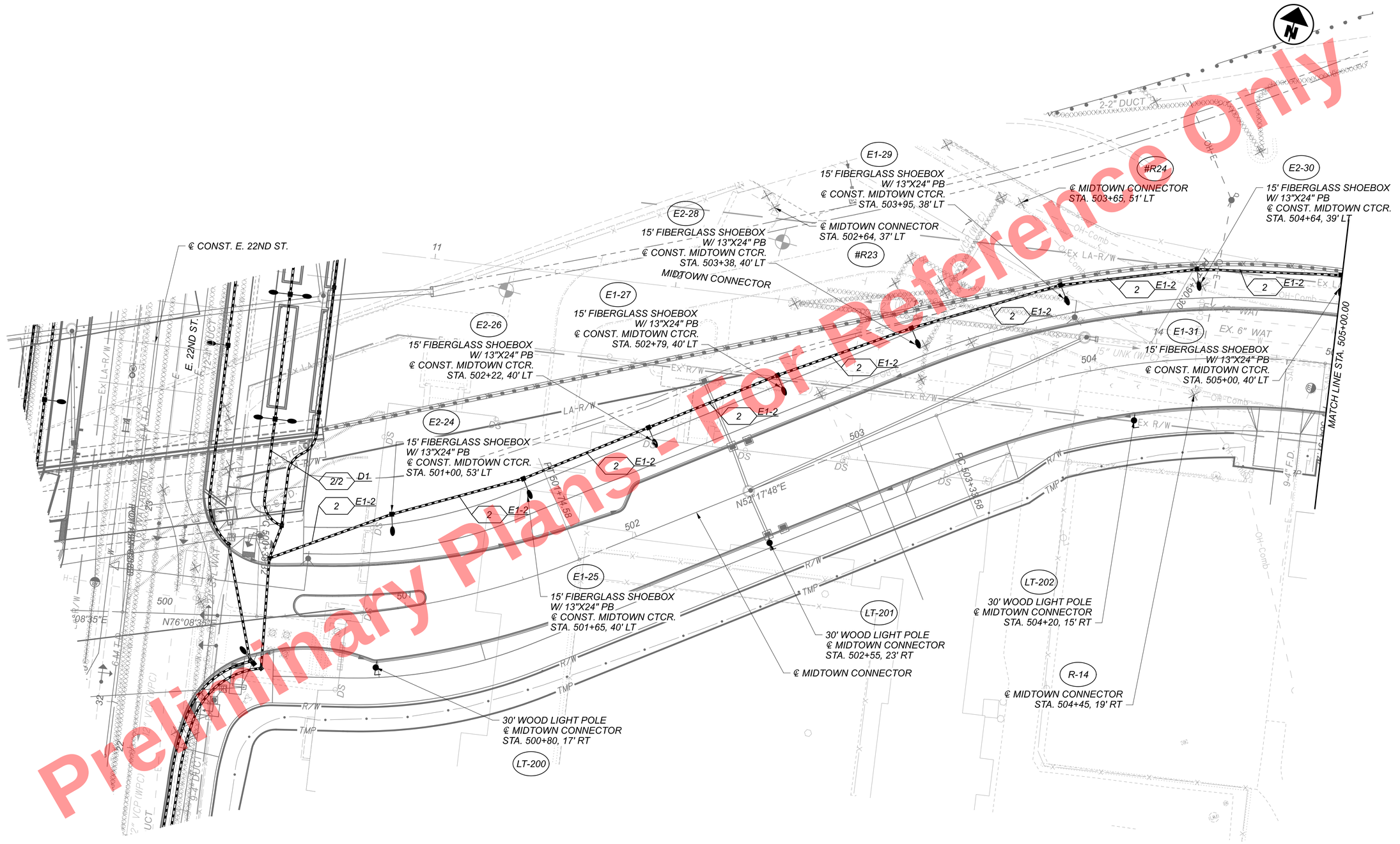

HORIZONTAL SCALE IN FEET
0 10 20 40

CPP LIGHTING PLAN - MIDTOWN CONNECTOR BEGIN TO STA. 505+00.00

NOTES:
1. FOR LEGEND SEE SHEET 1715
2. SEE LANDSCAPING DRAWINGS FOR ADDITIONAL INFORMATION.

DESIGN AGENCY
Michael Baker INTERNATIONAL

DESIGNER JTP
REVIEWER MMC 05/22/24
PROJECT ID 82382
SHEET 1737 TOTAL 2696

CUY-90-16.28 (CCG3A)

MODEL: 82382_LP790L_SHEET PAPERSIZE: 34x22 (in.) DATE: 3/27/2025 TIME: 8:00:23 PM USER: MaliaGallagher
pw:\\mb-us-pw.bentley.com:mb-us-pw-03\Documents\Cleveland_OH\01_Projects\000T\District2\82382\400-Engineering\Lighting\Sheets\82382_LP790L.dgn

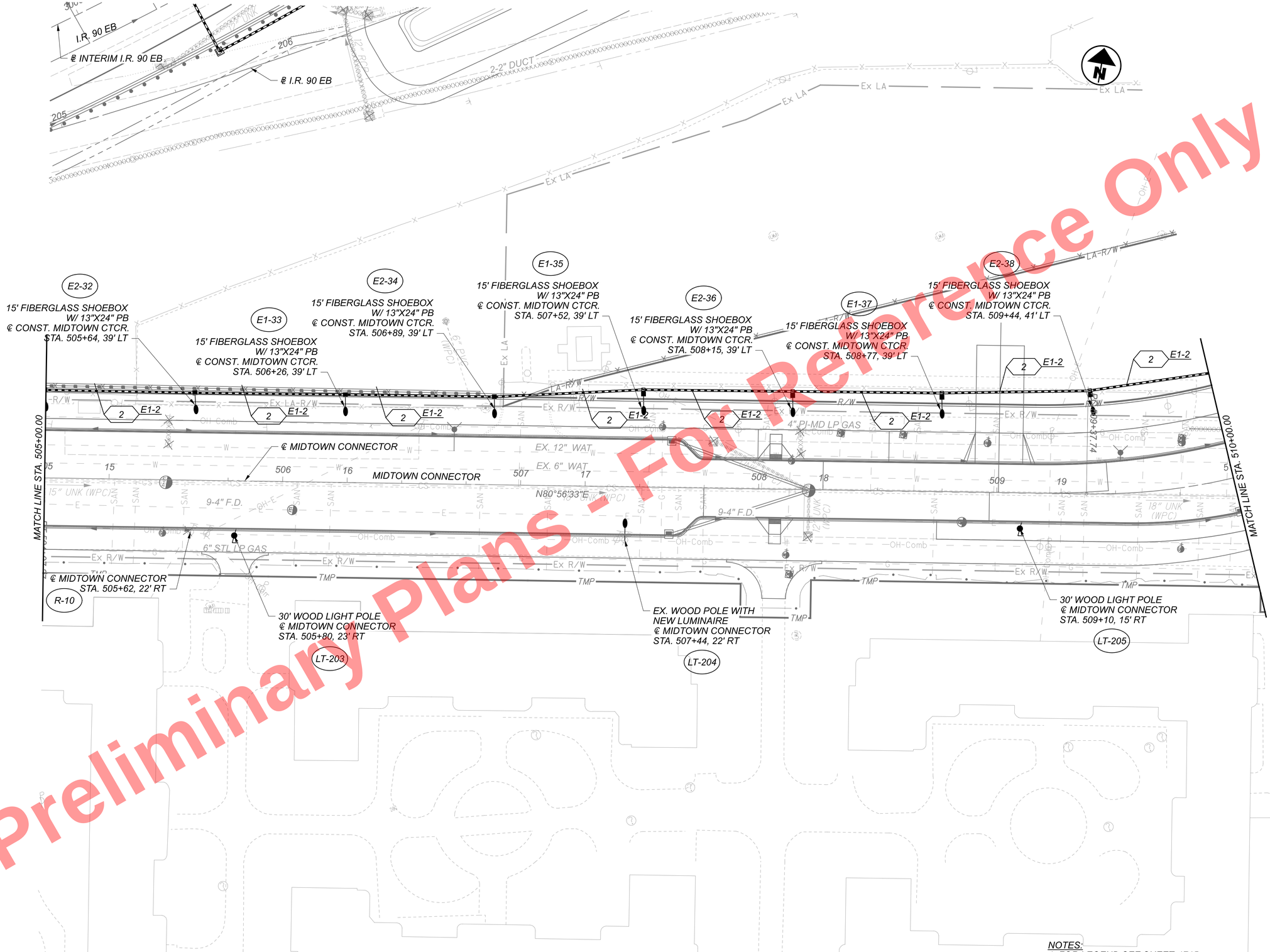

Preliminary Plans - For Reference Only

NOTES:
1. FOR LEGEND SEE SHEET 1715
2. SEE LANDSCAPING DRAWINGS FOR ADDITIONAL INFORMATION.

HORIZONTAL SCALE IN FEET
0 10 20 40

CPP LIGHTING PLAN - MIDTOWN CONNECTOR STA. 505+00.00 TO STA. 510+00.00

CUY-90-16.28 (CCG3A)

DESIGN AGENCY
Michael Baker INTERNATIONAL

DESIGNER JTP
REVIEWER MMC 05/22/24
PROJECT ID 82382
SHEET 1738 TOTAL 2696

MODEL: 82382_LP790I_SHEET-I PAPERSIZE: 34x22 (In.) DATE: 3/27/2025 TIME: 8:00:51PM USER: Maia.Gallagher
pw:\\mb-us-pw.bentley.com:mb-us-pw-03\Documents\Cleveland_OH\01_Projects\000T\District2\82382\400-Engineering\Lighting\Sheets\82382_LP7902.dgn

Preliminary Plans - For Reference Only

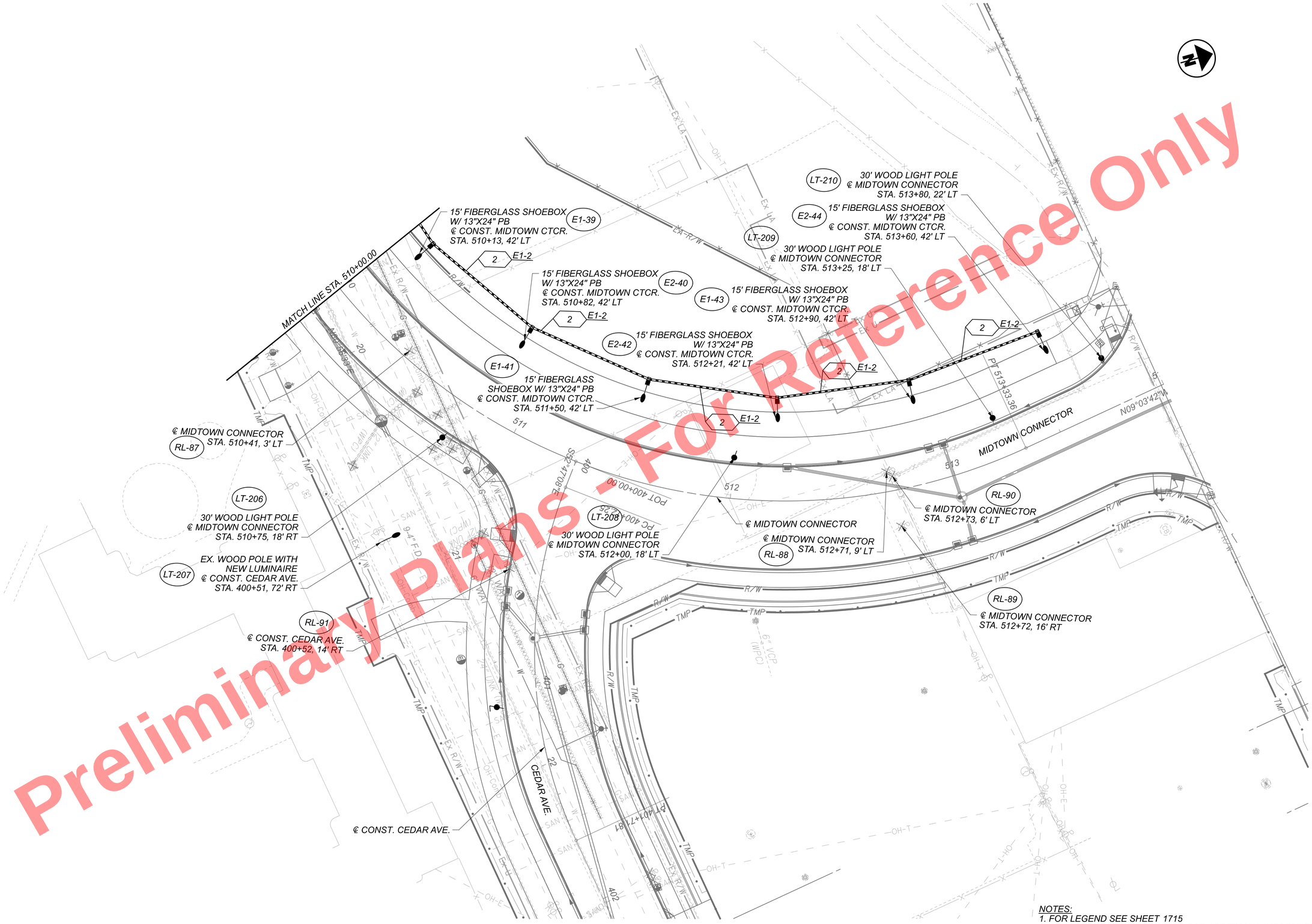

NOTES:
1. FOR LEGEND SEE SHEET 1715
2. SEE LANDSCAPING DRAWINGS FOR ADDITIONAL INFORMATION.

HORIZONTAL SCALE IN FEET
0 10 20 40

CPP LIGHTING PLAN - MIDTOWN CONNECTOR STA. 510+00.00 TO END

CUY-90-16.28 (CCG3A)

DESIGN AGENCY
Michael Baker INTERNATIONAL

DESIGNER JTP
REVIEWER MMC 05/22/24
PROJECT ID 82382
SHEET 1739 TOTAL 2696

MODEL: 82382_LP790i_SHEET-2 PAPERSIZE: 34x22 (in) DATE: 3/27/2025 TIME: 8:0#:0 PM USER: Mala.Gallagher
pw:\\mb-us-pw.bentley.com:mb-us-pw-03\Documents\Cleveland_OH\01_Projects\ODOT\District#12\82382\400-Engineering\Lighting\Sheets\82382_LP7903.dgn

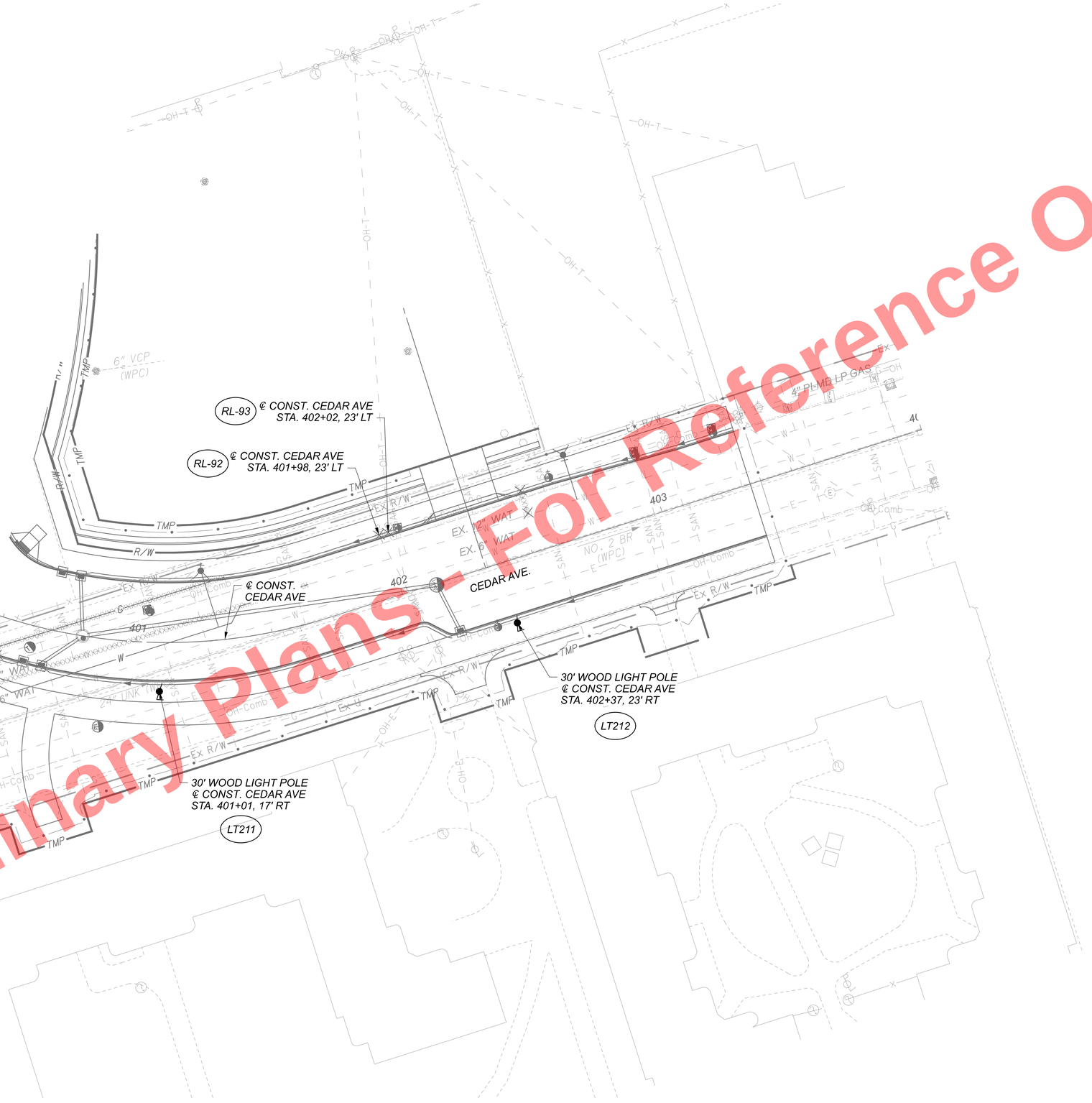

Preliminary Plans - For Reference Only

NOTES:
1. FOR LEGEND SEE SHEET 1715 .

HORIZONTAL
SCALE IN FEET
0 10 20 40

CPP LIGHTING PLAN - CEDAR AVE. BEGIN TO END

DESIGN AGENCY
Michael Baker INTERNATIONAL

DESIGNER
JTP

REVIEWER
MMC 05/22/24

PROJECT ID
82382

SHEET 1740 TOTAL 2696

CUY-90-16.28 (CCG3A)

MODEL: 82382_LP79ll_SHEET PAPERSIZE: 34x22 (ln.) DATE: 3/27/2025 TIME: 8:01:32 PM USER: Mala.Gallagher
pw:\\mb-us-pw.bentley.com:mb-us-pw-03\Documents\Cleveland_OH\01_Projects\ODOT\District2\82382\400-Engineering\Lighting\Sheets\82382_LP79ll.dgn

NOTES:
1. FOR LEGEND SEE SHEET 1715 .
2. SEE SHEETS 1732 AND 1733 FOR ADDITIONAL DETAIL ON LIGHTING ALONG EAST 18TH STREET.

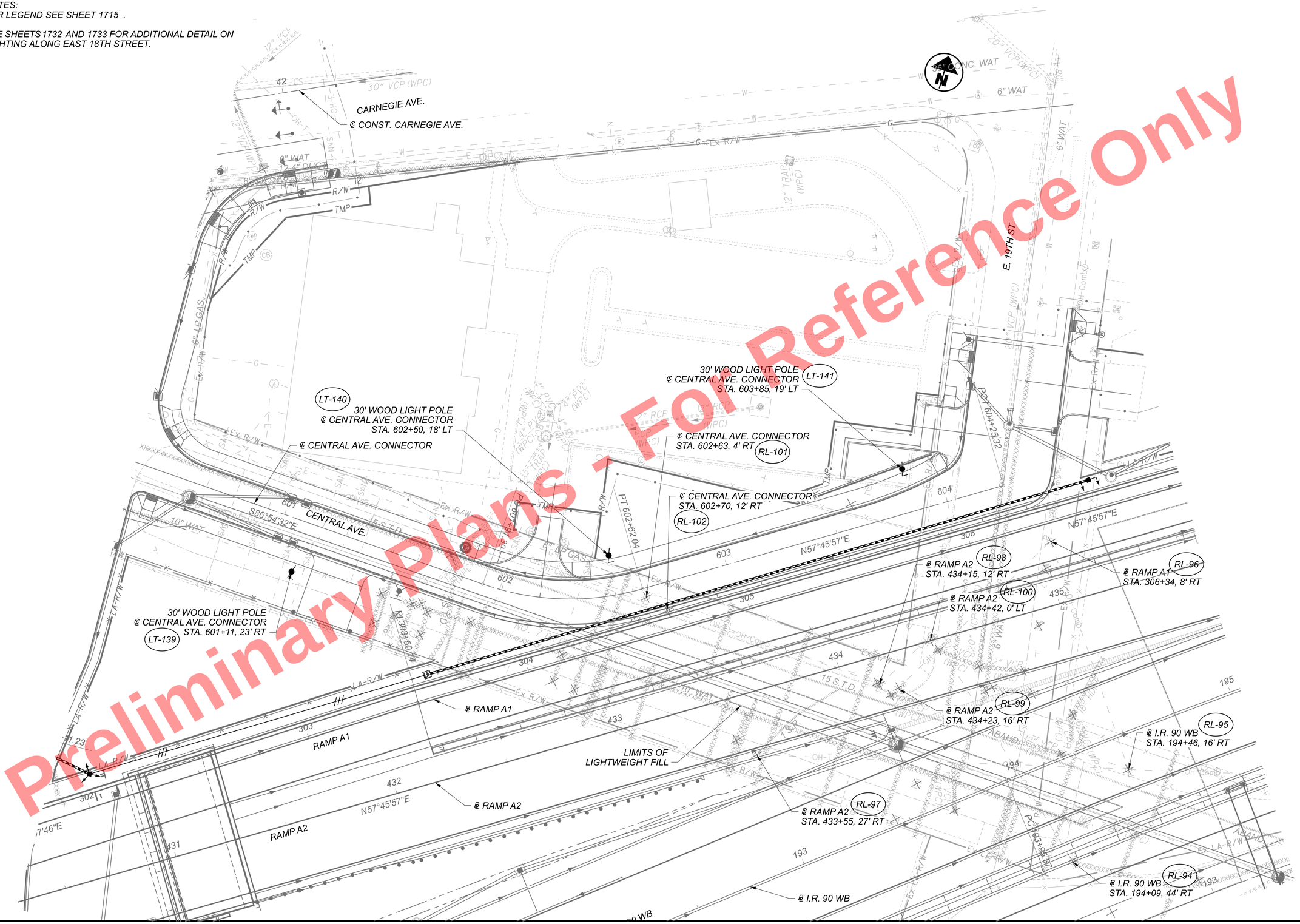

Preliminary Plans - For Reference Only

HORIZONTAL SCALE IN FEET
0 10 20 40

CPP LIGHTING PLAN - CENTRAL AVE. CONNECTOR BEGIN TO END

DESIGN AGENCY
Michael Baker INTERNATIONAL

DESIGNER
JLD

REVIEWER
SM 05/22/24

PROJECT ID
82382

SHEET 1741 | TOTAL 2696

CUY-90-16.28 (CCG3A)

MODEL: Central Ave. Connector PAPERSIZE: 34x22 (in.) DATE: 6/11/2025 TIME: 1:52:27 PM USER: Julie.Ross
pw:\\mb-us-pw.bentley.com:mb-us-pw-03\Documents\Cleveland_OH\01_Projects\ODOT\District2\82382\400-Engineering\Lighting\Sheets\82382_LP792L.dgn

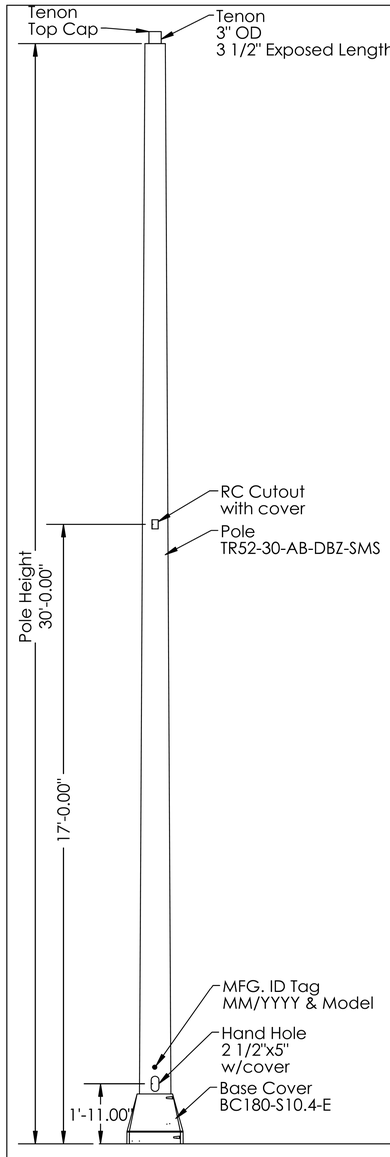

AGENCY: Lang Sales
PROJECT:
QUOTE#: N/A

POLE
Model: TR52
Top Dia: 6.6"
Taper: .14"/ft
Construction: Fiberglass Composite 72% Glass & 28% Epoxy Resin consisting of alternating 89 ° Hoops & 18° Helicals with Veil outer layer
Anchor Base: Plate-13.25'x13.25'x3/4" ASTM A36 Slots for 1" bolts. Hot Dipped Galvanized
Bolt Circle: 11"-15"
Tenon: 3" OD 3 1/2" Exposed Length ASTM A53 Galvanized
Hand Hole: 2 1/2"x5"@23" above grade. Cover painted to match pole.
Anchor Bolts: 1-8x36'x4" Hot Dipped Galvanized
Paint: UV & Cleaning chemical resistant
Color: Whatley Dark Bronze
Option 1: RC Cutout with cover painted to match pole
Option 2: 15'-23' area reinforced for future attachments by others.
Option 3: Full length pull wire.
Option 4: MFG ID Tag
Option 5: Tenon Top Cap
MAX Attachment Weight: 300 lbs
MAX Attachment EPA: 17.8 @ 100 mph ANSI
Pole Weight: 227 lbs approx

BASE COVER
Model: BC-180
Style: 2-Piece
Material: Elastomeric Urethane
Color: Whatley Dark Bronze
Height: 17.0"
Width: 18.5" sq
Weight: 21.5 lbs approx

ANCHOR BASE DETAIL

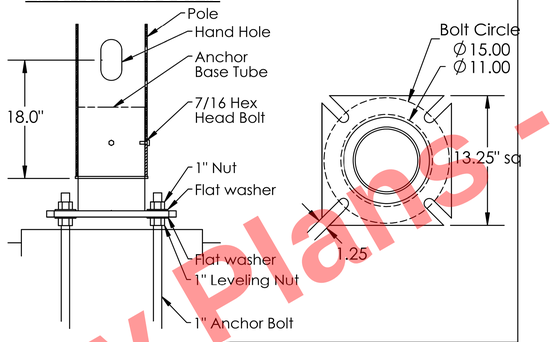

WHATLEY, INC. A Valmont Company
19845 US Highway 76
Newberry, SC. 29108
phone: (877) 959-7678
fax: (803) 276-8940
web: www.whatley.com

REV	DESCRIPTION	DATE

PART NO.	TR7030AES9903CL	DESCRIPTION:	Pole Assembly Group I 1-2
SCALE:	1:44	SIZE: A	REV. TR52-30-AB-DBZ-SMS-99-RC WDN1829
MATERIAL:	Noted		
FINISH:	Smooth		

DO NOT SCALE DRAWING

DOCUMENTATION	INITIAL	DATE
DRAWN	JTC	12/7/17
QUOTE REQUEST		
TOOLING REQUEST		
FIRST ARTICLE REQUEST		
FIRST ARTICLE INSPECTION		
PRODUCTION RELEASE		

UNLESS OTHERWISE NOTED:
DIMENSIONS ARE IN INCHES
TOLERANCES:
DECIMAL .XX ± .03
DECIMAL .XXX± .010
ANGLE ± 1/2

PROPRIETARY AND CONFIDENTIAL
THE INFORMATION CONTAINED IN THIS DRAWING IS THE SOLE PROPERTY OF WHATLEY, INC. ANY REPRODUCTION IN PART OR AS A WHOLE WITHOUT THE WRITTEN PERMISSION OF WHATLEY, INC. IS PROHIBITED.

ITEM 625 - LIGHT POLE, MISC.: 30' ROUND TAPERED FIBERGLASS STREETLIGHT
SCALE: NO SCALE

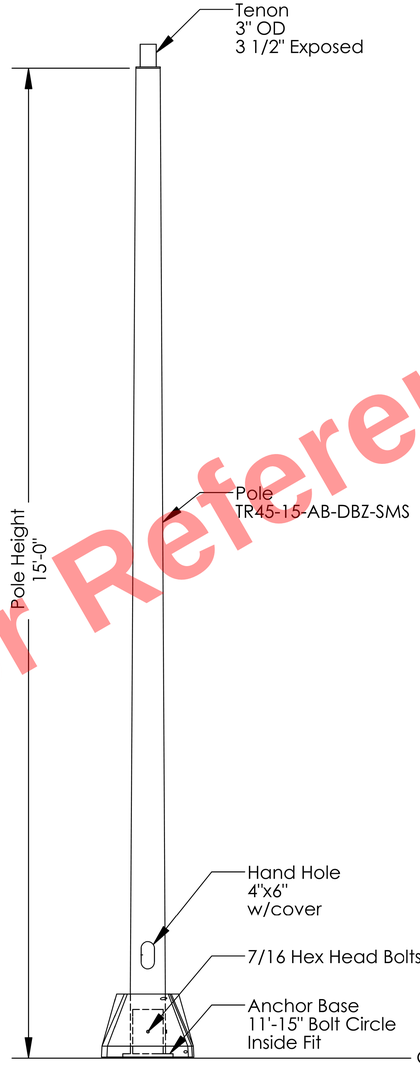

QUOTE#
CUSTOMER:
PROJECT:

POLE
Model: TR45
Top Dia: 4.6"
Taper: .14"/ft
Construction: Fiberglass Composite 72% Glass 28% Epoxy Resin Wound with alternating 89 ° Hoops & 18 ° Helicals with an outer Veil covering.
Anchor Base: Plate-3/4" Hot Rolled Steel ASTM A36 Slots for 1" bolts Galvanized
Bolt Circle: 11"-15"
Hand Hole: 4"x6" @ 18" above grade
Tenon: 3" OD 3 1/2" Exposed Carbon Mech Steel ASTM A513 Galvanized
Paint: UV & Cleaning chemical resistant
Color: Dark Bronze
Weight: 69 lbs approx
MAX EPA for Attachments: 12.9 @ 90 mph ANSI

BOLT COVER
Model: BC-140
Style: 2-Piece
Material: Elastomeric Urethane
Color: Dark Bronze
Weight: 13 lbs approx
Height: 11.5"
Width: 16"

Anchor Plate Detail

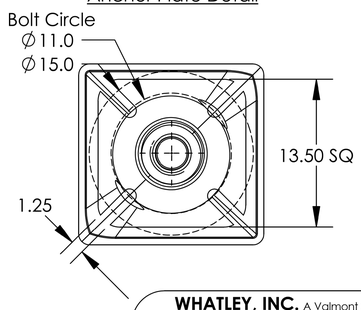

WHATLEY, INC. A Valmont Company
3550 Odessa Way, STE A
Aurora, CO., 80011
phone: (877) 959-7678
fax: (303) 286-7272
web: www.whatley.com

REV	DESCRIPTION	DATE
A	Revised HH & Pic	1/23/19

PART NO.	TR45-15-AB-DBZ-SMS-30-35 BC140	REV.	DESCRIPTION: Pole Assembly
SCALE:	1:24	SIZE: A	A
MATERIAL:	Noted		
FINISH:	Smooth		

DO NOT SCALE DRAWING

DOCUMENTATION	INITIAL	DATE
DRAWN	JTC	12/9/11
QUOTE REQUEST		
TOOLING REQUEST		
FIRST ARTICLE REQUEST		
FIRST ARTICLE INSPECTION		
PRODUCTION RELEASE		

UNLESS OTHERWISE NOTED:
DIMENSIONS ARE IN INCHES
TOLERANCES:
DECIMAL .XX ± .03
DECIMAL .XXX± .010
ANGLE ± 1/2

PROPRIETARY AND CONFIDENTIAL
THE INFORMATION CONTAINED IN THIS DRAWING IS THE SOLE PROPERTY OF WHATLEY, INC. ANY REPRODUCTION IN PART OR AS A WHOLE WITHOUT THE WRITTEN PERMISSION OF WHATLEY, INC. IS PROHIBITED.

ITEM 625 - LIGHT POLE, MISC.: 15' ROUND TAPERED FIBERGLASS PEDESTRIAN LIGHT
SCALE: NO SCALE

Preliminary Plans - For Reference Only

LIGHTING DETAILS
LIGHT POLE CUT SHEETS (CPP STREET AND PEDESTRIAN LIGHTING)

DESIGN AGENCY
Michael Baker INTERNATIONAL

DESIGNER JLD
REVIEWER SM 05/22/24
PROJECT ID 82382
SHEET 1742 TOTAL 2696

CUY-90-16.28 (CCG3A)

MODEL: Sheet PAPERSIZE: 34x22 (in.) DATE: 3/27/2025 TIME: 8:02:23 PM USER: Mata.Gallagher
pw:\\mb-us-pw.bentley.com:mb-us-pw-03\Documents\Cleveland_OH\01_Projects\DOT\District2\82382\400-Engineering\Lighting\Sheets\82382_LD00i.dgn

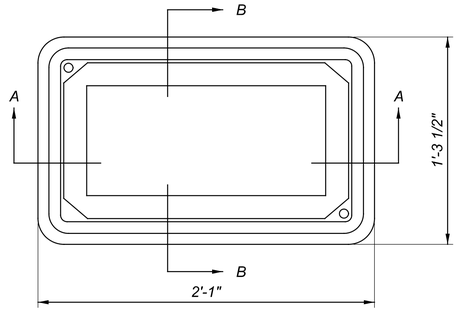

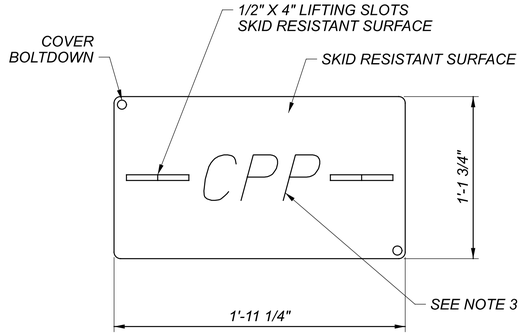

NOTE:
1. LOCATION OF PULL BOX MAY BE ADJUSTED AS DIRECTED BY THE ENGINEER ACCORDINGLY TO MEET FIELD CONDITIONS.

2. PULL BOX MAY BE LOCATED ON THE LEFT SIDE, RIGHT SIDE, OR BEHIND LIGHT POLE FOUNDATION AS DIRECTED BY THE ENGINEER TO AVOID CONFLICTS. SEE LIGHTING PLANS FOR LOCATIONS.

3. LABEL PULL BOX LID "CPP" FOR ALL STREET LIGHTING PULL BOXES. LABEL PULL BOX LID "LIGHTING" FOR ALL PEDESTRIAN/AESTHETIC LIGHTING PULL BOXES.

4. REFER TO LIGHTING PLANS FOR CONDUIT TYPES BETWEEN CPP STREET / PEDESTRIAN LIGHTING.

5. REFER TO LIGHTING PLANS FOR LOCATIONS OF CONCRETE ENCASED CONDUIT. PROVIDE A MINIMUM OF 2 INCHES OF CONCRETE BETWEEN CONDUITS AND A MINIMUM OF 3" OF CONCRETE ENCASEMENT ON ALL SIDES.

6. TYPICAL LIGHTING PULLBOX INSTALLATION DETAILS DO NOT APPLY FOR LIGHT POLES PROPOSED ON BRIDGE 13 (E. 22ND ST) AND BRIDGE 14 (CARNEGIE AVE). REFER TO STRUCTURES PLANS FOR INSTALLATION DETAILS.

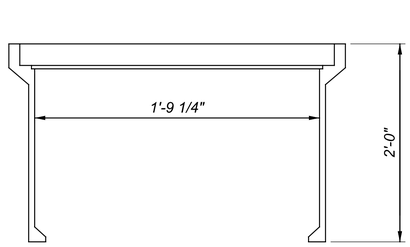

SECTION A-A

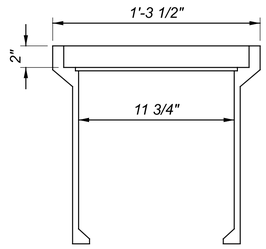

SECTION B-B

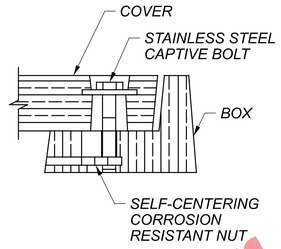

13"x24" CPP STREET / PEDESTRIAN LIGHTING PULLBOX

SCALE: NO SCALE

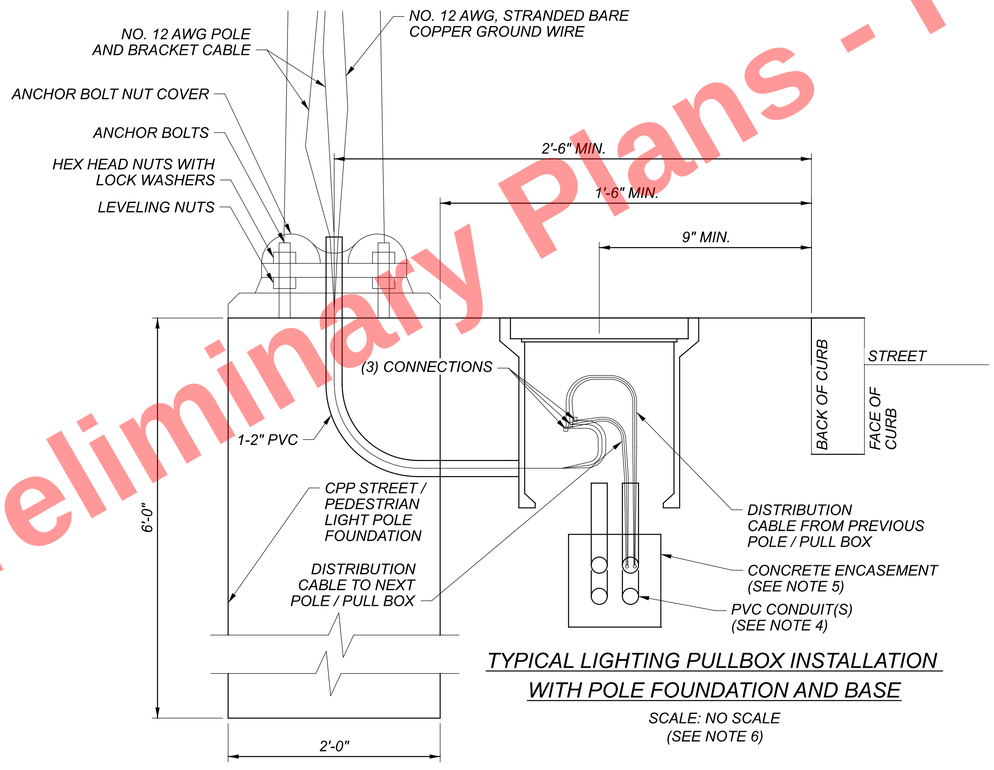

TYPICAL LIGHTING PULLBOX INSTALLATION WITH POLE FOUNDATION AND BASE

SCALE: NO SCALE
(SEE NOTE 6)

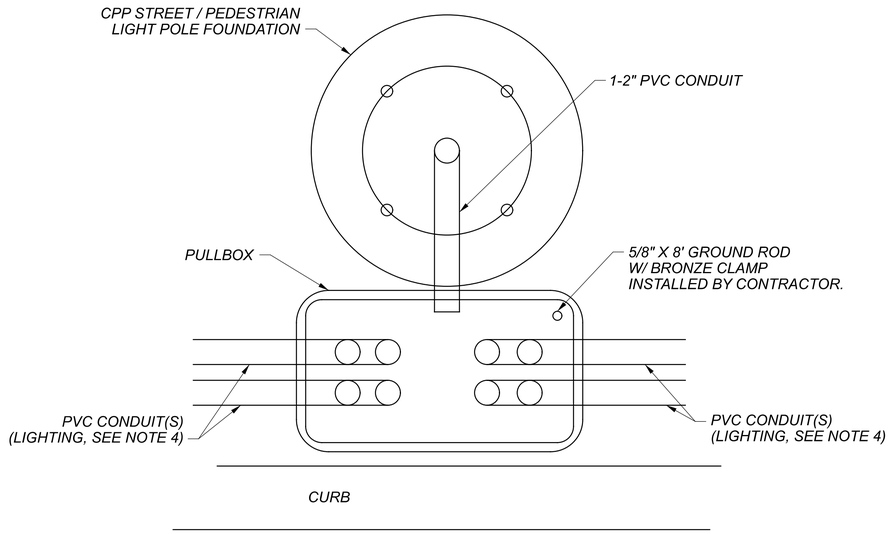

CPP STREET / PEDESTRIAN LIGHTING PULLBOX INSTALLATION

SCALE: NO SCALE
(SEE NOTE 6)

NOTE:
THE CONTRACTOR SHALL PROVIDE AND INSTALL GROUNDING STRAP, PAID INCIDENTAL TO PULL BOX.

Preliminary Plans - For Reference Only

LIGHTING DETAILS
CPP STREET AND PEDESTRIAN LIGHT POLES AND PULL BOXES

DESIGN AGENCY
Michael Baker INTERNATIONAL

DESIGNER JLD
REVIEWER SM 05/22/24
PROJECT ID 82382
SHEET 1743 TOTAL 2696

CUY-90-16.28 (CCG3A)

MODEL: Sheet PAPERSIZE: 34x22 (in.) DATE: 3/27/2025 TIME: 8:02:46 PM USER: Mala.Gallagher
pw:\\mb-us-pw.bentley.com:mb-us-pw-03\Documents\Cleveland_OH\01_Projects\ODOT\District2\82382\400-Engineering\Lighting\Sheets\82382_LD003.dgn

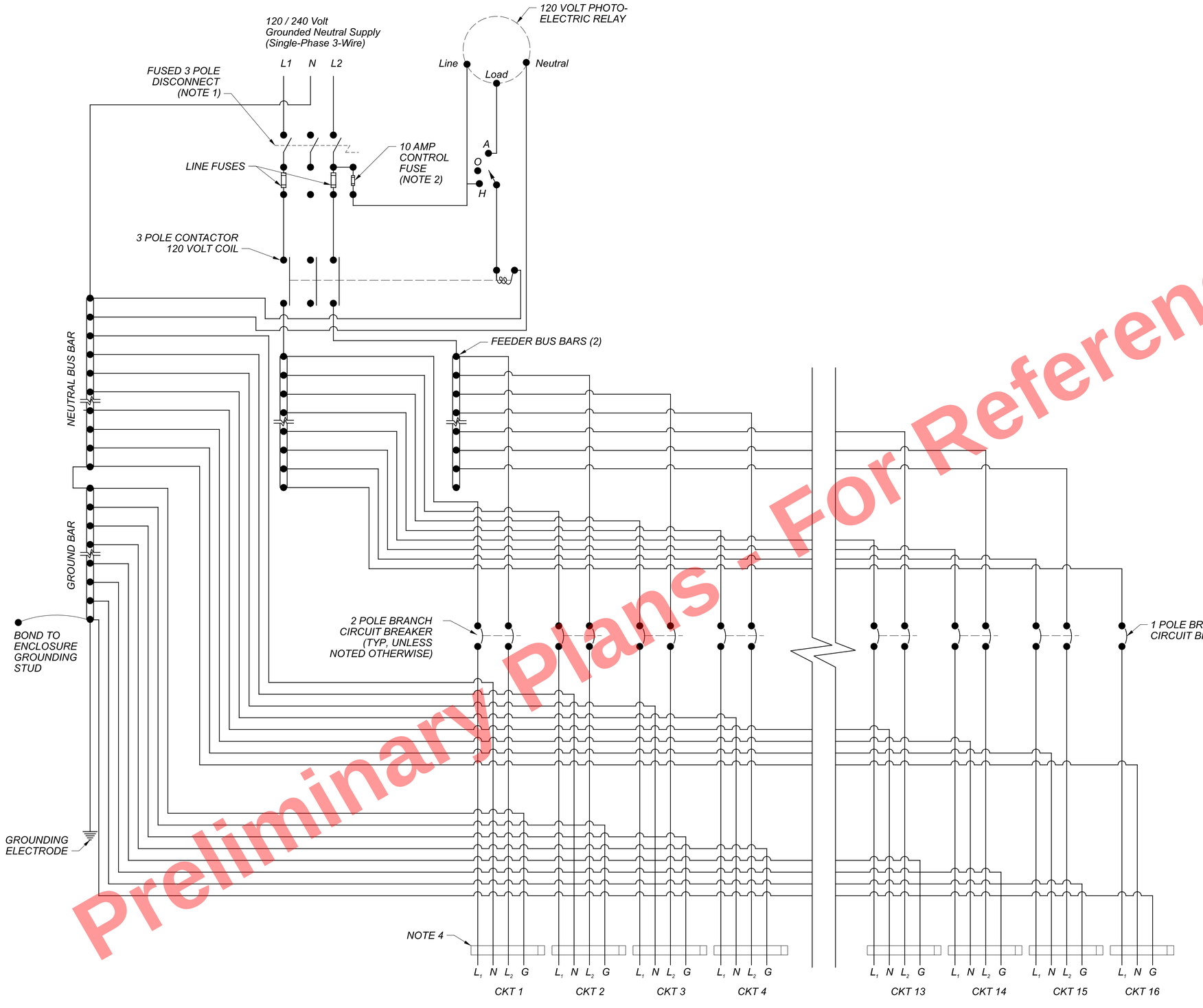

120 and 240 VOLT CONNECTIONS

NOTES:

1. POWER LINE FUSES SHALL BE CLASS RK1.
2. CONTROL FUSE SHALL BE CLASS CC.
3. SEE STANDARD AMPERE RATINGS IN NEC 240.6 (2011). DISCONNECT FUSE AND CIRCUIT BREAKERS SHALL BE COORDINATED PER NEC 240.12(1) (2011).
4. GROUP MULTIWIRE BRANCH CIRCUIT CONDUCTORS WITHIN ENCLOSURE PER NEC 210.4(D) (2011). INSTALL BRANCHCIRCUIT BREAKERS EATON EGS20XXFFG, SQUARE D BGL 160XX, SQUARE D QOU2XX OR APPROVED EQUAL.
5. ENCLOSURE CONSTRUCTION SHALL CONFORM TO NEC ART 409.
6. LIGHTING BRANCH CIRCUITS SHOWN ARE SCHEMATIC TYPICALLY ALL BRANCH CIRCUITS EMANATING FROM A CONTROL CENTER HAVE THE SAME CONFIGURATION. VOLTAGES ON ALL CONDUCTORS FOR NEW CONSTRUCTION SHALL NOT EXCEED 277V TO GROUND.
7. DO NOT INCLUDE NEUTRAL CONDUCTOR IN LIGHTING BRANCH CIRCUITS IF ALL LOADS ARE CONNECTED LINE-TO-LINE. SEE HL-60.11, HL-60.12 AND HL-60.21.
8. ALTERNATE LUMINAIRE LOADS L, -N/L, -N FOR THE LENGTH OF THE BRANCH CIRCUIT.
9. FOR LIGHTING BRANCH CIRCUITS FED FROM 3-PHASE SERVICE, APPLY COLORED PHASE TAPE ON THE LOAD SIDE OF THE CIRCUIT BREAKERS AS FOLLOWS:

   ØA ONE STRIPE
   ØB TWO STRIPES
   ØC THREE STRIPES

   USE A DIFFERENT COLORED TAPE FOR EACH BRANCHCIRCUIT. DO NOT USE RED OR BLUE FOR BRANCH CIRCUITS.

   PHASE MARKING TAPE IS IN ADDITION TO CMS 625.17 AND 725.02 MARKING REQUIREMENTS FOR CIRCUIT IDENTIFICATION.

   FOR ALL UNGROUNDED CONDUCTORS INSIDE THE CONTROL CENTER ON THE LINE SIDE OF THE BRANCH CIRCUIT BREAKERS, APPLY PHASE TAPE AS FOLLOWS:

   ØA BLACK (OR NO TAPE)
   ØB RED
   ØC BLUE

10. FOR LIGHTING BRANCH CIRCUITS FED FROM SINGLE-PHASE SERVICE, APPLY COLORED TAPE TO ALL UNDERGROUND CONDUCTORS. USE A DIFFERENT COLORED TAPE FOR EACH BRANCH CIRCUIT. FOR ALL UNGROUNDED CONDUCTORS INSIDE THE CONTROL CENTER ON THE LINE SIDE OF THE BRANCH CIRCUIT BREAKERS, APPLY COLORED TAPE, BUT DO NOT USE THE SAME COLOR AS ANY BRANCH CIRCUIT.
11. POST IDENTIFICATION MEANS INSIDE EACH ENCLOSURE PER NEC 210.5.
12. BUS BARS AND GROUND BARS ARE REQUIRED.
13. REMOVE ENAMEL COATING FROM UNDER GROUND BAR.
14. SURGE PROTECTIVE DEVICE (SPD) REQUIRED, SEE HL-40.20. CONNECT POWER LEADS TO LINE SIDE OF FUSED DISCONNECT, NEUTRAL LEAD TO NEUTRAL BUS BAR.
15. CIRCUITS 5 THRU 12 NOT SHOWN FOR CLARITY. CIRCUITS WILL BE WIRED THE SAME AS CIRCUITS 1 THRU 4 AND 13 THRU 15.

Preliminary Plans - For Reference Only

LIGHTING DETAILS
PEDESTRIAN LIGHTING PANEL DETAIL

DESIGN AGENCY
Michael Baker INTERNATIONAL

DESIGNER
JTP

REVIEWER
MMC 05/22/24

PROJECT ID
82382

SHEET 1744 | TOTAL 2696

CUY-90-16.28 (CCG3A)

MODEL: Sheet PAPERSIZE: 34x22 (in) DATE: 3/27/2025 TIME: 8:02:52 PM USER: Mala.Gallagher
pw:\\mb-us-pw.bentley.com:mb-us-pw-03\Documents\Cleveland_OH\01_Projects\ODOT\District2\82382\400-Engineering\Lighting\Sheets\82382_LD002.dgn

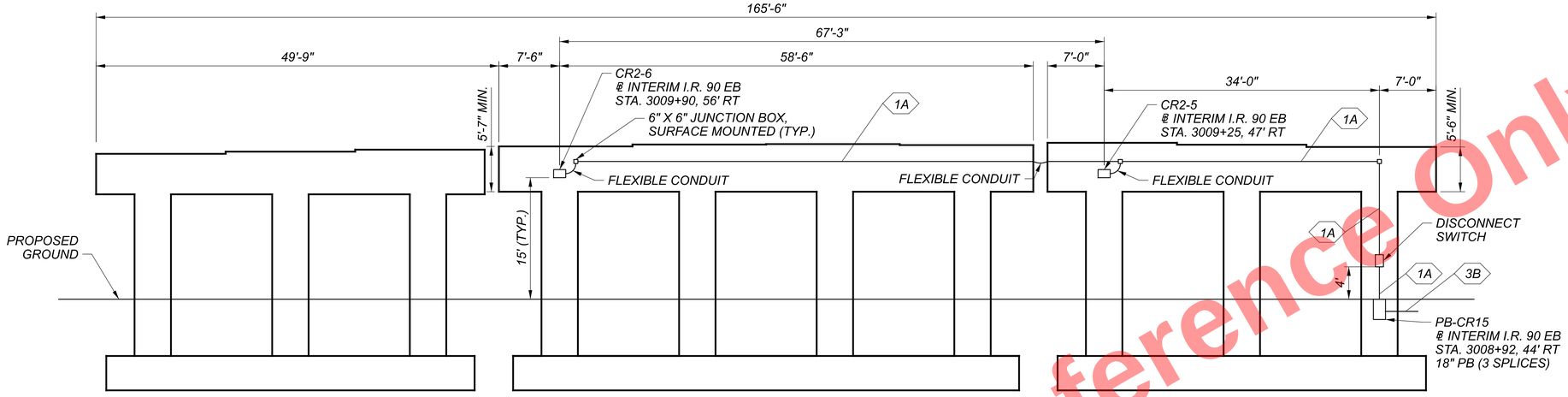

ELEVATION-PIER 1
(LOOKING EAST)
(NOT TO SCALE)

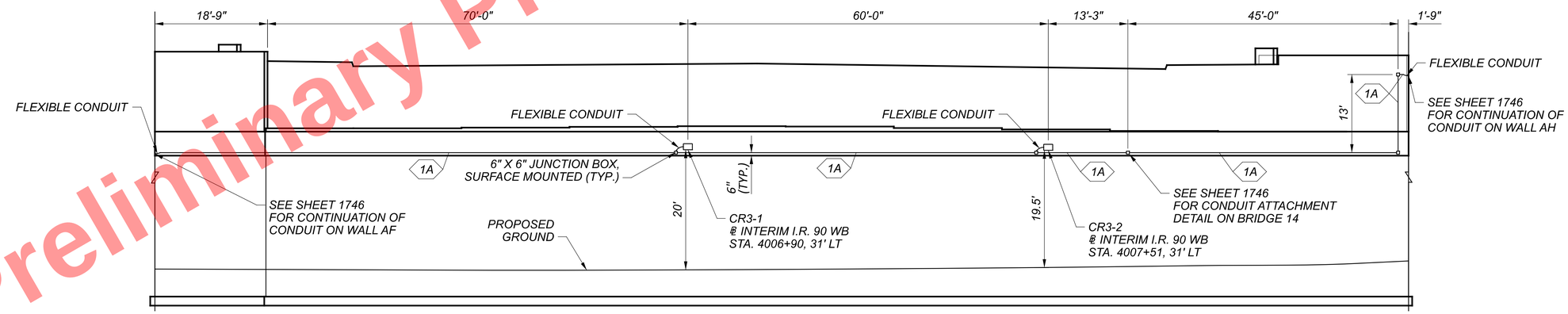

ELEVATION-REAR ABUTMENT
(LOOKING WEST)
(NOT TO SCALE)

NOTE:
CONTRACTOR SHALL INSTALL HORIZONTAL CONDUIT RUN AT THE TOP OF PROPOSED AESTHETIC TREATMENT ON REAR ABUTMENT. REFER TO LANDSCAPING PLANS FOR ADDITIONAL DETAIL ON THE AESTHETIC TREATMENT.

Preliminary Plans - For Reference Only

UNDERPASS LIGHTING DETAILS
CUY-90-1696 (BRIDGE 14 - CARNEGIE AVE.)

DESIGN AGENCY
Michael Baker INTERNATIONAL

DESIGNER SED
REVIEWER JLD 04/17/24
PROJECT ID 82382
SHEET 1745 TOTAL 2696

CUY-90-16.28 (CCG3A)

MODEL: Sheet PAPERSIZE: 34x22 (in.) DATE: 3/27/2025 TIME: 8:02:58 PM USER: MaiaGallagher
pw:\\mb-us-pw.bentley.commb-us-pw-03\Documents\Cleveland_OH\OiL_Projects\ODOT\District2\82382\400-Engineering\Lighting\Sheets\82382_LD310.dgn

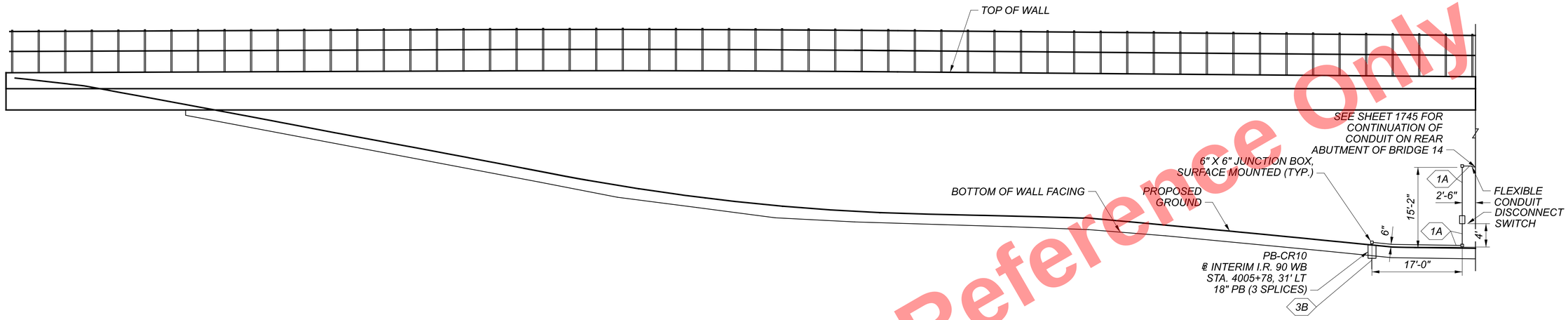

ELEVATION-WALL AF
(LOOKING NORTH)
(NOT TO SCALE)

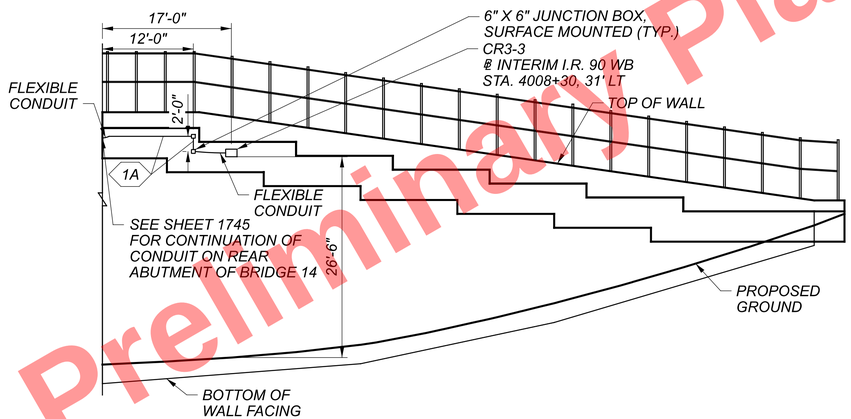

ELEVATION-WALL AH
(LOOKING WEST)
(NOT TO SCALE)

NOTE:
CONTRACTOR SHALL INSTALL VERTICAL CONDUIT RUN BETWEEN PROPOSED AESTHETIC TREATMENT DESIGN PANELS ON WALLS AH AND AF WHERE POSSIBLE. REFER TO LANDSCAPING PLANS FOR ADDITIONAL DETAIL ON THE AESTHETIC TREATMENT.

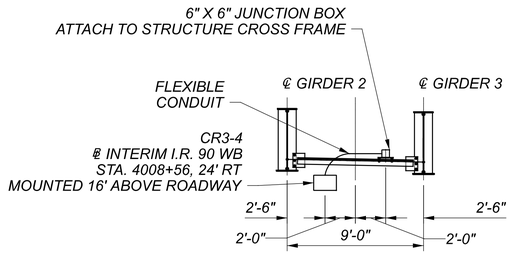

NOTE:
FOR ADDITIONAL LUMINAIRE SUPPORT DETAILS, REFER TO BRIDGE 14 STRUCTURES PLANS.

UNDERPASS LUMINAIRE DETAIL - BRIDGE 14 CROSS FRAME
(LOOKING EAST)
(NOT TO SCALE)

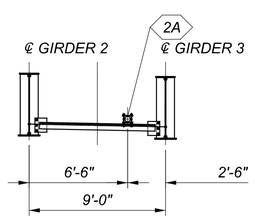

NOTE:
FOR ADDITIONAL CONDUIT MOUNTING DETAILS, REFER TO BRIDGE 14 STRUCTURES PLANS.

CONDUIT ATTACHMENT DETAIL - BRIDGE 14
(LOOKING EAST)
(NOT TO SCALE)

Preliminary Plans - For Reference Only

UNDERPASS LIGHTING DETAILS
WALLS AF & AH

DESIGN AGENCY
Michael Baker INTERNATIONAL

DESIGNER SED
REVIEWER JLD 04/17/24
PROJECT ID 82382
SHEET 1746 TOTAL 2696

CUY-90-16.28 (CCG3A)

MODEL: Sheet PAPERSIZE: 34x22 (in.) DATE: 3/27/2025 TIME: 8:03:05 PM USER: MaloGallagher
pw:\\mb-us-pw.bentley.com:mb-us-pw-03\Documents\Cleveland.OH\01_Projects\ODOT\District2\82382\400-Engineering\Lighting\Sheets\82382_LD31L.dgn

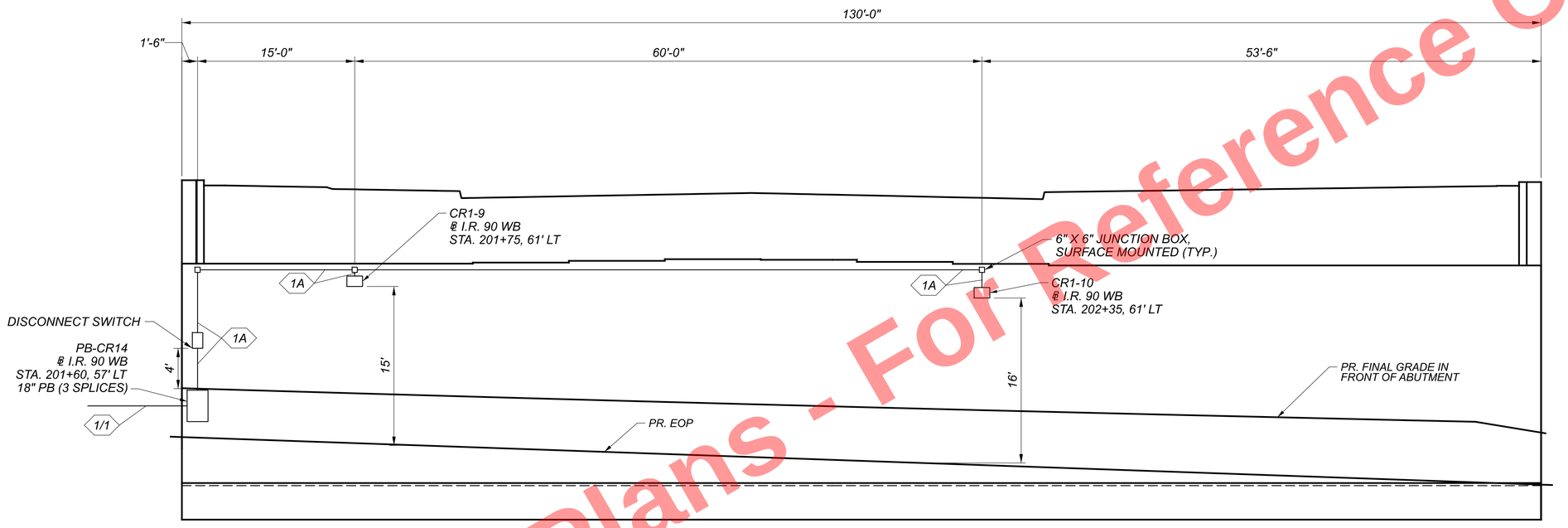

ELEVATION-FORWARD ABUTMENT
(LOOKING NORTH)
(NOT TO SCALE)

Preliminary Plans - For Reference Only

NOTE:
CONTRACTOR SHALL INSTALL HORIZONTAL CONDUIT RUN AT THE TOP OF PROPOSED AESTHETIC TREATMENT ON FORWARD ABUTMENT. CONTRACTOR SHALL INSTALL VERTICAL CONDUIT RUN BETWEEN PROPOSED AESTHETIC TREATMENT DESIGN PANELS ON FORWARD ABUTMENT. REFER TO LANDSCAPING PLANS FOR ADDITIONAL DETAIL ON THE AESTHETIC TREATMENT.

UNDERPASS LIGHTING DETAILS
CUY-90-1678 (BRIDGE 13 - E. 22ND ST.)

DESIGN AGENCY
Michael Baker INTERNATIONAL

DESIGNER
SED

REVIEWER
JLD 04/17/24

PROJECT ID
82382

SHEET 1747 | TOTAL 2696

CUY-90-16.28 (CCG3A)

MODEL: Sheet PAPERSIZE: 34x22 (in.) DATE: 3/27/2025 TIME: 8:03:14 PM USER: Mala.Gallagher
pw:\\mb-us-pw.bentley.com:mb-us-pw-03\Documents\Cleveland.OH\OI_Projects\ODOT\District2\82382\400-Engineering\Lighting\Sheets\82382_LD320.dgn

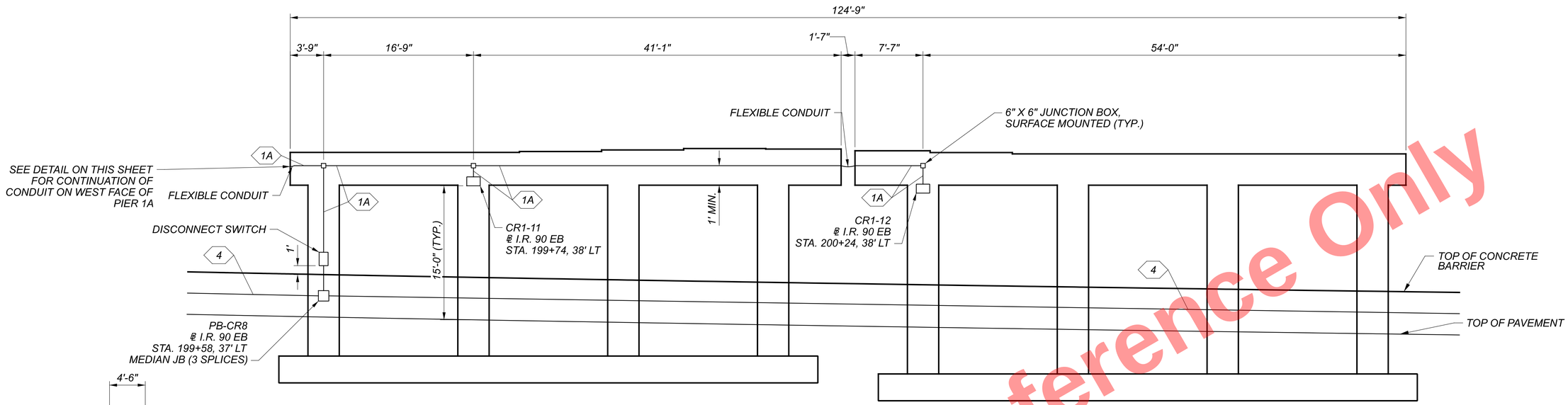

ELEVATION-PIER 1A AND 1B
(LOOKING NORTH)
(NOT TO SCALE)

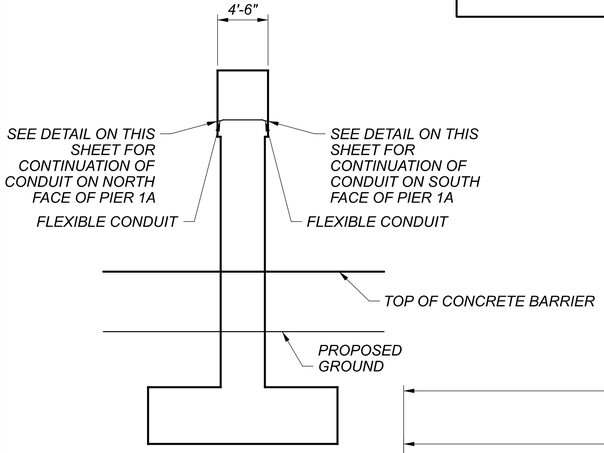

ELEVATION-PIER 1A
(LOOKING EAST)
(NOT TO SCALE)

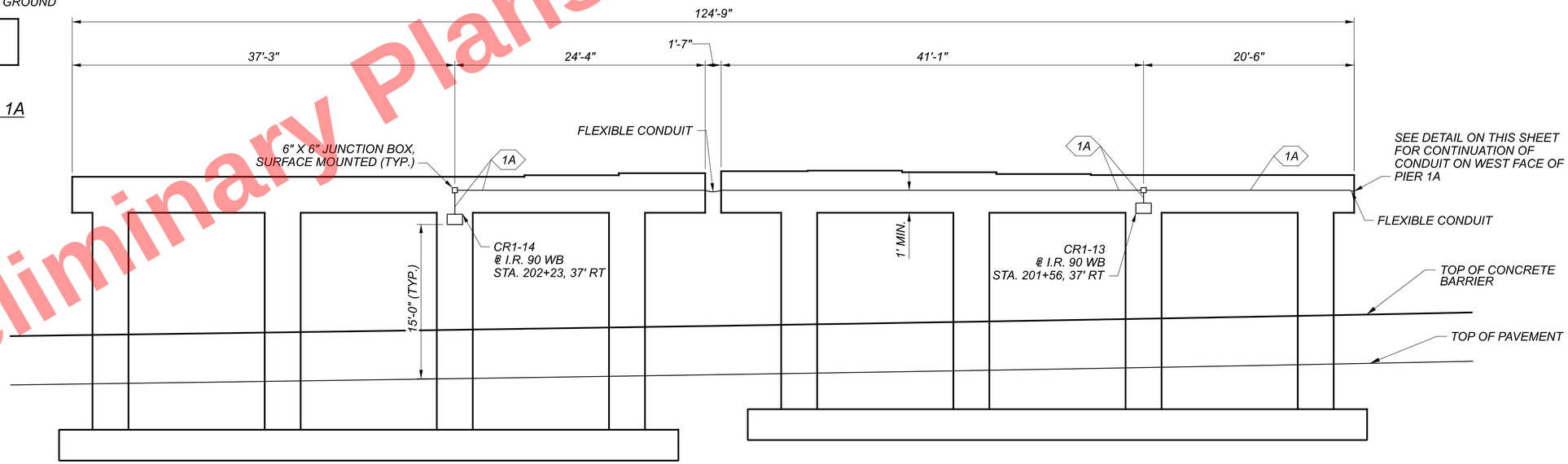

ELEVATION-PIER 1A AND 1B
(LOOKING SOUTH)
(NOT TO SCALE)

Preliminary Plans - For Reference Only

UNDERPASS LIGHTING DETAILS
CUY-90-1678 (BRIDGE 13 - E. 22ND ST.)

DESIGN AGENCY
Michael Baker INTERNATIONAL

DESIGNER SED
REVIEWER JLD 04/17/24
PROJECT ID 82382
SHEET 1748 TOTAL 2696

CUY-90-16.28 (CCG3A)

MODEL: Sheet PAPERSIZE: 34x22 (in.) DATE: 3/27/2025 TIME: 8:03:27 PM USER: MaiaGallagher
pw:\\mb-us-pw.bentley.com:mb-us-pw-03\Documents\Cleveland_OH\OiL_Projects\ODOT\District2\82382\400-Engineering\Lighting\Sheets\82382_LD32i.dgn

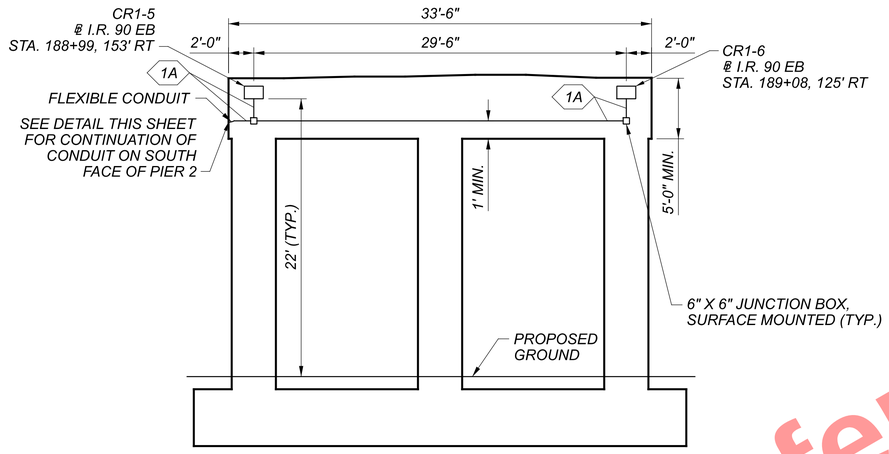

ELEVATION-PIER 2
(LOOKING WEST)
(NOT TO SCALE)

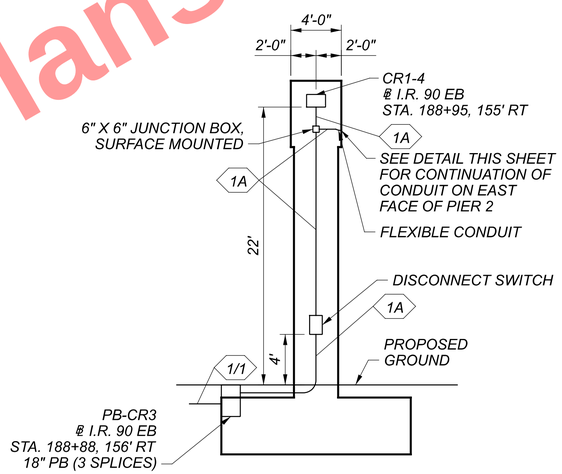

ELEVATION-PIER 2
(LOOKING NORTH)
(NOT TO SCALE)

Preliminary Plans - For Reference Only

UNDERPASS LIGHTING DETAILS
CUY-90-1652S (BRIDGE 12 - RAMP B6)

CUY-90-16.28 (CCG3A)

MODEL: Sheet PAPERSIZE: 34x22 (in.) DATE: 3/27/2025 TIME: 8:03:33 PM USER: Mala.Gallagher
pw:\\mb-us-pw.bentley.com:mb-us-pw-03\Documents\Cleveland.OH\01_Projects\ODOT\District2\82382\400-Engineering\Lighting\Sheets\82382_LD30i.dgn

DESIGN AGENCY
Michael Baker INTERNATIONAL

DESIGNER SED
REVIEWER JLD 04/17/24
PROJECT ID 82382
SHEET 1749 TOTAL 2696

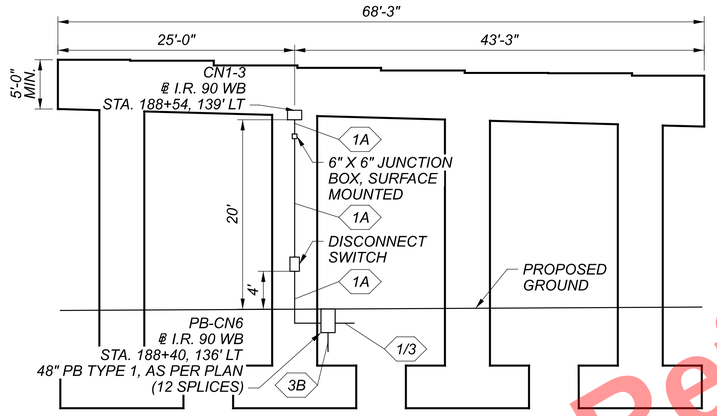

ELEVATION-PIER 10
(LOOKING EAST)
(NOT TO SCALE)

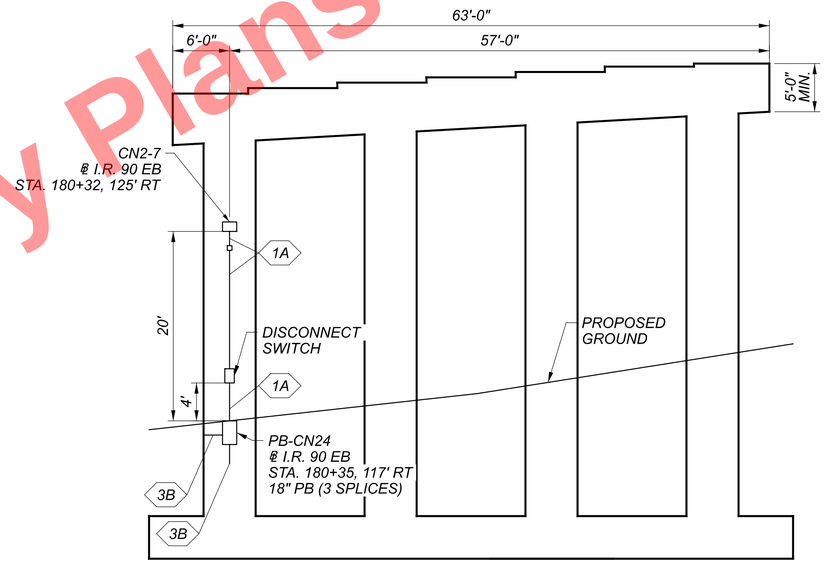

ELEVATION-PIER 6
(LOOKING SOUTH)
(NOT TO SCALE)

Preliminary Plans - For Reference Only

UNDERPASS LIGHTING DETAILS
CUY-77-1587 (BRIDGE 9 - I.R. 77 SB)

DESIGN AGENCY
Michael Baker INTERNATIONAL

DESIGNER
SED

REVIEWER
JLD 04/17/24

PROJECT ID
82382

SHEET 1750 | TOTAL 2696

CUY-90-16.28 (CCG3A)

MODEL: Sheet PAPERSIZE: 34x22 (in.) DATE: 3/27/2025 TIME: 8:03:38 PM USER: MalaGallagher
pw:\\mb-us-pw.bentley.com:mb-us-pw-03\Documents\Cleveland_OH\01_Projects\ODOT\District2\82382\400-Engineering\Lighting\Sheets\82382_LD403.dgn

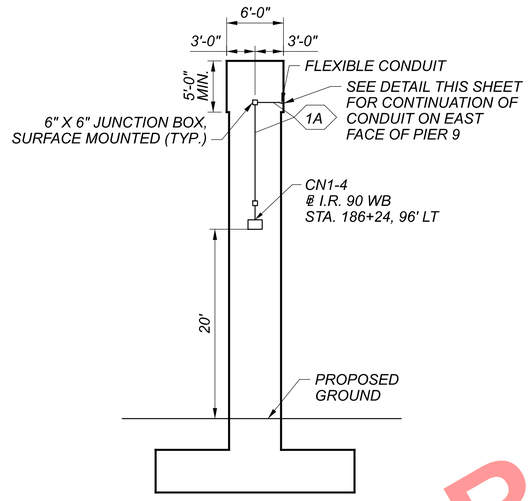

ELEVATION-PIER 9
(LOOKING NORTH)
(NOT TO SCALE)

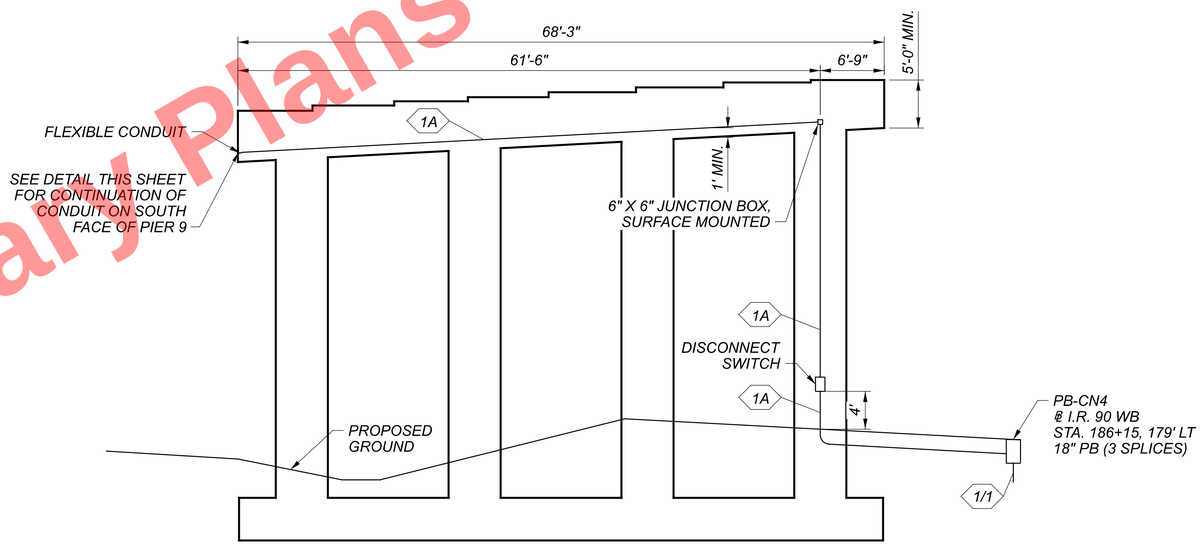

ELEVATION-PIER 9
(LOOKING WEST)
(NOT TO SCALE)

Preliminary Plans - For Reference Only

UNDERPASS LIGHTING DETAILS
CUY-77-1587 (BRIDGE 9 - I.R. 77 SB)

DESIGN AGENCY
Michael Baker INTERNATIONAL

DESIGNER
SED

REVIEWER
JLD 04/17/24

PROJECT ID
82382

SHEET 1751 | TOTAL 2696

CUY-90-16.28 (CCG3A)

MODEL: Sheet PAPERSIZE: 34x22 (in.) DATE: 3/27/2025 TIME: 8:03:43 PM USER: MalaGallagher
pw:\\mb-us-pw.bentley.com:mb-us-pw-03\Documents\Cleveland_OH\01_Projects\ODOT\District2\82382\400-Engineering\Lighting\Sheets\82382_LD401.dgn

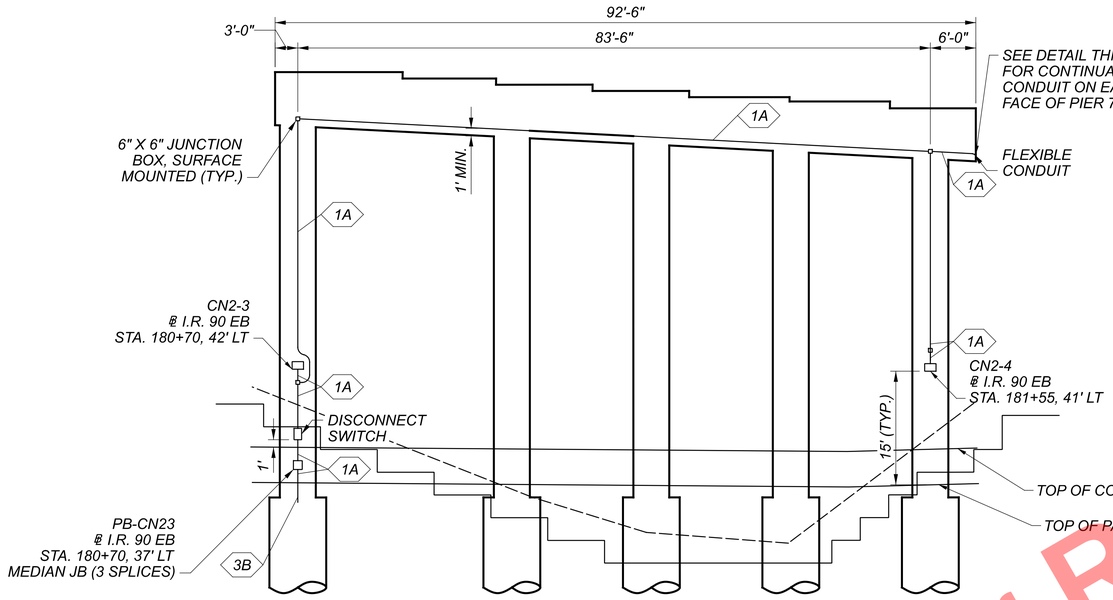

ELEVATION-PIER 7
(LOOKING NORTH)
(NOT TO SCALE)

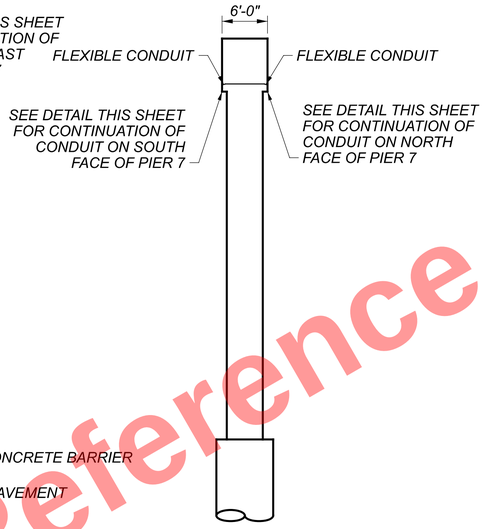

ELEVATION-PIER 7
(LOOKING WEST)
(NOT TO SCALE)

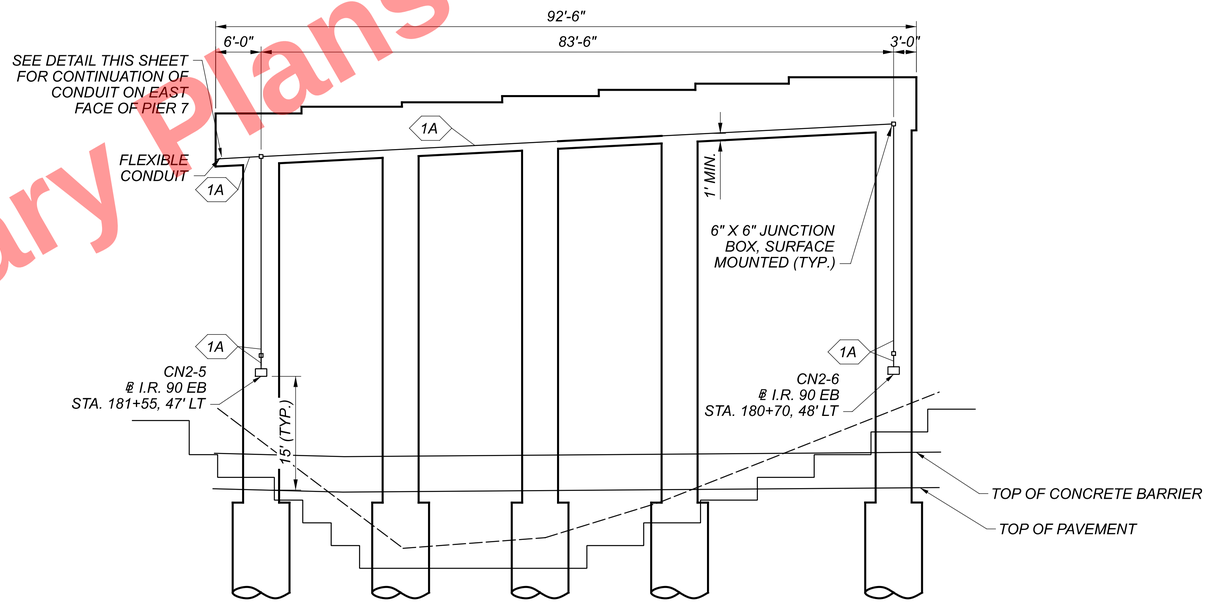

ELEVATION-PIER 7
(LOOKING SOUTH)
(NOT TO SCALE)

Preliminary Plans - For Reference Only

UNDERPASS LIGHTING DETAILS
CUY-77-1587 (BRIDGE 9 - I.R. 77 SB)

CUY-90-16.28 (CCG3A)

MODEL: Sheet PAPERSIZE: 34x22 (in.) DATE: 3/27/2025 TIME: 8:03:49 PM USER: MalaGallagher
pw:\\mb-us-pw.bentley.com:mb-us-pw-03\Documents\Cleveland_OH\01_Projects\ODOT\District2\82382\400-Engineering\Lighting\Sheets\82382_LD402.dgn

DESIGN AGENCY
Michael Baker INTERNATIONAL

DESIGNER SED
REVIEWER JLD 04/17/24
PROJECT ID 82382
SHEET 1752 TOTAL 2696

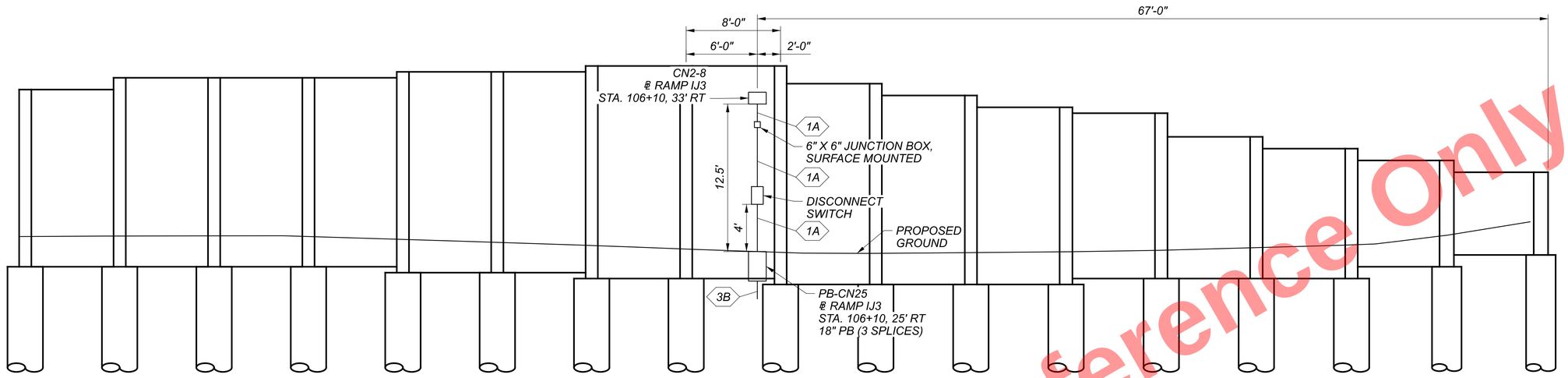

ELEVATION-WALL AJ
(LOOKING SOUTH)
(NOT TO SCALE)

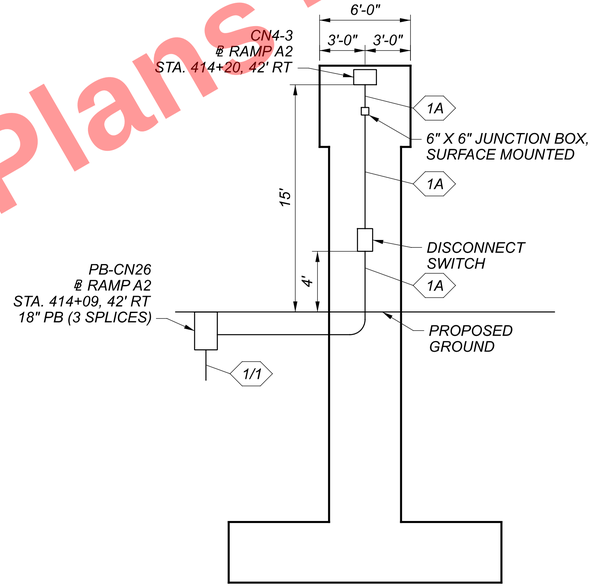

ELEVATION-PIER 2
(LOOKING SOUTH)
(NOT TO SCALE)

Preliminary Plans - For Reference Only

UNDERPASS LIGHTING DETAILS
CUY-77-1587 (BRIDGE 9 - I.R. 77 SB) & WALL AJ

DESIGN AGENCY
Michael Baker INTERNATIONAL

DESIGNER
SED

REVIEWER
JLD 04/17/24

PROJECT ID
82382

SHEET 1753 | TOTAL 2696

CUY-90-16.28 (CCG3A)

MODEL: Sheet PAPERSIZE: 34x22 (in.) DATE: 3/27/2025 TIME: 8:04:00 PM USER: MalaGallagher
pw:\\mb-us-pw.bentley.com:mb-us-pw-03\Documents\Cleveland.OH\Oi_Projects\ODOT\District2\82382\400-Engineering\Lighting\Sheets\82382_LD404.dgn

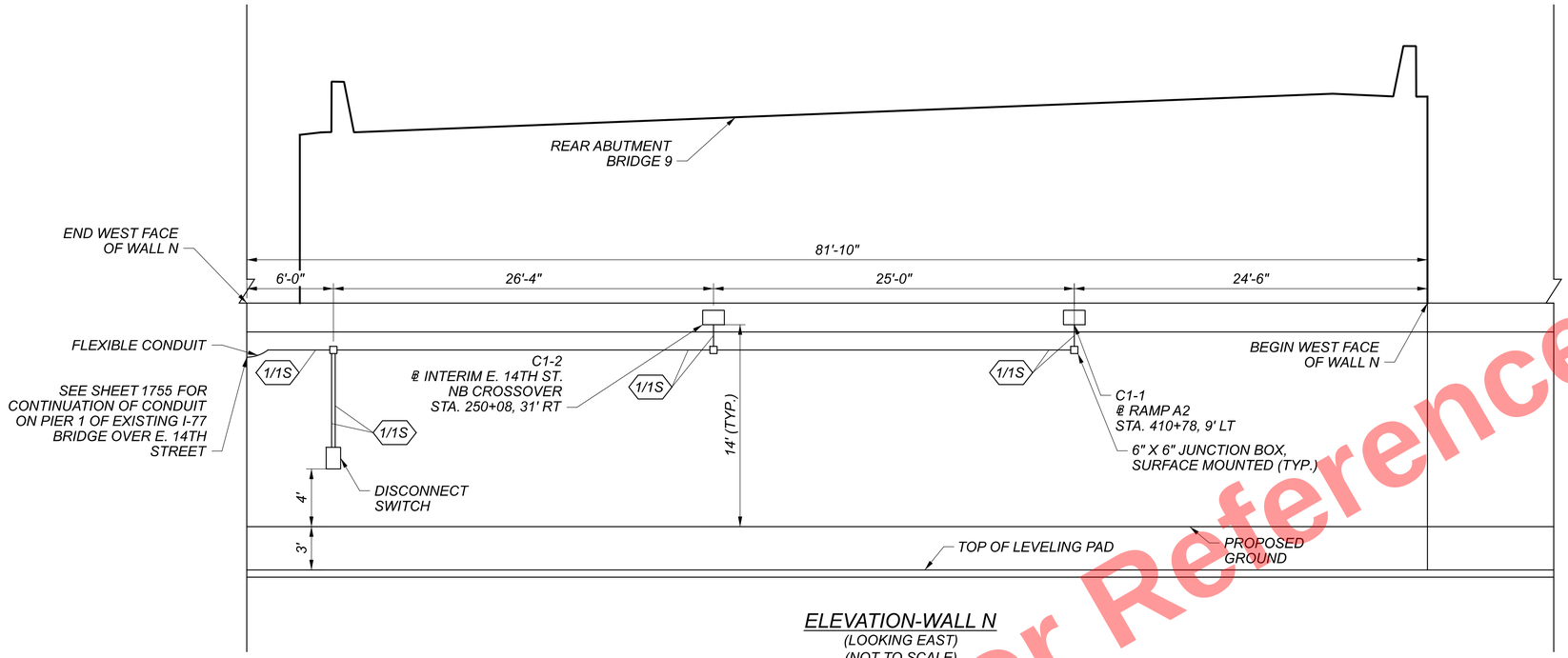

ELEVATION-WALL N
(LOOKING EAST)
(NOT TO SCALE)

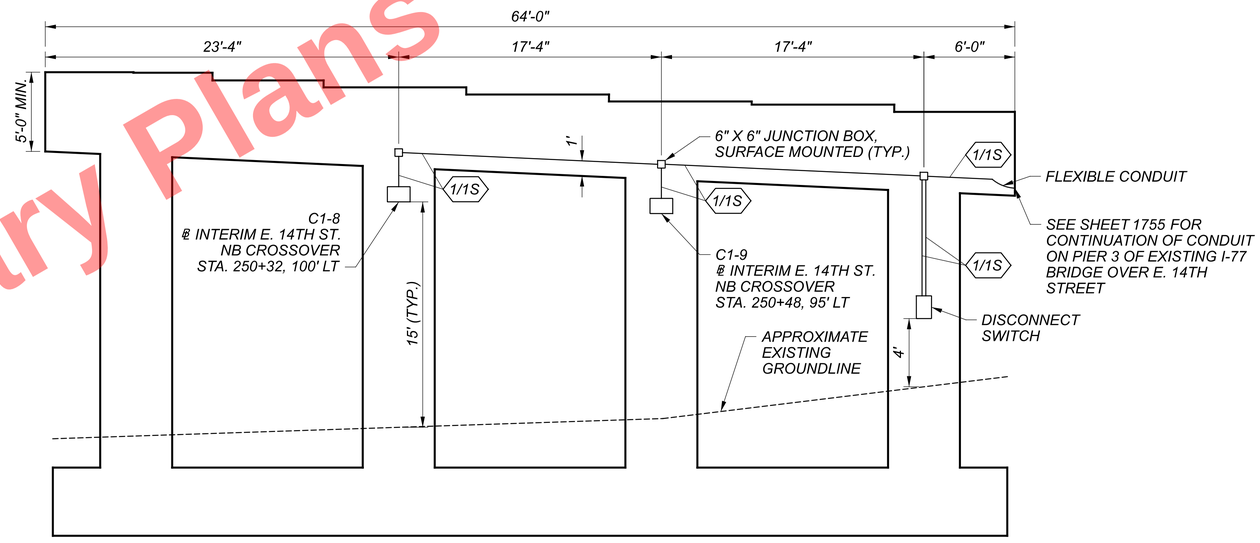

ELEVATION-PIER 1
(LOOKING WEST)
(NOT TO SCALE)

Preliminary Plans - For Reference Only

UNDERPASS LIGHTING DETAILS
CUY-77-1587 (BRIDGE 9 - I.R. 77 SB) & WALL N

DESIGN AGENCY
Michael Baker INTERNATIONAL

DESIGNER JLD
REVIEWER SM 11/03/23
PROJECT ID 82382
SHEET 1754 TOTAL 2696

CUY-90-16.28 (CCG3A)

MODEL: Sheet PAPERSIZE: 34x22 (In.) DATE: 3/27/2025 TIME: 8:04:06 PM USER: Mala.Gallagher
pw:\\mb-us-pw.bentley.com:mb-us-pw-03\Documents\Cleveland_OHIO_Projects\ODOT\District2\82382\400-Engineering\Lighting\Sheets\82382_LD50i.dgn

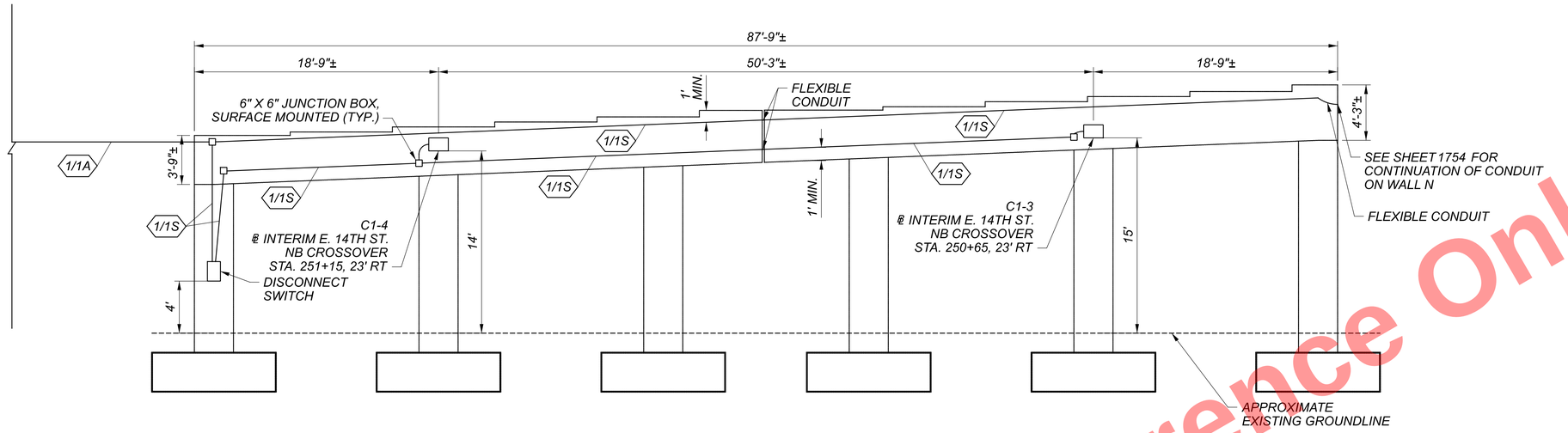

ELEVATION-PIER 1
(LOOKING EAST)
(NOT TO SCALE)

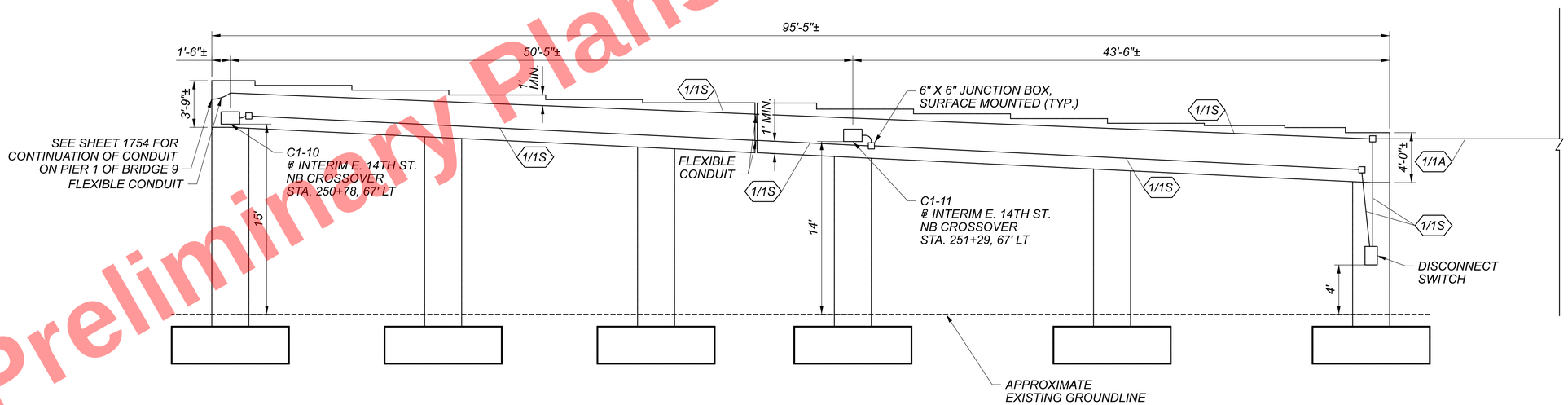

ELEVATION-PIER 3
(LOOKING WEST)
(NOT TO SCALE)

Preliminary Plans - For Reference Only

UNDERPASS LIGHTING DETAILS
CUY-21-1573 (I.R. 77)

DESIGN AGENCY
Michael Baker INTERNATIONAL

DESIGNER JLD
REVIEWER SM 11/03/23
PROJECT ID 82382
SHEET 1755 TOTAL 2696

CUY-90-16.28 (CCG3A)

MODEL: Sheet PAPERSIZE: 34x22 (in.) DATE: 3/27/2025 TIME: 8:04:12 PM USER: Mala.Gallagher
pw:\\mb-us-pw.bentley.com:mb-us-pw-03\Documents\Cleveland.OH\OI_Projects\ODOT\District2\82382\400-Engineering\Lighting\Sheets\82382_LD502.dgn

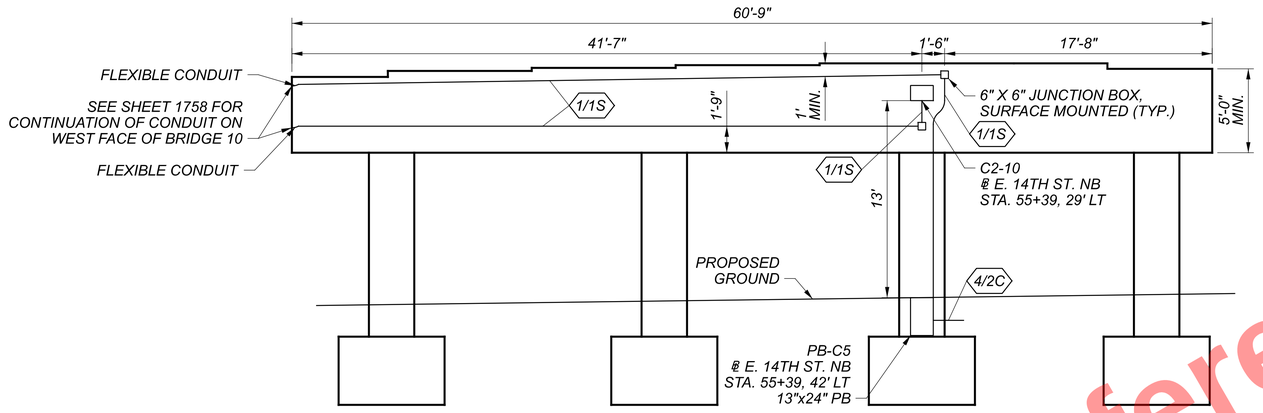

ELEVATION-PIER 1
(LOOKING EAST)
(NOT TO SCALE)

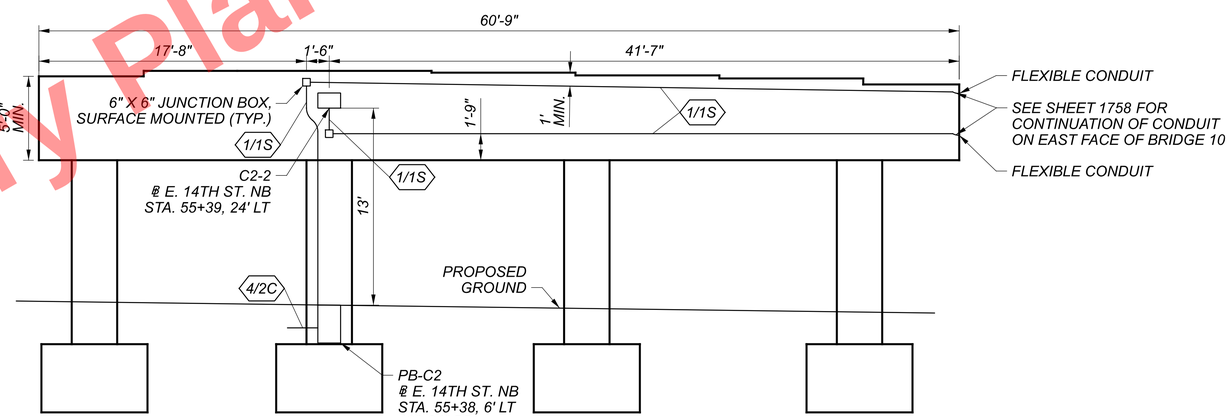

ELEVATION-PIER 1
(LOOKING WEST)
(NOT TO SCALE)

Preliminary Plans - For Reference Only

UNDERPASS LIGHTING DETAILS
CUY-90-1653R (BRIDGE 11 - I.R. 90 EB)

DESIGN AGENCY
Michael Baker INTERNATIONAL

DESIGNER JLD
REVIEWER SM 11/03/23
PROJECT ID 82382
SHEET 1756 TOTAL 2696

CUY-90-16.28 (CCG3A)

MODEL: Sheet PAPERSIZE: 34x22 (in.) DATE: 3/27/2025 TIME: 8:04:48 PM USER: Mala.Gallagher
pw:\\mb-us-pw.bentley.com:mb-us-pw-03\Documents\Cleveland.OH\OiL_Projects\ODOT\District2\82382\400-Engineering\Lighting\Sheets\82382_LD503.dgn

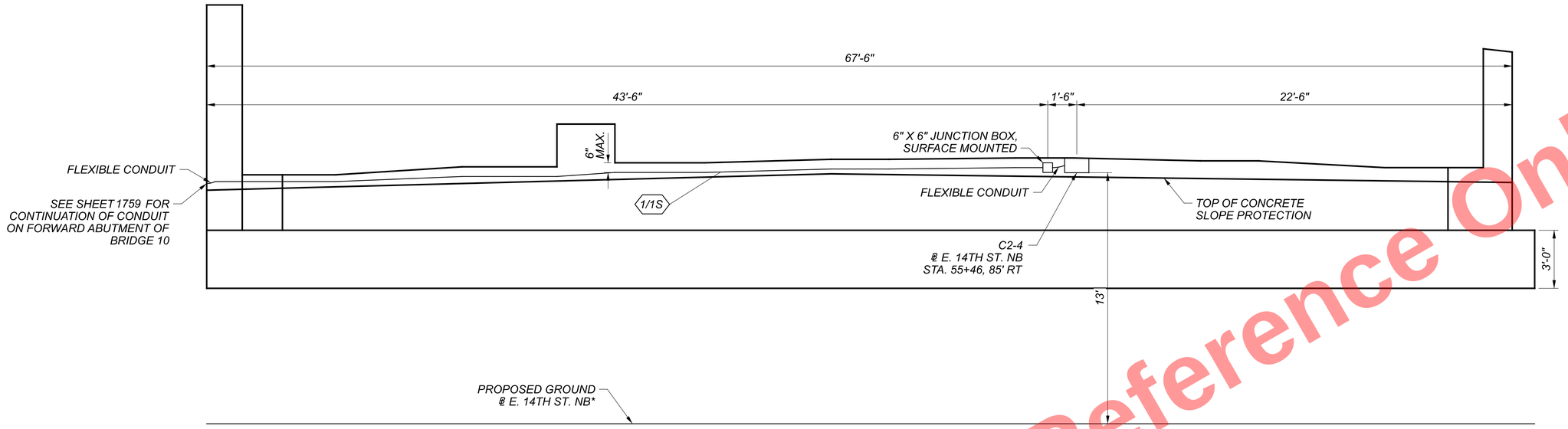

* FORWARD ABUTMENT IS INSTALLED ON A SLOPE AND OFFSET FROM E. 14TH ST. NB. FOR ADDITIONAL DETAIL, REFER TO STRUCTURES PLANS FOR BRIDGE 11

NOTE: CONTRACTOR SHALL NOT INSTALL MOUNTING HARDWARE WITHIN EXPANDED POLYSTYRENE FILLER OR REMOVABLE FORMS. REFER TO BRIDGE 11 PLANS FOR ADDITIONAL ABUTMENT DETAILS.

ELEVATION-FORWARD ABUTMENT

(LOOKING EAST)
(NOT TO SCALE)

Preliminary Plans - For Reference Only

UNDERPASS LIGHTING DETAILS
CUY-90-1653R (BRIDGE 11 - I.R. 90 EB)

DESIGN AGENCY
Michael Baker INTERNATIONAL

DESIGNER JLD
REVIEWER SM 11/03/23
PROJECT ID 82382
SHEET 1757 TOTAL 2696

CUY-90-16.28 (CCG3A)

MODEL: Sheet PAPERSIZE: 34x22 (in.) DATE: 3/27/2025 TIME: 8:04:31 PM USER: MalaGallagher
pw:\\mb-us-pw.bentley.com:mb-us-pw-03\Documents\Cleveland.OH\OiL_Projects\ODOT\District2\82382\400-Engineering\LIghting\Sheets\82382_LD504.dgn

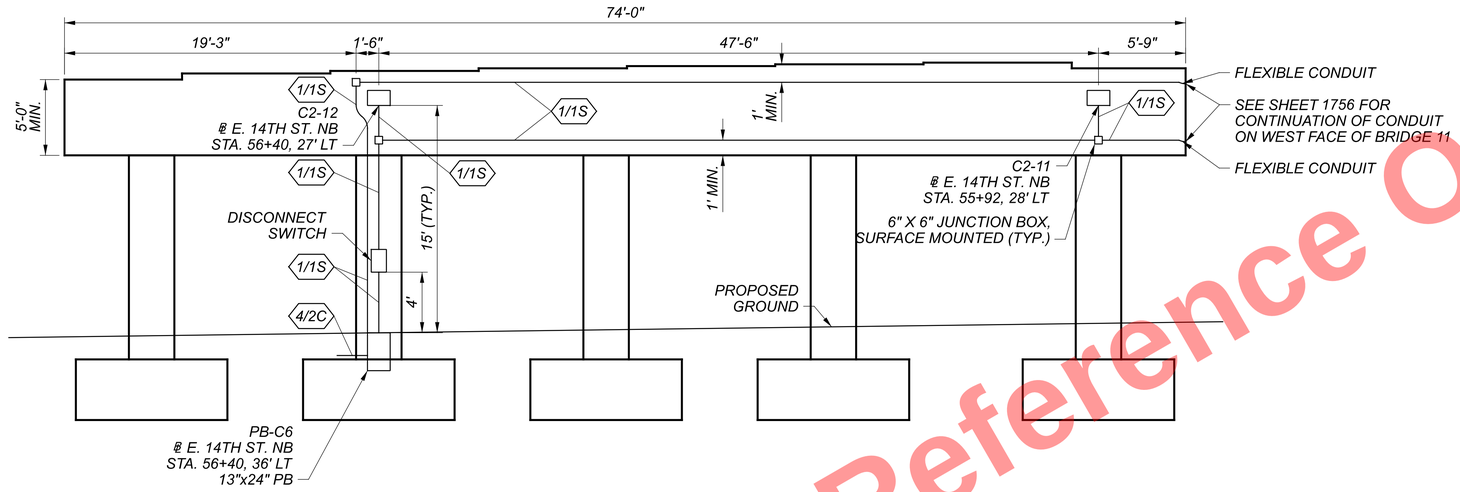

ELEVATION-PIER 1
(LOOKING EAST)
(NOT TO SCALE)

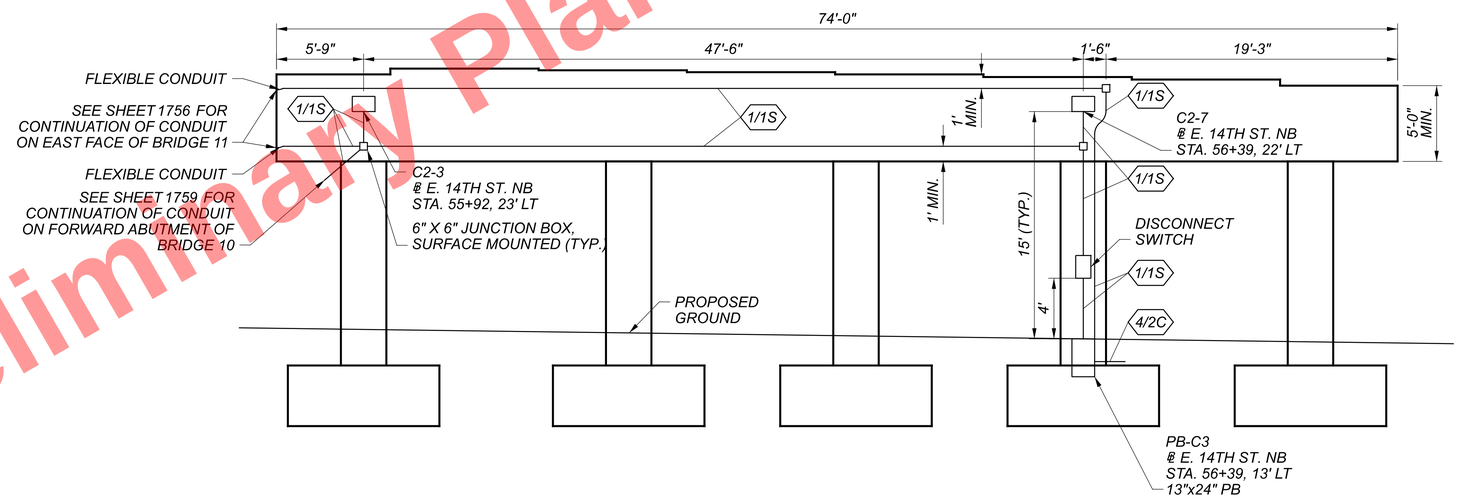

ELEVATION-PIER 1
(LOOKING WEST)
(NOT TO SCALE)

Preliminary Plans - For Reference Only

UNDERPASS LIGHTING DETAILS
CUY-90-1653L (BRIDGE 10 - I.R. 90 WB)

DESIGN AGENCY
Michael Baker INTERNATIONAL

DESIGNER JLD
REVIEWER SM 11/03/23
PROJECT ID 82382
SHEET 1758 TOTAL 2696

CUY-90-16.28 (CCG3A)

MODEL: Sheet PAPERSIZE: 34x22 (in.) DATE: 3/27/2025 TIME: 8:04:38 PM USER: MaLaGallagher
pw:\\mb-us-pw.bentley.com:mb-us-pw-03\Documents\Cleveland_OH\DL_Projects\DOT\District2\82382\400-Engineering\Lighting\Sheets\82382_LD505.dgn

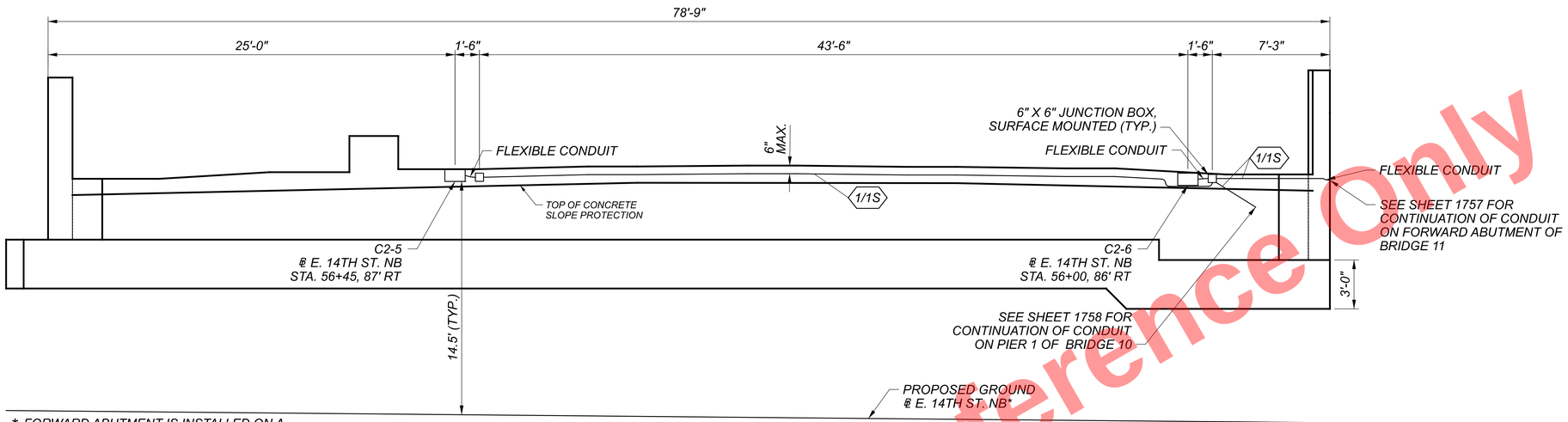

* FORWARD ABUTMENT IS INSTALLED ON A SLOPE AND OFFSET FROM E. 14TH ST. NB. FOR ADDITIONAL DETAIL, REFER TO STRUCTURES PLANS FOR BRIDGE 10

NOTE: CONTRACTOR SHALL NOT INSTALL MOUNTING HARDWARE WITHIN EXPANDED POLYSTYRENE FILLER OR REMOVABLE FORMS. REFER TO BRIDGE 10 PLANS FOR ADDITIONAL ABUTMENT DETAILS.

ELEVATION-FORWARD ABUTMENT

(LOOKING EAST)
(NOT TO SCALE)

Preliminary Plans - For Reference Only

UNDERPASS LIGHTING DETAILS
CUY-90-1653L (BRIDGE 10 - I.R. 90 WB)

DESIGN AGENCY
Michael Baker INTERNATIONAL

DESIGNER
JLD

REVIEWER
SM 11/03/23

PROJECT ID
82382

SHEET 1759 | TOTAL 2696

CUY-90-16.28 (CCG3A)

MODEL: Sheet PAPERSIZE: 34x22 (in.) DATE: 3/27/2025 TIME: 8:04:44 PM USER: Mala.Gallagher
pw:\\mb-us-pw.bentley.com:mb-us-pw-03\Documents\Cleveland_OH\DL_Projects\ODOT\District2\82382\400-Engineering\Lighting\Sheets\82382_LD506.dgn

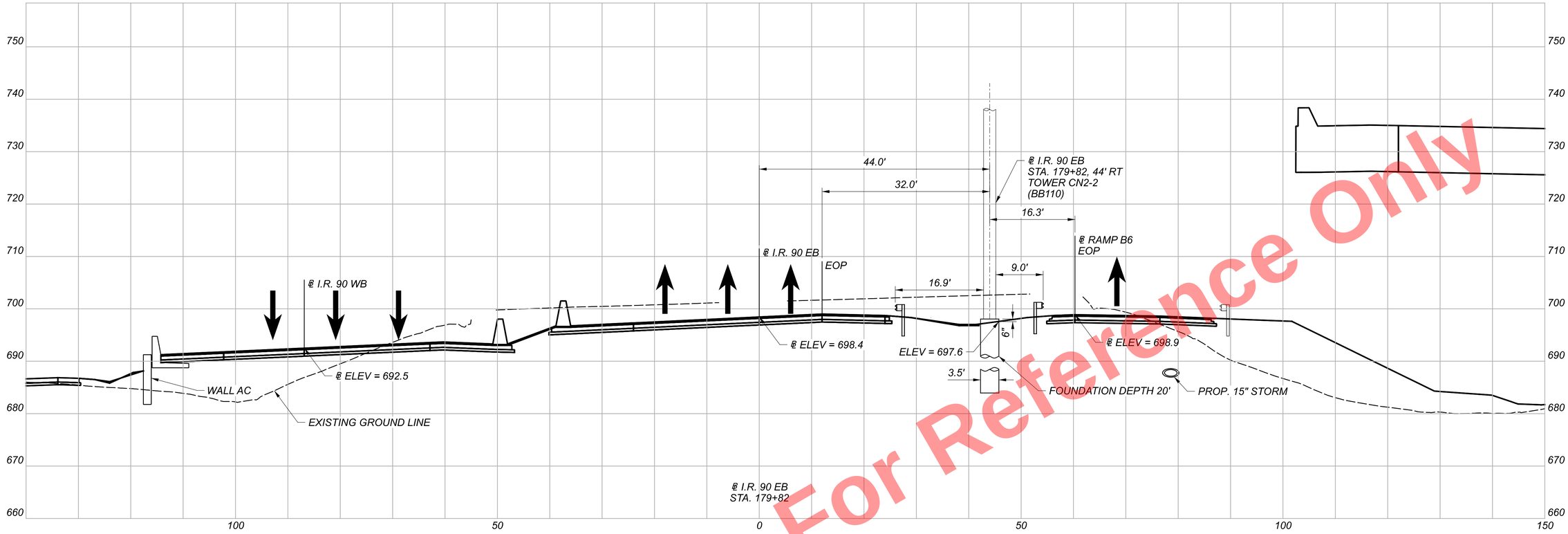

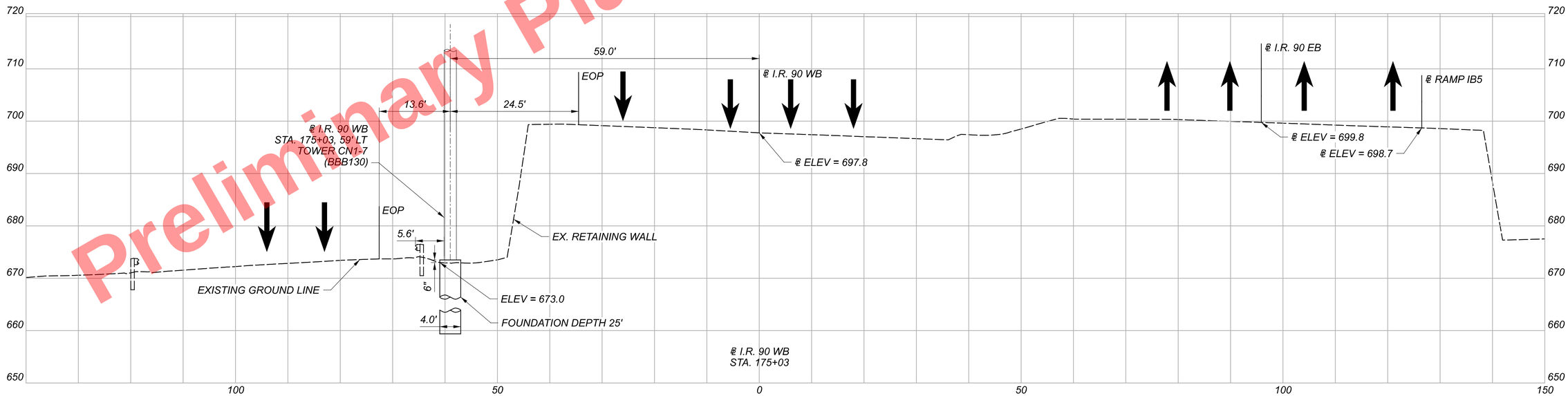

Preliminary Plans - For Reference Only

TOWER ELEVATION VIEWS
TOWERS CN1-7 & CN2-2

CUY-90-16.28 (CCG3A)

MODEL: Sheet PAPERSIZE: 34x22 (in.) DATE: 3/27/2025 TIME: 8:05:09 PM USER: MaiaGallagher
pw:\\mb-us-pw.bentley.com:mb-us-pw-03\Documents\Cleveland.OH\OI_Projects\ODOT\District2\82382\400-Engineering\LI

DESIGN AGENCY
Michael Baker INTERNATIONAL

DESIGNER SED
REVIEWER JLD 05/03/24
PROJECT ID 82382
SHEET 1760 TOTAL 2696

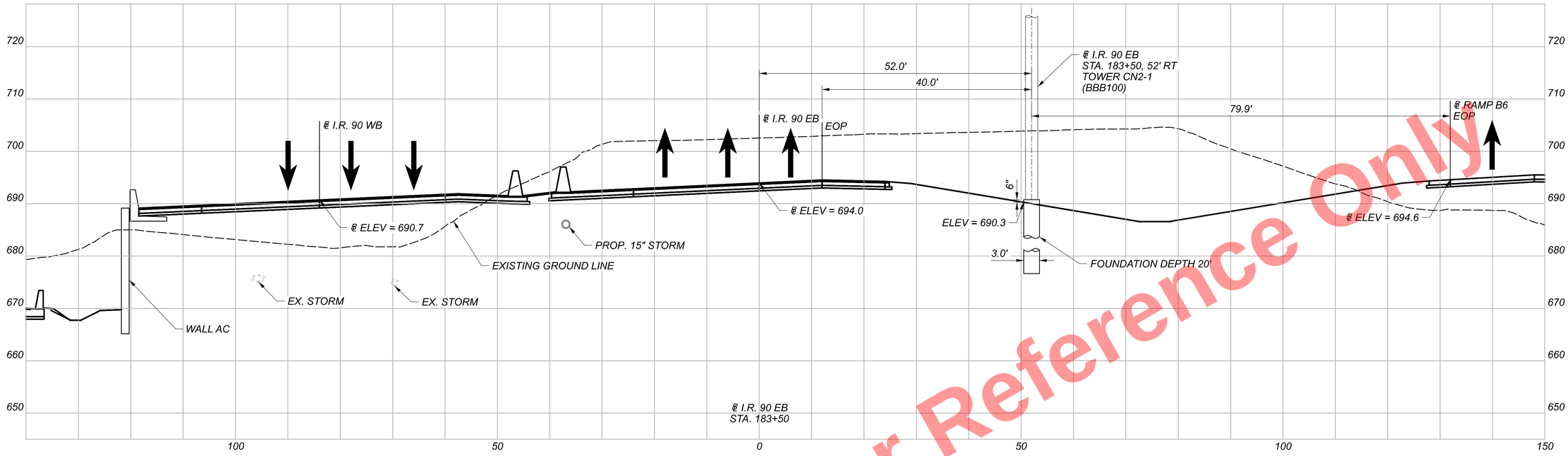

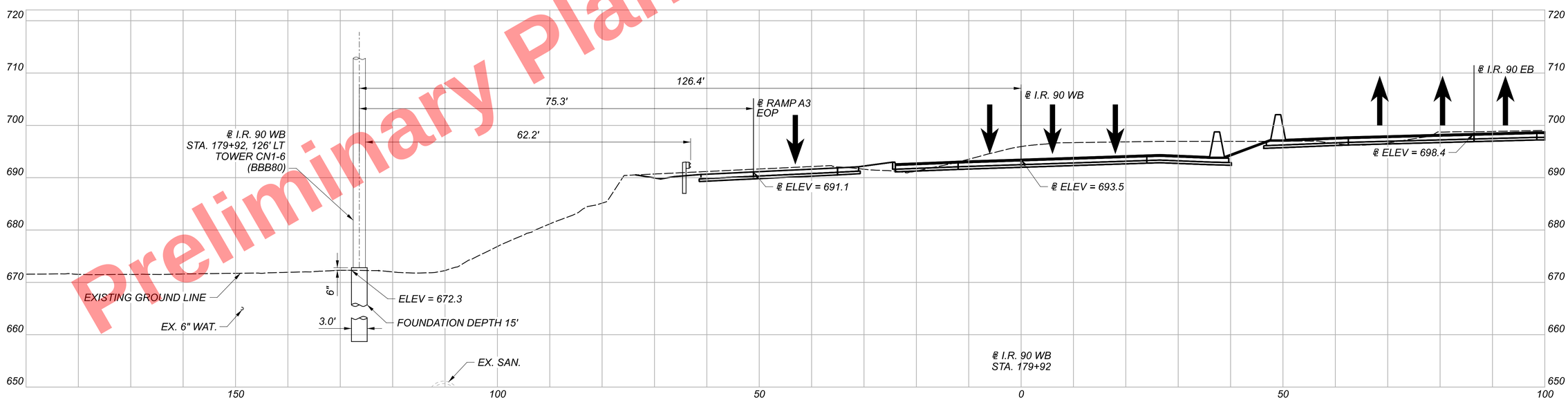

Preliminary Plans - For Reference Only

TOWER ELEVATION VIEWS
TOWERS CN1-6 & CN2-1

CUY-90-16.28 (CCG3A)

MODEL: Sheet PAPERSIZE: 34x22 (in.) DATE: 3/27/2025 TIME: 8:05:36 PM USER: MaiaGallagher
pw:\\mb-us-pw.bentley.com\mb-us-pw-03\Documents\Cleveland.OH\01_Projects\ODOT\District2\82382\400-Engineering\Lighting\Sheets\82382_LD102.dgn

DESIGN AGENCY
Michael Baker INTERNATIONAL

DESIGNER SED
REVIEWER JLD 05/03/24
PROJECT ID 82382
SHEET 1761 TOTAL 2696

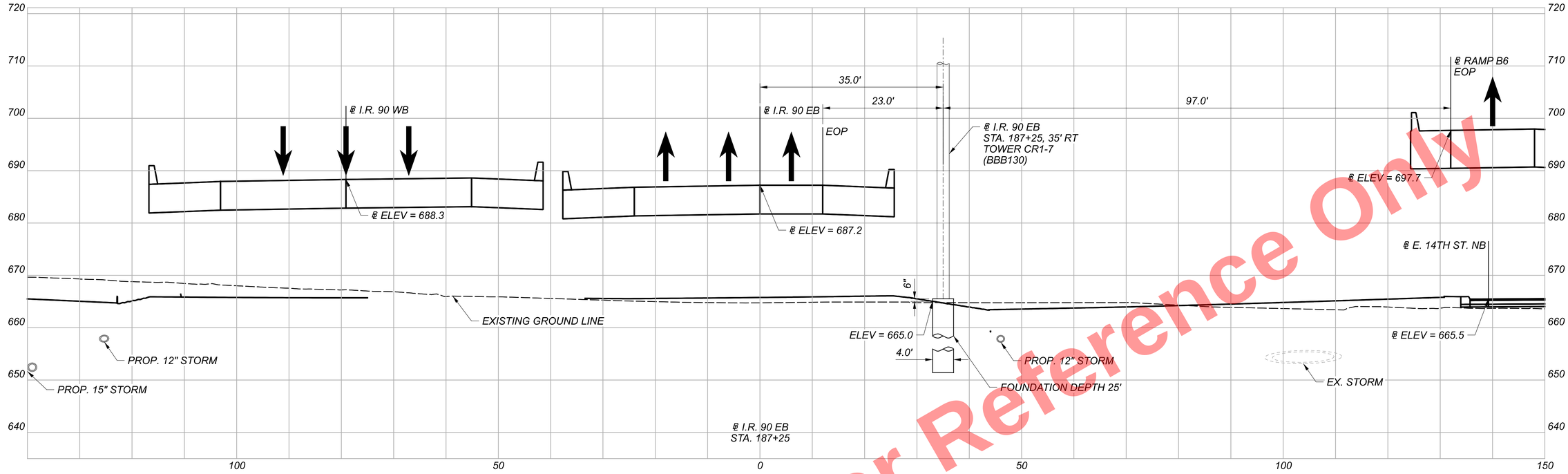

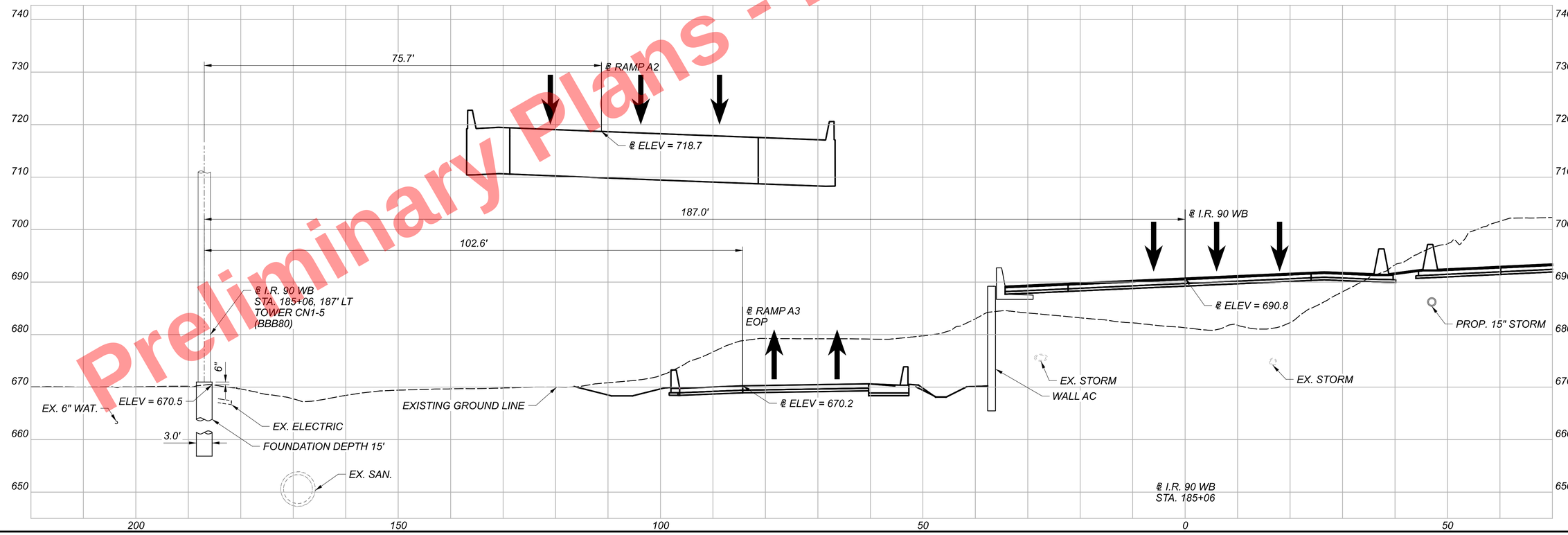

Preliminary Plans - For Reference Only

TOWER ELEVATION VIEWS
TOWERS CN1-5 & CR1-7

CUY-90-16.28 (CCG3A)

MODEL: Sheet PAPERSIZE: 34x22 (in.) DATE: 3/27/2025 TIME: 8:06:04 PM USER: Mala.Gallagher
pw:\\mb-us-pw.bentley.com:mb-us-pw-03\Documents\Cleveland_OH\01_Projects\000TODistrict2\82382\400-Engineering\Lighting\Sheets\82382_LD103.dgn

DESIGN AGENCY
Michael Baker INTERNATIONAL

DESIGNER SED
REVIEWER JLD 05/03/24
PROJECT ID 82382
SHEET 1762 TOTAL 2696

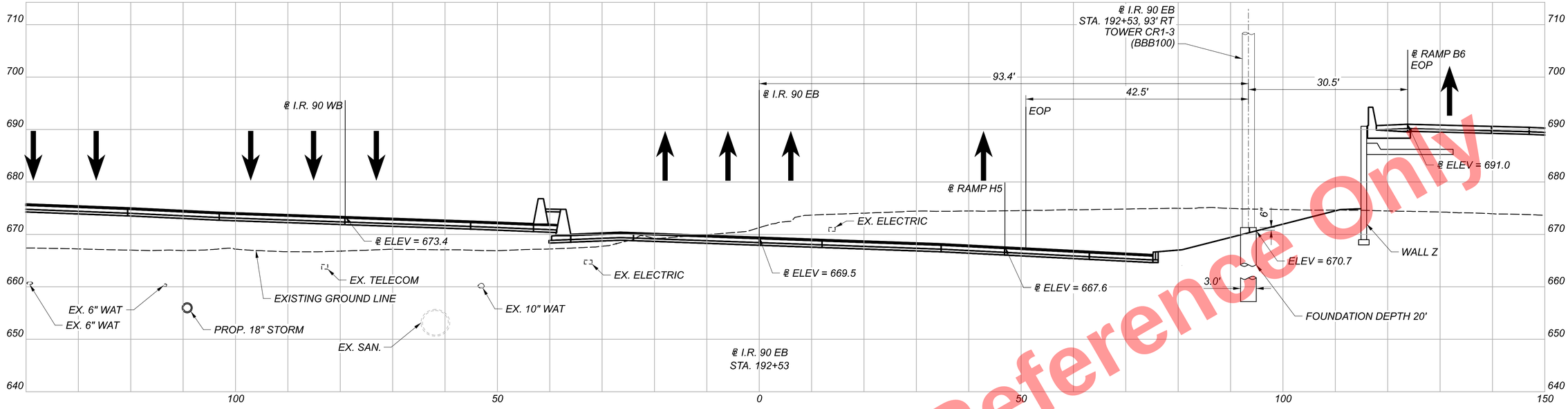

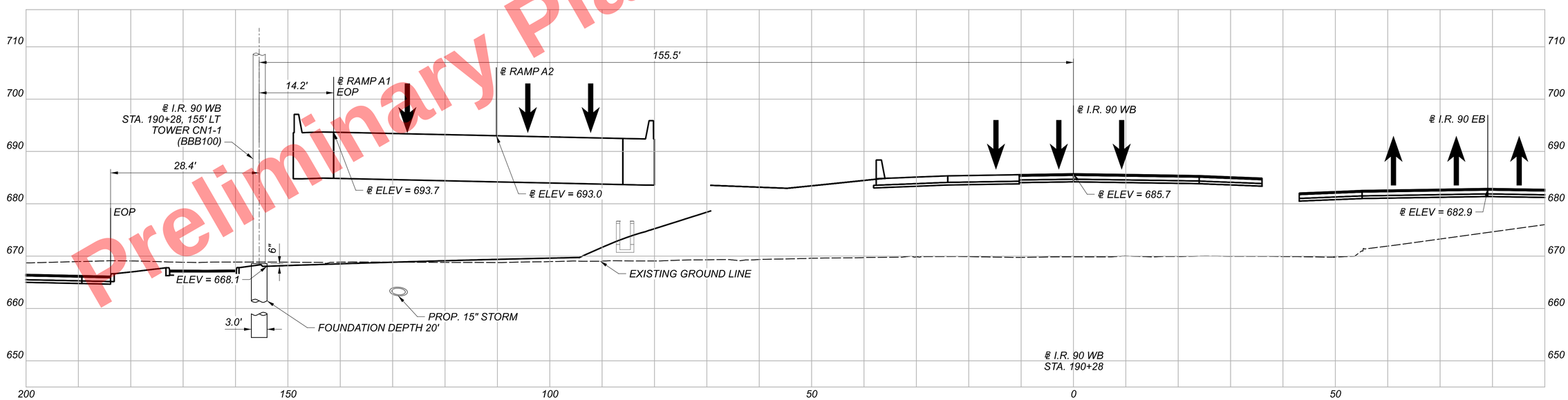

Preliminary Plans - For Reference Only

TOWER ELEVATION VIEWS
TOWERS CN1-1 & CR1-3

CUY-90-16.28 (CCG3A)

MODEL: Sheet PAPERSIZE: 34x22 (in.) DATE: 3/27/2025 TIME: 8:06:28 PM USER: Maia.Gallagher
pw:\\mb-us-pw.bentley.com:mb-us-pw-03\Documents\Cleveland.OH\01_Projects\ODOT\District2\82382\400-Engineering\Lighting\Sheets\82382_LD104.dgn

DESIGN AGENCY
Michael Baker INTERNATIONAL
DESIGNER SED
REVIEWER JLD 05/03/24
PROJECT ID 82382
SHEET 1763 TOTAL 2696

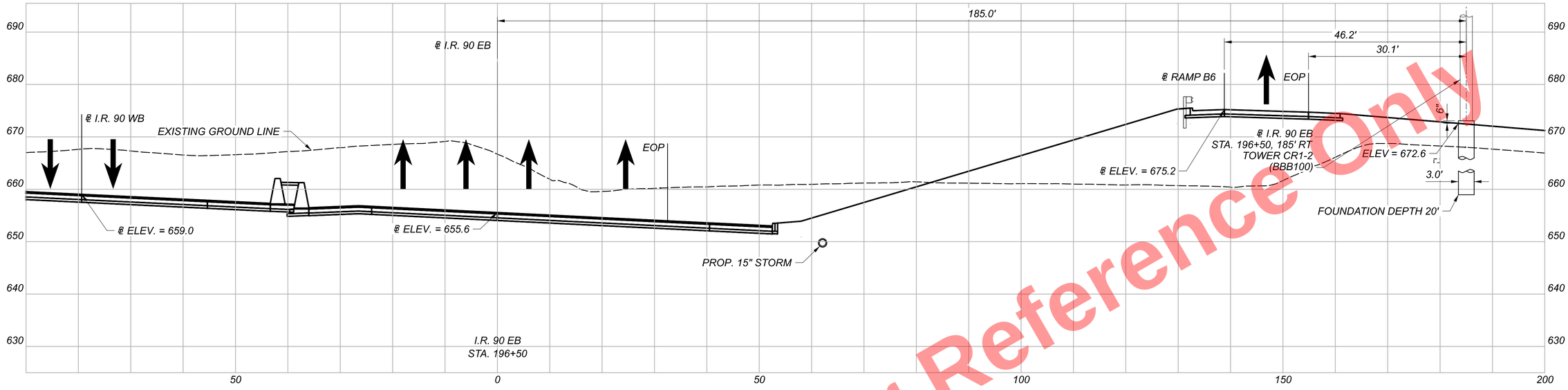

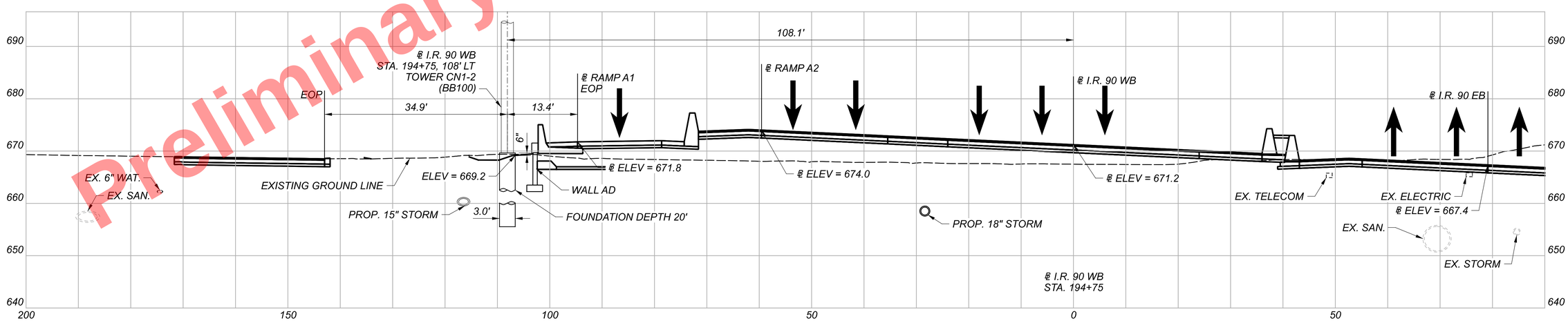

Preliminary Plans - For Reference Only

TOWER ELEVATION VIEWS
TOWERS CN1-2 & CR1-2

DESIGN AGENCY	Michael Baker INTERNATIONAL
DESIGNER	SED
REVIEWER	JLD 05/03/24
PROJECT ID	82382
SHEET	1764
TOTAL	2696

CUY-90-16.28 (CCG3A)

MODEL: Sheet PAPERSIZE: 34x22 (in.) DATE: 3/27/2025 TIME: 8:06:44 PM USER: Maia.Gallagher
pw:\\mb-us-pw.bentley.com\mb-us-pw-03\Documents\Cleveland.OH\OI_Projects\ODOT\District2\82382\400-Engineering\LI

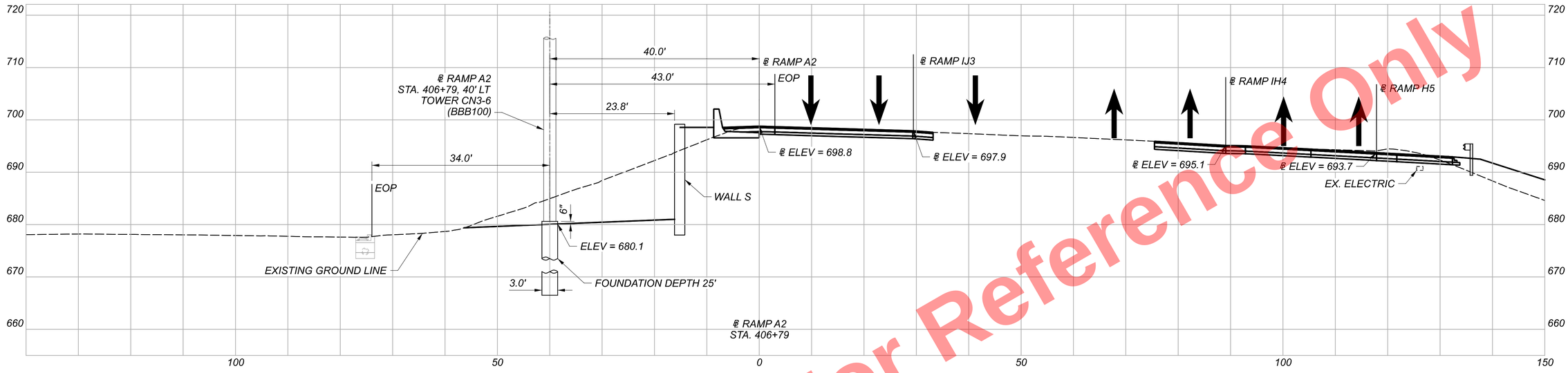

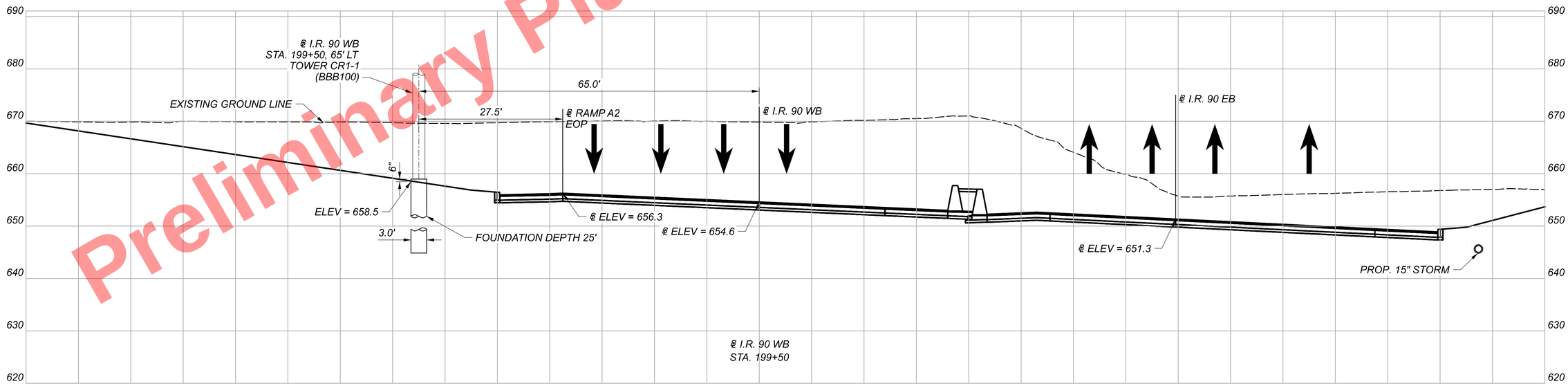

Preliminary Plans - For Reference Only

TOWER ELEVATION VIEWS
TOWERS CR1-1 & CN3-6

CUY-90-16.28 (CCG3A)

MODEL: Sheet PAPERSIZE: 34x22 (in.) DATE: 3/27/2025 TIME: 8:07:09 PM USER: MalaGallagher
pw:\\mb-us-pw.bentley.com:mb-us-pw-03\Documents\Cleveland.OH\OI_Projects\ODOT\District2\82382\400-Engineering\Lighting\Sheets\82382_LDI06.dgn

DESIGN AGENCY
Michael Baker INTERNATIONAL

DESIGNER SED
REVIEWER JLD 05/03/24
PROJECT ID 82382
SHEET 1765 TOTAL 2696

Preliminary Plans - For Reference Only

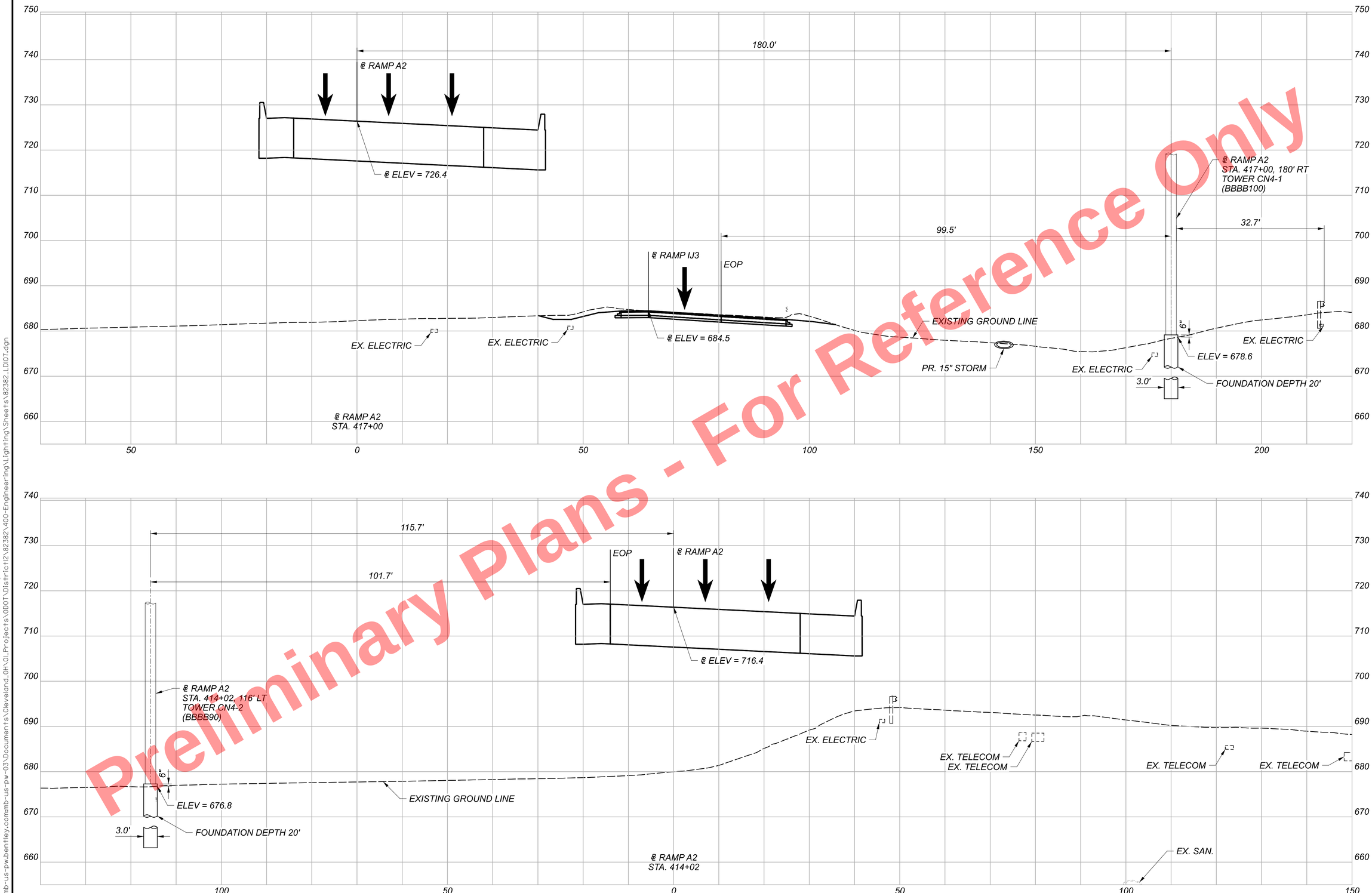

TOWER ELEVATION VIEWS
TOWERS CN4-2 & CN4-1

CUY-90-16.28 (CCG3A)

MODEL: Sheet PAPERSIZE: 34x22 (in.) DATE: 3/27/2025 TIME: 8:07:23 PM USER: Mala.Gallagher
pw:\\mb-us-pw.bentley.com:mb-us-pw-03.Documents\Cleveland_OH\01_Projects\ODOT\District2\82382\400-Engineering\Lighting\Sheets\82382_LD107.dgn

DESIGN AGENCY
Michael Baker INTERNATIONAL

DESIGNER	SED
REVIEWER	JLD 05/03/24
PROJECT ID	82382
SHEET	1766
TOTAL	2696

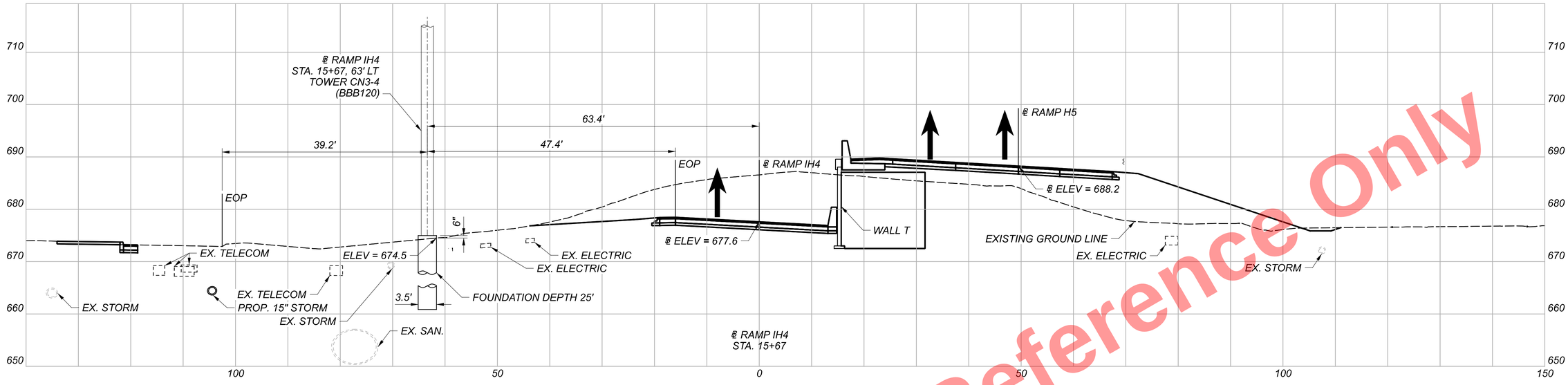

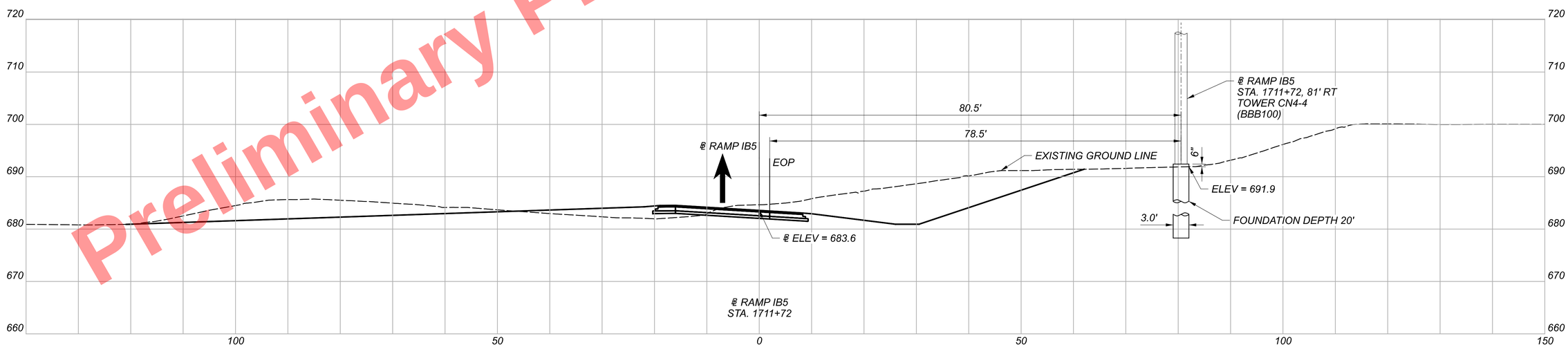

Preliminary Plans - For Reference Only

TOWER ELEVATION VIEWS
TOWERS CN4-4 & CN3-4

CUY-90-16.28 (CCG3A)

MODEL: Sheet PAPERSIZE: 34x22 (in.) DATE: 3/27/2025 TIME: 8:07:52 PM USER: Mala.Gallagher
pw:\\mb-us-pw.bentley.com:mb-us-pw-03\Documents\Cleveland.OH\OI_Projects\ODOT\District2\82382\400-Engineering\Lighting\Sheets\82382_LDI08.dgn

DESIGN AGENCY
Michael Baker INTERNATIONAL

DESIGNER SED
REVIEWER JLD 05/03/24
PROJECT ID 82382
SHEET 1767 TOTAL 2696

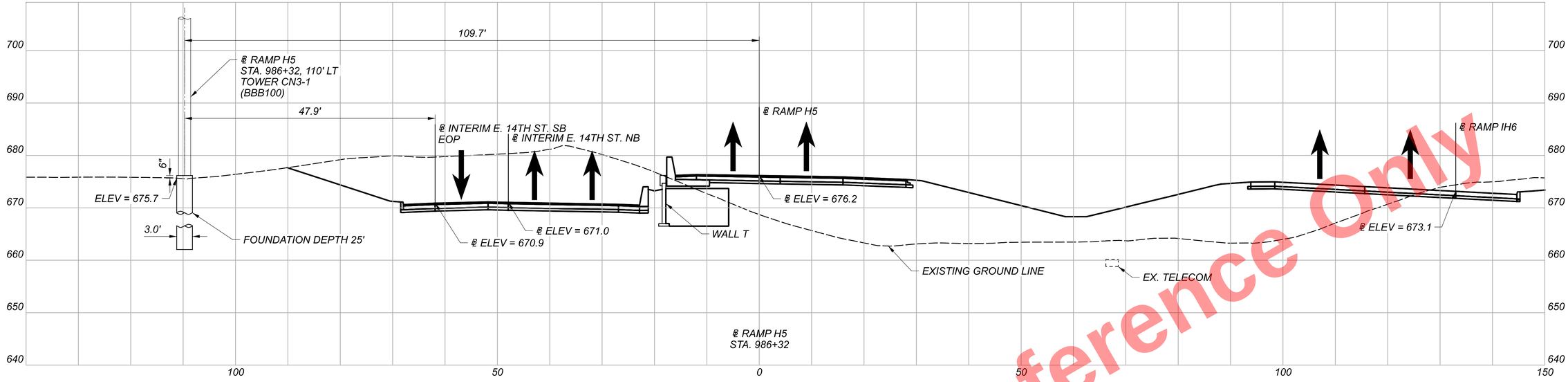

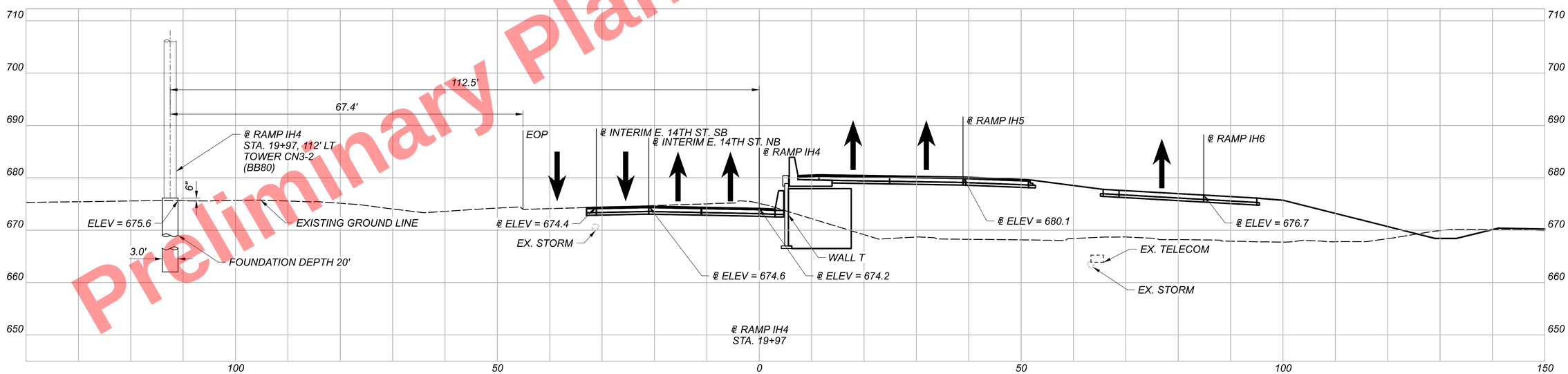

Preliminary Plans - For Reference Only

TOWER ELEVATION VIEWS
TOWERS CN3-2 & CN3-1

CUY-90-16.28 (CCG3A)

MODEL: Sheet PAPERSIZE: 34x22 (in.) DATE: 3/27/2025 TIME: 8:08:06 PM USER: MalaGallagher
pw:\\mb-us-pw.bentley.com\mb-us-pw-03\Documents\Cleveland.OH\01_Projects\ODOT\District2\82382\400-Engineering\Lighting\Sheets\82382_LD201.dgn

DESIGN AGENCY
Michael Baker INTERNATIONAL

DESIGNER SED
REVIEWER JLD 05/03/24
PROJECT ID 82382
SHEET 1768 TOTAL 2696

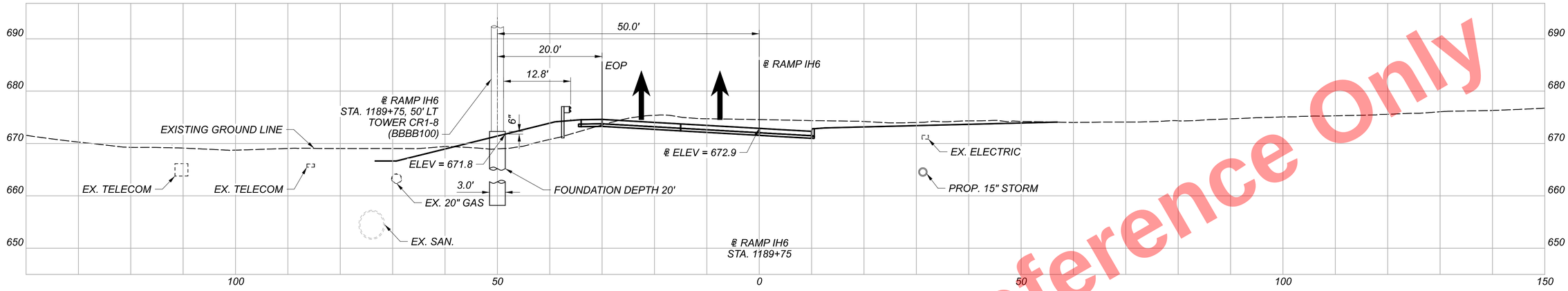

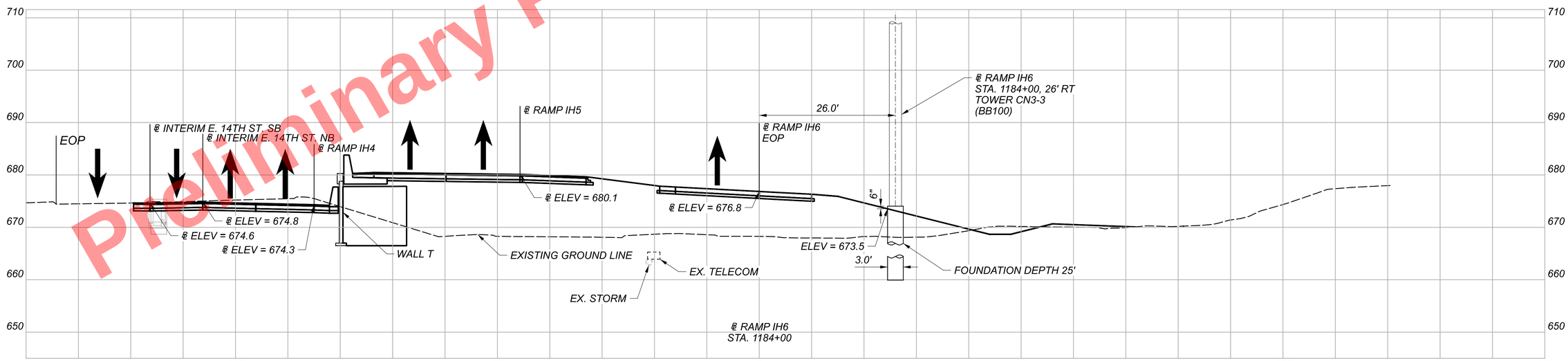

Preliminary Plans - For Reference Only

TOWER ELEVATION VIEWS
TOWERS CN3-3 & CR1-8

DESIGN AGENCY
Michael Baker INTERNATIONAL

DESIGNER SED
REVIEWER JLD 05/03/24
PROJECT ID 82382
SHEET 1769 TOTAL 2696

CUY-90-16.28 (CCG3A)

MODEL: Sheet PAPERSIZE: 34x22 (in.) DATE: 3/27/2025 TIME: 8:08:33 PM USER: Mala.Gallagher
pw:\\mb-us-pw.bentley.com:mb-us-pw-03\Documents\Cleveland.OH\OI_Projects\ODOT\District2\82382\400-Engineering\LI

LIGHT TOWER SCHEDULE											
TOWER				LOCATION			ELEV. (FT) (NOTE 2)	DETAILS			REFERENCE BORINGS
NO.	HEIGHT (FT)	NO. OF LUMINAIRES		ALIGNMENT	STATION	OFFSET		DIA. (IN)	REINF. BARS (NOTE 3)	LENGTH (FT) (NOTE 1)	
		SYM	ASYM								
CONTROL CENTER CR (CARNEGIE AVE)											
CR1-7	130	3		I.R. 90 EB	187+25	35' RT	665.5	48	16 #9	25	B-076-0-14/B-078-1-20
CR1-2	100	3		I.R. 90 EB	196+50	185' RT	673.1	36	16 #9	20	B-084-0-14/B-162-0-14
CR1-8	100	4		RAMP IH6	1189+75	50' LT	672.3	36	16 #9	20	B-114-0-14
CR1-3	100	3		I.R. 90 EB	192+53	93' RT	671.2	36	16 #9	20	B-083-0-14/B-161-0-14
CR1-1	100	3		I.R. 90 WB	199+50	65' LT	659.0	36	16 #9	25	B-151-0-14
CONTROL CENTER CN (CENTRAL AVE CONNECTOR)											
CN1-7	130	3		I.R. 90 WB	175+03	59' LT	673.5	48	16 #9	25	B-094-0-14/B-164-0-14
CN1-6	80	3		I.R. 90 WB	179+92	126' LT	672.8	36	16 #9	15	B-165-0-14/B-166-0-14
CN1-5	80	3		I.R. 90 WB	185+06	187' LT	671.0	36	16 #9	15	B-142-3-20
CN2-1	100	3		I.R. 90 EB	183+50	52' RT	690.8	36	16 #9	20	B-077-0-14/B-076-2-20
CN2-2	110	2		I.R. 90 EB	179+82	44' RT	698.1	42	16 #9	20	B-076-1-20/B-140-0-14
CN3-1	100	3		RAMP H5	986+32	110' LT	676.2	36	16 #9	25	B-129-1-20/B-120-2-20
CN3-2	80	2		RAMP IH4	19+97	112' LT	676.1	36	16 #9	20	B-152-0-14
CN3-3	100	2		RAMP IH6	1184+00	26' RT	674.0	36	16 #9	25	B-116-0-14/B-120-1-20
CN1-2	100	2		I.R. 90 WB	194+75	108' LT	669.7	36	16 #9	20	B-148-0-14
CN1-1	100	3		I.R. 90 WB	190+28	155' LT	668.6	36	16 #9	20	B-144-0-14
CN4-4	100	3		RAMP IB5	1711+72	81' RT	692.4	36	16 #9	20	B-139-1-20
CN4-2	90	4		RAMP A2	414+02	116' LT	677.3	36	16 #9	20	B-136-0-14/B-138-0-14
CN4-1	100	4		RAMP A2	417+00	180' RT	679.1	36	16 #9	20	B-152-1-20
CN3-6	100	3		RAMP A2	406+79	40' LT	680.6	36	16 #9	25	B-132-0-14
CN3-4	120	3		RAMP IH4	15+67	63' LT	675.0	42	16 #9	25	B-104-0-14/B-119-0-14

NOTES:

1. LENGTH OF DRILLED SHAFT IS FROM TOP OF FOUNDATION.
2. ELEVATION IS 6 INCHES ABOVE THE FINAL GROUND SURFACE (EXISTING OR PROPOSED) AT TOWER FOUNDATION.
3. SEE STANDARD DRAWING HL-20.21 FOR ADDITIONAL REINFORCING STEEL DETAILS. REINFORCING STEEL SHALL BE ITEM 509, GRADE 60. CONCRETE SHALL BE QC 1 OR QC MISC.

Preliminary Plans - For Reference Only

TOWER ELEVATION VIEWS
TOWER SCHEDULE

CUY-90-16.28 (CCG3A)

MODEL: Sheet PAPERSIZE: 34x22 (in.) DATE: 3/27/2025 TIME: 8:08:44 PM USER: Maia.Gallagher
pw:\\mb-us-pw.bentley.com:mb-us-pw-03\Documents\Cleveland.OH\01_Projects\ODOT\District2\82382\400-Engineering\Lighting\Sheets\82382_LD203.dgn

DESIGN AGENCY
Michael Baker INTERNATIONAL

DESIGNER JLD
REVIEWER SM 05/03/24
PROJECT ID 82382
SHEET 1770 TOTAL 2696

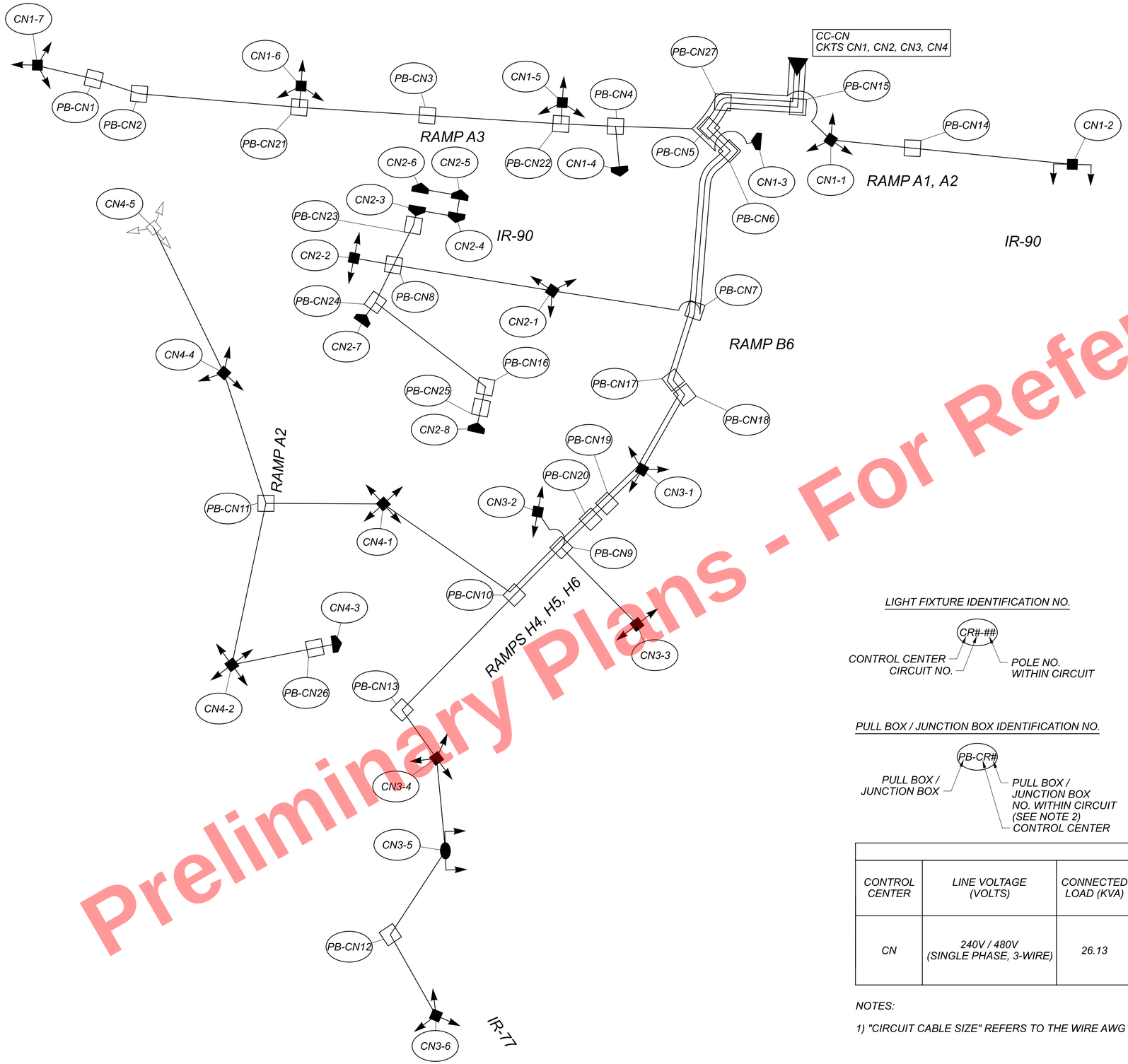

Preliminary Plans - For Reference Only

LEGEND:

LIGHT FIXTURE IDENTIFICATION NO.

PULL BOX / JUNCTION BOX IDENTIFICATION NO.

- HIGH MAST TOWER WITH 2 LED SYMMETRIC LUMINAIRES
- HIGH MAST TOWER WITH 2 LED SYMMETRIC LUMINAIRES WITH 180 DEGREE SHIELDS
- HIGH MAST TOWER WITH 3 LED SYMMETRIC LUMINAIRES
- HIGH MAST TOWER WITH 4 LED SYMMETRIC LUMINAIRES
- LOW MAST POLE WITH 1 LED SYMMETRIC LUMINAIRE
- LOW MAST POLE WITH 1 LED SYMMETRIC LUMINAIRE WITH 180 DEGREE SHIELDS
- UNDERPASS LED WALLPACK FIXTURE
- CONTROL CENTER
- PULL BOX / JUNCTION BOX
- DISTRIBUTION CABLE

CONTROL CENTER DATA									
CONTROL CENTER	LINE VOLTAGE (VOLTS)	CONNECTED LOAD (KVA)	SERVICE ENTRANCE CABLE (AWG)	ENCLOSURE RATING (AMPS)	CIRCUIT NO.	CIRCUIT LOAD (AMPS)	CIRCUIT FUSE SIZE (AMPS)	CIRCUIT CABLE SIZE (AWG)	MAINTAINING AGENCY
CN	240V / 480V (SINGLE PHASE, 3-WIRE)	26.13	4	100	1	16.10	25	4	ODOT
					2	6.67	20	4	
					3	15.75	20	4	
					4	15.92	20	4	

NOTES:

1) "CIRCUIT CABLE SIZE" REFERS TO THE WIRE AWG COMING OUT OF THE CONTROL CENTER FOR EACH CIRCUIT.

HORIZONTAL SCALE IN FEET
0 NTS

CIRCUIT SCHEMATIC & CONTROL CENTER DATA - CONTROL CENTER CN

DESIGN AGENCY
Michael Baker INTERNATIONAL

DESIGNER JLD
REVIEWER SM 05/22/24
PROJECT ID 82382
SHEET 1771 TOTAL 2696

CUY-90-16.28 (CCG3A)

MODEL: Sheet PAPERSIZE: 34x22 (in.) DATE: 3/27/2025 TIME: 8:08:55 PM USER: Maia.Gallagher
pw:\\mb-us-pw.bentley.com:mb-us-pw-03\Documents\Cleveland_OH\01_Projects\ODOT\District12\82382\400-Engineering\Lighting\Sheets\82382_LC1002.dgn

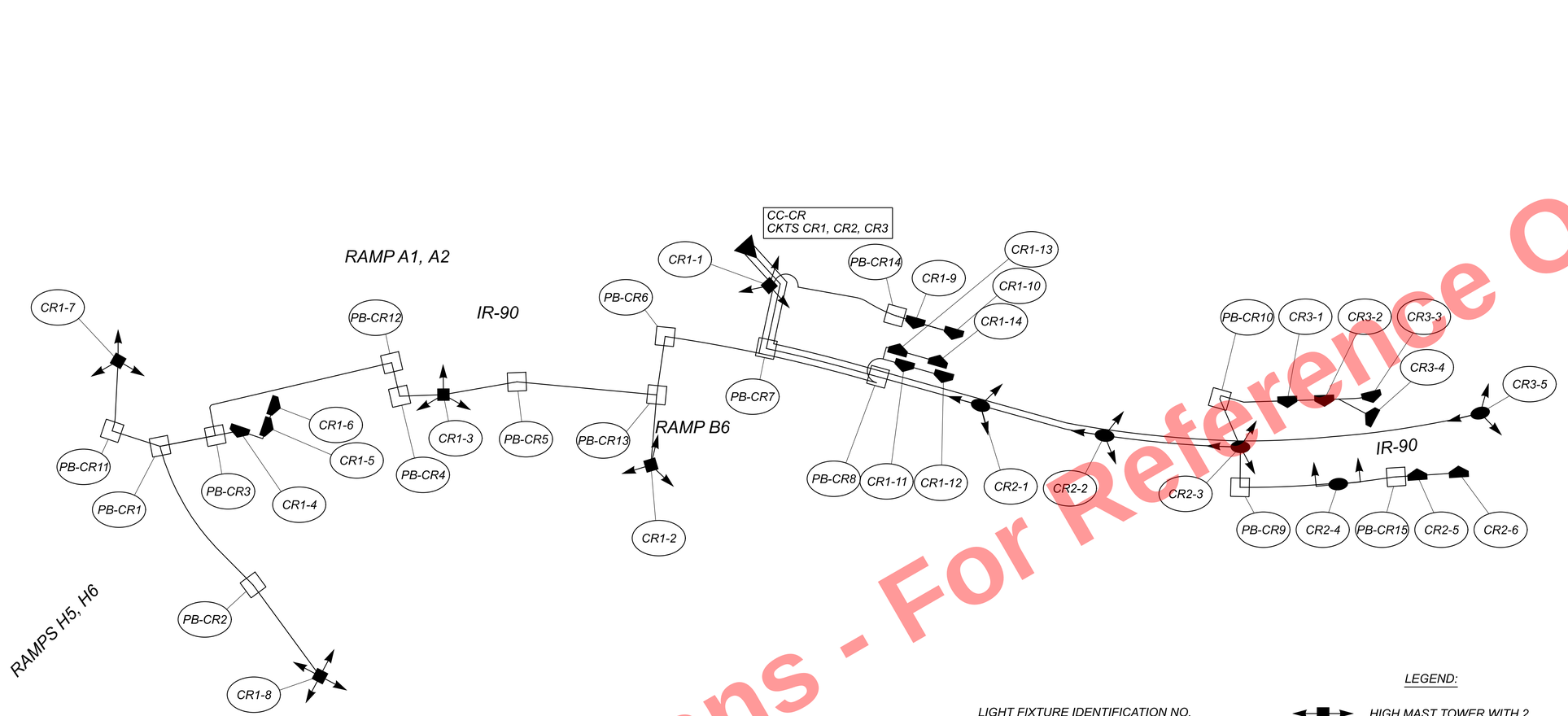

Preliminary Plans - For Reference Only

HORIZONTAL SCALE IN FEET
0 NTS

CIRCUIT SCHEMATIC & CONTROL CENTER DATA - CONTROL CENTER CR

LEGEND:

LIGHT FIXTURE IDENTIFICATION NO.



PULL BOX / JUNCTION BOX IDENTIFICATION NO.

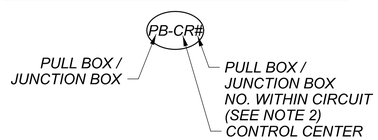

- HIGH MAST TOWER WITH 2 LED SYMMETRIC LUMINAIRES
- HIGH MAST TOWER WITH 2 LED SYMMETRIC LUMINAIRES WITH 180 DEGREE SHIELDS
- HIGH MAST TOWER WITH 3 LED SYMMETRIC LUMINAIRES
- HIGH MAST TOWER WITH 4 LED SYMMETRIC LUMINAIRES
- LOW MAST POLE WITH 1 LED SYMMETRIC LUMINAIRE
- LOW MAST POLE WITH 1 LED SYMMETRIC LUMINAIRE WITH 180 DEGREE SHIELDS
- UNDERPASS LED WALLPACK FIXTURE
- CONTROL CENTER
- PULL BOX / JUNCTION BOX
- DISTRIBUTION CABLE

CONTROL CENTER DATA									
CONTROL CENTER	LINE VOLTAGE (VOLTS)	CONNECTED LOAD (KVA)	SERVICE ENTRANCE CABLE (AWG)	ENCLOSURE RATING (AMPS)	CIRCUIT NO.	CIRCUIT LOAD (AMPS)	CIRCUIT FUSE SIZE (AMPS)	CIRCUIT CABLE SIZE (AWG)	MAINTAINING AGENCY
CR	240V / 480V (SINGLE PHASE, 3-WIRE)	12.59	4	60	1	19.57	25	4	ODOT
					2	4.85	20	4	
					3	1.81	20	4	

NOTES:

1) "CIRCUIT CABLE SIZE" REFERS TO THE WIRE AWG COMING OUT OF THE CONTROL CENTER FOR EACH CIRCUIT.

DESIGN AGENCY
Michael Baker INTERNATIONAL

DESIGNER JLD
REVIEWER SM 05/22/24
PROJECT ID 82382
SHEET 1772 TOTAL 2696

CUY-90-16.28 (CCG3A)

MODEL: Sheet PAPERSIZE: 34x22 (in.) DATE: 3/27/2025 TIME: 8:09:07 PM USER: Mala.Gallagher
pw:\\mb-us-pw.bentley.com:mb-us-pw-03\Documents\Cleveland_OH\01_Projects\ODOT\District12\82382\400-Engineering\Lighting\Sheets\82382_LC1001.dgn

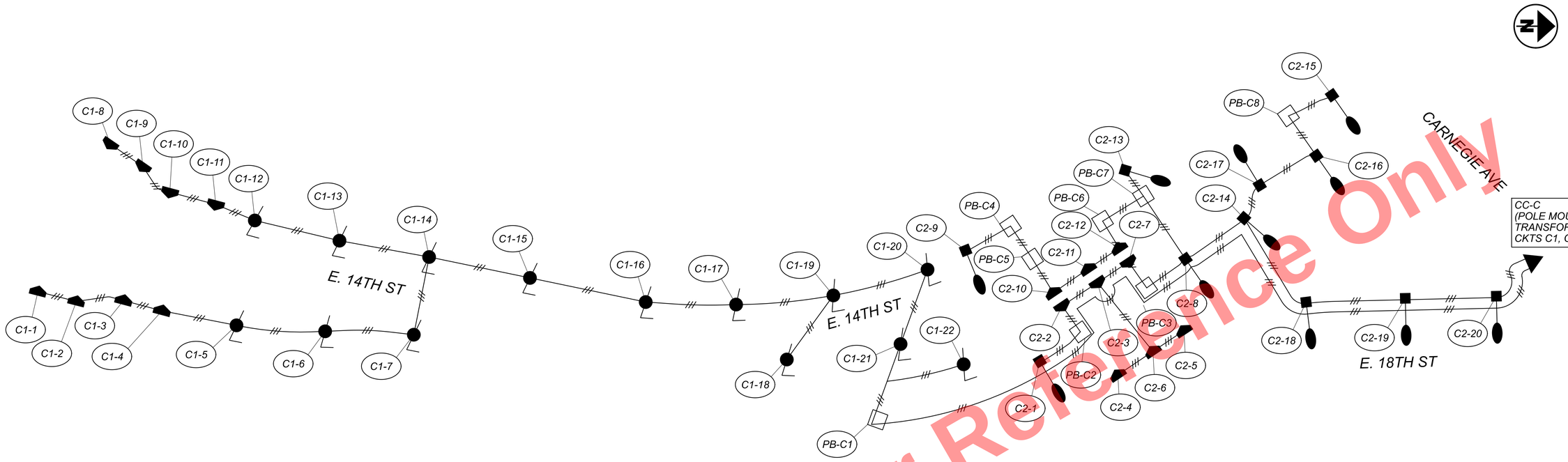

Preliminary Plans - For Reference Only

LIGHT FIXTURE IDENTIFICATION NO.

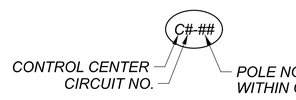

PULL BOX / JUNCTION BOX IDENTIFICATION NO.

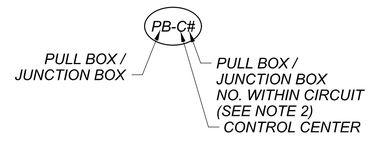

LEGEND:

- *WOOD POLE, EXISTING, WITH 1 NEW LED LUMINAIRE, 30' HEIGHT*
- *WOOD POLE WITH 1 LED LUMINAIRE, 30' HEIGHT*
- *BRONZE SHOEBOX POLE WITH 1 LED LUMINAIRE, 30' HEIGHT*
- *UNDERPASS LED WALLPACK FIXTURE*
- *TRANSFORMER (BY CPP)*
- *PULL BOX / JUNCTION BOX*
- *CIRCUIT WIRE (SINGLE-PHASE, 3-WIRE SYSTEM)*

POWER SERVICE DATA									
POWER SERVICE	*LINE VOLTAGE (VOLTS)*	*CONNECTED LOAD (KVA)*	*SERVICE ENTRANCE CABLE (AWG)*	*ENCLOSURE RATING (AMPS)*	*CIRCUIT NO.*	*CIRCUIT LOAD (AMPS)*	*CIRCUIT FUSE SIZE (AMPS)*	*CIRCUIT CABLE SIZE (AWG)*	*MAINTAINING AGENCY*
C	*120V / 240V (SINGLE PHASE, 3-WIRE)*	*5.08*	*4*	*60*	*1*	*10.12*	*20*	*4*	*CPP*
					2	*11.05*	*20*	*4*	

NOTES:

1) "CIRCUIT CABLE SIZE" REFERS TO THE WIRE AWG COMING OUT OF THE CONTROL CENTER FOR EACH CIRCUIT.

2) ONLY PULL BOXES / JUNCTION BOXES FOR BRANCH CIRCUITS AND JUNCTION BOXES BREAKING UP LONG CONDUIT RUNS ARE SHOWN IN THE CIRCUIT SCHEMATIC.

3) THE CONTRACTOR SHALL INSTALL THE CONDUIT, TRANSFORMER, CONDUCTORS AND POLES; CONNECTIONS AT THE TRANSFORMER SHALL BE INSTALLED BY CPP FORCES.

HORIZONTAL SCALE IN FEET
0 NTS

CIRCUIT SCHEMATIC & POWER SERVICE DATA - TRANSFORMER C

DESIGN AGENCY
Michael Baker INTERNATIONAL

DESIGNER JLD
REVIEWER SM 05/22/24
PROJECT ID 82382
SHEET 1773 TOTAL 2696

CUY-90-16.28 (CCG3A)

MODEL: SHEET PAPERSIZE: 34x22 (in.) DATE: 3/27/2025 TIME: 8:09:19 PM USER: Mala.Gallagher
pw:\\mb-us-pw.bentley.com:mb-us-pw-03\Documents\Cleveland_OH01_Projects\ODOT\District12\82382400-Engineering\Lighting\Sheets\82382_LC1003.dgn

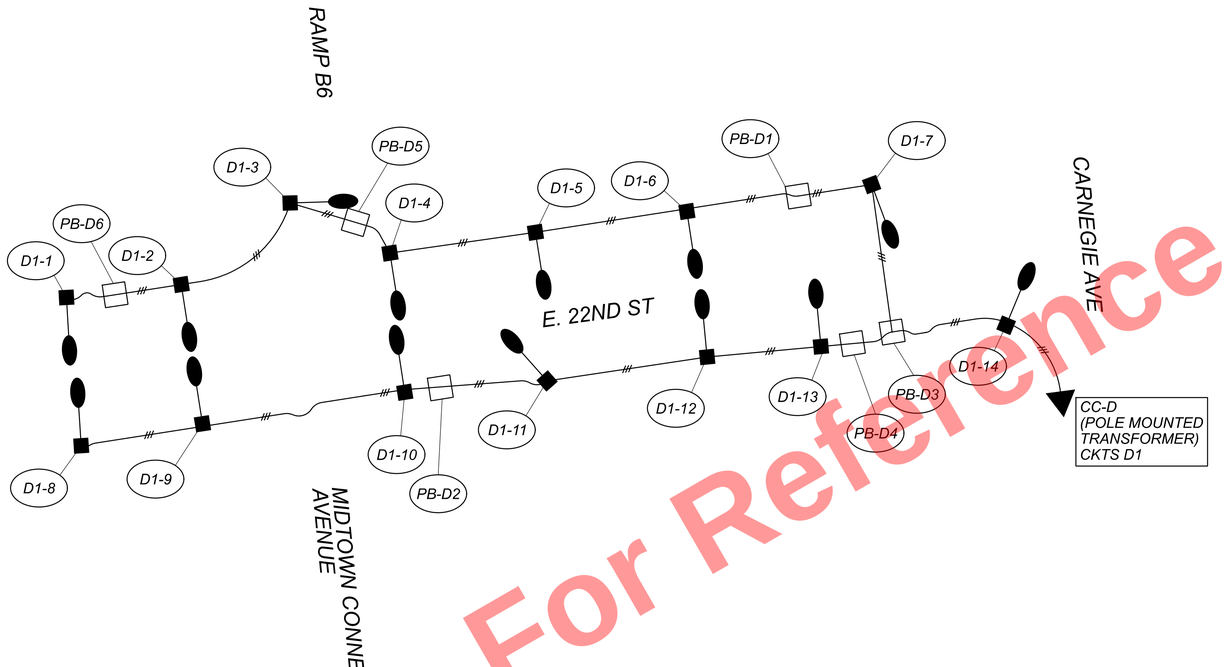

Preliminary Plans - For Reference Only

LIGHT FIXTURE IDENTIFICATION NO.



PULL BOX / JUNCTION BOX IDENTIFICATION NO.

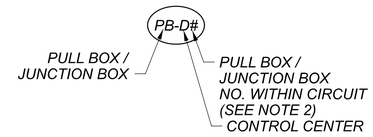

LEGEND:

- *WOOD POLE, EXISTING, WITH 1 NEW LED LUMINAIRE, 30' HEIGHT*
- *WOOD POLE WITH 1 LED LUMINAIRE, 30' HEIGHT*
- *BRONZE SHOEBOX POLE WITH 1 LED LUMINAIRE, 30' HEIGHT*
- *UNDERPASS LED WALLPACK FIXTURE*
- *TRANSFORMER (BY CPP)*
- *PULL BOX / JUNCTION BOX*
- *CIRCUIT WIRE (SINGLE-PHASE, 3-WIRE SYSTEM)*

POWER SERVICE DATA									
POWER SERVICE	*LINE VOLTAGE (VOLTS)*	*CONNECTED LOAD (KVA)*	*SERVICE ENTRANCE CABLE (AWG)*	*ENCLOSURE RATING (AMPS)*	*CIRCUIT NO.*	*CIRCUIT LOAD (AMPS)*	*CIRCUIT FUSE SIZE (AMPS)*	*CIRCUIT CABLE SIZE (AWG)*	*MAINTAINING AGENCY*
D	*120V / 240V (SINGLE PHASE, 3-WIRE)*	*2.69*	*4*	*60*	*1*	*11.20*	*20*	*4*	*CPP*

NOTES:

1) "CIRCUIT CABLE SIZE" REFERS TO THE WIRE AWG COMING OUT OF THE CONTROL CENTER FOR EACH CIRCUIT.

2) ONLY PULL BOXES / JUNCTION BOXES FOR BRANCH CIRCUITS AND JUNCTION BOXES BREAKING UP LONG CONDUIT RUNS ARE SHOWN IN THE CIRCUIT SCHEMATIC.

3) THE CONTRACTOR SHALL INSTALL THE CONDUIT, TRANSFORMER, CONDUCTORS AND POLES; CONNECTIONS AT THE TRANSFORMER SHALL BE INSTALLED BY CPP FORCES.

HORIZONTAL SCALE IN FEET
0 NTS

CIRCUIT SCHEMATIC & POWER SERVICE DATA - TRANSFORMER D

DESIGN AGENCY
Michael Baker INTERNATIONAL

DESIGNER JLD

REVIEWER SM 05/22/24

PROJECT ID 82382

SHEET 1774 TOTAL 2696

CUY-90-16.28 (CCG3A)

MODEL: SHEET PAPERSIZE: 34x22 (in.) DATE: 3/27/2025 TIME: 8:09:38 PM USER: Mala.Gallagher
pw:\\mb-us-pw.bentley.com:mb-us-pw-03\Documents\Cleveland_OH01_Projects\ODOT\District12\82382400-Engineering\Lighting\Sheets\82382_LC1004.dgn

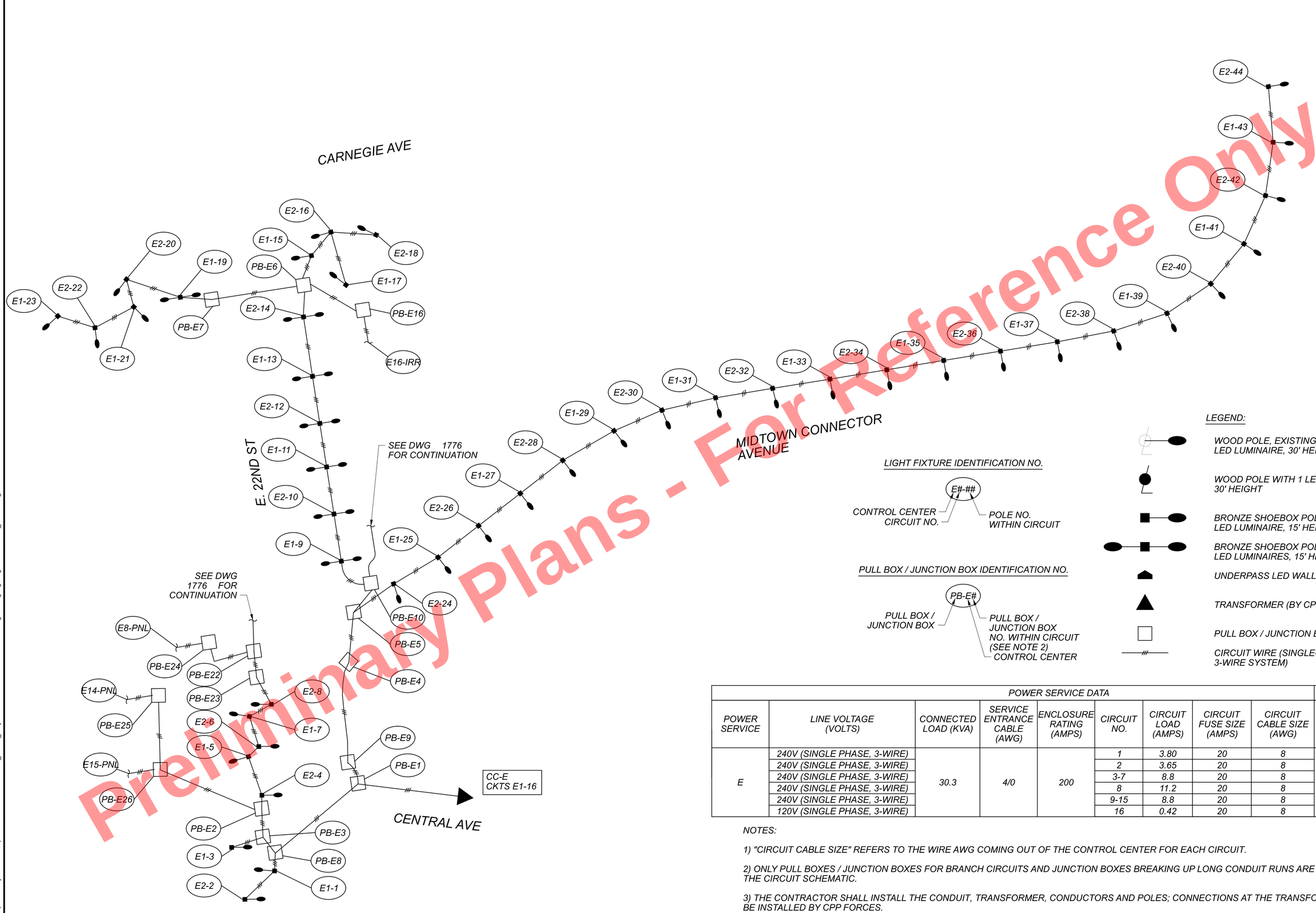

Preliminary Plans - Not For Reference Only

LEGEND:

- WOOD POLE, EXISTING, WITH 1 NEW LED LUMINAIRE, 30' HEIGHT
- WOOD POLE WITH 1 LED LUMINAIRE, 30' HEIGHT
- BRONZE SHOEBOX POLE WITH 1 LED LUMINAIRE, 15' HEIGHT
- BRONZE SHOEBOX POLE WITH 2 LED LUMINAIRES, 15' HEIGHT
- UNDERPASS LED WALLPACK FIXTURE
- TRANSFORMER (BY CPP)
- PULL BOX / JUNCTION BOX
- CIRCUIT WIRE (SINGLE-PHASE, 3-WIRE SYSTEM)

LIGHT FIXTURE IDENTIFICATION NO.

E#-## — CONTROL CENTER CIRCUIT NO. / POLE NO. WITHIN CIRCUIT

PULL BOX / JUNCTION BOX IDENTIFICATION NO.

PB-E# — PULL BOX / JUNCTION BOX; PULL BOX / JUNCTION BOX NO. WITHIN CIRCUIT (SEE NOTE 2) CONTROL CENTER

POWER SERVICE DATA									
POWER SERVICE	LINE VOLTAGE (VOLTS)	CONNECTED LOAD (KVA)	SERVICE ENTRANCE CABLE (AWG)	ENCLOSURE RATING (AMPS)	CIRCUIT NO.	CIRCUIT LOAD (AMPS)	CIRCUIT FUSE SIZE (AMPS)	CIRCUIT CABLE SIZE (AWG)	MAINTAINING AGENCY
E	240V (SINGLE PHASE, 3-WIRE)	30.3	4/0	200	1	3.80	20	8	ODOT
	240V (SINGLE PHASE, 3-WIRE)				2	3.65	20	8	
	240V (SINGLE PHASE, 3-WIRE)				3-7	8.8	20	8	
	240V (SINGLE PHASE, 3-WIRE)				8	11.2	20	8	
	240V (SINGLE PHASE, 3-WIRE)				9-15	8.8	20	8	
	120V (SINGLE PHASE, 3-WIRE)				16	0.42	20	8	

NOTES:

1) "CIRCUIT CABLE SIZE" REFERS TO THE WIRE AWG COMING OUT OF THE CONTROL CENTER FOR EACH CIRCUIT.

2) ONLY PULL BOXES / JUNCTION BOXES FOR BRANCH CIRCUITS AND JUNCTION BOXES BREAKING UP LONG CONDUIT RUNS ARE SHOWN IN THE CIRCUIT SCHEMATIC.

3) THE CONTRACTOR SHALL INSTALL THE CONDUIT, TRANSFORMER, CONDUCTORS AND POLES; CONNECTIONS AT THE TRANSFORMER SHALL BE INSTALLED BY CPP FORCES.

4) "PNL" CIRCUITS ARE FOR LIGHTING PANELS. "IRR" CIRCUITS ARE FOR IRRIGATION. SEE LANDSCAPING DRAWINGS FOR ADDITIONAL INFORMATION.

HORIZONTAL SCALE IN FEET
0 NTS

CIRCUIT SCHEMATIC & POWER SERVICE DATA - CONTROL CENTER E

DESIGN AGENCY
Michael Baker INTERNATIONAL

DESIGNER JTP
REVIEWER MMC 05/22/24
PROJECT ID 82382
SHEET 1775 TOTAL 2696

CUY-90-16.28 (CCG3A)

MODEL: SHEET PAPERSIZE: 34x22 (in.) DATE: 3/27/2025 TIME: 8:09:48 PM USER: Maia.Gallagher
pw:\\mb-us-pw.bentley.com:mb-us-pw-03\Documents\Cleveland_OH01_Projects\ODOTDistrict12\82382400-Engineering\Lighting\Sheets\82382_LC1005.dgn

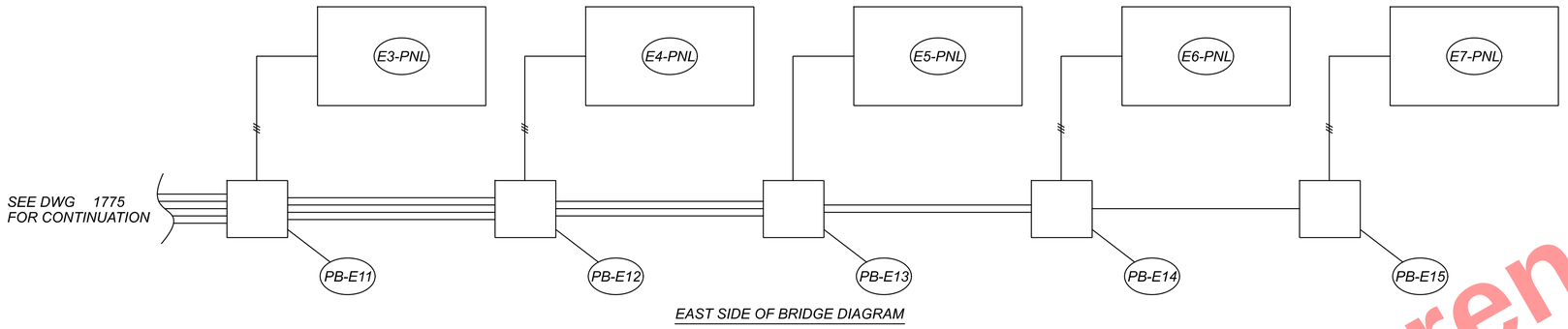

EAST SIDE OF BRIDGE DIAGRAM

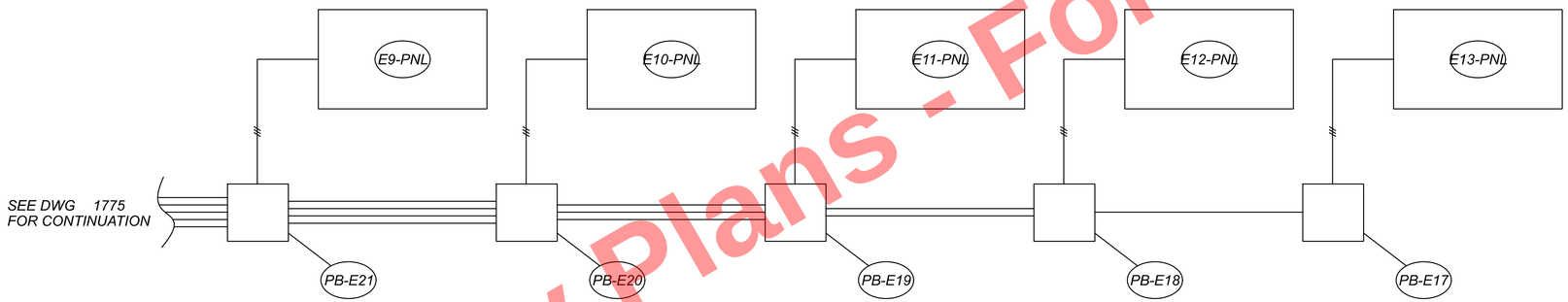

WEST SIDE OF BRIDGE DIAGRAM

Preliminary Plans - For Reference Only

LIGHT FIXTURE IDENTIFICATION NO.

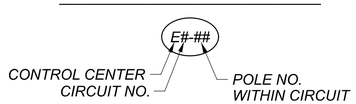

PULL BOX / JUNCTION BOX IDENTIFICATION NO.

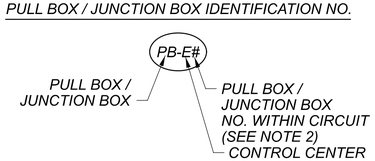

LEGEND:

PULL BOX / JUNCTION BOX

CIRCUIT WIRE (SINGLE-PHASE, 3-WIRE SYSTEM)

NOTES:

1) "PNL" CIRCUITS ARE FOR LIGHTING PANELS. SEE LANDSCAPING DRAWINGS FOR ADDITIONAL INFORMATION.

HORIZONTAL SCALE IN FEET
0 NTS

CIRCUIT SCHEMATIC & POWER SERVICE DATA - CONTROL CENTER E

DESIGN AGENCY
Michael Baker INTERNATIONAL

DESIGNER JTP
REVIEWER MMC 05/22/24
PROJECT ID 82382
SHEET 1776 TOTAL 2696

CUY-90-16.28 (CCG3A)

MODEL: SHEET PAPERSIZE: 34x22 (in.) DATE: 3/27/2025 TIME: 8:09:58 PM USER: Maia.Gallagher
pw:\\mb-us-pw.bentley.com:mb-us-pw-03\Documents\Cleveland_OH\01_Projects\ODOT\District12\82382\400-Engineering\Lighting\Sheets\82382_LC1006.dgn

CONTACT OHIO UTILITIES PROTECTION SERVICE, TWO WORKING DAYS PRIOR TO START OF CONSTRUCTION. IN OHIO, CALL TOLL FREE 1-800-362-2764. IT'S THE LAW.

UTILITIES SHOWN ARE FROM BEST AVAILABLE RECORDS AND FIELD INVESTIGATION, AND ARE NOT NECESSARILY COMPLETE OR EXACT. THE CONTRACTOR IS RESPONSIBLE FOR THE INVESTIGATION, LOCATION, SUPPORT, PROTECTION AND RESTORATION OF ALL EXISTING UTILITIES AND APPURTENANCES WHETHER SHOWN ON THIS PLAN OR NOT.

ALL POWER CONDUIT RUNS ARE TO BE CONSTRUCTED BY USING 2", 4", 5", OR 6" PVC TYPE EB CONDUITS, AS DEPICTED ON THE PLANS, ENCASED WITH A 3" CONCRETE ENVELOPE AND 2" SPACING BETWEEN CONDUITS, UNLESS OTHERWISE NOTED ON THE PLANS OR SPECIFICATIONS. THE CONCRETE ENVELOPE IS TO BE 4000PSI (CITY OF CLEVELAND CONCRETE MIX).

A RUGGED POLYETHYLENE MATERIAL WARNING TAPE CAPABLE OF RESISTING HIGH OR LOW PH CONDITIONS MUST BE PLACED ABOVE THE ELECTRICAL CONDUIT BANK. THIS WARNING TAPE IS TO BE SIX INCHES WIDE, RED IN COLOR, AND IMPRINTED WITH THE WORDS, "DANGER - BURIED HIGH VOLTAGE CABLES BELOW". THIS TAPE IS TO BE PLACED 6" ABOVE THE NEWLY INSTALLED DUCT BANK. THIS SHALL CONFORM WITH THE STANDARDS AS SET BY OHIO UTILITIES PROTECTION SERVICE. WARNING TAPE PAYMENT INCLUDED IN APPROPRIATE CONDUIT, PAY ITEM.

AS AN OPTION, CONTRACTOR MAY ELECT TO ENCASE CPP'S CONDUITS IN RED CONCRETE. BOTH METHODS ARE APPROVED BY CLEVELAND PUBLIC POWER AND ARE RECOMMENDED BY OHIO UTILITIES PROTECTION SERVICE. PAYMENT FOR TINTED DUCT CONCRETE, OR TINTED CONCRETE PROTECTIVE SLABS INCLUDED IN APPROPRIATE CONDUIT PAY ITEM.

THE TOP OF THE CONCRETE ENCASED CONDUIT SHALL BE INSTALLED AT A MINIMUM DEPTH OF 3'-0" BELOW THE EXISTING AND/OR PROPOSED GRADES. THE TOTAL TRENCH DEPTH WILL BE BASED UPON THE CONDUIT FORMATION. SEE DRAWINGS ISSUED BY CLEVELAND PUBLIC POWER FOR DETAILS.

VERTICAL AND HORIZONTAL CURVES SHALL HAVE A MINIMUM RADIUS OF NO LESS THAN 30 FEET. THESE CURVES ARE TO BE CONDUITS AS NOTED CONSTRUCTED BY USING THE APPROPRIATE 5°COUPLINGS, AND ASSOCIATED CHORD LENGTHS AS SHOWN ON THE CONDUIT CURVE CONSTRUCTION CHART. ANY OTHER CURVE DESIGN, FIELD CHANGES, OR THE USE OF PREFORMED RADIUS BENDS MUST BE APPROVED BY THE ENGINEERING DEPARTMENT OF CLEVELAND PUBLIC POWER.

ALL MANHOLES OUTSIDE WALLS AND CONDUIT RUNS ARE TO HAVE A MINIMUM CLEARANCE OF 5' (FACE TO FACE), HORIZONTALLY FROM ALL WATER LINES. VERTICAL CLEARANCE SHALL BE AT A MINIMUM OF 1'-6". CLEARANCE BETWEEN OTHER UTILITIES SHALL BE 1 FOOT, UNLESS NOTED OTHERWISE. CPP'S DUCT BANK SHALL CROSS OVER OR UNDER OTHER UTILITIES AT AN ANGLE OF NO MORE THAN 45°.

ANY CONDUIT RUNS THAT ARE CROSSING ANY STEAM LINES SHALL HAVE A MINIMUM CLEARANCE OF 5', OR BE INSTALLED PER THE CPP ENGINEERING DEPARTMENT. IN THE EVENT THAT THIS CAN'T BE ACCOMPLISHED, NOTIFY THE ENGINEERING DEPARTMENT OF CLEVELAND PUBLIC POWER PRIOR TO THE INSTALLATION OF CONDUITS.

EACH NEWLY CONSTRUCTED MANHOLE SHALL BE FREE OF ALL FOREIGN OBJECTS AND DEBRIS. THE CONTRACTOR SHALL ALSO PROVIDE A PULLING LINE IN EACH OF THE NEW CONDUITS. ALL MANHOLE COVERS SHOULD BE INSCRIBED WITH THE CLEVELAND PUBLIC POWER LOGO "CPP".

THE CONTRACTOR SHALL PROVIDE CLEVELAND PUBLIC POWER WITH AS-BUILT PLANS OF THE NEWLY INSTALLED CONDUIT SYSTEM, SHOWING BOTH VERTICAL AND HORIZONTAL LOCATIONS. THESE LOCATIONS SHALL BE AT 50' INTERVALS. ALL ELEVATIONS ARE TO BE BASED ON HORIZONTAL AND VERTICAL STATE PLANE COORDINATES. PAYMENT INCLUDED IN APPROPRIATE CONDUIT PAY ITEM. IN ADDITION, THE CONTRACTOR SHALL PROVIDE AS-BUILTS OF THE MANHOLES, INCLUDING AS-BUILTS PHOTOGRAPHS OF ALL INTERIOR SURFACES (WALLS,FLOOR,CEILING).

BACKFILL MATERIAL AND BACKFILLING PROCEDURES

FOR ALL BACKFILL UNDER ROADWAY PAVEMENT, REFER TO FLOWABLE FILL SPECIFICATIONS IN THIS SHEET. FOR ALL OTHER LOCATIONS, THE BACKFILL MATERIAL USED SHALL BE CRUSHED LIMESTONE OR GRAVEL AS PER ODOT ITEM 304- AGGREGATE BASE. CRUSHED AIR-COOLED SLAG MEETING #304 GRADATION MAY BE USED WITH PRIOR WRITTEN APPROVAL OF THE ENGINEER. THE USE OF SAND OR #57 AGGREGATE AS A PREMIUM BACKFILL IS PROHIBITED. SAND MAY ONLY BE USED AS INDICATED ON THE PLAN DETAILS FOR ITEMS SUCH AS CONDUIT COVER. THE SAND MATERIAL SHALL BE NATURAL RIVER OR BANK SAND; FREE OF SILT, CLAY, LOAM, FRIABLE OR SOLUBLE MATERIALS AND ORGANIC MATTER. THE BACKFILL SHALL BE INSTALLED IN 4 INCH (4") LIFTS AND COMPACTED USING MECHANICAL MEANS ONLY. COMPACT TO WITHIN 12" OF SUBGRADE AND EACH LAYER OF BACKFILL TO 95% MAXIMUM DRY DENSITY AS DETERMINED BY STANDARD PROCTOR TEST (ASTM D698). THE USE OF WATER FOR COMPACTION IS PROHIBITED, E.G. FLOODING OR PUDDLING. SAND USED AS EMBANKMENT CONSTRUCTION AND AS BACKFILL AROUND STRUCTURES SHALL BE ODOT ITEM 203- EMBANKMENT OR MEETING THE REQUIREMENTS OF 703 - SPECIAL BACKFILL MATERIAL OF THE SECTION.

EMPLOY A PLACEMENT METHOD THAT DOES NOT DISTURB OR DAMAGE CONDUIT ENCASEMENT.

DO NOT BACKFILL OVER WET, FROZEN OR UNSTABLE SUBGRADE SURFACES.

FLOWABLE FILL SPECIFICATION FOR UTILITY TRENCHES

PART I CERTIFICATE OF COMPLIANCE

MATERIAL MUST COME FROM A PLANT WITH A CURRENT CERTIFICATE OF COMPLIANCE DEMONSTRATING THE ABILITY OF THE MIX DESIGN TO MEET THE SPECIFIED REQUIREMENTS. CERTIFICATES IN EXCESS OF ONE YEAR WILL NOT BE ACCEPTED. CERTIFICATES MUST CONTAIN THE NAME OF SUPPLIER, DATE, CONTRACT NUMBER AND MIX DESIGN DATA ON EACH DELIVERY TICKET.

PART II MATERIALS

ALL MATERIALS SHALL CONFORM TO THE APPLICABLE REQUIREMENTS STATED HERIN.

1. CEMENT SHALL BE ASTM C-150 TYPE I.
2. THE USE OF FLY ASH IS STRICTLY PROHIBITIED.
3. FINE AGGREGATE SHALL CONFORM TO ODOT SPECIFICATION 703.03. FINE AGGREGATE FOR MORTAR OR GROUT. (ODOT CONSTRUCTION AND MATERIALS SPECIFICTIONS MOST CURRENT EDITION). THE USE OF SPENT FOUNDRY SAND OR CORE SAND IS STRICTLY PROHIBITED.

PART III PERFORMANCE ENHANCING ADMIXTURE

AN AIR-ENHANCING ADMIXTURE SHALL BE INCORPORATED IN THE MIX THAT WILL HAVE THE EFFECT OF LOWERING THE WATER/CEMENT RATIO TO BETWEEN 95 AND 105 LBS/CUBIC FOOT. THE AIR ENTRAINED CONTENT FOR THE MIX SHALL BE 30% TO ELIMINATE/MINIMIZE THE EXCESSIVE WATER AND SEGREGATION. COMPRESSIVE STRENGTHS SHALL HAVE A RANGE OF 50 PSI TO 80 PSI AT 28 DAYS WILL BE REQUIRED IF ADDITIONAL EXCAVATION BY MACHINE OR HAND IS REQUIRED.

SPECIFICATIONS

ALL WORK IN THIS CONTRACT SHALL CONFORM TO THE LATEST STATE OF OHIO DEPARTMENT OF TRANSPORTATION (ODOT) CONSTRUCTION AND MATERIALS SPECIFICATIONS, NATIONAL ELECTRIC SAFETY CODE FOR INSTALLATION BEFORE METER, NATIONAL ELECTRIC CODE FOR INSTALLATION AFTER METER AND OSHA REQUIREMENTS, EXCEPT WHERE LOCAL REGULATIONS ARE MORE STRINGENT, IN WHICH CASE LOCAL REGULATIONS SHALL GOVERN.

SCOPE OF WORK

A. THE CONTRACTOR SHALL RELOCATE OR REMOVE ALL CLEVELAND PUBLIC POWER (CPP) FACILITIES AS INDICATED ON THE PLANS AND/OR AS DIRECTED BY THE ENGINEER. THIS WORK SHALL BE PROPERLY COMPLETED, INCLUDING INCIDENTALS, AS SHOWN ON THE DRAWINGS AND HEREINAFTER SPECIFIED.

B. THE MAJOR ITEMS OF WORK TO BE FURNISHED AND INSTALLED BY THE CONTACTOR SHALL BE AS FOLLOWS.

WORK BY CONTRACTOR (E. 22ND ST.)

THE CONTRACTOR SHALL PROVIDE TEMPORARY PRIMARY ELECTRIC FACILITIES TO RE-ROUTE POWER OFF THE 22ND STREET BRIDGE DURING THE DEMOLITION AND REPLACEMENT OF THE BRIDGE. FOLLOWING CONSTRUCTION OF THE NEW BRIDGE, PERMANENT UNDERGROUND FACILITIES WILL BE PLACED ON THE BRIDGE, THE TEMPORARY FACILITIES WILL BE REMOVED AND PERMANENT CONNECTIONS MADE. THIS WORK INCLUDES:

- FURNISHING AND INSTALLING CONCRETE ENCASED PVC AND FRE DUCT BANKS OF VARIOUS ARRANGEMENTS.
- INSTALLING TEMPORARY WOODEN POWER POLES AND OVERHEAD ELECTRICAL CABLE SPANS OVER INTERSTATE 90.
- INSTALLING ELECTRICAL CABLES IN DUCTS AND INSTALLING CABLE ID TAGS
- INSTALLING DUCT BANK SYSTEM ACROSS BRIDGE INCLUDING BEAM SUPPORT SYSTEM
- TESTING ELECTRICAL SYSTEM
- FURNISHING AND INSTALLING ELECTRICAL VAULT/MANHOLE RACKING SYSTEMS WITHIN VAULTS OR MANHOLES.
- FURNISHING AND INSTALLING ELECTRICAL SPLICES, TRAINING AND BONDING WITHIN VAULTS OR MANHOLES.
- COORDINATING WITH CPP AND ITS CONTRACTORS
- REMOVAL OF EXISTING ELECTRICAL CABLES.

WORK BY CONTRACTOR (CARNEGIE AVE.)

THE CONTRACTOR SHALL PROVIDE TEMPORARY PRIMARY ELECTRIC FACILITIES TO RE-ROUTE POWER OFF THE CARNEGIE AVENUE BRIDGE DURING THE DEMOLITION AND REPLACEMENT OF THE BRIDGE. FOLLOWING CONSTRUCTION OF THE NEW BRIDGE, PERMANENT UNDERGROUND FACILITIES WILL BE PLACED ON THE BRIDGE, THE TEMPORARY FACILITIES WILL BE REMOVED AND PERMANENT CONNECTIONS MADE. THIS WORK INCLUDES:

- FURNISHING AND INSTALLING CONCRETE ENCASED PVC AND FRE DUCT BANKS OF VARIOUS ARRANGEMENTS.
- INSTALLING TEMPORARY WOODEN POWER POLES AND OVERHEAD ELECTRICAL CABLE SPANS OVER INTERSTATE 90.
- INSTALLING ELECTRICAL CABLES IN DUCTS AND INSTALLING CABLE ID TAGS
- INSTALLING DUCT BANK SYSTEM ACROSS BRIDGE INCLUDING BEAM SUPPORT SYSTEM
- TESTING ELECTRICAL SYSTEM
- FURNISHING AND INSTALLING ELECTRICAL VAULT/MANHOLE RACKING SYSTEMS WITHIN VAULTS OR MANHOLES.
- FURNISHING AND INSTALLING ELECTRICAL SPLICES, TRAINING AND BONDING WITHIN VAULTS OR MANHOLES.
- COORDINATING WITH CPP AND ITS CONTRACTORS
- REMOVAL OF EXISTING ELECTRICAL CABLES.

WORK BY CPP

- ENERGIZING ELECTRICAL SYSTEM
- DE-ENERGIZING OF EXISTING ELECTRICAL CABLES WITHIN DUCTS

ALONG PORTIONS OF THE CORRIDOR THE CONTRACTOR SHALL BE REQUIRED TO MAINTAIN THE EXISTING UNDERGROUND ELECTRICAL SERVICE UNTIL COMPLETION AND ACTIVATION OF THE PROPOSED UNDERGROUND POWER SYSTEM. THE CONTRACTOR SHALL COORDINATE THE DETAILS OF THIS WORK WITH CPP.

CABLE MARKING

FEEDER CABLE LOCATION IN CONDUIT BANK SHALL BE ASSIGNED BY CPP. EACH CABLE UPON ENTERING AND LEAVING MANHOLES SHALL BE MARKED WITH TAGS, INDICATING THE FEEDER NUMBER AND CABLE SIZE. THE LETTER SIZE SHALL BE A MINIMUM OF 1/2 IN., 1 IN. HIGH IS PREFERRED.

SUBMITTALS

IN ADDITION TO THE REQUIREMENTS OF CMS105 THE CONTRACTOR SHALL SUBMIT SHOP DRAWINGS ON ALL EQUIPMENT AND MATERIAL FURNISHED AND REQUIRED TO PERFORM THE WORK.

DEFINITIONS

WHENEVER IN THESE SPECIFICATIONS OR IN ANY DOCUMENT OR INSTRUCTIONS ON CONSTRUCTION WHERE THESE SPECIFICATIONS GOVERN, THE FOLLOWING TERMS (OR PRONOUNS IN PLACE OF THEM) ARE USED, THE INTENT AND MEANING SHALL BE INTERPRETED AS FOLLOWS:

THE CITY OR THE CITY OF CLEVELAND, IS THE DIRECTOR OF THE CITY OF CLEVELAND DEPARTMENT OF PUBLIC UTILITIES.

STATUS OF CITY INSPECTOR

INSPECTORS AS DESIGNATED BY THE CITY OF CLEVELAND SHALL BE AUTHORIZED TO INSPECT ALL WORK DONE AND MATERIALS FURNISHED. SUCH INSPECTING MAY EXTEND TO ALL OR ANY PART OF THE WORK, AND TO THE PREPARATION OR MANUFACTURE OF THE MATERIALS TO BE USED IN THE WORK. THE CITY INSPECTOR AS DESIGNATED BY THE DIRECTOR OF PUBLIC UTILITIES SHALL GIVE WORK INSTRUCTIONS THROUGH THE PROJECT ENGINEER.

ITEM 625 - CONDUIT, CONCRETE ENCASED, AS PER PLAN (XX) - 5" PVC

A. WORK INCLUDED

THE CONTRACTOR SHALL FURNISH ALL MATERIALS FOR AND SHALL PROPERLY CONSTRUCT AND CONNECT TO MANHOLES, AS SHOWN ON THE PLANS OR AS DIRECTED, ALL NON-REINFORCED AND REINFORCED CONCRETE-ENCASED PVC (EB) CONDUIT AS REQUIRED FOR THE PROPER COMPLETION OF THE WORK INCLUDED UNDER THIS CONTRACT. ALL CONDUITS SHALL BE ENCASED IN CONCRETE UNLESS NOTED OTHERWISE.

B. CONDUIT AND FITTINGS

1. POLYVINYL CHLORIDE (PVC) EB 20 CONDUIT SHALL CONFORM TO THE UL651 STANDARDS, 5 INCH INSIDE DIAMETER WITH CONCRETE ENCASEMENT AS DETAILED ON PLANS, COUPLINGS SHALL BE SOCKET TYPE, END BELLS AT MANHOLE ENTRANCE, 5 DEGREE SWEEPS, 11-1/4 DEGREE TO 90 DEGREES INCLUDING FILED DEGREES ANGLE COUPLINGS, STANDARD COUPLINGS, VARIOUS BENDS AND PLUGS OR CAPS TO CLOSE UNUSED CONDUITS, SHALL BE MADE OF THE SAME MATERIAL AS THE CONDUIT. CONDUIT SPACERS SHALL BE AS SHOWN IN THE PLAN DETAILS. CONCRETE BLOCK SPACERS WILL NOT BE ACCEPTED. CONTRACTOR SHALL CONTACT CPP BEFORE CONCRETE ENCASING ANY BENDS IN CONDUITS

2. FIBERGLASS REINFORCED EPOXY CONDUIT SHALL CONFORM TO UL 1684 AND UL1684A. FIBERGLASS CONDUIT SHALL HAVE A MINIMUM WALL THICKNESS OF 0.095". FIBERGLASS CONDUIT SHALL HAVE 5 INCH INSIDE DIAMETER EITHER CONCRETE ENCASED OR RACK MOUNTED AS INDICATED ON THE DRAWINGS. COUPLINGS SHALL HAVE BELL ON ONE END AND A SPIGOT ON THE OTHER END. ALL COUPLINGS SHALL BE MADE OF THE SAME MATERIAL. EXPANSION FITTINGS SHALL BE PROVIDED ON ALL EXPOSED CONDUIT RUNS.

C. CONCRETE

CONCRETE USED FOR ENCASEMENT OF CONDUITS SHALL CONFORM TO ROADWAY PLAN GENERAL NOTE CONCRETE DESIGN MIX (CLEVELAND 650, CLEVELAND MIX).

D. INSTALLATION

CONDUIT SHALL BE INSTALLED BY THE BUILT-UP METHOD WITH JOINTS IN ADJACENT DUCTS STAGGERED. NECESSARY SPACERS SHALL BE PLACED NO GREATER THAN 8-FEET INTERVALS TO HOLD DUCTS IN THE DESIRED CONFIGURATION, WITH THE DUCT BANK BRACED SECURELY TO KEEP IT FROM SHIFTING AND FLOATING WHILE CONCRETE IS POURED. SEALER COMPOUND FURNISHED BY THE CONDUIT AND EACH SECTION SHALL BE TAPPED SECURELY INTO PLACE IN THE PREVIOUS COUPLING TO OBTAIN JOINTS THAT ARE TIGHT AND LEAK-PROOF.

1. CONCRETE SHALL BE WORKED INTO THE SPACES BETWEEN DUCTS SO THAT THE CONDUIT BANK IS EFFECTIVELY ENCASED IN CONCRETE WITHOUT VOIDS OR EMPTY SPACES, REINFORCING RODS SHALL BE INSTALLED AS REQUIRED AND WHERE SHOWN ON THE PLANS.

2. CONDUIT WHICH IS CUT TO FIT SHORT SECTIONS SHALL BE DEBURRED ON THE DUCT END AND THE END OF THE BELL SHALL BE REAMED IN THE INSIDE DIAMETER FOR EACH ENTRY OF THE DUCT INTO COUPLING TO PRODUCE THE SAME JOINTING CONDITIONS AS PROVIDED BY FACTORY-MADE CONDUIT SECTIONS.

3. THE END BELLS SHALL BE GROUTED IN PLACE.

E. BACKFILLING

REFER TO NOTES "BACKFILL MATERIAL AND BACKFILLING PROCEDURES" AND "FLOWABLE FILL SPECIFICATION FOR UTILITY TRENCHES".

F. MEASUREMENT

THE NUMBER OF FEET OF CONDUIT TO BE PAID FOR SHALL BE THE ACTUAL NUMBER OF FEET FURNISHED AND PLACED AND ACCEPTED IN ACCORDANCE WITH THESE SPECIFICATIONS, AS MEASURED ALONG THE AXIS OF THE CONDUIT LINE, INCLUDING FITTINGS.

G. PAYMENT

THE FOOTAGE MEASURED AS PROVIDED ABOVE SHALL BE AID FOR AT THE CONTRACTOR PRICE BID PER FOOT UNDER ITEM 625 AS DESCRIBED BELOW, CLASSIFIED AS TO SIZE AND TYPE, WHICH PRICE AND PAYMENT SHALL CONSTITUTE FULL COMPENSATION FOR EXCAVATING AND FOR FURNISHING, HAULING, PLACING THE CONDUIT, FITTINGS, CAPPING, SPACERS, CONCRETE, REINFORCING STEEL, SHEETING AND BRACING, BACKFILL, PLASTIC CAUTION TAPE (OR RED TINTED CONCRETE), INCIDENTAL CONCRETE, REMOVAL OF ALL SURPLUS EXCAVATION AND DISCARDED MATERIAL, BREAKING AND RESTORATION OF EXISTING MANHOLE WALLS AND ALL LABOR EQUIPMENT, TOOLS AND INCIDENTALS NECESSARY TO COMPLETE THE WORK AS SPECIFIED.

THESE ITEMS AS MEASURED AS PROVIDED ABOVE SHALL BE PAID
FOR UNDER:

ITEM	UNIT	DESCRIPTION
625	FT	CONDUIT, CONCRETE ENCASED, AS PER PLAN, (XX)-5" PVC
625	FT	CONDUIT, CONCRETE ENCASED, AS PER PLAN, (XX) -5" FRE
625	FT	CONDUIT, RACK MOUNTED, AS PER PLAN, (XX) -5" FRE

Preliminary Plans - For Reference Only

CLEVELAND PUBLIC POWER
GENERAL NOTES (1 OF 3)

DESIGN AGENCY
ADVANCED ENGINEERING CONSULTANTS
Mechanical | Electrical | Plumbing | Fire Protection
1400 Dublin Road, Columbus, Ohio 43215
Tel: (614) 486-4778 Fax: (614) 486-4982

DESIGNER JCS
REVIEWER WH 05/17/24
PROJECT ID 82382
SHEET 1777 TOTAL 2696

CUY-90-16.28 (CCG3A)

MODEL: 82382_UNI30I PAPERSIZE: 34x22 (in.) DATE: 3/27/2025 TIME: 8:0:07 PM USER: Nate.Gallagher
pw:\\mb-us-pw.bentley.com:mb-us-pw-03\Documents\Cleveland_OH\01_Projects\00DTVDistrict12\82382\400-Engineering\UTILITIES\Sheets\82382_UNI30I.dgn

DISTRIBUTION CABLE MISC.: 556KCMIL 15KV SPACER CABLE WITH 0052 AWA MESSENGER

1. 15KV SPACER CABLE AND STEEL MESSENGER SHALL BE MANUFACTURED IN ACCORDANCE WITH
   a. ASTM B415-16 (LATEST REVISION)
   b. ANSI/NEMA WC74 / ICA S-93-639 (LATEST REVISION)
   c. ASTM B230
   d. ASTM B400
   e. ASTM D1248

2. PRODUCT REQUIREMENTS

2.1 MESSENGER
   a. MESSENGER IS USED TO SUPPORT SPACER CABLE SYSTEMS. THE MESSENGER'S STRENGTH SHALL PROTECT THE SYSTEM FROM FALLING TREES AND BRANCHES AS WELL AS CONTINUE TO SUPPORT HTE CABLE DURING HIGH WIND LOADS AND ICING CONDITIONS.
   b. THE MESSENGER SERVES AS THE SUPPORT MEMBER FOR SPACER CABLE SYSTEMS. TWO CONSTRUCTIONS OF MESSENGER SHALL BE ALUMOWELD-ALUMINUM (AWA). THE STRANDS USED TO MANUFACTURE THESE TYPES OF MESSENGERS SHALL BE A COMBINATION OF ALUMINUM CLAD STEEL WIRES AND 1350-H19 ALUMINUM WIRES.
   c. THE MESSENGER SHALL MEET OR EXCEED ALL REQUIREMENTS OF THE LATEST EDITIONS OF ASTM B415-16 - STANDARD SPECIFICATION FOR HARD-DRAWN ALUMINUM-CLAD STEEL WIRE. THE MESSENGER SHALL FURTHER MEET OR EXCEED THOSE APPLICABLE STANDARDS REFERENCED BY ASTM B415-16.
   d. MESSENGER FOR 556 KCMIL SPACER CABLE SHALL BE SIZE 0052 AWA, 0.546 IN OVERALL DIAMETER, SHALL HAVE 5 AW WIRES OF 0.1819 IN. DIAMETER AND 2 AL WIRES OF 0.1819 IN. DIAMETER. WEIGHT SHALL BE APPROXIMATELY 438 LBS PER 1000 FT AND SHALL HAVE A BREAKING STRENGTH OF AT LEAST 20,420 LBS.
   e. PACKAGING: REELS SHALL HAVE 18 TO 24 INCHES OF INSIDE TAIL WIRE EXPOSED THROUGH THE REEL STARTHOLE AND SECURED TO THE REEL FLANGE. WOODEN REELS SHALL HAVE 3 INCH MINIMUM DIAMETER CENTER ARBOR HOLES AND 1-1/2 INCH MINIMUM DIAMETER DRIVE PIN HOLES LOCATED 6 TO 21 INCHES FROM THE SPOOL FLANGE CENTER PER NEMA WC26.

2.2 COVERED CONDUCTOR
   a. THIS CONDUCTOR IS USED FOR PRIMARY OVERHEAD DISTRIBUTION. IT IS INSTALLED AS AN UNINSULATED CONDUCTOR; HOWEVER, THE COVERING SHALL BE EFFECTIVE IN PREVENTING DIRECT SHORTS AND INSTANTANEOUS FLASHOVERS SHOULD TREE LIMBS OR OTHER OBJECTS CONTACT CONDUCTORS IN SUCH CLOSE PROXIMITY. CONDUCTOR IS TO BE INSTALLED WITH OTHER SPACER CABLE CONDUCTORS AND A SUPPORTING MESSENGER THROUGH A SERIES OF SPACE-MAINTAINING DEVICES (SPACERS). CONDUCTORS SHALL BE RATED FOR CONTINUOUS OPERATION AT 75°C.
   b. CONDUCTORS SHALL BE COMPACT ROUND, CONCENTRICALLY STRANDED, 1350-H19 HARD DRAWN ALUMINUM.
   c. CONDUCTOR SHIELDING SHALL BE AN EXTRUDED BLACK SEMICONDUCTING POLYMER MEETING PHYSICAL REQUIREMENTS OF ANSI/NEMA WC 74. NOMINAL THICKNESS OF SHIELDING SHALL BE 15 MILS. THE MINIMUM THICKNESS AT ANY POINT SHALL NOT BE LESS THAN 0.010".
   d. CONDUCTOR COVERING:
      1. SHALL CONSIST OF TWO LAYERS THERMALLY BONDED TO EACH OTHER AND TO THE CONDUCTOR SHIELDING.
      2. THE INNER LAYER SHALL BE EXTRUDED NATURAL LOW DENSITY POLYETHYLENE, COMPLYING WITH ASTM SPECIFICATION D-1248 LATEST EDITION, FOR TYPE I, CLASS A, CATEGORY 5, GRADE E4 MATERIAL. NOMINAL THICKNESS OF THE INNER LAYER SHALL BE 75 MILS.
      3. THE OUTER LAYER SHALL BE AN EXTREDED BLACK, TRACK RESISTANT, HIGH DENSITY POLYETHYLENE, COMPLYING WITH ASTM SPECIFICATION D1248, LATEST EDITION, FOR TYPE III, CLASS C, CATEGORY 5, GRADE J5 MATERIAL. NOMINAL THICKNESS OF THE OUTER LAYER SHALL BE 75 MILS.
      4. OVERALL COVERING (DIAMETER) TOLERANCES SHALL BE LIMITED TO NOMINAL PLUS 20 MILS OR NOMINAL MINUS 10 MILS FOR ALL CONDUCTORS. NOMINAL OUTER DIAMETERS ARE PER SECTION 2.2.e.
   e. CONDUCTORS SHALL BE 556.5 KCMIL, 19 STRANDS, WITH A NOMINAL OUTER DIAMETER OF 1.120 IN. WEIGHT SHALL BE APPROXIMATELY 752 LBS PER 1000' OF CABLE.
   f. TESTING SHALL BE PERFORMED ON EACH REEL OF CABLE. TEST REPORTS SHALL BE FURNISHED UPON REQUEST OF THE PURCHASER. TESTS SHALL INCLUDE THE FOLLOWING MEASUREMENTS:
      1. CONDUCTOR DIAMETER
      2. WALL THICKNESS
      3. FINISHED DIAMETER
      4. CONCENTRICITY
      5. AC SPARK. AC SPARK SHALL BE PERFORMED CONTINUOUSLY AS THE CABLE IS BEING EXTRUDED. THE APPLIED AC VOLTAGE SHALL BE 15,000 VOLTS.
   g. SPACER CABLE CONDUCTORS SHALL BE PROVIDED WITH TRIANGULAR CABLE SPACERS, MADE OF HDPE AND SUITABLE FOR THE SELECTED CABLE. SPACERS SHALL BE PROVIDED EVERY 30' OF CIRCUIT LENGTH UNLESS NOTED OTHERWISE. SPACERS SHALL BE HENDRIX RTL OR APPROVED EQUAL.
   h. 556 KCMIL, 15KV SPACER CABLE, WITH 0052 AWA MESSENGER SHALL INCLUDE (3) PRIMARY COVERED CONDUCTORS, (1) MESSENGER, AND CABLE SPACERS AS SPECIFIED ABOVE.

ITEM 1. 556 KCMIL 15 KV SPACER CABLE WITH 0052 AWA MESSENGER

DISTRIBUTION CABLE MISC.: 500KCMIL 15KV CU WITH CONCENTRIC NEUTRAL

A. WORK INCLUDED

THE CONTRACTOR SHALL FURNISH ALL NECESSARY LABOR MATERIALS, TOOLS AND EQUIPMENT FOR INSTALLING ALL POWER CABLES, AS SPECIFIED, REQUIRED OR SHOWN ON THE PLANS.

B. DETAILED SPECIFICATIONS

MEDIUM VOLTAGE CABLES - EPR URD

1. ALL ETHYLENE PROPYLENE RUBBER INSULATED URD CABLE IS MANUFACUTRED,TESTED AND WARRANTED IN ACCORDANCE WITH:
   a. A.E.I.C CS-8 (LATEST REVISION)
   b. I.C.E.A S-94-649 (LATEST REVISION)

2. CHARACTERISTICS
   a. BARE ANNEALED COPPER CENTER CONDUCTOR, COMPACT CLASS B STRANDING PER ASTM B-3, AS SPECIFIED ON THE BID SHEET.
   b. 1/3 COPPER CONCENTRIC NEUTRAL, AS SPECIFIED ON BID SHEET
   c. ETHYLENE PROPYLENE RUBBER INSULTAION
   d. AVERAGE MINIMUM INSULATION THICKNESS 220 MILS
   e. POLYETHYLENE JACKET

3. 15 KV EPR URD
   a. RATED 15 KV 133%, 220-MIL INSULATION THICKNESS

ITEM 1. 500 KCMIL, 15 KV 133%, EPR URD, 33% NEUTRAL

C. MOLDED SPLICES

1. DESIGNED AND TESTED PER IEEE STANDARD 404.

2. VOLTAGE RATING:
   a. 15 KV CLASS (8.7 KV PHASE-TO-GROUND)
   b. IMPULSE WITHSTAND : A = 110 KV, 1.2 X 50 MICROSECOND WAVE.
   c. CORONA EXTINCTION VOLTAGE : A = 13 KV, MINIMUM, 3PC SENSITIVITY.
   d. DC WITHSTAND : DURING INSTALLATION : 56 KV
   e. DC WITHSTAND : 18 KV FOR XLPE INSULATED CABLES
      45 KV FOR EPR INSULATED CABLES
      REFERENCE AEIC CS6 AND CS8, SECTION L.2.0

ITEM 1. SPLICE FOR 500 KCMIL, 15 KV URD, ELASTIMOLD 15 PCJ 1 LM 2 330

OBTAIN CABLE SPLICE KITS AND ACCESSORIES FROM A SINGLE SOURCE MANUFACTURER AND SHALL BE APPROVED BY CPP.

3. SPLICE KITS: COMPLY WITH IEEE 404; TYPE AS RECOMMENDED BY CABLE OR SPLICING KIT MANUFACTURER FOR THE APPLICATION.

4. SPLICING PRODUCTS: AS RECOMMENDED, IN WRITING, BY SPLICING KIT MANUFACTURER FOR SPECIFIC D.CABLE LUBRICANTSIZES, MATERIALS, RATINGS, AND CONFIGURATIONS OF CABLE CONDUCTORS. INCLUDE ALL COMPONENTS REQUIRED FOR COMPLETE SPLICE, WITH DETAILED INSTRUCTIONS.

   a. HEAT-SHRINK SPLICING KIT OF UNIFORM, CROSS-SECTION, POLYMERIC CONSTRUCTION WITH OUTER HEAT-SHRINK JACKET.

5. MEDIUM-VOLTAGE TAPES: ETHYLENE/PROPYLENE RUBBER-BASED,30-MIL SPLICING TAPE, RATED FOR 130 DEG C OPERATION. MINIMUM 1-1/2 INCH WIDE.

D. CABLE LUBRICANT

USE MANUFACTURERS APPROVED PULLING COMPOUND OR LUBRICANTS FOR CABLE BEING INSTALLED THAT DO NOT DETERIORATE CONDUCTOR OR INSULATION.

E. BONDING WIRE

1. BONDING CONDUCTOR: NO. 4, STRANDED COPPER, ASTM B 8.
2. LISTED AND LABELED BY AN NRTL ACCEPTABLE TO AUTHORITIES HAVING JURISDICTION FOR APPLICATIONS IN WHICH USED AND FOR SPECIFIC TYPES, SIZES AND COMBINATIONS OF CONDUCTORS AND OTHER ITEMS CONNECTED.

F. CABLE PULLING

1. BEFORE STARTING CABLE INSTALLATION, THE DUCTS TO BE OCCUPIED SHOULD BE SELECTED THROUGHOUT THE ENTIRE LENGTH OF THE RUN AND THE DUCTS SELECTED MUST BE CHECKED TO SEE THAT THEY ARE CLEAN AND FREE FROM ALL OBSTRUCTIONS.

   a. PROOF CONDUITS PRIOR TO CONDUCTOR INSTALLATION BY PASSING A WIRE BRUSH MANDREL AND THEN A RUBBER DUCT SWAB THROUGH THE CONDUIT.

      i. WIRE BRUSH MANDREL: CONSISTS OF A LENGTH OF BRUSH APPROXIMATELY THE SIZE OF THE CONDUIT INNER DIAMETER WITH STIFF STEEL BRISTLES AND AN EYE ON EACH END FOR ATTACHING THE PULL ROPES. IF AN OBSTRUCTION IS FELT, PULL THE BRUSH BACK AND FORTH REPEATEDLY TO BREAK UP THE OBSTRUCTION.

      ii. RUBBER DUCT SWAB: CONSISTS OF A SERIES OF RUBBER DISCS APPROXIMATELY THE SIZE OF THE CONDUIT INNER DIAMETER ON A LENGTH OF STEEL CABLE WITH AN EYE ON EACH END FOR ATTACHING THE PULL ROPES. PULL THE RUBBER DUCT SWAB THROUGH THE DUCT TO EXTRACT LOOSE DEBRIS FROM THE DUCT.

   b. USE PULLING MEANS, INCLUDING FISH TAPE, ROPE, AND BASKET- WEAVE CABLE GRIPS, THAT DO NOT DAMAGE CABLES AND RACEWAYS. DO NOT USE ROPE HITCHES FOR PULLING ATTACHMENT TO CABLE.

   c. DO NOT EXCEED MANUFACTURER'S RECOMMENDED MAXIMUM PULLING TENSIONS AND SIDEWALL PRESSURE VALUES.

   d. USE PULL-IN GUIDES, CABLE FEEDERS, AND DRAW-IN PROTECTORS AS REQUIRED TO PROTECT CABLES DURING INSTALLTION.

   e. DO NOT PULL CABLES WITH ENDS UNSEALED. SEAL CABLE ENDS WITH RUBBER TAPE.

   f. SUPPORT CABLES USING GALVANIZED STEEL CHANNEL AND PORCELAIN OR MAPLE BLOCKS.

2. IF REELS ARE LEFT IN THE STREET, WARNING LIGHTS SHALL BE PLACED AROUND THEM.

3. LUBRICANT SHALL BE APPLIED TO THE CABLE JUST BEFORE IT ENTERS THE FEEDING TUBE. A COATING ABOUT 1/6" THICK IS AMPLE. NO LUBRICANT SHALL BE APPLIED FIRST AND LAST 5-FEET OF CABLE FOR CONVENIENCE AND CLEANLINESS IN SPLICING.

4. THE REEL OF CABLE MUST BE PROPERLY PLACED AT THE FEEDING END TO CAUSE MINIMUM FLEXING OF THE CABLE. IT SHOULD ALWAYS BE LOCATED ON THE SIDE OF THE MANHOLE TOWARD WHICH THE CABLE IS PULLED.

5. WHERE THERE IS A BEND IN THE DUCT LINE, THE PULLING SET-UP, WHENEVER POSSIBLE, SHOULD BE PLANNED FOR FEEDING-IN AT THE MANHOLE NEAREST THE BEND.

6. THE AMOUNT OF SLACK IN THE CABLE AT THE FEEDING END SHALL BE REGULATED BY WORKERS STATIONED AT THE CABLE REEL SO THAT THE CABLE PASSES FREELY INTO THE FEEDING TUBE WITHOUT SCRAPING THE MANHOLE FRAME.

7. THE CABLE SHALL BE DRAWN INTO THE DUCT JUST FAST ENOUGH TO KEEP THE CABLE AND REEL MOVING SMOOTHLY AND SO THE CABLE CAN BE PROPERLY INSPECTED AND LUBRICATED.

8. EYES OR SEALS DAMAGED DURING PULLING SHALL BE REPAIRED UNLESS SPLICING FOLLOWS IMMEDIATELY.

9. WHEN THE CABLE IS CUT, UNLESS SPLICING IS TO BE DONE IMMEDIATELY, THE ENDS SHALL BE PREPARED AND SEALED BY AN APPROVED METHOD. ALL SEALED ENDS SHOULD BE RACKED HIGH.

G. CABLE RACKING AND TRAINING

1. RACK AND TRAIN CABLES ON CABLE RACK ASSEMBLIES CONSISTING OF HOT-DIP GALVANIZED, EXCEPT INSULATORS.

2. IDENTIFY CABLES PHASE AND CIRCUIT NUMBER OF EACH CONDUCTOR AT EACH SPLICE, TERMINATION, PULL POINT, AND JUNCTION BOX. ARRANGE IDENTIFICATION SO THAT IT IS UNNECESSARY TO MOVE THE CABLE OR CONDUCTOR TO READ THE IDENTIFICATION.

H. BONDING

1. MAINTAIN SHIELD CONTINUITY AND CONNECTINONS TO METAL CONNECTION HARDWARE AT ALL CONNECTION POINTS.

2. GROUNDING CONDUCTORS: ROUTE ALONG SHORTEST AND STRAIGHTEST PATHS POSSIBLE UNLESS OTHERWISE INDICATED OR REQUIRED BY CODE. AVOID OBSTRUCTING ACCESS OR PLACING CONDUCTORS WHERE THEY MAY BE SUBJECTED TO STRAIN, IMPACT OR DAMAGE.

3. BONDING STRAPS AND JUMPERS: INSTALL IN LOCATIONS ACCESSIBLE FOR INSPECTION AND MAINTENANCE EXCEPT WHERE ROUTED THROUGH SHORT LENGTHS OF CONDUIT.
   a. BONDING TO STRUCTURE: BOND STRAPS DIRECTLY TO BASIC STRUCTURE, TAKING CARE NOT TO PENETRATE ANY ADJACENT PARTS.

I. TESTING

1. VISUAL AND MECHANICAL INSPECTIONS.

2. INSPECT EXPOSED CABLE SECTIONS FOR PHYSICAL DAMAGE.

3. INSPECT SHIELD GROUNDING AND CABLE SUPPORT. VISUALLY INSPECT CABLE TERMINATIONS PERFORMED BY CPP.

4. INSPECT COMPRESSION CONNECTORS FOR CORRECT CABLE MATCH AND IDENTIFICATION.

5. TESTING AGENCY: ENGAGE A QUALIFIED TESTING AGENCY TO PERFORM TESTS AND INSPECTIONS.

6. PERFORM THE FOLLOWING TESTS AND INSPECTIONS WITH THE ASSISTANCE OF A FACTORY-AUTHORIZED SERVICE REPRESENTATIVE:

   a. PERFORM EACH VISUAL AND MECHANICAL INSPECTION AND ELECTRICAL TEST STATED IN NETA ATS. CERTIFY COMPLIANCE WITH TEST PARAMETERS.
   b. AFTER INSTALLING MEDIUM-VOLTAGE CABLES AND BEFORE ELECTRICAL CIRCUITRY HAS BEEN ENERGIZED, TEST FOR COMPLIANCE WITH REQUIREMENTS.
   c. PERFORM DIRECT-CURRENT HIGH POTENTIAL TEST OF EACH NEW CONDUCTOR ACCORDING TO NETA ATS, CH. 7.3.3. DO NOT EXCEED CABLE MANUFACTURER'S RECOMMENDED MAXIMUM TEST VOLTAGE.

7. MEDIUM-VOLTAGE CABLES WILL BE CONSIDERED DEFECTIVE IF THEY DO NOT PASS TESTS AND INSPECTIONS.

8. PREPARE TEST AND INSPECTION REPORTS.

J. MEASUREMENT

THE NUMBER OF FEET OF CIRCUIT CABLE TO BE PAID FOR SHALL INCLUDE CABLE LENGTH IN DUCT PLUS LENGTH IN MANHOLES PER THE CABLE WIRING PLANS, INSTALLED IN PLACE INCLUDING CABLE RACKING, TRAINING, TESTING, CABLE TAGS, AND OTHER INCIDENTAL WORK. MEASUREMENT IS IN FEET OF CIRCUIT. EACH FOOT OF CIRCUIT INCLUDES (3) 500KCMIL 15KV CABLES WITH CONCENTRIC NEUTRAL.

SPECIALS

15KV TERMINATORS - PROVIDE 15 KV TERMINATION KITS FOR 500 KCMIL 15 KV CONDUCTORS AT RISER POLE INSTALLATIONS.

15KV SPLICES - PROVIDE 15 KV SPLICE KITS FOR 4/0 CU 15 KV CONDUCTORS OR 500 KCMIL CU 15 KV CONDUCTORS AS NOTED ON THE PLAN.

OVERHEAD TRANSFORMER REMOVAL - REMOVE EXISTING OVERHEAD TRANSFORMER (EQUAL/LESS THAN 75 KVA) AND TURN OVER TO CPP.

DOUBLE CROSS-ARM AND DEAD-END ASSEMBLY - PROVIDE 8' WOOD DOUBLE CROSS-ARM AND 15 KV CONDUCTOR DEAD-END CONSISTING OF THREE SINGLE CONDUCTOR, SINGLE INSULATORS.

15KV TEST CAP FOR SUBMERSIBLE USE

15KV 600 AMP DISCONNECT SWITCH FOR CROSS-ARM MOUNTING.

Preliminary Plans - For Reference Only

CLEVELAND PUBLIC POWER
GENERAL NOTES (2 OF 3)

DESIGN AGENCY
ADVANCED ENGINEERING CONSULTANTS
Worthington | Beachwood | Plain City | Pre-Fab Office
1400 Dublin Road, Columbus, Ohio 43215
Tel: (614) 486-4775 Fax: (614) 486-4882

DESIGNER JCS
REVIEWER WH 05/17/24
PROJECT ID 82382
SHEET 1778 TOTAL 2696

CUY-90-16.28 (CCG3A)

MODEL: 82382_UN30I PAPERSIZE: 34x22 (in.) DATE: 6/13/2025 TIME: 10:48 PM USER: Joseph.Hogan
pw:\\mb-us-pw.bentley.com\mb-us-pw-03\Documents\Cleveland_OH\OI_Projects\0007\District2\82382\400-Engineering\Utilities\Sheets\82382_UN302.dgn

ITEM 625 - LIGHTING MISC.: 24" SPACER CABLE TANGENT BRACKET

24" SPACER CABLE TANGENT BRACKETS SHALL CONFORM TO THE FOLLOWING:

A. 24" SPACER CABLE TANGENT BRACKET SHALL BE SUPPLIED WITH MESSENGER CLAMP FOR 1/2 INCH TO 9/16 INCH MESSENGER. HENDRIX BM-24 OR APPROVED EQUAL.
B. GROUND WIRE - THE GROUND WIRE SHALL BE #6 SOLD SOFT DRAWN BARE COPPER.
C. CONNECTORS - COPPER COMPRESSION TYPE.
D. ALL STEEL HARDWARE SHALL BE HOT DIP GALVANIZED.

INSTALLATION:

A. THE 24" BRACKET SHALL BE USED ON TANGENT POLES AND LINE ANGLES UP TO AND INCLUDING FIVE (5) DEGREES, TO ATTACH THE MESSENGER WIRE TO THE POLE. CABLE SPACERS SHALL BE USED TO SUPPORT THE SPACER CABLE FROM THE MESSENGER.
B. THE BRACKET SHALL BE ATTACHED TO THE POLE USING 5/8" DIAMETER MACHINE BOLTS WITH 2-1/4"X2-1/4"X3/16" SQ. CURVED WASHERS, SPRING LOCK DOUBLE COIL WASHERS. ALL STEEL HARDWARE SHALL BE GALVANIZED.
C. A #6 AWG COPPER GROUND WIRE SHALL CONNECT THE MESSENGER WIRE AND POLE GROUND.

THIS ITEM SHALL INCLUDE ALL MATERIAL AND LABOR REQUIRED TO INSTALL THE 24" SPACER CABLE TANGENT BRACKET IN A COMPLETE AND WORKMANLIKE MANNER.

ITEM 625 - LIGHTING MISC.: PRIMARY CONDUIT RISER

PRIMARY CONDUIT RISER SHALL CONSIST OF UNDERGROUND CONDUIT TURNED UP AND SECURED TO A POWER POLE, INCLUDED STANDOFF BRACKETS, CUTOUTS, LIGHTNING ARRESTERS AND CABLE TERMINATION EQUIPMENT. MATERIAL SHALL BE AS FOLLOWS:

A. CONDUIT SHALL BE 5" SCHEDULE 40 PVC IN CONFORMANCE WITH CONDUIT SPECIFICATIONS AS DETAILED IN THESE SPECIFICAITONS.
B. CONDUIT STAND-OFF BRACKET SHALL BE ALUMAFORM # CSO-6 OR -9 WITH #STS-5 STRAPS OR ENGINEER APPROVED EQUAL.
C. CUTOUTS SHALL BE 600A SOLID BLADE CUTOUT SWITCHES.
D. LIGHTNING ARRESTERS SHALL BE RISER POLE TYPE, 12KV RATED VOLTAGE, 10.2KV MCOV, 35.5IR-KV 0.5USEC 10KA MAXIMUM, 23.6 IRKV 500A SWITCHING SURGE MAXIMUM. ARRESTERS SHALL BE CONNECTED TO POLE GROUND USING #6 SOFT DRAWN SOLID BARE COPPER WIRE.
E. RISER TERMINATION POTHEADS SHALL BE 15KV AND RATED FOR MINIMUM 600A.

INSTALLATION:

A. INSTALLATION SHALL BE AS SHOWN ON POLE DETAIL SHEETS.
B. THIS ITEM SHALL INCLUDE ALL MATERIAL AND LABOR REQUIRED TO INSTALL PRIMARY CONDUIT RISER IN A COMPLETE AND WORKMANLIKE MANNER.

ITEM 625 - LIGHTING MISC.: SPACER CABLE DEADENED ASSEMBLY

SPACER CABLE DEADEND ASSEMBLY SHALL INCLUDE A DOUBLE CROSSARM, PRIMARY CONDUCTOR DEADEND HARDWARE, MESSENGER HARDWARE, AND ALL ASSOCIATED INCIDENTAL HARDWARE REQUIRED TO CONSTRUCT THE DEADEND ASSEMBLY. MATERIAL SHALL INCLUDE:
A. TWO WOOD CROSSARMS, DOUGLAS FIR, 3-3/4" x 10'-0", WITH ALUMAFORM RA6018 CROSSARM BRACES. CROSSARMS SHALL CONFORM TO ANSI 05.1, AWPA C-1-89, AWPA P-8-89, AWPA-C-9-87, REA 1728H-701, AND SHALL BE CURED AND TREATED WITH PENTACHLOROPHENAL IN ACCORDANCE WITH THE AWPA BOOK OF STANDARDS. TREATMENT SHALL HAVE A MINIMUM RETENSION OF 0.40, AND AN ASSAY ZONE OF 0.25-1.0.
B. GROUND WIRE SHALL BE #6 SOLID SOFT DRAWN BARE COPPER
C. CONNECTORS SHALL BE COPPER COMPRESSION TYPE
D. PRESHAPED TYPE GRIP FOR MESSENGER SHALL BE PREFORMED LINE PRODUCTS #AWDE-4128.
E. PRESHAPED TYPE GRIP FOR 556 MCM SPACER CABLE SHALL BE PREFORMED LINE PRODUCTS #ND-0123.
F. 15KV POLYMER DEADEND INSULATOR SHALL BE 5/8" DIAMETER ROD DEADEND INSULATOR, 16" LEAKAGE DISTANCE, OHIO BRASS #401015-0215
G. ALL STEEL HARDWARE SHALL BE HOT DIP GALVANIZED.

INSTALLATION:

A. INSTALLATION SHALL BE AS SHOWN ON POLE DETAIL SHEETS.
B. THIS ITEM SHALL INCLUDE ALL MATERIAL AND LABOR REQUIRED TO INSTALL THE SPACER CABLE DEADEND ASSEMBLY IN A COMPLETE AND WORKMANLIKE MANNER.

ITEM 625 - LIGHTING MISC.: SPACER CABLE TO SPACER CABLE DOUBLE DEADENED ASSEMBLY

SPACER CABLE TO SPACER CABLE DOUBLE DEADEND ASSEMBLY SHALL INCLUDE A DOUBLE CROSSARM, PRIMARY CONDUCTOR DEADEND HARDWARE ON EACH SIDE OF THE CROSSARM ASSEMBLY, MESSENGER HARDWARE, AND ALL ASSOCIATED INCIDENTAL HARDWARE REQUIRED TO CONSTRUCT THE DEADEND ASSEMBLY. MATERIAL SHALL INCLUDE:
A. TWO WOOD CROSSARMS, DOUGLAS FIR, 3-3/4" x 10'-0", WITH ALUMAFORM RA6018 CROSSARM BRACES. CROSSARMS SHALL CONFORM TO ANSI 05.1, AWPA C-1-89, AWPA P-8-89, AWPA-C-9-87, REA 1728H-701, AND SHALL BE CURED AND TREATED WITH PENTACHLOROPHENAL IN ACCORDANCE WITH THE AWPA BOOK OF STANDARDS. TREATMENT SHALL HAVE A MINIMUM RETENSION OF 0.40, AND AN ASSAY ZONE OF 0.25-1.0.
B. GROUND WIRE SHALL BE #6 SOLID SOFT DRAWN BARE COPPER
C. CONNECTORS SHALL BE COPPER COMPRESSION TYPE
D. PRESHAPED TYPE GRIP FOR MESSENGER SHALL BE PREFORMED LINE PRODUCTS #AWDE-4128.
E. PRESHAPED TYPE GRIP FOR 556 MCM SPACER CABLE SHALL BE PREFORMED LINE PRODUCTS #ND-0123.
F. 15KV POLYMER DEADEND INSULATOR SHALL BE 5/8" DIAMETER ROD DEADEND INSULATOR, 16" LEAKAGE DISTANCE, OHIO BRASS #401015-0215
G. ALL STEEL HARDWARE SHALL BE HOT DIP GALVANIZED.

INSTALLATION:

A. INSTALLATION SHALL BE AS SHOWN ON POLE DETAIL SHEETS.
B. THIS ITEM SHALL INCLUDE ALL MATERIAL AND LABOR REQUIRED TO INSTALL THE SPACER CABLE TO SPACER CABLE DOUBLE DEADEND ASSEMBLY IN A COMPLETE AND WORKMANLIKE MANNER.

ITEM 625 - LIGHTING MISC.: DEADEND ASSEMBLY.

DEADEND ASSEMBLY SHALL INCLUDE A DOUBLE CROSSARM, PRIMARY CONDUCTOR DEADEND HARDWARE AND ALL ASSOCIATED INCIDENTAL HARDWARE REQUIRED TO CONSTRUCT THE DEADEND ASSEMBLY. MATERIAL SHALL INCLUDE:
A. TWO WOOD CROSSARMS, DOUGLAS FIR, 3-3/4" x 10'-0", WITH ALUMAFORM RA6018 CROSSARM BRACES. CROSSARMS SHALL CONFORM TO ANSI 05.1, AWPA C-1-89, AWPA P-8-89, AWPA-C-9-87, REA 1728H-701, AND SHALL BE CURED AND TREATED WITH PENTACHLOROPHENAL IN ACCORDANCE WITH THE AWPA BOOK OF STANDARDS. TREATMENT SHALL HAVE A MINIMUM RETENSION OF 0.40, AND AN ASSAY ZONE OF 0.25-1.0.
B. GROUND WIRE SHALL BE #6 SOLID SOFT DRAWN BARE COPPER
C. CONNECTORS SHALL BE COPPER COMPRESSION TYPE
D. CLAMP, STRAIN, CLEVIS AS REQUIRED, STRAIGHT LINE DEADEND SIZED FOR THE CONDUCTOR AND MATERIAL AS SHOWN ON THE DRAWINGS.
E. 15KV GREAD DEADEND INSULATORS
G. ALL STEEL HARDWARE SHALL BE HOT DIP GALVANIZED.

INSTALLATION:

A. INSTALLATION SHALL BE AS SHOWN ON POLE DETAIL SHEETS.
B. THIS ITEM SHALL INCLUDE ALL MATERIAL AND LABOR REQUIRED TO INSTALL THE DEADEND ASSEMBLY IN A COMPLETE AND WORKMANLIKE MANNER.

ITEM 625 - LIGHTING MISC.: DOUBLE DEADEND ASSEMBLY.

DEADEND ASSEMBLY SHALL INCLUDE A DOUBLE CROSSARM, PRIMARY CONDUCTOR DEADEND HARDWARE ON EACH SIDE OF THE CROSSARM ASSEMBLY AND ALL ASSOCIATED INCIDENTAL HARDWARE REQUIRED TO CONSTRUCT THE DOUBLE DEADEND ASSEMBLY. MATERIAL SHALL INCLUDE:
A. TWO WOOD CROSSARMS, DOUGLAS FIR, 3-3/4" x 10'-0", WITH ALUMAFORM RA6018 CROSSARM BRACES. CROSSARMS SHALL CONFORM TO ANSI 05.1, AWPA C-1-89, AWPA P-8-89, AWPA-C-9-87, REA 1728H-701, AND SHALL BE CURED AND TREATED WITH PENTACHLOROPHENAL IN ACCORDANCE WITH THE AWPA BOOK OF STANDARDS. TREATMENT SHALL HAVE A MINIMUM RETENSION OF 0.40, AND AN ASSAY ZONE OF 0.25-1.0.
B. GROUND WIRE SHALL BE #6 SOLID SOFT DRAWN BARE COPPER
C. CONNECTORS SHALL BE COPPER COMPRESSION TYPE
D. CLAMP, STRAIN, CLEVIS AS REQUIRED, STRAIGHT LINE DEADEND SIZED FOR THE CONDUCTOR AND MATERIAL AS SHOWN ON THE DRAWINGS.
E. 15KV GREAD DEADEND INSULATORS
G. ALL STEEL HARDWARE SHALL BE HOT DIP GALVANIZED.

INSTALLATION:

A. INSTALLATION SHALL BE AS SHOWN ON POLE DETAIL SHEETS.
B. THIS ITEM SHALL INCLUDE ALL MATERIAL AND LABOR REQUIRED TO INSTALL THE DOUBLE DEADEND ASSEMBLY IN A COMPLETE AND WORKMANLIKE MANNER.

ITEM 625 - LIGHTING MISC.: JOINT-USE CONDUIT RISER

JOINT CONDUIT RISER SHALL CONSIST OF UNDERGROUND CONDUIT TURNED UP AND SECURED TO A POWER POLE, INCLUDED STANDOFF BRACKETS AND WEATHERHEAD. MATERIAL SHALL BE AS FOLLOWS:

A. CONDUIT SHALL BE 4" SCHEDULE 40 PVC IN CONFORMANCE WITH CONDUIT SPECIFICATIONS AS DETAILED IN THESE SPECIFICAITONS.
B. CONDUIT STAND-OFF BRACKET SHALL BE ALUMAFORM # CSO-6 OR -9 WITH #STS-5 STRAPS OR ENGINEER APPROVED EQUAL.
C. WEATHERHEAD FOR 4" PVC CONDUIT.

INSTALLATION:

A. INSTALLATION SHALL BE AS SHOWN ON POLE DETAIL SHEETS.
B. THIS ITEM SHALL INCLUDE ALL MATERIAL AND LABOR REQUIRED TO INSTALL THE JOINT-USE CONDUIT RISER IN A COMPLETE AND WORKMANLIKE MANNER.

ITEM 625 - LIGHTING MISC.: JOINT-USE MESSENGER ASSEMBLY

JOINT USE MESSENGER ASSEMBLIES SHALL CONSIST OF A DEADEND OR SPOOL/CLEVIS ASSEMBLY FOR SUPPORTING JOINT-USE MESSENGER WIRES. MATERIAL SHALL BE COORDINATED WITH EACH JOINT USER AND FURNISHED ACCORDING TO THEIR REQUIREMENTS.

THIS ITEM SHALL INCLUDE ALL MATERIAL AND LABOR REQUIRED TO INSTALL THE JOINT-USE MESSENGER ASSEMBLY IN A COMPLETE AND WORKMANLIKE MANNER.

ITEM 625 - LIGHTING MISC.: TWO-WAY BUCK

AEACH TWO WAY BUCK SHALL INCLUDE TWO DEADEND ASSEMBLIES, WITH PIN INSULATORS AND COPPER CONDUCTOR TIES BETWEEN BRANCHES OF THE PRIMARY CIRCUIT.
A. DEADEND ASSEMBLY. PER ITEM 625: LIGHTING MISC.: DEADEND ASSEMBLY.
B. 15 KV PIN INSULATORS
C. CONNECTORS SHALL BE COPPER COMPRESSION TYPE
D. ALL STEEL HARDWARE SHALL BE HOT DIP GALVANIZED.

INSTALLATION:

A. INSTALLATION SHALL BE AS SHOWN ON POLE DETAIL SHEETS.
B. THIS ITEM SHALL INCLUDE ALL MATERIAL AND LABOR REQUIRED TO INSTALL THE TWO-WAY BUCK IN A COMPLETE AND WORKMANLIKE MANNER.

ITEM 625 - GROUND ROD, AS PER PLAN

GROUND ROD AS PER PLAN SHALL CONSIST OF UTILITY POLE GROUNDING, INCLUDING GROUNDING WIRE, ATTACHMENT STAPLES, A GROUND ROD AND WOOD MOLDING FOR CONNECTION OF GROUNDED EQUIPMENT ON A WOOD UTILITY POLE.
A. GROUNDING WIRE SHALL BE #4 AWG SOFT DRAWN COPPER. GROUND WIRE JUMPERS FROM SOFT DRAWN POLE GROUND TO FIXED APPARATES SHALL BE #4 SOT DRAWN COPPER. THE GROUND WIRE JUMPERS FROM POLE GROUND TO VIBRATING CONDUCTORS SHALL BE #4 STRANDED SOFT DRAWN.
B. GROUND ROD SHALL BE 1/2" DIAMETER X 10' LONG COPPERWELD. ERICO, JOSLYN, CHANCE OR APPROVED EQUAL.
C. GROUND ROD CONNECTORS SHALL BE ERICO #CC12F COMPRESSION COUPLING OR APPROVED EQUAL FOR CONNECTION BETWEEN GROUND RODS AND SHALL BE TYPE GR EXOTHERMIC WELDING FOR CONNECTION BETWEEN GROUND WIRE AND GROUND ROD.
D. GROUND WIRE MOLDING SHALL BE TREATED WOOD, 8' LONGE, 1" WIDE, JOSLYN #EE-1/2 OR APPROVED EQUAL.
E. STAPLES SHALL BE ROLLED DIAMOND POINT COPPER COATED.

INSTALLATION:

A. INSTALLATION SHALL BE AS SHOWN ON POLE DETAIL SHEETS.
B. THIS ITEM SHALL INCLUDE ALL MATERIAL AND LABOR REQUIRED TO INSTALL THE POLE GROUNDING IN A COMPLETE AND WORKMANLIKE MANNER.

ITEM 632 - DOWN GUY, AS PER PLAN

DOWN GUY, AS PER PLAN SHALL INCLUDE ALL HARDWARE FOR POLE ATTACHMENT, THE STRANDED GUY WIRE, SCREW ANCHOR, INSULATORS, ANCHOR EXTENSIONS AND ALL OTHER HARDWARE REQUIRED TO COMPLETE THE INSTALLATION OF THE DOWN GUY. MATERIAL IS AS FOLLOWS:
A. ALL STEEL HARDWARE SHALL BE HOT DIP GALVANIZED.
B. GUY PLATE - 6" BOLT HOLE SPACING FOR 3/4" TO 7/8" BOLT, FOR USE WITH GUY STRAIN INSULATOR, 7/8" PIN, MATERIAL DUCTILE IRON, GALVANIZED. MACLEAN #EPR-66S-7 OR APPROVED EQUAL.
C. GUY WIRE - ALUMOWELD STEEL, 5/8" O.D. 1x7 STRANDED, 42400 LB STRENGTH.
D. SCREW ANCHOR - 1-1/2" SQUARE SHAFT, 5' LENGTH WITH 1-10" AND 1-12" HELIX, GALVANIZED STEEL, 24,000 LB PULLOUT. CHANCE #P012642-EJ, JOSLYN #J23382ACA OR APPROVED EQUAL.
E. ANCHOR EXTENSION - 1-1/2" SQ. SHAFT X 7' LENGTH, GALVANIZED STEEL, CHANCE #12655, JOSLYN #J23378.3 OR APPROVED EQUAL.
F. ANCHOR EXTENSION - 1-1/2" SQ. SHAFT X 3-1/2' LENGTH, GALVANIZED STEEL, CHANCE #12655, JOSLYN #J23378.3 OR APPROVED EQUAL.
G. ADAPTER - DOUBLE EYE FOR 1-1/2" SQUARE SHAFT, GALVANIZED STEEL, CHANCE #C102-0024, JOSLYN #J23365 OR APPROVED EQUAL.
H. GUY GUARD - PLASTIC, 1-1/2" X 2" X 8', YELLOW, FOR USE ON 5/8" GUY WIRE.
I. PREFORMED GRIP - FOR 5/8"-7 ALUMOWELD GUY WIRE.
K. INSULATOR - INSULATOR STRAIN, FIBERGLASS, 7/8" X 96", MIN STRENGTH 30,000 LBS, CLEVIS-CLEVIS END FITTINGS, ONE SHEAVE WHEEL, JOSLYN # 300-96, ANDERSON #APF396R OR APPROVED EQUAL.

INSTALLATION:
A. THE ANCHOR MUST PENETRATE INTO SOIL STIFF ENOUGH FOR THE REQUIRED HOLDING STRENGTH. ADDITIONAL ANCHOR EXTENSIONS HALL BE INSTALLED AS NECESSARY TO REACH SUFFICIENTLY STIFF SOILS.
B. THE DIGGER OPERATOR SHALL MAINTAIN CONSTANT DOWNWARD PRESSURE ON THE ANCHOR AS IT IS INSTALLED SUCH THAT FOR EACH REVOLUTION OF THE ANCHOR DURING INSTALLATION THE ANCHOR ADVANCES AT A RATE EQUAL TO THE PITCH OF THE ANCHOR'S HELIX.
C. UNIVORM ADVANCEMENT OF THE ANCHOR IS NECESSARY TO SCREW THE ANCOR INTO THE SOIL. TURNING THE ANCHOR WITHOUT ADVANCEMENT WILL HAVE A NEGATIVE IMPACT ON THE ANCHOR'S HOLDING CAPABILITIES.
D. ANCHORS AND EXTENSIONS SHALL BE INSTALLED IN LINE WITH GUY WIRE. THE DIFFERENCE BETWEEN THE ANGLE OF ANCHOR INSTALLATION AND GUY ANGLE SHALL NOT EXCEED +/- 5 DEGREES.
E. ANCHORS MUST BE INSTALLED A MINIMUM OF 6 FEET AS MEASURED ALONG THE ANCHOR EXTENSION.
F. ANCHOR EXTENSION RODS SHOULD BE INSTALLED SO THAT THE ANCHOR EYE IS 6 TO 12 INCHES ABOVE GRADE.
G. MULTIPLE ANCHOR INSTALLTIONS SOULD BE SEPARATED BY A MINIMUM FO 5 FEET.
H. THE ANCHOR SHALL BE INSTALLED APPROXIMATELY 25 FEET FROM THE POLE, OR AS INDICATED ON THE DRAWINGS. WHEN AN ANCHOR MUST BE MOVED DUE TO AN OBSTRUCTION, EVERY EFFORT SHOULD BE MADE TO MOVE IT FURTHER FROM THE POLE THAN SPECIFIED.
I. THE GUY PLATE SHALL BE INSTALLED ON THE POLE AS SHOWN ON THE DRAWINGS OR AS DIRECTED BY THE ENGINEER. THE GUY PLATE SHALL BE BOLTED TO THE POLE USING PRE-DRILLED HOLES. WHEN NEW HOLES MUST BE DRILLED INT HE POLE, THE NEW HOLES SHALL BE TREATED TO PREVENT DECAY OF THE WOOD POLE.
J. THE FIBERGLASS GUY INSULATOR SHALL ATTACH TO THE GUY PLATE WITH A 3/4" CLEVIS PIN WHICH IS SECURED WITH A COTTER PIN.
K. ADDITIONAL FIBERGLASS GUY INSULATORS MAY BE REQUIRED FOR ADEQUATE CLEARANCE. WHEN CONNECTING THE INSULATORS BACK TO BACK USE A 90 DEGREE FIGURE 8 LINK.
L. GUY WIRES MUST BE INSTALLED BEFORE LINE CONDUCTORS ARE INSTALLED. GUY WIRES SHALL BE PULLED TAUT BY MEANS OF A HOIST UNTIL THE POLE IS PULLED OVER SLIGHTLY TOWARD THE GUY.
M. PREFORMED GUY GRIPS SHALL BE USED TO TERMINATE THE GUY STRAND TO THE FIBERGLASS GUY INSULATOR AND ANCHOR ADAPTER. THE ENDS OF THE GRIPS ARE WRAPPED AROUND THE GUY STRAND AND SNAPPED INTO POSITION COMPLETING THE INSTALLATION.
N. THE GUY GUARD SHALL BE INSTALLED OVER THE GROUND WIRE FROM A POINT NEAR THE GROUND.
O. THIS ITEM SHALL INCLUDE ALL MATERIAL AND LABOR REQUIRED TO INSTALL THE POLE GROUNDING IN A COMPLETE AND WORKMANLIKE MANNER.

Preliminary Plans - For Reference Only

CLEVELAND PUBLIC POWER
GENERAL NOTES (3 OF 3)

DESIGN AGENCY
ADVANCED ENGINEERING CONSULTANTS

DESIGNER JCS
REVIEWER WH 05/17/24
PROJECT ID 82382
SHEET 1779 TOTAL 2696

CUY-90-16.28 (CCG3A)
MODEL: 82382_UNI30| PAPERSIZE: 34x22 (in.) DATE: 3/27/2025 TIME: 8:10:35 PM USER: Mala.Gallagher
pw:\\mb-us-pw.bentley.com:mb-us-pw-03\Documents\Cleveland.OH\01_Projects\000T\District2\82382\400-Engineering\Utilities\Sheets\82382_UNI30.dgn

SHEET NO.	STATION FROM	STATION TO	SIDE	CIRCUIT NODES	625 DISTRIBUTION CABLE, MISC.: 500KCMIL 15KV CU WITH CONCENTRIC NEUTRAL FT	625 DISTRIBUTION CABLE, MISC.: 556KCMIL 15KV SPACER CABLE WITH 0052 AWA MESSENGER FT	625 CONDUIT, AS PER PLAN, 5", 725.04 FT	625 CONDUIT, CONCRETE ENCASED, AS PER PLAN (2-5" CONDUIT, 725.051) FT	625 CONDUIT, CONCRETE ENCASED, AS PER PLAN (5-5" CONDUIT, 725.051) FT	625 CONDUIT, CONCRETE ENCASED, AS PER PLAN (7-5" CONDUIT, 725.051) FT	625 CONDUIT, CONCRETE ENCASED, AS PER PLAN (9-5" CONDUIT, 725.051) FT	625 CONDUIT CLEANED AND CABLES REMOVED, AS PER PLAN FT	625 GROUND ROD, AS PER PLAN EACH	625 LIGHTING, MISC.: 15KV IN-LINE SPLICE EACH	625 LIGHTING, MISC.: 24" SPACER CABLE TANGENT BRACKET EACH	625 LIGHTING, MISC.: DEAD-END ASSEMBLY EACH	625 LIGHTING, MISC.: DOUBLE DEAD-END ASSEMBLY EACH	625 LIGHTING, MISC.: JOINT-USE CONDUIT RISER EACH	625 LIGHTING, MISC.: JOINT-USE MESSENGER ASSEMBLY EACH	625 LIGHTING, MISC.: PRIMARY CONDUIT RISER EACH	625 LIGHTING, MISC.: SPACER CABLE DEADEND ASSEMBLY EACH	625 LIGHTING, MISC.: SPACER CABLE TO SPACER CABLE DOUBLE DEADEND ASSEMBLY EACH	625 LIGHTING, MISC.: TWO-WAY BUCK EACH	632 POWER CABLE, MISC.: NO. 2 / 0 AWG CU 15KV OPEN WIRE FT	632 WOOD POLE (40' CLASS III) EACH	632 WOOD POLE (45' CLASS III) EACH	632 WOOD POLE (50' CLASS III) EACH	632 WOOD POLE (55' CLASS II) EACH	632 WOOD POLE (55' CLASS III) EACH	632 WOOD POLE (70' CLASS H3) EACH	632 WOOD POLE (80' CLASS H6) EACH	632 DOWN GUY, AS PER PLAN EACH		
	EX. CEDAR AVE. CONNECTOR																																			
1783	1+20.00		RT	P8									1							1	1							1					2			
1783	1+20.00	1+28.00	RT	P8 TO P9		14																														
1783	1+22.00		RT	P1									1							1	1							1					2			
1783	1+22.00	1+30.00	RT	P1 TO P2		14																														
1783	1+28.00		RT	P9									1							1	1	1						1					4			
1783	1+28.00	83+11.00	RT/LT	P9 TO P10		320																														
1783	1+30.00		RT	P2									1							1	1	1						1					2			
1783	1+30.00	1+37.00	RT	P2 TO P3		28																														
1783	1+37.00		RT	P3									1							1	1	2						1					4			
	EX. CARNEGIE AVE																																			
1783	1+37.00	44+24.00	RT	P1,P2,P3,P8,P9 TO MH 80-36	790				148																											
	EX. CEDAR AVE. CONNECTOR																																			
1783	1+37.00	83+26.00	RT/LT	P3 TO P4		480																														
	EX. E. 22ND ST. N																																			
1783	21+51.00		RT	MH 81-27										20																						
1783	21+51.00	22+77.00	RT	MH 81-27 TO MH 80-45								630																								
	I.R. 90																																			
1783	21+51.00	82+64.00	RT	MH 81-27 TO P5,P6,P7,P11,P12	1150				220																											
	EX. E. 22ND ST. N																																			
1783	22+77.00	25+20.00	RT	MH 80-45 TO MH 80-44								1220																								
1783	25+20.00	27+35.00	RT	MH 80-44 TO MH 80-21								1085																								
1783	27+35.00		RT	MH 80-21										4																						
1783	27+35.00	44+24.00	RT	MH 80-21 TO MH 80-36	282			272																												
	EX. CARNEGIE AVE																																			
1783	44+24.00		RT	MH 80-36										20																						
	I.R. 90																																			
1783	82+61.00		RT	P12									1							1	1							1					2			
1783	82+61.00	82+64.00	RT	P12 TO P11		14																														
1783	82+64.00		RT	P11									1							1	1	1						1					2			
1783	82+64.00	93+11.00	RT/LT	P11 TO P10		396																														
1783	82+73.00		RT	P7									1							1	1							1					4			
1783	82+73.00	82+76.00	RT	P7 TO P6		14																														
1783	82+76.00		RT	P6									1							1	1	1						1					2			
1783	82+76.00	82+79.00	RT	P6 TO P5		28																														
1783	82+79.00		RT	P5									1							1	1	2						1					4			
1783	82+79.00	83+26.00	RT/LT	P5 TO P4		591																														
1783	83+26.00		LT	P4									1		3																	1				
1783	93+11.00		LT	P10									1		2																	1				
	EX. CEDAR AVE																																			
1784	14+18.00	14+23.00	RT/LT	EP1 TO P29																																
1784	14+23.00		LT	P29									1																							1	
1784	14+23.00	49+77.00	LT/RT	P29 TO P30																																
	EX. CARNEGIE AVE																																			
1784	49+58.00		RT	EP2												1																				
TOTALS CARRIED TO SHEET 1782					2222	1899	-	272	368	-	-	2935	13	44	5	1	-	-	-	10	10	8	1	1378	-	1	10	-	-	2	-	29			

Preliminary Plans - For Reference Only

CUY-90-16.28 (CCG3A)

MODEL: Sheet-01 PAPERSIZE: 34x22 (in.) DATE: 6/13/2025 TIME: 1:11:00 PM USER: Joseph.Hogan
pw:\\mb-us-pw.bentley.com:mb-us-pw-03\Documents\Cleveland_OH\01_Projects\ODOT\District12\82382\400-Engineering\Utilities\Sheets\82382_US401.dgn

CLEVELAND PUBLIC POWER SUBSUMMARY - 1

DESIGN AGENCY

DESIGNER JCS

REVIEWER WH 05/17/24

PROJECT ID 82382

SHEET 1780 TOTAL 2696

SHEET NO.	STATION FROM	STATION TO	SIDE	CIRCUIT NODES	625 DISTRIBUTION CABLE, MISC.: 500KCMIL 15KV CU WITH CONCENTRIC NEUTRAL FT	625 DISTRIBUTION CABLE, MISC.: 556KCMIL 15KV SPACER CABLE WITH 0052 AWA MESSENGER FT	625 CONDUIT, AS PER PLAN, 5", 725.04 FT	625 CONDUIT, CONCRETE ENCASED, AS PER PLAN (2-5" CONDUIT, 725.051) FT	625 CONDUIT, CONCRETE ENCASED, AS PER PLAN (5-5" CONDUIT, 725.051) FT	625 CONDUIT, CONCRETE ENCASED, AS PER PLAN (7-5" CONDUIT, 725.051) FT	625 CONDUIT, CONCRETE ENCASED, AS PER PLAN (9-5" CONDUIT, 725.051) FT	625 CONDUIT CLEANED AND CABLES REMOVED, AS PER PLAN FT	625 GROUND ROD, AS PER PLAN EACH	625 LIGHTING, MISC.: 15KV IN-LINE SPLICE EACH	625 LIGHTING, MISC.: 24" SPACER CABLE TANGENT BRACKET EACH	625 LIGHTING, MISC.: DEAD-END ASSEMBLY EACH	625 LIGHTING, MISC.: DOUBLE DEAD-END ASSEMBLY EACH	625 LIGHTING, MISC.: JOINT-USE CONDUIT RISER EACH	625 LIGHTING, MISC.: JOINT-USE MESSENGER ASSEMBLY EACH	625 LIGHTING, MISC.: PRIMARY CONDUIT RISER EACH	625 LIGHTING, MISC.: SPACER CABLE DEADEND ASSEMBLY EACH	625 LIGHTING, MISC.: SPACER CABLE TO SPACER CABLE DOUBLE DEADEND ASSEMBLY EACH	625 LIGHTING, MISC.: TWO-WAY BUCK EACH	632 POWER CABLE, MISC.: NO. 2 / 0 AWG CU 15KV OPEN WIRE FT	632 WOOD POLE (40' CLASS III) EACH	632 WOOD POLE (45' CLASS III) EACH	632 WOOD POLE (50' CLASS III) EACH	632 WOOD POLE (55' CLASS II) EACH	632 WOOD POLE (55' CLASS III) EACH	632 WOOD POLE (70' CLASS H3) EACH	632 WOOD POLE (80' CLASS H6) EACH	632 DOWN GUY, AS PER PLAN EACH		
	EX. CARNEGIE AVE (CONT.)																																				
1784	49+58.00	49+77.00	RT	EP2 TO P30																					160											
1784	49+77.00		RT	P30									1				1								1									2		
1784	50+00.00		RT	P20									1							1	1												2		
1784	50+00.00	50+12.00	RT	P20 TO P21		13																														
1784	50+05.00		RT	MH 95-32										28																						
1784	50+05.00	50+73.00	RT	MH 95-32 TO P13-15,P20-23	546					68																										
1784	50+05.00	57+74.00	RT	MH 95-32 TO MH 96-31								5390																								
1784	50+12.00		RT	P21									1							1	1	1											2		
1784	50+12.00	50+23.00	RT	P21 TO P22		26																														
1784	50+23.00		RT	P22									1							1	1	2											2		
1784	50+23.00	50+35.00	RT	P22 TO P23		39																														
1784	50+35.00		RT	P23									1					1	1	1	1	3											4		
1784	50+35.00	91+67.00	RT	P23 TO P24		1112																														
1784	50+53.00		RT	P13									1							1	1												2		
1784	50+53.00	50+63.00	RT	P13 TO P14		11																														
1784	50+63.00		RT	P14									1							1	1	1											2		
1784	50+63.00	50+73.00	RT	P14 TO P15		22																														
1784	50+73.00		RT	P15									1					1	5	1	1	2											4		
1784	50+73.00	91+91.00	RT	P15 TO P16		786																														
1784	54+82.00		RT	P25									1					1	1	1	1	3							1				4		
1784	54+82.00	54+92.00	RT	P25 TO P26		33																														
1784	54+82.00	57+74.00	RT	P16-19,P25-28 TO MH 96-31	2331					323																										
	I.R. 90																																				
1784	54+82.00	91+67.00	RT	P25 TO P24		716																														
	EX. CARNEGIE AVE																																				
1784	54+92.00		RT	P26									1							1	1	2							1				2		
1784	54+92.00	55+01.00	RT	P26 TO P27		22																														
1784	55+01.00		RT	P27									1							1	1	1							1				2		
1784	55+01.00	55+11.00	RT	P27 TO P28		11																														
1784	55+11.00		RT	P28									1							1	1								1				2		
1784	55+20.00		RT	P17									1					1	5	1	1	2							1				4		
1784	55+20.00	55+30.00	RT	P17 TO P18		22																														
	I.R. 90																																				
1784	55+20.00	91+91.00	RT	P17 TO P16		588																														
	EX. CARNEGIE AVE																																				
1784	55+30.00		RT	P18									1							1	1	1							1				2		
1784	55+30.00	55+40.00	RT	P18 TO P19		11																														
1784	55+40.00		RT	P19									1							1	1								1				2		
1784	57+74.00		RT	MH 96-31										28																						
	I.R. 90																																				
1784	91+67.00		RT	P24									1		4			1															1		
1784	91+91.00		RT	P16									1		3			5															1		
	E. 22ND ST.																																				
1787	31+32.00		RT	MH 81-27										20																						
1787	31+32.00	37+15.00	RT	MH 81-27 TO MH 80-21	3075		2376				341																									
TOTALS CARRIED TO SHEET 1782					5952	3412	2376	-	-	391	341	5390	17	76	7	-	1	4	18	14	14	18	-	160	1	-	7	4	3	-	2	38			

Preliminary Plans - For Reference Only

CLEVELAND PUBLIC POWER SUBSUMMARY - 2

CUY-90-16.28 (CCG3A)

MODEL: Sheet-02 PAPERSIZE: 34x22 (in.) DATE: 6/13/2025 TIME: 1:11:02 PM USER: Joseph.Hogan
pw:\\mb-us-pw.bentley.com:mb-us-pw-03\Documents\Cleveland_OH\01_Projects\ODOT\District12\82382\400-Engineering\Utilities\Sheets\82382_US401.dgn
US401.dgn

DESIGN AGENCY

DESIGNER JCS

REVIEWER WH 05/17/24

PROJECT ID 82382

SHEET 1781 TOTAL 2696

SHEET NO.	STATION FROM	STATION TO	SIDE	CIRCUIT NODES	625 DISTRIBUTION CABLE, MISC.: 500KCMIL 15KV CU WITH CONCENTRIC NEUTRAL FT	625 DISTRIBUTION CABLE, MISC.: 556KCMIL 15KV SPACER CABLE WITH 0052 AWA MESSENGER FT	625 CONDUIT, AS PER PLAN, 5", 725.04 FT	625 CONDUIT, CONCRETE ENCASED, AS PER PLAN (2-5" CONDUIT, 725.051) FT	625 CONDUIT, CONCRETE ENCASED, AS PER PLAN (5-5" CONDUIT, 725.051) FT	625 CONDUIT, CONCRETE ENCASED, AS PER PLAN (7-5" CONDUIT, 725.051) FT	625 CONDUIT, CONCRETE ENCASED, AS PER PLAN (9-5" CONDUIT, 725.051) FT	625 CONDUIT CLEANED AND CABLES REMOVED, AS PER PLAN FT	625 GROUND ROD, AS PER PLAN EACH	625 LIGHTING, MISC.: 15KV IN-LINE SPLICE EACH	625 LIGHTING, MISC.: 24" SPACER CABLE TANGENT BRACKET EACH	625 LIGHTING, MISC.: DEAD-END ASSEMBLY EACH	625 LIGHTING, MISC.: DOUBLE DEAD-END ASSEMBLY EACH	625 LIGHTING, MISC.: JOINT-USE CONDUIT RISER EACH	625 LIGHTING, MISC.: JOINT-USE MESSENGER ASSEMBLY EACH	625 LIGHTING, MISC.: PRIMARY CONDUIT RISER EACH	625 LIGHTING, MISC.: SPACER CABLE DEADEND ASSEMBLY EACH	625 LIGHTING, MISC.: SPACER CABLE TO SPACER CABLE DOUBLE DEADEND ASSEMBLY EACH	625 LIGHTING, MISC.: TWO-WAY BUCK EACH	632 POWER CABLE, MISC.: NO. 2 / 0 AWG CU 15KV OPEN WIRE FT	632 WOOD POLE (40' CLASS III) EACH	632 WOOD POLE (45' CLASS III) EACH	632 WOOD POLE (50' CLASS III) EACH	632 WOOD POLE (55' CLASS II) EACH	632 WOOD POLE (55' CLASS III) EACH	632 WOOD POLE (70' CLASS H3) EACH	632 WOOD POLE (80' CLASS H6) EACH	DOWN GUY, AS PER PLAN EACH		
	E. 22ND ST. (CONT.)																																					
1787	37+15.00		RT	MH 80-21										20																								
	CARNEGIE AVE.																																					
1788	56+64.00		RT	MH 95-32										28																								
1788	56+64.00	64+34.00	RT	MH 95-32 TO MH 96-31	5530		4152				311																										
1788	64+34.00		RT	MH 96-31										28																								
	TOTALS FROM THIS SHEET				5530	-	4152	-	-	-	311	-	-	76	-	-	-	-	-	-	-	-	-	-	-	-	-	-	-	-	-	-	-	-	-	-	-	-
	TOTALS FROM SHEET 1780				2222	1899	-	272	368	-	-	2935	13	44	5	1	-	-	-	10	10	8	1	1378	-	1	10	-	-	2	-	29						
	TOTALS FROM SHEET 1781				5952	3412	2376	-	-	391	341	5390	17	76	7	-	1	4	18	14	14	18	-	160	1	-	7	4	3	-	2	38						
	TOTALS TO GENERAL SUMMARY				13704	5311	6528	272	368	391	652	8325	30	196	12	1	1	4	18	24	24	26	1	1538	1	1	17	4	3	2	2	67						

Preliminary Plans - For Reference Only

CLEVELAND PUBLIC POWER SUBSUMMARY - 3

DESIGN AGENCY

AECOM

DESIGNER JCS

REVIEWER WH 05/17/24

PROJECT ID 82382

SHEET 1782 TOTAL 2696

CUY-90-16.28 (CCG3A)

MODEL: Sheet-03 PAPERSIZE: 34x22 (in.) DATE: 6/13/2025 TIME: 1:11:03 PM USER: Joseph.Hogan
pw:\\mb-us-pw.bentley.com:mb-us-pw-03\Documents\Cleveland_OH\01_Projects\ODOT\District12\82382\400-Engineering\Utilities\Sheets\82382_US401.dgn

GENERAL NOTES:
A. TEMPORARY POWER TO BE INSTALLED PRIOR TO DEMOLITION OF 22ND STREET BRIDGE. POWER WILL REMAIN IN SERVICE UNTIL PERMANENT INSTALLATION ACROSS RECONSTRUCTED BRIDGE. REMOVE TEMPORARY POLES AND CONDUCTORS PRIOR TO PHASE 9 INSTALLATION OF RAMP B6.

P12 (2) 50' CLASS 3 POLES (RISER POLE A) EACH W/ PRIMARY RISER ASSEMBLY DEADEND ASSEMBLY (2) DOWN GUYS STA. 82+60.7, 111.6' RT, ℄ EX. I.R. 90

P7 (2) 50' CLASS 3 POLES (RISER POLE A) EACH W/ PRIMARY RISER ASSEMBLY DEADEND ASSEMBLY (2) DOWN GUYS STA. 82+72.7, 123.2' RT, ℄ EX. I.R. 90

50' CLASS 3 POLES (RISER POLE B) P6 W/ PRIMARY RISER ASSEMBLY DOUBLE DEADEND ASSEMBLY DEADENED ASSEMBLY (2) DOWN GUYS STA. 82+75.9, 110.6' RT, ℄ EX. I.R. 90

50' CLASS 3 POLES (RISER POLE BR) P11 W/ PRIMARY RISER ASSEMBLY DOUBLE DEADEND ASSEMBLY DEADENED ASSEMBLY (4) DOWN GUYS STA. 82+63.8, 99.3' RT, ℄ EX. I.R. 90

50' CLASS 3 POLE (RISER POLE C) P5 W/ PRIMARY RISER ASSEMBLY (2) DOUBLE DEADEND ASSEMBLIES DEADEND ASSEMBLY (4) DOWN GUYS STA. 82+79.2, 97.7' RT, ℄ EX. I.R. 90

(2) CIRCUITS OF (3) 556 KCMIL SPACER CABLE CKTS 133M, 138M

(3) CIRCUITS OF (3) 556 KCMIL SPACER CABLE CKTS 251B, 255B, 259B

70' CLASS H3 POLE (MID-SPAN POLE D) P10 W/ (2) 24" SPACER CABLE TANGENT BRACKETS STA. 83+10.8, 92.0' LT, ℄ EX. I.R. 90

70' CLASS H3 POLES (MID-SPAN POLE A) P4 (3) 24" SPACER CABLE TANGENT BRACKETS STA. 83+25.6, 92.3' LT, ℄ EX. I.R. 90

P3 50' CLASS 3 POLE (RISER POLE C) W/ PRIMARY RISER ASSEMBLY (2) DOUBLE DEADEND ASSEMBLIES DEADEND ASSEMBLY (4) DOWN GUYS STA. 1+37.4, 95.1' RT, ℄ EX. R/W CEDAR CONN.

50' CLASS 3 POLE (RISER POLE BR) P9 W/ PRIMARY RISER ASSEMBLY DOUBLE DEADEND ASSEMBLY DEADENED ASSEMBLY (4) DOWN GUYS STA. 1+27.8, 106.6' RT ℄ EX. R/W CEDAR CONN.

50' CLASS 3 POLE (RISER POLE A) P8 W/ PRIMARY RISER ASSEMBLY DEADEND ASSEMBLY (2) DOWN GUYS STA. 1+20.1, 95.8' RT, ℄ EX. R/W CEDAR CONN.

50' CLASS 3 POLE (RISER POLE B) P2 W/ PRIMARY RISER ASSEMBLY DOUBLE DEADEND ASSEMBLY DEADENED ASSEMBLY (2) DOWN GUYS STA. 1+29.7, 84.3' RT, ℄ EX. R/W CEDAR CONN.

50' CLASS 3 POLE (RISER POLE A) P1 W/ PRIMARY RISER ASSEMBLY DEADEND ASSEMBLY (2) DOWN GUYS STA. 1+21.9, 73.5' RT, ℄ EX. R/W CEDAR CONN.

UNDERGROUND DUCTBANK (5) 5" CONDUTS, (5) CIRCUITS OF (3) 500KCMIL COPPER W/ CONCENTRIC NEUTRAL CKTS 133M, 138M, 251B, 255B, 259B

EXISTING MANHOLE 80-36

EXISTING CKTS 133M, 138M, 251B, 255B IN EXISTING DUCTBANK EXTEND PRIMARY CIRCUIT 259B, (3) 500 KCMIL COPPER + CONCENTRIC NEUTRALFROM MANHOLE 80-21 TO MANHOLE 80-36. PROVIDE (2) 5" CONDUIT DUCTBANK

UNDERGROUND DUCTBANK (5) 5" CONDUTS, (5) CIRCUITS OF (3) 500KCMIL COPPER W/ CONCENTRIC NEUTRAL CKTS 133M, 138M, 251B, 255B, 259B

EXISTING MANHOLE 81-27 TIE REROUTED CIRCUITS INTO EXISTING CIRCUITS IN MANHOLE.

REMOVE CIRCUITS 133M, 138M, 251B, 255B, 259B FROM EXISTING DUCT AFTER INSTALLATION OF OVERHEAD BYPASS

EXISTING MANHOLE 80-45

REMOVE CIRCUITS 133M, 138M, 251B, 255B, 259B FROM EXISTING DUCT AFTER INSTALLATION OF OVERHEAD BYPASS

EXISTING MANHOLE 80-44

REMOVE CIRCUITS 133M, 138M, 251B, 255B, 259B FROM EXISTING DUCT AFTER INSTALLATION OF OVERHEAD BYPASS

EXISTING MANHOLE 80-21

INTERSTATE 90

CEDAR CONNECTOR

CARNEGIE AVE.

E. 22ND ST.

℄ EX. I.R. 90

℄ EX. R/W CEDAR CONNECTOR

℄ EX. R/W CARNEGIE AVE.

℄ EX. R/W E. 22ND ST.

Ex R/W

Ex LA-R/W

TMP

Preliminary Plans - For Reference Only

HORIZONTAL SCALE IN FEET
0 15 30 60

CLEVELAND PUBLIC POWER
TEMPORARY POWER SCHEMATIC PLAN
E. 22ND ST. BRIDGE REPLACEMENT

DESIGN AGENCY
AMO ADVANCED ENGINEERING CONSULTANTS
Mechanical | Electrical | Plumbing | Fire Protection
1105 Dublin Road Columbus, Ohio 43215
Tel: (614) 486-6776 Fax: (614) 486-6982

DESIGNER JCS
REVIEWER WH 05/17/24
PROJECT ID 82382
SHEET 1783 TOTAL 2696

CUY-90-16.28 (CCG3A)

MODEL: 82382_GP7403 PAPERSIZE: 34x22 (in.) DATE: 6/13/2025 TIME: 11:24 PM USER: Joseph.Hogan
pw:\\mb-us-pw.bentley.com:mb-us-pw-03\Documents\Cleveland_OH\OI_Projects\ODOT\District 12\82382\400-Engineering\Utilities\Sheets\82382_UPI30i.dgn

Preliminary Plans - For Reference Only

P23 55' CLASS 3 POLE (RISER POLE G)
PRIMARY RISER ASSEMBLY
(3) DOUBLE DEADEND ASSEMBLIES
DEADEND ASSEMBLY
(4) DOWN GUYS
STA. 50+35.1, 74.5' RT, ℄ EX. R/W CARNEGIE AVE.

P22 55' CLASS 3 POLE (RISER POLE F)
PRIMARY RISER ASSEMBLY
(2) DOUBLE DEADEND ASSEMBLIES
DEADEND ASSEMBLY
(2) DOWN GUYS
STA. 50+23.2, 72.4' RT, ℄ EX. R/W CARNEGIE AVE.

P21 55' CLASS 2 POLE (RISER POLE E)
PRIMARY RISER ASSEMBLY
DOUBLE DEADEND ASSEMBLY
DEADEND ASSEMBLY
(2) DOWN GUYS
STA. 50+11.5, 70.2' RT, ℄ EX. R/W CARNEGIE AVE.

P20 55' CLASS 2 POLE (RISER POLE D)
PRIMARY RISER ASSEMBLY
DEADEND ASSEMBLY
(2) DOWN GUYS
STA. 49+99.6, 68.0' RT
℄ EX. R/W CARNEGIE AVE.

EXISTING MANHOLE 95-32

EP2 EXISTING POLE. PROVIDE DEADEND ASSEMBLY TO SOUTH AND CONNECT NEW CROSSING CONDUCTORS TO EXISTING CIRCUIT
STA. 49+58.1, 33.1' RT
℄ EX. R/W CARNEGIE AVE.

℄ EX. R/W CARNEGIE AVE.

(3) #2/0 AWG COPPER W/ #2/0 AWG NEUTRAL (SLACK)

UNDERGROUND DUCTBANK
(7) 5" CONDUITS,
(7) CIRCUITS OF (3) 500KCMIL COPPER W/ CONCENTRIC NEUTRAL
CKTS 117M, 120M, 126M, 132M, 133M, 138M, 259B

P30 40' CLASS 3 POLE
(CEDAR CROSSING POLE NORTHWEST)
DOUBLE DEADEND
(2) DOWN GUY
STA. 49+76.7, 66.4' RT
℄ EX. R/W CARNEGIE AVE.

(3) #2/0 AWG COPPER W/ #2/0 AWG NEUTRAL

P29 45' CLASS 3 POLE
(CEDAR CROSSING POLE SOUTHEAST)
TWO WAY BUCK, DOWN GUY
STA. 14+23.4, 62.4' LT
℄ EX. R/W CEDAR AVE.

55' CLASS 2 POLE (RISER POLE D) P13
PRIMARY RISER ASSEMBLY
DEADEND ASSEMBLY
(2) DOWN GUYS
STA. 50+53.0, 61.7' RT, ℄ EX. R/W CARNEGIE AVE.

55' CLASS 2 POLE (RISER POLE E) P14
PRIMARY RISER ASSEMBLY
DOUBLE DEADEND ASSEMBLY
DEADEND ASSEMBLY
(2) DOWN GUYS
STA. 50+62.7, 63.7' RT, ℄ EX. R/W CARNEGIE AVE.

55' CLASS 3 POLE (RISER POLE H) P15
PRIMARY RISER ASSEMBLY
(2) DOUBLE DEADEND ASSEMBLIES
DEADEND ASSEMBLY
(4) DOWN GUYS
STA. 50+72.6, 65.4' RT, ℄ EX. R/W CARNEGIE AVE.

(3) CIRCUITS OF (3) 556 KCMIL SPACER CABLE
CKTS 117M, 120M, 126M

(4) CIRCUITS OF (3) 556 KCMIL SPACER CABLE
CKTS 132M, 133M, 138M, 259B

80' CLASS H6 POLE (MID-SPAN POLE B) P24
W/(4) 24" TANGENT BRACKET ASSEMBLIES
STA. 91+67.1, 70.2' RT, ℄ EX. I.R. 90
SEE NOTE 1

80' CLASS H6 POLE (MID-SPAN POLE C) P16
W/(3) 24" TANGENT BRACKET ASSEMBLIES
STA. 91+90.6, 71.1' RT, ℄ EX. I.R. 90
SEE NOTE 2

REMOVE (7) CIRCUITS FROM EXISTING DUCTS CROSSING CARNEGIE AVE. BRIDGE BETWEEN MANHOLES 95-32 AND 96-31, AFTER CONSTRUCTION OF AERIAL BYPASS

50' CLASS 3 POLE (RISER POLE H) P17
PRIMARY RISER ASSEMBLY
(2) DOUBLE DEADEND ASSEMBLIES
DEADEND ASSEMBLY
(4) DOWN GUYS
STA. 55+20.3, 148.0' RT, ℄ EX. R/W CARNEGIE AVE.

50' CLASS 3 POLE (RISER POLE E) P18
PRIMARY RISER ASSEMBLY
DOUBLE DEADEND ASSEMBLY
DEADEND ASSEMBLY
(2) DOWN GUYS
STA. 55+30.2, 149.8' RT, ℄ EX. R/W CARNEGIE AVE.

50' CLASS 3 POLE (RISER POLE D) P19
PRIMARY RISER ASSEMBLY
DEADEND ASSEMBLY
(2) DOWN GUYS
STA. 55+40.0, 151.6' RT, ℄ EX. R/W CARNEGIE AVE.

UNDERGROUND DUCTBANK
(7) 5" CONDUITS, (7) CIRCUITS OF (3) 500KCMIL COPPER W/ CONCENTRIC NEUTRAL
CKTS 117M, 120M, 126M, 132M, 133M, 138M, 259B

EXISTING MANHOLE 96-31

(3) #2/0 AWG COPPER W/ #2/0 AWG NEUTRAL (SLACK)
EXISTING POLE. SLACK SPAN TO NEW POLE FOR CROSSING. EP1
REMOVE EXISTING CONDUCTORS AND RE-USE DEADEND FOR SLACK SPAN.
CONNECT TO EXISTING CIRCUIT
STA. 14+17.9, 19.2' RT
℄ EX. R/W CEDAR AVE.

P25 50' CLASS 3 POLE (RISER POLE G)
PRIMARY RISER ASSEMBLY
(3) DOUBLE DEADEND ASSEMBLIES
DEADEND ASSEMBLY
(4) DOWN GUYS
STA. 54+81.6, 157.0' RT
℄ EX. R/W CARNEGIE AVE.

P26 50' CLASS 3 POLE (RISER POLE F)
PRIMARY RISER ASSEMBLY
(2) DOUBLE DEADEND ASSEMBLIES
DEADEND ASSEMBLY
(2) DOWN GUYS
STA. 54+91.5, 158.8' RT
℄ EX. R/W CARNEGIE AVE.

50' CLASS 3 POLE (RISER POLE E) P27
PRIMARY RISER ASSEMBLY
DOUBLE DEADEND ASSEMBLY
DEADEND ASSEMBLY
(2) DOWN GUYS
STA. 55+01.3, 160.6' RT
℄ EX. R/W CARNEGIE AVE.

50' CLASS 3 POLE (RISER POLE D) P28
PRIMARY RISER ASSEMBLY
DEADEND ASSEMBLY
(2) DOWN GUYS
STA. 55+11.2, 162.3' RT
℄ EX. R/W CARNEGIE AVE.

CARNEGIE AVE.
INTERSTATE 90
℄ EX. I.R. 90
℄ EX. R/W CEDAR AVE.
N81°05'08"E 75.58'
S55°18'42"E
N79°41'18"E
N80°56'33"E
N80°58'22"E
1,994.74'
S84°07'41"W 224.27'
S7°48'53"W 1,067.53'
N35°22'00"W 2,260.80'
POT 401+20.00
PT 401+73.16
PC 301+80.51
POT 302+75.75
PI 58+48.81
ESMT TMP
POT 502+24.27
PC 500+00.00
PC 509+37.27
PI 64+21.90
POT 514+45.17
PT 513+33.36
PC 400+00.00
POT 400+12.23
PC 403+19.07
POT 303+00.00
PI 304+10.82
PT 304+40.82
TMP
R/W
Ex R/W
Ex LA
Ex LA-R/W
EX LA
EX R/W
OH-Comb
T.P.S.
I.P.S.

GENERAL NOTES:
A. TEMPORARY POWER TO BE INSTALLED PRIOR TO DEMOLITION OF CARNEGIE AVE. BRIDGE. POWER WILL REMAIN IN SERVICE UNTIL PERMANENT INSTALLATION ACROSS RECONSTRUCTED BRIDGE.

B. WESTERN CROSSING FROM CEDAR TO BE PERMANENT INSTALLATION.

NOTES:
1. SPAN INCLUDES PROVISION FOR COMMUNICATIONS ATTACHMENTS FROM MCI/VERIZON, WINDSTREAM, CHARTER, AND CROWN CASTLE. SEE POLE DETAILS.
2. SPAN INCLUDES PROVISION FOR COMMUNICATIONS ATTACHMENTS FROM CHARTER. SEE POLE DETAILS.

HORIZONTAL SCALE IN FEET
0 20 40 80

CLEVELAND PUBLIC POWER
TEMPORARY POWER SCHEMATIC PLAN
CARNEGIE AVE. BRIDGE REPLACEMENT

DESIGN AGENCY
ADVANCED ENGINEERING CONSULTANTS
Mechanical | Electrical | Plumbing | Fire Protection
1550 Old Henderson Road, Suite 220
Columbus, Ohio 43220 Fax: (614) 488-4992

DESIGNER JCS
REVIEWER WH 05/17/24
PROJECT ID 82382
SHEET 1784 TOTAL 2696

CUY-90-16.28 (CCG3A)

MODEL: 82382_GP7403 PAPERSIZE: 34x22 (in.) DATE: 6/13/2025 TIME: 11:30:00 PM USER: Joseph.Hogan
pw:\\vmb-us-pw.bentley.com:mb-us-pw-03\Documents\Cleveland_OH\01_Projects\000T\District2\82382\400-Engineering\Utilities\Sheets\82382_UPI302.dgn

GENERAL NOTES:

A. ALL TEMPORARY POLES, DUCTS AND CABLES SHALL BE INSTALLED PRIOR TO CUT-OVER AND DISCONNECTION OF EXISTING CABLES ON THE 22ND ST. BRIDGE IN ORDER TO MINIMIZE OUTAGES.

B. COORDINATE ALL OUTAGES WITH CLEVELAND PUBLIC POWER.

C. SEE POLE DETAILS ON SHEETS 1791-1795

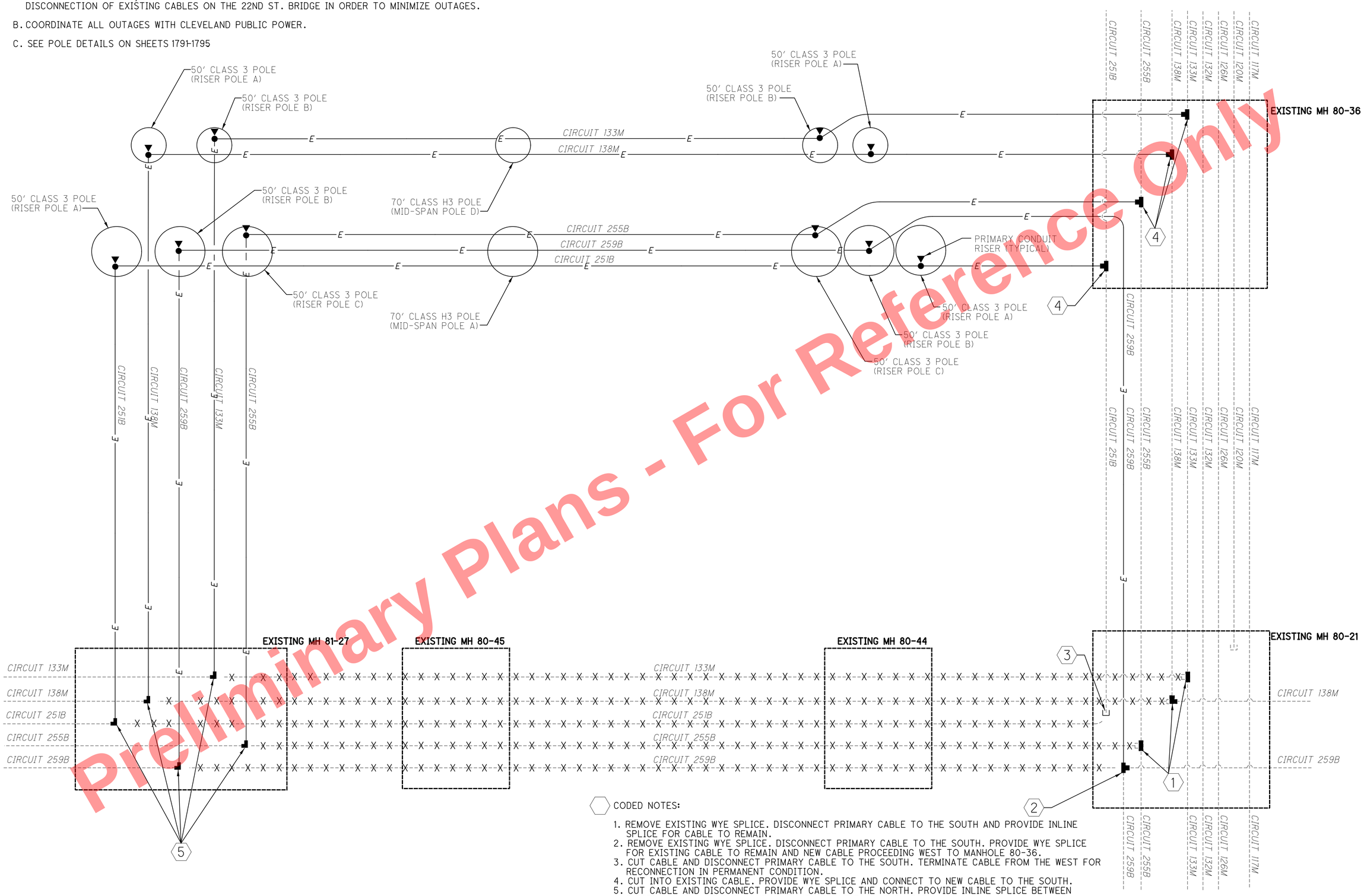

CODED NOTES:

1. REMOVE EXISTING WYE SPLICE. DISCONNECT PRIMARY CABLE TO THE SOUTH AND PROVIDE INLINE SPLICE FOR CABLE TO REMAIN.
2. REMOVE EXISTING WYE SPLICE. DISCONNECT PRIMARY CABLE TO THE SOUTH. PROVIDE WYE SPLICE FOR EXISTING CABLE TO REMAIN AND NEW CABLE PROCEEDING WEST TO MANHOLE 80-36.
3. CUT CABLE AND DISCONNECT PRIMARY CABLE TO THE SOUTH. TERMINATE CABLE FROM THE WEST FOR RECONNECTION IN PERMANENT CONDITION.
4. CUT INTO EXISTING CABLE. PROVIDE WYE SPLICE AND CONNECT TO NEW CABLE TO THE SOUTH.
5. CUT CABLE AND DISCONNECT PRIMARY CABLE TO THE NORTH. PROVIDE INLINE SPLICE BETWEEN EXISTING CABLE TO THE SOUTH AND NEW CABLE FROM THE WEST.

Preliminary Plans - For Reference Only

CLEVELAND PUBLIC POWER
15KV ONE LINE DIAGRAM
E. 22ND ST. TEMPORARY RELOCATION

DESIGN AGENCY

DESIGNER JCS

REVIEWER WH 05/17/24

PROJECT ID 82382

SHEET 1785 TOTAL 2696

CUY-90-16.28 (CCG3A)

MODEL: 82382_UNI301 PAPERSIZE: 34x22 (in.) DATE: 3/27/2025 TIME: 8:11:30 PM USER: Mala.Gallagher
pw:\\mb-us-pw.bentley.com:mb-us-pw-03\Documents\Cleveland_OH\01_Projects\ODOT\District2\82382\400-Engineering\Utilities\Sheets\82382_UC1301.dgn

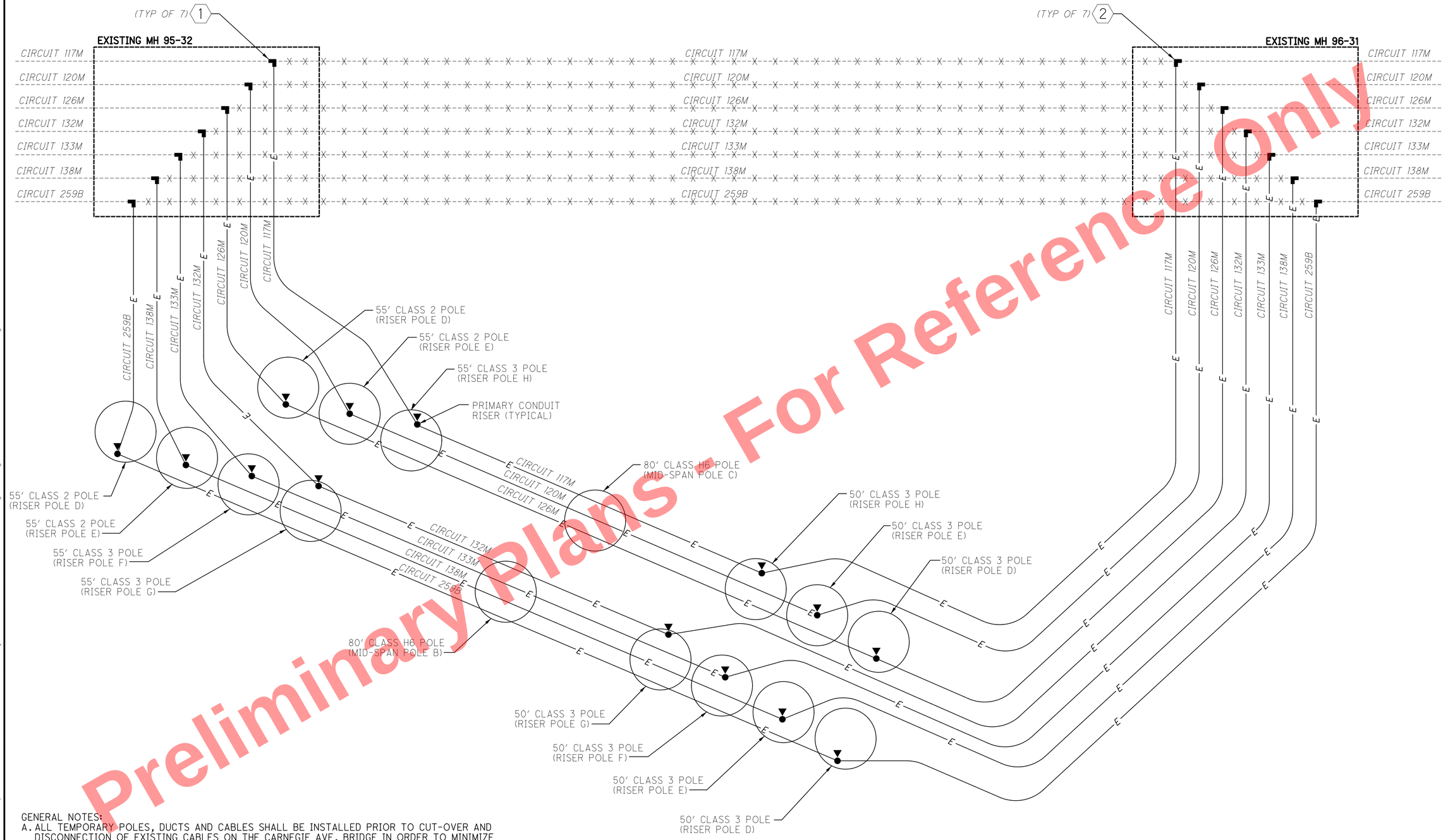

Preliminary Plans - For Reference Only

GENERAL NOTES:

A. ALL TEMPORARY POLES, DUCTS AND CABLES SHALL BE INSTALLED PRIOR TO CUT-OVER AND DISCONNECTION OF EXISTING CABLES ON THE CARNEGIE AVE. BRIDGE IN ORDER TO MINIMIZE OUTAGES.

B. COORDINATE ALL OUTAGES WITH CLEVELAND PUBLIC POWER.

C. ALL UNDERGROUND PRIMARY CABLES SHALL BE 500 KCMIL COPPER. ALL AERIAL PRIMARY CABLES SHALL BE 556 KCMIL SPACER CABLE.

D. SEE SHEETS 1791-1795 FOR POLE DETAILS.

⬡ CODED NOTES:

1. CUT CABLE AND DISCONNECT PRIMARY CABLE TO THE EAST. PROVIDE INLINE SPLICE BETWEEN EXISTING CABLE TO THE WEST AND NEW CABLE ROUTING SOUTH.

2. CUT CABLE AND DISCONNECT PRIMARY CABLE TO THE WEST. PROVIDE INLINE SPLICE BETWEEN EXISTING CABLE TO THE EAST AND NEW CABLE FROM THE SOUTH.

CLEVELAND PUBLIC POWER
15KV ONE LINE DIAGRAM
CARNEGIE AVE. TEMPORARY RELOCATION

DESIGN AGENCY
AEC ADVANCED ENGINEERING CONSULTANTS
Mechanical | Electrical | Plumbing | Fire Protection
1400 Dublin Road
Columbus, Ohio 43215
Tel: (614) 486-4778
Fax: (614) 486-4982

DESIGNER: JCS
REVIEWER: WH 05/17/24
PROJECT ID: 82382
SHEET: 1786 TOTAL: 2696

CUY-90-16.28 (CCG3A)

MODEL: 82382_UNI301 PAPERSIZE: 34x22 (In.) DATE: 3/27/2025 TIME: 8:11:40 PM USER: Mata.Gallagher
pw:\\mb-us-pw.bentley.com:mb-us-pw-03\Documents\Cleveland_OH\01_Projects\ODOT\Distrtct2\82382\400-Engineering\Utilities\Sheets\82382_UC1302.dgn

Preliminary Plans

For Reference Only

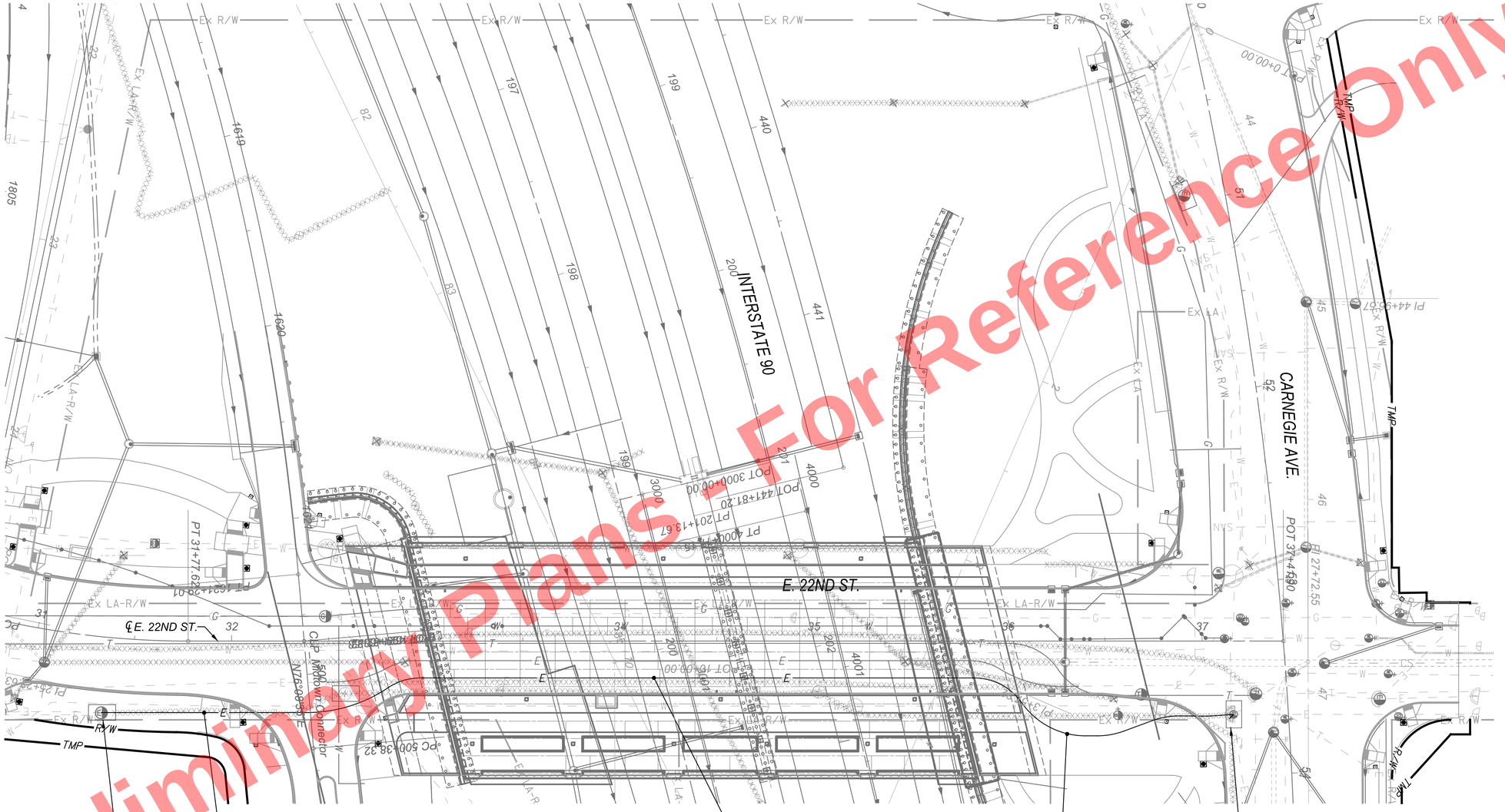

HORIZONTAL SCALE IN FEET
0 15 30 60

CLEVELAND PUBLIC POWER
POWER PLAN
E. 22ND ST. BRIDGE REPLACEMENT

DESIGN AGENCY
ADVANCED ENGINEERING CONSULTANTS

DESIGNER JCS
REVIEWER WH 05/17/24
PROJECT ID 82382
SHEET 1787 TOTAL 2696

CUY-90-16.28 (CCG3A)

MODEL: 82382_GP7403 PAPERSIZE: 34x22 (ln.) DATE: 6/13/2025 TIME: 11:40:3 PM USER: Joseph.Hogan
pw:\\mb-us-pw.bentley.com:mb-us-pw-03\Documents\Cleveland_OH\01_Projects\ODOT\District2\82382\400-Engineering\Utilities\Sheets\82382_UP401.dgn

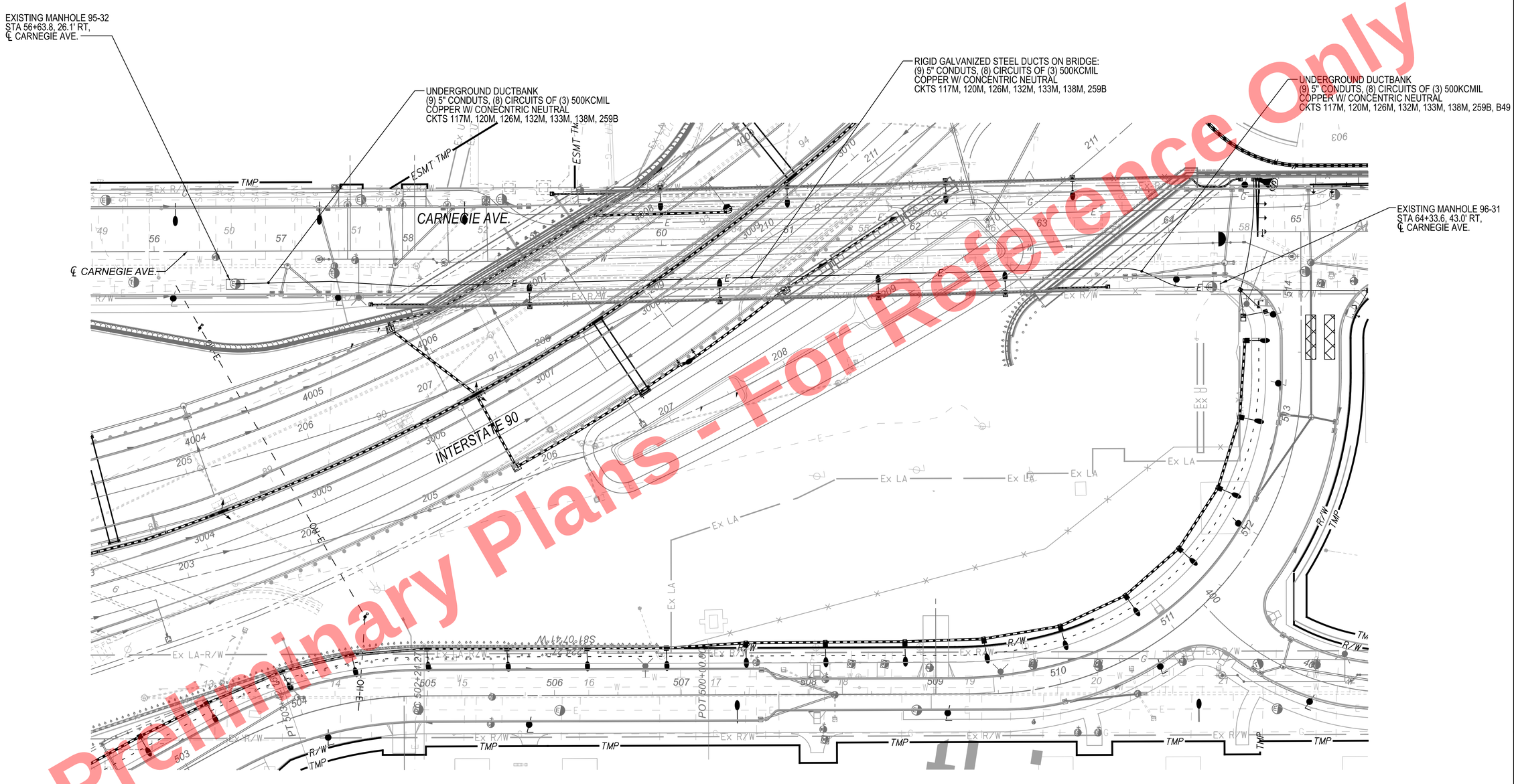

Preliminary Plans - For Reference Only

HORIZONTAL SCALE IN FEET
0 20 40 80

CLEVELAND PUBLIC POWER
POWER PLAN
CARNEGIE AVE. BRIDGE REPLACEMENT

DESIGN AGENCY
ADVANCED ENGINEERING CONSULTANTS

DESIGNER
JCS

REVIEWER
WH 05/17/24

PROJECT ID
82382

SHEET 1788 TOTAL 2696

CUY-90-16.28 (CCG3A)

MODEL: 82382_GP7403 PAPERSIZE: 34x22 (in) DATE: 6/13/2025 TIME: 11:24:24 PM USER: Joseph.Hogan
pw:\\mb-us-pw.bentley.com:mb-us-pw-03\Documents\Cleveland_OH\01_Projects\ODOT\District 12\82382\400-Engineering\Utilities\Sheets\82382_UP1402.dgn

GENERAL NOTES:
A. ALL TEMPORARY POLES, DUCTS AND CABLES SHALL BE INSTALLED PRIOR TO CUT-OVER AND DISCONNECTION OF EXISTING CABLES ON THE 22ND ST. BRIDGE IN ORDER TO MINIMIZE OUTAGES.

B. COORDINATE ALL OUTAGES WITH CLEVELAND PUBLIC POWER.

C. SEE POLE DETAILS ON SHEETS 1791-1795

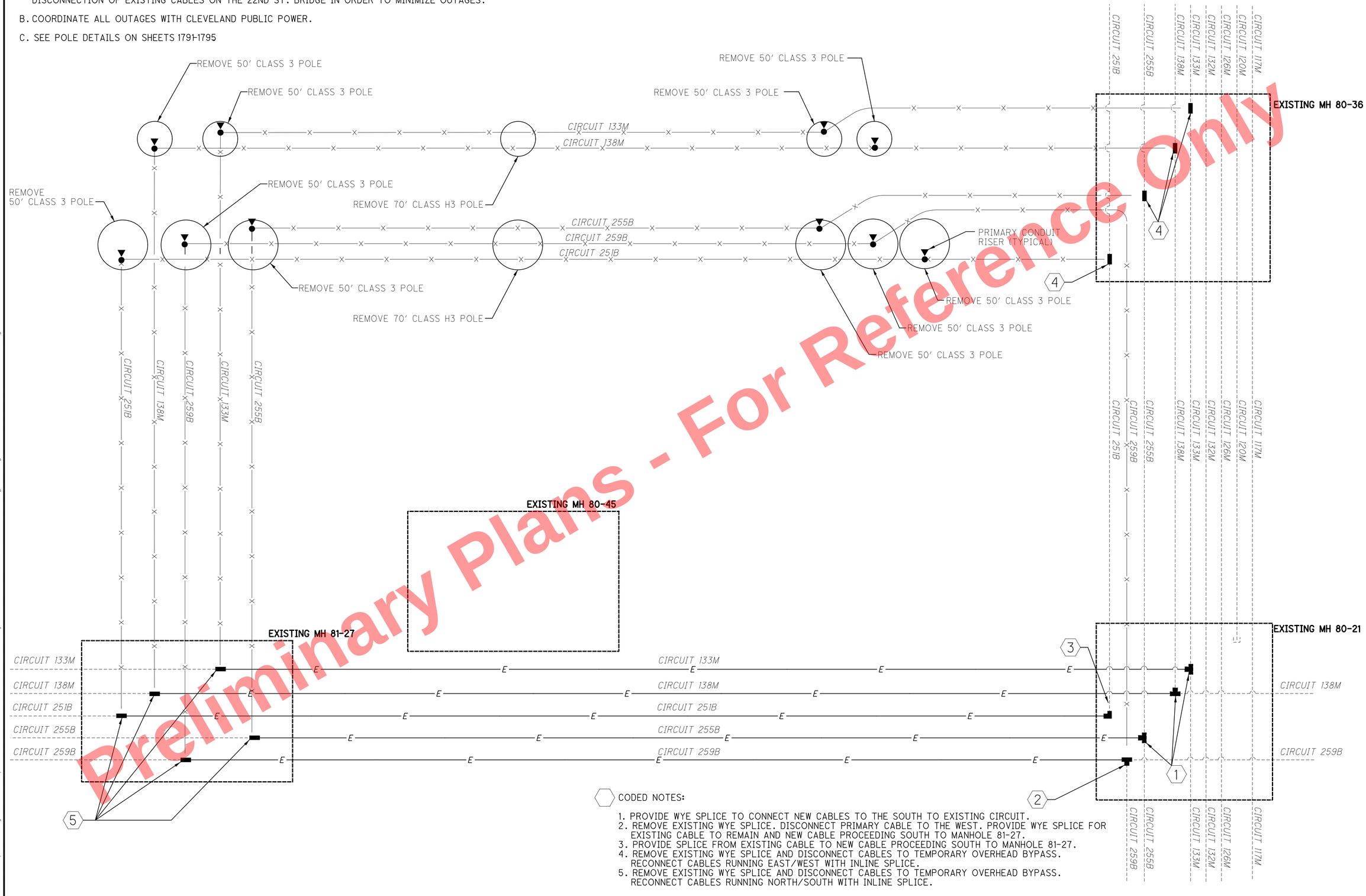

CODED NOTES:

1. PROVIDE WYE SPLICE TO CONNECT NEW CABLES TO THE SOUTH TO EXISTING CIRCUIT.
2. REMOVE EXISTING WYE SPLICE. DISCONNECT PRIMARY CABLE TO THE WEST. PROVIDE WYE SPLICE FOR EXISTING CABLE TO REMAIN AND NEW CABLE PROCEEDING SOUTH TO MANHOLE 81-27.
3. PROVIDE SPLICE FROM EXISTING CABLE TO NEW CABLE PROCEEDING SOUTH TO MANHOLE 81-27.
4. REMOVE EXISTING WYE SPLICE AND DISCONNECT CABLES TO TEMPORARY OVERHEAD BYPASS. RECONNECT CABLES RUNNING EAST/WEST WITH INLINE SPLICE.
5. REMOVE EXISTING WYE SPLICE AND DISCONNECT CABLES TO TEMPORARY OVERHEAD BYPASS. RECONNECT CABLES RUNNING NORTH/SOUTH WITH INLINE SPLICE.

Preliminary Plans - For Reference Only

CLEVELAND PUBLIC POWER
15KV ONE LINE DIAGRAM
E. 22ND ST. PERMANENT CONDITION

DESIGN AGENCY
ADVANCED ENGINEERING CONSULTANTS

DESIGNER JCS
REVIEWER WH 05/17/24
PROJECT ID 82382
SHEET 1789 TOTAL 2696

CUY-90-16.28 (CCG3A)
MODEL: 82382_UN30I PAPERSIZE: 34x22 (In.) DATE: 3/27/2025 TIME: 8:12:48 PM USER: Mala.Gallagher
pw:\\mb-us-pw.bentley.com:mb-us-pw-03\Documents\Cleveland_OH\01_Projects\ODOT\District2\82382\400-Engineering\Utilities\Sheets\82382_UC1303.dgn

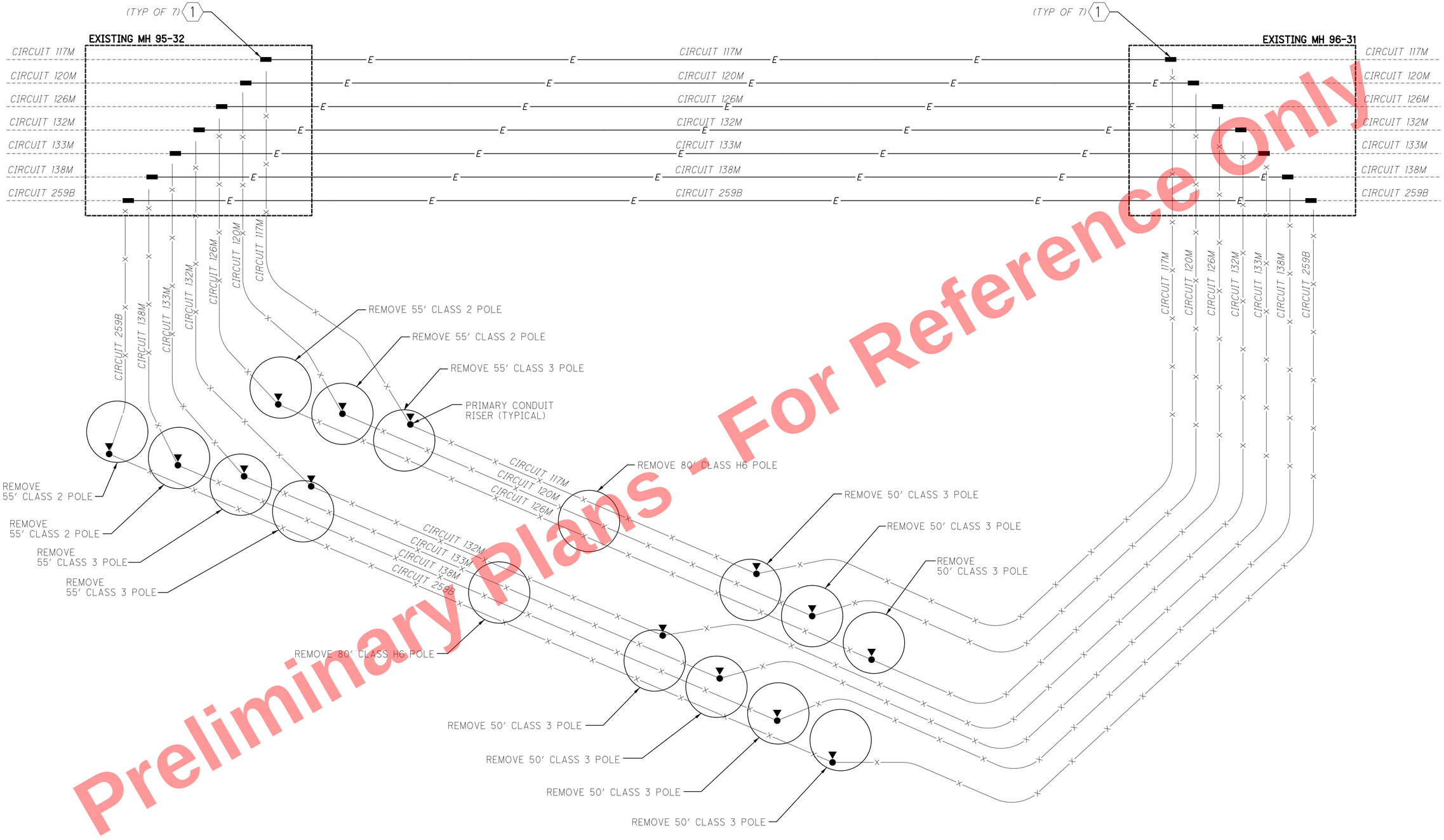

Preliminary Plans - For Reference Only

GENERAL NOTES:

A. ALL PERMANENT DUCTS AND CABLES SHALL BE INSTALLED PRIOR TO CUT-OVER AND DISCONNECTION OF TEMPORARY BYPASS CABLES IN ORDER TO MINIMIZE OUTAGES.

B. COORDINATE ALL OUTAGES WITH CLEVELAND PUBLIC POWER.

C. ALL UNDERGROUND PRIMARY CABLES SHALL BE 500 KCMIL COPPER.

CODED NOTES:

1. REMOVE EXISTING SPLICE AND CUT AND REMOVE CONDUCTORS CREATING TEMPORARY BYPASS. PROVIDE PRIMARY CABLES IN NEW DUCTBANK BETWEEN EXISTING MANHOLES. PROVIDE INLINE SPLICE FROM EXISTING TO REMAIN CIRCUIT CONDUCTORS AND NEW CONDUCTORS.

CLEVELAND PUBLIC POWER
15KV ONE LINE DIAGRAM
CARNEGIE AVE. PERMANENT CONDITION

DESIGN AGENCY
ADVANCED ENGINEERING CONSULTANTS
Mechanical | Electrical | Plumbing | Fire Protection
1400 Dublin Road
Columbus, Ohio 43215
Tel: (614) 486-4774
Fax: (614) 486-4882

DESIGNER JCS
REVIEWER WH 05/17/24
PROJECT ID 82382
SHEET 1790 TOTAL 2696

CUY-90-16.28 (CCG3A)

MODEL: 82382_UNI301 PAPERSIZE: 34x22 (In.) DATE: 3/27/2025 TIME: 8:12:58 PM USER: Mala.Gallagher
pw:\\mb-us-pw.bentley.commb-us-pw-03\Documents\Cleveland_OH\OL_Projects\ODOT\Distrtch12\82382\400-Engineering\Utilities\Sheets\82382_UCI304.dgn

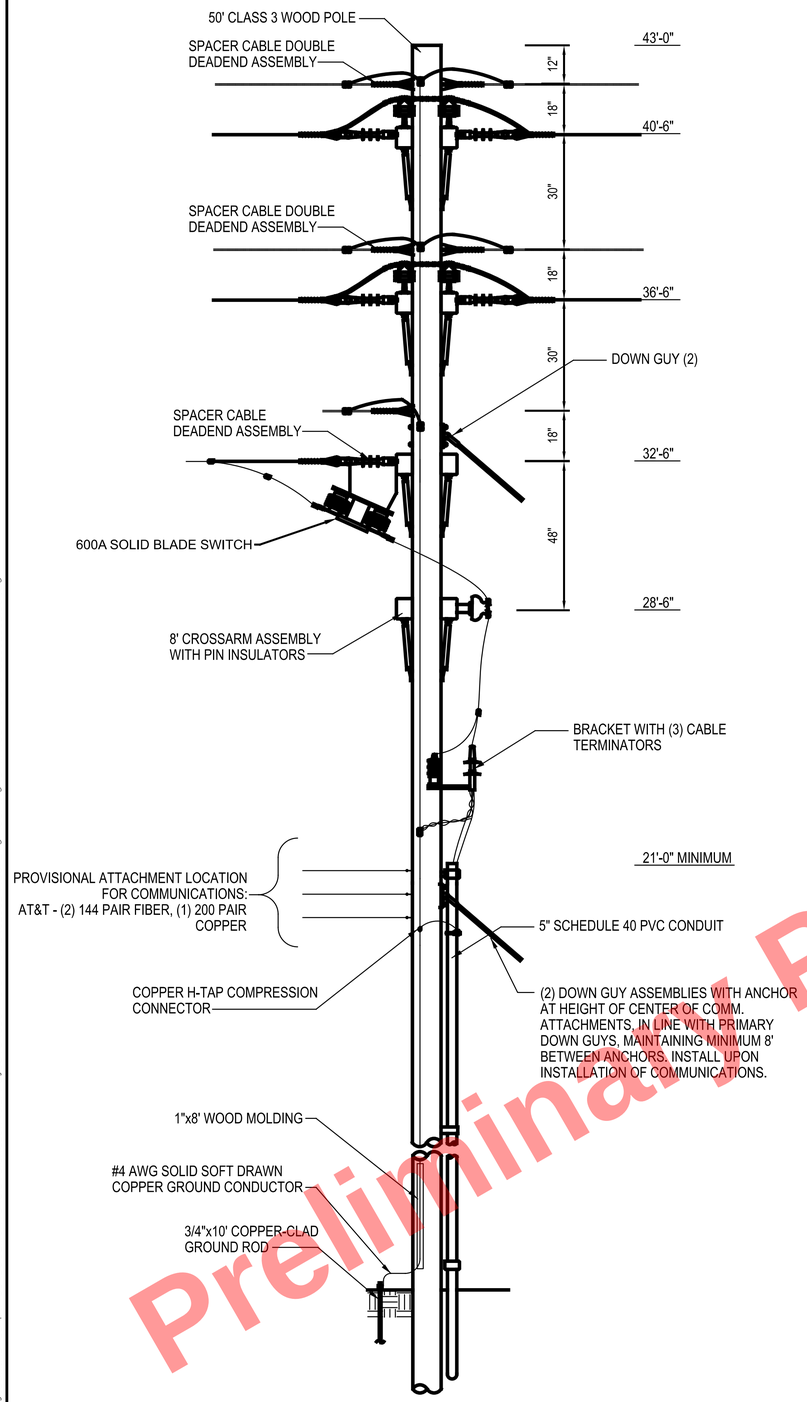

POLE DETAIL - RISER POLE C (P3) (P5)
NTS

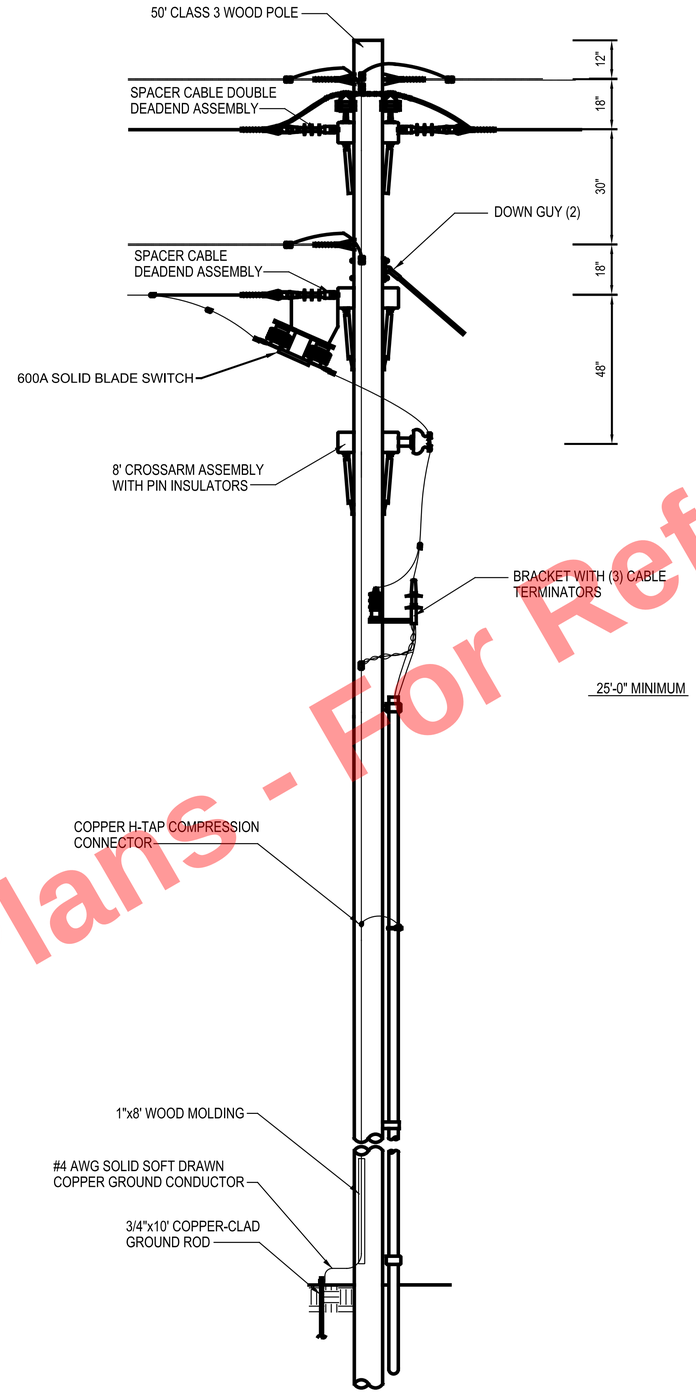

POLE DETAIL - RISER POLE B (P2) (P6)
NTS

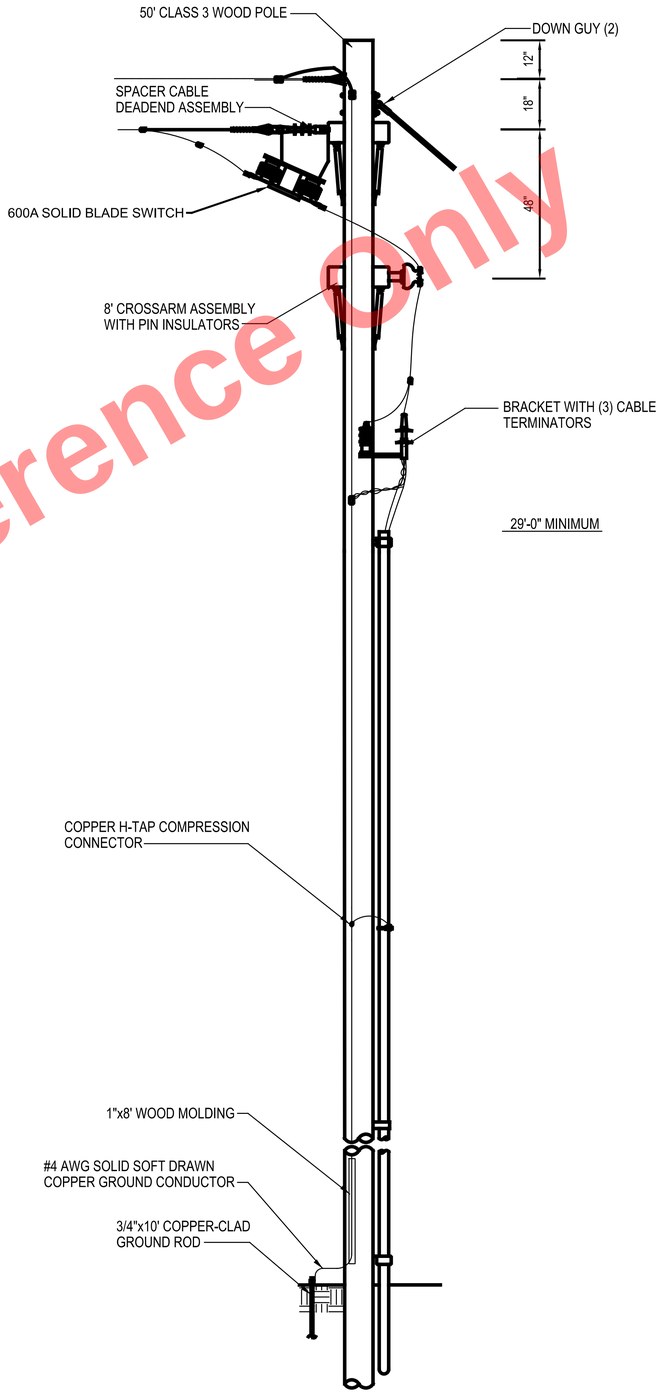

POLE DETAIL - RISER POLE A (P1) (P7) (P8) (P12)
NTS

Preliminary Plans - For Reference Only

CLEVELAND PUBLIC POWER
POLE DETAILS
E. 22ND ST. TEMPORARY RELOCATION

DESIGN AGENCY
AEC ADVANCED ENGINEERING CONSULTANTS

DESIGNER
JCS
REVIEWER
WH 05/17/24
PROJECT ID
82382
SHEET 1791 TOTAL 2696

CUY-90-16.28 (CCG3A)

MODEL: 82382_UNI301 PAPERSIZE: 34x22 (in.) DATE: 3/27/2025 TIME: 8:13:08 PM USER: Maia.Gallagher
pw:\\mb-us-pw.bentley.com:mb-us-pw-03\Documents\Cleveland_OH\01_Projects\ODOT\District12\82382\400-Engineering\Utilities\Sheets\82382_UDI301.dgn

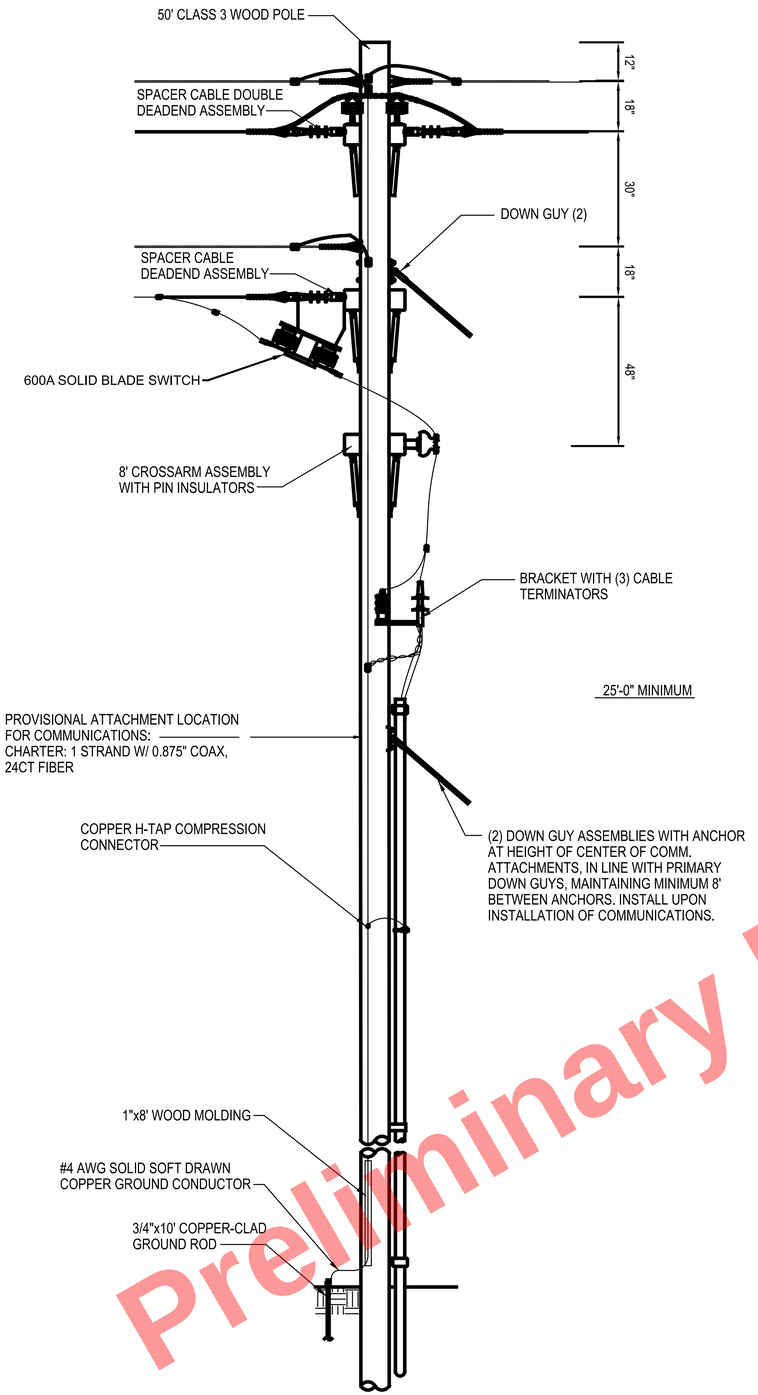

POLE DETAIL - RISER POLE BR (P9) (P11)
NTS

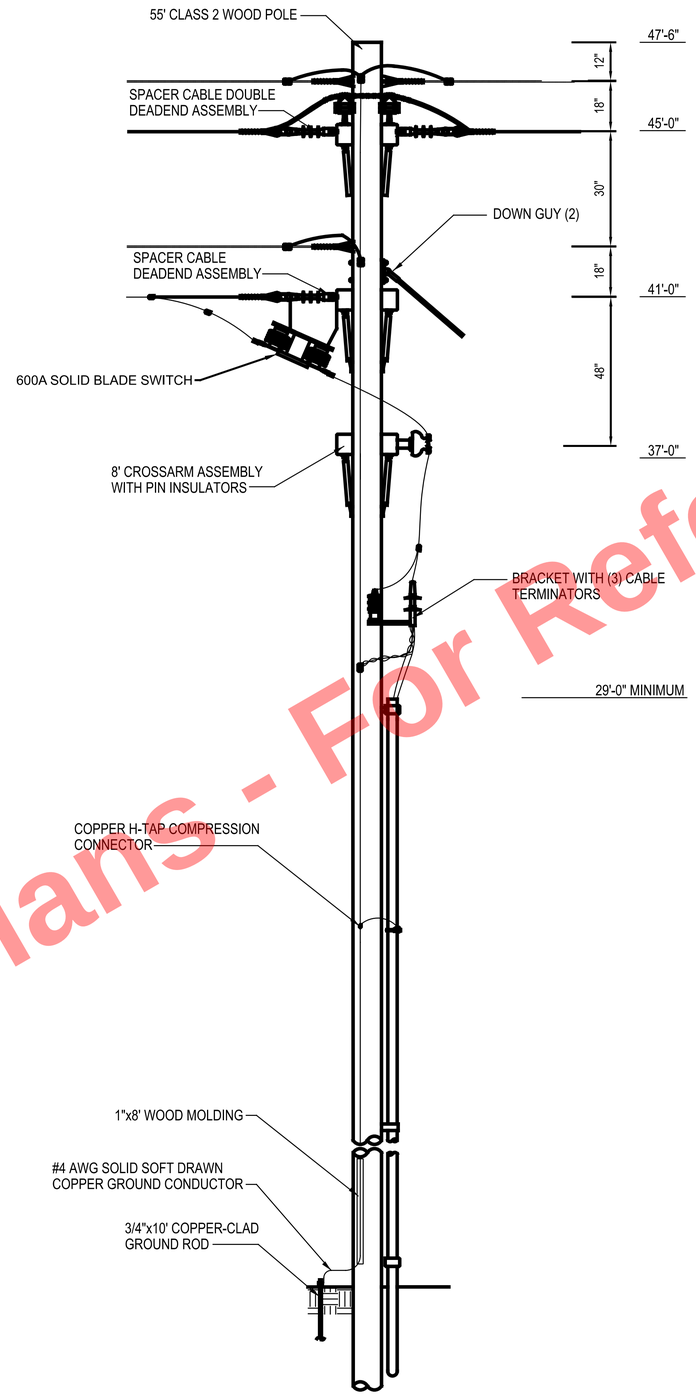

POLE DETAIL - RISER POLE E (P14) (P18) (P21) (P27)
NTS

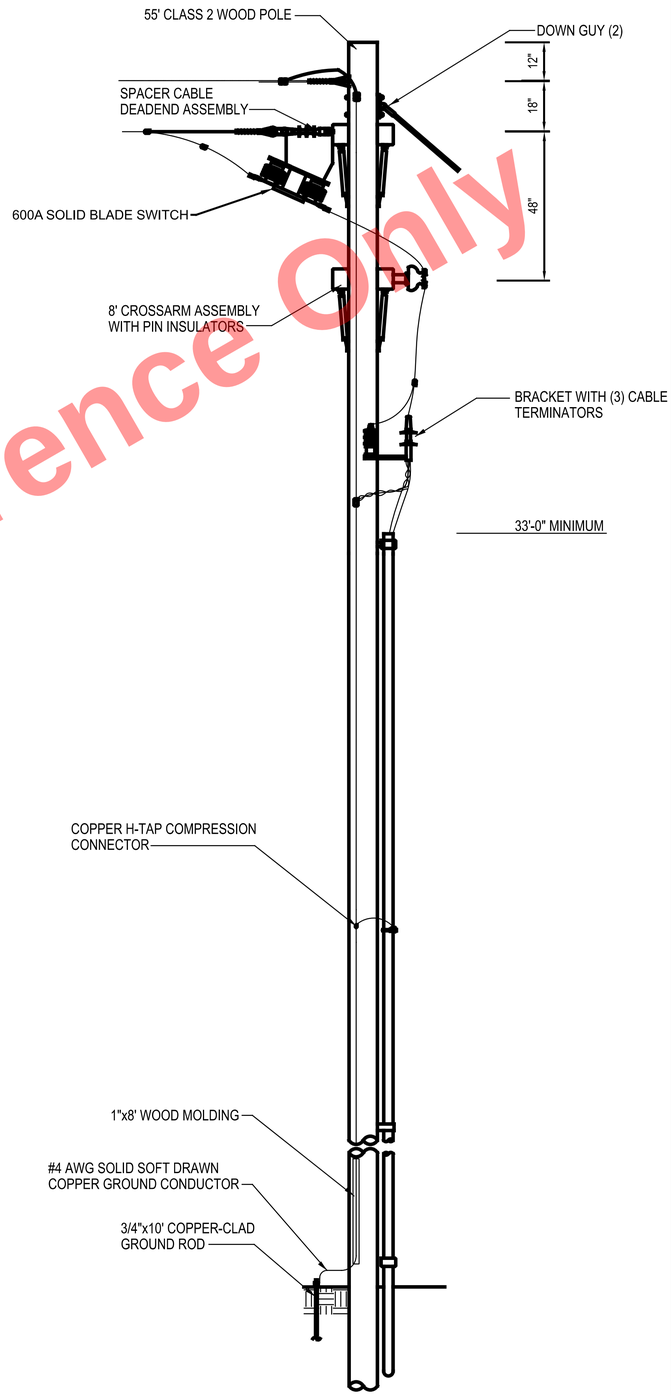

POLE DETAIL - RISER POLE D (P13) (P19) (P20) (P28)
NTS

Preliminary Plans - For Reference Only

CUY-90-16.28 (CCG3A)

MODEL: 82382_UNI30I PAPERSIZE: 34x22 (in.) DATE: 3/27/2025 TIME: 8:59:19 PM USER: MaLaGallagher
pw:\\mb-us-pw.bentley.com:mb-us-pw-03\Documents\Cleveland_OH\OiL_Projects\ODOT\District2\82382\400-Engineering\Utilities\Sheets\82382_UDI302.dgn

CLEVELAND PUBLIC POWER
POLE DETAILS
22ND ST & CARNEGIE AVE. TEMPORARY RELOCATION

DESIGN AGENCY
AEC ADVANCED ENGINEERING CONSULTANTS
Mechanical | Electrical | Plumbing | Fire Protection
1600 Dublin Road
Columbus, Ohio 43215
Tel: (614) 486-6776
Fax: (614) 486-6982

DESIGNER JCS
REVIEWER WH 05/17/24
PROJECT ID 82382
SHEET 1792 TOTAL 2696

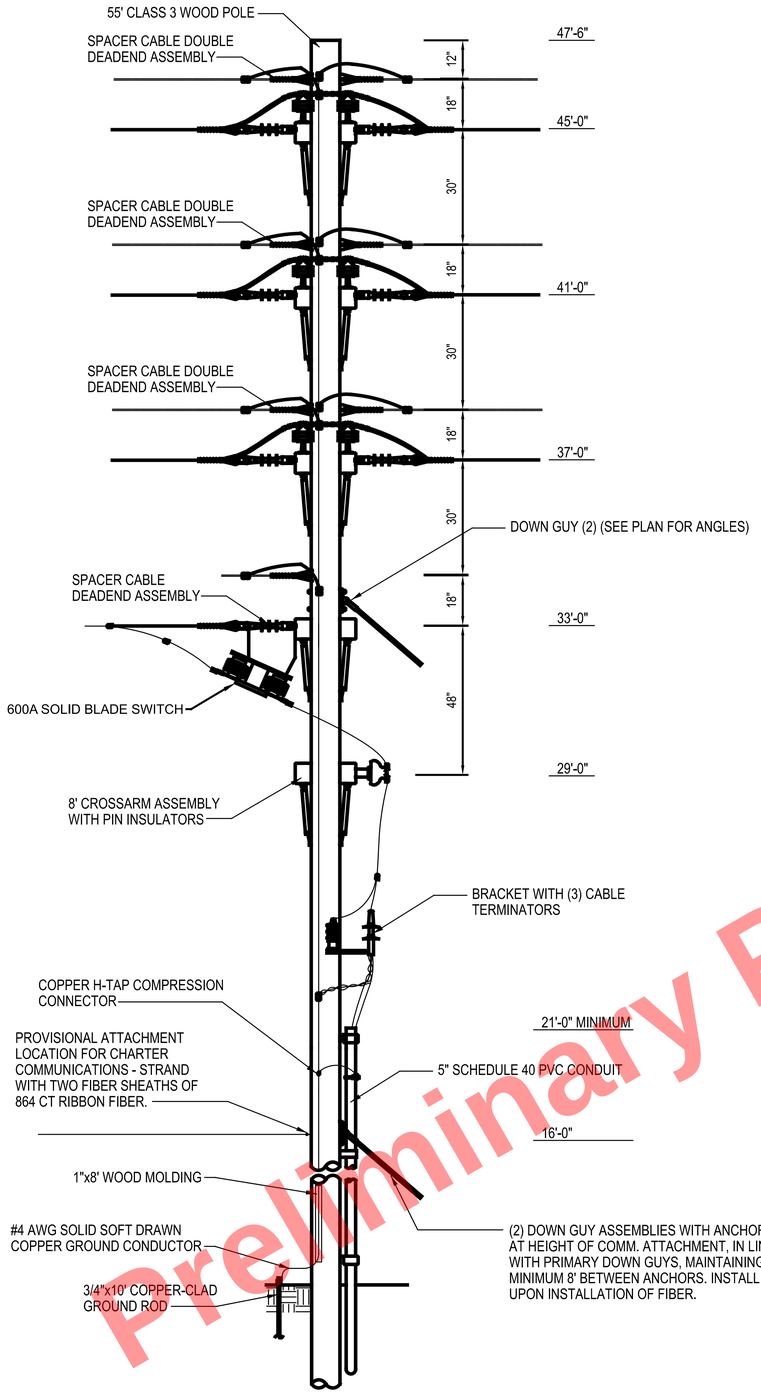

POLE DETAIL - RISER POLE G (P23) (P25)
NTS

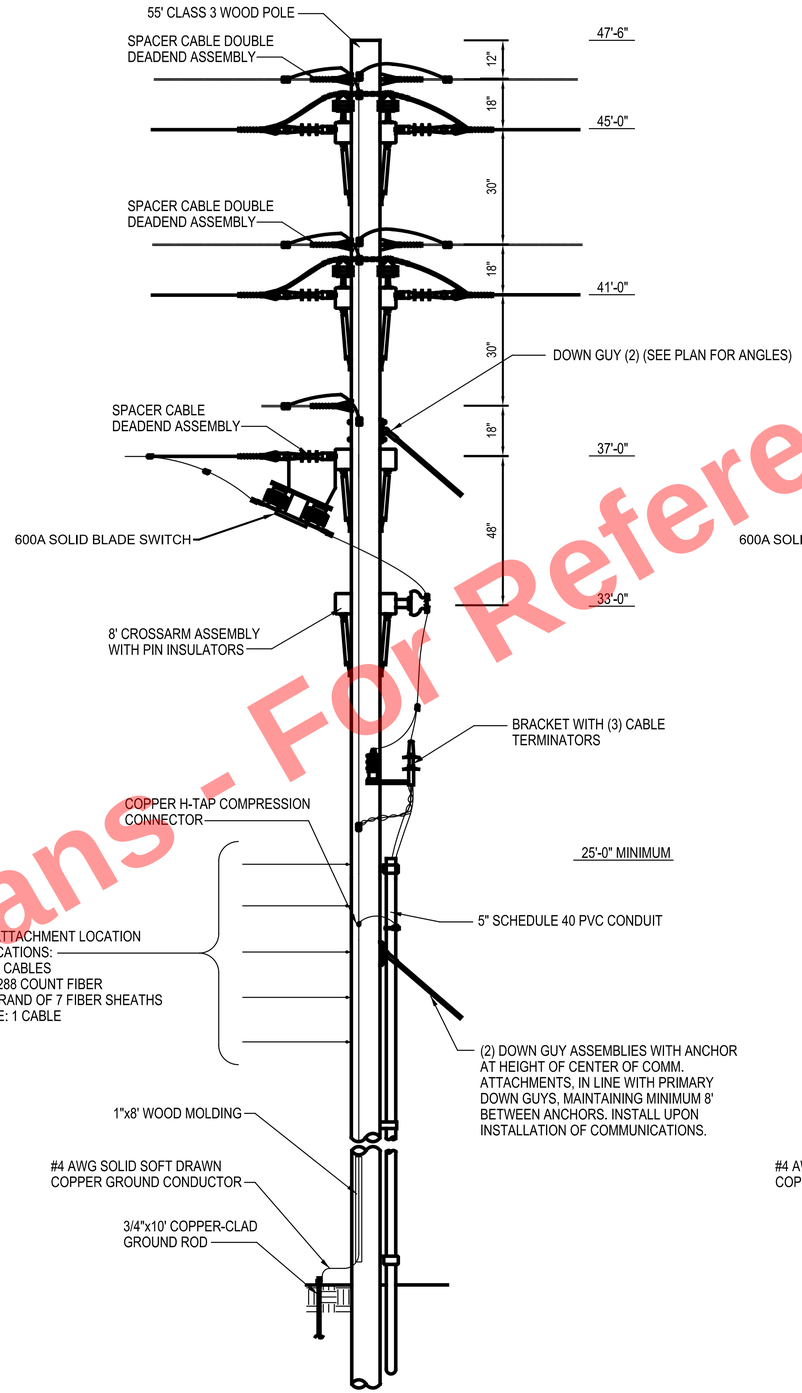

POLE DETAIL - RISER POLE F (P15) (P17)
NTS

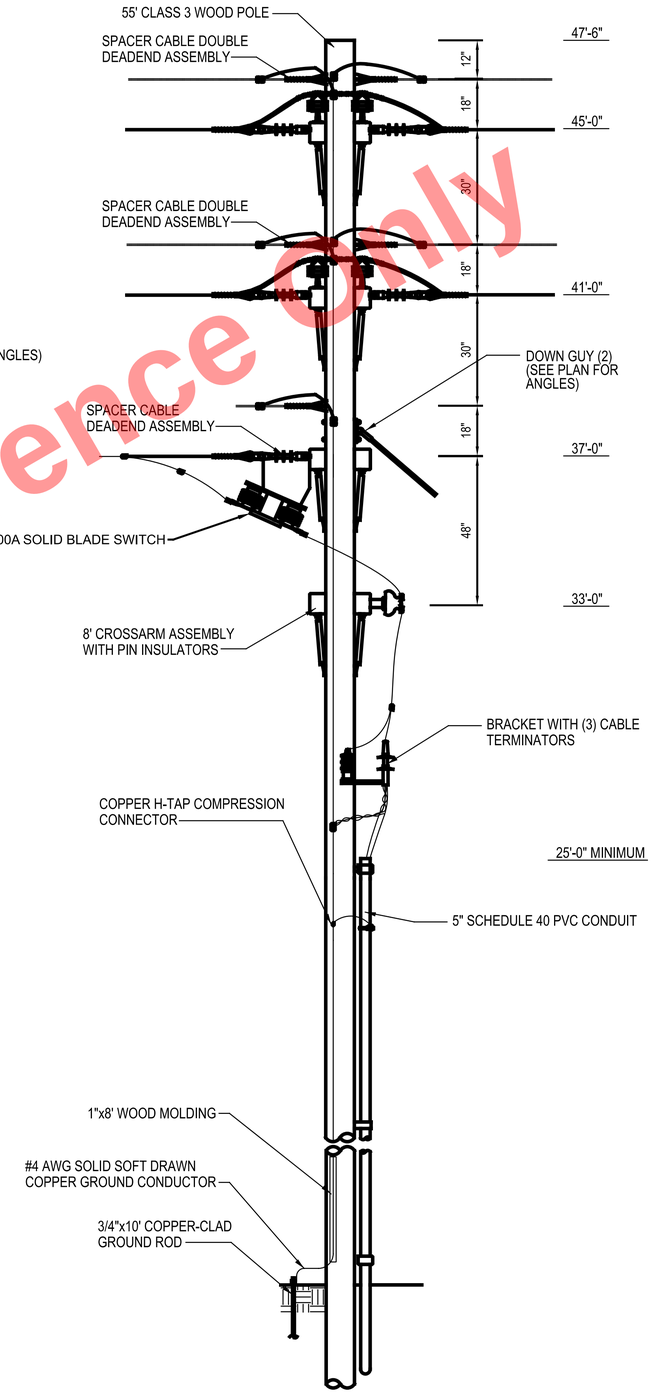

POLE DETAIL - RISER POLE H (P22) (P26)
NTS

Preliminary Plans - For Reference Only

CLEVELAND PUBLIC POWER
POLE DETAILS
CARNEGIE AVE. TEMPORARY RELOCATION

DESIGN AGENCY
ADVANCED ENGINEERING CONSULTANTS

DESIGNER JCS
REVIEWER WH 05/17/24
PROJECT ID 82382
SHEET 1793 TOTAL 2696

CUY-90-16.28 (CCG3A)

MODEL: 82382_UNI30I PAPERSIZE: 34x22 (in.) DATE: 3/27/2025 TIME: 8:13:35 PM USER: Mala.Gallagher
pw:\\mb-us-pw.bentley.com:mb-us-pw-03\Documents\Cleveland_OH\01_Projects\DOT\District2\82382\400-Engineering\Utilities\Sheets\82382_UDI303.dgn

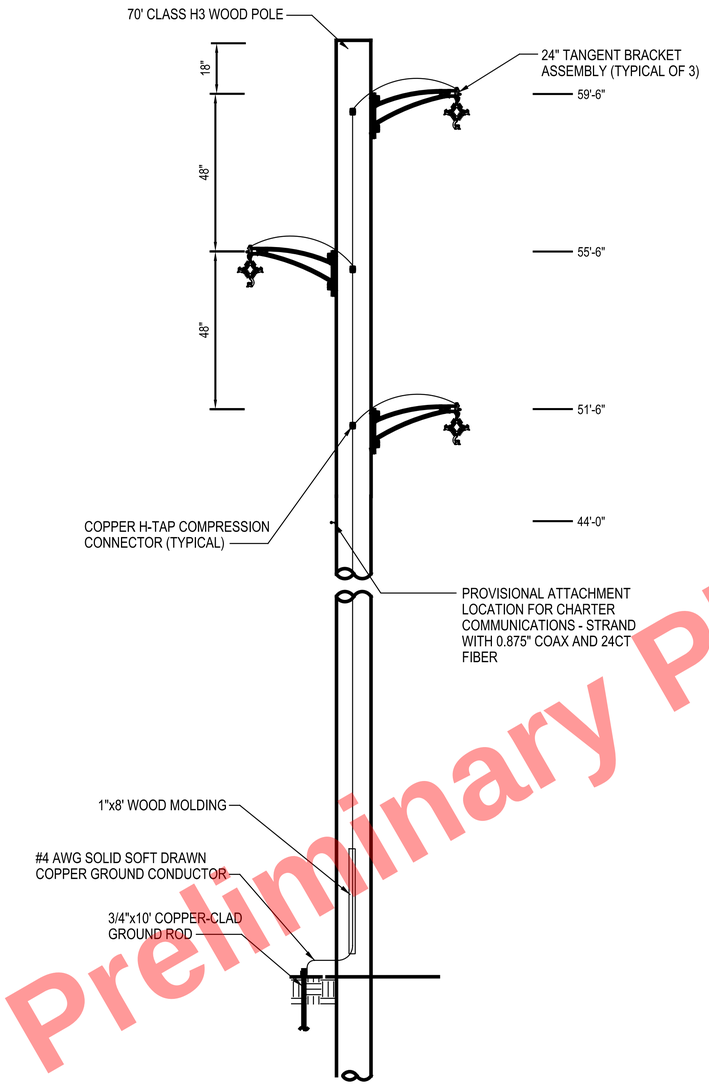

POLE DETAIL - MID-SPAN POLE A (22ND ST) P4
NTS

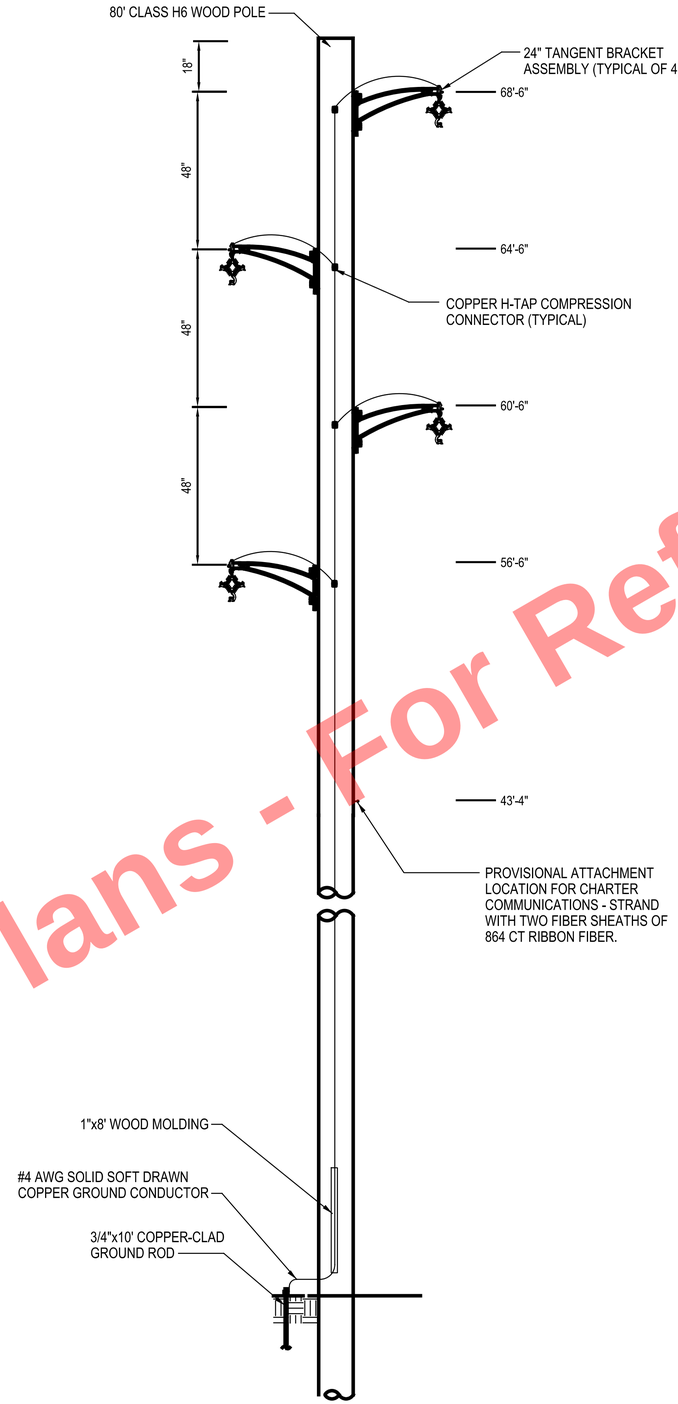

POLE DETAIL - MID-SPAN POLE B (CARNEGIE)
NTS

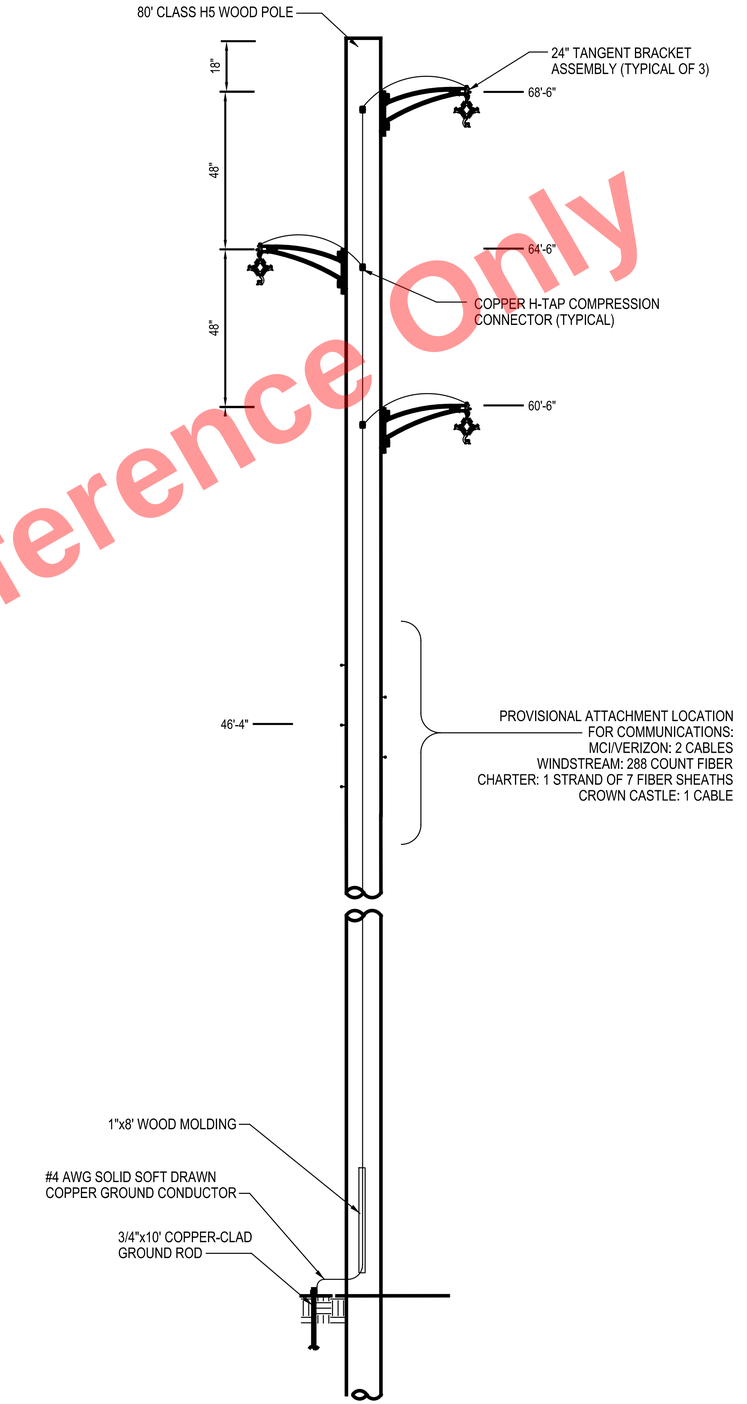

POLE DETAIL - MID-SPAN POLE C (CARNEGIE)
NTS

Preliminary Plans - For Reference Only

CUY-90-16.28 (CCG3A)

MODEL: 82382_UN30I PAPERSIZE: 34x22 (in) DATE: 3/27/2025 TIME: 8:13:45 PM USER: Mala.Gallagher
pw:\\mb-us-pw.bentley.com:mb-us-pw-03\Documents\Cleveland_OH\01_Projects\ODOT\District2\82382\400-Engineering\Utilities\Sheets\82382_UDI304.dgn

CLEVELAND PUBLIC POWER
POLE DETAILS
22ND ST. AND CARNEGIE AVE. MID-SPAN POLES

DESIGN AGENCY
ADVANCED ENGINEERING CONSULTANTS

DESIGNER JCS
REVIEWER WH 05/17/24
PROJECT ID 82382
SHEET 1794 TOTAL 2696

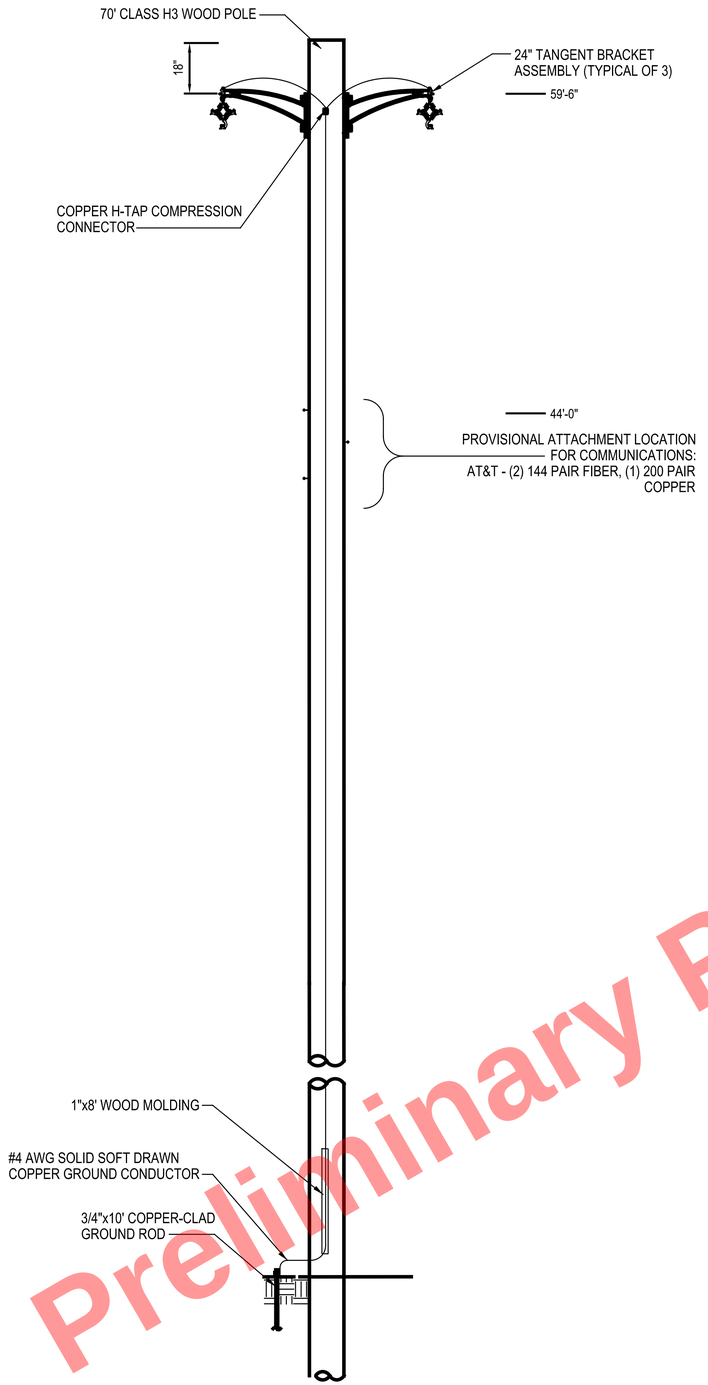

POLE DETAIL - MID-SPAN POLE D (22ND ST) (P10)
NTS

Preliminary Plans - For Reference Only

CUY-90-16.28 (CCG3A)

MODEL: 82382_UN30I PAPERSIZE: 34x22 (In) DATE: 3/27/2025 TIME: 8:13:55 PM USER: Mala.Gallagher
pw:\\mb-us-pw.bentley.com:mb-us-pw-03\Documents\Cleveland_OHIO_Projects\ODOT\District2\82382\400-Engineering\Utilities\Sheets\82382_UDI305.dgn

CLEVELAND PUBLIC POWER
POLE DETAILS
22ND ST. AND CARNEGIE AVE. MID-SPAN POLES

DESIGN AGENCY
ADVANCED ENGINEERING CONSULTANTS

DESIGNER	JCS
REVIEWER	WH 05/17/24
PROJECT ID	82382
SHEET	1795
TOTAL	2696

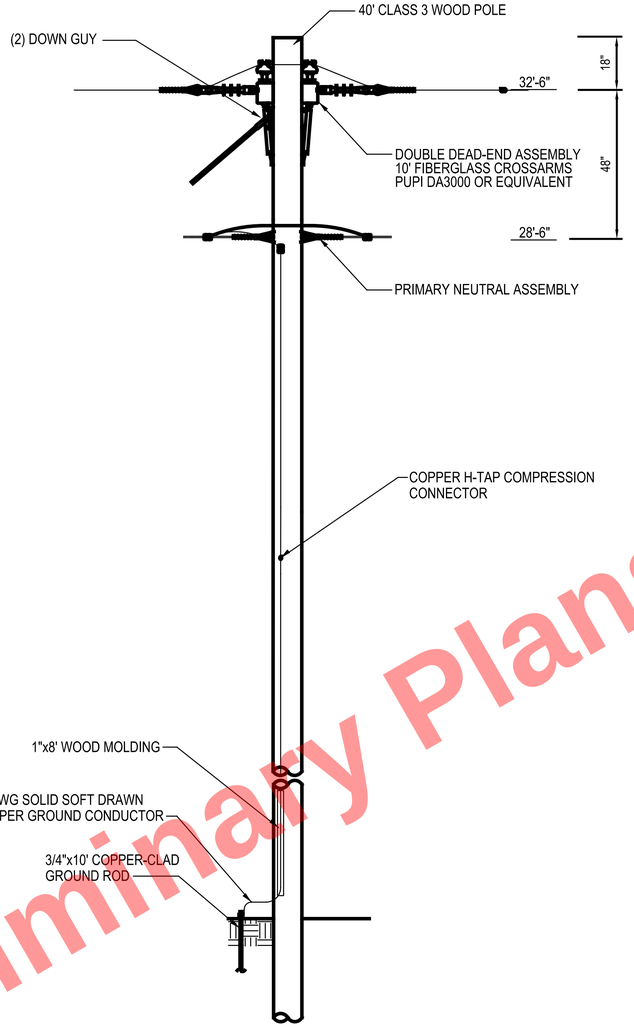

POLE DETAIL - CEDAR CROSSING (NORTHWEST)
NTS

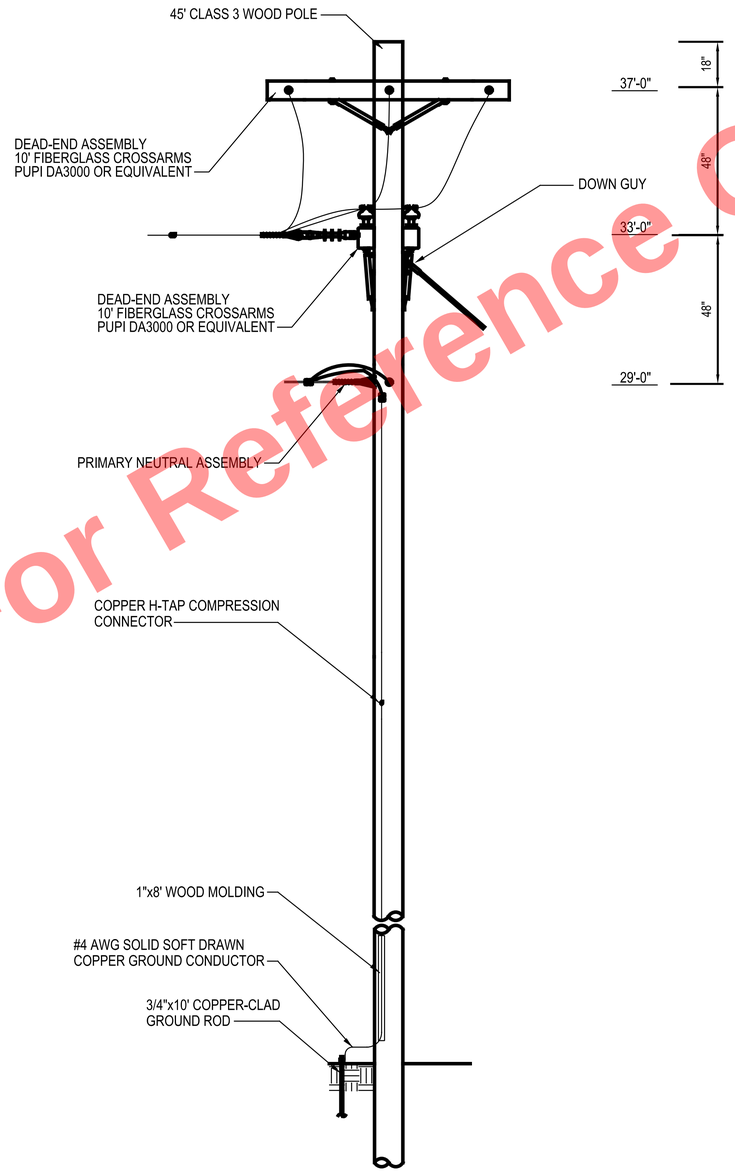

POLE DETAIL - CEDAR CROSSING (SOUTHEAST)
NTS

Preliminary Plans - For Reference Only

CUY-90-16.28 (CCG3A)

MODEL: 82382_UN130 PAPERSIZE: 34x22 (in) DATE: 3/27/2025 TIME: 8:40:05 PM USER: Mala.Gallagher
pw:\\mb-us-pw.bentley.com:mb-us-pw-03\Documents\Cleveland.OH\Oil_Projects\ODOT\District2\82382\400-Engineering\U

CLEVELAND PUBLIC POWER
POLE DETAILS
CEDAR CROSSING POLES

DESIGN AGENCY

AEC ADVANCED ENGINEERING CONSULTANTS
Mechanical | Electrical | Plumbing | Fire Protection
1400 Dublin Road Tel: (614) 486-6776
Columbus, Ohio 43215 Fax: (614) 486-6982

DESIGNER
JCS

REVIEWER
WH 05/17/24

PROJECT ID
82382

SHEET 1796 | TOTAL 2696

ITEM 659 - SEEDING AND MULCHING, CLASS 1, AS PER PLAN
ITEM 659 - SEEDING AND MULCHING, CLASS 2, AS PER PLAN
ITEM 659 - SEEDING AND MULCHING, CLASS 5B, AS PER PLAN

THE SCOPE OF WORK CONSISTS OF ALL MATERIALS, EQUIPMENT, LABOR, MAINTENANCE, SUBMITTALS, PRODUCTS AND SERVICES REQUIRED TO SUPPLY AND PLACE HIGH USE LAWN SEED MIX AS INDICATED ON THE DRAWINGS, ITEM 659 AND AS SPECIFIED HERE.

SUBMITTALS

AT LEAST 30 DAYS PRIOR TO INTENDED USE, THE CONTRACTOR SHALL PROVIDE THE FOLLOWING SAMPLES AND SUBMITTALS FOR APPROVAL. DO NOT ORDER MATERIALS UNTIL ENGINEER'S APPROVAL OF SAMPLES, CERTIFICATIONS OR TEST RESULTS HAS BEEN OBTAINED. DELIVERED MATERIALS SHALL CLOSELY MATCH THE APPROVED SAMPLES. ACCEPTANCE SHALL NOT CONSTITUTE FINAL ACCEPTANCE. THE ENGINEER RESERVES THE RIGHT TO REJECT ON OR AFTER DELIVERY ANY MATERIAL THAT DOES NOT MEET THESE SPECIFICATIONS.

SEED: SUBMIT A MANUFACTURER'S CERTIFICATE OF COMPLIANCE TO THE SPECIFICATIONS WITH EACH SHIPMENT OF EACH TYPE OF SEED. THESE CERTIFICATES SHALL INCLUDE THE GUARANTEED PERCENTAGES OF PURITY, WEED CONTENT AND GERMINATION OF THE SEED, AND ALSO THE NET WEIGHT AND DATE OF SHIPMENT. NO SEED MAY BE SOWN UNTIL THE CONTRACTOR HAS SUBMITTED THE CERTIFICATES.

FERTILIZER: SUBMIT PRODUCT LITERATURE OF SEEDING FERTILIZER AND CERTIFICATES SHOWING COMPOSITION AND ANALYSIS.
SUBMIT THE PURCHASING RECEIPT SHOWING THE TOTAL QUANTITY PURCHASED FOR THE PROJECT PRIOR TO INSTALLATION.

HYDROSEEDING: PRIOR TO THE START OF HYDROSEEDING, SUBMIT QUALIFICATIONS FOR HYDROSEEDING INSTALLER & CERTIFIED STATEMENT FOR APPROVAL AS TO THE NUMBER OF POUNDS OF MATERIALS TO BE USED PER 100 GALLONS OF WATER.

SEEDING SCHEDULE: INDICATING ANTICIPATED PLANTING DATES FOR EACH TYPE OF SEEDING, INCLUDING EROSION CONTROL SEEDING.

WOOD CELLULOSE FIBER MULCH: SUBMITS PRODUCT LITERATURE.

QUALITY ASSURANCE

QUALIFICATION OF LANDSCAPE CONTRACTOR: THE WORK OF THIS SECTION SHALL BE PERFORMED BY A LANDSCAPE CONTRACTING FIRM WHICH HAS SUCCESSFULLY INSTALLED WORK OF A SIMILAR QUALITY, SCHEDULE REQUIREMENT, AND CONSTRUCTION DETAILING WITH A MINIMUM OF FIVE YEARS EXPERIENCE. SUBMIT PROOF THAT THE LANDSCAPE CONTRACTING FIRM MEETS THIS REQUIREMENT.

QUALIFICATION OF FOREMAN OR CREW LEADER: ALL WORK OF UNLOADING, STOCKPILING, STORING, TRANSPORTING ON-SITE, PLANTING, STAKING AND GUYING, FERTILIZING, AND MAINTENANCE OF TREES, SHRUBS, VINES, GROUNDCOVER, AND PERENNIALS SHALL BE SUPERVISED BY A FOREMAN OR CREW LEADER WHO IS A CERTIFIED LANDSCAPE PROFESSIONAL OR A CERTIFIED HORTICULTURIST. SUBMIT PROOF OF CERTIFICATION. FOREMAN AND CREW LEADER SHALL REMAIN ON THE PROJECT ON A CONSISTANT BASIS FROM THE BEGINNING OF PLANTING THROUGH PROVISIONAL ACCEPTANCE.

DELIVER SEED IN ORIGINAL SEALED, LABELED, AND UNDAMAGED CONTAINERS.

THE SEASON FOR SEEDING SHALL BE AS FOLLOWS:

SPRING: APRIL 1ST TO JUNE 1ST
FALL: AUGUST 15TH TO OCTOBER 15TH

ITEM 659 - SEEDING AND MULCHING, CLASS 1, AS PER PLAN
ITEM 659 - SEEDING AND MULCHING, CLASS 2, AS PER PLAN
ITEM 659 - SEEDING AND MULCHING, CLASS 5B, AS PER PLAN (CONT.)

THE ACTUAL PLANTING OF SEED SHALL BE DONE, HOWEVER, ONLY DURING PERIODS WITHIN THIS SEASON WHICH ARE NORMAL FOR SUCH WORK AS DETERMINED BY WEATHER CONDITIONS AND BY ACCEPTED PRACTICE IN THIS LOCALITY. SEED LOAM AREAS WITHIN 5 DAYS OF SPREADING THE LOAM TO PREVENT LOSS OF SOIL VIA WATER AND WIND EROSION AND TO PREVENT THE FLOW OF SEDIMENT, FERTILIZER, AND PESTICIDES ONTO ROADWAYS, SIDEWALKS, AND INTO CATCH BASINS.

SEED SHALL BE FRESH, CLEAN, NEW CROP SEED. GRASS SHALL BE OF THE PREVIOUS YEAR'S CROP AND THE WEED SEED CONTENT SHALL NOT EXCEED 1% BY WEIGHT. THE SEED SHALL BE FURNISHED AND DELIVERED, IN THE PROPORTION SPECIFIED, IN NEW, CLEAN, SEALED, AND PROPERLY LABELED CONTAINERS. ALL SEED SHALL COMPLY WITH STATE AND FEDERAL SEED LAWS. SUBMIT MANUFACTURER'S CERTIFICATES OF COMPLIANCE. SEED WHICH HAS BECOME WET, MOLDY OR OTHERWISE DAMAGED SHALL NOT BE ACCEPTABLE.

SEED SPECIES: CONTRACTOR SHALL SUBMIT WEIGHT BY SEED COUNT FOR EACH SEED MIXTURE. STATE-CERTIFIED SEED OF GRASS SPECIES, AS FOLLOWS:

1. LAWN SEED MIX APPLICATION RATE: 8.0 LBS PER 1,000 SF

NAME	COMPOSITION	GERMINATION (MIN)	PURITY (MIN)
FURY TALL FESCUE (OR APPROVED EQUAL)	27%	90%	90%
CORONADO TALL FESCUE (OR APPROVED EQUAL)	27%	90%	90%
ENDEAVOR FESCUE (OR APPROVED EQUAL)	26%	90%	90%
IQ PERENNIAL RYEGRASS (OR APPROVED EQUAL)	10%	90%	90%
BROOKLAWN KENTUCKY BLUEGRASS (OR APPROVED EQUAL)	10%	85%	90%

2. ODOT ROADSIDE MIXTURE

	WT. PER AREA
KY BLUEGRASS	1.5
KY 31 FESCUE	2
PERENNIAL RYE	1.5

3. ODOT NATIVE WILDFLOWER AND GRASS MIXTURE 5B

BOTANICAL NAME	COMMON NAME	APPLICATION RATE
ASCLEPIAS TUBEROSA	BUTTERFLY WEED	0.34 LB PER 1000 SF
ASTER NOVAE-ANGLIAE	NEW ENGLAND ASTER	
CASSIA FASCICULATA	PARTRIDGE PEA	
ECHINACEA PURPUREA	PURPLE CONEFLOWER	
ERYNGIUM YUCCIFOLIUM	RATTLESNAKE MASTER	
HELIOPSIS HELIANTHOIDES	OX-EYE SUNFLOWER	
MONARDA FISTULOSA	WILD BERGAMOT	
RATIBIDA PINNATA	GREYHEAD CONEFLOWER	
RUDBECKIA FULGIDA	ORANGE CONEFLOWER	
SILPHIUM TEREBINTHINACEUM	PRAIRIE DOCK	
SILPHIUM TRIFOLIATUM	WHORLED ROSINWEED	
SOLIDAGO RIGIDA	STIFF GOLDENROD	
ANDROPOGON GERARDII	BIG BLUESTEM	0.046 LB PER 1000 SF
SCHIZACHYRIUM SCOPARIUM	LITTLE BLUESTEM	0.069 LB PER 1000 SF

ITEM 659 - SEEDING AND MULCHING, CLASS 1, AS PER PLAN
ITEM 659 - SEEDING AND MULCHING, CLASS 2, AS PER PLAN
ITEM 659 - SEEDING AND MULCHING, CLASS 5B, AS PER PLAN (CONT.)

WOOD CELLULOSE FIBER MULCH

MULCH TO COVER HYDROSEEDED AREAS WITH SLOPES LESS THAN THREE TO ONE (3:1) SHALL BE FIBER PROCESSED FROM WHOLE WOOD CHIPS AND CLEAN RECYCLED NEWSPRINT IN A 1:1 PROPORTION MANUFACTURED SPECIFICALLY FOR STANDARD HYDRAULIC MULCHING EQUIPMENT. FIBER SHALL NOT BE PRODUCED FROM RECYCLED MATERIAL SUCH AS SAWDUST, PAPER, OR CARDBOARD.

MOISTURE CONTENT SHALL NOT EXCEED 10 PERCENT, PLUS OR MINUS 3 PERCENT AS DEFINED BY THE PULP AND PAPER INDUSTRY STANDARDS. FIBER SHALL HAVE A WATER HOLDING CAPACITY OF NOT LESS THAN 900 GRAMS WATER PER 100 GRAMS FIBER.

THE MULCH SHALL BE OF SUCH CHARACTER THAT THE FIBER WILL BE DISPERSED INTO A UNIFORM SLURRY WHEN MIXED WITH WATER. IT SHALL BE NONTOXIC TO PLANT LIFE OR ANIMAL LIFE.

THE MULCH SHALL CONTAIN A NON-PETROLEUM BASED ORGANIC TACKIFIER AND A GREEN DYE TO ALLOW FOR EASY VISUAL METERING DURING APPLICATION BUT SHALL BE NON-INJURIOUS TO PLANT GROWTH.

FERTILIZER SHALL BE A COMMERCIAL PRODUCT COMPLYING WITH THE STATE AND UNITED STATES FERTILIZER LAWS. DELIVER TO THE SITE IN THE ORIGINAL UNOPENED CONTAINERS THAT SHALL BEAR THE MANUFACTURER'S CERTIFICATE OF COMPLIANCE COVERING ANALYSIS. FERTILIZER SHALL CONTAIN NOT LESS THAN THE PERCENTAGES OF WEIGHT OF INGREDIENTS AS RECOMMENDED BY THE SOIL ANALYSIS.

NITROGEN FERTILIZER SHALL BE SLOWLY SOLUBLE UREA FORMALDEHYDE, METHYLENE UREA, OR ISOBUTYLIDENE DIUREA; OR SLOW RELEASE SULFUR-COATED UREA. PHOSPHORUS SHALL BE SUPERPHOSPHATE OR TREBLE SUPERPHOSPHATE.

POTASSIUM SHALL BE SULFATE OF POTASH, K2SO4.

SALT INDEXES PER UNIT OF NUTRIENT FOR NITROGEN, PHOSPHOROUS, AND POTASSIUM SHALL BE LESS THAN 1.0 WHEN COMPARED TO SODIUM NITRATE (6.3). PROVIDE TREATMENTS AS NEEDED FOR FUNGUS OR PEST CONTROL. ALL TREATMENTS SHALL BE APPROVED BY THE ENGINEER AND THE OHIO DEPARTMENT OF FOOD AND AGRICULTURE FOR THE INTENDED USES AND APPLICATION RATES.

PROVIDE POST EMERGENT CRAB GRASS CONTROL THROUGHOUT THE MAINTENANCE PERIOD TO ENSURE A GERMINATED AND MOWN LAWN FREE OF CRAB GRASS.

EROSION CONTROL MATTING SHALL BE GEO-JUTE EROSION CONTROL FABRIC OR APPROVED EQUAL. THE JUTE IS CONSTRUCTED IN AN OPEN WEAVE WHICH ALLOWS HYDROSEEDING BEFORE OR AFTER INSTALLATION. THE JUTE IS COMPLETELY NATURAL, UNDYED, UNBLEACHED AND CONTAINS NO TOXINS OR SYNTHETIC FIBRES. IT'S COMPLETELY BIODEGRADABLE WITHIN TWO YEARS. HUGS ALL GROUND SURFACES TO HOLD SOIL AND SEED IN PLACE.

LAWN SHALL BE INSTALLED IMMEDIATELY AFTER FINISH GRADING HAS BEEN COMPLETED. CONTRACTOR SHALL REQUEST AND RECEIVE WRITTEN APPROVAL OF FINE GRADING FROM THE RESIDENT ENGINEER.

LIMIT OF GRADING AND EARTHWORK SHALL BE LIMIT OF SEEDING UNLESS OTHERWISE INDICATED ON THE CONTRACT DOCUMENTS. ALL LAWN AREAS DISTURBED OUTSIDE THE LIMIT OF SEEDING SHALL BE PREPARED AND SEEDED AS SPECIFIED HEREIN AT NO ADDITIONAL COST.

ITEM 659 - SEEDING AND MULCHING, CLASS 1, AS PER PLAN
ITEM 659 - SEEDING AND MULCHING, CLASS 2, AS PER PLAN
ITEM 659 - SEEDING AND MULCHING, CLASS 5B, AS PER PLAN (CONT.)

CONVENTIONAL SEEDING

1. SEEDING SHALL BE DONE IN TWO DIRECTIONS AT RIGHT ANGLES TO EACH OTHER. SOW THE SEED WITH APPROVED SEEDING DEVICE. NO SEEDING SHALL BE DONE IN WINDY WEATHER.

2. FOR SLOPES NOT AS STEEP AS ONE VERTICAL FOOT TO THREE HORIZONTAL FEET SEED SHALL BE LIGHTLY RAKED INTO THE GROUND, AFTER WHICH THE GROUND SHALL BE ROLLED AND COMPACTED. AFTER COMPACTING SPREAD A LIGHT LAYER OF SALT MARSH HAY MULCH OVER THE ENTIRE SEEDBED, AND THOROUGHLY AND EVENLY WATER WITH A FINE SPRAY THE ENTIRE BED TO PENETRATE THE SOIL TO A DEPTH OF AT LEAST 2 INCHES. HAY WHICH IS NOT SALT MARSH HAY OR WHICH IS NOT CERTIFIED WEED-FREE STRAW, SHALL NOT BE USED.

3. FOR ALL SLOPES STEEPER THAN OR EQUAL TO THREE TO ONE (3:1) IMMEDIATELY INSTALL EROSION CONTROL MATTING AS DESCRIBED IN THIS SECTION. SEED ONLY WHEN THE BED IS IN A FRIABLE CONDITION, NOT MUDDY OR HARD. RESTORE AREAS IF ERODED OR OTHERWISE DISTURBED AFTER FINISH GRADING AND BEFORE PLANTING.

FOR HYDROSEEDING, PRIOR TO THE START OF WORK, FURNISH A CERTIFIED STATEMENT AS TO THE NUMBER OF POUNDS OF MATERIALS TO BE USED PER 100 GALLONS OF WATER. THIS STATEMENT SHALL ALSO SPECIFY THE NUMBER OF SQUARE FEET OF HYDROSEEDING THAT CAN BE COVERED WITH THE QUANTITY OF SOLUTION IN THE HYDROSEEDER. FOR THE HYDROSEEDING PROCESS, A MOBILE TANK WITH A CAPACITY OF AT LEAST 500 GALLONS SHALL BE FILLED WITH WATER AND THE MIXTURE NOTED ABOVE IN THE SPECIFIED PROPORTIONS. THE RESULTING SLURRY SHALL BE THOROUGHLY MIXED BY MEANS OF POSITIVE AGITATION IN THE TANK. AT NO TIME SHALL THE MOBILE TANK OR TANK TRUCK BE ALLOWED ONTO THE PREPARED HYDROSEED BEDS. ONLY HOSE APPLICATION SHALL BE PERMITTED. THE HOSE SHALL BE EQUIPPED WITH A NOZZLE OF A PROPER DESIGN TO ENSURE EVEN DISTRIBUTION OF THE HYDROSEEDING SLURRY OVER THE AREA TO BE HYDROSEEDED AND SHALL BE OPERATED BY A PERSON THOROUGHLY FAMILIAR WITH THIS TYPE OF SEEDING OPERATION.

HYDROSEEDING SHALL BE A MULTI-STEP PROCESS. STEP ONE SHALL CONSIST OF SPREADING 100 PERCENT OF THE REQUIRED SEED UNIFORMLY OVER THE PREPARED LOAM BED SO THAT THE SEED COMES INTO DIRECT CONTACT WITH THE SOIL. TO MARK THE PROGRESS OF THE HYDROSEEDING OPERATION THE CONTRACTOR SHALL ADD THE FOLLOWING TO THE SLURRY:

FOR SLOPES LESS STEEP THAN THREE TO ONE (3:1) ADD 300 LBS. PER ACRE OF THE WOOD CELLULOSE FIBER MULCH TO THE SLURRY.

FOR SLOPES LESS STEEP THAN THREE TO ONE (3:1) STEP TWO SHALL CONSIST OF A SEPARATE APPLICATION OF WOOD CELLULOSE FIBER MULCH IMMEDIATELY FOLLOWING THE FIRST STEP OF HYDROSEEDING NOTED ABOVE. APPLY THE WOOD CELLULOSE FIBER MULCH AT A RATE OF 1,700 POUNDS PER ACRE. (TOTAL WOOD CELLULOSE FIBER MULCH COVER SHALL BE 2000 LBS. PER ACRE.)

MAINTENANCE OF LAWNS

BEGIN MAINTENANCE IMMEDIATELY AFTER EACH AREA IS SEEDED FOR THE FOLLOWING TIME PERIOD:

SEEDED AREAS - A 90 DAY ACTIVE GROWING PERIOD OR UNTIL FINAL ACCEPTANCE, WHICHEVER IS LONGER. IN THE EVENT THAT SEEDING OPERATIONS ARE COMPLETED TOO LATE IN THE FALL FOR ADEQUATE GERMINATION AND GROWTH OF GRASS, THEN MAINTENANCE SHALL CONTINUE INTO THE FOLLOWING SPRING FOR THE MINIMUM 60 DAY PERIOD. IN ADDITION, INSTALL BLANKETS OR NETTING TO PREVENT LOAM DEGRADATION AND MOVEMENT OVER THE WINTER. SUBMIT PRODUCT LITERATURE AND SAMPLES TO THE RESIDENT ENGINEER FOR REVIEW. BLANKETS AND NETTING SHALL BE PLACED IN A TIMELY MANNER AT NO ADDITIONAL COST TO THE OWNER.

Preliminary Plans - For Reference Only

LANDSCAPING GENERAL NOTES - 1

DESIGN AGENCY
Michael Baker INTERNATIONAL

DESIGNER BDC
REVIEWER JCF 01/10/24
PROJECT ID 82382
SHEET 1797 TOTAL 2696

CUY-90-16.28 (CCG3A)

MODEL: Sheet-01 PAPERSIZE: 34x22 (in.) DATE: 3/28/2025 TIME: 9:19:13 AM USER: Mala.Gallagher
pw:\\mb-us-pw.bentley.com:mb-us-pw-03\Documents\Cleveland_OH\01_Projects\ODOT\District12\82382400-Engineering\Landscaping\Sheets\82382_PN2000.dgn

ITEM 659 - SEEDING AND MULCHING, CLASS 1, AS PER PLAN
ITEM 659 - SEEDING AND MULCHING, CLASS 2, AS PER PLAN
ITEM 659 - SEEDING AND MULCHING, CLASS 5B, AS PER PLAN
(CONT.)

MAINTENANCE OF LAWNS (CONT.)

MAINTENANCE SHALL INCLUDE RESEEDING, MOWING, WATERING, WEEDING, FERTILIZING A MINIMUM OF TWO TIMES IN ADDITION TO THE FERTILIZER INCORPORATED BY HARROWING INTO THE SPREAD LOAM, AND RESETTING AND STRAIGHTENING OF PROTECTIVE BARRIERS. LAWN WORK MAINTENANCE SHALL ALSO INCLUDE FUNGUS AND/OR PEST CONTROL (TREATMENT AS REQUIRED AND APPROVED BY RESIDENT ENGINEER).

DURING THE MAINTENANCE PERIOD, ANY DECLINE IN THE CONDITION OF SEEDED AREAS SHALL REQUIRE IMMEDIATE ACTION TO IDENTIFY POTENTIAL PROBLEMS AND TO UNDERTAKE CORRECTIVE MEASURES.

WATERING SHALL BE DONE IN A MANNER THAT WILL PROVIDE UNIFORM COVERAGE, PREVENT EROSION DUE TO APPLICATION OF EXCESSIVE QUANTITIES OVER SMALL AREAS, AND PREVENT DAMAGE TO THE FINISHED SURFACE BY THE WATERING EQUIPMENT.

THE CONTRACTOR SHALL PROVIDE ALL LABOR AND ARRANGE FOR ALL WATERING NECESSARY TO ESTABLISH AN ACCEPTABLE LAWN. IN THE ABSENCE OF ADEQUATE RAINFALL, WATERING SHALL BE PERFORMED DAILY OR AS OFTEN AS NECESSARY TO MAINTAIN MOIST SOIL TO A DEPTH OF AT LEAST 2 INCHES FOR SEEDED AREAS AND 4 INCHES FOR SODDED AREAS. AT NO TIME SHALL A TANK TRUCK BE ALLOWED ON THE SEEDED AND/OR SODDED SURFACE.

WATERING SHALL BE DONE IN A MANNER THAT WILL PROVIDE UNIFORM COVERAGE, PREVENT EROSION DUE TO APPLICATION OF EXCESSIVE QUANTITIES OVER SMALL AREAS, AND PREVENT DAMAGE TO THE FINISHED SURFACE BY THE WATERING EQUIPMENT. THE CONTRACTOR SHALL FURNISH SUFFICIENT WATERING EQUIPMENT TO APPLY WATER TO THE REQUIRED SOIL DEPTHS EACH 8-HOUR PERIOD.

LAWN AREAS SHALL BE PROTECTED BY A 6-FOOT HIGH STANDARD CHAIN LINK BARRIER SET 18 EIGHTEEN INCHES (18") IN THE GROUND AT TEN FOOT (10') INTERVALS AND CONNECTED BY NO. TEN (10) WIRE. FLAGS OF WHITE CLOTH SHALL BE SECURED TO THE WIRE AT CENTER POINTS BETWEEN STAKES.

BARRIERS MUST BE RAISED IMMEDIATELY AFTER LAWN CONSTRUCTION AND SHALL BE MAINTAINED UNTIL ACCEPTANCE. BARRIERS SHALL BE REMOVED AND DISCARDED AS DIRECTED BY THE OWNERSHIP.

BIRD AND ANIMAL CONTROL SHALL BE INSTALLED AS NECESSARY TO ESTABLISH LAWN AND MEADOW AREAS AS SPECIFIED HEREIN. CONTRACTOR SHALL PROPOSE LEGAL BIRD AND ANIMAL CONTROL METHODS FOR APPROVAL BY RESIDENT ENGINEER.

AFTER THE GRASS IN SEEDED AREAS HAS GERMINATED, RESEED ALL AREAS AND PARTS OF AREAS THAT FAIL TO SHOW A UNIFORM STAND OF GRASS. RESEED SUCH AREAS AND PARTS OF AREAS REPEATEDLY UNTIL ALL AREAS ARE COVERED WITH A SATISFACTORY GROWTH OF GRASS WITH NO LESS THAN 20 GRASS SHOOTS PER SQUARE INCH AND 2880 GRASS SHOOTS PER SQUARE FOOT. RESEEDING TOGETHER WITH NECESSARY GRADING, FERTILIZING, AND TRIMMING SHALL BE DONE AT THE CONTRACTOR'S EXPENSE.

THE CONTRACTOR SHALL KEEP LAWN AREAS MOWED UNTIL ACCEPTANCE OF THE CONTRACT BY CUTTING TO A HEIGHT OF 2 INCHES WHEN GROWTH REACHES 3 INCHES OR AS DIRECTED BY THE RESIDENT ENGINEER.

AT EACH MOWING, ALL EDGES OF WALKS, DRIVES, PLANT BEDS AND OTHER BORDER CONDITIONS SHALL BE EDGE TRIMMED BY HAND OR MACHINE TO PRODUCE STRAIGHT AND UNIFORM EDGE CONDITIONS.

ITEM 659 - SEEDING AND MULCHING, CLASS 1, AS PER PLAN
ITEM 659 - SEEDING AND MULCHING, CLASS 2, AS PER PLAN
ITEM 659 - SEEDING AND MULCHING, CLASS 5B, AS PER PLAN
(CONT.)

MAINTENANCE OF LAWNS (CONT.)

REMOVE AND DISCARD FROM PAVED AREAS ONLY CLIPPINGS AND DEBRIS GENERATED BY EACH MOWING AND EDGING OPERATION LEGALLY OFF-SITE. RESIDENT ENGINEER, IF PRACTICAL AND AESTHETIC, MAY ALLOW SWEEPING (NOT BLOWING) CLIPPINGS BACK INTO GRASS. MOWERS SHALL BE EQUIPPED WITH MULCHING BLADES. DO NOT REMOVE FROM GRASS AREAS ANY CLIPPINGS THAT HAVE BEEN GENERATED BY MOWING OPERATIONS. DO NOT MOW GRASS WHEN WET.

NATIVE WILDFLOWER MIX MOWING

FIRST GROWING SEASON:

DURING THE FIRST GROWING SEASON, WHENEVER CANOPY HEIGHT (OVERALL VEGETATION) REACHED 18"-24", USE A BRUSH HOG MOWER OR STRING TRIMMER TO TRIM THE MEADOW TO A HEIGHT OF 8". TRIMMING SHOULD CEASE BY MID-SEPTEMBER.

SECOND AND SUBSEQUENT GROWING SEASONS:

PRIOR TO NEW SPRING GROWTH REACHING A HEIGHT OF 2" (MARCH-APRIL), TRIM ANY MATERIAL STANDING FROM THE PREVIOUS YEAR CLOSE TO THE GROUND, APPROXIMATELY 2".

APPLICATIONS OF FERTILIZER SHALL BE APPLIED TO SEEDED AREAS AT INSTALL, AT THE TIME OF THE FIRST MOWING, AND TWO MONTHS AFTER SECOND APPLICATION AND SHALL BE PERFORMED AND PAID FOR UNDER THIS ITEM. FIRST APPLICATION OF FERTILIZER SHALL BE AS RECOMMENDED BY SOIL TESTING. SECOND APPLICATION SHALL BE APPLIED AT A RATE THAT ENSURES THAT ONE-HALF POUND OF NITROGEN IS APPLIED PER 1,000 SQUARE FEET. PHOSPHORUS AND POTASSIUM SHALL BE APPLIED PROPORTIONALLY IN ACCORDANCE WITH THE RECOMMENDATIONS OF THE SOIL TESTS AND THE QUANTITIES PREVIOUSLY INTEGRATED INTO THE SOIL DURING THE FIRST APPLICATION.

A THIRD APPLICATION OF NITROGEN FERTILIZER SHALL BE APPLIED TO SEEDED AREAS APPROXIMATELY TWO MONTHS AFTER THE SECOND APPLICATION AND SHALL BE PAID FOR UNDER THIS SECTION. THIS THIRD APPLICATION SHALL CORRESPOND TO THE FOLLOWING APPLICATION RATES DEPENDENT UPON THE MONTH OF APPLICATION.

MAY 1-15: APPLY 1.0 POUND OF NITROGEN PER 1,000 SQUARE FEET.

JUNE 15-30: APPLY 1.0 POUND OF NITROGEN PER 1,000 SQUARE FEET.

AUGUST 15 THROUGH SEPTEMBER 15: APPLY 1.0 POUND OF NITROGEN PER 1,000 SQUARE FEET.

NOVEMBER 1-15: APPLY 1.5 POUNDS OF NITROGEN PER 1,000 SQUARE FEET

NITROGEN FERTILIZER SHALL BE COMPOSED OF 50 PERCENT SLOW RELEASE NITROGEN FERTILIZER.

PROMPTLY REMOVE SOIL AND DEBRIS CREATED BY LAWN WORK FROM PAVED AREAS. CLEAN WHEELS OF VEHICLES BEFORE LEAVING SITE TO AVOID TRACKING SOIL ONTO ROADS, WALKS, OR OTHER PAVED AREAS.

ERECT BARRICADES, PROTECTION, AND WARNING SIGNS AS REQUIRED TO PROTECT NEWLY PLANTED AREAS FROM TRAFFIC AND ANIMALS. MAINTAIN BARRICADES THROUGHOUT MAINTENANCE PERIOD AND REMOVE AFTER LAWN IS ESTABLISHED.

FOLLOWING THE MINIMUM REQUIRED MAINTENANCE PERIODS FOR LAWNS, THE CONTRACTOR SHALL REQUEST THE ENGINEER IN WRITING FOR A FORMAL INSPECTION OF COMPLETED WORK. REQUEST FOR INSPECTION SHALL BE RECEIVED BY THE ENGINEER AT LEAST 10 DAYS BEFORE ANTICIPATED DATE OF INSPECTION.

ITEM 659 - SEEDING AND MULCHING, CLASS 1, AS PER PLAN
ITEM 659 - SEEDING AND MULCHING, CLASS 2, AS PER PLAN
ITEM 659 - SEEDING AND MULCHING, CLASS 5B, AS PER PLAN
(CONT.)

NATIVE WILDFLOWER MIX MOWING (CONT.)

AT THE END OF THE MAINTENANCE PERIOD, SEEDED AREAS SHALL HAVE A CLOSE STAND OF GRASS AS DEFINED ABOVE WITH NO WEEDS PRESENT AND NO BARE SPOTS GREATER THAN 3 INCHES IN DIAMETER OVER GREATER THAN 5 PERECENT OF THE OVERALL SEEDED AREA. AT LEAST 90 PERCENT OF THE GRASS ESTABLISHED SHALL BE PERMANENT GRASS SPECIES. IF SEEDED AREAS ARE DIFICIENT, THE CONTRACTOR'S RESPONSIBILITY FOR MAINTENANCE OF ALL SEEDED AREAS SHALL BE EXTENDED UNTILL DIFICIENCIES ARE CORRECTED. SEEDED AREAS TO BE CORRECTED SHALL BE PREPARED AND RESEEDED IN ACCORDANCE WITH THE REQUIREMENTS OF THIS SECTION.

AT THE TIME OF ACCEPTANCE, THE CONTRACTOR SHALL REMOVE TEMPORARY BARRIERS USED TO PROTECT LAWN AREAS.

FURNISH FULL AND COMPLETE WRITTEN INSTRUCTIONS FOR MAINTENANCE OF THE LAWNS TO THE ENGINEER AT THE TIME OF ACCEPTANCE IN CONFORMANCE WITH SUBMITTALS REQUIREMENTS.

ENGINEER'S INSPECTION SHALL DETERMINE WHETHER MAINTENANCE SHALL CONTINUE.

ALL AREAS WITHIN CONSTRUCTION LIMITS WITHOUT A SPECIFIED GROUND TREATMENT SHALL RECEIVE ITEM 659, SEEDING AND MULCHING, CLASS 1, AS PER PLAN

SEEDED LAWN SHALL BE MEASURED FOR PAYMENT PER SQUARE YARD COMPLETE IN-PLACE AS SHOWN ON THE DRAWINGS AND AS SPECIFIED HEREIN TO CONSIST OF ALL LABOR MATERIALS AND EQUIPMENT, MAINTENANCE, FERTILIZER APPLICATIONS, HERBICIDE AND PESTICIDE TREATMENTS, INSTALLATION AND REMOVAL OF ALL PROTECTION FENCING, AND ALL OTHER INCIDENTALS.

METHOD OF MEASUREMENT:

SEEDING AND MULCHING SHALL BE MEASURED AS INDICATED FOR EACH PAY ITEM LISTED. REFER TO PLANTING SOILS SECTION FOR METHOD OF MEASUREMENT FOR SOIL MIXES REQUIRED FOR SEEDED AREAS.

A.	**ITEM 659 - SOIL ANALYSIS TEST**	**10 EACH**
B.	**ITEM 659 - TOPSOIL, AS PER PLAN**	**15613 CY**
C.	**ITEM 659 - REPAIR SEEDING AND MULCHING**	**7033 SY**
D.	**ITEM 659 - INTER-SEEDING**	**7033 SY**
E.	**ITEM 659 - COMMERCIAL FERTILIZER**	**19.62 TON**
F.	**ITEM 659 - LIME**	**29.06 ACRE**
G.	**ITEM 659 - WATER**	**779 M GAL**
H.	**ITEM 659 - MOWING**	**316 MSF**

ITEM 601 - ROCK CHANNEL PROTECTION, TYPE D, WITH FILTER, AS PER PLAN

ROCK CHANNEL PROTECTION SHALL BE SANDSTONE MATERIAL ONLY, MATCHING THE GRADATION AND OTHER REQUIREMENTS OF ITEM 601.

ITEM SPECIAL - TREE PROTECTION

CONTRACTOR SHALL PROTECT TREES INDICATED IN THE PLANS AS "TO BE PROTECTED" PER SPECIAL PROVISION - TREE PROTECTION DATED JUNE 16, 2022.

THE FOLLOWING QUANTITY HAS BEEN CARRIED TO THE GENERAL SUMMARY:

ITEM SPECIAL - TREE PROTECTION 9 EACH

ITEM SPECIAL - AIR KNIFE EXCAVATION

CONTRACTOR SHALL PERFORM AIR KNIFE EXCAVATION ALONG EXPOSED ROOTS OF TREES TO REMAIN ON THE NORTH SIDE OF CARNEGIE AND AS DIRECTED BY THE ENGINEER PER SPECIAL PROVISION - AIR KNIFE EXCAVATION DATED JUNE 16, 2022.

THE FOLLOWING QUANTITY HAS BEEN CARRIED TO THE GENERAL SUMMARY:

ITEM SPECIAL - AIR KNIFE EXCAVATION 320 FT

Preliminary Plans - For Reference Only

LANDSCAPING GENERAL NOTES - 2

DESIGN AGENCY
Michael Baker INTERNATIONAL

DESIGNER
BDC

REVIEWER
JCF 01/10/24

PROJECT ID
82382

SHEET 1798 | TOTAL 2696

CUY-90-16.28 (CCG3A)
MODEL: Sheet-02 PAPERSIZE: 34x22 (in.) DATE: 3/28/2025 TIME: 9:19:15 AM USER: Maia.Gallagher
pw:\\mb-us-pw.bentley.com:mb-us-pw-03\Documents\Cleveland_OH\01_Projects\ODOT\District12\82382\400-Engineering\Landscaping\Sheets\82382_PN2000.dgn

ITEM SPECIAL - PLANTING SOIL FOR BRIDGE 13 TREE PLANTERS
ITEM SPECIAL - PLANTING SOIL FOR BRIDGE 13 PARAPET PLANTERS

1.0 GENERAL REQUIREMENTS:

ALL MATERIAL AND WORK DESCRIBED ARE TO BE PAID FOR AS PART OF THE FOLLOWING ITEMS:

A. ITEM SPECIAL - PLANTING SOIL FOR BRIDGE 13 TREE PLANTERS
B. ITEM SPECIAL - PLANTING SOIL FOR BRIDGE 13 TREE PLANTERS

1.1 METHOD OF MEASUREMENT:

PLANTING SOILS SHALL BE MEASURED BY THE CUBIC YARD FOR EACH TYPE INDICATED. VOLUMES INCLUDED IN SUMMARY REPRESENT THE CUBIC YARD ON-SITE VOLUME TO BE FILLED WITH EACH TYPE OF SOIL MIX AND DO NOT INCLUDE A COMPACTION FACTION FOR EACH TYPE OF PLANTING SOIL MIX.

1.2 BASIS OF PAYMENT:

THE ACCEPTED PLANTING SOIL MIXES WILL BE PAID FOR AT THE CONTRACT PRICE DESIGNATED FOR EACH TYPE AS SHOWN ON THE PLANS. ALL COSTS FOR WORK IN THIS SECTION ARE TO BE INCLUDED IN THE PRICE FOR EACH TYPE OF SOIL MIX.

1.3 SUMMARY:

A. ALL LABOR, MATERIALS, EQUIPMENT AND TESTING REQUIREMENTS NECESSARY TO COMPLETE SOIL COMPONENT SELECTION, SOIL PREPARATION, MIXING AND PLACEMENT AS SHOWN ON THE DRAWINGS AND SPECIFIED HEREIN, INCLUDING BUT NOT LIMITED TO THE FOLLOWING:
   1. CONSTRUCT SOIL SYSTEM PROFILES USING THE SPECIFIED MATERIALS AND TECHNIQUES AS CONTAINED HEREIN, ON THE DRAWINGS AND BY MANUFACTURER'S SPECIFICATIONS WHERE APPLICABLE.
   2. TEST, FURNISH, DELIVER AND INSTALL ALL SOIL MATERIALS, INCLUDING OFF-SITE BORROW SOILS, SOIL AMENDMENT MATERIALS, SUCH AS SAND, TOPSOIL, ORGANIC AMENDMENT (COMPOST MATERIALS, AGGREGATES AND OTHER SOIL AMENDMENTS FOR USE IN THE SOIL SYSTEMS CONSISTING OF, BUT NOT NECESSARILY LIMITED TO, THE FOLLOWING:
      A. SAND-BASED STRUCTURAL SOIL LOWER PROFILE AND SAND-BASED STRUCTURAL SOIL UPPER PROFILE, COMPRISED OF THE SPECIFIED SAND AND THE SPECIFIED ORGANIC AMENDMENT.
      B. BASE MIX COMPRISED OF THE SPECIFIED TOPSOIL AND THE SPECIFIED SAND.
      C. VARIOUS PLANTING MIXES COMPRISED OF THE BASE MIX PLUS THE ORGANIC AMENDMENT (COMPOST) AND OTHER SOIL AMENDMENT MATERIALS, AS NEEDED TO MEET THE SPECIFIED CRITERIA.
      D. PREPARE TRANSITION ZONE AND SUBGRADE SOILS IN ALL PLANTING AREAS.
      E. PLEASE, SPREAD, COMPACT, AND BRING TO SPECIFIED ELEVATION ALL SOIL SYSTEMS AS INDICATED FOR EACH TYPE.
      F. TEST INSTALLED SOIL SYSTEMS TO ENSURE COMPACTION RATES AS SPECIFIED.
      G. PROTECT ALL SOIL SYSTEM INSTALLATIONS BY APPROVED MEANS UNTIL SUBSTANTIAL COMPLETION.

1.4 REFERENCES AND STANDARDS

THE FOLLOWING REFERENCES ARE USED HEREIN AND SHALL MEAN:

A. ASTM: AMERICAN SOCIETY OF TESTING MATERIALS
B. A2LA: AMERICAN ASSOCIATION FOR LABORATORY ACCREDITATION
C. USDA: UNITED STATES DEPARTMENT OF AGRICULTURE
D. USGA: UNITED STATES GOLF ASSOCIATION
E. AASHTO: AMERICAN ASSOCIATION OF STATE HIGHWAY AND TRANSPORTATION OFFICIALS
F. STANDARD SPECIFICATIONS: REGIONAL, STATE OR MUNICIPAL STANDARD SPECIFICATION DOCUMENTS FOR THE LOCATION OF PROPOSED USAGE
G. AOAC: ASSOCIATION OF OFFICIAL ANALYTICAL CHEMISTS
H. SSSA: SOIL SCIENCE OF AMERICA, METHODS OF SOIL ANALYSIS, PART 1 & PART 3
I. NCR221: RECOMMENDED SOIL TESTING PROCEDURES FOR THE NORTH CENTRAL REGION
J. TMECC: TEST METHODS FOR THE EXAMINATION OF COMPOSTING AND COMPOST

ITEM SPECIAL - PLANTING SOIL FOR BRIDGE 13 TREE PLANTERS
ITEM SPECIAL - PLANTING SOIL FOR BRIDGE 13 PARAPET PLANTERS

1.5 DEFINITIONS:

A. BASE MIX: HOMOGENEOUSLY BLENDED MIX OF THE SPECIFIED TOPSOIL AND THE SPECIFIED SAND WHICH IS THEN USED FOR MIXING WITH THE SPECIFIED ORGANIC AMENDMENT TO CREATE VARIOUS PLANTING MIXES.
B. COMPOST: AN ORGANIC MATERIAL THAT HAS BEEN AEROBICALLY COMPOSTED AND STABILIZED FROM FEEDSTOCKS SUCH AS A GREEN WASTE (YARD DEBRIS), BIOSOLIDS OR OTHER SUITABLE ORGANIC MATERIALS.
C. DEBRIS OR DELETERIOUS MATERIALS: ELEMENTS INCLUDING, BUT NOT LIMITED TO, CONCRETE, CONCRETE MASONRY, WOOD, EXCAVATED ROCK AND ROCK FRAGMENTS, RUBBLE, OVERBURDEN SOILS, ABANDONED UTILITY STRUCTURES, TRASH, REFUSE AND LITTER.
D. FINISH GRADE: ELEVATION OF FINISHED SURFACE OF A SOIL SYSTEM AFTER SPECIFIED COMPACTION AND NATURAL SETTLING.
E. HARDSCAPE: ALL STRUCTURAL AND FIXED ITEMS SUCH AS CONCRETE, CUT STONE, PAVING MATERIALS, LIGHTING FIXTURES, BENCHES AND OTHER FABRICATION ITEMS.
F. PLANTING MIX: A SAND/SOIL/COMPOST MATERIALS PRODUCED OFF-SITE BY HOMOGENOUSLY BLENDING TOPSOIL AND SAND WITH COMPOST TO PRODUCE THE SPECIFIED PLANTING MIX TYPE.
G. SAND: A NATURALLY OCCURRING MINERAL THAT HAS BEEN PROCESSED TO REMOVE COARSE GRAVEL, SILT AND CLAY AND SIZED TO MEET THE SPECIFICATIONS.
H. SAND-BASED STRUCTURAL SOIL MIX (UPPER AND LOWER PROFILES): HOMOGENOUSLY BLENDED MIX OF THE SPECIFIED SAND AND THE SPECIFIED ORGANIC AMENDMENT.
I. SOFTSCAPE: LANDSCAPING ITEMS SUCH AS TREES, SHRUBS, LAWN GRASSES, OTHER ORNAMENTALS PLANTS, MULCHES, EARTH AND RELATED SOILS AND OTHER ORGANIC NATURAL ITEMS.
J. SOIL SYSTEM: A PROFILE CONSISTING OF THE NATIVE SUB-GRADE SOIL OR A MANUFACTURED FILL MATERIALS AND SUBSEQUENT LAYERS, SUCH AS THE BASE MIX TRANSITION LAYER OR A PLANTING MIX.
K. SUBGRADE: SURFACE OR ELEVATION OF SUBSOIL REMAINING AFTER COMPLETING EXCAVATION OR BACKFILL OF SOILS OR OTHER MATERIALS IMMEDIATELY BENEATH TRANSITION MIX OR A PLANTING MIX OR OTHER SOIL SYSTEM.
L. TOPSOIL: A MINERAL SOIL FROM THE "A" HORIZON OF A WELL-DRAINED SITE AND HAVING A USDA SOIL TEXTURE CLASSIFICATION OF A CLAY LOAM OR LOAN AND AN ORGANIC MATTER CONTENT OF NOT LESS THAN 3% BY WEIGHT AS SPECIFIED BELOW.
M. TRANSITION LAYER: IMPORTED BASE MIX THAT IS HOMOGENEOUSLY BLENDED WITH NATIVE SUBGRADE TO CREATE A TRANSITION LAYER BETWEEN THE EXISTING NATIVE SOILS AND UPPER HORIZON PLANTING MIX.

REFER TO AND COMPLY WITH SPECIFICATIONS FOR SUBMITTAL PROCEDURES AND CRITERIA.

A. PRODUCT DATA: SUBMIT TECHNICAL DESCRIPTIVE DATA FOR EACH MANUFACTURED OR PACKAGED PRODUCT OF THIS SECTION. INCLUDE MANUFACTURER'S PRODUCT TESTING AND ANALYSIS AND INSTALLATION INSTRUCTIONS FOR MANUFACTURED OR PROCESSED ITEMS AND MATERIALS.
B. LOCATIONS: SUBMIT LOCATIONS OF MATERIALS SOURCES. SUBMIT LOCATION OF MIXING SITE(S).
C. SOILS SYSTEM COMPONENTS AND SOIL MIX SUPPLIERS:
   1. THE PROJECT ENGINEER SHALL HAVE THE RIGHT TO REJECT ANY SOIL SUPPLIER.
   2. SOIL MIX SUPPLIERS SHALL HAVE A MINIMUM OF FIVE YEARS EXPERIENCE AT SUPPLYING CUSTOM PLANTING MIXES.
   3. SUBMIT SUPPLIER NAME, ADDRESS, EMAIL, TELEPHONE AND FAX NUMBERS AND CONTACT NAME.
   4. SUBMIT CERTIFICATION THAT ACCEPTED SUPPLIER IS ABLE TO PROVIDE SUFFICIENT QUANTITIES OF MATERIALS AND MIXES FOR THE ENTIRE PROJECT AND WITHIN THE LIMITATIONS OF THE PROJECT SCHEDULE.
   5. CERTIFICATES: SUBMIT CERTIFIED TEST ANALYSIS FOR EACH CHEMICAL SOIL AMENDMENT AND FERTILIZER MATERIAL SPECIFIED (SPECIMEN LABEL) AND AS USED (PRODUCT LABEL). INCLUDING GUARANTEED ANALYSIS AND WEIGHT FOR PACKAGED MATERIALS.

D. SAND AND TOPSOIL SUBMITTALS:
   1. PROJECT ENGINEER MAY ENGAGE IN AN INDEPENDENT TESTING AGENCY TO QUALIFY SOILS, SOIL SYSTEM COMPONENTS AND SPECIFIED SOIL MIXES.
   2. THE CONTRACTOR SHALL SUBMIT REPRESENTATIVE SAMPLES OF ALL COMPONENT MATERIALS WHICH ARE INTENDED TO BE USED TO MAKE MIXES AND ALL FINAL MIXES TO AN AGRICULTURAL SOIL TESTING LABORATORY ACCEPTABLE TO THE PROJECT ENGINEER.

ITEM SPECIAL - PLANTING SOIL FOR BRIDGE 13 TREE PLANTERS
ITEM SPECIAL - PLANTING SOIL FOR BRIDGE 13 PARAPET PLANTERS

1.6 SUBMITTALS (CONT.)

D. SAND AND TOPSOIL SUBMITTALS (CONT.):
   3. ALL SOIL TESTS SHALL BE PERFORMED IN ACCORDANCE WITH THE CURRENT METHODS PROVIDED BY ASTM, USGA OR NCR221, UNLESS OTHERWISE NOTED.
   4. ALL ORGANIC AMENDMENT TESTS SHALL BE PERFORMED IN ACCORDANCE WITH THE TMECC, UNLESS OTHERWISE NOTED.
   5. ALL REPORTS PREPARED BY THE TESTING LABORATORY SHALL BE SENT TO THE PROJECT ENGINEER FOR APPROVAL.
   6. SAMPLES OF ALL SOIL MATERIALS TO BE BROUGHT TO THE SITE MUST BE APPROVED BEFORE DELIVERY.
   7. DEFICIENCIES IN THE SAND, TOPSOIL, ORGANIC MATERIALS, OTHER MIX COMPONENTS OR FINAL SOIL MIXES SHALL BE CORRECTED BY THE CONTRACTOR, AS DIRECTED BY THE PROJECT ENGINEER AFTER REVIEW OF THE TESTING AGENCY REPORT.

E. TEST REPORTS SHALL INCLUDE THE FOLLOWING:
   1. DATE ISSUED
   2. PROJECT TITLE AND NAMES OF CONTRACTOR AND SUPPLIER
   3. TESTING LABORATORY NAME, ADDRESS AND TELEPHONE NUMBER, AND NAME(S), AS APPLICABLE, OF EACH FIELD INSPECTOR OR LABORATORY CONTACT.
   4. DATE, PLACE, AND TIME OF SAMPLING OR TEST, WITH RECORD OF TEMPERATURE AND WEATHER CONDITIONS.
   5. LOCATION OR MATERIAL SOURCE
   6. TYPE OF TEST
   7. RESULTS OF TESTS INCLUDING IDENTIFICATION OF DEVIATIONS FROM ACCEPTABLE RANGES
   8. SOIL PH AND BUFFER PH TEST
   9. ANALYSIS FOR LEVELS OF HEAVY METALS TO INCLUDE ARSENIC, CADMIUM, CHROMIUM, COPPER, LEAD, MERCURY, NICKEL, SELENIUM AND ZINC. TEST RESULTS SHALL BE CITED IN MILLIGRAMS PER KILOGRAM DRY WEIGHT WITH COMPARISONS TO USEPA 40 CFR TABLE 3 OF 503.13 POLLUTANT CONCENTRATIONS.
   10. PARTICLE SIZE ANALYSIS SHALL BE PERFORMED AND COMPARED TO THE USDA SOIL CLASSIFICATION SYSTEM PER ASTM D422 (HYDROMETER TEST). THE USDA SAND AND GRAVEL CLASSIFICATIONS SHALL BE DETERMINED ON MATERIAL RETAINED ON THE #270 SIEVE FOLLOWING A WET WASHING PROCEDURE.
   11. DELETERIOUS MATERIALS SHALL BE DETERMINED BY ASTM D 5286.
   12. PERCENT OF ORGANIC MATTER BY WEIGHT SHALL BE DETERMINED BY ASTM D 2974 METHOD C, LOSS ON IGNITION AT 4400C.
   13. SATURATED HYDRAULIC CONDUCTIVITY SHALL BE DETERMINED BY ASTM F1815.
   14. ANALYSIS FOR NUTRIENT LEVELS IN PARTS PER MILLIONS OR POUND PER ACRE INCLUDING NITRATE NITROGEN, PHOSPHORUS, POTASSIUM, CALCIUM, MAGNESIUM, IRON, MANGANESE, ZINC, COPPER, BORON AND SODIUM AS EXCHANGEABLE SODIUM PERCENTAGE (ESP) PER NCR221.
   15. SOLUBLE SALTS SHALL BE DETERMINED BY ELECTRICAL CONDUCTIVITY OF A 1:2 SOIL/WATER SLURRY REPORTED IN MILLIMHOS PER CM.
   16. CATION EXCHANGE CAPACITY (CEC) PER NCR221 USING THE AMMONIUM ACETATE METHOD.
   17. SOIL ANALYSIS REPORTS SHALL SHOW RECOMMENDATIONS FOR SOIL ADDITIVES, INCLUDING ORGANIC AND INORGANIC SOIL AMENDMENTS, NECESSARY TO ACCOMPLISH PARTICULAR MIX OBJECTIVES NOTED.

F. ORGANIC AMENDMENT (COMPOST) SUBMITTALS:
   1. REPORTS OF ANALYSES FROM PRODUCERS OF COMPOSTED ORGANIC MATERIALS ARE REQUIRED.
   2. TESTING PROCEDURES SHALL CONFORM TO TMECC METHODS, UNLESS OTHERWISE NOTED.
   3. REPORTS SHALL INCLUDE PH, SALINITY, TOTAL NITROGEN, CARBON:NITROGEN RATIO, PHOSPHORUS, POTASSIUM, CALCIUM, MAGNESIUM, SODIUM AND BORON BY SATURATED MEDIA EXTRACTION (SME PER NCR-221), MOISTURE, BULK DENSITY, PARTICLE SIZE ANALYSIS, ORGANIC MATTER CONTENT AND SOLVITA MATURITY INDEX.
   4. COMPOSTED ORGANIC MATERIALS SHALL BE TESTED FOR THE USEPA 503 HEAVY METALS.

ITEM SPECIAL - PLANTING SOIL FOR BRIDGE 13 TREE PLANTERS
ITEM SPECIAL - PLANTING SOIL FOR BRIDGE 13 PARAPET PLANTERS

1.6 SUBMITTALS (CONT.)

G. BIOLOGICAL TESTS FOR PATHOGENS IN COMPOST:
   1. CONTACT THE TESTING LABORATORY TO REVIEW TESTING AND SAMPLING REQUIREMENTS BEFORE SENDING SAMPLES.
   2. SAMPLING REQUIREMENTS: COMPOSTED ORGANIC AMENDMENTS SHALL BE SAMPLED ACCORDING TO THE OHIO EPA COMPOSTING REGULATIONS 3745-24-46.
   3. MAINTAIN CLEAR AND CONCISE RECORDS OF TESTING AND SAMPLING PROCEDURES.
   4. COMPOST SAMPLES SHALL BE TESTED FOR THE FOLLOWING:
      A. FECAL COLIFORMS (MPN) TMECC 07.01
      B. SALMONELLA (MPN) TMECC 07.02

H. TESTING AGENCIES:
   1. SOIL PHYSICAL ANALYSIS ON ALL COMPONENTS AND PLANTING SOIL MIXES INCLUDING PARTICLE SIZE ANALYSIS SHALL BE DETERMINED BY AN A2LA (AMERICAN ASSOCIATION FOR LABORATORY ACCREDITATION) ACCREDITED LAB, SUCH AS HUMMEL & CO, 35 KING STREET, TRUMANSBURG, NY 14886, TEL. 607-387-5694, FAX 607-387-9499 OR OTHER QUALIFIED LABORATORY APPROVED BY THE PROJECT ENGINEER.
   2. SOIL CHEMICAL ANALYSIS ON ALL COMPONENTS AND PLANTING SOIL MIXES SHALL BE PERFORMED BY CLC LABS, 325 VENTURE DRIVE, WESTERVILLE, OH 43081, TEL. 614-888-1663, FAX 614-888-1330 OR OTHER QUALIFIED LABORATORY APPROVED BY THE PROJECT ENGINEER.
   3. COMPOST TESTING SHALL BE PERFORMED BY CLC LABS, 325 VENTURE DRIVE, WESTERVILLE, OH 43081, TEL. 614-888-1663, FAX 614-888-1330 OR OTHER QUALIFIED LABORATORY APPROVED BY THE PROJECT ENGINEER.
   4. ALTHOUGH THE REPORT(S) MAY CONTAIN THE LABORATORY'S COMMENTS OR RECOMMENDATIONS TO THE DESIGN REGARDING AMENDMENT REQUIREMENTS OR PROCEDURES, THE REPORT SHALL NOT BE INTERPRETED TO PRESCRIBE OR DICTATE PROCEDURES OR QUANTITIES OF SOIL MATERIALS FOR THE WORK OF THIS CONTRACT.
   5. CHANGING TESTING LABORATORIES DURING THE MIX DEVELOPMENT PHASE OR FOR QUALITY ASSURANCE TESTING MUST BE AUTHORIZED IN ADVANCE BY THE PROJECT ENGINEER.
   6. STATEMENT(S) OF QUALIFICATIONS: SUBMIT WITHIN 45 DAYS OF NOTICE TO PROCEED TO CONFIRM QUALIFICATIONS OF THE SELECTED TESTING AGENCIES.

I. SUBMIT SAMPLES OF ALL LISTED MATERIALS TO THE PROJECT ENGINEER FOR APPROVAL:
   1. SAND, EACH SOURCE, 5 LB PACKAGED
   2. TOPSOIL, EACH SOURCE, 5 LB PACKAGED
   3. ORGANIC AMENDMENT (COMPOST), EACH SOURCE, 5 LB PACKAGED
   4. BASE MIX, EACH SOURCE, 5 LB PACKAGED
   5. PLANTING MIXES, EACH SPECIFIED TYPE, 5 LB PACKAGED

1.7 QUALITY ASSURANCE:

A. THE BASE MIX IS COMPRISED FOR THE SPECIFIED TOPSOIL AND THE SPECIFIED SAND. EACH COMPONENT OF THE BASE MIX MUST MEET THE SPECIFICATION HEREIN AND BE VERIFIED BY TESTING AS SPECIFIED HEREIN, PRIOR TO DELIVERY TO THE SITE.
B. VARIOUS PLANTING MIXES ARE COMPRISED OF THE BASE MIX, ADDITIONAL ORGANIC AMENDMENT AND OTHER SOIL AMENDMENT MATERIALS, SUCH AS LIGHT-WEIGHT AGGREGATE, AS DETERMINED BY THE TESTING LABORATORY. EACH COMPONENT OF EACH PLANTING MIX MUST MEET THE SPECIFICATION HEREIN AND BE VERIFIED BY TESTING AS SPECIFIED HEREIN, PRIOR TO DELIVERY TO THE SITE.
C. NO MIX COMPONENT, SAND-BASED STRUCTURAL SOIL MIX, BASE MIX OR PLANTING MIX WILL BE ACCEPTED UNLESS IT MEETS ALL SUBMITTAL, TESTING AND CERTIFICATION REQUIREMENTS INCLUDING THE TESTING AND CERTIFICATION REPORTS IN THE FORMAT SPECIFIED HEREIN.
D. INSPECTIONS AND TESTING: SANDS, SOILS, COMPOSTS, AND OTHER MATERIALS TESTING AS WELL AS SOIL SYSTEM MIX TESTING REQUIRED IN THIS SECTION OR ADDITIONALLY REQUIRED BY THE PROJECT ENGINEER SHALL BE FURNISHED AND PAID FOR BY THE CONTRACTOR.
E. THE PROJECT ENGINEER RESERVES THE RIGHT TO TAKE AND ANALYZE AT ANY TIME SUCH ADDITIONAL SAMPLES OF MATERIALS AS DEEMED NECESSARY FOR VERIFICATION OF CONFORMANCE TO SPECIFICATION REQUIREMENTS. CONTRACTOR SHALL FURNISH SAMPLES FOR THIS PURPOSE UPON REQUEST AND SHALL PERFORM TESTING AS REQUESTED.

For Reference Only
Preliminary Plans - Not

LANDSCAPING GENERAL NOTES - 3

DESIGN AGENCY
Michael Baker INTERNATIONAL

DESIGNER BDC
REVIEWER JCF 01/10/24
PROJECT ID 82382
SHEET 1799 TOTAL 2696

CUY-90-16.28 (CCG3A)
MODEL: Sheet-03 PAPERSIZE: 34x22 (in.) DATE: 3/28/2025 TIME: 9:19:16 AM USER: Mala.Gallagher
pw:\\mb-us-pw.bentley.com:mb-us-pw-03\Documents\Cleveland_OH\01_Projects\ODOT\District12\82382\400-Engineering\Landscaping\Sheets\82382_PN2000.dgn

ITEM SPECIAL - PLANTING SOIL FOR BRIDGE 13
TREE PLANTERS
ITEM SPECIAL - PLANTING SOIL FOR BRIDGE 13
PARAPET PLANTERS

1.7 QUALITY ASSURANCE (CONT.):

F. SAMPLES THAT DO NOT MEET THE SPECIFICATIONS WILL REQUIRE THE CONTRACTOR TO RE-SUBMIT ADDITIONAL SAMPLES FOR TESTING. COSTS FOR RE-TESTING WILL BE THE RESPONSIBILITY OF THE CONTRACTOR.

G. OBSERVATIONS AND PERIODIC TESTING WILL BE MADE BY THE PROJECT ENGINEER ON MATERIALS DELIVERED TO THE SITE. ANY SOIL SYSTEM MIXES THAT DO NOT MEET THE REQUIREMENTS OF THE SPECIFICATIONS SHALL BE REMOVED BY THE CONTRACTOR AT NO ADDITIONAL COST. SAMPLES OF INDIVIDUAL COMPONENTS FOR ALL SOIL SYSTEMS SHALL BE SUBMITTED BY THE CONTRACTOR FOR TESTING AND ANALYSIS TO THE APPROVED TESTING LABORATORY. NO COMPONENT FOR THE BASE MIX OR THE PLANTING MIXES SHALL BE USED UNTIL TEST REPORTS FROM THE APPROVED TESTING LABORATORY HAVE BEEN RECEIVED AND APPROVED BY THE PROJECT ENGINEER.

H. AS NECESSARY, MAKE ANY AND ALL MIX AMENDMENTS TO ACHIEVE THE REQUIRED SPECIFICATIONS AND RESUBMIT TESTS REPORTS INDICATING AMENDMENT CHANGES UNTIL APPROVED. INCLUDE VERIFICATION TESTING OF ON-SITE SUB-SOILS FOR SUITABILITY TO SUPPORT BASE MIX, TRANSITION MIX AND PLANTING MIXES TO PROVIDE ADEQUATE SUB-SURFACE DRAINAGE.

1.8 QUALIFICATIONS:

A. INSTALLATION AND MAINTENANCE FOREMAN ON THE JOB SHALL BE COMPETENT ENGLISH-SPEAKING SUPERVISOR(S), EXPERIENCED IN LANDSCAPE INSTALLATION AND MAINTENANCE.

B. PERFORM WORK WITH PERSONNEL TOTALLY FAMILIAR WITH PLANTING SOIL PREPARATION AND LAWN AND PLANTING INSTALLATIONS UNDER THE SUPERVISION OF A FOREMAN EXPERIENCED WITH LANDSCAPE WORK.

C. TESTING LABORATORY: EXPERIENCED PERSON OR PERSONS EMPLOYED BY PUBLIC OR PRIVATE TESTING LABORATORY, QUALIFIED AND CAPABLE OF PERFORMING TESTS, MAKING SOIL RECOMMENDATIONS, AND ISSUING REPORTS AS SPECIFIED. THE TESTING LABORATORY SHALL SUBMIT A STATEMENT OF QUALIFICATIONS WITH REGARD TO THE SPECIFIED TESTING. THE TESTING LABORATORY SHALL BE AS APPROVED BY THE PROJECT ENGINEER.

D. IT SHALL BE THE RESPONSIBILITY OF THE CONTRACTOR TO ENSURE THAT THE SPECIFICATIONS ARE BEING ADHERED TO. FAILURE OF THE PROJECT ENGINEER TO IMMEDIATELY REJECT UNSATISFACTORY WORKMANSHIP OR TO NOTIFY THE CONTRACTOR OF DEVIATION FROM THE SPECIFICATIONS SHALL NOT RELIEVE THE CONTRACTOR OF RESPONSIBILITY TO REPAIR AND/OR REPLACE UNSATISFACTORY WORK.

1.9 PRE-INSTALLATION CONFERENCES:

A. PERSON(S) RESPONSIBLE FOR SOIL PREPARATION AND MIXES OF THIS SECTION SHALL ATTEND PRE-INSTALLATION CONFERENCE(S) TO COORDINATE WITH WORK OF OTHER SECTIONS.

1.10 REGULATORY REQUIREMENTS:

A. THE CONTRACTOR SHALL COMPLY WITH ALL RULES, REGULATIONS, LAWS AND ORDINANCES OF LOCAL, STATE AND FEDERAL AUTHORITIES HAVING JURISDICTION. PROVIDE LABOR, MATERIALS, EQUIPMENT AND SERVICES NECESSARY TO MAKE WORK COMPLY WITH SUCH REQUIREMENTS WITH NO ADDITIONAL COST.

B. THE CONTRACTOR SHALL PROCURE AND PAY FOR PERMITS AND LICENSES REQUIRED FOR WORK OF THIS SECTION.

1.11 PROJECT CONDITIONS:

A. THE CONTRACTOR SHALL BE RESPONSIBLE FOR PEDESTRIAN AND VEHICULAR SAFETY AND CONTROL WITHIN THE WORK SITE, AND SHALL PROVIDE THE NECESSARY WARNING DEVICES AND GROUND PERSONNEL NEEDED TO GIVE SAFETY, WARNING AND PROTECTION TO PERSONS AND VEHICULAR TRAFFIC WITHIN THE AREA.

B. DURING SITE PREPARATION, SOIL INSTALLATION AND PROTECTION, THE CONTRACTOR SHALL BE RESPONSIBLE FOR ALL DAMAGE TO EXISTING FEATURES ABOVE AND BELOW FINISHED GRADE DRAINAGE, UTILITY LINES, PAVING SURFACES, EXISTING VEGETATION, SITE FURNISHINGS INCURRED AS A RESULT OF WORK OPERATIONS, REPAIRS OR REPLACEMENTS SHALL BE MADE TO THE SATISFACTION OF THE PROJECT ENGINEER.

C. INVESTIGATE THE CONDITIONS OF SITE AND PUBLIC THOROUGHFARES AND ROADS AS TO AVAILABILITY, CLEARANCES, LOADS, LIMITS, RESTRICTIONS, AND OTHER LIMITATIONS AFFECTING TRANSPORTATION TO, INGRESS AND EGRESS OF THIS WORK SITE. CONFORM TO ALL GOVERNMENTAL REGULATIONS IN REGARD TO THE TRANSPORTATION OF MATERIALS TO, FROM, AND AT THE JOB SITE, AND SECURE IN ADVANCE SUCH PERMITS AS MAY BE NECESSARY.

ITEM SPECIAL - PLANTING SOIL FOR BRIDGE 13
TREE PLANTERS
ITEM SPECIAL - PLANTING SOIL FOR BRIDGE 13
PARAPET PLANTERS

1.11 PROJECT CONDITIONS (CONT.):

D. SHOULD THE CONTRACTOR, IN THE COURSE OF WORK, FIND ANY DISCREPANCIES BETWEEN CONTRACT DRAWINGS AND PHYSICAL CONDITIONS OR ANY OMISSIONS OR ERRORS IN DRAWINGS, OR IN LAYOUT AS FURNISHED BY THE PROJECT ENGINEER, IT WILL BE CONTRACTOR'S DUTY TO INFORM THE PROJECT ENGINEER IMMEDIATELY IN WRITING FOR CLARIFICATION. WORK DONE AFTER SUCH DISCOVERY, UNLESS AUTHORIZED BY THE PROJECT ENGINEER, SHALL BE DONE AT THE CONTRACTOR'S RISK.

1.12 ENVIRONMENTAL REQUIREMENTS FOR SOILS, SYSTEM COMPONENTS AND MIXES:

A. PERFORM BOTH OFF-SITE MIXING AND ON-SITE SOIL WORK ONLY DURING SUITABLE WEATHER CONDITIONS. DO NOT WORK OR PLACE SOIL WHEN FROZEN, EXCESSIVELY WET OR DRY, OR IN OTHERWISE UNSATISFACTORY CONDITION.

B. SOIL SYSTEM MIXES SHALL NOT BE HANDLED, HAULED OR PLACED DURING RAIN OR WET WEATHER OR WHEN NEAR OR ABOVE THE POINT WHERE MAXIMUM COMPACTION WILL OCCUR.

1.13 SEQUENCING AND SCHEDULING:

ADJUST, RELATE TOGETHER AND OTHERWISE COORDINATE WORK OF THIS SECTION WITH OTHER PROJECT WORK AS CONTAINED IN ALL OTHER SECTIONS OF THE PROJECT SPECIFICATIONS.

1.14 PRODUCT DELIVERY, STORAGE AND HANDLING:

A. PACKAGED MATERIALS: DELIVER PACKAGED MATERIALS TO THE LOCATION WHERE SOILS ARE TO BE MIXED, IN UNOPENED BAGS OR CONTAINERS, EACH BEARING THE NAME, GUARANTEE, AND TRADEMARK OR THE PRODUCER, MATERIAL COMPOSITION, MANUFACTURER'S CERTIFIED ANALYSIS, AND THE WEIGHT OR THE MATERIAL. RETAIN PACKAGES FOR THE PROJECT ENGINEER.

B. STORE AND HANDLE PACKAGED MATERIALS IN STRICT COMPLIANCE WITH MANUFACTURER'S INSTRUCTIONS AND RECOMMENDATIONS. PROTECT ALL MATERIALS FROM WEATHER, DAMAGE AND THEFT.

C. SOIL SYSTEM MIXES OR AMENDMENT MATERIALS STORED ON SITE TEMPORARILY IN STOCKPILES PRIOR TO PLACEMENT SHALL BE PROTECTED FROM INTRUSION OF CONTAMINANTS AND EROSION. ALL TEMPORARY STORAGE MEANS AND METHODS SHALL BE APPROVED BY THE PROJECT ENGINEER.

D. AFTER MIXING, SOIL SYSTEM MIXES SHALL BE COVERED WITH A TARPAULIN UNTIL TIME OF ACTUAL USE AND PROTECTED FROM CONTAMINATION, EXCESSIVE RAINFALL, EXCESS WATER ENTERING THE SITE OR EROSION.

2.0 PRODUCTS GENERAL:

A. SUBGRADE SOILS MAY BE SITE SALVAGED.

B. TOPSOIL USED IN BASE MIX OR PLANTING MIXES MAY BE SITE SALVAGED PROVIDED IT PASSES TEST REPORTS.

C. ALL BASE MIX AND PLANTING MIX COMPONENTS SHALL FULFILL THE REQUIREMENTS AS SPECIFIED.

D. BASE MIX: EACH COMPONENT OF THE BASE MIX MUST MEET THE SPECIFICATION HEREIN AND BE VERIFIED BY TESTING AS SPECIFIED HEREIN, PRIOR TO DELIVERY TO THE SITE.

2.1 SAND COMPONENT:

A. THE SAND SHALL BE A CLEAN, SHARP, NATURAL SILICA SAND THAT HAS BEEN SUITABLY WASHED AND CLASSIFIED (SIEVED). SUITABLE SANDS MAY BE REFERRED TO IN COMMERCE AS A UNIFORM, ASTM-33 CONCRETE SAND (PREFERRED) OR A COARSE MASON'S SAND. THE SELECTED SAND MUST MEET THE FOLLOWING USDA PARTICLE SIZE DISTRIBUTION AS WELL AS THE OTHER GRADATION CHARACTERISTICS LISTED IN PART 3 WHEN TESTED IN ACCORDANCE WITH THE ASTM D-422 USING USDA PARTICLE SIZE CLASSIFICATIONS.

B. THE ALLOWABLE PARTICLE SIZE DISTRIBUTION IS AS FOLLOWS:

USDA PERCENT PARTICLE CLASS	SIZE (MM)	% RETRAINED
GRAVEL	>3.34	0-3
FINE GRAVEL	2.00-3.34	0-10
GRAVEL + FINE GRAVEL: (NOT MORE THAN 12% COMBINED)		
VERY COARSE SAND	1.00-2.00	10-25
COARSE SAND	0.50-1.00	20-40
MEDIUM SAND	0.25-0.50	20-40
FINE SAND	0.10-0.25	0-10
VERY FINE SAND	0.05-0.10	0-10
(COMBINED SILT+CLAY)	<0.05	0-10

ITEM SPECIAL - PLANTING SOIL FOR BRIDGE 13
TREE PLANTERS
ITEM SPECIAL - PLANTING SOIL FOR BRIDGE 13
PARAPET PLANTERS

2.1 SAND COMPONENT (CONT.):

C. OTHER GRADATION CHARACTERISTICS MUST FALL WITHIN THE LIMITS SPECIFIED BELOW:

1. FINENESS MODULUS (FM): 2.5 TO 3.1
2. COEFFICIENT OF UNIFORMITY: 2.5TD 3.5 PREFERRED (<4.1 ACCEPTABLE)

D. THE SAND SHALL MEET THE FOLLOWING SPECIFICATIONS. PERFORM THE FOLLOWING TESTS AND SUBMIT TEST REPORTS SHOWING THE FOLLOWING CRITERIA ARE MET:

1. THE PARTICLE SIZE ANALYSIS/DISTRIBUTION AS DEFINED ABOVE
2. THE PH SHALL BE 5.5 TO 7.5
3. THE SOLUBLE SALTS SHALL BE LESS THAN 0.5 MMOH/CM (NCR 221)
4. THE ORGANIC MATTER CONTENT SHALL BE LESS THAN 1.0% (ASTM D 2974 METHOD C)
5. THE MATERIAL DRAINAGE RATE SHALL BE GREATER THAN 20 INCHES PER HOUR AND THE TOTAL POROSITY SHALL BE GREATER THAN 40% WHEN COMPACTED AND TESTED ACCORDING TO U.S. GOLF ASSOC. (USGA) METHODS.

E. PROVIDE CERTIFICATION FROM THE SUPPLIER THAT THE SAND DOES NOT CONTAIN ANY TOXIC SUBSTANCES HARMFUL TO PLANT GROWTH.

F. ASTM C33 CONCRETE SAND MEETS THE REQUIREMENTS OF THE SPECIFICATION AND IS AN ACCEPTABLE PRODUCT FOR THE SAND COMPONENT IN THE SOIL PROFILE.

2.2 TOPSOIL COMPONENT:

A. TESTING FOR TOPSOIL SHALL BE AS FOLLOWS:

1. PARTICLE SIZE ANALYSIS: ASTM D422 (HYDROMETER TEST) METHOD, COMPARED TO USDA SOIL CLASSIFICATION SYSTEM. USDA SAND AND GRAVEL CLASSIFICATIONS SHALL BE DETERMINED ON MATERIAL RETAINED ON THE #270 SIEVE FOLLOWING ASTM D422 WET WASHING PROCEDURE.
2. DELETERIOUS MATERIALS: ASTM D 5286.
3. SOIL PH AND BUFFER PH TEST.
4. SOLUBLE SALTS: BY ELECTRICAL CONDUCTIVITY OF A 1:2 SOIL/WATER SLURRY REPORTED IN MILLIMHOS PER CM.
5. PERCENT ORGANIC MATTER: BY WEIGHT, ASTM D 2974 METHOD C, LOSS ON IGNITION AT 4400C.

B. THE TOPSOIL SHALL BE A LOAMY, FRIABLE MINERAL SOIL ESSENTIALLY FREE FROM HEAVY OR STIFF CLAY LUMPS, STONES, CINDERS, CONCRETE, BRICK, ROOTS, STICKS, BRUSH, LITTER, PLASTICS, METALS, REFUSE OR OTHER DELETERIOUS MATERIALS.

C. THE TOPSOIL SHALL BE FREE OF HERBICIDES, PETROLEUM-BASED MATERIALS OR OTHER SUBSTANCES OF A HAZARDOUS OR TOXIC NATURE WHICH MAY INHIBIT PLANT GROWTH,

D. THE TOPSOIL SHALL BE FREE OF NOXIOUS WEEDS, SEEDS OR VEGETATIVE PARTS OF WEEDY PLANTS THAT CANNOT BE SELECTIVELY CONTROLLED IN THE PLANTING.

E. THE TOPSOIL SHALL BE TAKEN FROM THE A HORIZON OF A WELL-DRAINED SITE AND HAVE A USDA SOIL TEXTURE CLASSIFICATION OF A CLAY LOAM OR LOAM.

F. PARTICLE SIZE ANALYSIS:

USDA PARTICLE NAME	SIZE (MM)	ALLOWABLE LIMIT
GRAVEL	2.00-4.75	<5%
SAND	0.05-2.00	25-40%
SILT	0.002-0.05	25-50%
CLAY	<0.002	20-35%

G. THE TOPSOIL SHALL MEET THE FOLLOWING ADDITIONAL SPECIFICATIONS:

1. PH: 5.5 TO 7.0
2. SOLUBLE SALTS: LESS THAN 1.5 MMOH/CM
3. PERCENT ORGANIC MATTER: 3.0% TO 6.0%
4. PROVIDE CERTIFICATION FROM THE SUPPLIER THAT THE TOPSOIL DOES NOT CONTAIN ANY TOXIC SUBSTANCE HARMFUL TO PLANT GROWTH.
5. OFF-SITE TOPSOIL OR ON-SITE STOCKPILED TOPSOIL MEETING THE CRITERIA SHOWN ABOVE CAN BE USED FOR THE BASE MIX AND THEIR SOURCE OR LOCATION COMMUNICATED TO THE PROJECT ENGINEER.

ITEM SPECIAL - PLANTING SOIL FOR BRIDGE 13
TREE PLANTERS
ITEM SPECIAL - PLANTING SOIL FOR BRIDGE 13
PARAPET PLANTERS

2.3 ORGANIC COMPONENT:

A. THE ORGANIC AMENDMENT SHALL BE STABLE, MATURE AEROBICALLY COMPOSTED YARD DEBRIS (GREEN WASTE) COMPOST. LEAF HUMUS COMPOST, MANURE COMPOSTS, BIOSOLIDS COMPOST, PEAT, PEAT-HUMUS AND MUSHROOM COMPOST PRODUCTS ARE NOT ACCEPTABLE. THE COMPOST MATERIAL MUST MEET THE REQUIREMENTS OF THE OHIO EPA COMPOSTING REGULATIONS (OAC 3745-27-46) AND HAVE THE FOLLOWING CHARACTERISTICS:

1. THE COMPOST SHALL BE A HOMOGENEOUS MATERIAL ESSENTIALLY FREE OF SOIL CLODS, LUMPS, ROOTS AND STONES.
2. THE COMPOST SHALL HAVE A MAN-MADE FOREIGN MATERIAL (HARD PLASTICS, METAL, GLASS, ETC.). CONTENT LESS THAN 1.5% AS MATERIAL RETAINED ON A U.S. STD.NO.5 (4 MM) SIEVE (TMECC 03.06).
3. THE COMPOST SHALL BE SCREENED SUCH THAT A MINIMUM OF 90% PASSES A U.S.STD. 3/4" SIEVE AND THAT NO MORE THAN 10% PASSES A U.S. STD. NO.10 SIEVE ON A DRY WEIGHT BASIS.
4. THE COMPOST SHALL HAVE A PH OF 7.2 TO 8.0.
5. THE COMPOST SHALL HAVE A SOLUBLE SALTS CONTENT LESS THAN 6.0 MILLIMHOS PER CM. WHEN DETERMINED ON A 1:5 COMPOST/WATER SLURRY.
6. THE COMPOST SHALL HAVE AN ORGANIC MATTER CONTENT OF NOT LESS THAN 35% BY WEIGHT DETERMINED BY ASTM D2974-87 METHOD C ON MATERIAL PASSING A U.S. STD. 1/4" SIEVE.
7. THE COMPOST SHALL HAVE A CARBON TO NITROGEN (C:N) RATIO LESS THAN 36:1.
8. THE COMPOST SHALL HAVE A SOLVITA MATURITY INDEX BETWEEN 6 AND 7.
9. THE COMPOST SHALL HAVE A MOISTURE CONTENT OF 35% TO 65%.
10. THE COMPOST SHALL HAVE A DRY BULK DENSITY OF 0.17 TO 0.35 GRAMS PER CUBIC CENTIMETER (G/CC).
11. THE COMPOST SHALL BE TESTED FOR NITRATE, NITROGEN, PHOSPHORUS, POTASSIUM, CALCIUM, MAGNESIUM, IRON, MANGANESE, ZINC, COPPER, BORON AND SODIUM USING THE SME-DTPA EXTRACTION METHOD (NCR-221).
12. THE HEAVY METAL CONTENT AS DETERMINED BY TMECC 04.06 SHALL NOT EXCEED THE FOLLOWING LIMITS:

ELEMENT	CONCENTRATION LIMITS (MG/KG D.W.)
ARSENIC	41
CADMIUM	39
CHROMIUM	1200
COPPER	1500
LEAD	300
MERCURY	17
MOLYBDENUM	50
NICKEL	420
SELENIUM	36
ZINC	2800

13. THE COMPOST SHALL MEET ALL APPLICABLE STATE REGULATIONS BASED ON THE FEEDSTOCK TYPE.
14. ALL COMPOST TESTING SHALL BE DONE IN CONFORMANCE WITH THE U.S. COMPOST COUNCIL'S PUBLICATION TEST METHODS FOR THE EXAMINATION OF COMPOSTING AND COMPOST (TMECC) UNLESS OTHERWISE SPECIFIED ABOVE.

2.4 BASE MIX PREPARATION:

A. PREPARE THE BASE MIX BY THOROUGHLY BLENDING THE SAND COMPONENT AND THE TOPSOIL COMPONENT.

B. THE BASE MIX SHALL HAVE A GRANULAR CONSISTENCY ESSENTIALLY FREE OF SOIL LUMPS LARGER THAN 1". THE TOPSOIL USED TO MAKE THE BASE MIX MUST BE PULVERIZED AND PRE-SCREENED TO ACHIEVE A GRANULAR CONSISTENCY ESSENTIALLY FREE OF SOIL LUMPS.

C. MIXING SHALL BE DONE USING EQUIPMENT DESIGNED FOR SOIL BLENDING AND SCREENING.

D. THE BASE MIX SHALL SUBSTANTIALLY CONFORM TO A MIX OF 4 PARTS OF THE APPROVED SAND AND 1 PART OF THE APPROVED TOPSOIL.

E. MANUFACTURE 20 TO 30 CU. YDS OF BASE MIX AND COMPARE TO A TEST MIX PREPARED BY THE SOIL TESTING LABORATORY IN THE SAME RATIO OF 4 PARTS APPROVED SAND TO 1 PART APPROVED TOPSOIL.

F. TEST THE MANUFACTURED BASE MIX AND THE LABORATORY TEST MIX FOR ITS USDA SOIL TEXTURE ANALYSIS WITH GRAVEL/SAND CLASSIFICATIONS USING THE SAME PARTICLE SIZE CLASSIFICATIONS SHOWN FOR THE SAND COMPONENT REPORT.

For Reference Only
Preliminary Plans

LANDSCAPING GENERAL NOTES - 4

DESIGN AGENCY
Michael Baker INTERNATIONAL

DESIGNER BDC
REVIEWER JCF 01/10/24
PROJECT ID 82382
SHEET 1800 TOTAL 2696

CUY-90-16.28 (CCG3A)

MODEL: Sheet-04 PAPERSIZE: 34x22 (in.) DATE: 3/28/2025 TIME: 9:19:17 AM USER: Mala.Gallagher
pw:\\mb-us-pw.bentley.com:mb-us-pw-03\Documents\Cleveland_OH\01_Projects\ODOT\District12\82382\400-Engineering\Landscaping\Sheets\82382_PN2000.dgn

2.4 BASE MIX PREPARATION (CONT.):

G. IF THE MANUFACTURED BASE MIX RESULTS DO NOT SUBSTANTIALLY MATCH THE LABORATORY TEST MIX, MANUFACTURE ANOTHER 20 TO 30 CU. YDS. FOLLOWING THE RECOMMENDATIONS PROVIDED BY THE SOIL TESTING LABORATORY, REPEAT AS NECESSARY UNTIL THE TEST RESULTS SUBSTANTIALLY MATCH.

H. THE SATURATED HYDRAULIC CONDUCTIVITY OF THE BASE MIX SHALL BE 3 TO 8 INCHES PER HOUR (ASTM D 698-91/F-1815). ADJUST THE SOIL COMPONENT TO ACHIEVE THE SPECIFIED SATURATED HYDRAULIC CONDUCTIVITY AT 85% PROCTOR DENSITY.

I. THESE TEST RESULTS AND CRITERIA, WHEN APPROVED BY THE OWNER, SHALL ESTABLISH THE STANDARD TO WHICH ALL SUBSEQUENT BASE MIX TESTS MUST CONFORM.

J. THE BASE MIX SHALL HAVE ONE SAMPLE TESTED FROM EACH 500 CU. YDS. OF MANUFACTURED MATERIAL USING THE TESTS SHOWN IN THIS SECTION.

2.5 HANDLING OF BASE MIX:

A. BEFORE THE BASE MIX IS MIXED WITH THE ORGANIC AMENDMENT, HANDLE AND STOCKPILE THE BASE MIX IN THE FOLLOWING MANNER:

1. HOMOGENIZE TO MAKE A UNIFORM MIX, FREE OF SOIL LENSES AND OTHER IRREGULARITIES.
2. AERATE THE BASE MIX TO MAKE A FRIABLE PLANTING MEDIUM.
3. SEPARATE OUT AND REMOVE ALL CLAY LUMPS, STONES, ROOTS, AND OTHER DEBRIS-BASE MIX MATERIALS.

2.6 SAND-BASED STRUCTURAL SOIL MIXES PREPARATION:

A. PREPARE THE SAND-BASED STRUCTURAL SOIL LOWER PROFILE MIX BY THOROUGHLY BLENDING THE SAND COMPONENT AND THE ORGANIC COMPONENT TO ACHIEVE 2.0% TO 3.0% ORGANIC MATTER WHEN TESTED BY ASTM D2974-87 METHOD C ON MATERIAL PASSING A U.S. STD. 1/4" SIEVE.

B. PREPARE THE SAND-BASED STRUCTURAL SOIL UPPER PROFILE MIX BY THOROUGHLY BLENDING THE SAND COMPONENT AND THE ORGANIC COMPONENT TO ACHIEVE 4.0% TO 5.0% ORGANIC MATTER WHEN TESTED BY ASTM D2974-87 METHOD C ON MATERIAL PASSING A U.S. STD.1/4" SIEVE.

C. MIXING SHALL BE DONE USING EQUIPMENT DESIGNED FOR SOIL BLENDING AND SCREENING. THESE MIXES SHALL BE ASSUMED TO BE 4 PARTS OF THE APPROVED SAND AND 1 PART OF THE APPROVED COMPOST FOR THE PURPOSE OF DEVELOPING BIDS. ACTUAL MIX RATIOS TO ACHIEVE THE SPECIFIED ORGANIC MATTER CONTENT OR HYDRAULIC CONDUCTIVITY WILL VARY DEPENDING ON THE CHARACTERISTICS OF THE COMPOST.

D. MANUFACTURE 20 TO 30 CU. YDS OF SAND-BASED STRUCTURAL SOIL LOWER AND UPPER PROFILE MIXES AND COMPARE TO A MIX MEETING THE SPECIFICATIONS PREPARED BY THE SOIL TESTING LABORATORY.

E. TEST THE MANUFACTURED MIXES AND THE LABORATORY TEST MIXES FOR THEIR USDA SOIL TEXTURE ANALYSIS WITH GRAVEL/SAND CLASSIFICATIONS USING THE SAME PARTICLE SIZE CLASSIFICATIONS SHOWN FOR THE SAND COMPONENT REPORT.

F. IF THE MANUFACTURED MIX RESULTS DO NOT SUBSTANTIALLY MATCH THE LABORATORY TEST MIX, MANUFACTURE ANOTHER 20 TO 30 CU. YDS. FOLLOWING THE RECOMMENDATIONS PROVIDED BY THE SOIL TESTING LABORATORY. REPEAT AS NECESSARY UNTIL THE TEST RESULTS SUBSTANTIALLY MATCH.

G. THE SATURATED HYDRAULIC CONDUCTIVITY OF THE SAND-BASED STRUCTURAL SOIL LOWER PROFILE SHALL BE 10 TO 15 INCHES PER HOUR AND THE SATURATED HYDRAULIC CONDUCTIVITY OF THE SAND-BASED STRUCTURAL SOIL UPPER PROFILE SHALL BE 2 TO 7 INCHES PER HOUR. ADJUST THE ORGANIC AMENDMENT TO ACHIEVE THE DESIRED SATURATED HYDRAULIC CONDUCTIVITY.

H. THE UPPER AND LOWER SAND-BASED STRUCTURAL SOIL PROFILE MIXES SHALL HAVE A BRAY 1 PHOSPHORUS INDEX LESS THAN 26 PPM (52 LBS./ACRE).

I. THESE TEST RESULTS AND CRITERIA, WHEN APPROVED BY THE OWNER, SHALL ESTABLISH THE STANDARD TO WHICH ALL SUBSEQUENT SAND-BASED STRUCTURAL SOIL PROFILE MIX TESTS MUST CONFORM.

J. THE SAND-BASED STRUCTURAL SOIL PROFILE MIXES SHALL HAVE ONE SAMPLE TESTED FROM EACH 500 CU. YDS. OF MANUFACTURED MATERIAL USING THE ORGANIC MATTER TEST (ASTM D 2974 METHOD C).

ITEM SPECIAL - PLANTING SOIL FOR BRIDGE 13 TREE PLANTERS
ITEM SPECIAL - PLANTING SOIL FOR BRIDGE 13 PARAPET PLANTERS

2.7 PLANTING MIXES PREPARATION:

A. GENERAL:

1. PLANTING MIXES FOR PLANTERS AND PLANT BACKFILL SHALL BE OF THE TYPE(S) INDICATED IN ACCORDANCE WITH THE PLANTING DETAILS, AND SHALL BE PRE-MIXED AND PLACED AS SPECIFIED.
2. ALL AMENDMENTS SHALL BE THOROUGHLY INCORPORATED INTO THE MIXTURE TO ASSURE UNIFORM DISTRIBUTION. DELAY MIXING OF FERTILIZERS IF PLANTING WILL NOT FOLLOW WITHIN A FEW DAYS.
3. ADDITIONAL AMENDMENTS SHALL BE MIXED INTO THE SOIL AS RECOMMENDED BY THE TESTING LABORATORY AND AS APPROVED BY THE PROJECT ENGINEER FOR EACH PLANT TYPE AND CONDITION OF INSTALLATION.
4. ADEQUATE QUANTITIES OF PLANTING MIX MATERIALS SHALL BE PROVIDED TO ATTAIN, AFTER COMPACTION AND NATURAL SETTLEMENT, ALL DESIGN FINISH GRADES. VERIFY QUANTITIES FOR PLACEMENT AS SPECIFIED TO SUIT SITE CONDITIONS.
5. UNIFORMLY MIX COMPONENTS USING A MECHANICAL SOIL BLENDER DESIGNED FOR SUCH PURPOSE AS SPECIFIED FOR EACH PLANTING MIX TYPE.

B. MIXING OF BASE MIX AND COMPOST:

1. ADD COMPOST AS RECOMMENDED BY THE TESTING LABORATORY TO ACHIEVE THE SPECIFIED ORGANIC MATTER CONTENT BY PLANTING MIX TYPE. OTHER AMENDMENTS SHALL NOT BE ADDED TO PLANTING MIXES UNLESS APPROVED BY THE OWNER AND ADDITIONAL TESTS HAVE BEEN CONDUCTED TO VERIFY TYPE AND QUANTITY OF AMENDMENT.

2.8 PLANTING MIX TYPES:

A. PROVIDE PLANTING MIX TYPES AT THE LOCATIONS AND DEPTHS AS INDICATED ON THE CONTRACT DRAWINGS. MIX RATIO VOLUMES WILL BE ESTABLISHED UPON COMPLETION OF THE TESTING FOR THE INDIVIDUAL COMPONENTS OF THE PLANTING MIXES. THE CONTROLLING FACTOR WILL BE THE PERCENT (%) ORGANIC MATTER BY WEIGHT AS SPECIFIED FOR EACH PLANTING MIX. NOTE THAT VOLUME RATIOS OF THE BASE MIX AND THE ORGANIC AMENDMENT (COMPOST) COMPONENTS WILL BE, IN LARGE PART, DETERMINED BY THE ORGANIC MATTER CONTENT OF THE COMPOST. FOLLOW THE RECOMMENDATIONS ON MIX DESIGN PROVIDED BY THE SOIL TESTING LABORATORY TO ACHIEVE THE TARGET ORGANIC MATTER CONTENT FOR THE PLANTING MIX.

1. BASE MIX: FOR THE TRANSITION LAYER AND FOR LOWER HORIZONS OF BRIDGE 13 TREE PLANTERS, SEE DETAILS.
2. TREE AND PLANT SOIL MIX: FOR UPPER HORIZONS OF BRIDGE 13 TREE PLANTERS AND ENTIRE BRIDGE 13 PARAPET PLANTERS. ORGANIC MATTER CONTENT BY ASTM 02374-87 METHOD C ON MATERIAL PASSING A U.S. STD. 1/4" SIEVE SHALL BE WITHIN THE RANGE OF 6 TO 8%. FOR THE PURPOSE OF COST ESTIMATING USE 3 PARTS BASE MIX TO 1 PART COMPOST (VOL/VOL.).

2.9 TESTING OF PLANTING MIXES:

A. PERFORM INITIAL TESTS TO CONFIRM COMPLIANCE WITH THE PLANTING MIX ORGANIC MATTER CONTENT SPECIFICATIONS. THESE TEST RESULTS, WHEN APPROVED, WILL ESTABLISH THE STANDARD TO WHICH ALL OTHER TEST RESULTS MUST CONFORM.

B. TAKE ONE (1) COMPOSITE SAMPLE UPON ARRIVAL TO THE SITE FROM EACH 500 CUBIC YARDS OR AS REQUIRED BY THE PROJECT ENGINEER FOR TESTING EACH TYPE OF PLANTING MIX AND TEST THE FOLLOWING:

1. PARTICLE SIZE ANALYSIS: USE SIEVE SIZES AS SPECIFIED FOR THE BASE MIX.
2. ORGANIC MATTER CONTENT: ASTM D2974-87 METHOD C ON MATERIAL PASSING A U.S. STD. 1/4" SIEVE.
3. NUTRIENT ANALYSIS TO INCLUDE PHOSPHORUS, POTASSIUM, CALCIUM, MAGNESIUM, IRON, MANGANESE, ZINC, COPPER AND BORON. REQUEST TESTING LABORATORY RECOMMENDATIONS FOR FERTILIZER REQUIREMENTS FOR PLANT TYPES BEING USED.
4. SOIL PH AND BUFFER PH.
5. CATION EXCHANGE CAPACITY.
6. SOLUBLE SALT CONTENT.

ITEM SPECIAL - PLANTING SOIL FOR BRIDGE 13 TREE PLANTERS
ITEM SPECIAL - PLANTING SOIL FOR BRIDGE 13 PARAPET PLANTERS

2.10 STOCKPILING:

STOCKPILING ON-SITE, OFF-SITE, AND AT THE SOURCE SHOULD BE RESTRICTED TO NO MORE THAN THE NEEDS OF WHAT CAN BE USED IN A 72-HR. PERIOD. UNDER NO CIRCUMSTANCES SHALL ON-SITE OR OFF-SITE STORED MATERIAL EXCEED 500 CUBIC YARDS. STOCKPILES SHOULD BE NO MORE THAN 6 FEET IN HEIGHT TO PREVENT ANAEROBIC CONDITIONS WITHIN THE PILE. STOCKPILED COMPOSTS SHOULD BE TURNED EVERY OTHER WEEK (UNLESS OTHERWISE INSTRUCTED BY THE PROJECT ENGINEER) TO PREVENT ANAEROBIC CONDITIONS EXCESSIVE WATER ABSORPTION AND ANAEROBIC CONDITIONS.

3.0 EXECUTION:

A. PRIOR TO CONSTRUCTION AND SOIL PLACEMENT OPERATIONS AT PLANTING AREAS, ASCERTAIN THE LOCATION OF ALL ELECTRICAL CABLES CONDUITS, UNDER DRAINAGE SYSTEMS AND UTILITY LINES. TAKE PROPER PRECAUTIONS SO AS NOT TO DISTURB OR DAMAGE SUB-SURFACE ELEMENTS. CONTRACTOR FAILING TO TAKE THESE PRECAUTIONS SHALL BE RESPONSIBLE FOR MAKING REQUISITE REPAIRS TO DAMAGED UTILITIES AT CONTRACTOR'S OWN EXPENSE. VERIFY THAT REQUIRED UNDERGROUND UTILITIES ARE AVAILABLE, LOCATED AND READY FOR USE. COORDINATE WITH OTHER TRADES.

B. VERIFY THAT ALL WORK REQUIRING ACCESS THROUGH OR ADJACENT TO AREAS WHERE PLANTING MIXES ARE TO BE PLACED HAS BEEN COMPLETED AND NO FURTHER ACCESS WILL BE REQUIRED. IN THE EVENT THAT ACCESS WILL BE REQUIRED, COORDINATE WITH THE CONTRACTOR.

C. EXCAVATE AND COMPACT THE PROPOSED SUBGRADE TO DEPTHS, SLOPES AND WIDTHS AS SHOWN ON THE DRAWINGS. DO NOT OVER EXCAVATE COMPACTED SUBGRADES OF ADJACENT PAVEMENT OR STRUCTURES.

D. CONFIRM THAT THE SUBGRADE IS AT THE PROPER ELEVATION AND COMPACTED AS REQUIRED. SUBGRADE ELEVATIONS SHALL SLOPE PARALLEL TO THE FINISHED GRADE AS SHOWN ON THE DRAWINGS.

E. CLEAR THE EXCAVATION OF ALL CONSTRUCTION DEBRIS, TRASH, RUBBLE AND ANY FOREIGN MATERIAL. IN THE EVENT THAT FUELS, OILS, CONCRETE WASHOUT SILTS OR OTHER MATERIAL HARMFUL TO PLANTS HAVE BEEN SPILLED INTO THE SUBGRADE MATERIAL, EXCAVATE THE SOIL SUFFICIENTLY TO REMOVE THE HARMFUL MATERIAL. FILL ANY OVER EXCAVATION WITH APPROVED FILL AND COMPACT TO THE REQUIRED SUBGRADE COMPACTION.

F. PROTECT ADJACENT WALLS, WALKS, AND UTILITIES FROM DAMAGE OR STAINING BY THE SOIL. USE 1/2" PLYWOOD AND OR PLASTIC SHEETING AS DIRECTED TO COVER EXISTING CONCRETE, METAL AND MASONRY WORK AND OTHER ITEMS AS DIRECTED DURING THE PROGRESS OF THE WORK.

G. CLEAN UP ALL TRASH AND ANY SOIL OR DIRT SPILLED ON ANY PAVED SURFACE AT THE END OF EACH WORKING DAY.

H. ANY DAMAGE TO THE PAVING OR ARCHITECTURAL WORK CAUSED BY THE SOILS INSTALLATION CONTRACTOR SHALL BE REPAIRED BY THE CONTRACTOR AT THE SOILS INSTALLATION CONTRACTOR'S EXPENSE.

I. MAINTAIN ALL SILT AND SEDIMENT CONTROL DEVICES REQUIRED BY APPLICABLE REGULATIONS. PROVIDE ADEQUATE METHODS TO ASSURE THAT TRUCKS AND OTHER EQUIPMENT DO NO TRACK SOIL FROM THE SITE ONTO ADJACENT PROPERTY AND THE PUBLIC RIGHT OF WAY.

3.1 PREPARATION OF SUBGRADE:

A. PRIOR TO PREPARATION AND PLACEMENT OF TRANSITION LAYER THE CONTRACTOR SHALL VERIFY AS-CONSTRUCTED OR EXISTING ELEVATIONS AND COMPLETE ADDITIONAL GRADING AS NECESSARY TO BRING THE SUBGRADES TO THE CORRECT ELEVATIONS AS INDICATED ON THE DRAWINGS.

B. CLEAN UP SUBGRADE AND DISPOSE OF ALL DEBRIS PRIOR TO PLACEMENT. ANY SOILS POLLUTED BY GASOLINE, OIL, PLASTER, CONSTRUCTION DEBRIS, UNACCEPTABLE SOILS, OR OTHER SUBSTANCES WHICH WOULD RENDER THE SOILS UNSUITABLE FOR A PROPER PLANT GROWTH SHALL BE REMOVED FROM THE PREMISES WHETHER OR NOT SUCH POLLUTION OCCURS OF EXISTS PRIOR TO OR DURING THE CONTRACT PERIOD. IN THE EVENT THAT SUCH MATERIAL IS PLACED, THIS MATERIAL SHALL BE REMOVED AND REPLACED WITH APPROVED MATERIAL. ALL REMEDIAL OPERATIONS ASSOCIATED WITH SOIL MIXES SHALL BE REVIEWED AND APPROVED BY THE PROJECT ENGINEER.

C. OBTAIN WRITTEN APPROVAL OF SUBGRADE PRIOR TO PLACEMENT OF PLANTING SOILS.

ITEM SPECIAL - PLANTING SOIL FOR BRIDGE 13 TREE PLANTERS
ITEM SPECIAL - PLANTING SOIL FOR BRIDGE 13 PARAPET PLANTERS

3.2 PLACEMENT OF TRANSITION LAYER:

A. AFTER ACCEPTANCE OF SUBGRADES FOR PLANTING AREAS, THE TRANSITION LAYER SHALL BE FORMED BY PLACING THE BASE MIX TO THE PROPER DEPTH PER THE DRAWINGS. LOOSEN SUBSOIL TO DEPTH INDICATED ON DRAWINGS.

B. PLACE BASE MIX IN LIFTS NOT TO EXCEED 8 INCHES IN

C. DEPTH AND BLEND WITH LOOSENED SUBSOIL. LIGHTLY COMPACT USING A LIGHT-WEIGHT PLATE COMPACTOR. ROOT SYSTEMS OF EXISTING PLANTS ADJACENT TO SOIL

D. WORK ESPECIALLY SOIL ADJOINING EXISTING TREES, SHALL BE PROTECTED FROM DAMAGE TO THE FULLEST EXTENT POSSIBLE AND MAY NOT BE COMPACTED WHEN EXISTING ROOTS ARE IN THE IMMEDIATE VICINITY. ALL WORK INFRINGING ON ROOT SYSTEMS OF EXISTING PLANT MATERIAL SHALL BE REVIEWED AND APPROVED BY THE PROJECT ENGINEER PRIOR TO BEGINNING WORK. BLENDING OF TRANSITION MIX WITH NATIVE SOILS IMMEDIATELY ADJACENT TO EXISTING ROOTS MAY BE CAREFULLY CONDUCTED BY AMENDING THE SOIL BY HAND WITH HAND TOOLS.

3.3 PLACEMENT OF PLANTING SOIL MIXES:

A. REMOVE ALL LARGE CLODS, LUMPS, BRUSH, ROOTS, STUMPS, LITTER, AND OTHER FOREIGN MATERIAL AND STONES ONE-HALF INCH (1/2") IN DIAMETER OR LARGER. LEGALLY DISPOSE OF REMOVED MATERIAL OFF-SITE.

B. DO NOT PLACE A MUDDY OR WET SOIL MIX (AS DEFINED BY THE PROJECT ENGINEER).

C. PLACE AND SPREAD PLANTING MIXES OF THE TYPE SPECIFIED OVER APPROVED SUBGRADE OR TRANSITION ZONE AREAS TO A DEPTH SUFFICIENTLY GREATER THAN THE DEPTH REQUIRED FOR PLANTING AREAS SO THAT AFTER SETTLEMENT, THE COMPLETED WORK WILL CONFORM TO THE LINES, GRADES, AND ELEVATIONS SHOWN OR OTHERWISE INDICATED.

D. OBTAIN WRITTEN ACCEPTANCE FROM PROJECT ENGINEER FOLLOWING PLACEMENT OF PLANTING SOILS AND PRIOR TO PLANTING OPERATIONS.

E. FOR PLANT BED AREAS:

1. PLACE REQUIRED TRANSITION LAYER DEPTH PER DRAWINGS.
2. REQUIRED PLANTING SOIL MIX DEPTHS SHALL BE AS INDICATED ON DRAWINGS WITH A TOTAL DEPTH OF PLANTING MIX(ES) TO BE A MINIMUM PER THE DRAWINGS AS MEASURED IN PLACE IN A SETTLED, COMPACTED POSITION.
3. PLACE FILLS LIGHTLY IN LAYERS OF A MAXIMUM OF EIGHT INCH (8") LIFTS AND CAREFULLY SETTLE SOILS TO ELIMINATE AIR POCKETS AND TO MINIMIZE FUTURE SETTLING. LIGHTLY SCARIFY PREVIOUSLY PLACED SURFACES PRIOR TO PLACING SUBSEQUENT LIFTS. METHOD OF SETTLEMENT SHALL BE AS PREVIOUSLY APPROVED BY THE PROJECT ENGINEER. METHOD MAY INCLUDE, BUT IS NOT LIMITED TO, NATURAL SETTLEMENT OVER AN APPROVED PERIOD OF TIME OR LIGHT HAND-TAMPING, LIGHT ROLLING OR THE USE OF A LIGHT-WEIGHT PLATE COMPACTOR WITH THE NUMBER OF PASSES APPROVED BY THE PROJECT ENGINEER. DO NOT OVER COMPACT PLANTING MIXES.
4. AFTER SETTLEMENT HAS OCCURRED, ADD MIX TO MAINTAIN FINISHED GRADES. IF FOR ANY REASON SOIL IS LEFT EXPOSED FOR A LONG DURATION PRIOR TO PLANTING, ADD SOIL AND RE-GRADE AS REQUIRED IF EROSION OCCURS. FILLS SHALL NOT BE SO COMPACTED AS TO IN ANY WAY RESTRICT THE FLOW OF WATER OR AIR THROUGH THE SOIL.

F. FOR LAWN AREAS:

1. PLACE REQUIRED TRANSITION LAYER DEPTH PER DRAWINGS.
2. REQUIRED PLANTING SOIL MIX DEPTH SHALL BE AS INDICATED ON DRAWINGS WITH THE TOTAL PLANTING MIX TO BE A MINIMUM PER THE DRAWINGS AS MEASURED IN PLACE IN A SETTLED, COMPACTED POSITION.
3. PLACE FILLS LIGHTLY IN LAYERS OF A MAXIMUM OF EIGHT INCH (8") LIFTS AND CAREFULLY SETTLE SOILS TO ELIMINATE AIR POCKETS AND TO MINIMIZE FUTURE SETTLING. LIGHTLY SCARIFY PREVIOUSLY PLACED SURFACES PRIOR TO PLACING SUBSEQUENT LIFTS. METHOD OF SETTLEMENT SHALL BE AS PREVIOUSLY APPROVED BY THE PROJECT ENGINEER. METHOD MAY INCLUDE, BUT IS NOT LIMITED TO, NATURAL SETTLEMENT OVER AN APPROVED PERIOD OF TIME OR LIGHT HAND-TAMP, LIGHT ROLLING OR THE USE OF A LIGHT-WEIGHT PLATE COMPACTOR WITH THE NUMBER OF PASSES APPROVED BY THE PROJECT ENGINEER. DO NOT OVER COMPACT PLANTING MIXES.

Preliminary - Not For Construction

DESIGN AGENCY
Michael Baker INTERNATIONAL
DESIGNER BDC
REVIEWER JCF 01/10/24
PROJECT ID 82382
SHEET 1801 TOTAL 2696

CUY-90-16.28 (CCG3A)
MODEL: Sheet-05 PAPERSIZE: 34x22 (in.) DATE: 3/28/2025 TIME: 9:19:18 AM USER: Maia.Gallagher
pw:\\mb-us-pw.bentley.com:mb-us-pw-03\Documents\Cleveland_OH\01_Projects\ODOT\District12\82382400-Engineering\Landscaping\Sheets\82382_PN2000.dgn

ITEM SPECIAL - PLANTING SOIL FOR BRIDGE 13
TREE PLANTERS
ITEM SPECIAL - PLANTING SOIL FOR BRIDGE 13
PARAPET PLANTERS

3.3 PLACEMENT OF PLANTING SOIL MIXES (CONT.):

F. FOR LAWN AREAS (CONT.):

4. ROLL THE WHOLE SURFACE OF LAWN BED WITH A HAND ROLLER WEIGHING APPROXIMATELY ONE HUNDRED POUNDS (100 LB.) PER FOOT (12") OF ROLLER WIDTH. DURING THE ROLLING, FILL ALL DEPRESSIONS CAUSED BY SETTLEMENT WITH ADDITIONAL PLANTING SOIL AND THEN RE-GRADE. LIGHTLY ROLL AND RAKE UNTIL THE SURFACE PRESENTS A SMOOTH, EVEN, AND UNIFORM FINISH THAT IS AT REQUIRED GRADE.
5. ALLOW PLANT MIX IN LAWN AREAS TO REMAIN UNDISTURBED UNTIL FULLY SETTLED IN ACCORDANCE WITH SETTLEMENT METHODOLOGY SUBMITTED AS APPROVED BY THE PROJECT ENGINEER. AFTER ANY ADDITIONAL SETTLEMENT HAS OCCURRED, RESTORE AREAS TO FINISHED GRADE PRIOR TO SEEDING.
6. PROTECT PLANT MIX AGAINST CONSTRUCTION ACTIVITY WITH SITE PROTECTION FENCE AS SPECIFIED AND THE ERODING EFFECTS OF WIND AND RAIN WITH FILTER FABRIC AS APPROVED FOR THE PROTECTION PLAN.
7. BACKFILLING FOR TREES IN THIS AREA SHALL USE MATERIAL SPECIFIED IN THIS SECTION AND BE INSTALLED AS SPECIFIED IN SECTION 3.5 "PLANTING". PLACING, SHORING OR ANCHORING IS THE RESPONSIBILITY OF THE CONTRACTOR AS SHOWN ON THE DRAWINGS.
8. GRADING TOLERANCES: PLANTING AREAS SHALL BE FINE GRADED WITHIN +/-1/10 (0.10) FEET OF GRADES INDICATED ON THE DRAWINGS. MAINTAIN ALL FLAT AREAS AND SLOPES TO ALLOW FREE FLOW OF SURFACE DRAINAGE WITHOUT PONDING.

3.4 PLACEMENT OF SAND-BASED STRUCTURAL SOIL:

A. INSTALL STRUCTURAL SOIL IN 6 INCH LIFTS AND COMPACT EACH LIFT.
B. COMPACT ALL MATERIALS TO NOT LESS THAN 95% OF PEAK DRY DENSITY FROM A STANDARD AASHTO COMPACTION CURVE (AASHTO T 99). NO COMPACTION SHALL OCCUR WHEN MOISTURE CONTENT EXCEEDS MAXIMUM AS LISTED HEREIN. DELAY COMPACTION 24 HOURS IF MOISTURE CONTENT EXCEEDS MAXIMUM ALLOWABLE AND PROTECT STRUCTURAL SOIL DURING DELAYS IN COMPACTION WITH PLASTIC OR PLYWOOD AS DIRECTED BY THE PROJECT ENGINEER.
C. BRING STRUCTURAL SOILS TO FINISHED GRADES AS SHOWN ON THE DRAWINGS. IMMEDIATELY PROTECT THE STRUCTURAL SOIL MATERIAL FROM CONTAMINATION BY TOXIC MATERIALS, TRASH, DEBRIS, WATER CONTAINING CEMENT, CLAY, SILT OR MATERIALS THAT WILL ALTER THE PARTICLE SIZE DISTRIBUTION OF THE MIX WITH PLASTIC OR PLYWOOD AS DIRECTED BY THE PROJECT ENGINEER
D. THE PROJECT ENGINEER MAY PERIODICALLY CHECK THE MATERIAL BEING DELIVERED AND INSTALLED AT THE SITE FOR COLOR AND TEXTURE CONSISTENCY WITH THE APPROVED SAMPLE PROVIDED BY THE CONTRACTOR AS PART OF THE SUBMITTAL FOR STRUCTURAL SOIL. IN THE EVENT THAT THE INSTALLED MATERIAL VARIES SIGNIFICANTLY FROM THE APPROVED SAMPLE, THE PROJECT ENGINEER MAY REQUEST THAT THE CONTRACTOR TEST THE INSTALLED STRUCTURAL SOIL. ANY SOIL WHICH VARIES SIGNIFICANTLY FROM THE APPROVED TESTING RESULTS AS DETERMINED BY THE PROJECT ENGINEER, SHALL BE REMOVED AND NEW STRUCTURAL SOIL INSTALLED THAT MEETS THESE SPECIFICATIONS.
E. BACKFILLING FOR TREES IN THIS AREA SHALL USE MATERIAL SPECIFIED IN THIS SECTION. PLACING, SHORING OR ANCHORING IS THE RESPONSIBILITY OF THE CONTRACTOR AS SHOWN ON THE DRAWINGS.

3.5 DISPOSAL AND CLEAN UP

A. PROMPTLY REMOVE SOIL AND DEBRIS CREATED BY SOIL WORK FROM PAVED AREAS. CLEAN WHEELS OF VEHICLES BEFORE LEAVING SITE TO AVOID TRACKING SOIL ONTO ROADS, WALKS, OR OTHER PAVED AREAS.
B. LEGALLY DISPOSE OF OFF-SITE ALL REFUSE AND DEBRIS FROM THESE OPERATIONS. DO NOT DUMP OR BURN MATERIALS ON SITE.
C. MAINTAIN THE SITE IN AN ORDERLY CONDITION DURING THE PROGRESS OF THE WORK. CONTINUOUSLY AND PROMPTLY REMOVE EXCESS WASTE MATERIALS; KEEP LAWN AREAS, WALKS, AND ROADS CLEAR, STORE MATERIALS AND EQUIPMENT WHERE DIRECTED. PROMPTLY REMOVE EQUIPMENT, SURPLUS MATERIALS, AND DEBRIS AND TRASH RESULTING FROM OPERATIONS UNDER THIS CONTRACT UPON COMPLETION AND PRIOR TO INITIAL ACCEPTANCE OF WORK. LEAVE THE SITE IN A NEAT, ORDER CONDITION.

PLANTING

1.0 GENERAL:

GENERAL REQUIREMENTS FOR ALL PLANTINGS, SUPPLEMENTING THE REQUIREMENTS OF ITEM 661, ARE DESCRIBED HEREIN.

1.1 METHOD OF MEASUREMENT:

MEASUREMENT SHALL BE AS INDICATED FOR EACH PLANT SPECIES. THE COST ASSOCIATED WITH WRAPPING, BRACING, MULCHING, STAKING, FERTILIZING AND WATERING SHALL BE INCLUDED IN THE UNIT PRICE BID FOR EACH ITEM 661 - PLANTING TREES, SHRUBS, PERENNIALS AND VINES. REFER TO PLANTING SCHEDULE FOR ADDITIONAL INFORMATION PERTAINING TO EACH PLANT SPECIES.

1.2 BASIS OF PAYMENT:

THE ACCEPTED PLANTING ITEMS WILL BE PAID FOR AT THE CONTRACT PRICE DESIGNATED FOR EACH ITEM INCLUDED IN THE GENERAL SUMMARY. ALL COSTS FOR WORK IN THIS SECTION ARE TO BE INCLUDED IN THE PRICE. THE COSTS FOR PLANTING SOIL MIXES SHALL BE INCLUDED ELSEWHERE. REFER TO SECTION: PLANTING SOILS FURNISHED AND PLACED.

1.3 SUBMITTALS:

A. PRODUCT DATA FOR FERTILIZERS, ORGANIC AND MINERAL MULCH, PESTICIDES, HERBICIDES AND PRE-EMERGENTS INCLUDING PRODUCT LABEL AND MANUFACTURER'S APPLICATION INSTRUCTIONS.
B. PRODUCT CERTIFICATES SIGNED BY MANUFACTURERS CERTIFYING THAT THEIR PRODUCTS COMPLY WITH SPECIFIED REQUIREMENTS.
C. PRODUCT DATA FOR TREE STABILIZATION AND TREE GRATES. PLANT WARRANTY PRINTED ON INSTALLER'S LETTERHEAD.
D. QUALIFICATION DATA OF INSTALLER DEMONSTRATING
E. CAPABILITIES AND EXPERIENCE. INCLUDE LISTS OF COMPLETED PROJECTS WITH PROJECT NAMES AND ADDRESSES, NAMES AND ADDRESS OF DESIGNER AND OWNER, AND OTHER INFORMATION SPECIFIED. NURSERY TAGGING/DIGGING SCHEDULES AND PLANTING
F. SCHEDULE INDICATING ANTICIPATED DATES AND LOCATIONS FOR EACH TYPE OF SPECIFIED PLANTING. INCLUDE REQUIRED DIGGING SCHEDULE TO MEET INSTALLATION COMPLETION DATE DESCRIBED IN THIS SECTION. SAMPLES OF ORGANIC AND MINERAL MULCH (1 GALLON
G. BAGS). MAINTENANCE INSTRUCTIONS: FOR RECOMMENDED
H. PROCEDURES TO BE ESTABLISHED BY CITY FOR MAINTENANCE OF PLANTING AREAS DURING A CALENDAR YEAR. SUBMIT BEFORE EXPIRATION OF REQUIRED INITIAL MAINTENANCE PERIODS.

1.4 QUALITY ASSURANCE:

A. INSTALLER SHALL BE A QUALIFIED LANDSCAPE INSTALLER WHOSE WORK HAS RESULTED IN SUCCESSFUL PLANT ESTABLISHMENT SIMILAR IN SCOPE AND COMPLEXITY TO THIS PROJECT.
B. PROFESSIONAL MEMBERSHIP: INSTALLER SHALL BE A MEMBER IN GOOD STANDING OF EITHER THE PROFESSIONAL LANDCARE NETWORK OR THE AMERICAN NURSERY AND LANDSCAPE ASSOCIATION.
C. EXPERIENCE REQUIRED: MINIMUM OF FIVE YEARS' EXPERIENCE IN LANDSCAPE INSTALLATION. INSTALLER TO MAINTAIN AN EXPERIENCED FULL-TIME SUPERVISOR ON PROJECT SITE WHEN WORK IS IN PROGRESS. INSTALLER'S FIELD SUPERVISOR SHALL HAVE CERTIFICATION AS A CERTIFIED LANDSCAPE TECHNICIAN EXTERIOR, WITH INSTALLATION, MAINTENANCE, AND IRRIGATION SPECIALTY AREAS, DESIGNATED CLT-EXTERIOR AND AS A STATE LICENSED, COMMERCIAL PESTICIDE APPLICATOR.

1.5 DELIVERY, STORAGE, AND HANDLING:

A. DELIVER PACKAGED MATERIALS IN ORIGINAL UNOPENED CONTAINERS SHOWING WEIGHT, ANALYSIS, AND NAME OF MANUFACTURER. PROTECT MATERIALS FROM MOISTURE AND DETERIORATION DURING DELIVERY AND WHILE STORED AT SITE.
B. DELIVER BULK MATERIALS TO APPROVED STORAGE AREAS. DO NOT DUMP OR STORE BULK MATERIALS NEAR STRUCTURES, UTILITIES, WALKWAYS AND PAVEMENTS, OR ON EXISTING TURF AREAS OR PLANTS. EACH DELIVERY OF BULK FERTILIZERS, LIME, AND SOIL AMENDMENTS SHALL CONTAIN APPROPRIATE CERTIFICATES.
C. TREES: DELIVER SPRING DUG TREES. IF TREES MUST BE SUMMER DUG, ROOT BALLS WILL NEED TO BE ENLARGED PER ANSI Z60.1. SPECIAL CARE SHALL BE GIVEN TO SUMMER DUG TREES TO ENSURE THEIR SURVIVAL IF PLANTED IN THE SUMMER.

PLANTING (CONT.)

1.5 DELIVERY, STORAGE, AND HANDLING:

D. DO NOT PRUNE BEFORE DELIVERY, EXCEPT AS APPROVED BY PROJECT ENGINEER. PROTECT BARK, BRANCHES, AND ROOT SYSTEMS FROM SUN SCALD, DRYING, SWEATING, WHIPPING, AND OTHER HANDLING AND TYING DAMAGE. DO NOT BEND OR BIND-TIE TREES OR SHRUBS IN SUCH A MANNER AS TO DESTROY NATURAL SHAPE. PROVIDE PROTECTIVE COVERING DURING DELIVERY. DO NOT DROP TREES AND SHRUBS DURING DELIVERY. CONTRACTOR SHALL BE RESPONSIBLE FOR MAINTAINING THE STORED MATERIAL OFF-SITE IN A HEALTHY AND VIGOROUS CONDITION UNTIL INSTALLATION. DELIVER TREES, SHRUBS, GROUND COVERS, AND PLANTS AFTER PREPARATIONS FOR PLANTING HAVE BEEN COMPLETED AND INSTALL IMMEDIATELY.
E. DELIVER PLANTS WITH WATERPROOF, LEGIBLE IDENTIFICATION LABELS.
F. TEMPORARY STORAGE: NO NEW PLANTS SHALL REMAIN IN TEMPORARY STORAGE OVER THE WINTER OR SUMMER. PLANTS THAT ARE NOT PLANTED IMMEDIATELY UPON DELIVERY SHALL BE PROTECTED AS FOLLOWS:

1. PLANTS SHALL REMAIN ON THE SITE OF THE WORK NO LONGER THAN 3 DAYS BEFORE BEING PLANTED OR PLACED IN STORAGE.
2. THE ROOT BALLS SHALL BE KEPT MOIST AND THEIR SOLIDITY CAREFULLY PRESERVED. TO PREVENT DRYING OUT OR FREEZING, STORE PLANTS IN A COMPACT GROUP WITH SOIL, PEAT MOSS, SAWDUST, OR OTHER ACCEPTABLE MATERIAL PLACED AROUND AND BETWEEN THE BALLS SO THEY ARE COMPLETELY COVERED.

G. DO NOT REMOVE CONTAINER-GROWN STOCK FROM CONTAINERS BEFORE TIME OF PLANTING.
H. WATER ROOT SYSTEMS OF TREES AND SHRUBS STORED ON SITE WITH A FINE-MIST SPRAY. WATER AS OFTEN AS NECESSARY TO MAINTAIN ROOT SYSTEMS IN A MOIST CONDITION, HANDLE BALLED AND BURLAPPED STOCK BY THE ROOT BALL.
I. IF ANY PLANT MATERIAL APPEARS TO BE PHYSICALLY DAMAGED, EITHER THROUGH ABUSE OR NEGLECT, ACCIDENTAL OR INTENTIONAL, THE CONTRACTOR SHALL BE RESPONSIBLE FOR REMOVING THE PLANT(S) AND REPLACING THEM WITH MATERIALS THAT MEET THE SPECIFICATIONS.
J. BULBS: UNPACK BULBS AS SOON AS THEY ARRIVE. CHECK THE QUALITY, REJECTING ANY SOFT OR MUSHY BULBS OR ANY THAT SHOW SIGNS OR ROT OR MILDEW. IF THE BULBS CANNOT BE PLANTED IMMEDIATELY, STORE THEM IN A COOL, DRY AND DARK PLACE. ENSURE SUFFICIENT AIR CIRCULATION.

1.6 PROJECT CONDITIONS:

A. PLANTING RESTRICTIONS: PLANT DURING ONE OF THE FOLLOWING PERIODS. COORDINATE PLANTING PERIODS WITH INITIAL MAINTENANCE PERIODS TO PROVIDE REQUIRED MAINTENANCE FROM DATE OF PLANTING COMPLETION. SPRING: APRIL 1 TO JUNE 1, FALL: AUGUST 15 TO OCTOBER 15.
B. WEATHER LIMITATIONS: PROCEED WITH PLANTING ONLY WHEN EXISTING AND FORECASTED WEATHER CONDITIONS PERMIT PLANTING TO BE PERFORMED WHEN BENEFICIAL AND OPTIMUM RESULTS MAY BE OBTAINED. APPLY PRODUCTS DURING FAVORABLE WEATHER CONDITIONS ACCORDING TO MANUFACTURER'S WRITTEN INSTRUCTIONS.
C. NOTIFICATION: NOTIFY FIELD ENGINEER AND PROJECT ENGINEER IN WRITING AT LEAST SEVEN DAYS PRIOR TO INSTALLATION OF PLANT MATERIALS.
D. VERIFY LOCATION AND EXTENT OF UNDERGROUND UTILITIES. PROTECT EXISTING UTILITIES, PAVING, AND OTHER FACILITIES FROM DAMAGE CAUSED BY PLANT INSTALLATION.
E. DETERMINE LOCATION OF UNDERGROUND UTILITIES AND PERFORM WORK IN A MANNER WHICH WILL AVOID DAMAGE. HAND EXCAVATE, AS REQUIRED.
F. EXCAVATION: WHEN CONDITIONS DETRIMENTAL TO PLANT GROWTH ARE ENCOUNTERED, SUCH AS RUBBLE FILL, ADVERSE DRAINAGE CONDITIONS, OR OBSTRUCTIONS, NOTIFY OWNER BEFORE PLANTING.
G. COORDINATE INSTALLATION OF PLANTING MATERIALS DURING NORMAL PLANTING SEASONS FOR EACH TYPE OF PLANT MATERIAL REQUIRED.
H. RESTRICT TRAFFIC FROM PLANTING AREAS. ERECT TEMPORARY SIGNS AND BARRIERS AS REQUIRED.
I. PROVIDE NECESSARY WATERING EQUIPMENT REQUIRED FOR PLANT ESTABLISHMENT AND MAINTENANCE PERIOD.
J. PLANT INSTALLATION SHALL NOT OCCUR UNTIL FINE GRADING HAS BEEN APPROVED IN WRITING BY PROJECT ENGINEER.
K. A COMPLETE LIST OF PLANTS, INCLUDING A SCHEDULE OF SIZES, QUANTITIES, AND OTHER REQUIREMENTS, IS INCLUDED ON THE DRAWING. IN THE EVENT THAT DISCREPANCIES OR OMISSIONS OCCUR IN THE PLANT MATERIALS LIST, THE PLANTING PLAN SHALL GOVERN.

PLANTING (CONT.)

1.7 PREINSTALLATION CONFERENCE:

CONDUCT AT THE PROJECT SITE WITH THE PROJECT ENGINEER.

1.8 SEQUENCING:

INSTALL PLANTS ONLY AFTER UTILITIES, PAVEMENTS, IRRIGATION, AND OTHER WORK AFFECTING THE GROUND SURFACE HAS BEEN COMPLETED.

2.0 PLANT MATERIALS GENERAL:

A. IN ACCORDANCE WITH ODOT ITEM 661.03, THE CONTRACTOR IS TO SUPPLY THE PROJECT ENGINEER WITH COMPLETE AND DETAILED INFORMATION CONCERNING THE SOURCE OF SUPPLY FOR EACH ITEM OF REQUIRED PLANT MATERIAL WITHIN 15 DAYS AFTER RECEIVING THE NOTICE OF AWARD OF THE CONTRACT.
B. ALL PLANTS WILL BE NURSERY GROWN UNDER CLIMATIC CONDITIONS SIMILAR TO THOSE IN THE LOCALITY OF THE PROJECT FOR A MINIMUM OF 2 YEARS. IF PLANT MATERIAL IS UNAVAILABLE FROM LOCAL SOURCES, PROPOSED SOURCE SHALL ORIGINATE FROM STATES IMMEDIATELY ADJACENT TO OHIO OR FURTHER NORTH. PLANT MATERIAL FROM SOURCES FURTHER SOUTH IS UNACCEPTABLE. ALL TREE STOCK GROWN FROM SEED (I.E. NOT VEGETATIVELY PROPAGATED) WILL DERIVE FROM SEED OF TREES NATIVE TO LATITUDE OF THE STATE OF OHIO OR FURTHER NORTH. NO TREES GROWN OF SEED OF TREES NATIVE TO LATITUDE SOUTH OF OHIO ARE ACCEPTABLE AND WILL BE REJECTED.
C. ALL PLANTS SHALL BE IN ACCORDANCE WITH ODOT ITEM 661.04 AND THE FOLLOWING:

1. ALL PLANTS SHALL BE INSPECTED AND CERTIFIED IN COMPLIANCE WITH STATE AND FEDERAL LAW BY THE STATE NURSERY INSPECTOR.

2.1 TREES AND SHRUB MATERIAL:

A. FURNISH NURSERY-GROWN TREES AND SHRUBS CONFORMING TO ANSI Z60.1 AMERICAN STANDARD FOR NURSERY STOCK, WITH HEALTHY ROOT SYSTEMS DEVELOPED BY TRANSPLANTING OR ROOT PRUNING.
B. PROVIDE PLANTS TYPICAL OF THEIR SPECIES, CULTIVAR, OR VARIETY IN A HEALTHY, VIGOROUS GROWING CONDITION WITH NORMAL, WELL-SHAPED, FULLY DEVELOPED BRANCHING STRUCTURE FREE OF VOIDS OR OPEN SPACES IN THE CROWN, FREE OF DISEASE, INSECTS, EGGS, LARVAE, AND ANY INFESTATION, AND FREE OF DEFECTS SUCH AS KNOTS, FROST CRACK, SUN SCALD, INJURIES, ABRASIONS, AND DISFIGUREMENT.
C. SIZE: PROVIDE TREES AND SHRUBS OF SIZES CONFORMING TO ANSI Z60.1 FOR TYPE OF TREES AND SHRUBS REQUIRED. TREES AND SHRUBS OF A LARGER SIZE MAY BE USED IF ACCEPTABLE TO DESIGNER, WITH A PROPORTIONATE INCREASE IN SIZE OF ROOT BALLS AND PROVIDED THAT OVERSIZED PLANTS WILL NOT BE PRUNED TO SIZE INDICATED.
D. MEASUREMENTS: MEASURE TREES AND SHRUBS ACCORDING TO ANSI Z60.1 WITH BRANCHES AND TRUNKS OR CANES IN THEIR NORMAL POSITION. DO NOT PRUNE TO OBTAIN REQUIRED SIZES. TAKE CALIPER MEASUREMENTS 6 INCHES ABOVE GROUND FOR TREES UP TO 4-INCH CALIPER SIZE, AND 12 INCHES ABOVE GROUND FOR LARGER SIZES. MEASURE MAIN BODY OF TREE OR SHRUB FOR HEIGHT AND SPREAD; DO NOT MEASURE BRANCHES OR ROOTS TIP-TO-TIP.
E. HEIGHT OF BRANCHING SHALL BEAR RELATIONSHIP TO THE SIZE AND KIND OF TREE SO THAT THE CROWN OF THE TREE WILL BE IN GOOD BALANCE WITH THE TRUNK AS THE TREE GROWS. GENERAL GUIDELINE FOR BRANCHING IS ONE HALF THE HEIGHT OF THE TREE. EVERGREEN TREES SHALL BE BRANCHED TO THE GROUND.
F. ALL TREES AND SHRUBS SHALL BE LABELED WITH SECURELY ATTACHED, WATERPROOF TAG BEARING LEGIBLE DESIGNATION OF BOTANICAL AND COMMON NAME AND CERTIFICATION. THIS TAG SHALL REMAIN ON THE PLANT THROUGH FINAL INSPECTION BY THE PROJECT ENGINEER AND UPON APPROVAL, REMOVED BY THE CONTRACTOR.
G. ALL TREES AND SHRUBS SHALL BE NO. 1 GRADE SPECIMEN PLANTS WITH GROWTH AND BRANCHING HABIT TYPICAL OF THE SPECIFIED CONDITION. NO PARK GRADE (NO. 2 OR 3 GRADE) PLANTS WILL BE ACCEPTED.
H. ALL TREES WITHIN A SPECIES SHALL HAVE MATCHING FORM. ALL PLANT MATERIAL SHALL BE OF THE SIZE AND TYPE SPECIFIED. IF SUBSTITUTIONS ARE REQUIRED, ALL SUBSTITUTIONS MUST BE APPROVED BY THE PROJECT ENGINEER.
I. USE ONLY BURLAP AND JUTE TWINE ON B & B STOCK. NO PLANTS WILL BE ACCEPTED WITH PLASTIC BURLAP OR PLASTIC TWINE.
J. NO PRUNING WOUNDS SHALL BE PRESENT WITH A DIAMETER OF MORE THAN 1" AND SUCH WOUNDS MUST SHOW VIGOROUS BARK ON ALL EDGES.

Preliminary Plans - For Reference Only

LANDSCAPING GENERAL NOTES - 6

DESIGN AGENCY
Michael Baker INTERNATIONAL

DESIGNER BDC
REVIEWER JCF 01/10/24
PROJECT ID 82382
SHEET 1802 TOTAL 2696

CUY-90-16.28 (CCG3A)
MODEL: Sheet-06 PAPERSIZE: 34x22 (in.) DATE: 3/28/2025 TIME: 9:19:18 AM USER: Maia.Gallagher
pw:\\mb-us-pw.bentley.com:mb-us-pw-03\Documents\Cleveland_OH\01_Projects\ODOTDistrict12\82382400-Engineering\Landscaping\Sheets\82382_PN2000.dgn

PLANTING (CONT.)

2.1 TREES AND SHRUB MATERIAL (CONT.):

K. DIG BALLED AND BURLAPPED PLANTS WITH FIRM, NATURAL BALLS OF EARTH OF SUFFICIENT DIAMETER AND DEPTH TO ENCOMPASS THE FIBROUS AND FEED ROOT SYSTEM NECESSARY FOR FULL RECOVERY OF THE PLANT. CRACKED OR MUSHROOMED BALLS ARE NOT ACCEPTABLE. ROOT BALLS SHALL BE NO SMALLER THAN 1" IN DIAMETER FOR EACH IN CALIPER SPECIFIED.

L. TREES WITH A MAIN TRUNK FORMING A "Y" SHAPE ARE UNACCEPTABLE:

1. EXCURRENT GROWTH HABIT, WHILE YOUNG, (E.G. ACER, CELTIS, FRAXINUS, LIRIODENDRON, PLATANUS, QUERCUS, TILIA, ETC.) WITH A SINGLE MAIN TRUNK WITH ONE OBVIOUS, DOMINANT LEADER. TREES WITH A "BAYONETTED" LEADER THAT HAVE THE MAIN TRUNK FORMING A SHAPE ARE UNACCEPTABLE.
2. DECURRENT GROWTH HABIT, WHILE YOUNG: (E.C. CORNUS, HIBISCUS, MALUS, MANY PRUNUS, SYRINGA, VIBURNUM, ETC.) MAY HAVE CO-DOMINANT LEADERS BUT MAIN LEADERS THAT FORM A "Y" SHAPE OR POSSESS AN ACUTE ANGLE OF ATTACHMENT (WITH INCLUDED BARK) WITH THE MAIN STEM ARE UNACCEPTABLE.
3. TREES THAT ARE FASTIGIATE OR COLUMNAR HAVING ACUTE ANGLES OF BRANCH ATTACHMENT (E.G. CARPINUS BETULUS "COLUMNARIS", FAGUS SYLVATICA "DAWYCK") MUST HAVE A STRUCTURALLY SOUND MAIN SCAFFOLD, AND TRUNKS THAT FORM A "Y" SHAPE ARE UNACCEPTABLE.

M. SHRUBS AND SMALL PLANTS SHALL MEET THE REQUIREMENTS FOR SPREAD AND HEIGHT INDICATED IN THE PLANT LIST. THE MEASUREMENTS FOR HEIGHT SHALL BE TAKEN FROM THE GROUND LEVEL TO THE AVERAGE HEIGHT OF THE TOP OF THE PLANT AND NOT THE LONGEST BRANCH.

1. SINGLE STEMMED OR THIN PLANTS WILL NOT BE ACCEPTED.
2. SIDE BRANCHES SHALL BE FULLY DEVELOPED, WELL TWIGGED, BALANCED AND FULL TO THE GROUND.

N. PLANTS MAY BE INSPECTED AND APPROVED AT THE PLACE OF GROWTH FOR COMPLIANCE WITH SPECIFICATION REQUIREMENTS FOR QUALITY, SIZE AND VARIETY.

1. SUCH APPROVAL SHALL NOT IMPAIR THE RIGHT OF INSPECTION AND REJECTION UPON DELIVERY AT THE SITE OR DURING THE PROGRESS OF THE WORK.
2. INSPECTION OF PLANTS BY THE PROJECT ENGINEER BEFORE DIGGING SHALL BE AN OPTION.

2.2 PRODUCTS:

A. COMMERCIAL FERTILIZER: COMMERCIAL-GRADE COMPLETE FERTILIZER OF NEUTRAL CHARACTER, CONSISTING OF FAST- AND SLOW-RELEASE NITROGEN, 50 PERCENT DERIVED FROM NATURAL ORGANIC SOURCES OF UREA-FORM, PHOSPHOROUS, AND POTASSIUM.

1. AGRIFORM 21GPT PLANTING TABLETS, 21 GRAM WEIGHT, 20-10-5 BY ANALYSIS, 2 YEAR FORMULA. A.M. LEONARD, INC., 1-800-433-0633.

B. SLOW-RELEASE FERTILIZER: GRANULAR OR PELLETED FERTILIZER CONSISTING OF 50 PERCENT WATER-INSOLUBLE NITROGEN, PHOSPHORUS, AND POTASSIUM IN THE COMPOSITION RECOMMENDED TO REMEDY DEFICIENCIES FOUND IN SOIL TESTS.

C. ORGANIC MULCH:

1. MULCH SHALL BE A FINELY SHREDDED DOUBLE PROCESSED HARDWOOD MULCH OF UNIFORM TEXTURE AND SIZE AND SHALL BE A SLOW DECOMPOSING ALL ORGANIC MATERIAL. IT SHALL NOT CONTAIN AN EXCESSIVE AMOUNT OF ACID THAT MAY ADVERSELY AFFECT PLANT GROWTH. SHREDDED MULCH SHALL BE AGED TO BE UNIFORMLY DARK BROWN IN COLOR. MULCH APPLICATION SHALL BE RAKED SMOOTH, PRE-EMERGENT HERBICIDE APPLIED, AND THEN MULCHED TO A DEPTH OF 3", AND THEN THOROUGHLY WATERED.
2. SHREDDED HARDWOOD SHALL BE AGED (STOCKPILED) AT LEAST SIX MONTHS PRIOR TO PLACEMENT AROUND PLANTS AND SHALL BE FREE OF ALL ASH SPECIES MATERIAL. MULCH SHALL BE AS NOTED ON DETAILS AND PLACED TO A 3" DEPTH UNLESS NOTED OTHERWISE.

PLANTING (CONT.)

2.2 PRODUCTS (CONT.):

D. TREE STABILIZATION:

1. ABOVE GRADE STABILIZATION: 2-INCH X 2-INCH HARDWOOD STAKES WITH ARBOR TIES.
2. BELOW GRADE STABILIZATION: PLATYPUS D-MAN FIXING SYSTEM WITH GALVANIZED WIRE, D-MAN CELLS, AND ROOTBALL PROTECTION MESH. USE MODEL RF1P DMAN FOR TREES UP TO 3-INCH CALIPER AND MODEL RF2P DMAN FOR TREES 3-INCH CALIPER AND ABOVE.

E. PESTICIDES: REGISTERED AND APPROVED BY EPA, ACCEPTABLE TO AUTHORITIES HAVING JURISDICTION, AND OF TYPE RECOMMENDED BY MANUFACTURER FOR EACH SPECIFIC PROBLEM AND AS REQUIRED FOR PROJECT CONDITIONS AND APPLICATION. DO NOT USE RESTRICTED PESTICIDES UNLESS AUTHORIZED IN WRITING BY AUTHORITIES HAVING JURISDICTION.

F. PRE-EMERGENT HERBICIDE (SELECTIVE AND NON-SELECTIVE): EFFECTIVE FOR CONTROLLING THE GERMINATION OR GROWTH OF WEEDS WITHIN PLANTED AREAS AT THE SOIL LEVEL DIRECTLY BELOW THE MULCH LAYER. POST-EMERGENT HERBICIDE (SELECTIVE AND NON-SELECTIVE): EFFECTIVE FOR CONTROLLING WEED GROWTH THAT HAS ALREADY GERMINATED.

G. ANTIDESICCANT: WATER-INSOLUBLE EMULSION, PERMEABLE MOISTURE RETARDER, FILM FORMING, FOR TREES AND SHRUBS. DELIVER IN ORIGINAL, SEALED, AND FULLY LABELED CONTAINERS AND MIX ACCORDING TO MANUFACTURER'S INSTRUCTIONS.

H. TREE PIT SUMPS: #57 WASHED, UNCRUSHED DRAINAGE AGGREGATE.

I. WATER: POTABLE AND FROM A CLEAN DRINKING WATER SOURCE.

3.0 SCHEDULING:

A. DECIDUOUS PLANTS SHALL BE DUG AND PLANTED BETWEEN SEPTEMBER 15 AND DECEMBER AND/OR BETWEEN MARCH 15 AND JUNE 1. IF PLANTED IN LEAF, SPRAY WITH ANTI-DESICCANT.

B. EVERGREENS SHALL BE DUG AND PLANTED BETWEEN SEPTEMBER 1 AND NOVEMBER 1 OR IN THE SPRING BEFORE NEW GROWTH APPEARS.

C. NO PLANTING SHALL BE DONE ON FROZEN GROUND OR WHEN THE TEMPERATURE IS 32 F. DEGREES OR LOWER.

3.1 EXAMINATION:

A. EXAMINE AREAS TO BE PLANTED FOR COMPLIANCE WITH REQUIREMENTS AND OTHER CONDITIONS AFFECTING PERFORMANCE.

1. VERIFY THAT NO FOREIGN OR DELETERIOUS MATERIAL OR LIQUID SUCH AS PAINT, PAINT WASHOUT, CONCRETE SLURRY, CONCRETE LAYERS OR CHUNKS, CEMENT, PLASTER, OILS, GASOLINE, DIESEL FUEL, PAINT THINNER, TURPENTINE, TAR, ROOFING COMPOUND, OR ACID HAS BEEN DEPOSITED IN SOIL WITHIN A PLANTING AREA.
2. DO NOT MIX OR PLACE SOILS AND SOIL AMENDMENTS IN FROZEN, WET, OR MUDDY CONDITIONS.
3. SUSPEND SOIL SPREADING, GRADING, AND TILLING OPERATIONS DURING PERIODS OF EXCESSIVE SOIL MOISTURE UNTIL THE MOISTURE CONTENT REACHES ACCEPTABLE LEVELS TO ATTAIN THE REQUIRED RESULTS.
4. UNIFORMLY MOISTEN EXCESSIVELY DRY SOIL THAT IS NOT WORKABLE AND WHICH IS TOO DUSTY.

B. PROCEED WITH INSTALLATION ONLY AFTER UNSATISFACTORY CONDITIONS HAVE BEEN CORRECTED.

C. IF CONTAMINATION BY FOREIGN OR DELETERIOUS MATERIAL OR LIQUID IS PRESENT IN SOIL WITHIN A PLANTING AREA, REMOVE THE SOIL AND CONTAMINATION AS DIRECTED BY THE PROJECT ENGINEER AND REPLACE WITH NEW PLANTING SOIL.

D. BEGIN PLANT INSTALLATION ONLY AFTER FINISHED GRADING HAS BEEN APPROVED IN WRITING BY PROJECT ENGINEER. EXAMINE PLANTING AREAS TO VERIFY THEY ARE READY TO RECEIVE WORK UNDER THIS SECTION. START OF INSTALLATION CONSTITUTES ACCEPTANCE OF WORK BY OTHER TRADES.

E. BEGIN PLANT INSTALLATION ONLY AFTER ALL SUBMITTALS FOR SOIL TESTING, ANALYSIS, AND REQUIRED AMENDMENTS HAVE BEEN IDENTIFIED, REVIEWED, AND ACCEPTED IN WRITING BY PROJECT ENGINEER.

PLANTING (CONT.)

3.2 PREPARATION:

PROTECT STRUCTURES, UTILITIES, SIDEWALKS, PAVEMENTS, AND OTHER FACILITIES, TREES, SHRUBS, AND PLANTINGS FROM DAMAGE CAUSED BY PLANTING OPERATIONS.

3.3 FINISH GRADING:

SPECIFIED UNDER PLANTING SOILS FURNISHED AND PLACED.

3.4 LAYOUT OF PLANT MATERIAL:

A. LAY OUT INDIVIDUAL TREE LOCATIONS AND AREAS FOR MULTIPLE PLANTINGS. STAKE LOCATIONS, OUTLINE AREAS, AND SECURE PROJECT ENGINEER ACCEPTANCE BEFORE THE START OF PLANTING WORK. MAKE ADJUSTMENTS AS REQUIRED. EXCAVATE TO DIMENSIONS SHOWN ON DRAWINGS. SPREAD SOILS PER PLAN AS DESCRIBED ON LANDSCAPE SOILS PLAN SHEETS AND ASSOCIATED DETAILS.

B. THE LOCATIONS OF THE PROPOSED TREES AND SHRUBS ARE APPROXIMATE AND MAY BE RE-ARRANGED AT THE DIRECTION OF THE PROJECT ENGINEER WHEN OBSTRUCTIONS ARE ENCOUNTERED.

3.5 PLANTING:

A. WHERE TREES AND SHRUBS ARE SHOWN ON THE PLANS, THE INDIVIDUAL PLANT PITS SHALL BE DUG ON CENTERS PER THE SPACINGS NOTED ON THE LANDSCAPE PLANS.

B. PLANT PITS SHALL BE EXCAVATED AS SHOWN ON THE DRAWINGS. WHERE OBSTRUCTIONS ARE ENCOUNTERED ALLOW FOR A MINIMUM OF 12" (INCHES) OF BACKFILL MIXTURE AROUND THE SIDES OF THE BALLS. THE BOTTOM OF THE HOLE SHALL BE DUG NO DEEPER THAN THE ROOT BALL TO BE PLANTED.

C. REMOVE ALL ROCK OR OTHER OBSTRUCTIONS ENCOUNTERED IN EXCAVATION TO A DEPTH OF NOT LESS THAN 3' AND NO LESS THAN 6" BELOW BOTTOM OF BALL OR ROOTS.

D. IF AN AUGER IS USED IN DIGGING PLANT PITS AND POLISHED (SHINY) SIDES OCCUR IN CLAY OR HEAVY SOIL, THE USE OF SUCH AN AUGER SHALL BE DISCONTINUED AND THE HOLES SHALL BE DUG WITH A BACKHOE OR ANOTHER APPROVED METHOD.

E. TEST DRAIN BEDS AND PITS BY FILLING WITH WATER TWICE IN SUCCESSION. CONDITIONS PERMITTING RETENTION OF WATER FOR MORE THAN 24 HOURS SHALL BE BROUGHT TO THE ATTENTION OF THE ENGINEER.

F. ROOT PRUNE CONTAINER GROWN PLANTS BEFORE PLANTING. CUT SIDES WITH 3 TO 5 VERTICAL SLASHES AND MAKE 1 TO 2 CUTS AT BOTTOM OF CONTAINER FORMED ROOTS.

G. SET BALLED AND BURLAPPED STOCK PLUMB AND IN CENTER OF PIT OR TRENCH WITH FIRST ROOT/ROOT COLLAR TO GRADES AS INDICATED. PLACE TREE STOCK ON SETTING LAYER OF COMPACTED PLANTING SOIL.

H. SET PLANT MATERIAL IN THE PIT TO PROPER GRADE AND ALIGNMENT AS IT HELD BEFORE. SET PLANTS UPRIGHT, PLUMB AND FACED TO GIVE THE BEST APPEARANCE OR RELATIONSHIP TO EACH OTHER OR ADJACENT STRUCTURE. SET PLANT MATERIAL NO MORE THAN 1" ABOVE THE FINISH GRADE.

I. DO NOT USE PLANTING STOCK IF BALL IS CRACKED OR BROKEN BEFORE OR DURING PLANTING OPERATION.

J. AFTER BALLED AND BURLAPPED TREES ARE SET, PLACE SOIL MIX AROUND BASES OF BALLS AND FILL ALL VOIDS. USE 2 FERTILIZER TABLETS FOR EACH TREE OF 2 1/2" CALIPER OR LESS, USE 3 TABLETS FOR TREES OF 3" CALIPER OR GREATER, THOROUGHLY COMPACT AND WATER PLANTING SOIL MIXTURE AROUND BALLS. NO FILLING WILL BE PERMITTED AROUND TRUNKS OR ABOVE STEMS. BACKFILL THE PIT WITH PLANTING MIXTURE. DO NOT USE FROZEN OR MUDDY MIXTURES FOR BACKFILLING. FORM A RING OF SOIL AROUND THE EDGE OF EACH PIT TO RETAIN WATER. TO COMPENSATE FOR SHRINKAGE, FIX FINISHED GRADE OF PLANTING SOIL MIXTURE BEFORE WATERING AT AN ELEVATION HIGHER THAN DESIRED FINISHED GRADE.

K. REMOVE ALL BURLAP, ROPES AND WIRES FROM THE TOP 1/3 OF BALLS. ALL PLASTICIZED BURLAP, CONTAINERS AND TWINE MUST BE REMOVED AND DISPOSED OF OFF SITE. THE TOP SECTION OF WIRE BASKETS SHALL BE BENT BACKWARD INTO THE PLANT PIT, OR CUT AWAY SO THAT NO METAL PROTRUDES ABOVE GRADE. ALL NURSERY MARKING RIBBON AND LINER TAGS SHALL BE REMOVED. HOWEVER, TREE SPECIES/CULTIVAR TAGS SHALL NOT BE REMOVED.

L. INSTALL STABILIZATION AND BRACING ACCORDING TO PLANTING DETAILS.

M. SET CONTAINER-GROWN STOCK PLUMB AND IN CENTER OF PLANT PIT OR TRENCH WITH FIRST ROOT/ROOT COLLAR TO GRADES AS INDICATED. CAREFULLY REMOVE CONTAINERS SO AS NOT TO DAMAGE ROOT BALLS. PLACE STOCK ON SETTING LAYER OF COMPACTED PLANTING SOIL.

PLANTING (CONT.)

3.5 PLANTING (CONT.):

N. THE GROUNDCOVER PLANTING HOLES SHALL BE DUG THROUGH THE MULCH. BEFORE PLANTING, BIODEGRADABLE POTS SHALL BE SPLIT, AND NON-BIODEGRADABLE POTS SHALL BE REMOVED. ROOT SYSTEMS OF ALL POTTED PLANTS SHALL BE SPLIT OR CRUMBLED. THE GROUNDCOVER PLANTS SHALL BE PLANTED SUCH THAT THE ROOTS OF THE PLANT ARE SURROUNDED BY SOIL BELOW THE MULCH. POTTED PLANTS SHALL BE SET SO THAT THE TOP OF THE POT IS EVEN WITH THE EXISTING GRADE. SPACING TO THE PLANTS SHALL BE AT AN EQUAL DISTANCE APART AS SPECIFIED ON THE PLANS. WATER THE ENTIRE GROUNDCOVER BED.

O. PRUNE ACCORDING TO ANSI A300 STANDARD. LIMIT TO BROKEN, DAMAGED, OR DISEASED BRANCHES. DO NOT CUT TREE LEADERS. PRUNE SHRUBS TO RETAIN NATURAL CHARACTER. SHRUB SIZES INDICATED ARE SIZE AFTER PRUNING.

P. MULCH BACKFILLED SURFACES OF PITS, TRENCHES, PLANTED AREAS, AND OTHER AREAS INDICATED. APPLY 3" OF ORGANIC MULCH TO FINISH GRADES INDICATED. DO NOT PLACE MULCH AGAINST TRUNKS OR STEMS. MULCH SHALL HAVE A NEAT, CLEAN EDGED APPEARANCE.

Q. INSTALL TREE GRATES AND MINERAL MULCHES ACCORDING TO DETAILS.

R. APPLY ANTI-DESICCANT USING POWER SPRAY TO PROVIDE AN ADEQUATE FILM OVER TRUNKS, BRANCHES, STEMS, TWIGS, AND FOLIAGE. WHEN DECIDUOUS TREES OR SHRUBS ARE MOVED IN FULL-LEAF, SPRAY WITH ANTI-DESICCANT AT NURSERY BEFORE MOVING AND AGAIN 2 WEEKS AFTER PLANTING.

S. DURING PLANTING, KEEP PAVEMENTS CLEAN AND WORK AREA IN AN ORDERLY CONDITION. PROTECT LANDSCAPING FROM DAMAGE DUE TO LANDSCAPE OPERATIONS, OPERATIONS BY OTHER CONTRACTORS AND TRADES, AND TRESPASSERS. MAINTAIN PROTECTION DURING INSTALLATION AND MAINTENANCE PERIODS. TREAT, REPAIR, OR REPLACE DAMAGED LANDSCAPE WORK AS DIRECTED.

T. WORK SHALL INCLUDE ALL TOOLS, LABOR, AND MATERIALS NECESSARY TO SUCCESSFULLY PLANT TREES, SHRUBS, GROUNDCOVERS, AND HERBACEOUS PLANTS COMPLETE IN PLACE INCLUDING ALL APPURTENANCES AND WARRANTY.

3.6 ESTABLISHMENT AND MAINTENANCE:

A. PROVIDE FULL MAINTENANCE BY SKILLED EMPLOYEES OF LANDSCAPE INSTALLER.

B. MAINTENANCE SHALL BEGIN IMMEDIATELY AFTER EACH PLANT IS PLANTED AND CONTINUE UNTIL ACCEPTANCE IN WRITING BY PROJECT ENGINEER.

C. PLANTS SHALL BE WATERED, MULCHED AND PRUNED, WEED GROWTH CONTROLLED AND OTHERWISE MAINTAINED AS NEEDED. SETTLED PLANTS SHALL BE RAISED AND REALIGNED AND TREE STABILIZATION TIGHTENED AND REPAIRED.

D. APPLY TREATMENTS AS REQUIRED TO KEEP PLANTS FREE OF PESTS AND PATHOGENS OR DISEASE. USE INTEGRATED PEST MANAGEMENT PRACTICES WHENEVER POSSIBLE TO MINIMIZE THE USE OF PESTICIDES AND REDUCE HAZARDS.

E. INSTALL AND MAINTAIN TEMPORARY PIPING, HOSES, AND WATERING EQUIPMENT TO CONVEY WATER FROM SOURCES. LAY OUT TEMPORARY WATERING SYSTEM TO AVOID WALKING OVER MUDDY OR NEWLY PLANTED AREAS. WATER PLANTS AT RATE REQUIRED TO MAINTAIN HEALTH AND VIGOR UNLESS RAINFALL PRECIPITATION IS ADEQUATE.

3.7 CLEANING AND PROTECTION:

PERFORM CLEANING DURING INSTALLATION OF THE WORK AND UPON COMPLETION OF THE WORK. REMOVE FROM SITE ALL EXCESS MATERIALS, SOIL, DEBRIS AND EQUIPMENT. REPAIR ANY DAMAGE.

Preliminary Plans - Not For Construction

LANDSCAPING GENERAL NOTES - 7

DESIGN AGENCY
Michael Baker INTERNATIONAL

DESIGNER BDC
REVIEWER JCF 01/10/24
PROJECT ID 82382
SHEET 1803 TOTAL 2696

CUY-90-16.28 (CCG3A)
MODEL: Sheet-07 PAPERSIZE: 34x22 (in.) DATE: 3/28/2025 TIME: 9:19:19 AM USER: Maia.Gallagher
pw:\\mb-us-pw.bentley.com:mb-us-pw-03\Documents\Cleveland_OH\01_Projects\ODOT\District12\82382\400-Engineering\Landscaping\Sheets\82382_PN2000.dgn

ITEM 659 - TOPSOIL, AS PER PLAN

IN ADDITION TO THE REQUIREMENTS TO ITEM 659, TOPSOIL, FOLLOW TOPSOIL SPECIFICATIONS IN "PLANTING SOILS" SECTION 2.2 TOPSOIL COMPONENT AND "PLANTING SOILS" SECTION 2.3 ORGANIC COMPONENT.

ITEM 661 - MULCH, AS PER PLAN

IN ADDITION TO THE REQUIREMENTS TO ITEM 659, TOPSOIL, FOLLOW TOPSOIL SPECIFICATIONS IN "PLANTING SOILS" SECTION 2.2C ORGANIC MULCH.

ITEM SPECIAL - CLEVELAND PLANTING

PERFORM ADDITIONAL PLANTING/LANDSCAPE WORK PER THE REQUIREMENTS OF THE SPECIAL PROVISION - CLEVELAND PLANTING, DATED AUGUST 22, 2024, INCLUDING THE 24-MONTH GUARANTEE PERIOD DESCRIBED IN SECTION D-14 AND D-22 FOR ALL ITEM 661 WORK WITHIN THE HATCHED LIMITS SHOWN BELOW.

ITEM SPECIAL - CLEVELAND PLANTING ***LS***

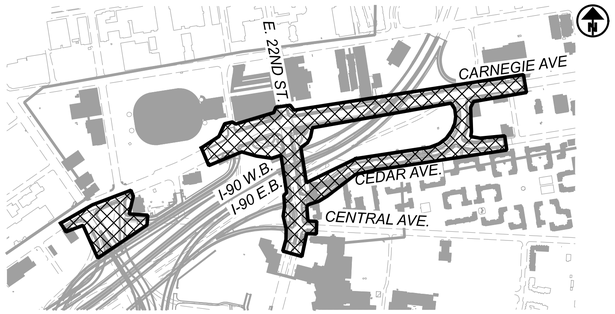

AREA OF SPECIAL PROVISION

Preliminary Plans - For Reference Only

LANDSCAPING GENERAL NOTES - 8

DESIGN AGENCY
Michael Baker INTERNATIONAL

DESIGNER
BDC

REVIEWER
JCF 01/10/24

PROJECT ID
82382

SHEET 1804 | TOTAL 2696

CUY-90-16.28 (CCG3A)

MODEL: Sheet-08 PAPERSIZE: 34x22 (in.) DATE: 3/28/2025 TIME: 9:19:20 AM USER: Maia.Gallagher
pw:\\mb-us-pw.bentley.com:mb-us-pw-03\Documents\Cleveland_OH\01_Projects\ODOT\District12\82382\400-Engineering\Landscaping\Sheets\82382_PN2000.dgn

SHEET NO.	LOCATION	SIDE	601 ROCK CHANNEL PROTECTION, TYPE D WITH FILTER, AS PER PLAN	659 SEEDING AND MULCHING, CLASS 1, AS PER PLAN	659 SEEDING AND MULCHING, CLASS 2, AS PER PLAN	659 SEEDING AND MULCHING, CLASS 5B, AS PER PLAN	661 MULCH, AS PER PLAN	661 LANDSCAPE WATERING	661 DECIDUOUS TREE, 2-1/2" CALIPER, AMERICAN SYCAMORE (POC)	661 DECIDUOUS TREE, 2-1/2" CALIPER, BUR OAK (QMA)	661 DECIDUOUS TREE, 2-1/2" CALIPER, CHINESE ELM (ULM)	661 DECIDUOUS TREE, 2-1/2" CALIPER, CHINKAPIN OAK (QMU)	661 DECIDUOUS TREE, 2-1/2" CALIPER, GREEN VASE ZELKOVA (ZSE)	661 DECIDUOUS TREE, 2-1/2" CALIPER, KENTUCKY COFFEETREE (GDI)	661 DECIDUOUS TREE, 2-1/2" CALIPER, LITTLELEAF LINDEN (TCO)	661 DECIDUOUS TREE, 2-1/2" CALIPER, OHIO BUCKEYE (AGL)	661 DECIDUOUS TREE, 2-1/2" CALIPER, SCARLET OAK (QCO)	661 DECIDUOUS TREE, 2-1/2" CALIPER, SOMERSET RED MAPLE (ARS)	661 DECIDUOUS TREE, 2-1/2" CALIPER, THORNLESS HONEYLOCUST (GTR)	661 EVERGREEN TREE, 8' HEIGHT, AMERICAN HOLLY (IOK)	661 EVERGREEN TREE, 8' HEIGHT, AMERICAN HOLLY (IOP)	661 EVERGREEN TREE, 8' HEIGHT, EASTERN REDCEDAR (JVI)	661 EVERGREEN TREE, 8' HEIGHT, PITCH PINE (PRI)	661 PLANTING, MISC.: FLOWERING TREE, 2-1/2" CALIPER, CRABAPPLE SP. (MAL)	661 PLANTING, MISC.: FLOWERING TREE, 2-1/2" CALIPER, EASTERN REDBUD (CCN)	661 PLANTING, MISC.: FLOWERING TREE, 2-1/2" CALIPER, FLOWERING DOGWOOD (CFL)	661 PLANTING, MISC.: FLOWERING TREE, 2-1/2" CALIPER, GREEN HAWTHORN (CVI)	661 PLANTING, MISC.: FLOWERING TREE, 2-1/2" CALIPER, IVORY SILK JAPANESE TREE LILAC (SRE)	661 PLANTING, MISC.: FLOWERING TREE, 2-1/2" CALIPER, KWANZAN FLOWERING CHERRY (PSE)	661 PLANTING, MISC.: FLOWERING TREE, 6-8' HEIGHT, AUTUMN BRILLIANCE SERVICEBERRY (ACA)	661 PLANTING, MISC.: FLOWERING TREE, 6-8' HEIGHT, COMMON WITCH HAZEL (HVI)	661 PLANTING, MISC.: SHRUB, 3 GALLON, SHORE JUNIPER (JCB)	
			CY	SY	SY	SY	CY	GAL	EACH	EACH	EACH	EACH	EACH	EACH	EACH	EACH	EACH	EACH	EACH	EACH	EACH	EACH	EACH	EACH	EACH	EACH	EACH	EACH	EACH	EACH	EACH		
1808	CARNEGIE	LT		423			1	200										3															
1808	CARNEGIE	RT		82																													
1808	I.R. 90 WB - RAMP A1 - CARNEGIE - E 22ND	INFIELD		2077	164	649	14	2700						3		3	5		2	2	18				9				12				
1808	RAMP A1	LT		91																													
1809	CARNEGIE	LT		545			3	650																			7	6					
1809	I.R. 90 EB	RT			240	27																											
1809	I.R. 90 WB - CARNEGIE - E 22ND	INFIELD		1501	1178	1011	9	1850						5		2	8		4						4	4	4	6					
1810	BRIDGE 13	RT					50	10050			5																				196		
1810	CENTRAL	LT		25																													
1810	E 22ND	RT		159			1	200																				4					
1810	I.R. 90 EB	RT			302	387																											
1810	I.R. 90 WB - RAMP A1 - CARNEGIE - E 22ND	INFIELD			180																												
1810	MIDTOWN CONNECTOR	LT		484			2	450	1																		3						
1810	MIDTOWN CONNECTOR	RT		129																													
1810	RAMP B6 - RAMP B6A - E 22ND	INFIELD		820	537		1	250						3														2					
1810	RAMP H5 - RAMP B6 - E 22ND	INFIELD		31	509	548	4	750				1				1								8				5					
1811	CENTRAL	RT		21																													
1811	E 22ND	RT		13																													
1811	RAMP B6A	RT		450			2	350			2																			3	2		
1812	BRIDGE 14	UNDER	180																														
1812	I.R. 90 EB	RT		56	2151	6737	16	3150				3				3			3			11	8	10	10	5	10						
1812	MIDTOWN CONNECTOR	LT		479																													
1813	CARNEGIE	RT		93																													
1813	MIDTOWN CONNECTOR	LT		316			1	200	2									2															
1813	MIDTOWN CONNECTOR	RT		169																													
1814	I.R. 90 EB	RT			1230	4175	13	2500				3				1			1			4	19	6	3	5	8						
1814	MIDTOWN CONNECTOR	LT		869			8	1600	3																	6		11	9	3			
1814	MIDTOWN CONNECTOR	RT		573			2	300																				3	3				
1815	CEDAR	LT		78																													
1815	CEDAR	RT		339			2	350	2									1										4					
1815	I.R. 90 EB	RT				1760		800				2				1									5	5		3					
1815	MIDTOWN CONNECTOR	LT		2603			1	250										3											2				
1815	MIDTOWN CONNECTOR	RT		1040			5	950	1				4					1							3			7		3			
1816	CEDAR	LT		49																													
1816	CEDAR	RT		90																													
1817	I.R. 90 WB - RAMP A1 - CARNEGIE - E 22ND	INFIELD			860	499																											
1817	RAMP A1	LT		506																													
1817	RAMP H5 - RAMP B6 - E 22ND	INFIELD			1234	471	6	1200				3						1							5		12			3			
1818	I.R. 90 EB - RAMP H5 - E 14TH NB	INFIELD			58																												
1818	RAMP B6 - RAMP B6A - E 22ND	INFIELD			1826																												
1818	RAMP B6A	RT		2323			8	1650									2							14					8	9			
1818	RAMP H5 - RAMP B6 - E 22ND	INFIELD			2489		6	1100				3						1									18						
1819	BRIDGE 9	UNDER	20																														
1819	I.R. 90 WB - RAMP A3 - E 14TH SB	INFIELD			509																												
1819	RAMP A3	LT			2022	2113																											
	TOTALS CARRIED TO SHEET	1806	200	16434	15489	18377	155	31500	9	-	7	15	4	11	-	11	15	12	10	2	18	15	27	21	48	19	64	33	36	43	14	196		

Preliminary Plans - For Reference Only

LANDSCAPING SUBSUMMARY - 1

DESIGN AGENCY
Michael Baker INTERNATIONAL

DESIGNER BDC
REVIEWER JCF 05/22/24
PROJECT ID 82382
SHEET 1805 TOTAL 2696

CUY-90-16.28 (CCG3A)

MODEL: Sheet-01 PAPERSIZE: 34x22 (in.) DATE: 3/28/2025 TIME: 1:24:15 PM USER: Joseph.Hogan
pw:\\mb-us-pw.bentley.com:mb-us-pw-03\Documents\Cleveland_OH\01_Projects\ODOT\District12\82382\400-Engineering\Landscaping\Sheets\82382_PS101.dgn

SHEET NO.	LOCATION	SIDE	601 ROCK CHANNEL PROTECTION, TYPE D WITH FILTER, AS PER PLAN	659 SEEDING AND MULCHING, CLASS 1, AS PER PLAN	659 SEEDING AND MULCHING, CLASS 2, AS PER PLAN	659 SEEDING AND MULCHING, CLASS 5B, AS PER PLAN	661 MULCH, AS PER PLAN	661 LANDSCAPE WATERING	661 DECIDUOUS TREE, 2-1/2" CALIPER, AMERICAN SYCAMORE (POC)	661 DECIDUOUS TREE, 2-1/2" CALIPER, BUR OAK (QMA)	661 DECIDUOUS TREE, 2-1/2" CALIPER, CHINESE ELM (ULM)	661 DECIDUOUS TREE, 2-1/2" CALIPER, CHINKAPIN OAK (QMU)	661 DECIDUOUS TREE, 2-1/2" CALIPER, GREEN VASE ZELKOVA (ZSE)	661 DECIDUOUS TREE, 2-1/2" CALIPER, KENTUCKY COFFEETREE (GDI)	661 DECIDUOUS TREE, 2-1/2" CALIPER, LITTLELEAF LINDEN (TCO)	661 DECIDUOUS TREE, 2-1/2" CALIPER, OHIO BUCKEYE (AGL)	661 DECIDUOUS TREE, 2-1/2" CALIPER, SCARLET OAK (QCO)	661 DECIDUOUS TREE, 2-1/2" CALIPER, SOMERSET RED MAPLE (ARS)	661 DECIDUOUS TREE, 2-1/2" CALIPER, THORNLESS HONEYLOCUST (GTR)	661 EVERGREEN TREE, 8' HEIGHT, AMERICAN HOLLY (IOK)	661 EVERGREEN TREE, 8' HEIGHT, AMERICAN HOLLY (IOP)	661 EVERGREEN TREE, 8' HEIGHT, EASTERN REDCEDAR (JVI)	661 EVERGREEN TREE, 8' HEIGHT, PITCH PINE (PRI)	661 PLANTING, MISC.: FLOWERING TREE, 2-1/2" CALIPER, CRABAPPLE SP. (MAL)	661 PLANTING, MISC.: FLOWERING TREE, 2-1/2" CALIPER, EASTERN REDBUD (CCN)	661 PLANTING, MISC.: FLOWERING TREE, 2-1/2" CALIPER, FLOWERING DOGWOOD (CFL)	661 PLANTING, MISC.: FLOWERING TREE, 2-1/2" CALIPER, GREEN HAWTHORN (CVI)	661 PLANTING, MISC.: FLOWERING TREE, 2-1/2" CALIPER, IVORY SILK JAPANESE TREE LILAC (SRE)	661 PLANTING, MISC.: FLOWERING TREE, 2-1/2" CALIPER, KWANZAN FLOWERING CHERRY (PSE)	661 PLANTING, MISC.: FLOWERING TREE, 6-8' HEIGHT, AUTUMN BRILLIANCE SERVICEBERRY (ACA)	661 PLANTING, MISC.: FLOWERING TREE, 6-8' HEIGHT, COMMON WITCH HAZEL (HVI)	661 PLANTING, MISC.: SHRUB, 3 GALLON, SHORE JUNIPER (JCB)	
			CY	SY	SY	SY	CY	GAL	EACH	EACH	EACH	EACH	EACH	EACH	EACH	EACH	EACH	EACH	EACH	EACH	EACH	EACH	EACH	EACH	EACH	EACH	EACH	EACH	EACH	EACH	EACH	EACH	EACH	
1820	BRIDGE 12	UNDER	123																															
1820	BRIDGE 9	UNDER	465																															
1820	BRIDGES 10 & 11	UNDER	276																															
1820	CEDAR CONNECTOR	LT		461																														
1820	E 14TH - E 18TH - CARNEGIE	INFIELD		2278			9	1700								3						5			11	8	7						
1820	E 14TH MEDIAN	INFIELD			900																													
1820	E 18TH	RT		89																														
1820	E 18TH - CEDAR CONN - RAMP A1	INFIELD		1418			2	450								2									5		2						
1820	I.R. 90 EB - RAMP A3 - E 14TH SB	INFIELD					1	150																	3								
1820	I.R. 90 EB - RAMP B6	INFIELD			1598		5	900						1	1	1									7					8			
1820	I.R. 90 EB - RAMP H5 - E 14TH NB	INFIELD			3411		10	1900		1				1		1		3							17	5	6			4			
1820	I.R. 90 WB - RAMP A2 - E 14TH NB	INFIELD			1300		1	150																	3								
1820	I.R. 90 WB - RAMP A3 - E 14TH SB	INFIELD			1316																												
1820	RAMP A1	LT		73																													
1820	RAMP A3	LT		73	1130	3154	1	250																				5					
1820	RAMP B6A	RT		348			1	150																										
1820	RAMP H5 - RAMP B6 - E 22ND	INFIELD			149																													
1820	RAMP H5 - RAMP H6 - ST. V PARKING LOT	INFIELD		120	334																													
1821	BRIDGE 9	UNDER	687																															
1821	E 14TH SB - RAMP E-17	INFIELD			1839	6257																												
1821	I.R. 90 EB - RAMP B6	INFIELD			4112		5	950					2	2											3	6					6			
1821	RAMP IB5	INFIELD		4010																														
1821	RAMP IB5 - BRIDGE 9 - ORANGE	INFIELD		5763																														
1821	RAMP IB5 - RAMP B6 - BRIDGE 9	INFIELD		964																														
1821	RAMP IJ3	LT			162																													
1821	RAMP IJ3 - BRIDGE 9 - RAMP B6	INFIELD			3515	4375	10	1900		1			2	1								9	2	5	10		6			2			
1821	RAMP IJ3 - RAMP E-17	INFIELD			3642	2161																												
1822	BRIDGE 12	UNDER	46																															
1822	DR-104A	LT		242																														
1822	E 14TH MEDIAN	INFIELD			572																													
1822	E 14TH SB - RAMP E-17	INFIELD			875	569																												
1822	I.R. 90 EB - RAMP B6	INFIELD			978		5	1000		2			1	1										10						6			
1822	I.R. 90 EB - RAMP H5 - E 14TH NB	INFIELD			1282		3	550		1			1			1									4					4			
1822	RAMP H5 - RAMP H6 - ST. V PARKING LOT	INFIELD		90	10835		32	6300												4	8	43	29	11	14	11				6			
1822	RAMP H6 - DR-104A MEDIAN	-		83																														
1822	RAMP IJ3 - BRIDGE 9 - RAMP B6	INFIELD			1034	488	3	550					1	1										3						6			
1822	RAMP IJ3 - RAMP E-17 - E 14TH SB	INFIELD			2461	1164																												
1823	BRIDGE 9	UNDER	486																															
1823	E 14TH SB - RAMP E-17	INFIELD			1647	1925																												
1823	RAMP IB5 - BRIDGE 9 - ORANGE	INFIELD		5000																														
1823	RAMP IH4 - E 14TH NB - I.R. 77 SB	INFIELD			2597																													
1823	RAMP IJ3	LT			397																													
1823	RAMP IJ3 - RAMP E-17	INFIELD			991	40																												
	TOTALS FROM THIS SHEET		2083	21012	47077	20133	88	16900	-	5	-	-	7	7	1	8	3	-	-	4	8	57	31	32	80	24	26	-	-	45	-	-	
	TOTALS FROM SHEET 1805		200	16434	15489	18377	155	31500	9	-	7	15	4	11	-	11	15	12	10	2	18	15	27	21	48	19	64	33	36	43	14	196	
	TOTALS TO GENERAL SUMMARY		2283	37446	62566	38510	243	48400	9	5	7	15	11	18	1	19	18	12	10	6	26	72	58	53	128	43	90	33	36	88	14	196	

Preliminary Plans - For Reference Only

LANDSCAPING SUBSUMMARY - 2

CUY-90-16.28 (CCG3A)

MODEL: Sheet-02 PAPERSIZE: 34x22 (in.) DATE: 3/28/2025 TIME: 1:24:16 PM USER: Joseph.Hogan
pw:\\mb-us-pw.bentley.com:mb-us-pw-03\Documents\Cleveland_OH\01_Projects\ODOT\District12\82382\400-Engineering\Landscaping\Sheets\82382_PS101.dgn
82382_PS101.dgn

DESIGN AGENCY
Michael Baker INTERNATIONAL

DESIGNER BDC
REVIEWER JCF 05/22/24
PROJECT ID 82382
SHEET 1806 TOTAL 2696

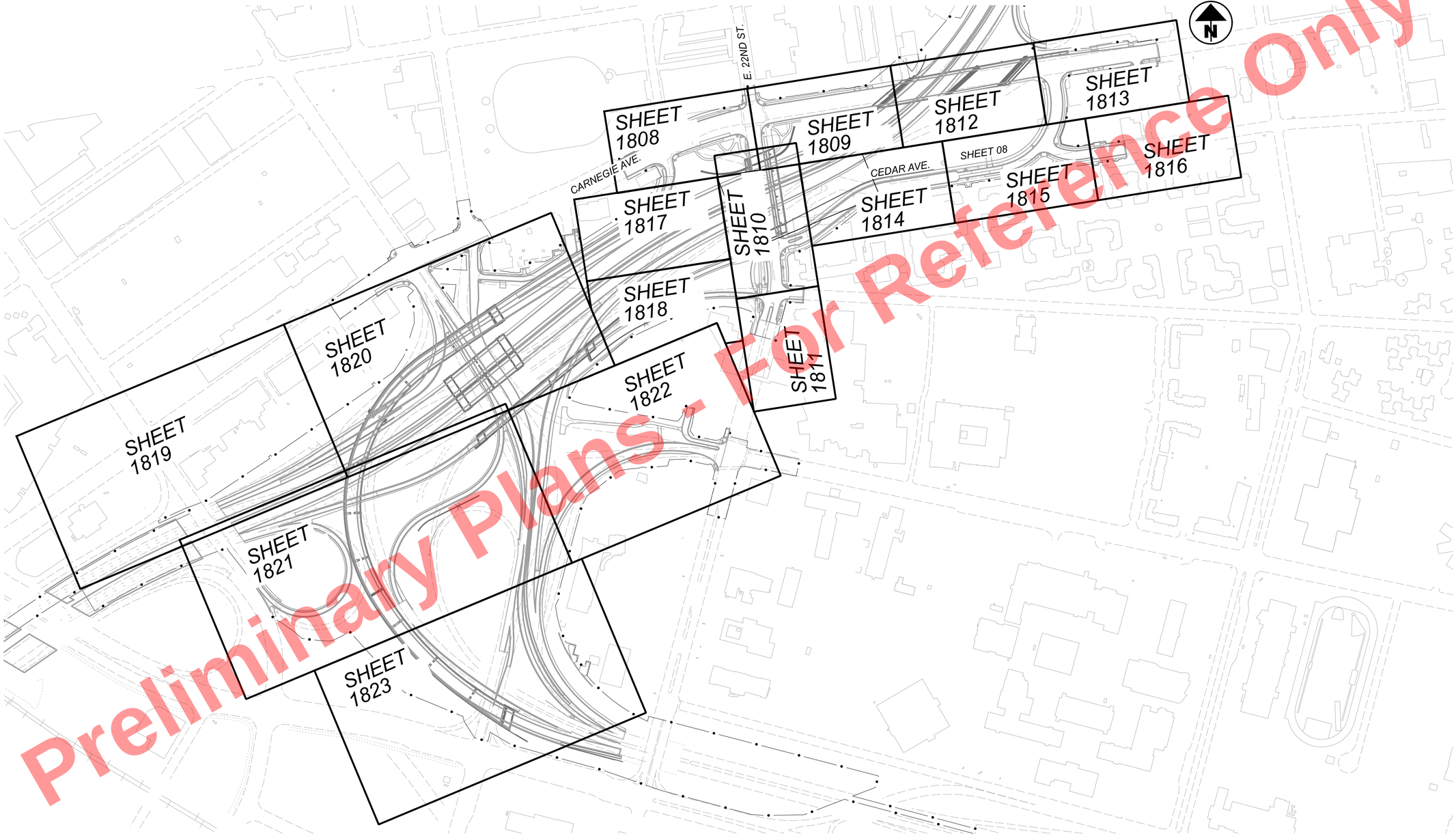

Preliminary Plans - Not For Reference Only

HORIZONTAL SCALE IN FEET
0 100 200 400

OVERALL PLANTING PLAN

CUY-90-16.28 (CCG3A)

MODEL: Sheet PAPERSIZE: 34x22 (in.) DATE: 3/28/2025 TIME: 8:19:46 AM USER: Mala.Gallagher
pw:\\mb-us-pw.bentley.com:mb-us-pw-03\Documents\Cleveland_OH\01_Projects\ODOT\District12\82382\400-Engineering\Landscaping\Sheets\82382_PP0002.dgn

DESIGN AGENCY
Michael Baker INTERNATIONAL

DESIGNER	BDC
REVIEWER	JCF 01/10/24
PROJECT ID	82382
SHEET	1807
TOTAL	2696

LEGEND

ITEM 661 - DECIDUOUS TREE

ITEM 661 - DECIDUOUS TREE (FLOWERING)

ITEM 661 - EVERGREEN TREE

ITEM 661 - DECIDUOUS SHRUBS

ITEM SPECIAL - METAL EDGING

ITEM 659 - CLASS 1 SEEDING (LAWN MIXTURE)

ITEM 659 - CLASS 2 (ROADSIDE MIXTURE)

TYP 30' OFFSET OF PAVEMENT EDGES

ITEM 659 - CLASS 5B SEEDING (NATIVE WILDFLOWER MIX)

NOTES:

1. FOR STREETSCAPES: TREES SHALL BE PLANTED A MINIMUM OF 4'-0" FROM BACK OF CURB

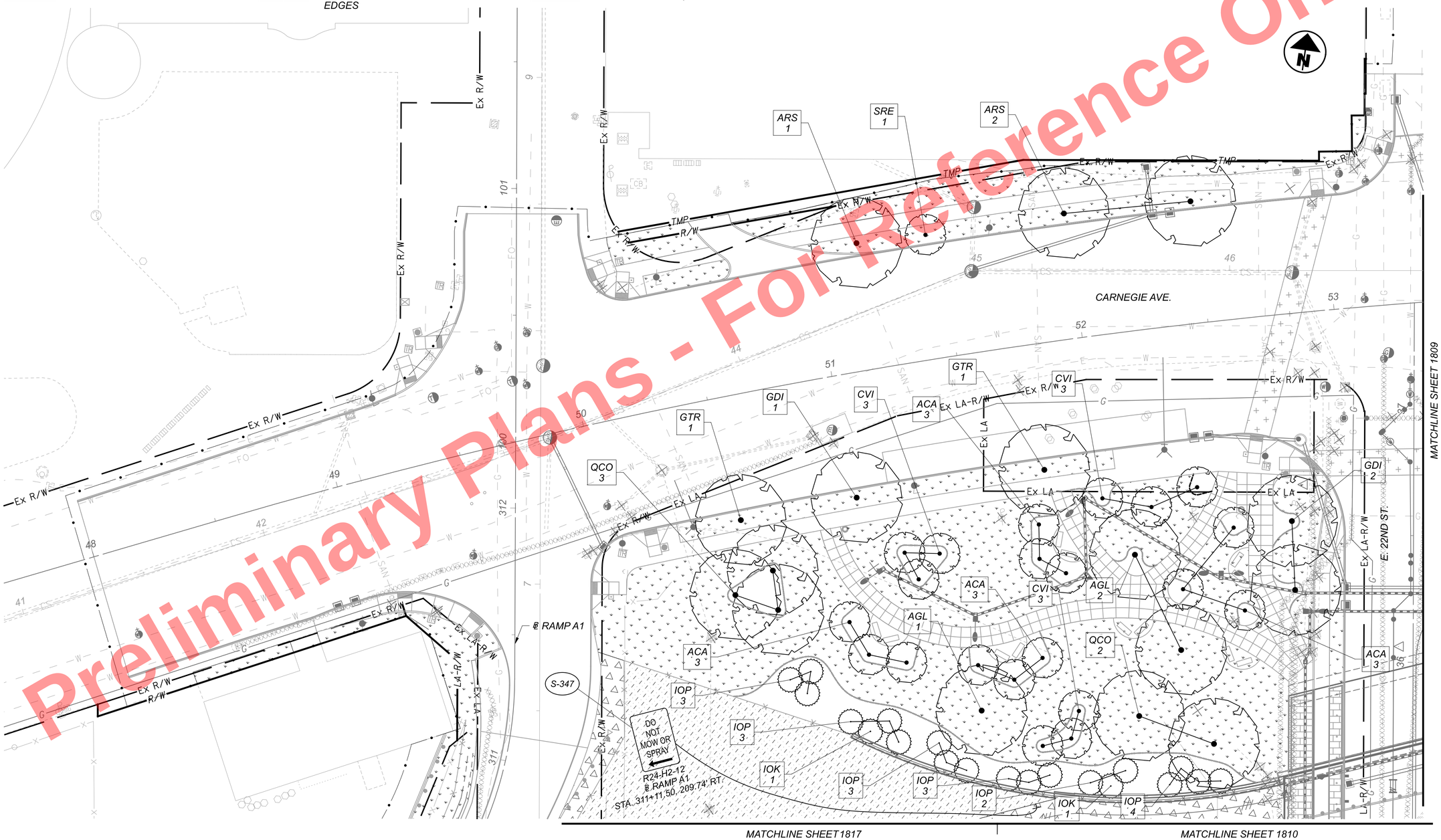

Preliminary Plans - For Reference Only

HORIZONTAL SCALE IN FEET
0 10 20 40

PLANTING PLAN
SHEET 01

DESIGN AGENCY
Michael Baker INTERNATIONAL

DESIGNER BDC
REVIEWER JCF 01/10/24
PROJECT ID 82382
SHEET 1808 TOTAL 2696

CUY-90-16.28 (CCG3A)

MODEL: Sheet PAPERSIZE: 34x22 (in.) DATE: 3/28/2025 TIME: 9:20:00 AM USER: Mala.Gallagher
pw:\\mb-us-pw.bentley.com\mb-us-pw-03\Documents\Cleveland_OH\01_Projects\0007\District2\82382\400-Engineering\Landscaping\Sheets\82382_PP2001.dgn

LEGEND

ITEM 661 - DECIDUOUS TREE

ITEM 661 - DECIDUOUS TREE (FLOWERING)

ITEM 661 - EVERGREEN TREE

ITEM 661 - DECIDUOUS SHRUBS

ITEM SPECIAL - METAL EDGING

ITEM 659 - CLASS 1 SEEDING (LAWN MIXTURE)

ITEM 659 - CLASS 2 (ROADSIDE MIXTURE)

TYP 30' OFFSET OF PAVEMENT EDGES

ITEM 659 - CLASS 5B SEEDING (NATIVE WILDFLOWER MIX)

TP

ITEM SPECIAL - TREE PROTECTION

NOTES:

1. FOR STREETSCAPES: TREES SHALL BE PLANTED A MINIMUM OF 4'-0" FROM BACK OF CURB
2. FOR LIMITED ACCESS FACILITIES: TREES SHALL BE PLANTED MIN. 30'-0" BACK FROM EDGE OF PAVEMENT WHEN GUARDRAIL IS NOT PRESENT

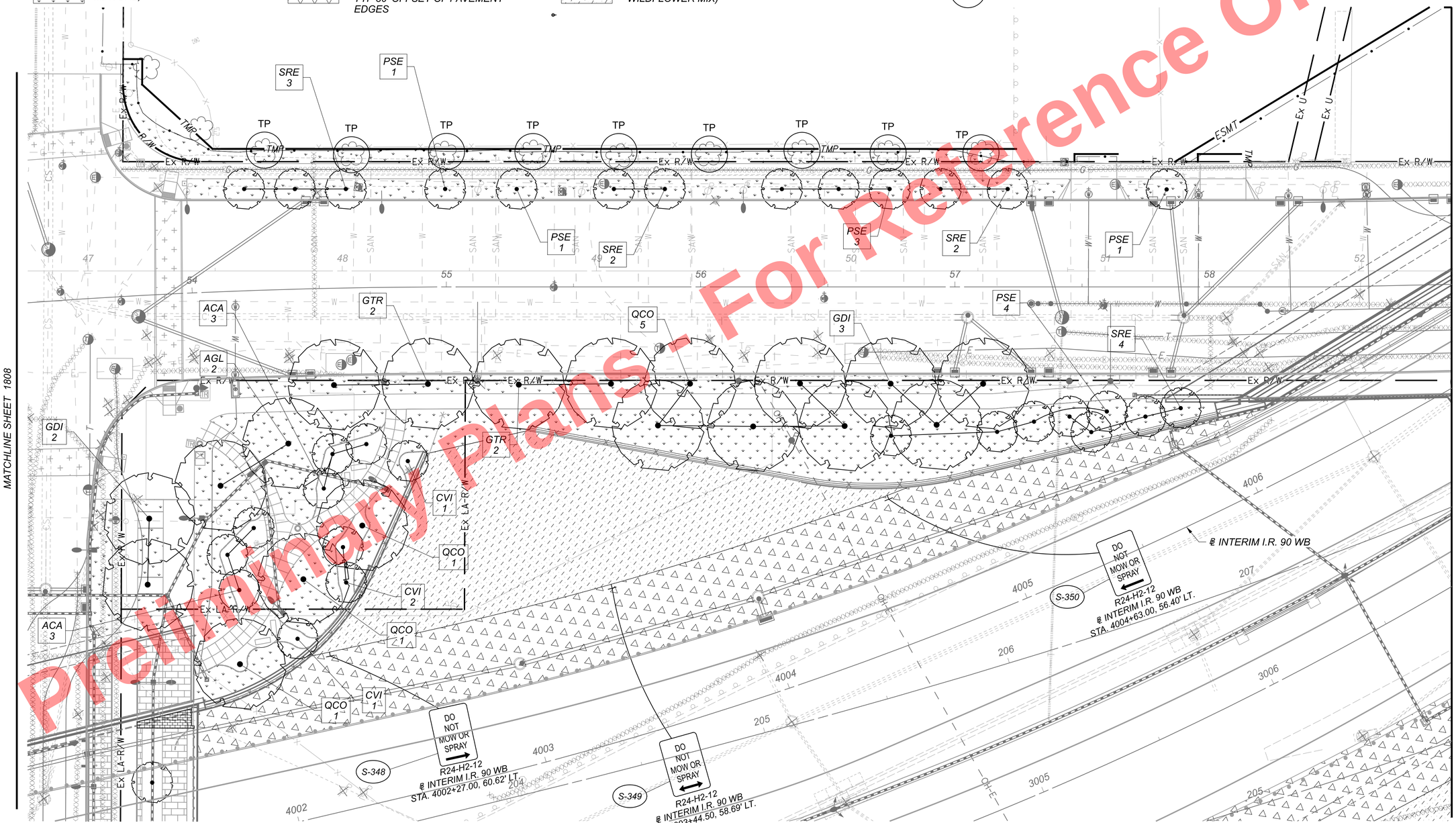

Preliminary Plans - For Reference Only

HORIZONTAL SCALE IN FEET
0 10 20 40

PLANTING PLAN
SHEET 02

CUY-90-16.28 (CCG3A)

MODEL: Sheet PAPERSIZE: 34x22 (in) DATE: 3/28/2025 TIME: 9:20:15 AM USER: Mala.Gallagher
pw:\\mb-us-pw.bentley.com:mb-us-pw-03\Documents\Cleveland_OH\01_Projects\000T\District2\82382\400-Engineering\Landscaping\Sheets\82382_PP2002.dgn

DESIGN AGENCY
Michael Baker INTERNATIONAL

DESIGNER BDC
REVIEWER JCF 01/10/24
PROJECT ID 82382
SHEET 1809 TOTAL 2696

LEGEND

ITEM 661 - DECIDUOUS TREE

ITEM 661 - DECIDUOUS TREE (FLOWERING)

ITEM 661 - EVERGREEN TREE

ITEM 661 - DECIDUOUS SHRUBS

ITEM 659 - CLASS 1 SEEDING (LAWN MIXTURE)

ITEM 659 - CLASS 2 (ROADSIDE MIXTURE)

TYP 30' OFFSET OF PAVEMENT EDGES

ITEM 659 - CLASS 5B SEEDING (NATIVE WILDFLOWER MIX)

NOTES:

1. FOR STREETSCAPES: TREES SHALL BE PLANTED A MINIMUM OF 4'-0" FROM BACK OF CURB

HORIZONTAL SCALE IN FEET
0 10 20 40

MATCHLINE SHEET 1818

MATCHLINE SHEET 1817

MATCHLINE SHEET 1811

MATCHLINE SHEET 1808

MATCHLINE SHEET 1809

MATCHLINE SHEET 1814

MATCHLINE SHEET1809

ACA 1
AGL 1
ACA 4
CCN 8
QMU 1
@ RAMP B6
GDI 3
S-347
SEE SHEET 01 FOR CARNEGIE WEST PARK PLANTING PLAN
S-351
DO NOT MOW OR SPRAY
R24-H2-12
@ INTERIM I.R. 90 EB
STA. 3001+01.00, 87.80' RT.
@ INTERIM I.R. 90 EB
PSE 2
PSE 4
ULM 5
JCB 31
JCB 28
JCB 31
JCB 31
ACA 3
JCB 9
JCB 9
JCB 8
JCB 9
JCB 9
CFL 3
POC 1
PSE 2
S-352
DO NOT MOW OR SPRAY
R24-H2-12
@ INTERIM I.R. 90 EB
STA. 3001+93.76, 80.44' RT.
S-348
SEE SHEET 02 FOR CARNEGIE EAST PARK PLANTING PLAN
S-353
DO NOT MOW OR SPRAY
R24-H2-12
@ RAMP B6
STA. 1620+86.50, 34.40' LT.
Ex R/W
Ex LA-R/W
TMP

Preliminary Plans - Not for Reference Only

PLANTING PLAN
SHEET 03

DESIGN AGENCY
Michael Baker INTERNATIONAL

DESIGNER BDC
REVIEWER JCF 01/10/24
PROJECT ID 82382
SHEET 1810 TOTAL 2696

CUY-90-16.28 (CCG3A)

MODEL: Sheet PAPERSIZE: 34x22 (in.) DATE: 3/28/2025 TIME: 9:20:28 AM USER: Mala.Gallagher
pw:\\mb-us-pw.bentley.com\mb-us-pw-03\Documents\Cleveland_OH\01_Projects\000T\District2\82382\400-Engineering\Landscaping\Sheets\82382_PP2003.dgn

LEGEND

ITEM 661 - DECIDUOUS TREE

ITEM 661 - DECIDUOUS TREE (FLOWERING)

ITEM 661 - EVERGREEN TREE

ITEM 661 - DECIDUOUS SHRUBS

ITEM 659 - CLASS 1 SEEDING (LAWN MIXTURE)

ITEM 659 - CLASS 2 (ROADSIDE MIXTURE)

TYP 30' OFFSET OF PAVEMENT EDGES

ITEM 659 - CLASS 5B SEEDING (NATIVE WILDFLOWER MIX)

NOTES:

1. FOR STREETSCAPES: TREES SHALL BE PLANTED A MINIMUM OF 4'-0" FROM BACK OF CURB
2. FOR LIMITED ACCESS FACILITIES: TREES SHALL BE PLANTED MIN. 30'-0" BACK FROM EDGE OF PAVEMENT WHEN GUARDRAIL IS NOT PRESENT

MATCHLINE SHEET1818

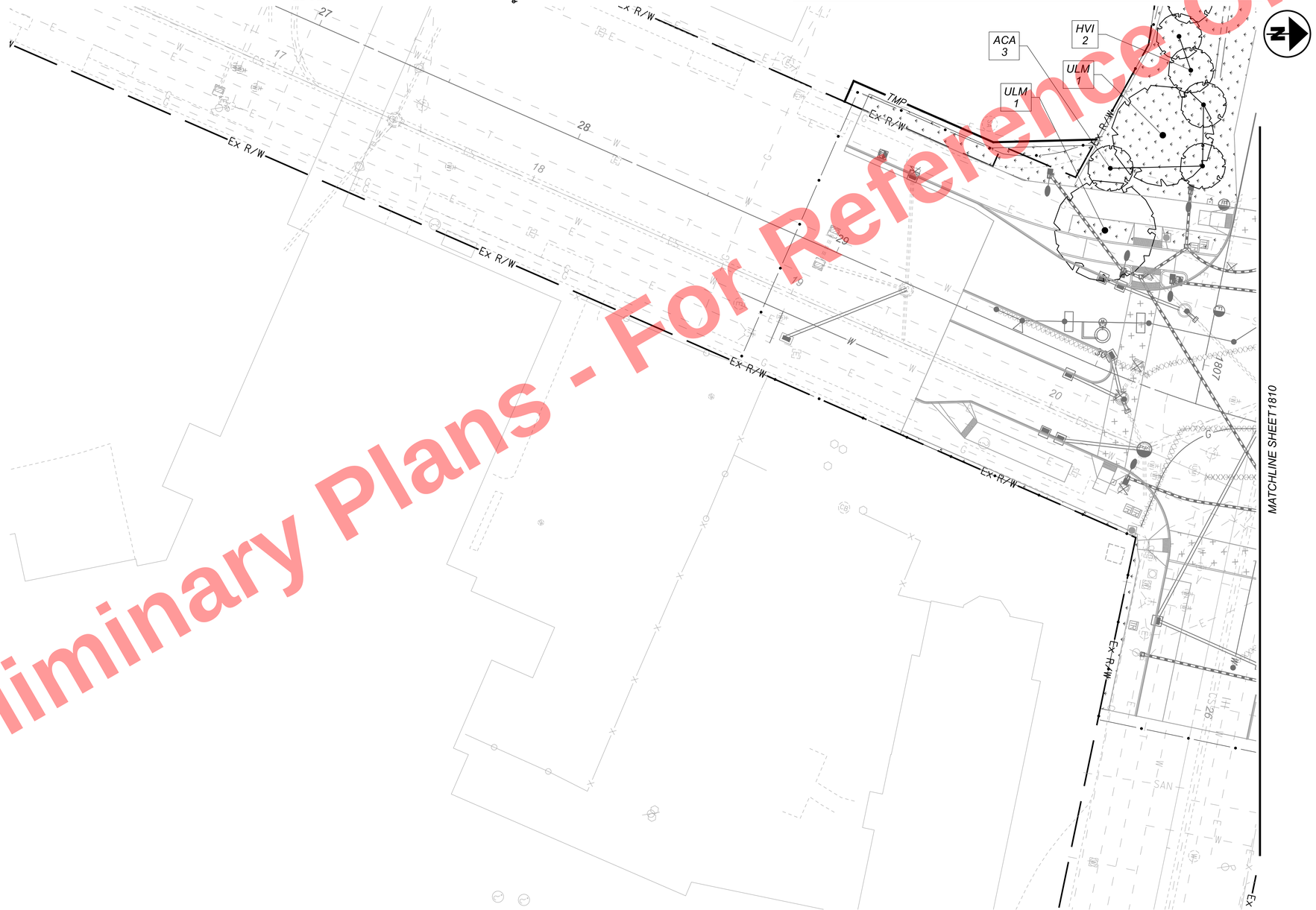

Preliminary Plans - For Reference Only

HORIZONTAL SCALE IN FEET
0 10 20 40

PLANTING PLAN
SHEET 04

DESIGN AGENCY
Michael Baker INTERNATIONAL

DESIGNER BDC
REVIEWER JCF 01/10/24
PROJECT ID 82382
SHEET 1811 TOTAL 2696

CUY-90-16.28 (CCG3A)

MODEL: Sheet PAPERSIZE: 34x22 (in.) DATE: 3/28/2025 TIME: 9:20:43 AM USER: Maia.Gallagher
pw:\\mb-us-pw.bentley.com:mb-us-pw-03\Documents\Cleveland.OH\OI_Projects\ODOT\District2\82382\400-Engineering\Landscaping\Sheets\82382_PP2004.dgn

LEGEND

ITEM 661 - DECIDUOUS TREE

ITEM 661 - DECIDUOUS TREE (FLOWERING)

ITEM 661 - EVERGREEN TREE

ITEM 661 - DECIDUOUS SHRUBS

ITEM 659 - CLASS 1 SEEDING (LAWN MIXTURE)

ITEM 659 - CLASS 2 (ROADSIDE MIXTURE)

TYP 30' OFFSET OF PAVEMENT EDGES

ITEM 659 - CLASS 5B SEEDING (NATIVE WILDFLOWER MIX)

ITEM 601 - ROCK CHANNEL PROTECTION, TYPE D WITH GEOTEXTILE FABRIC, AS PER PLAN

NOTES:

1. FOR STREETSCAPES: TREES SHALL BE PLANTED A MINIMUM OF 4'-0" FROM BACK OF CURB

HORIZONTAL SCALE IN FEET
0 10 20 40

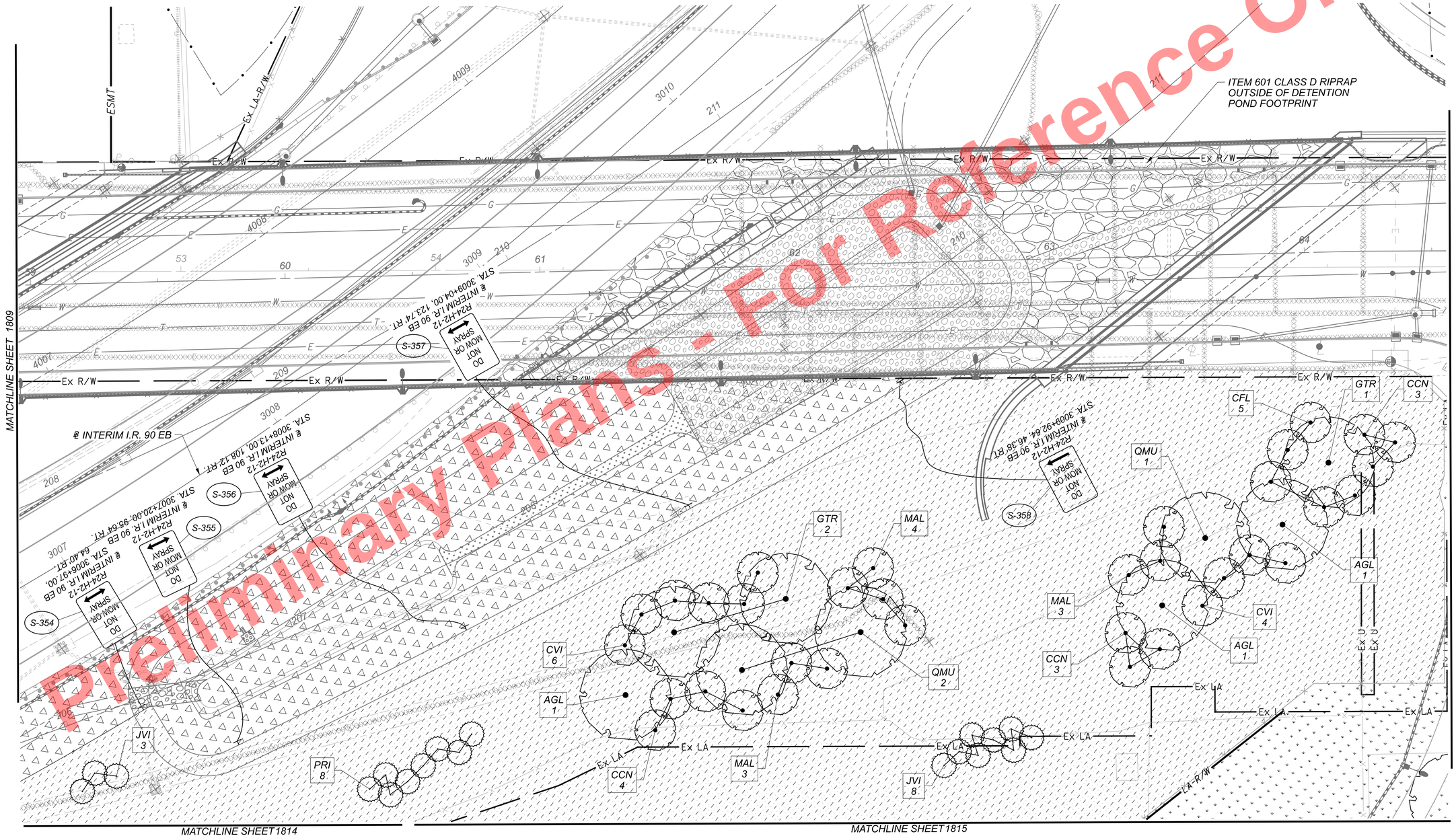

Preliminary Plans - Not For Reference Only

PLANTING PLAN
SHEET 05

DESIGN AGENCY
Michael Baker INTERNATIONAL

DESIGNER BDC
REVIEWER JCF 01/10/24
PROJECT ID 82382
SHEET 1812 TOTAL 2696

CUY-90-16.28 (CCG3A)

MODEL: Sheet PAPERSIZE: 34x22 (In.) DATE: 3/28/2025 TIME: 9:20:56 AM USER: MaiaGallagher
pw:\\mb-us-pw.bentley.commb-us-pw-03\Documents\Cleveland_OH\01_Projects\00DOT\District12\82382\400-Engineering\Landscaping\Sheets\82382_PP2005.dgn

LEGEND

ITEM 661 - DECIDUOUS TREE

ITEM 661 - DECIDUOUS TREE (FLOWERING)

ITEM 661 - EVERGREEN TREE

ITEM 661 - DECIDUOUS SHRUBS

ITEM 659 - CLASS 1 SEEDING (LAWN MIXTURE)

ITEM 659 - CLASS 2 (ROADSIDE MIXTURE)

TYP 30' OFFSET OF PAVEMENT EDGES

ITEM 659 - CLASS 5B SEEDING (NATIVE WILDFLOWER MIX)

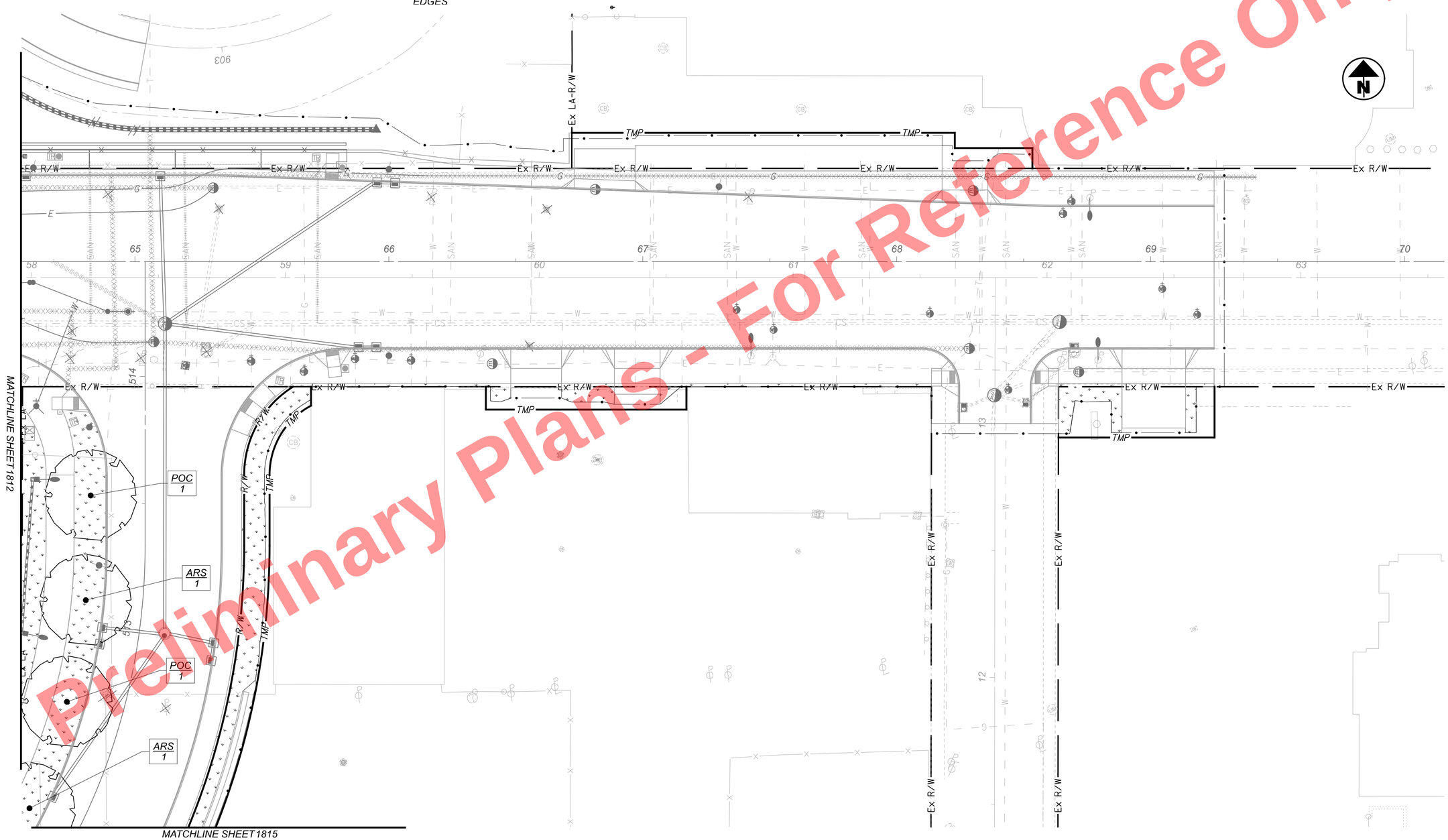

Preliminary Plans - Not For Reference Only

HORIZONTAL SCALE IN FEET
0 10 20 40

PLANTING PLAN
SHEET 06

DESIGN AGENCY
Michael Baker INTERNATIONAL

DESIGNER BDC
REVIEWER JCF 01/10/24
PROJECT ID 82382
SHEET 1813 TOTAL 2696

CUY-90-16.28 (CCG3A)

MODEL: Sheet PAPERSIZE: 34x22 (in.) DATE: 3/28/2025 TIME: 9:21:11 AM USER: Maia.Gallagher
pw:\\mb-us-pw.bentley.commb-us-pw-03\Documents\Cleveland_OH\OL_Projects\ODOT\Districts\12\82382\400-Engineering\Landscaping\Sheets\82382_PP2006.dgn

LEGEND

ITEM 661 - DECIDUOUS TREE

ITEM 661 - DECIDUOUS TREE (FLOWERING)

ITEM 661 - EVERGREEN TREE

ITEM 661 - DECIDUOUS SHRUBS

ITEM 659 - CLASS 1 SEEDING (LAWN MIXTURE)

ITEM 659 - CLASS 2 (ROADSIDE MIXTURE)

TYP 30' OFFSET OF PAVEMENT EDGES

ITEM 659 - CLASS 5B SEEDING (NATIVE WILDFLOWER MIX)

NOTES:

1. FOR STREETSCAPES: TREES SHALL BE PLANTED A MINIMUM OF 4'-0" FROM BACK OF CURB

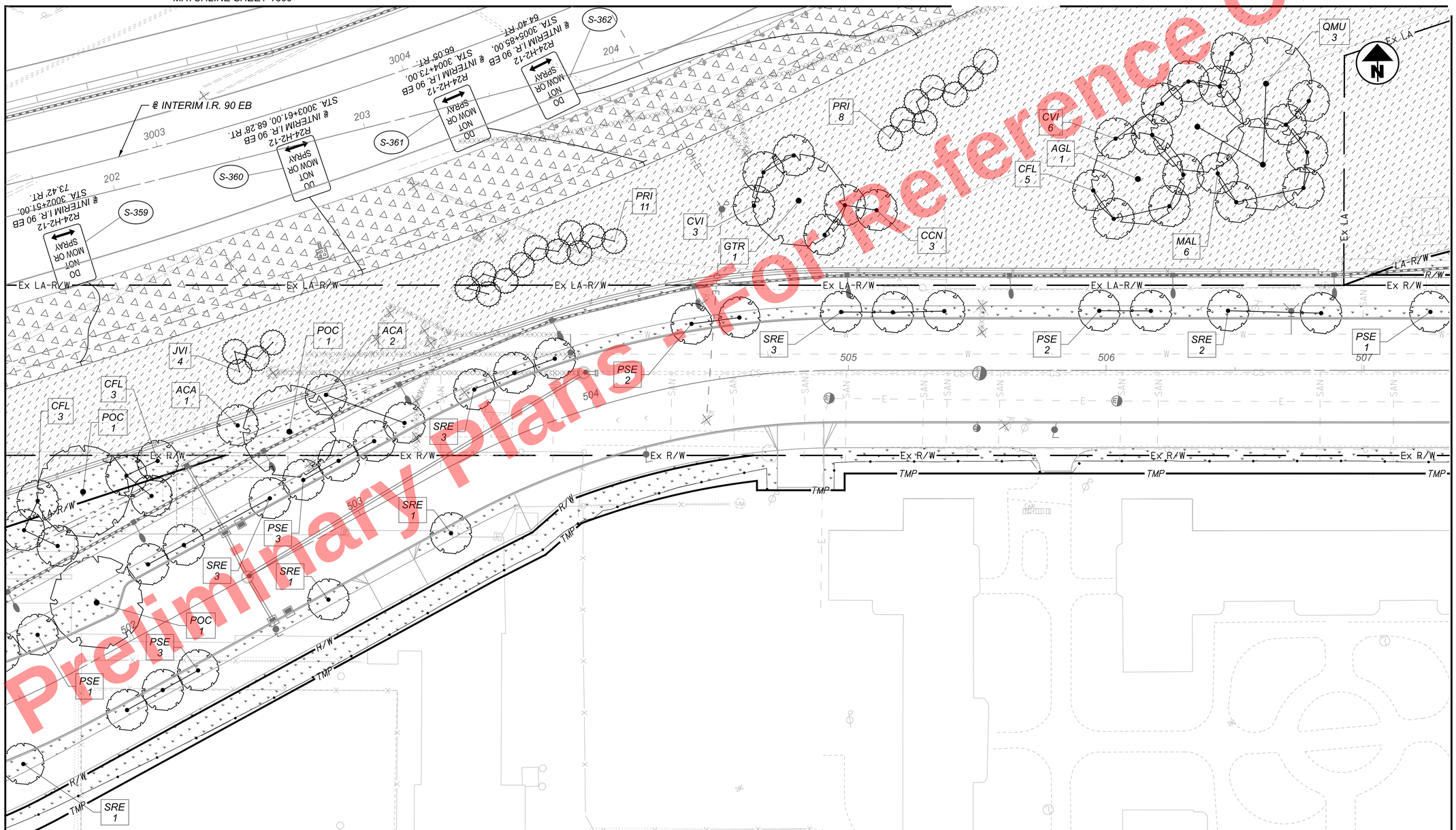

Preliminary Plans - For Reference Only

HORIZONTAL SCALE IN FEET
0 10 20 40

PLANTING PLAN
SHEET 07

DESIGN AGENCY
Michael Baker INTERNATIONAL

DESIGNER BDC
REVIEWER JCF 01/10/24
PROJECT ID 82382
SHEET 1814 TOTAL 2696

CUY-90-16.28 (CCG3A)

MODEL: Sheet PAPERSIZE: 34x22 (in.) DATE: 3/28/2025 TIME: 9:26:25 AM USER: Mala.Gallagher
pw:\\mb-us-pw.bentley.com:mb-us-pw-03\Documents\Cleveland_OH\01_Projects\ODOT\District12\82382\400-Engineering\Landscaping\Sheets\82382_PP2007.dgn

LEGEND

ITEM 661 - DECIDUOUS TREE

ITEM 661 - DECIDUOUS TREE (FLOWERING)

ITEM 661 - EVERGREEN TREE

ITEM 661 - DECIDUOUS SHRUBS

ITEM 659 - CLASS 1 SEEDING (LAWN MIXTURE)

ITEM 659 - CLASS 2 (ROADSIDE MIXTURE)

TYP 30' OFFSET OF PAVEMENT EDGES

ITEM 659 - CLASS 5B SEEDING (NATIVE WILDFLOWER MIX)

NOTES:

1. FOR STREETSCAPES: TREES SHALL BE PLANTED A MINIMUM OF 4'-0" FROM BACK OF CURB

HORIZONTAL SCALE IN FEET
0 20 40 80

MATCHLINE SHEET 1812

MATCHLINE SHEET 1813

MATCHLINE SHEET 1814

MATCHLINE SEE SHEET 1816

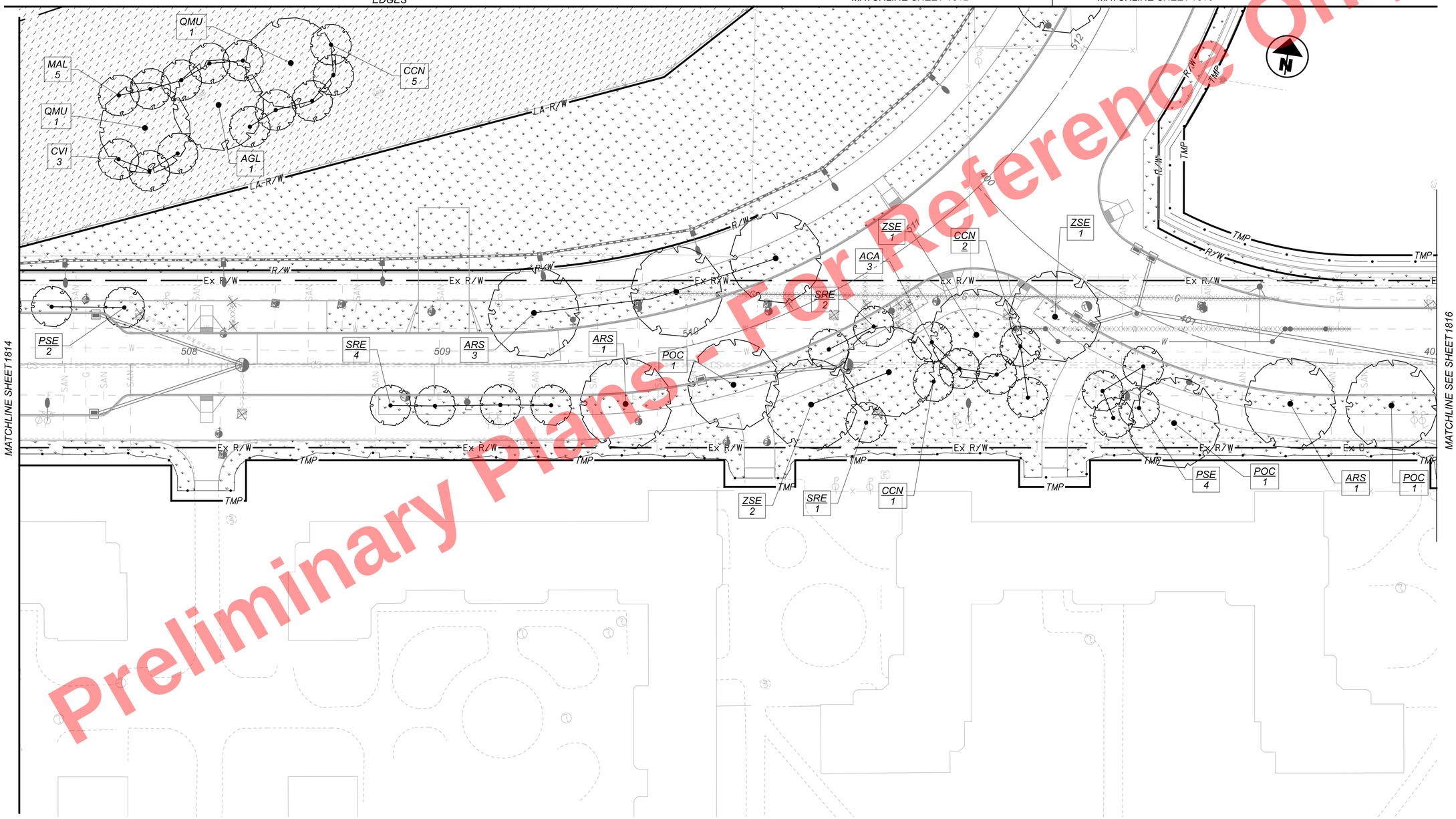

Preliminary Plans - Not For Reference Only

PLANTING PLAN
SHEET 08

DESIGN AGENCY
Michael Baker INTERNATIONAL

DESIGNER BDC
REVIEWER JCF 01/10/24
PROJECT ID 82382
SHEET 1815 TOTAL 2696

CUY-90-16.28 (CCG3A)

MODEL: Sheet PAPERSIZE: 34x22 (in.) DATE: 3/28/2025 TIME: 9:21:38 AM USER: MdlaGallagher
pw:\\mb-us-pw.bentley.com:mb-us-pw-03\Documents\Cleveland_OH\01_Projects\000TVDistrict2\82382\400-Engineering\Landscaping\Sheets\82382_PP2008.dgn

LEGEND

ITEM 661 - DECIDUOUS TREE

ITEM 661 - DECIDUOUS TREE (FLOWERING)

ITEM 661 - EVERGREEN TREE

ITEM 661 - DECIDUOUS SHRUBS

ITEM 659 - CLASS 1 SEEDING (LAWN MIXTURE)

ITEM 659 - CLASS 2 (ROADSIDE MIXTURE)

TYP 30' OFFSET OF PAVEMENT EDGES

ITEM 659 - CLASS 5B SEEDING (NATIVE WILDFLOWER MIX)

NOTES:

1. FOR STREETSCAPES: TREES SHALL BE PLANTED A MINIMUM OF 4'-0" FROM BACK OF CURB

HORIZONTAL SCALE IN FEET
0 20 40 80

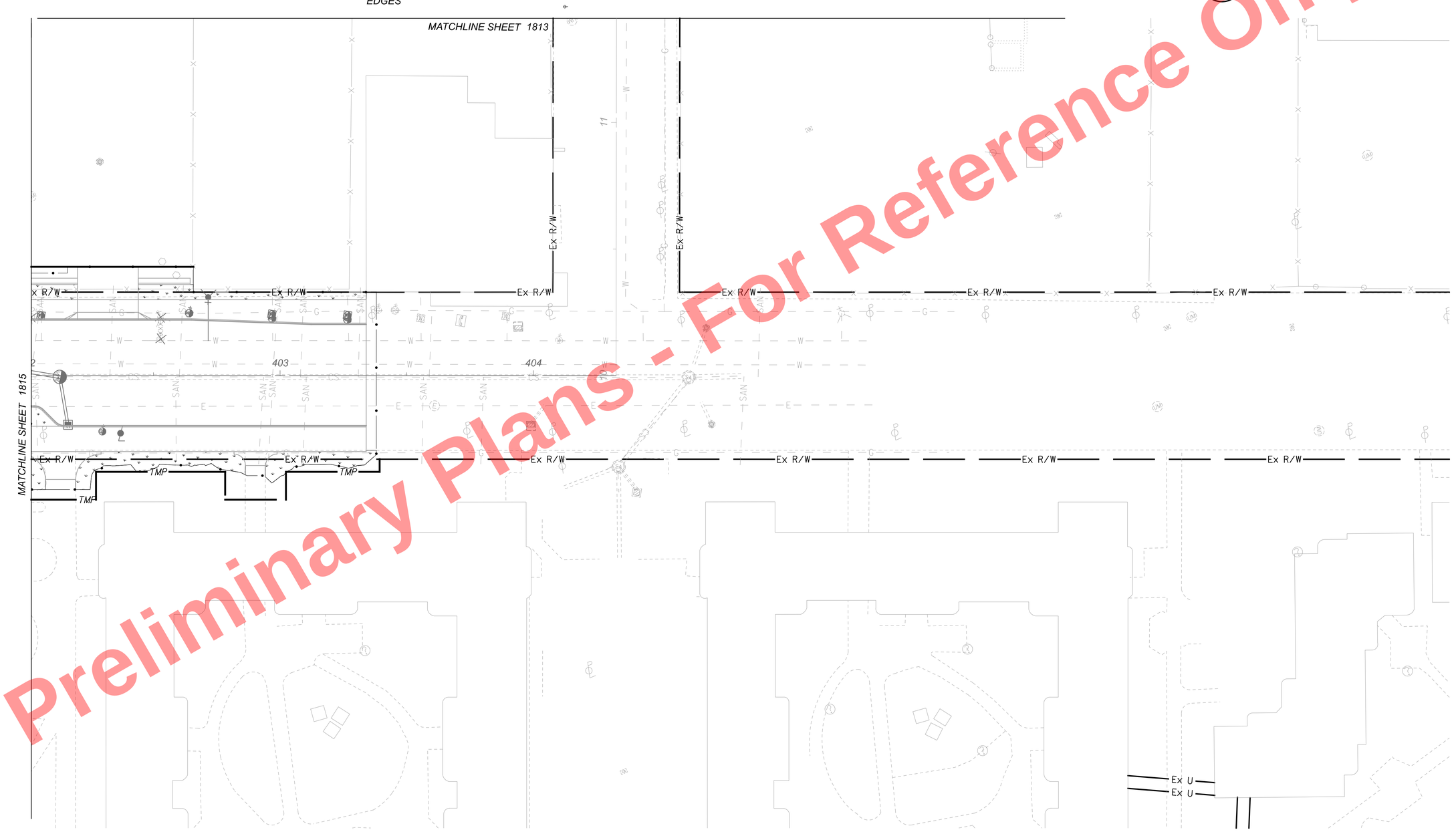

Preliminary Plans - For Reference Only

PLANTING PLAN
SHEET 09

DESIGN AGENCY
Michael Baker INTERNATIONAL

DESIGNER
BDC

REVIEWER
JCF 01/10/24

PROJECT ID
82382

SHEET 1816 TOTAL 2696

CUY-90-16.28 (CCG3A)

MODEL: Sheet PAPERSIZE: 34x22 (In.) DATE: 3/28/2025 TIME: 9:21:55 AM USER: MaiaGallagher
pw:\\mb-us-pw.bentley.com:mb-us-pw-03\Documents\Cleveland_OH\01_Projects\ODOT\District2\82382\400-Engineering\Landscaping\Sheets\82382_PP2009.dgn

LEGEND

ITEM 661 - DECIDUOUS TREE

ITEM 661 - DECIDUOUS TREE (FLOWERING)

ITEM 661 - EVERGREEN TREE

ITEM 661 - DECIDUOUS SHRUBS

ITEM 659 - CLASS 1 SEEDING (LAWN MIXTURE)

ITEM 659 - CLASS 2 (ROADSIDE MIXTURE)

TYP 30' OFFSET OF PAVEMENT EDGES

ITEM 659 - CLASS 5B SEEDING (NATIVE WILDFLOWER MIX)

MATCHLINE SHEET 1808

MATCHLINE SHEET 1810

MATCHLINE SHEET 11

Preliminary Plans - For Reference Only

HORIZONTAL SCALE IN FEET
0 10 20 40

PLANTING PLAN
SHEET 10

DESIGN AGENCY
Michael Baker INTERNATIONAL

DESIGNER BDC
REVIEWER JCF 01/10/24
PROJECT ID 82382
SHEET 1817 TOTAL 2696

CUY-90-16.28 (CCG3A)

MODEL: Sheet PAPERSIZE: 34x22 (in.) DATE: 3/28/2025 TIME: 9:22:11 AM USER: Mala.Gallagher
pw:\\mb-us-pw.bentley.com\mb-us-pw-03\Documents\Cleveland_OH\01_Projects\ODOT\District2\82382\400-Engineering\Landscaping\Sheets\82382_PP2010.dgn

LEGEND

ITEM 661 - DECIDUOUS TREE

ITEM 661 - DECIDUOUS TREE (FLOWERING)

ITEM 661 - EVERGREEN TREE

ITEM 661 - DECIDUOUS SHRUBS

ITEM 659 - CLASS 1 SEEDING (LAWN MIXTURE)

ITEM 659 - CLASS 2 (ROADSIDE MIXTURE)

TYP 30' OFFSET OF PAVEMENT EDGES

ITEM 659 - CLASS 5B SEEDING (NATIVE WILDFLOWER MIX)

NOTES:

1. FOR LIMITED ACCESS FACILITIES: TREES SHALL BE PLANTED MIN. 30'-0" BACK FROM EDGE OF PAVEMENT WHEN GUARDRAIL IS NOT PRESENT

HORIZONTAL SCALE IN FEET
0 10 20 40

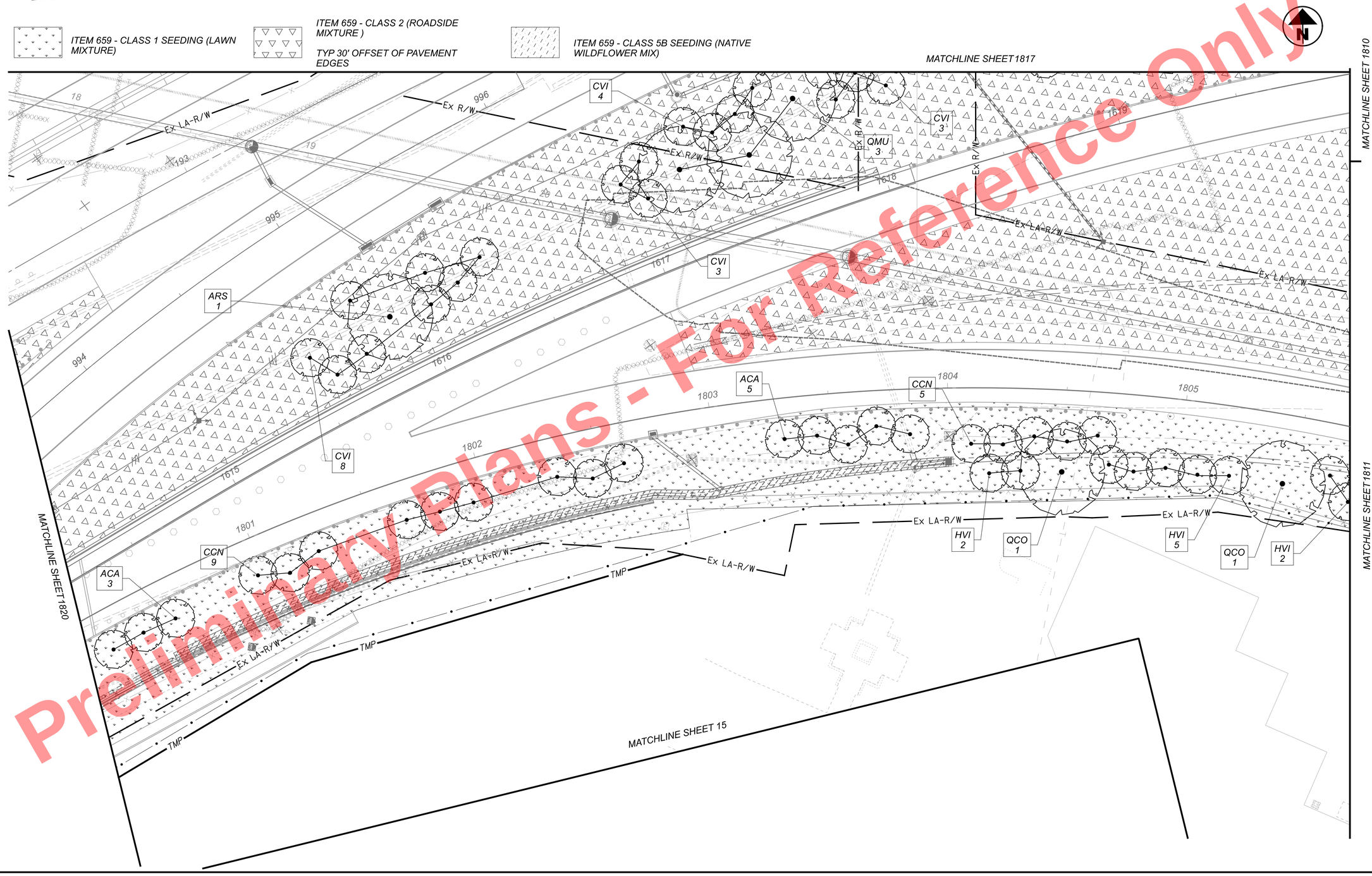

Preliminary Plans - For Reference Only

PLANTING PLAN
SHEET 11

DESIGN AGENCY
Michael Baker INTERNATIONAL

DESIGNER BDC
REVIEWER JCF 01/10/24
PROJECT ID 82382
SHEET 1818 TOTAL 2696

CUY-90-16.28 (CCG3A)

MODEL: Sheet PAPERSIZE: 34x22 (in) DATE: 3/28/2025 TIME: 9:22:28 AM USER: Mala.Gallagher
pw:\\mb-us-pw.bentley.com:mb-us-pw-03\Documents\Cleveland_OHIO_Projects\0007\District2\82382\400-Engineering\Landscaping\Sheets\82382_PP20II.dgn

LEGEND

ITEM 661 - DECIDUOUS TREE

ITEM 661 - DECIDUOUS TREE (FLOWERING)

ITEM 661 - EVERGREEN TREE

ITEM 661 - DECIDUOUS SHRUB

ITEM 659 - CLASS 1 SEEDING (LAWN MIXTURE)

ITEM 659 - CLASS 2 (ROADSIDE MIXTURE)

TYP 30' OFFSET OF PAVEMENT EDGES

ITEM 659 - CLASS 5B SEEDING (NATIVE WILDFLOWER MIX)

ITEM 601 - ROCK CHANNEL PROTECTION, TYPE D WITH GEOTEXTILE FABRIC, AS PER PLAN

NOTES:

1. FOR STREETSCAPES: TREES SHALL BE PLANTED A MINIMUM OF 4'-0" FROM BACK OF CURB
2. FOR LIMITED ACCESS FACILITIES: TREES SHALL BE PLANTED MIN. 30'-0" BACK FROM EDGE OF PAVEMENT WHEN GUARDRAIL IS NOT PRESENT

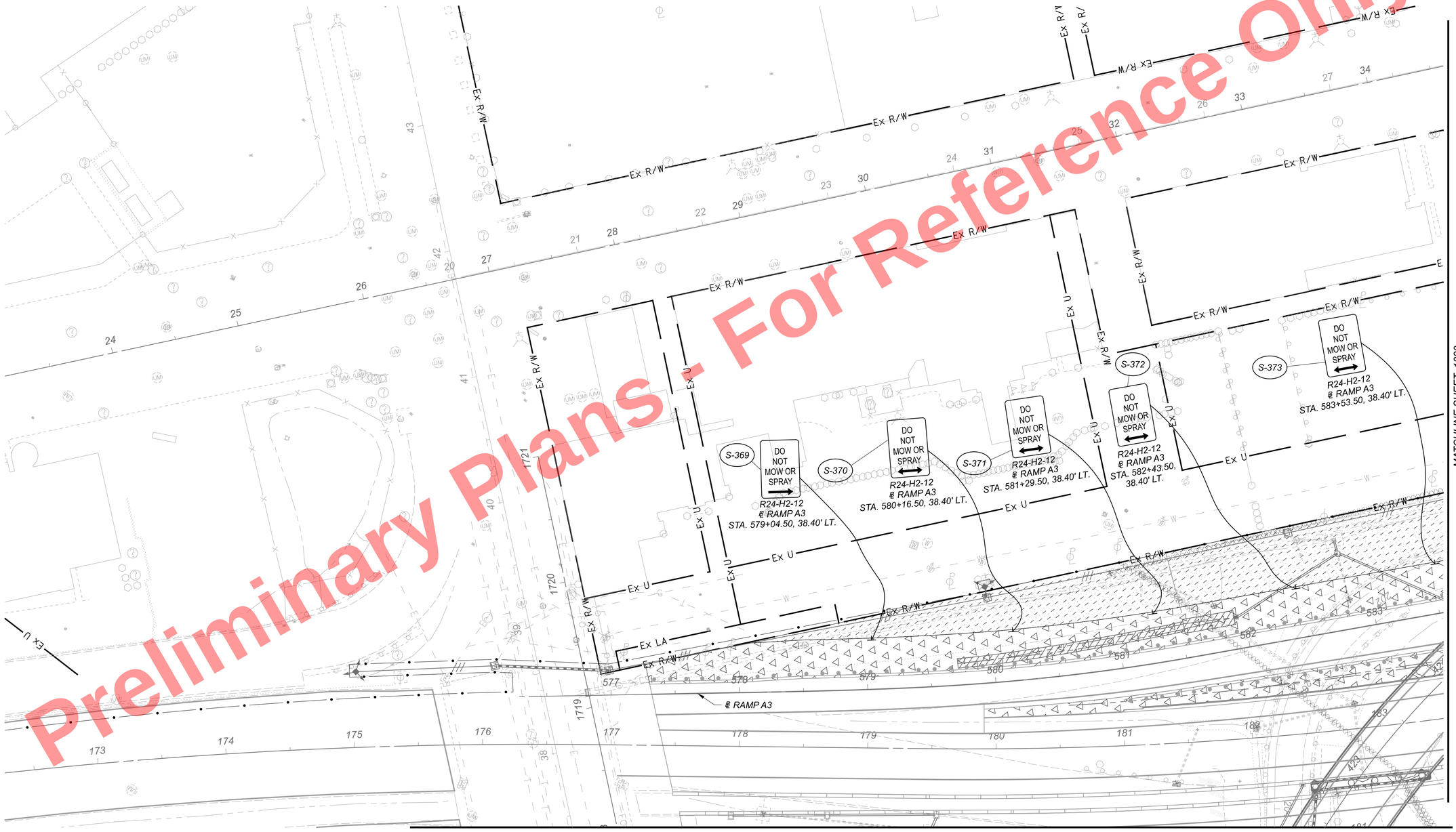

Preliminary Plans - For Reference Only

HORIZONTAL SCALE IN FEET
0 20 40 80

PLANTING PLAN
SHEET 12

DESIGN AGENCY
Michael Baker INTERNATIONAL

DESIGNER BDC
REVIEWER JCF 01/10/24
PROJECT ID 82382
SHEET 1819 TOTAL 2696

CUY-90-16.28 (CCG3A)

MODEL: Sheet PAPERSIZE: 34x22 (in.) DATE: 3/28/2025 TIME: 9:22:42 AM USER: Mala.Gallagher
pw:\\mb-us-pw.bentley.commb-us-pw-03\Documents\Cleveland_OH\01_Projects\000T\District2\82382\400-Engineering\Landscaping\Sheets\82382_PP2012.dgn

LEGEND

ITEM 661 - DECIDUOUS TREE

ITEM 661 - DECIDUOUS TREE (FLOWERING)

ITEM 661 - EVERGREEN TREE

ITEM 661 - DECIDUOUS SHRUB

ITEM 659 - CLASS 1 SEEDING (LAWN MIXTURE)

ITEM 659 - CLASS 2 (ROADSIDE MIXTURE)

TYP 30' OFFSET OF PAVEMENT EDGES

ITEM 659 - CLASS 5B SEEDING (NATIVE WILDFLOWER MIX)

ITEM 601 - ROCK CHANNEL PROTECTION, TYPE D WITH GEOTEXTILE FABRIC, AS PER PLAN

NOTES:

1. FOR LIMITED ACCESS FACILITIES: TREES SHALL BE PLANTED MIN. 30'-0" BACK FROM EDGE OF PAVEMENT WHEN GUARDRAIL IS NOT PRESENT

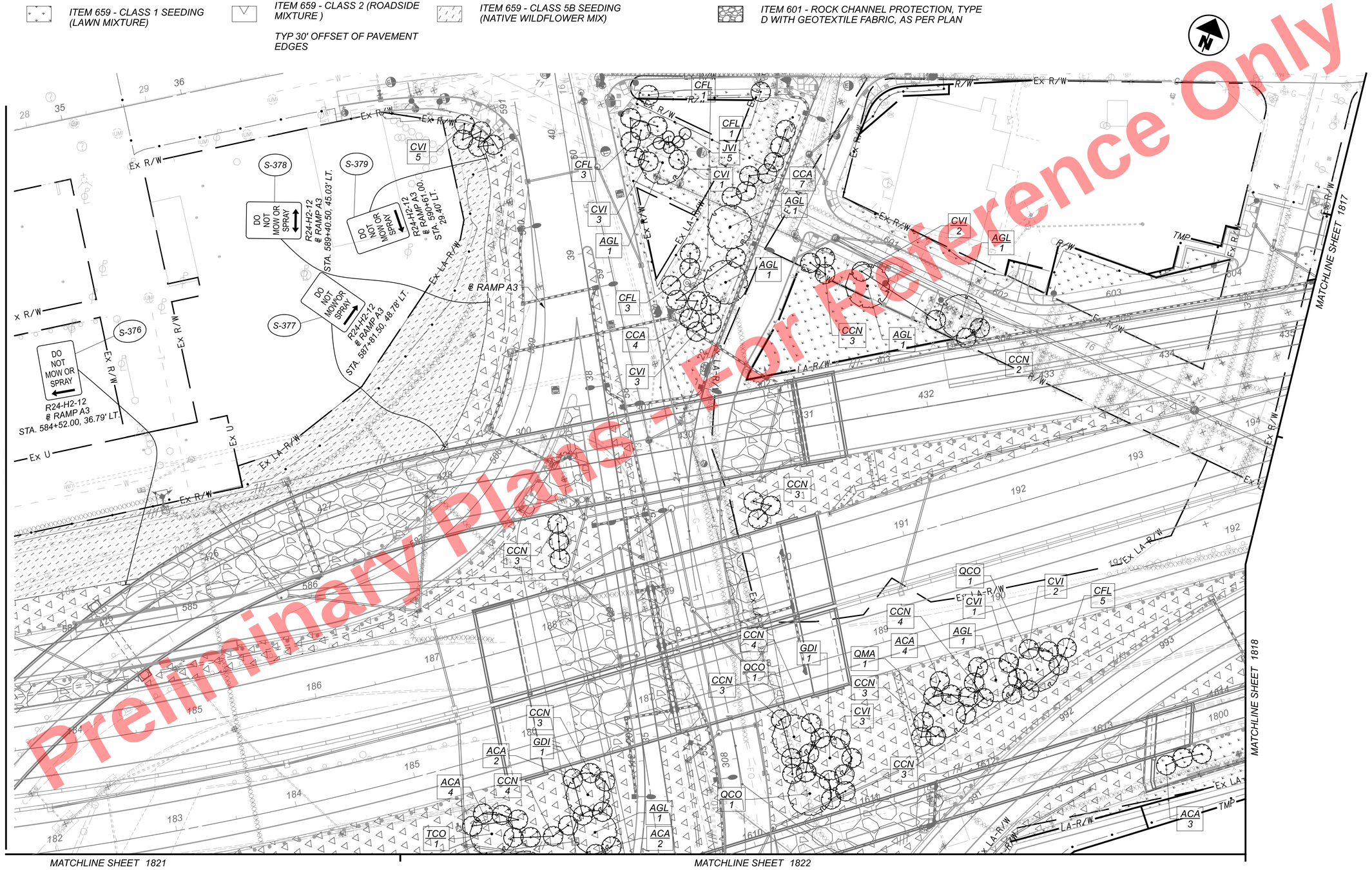

Preliminary Plans - For Reference Only

HORIZONTAL SCALE IN FEET
0 20 40 80

PLANTING PLAN
SHEET 13

DESIGN AGENCY
Michael Baker INTERNATIONAL

DESIGNER BDC
REVIEWER JCF 01/10/24
PROJECT ID 82382
SHEET 1820 TOTAL 2696

CUY-90-16.28 (CCG3A)

MODEL: Sheet PAPERSIZE: 34x22 (in.) DATE: 6/9/2025 TIME: 2:41:52 PM USER: Julie.Ross
pw:\\mb-us-pw.bentley.com:mb-us-pw-03\Documents\Cleveland_OH\01_Projects\ODOT\District2\82382\400-Engineering\Landscaping\Sheets\82382_PP2013.dgn

LEGEND

ITEM 661 - DECIDUOUS TREE

ITEM 661 - DECIDUOUS TREE (FLOWERING)

ITEM 661 - EVERGREEN TREE

ITEM 661 - DECIDUOUS SHRUB

ITEM 659 - CLASS 1 SEEDING (LAWN MIXTURE)

ITEM 659 - CLASS 2 (ROADSIDE MIXTURE)

TYP 30' OFFSET OF PAVEMENT EDGES

ITEM 659 - CLASS 5B SEEDING (NATIVE WILDFLOWER MIX)

DO NOT MOW → "SIGN R"

DO NOT MOW ↔ "SIGN D"

DO NOT MOW ← "SIGN L"

NOTES:

1. FOR LIMITED ACCESS FACILITIES: TREES SHALL BE PLANTED MIN. 30'-0" BACK FROM EDGE OF PAVEMENT WHEN GUARDRAIL IS NOT PRESENT

2. ALL STA. CALL-OUTS DIMENSIONED OFF ℄ RAMP IJ3 UNLESS OTHERWISE NOTED.

MATCHLINE SHEET 1819

MATCHLINE SHEET 1820

MATCHLINE SHEET 1822

MATCHLINE SHEET 1823

℄ RAMP B6

℄ RAMP IJ3

℄ INTERIM E. 14TH ST. SB

ACA 3

CCN 3

GDI 1

MAL 3

ZSE 1

QMA 1

CVI 4

ACA 2

CVI 2

JVI 6

MAL 5

PVI 2

CCN 4

JVI 3

SIGN D ℄ RAMP B6 STA. 1604+92.50, 48.81' RT.

SIGN D ℄ RAMP B6 STA. 1603+87.00, 48.80' RT.

SIGN D ℄ RAMP B6 STA. 1605+82.00,, 48.80' RT.

SIGN L ℄ RAMP B6 STA. 1602+85.50, 48.80' RT.

SIGN D STA. 106+24.50, 32.79' LT.

SIGN D STA. 105+34.50, 32.82' LT.

SIGN D STA. 107+24.50, 32.77' LT.

SIGN D STA. 104+47.00, 32.73' LT.

SIGN D STA. 103+59.50, 32.70' LT.

SIGN R STA. 105+90.00, 45.76' RT.

SIGN L STA. 105+92.50, 57.37' RT.

SIGN D STA. 104+39.50, 114.92' RT.

SIGN D STA. 106+45.00, 128.17' RT.

SIGN D STA. 104+37.00, 45.84' RT.

SIGN D STA. 107+41.50, 105.45' RT.

SIGN D STA. 102+86.50, 46.83' RT.

SIGN D STA. 105+15.00, 209.68' RT.

SIGN D STA. 102+52.00, 126.59' RT.

SIGN R STA. 102+79.50, 32.79' LT.

SIGN D STA. 101+43.50, 59.41' RT.

SIGN D STA. 200+56.13, 39.81' LT.

SIGN D STA. 101+22.00, 197.59' RT.

SIGN D STA. 101+18.50, 98.60' RT.

S-378 S-379 S-380 S-381 S-383 S-384 S-385 S-386 S-387 S-388 S-389 S-390 S-391 S-392 S-393 S-394 S-395 S-396 S-397 S-398 S-399 S-400

Preliminary Plans - Not For Construction Only

HORIZONTAL SCALE IN FEET 0 20 40 80

PLANTING PLAN SHEET 14

DESIGN AGENCY Michael Baker INTERNATIONAL

DESIGNER BDC

REVIEWER JCF 01/10/24

PROJECT ID 82382

SHEET 1821 TOTAL 2696

CUY-90-16.28 (CCG3A)

MODEL: Sheet PAPERSIZE: 34x22 (in.) DATE: 3/28/2025 TIME: 9:23:10 AM USER: Mala.Gallagher
pw:\\mb-us-pw.bentley.com:mb-us-pw-03\Documents\Cleveland_OH\01_Projects\ODOT\District2\82382\400-Engineering\Landscaping\Sheets\82382_PP2014.dgn

LEGEND

ITEM 661 - DECIDUOUS TREE

ITEM 661 - DECIDUOUS TREE (FLOWERING)

ITEM 661 - EVERGREEN TREE

ITEM 661 - DECIDUOUS SHRUB

ITEM 659 - CLASS 1 SEEDING (LAWN MIXTURE)

ITEM 659 - CLASS 2 (ROADSIDE MIXTURE)

TYP 30' OFFSET OF PAVEMENT EDGES

ITEM 659 - CLASS 5B SEEDING (NATIVE WILDFLOWER MIX)

ITEM 601 - ROCK CHANNEL PROTECTION, TYPE D WITH GEOTEXTILE FABRIC, AS PER PLAN

NOTE:

1.ALL STA. CALL-OUTS DIMENSIONED @ RAMP IJ3 UNLESS OTHERWISE NOTED.

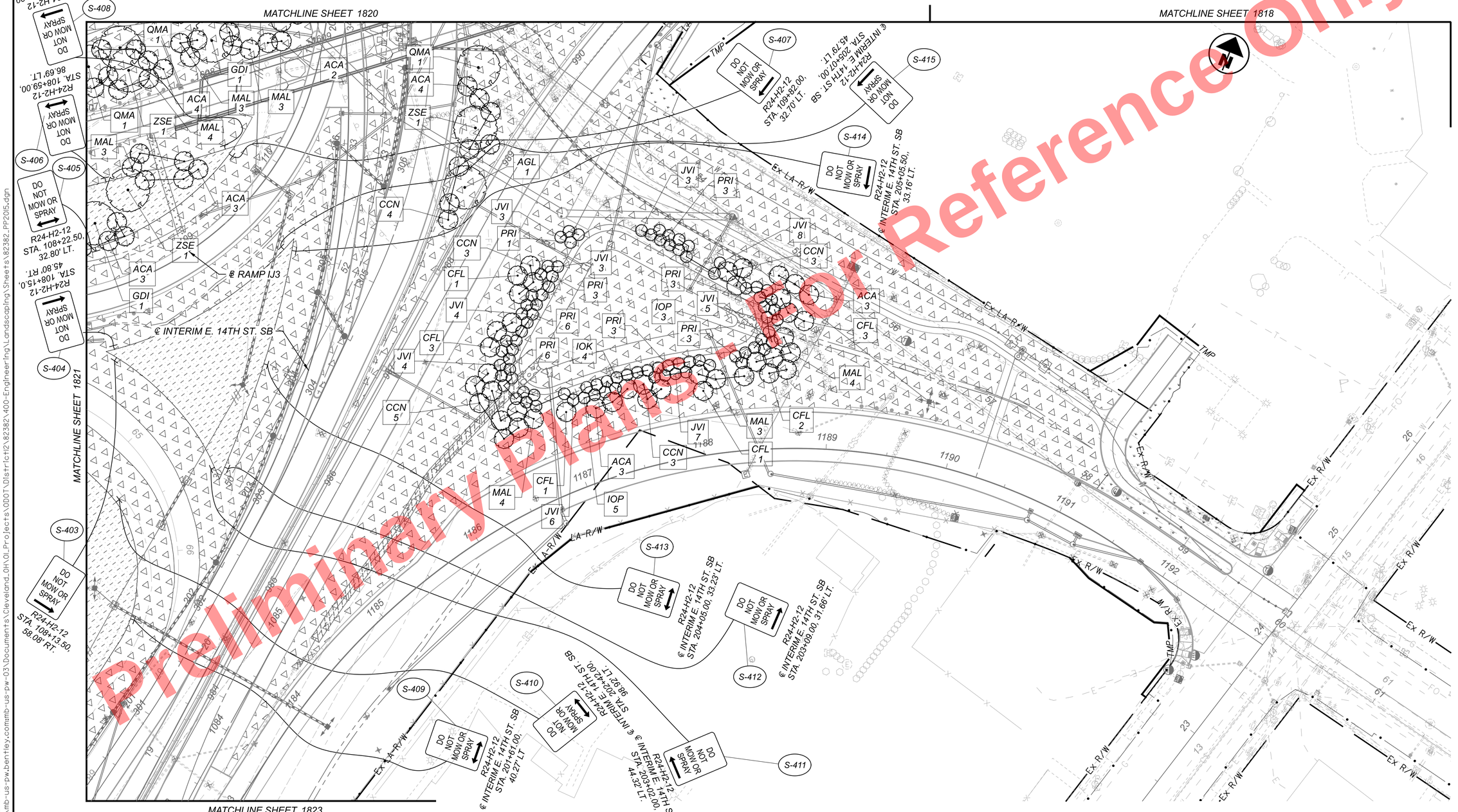

Preliminary Plans - Not for Construction
Reference Only

HORIZONTAL SCALE IN FEET
0 20 40 80

PLANTING PLAN
SHEET 15

DESIGN AGENCY
Michael Baker INTERNATIONAL

DESIGNER BDC
REVIEWER JCF 01/10/24
PROJECT ID 82382
SHEET 1822 TOTAL 2696

CUY-90-16.28 (CCG3A)

MODEL: Sheet PAPERSIZE: 34x22 (in.) DATE: 6/9/2025 TIME: 2:42:08 PM USER: JulieRoss
pw:\\mb-us-pw.bentley.com:mb-us-pw-03\Documents\Cleveland_OH\01_Projects\000T\District2\82382\400-Engineering\Landscaping\Sheets\82382_PP2015.dgn

LEGEND

ITEM 661 - DECIDUOUS TREE

ITEM 661 - DECIDUOUS TREE (FLOWERING)

ITEM 661 - EVERGREEN TREE

ITEM 661 - DECIDUOUS SHRUB

ITEM 659 - CLASS 1 SEEDING (LAWN MIXTURE)

ITEM 659 - CLASS 2 (ROADSIDE MIXTURE)

TYP 30' OFFSET OF PAVEMENT EDGES

ITEM 659 - CLASS 5B SEEDING (NATIVE WILDFLOWER MIX)

ITEM 601 - ROCK CHANNEL PROTECTION, TYPE D WITH GEOTEXTILE FABRIC, AS PER PLAN

NOTE:

1. ALL STA. CALL-OUTS DIMENSIONED OFF ℄ INTERIM E. 14TH ST. SB UNLESS OTHERWISE NOTED.

MATCHLINE SHEET 1821

MATCHLINE SHEET 1822

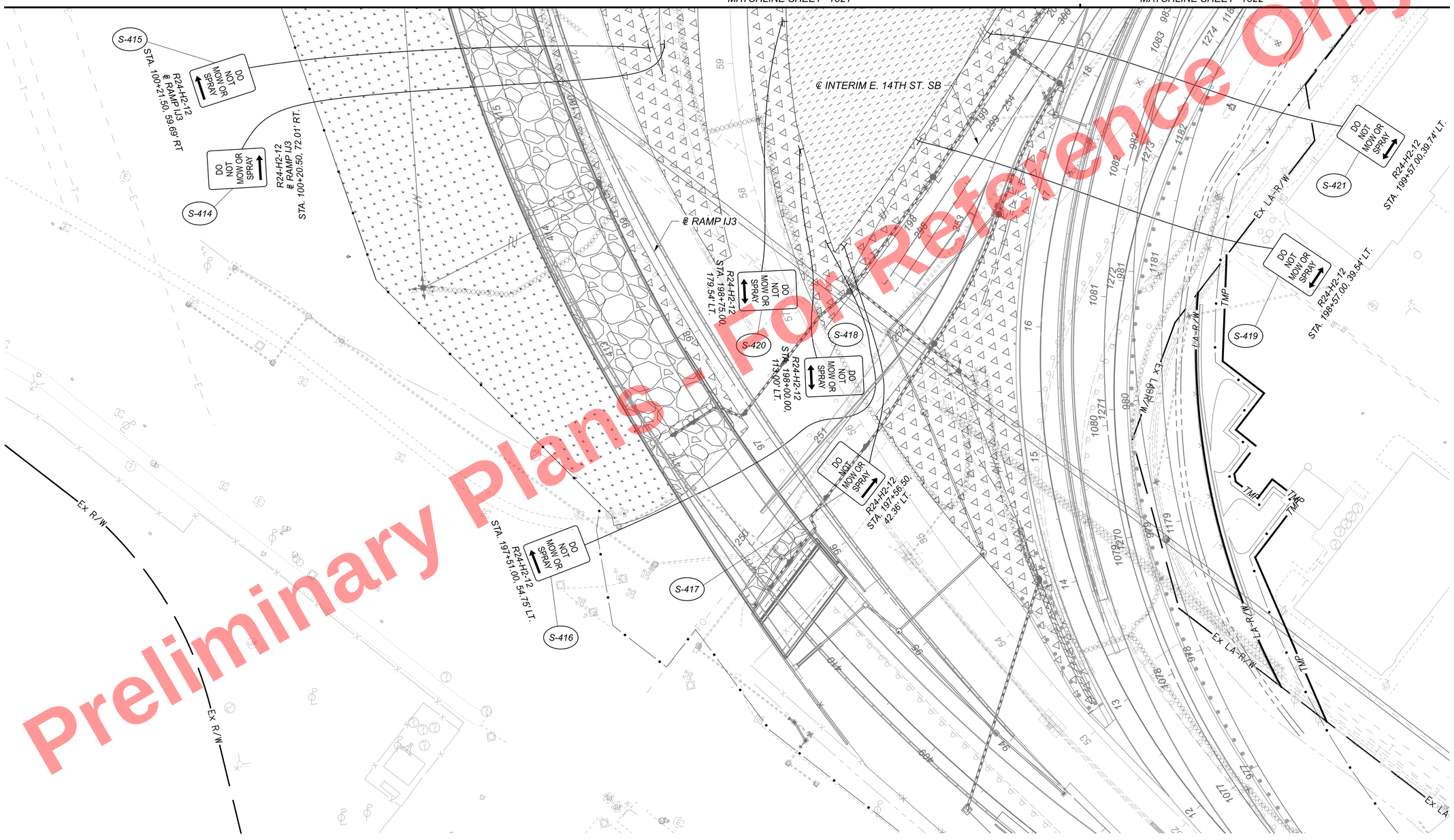

Preliminary Plans - For Reference Only

HORIZONTAL SCALE IN FEET 0 20 40 80

PLANTING PLAN SHEET 16

DESIGN AGENCY

Michael Baker INTERNATIONAL

DESIGNER BDC

REVIEWER JCF 01/10/24

PROJECT ID 82382

SHEET 1823 TOTAL 2696

CUY-90-16.28 (CCG3A)

MODEL: Sheet PAPERSIZE: 34x22 (in.) DATE: 3/28/2025 TIME: 9:23:40 AM USER: Maia.Gallagher
pw:\\mb-us-pw.bentley.com:mb-us-pw-03\Documents\Cleveland_OH\01_Projects\ODOT\District12\82382\400-Engineering\Landscaping\Sheets\82382_PP2016.dgn

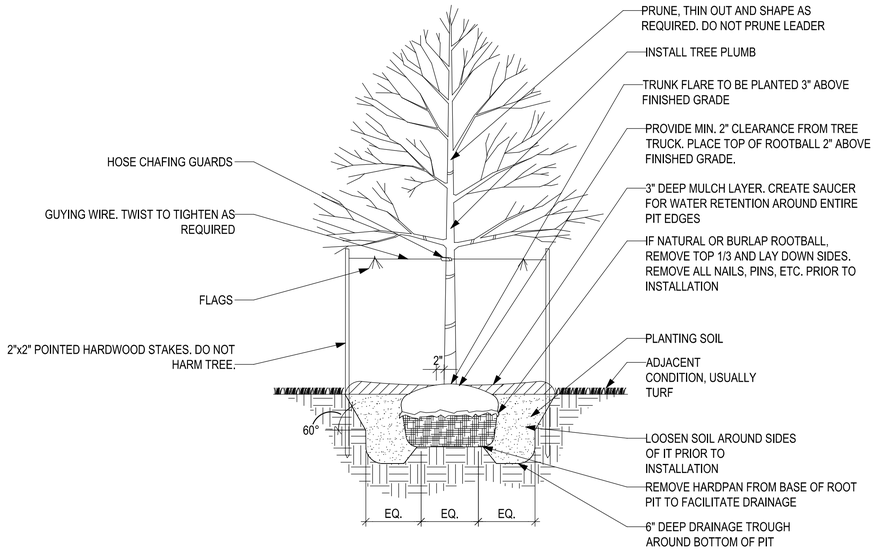

ITEM 661 - DECIDUOUS TREE PLANTING

SCALE: NTS

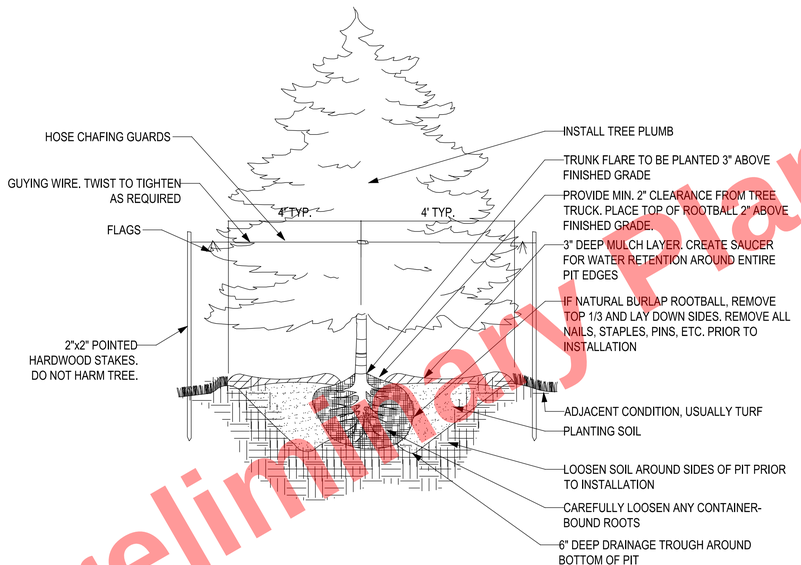

ITEM 661 - EVERGREEN TREE PLANTING

SCALE: NTS

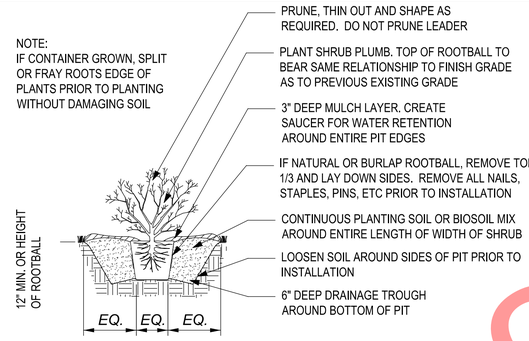

ITEM 661 - SHRUB PLANTING

SCALE: NTS

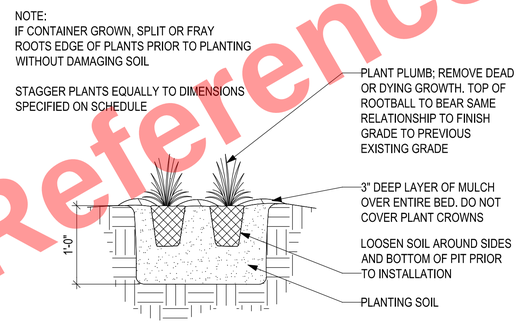

ITEM 661 - PERENNIAL AND ORNAMENTAL GRASS PLANTING

SCALE: NTS

PLANT SCHEDULE

DECIDUOUS TREES

QTY	KEY	BOTANICAL NAME	COMMON NAME	SIZE	SPACING	REMARKS
12	ARS	*Acer rubrum 'Somerset'*	Somerset Red Maple	2.5" cal	as shown	B&B, full uniform crown, symetrical branching, full specimen
19	AGL	*Aesculus glabra*	Ohio Buckeye	2.5" cal	as shown	B&B, full uniform crown, symetrical branching, full specimen
10	GTR	*Gleditsa triacanthos var. inermis*	Thornless Honeylocust	2.5" cal	as shown	B&B, full uniform crown, symetrical branching, full specimen
18	GDI	*Gymnocladus dioicus 'Stately Manor'*	Kentucky Coffeetree	2.5" cal	as shown	B&B, full uniform crown, symetrical branching, full specimen
9	POC	*Platanus occidentalis*	American Sycamore	2.5" cal	as shown	B&B, full uniform crown, symetrical branching, full specimen
18	QCO	*Quercus coccinea*	Scarlet Oak	2.5" cal	as shown	B&B, full uniform crown, symetrical branching, full specimen
5	QMA	*Quercus macrocarpa*	Bur Oak	2.5" cal	as shown	B&B, full uniform crown, symetrical branching, full specimen
15	QMU	*Quercus muehlenbergii*	Chinkapin Oak	2.5" cal	as shown	B&B, full uniform crown, symetrical branching, full specimen
1	TCO	*Tilia cordata*	Littleleaf Linden	2.5" cal	as shown	B&B, full uniform crown, symetrical branching, full specimen
7	ULM	*Ulmus parvifolia*	Chinese Elm	2.5" cal	as shown	B&B, full uniform crown, symetrical branching, full specimen
11	ZSE	*Zelkova serrata 'Green Vase'*	Green Vase Zelkova	2.5" cal	as shown	B&B, full uniform crown, symetrical branching, full specimen

FLOWERING TREES

QTY	KEY	BOTANICAL NAME	COMMON NAME	SIZE	SPACING	REMARKS
88	ACA	*Amelanchier canadensis 'Autumn Brilliance'*	Autumn Brilliance Serviceberry	6-8' Ht.	as shown	B&B, full uniform crown, symetrical branching, full specimen
128	CCN	*Cercis canadensis*	Eastern Redbud	2.5" cal	as shown	B&B, full uniform crown, symetrical branching, full specimen
43	CFL	*Cornus florida*	Flowering Dogwood	2.5" cal	as shown	B&B, full uniform crown, symetrical branching, full specimen
90	CVI	*Crataegus viridis 'Winter King'*	Green Hawthorn	2.5" cal	as shown	B&B, full uniform crown, symetrical branching, full specimen
14	HVI	*Hamamelis virginiana 'Harvest Moon'*	Common Witch Hazel	6-8' Ht.	as shown	Healthy, vigorous, well-rooted & established
53	MAL	*Malus sp.*	Crabapple sp.	2.5" cal	as shown	B&B, full uniform crown, symetrical branching, full specimen
36	PSE	*Prunus serrulata 'Kwanzan'*	Kwanzan Flowering Cherry	2.5" cal	as shown	B&B, full uniform crown, symetrical branching, full specimen
33	SRE	*Syringa reticulata 'Ivory Silk'*	Ivory Silk Japanese Tree Lilac	2.5" cal	as shown	B&B, full uniform crown, symetrical branching, full specimen

EVERGREEN TREES

QTY	KEY	BOTANICAL NAME	COMMON NAME	SIZE	SPACING	REMARKS
26	IOP	*Ilex opaca 'Jersey Princess'*	American Holly	6-8' Ht.	as shown	B&B, full uniform crown, symetrical branching, full specimen
6	IOK	*Ilex opaca 'Jersey Knight'*	American Holly	6-8' Ht.	as shown	B&B, full uniform crown, symetrical branching, full specimen
72	JVI	*Juniperus virginiana 'Canaertii'*	Eastern Redcedar	6-8' Ht.	as shown	B&B, full uniform crown, symetrical branching, full specimen
58	PRI	*Pinus rigida*	Pitch Pine	6-8' Ht.	as shown	B&B, full uniform crown, symetrical branching, full specimen

SHRUBS

QTY	KEY	BOTANICAL NAME	COMMON NAME	SIZE	SPACING	REMARKS
196	JCB	*Juniperus conferta 'Blue Pacific'*	Shore Juniper	3 gal.	3' O.C.	Healthy, vigorous, well-rooted & established

Preliminary Plans - For Reference Only

HORIZONTAL SCALE IN FEET
0 100 200 400

LANDSCAPE DETAILS
SHEET 01

DESIGN AGENCY
Michael Baker INTERNATIONAL

DESIGNER BDC
REVIEWER JCF 01/10/24
PROJECT ID 82382
SHEET 1824 TOTAL 2696

CUY-90-16.28 (CCG3A)

MODEL: Sheet PAPERSIZE: 34x22 (in.) DATE: 5/14/2025 TIME: 5:52:49 PM USER: Joseph.Hogan
pw:\\mb-us-pw.bentley.com\mb-us-pw-03\Documents\Cleveland_OH\01_Projects\0DOT\District2\82382\400-Engineering\Landscaping\Sheets\82382_PD5201.dgn

ITEM 451 - REINFORCED CONCRETE MISC.:
INTEGRALLY COLORED CONCRETE CROSSWALK

CONTRACTOR SHALL PROVIDE ALL MATERIALS, EQUIPMENT, LABOR, SUBMITTALS, MEETINGS AND INCIDENTALS FOR A COMPLETE AND FUNCTIONING CONCRETE CROSSWALK AS PER ITEM 451, DRAWINGS, SPECIFICATIONS AND THE FOLLOWING.

CONTRACTOR SHALL SUBMIT PRODUCT DATA FOR EACH DECORATIVE CEMENT CONCRETE PAVEMENT MIXTURE AND CONCRETE COLOR SAMPLES AT LEAST 4-INCHES BY 4-INCHES IN SIZE TO ENGINEER FOR APPROVAL PRIOR TO CONSTRUCTING MOCK UP OR ORDERING CONCRETE. INCLUDE ALTERNATE MIXTURE DESIGNS WHEN CHARACTERISTICS OF MATERIALS, PROJECT CONDITIONS, WEATHER, TEST RESULTS, OR OTHER CIRCUMSTANCES WARRANT ADJUSTMENTS.

COLOR CONCRETE PIGMENT SHALL BE ASTM C 979, SYNTHETIC MINERAL-OXIDE PIGMENTS OR COLORED WATER REDUCING ADMIXTURES; COLOR SHALL BE STABLE, NONFADING, AND RESISTANT TO LIME AND OTHER ALKALIS. COLOR SHALL BE INTEGRALLY MIXED WITH THE CONCRETE. INTEGRAL CONCRETE COLOR BASIS OF DESIGN IS L.M. SCOFIELD'S CHROMIX 1017 BARCELONA BROWN.

CONCRETE PIGMENT APPROVED MANUFACTURERS ARE:

1. INCRETE SYSTEMS INC.
2. L.M. SCOFIELD COMPANY.
3. SOLOMON COLORS.

LIQUID RELEASE AGENTS SHALL BE MANUFACTURER'S STANDARD CLEAR, EVAPORATING FORMULATION THAT FACILITATES RELEASE OF STAMP MATS AND TEXTURE ROLLERS. APPROVED PRODUCTS AND MANUFACTURES ARE:

1. ARTCRETE, INC.: FAUX BRICK LIQUID RELEASE AGENT.
2. BON TOOL CO.: LIOUIFORM RELEASE AGENT.
3. DECORATIVE CONCRETE SUPPLY INC.; DECOSUP LIQUID RELEASE.
4. INCRETE SYSTEMS INC.; LIQUID RELEASE.
5. RAFCO PRODUCTS; BRICKFORM LIQUID RELEASE AGENT.
6. SOUTHERN COLOR COMPANY, INC.; CLEAR LIQUID RELEASE AGENT.
7. SUPERSTONE, INC.; BUBBLE GUM LIQUID RELEASE.
8. SYMONS CORPORATION; CLEAR LIQUID RELEASE.

CONTRACTOR SHALL SEAL CROSSWALKS. SEALANT SHALL BE CLEAR ACRYLIC SEALER. APPLY UNIFORMLY IN TWO COATS IN CONTINUOUS OPERATIONS ACCORDING TO MANUFACTURER'S WRITTEN INSTRUCTIONS. ALLOW FIRST COAT TO DRY BEFORE APPL YING SECOND COAT, AT 90-DEGREES TO THE DIRECTION OF THE FIRST COAT USING SAME APPLICATION METHOD AND RATE.

BEGIN SEALING DRY SURFACE NO SOONER THAN 28 DAYS AFTER CONCRETE PLACEMENT.

MOCK UP ONE SAMPLE PER ITEM SPECIAL - INTEGRALLY COLORED CONCRETE CROSSWALK MOCK UP

THIS ITEM INCLUDES ALL LABOR, EQUIPMENT, TOOLS, SUBMITTALS, INCIDENTALS AND MATERIALS REQUIRED TO CONSTRUCT THE CONCRETE CROSSWALK, AS REQUIRED IN THIS SPECIFICATION AND SHOWN IN THE DRAWINGS, SHALL BE PAID UNDER THE UNIT PRICE OF ITEM 451 - REINFORCED CONCRETE, MISC.: INTEGRALLY COLORED CONCRETE CROSSWALK

REFER TO DETAIL ON SHEET 1848 FOR ADDITIONAL REQUIREMENTS

ITEM SPECIAL - INTEGRALLY COLORED
CONCRETE CROSSWALK MOCK UP

THIS ITEM CONSISTS OF BUILDING A CAST-IN-PLACE MOCK UP OF THE INTEGRALLY COLORED/ BROOM FINISHED CONCRETE CROSSWALK FOR ENGINEERS REVIEW AND APPROVAL OF INTEGRAL COLOR AND BRUSH TEXTURE. UPON ENGINEERS APPROVAL OF FINISH AND COLOR SAMPLES SUBMITTED AS PER ITEM 451 - REINFORCED CONCRETE MISC.: INTEGRALLY COLORED CONCRETE CROSSWALK, CONTRACTOR SHALL CAST AND CONSTRUCT MOCK UP SECTION OF CROSSWALK TO DEMONSTRATE TYPICAL PATTERN, TEXTURE, SURFACE FINISH, COLOR, JOINTS, AND STANDARD OF WORKMANSHIP.

MOCK UP SHALL BE 36 BY 36 INCHES AND DEMONSTRATE TYPICAL PATTERN, TEXTURE, SURFACE FINISH, COLOR, JOINTS, AND STANDARD OF WORKMANSHIP OF ALL PORTIONS OF CROSSWALK. MOCK UP SHALL NOT INCLUDE AGGREGATE BASE OR WIRE/REBAR. BUILD MOCK UP IN THE LOCATION DIRECTED BY THE ENGINEER. THE MOCK UP SHALL BE REVIEWED BY THE ENGINEER FOR COLOR AND TEXTURE, AESTHETIC QUALITIES OF WORKMANSHIP, AND OTHER MATERIAL AND CONSTRUCTION QUALITIES.

IF DIRECTED BY THE ENGINEER, CONSTRUCT ONE ADDITIONAL MOCK UP TO ACHIEVE THE DESIRED RESULTS. DO NOT ORDER MATERIALS IN EXCESS OF MATERIALS REQUIRED TO CONSTRUCT THE MOCK UP. RETAIN AND MAINTAIN ACCEPTED SAMPLE PAVEMENT DURING CONSTRUCTION IN AN UNDISTURBED CONDITION AS A CRITERION FOR JUDGING THE ACCEPTANCE OF THE BEING PERFORMED. UPON COMPLETION OF THE PROJECT, REMOVE AND DISPOSE OF THE MOCK UP S PER CMS 202.

THIS ITEM INCLUDES ALL LABOR, EQUIPMENT, TOOLS, SUBMITTALS, INCIDENTALS AND MATERIALS REQUIRED TO CONSTRUCT AND DISPOSE OF THE MOCK UP(S), INCLUDING INTEGRALLY COLORED CONCRETE, CONCRETE CURING COMPOUND AND SEALER.

THE FOLLOWING QUANTITIES HAVE BEEN CARRIED TO THE GENERAL SUMMARY:

ITEM SPECIAL - INTEGRALLY COLORED CONCRETE CROSSWALK MOCK UP	**2 EACH**

ITEM 608 - WALKWAY, MISC.:
PAVERS OVER CONCRETE (BRICK 1)
ITEM 608 - WALKWAY, MISC.:
PAVERS OVER CONCRETE (BRICK 2)
ITEM 608 - WALKWAY, MISC.:
PAVERS OVER CONCRETE (BRICK 3)
ITEM 608 - WALKWAY, MISC.:
PAVERS OVER CONCRETE (BRICK 4)

THIS ITEM SHALL BE FURNISHED AND INSTALLED IN ACCORDANCE WITH THE DRAWINGS AND AS PER ODOT 305, 452, AND 609. PAYMENT FOR THIS ITEM INCLUDES ALL EQUIPMENT, LABOR, AND MATERIAL FOR EXCAVATION, SUBGRADE COMPACTION, ITEM 304 AGGREGATE BASE COURSE, COMPACTION, ODOT 305 CONCRETE PAVER BASE (INCLUDING EXPANSION AND CONTROL JOINTS WITH FILLER, ODOT #2 DIA. PVC FORMED WEEP HOLES, INSTALLATION OF THE SAND SETTING BED, POLYMERIC SAND JOINT FILLER, GEOTEXTILE FILTER FABRIC, #9 STONE), AND ANY OTHER INCIDENTAL WORK RELATING TO THE COMPLETE IN PLACE INSTALLATION OF THE PAVERS OVER CONCRETE. FOR ADDITIONAL REQUIREMENTS, SEE DETAIL ON SHEET 1849

CONTRACTOR TO SUBMIT PAVER AND POLYMERIC SAND MATERIAL SAMPLES TO PROJECT ENGINEER FOR APPROVAL PRIOR TO CONSTRUCTION OF MOCK UP OR INSTALLATION. CONTRACTOR SHALL SUPPLY FOUR (4) REPRESENTATIVE FULL-SIZE SAMPLES OF PAVER, THAT INDICATE THE RANGE OF COLOR VARIATION AND TEXTURE EXPECTED IN THE FINISHED INSTALLATION. PROVIDE PAVERS WITHOUT FROGS, CHIPS, CRACKS, DISCOLORATIONS, CORES, OR OTHER DEFECTS IN SURFACES EXPOSED TO VIEW IN THE COMPLETED WORK. MIX PAVERS FROM SEVERAL PALLETS OR CUBES, AS THEY ARE PLACED, TO PRODUCE A UNIFORM BLEND OF COLORS AND TEXTURES. CUT PAVERS WITH A MOTOR-DRIVEN MASONRY SAW EQUIPMENT TO PROVIDE CLEAN, SHARP EDGES. USE FULL UNITS WITHOUT CUTTING WHERE POSSIBLE. HAMMER CUTTING IS NOT ACCEPTABLE. SET PAVER WITH JOINTS TO BE A MINIMUM OF 1/16" AND A MAXIMUM OF 1/8". DO NOT EXCEED 1/8" PAVER-TO-PAVER OFFSET FROM FLUSH NOR 1/8" INCH IN 10 FEET FROM INDICATED SLOPE FOR FINISHED SURFACE. INSTALL WEEP HOLES AS SHOWN ON DETAILS. ALL PAVERS SHALL HAVE BEVELED EDGE WITH SPACING LUGS. HANDLE AND COMPACT AND INSTALL BRICKS AS PER DRAWINGS AND MANUFACTURER'S RECOMMENDATIONS.

POLYMERIC SAND SHALL BE PLACED IN THE JOINTS AS SOON AS POSSIBLE AFTER FINAL PAVER SETTING. PAVER SURFACE SHALL BE COMPLETELY DRY AT THE TIME OF GROUTING. SPECIFIC POLYMERIC SAND PLACEMENT SHALL BE PER THE MANUFACTURER'S SPECIFICATIONS. POLYMERIC SAND SHALL BE PLACED INTO JOINTS SO FINISH GRADE OF POLYMERIC SAND IS A MINIMUM OF 1/8" LOWER THAN PAVER SURFACE AND AS PER MANUFACTURER'S RECOMMENDED METHODS. ALL RESIDUAL SAND RESIDUE SHALL BE REMOVED FROM THE PAVER SURFACE PRIOR TO BEGINNING THE CURING PROCESS. THE CURING PROCESS FOR THE POLYMERIC SAND SHOULD BE PER THE MANUFACTURER'S SPECIFICATIONS. AFTER CURING PERIOD, EXCESS POLYMERIC SAND SHOULD BE REMOVED FROM EXPOSED PAVER SURFACES; WASH AND SCRUB CLEAN.

MOCK UP ONE SAMPLE FOR EACH BRICK STYLE PER
ITEM SPECIAL - BRICK 1 PAVER MOCK UP
ITEM SPECIAL - BRICK 2 PAVER MOCK UP
ITEM SPECIAL - BRICK 3 PAVER MOCK UP
ITEM SPECIAL - BRICK 4 PAVER MOCK UP

SUPPLIER CONTACT INFORMATION:

ENDICOTT CLAY PRODUCTS	57120 707TH RD, ENDICOTT, NE 68350 (402) 729-3315 WWW.ENDICOTT.COM
HANOVER ARCHITECTURAL PRODUCTS	5000 HANOVER RD, HANOVER, PA 17331 (717) 637-0500 WWW.HANOVERPAVERSATHOME.COM
UNILOCK PREMIER PAVERS	12560 SHEETS RD, RITTMAN, OH 44270 (800) UNILOCK WWW.UNILOCK.COM
WHITACRE GREER COMPANY	1400 S. MAHONING AVE, ALLIANCE, OH 44601 (330) 823-5502 WWW.WGPAVER.COM

ITEM 608 - WALKWAY, MISC.:
PAVERS OVER CONCRETE (BRICK 1)
ITEM 608 - WALKWAY, MISC.:
PAVERS OVER CONCRETE (BRICK 2)
ITEM 608 - WALKWAY, MISC.:
PAVERS OVER CONCRETE (BRICK 3)
ITEM 608 - WALKWAY, MISC.:
PAVERS OVER CONCRETE (BRICK 4) (CONT.)

BRICK #1 (E. 22ND ST.)
PAVER COLORS SHALL MATCH THE EAST 22ND STREETSCAPE TREATMENT BETWEEN CENTRAL AVE AND WOODLAND AVE.

ALT. 1:
ENDICOTT CLAY PRODUCTS
RUNNING BOND CLAY PAVER COLOR:
RED BLEND
SOLDIER COURSE CLAY PAVER COLOR:
DARK IRONSPOT.
THE STYLE FOR ALL CLAY PAVERS SHALL BE 4" X 8" LUGGED WITH A RELIEVED EDGE.

ALT. 2:
WHITACRE GREER COMPANY
RUNNING BOND CLAY PAVER PATTERN COLOR:
BLENDED RATIO OF:
CINNAMON #42 (35%)
TANGERINE #43 (65%)
SOLDIER COURSE CLAY PAVER COLOR:
CIMMEREAN #53

BRICK #2 (BRIDGE 13 FIELD PAVER)

ALT. 1:
UNILOCK PREMIER PAVERS
RUNNING BOND, PERPENDICULAR TO ROADWAY
6" X 12" X 7CM, TUSCANY

ALT. 2:
HANOVER ARCHITECTURAL PRODUCTS
RUNNING BOND, PERPENDICULAR TO ROADWAY
PAVERS ON GRADE, COLOR: "MATRIX #1914"
6" X 18" X 3", TUDOR #13 FINISH

BRICK #3 (BRIDGE 13 ACCENT PAVERS AT PILASTERS)

ALT. 1:
UNILOCK SERIES PAVERS
RUNNING BOND, PERPENDICULAR TO ROADWAY
4" X 8" X 7CM, SERIES BLACK GRANITE

ALT. 2:
HANOVER ARCHITECTURAL PRODUCTS
RUNNING BOND, PERPENDICULAR TO ROADWAY
PREST-BRICK, SOLID COLOR, "SUPER BLACK"
4" X 8" X 3", NATURAL (NON-TUDOR) FINISH

BRICK #4 (FIELD PAVER OVER CONCRETE, NONSTRUCTURE)

ALT. 1:
UNILOCK PREMIER PAVERS
RUNNING BOND, PERPENDICULAR TO ROADWAY
6" X 12" X 7CM, TUSCANY

ALT. 2:
HANOVER ARCHITECTURAL PRODUCTS
RUNNING BOND, PERPENDICULAR TO ROADWAY
PAVERS ON GRADE, COLOR: "MATRIX #1914",
6" X 18" X 3", TUDOR #13 FINISH

Preliminary Plans - Plans Conference Only

HARDSCAPING /AESTHETICS GENERAL NOTES - 1

DESIGN AGENCY
Michael Baker INTERNATIONAL
DESIGNER BDC
REVIEWER JCF 01/10/24
PROJECT ID 82382
SHEET 1825 TOTAL 2696

CUY-90-16.28 (CCG3A)
MODEL: Sheet-01 PAPERSIZE: 34x22 (in.) DATE: 5/23/2025 TIME: 3:24:53 PM USER: Joseph.Hogan
pw:\\mb-us-pw.bentley.com:mb-us-pw-03\Documents\Cleveland_OH\01_Projects\ODOT\District12\82382\400-Engineering\Landscaping\Sheets\82382_PN1000.dgn

ITEM SPECIAL - BRICK 1 PAVER MOCK UP

THIS ITEM CONSISTS OF BUILDING A MOCK UP OF BRICK PAVERS FOR ENGINEERS REVIEW AND APPROVAL OF PATTERN, COLOR, AND JOINTS UPON ENGINEERS APPROVAL OF FINISH AND COLOR SAMPLES SUBMITTED AS PER ITEM 608 PAVERS OVER CONCRETE (BRICK 1), CONTRACTOR SHALL CAST AND CONSTRUCT MOCK UP SECTION OF CROSSWALK TO DEMONSTRATE TYPICAL PATTERN, TEXTURE, SURFACE FINISH, COLOR, JOINTS, AND STANDARD OF WORKMANSHIP.

MOCK UP SHALL BE 60 BY 60 INCHES AND DEMONSTRATE TYPICAL PATTERN, TEXTURE, SURFACE FINISH, COLOR, JOINTS, AND STANDARD OF WORKMANSHIP OF ALL PORTIONS OF PAVER CONSTRUCTION. MOCK UP SHALL INCLUDE CONCRETE BASE. BUILD MOCK UP IN THE LOCATION DIRECTED BY THE ENGINEER. THE MOCK UP SHALL BE REVIEWED BY THE ENGINEER FOR COLOR AND TEXTURE, AESTHETIC QUALITIES OF WORKMANSHIP, AND OTHER MATERIAL AND CONSTRUCTION QUALITIES.

IF DIRECTED BY THE ENGINEER, CONSTRUCT ONE ADDITIONAL MOCK UP TO ACHIEVE THE DESIRED RESULTS. DO NOT ORDER MATERIALS IN EXCESS OF MATERIALS REQUIRED TO CONSTRUCT THE MOCK UP. RETAIN AND MAINTAIN ACCEPTED SAMPLE PAVEMENT DURING CONSTRUCTION IN AN UNDISTURBED CONDITION AS A CRITERION FOR JUDGING THE ACCEPTANCE OF THE BEING PERFORMED. UPON COMPLETION OF THE PROJECT, REMOVE AND DISPOSE OF THE MOCK UPS PER CMS 202.

THIS ITEM INCLUDES ALL LABOR, EQUIPMENT, TOOLS, SUBMITTALS, INCIDENTALS AND MATERIALS REQUIRED TO CONSTRUCT AND DISPOSE OF THE MOCK UP(S).

THE FOLLOWING QUANTITIES HAVE BEEN CARRIED TO THE GENERAL SUMMARY:

ITEM SPECIAL - BRICK 1 PAVER MOCK UP 2 EACH

ITEM SPECIAL - BRICK 2 PAVER MOCK UP
ITEM SPECIAL - BRICK 3 PAVER MOCK UP

THIS ITEM CONSISTS OF BUILDING A MOCK UP OF BRICK PAVERS FOR ENGINEERS REVIEW AND APPROVAL OF PATTERN, COLOR, AND JOINTS UPON ENGINEERS APPROVAL OF FINISH AND COLOR SAMPLES SUBMITTED AS PER ITEM 608 PAVERS OVER CONCRETE (BRICK 2 AND BRICK 3), CONTRACTOR SHALL CAST AND CONSTRUCT MOCK UP SECTION OF CROSSWALK TO DEMONSTRATE TYPICAL PATTERN, TEXTURE, SURFACE FINISH, COLOR, JOINTS, AND STANDARD OF WORKMANSHIP.

MOCK UP SHALL BE 60 BY 60 INCHES AND DEMONSTRATE TYPICAL PATTERN, TEXTURE, SURFACE FINISH, COLOR, JOINTS, AND STANDARD OF WORKMANSHIP OF ALL PORTIONS OF PAVER CONSTRUCTION. THE MOCK UP SHALL INCLUDE TYPE 2 AND 3 PAVERS IN SAME SECTION. MOCK UP SHALL INCLUDE CONCRETE BASE, TYPE 10-B CURB, PAVERS ON SAND, ROADWAY CURB, AND 1" DIA WEEP CONDUIT. BUILD MOCK UP IN THE LOCATION DIRECTED BY THE ENGINEER. THE MOCK UP SHALL BE REVIEWED BY THE ENGINEER FOR COLOR AND TEXTURE, AESTHETIC QUALITIES OF WORKMANSHIP, AND OTHER MATERIAL AND CONSTRUCTION QUALITIES.

IF DIRECTED BY THE ENGINEER, CONSTRUCT ONE ADDITIONAL MOCK UP TO ACHIEVE THE DESIRED RESULTS. DO NOT ORDER MATERIALS IN EXCESS OF MATERIALS REQUIRED TO CONSTRUCT THE MOCK UP. RETAIN AND MAINTAIN ACCEPTED SAMPLE PAVEMENT DURING CONSTRUCTION IN AN UNDISTURBED CONDITION AS A CRITERION FOR JUDGING THE ACCEPTANCE OF THE BEING PERFORMED. UPON COMPLETION OF THE PROJECT, REMOVE AND DISPOSE OF THE MOCK UPS PER CMS 202.

THIS ITEM INCLUDES ALL LABOR, EQUIPMENT, TOOLS, SUBMITTALS, INCIDENTALS AND MATERIALS REQUIRED TO CONSTRUCT AND DISPOSE OF THE MOCK UP(S).

THE FOLLOWING QUANTITIES HAVE BEEN CARRIED TO THE GENERAL SUMMARY:

ITEM SPECIAL - BRICK 2 PAVER MOCK UP 2 EACH
ITEM SPECIAL - BRICK 3 PAVER MOCK UP 2 EACH

ITEM SPECIAL - BRICK 4 PAVER MOCK UP

THIS ITEM CONSISTS OF BUILDING A MOCK UP OF BRICK PAVERS FOR ENGINEERS REVIEW AND APPROVAL OF PATTERN, COLOR, AND JOINTS UPON ENGINEERS APPROVAL OF FINISH AND COLOR SAMPLES SUBMITTED AS PER ITEM 608 PAVERS OVER CONCRETE (BRICK 4), CONTRACTOR SHALL CAST AND CONSTRUCT MOCK UP SECTION OF CROSSWALK TO DEMONSTRATE TYPICAL PATTERN, TEXTURE, SURFACE FINISH, COLOR, JOINTS, AND STANDARD OF WORKMANSHIP.

MOCK UP SHALL BE 60 BY 60 INCHES AND DEMONSTRATE TYPICAL PATTERN, TEXTURE, SURFACE FINISH, COLOR, JOINTS, AND STANDARD OF WORKMANSHIP OF ALL PORTIONS OF PAVER CONSTRUCTION. MOCK UP SHALL INCLUDE CONCRETE BASE. BUILD MOCK UP IN THE LOCATION DIRECTED BY THE ENGINEER. THE MOCK UP SHALL BE REVIEWED BY THE ENGINEER FOR COLOR AND TEXTURE, AESTHETIC QUALITIES OF WORKMANSHIP, AND OTHER MATERIAL AND CONSTRUCTION QUALITIES.

IF DIRECTED BY THE ENGINEER, CONSTRUCT ONE ADDITIONAL MOCK UP TO ACHIEVE THE DESIRED RESULTS. DO NOT ORDER MATERIALS IN EXCESS OF MATERIALS REQUIRED TO CONSTRUCT THE MOCK UP. RETAIN AND MAINTAIN ACCEPTED SAMPLE PAVEMENT DURING CONSTRUCTION IN AN UNDISTURBED CONDITION AS A CRITERION FOR JUDGING THE ACCEPTANCE OF THE BEING PERFORMED. UPON COMPLETION OF THE PROJECT, REMOVE AND DISPOSE OF THE MOCK UP S PER CMS 202.

THIS ITEM INCLUDES ALL LABOR, EQUIPMENT, TOOLS, SUBMITTALS, INCIDENTALS AND MATERIALS REQUIRED TO CONSTRUCT AND DISPOSE OF THE MOCK UP(S).

THE FOLLOWING QUANTITIES HAVE BEEN CARRIED TO THE GENERAL SUMMARY:

ITEM SPECIAL - BRICK 4 PAVER MOCK UP 2 EACH

ITEM SPECIAL - PARK BENCH

CONTRACTOR SHALL PROVIDE ALL LABOR, EQUIPMENT. MATERIALS, INCIDENTALS, AND INSTALLATION NECESSARY FOR A COMPLETE AND FULLY FUNCTIONAL BENCH AS SHOWN ON DRAWINGS. THIS ITEM INCLUDES ALL LABOR, EQUIPMENT, TOOLS. SUBMITTALS, INCIDENTALS AND MATERIALS REQUIRED TO CONSTRUCT THIS ITEM AND SHALL BE PAID BY EACH UNDER ITEM SPECIAL - PARK BENCH.

CONTRACTOR TO SELECT FROM THE TWO BENCHES LISTED BELOW OR SUPPLY AN APPROVED EQUAL.

1. BENCH 270-60I MANUFACTURED BY DUMOR, LENGTH 6'. CAST ALUMINUM FRAME BENCHES WITH IPE SLATS. FRAME COLOR: BLACK, POWDER COATED.

2. TRIO BENCH, BACKED WITH ARMRESTS BY FORMS+SURFACES, LENGTH 6'. SURFACE MOUNTED, CAST ALUMINUM FRAME BENCHES WITH IPE SLATS. FRAME COLOR: BLACK, POWDER COATED

REFER TO DETAIL ON SHEET 1847 FOR ADDITIONAL REQUIREMENTS.

ITEM SPECIAL - SCREEN WALL COVER PLATE

THIS ITEM SHALL BE FURNISHED AND INSTALLED IN ACCORDANCE WITH THE DRAWINGS AND MANUFACTURER'S RECOMMENDED INSTALLATION. PAYMENT FOR THIS ITEM INCLUDES ALL EQUIPMENT, LABOR, AND MATERIALS FOR SITE PREPARATION, SHOP DRAWINGS, AND ANY OTHER INCIDENTAL WORK RELATING TO THE COMPLETE IN PLACE INSTALLATION OF THE COVER PLATES CONTRACTOR TO SUBMIT SHOP DRAWINGS TO PROJECT ENGINEER FOR APPROVAL PRIOR TO INSTALLATION.

FINISH: 316 STAINLESS STEEL. 1/4" THICKNESS. HOLES SHALL BE PRE-DRILLED PRIOR TO INSTALLATION ON RECESSED AREAS. FIELD CUT BASE OF COVER PLATE TO 1/2" OF FINISHED GRADE AT TOP OF PAVERS.

SCREEN WALL HARDWARE AND METAL ANGLES ARE INCIDENTAL TO COVER PLATE PAY ITEM. FINISH FOR ALL COVER PLATE HARDWARE SHALL BE 316 GRADE STAINLESS STEEL.

REFER TO DETAIL ON SHEET 1847 FOR ADDITIONAL REQUIREMENTS.

ITEM SPECIAL - SKATE GUARD

THIS ITEM SHALL BE FURNISHED AND INSTALLED IN ACCORDANCE WITH THE DRAWINGS AND MANUFACTURER'S RECOMMENDED INSTALLATION. PAYMENT FOR THIS ITEM INCLUDES ALL EQUIPMENT, LABOR, AND MATERIALS FOR SITE PREPARATION, SHOP DRAWINGS, AND ANY OTHER INCIDENTAL WORK RELATING TO THE COMPLETE IN PLACE INSTALLATION OF THE SKATE GUARDS. CONTRACTOR TO SUBMIT SHOP DRAWINGS TO PROJECT ENGINEER FOR APPROVAL PRIOR TO INSTALLATION. FINISH SHALL BE MILLED ALUMINUM.

ALT. 1:
45 DEGREE CHAMFER ANTI-SKATEBOARD GUARDS. BC SITE SERVICE ITEM NUMBER 101002 OR APPROVED EQUAL BY LANDSCAPE ARCHIECT.
WWW.BCSITESERVICE.COM

ALT. 2:
SKATEBOARD PREVENTION DEVICES FOR CHAMFERED EDGES. SETON
WWW.SETON.COM

REFER TO DETAIL ON SHEET 1847 FOR ADDITIONAL REQUIREMENTS.

ITEM SPECIAL - TRASH RECEPTACLE

THIS ITEM SHALL BE FURNISHED AND INSTALLED IN ACCORDANCE WITH THE DRAWINGS AND MANUFACTURER'S RECOMMENDED INSTALLATION. PAYMENT FOR THIS ITEM INCLUDES ALL EQUIPMENT, LABOR, AND MATERIALS FOR SITE PREPARATION, SHOP DRAWINGS, BLACK PLASTIC PLASTIC PLASTIC LINER, AND ANY OTHER INCIDENTAL WORK RELATING TO THE COMPLETE IN PLACE INSTALLATION OF THE TRASH RECEPTACLE. CONTRACTOR TO SUBMIT SHOP DRAWINGS TO PROJECT ENGINEER FOR APPROVAL PRIOR TO INSTALLATION. COLOR SHALL BE SILVER, APPROVED MODELS, AND MANUFACTURERS/SALES REPRESENTATIVE

ALT. 1:
LANDSCAPE FORMS CHASE PARK 24"x39" SIDE OPENING TRASH RECEPTACLE, WITH LOACKABLE LATCH, POWDER COATED BLACK.
CONTACT: LANDSCAPE FORMS, 431 LAWNDALE AVENUE, KALAMAZOO, MI 49048, KS 66062. PHONE 1-800-430-6209. WWW.LANDSCAPEFORMS.COM

ALT. 2:
VICTOR STANLEY TRASH RECEPTACLE MODEL DSC-36, POWDER COATED SILVER CONTACT: VICTOR STANLEY, P.O. BOX DRAWER 330, DUNKIRK, MD 20754
PHONE: 1-800-368-2573, WWW.VICTORSTANLEY.COM

REFER TO DETAIL ON SHEET 1847 FOR ADDITIONAL REQUIREMENTS

ITEM SPECIAL - BOLLARD

THIS ITEM SHALL BE FURNISHED AND INSTALLED IN ACCORDANCE WITH THE DRAWINGS AND MANUFACTURER'S RECOMMENDED INSTALLATION. PAYMENT FOR THIS ITEM INCLUDES ALL EQUIPMENT, LABOR, AND MATERIALS FOR SITE PREPARATION, SHOP DRAWINGS, AND ANY OTHER INCIDENTAL WORK RELATING TO THE COMPLETE IN PLACE INSTALLATION OF THE BOLLARDS. CONTRACTOR TO SUBMIT SHOP DRAWINGS TO PROJECT ENGINEER FOR APPROVAL PRIOR TO INSTALLATION.

ALT 1:
FORMS + SURFACES "LIGHT COLUMN BOLLARD" (UN-LIT),
6" DIAMETER, SURFACE MOUNT. STAINLESS STEEL FINISH.
WWW.FORMS-SURFACES.COM

ALT 2:
LANDSCAPE FORMS ANNAPOLIS BOLLARD (UN-LIT)
6" DIAMETER, SURFACE MOUNT. POWDER COAT SILVER.
WWW.LANDSCAPEFORMS.COM

NOTE: ALT 2 WILL REQUIRE ALTERNATIVE BOLT PATTERN TO MOUNT TO BRIDGE DECK TO BE DESIGNED BY CONTRACTOR.

REFER TO DETAIL ON SHEET 2267 FOR ADDITIONAL REQUIREMENTS.

ITEM SPECIAL - METAL EDGING

THIS ITEM SHALL BE FURNISHED AND INSTALLED IN ACCORDANCE WITH THE DRAWINGS AND MANUFACTURER'S RECOMMENDED INSTALLATION. PAYMENT FOR THIS ITEM INCLUDES ALL EQUIPMENT, LABOR, AND MATERIALS FOR SITE PREPARATION, SHOP DRAWINGS, AND ANY OTHER INCIDENTAL WORK RELATING TO THE COMPLETE IN PLACE INSTALLATION OF THE METAL EDGING. CONTRACTOR TO SUBMIT SHOP DRAWINGS TO PROJECT ENGINEER FOR APPROVAL PRIOR TO INSTALLATION.

ALT. 1:
PERMALOC CLEANLINE EDGING, 3/16" X 4". BLACK ANODIZED ALUMINUM FINISH. WWW.PERMALOC.COM 616-399-9600

ALT. 2:
SURELOC SURE-EDGE, 3/16" X 4". BLACK ANODIZED ALUMINUM FINISH.
WWW.SURELOCEDGING.COM 1 (800) 787-3562

REFER TO DETAIL ON SHEET 1848 FOR ADDITIONAL REQUIREMENTS.

For Reference Only
Preliminary Plans - Not For Construction

HARDSCAPING /AESTHETICS GENERAL NOTES - 2

DESIGN AGENCY
Michael Baker INTERNATIONAL
DESIGNER BDC
REVIEWER JCF 01/10/24
PROJECT ID 82382
SHEET 1826 TOTAL 2696

CUY-90-16.28 (CCG3A)

MODEL: Sheet-02 PAPERSIZE: 34x22 (in.) DATE: 5/23/2025 TIME: 3:24:54 PM USER: Joseph.Hogan
pw:\\mb-us-pw.bentley.com:mb-us-pw-03\Documents\Cleveland_OH\01_Projects\ODOT\District12\82382400-Engineering\Landscaping\Sheets\82382_PN1000.dgn

GATEWAY MONUMENT SIGN

THE GATEWAY MONUMENT SIGN (SEE HARDSCAPE PLAN AND DETAILS) IS PAID UNDER THE FOLLOWING ITEMS:

1. ITEM 511 - CLASS QC1 CONCRETE, MISC.: GATEWAY MONUMENT SIGN
2. ITEM 607 - FENCE, MISC.: GATEWAY MONUMENT SIGN
   SCREEN WALL PANELS
3. ITEM SPECIAL - GATEWAY SIGN ALUMINUM LETTERS
4. MOCK UPS:
   I. ITEM SPECIAL - GATEWAY MONUMENT SIGN
      SCREEN WALL MOCK UP
   II. ITEM SPECIAL - GATEWAY MONUMENT SIGN
      ARCHITECTURAL CONCRETE MIX MOCK UP

ITEM SPECIAL - GATEWAY SIGN ALUMINUM LETTERS

CONTRACTOR SHALL PROVIDE ALL LABOR, EQUIPMENT. MATERIALS, INCIDENTALS, AND INSTALLATION NECESSARY FOR A COMPLETE AND FULLY FUNCTIONAL GATEWAY SIGN ALUMINUM LETTERS AS SHOWN ON DRAWINGS. THIS ITEM INCLUDES ALL LABOR, EQUIPMENT, TOOLS. SUBMITTALS, INCIDENTALS AND MATERIALS REQUIRED TO CONSTRUCT THIS ITEM AND SHALL BE PAID BY EACH UNDER ITEM SPECIAL - GATEWAY SIGN ALUMINUM LETTERS.

CAST ALUMINUM, DEPTH 3/8" TO 1.5" (VARIES BY LETTER).

COLOR: BLACK FOX SW7020. 1/4-20 BOTTOM STUD ON EACH LETTER.

REFER TO DETAIL ON SHEET 1854 FOR LOCATION AND SPACING REQUIREMENTS.

ITEM 511 - CLASS QC1 CONCRETE, MISC.: GATEWAY MONUMENT SIGN

DESIGN CRITERIA

DC-1 BUILDING CODE: INTERNATIONAL BUILDING CODE (IBC) 2015, AS AMENDED BY THE 2017 OHIO BUILDING CODE

DC-2 LATERAL LOAD DESIGN CRITERIA

A. RISK CATEGORY II

B. WIND DESIGN CRITERIA
1. BASIC DESIGN WIND SPEED (V) 115 MPH
2. ALLOWABLE DESIGN WIND SPEED (Vasd) 90 MPH
3. EXPOSURE CATEGORY D

C. SEISMIC DESIGN CRITERIA
1. SEISMIC IMPORTANCE FACTOR (Ie) 1.0
2. SITE CLASS D
3. SHORT PERIOD SPECTRAL ACCELERATION (SS) 0.174g
4. ONE SECOND SPECTRAL ACCELERATION (S1) 0.058g
5. SHORT PERIOD RESPONSE ACCELERATION (SDS) 0.185g
6. ONE SECOND RESPONSE ACCELERATION (SD1) 0.092g
7. SEISMIC DESIGN CATEGORY B

DC-3 FOUNDATION DESIGN CRITERIA

A. FOUNDATION DESIGN IS BASED UPON THE FOLLOWING SOIL PARAMETERS:

1. ASSUMED NET ALLOWABLE SOIL BEARING PRESSURE:
   A. SPREAD FOOTINGS 2000 PSF
   B. CONTINUOUS FOOTINGS 2000 PSF

B. ASSUMED LATERAL EARTH PRESSURE PARAMETERS:
1. SOIL DENSITY = 110 PCF
2. COEFFICIENT OF ACTIVE PRESSURE (Ka) = 0.26
3. COEFFICIENT OF AT-REST PRESSURE (Ko) = <0.60>
4. COEFFICIENT OF PASSIVE EARTH PRESSURE (Kp) = <3.00>
5. ANGLE OF INTERNAL FRICTION (phi) = 36 DEGREES
6. COEFFICIENT OF FRICTION (u) = 0.4
7. MODULUS OF SUB-GRADE REACTION (ks) = 100 PCI

C. FROST DEPTH: 36 INCHES

GENERAL

G-1 METHODS, PROCEDURES AND SEQUENCES OF CONSTRUCTION ARE THE RESPONSIBILITY OF THE CONTRACTOR. THE CONTRACTOR IS RESPONSIBLE FOR IDENTIFYING AND IMPLEMENTING THE NECESSARY PRECAUTIONS TO MAINTAIN AND ENSURE THE INTEGRITY OF THE STRUCTURE AT EACH STAGE OF CONSTRUCTION.

G-2 TEMPORARY BRACING, SHEETING, SHORING, ETC, REQUIRED TO ENSURE THE STRUCTURAL INTEGRITY/STABILITY OF THE EXISTING BUILDINGS, SIDEWALKS, UTILITIES, ETC, DURING CONSTRUCTION IS THE RESPONSIBILITY OF THE CONTRACTOR AND MUST BE DESIGNED BY A REGISTERED PROFESSIONAL ENGINEER EMPLOYED BY THE CONTRACTOR.

G-3 IMPLEMENTATION OF JOB SITE SAFETY IS THE SOLE RESPONSIBILITY OF THE CONTRACTOR.

G-4 WHEN NOT SPECIFICALLY INDICATED ON THE STRUCTURAL DRAWINGS, THE CONTRACTOR IS RESPONSIBLE FOR DETERMINING SLEEVE AND BLOCK-OUT REQUIREMENTS FOR PENETRATIONS PRIOR TO FABRICATION OR ERECTION OF THE STRUCTURE. PENETRATIONS OF STRUCTURAL MEMBERS ARE SUBJECT TO APPROVAL BY THE ENGINEER. THE CONTRACTOR IS ALSO RESPONSIBLE FOR DETERMINING ANCHORAGE AND HANGER REQUIREMENTS REQUIRED FOR SUPPORTING EQUIPMENT, FINISHES, UTILITIES ETCETERA NOT INDICATED ON THE STRUCTURAL DRAWINGS.

G-5 DO NOT SCALE DRAWINGS.

ITEM 511 - CLASS QC1 CONCRETE, MISC.: GATEWAY MONUMENT SIGN (CONT.)

GENERAL (CONTINUED)

G-6 THE CONTRACTOR IS RESPONSIBLE FOR DETERMINING AND COORDINATING DIMENSIONS AND INSTALLATION DETAILS OF PURCHASED EQUIPMENT WITH THE SUPPORTING STRUCTURE. CONFLICTS BETWEEN THESE ITEMS AND THE BUILDING STRUCTURE MUST BE BROUGHT TO THE ATTENTION OF THE ENGINEER FOR RESOLUTION.

G-7 THE STRUCTURAL DRAWINGS GOVERN THE WORK FOR STRUCTURAL FEATURES, UNLESS OTHERWISE NOTED. DIMENSIONS SHOWN ON PLANS AND DETAILS ARE TO GOVERN THE STRUCTURAL WORK. THE CONTRACTOR IS TO REFER TO THE ARCHITECTURAL DRAWINGS FOR DIMENSIONS AND DETAILS NOT PROVIDED. DIMENSIONAL CONFLICTS IN THE DOCUMENTS MUST BE BROUGHT TO THE ATTENTION OF THE ENGINEER

G-8 IN CASE OF CONFLICT BETWEEN THE GENERAL NOTES, SPECIFICATIONS, DRAWINGS, OR WITHIN THESE DOCUMENTS, THE MOST STRINGENT REQUIREMENTS AS DETERMINED BY THE ENGINEER WILL GOVERN.

G-9 WORK NOT INDICATED ON A PART OF THE DRAWINGS, BUT REASONABLY IMPLIED TO BE SIMILAR TO THAT SHOWN AT CORRESPONDING LOCATIONS, IS TO BE REPEATED.

G-10 DETAILS DESIGNATED AS "TYPICAL DETAILS," APPLY GENERALLY TO THE DRAWINGS IN AREAS WHERE CONDITIONS ARE SIMILAR TO THOSE DESCRIBED IN THE DETAILS.

G-11 SHOP DRAWINGS:

A. SHOP DRAWINGS FOR MATERIALS MUST BE SUBMITTED TO THE ENGINEER FOR REVIEW PRIOR TO THE START OF FABRICATION OR COMMENCEMENT OF WORK.

B.SHOP DRAWINGS MUST BE CHECKED AND STAMPED BY THE CONTRACTOR PRIOR TO SUBMISSION. THE CONTRACTOR'S STAMP OF APPROVAL WILL CONSTITUTE CERTIFICATION THAT HE HAS VERIFIED FIELD MEASUREMENTS, CONSTRUCTION CRITERIA, MATERIALS AND SIMILAR DATA AND HAS CHECKED EACH DRAWING FOR COMPLETENESS, COORDINATION, AND COMPLIANCE WITH THE CONTRACT DOCUMENTS. SHOP DRAWINGS SUBMITTED WITHOUT THE CONTRACTOR'S STAMP AND REVIEW WILL BE RETURNED WITHOUT REVIEW BY THE ENGINEER OF RECORD.

C.REPRODUCTION OF ANY PORTION OF THE STRUCTURAL CONTRACT DRAWINGS FOR SUBMITTAL AS SHOP DRAWINGS IS PROHIBITED.

D. CHANGES TO SHOP DRAWINGS THAT ARE RE-SUBMITTED MUST BE CLOUDED OR SOMEHOW INDICATE THAT A CHANGE HAS BEEN MADE TO PREVIOUSLY ISSUED AND REVIEWED DRAWING.

E.THE CONTRACTOR IS TO PROVIDE ENGINEER WITH WRITTEN NOTICE OF DEVIATIONS OF ANY TYPE FROM THE REQUIREMENTS OF THE CONSTRUCTION DOCUMENTS. THE NOTICE MUST BE RECEIVED PRIOR TO SHOP DRAWING SUBMITTAL. THE CONTRACTOR REMAINS LIABLE FOR ANY DEVIATION UNLESS REVIEWED BY THE ENGINEER AND ACKNOWLEDGED IN WRITING, PRIOR TO THE RECEIPT OF THE SHOP DRAWINGS.

FOUNDATIONS

F-1 FOUNDATIONS HAVE BEEN DESIGNED AND MUST BE CONSTRUCTED IN ACCORDANCE WITH CRITERIA ESTABLISHED BY NATIONAL ENGINEERING AND ARCHITECTURAL SERVICES INC. IN THEIR GEOTECHNICAL REPORT PREPARED FOR THIS PROJECT DATED AUGUST 15, 2023. THIS REPORT IS CONSIDERED PART OF THESE CONTRACT DOCUMENTS.

F-2 FOUNDATIONS MUST BE PLACED ON UNDISTURBED SOIL OR COMPACTED FILL CONFORMING TO 95% STANDARD DENSITY PER ASTM D 698 (MAXIMUM FILL LIFT = 8").

ITEM 511 - CLASS QC1 CONCRETE, MISC.: GATEWAY MONUMENT SIGN (CONT.)

FOUNDATIONS (CONTINUED)

F-3 THE CONTRACTOR IS TO RETAIN THE SERVICES OF A PROFESSIONAL GEOTECHNICAL ENGINEER, SUBJECT TO THE APPROVAL OF THE OWNER TO VERIFY THAT THE MATERIAL ON WHICH FOUNDATIONS BEAR HAS AT LEAST THE CAPACITY AS NOTED IN THE DESIGN CRITERIA. THE GEOTECHNICAL ENGINEER IS TO MAKE RECOMMENDATIONS FOR IMPROVING AREAS THAT DO NOT MEET THE DESIGN CRITERIA.

F-4 EXTERIOR FOOTINGS ARE TO BEAR A MINIMUM OF 36 INCHES BELOW FINISHED GRADE. ELEVATIONS SHOWN ON THE DRAWINGS AT WHICH FOUNDATIONS BEAR ARE APPROXIMATE AND MAY VARY TO SUIT SUBSURFACE SOIL CONDITIONS. STEP-IN FOOTING LOCATIONS SHOWN ON THE DRAWINGS MUST BE FIELD VERIFIED AND ADJUSTED SO THAT FOUNDATIONS BEAR ON MATERIAL OF AT LEAST THE CAPACITY NOTED ABOVE.

F-5 PRIOR TO PLACING CONCRETE, WATER PRESENT MUST BE PUMPED OUT FROM THE BOTTOM OF EXCAVATIONS.

F-6 EQUIPMENT AND/OR MATERIALS WITH WEIGHT GREATER THAN THE DESIGN SURCHARGE MUST MAINTAIN A SAFE HORIZONTAL CLEAR DISTANCE FROM BASEMENT AND RETAINING WALLS. A SAFE HORIZONTAL CLEAR DISTANCE IS DEFINED AS THE DISTANCE FROM THE BASE OF THE RETAINING WALL TO THE TOP OF FINISHED GRADE. DESIGN SURCHARGE EQUALS 100 PSF.

REINFORCED CONCRETE

C-1 REINFORCED CONCRETE WORK MUST BE IN ACCORDANCE WITH THE AMERICAN CONCRETE INSTITUTE (ACI) "BUILDING CODE REQUIREMENTS FOR STRUCTURAL CONCRETE - ACI 318" (LATEST EDITION) AND THE "SPECIFICATIONS FOR STRUCTURAL CONCRETE FOR BUILDINGS- ACI 301" (LATEST EDITION).

C-2 PRIOR TO CONCRETE PLACEMENT, THE CONTRACTOR MUST SUBMIT CONCRETE MIX DESIGNS FOR EACH TYPE OF CONCRETE TO BE USED, PREPARED IN ACCORDANCE WITH THE PROJECT SPECIFICATIONS, TO THE ENGINEER FOR REVIEW.

C-3 CAST-IN-PLACE CONCRETE MUST HAVE A MINIMUM 28 DAY COMPRESSIVE STRENGTH (f'c) OF 4000 PSI.

C-4 REINFORCEMENT:
A. DEFORMED BARS: ASTM A 615/A 615M, GRADE 60

C-5 SPLICES (LAPS) OF REINFORCING BARS MUST BE CLASS 'B' TENSION LAPS PER ACI 318 (LATEST EDITION) UNLESS NOTED OTHERWISE. REFER TO THE MINIMUM LAP SPLICES OF REINFORCING BARS IN TENSION SCHEDULE ON DRAWING S-001.

C-6 PROVIDE ADEQUATE CONCRETE COVER IN ACCORDANCE WITH THE REQUIREMENTS AS SET FORTH BY ACI 318. REFER TO THE CONCRETE COVER SCHEDULE ON DRAWING S-001.

C-7 CONTINUOUS REINFORCING BARS MUST BE TURNED AND LAPPED AT CORNERS AND INTERSECTIONS OF WALLS AND FOOTINGS. HOOKED BARS TO HAVE STANDARD ACI HOOKS UNLESS NOTED OTHERWISE.

C-8 SLEEVES, INSERTS, MECHANICAL OPENINGS, CONDUITS, PIPES, RECESSES, DEPRESSIONS, CURBS AND OTHER EMBEDDED ITEMS MUST BE PROVIDED AS SHOWN ON THE ARCHITECTURAL, MECHANICAL, FIRE PROTECTION, PLUMBING AND ELECTRICAL DRAWINGS AND BY EQUIPMENT MANUFACTURERS. INSTALLATION OF THESE ITEMS MUST BE COORDINATED AND PROVIDED FOR PRIOR TO PLACING CONCRETE.

Preliminary Plans - For Reference Only

HARDSCAPING /AESTHETICS GENERAL NOTES - 3

DESIGN AGENCY
Michael Baker INTERNATIONAL

DESIGNER BDC
REVIEWER JCF 01/10/24
PROJECT ID 82382
SHEET 1827 TOTAL 2696

CUY-90-16.28 (CCG3A)

MODEL: Sheet-03 PAPERSIZE: 34x22 (in.) DATE: 5/23/2025 TIME: 3:24:54 PM USER: Joseph.Hogan
pw:\\mb-us-pw.bentley.com:mb-us-pw-03\Documents\Cleveland_OH\01_Projects\ODOT\District12\82382400-Engineering\Landscaping\Sheets\82382_PN1000.dgn

ITEM 511 - CLASS QC1 CONCRETE, MISC.: GATEWAY MONUMENT SIGN (CONT.)

REINFORCED CONCRETE (CONT.)

C-9 OPENINGS IN CONCRETE SLABS AND/OR CONCRETE WALLS MUST HAVE ADDITIONAL REINFORCEMENT. NUMBER AND SIZE OF REINFORCEMENT TO MATCH REINFORCEMENT INTERRUPTED BY OPENING (HALF TO EA SIDE). NO PENETRATIONS ARE PERMITTED THROUGH ANY CONCRETE BEAM, JOIST, COLUMN, PIER OR JAMB WITHOUT THE ENGINEER'S WRITTEN APPROVAL. PENETRATIONS MUST BE RE-ROUTED AS REQUIRED AT THESE LOCATIONS.

C-10 PENETRATIONS THROUGH CONCRETE SLABS AND/OR CONCRETE WALLS MUST BE PLACED DURING CONSTRUCTION OF THE WALL WITH THE APPROPRIATE SLEEVE.

C-11 PROVIDE BLOCK-OUTS FOR ART PANEL ANCHORAGE. FILL WITH CONCRETE ONCE PANEL IS IN PLACE.

C-12 ANCHOR RODS TO BE ASTM F 1554 Fy=36 KS MINIMUM, GALVANIZED, UNLESS NOTED OTHERWISE.

C-13 ALL GATEWAY MONUMENT SIGN CONCRETE SHALL BE BUFF WASH FINISH AS DESCRIBED ON SHEET 1829

STANDARD HOOKS IN TENSION PER (ACI 318-14)

HOOK DEVELOPMENT LENGTH (REQ'D EMBEDMENT) Ldh (INCHES)

BAR SIZE	f'c (4000 psi)
#3	8
#4	10
#5	12
#6	15
#7	17
#8	19
#9	22
#10	24
#11	27

NOTES:
1. CONCRETE IS NORMAL WEIGHT CONCRETE.
2. BAR YIELD STRENGTH, Fy = 60 ksi
3. REDUCTION FACTORS BASED ON ACI 318 SECTION 25.4.3.2 FOR COVER, STIRRUPS, OR EXCESS REINFORCEMENT HAVE NOT BEEN APPLIED AND ARE ASSUMED TO NOT BE MET.
4. ANY REDUCTION BASED ON FACTORS FROM ACI 318 SECTION 25.4.3.2 SHALL NOT REDUCE Ldh TO LESS THAN 8db OR 6"
5. DEVELOPMENT LENGTHS LISTED ABOVE ARE TO BE MULTIPLIED BY 1.2 FOR COATED REINFORCEMENT AND/OR MULTIPLIED BY 1.33 FOR LIGHTWEIGHT CONCRETE

CONCRETE COVER SCHEDULE

MINIMUM CONCRETE COVER PROTECTION FOR REINFORCMENT BARS SHALL BE AS FOLLOWS (RE: ACI 318-14):

FOOTINGS (EARTH FORMED)	3"
RETAINING WALLS (NO SURFACES SHALL BE EARTH FORMED)	
EARTH SIDE AND FRONT (EXPOSED TO WEATHER):	
#5 BAR & SMALLER	1.1/2"
#6 THRU #11 BAR	2"

NOTES:
1. DIMENSIONS FOR BAR PLACMENT GIVEN IN SECTIONS AND DETAILS SHALL SUPERSEDE MINIMUM COVER REQUIREMENTS GIVEN HERE.
2. PROVIDE STANDARD BAR CHAIRS AND SPACERS AS REQUIRED TO MAINTAIN MAINTAIN CONCRETE PROTECTION SPECIFIED.

ITEM 511 - CLASS QC1 CONCRETE, MISC.: GATEWAY MONUMENT SIGN (CONT.)

MINIMUM TENSION DEVELOPMENT LAP SPLICES (CLASS B) OF REINFORCING BARS (PER ACI 318)

f'c = 4000 psi

BAR DESIGNATION	TOP BARS		OTHER BARS	
	CASE 1	CASE 2	CASE 1	CASE 2
#3	25	37	19	28
#4	33	49	25	37
#5	41	61	31	47
#6	49	73	37	56
#7	71	106	54	81
#8	81	121	62	93
#9	91	136	70	105
#10	102	153	79	118
#11	114	170	87	131

NOTES:
1. LAP SPLICE LENGTH IS IN INCHES
2. TABULATED VAULES ARE BASED ON A MINIMUM YIELD STRENGTH OF REINFORCEMENT OF Fy = 60 ksi
3. CONCRETE IS NORMAL WEIGHT
4. TOP BAR INDICATES HORIZONTAL REINFORCEMENT WHICH IS PLACED ABOVE 12" OR MORE OF FRESH CONCRETE.
5. UNLESS NOTED OTHERWISE COLUMNS AND PIERS UTILIZE CLASS B LAP SPLICES
6. DEVELOPMENT LENGTH OF AN UNLAPPED, OR CLASS A SPLICE, BAR IS EQUAL TO VALUE FROM TABLED DIVIDED BY 1.3.
7. FOR SLABS AND WALLS, CONTRACTOR MAY PROVIDED REDUCED SPLICE LENGTHS IN ACCORDANCE WITH ACI 318 CHAPTER 25.
8. FOR EPOXY COATED REINFORCEMENT OR LIGHTWEIGHT CONCRETE REFER TO ACI 318 CHAPTER 25.

CASES FOR CLASS B LAP SPLICES

BEAMS OR COLUMNS	CASE 1	COVER ≥ 1 db AND C-C SPA > 2 db
	CASE 2	COVER < 1 db AND C-C SPA > 2 db
ALL OTHERS	CASE 1	COVER ≥ 1 db AND C-C SPA > 3 db
	CASE 2	COVER < 1 db AND C-C SPA > 3 db

Preliminary Plans - For Reference Only

HARDSCAPING /AESTHETICS GENERAL NOTES - 4

DESIGN AGENCY
Michael Baker INTERNATIONAL

DESIGNER BDC

REVIEWER JCF 01/10/24

PROJECT ID 82382

SHEET 1828 TOTAL 2696

CUY-90-16.28 (CCG3A)

MODEL: Sheet-04 PAPERSIZE: 34x22 (in.) DATE: 5/23/2025 TIME: 3:24:55 PM USER: Joseph.Hogan
pw:\\mb-us-pw.bentley.com:mb-us-pw-03\Documents\Cleveland_OH\01_Projects\ODOT\District12\82382\400-Engineering\Landscaping\Sheets\82382_PN1000.dgn

BUFF WASH FINISH CONCRETE

1.0 GENERAL:

SECTION INCLUDES DECORATIVE FINISH AND SAW-CUT JOINTING ON ALL BRIDGE 13 AND GATEWAY MONUMENT WALL CONCRETE AS DESIGNATED IN THE PLANS.

1.1 BASIS OF PAYMENT:

THE ACCEPTED BUFF WASHED FINISHED CONCRETE WILL BE PAID FOR AT THE CONTRACT PRICE DESIGNATED AS PART OF BRIDGE CONCRETE. ALL COSTS FOR WORK IN THIS SECTION ARE TO BE INCLUDED IN PRICE INCLUDING FINISH AND SAW CUT JOINTING. EXPANSION JOINT BETWEEN BUFF WASHED CONCRETE AND ARCHITECTURAL PRECAST SHALL BE INCLUDED IN PRECAST PRICE.

1.2 SUBMITTALS:

A. PRODUCT DATA: FOR EACH TYPE OF MANUFACTURED MATERIAL AND PRODUCT INDICATED.
B. DESIGN MIXTURES: FOR EACH CONCRETE PAVEMENT MIXTURE. INCLUDE ALTERNATE MIXTURE DESIGNS WHEN CHARACTERISTICS OF MATERIALS, PROJECT CONDITIONS, WEATHER, TEST RESULTS, OR OTHER CIRCUMSTANCES WARRANT ADJUSTMENTS. SUBMIT STATEMENT OF MIX DESIGN PREPARED BY BATCH PLANT SERVICING PROJECT FOR EACH LOAD DELIVERED TO PROJECT. STATEMENT OF MIX DESIGN SHALL BE ACCORDING TO ITEM 499.07.
C. QUALIFICATION DATA: FOR INSTALLER.
D. MATERIAL TEST REPORTS: FROM A QUALIFIED TESTING AGENCY INDICATING AND INTERPRETING TEST RESULTS FOR COMPLIANCE OF THE FOLLOWING WITH REQUIREMENTS INDICATED, BASED ON COMPREHENSIVE TESTING OF CURRENT MATERIALS:
   1. AGGREGATES: INCLUDE SERVICE RECORD DATA INDICATING ABSENCE OF DELETERIOUS EXPANSION OF CONCRETE DUE TO ALKALI-AGGREGATE REACTIVITY.
E. MATERIAL CERTIFICATES: SIGNED BY MANUFACTURERS CERTIFYING THAT EACH OF THE FOLLOWING MATERIALS COMPLIES WITH REQUIREMENTS:
   1. CEMENTITIOUS MATERIALS.
   2. STEEL REINFORCEMENT AND REINFORCEMENT ACCESSORIES.
   3. ADMIXTURES.
   4. SURFACE RETARDER.
   5. LIQUID DENSIFIER.
   6. CURING COMPOUNDS.
   7. APPLIED FINISH MATERIALS.
   8. BONDING AGENT OR EPOXY ADHESIVE.
   9. JOINT FILLERS.
F. STATEMENT OF COMPATIBILITY BETWEEN SURFACE RETARDER, LIQUID DENSIFIER, CURING, JOINT SEALANT, AND SEALER PRODUCTS.
G. FIELD QUALITY-CONTROL TEST REPORTS.
H. SHOP DRAWINGS:
   1. PAVING, JOINTING, AND POUR SEQUENCE PLAN: SUBMIT FIELD MEASURED DRAWING OF AREAS RECEIVING CONCRETE PAVING. SHOW LOCATIONS OF CONTROL AND EXPANSION JOINTS.
      A. OVERALL PLAN: NOT LESS THAN 1" = 20'.
      B. DETAIL PLANS: SCALE: NOT LESS THAN 1" = 10'. SHOW ALL FEATURES INCLUDING SURFACE UTILITY STRUCTURES AND VERTICAL PENETRATIONS IN PAVEMENT.
      C. PROPOSED LAYOUT OF CONTRACTION, CONSTRUCTION AND ISOLATION JOINTS. CLEARLY DELINEATE THE THREE DIFFERENT JOINT TYPES. SHOW SIZE, REINFORCING, DOWELS, AND SEALANT ASSEMBLY.
      D. CONCRETE POUR SEQUENCE. INDICATE SEQUENCE OF CONCRETE PAVING INSTALLATION.
I. MINUTES OF PRE-INSTALLATION CONFERENCE.
J. FIELD RECORDS OF TIME AND DATE OF PLACING, CURING, AND REMOVAL OF FORMS IN EACH PORTION OF THE WORK.

1.3 QUALITY ASSURANCE:

A. CONCRETE INSTALLER:
   1. TIME: NOT LESS THAN 5 YEARS SUCCESSFUL EXPERIENCE WITH INSTALLATION OF WORK OF THE TYPE REQUIRED BY THIS PROJECT.
   2. PROJECTS: SUCCESSFULLY COMPLETED A MINIMUM OF THREE PROJECTS OF NOT LESS THAN THE SIZE REQUIRED BY THE WORK OF THIS SECTION. THE PROJECT SIZES MUST REPRESENT NOT LESS THAN THE MINIMUM AMOUNT, TYPE, AND AESTHETIC EFFECT OF CONCRETE SIMILAR TO THAT REQUIRED FOR THIS PROJECT.

BUFF WASH FINISH CONCRETE (CONT.)

1.3 QUALITY ASSURANCE (CONT.):

B. READY-MIX MANUFACTURER QUALIFICATIONS: MANUFACTURER OF READY-MIXED CONCRETE PRODUCTS WHO COMPLIES WITH ASTM C 94/C 94M REQUIREMENTS FOR PRODUCTION FACILITIES AND EQUIPMENT.
   1. MANUFACTURER CERTIFIED ACCORDING TO NRMCA'S "CERTIFICATION OF READY MIXED CONCRETE PRODUCTION FACILITIES."
C. TESTING AGENCY QUALIFICATIONS: AN INDEPENDENT AGENCY QUALIFIED ACCORDING TO ASTM C 1077 AND ASTM E 329 FOR TESTING INDICATED, AS DOCUMENTED ACCORDING TO ASTM E 548.
   1. PERSONNEL CONDUCTING FIELD TESTS SHALL BE QUALIFIED AS ACI CONCRETE FIELD TESTING TECHNICIAN, GRADE 1, ACCORDING TO ACI CP-01 OR AN EQUIVALENT CERTIFICATION PROGRAM.
D. ACI PUBLICATIONS: COMPLY WITH ACT 301, "SPECIFICATION FOR STRUCTURAL CONCRETE," UNLESS MODIFIED BY REQUIREMENTS IN THE CONTRACT DOCUMENTS.
E. CONCRETE TESTING SERVICE: ENGAGE A QUALIFIED INDEPENDENT TESTING AGENCY TO PERFORM MATERIAL EVALUATION TESTS AND TO DESIGN CONCRETE MIXTURES.
F. SOURCE LIMITATIONS: OBTAIN DECORATIVE CEMENT CONCRETE PAVEMENT PRODUCTS AND EACH TYPE OR CLASS OF CEMENTITIOUS MATERIAL OF THE SAME BRAND FROM THE SAME MANUFACTURER'S PLANT AND EACH AGGREGATE THROUGH ONE SOURCE.
G. PREINSTALLATION CONFERENCE: CONDUCT CONFERENCE AT PROJECT SITE:
   1. BEFORE SUBMITTING DESIGN MIXTURES, REVIEW CEMENT CONCRETE PAVEMENT MIXTURE DESIGN AND EXAMINE PROCEDURES FOR ENSURING QUALITY OF CONCRETE MATERIALS AND PAVEMENT CONSTRUCTION PRACTICES. REQUIRE REPRESENTATIVES OF EACH ENTITY DIRECTLY CONCERNED WITH DECORATIVE CEMENT CONCRETE PAVEMENT TO ATTEND, INCLUDING THE FOLLOWING:
      A. CONTRACTOR'S SUPERINTENDENT.
      B. INDEPENDENT TESTING AGENCY RESPONSIBLE FOR CONCRETE DESIGN MIXES.
      C. READY-MIX CONCRETE PRODUCER.
      D. PROJECT ENGINEER.
H. MOCK UP ONE SAMPLE PER ITEM SPECIAL - BRIDGE 13 ARCHITECTURAL CONCRETE MIX MOCK UP
I. MOCK UP ONE SAMPLE PER ITEM SPECIAL - GATEWAY MONUMENT SIGN ARCHITECTURAL CONCRETE MIX MOCK UP

2.0 CONCRETE MIX DESIGN:

ACCORDING TO ITEM 499.03. REFER TO BRIDGE GENERAL NOTES.

2.1 MISCELLANEOUS PRODUCTS:

A. CHEMICAL SURFACE RETARDER: WATER-SOLUBLE, LIQUID OR GEL-SET RETARDER, FOR HORIZONTAL AND VERTICAL CONCRETE SURFACE APPLICATION, CAPABLE OF TEMPORARILY DELAYING FINAL HARDENING OF CONCRETE TO A DEPTH OF 1/32"-1/16".
B. LIQUID DENSIFIER: WATER-BASED SODIUM SILICAT SOLUTION TO DENSIFY AND DUSTPROOF CONCRETE.
C. PENETRATING SEALER: REFER TO BRIDGE GENERAL NOTES.

3.0 MONOLITHIC EXPOSED AGGREGATE FINISH:

ALL VISIBLE SURFACES OF THE BRIDGE PARAPET, PILASTERS, IN ADDITION TO THE SIDEWALK AS SHOWN ON THE PLANS TO RECEIVE A NON-EPOXY SEALER, SHALL BE TREATED TO ACHIEVE A MONOLITHIC FINE EXPOSED AGGREGATE FINISH (COMMONLY REFERRED TO AS BUFF WASH) PRIOR TO SEALING WITH NON-EPOXY SEALER AS FOLLOWS:

APPLICATION OF CHEMICAL SURFACE RETARDER:

HORIZONTAL SURFACES

A. SURFACE OF CONCRETE SHALL BE AS SMOOTH AS POSSIBLE WITH NO TROWEL OR EDGER MARKS.
B. CONCRETE SURFACE SHALL BE FREE OF BLEED AFTER WHILE STILL CONTAINING HIGH DEGREE OF MOISTURE.
C. MASK OFF ROADWAY CURB FACE AND TOP SURFACE TO 6 INCH WIDTH.
D. IMMEDIATELY AFTER BULLFLOATING AND ONE ROUND OF STEEL TROWELING, SPRAY-APPLY CHEMICAL SURFACE RETARDER TO PAVEMENT ACCORDING TO MANUFACTURER'S WRITTEN INSTRUCTIONS.
E. PER HOT WEATHER REQUIREMENTS OR IF RAIN IS EXPECTED BEFORE SURFACE RETARDER IS COMPLETELY DRY, COVER PAVEMENT SURFACE WITH PLASTIC SHEETING, SEALING LAPS WITH TAPE, AND REMOVE WHEN READY TO CONTINUE FINISHING OPERATIONS.

BUFF WASH FINISH CONCRETE (CONT.)

3.0 MONOLITHIC EXPOSED AGGREGATE FINISH (CONT.):

VERTICAL SURFACES

A. APPLY CHEMICAL SURFACE RETARDER AT THE RATE PER THE MANUFACTURER'S WRITTEN INSTRUCTIONS TO THE FACE OF FORMS AND ALLOW TO DRY TO TOUCH PRIOR TO PLACING CONCRETE. ENSURE A CONTINUOUS FILM COVERS ALL FORMS TO COME IN CONTACT WITH CONCRETE.
B. REMOVE FORMS ONCE CONCRETE HAS ALLOWED TO CURE.

REMOVAL OF RETARDED MORTAR:

A. WITHOUT DISLODGING AGGREGATE, REMOVE MORTAR PASTE BY LIGHTLY WASHING THE SURFACE WITH A STREAM OF WATER AIDED WITH A STIFF, NYLON-BRISTLE BROOM IF NECESSARY. POWER WASHING PASTE IS CONTRACTOR'S OPTION BUT MUST BE CAREFUL TO NOT OVER-WASH. REPEAT WATER FLUSHING AND BRUSHING CYCLE UNTIL CEMENT FILM IS REMOVED FROM AGGREGATE SURFACES TO DEPTH REQUIRED AND THAT THE APPEARANCE OF THE FINISH CONCRETE MATCHES THAT OF THE APPROVED SAMPLES. SURFACES SHALL HAVE A SANDY-LIKE APPEARANCE WHEN COMPLETED.

LIGHT SANDBLASTING MAY BE USED AS AN ALTERNATE TO CHEMICAL SURFACE RETARDERS TO ACHIEVE THE MONOLITHIC EXPOSED AGGREGATE FINISH IF THIS METHOD PRODUCES RESULTS ACCEPTABLE TO THE PROJECT ENGINEER. THE CONTRACTOR SHALL CREATE AS MANY SEPARATE 5'X5' SAMPLE PANELS AS NEEDED TO OBTAIN AN APPROVED MOCK UP WHICH WILL BE THE STANDARD WHICH ALL SUBSEQUENT WORK WILL BE COMPARED TO.

3.1 CURB FINISH:

FINE TEXTURED BRUSHED FINISH ON FACE AND TOP SURFACE ACCORDING TO APPROVED MOCK UP.

3.2 PAVEMENT JOINTS:

A. DECORATIVE JOINTS: CONSTRUCT DECORATIVE JOINTS, SECTIONING CONCRETE INTO AREAS AS INDICATED ON THE DRAWINGS AS FOLLOWS:
   1. SAW CUT JOINTS WITH POWER SAWS EQUIPPED WITH SHATTERPROOF ABRASIVE OR DIAMOND-RIMMED BLADES. CUT 1/8-INCH WIDE X 1/4-INCH DEPTH JOINTS INTO CONCRETE WHEN CUTTING ACTION WILL NOT TEAR, ABRADE, OR OTHERWISE DAMAGE SURFACE AND BEFORE DEVELOPING RANDOM CONTRACTION CRACKS.
   2. USE A HAND TOOL TO EXTEND CUTS ALL THE WAY TO VERTICAL EDGES SUCH AS WALLS, STEPS, CURBS AND COLUMNS, AND EXPANSION JOINT ARMOR AS REQUIRED. NO CUTTING INTO VERTICAL SURFACES WILL BE ALLOWED.
   3. SAW-CUT JOINTS IN STRAIGHT, TRUE LINES WITH NO OVER CUTTING.
   4. SAW-CUT OPERATIONS SHALL COMMENCE WITHIN 24 HOURS OF POUR UTILIZING "SOFF-CUT" SAWS AND BLADES SUITABLE FOR MATERIAL BEING CUT.
B. EXPANSION JOINTS: PREFORMED EXPANSION JOINT FILLER AND SEALANT IS INCLUDED FOR PAYMENT WITH PRECAST CONCRETE. REFER TO PRECAST CONCRETE SPECIFICATION.

3.3 PENETRATING SEALER:

REFER TO BRIDGE GENERAL NOTES.

3.4 FIELD QUALITY CONTROL:

A. REMOVE AND REPLACE CONCRETE PAVEMENT THAT IS BROKEN, DAMAGED, OR DEFECTIVE OR THAT DOES NOT COMPLY WITH REQUIREMENTS IN THIS SECTION.
B. PROTECT CONCRETE FROM DAMAGE. EXCLUDE TRAFFIC FROM PAVEMENT FOR AT LEAST 14 DAYS AFTER PLACEMENT. WHEN CONSTRUCTION TRAFFIC IS PERMITTED, MAINTAIN PAVEMENT AS CLEAN AS POSSIBLE BY REMOVING SURFACE STAINS AND SPILLAGE OF MATERIALS AS THEY OCCUR.
C. MAINTAIN CONCRETE PAVEMENT FREE OF STAINS, DISCOLORATION, DIRT, AND OTHER FOREIGN MATERIAL. CLEAN CONCRETE PAVEMENT NOT MORE THAN TWO DAYS BEFORE DATE SCHEDULED FOR FINAL ACCEPTANCE.

ITEM SPECIAL - BRIDGE 13 ARCHITECTURAL CONCRETE MIX MOCK UP

PROVIDE 5' X 5' MOCK UPS REPRESENTATIVE OF VERTICAL SURFACES AND HORIZONTAL FLATWORK INCLUDING DECORATIVE FINISH, ALL JOINT CONDITIONS, JOINT FILLERS, JOINT SEALANTS, AND SURFACE SEALERS FOR REVIEW BY PROJECT ENGINEER.

MOCK UPS SHALL INCLUDE DAMAGE REPAIR OF DECORATIVE SURFACE.

THE CONTRACTOR SHALL CREATE AS MANY SEPARATE 5' X 5' SAMPLE PANELS AS NEEDED TO OBTAIN AN APPROVED MOCK UP WHICH WILL BE THE STANDARD WHICH ALL SUBSEQUENT WORK WILL BE COMPARED TO.

OBTAIN WRITTEN APPROVAL OF MOCK UP BY PROJECT ENGINEER.

INCORPORATE APPROVED FINISH INTO FULL SIZE MOCK UP OF VERTICAL BRIDGE ELEMENTS PER STRUCTURAL DRAWINGS FOR REVIEW BY PROJECT ENGINEER.

THE FOLLOWING QUANTITIES HAVE BEEN CARRIED TO THE GENERAL SUMMARY:

ITEM SPECIAL - BRIDGE 13 ARCHITECTURAL CONCRETE MIX MOCK UP	**1 EACH**

ITEM SPECIAL - GATEWAY MONUMENT SIGN ARCHITECTURAL CONCRETE MIX MOCK UP

PROVIDE 5' X 5' MOCK UPS REPRESENTATIVE OF VERTICAL SURFACES AND HORIZONTAL FLATWORK INCLUDING DECORATIVE FINISH, ALL JOINT CONDITIONS, JOINT FILLERS, JOINT SEALANTS, AND SURFACE SEALERS FOR REVIEW BY PROJECT ENGINEER.

MOCK UPS SHALL INCLUDE DAMAGE REPAIR OF DECORATIVE SURFACE.

THE CONTRACTOR SHALL CREATE AS MANY SEPARATE 5' X 5' SAMPLE PANELS AS NEEDED TO OBTAIN AN APPROVED MOCK UP WHICH WILL BE THE STANDARD WHICH ALL SUBSEQUENT WORK WILL BE COMPARED TO.

OBTAIN WRITTEN APPROVAL OF MOCK UP BY PROJECT ENGINEER.

INCORPORATE APPROVED FINISH INTO FULL SIZE MOCK UP OF VERTICAL BRIDGE ELEMENTS PER STRUCTURAL DRAWINGS FOR REVIEW BY PROJECT ENGINEER.

THE FOLLOWING QUANTITIES HAVE BEEN CARRIED TO THE GENERAL SUMMARY:

ITEM SPECIAL - GATEWAY MONUMENT SIGN ARCHITECTURAL CONCRETE MIX MOCK UP	**1 EACH**

Preliminary Plans - For Reference Only

HARDSCAPING /AESTHETICS GENERAL NOTES - 5

DESIGN AGENCY
Michael Baker INTERNATIONAL

DESIGNER BDC
REVIEWER JCF 01/10/24
PROJECT ID 82382
SHEET 1829 TOTAL 2696

CUY-90-16.28 (CCG3A)

MODEL: Sheet-05 PAPERSIZE: 34x22 (in.) DATE: 5/23/2025 TIME: 3:24:56 PM USER: Joseph.Hogan
pw:\\mb-us-pw.bentley.com:mb-us-pw-03\Documents\Cleveland_OH\01_Projects\ODOT\District12\82382\400-Engineering\Landscaping\Sheets\82382_PN1000.dgn

ITEM SPECIAL - PLANTER WATERPROOFING SYSTEM

1.0 SUMMARY:

THIS SECTION INCLUDES THE FOLLOWING:

A. MONOLITHIC MEMBRANE
B. PROTECTION SHEET
C. FLASHING
D. DRAINAGE MAT
E. LIGHTWEIGHT AGGREGATE
F. FILTER FABRIC

1.1 SUMMARY:

FURNISH AND INSTALL A COMPLETED WATERPROOFING ASSEMBLY INCLUDING SURFACE CONDITIONER, A MONOLITHIC, RUBBERIZED ASPHALT MEMBRANE, PROTECTION SHEET, FLASHINGS, DRAINAGE MAT. TO ENSURE TOTAL SYSTEM COMPATIBILITY ALL PRODUCTS MUST BE PURCHASED FROM A SINGLE-SOURCE MANUFACTURER.

1.2 METHOD OF MEASUREMENT:

PLANTER WATERPROOFING SYSTEM SHALL BE MEASURED BY LUMP SUM FOR BRIDGE 13.

1.3 BASIS OF PAYMENT:

THE ACCEPTED PLANTER WATERPROOFING SYSTEM WILL BE PAID FOR AT THE CONTRACT PRICE DESIGNATED FOR BRIDGE 13 AS SHOWN ON THE PLANS. ALL COSTS FOR WORK IN THIS SECTION ARE TO BE INCLUDED IN THE LUMP SUM PRICE FOR EACH PLANTER WATERPROOFING SYSTEM.

1.4 RELATED WORK:

THE COORDINATION OF THE CONCRETE DECK WORK DESCRIBED BELOW IS NECESSARY TO FACILITATE THE SUCCESSFUL INSTALLATION OF THE WATERPROOFING MEMBRANE.

A. CAST IN PLACE CONCRETE DECK STRENGTH/DENSITY: CONFIRM WITH BRIDGE ENGINEER AND WATERPROOFING MANUFACTURER'S REQUIREMENTS. FINISH: WOOD-FLOAT OR WOOD-TROWELED FINISH. STEEL TROWELED IS NOT DESIRABLE.
B. CAST IN PLACE CONCRETE DECK HYDRATION (CURE): METHOD OF CURE: WATER CURE, WET COVERINGS, PAPER SHEETS, PLASTIC SHEETS OR APPROVED LIQUID CURING COMPOUND (SODIUM SILICATE PREFERRED). CONTACT MANUFACTURER FOR OTHER ALTERNATIVES.
C. CAST IN PLACE CONCRETE DECK DURATION OF CURE/DRY: STRUCTURAL WEIGHT CONCRETE: RECOMMEND 28 DAYS, MINIMUM 14 DAYS, PRIOR TO APPLICATION OF THE MEMBRANE.
D. LIGHTWEIGHT STRUCTURAL CONCRETE: RECOMMEND 60 DAYS, MINIMUM 28 DAYS, PRIOR TO APPLICATION OF MEMBRANE. VENTING OF THE DECK FROM THE UNDERSIDE IS RECOMMENDED TO FACILITATE DRYING.
E. THE ABOVE MINIMUM CURE/DRY TIMES ARE RECOMMENDED BASED UPON BASIC CONCRETE FUNDAMENTALS AND EXPERIENCE. DEPENDING ON CONDITIONS (I.E., AMBIENT TEMPERATURE, HUMIDITY) THE CONCRETE MAY BE DRY ENOUGH TO RECEIVE APPLICATION OF THE MEMBRANE IN LESS THAN THE 14 DAY MINIMUM RECOMMENDATION. CONSULT MANUFACTURER FOR SPECIFICS WHEN LESS THAN THE MINIMUM IS DESIRED.
F. FORM RELEASE AGENTS: CONTACT MANUFACTURER.

1.5 REFERENCES:

AMERICAN SOCIETY FOR TESTING AND MATERIALS (ASTM).

1.6 SUBMITTALS:

A. CERTIFICATION FROM AN APPROVED INDEPENDENT TESTING LABORATORY EXPERIENCED IN TESTING THIS TYPE MATERIAL, THAT THE MATERIAL MEETS CG58-37.50-M89 STANDARD FOR RUBBERIZED ASPHALT MEMBRANES, INCLUDING APPLICABLE ASTM PROCEDURES. TESTING SHALL BE DONE BY ORTECH INTERNATIONAL OR OTHER APPROVED NATIONAL TESTING LABORATORY. CERTIFICATION SHOWING FULL TIME QUALITY CONTROL OF PRODUCTION FACILITIES AND THAT EACH BATCH OF MATERIAL IS TESTED TO INSURE CONFORMANCE WITH THE MANUFACTURER'S PUBLISHED PHYSICAL PROPERTIES.
B. CERTIFICATION SHOWING THAT ALL WATERPROOFING COMPONENTS ARE BEING SUPPLIED AND WARRANTED BY A SINGLE-SOURCE MANUFACTURER. THE PLANT MANUFACTURING THIS TYPE MATERIAL MUST HAVE ISO 9001-2000 APPROVAL AS EVIDENCED BY A NOTARIZED COPY OF THE OFFICIAL CERTIFICATE.
C. PRODUCT DATA FOR ALL SYSTEM COMPONENTS.
D. MANUFACTURER'S STANDARD SIZE SAMPLES OF ALL PRODUCTS.

ITEM SPECIAL - PLANTER WATERPROOFING SYSTEM (CONT.)

1.7 QUALITY ASSURANCE:

A. THE WATERPROOFING CONTRACTOR SHALL DEMONSTRATE QUALIFICATIONS TO PERFORM THE WORK OF THIS SECTION BY SUBMITTING THE FOLLOWING DOCUMENTATION:
   1. CERTIFICATION OR LICENSE BY THE MEMBRANE MANUFACTURER AS A LOCALLY BASED, AUTHORIZED APPLICATOR OF THE PRODUCT THE INSTALLER INTENDS TO USE, FOR A MINIMUM OF FIVE (5) YEARS AND LIST OF AT LEAST THREE (3) PROJECTS, SATISFACTORILY COMPLETED WITHIN THE PAST FIVE (5) YEARS, OF SIMILAR SCOPE AND COMPLEXITY TO THIS PROJECT.
   2. PREVIOUS EXPERIENCE SUBMITTAL SHALL CORRESPOND TO SPECIFIC MEMBRANE SYSTEM PROPOSED FOR USE BY APPLICATOR.
B. THE RUBBERIZED ASPHALT MEMBRANE PRODUCT SHALL CONTAIN AN INERT CLAY FILLER TO ENABLE THE PRODUCT TO BE RESISTANT TO ACIDS (FERTILIZERS, BUILDING WASHES AND ACID RAIN).
C. MEMBRANE MANUFACTURER SHALL HAVE AVAILABLE AN IN-HOUSE TECHNICAL STAFF TO ASSIST THE CONTRACTOR, WHEN NECESSARY, IN APPLICATION OF THE PRODUCTS AND FINAL INSPECTION OF THE ASSEMBLY.
D. MEMBRANE MANUFACTURER QUALIFICATION: MANUFACTURER SHALL DEMONSTRATE QUALIFICATIONS TO SUPPLY MATERIALS OF THIS SECTION BY CERTIFYING THE FOLLOWING:
   1. MEMBRANE MANUFACTURER MUST SHOW EVIDENCE THAT THE SPECIFIED RUBBERIZED ASPHALT HAS BEEN MANUFACTURED BY THE SAME SOURCE FOR FIFTEEN (15) YEARS AND SUCCESSFULLY INSTALLED ON A YEARLY BASIS FOR A MINIMUM OF FIFTEEN (15) YEARS ON PROJECTS OF SIMILAR SCOPE AND COMPLEXITY.
   2. MEMBRANE MANUFACTURER MUST NOT ISSUE WARRANTIES FOR TERMS LONGER THAN THEY HAVE BEEN MANUFACTURING THEIR HOT FLUID RUBBERIZED ASPHALT MEMBRANE.
E. MOCK UP ONE INTERIOR PLANTING PER ITEM SPECIAL - BRIDGE 13 PLANTER MOCK UP.

1.8 PRE-CONSTRUCTION CONFERENCES:

THE MANUFACTURER WILL MEET WITH THE NECESSARY PARTIES AT THE JOBSITE TO REVIEW AND DISCUSS PROJECT CONDITIONS AS IT RELATES TO THE INTEGRITY OF THE WATERPROOFING ASSEMBLY.

1.9 DELIVERY, STORAGE AND HANDLING:

A. DELIVER MATERIALS IN ORIGINAL UNOPENED CONTAINERS OF PACKAGING CLEARLY LABELED WITH MANUFACTURER'S NAME, BRAND NAME, INSTRUCTION FOR USE AND ALL IDENTIFYING NUMBERS.
B. MATERIALS SHALL BE STORED IN A NEAT, SAFE MANNER, NOT TO EXCEED THE ALLOWABLE STRUCTURAL CAPACITY OF THE STORAGE AREA. STORE MATERIALS IN A CLEAN, DRY AREA PROTECTED FROM WATER AND DIRECT SUNLIGHT.
C. STORE ALL ADHESIVES AT TEMPERATURES BETWEEN 60°F (15.5°C) AND 80°F (26.6°C). IF EXPOSED TO LOWER TEMPERATURES, RESTORE MATERIALS TO 60°F (15.5°C) MINIMUM TEMPERATURE BEFORE USING.

1.10 PROJECT CONDITIONS:

A. APPLICATION OF THE MEMBRANE SHALL NOT COMMENCE NOR PROCEED DURING INCLEMENT WEATHER. ALL SURFACES TO RECEIVE THE MEMBRANE SHALL BE FREE OF WATER, DEW, FROST, SNOW AND ICE. APPLICATION OF MEMBRANE SHALL NOT COMMENCE NOR PROCEED WHEN THE AMBIENT TEMPERATURE IS BELOW 0°F (-17.7°C).
B. PREPARATION AND APPLICATION OF MEMBRANE MUST BE CONDUCTED IN WELL VENTILATED AREAS. OVER ITS SERVICE LIFE, DO NOT EXPOSE MEMBRANE OR ACCESSORIES TO A CONSTANT TEMPERATURE IN EXCESS OF 180°F (82°C) (I.E., HOT PIPES AND VENTS OR DIRECT STEAM VENTING, ETC.). ADHESIVES CONTAIN PETROLEUM DISTILLATES AND ARE EXTREMELY FLAMMABLE. DO NOT BREATHE VAPORS OR USE NEAR AN OPEN FIRE. DO NOT USE IN CONFINED AREAS WITHOUT ADEQUATE VENTILATION. CONSULT CONTAINER OR PACKAGING LABELS AND MATERIAL SAFETY DATA SHEETS (MSDS) FOR SPECIFIC SAFETY INFORMATION.
C. DO NOT ALLOW WASTE PRODUCTS (PETROLEUM, GREASE, OIL, SOLVENTS, VEGETABLE OR MINERAL OIL, ANIMAL FAT, ETC.) TO COME IN CONTACT WITH THE ROOF MEMBRANE. ANY EXPOSURE TO FOREIGN MATERIALS OR CHEMICAL DISCHARGES MUST BE PRESENTED TO MEMBRANE MANUFACTURER FOR EVALUATION TO DETERMINE ANY IMPACT ON THE WATERPROOF MEMBRANE ASSEMBLY PERFORMANCE.
D. CONCRETE DECK/WALL SURFACE CONDITION: IMPORTANT - REFER TO RELATED WORK, ABOVE.
E. DECK/WALL PREPARATION: REFER TO PREPARATION.
F. PROTECTION: GENERAL CONTRACTOR SHALL ASSURE ADEQUATE PROTECTION DURING INSTALLATION OF THE WATERPROOFING ASSEMBLY.

ITEM SPECIAL - PLANTER WATERPROOFING SYSTEM (CONT.)

1.11 WARRANTY:

UPON COMPLETION OF THE WORK, THE CONTRACTOR MUST SUPPLY THE PROJECT DESIGNER WITH A SINGLE-SOURCE WARRANTY OF U.S. ORIGIN DIRECT FROM THE MANUFACTURER. EACH WARRANTY VARIES IN SCOPE AND TERMS, CONTACT MANUFACTURER FOR EXACT WARRANTY TERMS AND CONDITIONS TO MEET THE SPECIFIC PROJECT REQUIREMENTS.

2.0 MATERIALS:

REFER TO SYSTEM DESCRIPTION, ALL COMPONENTS MUST BE OBTAINED FROM A SINGLE-SOURCE MANUFACTURER TO ENSURE TOTAL SYSTEM COMPATIBILITY AND INTEGRITY.

A. MEMBRANE: MEMBRANE SHALL BE A HOT, FLUID APPLIED, RUBBERIZED ASPHALT MEMBRANE MEETING THE FOLLOWING CGSB-37.50-M89 STANDARD AND OTHER PERTINENT PHYSICAL PROPERTIES:

PROPERTY	TEST METHOD	TYPICAL RESULT
FLASH POINT	ASTM D-92 CGSB-37.50-M89	502°F * (261°C)
PENETRATION	ASTM D-5329 CGSB-37.50-M89	98 MM @ 77°F (25°C) 187 MM @ 122°F (50°C)
FLOW	ASTM D-5329 CGSB-37.50-M89	1.0 MM @ 140°F (60°C)
TOUGHNESS	CGSB-37.50-M89	16.0 JOULES
RATIO OF TOUGHNESS TO PEAK LOAD	CGSB-37.50-M89	0.069
WATER VAPOR PERMEABILITY	ASTM E-96, PRODECURE E CGSB-37.50-M89	0.3 NG/PA(S)M2
WATER ABSORPTION	CGSB-37.50-M89	0.11 GRAM WEIGHT GAIN
LOW TEMPERATURE FLEXIBILITY (-25°C)	CGSB-37.50-M89	NO DELAMINATION ADHESION LOSS, OR CRACKING
LOW TEMPERATURE CRACK BRIDGE CAPABILITY	CGSB-37.50-M89	NO CRACKING ADHESION LOSS, OR SPLITTING
HEAT STABILITY	CGSB-37.50-M89	NO CHANGE IN VISCOSITY
VISCOSITY	CGSB-37.50-M89	11.0 SECONDS
WATER RESISTANCE (5 DAYS/50° C)	CGSB-37.50-M89	NO DELAMINATION BLISTERING, EMULSIFICATION, OR DETERIORATION
SOFTENING POINT	ASTM D-36	180°F (82°C)
ELONGATION	ASTM D-5329	1000% MINIMUM
RESILIENCY	ASTM D-3407	40% MINIMUM
BOND TO CONCRETE	ASTM D-3407	PASS 0°F (-18°C)
ACID RESISTANCE	ASTM D-896 PROCEDURE 7.1 (N-8)	PASS-50% NITRIC ACID 50% SULFURIC ACID
RESISTANCE TO HYDROSTATIC PRESSURE	ASTM D-08.22 DRAFT 2	100 PSI (EQUALS 23) PRESSURE FOOT OF HEAD WATER
RESISTANCE TO SALT WATER	ASTM D-896 SIMILAR 20% SODIUM CHLORIDE SODIUM CARBONATE CALCIUM CHLORIDE	NO DELAMINATION, BLISTERING, EMULSIFICATION OR DETERIORATION
RESISTANCE TO FERTILIZER	ASTM D-896 SIMILAR UNDILUTED 15/5/5, NITROGEN/ PHOSPHORUS/ POTASH	NO DELAMINATION, BLISTERING, EMULSIFICATION OR DETERIORATION

ITEM SPECIAL - PLANTER WATERPROOFING SYSTEM (CONT.)

PROPERTY	TEST METHOD	TYPICAL RESULT
RESISTANCE TO ANIMAL WASTE	3-YEAR EXPOSURE	NO DETERIORATION
SOLIDS CONTENT		100%-NO SOLVENTS
SHELF LIFE		10 YEARS (SEALED)
SPECIFIC GRAVITY (*102°F MORE THAN THE APPLICATION TEMPERATURE RECOMMENDED BY THE MANUFACTURER)		1.23+.02

B. SURFACE CONDITIONER: ASPHALTIC SURFACE CONDITIONER FOR CONCRETE SURFACES.
C. FLASHING/REINFORCING: SPUNBONDED POLYESTER FABRIC (STANDARD DUTY) REINFORCING SHEET
   1. UNIT WEIGHT: 1.35 OZ/SQ YD, PER ASTM D1910
   2. % ELONGATION: 42 TO BREAK, PER ASTM D2523
   3. TEAR STRENGTH: 8 LBS, PER ASTM D2263
   4. BREAKING STRENGTH: 25 LBS, PER ASTM D2523
   5. DE MATIA FLEX CYCLES: 100,000, PER ASTM D813
D. ADHESIVES/SEALANTS:
   1. CONTACT ADHESIVE TO BOND ELASTOMERIC FLASHING TOGETHER.
   2. CONTACT ADHESIVE TO BOND ELASTOMERIC FLASHING TO AN APPROVED SUBSTRATE.
   3. SEALANT TO SEAL ELASTOMERIC FLASHING SEAM EDGE.
E. PROTECTION SHEET AND ROOT BARRIER: HYDROFLEX RB II. A POLYESTER REINFORCED RUBBERIZED ASPHALT SHEET WITH A FACTORY APPLIED ROOT GROWTH REGULATOR.
F. PREFABRICATED DRAINAGE MAT: A COMPOSITE DRAINAGE SYSTEM CONSISTING OF A THREE-DIMENSIONAL, CRUSH-PROOF, DRAINAGE CORE AND A FILTER FABRIC MEETING THE FOLLOWING PHYSICAL PROPERTIES.

PROPERTY	TEST METHOD	VALUES
CORE COMPRESSIVE STRENGTH	ASTM D-1621	30,000 PSF (14.66 KG/CM2)
THICKNESS	ASTM D-1777	0.4 IN (1.016 CM)
FLOW, Q @ 3600 PSF & HYDRAULIC GRADIENT OF 114.86 KG/CM2	ASTM D-4716	25 GPM/FT WIDTH
FABRIC APPARENT OPENING SIZE (EOS)	CW-02215	70 US SIEVE (.212MM)
FABRIC FLOW	ASTM D-4491	18GPM/FT2 733LPMIN/M2
FABRIC PUNCTURE	ASTM D-4833	120 LB.
FABRIC TENSILE	ASTM D-4632	370 LB. MD X 250LB CD (1.65 KN)

G. DRAINAGE AND WATER RETENTION COMPONENT: GARDENDRAIN GR30. A RECYCLED POLYETHYLENE, THREE DIMENSIONAL PANEL WITH RETENTION CUPS AND DRAINAGE CHANNELS.

PROPERTY	TEST METHOD	RESULTS
WEIGHT	WITH CUPS EMPTY	0.3 LB/SF DRY 1.6 LBS/SF WET
	WITH CUPS FILLED	2.4 LBS/SF DRY 3.8 LBS/SF WET
COMPRESSIVE STRENGTH	ASTM D1621	5,069 LB/SF (EMPTY) 13,000+ LB/SF (FULL)
FLOW RATE WATER RETENTION	ASTM D4716	38 GAL/MIN/FT WIDTH 0.16 GAL/SF (FULL)

H. DRAINAGE LAYER: SELECT EXPANDED AGGREGATE GRADES TO SUBSTANTIALLY MATCH PARTICLE SIZES IN THE MIX TYPE, TYPICAL GRADE "GREENHOUSE BLEND".

PROPERTY	TEST METHOD	RESULT
WEIGHT	ASTM D5261	3.5 OZ/SY
FLOW RATE	ASTM D4491	150 GAL/MIN/SF
GRAB TENSILE STRENGTH	ASTM D4632	90 LB/MIN
MULLEN BURST STRENGTH	ASTM D3786	185 LB/SQ IN
TRAPEZOIDAL TEAR	ASTM D4533	40 LB (178N)
ELONGATION	ASTM D4632	50%
PUNCTURE STRENGTH	ASTM D4833	60 LB/MIN
APPARENT OPENING SIZE	ASTM D4751	50 (0.3 MM)

Preliminary Plans Not For Reference Only

CUY-90-16.28 (CCG3A)
MODEL: Sheet-06 PAPERSIZE: 34x22 (in.) DATE: 5/23/2025 TIME: 3:24:56 PM USER: Joseph.Hogan
pw:\\mb-us-pw.bentley.com:mb-us-pw-03\Documents\Cleveland_OH\01_Projects\ODOT\District12\82382400-Engineering\Landscaping\Sheets\82382_PN1000.dgn

DESIGN AGENCY
Michael Baker INTERNATIONAL
DESIGNER BDC
REVIEWER JCF 01/10/24
PROJECT ID 82382
SHEET 1830 TOTAL 2696

ITEM SPECIAL - PLANTER WATERPROOFING SYSTEM (CONT.)

2.0 MATERIALS (CONT.):

I. DRAINAGE LAYER: HYDROTECH LITE TOP EXPANDED AGGREGATE. A SELECT EXPANDED LIGHTWEIGHT AGGREGATE GRADED TO SUBSTANTIALLY MATCH PARTICLE SIZES IN THE MIX TYPE, TYPICAL GRADE GREENHOUSE BLEND".

MATERIAL		GREENHOUSE BLEND
WEIGHT PER CUBIC FOOT	46	
WEIGHT PER CUBIC YARD	1242	
KILOGRAM PER CUBIC METER	737	



PARTICLE SIZE/GRADATION

SIEVE	METRIC	SIZE (IN.)	% RETAINED
NO. 4	4.76 MM	0.187	4.1%
NO. 8	2.36 MM	0.0937	74.6%
NO. 16	1.18 MM	0.0469	20.6%
NO. 30	0.6 MM	0.0234	0.2%
NO. 50	0.3 MM	0.0117	0.0%
NO. 100	0.015 MM	0.059	0.4%
PAN (DUST)			

SHIPPING QUANTITES

BAGGED
SUPER SACK (40 CF)
BY WEIGHT
1840 LBS 0.92 TONS 835 KILOGRAMS
BY VOLUME
1.48 CY 1.13 CUBIC METERS

BULK/LOOSE
TRUCK LOAD
BY WEIGHT
48,000 LBS 24.0 TONS 21,772 KILOGRAMS
BY VOLUME
38.65 CY 29.55 CUBIC METERS

3.0 INSPECTION:

A. THE WATERPROOFING CONTRACTOR SHALL EXAMINE ALL SURFACES TO RECEIVE THE WATERPROOFING ASSEMBLY TO VERIFY IT IS ACCEPTABLE AND PROPER FOR THE APPLICATION OF THE MEMBRANE.
B. THE WATERPROOFING CONTRACTOR SHALL NOT PROCEED WITH THE INSTALLATION OF THE WATERPROOF MEMBRANE ASSEMBLY UNTIL ALL DECK DEFECTS HAVE BEEN CORRECTED.

3.1 PREPARATION:

A. ALL SURFACES MUST BE DRY, SMOOTH, FREE OF DEPRESSIONS, VOIDS, PROTRUSIONS, CLEAN AND FREE OF UNAPPROVED CURING COMPOUNDS, FORM RELEASE AGENTS, AND OTHER SURFACE CONTAMINANTS.
B. CAST IN-PLACE CONCRETE/COMPOSITE DECK: POURED IN PLACE CONCRETE MUST BE MONOLITHIC, SMOOTH, FREE OF VOIDS, SPALLED AREAS, LAITANCE, HONEYCOMBS, AND SHARP PROTRUSIONS.
C. PRECAST CONCRETE DECKS: PRECAST UNITS SHALL BE MECHANICALLY SECURED TO MINIMIZE DIFFERENTIAL MOVEMENT AND ALL JOINTS BETWEEN UNITS SHALL BE GROUTED. I, O2, 1 ATM>100
D. SUBSTRATE CLEANING: THOROUGHLY SWEEP THE SUBSTRATE WHICH IS TO RECEIVE THE WATERPROOFING MEMBRANE. SUBSTRATE MUST ALSO BE BLOWN CLEAN USING AN AIR COMPRESSOR TO REMOVE ANY REMAINING LOOSE DEBRIS. FINAL CHECK TO DETERMINE IF CONCRETE HAS BEEN PROPERLY CLEANED IS TO APPLY A TEST PATCH OF MONOLITHIC MEMBRANE TO THE SURFACE AND CHECK ITS ADHESION.

ITEM SPECIAL - PLANTER WATERPROOFING SYSTEM (CONT.)

3.2 MEMBRANE INSTALLATION:

A. SURFACE CONDITIONER APPLICATION TO CONCRETE: APPLY THE SURFACE CONDITIONER TO THE CONCRETE USING A HAND HELD SPRAYER EVENLY AT A RATE OF 300 TO 600 SF/GALLON (7.4 - 14.7 M2/L) DEPENDING ON SURFACE TEXTURE. SURFACE CONDITIONER SHOULD "TAN" THE SURFACE, NOT BLACKEN IT. ALLOW SUFFICIENT TIME FOR THE SURFACE CONDITIONER TO THOROUGHLY DRY PRIOR TO THE MEMBRANE APPLICATION.
B. MEMBRANE PREPARATION: THE MEMBRANE SHALL BE HEATED IN DOUBLE JACKETED, OIL BATH OR HOT AIR MELTER WITH MECHANICAL AGITATION, SPECIFICALLY DESIGNED FOR THE PREPARATION OF A RUBBERIZED ASPHALT MEMBRANE. HEAT MEMBRANE UNTIL MEMBRANE CAN BE DRAWN-FREE FLOWING AT A TEMPERATURE RANGE BETWEEN 350F DEGREES (176C) AND 400F DEGREES (204C).
C. DETAILING/FLASHING: ALL DETAILING AND FLASHING SHALL BE DONE IN ACCORDANCE WITH THE MANUFACTURER'S STANDARD GUIDELINE DETAILS. ALL DETAILING AND FLASHING SHALL BE COMPLETED BEFORE INSTALLING THE MEMBRANE OVER THE FIELD OF THE SUBSTRATE.
D. MEMBRANE APPLICATION: APPLY THE RUBBERIZED ASPHALT MEMBRANE AT A RATE TO PROVIDE A CONTINUOUS, MONOLITHIC COAT OF 90 MIL MINIMUM (APPROXIMATELY 2.3 MM), INTO WHICH IS FULLY EMBEDDED A LAYER OF THE SPUNBONDED POLYESTER FABRIC REINFORCING SHEET, FOLLOWED BY ANOTHER CONTINUOUS MONOLITHIC COAT OF MEMBRANE AT AN AVERAGE THICKNESS OF 125 MIL (APPROX. 3.2 MM). TOTAL MEMBRANE THICKNESS SHALL BE 215 MILS AVERAGE (APPROX. 5.5 MM), 180 MILS MINIMUM. OVERLAP FABRIC REINFORCING SHEET 1-2 INCHES (25.4 MM - 50.8 MM) WITH MEMBRANE BETWEEN SHEETS.
E. PROTECTION SHEET/ROOT BARRIER INSTALLATION: EMBED THE PROTECTION SHEET INTO THE MEMBRANE WHILE IT IS STILL HOT TO INSURE A GOOD BOND. OVERLAP ADJOINING SHEET EDGES (DRY) A MINIMUM OF 2"-3" (50.8 MM - 76.2 MM) TO INSURE COMPLETE COVERAGE. THE COMPLETED MEMBRANE/PROTECTION ASSEMBLY MUST BE COVERED WITH SUBSEQUENT TOPPING MATERIALS AS SOON AS POSSIBLE, WITHIN 30 DAYS OF MEMBRANE INSTALLATION.

3.3 MEMBRANE INTEGRITY TEST:

THE DECK AREA SHALL BE WATER TESTED BY MEANS OF ELECTRONIC TESTING OR PONDING WATER TO A MINIMUM DEPTH OF 2" (50.8 MM) FOR A PERIOD OF 48 HOURS TO CHECK THE INTEGRITY OF THE MEMBRANE INSTALLATION. ELECTRONIC LEAK DETECTION TESTING SHALL BE REQUIRED PRIOR TO THE PLACEMENT OF SUBSEQUENT OVERBURDEN IN THE EVENT OF EXCESSIVE DAMAGE TO THE MEMBRANE ASSEMBLY. VERIFY THAT THE STRUCTURE CAN SUPPORT THE DEADLOAD WEIGHT OF A WATERTEST BEFORE TESTING. IF LEAKS SHOULD OCCUR, THE WATER MUST BE DRAINED COMPLETELY AND THE MEMBRANE INSTALLATION REPAIRED.

3.4 DRAINAGE COURSE PLACEMENT:

A. GENERAL: EXAMINE THE DECK AREA TO BE COVERED WITH SUBSEQUENT TOPPING MATERIALS IN ORDER TO ENSURE THAT ALL DECK AREAS HAVE RECEIVED THE MEMBRANE, THE MEMBRANE IS FREE OF DAMAGE, IT IS PROPERLY PROTECTED, AND ALL FLASHING HAS BEEN PROPERLY INSTALLED.
B. IT IS RECOMMENDED THAT THE DRAINAGE COURSE AND OTHER SUBSEQUENT TOPPING MATERIALS BE INSTALLED AS EACH SECTION IS COMPLETED.
C. INSTALL DRAINAGE COURSE ON HORIZONTAL AND VERTICAL SURFACES IN ACCORDANCE WITH THE MANUFACTURER'S RECOMMENDATIONS. LAYOUT AND POSITION DRAINAGE COURSE AND ALLOW TO LAY FLAT. CUT AND FIT DRAINAGE COURSE TO PERIMETER AND PENETRATIONS.

ITEM SPECIAL - PLANTER WATERPROOFING SYSTEM (CONT.)

3.5 DRAINAGE/WATER RETENTION COMPONENT:

A. DRAINAGE BOARD SHALL BE INSTALLED WITH HOLES UP, OVER THE ROOT BARRIER PROTECTION, WATER RETENTION MAT (IF USED) OR STYROFOAM INSULATION (IF USED). ADJACENT PANELS SHALL BE BUTT TOGETHER. GARDENDRAIN SHALL BE CUT TO FIT AROUND PENETRATIONS, ETC. WITH A HEAVY-DUTY UTILITY KNIFE OR SMALL TOOTHED SAW.
B. THE CUPS OF THE DRAINAGE BOARD SHALL BE FILLED WITH LIGHTWEIGHT AGGREGATE LEVEL WITH THE TOP SURFACE OF THE PANELS WHERE REQUIRED DUE TO LOADING CONDITIONS.
C. ALL LOCATIONS FOR DRAINAGE BOARD SHOWN IN DETAILS ARE INCLUDED IN ITEM SPECIAL: PLANTER WATERPROOFING SYSTEM

ALT 1.
GARDENDRAIN GR 30 BY AMERICAN HYDROTECH.
WWW.HYDROTECHUSA.COM
ALT 2.
J-DRAIN 700 BY JDR ENTERPRISES. WWW.J-DRAIN.COM

3.6 FILTER FABRIC:

A LAYER OF SYSTEMFILTER SHALL BE LAID OVER THE GARDENDRAIN, LAPPING ADJACENT ROLLS A MINIMUM OF 6 INCHES (150 MM). ENOUGH MATERIAL SHALL BE LEFT TO BE DRAWN UP ABOVE THE ANTICIPATED GROWING MEDIA LEVEL. ANY EXCESS SHALL BE TRIMMED DOWN TO THE LEVEL OF THE GROWING MEDIA.

3.7 GROWING MEDIA AND VEGETATION INSTALLATION:

REFER TO PLANTING SOIL MIXES AND PLANTS.

3.8 JOB COMPLETION:

A. CONTRACTOR AND A REPRESENTATIVE OF THE MEMBRANE MANUFACTURER SHALL INSPECT THE WATERPROOFING ASSEMBLY AND NOTIFY THE CONTRACTOR OF ANY DEFECTS. ALL DEFECTS MUST BE CORRECTED. CLEAN UP ALL DEBRIS AND EQUIPMENT.
B. WORK SHALL INCLUDE ALL TOOLS, LABOR, AND MATERIALS NECESSARY TO SUCCESSFULLY INSTALL THE WATERPROOFING, PROTECTION SHEET, FLASHING, DRAINAGE MAT, AND FILTER FABRIC COMPLETE IN PLACE INCLUDING ALL APPURTENANCES AND WARRANTY.

ITEM SPECIAL - BRIDGE 13 PLANTER MOCK UP

MOCK UP ONE COMPLETE PLANTER INTERIOR FOR REVIEW AND APPROVAL PRIOR TO COMMENCEMENT. MOCK UP LENGTH SHALL BE MINIMUM 6 FEET LONG. WORK WILL BE REVIEWED FOR APPROVAL BY OWNER AND PROJECT ENGINEER AND SHALL BE USED AS THE ACCEPTABLE BENCHMARK FOR ALL WORK TO FOLLOW.

THE FOLLOWING QUANTITIES HAVE BEEN CARRIED TO THE GENERAL SUMMARY:

ITEM SPECIAL - BRIDGE 13 PLANTER MOCK UP 1 EACH

Preliminary Plans - Not For Reference Only

DESIGN AGENCY
Michael Baker INTERNATIONAL
DESIGNER BDC
REVIEWER JCF 01/10/24
PROJECT ID 82382
SHEET 1831 TOTAL 2696

CUY-90-16.28 (CCG3A)
MODEL: Sheet-07 PAPERSIZE: 34x22 (in.) DATE: 5/23/2025 TIME: 3:24:57 PM USER: Joseph.Hogan
pw:\\mb-us-pw.bentley.com:mb-us-pw-03\Documents\Cleveland_OH101_Projects\ODOT\District12\82382\400-Engineering\Landscaping\Sheets\82382_PN1000.dgn

ITEM 607 FENCE, MISC.: BRIDGE 13 SCREEN WALL PANELS
ITEM 607 FENCE, MISC.: GATEWAY MONUMENT SIGN
SCREEN WALL PANELS

1.0 SUMMARY:

THIS SECTION INCLUDES THE FOLLOWING:

A. INTERNALLY ILLUMINATED SCREEN WALL SYSTEM CAPABLE OF MEETING ALL APPLICABLE STANDARDS FOR WIND, LATERAL, DEAD LOADS, WITH EXTERIOR RATED LIGHT FIXTURES AND ELECTRICAL COMPONENTS.

1.1 METHOD OF MEASUREMENT:

A. SCREEN WALL SYSTEM SHALL BE MEASURED BY LUMP SUM FOR EACH AREA INCLUDING:

1. ITEM 607 FENCE, MISC.: BRIDGE 13 SCREEN WALL PANELS
2. ITEM 607 FENCE, MISC.: GATEWAY MONUMENT SIGN SCREEN WALL PANELS

1.2 BASIS OF PAYMENT:

A. ALL COSTS FOR WORK IN THIS SECTION ARE TO BE INCLUDED IN THE LUMP SUM PRICE FOR EACH SCREEN WALL SYSTEM. COST SHALL INCLUDE ALL CONDUIT AND WIRING BEGINNING AT FIRST PULL BOX ON THE BRIDGE OR PULLBOX NEAREST THE GATEWAY MONUMENT WALL.

1.3 SUBMITTALS:

A. PRODUCT DATA: SUBMIT MANUFACTURER'S PRODUCT DATA; INCLUDE PRODUCT DESCRIPTION, FABRICATION INFORMATION, AND COMPLIANCE WITH SPECIFIED PERFORMANCE REQUIREMENTS.
B. SUBMIT PRODUCT TEST REPORTS FROM A QUALIFIED INDEPENDENT 3RD PARTY TESTING AGENCY INDICATING EACH TYPE AND CLASS OF PANEL SYSTEM COMPLIES WITH THE PROJECT PERFORMANCE REQUIREMENTS, BASED ON COMPREHENSIVE TESTING OF CURRENT PRODUCTS. PREVIOUSLY COMPLETED TEST REPORTS WILL BE ACCEPTABLE IF FOR CURRENT MANUFACTURER AND INDICATIVE OF PRODUCTS USED ON THIS PROJECT. TEST REPORTS REQUIRED SHALL INCLUDE SPECIFIED MATERIAL PROPERTIES LISTED BELOW.
C. SHOP DRAWINGS: INCLUDE PLANS, ELEVATIONS, SECTIONS, PANEL DIMENSIONS, DETAILS, AND ATTACHMENTS TO OTHER WORK.
D. SAMPLES FOR INITIAL SELECTION: SUBMIT MINIMUM 4-INCH BY 4-INCH SAMPLES. INDICATE FULL COLOR, TEXTURE AND PATTERN VARIATION. SAMPLES FOR VERIFICATION: SUBMIT MINIMUM 8-INCH BY 8-INCH SAMPLE FOR EACH TYPE, TEXTURE, PATTERN, AND COLOR OF SOLID PLASTIC FABRICATION.
E. WARRANTY: MANUFACTURER'S SPECIAL WARRANTY ON PLASTIC FABRICATIONS: MANUFACTURER'S STANDARD FORM AGREEING TO REPAIR OR REPLACE UNITS THAT FAIL IN MATERIAL OR WORKMANSHIP WITHIN THE SPECIFIED WARRANTY PERIOD.
F. SCREEN WALL SYSTEM MAINTENANCE AND OPERATING BINDERS SHALL INCLUDE: TABLE OF CONTENTS, WRITTEN DESCRIPTION OF SYSTEM, SYSTEM DRAWINGS: ONE (1) COPY OF THE ORIGINAL PLAN: ONE (1) COPY OF THE RECORD DRAWING INCLUDING LOCATIONS OF AS-BUILT CONDUITS, AND PULL BOXES; ONE (1) COPY OF THE APPROVED SHOP DRAWINGS, WIRING DIAGRAM, LISTING OF MANUFACTURERS, PART NUMBER AND ANY OTHER REFERENCE NEEDED TO ORDER PARTS INCLUDING BUT NOT LIMITED TO TRANSFORMERS, LIGHT FIXTURES, AND LENSES, "APPROVED" SUBMITTALS OF ALL EQUIPMENT, OPERATION INSTRUCTION, MAINTENANCE INSTRUCTION, COMPLETE TROUBLESHOOTING CHARTS, PARTS LIST, AND WARRANTY DATA. O & M MANUALS SHALL BE PROVIDED AT SUBSTANTIAL COMPLETION TO ALLOW FOR PROJECT ENGINEER REVIEW PRIOR TO FINAL ACCEPTANCE.
G. SCREEN WALL SYSTEM SPARE PARTS AND TOOLS: PROVIDE OWNER TWO (2) SETS PER BRIDGE OF SPECIALTY TOOLS TO OPEN SCREEN WALL ASSEMBLY AND SERVICE PANELS. PROVIDE TEN PERCENT OF EXPENDABLE COMPONENTS (INCLUDING LIGHTS, TRANSFORMERS, FUSES, ETC.) AT SUBSTANTIAL COMPLETION.

ITEM 607 FENCE, MISC.: BRIDGE 13 SCREEN WALL PANELS
ITEM 607 FENCE, MISC.: GATEWAY MONUMENT SIGN
SCREEN WALL PANELS (CONT.)

1.4 QUALITY ASSURANCE:

A. MOCK UPS: BUILD MOCK UPS PER:
ITEM SPECIAL - BRIDGE 13 SCREEN WALL MOCK UP AND ITEM SPECIAL - GATEWAY MONUMENT SIGN SCREEN WALL MOCK UP.
B. MANUFACTURERS QUALIFICATIONS: MATERIALS AND SYSTEMS SHALL BE MANUFACTURED BY A COMPANY CONTINUOUSLY AND REGULARLY EMPLOYED IN THE MANUFACTURE OF SPECIFIED MATERIALS FOR A PERIOD OF AT LEAST THREE (3) CONSECUTIVE YEARS AND WHICH CAN SHOW EVIDENCE OF THOSE MATERIALS BEING SATISFACTORILY USED ON AT LEAST THREE (3) PROJECTS OF SIMILAR SIZE, SCOPE AND LOCATION. AT LEAST ONE (1) OF THE PROJECTS SHALL HAVE BEEN SUCCESSFUL FOR USE ONE YEAR OR LONGER. MANUFACTURER MUST OFFER A DOCUMENTED RECLAIM PROCESS THAT WILL TAKE BACK, AT THE MANUFACTURERS COST, PANELS THAT ARE AT THEIR END-OF LIFE CYCLE. MANUFACTURER MUST HAVE DOCUMENTED TRAINING AND QUALIFICATION PROGRAM FOR FABRICATION AND INSTALLATION OF PLASTIC FABRICATIONS.
C. INSTALLER: A FIRM WHICH HAS AT LEAST FIVE (5) YEARS EXPERIENCE IN WORK OF THE TYPE AND SIZE REQUIRED BY THIS SECTION AND WHICH IS ACCEPTABLE TO THE PROJECT ENGINEER.
D. REFERENCES: THE CONTRACTOR MUST SUPPLY THREE REFERENCES FOR WORK OF THIS TYPE AND SIZE WITH THEIR BID INCLUDING NAMES AND PHONE NUMBERS OF CONTACT PERSON(S).
E. THE PROJECT ENGINEER WILL BE ON SITE AT VARIOUS TIMES TO OBSERVE THE WORK BEING INSTALLED ACCORDING TO THE SPECIFICATIONS AND DRAWINGS.

1.5 SUMMARY:

CONDUCT PREINSTALLATION CONFERENCE INCLUDING INSTALLER, FABRICATOR, AND PROJECT ENGINEER.

1.6 DELIVERY, STORAGE, AND HANDLING

A. DELIVER PLASTIC FABRICATIONS, SYSTEMS AND SPECIFIED ITEMS IN MANUFACTURER'S STANDARD PROTECTIVE PACKAGING.
B. DO NOT DELIVER PLASTIC FABRICATIONS, SYSTEM, COMPONENTS AND ACCESSORIES TO PROJECT SITE UNTIL AREAS ARE READY FOR INSTALLATION.
C. STORE MATERIALS IN A FLAT ORIENTATION IN A DRY PLACE THAT IS NOT EXPOSED TO EXTERIOR ELEMENTS.
D. HANDLE MATERIALS TO PREVENT DAMAGE TO FINISHED SURFACES.
E. PROVIDE PROTECTIVE COVERINGS TO PREVENT DAMAGE OR STAINING FOLLOWING INSTALLATION FOR DURATION OF PROJECT.

1.7 WARRANTY:

MATERIAL SHALL HAVE WARRANTY FOR A PERIOD OF UP TO FIVE YEARS AFTER PURCHASE THAT THE PRODUCT IS FREE FROM MANUFACTURING AND WORKMANSHIP DEFECTS PROVIDED THAT ANY CLAIMS MADE UNDER THIS LIMITED WARRANTY MUST BE SUBMITTED IN WRITING BY NO LATER THAN FIVE YEARS AFTER THE PURCHASE OF THE PRODUCT.

2.0 SYSTEM DESCRIPTION:

TRANSLUCENT (COLOR AND TEXTURE TREATED) EXTERIOR GRADE POLYCARBONATE PANELS. HIGH IMPACT RESISTANT, UV STABLE, AND COLOR FUSED. AS THE PANELS WILL BE UTILIZED FOR AN EXTERIOR TEMPERATE CLIMATE THE PANELS WILL CONTAIN A DURABLE SURFACE FINISH TO RESIST WINDBLOWN DUST AND DEBRIS.

2.1 SCREEN WALL PANEL MATERIAL:

A. MANUFACTURER: PRODUCT MANUFACTURERS MUST BE SUBMITTED WITH SUPPORTING TECHNICAL DATA, SAMPLES AND ENGINEERING CALCULATIONS FOR WRITTEN ARCHITECTURAL APPROVAL TEN DAYS PRIOR TO BID DATE.
B. MATERIAL: POLYCARBONATE MEETING THE SPECIFIED PROPERTIES.
C. PANEL SIZES:

1. E. 22ND STREET: 4' W X8' H
2. GATEWAY MONUMENT SIGN: 4'W X4'H

D. SPECIFIED THICKNESS: 3/8" NOMINAL
E. SPECIFIED COLORS: TRANSLUCENT WHITE
F. FINISHES: STUCCO (FRONT) / STUCCO (BACK)

ITEM 607 FENCE, MISC.: BRIDGE 13 SCREEN WALL PANELS
ITEM 607 FENCE, MISC.: GATEWAY MONUMENT SIGN
SCREEN WALL PANELS (CONT.)

2.2 BASIS OF SAMPLE DESIGN:

A BASIS OF DESIGN SAMPLE OF PANEL MATERIAL IS AVAILABLE FOR REVIEW AT PROJECT ENGINEER'S OFFICE.

2.3 PANEL MATERIAL PROPERTIES:

A. PANEL MATERIAL SHALL MEET THE FOLLOWING TESTING REQUIREMENTS:

DESCRIPTION	TEST	UNITS	RESULT
IMPACT RESISTANCE (INSTRUMENTED)	ASTM D 6763	FT-LBS	>100
FLAME SPREAD	ASTM D 635-98	-	PASS CC1 RATING (CC1 RATING MATERIAL SELF-ESTINGUISH)
SELF-IGNITION TEMPERATURE	ASTM D 1929-96	°F	PASS >950° VS. 650°F MIN.
TENSILE STRENGTH	ASTM D 638	PSI	9000
COMPRESSIVE STRENGTH	ASTM D 695	PSI	12500
FLEXURAL STRENGTH	ASTM D 790	PSI	13500
FLEXURAL MODULUS	ASTM D 790	PSI	PSI
AMOUNT OF EXPANSION/ CONTRACTION	ASTM D 696	IN/ (IN°-F)	.00004
LARGE MISSILE IMPACT	ASTM D 1886	-	PASS/ NONBREAK
IMPACT STRENGTH UN-NOTCHED (23°C)	ASTM D 256	FT/LB	NONBREAK
HEAT DISTORTION TEMPERATURE (66 PSI)	ASTM D 648	°F	280

B. PANEL MATERIAL SHALL MEET THE FOLLOWING MINIMUM GUIDELINES:

1. HEAT RESISTANCE OF GREATER THAN 2300°F.
2. IMPACT STRENGTH SHALL BE GREATER THAN 200 FT-LBS (FOR DURABILITY, SHIPPING, INSTALLATION, AND FITNESS-FOR-USE).
3. SELF EXTINGUISHING AS PER ASTM D 635.
4. ULTRAVIOLET SCREENS TO PREVENT UV RADIATION FROM TRANSMITTING BELOW 370 MM. PANELS SHALL BE UV STABILIZED ON BOTH THE FIRST AND SECOND SURFACE OF EACH PANEL.
5. SUPPLIED BY AN ISO 14001 (ENVIRONMENTAL) CERTIFIED CORPORATION.
6. ALL COLOR MUST BE ATTACHED VIA FUSION ATTACHMENT COATINGS OR ADHESIVE APPLIED COLORS ARE NOT ACCEPTABLE.
7. MANUFACTURER MUST OFFER MATERIAL TAKE-BACK RECLAIM PROGRAM AT END OF USEFUL LIFE.
8. PANELS TO BE MANUFACTURED BY AND BE FROM ALL AMERICAN SOURCING OF MATERIAL, USA-FABRICATED
9. PANELS TO BE CERTIFIED GREENGUARD GOLD UL2818-2013 GOLD STANDARD FOR CHEMICAL EMISSIONS FOR BUILDING MATERIALS, FINISHES & FURNISHINGS

2.4 PANEL SUPPORT SYSTEM:

THE SUPPORT SYSTEM FOR THE PANELS SHALL BE A FABRICATED ALUMINUM FRAMEWORK WITH STEEL STRUCTURAL SUPPORTS.

ITEM 607 FENCE, MISC.: BRIDGE 13 SCREEN WALL PANELS
ITEM 607 FENCE, MISC.: GATEWAY MONUMENT SIGN
SCREEN WALL PANELS (CONT.)

2.5 SUPPORT SYSTEM COMPONENTS:

A. ALUMINUM FRAMEWORK TO BE 6063-T6 WITH 70% RECYCLED CONTENT FINISHED WITH ARCHITECTURAL TWO-STEP BLACK ELECTROLYTE PLATING IN CHANNEL SHAPE TO CONCEAL RECESSED LED LIGHTING.
B. STEEL STIFFENERS TO BRACE ALUMINUM FRAMEWORK SHALL BE MILD STEEL HOT DIP GALVANIZED AND POWDERCOATED BLACK SHERWIN WILLIAMS GRAPHITE BLACK RAL 9011 (RBS8-00006).
C. PANELS SHALL BE FASTENED TO ALUMINUM FRAMEWORK USING CAPS MANUFACTURED FROM 316 STAINLESS STEEL WITH TWO (2) FASTENING HOLES LOCATED AT THE SIDE OF THE CAP FOR USE WITH DRILL MOUNT CAP INSTALLATION TOOL.
D. STEEL STIFFENER SHALL BE MOUNTED TO CONCRETE PARAPET USING ADHESIVE ANCHORS; ALUMINUM FRAMEWORK SHALL BE BOLTED TO STEEL STIFFENERS AND VISUALLY COVER ANCHORS AT VERTICAL FRONT FACE OF PARAPET.
E. CONTINUOUS DRIP CAP ALONG TOP OF ASSEMBLIES TO BE 6063-T6 WITH 70% RECYCLED CONTENT FINISHED WITH ARCHITECTURAL TWO-STEP BLACK ELECTROLYTE PLATING, OVERLAP DRIP CAPS AT SEAMS.
F. CONTINUOUS T-SLOT TYPE GASKET AMESBURY 32007 IN WHITE COLOR SHALL BE PROVIDED AROUND PANEL EDGES.

2.6 SCREEN WALL LED BACK-LIGHTING

A. E. 22ND STREET: RGB DMX CONTROLLED LIGHTING TO BE RGB COLOR CHANGING LIGHT BARS WITH WET LOCATION RATING AND UL EQUIVALENT. SECTIONAL DIMENSION PROPERTIES TO MATCH LOW PROFILE LIGHT BARS.
1. BEAM ANGLE TO BE 25°
2. EACH 4' PANEL ASSEMBLY WITH RGB LIGHTING TO BE PAIRED TO DRIVER CONTROLLABLE BY DMX DIMMER. DMX 3 CHANNEL DIMMER WILL REQUIRE 120 VOLT INPUT AT EACH PANEL ASSEMBLY.
3. LIGHTING BARS SHALL RECESS IN ALUMINUM STRUCTURE AND MOUNT DIRECTLY TO ALUMINUM STRUCTURE WITH LIGHT BEAM DIRECTED TOWARDS THE CENTER OF THE ASSEMBLY.
4. CAT5 CABLING TO BE PROVIDED FROM BRIDGE MAIN CONTROL TO EACH INDIVIDUAL 4' PANEL ASSEMBLY IN SERIES FOR CONTROL OF THE DMX DIMMER.
5. SUPPLIER TO PROVIDE 185W DRIVER IN EACH 4' ASSEMBLY SUITABLE FOR WET LOCATION OR ENCLOSED IN NEMA 4 OR 4X RATED ENCLOSURE FOR DRIVER AS WELL AS MC CABLING AND PLUG AND PLAY CONNECTIONS FOR JOINING THE ASSEMBLIES ALONG THE SIDE OF THE BRIDGE CONTINUOUSLY.
6. ALL ELECTRICAL COMPONENTS TO BE PRE-ASSEMBLED AND INSTALLED PRIOR TO DELIVERY TO JOB SITE.
7. QUICK DISCONNECT BETWEEN DRIVER AND LINE VOLTAGE TO BE PROVIDED WITHIN THE NEMA ENCLOSURE, OR RATED ACCORDINGLY IF WET LOCATION DRIVER USED. #8 AWG MAINLINE TO BE USED TO PROVIDE POWER TO AREAS BETWEEN PILASTERS, WITH #12 AWG MC TO BE USED FROM MAIN LINE TO INDIVIDUAL ASSEMBLIES BETWEEN PILASTERS.
8. NEMA ENCLOSURES, DRIVERS, AND CABLING SHALL ALL NEST WITHIN RECESSES OF ALUMINUM FRAMEWORK AND NOT SHADOW OR IMPEDE LIGHTING OF PANELS.
9. PROGRAMMING FOR THE DMX TO BE PROVIDED BY DMX PROFESSIONAL ONSITE AFTER INSTALLATION OF ALL SYSTEMS.
10. EACH 4' SECTION TO HAVE TWO INDIVIDUALLY CONTROLLABLE ZONES, ONE PER SIDE.
11. LIGHTING PULL BOXES SHALL BE LABELED "LIGHTING".

For Reference Only
Preliminary - Plans For

CUY-90-16.28 (CCG3A)
MODEL: Sheet-08 PAPERSIZE: 34x22 (in.) DATE: 6/17/2025 TIME: 9:10:50 AM USER: Maia.Gallagher
pw:\\mb-us-pw.bentley.com:mb-us-pw-03\Documents\Cleveland_OH\01_Projects\ODOT\District12\82382\400-Engineering\Landscaping\Sheets\82382_PN1000.dgn

DESIGN AGENCY
Michael Baker INTERNATIONAL
DESIGNER BDC
REVIEWER JCF 01/10/24
PROJECT ID 82382
SHEET 1832 TOTAL 2696

ITEM 607 FENCE, MISC.: BRIDGE 13 SCREEN WALL PANELS
ITEM 607 FENCE, MISC.: GATEWAY MONUMENT SIGN SCREEN WALL PANELS (CONT.)

2.7 DMX CONTROL EQUIPMENT FOR SCREENWALLS

A. DMX CONTROL EQUIPMENT TO BE LOCATED IN NEMA 4R OR 4X CABINET MEASURING 16"X16"X6" MINIMUM, BASIS OF DESIGN IS WEIGMAN LOH161606 OR EQUAL. POWER TO BE PROVIDED TO THIS CABINET AND FOUR (4) CAT5 CONDUIT TO THE SCREEN WALLS AND LUMINAIRES. CONTROL EQUIPMENT TO INCLUDE A DMX PROGRAMMABLE CONTROLLER AND POWER SUPPLY, 4 PORT MINIMUM GIGABIT NETWORK SWITCH, AND JUNCTION BOX.
B. ALL JUNCTION BOXES AND PULL BOX COVERS ASSOCIATED WITH AESTHETIC LIGHTING SHALL BE LABELLED "LIGHTING"

3.0 FABRICATION:

COMPLY WITH MANUFACTURER'S WRITTEN RECOMMENDATIONS FOR FABRICATION.

3.1 MACHINING:

ACCEPTABLE MEANS OF MACHINING ARE LISTED BELOW. ENSURE THAT MATERIAL IS NOT CHIPPED OR WARPED BY MACHINING OPERATIONS.

A. SAWING: SELECT EQUIPMENT AND BLADES SUITABLE FOR TYPE OF CUT REQUIRED.
B. DRILLING: DRILLS SPECIFICALLY DESIGNED FOR USE WITH PLASTIC PRODUCTS.
C. FORMING: FORM PRODUCTS TO SHAPES INDICATED USING THE APPROPRIATE METHOD LISTED BELOW. COMPLY WITH MANUFACTURER'S WRITTEN INSTRUCTIONS.
D. COLD BENDING, HOT BENDING, THERMOFORMING IS ACCEPTABLE ONLY ON UNCOATED MATERIAL.
E. DRAPE FORMING, MATCHED MOLD FORMING, MECHANICAL FORMING, LAMINATING: LAMINATE TO SUBSTRATES INDICATED USING ADHESIVES AND TECHNIQUES RECOMMENDED BY MANUFACTURER.

3.2 MISCELLANEOUS MATERIALS:

A. GENERAL: PROVIDE PRODUCTS OF MATERIAL, SIZE, AND SHAPE REQUIRED FOR APPLICATION INDICATED, AND WITH A PROVEN RECORD OF COMPATIBILITY WITH SURFACES CONTACTED IN INSTALLATION.
B. CLEANER: TYPE RECOMMENDED BY MANUFACTURER.
C. FASTENERS: USE SCREWS DESIGNED SPECIFICALLY FOR PLASTICS. PROVIDE THREADED METAL INSERTS FOR APPLICATIONS REQUIRING FREQUENT DISASSEMBLY SUCH AS LIGHT FIXTURES.
D. BONDING CEMENTS: MAY BE ACHIEVED WITH SOLVENTS OR ADHESIVES, SUITABLE FOR USE WITH PRODUCT AND APPLICATION.

3.3 EXAMINATION:

A. EXAMINE SUBSTRATES, AREAS, AND CONDITIONS WHERE INSTALLATION OF PLASTIC FABRICATIONS WILL OCCUR, WITH INSTALLER PRESENT, FOR COMPLIANCE WITH MANUFACTURER'S REQUIREMENTS. VERIFY THAT SUBSTRATES AND CONDITIONS ARE SATISFACTORY FOR INSTALLATION AND COMPLY WITH REQUIREMENTS SPECIFIED.

3.4 INSTALLATION:

A. MANUFACTURER'S SHOP TO FABRICATE ITEMS TO THE GREATEST DEGREE POSSIBLE.
B. INSTALLATION TO BE PERFORMED BY AN AUTHORIZED MANUFACTURER PARTNER.
C. UTILIZE FASTENERS, ADHESIVES AND BONDING AGENTS RECOMMENDED BY MANUFACTURER FOR TYPE OF INSTALLATION INDICATED.
D. MATERIAL THAT IS CHIPPED, WARPED, HAZED, OR DISCOLORED AS A RESULT OF INSTALLATION OR FABRICATION METHODS WILL BE REJECTED.
E. INSTALL COMPONENTS PLUMB, LEVEL, AND RIGID, SCRIBED TO ADJACENT FINISHES, IN ACCORDANCE WITH APPROVED SHOP DRAWINGS AND PRODUCT DATA.
F. FORM FIELD JOINTS USING MANUFACTURER'S RECOMMENDED PROCEDURES.
G. LOCATE SEAMS IN PANELS SO THAT THEY ARE NOT DIRECTLY IN LINE WITH SEAMS IN SUBSTRATES.

3.5 CLEANING AND PROTECTION:

PROTECT SURFACES FROM DAMAGE UNTIL DATE OF SUBSTANTIAL COMPLETION. REPAIR WORK OR REPLACE DAMAGED WORK, WHICH CANNOT BE REPAIRED TO PROJECT ENGINEER'S SATISFACTION.

ITEM SPECIAL - BRIDGE 13 SCREEN WALL MOCK UP

BUILD MOCK UPS TO VERIFY SELECTIONS MADE UNDER SAMPLE SUBMITTALS AND TO DEMONSTRATE AESTHETIC EFFECTS. BUILD MOCK UP TO DEMONSTRATE FINISHED CONSTRUCTION QUALITY AND WORKMANSHIP FOR EACH TYPE OF PLASTIC FABRICATION AND LIGHTING EFFECT.

THIS ITEM INCLUDES ALL LABOR, EQUIPMENT, TOOLS, SUBMITTALS, INCIDENTALS AND MATERIALS REQUIRED TO CONSTRUCT AND DISPOSE OF THE MOCK UP(S).

THE FOLLOWING QUANTITIES HAVE BEEN CARRIED TO THE GENERAL SUMMARY:

ITEM SPECIAL - BRIDGE 13 SCREEN WALL MOCK UP 1 EACH

ITEM SPECIAL - GATEWAY MONUMENT SIGN SCREEN WALL MOCK UP

BUILD MOCK UPS TO VERIFY SELECTIONS MADE UNDER SAMPLE SUBMITTALS AND TO DEMONSTRATE AESTHETIC EFFECTS. BUILD MOCK UP TO DEMONSTRATE FINISHED CONSTRUCTION QUALITY AND WORKMANSHIP FOR EACH TYPE OF PLASTIC FABRICATION AND LIGHTING EFFECT.

THIS ITEM INCLUDES ALL LABOR, EQUIPMENT, TOOLS, SUBMITTALS, INCIDENTALS AND MATERIALS REQUIRED TO CONSTRUCT AND DISPOSE OF THE MOCK UP(S).

THE FOLLOWING QUANTITIES HAVE BEEN CARRIED TO THE GENERAL SUMMARY:

ITEM SPECIAL - GATEWAY MONUMENT SIGN SCREEN WALL MOCK UP 1 EACH

Preliminary Plans - For Reference Only

DESIGN AGENCY
Michael Baker INTERNATIONAL
DESIGNER BDC
REVIEWER JCF 01/10/24
PROJECT ID 82382
SHEET 1833 TOTAL 2696

CUY-90-16.28 (CCG3A)
MODEL: Sheet-09 PAPERSIZE: 34x22 (in.) DATE: 5/23/2025 TIME: 3:25:16 PM USER: Joseph.Hogan
pw:\\mb-us-pw.bentley.com:mb-us-pw-03\Documents\Cleveland_OH\01_Projects\ODOT\District12\82382\400-Engineering\Landscaping\Sheets\82382_PN1000.dgn

SCREEN WALL SYSTEM AND AESTHETIC LIGHTING

1.0 SUMMARY:

A. THIS SECTION INCLUDES THE FOLLOWING SITE METAL FABRICATIONS:

1. E. 22ND STREET PILASTER EMBLEMS.
2. STREET SIGN LETTERS.
3. HARDWARE FOR ANCHORAGE.

1.1 UNIT OF MEASURE:

A. E. 22ND STREET PILASTER EMBLEMS SHALL BE MEASURED BY LUMP SUM FOR ALL EMBLEMS.
B. STREET SIGN LETTERS SHALL BE MEASURED BY LUMP SUM FOR BRIDGE (EACH BRIDGE INCLUDES A FOUR COMPLETE SETS OF WALL MOUNTED STREET SIGN LETTERS).

1.2 BASIS OF PAYMENT:

THE ACCEPTED METAL FABRICATION WILL BE PAID FOR AT THE CONTRACT PRICE DESIGNATED FOR EACH TYPE SHOWN ON THE PLANS. ALL COSTS FOR WORK IN THIS SECTION ARE TO BE INCLUDED IN THE PRICE FOR EACH METAL FABRICATION.

1.3 REFERENCES:

A. OBC OHIO BUILDING CODE, EXCEPT WIND LOADS SHALL BE APPLIED PER OBC OR SHALL BE 40 PSF, WHICHEVER PRODUCES THE LARGEST FORCE EFFECT. THE WIND LOAD SHOULD BE APPLIED PERPENDICULAR TO THE PLANE OF THE SCREEN WALL AS A UNIFORM LOAD TO THE ENTIRE AREA OF THE PANELS. THE VERTICAL POSTS, THE CONNECTIONS OF THE PANEL TO THE VERTICAL POSTS AND THE CONNECTION OF THE POST TO CONCRETE RAILING SHALL BE DESIGNED FOR A LINE LOAD EQUAL IN VALUE TO THE WIND PRESSURE MULTIPLIED BY THE SCREEN WALL HEIGHT. THE LINE LOAD SHALL BE APPLIED AT A DISTANCE EQUAL TO 0.55 TIMES THE SCREEN WALL HEIGHT MEASURED FROM THE BOTTOM OF THE SCREEN WALL. FOR DETERMINING THE LOCATION OF THE LINE LOAD, THE HEIGHT OF THE SCREEN WALL SHALL BE TAKEN AS THE DISTANCE FROM THE TOP OF THE SCREEN WALL TO THE ELEVATION OF THE VERTICAL POST CONNECTION TO THE SUPPORTING CONCRETE RAILING.

B. ASTM ASTM INTERNATIONAL:
1. A 193 ALLOY AND STAINLESS STEEL BOLTING MATERIALS FOR HIGH TEMPERATURE SERVICE.
2. A 194 CARBON AND ALLOY STEEL NUTS FOR BOLTS FOR HIGH-PRESSURE AND HIGH-TEMPERATURE SERVICE.

C AWS AMERICAN WELDING SOCIETY:
1. A2.4 STANDARD WELDING SYMBOLS.
2. D1.6 STRUCTURE WELDING CODE (STAINLESS STEEL).

1.4 PERFORMANCE REQUIREMENTS:

A. CONNECTIONS: PROVIDE DETAILS OF SIMPLE SHEAR CONNECTIONS REQUIRED BY THE CONTRACT DOCUMENTS TO BE SELECTED OR COMPLETED BY STRUCTURAL-STEEL FABRICATOR TO WITHSTAND ASD-SERVICE LOADS INDICATED AND COMPLY WITH OTHER INFORMATION AND RESTRICTIONS INDICATED. SELECT AND COMPLETE CONNECTIONS USING SCHEMATIC DETAILS INDICATED AND AISC'S "MANUAL OF STEEL CONSTRUCTION, ALLOWABLE STRESS DESIGN," PART 4.
B. ENGINEERING RESPONSIBILITY: FABRICATOR'S RESPONSIBILITIES INCLUDE USING A QUALIFIED OHIO PROFESSIONAL ENGINEER TO PREPARE STRUCTURAL ANALYSIS DATA FOR STRUCTURAL-STEEL CONNECTIONS.
C. CONSTRUCTION: TYPE PR, PARTIALLY RESTRAINED.
D. CONSTRUCTION: TYPE 2, SIMPLE FRAMING.

1.5 SUBMITTALS:

A. PRODUCT DATA FOR EACH TYPE OF PRODUCT SPECIFIED, INCLUDING PAINT PRODUCTS AND GROUT.
B. SUBMIT DOCUMENTATION INDICATING PERCENTAGES BY WEIGHT OF POST-CONSUMER AND PRE-CONSUMER RECYCLED CONTENT FOR PRODUCTS HAVING RECYCLED CONTENT.
C. SUBMIT DOCUMENTATION IDENTIFYING VOC CONTENTS.
D. HARDWARE PRODUCT DATA.
E. MANUFACTURER'S COLOR CHARTS: SUBMIT SAMPLES OF EACH COLOR AND MATERIAL TO BE APPLIED, WITH TEXTURE TO SIMULATE ACTUAL CONDITIONS, ON REPRESENTATIVE SAMPLES OF THE ACTUAL SUBSTRATE. PROVIDE STEPPED SAMPLES, DEFINING EACH SEPARATE COAT, INCLUDING BLOCK FILLERS AND PRIMERS. USE REPRESENTATIVE COLORS WHEN PREPARING SAMPLES FOR REVIEW. RESUBMIT UNTIL REQUIRED SHEEN, COLOR, AND TEXTURE ARE ACHIEVED. PROVIDE A LIST OF MATERIAL AND APPLICATION FOR EACH COAT OF EACH SAMPLE. LABEL EACH SAMPLE AS TO LOCATION AND APPLICATION. SUBMIT SAMPLES ON THE FOLLOWING SUBSTRATES FOR THE DESIGNER'S REVIEW OF COLOR AND TEXTURE ONLY: FERROUS METAL: TWO 8 INCH LONG SAMPLES OF SOLID METAL FOR EACH COLOR AND FINISH.

SCREEN WALL SYSTEM AND AESTHETIC LIGHTING (CONT.)

F. PAINT COMPATIBILITY CERTIFICATES: FROM MANUFACTURERS OF TOPCOATS APPLIED OVER SHOP PRIMERS, CERTIFYING THAT SHOP PRIMERS ARE COMPATIBLE WITH TOPCOATS.

1.6 SINGLE-SOURCE RESPONSIBILITY:

PROVIDE PRIMERS AND UNDERCOAT PAINT PRODUCED BY THE SAME MANUFACTURER AS THE FINISH COATS.

1.7 QUALITY ASSURANCE:

A. INSTALLER QUALIFICATIONS: A QUALIFIED FIRM WITH NOT LESS THAN TEN (10) YEARS OF SUCCESSFUL EXPERIENCE IN COMPARABLE ARCHITECTURAL METAL FABRICATION PROJECTS AND EMPLOYING PERSONNEL SKILLED IN THE INSTALLATION PROCESSES AND OPERATIONS INDICATED.
B. WELDING: QUALIFY PROCEDURES AND PERSONNEL ACCORDING TO AWS D1.1., "STRUCTURAL WELDING CODE-STEEL."
C. COMPLY WITH APPLICABLE PROVISIONS OF THE FOLLOWING SPECIFICATIONS AND DOCUMENTS: AISC'S "CODE OF STANDARD PRACTICE FOR STEEL BUILDINGS AND BRIDGES." AISC'S "SEISMIC PROVISIONS FOR STRUCTURAL STEEL BUILDINGS AND SUPPLEMENT NO. 2." AISC'S "SPECIFICATION FOR STRUCTURAL STEEL BUILDINGS--ALLOWABLE STRESS DESIGN AND PLASTIC DESIGN." AISC'S "SPECIFICATION FOR THE DESIGN OF STEEL HOLLOW STRUCTURAL SECTIONS." RCSC'S "SPECIFICATION FOR STRUCTURAL JOINTS USING ASTM A 325 OR A 430 BOLTS."
D. COMPLY WITH APPLICABLE PROVISIONS OF THE FOLLOWING SPECIFICATIONS AND DOCUMENTS: AISC "CODE OF STANDARD PRACTICE," LATEST EDITION, SECTION 10 AS AMENDED HEREIN.

1.8 PRE-INSTALLATION CONFERENCE:

THE CONTRACTOR SHALL SCHEDULE AND CONDUCT CONFERENCE AT THE PROJECT. AS A MINIMUM, THE MEETING SHALL INCLUDE THE CONTRACTOR, FABRICATOR, ERECTOR, THE FINISH-PAINTING SUBCONTRACTOR, AND THE PROJECT ENGINEER.

1.9 DELIVERY, STORAGE, AND HANDLING

A. DELIVER PRODUCTS TO PROJECT SITE IN SUCH QUANTITIES AND AT SUCH TIMES TO ENSURE CONTINUITY OF INSTALLATION.
B. USE SPECIAL CARE IN HANDLING TO PREVENT TWISTING, WARPING, NICKING, AND OTHER DAMAGE. STORE MATERIALS TO PERMIT EASY ACCESS FOR INSPECTION AND IDENTIFICATION. KEEP STEEL MEMBERS OFF GROUND AND SPACED BY USING PALLETS, DUNNAGE, OR OTHER SUPPORTS AND SPACERS. PROTECT STEEL MEMBERS AND PACKAGED MATERIALS FROM EROSION AND DETERIORATION. STORE FASTENERS IN A PROTECTED PLACE. CLEAN AND RELUBRICATE BOLTS AND NUTS THAT BECOME DRY OR RUSTY BEFORE USE. DO NOT STORE MATERIALS ON STRUCTURE IN A MANNER THAT MIGHT CAUSE DISTORTION, DAMAGE, OR OVERLOAD TO MEMBERS OR SUPPORTING STRUCTURES. REPAIR OR REPLACE DAMAGED MATERIALS OR STRUCTURES AS DIRECTED.
C. DELIVER MATERIALS TO THE JOB SITE IN THE MANUFACTURER'S ORIGINAL, UNOPENED PACKAGES AND CONTAINERS BEARING MANUFACTURER'S NAME AND LABEL AND THE FOLLOWING INFORMATION: PRODUCT NAME OR TITLE OF MATERIAL. PRODUCT DESCRIPTION (GENERIC CLASSIFICATION OR BINDER TYPE). MANUFACTURER'S STOCK NUMBER AND DATE OF MANUFACTURE. FEDERAL SPECIFICATION NUMBER, IF APPLICABLE. CONTENTS BY VOLUME, FOR PIGMENT AND VEHICLE CONSTITUENTS, THINNING INSTRUCTIONS, APPLICATION INSTRUCTIONS, COLOR NAME AND NUMBER.
D. STORE MATERIALS NOT IN USE IN TIGHTLY COVERED CONTAINERS IN A WELL-VENTILATED AREA AT A MINIMUM AMBIENT TEMPERATURE OF 45 DEGREES F. MAINTAIN CONTAINERS USED IN STORAGE IN A CLEAN CONDITION, FREE OF FOREIGN MATERIALS AND RESIDUE. PROTECT FROM FREEZING. KEEP STORAGE AREA NEAT AND ORDERLY. REMOVE OILY RAGS AND WASTE DAILY. TAKE NECESSARY MEASURES TO ENSURE WORKERS AND WORK AREAS ARE PROTECTED FROM FIRE AND HEALTH HAZARDS RESULTING FROM HANDLING, MIXING, AND APPLICATION.

SCREEN WALL SYSTEM AND AESTHETIC LIGHTING (CONT.)

1.10 PROJECT CONDITIONS:

A. APPLY PAINTS ONLY WHEN THE TEMPERATURE OF SURFACES TO BE PAINTED AND SURROUNDING AIR TEMPERATURES ARE BETWEEN 50 DEGREES F AND 90 DEGREES F.
B. DO NOT APPLY PAINT IN SNOW, RAIN, FOG, OR MIST, WHEN THE RELATIVE HUMIDITY EXCEEDS 85 PERCENT, AT TEMPERATURES LESS THAN 5 DEGREES F ABOVE DEW POINT, OR TO DAMP OR WET SURFACES. PAINTING MAY CONTINUE DURING INCLEMENT WEATHER IF SURFACES AND AREAS TO BE PAINTED ARE ENCLOSED AND HEATED WITHIN TEMPERATURE LIMITS SPECIFIED BY THE MANUFACTURER DURING APPLICATION AND DRYING PERIODS.

1.11 EXTRA MATERIALS:

FURNISH EXTRA PAINT MATERIALS FROM THE SAME PRODUCTION RUN AS THE MATERIALS APPLIED IN THE QUANTITIES DESCRIBED BELOW. PACKAGE PAINT MATERIALS IN UNOPENED, FACTORY-SEALED CONTAINERS FOR STORAGE AND IDENTIFY WITH LABELS DESCRIBING CONTENTS. DELIVER EXTRA MATERIALS TO THE PROJECT ENGINEER. QUANTITY: FURNISH THE OWNER WITH AN ADDITIONAL 5 PERCENT, BUT NOT LESS THAN 1 GALLON OR 1 CASE, AS APPROPRIATE, OF EACH MATERIAL AND COLOR APPLIED.

1.12 COORDINATION:

A. COORDINATE INSTALLATION OF STEEL WELD PLATES, ANGLES, THREADED RODS, AND INSERTS FOR CASTING INTO CONCRETE THAT ARE SPECIFIED IN THIS SECTION BUT REQUIRED FOR WORK OF ANOTHER SECTION. DELIVER SUCH ITEMS TO PROJECT SITE IN TIME FOR INSTALLATION.
B. COORDINATE SELECTION OF SHOP PRIMERS WITH TOPCOATS TO BE APPLIED OVER THEM. COMPLY WITH PAINT AND COATING MANUFACTURERS' WRITTEN RECOMMENDATIONS TO ENSURE THAT SHOP PRIMERS AND TOPCOATS ARE COMPATIBLE WITH ONE ANOTHER.

2.0 METALS:

A. METAL SURFACES, GENERAL: FOR METAL FABRICATIONS EXPOSED TO VIEW UPON COMPLETION OF THE WORK, PROVIDE MATERIALS SELECTED FOR THEIR SURFACE FLATNESS, SMOOTHNESS, AND FREEDOM FROM SURFACE BLEMISHES. DO NOT USE MATERIALS WHOSE EXPOSED SURFACES EXHIBIT PITTING, SEAM MARKS, ROLLER MARKS, ROLLED TRADE NAMES, ROUGHNESS, AND, FOR STEEL SHEET, VARIATIONS IN FLATNESS EXCEEDING THOSE PERMITTED BY REFERENCE STANDARDS FOR STRETCHER LEVELED SHEET.
B. GALVANIZE FERROUS METALS AT EXTERIOR LOCATIONS AND OTHER HIGH MOISTURE LOCATIONS UNLESS SPECIFICALLY NOTED OTHERWISE.
C. PROVIDE STEEL WITH THE HIGHEST RECYCLED CONTENT AVAILABLE.
D. GALVANIZE FERROUS METALS AT EXTERIOR LOCATIONS AND OTHER HIGH MOISTURE LOCATIONS UNLESS SPECIFICALLY NOTED OTHERWISE.
E. STEEL PIPE FOR RAILINGS: ASTM A 53; TYPE F, STANDARD WEIGHT (SCHEDULE 40), 3/8 INCH WALL THICKNESS UNLESS OTHERWISE INDICATED, OR ANOTHER GRADE OR WEIGHT OR BOTH ARE REQUIRED BY STRUCTURAL LOADS.
F. FOR EXTERIOR INSTALLATIONS AND WHERE INDICATED, PROVIDE TUBING WITH HOT-DIP GALVANIZED COATING PER ASTM A 53.
G. ALUMINUM PLATE AND SHEET: ASTM B 209 ALLOY 6061-T6.
H. ALUMINUM EXTRUSIONS: ASTM B 221 ALLOY 6063-76.H.
CONCRETE INSERTS: THREADED OR WEDGE TYPE: GALVANIZED FERROUS CASTINGS, EITHER MALLEABLE IRON, ASTM A 47, OR CAST STEEL, ASTM A 27. PROVIDE BOLTS, WASHERS, AND SHIMS AS REQUIRED, HOT-DIP GALVANIZED PER ASTM A 153.
I. WELDING RODS AND BARE ELECTRODES: SELECT IN ACCORDANCE WITH AWS SPECIFICATIONS FOR THE METAL ALLOY TO BE WELDED.

2.1 METALS:

A. NON-SHRINK, NON-METALLIC GROUT: PREMIXED, FACTORY PACKAGED, NON-STAINING, NON-CORROSIVE, NON-GASEOUS GROUT COMPLYING WITH ASTM C 1107, GRADES A, B, OR C. PROVIDE GROUT SPECIFICALLY RECOMMENDED BY MANUFACTURER FOR INTERIOR AND EXTERIOR APPLICATIONS OF TYPE SPECIFIED IN THIS SECTION. SUBJECT TO COMPLIANCE WITH REQUIREMENTS, PROVIDE ONE OF THE FOLLOWING:
1. "EUCO NS GROUT"; EUCLID CHEMICAL CO.
2. "CRYSTEX"; L & M CONSTRUCTION CHEMICALS, INC.
3. "MASTERFLOW 713"; MASTER BUILDERS.
4. "SONOGROUT"; SONNEBORN BUILDING PRODUCTS DIV., CHEMREX, INC.

SCREEN WALL SYSTEM AND AESTHETIC LIGHTING (CONT.)

2.2 FASTENERS:

A. ANCHORS, GENERAL: ANCHORS CAPABLE OF SUSTAINING, WITHOUT FAILURE, A LOAD EQUAL TO SIX TIMES THE LOAD IMPOSED WHEN INSTALLED IN UNIT MASONRY AND FOUR TIMES THE LOAD IMPOSED WHEN INSTALLED IN CONCRETE, AS DETERMINED BY TESTING ACCORDING TO ASTM E 488/E 488M, CONDUCTED BY A QUALIFIED INDEPENDENT TESTING AGENCY,
B. CAST-IN-PLACE ANCHORS IN CONCRETE: EITHER THREADED TYPE OR WEDGE TYPE UNLESS OTHERWISE INDICATED; GALVANIZED FERROUS CASTINGS, EITHER ASTM A 47/A 47M MALLEABLE IRON OR ASTM A 27/A 27M CAST STEEL. PROVIDE BOLTS, WASHERS, AND SHIMS AS NEEDED, ALL HOT-DIP GALVANIZED PER ASTM F 2329.
C. GENERAL: UNLESS OTHERWISE INDICATED, PROVIDE TYPE 304 STAINLESS-STEEL FASTENERS FOR EXTERIOR USE AND ZINC-PLATED FASTENERS WITH COATING COMPLYING WITH ASTM B 633 OR ASTM F 1941 CLASS FE/ZN 5, AT EXTERIOR WALLS. SELECT FASTENERS FOR TYPE, GRADE, AND CLASS REQUIRED.
1. PROVIDE STAINLESS-STEEL FASTENERS FOR FASTENING ALUMINUM.
2. PROVIDE STAINLESS-STEEL FASTENERS FOR FASTENING STAINLESS STEEL.
3. PROVIDE STAINLESS-STEEL FASTENERS FOR FASTENING NICKEL SILVER.
4. PROVIDE BRONZE FASTENERS FOR FASTENING BRONZE.

2.4 E. 22ND STREET PILASTER EMBLEMS:

A. FABRICATED FROM ALUMINUM 6061 T6 SHEET ALUMINUM TO BE WELDED, GROUND SMOOTH, AND POWDERCOATED BLACK SHERWIN WILLIAMS GRAPHITE BLACK RAL 9011 (RBS8-00006).

2.5 STREET NAME LETTERS:

A. FABRICATED FROM ALUMINUM 6063 T6 EXTRUSION. ALUMINUM TO BE POWDERCOATED BLACK SHERWIN WILLIAMS GRAPHITE BLACK RAL 9011 (RBS8-00006).

2.6 PAINT:

A. FERROUS METAL SHOP PRIMER: MANUFACTURER'S OR FABRICATOR'S STANDARD, FAST CURING, LEADFREE, UNIVERSAL MODIFIED ALKYD PRIMER SELECTED FOR GOOD RESISTANCE TO NORMAL ATMOSPHERIC CORROSION, FOR COMPATIBILITY WITH FINISH PAINT SYSTEMS INDICATED, AND FOR CAPABILITY WITH FIELD APPLIED TOPCOATS. COMPLY WITH VOC REQUIREMENTS SPECIFIED IN DIVISION 01.
B. BITUMINOUS PAINT: COLD-APPLIED ASPHALT MASTIC COMPLYING WITH SSPC PAINT 12 EXCEPT CONTAINING NO ASBESTOS FIBERS. COMPLY WITH VOC REQUIREMENTS SPECIFIED IN DIVISION OI.
C. GALVANIZING REPAIR PAINT: HIGH-ZINC-DUST-CONTENT PAINT FOR REGAL VANIZING WELDS IN STEEL, COMPLYING WITH SSPC-PAINT 20.
D. FINISH PAINTING: POWDER COAT FINISH. RAL COLOR SELECTED BY DESIGNER TO MATCH OTHER EXTERIOR SITE METALS.

2.7 FABRICATION, GENERAL:

A. FORM METAL FABRICATIONS FROM MATERIALS OF SIZE, THICKNESS, AND SHAPES INDICATED BUT NOT LESS THAN THAT NEEDED TO COMPLY WITH PERFORMANCE REQUIREMENTS INDICATED. WORK TO DIMENSIONS INDICATED OR ACCEPTED ON SHOP DRAWINGS, USING PROVEN DETAILS OF FABRICATION AND SUPPORT. USE TYPE OF MATERIALS INDICATED OR SPECIFIED FOR VARIOUS COMPONENTS OF EACH METAL FABRICATION.
B. FORM EXPOSED WORK TRUE TO LINE AND LEVEL WITH ACCURATE ANGLES AND SURFACES AND STRAIGHT SHARP EDGES.
C. ALLOW FOR THERMAL MOVEMENT RESULTING FROM A MAXIMUM CHANGE (RANGE) IN AMBIENT TEMPERATURE OF 100 DEGREES F. IN THE DESIGN, FABRICATION, AND INSTALLATION OF INSTALLED METAL ASSEMBLIES TO PREVENT BUCKLING, OPENING UP OF JOINTS, AND OVERSTRESSING OF WELDS AND FASTENERS. BASE DESIGN CALCULATIONS ON ACTUAL SURFACE TEMPERATURES OF METALS DUE TO BOTH SOLAR HEAT GAIN AND NIGHTTIME SKY HEAT LOSS.
D. SHEAR AND PUNCH METALS CLEANLY AND ACCURATELY. REMOVE BURRS.
E. MITER CORNERS AND ANGLES OF FRAMES UNLESS INDICATED OTHERWISE.
F. REMOVE SHARP OR ROUGH AREAS ON EXPOSED TRAFFIC SURFACES.

Preliminary - For Reference Only

HARDSCAPING /AESTHETICS GENERAL NOTES - 10

DESIGN AGENCY
Michael Baker INTERNATIONAL
DESIGNER BDC
REVIEWER JCF 01/10/24
PROJECT ID 82382
SHEET 1834 TOTAL 2696

CUY-90-16.28 (CCG3A)

MODEL: Sheet-10 PAPERSIZE: 34x22 (in.) DATE: 6/16/2025 TIME: 4:20:47 PM USER: Brian.Clay
pw:\\mb-us-pw.bentley.com:mb-us-pw-03\Documents\Cleveland_OH\01_Projects\ODOT\District12\82382\400-Engineering\Landscaping\Sheets\82382_PN1000.dgn
PN1000.dgn

SCREEN WALL SYSTEM AND AESTHETIC LIGHTING (CONT.)

2.7 FABRICATION, GENERAL (CONTINUED):

G. WELD CORNERS AND SEAMS CONTINUOUSLY TO COMPLY WITH AWS RECOMMENDATIONS AND THE FOLLOWING:

1. USE MATERIALS AND METHODS TO MINIMIZE DISTORTION AND DEVELOP STRENGTH AND CORROSION RESISTANCE OF BASE METALS.
2. OBTAIN FUSION WITHOUT UNDERCUT OR OVERLAP.
3. REMOVE WELDING FLUX IMMEDIATELY.
4. EXPOSED CONNECTIONS: COMPLY WITH NATIONAL ORNAMENTAL & MISCELLANEOUS METALS ASSOCIATION (NOMMA) GUIDELINE 1 JOINT FINISHES AND PROVIDE 7#32FINISH NO. 29#32COMPLETELY SANDED JOINT.

H. FORM EXPOSED CONNECTIONS WITH HAIRLINE JOINTS, FLUSH AND SMOOTH, USING CONCEALED FASTENERS WHEREVER POSSIBLE. USE EXPOSED FASTENERS OF TYPE INDICATED OR, IF NOT INDICATED, PHILLIPS FLATHEAD (COUNTERSUNK) SCREWS OR BOLTS. LOCATE JOINTS WHERE LEAST CONSPICUOUS.

I. PROVIDE FOR ANCHORAGE OF TYPE INDICATED; COORDINATE WITH SUPPORTING STRUCTURE. FABRICATE AND SPACE ANCHORING DEVICES TO PROVIDE ADEQUATE SUPPORT FOR INTENDED USE AND TO SUPPORT INTENDED LOADS.

J. SHOP ASSEMBLY: PREASSEMBLE ITEMS IN SHOP TO GREATEST EXTENT POSSIBLE TO MINIMIZE FIELD SPLICING AND ASSEMBLY. DISASSEMBLE UNITS ONLY AS NECESSARY FOR SHIPPING AND HANDLING LIMITATIONS. USE CONNECTIONS THAT MAINTAIN STRUCTURAL VALUE OF JOINED PIECES. CLEARLY MARK UNITS FOR REASSEMBLY AND COORDINATED INSTALLATION.

K. CUT, REINFORCE, DRILL AND TAP MISCELLANEOUS METAL WORK AS INDICATED TO RECEIVE FINISH HARDWARE, SCREWS, AND SIMILAR ITEMS.

L. FABRICATE JOINTS THAT WILL BE EXPOSED TO WEATHER IN A MANNER TO EXCLUDE WATER, OR PROVIDE WEEP HOLES WHERE WATER MAY ACCUMULATE.

M. CNC TRIMMING 3 AXIS: ALL PANELS TO BE CUT TO SIZE AND SHAPE ON A 3 AXIS CNC TO ENSURE PRECISION.

N. PANEL JOINERY: THE VERTICAL JOINT BETWEEN PANELS SHALL BE DONE USING A TONGUE AND GROOVE DETAIL UNLESS OTHERWISE ACCEPTED WITH SHOP DRAWINGS AND MOCKUP.

O. EDGE FINISHING: ALL EXPOSED EDGES OF THE SCREENWALL PANELS WILL HAVE A SANDED FINISH

P. DRILLING: HOLES TO ACCOMMODATE THE HARDWARE WILL BE PRE-DRILLED INTO THE PANELS

Q. THREADED INSERTS: THREADED INSERTS TO ACCEPT THE HARDWARE WILL BE PLACED INTO THE SUPPORT FINDS AT THE FABRICATOR'S PLANT.

2.8 MISCELLANEOUS FRAMING AND SUPPORTS:

A. GENERAL: PROVIDE STEEL FRAMING AND SUPPORTS FOR APPLICATIONS INDICATED OR WHICH IS NOT A PART OF STRUCTURAL STEEL FRAMEWORK, AS REQUIRED TO COMPLETE WORK.

B. FABRICATE UNITS TO SIZES, SHAPES, AND PROFILES INDICATED AND REQUIRED TO RECEIVE ADJACENT OTHER CONSTRUCTION RETAINED BY FRAMING AND SUPPORTS. FABRICATE FROM STRUCTURAL STEEL SHAPES, PLATES, AND STEEL BARS OF WELDED CONSTRUCTION USING MITERED JOINTS FOR FIELD CONNECTION. CUT, DRILL, AND TAP UNITS TO RECEIVE HARDWARE, HANGERS, AND SIMILAR ITEMS.

1. EQUIP UNITS WITH INTEGRALLY WELDED ANCHORS FOR CASTING INTO CONCRETE OR BUILDING INTO MASONRY. FURNISH INSERTS IF UNITS MUST BE INSTALLED AFTER CONCRETE IS PLACED.
2. EXCEPT AS OTHERWISE INDICATED, SPACE ANCHORS 24 INCHES ON CENTER AND PROVIDE MINIMUM ANCHOR UNITS IN THE FORM OF STEEL STRAPS 1 1/4 INCHES WIDE X 1/4 INCH X 8 INCHES LONG.

C. GALVANIZE MISCELLANEOUS FRAMING AND SUPPORTS AT EXTERIOR LOCATIONS AND INTERIOR LOCATIONS WHERE INDICATED.

2.9 FINISHES, GENERAL:

A. COMPLY WITH NAAMM "METAL FINISHES MANUAL" FOR RECOMMENDATIONS RELATIVE TO APPLICATION AND DESIGNATIONS OF FINISHES.

B. FINISH METAL FABRICATIONS AFTER ASSEMBLY.

SCREEN WALL SYSTEM AND AESTHETIC LIGHTING (CONT.)

2.10 STEEL AND IRON FINISHES:

A. GALVANIZING: FOR THOSE ITEMS INDICATED FOR GALVANIZING, APPLY ZINC COATING BY THE HOT DIP PROCESS COMPLIANCE WITH THE FOLLOWING REQUIREMENTS:

1. ASTM A 153 FOR GALVANIZING IRON AND STEEL HARDWARE.
2. ASTM A 123 FOR GALVANIZING BOTH FABRICATED AND UNFABRICATED IRON AND STEEL PRODUCTS MADE OF UNCOATED ROLLED, PRESSED, AND FORGED SHAPES, PLATES, BARS, AND STRIP 0.0299 INCH THICK AND HEAVIER.

B. PREPARATION FOR SHOP PRIMING: PREPARE UNCOATED FERROUS METAL SURFACES TO COMPLY WITH MINIMUM REQUIREMENTS INDICATED BELOW FOR SSPC SURFACE PREPARATION SPECIFICATIONS AND ENVIRONMENTAL EXPOSURE CONDITIONS OF INSTALLED METAL FABRICATIONS:

1. EXTERIORS (SSPC ZONE 1B): SSPCSP6 "COMMERCIAL BLAST CLEANING."
2. INTERIORS (SSPC ZONE 1A): SSPCSP3 "POWER TOOL CLEANING"

C. APPLY SHOP PRIMER TO UNCOATED SURFACES OF METAL FABRICATIONS, EXCEPT THOSE WITH GALVANIZED FINISH OR TO BE EMBEDDED IN CONCRETE, SPRAYED ON FIREPROOFING, OR MASONRY, UNLESS OTHERWISE INDICATED. COMPLY WITH REQUIREMENTS OF SSPCPA1 "PAINT APPLICATION SPECIFICATION NO. 1" FOR SHOP PAINTING.

1. STRIPE PAINT ALL EDGES, CORNERS, CREVICES, BOLTS, WELDS, AND SHARP EDGES.

2.11 EXAMINATION:

A. VERIFICATION OF CONDITIONS: EXAMINE SITE AND VERIFY THAT CONDITIONS ARE SUITABLE TO RECEIVE WORK AND THAT NO DEFECTS OR ERRORS ARE PRESENT THAT WOULD CAUSE DEFECTIVE INSTALLATION OF PRODUCTS OR CAUSE LATENT DEFECTS IN WORKMANSHIP AND FUNCTION.

B. NOTIFICATION: BEFORE PROCEEDING WITH WORK, NOTIFY DESIGNER IN WRITING OF UNSUITABLE CONDITIONS IF APPLICABLE.

2.12 PREPARATION:

A. COORDINATE AND FURNISH ANCHORAGES, SETTING DRAWINGS, DIAGRAMS, TEMPLATES, INSTRUCTIONS, AND DIRECTIONS FOR INSTALLATION OF ANCHORAGES, INCLUDING CONCRETE INSERTS, SLEEVES, ANCHOR BOLTS AND MISCELLANEOUS ITEMS HAVING INTEGRAL ANCHORS THAT ARE TO BE EMBEDDED IN CONCRETE OR MASONRY CONSTRUCTION. COORDINATE DELIVERY OF SUCH ITEMS TO PROJECT SITE.

B. PROTECTION:

1. USE ALL APPROPRIATE PRECAUTIONS TO PREVENT DAMAGE TO EXISTING CONDITIONS TO REMAIN SUCH AS STRUCTURES, UTILITIES, IRRIGATION SYSTEMS, PLANT MATERIALS, AND PAVING ON OR ADJACENT TO THE SITE OF THE WORK.
2. USE PRECAUTION TO PREVENT EXCESSIVE COMPACTION OF PLANTING AREA SOIL AND SOIL MIXES WITHIN OR ADJACENT TO THE AREAS OF WORK.
3. PROVIDE BARRICADES OR OTHER BARRIERS TO PROTECT EXISTING CONDITIONS TO REMAIN FROM DAMAGE DURING CONSTRUCTION.

SCREEN WALL SYSTEM AND AESTHETIC LIGHTING (CONT.)

2.13 INSTALLATION, GENERAL:

A. PROVIDE ANCHORAGE DEVICES AND FASTENERS WHERE NECESSARY FOR SECURING MISCELLANEOUS METAL FABRICATIONS TO INPLACE CONSTRUCTION; INCLUDE THREADED FASTENERS FOR CONCRETE AND MASONRY INSERTS, TOGGLE BOLTS, THROUGHBOLTS, LAG BOLTS, WOOD SCREWS, AND OTHER CONNECTORS AS REQUIRED.

B. SET SLEEVES IN CONCRETE WITH TOPS FLUSH WITH FINISH SURFACE ELEVATIONS; PROTECT SLEEVES FROM WATER AND CONCRETE ENTRY.

C. PERFORM CUTTING, DRILLING, AND FITTING REQUIRED FOR INSTALLATION OF MISCELLANEOUS METAL FABRICATIONS. SET METAL FABRICATION ACCURATELY IN LOCATION, ALIGNMENT, AND ELEVATION: WITH EDGES AND SURFACES LEVEL, PLUMB, TRUE, AND FREE OF RACK; AND MEASURED FROM ESTABLISHED LINES AND LEVELS.

D. PROVIDE TEMPORARY BRACING OR ANCHORS IN FORMWORK FOR ITEMS THAT ARE TO BE BUILT INTO CONCRETE MASONRY OR SIMILAR CONSTRUCTION. FIT EXPOSED CONNECTIONS ACCURATELY TOGETHER TO FORM HAIRLINE JOINTS. WELD CONNECTIONS THAT ARE NOT TO BE LEFT AS EXPOSED JOINTS, BUT CANNOT BE SHOP WELDED BECAUSE OF SHIPPING SIZE LIMITATIONS. DO NOT WELD, CUT, OR ABRADE THE SURFACES OF EXTERIOR UNITS WHICH HAVE BEEN HOT DIP GALVANIZED AFTER FABRICATION, AND ARE INTENDED FOR BOLTED OR SCREWED FIELD CONNECTIONS.

E. FIELD WELDING: COMPLY WITH AWS CODE FOR PROCEDURES OF MANUAL SHIELDED METALARC WELDING, APPEARANCE AND QUALITY OF WELDS MADE, METHODS USED IN CORRECTING WELDING WORK, AND SPECIFIED FABRICATION REQUIREMENTS.

2.14 INSTALLATION OF RAILINGS:

A. ANCHOR RAILINGS IN CONCRETE BY MEANS OF PIPE SLEEVES PRESET AND ANCHORED INTO CONCRETE OR BY CORE DRILLING AFTER RAILINGS HAVE BEEN INSERTED, FILL ANNULAR SPACE SOLID WITH NON-SHRINK, NONMETALLIC GROUT, MIXED AND PLACED TO COMPLY WITH GROUT MANUFACTURER'S DIRECTIONS. FILL GROUT TO LEVELS SUFFICIENT TO MATCH ADJACENT PLANE FOR POSITIVE DRAINAGE.

2.15 ERECTION TOLERANCES:

A. MAXIMUM VARIATION FROM PLUMS: 1/8 INCH.
B. MAXIMUM OFFSET FROM TRUE ALIGNMENT: 1/16 INCH.
C. MAXIMUM OUT-OF-POSITION: 1/8 INCH.

2.16 ADJUSTING AND CLEANING:

A. TOUCHUP PAINTING: IMMEDIATELY AFTER ERECTION, CLEAN FIELD WELDS, BOLTED CONNECTIONS, AND ABRADED AREAS OF SHOP PAINT, AND PAINT EXPOSED AREAS WITH SAME MATERIAL AS USED FOR SHOP PAINTING TO COMPLY WITH SSPCPA 1 REQUIREMENTS FOR TOUCHUP OF FIELD PAINTED SURFACES.

1. APPLY BY BRUSH OR SPRAY TO PROVIDE A MINIMUM DRY FILM THICKNESS OF 2.0 MILS.

B. FOR GALVANIZED SURFACES CLEAN WELDS, BOLTED CONNECTIONS AND ABRADED AREAS AND APPLY GALVANIZING REPAIR PAINT TO COMPLY WITH ASTM A 780.

2.17 PROTECTION:

A. APPLY PROTECTIVE COVERINGS TO PREVENT WEATHERING OR DAMAGE UNTIL DATE OF FINAL COMPLETION.

Preliminary Plans - Not For Reference Only

CUY-90-16.28 (CCG3A)
MODEL: Sheet-11 PAPERSIZE: 34x22 (in.) DATE: 6/16/2025 TIME: 4:21:03 PM USER: Brian.Clay
pw:\\mb-us-pw.bentley.com:mb-us-pw-03\Documents\Cleveland_OH\01_Projects\ODOT\District12\82382\400-Engineering\Landscaping\Sheets\82382_PN1000.dgn

DESIGN AGENCY
Michael Baker INTERNATIONAL
DESIGNER BDC
REVIEWER JCF 01/10/24
PROJECT ID 82382
SHEET 1835 TOTAL 2696

ITEM SPECIAL - COMPLETE IRRIGATION SYSTEM

1.0 GENERAL REQUIREMENTS:

A. THE WORK SHALL INCLUDE THE FOLLOWING: FURNISH AND INSTALL A FULLY AUTOMATIC IRRIGATION SYSTEM, INCLUDING ALL LABOR, MATERIALS, EQUIPMENT AND SERVICES REQUIRED TO PROVIDE A COMPLETE AND FULLY OPERATING SYSTEM, AS SPECIFIED HEREIN AND AS DIAGRAMMED IN THE DRAWINGS.

B. THE DRAWINGS ARE SCHEMATIC AND TOGETHER WITH THE SPECIFICATIONS ARE INTENDED TO COMPLEMENT EACH OTHER. THE CONTRACTOR SHALL FURNISH AND INSTALL ALL PARTS, WHICH MAY BE REQUIRED BY THE DRAWINGS AND OMITTED BY THE SPECIFICATIONS, OR VICE VERSA, JUST AS THOUGH REQUIRED BY BOTH. SHOULD THERE APPEAR TO BE DISCREPANCIES OR QUESTION OF INTENT, THE CONTRACTOR SHALL REFER THE MATTER TO THE PROJECT ENGINEER FOR DECISION, AND THIS INTERPRETATION SHALL BE FINAL, CONCLUSIVE AND BINDING.

C. ALL NECESSARY FIELD CHANGES TO THE DRAWINGS TO AVOID ANY OBSTACLES SHALL BE MADE BY THE CONTRACTOR WITH THE PRIOR APPROVAL OF THE PROJECT ENGINEER.

D. TRENCH EXCAVATION, BACK FILLING AND BEDDING MATERIALS, TOGETHER WITH THE TESTING OF THE COMPLETED INSTALLATION SHALL BE INCLUDED IN THIS WORK.

E. ALL PARTS NECESSARY FOR THE PROPER AND COMPLETE EXECUTION OF THE WORK, WHETHER OR NOT INDICATED ON THE DRAWINGS, SHALL BE FURNISHED.

F. THE DIAGRAMMATIC IRRIGATION SYSTEM SHOWN ON THE DRAWINGS AND DESCRIBED WITHIN THESE SPECIFICATIONS REPRESENTS A SINGLE CONTROLLER AND IRRIGATION SYSTEM FOR EACH BRIDGE LANDSCAPE SUPPLIED FROM MUNICIPAL WATER. A MINIMUM 65-PSI STATIC AND 60-PSI DYNAMIC PRESSURE AT FULL SYSTEM FLOW IS REQUIRED FROM THE IRRIGATION CONTRACTOR'S POINT OF CONNECTION DOWNSTREAM OF THE BACKFLOW PREVENTER.

G. THE WORK UNDER THIS SECTION SHALL COMPLY WITH ALL ORDINANCES AND REGULATIONS OF AUTHORITIES HAVING JURISDICTION. THE CONTRACTOR SHALL OBTAIN AND PAY FOR ANY AND ALL PERMITS, TESTS AND CERTIFICATIONS REQUIRED FOR THE EXECUTION OF WORK UNDER THIS SECTION. FURNISH COPIES OF PERMITS, CERTIFICATIONS AND APPROVAL NOTICES TO THE OWNER PRIOR TO REQUESTING PAYMENT. THE CONTRACTOR SHALL INCLUDE IN THEIR BID ANY CHARGES BY THE WATER DEPARTMENT, UTILITY COMPANY, OR OTHER AUTHORITIES FOR WORK DONE BY THEM AND CHARGED TO THE CONTRACTOR.

H. THE CONTRACTOR SHALL FULLY INFORM HIMSELF OF EXISTING CONDITIONS ON THE SITE BEFORE SUBMITTING HIS BID, AND SHALL BE FULLY RESPONSIBLE FOR CARRYING OUT ALL WORK REQUIRED TO FULLY AND PROPERLY EXECUTE THE WORK OF THE CONTRACT. NO CLAIM FOR EXTRA COMPENSATION OR EXTENSION OF TIME WILL BE ALLOWED ON ACCOUNT OF ACTUAL CONDITIONS INCONSISTENT WITH THOSE ASSUMED.

1.1 METHOD OF MEASUREMENT:

LANDSCAPE IRRIGATION SYSTEM SHALL BE MEASURED SEPARATELY AS A COMPLETE ITEM BY THE NUMBER OF EACH.

1.2 BASIS OF PAYMENT:

THE DEPARTMENT WILL PAY FOR ALL WORK DESCRIBED IN THIS SECTION AT THE PRICE BID. ALL COSTS FOR WORK IN THIS SECTION ARE TO BE INCLUDED IN THE PRICE BID FOR EACH LANDSCAPE IRRIGATION SYSTEM.

1.3 REFERENCES:

APPLICABLE REQUIREMENTS OF ACCEPTED STANDARDS AND CODES SHALL APPLY TO THE WORK OF THIS SECTION AND SHALL BE SO LABELED OR LISTED:

- AMERICAN SOCIETY FOR TESTING & MATERIALS (ASTM)
- ASTM: D1784 RIGID POLY (VINYL CHLORIDE) (PVC) COMPOUNDS AND CHLORINATED POLY (VINYL CHLORIDE) (PVC) COMPOUNDS.
- ASTM: D1785 POLY (VINYL CHLORIDE) (PVC) PLASTIC PIPE, SCHEDULES 40, 80, AND CL200.
- ASTM: D2464 THREADED POLY (VINYL CHLORIDE) (PVC) PLASTIC PIPE FITTINGS, SCHEDULE 80.
- ASTM: D2466 POLY (VINYL CHLORIDE) (PVC) PLASTIC PIPE FITTINGS, SCHEDULE 40

ITEM SPECIAL - COMPLETE IRRIGATION SYSTEM (CONT.)

1.3 REFERENCES (CONT.):

- ASTM: D2564 SOLVENT CEMENTS FOR POLY (VINYL CHLORIDE) (PVC) PLASTIC PIPING SYSTEMS
- ASTM: D2737-99 POLYETHYLENE (PE) PRESSURE RATED TUBE.
- NATIONAL PLUMBING CODE (NPC)
- NATIONAL ELECTRIC CODE (NEC)
- NATIONAL SANITARY FOUNDATION (NSF)
- AMERICAN SOCIETY OF AGRICULTURAL ENGINEERS (ASAE)
- UNDERWRITERS LABORATORIES, INC. (UL)
- OCCUPATIONAL SAFETY AND HEAL TH REGULATIONS (OSHA)

1.4 SUBMITTALS:

A. SHOP DRAWINGS: SUBMIT THE PROPOSED IRRIGATION SYSTEM PER THE DIAGRAMS AND DESIGN SPECIFICATIONS PROVIDED. SUBMIT PLANS FOR REVIEW BY THE PROJECT ENGINEER PER THE PROJECT REQUIREMENTS FOLLOWING FIELD MEASUREMENTS AND VERIFICATION OF ALL KNOWN UTILITY CONFLICTS. NOTE ANY DEVIATION FROM THE DESIGN SPECIFICATIONS WHETHER SUGGESTED OR REQUIRED. PLANS MUST MEET REQUIREMENTS OF PERMITTING TO CONSTRUCT.

B. PRODUCT SPECIFICATIONS SHEETS OF ALL PROPOSED EQUIPMENT TO BE INSTALLED FOR APPROVAL BY PROJECT ENGINEER PRIOR TO THE START OF WORK. THE IRRIGATION SYSTEM MAY NOT COMMENCE UNTIL PRODUCT SHEETS ARE SUBMITTED AND APPROVED. SUBMITTALS SHALL BE MARKED TO SHOW PROPER NOZZLES, SIZES, FLOWS, AND EQUIPMENT TO BE INCLUDED: SPRINKLER HEADS, DRIP TUBING, FLOOD BUBBLER ASSEMBLIES, VALVES, MANUAL AND AUTOMATIC, CONTROLLERS, VALVE BOXES, PIPE AND FITTINGS, WIRE AND CONNECTORS, QUICK COUPLING VALVES, RAIN SENSOR, MOISTURE SENSORS AND CONTROLS, AIR VACUUM/ RELIEF VALVES, AND MISCELLANEOUS MATERIALS.

C. PROJECT RECORD DOCUMENTS: THE CONTRACTOR SHALL PROVIDE AND KEEP UP-TO-DATE A COMPLETE REDLINED RECORD SET OF DRAWINGS OF THE SYSTEM AS THE PROJECT PROCEEDS. DRAWINGS SHALL BE CORRECTED DAILY, SHOWING EVERY CHANGE FROM THE ORIGINAL DRAWINGS AND SPECIFICATIONS. RECORD DRAWINGS SHALL SPECIFY AND EXACTLY LOCATE SPRINKLER TYPE; POP UP HEIGHT AND NOZZLE FOR EACH SPRINKLER INSTALLED. EACH VALVE BOX LOCATION TO BE REFERENCED BY DISTANCE FROM A MINIMUM OF TWO PERMANENT LOCATIONS. CONTROLLER(S), RAIN SENSOR(S), AIR VACUUM RELIEF VALVES, FLUSHING VALVES, QUICK COUPLING VALVES, WATER METERS, BACK FLOW PREVENTION DEVICE AND ALL OTHER EQUIPMENT SHALL BE IND/CA TED ON THE DRAWINGS. ALL WIRE ROUTING, WIRE SIZE AND SPLICES SHALL BE INDICATED. MAIN LINE PIPE AND WIRE ROUTE SHALL HAVE TWO 12I DISTINCTLY DIFFERENT GRAPHIC SYMBOLS (LINE TYPES). THIS REDLINED RECORD SET OF DRAWINGS SHALL BE KEPT AT JOB SITE AND SHALL BE USED ONLY AS A RECORD SET. THIS RECORD SET OF DRAWINGS SHALL BE A VAIL ABLE AT ALL TIMES FOR OBSERVATION AND SHALL BE KEPT IN A LOCATION DESIGNATED BY PROJECT ENGINEER. SHOULD THIS RECORD SET OF DRAWINGS NOT BE AVAILABLE FOR REVIEW OR NOT BE UP-TO-DATE AT THE TIME OF THE OBSERVATION, IT WILL BE ASSUMED NO WORK HAS BEEN COMPLETED. PROVIDE COPIES OF THE REDLINED RECORD SET OF DRAWINGS FOR PROJECT ENGINEER REVIEW. MAKE NEAT AND LEGIBLE NOTATIONS ON THIS RECORD SET OF DRAWINGS AS THE WORK PROCEEDS, SHOWING THE WORK AS ACTUALLY INSTALLED. FOR EXAMPLE, SHOULD A PIECE OF EQUIPMENT BE INSTALLED IN A LOCATION THAT DOES NOT MATCH THE PLAN, INDICATE THAT EQUIPMENT IN A GRAPHIC MANNER IN THE LOCATION OF INSTALLATION AND SO AS TO MATCH THE ORIGINAL SYMBOLS AS INDICA TED IN THE IRRIGATION LEGEND. SHOULD THE EQUIPMENT BE DIFFERENT FROM THAT SPECIFIED, INDICATE WITH A NEW GRAPHIC SYMBOL BO TH ON THE DRAWINGS AND THE IRRIGATION LEGEND. THE RELOCATED EQUIPMENT DIMENSIONS AND NORTHING AND EASTING COORDINATES SHOULD THEN BE TRANSFERRED TO THE APPROPRIATE DRAWING IN THIS RECORD SET OF DRAWINGS AT THE PROPER TIME. ON OR BEFORE THE DATE OF FINAL FIELD OBSERVATION, DELIVER CORRECTED AND COMPLETED CAD COMPUTER PLOTS OF 'RECORD DRAWINGS" AND ELECTRONIC FILES ON DISK TO THE PROJECT ENGINEER AS PART OF CONTRACT CLOSEOUT. DELIVERY OF PLOTS WILL NOT RELIEVE CONTRACTOR OF THE RESPONSIBILITY OF FURNISHING REQUIRED INFORMATION THAT MAY HAVE BEEN OMITTED FROM THE PRINTS.

ITEM SPECIAL - COMPLETE IRRIGATION SYSTEM (CONT.)

1.4 SUBMITTALS (CONT.):

D. AT THE END OF EACH SEGMENT OF THE PROJECT THE CONTRACTOR SHALL SUBMIT THE FOLLOWING TO THE PROJECT ENGINEER: PLUMBING PERMITS (IF NONE REQUIRED, SO STATE), MATERIAL APPROVALS, PRESSURE LINE TESTS (BY WHOM APPROVED AND DATE), MATERIALS FURNISHED (RECIPIENT AND DATE)

E. MAINTENANCE AND OPERA TING BINDERS SHALL INCLUDE: TABLE OF CONTENTS, WRITTEN DESCRIPTION OF IRRIGATION SYSTEM, SYSTEM DRAWINGS: ONE(1) COPY OF THE ORIGINAL IRRIGATION PLAN; ONE (1) COPY OF THE RECORD DRAWING; ONE III REPRODUCIBLE OF THE RECORD DRAWING; ONE (I) COPY OF THE CONTROLLER VALVE SYSTEM WIRING DIAGRAM, LISTING OF MANUFACTURERS, MANUFACTURERS' DA TA WHERE MULTIPLE MODEL, TYPE AND SIZE LISTINGS ARE INCLUDED; CLEARLY AND CONSPICUOUSLY IND/CA TING THOSE THAT ARE PERTINENT TO THIS INSTALLATION, "APPROVED" SUBMITTALS OF ALL IRRIGATION EQUIPMENT, OPERATION INSTRUCTION, MAINTENANCE INSTRUCTION, COMPLETE TROUBLESHOOTING CHARTS, PARTS LIST, AND LIST OF EXPENDABLE PARTS, WINTERIZATION AND SPRING START-UP PROCEDURES, WARRANTY DA TA, NAMES, ADDRESSES AND TELEPHONE NUMBERS OF RECOMMENDED REPAIR AND SERVICE COMPANIES, AND A COPY OF THE SUGGESTED "SYSTEM OPERA TING SCHEDULE" WHICH SHALL CALL OUT THE CONTROLLER PROGRAM REQUIRED /ZONE RUN TIME IN MINUTES PER DAY AND DAYS PER WEEKI IN ORDER TO PROVIDE THE DESIRED AMOUNT OF WATER TO EACH AREA UNDER "NO-RAIN" CONDITIONS.

1.5 QUALITY ASSURANCE:

A. INSTALLER: A FIRM WHICH HAS AT LEAST FIVE 15I YEARS EXPERIENCE IN WORK OF THE TYPE AND SIZE REQUIRED BY THIS SECTION AND WHICH IS ACCEPTABLE TO THE DESIGNER.

B. REFERENCES: THE CONTRACTOR MUST SUPPLY THREE REFERENCES FOR WORK OF THIS TYPE AND SIZE WITH THEIR BID INCLUDING NAMES AND PHONE NUMBERS OF CONTACT PERSON(S).

C. THE PROJECT ENGINEER WILL BE ON SITE AT VARIOUS TIMES TO OBSERVE THE SYSTEM IS BEING INSTALLED ACCORDING TO THE SPECIFICATIONS AND DRAWINGS.

D. COVERAGE TEST: AFTER COMPLETION OF THE SYSTEM, TEST THE OPERATION OF ENTIRE SYSTEM AND ADJUST SPRINKLERS AS DIRECTED BY THE DESIGNER. DEMONSTRATE TO THE PROJECT ENGINEER THAT ALL IRR/GA TED AREAS ARE BEING ADEQUATELY COVERED. FURNISH AND INSTALL MATERIALS REQUIRED TO CORRECT ANY GAPS IN COVERAGE.

E. DURING FINAL ADJUSTMENTS AND PROJECT ENGINEER REVIEW, THE CONTRACTOR SHALL BE RESPONSIBLE FOR HAVING TWO-WAY COMMUNICATION AND SUFFICIENT PERSONNEL TO PROVIDE INSTANTANEOUS COMMUNICATION BETWEEN THE OBSERVATION AREA AND THE CONTROLLER FOR THE SYSTEM.

1.6 STORAGE AND HANDLING:

STORE AND HANDLE ALL MATERIALS IN COMPLIANCE WITH MANUFACTURER INSTRUCTIONS AND RECOMMENDATIONS. PROTECT FROM ALL POSSIBLE DAMAGE. MINIMIZE ON-SITE STORAGE.

1.7 WARRANTY:

A. THE CONTRACTOR SHALL OBTAIN THE STANDARD WRITTEN MANUFACTURER'S GUARANTEE OF ALL MATERIALS FURNISHED UNDER THIS SECTION WHERE SUCH GUARANTEES ARE OFFERED IN THE MANUFACTURER'S PUBLISHED PRODUCT DA TA. ALL THESE GUARANTEES SHALL BE IN ADDITION TO, AND NOT IN LIEU OF, OTHER LIABILITIES THAT THE CONTRACTOR MAY HAVE BY LAW.

B. IN ADDITION TO THE MANUFACTURERS GUARANTEES THE CONTRACTOR SHALL WARRANT THE ENTIRE IRRIGATION SYSTEM, BOTH PARTS AND LABOR FOR A PERIOD OF ONE (I) YEAR FROM THE DATE OF ACCEPTANCE. AS PART OF THE ONE-YEAR WARRANTY THE CONTRACTOR SHALL PERFORM THE FIRST. YEAR-END WINTERIZATION AND SPRING START-UP FOR THE IRRIGATION SYSTEM. SHOULD ANY PROBLEMS DEVELOP WITHIN THE WARRANTY PERIOD BECAUSE OF INFERIOR OR FAULTY MATERIALS OR WORKMANSHIP, CORRECTIONS SHALL BE MADE TO THE SATISFACTION OF THE PROJECT ENGINEER AT NO ADDITIONAL EXPENSE. A WRITTEN WARRANTY SHOWING DATE OF COMPLETION AND PERIOD OF WARRANTY SHALL BE SUPPLIED UPON COMPLETION OF EACH SEGMENT OF THE PROJECT.

ITEM SPECIAL - COMPLETE IRRIGATION SYSTEM (CONT.)

1.8 PROJECT CONDITIONS:

A. THE CONTRACTOR SHALL AT ALL TIMES COORDINATE HIS WORK CLOSELY WITH THE PROJECT ENGINEER TO EFFICIENTLY BRING THE PROJECT TO COMPLETION. THE PROJECT ENGINEER SHALL BE NOTIFIED AS TO THE START OF WORK, PROGRESSION AND COMPLETION, AS WELL AS ANY CHANGES TO THE DRAWINGS BEFORE THE CHANGE IS MADE.

B. THE CONTRACTOR SHALL ALSO COORDINATE THE WORK WITH OTHER TRADES.

C. THE CONTRACTOR SHALL BE HELD RESPONSIBLE FOR AND SHALL PAY FOR ANY DAMAGE TO OTHER WORK CAUSED BY HIS WORK, PERSONNEL, OR SUB-CONTRACTORS. REPAIRS OF SUCH DAMAGE IIF ANYI SHALL BE DONE BY THE CONTRACTOR WHO INSTALLED THE WORK, AS DIRECTED BY THE PROJECT ENGINEER.

D. CONTRACTOR SHALL INCLUDE IN THE BID, AN ALLOWANCE FOR FOUR I4I HOURS OF INSTRUCTION UPON COMPLETION OF CHECK/TEST /START-UP/ADJUSTMENT OPERATIONS BY A COMPETENT OPERA TOR PROJECT ENGINEER SHALL BE NOTIFIED AT LEAST ONE (IJ WEEK IN ADVANCE OF CHECK/TEST/STARTUP/ADJUSTMENT OPERATIONSI. UPON COMPLETION OF WORK AND PRIOR TO APPL/CATION FOR ACCEPTANCE AND FINAL PAYMENT, A MINIMUM OF THREE 13I THREE RING, HARD COVER BINDERS, SHALL BE SUBMITTED TO THE OWNER. AFTER REVIEW AND APPROVAL, THE COPIES WILL BE FORWARDED TO THE PROJECT ENGINEER.

E. NOTIFY ALL CITY DEPARTMENTS AND/OR PUBLIC UTILITY AND PROJECT ENGINEER CONCERNED, OF THE TIME AND LOCATION OF ANY WORK THAT MAY AFFECT THEM. COOPERATE AND COORDINATE WITH THEM IN THE PROTECTION AND/OR REPAIRS OF ANY UTILITIES. PROVIDE AND INSTALL TEMPORARY SUPPORT, ADEQUATE PROTECTION AND MAINTENANCE OF ALL STRUCTURES, DRAINS, SEWERS, AND OTHER OBSTRUCTIONS ENCOUNTERED. WHERE GRADE OR ALIGNMENT IS OBSTRUCTED, THE OBSTRUCTION SHALL BE PERMANENTLY SUPPORTED, RELOCATED, REMOVED OR RECONSTRUCTED AS DIRECTED BY THE DESIGNER.

1.9 PRE-INSTALLATION CONFERENCE:

BEFORE WORK COMMENCES, HOLD A CONFERENCE WITH THE PROJECT ENGINEER TO DISCUSS GENERAL DETAILS OF THE WORK. EXAMINE ALL CONTRACT DOCUMENTS APPLYING TO THIS SECTION NOTING ANY DISCREPANCIES AND BRINGING THE SAME TO THE ATTENTION OF THE PROJECT ENGINEER FOR TIMELY RESOLUTION. ALL WORK INDICATED ON DRAWINGS SHALL BE PROVIDED WHETHER OR NOT SPECIFICALLY MENTIONED IN THE SPECIFICATIONS. IF THERE ARE AMBIGUITIES BETWEEN DRAWINGS AND SPECIFICATIONS, AND SPECIFIC INTERPRETATION OR CLARIFICATION IS NOT ISSUED PRIOR TO BIDDING, THE INTERPRETATION OR CLARIFICATION WILL BE MADE ONLY BY PROJECT ENGINEER, AND CONTRACTOR SHALL COMPLY WITH THE DECISIONS. IN THE EVENT THE INSTALLATION CONTRADICTS THE DIRECTIONS GIVEN, THE INSTALLATION SHALL BE CORRECTED BY CONTRACTOR AT NO ADDITIONAL COST.

2.0 PRODUCTS:

ALL MATERIALS TO BE INCORPORATED IN THIS SYSTEM SHALL BE NEW AND WITHOUT FLAWS OR DEFECTS AND OF QUALITY AND PERFORMANCE AS SPECIFIED AND MEETING THE REQUIREMENTS OF THE SYSTEM. ALL MATERIAL OVERAGES AT THE COMPLETION OF THE INSTALLATION ARE THE PROPERTY OF THE CONTRACTOR AND SHALL BE REMOVED FROM THE SITE. NO MATERIAL SUBSTITUTIONS FROM THE IRRIGATION PRODUCTS DESCRIBED IN THESE SPECIFICATIONS AND SHOWN ON THE DRAWINGS SHALL BE MADE WITHOUT PRIOR APPROVAL AND ACCEPTANCE FROM THE PROJECT ENGINEER.

A. PVC IRRIGATION PIPE: ALL PIPE SHALL BEAR THE FOLLOWING MARKINGS: MANUFACTURER'S NAM[, NOMINAL PIPE SIZE, SCHEDULE OR CLASS, PRESSURE RA TING IN PSI, AND DATE OF EXTRUSION. ALL PIPE IN SIZES 2-1/2 INCHES AND SMALLER SHALL BE PVC, CLASS 200, TYPE 1120, SOR 21, SOLVENT-WELD PVC, CONFORMING TO ASTM NO. 02241 AS MANUFACTURED BY CERTAINTEED, CRESLINE OR JM.

B. PVC PIPE SLEEVES: ALL PIPE SLEEVES BENEATH NON-SOIL AREAS SHALL BE PVC, CLASS 200 WATER PIPE AS MANUFACTURED BY CERTAINTEED, CRESLINE OR JM. MINIMUM SLEEVE SIZE TO BE TWICE THE SIZE OF THE LINE IT WILL BE CARRYING.

Preliminary Not for Construction
For Reference Only

IRRIGATION GENERAL NOTES - 1

DESIGN AGENCY
Michael Baker INTERNATIONAL

DESIGNER BDC
REVIEWER JCF 01/10/24
PROJECT ID 82382
SHEET 1836 TOTAL 2696

CUY-90-16.28 (CCG3A)
MODEL: Sheet-01 PAPERSIZE: 34x22 (in.) DATE: 6/13/2025 TIME: 8:57:24 AM USER: Joseph.Hogan
pw:\\mb-us-pw.bentley.com:mb-us-pw-03\Documents\Cleveland_OH\01_Projects\ODOT\District12\82382400-Engineering\Landscaping\Sheets\82382_PN3000.dgn

ITEM SPECIAL - COMPLETE IRRIGATION SYSTEM (CONT.)

2.0 PRODUCTS (CONT.):

C. WIRE CONDUIT: CONDUIT FOR WIRING BENEATH NON-SOIL AREAS SHALL BE PVC, SCH-40 CONDUIT WITH SOLVENT-WELD JOINTS, AS MANUFACTURED BY CERTAINTEED, CRESLINE OR JM. SWEEP ELLS SHALL BE STANDARD ELECTRICAL TYPE PVC SCHEDULE 40 LONG SWEEP ELBOWS. CAP SWEEP ELL WITH TRI-PLUG WITH THE RING FOR SECURING NYLON PULL ROPE. CONDUIT FOR ABOVE GROUND WIRING TO RAIN SENSORS OR CONTROLLERS SHALL BE GALVANIZED, RIGID METALLIC CONDUIT.

D. PVC IRRIGATION FITTINGS: FITTINGS FOR SOLVENT WELD PVC PIPE, 2-1/2 INCH AND SMALLER IN SIZE, SHALL BE SCHEDULE 40 SOLVENT WELD PVC FITTINGS AS MANUFACTURED BY DURA, LASCO, SPEARS OR EQUAL. FITTINGS SHALL BEAR MANUFACTURER'S NAME OR TRADEMARK, MATERIAL DESIGNATION, SIZE, AND APPLICABLE I.P.S. SCHEDULE. ALL PVC THREADED CONNECTIONS IN AND OUT OF VALVES SHALL BE MADE USING SCHEDULE 80 TOE NIPPLES AND SCHEDULE 40 COUPLERS OR SOCKET FITTINGS. SCHEDULE 40 THREADS WILL NOT BE APPROVED FOR INSTALLATION. PVC SOLVENT SHALL BE NSF APPROVED, FOR TYPE J AND TYPE ff PVC PIPE, AND SCHEDULE 40 AND 80 FITTINGS. CEMENT IS TO MEET ASTM D2564 AND FF493 FOR POTABLE WATER PIPES. PVC SOLVENT CEMENT SHALL BE RECTORSEAL GOLD, JPS WELD-ON 711, OATEY HEAVY DUTY CEMENT OR EQUAL, AND SHALL BE USED IN CONJUNCT/ON WITH THE APPROPRIATE PRIMER. PRIMER SHALL BE NSF APPROVED, AND FORMULATED FOR PVC AND CPVC PIPE APPLICATIONS. PRIMER IS TO MEET ASTM F 656. PRIMER SHALL BE RECTORSEAL JIM PR-2, JPS WELD-ON P-68 CLEAR, OATEY CLEAR PRIMER FOR PVC AND CPVC. ALL NIPPLES TO BE SCHEDULE 80 PVC.

E. POLYETHYLENE IRRIGATION PIPE: PIPING 1-1/4 INCH AND SMALLER IN SIZE MAY ALSO BE INSTALLED WITH POLYETHYLENE (PER) PIPE, SDR 15, CLASS 100, TYPE III, GRADE 3, CLASS C CONFORMING TO ASTM D2239, WITH A MINIMUM PRESSURE RATING OF 100 PSI. POLYETHYLENE PIPE SHALL ONLY BE USED IN AREAS WHERE A FLEXIBLE PIPING IS NEEDED, SUCH AS SERVING THE FREE-STANDING PLANTERS VIA THE PVC SLEEVING IN THE BRICK SIDEWALK AREAS.

F. POLYETHYLENE IRRIGATION FITTINGS: FITTINGS FOR POLYETHYLENE PIPE SHALL BE INSERT PVC OR NYLON TYPE FITTINGS. FITTINGS SHALL CONFORM TO NSF STANDARDS AND BE ATTACHED WITH TWO (2) DOG-EARED STAINLESS STEEL CLAMPS PER PIPE TO FITTING CONNECTION. SUPPLY ONLY PIPES AND FITTINGS THAT ARE MARKED BY THE MANUFACTURER WITH THE APPROPRIATE ASTM DESIGNATIONS AND PRESSURE RATINGS AND ARE FREE FROM CRACKS, WRINKLES, BLISTERS, DENTS OR OTHER DAMAGE. FITTINGS SHALL BE PER ASTM D2609 AS MANUFACTURED BY DURA OR LASCO.

G. SPRAY SPRINKLERS: FULL AND PART CIRCLE POP UP SPRAY SPRINKLERS SHALL BE PRESSURE REGULA TING (3O-PSI), PLASTIC CONSTRUCT/ON WITH RATCHETING RISER, REMOVABLE NOZZLE AND CHECK VALVE. NOZZLE SIZE SHALL BE AS INDICATED ON THE DRAWING AND IN THE LEGEND. POP-UP HEIGHT SHALL BE 6 INCHES FOR TURF AND 12 INCHES FOR GROUND COVER, SHRUBS AND ANNUAL BEDS. SPRINKLER SHALL CARRY A MINIMUM 3-YEAR EXCHANGE WARRANTY AGAINST DEFECTS. SPRINKLERS SHALL BE MANUFACTURED BY RAIN BIRD.

H. VALVE BOXES: ALL VALVE BOXES SHALL BE MANUFACTURED FROM UNFORMED RESIN WITH A TENSILE STRENGTH OF 3,000-5,500 PSI CONFORMING TO ASTM D638. ALL BOXES SHALL BE GREEN IN COLOR. COVERS SHALL BE GREEN IN COLOR UNLESS OTHERWISE SPECIFIED. VALVE BOXES FOR AIR RELIEF VAL V[S AND FLUSHING VALVS ON DRIP ZONES SHALL BE 6-INCH ROUND VALVE BOXES WITH METAL DETECTION. VALVE BOXES FOR SINGLE I INCH AND 1-1/2 INCH ELECTRIC VALVES, ISOLATION VALVES AND QUICK COUPLING VALVES SHALL BE 10-INCH ROUND VAL V[BOXES WITH METAL DETECTION AND BOLT DOWN COVERS. VALVE BOXES FOR SINGLE 2 INCH AND DUAL ELECTRIC VALVES SHALL BE 12-INCH STANDARD VALVE BOXES WITH METAL DETECTION AND BOLT DOWN COVERS. WHEN MULTIPLE ELECTRIC VALVS ARE INSTALLED IN THE SAME AREA, THEY ARE TO BE INSTALLED TWO (2) VALVES PER BOX IN A 12-INCH STANDARD BOX. VALVE BOXES FOR WIRE SPLICES SHALL BE 10 INCH ROUND VALVE BOXES WITH DETECTABLE DISKS. ALL SPLICES SHALL BE IN SEPARATE VALVE BOXES AND NOT INCLUDED W/ ISOLATION VALVES. 24 VOLT SPLICES SHALL HAVE GRAY LIDS. VALVE BOX EXTENSIONS SHALL BE PROVIDED AND INSTALLED AS REQUIRED FOR PROPER BOX DEPTH.

ITEM SPECIAL - COMPLETE IRRIGATION SYSTEM (CONT.)

2.0 PRODUCTS (CONT.):

VALVE BOXES SHALL BE MANUFACTURED BY PENTEK, CARSON SPECIFICATION GRADE OR NDS PRO SERIES.

I. AUTOMATIC CONTROLLER: CONTROLLER SHALL BE ELECTRONIC IN CONSTRUCT/ON WITH CAPABILITY OF UP TO 10 HOUR RUN TIMES PER ZONE IN INCREMENTS OF I OR 10 MINUTES. CONTROLLERS TO HAVE MINIMUM FOUR INDEPENDENT PROGRAMS, AUTO/OFF SWITCH AND BE CAPABLE OF MANUAL, SEMI-AUTOMATIC AND AUTOMATIC OPERATION. CONTROLLER SHALL HAVE WATER BUDGETING FEA TUR[, CYCLE AND SOAK FEA TUR[, SENSOR INPUT TERMINAL, LOCKING, WEATHER RESISTANT CABINET AND INTERNAL TRANSFORMER. TERMINAL STRIP CONNECTION SHALL BE EASILY ACCESSIBLE. THE CONTROLLER SHALL BE U.L. LISTED, 120 VOLT, 60 HERTZ, A.C. TYPE. CONTROLLER SHALL BE AS MANUFACTURED BY RAIN BIRD. STATION QUANTITY SHALL PROVIDE A MINIMUM OF 4 SPARE ZONES. LOCATE PEDESTAL MOUNTED CONTROLLER IN LOCATION IND/CA TED ON DRAWINGS.

J. ELECTRIC CONTROL VALVES: ELECTRIC CONTROL VALVES SHALL BE ONE, ONE AND ONE HALF AND TWO-INCH REMOTE CONTROL, DIAPHRAGM TYPE, FIBERGLASS OR REINFORCED NYLON BODY PLASTIC VALVES WITH MANUAL FLOW CONTROL, MANUAL BLEED SCREW AND 200 PSI PRESSURE RA TING. VAL V[S SHALL BE MANUFACTURED BY RAIN BIRD MODEL PEB.

K. QUICK COUPLING VALVES: THE VALVE BODY SHALL BE OF CAST BRASS CONSTRUCTION WITH A WORKING PRESSURE OF 125 PSI. THE VALVE SEAT DISC PLUNGER BODY SHALL BE SPRING LOADED 50 THAT THE VALVE IS NORMALLY CLOSED UNDER ALL CONDITIONS WHEN THE KEY IS NOT INSERTED. THE TOP OF THE VALVE BODY RECEIVING THE KEY SHALL BE EQUIPPED WITH ACME THREADS AND SMOOTH FACE TO ALLOW THE KEY TO OPEN AND CLOSE THE VALVE SLOWLY. THE QUICK COUPLING VALVE SHALL BE EQUIPPED WITH A VINYL COVER. THE VALVE BODY CONSTRUCT/ON SHALL BE SUCH THAT THE COUPLER SEAL WASHER MAY BE REMOVED FROM THE TOP FOR CLEANING OR REPLACEMENT WITHOUT DISASSEMBLING ANY OTHER PARTS OF THE VALVE. KEYS SHALL BE ACME WITH /-INCH MAL[THREAD AND 3/4-INCH FEMALE THREAD AT THE TOP. CONTRACTOR SHALL PROVIDE TWO (2I KEYS FOR QUICK COUPLERS AND TWO (2I I-INCH X 3/4-INCH SWIVEL HOSE ELLS. QUICK COUPLING VALVES, KEYS AND SWIVELS SHALL BE MANUFACTURED BY RAIN BIRD.

L. WIRE: ALL VALVE CONTROL WIRE SHALL BE MINIMUM #/4-AWG, COMMON #/2-AWG, SINGLE STRAND, SOLID COPPER, UL- APPROVED DIRECT BURIAL AWG-U.F. 600V AND SHALL MEET ALL STATE AND LOCAL CODES FOR THIS SERVICE. INDIVIDUAL WIRES MUST BE USED FOR EACH ZONE VALVE. COMMON WIRE SHALL BE WHITE IN COLOR, CONTROL WIRE FOR SPRAY AND ROTOR ZONES SHALL BE RED IN COLOR, DRIP ZONE CONTROL WIRE SHALL BE ORANGE AND SPARE WIRES, INSTALLED WHERE IND/CA TED ON THE DRAWINGS SHALL BE BLUE. WHITE COL OR SHALL BE USED FOR COMMON WIRE ONLY. IN GROUND WIRE CONNECTIONS SHALL BE UL LISTED. ALL WIRE SPLICES SHALL BE MADE IN VALVE BOXES, AT CONTROLLER, OR AT VALVES. WIRE TYPE AND METHOD OF INSTALLATION SHALL BE IN ACCORDANCE WITH LOCAL CODES FOR NEC CLASS fl CIRCUITS OF JO-VOLT A.C. OR LESS.

M. ISOLATION VALVES: ISOLATION VALVES 2-1/2 INCHES AND SMALLER IN SIZE SHALL BE GATE TYPE, OF BRONZE CONSTRUCT/ON, US MANUFACTURE, 200 WOG WITH STEEL CROSS HANDLE AND 200 PSI RATING.

N. SWING JOINTS: SPRAY SPRINKLERS SHALL BE INSTALLED ON SWING PIPE ASSEMBLIES, MINIMUM LENGTH 6 INCHES, MAXIMUM 18 INCHES. QUICK COUPLING VALVES TO BE INSTALLED ON I-INCH PREFABRICATED PVC UNITIZED SWING JOINT ASSEMBLIES WITH DOUBLE 0-RING SEALS, MINIMUM 315 PSI RATING AND MINIMUM LENGTH OF 12 INCHES WITH BRASS INSERT AND STABILIZER (UNLESS STABILIZER IS AN INTEGRAL PART OF THE QUICK COUPLING VALVE).

0. AUTOMATIC RAIN SENSOR: RAIN SENSOR SHALL BE PLASTIC IN CONSTRUCT/ON WITH ADJUSTABLE INTERRUPT/ON POINT, I/2-INCH JPS THREADS AND STAINLESS STEEL VANDAL RESISTANT GUARD. RAIN SENSOR SHALL BE MANUFACTURED BY RA/NB/RD WITH SENSOR GUARD.

P. IN-LINE DRIP TUBING: IN-LINE EMITTERS IN DRIP TUBING TO BE .92 GALL ON PER HOUR ON PRE-INSTALLED 12-INCH SPACING WITHIN TUBE FOR ALL PLANTING BEDS. START PRESSURE SHALL BE A MINIMUM OF 45 PSI.

ITEM SPECIAL - COMPLETE IRRIGATION SYSTEM (CONT.)

2.0 PRODUCTS (CONT.):

Q. IN-LINE DRIP TUBING FITTINGS: FITTINGS FOR IN-LINE DRIP TUBING SHALL BE CONSTRUCTED OF MOLDED BROWN PLASTIC HAVING A (/.DJ OF .51 INCHES. FEMALE AND MALE THREADED ENDS SHALL BE CAPABLE OF MA TING TO STANDARD PIPE THREADS WITH TAPERED THREADS. STAINLESS STEEL CLAMPS SHALL BE USED TO SECURE IN-LINE DRIP TUBING TO INSERT BARBED FITTINGS. NOMINAL SIZE SHALL BE 13/16 INCHES, PART NO. 210. CLAMPS SHALL BE CONSTRUCTED OF 304-GRADE STAINLESS STEEL. INTERIOR CLAMP WALL SHALL BE SMOOTH TO PREVENT CRIMPING OR PINCHING OF TUBING. WALL THICKNESS OF CLAMPS SHALL BE 0.236 INCHES WITH AN OVERALL BANDWIDTH OF I/4-INCH. PROPERLY SECURED CLAMPS SHALL BE CAPABLE OF WITHSTAND/NG A MAXIMUM OPERA TING PRESSURE OF 441 PSI. CLAMPS SHALL BE ONE 'EAR" TYPE. TUBING STAKES SHALL BE PLASTIC COATED STEEL, OR OTHER NON-CORROSIVE STRONG MATERIAL TO SECURE TUBING.

R. DISK FILTER: THE FILTERS AT EACH DRIP ZONE VALVE SHALL BE A PLASTIC FILTER CONSISTING OF A TWO PIECE THREADED HOUSING WITH 0-RING SEAL. THE FILTER SCREEN SHALL BE I40-MESH SIZE. FILTERS SHALL BE SIZED TO MID-RANGE FLOW AND NOT EXCEED 2.5-PSI PRESSURE LOSS.

S. PRESSURE REGULA TORS: PRESSURE REGULA TORS SHALL ASSURE AN INCOMING PRESSURE OF 45-PSI INTO DRIP TUBING. DISCHARGE PRESSURE SHALL NOT BE LESS THAN 45-PSI. MANIFOLD REGULA TORS TO MATCH FLOW RATE TO MID-RANGE FLOW.

T. AUTOMATIC FLUSHING VALVE: FLUSH VALVES SHALL PRODUCE 1-GALLON FLUSH AND BE CONSTRUCTED OF BLACK MOLDED PLASTIC WITH INSERT BARBED FITTING END CONFIGURATION. THE TOP OF THE FLUSH VAL V[S SHALL HA V[SIX OPENINGS FROM WHICH DEBRIS OR SEDIMENT CAN PASS THROUGH FROM THE SYSTEM TO THE ATMOSPHERE OR VALVE BOX.

U. AIR VACUUM/ RELIEF VALVES: THE AIR VACUUM/ RELIEF VALVES SHALL BE CONSTRUCTED OF BLACK PLASTIC WITH I/2-INCH MALE PIPE THREAD CAPABLE OF MA TING WITH A THREADED PVC REDUCTION BUSHING.

V. REMOTE CONTROL: HAND HELP REMOTE CONTROL CAPABLE OF REMOTE OPERATION OF VALVES WHILE ADJUSTING AND MAINTAINING SYSTEM. PROVIDE ONE PER CONTROLLER.

2.1 METER AND BACKFLOW ENCLOSURE:

THE ENCLOSURE, CERTIFIED TO ASSE /060, SHALL BE OF MIN. 1/8" TK. TH/XO TROPIC POLYESTER RESIN REINFORCED WITH FIBERGLASS STRAND. MOLDED EXTERIORS WILL BE A SMOOTH, YACHT QUALITY FINISH, PROTECTED W/UV INHIBITED ISOPHTHALIC POLYESTER GEL COAT. NON-MOLDED PRODUCTS WILL UTILIZE AN INDUSTRIAL EXTERIOR TEXTURE, WITH THE SAME GEL COATED FINISH. INSULATION SHALL BE MIN. 11/4" THICK IRBI, UNI-CELLULAR, NON-WICKING, POLYISOCYANATE FOAM. ENCLOSURE SHALL UTILIZE A LOCKABLE FLIP TOP DESIGN, FOR MAINTENANCE ACCESS THROUGH LID WITHOUT REMOVAL OF THE ENTIRE UNIT. MOLDED PRODUCT SHALL UTILIZE AN OVERLAPPING LID SEAM DESIGN FOR WEATHER PROOFING AND VANDAL RESISTANCE. DRAINS SHALL BE SIZED FOR FULL PORT BACKFLOW DISCHARGE AND DESIGNED FOR ONE WAY EXIT, INHIBITING INTRUSION OF DEBRIS AND/OR VERMIN. ENCLOSURE SHALL BE ANCHORED TO A CONCRETE SLAB WITH STAINLESS STEEL ANCHORS AND REQUIRE A SINGLE LOCK FOR SECURITY PURPOSES.

2.2 WATER METER AND BACKFLOW PREVENTER:

PROVIDE AND INSTALL WATER METER AND BACKFLOW PREVENTOR ACCORDING TO APPROVED SHOP DRAWINGS AND MEETING REGULATORY REQUIREMENTS.

2.3 SPARE PARTS:

CONTRACTOR SHALL SUPPLY THE FOLLOWING TOOLS AND EQUIPMENT TO THE PROJECT ENGINEER BEFORE FINAL OBSERVATION: TWO (2) WRENCHES FOR DISASSEMBLING AND ADJUSTING EACH TYPE OF SPRINKLER HEAD PROVIDED, ONE (1) QUICK COUPLER KEY ASSEMBLY FOR EVERY FIVE OR FRACTION THEREOF OF EACH TYPE OF QUICK COUPLING VALVE PROVIDED, ONE (I) OF EACH TYPE OF GATE VALVE USED IN THE PROJECT, TWO (2) OF EACH TYPE SPRINKLER HEAD AND PATTERN (PC & FC) USED IN THE PROJECT, TWO (2) OF EACH TYPE NOZZLE USED IN THE PROJECT. BEFORE FINAL OBSERVATION CAN OCCUR, WRITTEN EVIDENCE THAT THE PROJECT ENGINEER HAS RECEIVED THE TOOLS AND EQUIPMENT MUST BE SHOWN.

ITEM SPECIAL - COMPLETE IRRIGATION SYSTEM (CONT.)

2.4 CRUSHED STONE:

CRUSHED STONE SHALL BE ANGULAR PEA GRAVEL UNDER VALVE BOXES IN SOIL AREAS.

3.0 FIELD ENGINEERING:

A. VERIFY DIMENSIONS AND GRADES AT JOB SITE BEFORE WORK IS COMMENCED. DO NOT PROCEED WITH INSTALLATION OF THE LANDSCAPE IRRIGATION SYSTEM WHEN IT IS APPARENT THAT OBSTRUCTIONS OR GRADE DIFFERENCES EXIST OR IF CONFLICTS IN CONSTRUCT/ON DETAILS, LEGEND, OR SPECIFIC NOTES ARE DISCOVERED. ALL SUCH OBSTRUCTIONS, CONFLICTS, OR DISCREPANCIES SHALL BE BROUGHT TO THE ATTENTION OF THE PROJECT ENGINEER.

B. MAKE ALL FIELD MEASUREMENTS NECESSARY FOR THE WORK NOTING THE RELATIONSHIP OF THE IRRIGATION WORK TO THE OTHER TRADES. COORDINATE WITH OTHER TRADES (LANDSCAPING AND OTHER SITE WORK TRADES).

C. PROJECT SHALL BE LAID OUT ESSENTIALLY AS INDICATED ON THE APPROVED SHOP DRAWINGS, MAKING MINOR ADJUSTMENTS FOR VARIATIONS IN THE PLANTING ARRANGEMENT. MAJOR CHANGES SHALL BE REVIEWED WITH THE PROJECT ENGINEER PRIOR TO PROCEEDING. LAYOUT OF SPRINKLER LINES IND/CA TED ON DRAWINGS IS DIAGRAMMATIC ONLY. LOCATION OF SPRINKLER EQUIPMENT IS CONTINGENT UPON AND SUBJECT TO INTEGRATION WITH ALL OTHER UNDERGROUND UTILITIES. CONTRACTOR SHALL EMPLOY ALL DA TA CONTAINED IN THE CONTRACT DOCUMENTS AND SHALL VERIFY THIS INFORMATION AT THE CONSTRUCT/ON SITE TO CONFIRM THE MANNER BY WHICH IT RELATES TO THE INSTALLATION.

D. COORDINATE INSTALLATION OF ALL SYSTEM COMPONENTS, INCLUDING PIPE, TO A VOID CONFLICT WITH THE TREES, SHRUBS, OR OTHER PLANTINGS.

E. DURING PROGRESS OF WORK, A COMPETENT SUPERINTENDENT AND ALL ASSISTANTS NECESSARY SHALL BE ON SITE. ALL SHALL BE SATISFACTORY TO THE DESIGNER. THE SUPERINTENDENT SHALL NOT BE CHANGED, EXCEPT WITH THE PRIOR CONSENT OF THE PROJECT ENGINEER, UNLESS THAT PERSON PROVES UNSATISFACTORY AND CEASES TO BE EMPLOYED. THE SUPERINTENDENT SHALL REPRESENT THE CONTRACTOR IN HIS ABSENCE AND ALL DIRECTIONS GIVEN TO THE SUPERINTENDENT SHALL BE AS BIND/NG AS IF GIVEN TO THE CONTRACTOR.

3.1 PROTECTION:

AT ALL TIMES, PROTECT EXISTING IRRIGATION, LANDSCAPING, PAVING, STRUCTURES, WALLS, FOOTINGS, ETC. FROM DAMAGE. ANY INADVERTENT DAMAGE TO THE WORK OF ANOTHER TRADE SHALL BE REPORTED AT ONCE.

3.2 PIPE AND FITTINGS INSTALLATION:

A. USING PROPER WIDTH TRENCHER CHAIN, EXCAVATE A STRAIGHT /VERTICALI AND TRUE TRENCH TO DEPTH REQUIRED FOR PIPE INVERT ELEVATION. LOAM OR TOPSOIL ENCOUNTERED WITHIN THE LIMITS OF TRENCH EXCAVATION FOR IRRIGATION MAINS AND BRANCH LINES SHALL BE CAREFULLY REMOVED TO THE LINES AND DEPTHS AS SHOWN ON THE DRAWINGS AND STOCKPILED FOR SUBSEQUENT REPLACEMENT IN THE UPPER 6 INCHES OF THE TRENCH FROM WHICH IT IS EXCAVATED. SUCH REMOVAL AND REPLACEMENT OF THE QUANTITIES OF LOAM SHALL BE CONSIDERED INC/DENTAL TO THE IRRIGATION SYSTEM AND NO ADDITIONAL COMPENSATION WILL BE ALLOWED THEREFORE. PIPE SHALL BE LAID ON UNDISTURBED TRENCH BOTTOM PROVIDED SUITABLE BASE IS AVAILABLE - NO ROCK LARGER THAN I-INCH OR SHARP EDGES ARE PERMISSIBLE. EXCAVATE TO 2-INCHES BELOW PIPE INVERT AND PROVIDE AND INSTALL SAND BASE OR CRUSHED STONE UPON WHICH TO LAY PIPE. BACK FILLING SHALL BE ACCOMPLISHED AS FOLLOWS: THE FIRST 10-INCH OF BACKFILL MATERIAL SHALL CONTAIN NO FOREIGN MATTER AND NO ROCK LARGER THAN I-INCH IN DIAMETER. CAREFULLY PLACE MATERIAL AROUND PIPE AND WIRE AND TAMP IN PLACE.

Preliminary - Not for Construction - For Reference Only

IRRIGATION GENERAL NOTES - 2

DESIGN AGENCY
Michael Baker INTERNATIONAL

DESIGNER BDC
REVIEWER JCF 01/10/24
PROJECT ID 82382
SHEET 1837 TOTAL 2696

CUY-90-16.28 (CCG3A)

MODEL: Sheet-02 PAPERSIZE: 34x22 (in.) DATE: 3/28/2025 TIME: 9:24:40 AM USER: Mata.Gallagher
pw:\\mb-us-pw.bentley.com:mb-us-pw-03\Documents\Cleveland_OH\01_Projects\ODOT\District12\82382\400-Engineering\Landscaping\Sheets\82382_PN3000.dgn

ITEM SPECIAL - COMPLETE IRRIGATION SYSTEM (CONT.)

3.0 FIELD ENGINEERING (CONT.):

B. REMAINDER OF BACKFILL SHALL BE LAID-UP IN 6-INCH /MAXIMUMI LIFTS AND TAMPED TO COMPACTION WITH MECHANICAL EQUIPMENT. COMPACT BACKFILL IN TRENCHES TO DRY DENSITY EQUAL TO THE ADJACENT UNDISTURBED SOIL, AND CONFORM TO ADJACENT GRADES WITHOUT DIPS, SUNKEN AREA, HUMPS, OR OTHER IRREGULARITIES. FROZEN MA TERI AL SHALL NOT BE USED FOR BACKFILL. PERFORM BACKFILLING WHEN PIPE IS COOL. DUR/NC HOT WEATHER COOL PIPE BY OPERA TING THE SYSTEM FOR A SHORT PERIOD, OR BY BACKFILLING IN THE EARLY PART OF THE MORNING BEFORE THE HEAT OF THE DAY. DO NOT, UNDER ANY CIRCUMSTANCES, USE TRUCK WHEELS FOR COMPACT/NC SOIL. RESTORE GRADES AND REPAIR DAMAGE WHERE SETTLING OCCURS.

C. MAKE ALL SOLVENT-WELD JOINTS IN STRICT ACCORDANCE WITH MANUFACTURER'S RECOMMENDATIONS, MAKING CERTAIN NOT TO APPLY AN EXCESS OF PRIMER OR SOLVENT, AND WIPING OFF EXCESS SOLVENT FROM EACH CONNECTION. ALLOW WELDED JOINTS AT LEAST 15 MINUTES SET-UP/CURING TIME BEFORE MOVING OR HANDLING. WHEN THE TEMPERATURE IS ABOVE 80*F, ALL OW CONNECTIONS TO SET MINIMUM 24 HOURS BEFORE PULLING OR PRESSURE IS APPLIED TO THE SYSTEM. WHEN TEMPERATURE IS BELOW 80* F, FOLLOW MANUFACTURER'S RECOMMENDATIONS. PROVIDE AND INSTALL FOR EXPANSION AND CONTRACTION AS RECOMMENDED.

D. WIRE SHALL BE LAID IN SAME TRENCH AS MAINLINE AND AT PIPE INVERT (SEE WIRE INSTALLATION). MAINLINE PIPE SHALL HAVE MINIMUM 22 INCHES OF COVER (EXCAVATE TO INVERT AS REQUIRED BY PIPE SIZE). LATERAL PIPE SHALL HAVE MINIMUM 16 INCHES OF COVER FOR PVC AND 12 INCHES OF COVER FOR POLYETHYLENE (EXCAVATE TO INVERT AS REQUIRED BY PIPE SIZE). CUT PLASTIC PIPE WITH HANDSAW OR PIPE-CUTTING TOOL, REMOVING ALL BURRS AT CUT ENDS. ALL PIPE CUTS ARE TO BE SQUARE AND TRUE. BEVEL CUT END AS REQUIRED TO CONFORM TO MANUFACTURER'S SPECIFICATIONS. EVERY PRECAUTION SHALL BE TAKEN TO PREVENT FOREIGN MATERIAL FROM ENTERING THE PIPE WHILE IT IS BEING PLACED IN THE TRENCH.

E. AT TIMES, WHEN INSTALLATION OF THE PIPING IS NOT IN PROGRESS, THE OPEN END(S) OF THE PIPE SHALL BE CLOSED BY A WATER TIGHT PLUG OR OTHER MEANS. ALL PIPING, WHICH CANNOT TEMPORARILY BE JOINED, SHALL BE SEALED TO MAKE AS WATERTIGHT AS POSSIBLE. THIS PROVISION SHALL APPLY DURING THE LUNCH HOUR AS WELL AS OVERNIGHT. PIPE NOT TO BE INSTALLED THAT DAY SHALL NOT BE LAID OUT.

F. SHOULD WATER ENTER THE TRENCH DURING OR AFTER INSTALLATION OF THE PIPING, NO ADDITIONAL PIPING MAY BE INSTALLED OR BACK FILLED UNTIL ALL WATER IS REMOVED FROM THE TRENCH. PIPE SHALL NOT BE INSTALLED WHEN WATER IS IN THE TRENCH, WHEN PRECIPITATION IS OCCURRING, OR WHEN THE AMBIENT TEMPERA TUR[IS AT 40F DECREES OR BELOW. PIPE INSTALLED AT TEMPERATURES BELOW 40F DECREES SHALL BE REMOVED AND REPLACED AT NO COST TO THE OWNER.

G. PVC PIPE SHALL BE SNAKED IN THE TRENCH TO ACCOMMODATE FOR EXPANSION AND CONTRACTION DUE TO CHANCES IN TEMPERATURE.

H. INSTALL IRRIGATION PIPE AS NECESSARY TO PREVENT DAMAGE TO TREE ROOTS. WHERE TRENCHING MUST OCCUR NEAR TREES, PROVIDE PROPER ROOT PRUNING AND SEALING METHODS TO ALL ROOTS /-INCH AND LARGER.

I. MAINTAIN 6-INCH MINIMUM CLEARANCE BETWEEN SPRINKLER LINES AND LINES OF OTHER TRADES. DO NOT INSTALL SPRINKLER LINES DIRECTLY ABOVE ANOTHER LINE OF ANY KIND. MAINTAIN /-INCH MINIMUM BETWEEN LINES WHICH CROSS AT ANGLES OF 45 TO 90 DECREES. EXERCISE CARE WHEN EXCAVATING, TRENCHING AND WORKING NEAR EXISTING UTILITIES.

J. THROUGHOUT THE GUARANTEE PERIOD IT WILL BE THE RESPONSIBILITY OF THE CONTRACTOR TO REFILL ANY TRENCHES THAT HAVE SETTLED DUE TO INCOMPLETE COMPACTION. PULLING OF PIPE WILL BE ALLOWED PROVIDED SOIL IS SUITABLE AND SPECIFIED DEPTH OF BURY CAN BE MAINTAINED.

3.3 ELECTRICAL WIRE CONDUIT INSTALLATION:

ELECTRICAL CONDUIT SHALL BE INSTALLED IN ALL NON-SOIL AREAS, AS WELL AS FOR ALL ABOVE GROUND WIRING WHERE WIRE PASSES UNDER OR THROUGH WALLS, WALKS AND PAVING TO CONTROLLERS AND RAIN SENSOR. CONDUIT SHALL EXTEND 18 INCHES BEYOND EDGES OF WALLS

ITEM SPECIAL - COMPLETE IRRIGATION SYSTEM (CONT.)

3.4 PIPE SLEEVING INSTALLATION:

SLEEVING SHALL BE INSTALLED WHEREVER PIPING IS CO/NC UNDER A NON-SOIL AREA, CENTRALLY WHERE IND/CA TED ON THE DRAWINGS. MINIMUM COVER OVER ALL SLEEVING PIPE SHALL BE 24 INCHES AS SHOWN ON THE DETAIL. SLEEVING SHALL EXTEND 18 INCHES BEYOND EDGES OF WALLS AND PAVEMENT.

3.5 ISOLATION VALVE INSTALLATION:

INSTALL ISOLATION VALVES PER DETAIL WHERE INDICATED ON THE DRAWINGS. INSTALL ALL ISOLATION VALVES ON A LEVEL CRUSHED STONE BASE SO THAT THEY CAN BE EASILY OPENED OR CLOSED WITH THE APPROPRIATE VALVE WRENCH. INSTALL SPECIFIED VALVE BOX OVER EACH ISOLATION VALVE. CHECK AND TIGHTEN VALVE BONNET PACKING BEFORE VALVE BOX AND BACKFILL INSTALLATION.

3.6 VALVE BOX INSTALLATION:

FURNISH AND INSTALL A VALVE ACCESS BOX FOR EACH ELECTRIC VALVE, QUICK COUPLING VALVE, ISOLATION VALVE, FLUSHING VALVE, AIR RELIEF VALVE AND WIRE SPLICE. ALL VALVE ACCESS BOXES SHALL BE INSTALLED ON A MINIMUM 4-INCH CRUSHED STONE BASE. FINISH ELEVATION OF ALL BOXES SHALL BE AT GRADE. ALL CRUSHED STONE TO BE SUPPLIED BY THE CONTRACTOR AND INSTALLED BEFORE VALVE BOX. CRUSHED STONE SHALL NOT BE POURED INTO PREVIOUSLY INSTALLED VALVE BOXES.

3.7 24 VOLT CONTROL VALVE INSTALLATION:

CONTROL VALVES SHALL BE INSTALLED ON A LEVEL CRUSHED STONE BASE. GRADE OF BASES SHALL BE CONSISTENT THROUGHOUT THE PROJECT SO THAT FINISH GRADES FALL WITHIN THE LIMITS OF WORK. VALVES SHALL BE SET PLUMB WITH ADJUST/NC HANDLE AND ALL BOLTS, SCREWS AND WIRING ACCESSIBLE THROUGH THE VALVE BOX OPENING. VALVES SHALL BE SET IN A PLUMB POSITION WITH 24-INCH MINIMUM MAINTENANCE CLEARANCE FROM OTHER EQUIPMENT. INSTALL AT SUFFICIENT DEPTH TO PROVIDE MORE THAN 6-INCH, NOR LESS THAN 4-INCH COVER FROM TOP OF VALVE TO FINISH GRADE. ADJUST ZONE VALVE OPERATION AFTER INSTALLATION USING FLOW CONTROL DEVICE ON VALVE.

3.8 WIRING INSTALLATION:

WIRING SHALL BE INSTALLED ALONG WITH THE MAIN LINE. MULTIPLE WIRE BUNDLES SHALL BE CINCHED TOGETHER AT MAXIMUM 12-FOOT CENTERS USING PLASTIC CABLE CINCHES AND SHALL BE LAID BESIDE, AND AT THE SAME INVERT AS, THE IRRIGATION LINES. SUFFICIENT SLACK FOR EXPANSION AND CONTRACT/ON SHALL BE MAINTAINED AND WIRING SHALL AT NO POINT BE INSTALLED TIGHTLY. PROVIDE AND INSTALL AN ADDITIONAL 8 INCHES TO 12 INCHES SLACK AT ALL CHANCES OF DIRECTION. WIRING IN VALVE BOXES SHALL BE A SUFFICIENT LENGTH TO ALLOW THE VALVE SOLENOID, SPLICE, AND ALL CONNECTIONS TO BE BROUGHT ABOVE GRADE FOR SERVICING. THIS ADDITIONAL SLACK SHALL BE COILED FOR NEATNESS IN THE VALVE BOX. EACH VALVE SHALL HAVE A SEPARATE WIRE BACK TO THE CONTROLLER. ALL WIRE SHALL BE LAID IN CONDUIT SLEEVES AND SHALL BE CAREFULLY BACK-FILLED TO A VOID ANY DAMAGE TO THE WIRE INSULATION OR WIRE CONDUCTORS THEMSELVES. IN AREAS OF UNSUITABLE MATERIAL, THE TRENCH SHALL HAVE A 2 INCHES LA YER OF SAND OR STONE DUST ON THE BOTTOM BEFORE THE WIRES ARE LAID INTO THE TRENCH AND BACK-FILLED. THE WIRES SHALL HAVE A MINIMUM OF 12 INCHES OF COVER. WIRE NOT TO BE INSTALLED THAT DAY SHALL NOT BE LAID OUT. AN EXPANSION CURL SHALL BE PROVIDED AND INSTALLED WITHIN 6 INCHES OF EACH WIRE CONNECTION TO A SOLENOID AND AT LEAST EVERY 100 FEET OF WIRE LENGTH ON RUNS MORE THAN 100 FEET IN LENGTH. EXPANSION CURLS CAN BE FORMED BY WRAPPING FIVE 15I TURNS OF WIRE AROUND A /-INCH DIAMETER OR LARGER PIPE AND THEN WITHDRAWING THE PIPE. PROVIDE AND INSTALL A COMMON GROUND WIRE OF WHITE COLOR. NO WHITE COLOR SHALL BE USED FOR POWER WIRE. CONTROL WIRE SHALL BE RED, DRIP ZONE CONTROL WIRE SHALL BE ORANGE AND SPARE WIRING SHALL BE BLUE IN COLOR. SERVICE WIRING IN CONNECTION WITH DRAWINGS AND LOCAL CODES FOR 24-VOLT SERVICE. ALL IN-GROUND WIRE CONNECTIONS SHALL BE WATERPROOFED WITH 3M DBY-6 SPLICE KITS. ALL SPLICES SHALL BE MADE IN VALVE BOXES /WIRE RUNS REQUIRING SPLICES BETWEEN VALVE LOCATIONS SHALL BE PROVIDED AND INSTALLED IN SPLICE BOX-VALVE BOX SHALL BE USEDI. SPLICE LOCATIONS SHALL BE SHOWN ON THE RECORD DRAWINGS.

ITEM SPECIAL - COMPLETE IRRIGATION SYSTEM (CONT.)

3.8 WIRING INSTALLATION (CONT.):

CONTRACTOR SHALL PROVIDE A COMPLETE WIRING DIAGRAM SHOWING WIRE ROUTING FOR THE CONNECTIONS BETWEEN THE CONTROLLER AND VALVES. SEE SECTION ONE FOR THE INCLUSION OF WIRING DIAGRAM IN OPERATION AND MAINTENANCE MANUALS.

3.9 CONTROLLER INSTALLATION:

INSTALL CONTROLLER AND MOISTURE SENSOR CONTROL PANEL CENTRALLY WHERE SHOWN ON THE DRAWINGS. CONTRACTOR TO WIRE VALVES AND RAIN SENSOR INTO CONTROLLER AND SET PROPER PROGRAM. WIRE CONTROLLER TO 120-VOL T ELECTRICAL SUPPLY PROVIDED AND INSTALLED TO THE CONTROLLER LOCATIONS PER ELECTRICAL PLANS. KEYS SHALL BE TURNED OVER TO PROJECT ENGINEER.

3.10 RAIN SENSOR INSTALLATION:

INSTALL RAIN SENSOR GENERALLY WHERE IND/CA TED ON THE DRAWINGS. COORDINATE FINAL LOCATION OF RAIN SENSOR WITH PROJECT ENGINEER. RAIN SENSOR SHALL BE IN DIRECT CONTACT WITH THE WEATHER AND NOT IN CONTACT WITH THE IRRIGATION SPRAY. INSTALL RAIN SENSOR WIRING WITHIN 1/2-INCH CONDUIT WHERE EXPOSED. ALL ABOVE GROUND WIRES SHALL BE INSTALLED IN CONDUITS.

3.11 QUICK COUPLING VALVE INSTALLATION:

PROVIDE AND INSTALL QUICK COUPLING VALVES WHERE IND/CA TED ON THE DRAWINGS. QUICK COUPLING VALVES TO BE MOUNTED ON I-INCH PREFABRICATED PVC UNITIZED SWING JOINT ASSEMBLIES WITH INTEGRAL 0-RINGS, MINIMUM LENGTH 12 INCHES WITH BRASS INSERT AND STABILIZER AS PER DETAILS.

3.12 IN-LINE EMITTER TUBE INSTALLATION:

IN-LINE EMITTER TUBING SHALL BE INSTALLED IN AREAS DESIGNATED BY HAND UNDER THE MULCH, AND SHALL HAVE AN AVERAGE DEPTH OF 4 INCHES UNLESS OTHERWISE IND/CA TED ON THE ORA WINGS. TUBING SHOULD NOT BE VISIBLE THROUGH THE MULCH. ALL IN-LINE EMITTER TUBING SHALL BE INSTALLED ON THE HIGH SIDE OF THE PLANT MATERIAL BEING WATERED TO HELP INSURE DISPERSION OF THE WATER. IN-LINE EMITTER TUBING IS TO BE INSTALLED 4 INCHES FROM ALL PLANTER EDGES, CURBS AND WALLS. SPACING OF IN-LINE EMITTER TUBE IS TO BE 18 INCHES CENTER-TO-CENTER IN ALL IRR/GA TED AREAS. ALL IN-LINE TUBING SHALL HAVE A MINIMUM INCOMING PRESSURE OF NOT LESS THAN 5-PSI OF THE PRESSURE REGULA TOR, 45-PSI, TO ASSURE A MAXIMUM LINEAR LENGTH OF 280 FEET AT ZERO ELEVATION LIFT.

3.13 DRIP PRESSURE REGULATOR:

PRESSURE REGULA TOR SHALL ASSURE A 45-PSI DOWNSTREAM PRESSURE ENTERING DRIP SUPPLY HEADER. PRESSURE SHALL BE VERIFIED BY CONTRACTOR TO ASSURE PROPER OPERA TING PRESSURE FOR THE IN-LINE EMITTER TUBING AT MAXIMUM LINEAR RUN OF 280 FEET. CONTRACTOR MAY NEED TO MANIFOLD PRESSURE REGULA TORS TO REACH THE MID-RANGE FLOW OF THE REGULA TOR.

3.14 TUBING STAKE INSTALLATION:

IN-LINE DRIP TUBING SHALL BE SECURED WITH STAKES. STAKES SHALL BE SPACED TO ENSURE THAT TUBING DOES NOT SHIFT LOCATION IN PRESENCE OF FOOT TRAFFIC, OPERATIONS, GRAVITY ON SLOPE INSTALLATIONS, OR ENVIRONMENTAL EFFECTS. STAKE IN-LINE DRIP TUBING AT MINIMUM 5-FOOT INTERVALS TO PREVENT MOVEMENT.

3.15 AIR RELIEF VALVE INSTALLATION:

AIR RELIEF VALVES SHALL BE INSTALLED IN THE EMITTER TUBING, AT HIGH ELEVATION POINTS AS INDICATED ON THE DRAWING.

3.16 FLUSH VALVE INSTALLATION:

FLUSH LINES SHALL BE INSTALLED ON END OF PVC EXHAUST HEADER WHERE IND/CA TED ON THE DRAWINGS.

3.17 CHECK/TEST/START-UP/ ADJUST /FLUSHING:

AFTER ALL PIPING, VALVES, SPRINKLER BODIES, PIPE LINES AND RISERS ARE IN PLACE AND CONNECTED, BUT PRIOR TO INSTALLATION OF SPRINKLER INTERNALS, OPEN THE CONTROL VALVES AND FLUSH OUT

ITEM SPECIAL - COMPLETE IRRIGATION SYSTEM (CONT.)

3.17 CHECK/TEST/START-UP/ ADJUST /FLUSHING (CONT.):

THE SYSTEM UNDER A FULL HEAD OF WATER. SPRINKLER INTERNALS, FLUSH CAPS AND RISER NOZZLES SHALL BE INSTALLED ONLY AFTER FLUSHING OF THE SYSTEM HAS BEEN ACCOMPLISHED TO THE FULL SATISFACTION OF THE PROJECT ENGINEER. CONTRACTOR SHALL BE RESPONSIBLE FOR FLUSHING THE ENTIRE SYSTEM AFTER INSTALLATION IS COMPLETE AND WILL BE RESPONSIBLE FOR ANY CLOGGED NOZZLES FOR THIRTY (30) DAYS AFTER SUBSTANTIAL COMPLETION OF THIS PORTION OF THE LANDSCAPE IRRIGATION SYSTEM.

3.18 LEAKAGE TEST:

TEST ALL LINES FOR LEAKS UNDER OPERATING PRESSURE. REPAIR ALL LEAKS AND RE-TEST.

3.20 COVERAGE TEST:

PERFORM A COVERAGE TEST IN THE PRESENCE OF THE PROJECT ENGINEER /NOTIFY PROJECT ENGINEER AT LEAST SEVEN (7) DAYS IN ADVANCE OF SCHEDULED COVERAGE TEST. PROJECT ENGINEER WILL DETERMINE IF THE WATER COVERAGE IS COMPLETE AND ADEQUATE. READJUST HEADS AND/OR HEAD LOCATIONS AS NECESSARY OR DIRECTED TO ACHIEVE PROPER COVERAGE. ALL TESTING SHALL BE AT THE EXPENSE OF THE CONTRACTOR.

3.21 CLEANING AND ADJUSTING:

AT THE COMPLETION OF THE WORK, ALL PARTS OF THE INSTALLATION SHALL BE THOROUGHLY CLEANED. ALL EQUIPMENT, PIPE, VALVES AND FITTINGS SHALL BE CLEANED OF GREASE, METAL CUTTINGS AND SLUDGE WHICH MAY HAVE ACCUMULATED BY THE OPERATION OF THE SYSTEM FOR TESTING. ADJUST SPRINKLER HEADS, VALVE BOXES, AND QUICK COUPLING VALVES TO GRADE AS REQUIRED, SO THAT THEY WILL NOT BE DAMAGED BY MOWING OPERATIONS. CONTINUE SPRINKLER COVERAGE ADJUSTMENT AS REQUIRED BY SETTLEMENT, ETC., THROUGHOUT THE GUARANTEE PERIOD. EACH CONTROL ZONE SHALL BE OPERA TED FOR A MINIMUM OF 5 MINUTES AND ALL HEADS CHECKED FOR CONSISTENCY OF DELIVERING WATER. ADJUSTMENTS SHALL BE MADE TO SPRINKLERS THAT ARE NOT CONSISTENT TO THE POINT THAT THEY MATCH THE MANUFACTURER'S STANDARDS. ALL SPRINKLERS, VALVES, TIMING DEVICES OR OTHER MECHANICAL OR ELECTRICAL COMPONENTS, WHICH FAIL TO MEET THESE STANDARDS, SHALL BE REJECTED, REPLACED AND TESTED UNTIL THEY MEET THE MANUFACTURER'S STANDARDS.

3.22 ACCEPTANCE AND OPERATION BY THE OWNER:

UPON COMPLETION OF THE WORK AND ACCEPTANCE BY THE PROJECT ENGINEER, THE CONTRACTOR SHALL BE RESPONSIBLE FOR THE TRAINING OF THE PROJECT ENGINEER IN THE OPERATION OF THE SYSTEM /PROVIDE MINIMUM 48 HOURS WRITTEN NOTICE IN ADVANCE OF TESTI. THE CONTRACTOR SHALL FURNISH, IN ADDITION TO THE RECORD DRAWINGS AND OPERATIONAL MANUALS, COPIES OF ALL AVAILABLE SPECIFICATION SHEETS AND CATALOG SHEETS FOR THE OPERATION OF THE IRRIGATION SYSTEM. THE CONTRACTOR SHALL GUARANTEE ALL PARTS AND LABOR FOR A MINIMUM PERIOD OF ONE 11I YEAR FROM DATE OF ACCEPTANCE. CONDITIONS FOR ACCEPTABILITY OF WORK FOR START OF MAINTENANCE BY CITY ISSUED BY THE PROJECT ENGINEER SHALL INCLUDE BUT NOT BE LIMITED TO: PUNCH LIST ITEMS COMPLETE AND APPROVED BY THE PROJECT ENGINEER, LANDSCAPE IRRIGATION SYSTEM COMPLETE AND IN PLACE, RECORD DRAWINGS COMPLETE, MAINTAIN INSTALLATION AND WATERING SCHEDULES UNTIL ALL CONDITIONS NOTED ABOVE HAVE BEEN COMPLETED.

3.23 CLEAN UP:

UPON COMPLETION OF ALL INSTALLATION WORK, CONTRACTOR SHALL REMOVE ALL LEFTOVER MATERIALS AND EQUIPMENT FROM THE SITE IN A SAFE AND LEGAL MANNER. CONTRACTOR SHALL REMOVE ALL DEBRIS RESULTING FROM WORK OF THIS SECTION. CONTRACTOR SHALL REGRADE, LIGHTLY COMPACT, AND REPLANT AROUND SPRINKLER HEADS WHERE NECESSARY TO MAINTAIN PROPER VERTICAL POSITIONING IN RELATION TO ESTABLISHED GRADE. CONTRACTOR SHALL FILL ALL DEPRESSIONS AND ERODED CHANNELS WITH SUFFICIENT SOIL MIX TO ADJUST GRADE TO ENSURE PROPER DRAINAGE. COMPACT LIGHTLY, AND REPLANT FILLED AREAS IN ACCORDANCE WITH DRAWINGS.

Preliminary - Not For Reference Only

IRRIGATION GENERAL NOTES - 3

DESIGN AGENCY
Michael Baker INTERNATIONAL

DESIGNER BDC
REVIEWER JCF 01/10/24
PROJECT ID 82382
SHEET 1838 TOTAL 2696

CUY-90-16.28 (CCG3A)
MODEL: Sheet03 PAPERSIZE: 34x22 (in.) DATE: 3/28/2025 TIME: 9:24:41 AM USER: Mala.Gallagher
pw:\\mb-us-pw.bentley.com:mb-us-pw-03\Documents\Cleveland_OH01_Projects\ODOT\District12\82382400-EngineeringLandscaping\Sheets\82382_PN3000.dgn

SHEET NO.	LOCATION	SIDE	451 REINFORCED CONCRETE PAVEMENT, MISC.: INTEGRALLY COLORED CONCRETE CROSSWALK (SY)	511 CLASS QC1 CONCRETE, MISC.: GATEWAY MONUMENT SIGN (CY)	607 FENCE, MISC.: BRIDGE 13 SCREEN WALL PANELS (LS)	607 FENCE, MISC.: GATEWAY MONUMENT SIGN SCREEN WALL PANELS (LS)	608 6" CONCRETE WALK, AS PER PLAN (SF)	608 WALKWAY, MISC.: PAVERS OVER CONCRETE (BRICK 1) (SF)	608 WALKWAY, MISC.: PAVERS OVER CONCRETE (BRICK 2) (SF)	608 WALKWAY, MISC.: PAVERS OVER CONCRETE (BRICK 3) (SF)	608 WALKWAY, MISC.: PAVERS OVER CONCRETE (BRICK 4) (SF)	680 SPECIAL - TRASH RECEPTACLE (EACH)	680 SPECIAL - COMPLETE IRRIGATION SYSTEM (EACH)	690 SPECIAL - GATEWAY SIGN ALUMINUM LETTERS (EACH)	690 SPECIAL - PARK BENCH (EACH)	690 SPECIAL - SCREEN WALL COVER PLATE (EACH)	690 SPECIAL - SKATE GUARD (EACH)	690 SPECIAL - METAL EDGING (FT)	690 SPECIAL - PLANTER WATERPROOFING SYSTEM (LS)	690 SPECIAL - PLANTING SOIL FOR BRIDGE 13 PARAPET PLANTERS (CY)	690 SPECIAL - PLANTING SOIL FOR BRIDGE 13 TREE PLANTERS (CY)
1841	CARNEGIE AVE.	LT	132																			
1841	CARNEGIE AVE.	RT	174																			
1842	E. 22ND ST.	LT	42						743		641	1					75					
1842	E. 22ND ST.	RT	80							110	1206	1	1				60	70		LS	29	174
1842	E. 22ND ST. BRIDGE	-			LS							2			6							
1843	E. 22ND ST.	LT	128	75		LS		961						21		24						
1843	E. 22ND ST.	RT	120																			
1844	E. 22ND ST.	LT					4219					3			12				778			
1845	E. 22ND ST.	RT					1878					2			6				340			
TOTALS TO GENERAL SUMMARY			676	75	LS	LS	6097	961	743	110	1847	9	1	21	24	159	70	1118	LS	29	174	

Preliminary Plans - For Reference Only

HARDSCAPING SUBSUMMARY - 1

CUY-90-16.28 (CCG3A)

MODEL: Sheet-01 PAPERSIZE: 34x22 (in.) DATE: 3/28/2025 TIME: 1:23:31 PM USER: Joseph.Hogan
pw:\\mb-us-pw.bentley.com:mb-us-pw-03\Documents\Cleveland_OH\01_Projects\ODOT\District12\82382\400-Engineering\Landscaping\Sheets\82382_PS201.dgn

DESIGN AGENCY
Michael Baker INTERNATIONAL

DESIGNER BDC
REVIEWER JCF 05/22/24
PROJECT ID 82382
SHEET 1839 TOTAL 2696

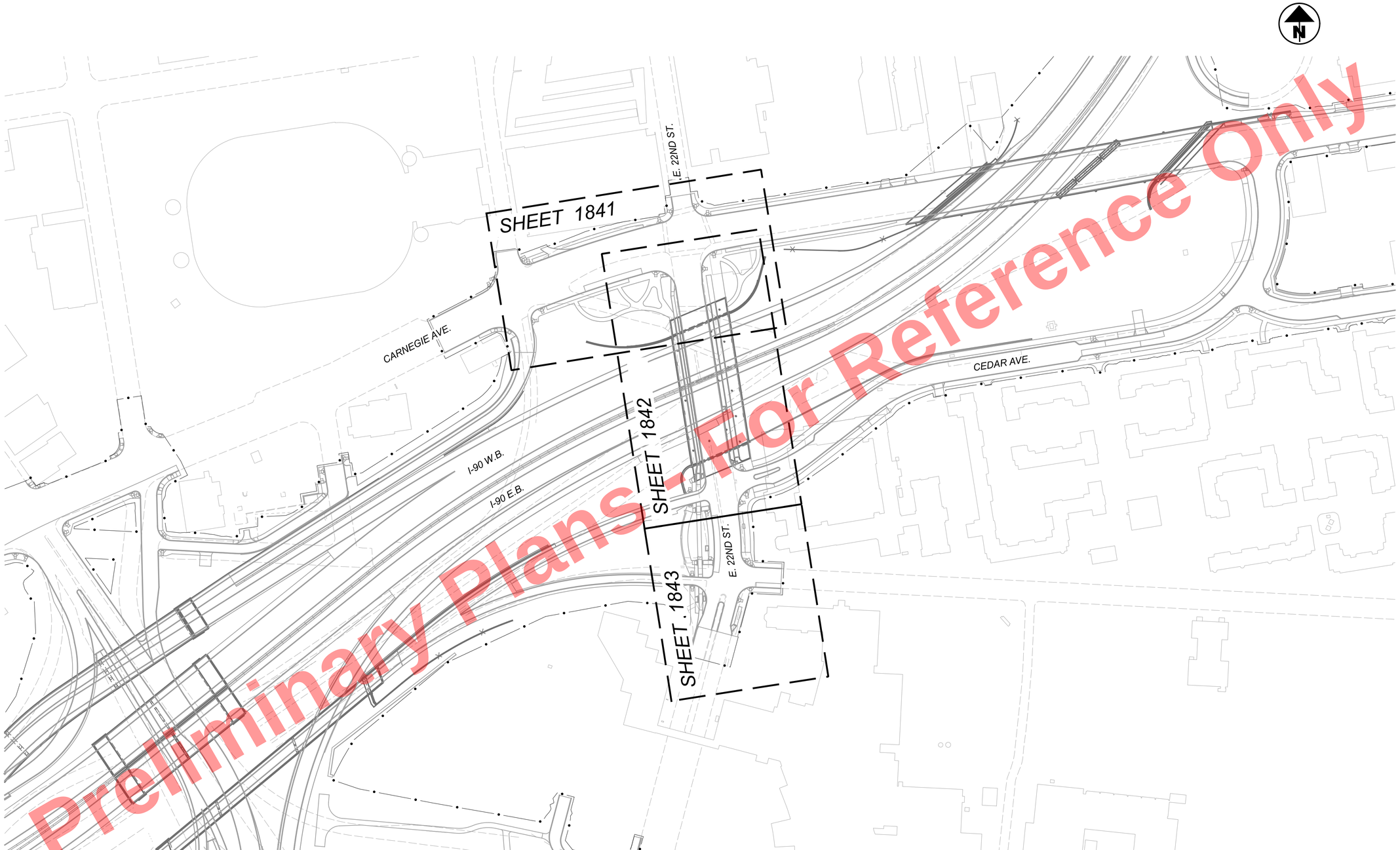

Preliminary Plans - For Reference Only

HORIZONTAL SCALE IN FEET
0 100 200 400

OVERALL HARDSCAPE PLAN

DESIGN AGENCY
Michael Baker INTERNATIONAL

DESIGNER	BDC
REVIEWER	JCF 01/10/24
PROJECT ID	82382
SHEET	1840
TOTAL	2696

CUY-90-16.28 (CCG3A)

MODEL: Sheet PAPERSIZE: 34x22 (in.) DATE: 3/28/2025 TIME: 9:25:07 AM USER: Mala.Gallagher
pw:\\tnb-us-pw.bentley.com:tnb-us-pw-03\Documents\Cleveland_OH\01_Projects\ODOT\District12\82382\400-Engineering\Landscaping\Sheets\82382_PP0001.dgn

LEGEND

ITEM 451 - REINFORCED CONCRETE PAVEMENT, MISC.: INTEGRALLY COLORED CONCRETE CROSSWALK

ITEM 608 - WALKWAY, MISC.: PAVERS OVER CONCRETE (BRICK #1)

ITEM 608 - WALKWAY, MISC.: PAVERS OVER CONCRETE (BRICK #2 EXCEPT WHERE NOTED AS BRICK #4)

ITEM 608 - WALKWAY, MISC.: PAVERS OVER CONCRETE (BRICK #3)

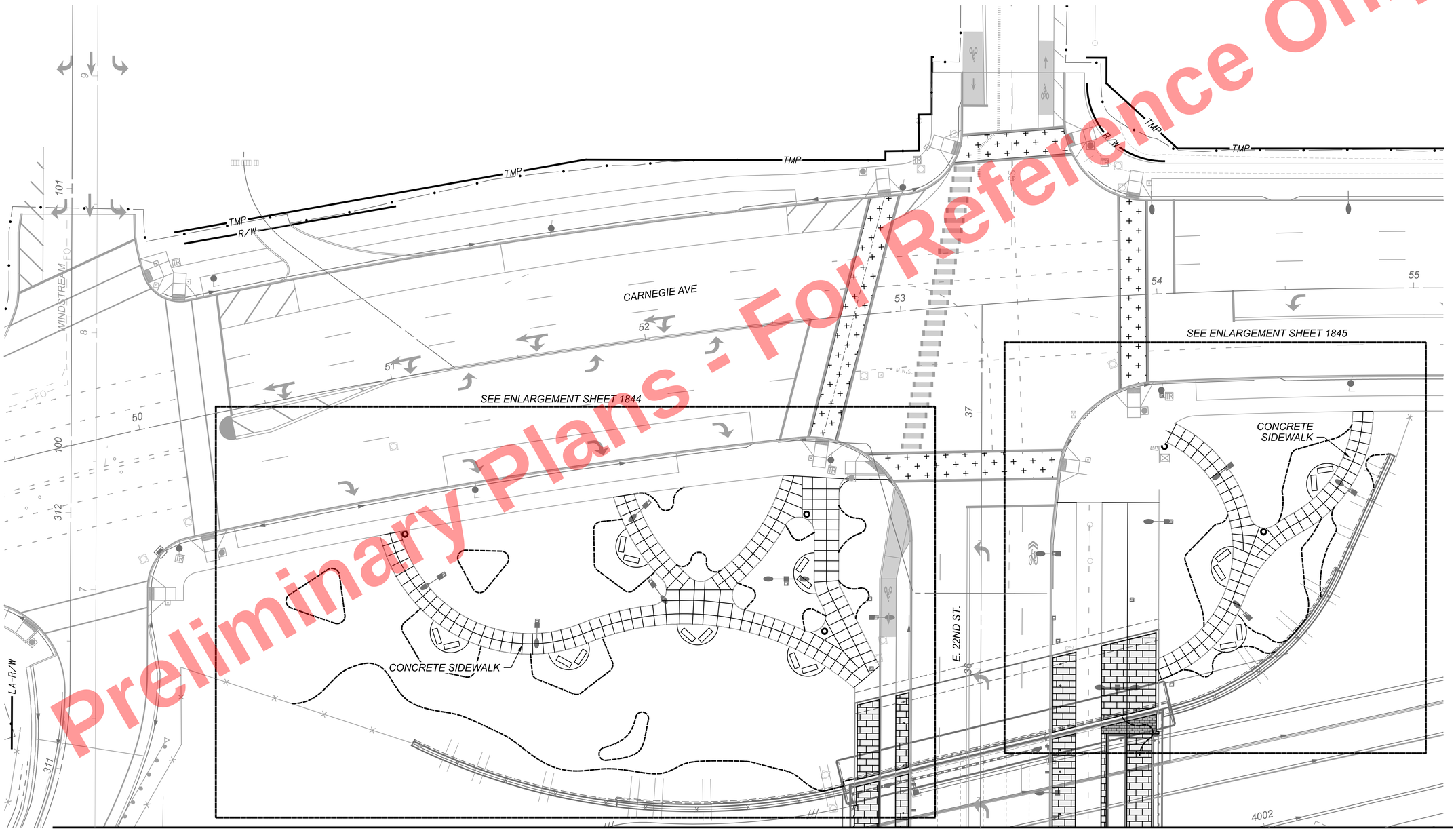

Preliminary Plans - For Reference Only

HORIZONTAL SCALE IN FEET
0 10 20 40

HARDSCAPE PLAN
SHEET 01

CUY-90-16.28 (CCG3A)

MODEL: Sheet PAPERSIZE: 34x22 (in.) DATE: 3/28/2025 TIME: 9:25:24 AM USER: MaLaGallagher
pw:\\mb-us-pw.bentley.com:mb-us-pw-03\Documents\Cleveland_OH\01_Projects\0DOT\District2\82382\400-Engineering\Landscaping\Sheets\82382_PP100l.dgn

DESIGN AGENCY
Michael Baker INTERNATIONAL

DESIGNER BDC
REVIEWER JCF 01/10/24
PROJECT ID 82382
SHEET 1841 TOTAL 2696

LEGEND

ITEM 451 - REINFORCED CONCRETE PAVEMENT, MISC.: INTEGRALLY COLORED CONCRETE CROSSWALK

ITEM 608 - WALKWAY, MISC.: PAVERS OVER CONCRETE (BRICK #1)

ITEM 608 - WALKWAY, MISC.: PAVERS OVER CONCRETE (BRICK #2 EXCEPT WHERE NOTED AS BRICK #4)

ITEM 608 - WALKWAY, MISC.: PAVERS OVER CONCRETE (BRICK #3)

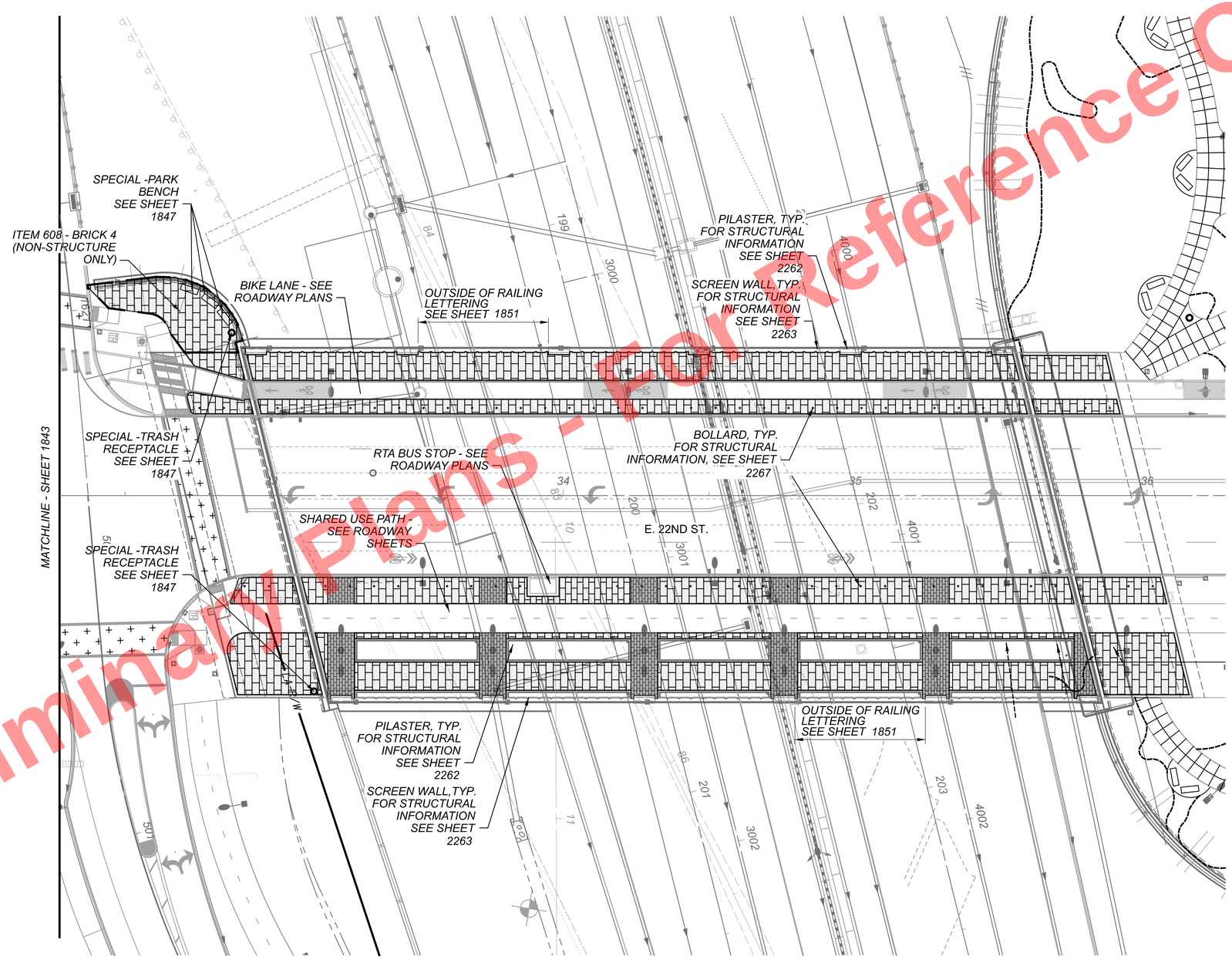

Preliminary Plans - For Reference Only

HORIZONTAL SCALE IN FEET
0 10 20 40

HARDSCAPE PLAN
SHEET 02

DESIGN AGENCY
Michael Baker INTERNATIONAL

DESIGNER
BDC

REVIEWER
JCF 01/10/24

PROJECT ID
82382

SHEET 1842 TOTAL 2696

CUY-90-16.28 (CCG3A)

MODEL: Sheet PAPERSIZE: 34x22 (in.) DATE: 3/28/2025 TIME: 9:25:43 AM USER: Mata.Gallagher
pw:\\mb-us-pw.bentley.com:mb-us-pw-03\Documents\Cleveland_OH\01_Projects\000T\District2\82382\400-Engineering\Landscaping\Sheets\82382_PPI002.dgn

LEGEND

ITEM 451 - REINFORCED CONCRETE PAVEMENT, MISC.: INTEGRALLY COLORED CONCRETE CROSSWALK

ITEM 608 - WALKWAY, MISC.: PAVERS OVER CONCRETE (BRICK #1)

ITEM 608 - WALKWAY, MISC.: PAVERS OVER CONCRETE (BRICK #2 EXCEPT WHERE NOTED AS BRICK #4)

ITEM 608 - WALKWAY, MISC.: PAVERS OVER CONCRETE (BRICK #3)

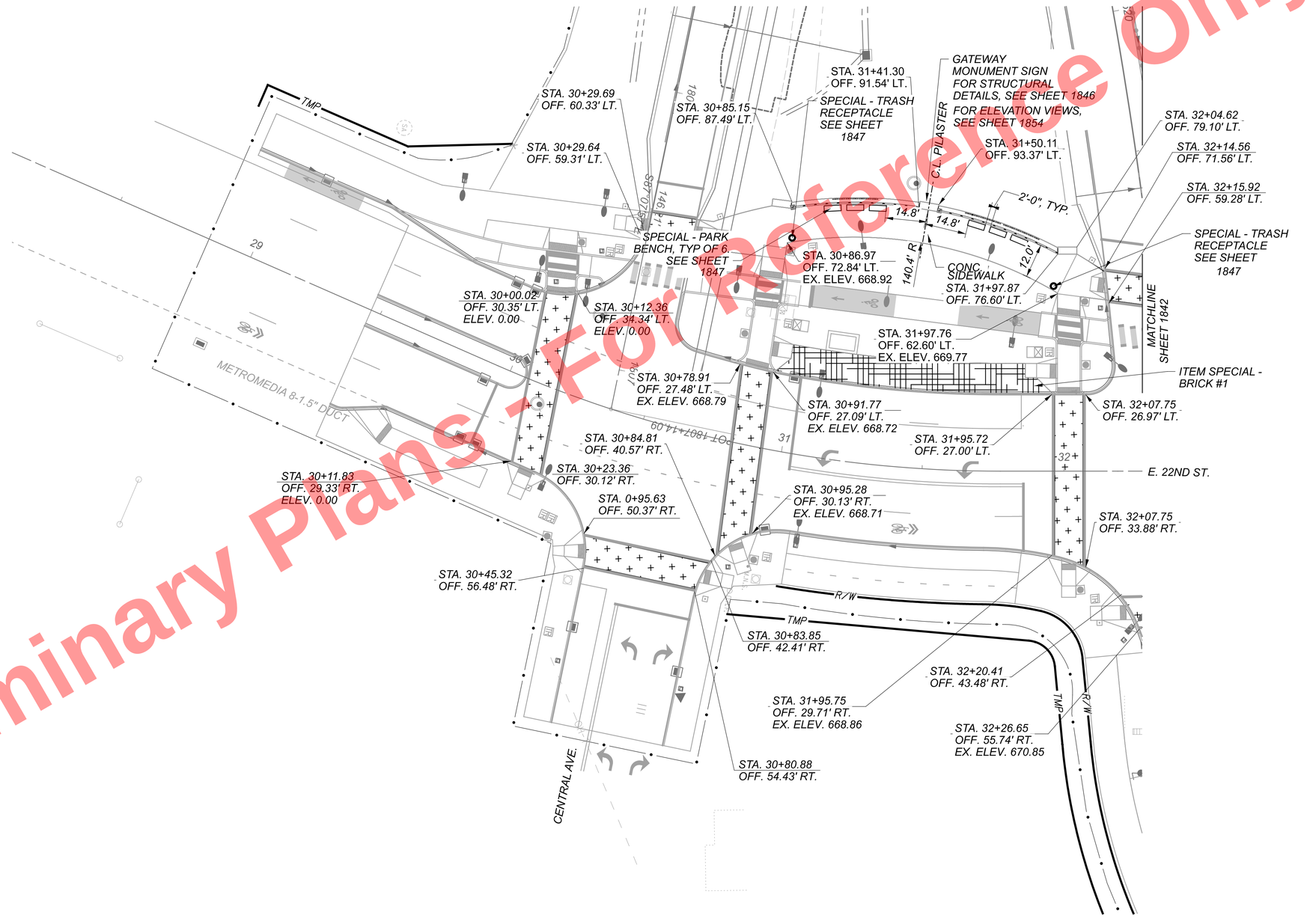

Preliminary Plans - Not For Reference Only

HORIZONTAL SCALE IN FEET
0 10 20 40

HARDSCAPE PLAN
SHEET 03

CUY-90-16.28 (CCG3A)

MODEL: Sheet PAPERSIZE: 34x22 (in.) DATE: 3/28/2025 TIME: 9:26:04 AM USER: MaLaGallagher
pw:\\mb-us-pw.bentley.com:mb-us-pw-03\Documents\Cleveland_OH\OiL_Projects\ODOT\District12\82382\400-Engineering\Landscaping\Sheets\82382_PPI003.dgn

DESIGN AGENCY
Michael Baker INTERNATIONAL

DESIGNER
BDC

REVIEWER
JCF 01/10/24

PROJECT ID
82382

SHEET 1843 TOTAL 2696

LEGEND

ITEM 451 - REINFORCED CONCRETE PAVEMENT, MISC.: INTEGRALLY COLORED CONCRETE CROSSWALK

ITEM 608 - WALKWAY, MISC.: PAVERS OVER CONCRETE (BRICK #1)

ITEM 608 - WALKWAY, MISC.: PAVERS OVER CONCRETE (BRICK #2 EXCEPT WHERE NOTED AS BRICK #4)

ITEM 608 - WALKWAY, MISC.: PAVERS OVER CONCRETE (BRICK #3)

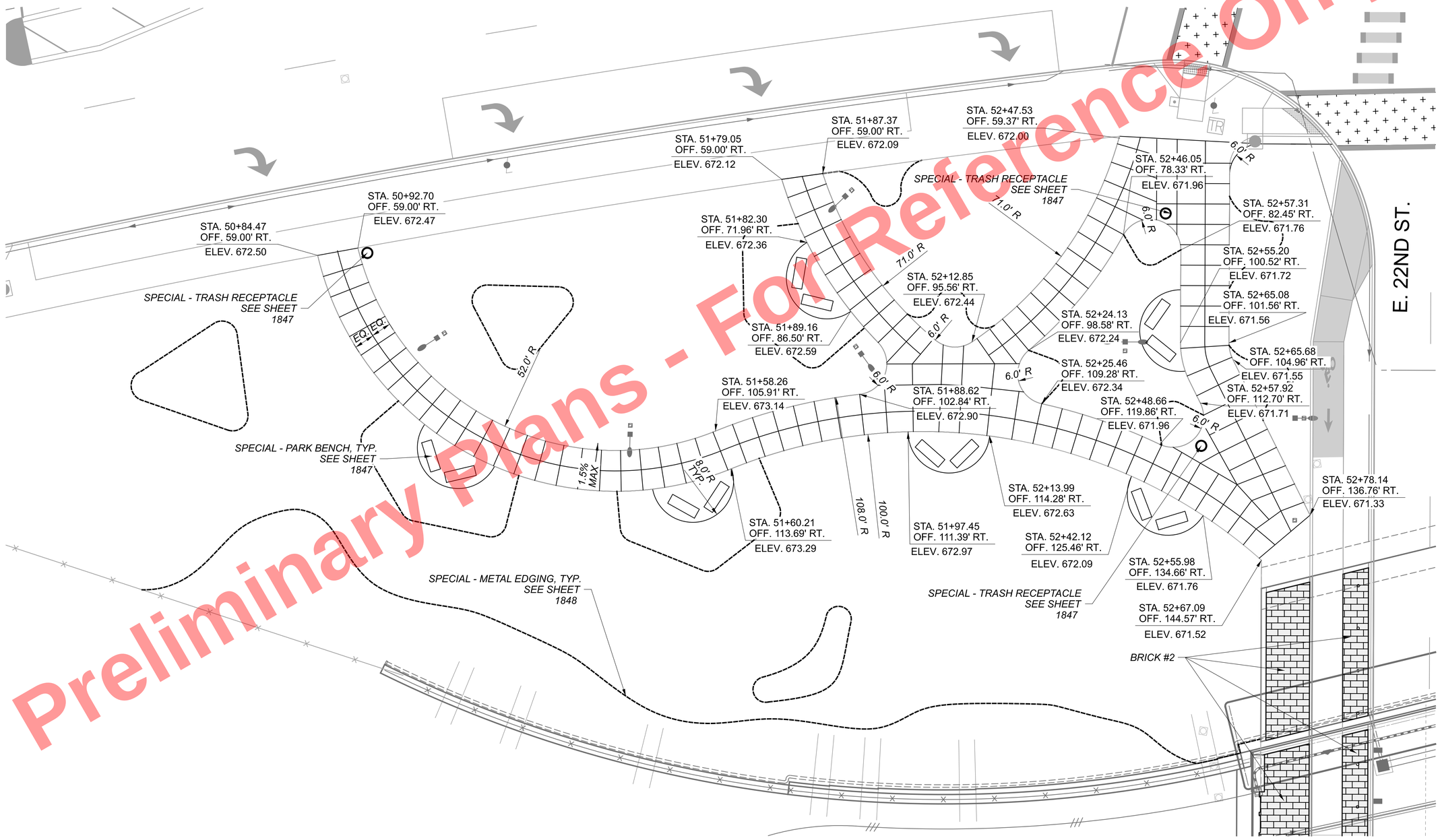

Preliminary Plans - For Reference Only

HORIZONTAL SCALE IN FEET
0 10 20 40

HARDSCAPE ENLARGEMENT
SHEET 01

CUY-90-16.28 (CCG3A)

MODEL: Sheet PAPERSIZE: 34x22 (in.) DATE: 3/28/2025 TIME: 9:26:27 AM USER: Maia.Gallagher
pw:\\mb-us-pw.bentley.com:mb-us-pw-03\Documents\Cleveland.OH\DI_Projects\DOT\District2\82382\400-Engineering\Landscaping\Sheets\82382_PPI01.dgn

DESIGN AGENCY
Michael Baker INTERNATIONAL

DESIGNER
BDC

REVIEWER
JCF 01/10/24

PROJECT ID
82382

SHEET 1844 TOTAL 2696

LEGEND

ITEM 451 - REINFORCED CONCRETE PAVEMENT, MISC.: INTEGRALLY COLORED CONCRETE CROSSWALK

ITEM 608 - WALKWAY, MISC.: PAVERS OVER CONCRETE (BRICK #1)

ITEM 608 - WALKWAY, MISC.: PAVERS OVER CONCRETE (BRICK #2 EXCEPT WHERE NOTED AS BRICK #4)

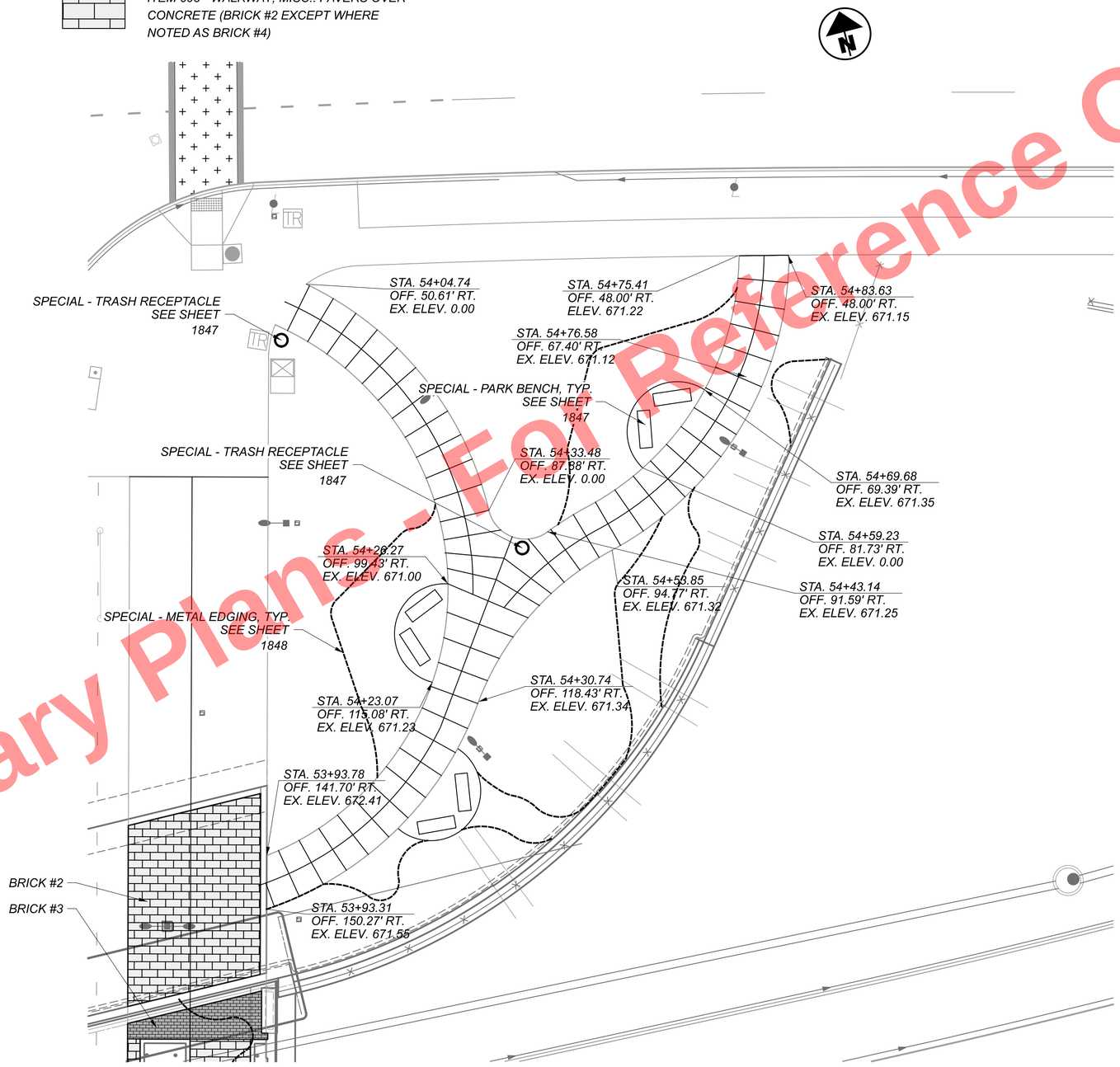

Preliminary Plans - For Reference Only

HORIZONTAL SCALE IN FEET
0 10 20 40

HARDSCAPE ENLARGEMENT SHEET 02

DESIGN AGENCY
Michael Baker INTERNATIONAL

DESIGNER BDC
REVIEWER JCF 01/10/24
PROJECT ID 82382
SHEET 1845 TOTAL 2696

CUY-90-16.28 (CCG3A)

MODEL: Sheet PAPERSIZE: 34x22 (in.) DATE: 3/28/2025 TIME: 9:26:39 AM USER: Maia.Gallagher
pw:\\mb-us-pw.bentley.com:mb-us-pw-03\Documents\Cleveland.OH\Ol_Projects\ODOT\District2\82382\400-Engineering\Landscaping\Sheets\82382_PPI0Ll.dgn

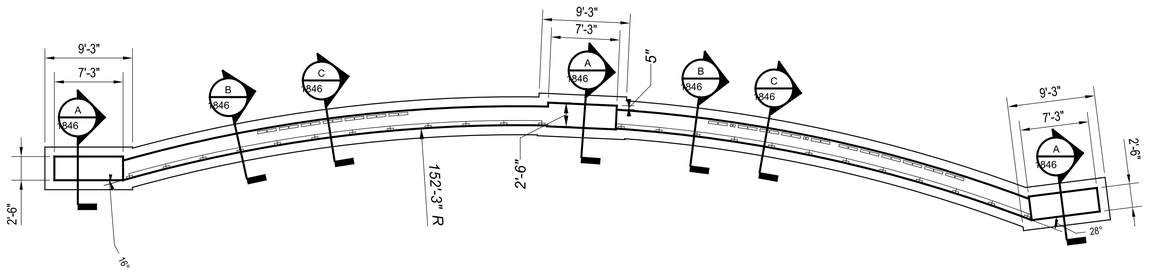

GATEWAY MONUMENT SIGN FOUNDATION PLAN

SCALE: 1/8"=1'-0"

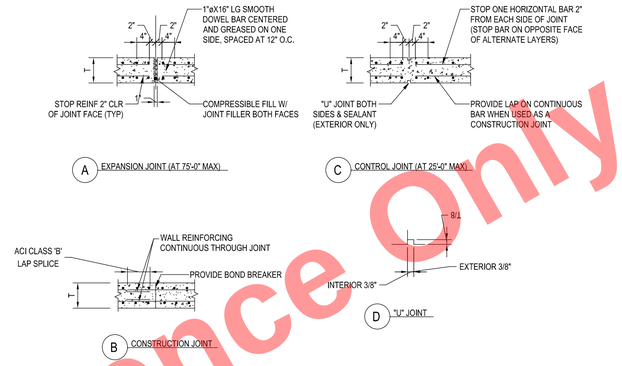

TYPICAL CONCRETE WALL JOINT DETAILS

SCALE: 1/2" = 1'-0"

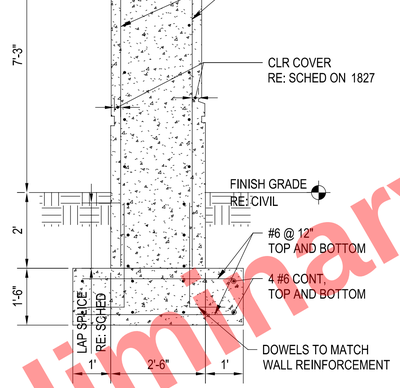

SECTION A-A

SCALE: 1/2" = 1'-0"

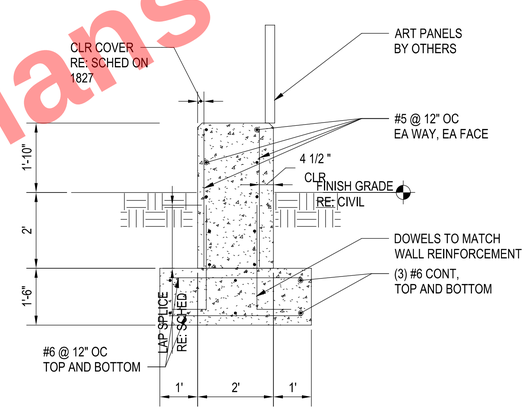

SECTION B-B

SCALE: 1/2" = 1'-0"

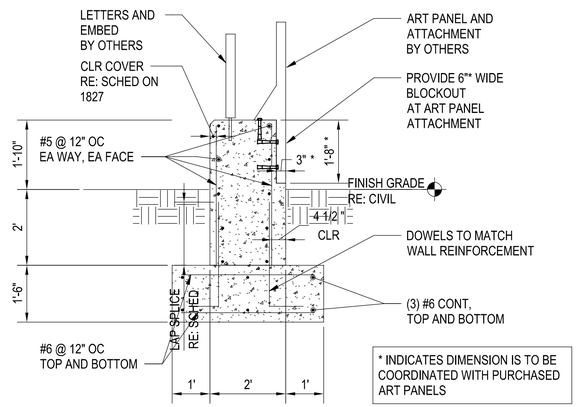

SECTION C-C

SCALE: 1/2" = 1'-0"

Preliminary Plans - For Reference Only

HORIZONTAL SCALE IN FEET
0 10 20 40

HARDSCAPE ENLARGEMENT SHEET 03

DESIGN AGENCY
Michael Baker INTERNATIONAL

DESIGNER BDC
REVIEWER JCF 01/10/24
PROJECT ID 82382
SHEET 1846 TOTAL 2696

CUY-90-16.28 (CCG3A)

MODEL: Sheet PAPERSIZE: 34x22 (in.) DATE: 3/28/2025 TIME: 9:27:05 AM USER: Maia.Gallagher
pw:\\mb-us-pw.bentley.com:mb-us-pw-03\Documents\Cleveland.OH\OI_Projects\ODOT\District2\82382\400-Engineering\Landscaping\Sheets\82382_PPI03.dgn

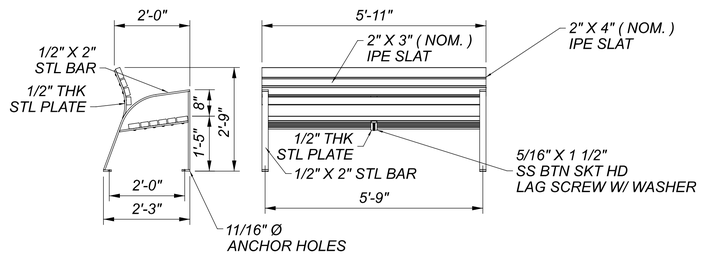

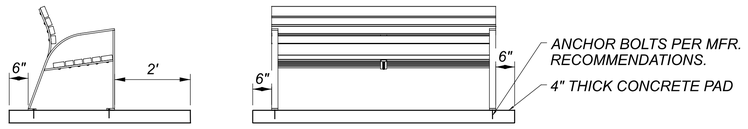

FOR EMBEDMENT INFORMATION, SEE SHEET 1849

ITEM SPECIAL - PARK BENCH

SCALE: 1/2" = 1'-0"

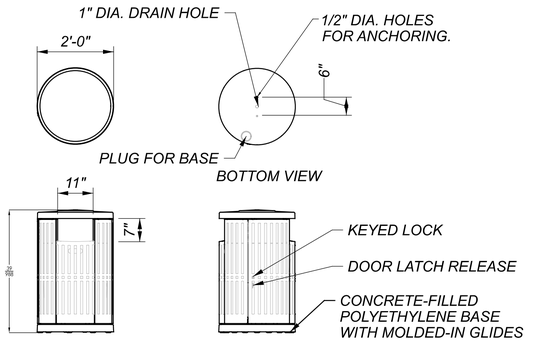

FOR EMBEDMENT INFORMATION, SEE SHEET 1849

ITEM SPECIAL - TRASH RECEPTACLE

SCALE: 1/2" = 1'-0"

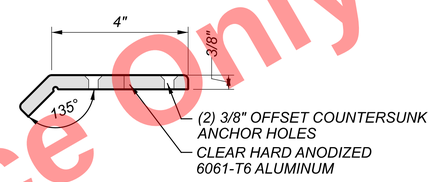

ITEM SPECIAL - SKATE GUARDS

SCALE: 6" = 1'-0"

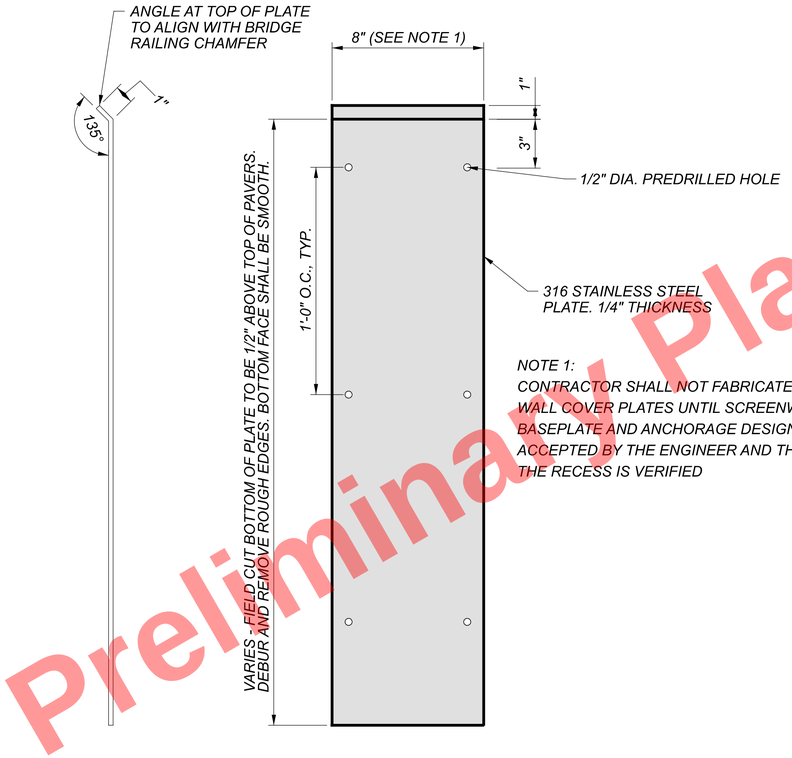

NOTE 1:
CONTRACTOR SHALL NOT FABRICATE SCREEN WALL COVER PLATES UNTIL SCREENWALL POSTS, BASEPLATE AND ANCHORAGE DESIGNS ARE ACCEPTED BY THE ENGINEER AND THE WIDTH OF THE RECESS IS VERIFIED

ITEM SPECIAL - SCREEN WALL COVER PLATE

SCALE: 3"=1"

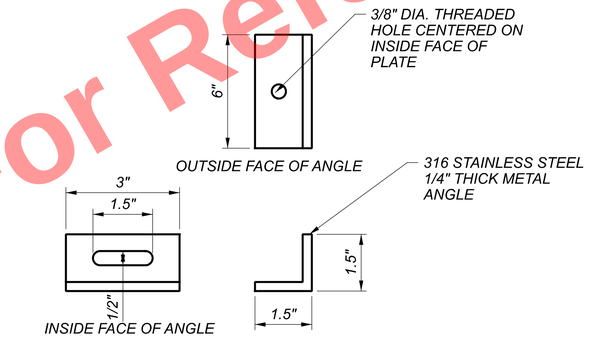

METAL ANGLE DETAILS: NTS

SCREEN WALL HARDWARE

SCALE: NTS

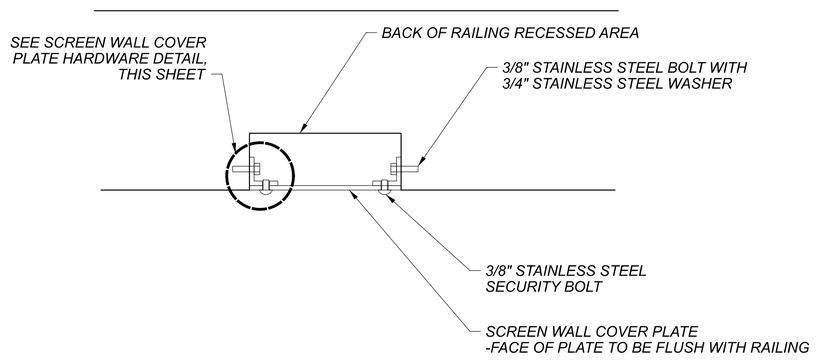

ITEM SPECIAL - SCREEN WALL COVER PLATE

SCALE: 3"=1"

Preliminary Plans - For Reference Only

HORIZONTAL SCALE IN FEET
0 100 200 400

HARDSCAPE DETAILS
SHEET 01

DESIGN AGENCY
Michael Baker INTERNATIONAL

DESIGNER BDC
REVIEWER JCF 01/10/24
PROJECT ID 82382
SHEET 1847 TOTAL 2696

CUY-90-16.28 (CCG3A)

MODEL: Sheet PAPERSIZE: 34x22 (in.) DATE: 6/12/2025 TIME: 3:05:19 PM USER: BrianClay
pw:\\mb-us-pw.bentley.com:mb-us-pw-03\Documents\Cleveland_OH\01_Projects\ODOT\District2\82382\400-Engineering\Landscaping\Sheets\82382_PD5101.dgn

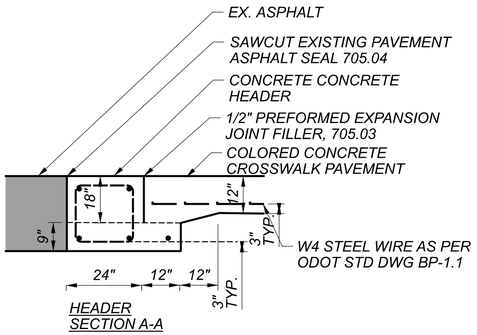

HEADER
SECTION A-A

CROSSWALK NOTES:
1. ALL REINFORCING STEEL AND TIES ARE TO BE EPOXY COATED
2. THE CONCRETE HEADER SHALL BE A SEPARATE POUR FROM THE COLORED CONCRETE CONCRETE PAVEMENT

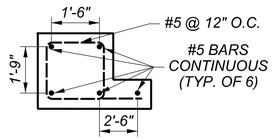

REBAR DETAIL

CROSSWALK LAYOUT

ITEM 451 - REINFORCED CONCRETE. MISC.: INTEGRALLY COLORED CONCRETE CROSSWALK

SCALE: NTS

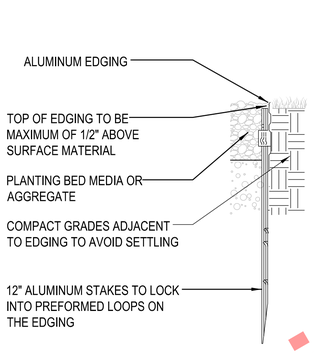

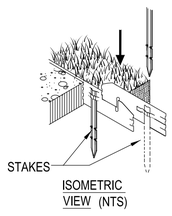

ISOMETRIC
VIEW (NTS)

NOTES:
1. INSTALL PER MANUFACTURER'S "INSTALLATION GUIDELINES"
2. 8'-0" SECTIONS TO INCLUDE (3) 12" ALUMINUM STAKES.
3. 16'-0" SECTIONS TO INCLUDE (5) 12" ALUMINUM STAKES.
4. CORNERS - CUT BASE EDGING UP HALFWAY AND FORM A CONTINUOUS CORNER.

ITEM SPECIAL - METAL EDGING

SCALE: 3"=1'-0"

Preliminary Plans - For Reference Only

HORIZONTAL
SCALE IN FEET
0 100 200 400

HARDSCAPE DETAILS
SHEET 02

DESIGN AGENCY
Michael Baker INTERNATIONAL

DESIGNER
BDC

REVIEWER
JCF 01/10/24

PROJECT ID
82382

SHEET 1848 TOTAL 2696

CUY-90-16.28 (CCG3A)

MODEL: Sheet PAPERSIZE: 34x22 (in.) DATE: 3/28/2025 TIME: 9:27:16 AM USER: Mata,Gallagher
pw:\\mb-us-pw.bentley.commb-us-pw-03\Documents\Cleveland_OH\01_Projects\0001\District2\82382\400-Engineering\Landscaping\Sheets\82382_PD5102.dgn

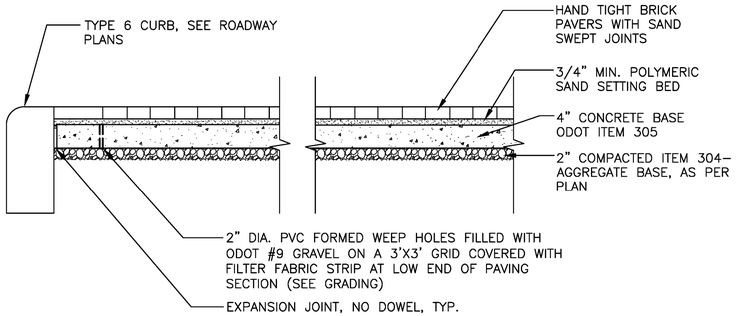

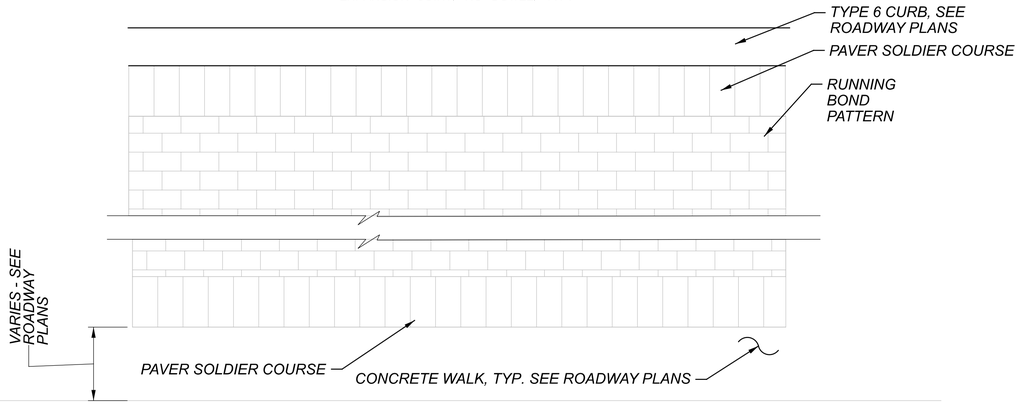

NOTES:

1. SEE HARDSCAPE PLANS AND DETAILS FOR PAVER TYPE & PATTERN LAYOUTS

2. CONSTRUCTION JOINTS PLACED EVERY 10'X10' MIN. EXPANSION JOINTS PLACED EVERY 30'X30' MIN., HOWEVER, JOINTS SHALL BE FIELD ADJUSTED SO FULL BRICKS ARE USED

3. CONCRETE COLLAR SHALL BE PLACED AROUND ALL UTILITIES INCLUDING LIGHT POLES, GAS, WATER VALVES, AND PULL BOXES.

4. ALL ABOVE DETAILS ARE INCIDENTAL TO ITEM 608 WALKWAY, MISC: PAVERS OVER CONCRETE (BRICK #1).

ITEM 608 - WALKWAY, MISC.: PAVERS OVER CONCRETE (BRICK #1)

SCALE: NTS

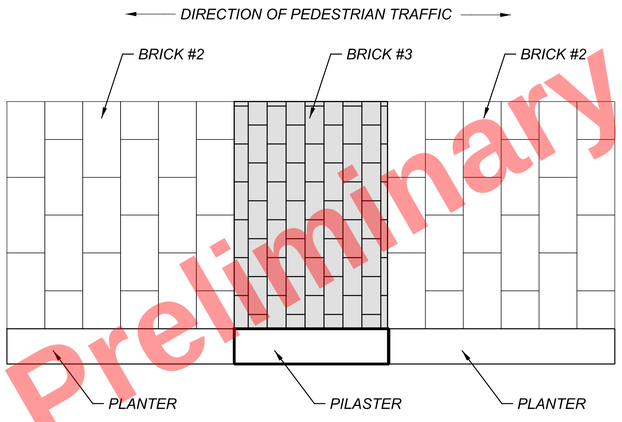

NOTES:

1. SEE HARDSCAPE PLANS AND DETAILS FOR PAVER TYPE & PATTERN LAYOUTS

2. CONCRETE FOR BRICK #2 AND #3 IS INSTALLED AND PAID FOR UNDER BRIDGE QUANTITIES.

ITEM 608 - WALKWAY, MISC.: PAVERS OVER CONCRETE (BRICK #2 AND #3)

SCALE: NTS

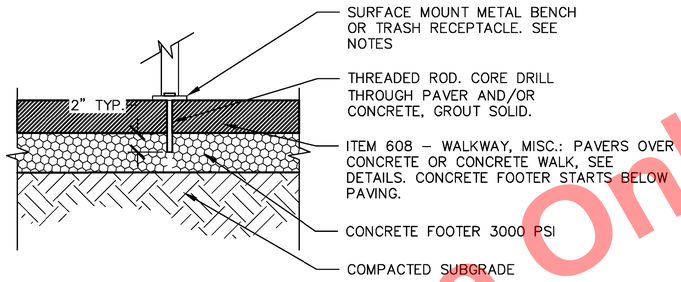

NOTE:
1. CENTER BENCH LEG OR TRASH RECEPTACLE ANCHORING POINT AND DRILL LOCATION 1" OFFSET TO PAVER EDGES TO REDUCE PAVER CRACKING.
2. SIZE THREADED RODS ACCORDING TO PRODUCT AND DEPTH OF ANCHORING.

SURFACE MOUNTING DETAIL FOR TRASH RECEPTACLE AND PARK BENCH

SCALE: NTS

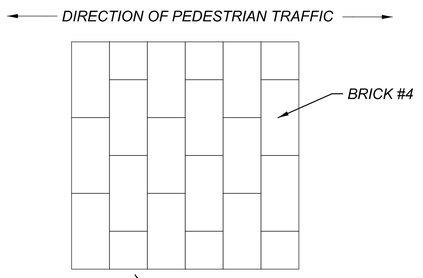

NOTES:

1. SEE HARDSCAPE PLANS AND DETAILS FOR PAVER TYPE & PATTERN LAYOUTS

2. CONSTRUCTION JOINTS PLACED EVERY 10'X10' MIN. EXPANSION JOINTS PLACED EVERY 30'X30' MIN., HOWEVER, JOINTS SHALL BE FIELD ADJUSTED SO FULL BRICKS ARE USED

3. CONCRETE COLLAR SHALL BE PLACED AROUND ALL UTILITIES INCLUDING LIGHT POLES, GAS, WATER VALVES, AND PULL BOXES.

4. ALL ABOVE DETAILS ARE INCIDENTAL TO ITEM 608 WALKWAY, MISC: PAVERS OVER CONCRETE (BRICK #4).

ITEM 608 - WALKWAY, MISC.: PAVERS OVER CONCRETE (BRICK #4)

SCALE: NTS

Preliminary Plans - For Reference Only

HORIZONTAL SCALE IN FEET
0 100 200 400

HARDSCAPE DETAILS
SHEET 03

DESIGN AGENCY
Michael Baker INTERNATIONAL

DESIGNER BDC
REVIEWER JCF 01/10/24
PROJECT ID 82382
SHEET 1849 TOTAL 2696

CUY-90-16.28 (CCG3A)

MODEL: Sheet PAPERSIZE: 34x22 (in.) DATE: 3/28/2025 TIME: 9:27:23 AM USER: MaiaGallagher
pw:\\mb-us-pw.bentley.com:mb-us-pw-03\Documents\Cleveland.OH\OI_Projects\ODOT\District2\82382\400-Engineering\Landscaping\Sheets\82382_PD5103.dgn

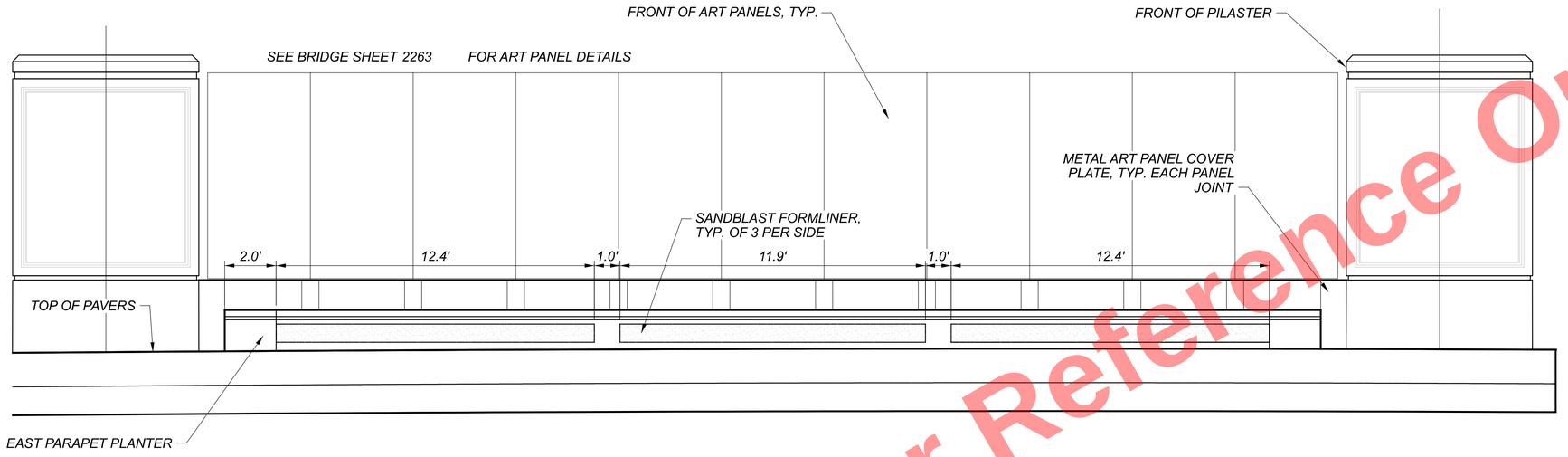

EAST SECTION SOUTH PLANTER

SCALE: 3/8" = 1'-0"

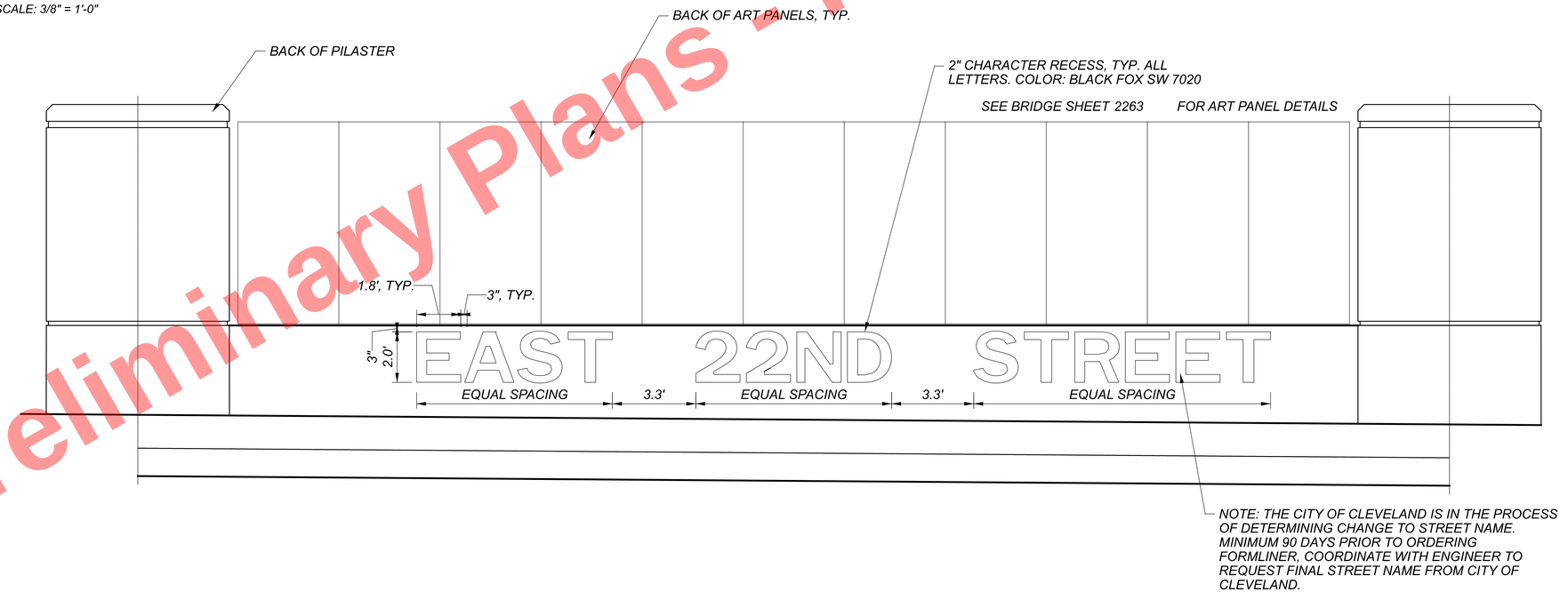

EAST EXTERIOR ELEVATION

SCALE: 3/8" = 1'-0"

Preliminary Plans - For Reference Only

HORIZONTAL SCALE IN FEET
0 100 200 400

BRIDGE AESTHETIC DETAILS
SHEET 01

DESIGN AGENCY
Michael Baker INTERNATIONAL

DESIGNER BDC
REVIEWER JCF 01/10/24
PROJECT ID 82382
SHEET 1850 TOTAL 2696

CUY-90-16.28 (CCG3A)

MODEL: Sheet PAPERSIZE: 34x22 (in.) DATE: 3/28/2025 TIME: 9:27:50 AM USER: Maia.Gallagher
pw:\\mb-us-pw.bentley.com:mb-us-pw-03\Documents\Cleveland_OH\01_Projects\0001\District2\82382\400-Engineering\Landscaping\Sheets\82382_PD5001.dgn

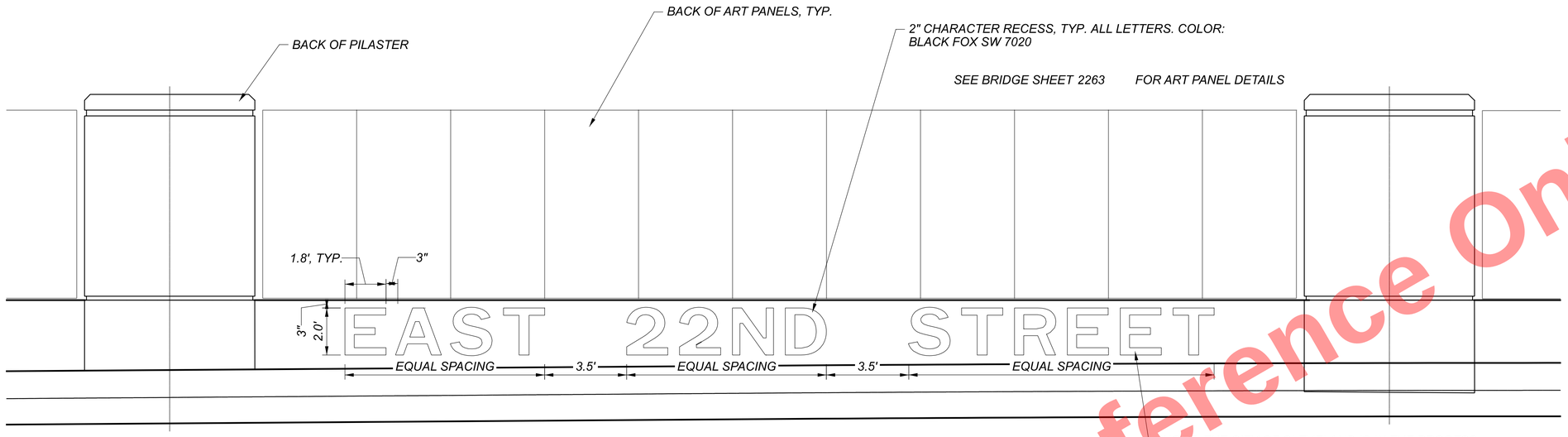

WEST EXTERIOR ELEVATION

SCALE: 3/8" = 1'-0"

Preliminary Plans - For Reference Only

HORIZONTAL SCALE IN FEET
0 100 200 400

BRIDGE AESTHETIC DETAILS
SHEET 02

DESIGN AGENCY
Michael Baker INTERNATIONAL

DESIGNER BDC
REVIEWER JCF 01/10/24
PROJECT ID 82382
SHEET 1851 TOTAL 2696

CUY-90-16.28 (CCG3A)

MODEL: Sheet PAPERSIZE: 34x22 (in.) DATE: 3/28/2025 TIME: 9:27:55 AM USER: Mala.Gallagher
pw:\\mb-us-pw.bentley.com\mb-us-pw-03\Documents\Cleveland_OH\Oi_Projects\ODOT\District2\82382\400-Engineering\Landscaping\Sheets\82382_PD5002.dgn

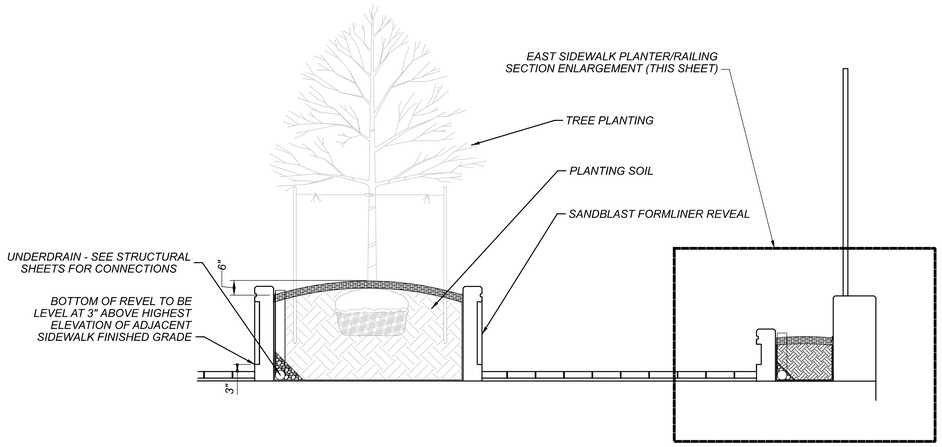

EAST SIDEWALK PLANTER/RAILING SECTION

SCALE: 1/2" = 1'-0"

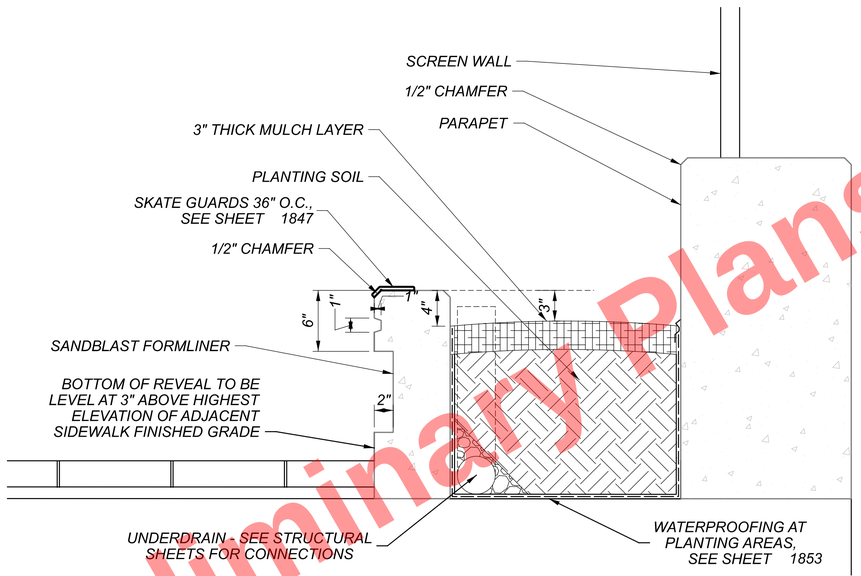

EAST SIDEWALK PLANTER/RAILING SECTION

Preliminary Plans - For Reference Only

HORIZONTAL SCALE IN FEET
0 100 200 400

BRIDGE AESTHETIC DETAILS
SHEET 03

DESIGN AGENCY
Michael Baker INTERNATIONAL

DESIGNER BDC
REVIEWER JCF 01/10/24
PROJECT ID 82382
SHEET 1852 TOTAL 2696

CUY-90-16.28 (CCG3A)

MODEL: Sheet PAPERSIZE: 34x22 (in.) DATE: 3/28/2025 TIME: 9:28:00 AM USER: Maia.Gallagher
pw:\\mb-us-pw.bentley.com:mb-us-pw-03\Documents\Cleveland_OH\Oi_Projects\0007\District2\82382\400-Engineering\Landscaping\Sheets\82382_PD5003.dgn

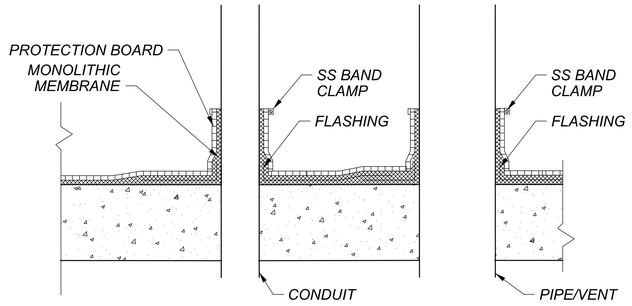

NOTES:
IN ADDITION TO PRIMING W/SURFACE CONDITIONER, ROUGHEN PIPE MATERIALS SUCH AS PVC,COPPER AND BRASS WITH SANDPAPER FOR PROPER ADHESION OF MONOLITHIC MEMBRANE. METAL PIPES MUST BE FREE OF ALL OIL AND RUST. THE SAME DETAILING ABOVE SHALL BE EMPLOYED FOR PENETRATIONS THROUGH VERTICAL/FOUNDATION WALL APPLICATIONS.

WATERPROOFING AT PLANTERS

SCALE: 3" = 1'-0"

Preliminary Plans - For Reference Only

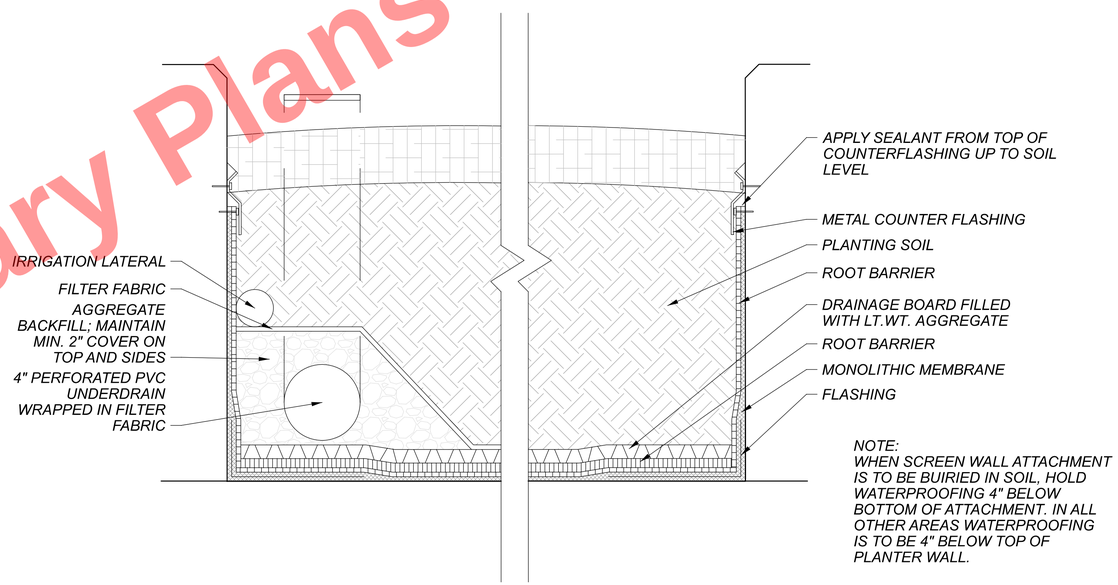

NOTE:
WHEN SCREEN WALL ATTACHMENT IS TO BE BUIRIED IN SOIL, HOLD WATERPROOFING 4" BELOW BOTTOM OF ATTACHMENT. IN ALL OTHER AREAS WATERPROOFING IS TO BE 4" BELOW TOP OF PLANTER WALL.

WATERPROOFING AT PLANTERS

SCALE: 3" = 1'-0"

HORIZONTAL SCALE IN FEET
0 100 200 400

BRIDGE AESTHETIC DETAILS
SHEET 04

DESIGN AGENCY
Michael Baker INTERNATIONAL

DESIGNER BDC
REVIEWER JCF 01/10/24
PROJECT ID 82382
SHEET 1853 TOTAL 2696

CUY-90-16.28 (CCG3A)

MODEL: Sheet PAPERSIZE: 34x22 (in.) DATE: 3/28/2025 TIME: 9:28:05 AM USER: Mala.Gallagher
pw:\\mb-us-pw.bentley.com:mb-us-pw-03\Documents\Cleveland_OH\OI_Projects\0007\District2\82382\400-Engineering\Landscaping\Sheets\82382_PD5004.dgn

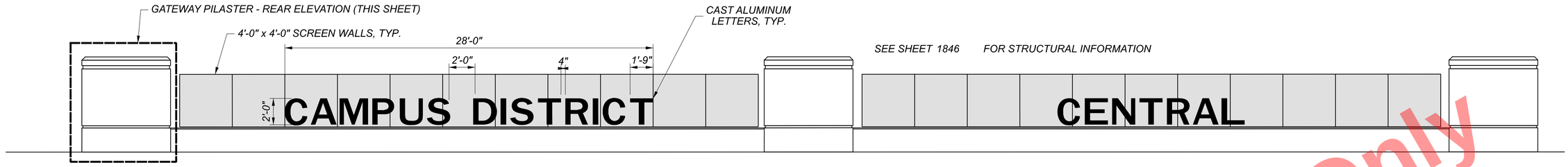

GATEWAY MONUMENT SIGN REAR ELEVATION

SCALE: 1/4"=1'-0"

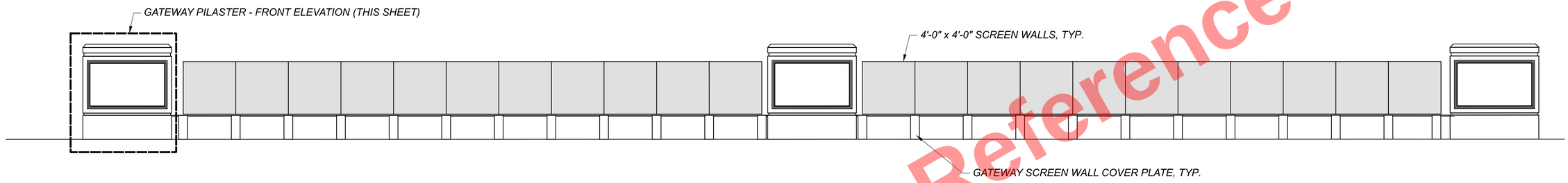

GATEWAY MONUMENT SIGN FRONT ELEVATION

SCALE: 1/4"=1'-0"

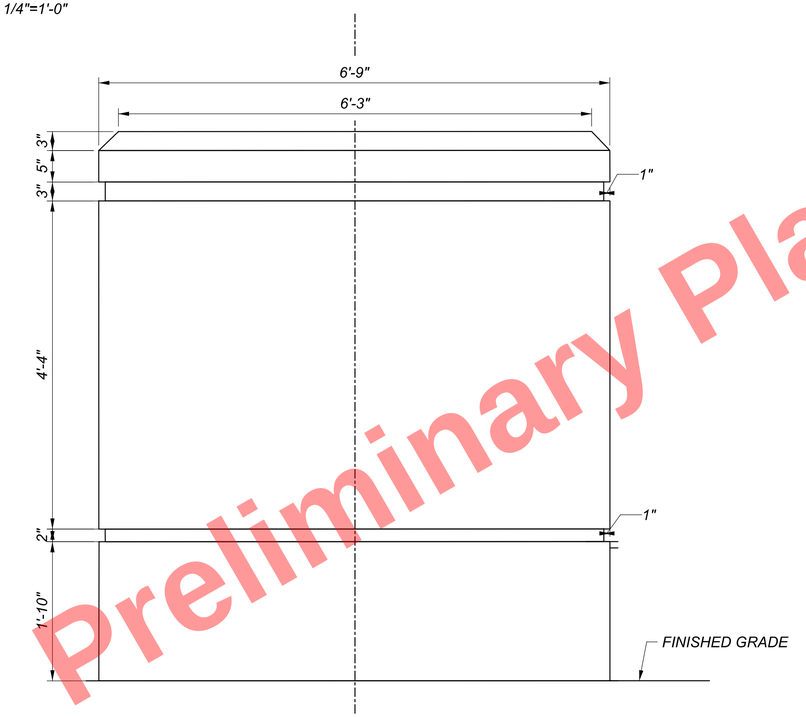

GATEWAY PILASTER - REAR ELEVATION

SCALE: 1" = 1'-0"

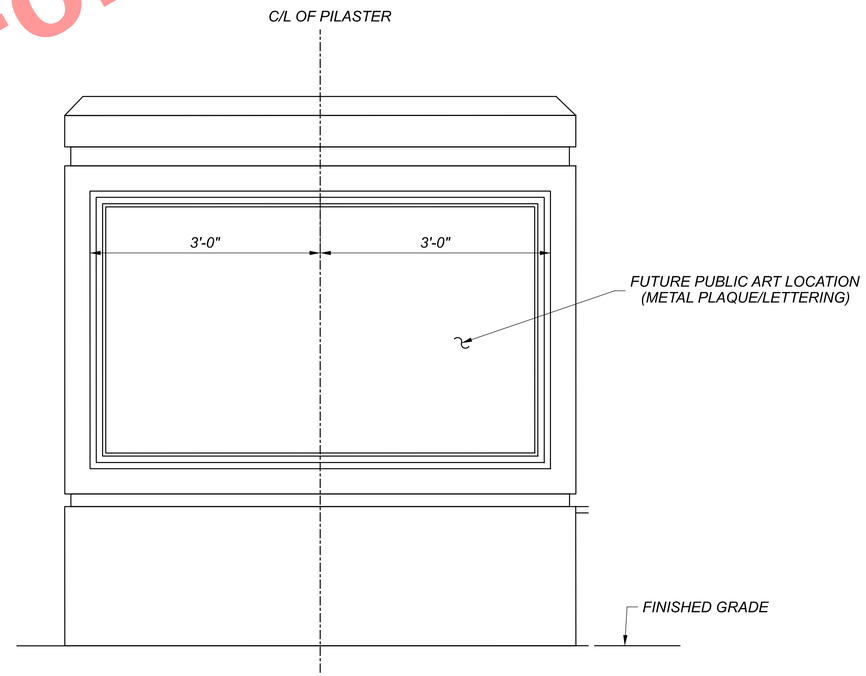

GATEWAY PILASTER - FRONT ELEVATION

SCALE: 1" = 1'-0"

Preliminary Plans - For Reference Only

HORIZONTAL SCALE IN FEET
0 100 200 400

BRIDGE AESTHETIC DETAILS
SHEET 05

DESIGN AGENCY
Michael Baker INTERNATIONAL

DESIGNER BDC
REVIEWER JCF 01/10/24
PROJECT ID 82382
SHEET 1854 TOTAL 2696

CUY-90-16.28 (CCG3A)

MODEL: Sheet PAPERSIZE: 34x22 (in.) DATE: 3/28/2025 TIME: 9:28:10 AM USER: Mala.Gallagher
pw:\\mb-us-pw.bentley.com:mb-us-pw-03\Documents\Cleveland_OH\01_Projects\0007\District2\82382\400-Engineering\Landscaping\Sheets\82382_PD5005.dgn

IRRIGATION SCHEDULE

SYMBOL	MANUFACTURER/MODEL/DESCRIPTION
	RAIN BIRD XCZLF-100-PRF 1" LOW FLOW, 0.2-10 GPM, WITH 1IN. LOW FLOW VALVE VALVE AND 1IN. PRESSURE REGULATING RBY FILTER AND 40PSI PRESSURE REGULATOR.
	AREA TO RECEIVE DRIPLINE RAIN BIRD XFS-09-18 XFS SUB-SURFACE PRESSURE COMPENSATING DRIPLINE W/COPPER SHIELD TECHNOLOGY. 0.9 GPH EMITTERS AT 18" O.C. LATERALS SPACED AT 18" APART, WITH EMITTERS OFFSET FOR TRIANGULAR PATTERN. UV RESISTANT. SPECIFY XF INSERT FITTINGS.
SYMBOL	MANUFACTURER/MODEL/DESCRIPTION
	RAIN BIRD 5-LRC 1" 1IN. BRASS QUICK-COUPLING VALVE, WITH CORROSION-RESISTANT STAINLESS STEEL SPRING, LOCKING THERMOPLASTIC RUBBER COVER, AND 1-PIECE BODY.
	RED WHITE VALVE CORP. 206 BRONZE GATE SHUT OFF VALVE WITH WHEEL HANDLE, SAME SIZE AS PIPE DIAMETER.
BF	FEBCO 825Y 1" REDUCED PRESSURE BACKFLOW PREVENTER - INSTALL PER WATER AGENCY REQUIREMENTS
C	RAIN BIRD ESPLXME2-LXMMSS-LXMMSSPED 12 STATION, TRADITIONALLY-WIRED, COMMERCIAL CONTROLLER. INDOOR/OUTDOOR, PLASTIC WALL-MOUNT ENCLOSURE. INSTALL IN LXMMSS-LXMMSSPED STAINLESS STEEL CABINET W/ PEDESTAL.
	RAIN BIRD WR2-RFC WIRELESS RAIN AND FREEZE SENSOR COMBO, INCLUDES 1 RECEIVER AND 1 RAIN/FREEZE SENSOR TRANSMITTER.
	1-1/2" WATER METER PER CIVIL PLANS (TBD) - STD-M16
	IRRIGATION LATERAL LINE: 1" HDPE PE4710 DR 11 (202PSI); HIGH-DENSITY POLYETHYLENE IRRIGATION PIPE, HEAT FUSION INSTALLATION AS PER MANUFACTURERS RECOMMENDATION.
	IRRIGATION MAINLINE: 1 1/2" HDPE PE4710 DR 11 (202PSI); HIGH-DENSITY POLYETHYLENE IRRIGATION PIPE, HEAT FUSION INSTALLATION; AS PER MANUFACTURER'S RECOMMENDATION.
	PIPE SLEEVE: SCH. 40 PVC PER BRIDGE PLANS

Valve Callout
- # (1) — Valve Number
- # — Valve Flow
- #" — Valve Size

CRITICAL ANALYSIS

P.O.C. NUMBER: 01
Water Source Information: TBD

FLOW AVAILABLE
Water Meter Size: 1-1/2"
Flow Available 40.32 GPM

PRESSURE REQUIREMENTS - FIELD VERIFY
Static Pressure at POC: 70 PSI
Elevation Change: 5.00 ft
Service Line Size: 1 1/2"
Length of Service Line: 20 ft
Pressure Required: 68 PSI

DESIGN ANALYSIS
Maximum Station Flow: 8.75 GPM
Flow Available at POC: 40.32 GPM
Residual Flow Available: 31.58 GPM

Critical Station: 2
Design Pressure: 30 PSI
Friction Loss: 1.81 PSI
Fittings Loss: 0.18 PSI
Elevation Loss: 0 PSI
Loss through Valve: 10.7 PSI
Pressure Req. at Critical Station: 42.7 PSI
Loss for Fittings: 0.02 PSI
Loss for Main Line: 0.18 PSI
Loss for POC to Valve Elevation: 0 PSI
Loss for Backflow: 12.2 PSI
Loss for Water Meter: 0.1 PSI
Critical Station Pressure at POC: 55.2 PSI
Pressure Required: 68 PSI
Residual Pressure: 12.8 PSI

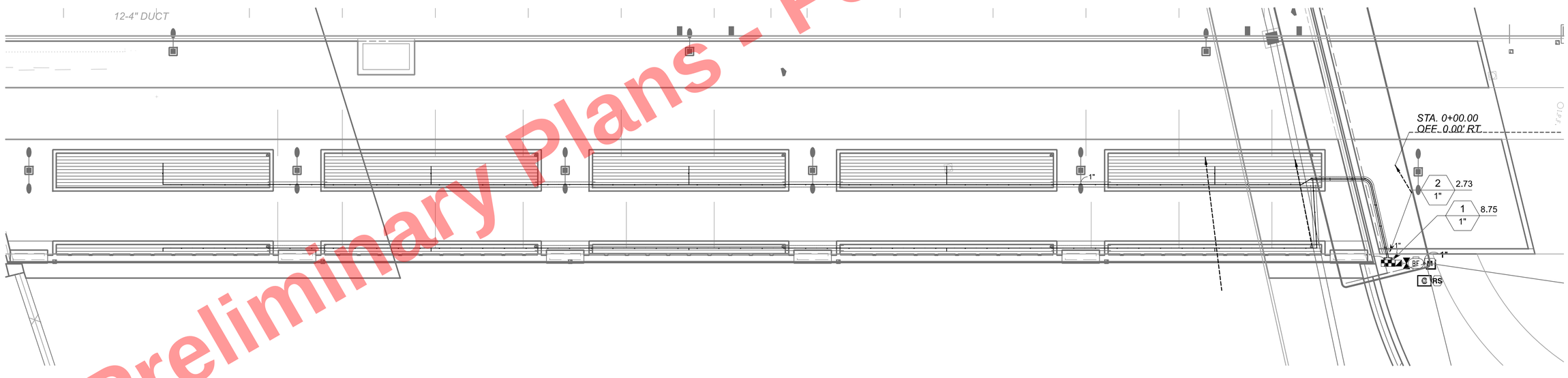

Preliminary Plans - For Reference Only

HORIZONTAL SCALE IN FEET
0 10 20 40

IRRIGATION PLAN
SHEET 01

DESIGN AGENCY
Michael Baker INTERNATIONAL

DESIGNER BDC
REVIEWER JCF 01/10/24
PROJECT ID 82382
SHEET 1855 TOTAL 2696

CUY-90-16.28 (CCG3A)

MODEL: Sheet PAPERSIZE: 34x22 (in.) DATE: 3/28/2025 TIME: 9:28:29 AM USER: MalaGallagher
pw:\\mb-us-pw.bentley.com:mb-us-pw-03\Documents\Cleveland_OH\01_Projects\ODOT\District12\82382\400-Engineering\Landscaping\Sheets\82382_PP3001.dgn

IRRIGATION NOTES:

1. 70 PSI AND A RATE OF 35 GPM REQUIRED AT METER.(SIZED FOR FUTURE). IRRIGATION CONTRACTOR IS RESPONSIBLE TO VERIFY ACTUAL CONDITIONS BEFORE STARTING INSTALLATION. IF FLOW/PRESSURE CONDITIONS CANNOT BE MET, FIELD ADJUSTMENT MAY BE NECESSARY (BOOSTER PUMP, ZONE RESIZING, MAINLINE SIZE UPGRADE ETC) TO ACHIEVE SUFFICIENT OPERATION OF SYSTEM.
2. ALL PIPE SHALL BE CLASS 200 PVC PIPE, UNLESS NOTED OTHERWISE.
3. ALL WIRING AS PER LOCAL CODE
4. BACKFLOW PREVENTION AS PER LOCAL CODE, INSTALLER TO VERIFY ALL CODES
5. THE IRRIGATION SYSTEM IS DIAGRAMMATIC; ADJUSTMENTS NECESSARY IN THE FIELD SHALL BE MADE BY THE CONTRACTOR FOR APPROVAL BY LANDSCAPE ARCHITECT PRIOR TO INSTALLATION
6. ALL VALVES SHALL BE LOCATED IN VALVE BOXES FLUSH WITH GRADE
7. THE IRRIGATION SYSTEM SHALL BE INSTALLED AS PER MANUFACTURER'S SPECIFICATIONS.
8. WINTERIZATION OF SYSTEM SHALL BE AS PER MANUFACTURER'S SPECIFICATIONS
9. SLEEVING SHALL BE REQUIRED UNDER ALL WALKS AND ROADWAYS. SLEEVE SIZE SHALL BE TWICE (2X) THE SIZE OF PIPE BEING SLEEVED (MINIMUM 3" UNLESS NOTED).
10. IRRIGATION PLANS AND DETAILS ARE DIAGRAMMATIC IN NATURE. CONTRACTOR SHALL PROVIDE A COMPLETELY FUNCTIONAL SYSTEM WITH ALL LABOR, MATERIALS, AND ACCESSORIES REQUIRED
11. BIDDING CONTRACTORS SHOULD BECOME THOROUGHLY FAMILIAR WITH ALL FACETS OF THE PROPOSED IRRIGATION SYSTEM. FAILURE TO CLARIFY MISUNDERSTANDINGS, OR INTENT OF THESE DRAWINGS AND SPECIFICATIONS BEFORE SUBMITTAL OF BID SHALL BE THE RESPONSIBILITY OF THE CONTRACTOR.
12. THE IRRIGATION CONTRACTOR SHALL LOCATE ALL UTILITIES AS ARE COMMONLY ENCOUNTERED UNDERGROUND AND SHALL TAKE PROPER PRECAUTIONS NOT TO DAMAGE OR DISTURB SUCH IMPROVEMENTS. COORDINATE WITH THE GENERAL CONTRACTOR.
13. IRRIGATION CONTRACTOR WILL ARRANGE INSPECTIONS REQUIRED BY LOCAL AGENCIES AND ORDINANCES DURING THE COURSE OF CONSTRUCTION AS REQUIRED.
14. IRRIGATION CONTRACTOR SHALL MAKE ANY NECESSARY MINOR ADJUSTMENTS TO LAYOUT REQUIRED TO ACHIEVE FULL COVERAGE OF IRRIGATION AREAS AT NO ADDITIONAL COST TO THE OWNER.
15. ELECTRICAL POWER WILL BE PROVIDED AT EACH CONTROLLER LOCATION. COORDINATE WITH LANDSCAPE ARCHITECT AS TO FINAL LOCATION OF CONTROLLER. COORDINATE HOOK-UP WITH ELECTRICAL CONTRACTOR AS REQUIRED.
16. INSTALL RAIN SENSOR(S) ON VERTICAL SURFACES. COORDINATE CONTROLLER & RAIN SENSOR'S FINAL LOCATION WITH LANDSCAPE ARCHITECT.
17. IRRIGATION CONTROL WIRE SHALL BE SOLID COPPER WIRE U.L. APPROVED FOR DIRECT BURIAL IN GROUND. MINIMUM GAUGE: #14 U.F. (#12 U.F.FOR RUNS OVER 2000 L.F.) COMMON GROUND WIRE SHALL BE WHITE.
18. 24 VAC WIRE SPLICING MATERIAL WILL BE DIRECT BURIAL SPLICE KIT AS MANUFACTURED BY 3M, OR EQUIVALENT.
19. IRRIGATION PIPING SHOULD BE INSTALLED SO THAT THERE IS NO DISTURBANCE TO THE CRITICAL ROOT ZONES OF EXISTING TREES.
20. IRRIGATION LATERALS & MAINLINE SHOWN AS-IS FOR CLARITY. INSTALL IN TURF OR LANDSCAPE AREAS.
21. MAINLINE DEPTH TO BE 18" MINIMUM. LATERAL LINE DEPTH TO BE MINIMUM 12".
22. IRRIGATION CONTRACTOR RESPONSIBLE TO INSTALL LATERAL PIPING FROM DRIP AREA TO DRIP AREA, THE INSTALLATION OF FLUSH VALVES & AIR RELIEF VALVES WHERE NEEDED. DO NOT EXCEED MAXIMUM LATERAL DRIPLINE RUNS, SEE MANUFACTURERS DATA FOR ADDITIONAL INFORMATION.
23. ALL IRRIGATION CONTROLLERS TO BE GROUNDED PER MANUFACTURER'S RECOMMENDATIONS.

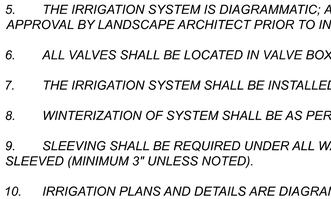

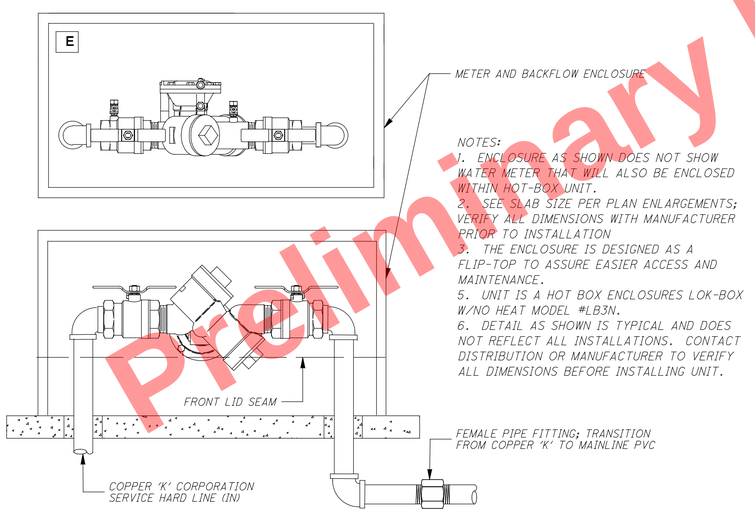

NOTES:
1. ENCLOSURE AS SHOWN DOES NOT SHOW WATER METER THAT WILL ALSO BE ENCLOSED WITHIN HOT-BOX UNIT.
2. SEE SLAB SIZE PER PLAN ENLARGEMENTS; VERIFY ALL DIMENSIONS WITH MANUFACTURER PRIOR TO INSTALLATION
3. THE ENCLOSURE IS DESIGNED AS A FLIP-TOP TO ASSURE EASIER ACCESS AND MAINTENANCE.
5. UNIT IS A HOT BOX ENCLOSURES LOK-BOX W/NO HEAT MODEL #LB3N.
6. DETAIL AS SHOWN IS TYPICAL AND DOES NOT REFLECT ALL INSTALLATIONS. CONTACT DISTRIBUTION OR MANUFACTURER TO VERIFY ALL DIMENSIONS BEFORE INSTALLING UNIT.

1 HOT-BOX ENCLOSURES LOK-BOX W/NO HEAT MODEL #LB3N
N.T.S.

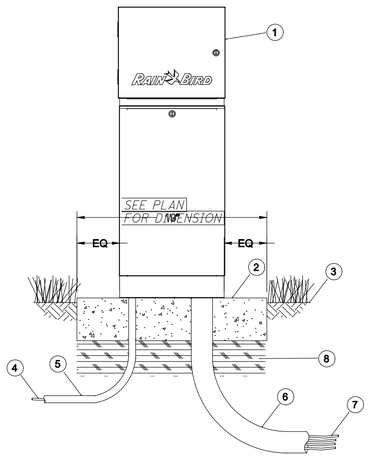

1 IRRIGATION CONTROLLER: RAIN BIRD ESP-LXME CONTROLLER WITH LXMM METAL CABINET AND LXMMPED METAL PEDESTAL. INSTALL CONTROLLER, CABINET AND PEDESTAL PER MANUFACTURER'S RECOMMENDATIONS.

2 CONCRETE PAD: 6-INCH MINIMUM THICKNESS

3 FINISH GRADE

4 POWER SUPPLY WIRE

5 1-INCH SCH 40 PVC CONDUIT, FITTINGS AND SWEEP ELL FOR POWER SUPPLY

6 3-INCH SCH 40 PVC CONDUIT, FITTINGS AND SWEEP ELL FOR STATION WIRES

7 WIRES TO REMOTE CONTROL VALVES (PROVIDE TWO (2) ADDITIONAL WIRES FOR FUTURE EXPANSION)

8 COMPACTED SUBGRADE

NOTES:
1. ESP-LXME CONTROLLER IS AVAILABLE IN 8- OR 12-STATION BASE MODELS. ADDITIONAL MODULES IN 4-, 8- AND 12-STATION VERSIONS MAY BE ADDED TO BRING THE CONTROLLER UP TO 48 STATIONS MAXIMUM.
2. FOR EASE OF INSTALLATION INTO A CONTROLLER WITH MORE THAN 24 STATIONS, INSTALL A JUNCTION BOX AT THE BASE OF CONTROLLER AND TRANSITION LARGER VALVE AND COMMON WIRES FROM FIELD TO 18 AWG MULTI CONDUCTOR WIRE TO BE USED IN CONTROLLER.
3. PROVIDE PROPER GROUNDING COMPONENTS TO ACHIEVE GROUND RESISTANCE OF 10 OHMS OR LESS.

2 RAIN BIRD ESP-LXME IN METAL PEDESTAL
N.T.S.

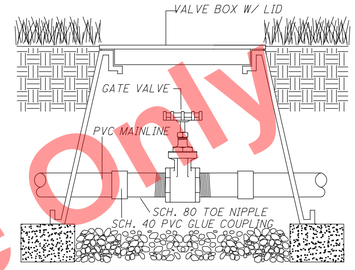

5 RED-WHITE 206 SERIES BRONZE GATE VALVE
N.T.S.

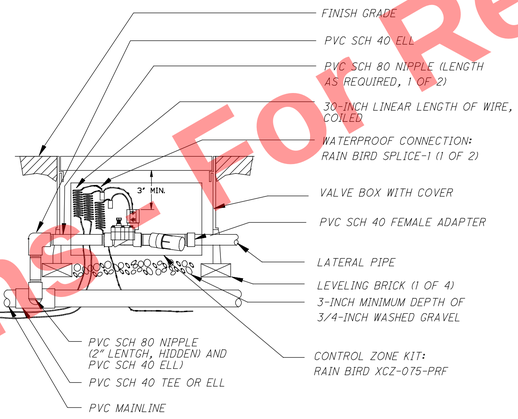

3 RAIN BIRD DRIP ZONE KIT XCZ-075-PRF
N.T.S.

NOTES:
LENGTH OF LONGEST DRIPLINE LATERAL SHOULD NOT EXCEED THE MAXIMUM SPACING SHOWN IN THE ACCOMPANYING TABLE.

PLACE TIE DOWN STAKES EVERY THREE FEET IN SAND, FOUR FEET IN LOAM, AND FIVE FEET IN CLAY.

AT FITTINGS WHERE THERE IS A CHANGE OF DIRECTION SUCH AS TEES OR ELBOWS, USE TIE-DOWN STAKES ON EACH LEG OF THE CHANGE OF DIRECTION.

	Dripline Maximum Lateral Lengths (Feet)					
	12" Spacing		18" Spacing		24" Spacing	
PSI	0.6 GPH	0.9 GPH	0.6 GPH	0.9 GPH	0.6 GPH	0.9 GPH
15	273	155	314	250	424	322
20	318	169	353	294	508	368
30	360	230	413	350	586	414
40	395	255	465	402	652	474
50	417	285	528	420	720	488
60	460	290	596	455	780	512

WHEN USING 17MM INSERT FITTINGS WITH DESIGN PRESSURE OVER 50PSI, IT IS RECOMMENDED THAT STAINLESS STEEL CLAMPS BE INSTALLED ON EACH FITTING.

4 DRIPLINE INSTALLATION NOTES
N.T.S.

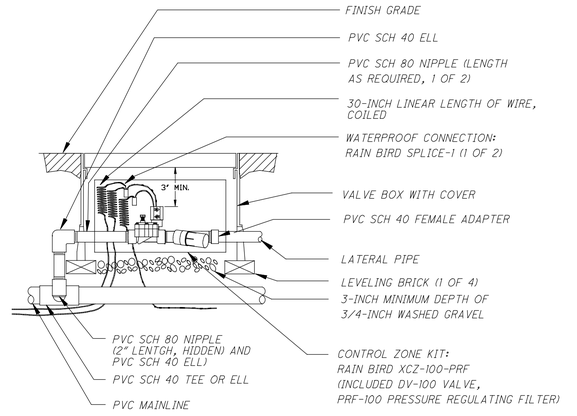

6 RAIN BIRD DRIP ZONE KIT XCZ-100-PRF
N.T.S.

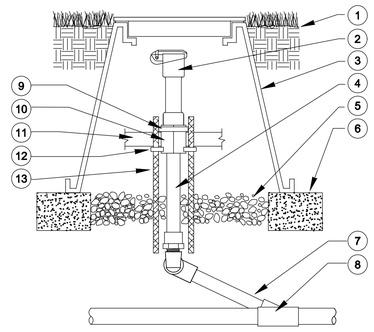

1 FINISH GRADE/TOP OF MULCH
2 QUICK-COUPLING VALVE: RAIN BIRD MODEL 5RC
3 VALVE BOX WITH COVER:
4 PVC SCH 80 NIPPLE (LENGTH AS REQUIRED)
5 3-INCH MINIMUM DEPTH OF 3/4-INCH WASHED GRAVEL
6 BRICK (1 OF 2)
7 MANUFACTURED SWING JOING
8 PVC SCH 40 TEE OR ELL
9 SNAP-LOK RING
10 SNAP-LOK
11 1" PVC PIPE
12 STABILIZER ELBOW
13 1/2" OR 3/8" REBAR

7 RAIN BIRD QUICK COUPLER 5RC SEREIS WITH SNAP LOK
N.T.S.

HORIZONTAL SCALE IN FEET
0 100 200 400

IRRIGATION SYSTEM DETAILS
SHEET 01

DESIGN AGENCY
Michael Baker INTERNATIONAL

DESIGNER BDC
REVIEWER JCF 01/10/24
PROJECT ID 82382
SHEET 1856 TOTAL 2696

Preliminary Plans For Reference Only

CUY-90-16.28 (CCG3A)
MODEL: Sheet PAPERSIZE: 34x22 (in.) DATE: 3/28/2025 TIME: 9:28:51 AM USER: Mata.Gallagher
pw:\\mb-us-pw.bentley.com:mb-us-pw-03\Documents\Cleveland_OH\OI_Projects\ODOT\District#12\82382\400-Engineering\Landscaping\Sheets\82382_PD3001.dgn

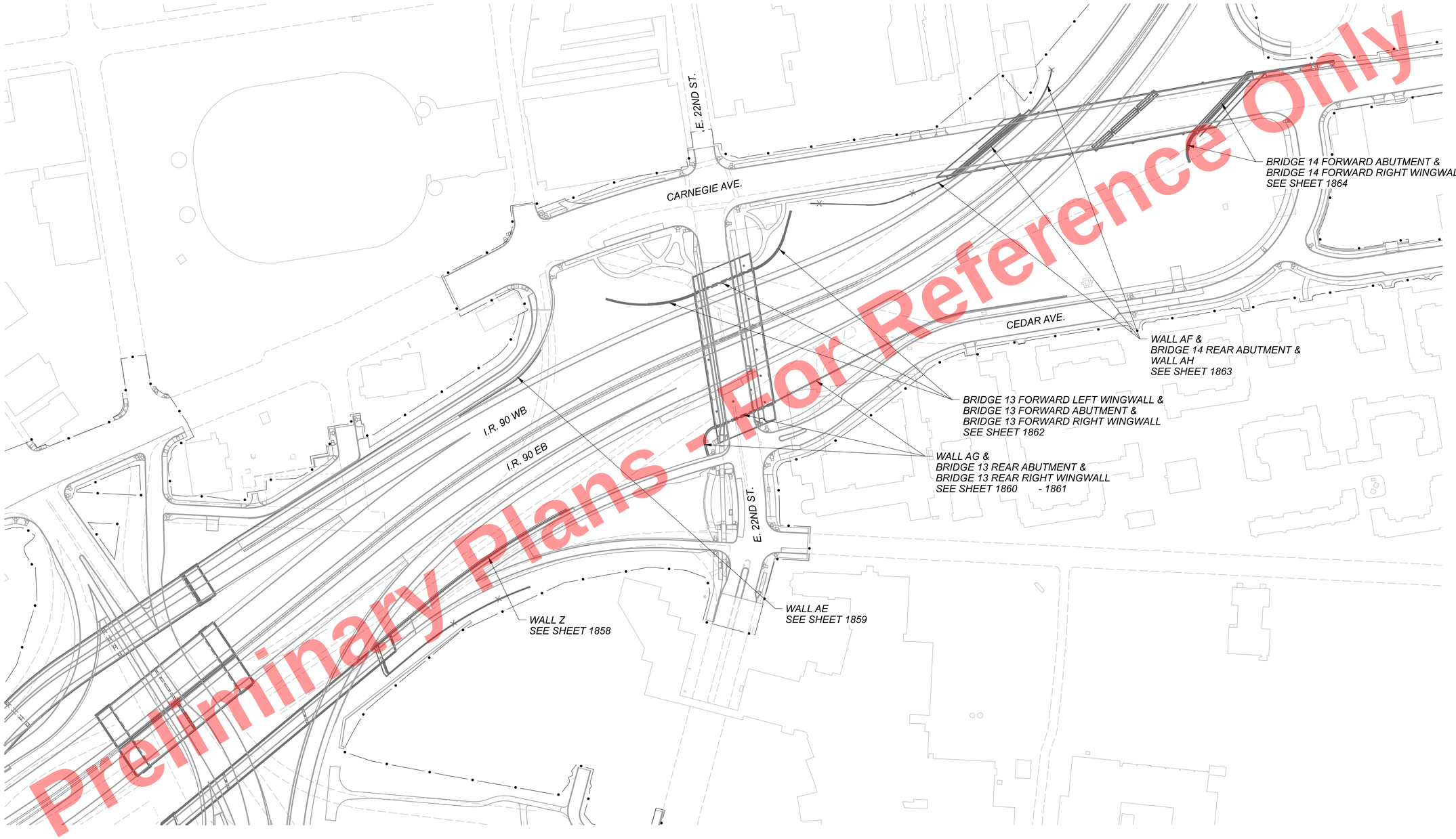

Preliminary Plans - For Reference Only

HORIZONTAL SCALE IN FEET
0 100 200 400

OVERALL WALL AESTHETICS PLAN

CUY-90-16.28 (CCG3A)

MODEL: Sheet PAPERSIZE: 34x22 (in.) DATE: 3/28/2025 TIME: 9:29:11 AM USER: Mata.Gallagher
pw:\\mb-us-pw.bentley.com:mb-us-pw-03\Documents\Cleveland_OH\01_Projects\ODOT\District12\82382\400-Engineering\Landscaping\Sheets\82382_PP0003.dgn

DESIGN AGENCY
Michael Baker INTERNATIONAL

DESIGNER BDC
REVIEWER JCF 01/10/24
PROJECT ID 82382
SHEET 1857 TOTAL 2696

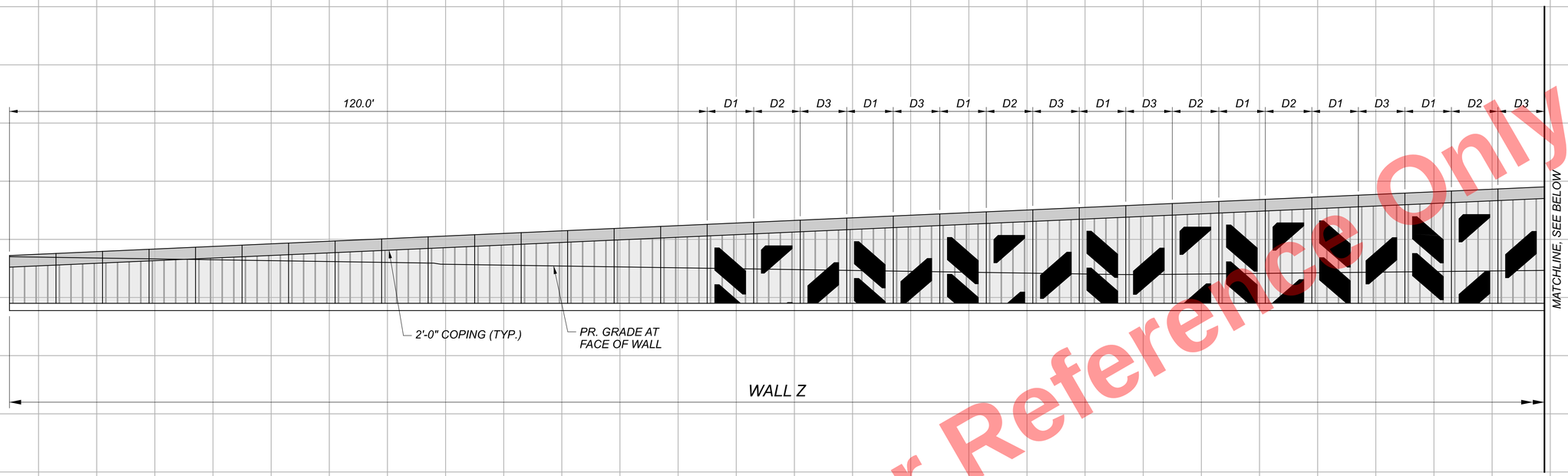

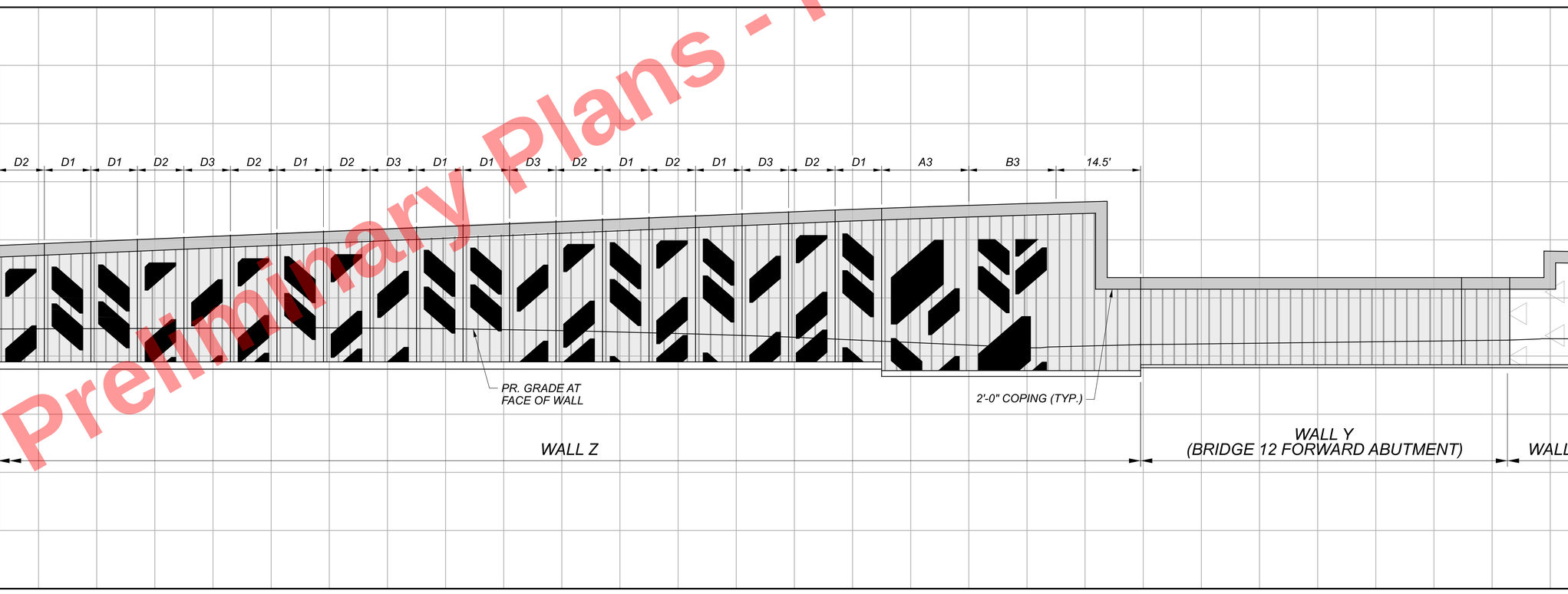

Preliminary Plans - Not For Reference Only

WALL AESTHETIC ELEVATION
WALL Z

DESIGN AGENCY
Michael Baker INTERNATIONAL

DESIGNER
BDC

REVIEWER
JCF 01/10/24

PROJECT ID
82382

SHEET 1858 | TOTAL 2696

CUY-90-16.28 (CCG3A)

MODEL: Sheet-04 PAPERSIZE: 34x22 (in.) DATE: 3/28/2025 TIME: 9:29:48 AM USER: Mala.Gallagher
pw:\\mb-us-pw.bentley.com:mb-us-pw-03\Documents\Cleveland_OH\01_Projects\00DT\District2\82382\400-Engineering\Landscaping\Sheets\82382_PF0001.dgn

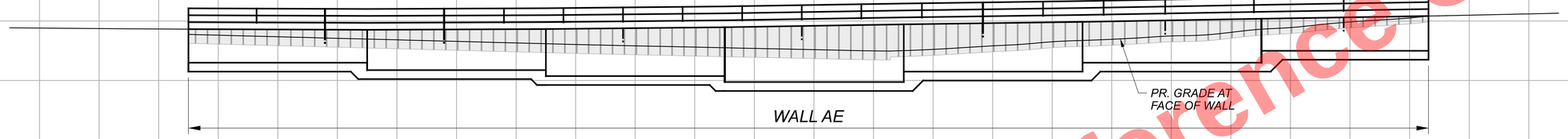

Preliminary Plans - Not For Reference Only

WALL AESTHETIC ELEVATION
WALL AE

DESIGN AGENCY
Michael Baker INTERNATIONAL

DESIGNER
BDC

REVIEWER
JCF 01/10/24

PROJECT ID
82382

SHEET 1859 | TOTAL 2696

CUY-90-16.28 (CCG3A)

MODEL: Sheet-01 PAPERSIZE: 34x22 (in.) DATE: 3/28/2025 TIME: 9:29:48 AM USER: Mala.Gallagher
pw:\\mb-us-pw.bentley.com:mb-us-pw-03\Documents\Cleveland_OH\01_Projects\ODOT\District#12\82382\400-Engineering\Landscaping\Sheets\82382_PF0001.dgn

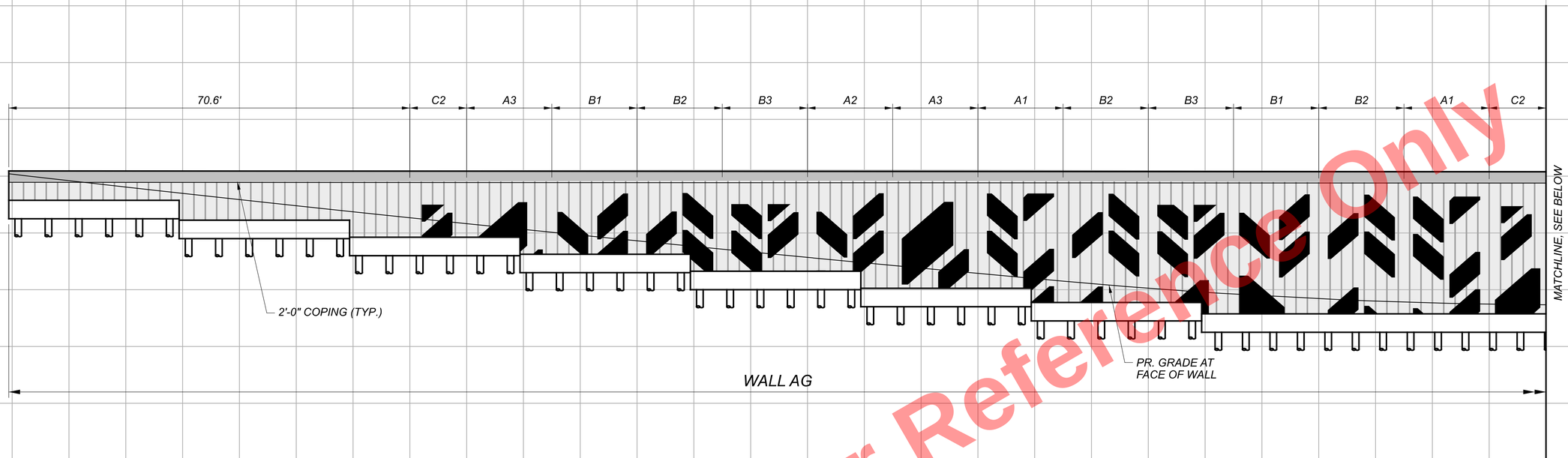

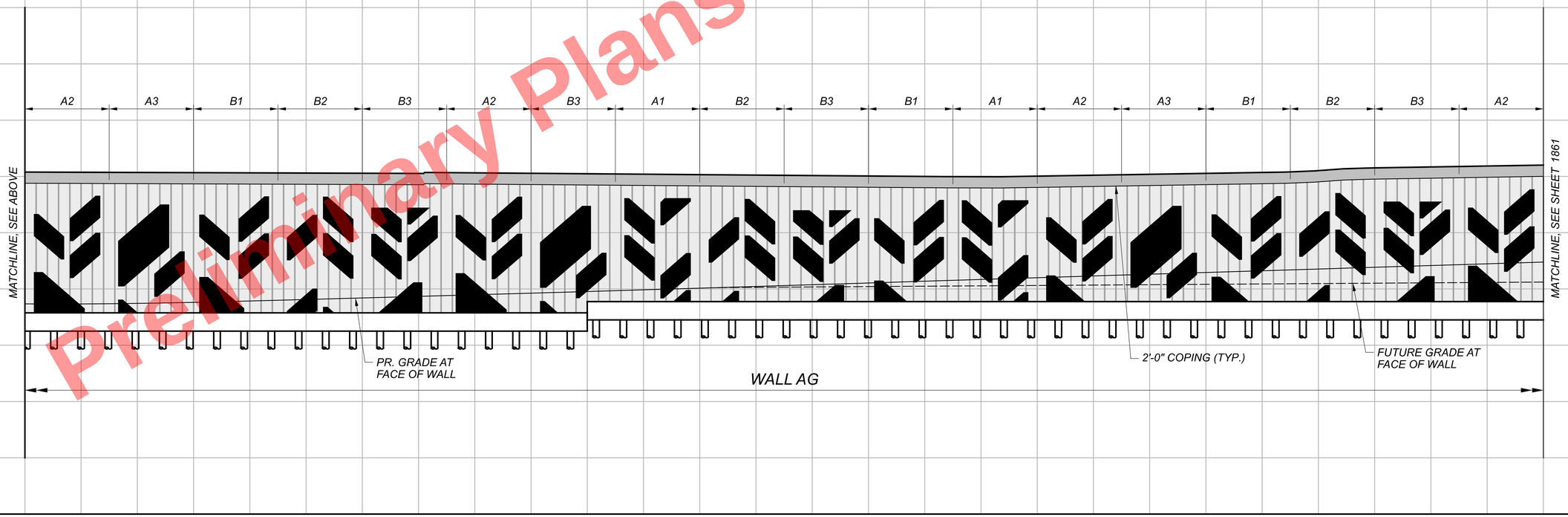

Preliminary Plans - Not For Reference Only

WALL AESTHETIC ELEVATION
WALL AG

DESIGN AGENCY
Michael Baker INTERNATIONAL

DESIGNER BDC
REVIEWER JCF 01/10/24
PROJECT ID 82382
SHEET 1860 TOTAL 2696

CUY-90-16.28 (CCG3A)

MODEL: Sheet-05 PAPERSIZE: 34x22 (in.) DATE: 3/28/2025 TIME: 9:29:50 AM USER: Mata.Gallagher
pw:\\mb-us-pw.bentley.com:mb-us-pw-03\Documents\Cleveland_OH\OI_Projects\DOT\District2\82382\400-Engineering\Landscaping\Sheets\82382_PF000I.dgn

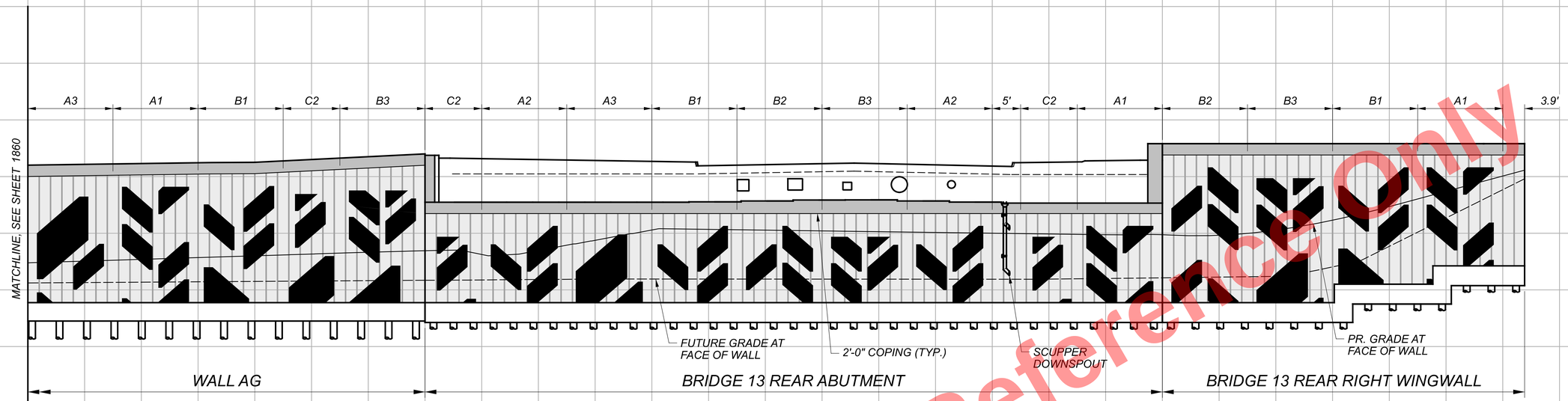

Preliminary Plans - Not For Reference Only

WALL AESTHETIC ELEVATION
WALL AG (CONT.) & BRIDGE 13 REAR ABUTMENT & BRIDGE 13 REAR RIGHT WINGWALL

DESIGN AGENCY
Michael Baker INTERNATIONAL

DESIGNER BDC
REVIEWER JCF 01/10/24
PROJECT ID 82382
SHEET 1861 TOTAL 2696

CUY-90-16.28 (CCG3A)

MODEL: Sheet-06 PAPERSIZE: 34x22 (in.) DATE: 3/28/2025 TIME: 9:29:51 AM USER: Mala.Gallagher
pw:\\mb-us-pw.bentley.com:mb-us-pw-03\Documents\Cleveland_OH\01_Projects\ODOT\District#12\82382\400-Engineering\Landscaping\Sheets\82382_PF0001.dgn

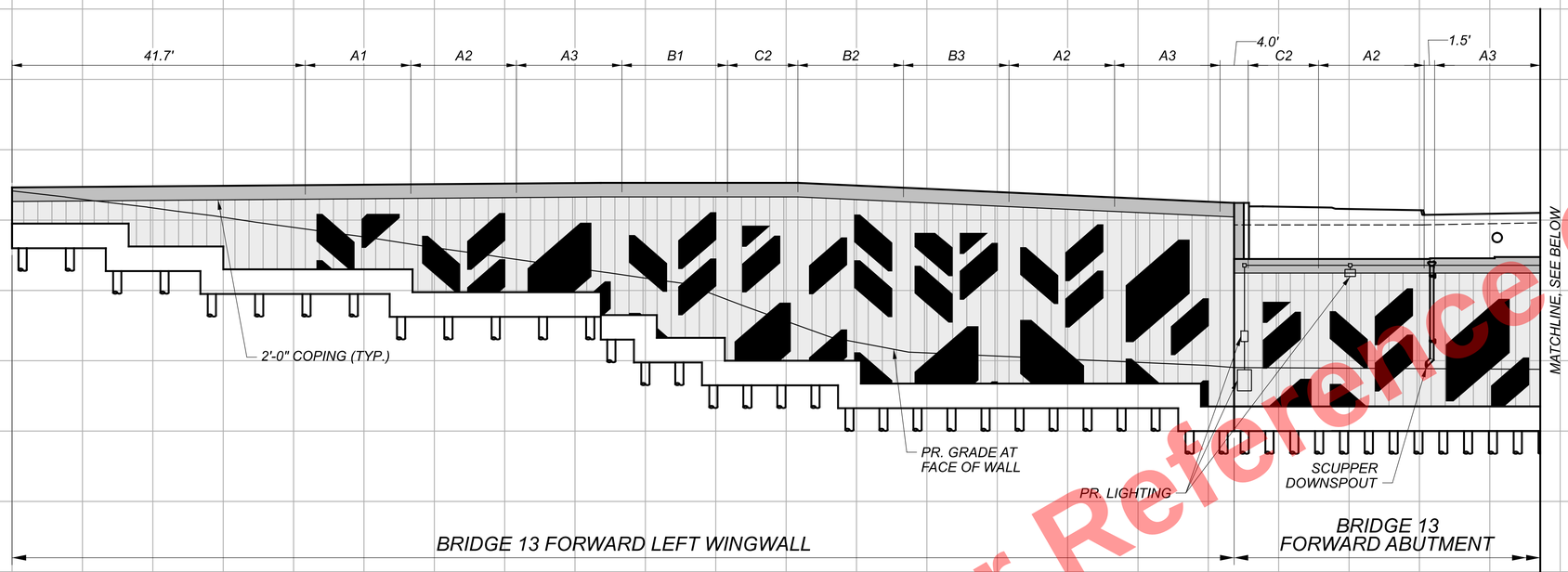

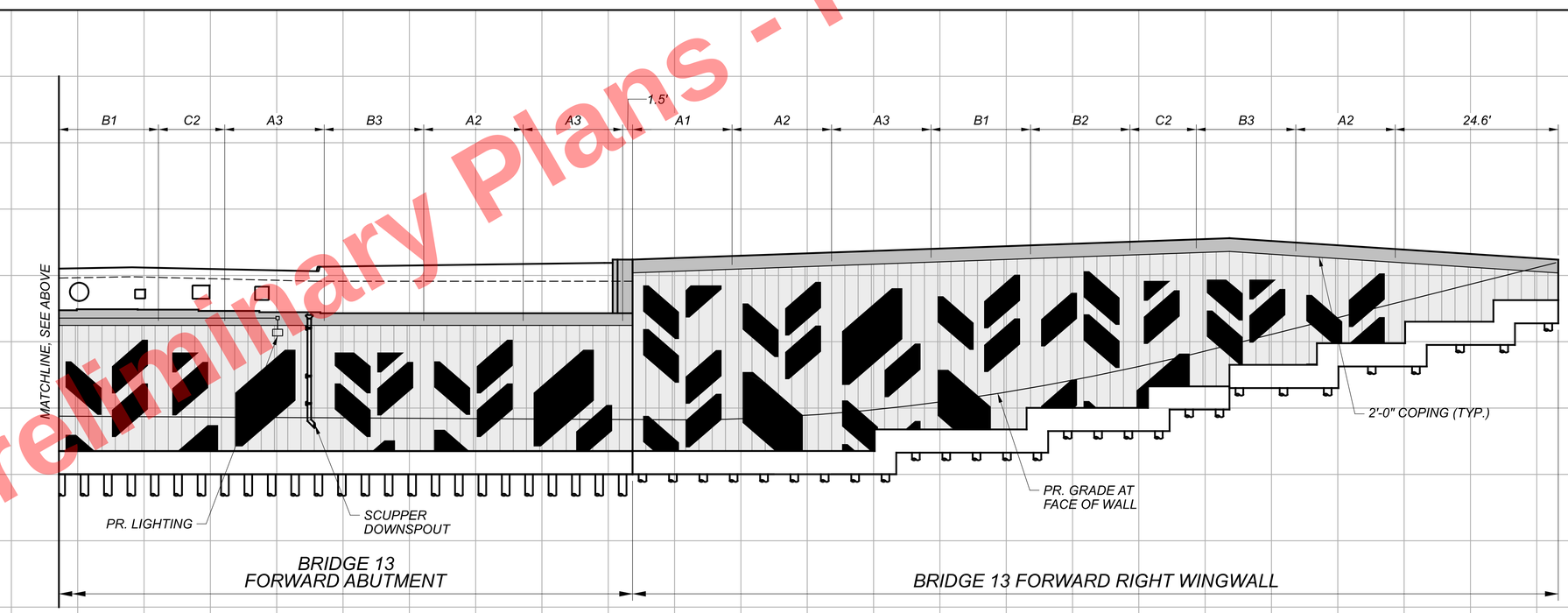

Preliminary Plans - Not For Reference Only

WALL AESTHETIC ELEVATION
BRIDGE 13 FORWARD ABUTMENT AND FORWARD WINGWALLS

DESIGN AGENCY
Michael Baker INTERNATIONAL

DESIGNER
BDC

REVIEWER
JCF 01/10/24

PROJECT ID
82382

SHEET 1862 | TOTAL 2696

CUY-90-16.28 (CCG3A)

MODEL: Sheet-02 PAPERSIZE: 34x22 (in.) DATE: 3/28/2025 TIME: 9:29:51 AM USER: Mata.Gallagher
pw:\\mb-us-pw.bentley.com:mb-us-pw-03\Documents\Cleveland_OH\01_Projects\0007\District2\82382\400-Engineering\Landscaping\Sheets\82382_PF0001.dgn

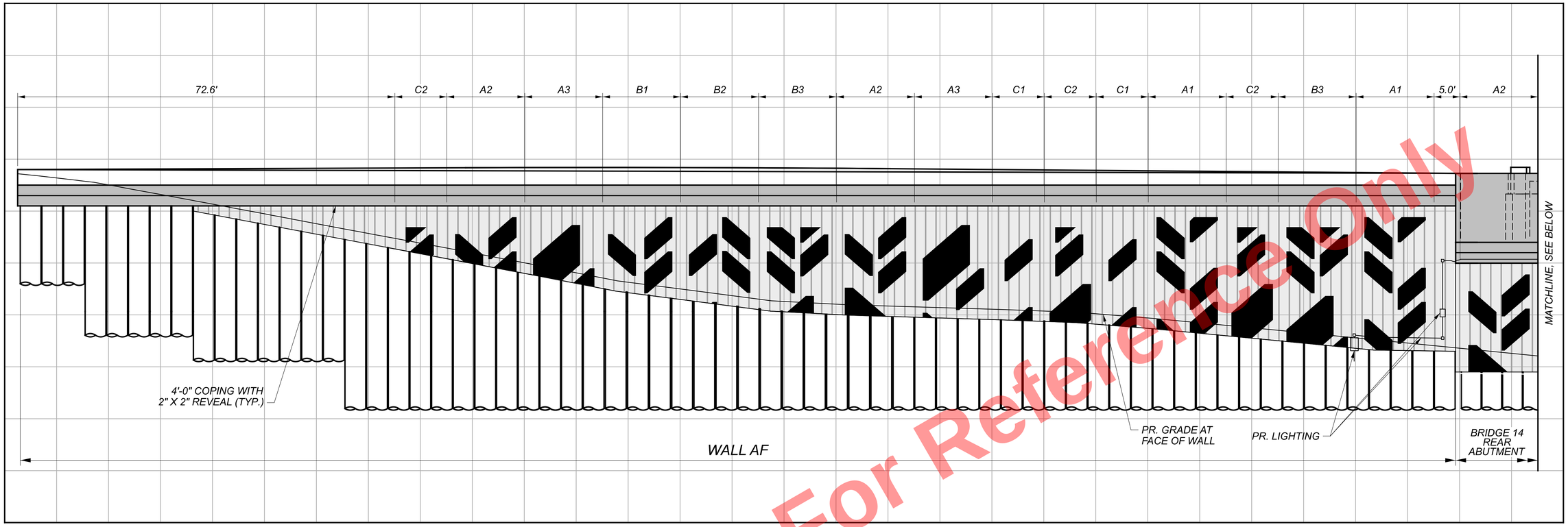

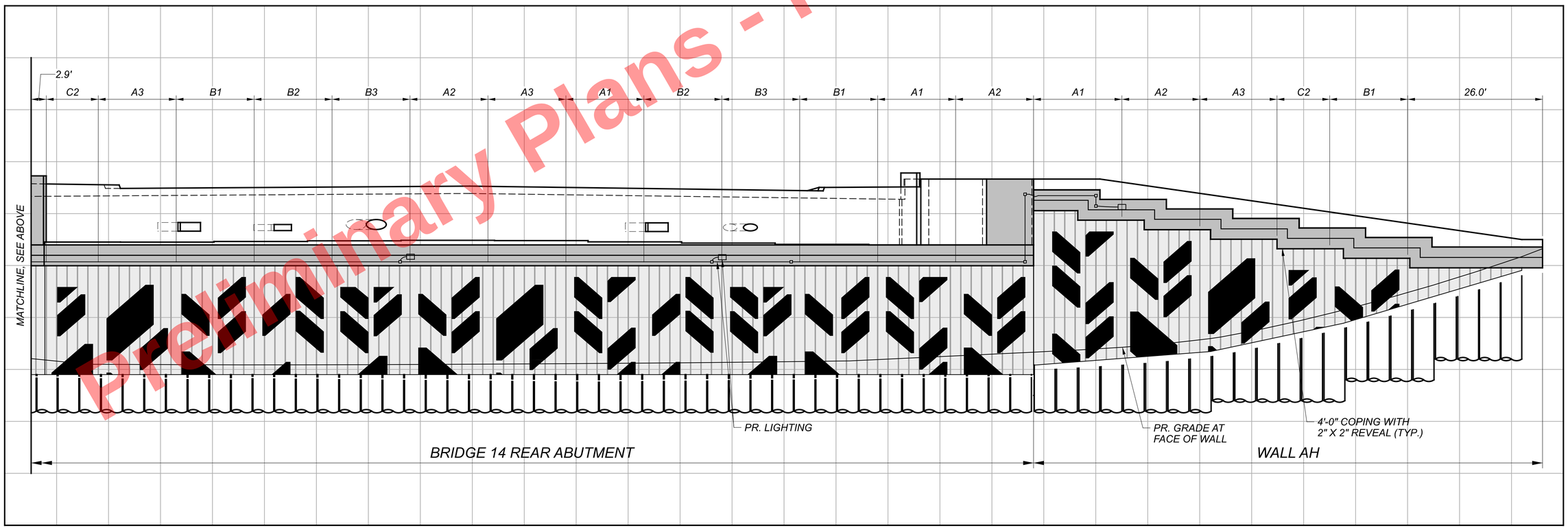

Preliminary Plans - For Reference Only

WALL AESTHETIC ELEVATION
WALL AF & BRIDGE 14 REAR ABUTMENT & WALL AH

DESIGN AGENCY
Michael Baker INTERNATIONAL

DESIGNER BDC
REVIEWER JCF 01/10/24
PROJECT ID 82382
SHEET 1863 TOTAL 2696

CUY-90-16.28 (CCG3A)

MODEL: Sheet-03 PAPERSIZE: 34x22 (in.) DATE: 3/28/2025 TIME: 9:29:53 AM USER: Mala.Gallagher
pw:\\mb-us-pw.bentley.com:mb-us-pw-03\Documents\Cleveland_OH\01_Projects\000TYDistrict2\82382\400-Engineering\Landscaping\Sheets\82382_PF0001.dgn

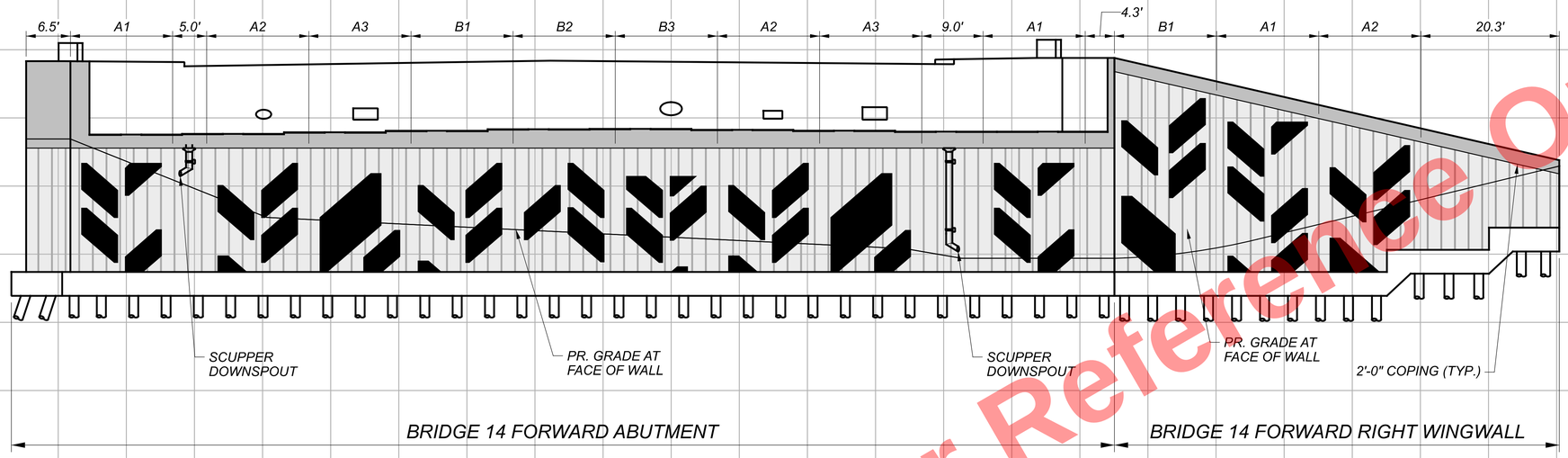

Preliminary Plans - Not For Reference Only

WALL AESTHETIC ELEVATION
BRIDGE 14 FORWARD ABUTMENT & FORWARD RIGHT WINGWALL

DESIGN AGENCY
Michael Baker INTERNATIONAL

DESIGNER
BDC

REVIEWER
JCF 01/10/24

PROJECT ID
82382

SHEET 1864 | TOTAL 2696

CUY-90-16.28 (CCG3A)

MODEL: Sheet-07 PAPERSIZE: 34x22 (in.) DATE: 3/28/2025 TIME: 9:29:54 AM USER: MalaGallagher
pw:\\mb-us-pw.bentley.commb-us-pw-03\Documents\Cleveland_OH\01_Projects\0D0T\District2\82382\400-Engineering\Landscaping\Sheets\82382_PF0001.dgn

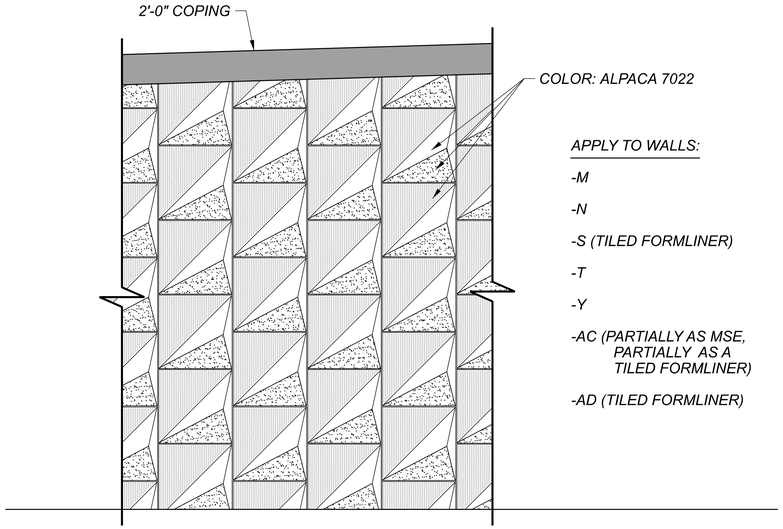

MECHANICALLY STABILIZED EARTH WALL WITH RAISED PRISM ARCHITECTURAL TREATMENT

SCALE: NTS

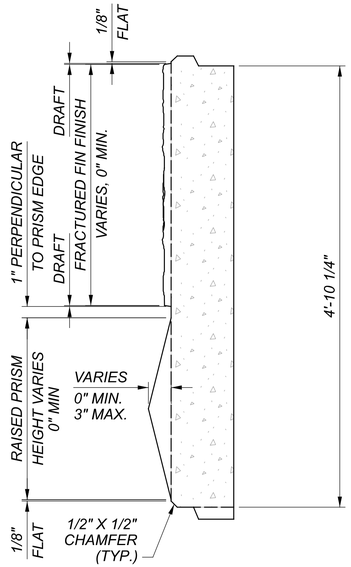

VERTICAL PRISM PANEL SECTION

SCALE: NTS

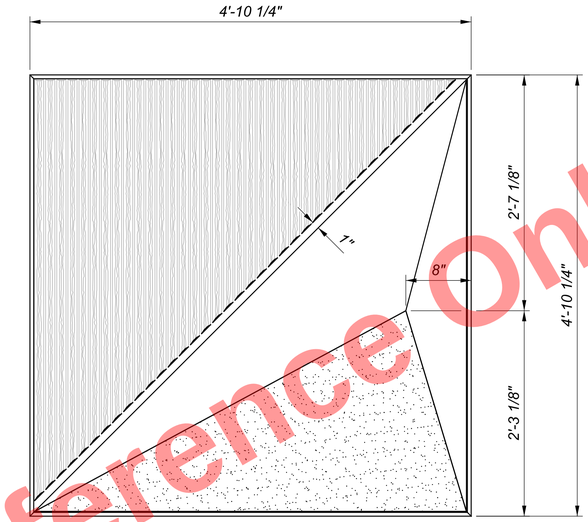

TYPICAL PRISM PANEL DETAIL

SCALE: NTS

REPRESENTS PLAIN FINISH AREA WITH SHADOW ON UNDERSIDE

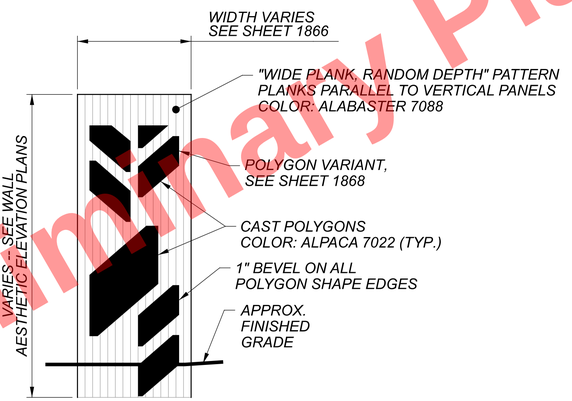

RETAINING WALL LOCATION	FORMLINER SHAPE CONFIGURATION											
	A1	A2	A3	B1	B2	B3	C1	C2	D1	D2	D3	WIDE PLANK FORMLINER ONLY (NO POLYGONS)
WALL AE												●
WALL Z			●			●			●	●	●	
BRIDGE 12 FORWARD ABUTMENT PORTION OF WALL Y (STA. 1300+00 TO STA. 1300+63.50)												●
WALL AG	●	●	●	●	●	●		●				
BRIDGE 13 REAR ABUTMENT	●	●										
BRIDGE 13 REAR RIGHT WINGWALL	●			●	●	●						
BRIDGE 13 FORWARD LEFT WINGWALL	●	●	●	●	●	●		●				
BRIDGE 13 FORWARD ABUTMENT	●	●	●	●	●	●						
BRIDGE 13 FORWARD RIGHT WINGWALL	●	●	●	●	●	●		●				
BRIDGE 13 PIERS & ABUTMENT END CAPS												●
WALL AF	●	●	●	●	●	●	●	●				
BRIDGE 14 REAR ABUTMENT	●	●	●	●	●	●						
WALL AH	●	●	●	●				●				
BRIDGE 14 FORWARD ABUTMENT	●	●	●	●	●	●						
BRIDGE 14 FORWARD RIGHT WINGWALL	●	●		●								
BRIDGE 14 PIERS & ABUTMENT END CAPS												●

● INDICATES FORMLINER TYPE AND LOCATION

TYPICAL RETAINING WALL PANEL AND LOCATIONS

SCALE: NTS

Preliminary Plans - For Reference Only

HORIZONTAL SCALE IN FEET
0 100 200 400

WALL AESTHETIC DETAILS
SHEET 01

DESIGN AGENCY
Michael Baker INTERNATIONAL

DESIGNER BDC
REVIEWER JCF 01/10/24
PROJECT ID 82382
SHEET 1865 TOTAL 2696

CUY-90-16.28 (CCG3A)

MODEL: Sheet PAPERSIZE: 34x22 (in.) DATE: 3/28/2025 TIME: 9:30:02 AM USER: Mala.Gallagher
pw:\\mb-us-pw.bentley.com:mb-us-pw-03\Documents\Cleveland_OH\01_Projects\ODOT\District2\82382\400-Engineering\Landscaping\Sheets\82382_PD601.dgn

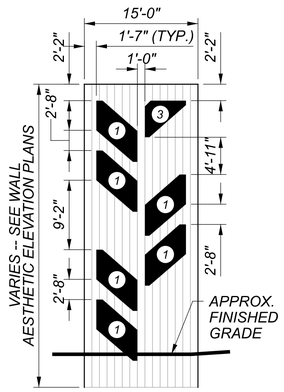

RETAINING WALL PANEL A1: ELEVATION

SCALE: NTS

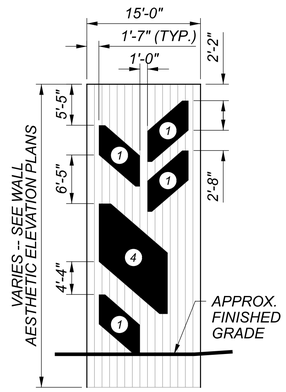

RETAINING WALL PANEL A2: ELEVATION

SCALE: NTS

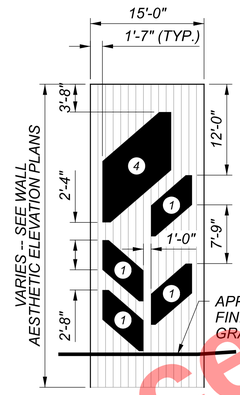

RETAINING WALL PANEL A3: ELEVATION

SCALE: NTS

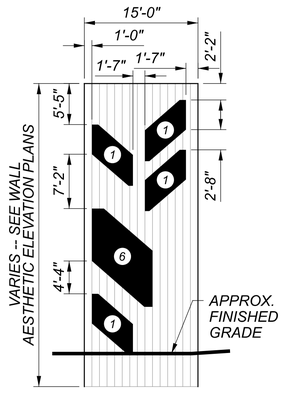

RETAINING WALL PANEL B1: ELEVATION

SCALE: NTS

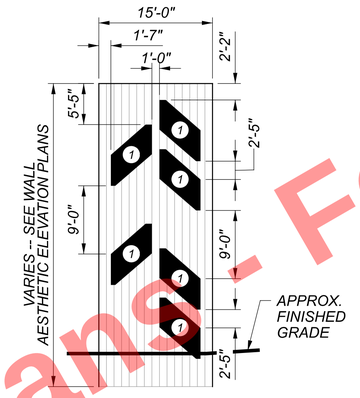

RETAINING WALL PANEL B2: ELEVATION

SCALE: NTS

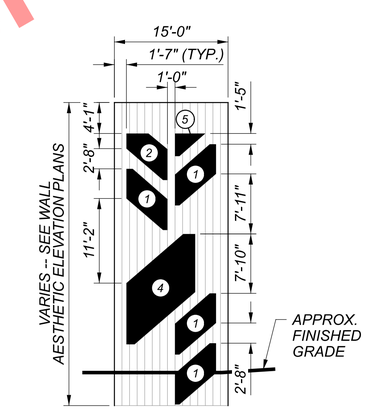

RETAINING WALL PANEL B3: ELEVATION

SCALE: NTS

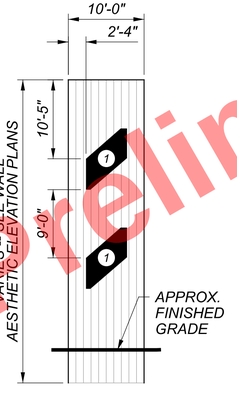

RETAINING WALL PANEL C1: ELEVATION

SCALE: NTS

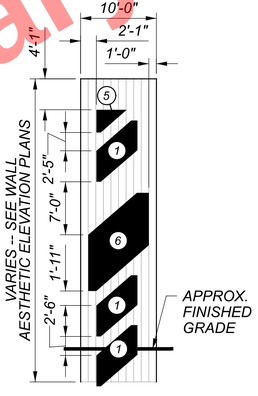

RETAINING WALL PANEL C2: ELEVATION

SCALE: NTS

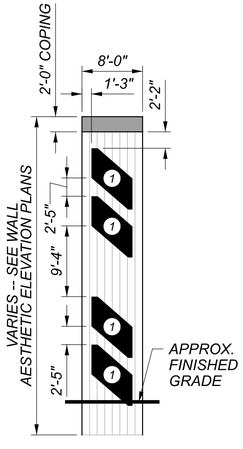

RETAINING WALL PANEL D1: ELEVATION

SCALE: NTS

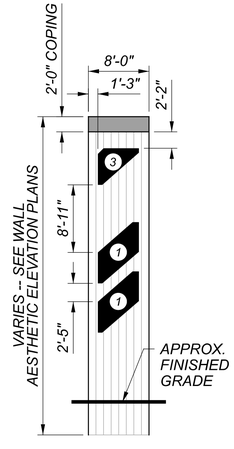

RETAINING WALL PANEL D2: ELEVATION

SCALE: NTS

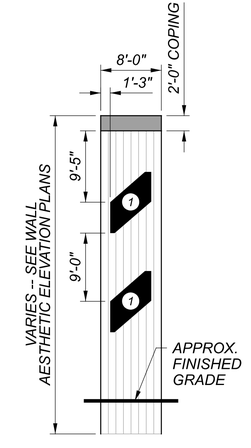

RETAINING WALL PANEL D3: ELEVATION

SCALE: NTS

Preliminary Plans - For Reference Only

HORIZONTAL SCALE IN FEET
0 100 200 400

WALL AESTHETIC DETAILS
SHEET 02

DESIGN AGENCY
Michael Baker INTERNATIONAL

DESIGNER BDC
REVIEWER JCF 01/10/24
PROJECT ID 82382
SHEET 1866 TOTAL 2696

CUY-90-16.28 (CCG3A)

MODEL: Sheet PAPERSIZE: 34x22 (in.) DATE: 3/28/2025 TIME: 9:30:07 AM USER: Matt.Gallagher
pw:\\mb-us-pw.bentley.com:mb-us-pw-03\Documents\Cleveland_OH\01_Projects\ODOT\District2\82382\400-Engineering\Landscaping\Sheets\82382_PD6002.dgn

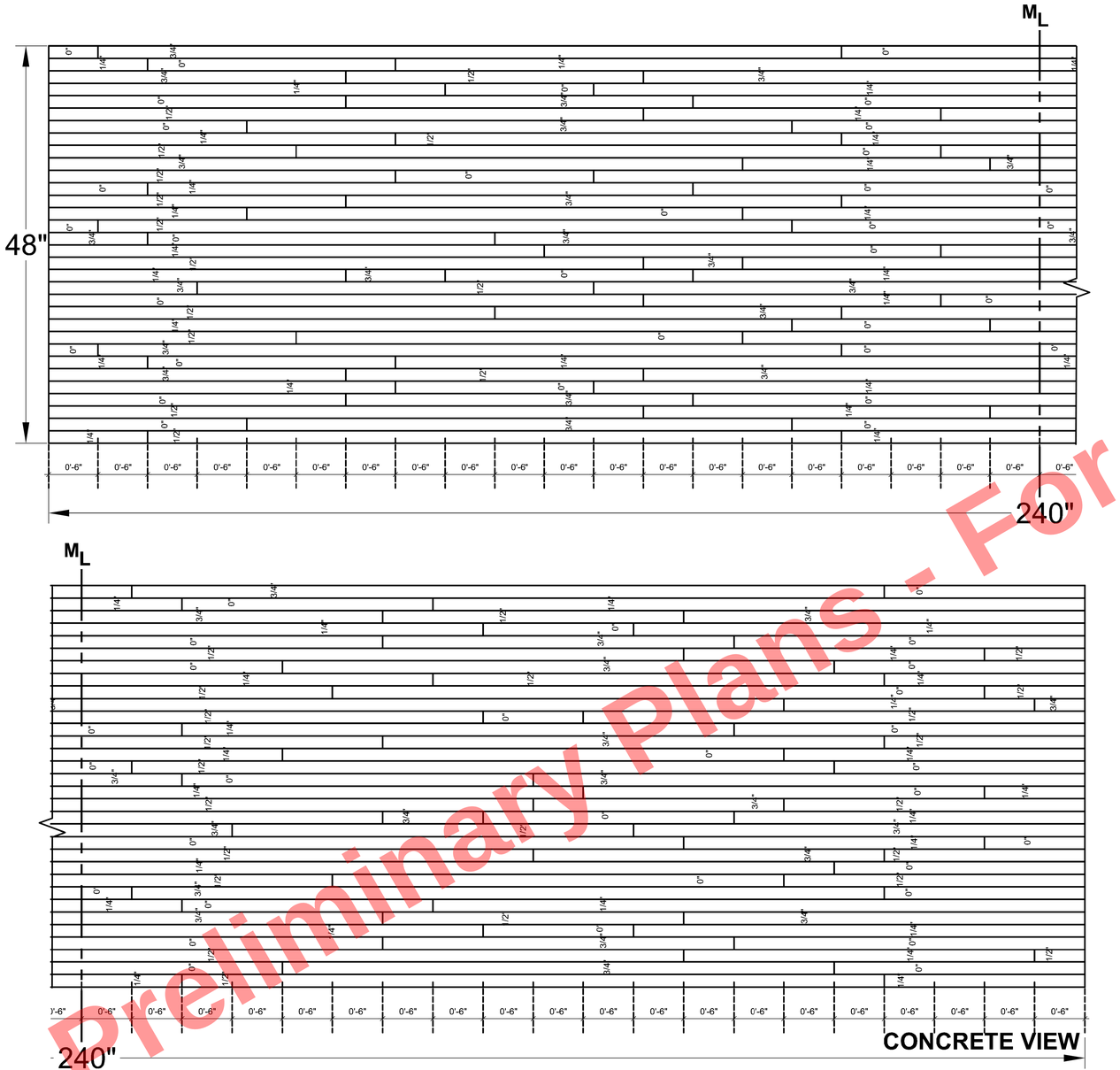

FORMLINER FIELD PATTERN

SCALE: 1 1/2" = 1'-0"

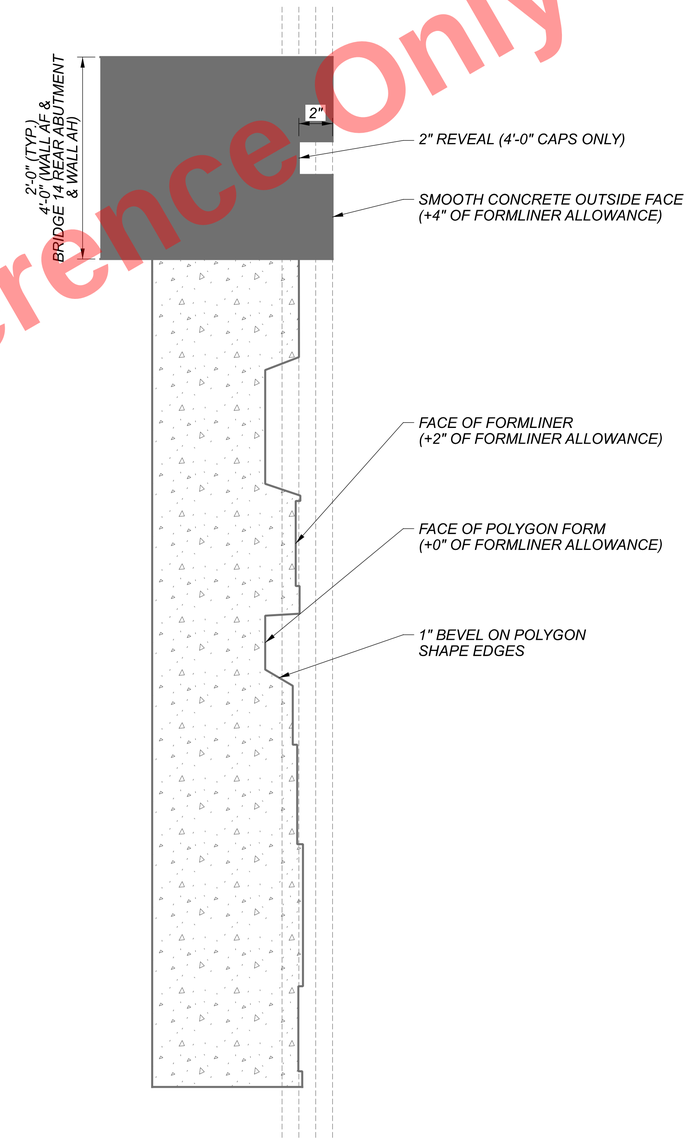

RETAINING WALL PANEL SECTION

SCALE: 1 1/2" = 1'-0"

Preliminary Plans - For Reference Only

HORIZONTAL SCALE IN FEET
0 100 200 400

WALL AESTHETIC DETAILS
SHEET 03

DESIGN AGENCY
Michael Baker INTERNATIONAL

DESIGNER BDC
REVIEWER JCF 01/10/24
PROJECT ID 82382
SHEET 1867 TOTAL 2696

CUY-90-16.28 (CCG3A)

MODEL: Sheet PAPERSIZE: 34x22 (in.) DATE: 3/28/2025 TIME: 9:30:12 AM USER: Mala.Gallagher
pw:\\mb-us-pw.bentley.com:mb-us-pw-03\Documents\Cleveland_OH\01_Projects\0007\District2\82382\400-Engineering\Landscaping\Sheets\82382_PD6003.dgn

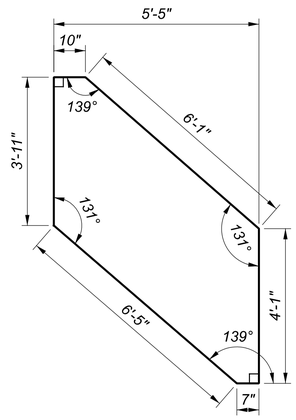

RETAINING WALL POLYGON VARIANT 1

SCALE: 1/2" = 1'-0"

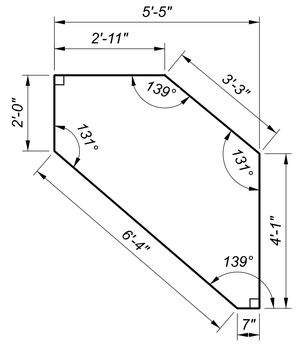

RETAINING WALL POLYGON VARIANT 2

SCALE: 1/2" = 1'-0"

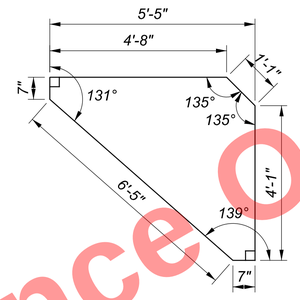

RETAINING WALL POLYGON VARIANT 3

SCALE: 1/2" = 1'-0"

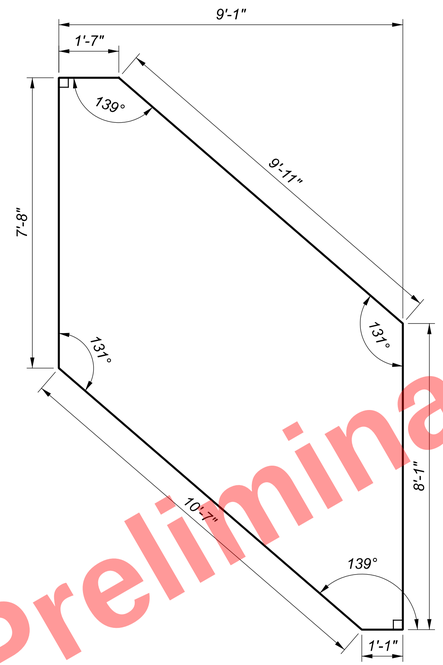

RETAINING WALL POLYGON VARIANT 4

SCALE: 1/2" = 1'-0"

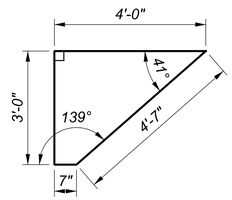

RETAINING WALL POLYGON VARIANT 5

SCALE: 1/2" = 1'-0"

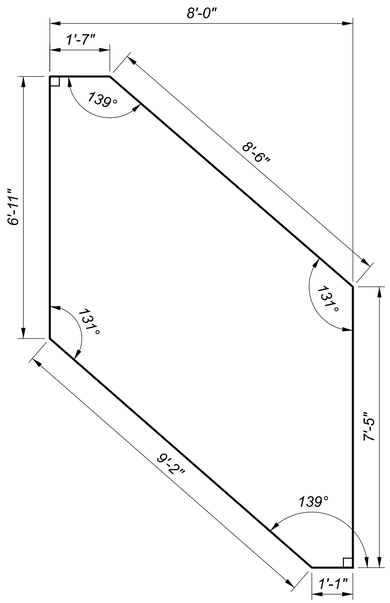

RETAINING WALL POLYGON VARIANT 6

SCALE: 1/2" = 1'-0"

Preliminary Plans - For Reference Only

HORIZONTAL SCALE IN FEET
0 100 200 400

TRENCH WALL POLYGON VARIANTS
SHEET 01

DESIGN AGENCY
Michael Baker INTERNATIONAL

DESIGNER BDC
REVIEWER JCF 01/10/24
PROJECT ID 82382
SHEET 1868 TOTAL 2696

CUY-90-16.28 (CCG3A)

MODEL: Sheet PAPERSIZE: 34x22 (in.) DATE: 3/28/2025 TIME: 9:30:27 AM USER: MaiaGallagher
pw:\\mb-us-pw.bentley.commb-us-pw-03\Documents\Cleveland_OH\OL_Projects\ODOT\Districts\12\82382\400-Engineering\Landscaping\Sheets\82382_PD6004.dgn

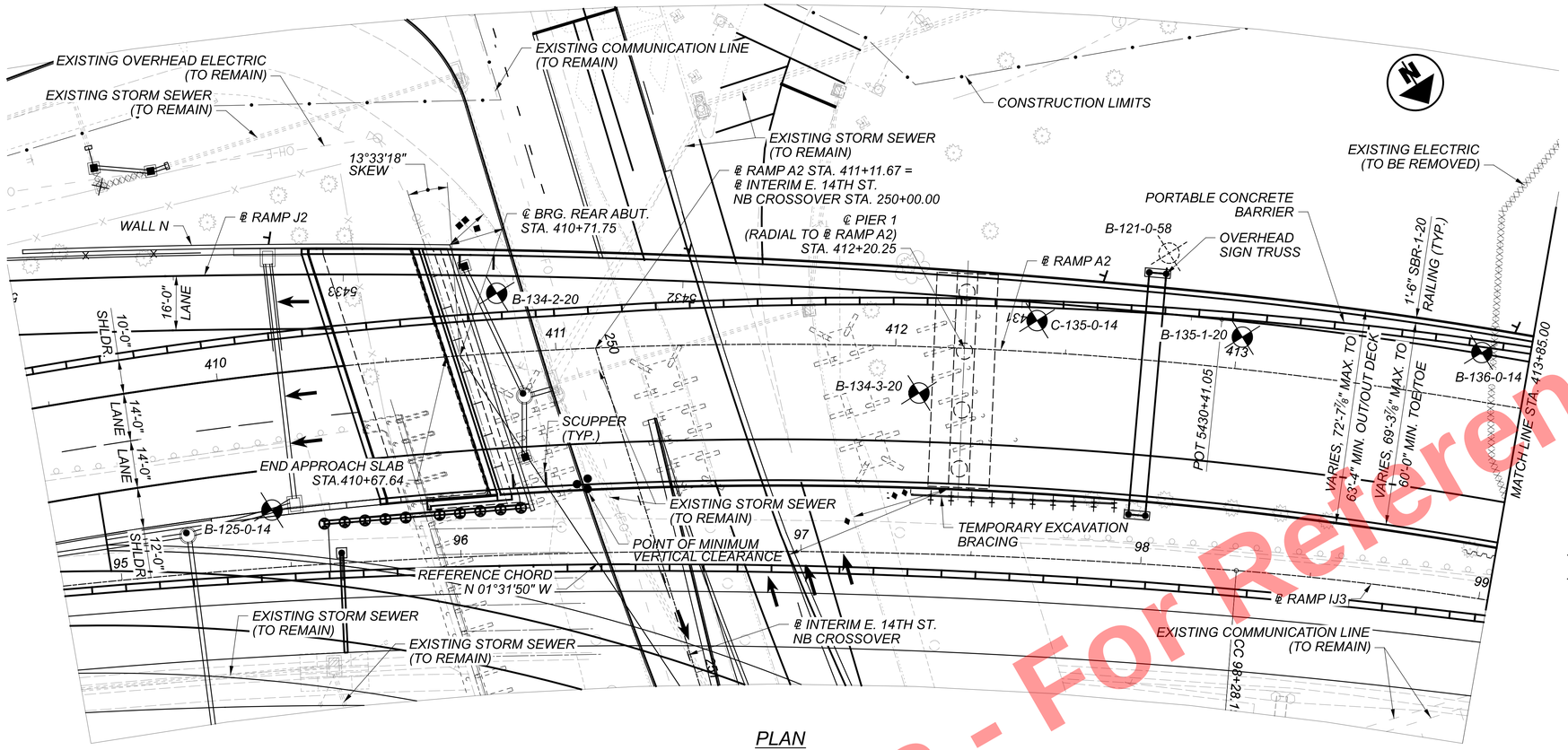

PLAN

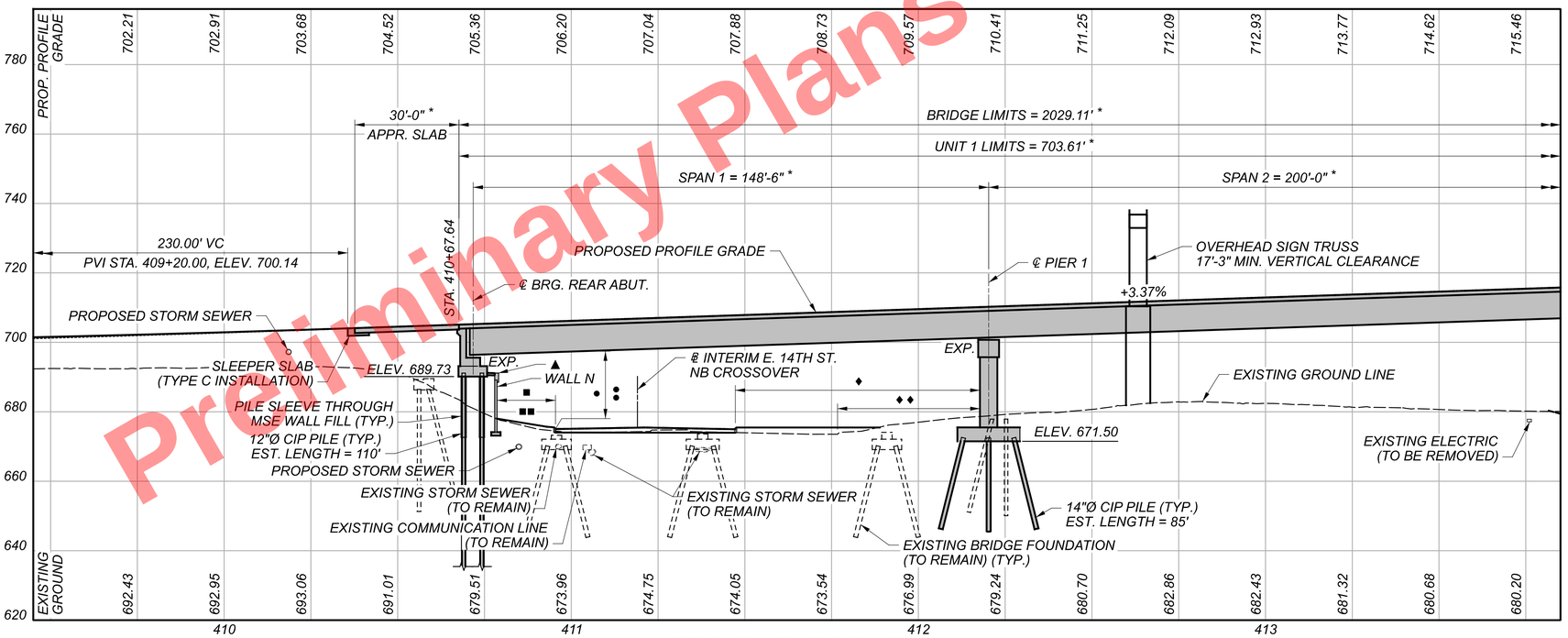

PROFILE ALONG ℄ RAMP A2

BENCHMARK DATA

BM-59 STA. 430+49.74, ELEV. 660.15 , OFFSET 458.93' RT., ℄ RAMP A2, MAG NAIL AT NOSE OF DRAINAGE CHANNEL

BM-61 STA. 425+47.56, ELEV. 674.03 , OFFSET 381.20' LT., ℄ RAMP A2, RAILROAD SPIKE IN NORTH FACE OF POWER/LIGHT POLE

BM-62 STA. 431+86.05, ELEV. 672.11 , OFFSET 388.05' LT., ℄ RAMP A2, RAILROAD SPIKE IN EAST FACE OF POWER/LIGHT POLE

BM-66 STA. 421+92.16, ELEV. 671.90 , OFFSET 844.15' LT., ℄ RAMP A2, CUT CROSS ON N-E BOLT OF CANTILEVER OVERHEAD SIGN

BM-67 STA. 418+24.32, ELEV. 674.82 , OFFSET 454.15' LT., ℄ RAMP A2, CUT CROSS ON N-E BOLT OF EAST LEG OF JCT 422 SIGN

BM-68 STA. 411+16.80, ELEV. 678.92 , OFFSET 249.57' LT., ℄ RAMP A2, CUT CROSS ON N-E BOLT OF TRAFFIC SIGNAL POLE

FOR ADDITIONAL BENCHMARK INFORMATION, SEE ROADWAY PLANS.

NOTES

EARTHWORK LIMITS SHOWN ARE APPROXIMATE. ACTUAL SLOPES SHALL CONFORM TO PLAN CROSS SECTIONS.

FOR HORIZONTAL CURVE DATA, SEE SHEET 2 / 167 .

FOR BORING INFORMATION, SEE SHEET 3 / 167 .

ROADSIDE PROTECTION WILL BE PROVIDED AS NOTED.

DESIGN TRAFFIC:

2015 ADT = 22,200 2015 ADTT = 888

2035 ADT = 23,500 2035 ADTT = 940

DIRECTIONAL DISTRIBUTION = N/A

LEGEND

- BORING LOCATION
- HISTORIC BORING LOCATION
- * MEASURED ALONG ℄ RAMP A2
- ▲ TOP OF WALL ELEV. 692.0

PROPOSED E. 14TH ST.:

- ● 16'-0" REQUIRED MINIMUM VERTICAL CLEARANCE 21'-6" ACTUAL MINIMUM VERTICAL CLEARANCE
- ■ REQUIRED CLEAR ZONE: 4'-0" ACTUAL CLEARANCE: 15'-11" PROTECTION PROVIDED: NO
- ♦ REQUIRED CLEAR ZONE: 4'-0" ACTUAL CLEARANCE: 50'-8" PROTECTION PROVIDED: NO

EXISTING E. 14TH ST. (INTERIM):

- ●● 16'-0" REQUIRED MINIMUM VERTICAL CLEARANCE 22'-7⅝" ACTUAL MINIMUM VERTICAL CLEARANCE
- ■■ REQUIRED CLEAR ZONE: 4'-0" ACTUAL CLEARANCE: 13'-5" PROTECTION PROVIDED: NO
- ♦♦ REQUIRED CLEAR ZONE: 4'-0" ACTUAL CLEARANCE: 29'-3" PROTECTION PROVIDED: NO

PROPOSED STRUCTURE

TYPE: UNIT 1: FOUR SPAN CONTINUOUS STEEL PLATE GIRDER WITH COMPOSITE REINFORCED CONCRETE DECK, SUPPORTED ON A STUB ABUTMENT BEHIND AN MSE WALL AND CAP AND COLUMN AND HAMMERHEAD PIERS

UNIT 2: SEVEN SPAN CONTINUOUS STEEL PLATE GIRDER WITH COMPOSITE REINFORCED CONCRETE DECK, SUPPORTED ON A FULL HEIGHT ABUTMENT AND CAP AND COLUMN AND STRADDLE BENT PIERS

SPANS: UNIT 1: 148'-6", 200'-0", 205'-0", 143'-10" C/C BEARINGS (MEASURED ALONG ℄ RAMP A2)

UNIT 2: 142'-1", 184'-6", 189'-8", 210'-4", 175'-0", 232'-0", 185'-0" C/C BEARINGS (MEASURED ALONG ℄ RAMP A2)

ROADWAY: VARIES, 69'-3⅜" MAX. TO 60'-0" MIN. TOE/TOE BRIDGE RAILING

LOADING: HL93 WITH 60 PSF FUTURE WEARING SURFACE

SKEW: VARIES

WEARING SURFACE: 1" MONOLITHIC CONCRETE

APPROACH SLABS: 30'-0" LONG, 17" THICK (AS-1-15, AS-2-15)

ALIGNMENT: 04°30'00" CURVE RIGHT TO 08°30'00" CURVE RIGHT

SUPERELEVATION: VARIES, 0.06 FT/FT MAX.

DECK AREA: 130,233 SF

STRUCTURE FILE NUMBER: 1806910

COORDINATES: LATITUDE 41°29'33.92" N

LONGITUDE 81°40'39.65" W

SITE PLAN - (1 OF 5)
CUY-77-1587 (BRIDGE 9)
I.R. 77 SB OVER I.R. 90 AND CR-721 (E. 14TH ST.)

SFN	
1806910	
DESIGN AGENCY	
HDR	
DESIGNER	CHECKER
TJE	NJH
REVIEWER	
DWW 01/11/24	
PROJECT ID	
82382	
SUBSET	TOTAL
1	167
SHEET	TOTAL
1869	2696

Preliminary Plans - For Reference Only

CUY-90-16.28 (CCG3A)
MODEL: 82382_SFN_1806910_SP001 PAPERSIZE: 34x22 (in.) DATE: 3/28/2025 TIME: 10:05:31 AM USER: RohitBk
pw:\\mb-us-pw.bentley.com:mb-us-pw-03\Documents\Cleveland_OH01_Projects\ODOT\District12\82382\400-Engineering\Structures\SFN_1806910\Sheets\82382_SFN_1806910_SP001.dgn

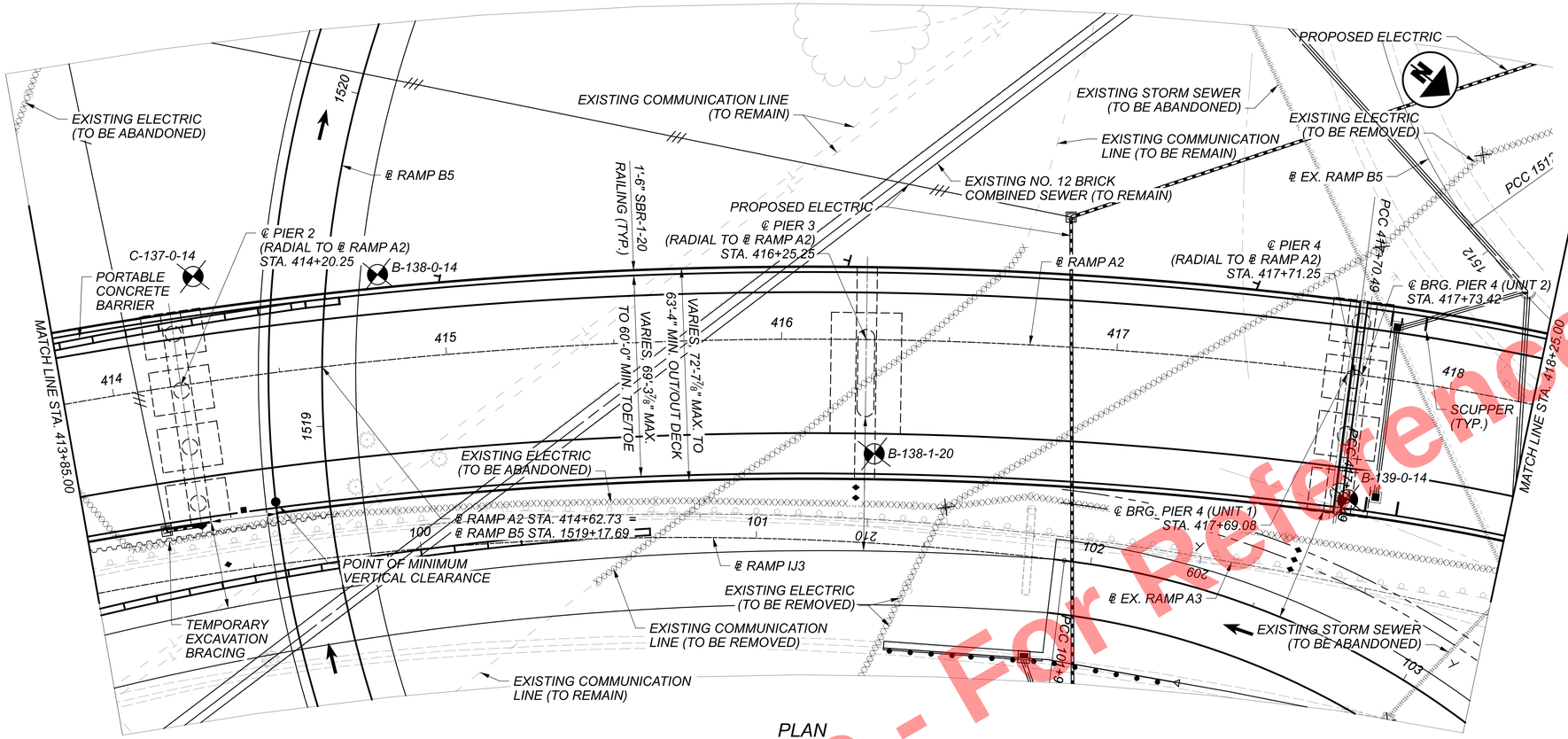

PLAN

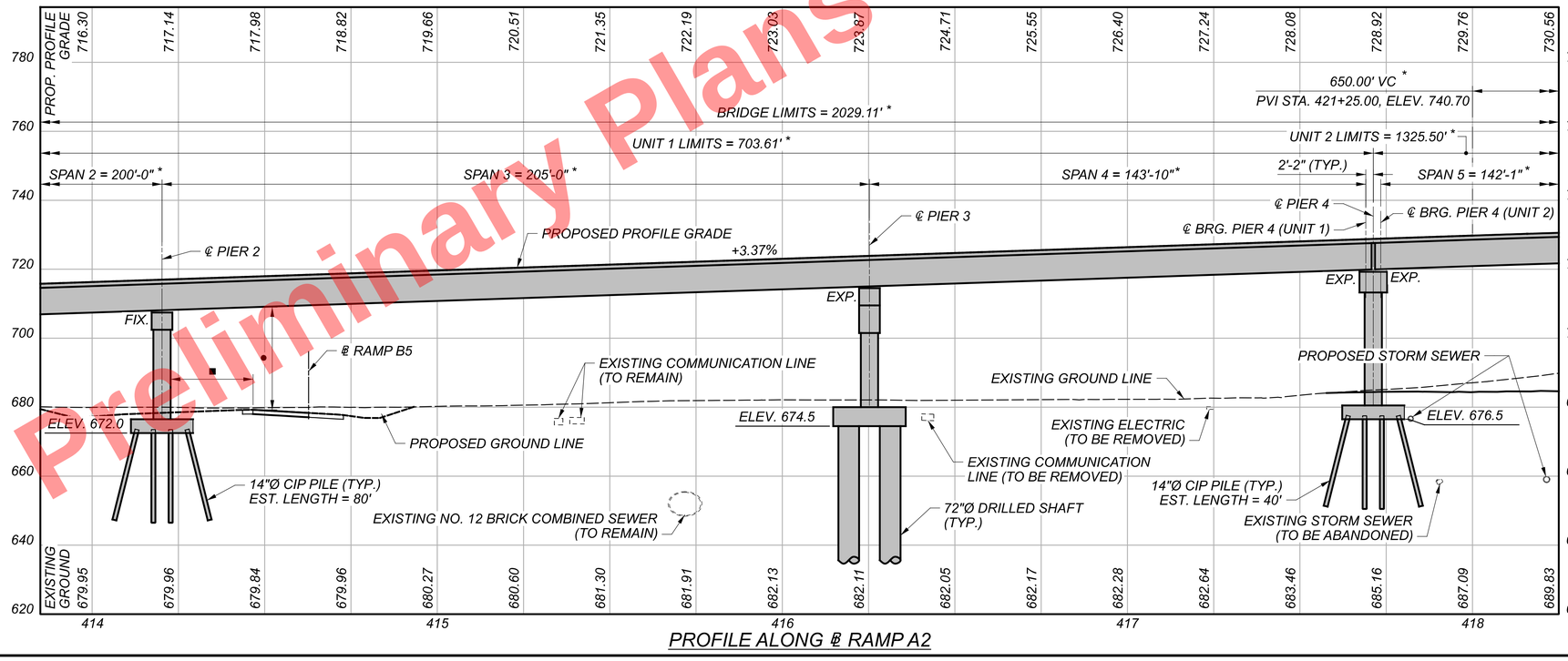

PROFILE ALONG ℄ RAMP A2

LEGEND

⌖ BORING LOCATION

* MEASURED ALONG ℄ RAMP A2

RAMP B5:
- ● 16'-0" REQUIRED MINIMUM VERTICAL CLEARANCE
  27'-3¾" ACTUAL MINIMUM VERTICAL CLEARANCE
- ■ REQUIRED CLEAR ZONE: 30'-0"
  ACTUAL CLEARANCE: 19'-9"
  PROTECTION PROVIDED: MGS (FUTURE RAMP B5)

RAMP IJ5:
- ◆ REQUIRED CLEAR ZONE: 30'-0"
  ACTUAL CLEARANCE: 26'-3"
  PROTECTION PROVIDED: PCB
- ◆◆ REQUIRED CLEAR ZONE: 30'-0"
  ACTUAL CLEARANCE: 39'-11"
  PROTECTION PROVIDED: NO
- ◆◆◆ REQUIRED CLEAR ZONE: 30'-0"
  ACTUAL CLEARANCE: 34'-3"
  PROTECTION PROVIDED: NO

RAMP A2 CURVE PRA2-01
P.I. = STA. 413+02.39
Δ = 44°30'41" RT
Dc = 04°30'00"
R = 1,273.24'
T = 521.04'
L = 989.14'
E = 102.49'

RAMP A2 CURVE PRA2-02
P.I. = STA. 424+26.19
Δ = 88°25'03" RT
Dc = 08°30'00"
R = 674.07'
T = 655.7'
L = 1,040.21'
E = 266.31'

RAMP J2 CURVE PRJ2-01
P.I. = STA. 5435+61.54
Δ = 23°06'15" LT
Dc = 02°15'00"
R = 2,546.48'
T = 520.50'
L = 1,026.85'
E = 52.65'

RAMP A3 CURVE PRA3-02
P.I. = STA. 588+26.63
Δ = 88°45'09" LT
Dc = 24°45'00"
R = 231.50'
T = 226.51'
L = 358.60'
E = 92.38'

RAMP A1 CURVE PRA1-01
P.I. = STA. 310+56.73
Δ = 66°35'38" LT
Dc = 38°11'50"
R = 150.00'
T = 98.52'
L = 174.34'
E = 29.46'

NOTES:
1. SEE SHEET 1 / 167 FOR ADDITIONAL SITE PLAN INFORMATION.
2. FOR BORING INFORMATION SEE SHEET 3 / 167 .
3. ROADSIDE PROTECTION WILL BE PROVIDED AS NOTED.

SITE PLAN - (2 OF 5)
CUY-77-1587 (BRIDGE 9)
I.R. 77 SB OVER I.R. 90 AND CR-721 (E. 14TH ST.)

SFN	1806910
DESIGN AGENCY	HDR
DESIGNER	TJE
CHECKER	NJH
REVIEWER	DWW 01/11/24
PROJECT ID	82382
SUBSET	2
TOTAL	167
SHEET	1870
TOTAL	2696

Preliminary Plans - For Reference Only

CUY-90-16.28 (CCG3A)
MODEL: 82382_SFN_1806910_SP002 PAPERSIZE: 34x22 (in.) DATE: 3/28/2025 TIME: 10:06:08 AM USER: RohitLBk
pw:\\mb-us-pw.bentley.com:mb-us-pw-03\Documents\Cleveland_OH\01_Projects\ODOT\District12\82382\400-Engineering\Structures\SFN_1806910\Sheets\82382_SFN_1806910_SP002.dgn

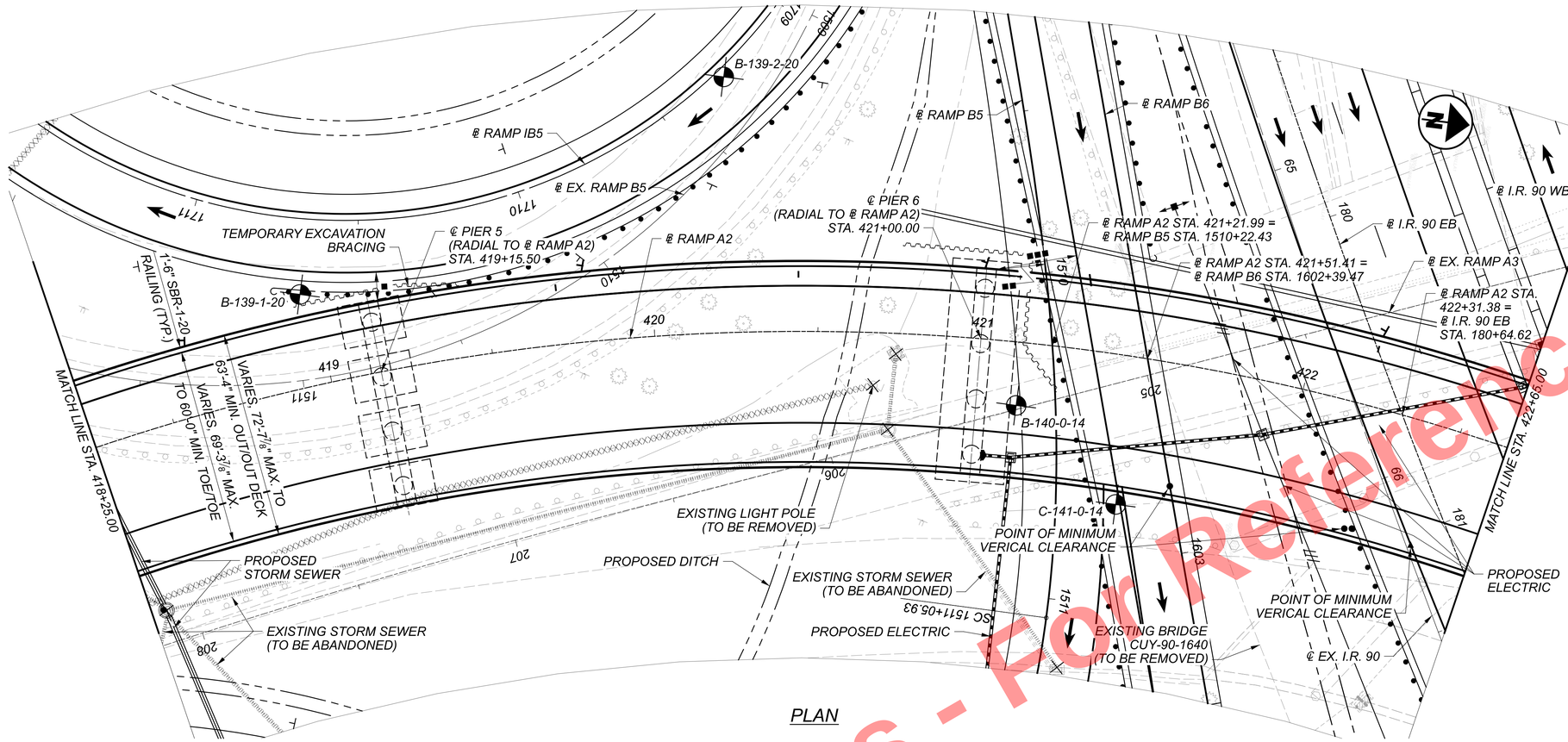

PLAN

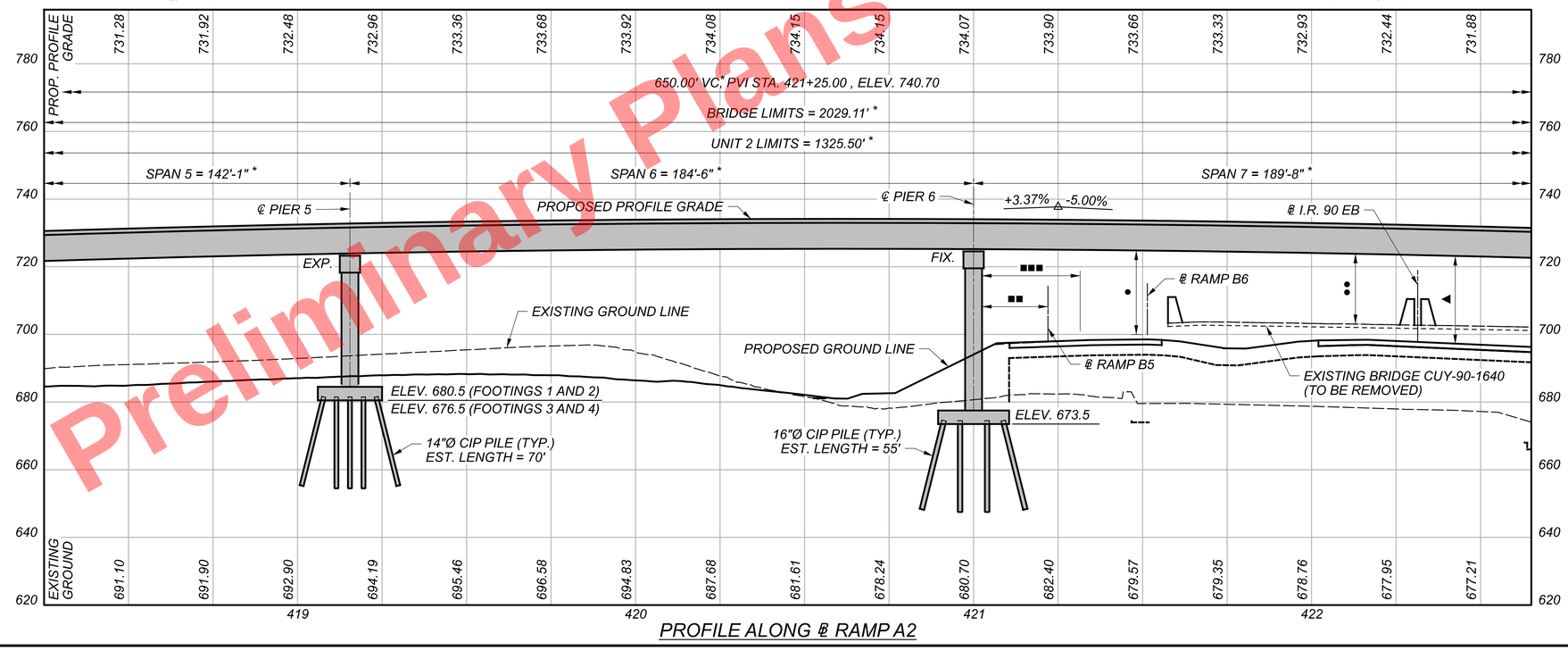

PROFILE ALONG ℄ RAMP A2

LEGEND

- BORING LOCATION
- * MEASURED ALONG ℄ RAMP A2

EXISTING I-90 EB:
- ●● 16'-0" REQUIRED MINIMUM VERTICAL CLEARANCE
  17'-9⅝" ACTUAL MINIMUM VERTICAL CLEARANCE

PROPOSED I-90 EB:
- ▲ 16'-0" REQUIRED MINIMUM VERTICAL CLEARANCE
  23'-6⅞" ACTUAL MINIMUM VERTICAL CLEARANCE

RAMP IB5:
- ■ REQUIRED CLEAR ZONE: 17'-0"
  ACTUAL CLEARANCE: 8'-11"
  PROTECTION PROVIDED: MGS

RAMP B5 AND RAMP B6:
- ● 16'-0" REQUIRED MINIMUM VERTICAL CLEARANCE
  24'-9⅞" ACTUAL MINIMUM VERTICAL CLEARANCE
- ■■ REQUIRED CLEAR ZONE: 30'-0"
  ACTUAL CLEARANCE: 14'-11"
  PROTECTION PROVIDED: MGS
- ■■■ REQUIRED CLEAR ZONE: 30'-0"
  ACTUAL CLEARANCE: 20'-10"
  PROTECTION PROVIDED: MGS

BORING DATA

BORING	STATION	OFFSET
B-125-0-14	410+11.35	39.83' RT.
B-134-2-20	410+83.70	17.62' LT.
B-134-3-20	412+07.30	13.67' RT.
C-135-0-14	412+41.06	9.23' LT.
B-121-0-58	412+77.72	31.91' LT.
B-135-1-20	413+01.20	9.44' LT.
B-136-0-14	413+70.98	14.35' LT.
C-137-0-14	414+28.42	31.61' LT.
B-138-0-14	414+81.88	25.60' LT.
B-138-1-20	416+28.11	34.01' RT.
B-139-0-14	417+74.09	37.36' RT.
B-139-1-20	418+96.35	28.32' LT.
B-139-2-20	420+23.62	78.33' LT.
B-140-0-14	421+12.78	19.37' RT.
C-141-0-14	421+48.58	45.61' RT.
B-142-0-14	423+14.51	86.40' LT.
B-106-0-58	423+17.89	38.08' RT.
B-141-1-20	423+20.13	12.97' LT.
B-142-1-20	424+27.86	27.02' RT.
B-142-2-20	424+92.22	29.13' RT.
B-142-3-20	426+81.27	38.58' RT.
B-080-0-14	428+75.50	92.86' RT.
C-143-0-14	428+80.03	58.56' LT.
B-144-0-14	430+45.80	52.20' RT.
C-145-0-14	430+69.40	40.40' LT.
C-121-0-14	431+45.98	21.86' RT.

NOTES:

1. SEE SHEET 1 / 167 FOR ADDITIONAL SITE PLAN INFORMATION.
2. FOR HORIZONTAL CURVE DATA SEE SHEET 2 / 167.
3. ROADSIDE PROTECTION WILL BE PROVIDED AS NOTED.

Preliminary Plans - For Reference Only

SITE PLAN - (3 OF 5)
CUY-77-1587 (BRIDGE 9)
I.R. 77 SB OVER I.R. 90 AND CR-721 (E. 14TH ST.)

SFN 1806910
DESIGN AGENCY HDR
DESIGNER TJE | CHECKER NJH
REVIEWER DWW 01/11/24
PROJECT ID 82382
SUBSET 3 | TOTAL 167
SHEET 1871 | TOTAL 2696

CUY-90-16.28 (CCG3A)

MODEL: 82382_SFN_1806910_SP003 PAPERSIZE: 34x22 (in.) DATE: 3/28/2025 TIME: 10:06:31 AM USER: Rohit.Bk
pw:\\mb-us-pw.bentley.com:mb-us-pw-03\Documents\Cleveland_OH01_Projects\ODOT\District12\82382\400-Engineering\Structures\SFN_1806910\Sheets\82382_SFN_1806910_SP003.dgn

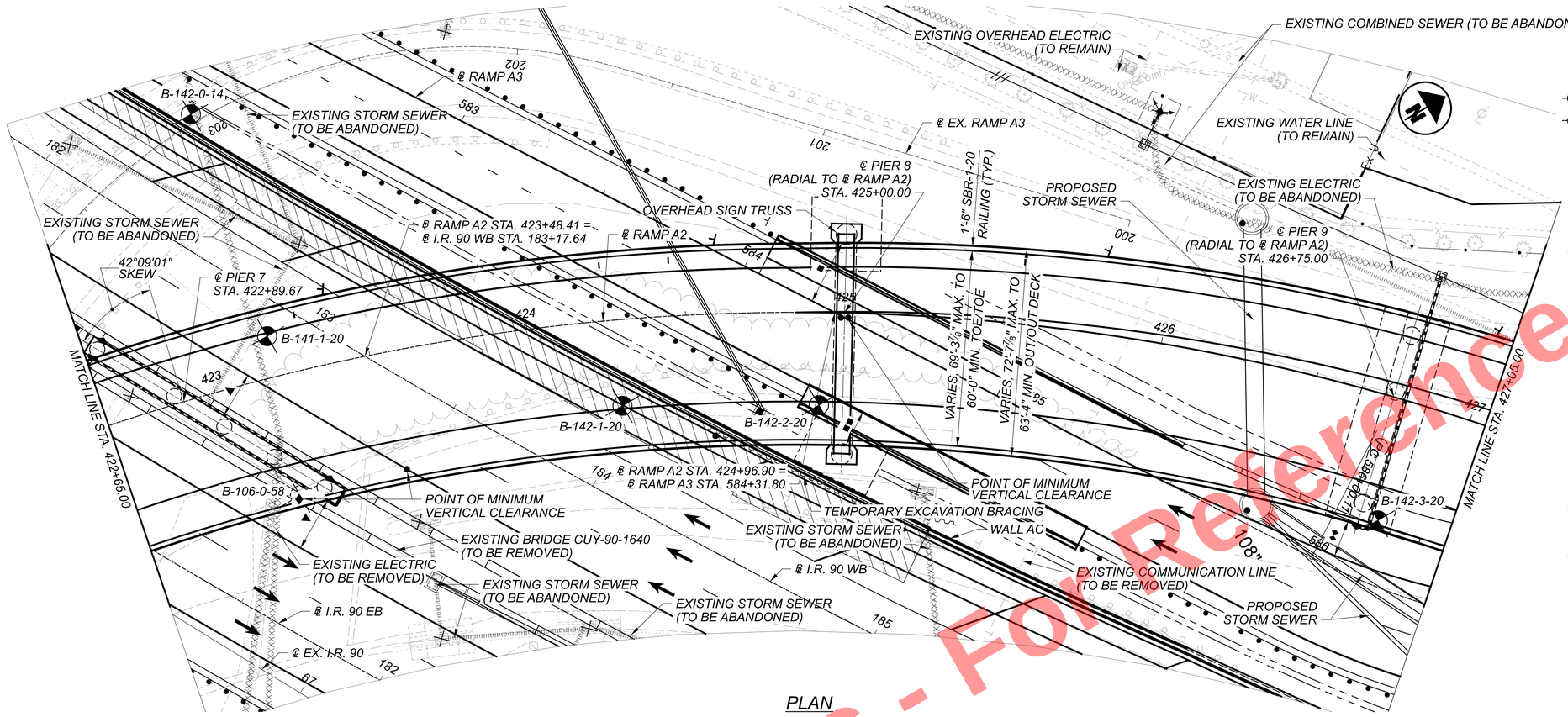

PLAN

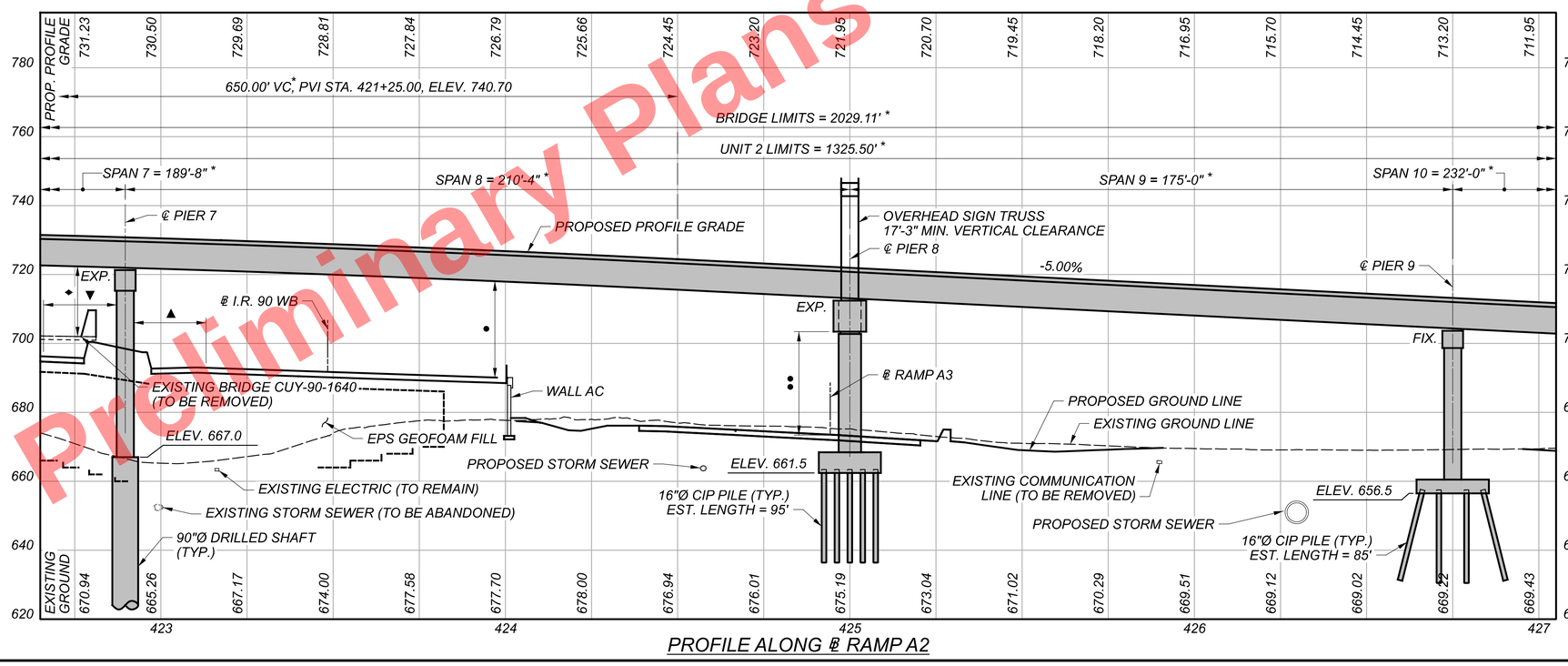

PROFILE ALONG ℄ RAMP A2

LEGEND

- BORING LOCATION
- HISTORIC BORING LOCATION
- * MEASURED ALONG ℄ RAMP A2

PROPOSED I-90 EB:
- ▼ REQUIRED CLEAR ZONE: 30'-0"
  ACTUAL CLEARANCE: 17'-1"
  PROTECTION PROVIDED: MEDIAN BARRIER

EXISTING I-90 WB:
- ♦ 16'-0" REQUIRED MINIMUM VERTICAL CLEARANCE
  16'-9⅜" ACTUAL MINIMUM VERTICAL CLEARANCE

PROPOSED I-90 WB:
- ● 16'-0" REQUIRED MINIMUM VERTICAL CLEARANCE
  23'-8" ACTUAL MINIMUM VERTICAL CLEARANCE
- ▲ REQUIRED CLEAR ZONE: 30'-0"
  ACTUAL CLEARANCE: 14'-6"
  PROTECTION PROVIDED: MEDIAN BARRIER

RAMP A3:
- ●● 16'-0" REQUIRED MINIMUM VERTICAL CLEARANCE
  28'-3⅜" ACTUAL MINIMUM VERTICAL CLEARANCE
- ■ REQUIRED CLEAR ZONE: 30'-0"
  ACTUAL CLEARANCE: 20'-4"
  PROTECTION PROVIDED: MOMENT SLAB & BARRIER
- ■■ REQUIRED CLEAR ZONE: 30'-0"
  ACTUAL CLEARANCE: 11'-2"
  PROTECTION PROVIDED: MOMENT SLAB & BARRIER
- ♦♦ REQUIRED CLEAR ZONE: 30'-0"
  ACTUAL CLEARANCE: 11'-7"
  PROTECTION PROVIDED: TYPE D BARRIER

NOTES:

1. SEE SHEET 1 / 167 FOR ADDITIONAL SITE PLAN INFORMATION.
2. FOR HORIZONTAL CURVE DATA SEE SHEET 2 / 167.
3. FOR BORING INFORMATION SEE SHEET 3 / 167.
4. ROADSIDE PROTECTION WILL BE PROVIDED AS NOTED.

SITE PLAN - (4 OF 5)
CUY-77-1587 (BRIDGE 9)
I.R. 77 SB OVER I.R. 90 AND CR-721 (E. 14TH ST.)

SFN	1806910
DESIGN AGENCY	HDR
DESIGNER	TJE
CHECKER	NJH
REVIEWER	DWW 01/11/24
PROJECT ID	82382
SUBSET	4
TOTAL	167
SHEET	1872
TOTAL	2696

Preliminary Plans - For Reference Only

CUY-90-16.28 (CCG3A)

MODEL: 82382_SFN_1806910_SP004 PAPERSIZE: 34x22 (in.) DATE: 3/28/2025 TIME: 10:06:55 AM USER: RohitLBk
pw:\\mb-us-pw.bentley.com:mb-us-pw-03\Documents\Cleveland_OH\01_Projects\ODOT\District12\82382\400-Engineering\Structures\SFN_1806910\Sheets\82382_SFN_1806910_SP004.dgn

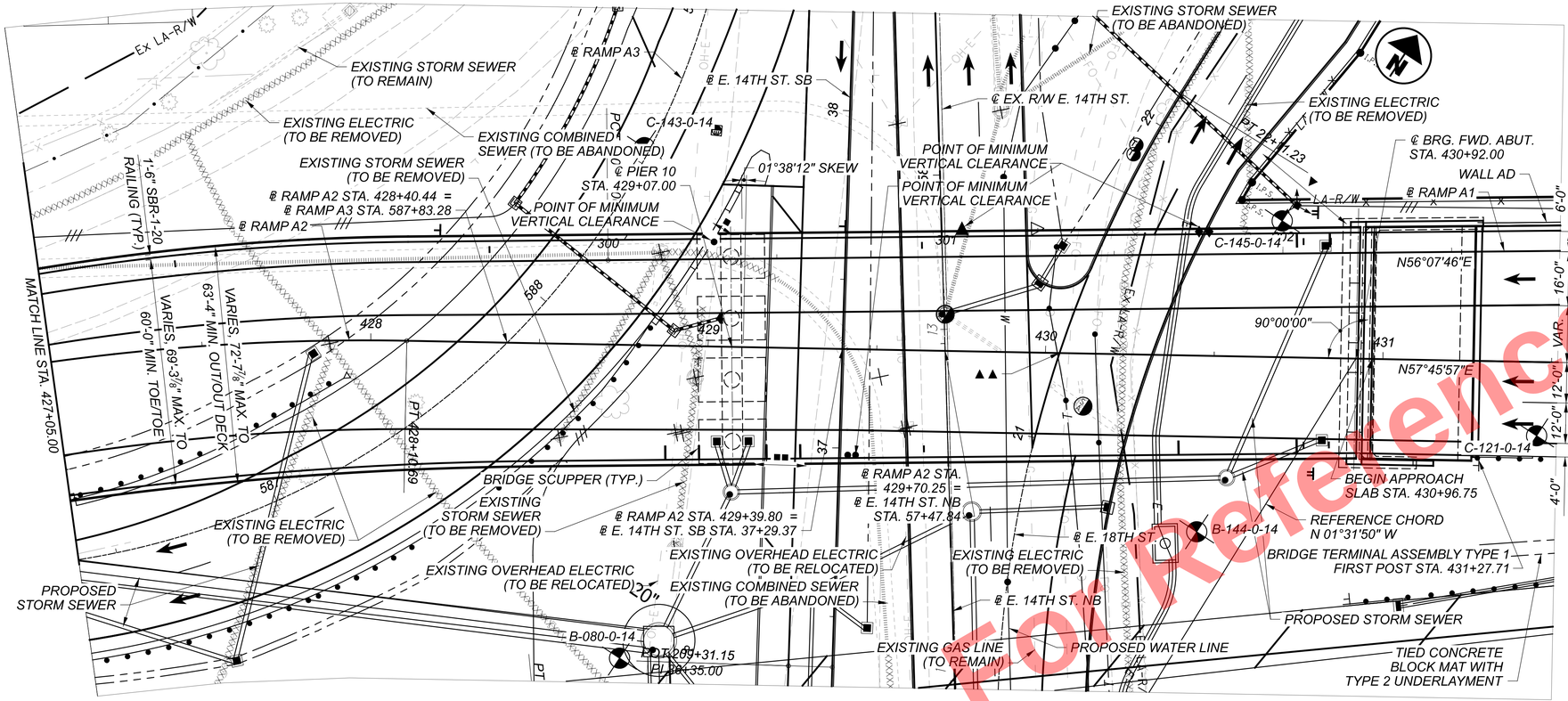

PLAN

PROFILE ALONG ℄ RAMP A2

LEGEND

- BORING LOCATION
- * MEASURED ALONG ℄ RAMP A2
- ▲▲ ℄ RAMP A2 STA. 430+04.17 = ℄ E. 18TH ST. STA. 21+26.18

RAMP A3:
- ● 16'-0" REQUIRED MINIMUM VERTICAL CLEARANCE
  27'-9" ACTUAL MINIMUM VERTICAL CLEARANCE
- ■ REQUIRED CLEAR ZONE: 15'-0"
  ACTUAL CLEARANCE: 6'-6"
  PROTECTION PROVIDED: TYPE D BARRIER

E. 14TH ST. SB:
- ●● 16'-0" REQUIRED MINIMUM VERTICAL CLEARANCE
  24'-10⅛" ACTUAL MINIMUM VERTICAL CLEARANCE
- ■■ REQUIRED CLEAR ZONE: 4'-0"
  ACTUAL CLEARANCE: 6'-4"
  PROTECTION PROVIDED: NO

E. 14TH ST. NB:
- ▲ 16'-0" REQUIRED MINIMUM VERTICAL CLEARANCE
  22'-11⅛" ACTUAL MINIMUM VERTICAL CLEARANCE

E. 18TH ST.:
- ♦♦ 16'-0" REQUIRED MINIMUM VERTICAL CLEARANCE
  21'-1⅞" ACTUAL MINIMUM VERTICAL CLEARANCE
- ▼ REQUIRED CLEAR ZONE: 15'-0"
  ACTUAL CLEARANCE: 32'-2"
  PROTECTION PROVIDED: NO

NOTES:
1. SEE SHEET 1 / 167 FOR ADDITIONAL SITE PLAN INFORMATION.
2. FOR HORIZONTAL CURVE DATA SEE SHEET 2 / 167.
3. FOR BORING INFORMATION SEE SHEET 3 / 167.
4. ROADSIDE PROTECTION WILL BE PROVIDED AS NOTED.

Preliminary Plans - For Reference Only

SITE PLAN - (5 OF 5)
CUY-77-1587 (BRIDGE 9)
I.R. 77 SB OVER I.R. 90 AND CR-721 (E. 14TH ST.)

SFN	1806910
DESIGN AGENCY	HDR
DESIGNER	TJE
CHECKER	NJH
REVIEWER	DWW 01/11/24
PROJECT ID	82382
SUBSET	5
TOTAL	167
SHEET	1873
TOTAL	2696

CUY-90-16.28 (CCG3A)

MODEL: 82382_SFN_1806910_SP005 PAPERSIZE: 34x22 (in.) DATE: 5/16/2025 TIME: 2:01:54 PM USER: Kathy.Johnson
pw:\\mb-us-pw.bentley.com:mb-us-pw-03\Documents\Cleveland_OH\01_Projects\ODOT\District12\82382400-Engineering\Structures\SFN_1806910\Sheets\82382_SFN_1806910_SP005.dgn

SHEET	DESCRIPTION
1	SITE PLAN - (1 OF 5)
2	SITE PLAN - (2 OF 5)
3	SITE PLAN - (3 OF 5)
4	SITE PLAN - (4 OF 5)
5	SITE PLAN - (5 OF 5)
6	SHEET INDEX
7	GENERAL PLAN - (1 OF 5)
8	GENERAL PLAN - (2 OF 5)
9	GENERAL PLAN - (3 OF 5)
10	GENERAL PLAN - (4 OF 5)
11	GENERAL PLAN - (5 OF 5)
12	GENERAL NOTES - (1 OF 4)
13	GENERAL NOTES - (2 OF 4)
14	GENERAL NOTES - (3 OF 4)
15	GENERAL NOTES - (4 OF 4)
16	ESTIMATED QUANTITIES
17	GEOMETRIC LAYOUT
18	FOUNDATION PLAN - (1 OF 6)
19	FOUNDATION PLAN - (2 OF 6)
20	FOUNDATION PLAN - (3 OF 6)
21	FOUNDATION PLAN - (4 OF 6)
22	FOUNDATION PLAN - (5 OF 6)
23	FOUNDATION PLAN - (6 OF 6)
24	DRILLED SHAFT DETAILS - (1 OF 2)
25	DRILLED SHAFT DETAILS - (2 OF 2)
26	DEMONSTRATION SHAFT FOR BI-DIRECTIONAL LOAD TEST DETAILS (1 OF 2)
27	DEMONSTRATION SHAFT FOR BI-DIRECTIONAL LOAD TEST DETAILS (2 OF 2)
28	TEMPORARY SHORING DETAILS - (1 OF 6)
29	TEMPORARY SHORING DETAILS - (2 OF 6)
30	TEMPORARY SHORING DETAILS - (3 OF 6)
31	TEMPORARY SHORING DETAILS - (4 OF 6)
32	TEMPORARY SHORING DETAILS - (5 OF 6)
33	TEMPORARY SHORING DETAILS - (6 OF 6)
34	REAR ABUTMENT PLAN AND ELEVATION
35	REAR ABUTMENT FOOTING PLAN AND SECTION
36	REAR ABUTMENT WINGWALL DETAILS
37	FORWARD ABUTMENT PLAN AND ELEVATION
38	FORWARD ABUTMENT FOOTING PLAN
39	FORWARD ABUTMENT SECTION AND DETAILS
40	FORWARD ABUTMENT WINGWALL DETAILS
41	PIER 1 PLAN AND ELEVATION
42	PIER 1 DETAILS
43	PIER 2 PLAN AND ELEVATION
44	PIER 2 DETAILS
45	PIER 3 PLAN AND ELEVATION
46	PIER 3 DETAILS - (1 OF 2)
47	PIER 3 DETAILS - (2 OF 2)
48	PIER 4 PLAN AND ELEVATION
49	PIER 4 DETAILS - (1 OF 2)
50	PIER 4 DETAILS - (2 OF 2)
51	PIER 5 PLAN AND ELEVATION
52	PIER 5 DETAILS
53	PIER 6 PLAN AND ELEVATION
54	PIER 6 DETAILS
55	PIER 7 PLAN AND ELEVATION
56	PIER 7 DETAILS
57	PIER 8 PLAN AND ELEVATION
58	PIER 8 DETAILS - (1 OF 4)
59	PIER 8 DETAILS - (2 OF 4)
60	PIER 8 DETAILS - (3 OF 4)
61	PIER 8 DETAILS - (4 OF 4)
62	PIER 9 PLAN AND ELEVATION
63	PIER 9 DETAILS
64	PIER 10 PLAN AND ELEVATION
65	PIER 10 DETAILS
66	BEARING LOCATION PLAN - (1 OF 2)
67	BEARING LOCATION PLAN - (2 OF 2)

SHEET	DESCRIPTION
68	BEARING DETAILS - (1 OF 3)
69	BEARING DETAILS - (2 OF 3)
70	BEARING DETAILS - (3 OF 3)
71	UNIT 1 FRAMING PLAN - (1 OF 2)
72	UNIT 1 FRAMING PLAN - (2 OF 2)
73	UNIT 2 FRAMING PLAN - (1 OF 4)
74	UNIT 2 FRAMING PLAN - (2 OF 4)
75	UNIT 2 FRAMING PLAN - (3 OF 4)
76	UNIT 2 FRAMING PLAN - (4 OF 4)
77	UNIT 1 GIRDER ELEVATION - (1 OF 2)
78	UNIT 1 GIRDER ELEVATION - (2 OF 2)
79	UNIT 2 GIRDER ELEVATION - (1 OF 3)
80	UNIT 2 GIRDER ELEVATION - (2 OF 3)
81	UNIT 2 GIRDER ELEVATION - (3 OF 3)
82	GIRDER DETAILS - (1 OF 3)
83	GIRDER DETAILS - (2 OF 3)
84	GIRDER DETAILS - (3 OF 3)
85	FIELD SPLICE DETIALS - (1 OF 2)
86	FIELD SPLICE DETIALS - (2 OF 2)
87	CROSSFRAMES - (1 OF 2)
88	CROSSFRAMES - (2 OF 2)
89	LATERAL BRACING
90	HEADER BEAM DETAILS - (1 OF 2)
91	HEADER BEAM DETAILS - (2 OF 2)
92	INSPECTION HANDRAIL DETAILS
93	UNIT 1 - GIRDER DEFLECTION AND CAMBER - (1 OF 2)
94	UNIT 1 - GIRDER DEFLECTION AND CAMBER - (2 OF 2)
95	UNIT 2 - GIRDER DEFLECTION AND CAMBER - (1 OF 4)
96	UNIT 2 - GIRDER DEFLECTION AND CAMBER - (2 OF 4)
97	UNIT 2 - GIRDER DEFLECTION AND CAMBER - (3 OF 4)
98	UNIT 2 - GIRDER DEFLECTION AND CAMBER - (4 OF 4)
99	ERECTION PLAN AND DETAILS - (1 OF 6)
100	ERECTION PLAN AND DETAILS - (2 OF 6)
101	ERECTION PLAN AND DETAILS - (3 OF 6)
102	ERECTION PLAN AND DETAILS - (4 OF 6)
103	ERECTION PLAN AND DETAILS - (5 OF 6)
104	ERECTION PLAN AND DETAILS - (6 OF 6)
105	DECK AND RAILING PLAN - (1 OF 9)
106	DECK AND RAILING PLAN - (2 OF 9)
107	DECK AND RAILING PLAN -(3 OF 9)
108	DECK AND RAILING PLAN - (4 OF 9)
109	DECK AND RAILING PLAN - (5 OF 9)
110	DECK AND RAILING PLAN - (6 OF 9)
111	DECK AND RAILING PLAN - (7 OF 9)
112	DECK AND RAILING PLAN - (8 OF 9)
113	DECK AND RAILING PLAN - (9 OF 9)
114	TRANSVERSE SECTION - (1 OF 3)
115	TRANSVERSE SECTION - (2 OF 3)
116	TRANSVERSE SECTION - (3 OF 3)
117	DECK DETAILS - (1 OF 3)
118	DECK DETAILS - (2 OF 3)
119	DECK DETAILS - (3 OF 3)
120	BRIDGE DRAINAGE DETAILS - (1 OF 7)
121	BRIDGE DRAINAGE DETAILS - (2 OF 7)
122	BRIDGE DRAINAGE DETAILS - (3 OF 7)
123	BRIDGE DRAINAGE DETAILS - (4 OF 7)
124	BRIDGE DRAINAGE DETAILS - (5 OF 7)
125	BRIDGE DRAINAGE DETAILS - (6 OF 7)
126	BRIDGE DRAINAGE DETAILS - (7 OF 7)
127	BRIDGE RAILING DETAILS
128	MODULAR EXPANSION JOINT DETAILS - (1 OF 7)
129	MODULAR EXPANSION JOINT DETAILS - (2 OF 7)
130	MODULAR EXPANSION JOINT DETAILS - (3 OF 7)
131	MODULAR EXPANSION JOINT DETAILS - (4 OF 7)
132	MODULAR EXPANSION JOINT DETAILS - (5 OF 7)
133	MODULAR EXPANSION JOINT DETAILS - (6 OF 7)
134	MODULAR EXPANSION JOINT DETAILS - (7 OF 7)
135	UNIT 1 - SCREED ELEVATIONS - (1 OF 2)
136	UNIT 1 - SCREED ELEVATIONS - (2 OF 2)

SHEET	DESCRIPTION
137	UNIT 2 - SCREED ELEVATIONS - (1 OF 3)
138	UNIT 2 - SCREED ELEVATIONS - (2 OF 3)
139	UNIT 2 - SCREED ELEVATIONS - (3 OF 3)
140	UNIT 1 - TOP OF HAUNCH ELEVATIONS - (1 OF 2)
141	UNIT 1 - TOP OF HAUNCH ELEVATIONS - (2 OF 2)
142	UNIT 2 - TOP OF HAUNCH ELEVATIONS - (1 OF 3)
143	UNIT 2 - TOP OF HAUNCH ELEVATIONS - (2 OF 3)
144	UNIT 2 - TOP OF HAUNCH ELEVATIONS - (3 OF 3)
145	UNIT 1 - FINAL DECK ELEVATIONS - (1 OF 3)
146	UNIT 1 - FINAL DECK ELEVATIONS - (2 OF 3)
147	UNIT 1 - FINAL DECK ELEVATIONS - (3 OF 3)
148	UNIT 2 - FINAL DECK ELEVATIONS - (1 OF 6)
149	UNIT 2 - FINAL DECK ELEVATIONS - (2 OF 6)
150	UNIT 2 - FINAL DECK ELEVATIONS - (3 OF 6)
151	UNIT 2 - FINAL DECK ELEVATIONS - (4 OF 6)
152	UNIT 2 - FINAL DECK ELEVATIONS - (5 OF 6)
153	UNIT 2 - FINAL DECK ELEVATIONS - (6 OF 6)
154	DECK POUR SEQUENCE
155	REAR APPROACH SLAB
156	REAR APPROACH SLAB RAILING DETAILS
157	FORWARD APPROACH SLAB
158	FORWARD APPROACH SLAB RAILING DETAILS
159	REINFORCEMENT LIST - (1 OF 9)
160	REINFORCEMENT LIST - (2 OF 9)
161	REINFORCEMENT LIST - (3 OF 9)
162	REINFORCEMENT LIST - (4 OF 9)
163	REINFORCEMENT LIST - (5 OF 9)
164	REINFORCEMENT LIST - (6 OF 9)
165	REINFORCEMENT LIST - (7 OF 9)
166	REINFORCEMENT LIST - (8 OF 9)
167	REINFORCEMENT LIST - (9 OF 9)

Preliminary Plans - Plans For Reference Only

SHEET INDEX

CUY-77-1587 (BRIDGE 9)

I.R. 77 SB OVER I.R. 90 AND CR-721 (E. 14TH ST.)

SFN	1806910
DESIGN AGENCY	HDR
DESIGNER	GDS
CHECKER	JTW
REVIEWER	DWW 01/11/24
PROJECT ID	82382
SUBSET	6
TOTAL	167
SHEET	1874
TOTAL	2696

CUY-90-16.28 (CCG3A)

MODEL: Sheet PAPERSIZE: 34x22 (in.) DATE: 3/28/2025 TIME: 10:07:47 AM USER: Rohit.Bk
pw:\\mb-us-pw.bentley.com:mb-us-pw-03\Documents\Cleveland_OH\01_Projects\ODOT\District12\82382400-Engineering\Structures\SFN_1806910\Sheets\82382_SFN_1806910_SN005.dgn

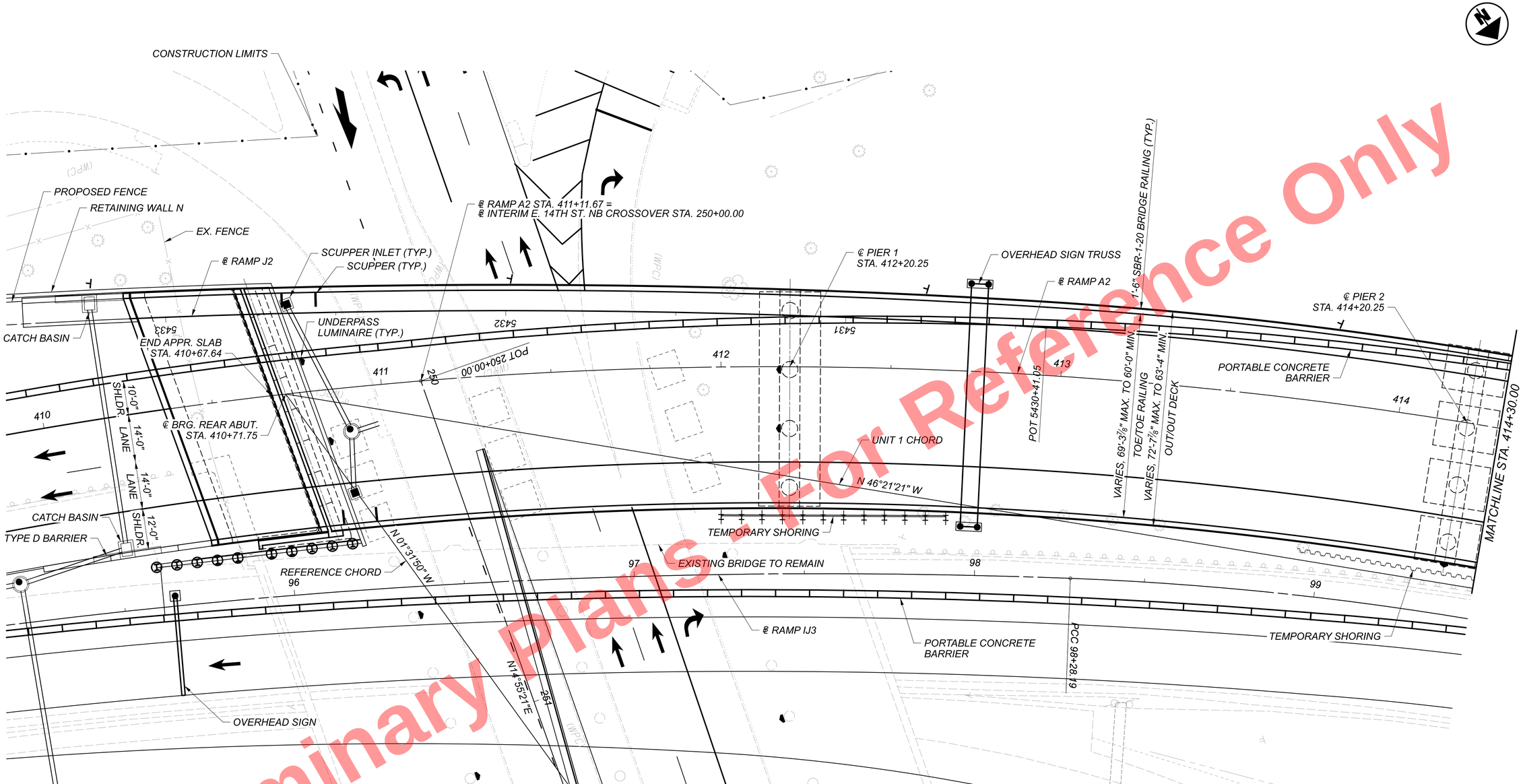

GENERAL PLAN

NOTES:

1. FOR GEOMETRY FROM REFERENCE AND UNIT CHORDS, SEE GEOMETRIC LAYOUT ON SHEET 17 / 167 .
2. FOR VERTICAL CURVE DATA, SEE SITE PLAN ON SHEETS 1 / 167 THRU 5 / 167 .

Preliminary Plans - Not for Construction
For Reference Only

GENERAL PLAN - (1 OF 5)
CUY-77-1587 (BRIDGE 9)
I.R. 77 SB OVER I.R. 90 AND CR-721 (E. 14TH ST.)

SFN	1806910
DESIGN AGENCY	HDR
DESIGNER	TJE
CHECKER	BTA
REVIEWER	DWW 01/11/24
PROJECT ID	82382
SUBSET	7
TOTAL	167
SHEET	1875
TOTAL	2696

CUY-90-16.28 (CCG3A)

MODEL: Sheet PAPERSIZE: 34x22 (in.) DATE: 3/28/2025 TIME: 10:08:10 AM USER: Rohit.Bk
pw:\\mb-us-pw.bentley.com:mb-us-pw-03\Documents\Cleveland_OH\01_Projects\ODOT\District12\82382\400-Engineering\Structures\SFN_1806910\Sheets\82382_SFN_1806910_SG001.dgn

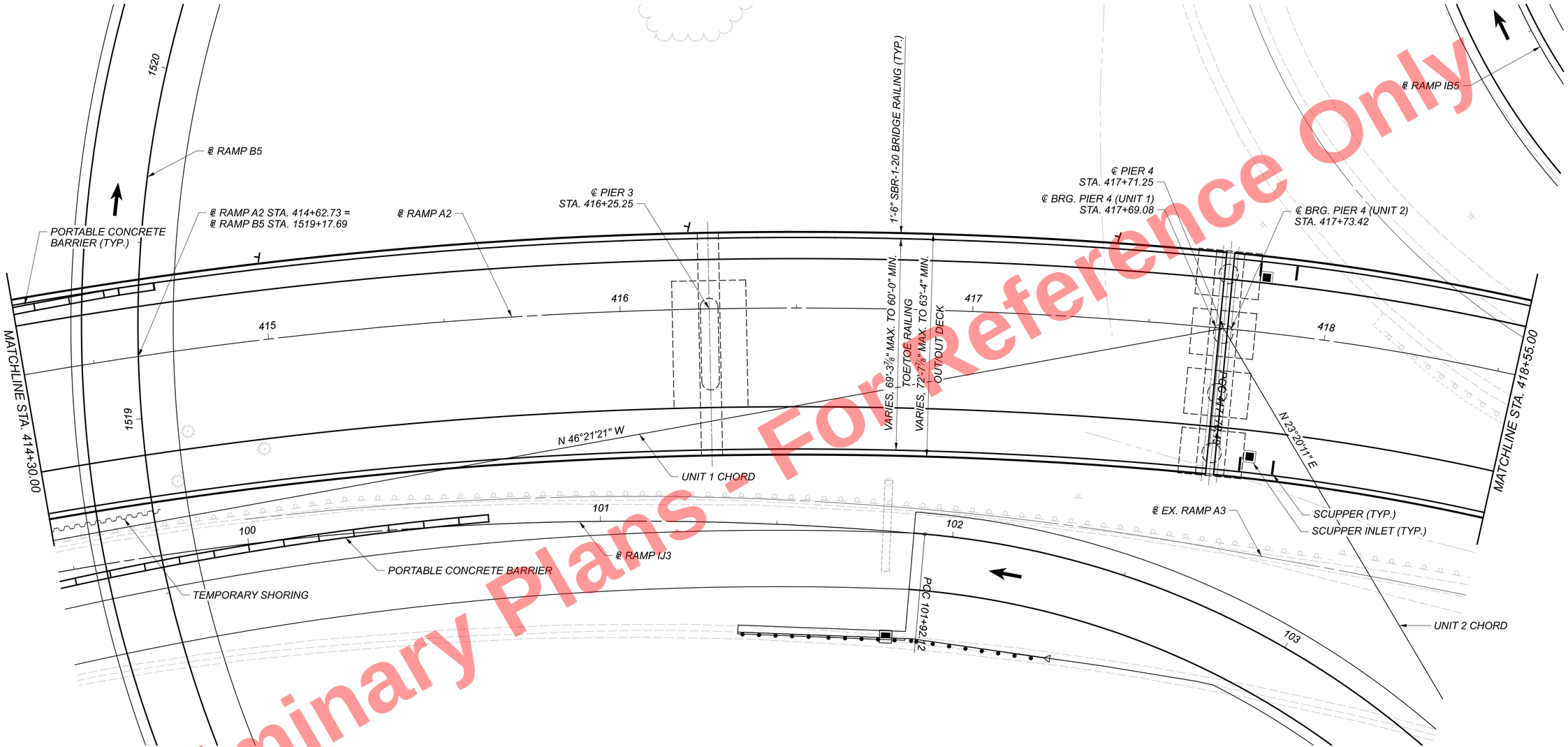

GENERAL PLAN

NOTES:

1. FOR GEOMETRY FROM REFERENCE AND UNIT CHORDS, SEE GEOMETRIC LAYOUT ON SHEET 17 / 167 .
2. FOR VERTICAL CURVE DATA, SEE SITE PLAN ON SHEETS 1 / 167 THRU 5 / 167 .

Preliminary Plans - For Reference Only

GENERAL PLAN - (2 OF 5)
CUY-77-1587 (BRIDGE 9)
I.R. 77 SB OVER I.R. 90 AND CR-721 (E. 14TH ST.)

SFN	1806910
DESIGN AGENCY	HDR
DESIGNER	TJE
CHECKER	BTA
REVIEWER	DWW 01/11/24
PROJECT ID	82382
SUBSET	8
TOTAL	167
SHEET	1876
TOTAL	2696

CUY-90-16.28 (CCG3A)

MODEL: Sheet PAPERSIZE: 34x22 (in.) DATE: 3/28/2025 TIME: 10:08:29 AM USER: Rohit.Bk
pw:\\mb-us-pw.bentley.com:mb-us-pw-03\Documents\Cleveland_OH01_Projects\ODOT\District12\82382400-Engineering\Structures\SFN_1806910\Sheets\82382_SFN_1806910_SG002.dgn

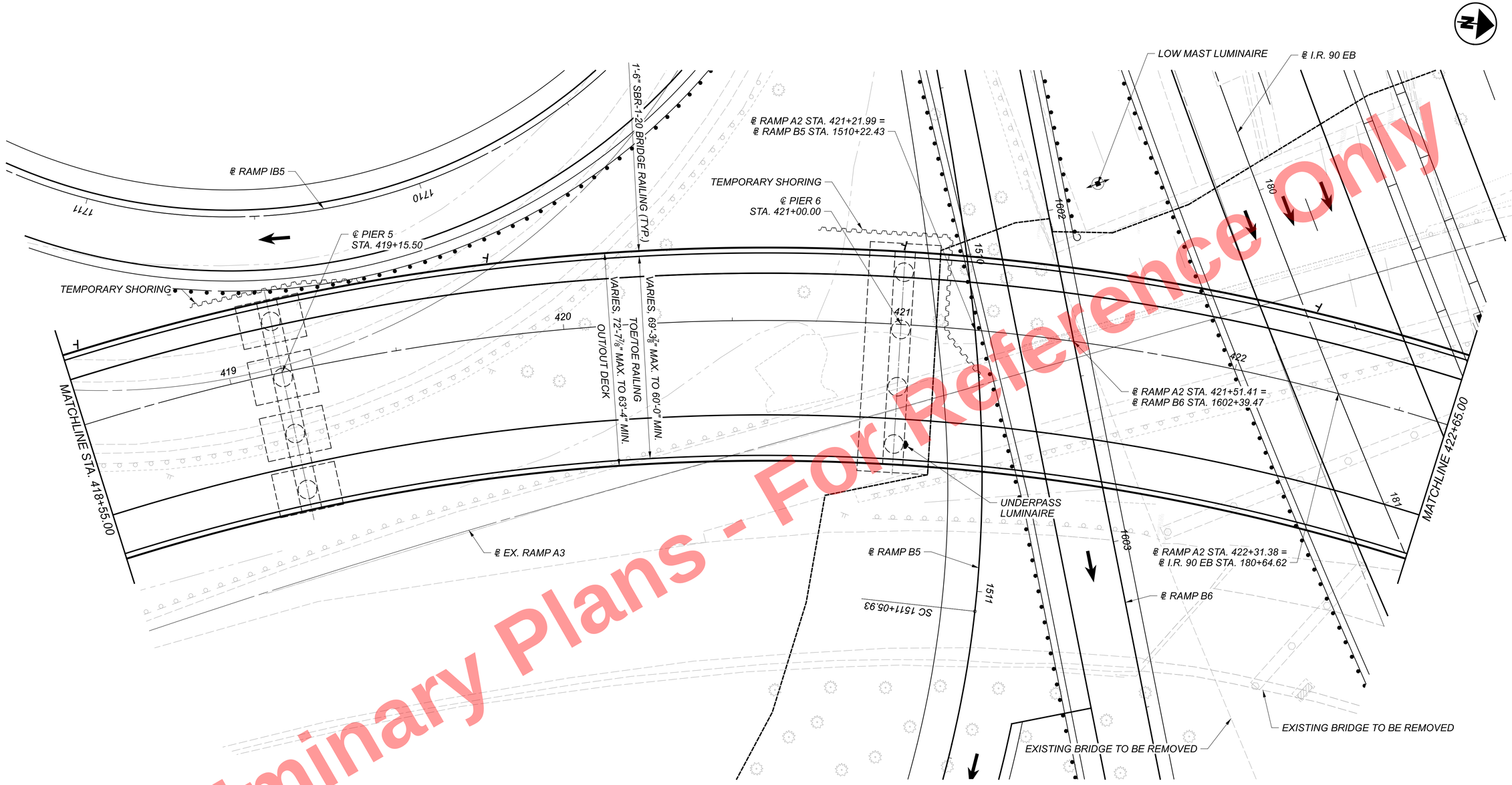

GENERAL PLAN

Preliminary Plans - For Reference Only

NOTES:

1. FOR GEOMETRY FROM REFERENCE AND UNIT CHORDS, SEE GEOMETRIC LAYOUT ON SHEET 17 / 167 .
2. FOR VERTICAL CURVE DATA, SEE SITE PLAN ON SHEETS 1 / 167 THRU 5 / 167 .

GENERAL PLAN - (3 OF 5)
CUY-77-1587 (BRIDGE 9)
I.R. 77 SB OVER I.R. 90 AND CR-721 (E. 14TH ST.)

SFN 1806910
DESIGN AGENCY
DESIGNER TJE | CHECKER BTA
REVIEWER DWW 01/11/24
PROJECT ID 82382
SUBSET 9 | TOTAL 167
SHEET 1877 | TOTAL 2696

CUY-90-16.28 (CCG3A)

MODEL: Sheet PAPERSIZE: 34x22 (in.) DATE: 3/28/2025 TIME: 10:08:45 AM USER: Rohit.Bk
pw:\\mb-us-pw.bentley.com:mb-us-pw-03\Documents\Cleveland_OH\01_Projects\ODOT\District12\82382\400-Engineering\Structures\SFN_1806910\Sheets\82382_SFN_1806910_SG003.dgn

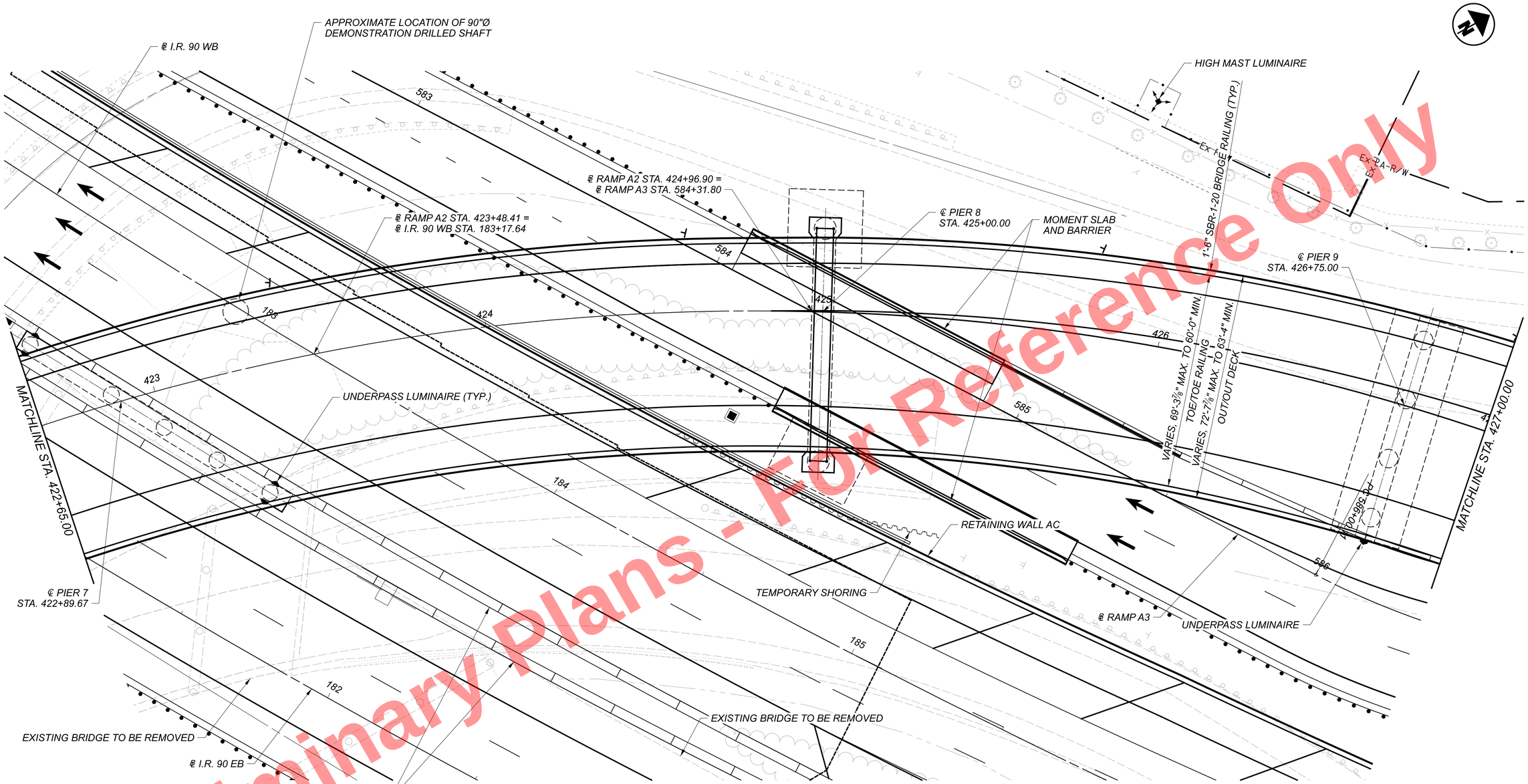

GENERAL PLAN

NOTES:

1. FOR GEOMETRY FROM REFERENCE AND UNIT CHORDS, SEE GEOMETRIC LAYOUT ON SHEET 17 / 167 .
2. FOR VERTICAL CURVE DATA, SEE SITE PLAN ON SHEETS 1 / 167 THRU 5 / 167 .

Preliminary Plans - For Reference Only

CUY-90-16.28 (CCG3A)

MODEL: Sheet PAPERSIZE: 34x22 (in.) DATE: 3/28/2025 TIME: 10:09:01 AM USER: RohitLBk
pw:\\mb-us-pw.bentley.com:mb-us-pw-03\Documents\Cleveland_OH\01_Projects\ODOT\District12\82382\400-Engineering\Structures\SFN_1806910\Sheets\82382_SFN_1806910_SG004.dgn

GENERAL PLAN - (4 OF 5)
CUY-77-1587 (BRIDGE 9)
I.R. 77 SB OVER I.R. 90 AND CR-721 (E. 14TH ST.)

SFN	1806910
DESIGN AGENCY	HDR
DESIGNER	TJE
CHECKER	BTA
REVIEWER	DWW 01/11/24
PROJECT ID	82382
SUBSET	10
TOTAL	167
SHEET	1878
TOTAL	2696

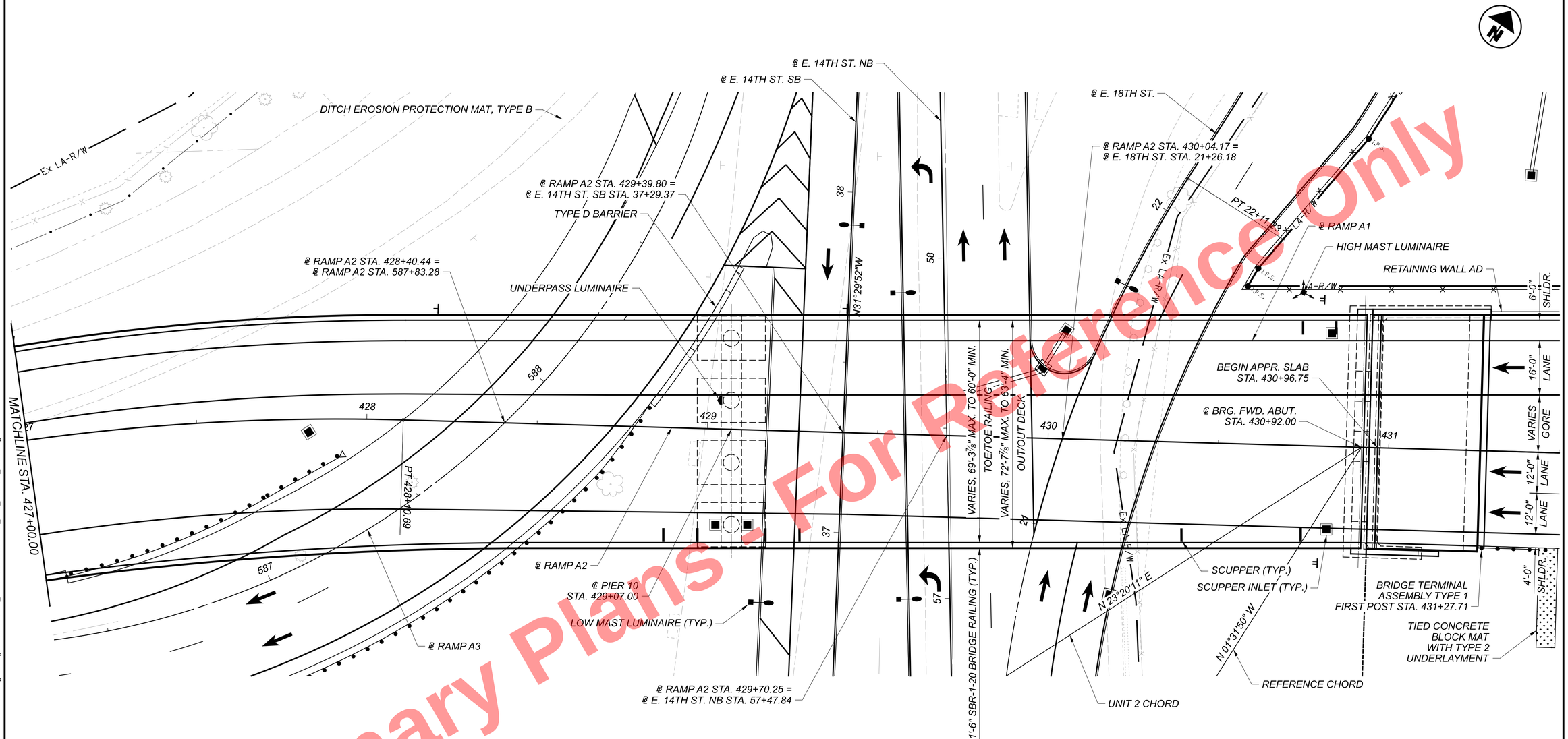

Preliminary Plans - For Reference Only

GENERAL PLAN

NOTES:

1. FOR GEOMETRY FROM REFERENCE AND UNIT CHORDS, SEE GEOMETRIC LAYOUT ON SHEET 17 / 167 .
2. FOR VERTICAL CURVE DATA, SEE SITE PLAN ON SHEETS 1 / 167 THRU 5 / 167 .

GENERAL PLAN - (5 OF 5)
CUY-77-1587 (BRIDGE 9)
I.R. 77 SB OVER I.R. 90 AND CR-721 (E. 14TH ST.)

SFN 1806910
DESIGN AGENCY HDR
DESIGNER TJE | CHECKER BTA
REVIEWER DWW 01/11/24
PROJECT ID 82382
SUBSET 11 | TOTAL 167
SHEET 1879 | TOTAL 2696

CUY-90-16.28 (CCG3A)

MODEL: Sheet PAPERSIZE: 34x22 (in.) DATE: 3/28/2025 TIME: 10:09:22 AM USER: RohitBk
pw:\\mb-us-pw.bentley.com:mb-us-pw-03\Documents\Cleveland_OH\01_Projects\ODOT\District12\82382\400-Engineering\Structures\SFN_1806910\Sheets\82382_SFN_1806910_SG005.dgn

STANDARD DRAWINGS AND SUPPLEMENTAL SPECIFICATIONS:

REFER TO THE FOLLOWING STANDARD BRIDGE DRAWINGS:

AS-1-15	REVISED	07-17-15
AS-2-15	REVISED	01-18-19
SBR-1-20	REVISED	07-19-24

AND TO THE FOLLOWING SUPPLEMENTAL SPECIFICATIONS:

800	DATED	SEE TITLE SHEET
840	DATED	04-15-22
855	DATED	04-20-18
866	DATED	04-21-17
869	DATED	10-17-14
894	DATED	04-16-21

DESIGN SPECIFICATIONS:

THIS STRUCTURE CONFORMS TO THE 9TH EDITION OF THE "LRFD BRIDGE DESIGN SPECIFICATIONS" ADOPTED BY THE AMERICAN ASSOCIATION OF STATE HIGHWAY AND TRANSPORTATION OFFICIALS, 2020 AND THE ODOT BRIDGE DESIGN MANUAL, 2020.

SPECIAL DESIGN SPECIFICATIONS:

THIS BRIDGE REQUIRED THE USE OF A THREE DIMENSIONAL FINITE ELEMENT MODEL TO ANALYZE THE STRUCTURE, IN WHICH ALL STRUCTURAL COMPONENTS ARE EXPLICITLY MODELED (GIRDERS, DECK, AND ALL CROSSFRAME MEMBERS). THE COMPUTER PROGRAM USED FOR THE STRUCTURAL ANALYSIS WAS LARSA 4D (VERSION 8.00.R9021). THE BRIDGE COMPONENT FORCES WERE DETERMINED BY THIS METHOD AND THE LOAD DISTRIBUTION WAS DETERMINED AS FOLLOWS:

DEAD LOAD DISTRIBUTION: STRUCTURAL STEEL SELF-WEIGHT (NON-COMPOSITE) INCLUDES A 5% INCREASE OF STEEL DENSITY TO ACCOUNT FOR MISCELLANEOUS STEEL DETAILS. THE WEIGHT OF THE CONCRETE DECK SLAB (NON-COMPOSITE) IS PLACED AS A UNIFORMLY DISTRIBUTED LOAD, AND IS DETERMINED BY TRIBUTARY WIDTH TO EACH GIRDER. THE WEIGHT OF THE CONCRETE HAUNCH (NON-COMPOSITE) IS PLACED AS A UNIFORMLY DISTRIBUTED LOAD ALONG EACH GIRDER. EDGE RAILING LOADS (COMPOSITE) WERE PLACED AS UNIFORM SURFACE LOAD TO THE OVERHANG DECK PLATES, AND THE FUTURE WEARING SURFACE LOAD OF 60 PSF (COMPOSITE) WAS PLACED ON THE CONCRETE DECK AS A UNIFORM SURFACE LOAD IN THE THREE DIMENSIONAL FINITE ELEMENT MODEL.

LIVE LOAD DISTRIBUTION: A LIVE LOAD INFLUENCE SURFACE, IN CONJUNCTION WITH THE THREE DIMENSIONAL FINITE ELEMENT MODEL, WAS USED FOR LIVE LOAD ANALYSIS. INFLUENCE ORDINATES ARE DETERMINED WITHIN THE FINITE ELEMENT PROGRAM BY APPLYING A VERTICAL UNIT LOAD AT LONGITUDINAL AND TRANSVERSE POSITIONS AT DEFINED INCREMENTS ON THE CONCRETE DECK. LIVE LOADS ARE THEN PLACED ON THE INFLUENCE SURFACE AT CRITICAL LOCATIONS TO DETERMINE THE MAXIMUM/MINIMUM STRUCTURAL COMPONENT FORCE EFFECT BASED ON THE LONGITUDINAL AND TRANSVERSE STIFFNESS. THE LIVE LOAD DISTRIBUTION FACTORS VARY ALONG THE WIDTH AND LENGTH OF THE STRUCTURE.

OPERATIONAL IMPORTANCE:

A LOAD MODIFIER OF 1.0 HAS BEEN ASSUMED FOR THE DESIGN OF THIS STRUCTURE IN ACCORDANCE WITH THE AASHTO LRFD BRIDGE DESIGN SPECIFICATIONS, ARTICLE 1.3.5 AND THE ODOT BRIDGE DESIGN MANUAL.

REDUNDANCY:

THE FOLLOWING ITEMS WERE CONSIDERED NON-REDUNDANT FOR DESIGN AND INCLUDED A LOAD MODIFIER EQUAL TO 1.05 IN ACCORDANCE WITH THE AASHTO LRFD BRIDGE DESIGN SPECIFICATIONS, ARTICLE 1.3.4: PIER 8 CAP AND COLUMNS

DESIGN LOADING:

HL-93
FUTURE WEARING SURFACE (FWS) OF 0.060 KIPS/SQ.FT.

DESIGN DATA:

CONCRETE CLASS QC2 - COMPRESSIVE STRENGTH 4.5 KSI (SUPERSTRUCTURE)
CONCRETE CLASS QC1 - COMPRESSIVE STRENGTH 4.0 KSI (SUBSTRUCTURE)
CONCRETE CLASS QC4 - COMPRESSIVE STRENGTH 4.0 KSI (MASS CONCRETE)
CONCRETE CLASS QC4 - COMPRESSIVE STRENGTH 6.0 KSI (MASS CONCRETE) PIER 8 CAP
CONCRETE CLASS QC5, WITH 3/8-IN. MAX. AGGREGATE SIZE: COMPRESSIVE STRENGTH 4.5 KSI (DRILLED SHAFT) AT PIER 3
CONCRETE CLASS QC4, WITH 3/8-IN. MAX. AGGREGATE SIZE: COMPRESSIVE STRENGTH 4.5 KSI (DRILLED SHAFT) AT PIER 7

CONCRETE REINFORCEMENT:
EPOXY COATED STEEL REINFORCEMENT - MINIMUM YIELD STRENGTH 60 KSI (DECK SLABS, RAILING, ABUTMENTS, PIERS AND APPROACH SLABS)
GFRP REINFORECMENT - C&MS 705.28 (MODULUS = 8700 KSI)(RAILING)

STRUCTURAL STEEL - ASTM A709 GRADE 50 - YIELD STRENGTH 50 KSI

SHEET PILING - ASTM A572 GRADE 50 - YIELD STRENGTH 50 KSI

CAST-IN PLACE STEEL PIPE PILES - ASTM A252, STEEL PIPE GRADE 3
MINIMUM YIELD STRENGTH 45 KSI

POST-TENSIONING DESIGN DATA:

A. POST-TENSIONING STRANDS SHALL BE IN ACCORDANCE WITH ASTM A416, GRADE 270, LOW RELAXATION.

B. THE DESIGN IS BASED UPON THE FOLLOWING INITIAL TENDON STRESSES AND TENDON CHARACTERISTICS:
DIAMETER: 0.6 INCHES
WOBBLE COEFFICIENT: 0.0002
FRICTION COEFFICIENT: 0.23
ANCHOR SET: 0.25 INCHES
MAXIMUM JACKING STRESS: 195 KSI
MAXIMUM STRESS AT ANCHORAGE AFTER SEATING: 187 KSI
MAXIMUM STRESS OTHER LOCATIONS AFTER SEATING: 187 KSI
APPARENT MODULUS OF ELASTICITY: 28,500 KSI

C. A MINIMUM COMPRESSIVE STRENGTH OF 5,000 PSI SHALL BE OBTAINED PRIOR TO STRESSING OF POST-TENSIONING TENDONS.

MONOLITHIC WEARING SURFACE:

MONOLITHIC WEARING SURFACE IS ASSUMED, FOR DESIGN PURPOSES, TO BE 1" THICK.

REAR ABUTMENT PILE DRIVING CONSTRAINTS:

PRIOR TO DRIVING ABUTMENT PILES TO THE ULTIMATE BEARING VALUE (UBV), CONSTRUCT THE MSE WALL AND THE BRIDGE APPROACH EMBANKMENT BEHIND THE ABUTMENT UP TO THE BOTTOM OF THE FOOTING FOR A MINIMUM DISTANCE OF 200 FEET BEHIND THE REAR ABUTMENT. THE CONTRACTOR MAY PRE-DRIVE ABUTMENT PILES BEFORE CONSTRUCTING MSE WALLS. PRE-DRIVING CONSISTS OF INSTALLING THE ABUTMENT PILES INTO THE SOIL ONLY AS FAR AS NECESSARY SO THAT THE PILE WILL REMAIN VERTICAL DURING MSE WALL CONSTRUCTION. IF PRE-DRIVING PILES, INSTALL PILE SLEEVES AROUND PILES BEFORE CONSTRUCTING THE MSE WALL. PROVIDE AT LEAST 3-FT OF PILE ABOVE THE TOP OF THE PILE SLEEVE TO MEET THE REQUIREMENTS OF C&MS 507.09 REGARDING SPLICES.

IF NOT PRE-DRIVING ABUTMENT PILES, INSTALL THE ABUTMENT PILES THROUGH PILE SLEEVES AFTER THE ABOVE REQUIRED MSE WALL AND EMBANKMENT HAVE BEEN CONSTRUCTED.

ITEM 203 EMBANKMENT, AS PER PLAN:

PLACE AND COMPACT EMBANKMENT MATERIAL IN 6 INCH LIFTS FOR THE CONSTRUCTION OF THE APPROACH EMBANKMENT BETWEEN STATIONS 409+67.00 TO 431+97.00.

REAR ABUTMENT PROPRIETARY RETAINING WALL DATA:

THE PROPRIETARY WALL SUPPLIER SHALL DESIGN THE INTERNAL STABILITY OF A MECHANICALLY STABILIZED EARTH (MSE) WALL IN ACCORDANCE WITH SS840 TO SUPPORT THE ABUTMENT. THE DESIGN FOR INTERNAL STABILITY SHALL INCLUDE A NOMINAL (I.E. UNFACTORED) HORIZONTAL STRIP LOAD DUE TO FRICTION (FR) FROM THE SUPERSTRUCTURE OF 1.85 K/FT AT THE REAR ABUTMENT (WALL N) APPLIED PERPENDICULAR TO THE FACE OF WALL AT THE BASE OF THE CONCRETE FOOTING. THIS STRIP LOAD DOES NOT INCLUDE EARTH PRESSURE LOADS FROM THE ABUTMENT BACKFILL. HOWEVER, THE PROPRIETARY WALL SUPPLIER SHALL INCLUDE EARTH PRESSURE LOADS FROM THE ABUTMENT BACKFILL IN THE DESIGN CALCULATIONS.

FRICTION DRILLED SHAFTS:

THE MAXIMUM FACTORED LOAD TO BE SUPPORTED BY EACH DRILLED SHAFT IS 2038.9 KIPS AT PIER 3 AND 2534.0 KIPS AT PIER 7. THIS LOAD IS RESISTED BY FRICTIONAL SIDE RESISTANCE ALONG THE LENGTH OF THE DRILLED SHAFT AND BY TIP RESISTANCE. AT PIER 3, THE FACTORED SIDE RESISTANCE IS 1707.3 KIPS, ASSUMED TO ACT ALONG THE ENTIRE LENGTH OF THE DRILLED SHAFT, AND THE FACTORED TIP RESISTANCE IS 334.0 KIPS. AT PIER 7, THE FACTORED SIDE RESISTANCE IS 2115.3 KIPS, ASSUMED TO ACT ALONG THE BOTTOM 83 FEET OF THE DRILLED SHAFT, AND THE FACTORED TIP RESISTANCE IS 424.6 KIPS.

ITEM 524 - DRILLED SHAFTS, 90" DIAMETER, ABOVE BEDROCK, AS PER PLAN:

INSTALLATION OF DRILLED SHAFTS AT PIER 7 MAY CONFLICT WITH EXISTING FOUNDATIONS, SPECIALIZED EQUIPMENT, MATERIAL, AND ALL NECESSARY LABOR TO PERFORM THIS WORK WILL BE CONSIDERED INCIDENTAL AND INCLUDED WITH PAY ITEM 524-DRILLED SHAFTS, 90" DIAMETER, ABOVE BEDROCK, AS PER PLAN. REFER TO FOUNDATION PLANS FOR APPROXIMATE LOCATIONS OF EXISTING PILES.

LATERALLY LOADED DRILLED SHAFTS:

THE MAXIMUM FACTORED LATERAL LOAD TO BE SUPPORTED BY EACH DRILLED SHAFT AT PIER 3 IS 58.5 KIPS. THIS LOAD PRODUCES A MAXIMUM FACTORED BENDING MOMENT OF 934 KIP-FEET, AND A MAXIMUM FACTORED SHEAR OF 58.5 KIPS, WITHIN THE DRILLED SHAFT.

THE MAXIMUM FACTORED LATERAL LOAD AND BENDING MOMENT TO BE SUPPORTED BY EACH DRILLED SHAFT AT PIER 7 ARE 100 KIPS AND 3739 KIP-FEET, RESPECTIVELY. THESE LOADS PRODUCE A MAXIMUM FACTORED BENDING MOMENT OF 5108 KIP-FEET, AND A MAXIMUM FACTORED SHEAR OF 133 KIPS, WITHIN THE DRILLED SHAFT.

ITEM 524 - DRILLED SHAFTS, MISC.: 90" DIAMETER DEMONSTRATION DRILLED SHAFT

PART 1: DESCRIPTION
THIS WORK CONSISTS OF ALL LABOR, MATERIALS, EQUIPMENT AND INCIDENTALS TO CONSTRUCT A DEMONSTRATION DRILLED SHAFT FOR TESTING AND EVALUATION TO VERIFY THE PROPOSED CONSTRUCTION METHODS FOR THE PRODUCTION DRILLED SHAFTS.

COMPLETE THE INSTALLATION OF THE DEMONSTRATION DRILLED SHAFT WITHIN 90 DAYS OF CONTRACT AWARD DATE. THE DEPARTMENT WILL CONSIDER THE DEMONSTRATION DRILLED SHAFT INSTALLATION COMPLETE AFTER RECEIVING WRITTEN ACCEPTANCE FROM THE ENGINEER.

PART 2: MATERIALS
THE DEMONSTRATION DRILLED SHAFT SHALL USE THE SAME CONCRETE MIX DESIGN AND STEEL REINFORCEMENT AS THE PRODUCTION DRILLED SHAFTS.

PART 3: EXECUTION
SUBMIT A DRILLED SHAFT INSTALLATION PLAN TO THE ENGINEER FOR ACCEPTANCE IN ACCORDANCE WITH THE REQUIREMENTS OF C&MS 524.03. CONSTRUCT AT LEAST ONE DEMONSTRATION DRILLED SHAFT IN THE AREA SHOWN IN THE PLANS AND IN ACCORDANCE WITH THE ACCEPTED WRITTEN INSTALLATION. UPON CONSTRUCTION OF THE DEMONSTRATION DRILLED SHAFT, AND RECEIPT OF TESTING AND EVALUATION RESULTS CONFIRMING THE DEMONSTRATION DRILLED SHAFT HAS BEEN INSTALLED IN ACCORDANCE WITH CONTRACT DOCUMENTS, THE ENGINEER WILL ISSUE A LETTER ACCEPTING THE INSTALLATION PLAN FOR THE CONSTRUCTION OF THE SUBSEQUENT PRODUCTION DRILLED SHAFTS.

IF MODIFICATION(S) TO THE INSTALLATION PLAN ARE MADE, WHETHER DUE TO THE TESTING AND EVALUATION RESULTS OR FOR OTHER REASON, THE DEPARTMENT WILL REQUIRE CONSTRUCTION OF AN ADDITIONAL DEMONSTRATION SHAFT CONSTRUCTED IN ACCORDANCE WITH THE MODIFIED INSTALLATION PLAN, AT NO ADDITIONAL COST.

THE DIAMETER, LENGTH, REINFORCING, INSTALLATIONS METHODS, AND OTHER MISCELLANEOUS DETAILS OF THE DEMONSTRATION SHAFT SHALL BE THE SAME AS THE PRODUCTION DRILLED SHAFTS.

SUBMIT THE LOCATION OF THE DEMONSTRATION SHAFT TO THE ENGINEER FOR ACCEPTANCE. LOCATE THE DEMONSTRATION DRILLED SHAFT SUCH THAT NO INTERFERENCE OCCURS WITH THE FOUNDATIONS OF EXISTING OR PROPOSED STRUCTURES, THE PROPOSED MAINTENANCE OF TRAFFIC, OR EXISTING OR PROPOSED UTILITIES.

TEST THE DEMONSTRATION SHAFT BY THERMAL INTEGRITY PROFILING (TIP) ACCORDING TO ASTM D7949, METHOD B; BY CROSSHOLE SONIC LOGGING (CSL) ACCORDING TO ASTM D6760; BY HIGH-STRAIN DYNAMIC TESTING ACCORDING TO ASTM D4945; AND BY BI-DIRECTIONAL STATIC AXIAL COMPRESSIVE LOAD TESTING ACCORDING TO ASTM D8169.

PART 4: MEASUREMENT AND PAYMENT
THE DEPARTMENT WILL MEASURE DEMONSTRATION DRILLED SHAFT BY THE NUMBER OF FEET, MEASURED ALONG THE AXIS OF THE DRILLED SHAFT FROM THE REQUIRED BOTTOM ELEVATION OF THE SHAFT TO THE PROPOSED TOP PLAN ELEVATION.

IN ADDITION TO THE PROVISIONS OF C&MS 524.17, THE DEPARTMENT WILL PAY FOR ACCEPTED QUANTITIES OF DEMONSTRATION DRILLED SHAFT AFTER INSTALLATION OF THE DEMONSTRATION SHAFT AND AFTER BEING PROVIDED WITH WRITTEN TESTING AND EVALUATION RESULTS ACCEPTABLE TO THE ENGINEER.

THE CONTRACT PRICE IS FULL COMPENSATION FOR FURNISHING AND INSTALLING DRILLED SHAFTS IN ACCORDANCE WITH THE ABOVE REQUIREMENTS, INCLUDING MOBILIZATION, SITE ACCESS, AND FINAL REMOVAL OF THE SHAFT TO A DEPTH OF AT LEAST 2 FOOT BELOW THE BOTTOM OF THE PROPOSED LIGHTWEIGHT FILL.

THE DEPARTMENT WILL PAY FOR TESTING AND EVALUATION OF THE ACCEPTED DEMONSTRATION SHAFT SEPARATELY. THE DEPARTMENT WILL NOT PAY FOR TESTING AND EVALUATION OF ADDITIONAL DEMONSTRATION DRILLED SHAFTS.

THE DEPARTMENT WILL PAY FOR ACCEPTED QUANTITIES AT THE CONTRACT PRICE AS FOLLOWS:
ITEM 524 – DRILLED SHAFTS, MISC.: 90" DIAMETER DEMONSTRATION DRILLED SHAFT

For Reference Only
Preliminary Plans Not to Be Used for Construction

GENERAL NOTES - (1 OF 4)
CUY-77-1587 (BRIDGE 9)
I.R. 77 SB OVER I.R. 90 AND CR-721 (E. 14TH ST.)

SFN 1806910
DESIGN AGENCY
HDR
DESIGNER TJE | CHECKER BTA
REVIEWER DWW 01/11/24
PROJECT ID 82382
SUBSET 12 | TOTAL 167
SHEET 1880 | TOTAL 2696

CUY-90-16.28 (CCG3A)
MODEL: Sheet PAPERSIZE: 34x22 (in.) DATE: 6/9/2025 TIME: 12:58:32 PM USER: Tolga.Feran
pw:\\mb-us-pw.bentley.com:mb-us-pw-03\Documents\Cleveland_OH\01_Projects\ODOT\District12\82382400-Engineering\Structures\SFN_1806910\Sheets\82382_SFN_1806910_SN001.dgn

PILE DESIGN LOADS (ULTIMATE BEARING VALUE):

REAR ABUTMENT PILES:
THE ULTIMATE BEARING VALUE IS 310 KIPS PER PILE
12-IN DIAMETER PILES 115 FEET LONG, ORDER LENGTH
MIN. PILE WALL THICKNESS: 0.25 IN.
1 DYNAMIC LOAD TESTING ITEM
1 RESTRIKE

PIER 1 PILES:
THE ULTIMATE BEARING VALUE IS 351 KIPS PER PILE
14-IN DIAMETER PILES 90 FEET LONG, ORDER LENGTH
MIN. PILE WALL THICKNESS: 0.25 IN.
1 DYNAMIC LOAD TESTING ITEM
1 RESTRIKE

PIER 2 PILES:
THE ULTIMATE BEARING VALUE IS 376 KIPS PER PILE
14-IN DIAMETER PILES 85 FEET LONG, ORDER LENGTH
MIN. PILE WALL THICKNESS: 0.25 IN.
1 DYNAMIC LOAD TESTING ITEM
1 RESTRIKE

PIER 4 PILES:
THE ULTIMATE BEARING VALUE IS 262 KIPS PER PILE
14-IN DIAMETER PILES 45 FEET LONG, ORDER LENGTH
MIN. PILE WALL THICKNESS: 0.25 IN.
1 DYNAMIC LOAD TESTING ITEM
1 RESTRIKE

PIER 5 PILES:
THE ULTIMATE BEARING VALUE IS 330 KIPS PER PILE
14-IN DIAMETER PILES 75 FEET LONG, ORDER LENGTH
MIN. PILE WALL THICKNESS: 0.25 IN.
1 DYNAMIC LOAD TESTING ITEM
1 RESTRIKE

PIER 6 PILES:
THE ULTIMATE BEARING VALUE IS 411 KIPS PER PILE
16-IN DIAMETER PILES 60 FEET LONG, ORDER LENGTH
MIN. PILE WALL THICKNESS: 0.25 IN.
1 DYNAMIC LOAD TESTING ITEM
1 RESTRIKE

PIER 8 PILES:
THE ULTIMATE BEARING VALUE IS 422 KIPS PER PILE
16-IN DIAMETER PILES 100 FEET LONG, ORDER LENGTH
MIN. PILE WALL THICKNESS: 0.25 IN.
1 DYNAMIC LOAD TESTING ITEM
1 RESTRIKE

PIER 9 PILES:
THE ULTIMATE BEARING VALUE IS 414 KIPS PER PILE
16-IN DIAMETER PILES 90 FEET LONG, ORDER LENGTH
MIN. PILE WALL THICKNESS: 0.25 IN.
1 DYNAMIC LOAD TESTING ITEM
1 RESTRIKE

PIER 10 PILES:
THE ULTIMATE BEARING VALUE IS 401 KIPS PER PILE
16-IN DIAMETER PILES 85 FEET LONG, ORDER LENGTH
MIN. PILE WALL THICKNESS: 0.25 IN.
1 DYNAMIC LOAD TESTING ITEM
1 RESTRIKE

FORWARD ABUTMENT PILES:
THE ULTIMATE BEARING VALUE IS 322 KIPS PER PILE
12-IN DIAMETER PILES 110 FEET LONG, ORDER LENGTH
MIN. PILE WALL THICKNESS: 0.25 IN.
1 DYNAMIC LOAD TESTING ITEM
1 RESTRIKE

PILES DRIVEN TO FULL ESTIMATED LENGTH WITH PILE/SOIL SETUP:

THE ULTIMATE BEARING VALUE (UBV) FOR THE PILES IS SHOWN IN THE TABLE BELOW. PART OF THE UBV WILL BE ACHIEVED THROUGH PILE/SOIL SETUP, WHICH IS A TIME DEPENDENT INCREASE IN RESISTANCE THAT OCCURS IN SOME SOILS.

ITEM 507 - PREBORED HOLES, AS PER PLAN:

THE FORWARD ABUTMENT IS PROPOSED AT A LOCATION OF A FORMER INDEPENDENT TOWEL COMPANY THAT WAS DEMOLISHED IN 2008. BASEMENT FLOOR WAS LEFT INTACT PRIOR TO BACKFILLING. THEREFORE, ALL FORWARD ABUTMENT PILES SHALL BE PREBORED TO A MINIMUM ELEVATION OF 650 PRIOR TO DRILLING OPERATIONS.

PILES DRIVEN TO FULL ESTIMATED LENGTH WITH PILE/SOIL SETUP (CON'T):

NOTIFY THE ENGINEER AT LEAST 5 DAYS BEFORE DRIVING PILES SO THAT THE ENGINEER CAN NOTIFY THE DISTRICT GEOTECHNICAL ENGINEER, THE OFFICE OF CONSTRUCTION ADMINISTRATION, AND THE OFFICE OF GEOTECHNICAL ENGINEERING.

DRIVE THE FIRST TWO PILES AT THE RESPECTIVE SUBSTRUCTURE LOCATIONS TO THE FULL ESTIMATED LENGTH SHOWN IN THE TABLE. PERFORM DYNAMIC LOAD TESTING ON BOTH PILES WHILE DRIVING. AFTER DRIVING AND TESTING THE FIRST TWO PILES, DRIVE THE REMAINING PILES IN THE SUBSTRUCTURE TO THE SAME DEPTH AS THE FIRST TWO PILES. AFTER DRIVING ALL PILES TO THE ESTIMATED LENGTH, CEASE ALL DRIVING OPERATIONS AT THE SUBSTRUCTURE THE PERIOD OF DAYS SHOWN BELOW. INCLUDE THE WAITING PERIOD AS A SEPARATE ACTIVITY IN THE PROGRESS SCHEDULE. AFTER THE WAITING PERIOD, PERFORM PILE RESTRIKES ON BOTH OF THE FIRST TWO PILES (ONE RESTRIKE ITEM).

SUBMIT ALL TEST RESULTS TO THE ENGINEER. IF THE RESTRIKE TEST RESULTS INDICATE THAT BOTH PILES ACHIEVED THE REQUIRED UBV, ALL PILES IN THE SUBSTRUCTURE MAY BE ACCEPTED BY THE ENGINEER.

IF THE RESTRIKE TEST RESULTS INDICATE THAT EITHER OF THE TWO PILES DID NOT ACHIEVE THE REQUIRED UBV, IMMEDIATELY NOTIFY THE ENGINEER SO THAT THE ENGINEER CAN NOTIFY THE DISTRICT GEOTECHNICAL ENGINEER, THE OFFICE OF CONSTRUCTION ADMINISTRATION, AND THE OFFICE OF GEOTECHNICAL ENGINEERING. THE ENGINEER WILL REVIEW THE TEST RESULTS AND ESTABLISH ADDITIONAL RESTRIKE TESTING OR DRIVING CRITERIA FOR THE PILING IN THE SUBSTRUCTURE WITH THE ASSISTANCE OF THE DISTRICT GEOTECHNICAL ENGINEER, THE OFFICE OF CONSTRUCTION ADMINISTRATION, AND THE OFFICE OF GEOTECHNICAL ENGINEERING.

IF DIRECTED BY THE ENGINEER, PERFORM ADDITIONAL RESTRIKE TESTING OR DRIVE ALL PILES IN THE SUBSTRUCTURE TO THE ESTABLISHED DRIVING CRITERIA. THE DEPARTMENT WILL PAY FOR SPLICING OF THE PILES BEYOND THE ESTIMATED LENGTH PROVIDED IN THE PLANS UNDER C&MS 109.05 WITH A NEGOTIATED PRICE PER SPLICE.

THIS PLAN NOTE INCLUDES A QUANTITY OF ONE EACH ITEM 523 DYNAMIC LOAD TESTING, AS PER PLAN AND A QUANTITY OF ONE EACH ITEM 523 RESTRIKE, AS PER PLAN PER EACH SUBSTRUCTURE UNIT.

SUBSTRUCTURE LOC.	*UBV*	*EST. LENGTH*	*WAITING PERIOD*
REAR ABUTMENT	*310 KIPS*	*110 FEET*	*7 DAYS*
PIER 1	*351 KIPS*	*85 FEET*	*7 DAYS*
PIER 2	*376 KIPS*	*80 FEET*	*7 DAYS*
PIER 4	*262 KIPS*	*40 FEET*	*7 DAYS*
PIER 5	*330 KIPS*	*70 FEET*	*7 DAYS*
PIER 6	*411 KIPS*	*55 FEET*	*7 DAYS*
PIER 8	*422 KIPS*	*95 FEET*	*7 DAYS*
PIER 9	*414 KIPS*	*85 FEET*	*7 DAYS*
PIER 10	*401 KIPS*	*80 FEET*	*7 DAYS*
FWD. ABUTMENT	*322 KIPS*	*105 FEET*	*7 DAYS*

ITEM 524 - DRILLED SHAFTS, MISC.: CSL TESTING, 90" DIA. SHAFT

PERFORM INTEGRITY TESTING ON ALL OF THE DRILLED SHAFTS AT PIER 7 BY CROSSHOLE SONIC LOGGING (CSL). PERFORM CSL TESTING PER ASTM D6760, "STANDARD TEST METHOD FOR INTEGRITY TESTING OF CONCRETE DEEP FOUNDATIONS BY ULTRASONIC CROSSHOLE TESTING," AND PER THE PROJECT SPECIAL PROVISIONS.

ITEM 524 - DRILLED SHAFTS, MISC.: HIGH-STRAIN DYNAMIC TESTING OF DRILLED SHAFTS

PERFORM FIELD VERIFICATION OF NOMINAL AXIAL RESISTANCE ON ALL DRILLED SHAFTS AT PIER 3 AND PIER 7 BY HIGH-STRAIN DYNAMIC TESTING. PERFORM HIGH STRAIN DYNAMIC TESTING PER ASTM D4945, "STANDARD TEST METHOD FOR HIGH-STRAIN DYNAMIC TESTING OF DEEP FOUNDATIONS," AND PER THE PROJECT SPECIAL PROVISIONS.

ITEM 894 - THERMAL INTEGRITY PROFILER (T.I.P.) TEST:

PERFORM INTEGRITY TESTING ON ALL OF THE DRILLED SHAFTS AT PIER 3 AND ALL OF THE DRILLED SHAFTS AT PIER 7 BY THERMAL INTEGRITY PROFILING (TIP). PERFORM TIP TESTING PER ASTM D7949, "STANDARD TEST METHODS FOR THERMAL INTEGRITY PROFILING OF CONCRETE DEEP FOUNDATIONS," METHOD B, AND PER SUPPLEMENTAL SPECIFICATION 894.

ITEM 524 - DRILLED SHAFTS, MISC.: BI-DIRECTIONAL TESTING OF DRILLED SHAFTS:

PERFORM FIELD VERIFICATION OF AXIAL RESISTANCE ON THE DEMONSTRATION DRILLED SHAFT AT PIER 7 BY BI-DIRECTIONAL STATIC LOAD TESTING (BDSLT). PERFORM BDSLT PER ASTM D8169, "STANDARD TEST METHODS FOR DEEP FOUNDATIONS UNDER BI-DIRECTIONAL STATIC AXIAL COMPRESSIVE LOAD" AND PER THE PROJECT SPECIAL PROVISIONS.

ITEM SPECIAL - STRUCTURE MISC.: PRECONSTRUCTION CONDITION SURVEY

BEFORE DRILLING OPERATION BEGINS AT PIER 3, CONDUCT A CONDITION SURVEY OF EXISTING STORM SEWER WITHIN 200-FT OF THE DRILLED SHAFT WORK. THE PURPOSE OF THE SURVEY IS TO DOCUMENT THE CONDITION OF THE STORM SEWER PRIOR TO DRILLING OPERATIONS, SO THAT CLAIMS OF DAMAGE CAUSED BY THE DRILLING CAN BE VERIFIED.

ITEM SPECIAL - STRUCTURE MISC.: PRECONSTRUCTION CONDITION SURVEY (CON'T)

RETAIN AN EXPERIENCED VIBRATION SPECIALIST TO PERFORM OR SUPERVISE THE CONDITION SURVEY. USE A VIBRATION SPECIALIST THAT MEETS THE QUALIFICATION REQUIREMENTS FOR VIBRATION MONITORING.

RECORD THE CONDITION OF THE STORM SEWER, USING WRITTEN TEXT, PHOTOGRAPHS, AND VIDEO RECORDINGS. RECORD THE LOCATION, SIZE, AND TYPE OF ALL CRACKS AND OTHER STRUCTURAL DEFICIENCIES.

IF OWNERS FAIL TO ALLOW ACCESS TO THE PROPERTY FOR THE PRECONSTRUCTION CONDITION SURVEY, SEND A CERTIFIED LETTER TO THE OWNER OR OCCUPANT. DOCUMENT THE NOTIFICATION EFFORT AND THE CERTIFIED LETTER IN THE REPORT.

SUBMIT THREE COPIES OF A REPORT TO THE ENGINEER THAT SUMMARIZES THE PRECONSTRUCTION CONDITION OF THE STORM SEWER, AND THAT IDENTIFIES AREAS OF CONCERN.

THE DEPARTMENT WILL PAY FOR THIS ITEM AT THE CONTRACT LUMP SUM PRICE FOR ITEM SPECIAL STRUCTURE MISC.: PRECONSTRUCTION CONDITION SURVEY.

ITEM SPECIAL - STRUCTURE MISC.: VIBRATION MONITORING

MONITOR GROUND VIBRATIONS CAUSED BY DRILLED SHAFT INSTALLATION AT PIER 3 TO MINIMIZE THE POTENTIAL DAMAGE TO THE EXISTING STORM SEWER.

RETAIN AN EXPERIENCED VIBRATION SPECIALIST TO ESTABLISH THE ACCEPTABLE VIBRATION LIMITS AND TO PERFORM THE VIBRATION MONITORING. USE A VIBRATION SPECIALIST THAT IS AN EXPERT IN THE INTERPRETATION OF VIBRATION DATA, AND WHO MEETS ONE OF THE FOLLOWING CRITERIA: 1) IS A REGISTERED ENGINEER WITH AT LEAST TWO YEARS OF PROVEN EXPERIENCE IN MONITORING VIBRATIONS ON SIMILAR CONSTRUCTION PROJECTS, OR 2) HAS AT LEAST FIVE YEARS OF PROVEN EXPERIENCE IN MONITORING VIBRATIONS ON SIMILAR CONSTRUCTION PROJECTS. DO NOT USE A VIBRATION SPECIALIST THAT IS AN EMPLOYEE OF THE CONTRACTOR.

SUBMIT A RESUME OF THE CREDENTIALS OF THE PROPOSED VIBRATION SPECIALIST AT OR BEFORE THE PRECONSTRUCTION MEETING. INCLUDE IN THE RESUME A LIST OF CONSTRUCTION PROJECTS ON WHICH THE VIBRATION SPECIALIST WAS RESPONSIBLY IN CHARGE OF MONITORING THE VIBRATIONS. LIST A DESCRIPTION OF THE PROJECTS, WITH DETAILS OF THE VIBRATION INTERPRETATIONS MADE ON THE PROJECT. LIST THE NAMES AND TELEPHONE NUMBERS OF PROJECT OWNERS WITH SUFFICIENT KNOWLEDGE OF THE PROJECTS TO VERIFY THE SUBMITTED INFORMATION. OBTAIN THE ENGINEER'S ACCEPTANCE OF THE VIBRATION SPECIALIST BEFORE BEGINNING ANY PILE DRIVING WORK. ALLOW 30 DAYS FOR THE REVIEW OF THIS DOCUMENTATION.

USE SEISMOGRAPHS CAPABLE OF CONTINUOUSLY RECORDING THE PEAK PARTICLE VELOCITY FOR THREE MUTUALLY PERPENDICULAR COMPONENTS OF VIBRATION, AND OF PROVIDING A PERMANENT RECORD OF THE ENTIRE VIBRATION EVENT. USE A SUFFICIENT NUMBER OF SEISMOGRAPHS TO PROVIDE REDUNDANCY IN CASE ONE DEVICE SHOULD FAIL. SUBMIT A PLAN OF THE PROPOSED SEISMOGRAPH LOCATIONS TO THE ENGINEER FOR REVIEW.

THE VIBRATION SPECIALIST SHALL PERFORM THE FOLLOWING:

1. *MEASURE THE AMBIENT GROUND VIBRATIONS NEAR THE STORM SEWER BEFORE THE DRILLING OPERATION BEGINS.*
2. *ESTABLISH VIBRATION LIMITS TO MINIMIZE POTENTIAL DAMAGE TO THE STORM SEWER AND EXPLAIN WHY THEY ARE BEING USED TO THE ENGINEER BEFORE PERFORMING DRILLING OPERATIONS NEAR THE SEWER.*
3. *MONITOR GROUND VIBRATIONS DURING DRILLING OPERATIONS.*
4. *IMMEDIATELY INFORM THE CONTRACTOR AND ENGINEER IF THE VIBRATION LIMITS ARE REACHED OR EXCEEDED.*
5. *FURNISH THE DATA RECORDED AND INCLUDE THE FOLLOWING:*
   - *A. IDENTIFICATION OF SEISMOGRAPH.*
   - *B. DISTANCE AND DIRECTION OF SEISMOGRAPH FROM DRILLING OPERATIONS.*
   - *C. START TIME AND DURATION OF DRILLING OPERATIONS.*
   - *D. LIST OF SHAFTS DRILLED DURING EACH MONITORING INTERVAL.*

IMMEDIATELY SUSPEND ALL DRILLING OPERATIONS IF THE VIBRATION LIMITS ARE REACHOR EXCEEDED. EVALUATE ALTERNATIVE CONSTRUCTION PROCEDURES TO REDUCE THE VIBRATIONS.

SUBMIT THREE COPIES OF THE FINAL REPORT WHICH CONTAINS ALL MEASUREMENTS, INTERPRETATIONS, AND RECOMMENDATIONS TO THE ENGINEER.

THE DEPARTMENT WILL PAY FOR THIS ITEM AT THE CONTRACT LUMP SUM PRICE FOR ITEM SPECIAL - STRUCTURE MISC.: VIBRATION MONITORING. THE DEPARTMENT WILL PAY THE FINAL TWENTY PERCENT AFTER THE ENGINEER RECEIVES THE FINAL REPORT.

THE DEPARTMENT WILL PAY ACCORDING TO C&MS 109.05 FOR ALTERNATIVE CONSTRUCTION PROCEDURES THAT THE ENGINEER DETERMINES ARE NECESSARY TO REDUCE VIBRATIONS.

Preliminary Plans - For Reference Only

GENERAL NOTES - (2 OF 4)
CUY-77-1587 (BRIDGE 9)
I.R. 77 SB OVER I.R. 90 AND CR-721 (E. 14TH ST.)

SFN 1806910
DESIGN AGENCY HDR
DESIGNER TJE | CHECKER BTA
REVIEWER DWW 01/11/24
PROJECT ID 82382
SUBSET 13 | TOTAL 167
SHEET 1881 | TOTAL 2696

CUY-90-16.28 (CCG3A)
MODEL: Sheet PAPERSIZE: 34x22 (in.) DATE: 3/28/2025 TIME: 10:09:54 AM USER: Rohit.Bk
pw:\\mb-us-pw.bentley.com:mb-us-pw-03\Documents\Cleveland_OH\01_Projects\ODOT\District12\82382\400-Engineering\Structures\SFN_1806910\Sheets\82382_SFN_1806910_SN002.dgn

ITEM 516 SPECIAL - MODULAR EXPANSION JOINT:

THE REAR ABUTMENT JOINT SHALL BE A DS BROWN D-240 OR APPROVED ALTERNATE, THE THE PIER 4 JOINT SHALL BE A DS BROWN D-560 OR APPROVED ALTERNATE, AND THE FORWARD ABUTMENT JOINT SHALL BE A DS BROWN D-400 OR APPROVED ALTERNATE.

THE MANUFACTURER SHALL SUBMIT DESIGN CALCULATIONS SHOWING THAT THE DEVICE CAN MEET THE IMPACT AND FATIGUE DESIGN REQUIREMENTS SET FORTH BY THE CURRENT AASHTO LRFD BRIDGE DESIGN SPECIFICATIONS.

A. DESCRIPTION

FURNISH ALL MATERIALS, SERVICES, LABOR, TOOLS, EQUIPMENT AND INCIDENTALS NECESSARY TO DESIGN, FABRICATE, INSPECT, TEST AND INSTALL MODULAR EXPANSION JOINTS IN ACCORDANCE WITH THE PLANS AND THESE NOTES. ALL REQUIREMENTS OF 513 & 516 APPLY, UNLESS MODIFIED BY THESE NOTES.

EACH MODULAR EXPANSION JOINT SYSTEM SHALL ACCOMMODATE THE MOVEMENTS AND ROTATIONS AS INDICATED.

B. DESIGN

1. PREPARE AND CHECK THE DESIGN UNDER THE AUTHORITY OF AN OHIO REGISTERED PROFESSIONAL ENGINEER. THE REGISTERED ENGINEER SHALL SEAL, SIGN AND DATE THE DESIGN CALCULATIONS AND SHOP DRAWINGS.
2. INCLUDE DESIGN CALCULATIONS WITH THE CONTRACTOR'S SUBMISSION OF SHOP DRAWINGS PER 513.06.
3. PROVIDE A DETAILED INSTALLATION PROCEDURE AND INCLUDE ANY SPECIFIC MANUFACTURER'S NOTES NECESSARY FOR COMPLETION OF THE WORK.
4. DESIGN AND TEST THE MODULAR JOINT COMPONENTS, JOINT ARMOR AND ANCHORAGES ACCORDING TO THE AASHTO LRFD BRIDGE DESIGN SPECIFICATIONS AND THE AASHTO LRFD BRIDGE CONSTRUCTION SPECIFICATIONS.
5. DESIGN TEMPORARY AND FIELD CONNECTIONS TO THE BRIDGE TO ACCOMMODATE ADJUSTMENTS FOR ROADWAY GEOMETRY AND VARYING TEMPERATURE.
6. DESIGN FOR THE PLAN SPECIFIED THERMAL MOVEMENT PER AASHTO LRFD 3.12.2 FOR A COLD CLIMATE (TEMPERATURE RANGE IS FROM -30°F TO +120°F WITH A BASE TEMPERATURE SET TO 60°F).
7. SUPPLY SUPPORT BAR BEARINGS TO TRANSFER THE LOAD FROM THE SUPPORT BARS TO THE JOINT ARMOR.
8. FOR DESIGN OF THE DECK JOINT AT ALL LIMIT STATES, THE DYNAMIC LOAD ALLOWANCE (IM) SHALL BE TAKEN AS 125% OF THE STATIC EFFECT OF EITHER THE DESIGN TRUCK OR THE DESIGN TANDEM.
9. SUPPLY EQUALIZATION SPRINGS TO COUNTER THE COMPRESSION FORCES FROM THE SEALING ELEMENTS AND MAINTAIN EQUAL EXPANSION PROPERTIES FOR EACH SEALING ELEMENT ACROSS THE JOINT.
10. SUPPLY CONTROL SPRINGS WHICH WORK LONGITUDINALLY TO MAINTAIN EQUIDISTANT SPACING BETWEEN TRANSVERSE SEPARATION BEAMS.
11. SUPPLY SEPARATION BEAMS / TRANSVERSE DIVIDERS / CENTER BEAMS TO LIMIT TOTAL HORIZONTAL MOVEMENT IN ANY INDIVIDUAL STRIP SEAL.
12. SUPPLY A STRIP SEAL TYPE SEAL CONNECTED TO MATCHING RETAINERS CONNECTED TO THE JOINT ARMOR AND THE SEPARATION BEAMS. DO NOT EXCEED 3.15 INCHES OF TOTAL HORIZONTAL MOVEMENT IN ANY INDIVIDUAL STRIP SEAL.
13. SUPPLY REMOVABLE AND REPLACEABLE NEOPRENE SEALS, SUPPORT BAR BEARINGS AND EQUALIZATION SPRINGS.
14. SET SEALS AND RETAINERS 1/8" LOWER THAN THE ROADWAY SURFACE.
15. DESIGN AND FABRICATE THE MODULAR JOINT AS A CONTINUOUS FULL LENGTH MEMBER WITHOUT FIELD SPLICES.

C. MATERIALS

1. SUPPLY STRUCTURAL STEEL MEETING ASTM A709 GRADE 50. SUPPLY SEPARATION BEAMS / TRANSVERSE DIVIDERS / CENTER BEAMS, EDGE BEAMS AND JOINT ARMOR MEETING CHARPY V NOTCH IMPACT REQUIREMENTS PER ASTM A709 TABLE S1.2 ZONE 2 TEMPERATURE RANGE. SUPPLY TUBE SECTIONS MEETING ASTM A501 OR A500 GRADE B.
2. SUPPLY ASTM A240, TYPE 304 STAINLESS STEEL, 13 GAGE MINIMUM THICKNESS WITH A #8 MIRROR FINISH FOR SLIDING SURFACES IN CONTACT WITH PTFE.
3. SUPPLY TESTING AND REPORTS BY THE MANUFACTURER OR AN INDEPENDENT TESTING LABORATORY FOR ALL ELASTOMERIC, PTFE URETHANE AND PREFORMED FABRIC MATERIALS USED IN ALL BEARINGS AND SPRINGS. THE SUBMISSION OF MATERIAL CERTIFICATION AND TESTING DATA SHALL BE PER 513.08. THE MODULAR BRIDGE JOINT SYSTEM SHALL BE TESTED IN ACCORDANCE WITH THE AASHTO LRFD BRIDGE CONSTRUCTION SPECIFICATIONS APPENDIX A19.
4. SUPPLY STRIP SEALS CONFORMING TO ASTM D5973. SUBMIT CERTIFIED TEST DATA PER 513.08 FROM THE MANUFACTURER OR AN ACCREDITED LABORATORY. D5973 SECTION 8, LOT SIZE IS ONE SAMPLE PER JOINT. A SAMPLE IS A PIECE 4 FEET LONG WITH ALL MANUFACTURER'S MARKINGS. THE SEAL AND RETAINER ARE AN INTEGRAL SYSTEM SUPPLIED BY ONE MANUFACTURER.
5. SEAL RETAINERS: EXTRUDE, HOT ROLL OR MACHINE, STEEL RETAINERS INTO A SOLID SHAPE. RETAINERS MANUFACTURED FROM BENT PLATE OR BUILT UP PIECES ARE NOT ACCEPTABLE. THE INTERNAL DIMENSIONS OF THE RETAINER SHALL BE SPECIFIED BY THE MANUFACTURER TO ACHIEVE POSITIVE SEAL ANCHORAGE.
6. SEPARATION BEAMS / TRANSVERSE DIVIDERS / CENTER BEAMS SHALL BE A SOLID, MACHINED OR EXTRUDED STEEL SECTION.
7. LUBRICANT-ADHESIVE. ONE PART MOISTURE CURING POLYURETHANE COMPOUND MEETING THE REQUIREMENTS OF ASTM D4070 AND AS SPECIFIED BY THE SEAL MANUFACTURER.
8. HARDWARE SHALL BE ASTM A325 TYPE 1, GALVANIZED, OR A449 GALVANIZED.

D. FABRICATION

1. THE MODULAR JOINTS SHALL BE FABRICATED ACCORDING TO CMS 513.
2. SHOP ASSEMBLE THE MODULAR JOINT WITH ALL COMPONENTS EXCEPT, NEOPRENE SEALS, PER 513.24 EXCEPT THAT FULL ASSEMBLY IS REQUIRED WITH PHASED CONSTRUCTION.
3. JOINTS IN STRIP SEALS: NO JOINTS ARE ALLOWED.
4. JOINTS IN RETAINERS: WELDS ARE WATER TIGHT, PARTIAL PENETRATION WELDS AROUND THE OUTER PERIPHERY OF THE ABUTTING SURFACES. MAKE SPLICES ONLY IN COMPRESSION ZONES OF THE JOINT ARMOR. GRIND FLUSH ALL WELDS IN CONTACT WITH THE SEAL AND JOINT ARMOR. DO NOT USE SHORT PIECES OF RETAINERS LESS THAN 6'-0" LONG, UNLESS REQUIRED AT CURBS OR SIDEWALKS. DO NOT PROVIDE ADDITIONAL SPLICES IN RETAINERS AT CURB OR SIDEWALK SECTIONS OTHER THAN REQUIRED FOR GEOMETRY.
5. SHOP OR FIELD WELDS OF CENTER BEAMS, SHALL BE COMPLETE PENETRATION WELDS, GROUND TO PROVIDE A SMOOTH TRANSITION AND BE 100% ULTRASONICALLY TESTED PER AASHTO / AWS BRIDGE WELDING CODE, WITH TENSION ACCEPTANCE CRITERIA, WITNESSED BY THE DEPARTMENT.
6. SUPPORT BAR CONNECTIONS SHALL BE COMPLETE PENETRATION WELDS GROUND TO PROVIDE SMOOTH TRANSITIONS AND BE 100% ULTRASONICALLY TESTED PER AASHTO / AWS BRIDGE WELDING CODE, WITH TENSION ACCEPTANCE CRITERIA, WITNESSED BY THE DEPARTMENT.
7. TEMPORARY SUPPORTS: FABRICATOR DESIGNED AND INSTALLED SUPPORTS ARE REQUIRED TO SUPPORT SHIPPING, ERECTION AND CONSTRUCTION FORCES WITHOUT DAMAGE TO THE STEEL ARMOR OR COATINGS. THESE SUPPORTS SHALL BE ADJUSTABLE FOR FIELD TEMPERATURE SETTING. PROVIDE PROTECTIVE LAYERS BETWEEN TEMPORARY SUPPORTS AND COATED SURFACES TO PREVENT DAMAGE.

E. COATING

1. GALVANIZE OR METALLIZE ALL STEEL SURFACES AND COMPONENTS, EXCEPT AT STAINLESS STEEL AND PTFE SLIDING SURFACES. THESE COATINGS MAY BE MIXED ON ONE ASSEMBLY, IF ALL SIMILAR COMPONENTS OF THE ASSEMBLY HAVE THE SAME COATING TYPE.
2. PROVIDE A GALVANIZED COATING PER ASTM A123, WITH A MINIMUM THICKNESS OF 4 MILS. CLEAN EXCESSIVE GALVANIZING AS NECESSARY TO ACHIEVE MECHANICAL MOVEMENT AND SEAL INSTALLATION.
3. PROVIDE A METALIZED COATING PER THE SOCIETY FOR PROTECTIVE COATINGS (SSPC) SPECIFICATION SSPC-CS23.00 (MARCH 17, 2003) FOR THERMAL SPRAY METALLIC COATINGS. THE COATING SHALL BE A MINIMUM OF 8 MILS THICK. THE METALLIZING WIRE SHALL BE 100% ZINC. AREAS OF STRUCTURAL STEEL THAT ARE IN CONTACT WITH CAST-IN-PLACE CONCRETE SHALL HAVE AN ADDITIONAL COATING. THE COATING SHALL BE THE EPOXY INTERMEDIATE COAT SPECIFIED IN CMS 514. THE COATING THICKNESS WILL COVER ALL PEAKS, VALLEYS AND SURFACE ROUGHNESS ATTRIBUTED TO METALIZING.
4. COATING REPAIRS: DAMAGED COATINGS SHALL BE REPAIRED BY ASTM A780, ANNEX "A1. REPAIR USING ZINC BASED ALLOYS". THE PROCEDURE SHALL BE AS FOLLOWS: REMOVE SURFACE CONTAMINATES, PREHEAT TO 600 DEGREE F, AND APPLY ZINC COATING BY RUBBING WITH A PURE ZINC STICK OR SPRINKLING ZINC POWDER ON THE PREHEATED SURFACE, TO ACHIEVE A MINIMUM COATING THICKNESS OF 6 MILS. MAKE COATING REPAIRS OF WELDED SURFACES PRIOR TO CONCRETE PLACEMENT OPERATIONS.
5. THE METALIZED OR GALVANIZED COATINGS SHOULD NOT BE FIELD PAINTED, EXCEPT FOR AREAS DAMAGED BY CONNECTION TO PAINTED SUPERSTRUCTURE STEEL MEMBERS. THESE AREAS SHALL BE PAINTED USING THE SAME SYSTEM SPECIFIED FOR THE SUPERSTRUCTURE.
6. PRIOR TO SHIPPING, RETAINER GROOVES SHALL BE PROTECTED FROM CONSTRUCTION DEBRIS BY THE INSTALLATION OF BACKER RODS OR OTHER EFFECTIVE MASKING TECHNIQUES.

F. INSTALLATION

1. PROVIDE A JOINT MANUFACTURER'S TECHNICAL REPRESENTATIVE TO PHYSICALLY OVERSEE THE FABRICATION, INSTALLATION, ADJUSTMENT AND TESTING DURING ALL OPERATIONS. WHERE SPECIAL INSTRUCTIONS ARE NOT CONTAINED HEREIN OR ELSEWHERE IN THESE NOTES, DIRECTION FOR THE INSTALLATION SHALL BE ACCORDING TO THE RECOMMENDATIONS OF THE TECHNICAL REPRESENTATIVE.
2. COORDINATE AND SCHEDULE THE TECHNICAL REPRESENTATIVE.
3. INSTALL THE SUPERSTRUCTURE SUPPORTING UNITS BEFORE INSTALLING THE MODULAR JOINT. POSITION THE JOINT TO MATCH ROADWAY GEOMETRY, SUPERSTRUCTURE CONNECTIONS AND TEMPERATURE OPENING. TAKE CARE TO MAINTAIN EXACT ALIGNMENT OF ADJACENT ENDS OF THE ARMOR AND SEPARATION BEAMS / TRANSVERSE DIVIDERS / CENTER BEAMS FOR FIELD WELDED UNITS. PROVIDE TEMPORARY SUPPORTS AS DIRECTED BY THE MANUFACTURER TO MAINTAIN THE PROPER POSITIONING. FOR PHASED CONSTRUCTION, THE CONTRACTOR'S METHODS FOR INSTALLATION AND TEMPORARY SUPPORTS SHALL ACHIEVE SEPARATION OF THE PHASES AND UNRESTRICTED TEMPERATURE MOVEMENT.
4. PERFORM CONCRETE PLACEMENT USING VIBRATION AND HAND WORK AS NECESSARY TO ACHIEVE CONSOLIDATION AND ELIMINATE AIR VOIDS.
5. PLACE THE DECK CONCRETE FIRST. CHECK THE ABUTMENT OR ADJACENT SPAN SIDE OF THE MODULAR JOINT FOR ALIGNMENT AND TEMPERATURE ADJUSTMENT. TEMPERATURE SHALL BE MEASURED AT THE UNDERSIDE OF THE CONCRETE DECK AT EACH END AND MID-SPAN TO ACHIEVE THE AVERAGE SUPERSTRUCTURE TEMPERATURE. PLACE THE BACKWALL OR ADJACENT SPAN CONCRETE SECOND. THE MANUFACTURER'S REPRESENTATIVE SHALL CHECK THAT TEMPERATURE MOVEMENT HAS NOT CAUSED ANY DAMAGE TO THE BOND BETWEEN THE JOINT AND THE CONCRETE.
6. EXAMINE SEAL RETAINERS FOR SOIL OR DEFECTS THAT CAN DAMAGE THE SEAL. REPAIR ANY DEFECTS AS DIRECTED BY THE MANUFACTURER'S REPRESENTATIVE.

F. INSTALLATION (CON'T)

7. SOLVENT CLEAN THE NEOPRENE SEAL ELEMENTS AND THE RETAINER GROOVES TO REMOVE OIL, GREASE OR OTHER SOIL IMMEDIATELY PRIOR TO INSTALLING THE SEALS. INSTALL SEALS USING PROCEDURES AND ADHESIVE SPECIFIED BY THE JOINT MANUFACTURER. KEEP THE BONDING SURFACES CLEAN, DRY AND WARMER THAN 45°F.
8. TEST THE INSTALLED MODULAR JOINT FOR LEAKS. FLOOD THE TOTAL EXPANSION JOINT LENGTH WITH WATER FOR A PERIOD OF NOT LESS THAN ONE HOUR. COVER THE ENTIRE JOINT SYSTEM BY EITHER PONDING OR FLOWING WATER. LOCATE ANY POINTS OF LEAKAGE AND TAKE ANY AND ALL MEASURES NECESSARY TO STOP THE LEAKAGE. PERFORM THIS WORK AT THE CONTRACTOR'S EXPENSE. PERFORM A SECOND WATER TEST AFTER ALL REPAIRS HAVE BEEN MADE.

G. METHOD OF MEASUREMENT

INCLUDE THE COST OF THE MANUFACTURER'S TECHNICAL REPRESENTATIVE AND ALL LABOR, MATERIALS AND EQUIPMENT NECESSARY TO DESIGN, SUPPLY, INSTALL AND TEST A MODULAR EXPANSION JOINT ACCORDING TO THE PLANS AND THESE NOTES. THE DEPARTMENT WILL MEASURE EXPANSION JOINTS BY THE NUMBER OF FEET HORIZONTALLY ALONG THE JOINT CENTERLINE BETWEEN AND THE OUTER LIMITS OF THE FABRICATED JOINT.

H. BASIS OF PAYMENT

THE DEPARTMENT WILL PAY FOR THE ACCEPTED QUANTITIES AT THE CONTRACT PRICE AS FOLLOWS:

ITEM	UNIT	DESCRIPTION
516	FT	SPECIAL - MODULAR EXPANSION JOINT

ITEM 503 - COFFERDAMS AND EXCAVATION BRACING, AS PER PLAN:

THE DESIGN SHOWN ON THE PLANS FOR TEMPORARY SUPPORT OF EXCAVATION IS ONE REPRESENTATIVE DESIGN THAT MAY BE USED TO CONSTRUCT THE PROJECT. THE CONTRACTOR MAY CONSTRUCT THE DESIGN SHOWN ON THE PLANS OR PREPARE AN ALTERNATE DESIGN TO SUPPORT THE SIDES OF EXCAVATIONS. IF CONSTRUCTING AN ALTERNATE DESIGN FOR TEMPORARY SUPPORT OF EXCAVATION, PREPARE AND PROVIDE PLANS IN ACCORDANCE WITH C&MS 501.05. THE DEPARTMENT WILL PAY FOR THE TEMPORARY SUPPORT OF EXCAVATION AT THE CONTRACT LUMP SUM PRICE FOR COFFERDAMS AND EXCAVATION BRACING. THE DEPARTMENT WILL NOT MAKE ADDITIONAL PAYMENT FOR PROVIDING AN ALTERNATE DESIGN.

For Reference Only
Not for Construction
Preliminary Plans

GENERAL NOTES - (3 OF 4)
CUY-77-1587 (BRIDGE 9)
I.R. 77 SB OVER I.R. 90 AND CR-721 (E. 14TH ST.)

SFN 1806910
DESIGN AGENCY HDR
DESIGNER TJE | CHECKER BTA
REVIEWER DWW 01/11/24
PROJECT ID 82382
SUBSET 14 | TOTAL 167
SHEET 1882 | TOTAL 2696

CUY-90-16.28 (CCG3A)

MODEL: Sheet PAPERSIZE: 34x22 (in.) DATE: 3/28/2025 TIME: 10:10:01 AM USER: Rohit.Bk
pw:\\mb-us-pw.bentley.com:mb-us-pw-03\Documents\Cleveland_OH101_Projects\ODOT\District12\82382\400-Engineering\Structures\SFN_1806910\Sheets\82382_SFN_1806910_SN003.dgn

DECK PLACEMENT ASSUMPTIONS

THE FOLLOWING ASSUMPTIONS OF CONSTRUCTION MEANS AND METHODS WERE MADE FOR THE ANALYSIS AND DESIGN OF THE SUPERSTRUCTURE. THE CONTRACTOR IS RESPONSIBLE FOR THE DESIGN OF THE FALSEWORK SUPPORT SYSTEM WITHIN THESE PARAMETERS AND WILL ASSUME RESPONSIBILITY FOR SUPERSTRUCTURE ANALYSIS FOR DEVIATION FROM THESE DESIGN ASSUMPTIONS.

AN EIGHT WHEEL FINISHING MACHINE WITH A MAXIMUM WHEEL LOAD OF 2.53 KIPS.

A MINIMUM OUT-TO-OUT WHEEL SPACING AT EACH END OF THE MACHINE OF 103".

A MAXIMUM SPACING OF OVERHANG FALSEWORK BRACKETS OF 48 IN.

A MAXIMUM DISTANCE FROM THE CENTERLINE OF THE FASCIA GIRDER TO THE FACE OF THE SAFETY HANDRAIL OF 65".

ITEM 512 SEALING OF CONCRETE SURFACES, AS PER PLAN, (PERMANENT GRAFFITI PROTECTION):

APPLY A PERMANENT GRAFFITI COATING QUALIFIED ACCORDING TO S1083 THAT IS COMPATIBLE WITH THE CONCRETE SEALER OVER WHICH IT IS APPLIED. APPLY THE GRAFFITI COATING IN ACCORDANCE WITH THE MANUFACTURER'S PRINTED INSTRUCTIONS. GRAFFITI PROTECTION SHALL BE PLACED 10 FT ABOVE GRADE AT ALL ABUTMENTS, WINGWALLS, PIER COLUMNS AND RETAINING WALLS.

COLORS AND SURFACE TREATMENT

ABUTMENTS, PIERS, PARAPETS AND DECK OVERHANGS: SEAL SURFACES AS NOTED IN THE BRIDGE PLANS WITH EPOXY-URETHANE USING FEDERAL STANDARD COLOR NUMBER SW 7002 (ALPACA).

STRUCTURAL STEEL: PAINT ALL STRUCTURAL STEEL FOR THE FULL LENGTH OF THE BRIDGE WITH SYSTEM IZEU. THE PRIME COAT SHALL BE PER CMS 708.01. THE FINISH COAT FOR ALL STRUCTURAL STEEL SHALL BE FEDERAL COLOR NUMBER SW 7008 (ALABASTER).

EXISTING STRUCTURE VERIFICATION:

DETAILS AND DIMENSIONS SHOWN ON THESE PLANS PERTAINING TO THE EXISTING STRUCTURE HAVE BEEN OBTAINED FROM PLANS OF THE EXISTING STRUCTURE AND FROM FIELD OBSERVATIONS AND MEASUREMENTS. CONSEQUENTLY, THEY ARE INDICATIVE OF THE EXISTING STRUCTURE AND THE PROPOSED WORK BUT THEY SHALL BE CONSIDERED TENTATIVE AND APPROXIMATE. THE CONTRACTOR IS REFERRED TO C&MS SECTIONS 102.05, 105.02 AND 513.04. BASE CONTRACT BID PRICES UPON A RECOGNITION OF THE UNCERTAINTIES DESCRIBED ABOVE AND UPON A PREBID EXAMINATION OF THE EXISTING STRUCTURE. HOWEVER, THE DEPARTMENT WILL PAY FOR ALL PROJECT WORK BASED UPON ACTUAL DETAILS AND DIMENSIONS THAT HAVE BEEN VERIFIED IN THE FIELD.

STRUCTURE GROUNDING:

STRUCTURE TO BE GROUNDED AS PER LIGHTING GENERAL NOTES SHEET 1684. QUANTITY CARRIED TO LIGHTING SUBSUMMARY.

ITEM 503 - UNCLASSIFIED EXCAVATION

LIMITS OF UNCLASSIFIED EXCAVATIONS SHALL BE PER CMS 503.09. APPROXIMATE LIMITS FOR TYPICAL SUBSTRUCTURE UNITS ARE SHOWN BELOW.

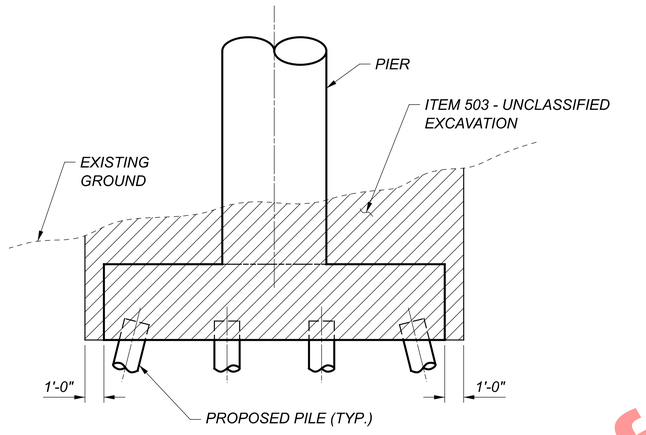

TYPICAL PIER EXCAVATION DETAIL

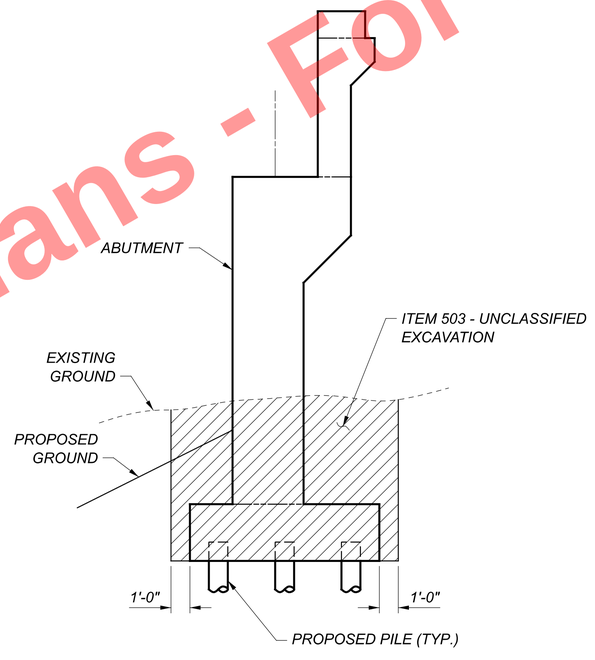

TYPICAL ABUTMENT EXCAVATION DETAIL

ABBREVIATIONS:

THE FOLLOWING ABBREVIATIONS HAVE BEEN USED THROUGHOUT THESE PLANS TO INDICATE THE DESIGNATIONS CONTAINED IN THE LEGEND BELOW:

ABUT. - ABUTMENT
ALT. - ALTERNATE
APPR. - APPROACH
℄ - BASELINE
BOT. - BOTTOM
BRG. - BEARING
BRGS. - BEARINGS
BTA - BRIDGE TERMINAL ASSEMBLY
℄ - CENTERLINE
C/C - CENTER TO CENTER
CIP - CAST-IN-PLACE
C.J. - CONSTRUCTION JOINT
CLR. - CLEARANCE
CP - COMPLETE PENETRATION BUTT WELD
CMS - CONSTRUCTION AND MATERIAL SPECIFICATIONS
CONC. - CONCRETE
CONST. - CONSTRUCTION
C.P.P. - CORRUGATED PLASTIC PIPE
CS - INDICATES BUTT WELD SUBJECT TO COMPRESSIVE STRESSES ONLY
CU YD - CUBIC YARD
CVN - CHARPY V-NOTCH TESTING
DIA. - DIAMETER
E.F. - EACH FACE
ELEV., EL. - ELEVATION
EQ. - EQUAL
EX. - EXISTING
EXP. - EXPANSION
F.A. - FORWARD ABUTMENT
F.F. - FAR FACE
F/F - FACE TO FACE
F.S. - FIELD SPLICE
FT/FT - FOOT PER FOOT
FTG. - FOOTING
FWD. - FORWARD
GEN. - GENERAL
INT. - INTEGRAL
LF - LEFT FORWARD
LT. - LEFT
MAX. - MAXIMUM
M.E. - MATCH EXISTING
MIN. - MINIMUM
MISC. - MISCELLANEOUS
MOT - MAINTENANCE OF TRAFFIC
N.F. - NEAR FACE
NO./# - NUMBER
O/O - OUT TO OUT
PCPP - PERFORATED CORRUGATED PLASTIC PIPE
PEJF - PREFORMED EXPANSION JOINT FILLER
PG - PROFILE GRADE
PGL - PROFILE GRADE LINE
PROP. - PROPOSED
PT - POINT OF TANGENCY
PVC - POINT OF VERTICAL CURVATURE
PVI - POINT OF VERTICAL INTERSECTION
PVT - POINT OF VERTICAL TANGENCY
R. - RADIUS
R.A. - REAR ABUTMENT
RCP - ROCK CHANNEL PROTECTION
RF - RIGHT FORWARD
RT. - RIGHT
R/W - RIGHT OF WAY
SAN. - SANITARY
SER. - SERIES
SHLDR. - SHOULDER
SHT. - SHEET
S.O. - SERIES OF
SPA. - SPACES OR SPACING
SR - STATE ROUTE
STA. - STATION
STD. - STANDARD
STM. - STORM
STR. - STRAIGHT
T&B - TOP AND BOTTOM
TBM - TEMPORARY BENCH MARK
TEMP. - TEMPORARY
T.O.S. - TOE OF SLOPE
T/RAILING - TOE OF RAILING
T/T - TOE TO TOE
TYP. - TYPICAL
U.G. - UNDERGROUND
U.N.O. - UNLESS NOTED OTHERWISE
VAR. - VARIES
VC - VERTICAL CURVE
VERT. - VERTICAL
W/ - WITH
W/O - WITHOUT
W.P. - WORK POINT

Preliminary Plans - For Reference Only

GENERAL NOTES - (4 OF 4)
CUY-77-1587 (BRIDGE 9)
I.R. 77 SB OVER I.R. 90 AND CR-721 (E. 14TH ST.)

SFN 1806910
DESIGN AGENCY
DESIGNER TJE | CHECKER BTA
REVIEWER DWW 01/11/24
PROJECT ID 82382
SUBSET 15 | TOTAL 167
SHEET 1883 | TOTAL 2696

CUY-90-16.28 (CCG3A)

MODEL: Sheet PAPERSIZE: 34x22 (in.) DATE: 3/28/2025 TIME: 10:10:07 AM USER: RohitLBk
pw:\\mb-us-pw.bentley.com:mb-us-pw-03\Documents\Cleveland_OH\01_Projects\ODOT\District12\82382\400-Engineering\Structures\SFN_1806910\Sheets\82382_SFN_1806910_SN004.dgn

ESTIMATED QUANTITIES

CALCULATED BY: NJH/JML DATE: May-2024
CHECKED BY: DGJ DATE: May-2024

PARTICIPATION	ITEM	EXTENSION	TOTAL	UNIT	DESCRIPTION	ABUTMENTS	PIERS	SUPERSTR.	GENERAL	SHEET REF.
03/IMS/08	503	11101	LS		COFFERDAMS AND EXCAVATION BRACING, AS PER PLAN				LS	14 / 167
03/IMS/08	503	21100	5173	CY	UNCLASSIFIED EXCAVATION	225	4948			
03/IMS/08	505	11100	LS		PILE DRIVING EQUIPMENT MOBILIZATION				LS	
03/IMS/08	507	00500	6435	FT	12" CAST-IN-PLACE REINFORCED CONCRETE PILES, DRIVEN	6435				
03/IMS/08	507	00550	6735	FT	12" CAST-IN-PLACE REINFORCED CONCRETE PILES, FURNISHED	6735				
03/IMS/08	507	00600	13760	FT	14" CAST-IN-PLACE REINFORCED CONCRETE PILES, DRIVEN		13760			
03/IMS/08	507	00650	14760	FT	14" CAST-IN-PLACE REINFORCED CONCRETE PILES, FURNISHED		14760			
03/IMS/08	507	00700	16690	FT	16" CAST-IN-PLACE REINFORCED CONCRETE PILES, DRIVEN		16690			
03/IMS/08	507	00750	17760	FT	16" CAST-IN-PLACE REINFORCED CONCRETE PILES, FURNISHED		17760			
03/IMS/08	507	92201	446	FT	PREBORED HOLES, AS PER PLAN	446				13 / 167
03/IMS/08	509	10000	2309681	LB	EPOXY COATED STEEL REINFORCEMENT	68448	930999	1310234		
03/IMS/08	509	30020	63147	FT	NO. 4 GFRP DEFORMED BARS			63147		
03/IMS/08	511	34446	3826	CY	CLASS QC2 CONCRETE WITH QC/QA, BRIDGE DECK			3826		
03/IMS/08	511	34450	626	CY	CLASS QC2 CONCRETE WITH QC/QA, BRIDGE DECK (PARAPET)			626		
03/IMS/08	511	41012	342	CY	CLASS QC1 CONCRETE WITH QC/QA, PIER ABOVE FOOTINGS		342			
03/IMS/08	511	44112	437	CY	CLASS QC1 CONCRETE WITH QC/QA, ABUTMENT NOT INCLUDING FOOTING	437				
03/IMS/08	511	45602	1908	CY	CLASS QC4 MASS CONCRETE, SUBSTRUCTURE WITH QC/QA (4 KSI)		1908			
03/IMS/08	511	45602	187	CY	CLASS QC4 MASS CONCRETE, SUBSTRUCTURE WITH QC/QA (6 KSI)		187			
03/IMS/08	511	46512	1460	CY	CLASS QC1 CONCRETE WITH QC/QA, FOOTING	179	1281			
										15 / 167
03/IMS/08	512	10001	622	SY	SEALING OF CONCRETE SURFACES, AS PER PLAN (PERMANENT GRAFFITI PROTECTION)	51	571			
03/IMS/08	512	10100	8194	SY	SEALING OF CONCRETE SURFACES (EPOXY-URETHANE)	432	3426	4336		
03/IMS/08	512	33000	56	SY	TYPE 2 WATERPROOFING	56				
03/IMS/08	513	10301	7547000	LB	STRUCTURAL STEEL MEMBERS, LEVEL 5, AS PER PLAN			7547000		
03/IMS/08	513	20000	32600	EACH	WELDED STUD SHEAR CONNECTORS			32600		
03/IMS/08	514	00060	391000	SF	FIELD PAINTING STRUCTURAL STEEL, INTERMEDIATE COAT			391000		
03/IMS/08	514	00066	391000	SF	FIELD PAINTING STRUCTURAL STEEL, FINISH COAT			391000		
03/IMS/08	516	10010	149	FT	ARMORLESS PREFORMED JOINT SEAL				149	
03/IMS/08	516	13900	168	SF	2" PREFORMED EXPANSION JOINT FILLER	146		22		
03/IMS/08	SPECIAL	51612400	209	FT	MODULAR EXPANSION JOINT			209		14 / 167
03/IMS/08	518	12301	16	EACH	SCUPPERS, INCLUDING SUPPORTS, AS PER PLAN			16		120 / 167
03/IMS/08	518	21200	81	CY	POROUS BACKFILL WITH GEOTEXTILE FABRIC	81				
03/IMS/08	518	40000	214	FT	6" PERFORATED CORRUGATED PLASTIC PIPE	214				
03/IMS/08	523	20001	10	EACH	DYNAMIC LOAD TESTING, AS PER PLAN	2	8			13 / 167
03/IMS/08	523	20501	10	EACH	RESTRIKE, AS PER PLAN	2	8			13 / 167
03/IMS/08	524	94946	471	FT	DRILLED SHAFTS, 72" DIAMETER, ABOVE BEDROCK		471			
03/IMS/08	524	94989	440	FT	DRILLED SHAFTS, 90" DIAMETER, ABOVE BEDROCK, AS PER PLAN		440			12 / 167
03/IMS/08	524	95000	88	FT	DRILLED SHAFTS, MISC.: 90" DIAMETER DEMONSTRATION DRILLED SHAFT		88			12 / 167
03/IMS/08	524	95100	6	EACH	DRILLED SHAFTS, MISC.: CSL TESTING, 90" DIA. SHAFT		6			12 / 167 AND 13 / 167
03/IMS/08	524	95100	12	EACH	DRILLED SHAFTS, MISC.: HIGH-STRAIN DYNAMIC TESTING OF DRILLED SHAFTS		12			12 / 167 AND 13 / 167
03/IMS/08	524	95100	1	EACH	DRILLED SHAFTS, MISC.: BI-DIRECTIONAL TESTING OF DRILLED SHAFTS		1			13 / 167
03/IMS/08	526	30010	483	SY	REINFORCED CONCRETE APPROACH SLABS WITH QC/QA (T=17")				483	
03/IMS/08	526	90030	149	FT	TYPE C INSTALLATION				149	
03/IMS/08	SPECIAL	53000200	LS		SPECIAL - STRUCTURES MISC.: VIBRATION MONITORING				LS	13 / 167
03/IMS/08	SPECIAL	53000200	LS		SPECIAL - STRUCTURES MISC.: PRECONSTRUCTION CONDITION SURVEY				LS	13 / 167
03/IMS/08	601	21001	18	SY	CONCRETE SLOPE PROTECTION, AS PER PLAN	18				35 / 167
03/IMS/08	855	00010	12136	LB	POST-TENSIONING STRAND TENDON		12136			
03/IMS/08	869	00101	100	EACH	HIGH LOAD MULTI-ROTATIONAL (HLMR) BEARINGS, AS PER PLAN			100		68 / 167 TO 70 / 167
03/IMS/08	894	10000	12	EACH	THERMAL INTEGRITY PROFILING (TIP) TEST		12			12 / 167 AND 13 / 167

Preliminary Plans - For Reference Only

ESTIMATED QUANTITIES
CUY-77-1587 (BRIDGE 9)
I.R. 77 SB OVER I.R. 90 AND CR-721 (E. 14TH ST.)

SFN 1806910
DESIGN AGENCY HDR
DESIGNER BTA | CHECKER JS
REVIEWER DWW 01/11/24
PROJECT ID 82382
SUBSET 16 | TOTAL 167
SHEET 1884 | TOTAL 2696

CUY-90-16.28 (CCG3A)

MODEL: Sheet PAPERSIZE: 34x22 (in.) DATE: 3/28/2025 TIME: 10:10:13 AM USER: RohitLBk
pw:\\mb-us-pw.bentley.com:mb-us-pw-03\Documents\Cleveland_OH\01_Projects\ODOT\District12\82382\400-Engineering\Structures\SFN_1806910\Sheets\82382_SFN_1806910_SQ001.dgn

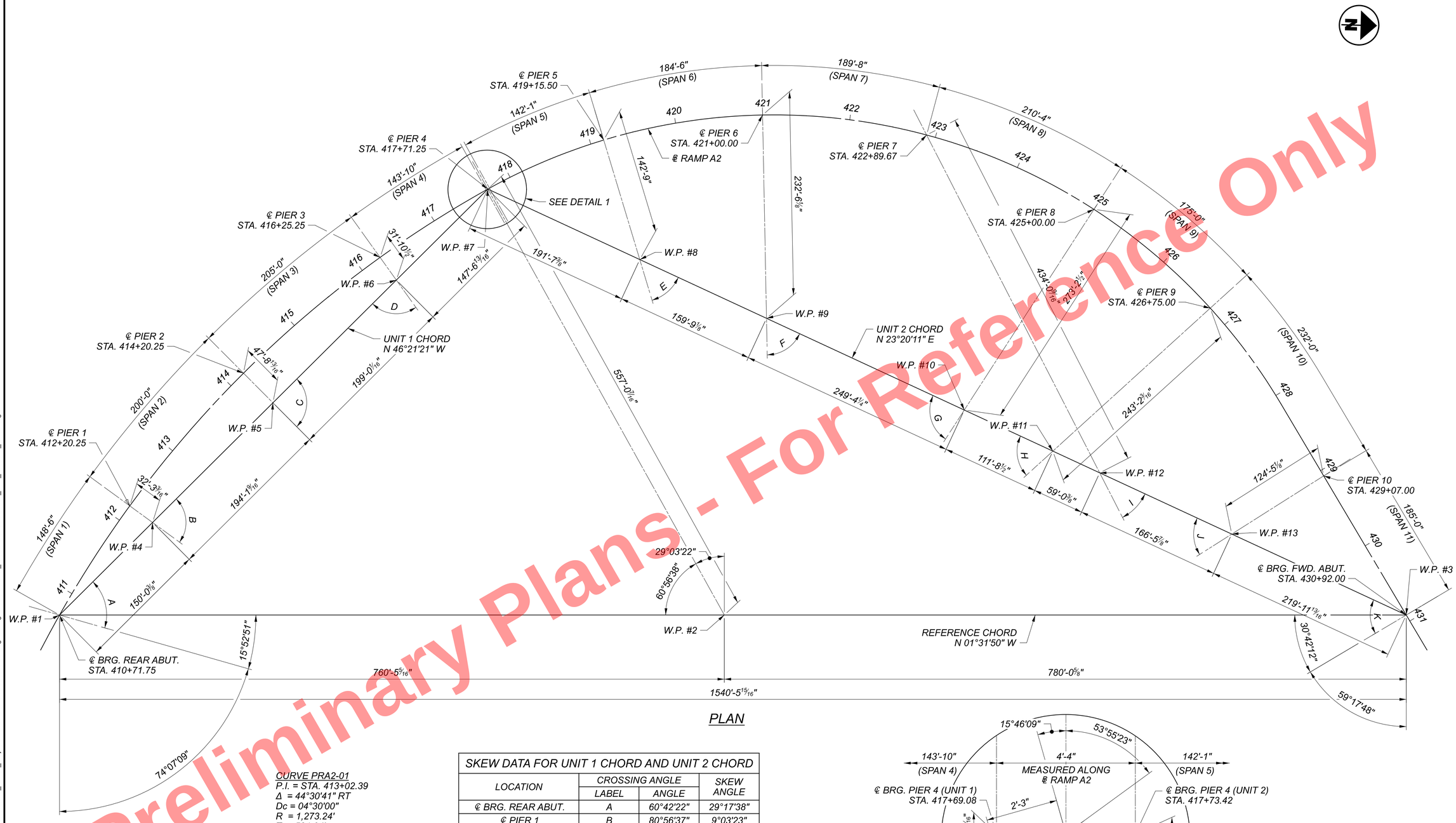

PLAN

SKEW DATA FOR UNIT 1 CHORD AND UNIT 2 CHORD			
LOCATION	CROSSING ANGLE		SKEW ANGLE
	LABEL	ANGLE	
℄ BRG. REAR ABUT.	A	60°42'22"	29°17'38"
℄ PIER 1	B	80°56'37"	9°03'23"
℄ PIER 2	C	89°56'37"	0°03'23"
℄ PIER 3	D	80°49'53"	9°10'07"
℄ PIER 4	-	-	-
℄ PIER 5	E	48°20'17"	41°39'43"
℄ PIER 6	F	64°01'14"	25°58'46"
℄ PIER 7	I	37°59'32"	52°00'28"
℄ PIER 8	G	81°58'46"	8°01'14"
℄ PIER 9	H	67°06'16"	22°53'44"
℄ PIER 10	J	57°12'26"	32°47'34"
℄ BRG. FWD. ABUT.	K	55°34'14"	34°25'46"

<u>CURVE PRA2-01</u>
P.I. = STA. 413+02.39
Δ = 44°30'41" RT
Dc = 04°30'00"
R = 1,273.24'
T = 521.04'
L = 989.14'
E = 102.49'

<u>CURVE PRA2-02</u>
P.I. = STA. 424+26.19
Δ = 88°25'03" RT
Dc = 08°30'00"
R = 674.07'
T = 655.7'
L = 1,040.21'
E = 266.31'

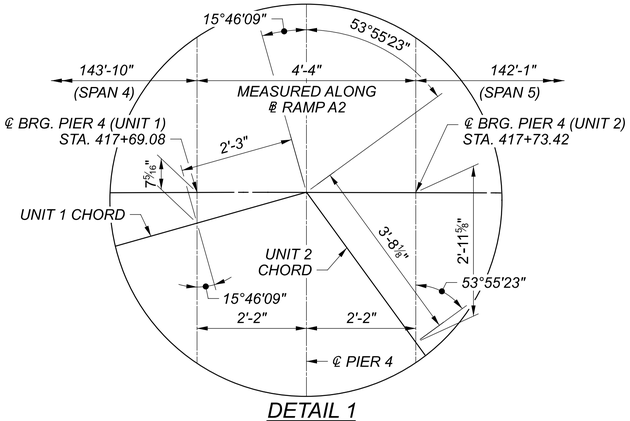

DETAIL 1

<u>NOTE:</u>
SPANS MEASURED ALONG ℄ RAMP A2

Preliminary Plans - For Reference Only

CUY-90-16.28 (CCG3A)

MODEL: Sheet PAPERSIZE: 34x22 (in.) DATE: 3/28/2025 TIME: 10:10:19 AM USER: RohitLBk
pw:\\mb-us-pw.bentley.com:mb-us-pw-03\Documents\Cleveland_OH01_Projects\ODOT\District12\82382400-Engineering\Structures\SFN_1806910\Sheets\82382_SFN_1806910_SO001.dgn

GEOMETRIC LAYOUT
CUY-77-1587 (BRIDGE 9)
I.R. 77 SB OVER I.R. 90 AND CR-721 (E. 14TH ST.)

SFN	1806910
DESIGN AGENCY	HDR
DESIGNER	JS
CHECKER	TJE
REVIEWER	DWW 01/11/24
PROJECT ID	82382
SUBSET	17
TOTAL	167
SHEET	1885
TOTAL	2696

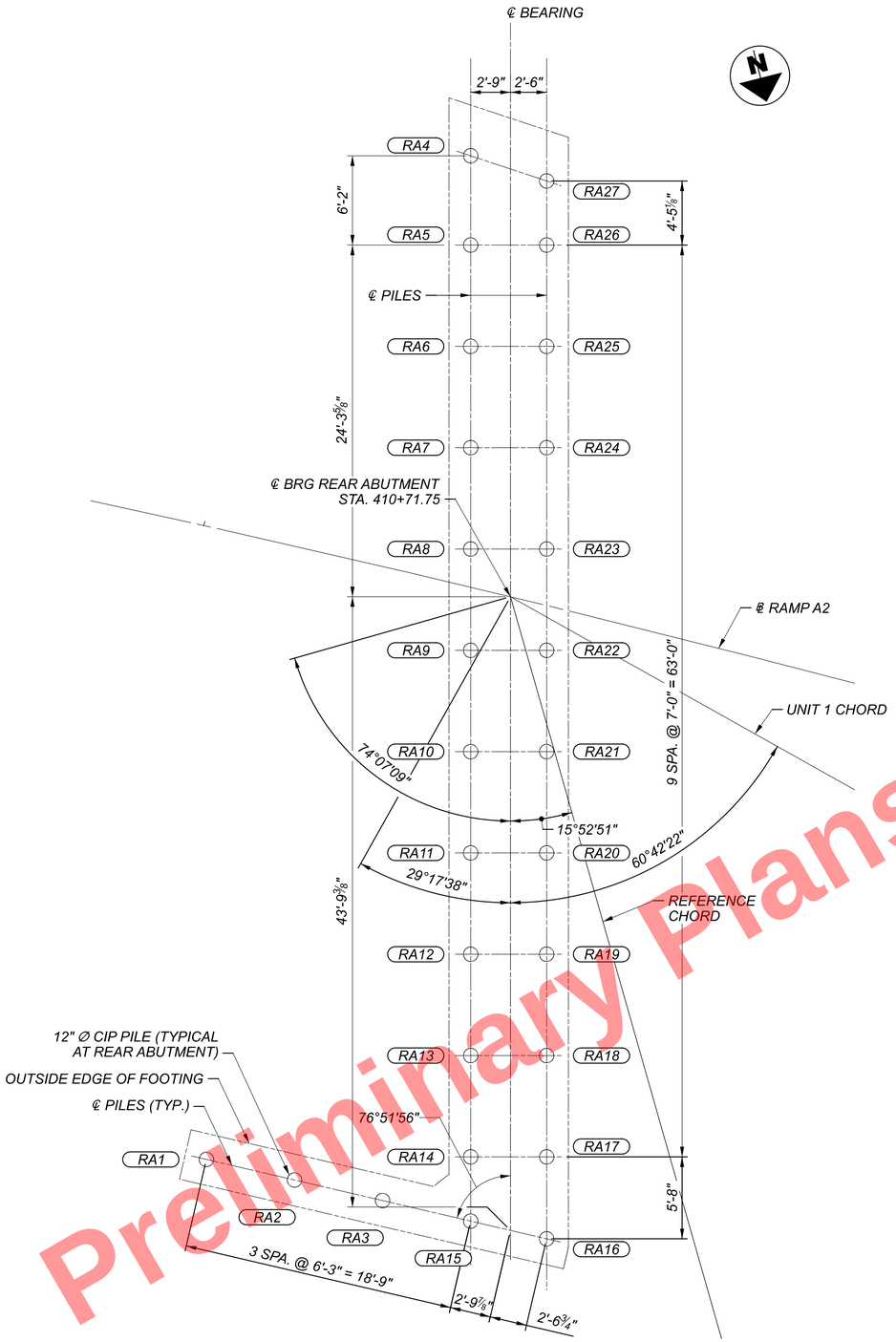

PLAN
REAR ABUTMENT

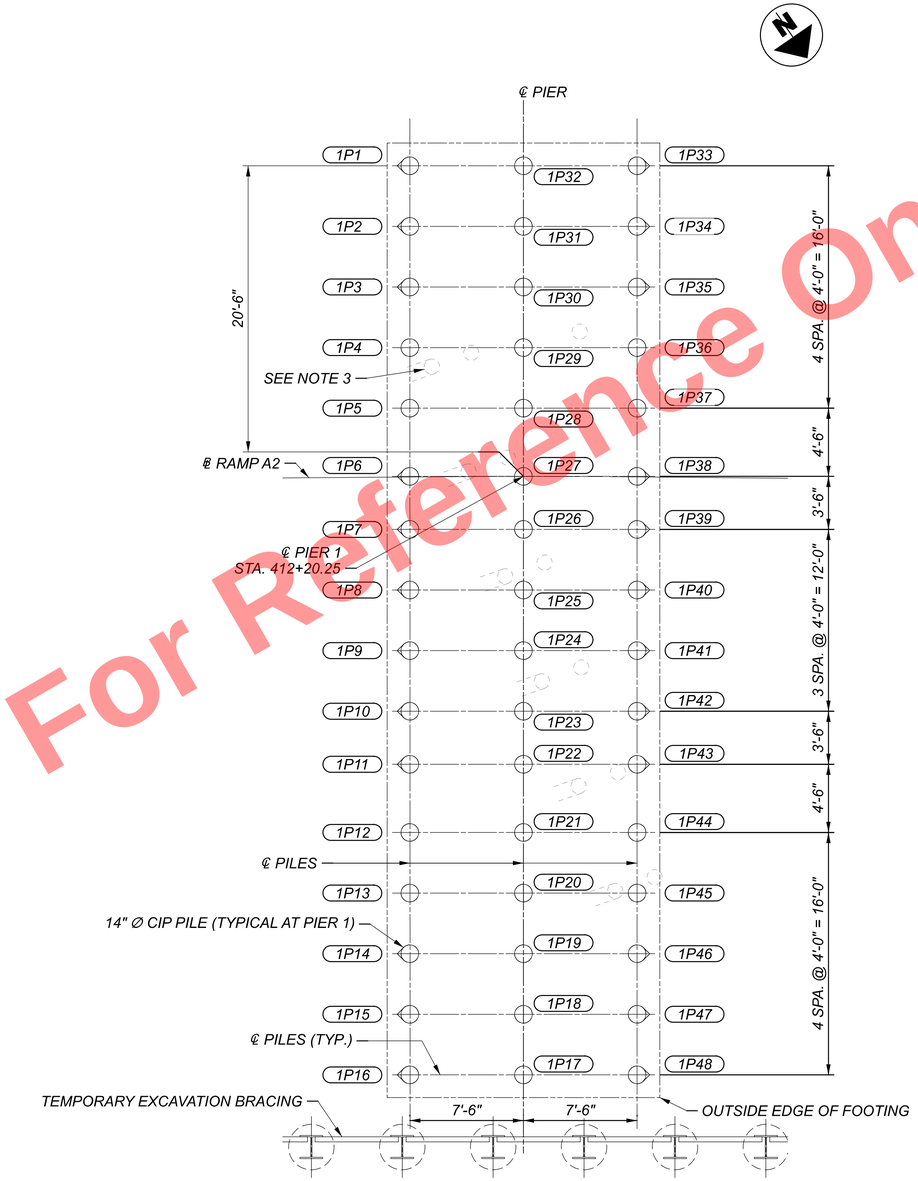

PLAN
PIER 1

LEGEND:

- CIP PILE (VERTICAL)
- CIP PILE (BATTERED 1:4)
- EX. 12" Ø± CIP PILE (VERTICAL)
- EX. 12" Ø± CIP PILE (BATTERED 1:4)
- (#) PILE NUMBER
- [#] DRILLED SHAFT NUMBER

NOTES:

1. FOR REAR ABUTMENT DETAILS, SEE SHEETS 34 / 167 THRU 36 / 167 .
2. FOR PIER 1 DETAILS, SEE SHEETS 41 / 167 AND 42 / 167 .
3. REMOVE PORTIONS OF EX. STRUCTURE PER CMS 202.03. STRUCTURE REMOVAL IS PAID FOR WITHIN THE PROJECT BUT NOT INCLUDED IN THE QUANTITIES FOR CUY-77-1587.

Preliminary Plans - For Reference Only

FOUNDATION PLAN - (1 OF 6)
CUY-77-1587 (BRIDGE 9)
I.R. 77 SB OVER I.R. 90 AND CR-721 (E. 14TH ST.)

SFN 1806910
DESIGN AGENCY HDR
DESIGNER JS | CHECKER TJE
REVIEWER DWW 01/11/24
PROJECT ID 82382
SUBSET 18 | TOTAL 167
SHEET 1886 | TOTAL 2696

CUY-90-16.28 (CCG3A)

MODEL: Sheet PAPERSIZE: 34x22 (in.) DATE: 3/28/2025 TIME: 10:10:25 AM USER: RohitLBk
pw:\\mb-us-pw.bentley.com:mb-us-pw-03\Documents\Cleveland_OH01_Projects\ODOT\District12\82382\400-Engineering\Structures\SFN_1806910\Sheets\82382_SFN_1806910_SO002.dgn

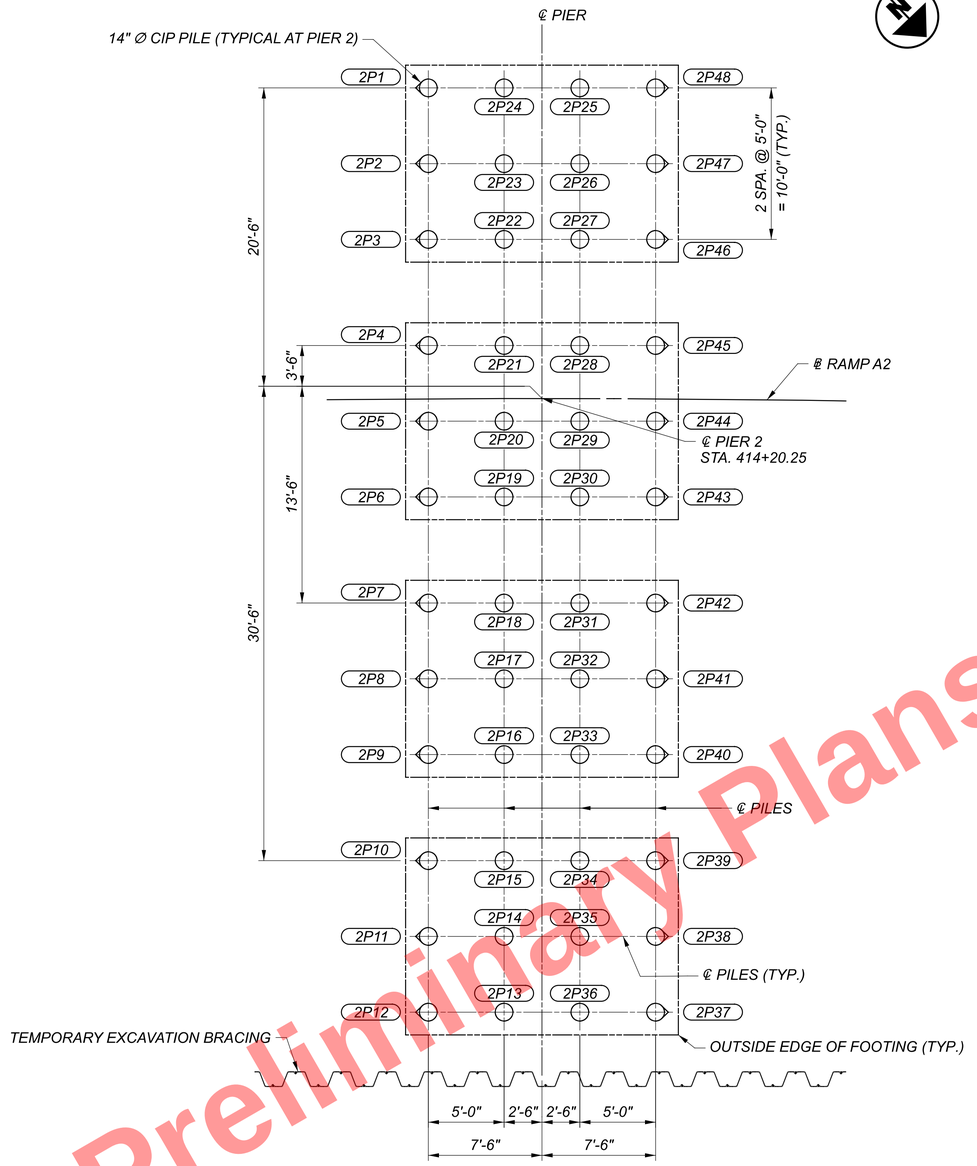

PLAN
PIER 2

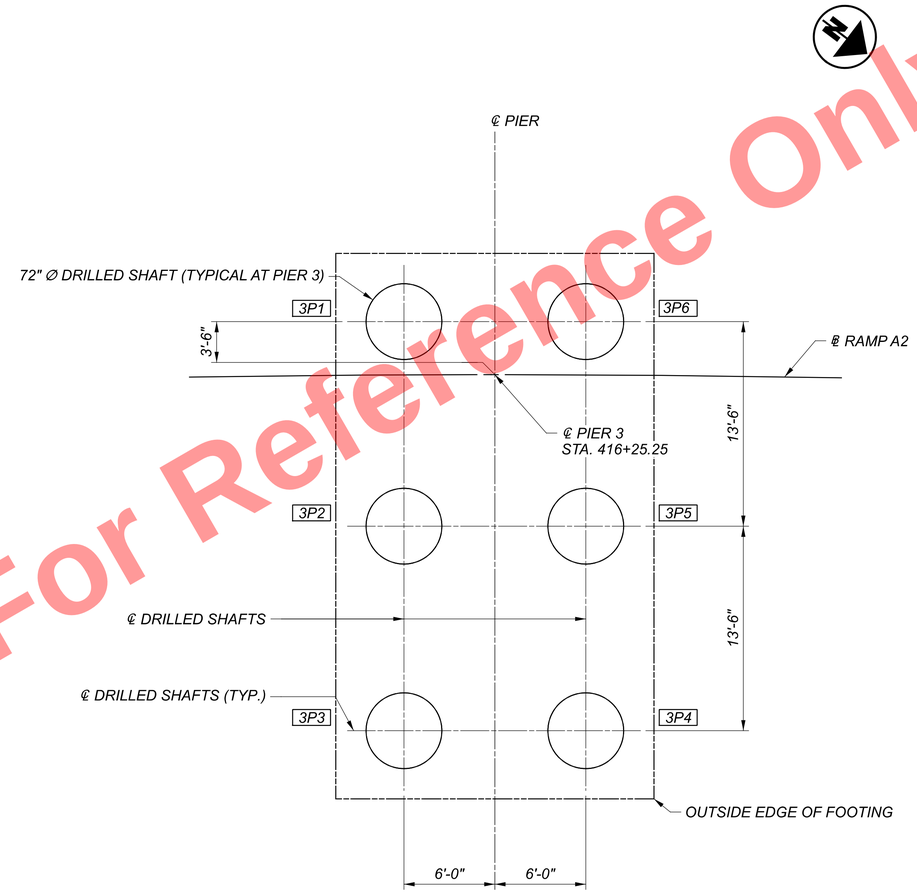

PLAN
PIER 3

LEGEND:

- CIP PILE (VERTICAL)
- CIP PILE (BATTERED 1:4)
- EX. 12" Ø± CIP PILE (VERTICAL)
- EX. 12" Ø± CIP PILE (BATTERED 1:4)
- (#) PILE NUMBER
- [#] DRILLED SHAFT NUMBER

NOTES:

1. FOR PIER 2 DETAILS, SEE SHEETS 43 / 167 AND 44 / 167 .
2. FOR PIER 3 DETAILS, SEE SHEETS 45 / 167 THRU 47 / 167 .

Preliminary Plans - For Reference Only

FOUNDATION PLAN - (2 OF 6)
CUY-77-1587 (BRIDGE 9)
I.R. 77 SB OVER I.R. 90 AND CR-721 (E. 14TH ST.)

SFN	1806910
DESIGN AGENCY	HDR
DESIGNER	JS
CHECKER	TJE
REVIEWER	DWW 01/11/24
PROJECT ID	82382
SUBSET	19
TOTAL	167
SHEET	1887
TOTAL	2696

CUY-90-16.28 (CCG3A)

MODEL: Sheet PAPERSIZE: 34x22 (in.) DATE: 3/28/2025 TIME: 10:10:31 AM USER: Rohit.Bk
pw:\\mb-us-pw.bentley.com:mb-us-pw-03\Documents\Cleveland_OH101_Projects\ODOT\District12\82382\400-Engineering\Structures\SFN_1806910\Sheets\82382_SFN_1806910_SO003.dgn

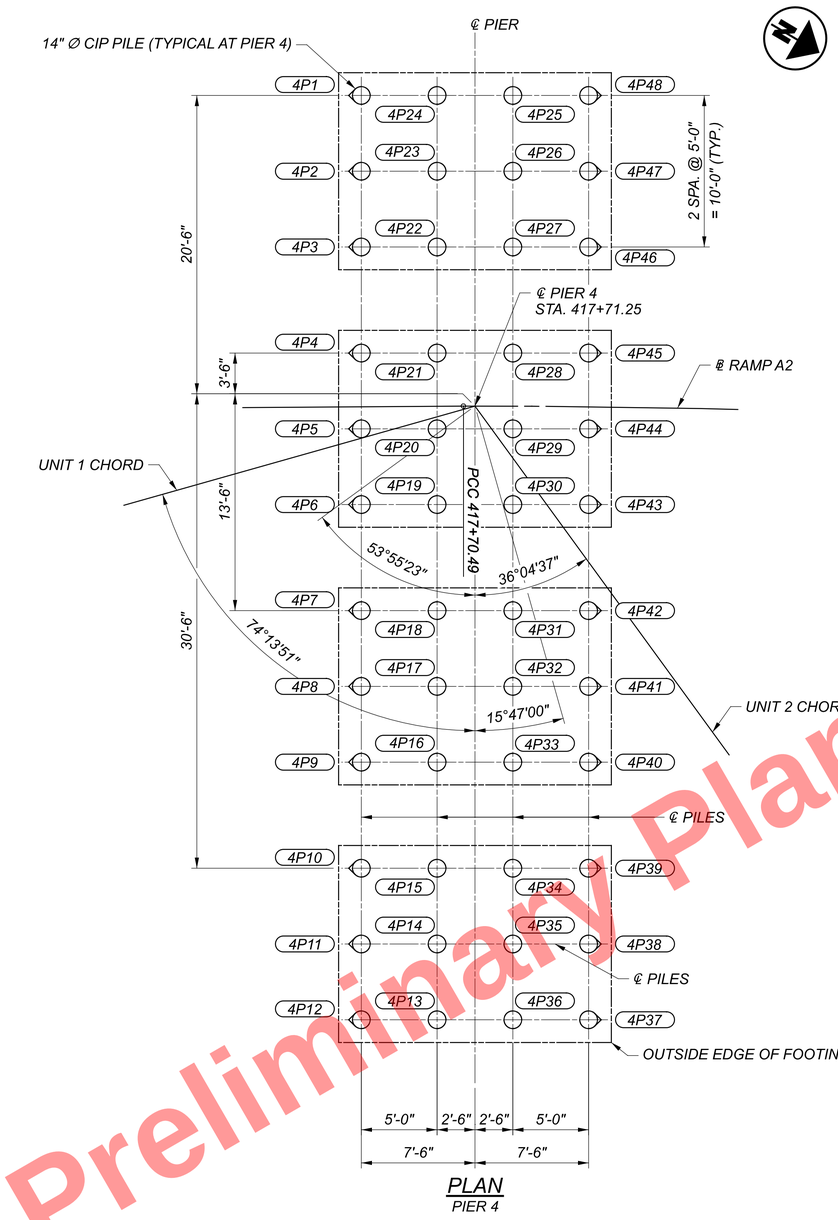

PLAN
PIER 4

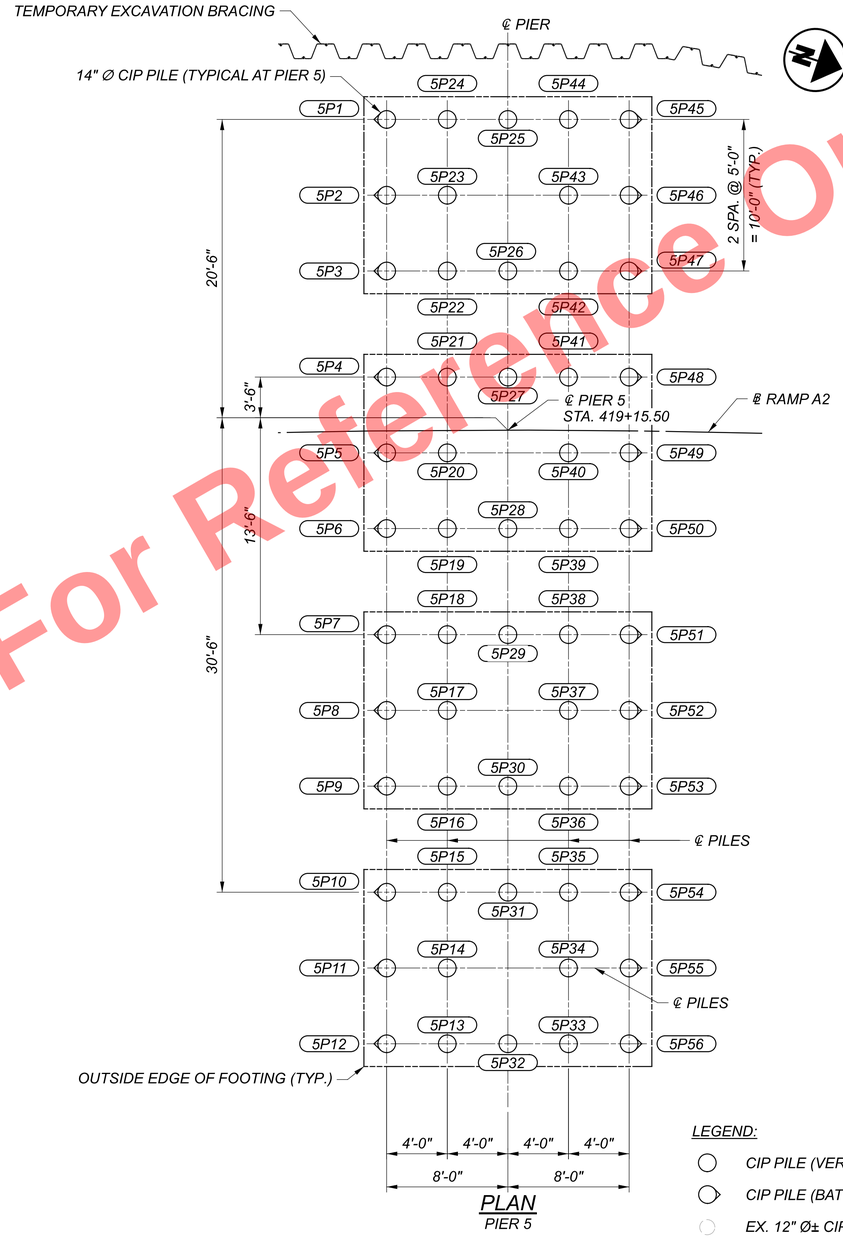

PLAN
PIER 5

LEGEND:

- CIP PILE (VERTICAL)
- CIP PILE (BATTERED 1:4)
- EX. 12" Ø± CIP PILE (VERTICAL)
- EX. 12" Ø± CIP PILE (BATTERED 1:4)
- (#) PILE NUMBER
- [#] DRILLED SHAFT NUMBER

NOTES:

1. FOR PIER 4 DETAILS, SEE SHEETS 48 / 167 THRU 50 / 167.
2. FOR PIER 5 DETAILS, SEE SHEETS 51 / 167 AND 52 / 167.

Preliminary Plans - For Reference Only

FOUNDATION PLAN - (3 OF 6)
CUY-77-1587 (BRIDGE 9)
I.R. 77 SB OVER I.R. 90 AND CR-721 (E. 14TH ST.)

SFN 1806910
DESIGN AGENCY
DESIGNER JS | CHECKER TJE
REVIEWER DWW 01/11/24
PROJECT ID 82382
SUBSET 20 | TOTAL 167
SHEET 1888 | TOTAL 2696

CUY-90-16.28 (CCG3A)

MODEL: Sheet PAPERSIZE: 34x22 (in.) DATE: 3/28/2025 TIME: 10:10:38 AM USER: RohitLBk
pw:\\mb-us-pw.bentley.com:mb-us-pw-03\Documents\Cleveland_OH\01_Projects\ODOT\District12\82382\400-Engineering\Structures\SFN_1806910\Sheets\82382_SFN_1806910_SO004.dgn

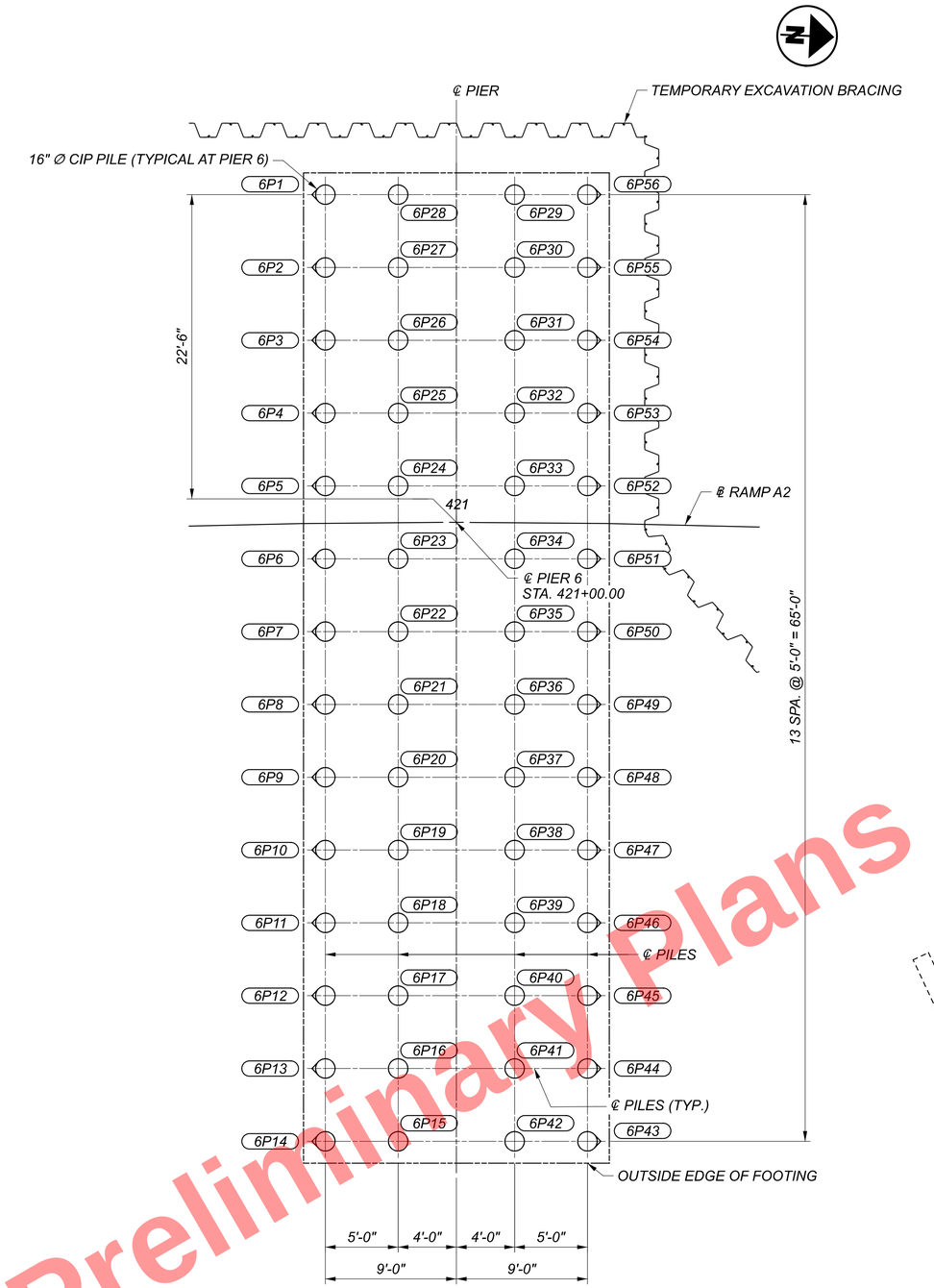

PLAN
PIER 6

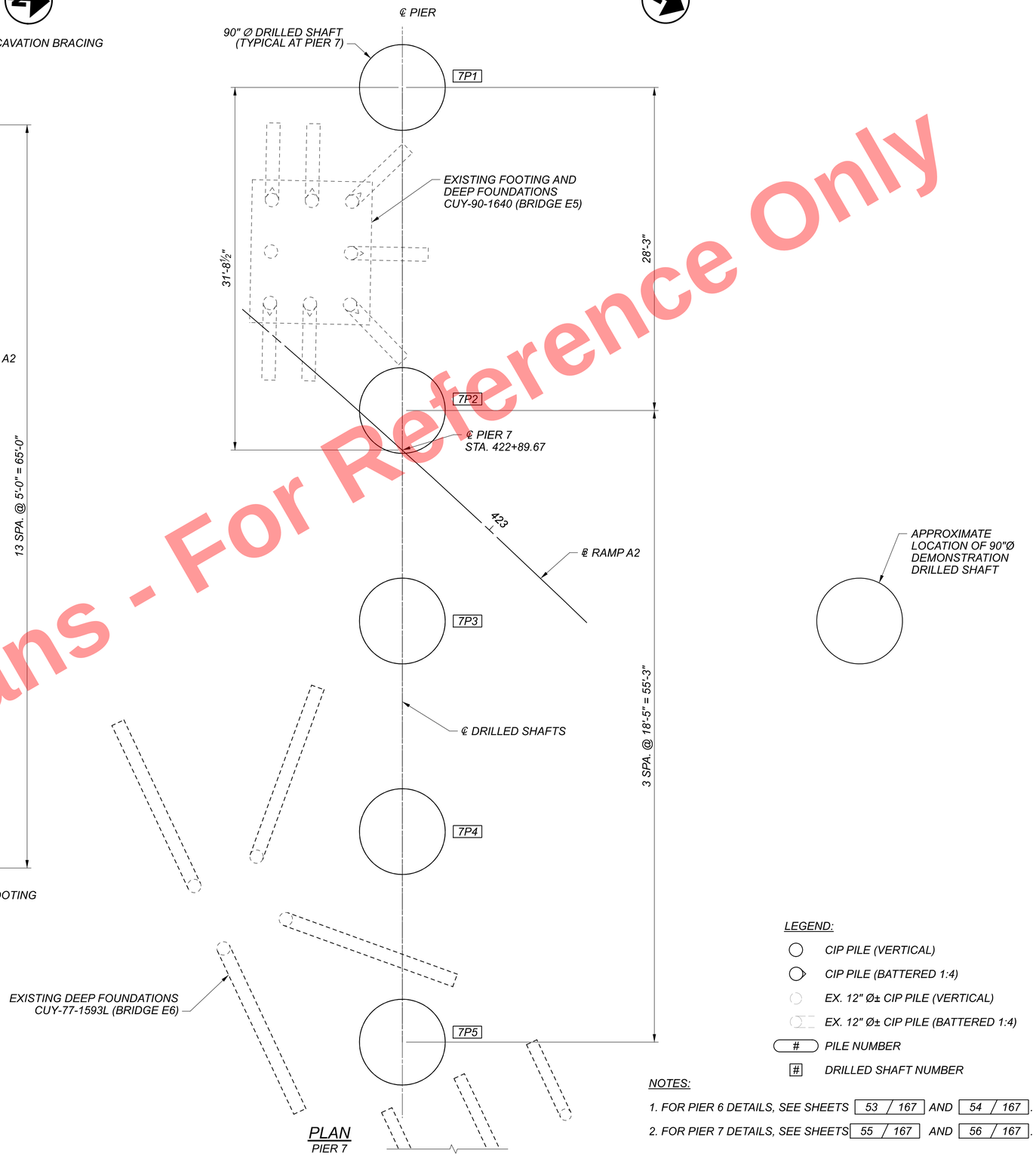

PLAN
PIER 7

LEGEND:

- CIP PILE (VERTICAL)
- CIP PILE (BATTERED 1:4)
- EX. 12" Ø± CIP PILE (VERTICAL)
- EX. 12" Ø± CIP PILE (BATTERED 1:4)
- (#) PILE NUMBER
- [#] DRILLED SHAFT NUMBER

NOTES:

1. FOR PIER 6 DETAILS, SEE SHEETS 53 / 167 AND 54 / 167.
2. FOR PIER 7 DETAILS, SEE SHEETS 55 / 167 AND 56 / 167.

Preliminary Plans - For Reference Only

FOUNDATION PLAN - (4 OF 6)
CUY-77-1587 (BRIDGE 9)
I.R. 77 SB OVER I.R. 90 AND CR-721 (E. 14TH ST.)

SFN	1806910
DESIGN AGENCY	HDR
DESIGNER	JS
CHECKER	TJE
REVIEWER	DWW 01/11/24
PROJECT ID	82382
SUBSET	21
TOTAL	167
SHEET	1889
TOTAL	2696

CUY-90-16.28 (CCG3A)

MODEL: Sheet PAPERSIZE: 34x22 (in.) DATE: 3/28/2025 TIME: 10:10:45 AM USER: RohitBk
pw:\\mb-us-pw.bentley.com:mb-us-pw-03\Documents\Cleveland_OH01_Projects\ODOT\District12\82382400-Engineering\Structures\SFN_1806910\Sheets\82382_SFN_1806910_SO005.dgn

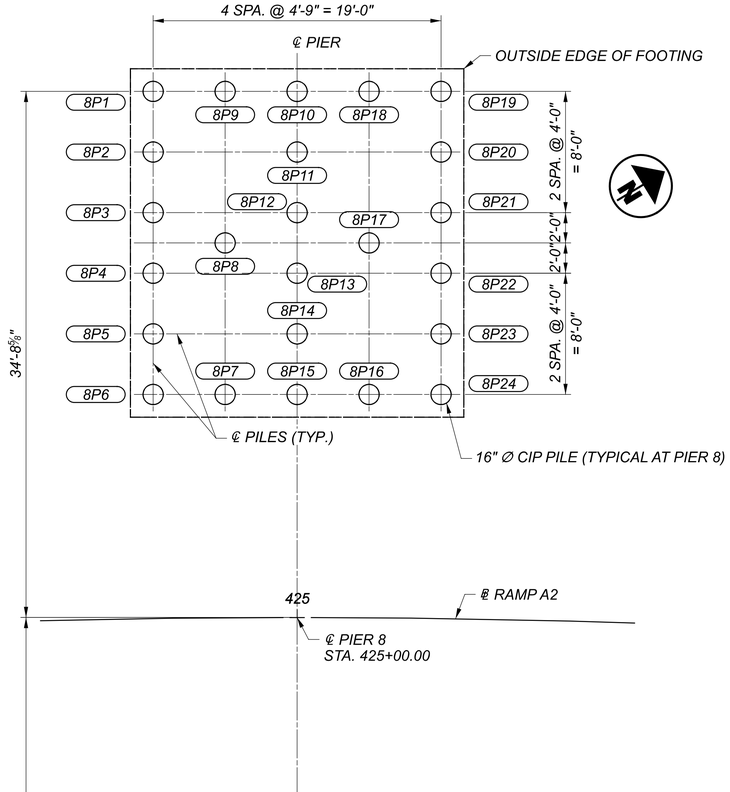

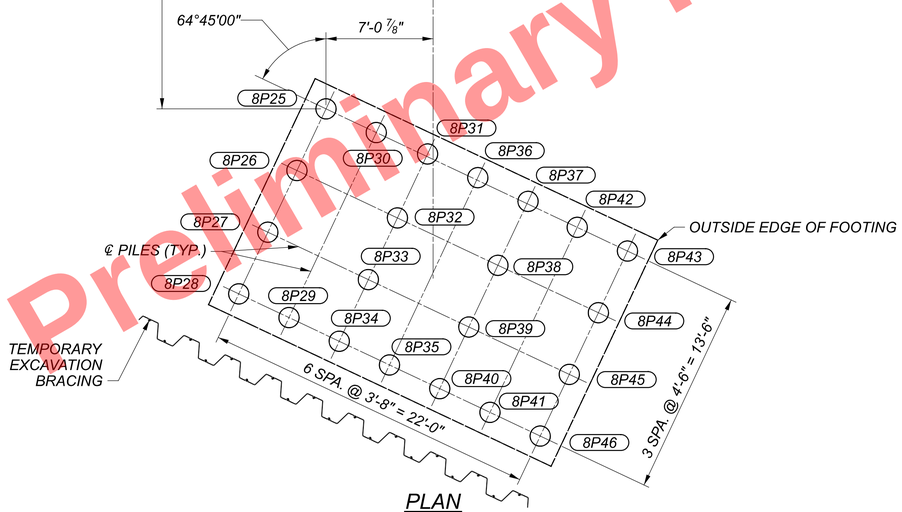

PLAN
PIER 8

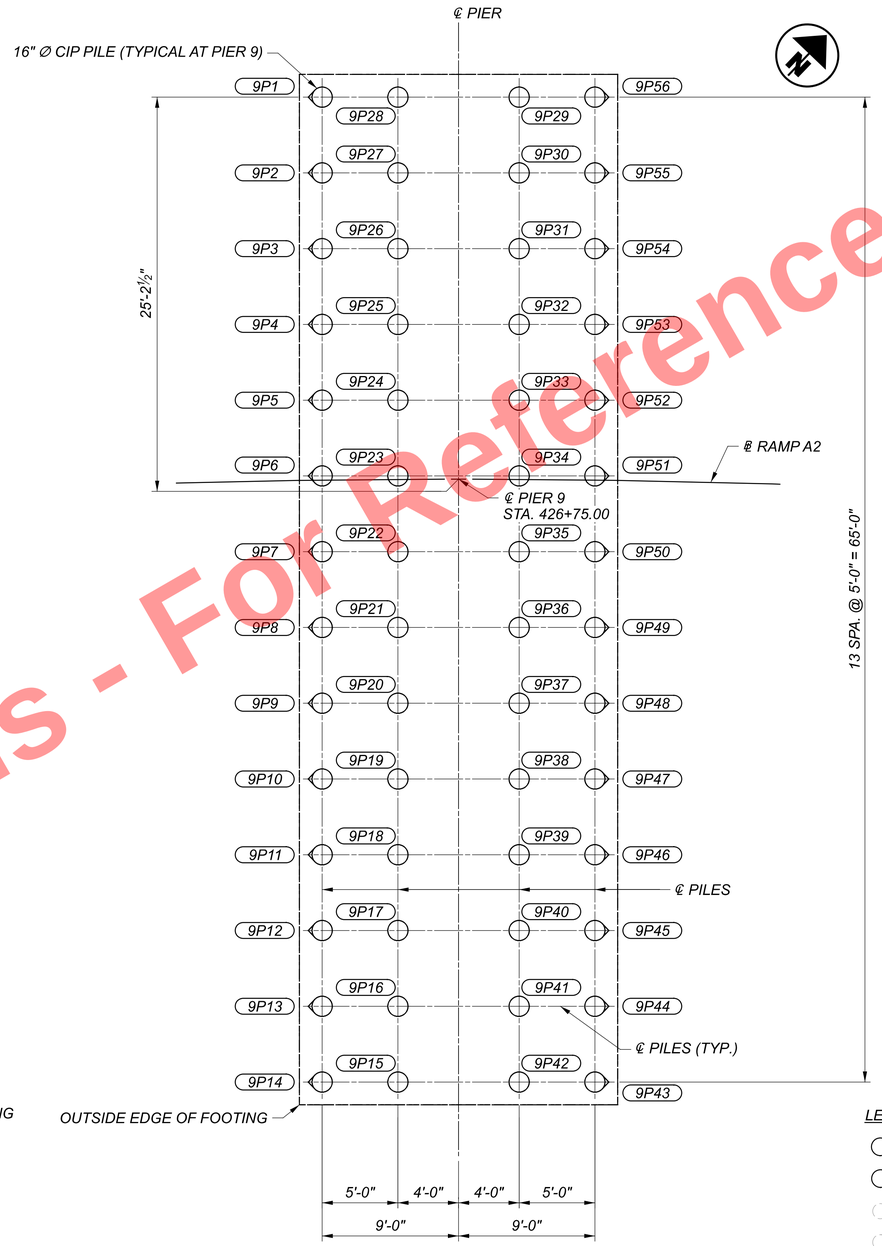

PLAN
PIER 9

LEGEND:

- CIP PILE (VERTICAL)
- CIP PILE (BATTERED 1:4)
- EX. 12" Ø± CIP PILE (VERTICAL)
- EX. 12" Ø± CIP PILE (BATTERED 1:4)
- (#) PILE NUMBER
- [#] DRILLED SHAFT NUMBER

NOTES:

1. FOR PIER 8 DETAILS, SEE SHEETS 57 / 167 THRU 61 / 167 .
2. FOR PIER 9 DETAILS, SEE SHEETS 62 / 167 AND 63 / 167 .

Preliminary Plans - For Reference Only

FOUNDATION PLAN - (5 OF 6)
CUY-77-1587 (BRIDGE 9)
I.R. 77 SB OVER I.R. 90 AND CR-721 (E. 14TH ST.)

SFN	1806910
DESIGN AGENCY	HDR
DESIGNER	JS
CHECKER	TJE
REVIEWER	DWW 01/11/24
PROJECT ID	82382
SUBSET	22
TOTAL	167
SHEET	1890
TOTAL	2696

CUY-90-16.28 (CCG3A)

MODEL: Sheet PAPERSIZE: 34x22 (in.) DATE: 3/28/2025 TIME: 10:10:51 AM USER: Rohit.Bk
pw:\\mb-us-pw.bentley.com:mb-us-pw-03\Documents\Cleveland_OH\01_Projects\ODOT\District12\82382400-Engineering\Structures\SFN_1806910\Sheets\82382_SFN_1806910_SO006.dgn

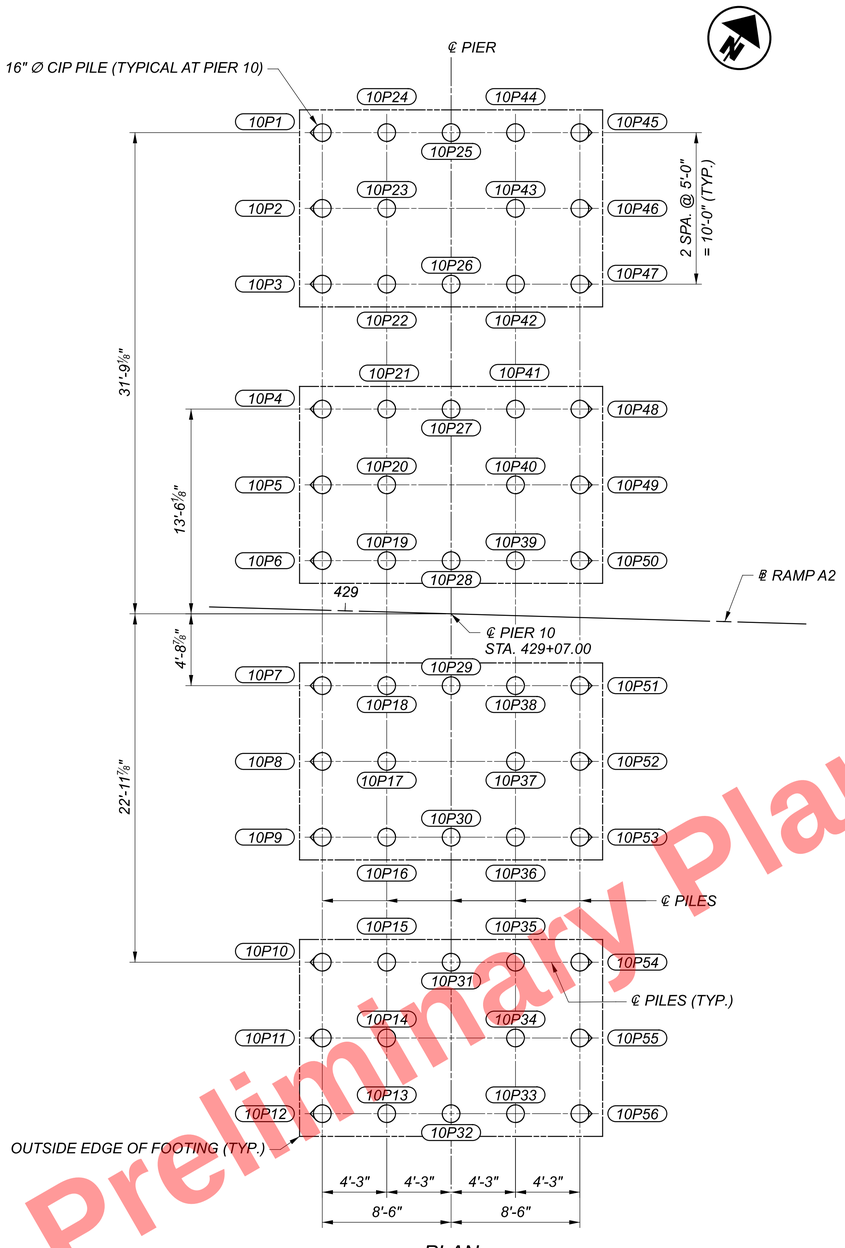

PLAN
PIER 10

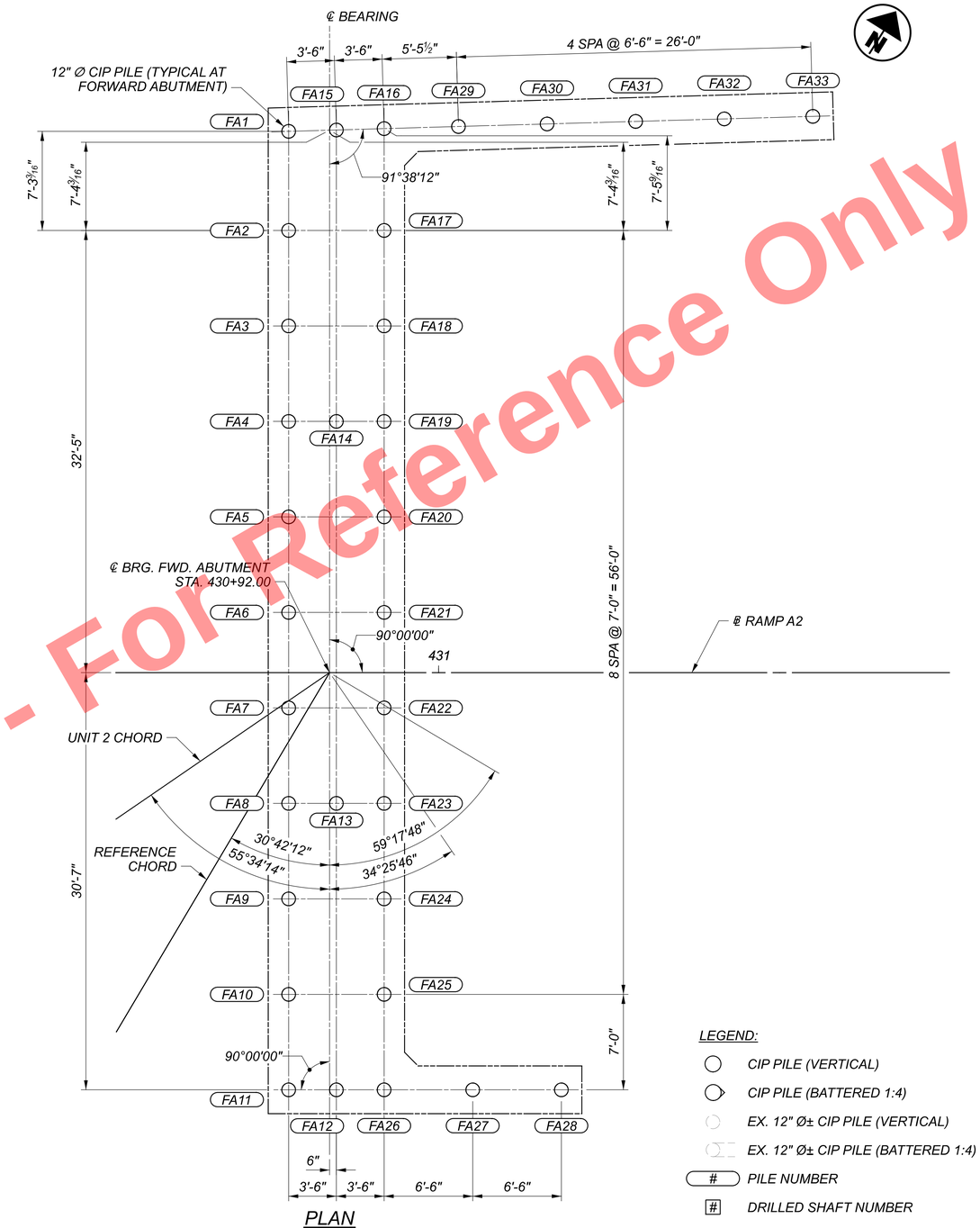

PLAN
FORWARD ABUTMENT

LEGEND:

- CIP PILE (VERTICAL)
- CIP PILE (BATTERED 1:4)
- EX. 12" Ø± CIP PILE (VERTICAL)
- EX. 12" Ø± CIP PILE (BATTERED 1:4)
- (#) PILE NUMBER
- [#] DRILLED SHAFT NUMBER

NOTES:

1. FOR PIER 10 DETAILS, SEE SHEETS 64 / 167 THRU 65 / 167 .
2. FOR FORWARD ABUTMENT DETAILS, SEE SHEETS 37 / 167 THRU 40 / 167 .
3. PREBORE ALL FORWARD ABUTMENT PILES TO AN ELEVATION OF 650' PRIOR TO PERFORMING DRIVING OPERATIONS.

Preliminary Plans - For Reference Only

FOUNDATION PLAN - (6 OF 6)
CUY-77-1587 (BRIDGE 9)
I.R. 77 SB OVER I.R. 90 AND CR-721 (E. 14TH ST.)

SFN	1806910
DESIGN AGENCY	HDR
DESIGNER	JS
CHECKER	TJE
REVIEWER	DWW 01/11/24
PROJECT ID	82382
SUBSET	23
TOTAL	167
SHEET	1891
TOTAL	2696

CUY-90-16.28 (CCG3A)

MODEL: Sheet PAPERSIZE: 34x22 (in.) DATE: 3/28/2025 TIME: 10:10:57 AM USER: RohitLBk
pw:\\mb-us-pw.bentley.com:mb-us-pw-03\Documents\Cleveland_OH\01_Projects\ODOT\District12\82382\400-Engineering\Structures\SFN_1806910\Sheets\82382_SFN_1806910_SO007.dgn

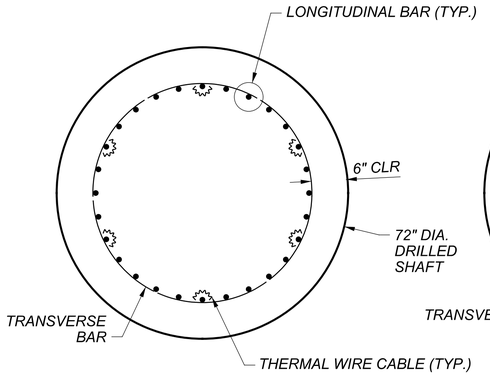

SECTION A-A
NO SCALE

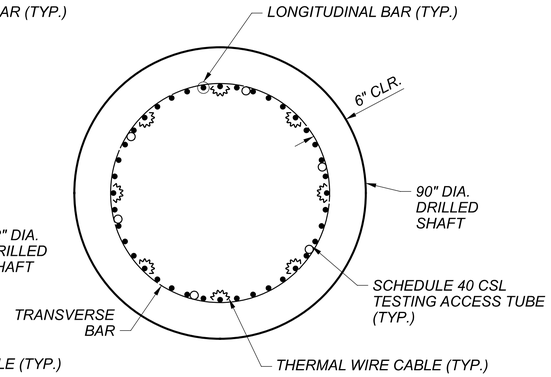

SECTION B-B
NO SCALE

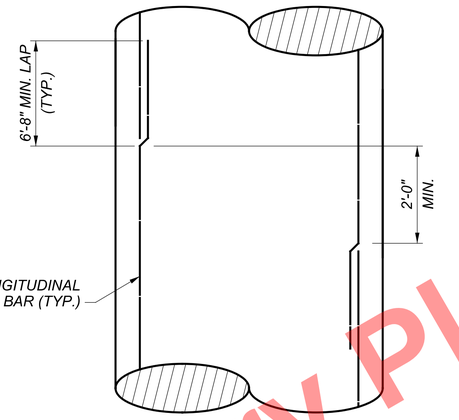

LAP SPLICE DETAIL
NO SCALE

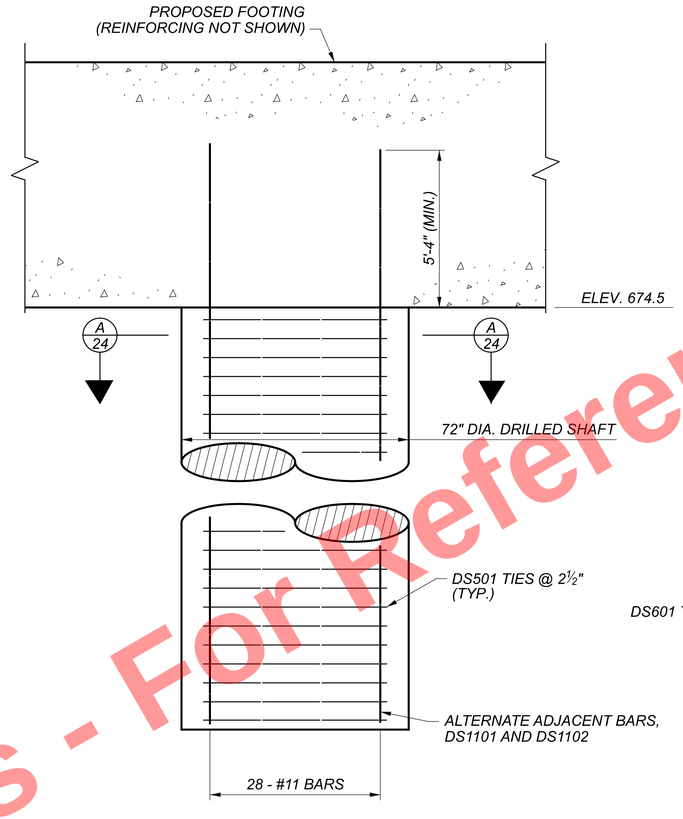

DRILLED SHAFT DETAIL
PIER 3
NO SCALE

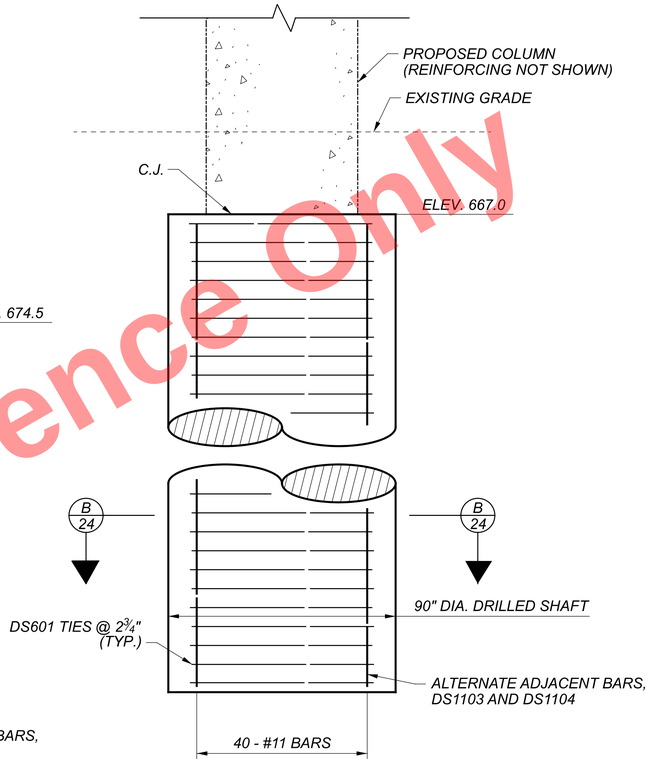

DRILLED SHAFT DETAIL
PIER 7
NO SCALE

PIER	DRILLED SHAFT NUMBER	ESTIMATED QUANTITIES, PER SHAFT			REINFORCING BAR MARKS		NUMBER OF DRILLED SHAFTS TO BE TESTED			
		ITEM 524 - DRILLED SHAFT 72" DIAMETER	ITEM 524 - DRILLED SHAFT 90" DIAMETER, APP	ITEM 524 - DEMONSTRATION SHAFT	LONGITUDINAL	TIES	BY T.I.P.	BY CSL	BY HIGH-STRAIN DYNAMIC TESTING	BY BI-DIRECTIONAL TESTING
3	3P1 TO 3P6	78.5 FT.	--	--	DS1101, DS1102	DS501	6	--	6	--
7	7P1 TO 7P5	--	88 FT.	--	DS1103, DS1104	DS601	5	5	5	--
	DEMONSTRATION SHAFT	--	--	88 FT.	DS1105, DS1106		1	1	1	1

NOTES:

1. FOR GENERAL NOTES, SEE SHEETS 12 / 167 THRU 15 / 167 .
2. FOR PIER 3 PLAN, ELEVATION AND DETAILS, SEE SHEETS 45 / 167 THRU 47 / 167 .
3. FOR PIER 7 PLAN, ELEVATION AND DETAILS, SEE SHEET 55 / 167 AND 56 / 167 .
4. FOR FOUNDATION PLANS, SEE SHEETS 18 / 167 THRU 23 / 167 .
5. FOR DEMONSTRATION SHAFT DETAILS, SEE SHEETS 26 / 167 AND 27 / 167 .
6. THE INSTALLATION SEQUENCE OF CONSTRUCTION SHALL BE SUCH THAT NO DRILLED SHAFT IS INSTALLED ADJACENT TO EITHER AN OPEN DRILLED SHAFT EXCAVATION OR A DRILLED SHAFT IN WHICH THE CONCRETE HAS LESS THAN A 48 HOUR CURE.
7. CARE SHALL BE EXERCISED AS TO COVER UNATTENDED OPEN SHAFTS. TEMPORARY COVERS SHALL BE OF ADEQUATE STRENGTH TO PREVENT A PERSON FROM FALLING IN. NO DRILLED SHAFT EXCAVATION MAY BE LEFT OVERNIGHT WITHOUT CONCRETE PLACED.

Preliminary Plans - For Reference Only

DRILLED SHAFT DETAILS - (1 OF 2)
CUY-77-1587 (BRIDGE 9)
I.R. 77 SB OVER I.R. 90 AND CR-721 (E. 14TH ST.)

SFN 1806910
DESIGN AGENCY
DESIGNER PJC | CHECKER RBK
REVIEWER DWW 01/11/24
PROJECT ID 82382
SUBSET 24 | TOTAL 167
SHEET 1892 | TOTAL 2696

CUY-90-16.28 (CCG3A)

MODEL: Sheet PAPERSIZE: 34x22 (in.) DATE: 3/28/2025 TIME: 10:11:03 AM USER: Rohit.Bk
pw:\\mb-us-pw.bentley.com:mb-us-pw-03\Documents\Cleveland_OH\01_Projects\ODOT\District12\82382\400-Engineering\Structures\SFN_1806910\Sheets\82382_SFN_1806910_SO008.dgn

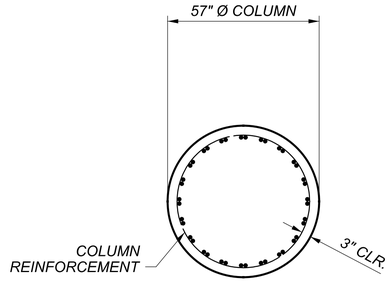

SECTION C-C

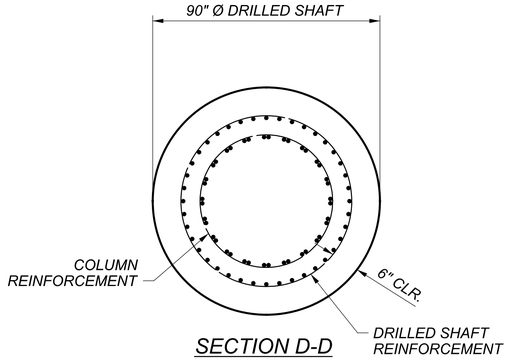

SECTION D-D

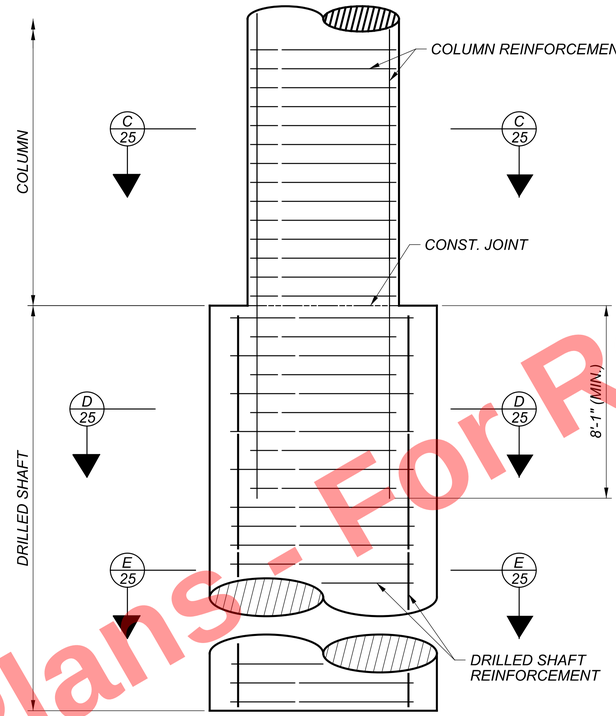

DRILLED SHAFT TO COLUMN DETAIL

PIER 7

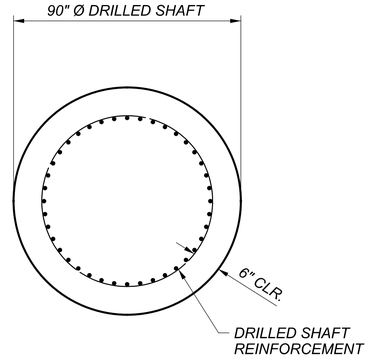

SECTION E-E

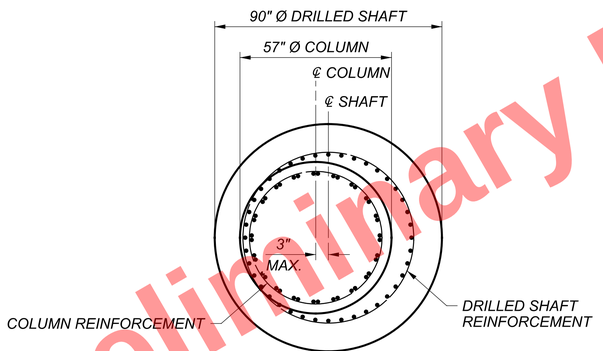

SHAFT OFFSET TOLERANCE

NOTES:

1. FOR ADDITIONAL DRILLED SHAFT NOTES AND DETAILS, SEE SHEETS 24 / 167 .
2. FOR PIER 7 PLAN, ELEVATION AND DETAILS, SEE SHEETS 55 / 167 THRU 56 / 167 .

Preliminary Plans - For Reference Only

DRILLED SHAFT DETAILS - (2 OF 2)
CUY-77-1587 (BRIDGE 9)
I.R. 77 SB OVER I.R. 90 AND CR-721 (E. 14TH ST.)

SFN	1806910
DESIGN AGENCY	HDR
DESIGNER	NJH
CHECKER	RBK
REVIEWER	DWW 01/11/24
PROJECT ID	82382
SUBSET	25
TOTAL	167
SHEET	1893
TOTAL	2696

CUY-90-16.28 (CCG3A)

MODEL: Sheet PAPERSIZE: 34x22 (in.) DATE: 3/28/2025 TIME: 10:11:10 AM USER: Rohit.Bk
pw:\\mb-us-pw.bentley.com:mb-us-pw-03\Documents\Cleveland_OH\01_Projects\ODOT\District12\82382\400-Engineering\Structures\SFN_1806910\Sheets\82382_SFN_1806910_SO009.dgn

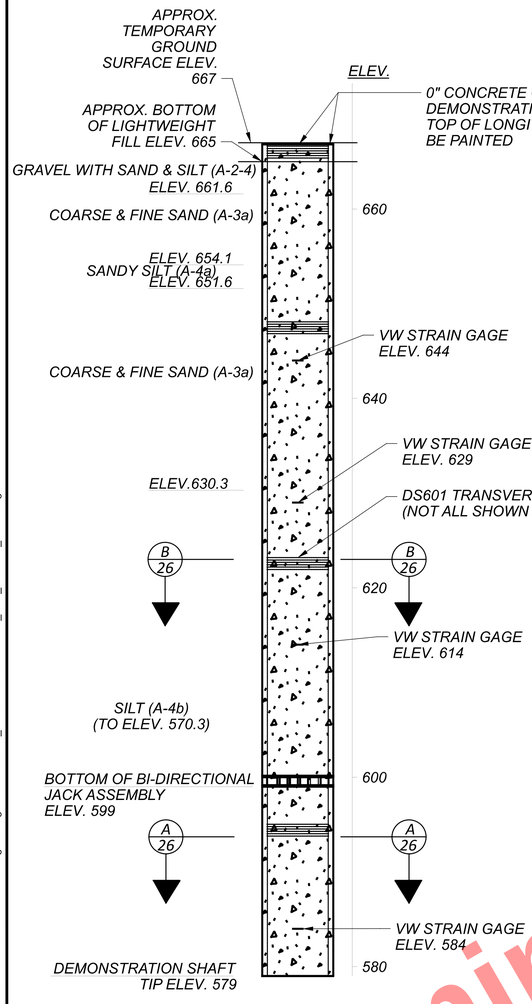

ELEVATION

(SOIL CLASSIFICATIONS AND ELEVATIONS AS ENCOUNTERED IN PROJECT BORING B-141-1-20)

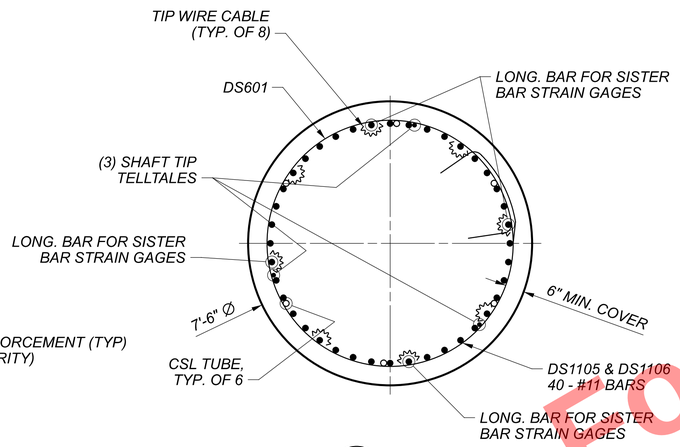

A 26 SECTION

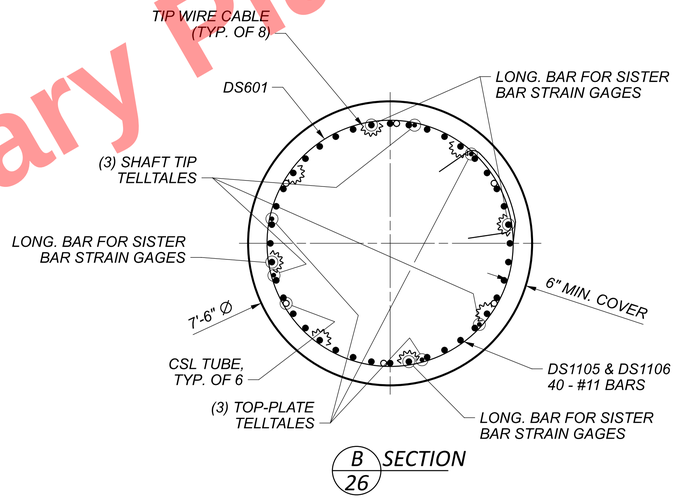

B 26 SECTION

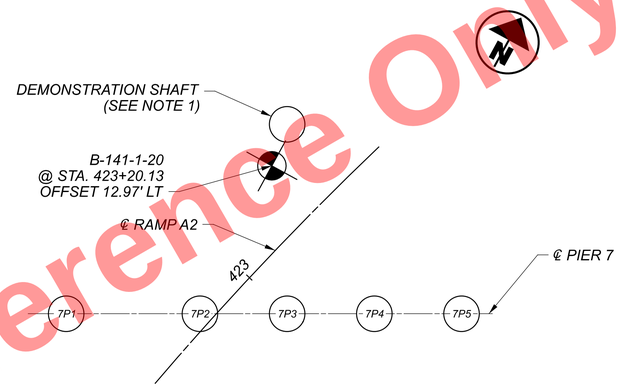

PLAN - DEMONSTRATION SHAFT LOCATION

NOTES:

1. THE CONTRACTOR MAY PROPOSE AN ALTERNATE LOCATION FOR THE DEMONSTRATION SHAFT, WITH THE ACCEPTANCE OF THE ENGINEER. THE PROPOSED LOCATION MUST BE A MINIMUM OF 5 DRILLED SHAFT DIAMETERS AWAY FROM ANY PRODUCTION DRILLED SHAFT.
2. THE TOP ELEVATION OF THE DEMONSTRATION SHAFT IS TO BE DETERMINED BY THE CONTRACTOR.
3. INSTALL 2 PAIR OF VIBRATING WIRE (VW) STRAIN GAGES (WITH SISTER BARS) ORTHOGONALLY OPPOSITE EACH OTHER AT EACH STRAIN GAGE LEVEL (TOTAL OF 16 STRAIN GAGES REQUIRED).
4. PROVIDE A PAIR OF AUTOMATED DIGITAL SURVEY LEVELS (E.G. LEICA MODEL DNA 03, SOKIA MODEL SDL 30, OR EQUAL) IN ACCORDANCE WITH ASTM D8169-18, INSTEAD OF AN INDEPENDENT REFERENCE BEAM. USE EACH SURVEY LEVEL TO MONITOR A SEPARATE INVAR-GRADE SURVEY ROD (INVAR ROD) WITH A PRECISION OF 0.001 INCH. RIGIDLY-MOUNT THE INVAR RODS TO THE TOP OF SHAFT FROM A MINIMUM OF 5 SHAFT DIAMETERS AWAY FROM THE CENTER OF THE DEMONSTRATION SHAFT.
5. PROVIDE AND INSTALL LINEAR VIBRATING WIRE DISPLACEMENT (EXPANSION) TRANSDUCERS (LVWDT) TO MONITOR JACK COMPRESSION AND JACK EXPANSION.
6. PROVIDE AND INSTALL TOP-PLATE AND SHAFT TIP TELLTALES TO MONITOR SHAFT MOVEMENTS WHICH CAN BE USED TO ESTIMATE SHAFT COMPRESSIONS ALONG WITH THE LVWDT AND TOP OF SHAFT DISPLACEMENT MEASUREMENTS.
7. CONTRACTOR SHALL VERIFY ALL UTILITY LOCATIONS PRIOR TO FINALIZING THE LOCATION OF THE DEMONSTRATION SHAFT.
8. DRILLING SLURRY IF USED MUST BE A POLYMER TYPE (MINERAL TYPE IS NOT ACCEPTABLE DUE TO RISK OF FORMATION OF A MUD CAKE ON THE SIDEWALL OF THE DRILLED SHAFT).
9. THE DEMONSTRATION DRILLED SHAFT REINFORCEMENT AND CONCRETE MIX, INCLUDING THE CONCRETE MAXIMUM AGGREGATE SIZE REQUIREMENT, SHALL BE THE SAME AS THE PIER 7 PRODUCTION DRILLED SHAFT.
10. HIGH STRAIN DYNAMIC LOAD TESTING OF THE DEMONSTRATION DRILLED SHAFT TO BE PERFORMED AFTER THE BI-DIRECTIONAL STATIC LOAD TEST HAS BEEN COMPLETED.
11. FOR MORE INFORMATION ON CSL AND TIP TESTING REQUIREMENTS FOR THE DEMONSTRATION SHAFT, SEE SHEET 24 / 167 .
12. FOR GENERAL NOTES, SEE SHEETS 12 / 167 THRU 15 / 167 .
13. FOR LOAD TESTING REQUIREMENTS AND ADDITIONAL INFORMATION, SEE SPECIAL PROVISION 5201 - ITEM 524 DRILLED SHAFTS, MISC.: DEMONSTRATION DRILLED SHAFT AND BI-DIRECTIONAL STATIC LOAD TESTING OF DRILLED SHAFTS, BRIDGE NO. CUY-77-15.87, DATED MARCH 25, 2025.

Preliminary Plans - Not For Reference Only

DEMONSTRATION SHAFT FOR BI-DIRECTIONAL LOAD TEST DETAILS (1 OF 2)
CUY-77-1587 (BRIDGE 9)
I.R. 77 SB OVER I.R. 90 AND CR-721 (E. 14TH ST.)

SFN	1806910
DESIGN AGENCY	HDR
DESIGNER	RBK
CHECKER	JML
REVIEWER	JMS 07/15/24
PROJECT ID	82382
SUBSET	26
TOTAL	167
SHEET	1894
TOTAL	2696

CUY-90-16.28 (CCG3A)

MODEL: Sheet PAPERSIZE: 34x22 (in.) DATE: 5/15/2025 TIME: 12:05:51 PM USER: TSCHOEN
pw:\\mb-us-pw.bentley.com:mb-us-pw-03\Documents\Cleveland_OH\01_Projects\ODOT\District12\82382\400-Engineering\Structures\SFN_1806910\Sheets\82382_SFN_1806910_SO010.dgn

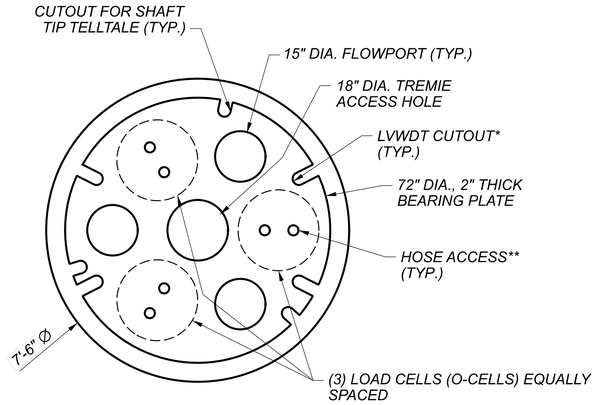

*LVWDT = LINEAR VIBRATING WIRE DISPLACEMENT (EXPANSION) TRANSDUCERS. CUTOUTS ARE ONLY REQUIRED FOR TOP BEARING PLATE.

**HOSE ACCESS HOLES ARE ONLY REQUIRED FOR TOP BEARING PLATE.

***REBARS, CSL TUBES, STRAIN GAGES, AND THERMAL INTEGRITY PROFILING (TIP) WIRE STRINGS ARE NOT SHOWN FOR CLARITY.

BI-DIRECTIONAL JACK ASSEMBLY SECTION

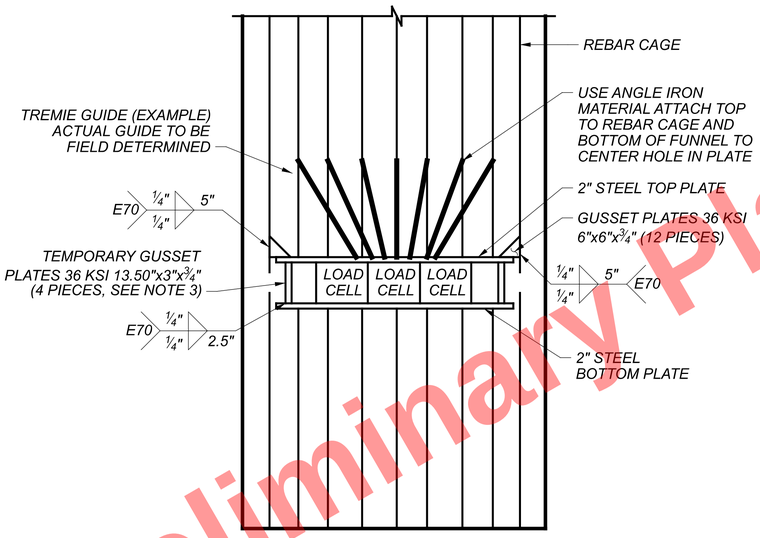

BI-DIRECTIONAL JACK ASSEMBLY ELEVATION
(NOT TO SCALE)

1. STEEL PLATES ARE WELDED TO REINFORCING CAGE WITH FILLET WELDS ON BOTH SIDES OF REBAR AND GUSSET PLATES.
2. A TREMIE PIPE GUIDE FUNNEL IS CONSTRUCTED AND WELDED TO THE REBAR CAGE AND BEARING PLATE TO ALLOW CONCRETE PLACEMENT BELOW THE BI-DIRECTIONAL JACK ASSEMBLY.
3. TEMPORARY STEEL GUSSET PLATES INSTALLED DURING HANDLING AND LIFTING OF CAGE. TO BE CUT ONCE CAGE IS VERTICAL.

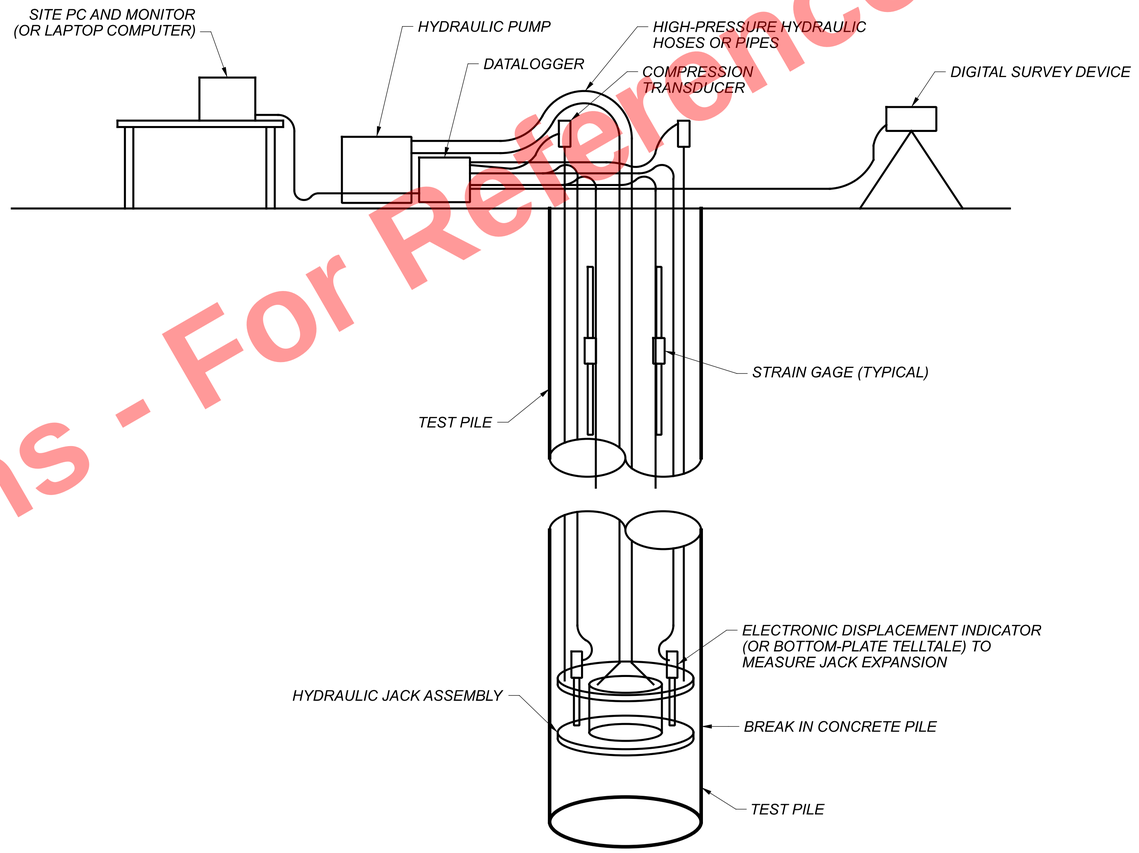

BI-DIRECTIONAL LOAD TEST INSTRUMENTATION SCHEMATIC
(NOT TO SCALE)

Preliminary Plans - For Reference Only

DEMONSTRATION SHAFT FOR BI-DIRECTIONAL LOAD TEST DETAILS (2 OF 2)
CUY-77-1587 (BRIDGE 9)
I.R. 77 SB OVER I.R. 90 AND CR-721 (E. 14TH ST.)

SFN 1806910
DESIGN AGENCY
DESIGNER RBK | CHECKER JML
REVIEWER JMS 07/15/24
PROJECT ID 82382
SUBSET 27 | TOTAL 167
SHEET 1895 | TOTAL 2696

CUY-90-16.28 (CCG3A)

MODEL: Sheet PAPERSIZE: 34x22 (in.) DATE: 5/15/2025 TIME: 12:05:55 PM USER: TSCHOEN
pw:\\mb-us-pw.bentley.com:mb-us-pw-03\Documents\Cleveland_OH01_Projects\ODOT\District12\82382400-Engineering\Structures\SFN_1806910\Sheets\82382_SFN_1806910_SO011.dgn

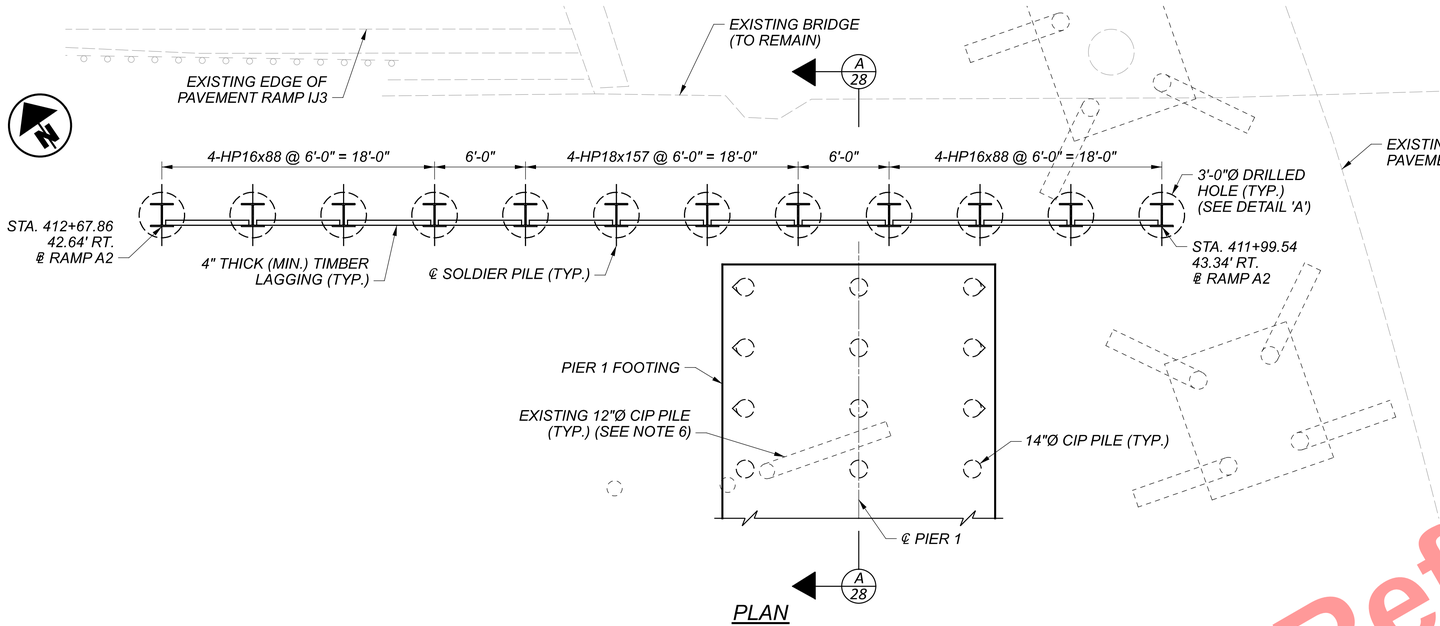

PLAN

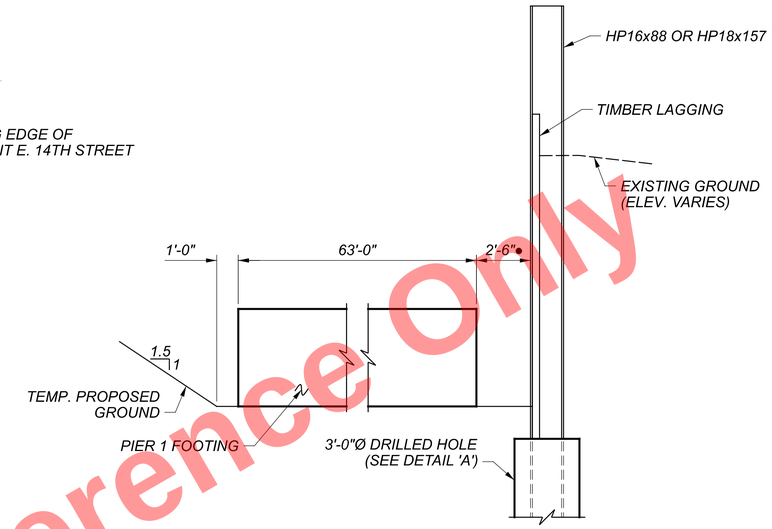

SECTION A-A

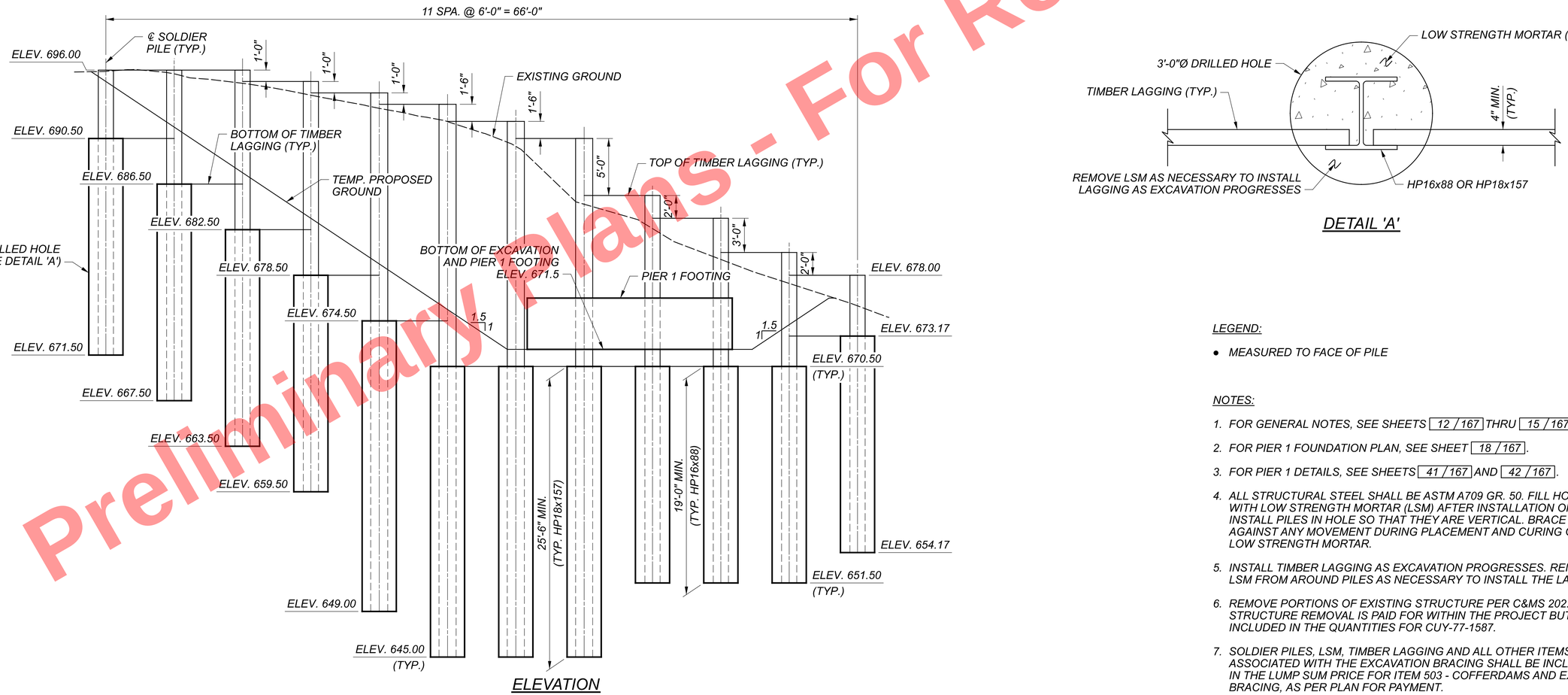

ELEVATION

DETAIL 'A'

LEGEND:

- MEASURED TO FACE OF PILE

NOTES:

1. FOR GENERAL NOTES, SEE SHEETS 12 / 167 THRU 15 / 167.
2. FOR PIER 1 FOUNDATION PLAN, SEE SHEET 18 / 167.
3. FOR PIER 1 DETAILS, SEE SHEETS 41 / 167 AND 42 / 167.
4. ALL STRUCTURAL STEEL SHALL BE ASTM A709 GR. 50. FILL HOLES WITH LOW STRENGTH MORTAR (LSM) AFTER INSTALLATION OF PILES. INSTALL PILES IN HOLE SO THAT THEY ARE VERTICAL. BRACE PILES AGAINST ANY MOVEMENT DURING PLACEMENT AND CURING OF LOW STRENGTH MORTAR.
5. INSTALL TIMBER LAGGING AS EXCAVATION PROGRESSES. REMOVE LSM FROM AROUND PILES AS NECESSARY TO INSTALL THE LAGGING.
6. REMOVE PORTIONS OF EXISTING STRUCTURE PER C&MS 202.03. STRUCTURE REMOVAL IS PAID FOR WITHIN THE PROJECT BUT NOT INCLUDED IN THE QUANTITIES FOR CUY-77-1587.
7. SOLDIER PILES, LSM, TIMBER LAGGING AND ALL OTHER ITEMS ASSOCIATED WITH THE EXCAVATION BRACING SHALL BE INCLUDED IN THE LUMP SUM PRICE FOR ITEM 503 - COFFERDAMS AND EXCAVATION BRACING, AS PER PLAN FOR PAYMENT.

Preliminary Plans - For Reference Only

TEMPORARY SHORING DETAILS - (1 OF 6)
CUY-77-1587 (BRIDGE 9)
I.R. 77 SB OVER I.R. 90 AND CR-721 (E. 14TH ST.)

SFN	1806910
DESIGN AGENCY	HDR
DESIGNER	TJE
CHECKER	EJL
REVIEWER	DWW 01/11/24
PROJECT ID	82382
SUBSET	28
TOTAL	167
SHEET	1896
TOTAL	2696

CUY-90-16.28 (CCG3A)

MODEL: Sheet PAPERSIZE: 34x22 (in.) DATE: 3/28/2025 TIME: 10:11:52 AM USER: Rohit.Bk
pw:\\mb-us-pw.bentley.com:mb-us-pw-03\Documents\Cleveland_OH\01_Projects\ODOT\District12\82382400-Engineering\Structures\SFN_1806910\Sheets\82382_SFN_1

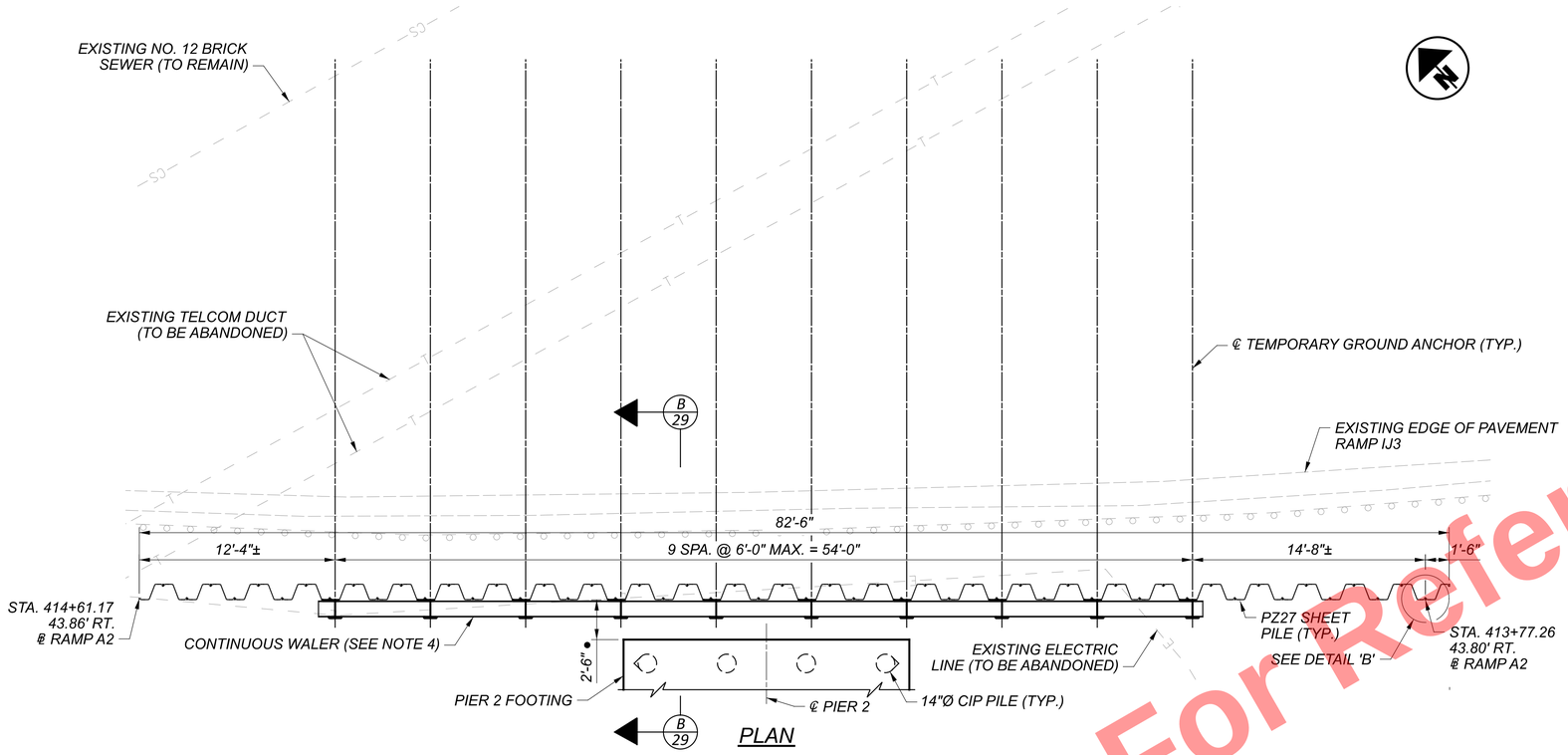

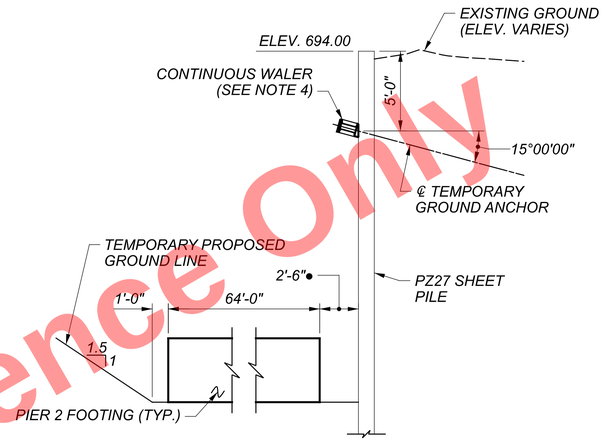

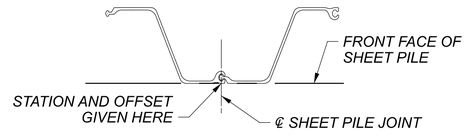

TEMPORARY GROUND ANCHOR DESIGN DATA:

THE CONTRACTOR SHALL DESIGN THE TEMPORARY GROUND ANCHORS BASED ON THE FOLLOWING:

MINIMUM UNBONDED LENGTH = 15'-0"

MAXIMUM TEST LOAD = 94 KIPS

LOCK-OFF LOAD = 61 KIPS

LEGEND:

- *MEASURED TO FACE OF SHEET PILE*

NOTES:

1. *FOR GENERAL NOTES, SEE SHEETS 12 / 167 THRU 15 / 167.*
2. *FOR PIER 2 FOUNDATION PLAN, SEE SHEET 19 / 167.*
3. *FOR PIER 2 DETAILS, SEE SHEETS 43 / 167 AND 44 / 167.*
4. *FOR ADDITIONAL SHEET PILE, GROUND ANCHOR AND WALER DETAILS, SEE SHEET 33 / 167.*
5. *STRUCTURAL STEEL FOR SHEET PILING SHALL BE ASTM A709 GR. 50.*
6. *EXCAVATE NO DEEPER THAN 8 FEET FROM TOP OF WALL BEFORE INSTALLING TEMPORARY GROUND ANCHORS. CONTINUE EXCAVATION ONLY AFTER ALL GROUND ANCHORS HAVE BEEN LOCKED-OFF.*
7. *INSTALL AND TEST TEMPORARY GROUND ANCHORS ACCORDING TO SUPPLEMENTAL SPECIFICATION 866. THE CONTRACTOR IS RESPONSIBLE FOR THE DESIGN AND INSTALLATION OF GROUND ANCHORS THAT CAN SUPPORT THE SPECIFIED MAXIMUM TEST LOAD. PREPARE AND SUBMIT SHOP DRAWINGS AND CALCULATIONS ACCORDING TO 866.04.B. ENSURE THAT GROUND ANCHORS DO NOT CONFLICT WITH EXISTING UTILITIES.*
8. *STEEL SHEET PILING LEFT IN PLACE SHALL HAVE A MINIMUM SECTION MODULUS OF 30.2 IN^3 PER FOOT OF WALL.*

Preliminary Plans - For Reference Only

TEMPORARY SHORING DETAILS - (2 OF 6)
CUY-77-1587 (BRIDGE 9)
I.R. 77 SB OVER I.R. 90 AND CR-721 (E. 14TH ST.)

SFN	1806910
DESIGN AGENCY	HDR
DESIGNER	TJE
CHECKER	EJL
REVIEWER	DWW 01/11/24
PROJECT ID	82382
SUBSET	29
TOTAL	167
SHEET	1897
TOTAL	2696

CUY-90-16.28 (CCG3A)
MODEL: Sheet PAPERSIZE: 34x22 (in.) DATE: 3/28/2025 TIME: 10:12:10 AM USER: Rohit.Bk
pw:\\mb-us-pw.bentley.com:mb-us-pw-03\Documents\Cleveland_OH\01_Projects\ODOT\District12\82382400-Engineering\Structures\SFN_1806910\Sheets\82382_SHT002.dgn

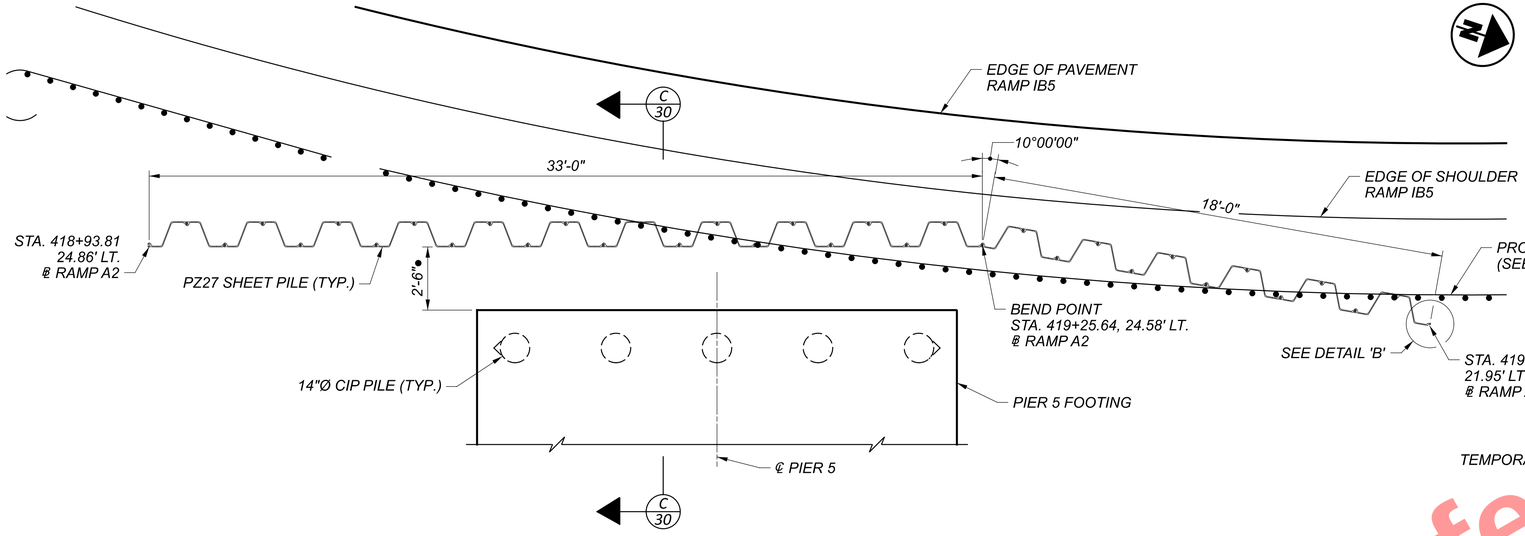

PLAN

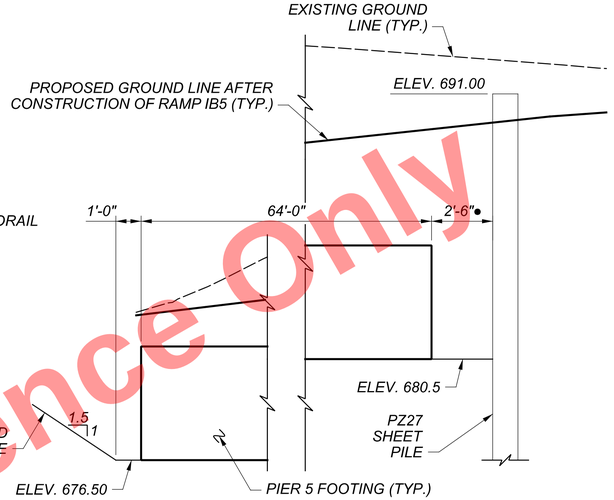

SECTION C-C

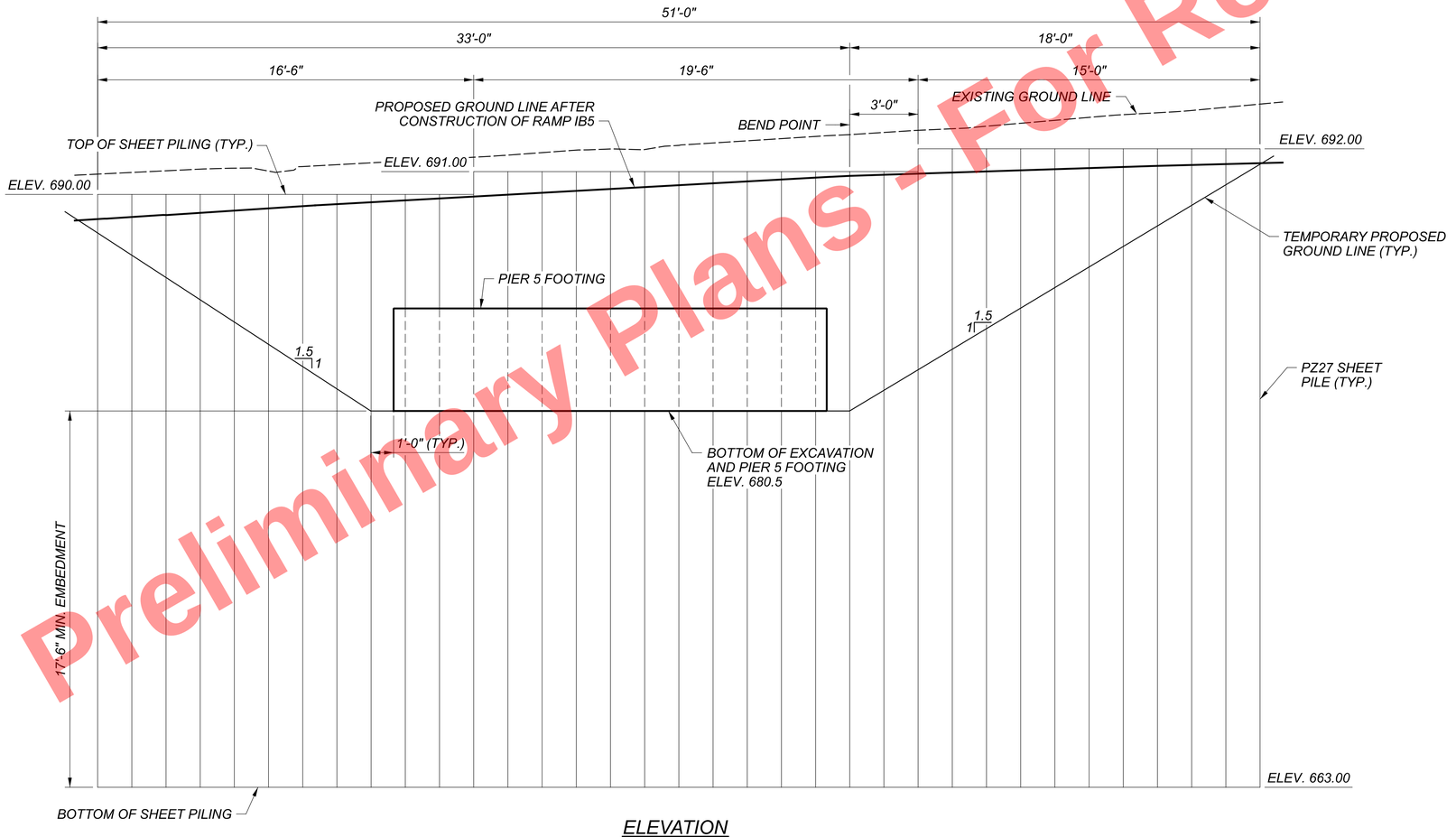

ELEVATION

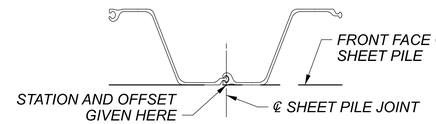

DETAIL 'B'

LEGEND:

- MEASURED TO FACE OF SHEET PILE

NOTES:

1. FOR GENERAL NOTES, SEE SHEETS 12 / 167 THRU 15 / 167.
2. FOR PIER 5 FOUNDATION PLAN, SEE SHEET 20 / 167.
3. FOR PIER 5 DETAILS, SEE SHEETS 51 / 167 AND 52 / 167.
4. STRUCTURAL STEEL FOR SHEET PILING SHALL BE ASTM A709 GR. 50.
5. INSTALL PROPOSED RAMP IB5 GUARDRAIL AFTER TEMPORARY SHEET PILING HAS BEEN REMOVED.
6. STEEL SHEET PILING LEFT IN PLACE SHALL HAVE A MINIMUM SECTION MODULUS OF 30.2 IN^3 PER FOOT OF WALL

For Reference Only
Preliminary Plans - For

TEMPORARY SHORING DETAILS - (3 OF 6)
CUY-77-1587 (BRIDGE 9)
I.R. 77 SB OVER I.R. 90 AND CR-721 (E. 14TH ST.)

SFN	1806910
DESIGN AGENCY	HDR
DESIGNER	TJE
CHECKER	EJL
REVIEWER	DWW 01/11/24
PROJECT ID	82382
SUBSET	30
TOTAL	167
SHEET	1898
TOTAL	2696

CUY-90-16.28 (CCG3A)

MODEL: Sheet PAPERSIZE: 34x22 (in.) DATE: 3/28/2025 TIME: 10:12:19 AM USER: RohitBk
pw:\\mb-us-pw.bentley.com:mb-us-pw-03\Documents\Cleveland_OH\01_Projects\ODOT\District12\82382400-Engineering\Structures\SFN_1806910\Sheets\82382_SFN_1806910_SH003.dgn

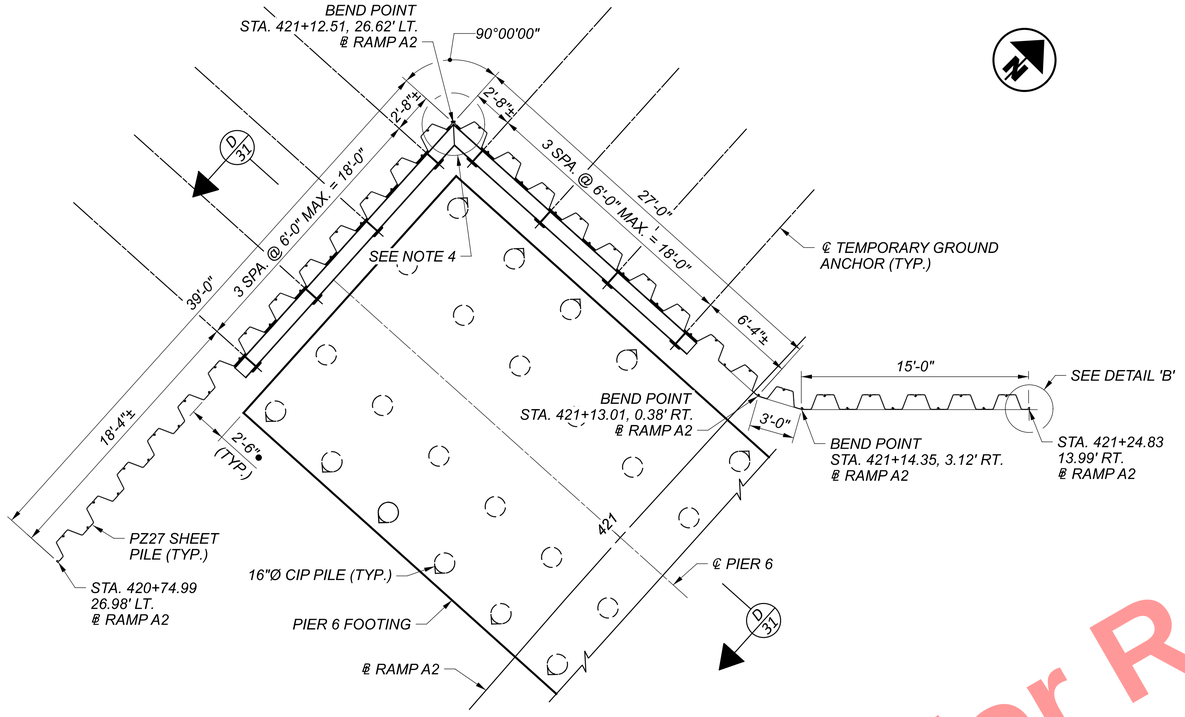

PLAN

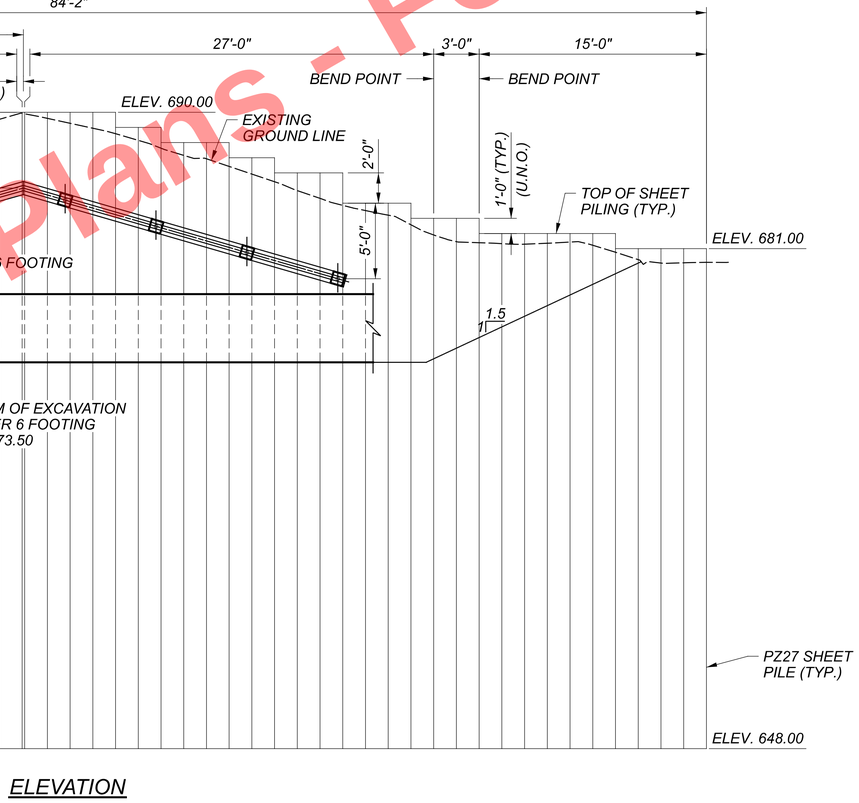

ELEVATION

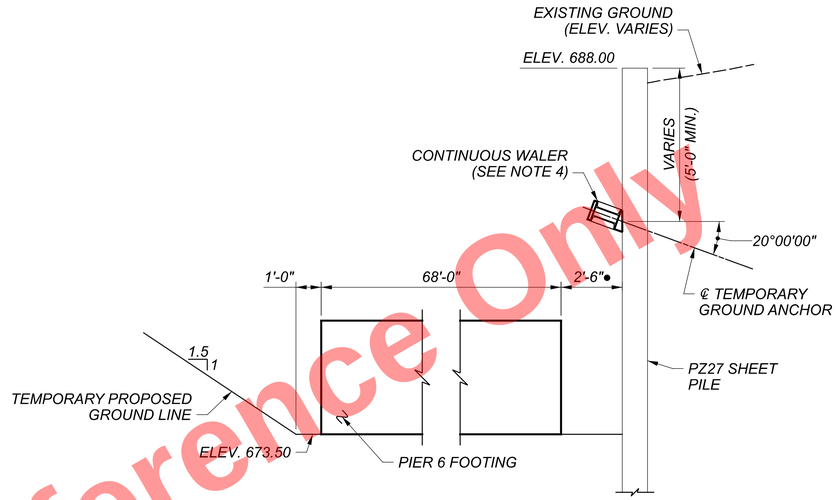

SECTION D-D

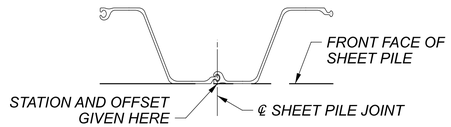

DETAIL 'B'

TEMPORARY GROUND ANCHOR DESIGN DATA:

THE CONTRACTOR SHALL DESIGN THE TEMPORARY GROUND ANCHORS BASED ON THE FOLLOWING:

MINIMUM UNBONDED LENGTH = 15'-0"

MAXIMUM TEST LOAD = 81 KIPS

LOCK-OFF LOAD = 50 KIPS

LEGEND:

- *MEASURED TO FACE OF SHEET PILE*

NOTES:

1. *FOR GENERAL NOTES, SEE SHEETS 12 / 167 THRU 15 / 167.*
2. *FOR PIER 6 FOUNDATION PLAN, SEE SHEET 21 / 167.*
3. *FOR PIER 6 DETAILS, SEE SHEETS 53 / 167 AND 54 / 167.*
4. *FOR ADDITIONAL SHEET PILE, GROUND ANCHOR AND WALER DETAILS, SEE SHEET 33 / 167.*
5. *STRUCTURAL STEEL FOR SHEET PILING SHALL BE ASTM A709 GR. 50.*
6. *EXCAVATE NO DEEPER THAN 10 FEET FROM TOP OF WALL BEFORE INSTALLING TEMPORARY GROUND ANCHORS. CONTINUE EXCAVATION ONLY AFTER ALL GROUND ANCHORS HAVE BEEN LOCKED-OFF.*
7. *INSTALL AND TEST TEMPORARY GROUND ANCHORS ACCORDING TO SUPPLEMENTAL SPECIFICATION 866. THE CONTRACTOR IS RESPONSIBLE FOR THE DESIGN AND INSTALLATION OF GROUND ANCHORS THAT CAN SUPPORT THE SPECIFIED MAXIMUM TEST LOAD. PREPARE AND SUBMIT SHOP DRAWINGS AND CALCULATIONS ACCORDING TO 866.04.B.*
8. *STEEL SHEET PILING LEFT IN PLACE SHALL HAVE A MINIMUM SECTION MODULUS OF 30.2 IN^3 PER FOOT OF WALL.*

Preliminary Plans - For Reference Only

TEMPORARY SHORING DETAILS - (4 OF 6)

CUY-77-1587 (BRIDGE 9)

I.R. 77 SB OVER I.R. 90 AND CR-721 (E. 14TH ST.)

SFN	1806910
DESIGN AGENCY	HDR
DESIGNER	TJE
CHECKER	EJL
REVIEWER	DWW 01/11/24
PROJECT ID	82382
SUBSET	31
TOTAL	167
SHEET	1899
TOTAL	2696

CUY-90-16.28 (CCG3A)
MODEL: Sheet PAPERSIZE: 34x22 (in.) DATE: 3/28/2025 TIME: 10:12:35 AM USER: RohitBk
pw:\\mb-us-pw.bentley.com:mb-us-pw-03\Documents\Cleveland_OH\01_Projects\ODOTDistrict12\82382400-Engineering\Structures\SFN_1806910\Sheets\82382_SFN_1806910_SH004.dgn

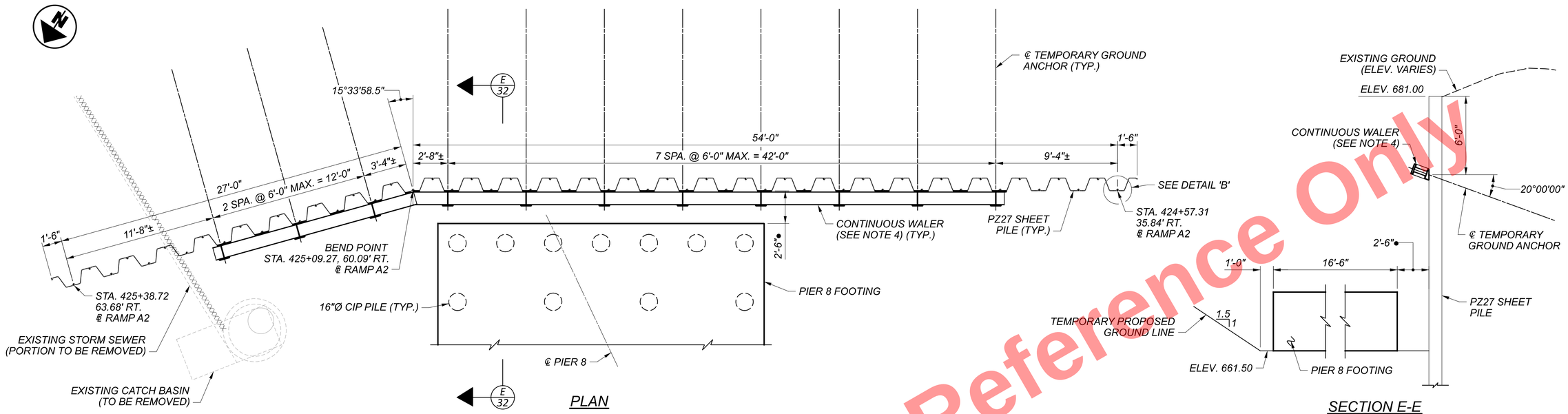

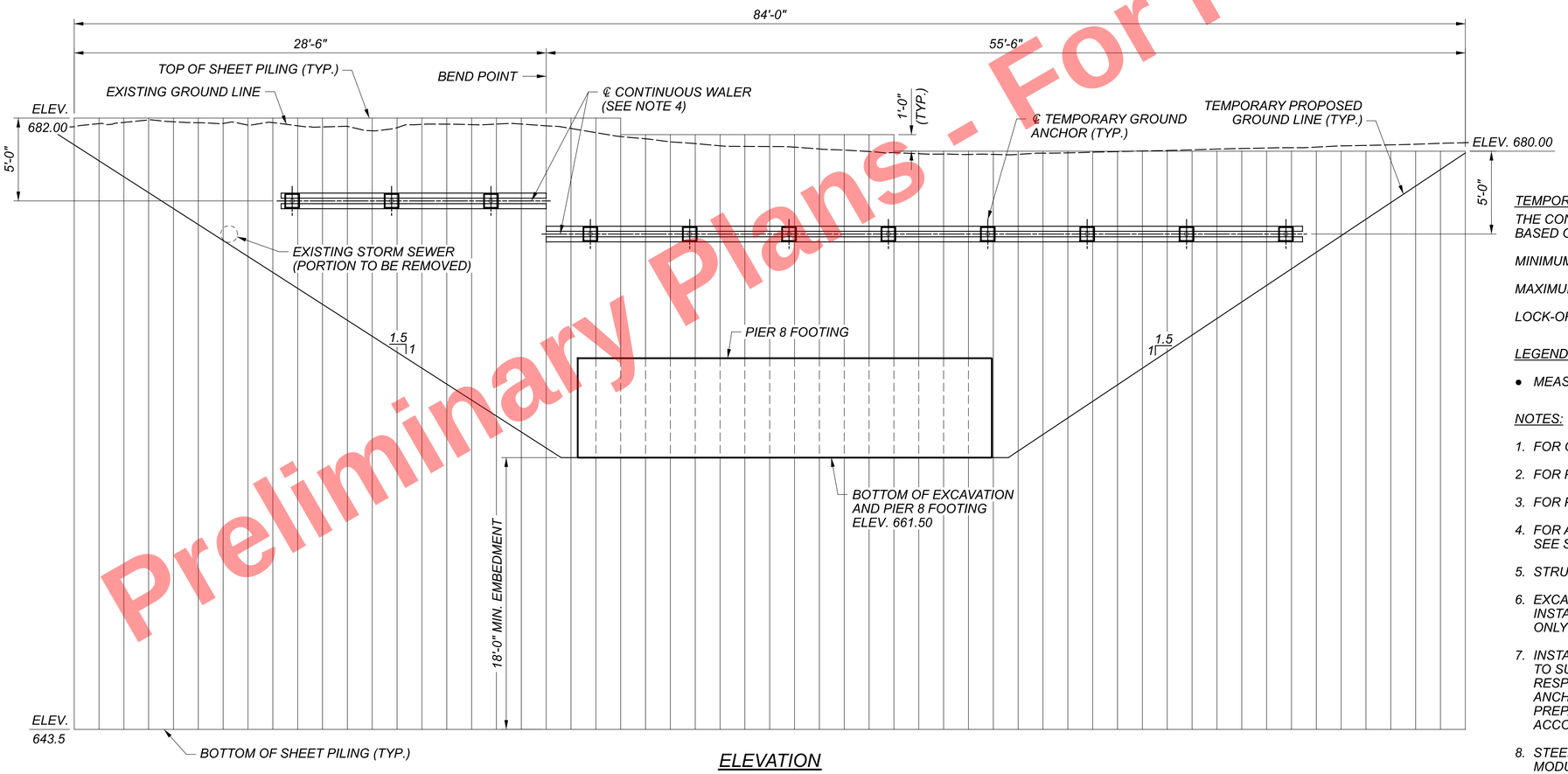

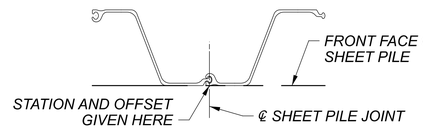

DETAIL 'B'

TEMPORARY GROUND ANCHOR DESIGN DATA:

THE CONTRACTOR SHALL DESIGN THE TEMPORARY GROUND ANCHORS BASED ON THE FOLLOWING:

MINIMUM UNBONDED LENGTH = 15'-0"

MAXIMUM TEST LOAD = 126 KIPS

LOCK-OFF LOAD = 84 KIPS

LEGEND:

- MEASURED TO FACE OF SHEET PILE

NOTES:

1. FOR GENERAL NOTES, SEE SHEETS 12 / 167 THRU 15 / 167.
2. FOR PIER 8 FOUNDATION PLAN, SEE SHEET 22 / 167.
3. FOR PIER 8 DETAILS, SEE SHEETS 57 / 167 THRU 61 / 167.
4. FOR ADDITIONAL SHEET PILE, GROUND ANCHOR AND WALER DETAILS, SEE SHEET 33 / 167.
5. STRUCTURAL STEEL FOR SHEET PILING SHALL BE ASTM A709 GR. 50.
6. EXCAVATE NO DEEPER THAN 10 FEET FROM TOP OF WALL BEFORE INSTALLING TEMPORARY GROUND ANCHORS. CONTINUE EXCAVATION ONLY AFTER ALL GROUND ANCHORS HAVE BEEN LOCKED-OFF.
7. INSTALL AND TEST TEMPORARY GROUND ANCHORS ACCORDING TO SUPPLEMENTAL SPECIFICATION 866. THE CONTRACTOR IS RESPONSIBLE FOR THE DESIGN AND INSTALLATION OF GROUND ANCHORS THAT CAN SUPPORT THE SPECIFIED MAXIMUM TEST LOAD. PREPARE AND SUBMIT SHOP DRAWINGS AND CALCULATIONS ACCORDING TO 866.04.B.
8. STEEL SHEET PILING LEFT IN PLACE SHALL HAVE A MINIMUM SECTION MODULUS OF 30.2 IN^3 PER FOOT OF WALL.

TEMPORARY SHORING DETAILS - (5 OF 6)

CUY-77-1587 (BRIDGE 9)

I.R. 77 SB OVER I.R. 90 AND CR-721 (E. 14TH ST.)

SFN	1806910
DESIGN AGENCY	HDR
DESIGNER	TJE
CHECKER	EJL
REVIEWER	DWW 01/11/24
PROJECT ID	82382
SUBSET	32
TOTAL	167
SHEET	1900
TOTAL	2696

Preliminary Plans - For Reference Only

CUY-90-16.28 (CCG3A)
MODEL: Sheet PAPERSIZE: 34x22 (in.) DATE: 3/28/2025 TIME: 10:12:46 AM USER: Rohit.Bk
pw:\\mb-us-pw.bentley.com:mb-us-pw-03\Documents\Cleveland_OH01_Projects\ODOTDistrict12\82382400-Engineering\Structures\SFN_1806910\Sheets\82382_SFN_1806910_SH005.dgn

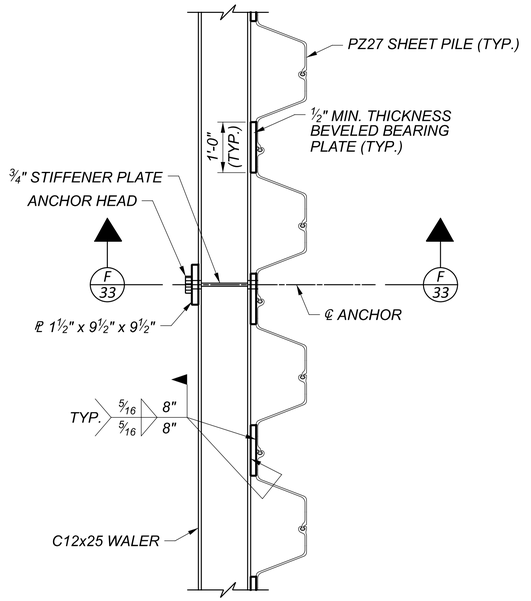

ANCHOR DETAIL
(PIER 2 AND PIER 6)

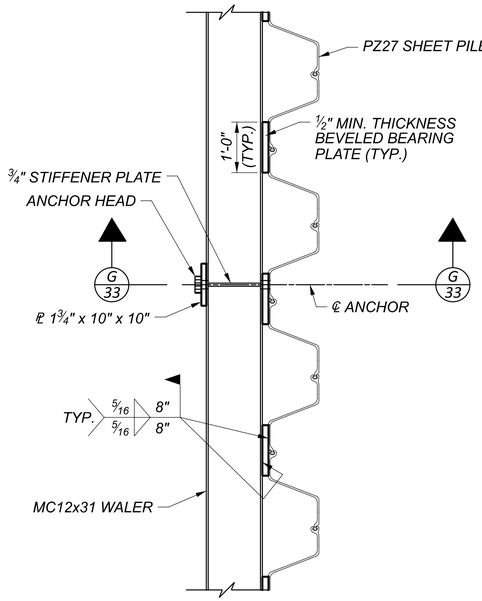

ANCHOR DETAIL
(PIER 8)

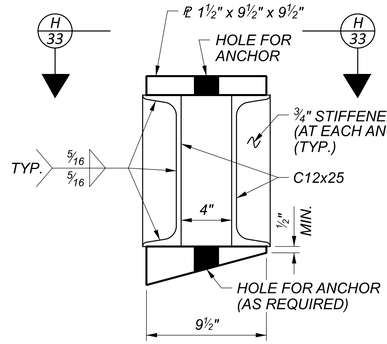

WALER DETAIL
(PIER 2 AND PIER 6)

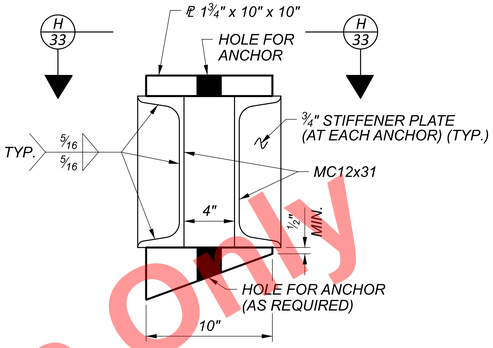

WALER DETAIL
(PIER 8)

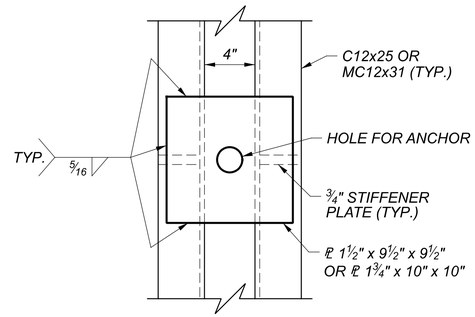

VIEW H-H

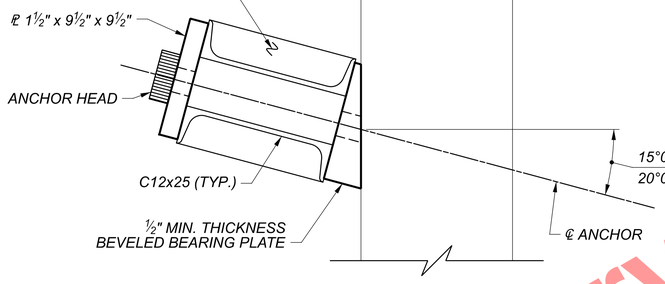

SECTION F-F

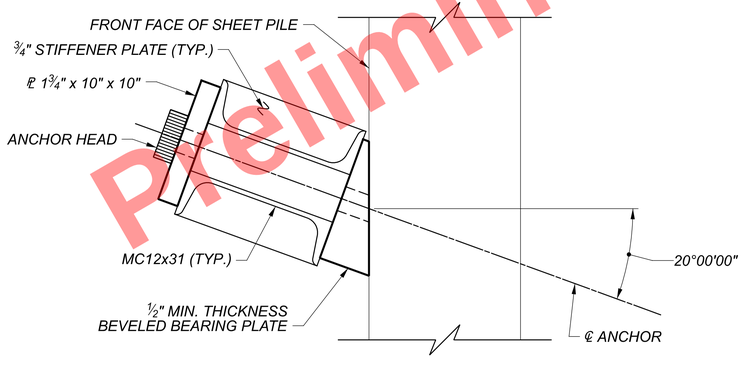

SECTION G-G

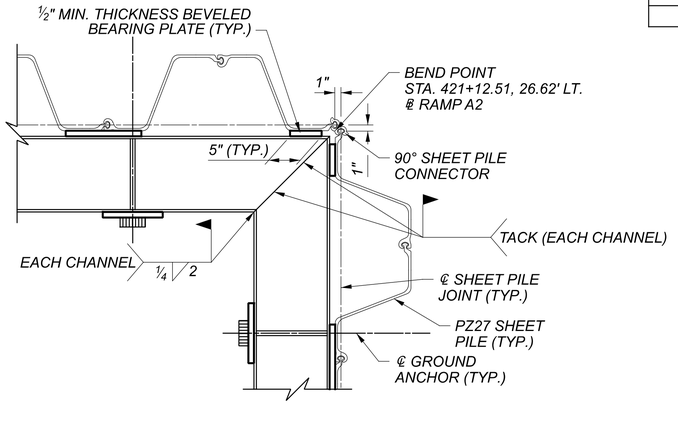

PIER 6 SHEET PILE CORNER DETAIL

TEMPORARY GROUND ANCHOR DESIGN DATA			
LOCATION	MIN. UNBONDED LENGTH	MAXIMUM TEST LOAD	LOCK-OFF LOAD
PIER 2	15'-0"	94 KIPS	61 KIPS
PIER 6	15'-0"	81 KIPS	50 KIPS
PIER 8	15'-0"	126 KIPS	84 KIPS

NOTES:

1. FOR GENERAL NOTES, SEE SHEETS 12 / 167 THRU 15 / 167.
2. FOR TEMPORARY SHORING PLAN AND ELEVATION VIEWS, SEE SHEETS 28 / 167 THRU 32 / 167.
3. STRUCTURAL STEEL FOR SHEET PILING, BEARING PLATES AND STIFFENER PLATES SHALL BE ASTM A709 GR. 50. STRUCTURAL STEEL FOR WALER MEMBERS MAY BE ASTM A709 GR.36.
4. INSTALL AND TEST TEMPORARY GROUND ANCHORS ACCORDING TO SUPPLEMENTAL SPECIFICATION 866. THE CONTRACTOR IS RESPONSIBLE FOR THE DESIGN AND INSTALLATION OF GROUND ANCHORS THAT CAN SUPPORT THE SPECIFIED MAXIMUM TEST LOAD. PREPARE AND SUBMIT SHOP DRAWINGS AND CALCULATIONS ACCORDING TO 866.04.B.
5. ALL SHEET PILING, GROUND ANCHORS, WALERS, STEEL CONNECTION PLATES AND ALL OTHER ITEMS ASSOCIATED WITH THE TEMPORARY EXCAVATION BRACING SHALL BE INCLUDED IN THE CONTRACT LUMP SUM PRICE FOR ITEM 503 - COFFERDAMS AND EXCAVATION BRACING, AS PER PLAN, FOR PAYMENT.

Preliminary Plans - For Reference Only

TEMPORARY SHORING DETAILS - (6 OF 6)
CUY-77-1587 (BRIDGE 9)
I.R. 77 SB OVER I.R. 90 AND CR-721 (E. 14TH ST.)

SFN 1806910
DESIGN AGENCY
DESIGNER TJE | CHECKER EJL
REVIEWER DWW 01/11/24
PROJECT ID 82382
SUBSET 33 | TOTAL 167
SHEET 1901 | TOTAL 2696

CUY-90-16.28 (CCG3A)

MODEL: Sheet PAPERSIZE: 34x22 (in.) DATE: 3/28/2025 TIME: 10:12:54 AM USER: RohitLBk
pw:\\mb-us-pw.bentley.com:mb-us-pw-03\Documents\Cleveland_OH\01_Projects\ODOT\District12\82382\400-Engineering\Structures\SFN_1806910\Sheets\82382_SFN_1806910_SH006.dgn

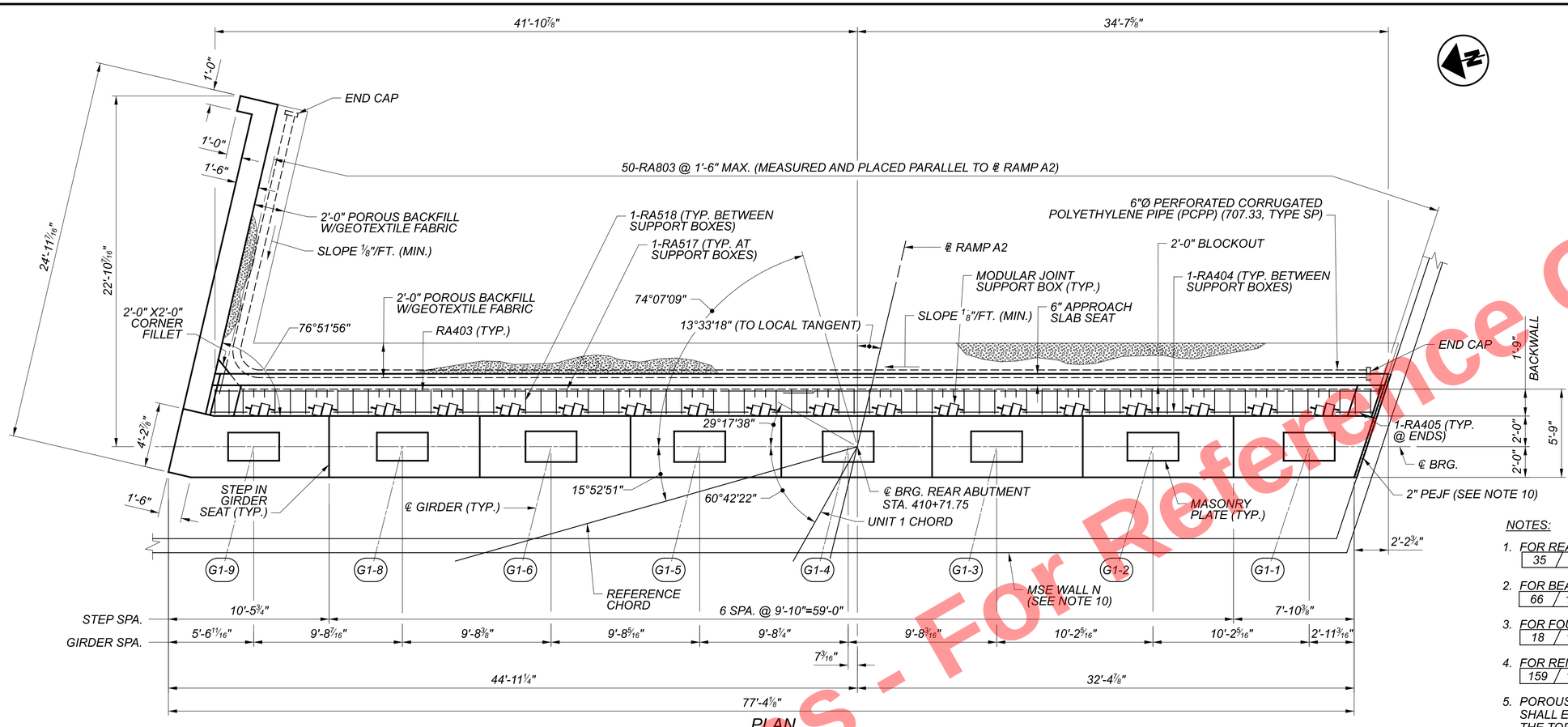

PLAN

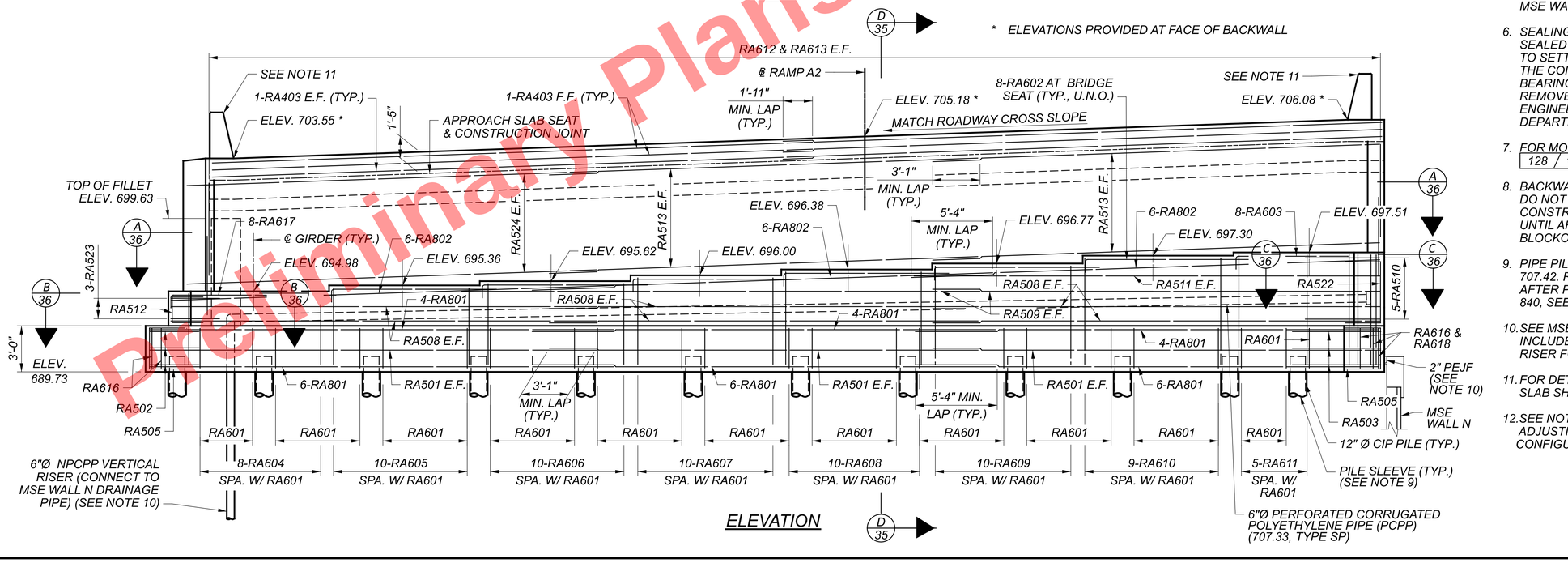

ELEVATION

NOTES:

1. FOR REAR ABUTMENT DETAILS, SEE SHEETS 35 / 167 THRU 36 / 167
2. FOR BEARING DETAILS, SEE SHEETS 66 / 167 THRU 70 / 167
3. FOR FOUNDATION PLAN, SEE SHEETS 18 / 167 THRU 23 / 167
4. FOR REINFORCMENT LIST, SEE SHEETS 159 / 167 THRU 167 / 167
5. POROUS BACKFILL WITH GEOTEXTILE FABRIC, 2'-0" THICK SHALL EXTEND VERTICALLY FROM THE SUBGRADE TO THE TOP OF THE FOOTING AND LATERALLY FROM THE MSE WALL TO THE END OF THE WINGWALL.
6. SEALING OF THE BEAM SEATS: IF THE BEAM SEATS ARE SEALED WITH AN EPOXY OR NON-EPOXY SEALER PRIOR TO SETTING THE BEARINGS, DO NOT APPLY SEALER TO THE CONCRETE SURFACES UNDER THE PROPOSED BEARING LOCATIONS. IF THESE LOCATIONS ARE SEALED, REMOVE THE SEALER TO THE SATISFACTION OF THE ENGINEER PRIOR TO SETTING THE BEARINGS. THE DEPARTMENT WILL NOT PAY FOR THIS REMOVAL.
7. FOR MODULAR JOINT DETAILS, SEE SHEETS 128 / 167 THRU 134 / 167
8. BACKWALL CONCRETE: IN ADDITION TO CMS 511.09, DO NOT PLACE BACKWALL CONCRETE ABOVE THE CONSTRUCTION JOINT AT THE APPROACH SLAB SEAT UNTIL AFTER THE DECK CONCRETE IN THE DECK END BLOCKOUT HAS BEEN PLACED.
9. PIPE PILE SLEEVES: MIN. 14" DIA., CMS 707.33 OR 707.42. REFER TO SS 840 FOR BACKFILLING OF SLEEVES AFTER PLACEMENT. INCLUDE FOR PAYMENT WITH ITEM 840, SEE MSE WALL N PLANS.
10. SEE MSE WALL N PLANS FOR ADDITIONAL DETAILS. INCLUDE MSE WALL , 2" PEJF AND 6"Ø NPCPP VERTICAL RISER FOR PAYMENT WITH MSE WALL N PAY ITEMS.
11. FOR DETAILS OF RAILING ON BACKWALL, SEE APPROACH SLAB SHEETS 155 / 167 THRU 158 / 167 .
12. SEE NOTE 14 ON SHEET 69 / 167 FOR ELEVATION ADJUSTMENTS NECESSARY BASED ON FINAL BEARING CONFIGURATIONS.

REAR ABUTMENT PLAN AND ELEVATION
CUY-77-1587 (BRIDGE 9)
I.R. 77 SB OVER I.R. 90 AND CR-721 (E. 14TH ST.)

SFN	1806910
DESIGN AGENCY	HDR
DESIGNER	RBK
CHECKER	MKO
REVIEWER	DWW 01/11/24
PROJECT ID	82382
SUBSET	34
TOTAL	167
SHEET	1902
TOTAL	2696

CUY-90-16.28 (CCG3A)

MODEL: Sheet PAPERSIZE: 34x22 (in.) DATE: 3/28/2025 TIME: 10:13:09 AM USER: Rohit.Bk
pw:\\mb-us-pw.bentley.com:mb-us-pw-03\Documents\Cleveland_OH\01_Projects\ODOT\District12\82382\400-Engineering\Structures\SFN_1806910\Sheets\82382_SFN_1806910_SR001.dgn

Preliminary Plans - For Reference Only

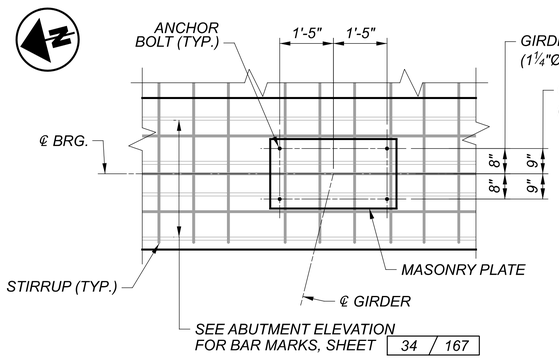

BEARING ANCHOR PLAN

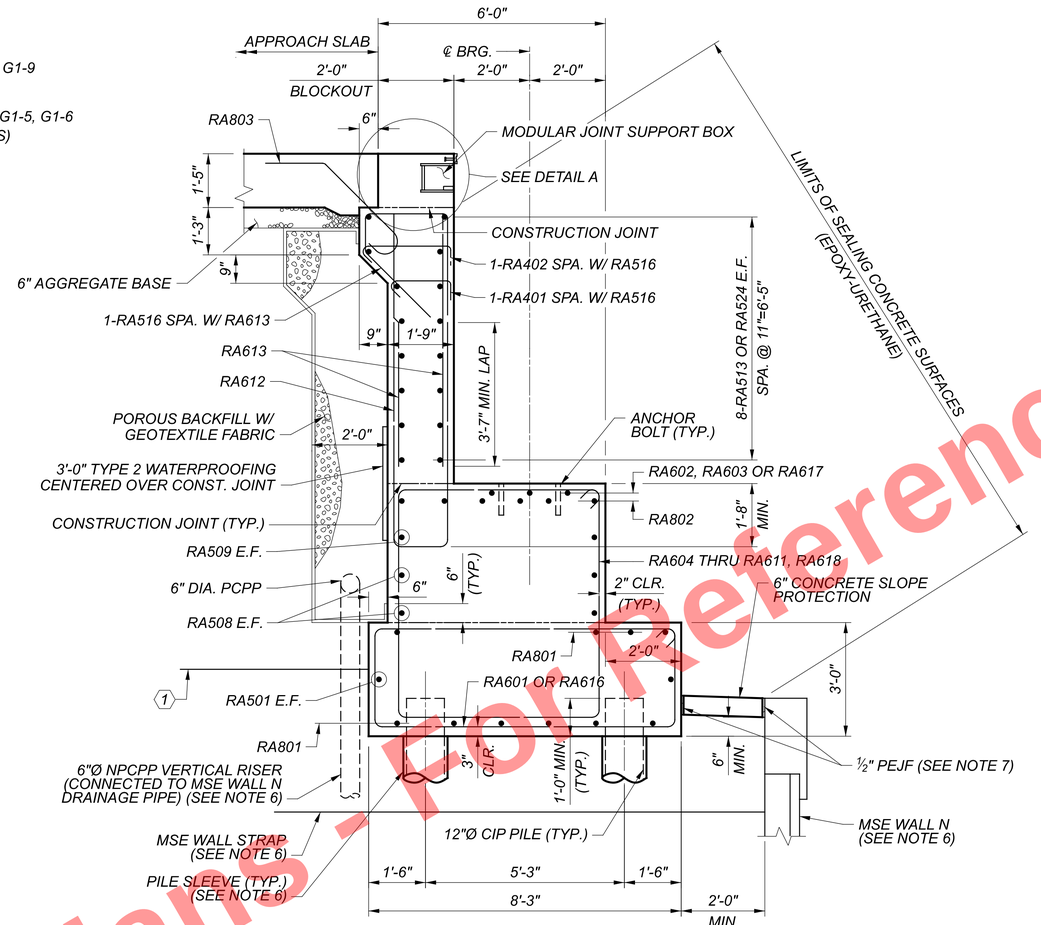

SECTION D-D

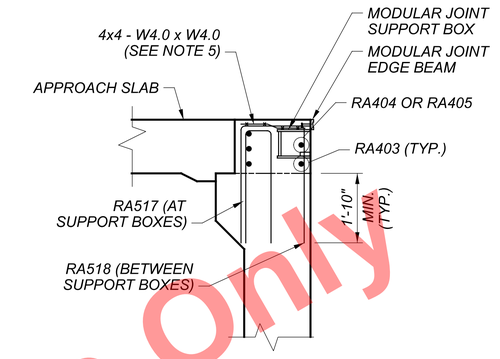

DETAIL A

NOTES:

1. FOR BEARING DETAILS, SEE SHEETS 66 / 167 THRU 70 / 167
2. FOR FOUNDATION PLAN, SEE SHEETS 18 / 167 THRU 23 / 167
3. FOR REINFORCEMENT LIST, SEE SHEETS 159 / 167 THRU 167 / 167
4. ACCURATELY PLACE CONCRETE REINFORCEMENT IN THE VICINITY OF THE BRIDGE SEAT TO AVOID INTERFERENCE WITH THE DRILLING OF BEARING ANCHOR HOLES OR THE PRESETTING OF BEARING ANCHORS.
5. GALVANIZED WELDED WIRE FABRIC SHALL CONFORM TO CMS 709.14 AND BE INCLUDED FOR PAYMENT WITH ITEM 509, EPOXY COATED STEEL REINFORCEMENT.
6. SEE MSE WALL N PLANS FOR ADDITIONAL DETAILS. INCLUDE MSE WALL, 2" PEJF, PILE SLEEVES, MSE WALL STRAPS AND 6"Ø NPCPP VERTICAL RISER FOR PAYMENT WITH MSE WALL N PAY ITEMS.
7. INCLUDE 1/2" PEJF WITH ITEM 601 CONCRETE SLOPE PROTECTION, AS PER PLAN FOR PAYMENT.

LEGEND:

1 ONE ROW OF SOIL REINFORCEMENT ATTACHED TO FOOTING (ATTACHMENT DETAIL PER WALL MANUFACTURER, SEE NOTE 6).

2 4-RA601 @ EQ. SPA. = 2'-11"

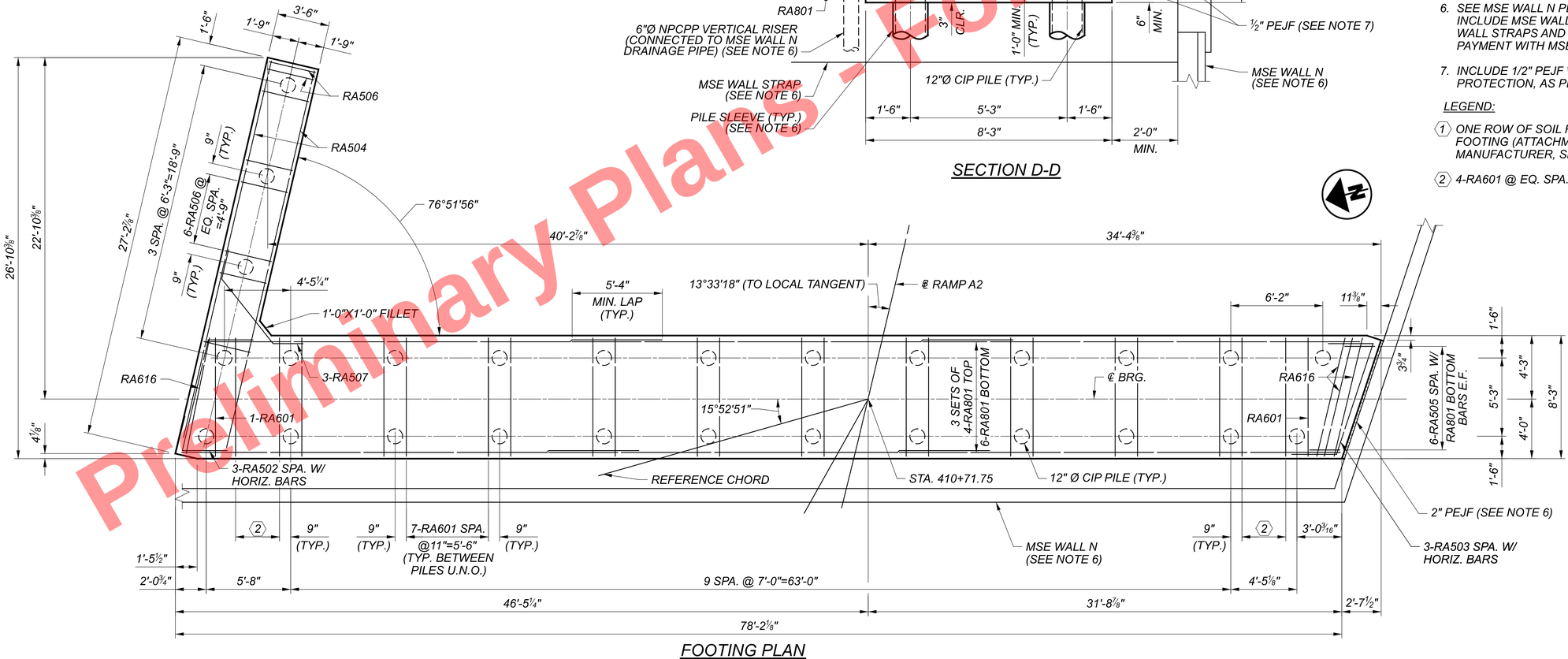

FOOTING PLAN

Preliminary Plans - For Reference Only

REAR ABUTMENT FOOTING PLAN AND SECTION
CUY-77-1587 (BRIDGE 9)
I.R. 77 SB OVER I.R. 90 AND CR-721 (E. 14TH ST.)

SFN	1806910
DESIGN AGENCY	HDR
DESIGNER	RBK
CHECKER	MKO
REVIEWER	DWW 01/11/24
PROJECT ID	82382
SUBSET	35
TOTAL	167
SHEET	1903
TOTAL	2696

CUY-90-16.28 (CCG3A)

MODEL: Sheet PAPERSIZE: 34x22 (in.) DATE: 3/28/2025 TIME: 10:13:15 AM USER: RohitLBk
pw:\\mb-us-pw.bentley.com:mb-us-pw-03\Documents\Cleveland_OH\01_Projects\ODOT\District12\82382\400-Engineering\Structures\SFN_1806910\Sheets\82382_SFN_1806910_SR002.dgn

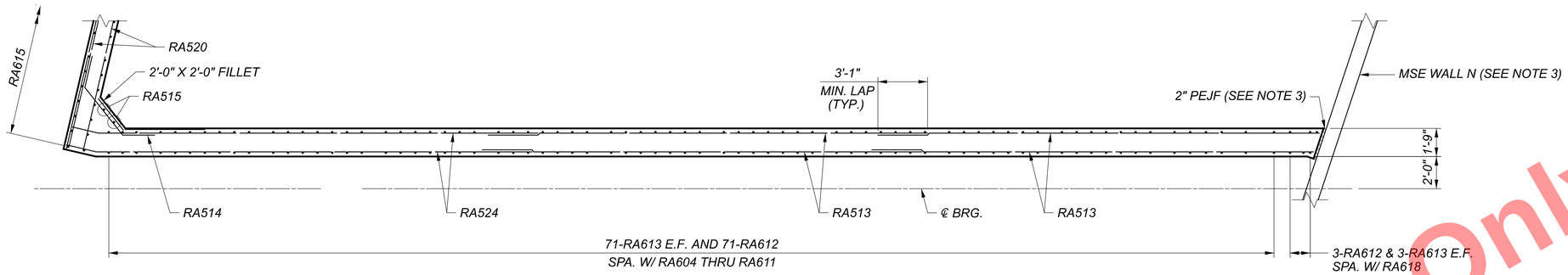

SECTION A-A

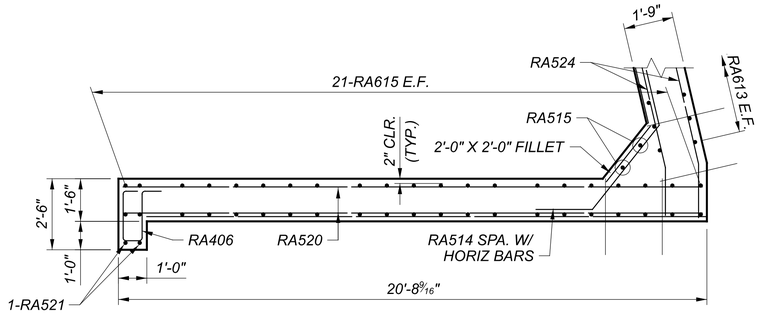

SECTION G-G

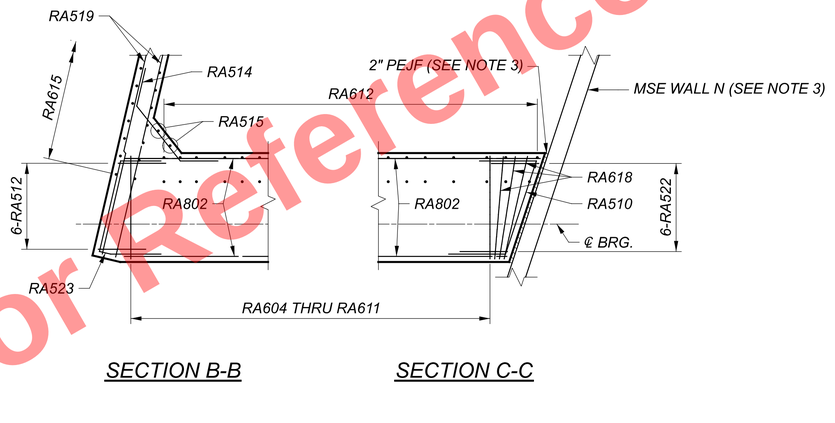

SECTION B-B SECTION C-C

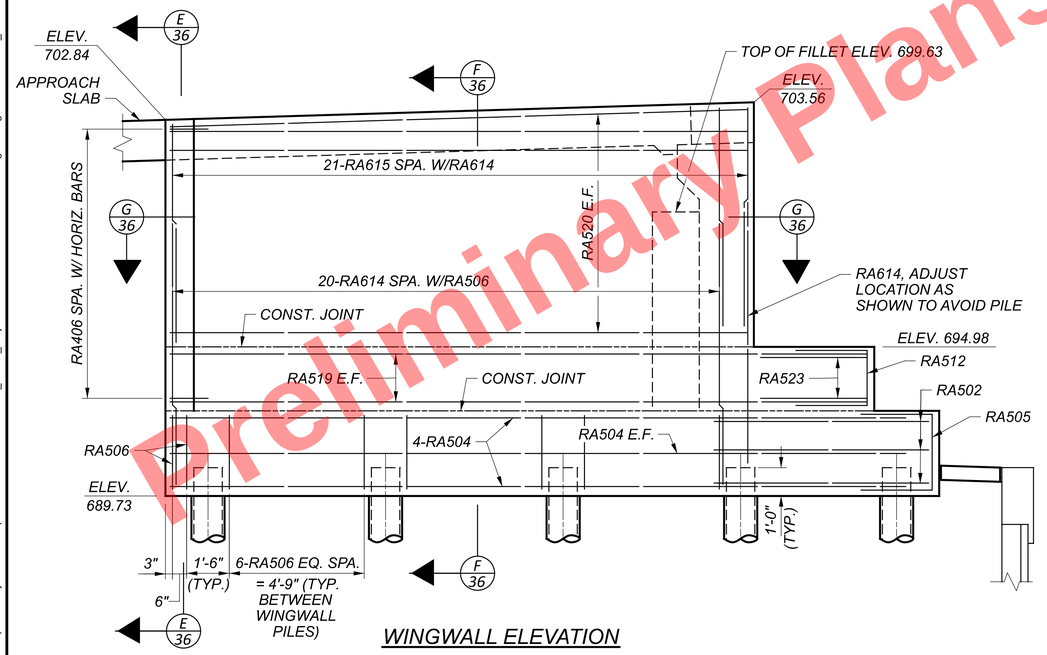

WINGWALL ELEVATION

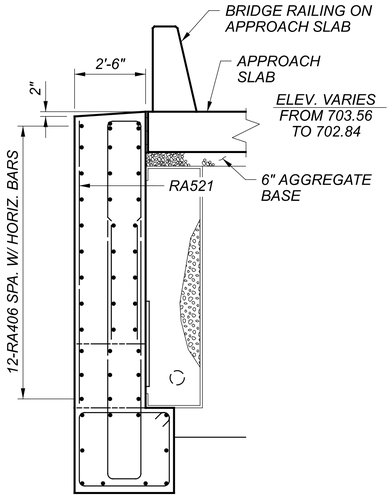

SECTION E-E
SEE SECTION F-F FOR
ADDITIONAL DETAILS

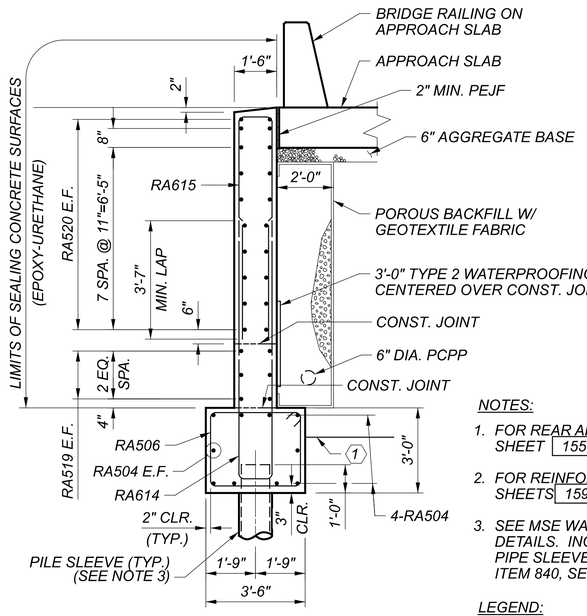

SECTION F-F

NOTES:

1. FOR REAR APPROACH SLAB DETAILS, SEE SHEET 155 / 167
2. FOR REINFORCEMENT LIST, SEE SHEETS 159 / 167 THRU 167 / 167
3. SEE MSE WALL N PLANS FOR ADDITIONAL DETAILS. INCLUDE MSE WALL, PEJF AND PIPE SLEEVES FOR PAYMENT WITH ITEM 840, SEE MSE WALL N PLANS.

LEGEND:

(1) ONE ROW OF SOIL REINFORCEMENT ATTACHED TO FOOTING (ATTACHMENT PER WALL MANUFACTURER, SEE NOTE 3).

REAR ABUTMENT WINGWALL DETAILS
CUY-77-1587 (BRIDGE 9)
I.R. 77 SB OVER I.R. 90 AND CR-721 (E. 14TH ST.)

SFN	1806910
DESIGN AGENCY	HDR
DESIGNER	RBK
CHECKER	MKO
REVIEWER	DWW 01/11/24
PROJECT ID	82382
SUBSET	36
TOTAL	167
SHEET	1904
TOTAL	2696

CUY-90-16.28 (CCG3A)

MODEL: Sheet PAPERSIZE: 34x22 (in.) DATE: 3/28/2025 TIME: 10:13:21 AM USER: RohitBk
pw:\\mb-us-pw.bentley.com:mb-us-pw-03\Documents\Cleveland_OH01_Projects\ODOT\District12\82382400-Engineering\Structures\SFN_1806910\Sheets\82382_SFN_1806910_SR003.dgn

Preliminary Plans - For Reference Only

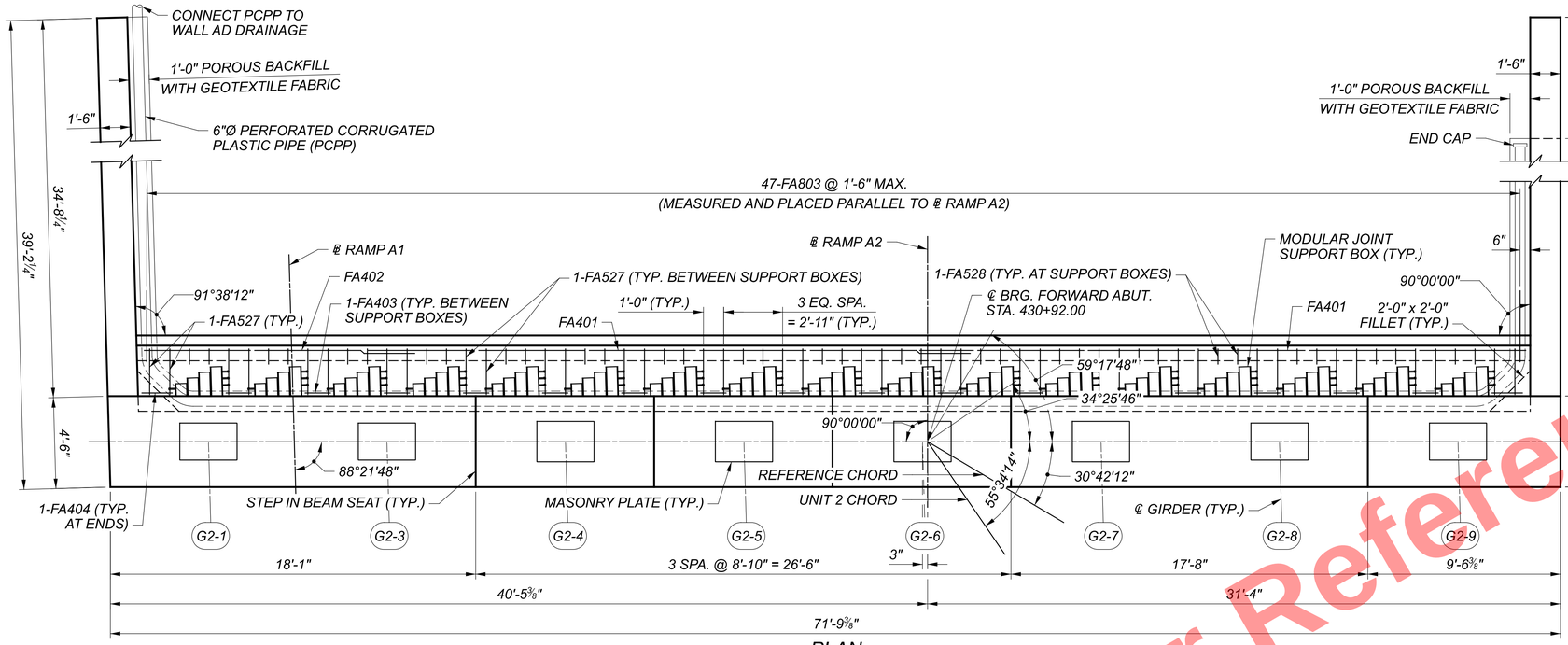

PLAN

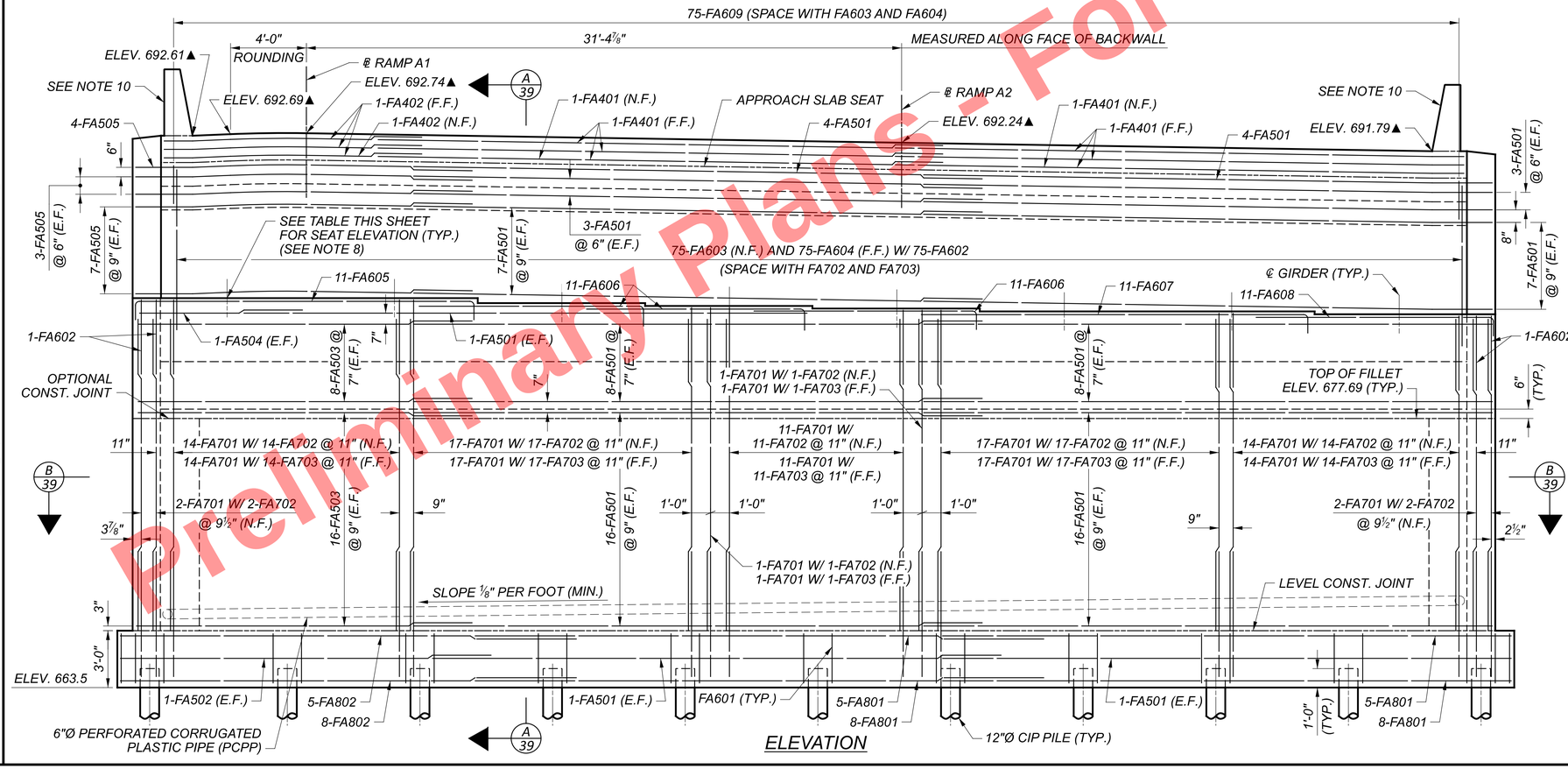

ELEVATION

REQUIRED MINIMUM LAP LENGTHS	
#4	2'-6"
#5	3'-1"
#6	3'-7"
#7	4'-2"
#8	5'-4"

GIRDER SEAT ELEVATIONS	
GIRDER	ELEVATION
G2-1	684.04
G2-3	684.04
G2-4	683.78
G2-5	683.63
G2-6	683.49
G2-7	683.34
G2-8	683.34
G2-9	683.19

LEGEND:

▲ ELEVATION PROVIDED AT FACE OF BACKWALL (STA. 430+94.25)

NOTES:

1. FOR GENERAL NOTES, SEE SHEETS 12 / 167 THRU 15 / 167.
2. FOR FOUNDATION PLAN, SEE SHEET 23 / 167.
3. FOR REINFORCEMENT LIST, SEE SHEET 159 / 167.
4. SEALING OF THE BEAM SEATS: IF THE BEAM SEATS ARE SEALED WITH AN EPOXY OR NON-EPOXY SEALER PRIOR TO SETTING THE BEARINGS, DO NOT APPLY SEALER TO THE CONCRETE SURFACES UNDER THE PROPOSED BEARING LOCATIONS. IF THESE LOCATIONS ARE SEALED, REMOVE THE SEALER TO THE SATISFACTION OF THE ENGINEER PRIOR TO SETTING THE BEARINGS. THE DEPARTMENT WILL NOT PAY FOR THIS REMOVAL.
5. BRIDGE SEAT REINFORCING, SETTING ANCHORS: ACCURATELY PLACE CONCRETE REINFORCEMENT IN THE VICINITY OF THE BRIDGE SEAT TO AVOID INTERFERENCE WITH THE DRILLING OF BEARING ANCHOR HOLES OR THE PRE-SETTING OF BEARING ANCHORS.
6. BACKWALL CONCRETE: IN ADDITION TO THE REQUIREMENTS OF C&MS 511.09, DO NOT PLACE BACKWALL CONCRETE ABOVE THE CONSTRUCTION JOINT AT THE APPROACH SLAB SEAT UNTIL AFTER THE DECK CONCRETE IN THE DECK END BLOCKOUT HAS BEEN PLACED.
7. FOR BEARING DETAILS, SEE SHEETS 66 / 167 THRU 70 / 167.
8. REFER TO NOTE 14 ON SHEET 69 / 167 FOR ELEVATION ADJUSTMENTS NECESSARY BASED ON FINAL BEARING CONFIGURATIONS.
9. FOR MODULAR JOINT DETAILS, SEE SHEETS 128 / 167 THRU 134 / 167.
10. FOR DETAILS OF RAILING ON BACKWALL, SEE APPROACH SLAB SHEETS 155 / 167 THRU 158 / 167.

FORWARD ABUTMENT PLAN AND ELEVATION
CUY-77-1587 (BRIDGE 9)
I.R. 77 SB OVER I.R. 90 AND CR-721 (E. 14TH ST.)

SFN	1806910
DESIGN AGENCY	HDR
DESIGNER	NJH
CHECKER	TJE
REVIEWER	DWW 01/11/24
PROJECT ID	82382
SUBSET	37
TOTAL	167
SHEET	1905
TOTAL	2696

For Reference Only
Preliminary Plans - Not

CUY-90-16.28 (CCG3A)
MODEL: Sheet PAPERSIZE: 34x22 (in.) DATE: 3/28/2025 TIME: 10:13:27 AM USER: RohitLBk
pw:\\mb-us-pw.bentley.com:mb-us-pw-03\Documents\Cleveland_OH\01_Projects\ODOT\District12\82382\400-Engineering\Structures\SFN_1806910\Sheets\82382_SFN_1806910_SF001.dgn

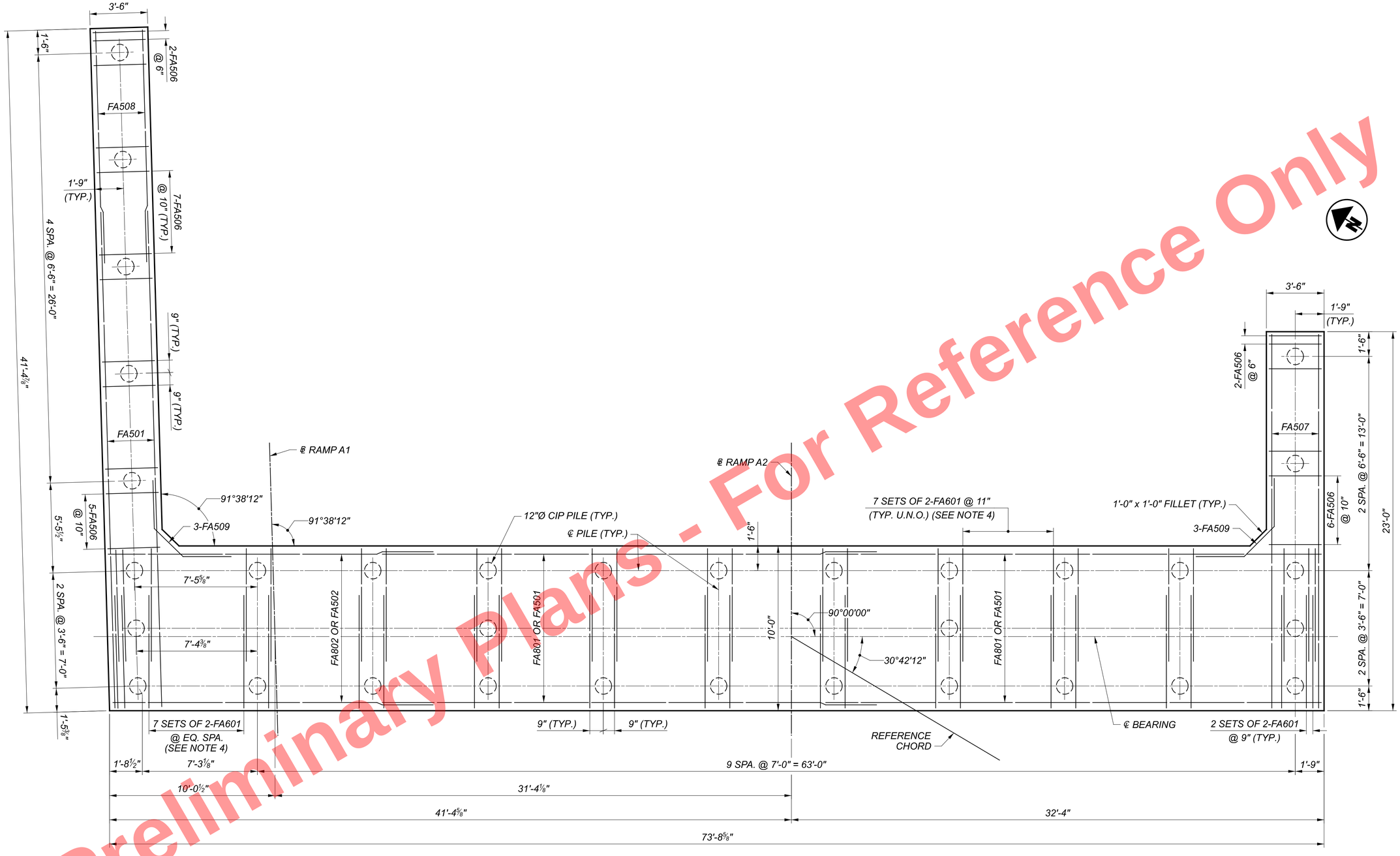

FOOTING PLAN

REQUIRED MINIMUM LAP LENGTHS	
#5	3'-1"
#6	3'-7"
#7	4'-2"
#8	5'-4"

NOTES:

1. FOR GENERAL NOTES, SEE SHEETS 12 / 167 THRU 15 / 167.
2. FOR FOUNDATION PLAN, SEE SHEET 23 / 167.
3. FOR REINFORCEMENT LIST, SEE SHEET 159 / 167.
4. SPACING MAY BE ADJUSTED UP TO 1 INCH AS NEEDED TO AVOID CONFLICTS WITH FA701 BARS.

Preliminary Plans - For Reference Only

FORWARD ABUTMENT FOOTING PLAN
CUY-77-1587 (BRIDGE 9)
I.R. 77 SB OVER I.R. 90 AND CR-721 (E. 14TH ST.)

SFN 1806910
DESIGN AGENCY
DESIGNER NJH | CHECKER TJE
REVIEWER DWW 01/11/24
PROJECT ID 82382
SUBSET 38 | TOTAL 167
SHEET 1906 | TOTAL 2696

CUY-90-16.28 (CCG3A)

MODEL: Sheet PAPERSIZE: 34x22 (in.) DATE: 3/28/2025 TIME: 10:13:33 AM USER: RohitLBk
pw:\\mb-us-pw.bentley.com:mb-us-pw-03\Documents\Cleveland_OH\01_Projects\ODOT\District12\82382\400-Engineering\Structures\SFN_1806910\Sheets\82382_SFN_1806910_SF002.dgn

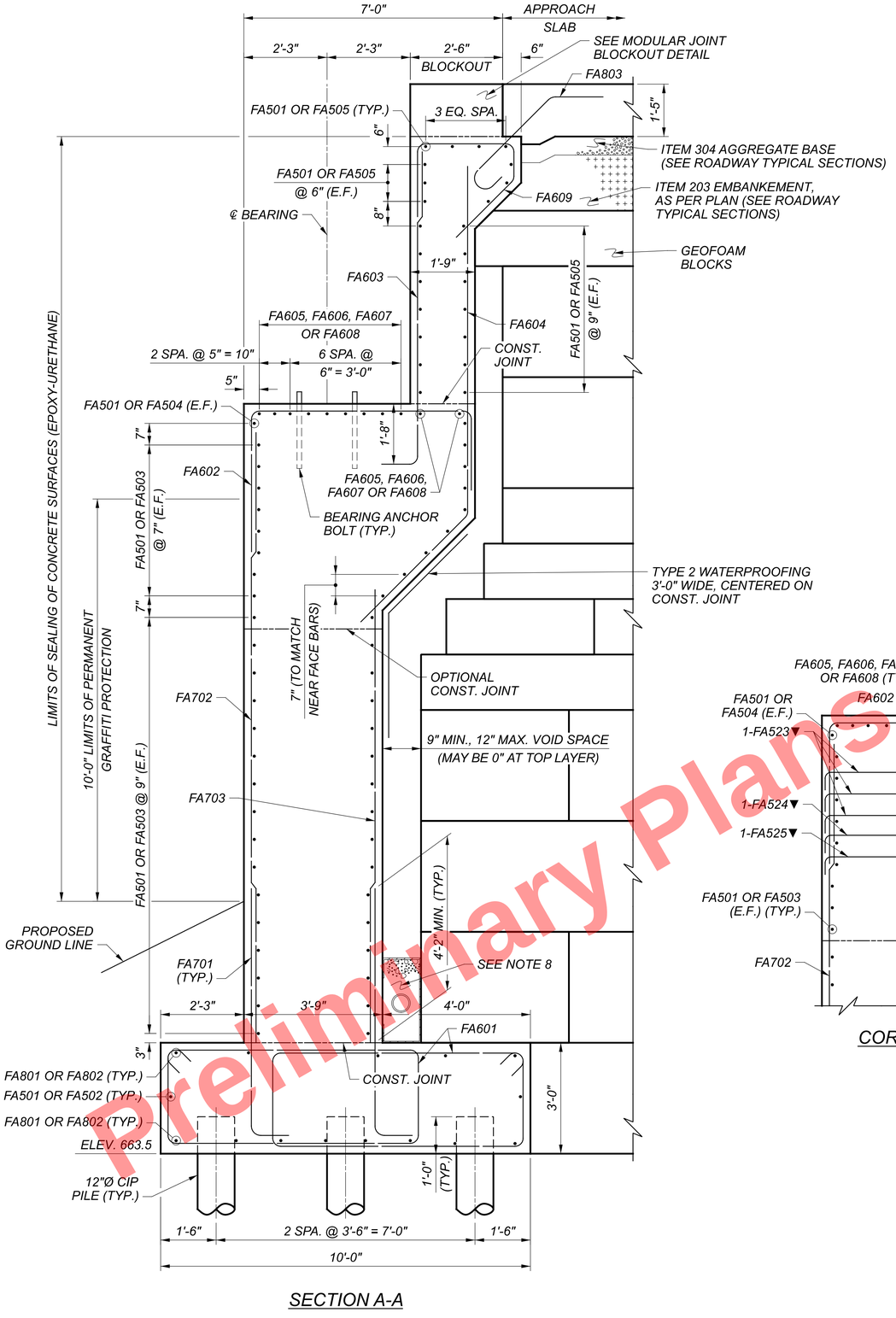

SECTION A-A

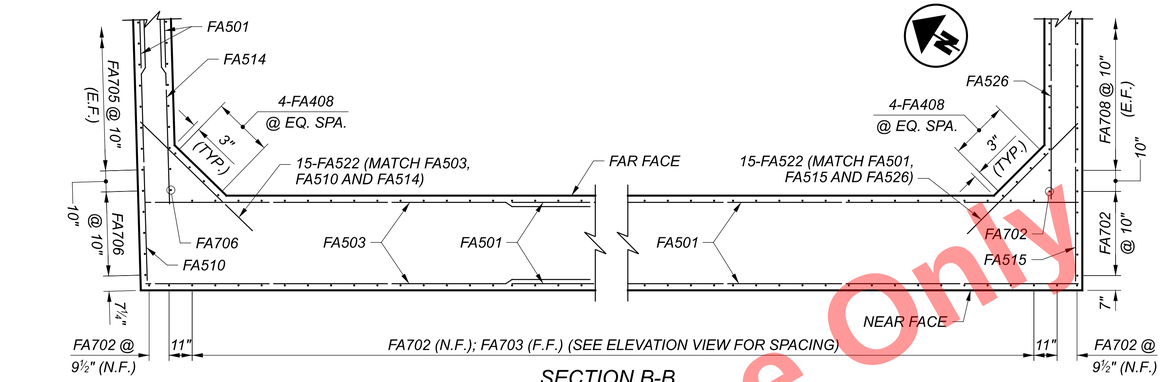

SECTION B-B

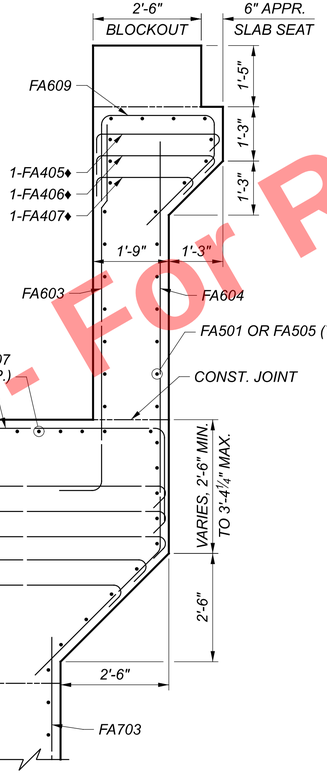

CORBEL DETAILS

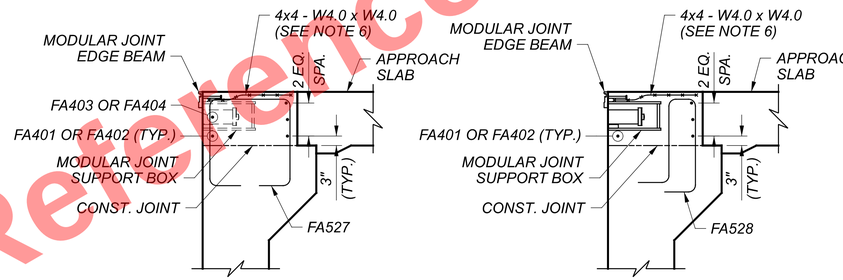

SECTION BETWEEN SUPPORT BOXES

SECTION AT SUPPORT BOXES

MODULAR JOINT BLOCKOUT DETAILS

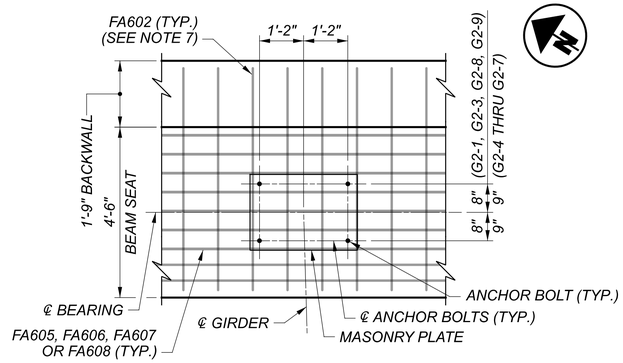

BEARING ANCHOR PLAN

LEGEND:

▼ *WITH EACH FA602*

♦ *WITH EACH FA609*

REQUIRED MINIMUM LAP LENGTHS	
#5	3'-1"
#6	3'-7"
#7	4'-2"
#8	5'-4"

NOTES:

1. *FOR GENERAL NOTES, SEE SHEETS* 12 / 167 *THRU* 15 / 167.
2. *FOR APPROACH SLAB DETAILS, SEE SHEETS* 157 / 167 *THRU* 158 / 167.
3. *FOR FOUNDATION PLAN, SEE SHEET* 23 / 167.
4. *FOR REINFORCEMENT LIST, SEE SHEET* 159 / 167.
5. *FOR BEARING DETAILS, SEE SHEETS* 66 / 167 *THRU* 70 / 167.
6. *GALVANIZED WELDED WIRE FABRIC SHALL CONFORM TO C&MS 709.14 AND SHALL BE INCLUDED FOR PAYMENT WITH ITEM 509, EPOXY COATED STEEL REINFORCEMENT.*
7. *ACCURATELY PLACE CONCRETE REINFORCEMENT IN THE VICINITY OF THE BRIDGE SEAT TO AVOID INTERFERENCE WITH THE DRILLING OF BEARING ANCHOR HOLES OR THE PRE-SETTING OF BEARING ANCHORS.*
8. *FOR DRAINAGE DETAILS, SEE WALL DRAINAGE DETAIL ON SHEET* 40 / 167.

Preliminary Plans - For Reference Only

FORWARD ABUTMENT SECTION AND DETAILS

CUY-77-1587 (BRIDGE 9)

I.R. 77 SB OVER I.R. 90 AND CR-721 (E. 14TH ST.)

SFN 1806910

DESIGN AGENCY HDR

DESIGNER	CHECKER
NJH	TJE

REVIEWER DWW 01/11/24

PROJECT ID 82382

SUBSET	TOTAL
39	167

SHEET	TOTAL
1907	2696

CUY-90-16.28 (CCG3A)

MODEL: Sheet PAPERSIZE: 34x22 (in.) DATE: 3/28/2025 TIME: 10:13:38 AM USER: RohitLBk
pw:\\mb-us-pw.bentley.com:mb-us-pw-03\Documents\Cleveland_OH\01_Projects\ODOT\District12\82382\400-Engineering\Structures\SFN_1806910\Sheets\82382_SFN_1806910_SF003.dgn

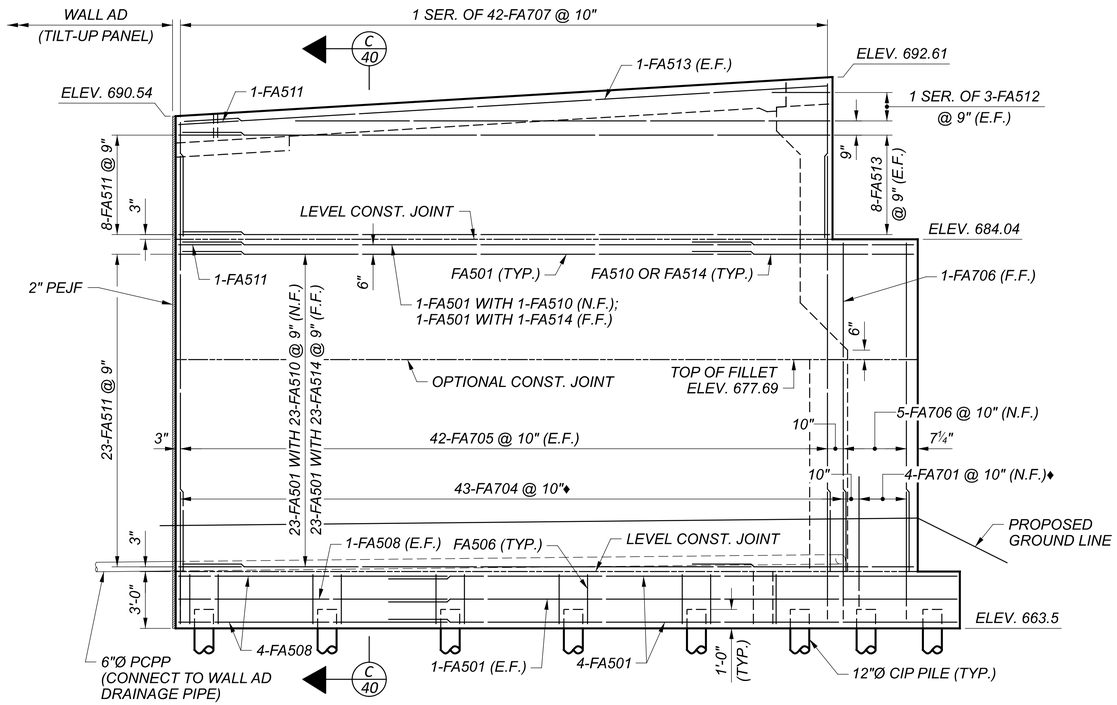

LEFT WINGWALL ELEVATION

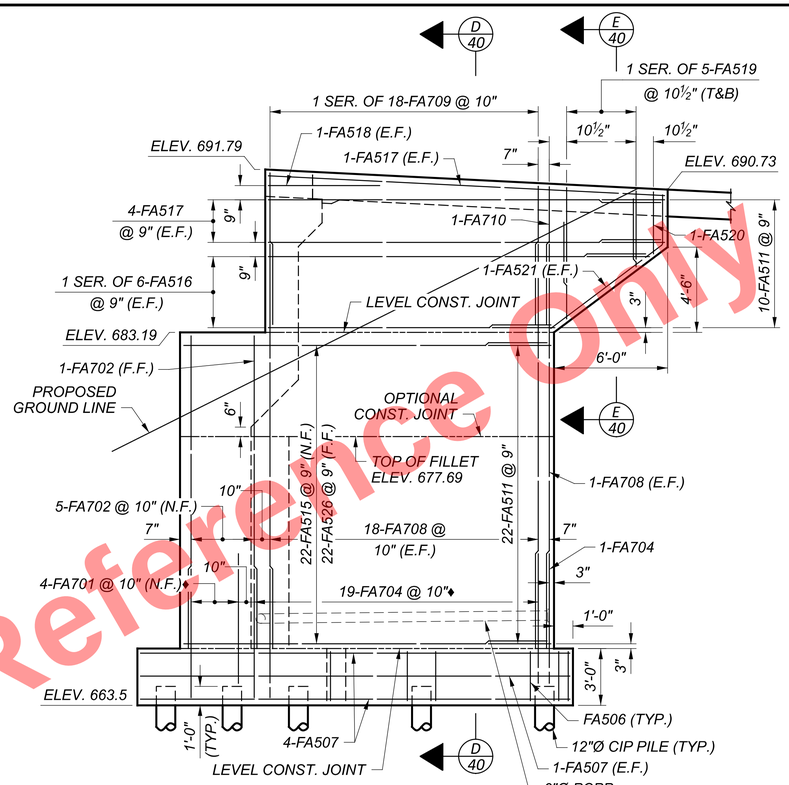

RIGHT WINGWALL ELEVATION

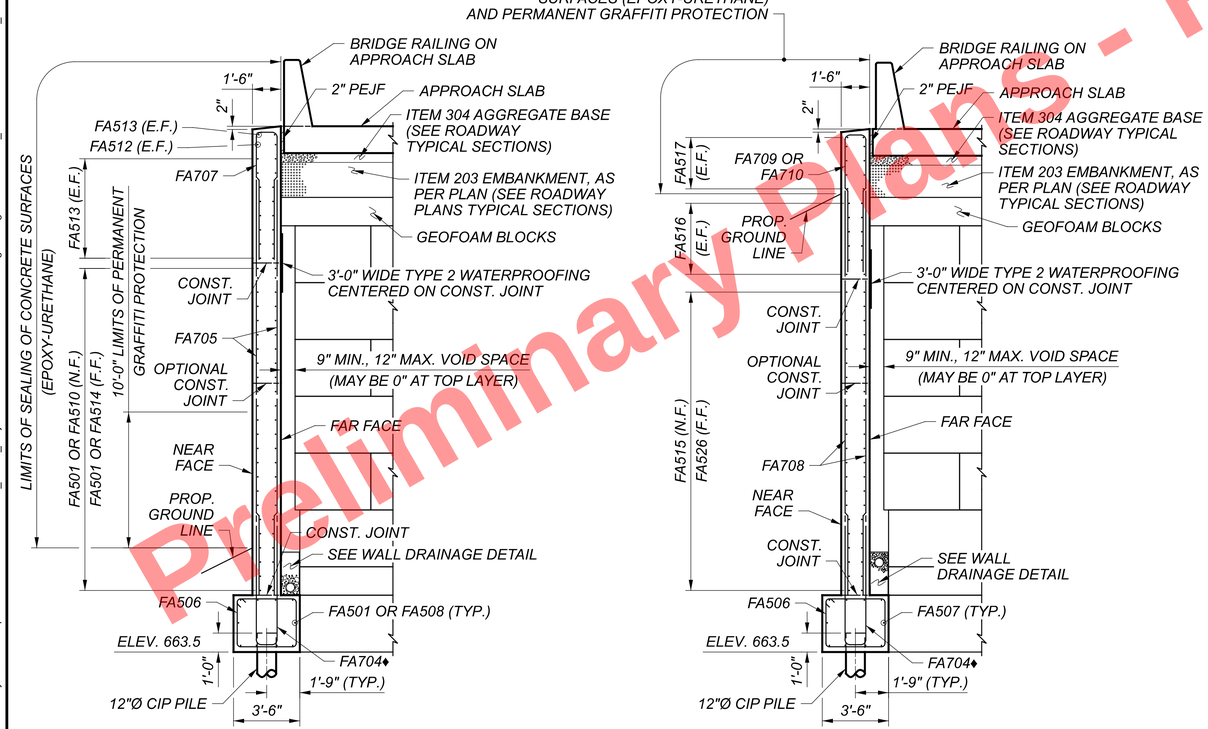

SECTION C-C

SECTION D-D

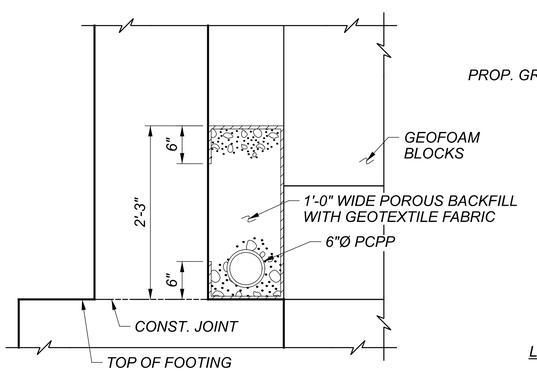

WALL DRAINAGE DETAIL

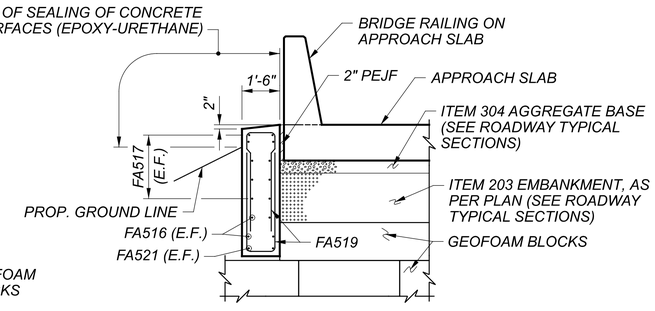

SECTION E-E

REQUIRED MINIMUM LAP LENGTHS	
#5	3'-1"
#6	3'-7"
#7	4'-2"
#8	5'-4"

LEGEND:

♦ WHERE PILES INTERFERE WITH REINFORCING, ADJUST REINFORCING LOCATION VERTICALLY TO ELIMINATE CONFLICTS. PROVIDE 2" CLEAR BETWEEN TOP OF PILE AND BOTTOM OF BAR.

NOTES:

1. FOR GENERAL NOTES, SEE SHEETS 12 / 167 THRU 15 / 167.
2. FOR APPROACH SLAB DETAILS, SEE SHEETS 157 / 167 THRU 158 / 167.
3. FOR FOUNDATION PLAN, SEE SHEET 23 / 167.
4. FOR REINFORCEMENT LIST, SEE SHEET 159 / 167.

Preliminary Plans - For Reference Only

FORWARD ABUTMENT WINGWALL DETAILS
CUY-77-1587 (BRIDGE 9)
I.R. 77 SB OVER I.R. 90 AND CR-721 (E. 14TH ST.)

SFN 1806910
DESIGN AGENCY
HDR
DESIGNER NJH | CHECKER TJE
REVIEWER DWW 01/11/24
PROJECT ID 82382
SUBSET 40 | TOTAL 167
SHEET 1908 | TOTAL 2696

CUY-90-16.28 (CCG3A)

MODEL: Sheet PAPERSIZE: 34x22 (in.) DATE: 3/28/2025 TIME: 10:13:44 AM USER: RohitBk
pw:\\mb-us-pw.bentley.com:mb-us-pw-03\Documents\Cleveland_OH\01_Projects\ODOT\District12\82382400-Engineering\Structures\SFN_1806910\Sheets\82382_SF004.dgn

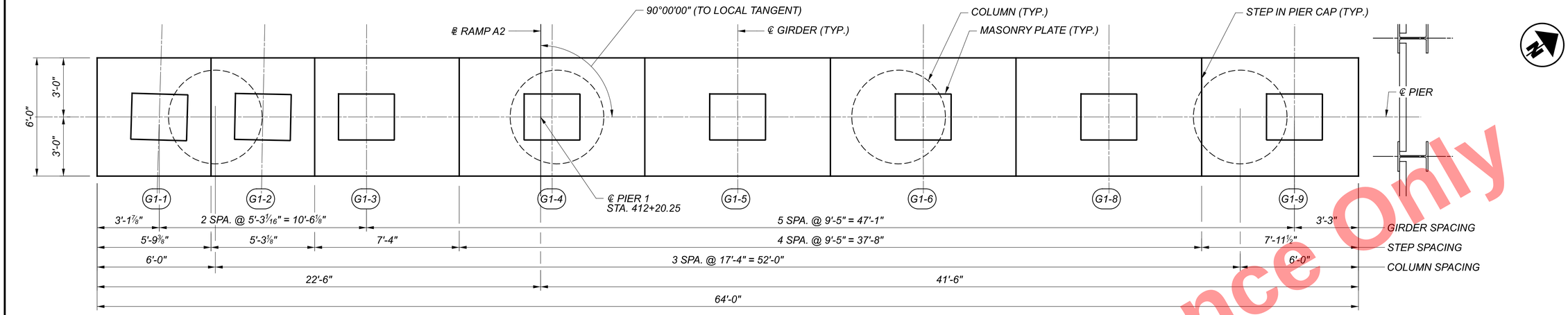

PLAN

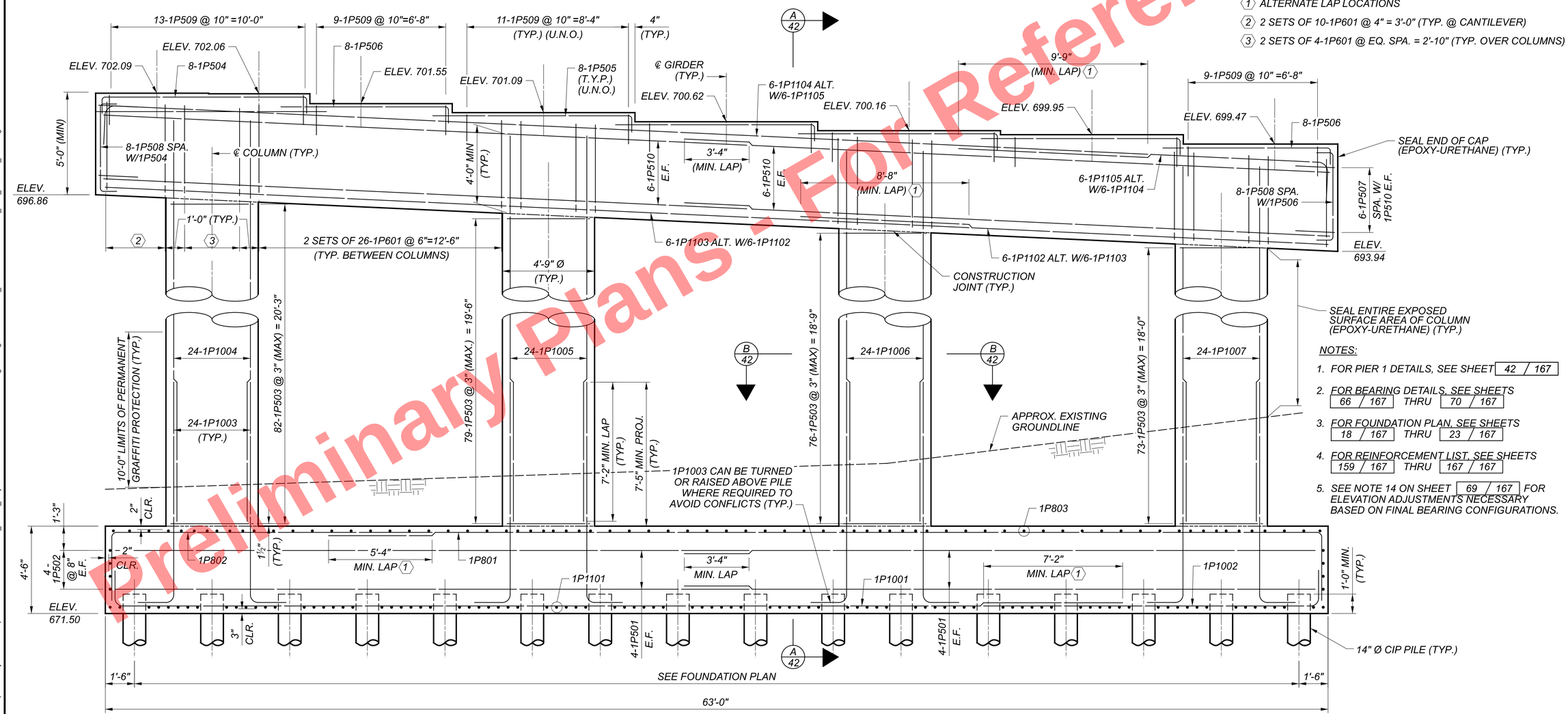

ELEVATION

LEGEND:

1. ALTERNATE LAP LOCATIONS
2. 2 SETS OF 10-1P601 @ 4" = 3'-0" (TYP. @ CANTILEVER)
3. 2 SETS OF 4-1P601 @ EQ. SPA. = 2'-10" (TYP. OVER COLUMNS)

NOTES:

1. FOR PIER 1 DETAILS, SEE SHEET 42 / 167
2. FOR BEARING DETAILS, SEE SHEETS 66 / 167 THRU 70 / 167
3. FOR FOUNDATION PLAN, SEE SHEETS 18 / 167 THRU 23 / 167
4. FOR REINFORCEMENT LIST, SEE SHEETS 159 / 167 THRU 167 / 167
5. SEE NOTE 14 ON SHEET 69 / 167 FOR ELEVATION ADJUSTMENTS NECESSARY BASED ON FINAL BEARING CONFIGURATIONS.

Preliminary Plans - For Reference Only

PIER 1 PLAN AND ELEVATION
CUY-77-1587 (BRIDGE 9)
OVER I.R. 90 AND CR-721 (E. 14TH ST.)
I.R. 77 SB OVE

CUY-90-16.28 (CCG3A)

MODEL: Sheet PAPERSIZE: 34x22 (in.) DATE: 3/28/2025 TIME: 10:13:51 AM USER: RohitBk
pw:\\mb-us-pw.bentley.com:mb-us-pw-03\Documents\Cleveland_OH\01_Projects\ODOT\District12\82382\400-Engineering\Structures\SFN_1806910\Sheets\82382_SFN_1806910_S1001.dgn
SFN_1806910_S1001.dgn

SFN	1806910
DESIGN AGENCY	HDR
DESIGNER	PJC
CHECKER	RBK
REVIEWER	DWW 01/11/24
PROJECT ID	82382
SUBSET	41
TOTAL	167
SHEET	1909
TOTAL	2696

Preliminary Plans - For Reference Only

LEGEND:

1. 5 SPA. @ 6"=2'-6"
2. 6 SPA. @ 6"=3'-0"
3. 4 SPA. @ 6"=2'-0"
4. 3 SPA. @ 8"=2'-0"
5. 2 SPA. @ 1'-0"=2'-0"
6. 2 SPA. @ 8"=1'-4"
7. ALTERNATE LAP LOCATIONS

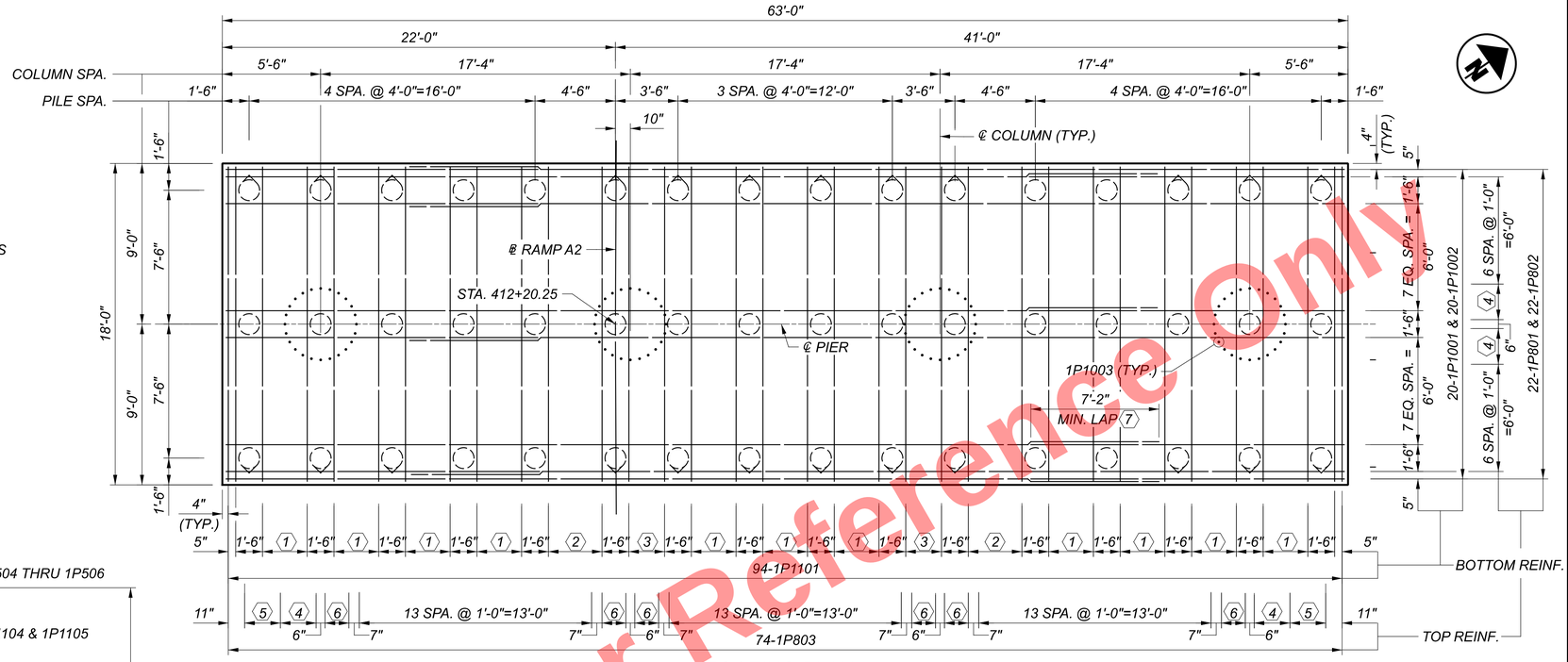

FOOTING PLAN

(TOP REINFORCING MAT NOT SHOWN FOR CLARITY)

NOTES:

1. FOR BEARING DETAILS, SEE SHEETS 66 / 167 THRU 70 / 167
2. FOR FOUNDATION PLAN, SEE SHEETS 18 / 167 THRU 23 / 167
3. FOR REINFORCEMENT LIST, SEE SHEETS 159 / 167 THRU 167 / 167
4. PILES MARKED ◯ SHALL BE BATTERED 1:4 IN THE DIRECTION SHOWN.
5. ACCURATELY PLACE CONCRETE REINFORCEMENT IN THE VICINITY OF THE BRIDGE SEAT TO AVOID THE PRESETTING OF BEARING ANCHORS. SET THE BEARING ANCHORS PRIOR TO POURING THE CONCRETE.

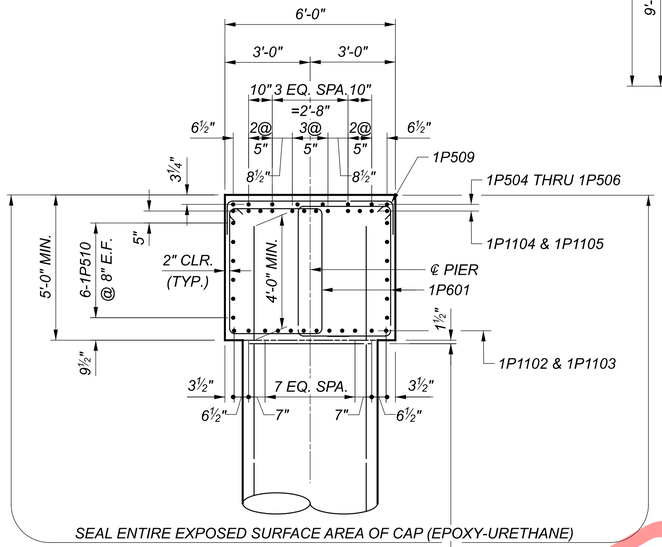

SEAL ENTIRE EXPOSED SURFACE AREA OF CAP (EPOXY-URETHANE)

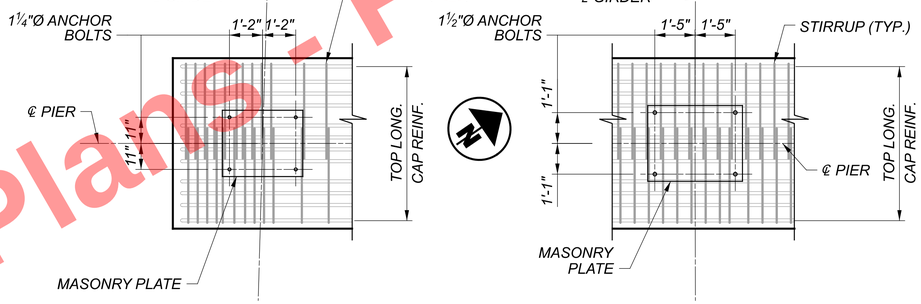

GIRDER G1-1 SHOWN

GIRDERS G1-2, G1-8 & G1-9 SIMILAR

GIRDER G1-3 SHOWN

GIRDERS G1-4, G1-5 & G1-6 SIMILAR

BEARING ANCHOR PLANS

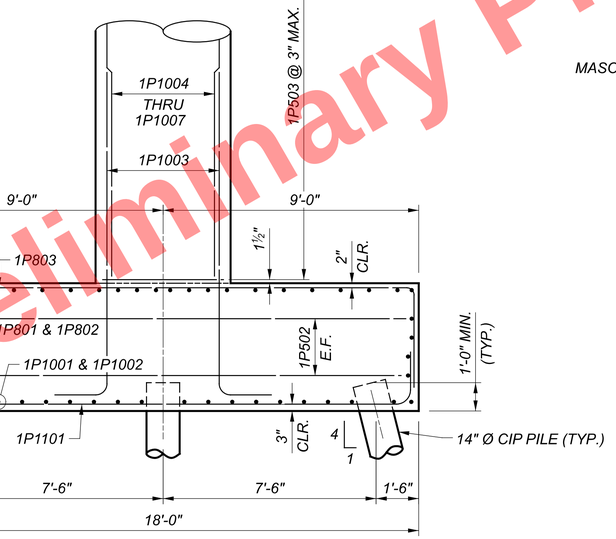

SECTION A-A

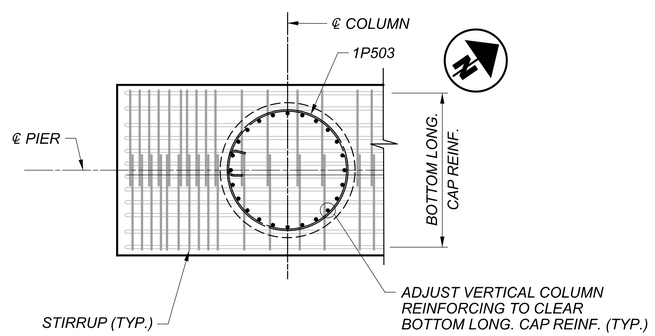

CAP AND COLUMN INTERFACE DETAILS

EXTERIOR COLUMN SHOWN, INTERIOR COLUMN SIMILAR

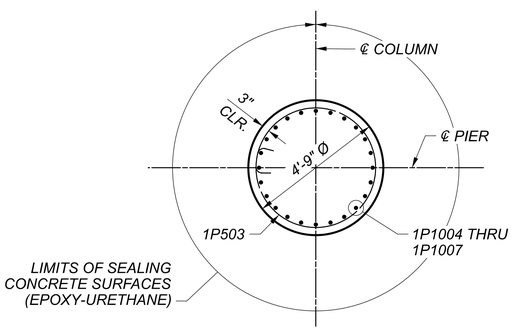

SECTION B-B

PIER 1 DETAILS
CUY-77-1587 (BRIDGE 9)
I.R. 77 SB OVER I.R. 90 AND CR-721 (E. 14TH ST.)

SFN	1806910
DESIGN AGENCY	HDR
DESIGNER	PJC
CHECKER	RBK
REVIEWER	DWW 01/11/24
PROJECT ID	82382
SUBSET	42
TOTAL	167
SHEET	1910
TOTAL	2696

CUY-90-16.28 (CCG3A)

MODEL: Sheet PAPERSIZE: 34x22 (in.) DATE: 3/28/2025 TIME: 10:13:57 AM USER: Rohit.Bk
pw:\\tmb-us-pw.bentley.com:tmb-us-pw-03\Documents\Cleveland_OH\01_Projects\ODOT\District12\82382\400-Engineering\Structures\SFN_1806910\Sheets\82382_SFN_1806910_S1002.dgn

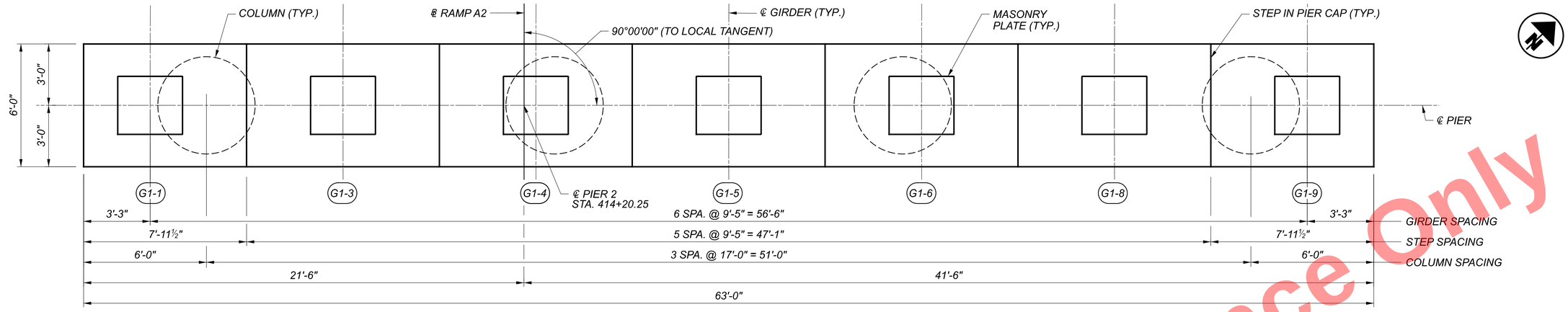

PLAN

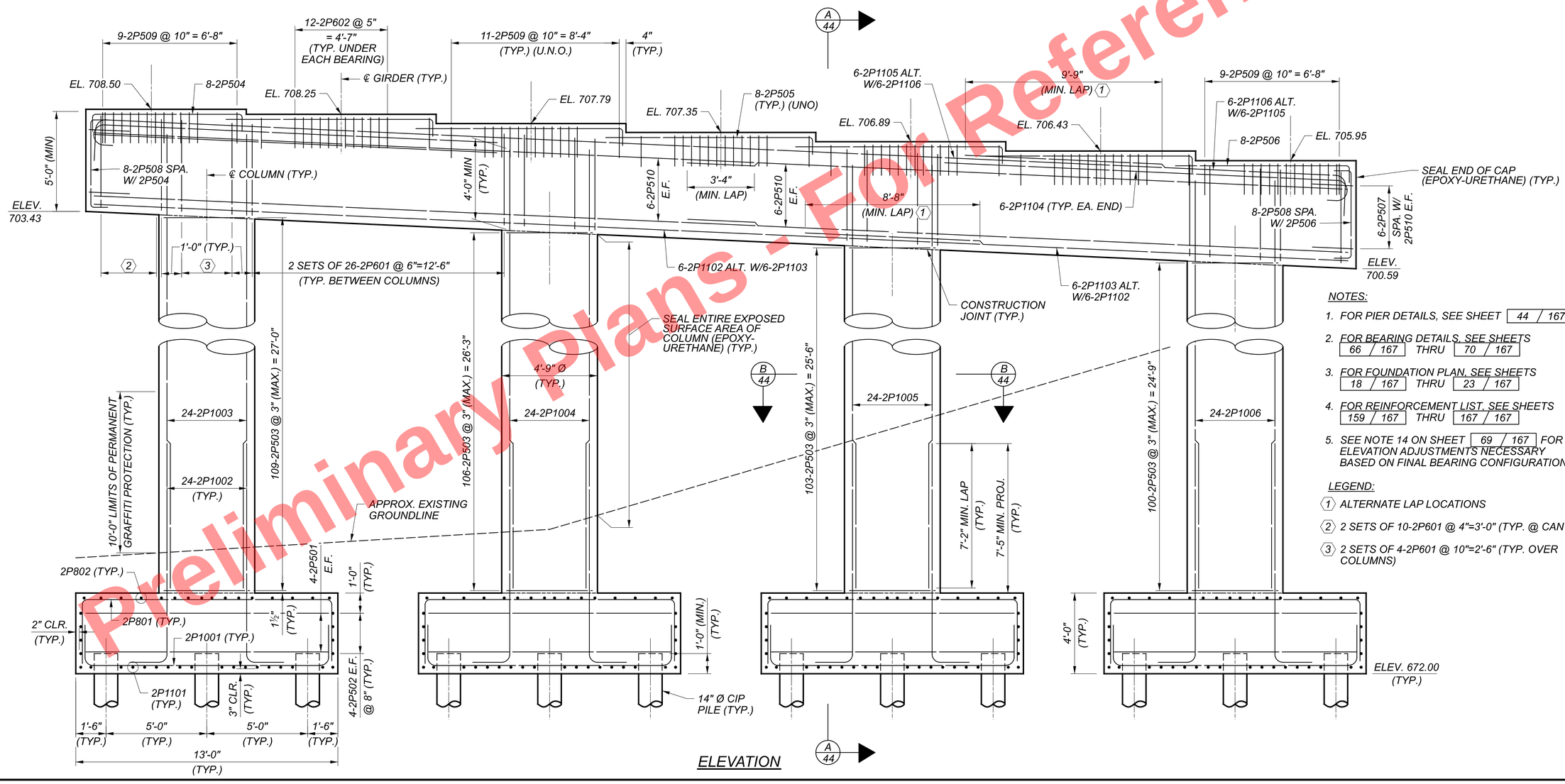

ELEVATION

NOTES:

1. FOR PIER DETAILS, SEE SHEET 44 / 167
2. FOR BEARING DETAILS, SEE SHEETS 66 / 167 THRU 70 / 167
3. FOR FOUNDATION PLAN, SEE SHEETS 18 / 167 THRU 23 / 167
4. FOR REINFORCEMENT LIST, SEE SHEETS 159 / 167 THRU 167 / 167
5. SEE NOTE 14 ON SHEET 69 / 167 FOR ELEVATION ADJUSTMENTS NECESSARY BASED ON FINAL BEARING CONFIGURATIONS.

LEGEND:

1. ALTERNATE LAP LOCATIONS
2. 2 SETS OF 10-2P601 @ 4"=3'-0" (TYP. @ CANTILEVER)
3. 2 SETS OF 4-2P601 @ 10"=2'-6" (TYP. OVER COLUMNS)

Preliminary Plans - For Reference Only

PIER 2 PLAN AND ELEVATION
CUY-77-1587 (BRIDGE 9)
I.R. 77 SB OVER I.R. 90 AND CR-721 (E. 14TH ST.)

CUY-90-16.28 (CCG3A)

MODEL: Sheet PAPERSIZE: 34x22 (in.) DATE: 3/28/2025 TIME: 10:14:04 AM USER: Rohit.Bk
pw:\\tnb-us-pw.bentley.com:tnb-us-pw-03\Documents\Cleveland_OH\01_Projects\ODOT\District12\82382\400-Engineering\Structures\SFN_1806910\Sheets\82382_SFN_1806910_S1003.dgn

SFN	1806910
DESIGN AGENCY	HDR
DESIGNER	PJC
CHECKER	RBK
REVIEWER	DWW 01/11/24
PROJECT ID	82382
SUBSET	43
TOTAL	167
SHEET	1911
TOTAL	2696

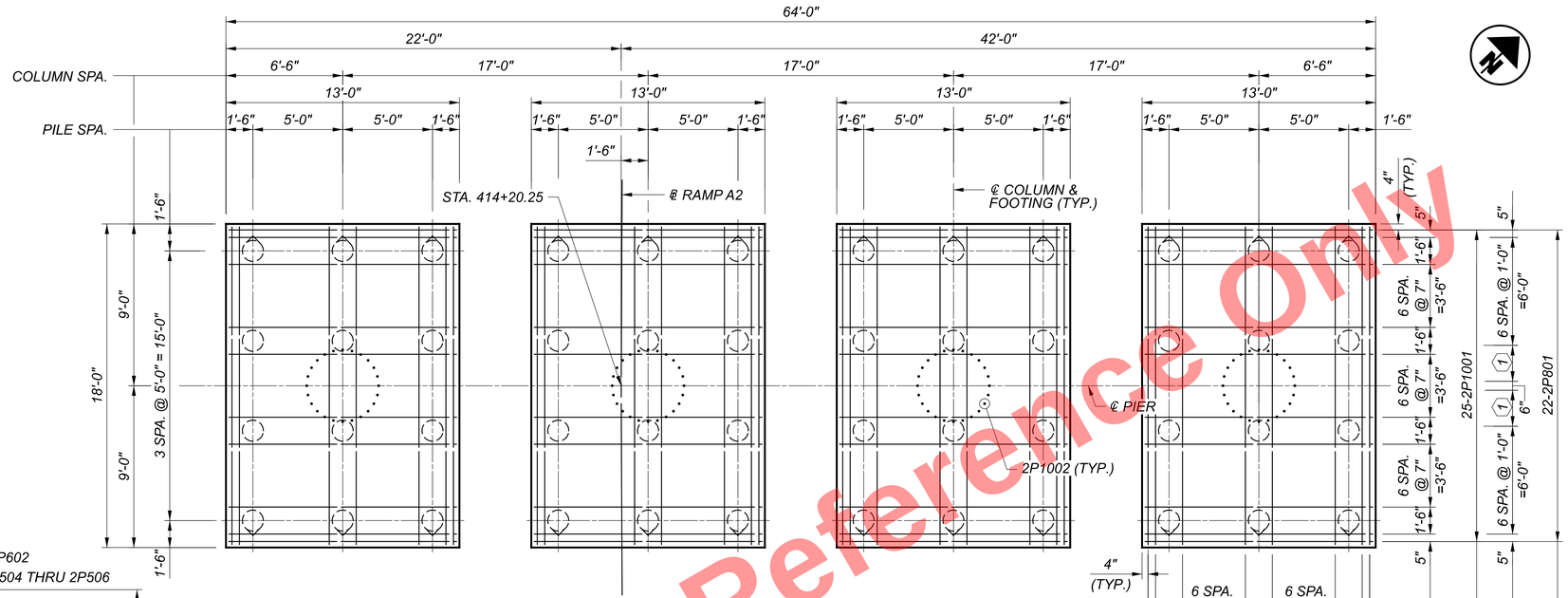

FOOTING PLAN

(TOP REINFORCING MAT NOT SHOWN FOR CLARITY)

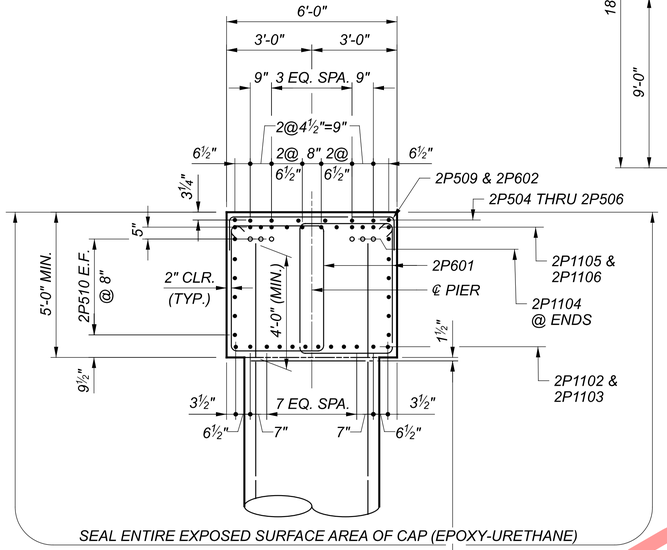

SEAL ENTIRE EXPOSED SURFACE AREA OF CAP (EPOXY-URETHANE)

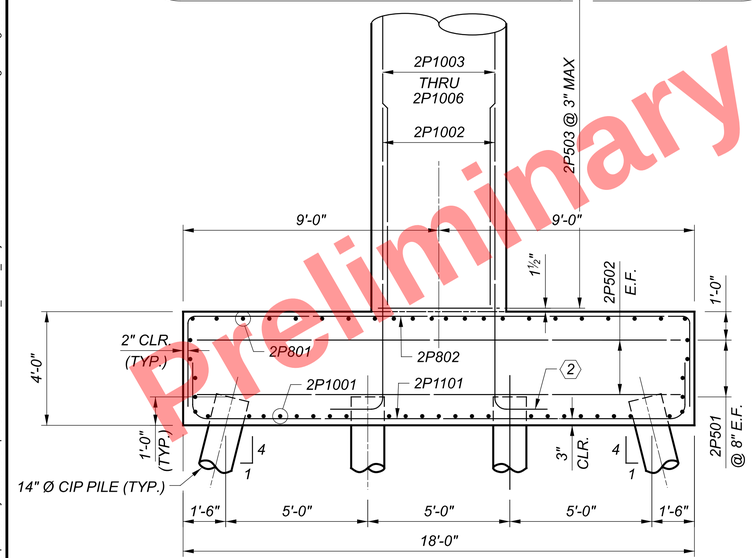

SECTION A-A

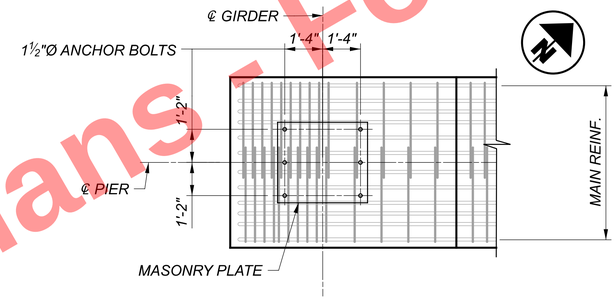

BEARING ANCHOR PLAN

GIRDER G1-1 SHOWN
GIRDERS G1-3,G1-4,G1-5, G1-6, G1-8 & G1-9 SIMILAR

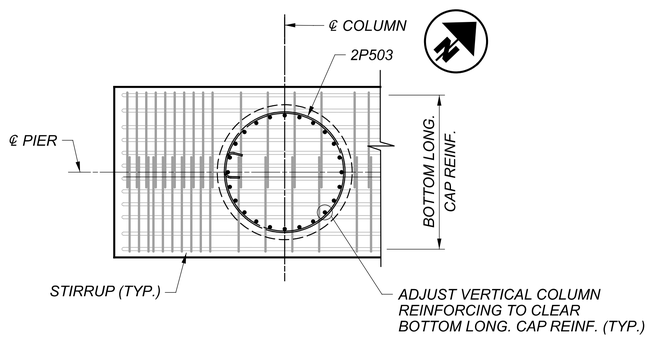

CAP AND COLUMN INTERFACE DETAILS

EXTERIOR COLUMN SHOWN, INTERIOR COLUMN SIMILAR

LEGEND:

1. 3 SPA. 8"
2. 2P1002 CAN BE TURNED OR RAISED ABOVE PILE WHERE REQUIRED TO AVOID CONFLICTS (TYP.)

NOTES:

1. FOR BEARING DETAILS, SEE SHEETS 66 / 167 THRU 70 / 167
2. FOR FOUNDATION PLAN, SEE SHEETS 18 / 167 THRU 23 / 167
3. FOR REINFORCEMENT LIST, SEE SHEETS 159 / 167 THRU 167 / 167
4. PILES MARKED THUS ◯ SHALL BE BATTERED 1:4 IN THE DIRECTION SHOWN.
5. ACCURATELY PLACE CONCRETE REINFORCEMENT IN THE VICINITY OF THE BRIDGE SEAT TO AVOID THE PRESETTING OF BEARING ANCHORS. SET THE BEARING ANCHORS PRIOR TO POURING THE CONCRETE.

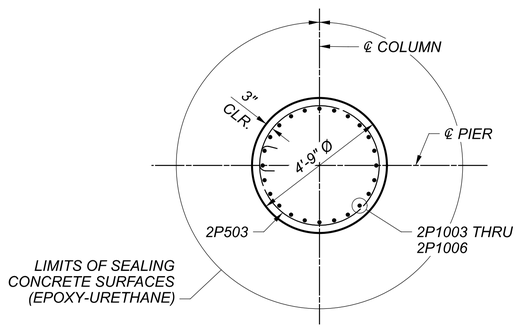

SECTION B-B

PIER 2 DETAILS

CUY-77-1587 (BRIDGE 9)
I.R. 77 SB OVER I.R. 90 AND CR-721 (E. 14TH ST.)

SFN	1806910
DESIGN AGENCY	HDR
DESIGNER	PJC
CHECKER	RBK
REVIEWER	DWW 01/11/24
PROJECT ID	82382
SUBSET	44
TOTAL	167
SHEET	1912
TOTAL	2696

CUY-90-16.28 (CCG3A)

MODEL: Sheet PAPERSIZE: 34x22 (in.) DATE: 3/28/2025 TIME: 10:14:09 AM USER: RohitBk
pw:\\mb-us-pw.bentley.com:mb-us-pw-03\Documents\Cleveland_OH01_Projects\ODOT\District12\82382400-Engineering\Structures\SFN_1806910\Sheets\82382_S

Preliminary Plans - Not For Reference Only

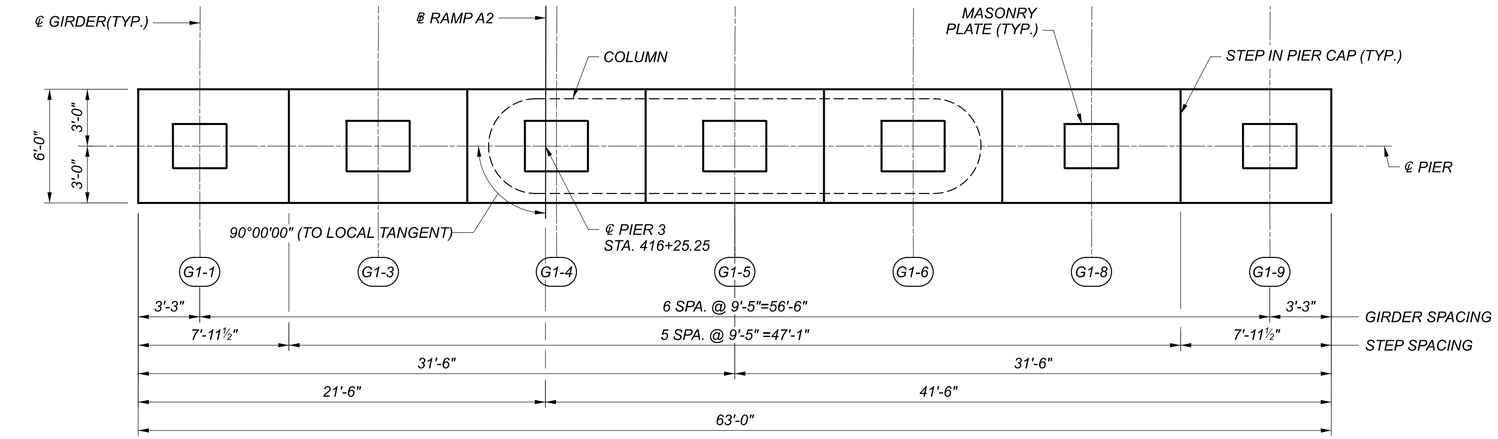

PLAN

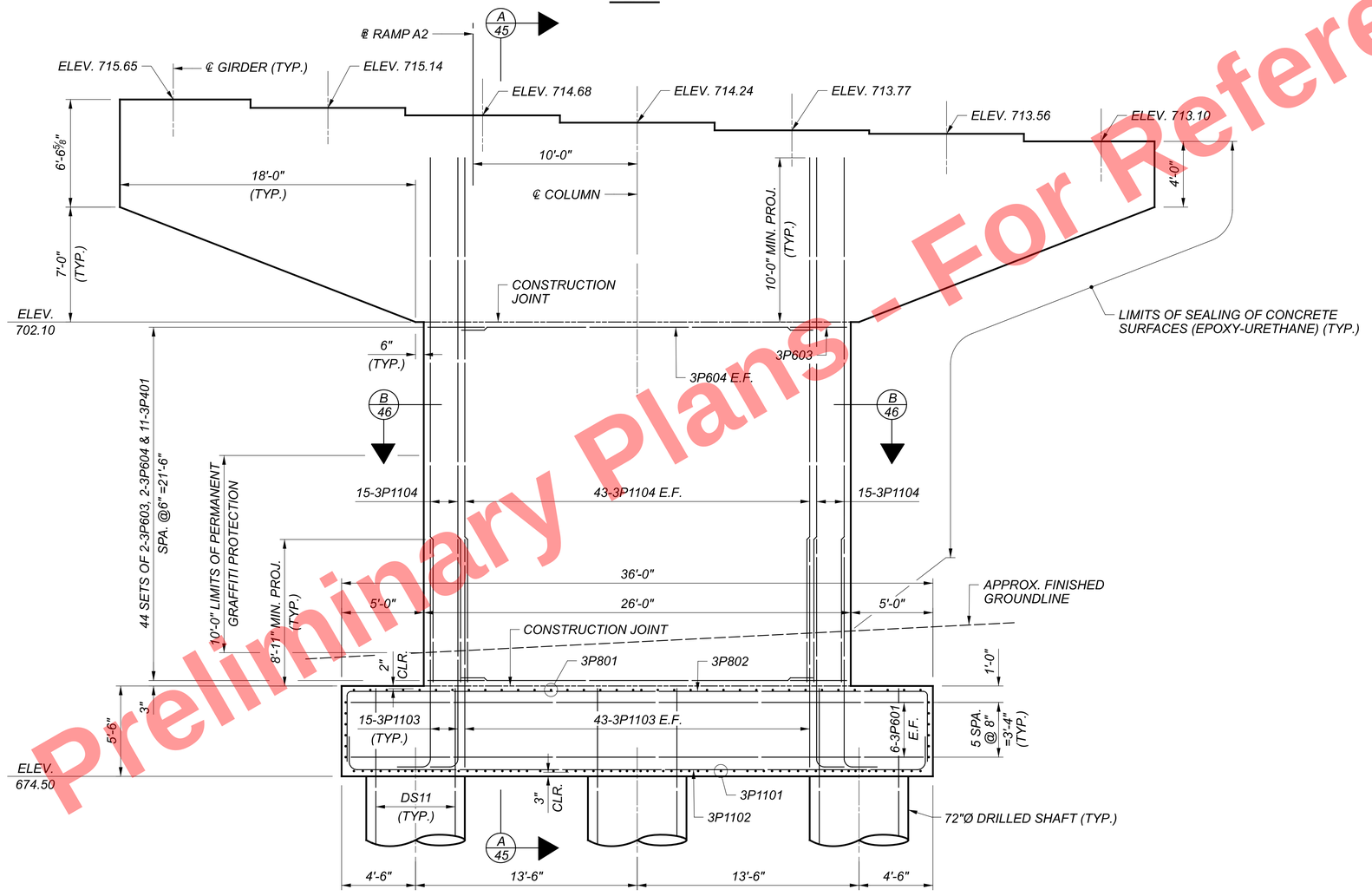

ELEVATION
(CAP REINFORCING NOT SHOWN)

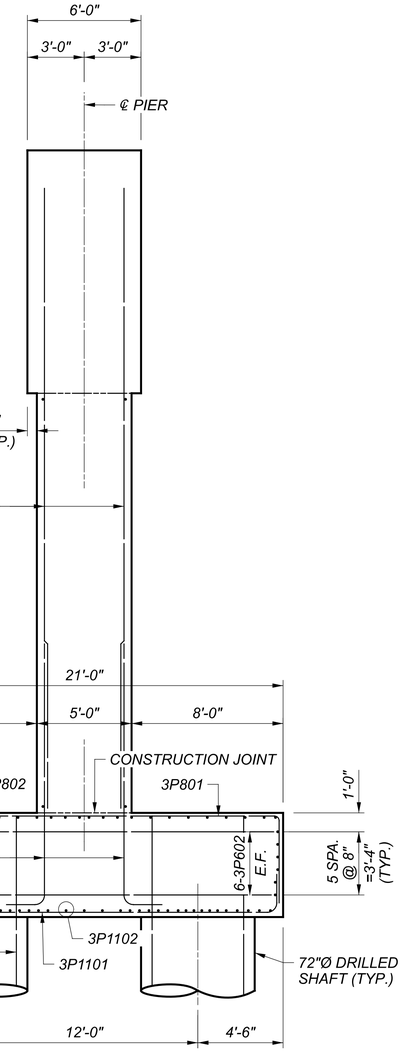

SECTION A-A
(CAP REINFORCING NOT SHOWN)

NOTES:

1. FOR CAP, BEARING AND COLUMN REINFORCING INTERFACE DETAIL, SEE SHEET 47 / 167
2. FOR CAP REINFORCEMENT DETAILS, SEE SHEET 46 / 167
3. FOR FOOTING PLAN AND ADDITIONAL DETAILS, SEE SHEET 47 / 167
4. FOR BEARING DETAILS, SEE SHEETS 66 / 167 THRU 70 / 167
5. FOR FOUNDATION PLAN, SEE SHEETS 18 / 167 THRU 23 / 167
6. FOR REINFORCEMENT LIST, SEE SHEETS 159 / 167 THRU 167 / 167
7. SEE NOTE 14 ON SHEET 69 / 167 FOR ELEVATION ADJUSTMENTS NECESSARY BASED ON FINAL BEARING CONFIGURATIONS.

Preliminary Plans - For Reference Only

PIER 3 PLAN AND ELEVATION
CUY-77-1587 (BRIDGE 9)
I.R. 77 SB OVER I.R. 90 AND CR-721 (E. 14TH ST.)

SFN	1806910
DESIGN AGENCY	HDR
DESIGNER	PJC
CHECKER	NJH
REVIEWER	DWW 01/11/24
PROJECT ID	82382
SUBSET	45
TOTAL	167
SHEET	1913
TOTAL	2696

CUY-90-16.28 (CCG3A)

MODEL: Sheet PAPERSIZE: 34x22 (in.) DATE: 3/28/2025 TIME: 10:14:16 AM USER: RohitBk
pw:\\mb-us-pw.bentley.com:mb-us-pw-03\Documents\Cleveland_OH01_Projects\ODOT\District12\82382400-Engineering\Structures\SFN_1806910\Sheets\82382_SFN_1806910_S1005.dgn

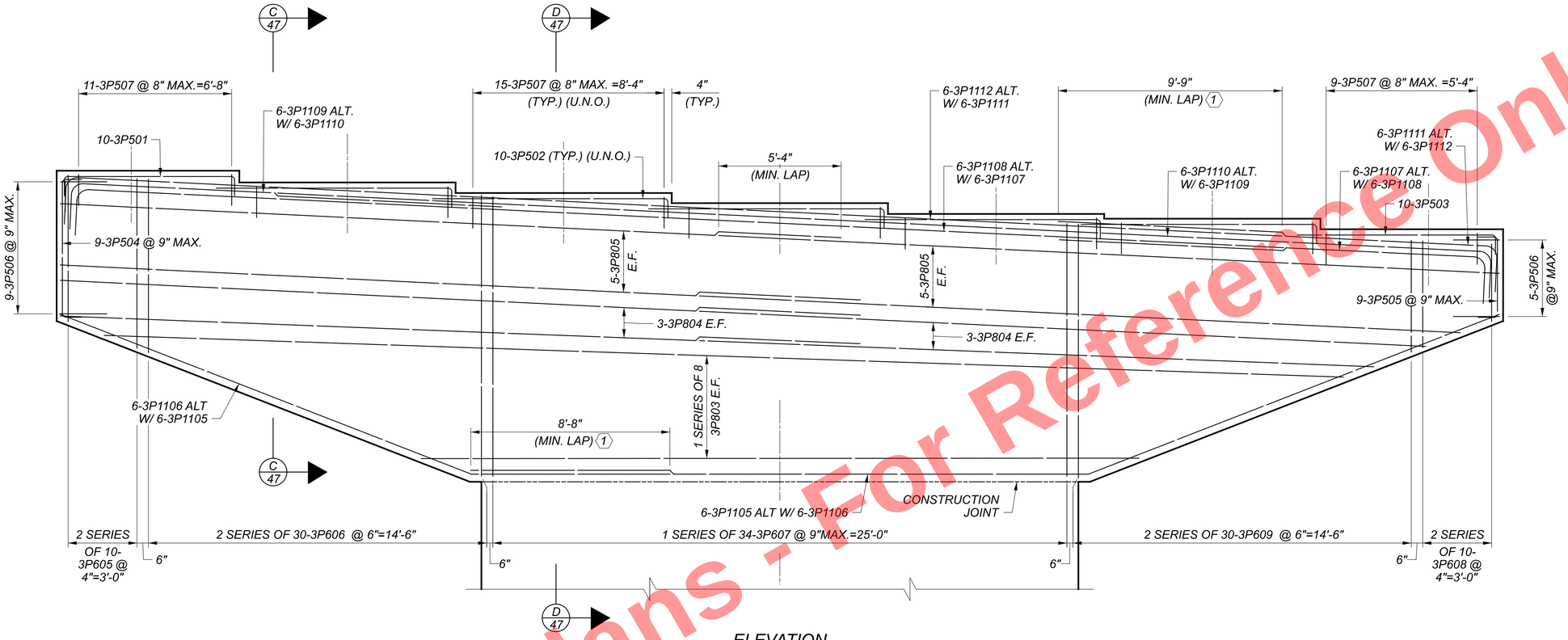

ELEVATION
(COLUMN REINFORCING NOT SHOWN)

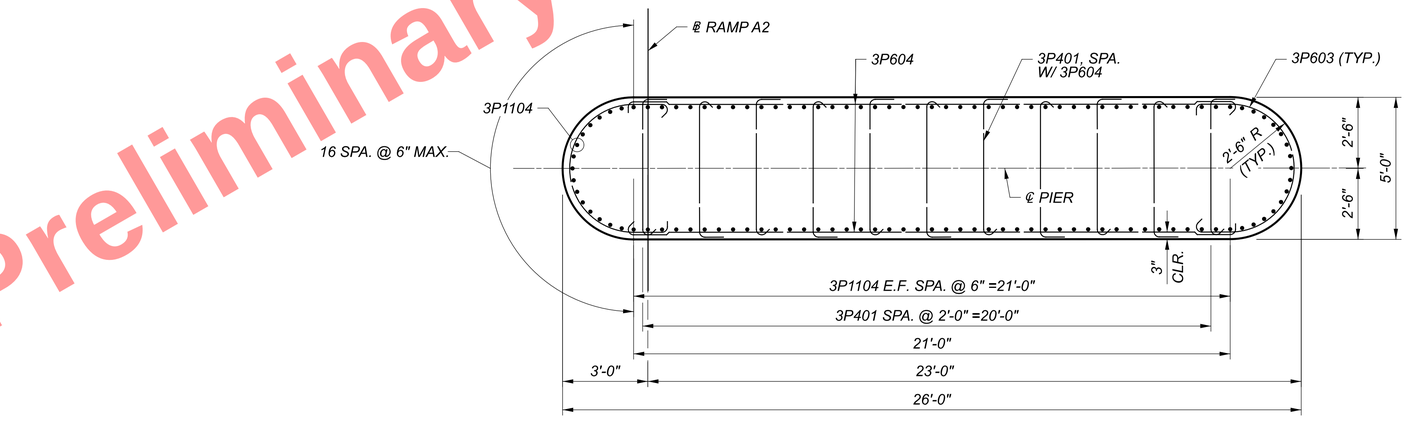

SECTION B-B

NOTES:

1. FOR PIER COLUMN DETAILS, SEE SHEET 45 / 167

1 ALTERNATE LAP LOCATIONS

Preliminary Plans - For Reference Only

PIER 3 DETAILS - (1 OF 2)
CUY-77-1587 (BRIDGE 9)
I.R. 77 SB OVER I.R. 90 AND CR-721 (E. 14TH ST.)

SFN	1806910
DESIGN AGENCY	HDR
DESIGNER	PJC
CHECKER	NJH
REVIEWER	DWW 01/11/24
PROJECT ID	82382
SUBSET	46
TOTAL	167
SHEET	1914
TOTAL	2696

CUY-90-16.28 (CCG3A)

MODEL: Sheet PAPERSIZE: 34x22 (in.) DATE: 3/28/2025 TIME: 10:14:24 AM USER: RohitLBk
pw:\\mb-us-pw.bentley.com:mb-us-pw-03\Documents\Cleveland_OH\01_Projects\ODOT\District12\82382\400-Engineering\Structures\SFN_1806910\Sheets\82382_SFN_1806910_S1006.dgn

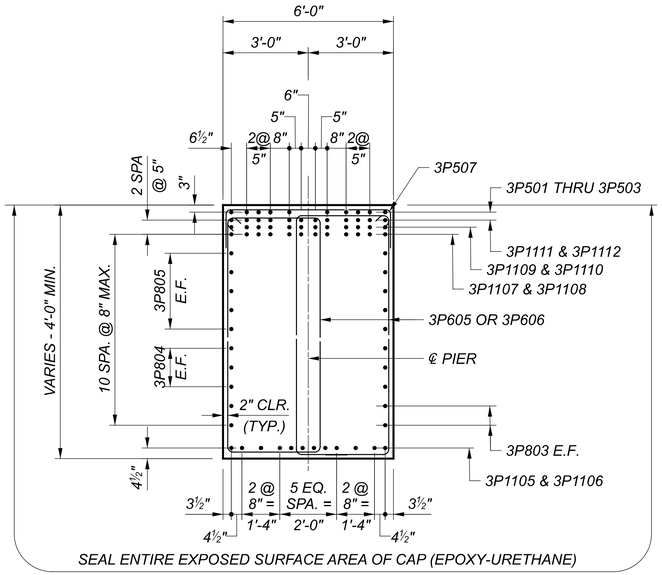

SECTION C-C

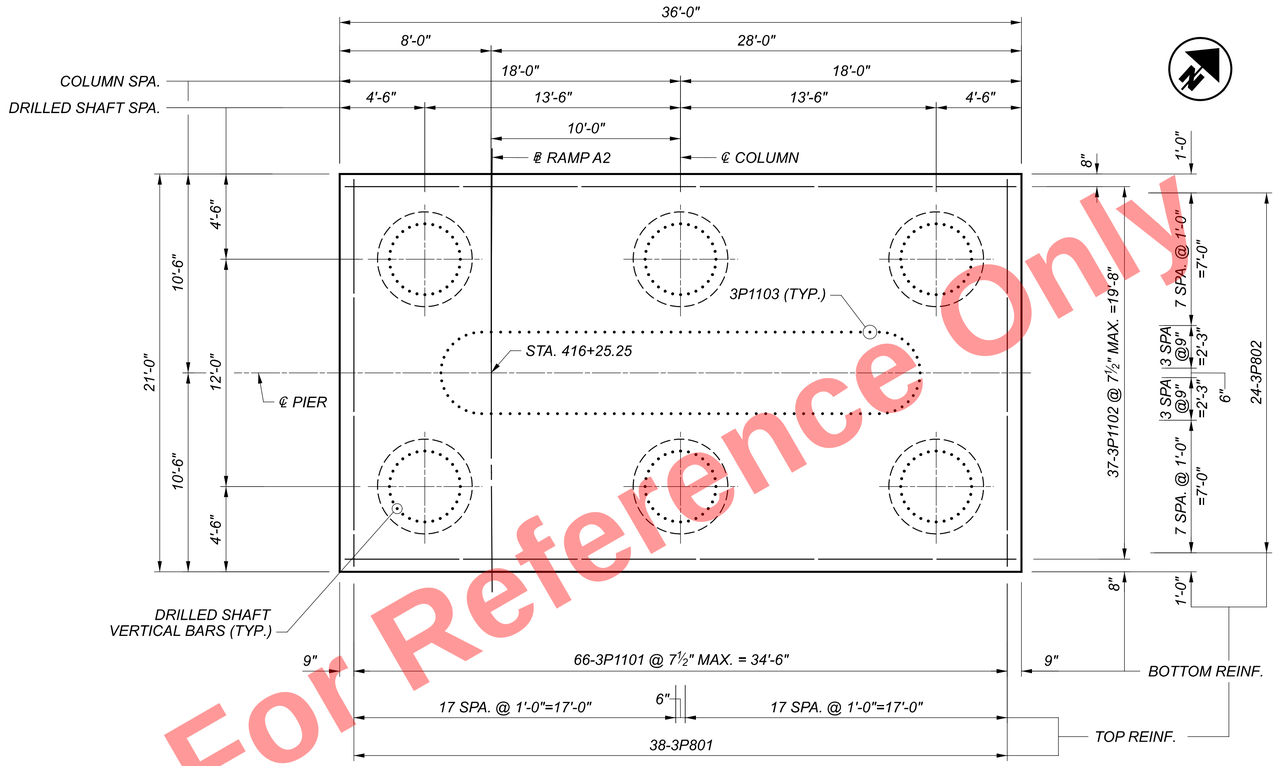

FOOTING PLAN

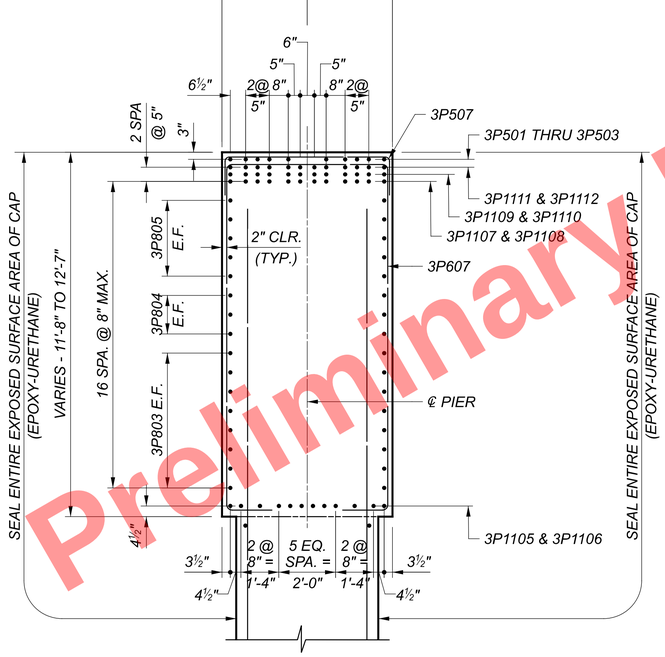

SECTION D-D

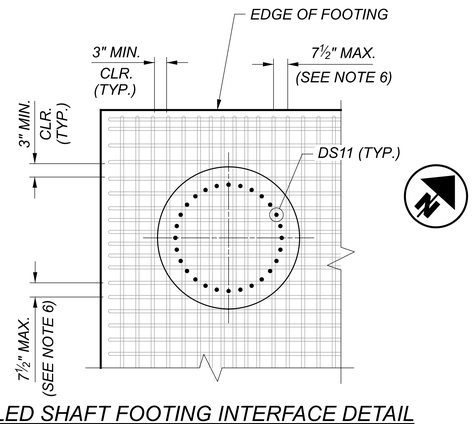

DRILLED SHAFT FOOTING INTERFACE DETAIL

TOP LEFT CORNER SHOWN, OTHERS SIMILAR

NOTES:

1. FOR BEARING DETAILS, SEE SHEETS 66 / 167 THRU 70 / 167
2. FOR FOUNDATION PLAN, SEE SHEETS 18 / 167 THRU 23 / 167
3. FOR REINFORCEMENT LIST, SEE SHEETS 159 / 167 THRU 167 / 167
4. FOR DRILLED SHAFT DETAILS SEE SHEETS 24 / 167 THRU 25 / 167
5. ACCURATELY PLACE CONCRETE REINFORCEMENT IN THE VICINITY OF THE BRIDGE SEAT TO AVOID THE PRESETTING OF BEARING ANCHORS. SET THE BEARING ANCHORS PRIOR TO POURING THE CONCRETE.
6. FOOTING REINFORCING MAY BE REPOSITIONED AS REQUIRED TO CLEAR LONGITUDINAL DRILLED SHAFT REINFORCING.

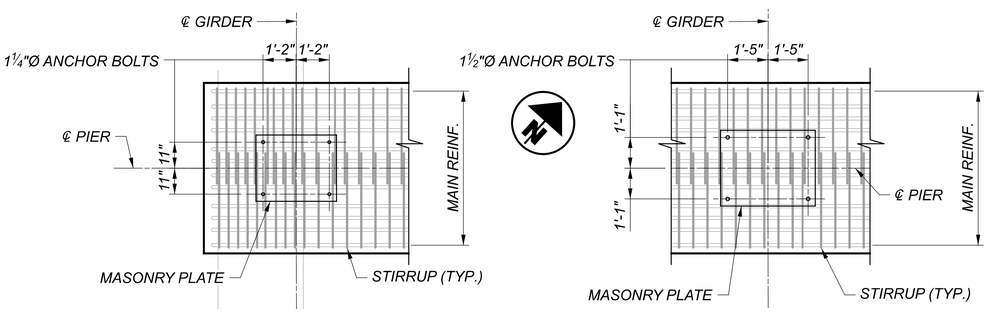

GIRDER G1-1 SHOWN

GIRDERS G1-8 & G1-9 SIMILAR

GIRDER G1-3 SHOWN

GIRDERS G1-4, G1-5 & G1-6 SIMILAR

BEARING ANCHOR PLANS

Preliminary Plans - For Reference Only

PIER 3 DETAILS - (2 OF 2)
CUY-77-1587 (BRIDGE 9)
I.R. 77 SB OVER I.R. 90 AND CR-721 (E. 14TH ST.)

SFN	1806910
DESIGN AGENCY	HDR
DESIGNER	PJC
CHECKER	NJH
REVIEWER	DWW 01/11/24
PROJECT ID	82382
SUBSET	47
TOTAL	167
SHEET	1915
TOTAL	2696

CUY-90-16.28 (CCG3A)
MODEL: Sheet PAPERSIZE: 34x22 (in.) DATE: 3/28/2025 TIME: 10:14:31 AM USER: RohitLBk
pw:\\mb-us-pw.bentley.com:mb-us-pw-03\Documents\Cleveland_OH\01_Projects\ODOT\District12\82382\400-Engineering\Structures\SFN_1806910\Sheets\82382_SFN_1806910_SI007.dgn

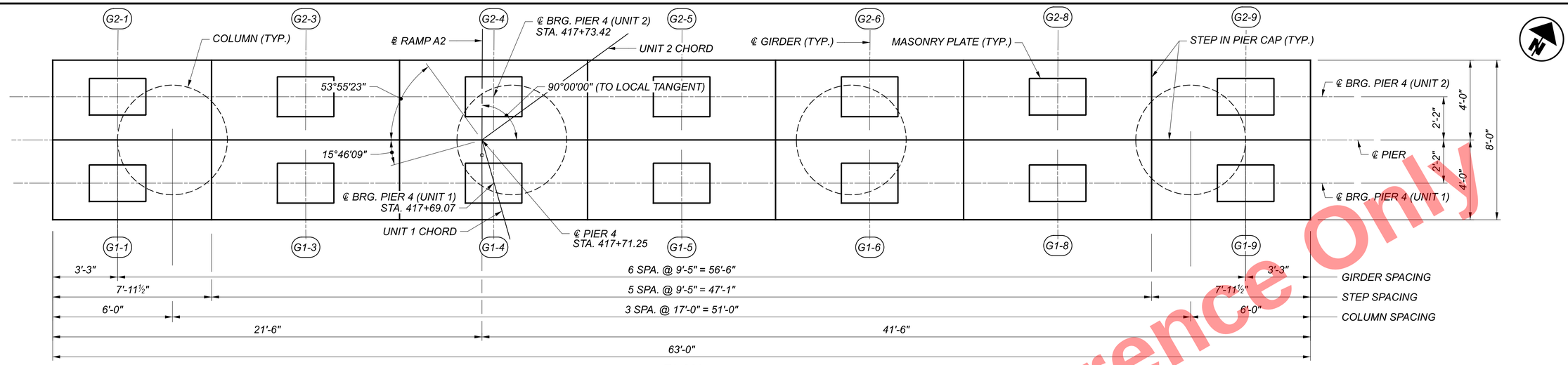

PLAN

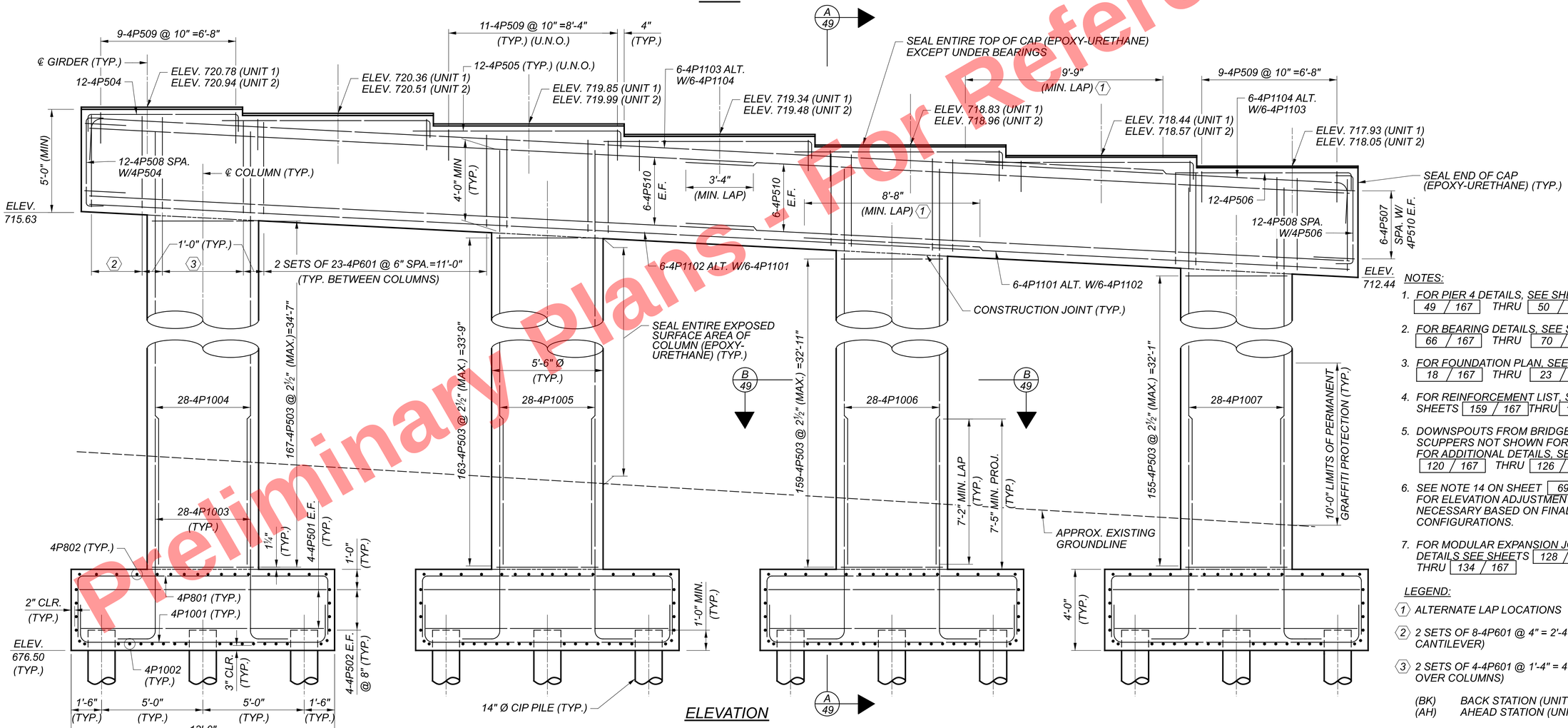

ELEVATION

NOTES:

1. FOR PIER 4 DETAILS, SEE SHEETS 49 / 167 THRU 50 / 167
2. FOR BEARING DETAILS, SEE SHEETS 66 / 167 THRU 70 / 167
3. FOR FOUNDATION PLAN, SEE SHEETS 18 / 167 THRU 23 / 167
4. FOR REINFORCEMENT LIST, SEE SHEETS 159 / 167 THRU 167 / 167
5. DOWNSPOUTS FROM BRIDGE DECK SCUPPERS NOT SHOWN FOR CLARITY. FOR ADDITIONAL DETAILS, SEE SHEETS 120 / 167 THRU 126 / 167
6. SEE NOTE 14 ON SHEET 69 / 167 FOR ELEVATION ADJUSTMENTS NECESSARY BASED ON FINAL BEARING CONFIGURATIONS.
7. FOR MODULAR EXPANSION JOINT DETAILS SEE SHEETS 128 / 167 THRU 134 / 167

LEGEND:

1. ALTERNATE LAP LOCATIONS
2. 2 SETS OF 8-4P601 @ 4" = 2'-4" (TYP. @ CANTILEVER)
3. 2 SETS OF 4-4P601 @ 1'-4" = 4'-0" (TYP. OVER COLUMNS)

(BK) BACK STATION (UNIT 1)
(AH) AHEAD STATION (UNIT 2)

Preliminary Plans - Not For Reference Only

PIER 4 PLAN AND ELEVATION
CUY-77-1587 (BRIDGE 9)
I.R. 77 SB OVER I.R. 90 AND CR-721 (E. 14TH ST.)

SFN	1806910
DESIGN AGENCY	HDR
DESIGNER	PJC
CHECKER	RBK
REVIEWER	DWW 01/11/24
PROJECT ID	82382
SUBSET	48
TOTAL	167
SHEET	1916
TOTAL	2696

CUY-90-16.28 (CCG3A)
MODEL: Sheet PAPERSIZE: 34x22 (in.) DATE: 3/28/2025 TIME: 10:14:38 AM USER: Rohit.Bk
pw:\\mb-us-pw.bentley.com:mb-us-pw-03\Documents\Cleveland_OH101_Projects\ODOT\District12\82382\400-Engineering\Structures\SFN_1806910\Sheets\82382_SFN_1806910_S1008.dgn

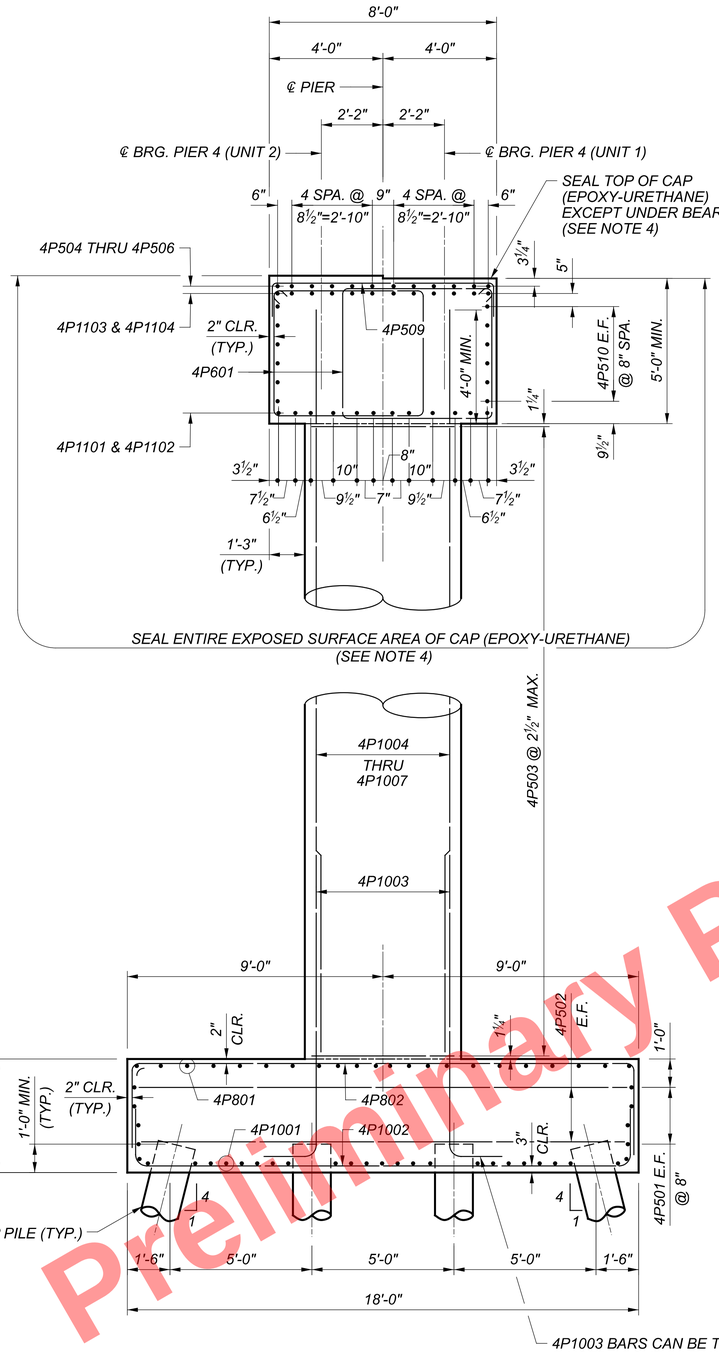

SECTION A-A

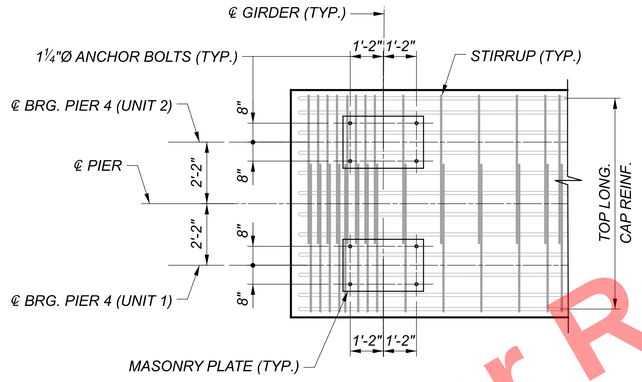

GIRDER G1-1 SHOWN

GIRDERS G1-8 & G1-9 SIMILAR (UNIT 1 GIRDERS)

GIRDER G2-1 SHOWN

GIRDERS G2-8 & G2-9 SIMILAR (UNIT 2 GIRDERS)

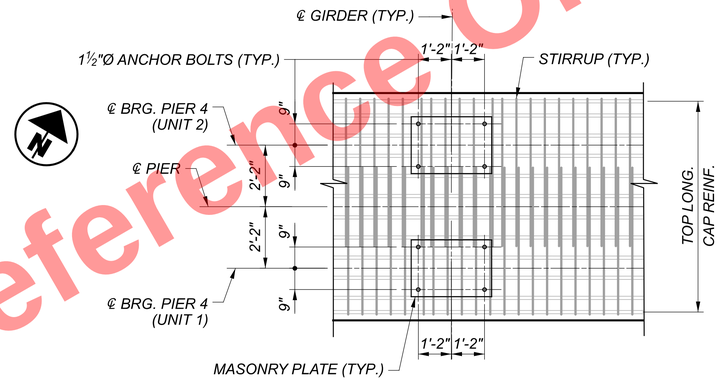

GIRDER G1-3 SHOWN

GIRDERS G1-4, G1-5 & G1-6 SIMILAR (UNIT 1 GIRDERS)

GIRDER G2-3 SHOWN

GIRDERS G2-4, G2-5 & G2-6 SIMILAR (UNIT 2 GIRDERS)

BEARING ANCHOR PLANS

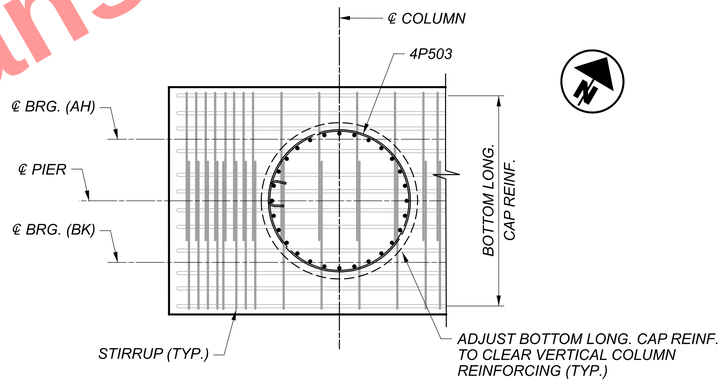

CAP AND COLUMN INTERFACE DETAILS

EXTERIOR COULMN SHOWN, INTERIOR COLUMN SIMILAR

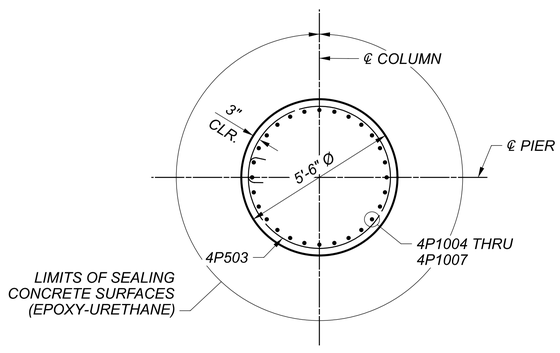

SECTION B-B

NOTES:

1. FOR BEARING DETAILS, SEE SHEETS 66 / 167 THRU 70 / 167
2. FOR REINFORCEMENT LIST, SEE SHEETS 159 / 167 THRU 167 / 167
3. ACCURATELY PLACE CONCRETE REINFORCEMENT IN THE VICINITY OF THE BRIDGE SEAT TO AVOID THE PRESETTING OF BEARING ANCHORS. SET THE BEARING ANCHORS PRIOR TO POURING CONCRETE.
4. DO NOT APPLY SEALER TO THE CONCRETE SURFACES UNDER THE PROPOSED BEARING LOCATIONS. IF THESE LOCATIONS ARE SEALED, REMOVE THE SEALER TO THE SATISFACTION OF THE ENGINEER PRIOR TO SETTING THE BEARINGS. THE DEPARTMENT WILL NOT PAY FOR THIS REMOVAL.

Preliminary Plans - For Reference Only

PIER 4 DETAILS - (1 OF 2)
CUY-77-1587 (BRIDGE 9)
I.R. 77 SB OVER I.R. 90 AND CR-721 (E. 14TH ST.)

SFN	1806910
DESIGN AGENCY	HDR
DESIGNER	PJC
CHECKER	RBK
REVIEWER	DWW 01/11/24
PROJECT ID	82382
SUBSET	49
TOTAL	167
SHEET	1917
TOTAL	2696

CUY-90-16.28 (CCG3A)

MODEL: Sheet PAPERSIZE: 34x22 (in.) DATE: 3/28/2025 TIME: 10:14:44 AM USER: RohitLBk
pw:\\mb-us-pw.bentley.com:mb-us-pw-03\Documents\Cleveland_OH\01_Projects\ODOT\District12\82382\400-Engineering\Structures\SFN_1806910\Sheets\82382_SFN_1806910_S1009.dgn

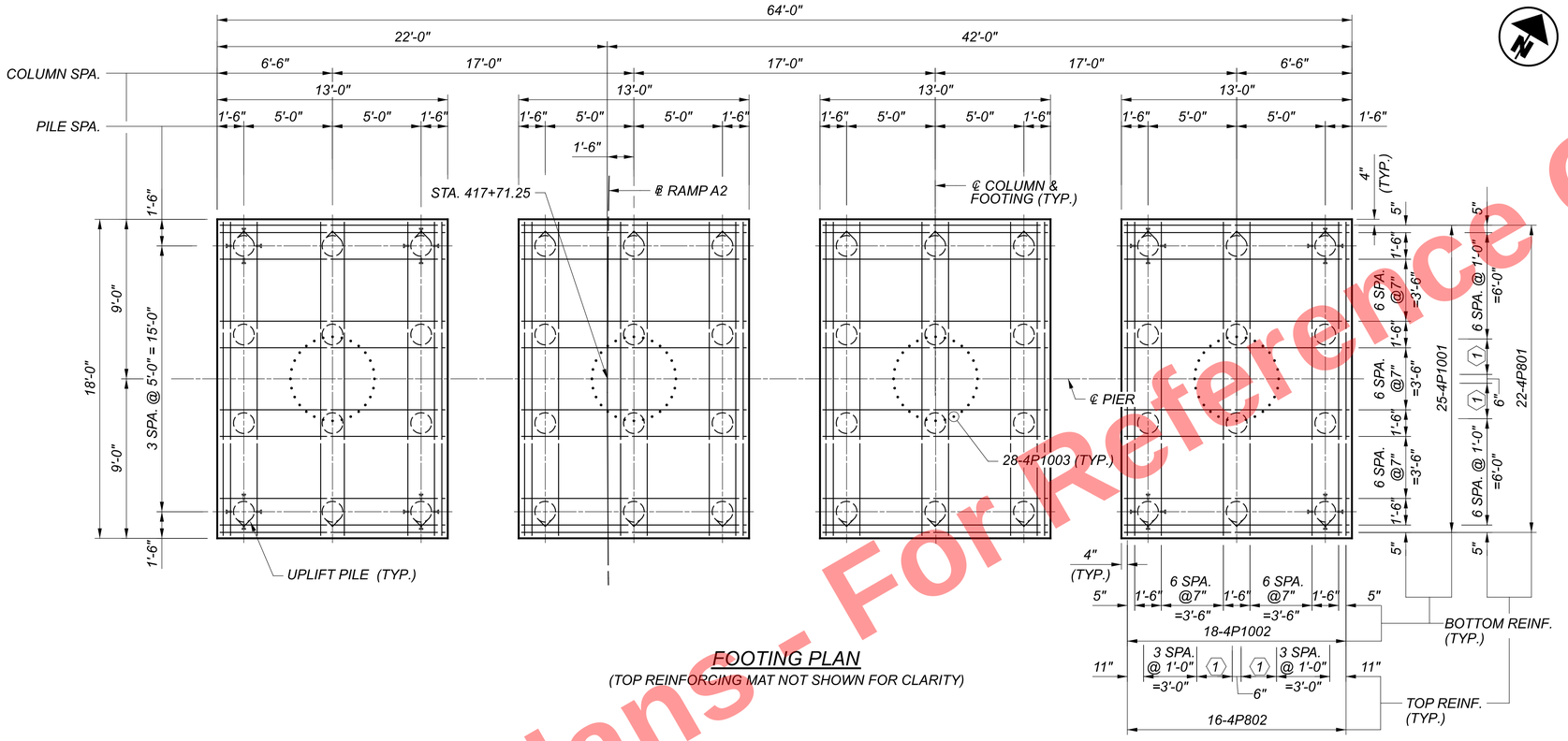

FOOTING PLAN

(TOP REINFORCING MAT NOT SHOWN FOR CLARITY)

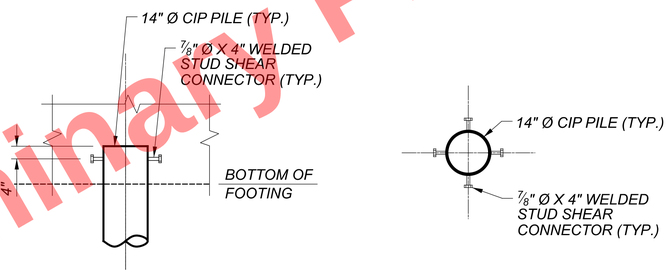

PILE SHEAR/UPLIFT RESTRAINT DETAILS

NOTES:

1. FOR FOUNDATION PLAN, SEE SHEETS 18 / 167 THRU 23 / 167
2. FOR REINFORCEMENT LIST, SEE SHEETS 159 / 167 THRU 167 / 167
3. PILES MARKED ◯ SHALL BE BATTERED 1:4 IN THE DIRECTION SHOWN.

LEGEND:

⟨1⟩ 3 SPA. 8"

Preliminary Plans - For Reference Only

PIER 4 DETAILS - (2 OF 2)
CUY-77-1587 (BRIDGE 9)
I.R. 77 SB OVER I.R. 90 AND CR-721 (E. 14TH ST.)

SFN 1806910
DESIGN AGENCY HDR
DESIGNER PJC | CHECKER RBK
REVIEWER DWW 01/11/24
PROJECT ID 82382
SUBSET 50 | TOTAL 167
SHEET 1918 | TOTAL 2696

CUY-90-16.28 (CCG3A)

MODEL: Sheet PAPERSIZE: 34x22 (in.) DATE: 3/28/2025 TIME: 10:14:51 AM USER: RohitBk
pw:\\mb-us-pw.bentley.com:mb-us-pw-03\Documents\Cleveland_OH01_Projects\ODOT\District12\82382400-Engineering\Structures\SFN_1806910\Sheets\82382_SFN_1806910_SI010.dgn

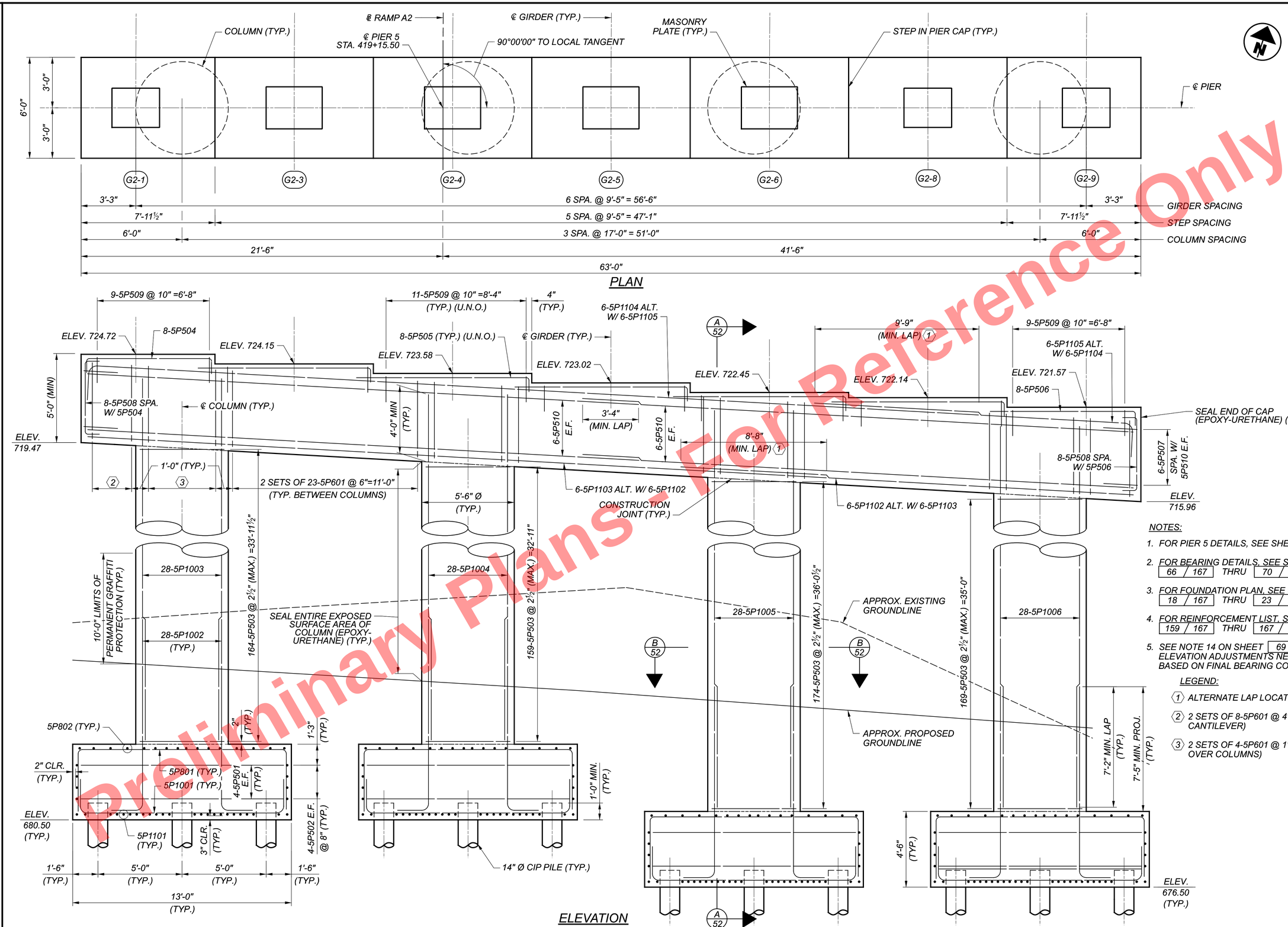

ELEVATION

NOTES:

1. FOR PIER 5 DETAILS, SEE SHEET 52 / 167
2. FOR BEARING DETAILS, SEE SHEETS 66 / 167 THRU 70 / 167
3. FOR FOUNDATION PLAN, SEE SHEETS 18 / 167 THRU 23 / 167
4. FOR REINFORCEMENT LIST, SEE SHEETS 159 / 167 THRU 167 / 167
5. SEE NOTE 14 ON SHEET 69 / 167 FOR ELEVATION ADJUSTMENTS NECESSARY BASED ON FINAL BEARING CONFIGURATIONS.

LEGEND:

1 ALTERNATE LAP LOCATIONS

2 2 SETS OF 8-5P601 @ 4" = 2'-4"(TYP. @ CANTILEVER)

3 2 SETS OF 4-5P601 @ 1'-4" = 4'-0" (TYP. OVER COLUMNS)

Preliminary Plans - For Reference Only

PIER 5 PLAN AND ELEVATION
CUY-77-1587 (BRIDGE 9)
I.R. 77 SB OVER I.R. 90 AND CR-721 (E. 14TH ST.)

CUY-90-16.28 (CCG3A)

MODEL: Sheet PAPERSIZE: 34x22 (in.) DATE: 3/28/2025 TIME: 10:14:57 AM USER: Rohit.Bk
pw:\\mb-us-pw.bentley.com:mb-us-pw-03\Documents\Cleveland_OH\01_Projects\ODOT\District12\82382\400-Engineering\Structures\SFN_1806910\Sheets\82382_SFN_1806910_SI011.dgn

SFN 1806910

DESIGN AGENCY HDR

DESIGNER	CHECKER
PJC	RBK

REVIEWER DWW 01/11/24

PROJECT ID 82382

SUBSET	TOTAL
51	167

SHEET	TOTAL
1919	2696

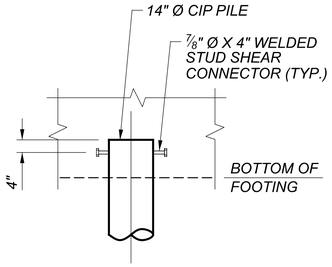

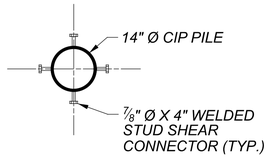

PILE SHEAR/UPLIFT RESTRAINT DETAILS

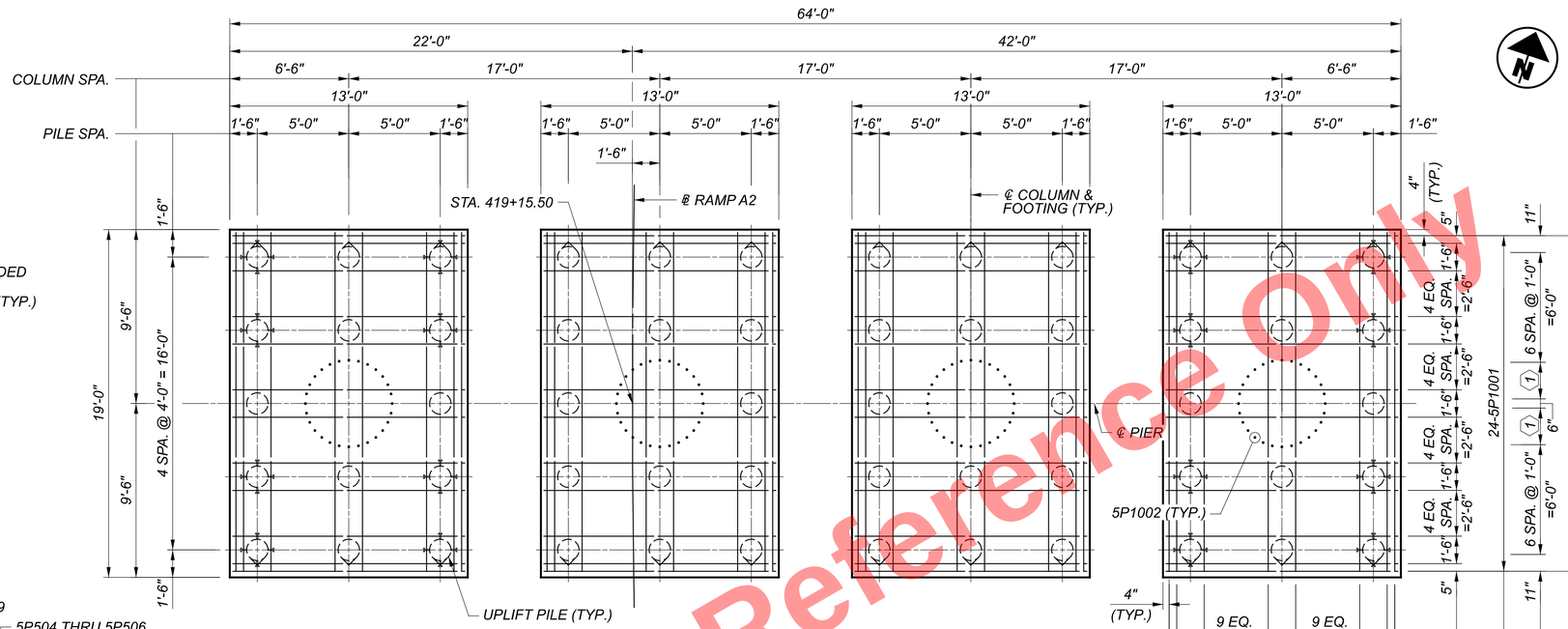

FOOTING PLAN

(TOP REINFORCING MAT NOT SHOWN FOR CLARITY)

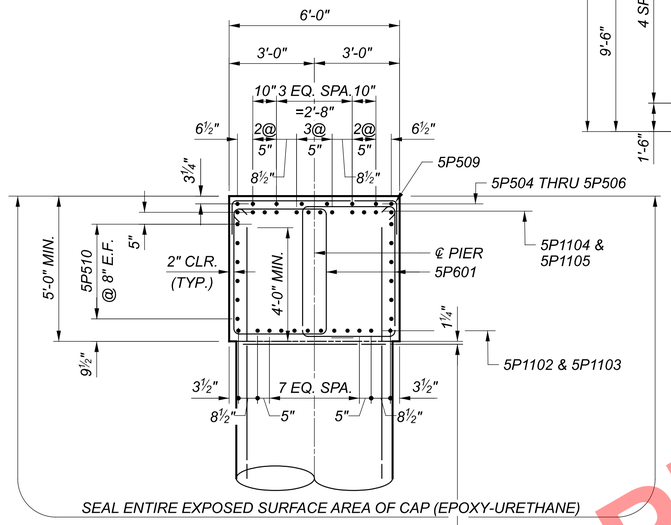

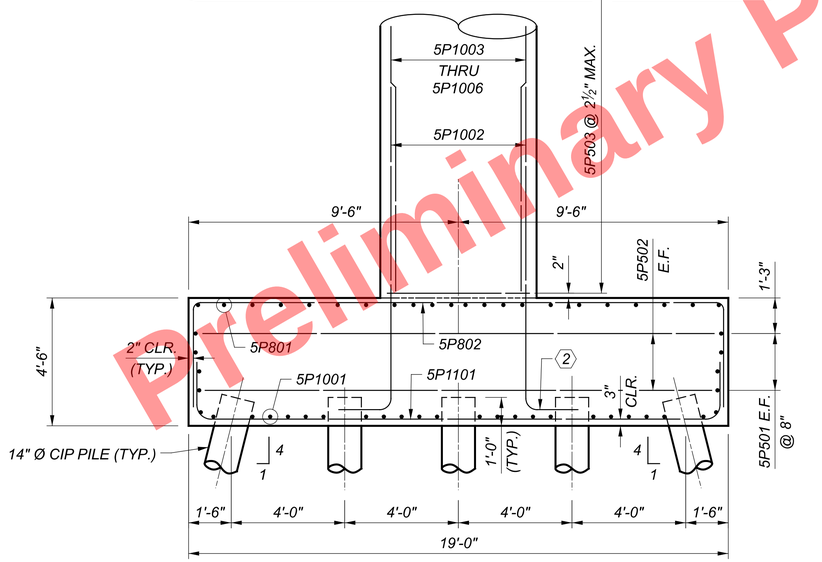

SECTION A-A

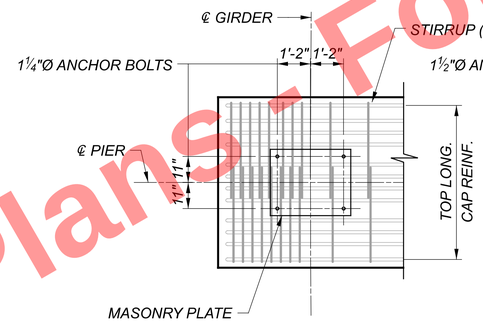

GIRDER G2-1 SHOWN

GIRDERS G2-8 & G2-9 SIMILAR

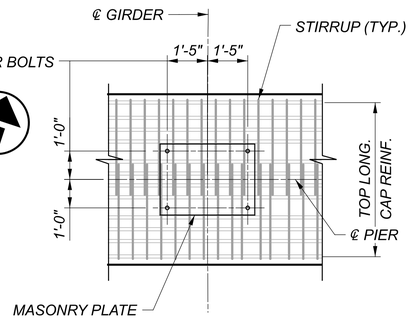

GIRDER G2-3 SHOWN

GIRDERS G2-4, G2-5 & G2-6 SIMILAR

BEARING ANCHOR PLANS

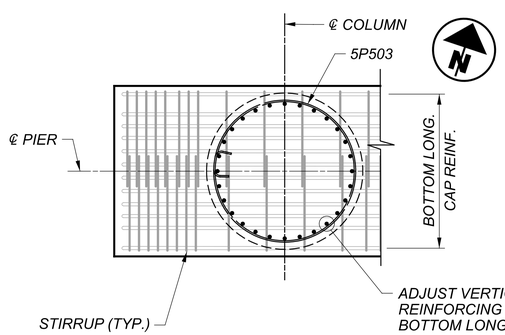

CAP AND COLUMN INTERFACE DETAILS

EXTERIOR COLUMN SHOWN, INTERIOR COLUMN SIMILAR

LEGEND:

1. 3 SPA. 8"
2. 5P1002 CAN BE TURNED OR RAISED ABOVE PILE WHERE REQUIRED TO AVOID CONFLICTS (TYP.)

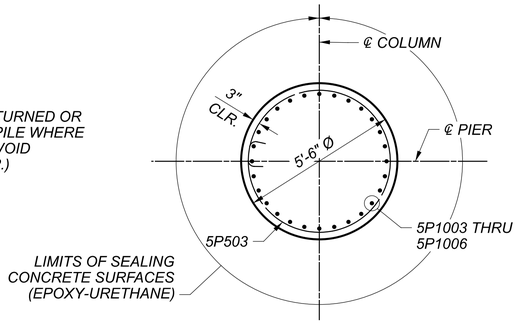

SECTION B-B

NOTES:

1. FOR BEARING DETAILS, SEE SHEETS 66 / 167 THRU 70 / 167
2. FOR FOUNDATION PLAN, SEE SHEETS 18 / 167 THRU 23 / 167
3. FOR REINFORCEMENT LIST, SEE SHEETS 159 / 167 THRU 167 / 167
4. PILES MARKED ◯ SHALL BE BATTERED 1:4 IN THE DIRECTION SHOWN.
5. ACCURATELY PLACE CONCRETE REINFORCEMENT IN THE VICINITY OF THE BRIDGE SEAT TO AVOID THE PRESETTING OF BEARING ANCHORS. SET THE BEARING ANCHORS PRIOR TO POURING THE CONCRETE.

Preliminary Plans - For Reference Only

PIER 5 DETAILS
CUY-77-1587 (BRIDGE 9)
I.R. 77 SB OVER I.R. 90 AND CR-721 (E. 14TH ST.)

SFN	1806910
DESIGN AGENCY	HDR
DESIGNER	PJC
CHECKER	RBK
REVIEWER	DWW 01/11/24
PROJECT ID	82382
SUBSET	52
TOTAL	167
SHEET	1920
TOTAL	2696

CUY-90-16.28 (CCG3A)
MODEL: Sheet PAPERSIZE: 34x22 (in.) DATE: 3/28/2025 TIME: 10:15:04 AM USER: RohitBk
pw:\\mb-us-pw.bentley.com:mb-us-pw-03\Documents\Cleveland_OH\01_Projects\ODOT\District12\82382400-Engineering\Structures\SFN_1806910\Sheets\82382_SFN_1806910_SI012.dgn

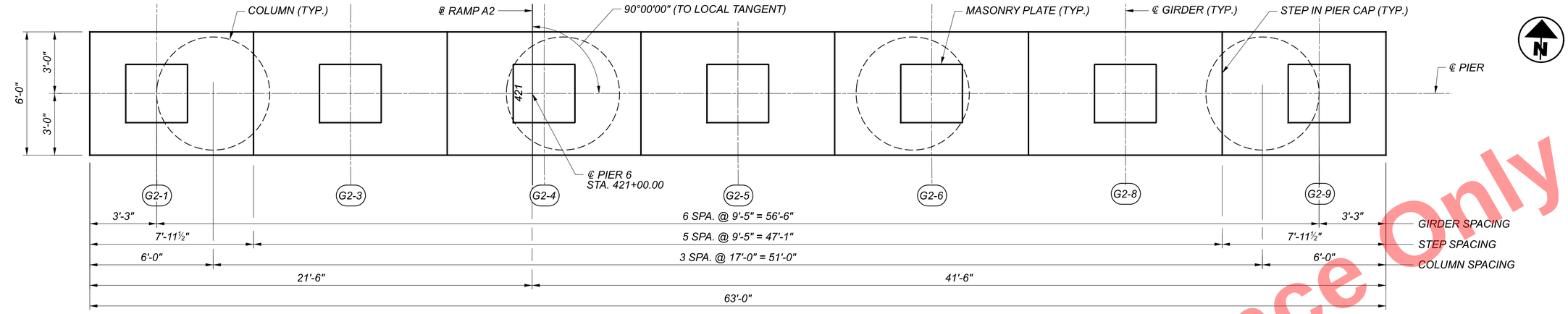

PLAN

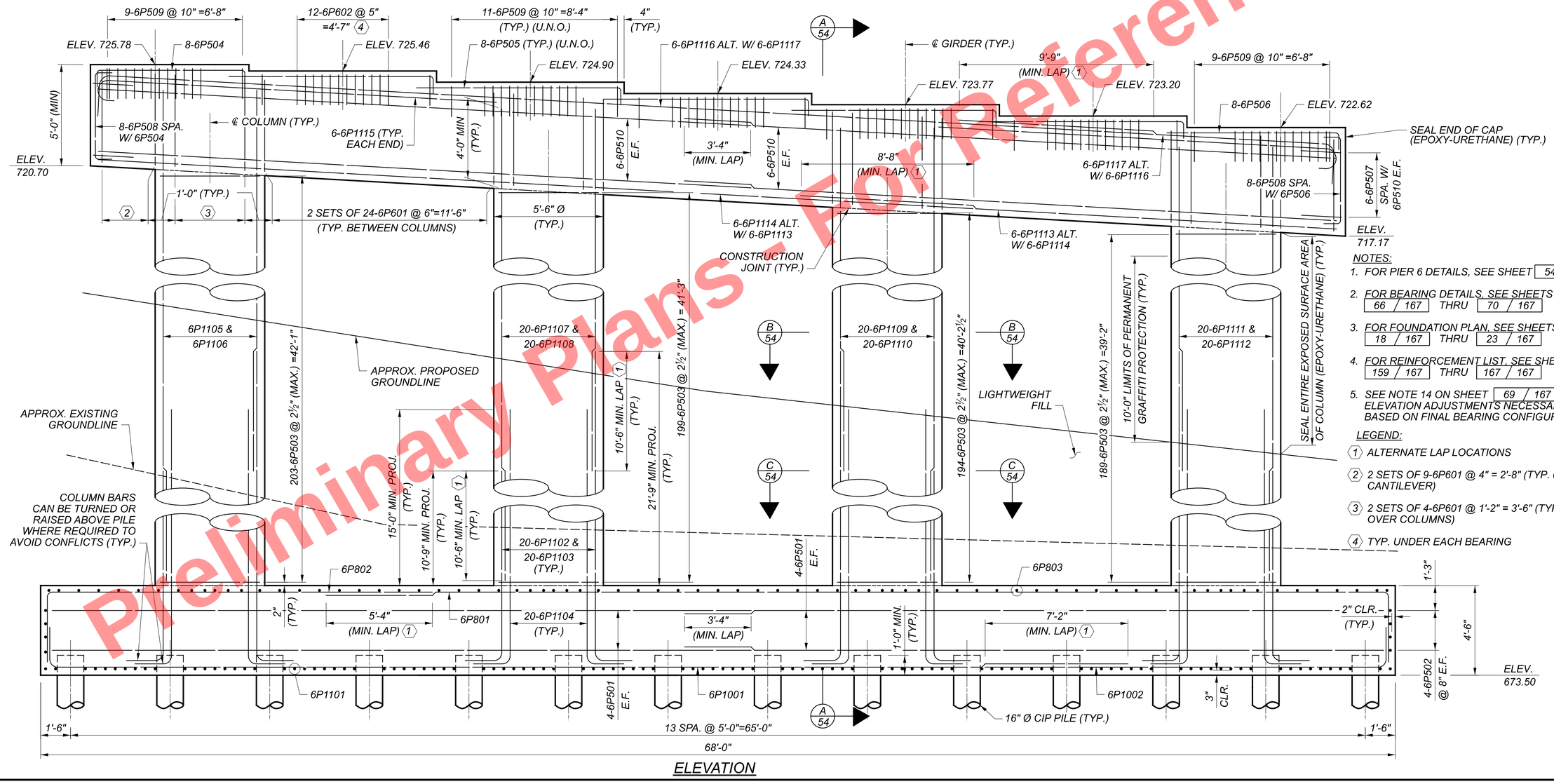

ELEVATION

NOTES:

1. FOR PIER 6 DETAILS, SEE SHEET 54 / 167
2. FOR BEARING DETAILS, SEE SHEETS 66 / 167 THRU 70 / 167
3. FOR FOUNDATION PLAN, SEE SHEETS 18 / 167 THRU 23 / 167
4. FOR REINFORCEMENT LIST, SEE SHEETS 159 / 167 THRU 167 / 167
5. SEE NOTE 14 ON SHEET 69 / 167 FOR ELEVATION ADJUSTMENTS NECESSARY BASED ON FINAL BEARING CONFIGURATIONS.

LEGEND:

1. ALTERNATE LAP LOCATIONS
2. 2 SETS OF 9-6P601 @ 4" = 2'-8" (TYP. @ CANTILEVER)
3. 2 SETS OF 4-6P601 @ 1'-2" = 3'-6" (TYP. OVER COLUMNS)
4. TYP. UNDER EACH BEARING

Preliminary Plans - Not For Reference Only

PIER 6 PLAN AND ELEVATION
CUY-77-1587 (BRIDGE 9)
I.R. 77 SB OVER I.R. 90 AND CR-721 (E. 14TH ST.)

SFN	1806910
DESIGN AGENCY	HDR
DESIGNER	PJC
CHECKER	RBK
REVIEWER	DWW 01/11/24
PROJECT ID	82382
SUBSET	53
TOTAL	167
SHEET	1921
TOTAL	2696

CUY-90-16.28 (CCG3A)
MODEL: Sheet PAPERSIZE: 34x22 (in.) DATE: 3/28/2025 TIME: 10:15:11 AM USER: Rohit.Bk
pw:\\mb-us-pw.bentley.com:mb-us-pw-03\Documents\Cleveland_OH\01_Projects\ODOT\District12\82382\400-Engineering\Structures\SFN_1806910\Sheets\82382_SFN_1806910_SI013.dgn

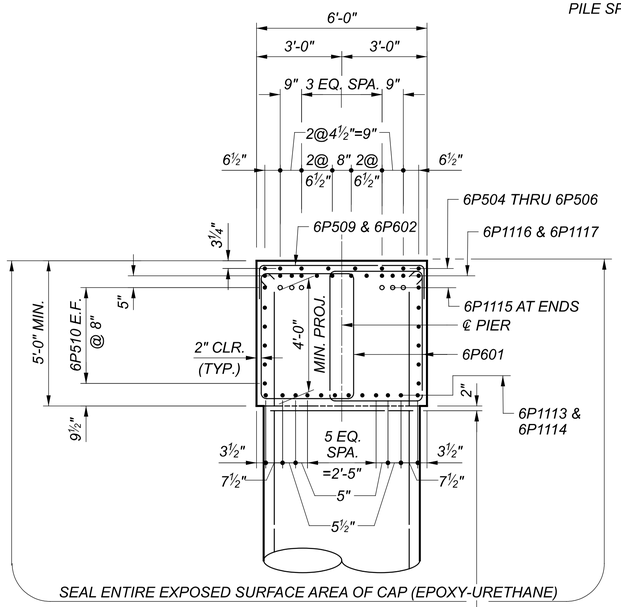

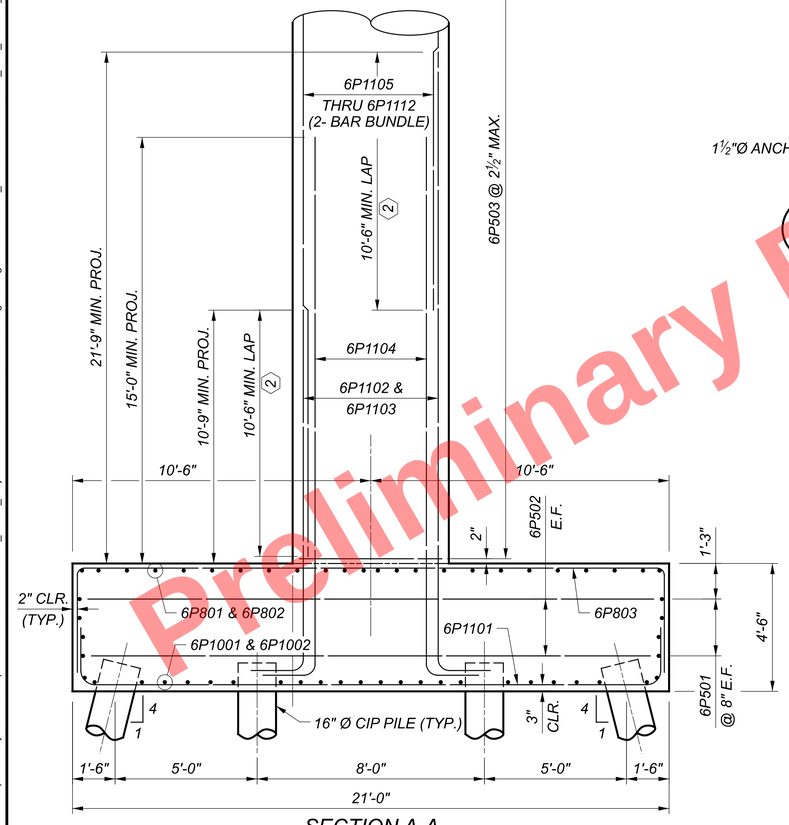

SECTION A-A

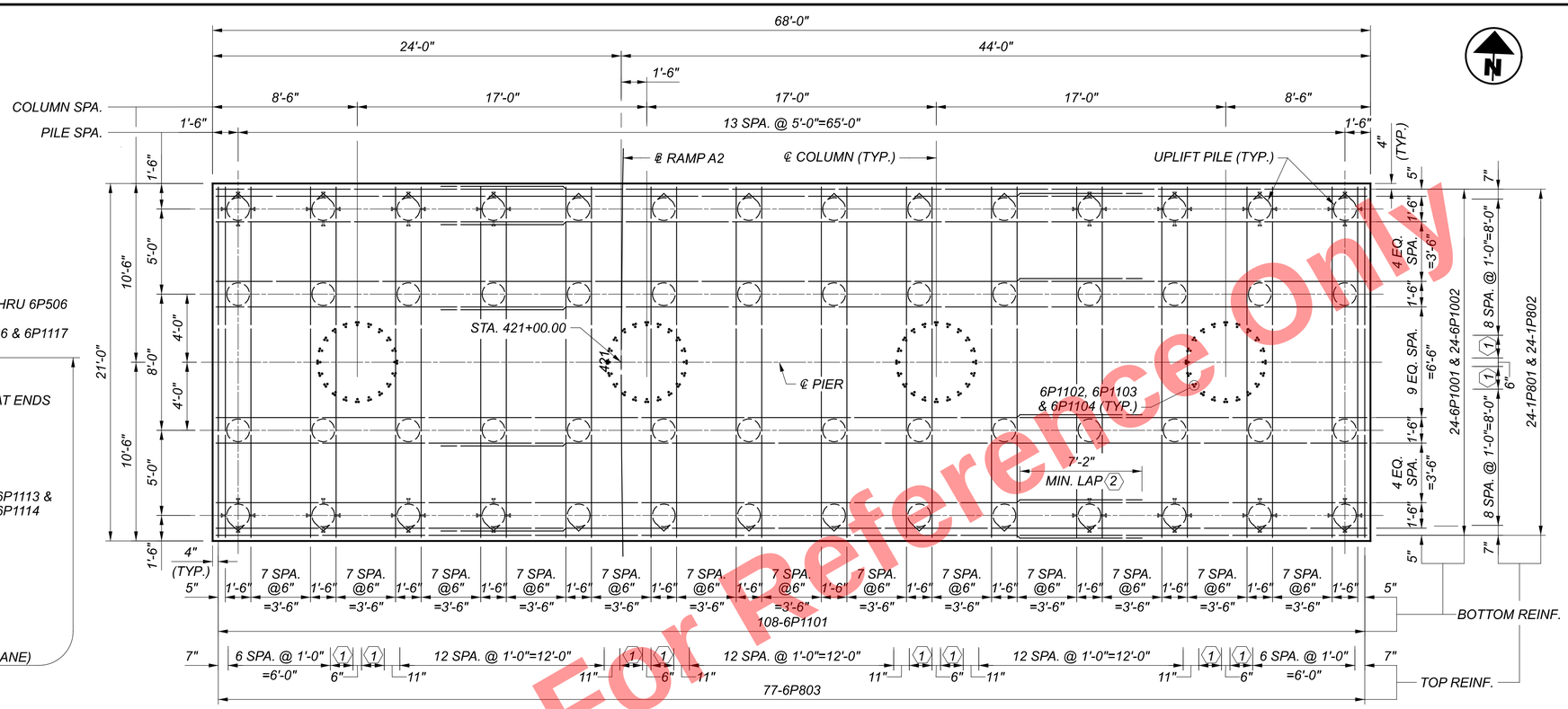

FOOTING PLAN

(TOP REINFORCING MAT NOT SHOWN FOR CLARITY)

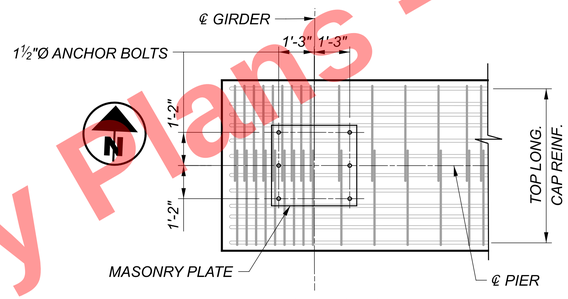

BEARING ANCHOR PLAN

GIRDER G2-1 SHOWN
GIRDERS G2-3, G2-4, G2-5, G2-6, G2-8 & G2-9 SIMILAR

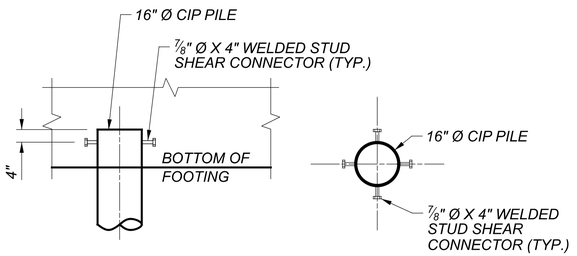

PILE SHEAR/UPLIFT RESTRAINT DETAILS

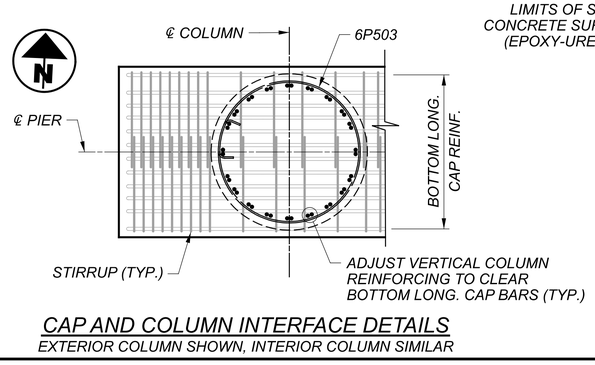

CAP AND COLUMN INTERFACE DETAILS

EXTERIOR COLUMN SHOWN, INTERIOR COLUMN SIMILAR

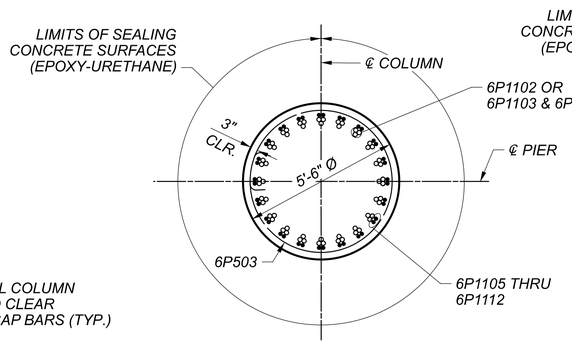

SECTION C-C

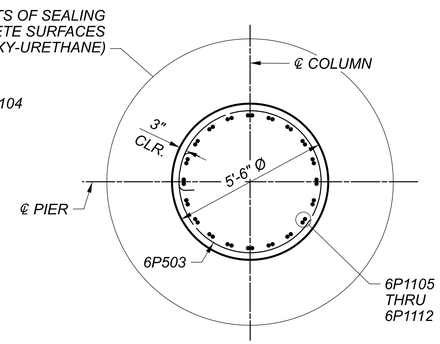

SECTION B-B

NOTES:

1. FOR BEARING DETAILS, SEE SHEETS 66 / 167 THRU 70 / 167
2. FOR FOUNDATION PLAN, SEE SHEETS 18 / 167 THRU 23 / 167
3. FOR REINFORCEMENT LIST, SEE SHEETS 159 / 167 THRU 167 / 167
4. PILES MARKED ⬡ SHALL BE BATTERED 1:4 IN THE DIRECTION SHOWN.
5. ACCURATELY PLACE CONCRETE REINFORCEMENT IN THE VICINITY OF THE BRIDGE SEAT TO AVOID THE PRESETTING OF BEARING ANCHORS. SET THE BEARING ANCHORS PRIOR TO POURING THE CONCRETE.

LEGEND:

⟨1⟩ 2 SPA. @ 8"=1'-4"

⟨2⟩ ALTERNATE LAP LOCATIONS

Preliminary Plans - For Reference Only

PIER 6 DETAILS
CUY-77-1587 (BRIDGE 9)
I.R. 77 SB OVER I.R. 90 AND CR-721 (E. 14TH ST.)

SFN	1806910
DESIGN AGENCY	HDR
DESIGNER	PJC
CHECKER	RBK
REVIEWER	DWW 01/11/24
PROJECT ID	82382
SUBSET	54
TOTAL	167
SHEET	1922
TOTAL	2696

CUY-90-16.28 (CCG3A)
MODEL: Sheet PAPERSIZE: 34x22 (in.) DATE: 3/28/2025 TIME: 10:15:18 AM USER: Rohit.Bk
pw:\\mb-us-pw.bentley.com:mb-us-pw-03\Documents\Cleveland_OH01_Projects\ODOT\District12\82382400-Engineering\Structures\SFN_1806910\Sheets\82382_SFN_1806910_SI014.dgn

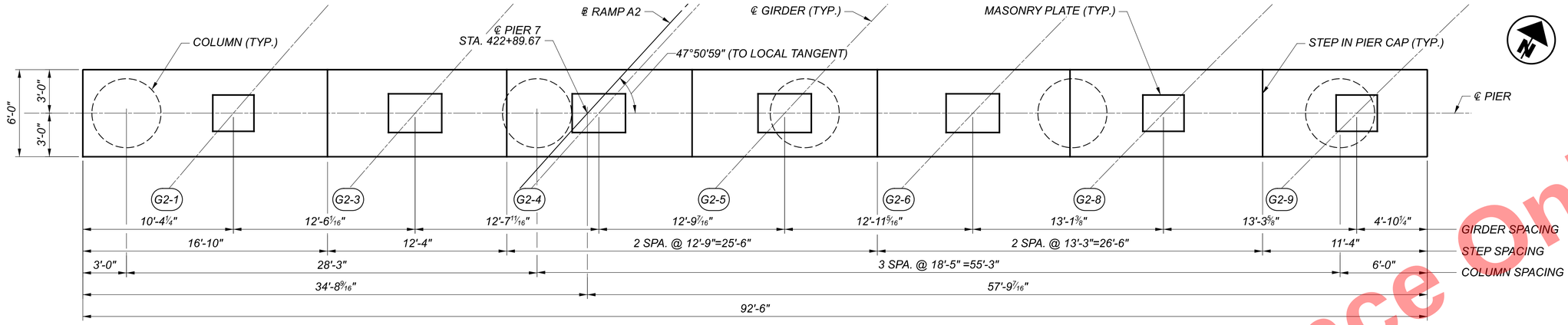

PLAN

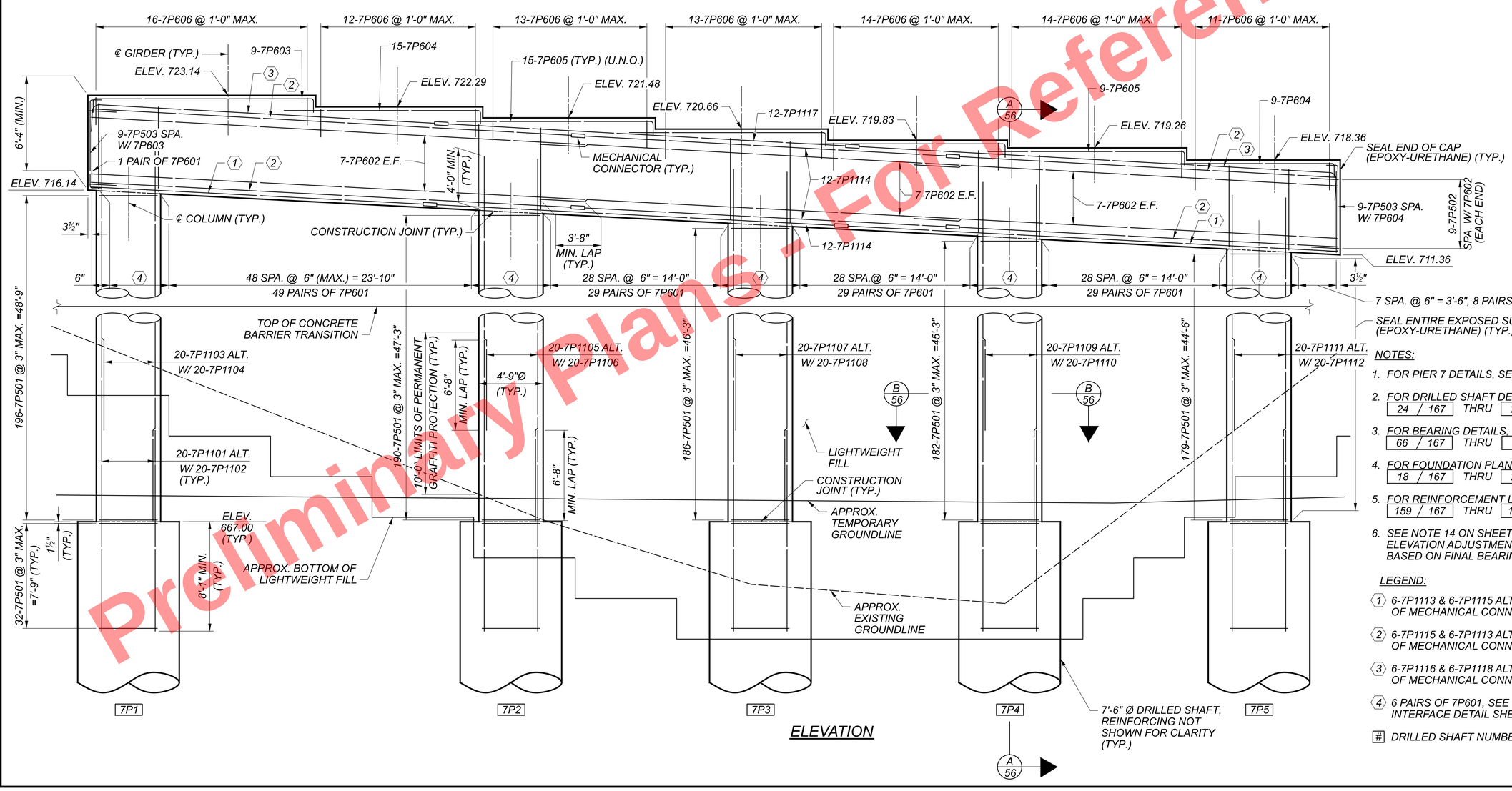

ELEVATION

NOTES:

1. FOR PIER 7 DETAILS, SEE SHEET 56 / 167
2. FOR DRILLED SHAFT DETAILS SEE SHEETS 24 / 167 THRU 25 / 167
3. FOR BEARING DETAILS, SEE SHEETS 66 / 167 THRU 70 / 167
4. FOR FOUNDATION PLAN, SEE SHEETS 18 / 167 THRU 23 / 167
5. FOR REINFORCEMENT LIST, SEE SHEETS 159 / 167 THRU 167 / 167
6. SEE NOTE 14 ON SHEET 69 / 167 FOR ELEVATION ADJUSTMENTS NECESSARY BASED ON FINAL BEARING CONFIGURATIONS.

LEGEND:

1. 6-7P1113 & 6-7P1115 ALTERNATE LOCATION OF MECHANICAL CONNECTOR AT EACH BAR
2. 6-7P1115 & 6-7P1113 ALTERNATE LOCATION OF MECHANICAL CONNECTOR AT EACH BAR
3. 6-7P1116 & 6-7P1118 ALTERNATE LOCATION OF MECHANICAL CONNECTOR AT EACH BAR
4. 6 PAIRS OF 7P601, SEE CAP AND COLUMN INTERFACE DETAIL SHEET 56 / 167

[#] DRILLED SHAFT NUMBER

Preliminary Plans - For Reference Only

PIER 7 PLAN AND ELEVATION
CUY-77-1587 (BRIDGE 9)
I.R. 77 SB OVER I.R. 90 AND CR-721 (E. 14TH ST.)

CUY-90-16.28 (CCG3A)

SFN	1806910
DESIGN AGENCY	HDR
DESIGNER	NJH
CHECKER	RBK
REVIEWER	DWW 01/11/24
PROJECT ID	82382
SUBSET	55
TOTAL	167
SHEET	1923
TOTAL	2696

MODEL: Sheet PAPERSIZE: 34x22 (in.) DATE: 3/28/2025 TIME: 10:15:24 AM USER: RohitLBk
pw:\\mb-us-pw.bentley.com:mb-us-pw-03\Documents\Cleveland_OH\01_Projects\ODOT\District12\82382\400-Engineering\Structures\SFN_1806910\Sheets\82382_SFN_1806910_SI015.dgn

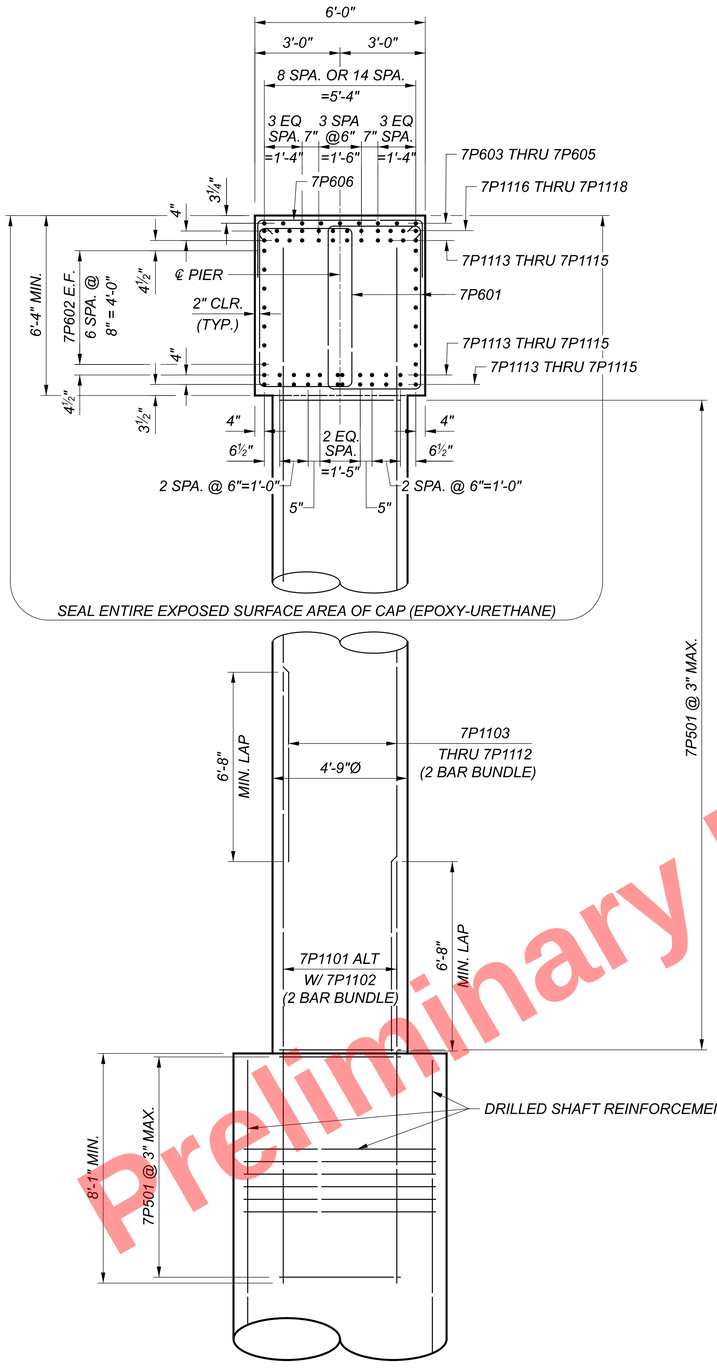

SECTION A-A

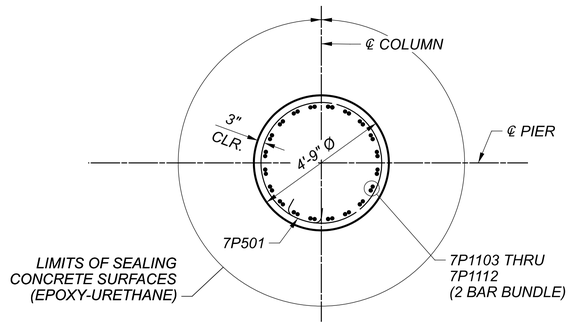

SECTION B-B

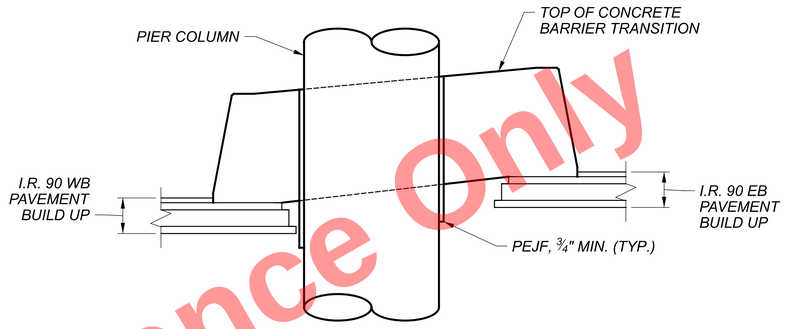

PIER COLUMN DETAIL

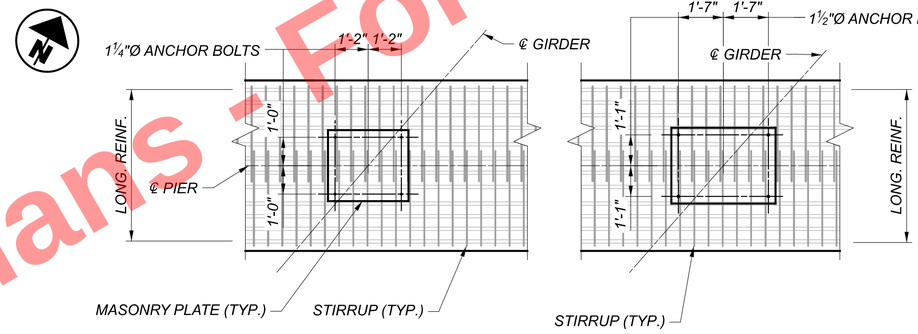

GIRDER G2-1 SHOWN
GIRDERS G2-8 & G2-9 SIMILAR

GIRDER G2-3 SHOWN
GIRDERS G2-4, G2-5 & G2-6 SIMILAR

BEARING ANCHOR PLANS

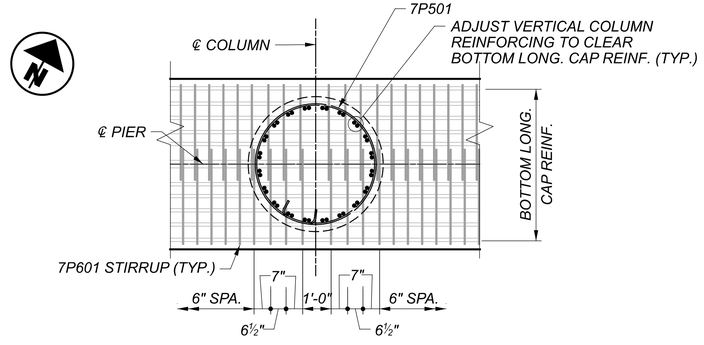

CAP AND COLUMN INTERFACE DETAIL
INTERIOR COLUMN SHOWN, EXTERIOR COLUMN SIMILAR

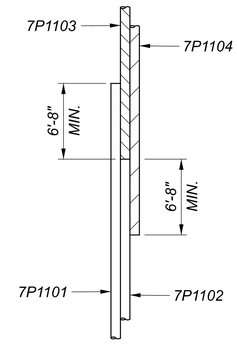

COLUMN BUNDLE LAP DETAIL
COLUMN ABOVE DRILLED SHAFT 7P1 SHOWN, OTHERS SIMILAR

NOTES:

1. FOR BEARING DETAILS, SEE SHEETS 66 / 167 THRU 70 / 167
2. FOR FOUNDATION PLAN, SEE SHEETS 18 / 167 THRU 23 / 167
3. FOR REINFORCEMENT LIST, SEE SHEETS 159 / 167 THRU 167 / 167
4. ACCURATELY PLACE CONCRETE REINFORCEMENT IN THE VICINITY OF THE BRIDGE SEAT TO AVOID THE PRESETTING OF BEARING ANCHORS. SET THE BEARING ANCHORS PRIOR TO POURING THE CONCRETE.
5. FOR DRILLED SHAFT DETAILS, SEE SHEETS 24 / 167 THRU 25 / 167

Preliminary Plans - For Reference Only

PIER 7 DETAILS
CUY-77-1587 (BRIDGE 9)
I.R. 77 SB OVER I.R. 90 AND CR-721 (E. 14TH ST.)

SFN 1806910
DESIGN AGENCY HDR
DESIGNER NJH | CHECKER RBK
REVIEWER DWW 01/11/24
PROJECT ID 82382
SUBSET 56 | TOTAL 167
SHEET 1924 | TOTAL 2696

CUY-90-16.28 (CCG3A)
MODEL: Sheet PAPERSIZE: 34x22 (in.) DATE: 3/28/2025 TIME: 10:15:31 AM USER: Rohit.Bk
pw:\\mb-us-pw.bentley.com:mb-us-pw-03\Documents\Cleveland_OH101_Projects\ODOT\District12\82382\400-Engineering\Structures\SFN_1806910\Sheets\82382_SFN_1806910_SI016.dgn

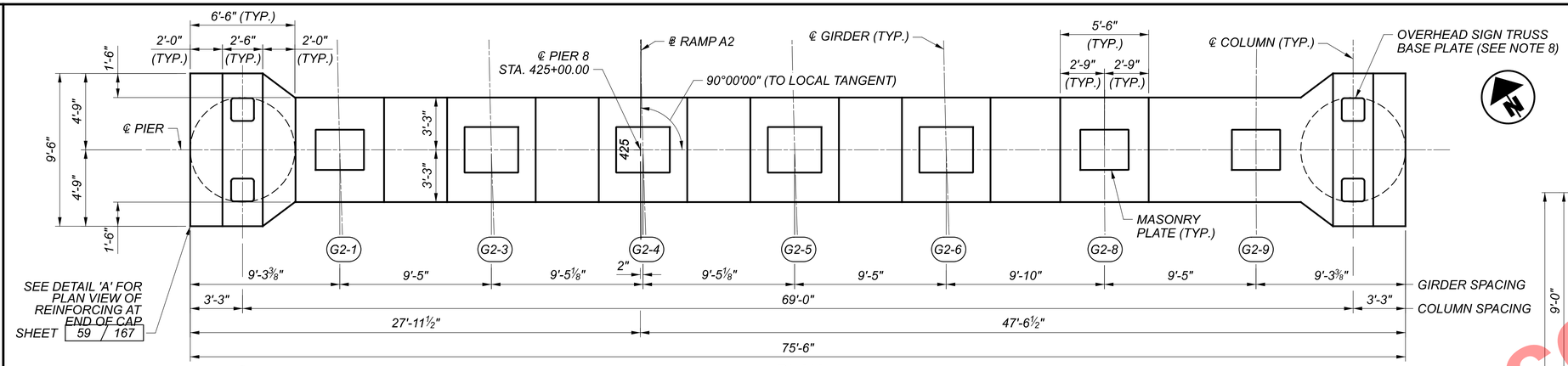

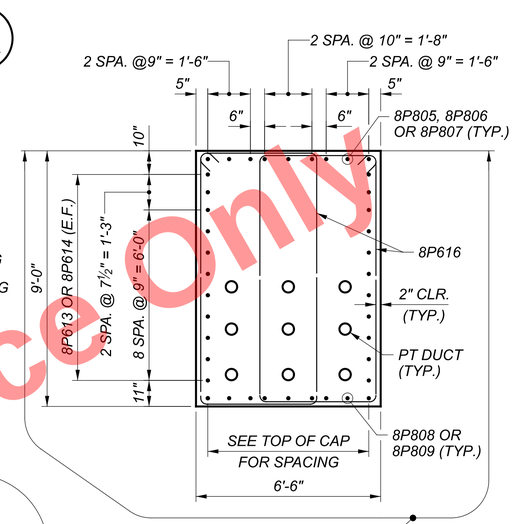

SECTION A-A

LEGEND:

1 ALTERNATE LAP LOCATIONS

▲ FIELD BEND VERTICALLY INTO BLOCKOUT AFTER STRESSING

NOTES:

1. FOR POST TENSIONING DETAILS SEE SHEET 60 / 167
2. FOR FOOTING PLAN SEE SHEET 58 / 167
3. FOR BEARING DETAILS, SEE SHEETS 66 / 167 THRU 70 / 167
4. FOR FOUNDATION PLAN, SEE SHEETS 18 / 167 THRU 23 / 167
5. FOR REINFORCEMENT LIST, SEE SHEETS 159 / 167 THRU 167 / 167
6. FOR PIER CAP BEARING DETAILS, SEE SHEET 61 / 167
7. SEE STEEL TRUSS OVERHEAD SIGN SUPPORT DETAILS OHIO STANDARD PLAN SHEET TC-15.116.
8. FOR PEDESTAL DETAILS, SEE SHEET 59 / 167
9. FOR OVERHEAD SIGN PEDESTAL REINFORCING DETAILS, SEE SHEET 59 / 167
10. SEE NOTE 14 ON SHEET 69 / 167 FOR ELEVATION ADJUSTMENTS NECESSARY BASED ON FINAL BEARING CONFIGURATIONS.

PIER 8 PLAN AND ELEVATION
CUY-77-1587 (BRIDGE 9)
I.R. 77 SB OVER I.R. 90 AND CR-721 (E. 14TH ST.)

SFN	1806910
DESIGN AGENCY	HDR
DESIGNER	NJH
CHECKER	PJC
REVIEWER	DWW 01/11/24
PROJECT ID	82382
SUBSET	57
TOTAL SHEET	167
SHEET	1925
TOTAL SHEET	2696

CUY-90-16.28 (CCG3A)

MODEL: Sheet PAPERSIZE: 34x22 (in.) DATE: 3/28/2025 TIME: 10:15:39 AM USER: RohitBk
pw:\\mb-us-pw.bentley.com:mb-us-pw-03\Documents\Cleveland_OH\01_Projects\ODOT\District12\82382\400-Engineering\Structures\SFN_1806910\Sheets\82382_SFN_1806910_SI017.dgn

Preliminary Plans - For Reference Only

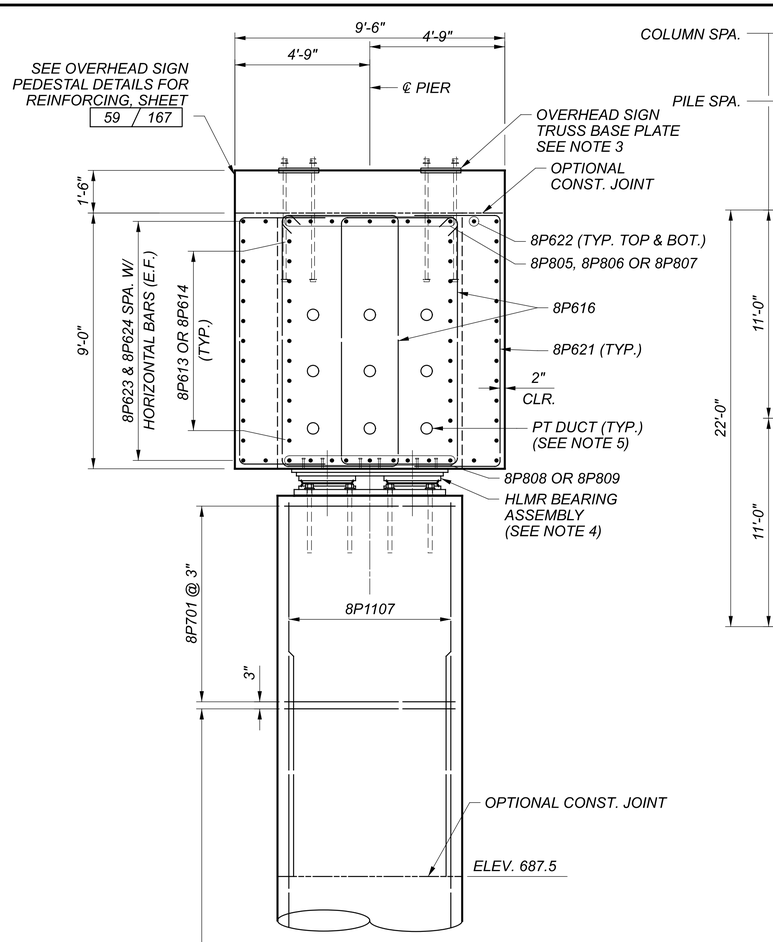

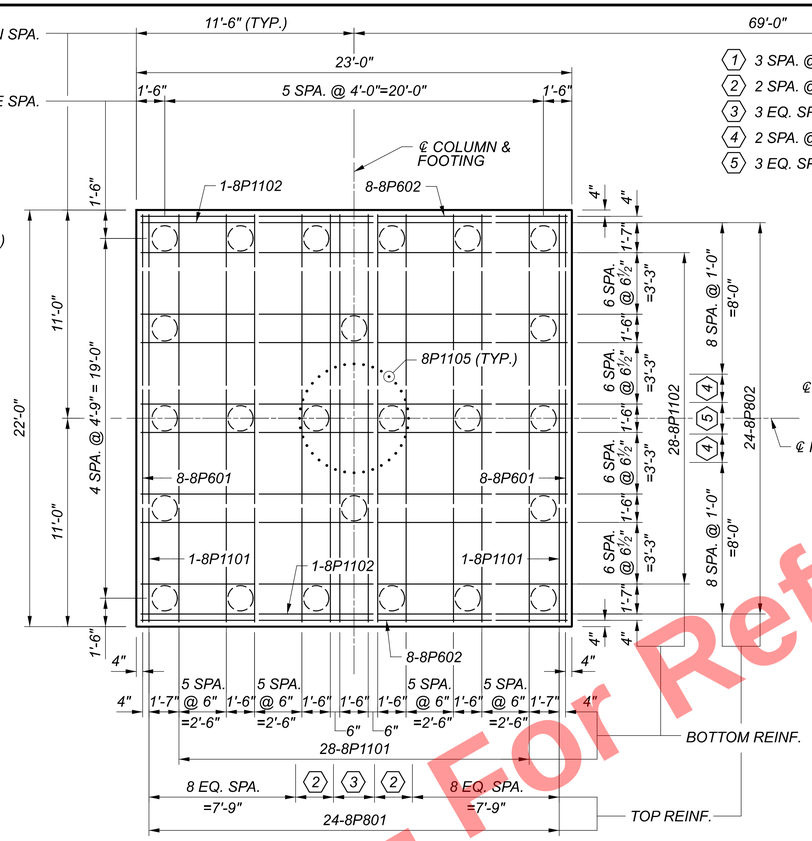

LEFT COLUMN FOOTING PLAN

(TOP REINFORCING MAT NOT SHOWN FOR CLARITY)

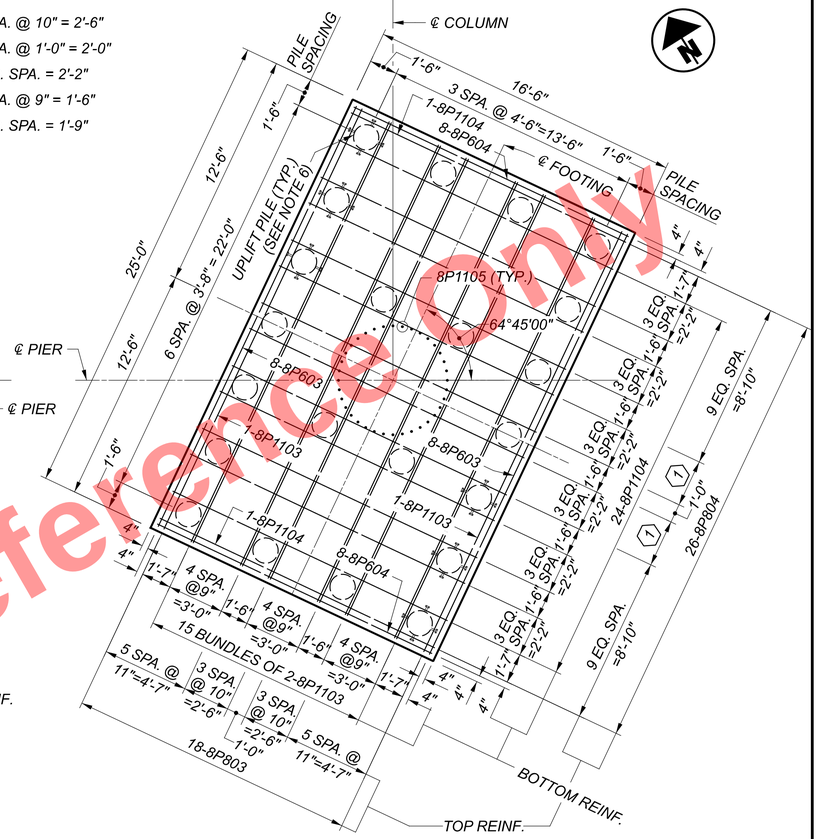

RIGHT COLUMN FOOTING PLAN

(TOP REINFORCING MAT NOT SHOWN FOR CLARITY)

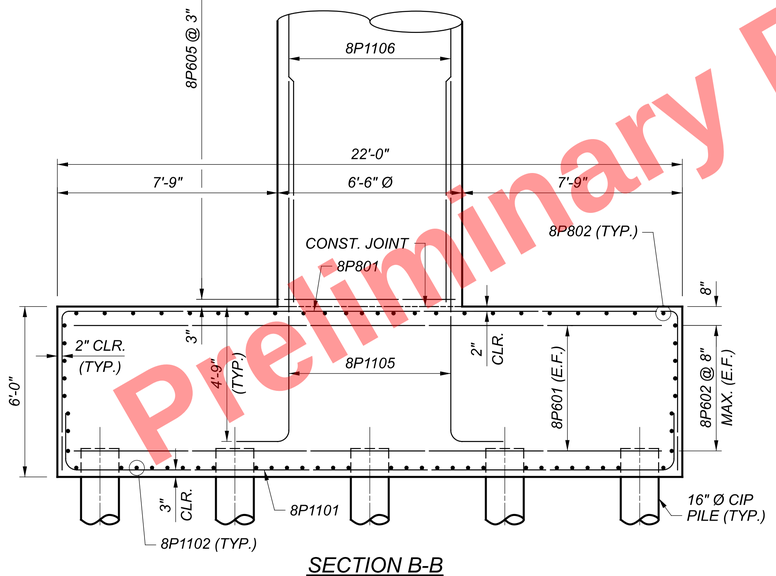

SECTION B-B

LEFT COLUMN

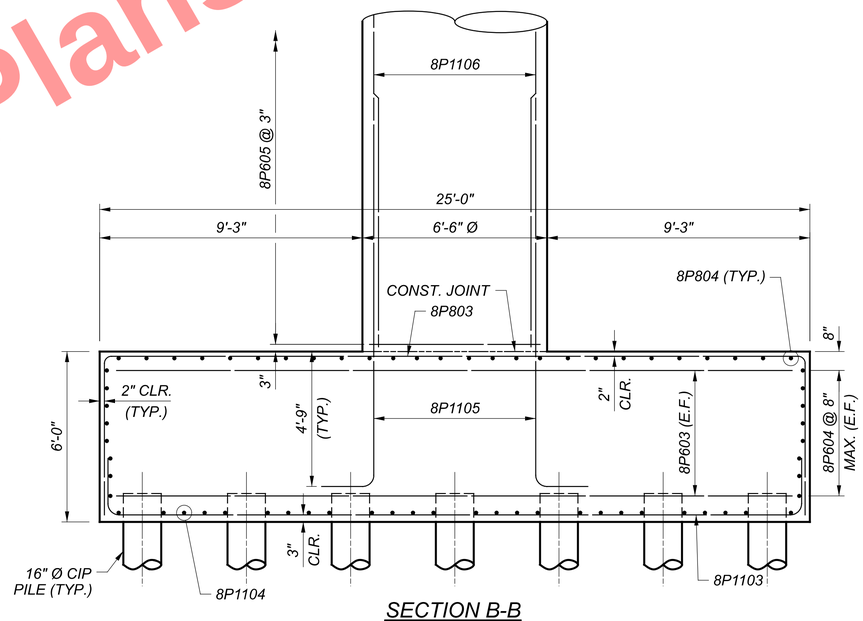

SECTION B-B

RIGHT COLUMN (FOOTING SKEWED, SEE PLAN VIEW)
(SEE SECTION B-B LEFT COLUMN FOR INFORMATION NOT SHOWN)

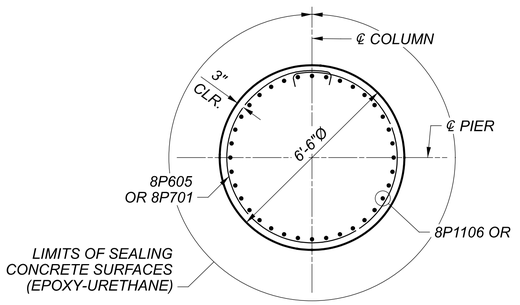

SECTION C-C

NOTES:

1. FOR FOUNDATION PLAN, SEE SHEETS 18 / 167 THRU 23 / 167 .
2. FOR REINFORCEMENT LIST, SEE SHEETS 159 / 167 THRU 167 / 167.
3. FOR OVERHEAD SIGN TRUSS, BASEPLATE AND ANCHORAGE DETAILS, SEE ODOT STD. DWG. TC-15.116.
4. FOR HLMR BEARING DETAILS, SEE SHEET 61 / 167 .
5. FOR POST-TENSIONING DETAILS, SEE SHEET 60 / 167 .
6. FOR PILE SHEAR/UPLIFT RESTRAINT DETAILS, SEE SHEET 59 / 167 .

Preliminary Plans - For Reference Only

PIER 8 DETAILS - (1 OF 4)
CUY-77-1587 (BRIDGE 9)
I.R. 77 SB OVER I.R. 90 AND CR-721 (E. 14TH ST.)

SFN	1806910
DESIGN AGENCY	HDR
DESIGNER	NJH
CHECKER	PJC
REVIEWER	DWW 01/11/24
PROJECT ID	82382
SUBSET	58
TOTAL	167
SHEET	1926
TOTAL	2696

CUY-90-16.28 (CCG3A)

MODEL: Sheet PAPERSIZE: 34x22 (in.) DATE: 3/28/2025 TIME: 10:15:47 AM USER: Rohit.Bk
pw:\\mb-us-pw.bentley.com:mb-us-pw-03\Documents\Cleveland_OH101_Projects\ODOT\District12\82382\400-Engineering\Structures\SFN_1806910\Sheets\82382_SFN_1806910_SI018.dgn

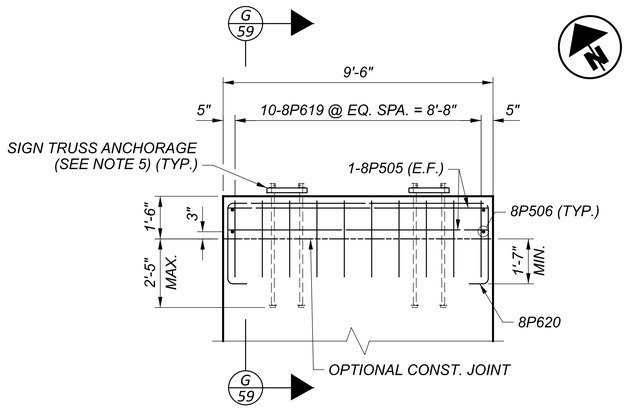

OVERHEAD SIGN PEDESTAL DETAIL

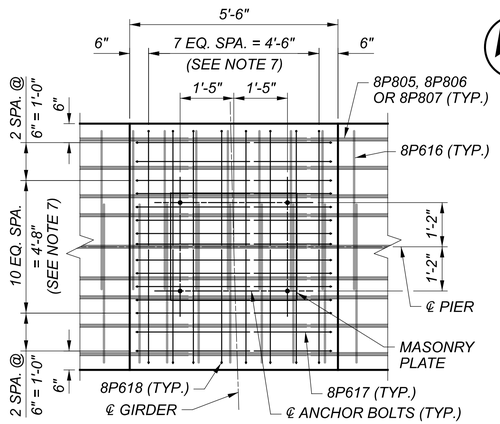

BEARING ANCHOR PLAN

(GUIDED BEARINGS)

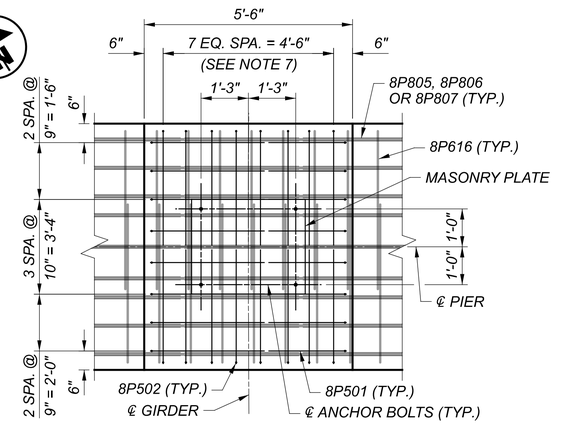

BEARING ANCHOR PLAN

(NON-GUIDED BEARINGS)

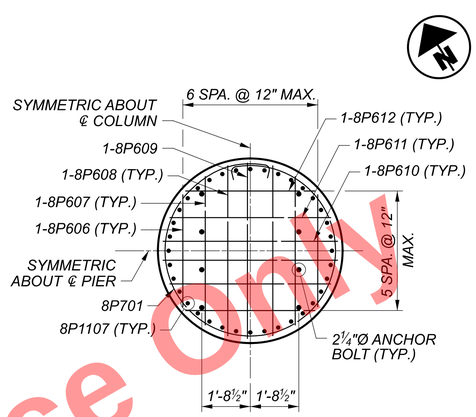

SECTION D-D

(APPLIES TO BOTH COLUMNS)

GIRDER #	①	②	③	④
G2-1	8-8P501	8-8P502	4-8P503 (E.F.)	4-8P504 (E.F.)
G2-3	15-8P617	8-8P618	4-8P503 (E.F.)	4-8P504 (E.F.)
G2-4	15-8P617	8-8P618	3-8P503 (E.F.)	3-8P504 (E.F.)
G2-5	15-8P617	8-8P618	2-8P503 (E.F.)	2-8P504 (E.F.)
G2-6	15-8P617	8-8P618	1-8P503 (E.F.)	1-8P504 (E.F.)
G2-8	8-8P501	8-8P502	-	-

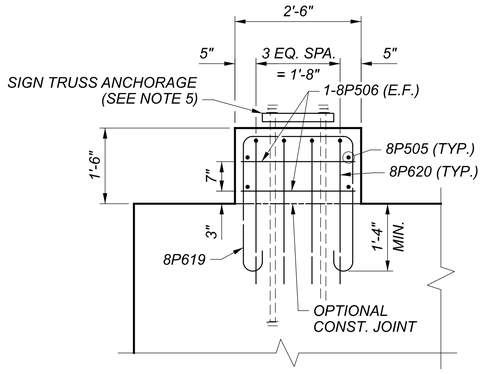

SECTION G-G

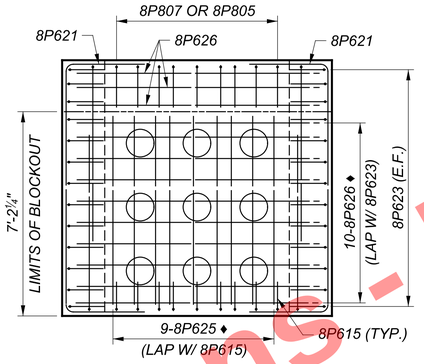

BLOCKOUT REINFORCING DETAIL

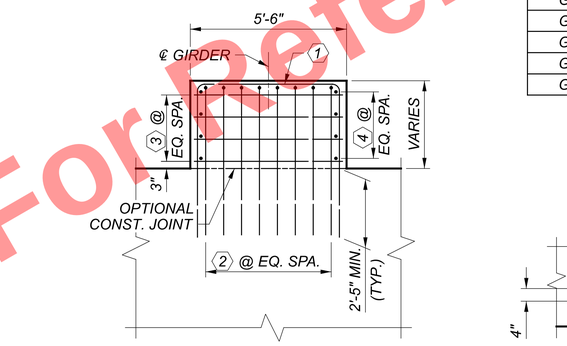

GIRDER PEDESTAL DETAIL

(G2-1 SHOWN, OTHERS SIMILAR)

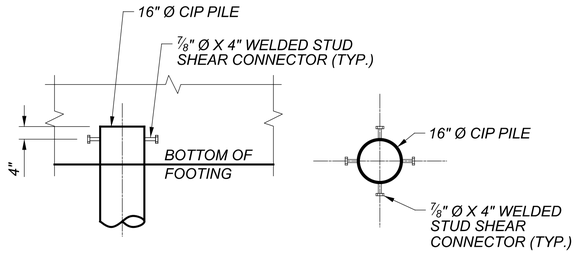

PILE SHEAR/UPLIFT RESTRAINT DETAILS

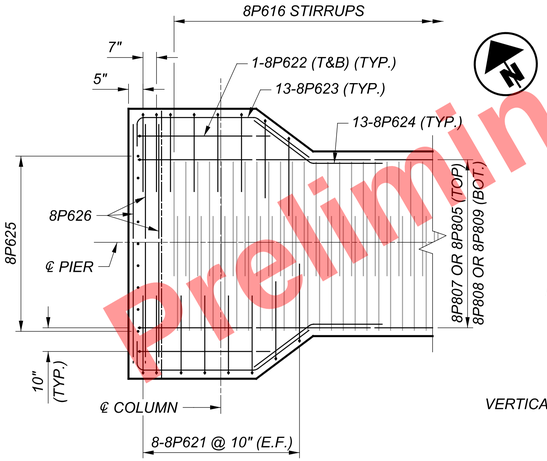

DETAIL A - CAP PLAN AT END

(LEFT END SHOWN, RIGHT END SIMILAR)

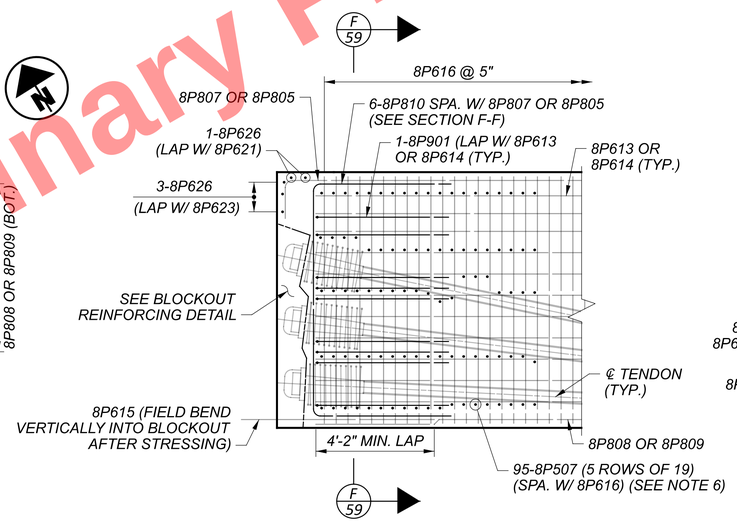

ANCHORAGE ZONE REINFORCING DETAIL

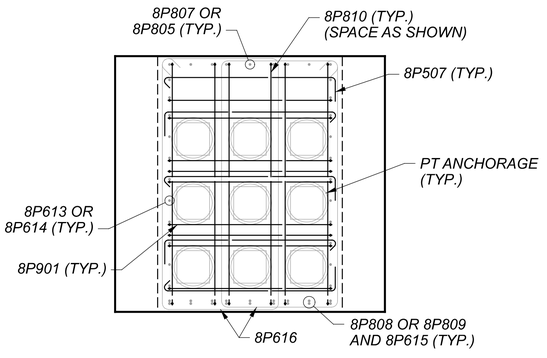

SECTION F-F

LEGEND:

♦ ADD BARS AFTER STRESSING IS COMPLETE

NOTES:

1. FOR POST TENSIONING DETAILS SEE SHEETS 60 / 167 .
2. FOR BEARING DETAILS, SEE SHEETS 66 / 167 THRU 70 / 167 .
3. FOR REINFORCEMENT LIST, SEE SHEETS 159 / 167 THRU 167 / 167 .
4. FOR PIER CAP BEARING DETAILS, SEE SHEET 61 / 167 .
5. FOR OVERHEAD SIGN TRUSS DETAILS, SEE ODOT STD. DWG. TC-15.116 AND TC-21.21.
6. SPACE HORIZONTAL 8P507 BARS AS CLOSE AS POSSIBLE TO THE SPACING SHOWN. ADJUST SPACING TO CLEAR PT DUCT, ANCHORAGE AND DRAINAGE PIPE AS REQUIRED.
7. ADJUST SPACING AS NEEDED TO CLEAR ANCHOR BOLTS AND CAP REINFORCING.

Preliminary Plans - For Reference Only

PIER 8 DETAILS - (2 OF 4)
CUY-77-1587 (BRIDGE 9)
I.R. 77 SB OVER I.R. 90 AND CR-721 (E. 14TH ST.)

SFN	1806910
DESIGN AGENCY	HDR
DESIGNER	NJH
CHECKER	PJC
REVIEWER	DWW 01/11/24
PROJECT ID	82382
SUBSET	59
TOTAL	167
SHEET	1927
TOTAL	2696

CUY-90-16.28 (CCG3A)
MODEL: Sheet PAPERSIZE: 34x22 (in.) DATE: 3/28/2025 TIME: 10:15:54 AM USER: Rohit.Bk
pw:\\mb-us-pw.bentley.com:mb-us-pw-03\Documents\Cleveland_OH\01_Projects\ODOT\District12\82382\400-Engineering\Structures\SFN_1806910\Sheets\82382_SFN_1806910_SI019.dgn

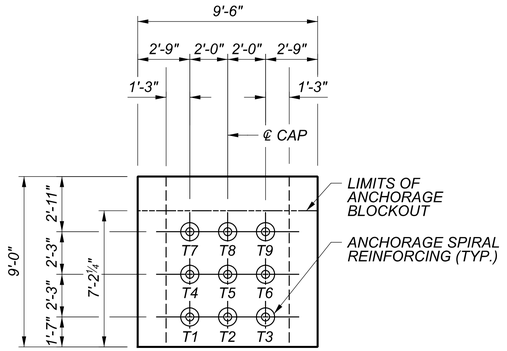

VIEW A-A

SHOWING END ANCHORAGE BLOCKOUTS
(LEFT END SHOWN, RIGHT END OPPOSITE HAND)

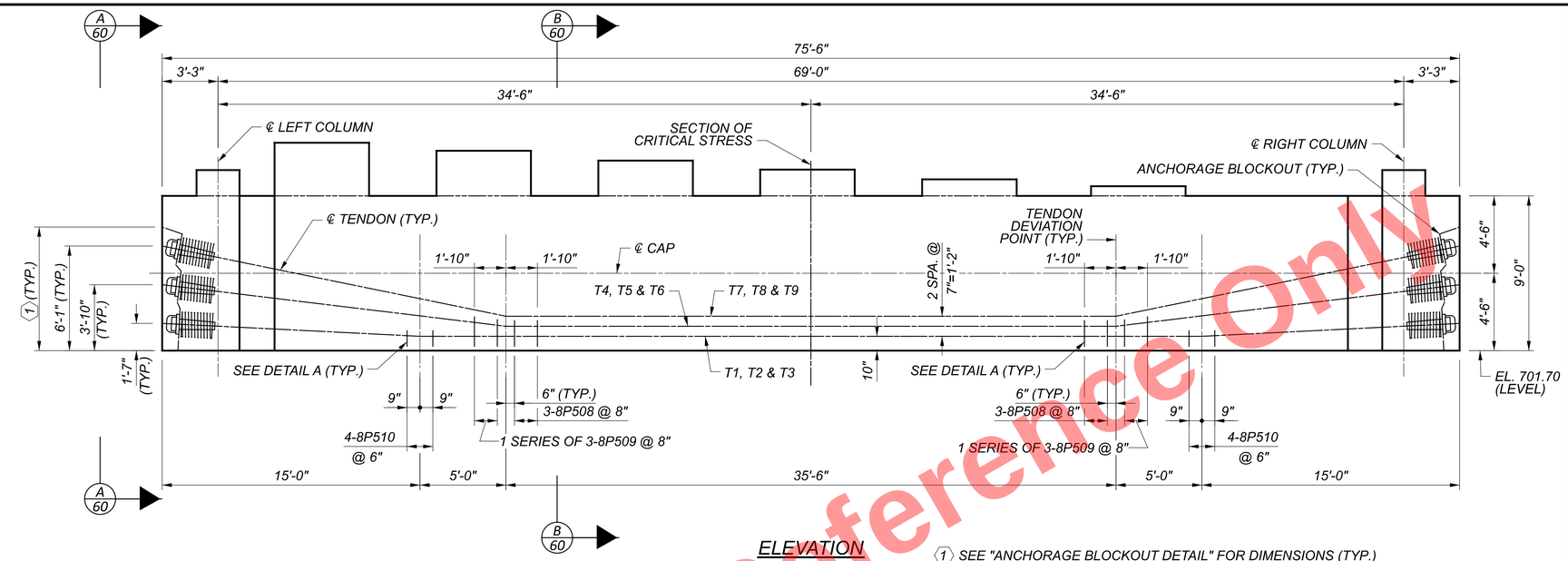

ELEVATION

(TENDON PROFILES)

1 SEE "ANCHORAGE BLOCKOUT DETAIL" FOR DIMENSIONS (TYP.)
FILL WITH EPOXY GROUT AFTER STRESSING TENDONS.

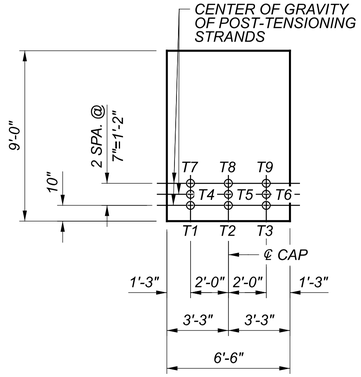

SECTION B-B

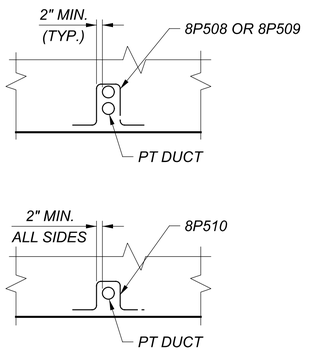

DETAIL A

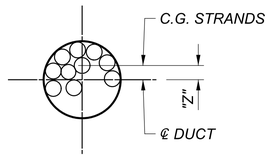

TENDON SIZE	"Z"
24 - 0.6"	⅞"

CONSIDER THE AMOUNT OF TENDON OFFSET ("Z") WITHIN THE DUCT AS SHOWN FOR THE PURPOSE OF LOCATING DUCTS.

TENDON OFFSET DETAIL

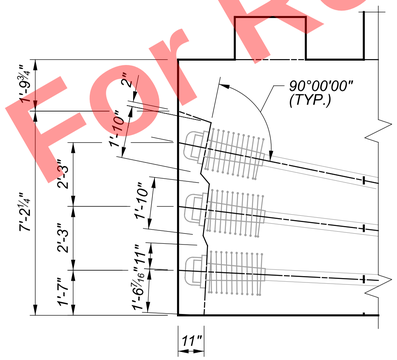

ANCHORAGE BLOCKOUT DETAIL

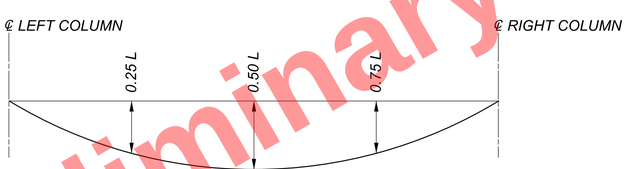

PIER 8 CAP - TABLE OF DEFLECTIONS (FEET)

	℄ LEFT COLUMN	0.25 L	0.50 L	0.75 L	℄ RIGHT COLUMN
STAGE 6	0.000	0.012	0.017	0.013	0.000
STAGE 7	0.000	0.004	0.005	0.005	0.000
STAGE 8	0.000	0.015	0.020	0.016	0.000
STAGE 9	0.000	-0.002	-0.003	-0.001	0.000
STAGE 10	0.000	0.007	0.009	0.008	0.000
STAGE 11	0.000	0.006	0.007	0.007	0.000

POSITIVE DEFLECTIONS ARE UPWARD. DEFLECTIONS SHOWN ARE CUMULATIVE AT THE STAGES SHOWN AND INCLUDE THE EFFECTS OF DEAD LOAD, PRESTRESSING, PRESTRESSING LOSSES, AND ESTIMATED CREEP AND SHRINKAGE EFFECTS.

NOTES:

1. FURNISH AND INSTALL ALL POST-TENSIONING HARDWARE, COMPONENTS, STRANDS AND GROUT IN ACCORDANCE WITH ODOT SUPPLEMENTAL SPECIFICATION 855 AND THESE PLANS.
2. ANY REINFORCING INTERFERING WITH TENDON ALIGNMENT OR STRESSING SHALL BE ADJUSTED PER SUPPLEMENTAL SPECIFICATION 855.
3. PIER CAP CONCRETE SHALL BE INCLUDED IN ITEM 511 - CLASS QC4 MASS CONCRETE, SUBSTRUCTURE, AS PER PLAN. CONCRETE SHALL OBTAIN A MINIMUM COMPRESSIVE STRENGTH OF 5.0 KSI BEFORE ANY POST-TENSIONING IS PERFORMED.
4. PRESTRESSING STEEL SHALL BE 0.60 INCH DIAMETER UNCOATED 7-WIRE, LOW RELAXATION, GRADE 270 CONFORMING TO ASTM A416.
5. LOCAL ZONE ANCHORAGE AND REINFORCEMENT SHALL BE THE RESPONSIBILITY OF THE CONTRACTOR AND POST-TENSIONING SUPPLIER PER SUPPLEMENTAL SPECIFICATION 855.
6. TENDONS SHALL BE JACKED TO 100% OF THE REQUIRED JACKING FORCE AS SPECIFICED IN THE CONSTRUCTION SEQUENCE. PARTIAL JACKING SHALL NOT BE PERFORMED PER SUPPLEMENTAL SPECIFICATION 855.
7. NO CAMBER OF THE PIER CAP IS REQUIRED.

POST-TENSIONING DESIGN NOTES:

THE POST-TENSIONING DESIGN IS BASED ON THE FOLLOWING VALUES AND ASSUMPTIONS:

CONCRETE COMPRESSIVE STRENGTHS: $f'ci$ = 5.0 KSI (MIN.) AT TIME OF STRESSING
$f'c$ = 6.0 KSI (MIN.) AT 28 DAYS

WOBBLE FRICTION COEFFICIENT, K = 0.0002
FRICTION COEFFICIENT, μ = 0.23
ANCHOR SET = 0.25 INCHES (BASED ON SINGLE END STRESSING)

LOSSES OTHER THAN FRICTION AND ANCHOR SET ARE ASSUMED TO BE 21.25 KSI.

THE TENDON ARRANGEMENT SHOWN IS BASED ON 24 x 0.6" DIAMETER STRAND TENDONS WITH AREA = 5.21 SQ. IN. PER TENDON. 4¾" NOMINAL OUTSIDE DIAMETER CORRUGATED PLASTIC DUCTS WERE ASSUMED.

THE ASSUMED JACKING FORCE, P(JACK) = 1016 KIPS PER TENDON

AT THE SECTION OF CRITICAL STRESS, PROVIDE A FINAL POST-TENSIONING FORCE AFTER ALL LOSSES OF, P(FINAL) = 7656 KIPS

CONSTRUCTION SEQUENCE:

STAGE 1: CONSTRUCT FOOTINGS AND COLUMNS. INSTALL BEARING ASSEMBLIES ON EACH COLUMN.

STAGE 2: ERECT FORMWORK FOR PIER CAP.

STAGE 3: INSTALL PIER CAP REINFORCEMENT, TENDONS AND ANCHORAGES.

STAGE 4: PLACE PIER CAP CONCRETE (INCLUDING GIRDER PEDESTALS). FALSEWORK AND BOTTOM FORMS SHALL REMAIN IN PLACE UNTIL FULL JACKING FORCES ARE ACHIEVED IN EACH TENDON IN STAGE 6.

STAGE 5: AFTER CONCRETE HAS REACHED $f'ci$, STRESS TENDONS T5, T8 AND T2 IN THE GIVEN ORDER.

STAGE 6: SIMULTANEOUSLY STRESS TENDONS T7 AND T9.

STAGE 7: ERECT STEEL SUPERSTRUCTURE AND REMOVE PIER CAP FALSEWORK.

STAGE 8: SIMULTANEOUSLY STRESS TENDONS T1 AND T3.

STAGE 9: CAST CONCRETE DECK.

STAGE 10: SIMULTANEOUSLY STRESS TENDONS T4 AND T6.

STAGE 11: CAST BRIDGE RAILING.

STAGE 12: WELD CONNECTION BETWEEN BEARING SOLE PLATES AND CAP MASONRY PLATES.

STAGE 13: CAST CLOSURE POURS AT BOTH ENDS OF THE PIER CAP AND SEAL CONCRETE SURFACES.

ANY DEVIATIONS FROM THE CONSTRUCTION SEQUENCE SHOWN MUST BE APPROVED BY THE ENGINEER.

Preliminary Plans - For Reference Only

PIER 8 DETAILS - (3 OF 4)
CUY-77-1587 (BRIDGE 9)
I.R. 77 SB OVER I.R. 90 AND CR-721 (E. 14TH ST.)

SFN 1806910
DESIGN AGENCY
DESIGNER NJH | CHECKER PJC
REVIEWER DWW 01/11/24
PROJECT ID 82382
SUBSET 60 | TOTAL 167
SHEET 1928 | TOTAL 2696

CUY-90-16.28 (CCG3A)
MODEL: Sheet PAPERSIZE: 34x22 (in.) DATE: 3/28/2025 TIME: 10:16:00 AM USER: Rohit.Bk
pw:\\tmb-us-pw.bentley.com:tmb-us-pw-03\Documents\Cleveland_OH\01_Projects\ODOT\District12\82382\400-Engineering\Structures\SFN_1806910\Sheets\82382_SFN_1806910_SI020.dgn

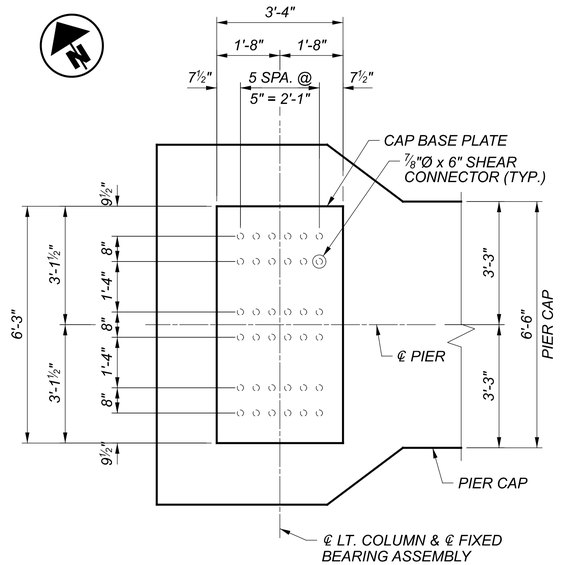

CAP BASE PLATE DETAIL
LT. COLUMN (FIXED)

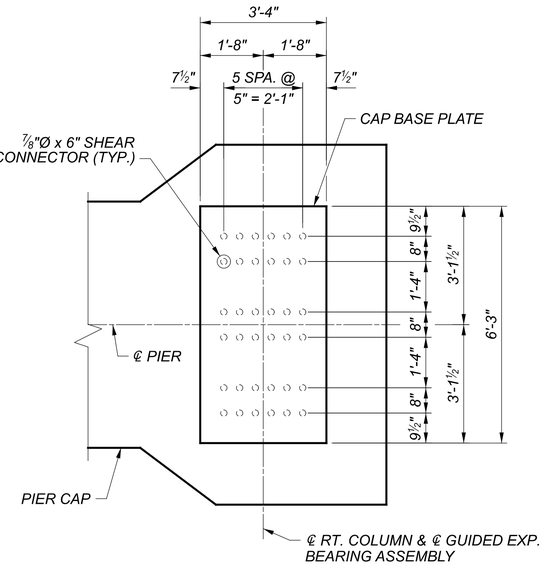

CAP BASE PLATE DETAIL
RT. COLUMN (GUIDED EXP.)

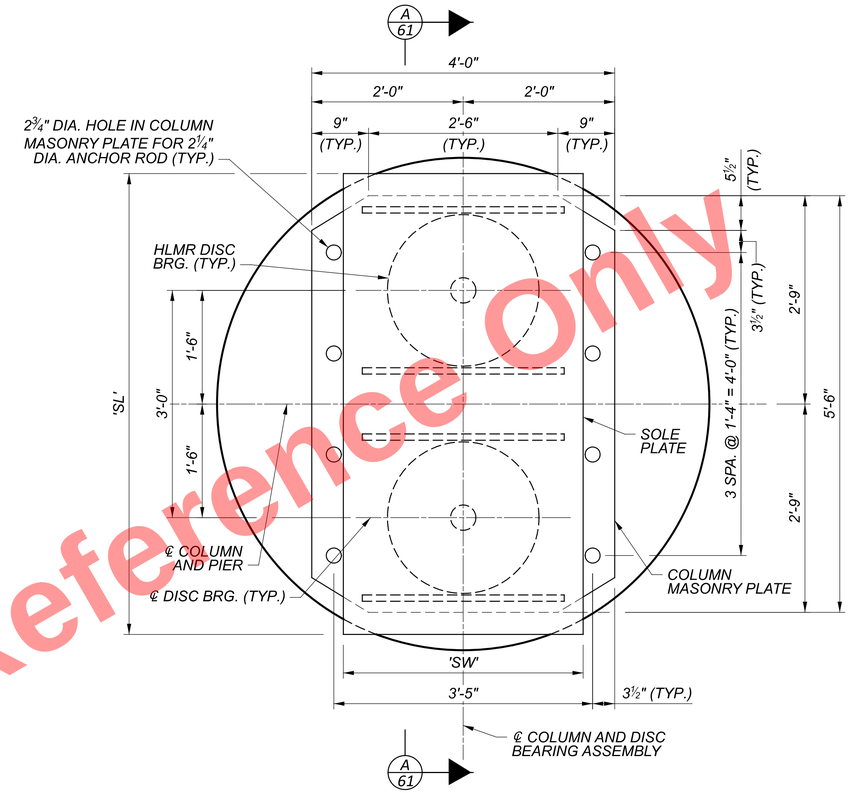

COLUMN BEARING PLAN VIEW
(RT. COLUMN SHOWN, LT. COLUMN SIMILAR)

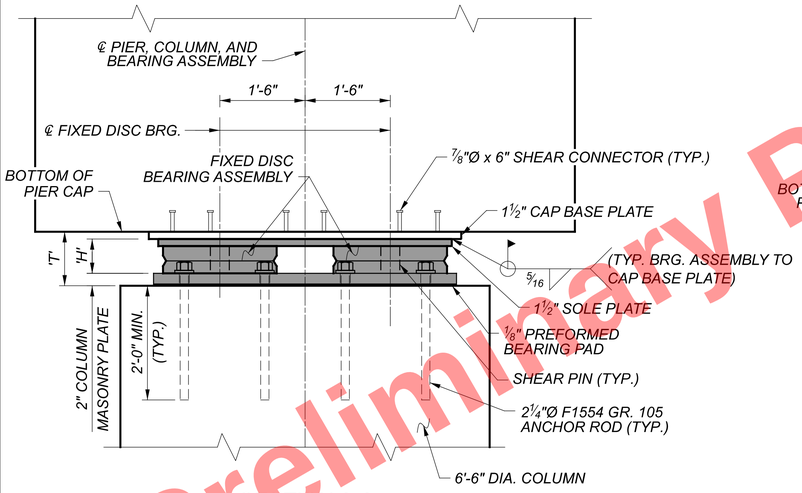

SECTION A-A
LT. COLUMN (FIXED)

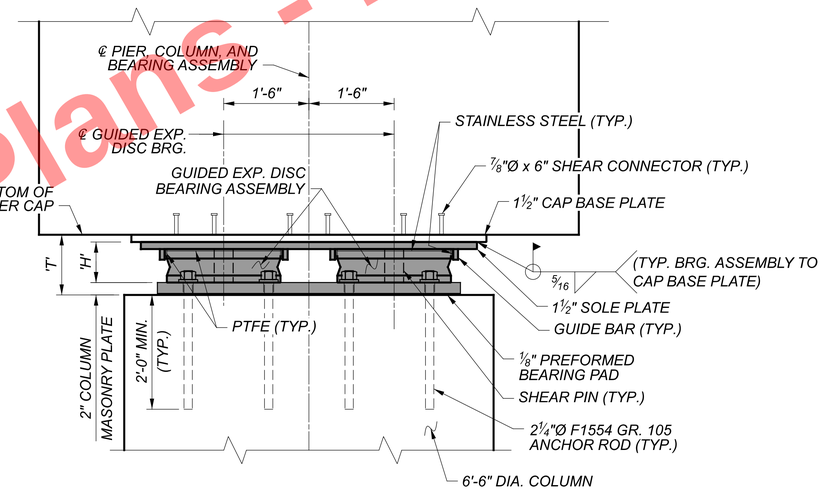

SECTION A-A
RT. COLUMN (GUIDED EXP.)

PIER 8 COLUMN BEARING TABLE

LOCATION	TYPE	NO. REQ'D*	SKEW (DEGREES)	SOLE PLATE 'SL' (INCHES)	SOLE PLATE 'SW' (INCHES)	SOLE PLATE SLOPE (%)	EST. HLMR DISC HEIGHT, H (INCHES)	TOTAL BEARING HEIGHT, T (INCHES)	MAXIMUM DESIGN LOADS (KIPS) STRENGTH LIMIT STATE TOTAL VERTICAL LOAD	STRENGTH LIMIT STATE TOTAL HORIZONTAL LOAD	SERVICE LIMIT STATE TOTAL VERTICAL LOAD	SERVICE LIMIT STATE VERTICAL DEAD LOAD	SERVICE LIMIT STATE TOTAL HORIZONTAL LOAD	DESIGN MOVEMENTS (INCHES) PARALLEL TO ℄ PIER 8 CONTRACTION	DESIGN MOVEMENTS (INCHES) PARALLEL TO ℄ PIER 8 EXPANSION	DESIGN ROTATION** (RADIANS)	DESIGN COEFFICIENT OF FRICTION
LT. COLUMN	FIXED	2	0.00	64.00	34.00	0.00	7.63	11.25	2250	466	1910	972	77	0.0	0.0	0.02	N/A
RT. COLUMN	GUIDED EXP.	2	0.00	73.00	38.00	0.00	8.73	12.36	1950	241	1646	859	63	2.0	1.4	0.02	0.06

* THE MASONRY PLATE IS SHARED BETWEEN A PAIR OF ADJACENT BEARINGS. TWO (2) HLMR DISC BEARINGS, THE MASONRY PLATE, AND THE SOLE PLATE CONSTITUTE ONE (1) BEARING ASSEMBLY.
** ROTATIONS INCLUDE AN ALLOWANCE OF 0.005 RADIANS FOR UNCERTAINTIES.

NOTES:

1. TOTAL BEARING HEIGHT, 'T' IS MEASURED FROM BOTTOM OF CAP TO TOP OF BEARING SEAT AT CENTERLINE OF BEARING.
2. EXERCISE CAUTION WHEN WELDING NEAR THE DISC BEARING PADS IN CONTACT WITH THE STEEL. WELD IN ACCORDANCE WITH THE MANUFACTURER'S REQUIREMENTS TO MAINTAIN A SAFE TEMPERATURE SO AS NOT TO DAMAGE THE DISC BEARINGS. ANY DAMAGE DUE TO WELDING WILL BE CAUSE FOR REJECTION.
3. ALL BEARINGS SHALL BE MARKED WITH THE BEARING LOCATION OF THE COLUMN PRIOR TO SHIPPING. ALL BEARINGS SHALL BE INCLUDED FOR PAYMENT WITH ITEM 869 - HIGH LOAD MULTI-ROTATIONAL (HLMR) BEARINGS, AS PER PLAN.
4. TOP OF COLUMN ELEVATIONS ARE BASED ON THE BEARING HEIGHTS PROVIDED IN THE TABLE SHOWN. IF THE CONTRACTOR'S SELECTED BEARING MANUFACTURER HAS A DESIGN THAT DOES NOT CONFORM TO THE HEIGHTS PROVIDED IN THE TABLE, ADJUST THE TOP OF COLUMN ELEVATIONS AT NO ADDITIONAL COST TO THE STATE.
5. BEARINGS ARE TO BE SET BY USE OF A STEEL TEMPLATE WITH A MINIMUM THICKNESS OF ¼-INCH.
6. FOR ADDITIONAL BEARING NOTES, SEE NOTES 2 THRU 8 ON SHEET 69 / 167 .
7. CAP BASE PLATES SHALL BE METALLIZED AND SEALED IN ACCORDANCE WITH SUPPLEMENTAL SPECIFICATION 869. AREA WHERE COATINGS ARE DAMAGED OR WHERE THE SURFACE IS MASKED TO FACILITATE FIELD WELDING SHALL BE REPAIRED ACCORDING TO SUPPLEMENTAL SPECIFICATION 869.

Preliminary Plans - For Reference Only

PIER 8 DETAILS - (4 OF 4)
CUY-77-1587 (BRIDGE 9)
I.R. 77 SB OVER I.R. 90 AND CR-721 (E. 14TH ST.)

SFN 1806910
DESIGN AGENCY HDR
DESIGNER NJH | CHECKER ABO
REVIEWER DWW 01/11/24
PROJECT ID 82382
SUBSET 61 | TOTAL 167
SHEET 1929 | TOTAL 2696

CUY-90-16.28 (CCG3A)
MODEL: Sheet PAPERSIZE: 34x22 (in.) DATE: 3/28/2025 TIME: 10:16:07 AM USER: Rohit.Bk
pw:\\mb-us-pw.bentley.com:mb-us-pw-03\Documents\Cleveland_OH\01_Projects\ODOT\District12\82382400-Engineering\Structures\SFN_1806910\Sheets\82382_SFN_1

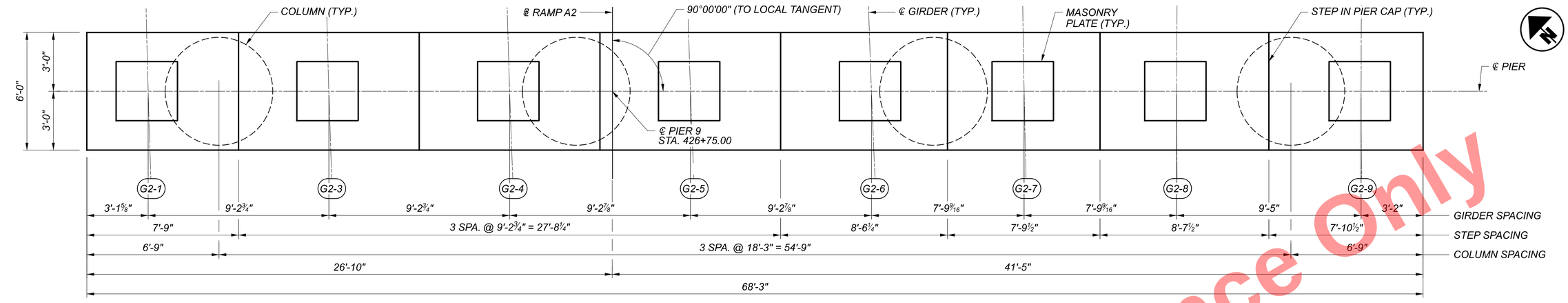

PLAN

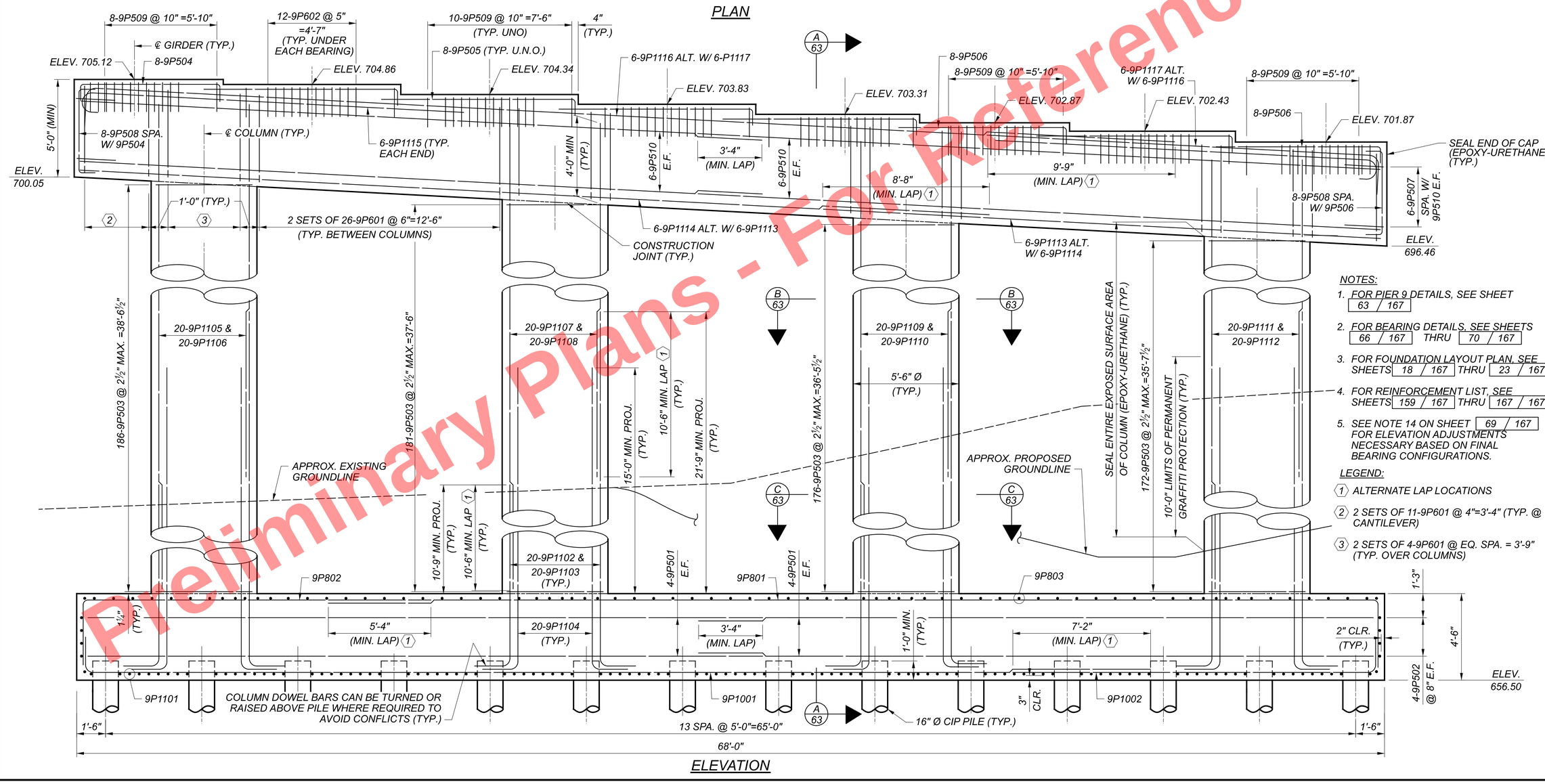

ELEVATION

NOTES:

1. FOR PIER 9 DETAILS, SEE SHEET 63 / 167
2. FOR BEARING DETAILS, SEE SHEETS 66 / 167 THRU 70 / 167
3. FOR FOUNDATION LAYOUT PLAN, SEE SHEETS 18 / 167 THRU 23 / 167
4. FOR REINFORCEMENT LIST, SEE SHEETS 159 / 167 THRU 167 / 167
5. SEE NOTE 14 ON SHEET 69 / 167 FOR ELEVATION ADJUSTMENTS NECESSARY BASED ON FINAL BEARING CONFIGURATIONS.

LEGEND:

1 ALTERNATE LAP LOCATIONS

2 2 SETS OF 11-9P601 @ 4"=3'-4" (TYP. @ CANTILEVER)

3 2 SETS OF 4-9P601 @ EQ. SPA. = 3'-9" (TYP. OVER COLUMNS)

Preliminary Plans - For Reference Only

PIER 9 PLAN AND ELEVATION
CUY-77-1587 (BRIDGE 9)
I.R. 77 SB OVER I.R. 90 AND CR-721 (E. 14TH ST.)

SFN	1806910
DESIGN AGENCY	HDR
DESIGNER	PJC
CHECKER	RBK
REVIEWER	DWW 01/11/24
PROJECT ID	82382
SUBSET	62
TOTAL	167
SHEET	1930
TOTAL	2696

CUY-90-16.28 (CCG3A)

MODEL: Sheet PAPERSIZE: 34x22 (in.) DATE: 3/28/2025 TIME: 10:16:13 AM USER: Rohit.Bk
pw:\\mb-us-pw.bentley.com:mb-us-pw-03\Documents\Cleveland_OH\01_Projects\ODOT\District12\82382\400-Engineering\Structures\SFN_1806910\Sheets\82382_SFN_1806910_SI021.dgn

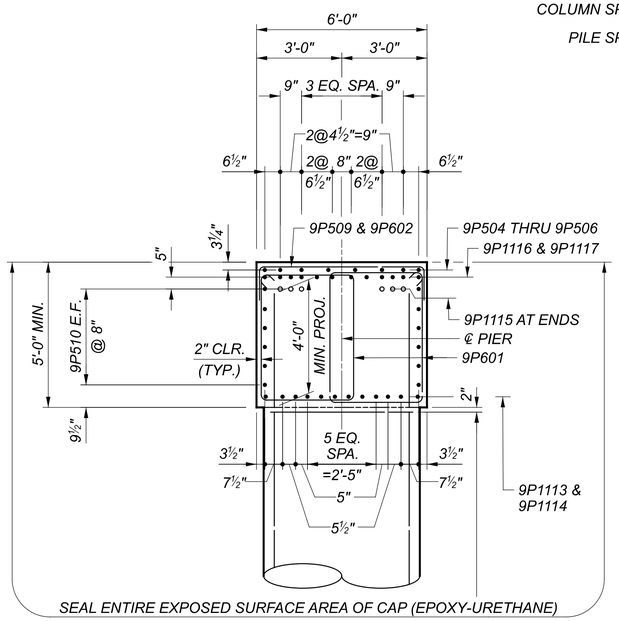

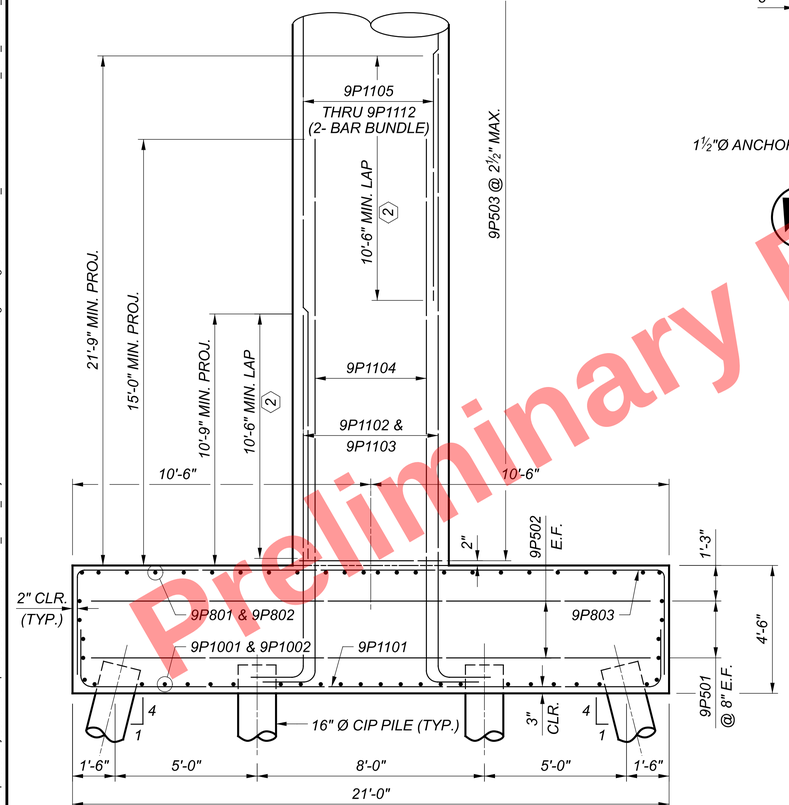

SECTION A-A

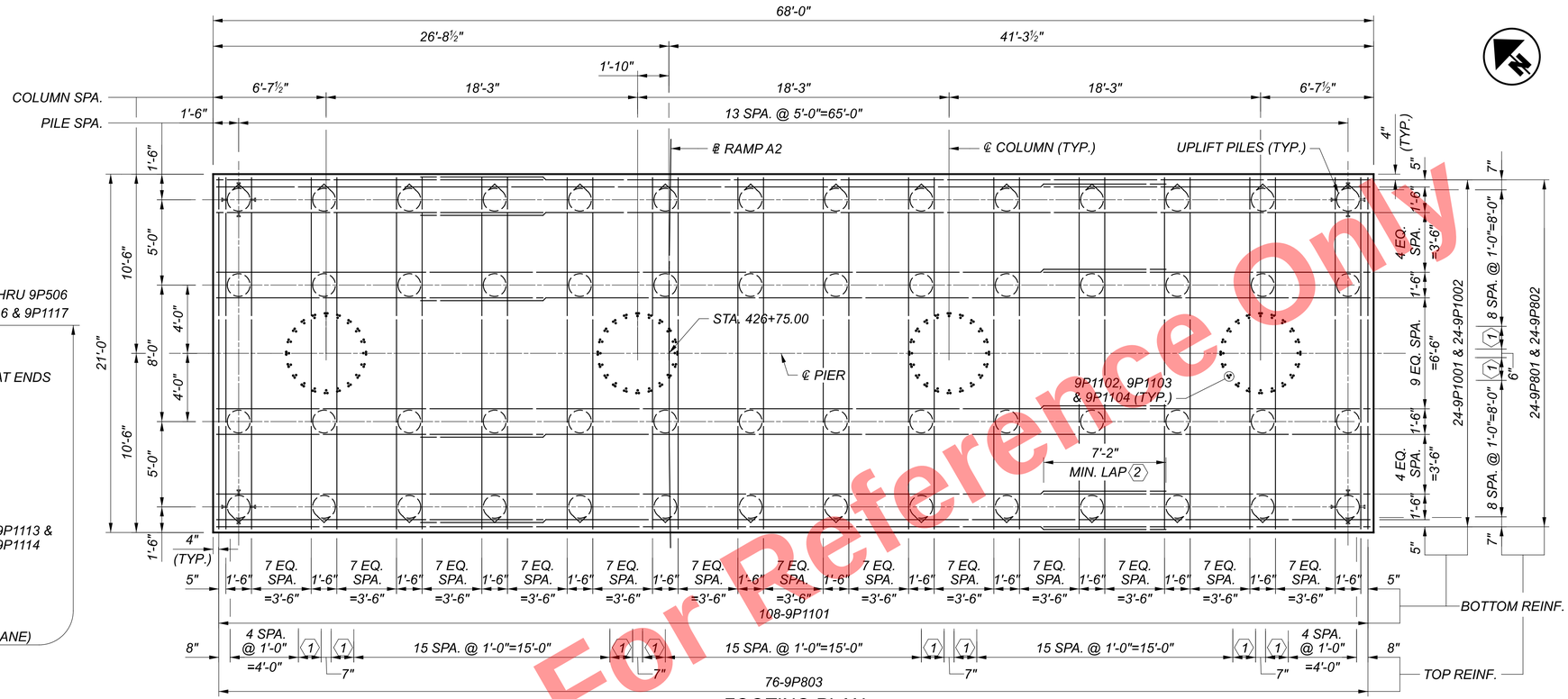

FOOTING PLAN

(TOP REINFORCING MAT NOT SHOWN FOR CLARITY)

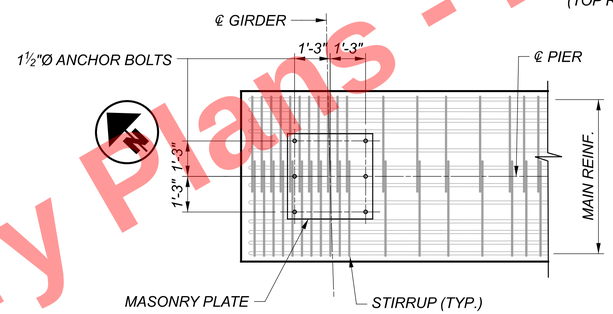

BEARING ANCHOR PLAN

GIRDER G2-1 SHOWN
GIRDERS G2-3, G2-4, G2-5, G2-6, G2-8 & G2-9 SIMILAR

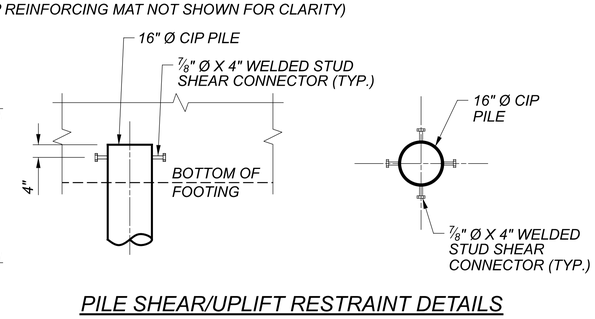

PILE SHEAR/UPLIFT RESTRAINT DETAILS

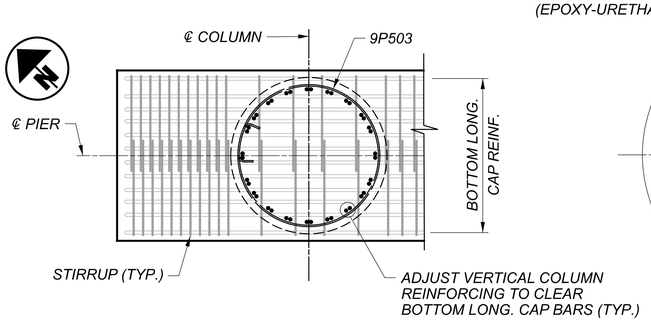

CAP AND COLUMN INTERFACE DETAILS

EXTERIOR COLUMN SHOWN, INTERIOR COLUMN SIMILAR

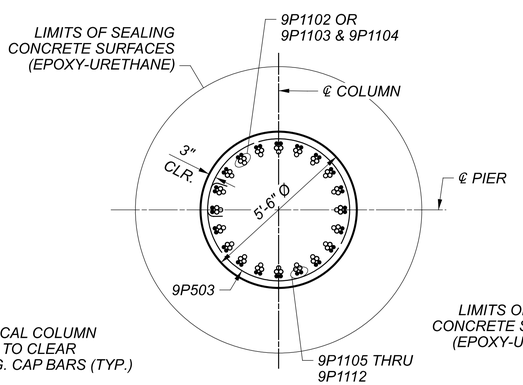

SECTION C-C

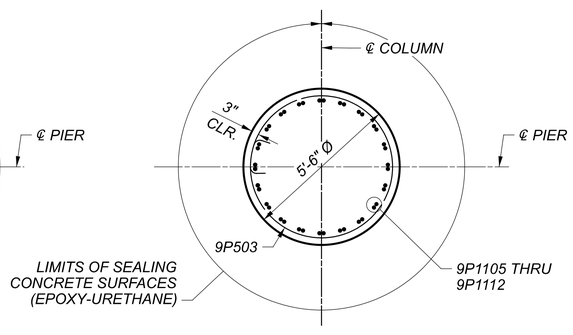

SECTION B-B

NOTES:

1. *FOR BEARING DETAILS, SEE SHEETS* 66 / 167 *THRU* 70 / 167
2. *FOR FOUNDATION PLAN, SEE SHEETS* 18 / 167 *THRU* 23 / 167
3. *FOR REINFORCEMENT LIST, SEE SHEETS* 159 / 167 *THRU* 167 / 167
4. *PILES MARKED ◯ SHALL BE BATTERED 1:4 IN THE DIRECTION SHOWN.*
5. *ACCURATELY PLACE CONCRETE REINFORCEMENT IN THE VICINITY OF THE BRIDGE SEAT TO AVOID THE PRESETTING OF BEARING ANCHORS. SET THE BEARING ANCHORS PRIOR TO POURING THE CONCRETE.*

LEGEND:

1 *2 SPA. @ 8"=1'-4"*

2 *ALTERNATE LAP LOCATIONS*

Preliminary Plans - For Reference Only

PIER 9 DETAILS
CUY-77-1587 (BRIDGE 9)
I.R. 77 SB OVER I.R. 90 AND CR-721 (E. 14TH ST.)

SFN	1806910
DESIGN AGENCY	HDR
DESIGNER	PJC
CHECKER	RBK
REVIEWER	DWW 01/11/24
PROJECT ID	82382
SUBSET	63
TOTAL	167
SHEET	1931
TOTAL	2696

CUY-90-16.28 (CCG3A)

MODEL: Sheet PAPERSIZE: 34x22 (in.) DATE: 3/28/2025 TIME: 10:16:19 AM USER: Rohit.Bk
pw:\\lmb-us-pw.bentley.com:lmb-us-pw-03\Documents\Cleveland_OH101_Projects\ODOT\District12\82382\400-Engineering\Structures\SFN_1806910\Sheets\82382_SFN_1806910_SI022.dgn

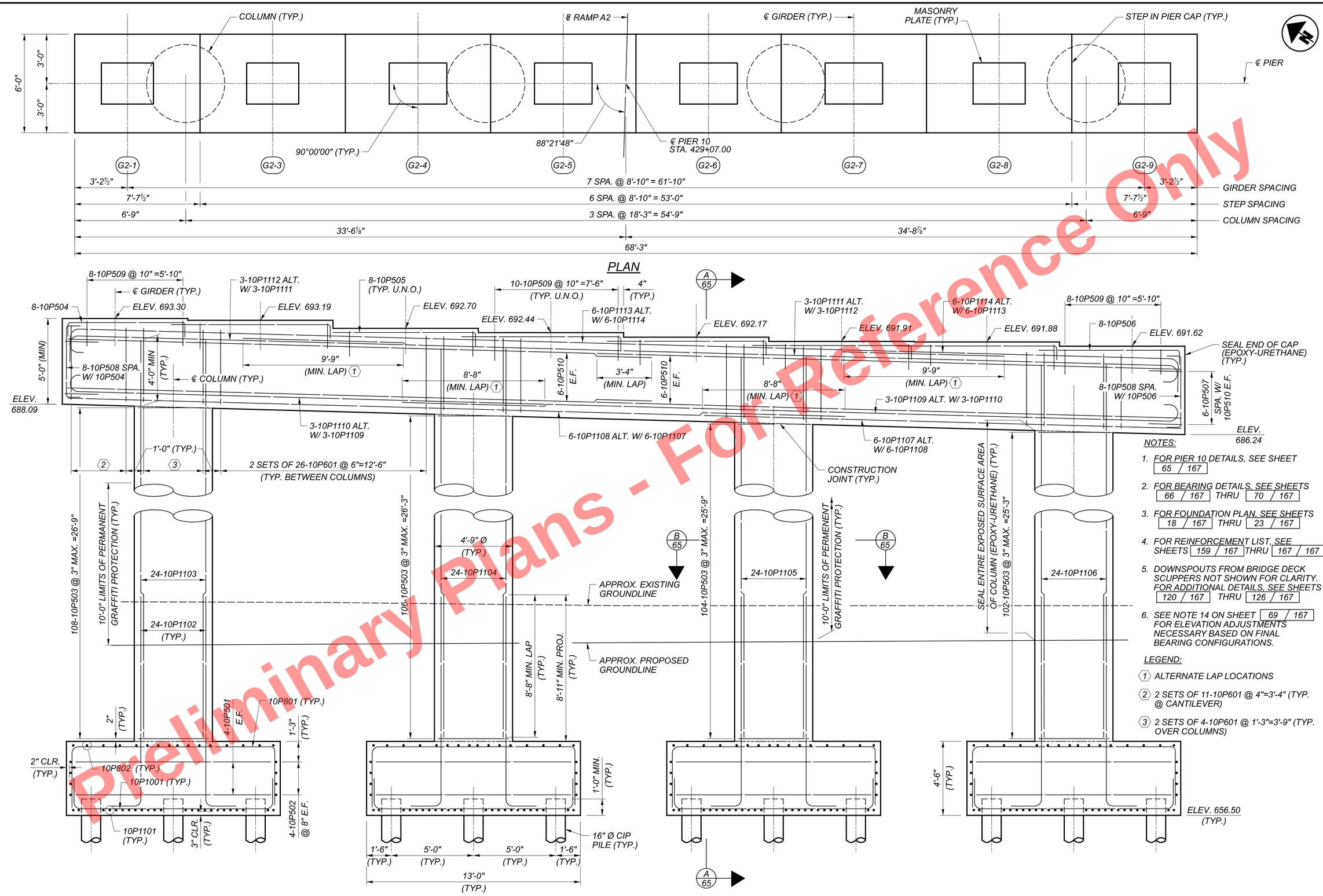

NOTES:

1. FOR PIER 10 DETAILS, SEE SHEET 65 / 167
2. FOR BEARING DETAILS, SEE SHEETS 66 / 167 THRU 70 / 167
3. FOR FOUNDATION PLAN, SEE SHEETS 18 / 167 THRU 23 / 167
4. FOR REINFORCEMENT LIST, SEE SHEETS 159 / 167 THRU 167 / 167
5. DOWNSPOUTS FROM BRIDGE DECK SCUPPERS NOT SHOWN FOR CLARITY. FOR ADDITIONAL DETAILS, SEE SHEETS 120 / 167 THRU 126 / 167
6. SEE NOTE 14 ON SHEET 69 / 167 FOR ELEVATION ADJUSTMENTS NECESSARY BASED ON FINAL BEARING CONFIGURATIONS.

LEGEND:

1. ALTERNATE LAP LOCATIONS
2. 2 SETS OF 11-10P601 @ 4"=3'-4" (TYP. @ CANTILEVER)
3. 2 SETS OF 4-10P601 @ 1'-3"=3'-9" (TYP. OVER COLUMNS)

PIER 10 PLAN AND ELEVATION
CUY-77-1587 (BRIDGE 9)
I.R. 77 SB OVER I.R. 90 AND CR-721 (E. 14TH ST.)

SFN	1806910
DESIGN AGENCY	HDR
DESIGNER	PJC
CHECKER	RBK
REVIEWER	DWW 01/11/24
PROJECT ID	82382
SUBSET	64
TOTAL	167
SHEET	1932
TOTAL	2696

Preliminary Plans - For Reference Only

CUY-90-16.28 (CCG3A)
MODEL: Sheet PAPERSIZE: 34x22 (in.) DATE: 3/28/2025 TIME: 10:16:26 AM USER: Rohit.Bk
pw:\\mb-us-pw.bentley.com:mb-us-pw-03\Documents\Cleveland_OH\01_Projects\ODOT\District12\82382\400-Engineering\Structures\SFN_1806910\Sheets\82382_SFN_1806910_SI023.dgn

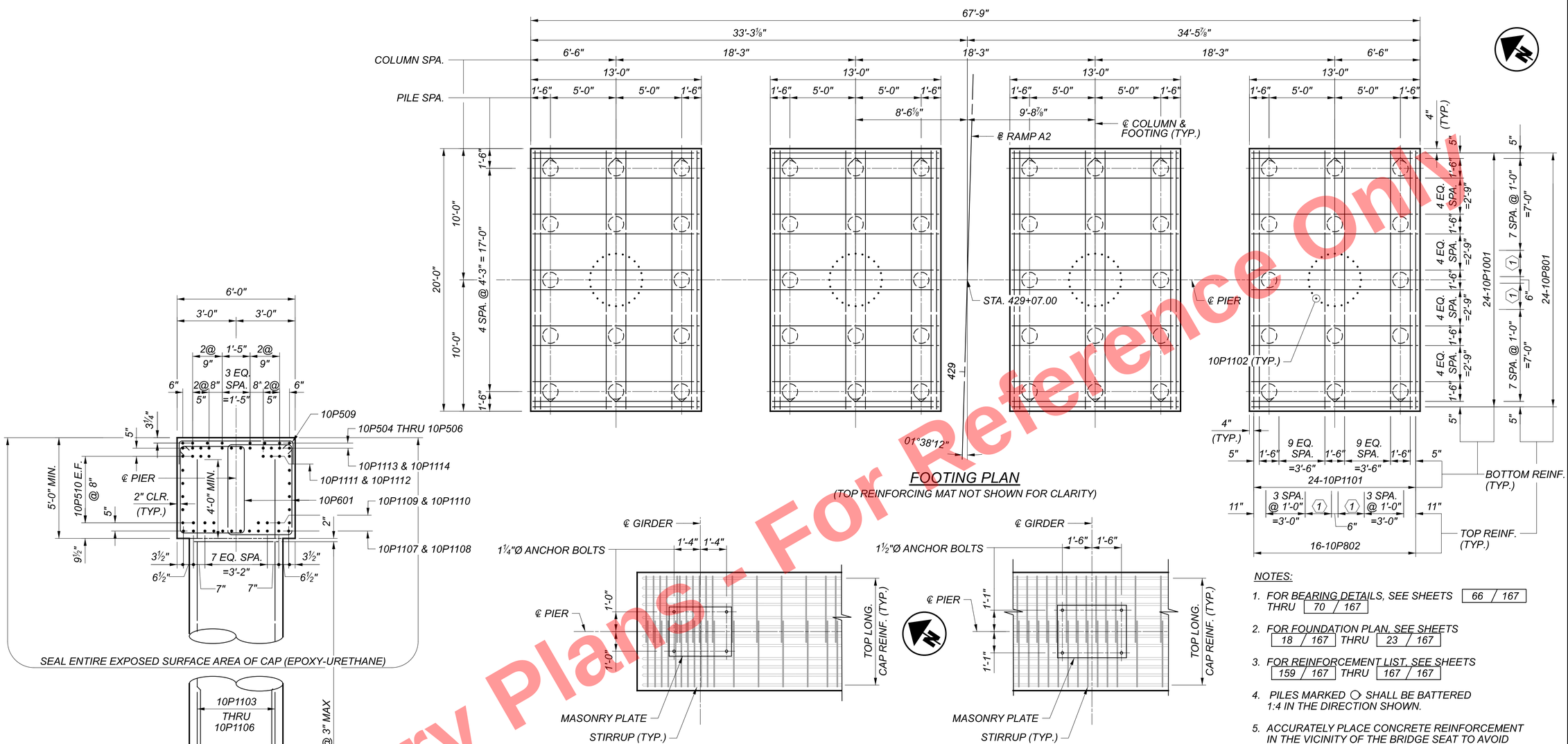

FOOTING PLAN

(TOP REINFORCING MAT NOT SHOWN FOR CLARITY)

SECTION A-A

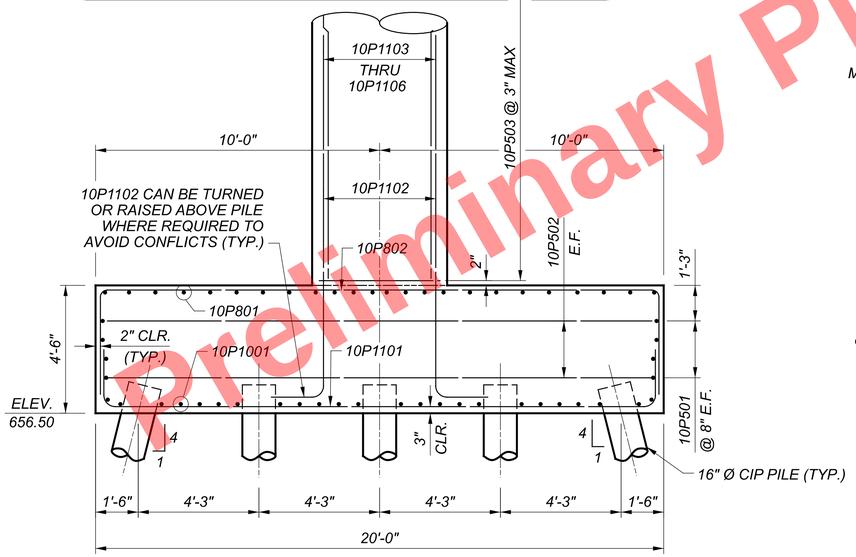

SECTION A-A

GIRDER G2-1 SHOWN

GIRDERS G2-3, G2-8 & G2-9 SIMILAR

GIRDER G2-4 SHOWN

GIRDERS G2-5, G2-6 & G2-7 SIMILAR

BEARING ANCHOR PLANS

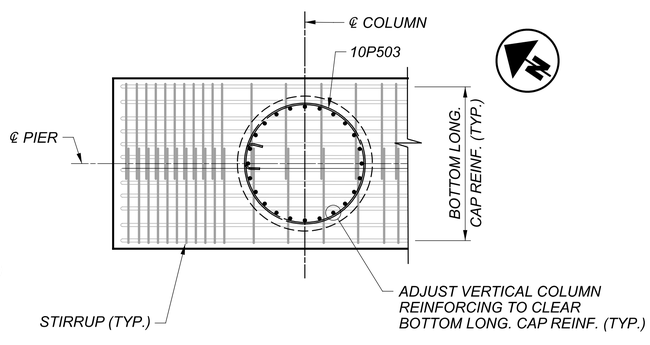

CAP AND COLUMN INTERFACE DETAILS

EXTERIOR COLUMN SHOWN, INTERIOR COLUMN SIMILAR

NOTES:

1. FOR BEARING DETAILS, SEE SHEETS 66 / 167 THRU 70 / 167
2. FOR FOUNDATION PLAN, SEE SHEETS 18 / 167 THRU 23 / 167
3. FOR REINFORCEMENT LIST, SEE SHEETS 159 / 167 THRU 167 / 167
4. PILES MARKED ◯ SHALL BE BATTERED 1:4 IN THE DIRECTION SHOWN.
5. ACCURATELY PLACE CONCRETE REINFORCEMENT IN THE VICINITY OF THE BRIDGE SEAT TO AVOID PRESETTING OF BEARING ANCHORS. SET THE BEARING ANCHORS PRIOR TO POURING THE CONCRETE.

LEGEND:

⟨1⟩ 3 SPA. 8"

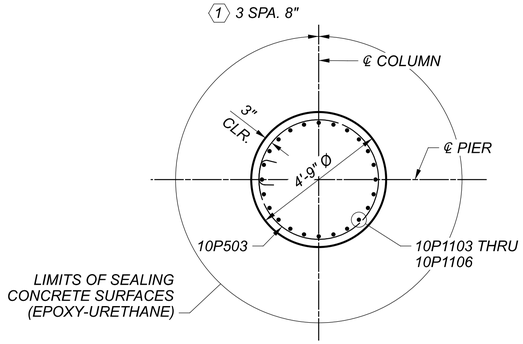

SECTION B-B

Preliminary Plans - Not For Reference Only

PIER 10 DETAILS
CUY-77-1587 (BRIDGE 9)
I.R. 77 SB OVER I.R. 90 AND CR-721 (E. 14TH ST.)

SFN 1806910
DESIGN AGENCY HDR
DESIGNER PJC | CHECKER RBK
REVIEWER DWW 01/11/24
PROJECT ID 82382
SUBSET 65 | TOTAL 167
SHEET 1933 | TOTAL 2696

CUY-90-16.28 (CCG3A)

MODEL: Sheet PAPERSIZE: 34x22 (in.) DATE: 3/28/2025 TIME: 10:16:32 AM USER: RohitLBk
pw:\\mb-us-pw.bentley.com:mb-us-pw-03\Documents\Cleveland_OH\01_Projects\ODOT\District12\82382\400-Engineering\Structures\SFN_1806910\Sheets\82382_SFN_

LOCATION	GIRDER NUMBER	BEARING TYPE	MASONRY PLATE							SOLE PLATE			ANCHOR BOLTS		EST. HLMR DISC BEARING HEIGHT, 'H' (INCHES)	TOTAL BEARING HEIGHT, 'T' (INCHES)
			'ML' (INCHES)	'MW' (INCHES)	'MT' (INCHES)	'A' (INCHES)	'B' (INCHES)	'C' (INCHES)	'D' (INCHES)	'SL' (INCHES)	'SW' (INCHES)	SLOPE (%)	NO. OF BOLTS PER GIRDER	DIAMETER (INCHES)		
REAR ABUT.	G1-1, G1-2, G1-8, G1-9	NON-GUIDED	22.00	40.00	1.25	8.00	16.00	17.00	34.00	22.00	24.00	3.37	4	1.25	3.95	5.33
REAR ABUT.	G1-3, G1-4, G1-5, G1-6	GUIDED	24.00	40.00	1.25	9.00	18.00	17.00	34.00	27.50	24.00	3.37	4	1.50	5.45	6.83
PIER 1	G1-1, G1-2, G1-8, G1-9	NON-GUIDED	28.00	34.00	1.25	11.00	22.00	14.00	28.00	26.00	24.00	3.37	4	1.25	5.20	6.58
PIER 1	G1-3, G1-4, G1-5, G1-6	GUIDED	32.00	40.00	1.25	13.00	26.00	17.00	34.00	33.50	29.50	3.37	4	1.50	8.20	9.58
PIER 2	G1-1, G1-3, G1-4, G1-5, G1-6, G1-8, G1-9	FIXED	34.00	38.00	1.25	14.00	28.00	16.00	32.00	23.00	26.00	3.37	6	1.50	7.75	9.13
PIER 3	G1-1, G1-8, G1-9	NON-GUIDED	28.00	34.00	1.25	11.00	22.00	14.00	28.00	26.50	24.00	3.37	4	1.25	5.20	6.58
PIER 3	G1-3, G1-4, G1-5, G1-6	GUIDED	32.00	40.00	1.25	13.00	26.00	17.00	34.00	33.50	29.50	3.37	4	1.50	8.20	9.58
PIER 4 (UNIT 1)	G1-1, G1-8, G1-9	NON-GUIDED	22.00	34.00	1.25	8.00	16.00	14.00	28.00	22.00	24.00	3.37	4	1.25	3.95	5.33
PIER 4 (UNIT 1)	G1-3, G1-4, G1-5, G1-6	GUIDED	24.00	34.00	1.25	9.00	18.00	14.00	28.00	27.00	24.00	3.37	4	1.50	5.45	6.83
PIER 4 (UNIT 2)	G2-1, G2-8, G2-9	NON-GUIDED	22.00	34.00	1.25	8.00	16.00	14.00	28.00	31.50	24.00	3.37	4	1.25	3.95	5.33
PIER 4 (UNIT 2)	G2-3, G2-4, G2-5, G2-6	GUIDED	24.00	34.00	1.25	9.00	18.00	14.00	28.00	36.50	24.00	3.37	4	1.50	5.45	6.83
PIER 5	G2-1, G2-8, G2-9	NON-GUIDED	28.00	34.00	1.25	11.00	22.00	14.00	28.00	34.50	24.00	1.88	4	1.25	5.20	6.58
PIER 5	G2-3, G2-4, G2-5, G2-6	GUIDED	30.00	40.00	1.25	12.00	24.00	17.00	34.00	42.00	29.50	1.88	4	1.50	8.20	9.58
PIER 6	G2-1, G2-3, G2-4, G2-5, G2-6, G2-8, G2-9	FIXED	34.00	36.00	1.25	14.00	28.00	15.00	30.00	23.00	24.00	-0.49	6	1.50	7.75	9.13
PIER 7	G2-1	NON-GUIDED	30.00	34.00	1.25	12.00	24.00	14.00	28.00	29.00	26.00	-2.73	4	1.25	5.20	6.58
PIER 7	G2-3	GUIDED	32.00	44.00	1.25	13.00	26.00	19.00	38.00	39.50	31.00	-2.83	4	1.50	8.70	10.08
PIER 7	G2-4	GUIDED	32.00	44.00	1.25	13.00	26.00	19.00	38.00	39.50	31.00	-2.94	4	1.50	8.70	10.08
PIER 7	G2-5	GUIDED	32.00	44.00	1.25	13.00	26.00	19.00	38.00	39.50	31.00	-3.05	4	1.50	8.70	10.08
PIER 7	G2-6	GUIDED	32.00	44.00	1.25	13.00	26.00	19.00	38.00	39.50	31.00	-3.17	4	1.50	8.70	10.08
PIER 7	G2-8	NON-GUIDED	30.00	34.00	1.25	12.00	24.00	14.00	28.00	29.00	26.00	-3.29	4	1.25	5.20	6.58
PIER 7	G2-9	NON-GUIDED	30.00	34.00	1.25	12.00	24.00	14.00	28.00	29.00	26.00	-3.42	4	1.25	5.20	6.58
PIER 8	G2-1, G2-8, G2-9	NON-GUIDED	30.00	36.00	1.25	12.00	24.00	15.00	30.00	28.50	26.00	-5.00	4	1.25	5.95	7.33
PIER 8	G2-3, G2-4, G2-5, G2-6	GUIDED	34.00	40.00	1.25	14.00	28.00	17.00	34.00	33.00	29.50	-5.00	4	1.50	8.20	9.58

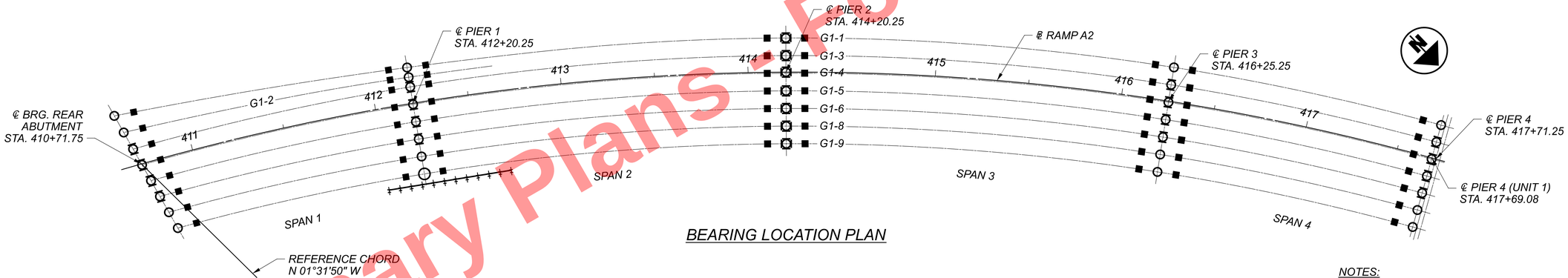

BEARING LOCATION PLAN

LEGEND:

- NON-GUIDED EXPANSION DISC BEARING
- GUIDED EXPANSION DISC BEARING
- FIXED DISC BEARING
- FUTURE JACKING POINT

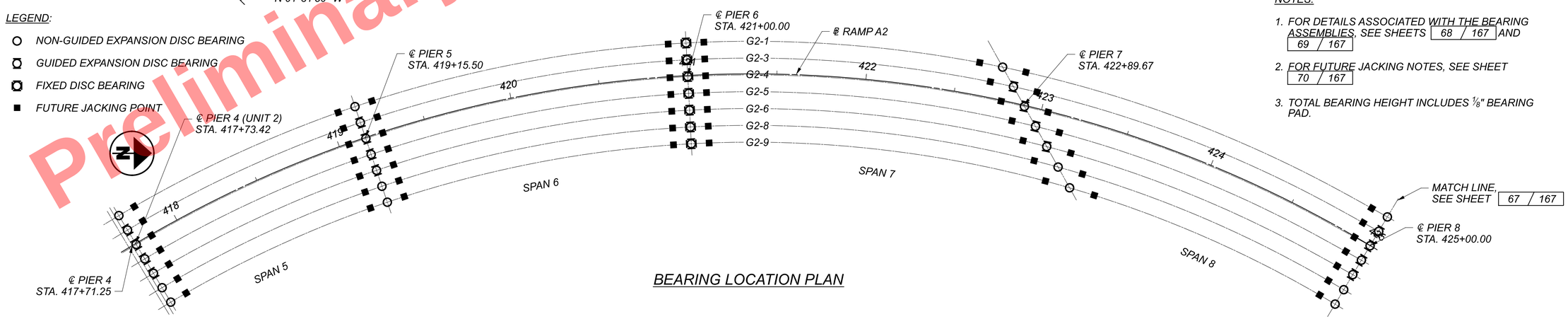

BEARING LOCATION PLAN

NOTES:

1. FOR DETAILS ASSOCIATED WITH THE BEARING ASSEMBLIES, SEE SHEETS 68 / 167 AND 69 / 167
2. FOR FUTURE JACKING NOTES, SEE SHEET 70 / 167
3. TOTAL BEARING HEIGHT INCLUDES 1/8" BEARING PAD.

Preliminary Plans - For Reference Only

BEARING LOCATION PLAN - (1 OF 2)
CUY-77-1587 (BRIDGE 9)
I.R. 77 SB OVER I.R. 90 AND CR-721 (E. 14TH ST.)

SFN 1806910
DESIGN AGENCY HDR
DESIGNER ABO | CHECKER RBK
REVIEWER DWW 01/11/24
PROJECT ID 82382
SUBSET 66 | TOTAL 167
SHEET 1934 | TOTAL 2696

CUY-90-16.28 (CCG3A)

MODEL: Sheet PAPERSIZE: 34x22 (in.) DATE: 3/28/2025 TIME: 10:16:38 AM USER: Rohit.Bk
pw:\\mb-us-pw.bentley.com:mb-us-pw-03\Documents\Cleveland_OH\01_Projects\ODOT\District12\82382\400-Engineering\Structures\SFN_1806910\Sheets\82382_SFN_1806910_SB001.dgn

LOCATION	GIRDER NUMBER	BEARING TYPE	MASONRY PLATE							SOLE PLATE			ANCHOR BOLTS		EST. HLMR DISC BEARING HEIGHT, 'H' (INCHES)	TOTAL BEARING HEIGHT, 'T' (INCHES)
			'ML' (INCHES)	'MW' (INCHES)	'MT' (INCHES)	'A' (INCHES)	'B' (INCHES)	'C' (INCHES)	'D' (INCHES)	'SL' (INCHES)	'SW' (INCHES)	SLOPE (%)	NO. OF BOLTS PER GIRDER	DIAMETER (INCHES)		
PIER 9	G2-1, G2-3, G2-4, G2-5, G2-6, G2-7, G2-8, G2-9	FIXED	36.00	36.00	1.25	15.00	30.00	15.00	30.00	24.00	24.00	-5.00	6	1.50	7.81	9.19
PIER 10	G2-1	NON-GUIDED	30.00	38.00	1.25	12.00	24.00	16.00	32.00	35.00	28.00	-5.00	4	1.25	5.95	7.33
PIER 10	G2-3, G2-8, G2-9	NON-GUIDED	30.00	38.00	1.25	12.00	24.00	16.00	32.00	35.00	24.00	-5.00	4	1.25	5.95	7.33
PIER 10	G2-4, G2-5, G2-6, G2-7	GUIDED	32.00	42.00	1.25	13.00	26.00	18.00	36.00	42.00	31.00	-5.00	4	1.50	8.70	10.08
FWD. ABUT.	G2-1	NON-GUIDED	22.00	34.00	1.50	8.00	16.00	14.00	28.00	28.50	24.00	-5.00	4	1.25	3.95	5.58
FWD. ABUT.	G2-3, G2-8, G2-9	NON-GUIDED	22.00	34.00	1.25	8.00	16.00	14.00	28.00	28.50	24.00	-5.00	4	1.25	3.95	5.33
FWD. ABUT.	G2-4, G2-5, G2-6,	GUIDED	24.00	34.00	1.25	9.00	18.00	14.00	28.00	34.00	24.00	-5.00	4	1.50	5.45	6.83
FWD. ABUT.	G2-7	GUIDED	24.00	34.00	1.375	9.00	18.00	14.00	28.00	34.00	24.00	-5.00	4	1.50	5.45	6.95

LOCATION	GIRDER NUMBER	'SKEW'
REAR ABUT.	G1-1	108°20'05"
	G1-2	106°21'44"
	G1-3	103°27'36"
	G1-4	103°33'41"
	G1-5	103°39'52"
	G1-6	103°46'08"
	G1-8	103°52'31"
	G1-9	103°59'00"
PIER 1	G1-1	91°38'45"
	G1-2	91°10'01"
	G1-3	90°00'00"
	G1-4	90°00'00"
	G1-5	90°00'00"
	G1-6	90°00'00"
	G1-8	90°00'00"
	G1-9	90°00'00"
PIER 2	G1-1	90°00'00"
	G1-3	90°00'00"
	G1-4	90°00'00"
	G1-5	90°00'00"
	G1-6	90°00'00"
	G1-8	90°00'00"
	G1-9	90°00'00"

LOCATION	GIRDER NUMBER	'SKEW'
PIER 3	G1-1	90°00'00"
	G1-3	90°00'00"
	G1-4	90°00'00"
	G1-5	90°00'00"
	G1-6	90°00'00"
	G1-8	90°00'00"
	G1-9	90°00'00"
PIER 4 (UNIT 1)	G1-1	89°52'26"
	G1-3	89°52'22"
	G1-4	89°52'19"
	G1-5	89°52'15"
	G1-6	89°52'12"
	G1-8	89°52'08"
	G1-9	89°52'05"
PIER 4 (UNIT 2)	G2-1	90°10'45"
	G2-3	90°10'54"
	G2-4	90°11'03"
	G2-5	90°11'13"
	G2-6	90°11'23"
	G2-8	90°11'33"
	G2-9	90°11'43"

LOCATION	GIRDER NUMBER	'SKEW'
PIER 5	G2-1	90°00'00"
	G2-3	90°00'00"
	G2-4	90°00'00"
	G2-5	90°00'00"
	G2-6	90°00'00"
	G2-8	90°00'00"
	G2-9	90°00'00"
PIER 6	G2-1	90°00'00"
	G2-3	90°00'00"
	G2-4	90°00'00"
	G2-5	90°00'00"
	G2-6	90°00'00"
	G2-8	90°00'00"
	G2-9	90°00'00"
PIER 7	G2-1	130°47'51"
	G2-3	131°28'59"
	G2-4	132°11'43"
	G2-5	132°56'11"
	G2-6	133°42'29"
	G2-8	134°30'46"
	G2-9	135°21'11"

LOCATION	GIRDER NUMBER	'SKEW'
PIER 8	G2-1	88°25'29"
	G2-3	88°23'58"
	G2-4	88°22'25"
	G2-5	88°20'52"
	G2-6	88°19'17"
	G2-8	90°00'00"
	G2-9	90°00'00"
PIER 9	G2-1	88°24'21"
	G2-3	88°15'58"
	G2-4	88°07'29"
	G2-5	87°58'53"
	G2-6	87°50'12"
	G2-7	88°53'57"
	G2-8	90°00'00"
	G2-9	90°00'00"
PIER 10	G2-1	90°00'00"
	G2-3	90°00'00"
	G2-4	90°00'00"
	G2-5	90°00'00"
	G2-6	90°00'00"
	G2-7	90°00'00"
	G2-8	90°00'00"
	G2-9	90°00'00"

LOCATION	GIRDER NUMBER	'SKEW'
FWD. ABUT.	G2-1	88°21'48"
	G2-3	88°21'48"
	G2-4	88°21'48"
	G2-5	88°21'48"
	G2-6	88°21'48"
	G2-7	88°21'48"
	G2-8	88°21'48"
	G2-9	88°21'48"

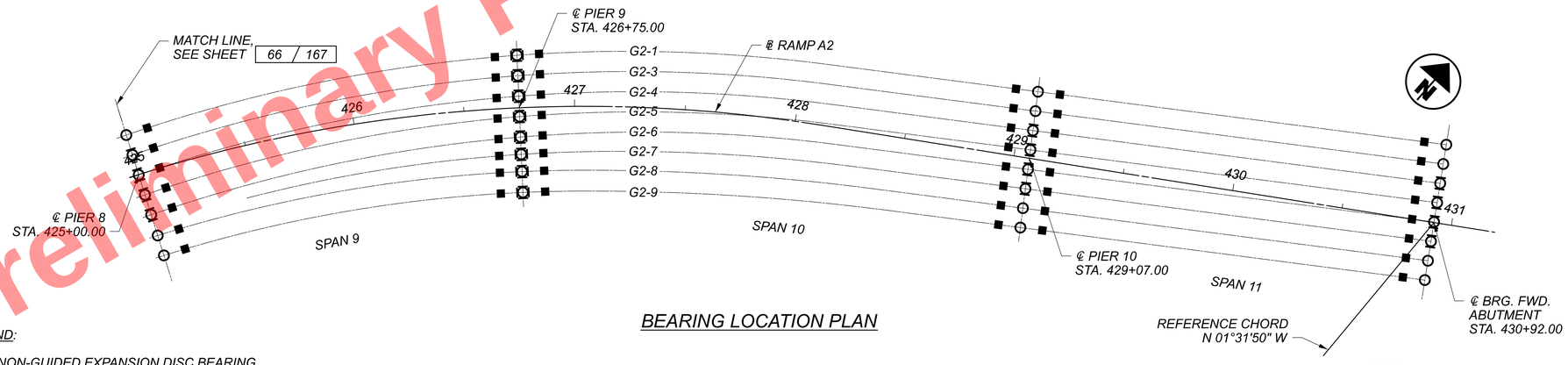

BEARING LOCATION PLAN

LEGEND:

- NON-GUIDED EXPANSION DISC BEARING
- GUIDED EXPANSION DISC BEARING
- FIXED DISC BEARING
- FUTURE JACKING POINT

NOTES:

1. FOR DETAILS ASSOCIATED WITH THE BEARING ASSEMBLIES, SEE SHEETS 68 / 167 AND 69 / 167 .
2. FOR FUTURE JACKING NOTES, SEE SHEET 70 / 167 .
3. TOTAL BEARING HEIGHT INCLUDES ⅛" BEARING PAD.

Preliminary Plans - For Reference Only

BEARING LOCATION PLAN - (2 OF 2)
CUY-77-1587 (BRIDGE 9)
I.R. 77 SB OVER I.R. 90 AND CR-721 (E. 14TH ST.)

SFN 1806910
DESIGN AGENCY HDR
DESIGNER ABO | CHECKER RBK
REVIEWER DWW 01/11/24
PROJECT ID 82382
SUBSET 67 | TOTAL 167
SHEET 1935 | TOTAL 2696

CUY-90-16.28 (CCG3A)

MODEL: Sheet PAPERSIZE: 34x22 (in.) DATE: 3/28/2025 TIME: 10:16:44 AM USER: Rohit.Bk
pw:\\mb-us-pw.bentley.com:mb-us-pw-03\Documents\Cleveland_OH101_Projects\ODOT\District12\82382\400-Engineering\Structures\SFN_1806910\Sheets\82382_SFN_1806910_SB002.dgn

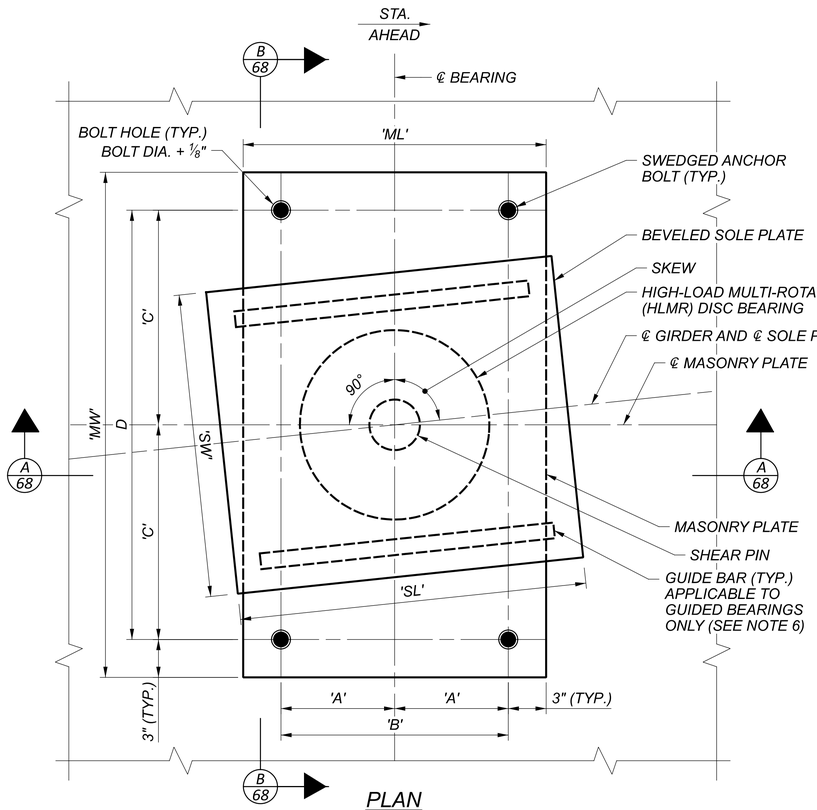

PLAN

HLMR GUIDED EXPANSION DISC BEARING IS SHOWN, HLMR NON-GUIDED DISC BEARING SIMILAR

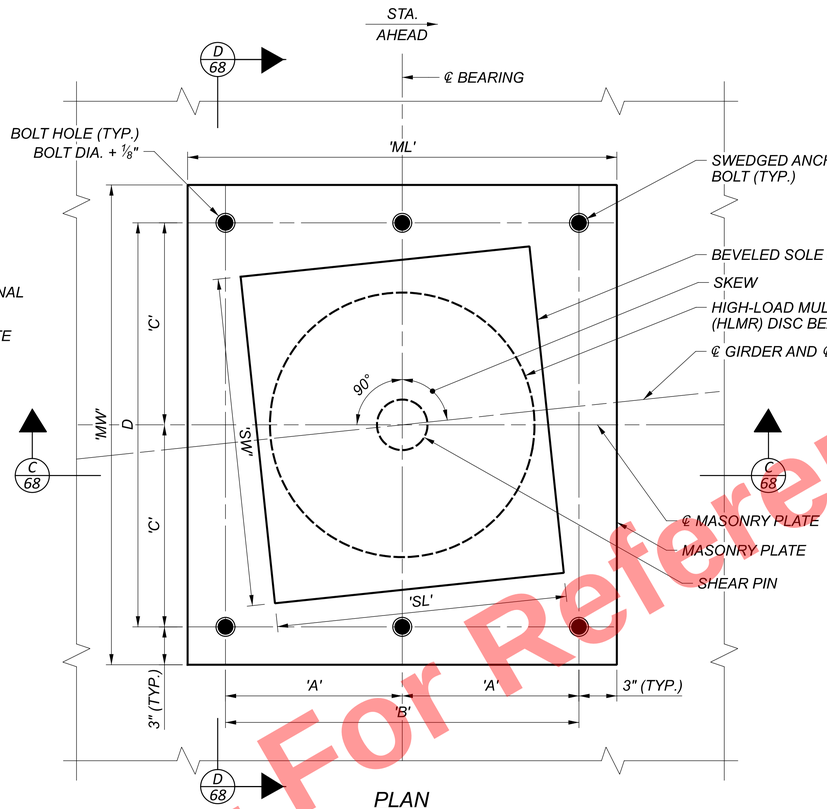

PLAN

HLMR FIXED DISC BEARING

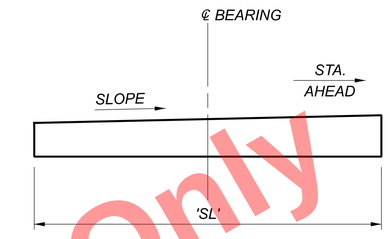

SOLE PLATE DETAIL

NOT TO SCALE

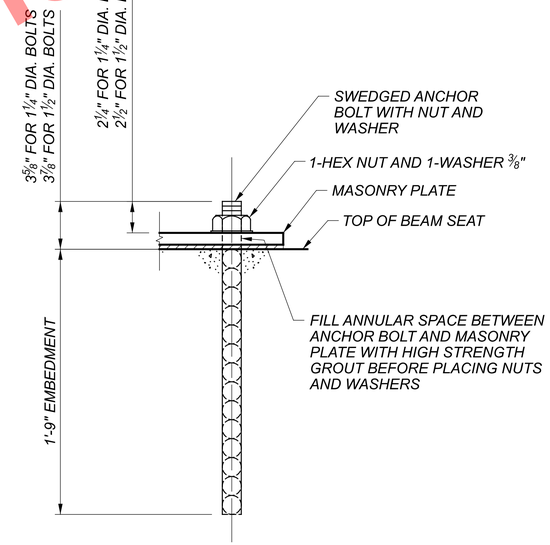

SWEDGED ANCHOR BOLT DETAIL

NOT TO SCALE

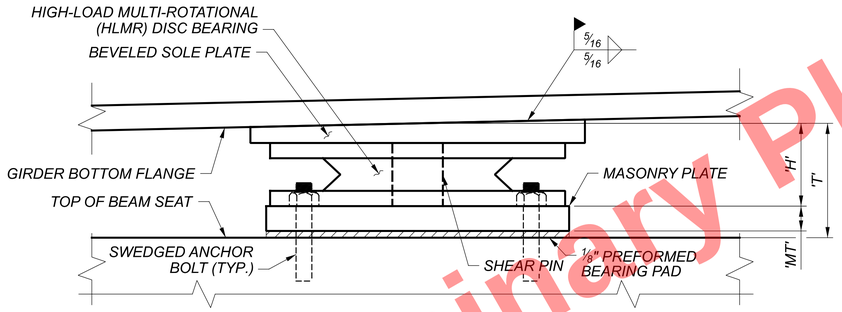

SECTION A-A

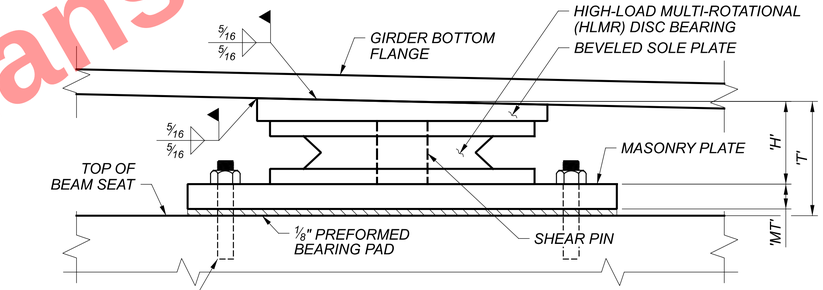

SECTION C-C

ALL BOLTS NOT SHOWN FOR CLARITY

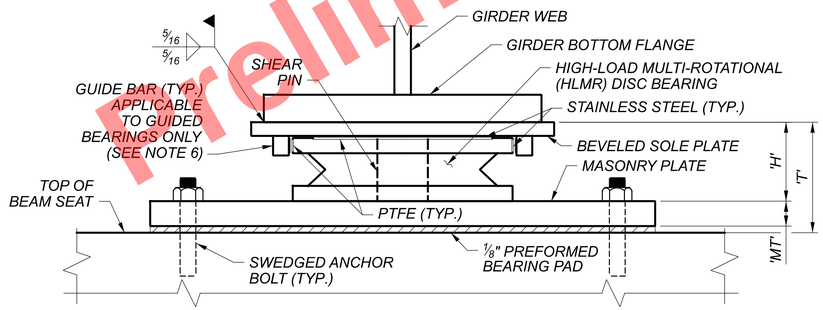

SECTION B-B

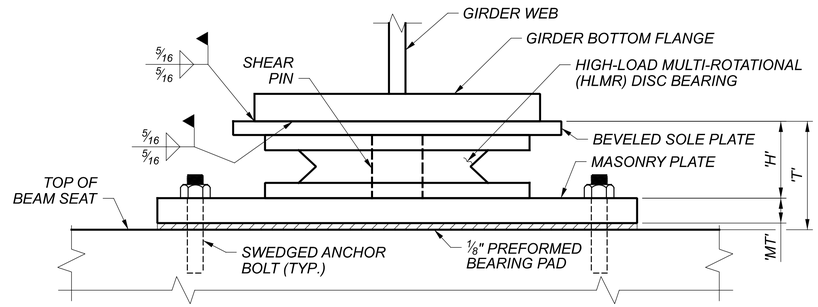

SECTION D-D

NOTES:

1. FOR ADDITIONAL INFORMATION ASSOCIATED WITH THE BEARING ASSEMBLIES SEE SHEET 69 / 167.
2. A POSITIVE (+) SOLE PLATE SLOPE INDICATES INCREASING THICKNESS AHEAD STATION.
3. TOTAL BEARING HEIGHT, 'T' IS MEASURED FROM BOTTOM OF FLANGE TO TOP OF BEAM SEAT AT CENTERLINE OF BEARING.
4. EXERCISE CAUTION WHEN WELDING NEAR THE DISC BEARING PADS IN CONTACT WITH THE STEEL. WELD IN ACCORDANCE WITH THE MANUFACTURER'S REQUIREMENTS TO MAINTAIN A SAFE TEMPERATURE SO AS NOT TO DAMAGE THE DISC BEARINGS. ANY DAMAGE DUE TO WELDING WILL BE CAUSE FOR REJECTION.
5. ALL BEARINGS SHALL BE MARKED PRIOR TO SHIPPING. THE MARKS SHALL INCLUDE THE BEARING LOCATION OF THE GIRDERS AND INCLUDED WITH PAYMENT FOR ITEM 869 - HIGH LOAD MULTI-ROTATIONAL (HLMR) BEARINGS, AS PER PLAN.
6. GUIDE BARS ARE ORIENTED PARALLEL TO ℄ GIRDER AND ℄ SOLE PLATE AT ALL GUIDED HLMR DISC BEARINGS.

Preliminary Plans - For Reference Only

BEARING DETAILS - (1 OF 3)
CUY-77-1587 (BRIDGE 9)
I.R. 77 SB OVER I.R. 90 AND CR-721 (E. 14TH ST.)

SFN	1806910
DESIGN AGENCY	HDR
DESIGNER	ABO
CHECKER	RBK
REVIEWER	DWW 01/11/24
PROJECT ID	82382
SUBSET	68
TOTAL	167
SHEET	1936
TOTAL	2696

CUY-90-16.28 (CCG3A)
MODEL: Sheet PAPERSIZE: 34x22 (in.) DATE: 3/28/2025 TIME: 10:16:50 AM USER: RohitLBk
pw:\\mb-us-pw.bentley.com:mb-us-pw-03\Documents\Cleveland_OH\01_Projects\ODOT\District12\82382\400-Engineering\Structures\SFN_1806910\Sheets\82382_SFN_1806910_SB003.dgn

DISC BEARING DATA TABLE

LOCATION	GIRDER NO.	BEARING TYPE	MAXIMUM DESIGN LOADS (KIPS)					DESIGN MOVEMENTS (INCHES) PARALLEL TO CL GIRDER		DESIGN ROTATION (RADIANS) (SEE NOTE 13)		DESIGN COEFFICIENT OF FRICTION
			STRENGTH LIMIT STATE		SERVICE LIMIT STATE							
			TOTAL VERTICAL LOAD	TOTAL HORIZONTAL LOAD	TOTAL VERTICAL LOAD	VERTICAL DEAD LOAD	TOTAL HORIZONTAL LOAD	CONTRACTION	EXPANSION	STRENGTH LIMIT STATE	SERVICE LIMIT STATE	
REAR ABUT.	G1-1, G1-2, G1-8, G1-9	NON-GUIDED	355	--	280	140	--	4.18	3.35	0.0117	0.0099	0.06
REAR ABUT.	G1-3, G1-4, G1-5, G1-6	GUIDED	321	60	250	120	11	4.24	3.35	0.0102	0.0088	0.06
PIER 1	G1-1, G1-2, G1-8, G1-9	NON-GUIDED	1040	--	810	470	--	2.97	2.47	0.0094	0.0083	0.06
PIER 1	G1-3, G1-4, G1-5, G1-6	GUIDED	899	200	680	450	19	2.91	2.42	0.0086	0.0077	0.06
PIER 2	G1-1, G1-3, G1-4, G1-5, G1-6, G1-8, G1-9	FIXED	1159	410	900	540	50	--	--	0.0106	0.0091	--
PIER 3	G1-1, G1-8, G1-9	NON-GUIDED	1023	--	780	470	--	2.57	3.02	0.0102	0.0089	0.06
PIER 3	G1-3, G1-4, G1-5, G1-6	GUIDED	1098	200	840	510	29	2.51	2.96	0.0093	0.0082	0.06
PIER 4 (UNIT 1)	G1-1, G1-8, G1-9	NON-GUIDED	377	--	290	130	--	3.28	4.06	0.0114	0.0097	0.06
PIER 4 (UNIT 1)	G1-3, G1-4, G1-5, G1-6	GUIDED	309	50	240	120	7	3.24	4.05	0.0102	0.0089	0.06
PIER 4 (UNIT 2)	G2-1, G2-8, G2-9	NON-GUIDED	404	--	310	140	--	8.75	7.13	0.0121	0.0102	0.06
PIER 4 (UNIT 2)	G2-3, G2-4, G2-5, G2-6	GUIDED	326	50	250	120	11	8.66	7.04	0.0109	0.0094	0.06
PIER 5	G2-1, G2-8, G2-9	NON-GUIDED	1030	--	800	460	--	7.10	5.80	0.0099	0.0086	0.06
PIER 5	G2-3, G2-4, G2-5, G2-6	GUIDED	934	190	720	470	34	7.03	5.71	0.0090	0.0080	0.06
PIER 6	G2-1, G2-3, G2-4, G2-5, G2-6, G2-8, G2-9	FIXED	1165	405	890	540	84	--	--	0.0113	0.0096	--
PIER 7	G2-1, G2-8, G2-9	NON-GUIDED	1118	--	860	520	--	4.49	3.74	0.0148	0.0122	0.06
PIER 7	G2-3, G2-4, G2-5, G2-6	GUIDED	1338	225	1030	670	24	4.30	3.62	0.0127	0.0106	0.06
PIER 8	G2-1, G2-8, G2-9	NON-GUIDED	1450	--	1110	650	--	2.59	2.44	0.0128	0.0107	0.06
PIER 8	G2-3, G2-4, G2-5, G2-6	GUIDED	915	180	700	430	50	2.50	2.36	0.0113	0.0097	0.06
PIER 9	G2-1, G2-3, G2-4, G2-5, G2-6, G2-7, G2-8, G2-9	FIXED	1128	455	870	530	76	--	--	0.0131	0.0109	--
PIER 10	G2-1, G2-3, G2-8, G2-9	NON-GUIDED	1296	--	1020	640	--	4.85	5.90	0.0108	0.0093	0.06
PIER 10	G2-4, G2-5, G2-6, G2-7	GUIDED	1054	285	810	570	38	4.68	5.77	0.0091	0.0080	0.06
FWD. ABUT.	G2-1, G2-3, G2-8, G2-9	NON-GUIDED	431	--	330	160	--	5.92	7.43	0.0137	0.0113	0.06
FWD. ABUT.	G2-4, G2-5, G2-6, G2-7	GUIDED	350	70	270	140	13	5.75	7.30	0.0112	0.0095	0.06

Preliminary Plans - For Reference Only

NOTES:

1. FOR INFORMATION AND DETAILS ASSOCIATED WITH THE BEARING ASSEMBLIES, SEE SHEETS 66 / 167 THRU 70 / 167 .
2. DISC BEARINGS SHALL BE DESIGNED, FABRICATED, TESTED AND INSTALLED IN ACCORDANCE WITH SUPPLEMENTAL SPECIFICATION 869, CHAPTER 14 OF THE AASHTO LRFD BRIDGE DESIGN SPECIFICATION AND CHAPTER 18 OF THE AASHTO LRFD BRIDGE CONSTRUCTION SPECIFICATIONS. THE SHOP DRAWINGS SHALL BE SUBMITTED SHOWING MANUFACTURER, MATERIALS, AND DIMENSIONS OF ALL COMPONENTS OF THE BEARING ASSEMBLY TO THE ENGINEER FOR APPROVAL. THE MANUFACTURER SHALL SUBMIT CERTIFIED COPIES OF TEST REPORTS TO THE ENGINEER FOR REVIEW.
3. HIGH LOAD MULTI-ROTATIONAL BEARINGS SHALL BE DISC TYPE. POT BEARINGS ARE NOT PERMITTED. BEARING ASSEMBLIES SHOWN ARE SCHEMATIC.
4. ANCHOR BOLTS SHALL BE ASTM F1554, GRADE 105. NUTS SHALL CONFORM TO ASTM A563. WASHERS SHALL CONFORM TO ASTM F436. MASONRY PLATE SHALL CONFORM TO ASTM A709, GRADE 36 OR GRADE 50.
5. BEARINGS SHALL BE DESIGNED AND DETAILED SUCH THAT THE BEARING ASSEMBLY CAN BE REMOVED FOR REPLACEMENT OR REPAIR.
6. MARK THE THICKER EDGE OF THE SOLE PLATE AS SUCH FOR THE PURPOSE OF FIELD IDENTIFICATION. PLACE MARK ON THE EDGE OF THE SOLE PLATE SO THAT IT WILL BE VISIBLE AFTER BEARING INSTALLATION.
7. MARK EACH BEARING WITH THE NAME OF THE MANUFACTURER AND TYPE OR MODEL NUMBER, ALONG WITH THE UP-STATION SIDE OF THE SOLE PLATE. PLACE THE IDENTIFICATION MARK IN A PERMANENT MANNER AND LOCATION SO THAT IT IS VISIBLE AFTER ERECTION.
8. THE MANUFACTURER SHALL WELD OR PRESS FIT THE BEARING PLATE TO THE MASONRY PLATE TO ENSURE FULL LATERAL CAPACITY CAN BE TAKEN BY THE BEARING.
9. GUIDED AND NON-GUIDED BEARINGS MAY BE REQUIRED TO BE FIXED TEMPORARILY DURING ERECTION OF SUPERSTRUCTURE. THE CONTRACTOR SHALL DESIGN TEMPORARY FIXING DEVICES AND SUBMIT DETAILS FOR REVIEW BY THE ENGINEER.
10. TACK WELD OR SECURELY CLAMP THE BEVELED LOAD PLATE TO THE GIRDER BOTTOM FLANGE DURING DECK CASTING. AFTER A MINIMUM OF SEVEN DAYS AFTER DECK CASTING IS COMPLETE, THE BEARING SHALL BE RESET. THE BEARING RE-SETTING SHALL CENTER THE DISC (ACCOUNTING FOR SETTING TEMPERATURE) ON THE SOLE PLATE PRIOR TO COMPLETING THE BOTTOM FLANGE TO BEVELED LOAD PLATE WELD.
11. THE BEARING PROVIDER IS RESPONSIBLE FOR DESIGN AND SUPPLY OF MASONRY PLATE, LOWER BEARING PLATE, ELASTOMERIC DISC, UPPER BEARING PLATE, SOLE PLATE AND GUIDE BARS, ANY AND ALL PTFE AND STAINLESS STEEL SLIDING SURFACES, AND ANY OTHER REQUIRED COMPONENTS OF THE BEARING ASSEMBLY.
12. THE MINIMUM THICKNESS OF EACH BEARING PLATE AND SOLE PLATE SHALL BE AS REQUIRED BY DESIGN BUT MUST BE AT LEAST $\frac{3}{4}$".
13. ROTATION VALUES IN THE TABLE INCLUDE AN ALLOWANCE OF 0.005 RADIANS FOR UNCERTAINTIES AND ARE THE MAXIMUM ROTATIONS IN ANY DIRECTION.
14. THE PIER AND ABUTMENT BEAM SEAT ELEVATIONS ARE BASED ON BEARING HEIGHTS PROVIDED IN THE TABLE SHOWN. IF THE CONTRACTOR'S SELECTED BEARING MANUFACTURER HAS A DESIGN THAT DOES NOT CONFORM TO THE HEIGHTS PROVIDED IN THE TABLE, ADJUST THE BEARING SEAT ELEVATIONS AT NO ADDITIONAL COST TO THE STATE. ADJUST THE LOCATION OF REINFORCING STEEL HORIZONTALLY AS NECESSARY TO AVOID INTERFERENCE WITH THE BEARING ANCHOR BOLTS. MAINTAIN THE MINIMUM CONCRETE COVER AND MINIMUM SPACING REQUIRED BY THE PROJECT PLANS. IF THE REINFORCING STEEL CANNOT BE MOVED TO PROVIDE THE REQUIRED POSITION FOR THE ANCHOR BOLTS, THE CONTRACTOR'S BEARING MANUFACTURER SHALL RE-DESIGN THE BEARINGS TO ACCOMMODATE AN ACCEPTABLE ANCHOR BOLT CONFIGURATION.
15. BEARINGS ARE TO BE SET BY USE OF A STEEL TEMPLATE WITH A MINIMUM THICKNESS OF $\frac{1}{4}$-IN.

BEARING DETAILS - (2 OF 3)
CUY-77-1587 (BRIDGE 9)
I.R. 77 SB OVER I.R. 90 AND CR-721 (E. 14TH ST.)

SFN 1806910
DESIGN AGENCY HDR
DESIGNER ABO | CHECKER RBK
REVIEWER DWW 01/11/24
PROJECT ID 82382
SUBSET 69 | TOTAL 167
SHEET 1937 | TOTAL 2696

CUY-90-16.28 (CCG3A)

MODEL: Sheet PAPERSIZE: 34x22 (in.) DATE: 3/28/2025 TIME: 10:16:56 AM USER: Rohit.Bk
pw:\\mb-us-pw.bentley.com:mb-us-pw-03\Documents\Cleveland_OH\01_Projects\ODOT\District12\82382400-Engineering\Structures\SFN_1806910\Sheets\82382_SFN_1

MAXIMUM JACKING LOAD TABLE (TONS)							
LOCATION	GIRDER NO.	BEARING TYPE	DL	JDL	LL	JLL	TOTAL
REAR ABUT.	G1-1, G1-2, G1-8, G1-9	NON-GUIDED	67	87	55	96	184
REAR ABUT.	G1-3, G1-4, G1-5, G1-6	GUIDED	59	77	48	84	161
PIER 1	G1-1, G1-2, G1-8, G1-9	NON-GUIDED	232	301	120	209	511
PIER 1	G1-3, G1-4, G1-5, G1-6	GUIDED	222	289	90	158	446
PIER 2	G1-1, G1-3, G1-4, G1-5, G1-6, G1-8, G1-9	FIXED	266	346	129	226	572
PIER 3	G1-1, G1-8, G1-9	NON-GUIDED	232	302	117	205	507
PIER 3	G1-3, G1-4, G1-5, G1-6	GUIDED	255	331	123	214	545
PIER 4 (UNIT 1)	G1-1, G1-8, G1-9	NON-GUIDED	62	80	60	105	186
PIER 4 (UNIT 1)	G1-3, G1-4, G1-5, G1-6	GUIDED	56	73	47	83	156
PIER 4 (UNIT 2)	G2-1, G2-8, G2-9	NON-GUIDED	66	86	65	114	199
PIER 4 (UNIT 2)	G2-3, G2-4, G2-5, G2-6	GUIDED	58	76	50	88	163
PIER 5	G2-1, G2-8, G2-9	NON-GUIDED	228	297	120	210	507
PIER 5	G2-3, G2-4, G2-5, G2-6	GUIDED	232	301	100	176	477
PIER 6	G2-1, G2-3, G2-4, G2-5, G2-6, G2-8, G2-9	FIXED	266	346	136	237	583
PIER 7	G2-1, G2-8, G2-9	NON-GUIDED	257	335	143	251	586
PIER 7	G2-3, G2-4, G2-5, G2-6	GUIDED	330	429	136	238	667
PIER 8	G2-1, G2-8, G2-9	NON-GUIDED	325	422	170	298	720
PIER 8	G2-3, G2-4, G2-5, G2-6	GUIDED	214	278	102	178	456
PIER 9	G2-1, G2-3, G2-4, G2-5, G2-6, G2-7, G2-8, G2-9	FIXED	262	340	124	218	558
PIER 10	G2-1, G2-3, G2-8, G2-9	NON-GUIDED	319	415	128	223	638
PIER 10	G2-4, G2-5, G2-6, G2-7	GUIDED	283	367	90	158	525
FWD. ABUT.	G2-1, G2-3, G2-8, G2-9	NON-GUIDED	75	98	66	116	214
FWD. ABUT.	G2-4, G2-5, G2-6, G2-7	GUIDED	67	87	50	87	174

JACKING LOAD NOTES:

JDL = 1.30DL
JLL = 1.75LL

WHERE:
DL DENOTES DEAD LOAD REACTIONS AT BEARING
JDL DENOTES JACKING DESIGN DEAD LOAD REACTIONS AT BEARING
LL DENOTES LIVE LOAD + IM REACTIONS AT BEARING
JLL DENOTES JACKING DESIGN LIVE LOAD + IM REACTIONS AT BEARING
TOTAL DENOTES JDL + JLL

LOADS SHOWN ARE PER BEARING AND IN UNITS OF TONS.

FUTURE JACKING NOTES:

1. *SUBMIT THE PROPOSED JACKING AND/OR BEARING REPLACEMENT PROCEDURE TO THE DEPARTMENT FOR REVIEW AND APPROVAL PRIOR TO COMMENCEMENT OF ANY JACKING OPERATIONS.*
2. *JACK THE SUPERSTRUCTURE ONLY AT LOCATIONS SHOWN ON THE DRAWINGS. THE CONTRACTOR IS RESPONSIBLE FOR DESIGNING THE JACKS AND JACKING PROCEDURE, INCLUDING, BUT NOT LIMITED TO, CHECKING CONCRETE BEARING STRESSES, STABILITY, AND GIRDER AND DETAIL STRESSES. FOR LOADS, SEE MAXIMUM JACKING LOAD TABLE. NOTE THAT THE LOADS GIVEN ARE THOSE AT THE BEARINGS, NOT NECESSARILY THE JACKS. ANALYSIS MAY BE REQUIRED TO DETERMINE SOME JACKING LOADS.*
3. *JACK EACH GIRDER AT A GIVEN SUBSTRUCTURE LOCATION SIMULTANEOUSLY AND WITH THE SAME DISPLACEMENT AND RATE OF DISPLACEMENT. PROVIDE HYDRAULIC REGULATING DEVICES AS REQUIRED.*
4. *CENTER THE JACKS ON THE CENTERLINE OF THE GIRDER WEBS AND THE JACKING STIFFENER PLATES OR AS DETAILED IN THE JACKING PROCEDURE SUBMITTED TO THE DEPARTMENT.*
5. *ACCOUNT FOR ANY THERMAL MOVEMENTS AND ANY HORIZONTAL FORCES THAT MAY BE ENCOUNTERED DURING THE PERIOD WHEN THE SUPERSTRUCTURE IS BEING JACKED OR IS SHORED ON TEMPORARY SUPPORTS.*
6. *IF TRAFFIC IS PERMITTED ON THE BRIDGE DURING JACKING, ACCOUNT FOR THE EFFECTS OF VIBRATIONS DUE TO TRAFFIC ON THE BRIDGE AND ALSO NEAR THE SUBSTRUCTURE UNIT ON WHICH JACKING IS TAKING PLACE OR WHILE THE SUPERSTRUCTURE IS BEING SHORED ON TEMPORARY SUPPORTS.*
7. *WHEN JACKING AT EXPANSION JOINTS, REMOVE THE RAILING COVER PLATES TO PREVENT DAMAGE TO THE JOINT.*
8. *DO NOT DAMAGE THE SUPERSTRUCTURE OR SUBSTRUCTURE WHEN JACKING AND REPLACING THE BEARINGS.*
9. *THE MAXIMUM ALLOWABLE JACKING DISPLACEMENT OF THE SUPERSTRUCTURE IS ONE INCH (1") VERTICAL.*
10. *PROVIDE RESTRAINT AGAINST TRANSVERSE WIND LOADING DURING JACKING OPERATIONS.*

Preliminary Plans - For Reference Only

BEARING DETAILS - (3 OF 3)
CUY-77-1587 (BRIDGE 9)
I.R. 77 SB OVER I.R. 90 AND CR-721 (E. 14TH ST.)

SFN 1806910
DESIGN AGENCY
DESIGNER ABO | CHECKER RBK
REVIEWER DWW 01/11/24
PROJECT ID 82382
SUBSET 70 | TOTAL 167
SHEET 1938 | TOTAL 2696

CUY-90-16.28 (CCG3A)

MODEL: Sheet PAPERSIZE: 34x22 (in.) DATE: 3/28/2025 TIME: 10:17:02 AM USER: Rohit.Bk
pw:\\mb-us-pw.bentley.com:mb-us-pw-03\Documents\Cleveland_OH01_Projects\ODOT\District12\82382400-Engineering\Structures\SFN_1806910\Sheets\82382_SFN_1806910_SB006.dgn

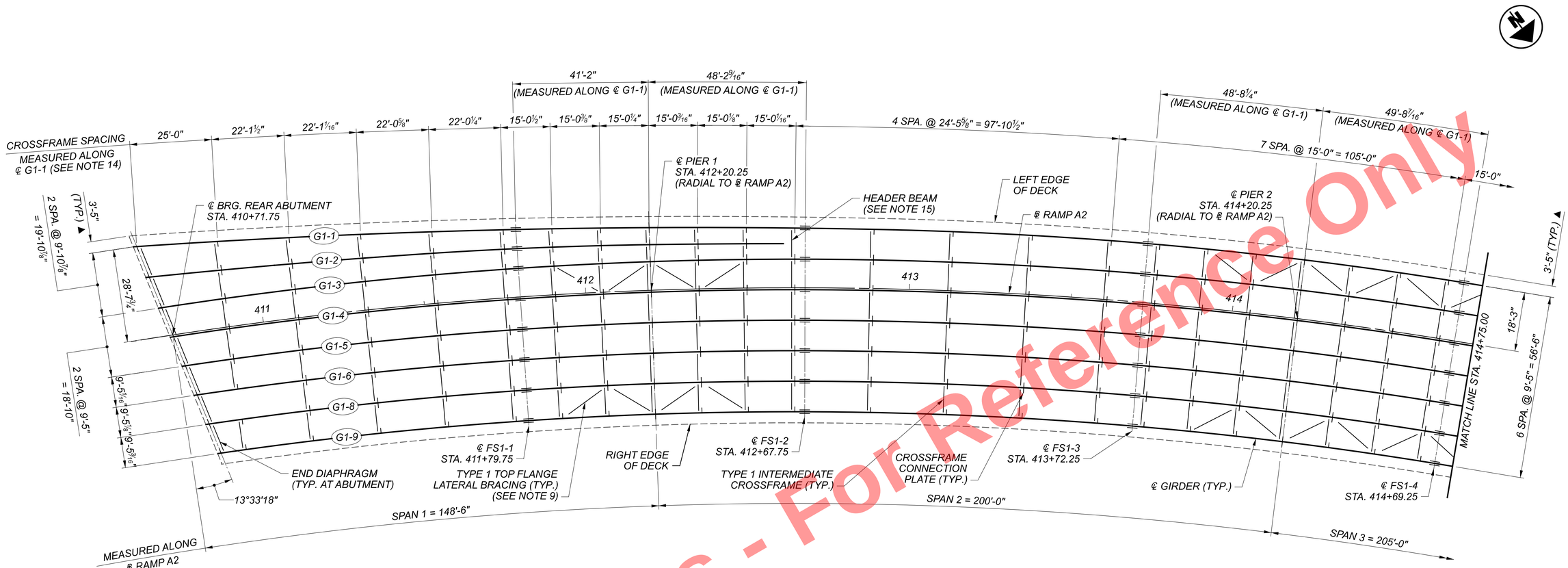

UNIT 1 FRAMING PLAN

GIRDER RADIUS TABLE												
GIRDER #	STA./OFF. FROM		STA./OFF. TO		STA./OFF. FROM		STA./OFF. TO		STA./OFF. FROM		STA./OFF. TO	
G1-1	410+65.00	28.67' LT.	412+94.77	18.25' LT.	412+94.77	18.25' LT.	417+69.12	18.25' LT.	-	-	-	-
	R = 2550.7291'				R = 1291.4895'				-			
G1-2	410+67.30	18.75' LT.	411+54.26	15.49' LT.	411+54.26	15.49' LT.	412+20.25	14.09' LT.	412+20.25	14.09' LT.	412+64.61	13.63' LT.
	R = 2364.6596'				R = 1316.6005'				R = 3098.1694'			
G1-3	410+69.64	8.83' LT.	417+69.10	8.83' LT.	-	-	-	-	-	-	-	-
	R = 1282.0729'				-				-			
G1-4	410+71.89	0.58' RT.	417+69.08	0.58' RT.	-	-	-	-	-	-	-	-
	R = 1272.6562'				-				-			
G1-5	410+74.18	10.00' RT.	417+69.06	10.00' RT.	-	-	-	-	-	-	-	-
	R = 1263.2395'				-				-			
G1-6	410+76.51	19.42' RT.	417+69.04	19.42' RT.	-	-	-	-	-	-	-	-
	R = 1253.8229'				-				-			
G1-8	410+78.87	28.83' RT.	417+69.02	28.83' RT.	-	-	-	-	-	-	-	-
	R = 1244.4062'				-				-			
G1-9	410+81.27	38.25' RT.	417+69.00	38.25' RT.	-	-	-	-	-	-	-	-
	R = 1234.9895'				-				-			

LEGEND:

(#) GIRDER NUMBER

▲ DECK OVERHANG MEASURED PERPENDICULAR TO GIRDER ℄

NOTES:

1. TRANSVERSE DIMENSIONS ARE MEASURED RADIAL TO ℄ RAMP A2 UNLESS NOTED OTHERWISE.
2. ALL STRUCTURAL STEEL SHALL BE ASTM A709 GR. 50.
3. FOR GENERAL NOTES, SEE SHEETS 12 / 167 THRU 15 / 167.
4. FOR UNIT 2 FRAMING PLAN, SEE SHEETS 73 / 167 THRU 76 / 167.
5. FOR UNIT 1 GIRDER ELEVATION, SEE SHEETS 77 / 167 AND 78 / 167.
6. FOR GIRDER STEEL DETAILS, SEE SHEETS 82 / 167 THRU 84 / 167.
7. FOR FIELD SPLICE DETAILS, SEE SHEETS 85 / 167 AND 86 / 167.
8. FOR CROSSFRAME DETAILS, SEE SHEETS 87 / 167 AND 88 / 167.
9. FOR TOP FLANGE LATERAL BRACING DETAILS, SEE SHEET 89 / 167.
10. FOR GEOMETRIC LAYOUT, SEE SHEET 17 / 167.
11. FOR BEARING ORIENTATION AND DETAILS, SEE SHEETS 66 / 167 THRU 70 / 167.
12. FOR INSPECTION HANDRAIL DETAILS, SEE SHEET 92 / 167.
13. FOR UNIT 1 GIRDER CAMBER AND DEFLECTIONS, SEE SHEETS 93 / 167 AND 94 / 167.
14. FIELD SPLICES, CROSSFRAMES AND HEADER BEAMS ARE ORIENTED RADIAL TO ℄ RAMP A2 UNLESS NOTED OTHERWISE.
15. FOR HEADER BEAM DETAILS, SEE SHEETS 90 / 167 AND 91 / 167.
16. FOR TRANSVERSE SECTIONS, SEE SHEETS 114 / 167 THRU 116 / 167.

Preliminary Plans - For Reference Only

UNIT 1 FRAMING PLAN - (1 OF 2)
CUY-77-1587 (BRIDGE 9)
I.R. 77 SB OVER I.R. 90 AND CR-721 (E. 14TH ST.)

SFN 1806910
DESIGN AGENCY HDR
DESIGNER RWJ | CHECKER APR
REVIEWER DWW 01/11/24
PROJECT ID 82382
SUBSET 71 | TOTAL 167
SHEET 1939 | TOTAL 2696

CUY-90-16.28 (CCG3A)

MODEL: Sheet PAPERSIZE: 34x22 (in.) DATE: 3/28/2025 TIME: 10:17:09 AM USER: RohitLBk
pw:\\mb-us-pw.bentley.com:mb-us-pw-03\Documents\Cleveland_OH\01_Projects\ODOT\District12\82382\400-Engineering\Structures\SFN_1806910\Sheets\82382_SFN_1806910_SS005.dgn

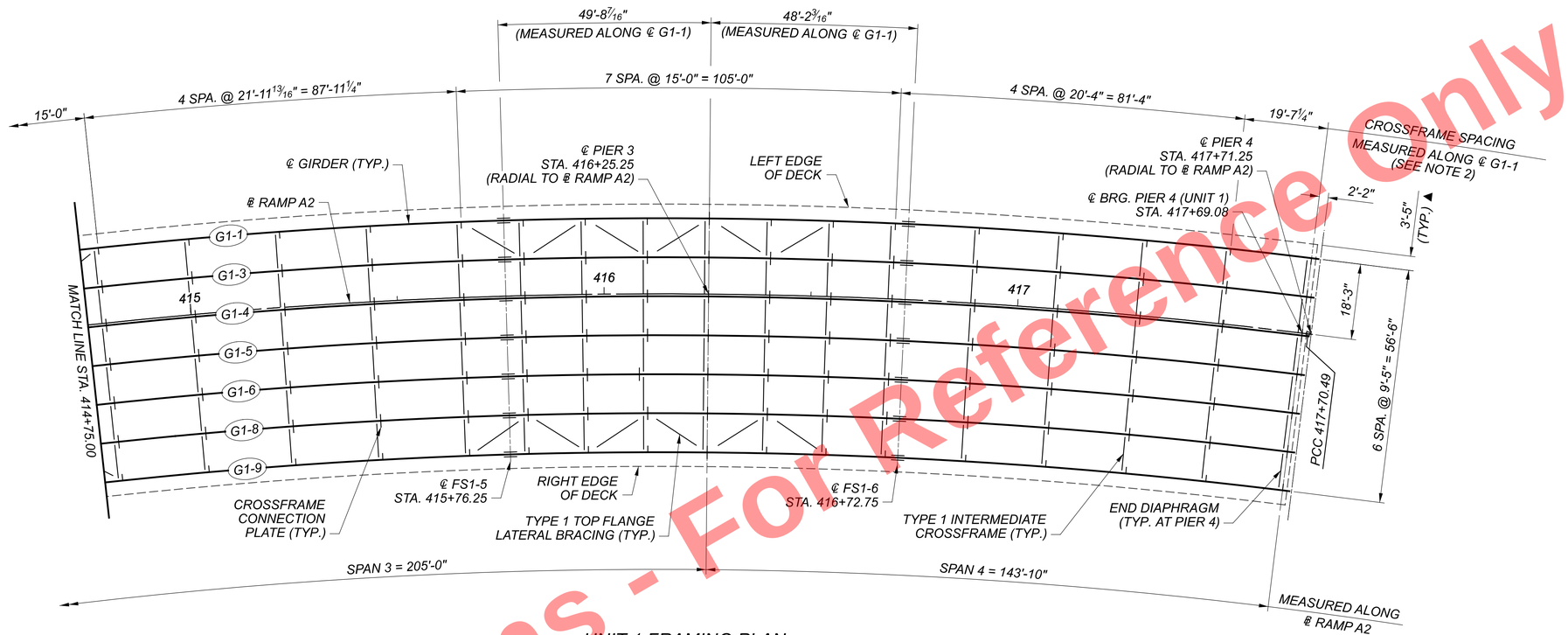

UNIT 1 FRAMING PLAN

Preliminary Plans - Not For Reference Only

LEGEND:

(#) GIRDER NUMBER

▲ DECK OVERHANG MEASURED PERPENDICULAR TO GIRDER ℄

NOTES:

1. TRANSVERSE DIMENSIONS ARE MEASURED RADIAL TO ℄ RAMP A2 UNLESS NOTED OTHERWISE.
2. FIELD SPLICES, CROSSFRAMES AND HEADER BEAMS ARE ORIENTED RADIAL TO ℄ RAMP A2 UNLESS NOTED OTHERWISE.
3. FOR ADDITIONAL NOTES, SEE SHEET 71 / 167 .
4. FOR GIRDER RADIUS TABLE, SEE SHEET 71 / 167 .

UNIT 1 FRAMING PLAN - (2 OF 2)
CUY-77-1587 (BRIDGE 9)
I.R. 77 SB OVER I.R. 90 AND CR-721 (E. 14TH ST.)

SFN	1806910
DESIGN AGENCY	HDR
DESIGNER	RJW
CHECKER	APR
REVIEWER	DWW 01/11/24
PROJECT ID	82382
SUBSET	72
TOTAL	167
SHEET	1940
TOTAL	2696

CUY-90-16.28 (CCG3A)

MODEL: Sheet PAPERSIZE: 34x22 (in.) DATE: 3/28/2025 TIME: 10:17:17 AM USER: Rohit.Bk
pw:\\mb-us-pw.bentley.com:mb-us-pw-03\Documents\Cleveland_OH101_Projects\ODOT\District12\82382\400-Engineering\Structures\SFN_1806910\Sheets\82382_SFN_1806910_SS006.dgn

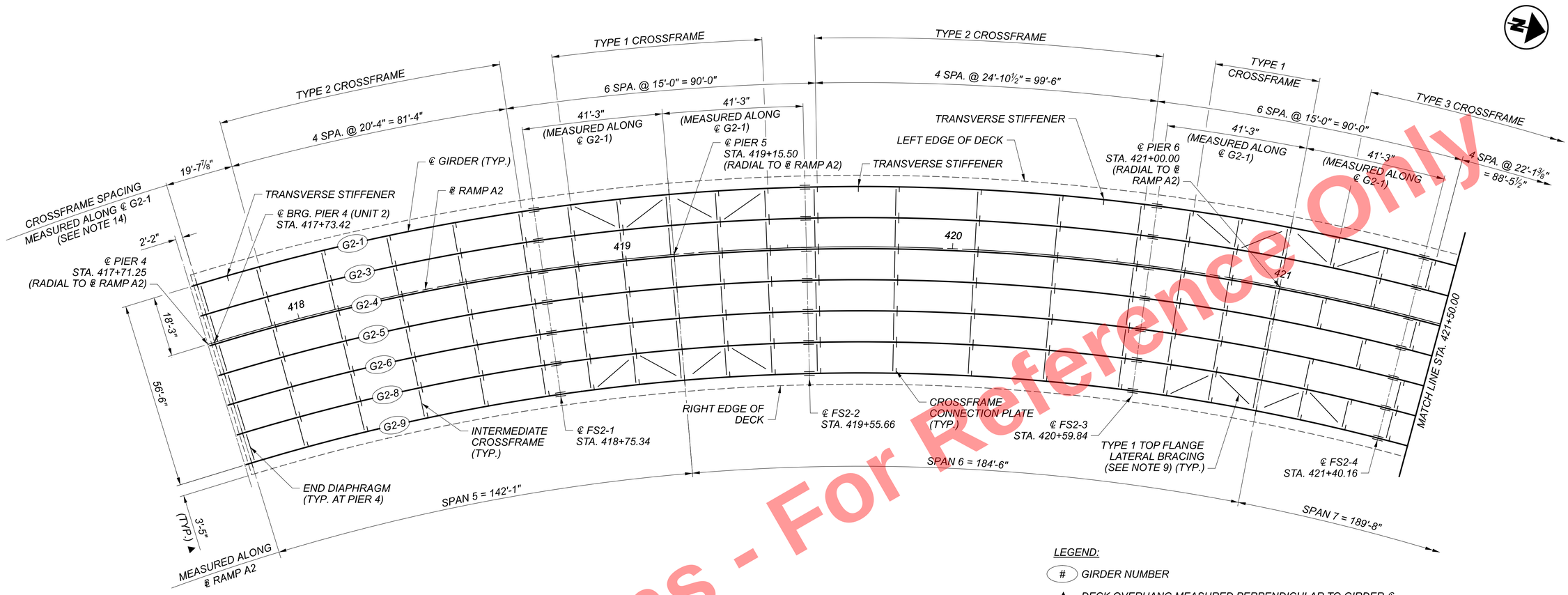

UNIT 2 FRAMING PLAN

LEGEND:

(#) GIRDER NUMBER

▲ DECK OVERHANG MEASURED PERPENDICULAR TO GIRDER ℄

NOTES:

1. TRANSVERSE DIMENSIONS ARE MEASURED RADIAL TO ℄ RAMP A2 UNLESS NOTED OTHERWISE.
2. ALL STRUCTURAL STEEL SHALL BE ASTM A709 GR. 50.
3. FOR GENERAL NOTES, SEE SHEETS 12 / 167 THRU 15 / 167.
4. FOR UNIT 1 FRAMING PLAN, SEE SHEETS 71 / 167 AND 72 / 167.
5. FOR UNIT 2 GIRDER ELEVATION, SEE SHEETS 79 / 167 THRU 81 / 167.
6. FOR GIRDER STEEL DETAILS, SEE SHEETS 82 / 167 THRU 84 / 167.
7. FOR FIELD SPLICE DETAILS, SEE SHEETS 85 / 167 AND 86 / 167.
8. FOR CROSSFRAME DETAILS, SEE SHEETS 87 / 167 AND 88 / 167.
9. FOR TOP FLANGE LATERAL BRACING DETAILS, SEE SHEET 89 / 167.
10. FOR GEOMETRIC LAYOUT, SEE SHEET 17 / 167.
11. FOR BEARING ORIENTATION AND DETAILS, SEE SHEETS 66 / 167 THRU 70 / 167.
12. FOR INSPECTION HANDRAIL DETAILS, SEE SHEET 92 / 167.
13. FOR UNIT 2 GIRDER CAMBER AND DEFLECTIONS, SEE SHEETS 95 / 167 THRU 98 / 167.
14. FIELD SPLICES, CROSSFRAMES AND HEADER BEAMS ARE ORIENTED RADIAL TO ℄ RAMP A2 UNLESS NOTED OTHERWISE.
15. FOR HEADER BEAM DETAILS SEE SHEETS 90 / 167 AND 91 / 167.
16. WHERE TRANSVERSE STIFFENERS ARE SHOWN, THEY SHALL BE LOCATED AT EQUAL SPACES BETWEEN ADJACENT CROSSFRAME CONNECTION PLATES OR BETWEEN THE BEARING STIFFENER AND THE ADJACENT CROSSFRAME CONNECTION PLATE.
17. FOR TRANSVERSE SECTIONS, SEE SHEETS 114 / 167 THRU 116 / 167.

GIRDER RADIUS/GEOMETRY TABLE

GIRDER #	STA./OFF. FROM	STA./OFF. TO	STA./OFF. FROM	STA./OFF. TO	STA./OFF. FROM	STA./OFF. TO	STA./OFF. FROM	STA./OFF. TO
G2-1	417+73.36 18.25' LT.	424+75.58 18.25' LT.	424+75.58 18.25' LT.	424+94.09 18.51' LT.	424+94.09 18.51' LT.	428+10.58 27.56' LT.	428+10.58 26.56' LT.	430+92.00 35.60' LT.
	R = 692.3180'		TANGENT		R = 696.4030'		TANGENT	
G2-3	417+73.39 8.83' LT.	424+75.58 8.83' LT.	424+75.58 8.83' LT.	424+94.34 9.10' LT.	424+94.34 9.10' LT.	428+12.15 18.77' LT.	428+12.15 18.77' LT.	430+92.00 26.76' LT.
	R = 682.9013'		TANGENT		R = 692.3904'		TANGENT	
G2-4	417+73.42 0.58' RT.	424+75.58 0.58' RT.	424+75.58 0.58' RT.	424+94.60 0.32' RT.	424+94.60 0.32' RT.	428+14.85 10.01' LT.	428+14.85 10.01' LT.	430+92.00 17.92' LT.
	R = 673.4846'		TANGENT		R = 688.3858'		TANGENT	
G2-5	417+73.45 10.00' RT.	424+75.58 10.00' RT.	424+75.58 10.00' RT.	424+94.87 9.73' RT.	424+94.87 9.73' RT.	428+17.54 1.25' LT.	428+17.54 1.25' LT.	430+92.00 9.09' LT.
	R = 664.0679'		TANGENT		R = 684.3811'		TANGENT	
G2-6	417+73.48 19.42' RT.	424+75.58 19.42' RT.	424+75.58 19.42' RT.	424+95.15 19.14' RT.	424+95.15 19.14' RT.	428+20.24 7.51' RT.	428+20.24 7.51' RT.	430+92.00 0.25' LT.
	R = 654.6512'		TANGENT		R = 680.3765'		TANGENT	
G2-7	425+44.97 23.25 RT.	428+34.79 15.94' RT.	428+34.79 15.94' RT.	430+92.00 8.59' RT.	- -	- -	- -	- -
	SPIRAL **		TANGENT		-		-	
G2-8	417+73.51 28.83' RT.	427+01.50 28.83' RT.	427+01.50 28.83' RT.	428+38.67 24.66' RT.	428+38.67 24.66' RT.	430+92.00 17.42' RT.	- -	- -
	R = 645.2345'		R = 994.9109'		TANGENT		-	
G2-9	417+73.55 38.25' RT.	427+01.50 38.25' RT.	427+01.50 38.25' RT.	428+47.65 33.24' RT.	428+47.65 33.24' RT.	430+92.00 26.26' RT.	- -	- -
	R = 635.8180'		R = 1051.1072'		TANGENT		-	

** GIRDER G2-7 FOLLOWS A GEOMETRIC SPIRAL THROUGH THE MIDPOINT BETWEEN GIRDERS G2-6 AND G2-8

Preliminary Plans - For Reference Only

UNIT 2 FRAMING PLAN - (1 OF 4)
CUY-77-1587 (BRIDGE 9)
I.R. 77 SB OVER I.R. 90 AND CR-721 (E. 14TH ST.)

SFN 1806910
DESIGN AGENCY HDR
DESIGNER TJE | CHECKER NJH
REVIEWER DWW 01/11/24
PROJECT ID 82382
SUBSET 73 | TOTAL 167
SHEET 1941 | TOTAL 2696

CUY-90-16.28 (CCG3A)

MODEL: Sheet PAPERSIZE: 34x22 (in.) DATE: 3/28/2025 TIME: 10:17:24 AM USER: Rohit.Bk
pw:\\mb-us-pw.bentley.com:mb-us-pw-03\Documents\Cleveland_OH\01_Projects\ODOT\District12\82382400-Engineering\Structures\SFN_1806910\Sheets\82382_SFN_1806910_SS001.dgn

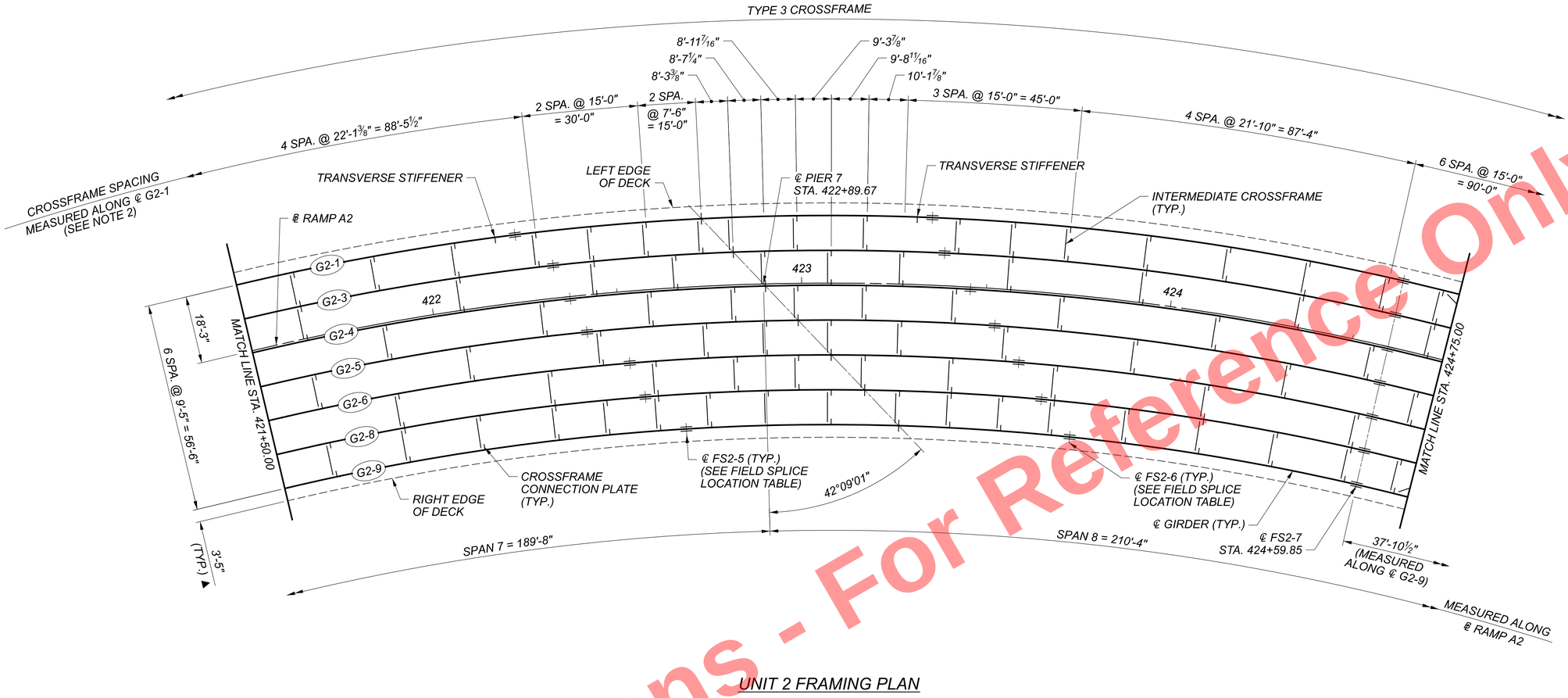

UNIT 2 FRAMING PLAN

FIELD SPLICE LOCATION TABLE		
GIRDER #	FS2-5	FS2-6
G2-1	422+24.50	423+34.61
G2-3	422+33.62	423+38.25
G2-4	422+37.24	423+45.66
G2-5	422+40.89	423+52.88
G2-6	422+51.88	423+60.25
G2-8	422+55.48	423+67.43
G2-9	422+66.48	423+76.47

LEGEND:

(#) GIRDER NUMBER

▲ DECK OVERHANG MEASURED PERPENDICULAR TO GIRDER ℄

NOTES:

1. TRANSVERSE DIMENSIONS ARE MEASURED RADIAL TO ℄ RAMP A2 UNLESS NOTED OTHERWISE.
2. FIELD SPLICES, CROSSFRAMES AND HEADER BEAMS ARE ORIENTED RADIAL TO ℄ RAMP A2 UNLESS NOTED OTHERWISE.
3. FOR ADDITIONAL NOTES, SEE SHEET 73 / 167 .
4. FOR GIRDER RADIUS/GEOMETRY TABLE, SEE SHEET 73 / 167 .

Preliminary Plans - For Reference Only

UNIT 2 FRAMING PLAN - (2 OF 4)
CUY-77-1587 (BRIDGE 9)
I.R. 77 SB OVER I.R. 90 AND CR-721 (E. 14TH ST.)

SFN 1806910
DESIGN AGENCY HDR
DESIGNER TJE | CHECKER NJH
REVIEWER DWW 01/11/24
PROJECT ID 82382
SUBSET 74 | TOTAL 167
SHEET 1942 | TOTAL 2696

CUY-90-16.28 (CCG3A)

MODEL: Sheet PAPERSIZE: 34x22 (in.) DATE: 3/28/2025 TIME: 10:17:31 AM USER: RohitLBk
pw:\\mb-us-pw.bentley.com:mb-us-pw-03\Documents\Cleveland_OH\01_Projects\ODOT\District12\82382\400-Engineering\Structures\SFN_1806910\Sheets\82382_SFN_1806910_SS002.dgn

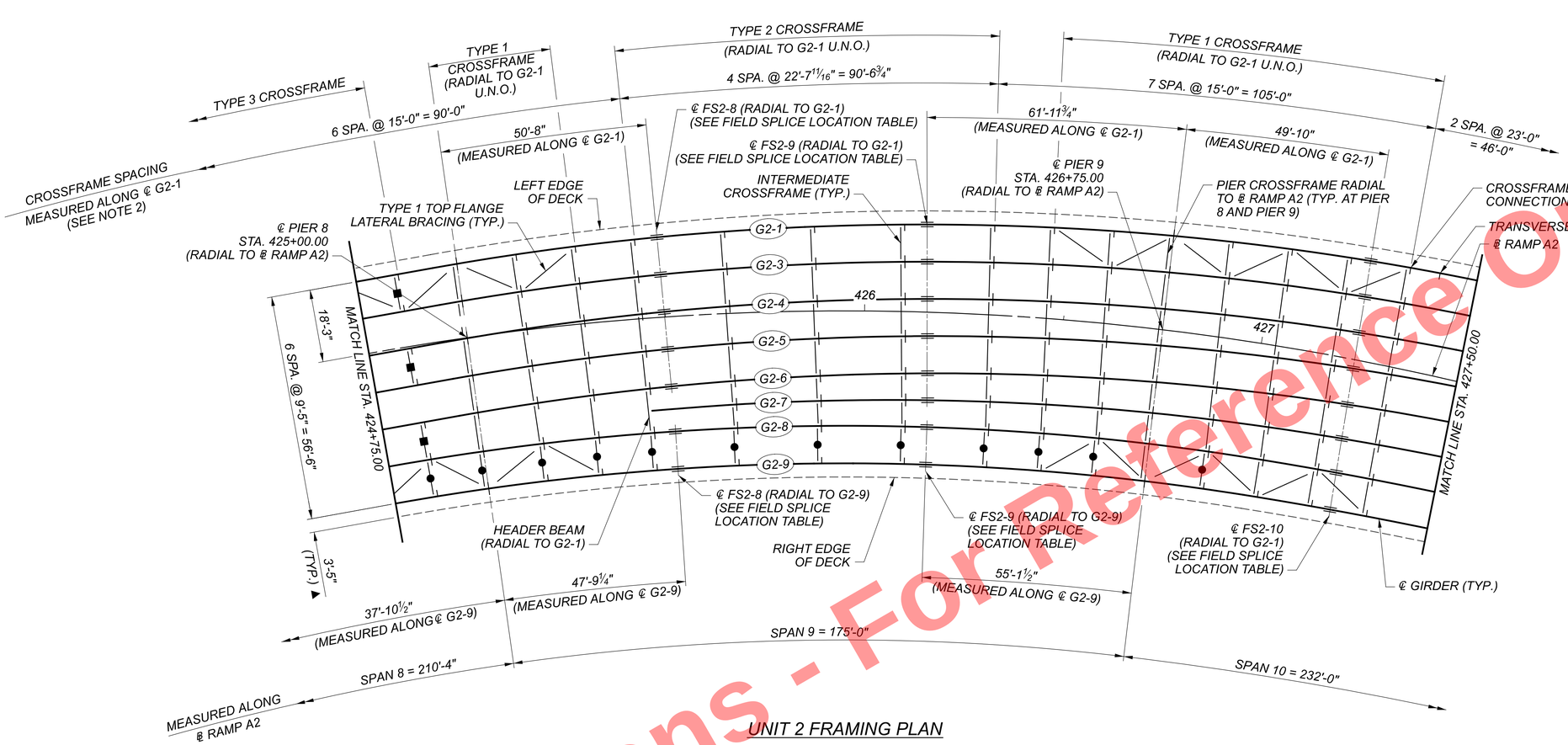

UNIT 2 FRAMING PLAN

FIELD SPLICE LOCATION TABLE			
GIRDER #	FS2-8	FS2-9	FS2-10
G2-1	425+49.23	426+15.08	427+23.07
G2-3	425+49.49	426+15.33	427+23.32
G2-4	425+49.75	426+15.59	427+23.57
G2-5	425+50.02	426+15.86	427+23.83
G2-6	425+50.30	426+16.14	427+24.10
G2-7	-	426+16.35	427+24.36
G2-8	425+50.65	426+16.56	427+24.62
G2-9	425+50.64	426+16.56	427+24.92

LEGEND:

- (#) GIRDER NUMBER
- ▲ DECK OVERHANG MEASURED PERPENDICULAR TO GIRDER ℄
- ■ CROSSFRAME ORIENTED NORMAL TO G2-1
- ● CROSSFRAME ORIENTED NORMAL TO G2-9

NOTES:

1. TRANSVERSE DIMENSIONS ARE MEASURED RADIAL TO ℄ RAMP A2 UNLESS NOTED OTHERWISE.
2. FIELD SPLICES, CROSSFRAMES AND HEADER BEAMS ARE ORIENTED RADIAL TO ℄ RAMP A2 UNLESS NOTED OTHERWISE.
3. FOR ADDITIONAL NOTES, SEE SHEET 73 / 167 .
4. FOR GIRDER RADIUS/GEOMETRY TABLE, SEE SHEET 73 / 167 .

Preliminary Plans - For Reference Only

UNIT 2 FRAMING PLAN - (3 OF 4)
CUY-77-1587 (BRIDGE 9)
I.R. 77 SB OVER I.R. 90 AND CR-721 (E. 14TH ST.)

SFN 1806910
DESIGN AGENCY HDR
DESIGNER TJE | CHECKER NJH
REVIEWER DWW 01/11/24
PROJECT ID 82382
SUBSET 75 | TOTAL 167
SHEET 1943 | TOTAL 2696

CUY-90-16.28 (CCG3A)

MODEL: Sheet PAPERSIZE: 34x22 (in.) DATE: 3/28/2025 TIME: 10:17:38 AM USER: RohitLBk
pw:\\mb-us-pw.bentley.com:mb-us-pw-03\Documents\Cleveland_OH\01_Projects\ODOT\District12\82382\400-Engineering\Structures\SFN_1806910\Sheets\82382_SFN_1806910_SS003.dgn

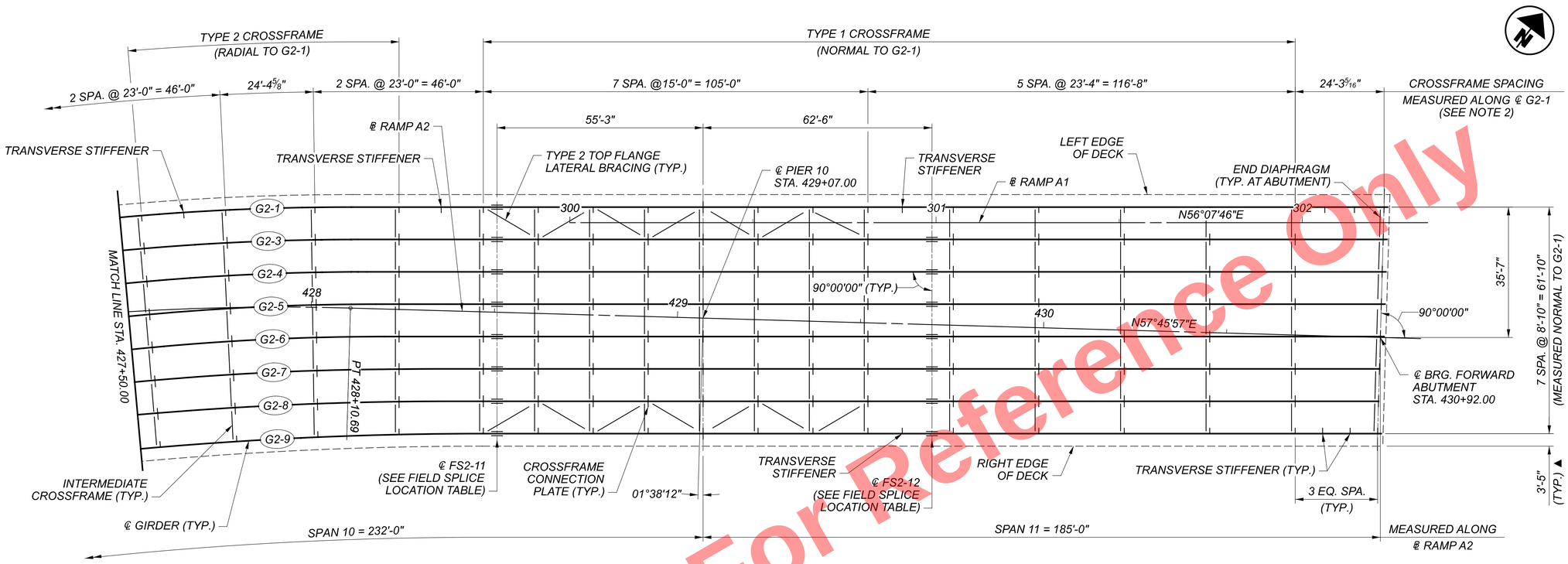

UNIT 2 FRAMING PLAN

FIELD SPLICE LOCATION TABLE		
GIRDER #	FS2-11	FS2-12
G2-1	428+50.91	429+68.61
G2-3	428+51.16	429+68.86
G2-4	428+51.41	429+69.11
G2-5	428+51.66	429+69.37
G2-6	428+51.92	429+69.62
G2-7	428+52.17	429+69.87
G2-8	428+52.42	429+70.12
G2-9	428+52.67	429+70.38

LEGEND:

(#) GIRDER NUMBER

▲ DECK OVERHANG MEASURED PERPENDICULAR TO GIRDER ℄

NOTES:

1. TRANSVERSE DIMENSIONS ARE MEASURED RADIAL TO ℄ RAMP A2 UNLESS NOTED OTHERWISE.
2. FIELD SPLICES, CROSSFRAMES AND HEADER BEAMS ARE ORIENTED RADIAL TO ℄ RAMP A2 UNLESS NOTED OTHERWISE.
3. FOR ADDITIONAL NOTES, SEE SHEET 73 / 167 .
4. FOR GIRDER RADIUS/GEOMETRY TABLE, SEE SHEET 73 / 167 .

Preliminary Plans - Not For Reference Only

UNIT 2 FRAMING PLAN - (4 OF 4)
CUY-77-1587 (BRIDGE 9)
I.R. 77 SB OVER I.R. 90 AND CR-721 (E. 14TH ST.)

SFN 1806910
DESIGN AGENCY
DESIGNER TJE | CHECKER NJH
REVIEWER DWW 01/11/24
PROJECT ID 82382
SUBSET 76 | TOTAL 167
SHEET 1944 | TOTAL 2696

CUY-90-16.28 (CCG3A)

MODEL: Sheet PAPERSIZE: 34x22 (in.) DATE: 3/28/2025 TIME: 10:17:44 AM USER: Rohit.Bk
pw:\\mb-us-pw.bentley.com:mb-us-pw-03\Documents\Cleveland_OH\01_Projects\ODOT\District12\82382400-Engineering\Structures\SFN_1806910\Sheets\82382_SFN_1

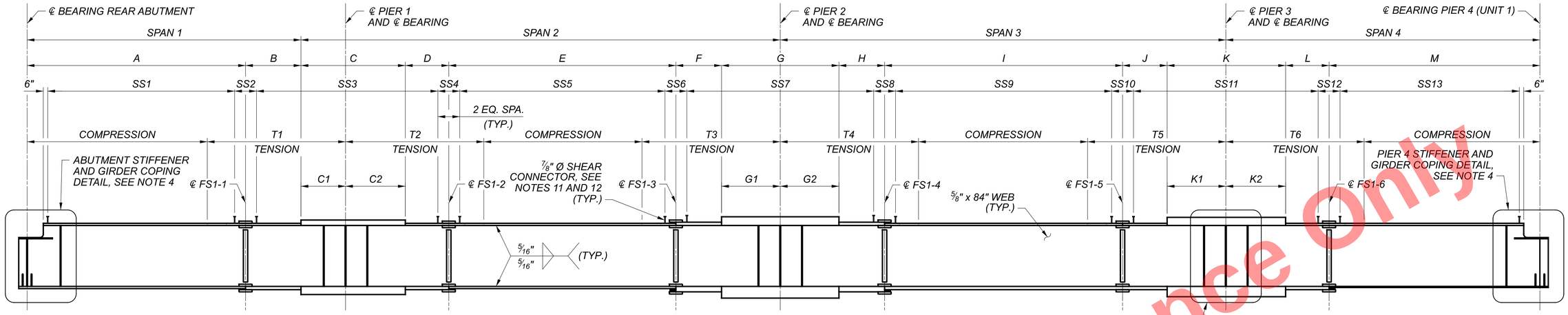

GIRDER ELEVATION
(G1-1 AND G1-3 THRU G1-9)

UNIT 1 TOP FLANGE TENSION ZONE LIMITS

GIRDER #	T1	T2	T3	T4	T5	T6
G1-1	78'-0"	**	**	103'-0"	81'-0"	105'-0"
G1-3	76'-0"	**	**	81'-0"	81'-0"	85'-0"
G1-4	66'-0"	69'-0"	84'-0"	81'-0"	60'-0"	85'-0"
G1-5	66'-0"	69'-0"	84'-0"	81'-0"	60'-0"	73'-0"
G1-6	66'-0"	69'-0"	84'-0"	81'-0"	60'-0"	73'-0"
G1-8	85'-0"	69'-0"	84'-0"	81'-0"	81'-0"	85'-0"
G1-9	**	**	**	**	**	105'-0"

** ENTIRE SPAN IN TENSION

UNIT 1 SPAN LENGTHS

LOCATION	SPAN 1	SPAN 2	SPAN 3	SPAN 4
℄ RAMP A2	148'-6"	200'-0"	205'-0"	143'-10"
G1-1	158'-4 5/8"	202'-10 3/4"	207'-11 1/4"	145'-11 1/4"
G1-3	151'-7 15/16"	201'-4 5/8"	206'-5 1/16"	144'-10 3/16"
G1-4	148'-3 1/2"	199'-10 7/8"	204'-10 7/8"	143'-9 3/16"
G1-5	144'-11 1/16"	198'-5 1/8"	203'-4 11/16"	142'-8 3/16"
G1-6	141'-6 5/8"	196'-11 3/8"	201'-10 1/2"	141'-7 3/16"
G1-8	138'-2 3/16"	195'-5 5/8"	200'-4 5/16"	140'-6 1/8"
G1-9	134'-9 11/16"	193'-11 7/8"	198'-10 1/8"	139'-5 1/8"

UNIT 1 GIRDER DIMENSIONS

	C1	C2	G1	G2	K1	K2
G1-1	20'-9 15/16"	27'-11"	27'-4 5/8"	27'-4 5/8"	27'-4 5/8"	27'-10 3/4"
G1-3	20'-7 11/16"	27'-8 5/16"	27'-2 1/4"	27'-2 1/4"	27'-2 1/4"	27'-8 5/16"
G1-4	20'-5 7/8"	27'-5 7/8"	26'-11 7/8"	26'-11 7/8"	26'-11 7/8"	27'-5 7/8"
G1-5	20'-4 1/16"	27'-3 7/16"	26'-9 7/16"	26'-9 7/16"	26'-9 7/16"	27'-3 7/16"
G1-6	20'-2 1/4"	27'-0 15/16"	26'-7 1/16"	26'-7 1/16"	26'-7 1/16"	27'-0 15/16"
G1-8	20'-0 7/16"	26'-10 1/2"	26'-4 11/16"	26'-4 11/16"	26'-4 11/16"	26'-10 1/2"
G1-9	19'-10 5/8"	26'-8 1/16"	26'-2 1/4"	26'-2 1/4"	26'-2 1/4"	26'-8 1/16"

UNIT 1 GIRDER DIMENSIONS

GIRDER #	A	B	C	D	E	F	G	H	I	J	K	L	M
G1-1	117'-2 5/8"	20'-4 1/16"	48'-8 15/16"	20'-3 1/2"	106'-0"	21'-3 5/8"	54'-9 1/4"	22'-3 13/16"	108'-6 3/8"	22'-3 13/16"	55'-3 3/8"	20'-3 7/16"	97'-9 1/16"
G1-3	110'-10 9/16"	20'-1 11/16"	48'-4"	20'-1 11/16"	105'-2 5/8"	21'-1 3/4"	54'-4 1/2"	22'-1 13/16"	107'-8 15/16"	22'-1 13/16"	54'-10 9/16"	20'-1 11/16"	97'-0 3/16"
G1-4	107'-9 3/4"	19'-11 7/8"	47'-11 3/4"	19'-11 7/8"	104'-5 3/8"	20'-11 7/8"	53'-11 3/4"	21'-11 7/8"	106'-11 3/8"	21'-11 7/8"	54'-5 3/4"	19'-11 7/8"	96'-3 7/16"
G1-5	104'-8 7/8"	19'-10 1/8"	47'-7 1/2"	19'-10 1/8"	103'-8 1/8"	20'-10"	53'-6 7/8"	21'-9 15/16"	106'-1 15/16"	21'-9 15/16"	54'-0 7/8"	19'-10 1/8"	95'-6 5/8"
G1-6	101'-8 1/16"	19'-8 5/16"	47'-3 3/16"	19'-8 5/16"	102'-10 7/8"	20'-8 3/16"	53'-2 1/8"	21'-8"	105'-4 3/8"	21'-8"	53'-8"	19'-8 5/16"	94'-9 15/16"
G1-8	98'-7 3/16"	19'-6 9/16"	46'-10 15/16"	19'-6 9/16"	102'-1 9/16"	20'-6 5/16"	52'-9 3/8"	21'-6"	104'-6 15/16"	21'-6"	53'-3 3/16"	19'-6 9/16"	94'-1 1/16"
G1-9	95'-6 5/16"	19'-4 13/16"	46'-6 11/16"	19'-4 13/16"	101'-4 5/16"	20'-4 7/16"	52'-4 9/16"	21'-4 1/16"	103'-9 7/16"	21'-4 1/16"	52'-10 3/8"	19'-4 13/16"	93'-4 1/4"

UNIT 1 TOP FLANGE PLATE SIZES

GIRDER #	A	B	C	D	E	F	G	H	I	J	K	L	M
G1-1	1" x 22"	1" x 22"	1 1/2" x 22"	1" x 22"	1" x 22"	1 1/4" x 22"	2 1/2" x 22"	1 1/4" x 22"	1" x 22"	1" x 22"	2" x 22"	1" x 22"	1" x 22"
G1-3	1" x 22"	1" x 22"	1 1/2" x 22"	1" x 22"	1" x 22"	1 1/4" x 22"	2 1/4" x 22"	1 1/4" x 22"	1" x 22"	1" x 22"	1 3/4" x 22"	1" x 22"	1" x 22"
G1-4	1" x 22"	1" x 22"	1 1/2" x 22"	1" x 22"	1" x 22"	1 1/4" x 22"	2 1/4" x 22"	1 1/4" x 22"	1" x 22"	1" x 22"	1 3/4" x 22"	1" x 22"	1" x 22"
G1-5	1" x 22"	1" x 22"	1 1/2" x 22"	1" x 22"	1" x 22"	1 1/4" x 22"	2" x 22"	1 1/4" x 22"	1" x 22"	1" x 22"	1 1/2" x 22"	1" x 22"	1" x 22"
G1-6	1" x 22"	1" x 22"	1 1/2" x 22"	1" x 22"	1" x 22"	1 1/4" x 22"	2" x 22"	1 1/4" x 22"	1" x 22"	1" x 22"	1 1/2" x 22"	1" x 22"	1" x 22"
G1-8	1" x 22"	1" x 22"	1 1/2" x 22"	1" x 22"	1" x 22"	1 1/4" x 22"	2" x 22"	1 1/4" x 22"	1" x 22"	1" x 22"	1 1/2" x 22"	1" x 22"	1" x 22"
G1-9	1" x 22"	1" x 22"	1 1/2" x 22"	1" x 22"	1" x 22"	1 1/4" x 22"	2 1/4" x 22"	1 1/4" x 22"	1" x 22"	1" x 22"	1 1/2" x 22"	1" x 22"	1" x 22"

UNIT 1 BOTTOM FLANGE PLATE SIZES

GIRDER #	A	B	C	D	E	F	G	H	I	J	K	L	M
G1-1	1" x 22"	1 1/4" x 22"	2" x 22"	1 1/4" x 22"	1" x 22"	1 1/2" x 24"	2 3/4" x 24"	1 1/2" x 24"	1 1/4" x 22"	1 1/4" x 22"	2 1/4" x 22"	1 1/4" x 22"	1" x 22"
G1-3	1" x 22"	1" x 22"	1 3/4" x 22"	1" x 22"	1" x 22"	1 1/4" x 22"	2 1/2" x 22"	1 1/4" x 22"	1" x 22"	1 1/4" x 22"	2 1/4" x 22"	1 1/4" x 22"	1" x 22"
G1-4	1" x 22"	1" x 22"	1 3/4" x 22"	1" x 22"	1" x 22"	1 1/4" x 22"	2 1/2" x 22"	1 1/4" x 22"	1" x 22"	1 1/4" x 22"	2 1/4" x 22"	1 1/4" x 22"	1" x 22"
G1-5	1" x 22"	1" x 22"	1 3/4" x 22"	1" x 22"	1" x 22"	1 1/4" x 22"	2 1/4" x 22"	1 1/4" x 22"	1" x 22"	1 1/4" x 22"	2" x 22"	1 1/4" x 22"	1" x 22"
G1-6	1" x 22"	1" x 22"	1 3/4" x 22"	1" x 22"	1" x 22"	1 1/4" x 22"	2 1/4" x 22"	1 1/4" x 22"	1" x 22"	1 1/4" x 22"	2" x 22"	1 1/4" x 22"	1" x 22"
G1-8	1" x 22"	1" x 22"	1 3/4" x 22"	1" x 22"	1" x 22"	1 1/4" x 22"	2 1/4" x 22"	1 1/4" x 22"	1" x 22"	1 1/4" x 22"	2" x 22"	1 1/4" x 22"	1" x 22"
G1-9	1" x 22"	1 1/4" x 22"	2" x 22"	1 1/4" x 22"	1" x 22"	1 1/4" x 22"	2 1/2" x 22"	1 1/4" x 22"	1" x 22"	1 1/4" x 22"	2" x 22"	1 1/4" x 22"	1" x 22"

NOTES:

1. ALL FLANGE AND WEB PLATES, INCLUDING FIELD SPLICE PLATES, CROSSFRAME MEMBERS, AND CROSSFRAME CONNECTION PLATES SHALL BE DESIGNATED (CVN).
2. WHERE A SHAPE OR PLATE IS DESIGNATED (CVN), FURNISH MATERIAL THAT MEETS THE MINIMUM NOTCH TOUGHNESS REQUIREMENTS AS SPECIFIED IN C&MS 711.01.
3. FOR FRAMING PLAN, SEE SHEETS 71 / 167 THRU 76 / 167 .
4. FOR GIRDER STEEL DETAILS, SEE SHEETS 82 / 167 THRU 84 / 167.
5. FOR CROSSFRAME DETAILS, SEE SHEETS 87 / 167 AND 88 / 167.
6. FOR FIELD SPLICE DETAILS, SEE SHEETS 85 / 167 AND 86 / 167.
7. FOR CAMBER AND DEFLECTION VALUES, SEE SHEETS 93 / 167 THRU 98 / 167.
8. FOR BEARING DETAILS, SEE SHEETS 68 / 167 THRU 70 / 167.
9. PER C&MS 513.06, DETAIL STRUCTURAL STEEL TO FIT UNDER FULL STEEL DEAD LOAD PRIOR TO DECK PLACEMENT WITH THE GIRDER WEBS PLUMB.
10. WELDED ATTACHMENT OF SUPPORTS FOR CONCRETE DECK FINISHING MACHINES IS PERMITTED ONLY IN AREAS OF TOP FLANGES DESIGNATED "COMPRESSION". DO NOT WELD ATTACHMENTS TO AREAS DESIGNATED "TENSION". FILLET WELDS TO COMPRESSION FLANGES SHALL BE AT LEAST 1" FROM EDGE OF FLANGE, BE NO MORE THAN 2" LONG, AND BE AT LEAST 5/16".
11. SHEAR CONNECTORS SHALL NOT BE LOCATED OVER FLANGE TRANSITIONS. SHEAR CONNECTOR SPACING MAY BE ADJUSTED AS NEEDED AT FLANGE TRANSITIONS TO AVOID CONFLICT.
12. FOR UNIT 1 SHEAR CONNECTOR HEIGHTS AND SPACING, SEE SHEET 78 / 167.

For Reference Only
Preliminary Plans

UNIT 1 GIRDER ELEVATION - (1 OF 2)
CUY-77-1587 (BRIDGE 9)
I.R. 77 SB OVER I.R. 90 AND CR-721 (E. 14TH ST.)

SFN 1806910
DESIGN AGENCY HDR
DESIGNER RWJ | CHECKER APR
REVIEWER DWW 01/11/24
PROJECT ID 82382
SUBSET 77 | TOTAL 167
SHEET 1945 | TOTAL 2696

CUY-90-16.28 (CCG3A)
MODEL: Sheet PAPERSIZE: 34x22 (in.) DATE: 3/28/2025 TIME: 10:17:52 AM USER: Rohit.Bk
pw:\\mb-us-pw.bentley.com:mb-us-pw-03\Documents\Cleveland_OH\01_Projects\ODOT\District12\82382\400-Engineering\Structures\SFN_1806910\Sheets\82382_SFN_1806910_SS007.dgn

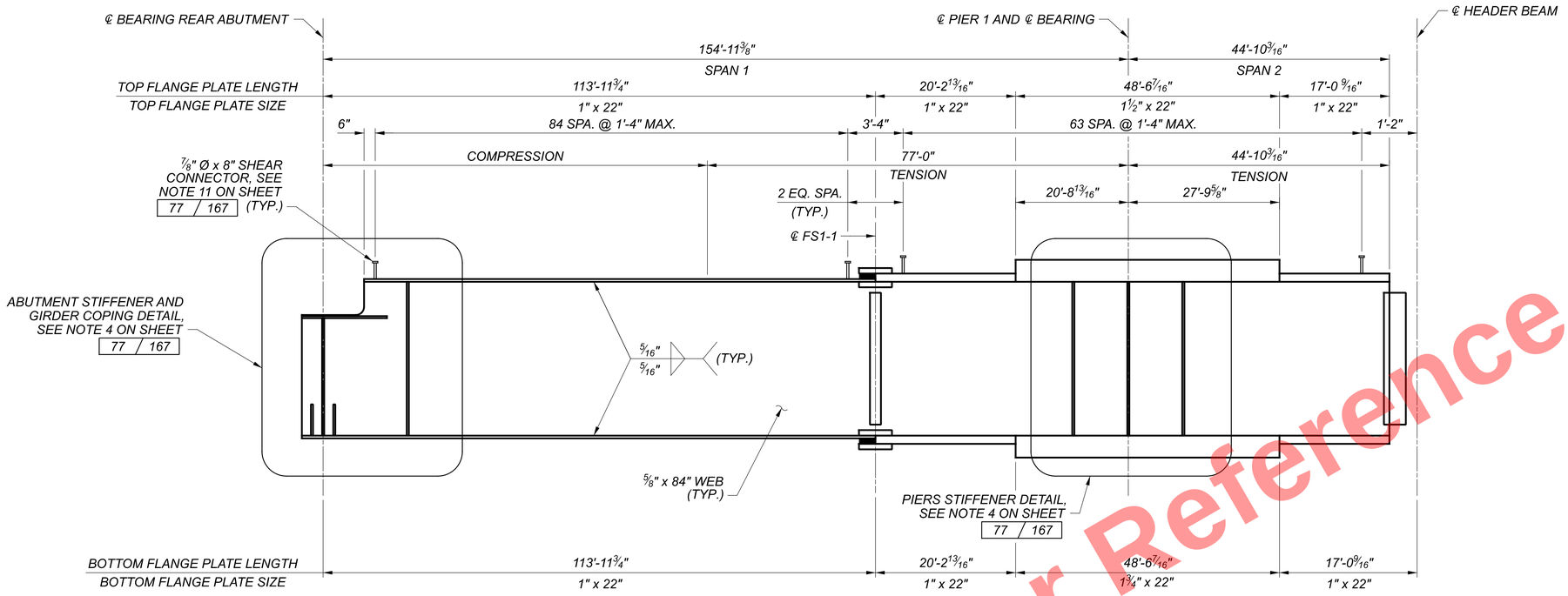

GIRDER ELEVATION
(G1-2)

UNIT 1 SHEAR CONNECTOR HEIGHT

GIRDER #	A	B	C	D	E	F	G	H	I	J	K	L	M
G1-1	297 @ 8"	51 @ 8"	123 @ 8"	51 @ 8"	267 @ 8"	51 @ 8"	144 @ 7"	54 @ 8"	273 @ 8"	54 @ 8"	141 @ 7"	51 @ 8"	246 @ 8"
G1-3	246 @ 8"	42 @ 8"	111 @ 8"	42 @ 8"	234 @ 8"	45 @ 8"	123 @ 7"	48 @ 8"	240 @ 8"	48 @ 8"	126 @ 8"	42 @ 8"	213 @ 8"
G1-4	240 @ 8"	42 @ 8"	111 @ 8"	42 @ 8"	231 @ 8"	45 @ 8"	123 @ 7"	48 @ 8"	237 @ 8"	48 @ 8"	123 @ 8"	42 @ 8"	213 @ 8"
G1-5	234 @ 8"	42 @ 8"	108 @ 8"	42 @ 8"	231 @ 8"	45 @ 8"	120 @ 7"	48 @ 8"	237 @ 8"	48 @ 8"	123 @ 8"	42 @ 8"	210 @ 8"
G1-6	225 @ 8"	42 @ 8"	108 @ 8"	42 @ 8"	228 @ 8"	45 @ 8"	120 @ 7"	48 @ 8"	234 @ 8"	48 @ 8"	120 @ 8"	42 @ 8"	210 @ 8"
G1-8	219 @ 8"	42 @ 8"	108 @ 8"	42 @ 8"	228 @ 8"	45 @ 8"	120 @ 7"	45 @ 8"	231 @ 8"	48 @ 8"	120 @ 8"	42 @ 8"	207 @ 8"
G1-9	243 @ 8"	48 @ 8"	120 @ 8"	48 @ 8"	258 @ 8"	51 @ 8"	135 @ 7"	51 @ 8"	264 @ 8"	51 @ 8"	138 @ 8"	48 @ 8"	234 @ 8"

UNIT 1 SHEAR CONNECTOR QUANTITIES

GIRDER #	7" HEIGHT	8" HEIGHT
G1-1	285	1518
G1-2	0	447
G1-3	123	1437
G1-4	123	1422
G1-5	120	1410
G1-6	120	1392
G1-8	120	1377
G1-9	135	1554
TOTAL	1026	10557

UNIT 1 SHEAR CONNECTOR SPACING

GIRDER #	SS1	SS2	SS3	SS4	SS5	SS6	SS7	SS8	SS9	SS10	SS11	SS12	SS13
G1-1	98 SPA. @ 1'-2" MAX.	3'-4"	74 SPA. @ 1'-2" MAX.	3'-4"	88 SPA. @ 1'-2" MAX.	3'-4"	82 SPA. @ 1'-2" MAX.	3'-11"	90 SPA. @ 1'-2" MAX.	3'-11"	81 SPA. @ 1'-2" MAX.	3'-4"	81 SPA. @ 1'-2" MAX.
G1-3	81 SPA. @ 1'-4" MAX.	3'-4"	64 SPA. @ 1'-4" MAX.	3'-4"	77 SPA. @ 1'-4" MAX.	3'-4"	71 SPA. @ 1'-4" MAX.	3'-4"	79 SPA. @ 1'-4" MAX.	3'-4"	71 SPA. @ 1'-4" MAX.	3'-4"	70 SPA. @ 1'-4" MAX.
G1-4	79 SPA. @ 1'-4" MAX.	3'-4"	64 SPA. @ 1'-4" MAX.	3'-4"	76 SPA. @ 1'-4" MAX.	3'-4"	71 SPA. @ 1'-4" MAX.	3'-4"	78 SPA. @ 1'-4" MAX.	3'-4"	70 SPA. @ 1'-4" MAX.	3'-4"	70 SPA. @ 1'-4" MAX.
G1-5	77 SPA. @ 1'-4" MAX.	3'-4"	63 SPA. @ 1'-4" MAX.	3'-4"	76 SPA. @ 1'-4" MAX.	3'-4"	70 SPA. @ 1'-4" MAX.	3'-4"	78 SPA. @ 1'-4" MAX.	3'-4"	70 SPA. @ 1'-4" MAX.	3'-4"	69 SPA. @ 1'-4" MAX.
G1-6	74 SPA. @ 1'-4" MAX.	3'-4"	63 SPA. @ 1'-4" MAX.	3'-4"	75 SPA. @ 1'-4" MAX.	3'-4"	70 SPA. @ 1'-4" MAX.	3'-4"	77 SPA. @ 1'-4" MAX.	3'-4"	69 SPA. @ 1'-4" MAX.	3'-4"	69 SPA. @ 1'-4" MAX.
G1-8	72 SPA. @ 1'-4" MAX.	3'-4"	63 SPA. @ 1'-4" MAX.	3'-4"	75 SPA. @ 1'-4" MAX.	3'-4"	69 SPA. @ 1'-4" MAX.	3'-4"	76 SPA. @ 1'-4" MAX.	3'-4"	69 SPA. @ 1'-4" MAX.	3'-4"	68 SPA. @ 1'-4" MAX.
G1-9	80 SPA. @ 1'-2" MAX.	3'-4"	71 SPA. @ 1'-2" MAX.	3'-4"	85 SPA. @ 1'-2" MAX.	3'-4"	78 SPA. @ 1'-2" MAX.	3'-4"	87 SPA. @ 1'-2" MAX.	3'-4"	78 SPA. @ 1'-2" MAX.	3'-4"	77 SPA. @ 1'-2" MAX.

NOTES:

1. FOR GIRDER ELEVATION NOTES, SEE SHEET 77 / 167.

Preliminary Plans - For Reference Only

UNIT 1 GIRDER ELEVATION - (2 OF 2)
CUY-77-1587 (BRIDGE 9)
I.R. 77 SB OVER I.R. 90 AND CR-721 (E. 14TH ST.)

SFN 1806910
DESIGN AGENCY
DESIGNER RWJ | CHECKER APR
REVIEWER DWW 01/11/24
PROJECT ID 82382
SUBSET 78 | TOTAL 167
SHEET 1946 | TOTAL 2696

CUY-90-16.28 (CCG3A)
MODEL: Sheet PAPERSIZE: 34x22 (in.) DATE: 3/28/2025 TIME: 10:18:00 AM USER: RohitLBk
pw:\\mb-us-pw.bentley.com:mb-us-pw-03\Documents\Cleveland_OH\01_Projects\ODOT\District12\82382\400-Engineering\Structures\SFN_1806910\Sheets\82382_SFN_1806910_SS034.dgn

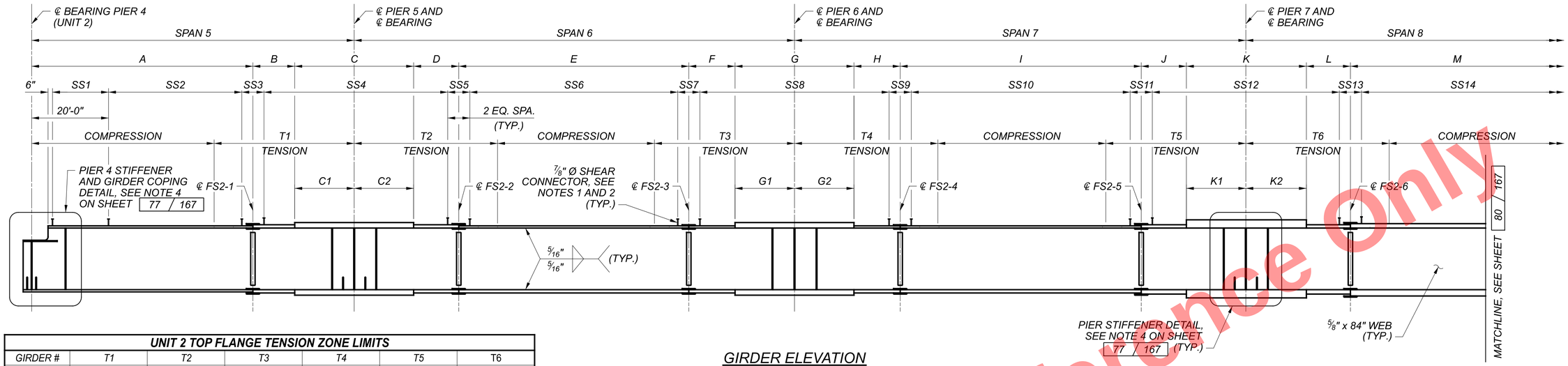

GIRDER ELEVATION
(G2-1 THRU G2-6, G2-8 AND G2-9)

UNIT 2 TOP FLANGE TENSION ZONE LIMITS

GIRDER #	T1	T2	T3	T4	T5	T6
G2-1	106'-0"	**	**	**	**	74'-0"
G2-3	84'-6"	93'-6"	87'-6"	**	**	76'-0"
G2-4	83'-6"	86'-6"	86'-6"	**	**	86'-6"
G2-5	72'-6"	85'-0"	85'-0"	80'-6"	89'-6"	92'-6"
G2-6	71'-6"	84'-0"	90'-0"	79'-6"	69'-0"	92'-6"
G2-8	70'-6"	**	**	78'-6"	63'-0"	**
G2-9	116'-6"	**	**	77'-0"	64'-6"	**

** ENTIRE SPAN IN TENSION

UNIT 2 SPAN LENGTHS

LOCATION	SPAN 5	SPAN 6	SPAN 7	SPAN 8	SPAN 9	SPAN 10	SPAN 11
℄ RAMP A2	142'-1"	184'-6"	189'-8"	210'-4"	175'-0"	232'-0"	185'-0"
G2-1	145'-11 7/8"	189'-5 15/16"	181'-9 1/8"	232'-4 9/16"	180'-6 13/16"	236'-4 11/16"	185'-11 5/16"
G2-3	143'-11 11/16"	186'-11"	184'-2 7/16"	221'-5/8"	178'-1 3/4"	234'-10"	185'-8 1/4"
G2-4	141'-11 1/2"	184'-4 1/16"	190'-7/16"	209'-7 9/16"	175'-8 11/16"	233'-3 1/4"	185'-5 1/4"
G2-5	139'-11 5/16"	181'-9 1/8"	195'-11 9/16"	198'-1 5/16"	173'-3 5/8"	231'-8 9/16"	185'-2 3/16"
G2-6	137'-11 1/8"	179'-2 1/4"	202'-1/16"	186'-5 13/16"	170'-10 9/16"	230'-1 15/16"	184'-11 3/16"
G2-8	135'-10 15/16"	176'-7 5/16"	208'-1 15/16"	174'-8 3/4"	167'-6 3/16"	227'-1 3/8"	184'-5 1/8"
G2-9	133'-10 3/4"	174'-3/8"	214'-5 3/8"	162'-10 1/4"	165'-13/16"	225'-6 3/16"	184'-2 1/8"

UNIT 2 GIRDER DIMENSIONS

GIRDER #	C1	C2	G1	G2	K1	K2
G2-1	22'-6"	22'-6"	22'-6"	22'-6"	22'-6"	35'-2"
G2-3	22'-2 5/16"	22'-2 5/16"	22'-2 5/16"	22'-2 5/16"	26'-8"	31'-4"
G2-4	21'-10 5/8"	21'-10 5/8"	21'-10 5/8"	21'-10 5/8"	27'-5"	32'-2"
G2-5	21'-7"	21'-7"	21'-7"	21'-7"	28'-5"	31'-8"
G2-6	21'-3 5/16"	21'-3 5/16"	21'-3 5/16"	21'-3 5/16"	29'-4"	25'-11"
G2-8	20'-11 5/8"	20'-11 5/8"	20'-11 5/8"	20'-11 5/8"	30'-1"	26'-11"
G2-9	20'-7 15/16"	20'-7 15/16"	20'-7 15/16"	20'-7 15/16"	30'-11"	20'-8"

UNIT 2 GIRDER DIMENSIONS

GIRDER #	A	B	C	D	E	F	G	H	I	J	K	L	M
G2-1	104'-8 7/8"	18'-9"	45'-0"	18'-9"	106'-11 15/16"	18'-9"	45'-0"	18'-9"	86'-7 1/2"	28'-1"	57'-8"	27'-4"	128'-7 5/8"
G2-3	103'-3 7/16"	18'-5 15/16"	44'-4 5/8"	18'-5 15/16"	105'-6 1/2"	18'-5 15/16"	44'-4 5/8"	18'-5 15/16"	94'-8 3/16"	22'-2"	58'-0"	25'-10"	123'-2 5/16"
G2-4	101'-10"	18'-2 7/8"	43'-9 1/4"	18'-2 7/8"	104'-1 1/16"	18'-2 7/8"	43'-9 1/4"	18'-2 7/8"	96'-11 15/16"	25'-6"	59'-7"	23'-3"	114'-1"
G2-5	100'-4 1/2"	17'-11 13/16"	43'-2"	17'-11 13/16"	102'-7 1/2"	17'-11 13/16"	43'-2"	17'-11 13/16"	99'-2 3/4"	28'-9"	60'-1"	21'-6"	105'-4 7/16"
G2-6	98'-11 1/16"	17'-8 3/4"	42'-6 5/8"	17'-8 3/4"	101'-2 1/8"	17'-8 3/4"	42'-6 5/8"	17'-8 3/4"	108'-6"	25'-2"	55'-3"	24'-10"	96'-8 3/4"
G2-8	97'-5 5/8"	17'-5 11/16"	41'-11 1/4"	17'-5 11/16"	99'-8 11/16"	17'-5 11/16"	41'-11 1/4"	17'-5 11/16"	110'-4 5/8"	29'-3"	57'-0"	20'-11"	88'-5 1/2"
G2-9	96'-0 3/16"	17'-2 5/8"	41'-3 7/8"	17'-2 5/8"	98'-3 1/4"	17'-2 5/8"	41'-3 7/8"	17'-2 5/8"	119'-1 13/16"	26'-6"	51'-7"	25'-8"	78'-7 3/4"

UNIT 2 TOP FLANGE PLATE SIZES

GIRDER #	A	B	C	D	E	F	G	H	I	J	K	L	M
G2-1	1" x 22"	1 1/2" x 22"	2 1/4" x 22"	1 1/2" x 22"	1" x 22"	1" x 22"	2 1/4" x 22"	1" x 22"	1" x 22"	1 1/2" x 24"	3" x 24"	1 1/2" x 24"	1 3/4" x 24"
G2-3	1" x 22"	1 1/2" x 22"	2" x 22"	1 1/2" x 22"	1" x 22"	1" x 22"	2" x 22"	1" x 22"	1" x 22"	1 3/4" x 24"	2 3/4" x 24"	1 3/4" x 24"	1 1/2" x 24"
G2-4	1" x 22"	1 1/2" x 22"	2" x 22"	1 1/2" x 22"	1" x 22"	1" x 22"	2" x 22"	1" x 22"	1" x 22"	1 3/4" x 24"	2 3/4" x 24"	2" x 24"	1 1/4" x 22"
G2-5	1" x 22"	1 1/2" x 22"	2" x 22"	1 1/2" x 22"	1" x 22"	1 1/4" x 22"	2" x 22"	1 1/4" x 22"	1 1/4" x 24"	1 1/2" x 24"	2 1/2" x 24"	1 1/2" x 24"	1 1/4" x 24"
G2-6	1" x 22"	1 1/2" x 22"	2" x 22"	1 1/2" x 22"	1" x 22"	1 1/4" x 22"	2" x 22"	1 1/4" x 22"	1" x 22"	1 1/2" x 24"	2 1/2" x 24"	1 1/2" x 24"	1 1/2" x 22"
G2-8	1" x 22"	1 1/2" x 22"	2" x 22"	1 1/2" x 22"	1" x 22"	1 1/4" x 22"	2" x 22"	1 1/4" x 22"	1 1/4" x 22"	1 1/2" x 22"	2 1/2" x 22"	1 1/2" x 22"	1" x 22"
G2-9	1" x 22"	1 1/2" x 22"	2" x 22"	1 1/2" x 22"	1" x 22"	1 1/4" x 22"	2" x 22"	1 1/4" x 22"	1 1/4" x 22"	1 1/2" x 22"	2 1/2" x 22"	1 1/2" x 22"	1" x 22"

UNIT 2 BOTTOM FLANGE PLATE SIZES

GIRDER #	A	B	C	D	E	F	G	H	I	J	K	L	M
G2-1	1" x 22"	1 1/2" x 22"	2 1/2" x 22"	1 1/2" x 22"	1 1/2" x 22"	1 1/2" x 22"	2 1/2" x 22"	1 1/2" x 22"	1 1/2" x 22"	2" x 24"	3" x 24"	2" x 24"	2 3/4" x 24"
G2-3	1" x 22"	1 1/2" x 22"	2 1/4" x 22"	1 1/2" x 22"	1" x 22"	1 1/2" x 22"	2 1/4" x 22"	1 1/2" x 22"	1" x 22"	1 3/4" x 24"	3" x 24"	2 1/2" x 24"	2 1/4" x 24"
G2-4	1" x 22"	1 1/2" x 22"	2 1/4" x 22"	1 1/2" x 22"	1" x 22"	1 1/2" x 22"	2 1/4" x 22"	1 1/2" x 22"	1" x 22"	1 3/4" x 24"	3" x 24"	2 1/2" x 24"	1 3/4" x 22"
G2-5	1" x 22"	1 1/2" x 22"	2 1/4" x 22"	1 1/2" x 22"	1" x 22"	1 1/2" x 22"	2 1/4" x 22"	1 1/2" x 22"	2" x 24"	2" x 24"	3" x 24"	2 1/4" x 24"	2" x 24"
G2-6	1" x 22"	1 1/2" x 22"	2 1/4" x 22"	1 1/2" x 22"	1" x 22"	1 1/2" x 22"	2 1/4" x 22"	1 1/2" x 22"	1" x 22"	1 1/2" x 24"	2 3/4" x 24"	2" x 24"	1 1/2" x 22"
G2-8	1" x 22"	1 1/2" x 22"	2 1/4" x 22"	1 1/2" x 22"	1" x 22"	1 1/2" x 22"	2 1/4" x 22"	1 1/2" x 22"	1 1/4" x 22"	1 1/2" x 22"	2 3/4" x 22"	1 1/2" x 22"	1" x 22"
G2-9	1" x 22"	1 1/2" x 22"	2 1/4" x 22"	1 1/2" x 22"	1" x 22"	1 1/2" x 22"	2 1/2" x 22"	1 1/2" x 22"	1 1/4" x 22"	1 1/2" x 22"	2 3/4" x 22"	1 1/2" x 22"	1" x 22"

NOTES:

1. FOR UNIT 2 SHEAR CONNECTOR HEIGHTS AND SPACING, SEE SHEET 81 / 167.
2. SHEAR CONNECTORS SHALL NOT BE LOCATED OVER FLANGE TRANSITIONS. SHEAR CONNECOR SPACING MAY BE ADJUSTED AS NEEDED AT FLANGE TRANSITIONS TO AVOID CONFLICT.
3. FOR ADDITIONAL GIRDER ELEVATION NOTES, SEE SHEET 77 / 167.

Preliminary Plans - For Reference Only

UNIT 2 GIRDER ELEVATION - (1 OF 3)
CUY-77-1587 (BRIDGE 9)
I.R. 77 SB OVER I.R. 90 AND CR-721 (E. 14TH ST.)

SFN 1806910
DESIGN AGENCY HDR
DESIGNER TJE | CHECKER NJH
REVIEWER DWW 01/11/24
PROJECT ID 82382
SUBSET 79 | TOTAL 167
SHEET 1947 | TOTAL 2696

CUY-90-16.28 (CCG3A)

MODEL: Sheet PAPERSIZE: 34x22 (in.) DATE: 3/28/2025 TIME: 10:18:07 AM USER: RohitI.Bk
pw:\\mb-us-pw.bentley.com:mb-us-pw-03\Documents\Cleveland_OH\01_Projects\ODOT\District12\82382400-Engineering\Structures\SFN_1806910\Sheets\82382_SFN_1806910_SS008.dgn

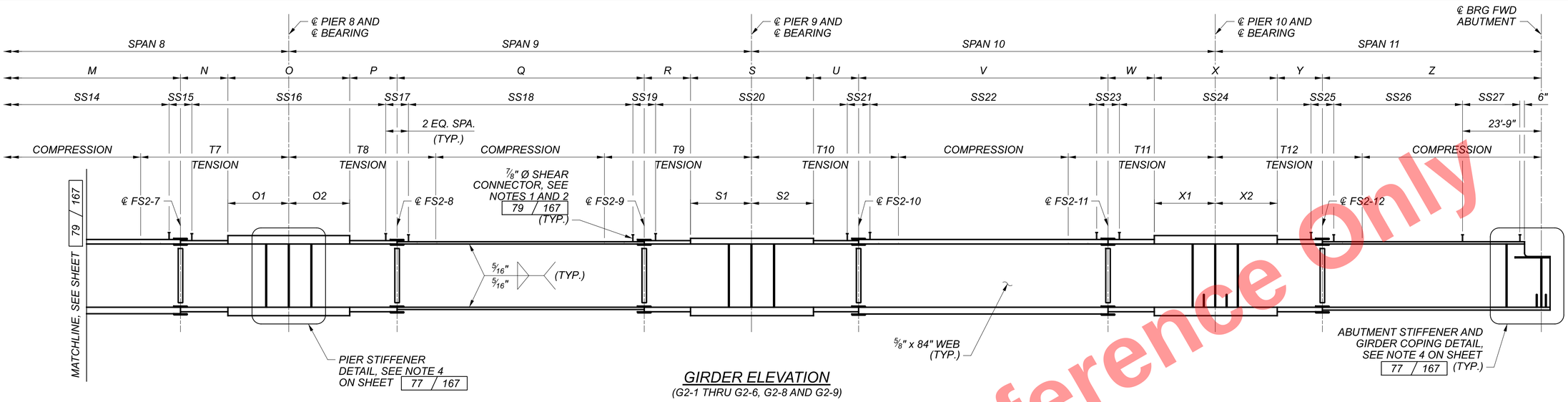

GIRDER ELEVATION
(G2-1 THRU G2-6, G2-8 AND G2-9)

UNIT 2 TOP FLANGE TENSION ZONE LIMITS

GIRDER #	T7	T8	T9	T10	T11	T12
G2-1	67'-0"	**	**	83'-0"	83'-0"	138'-6"
G2-3	82'-6"	**	**	82'-6"	83'-0"	109'-6"
G2-4	81'-0"	**	**	81'-6"	83'-0"	92'-0"
G2-5	80'-0"	**	**	81'-0"	83'-0"	92'-0"
G2-6	79'-0"	**	**	80'-0"	83'-0"	92'-0"
G2-8	**	**	**	78'-6"	105'-6"	92'-0"
G2-9	**	**	**	**	**	109'-6"

UNIT 2 GIRDER DIMENSIONS

GIRDER #	O1	O2	S1	S2	X1	X2
G2-1	22'-6 1/8"	22'-6"	26'-3"	26'-3"	26'-3"	26'-3"
G2-3	22'-2 1/2"	22'-5 7/16"	25'-7 3/4"	26'-1 15/16"	26'-3"	26'-3"
G2-4	21'-10 3/16"	22'-4 15/16"	25'-0 7/16"	26'-0 7/8"	26'-3"	26'-3"
G2-5	21'-7 3/16"	22'-4 3/8"	24'-5 3/16"	25'-11 3/4"	26'-3"	26'-3"
G2-6	21'-3 7/16"	22'-3 13/16"	23'-9 15/16"	25'-10 11/16"	26'-3"	26'-3"
G2-8	20'-11 11/16"	22'-3 1/4"	22'-10"	25'-8 11/16"	26'-3"	26'-3"
G2-9	20'-8"	21'-11 3/8"	22'-6"	25'-7 5/8"	26'-3"	26'-3"

UNIT 2 GIRDER DIMENSIONS

GIRDER #	M	N	O	P	Q	R	S	U	V	W	X	Y	Z
G2-1	128'-7 5/8"	18'-8 13/16"	45'-0 1/8"	28'-2"	67'-11 1/16"	35'-8 3/4"	52'-6"	23'-7"	131'-3 11/16"	29'-0"	52'-6"	36'-3"	123'-5 5/16"
G2-3	123'-2 5/16"	18'-5 13/16"	44'-7 15/16"	27'-9 7/16"	67'-0 1/8"	35'-3"	51'-9 11/16"	23'-3 5/16"	130'-1 3/4"	29'-0"	52'-6"	36'-3"	123'-2 1/4"
G2-4	114'-1"	18'-2 3/4"	44'-3 1/8"	27'-4 7/8"	66'-1 1/8"	34'-9 5/16"	51'-1 5/16"	22'-11 9/16"	128'-11 13/16"	29'-0"	52'-6"	36'-3"	122'-11 1/4"
G2-5	105'-4 7/16"	17'-11 11/16"	43'-11 9/16"	27'-0 5/16"	65'-2 3/16"	34'-3 9/16"	50'-4 15/16"	22'-7 7/8"	127'-9 15/16"	29'-0"	52'-6"	36'-3"	122'-8 3/16"
G2-6	96'-8 3/4"	17'-8 5/8"	43'-7 1/4"	26'-7 3/4"	64'-3 1/4"	33'-9 13/16"	49'-8 5/8"	22'-4 1/8"	126'-8 1/8"	29'-0"	52'-6"	36'-3"	122'-5 3/16"
G2-8	88'-5 1/2"	17'-5 9/16"	43'-2 15/16"	26'-2 9/16"	63'-1 1/16"	33'-1 5/16"	48'-6 11/16"	21'-9 3/16"	124'-4 3/8"	29'-0"	52'-6"	36'-3"	121'-11 1/8"
G2-9	78'-7 3/4"	17'-2 1/2"	42'-7 3/8"	25'-9 7/8"	62'-2 1/16"	32'-7 1/2"	48'-1 5/8"	21'-5 1/2"	123'-2 1/16"	29'-0"	52'-6"	36'-3"	121'-8 1/8"

UNIT 2 TOP FLANGE PLATE SIZES

GIRDER #	M	N	O	P	Q	R	S	U	V	W	X	Y	Z
G2-1	1 3/4" x 24"	1 1/2" x 24"	3" x 24"	1 1/2" x 24"	1" x 22"	1 1/2" x 22"	2 1/2" x 22"	1 1/2" x 22"	1 3/4" x 22"	1 3/4" x 24"	3" x 24"	1 3/4" x 24"	1" x 22"
G2-3	1 1/2" x 24"	1 1/4" x 22"	2" x 22"	1 1/4" x 22"	1" x 22"	1 1/2" x 22"	2 1/2" x 22"	1 1/2" x 22"	1 3/4" x 22"	1 3/4" x 22"	3" x 22"	1 3/4" x 22"	1" x 22"
G2-4	1 1/4" x 22"	1 1/4" x 22"	2" x 22"	1 1/4" x 22"	1" x 22"	1 1/2" x 22"	2 1/2" x 22"	1 1/2" x 22"	1 1/2" x 22"	1 3/4" x 22"	3" x 22"	1 3/4" x 22"	1" x 22"
G2-5	1 1/4" x 24"	1 1/4" x 22"	1 3/4" x 22"	1 1/4" x 22"	1" x 22"	1 1/4" x 22"	2" x 22"	1 1/4" x 22"	1" x 22"	1 3/4" x 22"	2 3/4" x 22"	1 3/4" x 22"	1" x 22"
G2-6	1 1/2" x 22"	1 1/4" x 22"	1 3/4" x 22"	1 1/4" x 22"	1" x 22"	1 1/4" x 22"	2" x 22"	1 1/4" x 22"	1" x 22"	1 3/4" x 22"	2 3/4" x 22"	1 3/4" x 22"	1" x 22"
G2-8	1" x 22"	1 1/4" x 22"	1 3/4" x 22"	1 1/4" x 22"	1" x 22"	1 1/4" x 22"	2" x 22"	1 1/4" x 22"	1" x 22"	1 3/4" x 22"	2 3/4" x 22"	1 3/4" x 22"	1" x 22"
G2-9	1" x 22"	1 1/4" x 22"	1 3/4" x 22"	1 1/4" x 22"	1" x 22"	1 1/4" x 22"	2" x 22"	1 1/4" x 22"	1" x 22"	1 3/4" x 22"	2 3/4" x 22"	1 3/4" x 22"	1" x 22"

UNIT 2 BOTTOM FLANGE PLATE SIZES

GIRDER #	M	N	O	P	Q	R	S	U	V	W	X	Y	Z
G2-1	2 3/4" x 24"	1 3/4" x 24"	3" x 24"	1 3/4" x 24"	1" x 22"	1 3/4" x 22"	3" x 22"	1 3/4" x 22"	2 1/2" x 24"	1 3/4" x 24"	3" x 26"	1 3/4" x 24"	1 1/4" x 22"
G2-3	2 1/4" x 24"	1 1/2" x 22"	2 1/2" x 22"	1 1/2" x 22"	1" x 22"	1 1/2" x 22"	2 1/2" x 22"	1 1/2" x 22"	2 1/2" x 24"	1 3/4" x 22"	3" x 22"	1 3/4" x 22"	1 1/4" x 22"
G2-4	1 3/4" x 22"	1 1/2" x 22"	2 1/2" x 22"	1 1/2" x 22"	1" x 22"	1 1/2" x 22"	2 1/2" x 22"	1 1/2" x 22"	1 3/4" x 22"	1 3/4" x 22"	3" x 22"	1 3/4" x 22"	1 1/4" x 22"
G2-5	2" x 24"	1 1/2" x 22"	2" x 22"	1 1/4" x 22"	1" x 22"	1 1/4" x 22"	2 1/4" x 22"	1 1/4" x 22"	1 1/2" x 22"	1 3/4" x 22"	3" x 22"	1 3/4" x 22"	1 1/4" x 22"
G2-6	1 1/2" x 22"	1 1/4" x 22"	2" x 22"	1 1/4" x 22"	1" x 22"	1 1/4" x 22"	2 1/4" x 22"	1 1/4" x 22"	1 1/2" x 22"	1 3/4" x 22"	3" x 22"	1 3/4" x 22"	1 1/4" x 22"
G2-8	1" x 22"	1 1/4" x 22"	2" x 22"	1 1/4" x 22"	1" x 22"	1 1/4" x 22"	2 1/4" x 22"	1 1/4" x 22"	1 1/4" x 22"	1 3/4" x 22"	3" x 22"	1 3/4" x 22"	1 1/4" x 22"
G2-9	1" x 22"	1 1/4" x 22"	2" x 22"	1 1/4" x 22"	1" x 22"	1 1/4" x 22"	2 1/2" x 22"	1 1/4" x 22"	1 1/4" x 22"	1 3/4" x 22"	3" x 22"	1 3/4" x 22"	1 1/4" x 22"

Preliminary Plans - For Reference Only

NOTES:

1. FOR GIRDER ELEVATION NOTES, SEE SHEET 77 / 167.

UNIT 2 GIRDER ELEVATION - (2 OF 3)
CUY-77-1587 (BRIDGE 9)
I.R. 77 SB OVER I.R. 90 AND CR-721 (E. 14TH ST.)

SFN 1806910
DESIGN AGENCY HDR
DESIGNER TJE | CHECKER NJH
REVIEWER DWW 01/11/24
PROJECT ID 82382
SUBSET 80 | TOTAL 167
SHEET 1948 | TOTAL 2696

CUY-90-16.28 (CCG3A)

MODEL: Sheet PAPERSIZE: 34x22 (in.) DATE: 3/28/2025 TIME: 10:18:14 AM USER: Rohit.Bk
pw:\\tmb-us-pw.bentley.com:mb-us-pw-03\Documents\Cleveland_OH\01_Projects\ODOT\District12\82382\400-Engineering\Structures\SFN_1806910\Sheets\82382_SFN_1806910_SS009.dgn

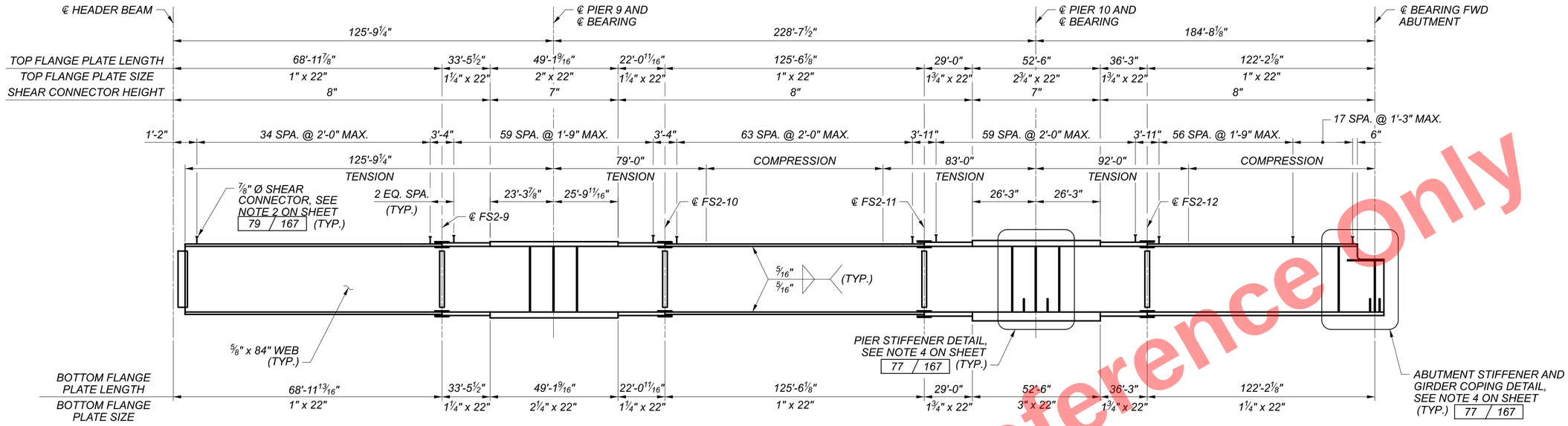

GIRDER ELEVATION
(G2-7)

UNIT 2 SHEAR CONNECTOR SPACING

GIRDER #	SS1	SS2	SS3	SS4	SS5	SS6	SS7	SS8	SS9	SS10	SS11	SS12	SS13	SS14	SS15
G2-1	27 SPA. @ 8" MAX.	84 SPA. @ 1'-0" MAX.	3'-4"	79 SPA. @ 1'-0" MAX.	4'-6"	103 SPA. @ 1'-0" MAX.	4'-6"	78 SPA. @ 1'-0" MAX.	4'-6"	83 SPA. @ 1'-0" MAX.	4'-6"	109 SPA. @ 1'-0" MAX.	4'-6"	125 SPA. @ 1'-0" MAX.	4'-6"
G2-3	15 SPA. @ 1'-3" MAX.	55 SPA. @ 1'-6" MAX.	3'-4"	53 SPA. @ 1'-6" MAX.	3'-4"	77 SPA. @ 1'-4" MAX.	3'-4"	59 SPA. @ 1'-4" MAX.	3'-4"	69 SPA. @ 1'-4" MAX.	3'-11"	68 SPA. @ 1'-6" MAX.	4'-6"	90 SPA. @ 1'-4" MAX.	3'-11"
G2-4	15 SPA. @ 1'-3" MAX.	54 SPA. @ 1'-6" MAX.	3'-4"	52 SPA. @ 1'-6" MAX.	3'-4"	68 SPA. @ 1'-6" MAX.	3'-4"	58 SPA. @ 1'-4" MAX.	3'-4"	71 SPA. @ 1'-4" MAX.	3'-11"	70 SPA. @ 1'-6" MAX.	3'-11"	74 SPA. @ 1'-6" MAX.	3'-11"
G2-5	15 SPA. @ 1'-3" MAX.	53 SPA. @ 1'-6" MAX.	3'-4"	51 SPA. @ 1'-6" MAX.	3'-4"	67 SPA. @ 1'-6" MAX.	3'-4"	57 SPA. @ 1'-4" MAX.	3'-11"	64 SPA. @ 1'-6" MAX.	4'-6"	71 SPA. @ 1'-6" MAX.	4'-6"	68 SPA. @ 1'-6" MAX.	3'-11"
G2-6	15 SPA. @ 1'-3" MAX.	52 SPA. @ 1'-6" MAX.	3'-4"	50 SPA. @ 1'-6" MAX.	3'-4"	66 SPA. @ 1'-6" MAX.	3'-4"	50 SPA. @ 1'-6" MAX.	3'-4"	79 SPA. @ 1'-4" MAX.	3'-4"	68 SPA. @ 1'-6" MAX.	3'-11"	62 SPA. @ 1'-6" MAX.	3'-11"
G2-8	15 SPA. @ 1'-3" MAX.	51 SPA. @ 1'-6" MAX.	3'-4"	50 SPA. @ 1'-6" MAX.	3'-4"	65 SPA. @ 1'-6" MAX.	3'-4"	49 SPA. @ 1'-6" MAX.	3'-11"	80 SPA. @ 1'-4" MAX.	3'-11"	70 SPA. @ 1'-6" MAX.	3'-4"	64 SPA. @ 1'-4" MAX.	3'-4"
G2-9	27 SPA. @ 8" MAX.	75 SPA. @ 1'-0" MAX.	3'-4"	73 SPA. @ 1'-0" MAX.	3'-4"	95 SPA. @ 1'-0" MAX.	3'-4"	73 SPA. @ 1'-0" MAX.	3'-11"	116 SPA. @ 1'-0" MAX.	3'-11"	101 SPA. @ 1'-0" MAX.	3'-4"	76 SPA. @ 1'-0" MAX.	3'-4"

UNIT 2 SHEAR CONNECTOR SPACING

GIRDER #	SS16	SS17	SS18	SS19	SS20	SS21	SS22	SS23	SS24	SS25	SS26	SS27
G2-1	88 SPA. @ 1'-0" MAX	3'-11"	65 SPA. @ 1'-0" MAX.	3'-11"	108 SPA. @ 1'-0" MAX.	3'-11"	128 SPA. @ 1'-0" MAX.	3'-11"	114 SPA. @ 1'-0" MAX.	3'-11"	98 SPA. @ 1'-0" MAX.	32 SPA. @ 8" MAX.
G2-3	59 SPA. @ 1'-6" MAX.	3'-4"	43 SPA. @ 1'-6" MAX.	3'-4"	62 SPA. @ 1'-9" MAX.	3'-11"	64 SPA. @ 2'-0" MAX.	3'-11"	57 SPA. @ 2'-0" MAX.	3'-11"	56 SPA. @ 1'-9" MAX.	17 SPA. @ 1'-3" MAX.
G2-4	58 SPA. @ 1'-6" MAX.	3'-4"	42 SPA. @ 1'-6" MAX.	3'-4"	71 SPA. @ 1'-6" MAX.	3'-11"	63 SPA. @ 2'-0" MAX.	3'-11"	57 SPA. @ 2'-0" MAX.	3'-11"	56 SPA. @ 1'-9" MAX.	17 SPA. @ 1'-3" MAX.
G2-5	57 SPA. @ 1'-6" MAX.	3'-4"	42 SPA. @ 1'-6" MAX.	3'-4"	70 SPA. @ 1'-6" MAX.	3'-11"	62 SPA. @ 2'-0" MAX.	4'-6"	57 SPA. @ 2'-0" MAX.	3'-11"	56 SPA. @ 1'-9" MAX.	17 SPA. @ 1'-3" MAX.
G2-6	57 SPA. @ 1'-6" MAX.	3'-4"	35 SPA. @ 1'-9" MAX.	3'-4"	59 SPA. @ 1'-9" MAX.	3'-11"	62 SPA. @ 2'-0" MAX.	4'-6"	57 SPA. @ 2'-0" MAX.	3'-11"	56 SPA. @ 1'-9" MAX.	17 SPA. @ 1'-3" MAX.
G2-8	56 SPA. @ 1'-6" MAX.	3'-4"	35 SPA. @ 1'-9" MAX.	3'-4"	58 SPA. @ 1'-9" MAX.	3'-11"	69 SPA. @ 1'-9" MAX.	3'-11"	57 SPA. @ 2'-0" MAX.	3'-11"	55 SPA. @ 1'-9" MAX.	17 SPA. @ 1'-3" MAX.
G2-9	83 SPA. @ 1'-0" MAX.	3'-4"	59 SPA. @ 1'-0" MAX.	3'-4"	99 SPA. @ 1'-0" MAX.	3'-11"	120 SPA. @ 1'-0" MAX.	3'-11"	114 SPA. @ 1'-0" MAX.	3'-11"	96 SPA. @ 1'-0" MAX.	32 SPA. @ 8" MAX.

UNIT 2 SHEAR CONNECTOR QUANTITIES

GIRDER #	7" HEIGHT	8" HEIGHT
G2-1	894	3108
G2-3	567	2001
G2-4	624	1893
G2-5	489	1971
G2-6	450	1944
G2-7	165	708
G2-8	450	1962
G2-9	711	3045
TOTAL	4350	16632

UNIT 2 SHEAR CONNECTOR HEIGHT

GIRDER #	A	B	C	D	E	F	G	H	I	J	K	L	M	N	O	P	Q	R	S	U	V	W	X	Y	Z
G2-1	336 @ 8"	54 @ 8"	135 @ 7"	51 @ 8"	312 @ 8"	51 @ 8"	135 @ 7"	51 @ 8"	252 @ 8"	78 @ 8"	174 @ 7"	78 @ 8"	378 @ 8"	51 @ 8"	135 @ 7"	81 @ 8"	198 @ 8"	105 @ 8"	159 @ 7"	63 @ 8"	387 @ 8"	84 @ 8"	156 @ 7"	105 @ 8"	393 @ 8"
G2-3	213 @ 8"	36 @ 8"	90 @ 7"	36 @ 8"	234 @ 8"	39 @ 8"	102 @ 7"	39 @ 8"	210 @ 8"	42 @ 8"	117 @ 7"	48 @ 8"	273 @ 8"	36 @ 8"	90 @ 7"	54 @ 8"	132 @ 8"	60 @ 8"	90 @ 7"	36 @ 8"	195 @ 8"	42 @ 8"	78 @ 7"	54 @ 8"	222 @ 8"
G2-4	210 @ 8"	36 @ 8"	87 @ 7"	36 @ 8"	207 @ 8"	39 @ 8"	99 @ 7"	39 @ 8"	216 @ 8"	48 @ 8"	120 @ 7"	45 @ 7"	225 @ 8"	33 @ 8"	90 @ 7"	54 @ 8"	129 @ 8"	69 @ 8"	105 @ 7"	42 @ 8"	192 @ 8"	42 @ 8"	78 @ 7"	54 @ 8"	222 @ 8"
G2-5	207 @ 8"	33 @ 8"	90 @ 7"	33 @ 8"	204 @ 8"	39 @ 8"	96 @ 7"	39 @ 8"	195 @ 8"	54 @ 8"	123 @ 7"	39 @ 8"	207 @ 8"	33 @ 8"	90 @ 8"	51 @ 8"	129 @ 8"	69 @ 8"	102 @ 7"	42 @ 8"	189 @ 8"	42 @ 8"	78 @ 7"	54 @ 8"	222 @ 8"
G2-6	204 @ 8"	33 @ 8"	87 @ 7"	33 @ 8"	201 @ 8"	33 @ 8"	87 @ 7"	33 @ 8"	240 @ 8"	48 @ 8"	111 @ 7"	48 @ 8"	189 @ 8"	33 @ 8"	90 @ 8"	51 @ 8"	108 @ 8"	57 @ 8"	87 @ 7"	36 @ 8"	189 @ 8"	42 @ 8"	78 @ 7"	54 @ 8"	222 @ 8"
G2-8	201 @ 8"	33 @ 8"	87 @ 7"	33 @ 8"	198 @ 8"	33 @ 8"	84 @ 7"	33 @ 8"	243 @ 8"	57 @ 8"	114 @ 7"	42 @ 8"	195 @ 8"	33 @ 8"	87 @ 8"	51 @ 8"	108 @ 8"	57 @ 8"	87 @ 7"	33 @ 8"	210 @ 8"	42 @ 8"	78 @ 7"	54 @ 8"	219 @ 8"
G2-9	309 @ 8"	48 @ 8"	126 @ 7"	48 @ 8"	288 @ 8"	48 @ 8"	126 @ 7"	48 @ 8"	351 @ 8"	75 @ 8"	156 @ 7"	75 @ 8"	231 @ 8"	48 @ 8"	129 @ 8"	75 @ 8"	180 @ 8"	96 @ 8"	147 @ 7"	57 @ 8"	363 @ 8"	84 @ 8"	156 @ 7"	105 @ 8"	387 @ 8"

NOTES:

1. FOR GIRDER ELEVATION NOTES, SEE SHEET 77 / 167.

Preliminary Plans - For Reference Only

UNIT 2 GIRDER ELEVATION - (3 OF 3)
CUY-77-1587 (BRIDGE 9)
I.R. 77 SB OVER I.R. 90 AND CR-721 (E. 14TH ST.)

SFN 1806910
DESIGN AGENCY HDR
DESIGNER TJE | CHECKER NJH
REVIEWER DWW 01/11/24
PROJECT ID 82382
SUBSET 81 | TOTAL 167
SHEET 1949 | TOTAL 2696

CUY-90-16.28 (CCG3A)

MODEL: Sheet PAPERSIZE: 34x22 (in.) DATE: 3/28/2025 TIME: 10:18:21 AM USER: RohitLBk
pw:\\mb-us-pw.bentley.com:mb-us-pw-03\Documents\Cleveland_OH\01_Projects\ODOT\District12\82382\400-Engineering\Structures\SFN_1806910\Sheets\82382_SFN_1806910_SS010.dgn

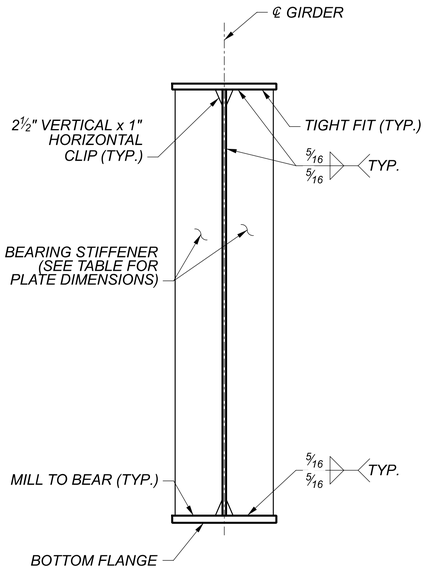

BEARING STIFFENER DETAIL

BEARING AND JACKING STIFFENER DIMENSIONS			
	LOCATION	BEARING STIFFENER	JACKING STIFFENER
UNIT 1	REAR ABUT.	℄ 1" x 10"	℄ 1" x 10"
	PIER 1	℄ 1" x 10"	℄ 1" x 10"
	PIER 2	℄ 1" x 10"	℄ 1" x 10"
	PIER 3	℄ 1" x 10"	℄ 1" x 10"
	PIER 4	℄ 1" x 10"	℄ 1" x 10"
UNIT 2	PIER 4	℄ 1" x 10"	℄ 1" x 10"
	PIER 5	℄ 1" x 10"	℄ 1" x 10"
	PIER 6	℄ 1" x 10"	℄ 1" x 10"
	PIER 7	℄ 1 ¼" x 10"	℄ 1 ¼" x 10"
	PIER 8	℄ 1 ¼" x 10"	℄ 1 ¼" x 10"
	PIER 9	℄ 1" x 10"	℄ 1" x 10"
	PIER 10	℄ 1 ¼" x 10"	℄ 1 ¼" x 10"
	FWD. ABUT.	℄ 1" x 10"	℄ 1" x 10"

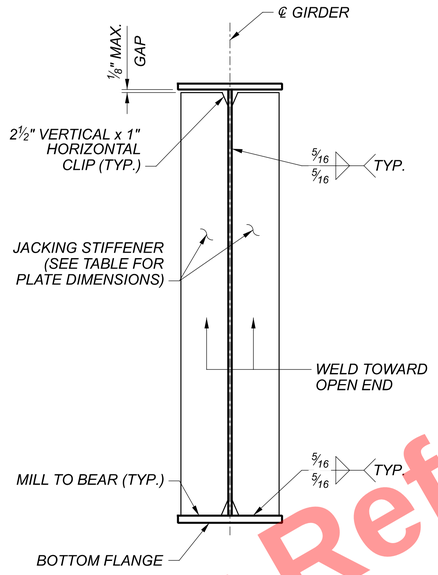

JACKING STIFFENER DETAIL

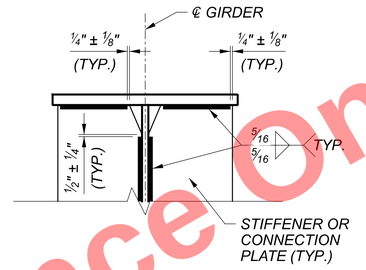

STIFFENER AND CONNECTION PLATE WELD TERMINATION DETAILS

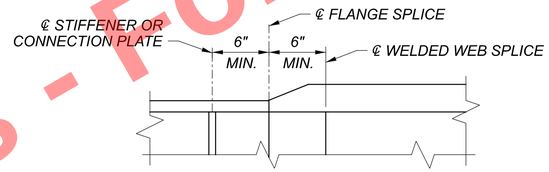

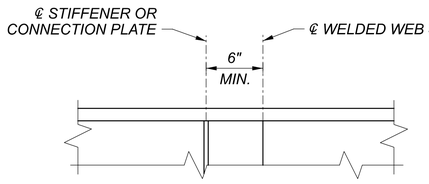

WELDED SHOP SPLICE CLEARANCE DETAILS

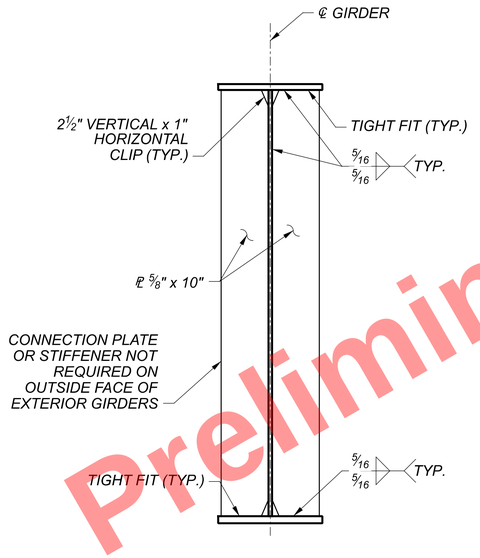

TRANSVERSE STIFFENER/ CONNECTION PLATE DETAIL

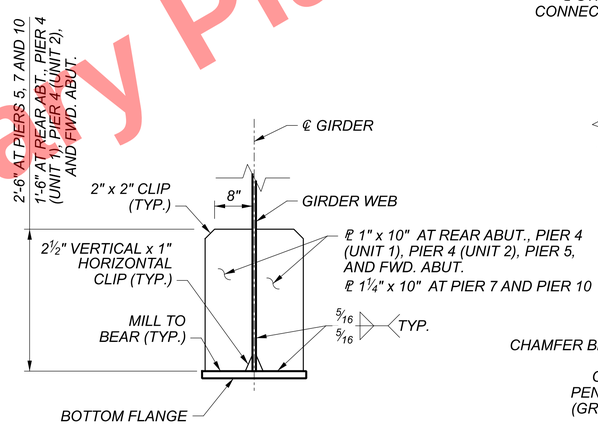

AUXILIARY STIFFENER DETAIL

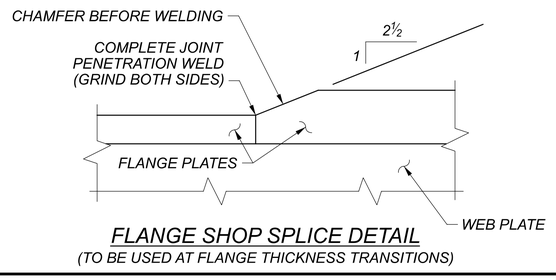

FLANGE SHOP SPLICE DETAIL
(TO BE USED AT FLANGE THICKNESS TRANSITIONS)

NOTES:

1. ALL STIFFENER AND CONNECTION PLATES SHALL BE ASTM A709, GRADE 50 STEEL.
2. CROSSFRAME CONNECTION PLATES SHALL BE NORMAL TO THE TOP FLANGE UNLESS NOTED OTHERWISE. BEARING, AUXILIARY AND JACKING STIFFENERS SHALL BE VERTICAL AFTER ERECTION.
3. FOR ADDITIONAL NOTES AND GIRDER ELEVATIONS, SEE SHEETS 77 / 167 THRU 81 / 167 .
4. FOR CROSSFRAME CONNECTION PLATES AND TRANSVERSE STIFFENER LOCATIONS, SEE FRAMING PLANS ON SHEETS 71 / 167 THRU 76 / 167 .
5. FOR JACKING STIFFENER AND AUXILIARY BEARING STIFFENER PLACEMENT, SEE SHEET 83 / 167 AND 84 / 167 .
6. IF THE TRANSVERSE STIFFENER IS LOCATED IN A REGION WHERE THE TOP FLANGE IS IN TENSION, AS INDICATED ON THE GIRDER ELEVATIONS, THE STIFFENER TO TOP FLANGE WELD SHALL BE ELIMINATED. CONNECTION PLATES SHALL BE WELDED TO BOTH TOP AND BOTTOM FLANGES.

Preliminary Plans - For Reference Only

GIRDER DETAILS - (1 OF 3)
CUY-77-1587 (BRIDGE 9)
I.R. 77 SB OVER I.R. 90 AND CR-721 (E. 14TH ST.)

SFN 1806910
DESIGN AGENCY
HDR
DESIGNER MKO | CHECKER ABO
REVIEWER DWW 01/11/24
PROJECT ID 82382
SUBSET 82 | TOTAL 167
SHEET 1950 | TOTAL 2696

CUY-90-16.28 (CCG3A)
MODEL: Sheet PAPERSIZE: 34x22 (in.) DATE: 3/28/2025 TIME: 10:18:28 AM USER: RohitBk
pw:\\mb-us-pw.bentley.com:mb-us-pw-03\Documents\Cleveland_OH\01_Projects\ODOT\District12\82382400-Engineering\Structures\SFN_1806910\Sheets\82382_SFN_1806910_SS011.dgn

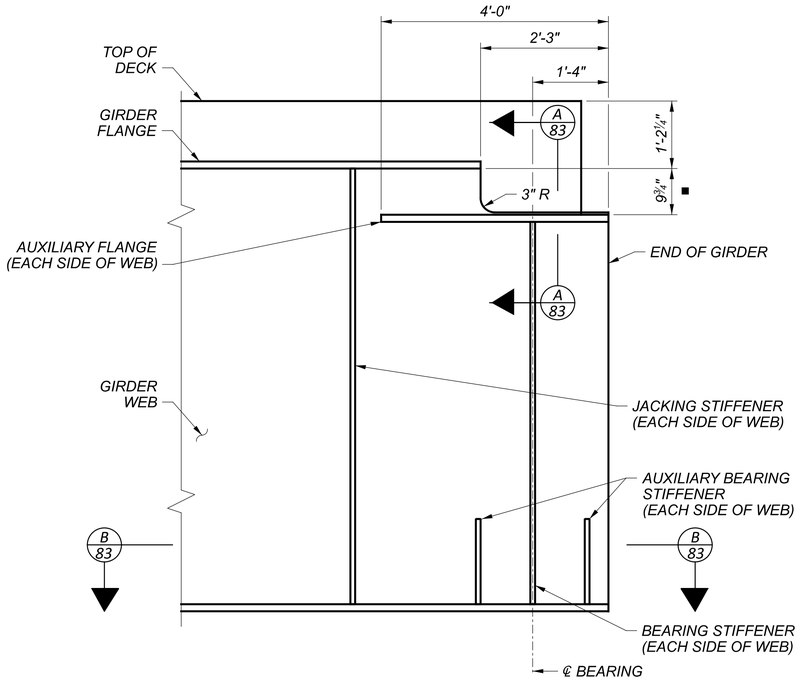

REAR ABUTMENT STIFFENER AND COPING DETAIL
(SEE NOTE 1)

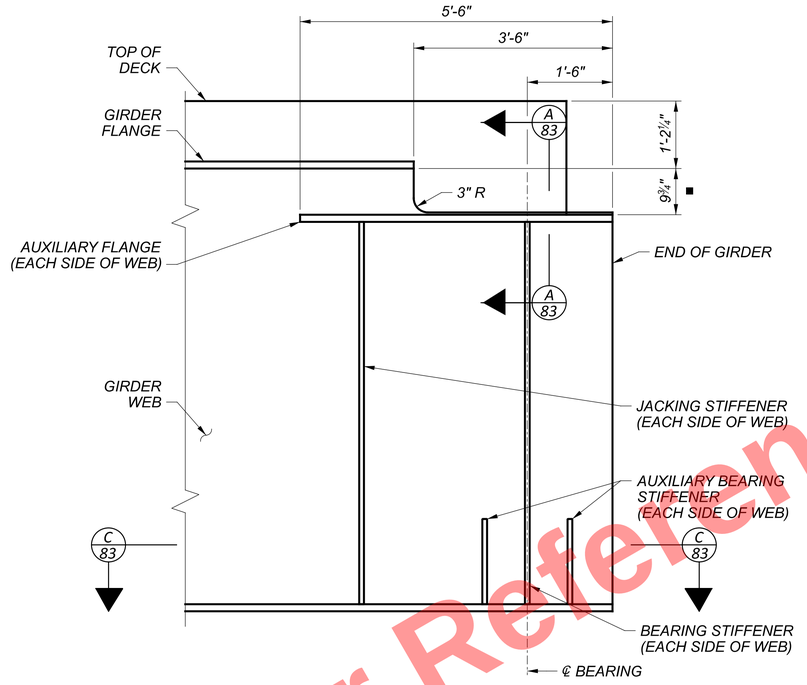

FORWARD ABUTMENT STIFFENER AND COPING DETAIL
(SEE NOTE 1)

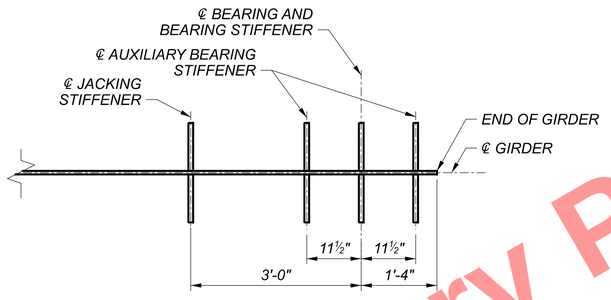

SECTION B-B

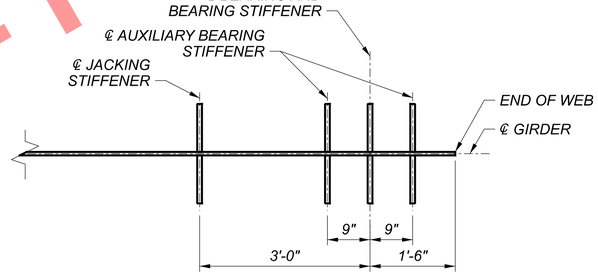

SECTION C-C

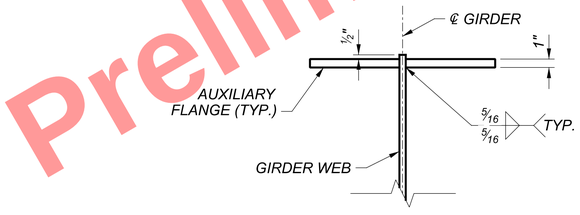

SECTION A-A

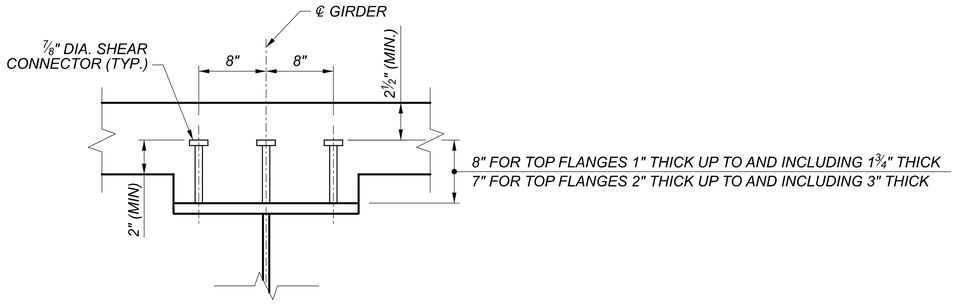

SHEAR CONNECTOR DETAIL
(SEE NOTE 3)

LEGEND:

■ MEASURED TO TOP OF AUXILIARY FLANGE

NOTES:

1. BEARING, AUXILIARY AND JACKING STIFFENERS SHALL BE VERTICAL AFTER ERECTION.
2. FOR ADDITIONAL STIFFENER NOTES AND DETAILS, SEE SHEET 82 / 167 .
3. CONTRACTOR TO VERIFY MINIMUM COVER AND EMBEDMENTS WILL BE MAINTAINED FOR SHEAR CONNECTORS ONCE CONCRETE DECK IS POURED.

Preliminary Plans - For Reference Only

GIRDER DETAILS - (2 OF 3)
CUY-77-1587 (BRIDGE 9)
I.R. 77 SB OVER I.R. 90 AND CR-721 (E. 14TH ST.)

SFN	1806910
DESIGN AGENCY	HDR
DESIGNER	MKO
CHECKER	ABO
REVIEWER	DWW 01/11/24
PROJECT ID	82382
SUBSET	83
TOTAL	167
SHEET	1951
TOTAL	2696

CUY-90-16.28 (CCG3A)
MODEL: Sheet PAPERSIZE: 34x22 (in.) DATE: 3/28/2025 TIME: 10:18:36 AM USER: RohitBk
pw:\\mb-us-pw.bentley.com:mb-us-pw-03\Documents\Cleveland_OH01_Projects\ODOT\District12\82382400-Engineering\Structures\SFN_1806910\Sheets\82382_SFN_1806910_SS028.dgn

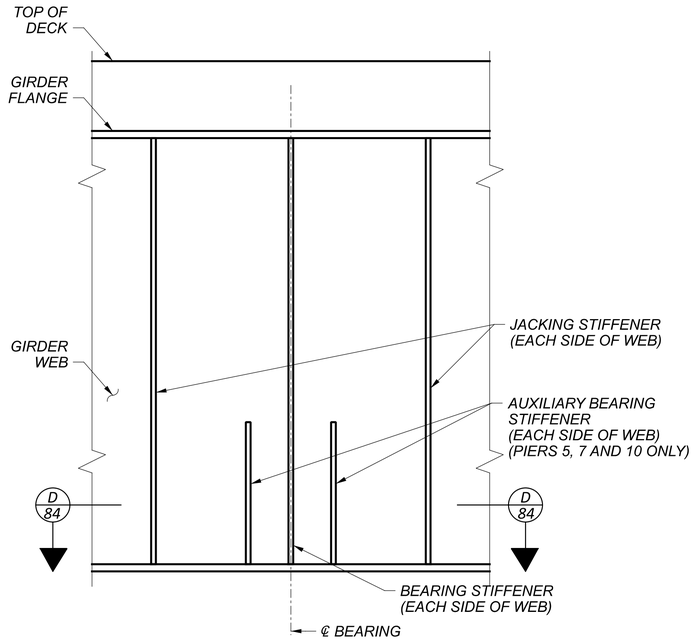

TYPICAL PIER STIFFENER DETAIL

(SEE NOTE 1)

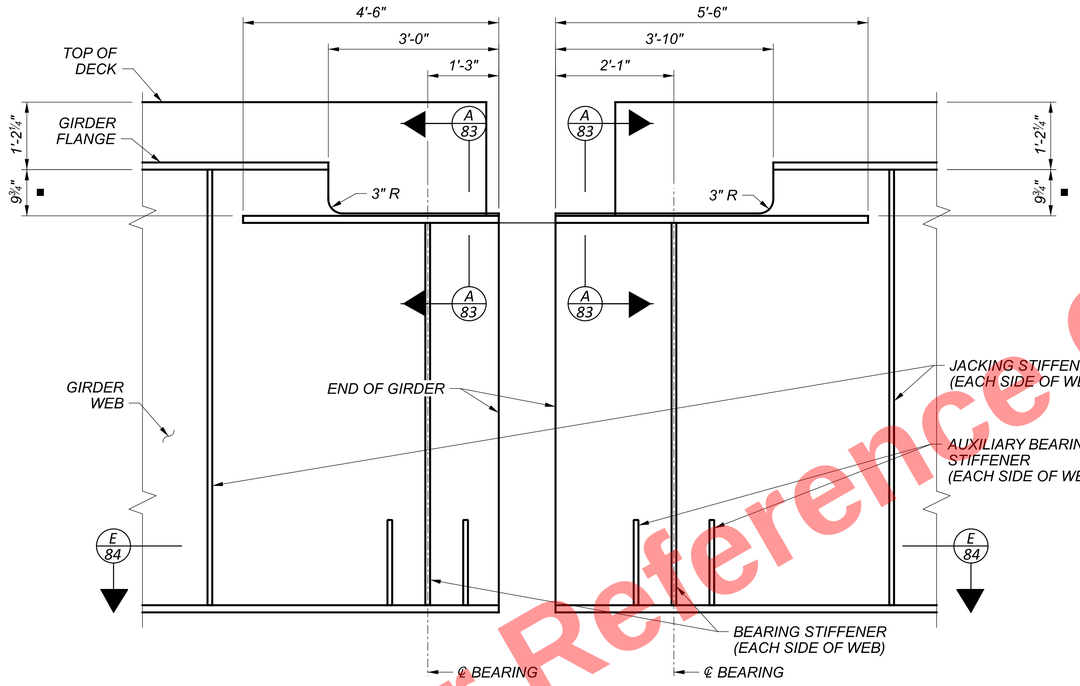

PIER 4 STIFFENER AND COPING DETAIL

(SEE NOTE 1)

*TO TOP OF AUXILIARY FLANGE

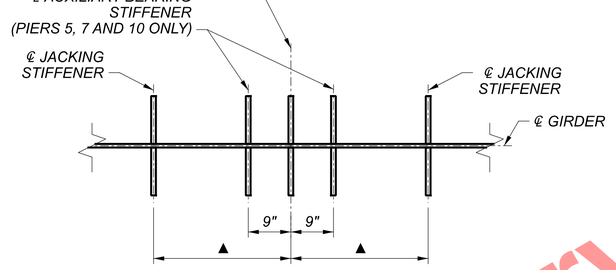

SECTION D-D

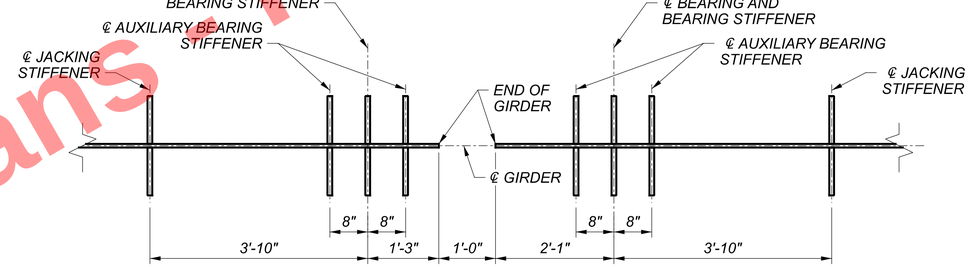

SECTION E-E

LOCATION	GIRDER	▲
PIER 1	G1-1 THRU G1-9	2'-5"
PIER 2	G1-1 THRU G1-9	2'-5"
PIER 3	G1-1 THRU G1-9	2'-5"
PIER 5	G2-1 THRU G2-9	2'-5"
PIER 6	G2-1 THRU G2-9	2'-5"
PIER 7	G2-1 THRU G2-9	3'-3"
PIER 8	G2-1 THRU G2-9	2'-4½"
PIER 9	G2-1 THRU G2-9	2'-5"
PIER 10	G1-1, G2-3, G2-8 AND G2-9	2'-4½"
PIER 10	G2-4 THRU G2-7	2'-5"

LEGEND:

■ MEASURED TO TOP OF AUXILIARY FLANGE

NOTES:

1. BEARING, AUXILIARY AND JACKING STIFFENERS SHALL BE VERTICAL AFTER ERECTION.
2. FOR ADDITIONAL STIFFENER NOTES AND DETAILS, SEE SHEET 82 / 167 .

Preliminary Plans - For Reference Only

GIRDER DETAILS - (3 OF 3)
CUY-77-1587 (BRIDGE 9)
I.R. 77 SB OVER I.R. 90 AND CR-721 (E. 14TH ST.)

SFN 1806910
DESIGN AGENCY HDR
DESIGNER MKO | CHECKER ABO
REVIEWER DWW 01/11/24
PROJECT ID 82382
SUBSET 84 | TOTAL 167
SHEET 1952 | TOTAL 2696

CUY-90-16.28 (CCG3A)

MODEL: Sheet PAPERSIZE: 34x22 (in.) DATE: 3/28/2025 TIME: 10:18:43 AM USER: Rohit.Bk
pw:\\mb-us-pw.bentley.com:mb-us-pw-03\Documents\Cleveland_OH01_Projects\ODOT\District12\82382400-Engineering\Structures\SFN_1806910\Sheets\82382_SFN_1806910_SS029.dgn

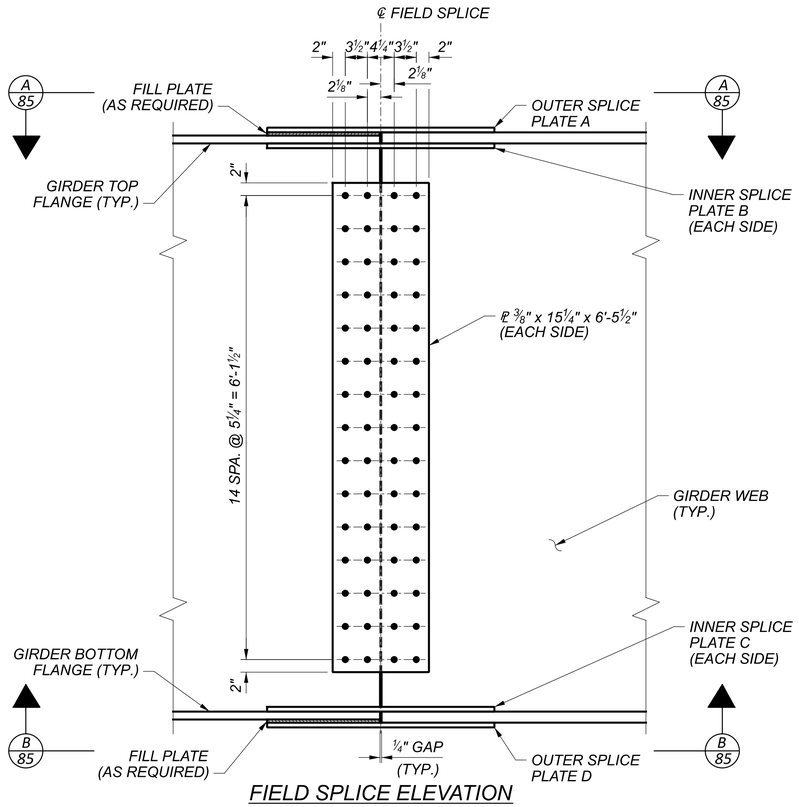

FIELD SPLICE ELEVATION

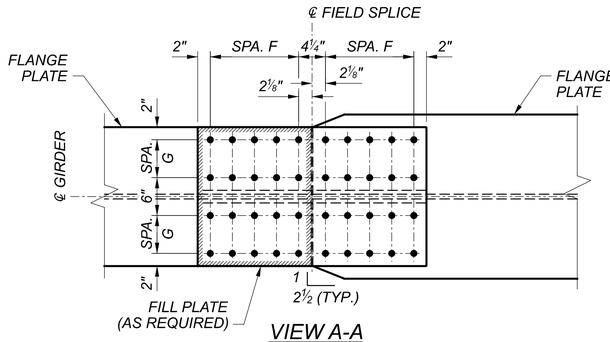

VIEW A-A
(AT FLANGE WIDTH TRANSITION)

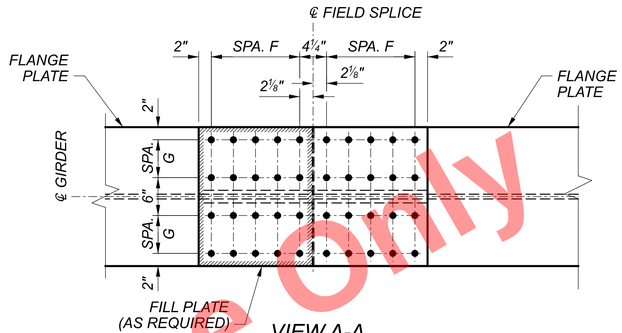

VIEW A-A
(AT CONSTANT FLANGE WIDTH)

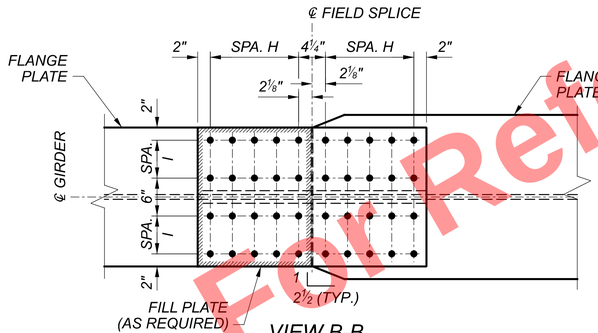

VIEW B-B
(AT FLANGE WIDTH TRANSITION)

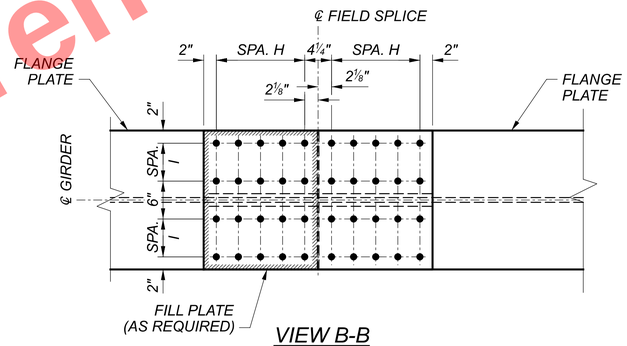

VIEW B-B
(AT CONSTANT FLANGE WIDTH)

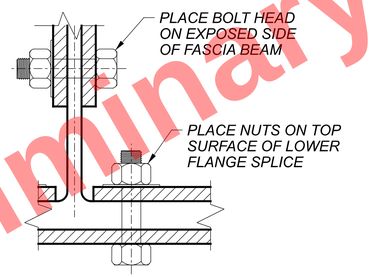

BOLT ORIENTATION DETAIL

NOTES:

1. FOR GENERAL NOTES, SEE SHEETS 12 / 167 THRU 15 / 167.
2. FOR FRAMING PLAN, SEE SHEETS 71 / 167 THRU 76 / 167.
3. FOR GIRDER ELEVATIONS, SEE SHEETS 77 / 167 THRU 81 / 167.
4. ALL SPLICE MATERIAL TO BE ASTM A709 GRADE 50 STEEL.
5. HIGH STRENGTH BOLTS SHALL BE 1" DIA. ASTM F3125 GRADE A325, TYPE I IN 1⅛" DIA. HOLES. EXCLUDE THREADS FROM THE SHEAR PLANES FOR FLANGE SPLICE BOLTS. THREADS ARE PERMITTED TO BE INCLUDED IN THE SHEAR PLANES FOR WEB SPLICE BOLTS.
6. ALL SPLICE PLATES SHALL BE DESIGNATED (CVN) AND MEET MINIMUM (CVN) NOTCH TOUGHNESS REQUIREMENTS AS SPECIFIED IN C&MS 711.01.
7. FULL BOLT PATTERNS NOT SHOWN.
8. ALL FILL PLATES SHALL BE A SINGLE PLATE.
9. DIRECT TENSION INDICATORS (DTIs) ARE NOT PERMITTED.
10. FOR TABLES OF SPLICE DIMENSIONS AND SPLICE DESIGNATIONS, SEE SHEET 86 / 167.

Preliminary Plans - For Reference Only

FIELD SPLICE DETAILS - (1 OF 2)
CUY-77-1587 (BRIDGE 9)
I.R. 77 SB OVER I.R. 90 AND CR-721 (E. 14TH ST.)

SFN 1806910
DESIGN AGENCY HDR
DESIGNER RWJ | CHECKER TJE
REVIEWER DWW 01/11/24
PROJECT ID 82382
SUBSET 85 | TOTAL 167
SHEET 1953 | TOTAL 2696

CUY-90-16.28 (CCG3A)
MODEL: Sheet PAPERSIZE: 34x22 (in.) DATE: 3/28/2025 TIME: 10:18:50 AM USER: RohitLBk
pw:\\mb-us-pw.bentley.com:mb-us-pw-03\Documents\Cleveland_OH\01_Projects\ODOT\District12\82382\400-Engineering\Structures\SFN_1806910\Sheets\82382_SFN_1806910_SS014.dgn

FIELD SPLICE LAYOUT - UNIT 1

LOCATION	G1-1	G1-2	G1-3	G1-4	G1-5	G1-6	G1-8	G1-9
FS1-1	Type 1	Type 1	Type 1	Type 1	Type 1	Type 1	Type 1	Type 1
FS1-2	Type 1	--	Type 1	Type 1	Type 1	Type 1	Type 1	Type 1
FS1-3	Type 1	--	Type 1	Type 1	Type 1	Type 1	Type 1	Type 1
FS1-4	Type 2	--	Type 1	Type 1	Type 1	Type 1	Type 1	Type 1
FS1-5	Type 2	--	Type 1	Type 1	Type 1	Type 1	Type 1	Type 1
FS1-6	Type 1	--	Type 1	Type 1	Type 1	Type 1	Type 1	Type 1

FIELD SPLICE LAYOUT - UNIT 2

LOCATION	G2-1	G2-3	G2-4	G2-5	G2-6	G2-7	G2-8	G2-9
FS2-1	Type 1	Type 1	Type 1	Type 1	Type 1	--	Type 1	Type 1
FS2-2	Type 3	Type 1	Type 1	Type 1	Type 1	--	Type 1	Type 1
FS2-3	Type 3	Type 1	Type 1	Type 1	Type 1	--	Type 1	Type 1
FS2-4	Type 3	Type 1	Type 1	Type 7	Type 1	--	Type 2	Type 2
FS2-5	Type 3	Type 2	Type 2	Type 4	Type 1	--	Type 2	Type 2
FS2-6	Type 4	Type 4	Type 5	Type 4	Type 7	--	Type 1	Type 1
FS2-7	Type 4	Type 7	Type 7	Type 7	Type 2	--	Type 1	Type 1
FS2-8	Type 2	Type 1	Type 1	Type 1	Type 1	--	Type 1	Type 1
FS2-9	Type 2	Type 1	Type 1	Type 1	Type 1	Type 1	Type 1	Type 1
FS2-10	Type 5	Type 7	Type 7	Type 2	Type 2	Type 1	Type 2	Type 2
FS2-11	Type 6	Type 5	Type 5	Type 3	Type 3	Type 2	Type 2	Type 2
FS2-12	Type 2	Type 2	Type 2	Type 2	Type 2	Type 2	Type 2	Type 2

FIELD SPLICE DIMENSIONS

FIELD SPLICE		TOP FLANGE SPLICE				BOTTOM FLANGE SPLICE			
TYPE	QTY	PLATE A	PLATE B	SPA. F	SPA. G	PLATE C	PLATE D	SPA. H	SPA. I
1	82	¾" x 22"	¾" x 10"	3 @ 3 ½" = 10 ½"	1 @ 6"	¾" x 10"	¾" x 22"	3 @ 3 ½" = 10 ½"	1 @ 6"
2	26	¾" x 22"	¾" x 10"	4 @ 3 ½" = 1'-2"	1 @ 6"	¾" x 10"	¾" x 22"	4 @ 3 ½" = 1'-2"	1 @ 6"
3	6	¾" x 22"	¾" x 10"	5 @ 3 ½" = 1'-5 ½"	1 @ 6"	1" x 10"	⅞" x 22"	5 @ 3 ½" = 1'-5 ½"	1 @ 6"
4	5	⅞" x 24"	1" x 11"	5 @ 3 ½" = 1'-5 ½"	1 @ 7"	1 ⅜" x 11"	1 ¼" x 24"	8 @ 3 ½" = 2'-4"	1 @ 7"
5	4	1" x 22"	1 ⅛" x 10"	4 @ 3 ½" = 1'-2"	1 @ 6"	1 ⅛" x 10"	1 ⅛" x 22"	6 @ 3 ½" = 1'-9"	1 @ 6"
6	1	1 ⅛" x 22"	1 ⅛" x 10"	4 @ 3 ½" = 1'-2"	1 @ 6"	1 ⅛" x 11"	1" x 24"	7 @ 3 ½" = 2'-0 ½"	1 @ 7"
7	7	1" x 22"	1" x 10"	4 @ 3 ½" = 1'-2"	1 @ 6"	1" x 10"	1" x 22"	5 @ 3 ½" = 1'-5 ½"	1 @ 6"

UNIT 1 - TOP FLANGE FILL PLATE THICKNESS

LOCATION	G1-1	G1-2	G1-3	G1-4	G1-5	G1-6	G1-8	G1-9
FS1-1	--	--	--	--	--	--	--	--
FS1-2	--	--	--	--	--	--	--	--
FS1-3	¼"	--	¼"	¼"	¼"	¼"	¼"	¼"
FS1-4	¼"	--	¼"	¼"	¼"	¼"	¼"	¼"
FS1-5	--	--	--	--	--	--	--	--
FS1-6	--	--	--	--	--	--	--	--

UNIT 2 - TOP FLANGE FILL PLATE THICKNESS

LOCATION	G2-1	G2-3	G2-4	G2-5	G2-6	G2-7	G2-8	G2-9
FS2-1	½"	½"	½"	½"	½"	--	½"	½"
FS2-2	½"	½"	½"	½"	½"	--	½"	½"
FS2-3	--	--	--	¼"	¼"	--	¼"	¼"
FS2-4	--	--	--	--	¼"	--	--	--
FS2-5	½"	¾"	¾"	¼"	½"	--	¼"	¼"
FS2-6	¼"	¼"	¾"	¼"	--	--	½"	½"
FS2-7	¼"	¼"	--	--	¼"	--	¼"	¼"
FS2-8	½"	¼"	¼"	¼"	¼"	--	¼"	¼"
FS2-9	½"	½"	½"	¼"	¼"	¼"	¼"	¼"
FS2-10	¼"	¼"	--	¼"	¼"	¼"	¼"	¼"
FS2-11	--	--	¼"	¾"	¾"	¾"	¾"	¾"
FS2-12	¾"	¾"	¾"	¾"	¾"	¾"	¾"	¾"

UNIT 1 - BOTTOM FLANGE FILL PLATE THICKNESS

LOCATION	G1-1	G1-2	G1-3	G1-4	G1-5	G1-6	G1-8	G1-9
FS1-1	¼"	--	--	--	--	--	--	¼"
FS1-2	¼"	--	--	--	--	--	--	¼"
FS1-3	½"	--	¼"	¼"	¼"	¼"	¼"	¼"
FS1-4	¼"	--	¼"	¼"	¼"	¼"	¼"	¼"
FS1-5	--	--	¼"	¼"	¼"	¼"	¼"	¼"
FS1-6	¼"	--	¼"	¼"	¼"	¼"	¼"	¼"

UNIT 2 - BOTTOM FLANGE FILL PLATE THICKNESS

LOCATION	G2-1	G2-3	G2-4	G2-5	G2-6	G2-7	G2-8	G2-9
FS2-1	¾"	½"	½"	½"	½"	--	½"	½"
FS2-2	¼"	½"	½"	½"	½"	--	½"	½"
FS2-3	¼"	½"	½"	½"	½"	--	½"	½"
FS2-4	¼"	½"	½"	½"	½"	--	¼"	¼"
FS2-5	½"	¾"	¾"	--	½"	--	¼"	¼"
FS2-6	¼"	¼"	¾"	¼"	½"	--	½"	½"
FS2-7	--	¾"	¼"	½"	¼"	--	¼"	¼"
FS2-8	¾"	½"	½"	¼"	¼"	--	¼"	¼"
FS2-9	½"	½"	½"	¼"	¼"	¼"	¼"	¼"
FS2-10	½"	1"	¼"	¼"	¼"	¼"	--	--
FS2-11	--	¾"	--	¼"	¼"	¾"	½"	½"
FS2-12	--	½"	½"	½"	½"	½"	½"	½"

NOTE:

1. FOR SPLICE DETAILS AND ADDITIONAL NOTES, SEE SHEET 85 / 167 .

Preliminary Plans - For Reference Only

FIELD SPLICE DETAILS - (2 OF 2)
CUY-77-1587 (BRIDGE 9)
I.R. 77 SB OVER I.R. 90 AND CR-721 (E. 14TH ST.)

SFN 1806910
DESIGN AGENCY HDR
DESIGNER RWJ | CHECKER TJE
REVIEWER DWW 01/11/24
PROJECT ID 82382
SUBSET 86 | TOTAL 167
SHEET 1954 | TOTAL 2696

CUY-90-16.28 (CCG3A)

MODEL: Sheet PAPERSIZE: 34x22 (in.) DATE: 3/28/2025 TIME: 10:18:59 AM USER: RohitLBk
pw:\\mb-us-pw.bentley.com:mb-us-pw-03\Documents\Cleveland_OH\01_Projects\ODOT\District12\82382\400-Engineering\Structures\SFN_1806910\Sheets\82382_SFN_1806910_SS015.dgn

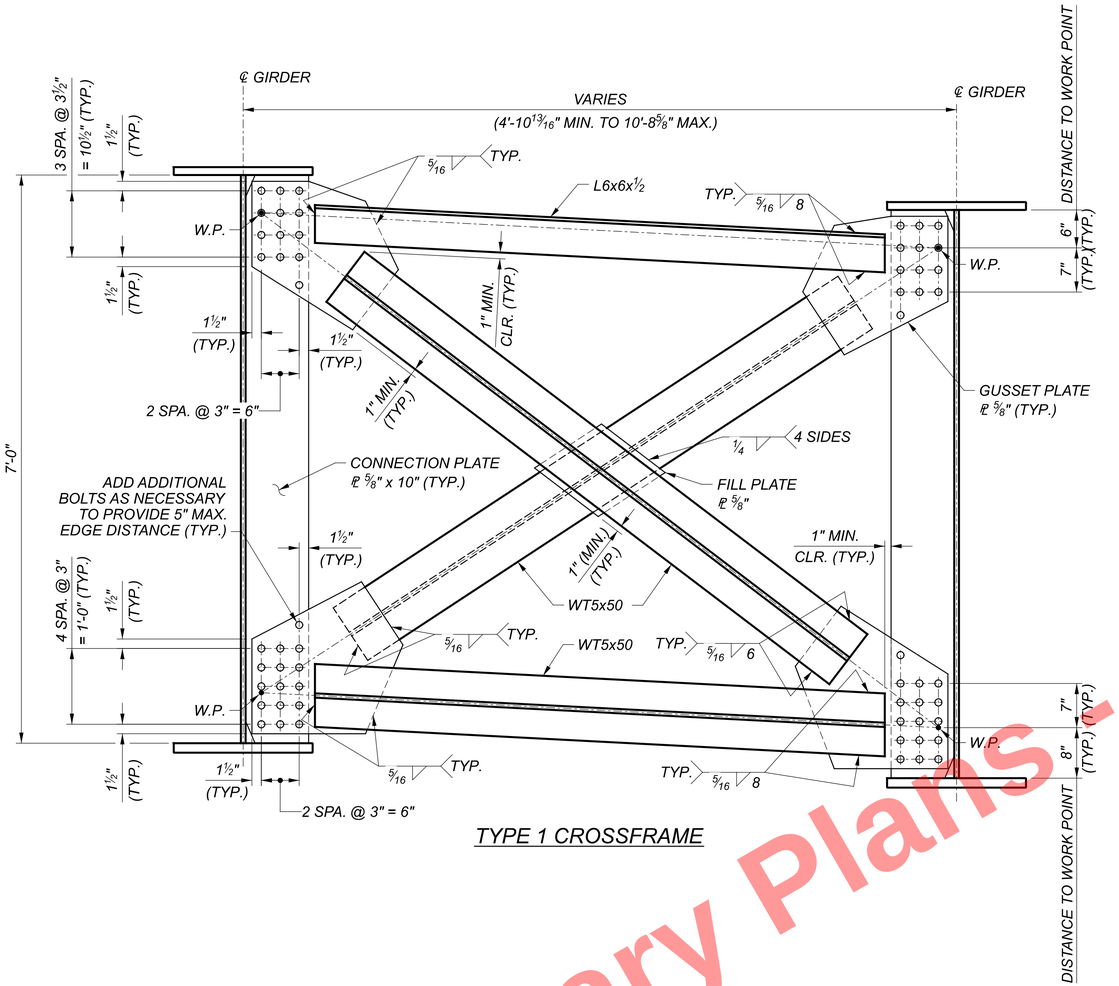

TYPE 1 CROSSFRAME

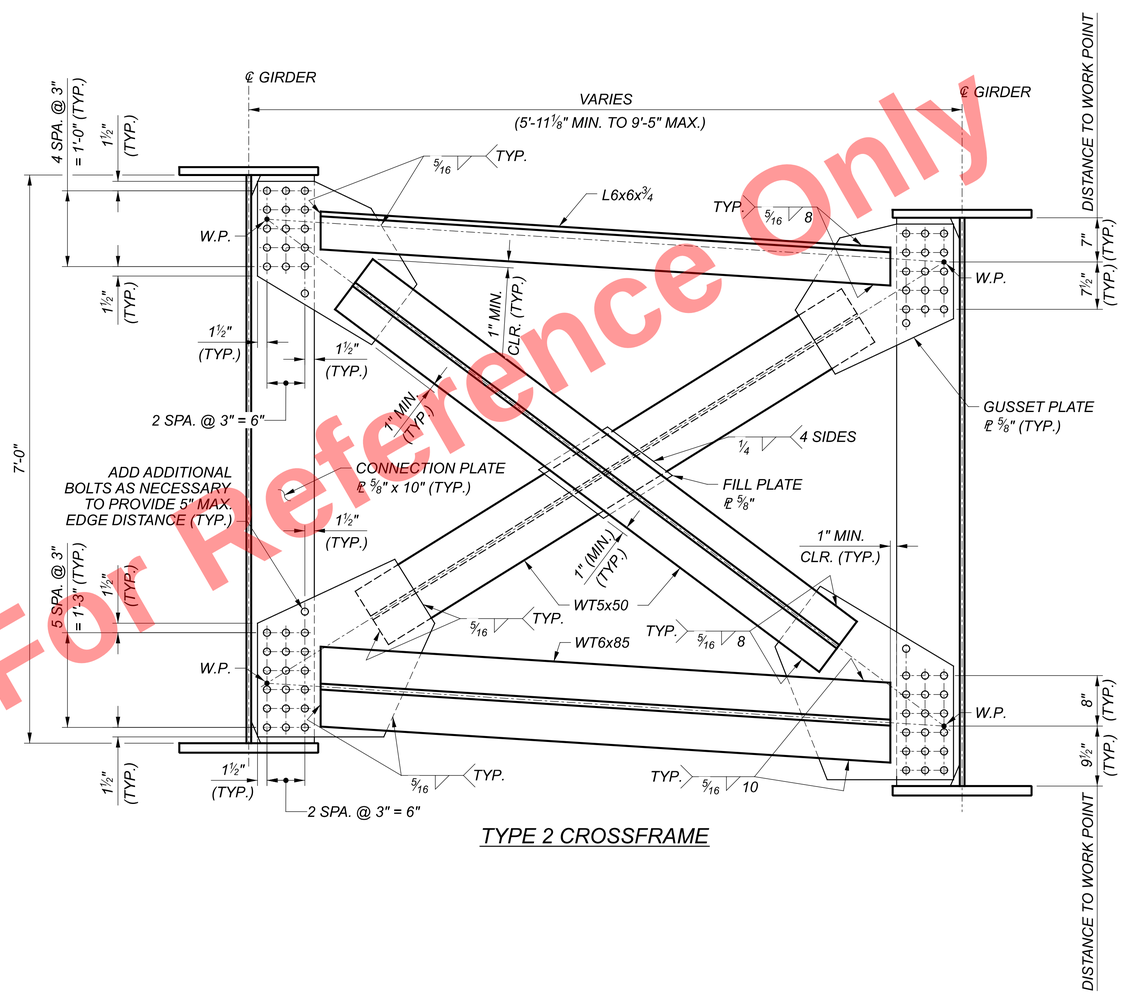

TYPE 2 CROSSFRAME

Preliminary Plans - For Reference Only

NOTES:

1. FOR STIFFENER AND CONNECTION PLATE DETAILS, SEE SHEET 82 / 167 .
2. FOR CROSSFRAME LOCATIONS, SEE FRAMING PLAN ON SHEETS 71 / 167 THRU 76 / 167 .
3. ALL CROSSFRAME MEMBERS AND GUSSET PLATES SHALL BE ASTM A709, GRADE 50 STEEL.
4. HIGH STRENGTH BOLTS SHALL BE 1" DIA. ASTM F3125 GRADE A325, TYPE I IN 1 1/8" DIA. STANDARD HOLES FOR CROSSFRAMES.
5. ALL CROSSFRAME MEMBERS, INCLUDING CONNECTION PLATES, GUSSET PLATES, ANGLES, W-SHAPES AND WT-SHAPES SHALL BE DESIGNATED (CVN). FOR ADDITIONAL NOTES, SEE SHEET 77 / 167 .
6. PROVIDE CLASS A SURFACE CONDITION FOR THE CONTACT AREA OF BOLTED PARTS FOR THE CROSSFRAMES.
7. LOCATE MEMBER NEUTRAL AXIS ALONG THE WORK LINE FROM W.P. TO W.P.
8. SHOP ASSEMBLY OF THE CROSSFRAMES TO ADJACENT GIRDERS IS REQUIRED.

CROSSFRAMES - (1 OF 2)
CUY-77-1587 (BRIDGE 9)
I.R. 77 SB OVER I.R. 90 AND CR-721 (E. 14TH ST.)

SFN	1806910
DESIGN AGENCY	HDR
DESIGNER	RWJ
CHECKER	RBK
REVIEWER	DWW 01/11/24
PROJECT ID	82382
SUBSET	87
TOTAL	167
SHEET	1955
TOTAL	2696

CUY-90-16.28 (CCG3A)

MODEL: Sheet PAPERSIZE: 34x22 (in.) DATE: 3/28/2025 TIME: 10:19:06 AM USER: RohitBk
pw:\\mb-us-pw.bentley.com:mb-us-pw-03\Documents\Cleveland_OH\01_Projects\ODOT\District12\82382400-Engineering\Structures\SFN_1806910\Sheets\82382_SFN_1806910_SS012.dgn

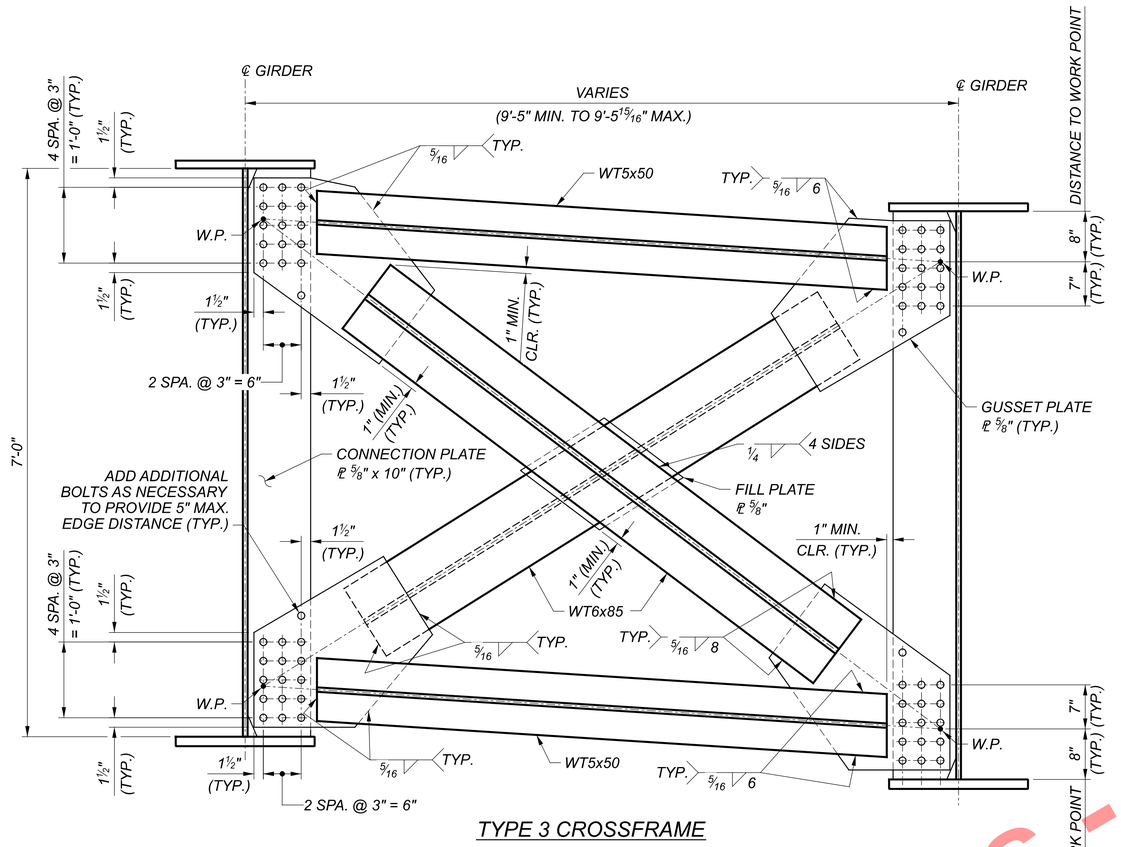

TYPE 3 CROSSFRAME

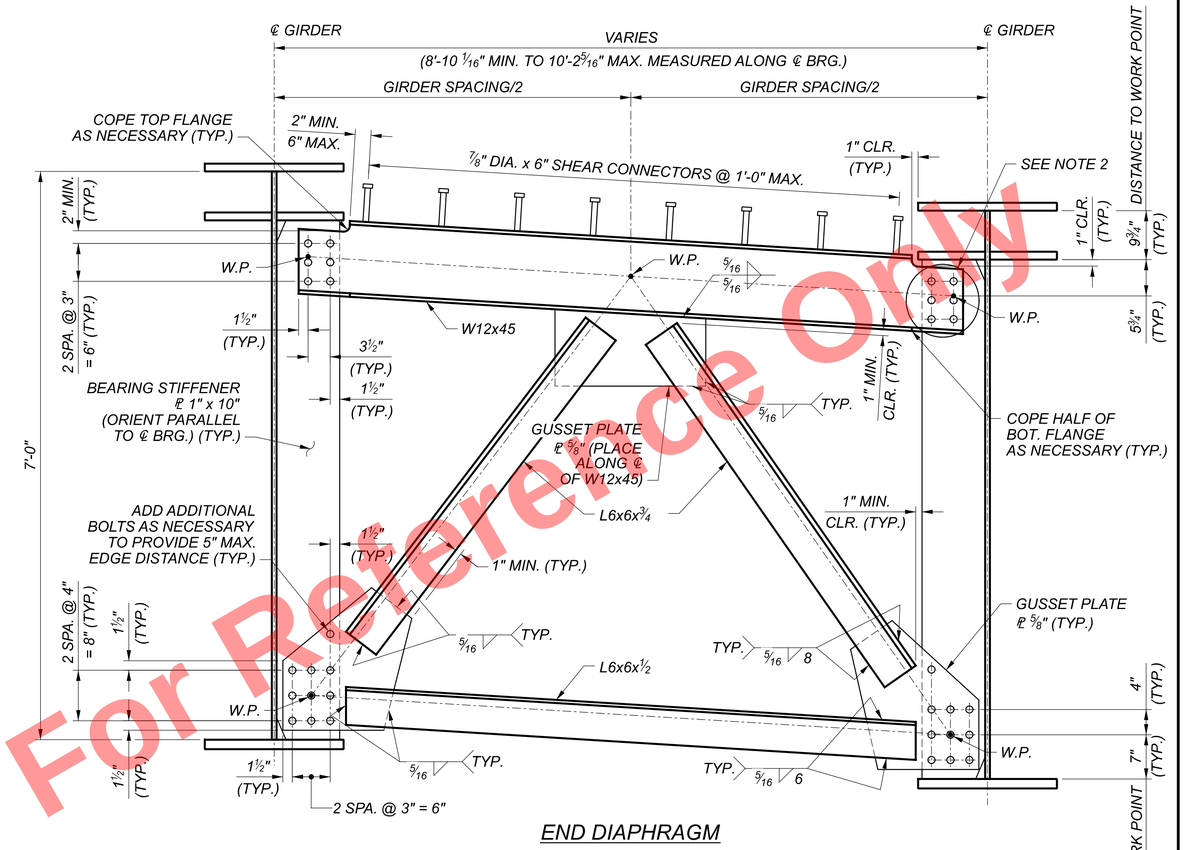

END DIAPHRAGM

NOTES:

1. *FOR CROSSFRAME NOTES, SEE SHEET* 87 / 167 .
2. *BOLT COLUMNS IN TOP CHORD CONNECTION MAY BE ADJUSTED VERTICALLY TO ALIGN BOLT ROWS PARALLEL TO TOP CHORD WORK LINE. MAINTAIN MINIMUM BOLT CLEARANCES.*

Preliminary Plans - For Reference Only

CROSSFRAMES - (2 OF 2)
CUY-77-1587 (BRIDGE 9)
I.R. 77 SB OVER I.R. 90 AND CR-721 (E. 14TH ST.)

SFN	1806910
DESIGN AGENCY	HDR
DESIGNER	RWJ
CHECKER	RBK
REVIEWER	DWW 01/11/24
PROJECT ID	82382
SUBSET	88
TOTAL	167
SHEET	1956
TOTAL	2696

CUY-90-16.28 (CCG3A)

MODEL: Sheet PAPERSIZE: 34x22 (in.) DATE: 3/28/2025 TIME: 10:19:12 AM USER: RohitLBk
pw:\\mb-us-pw.bentley.com:mb-us-pw-03\Documents\Cleveland_OH\01_Projects\ODOT\District12\82382\400-Engineering\Structures\SFN_1806910\Sheets\82382_SS013.dgn

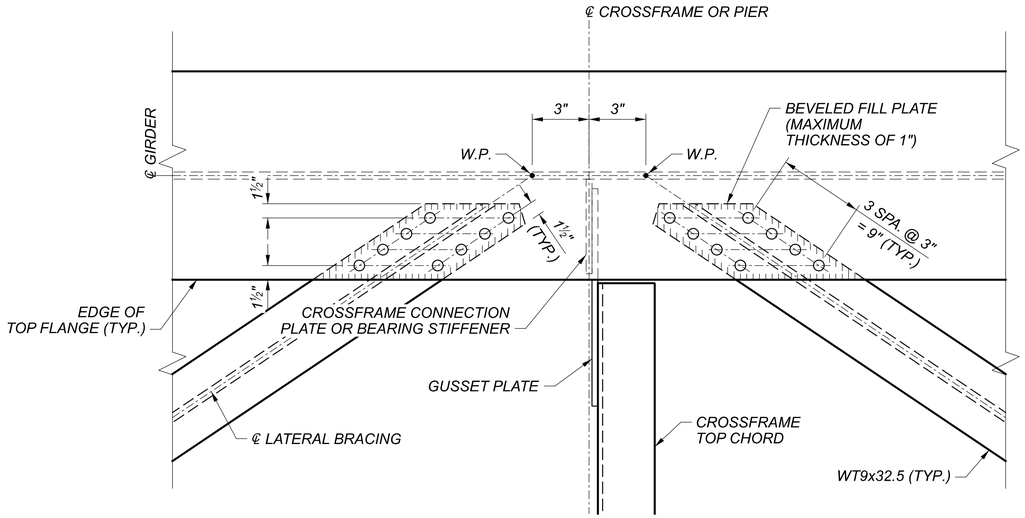

TOP FLANGE LATERAL BRACING CONNECTION PLAN - TYPE 1

(SYMMETRICAL ABOUT ℄ CROSSFRAME)

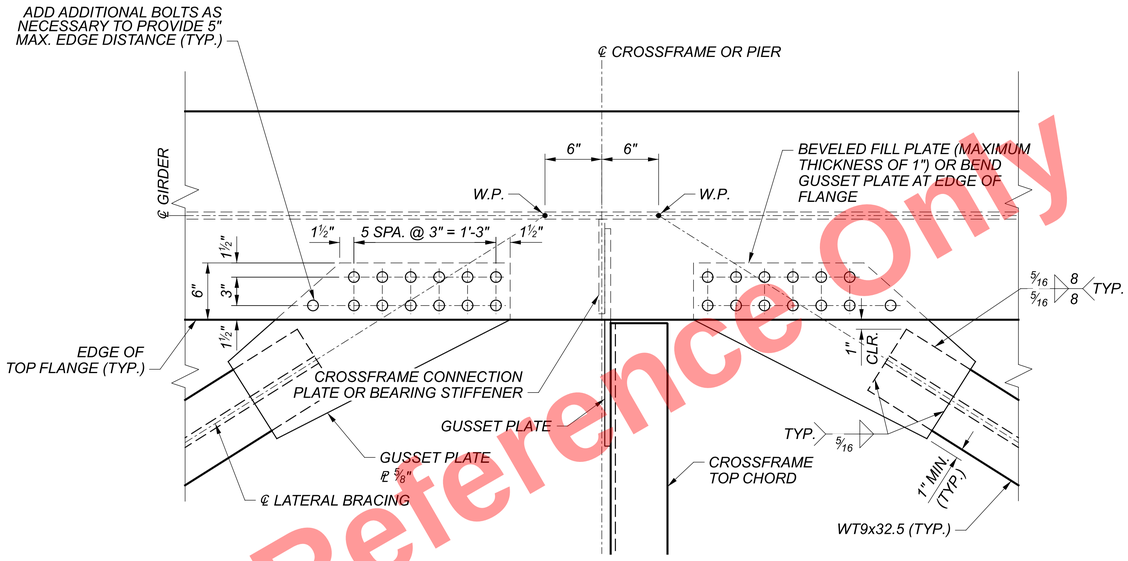

TOP FLANGE LATERAL BRACING CONNECTION PLAN - TYPE 2

(SYMMETRICAL ABOUT ℄ CROSSFRAME)

Preliminary Plans - For Reference Only

NOTES:

1. FOR LATERAL BRACING LOCATIONS, SEE FRAMING PLAN ON SHEETS 71 / 167 THRU 76 / 167.
2. ALL LATERAL BRACING MEMBERS AND GUSSET PLATES SHALL BE ASTM A709, GRADE 50 STEEL.
3. HIGH STRENGTH BOLTS SHALL BE 1" DIA. ASTM F3125 GRADE A325, TYPE I IN 1⅛" DIA. STANDARD HOLES FOR LATERAL BRACING.
4. PROVIDE CLASS A SURFACE CONDITION FOR THE CONTACT AREA OF BOLTED PARTS FOR THE LATERAL BRACING.
5. LOCATE MEMBER NEUTRAL AXIS ALONG THE WORK LINE FROM W.P. TO W.P.
6. ADJUST SHEAR CONNECTOR LOCATIONS AS NECESSARY TO AVOID NECESSARY TO AVOID CONFLICTS WITH LATERAL BRACING CONNECTIONS.

LATERAL BRACING
CUY-77-1587 (BRIDGE 9)
I.R. 77 SB OVER I.R. 90 AND CR-721 (E. 14TH ST.)

SFN	1806910
DESIGN AGENCY	HDR
DESIGNER	RWJ
CHECKER	RBK
REVIEWER	DWW 01/11/24
PROJECT ID	82382
SUBSET	89
TOTAL	167
SHEET	1957
TOTAL	2696

CUY-90-16.28 (CCG3A)

MODEL: Sheet PAPERSIZE: 34x22 (in.) DATE: 3/28/2025 TIME: 10:19:20 AM USER: Rohit.Bk
pw:\\mb-us-pw.bentley.com:mb-us-pw-03\Documents\Cleveland_OH01_Projects\ODOT\District12\82382400-Engineering\Structures\SFN_1806910\Sheets\82382_SFN_1806910_SS016.dgn

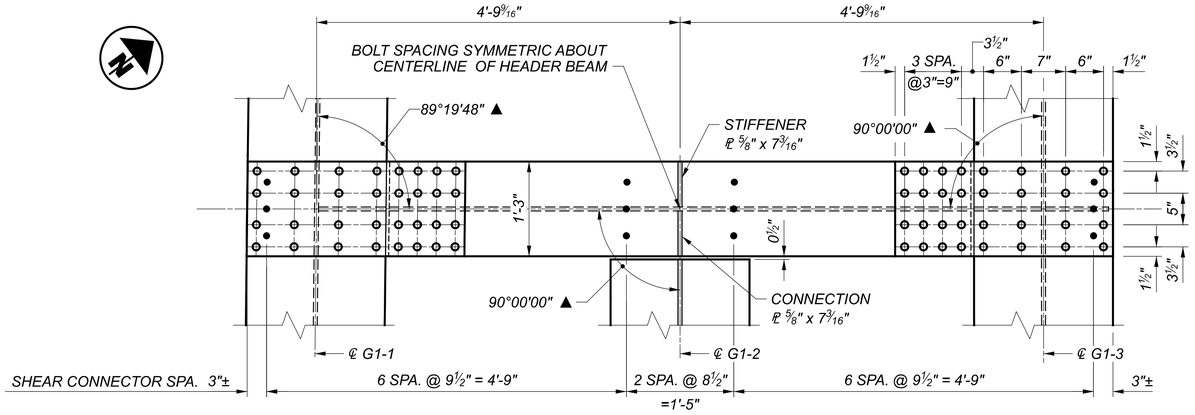

PLAN VIEW - UNIT 1 HEADER BEAM

(CONCRETE DECK NOT SHOWN)

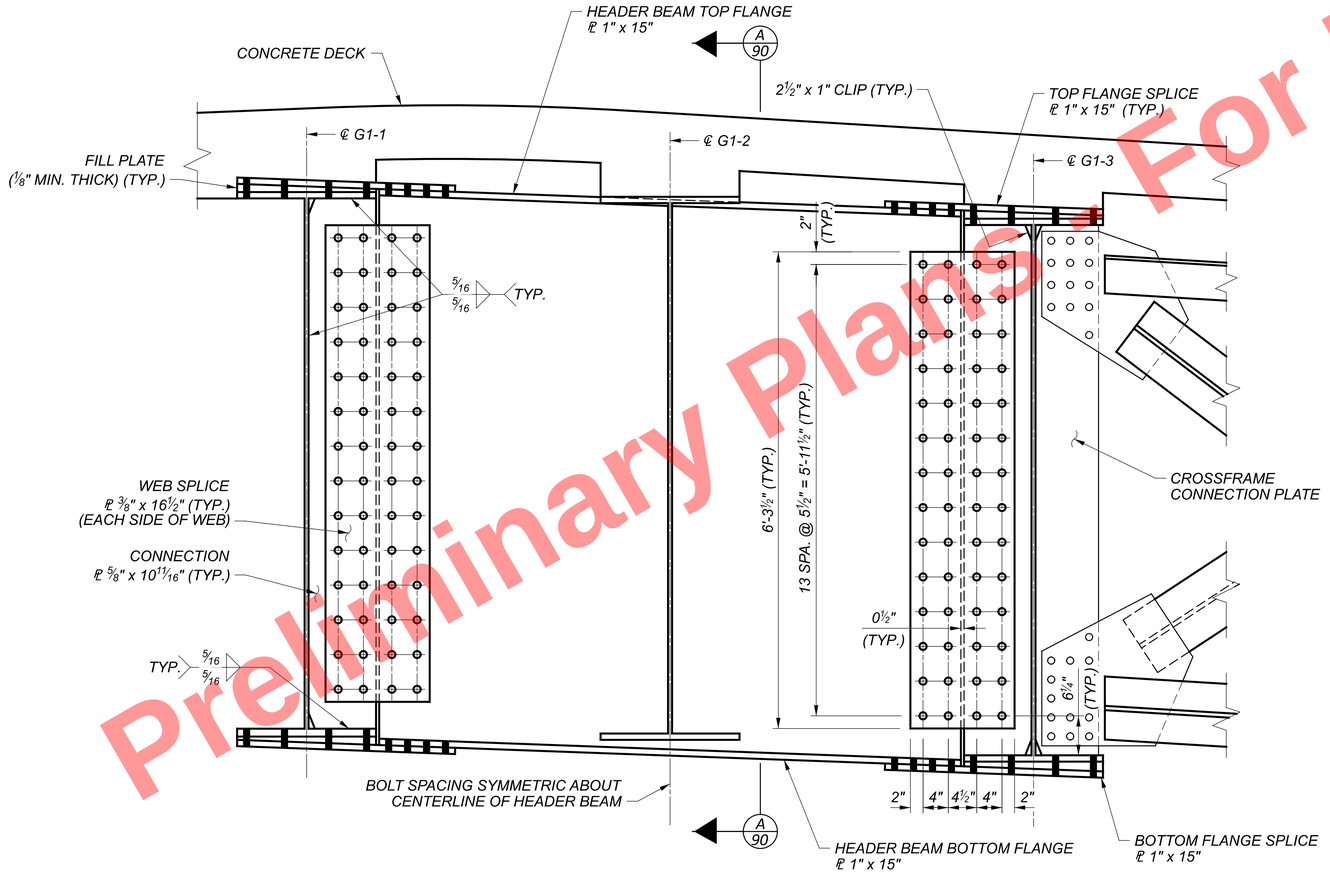

ELEVATION - UNIT 1 HEADER BEAM

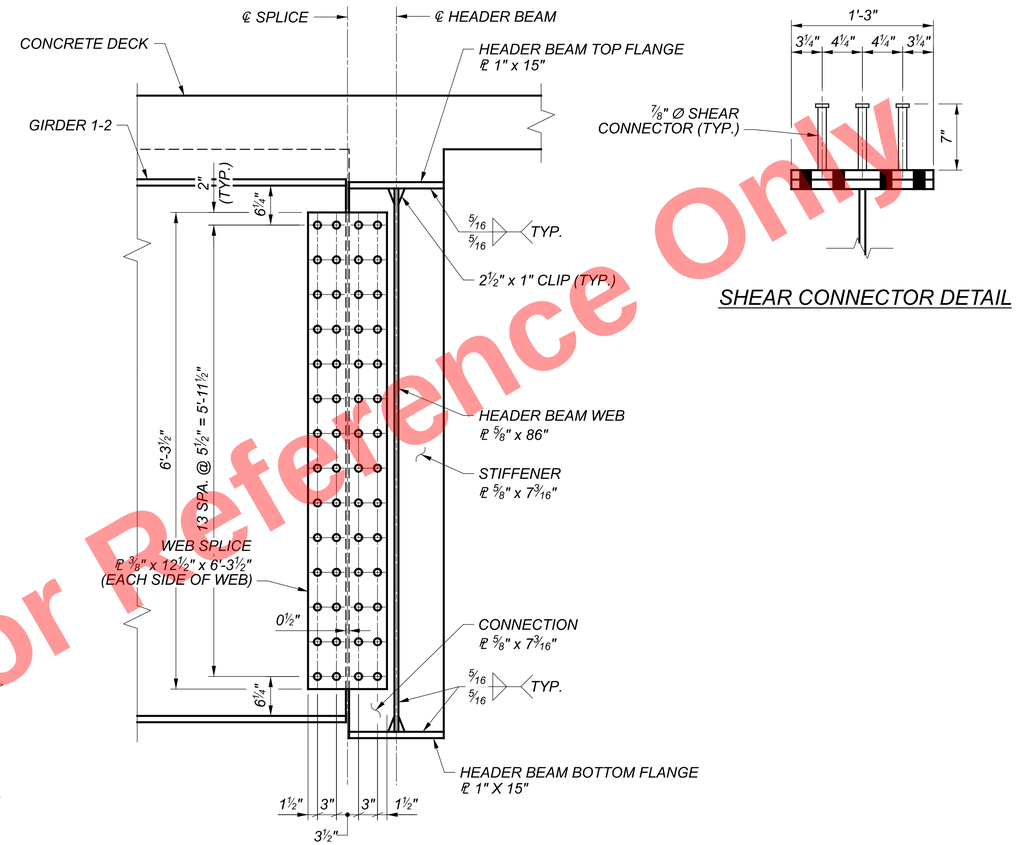

VIEW A-A

SHEAR CONNECTOR DETAIL

Preliminary Plans - Not For Reference Only

LEGEND:

▲ ANGLE MEASUREMENTS ARE TO LOCAL TANGENT OF GIRDER AT THE INTERSECTION OF GIRDER CENTERLINE AND HEADER BEAM CENTERLINE.

NOTES:

1. ALL BOLTS ARE 1" DIA. ASTM F3125 GRADE A325, TYPE I IN STANDARD 1⅛" DIA. HOLES.
2. BOLT THREADS ARE ASSUMED TO BE EXCLUDED FROM THE SHEAR PLANES FOR THE FLANGE SPLICES.
3. BOLT THREADS ARE ASSUMED TO BE INCLUDED IN THE SHEAR PLANES FOR THE WEB SPLICES.

HEADER BEAM DETAILS - (1 OF 2)

CUY-77-1587 (BRIDGE 9)

I.R. 77 SB OVER I.R. 90 AND CR-721 (E. 14TH ST.)

SFN	1806910
DESIGN AGENCY	HDR
DESIGNER	TJE
CHECKER	RBK
REVIEWER	DWW 01/11/24
PROJECT ID	82382
SUBSET	90
TOTAL	167
SHEET	1958
TOTAL	2696

CUY-90-16.28 (CCG3A)

MODEL: Sheet PAPERSIZE: 34x22 (in.) DATE: 3/28/2025 TIME: 10:19:26 AM USER: RohitBk
pw:\\mb-us-pw.bentley.com:mb-us-pw-03\Documents\Cleveland_OH\01_Projects\ODOT\District12\82382\400-Engineering\Structures\SFN_1806910\Sheets\82382_SFN_1806910_SS032.dgn

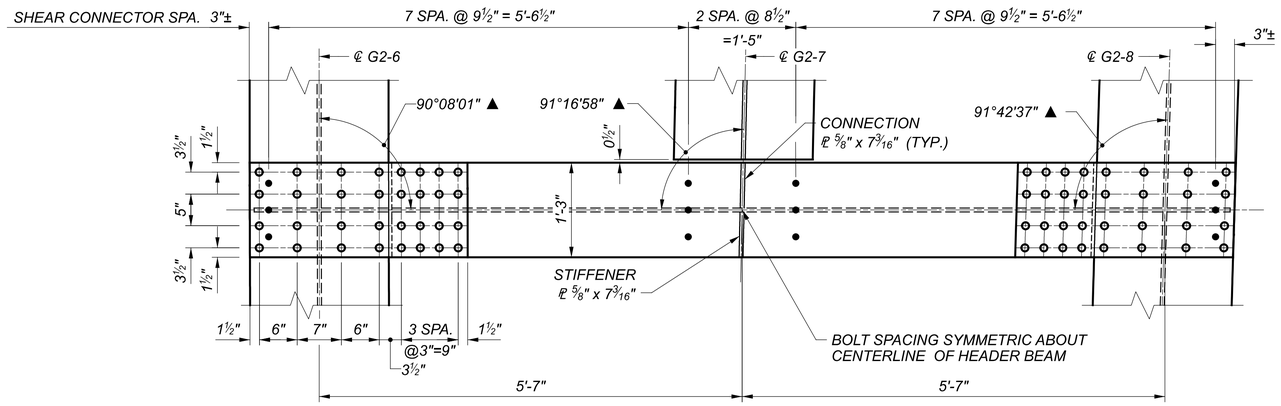

PLAN VIEW - UNIT 2 HEADER BEAM
(CONCRETE DECK NOT SHOWN)

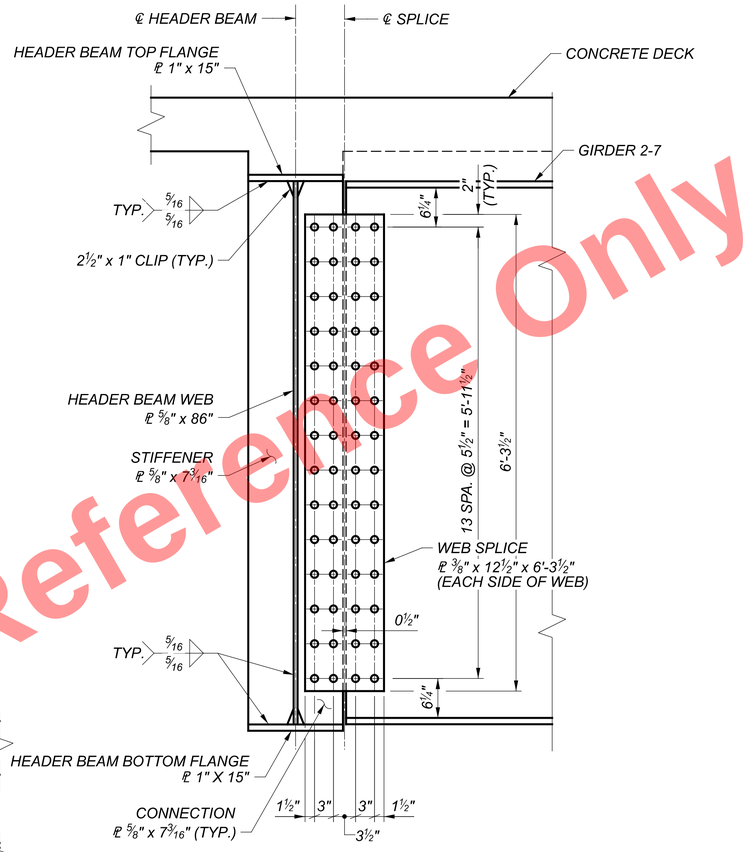

VIEW B-B

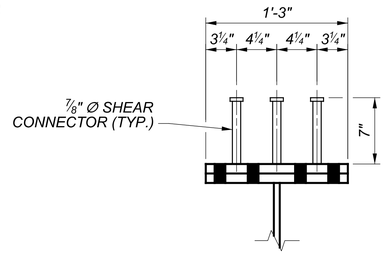

SHEAR CONNECTOR DETAIL

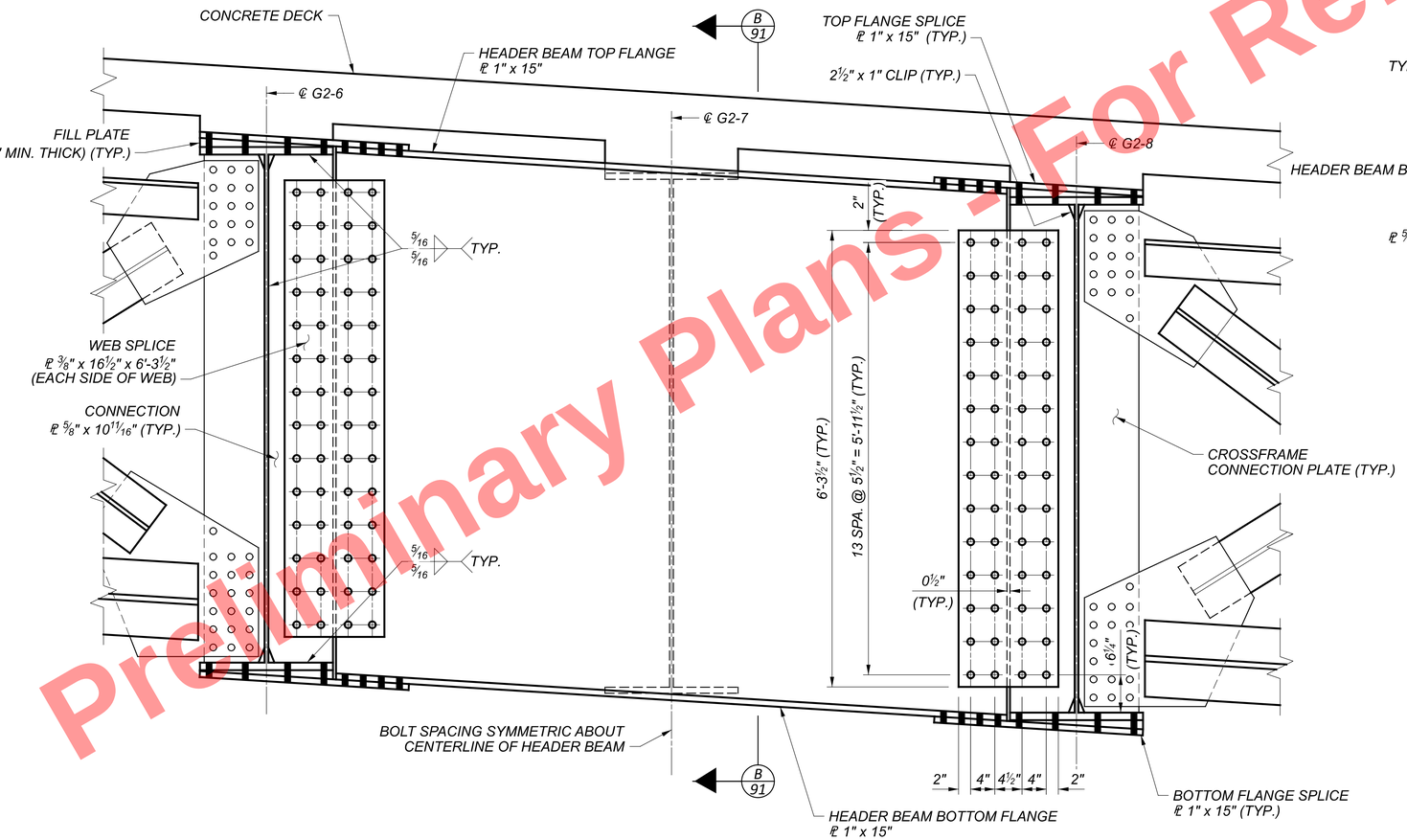

ELEVATION - UNIT 2 HEADER BEAM

Preliminary Plans - For Reference Only

LEGEND:

▲ *ANGLE MEASUREMENTS ARE TO LOCAL TANGENT OF GIRDER AT THE INTERSECTION OF GIRDER CENTERLINE AND HEADER BEAM CENTERLINE.*

NOTES:

1. *ALL BOLTS ARE 1" DIA. ASTM F3125 GRADE A325, TYPE I IN STANDARD 1⅛" DIA. HOLES.*
2. *BOLT THREADS ARE ASSUMED TO BE EXCLUDED FROM THE SHEAR PLANES FOR THE FLANGE SPLICES.*
3. *BOLT THREADS ARE ASSUMED TO BE INCLUDED IN THE SHEAR PLANES FOR THE WEB SPLICES.*

HEADER BEAM DETAILS - (2 OF 2)
CUY-77-1587 (BRIDGE 9)
I.R. 77 SB OVER I.R. 90 AND CR-721 (E. 14TH ST.)

SFN	1806910
DESIGN AGENCY	HDR
DESIGNER	TJE
CHECKER	RBK
REVIEWER	DWW 01/11/24
PROJECT ID	82382
SUBSET	91
TOTAL	167
SHEET	1959
TOTAL	2696

CUY-90-16.28 (CCG3A)

MODEL: Sheet PAPERSIZE: 34x22 (in.) DATE: 3/28/2025 TIME: 10:19:34 AM USER: RohitLBk
pw:\\mb-us-pw.bentley.com:mb-us-pw-03\Documents\Cleveland_OH\01_Projects\ODOT\District12\82382\400-Engineering\Structures\SFN_1806910\Sheets\82382_SFN_1806910_SS033.dgn

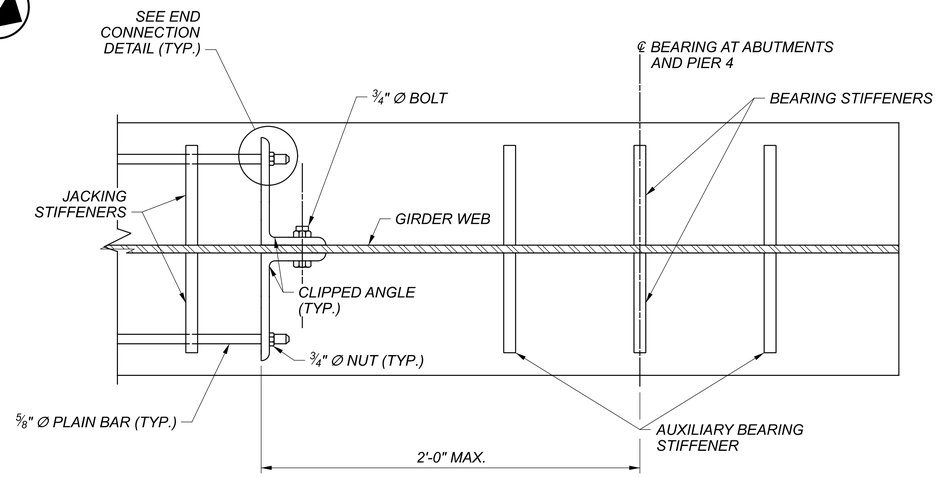

HANDRAIL PLAN AT END BEARINGS

(REAR ABUT., PIER 4, AND FWD. ABUT.)

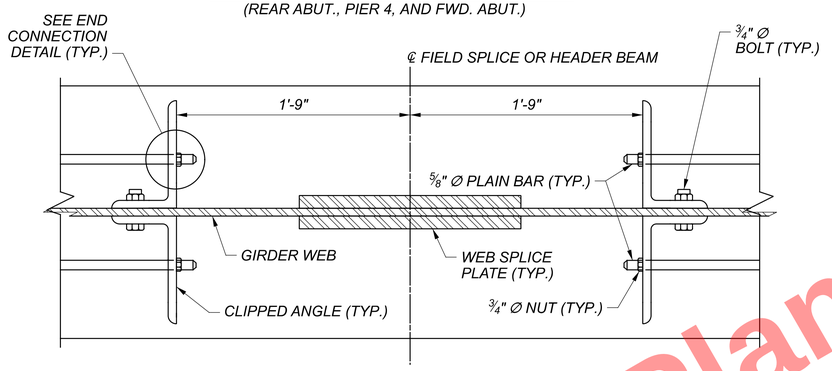

HANDRAIL PLAN AT FIELD SPLICES AND HEADER BEAMS

(SEE NOTE 3)

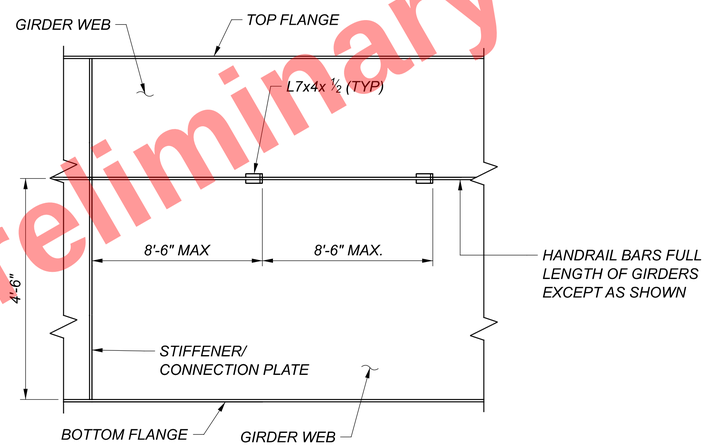

HANDRAIL ELEVATION

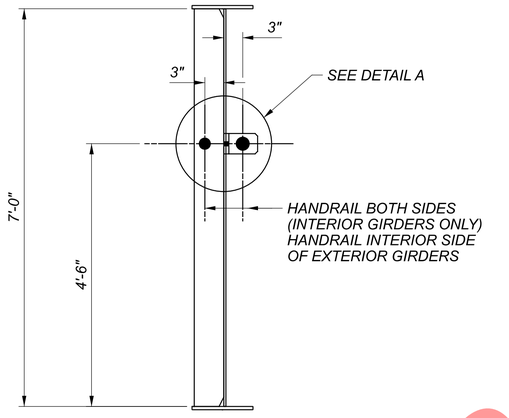

HALF SECTION AT STIFFENER/CONNECTION PLATE

HALF SECTION BETWEEN STIFFENER/CONNECTION PLATES

HANDRAIL SECTION

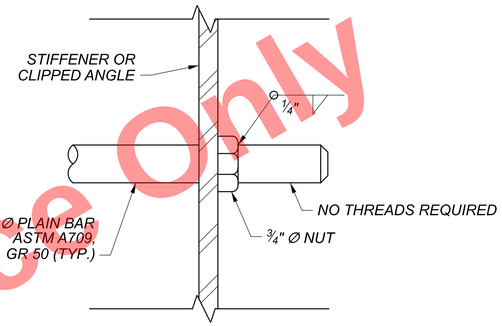

END CONNECTION DETAIL

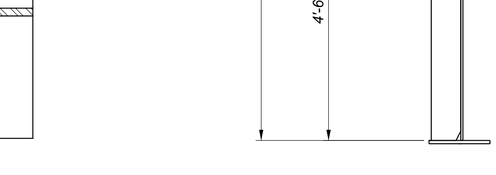

WELD SHOP SPLICE DETAIL

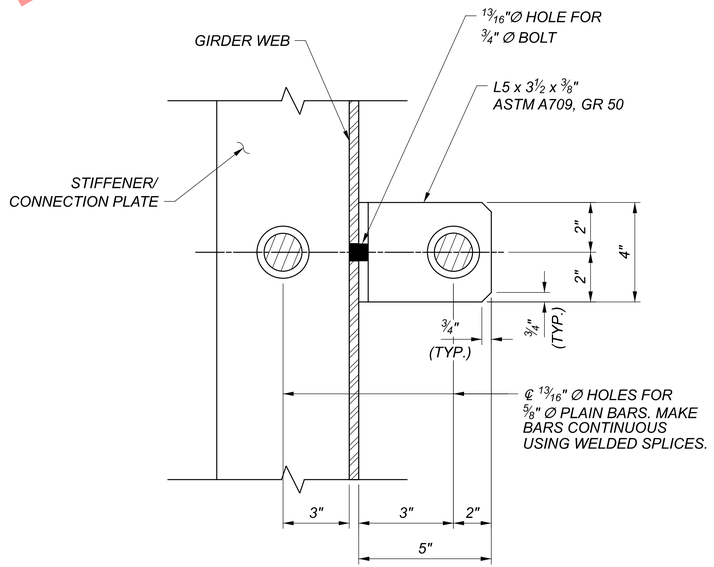

HALF SECTION AT STIFFENER/CONNECTION PLATE

HALF SECTION BETWEEN STIFFENER/CONNECTION PLATES

DETAIL A

NOTES:

1. FOR GENERAL NOTES, SEE SHEETS 12 / 167 THRU 15 / 167 .
2. BOLTS FOR HANDRAIL CLIP ANGLES SHALL BE ASTM F3125, GRADE A325, TYPE I.
3. END HANDRAIL ACCORDING TO THE DETAILS AT ANY GIRDER FACE WHICH TERMINATES INTO A HEADER BEAM OR IS INTERUPTED BY A HEADER BEAM CONNECTION PLATE.
4. INSPECTION HANDRAIL TO BE PAID FOR UNDER ITEM 513 STRUCTURAL STEEL MEMBERS, LEVEL 5, AS PER PLAN.

Preliminary Plans - For Reference Only

INSPECTION HANDRAIL DETAILS
CUY-77-1587 (BRIDGE 9)
I.R. 77 SB OVER I.R. 90 AND CR-721 (E. 14TH ST.)

SFN 1806910
DESIGN AGENCY HDR
DESIGNER BTA | CHECKER TJE
REVIEWER DWW 01/11/24
PROJECT ID 82382
SUBSET 92 | TOTAL 167
SHEET 1960 | TOTAL 2696

CUY-90-16.28 (CCG3A)

MODEL: Sheet PAPERSIZE: 34x22 (in.) DATE: 3/28/2025 TIME: 10:19:40 AM USER: RohitBk
pw:\\mb-us-pw.bentley.com:mb-us-pw-03\Documents\Cleveland_OH\01_Projects\ODOT\District12\82382\400-Engineering\Structures\SFN_1806910\Sheets\82382_SFN_1806910_SS017.dgn

STRUCTURAL STEEL DEFLECTIONS AND CAMBER

		SPAN 1										SPAN 2										
		0.1	0.2	0.3	0.4	0.5	0.6	0.7	℄ FS1-1	0.8	0.9	0.1	0.2	℄ FS1-2	0.3	0.4	0.5	0.6	0.7	℄ FS1-3	0.8	0.9
G1-1	DEFLECTION DUE TO WEIGHT OF STEEL	5/16"	9/16"	3/4"	13/16"	13/16"	11/16"	1/2"	7/16"	5/16"	1/8"	1/16"	3/16"	1/4"	3/8"	1/2"	9/16"	1/2"	3/8"	1/4"	3/16"	0"
	DEFLECTION DUE TO REMAINING DEAD LOAD	7/8"	1 5/8"	2 1/8"	2 3/8"	2 1/4"	1 15/16"	1 3/8"	1 1/8"	13/16"	5/16"	3/16"	5/8"	7/8"	1 5/16"	1 7/8"	2 1/8"	2"	1 1/2"	1 1/16"	3/4"	1/4"
	ADJUSTMENT FOR VERTICAL CURVE/SUPERELEVATION	-1/4"	-1/2"	-5/8"	-3/4"	-3/4"	-3/4"	-5/8"	-9/16"	-1/2"	-5/16"	-1/4"	-3/8"	-7/16"	-7/16"	-3/8"	-5/16"	-1/4"	-3/16"	-1/8"	-1/8"	-1/16"
	REQUIRED SHOP CAMBER	15/16"	1 11/16"	2 1/4"	2 7/16"	2 5/16"	1 7/8"	1 1/4"	1"	5/8"	1/8"	0"	7/16"	11/16"	1 1/4"	2"	2 3/8"	2 1/4"	1 11/16"	1 3/16"	13/16"	3/16"
G1-2	DEFLECTION DUE TO WEIGHT OF STEEL	5/16"	1/2"	11/16"	3/4"	3/4"	5/8"	7/16"	3/8"	1/4"	1/8"	1/16"	3/16"	-	-	-	-	-	-	-	-	-
	DEFLECTION DUE TO REMAINING DEAD LOAD	13/16"	1 1/2"	1 15/16"	2 1/8"	2 1/16"	1 3/4"	1 1/4"	1 1/16"	3/4"	1/4"	3/16"	11/16"	-	-	-	-	-	-	-	-	-
	ADJUSTMENT FOR VERTICAL CURVE/SUPERELEVATION	-3/16"	-5/16"	-7/16"	-7/16"	-7/16"	-3/8"	-1/4"	-1/4"	-3/16"	-1/16"	-1/16"	0"	-	-	-	-	-	-	-	-	-
	REQUIRED SHOP CAMBER	15/16"	1 11/16"	2 3/16"	2 7/16"	2 3/8"	2"	1 7/16"	1 3/16"	13/16"	5/16"	3/16"	7/8"	-	-	-	-	-	-	-	-	-
G1-3	DEFLECTION DUE TO WEIGHT OF STEEL	1/4"	1/2"	5/8"	11/16"	11/16"	9/16"	7/16"	3/8"	1/4"	1/8"	1/16"	1/4"	5/16"	7/16"	9/16"	5/8"	9/16"	3/8"	1/4"	3/16"	1/16"
	DEFLECTION DUE TO REMAINING DEAD LOAD	3/4"	1 3/8"	1 13/16"	1 15/16"	1 7/8"	1 5/8"	1 1/8"	1"	5/8"	1/4"	1/4"	3/4"	1"	1 3/8"	1 15/16"	2 3/16"	2"	1 1/2"	1 1/16"	3/4"	1/4"
	ADJUSTMENT FOR VERTICAL CURVE/SUPERELEVATION	0"	0"	0"	0"	0"	0"	0"	0"	0"	0"	0"	0"	0"	0"	0"	0"	0"	0"	0"	0"	0"
	REQUIRED SHOP CAMBER	1"	1 7/8"	2 7/16"	2 5/8"	2 9/16"	2 3/16"	1 9/16"	1 3/8"	7/8"	3/8"	5/16"	1"	1 5/16"	1 13/16"	2 1/2"	2 13/16"	2 9/16"	1 7/8"	1 5/16"	15/16"	5/16"
G1-4	DEFLECTION DUE TO WEIGHT OF STEEL	1/4"	7/16"	9/16"	5/8"	9/16"	1/2"	3/8"	5/16"	3/16"	1/16"	1/8"	1/4"	3/8"	1/2"	5/8"	11/16"	9/16"	7/16"	5/16"	3/16"	1/16"
	DEFLECTION DUE TO REMAINING DEAD LOAD	11/16"	1 1/4"	1 5/8"	1 3/4"	1 11/16"	1 7/16"	1"	7/8"	9/16"	3/16"	5/16"	7/8"	1 1/16"	1 1/2"	2"	2 3/16"	2"	1 1/2"	1 1/16"	13/16"	1/4"
	ADJUSTMENT FOR VERTICAL CURVE/SUPERELEVATION	0"	0"	0"	0"	0"	0"	0"	0"	0"	0"	0"	0"	0"	0"	0"	0"	0"	0"	0"	0"	0"
	REQUIRED SHOP CAMBER	15/16"	1 11/16"	2 3/16"	2 3/8"	2 1/4"	1 15/16"	1 3/8"	1 3/16"	3/4"	1/4"	7/16"	1 1/8"	1 7/16"	2"	2 5/8"	2 7/8"	2 9/16"	1 15/16"	1 3/8"	1"	5/16"
G1-5	DEFLECTION DUE TO WEIGHT OF STEEL	3/16"	3/8"	1/2"	9/16"	1/2"	7/16"	5/16"	1/4"	3/16"	1/16"	1/8"	5/16"	3/8"	1/2"	11/16"	11/16"	5/8"	7/16"	5/16"	1/4"	1/16"
	DEFLECTION DUE TO REMAINING DEAD LOAD	5/8"	1 1/16"	1 7/16"	1 9/16"	1 1/2"	1 1/4"	7/8"	3/4"	7/16"	1/8"	5/16"	15/16"	1 3/16"	1 9/16"	2 1/16"	2 1/4"	2 1/16"	1 1/2"	1 1/8"	13/16"	1/4"
	ADJUSTMENT FOR VERTICAL CURVE/SUPERELEVATION	0"	0"	0"	0"	0"	0"	0"	0"	0"	0"	0"	0"	0"	0"	0"	0"	0"	0"	0"	0"	0"
	REQUIRED SHOP CAMBER	13/16"	1 7/16"	1 15/16"	2 1/8"	2"	1 11/16"	1 3/16"	1"	5/8"	3/16"	7/16"	1 1/4"	1 9/16"	2 1/16"	2 3/4"	2 15/16"	2 11/16"	1 15/16"	1 7/16"	1 1/16"	5/16"
G1-6	DEFLECTION DUE TO WEIGHT OF STEEL	3/16"	5/16"	7/16"	7/16"	7/16"	3/8"	1/4"	3/16"	1/8"	1/16"	1/8"	3/8"	7/16"	9/16"	11/16"	3/4"	5/8"	1/2"	5/16"	1/4"	1/16"
	DEFLECTION DUE TO REMAINING DEAD LOAD	1/2"	15/16"	1 1/4"	1 3/8"	1 5/16"	1 1/16"	3/4"	11/16"	3/8"	1/8"	3/8"	1"	1 1/4"	1 11/16"	2 1/8"	2 5/16"	2 1/8"	1 9/16"	1 1/8"	7/8"	5/16"
	ADJUSTMENT FOR VERTICAL CURVE/SUPERELEVATION	0"	0"	0"	0"	0"	0"	0"	0"	0"	0"	0"	0"	0"	0"	0"	0"	0"	0"	0"	0"	0"
	REQUIRED SHOP CAMBER	11/16"	1 1/4"	1 11/16"	1 13/16"	1 3/4"	1 7/16"	1"	7/8"	1/2"	3/16"	1/2"	1 3/8"	1 11/16"	2 1/4"	2 13/16"	3 1/16"	2 3/4"	2 1/16"	1 7/16"	1 1/8"	3/8"
G1-8	DEFLECTION DUE TO WEIGHT OF STEEL	1/8"	1/4"	5/16"	3/8"	5/16"	1/4"	3/16"	3/16"	1/16"	0"	1/8"	3/8"	7/16"	9/16"	3/4"	3/4"	11/16"	1/2"	3/8"	1/4"	1/16"
	DEFLECTION DUE TO REMAINING DEAD LOAD	7/16"	7/8"	1 1/8"	1 3/16"	1 1/8"	7/8"	5/8"	9/16"	5/16"	1/16"	7/16"	1 1/16"	1 5/16"	1 3/4"	2 3/16"	2 3/8"	2 1/8"	1 5/8"	1 3/16"	7/8"	5/16"
	ADJUSTMENT FOR VERTICAL CURVE/SUPERELEVATION	0"	0"	0"	0"	0"	0"	0"	0"	0"	0"	0"	0"	0"	0"	0"	0"	0"	0"	0"	0"	0"
	REQUIRED SHOP CAMBER	9/16"	1 1/8"	1 7/16"	1 9/16"	1 7/16"	1 1/8"	13/16"	3/4"	3/8"	1/16"	9/16"	1 7/16"	1 3/4"	2 5/16"	2 15/16"	3 1/8"	2 13/16"	2 1/8"	1 9/16"	1 1/8"	3/8"
G1-9	DEFLECTION DUE TO WEIGHT OF STEEL	1/8"	3/16"	1/4"	1/4"	1/4"	3/16"	1/8"	1/8"	1/16"	0"	3/16"	3/8"	1/2"	5/8"	3/4"	3/4"	11/16"	1/2"	3/8"	5/16"	1/8"
	DEFLECTION DUE TO REMAINING DEAD LOAD	7/16"	3/4"	15/16"	1"	15/16"	3/4"	1/2"	7/16"	1/4"	1/16"	1/2"	1 1/8"	1 3/8"	1 13/16"	2 1/4"	2 7/16"	2 3/16"	1 5/8"	1 3/16"	15/16"	3/8"
	ADJUSTMENT FOR VERTICAL CURVE/SUPERELEVATION	0"	0"	0"	0"	0"	0"	0"	0"	0"	0"	0"	0"	0"	0"	0"	0"	0"	0"	0"	0"	0"
	REQUIRED SHOP CAMBER	9/16"	15/16"	1 3/16"	1 1/4"	1 3/16"	15/16"	5/8"	9/16"	5/16"	1/16"	11/16"	1 1/2"	1 7/8"	2 7/16"	3"	3 3/16"	2 7/8"	2 1/8"	1 9/16"	1 1/4"	1/2"

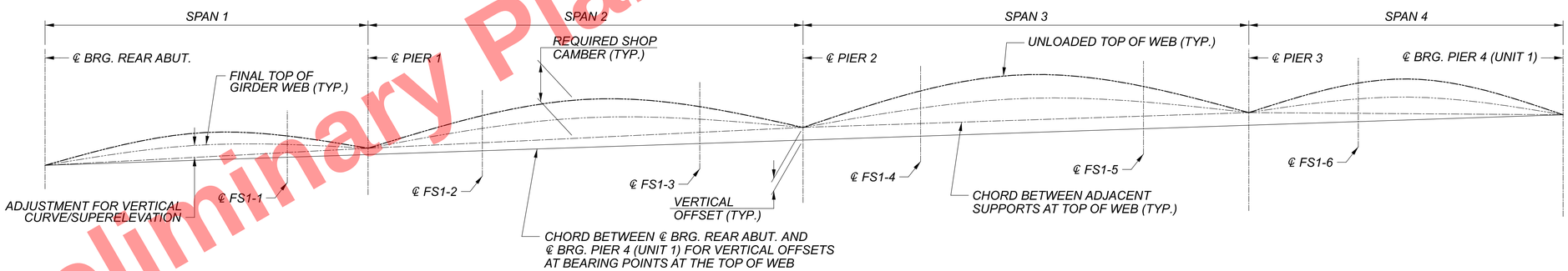

UNIT 1 CAMBER DIAGRAM

VERTICAL OFFSETS AT SUPPORT POINTS*								
SUPPORT LOCATION	G1-1	G1-2	G1-3	G1-4	G1-5	G1-6	G1-8	G1-9
REAR ABUT.	0"	0"	0"	0"	0"	0"	0"	0"
PIER 1	-4 9/16"	-7/16"	-1/8"	0"	1/8"	1/4"	3/8"	7/16"
HEADER BEAM	-	0"	-	-	-	-	-	-
PIER 2	-3 5/8"	-	-1/4"	0"	5/16"	9/16"	7/8"	1 1/8"
PIER 3	-2 1/16"	-	-7/16"	0"	1/2"	15/16"	1 3/8"	1 13/16"
PIER 4 (UNIT 1)	0"	-	0"	0"	0"	0"	0"	0"

* NEGATIVE VALUES INDICATE THE TOP OF WEB IS BELOW THE CHORD BETWEEN ℄ BRG. REAR ABUT. AND ℄ BRG. PIER 4 (UNIT 1)

NOTES:

1. POSITIVE VALUES FOR DEFLECTIONS INDICATE DEFLECTIONS DOWNWARD. POSITIVE VALUES FOR VERTICAL CURVE ADJUSTMENT AND TOTAL REQUIRED SHOP CAMBER INDICATE VALUES ABOVE THE CHORD LINE.
2. DEFLECTIONS AND ADJUSTMENTS FOR VERTICAL CURVES ARE GIVEN TO THE NEAREST 1/16 INCH. THE ADJUSTMENTS FOR HORIZONTAL CURVATURE AND HEAT CURVING ARE ZERO AT ALL LOCATIONS.
3. FOR GENERAL NOTES, SEE SHEETS 12 / 167 THRU 15 / 167.
4. FOR FRAMING PLAN, SEE SHEETS 71 / 167 AND 72 / 167.
5. FOR UNIT 1 GIRDER ELEVATIONS, SEE SHEETS 77 / 167 AND 78 / 167.
6. FOR UNIT 1 LOCATION PLAN, SEE SHEET 145 / 167.

Preliminary Plans - For Reference Only

UNIT 1 - GIRDER DEFLECTION AND CAMBER - (1 OF 2)
CUY-77-1587 (BRIDGE 9)
I.R. 77 SB OVER I.R. 90 AND CR-721 (E. 14TH ST.)

SFN 1806910
DESIGN AGENCY HDR
DESIGNER TJE | CHECKER NJH
REVIEWER DWW 01/11/24
PROJECT ID 82382
SUBSET 93 | TOTAL 167
SHEET 1961 | TOTAL 2696

CUY-90-16.28 (CCG3A)

MODEL: Sheet PAPERSIZE: 34x22 (in.) DATE: 3/28/2025 TIME: 10:19:47 AM USER: Rohit.Bk
pw:\\tmb-us-pw.bentley.com:mb-us-pw-03\Documents\Cleveland_OH\101_Projects\ODOT\District12\82382\400-Engineering\Structures\SFN_1806910\Sheets\82382_SFN_1806910_SS018.dgn

STRUCTURAL STEEL DEFLECTIONS AND CAMBER

		SPAN 3										SPAN 4									
		0.1	0.2	℄ FS1-4	0.3	0.4	0.5	0.6	0.7	℄ FS1-5	0.8	0.9	0.1	0.2	0.3	℄ FS1-6	0.4	0.5	0.6	0.7	0.8	0.9
G1-1	DEFLECTION DUE TO WEIGHT OF STEEL	3/16"	9/16"	11/16"	7/8"	1 1/8"	1 1/4"	1 3/16"	15/16"	3/4"	9/16"	1/4"	0"	1/16"	1/8"	3/16"	1/4"	3/8"	3/8"	3/8"	5/16"	3/16"
	DEFLECTION DUE TO REMAINING DEAD LOAD	1/2"	1 1/4"	1 5/8"	2 1/8"	2 7/8"	3 1/8"	2 15/16"	2 5/16"	1 13/16"	1 7/16"	5/8"	1/8"	3/8"	3/4"	7/8"	1 1/8"	1 7/16"	1 9/16"	1 7/16"	1 3/16"	11/16"
	ADJUSTMENT FOR VERTICAL CURVE/SUPERELEVATION	0"	0"	0"	0"	0"	0"	0"	0"	0"	0"	0"	-1/8"	-3/16"	-5/16"	-5/16"	-3/8"	-1/2"	-9/16"	-11/16"	-3/8"	-5/16"
	REQUIRED SHOP CAMBER	11/16"	1 13/16"	2 5/16"	3"	4"	4 3/8"	4 1/8"	3 1/4"	2 9/16"	2"	7/8"	0"	1/4"	9/16"	3/4"	1"	1 5/16"	1 3/8"	1 1/8"	1 1/8"	9/16"
G1-3	DEFLECTION DUE TO WEIGHT OF STEEL	3/16"	1/2"	5/8"	13/16"	1 1/16"	1 3/16"	1 1/8"	7/8"	11/16"	9/16"	1/4"	0"	1/16"	3/16"	3/16"	1/4"	3/8"	3/8"	3/8"	5/16"	3/16"
	DEFLECTION DUE TO REMAINING DEAD LOAD	7/16"	1 3/16"	1 1/2"	2"	2 11/16"	3"	2 13/16"	2 3/16"	1 11/16"	1 5/16"	9/16"	1/8"	5/16"	11/16"	13/16"	1 1/16"	1 3/8"	1 7/16"	1 3/8"	1 1/16"	5/8"
	ADJUSTMENT FOR VERTICAL CURVE/SUPERELEVATION	0"	0"	0"	0"	0"	0"	0"	0"	0"	0"	0"	-1/16"	-1/8"	-3/16"	-3/16"	-3/16"	-1/4"	-5/16"	-3/8"	-3/16"	-3/16"
	REQUIRED SHOP CAMBER	5/8"	1 11/16"	2 1/8"	2 13/16"	3 3/4"	4 3/16"	3 15/16"	3 1/16"	2 3/8"	1 7/8"	13/16"	1/16"	1/4"	11/16"	13/16"	1 1/8"	1 1/2"	1 1/2"	1 3/8"	1 3/16"	5/8"
G1-4	DEFLECTION DUE TO WEIGHT OF STEEL	3/16"	1/2"	5/8"	13/16"	1"	1 1/8"	1 1/16"	13/16"	5/8"	1/2"	3/16"	0"	1/16"	3/16"	3/16"	1/4"	3/8"	3/8"	3/8"	5/16"	3/16"
	DEFLECTION DUE TO REMAINING DEAD LOAD	7/16"	1 1/8"	1 7/16"	1 15/16"	2 9/16"	2 13/16"	2 5/8"	2 1/16"	1 9/16"	1 1/4"	1/2"	1/16"	5/16"	5/8"	3/4"	1"	1 5/16"	1 3/8"	1 5/16"	1"	9/16"
	ADJUSTMENT FOR VERTICAL CURVE/SUPERELEVATION	0"	0"	0"	0"	0"	0"	0"	0"	0"	0"	0"	0"	0"	0"	0"	0"	0"	0"	0"	0"	0"
	REQUIRED SHOP CAMBER	5/8"	1 5/8"	2 1/16"	2 3/4"	3 9/16"	3 15/16"	3 11/16"	2 7/8"	2 3/16"	1 3/4"	11/16"	1/16"	3/8"	13/16"	15/16"	1 1/4"	1 11/16"	1 3/4"	1 11/16"	1 5/16"	3/4"
G1-5	DEFLECTION DUE TO WEIGHT OF STEEL	3/16"	7/16"	9/16"	3/4"	15/16"	1 1/16"	1"	13/16"	5/8"	1/2"	3/16"	0"	1/16"	3/16"	3/16"	1/4"	3/8"	3/8"	3/8"	5/16"	3/16"
	DEFLECTION DUE TO REMAINING DEAD LOAD	3/8"	1 1/16"	1 5/16"	1 13/16"	2 7/16"	2 11/16"	2 1/2"	2"	1 1/2"	1 3/16"	1/2"	1/16"	5/16"	5/8"	3/4"	1"	1 1/4"	1 5/16"	1 1/4"	1"	9/16"
	ADJUSTMENT FOR VERTICAL CURVE/SUPERELEVATION	0"	0"	0"	0"	0"	0"	0"	0"	0"	0"	0"	1/16"	1/8"	3/16"	3/16"	1/4"	5/16"	3/8"	7/16"	1/4"	3/16"
	REQUIRED SHOP CAMBER	9/16"	1 1/2"	1 7/8"	2 9/16"	3 3/8"	3 3/4"	3 1/2"	2 13/16"	2 1/8"	1 11/16"	11/16"	1/8"	1/2"	1"	1 1/8"	1 1/2"	1 15/16"	2 1/16"	2 1/16"	1 9/16"	15/16"
G1-6	DEFLECTION DUE TO WEIGHT OF STEEL	3/16"	7/16"	1/2"	11/16"	7/8"	1"	15/16"	3/4"	9/16"	1/2"	3/16"	0"	1/16"	3/16"	3/16"	1/4"	3/8"	3/8"	3/8"	5/16"	3/16"
	DEFLECTION DUE TO REMAINING DEAD LOAD	3/8"	1"	1 1/4"	1 11/16"	2 5/16"	2 9/16"	2 3/8"	1 7/8"	1 7/16"	1 3/16"	7/16"	1/16"	5/16"	5/8"	3/4"	15/16"	1 3/16"	1 5/16"	1 3/16"	15/16"	9/16"
	ADJUSTMENT FOR VERTICAL CURVE/SUPERELEVATION	0"	0"	0"	0"	0"	0"	0"	0"	0"	0"	0"	1/8"	1/4"	3/8"	3/8"	1/2"	9/16"	11/16"	13/16"	1/2"	3/8"
	REQUIRED SHOP CAMBER	9/16"	1 7/16"	1 3/4"	2 3/8"	3 3/16"	3 9/16"	3 5/16"	2 5/8"	2"	1 11/16"	5/8"	3/16"	5/8"	1 3/16"	1 5/16"	1 11/16"	2 1/8"	2 3/8"	2 3/8"	1 3/4"	1 1/8"
G1-8	DEFLECTION DUE TO WEIGHT OF STEEL	1/8"	3/8"	1/2"	5/8"	13/16"	15/16"	7/8"	11/16"	9/16"	7/16"	3/16"	0"	1/16"	3/16"	3/16"	1/4"	3/8"	3/8"	3/8"	5/16"	3/16"
	DEFLECTION DUE TO REMAINING DEAD LOAD	5/16"	15/16"	1 3/16"	1 5/8"	2 3/16"	2 7/16"	2 5/16"	1 13/16"	1 7/16"	1 1/8"	1/2"	1/8"	5/16"	5/8"	3/4"	15/16"	1 3/16"	1 1/4"	1 3/16"	15/16"	1/2"
	ADJUSTMENT FOR VERTICAL CURVE/SUPERELEVATION	0"	0"	0"	0"	0"	0"	0"	0"	0"	0"	0"	3/16"	3/8"	1/2"	9/16"	11/16"	7/8"	1 1/16"	1 3/16"	3/4"	9/16"
	REQUIRED SHOP CAMBER	7/16"	1 5/16"	1 11/16"	2 1/4"	3"	3 3/8"	3 3/16"	2 1/2"	2"	1 9/16"	11/16"	5/16"	3/4"	1 5/16"	1 1/2"	1 7/8"	2 7/16"	2 11/16"	2 3/4"	2"	1 1/4"
G1-9	DEFLECTION DUE TO WEIGHT OF STEEL	1/8"	5/16"	7/16"	9/16"	3/4"	7/8"	13/16"	11/16"	1/2"	7/16"	3/16"	1/16"	1/8"	3/16"	3/16"	1/4"	5/16"	3/8"	5/16"	1/4"	1/8"
	DEFLECTION DUE TO REMAINING DEAD LOAD	5/16"	7/8"	1 1/8"	1 9/16"	2 1/16"	2 5/16"	2 3/16"	1 3/4"	1 3/8"	1 1/8"	1/2"	3/16"	3/8"	11/16"	3/4"	15/16"	1 3/16"	1 1/4"	1 1/8"	7/8"	1/2"
	ADJUSTMENT FOR VERTICAL CURVE/SUPERELEVATION	0"	0"	0"	0"	0"	0"	0"	0"	0"	0"	0"	1/4"	7/16"	11/16"	3/4"	15/16"	1 3/16"	1 3/8"	1 5/8"	15/16"	3/4"
	REQUIRED SHOP CAMBER	7/16"	1 3/16"	1 9/16"	2 1/8"	2 13/16"	3 3/16"	3"	2 7/16"	1 7/8"	1 9/16"	11/16"	1/2"	15/16"	1 9/16"	1 11/16"	2 1/8"	2 11/16"	3"	3 1/16"	2 1/16"	1 3/8"

Preliminary Plans - For Reference Only

NOTES:

1. POSITIVE VALUES FOR DEFLECTIONS INDICATE DEFLECTIONS DOWNWARD. POSITIVE VALUES FOR VERTICAL CURVE ADJUSTMENT AND TOTAL REQUIRED SHOP CAMBER INDICATE VALUES ABOVE THE CHORD LINE.
2. DEFLECTIONS AND ADJUSTMENTS FOR VERTICAL CURVES ARE GIVEN TO THE NEAREST $\frac{1}{16}$ INCH. THE ADJUSTMENTS FOR HORIZONTAL CURVATURE AND HEAT CURVING ARE ZERO AT ALL LOCATIONS.
3. FOR GENERAL NOTES, SEE SHEETS 12 / 167 THRU 15 / 167.
4. FOR FRAMING PLAN, SEE SHEETS 71 / 167 AND 72 / 167.
5. FOR UNIT 1 GIRDER ELEVATIONS, SEE SHEETS 77 / 167 AND 78 / 167.
6. FOR UNIT 1 LOCATION PLAN, SEE SHEET 145 / 167.
7. FOR UNIT 1 CAMBER DIAGRAM, SEE SHEET 93 / 167.

UNIT 1 - GIRDER DEFLECTION AND CAMBER - (2 OF 2)
CUY-77-1587 (BRIDGE 9)
I.R. 77 SB OVER I.R. 90 AND CR-721 (E. 14TH ST.)

SFN 1806910
DESIGN AGENCY HDR
DESIGNER TJE | CHECKER NJH
REVIEWER DWW 01/11/24
PROJECT ID 82382
SUBSET 94 | TOTAL 167
SHEET 1962 | TOTAL 2696

CUY-90-16.28 (CCG3A)

MODEL: Sheet PAPERSIZE: 34x22 (in.) DATE: 3/28/2025 TIME: 10:19:53 AM USER: RohitLBk
pw:\\mb-us-pw.bentley.com:mb-us-pw-03\Documents\Cleveland_OH\01_Projects\ODOT\District12\82382\400-Engineering\Structures\SFN_1806910\Sheets\82382_SFN_1806910_SS019.dgn

STRUCTURAL STEEL DEFLECTIONS AND CAMBER

		SPAN 5										SPAN 6									
		0.1	0.2	0.3	0.4	0.5	0.6	0.7	℄ FS2-1	0.8	0.9	0.1	0.2	℄ FS2-2	0.3	0.4	0.5	0.6	0.7	℄ FS2-3	0.8	0.9
G2-1	DEFLECTION DUE TO WEIGHT OF STEEL	3/16"	3/8"	7/16"	1/2"	7/16"	5/16"	3/16"	3/16"	1/16"	0"	3/16"	7/16"	1/2"	3/4"	1"	1 1/8"	1 1/16"	7/8"	11/16"	5/8"	5/16"
	DEFLECTION DUE TO REMAINING DEAD LOAD	3/4"	1 3/8"	1 3/4"	1 7/8"	1 13/16"	1 1/2"	1"	15/16"	9/16"	3/16"	5/16"	15/16"	1 1/16"	1 5/8"	2 1/4"	2 9/16"	2 7/16"	2"	1 7/16"	1 1/4"	9/16"
	ADJUSTMENT FOR VERTICAL CURVE/SUPERELEVATION	1 5/16"	2 5/8"	3 9/16"	4"	4 1/8"	3 15/16"	3 7/16"	3 5/16"	2 9/16"	1 7/16"	2 3/8"	4 3/16"	4 1/2"	5 9/16"	6 5/16"	6 9/16"	6 5/16"	5 1/2"	4 1/2"	4 3/16"	2 3/8"
	REQUIRED SHOP CAMBER	2 1/4"	4 3/8"	5 3/4"	6 3/8"	6 3/8"	5 3/4"	4 5/8"	4 7/16"	3 3/16"	1 5/8"	2 7/8"	5 9/16"	6 1/16"	7 15/16"	9 9/16"	10 1/4"	9 13/16"	8 3/8"	6 5/8"	6 1/16"	3 1/4"
G2-3	DEFLECTION DUE TO WEIGHT OF STEEL	3/16"	3/8"	7/16"	1/2"	7/16"	3/8"	1/4"	3/16"	1/8"	1/16"	3/16"	3/8"	7/16"	5/8"	7/8"	15/16"	15/16"	3/4"	9/16"	1/2"	1/4"
	DEFLECTION DUE TO REMAINING DEAD LOAD	11/16"	1 1/4"	1 5/8"	1 3/4"	1 5/8"	1 3/8"	15/16"	7/8"	1/2"	3/16"	5/16"	13/16"	15/16"	1 7/16"	2"	2 1/4"	2 1/8"	1 3/4"	1 3/16"	1 1/16"	1/2"
	ADJUSTMENT FOR VERTICAL CURVE/SUPERELEVATION	1 3/16"	2 3/8"	3 1/4"	3 3/4"	3 7/8"	3 3/4"	3 1/4"	3 1/8"	2 1/2"	1 3/8"	2 3/8"	4 3/16"	4 1/2"	5 9/16"	6 5/16"	6 9/16"	6 5/16"	5 1/2"	4 1/2"	4 3/16"	2 3/8"
	REQUIRED SHOP CAMBER	2 1/16"	4"	5 5/16"	6"	5 15/16"	5 1/2"	4 7/16"	4 3/16"	3 1/8"	1 5/8"	2 7/8"	5 3/8"	5 7/8"	7 5/8"	9 3/16"	9 3/4"	9 3/8"	8"	6 1/4"	5 3/4"	3 1/8"
G2-4	DEFLECTION DUE TO WEIGHT OF STEEL	3/16"	3/8"	7/16"	1/2"	7/16"	3/8"	1/4"	1/4"	1/8"	1/16"	1/8"	5/16"	3/8"	9/16"	3/4"	13/16"	3/4"	5/8"	7/16"	3/8"	3/16"
	DEFLECTION DUE TO REMAINING DEAD LOAD	5/8"	1 1/8"	1 7/16"	1 5/8"	1 1/2"	1 1/4"	7/8"	13/16"	1/2"	3/16"	1/4"	3/4"	13/16"	1 5/16"	1 3/4"	2"	1 7/8"	1 1/2"	1"	15/16"	3/8"
	ADJUSTMENT FOR VERTICAL CURVE/SUPERELEVATION	1"	2 1/16"	2 7/8"	3 3/8"	3 5/8"	3 1/2"	3 1/8"	3"	2 3/8"	1 3/8"	2 3/8"	4 3/16"	4 1/2"	5 9/16"	6 5/16"	6 9/16"	6 5/16"	5 1/2"	4 1/2"	4 3/16"	2 3/8"
	REQUIRED SHOP CAMBER	1 13/16"	3 9/16"	4 3/4"	5 1/2"	5 9/16"	5 1/8"	4 1/4"	4 1/16"	3"	1 5/8"	2 3/4"	5 1/4"	5 11/16"	7 7/16"	8 13/16"	9 3/8"	8 15/16"	7 5/8"	5 15/16"	5 1/2"	2 15/16"
G2-5	DEFLECTION DUE TO WEIGHT OF STEEL	3/16"	5/16"	7/16"	1/2"	7/16"	3/8"	1/4"	1/4"	1/8"	1/16"	1/8"	1/4"	5/16"	7/16"	5/8"	5/8"	5/8"	7/16"	5/16"	1/4"	1/8"
	DEFLECTION DUE TO REMAINING DEAD LOAD	9/16"	1 1/16"	1 3/8"	1 1/2"	1 7/16"	1 3/16"	13/16"	3/4"	7/16"	3/16"	1/4"	5/8"	3/4"	1 1/8"	1 9/16"	1 3/4"	1 5/8"	1 1/4"	13/16"	3/4"	5/16"
	ADJUSTMENT FOR VERTICAL CURVE/SUPERELEVATION	13/16"	1 11/16"	2 7/16"	3 1/16"	3 5/16"	3 1/4"	2 15/16"	2 13/16"	2 1/4"	1 5/16"	2 3/8"	4 3/16"	4 1/2"	5 9/16"	6 5/16"	6 9/16"	6 5/16"	5 1/2"	4 1/2"	4 3/16"	2 3/8"
	REQUIRED SHOP CAMBER	1 9/16"	3 1/16"	4 1/4"	5 1/16"	5 3/16"	4 13/16"	4"	3 13/16"	2 13/16"	1 9/16"	2 3/4"	5 1/16"	5 9/16"	7 1/8"	8 1/2"	8 15/16"	8 9/16"	7 3/16"	5 5/8"	5 3/16"	2 13/16"
G2-6	DEFLECTION DUE TO WEIGHT OF STEEL	3/16"	5/16"	7/16"	7/16"	7/16"	3/8"	1/4"	1/4"	1/8"	1/16"	1/16"	1/4"	1/4"	3/8"	1/2"	1/2"	7/16"	5/16"	3/16"	3/16"	1/16"
	DEFLECTION DUE TO REMAINING DEAD LOAD	9/16"	15/16"	1 1/4"	1 3/8"	1 5/16"	1 1/8"	13/16"	3/4"	7/16"	3/16"	3/16"	9/16"	5/8"	1"	1 3/8"	1 1/2"	1 3/8"	1 1/16"	11/16"	9/16"	3/16"
	ADJUSTMENT FOR VERTICAL CURVE/SUPERELEVATION	11/16"	1 5/16"	2 1/16"	2 11/16"	3 1/16"	3 1/16"	2 3/4"	2 11/16"	2 1/8"	1 1/4"	2 3/8"	4 3/16"	4 1/2"	5 9/16"	6 5/16"	6 9/16"	6 5/16"	5 1/2"	4 1/2"	4 3/16"	2 3/8"
	REQUIRED SHOP CAMBER	1 7/16"	2 9/16"	3 3/4"	4 1/2"	4 13/16"	4 9/16"	3 13/16"	3 11/16"	2 11/16"	1 1/2"	2 5/8"	5"	5 3/8"	6 15/16"	8 3/16"	8 9/16"	8 1/8"	6 7/8"	5 3/8"	4 15/16"	2 5/8"
G2-8	DEFLECTION DUE TO WEIGHT OF STEEL	3/16"	5/16"	7/16"	7/16"	7/16"	3/8"	1/4"	1/4"	3/16"	1/16"	1/16"	3/16"	3/16"	1/4"	5/16"	3/8"	5/16"	3/16"	1/8"	1/16"	0"
	DEFLECTION DUE TO REMAINING DEAD LOAD	1/2"	7/8"	1 3/16"	1 5/16"	1 1/4"	1 1/16"	3/4"	11/16"	7/16"	3/16"	3/16"	1/2"	9/16"	7/8"	1 3/16"	1 1/4"	1 1/8"	13/16"	1/2"	7/16"	1/8"
	ADJUSTMENT FOR VERTICAL CURVE/SUPERELEVATION	7/16"	1"	1 5/8"	2 3/8"	2 3/4"	2 13/16"	2 9/16"	2 1/2"	2"	1 3/16"	2 3/8"	4 3/16"	4 1/2"	5 9/16"	6 5/16"	6 9/16"	6 5/16"	5 1/2"	4 1/2"	4 3/16"	2 3/8"
	REQUIRED SHOP CAMBER	1 1/8"	2 3/16"	3 1/4"	4 1/8"	4 7/16"	4 1/4"	3 9/16"	3 7/16"	2 5/8"	1 7/16"	2 5/8"	4 7/8"	5 1/4"	6 11/16"	7 13/16"	8 3/16"	7 3/4"	6 1/2"	5 1/8"	4 11/16"	2 1/2"
G2-9	DEFLECTION DUE TO WEIGHT OF STEEL	3/16"	5/16"	3/8"	7/16"	7/16"	3/8"	1/4"	1/4"	3/16"	1/16"	1/16"	1/8"	1/8"	3/16"	3/16"	3/16"	1/8"	1/16"	0"	0"	-1/16"
	DEFLECTION DUE TO REMAINING DEAD LOAD	7/16"	13/16"	1 1/16"	1 3/16"	1 1/8"	1"	3/4"	11/16"	7/16"	3/16"	3/16"	7/16"	1/2"	3/4"	1"	1 1/16"	15/16"	5/8"	5/16"	1/4"	1/16"
	ADJUSTMENT FOR VERTICAL CURVE/SUPERELEVATION	5/16"	5/8"	1 1/4"	2"	2 7/16"	2 9/16"	2 7/16"	2 5/16"	1 15/16"	1 1/8"	2 3/8"	4 3/16"	4 1/2"	5 9/16"	6 5/16"	6 9/16"	6 5/16"	5 1/2"	4 1/2"	4 3/16"	2 3/8"
	REQUIRED SHOP CAMBER	15/16"	1 3/4"	2 11/16"	3 5/8"	4"	3 15/16"	3 7/16"	3 1/4"	2 9/16"	1 3/8"	2 5/8"	4 3/4"	5 1/8"	6 1/2"	7 1/2"	7 13/16"	7 3/8"	6 3/16"	4 13/16"	4 7/16"	2 3/8"

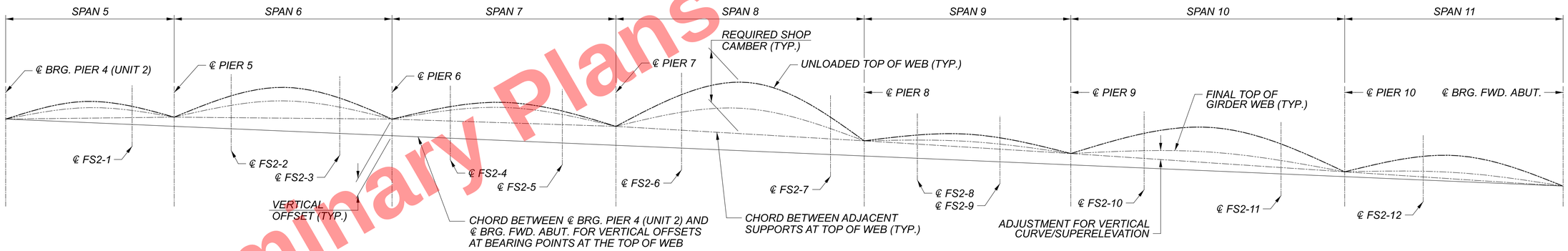

UNIT 2 CAMBER DIAGRAM

VERTICAL OFFSETS AT SUPPORT POINTS*								
SUPPORT LOCATION	G2-1	G2-3	G2-4	G2-5	G2-6	G2-7	G2-8	G2-9
PIER 4 (UNIT 2)	0"	0"	0"	0"	0"	-	0"	0"
PIER 5	95 15/16"	94 15/16"	93 3/4"	92 9/16"	91 5/16"	-	90 3/8"	89 3/16"
PIER 6	173 3/8"	171 3/4"	169 11/16"	167 11/16"	165 5/8"	-	164 1/4"	162 1/4"
PIER 7	198 1/4"	195 15/16"	193"	189 13/16"	186 7/16"	-	183 13/16"	179 15/16"
PIER 8	162 15/16"	159 7/8"	156 1/16"	152 5/16"	148 1/2"	-	145 13/16"	142"
HEADER BEAM	-	-	-	-	-	0"	-	-
PIER 9	120"	116 11/16"	112 5/8"	108 1/2"	104 3/8"	-2 5/8"	97 3/8"	93 1/8"
PIER 10	53 1/2"	52 3/8"	51"	49 5/8"	48 1/4"	1/2"	45 3/16"	43 13/16"
FWD. ABUT.	0"	0"	0"	0"	0"	0"	0"	0"

* NEGATIVE VALUES INDICATE THE TOP OF WEB IS BELOW THE CHORD BETWEEN ℄ BRG. PIER 4 (UNIT 2) AND ℄ BRG. FWD. ABUT.

NOTES:

1. POSITIVE VALUES FOR DEFLECTIONS INDICATE DEFLECTIONS DOWNWARD. POSITIVE VALUES FOR VERTICAL CURVE ADJUSTMENT AND TOTAL REQUIRED SHOP CAMBER INDICATE VALUES ABOVE THE CHORD LINE.
2. DEFLECTIONS AND ADJUSTMENTS FOR VERTICAL CURVES ARE GIVEN TO THE NEAREST 1/16 INCH. THE ADJUSTMENTS FOR HORIZONTAL CURVATURE AND HEAT CURVING ARE ZERO AT ALL LOCATIONS.
3. FOR GENERAL NOTES, SEE SHEETS 12 / 167 THRU 15 / 167.
4. FOR FRAMING PLAN, SEE SHEETS 73 / 167 THRU 76 / 167.
5. FOR UNIT 2 GIRDER ELEVATIONS, SEE SHEETS 79 / 167 THRU 81 / 167.
6. FOR UNIT 2 LOCATION PLAN, SEE SHEETS 148 / 167 AND 149 / 167.

Preliminary Plans - For Reference Only

UNIT 2 - GIRDER DEFLECTION AND CAMBER - (1 OF 4)
CUY-77-1587 (BRIDGE 9)
I.R. 77 SB OVER I.R. 90 AND CR-721 (E. 14TH ST.)

SFN 1806910
DESIGN AGENCY HDR
DESIGNER TJE | CHECKER NJH
REVIEWER DWW 01/11/24
PROJECT ID 82382
SUBSET 95 | TOTAL 167
SHEET 1963 | TOTAL 2696

CUY-90-16.28 (CCG3A)

MODEL: Sheet PAPERSIZE: 34x22 (in.) DATE: 3/28/2025 TIME: 10:20:01 AM USER: RohitLBk
pw:\\mb-us-pw.bentley.com:mb-us-pw-03\Documents\Cleveland_OH\01_Projects\ODOT\District12\82382\400-Engineering\Structures\SFN_1806910\Sheets\82382_SFN_1806910_SS020.dgn

STRUCTURAL STEEL DEFLECTIONS AND CAMBER

		SPAN 7											SPAN 8									
		0.1	0.2	℄ FS2-4	0.3	0.4	0.5	0.6	0.7	℄ FS2-5	0.8	0.9	0.1	0.2	℄ FS2-6	0.3	0.4	0.5	0.6	0.7	0.8	℄ FS2-7	0.9
G2-1	DEFLECTION DUE TO WEIGHT OF STEEL	-1/8"	-1/4"	-5/16"	-3/8"	-7/16"	-9/16"	-5/8"	-5/8"	-5/8"	-9/16"	-3/8"	3/4"	1 11/16"	2 1/4"	2 1/2"	3 1/8"	3 3/8"	3 1/4"	2 11/16"	1 13/16"	1 5/8"	7/8"
	DEFLECTION DUE TO REMAINING DEAD LOAD	-1/16"	1/16"	3/16"	5/16"	1/2"	9/16"	3/8"	1/16"	0"	-3/16"	-1/4"	1 1/8"	2 5/8"	3 11/16"	4 1/8"	5 1/4"	5 3/4"	5 1/2"	4 9/16"	3 1/16"	2 11/16"	1 7/16"
	ADJUSTMENT FOR VERTICAL CURVE/SUPERELEVATION	2 1/8"	3 3/4"	4 1/8"	4 7/8"	5 5/8"	5 13/16"	5 9/16"	4 15/16"	4 3/4"	3 3/4"	2 1/8"	3 3/8"	5 7/8"	7 3/16"	7 5/8"	8 5/8"	8 13/16"	8 3/16"	6 3/4"	4 9/16"	4 1/16"	2 1/8"
	REQUIRED SHOP CAMBER	1 15/16"	3 9/16"	4"	4 13/16"	5 11/16"	5 13/16"	5 5/16"	4 3/8"	4 1/8"	3"	1 1/2"	5 1/4"	10 3/16"	13 1/8"	14 1/4"	17"	17 15/16"	16 15/16"	14"	9 7/16"	8 3/8"	4 7/16"
G2-3	DEFLECTION DUE TO WEIGHT OF STEEL	-1/16"	-1/16"	-1/16"	-1/16"	-1/16"	-1/8"	-3/16"	-1/4"	-1/4"	-1/4"	-3/16"	9/16"	1 1/4"	1 5/8"	1 7/8"	2 3/8"	2 9/16"	2 7/16"	2"	1 3/8"	1 5/16"	11/16"
	DEFLECTION DUE TO REMAINING DEAD LOAD	0"	1/4"	5/16"	1/2"	3/4"	13/16"	5/8"	3/8"	1/4"	1/16"	-1/16"	7/8"	2"	2 11/16"	3 3/16"	4 1/16"	4 7/16"	4 1/4"	3 9/16"	2 7/16"	2 1/4"	1 3/16"
	ADJUSTMENT FOR VERTICAL CURVE/SUPERELEVATION	2 5/16"	4 1/16"	4 3/8"	5 3/8"	6 1/8"	6 3/8"	6 1/8"	5 3/8"	5"	4 1/16"	2 5/16"	3 1/8"	5 7/16"	6 1/2"	7 1/16"	7 15/16"	8 1/16"	7 1/2"	6 3/16"	4 1/8"	3 3/4"	1 15/16"
	REQUIRED SHOP CAMBER	2 1/4"	4 1/4"	4 5/8"	5 13/16"	6 13/16"	7 1/16"	6 9/16"	5 1/2"	5"	3 7/8"	2 1/16"	4 9/16"	8 11/16"	10 13/16"	12 1/8"	14 3/8"	15 1/16"	14 3/16"	11 3/4"	7 15/16"	7 5/16"	3 13/16"
G2-4	DEFLECTION DUE TO WEIGHT OF STEEL	0"	1/8"	1/8"	3/16"	5/16"	5/16"	3/16"	1/16"	1/16"	0"	-1/16"	3/8"	13/16"	1 1/8"	1 1/4"	1 9/16"	1 11/16"	1 11/16"	1 7/16"	1"	1"	9/16"
	DEFLECTION DUE TO REMAINING DEAD LOAD	1/16"	3/8"	7/16"	3/4"	1 1/16"	1 1/8"	15/16"	5/8"	9/16"	1/4"	0"	5/8"	1 3/8"	1 15/16"	2 3/16"	2 7/8"	3 3/16"	3 1/8"	2 5/8"	1 7/8"	1 3/4"	1"
	ADJUSTMENT FOR VERTICAL CURVE/SUPERELEVATION	2 1/2"	4 1/2"	4 11/16"	5 7/8"	6 11/16"	7"	6 11/16"	5 7/8"	5 5/8"	4 1/2"	2 1/2"	2 7/8"	5"	6 1/16"	6 1/2"	7 1/4"	7 3/8"	6 13/16"	5 9/16"	3 11/16"	3 9/16"	1 11/16"
	REQUIRED SHOP CAMBER	2 9/16"	5"	5 1/4"	6 13/16"	8 1/16"	8 7/16"	7 13/16"	6 9/16"	6 1/4"	4 3/4"	2 7/16"	3 7/8"	7 3/16"	9 1/8"	9 15/16"	11 11/16"	12 1/4"	11 5/8"	9 5/8"	6 9/16"	6 5/16"	3 1/4"
G2-5	DEFLECTION DUE TO WEIGHT OF STEEL	1/8"	5/16"	5/16"	1/2"	5/8"	5/8"	9/16"	3/8"	3/8"	3/16"	1/16"	3/16"	1/2"	11/16"	13/16"	1 1/16"	1 3/16"	1 3/16"	1 1/16"	3/4"	3/4"	7/16"
	DEFLECTION DUE TO REMAINING DEAD LOAD	1/4"	5/8"	5/8"	1 1/16"	1 7/16"	1 1/2"	1 3/8"	1"	1"	9/16"	3/16"	3/8"	15/16"	1 5/16"	1 1/2"	2 1/16"	2 5/16"	2 5/16"	2"	1 7/16"	1 7/16"	13/16"
	ADJUSTMENT FOR VERTICAL CURVE/SUPERELEVATION	2 3/4"	4 7/8"	4 15/16"	6 7/16"	7 3/8"	7 5/8"	7 5/16"	6 7/16"	6 5/16"	4 7/8"	2 3/4"	2 9/16"	4 9/16"	5 9/16"	5 7/8"	6 5/8"	6 11/16"	6 1/8"	5"	3 5/16"	3 5/16"	1 1/2"
	REQUIRED SHOP CAMBER	3 1/8"	5 13/16"	5 7/8"	8"	9 7/16"	9 3/4"	9 1/4"	7 13/16"	7 11/16"	5 5/8"	3"	3 1/8"	6"	7 9/16"	8 3/16"	9 3/4"	10 3/16"	9 5/8"	8 1/16"	5 1/2"	5 1/2"	2 3/4"
G2-6	DEFLECTION DUE TO WEIGHT OF STEEL	3/16"	7/16"	7/16"	11/16"	15/16"	1"	7/8"	11/16"	9/16"	3/8"	1/8"	1/8"	1/4"	7/16"	1/2"	11/16"	13/16"	13/16"	11/16"	1/2"	1/2"	5/16"
	DEFLECTION DUE TO REMAINING DEAD LOAD	5/16"	15/16"	7/8"	1 9/16"	2 1/16"	2 1/4"	2 1/16"	1 9/16"	1 3/8"	7/8"	3/8"	3/16"	9/16"	7/8"	1 1/16"	1 7/16"	1 11/16"	1 3/4"	1 1/2"	1 1/16"	1 1/8"	5/8"
	ADJUSTMENT FOR VERTICAL CURVE/SUPERELEVATION	3"	5 3/8"	5 1/4"	7 1/16"	8"	8 3/8"	8"	7"	6 9/16"	5 3/8"	3"	2 5/16"	4 1/8"	5 1/16"	5 5/16"	5 15/16"	6"	5 1/2"	4 7/16"	2 7/8"	3"	1 5/16"
	REQUIRED SHOP CAMBER	3 1/2"	6 3/4"	6 9/16"	9 5/16"	11"	11 5/8"	10 15/16"	9 1/4"	8 1/2"	6 5/8"	3 1/2"	2 5/8"	4 15/16"	6 3/8"	6 7/8"	8 1/16"	8 1/2"	8 1/16"	6 5/8"	4 7/16"	4 5/8"	2 1/4"
G2-8	DEFLECTION DUE TO WEIGHT OF STEEL	1/4"	9/16"	1/2"	7/8"	1 1/16"	1 1/8"	1 1/16"	13/16"	3/4"	1/2"	3/16"	1/16"	1/8"	1/4"	1/4"	3/8"	7/16"	7/16"	3/8"	5/16"	5/16"	3/16"
	DEFLECTION DUE TO REMAINING DEAD LOAD	1/2"	1 1/4"	1 1/8"	2"	2 9/16"	2 3/4"	2 1/2"	1 15/16"	1 13/16"	1 3/16"	1/2"	1/8"	7/16"	11/16"	13/16"	1 1/8"	1 5/16"	1 5/16"	1 1/8"	3/4"	7/8"	7/16"
	ADJUSTMENT FOR VERTICAL CURVE/SUPERELEVATION	3 5/16"	5 7/8"	5 1/2"	7 11/16"	8 3/4"	9 1/8"	8 3/4"	7 11/16"	7 7/16"	5 7/8"	3 5/16"	2 1/8"	3 3/4"	4 5/8"	4 13/16"	5 3/8"	5 1/2"	5"	4 1/16"	2 3/4"	3"	1 3/8"
	REQUIRED SHOP CAMBER	4 1/16"	7 11/16"	7 1/8"	10 9/16"	12 3/8"	13"	12 5/16"	10 7/16"	10"	7 9/16"	4"	2 5/16"	4 5/16"	5 9/16"	5 7/8"	6 7/8"	7 1/4"	6 3/4"	5 9/16"	3 13/16"	4 3/16"	2"
G2-9	DEFLECTION DUE TO WEIGHT OF STEEL	5/16"	11/16"	9/16"	1"	1 1/4"	1 5/16"	1 1/4"	15/16"	7/8"	5/8"	1/4"	-1/16"	0"	0"	1/16"	1/8"	1/8"	1/8"	1/8"	1/16"	1/16"	1/16"
	DEFLECTION DUE TO REMAINING DEAD LOAD	11/16"	1 9/16"	1 5/16"	2 7/16"	3 1/16"	3 1/4"	2 15/16"	2 5/16"	2 1/16"	1 7/16"	5/8"	1/16"	3/16"	7/16"	1/2"	3/4"	15/16"	15/16"	3/4"	1/2"	9/16"	1/4"
	ADJUSTMENT FOR VERTICAL CURVE/SUPERELEVATION	3 5/8"	6 3/8"	5 13/16"	8 3/8"	9 9/16"	10"	9 9/16"	8 3/8"	7 13/16"	6 3/8"	3 5/8"	1 7/8"	3 5/16"	4 1/8"	4 1/4"	4 3/4"	4 13/16"	4 3/8"	3 1/2"	2 5/16"	2 11/16"	1 3/16"
	REQUIRED SHOP CAMBER	4 5/8"	8 5/8"	7 11/16"	11 13/16"	13 7/8"	14 9/16"	13 3/4"	11 5/8"	10 3/4"	8 7/16"	4 1/2"	1 7/8"	3 1/2"	4 9/16"	4 13/16"	5 5/8"	5 7/8"	5 7/16"	4 3/8"	2 7/8"	3 5/16"	1 1/2"

Preliminary Plans - For Reference Only

NOTES:

1. POSITIVE VALUES FOR DEFLECTIONS INDICATE DEFLECTIONS DOWNWARD. POSITIVE VALUES FOR VERTICAL CURVE ADJUSTMENT AND TOTAL REQUIRED SHOP CAMBER INDICATE VALUES ABOVE THE CHORD LINE.
2. DEFLECTIONS AND ADJUSTMENTS FOR VERTICAL CURVES ARE GIVEN TO THE NEAREST $\frac{1}{16}$ INCH. THE ADJUSTMENTS FOR HORIZONTAL CURVATURE AND HEAT CURVING ARE ZERO AT ALL LOCATIONS.
3. FOR GENERAL NOTES, SEE SHEETS 12 / 167 THRU 15 / 167.
4. FOR FRAMING PLAN, SEE SHEETS 73 / 167 THRU 76 / 167.
5. FOR UNIT 2 GIRDER ELEVATIONS, SEE SHEETS 79 / 167 THRU 81 / 167.
6. FOR UNIT 2 LOCATION PLAN, SEE SHEETS 148 / 167 AND 149 / 167.
7. FOR UNIT 2 CAMBER DIAGRAM, SEE SHEET 95 / 167.

UNIT 2 - GIRDER DEFLECTION AND CAMBER - (2 OF 4)
CUY-77-1587 (BRIDGE 9)
I.R. 77 SB OVER I.R. 90 AND CR-721 (E. 14TH ST.)

SFN 1806910
DESIGN AGENCY
DESIGNER TJE | CHECKER NJH
REVIEWER DWW 01/11/24
PROJECT ID 82382
SUBSET 96 | TOTAL 167
SHEET 1964 | TOTAL 2696

CUY-90-16.28 (CCG3A)

MODEL: Sheet PAPERSIZE: 34x22 (in.) DATE: 3/28/2025 TIME: 10:20:08 AM USER: RohitLBk
pw:\\imb-us-pw.bentley.com:mb-us-pw-03\Documents\Cleveland_OH\01_Projects\ODOT\District12\82382\400-Engineering\Structures\SFN_1806910\Sheets\82382_SFN_1806910_SS021.dgn

STRUCTURAL STEEL DEFLECTIONS AND CAMBER

		SPAN 9											SPAN 10									
		0.1	0.2	℄ FS2-8	0.3	0.4	0.5	0.6	℄ FS2-9	0.7	0.8	0.9	0.1	0.2	℄ FS2-10	0.3	0.4	0.5	0.6	0.7	℄ FS2-11	0.8	0.9
G2-1	DEFLECTION DUE TO WEIGHT OF STEEL	-3/8"	-5/8"	-3/4"	-13/16"	-7/8"	-7/8"	-13/16"	-13/16"	-3/4"	-5/8"	-3/8"	13/16"	1 5/8"	1 11/16"	2 3/8"	2 13/16"	2 7/8"	2 9/16"	2"	1 1/2"	1 1/4"	9/16"
	DEFLECTION DUE TO REMAINING DEAD LOAD	-5/16"	-1/2"	-3/8"	-3/8"	-1/4"	-1/4"	-3/8"	-7/16"	-1/2"	-9/16"	-3/8"	1 1/4"	2 3/4"	2 7/8"	4 1/16"	4 13/16"	4 15/16"	4 5/16"	3 3/16"	2 5/16"	1 7/8"	11/16"
	ADJUSTMENT FOR VERTICAL CURVE/SUPERELEVATION	0"	1/16"	1/8"	1/8"	3/16"	1/4"	5/16"	3/8"	7/16"	1/2"	3/8"	5/16"	5/8"	3/4"	15/16"	1 3/16"	1 11/16"	1 7/8"	1 1/2"	1 3/16"	1 1/16"	9/16"
	REQUIRED SHOP CAMBER	-11/16"	-1 1/16"	-1"	-1 1/16"	-15/16"	-7/8"	-7/8"	-7/8"	-13/16"	-11/16"	-3/8"	2 3/8"	5"	5 5/16"	7 3/8"	8 13/16"	9 1/2"	8 3/4"	6 11/16"	5"	4 3/16"	1 13/16"
G2-3	DEFLECTION DUE TO WEIGHT OF STEEL	-1/4"	-7/16"	-1/2"	-9/16"	-9/16"	-5/8"	-5/8"	-5/8"	-9/16"	-1/2"	-5/16"	11/16"	1 7/16"	1 9/16"	2 1/8"	2 9/16"	2 5/8"	2 3/8"	1 13/16"	1 3/8"	1 1/8"	1/2"
	DEFLECTION DUE TO REMAINING DEAD LOAD	-1/8"	-1/4"	-3/16"	-3/16"	-1/16"	-1/8"	-1/4"	-5/16"	-3/8"	-7/16"	-5/16"	1 3/16"	2 9/16"	2 11/16"	3 13/16"	4 9/16"	4 11/16"	4 1/8"	3 1/16"	2 3/16"	1 3/4"	5/8"
	ADJUSTMENT FOR VERTICAL CURVE/SUPERELEVATION	0"	0"	1/16"	1/16"	1/16"	1/8"	3/16"	1/4"	1/4"	5/16"	1/4"	5/16"	5/8"	11/16"	13/16"	1 1/16"	1 7/16"	1 1/2"	1 1/4"	1"	7/8"	7/16"
	REQUIRED SHOP CAMBER	-3/8"	-11/16"	-5/8"	-11/16"	-9/16"	-5/8"	-11/16"	-11/16"	-11/16"	-5/8"	-3/8"	2 3/16"	4 5/8"	4 15/16"	6 3/4"	8 3/16"	8 3/4"	8"	6 1/8"	4 9/16"	3 3/4"	1 9/16"
G2-4	DEFLECTION DUE TO WEIGHT OF STEEL	-1/16"	-1/4"	-5/16"	-5/16"	-5/16"	-3/8"	-3/8"	-7/16"	-3/8"	-3/8"	-3/16"	5/8"	1 5/16"	1 3/8"	1 7/8"	2 5/16"	2 3/8"	2 1/8"	1 5/8"	1 1/4"	1"	7/16"
	DEFLECTION DUE TO REMAINING DEAD LOAD	0"	-1/16"	0"	0"	1/16"	0"	-1/8"	-3/16"	-5/16"	-3/8"	-5/16"	1 1/8"	2 7/16"	2 9/16"	3 5/8"	4 5/16"	4 7/16"	3 15/16"	2 7/8"	2 1/16"	1 5/8"	9/16"
	ADJUSTMENT FOR VERTICAL CURVE/SUPERELEVATION	-1/16"	-1/16"	-1/16"	-1/8"	-1/8"	-1/16"	-1/16"	0"	0"	1/16"	1/16"	1/4"	1/2"	9/16"	11/16"	7/8"	1 1/16"	1 3/16"	15/16"	3/4"	11/16"	3/8"
	REQUIRED SHOP CAMBER	-1/8"	-3/8"	-3/8"	-7/16"	-3/8"	-7/16"	-9/16"	-5/8"	-11/16"	-11/16"	-7/16"	2"	4 1/4"	4 1/2"	6 3/16"	7 1/2"	7 7/8"	7 1/4"	5 7/16"	4 1/16"	3 5/16"	1 3/8"
G2-5	DEFLECTION DUE TO WEIGHT OF STEEL	0"	-1/16"	-1/16"	-1/16"	-1/8"	-1/8"	-3/16"	-1/4"	-1/4"	-1/4"	-3/16"	9/16"	1 1/8"	1 3/16"	1 11/16"	2 1/16"	2 1/8"	1 15/16"	1 7/16"	1 1/16"	7/8"	3/8"
	DEFLECTION DUE TO REMAINING DEAD LOAD	1/8"	1/8"	3/16"	3/16"	1/4"	3/16"	0"	-1/8"	-3/16"	-5/16"	-1/4"	1 1/16"	2 1/4"	2 3/8"	3 7/16"	4 1/8"	4 1/4"	3 3/4"	2 3/4"	1 15/16"	1 9/16"	9/16"
	ADJUSTMENT FOR VERTICAL CURVE/SUPERELEVATION	-1/16"	-3/16"	-3/16"	-3/16"	-1/4"	-1/4"	-1/4"	-1/4"	-1/4"	-1/4"	-1/8"	1/4"	7/16"	7/16"	9/16"	11/16"	3/4"	13/16"	11/16"	9/16"	1/2"	5/16"
	REQUIRED SHOP CAMBER	1/16"	-1/8"	-1/16"	-1/16"	-1/8"	-3/16"	-7/16"	-5/8"	-11/16"	-13/16"	-9/16"	1 7/8"	3 13/16"	4"	5 11/16"	6 7/8"	7 1/8"	6 1/2"	4 7/8"	3 9/16"	2 15/16"	1 1/4"
G2-6	DEFLECTION DUE TO WEIGHT OF STEEL	1/16"	1/16"	1/8"	1/8"	1/16"	1/16"	0"	-1/16"	-1/16"	-1/8"	-1/8"	7/16"	1"	1 1/16"	1 1/2"	1 13/16"	1 7/8"	1 11/16"	1 5/16"	15/16"	3/4"	5/16"
	DEFLECTION DUE TO REMAINING DEAD LOAD	1/4"	5/16"	3/8"	3/8"	7/16"	5/16"	1/8"	0"	-1/16"	-1/4"	-3/16"	1"	2 1/8"	2 1/4"	3 1/4"	3 15/16"	4 1/16"	3 9/16"	2 5/8"	1 13/16"	1 7/16"	1/2"
	ADJUSTMENT FOR VERTICAL CURVE/SUPERELEVATION	-1/8"	-1/4"	-5/16"	-3/8"	-7/16"	-1/2"	-1/2"	-9/16"	-1/2"	-1/2"	-3/8"	3/16"	5/16"	5/16"	7/16"	1/2"	7/16"	1/2"	7/16"	3/8"	3/8"	3/16"
	REQUIRED SHOP CAMBER	3/16"	1/8"	3/16"	1/8"	1/16"	-1/8"	-3/8"	-5/8"	-5/8"	-7/8"	-11/16"	1 5/8"	3 7/16"	3 5/8"	5 3/16"	6 1/4"	6 3/8"	5 3/4"	4 3/8"	3 1/8"	2 9/16"	1"
G2-7	DEFLECTION DUE TO WEIGHT OF STEEL	-	-	3/16"	3/16"	3/16"	3/16"	1/8"	1/16"	0"	-1/16"	-1/16"	3/8"	7/8"	7/8"	1 1/4"	1 9/16"	1 5/8"	1 1/2"	1 1/8"	13/16"	5/8"	1/4"
	DEFLECTION DUE TO REMAINING DEAD LOAD	-	-	7/16"	1/2"	1/2"	7/16"	1/4"	1/8"	0"	-1/8"	-3/16"	15/16"	2 1/16"	2 3/16"	3 1/16"	3 3/4"	3 7/8"	3 7/16"	2 1/2"	1 3/4"	1 3/8"	7/16"
	ADJUSTMENT FOR VERTICAL CURVE/SUPERELEVATION	-	-	-1/16"	-1/8"	-3/16"	-5/16"	-7/16"	-1/2"	-1/2"	-5/8"	-7/16"	-1/8"	-1/4"	-5/16"	-1/4"	-1/4"	-7/16"	-5/16"	-1/8"	0"	0"	0"
	REQUIRED SHOP CAMBER	-	-	9/16"	9/16"	1/2"	5/16"	-1/16"	-5/16"	-1/2"	-13/16"	-11/16"	1 3/16"	2 11/16"	2 3/4"	4 1/16"	5 1/16"	5 1/16"	4 5/8"	3 1/2"	2 9/16"	2"	11/16"
G2-8	DEFLECTION DUE TO WEIGHT OF STEEL	1/8"	1/4"	5/16"	5/16"	5/16"	5/16"	1/4"	3/16"	1/8"	0"	0"	5/16"	11/16"	3/4"	1 1/16"	1 5/16"	1 3/8"	1 1/4"	15/16"	11/16"	9/16"	3/16"
	DEFLECTION DUE TO REMAINING DEAD LOAD	1/4"	7/16"	9/16"	9/16"	5/8"	9/16"	3/8"	1/4"	1/8"	-1/16"	-1/8"	7/8"	1 15/16"	2 1/16"	2 15/16"	3 9/16"	3 11/16"	3 5/16"	2 3/8"	1 5/8"	1 5/16"	7/16"
	ADJUSTMENT FOR VERTICAL CURVE/SUPERELEVATION	-1/8"	-3/16"	-5/16"	-5/16"	-7/16"	-1/2"	-5/8"	-11/16"	-3/4"	-13/16"	-9/16"	-1/2"	-13/16"	-15/16"	-1"	-1"	-1 5/16"	-1 1/16"	-5/8"	-7/16"	-3/8"	-1/8"
	REQUIRED SHOP CAMBER	1/4"	1/2"	9/16"	9/16"	1/2"	3/8"	0"	-1/4"	-1/2"	-7/8"	-11/16"	11/16"	1 13/16"	1 7/8"	3"	3 7/8"	3 3/4"	3 1/2"	2 11/16"	1 7/8"	1 1/2"	1/2"
G2-9	DEFLECTION DUE TO WEIGHT OF STEEL	3/16"	5/16"	7/16"	7/16"	1/2"	1/2"	3/8"	5/16"	1/4"	1/8"	0"	1/4"	9/16"	9/16"	7/8"	1 1/16"	1 1/8"	1 1/16"	3/4"	9/16"	7/16"	1/8"
	DEFLECTION DUE TO REMAINING DEAD LOAD	5/16"	9/16"	11/16"	3/4"	13/16"	3/4"	1/2"	3/8"	1/4"	0"	-1/16"	13/16"	1 13/16"	1 15/16"	2 3/4"	3 3/8"	3 1/2"	3 1/8"	2 1/4"	1 9/16"	1 1/4"	3/8"
	ADJUSTMENT FOR VERTICAL CURVE/SUPERELEVATION	-1/8"	-1/4"	-3/8"	-7/16"	-9/16"	-11/16"	-13/16"	-15/16"	-1"	-1 1/8"	-13/16"	-5/8"	-1"	-1 3/16"	-1 3/16"	-1 5/16"	-1 1/4"	-1 7/16"	-13/16"	-9/16"	-1/2"	-3/16"
	REQUIRED SHOP CAMBER	3/8"	5/8"	3/4"	3/4"	3/4"	9/16"	1/16"	-1/4"	-1/2"	-1"	-7/8"	7/16"	1 3/8"	1 5/16"	2 7/16"	3 1/8"	3 3/8"	2 3/4"	2 3/16"	1 9/16"	1 3/16"	5/16"

NOTES:

1. *POSITIVE VALUES FOR DEFLECTIONS INDICATE DEFLECTIONS DOWNWARD. POSITIVE VALUES FOR VERTICAL CURVE ADJUSTMENT AND TOTAL REQUIRED SHOP CAMBER INDICATE VALUES ABOVE THE CHORD LINE.*
2. *DEFLECTIONS AND ADJUSTMENTS FOR VERTICAL CURVES ARE GIVEN TO THE NEAREST $\frac{1}{16}$ INCH. THE ADJUSTMENTS FOR HORIZONTAL CURVATURE AND HEAT CURVING ARE ZERO AT ALL LOCATIONS.*
3. *FOR GENERAL NOTES, SEE SHEETS* 12 / 167 *THRU* 15 / 167.
4. *FOR FRAMING PLAN, SEE SHEETS* 73 / 167 *THRU* 76 / 167.
5. *FOR UNIT 2 GIRDER ELEVATIONS, SEE SHEETS* 79 / 167 *THRU* 81 / 167.
6. *FOR UNIT 2 LOCATION PLAN, SEE SHEETS* 148 / 167 *AND* 149 / 167.
7. *FOR UNIT 2 CAMBER DIAGRAM, SEE SHEET* 95 / 167.

Preliminary Plans - For Reference Only

UNIT 2 - GIRDER DEFLECTION AND CAMBER - (3 OF 4)
CUY-77-1587 (BRIDGE 9)
I.R. 77 SB OVER I.R. 90 AND CR-721 (E. 14TH ST.)

SFN 1806910
DESIGN AGENCY HDR
DESIGNER TJE | CHECKER NJH
REVIEWER DWW 01/11/24
PROJECT ID 82382
SUBSET 97 | TOTAL 167
SHEET 1965 | TOTAL 2696

CUY-90-16.28 (CCG3A)

MODEL: Sheet PAPERSIZE: 34x22 (in.) DATE: 3/28/2025 TIME: 10:20:14 AM USER: Rohit.Bk
pw:\\mb-us-pw.bentley.com:mb-us-pw-03\Documents\Cleveland_OH\01_Projects\ODOT\District12\82382\400-Engineering\Structures\SFN_1806910\Sheets\82382_SFN_1806910_SS022.dgn

STRUCTURAL STEEL DEFLECTIONS AND CAMBER

		SPAN 11									
		0.1	0.2	0.3	℄ FS2-12	0.4	0.5	0.6	0.7	0.8	0.9
G2-1	DEFLECTION DUE TO WEIGHT OF STEEL	-1/8"	-1/16"	1/16"	1/8"	1/4"	1/2"	9/16"	5/8"	1/2"	1/4"
	DEFLECTION DUE TO REMAINING DEAD LOAD	3/16"	11/16"	1 7/16"	1 3/4"	2 1/4"	2 7/8"	3 1/8"	2 7/8"	2 1/4"	1 1/4"
	ADJUSTMENT FOR VERTICAL CURVE/SUPERELEVATION	-3/16"	-7/16"	-1 1/16"	-7/8"	-1 3/8"	-1 5/8"	-1 5/8"	-1 1/4"	-13/16"	-7/16"
	REQUIRED SHOP CAMBER	-1/8"	3/16"	7/16"	1"	1 1/8"	1 3/4"	2 1/16"	2 1/4"	1 15/16"	1 1/16"
G2-3	DEFLECTION DUE TO WEIGHT OF STEEL	-1/16"	0"	3/16"	1/4"	3/8"	9/16"	11/16"	11/16"	9/16"	5/16"
	DEFLECTION DUE TO REMAINING DEAD LOAD	3/16"	3/4"	1 1/2"	1 13/16"	2 5/16"	2 7/8"	3 1/8"	2 7/8"	2 1/4"	1 3/16"
	ADJUSTMENT FOR VERTICAL CURVE/SUPERELEVATION	-1/8"	-5/16"	-3/4"	-5/8"	-1"	-1 1/4"	-1 1/4"	-15/16"	-5/8"	-5/16"
	REQUIRED SHOP CAMBER	0"	7/16"	15/16"	1 7/16"	1 11/16"	2 3/16"	2 9/16"	2 5/8"	2 3/16"	1 3/16"
G2-4	DEFLECTION DUE TO WEIGHT OF STEEL	0"	1/16"	1/4"	3/8"	1/2"	11/16"	13/16"	3/4"	5/8"	5/16"
	DEFLECTION DUE TO REMAINING DEAD LOAD	1/4"	3/4"	1 9/16"	1 7/8"	2 3/8"	2 15/16"	3 1/8"	2 7/8"	2 1/4"	1 3/16"
	ADJUSTMENT FOR VERTICAL CURVE/SUPERELEVATION	-1/16"	-1/8"	-7/16"	-5/16"	-9/16"	-3/4"	-3/4"	-1/2"	-3/8"	-3/16"
	REQUIRED SHOP CAMBER	3/16"	11/16"	1 3/8"	1 15/16"	2 5/16"	2 7/8"	3 3/16"	3 1/8"	2 1/2"	1 5/16"
G2-5	DEFLECTION DUE TO WEIGHT OF STEEL	0"	1/8"	3/8"	7/16"	5/8"	13/16"	7/8"	13/16"	5/8"	3/8"
	DEFLECTION DUE TO REMAINING DEAD LOAD	1/4"	13/16"	1 5/8"	1 15/16"	2 7/16"	3"	3 3/16"	2 15/16"	2 1/4"	1 3/16"
	ADJUSTMENT FOR VERTICAL CURVE/SUPERELEVATION	1/16"	1/16"	-1/16"	0"	-1/8"	-3/16"	-3/16"	-1/8"	-1/8"	-1/16"
	REQUIRED SHOP CAMBER	5/16"	1"	1 15/16"	2 3/8"	2 15/16"	3 5/8"	3 7/8"	3 5/8"	2 3/4"	1 1/2"
G2-6	DEFLECTION DUE TO WEIGHT OF STEEL	1/16"	3/16"	7/16"	9/16"	11/16"	7/8"	15/16"	7/8"	11/16"	3/8"
	DEFLECTION DUE TO REMAINING DEAD LOAD	5/16"	7/8"	1 11/16"	2"	2 1/2"	3 1/16"	3 3/16"	2 15/16"	2 1/4"	1 3/16"
	ADJUSTMENT FOR VERTICAL CURVE/SUPERELEVATION	1/8"	3/16"	5/16"	5/16"	3/8"	3/8"	5/16"	1/4"	1/8"	1/16"
	REQUIRED SHOP CAMBER	1/2"	1 1/4"	2 7/16"	2 7/8"	3 9/16"	4 5/16"	4 7/16"	4 1/16"	3 1/16"	1 5/8"
G2-7	DEFLECTION DUE TO WEIGHT OF STEEL	1/16"	1/4"	1/2"	5/8"	13/16"	1"	1 1/16"	15/16"	3/4"	3/8"
	DEFLECTION DUE TO REMAINING DEAD LOAD	5/16"	15/16"	1 3/4"	2 1/16"	2 9/16"	3 1/8"	3 1/4"	3"	2 1/4"	1 3/16"
	ADJUSTMENT FOR VERTICAL CURVE/SUPERELEVATION	3/16"	3/8"	11/16"	3/4"	3/4"	7/8"	13/16"	9/16"	3/8"	3/16"
	REQUIRED SHOP CAMBER	9/16"	1 9/16"	2 15/16"	3 7/16"	4 1/8"	5"	5 1/8"	4 1/2"	3 3/8"	1 3/4"
G2-8	DEFLECTION DUE TO WEIGHT OF STEEL	1/8"	5/16"	5/8"	11/16"	7/8"	1 1/16"	1 1/8"	1"	3/4"	3/8"
	DEFLECTION DUE TO REMAINING DEAD LOAD	3/8"	1"	1 13/16"	2 1/8"	2 5/8"	3 3/16"	3 3/8"	3 1/16"	2 5/16"	1 3/16"
	ADJUSTMENT FOR VERTICAL CURVE/SUPERELEVATION	1/4"	9/16"	1"	1 3/16"	1 3/16"	1 3/8"	1 5/16"	1"	5/8"	5/16"
	REQUIRED SHOP CAMBER	3/4"	1 7/8"	3 7/16"	4"	4 11/16"	5 5/8"	5 13/16"	5 1/16"	3 11/16"	1 7/8"
G2-9	DEFLECTION DUE TO WEIGHT OF STEEL	1/8"	3/8"	11/16"	13/16"	15/16"	1 1/8"	1 3/16"	1 1/16"	13/16"	7/16"
	DEFLECTION DUE TO REMAINING DEAD LOAD	3/8"	1 1/16"	1 15/16"	2 1/4"	2 3/4"	3 5/16"	3 7/16"	3 1/8"	2 3/8"	1 3/16"
	ADJUSTMENT FOR VERTICAL CURVE/SUPERELEVATION	3/8"	11/16"	1 3/8"	1 9/16"	1 5/8"	1 15/16"	1 13/16"	1 5/16"	7/8"	7/16"
	REQUIRED SHOP CAMBER	7/8"	2 1/8"	4"	4 5/8"	5 5/16"	6 3/8"	6 7/16"	5 1/2"	4 1/16"	2 1/16"

Preliminary Plans - For Reference Only

NOTES:

1. POSITIVE VALUES FOR DEFLECTIONS INDICATE DEFLECTIONS DOWNWARD. POSITIVE VALUES FOR VERTICAL CURVE ADJUSTMENT AND TOTAL REQUIRED SHOP CAMBER INDICATE VALUES ABOVE THE CHORD LINE.
2. DEFLECTIONS AND ADJUSTMENTS FOR VERTICAL CURVES ARE GIVEN TO THE NEAREST $\frac{1}{16}$ INCH. THE ADJUSTMENTS FOR HORIZONTAL CURVATURE AND HEAT CURVING ARE ZERO AT ALL LOCATIONS.
3. FOR GENERAL NOTES, SEE SHEETS 12 / 167 THRU 15 / 167.
4. FOR FRAMING PLAN, SEE SHEETS 73 / 167 THRU 76 / 167.
5. FOR UNIT 2 GIRDER ELEVATIONS, SEE SHEETS 79 / 167 THRU 81 / 167.
6. FOR UNIT 2 LOCATION PLAN, SEE SHEETS 148 / 167 AND 149 / 167.
7. FOR UNIT 2 CAMBER DIAGRAM, SEE SHEET 95 / 167.

UNIT 2 - GIRDER DEFLECTION AND CAMBER - (4 OF 4)
CUY-77-1587 (BRIDGE 9)
I.R. 77 SB OVER I.R. 90 AND CR-721 (E. 14TH ST.)

SFN 1806910
DESIGN AGENCY HDR
DESIGNER TJE | CHECKER NJH
REVIEWER DWW 01/11/24
PROJECT ID 82382
SUBSET 98 | TOTAL 167
SHEET 1966 | TOTAL 2696

CUY-90-16.28 (CCG3A)

MODEL: Sheet PAPERSIZE: 34x22 (in.) DATE: 3/28/2025 TIME: 10:20:21 AM USER: Rohit.Bk
pw:\\mb-us-pw.bentley.com:mb-us-pw-03\Documents\Cleveland_OH\01_Projects\ODOT\District12\82382\400-Engineering\Structures\SFN_1806910\Sheets\82382_SFN_1806910_SS023.dgn

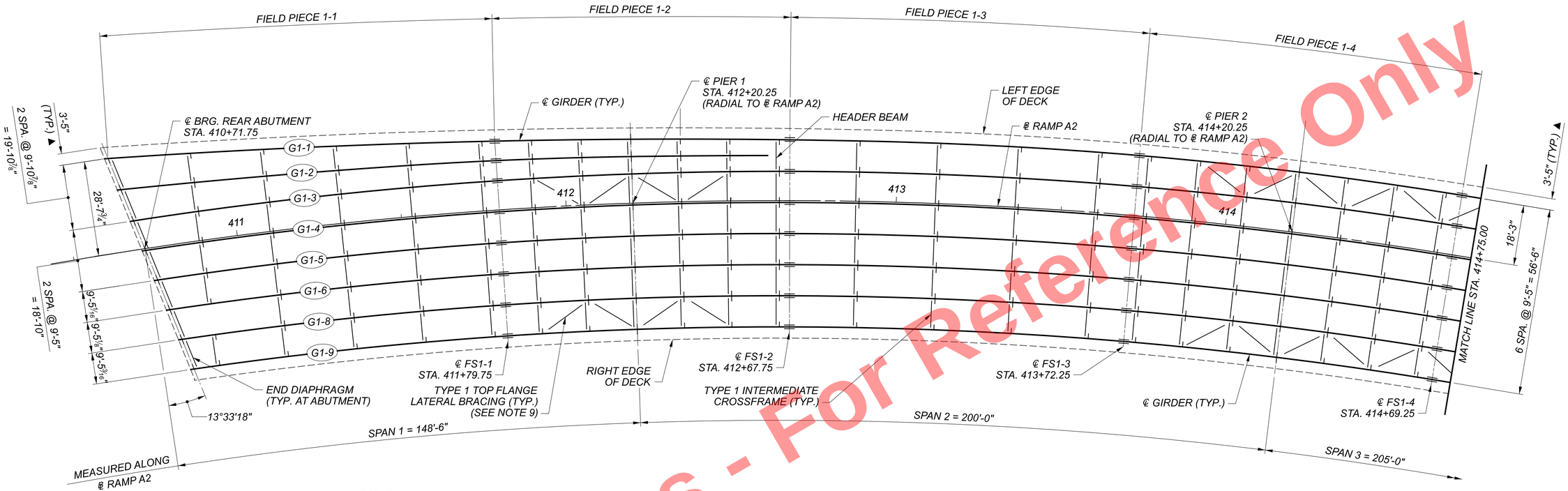

LEGEND:

(#) = GIRDER NUMBER

UNIT 1 ERECTION PLAN

CONCEPTUAL ERECTION SEQUENCE

ERECTION PROCEEDS FROM REAR TO FORWARD AND AS FOLLOWS:

1. THE FIRST GIRDERS ERECTED IN ALL SPANS ARE ASSUMED TO BE A TANDEM GIRDER PAIR WITH ALL CROSSFRAMES ATTACHED AND TOP FLANGE LATERAL BRACING ATTACHED. IT IS ASSUMED THAT GIRDERS ARE PLACED IN UNIT 1 FROM THE RIGHT SIDE OF THE BRIDGE TO THE LEFT SIDE OF THE BRIDGE. STARTING WITH G1-9.
2. SET ALL BEARINGS AT REAR ABUTMENT AND PIER 1.
3. PLACE FIELD PIECE 1-1 FOR G1-9 AND HOLD WITH CRANE.
4. PLACE FIELD PIECE 1-2 AND SPLICE WITH FIELD PIECE 1-1 FOR G1-9. CRANES MAY BE RELEASED AFTER THIS STEP
5. ERECT FIELD PIECE 1-1 AND FIELD PIECE 1-2 FOR ALL GIRDERS STARTING WITH G1-9 MOVING FROM THE RIGHT SIDE OF THE BRIDGE TO THE LEFT SIDE OF THE BRIDGE PRIOR TO MOVING ON TO SPAN 2.
6. SET ALL BEARINGS AT PIER 2.
7. PLACE FIELD PIECE 1-3 AND SPLICE WITH FIELD PIECE 1-2 FOR G1-9. HOLD FIELD PIECE 1-3 WITH CRANE.
8. PLACE FIELD PIECE 1-4 AND SPLICE WITH FIELD PIECE 1-3 FOR G1-9. CRANES MAY BE RELEASED AFTER THIS STEP.
9. ERECT FIELD PIECE 1-3 AND FIELD PIECE 1-4 FOR ALL GIRDERS STARTING WITH G1-9 MOVING FROM THE RIGHT SIDE OF THE BRIDGE TO THE LEFT SIDE OF THE BRIDGE PRIOR TO MOVING ON TO SPAN 3.

NOTES:

1. THE CONCEPTUAL ERECTION SEQUENCE IS A REPRESENTATION OF ONE POTENTIAL ERECTION SEQUENCE AND IS BASED ON THE USE OF TWO CRANES. ALL INTERMEDIATE STAGES OF ERECTION, TEMPORARY RESTRAINING DEVICES, TEMPORARY BRACING, COMPRESSION FLANGE STIFFENING TRUSS, CRANE LOCATIONS, ETC. THAT MAY BE NECESSARY, ARE NOT SHOWN. THE CONTRACTOR IS RESPONSIBLE FOR THE STABILITY OF PARTIAL AND COMPLETE GIRDERS THROUGHOUT THE ERECTION PROCESS. THE CONTRACTOR'S ATTENTION IS DIRECTED TO CMS 513.26 FOR THE REQUIREMENTS FOR STABILITY OF STEEL GIRDERS DURING SHIPPING AND ERECTION AND THE SUBMITTAL REQUIREMENTS OF CMS 501.05.B.4.
2. THE ERECTION METHOD USED BY THE CONTRACTOR SHALL BE DOCUMENTED ON THE ERECTION DRAWINGS WITH ALL SUPPORTING STABILITY CALCULATIONS SUBMITTED IN ACCORDANCE WITH CMS 501 AND 513. THE CONTRACTOR MAY SUBMIT AN ALTERNATE MEANS OF ERECTION FROM THE CONCEPT SHOWN IN THE PLANS AND SHALL REFERENCE THE FHWA NHI-15-044 PUBLICATION FOR STRUCTURAL STABILITY IN BRIDGE CONSTRUCTION.
3. FOR CONNECTIONS MADE DURING THE ERECTION SEQUENCE BOLT INSTALLATION REQUIREMENTS ARE PER CMS 513.20 AND CMS 513.26.
4. IF A FIELD SPLICE IS INCLUDED IN LIFT LENGTH, BOLT THE GIRDER SECTIONS TOGETHER ON THE GROUND BEFORE LIFTING IN PLACE. COMPLETELY BOLT UP FIELD SPLICES PRIOR TO ERECTION.
5. IF TWO GIRDER LINES ARE TO BE PLACED SIMULTANEOUSLY, INSTALL ALL CROSSFRAMES BETWEEN THE TWO GIRDERS ON THE GROUND BEFORE LIFTING AND PLACING THE PAIR OF GIRDERS. COMPLETELY BOLT UP THE CROSSFRAME CONNECTIONS PRIOR TO ERECTION.
6. IF A SINGLE GIRDER LINE IS PLACED, DO NOT RELEASE THE GIRDER FROM THE LIFTING APPARATUS UNTIL ALL CROSSFRAMES IN THE ADJACENT BAY HAVE BEEN COMPLETELY INSTALLED.
7. WIND LOADING FOR THIS ERECTION CONCEPT IS BASED ON THE AASHTO GUIDE SPECIFICATIONS FOR WIND LOADS ON BRIDGES DURING CONSTRUCTION. A 115 MPH WIND SPEED AND WIND EXPOSURE CATEGORY C WAS ASSUMED. THE MAXIMUM WIND SPEED IS REDUCED TO 45 MPH WHEN ONLY TWO GIRDERS ARE ERECTED IN ANY SPAN.
8. SEVENTY FIVE PERCENT (75%) OF THE BOLTS IN THE FIELD SPLICE MUST BE INSTALLED BEFORE ALLOWING TRAFFIC TO PASS BENEATH OR ADJACENT TO THE STRUCTURE. BOLTS ARE TO BE FULLY TIGHTENED PER CMS 513.26. FOR ANY ERECTION METHOD USED
9. ALL CROSSFRAMES MUST BE IN PLACE WITH ALL BOLTS INSTALLED BEFORE ALLOWING TRAFFIC TO PASS BENEATH OR ADJACENT TO THE STRUCTURE.
10. UNLESS OTHERWISE NOTED, PERMANENTLY FASTEN ALL CROSSFRAME, FIELD SPLICE, AND TOP FLANGE LATERAL BRACING CONNECTIONS PER CMS 513.26 BEFORE POURING THE DECK CONCRETE.
11. TEMPORARILY RESTRAIN TRANSVERSE AND LONGITUDINAL MOVEMENT AT ALL NON-GUIDED BEARINGS UNTIL MOVEMENT RESTRAINT IS PROVIDED BY INSTALLATION OF FIXED BEARINGS. TEMPORARILY RESTRAIN LONGITUDINAL MOVEMENT AT ALL GUIDED BEARINGS UNTIL MOVEMENT RESTRAINT IS PROVIDED BY INSTALLATION OF FIXED BEARINGS. FIXED BEARINGS ARE NOT CONSIDERED TO BE FULLY INSTALLED UNTIL ANCHOR BOLTS HAVE BEEN GROUTED AND SOLE PLATES ARE WELDED TO THE BOTTOM FLANGE. NON-GUIDED BEARINGS ARE NOT CONSIDERED RESTRAINED IN THE TRANSVERSE OR LONGITUDINAL DIRECTION WITHOUT THE ADDITION OF A TEMPORARY RESTRAINT DEVICE. GUIDED BEARINGS ARE NOT CONSIDERED RESTRAINED IN THE TRANSVERSE DIRECTION UNTIL ANCHOR BOLTS HAVE BEEN GROUTED AND SOLE PLATED ARE WELDED TO THE BOTTOM FLANGE. GUIDED BEARINGS ARE NOT CONSIDERED RESTRAINED IN THE LONGITUDINAL DIRECTION WITHOUT THE ADDITION OF A TEMPORARY RESTRAINT DEVICE.
12. TEMPORARY BEARING RESTRAINTS MUST REMAIN IN PLACE UNTIL BEARING ANCHOR BOLTS ARE GROUTED AND SOLE PLATES ARE WELDED TO THE GIRDER BOTTOM FLANGE AND THE ERECTED STEEL HAS REACHED A FIXED PIER.
13. FASTENER ASSEMBLIES LEFT IN THE SNUG-TIGHT CONDITION MAY EXPERIENCE LOSS IN LUBRICATION. BOLTS BEING INSTALLED MAY NOT ACHIEVE THE REQUIRED PRETENSION OR MAY BE DISTORTED, AFFECTING THEIR INTEGRITY DUE TO THE INCREASED FRICTION. IF THERE IS A QUESTION REGARDING THE ADEQUACY OF THE LUBRICATION, REMOVE AND TEST REPRESENTATIVE ASSEMBLIES TO DETERMINE IF ALL FASTENER ASSEMBLIES MUST BE RELUBRICATED OR REPLACED. RELUBRICATED FASTENER ASSEMBLIES SHOULD BE RETESTED PER AASHTO (S10.1-2019) ARTICLE 7.3.

Preliminary Plans - For Reference Only

ERECTION PLAN AND DETAILS - (1 OF 6)
CUY-77-1587 (BRIDGE 9)
I.R. 77 SB OVER I.R. 90 AND CR-721 (E. 14TH ST.)

SFN	1806910
DESIGN AGENCY	HDR
DESIGNER	MKO
CHECKER	JK
REVIEWER	DWW 01/11/24
PROJECT ID	82382
SUBSET	99
TOTAL	167
SHEET	1967
TOTAL	2696

CUY-90-16.28 (CCG3A)
MODEL: Sheet PAPERSIZE: 34x22 (in.) DATE: 3/28/2025 TIME: 10:20:28 AM USER: Rohit.Bk
pw:\\mb-us-pw.bentley.com:mb-us-pw-03\Documents\Cleveland_OH101_Projects\ODOT\District12\82382\400-Engineering\Structures\SFN_1806910\Sheets\82382_SFN_1806910_SS024.dgn

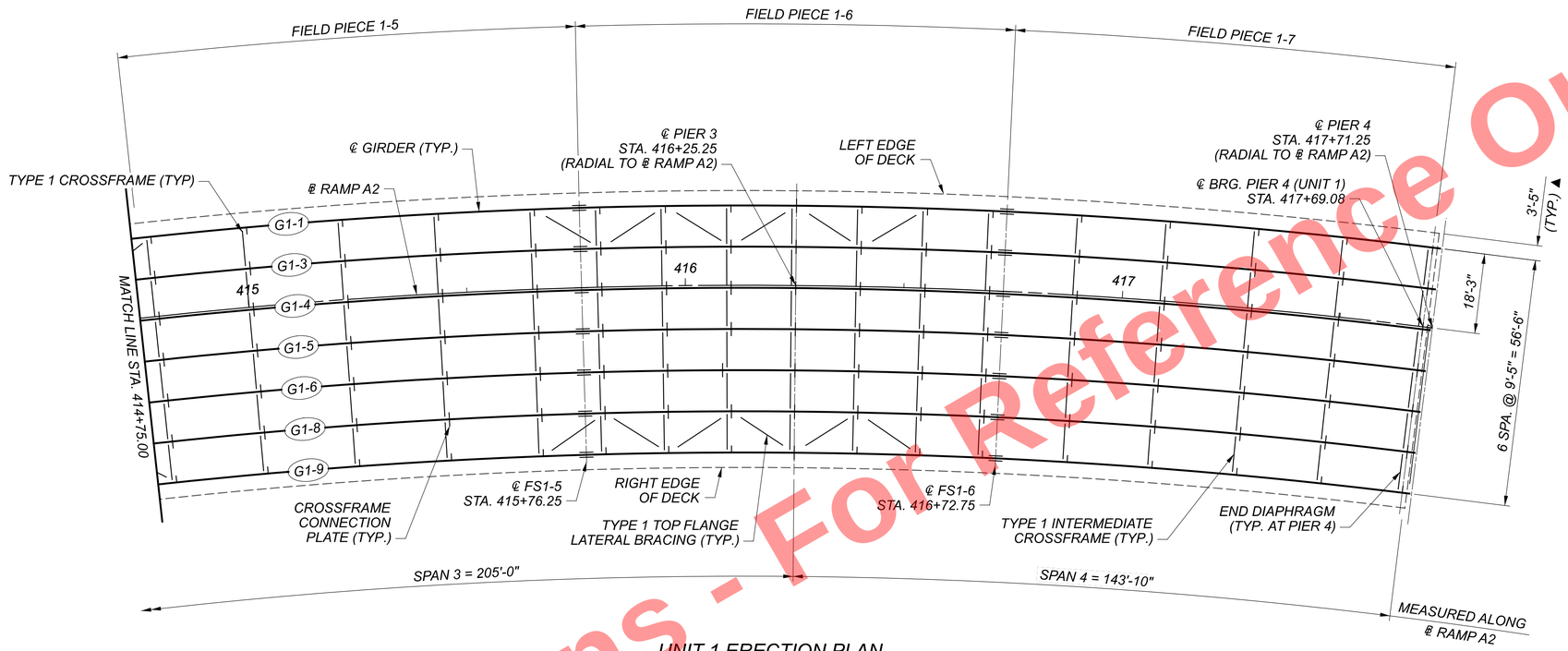

UNIT 1 ERECTION PLAN

CONCEPTUAL ERECTION SEQUENCE

10. SET ALL BEARINGS AT PIER 3.
11. PLACE FIELD PIECE 1-5 AND SPLICE WITH FIELD PIECE 1-4 FOR G1-9. HOLD FIELD PIECE 1-5 WITH CRANE.
12. PLACE FIELD PIECE 1-6 AND SPLICE WITH FIELD PIECE 1-5 FOR G1-9. CRANES MAY BE RELEASED AFTER THIS STEP.
13. ERECT FIELD PIECE 1-5 AND FIELD PIECE 1-6 FOR ALL GIRDERS STARTING WITH G1-9 MOVING FROM THE RIGHT SIDE OF THE BRIDGE TO THE LEFT SIDE OF THE BRIDGE PRIOR TO MOVING ON TO SPAN 4.
14. SET ALL BEARINGS AT PIER 4.
15. PLACE FIELD PIECE 1-7 AND SPLICE WITH FIELD PIECE 1-6 FOR ALL GIRDERS. CRANES MAY BE RELEASED AFTER THIS STEP.

LEGEND:

(#) = GIRDER NUMBER

NOTES:

1. FOR ERECTION PLAN NOTES SEE SHEET 99 / 167.

Preliminary Plans - For Reference Only

ERECTION PLAN AND DETAILS - (2 OF 6)
I.R. 77 SB OVER I.R. 90 AND CR-721 (E. 14TH ST.)
CUY-77-1587 (BRIDGE 9)

SFN	1806910
DESIGN AGENCY	HDR
DESIGNER	MKO
CHECKER	JK
REVIEWER	DWW 01/11/24
PROJECT ID	82382
SUBSET	100
TOTAL	167
SHEET	1968
TOTAL	2696

CUY-90-16.28 (CCG3A)

MODEL: Sheet PAPERSIZE: 34x22 (in.) DATE: 3/28/2025 TIME: 10:20:36 AM USER: Rohit.Bk
pw:\\mb-us-pw.bentley.com:mb-us-pw-03\Documents\Cleveland_OH\01_Projects\ODOT\District12\82382400-Engineering\Structures\SFN_1806910\Sheets\82382_SFN_1

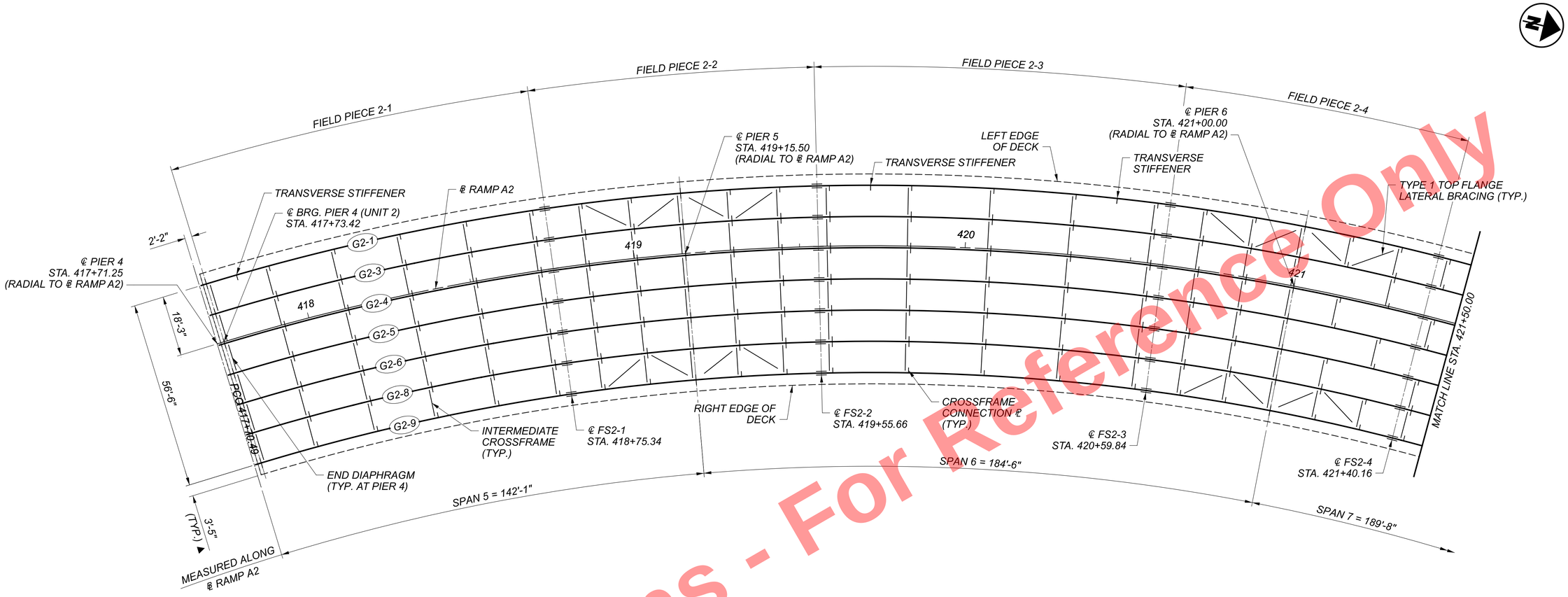

UNIT 2 ERECTION PLAN

<u>CONCEPTUAL ERECTION SEQUENCE</u>

ERECTION PROCEEDS FROM REAR TO FORWARD FROM PIER 4 TO PIER 7, THEN FORWARD TO REAR FROM THE FORWARD ABUTMENT TO PIER 8, AND AS FOLLOWS.

1. *THE FIRST GIRDERS PLACED IN SPANS 5 THROUGH 7 AND 9 THROUGH 11 ARE ASSUMED TO BE A TANDEM GIRDER PAIR WITH ALL CROSSFRAMES ATTACHED AND TOP FLANGE LATERAL BRACING ATTACHED. IT IS ASSUMED THAT GIRDERS ARE PLACED FROM THE RIGHT SIDE OF THE BRIDGE TO THE LEFT SIDE OF THE BRIDGE.*
2. *SET ALL BEARINGS AT PIER 4 AND PIER 5.*
3. *PLACE FIELD PIECE 2-1 AND HOLD WITH CRANE FOR G2-9.*
4. *PLACE FIELD PIECE 2-2 AND SPLICE WITH FIELD PIECE 2-1 FOR G2-9. CRANES MAY BE RELEASED AFTER THIS STEP.*
5. *ERECT FIELD PIECE 2-1 AND FIELD PIECE 2-2 FOR ALL GIRDERS STARTING WITH G2-9 MOVING FROM THE RIGHT SIDE OF THE BRIDGE TO THE LEFT SIDE OF THE BRIDGE PRIOR TO MOVING ON TO SPAN 6.*
6. *SET ALL BEARINGS AT PIER 6.*
7. *PLACE FIELD PIECE 2-3 AND SPLICE WITH FIELD PIECE 2-2 FOR G2-9. HOLD FIELD PIECE 2-3 WITH CRANE.*
8. *PLACE FIELD PIECE 2-4 AND SPLICE WITH FIELD PIECE 2-3 FOR G2-9. CRANES MAY BE RELEASED AFTER THIS STEP.*
9. *ERECT FIELD PIECE 2-3 AND FIELD PIECE 2-4 FOR ALL GIRDERS STARTING WITH G2-9 MOVING FROM THE RIGHT SIDE OF THE BRIDGE TO THE LEFT SIDE OF THE BRIDGE PRIOR TO MOVING ON TO SPAN 7.*

Preliminary Plans - For Reference Only

<u>LEGEND:</u>

(#) = GIRDER NUMBER

<u>NOTES:</u>

1. FOR ERECTION PLAN NOTES SEE SHEET 99 / 167.

ERECTION PLAN AND DETAILS - (3 OF 6)
CUY-77-1587 (BRIDGE 9)
I.R. 77 SB OVER I.R. 90 AND CR-721 (E. 14TH ST.)

SFN	1806910
DESIGN AGENCY	HDR
DESIGNER	MKO
CHECKER	JK
REVIEWER	DWW 01/11/24
PROJECT ID	82382
SUBSET	101
TOTAL	167
SHEET	1969
TOTAL	2696

CUY-90-16.28 (CCG3A)
MODEL: Sheet PAPERSIZE: 34x22 (in.) DATE: 3/28/2025 TIME: 10:20:43 AM USER: Rohit.Bk
pw:\\mb-us-pw.bentley.com:mb-us-pw-03\Documents\Cleveland_OH01_Projects\ODOT\District12\82382400-Engineering\Structures\SFN_1806910\Sheets\82382_SFN_1806910_SS026.dgn

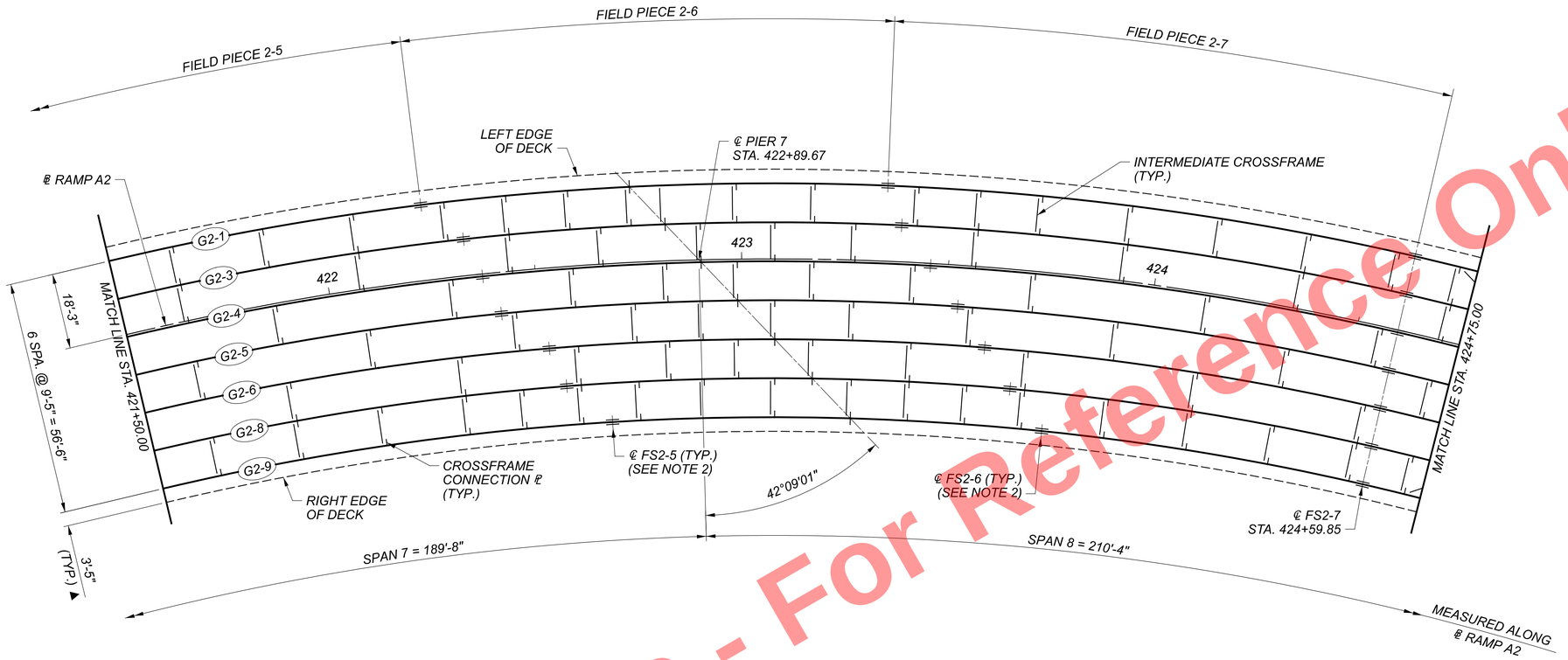

UNIT 2 ERECTION PLAN

CONCEPTUAL ERECTION SEQUENCE

10. SET ALL BEARINGS AT PIER 7.
11. PLACE FIELD PIECE 2-5 AND SPLICE WITH FIELD PIECE 2-4 FOR G2-9. HOLD FIELD PIECE 2-5 WITH CRANE.
12. PLACE FIELD PIECE 2-6 AND SPLICE WITH FIELD PIECE 2-5 FOR G2-9. CRANES MAY BE RELEASED AFTER THIS STEP.
13. ERECT FIELD PIECE 2-5 AND FIELD PIECE 2-6 FOR ALL GIRDERS STARTING WITH G2-9 MOVING FROM THE RIGHT SIDE OF THE BRIDGE TO THE LEFT SIDE OF THE BRIDGE PRIOR TO MOVING ON TO SPAN 11. (SEE SHEET 103 / 167)

LEGEND:

(#) = GIRDER NUMBER

NOTES:

1. FOR ERECTION PLAN NOTES SEE SHEET 99 / 167 .
2. FOR FIELD SPLICE LOCATION TABLE, SEE SHEETS 74 / 167 THRU 76 / 167 .

Preliminary Plans - For Reference Only

ERECTION PLAN AND DETAILS - (4 OF 6)
CUY-77-1587 (BRIDGE 9)
I.R. 77 SB OVER I.R. 90 AND CR-721 (E. 14TH ST.)

SFN 1806910
DESIGN AGENCY HDR
DESIGNER MKO | CHECKER JK
REVIEWER DWW 01/11/24
PROJECT ID 82382
SUBSET 102 | TOTAL 167
SHEET 1970 | TOTAL 2696

CUY-90-16.28 (CCG3A)

MODEL: Sheet PAPERSIZE: 34x22 (in.) DATE: 3/28/2025 TIME: 10:20:50 AM USER: Rohit.Bk
pw:\\mb-us-pw.bentley.com:mb-us-pw-03\Documents\Cleveland_OH\01_Projects\ODOT\District12\82382\400-Engineering\Structures\SFN_1806910\Sheets\82382_SFN_1806910_SS027.dgn

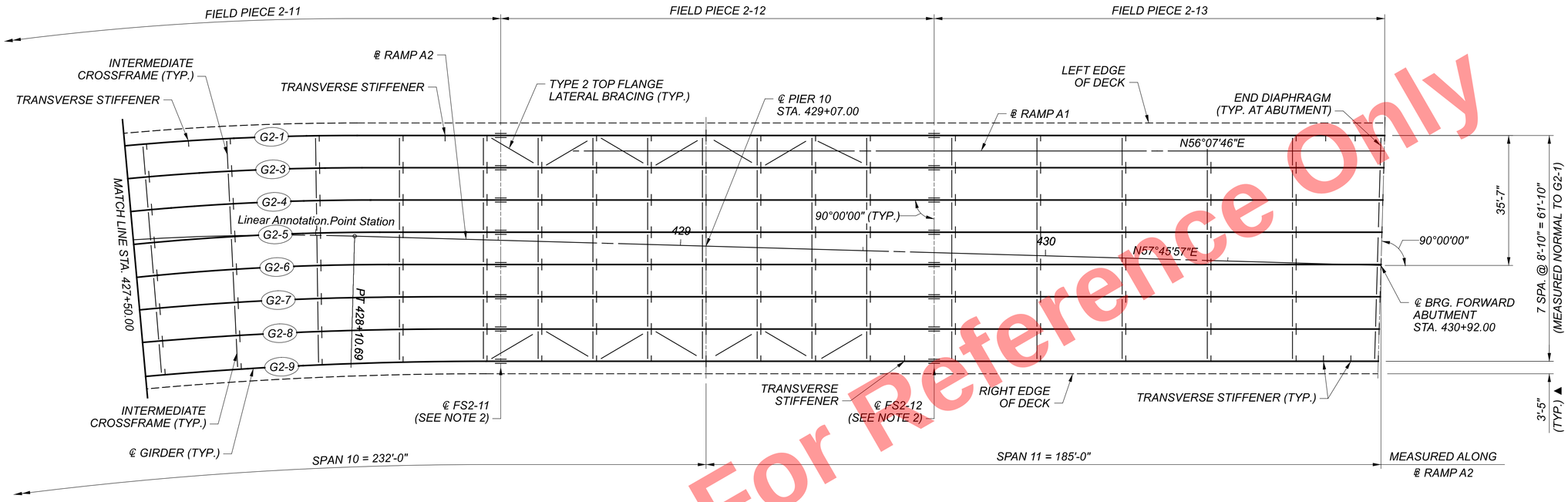

UNIT 2 ERECTION PLAN

CONCEPTUAL ERECTION SEQUENCE

14. SET ALL BEARINGS AT FORWARD ABUTMENT AND PIER 10.
15. PLACE FIELD PIECE 2-13 FOR G2-9 AND HOLD WITH CRANE.
16. PLACE FIELD PIECE 2-12 AND SPLICE WITH FIELD PIECE 2-13 FOR G2-9. CRANES MAY BE RELEASED AFTER THIS STEP.
17. ERECT FIELD PIECE 2-12 AND FIELD PIECE 2-13 FOR ALL GIRDERS STARTING WITH G2-9 MOVING FROM THE RIGHT SIDE OF THE BRIDGE TO THE LEFT SIDE OF THE BRIDGE PRIOR TO MOVING ON TO SPAN 10.
18. SET ALL BEARINGS AT PIER 9.
19. PLACE FIELD PIECE 2-11 AND SPLICE WITH FIELD PIECE 2-12 FOR G2-9. HOLD FIELD PIECE 2-11 WITH CRANE.
20. PLACE FIELD PIECE 2-10 AND SPLICE WITH FIELD PIECE 2-11 FOR G2-9. CRANES MAY BE RELEASED AFTER THIS STEP.
21. ERECT FIELD PIECE 2-10 AND FIELD PIECE 2-11 FOR ALL GIRDERS STARTING WITH G2-9 MOVING FROM THE RIGHT SIDE OF THE BRIDGE TO THE LEFT SIDE OF THE BRIDGE PRIOR TO MOVING ON TO SPAN 9.

LEGEND:

(#) = GIRDER NUMBER

NOTES:

1. FOR ERECTION PLAN NOTES SEE SHEET 99 / 167.
2. FOR FIELD SPLICE LOCATION TABLE, SEE SHEETS 74 / 167 THRU 76 / 167.

Preliminary Plans - For Reference Only

ERECTION PLAN AND DETAILS - (5 OF 6)
CUY-77-1587 (BRIDGE 9)
I.R. 77 SB OVER I.R. 90 AND CR-721 (E. 14TH ST.)

SFN 1806910
DESIGN AGENCY
DESIGNER MKO | CHECKER JK
REVIEWER DWW 01/11/24
PROJECT ID 82382
SUBSET 103 | TOTAL 167
SHEET 1971 | TOTAL 2696

CUY-90-16.28 (CCG3A)

MODEL: Sheet PAPERSIZE: 34x22 (in.) DATE: 3/28/2025 TIME: 10:20:56 AM USER: Rohit.Bk
pw:\\mb-us-pw.bentley.com:mb-us-pw-03\Documents\Cleveland_OH01_Projects\ODOT\District12\82382400-Engineering\Structures\SFN_1806910\Sheets\82382_SFN_1

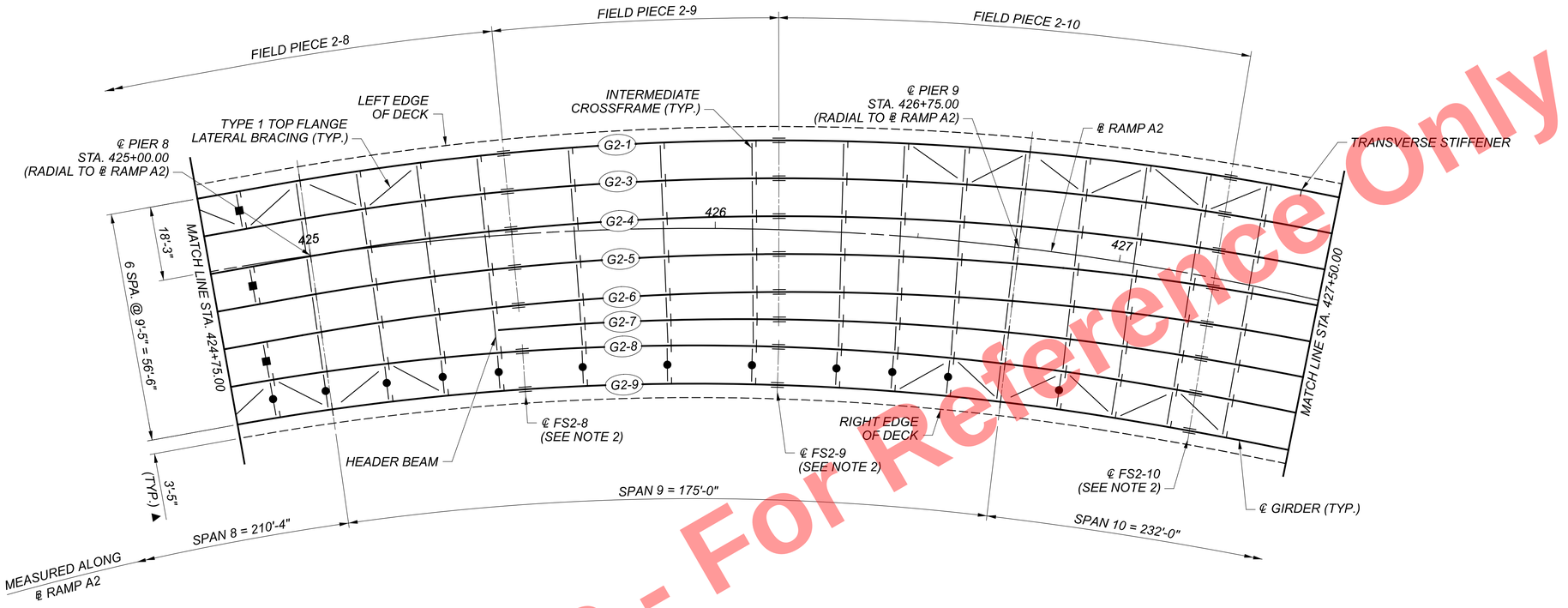

UNIT 2 ERECTION PLAN

CONCEPTUAL ERECTION SEQUENCE

22. *SET ALL BEARINGS AT PIER 8.*
23. *PLACE FIELD PIECE 2-9 AND SPLICE WITH FIELD PIECE 2-10 FOR G2-9. HOLD FIELD PIECE 2-9 WITH CRANE.*
24. *PLACE FIELD PIECE 2-8 AND SPLICE WITH FIELD PIECE 2-9 FOR G2-9. CRANES MAY BE RELEASED AFTER THIS STEP.*
25. *ERECT FIELD PIECE 2-8 AND FIELD PIECE 2-9 FOR ALL GIRDERS STARTING WITH G2-9 MOVING FROM THE RIGHT SIDE OF THE BRIDGE TO THE LEFT SIDE OF THE BRIDGE PRIOR TO MOVING ON TO SPAN 8.*
26. *PLACE FIELD PIECE 2-7 AND SPLICE WITH FIELD PIECE 2-6 AND FIELD PIECE 2-8 (SEE SHEET 88). ALL GIRDERS PLACED IN THIS STEP ARE ASSUMED TO BE SINGLE GIRDER PICKS. DO NOT RELEASE CRANE UNTIL A MINIMUM OF TWO GIRDERS ARE ERECTED WITH CROSSFRAMES COMPLETELY INSTALLED.*

LEGEND:

(#) = *GIRDER NUMBER*

NOTES:

1. *FOR ERECTION PLAN NOTES SEE SHEET* 99 / 167.
2. *FOR FIELD SPLICE LOCATION TABLE, SEE SHEETS* 74 / 167 *THRU* 76 / 167.

Preliminary Plans - For Reference Only

ERECTION PLAN AND DETAILS - (6 OF 6)
CUY-77-1587 (BRIDGE 9)
I.R. 77 SB OVER I.R. 90 AND CR-721 (E. 14TH ST.)

SFN	1806910
DESIGN AGENCY	HDR
DESIGNER	MKO
CHECKER	JK
REVIEWER	DWW 01/11/24
PROJECT ID	82382
SUBSET	104
TOTAL	167
SHEET	1972
TOTAL	2696

CUY-90-16.28 (CCG3A)

MODEL: Sheet PAPERSIZE: 34x22 (in.) DATE: 3/28/2025 TIME: 10:21:03 AM USER: Rohit.Bk
pw:\\mb-us-pw.bentley.com:mb-us-pw-03\Documents\Cleveland_OH\01_Projects\ODOT\District12\82382\2400-Engineering\Structures\SFN_1806910\Sheets\82382_SFN_1806910_SS031.dgn

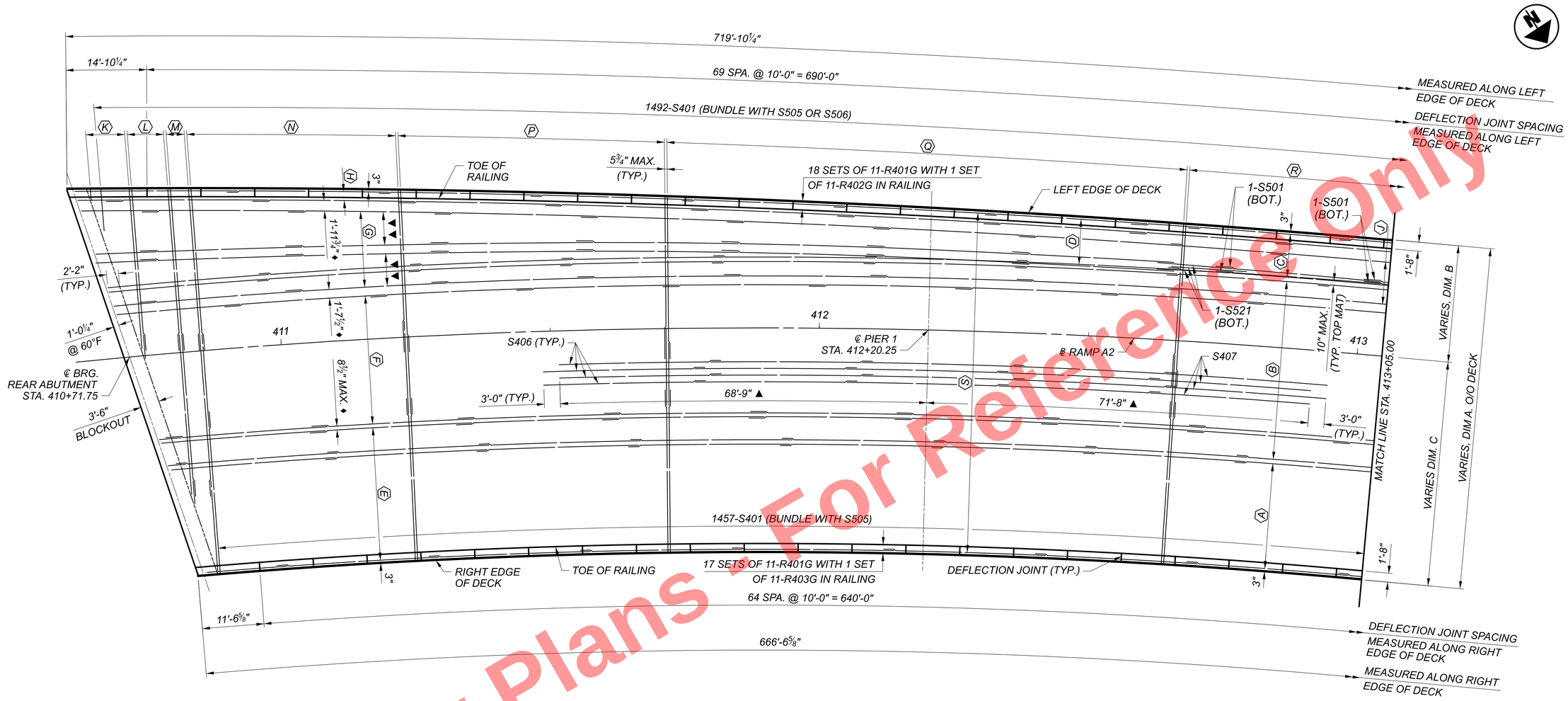

DECK AND RAILING PLAN

LONGITUDINAL BARS:

- Ⓐ TOP: 23 SETS OF 25-S402 WITH 1 SER. OF 25-S403 @ EQ. SPA. (10" MAX.)
- Ⓑ TOP: 24 SETS OF 41-S402 WITH 1 SER. OF 41-S404 @ EQ. SPA. (10" MAX.)
- Ⓒ TOP: 18 SETS OF 11-S402 WITH 1 SET OF 11-S405 @ EQ. SPA. (10" MAX.)
- Ⓓ TOP: 7 SETS OF 21-S402 @ EQ. SPA. (10" MAX.)
- Ⓔ BOT: 24 SETS OF 32-S501 WITH 1 SER. OF 32-S502 ♦
- Ⓕ BOT: 25 SETS OF 32-S501 WITH 1 SER. OF 32-S503 ♦
- Ⓖ BOT: 7 SETS OF 24-S501 WITH 1 SER. OF 24-S528 ♦
- Ⓗ BOT: 26 SETS OF 4-S501 WITH 1 SET OF 4-S504 ♦
- Ⓙ BOT: 18 SETS OF 12-S501 ♦
- Ⓢ TOP: 4 SETS OF 152-S406 WITH 1 SET OF 152-S407 BETWEEN S402 OVER PIER 1 ♦

TRANSVERSE BARS:

- Ⓚ TOP: 1 SER. OF 16-S506 @ 5¾" MAX.
  BOT: 1 SER. OF 16-S507 @ 5¾" MAX.
- Ⓛ TOP: 1 SET OF 15-S505 WITH 1 SER. OF 15-S508 @ 5¾" MAX.
  BOT: 1 SET OF 15-S501 WITH 1 SER. OF 15-S508 @ 5¾" MAX.
- Ⓜ TOP: 1 SET OF 8-S505 WITH 1 SET OF 8-S501 AND 1 SER. OF 8-S509 @ 5¾" MAX.
  BOT: 2 SETS OF 8-S501 WITH 1 SER. OF 8-S509 @ 5¾" MAX.
- Ⓝ TOP: 2 SETS OF 83-S505 WITH 1 SET OF 83-S510 @ 5¾" MAX.
  BOT: 2 SETS OF 83-S501 WITH 1 SET OF 83-S510 @ 5¾" MAX.
- Ⓟ TOP: 2 SETS OF 106-S505 WITH 1 SET OF 106-S511 @ 5¾" MAX.
  BOT: 2 SETS OF 106-S501 WITH 1 SET OF 106-S511 @ 5¾" MAX.
- Ⓠ TOP: 2 SETS OF 207-S505 WITH 1 SET OF 207-S512 @ 5¾" MAX.
  BOT: 2 SETS OF 207-S501 WITH 1 SET OF 207-S512 @ 5¾" MAX.
- Ⓡ TOP: 2 SETS OF 1061-S505 WITH 1 SET OF 1061-S513 @ 5¾" MAX.
  BOT: 2 SETS OF 1061-S501 WITH 1 SET OF 1061-S513 @ 5¾" MAX.

TABLE OF DECK WIDTH DIMENSIONS**			
DIMENSION	410+70.87	410+81.13	412+94.77
A	73'-3⅜"	72'-4⅛"	63'-4"
B	31'-6⅞"	30'-8⅛"	21'-8"
C	41'-8½"	41'-8"	41'-8"

** DIMENSIONS MEASURED RADIAL TO ℄ RAMP A2.

REQUIRED MINIMUM LAP LENGTHS	
#4 (RAILING)	1'-1"
#4 (DECK)	1'-10"
#5 (DECK)	2'-10"

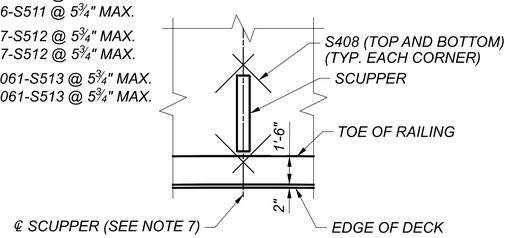

SCUPPER REINFORCEMENT PLAN DETAIL

LEGEND:

- ▲ MEASURED ALONG ℄ RAMP A2
- ♦ SEE TRANSVERSE SECTION
- ▼▼ 11 SPA. @ 8½" MAX. ♦

NOTES:

1. FOR TRANSVERSE SECTIONS, SEE SHEETS 114 / 167 THRU 116 / 167 .
2. FOR MODULAR EXPANSION JOINT AND BLOCKOUT DETAILS, SEE SHEETS 128 / 167 THRU 134 / 167 .
4. FOR ADDITIONAL RAILING REINFORCING BARS AND DETAILS, SEE SHEET 127 / 167 .
5. FOR DECK POUR SEQUENCE, SEE SHEET 154 / 167 .
6. FOR SCREED, TOP OF HAUNCH AND FINAL DECK ELEVATIONS, SEE SHEETS 135 / 167 THRU 153 / 167 .
7. FOR SCUPPER LOCATIONS, SEE SHEET 121 / 167 .
8. FIELD CUT DECK REINFORCING BARS TO CLEAR SCUPPERS. FOR ADDITIONAL SCUPPER AND DECK DETAILS, SEE SHEET 120 / 167 THRU 126 / 167 .
9. FOR REINFORCMENT LISTS, SEE SHEETS 159 / 167 THRU 167 / 167 .

Preliminary Plans - For Reference Only

DECK AND RAILING PLAN - (1 OF 9)
CUY-77-1587 (BRIDGE 9)
I.R. 77 SB OVER I.R. 90 AND CR-721 (E. 14TH ST.)

SFN 1806910
DESIGN AGENCY HDR
DESIGNER NJH | CHECKER RBK
REVIEWER DWW 01/11/24
PROJECT ID 82382
SUBSET 105 | TOTAL 167
SHEET 1973 | TOTAL 2696

CUY-90-16.28 (CCG3A)

MODEL: Sheet PAPERSIZE: 34x22 (in.) DATE: 3/28/2025 TIME: 10:21:11 AM USER: Rohit.Bk
pw:\\mb-us-pw.bentley.com:mb-us-pw-03\Documents\Cleveland_OH\01_Projects\ODOT\District12\82382\400-Engineering\Structures\SFN_1806910\Sheets\82382_SFN_1806910_SD001.dgn

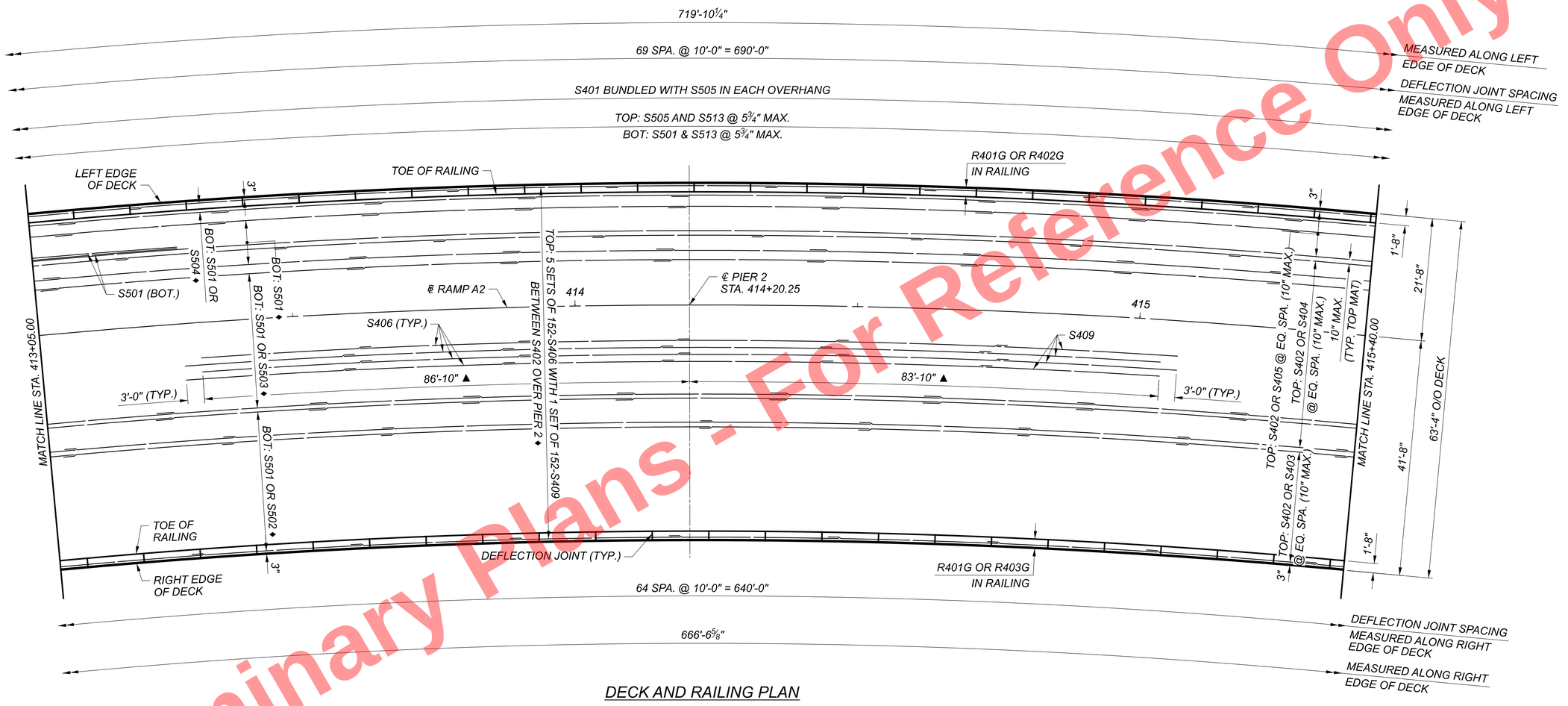

DECK AND RAILING PLAN

Preliminary Plans - For Reference Only

LEGEND:

▲ *MEASURED ALONG ℄ RAMP A2*

♦ *SEE TRANSVERSE SECTION*

NOTES:

1. FOR ADDITIONAL DECK REINFORCEMENT NOTES AND MINIMUM LAP LENGTHS, SEE SHEET 105 / 167 .
2. FOR TRANSVERSE SECTIONS, SEE SHEETS 114 / 167 THRU 116 / 167 .

DECK AND RAILING PLAN - (2 OF 9)
CUY-77-1587 (BRIDGE 9)
I.R. 77 SB OVER I.R. 90 AND CR-721 (E. 14TH ST.)

SFN	1806910
DESIGN AGENCY	HDR
DESIGNER	NJH
CHECKER	RBK
REVIEWER	DWW 01/11/24
PROJECT ID	82382
SUBSET	106
TOTAL	167
SHEET	1974
TOTAL	2696

CUY-90-16.28 (CCG3A)
MODEL: Sheet PAPERSIZE: 34x22 (in.) DATE: 3/28/2025 TIME: 10:21:18 AM USER: Rohit.Bk
pw:\\mb-us-pw.bentley.com:mb-us-pw-03\Documents\Cleveland_OH\01_Projects\ODOT\District12\82382\400-Engineering\Structures\SFN_1806910\Sheets\82382_SFN_1806910_SD002.dgn

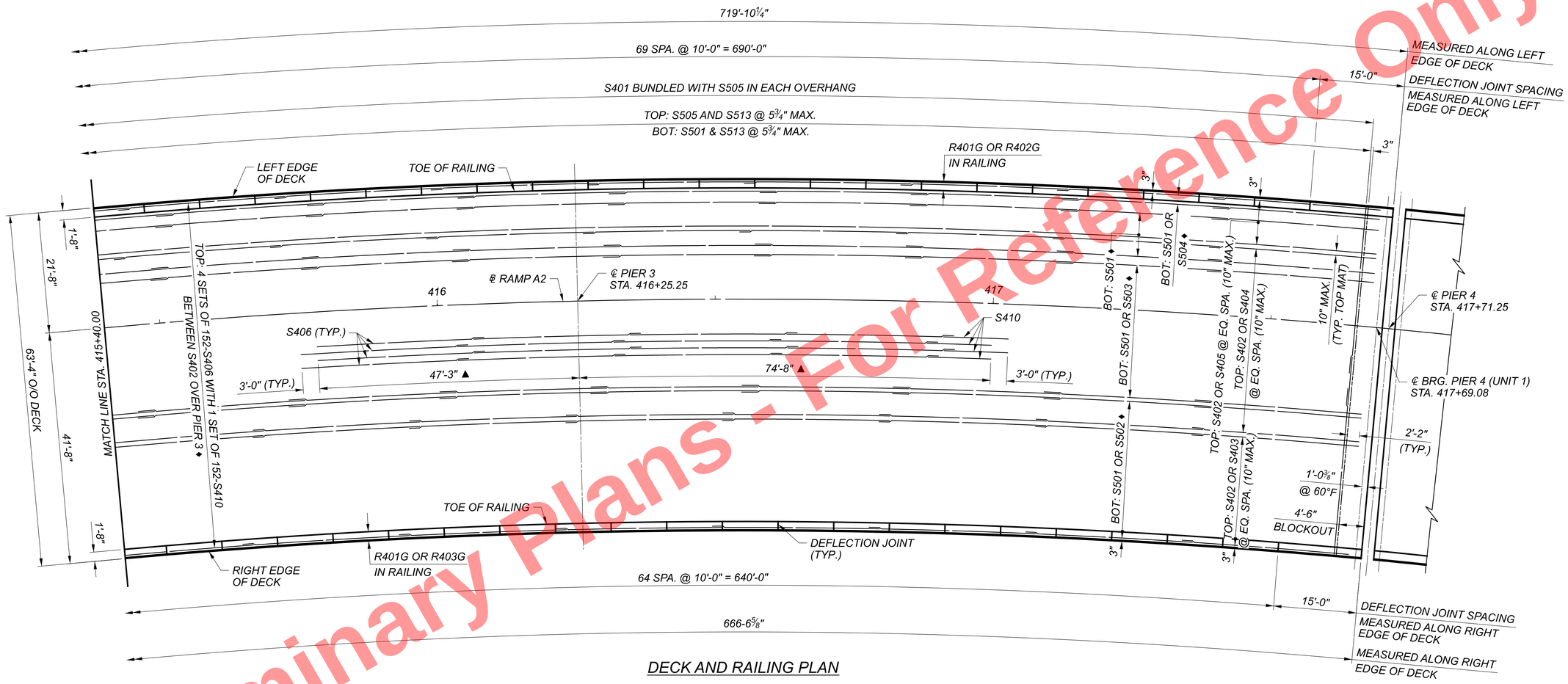

DECK AND RAILING PLAN

Preliminary Plans - For Reference Only

LEGEND:

▲ MEASURED ALONG ℄ RAMP A2

♦ SEE TRANSVERSE SECTION

NOTES:

1. FOR ADDITIONAL DECK REINFORCEMENT NOTES AND MINIMUM LAP LENGTHS, SEE SHEET 105 / 167 .
2. FOR TRANSVERSE SECTIONS, SEE SHEETS 114 / 167 THRU 116 / 167 .

DECK AND RAILING PLAN - (3 OF 9)
CUY-77-1587 (BRIDGE 9)
I.R. 77 SB OVER I.R. 90 AND CR-721 (E. 14TH ST.)

SFN	1806910
DESIGN AGENCY	HDR
DESIGNER	NJH
CHECKER	RBK
REVIEWER	DWW 01/11/24
PROJECT ID	82382
SUBSET	107
TOTAL	167
SHEET	1975
TOTAL	2696

CUY-90-16.28 (CCG3A)
MODEL: Sheet PAPERSIZE: 34x22 (in.) DATE: 3/28/2025 TIME: 10:21:25 AM USER: Rohit.Bk
pw:\\mb-us-pw.bentley.com:mb-us-pw-03\Documents\Cleveland_OH101_Projects\ODOT\District12\82382\400-Engineering\Structures\SFN_1806910\Sheets\82382_SFN_1806910_SD003.dgn

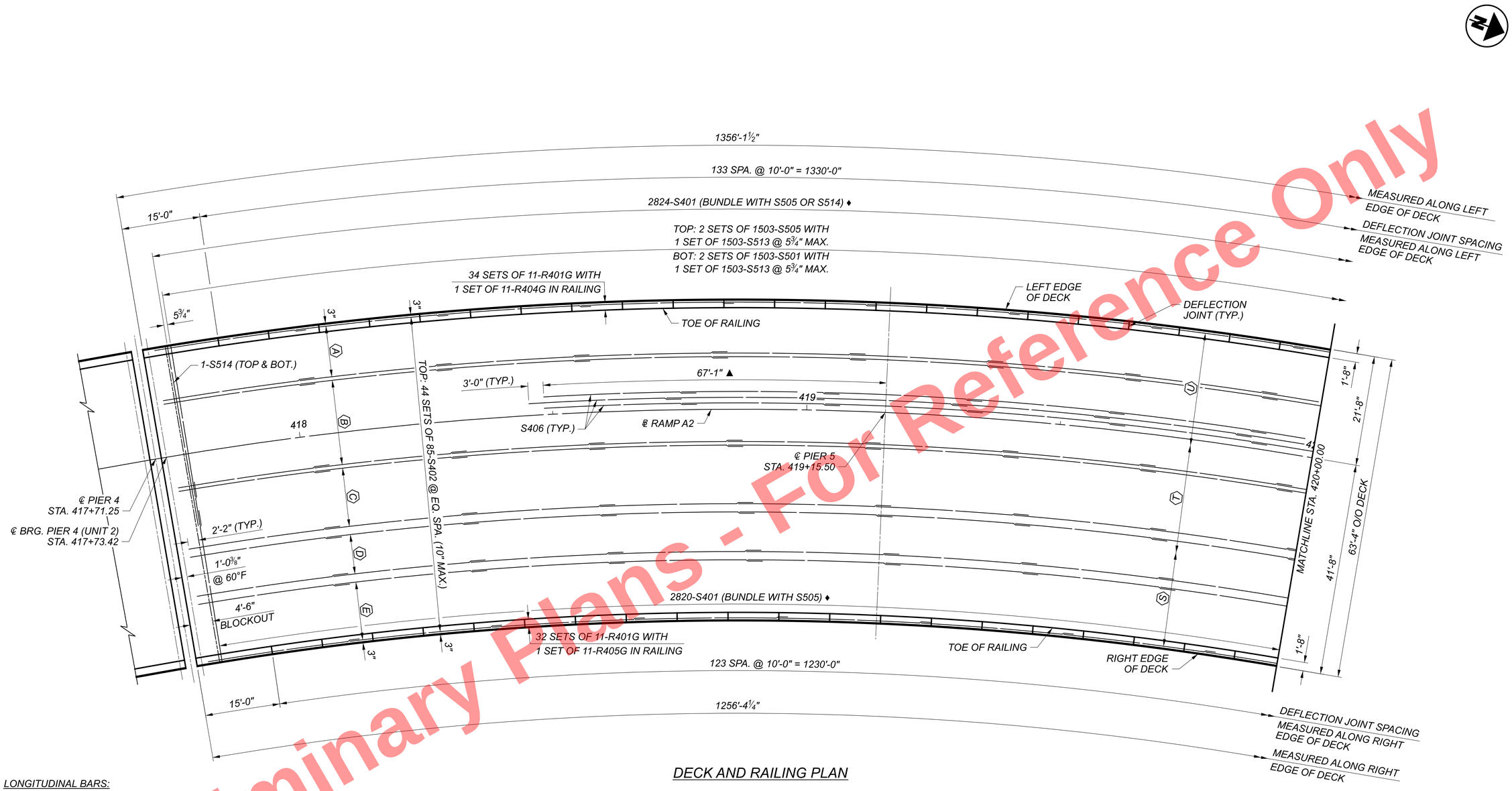

DECK AND RAILING PLAN

LONGITUDINAL BARS:

- Ⓐ BOT: 49 SETS OF 14-S501 WITH 1 SER. OF 14-S515 ♦
- Ⓑ BOT: 48 SETS OF 22-S501 WITH 1 SER. OF 22-S516 ♦
- Ⓒ BOT: 47 SETS OF 16-S501 WITH 1 SER. OF 16-S517 ♦
- Ⓓ BOT: 27 SETS OF 12-S501 WITH 1 SER. OF 12-S518 ♦
- Ⓔ BOT: 46 SETS OF 16-S501 WITH 1 SER. OF 16-S519 ♦
- Ⓢ TOP: 29 SETS OF 51-S406 WITH 1 SER. OF 51-S417 BETWEEN S402 OVER PIERS 5 THRU 9 ♦
- Ⓣ TOP: 30 SETS OF 57-S406 WITH 1 SER. OF 57-S418 BETWEEN S402 OVER PIERS 5 THRU 9 ♦
- Ⓤ TOP: 31 SETS OF 60-S406 WITH 1 SER. OF 61-S419 BETWEEN S402 OVER PIERS 5 THRU 9 ♦

LEGEND:

- ▲ MEASURED ALONG ℄ RAMP A2
- ♦ SEE TRANSVERSE SECTION
- ● SPACING VARIES ALONG LENGTH OF UNIT 2

NOTES:

1. FOR ADDITIONAL DECK REINFORCEMENT NOTES AND MINIMUM LAP LENGTHS, SEE SHEET 105 / 167 .
2. FOR TRANSVERSE SECTIONS, SEE SHEETS 114 / 167 THRU 116 / 167 .

Preliminary Plans - For Reference Only

DECK AND RAILING PLAN - (4 OF 9)
CUY-77-1587 (BRIDGE 9)
I.R. 77 SB OVER I.R. 90 AND CR-721 (E. 14TH ST.)

CUY-90-16.28 (CCG3A)

MODEL: Sheet PAPERSIZE: 34x22 (in.) DATE: 3/28/2025 TIME: 10:21:32 AM USER: RohitLBk
pw:\\mb-us-pw.bentley.com:mb-us-pw-03\Documents\Cleveland_OH\01_Projects\ODOT\District12\82382\400-Engineering\Structures\SFN_1806910\Sheets\82382_SFN_1806910_SD004.dgn

SFN	1806910
DESIGN AGENCY	HDR
DESIGNER	NJH
CHECKER	RBK
REVIEWER	DWW 01/11/24
PROJECT ID	82382
SUBSET	108
TOTAL	167
SHEET	1976
TOTAL	2696

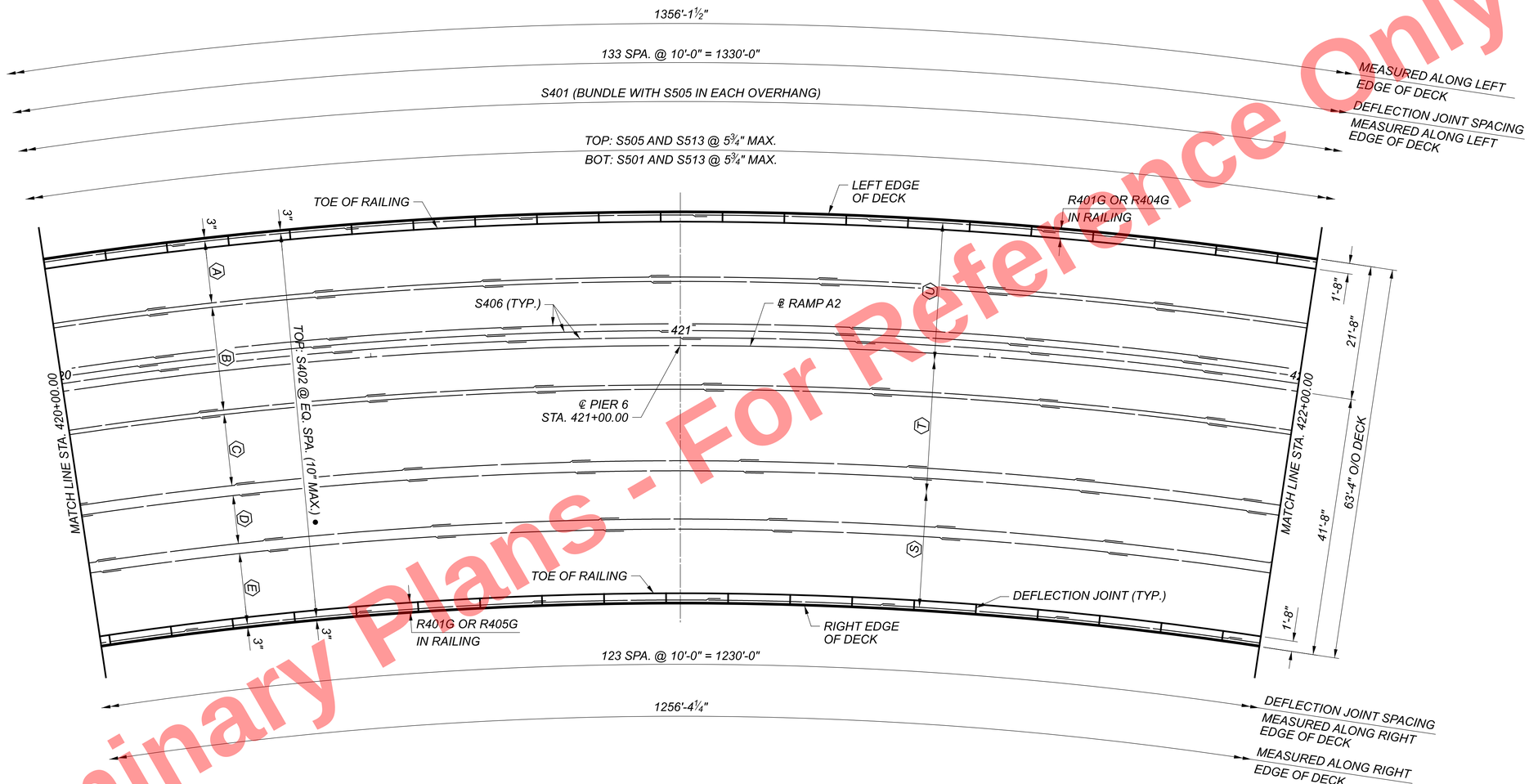

DECK AND RAILING PLAN

LONGITUDINAL BARS:

- Ⓐ BOT: S501 OR S515 ♦
- Ⓑ BOT: S501 OR S516 ♦
- Ⓒ BOT: S501 OR S517 ♦
- Ⓓ BOT: S501 OR S518 ♦
- Ⓔ BOT: S501 OR S519 ♦
- Ⓢ TOP: S406 OR S417 BETWEEN S402 OVER PIERS 5 THRU 9 ♦
- Ⓣ TOP: S406 OR S418 BETWEEN S402 OVER PIERS 5 THRU 9 ♦
- Ⓤ TOP: S406 OR S419 BETWEEN S402 OVER PIERS 5 THRU 9 ♦

LEGEND:

- ♦ SEE TRANSVERSE SECTION
- ● SPACING VARIES ALONG LENGTH OF UNIT 2

NOTES:

1. FOR ADDITIONAL DECK REINFORCEMENT NOTES AND MINIMUM LAP LENGTHS, SEE SHEET 105 / 167 .
2. FOR TRANSVERSE SECTIONS, SEE SHEETS 114 / 167 THRU 116 / 167 .

Preliminary Plans - For Reference Only

DECK AND RAILING PLAN - (5 OF 9)
CUY-77-1587 (BRIDGE 9)
I.R. 77 SB OVER I.R. 90 AND CR-721 (E. 14TH ST.)

SFN	1806910
DESIGN AGENCY	HDR
DESIGNER	NJH
CHECKER	RBK
REVIEWER	DWW 01/11/24
PROJECT ID	82382
SUBSET	109
TOTAL	167
SHEET	1977
TOTAL	2696

CUY-90-16.28 (CCG3A)

MODEL: Sheet PAPERSIZE: 34x22 (in.) DATE: 3/28/2025 TIME: 10:21:38 AM USER: Rohit.Bk
pw:\\mb-us-pw.bentley.com:mb-us-pw-03\Documents\Cleveland_OH\01_Projects\ODOT\District12\82382\400-Engineering\Structures\SFN_1806910\Sheets\82382_SFN_1806910_SD005.dgn

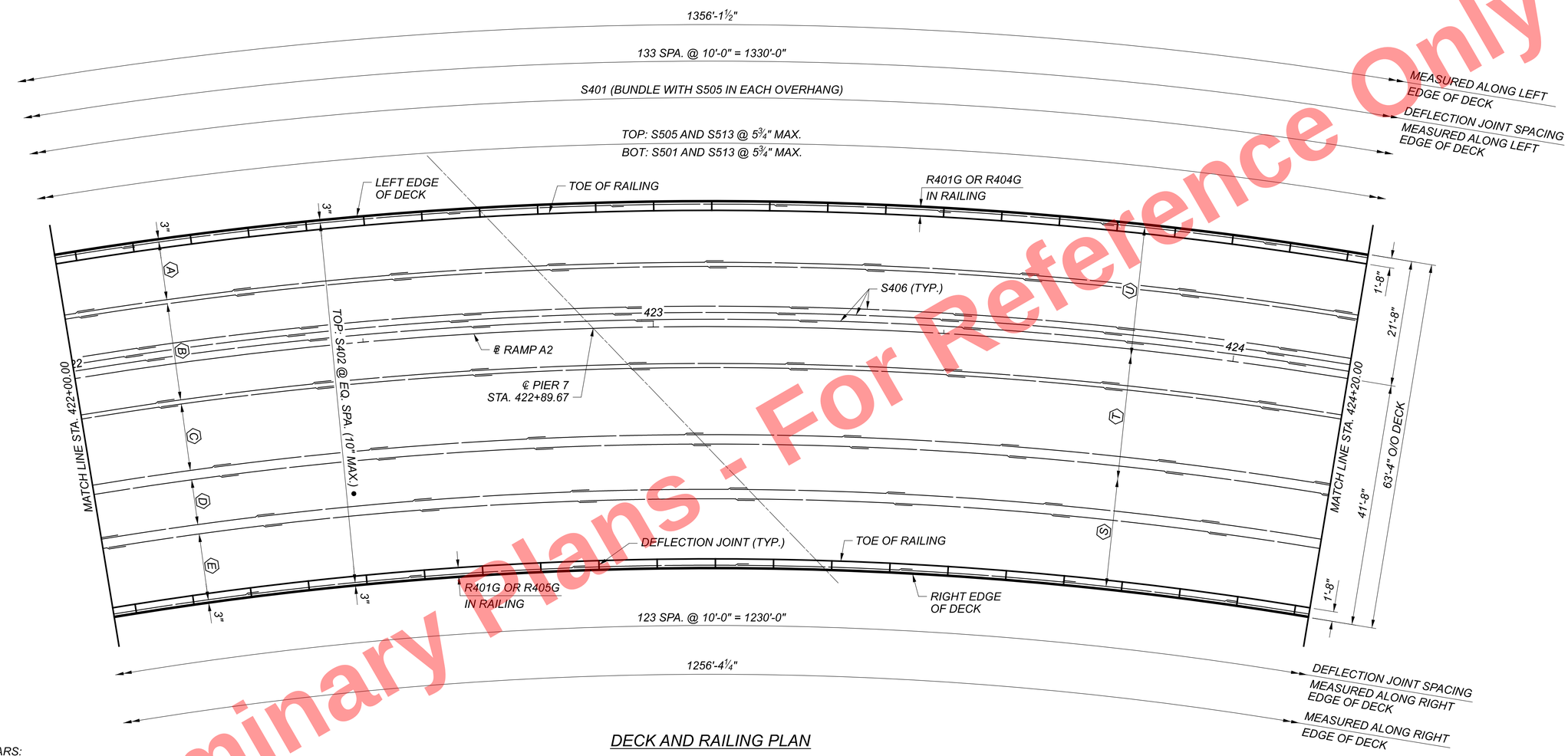

DECK AND RAILING PLAN

LONGITUDINAL BARS:

- (A) BOT: S501 OR S515 ♦
- (B) BOT: S501 OR S516 ♦
- (C) BOT: S501 OR S517 ♦
- (D) BOT: S501 OR S518 ♦
- (E) BOT: S501 OR S519 ♦
- (S) TOP: S406 OR S417 BETWEEN S402 OVER PIERS 5 THRU 9 ♦
- (T) TOP: S406 OR S418 BETWEEN S402 OVER PIERS 5 THRU 9 ♦
- (U) TOP: S406 OR S419 BETWEEN S402 OVER PIERS 5 THRU 9 ♦

LEGEND:

- ♦ SEE TRANSVERSE SECTION
- ● SPACING VARIES ALONG LENGTH OF UNIT 2

NOTES:

1. FOR ADDITIONAL DECK REINFORCEMENT NOTES AND MINIMUM LAP LENGTHS, SEE SHEET 105 / 167 .
2. FOR TRANSVERSE SECTIONS, SEE SHEETS 114 / 167 THRU 116 / 167 .

Preliminary Plans - For Reference Only

DECK AND RAILING PLAN - (6 OF 9)
CUY-77-1587 (BRIDGE 9)
I.R. 77 SB OVER I.R. 90 AND CR-721 (E. 14TH ST.)

SFN	1806910
DESIGN AGENCY	HDR
DESIGNER	NJH
CHECKER	RBK
REVIEWER	DWW 01/11/24
PROJECT ID	82382
SUBSET	110
TOTAL	167
SHEET	1978
TOTAL	2696

CUY-90-16.28 (CCG3A)

MODEL: Sheet PAPERSIZE: 34x22 (in.) DATE: 3/28/2025 TIME: 10:21:45 AM USER: Rohit.Bk
pw:\\mb-us-pw.bentley.com:mb-us-pw-03\Documents\Cleveland_OH01_Projects\ODOT\District12\82382400-Engineering\Structures\SFN_1806910\Sheets\82382_SFN_1806910_SD006.dgn

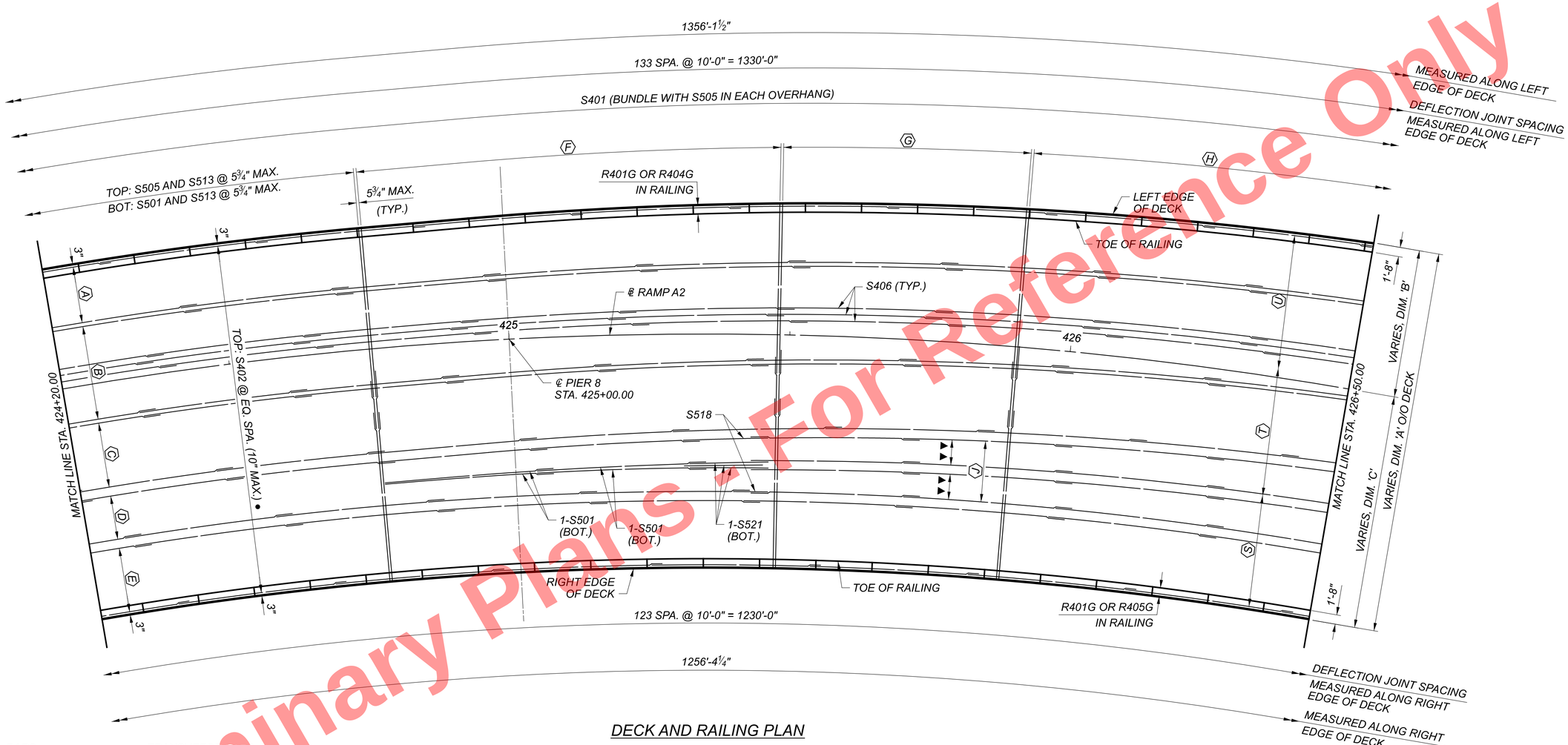

DECK AND RAILING PLAN

LONGITUDINAL BARS:

- Ⓐ BOT: S501 OR S515 ♦
- Ⓑ BOT: S501 OR S516 ♦
- Ⓒ BOT: S501 OR S517 ♦
- Ⓓ BOT: S501 OR S518 ♦
- Ⓔ BOT: S501 OR S519 ♦
- Ⓙ BOT: 19 SETS OF 24-S501 WITH 1 SER. OF 24-S529 ♦
- Ⓢ TOP: S406 OR S417 BETWEEN S402 OVER PIERS 5 THRU 9 ♦
- Ⓣ TOP: S406 OR S418 BETWEEN S402 OVER PIERS 5 THRU 9 ♦
- Ⓤ TOP: S406 OR S419 BETWEEN S402 OVER PIERS 5 THRU 9 ♦

TRANSVERSE BARS:

- Ⓕ TOP: 2 SETS OF 156-S505 & 1 SET OF 156-S520 BUNDLED WITH 2 SETS OF 156-S411 & 1 SET OF 156-S412 @ 5¾" MAX.
  BOT: 2 SETS OF 156-S501 & 1 SET OF 156-S520 @ 5¾" MAX.
- Ⓖ TOP: 2 SETS OF 91-S505 WITH 1 SET OF 91-S512 @ 5¾" MAX.
  BOT: 2 SETS OF 91-S501 WITH 1 SET OF 91-S512 @ 5¾" MAX.
- Ⓗ TOP: 2 SETS OF 213-S505 WITH 1 SET OF 213-S511 @ 5¾" MAX.
  BOT: 2 SETS OF 213-S501 WITH 1 SET OF 213-S511 @ 5¾" MAX.

TABLE OF DECK WIDTH DIMENSIONS**		
DIMENSION	424+75.58	428+46.70
A	63'-4"	68'-8"
B	21'-8"	31'-11⅞"
C	41'-8"	36'-8⅛"

** DIMENSIONS MEASURED NORMAL TO LEFT EDGE OF DECK

LEGEND:

♦ SEE TRANSVERSE SECTION

● SPACING VARIES ALONG LENGTH OF UNIT 2

▼▼ 11 SPA. @ 8½" MAX. ♦

NOTES:

1. FOR ADDITIONAL DECK REINFORCEMENT NOTES AND MINIMUM LAP LENGTHS, SEE SHEET 105 / 167 .
2. FOR TRANSVERSE SECTIONS, SEE SHEETS 114 / 167 THRU 116 / 167 .

Preliminary Plans - For Reference Only

DECK AND RAILING PLAN - (7 OF 9)
CUY-77-1587 (BRIDGE 9)
I.R. 77 SB OVER I.R. 90 AND CR-721 (E. 14TH ST.)

SFN 1806910
DESIGN AGENCY HDR
DESIGNER NJH | CHECKER RBK
REVIEWER DWW 01/11/24
PROJECT ID 82382
SUBSET 111 | TOTAL 167
SHEET 1979 | TOTAL 2696

CUY-90-16.28 (CCG3A)

MODEL: Sheet PAPERSIZE: 34x22 (in.) DATE: 3/28/2025 TIME: 10:21:52 AM USER: Rohit.Bk
pw:\\mb-us-pw.bentley.com:mb-us-pw-03\Documents\Cleveland_OH\01_Projects\ODOT\District12\82382\400-Engineering\Structures\SFN_1806910\Sheets\82382_SFN_1806910_SD007.dgn

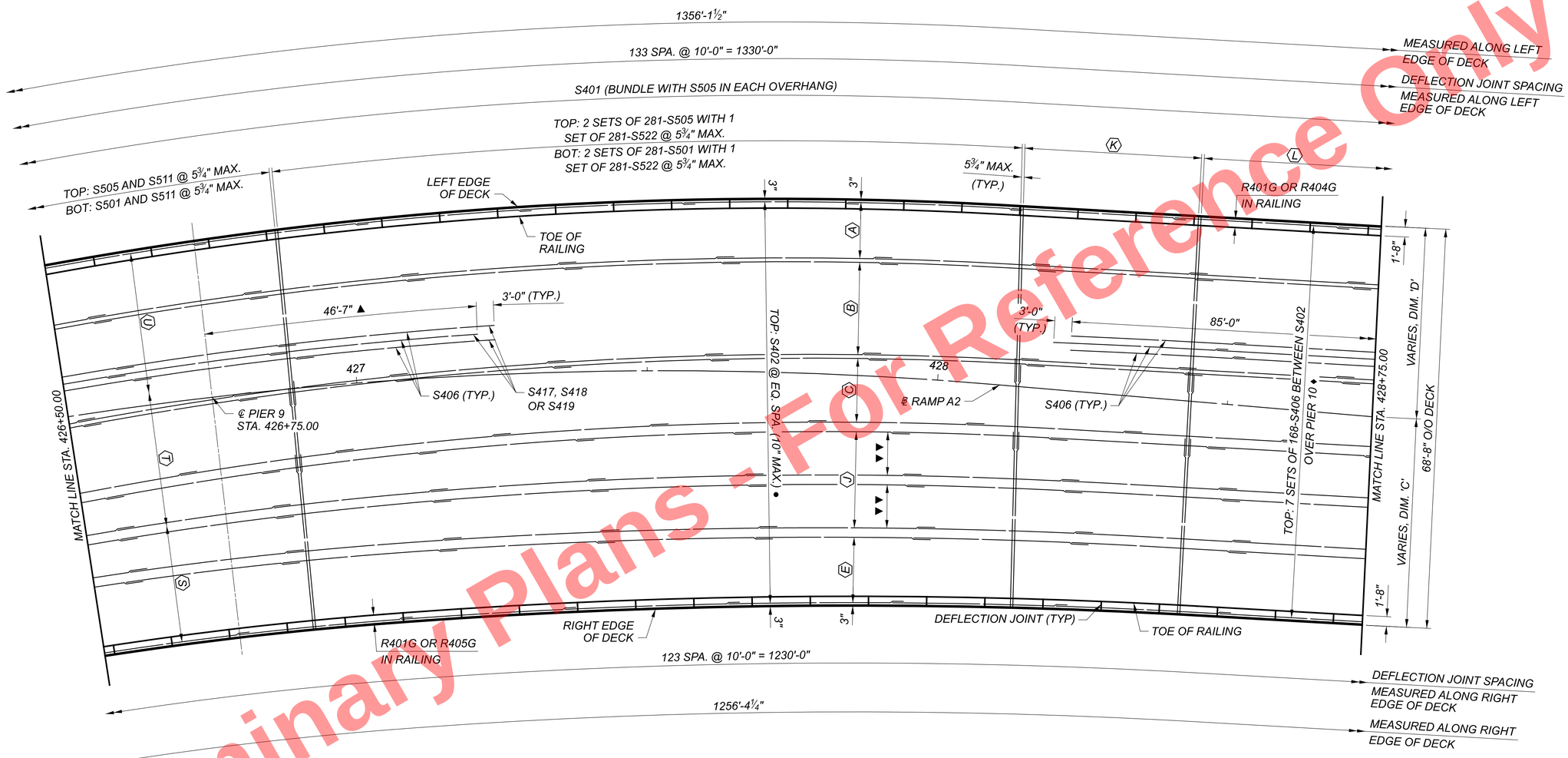

DECK AND RAILING PLAN

LONGITUDINAL BARS:

- Ⓐ BOT: S501 OR S515 ♦
- Ⓑ BOT: S501 OR S516 ♦
- Ⓒ BOT: S501 OR S517 ♦
- Ⓔ BOT: S501 OR S519 ♦
- Ⓙ BOT: S501 OR S529 ♦
- Ⓢ TOP: S406 OR S417 BETWEEN S402 OVER PIERS 5 THRU 9 ♦
- Ⓣ TOP: S406 OR S418 BETWEEN S402 OVER PIERS 5 THRU 9 ♦
- Ⓤ TOP: S406 OR S419 BETWEEN S402 OVER PIERS 5 THRU 9 ♦

TRANSVERSE BARS:

- Ⓚ TOP: 2 SETS OF 67-S505 WITH 1 SET OF 67-S511 @ 5¾" MAX.
  BOT: 2 SETS OF 67-S501 WITH 1 SET OF 67-S511 @ 5¾" MAX.
- Ⓛ TOP: 2 SETS OF 509-S505 WITH 1 SET OF 509-S523 @ 5¾" MAX.
  BOT: 2 SETS OF 509-S501 WITH 1 SET OF 509-S523 @ 5¾" MAX.

TABLE OF DECK WIDTH DIMENSIONS**		
DIMENSION	428+46.70	430+92.69
B	31'-11⅞"	39'-0¼"
C	36'-8⅛"	29'-7¾"

** DIMENSIONS MEASURED NORMAL TO LEFT EDGE OF DECK

LEGEND:

♦ SEE TRANSVERSE SECTION

• SPACING VARIES ALONG LENGTH OF UNIT 2

▼▼ 11 SPA. @ 8½" MAX. ♦

NOTES:

1. FOR ADDITIONAL DECK REINFORCEMENT NOTES AND MINIMUM LAP LENGTHS, SEE SHEET 105 / 167 .
2. FOR TRANSVERSE SECTIONS, SEE SHEETS 114 / 167 THRU 116 / 167 .

Preliminary Plans - For Reference Only

DECK AND RAILING PLAN - (8 OF 9)
CUY-77-1587 (BRIDGE 9)
I.R. 77 SB OVER I.R. 90 AND CR-721 (E. 14TH ST.)

SFN 1806910
DESIGN AGENCY HDR
DESIGNER NJH | CHECKER RBK
REVIEWER DWW 01/11/24
PROJECT ID 82382
SUBSET 112 | TOTAL 167
SHEET 1980 | TOTAL 2696

CUY-90-16.28 (CCG3A)

MODEL: Sheet PAPERSIZE: 34x22 (in.) DATE: 3/28/2025 TIME: 10:21:58 AM USER: RohitLBk
pw:\\mb-us-pw.bentley.com:mb-us-pw-03\Documents\Cleveland_OH01_Projects\ODOT\District12\82382\400-Engineering\Structures\SFN_1806910\Sheets\82382_SFN_1806910_SD008.dgn

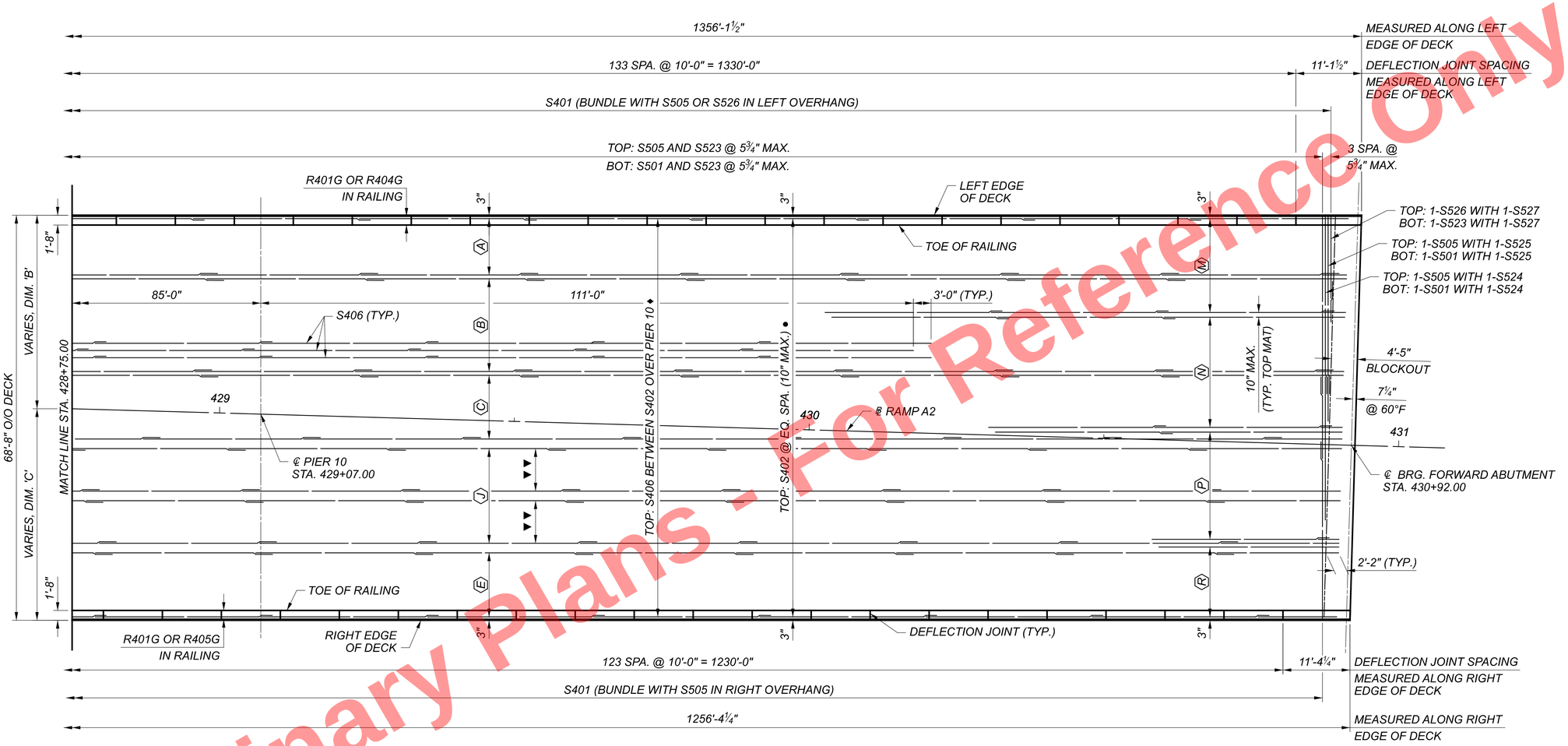

DECK AND RAILING PLAN

LONGITUDINAL BARS:

- Ⓐ BOT: S501 OR S515 ♦
- Ⓑ BOT: S501 OR S516 ♦
- Ⓒ BOT: S501 OR S517 ♦
- Ⓔ BOT: S501 OR S519 ♦
- Ⓙ BOT: S501 OR S529 ♦
- Ⓜ TOP: 3 SETS OF 21-S402 WITH 1 SER. OF 21-S413 @ 10" MAX.
- Ⓝ TOP: 2 SETS OF 24-S402 WITH 1 SER. OF 24-S414 @ 10" MAX.
- Ⓟ TOP: 1 SET OF 24-S402 WITH 1 SER. OF 24-S415 @ 10" MAX.
- Ⓡ TOP: 1 SER. OF 16-S416 @ 10" MAX.

TABLE OF DECK WIDTH DIMENSIONS**		
DIMENSION	428+46.70	430+92.69
B	31'-11⅞"	39'-0¼"
C	36'-8⅛"	29'-7¾"

** DIMENSIONS MEASURED NORMAL TO LEFT EDGE OF DECK

LEGEND:

♦ SEE TRANSVERSE SECTION

● SPACING VARIES ALONG LENGTH OF UNIT 2

▼▼ 11 SPA. @ 8½" MAX. ♦

NOTES:

1. FOR ADDITIONAL DECK REINFORCEMENT NOTES AND MINIMUM LAP LENGTHS, SEE SHEET 105 / 167 .
2. FOR TRANSVERSE SECTIONS, SEE SHEETS 114 / 167 THRU 116 / 167 .

Preliminary Plans - For Reference Only

DECK AND RAILING PLAN - (9 OF 9)
CUY-77-1587 (BRIDGE 9)
I.R. 77 SB OVER I.R. 90 AND CR-721 (E. 14TH ST.)

SFN 1806910
DESIGN AGENCY
DESIGNER NJH | CHECKER RBK
REVIEWER DWW 01/11/24
PROJECT ID 82382
SUBSET 113 | TOTAL 167
SHEET 1981 | TOTAL 2696

CUY-90-16.28 (CCG3A)

MODEL: Sheet PAPERSIZE: 34x22 (in.) DATE: 3/28/2025 TIME: 10:22:05 AM USER: RohitLBk
pw:\\mb-us-pw.bentley.com:mb-us-pw-03\Documents\Cleveland_OH\01_Projects\ODOT\District12\82382\400-Engineering\Structures\SFN_1806910\Sheets\82382_SFN_1806910_SD009.dgn

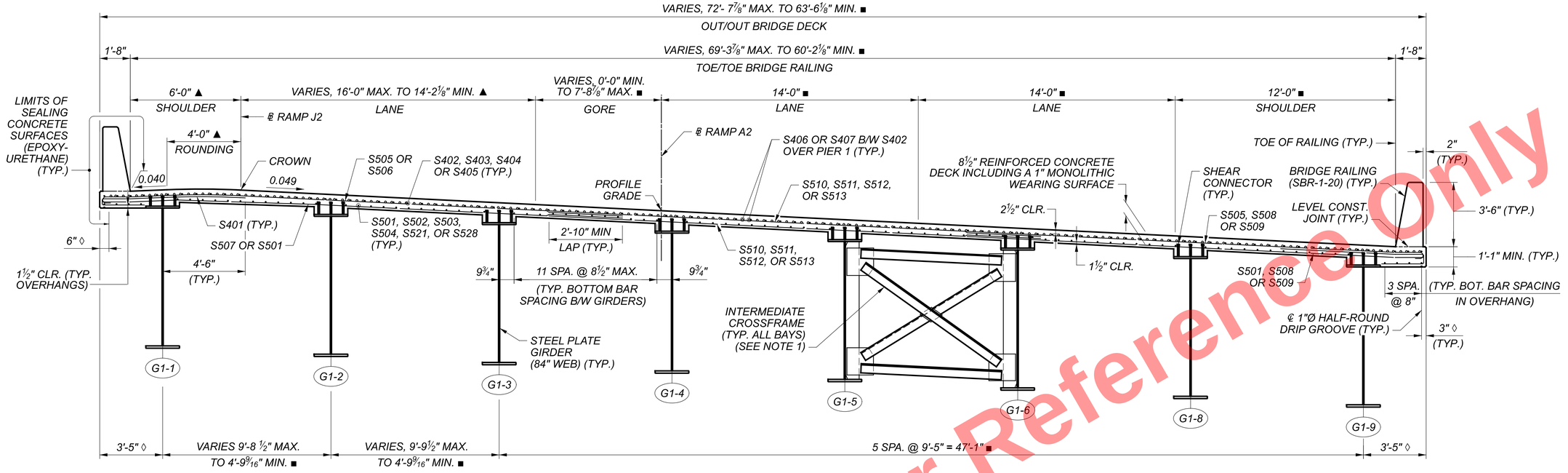

TRANSVERSE SECTION
STA. 410+71.75 TO STA. 412+64.61

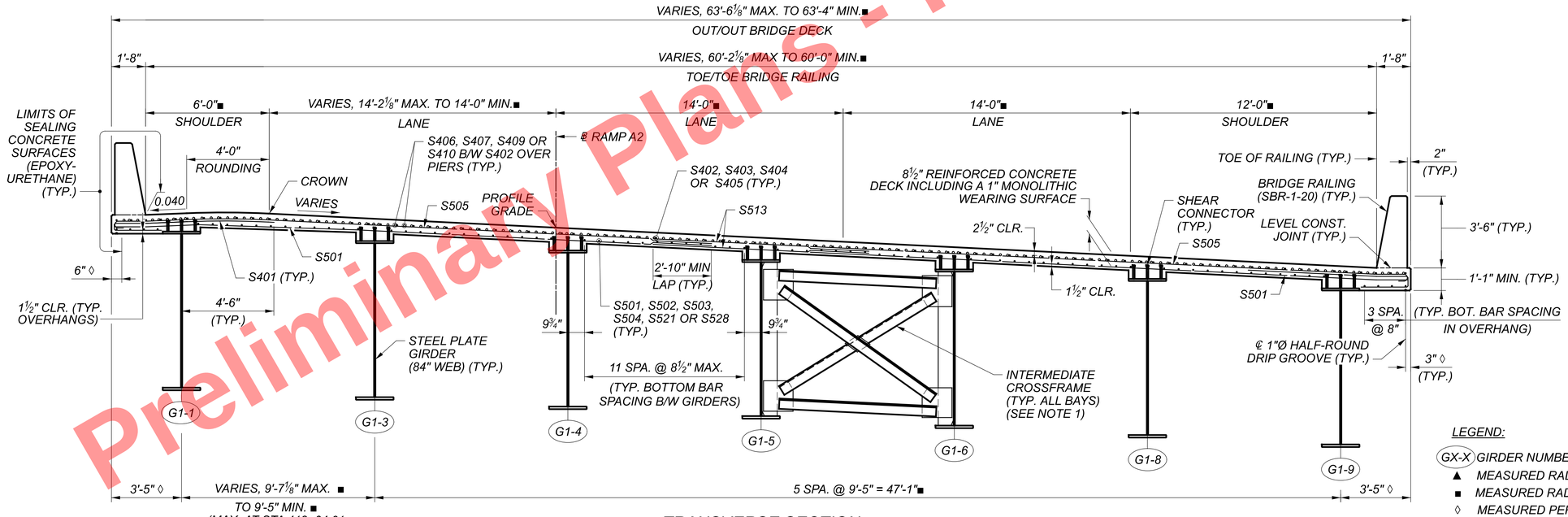

TRANSVERSE SECTION
STA. 412+64.61 TO STA. 417+69.08

Preliminary Plans - For Reference Only

LEGEND:

GX-X GIRDER NUMBER
▲ MEASURED RADIALLY TO ℄ RAMP J2
■ MEASURED RADIALLY TO ℄ RAMP A2
◊ MEASURED PERPENDICULAR TO THE EDGE OF DECK

NOTES:

1. FOR ADDITIONAL NOTES, SEE SHEET 116 / 167 .
2. FOR SUPERELEVATION TRANSITION INFORMATION, SEE SHEET 116 / 167 .

TRANSVERSE SECTION - (1 OF 3)
CUY-77-1587 (BRIDGE 9)
I.R. 77 SB OVER I.R. 90 AND CR-721 (E. 14TH ST.)

SFN	1806910
DESIGN AGENCY	HDR
DESIGNER	NJH
CHECKER	RBK
REVIEWER	DWW 01/11/24
PROJECT ID	82382
SUBSET	114
TOTAL	167
SHEET	1982
TOTAL	2696

CUY-90-16.28 (CCG3A)

MODEL: Sheet PAPERSIZE: 34x22 (in.) DATE: 3/28/2025 TIME: 10:22:12 AM USER: Rohit.Bk
pw:\\mb-us-pw.bentley.com:mb-us-pw-03\Documents\Cleveland_OH01_Projects\ODOT\District12\82382400-Engineering\Structures\SFN_1806910\Sheets\82382_SFN_1806910_ST001.dgn

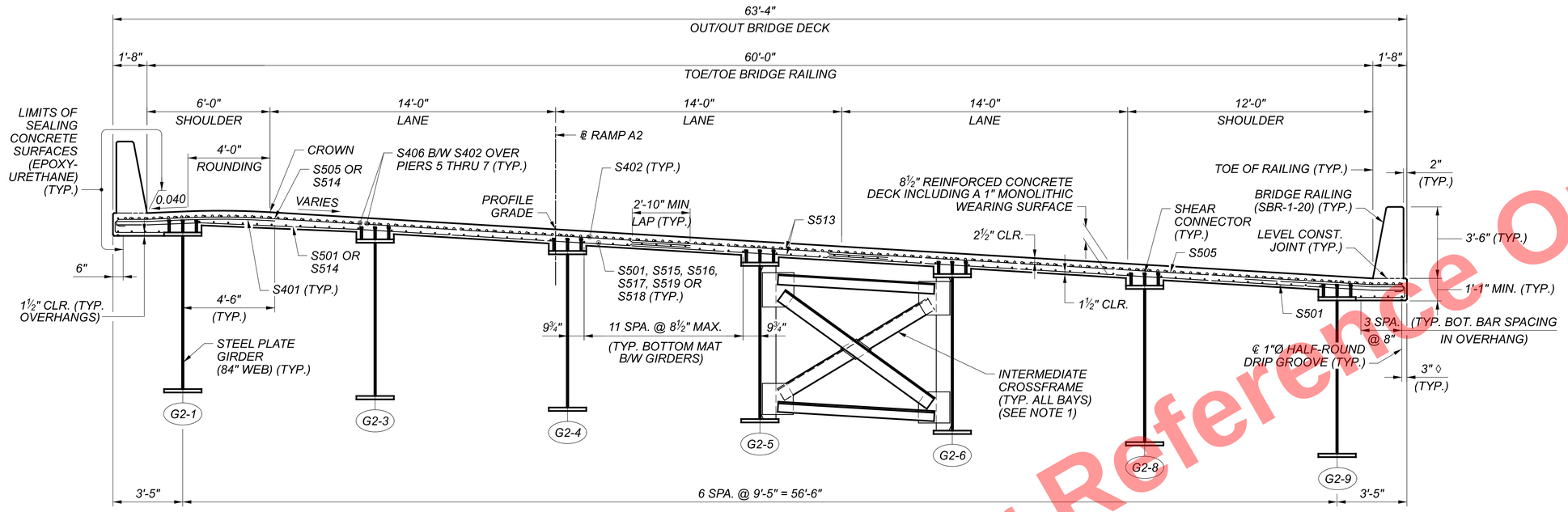

TRANSVERSE SECTION
STA. 417+73.42 TO STA. 424+75.58

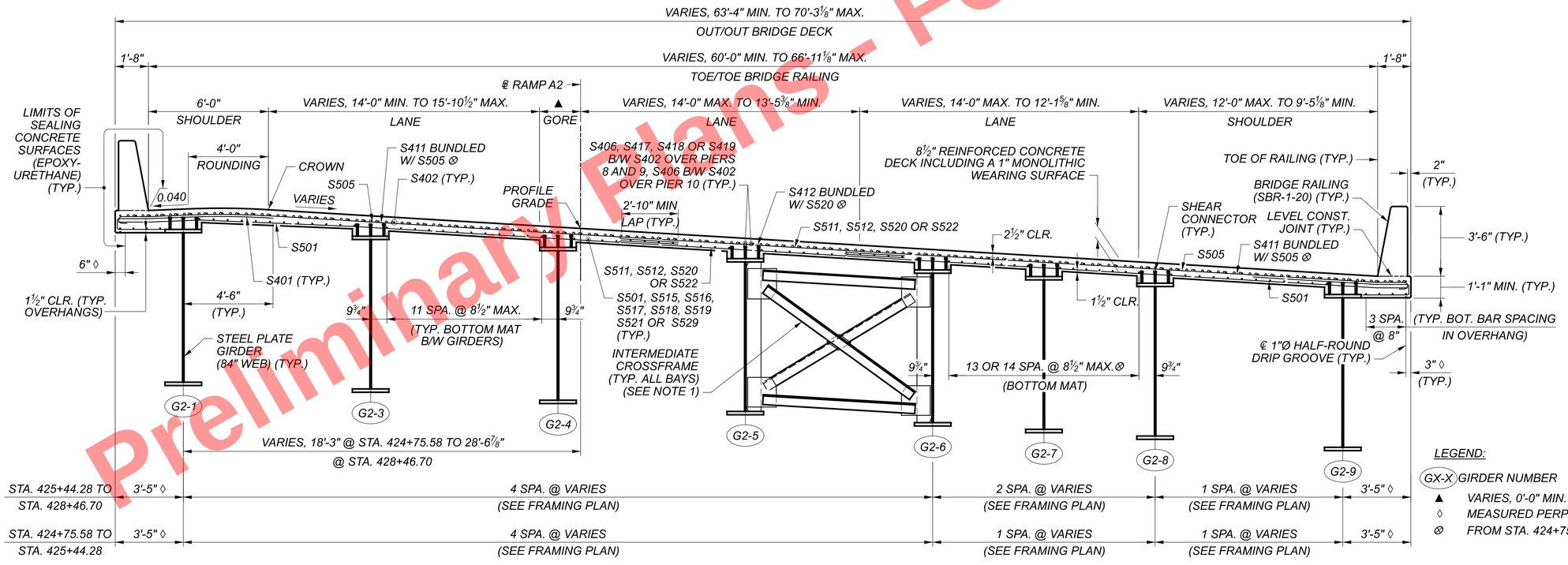

TRANSVERSE SECTION
STA. 424+75.58 TO STA. 428+46.70

LEGEND:

(GX-X) GIRDER NUMBER
▲ VARIES, 0'-0" MIN. TO 8'-5⅜" MAX.
◊ MEASURED PERPENDICULAR TO THE EDGE OF DECK
⊗ FROM STA. 424+75.58 TO STA. 425+47.79

NOTES:

1. FOR ADDITIONAL NOTES, SEE SHEET 116 / 167.
2. FOR SUPERELEVATION TRANSITION INFORMATION, SEE SHEET 116 / 167.

TRANSVERSE SECTION - (2 OF 3)
CUY-77-1587 (BRIDGE 9)
I.R. 77 SB OVER I.R. 90 AND CR-721 (E. 14TH ST.)

SFN	1806910
DESIGN AGENCY	HDR
DESIGNER	NJH
CHECKER	RBK
REVIEWER	DWW 01/11/24
PROJECT ID	82382
SUBSET	115
TOTAL	167
SHEET	1983
TOTAL	2696

CUY-90-16.28 (CCG3A)

MODEL: Sheet PAPERSIZE: 34x22 (in.) DATE: 3/28/2025 TIME: 10:22:20 AM USER: RohitBk
pw:\\mb-us-pw.bentley.com:mb-us-pw-03\Documents\Cleveland_OH\01_Projects\ODOT\District12\82382400-Engineering\Structures\SFN_1806910\Sheets\82382_SFN_1806910_ST002.dgn

Preliminary Plans - For Reference Only

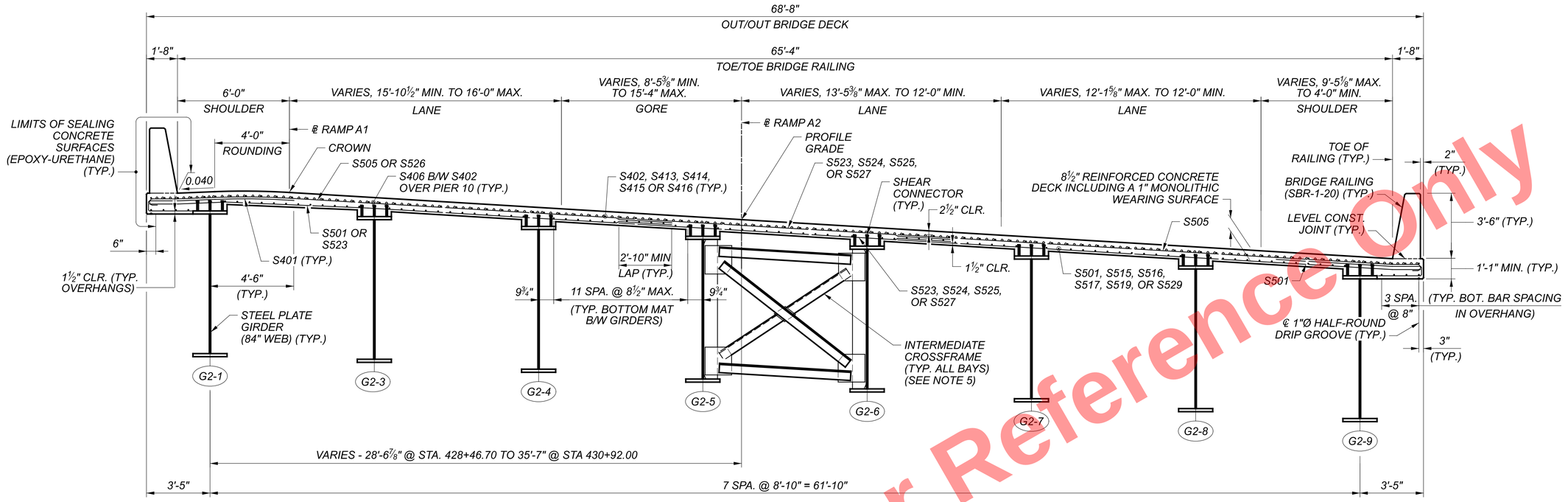

TRANSVERSE SECTION

STA 428+46.70 TO STA. 430+92.00
(ALL DIMENSIONS MEASURED PERPENDICULAR TO LEFT EDGE OF DECK)

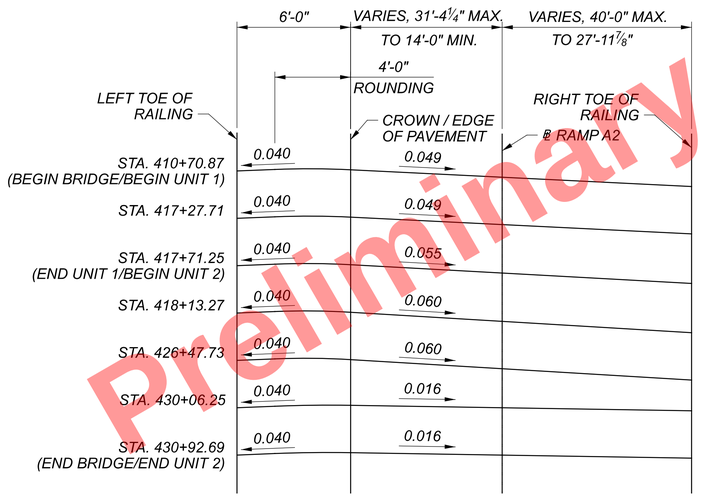

SUPERELEVATION TRANSITION DIAGRAM

LEGEND:

(GX-X) GIRDER NUMBER

NOTES:

1. FOR FRAMING PLAN AND GIRDER ELEVATIONS, SEE SHEETS 71 / 167 THRU 81 / 167.
2. FOR SCREED, TOP OF HAUNCH, AND FINAL DECK ELEVATIONS, SEE SHEETS 135 / 167 THRU 153 / 167 .
3. FOR DECK PLANS, SEE SHEETS 105 / 167 THRU 113 / 167.
4. FOR BRIDGE RAILING PLAN AND DETAILS, SEE SHEET 127 / 167.
5. FOR CROSSFRAME DETAILS, SEE SHEETS 87 / 167 THRU 88 / 167.
6. FOR REINFORCEMENT LISTS, SEE SHEETS 159 / 167 THRU 167 / 167.
7. DECK SLAB CONCRETE QUANTITY: THE ESTIMATED QUANTITY OF DECK SLAB CONCRETE IS BASED ON THE CONSTANT DECK SLAB THICKNESS, AS SHOWN, PLUS THE QUANTITY OF CONCRETE THAT FORMS EACH GIRDER HAUNCH. THE ESTIMATE ASSUMES A CONSTANT HAUNCH THICKNESS OF 5¾ INCHES AND HAUNCH WIDTH EQUAL TO TOP FLANGE WIDTH. DEVIATE FROM THIS HAUNCH THICKNESS AS NECESSARY TO PLACE THE DECK SURFACE AT THE FINISHED GRADE.

   THE HAUNCH THICKNESS WAS ALSO MEASURED AT THE CENTERLINE OF GIRDER, FROM THE SURFACE OF THE DECK TO THE BOTTOM OF THE TOP FLANGE MINUS THE DECK SLAB THICKNESS. THE AREA OF ALL EMBEDDED STEEL PLATES HAS BEEN DEDUCTED FROM THE HAUNCH QUANTITY IN ACCORDANCE WITH C&MS 511.23.

Preliminary Plans - For Reference Only

TRANSVERSE SECTION - (3 OF 3)
CUY-77-1587 (BRIDGE 9)
I.R. 77 SB OVER I.R. 90 AND CR-721 (E. 14TH ST.)

SFN	1806910
DESIGN AGENCY	HDR
DESIGNER	NJH
CHECKER	RBK
REVIEWER	DWW 01/11/24
PROJECT ID	82382
SUBSET	116
TOTAL	167
SHEET	1984
TOTAL	2696

CUY-90-16.28 (CCG3A)
MODEL: Sheet PAPERSIZE: 34x22 (in.) DATE: 3/28/2025 TIME: 10:22:27 AM USER: RohitBk
pw:\\mb-us-pw.bentley.com:mb-us-pw-03\Documents\Cleveland_OH01_Projects\ODOT\District12\82382400-Engineering\Structures\SFN_1806910\Sheets\82382_SFN_1806910_ST003.dgn

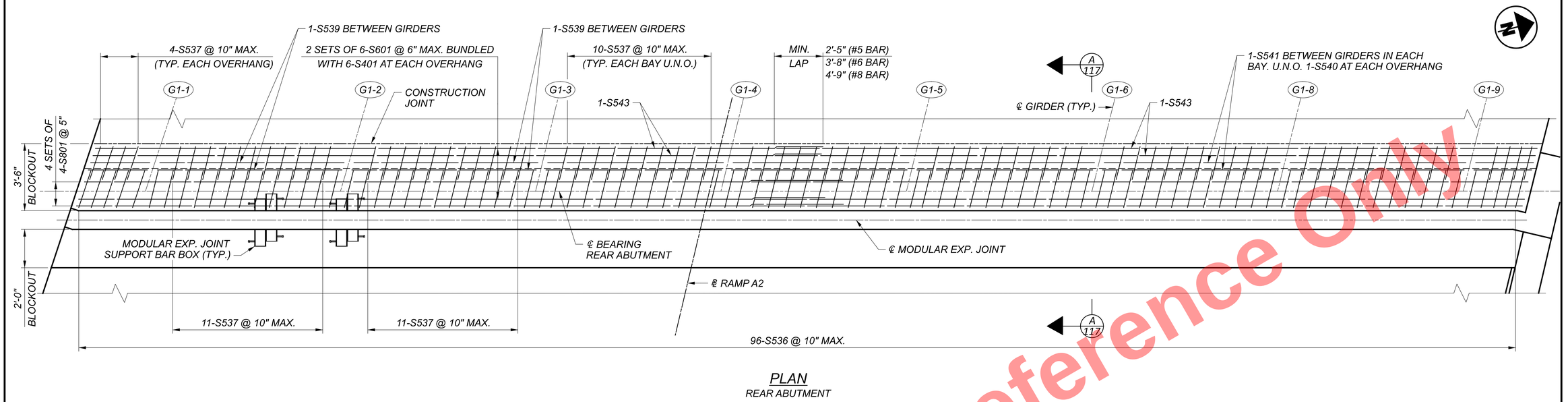

PLAN
REAR ABUTMENT

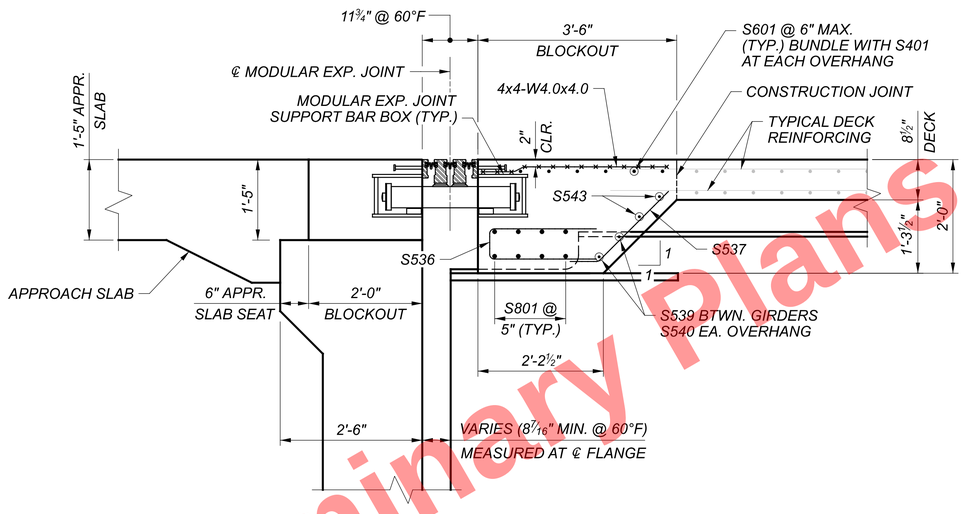

SECTION A-A

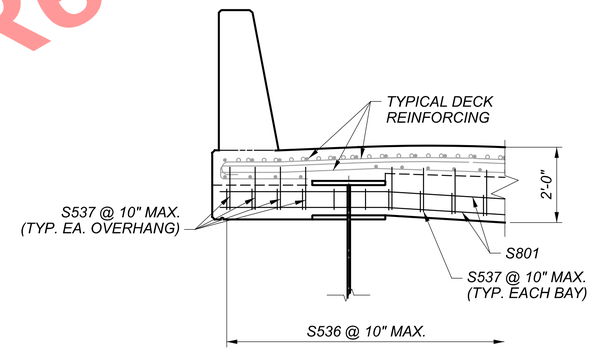

END VIEW

NOTES:

1. ADJUST REINFORCEMENT AS NECESSARY TO CLEAR MODULAR EXPANSION JOINT. FOR MODULAR EXPANSION JOINT DETAILS, SEE SHEETS 128 / 167 THRU 134 / 167.
2. FOR MAIN DECK PLAN AND REINFORCEMENT, SEE SHEETS 105 / 167 THRU 113 / 167.
3. FOR ABUTMENT AND APPROACH SLAB BLOCKOUT DETAILS, SEE SHEETS 34 / 167, 35 / 167, 37 / 167, AND 39 / 167.
4. FOR REINFORCEMENT LIST, SEE SHEET 159 / 167.
5. GALVANIZED WELDED WIRE FABRIC SHALL CONFORM TO CMS 709.14 AND BE INCLUDED FOR PAYMENT WITH ITEM 509, EPOXY COATED STEEL REINFORCEMENT, AS PER PLAN.
6. DIMENSIONS ARE BASED ON THE D.S. BROWN STEELFLEX EXPANSION JOINT SYSTEMS. THE CONTRACTOR MAY USE AN APPROVED EQUAL MODULAR EXPANSION JOINT SYSTEM. IF AN APPROVED EQUAL MODULAR JOINT SYSTEM IS SELECTED, THE CONTRACTOR SHALL SUBMIT A CORRECTIVE WORK PER CMS 501.05.C. THE SUBMITTAL SHALL INCLUDE ALL PROPOSED CHANGES ASSOCIATED WITH THE PROPOSED MODULAR EXPANSION SYSTEM, INCLUDING BUT NOT LIMITED TO: REINFORCING CHANGES, BLOCKOUT DIMENSIONAL CHANGES, MATERIAL SPECIFICATION AND BRIDGE RAILING MODIFICATIONS.

Preliminary Plans - For Reference Only

DECK DETAILS - (1 OF 3)
CUY-77-1587 (BRIDGE 9)
I.R. 77 SB OVER I.R. 90 AND CR-721 (E. 14TH ST.)

SFN	1806910
DESIGN AGENCY	HDR
DESIGNER	NJH
CHECKER	RBK
REVIEWER	DWW 01/11/24
PROJECT ID	82382
SUBSET	117
TOTAL	167
SHEET	1985
TOTAL	2696

CUY-90-16.28 (CCG3A)

MODEL: Sheet PAPERSIZE: 34x22 (in.) DATE: 3/28/2025 TIME: 10:22:34 AM USER: Rohit.Bk
pw:\\mb-us-pw.bentley.com:mb-us-pw-03\Documents\Cleveland_OH\01_Projects\ODOT\District12\82382400-Engineering\Structures\SFN_1806910\Sheets\82382_SFN_1806910_SD022.dgn

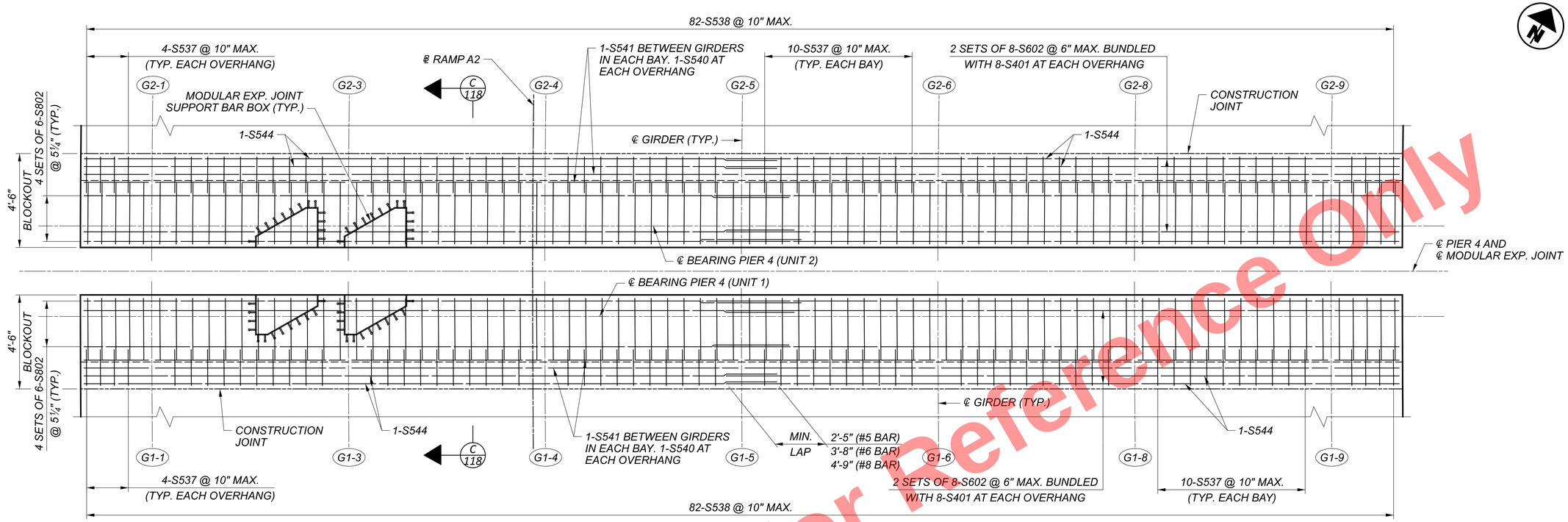

PLAN
PIER 4

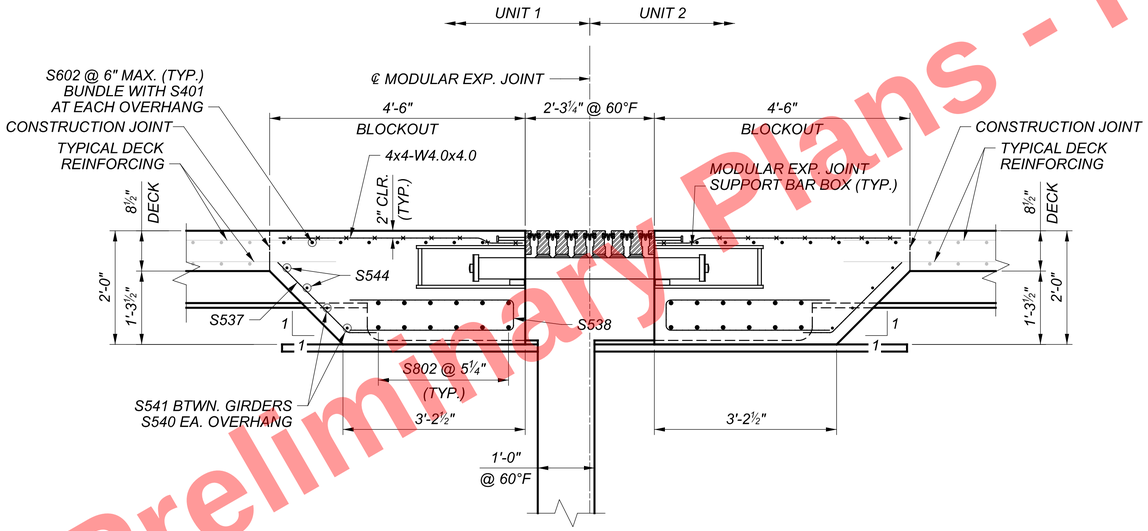

SECTION C-C
(REINFORCEMENT IS SYMMETRICAL ABOUT ℄ MODULAR EXP. JOINT)

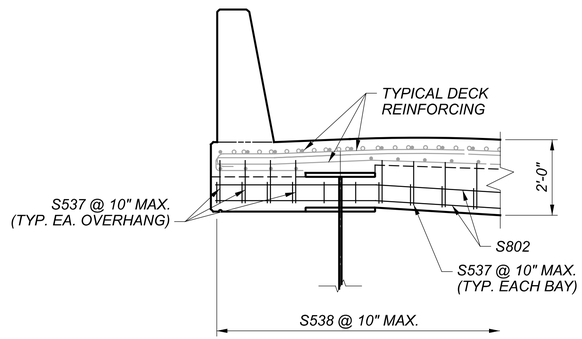

END VIEW

NOTES:

1. FOR DECK DETAIL NOTES, SEE SHEET 117 / 167 .

Preliminary Plans - For Reference Only

DECK DETAILS - (2 OF 3)
CUY-77-1587 (BRIDGE 9)
I.R. 77 SB OVER I.R. 90 AND CR-721 (E. 14TH ST.)

SFN 1806910
DESIGN AGENCY
DESIGNER NJH | CHECKER RBK
REVIEWER DWW 01/11/24
PROJECT ID 82382
SUBSET 118 | TOTAL 167
SHEET 1986 | TOTAL 2696

CUY-90-16.28 (CCG3A)

MODEL: Sheet PAPERSIZE: 34x22 (in.) DATE: 3/28/2025 TIME: 10:22:40 AM USER: Rohit.Bk
pw:\\mb-us-pw.bentley.com:mb-us-pw-03\Documents\Cleveland_OH\01_Projects\ODOT\District12\82382\400-Engineering\Structures\SFN_1806910\Sheets\82382_SFN_1806910_SD024.dgn

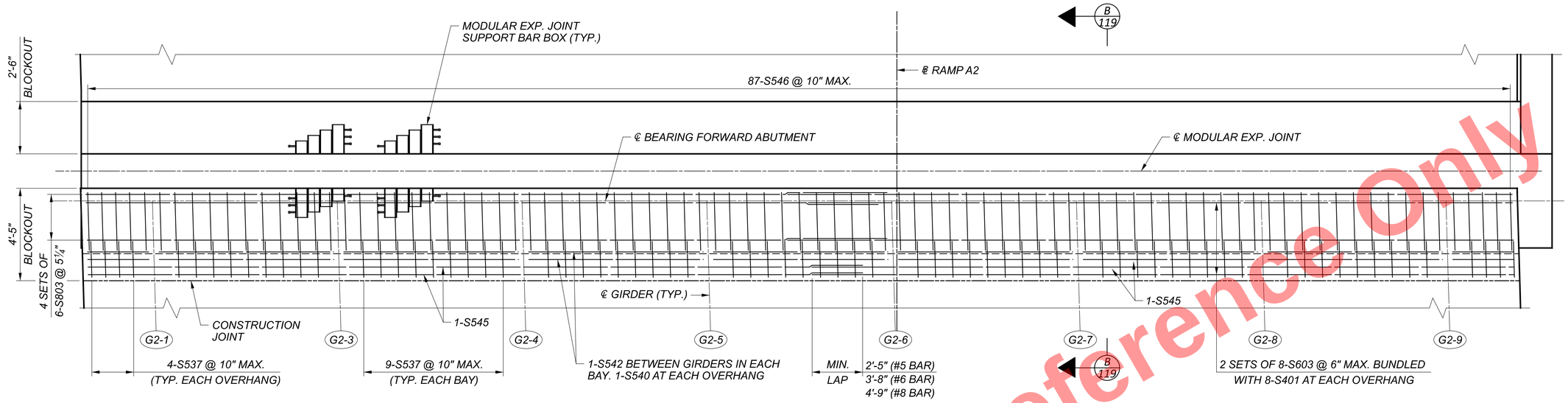

PLAN
FORWARD ABUTMENT

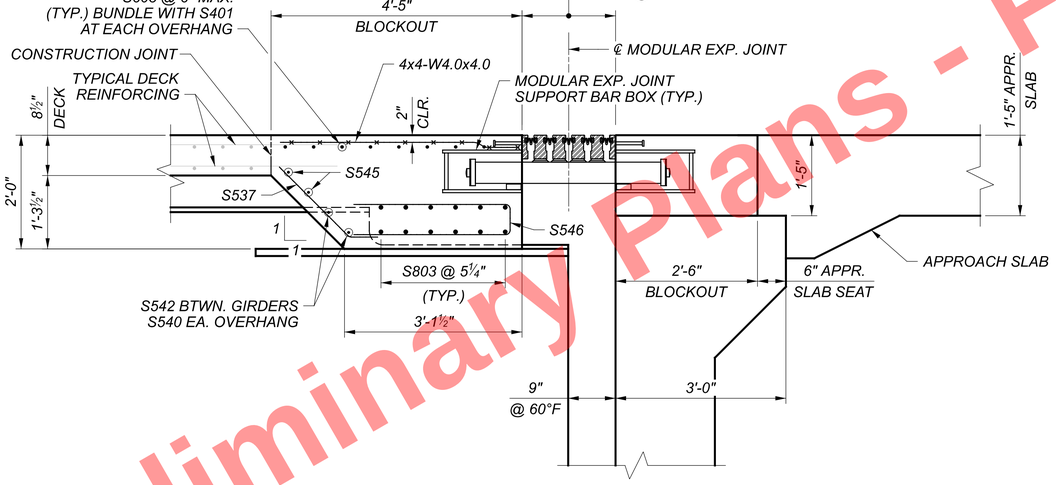

SECTION B-B

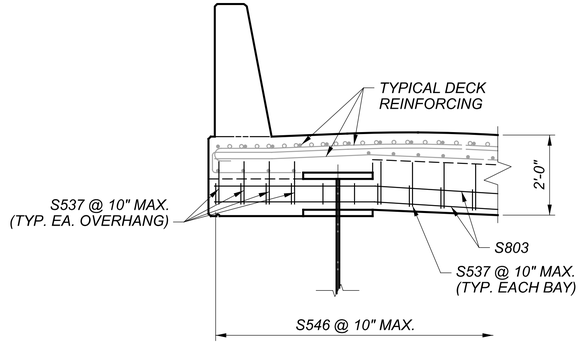

END VIEW

NOTES:

1. FOR DECK DETAIL NOTES, SEE SHEET 117 / 167 .

DECK DETAILS - (3 OF 3)
CUY-77-1587 (BRIDGE 9)
I.R. 77 SB OVER I.R. 90 AND CR-721 (E. 14TH ST.)

SFN	1806910
DESIGN AGENCY	HDR
DESIGNER	NJH
CHECKER	RBK
REVIEWER	DWW 01/11/24
PROJECT ID	82382
SUBSET	119
TOTAL	167
SHEET	1987
TOTAL	2696

Preliminary Plans - For Reference Only

CUY-90-16.28 (CCG3A)
MODEL: Sheet PAPERSIZE: 34x22 (in.) DATE: 3/28/2025 TIME: 10:22:48 AM USER: Rohit.Bk
pw:\\mb-us-pw.bentley.com:mb-us-pw-03\Documents\Cleveland_OH01_Projects\ODOT\District12\82382400-Engineering\Structures\SFN_1806910\Sheets\82382_SFN_1806910_SD023.dgn

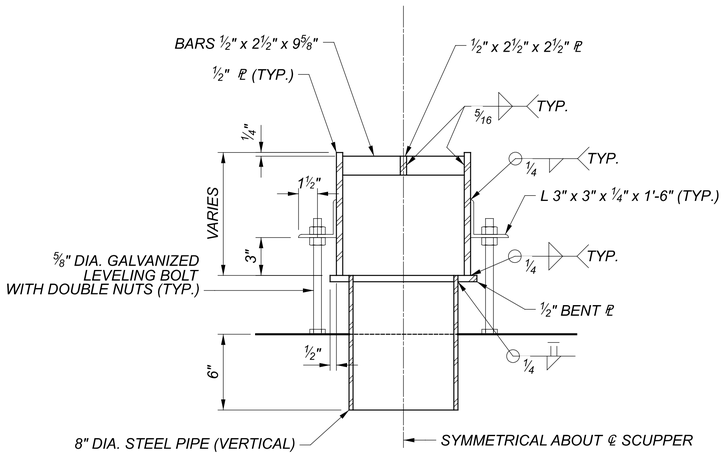

DETAIL 1

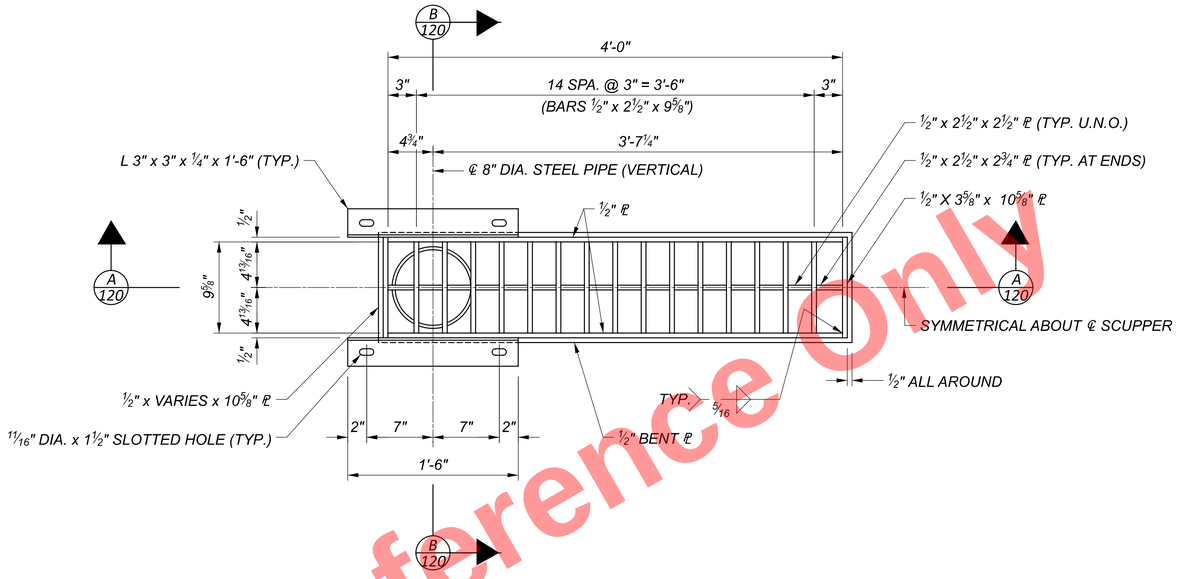

SCUPPER PLAN

(DECK CONCRETE NOT SHOWN FOR CLARITY)

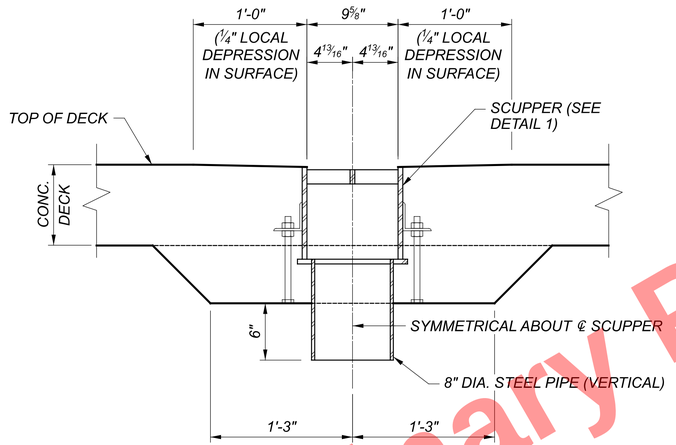

SECTION B-B

(CONCRETE DECK REINFORCING NOT SHOWN)

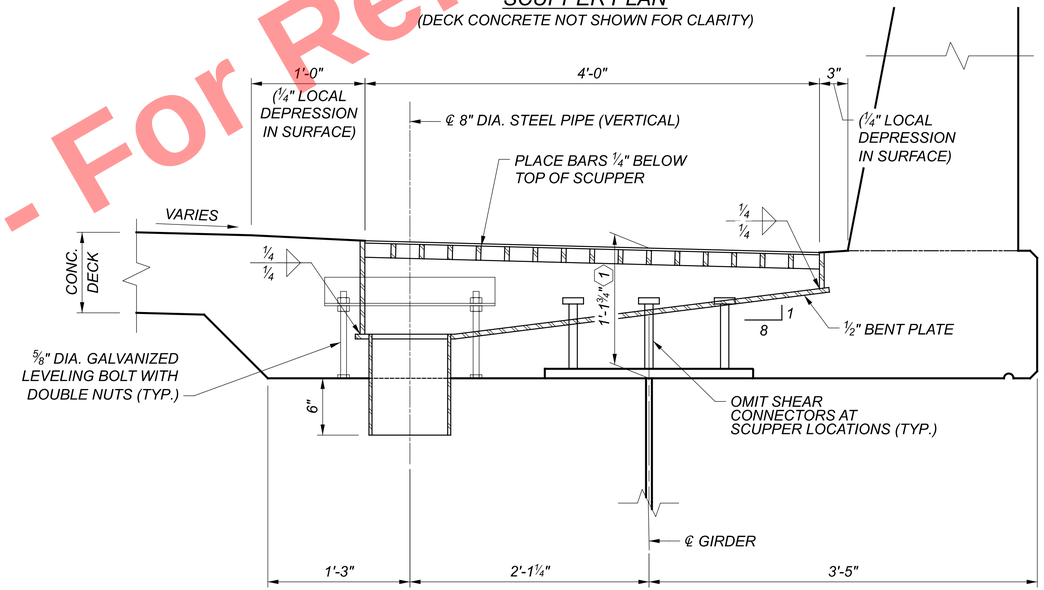

SECTION A-A

(RIGHT SIDE SHOWN, LEFT SIDE SIMILAR)

1 MEASURED FROM TOP OF WEB TO TOP OF BAR.

NOTES:

1. FOR SCUPPER LOCATIONS, SEE SHEET 121 / 167 .
2. ALL STRUCTURAL STEEL FOR SCUPPERS SHALL BE ASTM A709, GRADE 36, EXCEPT AS NOTED.
3. SCUPPER PIPE SHALL BE ASTM A53, SCHEDULE 40.
4. SCUPPERS SHALL BE GALVANIZED IN ACCORANCE WITH CMS 711.02.
5. FOR DOWNSPOUT PIPE DETAILS, SEE SHEETS 122 / 167 THRU 126 / 167 .
6. SCUPPERS SHALL CONFORM TO CMS 518, EXCEPT AS NOTED.
7. FOR DETAILS OF ADDITIONAL DECK REINFORCEMENT AT SCUPPERS, SEE SHEET 105 / 167 .
8. DRAINAGE PIPE, HANGER ASSEMBLIES, DRAIN PANS, SUPPORT BRACKETS AND ALL INCIDENTALS TO FURNISH AND INSTALL THE DRAINAGE COLLECTION SYSTEM SHALL BE INCLUDED WITH PAYMENT FOR ITEM 518 - SCUPPERS, INCLUDING SUPPORTS, AS PER PLAN.

For Reference Only
Preliminary Plans - For

BRIDGE DRAINAGE DETAILS - (1 OF 7)
CUY-77-1587 (BRIDGE 9)
I.R. 77 SB OVER I.R. 90 AND CR-721 (E. 14TH ST.)

SFN	1806910
DESIGN AGENCY	HDR
DESIGNER	RBK
CHECKER	BTA
REVIEWER	DWW 01/11/24
PROJECT ID	82382
SUBSET	120
TOTAL	167
SHEET	1988
TOTAL	2696

CUY-90-16.28 (CCG3A)
MODEL: Sheet PAPERSIZE: 34x22 (in.) DATE: 3/28/2025 TIME: 10:22:55 AM USER: Rohit.Bk
pw:\\mb-us-pw.bentley.com:mb-us-pw-03\Documents\Cleveland_OH\01_Projects\ODOT\District12\82382\400-Engineering\Structures\SFN_1806910\Sheets\82382_SFN_1806910_SM001.dgn

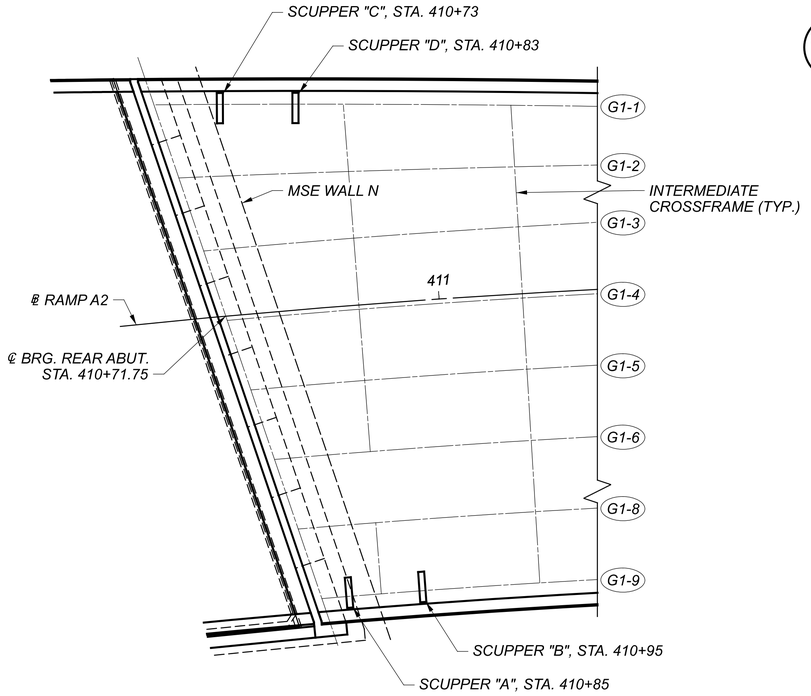

PLAN - REAR ABUTMENT

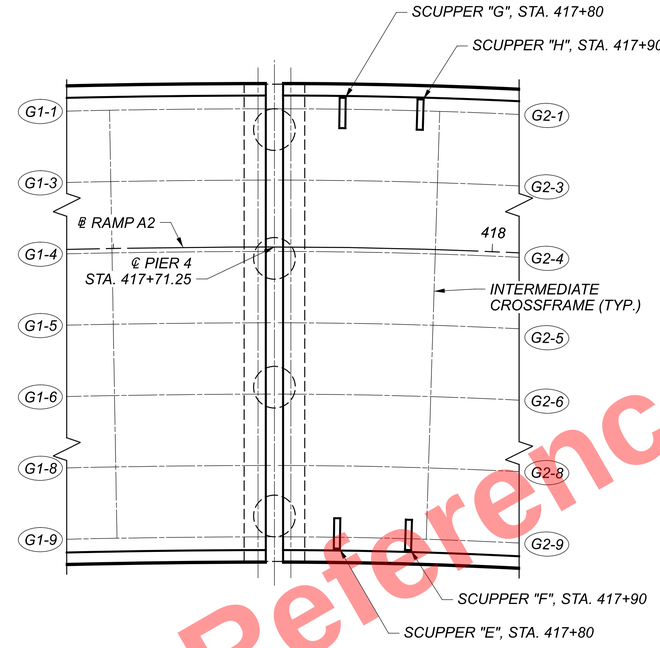

PLAN - PIER 4

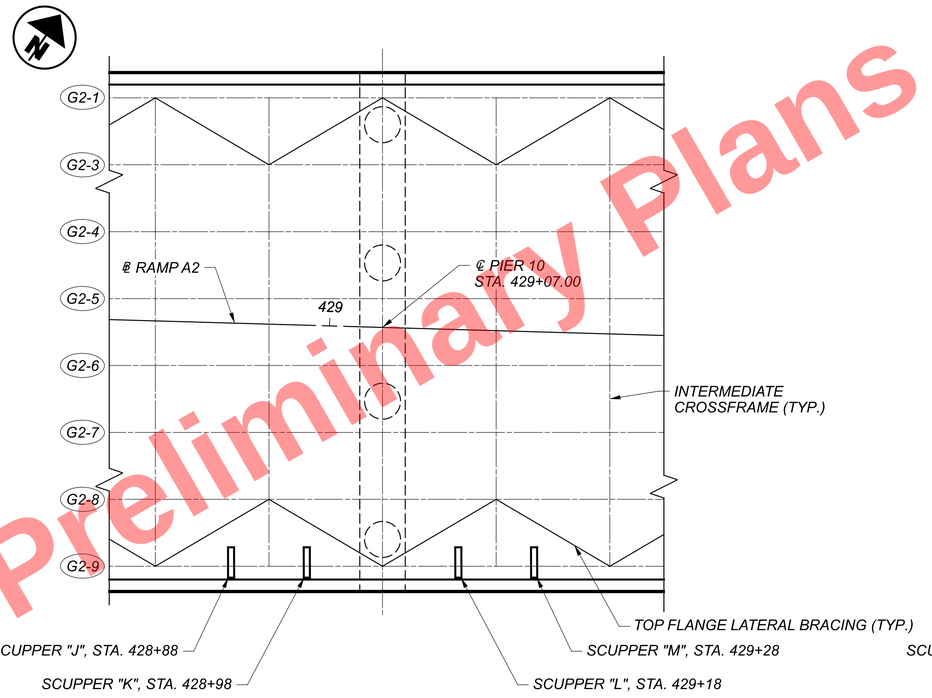

PLAN - PIER 10

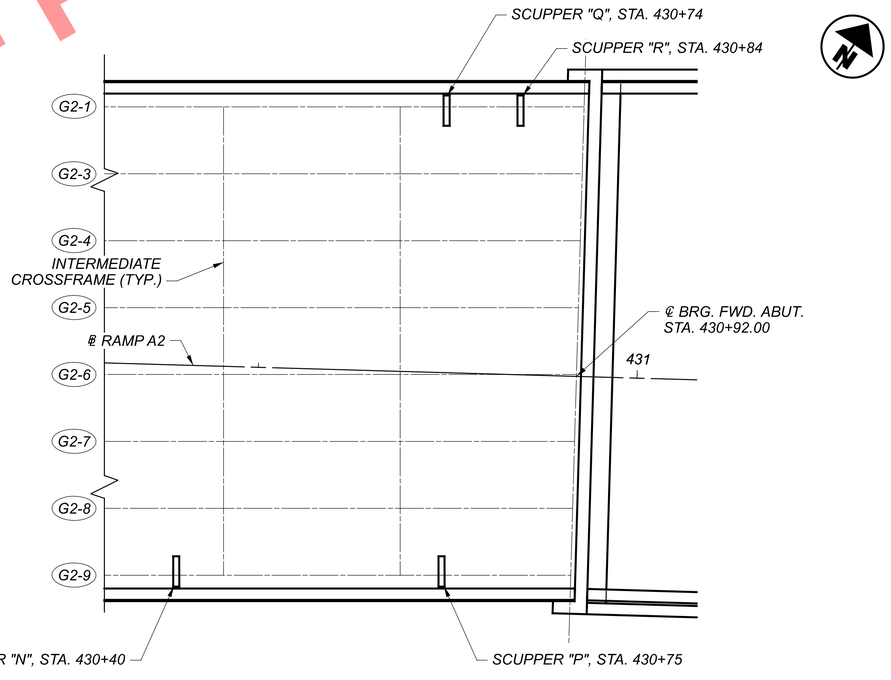

PLAN - FORWARD ABUTMENT

NOTES:

1. FOR ADDITIONAL NOTES, SEE SHEET 120 / 167 .

Preliminary Plans - For Reference Only

BRIDGE DRAINAGE DETAILS - (2 OF 7)
CUY-77-1587 (BRIDGE 9)
I.R. 77 SB OVER I.R. 90 AND CR-721 (E. 14TH ST.)

SFN	1806910
DESIGN AGENCY	HDR
DESIGNER	RBK
CHECKER	BTA
REVIEWER	DWW 01/11/24
PROJECT ID	82382
SUBSET	121
TOTAL	167
SHEET	1989
TOTAL	2696

CUY-90-16.28 (CCG3A)

MODEL: Sheet PAPERSIZE: 34x22 (in.) DATE: 3/28/2025 TIME: 10:23:04 AM USER: RohitLBk
pw:\\mb-us-pw.bentley.com:mb-us-pw-03\Documents\Cleveland_OH\01_Projects\ODOT\District12\82382\400-Engineering\Structures\SFN_1806910\Sheets\82382_SFN_1806910_SM002.dgn

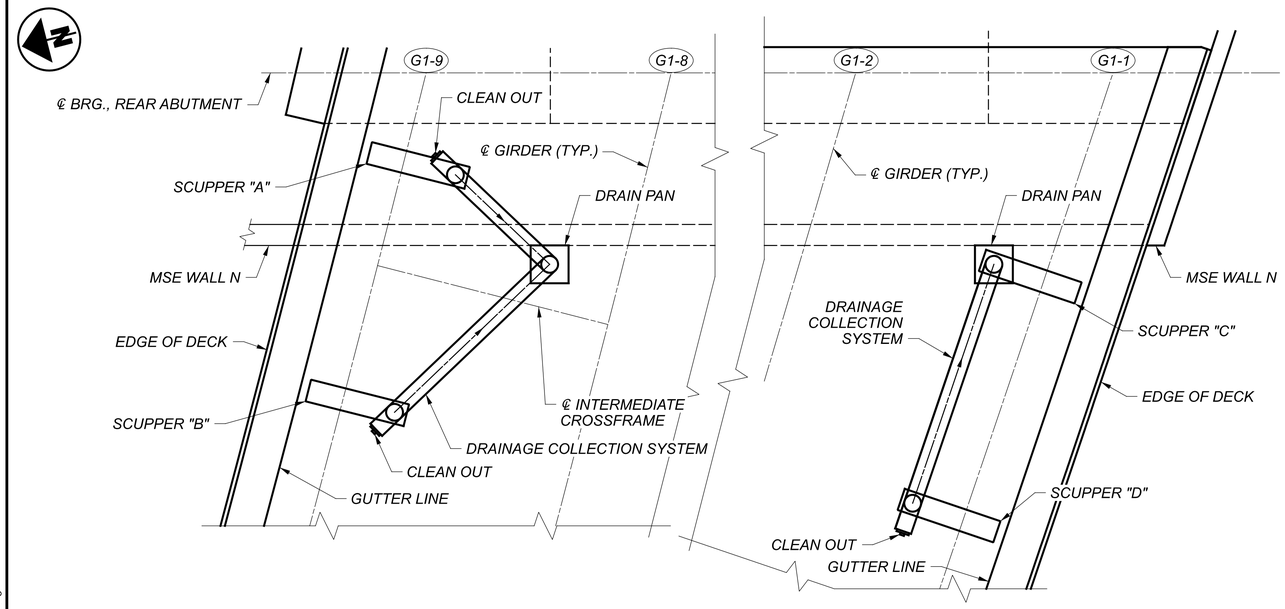

PLAN - REAR ABUTMENT

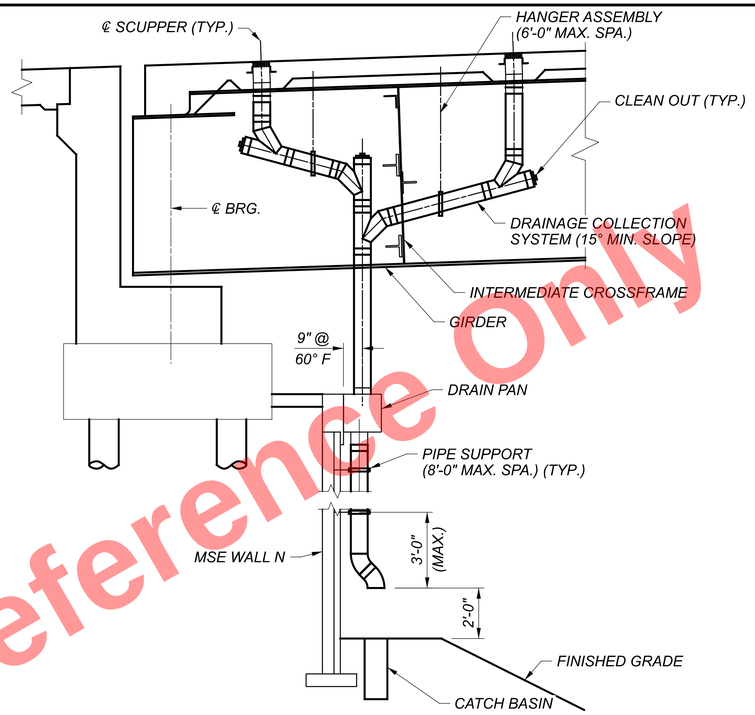

SECTION C-C

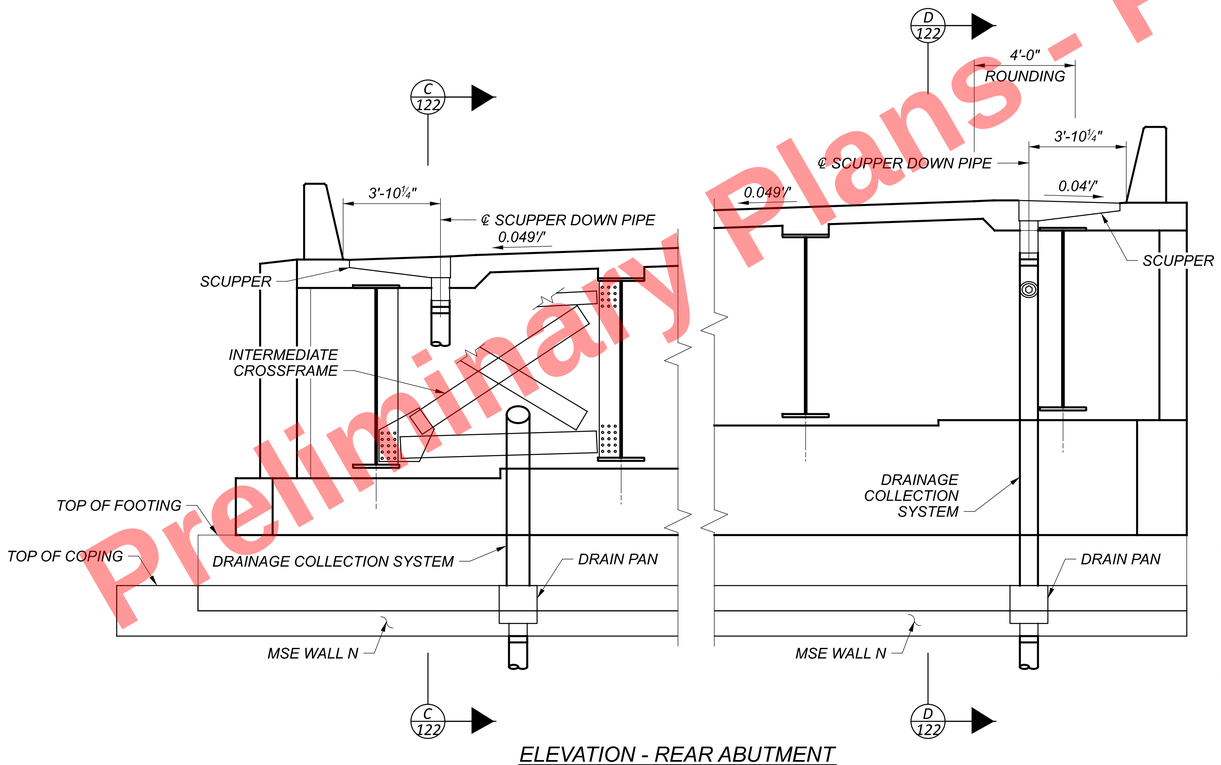

ELEVATION - REAR ABUTMENT

(LOOKING BACK STATION)

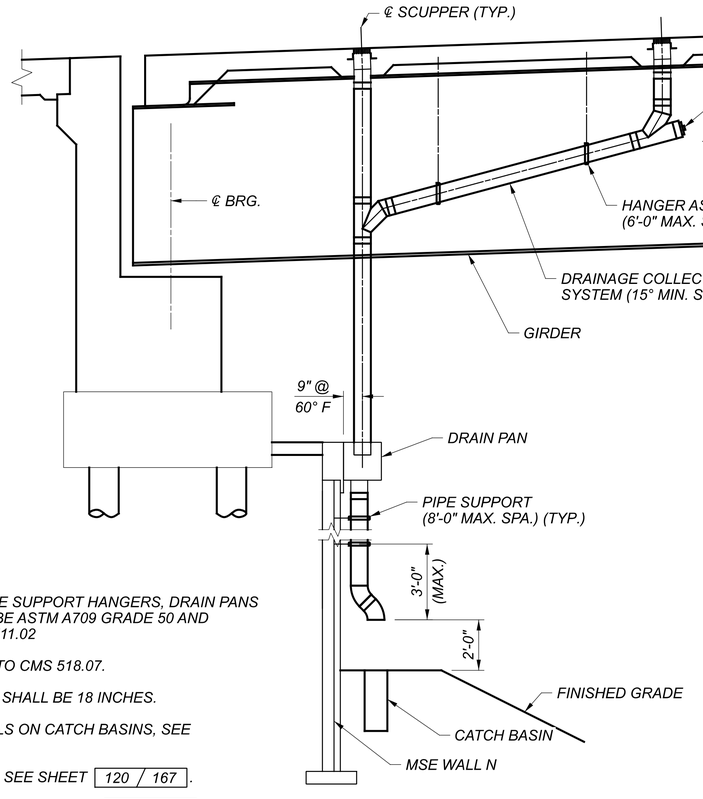

SECTION D-D

NOTES:

1. ALL MATERIALS FOR THE SUPPORT HANGERS, DRAIN PANS AND BRACKETS SHALL BE ASTM A709 GRADE 50 AND GALVANZIED PER CMS 711.02
2. PIPE SHALL CONFORM TO CMS 518.07.
3. MINIMUM BEND RADIUS SHALL BE 18 INCHES.
4. FOR ADDITIONAL DETAILS ON CATCH BASINS, SEE DRAINAGE PLANS.
5. FOR SCUPPER DETAILS, SEE SHEET 120 / 167.
6. FOR DRAIN PAN DETAILS, SEE SHEET 126 / 167.

Preliminary Plans - For Reference Only

BRIDGE DRAINAGE DETAILS - (3 OF 7)

CUY-77-1587 (BRIDGE 9)

I.R. 77 SB OVER I.R. 90 AND CR-721 (E. 14TH ST.)

SFN	1806910
DESIGN AGENCY	HDR
DESIGNER	RBK
CHECKER	BTA
REVIEWER	DWW 01/11/24
PROJECT ID	82382
SUBSET	122
TOTAL	167
SHEET	1990
TOTAL	2696

CUY-90-16.28 (CCG3A)
MODEL: Sheet PAPERSIZE: 34x22 (in.) DATE: 3/28/2025 TIME: 10:23:11 AM USER: RohitLBk
pw:\\mb-us-pw.bentley.com:mb-us-pw-03\Documents\Cleveland_OH\01_Projects\ODOT\District12\82382\400-Engineering\Structures\SFN_1806910\Sheets\82382_SFN_1806910_SM003.dgn

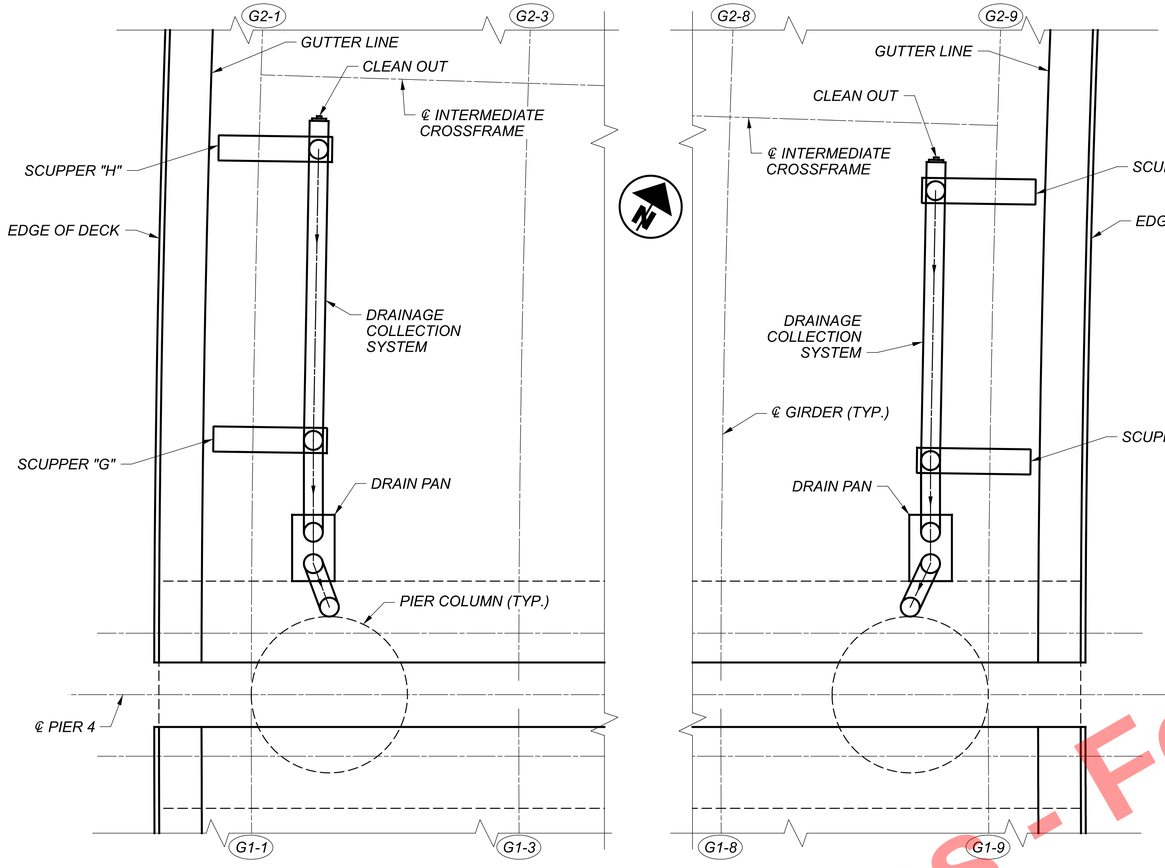

PLAN - PIER 4

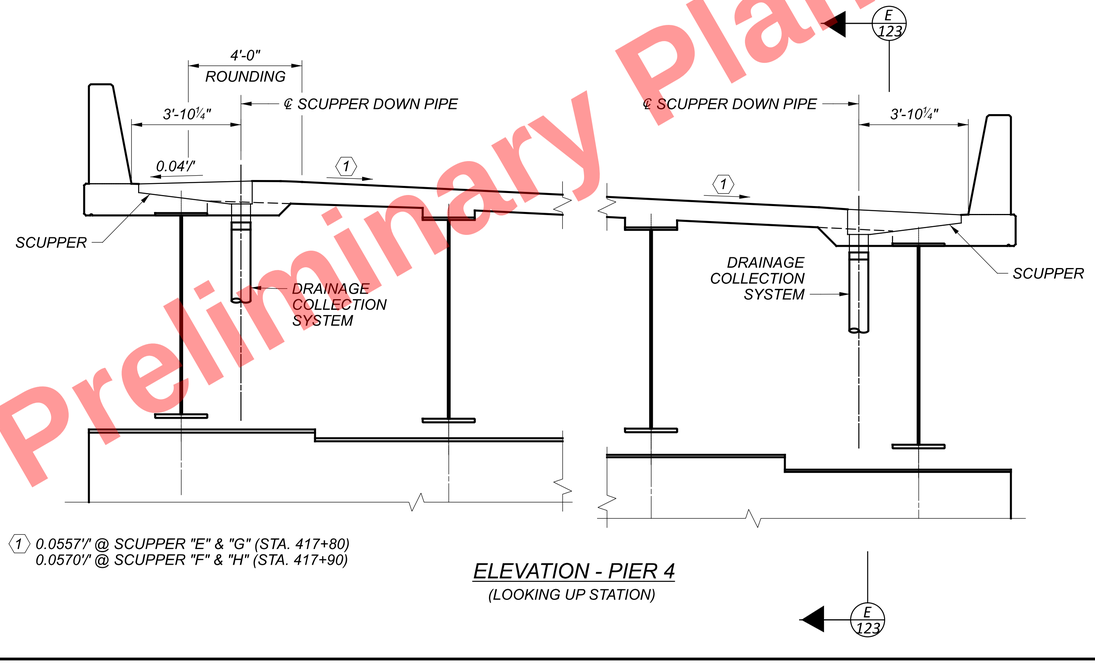

1 0.0557"/' @ SCUPPER "E" & "G" (STA. 417+80)
0.0570"/' @ SCUPPER "F" & "H" (STA. 417+90)

ELEVATION - PIER 4
(LOOKING UP STATION)

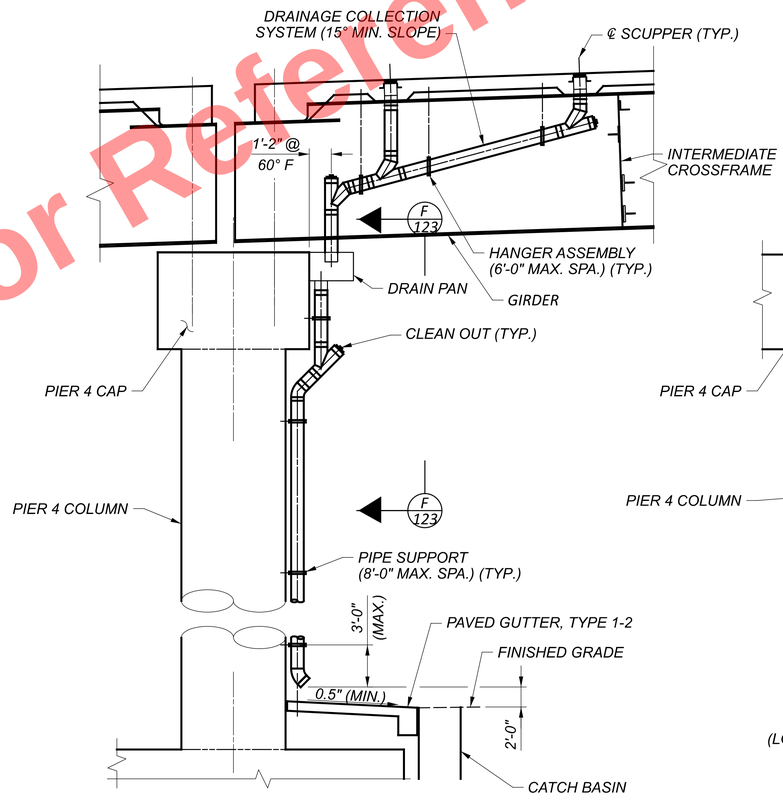

SECTION E-E

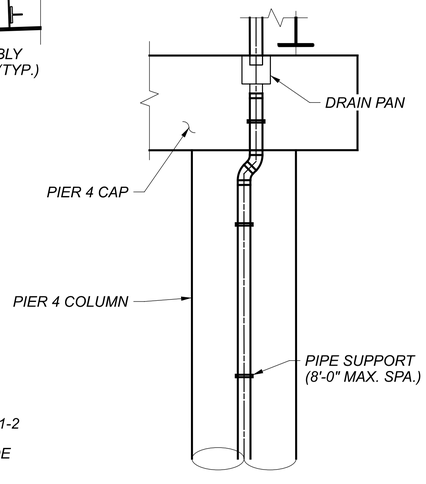

VIEW F-F
(LOOKING BACK STATION)

NOTES:

1. FOR ADDITIONAL NOTES, SEE SHEET 120 / 167.
2. FOR ADDITIONAL NOTES AND DETAILS ON PAVED GUTTER, SEE ODOT SCD DM-2.1. INCLUDE WITH PAYMENT FOR ITEM 518 - SCUPPERS, INCLUDING SUPPORTS, AS PER PLAN.

Preliminary Plans - For Reference Only

BRIDGE DRAINAGE DETAILS - (4 OF 7)
CUY-77-1587 (BRIDGE 9)
I.R. 77 SB OVER I.R. 90 AND CR-721 (E. 14TH ST.)

SFN	1806910
DESIGN AGENCY	HDR
DESIGNER	RBK
CHECKER	BTA
REVIEWER	DWW 01/11/24
PROJECT ID	82382
SUBSET	123
TOTAL	167
SHEET	1991
TOTAL	2696

CUY-90-16.28 (CCG3A)

MODEL: Sheet PAPERSIZE: 34x22 (in.) DATE: 3/28/2025 TIME: 10:23:19 AM USER: RohitLBk
pw:\\mb-us-pw.bentley.com:mb-us-pw-03\Documents\Cleveland_OH\01_Projects\ODOT\District12\82382\400-Engineering\Structures\SFN_1806910\Sheets\82382_SFN_1806910_SM004.dgn

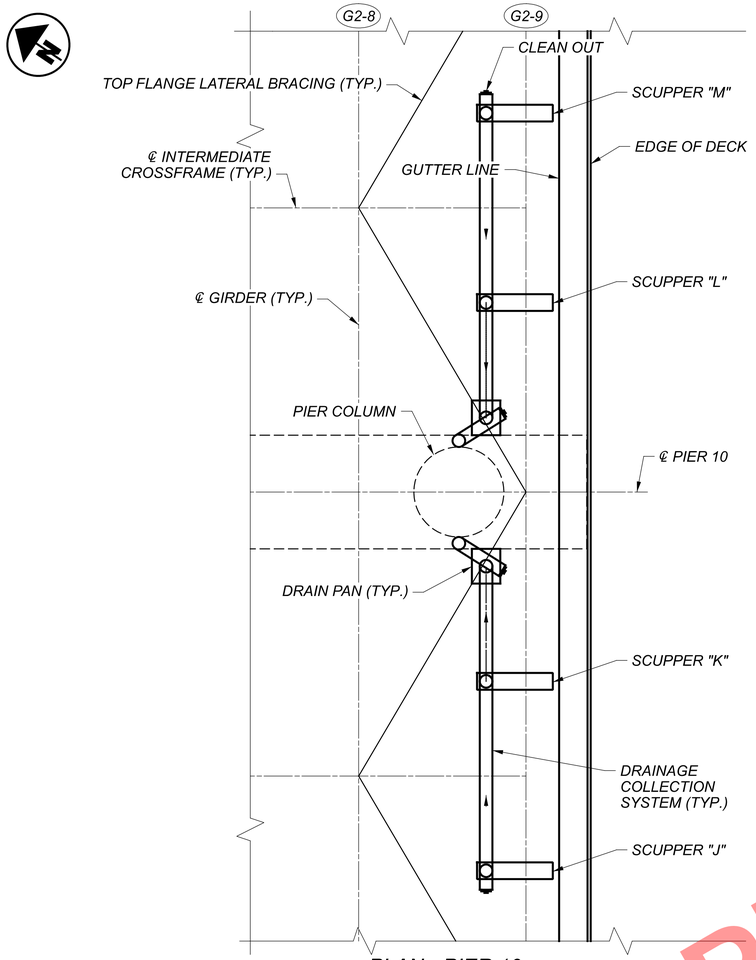

PLAN - PIER 10

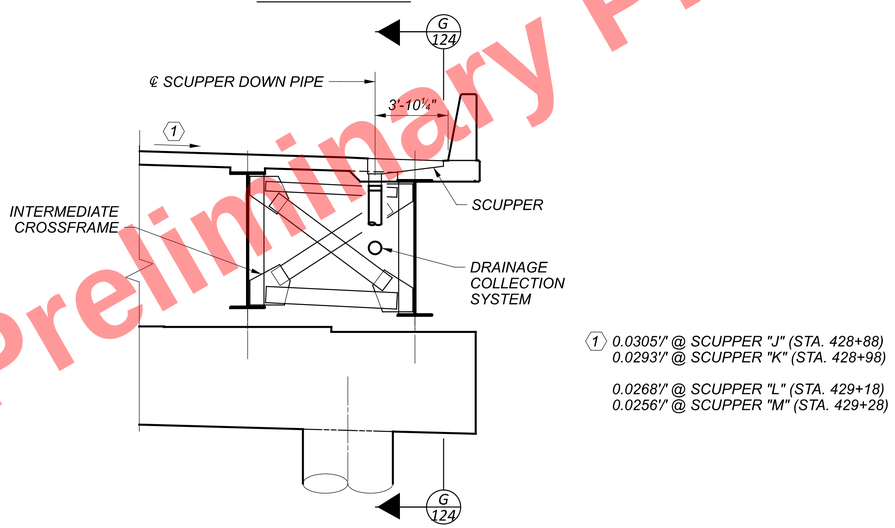

ELEVATION - PIER 10
(LOOKING UP STATION)

1 0.0305'/' @ SCUPPER "J" (STA. 428+88)
0.0293'/' @ SCUPPER "K" (STA. 428+98)

0.0268'/' @ SCUPPER "L" (STA. 429+18)
0.0256'/' @ SCUPPER "M" (STA. 429+28)

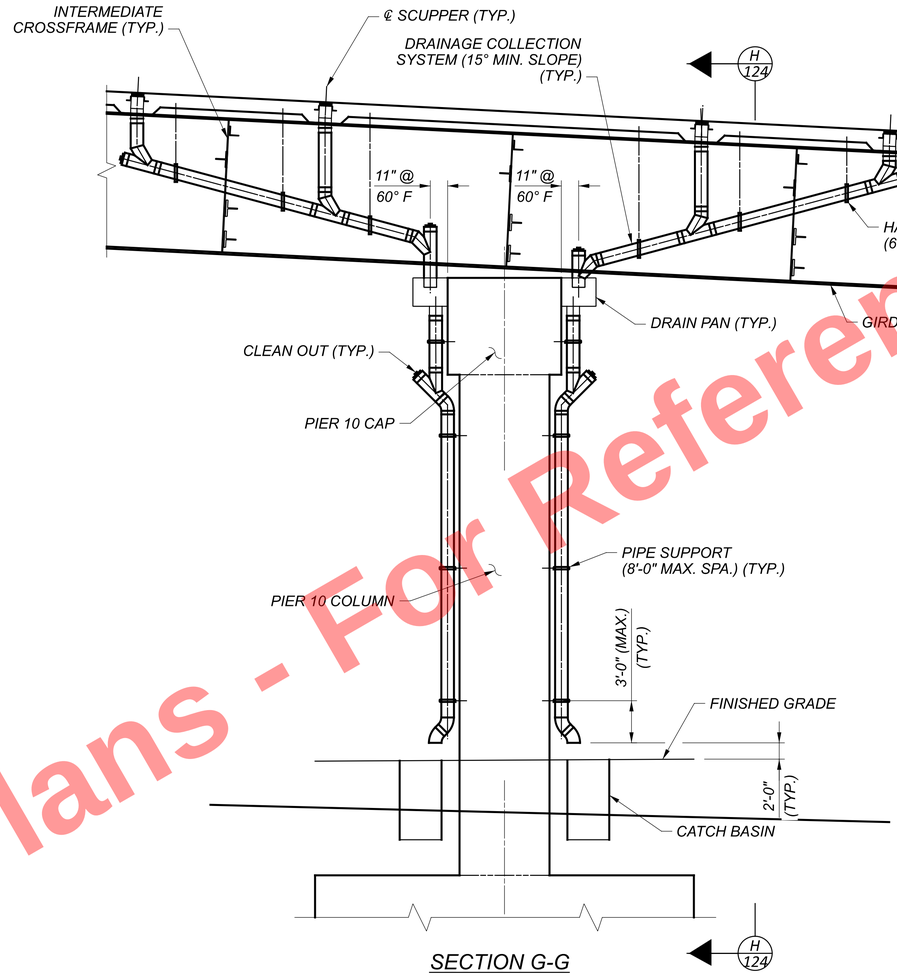

SECTION G-G

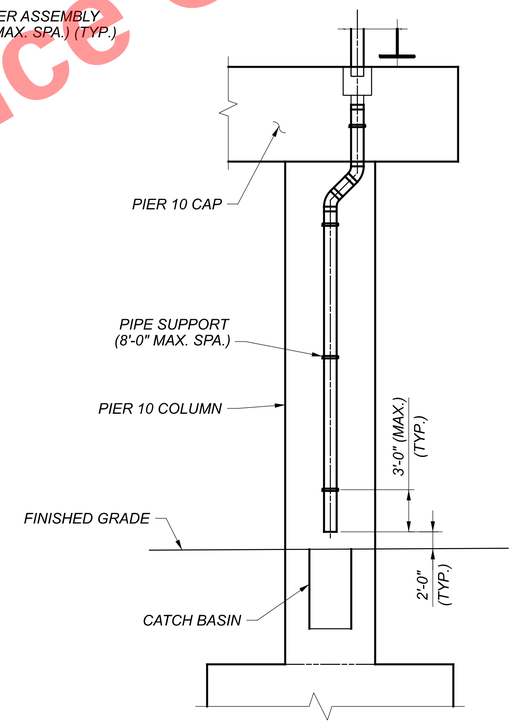

SECTION H-H
(LOOKING DOWN STATION)

NOTES:

1. FOR ADDITIONAL NOTES, SEE SHEET 120 / 167 .

Preliminary Plans - For Reference Only

BRIDGE DRAINAGE DETAILS - (5 OF 7)
CUY-77-1587 (BRIDGE 9)
I.R. 77 SB OVER I.R. 90 AND CR-721 (E. 14TH ST.)

SFN 1806910
DESIGN AGENCY HDR
DESIGNER RBK | CHECKER BTA
REVIEWER DWW 01/11/24
PROJECT ID 82382
SUBSET 124 | TOTAL 167
SHEET 1992 | TOTAL 2696

CUY-90-16.28 (CCG3A)

MODEL: Sheet PAPERSIZE: 34x22 (in.) DATE: 3/28/2025 TIME: 10:23:26 AM USER: Rohit.Bk
pw:\\mb-us-pw.bentley.com:mb-us-pw-03\Documents\Cleveland_OH\01_Projects\ODOT\District12\82382\400-Engineering\Structures\SFN_1806910\Sheets\82382_SFN_1806910_SM005.dgn

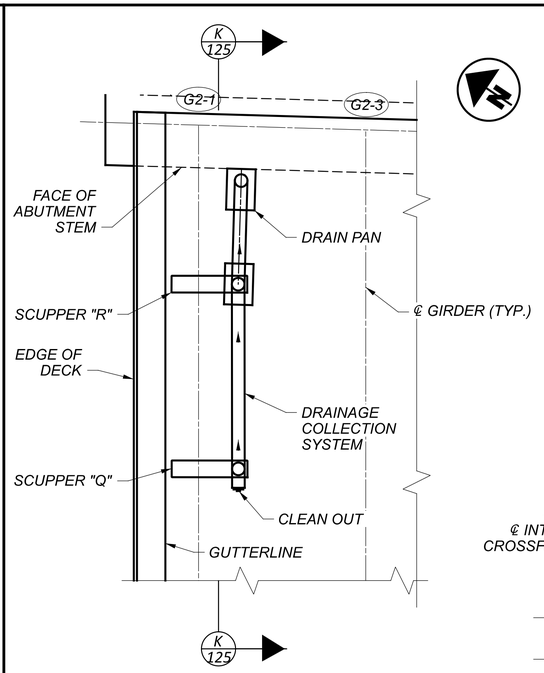

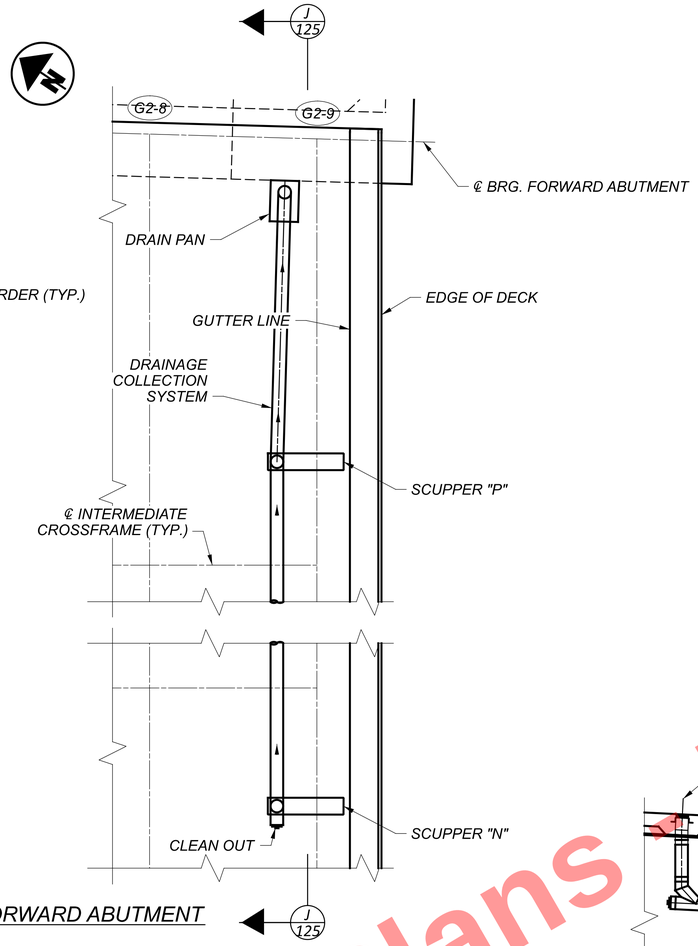

PLAN - FORWARD ABUTMENT

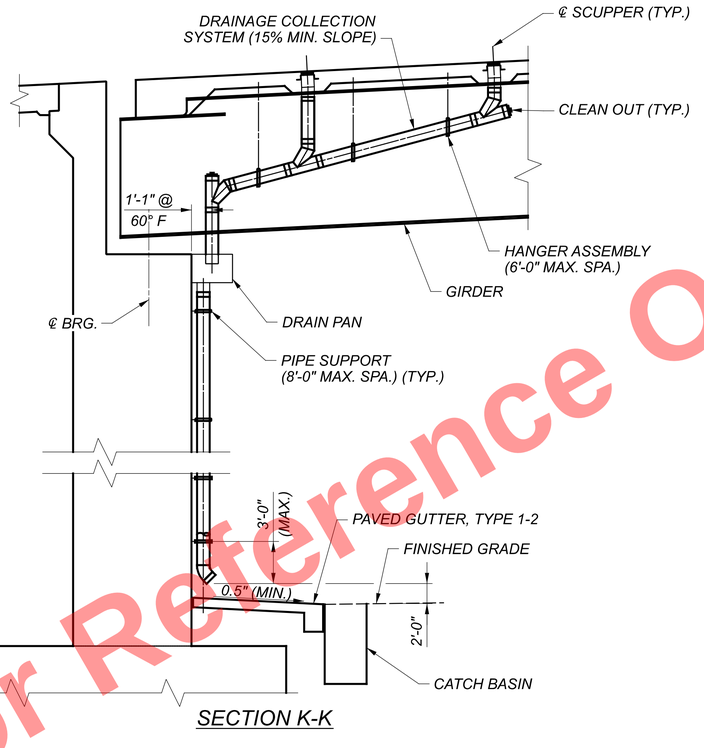

SECTION K-K

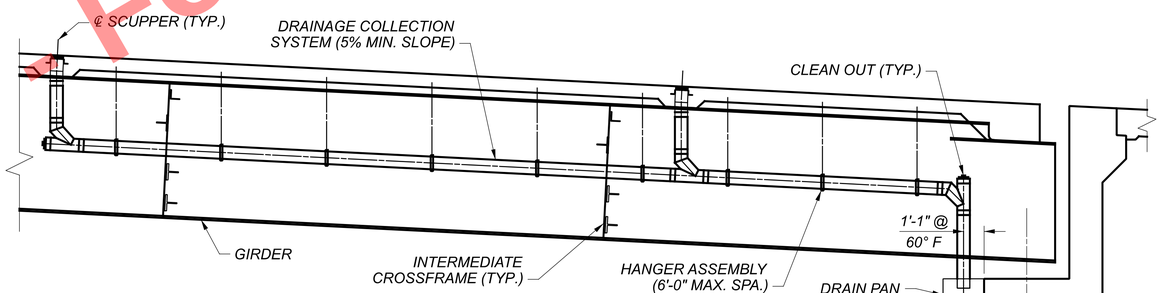

SECTION J-J

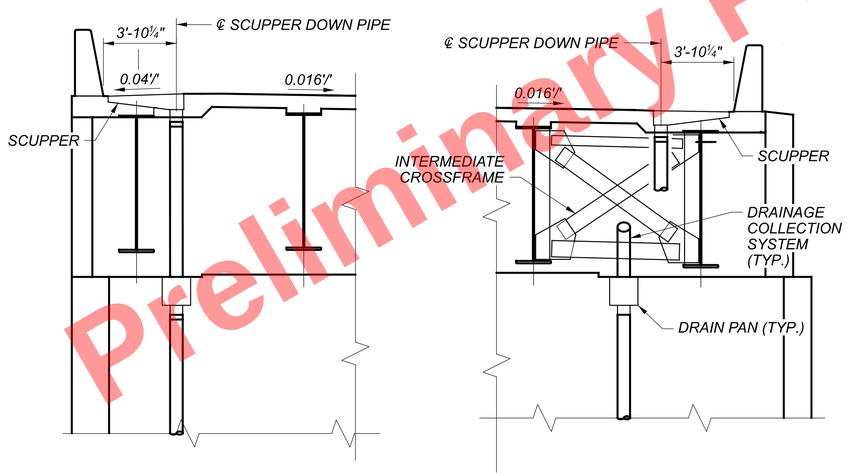

ELEVATION - FORWARD ABUTMENT
(LOOKING UP STATION)

NOTES:

1. FOR ADDITIONAL NOTES, SEE SHEET 120 / 167.

Preliminary Plans - For Reference Only

BRIDGE DRAINAGE DETAILS - (6 OF 7)
CUY-77-1587 (BRIDGE 9)
I.R. 77 SB OVER I.R. 90 AND CR-721 (E. 14TH ST.)

SFN	1806910
DESIGN AGENCY	HDR
DESIGNER	RBK
CHECKER	BTA
REVIEWER	DWW 01/11/24
PROJECT ID	82382
SUBSET	125
TOTAL	167
SHEET	1993
TOTAL	2696

CUY-90-16.28 (CCG3A)
MODEL: Sheet PAPERSIZE: 34x22 (in.) DATE: 3/28/2025 TIME: 10:23:33 AM USER: Rohit.Bk
pw:\\mb-us-pw.bentley.com:mb-us-pw-03\Documents\Cleveland_OH101_Projects\ODOT\District12\82382\400-Engineering\Structures\SFN_1806910\Sheets\82382_SFN_1806910_SM006.dgn

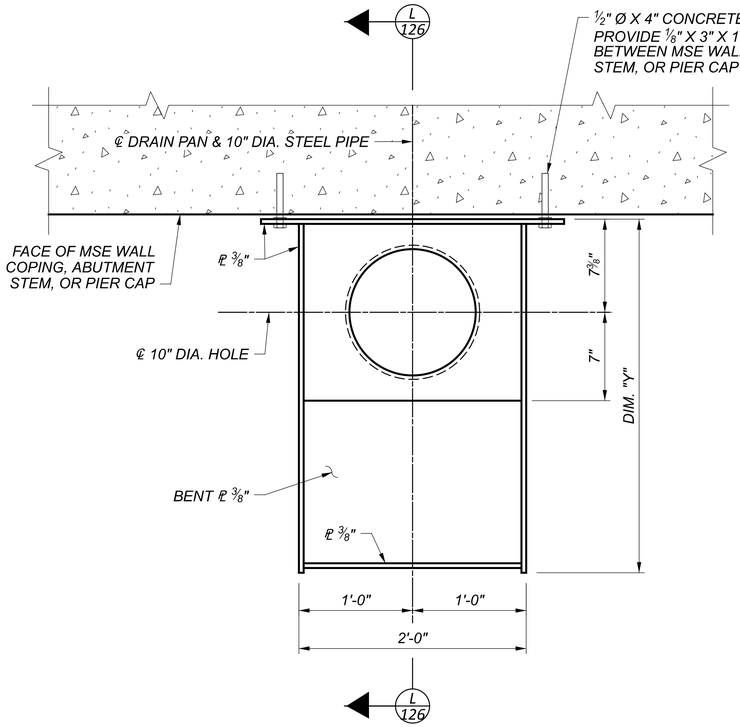

PLAN

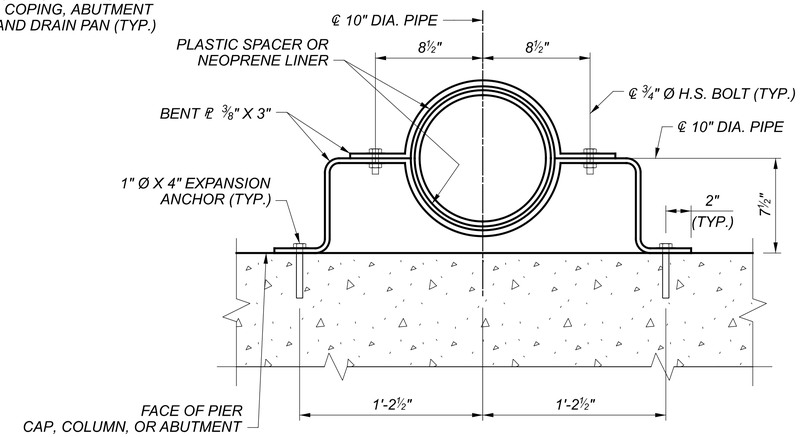

SECTION M-M

(AT PIERS AND FORWARD ABUTMENT)

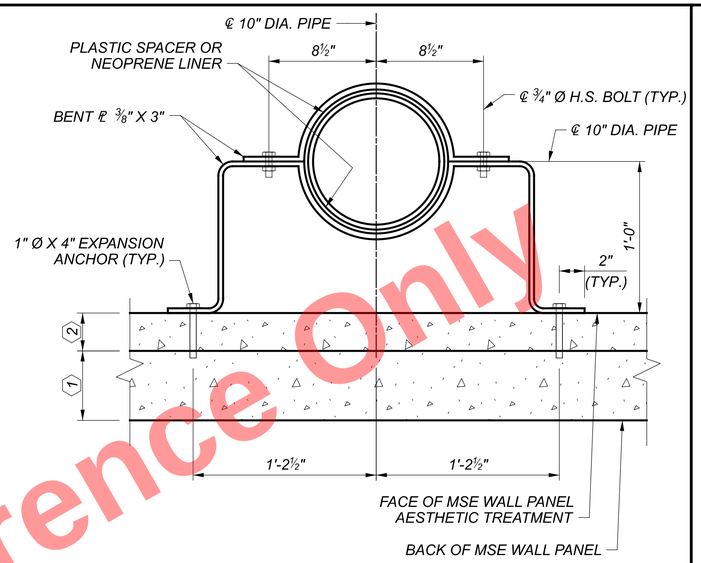

SECTION M-M

(REAR ABUTMENT ONLY)

(1) 5½" MSE WALL PANEL THICKNESS

(2) 3" AESTHETIC FACING TREATMENT

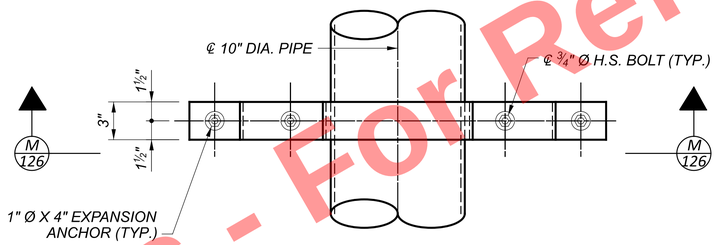

PIPE SUPPORT BRACKET DETAIL

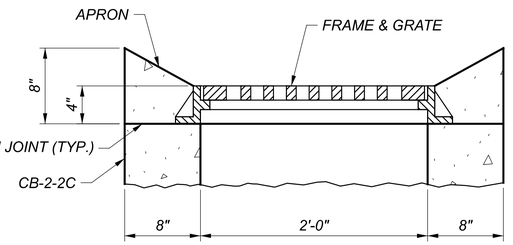

CATCH BASIN APRON DETAIL

DRAIN PAN DIMENSION TABLE		
LOCATION	DIM. "Y"	DIM. "Z"
REAR ABUTMENT	1'-6"	9"
PIER 4	2'-4"	1'-2"
PIER 10	1'-10"	11"
FORWARD ABUTMENT	2'-2"	1'-1"

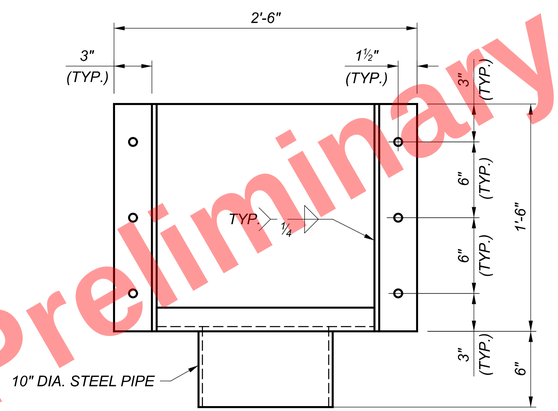

ELEVATION

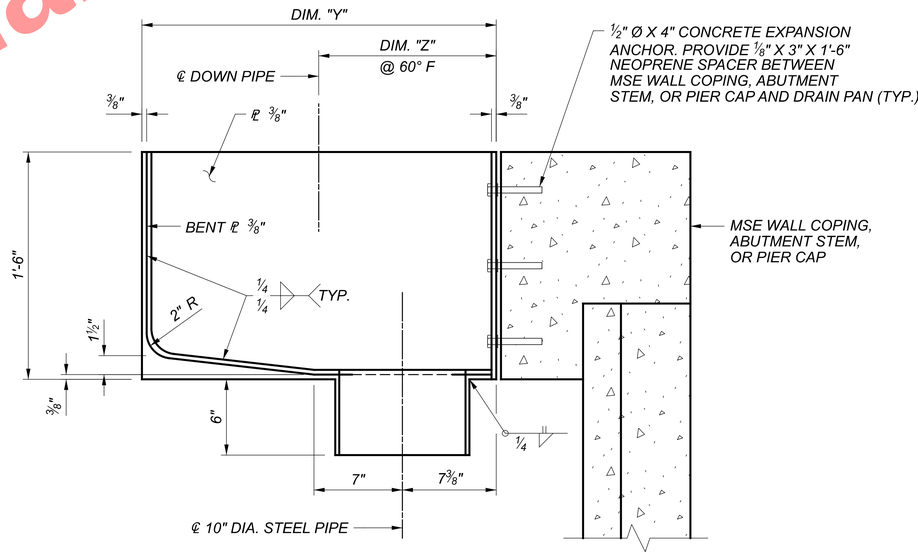

SECTION L-L

(MSE WALL COPING SHOWN, ABUTMENT STEM AND PIER CAP SIMILAR)

DRAIN PAN DETAILS

NOTES:

1. FOR ADDITIONAL NOTES, SEE SHEET 120 / 167 .

Preliminary Plans - For Reference Only

BRIDGE DRAINAGE DETAILS - (7 OF 7)
CUY-77-1587 (BRIDGE 9)
I.R. 77 SB OVER I.R. 90 AND CR-721 (E. 14TH ST.)

SFN 1806910
DESIGN AGENCY HDR
DESIGNER RBK | CHECKER BTA
REVIEWER DWW 01/11/24
PROJECT ID 82382
SUBSET 126 | TOTAL 167
SHEET 1994 | TOTAL 2696

CUY-90-16.28 (CCG3A)

MODEL: Sheet PAPERSIZE: 34x22 (in.) DATE: 3/28/2025 TIME: 10:23:41 AM USER: Rohit.Bk
pw:\\mb-us-pw.bentley.com:mb-us-pw-03\Documents\Cleveland_OH101_Projects\ODOT\District12\82382\400-Engineering\Structures\SFN_1806910\Sheets\82382_SFN_1806910_SM007.dgn

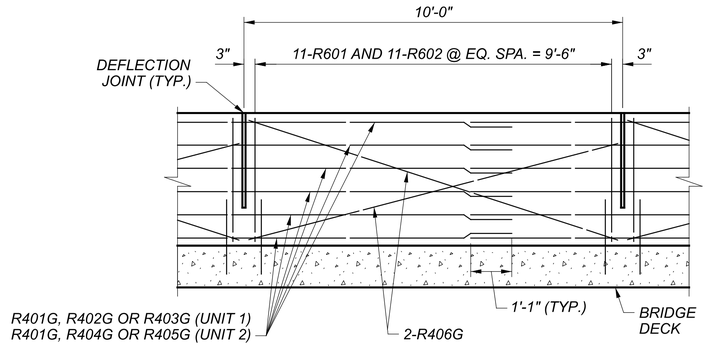

BRIDGE RAILING REINFORCING - 10'-0" PANEL

(133 PANELS - UNIT 1)
(256 PANELS - UNIT 2)

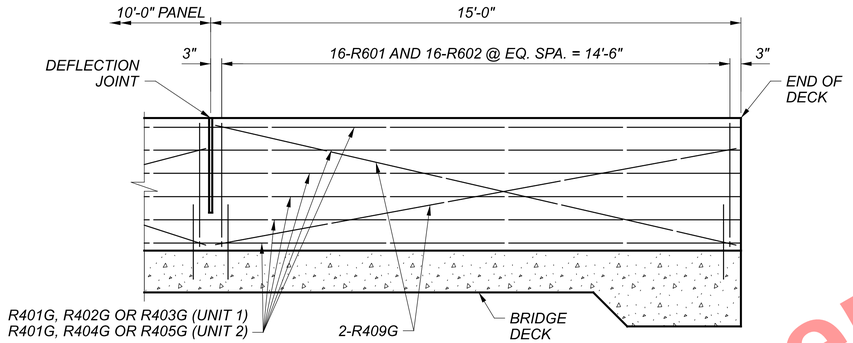

BRIDGE RAILING REINFORCING - 15'-0" PANEL

(2 PANELS - UNIT 1)
(2 PANELS - UNIT 2)

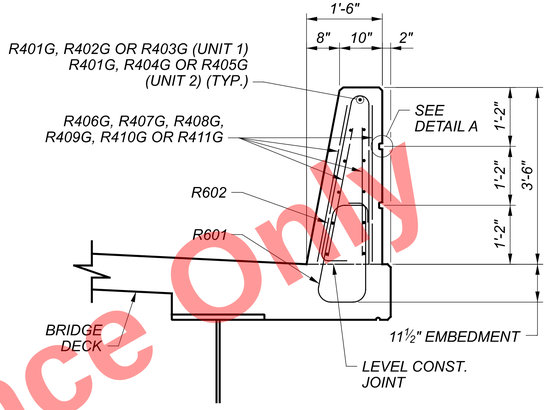

TYPICAL BRIDGE RAILING SECTION

(DECK REINFORCING NOT SHOWN)

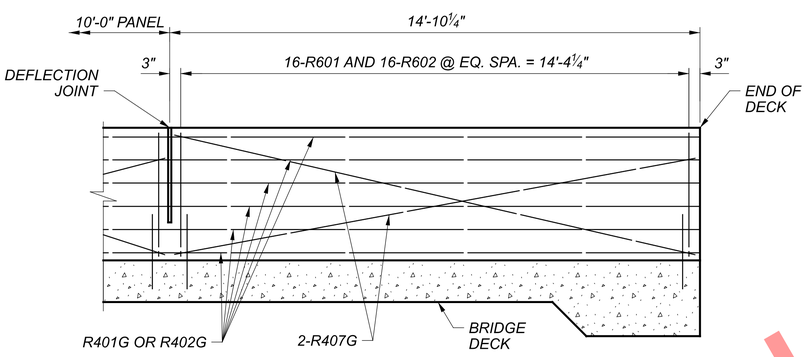

BRIDGE RAILING REINFORCING - 14'-10¼" PANEL

(1 PANEL - UNIT 1)

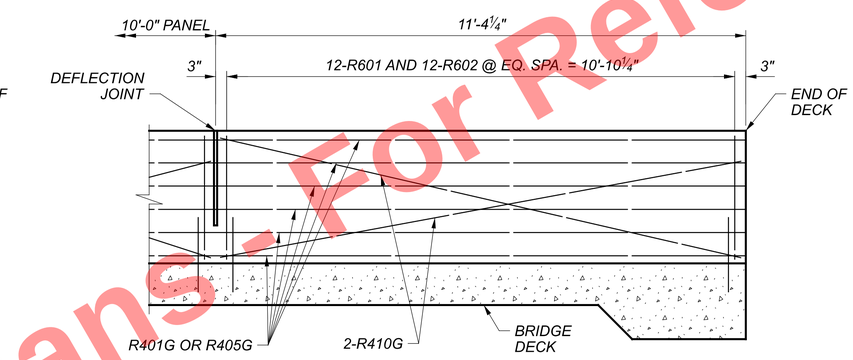

BRIDGE RAILING REINFORCING - 11'-4¼" PANEL

(1 PANEL - UNIT 2)

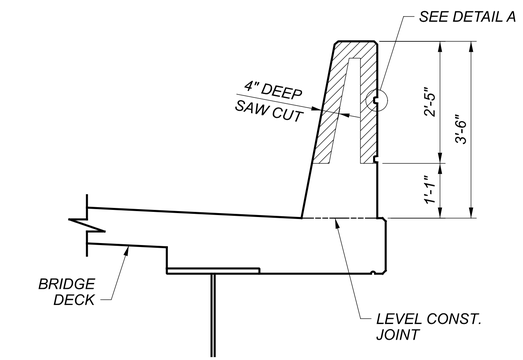

DEFLECTION JOINT DETAIL

(DECK AND RAILING REINFORCING NOT SHOWN)

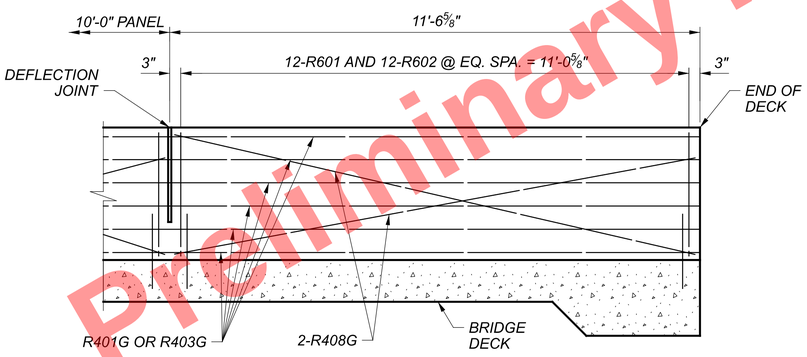

BRIDGE RAILING REINFORCING - 11'-6⅝" PANEL

(1 PANEL - UNIT 1)

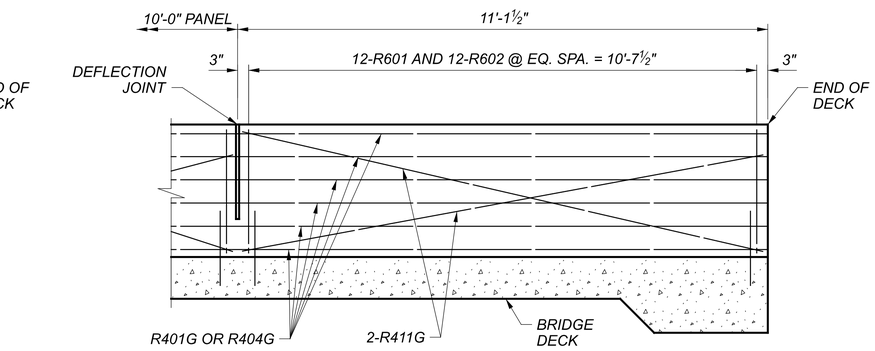

BRIDGE RAILING REINFORCING - 11'-1½" PANEL

(1 PANEL - UNIT 2)

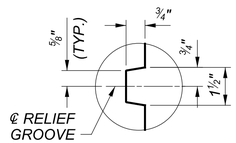

DETAIL A

NOTES:

1. FOR ADDITIONAL RAILING NOTES AND DETAILS, SEE ODOT STD. DWG. SBR-1-20.

2. THE CONCRETE FOR THE RAILING MOUNTED ON THE APPROACH SLAB SHALL BE PAID FOR WITH ITEM 511, CLASS QC2 CONCRETE WITH QC/QA BRIDGE DECK (PARAPET).

3. FOR APPROACH SLAB RAILING AND TRANSITION DETAILS, SEE SHEETS 156 / 167 AND 158 / 167 .

4. FOR DECK AND RAILING PLAN, SEE SHEETS 105 / 167 THRU 113 / 167

5. FOR TRANSVERSE SECTIONS, SEE SHEETS 114 / 167 THRU 116 / 167

Preliminary Plans - For Reference Only

BRIDGE RAILING DETAILS
CUY-77-1587 (BRIDGE 9)
I.R. 77 SB OVER I.R. 90 AND CR-721 (E. 14TH ST.)

SFN 1806910
DESIGN AGENCY
DESIGNER NJH | CHECKER RBK
REVIEWER DWW 01/11/24
PROJECT ID 82382
SUBSET 127 | TOTAL 167
SHEET 1995 | TOTAL 2696

CUY-90-16.28 (CCG3A)
MODEL: Sheet PAPERSIZE: 34x22 (in.) DATE: 3/28/2025 TIME: 10:23:47 AM USER: Rohit.Bk
pw:\\mb-us-pw.bentley.com:mb-us-pw-03\Documents\Cleveland_OH01_Projects\ODOT\District12\82382\400-Engineering\Structures\SFN_1806910\Sheets\82382_SFN_1806910_SA001.dgn

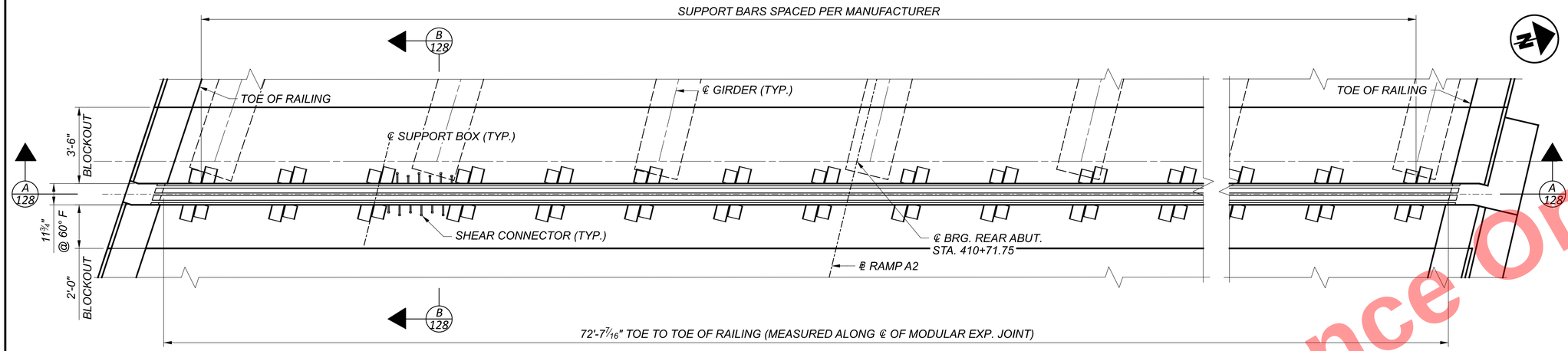

PLAN AT MODULAR EXPANSION JOINT
REAR ABUTMENT

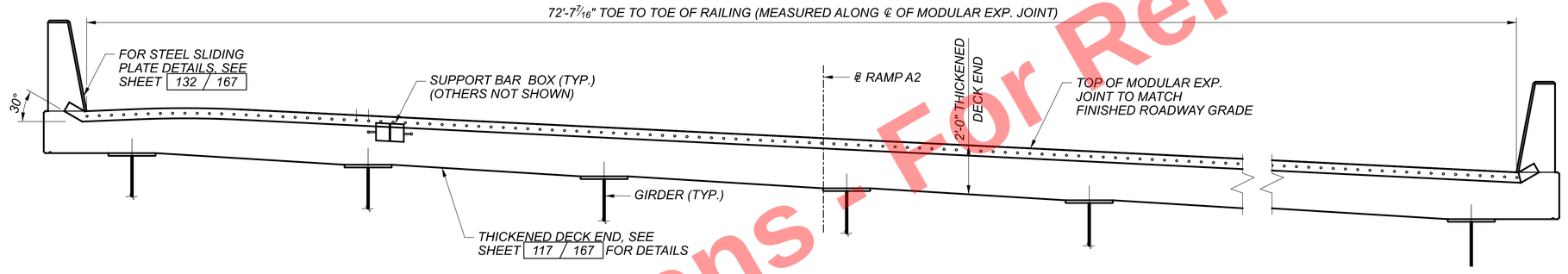

SECTION A-A

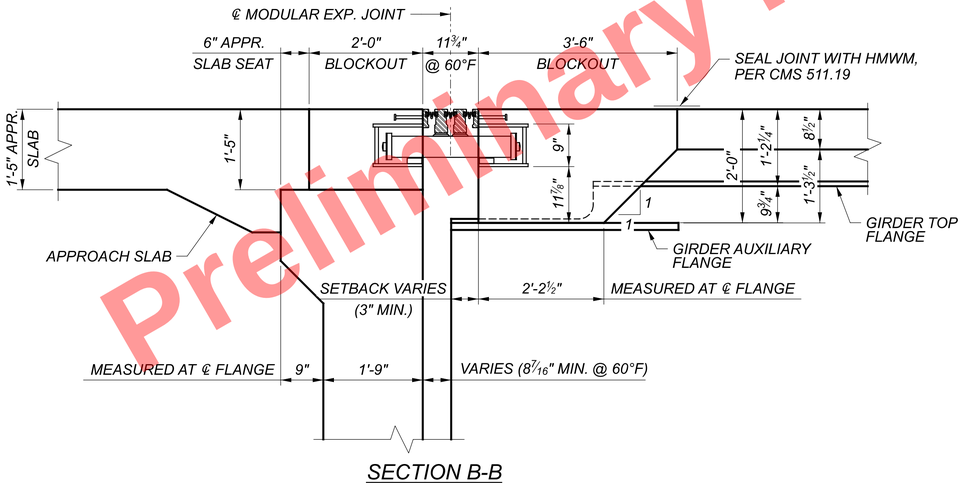

SECTION B-B
(HORIZONTAL DIMENSIONS MEASURED NORMAL TO ℄ BRG. AND ℄ MODULAR EXP. JOINT, UNLESS NOTED OTHERWISE)

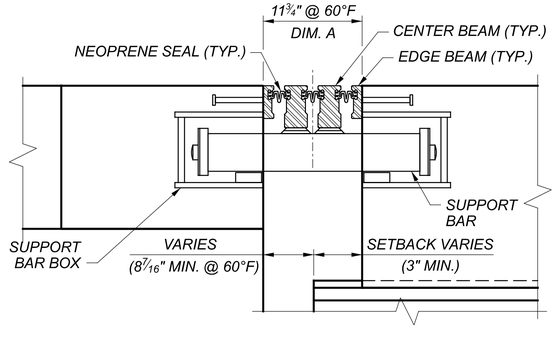

MODULAR EXP. JOINT DETAIL
(HORIZONTAL DIMENSIONS MEASURED NORMAL TO ℄ BRG. AND ℄ MODULAR EXP. JOINT, UNLESS NOTED OTHERWISE)

EXPANSION JOINT OPENING DIMENSIONS ▲	
	REAR ABUT. DIM. "A" (IN.)
30ºF	12.53
40ºF	12.27
50ºF	12.01
60ºF	11.75
70ºF	11.49
80ºF	11.23
90ºF	10.97

▲ JOINT OPENINGS SHOWN ARE BASED ON A MID-TEMP OF 45°F USING THE DESIGN DATA FOR D.S. BROWN STEELFLEX MODULAR EXPANSION JOINT SYSTEMS

NOTES:

1. FOR MODULAR EXPANSION JOINT NOTES, SEE SHEET 131 / 167 .
2. DESIGN THE MODULAR EXPANSION JOINT SYSTEM TO ACCOMMODATE 8.4 INCHES OF MOVEMENT MEASURED ALONG THE LOCAL TANGENT OF BASELINE RAMP A2 WHERE IT CROSSES THE CENTERLINE OF BEARING. THIS MOVEMENT INCLUDES ALL AASHTO PRESCRIBED CONTINGENCIES.

Preliminary Plans - For Reference Only

MODULAR EXPANSION JOINT DETAILS - (1 OF 7)
CUY-77-1587 (BRIDGE 9)
I.R. 77 SB OVER I.R. 90 AND CR-721 (E. 14TH ST.)

SFN 1806910
DESIGN AGENCY
DESIGNER MKO | CHECKER ABO
REVIEWER DWW 01/11/24
PROJECT ID 82382
SUBSET 128 | TOTAL 167
SHEET 1996 | TOTAL 2696

CUY-90-16.28 (CCG3A)

MODEL: Sheet PAPERSIZE: 34x22 (in.) DATE: 3/28/2025 TIME: 10:23:53 AM USER: RohitLBk
pw:\\mb-us-pw.bentley.com:mb-us-pw-03\Documents\Cleveland_OH\01_Projects\ODOT\District12\82382\400-Engineering\Structures\SFN_1806910\Sheets\82382_SFN_1806910_SX001.dgn

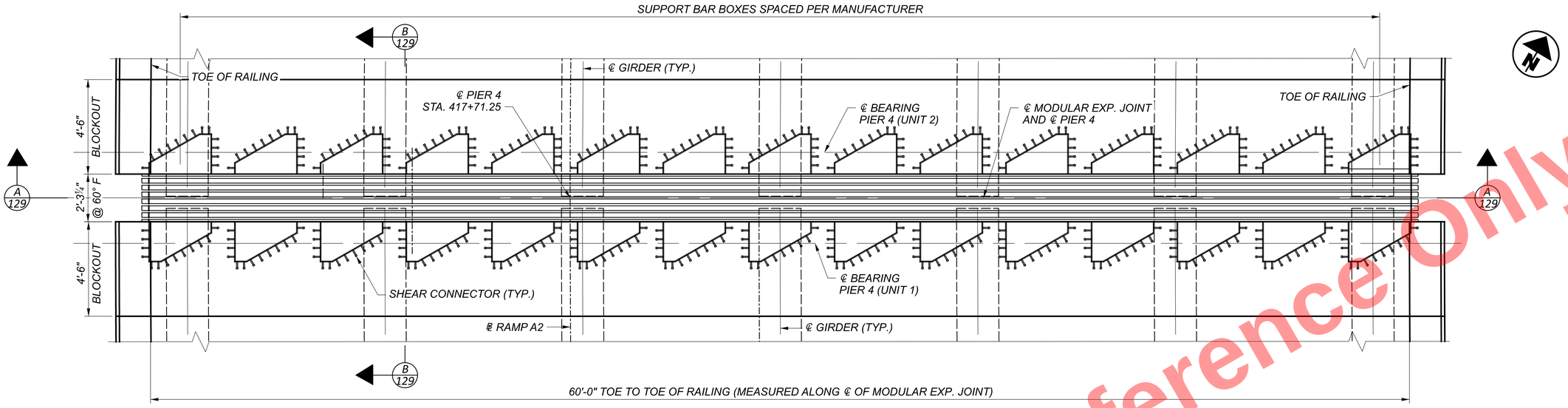

PLAN AT MODULAR EXPANSION JOINT
PIER 4

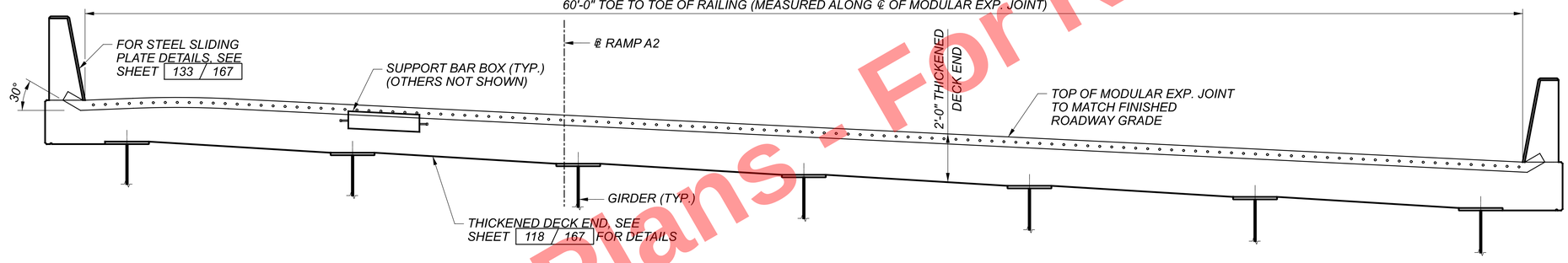

SECTION A-A

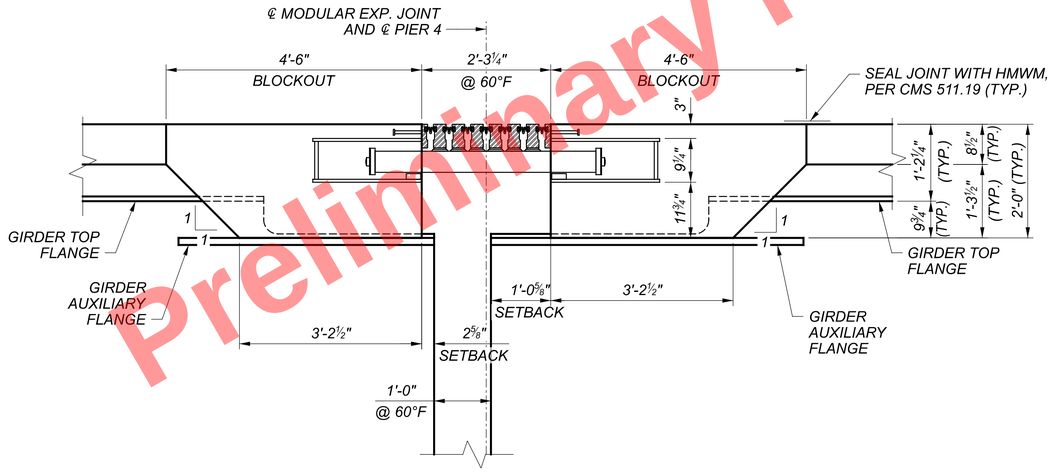

SECTION B-B
(HORIZONTAL DIMENSIONS MEASURED NORMAL TO ℄ PIER 4
AND ℄ MODULAR EXP. JOINT, UNLESS NOTED OTHERWISE)

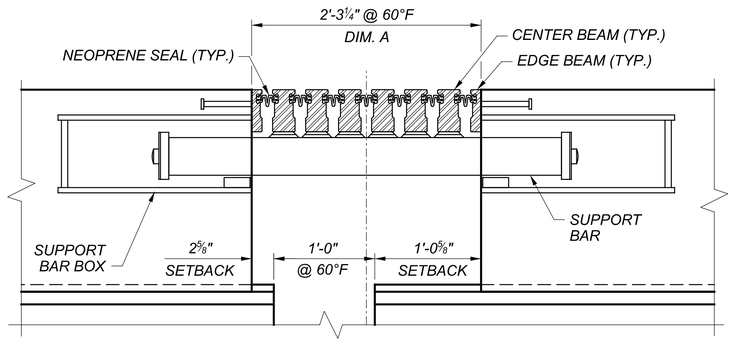

MODULAR EXP. JOINT DETAIL
(HORIZONTAL DIMENSIONS MEASURED NORMAL TO ℄ PIER 4
AND ℄ MODULAR EXP. JOINT, UNLESS NOTED OTHERWISE)

EXPANSION JOINT OPENING DIMENSIONS▲	
	PIER 4 DIM. "A" (IN.)
30ºF	29.60
40ºF	28.82
50ºF	28.03
60ºF	27.25
70ºF	26.47
80ºF	25.69
90ºF	24.91

▲ JOINT OPENINGS SHOWN ARE BASED ON A MID-TEMP OF 45°F USING THE DESIGN DATA FOR D.S. BROWN STEELFLEX MODULAR EXPANSION JOINT SYSTEMS

NOTES:

1. FOR MODULAR EXPANSION JOINT NOTES, SEE SHEET 131 / 167 .
2. DESIGN THE MODULAR EXPANSION JOINT SYSTEM TO ACCOMMODATE 19.7 INCHES OF MOVEMENT MEASURED NORMAL TO CENTERLINE OF BEARING AND CENTERLINE OF PIER 4. THIS MOVEMENT INCLUDES ALL AASHTO PRESCRIBED CONTINGENCIES.

Preliminary Plans - For Reference Only

MODULAR EXPANSION JOINT DETAILS - (2 OF 7)
CUY-77-1587 (BRIDGE 9)
I.R. 77 SB OVER I.R. 90 AND CR-721 (E. 14TH ST.)

SFN 1806910
DESIGN AGENCY
DESIGNER MKO | CHECKER ABO
REVIEWER DWW 01/11/24
PROJECT ID 82382
SUBSET 129 | TOTAL 167
SHEET 1997 | TOTAL 2696

CUY-90-16.28 (CCG3A)

MODEL: Sheet PAPERSIZE: 34x22 (in.) DATE: 3/28/2025 TIME: 10:24:02 AM USER: RohitBk
pw:\\mb-us-pw.bentley.com:mb-us-pw-03\Documents\Cleveland_OH\01_Projects\ODOT\District12\82382\400-Engineering\Structures\SFN_1806910\Sheets\82382_SFN_1806910_SX002.dgn

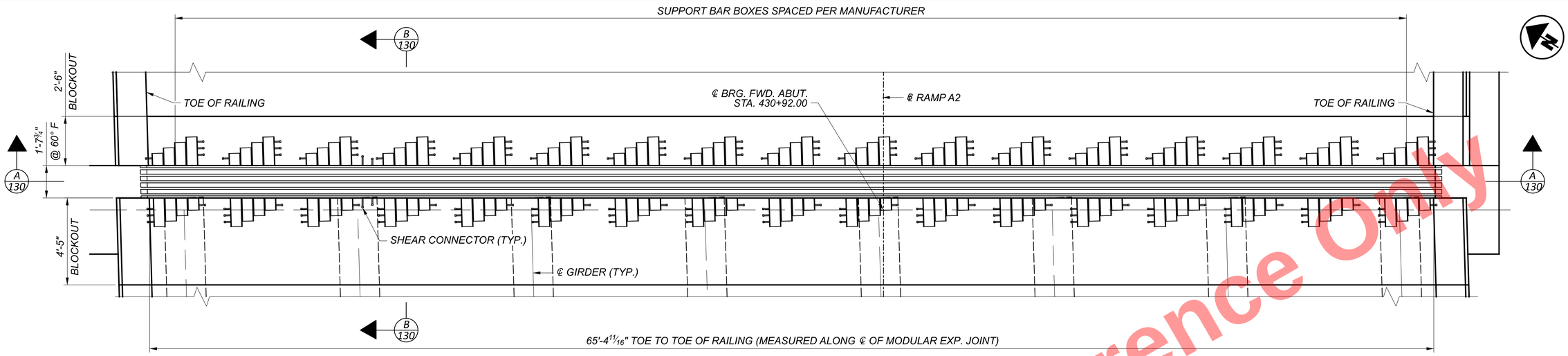

PLAN AT MODULAR EXPANSION JOINT
FORWARD ABUTMENT

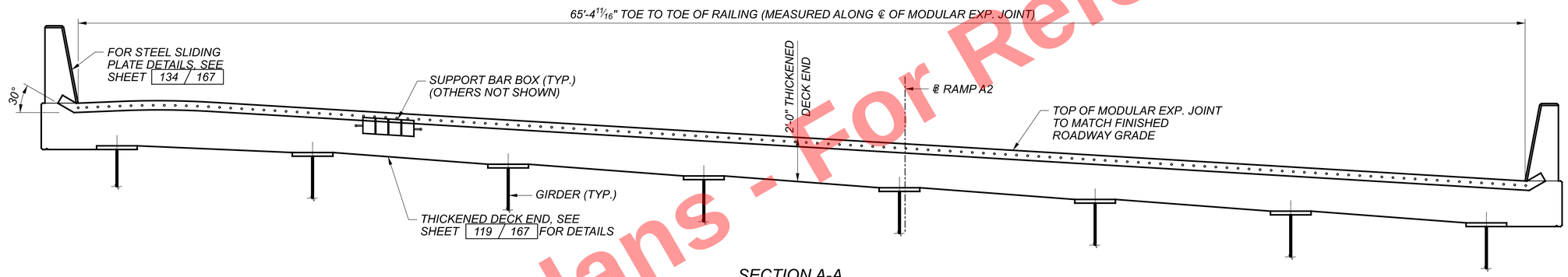

SECTION A-A

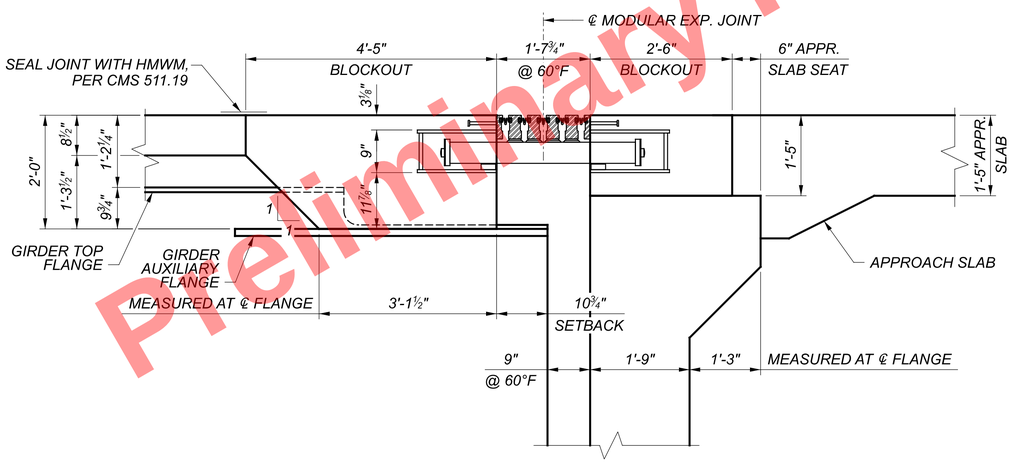

SECTION B-B
(HORIZONTAL DIMENSIONS MEASURED NORMAL TO ℄ BRG. AND ℄ MODULAR EXP. JOINT, UNLESS NOTED OTHERWISE)

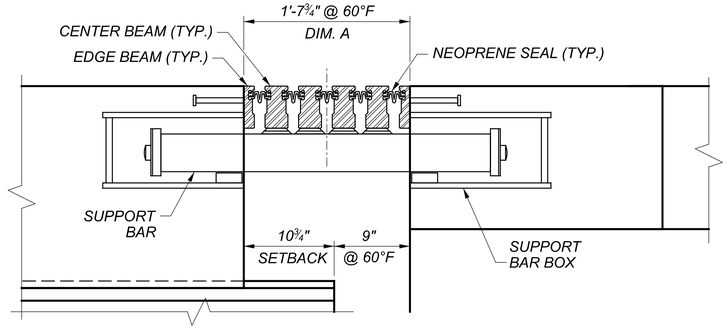

MODULAR EXP. JOINT DETAIL
(HORIZONTAL DIMENSIONS MEASURED NORMAL TO ℄ BRG. AND ℄ MODULAR EXP. JOINT, UNLESS NOTED OTHERWISE)

EXPANSION JOINT OPENING DIMENSIONS ▲	
	FWD. ABUT. DIM. "A" (IN.)
30ºF	21.13
40ºF	20.67
50ºF	20.21
60ºF	19.75
70ºF	19.29
80ºF	18.82
90ºF	18.36

▲ JOINT OPENINGS SHOWN ARE BASED ON A MID-TEMP OF 45°F USING THE DESIGN DATA FOR D.S. BROWN STEELFLEX MODULAR EXPANSION JOINT SYSTEMS.

NOTES:

1. FOR MODULAR EXPANSION JOINT NOTES, SEE SHEET 131 / 167 .
2. DESIGN THE MODULAR EXPANSION JOINT SYSTEM TO ACCOMMODATE 13.7 INCHES OF MOVEMENT MEASURED ALONG THE CENTERLINE OF GIRDER. THIS MOVEMENT INCLUDES ALL AASHTO PRESCRIBED CONTINGENCIES.

Preliminary Plans - For Reference Only

MODULAR EXPANSION JOINT DETAILS - (3 OF 7)
CUY-77-1587 (BRIDGE 9)
I.R. 77 SB OVER I.R. 90 AND CR-721 (E. 14TH ST.)

SFN 1806910
DESIGN AGENCY HDR
DESIGNER MKO | CHECKER ABO
REVIEWER DWW 01/11/24
PROJECT ID 82382
SUBSET 130 | TOTAL 167
SHEET 1998 | TOTAL 2696

CUY-90-16.28 (CCG3A)

MODEL: Sheet PAPERSIZE: 34x22 (in.) DATE: 3/28/2025 TIME: 10:24:10 AM USER: Rohit.Bk
pw:\\mb-us-pw.bentley.com:mb-us-pw-03\Documents\Cleveland_OH\01_Projects\ODOT\District12\82382\400-Engineering\Structures\SFN_1806910\Sheets\82382_SFN_1806910_SX003.dgn

NOTES:

1. THE MODULAR EXPANSION JOINTS SHALL BE PLACED AFTER ALL DECK POURS FOR BOTH UNIT 1 AND UNIT 2 HAVE BEEN COMPLETED AND AFTER THE REQUIREMENTS NOTED IN THE DECK POURING SEQUENCE ON SHEET 154 / 167 HAVE BEEN SATISFIED SUCH THAT THE THICKENED DECK ENDS AND BLOCKOUTS ARE PERMITTED TO BEGIN.

2. THE MODULAR EXPANSION JOINT SYSTEM, INCLUDING ANCHORAGES AND SUPPORT BAR BOXES SHALL BE SUPPLIED BY THE APPROVED CHOSEN MANUFACTURER.

3. THE DETAILS SHOWN ARE INTENDED TO BE SCHEMATIC. THE ACTUAL COMPONENTS OF THE EXPANSION JOINT SYSTEM MAY VARY FROM THOSE SHOWN. THIS INCLUDES, BUT IS NOT LIMITED TO THE NUMBER OF CELLS, NUMBER OF SUPPORT BARS, SUPPORT BAR SPACING, AND SUPPORT BAR BOX SIZE. HOWEVER, THE TOTAL REQUIRED RANGE OF EXPANSION REMAINS UNCHANGED REGARDLESS OF MANUFACTURER CHOSEN.

4. SPACING OF SUPPORT BARS SHALL BE LIMITED TO THREE FOOT CENTERS UNDER MAIN LOAD BEARING BEAMS UNLESS FATIGUE TESTING OF THE ACTUAL WELDING CONNECTION DETAILS HAS BEEN PERFORMED TO SHOW THAT A GREATER SPACING IS ACCEPTABLE. FATIGUE RESISTANCE SHALL BE DETERMINED ACCORDING TO AASHTO LRFD 6.6.1.2.5. ALL COMPONENTS OR DETAILS SHALL BE DESIGNED FOR INFINITE LIFE USING FATIGUE I LOAD COMBINATION.

5. WELDING SHALL COMPLY WITH THE CURRENT AASHTO/AWS BRIDGE WELDING CODE D1.5.

6. THE CONTRACTOR SHALL VERIFY ALL DIMENSIONS PRIOR TO FABRICATION.

7. DETAILED SHOP DRAWINGS SHALL BE SUBMITTED FOR THE MODULAR EXPANSION JOINT ASSEMBLY AND THE SHIPPING DEVICE FOR APPROVAL BY THE ENGINEER. THE SHOP DRAWINGS SHALL INCLUDE A TEMPERATURE ADJUSTMENT CHART WITH 10° INCREMENTS BASED ON THE FINAL MODULAR EXPANSION JOINT DESIGN PERFORMED BY THE MANUFACTURER.

8. MODULAR EXPANSION JOINT SHALL BE MANUFACTURED TO FIT ROADWAY CROSS SLOPES AND GRADES INDICATED ON PLANS AND TO RUN CONTINUOUSLY BETWEEN LIMITS AS SHOWN. ALL WELDED SHOP AND FIELD SPLICES EXPOSED TO THE DECK SURFACES (TOE TO TOE OF RAILING) SHALL BE GROUND SMOOTH.

9. EXPANSION JOINT COVER PLATES ARE TO BE PROVIDED AT THE TRAFFIC BARRIERS. THE COST OF COVER PLATES, SCREWS, THREADED INSERTS, SHEAR CONNECTORS AND ANY OTHER INCIDENTALS SHALL BE INCLUDED IN THE PRICE BID FOR SPECIAL - MODULAR EXPANSION JOINT.

10. CONTRACTOR SHALL COORDINATE AND ADJUST REBAR DETAILS AT EXPANSION JOINT BLOCKOUT WITH JOINT MANUFACTURER TO AVOID INTERFERENCE WITH EXPANSION JOINT COMPONENTS.

11. THE EXPANSION DEVICE SHALL MEET THE LATEST EDITION OF THE AASHTO LRFD BRIDGE DESIGN AND ODOT BRIDGE DESIGN MANUAL.

12. SHOP AND FIELD WELDED SPLICES IN THE MAIN BEAMS AND CONNECTIONS TO THE MAIN BEAMS SHALL BE FULL PENETRATION WELDS AND 100 PERCENT NON-DESTRUCTIVELY TESTED IN ACCORDANCE WITH AWS D1.5 BRIDGE WELDING CODE.

13. APPROVED MANUFACTURER/FABRICATOR SHALL SUPPLY A QUALIFIED TECHNICAL REPRESENTATIVE TO THE JOBSITE DURING ALL INSTALLATION PROCEDURES.

14. FILL BLOCKOUT VOID WITH 4.5 KSI CLASS QC2 (SUPERSTRUCTURE) CONCRETE.

15. DIMENSIONS ARE BASED ON THE D.S. BROWN STEELFLEX MODULAR EXPANSION JOINT SYSTEMS. THE CONTRACTOR MAY USE AN APPROVED EQUAL MODULAR EXPANSION JOINT SYSTEM. IF AN APPROVED EQUAL MODULAR JOINT SYSTEM IS SELECTED, THE CONTRACTOR SHALL SUBMIT A CORRECTIVE WORK PER CMS 501.05.C. THE SUBMITTAL SHALL INCLUDE ALL PROPOSED CHANGES ASSOCIATED WITH THE PROPOSED MODULAR EXPANSION SYSTEM, INCLUDING BUT NOT LIMITED TO; REINFORCING CHANGES, BLOCKOUT DIMENSIONAL CHANGES, MATERIAL SPECIFICATION AND BRIDGE RAILING MODIFICATIONS.

Preliminary Plans - For Reference Only

MODULAR EXPANSION JOINT DETAILS - (4 OF 7)
CUY-77-1587 (BRIDGE 9)
I.R. 77 SB OVER I.R. 90 AND CR-721 (E. 14TH ST.)

SFN 1806910

DESIGN AGENCY

DESIGNER	CHECKER
MKO	ABO

REVIEWER
DWW 01/11/24

PROJECT ID
82382

SUBSET	TOTAL
131	167

SHEET	TOTAL
1999	2696

CUY-90-16.28 (CCG3A)

MODEL: Sheet PAPERSIZE: 34x22 (in.) DATE: 3/28/2025 TIME: 10:24:16 AM USER: RohitBk
pw:\\mb-us-pw.bentley.com:mb-us-pw-03\Documents\Cleveland_OH\01_Projects\ODOT\District12\82382400-Engineering\Structures\SFN_1806910\Sheets\82382_SFN_1806910_SX004.dgn

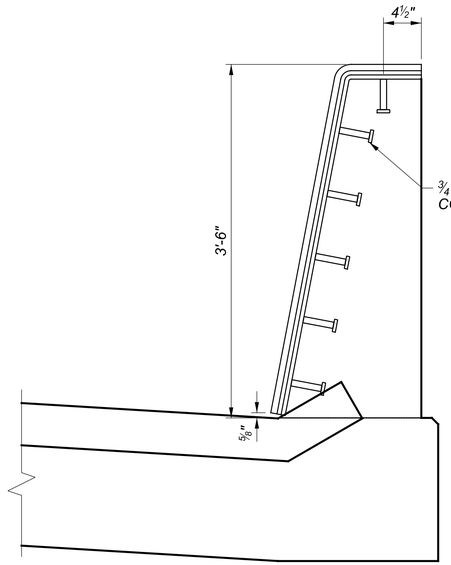

SECTION A-A

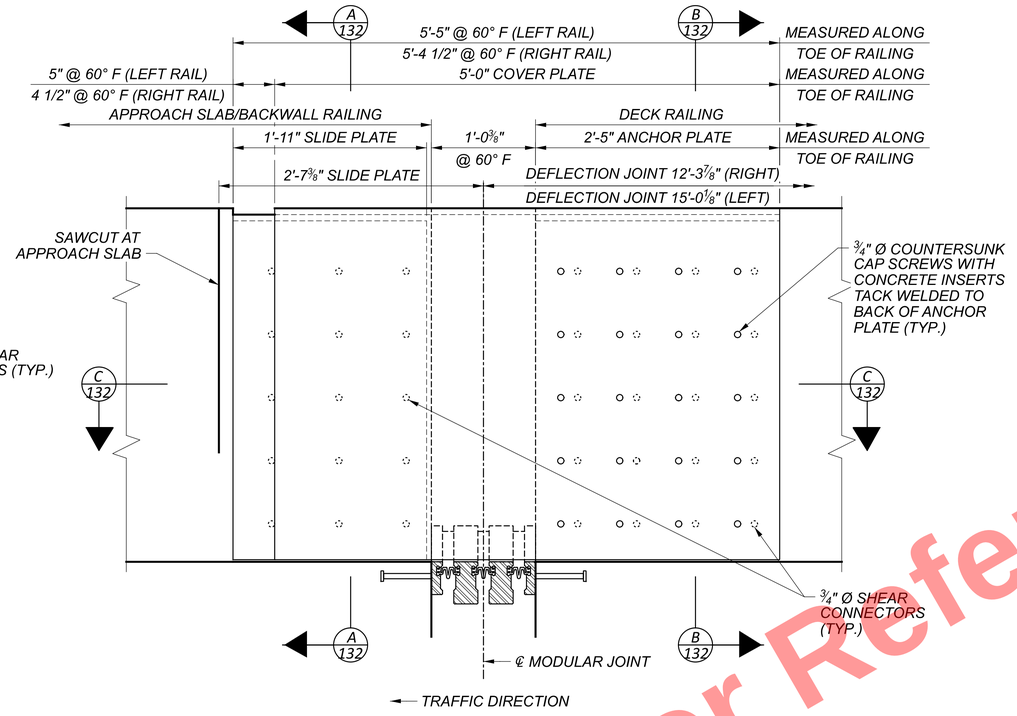

REAR ABUTMENT RAILING ELEVATION AT MODULAR EXPANSION JOINT

(LEFT RAILING SHOWN - RIGHT RAILING SIMILAR)

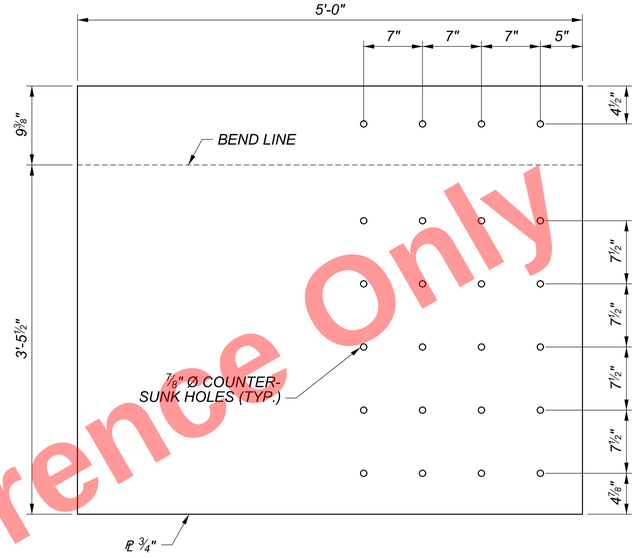

COVER PLATE

(DIMENSIONS SHOWN ARE AT MID-THICKNESS OF PLATE)

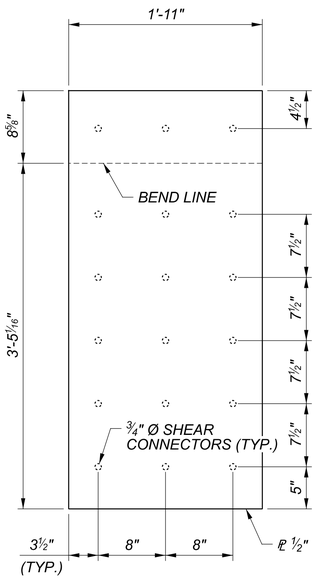

SLIDE PLATE

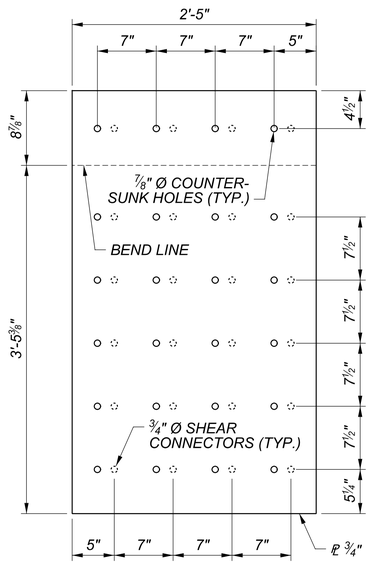

ANCHOR PLATE

(DIMENSIONS SHOWN ARE AT MID-THICKNESS OF PLATE)

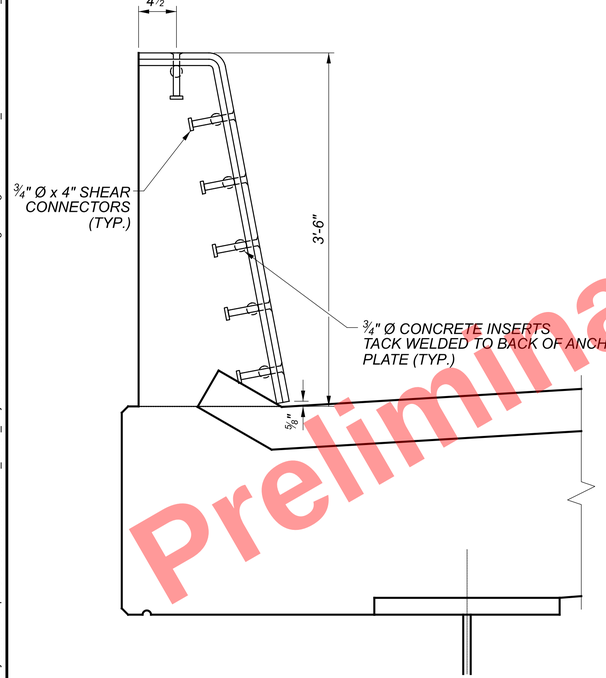

SECTION B-B

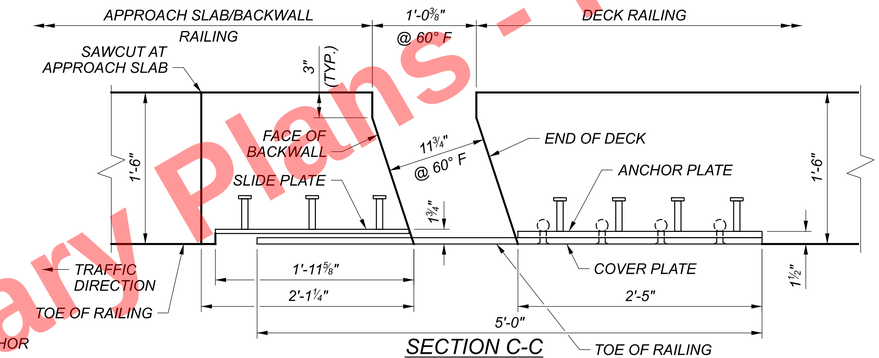

SECTION C-C

(LEFT RAILING)

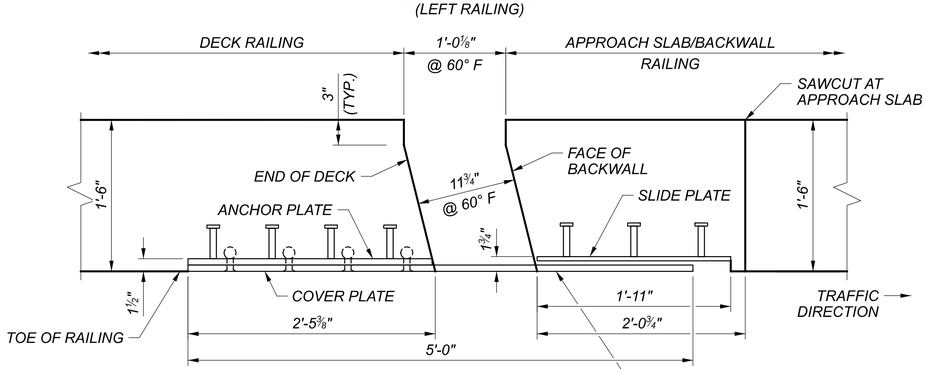

SECTION C-C

(RIGHT RAILING)

NOTES:

1. ALL PLATES SHALL BE ASTM A709 GRADE 50 STEEL.
2. ALL STRUCTURAL STEEL, INCLUDING SHEAR CONNECTORS AND THREADED INSERTS SHALL MEET THE REQUIREMENTS OF ODOT CMS 513 AND GALVANIZED AFTER FABRICATION IN ACCORDANCE WITH ODOT CMS 711.02. ANY TEMPORARY SUPPORTS OR LEVELING HARDWARE TO BE ENCASED IN CONCRETE SHALL BE GALVANIZED IN ACCORDANCE TO CMS 711.02.
3. ALL MACHINE SCREWS SHALL BE GALVANIZED AND ¾" Ø UNLESS OTHERWISE NOTED.
4. FOR EXPANSION JOINT OPENING DIMENSIONS, SEE SHEET 128 / 167

Preliminary Plans - For Reference Only

CUY-90-16.28 (CCG3A)

MODEL: Sheet PAPERSIZE: 34x22 (in.) DATE: 3/28/2025 TIME: 10:24:23 AM USER: Rohit.Bk
pw:\\tmb-us-pw.bentley.com:tmb-us-pw-03\Documents\Cleveland_OH\01_Projects\ODOT\District12\82382\400-Engineering\Structures\SFN_1806910\Sheets\82382_SFN_1806910_SX005.dgn

MODULAR EXPANSION JOINT DETAILS - (5 OF 7)
CUY-77-1587 (BRIDGE 9)
I.R. 77 SB OVER I.R. 90 AND CR-721 (E. 14TH ST.)

SFN	1806910
DESIGN AGENCY	HDR
DESIGNER	MKO
CHECKER	TJE
REVIEWER	DWW 01/11/24
PROJECT ID	82382
SUBSET	132
TOTAL	167
SHEET	2000
TOTAL	2696

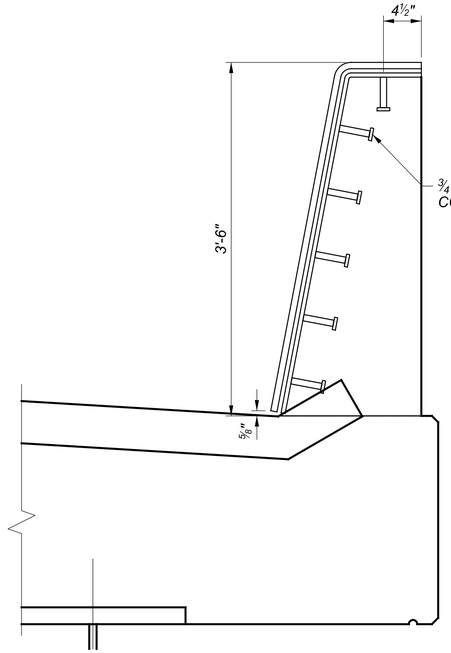

SECTION A-A

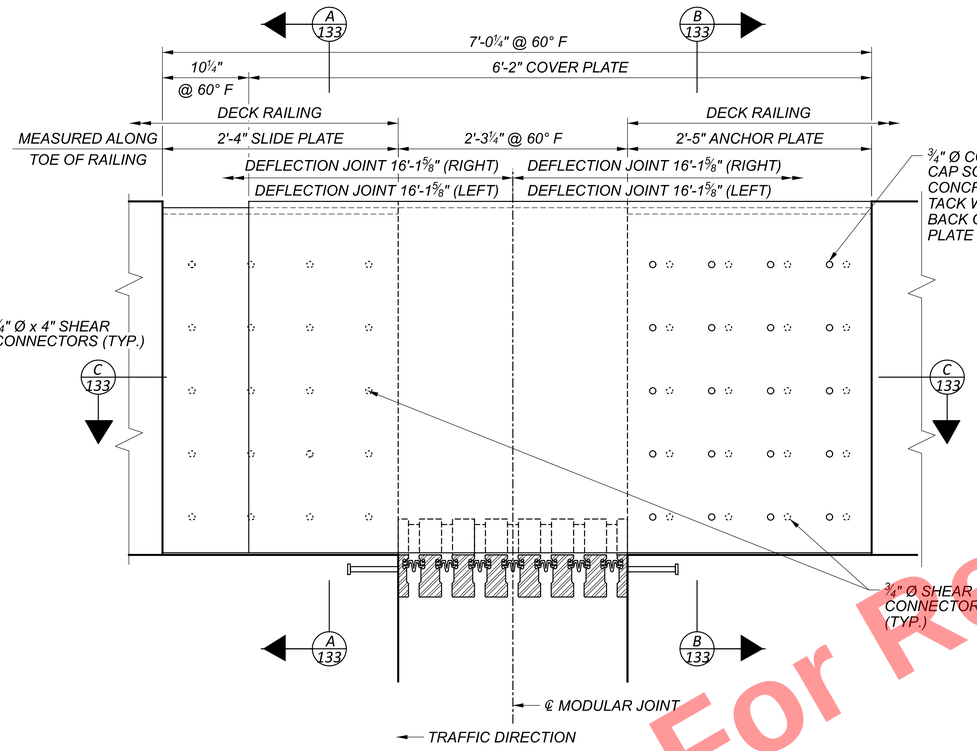

PIER 4 RAILING ELEVATION
AT MODULAR EXPANSION JOINT
(LEFT RAILING SHOWN - RIGHT RAILING SIMILAR)

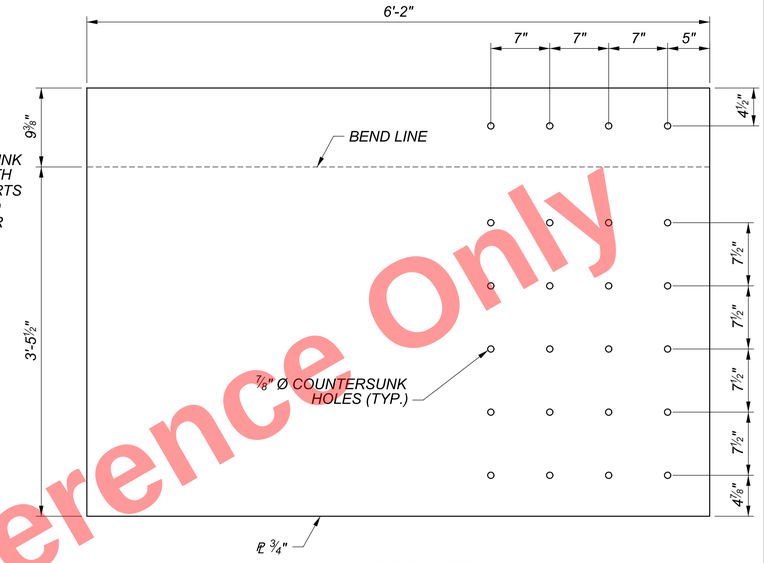

COVER PLATE
(DIMENSIONS SHOWN ARE AT MID-THICKNESS OF PLATE)

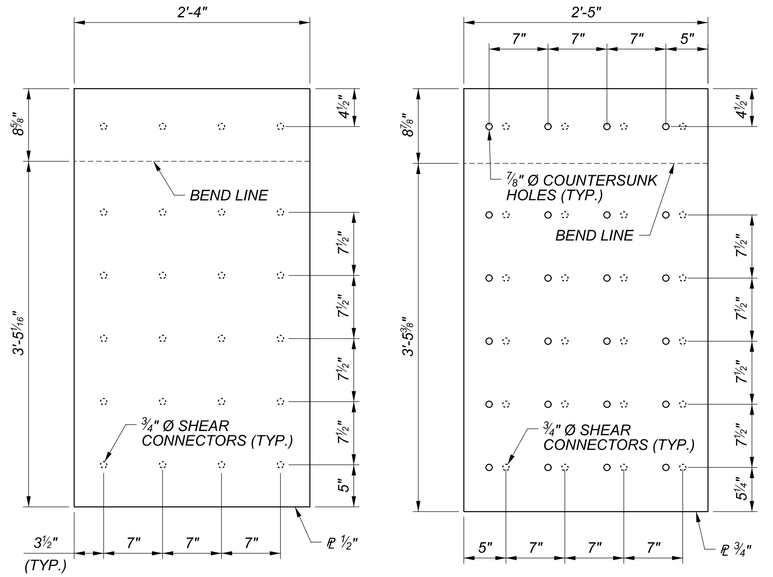

SLIDE PLATE ANCHOR PLATE
(DIMENSIONS SHOWN ARE AT MID-THICKNESS OF PLATE)

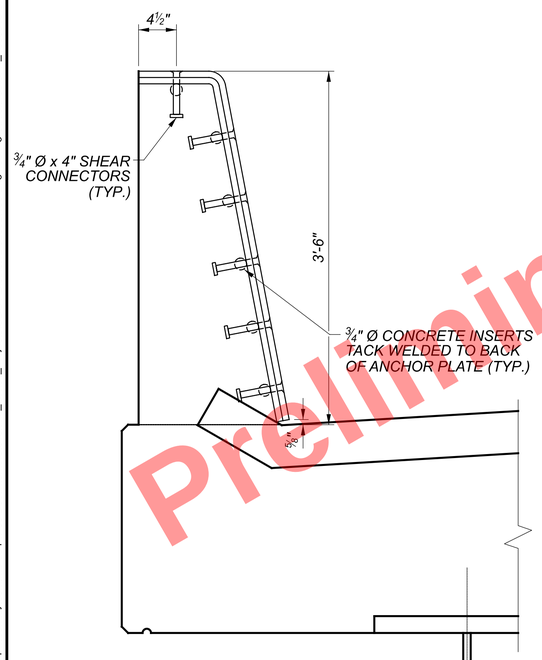

SECTION B-B

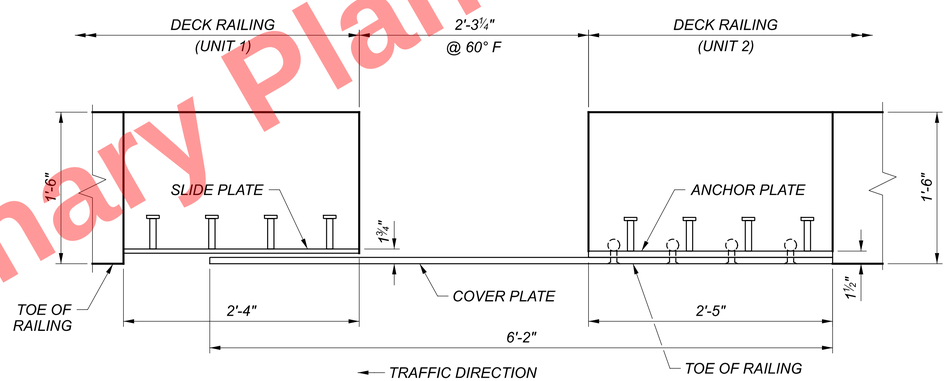

SECTION C-C
(LEFT RAILING SHOWN - RIGHT RAILING OPPOSITE HAND)

NOTES:

1. ALL PLATES SHALL BE ASTM A709 GRADE 50 STEEL.
2. ALL STRUCTURAL STEEL, INCLUDING SHEAR CONNECTORS AND THREADED INSERTS SHALL MEET THE REQUIREMENTS OF ODOT CMS 513 AND GALVANIZED AFTER FABRICATION IN ACCORDANCE WITH ODOT CMS 711.02. ANY TEMPORARY SUPPORTS OR LEVELING HARDWARE TO BE ENCASED IN CONCRETE SHALL BE GALVANIZED IN ACCORDANCE TO CMS 711.02.
3. ALL MACHINE SCREWS SHALL BE GALVANIZED AND ¾" Ø UNLESS OTHERWISE NOTED.
4. FOR EXPANSION JOINT OPENING DIMENSIONS, SEE SHEET 129 / 167

For Reference Only
Preliminary Plans

MODULAR EXPANSION JOINT DETAILS - (6 OF 7)
CUY-77-1587 (BRIDGE 9)
I.R. 77 SB OVER I.R. 90 AND CR-721 (E. 14TH ST.)

SFN	1806910
DESIGN AGENCY	HDR
DESIGNER	MKO
CHECKER	TJE
REVIEWER	DWW 01/11/24
PROJECT ID	82382
SUBSET	133
TOTAL	167
SHEET	2001
TOTAL	2696

CUY-90-16.28 (CCG3A)

MODEL: Sheet PAPERSIZE: 34x22 (in.) DATE: 3/28/2025 TIME: 10:24:30 AM USER: Rohit.Bk
pw:\\mb-us-pw.bentley.com:mb-us-pw-03\Documents\Cleveland_OH\01_Projects\ODOT\District12\82382\400-Engineering\Structures\SFN_1806910\Sheets\82382_SFN_1806910_SX006.dgn

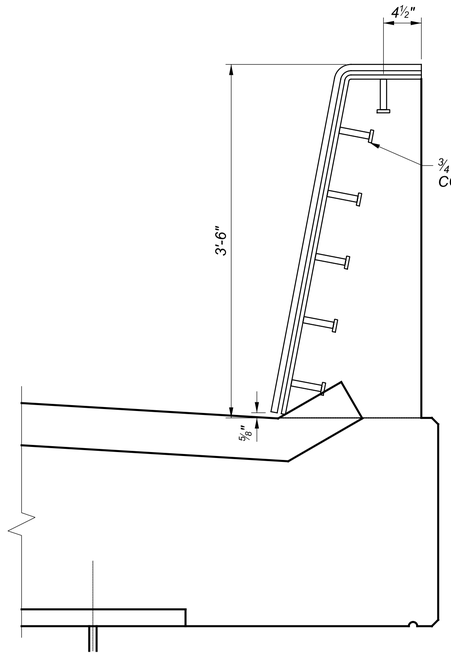

SECTION A-A

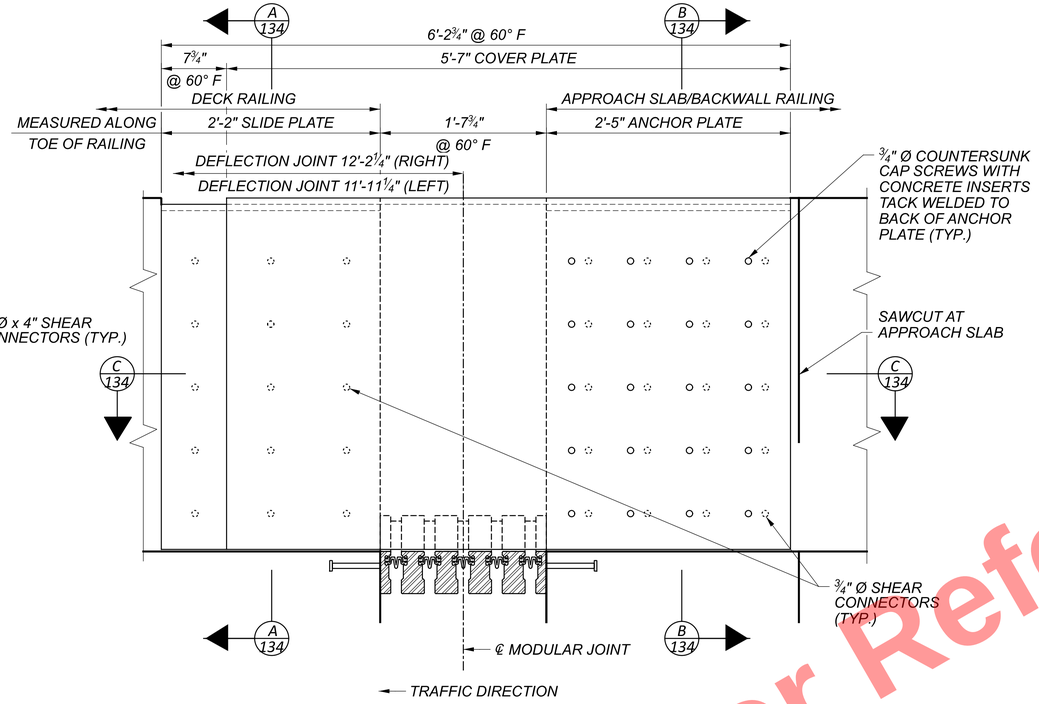

FORWARD ABUTMENT RAILING ELEVATION AT MODULAR EXPANSION JOINT

(LEFT RAILING SHOWN - RIGHT RAILING SIMILAR)

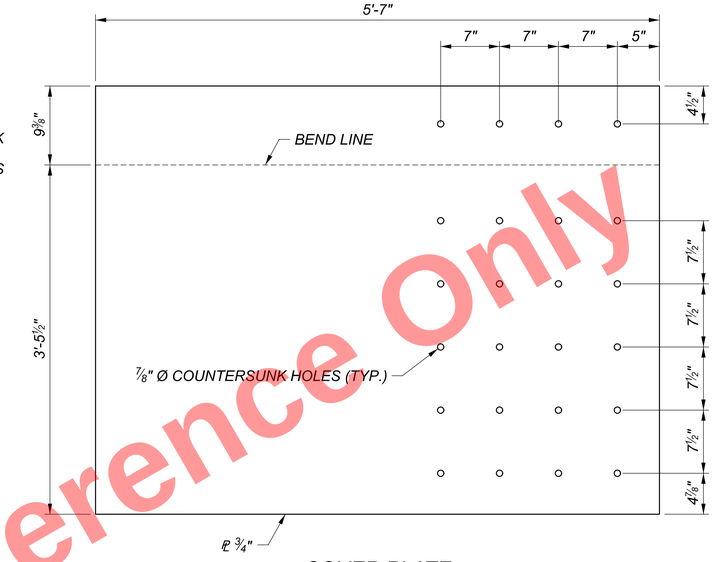

COVER PLATE

(DIMENSIONS SHOWN ARE AT MID-THICKNESS OF PLATE)

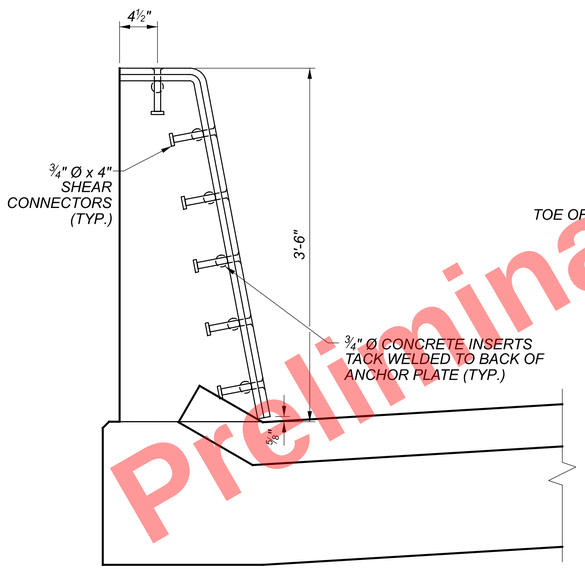

SECTION B-B

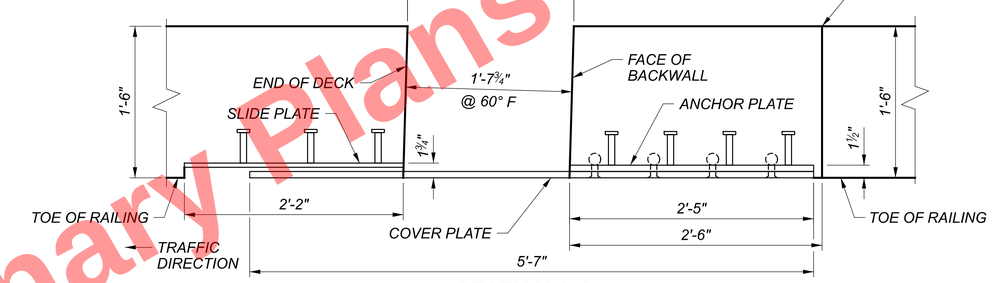

SECTION C-C

(LEFT RAILING)

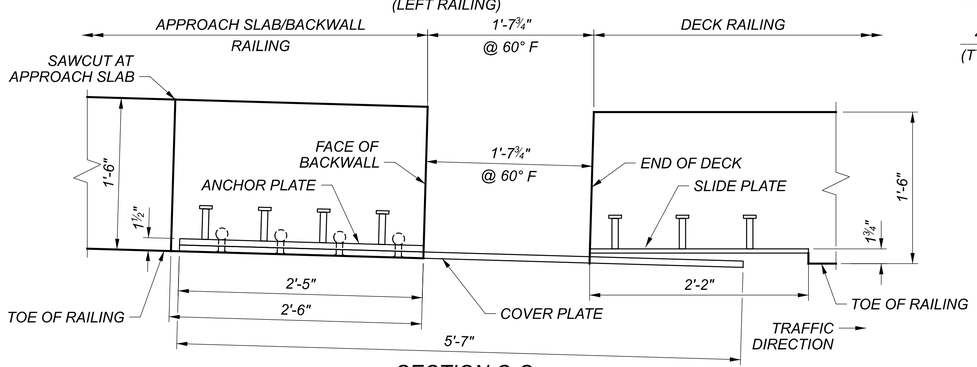

SECTION C-C

(RIGHT RAILING)

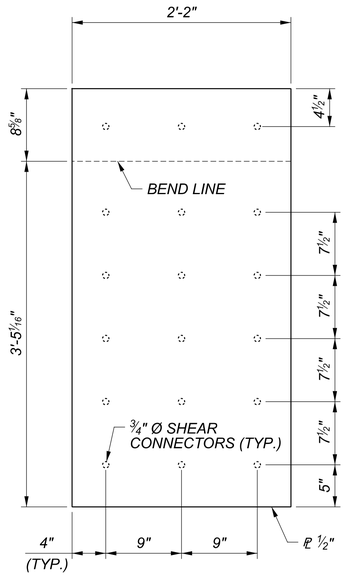

SLIDE PLATE

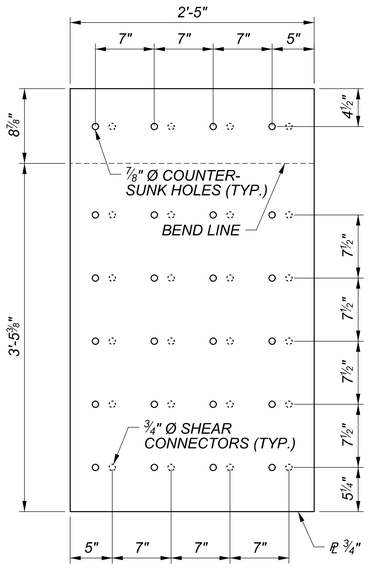

ANCHOR PLATE

(DIMENSIONS SHOWN ARE AT MID-THICKNESS OF PLATE)

NOTES:

1. ALL PLATES SHALL BE ASTM A709 GRADE 50 STEEL.
2. ALL STRUCTURAL STEEL, INCLUDING SHEAR CONNECTORS AND THREADED INSERTS SHALL MEET THE REQUIREMENTS OF ODOT CMS 513 AND GALVANIZED AFTER FABRICATION IN ACCORDANCE WITH ODOT CMS 711.02. ANY TEMPORARY SUPPORTS OR LEVELING HARDWARE TO BE ENCASED IN CONCRETE SHALL BE GALVANIZED IN ACCORDANCE TO CMS 711.02.
3. ALL MACHINE SCREWS SHALL BE GALVANIZED AND ¾" Ø UNLESS OTHERWISE NOTED.
4. FOR EXPANSION JOINT OPENING DIMENSIONS, SEE SHEET 130 / 167

Preliminary Plans - For Reference Only

MODULAR EXPANSION JOINT DETAILS - (7 OF 7)

CUY-77-1587 (BRIDGE 9)

I.R. 77 SB OVER I.R. 90 AND CR-721 (E. 14TH ST.)

SFN	1806910
DESIGN AGENCY	HDR
DESIGNER	MKO
CHECKER	TJE
REVIEWER	DWW 01/11/24
PROJECT ID	82382
SUBSET	134
TOTAL	167
SHEET	2002
TOTAL	2696

CUY-90-16.28 (CCG3A)

MODEL: Sheet PAPERSIZE: 34x22 (in.) DATE: 3/28/2025 TIME: 10:24:37 AM USER: Rohit.Bk
pw:\\mb-us-pw.bentley.com:mb-us-pw-03\Documents\Cleveland_OH\01_Projects\ODOT\District12\82382\400-Engineering\Structures\SFN_1806910\Sheets\82382_SFN_1806910_SX007.dgn

SCREED ELEVATIONS - SPAN 1													
LOCATION		℄ BRG. REAR ABUT.	0.1	0.2	0.3	0.4	0.5	0.6	0.7	℄ FS1-1	0.8	0.9	℄ PIER 1
LEFT CURBLINE	STATION	410+64.58	410+80.06	410+95.57	411+11.10	411+26.64	411+42.21	411+57.79	411+73.39	411+79.75	411+89.00	412+04.62	412+20.25
	SCREED ELEVATION	706.13	706.66	707.19	707.69	708.18	708.65	709.11	709.55	709.73	709.99	710.45	710.92
END ROUNDING	STATION	410+65.05	410+80.49	410+95.95	411+11.43	411+26.93	411+42.44	411+57.98	411+73.53	411+79.75	411+89.09	412+04.67	412+20.25
	SCREED ELEVATION	706.23	706.76	707.28	707.79	708.28	708.74	709.20	709.63	709.81	710.08	710.53	711.00
CROWN	STATION	410+66.00	410+81.34	410+96.71	411+12.09	411+27.50	411+42.92	411+58.36	411+73.82	411+79.75	411+89.28	412+04.76	412+20.25
	SCREED ELEVATION	706.25	706.77	707.28	707.79	708.27	708.73	709.18	709.62	709.79	710.06	710.51	710.99
℄ RAMP A2 / PROPOSED PROFILE GRADE	STATION	410+71.75	410+86.60	411+01.45	411+16.30	411+31.15	411+46.00	411+60.85	411+75.70	411+79.75	411+90.55	412+05.40	412+20.25
	SCREED ELEVATION	705.25	705.81	706.36	706.89	707.40	707.89	708.37	708.83	708.96	709.30	709.76	710.25
RIGHT CURBLINE	STATION	410+81.72	410+95.57	411+09.42	411+23.28	411+37.13	411+50.98	411+64.84	411+78.69	411+79.75	411+92.54	412+06.40	412+20.25
	SCREED ELEVATION	703.63	704.13	704.62	705.10	705.57	706.04	706.49	706.93	706.96	707.38	707.83	708.29

SCREED ELEVATIONS - SPAN 2															
LOCATION		℄ PIER 1	0.1	0.2	HEADER BEAM	℄ FS1-2	0.3	0.4	0.5	0.6	0.7	℄ FS1-3	0.8	0.9	℄ PIER 2
LEFT CURBLINE	STATION	412+20.25	412+40.25	412+60.25	-	412+67.75	412+80.25	413+00.25	413+20.25	413+40.25	413+60.25	413+72.25	413+80.25	414+00.25	414+20.25
	SCREED ELEVATION	710.92	711.59	712.28	-	712.55	713.00	713.72	714.42	715.08	715.71	716.08	716.32	716.95	717.60
END ROUNDING	STATION	412+20.25	412+40.25	412+60.25	-	412+67.75	412+80.25	413+00.25	413+20.25	413+40.25	413+60.25	413+72.25	413+80.25	414+00.25	414+20.25
	SCREED ELEVATION	711.00	711.67	712.36	-	712.63	713.08	713.80	714.49	715.16	715.79	716.16	716.40	717.03	717.68
CROWN	STATION	412+20.25	412+40.25	412+60.25	-	412+67.75	412+80.25	413+00.25	413+20.25	413+40.25	413+60.25	413+72.25	413+80.25	414+00.25	414+20.25
	SCREED ELEVATION	710.99	711.65	712.35	-	712.62	713.07	713.79	714.48	715.14	715.77	716.14	716.38	717.01	717.67
℄ RAMP A2 / PROPOSED PROFILE GRADE	STATION	412+20.25	412+40.25	412+60.25	-	412+67.75	412+80.25	413+00.25	413+20.25	413+40.25	413+60.25	413+72.25	413+80.25	414+00.25	414+20.25
	SCREED ELEVATION	710.25	710.95	711.67	-	711.94	712.39	713.11	713.80	714.45	715.09	715.45	715.70	716.33	716.98
RIGHT CURBLINE	STATION	412+20.25	412+40.25	412+60.25	-	412+67.75	412+80.25	413+00.25	413+20.25	413+40.25	413+60.25	413+72.25	413+80.25	414+00.25	414+20.25
	SCREED ELEVATION	708.29	709.00	709.73	-	710.00	710.46	711.17	711.86	712.51	713.14	713.50	713.75	714.38	715.02

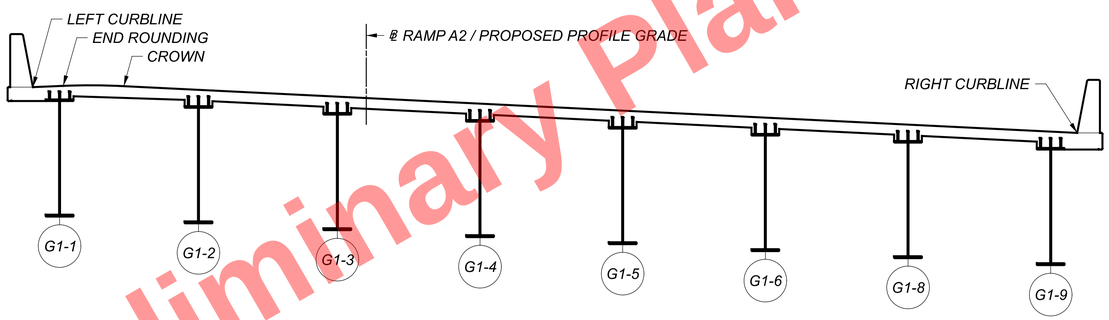

UNIT 1 TYPICAL CROSS SECTION

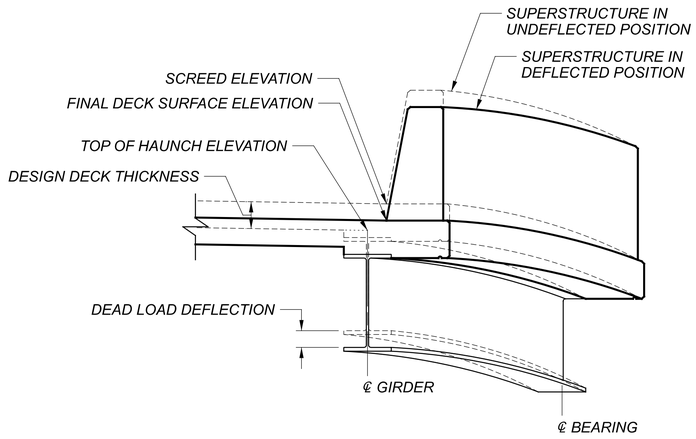

DEFLECTION DETAIL

NOTES:

1. SCREED ELEVATIONS SHOWN REPRESENT THE THEORETICAL DECK SURFACE LOCATION PRIOR TO DEFLECTIONS CAUSED BY DECK PLACEMENT AND OTHER ANTICIPATED DEAD LOADS.
2. FOR DECK PLAN, SEE SHEETS 105 / 167 THRU 113 / 167.
3. FOR RAILING DETAILS, SEE SHEET 127 / 167.
4. FOR FINAL DECK SURFACE ELEVATIONS SEE SHEETS 145 / 167 THRU 153 / 167.

Preliminary Plans - For Reference Only

UNIT 1 - SCREED ELEVATIONS - (1 OF 2)
CUY-77-1587 (BRIDGE 9)
I.R. 77 SB OVER I.R. 90 AND CR-721 (E. 14TH ST.)

SFN 1806910
DESIGN AGENCY HDR
DESIGNER TJE | CHECKER NJH
REVIEWER DWW 01/11/24
PROJECT ID 82382
SUBSET 135 | TOTAL 167
SHEET 2003 | TOTAL 2696

CUY-90-16.28 (CCG3A)

MODEL: Sheet PAPERSIZE: 34x22 (in.) DATE: 3/28/2025 TIME: 10:24:43 AM USER: Rohit.Bk
pw:\\mb-us-pw.bentley.com:mb-us-pw-03\Documents\Cleveland_OH01_Projects\ODOT\District12\82382400-Engineering\Structures\SFN_1806910\Sheets\82382_SFN_1806910_SD010.dgn

SCREED ELEVATIONS - SPAN 3

LOCATION		℄ PIER 2	0.1	0.2	℄ FS1-4	0.3	0.4	0.5	0.6	0.7	℄ FS1-5	0.8	0.9	℄ PIER 3
LEFT CURBLINE	STATION	414+20.25	414+40.75	414+61.25	414+69.25	414+81.75	415+02.25	415+22.75	415+43.25	415+63.75	415+76.25	415+84.25	416+04.75	416+25.25
	SCREED ELEVATION	717.60	718.34	719.09	719.39	719.85	720.60	721.31	721.99	722.63	723.01	723.24	723.87	724.50
END ROUNDING	STATION	414+20.25	414+40.75	414+61.25	414+69.25	414+81.75	415+02.25	415+22.75	415+43.25	415+63.75	415+76.25	415+84.25	416+04.75	416+25.25
	SCREED ELEVATION	717.68	718.42	719.17	719.47	719.93	720.68	721.39	722.07	722.70	723.08	723.32	723.95	724.58
CROWN	STATION	414+20.25	414+40.75	414+61.25	414+69.25	414+81.75	415+02.25	415+22.75	415+43.25	415+63.75	415+76.25	415+84.25	416+04.75	416+25.25
	SCREED ELEVATION	717.67	718.40	719.15	719.45	719.91	720.66	721.37	722.05	722.68	723.06	723.30	723.93	724.57
℄ RAMP A2 / PROPOSED PROFILE GRADE	STATION	414+20.25	414+40.75	414+61.25	414+69.25	414+81.75	415+02.25	415+22.75	415+43.25	415+63.75	415+76.25	415+84.25	416+04.75	416+25.25
	SCREED ELEVATION	716.98	717.71	718.45	718.75	719.21	719.95	720.67	721.34	721.98	722.36	722.60	723.23	723.88
RIGHT CURBLINE	STATION	414+20.25	414+40.75	414+61.25	414+69.25	414+81.75	415+02.25	415+22.75	415+43.25	415+63.75	415+76.25	415+84.25	416+04.75	416+25.25
	SCREED ELEVATION	715.02	715.74	716.47	716.76	717.22	717.95	718.66	719.34	720.00	720.39	720.63	721.27	721.92

SCREED ELEVATIONS - SPAN 4

LOCATION		℄ PIER 3	0.1	0.2	0.3	℄ FS1-6	0.4	0.5	0.6	0.7	0.8	0.9	℄ BRG. PIER 4 (UNIT 1)
LEFT CURBLINE	STATION	416+25.25	416+39.63	416+54.02	416+68.40	416+72.75	416+82.78	416+97.17	417+11.55	417+25.93	417+40.32	417+54.70	417+69.13
	SCREED ELEVATION	724.50	725.00	725.50	726.02	726.18	726.53	727.04	727.54	728.01	728.51	728.97	729.43
END ROUNDING	STATION	416+25.25	416+39.63	416+54.02	416+68.40	416+72.75	416+82.78	416+97.17	417+11.55	417+25.93	417+40.32	417+54.70	417+69.12
	SCREED ELEVATION	724.58	725.08	725.58	726.10	726.26	726.61	727.12	727.62	728.09	728.59	729.05	729.51
CROWN	STATION	416+25.25	416+39.63	416+54.02	416+68.40	416+72.75	416+82.78	416+97.17	417+11.55	417+25.93	417+40.32	417+54.70	417+69.11
	SCREED ELEVATION	724.57	725.06	725.56	726.08	726.24	726.59	727.10	727.60	728.07	728.56	729.02	729.48
℄ RAMP A2 / PROPOSED PROFILE GRADE	STATION	416+25.25	416+39.63	416+54.02	416+68.40	416+72.75	416+82.78	416+97.17	417+11.55	417+25.93	417+40.32	417+54.70	417+69.08
	SCREED ELEVATION	723.88	724.37	724.87	725.38	725.54	725.90	726.41	726.90	727.38	727.84	728.28	728.72
RIGHT CURBLINE	STATION	416+25.25	416+39.63	416+54.02	416+68.40	416+72.75	416+82.78	416+97.17	417+11.55	417+25.93	417+40.32	417+54.70	417+68.99
	SCREED ELEVATION	721.92	722.42	722.92	723.43	723.58	723.93	724.44	724.93	725.40	725.79	726.20	726.56

Preliminary Plans - For Reference Only

NOTES:

1. *FOR SCREED ELEVATION NOTES AND DEFLECTION DETAIL, SEE SHEET* 135 / 167 .
2. *FOR UNIT 1 TYPICAL CROSS SECTION, SEE SHEET* 135 / 167 .

UNIT 1 - SCREED ELEVATIONS - (2 OF 2)
CUY-77-1587 (BRIDGE 9)
I.R. 77 SB OVER I.R. 90 AND CR-721 (E. 14TH ST.)

SFN 1806910

DESIGN AGENCY

DESIGNER TJE | CHECKER NJH

REVIEWER DWW 01/11/24

PROJECT ID 82382

SUBSET 136 | TOTAL 167

SHEET 2004 | TOTAL 2696

CUY-90-16.28 (CCG3A)

MODEL: Sheet PAPERSIZE: 34x22 (in.) DATE: 3/28/2025 TIME: 10:24:49 AM USER: RohitLBk
pw:\\mb-us-pw.bentley.com:mb-us-pw-03\Documents\Cleveland_OH\01_Projects\ODOT\District12\82382\400-Engineering\Structures\SFN_1806910\Sheets\82382_SFN_1806910_SD011.dgn

SCREED ELEVATIONS - SPAN 5

LOCATION		℄ BRG. PIER 4 (UNIT 2)	0.1	0.2	0.3	0.4	0.5	0.6	0.7	℄ FS2-1	0.8	0.9	℄ PIER 5
LEFT CURBLINE	STATION	417+73.35	417+87.63	418+01.83	418+16.04	418+30.25	418+44.46	418+58.67	418+72.88	418+75.34	418+87.08	419+01.29	419+15.50
	SCREED ELEVATION	729.59	730.16	730.72	731.23	731.68	732.08	732.44	732.76	732.81	733.05	733.33	733.59
END ROUNDING	STATION	417+73.36	417+87.63	418+01.83	418+16.04	418+30.25	418+44.46	418+58.67	418+72.88	418+75.34	418+87.08	419+01.29	419+15.50
	SCREED ELEVATION	729.67	730.24	730.80	731.31	731.76	732.16	732.52	732.84	732.89	733.13	733.41	733.67
CROWN	STATION	417+73.37	417+87.63	418+01.83	418+16.04	418+30.25	418+44.46	418+58.67	418+72.88	418+75.34	418+87.08	419+01.29	419+15.50
	SCREED ELEVATION	729.64	730.20	730.76	731.27	731.71	732.12	732.48	732.79	732.85	733.09	733.37	733.63
℄ RAMP A2 / PROPOSED PROFILE GRADE	STATION	417+73.42	417+87.63	418+01.83	418+16.04	418+30.25	418+44.46	418+58.67	418+72.88	418+75.34	418+87.08	419+01.29	419+15.50
	SCREED ELEVATION	728.87	729.40	729.92	730.41	730.86	731.26	731.62	731.95	732.00	732.25	732.53	732.79
RIGHT CURBLINE	STATION	417+73.55	417+87.63	418+01.83	418+16.04	418+30.25	418+44.46	418+58.67	418+72.88	418+75.34	418+87.08	419+01.29	419+15.50
	SCREED ELEVATION	726.67	727.10	727.53	727.97	728.42	728.83	729.20	729.54	729.59	729.84	730.13	730.39

SCREED ELEVATIONS - SPAN 6

LOCATION		℄ PIER 5	0.1	0.2	℄ FS2-2	0.3	0.4	0.5	0.6	0.7	℄ FS2-3	0.8	0.9	℄ PIER 6
LEFT CURBLINE	STATION	419+15.50	419+33.95	419+52.40	419+55.66	419+70.85	419+89.30	420+07.75	420+26.20	420+44.65	420+59.84	420+63.10	420+81.55	421+00.00
	SCREED ELEVATION	733.59	733.94	734.27	734.33	734.57	734.82	734.99	735.09	735.11	735.08	735.07	734.98	734.87
END ROUNDING	STATION	419+15.50	419+33.95	419+52.40	419+55.66	419+70.85	419+89.30	420+07.75	420+26.20	420+44.65	420+59.84	420+63.10	420+81.55	421+00.00
	SCREED ELEVATION	733.67	734.02	734.35	734.41	734.65	734.89	735.07	735.16	735.19	735.16	735.15	735.06	734.95
CROWN	STATION	419+15.50	419+33.95	419+52.40	419+55.66	419+70.85	419+89.30	420+07.75	420+26.20	420+44.65	420+59.84	420+63.10	420+81.55	421+00.00
	SCREED ELEVATION	733.63	733.98	734.31	734.37	734.60	734.85	735.02	735.11	735.14	735.11	735.10	735.02	734.91
℄ RAMP A2 / PROPOSED PROFILE GRADE	STATION	419+15.50	419+33.95	419+52.40	419+55.66	419+70.85	419+89.30	420+07.75	420+26.20	420+44.65	420+59.84	420+63.10	420+81.55	421+00.00
	SCREED ELEVATION	732.79	733.14	733.46	733.51	733.74	733.97	734.15	734.24	734.27	734.25	734.24	734.17	734.07
RIGHT CURBLINE	STATION	419+15.50	419+33.95	419+52.40	419+55.66	419+70.85	419+89.30	420+07.75	420+26.20	420+44.65	420+59.84	420+63.10	420+81.55	421+00.00
	SCREED ELEVATION	730.39	730.73	731.03	731.08	731.30	731.51	731.67	731.76	731.80	731.79	731.78	731.74	731.67

SCREED ELEVATIONS - SPAN 7

LOCATION		℄ PIER 6	0.1	0.2	℄ FS2-4	0.3	0.4	0.5	0.6	0.7	℄ FS2-5	0.8	0.9	℄ PIER 7
LEFT CURBLINE	STATION	421+00.00	421+17.23	421+34.46	421+40.16	421+51.69	421+68.92	421+86.15	422+03.37	422+20.60	-	422+37.83	422+55.06	422+72.29
	SCREED ELEVATION	734.87	734.76	734.63	734.58	734.47	734.26	734.01	733.70	733.34	-	732.95	732.53	732.10
END ROUNDING	STATION	421+00.00	421+17.40	421+34.79	421+40.16	421+52.19	421+69.59	421+86.98	422+04.38	422+21.78	-	422+39.17	422+56.57	422+73.97
	SCREED ELEVATION	734.95	734.84	734.70	734.66	734.54	734.33	734.08	733.76	733.40	-	733.00	732.57	732.14
CROWN	STATION	421+00.00	421+17.74	421+35.47	421+40.16	421+53.21	421+70.94	421+88.68	422+06.41	422+24.15	-	422+41.89	422+59.62	422+77.36
	SCREED ELEVATION	734.91	734.80	734.66	734.63	734.49	734.28	734.02	733.69	733.32	-	732.90	732.46	732.00
℄ RAMP A2 / PROPOSED PROFILE GRADE	STATION	421+00.00	421+18.97	421+37.93	421+40.16	421+56.90	421+75.87	421+94.84	422+13.80	422+32.77	-	422+51.74	422+70.70	422+89.67
	SCREED ELEVATION	734.07	733.96	733.82	733.80	733.64	733.41	733.11	732.75	732.33	-	731.85	731.35	730.81
RIGHT CURBLINE	STATION	421+00.00	421+22.92	421+45.85	421+40.16	421+68.77	421+91.69	422+14.62	422+37.54	422+60.46	-	422+83.39	423+06.31	423+29.23
	SCREED ELEVATION	731.67	731.58	731.44	731.47	731.23	730.93	730.53	730.01	729.41	-	728.72	727.96	727.15

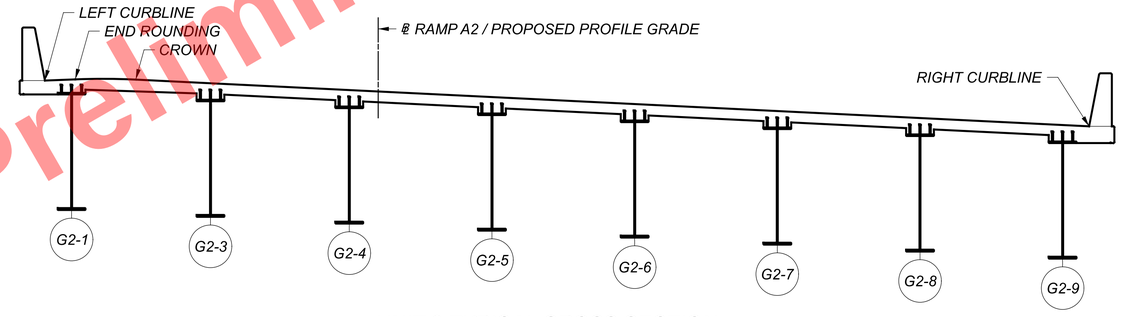

UNIT 2 TYPICAL CROSS SECTION

NOTE:

1. FOR SCREED ELEVATION NOTES AND DEFLECTION DETAIL, SEE SHEET 135 / 167.

Preliminary Plans - For Reference Only

UNIT 2 - SCREED ELEVATIONS - (1 OF 3)
CUY-77-1587 (BRIDGE 9)
I.R. 77 SB OVER I.R. 90 AND CR-721 (E. 14TH ST.)

SFN 1806910
DESIGN AGENCY HDR
DESIGNER TJE | CHECKER NJH
REVIEWER DWW 01/11/24
PROJECT ID 82382
SUBSET 137 | TOTAL 167
SHEET 2005 | TOTAL 2696

CUY-90-16.28 (CCG3A)

MODEL: Sheet PAPERSIZE: 34x22 (in.) DATE: 3/28/2025 TIME: 10:24:55 AM USER: RohitLBk
pw:\\mb-us-pw.bentley.com:mb-us-pw-03\Documents\Cleveland_OH\01_Projects\ODOT\District12\82382\400-Engineering\Structures\SFN_1806910\Sheets\82382_SFN_1806910_SD012.dgn

SCREED ELEVATIONS - SPAN 8

LOCATION		℄ PIER 7	0.1	0.2	℄ FS2-6	0.3	0.4	0.5	0.6	0.7	0.8	℄ FS2-7	0.9	℄ PIER 8
LEFT CURBLINE	STATION	422+72.29	422+95.06	423+17.83	-	423+40.61	423+63.38	423+86.15	424+08.92	424+31.69	424+54.47	424+59.85	424+77.24	425+00.00
	SCREED ELEVATION	732.10	731.55	730.95	-	730.29	729.54	728.66	727.65	726.52	725.28	724.98	724.01	722.77
END ROUNDING	STATION	422+73.97	422+96.57	423+19.17	-	423+41.78	423+64.38	423+86.99	424+09.59	424+32.20	424+54.80	424+59.85	424+77.41	425+00.00
	SCREED ELEVATION	732.14	731.58	730.99	-	730.33	729.58	728.70	727.70	726.58	725.34	725.06	724.08	722.85
CROWN	STATION	422+77.36	422+99.62	423+21.89	-	423+44.15	423+66.42	423+88.68	424+10.95	424+33.21	424+55.48	424+59.85	424+77.75	425+00.00
	SCREED ELEVATION	732.00	731.44	730.84	-	730.17	729.41	728.54	727.56	726.46	725.25	725.01	724.01	722.82
℄ RAMP A2 / PROPOSED PROFILE GRADE	STATION	422+89.67	423+10.70	423+31.74	-	423+52.77	423+73.80	423+94.84	424+15.87	424+36.90	424+57.93	424+59.85	424+78.97	425+00.00
	SCREED ELEVATION	730.81	730.22	729.58	-	728.89	728.13	727.29	726.35	725.32	724.21	724.11	723.09	721.95
RIGHT CURBLINE	STATION	423+29.23	423+46.31	423+63.39	-	423+80.46	423+97.54	424+14.62	424+31.69	424+48.77	424+65.85	424+59.85	424+82.92	425+00.00
	SCREED ELEVATION	727.15	726.55	725.91	-	725.26	724.56	723.82	723.02	722.18	721.30	721.61	720.43	719.55

SCREED ELEVATIONS - SPAN 9

LOCATION		℄ PIER 8	0.1	0.2	HEADER BEAM	℄ FS2-8	0.3	0.4	0.5	0.6	℄ FS2-9	0.7	0.8	0.9	℄ PIER 9
LEFT CURBLINE	STATION	425+00.00	425+17.56	425+35.10	-	425+49.18	425+52.63	425+70.15	425+87.66	426+05.15	426+15.03	426+22.63	426+40.10	426+57.56	426+75.00
	SCREED ELEVATION	722.77	721.89	721.03	-	720.36	720.20	719.36	718.51	717.66	717.18	716.81	715.96	715.11	714.26
END ROUNDING	STATION	425+00.00	425+17.61	425+35.16	-	425+49.23	425+52.69	425+70.21	425+87.71	426+05.21	426+15.08	426+22.69	426+40.16	426+57.61	426+75.00
	SCREED ELEVATION	722.85	721.97	721.11	-	720.44	720.27	719.44	718.59	717.74	717.26	716.89	716.04	715.19	714.34
CROWN	STATION	425+00.00	425+17.72	425+35.26	-	425+49.34	425+52.80	425+70.31	425+87.82	426+05.32	426+15.19	426+22.80	426+40.26	426+57.72	426+75.00
	SCREED ELEVATION	722.82	721.94	721.08	-	720.41	720.24	719.41	718.56	717.70	717.22	716.85	716.00	715.15	714.31
℄ RAMP A2 / PROPOSED PROFILE GRADE	STATION	425+00.00	425+18.13	425+35.69	-	425+49.78	425+53.24	425+70.78	425+88.30	426+05.80	426+15.69	426+23.30	426+40.78	426+58.25	426+75.00
	SCREED ELEVATION	721.95	721.04	720.16	-	719.46	719.29	718.42	717.54	716.65	716.15	715.76	714.88	714.02	713.20
RIGHT CURBLINE	STATION	425+00.00	425+19.34	425+36.91	-	425+50.65	425+54.46	425+72.00	425+89.52	426+07.03	426+16.56	426+24.53	426+42.01	426+59.48	426+75.00
	SCREED ELEVATION	719.55	718.61	717.75	-	717.08	716.89	716.02	715.14	714.24	713.75	713.35	712.45	711.61	710.92

SCREED ELEVATIONS - SPAN 10

LOCATION		℄ PIER 9	0.1	0.2	℄ FS2-10	0.3	0.4	0.5	0.6	0.7	℄ FS2-11	0.8	0.9	℄ PIER 10
LEFT CURBLINE	STATION	426+75.00	426+97.79	427+20.56	427+23.03	427+43.30	427+66.03	427+88.73	428+11.45	428+35.11	428+50.86	428+58.77	428+82.43	429+06.09
	SCREED ELEVATION	714.26	713.19	712.14	712.04	711.08	709.97	708.82	707.58	706.25	705.36	704.91	703.57	702.26
END ROUNDING	STATION	426+75.00	426+97.84	427+20.61	427+23.08	427+43.36	427+66.08	427+88.78	428+11.50	428+35.16	428+50.91	428+58.82	428+82.48	429+06.14
	SCREED ELEVATION	714.34	713.27	712.23	712.12	711.16	710.05	708.90	707.66	706.33	705.44	704.99	703.65	702.34
CROWN	STATION	426+75.00	426+97.95	427+20.72	427+23.19	427+43.46	427+66.19	427+88.89	428+11.62	428+35.28	428+51.03	428+58.94	428+82.60	429+06.26
	SCREED ELEVATION	714.31	713.24	712.20	712.09	711.13	710.03	708.88	707.65	706.34	705.44	704.99	703.66	702.37
℄ RAMP A2 / PROPOSED PROFILE GRADE	STATION	426+75.00	426+98.51	427+21.29	427+23.77	427+44.05	427+66.79	427+89.51	428+12.29	428+35.96	428+51.73	428+59.64	428+83.32	429+07.00
	SCREED ELEVATION	713.20	712.12	711.08	710.96	710.04	708.96	707.83	706.65	705.38	704.52	704.10	702.83	701.60
RIGHT CURBLINE	STATION	426+75.00	426+99.73	427+22.51	427+24.98	427+45.25	427+67.96	427+90.63	428+13.33	428+36.97	428+52.72	428+60.63	428+84.29	429+07.95
	SCREED ELEVATION	710.92	709.87	708.94	708.83	708.02	707.09	706.12	705.08	703.98	703.22	702.85	701.72	700.62

Preliminary Plans - For Reference Only

NOTES:

1. *FOR SCREED ELEVATION NOTES AND DEFLECTION DETAIL, SEE SHEET* 135 / 167 .
2. *FOR UNIT 2 TYPICAL CROSS SECTION, SEE SHEET* 137 / 167 .

UNIT 2 - SCREED ELEVATIONS - (2 OF 3)
CUY-77-1587 (BRIDGE 9)
I.R. 77 SB OVER I.R. 90 AND CR-721 (E. 14TH ST.)

SFN 1806910
DESIGN AGENCY HDR
DESIGNER TJE | CHECKER NJH
REVIEWER DWW 01/11/24
PROJECT ID 82382
SUBSET 138 | TOTAL 167
SHEET 2006 | TOTAL 2696

CUY-90-16.28 (CCG3A)

MODEL: Sheet PAPERSIZE: 34x22 (in.) DATE: 3/28/2025 TIME: 10:25:01 AM USER: RohitLBk
pw:\\mb-us-pw.bentley.com:mb-us-pw-03\Documents\Cleveland_OH\01_Projects\ODOT\District12\82382\400-Engineering\Structures\SFN_1806910\Sheets\82382_SFN_1806910_SD013.dgn

SCREED ELEVATIONS - SPAN 11

LOCATION		℄ PIER 10	0.1	0.2	0.3	℄ FS2-12	0.4	0.5	0.6	0.7	0.8	0.9	℄ BRG. FWD. ABUT.
LEFT CURBLINE	STATION	429+06.09	429+24.68	429+43.27	429+61.86	429+68.56	429+80.45	429+99.04	430+17.63	430+36.23	430+54.82	430+73.41	430+92.00
	SCREED ELEVATION	702.26	701.31	700.37	699.43	699.13	698.52	697.59	696.66	695.72	694.75	693.74	692.72
END ROUNDING	STATION	429+06.14	429+24.73	429+43.33	429+61.92	429+68.62	429+80.51	429+99.10	430+17.69	430+36.28	430+54.87	430+73.47	430+92.00
	SCREED ELEVATION	702.34	701.39	700.45	699.51	699.21	698.60	697.67	696.74	695.80	694.83	693.82	692.80
CROWN	STATION	429+06.26	429+24.85	429+43.44	429+62.03	429+68.73	429+80.62	429+99.21	430+17.81	430+36.40	430+54.99	430+73.58	430+92.00
	SCREED ELEVATION	702.37	701.42	700.49	699.55	699.25	698.64	697.72	696.79	695.85	694.87	693.87	692.85
℄ RAMP A2 / PROPOSED PROFILE GRADE	STATION	429+07.00	429+25.61	429+44.21	429+62.82	429+69.53	429+81.43	430+00.03	430+18.64	430+37.25	430+55.85	430+74.46	430+92.00
	SCREED ELEVATION	701.60	700.69	699.81	698.95	698.64	698.09	697.20	696.28	695.33	694.35	693.33	692.35
RIGHT CURBLINE	STATION	429+07.95	429+26.54	429+45.13	429+63.73	429+70.43	429+82.32	430+00.91	430+19.50	430+38.09	430+56.68	430+75.27	430+92.00
	SCREED ELEVATION	700.62	699.80	699.01	698.26	697.99	697.47	696.66	695.78	694.83	693.85	692.83	691.90

Preliminary Plans - For Reference Only

NOTES:

1. FOR SCREED ELEVATION NOTES AND DEFLECTION DETAIL, SEE SHEET 135 / 167 .
2. FOR UNIT 2 TYPICAL CROSS SECTION, SEE SHEET 137 / 167 .

UNIT 2 - SCREED ELEVATIONS - (3 OF 3)
CUY-77-1587 (BRIDGE 9)
I.R. 77 SB OVER I.R. 90 AND CR-721 (E. 14TH ST.)

SFN 1806910
DESIGN AGENCY HDR
DESIGNER TJE | CHECKER NJH
REVIEWER DWW 01/11/24
PROJECT ID 82382
SUBSET 139 | TOTAL 167
SHEET 2007 | TOTAL 2696

CUY-90-16.28 (CCG3A)

MODEL: Sheet PAPERSIZE: 34x22 (in.) DATE: 3/28/2025 TIME: 10:25:07 AM USER: RohitLBk
pw:\\mb-us-pw.bentley.com:mb-us-pw-03\Documents\Cleveland_OH01_Projects\ODOT\District12\82382\400-Engineering\Structures\SFN_1806910\Sheets\82382_SFN_1806910_SD014.dgn

TOP OF HAUNCH ELEVATIONS - SPAN 1

LOCATION		℄ BRG. REAR ABUT.	0.1	0.2	0.3	0.4	0.5	0.6	0.7	℄ FS1-1	0.8	0.9	℄ PIER 1
G1-1	STATION	410+65.00	410+80.44	410+95.90	411+11.39	411+26.89	411+42.41	411+57.96	411+73.51	411+79.75	411+89.08	412+04.66	412+20.25
	HAUNCH ELEVATION	705.51	706.04	706.56	707.07	707.56	708.02	708.48	708.92	709.09	709.36	709.81	710.29
G1-2	STATION	410+67.30	410+82.55	410+97.82	411+13.10	411+28.39	411+43.69	411+58.99	411+74.30	411+79.75	411+89.61	412+04.93	412+20.25
	HAUNCH ELEVATION	705.31	705.86	706.39	706.91	707.42	707.91	708.38	708.84	709.00	709.29	709.75	710.23
G1-3	STATION	410+69.64	410+84.70	410+99.76	411+14.82	411+29.88	411+44.94	411+60.00	411+75.07	411+79.75	411+90.13	412+05.19	412+20.25
	HAUNCH ELEVATION	704.90	705.47	706.03	706.58	707.09	707.60	708.08	708.55	708.69	709.01	709.49	709.97
G1-4	STATION	410+71.89	410+86.73	411+01.56	411+16.40	411+31.23	411+46.07	411+60.91	411+75.74	411+79.75	411+90.58	412+05.41	412+20.25
	HAUNCH ELEVATION	704.52	705.07	705.62	706.15	706.66	707.16	707.63	708.10	708.22	708.56	709.03	709.51
G1-5	STATION	410+74.18	410+88.79	411+03.39	411+18.00	411+32.61	411+47.22	411+61.82	411+76.43	411+79.75	411+91.04	412+05.64	412+20.25
	HAUNCH ELEVATION	704.13	704.68	705.21	705.73	706.23	706.72	707.19	707.65	707.75	708.10	708.57	709.05
G1-6	STATION	410+76.51	410+90.88	411+05.26	411+19.63	411+34.00	411+48.38	411+62.75	411+77.13	411+79.75	411+91.50	412+05.88	412+20.25
	HAUNCH ELEVATION	703.75	704.28	704.80	705.31	705.80	706.28	706.74	707.20	707.28	707.65	708.12	708.59
G1-8	STATION	410+78.87	410+93.01	411+07.14	411+21.28	411+35.42	411+49.56	411+63.70	411+77.84	411+79.75	411+91.97	412+06.11	412+20.25
	HAUNCH ELEVATION	703.37	703.88	704.39	704.89	705.37	705.84	706.30	706.75	706.81	707.20	707.66	708.13
G1-9	STATION	410+81.27	410+95.17	411+09.06	411+22.96	411+36.86	411+50.76	411+64.66	411+78.56	411+79.75	411+92.45	412+06.35	412+20.25
	HAUNCH ELEVATION	702.99	703.49	703.99	704.47	704.94	705.41	705.86	706.31	706.34	706.75	707.20	707.67

TOP OF HAUNCH ELEVATIONS - SPAN 2

LOCATION		℄ PIER 1	0.1	0.2	HEADER BEAM	℄ FS1-2	0.3	0.4	0.5	0.6	0.7	℄ FS1-3	0.8	0.9	℄ PIER 2
G1-1	STATION	412+20.25	412+40.25	412+60.25	412+64.61	412+67.75	412+80.25	413+00.25	413+20.25	413+40.25	413+60.25	413+72.25	413+80.25	414+00.25	414+20.25
	HAUNCH ELEVATION	710.29	710.95	711.64	711.80	711.91	712.36	713.08	713.78	714.44	715.07	715.44	715.68	716.31	716.97
G1-2	STATION	412+20.25	412+40.25	412+60.25	412+64.61	-	-	-	-	-	-	-	-	-	-
	HAUNCH ELEVATION	710.23	710.90	711.61	711.70	-	-	-	-	-	-	-	-	-	-
G1-3	STATION	412+20.25	412+40.25	412+60.25	412+64.61	412+67.75	412+80.25	413+00.25	413+20.25	413+40.25	413+60.25	413+72.25	413+80.25	414+00.25	414+20.25
	HAUNCH ELEVATION	709.97	710.67	711.38	711.54	711.66	712.11	712.83	713.52	714.18	714.81	715.18	715.42	716.05	716.71
G1-4	STATION	412+20.25	412+40.25	412+60.25	-	412+67.75	412+80.25	413+00.25	413+20.25	413+40.25	413+60.25	413+72.25	413+80.25	414+00.25	414+20.25
	HAUNCH ELEVATION	709.51	710.21	710.93	-	711.20	711.66	712.37	713.06	713.72	714.35	714.72	714.97	715.59	716.24
G1-5	STATION	412+20.25	412+40.25	412+60.25	-	412+67.75	412+80.25	413+00.25	413+20.25	413+40.25	413+60.25	413+72.25	413+80.25	414+00.25	414+20.25
	HAUNCH ELEVATION	709.05	709.75	710.48	-	710.75	711.20	711.92	712.60	713.26	713.89	714.26	714.50	715.13	715.78
G1-6	STATION	412+20.25	412+40.25	412+60.25	-	412+67.75	412+80.25	413+00.25	413+20.25	413+40.25	413+60.25	413+72.25	413+80.25	414+00.25	414+20.25
	HAUNCH ELEVATION	708.59	709.29	710.02	-	710.29	710.75	711.46	712.15	712.81	713.43	713.80	714.05	714.67	715.32
G1-8	STATION	412+20.25	412+40.25	412+60.25	-	412+67.75	412+80.25	413+00.25	413+20.25	413+40.25	413+60.25	413+72.25	413+80.25	414+00.25	414+20.25
	HAUNCH ELEVATION	708.13	708.84	709.56	-	709.84	710.29	711.00	711.69	712.34	712.97	713.34	713.59	714.21	714.86
G1-9	STATION	412+20.25	412+40.25	412+60.25	-	412+67.75	412+80.25	413+00.25	413+20.25	413+40.25	413+60.25	413+72.25	413+80.25	414+00.25	414+20.25
	HAUNCH ELEVATION	707.67	708.38	709.11	-	709.38	709.84	710.55	711.24	711.89	712.51	712.88	713.13	713.76	714.40

Preliminary Plans - For Reference Only

NOTES:

1. TOP OF HAUNCH ELEVATIONS SHOWN REPRESENT THE THEORETICAL LOCATION OF THE BOTTOM OF THE DECK ABOVE THE BEAM/GIRDER HAUNCH PRIOR TO DEFLECTIONS CAUSED BY DECK PLACEMENT AND OTHER ANTICIPATED DEAD LOADS.
2. FOR DECK PLAN, SEE SHEETS 105 / 167 THRU 113 / 167.
3. FOR RAILING DETAILS, SEE SHEET 127 / 167.
4. FOR UNIT 1 TYPICAL CROSS SECTION AND DEFLECTION DETAIL, SEE SHEET 135 / 167.
5. FOR FINAL DECK SURFACE ELEVATIONS SEE SHEETS 145 / 167 THRU 153 / 167.

UNIT 1 - TOP OF HAUNCH ELEVATIONS - (1 OF 2)
CUY-77-1587 (BRIDGE 9)
I.R. 77 SB OVER I.R. 90 AND CR-721 (E. 14TH ST.)

SFN 1806910
DESIGN AGENCY HDR
DESIGNER TJE | CHECKER NJH
REVIEWER DWW 01/11/24
PROJECT ID 82382
SUBSET 140 | TOTAL 167
SHEET 2008 | TOTAL 2696

CUY-90-16.28 (CCG3A)

MODEL: Sheet PAPERSIZE: 34x22 (in.) DATE: 3/28/2025 TIME: 10:25:14 AM USER: Rohit.Bk
pw:\\mb-us-pw.bentley.com:mb-us-pw-03\Documents\Cleveland_OH01_Projects\ODOT\District12\82382400-Engineering\Structures\SFN_1806910\Sheets\82382_SFN_1806910_SD016.dgn

TOP OF HAUNCH ELEVATIONS - SPAN 3

LOCATION		℄ PIER 2	0.1	0.2	℄ FS1-4	0.3	0.4	0.5	0.6	0.7	℄ FS1-5	0.8	0.9	℄ PIER 3
G1-1	STATION	414+20.25	414+40.75	414+61.25	414+69.25	414+81.75	415+02.25	415+22.75	415+43.25	415+63.75	415+76.25	415+84.25	416+04.75	416+25.25
	HAUNCH ELEVATION	716.97	717.70	718.45	718.75	719.21	719.97	720.68	721.35	721.99	722.37	722.61	723.23	723.87
G1-3	STATION	414+20.25	414+40.75	414+61.25	414+69.25	414+81.75	415+02.25	415+22.75	415+43.25	415+63.75	415+76.25	415+84.25	416+04.75	416+25.25
	HAUNCH ELEVATION	716.71	717.43	718.18	718.48	718.94	719.69	720.41	721.08	721.72	722.10	722.33	722.96	723.61
G1-4	STATION	414+20.25	414+40.75	414+61.25	414+69.25	414+81.75	415+02.25	415+22.75	415+43.25	415+63.75	415+76.25	415+84.25	416+04.75	416+25.25
	HAUNCH ELEVATION	716.24	716.97	717.72	718.01	718.47	719.22	719.93	720.60	721.25	721.62	721.87	722.50	723.14
G1-5	STATION	414+20.25	414+40.75	414+61.25	414+69.25	414+81.75	415+02.25	415+22.75	415+43.25	415+63.75	415+76.25	415+84.25	416+04.75	416+25.25
	HAUNCH ELEVATION	715.78	716.50	717.25	717.54	718.00	718.75	719.46	720.13	720.78	721.16	721.40	722.03	722.68
G1-6	STATION	414+20.25	414+40.75	414+61.25	414+69.25	414+81.75	415+02.25	415+22.75	415+43.25	415+63.75	415+76.25	415+84.25	416+04.75	416+25.25
	HAUNCH ELEVATION	715.32	716.04	716.78	717.07	717.53	718.27	718.99	719.66	720.31	720.69	720.94	721.57	722.22
G1-8	STATION	414+20.25	414+40.75	414+61.25	414+69.25	414+81.75	415+02.25	415+22.75	415+43.25	415+63.75	415+76.25	415+84.25	416+04.75	416+25.25
	HAUNCH ELEVATION	714.86	715.58	716.32	716.61	717.06	717.80	718.51	719.19	719.84	720.23	720.47	721.11	721.76
G1-9	STATION	414+20.25	414+40.75	414+61.25	414+69.25	414+81.75	415+02.25	415+22.75	415+43.25	415+63.75	415+76.25	415+84.25	416+04.75	416+25.25
	HAUNCH ELEVATION	714.40	715.11	715.85	716.14	716.60	717.33	718.04	718.72	719.37	719.76	720.01	720.65	721.30

TOP OF HAUNCH ELEVATIONS - SPAN 4

LOCATION		℄ PIER 3	0.1	0.2	0.3	℄ FS1-6	0.4	0.5	0.6	0.7	0.8	0.9	℄ BRG. PIER 4 (UNIT 1)
G1-1	STATION	416+25.25	416+39.63	416+54.02	416+68.40	416+72.75	416+82.78	416+97.17	417+11.55	417+25.93	417+40.32	417+54.70	417+69.12
	HAUNCH ELEVATION	723.87	724.36	724.87	725.38	725.54	725.90	726.41	726.90	727.37	727.87	728.33	728.79
G1-3	STATION	416+25.25	416+39.63	416+54.02	416+68.40	416+72.75	416+82.78	416+97.17	417+11.55	417+25.93	417+40.32	417+54.70	417+69.10
	HAUNCH ELEVATION	723.61	724.10	724.60	725.11	725.27	725.63	726.14	726.63	727.11	727.58	728.04	728.49
G1-4	STATION	416+25.25	416+39.63	416+54.02	416+68.40	416+72.75	416+82.78	416+97.17	417+11.55	417+25.93	417+40.32	417+54.70	417+69.08
	HAUNCH ELEVATION	723.14	723.63	724.14	724.65	724.81	725.16	725.67	726.16	726.64	727.10	727.55	727.98
G1-5	STATION	416+25.25	416+39.63	416+54.02	416+68.40	416+72.75	416+82.78	416+97.17	417+11.55	417+25.93	417+40.32	417+54.70	417+69.06
	HAUNCH ELEVATION	722.68	723.17	723.68	724.19	724.34	724.70	725.21	725.70	726.17	726.62	727.06	727.47
G1-6	STATION	416+25.25	416+39.63	416+54.02	416+68.40	416+72.75	416+82.78	416+97.17	417+11.55	417+25.93	417+40.32	417+54.70	417+69.04
	HAUNCH ELEVATION	722.22	722.71	723.22	723.73	723.88	724.24	724.74	725.23	725.71	726.13	726.57	726.96
G1-8	STATION	416+25.25	416+39.63	416+54.02	416+68.40	416+72.75	416+82.78	416+97.17	417+11.55	417+25.93	417+40.32	417+54.70	417+69.02
	HAUNCH ELEVATION	721.76	722.25	722.75	723.26	723.42	723.77	724.28	724.77	725.25	725.65	726.07	726.45
G1-9	STATION	416+25.25	416+39.63	416+54.02	416+68.40	416+72.75	416+82.78	416+97.17	417+11.55	417+25.93	417+40.32	417+54.70	417+69.00
	HAUNCH ELEVATION	721.30	721.80	722.30	722.81	722.96	723.31	723.82	724.31	724.78	725.17	725.58	725.94

Preliminary Plans - For Reference Only

NOTES:

1. FOR TOP OF HAUNCH ELEVATION NOTES, SEE SHEET 140 / 167 .
2. FOR UNIT 1 TYPICAL CROSS SECTION AND DEFLECTION DETAIL, SEE SHEET 135 / 167 .

UNIT 1 - TOP OF HAUNCH ELEVATIONS - (2 OF 2)
CUY-77-1587 (BRIDGE 9)
I.R. 77 SB OVER I.R. 90 AND CR-721 (E. 14TH ST.)

SFN 1806910
DESIGN AGENCY
DESIGNER TJE | CHECKER NJH
REVIEWER DWW 01/11/24
PROJECT ID 82382
SUBSET 141 | TOTAL 167
SHEET 2009 | TOTAL 2696

CUY-90-16.28 (CCG3A)

MODEL: Sheet PAPERSIZE: 34x22 (in.) DATE: 3/28/2025 TIME: 10:25:26 AM USER: Rohit.Bk
pw:\\mb-us-pw.bentley.com:mb-us-pw-03\Documents\Cleveland_OH01_Projects\ODOT\District12\82382400-Engineering\Structures\SFN_1806910\Sheets\82382_SFN_1806910_SD017.dgn

TOP OF HAUNCH ELEVATIONS - SPAN 5

LOCATION		℄ BRG. PIER 4 (UNIT 2)	0.1	0.2	0.3	0.4	0.5	0.6	0.7	℄ FS2-1	0.8	0.9	℄ PIER 5
G2-1	STATION	417+73.36	417+87.63	418+01.83	418+16.04	418+30.25	418+44.46	418+58.67	418+72.88	418+75.34	418+87.08	419+01.29	419+15.50
	HAUNCH ELEVATION	728.95	729.52	730.08	730.59	731.04	731.44	731.80	732.12	732.17	732.41	732.69	732.95
G2-3	STATION	417+73.39	417+87.63	418+01.83	418+16.04	418+30.25	418+44.46	418+58.67	418+72.88	418+75.34	418+87.08	419+01.29	419+15.50
	HAUNCH ELEVATION	728.64	729.20	729.74	730.24	730.69	731.09	731.45	731.77	731.83	732.07	732.35	732.61
G2-4	STATION	417+73.42	417+87.63	418+01.83	418+16.04	418+30.25	418+44.46	418+58.67	418+72.88	418+75.34	418+87.08	419+01.29	419+15.50
	HAUNCH ELEVATION	728.13	728.66	729.18	729.66	730.11	730.51	730.88	731.20	731.26	731.50	731.78	732.05
G2-5	STATION	417+73.45	417+87.63	418+01.83	418+16.04	418+30.25	418+44.46	418+58.67	418+72.88	418+75.34	418+87.08	419+01.29	419+15.50
	HAUNCH ELEVATION	727.61	728.11	728.61	729.09	729.54	729.94	730.31	730.63	730.69	730.93	731.22	731.48
G2-6	STATION	417+73.48	417+87.63	418+01.83	418+16.04	418+30.25	418+44.46	418+58.67	418+72.88	418+75.34	418+87.08	419+01.29	419+15.50
	HAUNCH ELEVATION	727.09	727.58	728.05	728.52	728.96	729.37	729.74	730.07	730.12	730.37	730.65	730.92
G2-8	STATION	417+73.51	417+87.63	418+01.83	418+16.04	418+30.25	418+44.46	418+58.67	418+72.88	418+75.34	418+87.08	419+01.29	419+15.50
	HAUNCH ELEVATION	726.58	727.04	727.49	727.95	728.39	728.80	729.17	729.50	729.55	729.80	730.09	730.35
G2-9	STATION	417+73.55	417+87.63	418+01.83	418+16.04	418+30.25	418+44.46	418+58.67	418+72.88	418+75.34	418+87.08	419+01.29	419+15.50
	HAUNCH ELEVATION	726.06	726.49	726.93	727.37	727.82	728.22	728.60	728.93	728.99	729.24	729.52	729.79

TOP OF HAUNCH ELEVATIONS - SPAN 6

LOCATION		℄ PIER 5	0.1	0.2	℄ FS2-2	0.3	0.4	0.5	0.6	0.7	℄ FS2-3	0.8	0.9	℄ PIER 6
G2-1	STATION	419+15.50	419+33.95	419+52.40	419+55.66	419+70.85	419+89.30	420+07.75	420+26.20	420+44.65	420+59.84	420+63.10	420+81.55	421+00.00
	HAUNCH ELEVATION	732.95	733.30	733.64	733.69	733.93	734.18	734.35	734.45	734.47	734.44	734.43	734.35	734.23
G2-3	STATION	419+15.50	419+33.95	419+52.40	419+55.66	419+70.85	419+89.30	420+07.75	420+26.20	420+44.65	420+59.84	420+63.10	420+81.55	421+00.00
	HAUNCH ELEVATION	732.61	732.96	733.29	733.34	733.58	733.82	733.99	734.08	734.11	734.08	734.07	734.00	733.89
G2-4	STATION	419+15.50	419+33.95	419+52.40	419+55.66	419+70.85	419+89.30	420+07.75	420+26.20	420+44.65	420+59.84	420+63.10	420+81.55	421+00.00
	HAUNCH ELEVATION	732.05	732.39	732.72	732.77	733.00	733.23	733.40	733.50	733.53	733.50	733.50	733.43	733.32
G2-5	STATION	419+15.50	419+33.95	419+52.40	419+55.66	419+70.85	419+89.30	420+07.75	420+26.20	420+44.65	420+59.84	420+63.10	420+81.55	421+00.00
	HAUNCH ELEVATION	731.48	731.83	732.14	732.20	732.42	732.65	732.82	732.91	732.94	732.92	732.92	732.86	732.76
G2-6	STATION	419+15.50	419+33.95	419+52.40	419+55.66	419+70.85	419+89.30	420+07.75	420+26.20	420+44.65	420+59.84	420+63.10	420+81.55	421+00.00
	HAUNCH ELEVATION	730.92	731.26	731.57	731.62	731.84	732.07	732.23	732.32	732.36	732.35	732.34	732.28	732.19
G2-8	STATION	419+15.50	419+33.95	419+52.40	419+55.66	419+70.85	419+89.30	420+07.75	420+26.20	420+44.65	420+59.84	420+63.10	420+81.55	421+00.00
	HAUNCH ELEVATION	730.35	730.69	731.00	731.05	731.27	731.49	731.64	731.74	731.77	731.77	731.76	731.71	731.63
G2-9	STATION	419+15.50	419+33.95	419+52.40	419+55.66	419+70.85	419+89.30	420+07.75	420+26.20	420+44.65	420+59.84	420+63.10	420+81.55	421+00.00
	HAUNCH ELEVATION	729.79	730.13	730.43	730.48	730.69	730.91	731.06	731.16	731.19	731.19	731.18	731.14	731.06

TOP OF HAUNCH ELEVATIONS - SPAN 7

LOCATION		℄ PIER 6	0.1	0.2	℄ FS2-4	0.3	0.4	0.5	0.6	0.7	℄ FS2-5	0.8	0.9	℄ PIER 7
G2-1	STATION	421+00.00	421+17.38	421+34.75	421+40.16	421+52.13	421+69.50	421+86.88	422+04.25	422+21.63	422+24.51	422+39.00	422+56.38	422+73.76
	HAUNCH ELEVATION	734.23	734.12	733.98	733.94	733.82	733.62	733.36	733.04	732.68	732.62	732.28	731.86	731.43
G2-3	STATION	421+00.00	421+18.18	421+36.36	421+40.16	421+54.55	421+72.73	421+90.91	422+09.09	422+27.27	422+33.62	422+45.46	422+63.64	422+81.82
	HAUNCH ELEVATION	733.89	733.78	733.65	733.61	733.47	733.25	732.98	732.64	732.25	732.10	731.81	731.35	730.86
G2-4	STATION	421+00.00	421+19.02	421+38.04	421+40.16	421+57.06	421+76.08	421+95.10	422+14.12	422+33.14	422+37.24	422+52.16	422+71.18	422+90.20
	HAUNCH ELEVATION	733.32	733.21	733.07	733.06	732.90	732.66	732.37	732.00	731.58	731.48	731.10	730.59	730.05
G2-5	STATION	421+00.00	421+19.89	421+39.78	421+40.16	421+59.68	421+79.57	421+99.46	422+19.35	422+39.24	422+40.89	422+59.13	422+79.02	422+98.92
	HAUNCH ELEVATION	732.76	732.66	732.51	732.51	732.32	732.08	731.76	731.37	730.91	730.87	730.39	729.83	729.23
G2-6	STATION	421+00.00	421+20.80	421+41.60	421+40.16	421+62.40	421+83.20	422+04.00	422+24.80	422+45.60	422+51.88	422+66.40	422+87.20	423+07.99
	HAUNCH ELEVATION	732.19	732.09	731.96	731.97	731.77	731.51	731.17	730.75	730.24	730.07	729.66	729.04	728.38
G2-8	STATION	421+00.00	421+21.75	421+43.49	421+40.16	421+65.24	421+86.99	422+08.73	422+30.48	422+52.22	422+55.48	422+73.97	422+95.72	423+17.46
	HAUNCH ELEVATION	731.63	731.53	731.40	731.42	731.20	730.93	730.56	730.10	729.55	729.45	728.92	728.24	727.51
G2-9	STATION	421+00.00	421+22.74	421+45.47	421+40.16	421+68.20	421+90.94	422+13.67	422+36.41	422+59.14	422+66.48	422+81.88	423+04.61	423+27.35
	HAUNCH ELEVATION	731.06	730.98	730.84	730.87	730.63	730.34	729.94	729.44	728.84	728.63	728.16	727.41	726.61

NOTES:

1. *FOR TOP OF HAUNCH ELEVATION NOTES, SEE SHEET* 140 / 167 .
2. *FOR UNIT 2 TYPICAL CROSS SECTION, SEE SHEET* 137 / 167 .
3. *FOR DEFLECTION DETAIL, SEE SHEET* 135 / 167 .

Preliminary Plans - For Reference Only

UNIT 2 - TOP OF HAUNCH ELEVATIONS - (1 OF 3)
CUY-77-1587 (BRIDGE 9)
I.R. 77 SB OVER I.R. 90 AND CR-721 (E. 14TH ST.)

SFN 1806910
DESIGN AGENCY
DESIGNER TJE | CHECKER NJH
REVIEWER DWW 01/11/24
PROJECT ID 82382
SUBSET 142 | TOTAL 167
SHEET 2010 | TOTAL 2696

CUY-90-16.28 (CCG3A)
MODEL: Sheet PAPERSIZE: 34x22 (in.) DATE: 3/28/2025 TIME: 10:25:33 AM USER: Rohit.Bk
pw:\\mb-us-pw.bentley.com:mb-us-pw-03\Documents\Cleveland_OH\01_Projects\ODOT\District12\82382400-Engineering\Structures\SFN_1806910\Sheets\82382_SFN_1806910_SD018.dgn

TOP OF HAUNCH ELEVATIONS - SPAN 8

LOCATION		℄ PIER 7	0.1	0.2	℄ FS2-6	0.3	0.4	0.5	0.6	0.7	0.8	℄ FS2-7	0.9	℄ PIER 8
G2-1	STATION	422+73.76	422+96.38	423+19.01	423+34.61	423+41.63	423+64.26	423+86.88	424+09.51	424+32.13	424+54.76	424+59.85	424+77.38	425+00.00
	HAUNCH ELEVATION	731.43	730.87	730.28	729.83	729.62	728.86	727.99	726.99	725.87	724.63	724.34	723.36	722.14
G2-3	STATION	422+81.82	423+03.64	423+25.46	423+38.25	423+47.28	423+69.10	423+90.91	424+12.73	424+34.55	424+56.37	424+59.85	424+78.19	425+00.00
	HAUNCH ELEVATION	730.86	730.29	729.67	729.28	729.00	728.24	727.37	726.40	725.33	724.16	723.97	722.96	721.80
G2-4	STATION	422+90.20	423+11.18	423+32.16	423+45.66	423+53.14	423+74.12	423+95.10	424+16.09	424+37.07	424+58.05	424+59.85	424+79.03	425+00.00
	HAUNCH ELEVATION	730.05	729.46	728.82	728.39	728.13	727.37	726.52	725.59	724.56	723.46	723.36	722.34	721.23
G2-5	STATION	422+98.92	423+19.03	423+39.14	423+52.88	423+59.24	423+79.35	423+99.46	424+19.57	424+39.68	424+59.79	424+59.85	424+79.90	425+00.00
	HAUNCH ELEVATION	729.23	728.62	727.97	727.50	727.28	726.53	725.70	724.80	723.82	722.77	722.77	721.72	720.67
G2-6	STATION	423+07.99	423+27.20	423+46.40	423+60.25	423+65.60	423+84.80	424+04.00	424+23.20	424+42.41	424+61.61	424+59.85	424+80.81	425+00.00
	HAUNCH ELEVATION	728.38	727.76	727.11	726.62	726.43	725.68	724.88	724.02	723.08	722.09	722.18	721.09	720.10
G2-8	STATION	423+17.46	423+35.72	423+53.97	423+67.43	423+72.22	423+90.48	424+08.73	424+26.99	424+45.24	424+63.49	424+59.85	424+81.75	425+00.00
	HAUNCH ELEVATION	727.51	726.90	726.26	725.76	725.58	724.85	724.08	723.24	722.34	721.40	721.59	720.46	719.51
G2-9	STATION	423+27.35	423+44.61	423+61.88	423+76.47	423+79.14	423+96.41	424+13.67	424+30.94	424+48.20	424+65.47	424+59.85	424+82.74	425+00.00
	HAUNCH ELEVATION	726.61	726.01	725.37	724.81	724.71	724.01	723.26	722.46	721.60	720.72	721.00	719.83	718.95

TOP OF HAUNCH ELEVATIONS - SPAN 9

LOCATION		℄ PIER 8	0.1	0.2	HEADER BEAM	℄ FS2-8	0.3	0.4	0.5	0.6	℄ FS2-9	0.7	0.8	0.9	℄ PIER 9
G2-1	STATION	425+00.00	425+17.60	425+35.15	-	425+49.23	425+52.68	425+70.20	425+87.71	426+05.20	426+15.07	426+22.68	426+40.15	426+57.60	426+75.00
	HAUNCH ELEVATION	722.14	721.26	720.39	-	719.72	719.56	718.72	717.88	717.02	716.54	716.17	715.32	714.47	713.62
G2-3	STATION	425+00.00	425+17.86	425+35.41	-	425+49.48	425+52.94	425+70.46	425+87.96	426+05.46	426+15.33	426+22.94	426+40.40	426+57.86	426+75.00
	HAUNCH ELEVATION	721.80	720.93	720.07	-	719.39	719.23	718.39	717.54	716.69	716.21	715.84	714.99	714.15	713.32
G2-4	STATION	425+00.00	425+18.12	425+35.67	-	425+49.75	425+53.20	425+70.72	425+88.23	426+05.72	426+15.59	426+23.20	426+40.66	426+58.12	426+75.00
	HAUNCH ELEVATION	721.23	720.36	719.51	-	718.83	718.67	717.83	716.98	716.13	715.65	715.27	714.43	713.59	712.79
G2-5	STATION	425+00.00	425+18.39	425+35.94	-	425+50.02	425+53.47	425+70.99	425+88.50	426+05.99	426+15.86	426+23.47	426+40.93	426+58.38	426+75.00
	HAUNCH ELEVATION	720.67	719.79	718.94	-	718.27	718.11	717.27	716.42	715.56	715.08	714.71	713.86	713.03	712.26
G2-6	STATION	425+00.00	425+18.67	425+36.22	425+44.80	425+50.30	425+53.75	425+71.27	425+88.78	426+06.27	426+16.14	426+23.75	426+41.21	426+58.66	426+75.00
	HAUNCH ELEVATION	720.10	719.22	718.38	717.97	717.71	717.54	716.71	715.85	715.00	714.51	714.15	713.29	712.48	711.74
G2-7	STATION	-	-	-	425+44.97	425+50.47	425+53.93	425+71.45	425+88.97	426+06.47	426+16.35	426+23.95	426+41.43	426+58.89	426+75.00
	HAUNCH ELEVATION	-	-	-	717.60	717.36	717.20	716.34	715.48	714.60	714.11	713.73	712.86	712.02	711.29
G2-8	STATION	425+00.00	425+18.99	425+36.55	425+45.15	425+50.65	425+54.10	425+71.64	425+89.16	426+06.67	426+16.56	426+24.17	426+41.65	426+59.12	426+75.00
	HAUNCH ELEVATION	719.51	718.58	717.72	717.30	717.03	716.85	715.98	715.10	714.21	713.71	713.31	712.43	711.58	710.85
G2-9	STATION	425+00.00	425+19.29	425+36.85	-	425+50.65	425+54.40	425+71.94	425+89.46	426+06.97	426+16.56	426+24.47	426+41.95	426+59.42	426+75.00
	HAUNCH ELEVATION	718.95	718.01	717.15	-	716.47	716.29	715.42	714.54	713.64	713.15	712.75	711.85	711.01	710.31

Preliminary Plans - For Reference Only

NOTES:

1. FOR TOP OF HAUNCH ELEVATION NOTES, SEE SHEET 140 / 167 .
2. FOR UNIT 2 TYPICAL CROSS SECTION, SEE SHEET 137 / 167 .
3. FOR DEFLECTION DETAIL, SEE SHEET 135 / 167 .

UNIT 2 - TOP OF HAUNCH ELEVATIONS - (2 OF 3)
CUY-77-1587 (BRIDGE 9)
I.R. 77 SB OVER I.R. 90 AND CR-721 (E. 14TH ST.)

SFN 1806910
DESIGN AGENCY
DESIGNER TJE | CHECKER NJH
REVIEWER DWW 01/11/24
PROJECT ID 82382
SUBSET 143 | TOTAL 167
SHEET 2011 | TOTAL 2696

CUY-90-16.28 (CCG3A)

MODEL: Sheet PAPERSIZE: 34x22 (in.) DATE: 3/28/2025 TIME: 10:25:40 AM USER: Rohit.Bk
pw:\\mb-us-pw.bentley.com:mb-us-pw-03\Documents\Cleveland_OH01_Projects\ODOT\District12\82382400-Engineering\Structures\SFN_1806910\Sheets\82382_SFN_1806910_SD019.dgn

TOP OF HAUNCH ELEVATIONS - SPAN 10

LOCATION		℄ PIER 9	0.1	0.2	℄ FS2-10	0.3	0.4	0.5	0.6	0.7	℄ FS2-11	0.8	0.9	℄ PIER 10
G2-1	STATION	426+75.00	426+97.84	427+20.60	427+23.08	427+43.35	427+66.07	427+88.78	428+11.50	428+35.16	428+50.91	428+58.82	428+82.48	429+06.14
	HAUNCH ELEVATION	713.62	712.55	711.51	711.40	710.44	709.33	708.18	706.94	705.62	704.72	704.27	702.93	701.62
G2-3	STATION	426+75.00	426+98.08	427+20.85	427+23.32	427+43.59	427+66.31	427+89.01	428+11.75	428+35.41	428+51.16	428+59.07	428+82.73	429+06.39
	HAUNCH ELEVATION	713.32	712.26	711.23	711.12	710.18	709.09	707.96	706.75	705.45	704.56	704.12	702.80	701.52
G2-4	STATION	426+75.00	426+98.34	427+21.10	427+23.57	427+43.84	427+66.56	427+89.25	428+12.00	428+35.66	428+51.41	428+59.32	428+82.98	429+06.64
	HAUNCH ELEVATION	712.79	711.74	710.74	710.63	709.72	708.65	707.54	706.37	705.09	704.23	703.79	702.51	701.26
G2-5	STATION	426+75.00	426+98.60	427+21.36	427+23.83	427+44.10	427+66.81	427+89.50	428+12.26	428+35.91	428+51.66	428+59.57	428+83.23	429+06.89
	HAUNCH ELEVATION	712.26	711.23	710.24	710.13	709.25	708.22	707.13	705.99	704.74	703.90	703.48	702.23	701.00
G2-6	STATION	426+75.00	426+98.87	427+21.63	427+24.10	427+44.36	427+67.07	427+89.75	428+12.51	428+36.17	428+51.92	428+59.83	428+83.48	429+07.14
	HAUNCH ELEVATION	711.74	710.72	709.75	709.65	708.79	707.78	706.72	705.60	704.39	703.57	703.15	701.93	700.74
G2-7	STATION	426+75.00	426+99.12	427+21.89	427+24.36	427+44.62	427+67.34	427+90.02	428+12.76	428+36.42	428+52.17	428+60.08	428+83.74	429+07.40
	HAUNCH ELEVATION	711.29	710.25	709.30	709.18	708.33	707.35	706.30	705.22	704.04	703.24	702.84	701.64	700.48
G2-8	STATION	426+75.00	426+99.38	427+22.15	427+24.63	427+44.90	427+67.61	427+90.29	428+13.02	428+36.67	428+52.42	428+60.33	428+83.99	429+07.65
	HAUNCH ELEVATION	710.85	709.79	708.83	708.72	707.88	706.91	705.88	704.84	703.69	702.91	702.52	701.36	700.23
G2-9	STATION	426+75.00	426+99.68	427+22.45	427+24.92	427+45.19	427+67.90	427+90.58	428+13.28	428+36.92	428+52.67	428+60.58	428+84.24	429+07.90
	HAUNCH ELEVATION	710.31	709.26	708.33	708.21	707.40	706.46	705.49	704.45	703.34	702.58	702.20	701.06	699.96

TOP OF HAUNCH ELEVATIONS - SPAN 11

LOCATION		℄ PIER 10	0.1	0.2	0.3	℄ FS2-12	0.4	0.5	0.6	0.7	0.8	0.9	℄ BRG. FWD. ABUT.
G2-1	STATION	429+06.14	429+24.73	429+43.32	429+61.91	429+68.61	429+80.50	429+99.09	430+17.68	430+36.28	430+54.87	430+73.46	430+92.00
	HAUNCH ELEVATION	701.62	700.67	699.74	698.79	698.49	697.88	696.95	696.02	695.08	694.11	693.10	692.08
G2-3	STATION	429+06.39	429+24.98	429+43.57	429+62.16	429+68.86	429+80.75	429+99.35	430+17.94	430+36.53	430+55.12	430+73.71	430+92.00
	HAUNCH ELEVATION	701.52	700.58	699.67	698.74	698.44	697.85	696.93	696.00	695.06	694.09	693.08	692.07
G2-4	STATION	429+06.64	429+25.23	429+43.82	429+62.41	429+69.11	429+81.01	429+99.60	430+18.19	430+36.78	430+55.37	430+73.96	430+92.00
	HAUNCH ELEVATION	701.26	700.34	699.44	698.55	698.25	697.67	696.77	695.85	694.91	693.93	692.92	691.93
G2-5	STATION	429+06.89	429+25.48	429+44.08	429+62.67	429+69.37	429+81.26	429+99.85	430+18.44	430+37.03	430+55.62	430+74.22	430+92.00
	HAUNCH ELEVATION	701.00	700.10	699.22	698.36	698.05	697.50	696.61	695.70	694.76	693.78	692.77	691.79
G2-6	STATION	429+07.14	429+25.74	429+44.33	429+62.92	429+69.62	429+81.51	430+00.10	430+18.69	430+37.28	430+55.88	430+74.47	430+92.00
	HAUNCH ELEVATION	700.74	699.86	699.00	698.17	697.86	697.32	696.45	695.54	694.60	693.62	692.61	691.65
G2-7	STATION	429+07.40	429+25.99	429+44.58	429+63.17	429+69.87	429+81.76	430+00.35	430+18.95	430+37.54	430+56.13	430+74.72	430+92.00
	HAUNCH ELEVATION	700.48	699.62	698.78	697.97	697.68	697.15	696.30	695.40	694.45	693.47	692.46	691.51
G2-8	STATION	429+07.65	429+26.24	429+44.83	429+63.42	429+70.12	429+82.01	430+00.61	430+19.20	430+37.79	430+56.38	430+74.97	430+92.00
	HAUNCH ELEVATION	700.23	699.39	698.57	697.78	697.50	696.97	696.14	695.25	694.30	693.32	692.31	691.36
G2-9	STATION	429+07.90	429+26.49	429+45.08	429+63.68	429+70.38	429+82.27	430+00.86	430+19.45	430+38.04	430+56.63	430+75.22	430+92.00
	HAUNCH ELEVATION	699.96	699.14	698.35	697.59	697.32	696.80	695.98	695.10	694.16	693.17	692.15	691.22

Preliminary Plans - For Reference Only

NOTES:

1. FOR TOP OF HAUNCH ELEVATION NOTES, SEE SHEET 140 / 167 .
2. FOR UNIT 2 TYPICAL CROSS SECTION, SEE SHEET 137 / 167 .
3. FOR DEFLECTION DETAIL, SEE SHEET 135 / 167 .

UNIT 2 - TOP OF HAUNCH ELEVATIONS - (3 OF 3)
CUY-77-1587 (BRIDGE 9)
I.R. 77 SB OVER I.R. 90 AND CR-721 (E. 14TH ST.)

SFN 1806910
DESIGN AGENCY
DESIGNER TJE | CHECKER NJH
REVIEWER DWW 01/11/24
PROJECT ID 82382
SUBSET 144 | TOTAL 167
SHEET 2012 | TOTAL 2696

CUY-90-16.28 (CCG3A)

MODEL: Sheet PAPERSIZE: 34x22 (in.) DATE: 3/28/2025 TIME: 10:25:46 AM USER: Rohit.Bk
pw:\\mb-us-pw.bentley.com:mb-us-pw-03\Documents\Cleveland_OH01_Projects\ODOT\District12\82382400-Engineering\Structures\SFN_1806910\Sheets\82382_SFN_1806910_SD020.dgn

FINAL DECK SURFACE ELEVATIONS - SPAN 1

LOCATION		℄ BRG. REAR ABUT.	0.1	0.2	0.3	0.4	0.5	0.6	0.7	℄ FS1-1	0.8	0.9	℄ PIER 1
LEFT CURBLINE	STATION	410+64.58	410+80.06	410+95.57	411+11.10	411+26.64	411+42.21	411+57.79	411+73.39	411+79.75	411+89.00	412+04.62	412+20.25
	FINAL DECK ELEVATION	706.13	706.59	707.05	707.52	707.99	708.46	708.94	709.43	709.63	709.92	710.42	710.92
G1-1	STATION	410+65.00	410+80.44	410+95.90	411+11.39	411+26.89	411+42.41	411+57.96	411+73.51	411+79.75	411+89.08	412+04.66	412+20.25
	FINAL DECK ELEVATION	706.22	706.67	707.13	707.60	708.07	708.54	709.02	709.51	709.70	710.00	710.49	710.99
END ROUNDING	STATION	410+65.05	410+80.49	410+95.95	411+11.43	411+26.93	411+42.44	411+57.98	411+73.53	411+79.75	411+89.09	412+04.67	412+20.25
	FINAL DECK ELEVATION	706.23	706.69	707.15	707.61	708.08	708.55	709.03	709.52	709.71	710.01	710.50	711.00
CROWN	STATION	410+66.00	410+81.34	410+96.71	411+12.09	411+27.50	411+42.92	411+58.36	411+73.82	411+79.75	411+89.28	412+04.76	412+20.25
	FINAL DECK ELEVATION	706.25	706.70	707.15	707.62	708.08	708.55	709.03	709.51	709.70	710.00	710.49	710.99
G1-2	STATION	410+67.30	410+82.55	410+97.82	411+13.10	411+28.39	411+43.69	411+58.99	411+74.30	411+79.75	411+89.61	412+04.93	412+20.25
	FINAL DECK ELEVATION	706.02	706.50	706.98	707.46	707.95	708.44	708.94	709.44	709.62	709.94	710.44	710.94
G1-3	STATION	410+69.64	410+84.70	410+99.76	411+14.82	411+29.88	411+44.94	411+60.00	411+75.07	411+79.75	411+90.13	412+05.19	412+20.25
	FINAL DECK ELEVATION	705.61	706.12	706.63	707.13	707.64	708.15	708.65	709.16	709.32	709.67	710.17	710.68
℄ RAMP A2 / PROPOSED PROFILE GRADE	STATION	410+71.75	410+86.60	411+01.45	411+16.30	411+31.15	411+46.00	411+60.85	411+75.70	411+79.75	411+90.55	412+05.40	412+20.25
	FINAL DECK ELEVATION	705.25	705.75	706.25	706.75	707.25	707.75	708.25	708.75	708.89	709.25	709.75	710.25
G1-4	STATION	410+71.89	410+86.73	411+01.56	411+16.40	411+31.23	411+46.07	411+60.91	411+75.74	411+79.75	411+90.58	412+05.41	412+20.25
	FINAL DECK ELEVATION	705.23	705.73	706.22	706.72	707.22	707.72	708.22	708.72	708.86	709.22	709.72	710.22
G1-5	STATION	410+74.18	410+88.79	411+03.39	411+18.00	411+32.61	411+47.22	411+61.82	411+76.43	411+79.75	411+91.04	412+05.64	412+20.25
	FINAL DECK ELEVATION	704.84	705.33	705.83	706.32	706.81	707.30	707.79	708.28	708.40	708.78	709.27	709.76
G1-6	STATION	410+76.51	410+90.88	411+05.26	411+19.63	411+34.00	411+48.38	411+62.75	411+77.13	411+79.75	411+91.50	412+05.88	412+20.25
	FINAL DECK ELEVATION	704.46	704.94	705.43	705.91	706.39	706.88	707.36	707.85	707.93	708.33	708.81	709.30
G1-8	STATION	410+78.87	410+93.01	411+07.14	411+21.28	411+35.42	411+49.56	411+63.70	411+77.84	411+79.75	411+91.97	412+06.11	412+20.25
	FINAL DECK ELEVATION	704.08	704.55	705.03	705.50	705.98	706.46	706.93	707.41	707.47	707.88	708.36	708.84
G1-9	STATION	410+81.27	410+95.17	411+09.06	411+22.96	411+36.86	411+50.76	411+64.66	411+78.56	411+79.75	411+92.45	412+06.35	412+20.25
	FINAL DECK ELEVATION	703.70	704.16	704.63	705.10	705.57	706.04	706.50	706.97	707.01	707.44	707.91	708.37
RIGHT CURBLINE	STATION	410+81.72	410+95.57	411+09.42	411+23.28	411+37.13	411+50.98	411+64.84	411+78.69	411+79.75	411+92.54	412+06.40	412+20.25
	FINAL DECK ELEVATION	703.63	704.09	704.56	705.02	705.49	705.96	706.42	706.89	706.93	707.36	707.82	708.29

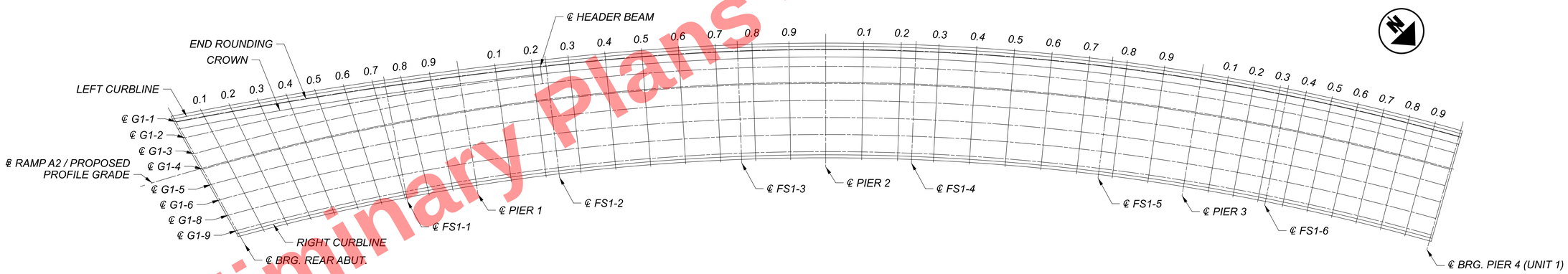

UNIT 1 LOCATION PLAN

NOTES:

1. FINAL DECK SURFACE ELEVATIONS SHOWN REPRESENT THE DECK SURFACE LOCATION AFTER ALL ANTICIPATED DEAD LOAD DEFLECTIONS HAVE OCCURRED.
2. FOR DECK PLAN, SEE SHEETS 105 / 167 THRU 113 / 167.
3. FOR RAILING DETAILS, SEE SHEET 127 / 167.
4. FOR SCREED AND TOP OF HAUNCH ELEVATIONS SEE SHEETS 135 / 167 THRU 144 / 167.
5. FOR UNIT 1 TYPICAL CROSS SECTION AND DEFLECTION DETAIL, SEE SHEET 135 / 167.

Preliminary Plans - For Reference Only

UNIT 1 - FINAL DECK ELEVATIONS - (1 OF 3)
CUY-77-1587 (BRIDGE 9)
I.R. 77 SB OVER I.R. 90 AND CR-721 (E. 14TH ST.)

SFN 1806910
DESIGN AGENCY HDR
DESIGNER TJE | CHECKER NJH
REVIEWER DWW 01/11/24
PROJECT ID 82382
SUBSET 145 | TOTAL 167
SHEET 2013 | TOTAL 2696

CUY-90-16.28 (CCG3A)

MODEL: Sheet PAPERSIZE: 34x22 (in.) DATE: 3/28/2025 TIME: 10:25:52 AM USER: Rohit.Bk
pw:\\mb-us-pw.bentley.com:mb-us-pw-03\Documents\Cleveland_OH01_Projects\ODOTDistrict12\82382400-Engineering\Structures\SFN_1806910\Sheets\82382_SFN_1806910_SD026.dgn

FINAL DECK SURFACE ELEVATIONS - SPAN 2

LOCATION		℄ PIER 1	0.1	0.2	HEADER BEAM	℄ FS1-2	0.3	0.4	0.5	0.6	0.7	℄ FS1-3	0.8	0.9	℄ PIER 2
LEFT CURBLINE	STATION	412+20.25	412+40.25	412+60.25	-	412+67.75	412+80.25	413+00.25	413+20.25	413+40.25	413+60.25	413+72.25	413+80.25	414+00.25	414+20.25
	FINAL DECK ELEVATION	710.92	711.57	712.23	-	712.48	712.89	713.57	714.24	714.91	715.58	715.99	716.26	716.93	717.60
G1-1	STATION	412+20.25	412+40.25	412+60.25	412+64.61	412+67.75	412+80.25	413+00.25	413+20.25	413+40.25	413+60.25	413+72.25	413+80.25	414+00.25	414+20.25
	FINAL DECK ELEVATION	710.99	711.64	712.30	712.44	712.55	712.96	713.64	714.31	714.98	715.65	716.06	716.33	717.00	717.67
END ROUNDING	STATION	412+20.25	412+40.25	412+60.25	-	412+67.75	412+80.25	413+00.25	413+20.25	413+40.25	413+60.25	413+72.25	413+80.25	414+00.25	414+20.25
	FINAL DECK ELEVATION	711.00	711.65	712.31	-	712.56	712.97	713.65	714.32	714.99	715.66	716.07	716.34	717.01	717.68
CROWN	STATION	412+20.25	412+40.25	412+60.25	-	412+67.75	412+80.25	413+00.25	413+20.25	413+40.25	413+60.25	413+72.25	413+80.25	414+00.25	414+20.25
	FINAL DECK ELEVATION	710.99	711.64	712.29	-	712.54	712.96	713.63	714.30	714.97	715.65	716.05	716.32	716.99	717.67
G1-2	STATION	412+20.25	412+40.25	412+60.25	412+64.61	-	-	-	-	-	-	-	-	-	-
	FINAL DECK ELEVATION	710.94	711.60	712.26	712.41	-	-	-	-	-	-	-	-	-	-
G1-3	STATION	412+20.25	412+40.25	412+60.25	412+64.61	412+67.75	412+80.25	413+00.25	413+20.25	413+40.25	413+60.25	413+72.25	413+80.25	414+00.25	414+20.25
	FINAL DECK ELEVATION	710.68	711.35	712.03	712.17	712.28	712.70	713.37	714.05	714.72	715.39	715.80	716.07	716.74	717.41
℄ RAMP A2 / PROPOSED PROFILE GRADE	STATION	412+20.25	412+40.25	412+60.25	-	412+67.75	412+80.25	413+00.25	413+20.25	413+40.25	413+60.25	413+72.25	413+80.25	414+00.25	414+20.25
	FINAL DECK ELEVATION	710.25	710.92	711.60	-	711.85	712.27	712.94	713.61	714.29	714.96	715.36	715.63	716.31	716.98
G1-4	STATION	412+20.25	412+40.25	412+60.25	-	412+67.75	412+80.25	413+00.25	413+20.25	413+40.25	413+60.25	413+72.25	413+80.25	414+00.25	414+20.25
	FINAL DECK ELEVATION	710.22	710.89	711.57	-	711.82	712.24	712.91	713.59	714.26	714.93	715.34	715.61	716.28	716.95
G1-5	STATION	412+20.25	412+40.25	412+60.25	-	412+67.75	412+80.25	413+00.25	413+20.25	413+40.25	413+60.25	413+72.25	413+80.25	414+00.25	414+20.25
	FINAL DECK ELEVATION	709.76	710.43	711.11	-	711.36	711.78	712.45	713.12	713.80	714.47	714.87	715.14	715.82	716.49
G1-6	STATION	412+20.25	412+40.25	412+60.25	-	412+67.75	412+80.25	413+00.25	413+20.25	413+40.25	413+60.25	413+72.25	413+80.25	414+00.25	414+20.25
	FINAL DECK ELEVATION	709.30	709.97	710.64	-	710.90	711.32	711.99	712.66	713.34	714.01	714.41	714.68	715.36	716.03
G1-8	STATION	412+20.25	412+40.25	412+60.25	-	412+67.75	412+80.25	413+00.25	413+20.25	413+40.25	413+60.25	413+72.25	413+80.25	414+00.25	414+20.25
	FINAL DECK ELEVATION	708.84	709.51	710.18	-	710.43	710.86	711.53	712.20	712.87	713.55	713.95	714.22	714.89	715.57
G1-9	STATION	412+20.25	412+40.25	412+60.25	-	412+67.75	412+80.25	413+00.25	413+20.25	413+40.25	413+60.25	413+72.25	413+80.25	414+00.25	414+20.25
	FINAL DECK ELEVATION	708.37	709.05	709.72	-	709.97	710.39	711.07	711.74	712.41	713.09	713.49	713.76	714.43	715.11
RIGHT CURBLINE	STATION	412+20.25	412+40.25	412+60.25	-	412+67.75	412+80.25	413+00.25	413+20.25	413+40.25	413+60.25	413+72.25	413+80.25	414+00.25	414+20.25
	FINAL DECK ELEVATION	708.29	708.96	709.64	-	709.89	710.31	710.98	711.65	712.33	713.00	713.40	713.67	714.35	715.02

Preliminary Plans - For Reference Only

NOTES:

1. *FOR FINAL DECK ELEVATION NOTES, SEE SHEET* 145 / 167 .
2. *FOR UNIT 1 TYPICAL CROSS SECTION AND DEFLECTION DETAIL, SEE SHEET* 135 / 167 .

UNIT 1 - FINAL DECK ELEVATIONS - (2 OF 3)
CUY-77-1587 (BRIDGE 9)
I.R. 77 SB OVER I.R. 90 AND CR-721 (E. 14TH ST.)

SFN 1806910
DESIGN AGENCY HDR
DESIGNER TJE | CHECKER NJH
REVIEWER DWW 01/11/24
PROJECT ID 82382
SUBSET 146 | TOTAL 167
SHEET 2014 | TOTAL 2696

CUY-90-16.28 (CCG3A)

MODEL: Sheet PAPERSIZE: 34x22 (in.) DATE: 3/28/2025 TIME: 10:25:58 AM USER: Rohit.Bk
pw:\\mb-us-pw.bentley.com:mb-us-pw-03\Documents\Cleveland_OH01_Projects\ODOT\District12\82382400-Engineering\Structures\SFN_1806910\Sheets\82382_SFN_1806910_SD027.dgn

FINAL DECK SURFACE ELEVATIONS - SPAN 3

LOCATION		℄ PIER 2	0.1	0.2	℄ FS1-4	0.3	0.4	0.5	0.6	0.7	℄ FS1-5	0.8	0.9	℄ PIER 3
LEFT CURBLINE	STATION	414+20.25	414+40.75	414+61.25	414+69.25	414+81.75	415+02.25	415+22.75	415+43.25	415+63.75	415+76.25	415+84.25	416+04.75	416+25.25
	FINAL DECK ELEVATION	717.60	718.29	718.98	719.25	719.67	720.36	721.05	721.74	722.43	722.86	723.12	723.81	724.50
G1-1	STATION	414+20.25	414+40.75	414+61.25	414+69.25	414+81.75	415+02.25	415+22.75	415+43.25	415+63.75	415+76.25	415+84.25	416+04.75	416+25.25
	FINAL DECK ELEVATION	717.67	718.36	719.05	719.32	719.74	720.43	721.12	721.81	722.50	722.93	723.19	723.88	724.57
END ROUNDING	STATION	414+20.25	414+40.75	414+61.25	414+69.25	414+81.75	415+02.25	415+22.75	415+43.25	415+63.75	415+76.25	415+84.25	416+04.75	416+25.25
	FINAL DECK ELEVATION	717.68	718.37	719.06	719.33	719.75	720.44	721.13	721.82	722.51	722.94	723.20	723.89	724.58
CROWN	STATION	414+20.25	414+40.75	414+61.25	414+69.25	414+81.75	415+02.25	415+22.75	415+43.25	415+63.75	415+76.25	415+84.25	416+04.75	416+25.25
	FINAL DECK ELEVATION	717.67	718.36	719.05	719.32	719.74	720.43	721.12	721.81	722.50	722.92	723.19	723.88	724.57
G1-3	STATION	414+20.25	414+40.75	414+61.25	414+69.25	414+81.75	415+02.25	415+22.75	415+43.25	415+63.75	415+76.25	415+84.25	416+04.75	416+25.25
	FINAL DECK ELEVATION	717.41	718.10	718.79	719.06	719.48	720.17	720.86	721.55	722.24	722.66	722.93	723.62	724.31
℄ RAMP A2 / PROPOSED PROFILE GRADE	STATION	414+20.25	414+40.75	414+61.25	414+69.25	414+81.75	415+02.25	415+22.75	415+43.25	415+63.75	415+76.25	415+84.25	416+04.75	416+25.25
	FINAL DECK ELEVATION	716.98	717.67	718.36	718.63	719.05	719.74	720.43	721.12	721.81	722.23	722.50	723.19	723.88
G1-4	STATION	414+20.25	414+40.75	414+61.25	414+69.25	414+81.75	415+02.25	415+22.75	415+43.25	415+63.75	415+76.25	415+84.25	416+04.75	416+25.25
	FINAL DECK ELEVATION	716.95	717.64	718.33	718.60	719.02	719.71	720.40	721.09	721.78	722.20	722.47	723.16	723.85
G1-5	STATION	414+20.25	414+40.75	414+61.25	414+69.25	414+81.75	415+02.25	415+22.75	415+43.25	415+63.75	415+76.25	415+84.25	416+04.75	416+25.25
	FINAL DECK ELEVATION	716.49	717.18	717.87	718.14	718.56	719.25	719.94	720.63	721.32	721.74	722.01	722.70	723.39
G1-6	STATION	414+20.25	414+40.75	414+61.25	414+69.25	414+81.75	415+02.25	415+22.75	415+43.25	415+63.75	415+76.25	415+84.25	416+04.75	416+25.25
	FINAL DECK ELEVATION	716.03	716.72	717.41	717.68	718.10	718.79	719.48	720.17	720.86	721.28	721.55	722.24	722.93
G1-8	STATION	414+20.25	414+40.75	414+61.25	414+69.25	414+81.75	415+02.25	415+22.75	415+43.25	415+63.75	415+76.25	415+84.25	416+04.75	416+25.25
	FINAL DECK ELEVATION	715.57	716.26	716.95	717.22	717.64	718.33	719.02	719.71	720.40	720.82	721.09	721.78	722.47
G1-9	STATION	414+20.25	414+40.75	414+61.25	414+69.25	414+81.75	415+02.25	415+22.75	415+43.25	415+63.75	415+76.25	415+84.25	416+04.75	416+25.25
	FINAL DECK ELEVATION	715.11	715.80	716.49	716.76	717.18	717.87	718.56	719.25	719.94	720.36	720.63	721.32	722.01
RIGHT CURBLINE	STATION	414+20.25	414+40.75	414+61.25	414+69.25	414+81.75	415+02.25	415+22.75	415+43.25	415+63.75	415+76.25	415+84.25	416+04.75	416+25.25
	FINAL DECK ELEVATION	715.02	715.71	716.40	716.67	717.09	717.78	718.47	719.16	719.85	720.27	720.54	721.23	721.92

FINAL DECK SURFACE ELEVATIONS - SPAN 4

LOCATION		℄ PIER 3	0.1	0.2	0.3	℄ FS1-6	0.4	0.5	0.6	0.7	0.8	0.9	℄ BRG. PIER 4 (UNIT 1)
LEFT CURBLINE	STATION	416+25.25	416+39.63	416+54.02	416+68.40	416+72.75	416+82.78	416+97.17	417+11.55	417+25.93	417+40.32	417+54.70	417+69.13
	FINAL DECK ELEVATION	724.50	724.99	725.47	725.96	726.10	726.44	726.92	727.41	727.89	728.41	728.91	729.43
G1-1	STATION	416+25.25	416+39.63	416+54.02	416+68.40	416+72.75	416+82.78	416+97.17	417+11.55	417+25.93	417+40.32	417+54.70	417+69.12
	FINAL DECK ELEVATION	724.57	725.06	725.54	726.03	726.17	726.51	726.99	727.48	727.96	728.48	728.98	729.50
END ROUNDING	STATION	416+25.25	416+39.63	416+54.02	416+68.40	416+72.75	416+82.78	416+97.17	417+11.55	417+25.93	417+40.32	417+54.70	417+69.12
	FINAL DECK ELEVATION	724.58	725.07	725.55	726.04	726.18	726.52	727.00	727.49	727.97	728.49	728.99	729.51
CROWN	STATION	416+25.25	416+39.63	416+54.02	416+68.40	416+72.75	416+82.78	416+97.17	417+11.55	417+25.93	417+40.32	417+54.70	417+69.11
	FINAL DECK ELEVATION	724.57	725.05	725.53	726.02	726.17	726.50	726.99	727.47	727.95	728.47	728.97	729.48
G1-3	STATION	416+25.25	416+39.63	416+54.02	416+68.40	416+72.75	416+82.78	416+97.17	417+11.55	417+25.93	417+40.32	417+54.70	417+69.10
	FINAL DECK ELEVATION	724.31	724.80	725.28	725.77	725.91	726.25	726.73	727.22	727.70	728.20	728.70	729.20
℄ RAMP A2 / PROPOSED PROFILE GRADE	STATION	416+25.25	416+39.63	416+54.02	416+68.40	416+72.75	416+82.78	416+97.17	417+11.55	417+25.93	417+40.32	417+54.70	417+69.08
	FINAL DECK ELEVATION	723.88	724.36	724.85	725.33	725.48	725.82	726.30	726.78	727.27	727.75	728.24	728.72
G1-4	STATION	416+25.25	416+39.63	416+54.02	416+68.40	416+72.75	416+82.78	416+97.17	417+11.55	417+25.93	417+40.32	417+54.70	417+69.08
	FINAL DECK ELEVATION	723.85	724.34	724.82	725.30	725.45	725.79	726.27	726.76	727.24	727.72	728.21	728.69
G1-5	STATION	416+25.25	416+39.63	416+54.02	416+68.40	416+72.75	416+82.78	416+97.17	417+11.55	417+25.93	417+40.32	417+54.70	417+69.06
	FINAL DECK ELEVATION	723.39	723.87	724.36	724.84	724.99	725.33	725.81	726.29	726.78	727.24	727.72	728.18
G1-6	STATION	416+25.25	416+39.63	416+54.02	416+68.40	416+72.75	416+82.78	416+97.17	417+11.55	417+25.93	417+40.32	417+54.70	417+69.04
	FINAL DECK ELEVATION	722.93	723.41	723.90	724.38	724.53	724.87	725.35	725.83	726.32	726.76	727.23	727.67
G1-8	STATION	416+25.25	416+39.63	416+54.02	416+68.40	416+72.75	416+82.78	416+97.17	417+11.55	417+25.93	417+40.32	417+54.70	417+69.02
	FINAL DECK ELEVATION	722.47	722.95	723.44	723.92	724.07	724.40	724.89	725.37	725.86	726.28	726.74	727.16
G1-9	STATION	416+25.25	416+39.63	416+54.02	416+68.40	416+72.75	416+82.78	416+97.17	417+11.55	417+25.93	417+40.32	417+54.70	417+69.00
	FINAL DECK ELEVATION	722.01	722.49	722.97	723.46	723.61	723.94	724.43	724.91	725.39	725.80	726.25	726.65
RIGHT CURBLINE	STATION	416+25.25	416+39.63	416+54.02	416+68.40	416+72.75	416+82.78	416+97.17	417+11.55	417+25.93	417+40.32	417+54.70	417+68.99
	FINAL DECK ELEVATION	721.92	722.40	722.89	723.37	723.52	723.86	724.34	724.82	725.31	725.71	726.16	726.56

For Reference Only
Preliminary Plans - Not for Construction

NOTES:

1. *FOR FINAL DECK ELEVATION NOTES, SEE SHEET* 145 / 167 .
2. *FOR UNIT 1 TYPICAL CROSS SECTION AND DEFLECTION DETAIL, SEE SHEET* 135 / 167 .

UNIT 1 - FINAL DECK ELEVATIONS - (3 OF 3)
CUY-77-1587 (BRIDGE 9)
I.R. 77 SB OVER I.R. 90 AND CR-721 (E. 14TH ST.)

SFN 1806910
DESIGN AGENCY HDR
DESIGNER TJE | CHECKER NJH
REVIEWER DWW 01/11/24
PROJECT ID 82382
SUBSET 147 | TOTAL 167
SHEET 2015 | TOTAL 2696

CUY-90-16.28 (CCG3A)

MODEL: Sheet PAPERSIZE: 34x22 (in.) DATE: 3/28/2025 TIME: 10:26:04 AM USER: RohitLBk
pw:\\mb-us-pw.bentley.com:mb-us-pw-03\Documents\Cleveland_OH\01_Projects\ODOT\District12\82382\400-Engineering\Structures\SFN_1806910\Sheets\82382_SFN_1806910_SD028.dgn

FINAL DECK SURFACE ELEVATIONS - SPAN 5

LOCATION		℄ BRG. PIER 4 (UNIT 2)	0.1	0.2	0.3	0.4	0.5	0.6	0.7	℄ FS2-1	0.8	0.9	℄ PIER 5
LEFT CURBLINE	STATION	417+73.35	417+87.63	418+01.83	418+16.04	418+30.25	418+44.46	418+58.67	418+72.88	418+75.34	418+87.08	419+01.29	419+15.50
	FINAL DECK ELEVATION	729.59	730.10	730.61	731.09	731.52	731.93	732.32	732.67	732.73	733.00	733.31	733.59
G2-1	STATION	417+73.36	417+87.63	418+01.83	418+16.04	418+30.25	418+44.46	418+58.67	418+72.88	418+75.34	418+87.08	419+01.29	419+15.50
	FINAL DECK ELEVATION	729.66	730.17	730.68	731.16	731.59	732.00	732.39	732.74	732.80	733.07	733.38	733.66
END ROUNDING	STATION	417+73.36	417+87.63	418+01.83	418+16.04	418+30.25	418+44.46	418+58.67	418+72.88	418+75.34	418+87.08	419+01.29	419+15.50
	FINAL DECK ELEVATION	729.67	730.18	730.69	731.17	731.60	732.01	732.40	732.75	732.81	733.08	733.39	733.67
CROWN	STATION	417+73.37	417+87.63	418+01.83	418+16.04	418+30.25	418+44.46	418+58.67	418+72.88	418+75.34	418+87.08	419+01.29	419+15.50
	FINAL DECK ELEVATION	729.64	730.14	730.65	731.13	731.56	731.97	732.36	732.71	732.77	733.04	733.35	733.63
G2-3	STATION	417+73.39	417+87.63	418+01.83	418+16.04	418+30.25	418+44.46	418+58.67	418+72.88	418+75.34	418+87.08	419+01.29	419+15.50
	FINAL DECK ELEVATION	729.35	729.85	730.34	730.82	731.25	731.66	732.05	732.40	732.46	732.73	733.04	733.32
℄ RAMP A2 / PROPOSED PROFILE GRADE	STATION	417+73.42	417+87.63	418+01.83	418+16.04	418+30.25	418+44.46	418+58.67	418+72.88	418+75.34	418+87.08	419+01.29	419+15.50
	FINAL DECK ELEVATION	728.87	729.35	729.82	730.29	730.72	731.13	731.52	731.87	731.93	732.20	732.51	732.79
G2-4	STATION	417+73.42	417+87.63	418+01.83	418+16.04	418+30.25	418+44.46	418+58.67	418+72.88	418+75.34	418+87.08	419+01.29	419+15.50
	FINAL DECK ELEVATION	728.84	729.31	729.79	730.25	730.69	731.10	731.48	731.84	731.90	732.17	732.48	732.76
G2-5	STATION	417+73.45	417+87.63	418+01.83	418+16.04	418+30.25	418+44.46	418+58.67	418+72.88	418+75.34	418+87.08	419+01.29	419+15.50
	FINAL DECK ELEVATION	728.32	728.78	729.23	729.69	730.12	730.53	730.92	731.27	731.33	731.60	731.91	732.19
G2-6	STATION	417+73.48	417+87.63	418+01.83	418+16.04	418+30.25	418+44.46	418+58.67	418+72.88	418+75.34	418+87.08	419+01.29	419+15.50
	FINAL DECK ELEVATION	727.80	728.24	728.68	729.12	729.56	729.97	730.35	730.71	730.77	731.04	731.35	731.63
G2-8	STATION	417+73.51	417+87.63	418+01.83	418+16.04	418+30.25	418+44.46	418+58.67	418+72.88	418+75.34	418+87.08	419+01.29	419+15.50
	FINAL DECK ELEVATION	727.28	727.70	728.12	728.56	728.99	729.40	729.79	730.14	730.20	730.47	730.78	731.06
G2-9	STATION	417+73.55	417+87.63	418+01.83	418+16.04	418+30.25	418+44.46	418+58.67	418+72.88	418+75.34	418+87.08	419+01.29	419+15.50
	FINAL DECK ELEVATION	726.77	727.17	727.57	727.99	728.43	728.84	729.22	729.58	729.64	729.91	730.22	730.50
RIGHT CURBLINE	STATION	417+73.55	417+87.63	418+01.83	418+16.04	418+30.25	418+44.46	418+58.67	418+72.88	418+75.34	418+87.08	419+01.29	419+15.50
	FINAL DECK ELEVATION	726.67	727.07	727.46	727.89	728.32	728.73	729.12	729.47	729.53	729.80	730.11	730.39

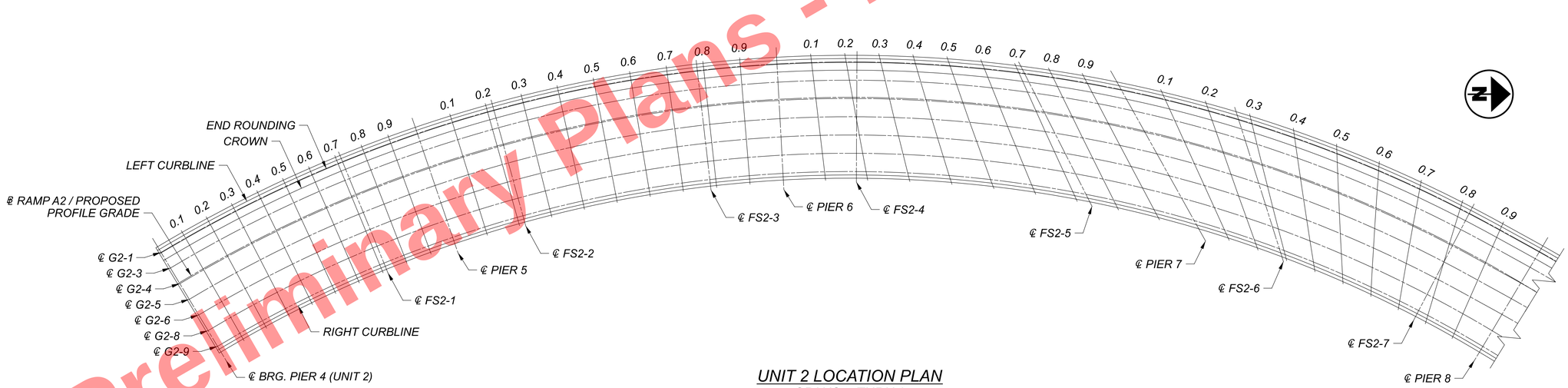

UNIT 2 LOCATION PLAN
SPANS 5 THRU 8

NOTES:

1. FOR FINAL DECK ELEVATION NOTES, SEE SHEET 145 / 167 .
2. FOR UNIT 2 TYPICAL CROSS SECTION, SEE SHEET 137 / 167 .
3. FOR DEFLECTION DETAIL, SEE SHEET 135 / 167 .

Preliminary Plans - For Reference Only

UNIT 2 - FINAL DECK ELEVATIONS - (1 OF 6)
CUY-77-1587 (BRIDGE 9)
I.R. 77 SB OVER I.R. 90 AND CR-721 (E. 14TH ST.)

SFN 1806910
DESIGN AGENCY HDR
DESIGNER TJE | CHECKER NJH
REVIEWER DWW 01/11/24
PROJECT ID 82382
SUBSET 148 | TOTAL 167
SHEET 2016 | TOTAL 2696

CUY-90-16.28 (CCG3A)

MODEL: Sheet PAPERSIZE: 34x22 (in.) DATE: 3/28/2025 TIME: 10:26:11 AM USER: Rohit.Bk
pw:\\mb-us-pw.bentley.com:mb-us-pw-03\Documents\Cleveland_OH\01_Projects\ODOT\District12\82382\400-Engineering\Structures\SFN_1806910\Sheets\82382_SFN_1806910_SD030.dgn

FINAL DECK SURFACE ELEVATIONS - SPAN 6

LOCATION		℄ PIER 5	0.1	0.2	℄ FS2-2	0.3	0.4	0.5	0.6	0.7	℄ FS2-3	0.8	0.9	℄ PIER 6
LEFT CURBLINE	STATION	419+15.50	419+33.95	419+52.40	419+55.66	419+70.85	419+89.30	420+07.75	420+26.20	420+44.65	420+59.84	420+63.10	420+81.55	421+00.00
	FINAL DECK ELEVATION	733.59	733.92	734.20	734.24	734.43	734.63	734.78	734.88	734.94	734.96	734.96	734.94	734.87
G2-1	STATION	419+15.50	419+33.95	419+52.40	419+55.66	419+70.85	419+89.30	420+07.75	420+26.20	420+44.65	420+59.84	420+63.10	420+81.55	421+00.00
	FINAL DECK ELEVATION	733.66	733.99	734.27	734.31	734.50	734.70	734.85	734.95	735.01	735.03	735.03	735.01	734.94
END ROUNDING	STATION	419+15.50	419+33.95	419+52.40	419+55.66	419+70.85	419+89.30	420+07.75	420+26.20	420+44.65	420+59.84	420+63.10	420+81.55	421+00.00
	FINAL DECK ELEVATION	733.67	734.00	734.28	734.32	734.51	734.71	734.86	734.96	735.02	735.04	735.04	735.02	734.95
CROWN	STATION	419+15.50	419+33.95	419+52.40	419+55.66	419+70.85	419+89.30	420+07.75	420+26.20	420+44.65	420+59.84	420+63.10	420+81.55	421+00.00
	FINAL DECK ELEVATION	733.63	733.96	734.24	734.28	734.47	734.67	734.82	734.92	734.98	735.00	735.00	734.98	734.91
G2-3	STATION	419+15.50	419+33.95	419+52.40	419+55.66	419+70.85	419+89.30	420+07.75	420+26.20	420+44.65	420+59.84	420+63.10	420+81.55	421+00.00
	FINAL DECK ELEVATION	733.32	733.65	733.93	733.97	734.16	734.36	734.51	734.61	734.67	734.69	734.69	734.67	734.60
℄ RAMP A2 / PROPOSED PROFILE GRADE	STATION	419+15.50	419+33.95	419+52.40	419+55.66	419+70.85	419+89.30	420+07.75	420+26.20	420+44.65	420+59.84	420+63.10	420+81.55	421+00.00
	FINAL DECK ELEVATION	732.79	733.12	733.40	733.44	733.63	733.83	733.98	734.08	734.14	734.16	734.16	734.14	734.07
G2-4	STATION	419+15.50	419+33.95	419+52.40	419+55.66	419+70.85	419+89.30	420+07.75	420+26.20	420+44.65	420+59.84	420+63.10	420+81.55	421+00.00
	FINAL DECK ELEVATION	732.76	733.08	733.36	733.41	733.60	733.79	733.94	734.05	734.11	734.13	734.13	734.10	734.03
G2-5	STATION	419+15.50	419+33.95	419+52.40	419+55.66	419+70.85	419+89.30	420+07.75	420+26.20	420+44.65	420+59.84	420+63.10	420+81.55	421+00.00
	FINAL DECK ELEVATION	732.19	732.52	732.80	732.84	733.03	733.23	733.38	733.48	733.54	733.56	733.56	733.54	733.47
G2-6	STATION	419+15.50	419+33.95	419+52.40	419+55.66	419+70.85	419+89.30	420+07.75	420+26.20	420+44.65	420+59.84	420+63.10	420+81.55	421+00.00
	FINAL DECK ELEVATION	731.63	731.95	732.23	732.28	732.47	732.66	732.81	732.92	732.98	733.00	733.00	732.97	732.90
G2-8	STATION	419+15.50	419+33.95	419+52.40	419+55.66	419+70.85	419+89.30	420+07.75	420+26.20	420+44.65	420+59.84	420+63.10	420+81.55	421+00.00
	FINAL DECK ELEVATION	731.06	731.39	731.67	731.71	731.90	732.10	732.25	732.35	732.41	732.43	732.43	732.41	732.34
G2-9	STATION	419+15.50	419+33.95	419+52.40	419+55.66	419+70.85	419+89.30	420+07.75	420+26.20	420+44.65	420+59.84	420+63.10	420+81.55	421+00.00
	FINAL DECK ELEVATION	730.50	730.82	731.10	731.15	731.34	731.53	731.68	731.79	731.85	731.87	731.87	731.84	731.77
RIGHT CURBLINE	STATION	419+15.50	419+33.95	419+52.40	419+55.66	419+70.85	419+89.30	420+07.75	420+26.20	420+44.65	420+59.84	420+63.10	420+81.55	421+00.00
	FINAL DECK ELEVATION	730.39	730.72	731.00	731.04	731.23	731.43	731.58	731.68	731.74	731.76	731.76	731.74	731.67

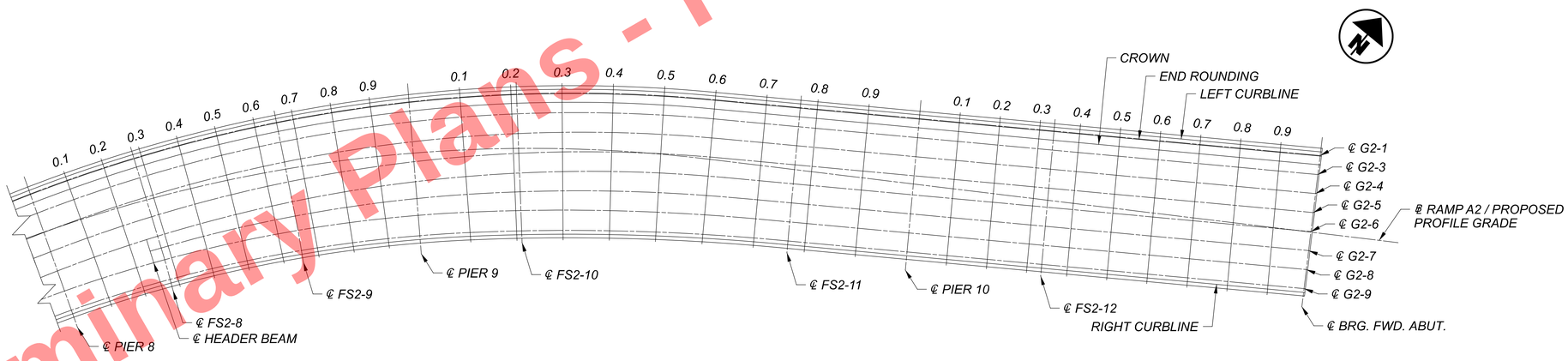

UNIT 2 LOCATION PLAN
SPANS 9 THRU 11

NOTES:

1. FOR FINAL DECK ELEVATION NOTES, SEE SHEET 145 / 167 .
2. FOR UNIT 2 TYPICAL CROSS SECTION, SEE SHEET 137 / 167 .
3. FOR DEFLECTION DETAIL, SEE SHEET 135 / 167 .

Preliminary Plans - For Reference Only

UNIT 2 - FINAL DECK ELEVATIONS - (2 OF 6)
CUY-77-1587 (BRIDGE 9)
I.R. 77 SB OVER I.R. 90 AND CR-721 (E. 14TH ST.)

SFN 1806910
DESIGN AGENCY
DESIGNER TJE | CHECKER NJH
REVIEWER DWW 01/11/24
PROJECT ID 82382
SUBSET 149 | TOTAL 167
SHEET 2017 | TOTAL 2696

CUY-90-16.28 (CCG3A)

MODEL: Sheet PAPERSIZE: 34x22 (in.) DATE: 3/28/2025 TIME: 10:26:21 AM USER: RohitLBk
pw:\\mb-us-pw.bentley.com:mb-us-pw-03\Documents\Cleveland_OH\01_Projects\ODOT\District12\82382\400-Engineering\Structures\SFN_1806910\Sheets\82382_SFN_1806910_SD031.dgn

FINAL DECK SURFACE ELEVATIONS - SPAN 7

LOCATION		℄ PIER 6	0.1	0.2	℄ FS2-4	0.3	0.4	0.5	0.6	0.7	℄ FS2-5	0.8	0.9	℄ PIER 7
LEFT CURBLINE	STATION	421+00.00	421+17.23	421+34.46	421+40.16	421+51.69	421+68.92	421+86.15	422+03.37	422+20.60	-	422+37.83	422+55.06	422+72.29
	FINAL DECK ELEVATION	734.87	734.76	734.62	734.57	734.44	734.22	733.96	733.67	733.33	-	732.96	732.55	732.10
G2-1	STATION	421+00.00	421+17.38	421+34.75	421+40.16	421+52.13	421+69.50	421+86.88	422+04.25	422+21.63	422+24.51	422+39.00	422+56.38	422+73.76
	FINAL DECK ELEVATION	734.94	734.83	734.69	734.64	734.50	734.28	734.02	733.72	733.38	733.32	733.01	732.59	732.13
END ROUNDING	STATION	421+00.00	421+17.40	421+34.79	421+40.16	421+52.19	421+69.59	421+86.98	422+04.38	422+21.78	-	422+39.17	422+56.57	422+73.97
	FINAL DECK ELEVATION	734.95	734.84	734.70	734.65	734.51	734.29	734.03	733.73	733.39	-	733.01	732.59	732.14
CROWN	STATION	421+00.00	421+17.74	421+35.47	421+40.16	421+53.21	421+70.94	421+88.68	422+06.41	422+24.15	-	422+41.89	422+59.62	422+77.36
	FINAL DECK ELEVATION	734.91	734.80	734.65	734.61	734.46	734.23	733.96	733.65	733.30	-	732.91	732.48	732.00
G2-3	STATION	421+00.00	421+18.18	421+36.36	421+40.16	421+54.55	421+72.73	421+90.91	422+09.09	422+27.27	422+33.62	422+45.46	422+63.64	422+81.82
	FINAL DECK ELEVATION	734.60	734.49	734.33	734.30	734.14	733.90	733.62	733.29	732.92	732.79	732.52	732.06	731.57
℄ RAMP A2 / PROPOSED PROFILE GRADE	STATION	421+00.00	421+18.97	421+37.93	421+40.16	421+56.90	421+75.87	421+94.84	422+13.80	422+32.77	-	422+51.74	422+70.70	422+89.67
	FINAL DECK ELEVATION	734.07	733.95	733.79	733.77	733.58	733.32	733.02	732.67	732.28	-	731.83	731.35	730.81
G2-4	STATION	421+00.00	421+19.02	421+38.04	421+40.16	421+57.06	421+76.08	421+95.10	422+14.12	422+33.14	422+37.24	422+52.16	422+71.18	422+90.20
	FINAL DECK ELEVATION	734.03	733.92	733.75	733.73	733.54	733.28	732.98	732.63	732.23	732.14	731.79	731.30	730.76
G2-5	STATION	421+00.00	421+19.89	421+39.78	421+40.16	421+59.68	421+79.57	421+99.46	422+19.35	422+39.24	422+40.89	422+59.13	422+79.02	422+98.92
	FINAL DECK ELEVATION	733.47	733.34	733.17	733.17	732.94	732.67	732.34	731.96	731.53	731.49	731.05	730.52	729.94
G2-6	STATION	421+00.00	421+20.80	421+41.60	421+40.16	421+62.40	421+83.20	422+04.00	422+24.80	422+45.60	422+51.88	422+66.40	422+87.20	423+07.99
	FINAL DECK ELEVATION	732.90	732.77	732.59	732.60	732.34	732.05	731.69	731.28	730.82	730.67	730.30	729.72	729.09
G2-8	STATION	421+00.00	421+21.75	421+43.49	421+40.16	421+65.24	421+86.99	422+08.73	422+30.48	422+52.22	422+55.48	422+73.97	422+95.72	423+17.46
	FINAL DECK ELEVATION	732.34	732.20	732.00	732.04	731.74	731.42	731.04	730.60	730.09	730.01	729.53	728.90	728.22
G2-9	STATION	421+00.00	421+22.74	421+45.47	421+40.16	421+68.20	421+90.94	422+13.67	422+36.41	422+59.14	422+66.48	422+81.88	423+04.61	423+27.35
	FINAL DECK ELEVATION	731.77	731.63	731.41	731.47	731.14	730.79	730.38	729.90	729.35	729.16	728.74	728.07	727.32
RIGHT CURBLINE	STATION	421+00.00	421+22.92	421+45.85	421+40.16	421+68.77	421+91.69	422+14.62	422+37.54	422+60.46	-	422+83.39	423+06.31	423+29.23
	FINAL DECK ELEVATION	731.67	731.52	731.31	731.37	731.02	730.67	730.25	729.77	729.22	-	728.60	727.91	727.15

FINAL DECK SURFACE ELEVATIONS - SPAN 8

LOCATION		℄ PIER 7	0.1	0.2	℄ FS2-6	0.3	0.4	0.5	0.6	0.7	0.8	℄ FS2-7	0.9	℄ PIER 8
LEFT CURBLINE	STATION	422+72.29	422+95.06	423+17.83	-	423+40.61	423+63.38	423+86.15	424+08.92	424+31.69	424+54.47	424+59.85	424+77.24	425+00.00
	FINAL DECK ELEVATION	732.10	731.45	730.74	-	729.95	729.10	728.18	727.20	726.14	725.03	724.76	723.89	722.77
G2-1	STATION	422+73.76	422+96.38	423+19.01	423+34.61	423+41.63	423+64.26	423+86.88	424+09.51	424+32.13	424+54.76	424+59.85	424+77.38	425+00.00
	FINAL DECK ELEVATION	732.13	731.48	730.77	730.23	729.98	729.13	728.22	727.24	726.19	725.08	724.83	723.95	722.84
END ROUNDING	STATION	422+73.97	422+96.57	423+19.17	-	423+41.78	423+64.38	423+86.99	424+09.59	424+32.20	424+54.80	424+59.85	424+77.41	425+00.00
	FINAL DECK ELEVATION	732.14	731.49	730.77	-	729.99	729.14	728.23	727.25	726.20	725.09	724.84	723.96	722.85
CROWN	STATION	422+77.36	422+99.62	423+21.89	-	423+44.15	423+66.42	423+88.68	424+10.95	424+33.21	424+55.48	424+59.85	424+77.75	425+00.00
	FINAL DECK ELEVATION	732.00	731.35	730.64	-	729.86	729.02	728.11	727.15	726.11	725.02	724.80	723.90	722.82
G2-3	STATION	422+81.82	423+03.64	423+25.46	423+38.25	423+47.28	423+69.10	423+90.91	424+12.73	424+34.55	424+56.37	424+59.85	424+78.19	425+00.00
	FINAL DECK ELEVATION	731.57	730.92	730.21	729.76	729.44	728.60	727.71	726.75	725.74	724.66	724.49	723.57	722.51
℄ RAMP A2 / PROPOSED PROFILE GRADE	STATION	422+89.67	423+10.70	423+31.74	-	423+52.77	423+73.80	423+94.84	424+15.87	424+36.90	424+57.93	424+59.85	424+78.97	425+00.00
	FINAL DECK ELEVATION	730.81	730.17	729.46	-	728.70	727.89	727.01	726.08	725.09	724.05	723.96	723.00	721.95
G2-4	STATION	422+90.20	423+11.18	423+32.16	423+45.66	423+53.14	423+74.12	423+95.10	424+16.09	424+37.07	424+58.05	424+59.85	424+79.03	425+00.00
	FINAL DECK ELEVATION	730.76	730.12	729.41	728.93	728.66	727.84	726.97	726.04	725.05	724.01	723.92	722.96	721.94
G2-5	STATION	422+98.92	423+19.03	423+39.14	423+52.88	423+59.24	423+79.35	423+99.46	424+19.57	424+39.68	424+59.79	424+59.85	424+79.90	425+00.00
	FINAL DECK ELEVATION	729.94	729.30	728.60	728.10	727.86	727.06	726.21	725.31	724.36	723.36	723.36	722.36	721.38
G2-6	STATION	423+07.99	423+27.20	423+46.40	423+60.25	423+65.60	423+84.80	424+04.00	424+23.20	424+42.41	424+61.61	424+59.85	424+80.81	425+00.00
	FINAL DECK ELEVATION	729.09	728.46	727.78	727.26	727.05	726.27	725.45	724.58	723.66	722.71	722.79	721.75	720.81
G2-8	STATION	423+17.46	423+35.72	423+53.97	423+67.43	423+72.22	423+90.48	424+08.73	424+26.99	424+45.24	424+63.49	424+59.85	424+81.75	425+00.00
	FINAL DECK ELEVATION	728.22	727.59	726.93	726.41	726.22	725.47	724.67	723.84	722.96	722.05	722.23	721.13	720.22
G2-9	STATION	423+27.35	423+44.61	423+61.88	423+76.47	423+79.14	423+96.41	424+13.67	424+30.94	424+48.20	424+65.47	424+59.85	424+82.74	425+00.00
	FINAL DECK ELEVATION	727.32	726.71	726.06	725.48	725.38	724.65	723.89	723.09	722.25	721.38	721.66	720.52	719.66
RIGHT CURBLINE	STATION	423+29.23	423+46.31	423+63.39	-	423+80.46	423+97.54	424+14.62	424+31.69	424+48.77	424+65.85	424+59.85	424+82.92	425+00.00
	FINAL DECK ELEVATION	727.15	726.54	725.90	-	725.22	724.50	723.74	722.94	722.11	721.26	721.56	720.40	719.55

Preliminary Plans - Not For Reference Only

NOTES:

1. FOR FINAL DECK ELEVATION NOTES, SEE SHEET 145 / 167 .
2. FOR UNIT 2 TYPICAL CROSS SECTION, SEE SHEET 137 / 167 .
3. FOR DEFLECTION DETAIL, SEE SHEET 135 / 167 .

UNIT 2 - FINAL DECK ELEVATIONS - (3 OF 6)
CUY-77-1587 (BRIDGE 9)
I.R. 77 SB OVER I.R. 90 AND CR-721 (E. 14TH ST.)

SFN 1806910
DESIGN AGENCY
DESIGNER TJE | CHECKER NJH
REVIEWER DWW 01/11/24
PROJECT ID 82382
SUBSET 150 | TOTAL 167
SHEET 2018 | TOTAL 2696

CUY-90-16.28 (CCG3A)
MODEL: Sheet PAPERSIZE: 34x22 (in.) DATE: 3/28/2025 TIME: 10:26:28 AM USER: RohitLBk
pw:\\mb-us-pw.bentley.com:mb-us-pw-03\Documents\Cleveland_OH\01_Projects\ODOT\District12\82382\400-Engineering\Structures\SFN_1806910\Sheets\82382_SFN_1806910_SD032.dgn

FINAL DECK SURFACE ELEVATIONS - SPAN 9

LOCATION		℄ PIER 8	0.1	0.2	HEADER BEAM	℄ FS2-8	0.3	0.4	0.5	0.6	℄ FS2-9	0.7	0.8	0.9	℄ PIER 9
LEFT CURBLINE	STATION	425+00.00	425+17.56	425+35.10	-	425+49.18	425+52.63	425+70.15	425+87.66	426+05.15	426+15.03	426+22.63	426+40.10	426+57.56	426+75.00
	FINAL DECK ELEVATION	722.77	721.92	721.07	-	720.39	720.23	719.38	718.54	717.69	717.21	716.85	716.00	715.14	714.26
G2-1	STATION	425+00.00	425+17.60	425+35.15	-	425+49.23	425+52.68	425+70.20	425+87.71	426+05.20	426+15.07	426+22.68	426+40.15	426+57.60	426+75.00
	FINAL DECK ELEVATION	722.84	721.99	721.14	-	720.46	720.30	719.45	718.61	717.76	717.28	716.92	716.07	715.21	714.33
END ROUNDING	STATION	425+00.00	425+17.61	425+35.16	-	425+49.23	425+52.69	425+70.21	425+87.71	426+05.21	426+15.08	426+22.69	426+40.16	426+57.61	426+75.00
	FINAL DECK ELEVATION	722.85	722.00	721.15	-	720.47	720.31	719.46	718.62	717.77	717.29	716.93	716.08	715.22	714.34
CROWN	STATION	425+00.00	425+17.72	425+35.26	-	425+49.34	425+52.80	425+70.31	425+87.82	426+05.32	426+15.19	426+22.80	426+40.26	426+57.72	426+75.00
	FINAL DECK ELEVATION	722.82	721.96	721.11	-	720.43	720.27	719.42	718.58	717.73	717.25	716.89	716.04	715.18	714.31
G2-3	STATION	425+00.00	425+17.86	425+35.41	-	425+49.48	425+52.94	425+70.46	425+87.96	426+05.46	426+15.33	426+22.94	426+40.40	426+57.86	426+75.00
	FINAL DECK ELEVATION	722.51	721.64	720.80	-	720.12	719.95	719.11	718.26	717.42	716.94	716.58	715.73	714.88	714.03
℄ RAMP A2 / PROPOSED PROFILE GRADE	STATION	425+00.00	425+18.13	425+35.69	-	425+49.78	425+53.24	425+70.78	425+88.30	426+05.80	426+15.69	426+23.30	426+40.78	426+58.25	426+75.00
	FINAL DECK ELEVATION	721.95	721.04	720.17	-	719.46	719.29	718.41	717.54	716.66	716.17	715.79	714.91	714.04	713.20
G2-4	STATION	425+00.00	425+18.12	425+35.67	-	425+49.75	425+53.20	425+70.72	425+88.23	426+05.72	426+15.59	426+23.20	426+40.66	426+58.12	426+75.00
	FINAL DECK ELEVATION	721.94	721.07	720.22	-	719.54	719.37	718.53	717.69	716.84	716.37	716.00	715.16	714.32	713.50
G2-5	STATION	425+00.00	425+18.39	425+35.94	-	425+50.02	425+53.47	425+70.99	425+88.50	426+05.99	426+15.86	426+23.47	426+40.93	426+58.38	426+75.00
	FINAL DECK ELEVATION	721.38	720.49	719.64	-	718.96	718.80	717.95	717.11	716.27	715.80	715.43	714.59	713.76	712.97
G2-6	STATION	425+00.00	425+18.67	425+36.22	425+44.80	425+50.30	425+53.75	425+71.27	425+88.78	426+06.27	426+16.14	426+23.75	426+41.21	426+58.66	426+75.00
	FINAL DECK ELEVATION	720.81	719.91	719.06	718.65	718.39	718.22	717.38	716.54	715.70	715.22	714.86	714.02	713.20	712.45
G2-7	STATION	-	-	-	425+44.97	-	425+53.93	425+71.45	425+88.97	426+06.47	426+16.35	426+23.95	426+41.43	426+58.89	426+75.00
	FINAL DECK ELEVATION	-	-	-	718.31	-	717.87	717.01	716.15	715.29	714.81	714.44	713.58	712.75	712.00
G2-8	STATION	425+00.00	425+18.99	425+36.55	425+45.15	425+50.65	425+54.10	425+71.64	425+89.16	426+06.67	426+16.56	426+24.17	426+41.65	426+59.12	426+75.00
	FINAL DECK ELEVATION	720.22	719.27	718.39	717.96	717.69	717.52	716.64	715.76	714.89	714.39	714.01	713.14	712.29	711.56
G2-9	STATION	425+00.00	425+19.29	425+36.85	-	425+50.65	425+54.40	425+71.94	425+89.46	426+06.97	426+16.56	426+24.47	426+41.95	426+59.42	426+75.00
	FINAL DECK ELEVATION	719.66	718.69	717.81	-	717.12	716.94	716.06	715.18	714.31	713.83	713.43	712.56	711.72	711.02
RIGHT CURBLINE	STATION	425+00.00	425+19.34	425+36.91	-	425+50.65	425+54.46	425+72.00	425+89.52	426+07.03	426+16.56	426+24.53	426+42.01	426+59.48	426+75.00
	FINAL DECK ELEVATION	719.55	718.58	717.71	-	717.02	716.83	715.95	715.07	714.20	713.72	713.32	712.45	711.62	710.92

Preliminary Plans - For Reference Only

NOTES:

1. *FOR FINAL DECK ELEVATION NOTES, SEE SHEET* 145 / 167 .
2. *FOR UNIT 2 TYPICAL CROSS SECTION, SEE SHEET* 137 / 167 .
3. *FOR DEFLECTION DETAIL, SEE SHEET* 135 / 167 .

UNIT 2 - FINAL DECK ELEVATIONS - (4 OF 6)
CUY-77-1587 (BRIDGE 9)
I.R. 77 SB OVER I.R. 90 AND CR-721 (E. 14TH ST.)

SFN 1806910
DESIGN AGENCY HDR
DESIGNER TJE | CHECKER NJH
REVIEWER DWW 01/11/24
PROJECT ID 82382
SUBSET 151 | TOTAL 167
SHEET 2019 | TOTAL 2696

CUY-90-16.28 (CCG3A)

MODEL: Sheet PAPERSIZE: 34x22 (in.) DATE: 3/28/2025 TIME: 10:26:36 AM USER: RohitLBk
pw:\\mb-us-pw.bentley.com:mb-us-pw-03\Documents\Cleveland_OH01_Projects\ODOT\District12\82382\400-Engineering\Structures\SFN_1806910\Sheets\82382_SFN_1806910_SD033.dgn

FINAL DECK SURFACE ELEVATIONS - SPAN 10

LOCATION		℄ PIER 9	0.1	0.2	℄ FS2-10	0.3	0.4	0.5	0.6	0.7	℄ FS2-11	0.8	0.9	℄ PIER 10
LEFT CURBLINE	STATION	426+75.00	426+97.79	427+20.56	427+23.03	427+43.30	427+66.03	427+88.73	428+11.45	428+35.11	428+50.86	428+58.77	428+82.43	429+06.09
	FINAL DECK ELEVATION	714.26	713.09	711.92	711.80	710.74	709.56	708.41	707.22	705.99	705.17	704.75	703.51	702.26
G2-1	STATION	426+75.00	426+97.84	427+20.60	427+23.08	427+43.35	427+66.07	427+88.78	428+11.50	428+35.16	428+50.91	428+58.82	428+82.48	429+06.14
	FINAL DECK ELEVATION	714.33	713.16	711.99	711.87	710.81	709.63	708.48	707.29	706.06	705.24	704.82	703.58	702.33
END ROUNDING	STATION	426+75.00	426+97.84	427+20.61	427+23.08	427+43.36	427+66.08	427+88.78	428+11.50	428+35.16	428+50.91	428+58.82	428+82.48	429+06.14
	FINAL DECK ELEVATION	714.34	713.17	712.00	711.88	710.82	709.64	708.49	707.30	706.07	705.25	704.83	703.59	702.34
CROWN	STATION	426+75.00	426+97.95	427+20.72	427+23.19	427+43.46	427+66.19	427+88.89	428+11.62	428+35.28	428+51.03	428+58.94	428+82.60	429+06.26
	FINAL DECK ELEVATION	714.31	713.14	711.97	711.85	710.81	709.63	708.48	707.30	706.07	705.26	704.84	703.61	702.37
G2-3	STATION	426+75.00	426+98.08	427+20.85	427+23.32	427+43.59	427+66.31	427+89.01	428+11.75	428+35.41	428+51.16	428+59.07	428+82.73	429+06.39
	FINAL DECK ELEVATION	714.03	712.87	711.72	711.60	710.57	709.42	708.28	707.11	705.90	705.09	704.68	703.46	702.23
℄ RAMP A2 / PROPOSED PROFILE GRADE	STATION	426+75.00	426+98.51	427+21.29	427+23.77	427+44.05	427+66.79	427+89.51	428+12.29	428+35.96	428+51.73	428+59.64	428+83.32	429+07.00
	FINAL DECK ELEVATION	713.20	712.03	710.89	710.76	709.75	708.61	707.48	706.34	705.15	704.36	703.97	702.78	701.60
G2-4	STATION	426+75.00	426+98.34	427+21.10	427+23.57	427+43.84	427+66.56	427+89.25	428+12.00	428+35.66	428+51.41	428+59.32	428+82.98	429+06.64
	FINAL DECK ELEVATION	713.50	712.36	711.24	711.12	710.12	709.00	707.88	706.75	705.56	704.77	704.37	703.17	701.97
G2-5	STATION	426+75.00	426+98.60	427+21.36	427+23.83	427+44.10	427+66.81	427+89.50	428+12.26	428+35.91	428+51.66	428+59.57	428+83.23	429+06.89
	FINAL DECK ELEVATION	712.97	711.85	710.76	710.64	709.67	708.58	707.48	706.38	705.22	704.45	704.06	702.89	701.71
G2-6	STATION	426+75.00	426+98.87	427+21.63	427+24.10	427+44.36	427+67.07	427+89.75	428+12.51	428+36.17	428+51.92	428+59.83	428+83.48	429+07.14
	FINAL DECK ELEVATION	712.45	711.34	710.28	710.17	709.22	708.16	707.09	706.01	704.88	704.12	703.74	702.60	701.45
G2-7	STATION	426+75.00	426+99.12	427+21.89	427+24.36	427+44.62	427+67.34	427+90.02	428+12.76	428+36.42	428+52.17	428+60.08	428+83.74	429+07.40
	FINAL DECK ELEVATION	712.00	710.88	709.83	709.71	708.78	707.74	706.68	705.64	704.54	703.80	703.43	702.31	701.19
G2-8	STATION	426+75.00	426+99.38	427+22.15	427+24.63	427+44.90	427+67.61	427+90.29	428+13.02	428+36.67	428+52.42	428+60.33	428+83.99	429+07.65
	FINAL DECK ELEVATION	711.56	710.42	709.38	709.26	708.34	707.32	706.28	705.27	704.20	703.48	703.12	702.03	700.93
G2-9	STATION	426+75.00	426+99.68	427+22.45	427+24.92	427+45.19	427+67.90	427+90.58	428+13.28	428+36.92	428+52.67	428+60.58	428+84.24	429+07.90
	FINAL DECK ELEVATION	711.02	709.90	708.88	708.76	707.88	706.89	705.91	704.90	703.86	703.16	702.80	701.74	700.67
RIGHT CURBLINE	STATION	426+75.00	426+99.73	427+22.51	427+24.98	427+45.25	427+67.96	427+90.63	428+13.33	428+36.97	428+52.72	428+60.63	428+84.29	429+07.95
	FINAL DECK ELEVATION	710.92	709.80	708.79	708.67	707.79	706.81	705.83	704.82	703.79	703.09	702.74	701.68	700.62

Preliminary Plans - For Reference Only

NOTES:

1. *FOR FINAL DECK ELEVATION NOTES, SEE SHEET* 145 / 167 .
2. *FOR UNIT 2 TYPICAL CROSS SECTION, SEE SHEET* 137 / 167 .
3. *FOR DEFLECTION DETAIL, SEE SHEET* 135 / 167 .

UNIT 2 - FINAL DECK ELEVATIONS - (5 OF 6)
CUY-77-1587 (BRIDGE 9)
I.R. 77 SB OVER I.R. 90 AND CR-721 (E. 14TH ST.)

SFN 1806910

DESIGN AGENCY

DESIGNER TJE | CHECKER NJH

REVIEWER DWW 01/11/24

PROJECT ID 82382

SUBSET 152 | TOTAL 167

SHEET 2020 | TOTAL 2696

CUY-90-16.28 (CCG3A)

MODEL: Sheet PAPERSIZE: 34x22 (in.) DATE: 3/28/2025 TIME: 10:26:42 AM USER: RohitLBk
pw:\\mb-us-pw.bentley.com:mb-us-pw-03\Documents\Cleveland_OH01_Projects\ODOT\District12\82382\400-Engineering\Structures\SFN_1806910\Sheets\82382_SFN_1806910_SD034.dgn

FINAL DECK SURFACE ELEVATIONS - SPAN 11

LOCATION		℄ PIER 10	0.1	0.2	0.3	℄ FS2-12	0.4	0.5	0.6	0.7	0.8	0.9	℄ BRG. FWD. ABUT.
LEFT CURBLINE	STATION	429+06.09	429+24.68	429+43.27	429+61.86	429+68.56	429+80.45	429+99.04	430+17.63	430+36.23	430+54.82	430+73.41	430+92.00
	FINAL DECK ELEVATION	702.26	701.29	700.32	699.31	698.98	698.33	697.35	696.40	695.48	694.56	693.64	692.72
G2-1	STATION	429+06.14	429+24.73	429+43.32	429+61.91	429+68.61	429+80.50	429+99.09	430+17.68	430+36.28	430+54.87	430+73.46	430+92.00
	FINAL DECK ELEVATION	702.33	701.36	700.39	699.38	699.05	698.40	697.42	696.47	695.55	694.63	693.71	692.79
END ROUNDING	STATION	429+06.14	429+24.73	429+43.33	429+61.92	429+68.62	429+80.51	429+99.10	430+17.69	430+36.28	430+54.87	430+73.47	430+92.00
	FINAL DECK ELEVATION	702.34	701.37	700.40	699.39	699.06	698.41	697.43	696.48	695.56	694.64	693.72	692.80
CROWN	STATION	429+06.26	429+24.85	429+43.44	429+62.03	429+68.73	429+80.62	429+99.21	430+17.81	430+36.40	430+54.99	430+73.58	430+92.00
	FINAL DECK ELEVATION	702.37	701.40	700.43	699.43	699.10	698.45	697.48	696.53	695.61	694.69	693.76	692.85
G2-3	STATION	429+06.39	429+24.98	429+43.57	429+62.16	429+68.86	429+80.75	429+99.35	430+17.94	430+36.53	430+55.12	430+73.71	430+92.00
	FINAL DECK ELEVATION	702.23	701.27	700.31	699.33	699.00	698.36	697.39	696.45	695.53	694.61	693.69	692.78
℄ RAMP A2 / PROPOSED PROFILE GRADE	STATION	429+07.00	429+25.61	429+44.21	429+62.82	429+69.53	429+81.43	430+00.03	430+18.64	430+37.25	430+55.85	430+74.46	430+92.00
	FINAL DECK ELEVATION	701.60	700.67	699.74	698.81	698.47	697.88	696.95	696.02	695.09	694.16	693.23	692.35
G2-4	STATION	429+06.64	429+25.23	429+43.82	429+62.41	429+69.11	429+81.01	429+99.60	430+18.19	430+36.78	430+55.37	430+73.96	430+92.00
	FINAL DECK ELEVATION	701.97	701.03	700.09	699.13	698.80	698.18	697.23	696.29	695.37	694.45	693.53	692.64
G2-5	STATION	429+06.89	429+25.48	429+44.08	429+62.67	429+69.37	429+81.26	429+99.85	430+18.44	430+37.03	430+55.62	430+74.22	430+92.00
	FINAL DECK ELEVATION	701.71	700.79	699.86	698.93	698.60	698.00	697.07	696.14	695.22	694.30	693.38	692.50
G2-6	STATION	429+07.14	429+25.74	429+44.33	429+62.92	429+69.62	429+81.51	430+00.10	430+18.69	430+37.28	430+55.88	430+74.47	430+92.00
	FINAL DECK ELEVATION	701.45	700.55	699.64	698.73	698.40	697.82	696.91	695.99	695.07	694.14	693.22	692.35
G2-7	STATION	429+07.40	429+25.99	429+44.58	429+63.17	429+69.87	429+81.76	430+00.35	430+18.95	430+37.54	430+56.13	430+74.72	430+92.00
	FINAL DECK ELEVATION	701.19	700.30	699.41	698.53	698.22	697.64	696.74	695.83	694.91	693.99	693.07	692.21
G2-8	STATION	429+07.65	429+26.24	429+44.83	429+63.42	429+70.12	429+82.01	430+00.61	430+19.20	430+37.79	430+56.38	430+74.97	430+92.00
	FINAL DECK ELEVATION	700.93	700.06	699.19	698.34	698.03	697.46	696.58	695.68	694.76	693.84	692.92	692.07
G2-9	STATION	429+07.90	429+26.49	429+45.08	429+63.68	429+70.38	429+82.27	430+00.86	430+19.45	430+38.04	430+56.63	430+75.22	430+92.00
	FINAL DECK ELEVATION	700.67	699.82	698.97	698.14	697.84	697.28	696.42	695.53	694.60	693.68	692.76	691.93
RIGHT CURBLINE	STATION	429+07.95	429+26.54	429+45.13	429+63.73	429+70.43	429+82.32	430+00.91	430+19.50	430+38.09	430+56.68	430+75.27	430+92.00
	FINAL DECK ELEVATION	700.62	699.77	698.92	698.10	697.80	697.24	696.39	695.49	694.57	693.65	692.73	691.90

Preliminary Plans - For Reference Only

NOTES:

1. *FOR FINAL DECK ELEVATION NOTES, SEE SHEET* 145 / 167 .
2. *FOR UNIT 2 TYPICAL CROSS SECTION, SEE SHEET* 137 / 167 .
3. *FOR DEFLECTION DETAIL, SEE SHEET* 135 / 167 .

UNIT 2 - FINAL DECK ELEVATIONS - (6 OF 6)
CUY-77-1587 (BRIDGE 9)
I.R. 77 SB OVER I.R. 90 AND CR-721 (E. 14TH ST.)

SFN 1806910

DESIGN AGENCY

DESIGNER TJE | CHECKER NJH

REVIEWER DWW 01/11/24

PROJECT ID 82382

SUBSET 153 | TOTAL 167

SHEET 2021 | TOTAL 2696

CUY-90-16.28 (CCG3A)

MODEL: Sheet PAPERSIZE: 34x22 (in.) DATE: 3/28/2025 TIME: 10:26:48 AM USER: RohitLBk
pw:\\mb-us-pw.bentley.com:mb-us-pw-03\Documents\Cleveland_OH01_Projects\ODOT\District12\82382\400-Engineering\Structures\SFN_1806910\Sheets\82382_SFN_1806910_SD035.dgn

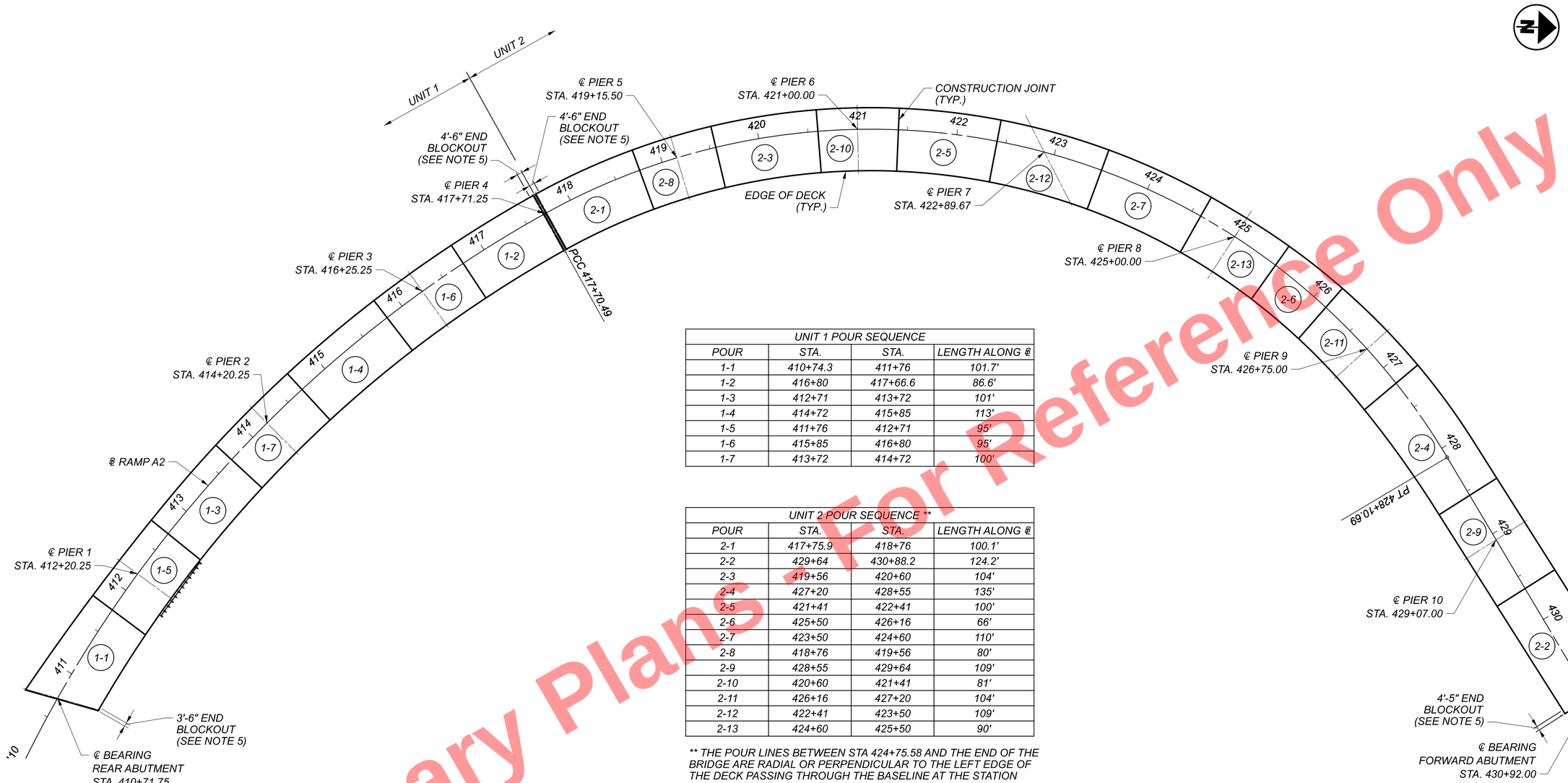

UNIT 1 POUR SEQUENCE			
POUR	STA.	STA.	LENGTH ALONG ℄
1-1	410+74.3	411+76	101.7'
1-2	416+80	417+66.6	86.6'
1-3	412+71	413+72	101'
1-4	414+72	415+85	113'
1-5	411+76	412+71	95'
1-6	415+85	416+80	95'
1-7	413+72	414+72	100'

UNIT 2 POUR SEQUENCE **			
POUR	STA.	STA.	LENGTH ALONG ℄
2-1	417+75.9	418+76	100.1'
2-2	429+64	430+88.2	124.2'
2-3	419+56	420+60	104'
2-4	427+20	428+55	135'
2-5	421+41	422+41	100'
2-6	425+50	426+16	66'
2-7	423+50	424+60	110'
2-8	418+76	419+56	80'
2-9	428+55	429+64	109'
2-10	420+60	421+41	81'
2-11	426+16	427+20	104'
2-12	422+41	423+50	109'
2-13	424+60	425+50	90'

** THE POUR LINES BETWEEN STA 424+75.58 AND THE END OF THE BRIDGE ARE RADIAL OR PERPENDICULAR TO THE LEFT EDGE OF THE DECK PASSING THROUGH THE BASELINE AT THE STATION SHOWN IN THE TABLE.

DECK POUR SEQUENCE

NOTES:

1. (#-#) INDICATES PLACEMENT SEQUENCE.
2. A MINIMUM OF TWO DAYS MUST ELAPSE BETWEEN POURS WITHIN THE SAME UNIT. TWO DAYS WILL BE MEASURED FROM THE END OF ONE POUR AND THE BEGINNING OF THE NEXT POUR.
3. DO NOT PLACE BRIDGE RAILING CONCRETE UNTIL ALL DECK POURS ARE COMPLETED.
4. NO OTHER DECK PLACEMENT SEQUENCE IS PERMITTED WITHOUT WRITTEN APPROVAL OF THE ENGINEER AND WITHOUT A DETAILED COMPUTER ANALYSIS OF THE SUPERSTRUCTURE TO DEMONSTRATE THAT NO UNACCEPTABLE OVERSTRESS WILL RESULT. THE CONTRACTOR WILL PREPARE REVISED DRAWINGS.
5. MAKE FINAL ADJUSTMENTS OF MODULAR EXPANSION JOINTS PRIOR TO POURING THE END BLOCKOUT. FOR MODULAR JOINT AND BLOCKOUT DETAILS, SEE SHEET 128 / 167 THRU 134 / 167 .

Preliminary Plans - For Reference Only

DECK POUR SEQUENCE
CUY-77-1587 (BRIDGE 9)
I.R. 77 SB OVER I.R. 90 AND CR-721 (E. 14TH ST.)

SFN 1806910
DESIGN AGENCY HDR
DESIGNER TJE | CHECKER NJH
REVIEWER DWW 01/11/24
PROJECT ID 82382
SUBSET 154 | TOTAL 167
SHEET 2022 | TOTAL 2696

CUY-90-16.28 (CCG3A)

MODEL: Sheet PAPERSIZE: 34x22 (in.) DATE: 3/28/2025 TIME: 10:26:59 AM USER: Rohit.Bk
pw:\\mb-us-pw.bentley.com:mb-us-pw-03\Documents\Cleveland_OH\01_Projects\ODOT\District12\82382400-Engineering\Structures\SFN_1806910\Sheets\82382_SFN_1

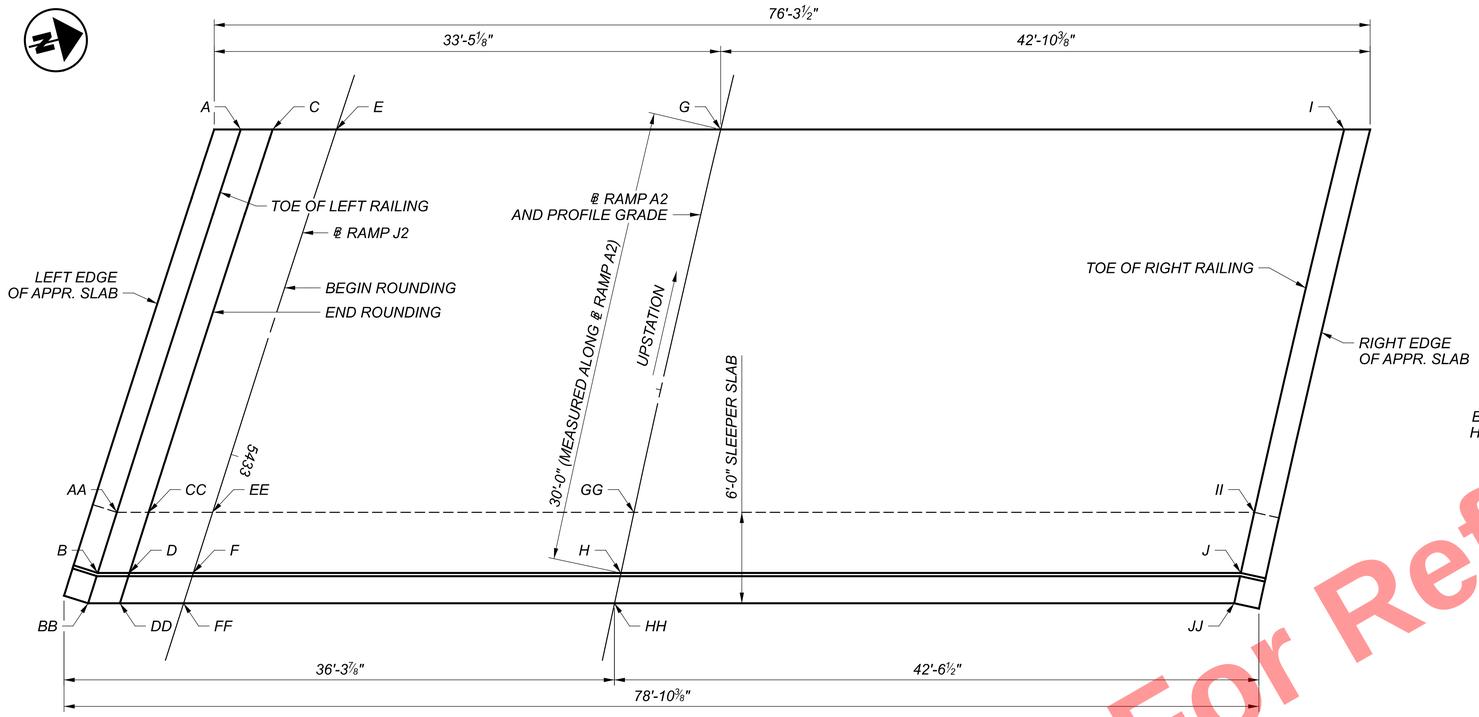

PLAN

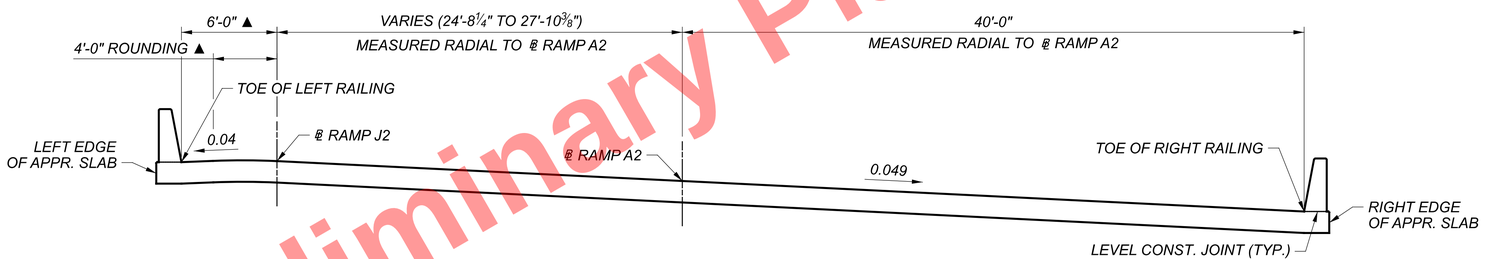

APPROACH SLAB SECTION
(LOOKING UPSTATION)

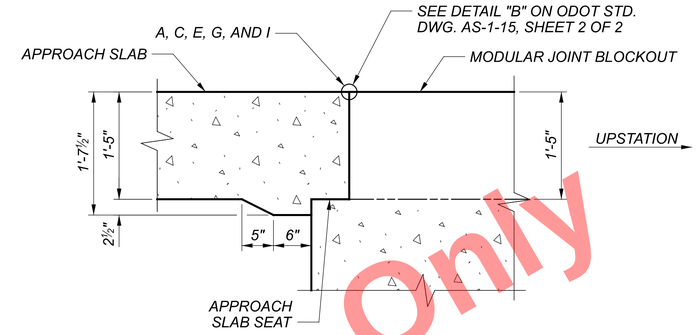

APPROACH SLAB AT ABUTMENT
(SEE NOTE 1)

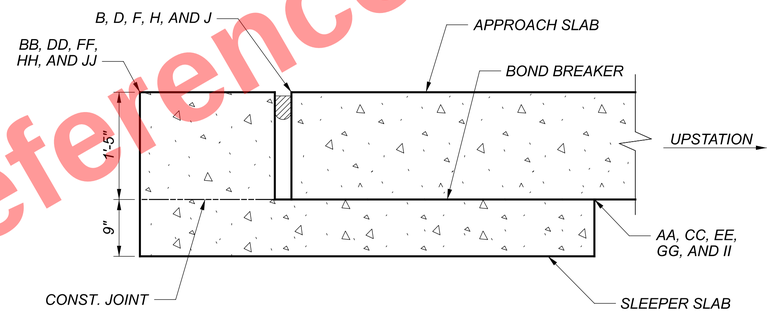

SLEEPER SLAB SECTION
(SEE NOTE 2)

REAR APPROACH SLAB							
MARK	STATION	OFFSET	ELEVATION	MARK	STATION	OFFSET	ELEVATION
A	410+60.49	30.84' LT	706.02	F	410+31.88	27.63' LT.	705.26
B	410+30.63	33.79' LT.	705.15	G	410+67.64	0.00'	705.11
C	410+60.95	28.79' LT.	706.11	H	410+37.64	0.00'	704.10
D	410+31.05	31.73' LT.	705.25	I	410+77.46	40.00' RT.	703.48
E	410+61.88	24.68' LT.	706.13	J	410+46.44	40.00' RT.	702.44

REAR SLEEPER SLAB							
MARK	STATION	OFFSET	ELEVATION	MARK	STATION	OFFSET	ELEVATION
AA	410+34.70	33.37' LT.	703.85	FF	410+29.84	27.84' LT.	705.21
BB	410+28.60	34.00' LT.	705.10	GG	410+41.73	0.00'	702.82
CC	410+35.12	31.31' LT.	703.95	HH	410+35.59	0.00'	704.03
DD	410+29.10	31.95' LT.	705.20	II	410+50.67	40.00' RT.	701.16
EE	410+35.97	27.20' LT.	703.96	JJ	410+44.32	40.00' RT.	702.37

LEGEND:

▲ MEASURED RADIAL TO ℄ RAMP J2

NOTES:

1. FOR ADDITIONAL DETAILS, REINFORCING AND NOTES ON APPROACH SLAB AND SLEEPER SLAB SEE ODOT STD. DWG. AS-1-15 AND AS-2-15.
2. APPROACH SLAB INSTALLATION SHALL BE TYPE C, PER ODOT STD. DWG. AS-2-15.
3. STATION AND OFFSETS ARE MEASURED FROM ℄ RAMP A2.
4. FOR APPROACH SLAB BRIDGE RAILING DETAILS, SEE SHEET 156 / 167 .
5. FOR MODULAR JOINT BLOCKOUT DETAILS, SEE SHEETS 34 / 167 AND 35 / 167 .
6. THE CONCRETE FOR THE BRIDGE RAILING MOUNTED ON THE APPROACH SLABS SHALL BE PAID FOR UNDER ITEM 511, CLASS QC2 CONCRETE WITH QA/QC, BRIDGE DECK (PARAPET). THE CONCRETE AND REINFORCEMENT FOR THE APPROACH SLAB SHALL BE PAID FOR UNDER ITEM 526, REINFORCED CONCRETE APPROACH SLABS WITH QC/QA (T=17"). THE CONCRETE AND REINFORCEMENT FOR THE SLEEPER SLAB INCLUDING CURB SHALL BE PAID FOR UNDER ITEM 526, TYPE C INSTALLATION. THE CONCRETE REINFORCEMENT IN THE RAILING (PARAPET) SHALL BE PAID FOR WITH ITEM 509, EPOXY COATED STEEL REINFORCEMENT OR ITEM 509, NO. 4 DEFORMED GFRP REINFORCEMENT.
7. THE ARMORLESS PREFORMED JOINT SEAL SHALL BE PAID FOR UNDER ITEM 516, ARMORLESS PREFORMED JOINT SEAL.

Preliminary Plans - For Reference Only

REAR APPROACH SLAB
CUY-77-1587 (BRIDGE 9)
I.R. 77 SB OVER I.R. 90 AND CR-721 (E. 14TH ST.)

SFN 1806910
DESIGN AGENCY
HDR
DESIGNER TJE | CHECKER ABO
REVIEWER DWW 01/11/24
PROJECT ID 82382
SUBSET 155 | TOTAL 167
SHEET 2023 | TOTAL 2696

CUY-90-16.28 (CCG3A)

MODEL: Sheet PAPERSIZE: 34x22 (in.) DATE: 3/28/2025 TIME: 10:27:06 AM USER: Rohit.Bk
pw:\\mb-us-pw.bentley.com:mb-us-pw-03\Documents\Cleveland_OH\01_Projects\ODOT\District12\82382\400-Engineering\Structures\SFN_1806910\Sheets\82382_SFN_1806910_SW008.dgn

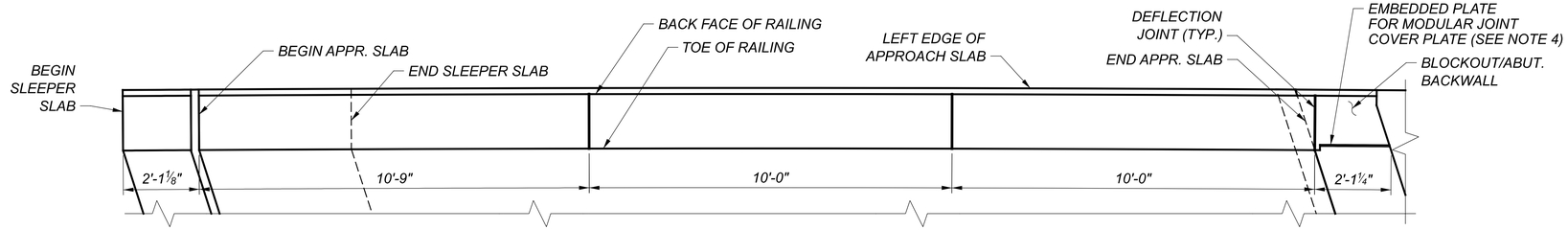

LEFT RAILING PLAN

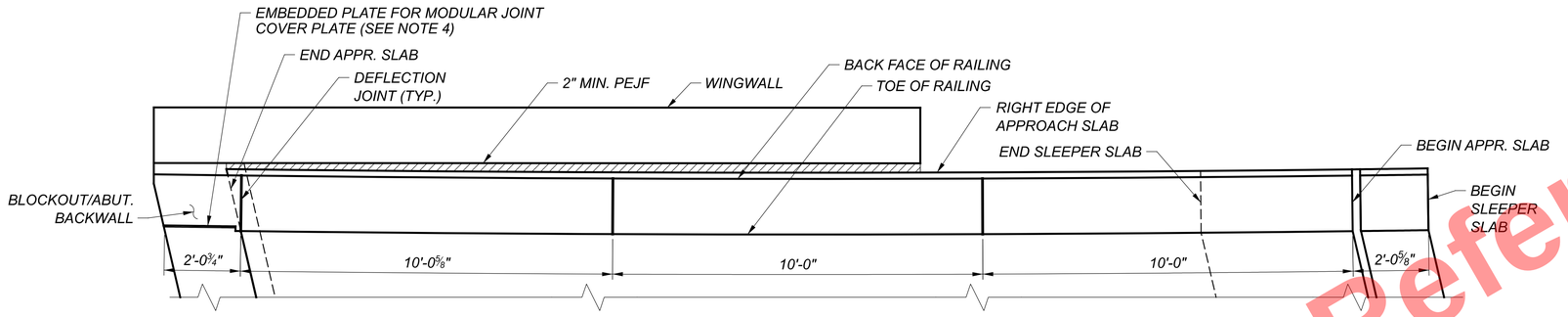

RIGHT RAILING PLAN

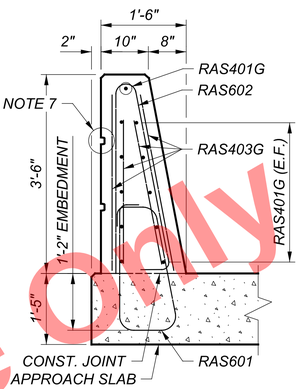

SECTION A-A

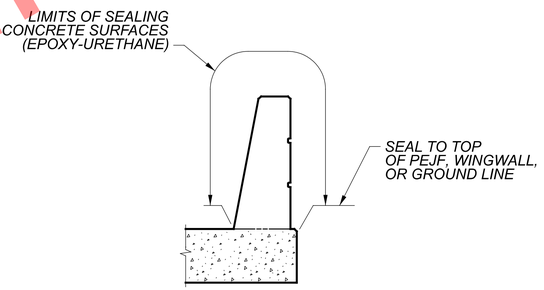

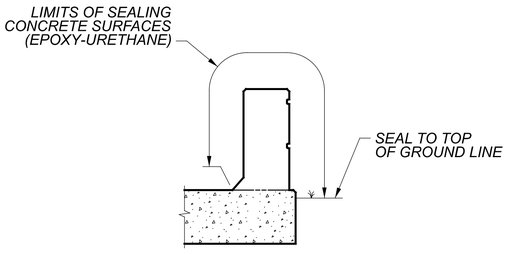

APPROACH SLAB RAILING SEALING DETAIL

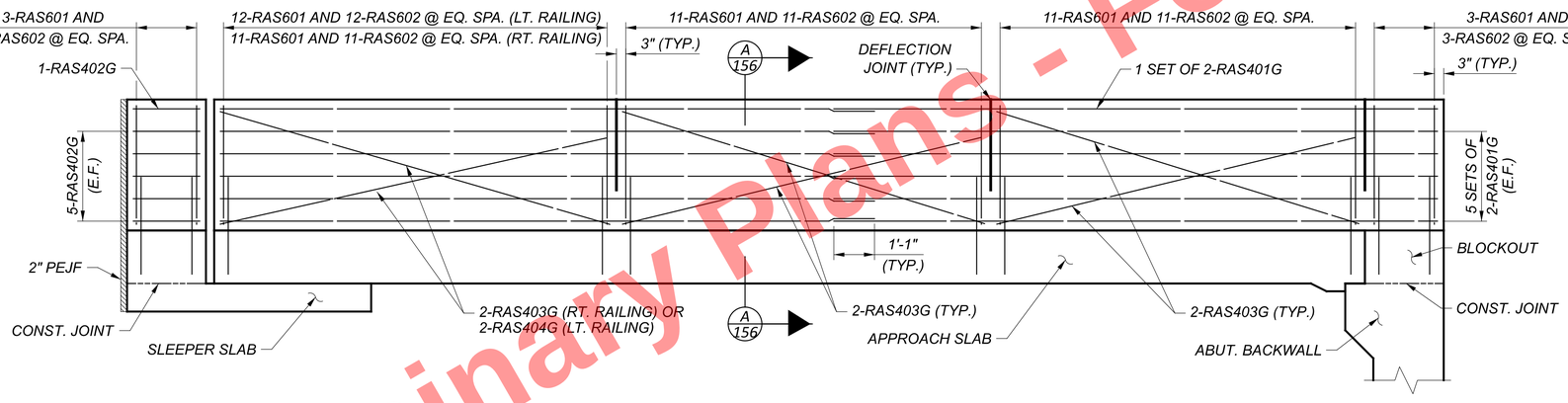

RAILING ELEVATION

(LEFT RAILING SHOWN - RIGHT RAILING SIMILAR)

NOTES:

1. FOR ADDITIONAL DETAILS, NOTES, AND DIMENSIONS NOT SHOWN FOR APPROACH SLABS, SEE ODOT STD. DWG. AS-1-15 AND AS-2-15.
2. FOR ADDITIONAL DETAILS, NOTES AND DIMENSIONS NOT SHOWN FOR BRIDGE RAILING ON APPROACH SLABS, SEE ODOT STD. DWG. SBR-1-20.
3. FOR REAR APPROACH SLAB PLAN, SEE SHEET 155 / 167 .
4. FOR REAR ABUTMENT MODULAR JOINT COVER PLATE DETAILS, SEE SHEET 132 / 167 .
5. FOR REAR ABUTMENT DETAILS, SEE SHEETS 34 / 167 THRU 36 / 167 .
6. THE CONCRETE FOR THE RAILING ON THE APPROACH SLAB SHALL BE PAID FOR WITH ITEM 511, CLASS QC2 CONCRETE WITH QC/QA, BRIDGE DECK (PARAPET). THE CONCRETE AND REINFORCEMENT FOR THE APPROACH SLABS SHALL BE PAID FOR WITH ITEM 526, REINFORCED CONCRETE APPROACH SLABS WITH QC/QA (T=17"). THE CONCRETE AND REINFORCEMENT FOR THE SLEEPER SLAB SHALL BE PAID FOR WITH ITEM 526, TYPE C INSTALLATION. THE CONCRETE REINFORCEMENT IN THE RAILING (PARAPET) SHALL BE PAID FOR WITH ITEM 509, EPOXY COATED STEEL REINFORCEMENT OR ITEM 509, NO. 4 DEFORMED GFRP REINFORCEMENT.
7. FOR AESTHETIC GROOVE SPACING AND DETAIL, SEE SHEET 127 / 167 .

REAR APPROACH SLAB RAILING DETAILS

CUY-77-1587 (BRIDGE 9)

I.R. 77 SB OVER I.R. 90 AND CR-721 (E. 14TH ST.)

SFN	1806910
DESIGN AGENCY	HDR
DESIGNER	TJE
CHECKER	ABO
REVIEWER	DWW 01/11/24
PROJECT ID	82382
SUBSET	156
TOTAL	167
SHEET	2024
TOTAL	2696

CUY-90-16.28 (CCG3A)

MODEL: Sheet PAPERSIZE: 34x22 (in.) DATE: 3/28/2025 TIME: 10:27:13 AM USER: RohitLBk
pw:\\mb-us-pw.bentley.com:mb-us-pw-03\Documents\Cleveland_OH\01_Projects\ODOT\District12\82382\400-Engineering\Structures\SFN_1806910\Sheets\82382_SFN_1806910_SM010.dgn

Preliminary Plans - For Reference Only

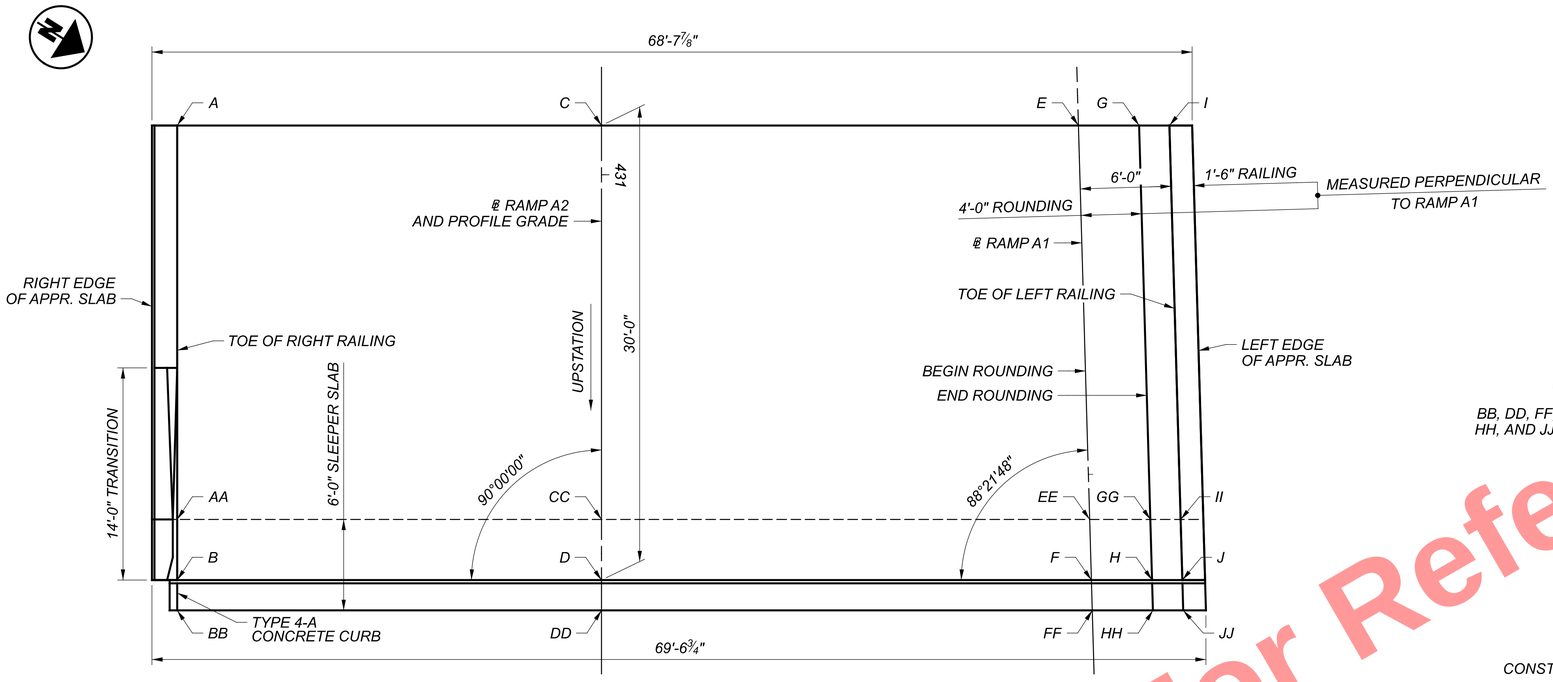

PLAN

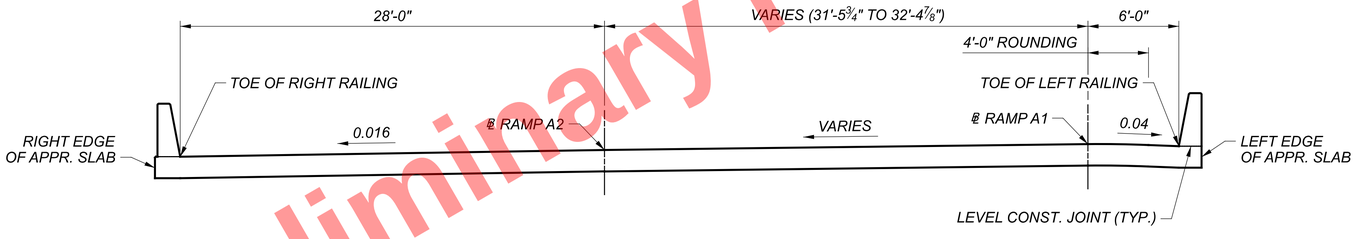

APPROACH SLAB SECTION
(LOOKING DOWNSTATION)

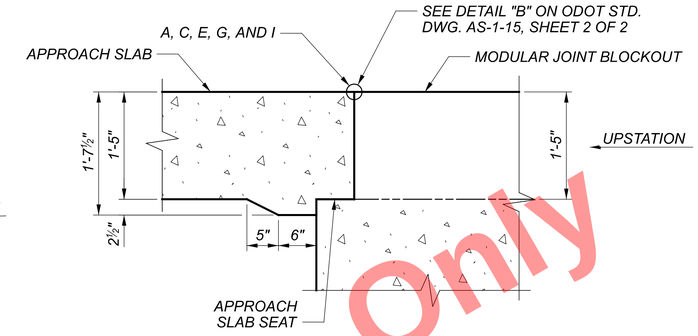

APPROACH SLAB AT ABUTMENT
(SEE NOTE 1)

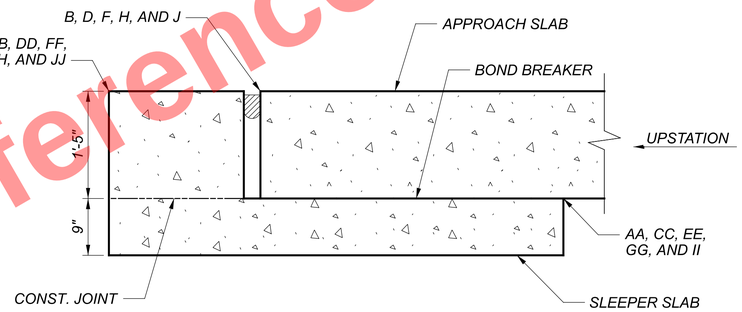

SLEEPER SLAB SECTION
(SEE NOTE 2)

FORWARD APPROACH SLAB							
MARK	STATION	OFFSET	ELEVATION	MARK	STATION	OFFSET	ELEVATION
A	430+96.75	28.00' RT.	691.66	F	431+26.75	32.34' LT.	690.84
B	431+26.75	28.00' RT.	690.16	G	430+96.75	35.48' LT.	692.57
C	430+96.75	0.00'	692.11	H	431+26.75	36.34' LT.	690.77
D	431+26.75	0.00'	690.61	I	430+96.75	37.48' LT.	692.48
E	430+96.75	31.48' LT.	692.62	J	431+26.75	38.34' LT.	690.69

FORWARD SLEEPER SLAB							
MARK	STATION	OFFSET	ELEVATION	MARK	STATION	OFFSET	ELEVATION
AA	431+22.75	28.00' RT.	688.94	FF	431+28.75	32.40' LT.	690.72
BB	431+28.75	28.00' RT.	690.06	GG	431+22.75	36.23' LT.	689.59
CC	431+22.75	0.00'	689.39	HH	431+28.75	36.40' LT.	690.65
DD	431+28.75	0.00'	690.51	II	431+22.75	38.23' LT.	689.51
EE	431+22.75	32.22' LT.	689.66	JJ	431+28.75	38.40' LT.	690.56

NOTES:

1. FOR ADDITIONAL DETAILS, REINFORCING AND NOTES ON APPROACH SLAB AND SLEEPER SLABS, SEE ODOT STD. DWG. AS-1-15 AND AS-2-15.
2. APPROACH SLAB INSTALLATION SHALL BE TYPE C, PER ODOT STD. DWG. AS-2-15.
3. STATION AND OFFSETS ARE MEASURED FROM ℄ RAMP A2.
4. FOR APPROACH SLAB BRIDGE RAILING DETAILS, SEE SHEET 158 / 167 .
5. FOR MODULAR JOINT BLOCKOUT DETAILS, SEE SHEETS 37 / 167 AND 39 / 167 .
6. THE CONCRETE FOR THE BRIDGE RAILING MOUNTED ON THE APPROACH SLABS SHALL BE PAID FOR UNDER ITEM 511, CLASS QC2 CONCRETE WITH QA/QC, BRIDGE DECK (PARAPET). THE CONCRETE AND REINFORCEMENT FOR THE APPROACH SLAB SHALL BE PAID FOR UNDER ITEM 526, REINFORCED CONCRETE APPROACH SLABS WITH QC/QA (T=17"). THE CONCRETE AND REINFORCEMENT FOR THE SLEEPER SLAB INCLUDING CURB SHALL BE PAID FOR UNDER ITEM 526, TYPE C INSTALLATION. THE CONCRETE REINFORCEMENT IN THE RAILING (PARAPET) SHALL BE PAID FOR WITH ITEM 509, EPOXY COATED STEEL REINFORCEMENT OR ITEM 509, NO. 4 DEFORMED GFRP REINFORCEMENT.
7. THE ARMORLESS PREFORMED JOINT SEAL SHALL BE PAID FOR UNDER ITEM 516, ARMORLESS PREFORMED JOINT SEAL.

Preliminary Plans - For Reference Only

FORWARD APPROACH SLAB
CUY-77-1587 (BRIDGE 9)
I.R. 77 SB OVER I.R. 90 AND CR-721 (E. 14TH ST.)

SFN 1806910
DESIGN AGENCY
DESIGNER TJE | CHECKER ABO
REVIEWER DWW 01/11/24
PROJECT ID 82382
SUBSET 157 | TOTAL 167
SHEET 2025 | TOTAL 2696

CUY-90-16.28 (CCG3A)

MODEL: Sheet PAPERSIZE: 34x22 (in.) DATE: 3/28/2025 TIME: 10:27:20 AM USER: RohitLBk
pw:\\mb-us-pw.bentley.com:mb-us-pw-03\Documents\Cleveland_OH\01_Projects\ODOT\District12\82382\400-Engineering\Structures\SFN_1806910\Sheets\82382_SFN_1806910_SW009.dgn

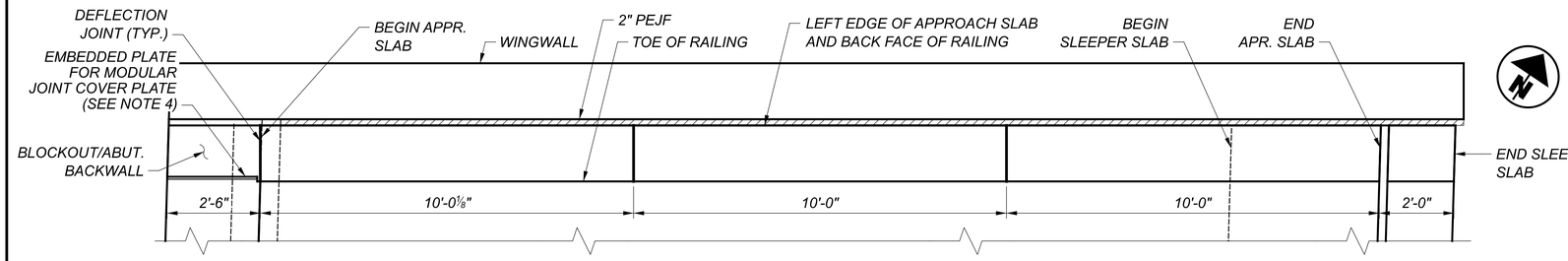

LEFT RAILING PLAN

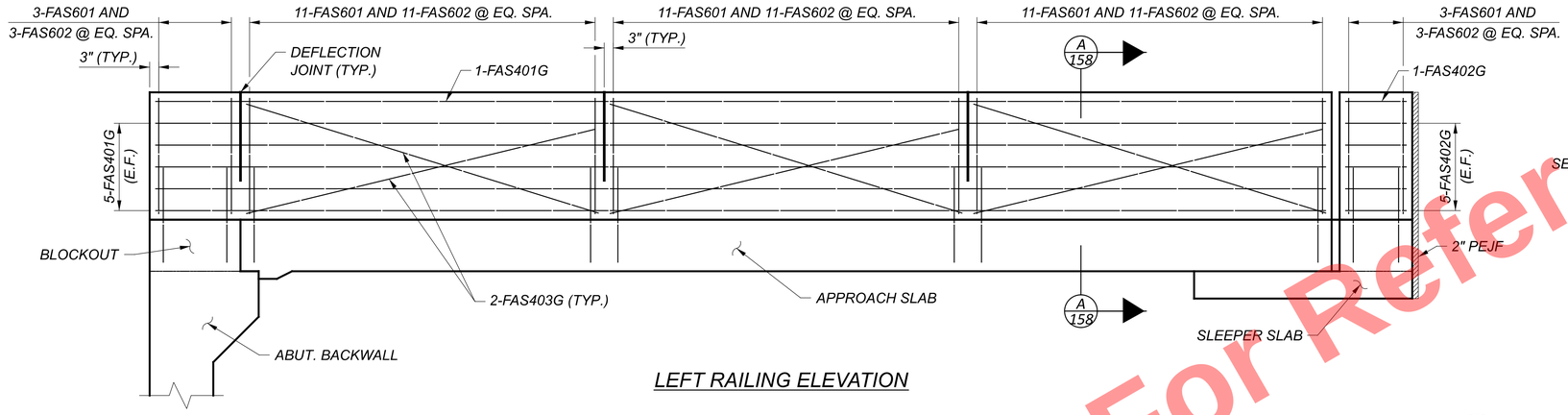

LEFT RAILING ELEVATION

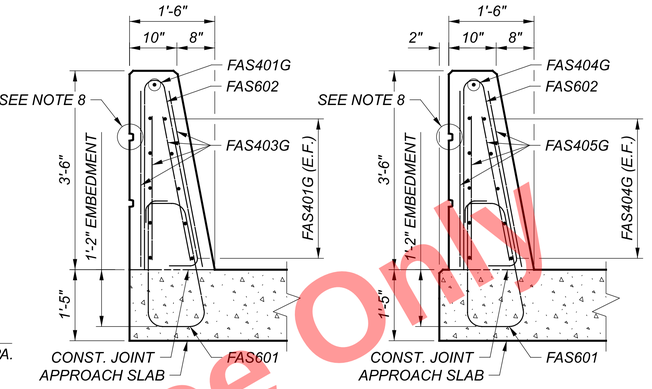

SECTION A-A

SECTION B-B

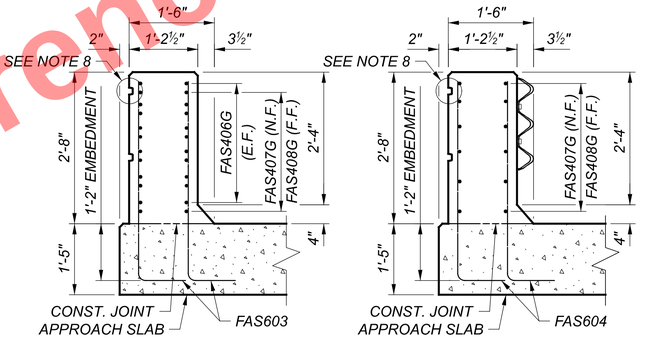

SECTION C-C

SECTION D-D

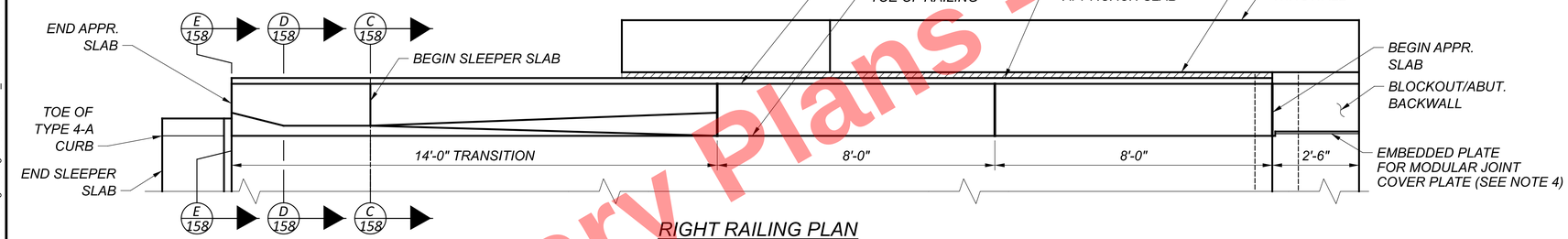

RIGHT RAILING PLAN

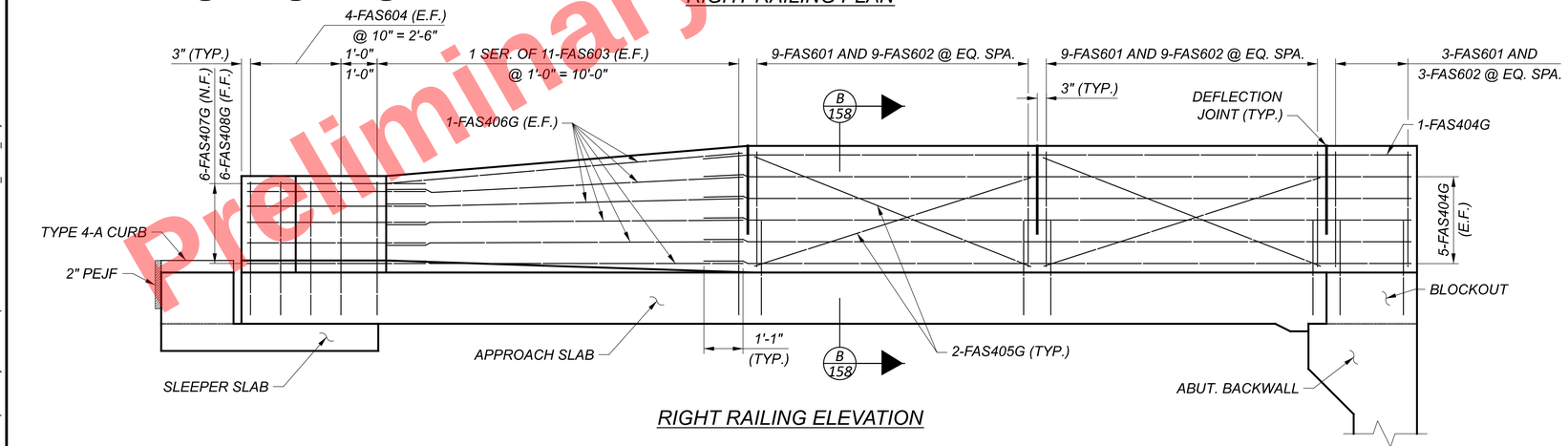

RIGHT RAILING ELEVATION

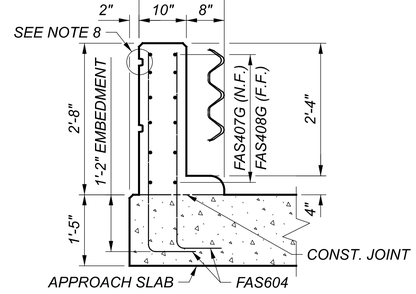

SECTION E-E

NOTES:

1. FOR ADDITIONAL DETAILS, NOTES, AND DIMENSIONS NOT SHOWN FOR APPROACH SLABS, SEE ODOT STD. DWG. AS-1-15 AND AS-2-15.
2. FOR ADDITIONAL DETAILS, NOTES AND DIMENSIONS NOT SHOWN FOR BRIDGE RAILING ON APPROACH SLABS, SEE ODOT STD. DWG. SBR-1-20.
3. FOR FORWARD APPROACH SLAB PLAN, SEE SHEET 157 / 167 .
4. FOR FORWARD ABUTMENT MODULAR JOINT COVER PLATE DETAILS, SEE SHEET 134 / 167 .
5. FOR FORWARD ABUTMENT DETAILS, SEE SHEETS 37 / 167 THRU 39 / 167 .
6. FOR SEALING LIMITS, SEE SHEET 156 / 167 .
7. THE CONCRETE FOR THE RAILING ON THE APPROACH SLAB SHALL BE PAID FOR WITH ITEM 511, CLASS QC2 CONCRETE WITH QC/QA, BRIDGE DECK (PARAPET). THE CONCRETE AND REINFORCEMENT FOR THE APPROACH SLABS SHALL BE PAID FOR WITH ITEM 526, REINFORCED CONCRETE APPROACH SLABS WITH QC/QA (T=17"). THE CONCRETE AND REINFORCEMENT FOR THE SLEEPER SLAB SHALL BE PAID FOR WITH ITEM 526, TYPE C INSTALLATION. THE CONCRETE REINFORCEMENT IN THE RAILING (PARAPET) SHALL BE PAID FOR WITH ITEM 509, EPOXY COATED STEEL REINFORCEMENT OR ITEM 509, NO. 4 DEFORMED GFRP REINFORCEMENT.
8. FOR AESTHETIC GROOVE SPACING AND DETAIL, SEE SHEET 127 / 167 .

FORWARD APPROACH SLAB RAILING DETAILS

CUY-77-1587 (BRIDGE 9)
I.R. 77 SB OVER I.R. 90 AND CR-721 (E. 14TH ST.)

SFN	1806910
DESIGN AGENCY	HDR
DESIGNER	TJE
CHECKER	ABO
REVIEWER	DWW 01/11/24
PROJECT ID	82382
SUBSET	158
TOTAL	167
SHEET	2026
TOTAL	2696

CUY-90-16.28 (CCG3A)

MODEL: Sheet PAPERSIZE: 34x22 (in.) DATE: 3/28/2025 TIME: 10:27:26 AM USER: Rohit.Bk
pw:\\mb-us-pw.bentley.com:mb-us-pw-03\Documents\Cleveland_OH01_Projects\ODOTDistrict12\82382400-Engineering\Structures\SFN_1806910\Sheets\82382_SFN_1806910_SM011.dgn

Preliminary Plans - For Reference Only

MARK	NUMBER	LENGTH	MATERIAL	WEIGHT (LB.)	TYPE	DIMENSIONS						
						A	B	C	D	E	R	INC.
REAR ABUTMENT (60 KSI, EPOXY COATED)												
RA401	74	2'-5"	ECSR	119	56	1'-5"						
RA402	74	3'-2"	ECSR	157	56	2'-2"						
RA403	8	39'-1"	ECSR	209	STR							
RA404	17	2'-6"	ECSR	28	STR							
RA405	2	2'-4"	ECSR	3	STR							
RA406	12	5'-6"	ECSR	44	30	8"	8"	1'-11"	1'-11"			
RA501	6	28'-1"	ECSR	176	STR							
RA502	3	11'-7"	ECSR	36	50	2'-0"	7'-7"	2'-0"	1'-9"			
RA503	3	11'-9"	ECSR	37	50	2'-0"	7'-7"	2'-0"	2'-6"			
RA504	10	26'-3"	ECSR	274	STR							
RA505	12	6'-4"	ECSR	79	2	2'-0"	2'-7"	2'-0"				
RA506	20	12'-1"	ECSR	252	3	3'-2"	2'-7"					
RA507	3	10'-7"	ECSR	33	20	2'-0"	1'-7"	5'-6"	1'-7"	2'-0"		
RA508	12	27'-9"	ECSR	347	STR							
RA509	4	30'-0"	ECSR	125	STR							
RA510	5	9'-4"	ECSR	49	50	2'-0"	5'-3"	2'-0"	1'-9"			
RA511	2	27'-6"	ECSR	57	STR							
RA512	6	5'-8"	ECSR	35	2	2'-0"	1'-11"	2'-0"				
RA513	32	30'-0"	ECSR	1001	STR							
RA514	8	9'-2"	ECSR	76	20	2'-0"	1'-7"	4'-1"	1'-7"	2'-0"		
RA515	2	6'-8"	ECSR	14	STR							
RA516	74	5'-10"	ECSR	450	12	1'-6"	1'-6"	11"	2'-2"	10"		
RA517	36	6'-5"	ECSR	241	2	3'-1"	6"	3'-1"				
RA518	57	7'-7"	ECSR	451	2	3'-1"	1'-8"	3'-1"				
RA519	6	24'-7"	ECSR	154	STR							
RA520	20	20'-4"	ECSR	424	STR							
RA521	2	9'-9"	ECSR	20	STR							
RA522	6	8'-2"	ECSR	51	2	2'-0"	4'-5"	2'-0"				
RA523	3	9'-0"	ECSR	28	50	2'-0"	5'-1"	2'-0"	1'-2"			
RA524	16	23'-3"	ECSR	388	19	21'-11"	1'-3"	4"				
RA601	73	21'-10"	ECSR	2394	3	7'-11"	2'-7"					
RA602	48	13'-6"	ECSR	973	1	1'-0"	12'-8"					
RA603	8	8'-4"	ECSR	100	1	1'-0"	7'-6"					
RA604	8	21'-0"	ECSR	252	3	5'-5"	4'-8"					
RA605	10	21'-8"	ECSR	325	3	5'-5"	5'-0"					
RA606	10	22'-2"	ECSR	333	3	5'-5"	5'-3"					
RA607	10	23'-0"	ECSR	345	3	5'-5"	5'-8"					
RA608	10	23'-10"	ECSR	358	3	5'-5"	6'-1"					
RA609	10	24'-6"	ECSR	368	3	5'-5"	6'-5"					
RA610	9	25'-8"	ECSR	347	3	5'-5"	7'-0"					
RA611	5	26'-0"	ECSR	195	3	5'-5"	7'-2"					
RA612	74	12'-11"	ECSR	1436	2	5'-11"	1'-5"	5'-11"				
RA613	148	6'-7"	ECSR	1463	STR							
RA614	21	19'-10"	ECSR	626	2	9'-6"	1'-2"	9'-6"				
RA615	21	15'-6"	ECSR	489	2	7'-4"	1'-2"	7'-4"				
RA616	5	22'-2"	ECSR	166	3	8'-1"	2'-7"					
RA617	8	14'-1"	ECSR	169	1	1'-0"	13'-3"					
RA618	3	26'-4"	ECSR	119	3	5'-7"	7'-2"					
RA801	30	29'-7"	ECSR	2370	STR							
RA802	18	29'-3"	ECSR	1406	STR							
RA803	50	5'-3"	ECSR	701	18	2'-11"	1'-0"	1'-0"				
			SUB-TOTAL	20293	ITEM 509 - EPOXY COATED STEEL REINFORCEMENT							

MARK	NUMBER	LENGTH	MATERIAL	WEIGHT (LBS.)	TYPE	DIMENSIONS						
						A	B	C	D	E	R	INC.
FORWARD ABUTMENT (60 KSI, EPOXY COATED)												
FA401	8	30'-0"	ECSR	160	STR							
FA402	4	13'-6"	ECSR	36	STR							
FA403	16	1'-3"	ECSR	13	STR							
FA404	2	1'-6"	ECSR	2	STR							
FA405	75	3'-8"	ECSR	184	56	2'-8"						
FA406	75	3'-6"	ECSR	175	56	2'-6"						
FA407	75	3'-0"	ECSR	150	56	2'-0"						
FA408	8	11'-0"	ECSR	59	STR							
FA501	208	30'-0"	ECSR	6508	STR							
FA502	2	19'-7"	ECSR	41	STR							
FA503	48	17'-8"	ECSR	884	STR							
FA504	2	8'-8"	ECSR	18	STR							
FA505	24	17'-8"	ECSR	442	STR							
FA506	50	12'-1"	ECSR	630	3	3'-2"	2'-7"					
FA507	10	22'-8"	ECSR	236	STR							
FA508	10	14'-2"	ECSR	148	STR							
FA509	6	6'-8"	ECSR	42	20	1'-9"	1'-9"	1'-8"	1'-9"	1'-9"		
FA510	24	12'-0"	ECSR	300	STR							
FA511	65	7'-1"	ECSR	480	2	3'-1"	1'-2"	3'-1"				
FA512	2 SER. OF 3	34'-4" TO 10'-8"	ECSR	141	STR							11'-10"
FA513	18	34'-4"	ECSR	645	STR							
FA514	24	8'-5"	ECSR	211	STR							
FA515	22	19'-5"	ECSR	446	STR							
FA516	2 SER. OF 6	20'-1" TO 15'-1"	ECSR	220	STR							1'-0"
FA517	10	20'-11"	ECSR	218	STR							
FA518	2	13'-6"	ECSR	28	STR							
FA519	2 SER. OF 5	11'-1" TO 8'-1"	ECSR	100	2	5'-1" TO 3'-7"	1'-2"	5'-1" TO 3'-7"				4 ½"
FA520	1	9'-5"	ECSR	10	3	3'-3"	1'-2"					
FA521	2	9'-11"	ECSR	21	19	7'-3"	1'-7"	2'-2"				
FA522	30	7'-10"	ECSR	245	STR							
FA523	237	7'-1"	ECSR	1751	56	5'-11"						
FA524	79	6'-7"	ECSR	542	56	5'-5"						
FA525	79	6'-0"	ECSR	494	56	4'-10"						
FA526	22	15'-10"	ECSR	363	STR							
FA527	36	7'-10"	ECSR	294	5	2'-2"	2'-3"	10"				
FA528	34	6'-8"	ECSR	236	30	10"	9"	2'-6"	2'-3"			
FA601	148	19'-8"	ECSR	4372	3	6'-10"	2'-7"					
FA602	79	12'-3"	ECSR	1454	2	2'-2"	5'-11"	4'-6"				
FA603	75	9'-7"	ECSR	1080	1	1'-0"	8'-9"					
FA604	75	13'-9"	ECSR	1549	19	9'-6"	3'-0"	3'-0"				
FA605	11	19'-5"	ECSR	321	2	1'-0"	17'-9"	1'-0"				
FA606	33	12'-8"	ECSR	628	1	1'-0"	11'-10"					
FA607	11	21'-3"	ECSR	351	1	1'-0"	20'-5"					
FA608	11	13'-5"	ECSR	222	1	1'-0"	12'-7"					
FA609	75	9'-4"	ECSR	1051	12	1'-9"	1'-9"	11"	2'-8"	3'-7"		
FA701	162	7'-10"	ECSR	2594	1	1'-2"	6'-10"					
FA702	85	16'-6"	ECSR	2867	STR							
FA703	75	14'-4"	ECSR	2197	STR							
FA704	63	14'-8"	ECSR	1889	2	6'-11"	1'-2"	6'-11"				
FA705	84	21'-11"	ECSR	3763	STR							
FA706	6	17'-4"	ECSR	213	STR							
FA707	1 SER. OF 42	17'-0" TO 13'-2"	ECSR	1295	2	8'-1" TO 6'-2"	1'-2"	8'-1" TO 6'-2"				9/16"
FA708	38	21'-1"	ECSR	1638	STR							
FA709	1 SER. OF 18	17'-0" TO 15'-7"	ECSR	599	2	8'-1" TO 7'-4 ½"	1'-2"	8'-1" TO 7'-4 ½"				½"
FA710	1	15'-6"	ECSR	32	2	7'-4"	1'-2"	7'-4"				
FA801	26	30'-0"	ECSR	2083	STR							
FA802	13	24'-1"	ECSR	836	STR							
FA803	47	5'-2"	ECSR	648	18	2'-10"	1'-0"	1'-0"				
				SUB-TOTAL	48155	ITEM 509 - EPOXY COATED STEEL REINFORCEMENT						

Preliminary Plans - For Reference Only

NOTES:

1. FOR GENERAL NOTES, SEE SHEETS 12 / 167 THRU 15 / 167.
2. FOR BAR BENDING DIAGRAM AND ADDITIONAL NOTES, SEE SHEET 167 / 167.

REINFORCEMENT LIST - (1 OF 9)
CUY-77-1587 (BRIDGE 9)
I.R. 77 SB OVER I.R. 90 AND CR-721 (E. 14TH ST.)

SFN 1806910
DESIGN AGENCY HDR
DESIGNER JS | CHECKER BTA
REVIEWER DWW 01/11/24
PROJECT ID 82382
SUBSET 159 | TOTAL 167
SHEET 2027 | TOTAL 2696

CUY-90-16.28 (CCG3A)

MODEL: Sheet PAPERSIZE: 34x22 (in.) DATE: 3/28/2025 TIME: 10:27:33 AM USER: RohitLBk
pw:\\mb-us-pw.bentley.com:mb-us-pw-03\Documents\Cleveland_OH\01_Projects\ODOT\District12\82382\400-Engineering\Structures\SFN_1806910\Sheets\82382_SFN_1806910_SL001.dgn

MARK	NUMBER	LENGTH	MATERIAL	WEIGHT (LBS.)	TYPE	DIMENSIONS						
						A	B	C	D	E	R	INC.
PIER 1 (60 KSI, EPOXY COATED STEEL REINFORCEMENT)												
1P501	16	33'-0"	ECSR	551	STR							
1P502	8	17'-8"	ECSR	147	STR							
1P503	310	16'-2"	ECSR	5227	52	1'-4"					2'-1 ½"	
1P504	8	12'-1"	ECSR	101	2	0'-10"	10'-8"	0'-10"				
1P505	32	10'-6"	ECSR	350	1	0'-10"	9'-9"					
1P506	16	8'-5"	ECSR	140	1	0'-10"	7'-8"					
1P507	12	7'-1"	ECSR	89	2	0'-10"	5'-8"	0'-10"				
1P508	16	6'-3"	ECSR	104	2	0'-10"	4'-10"	0'-10"				
1P509	75	7'-1"	ECSR	554	2	0'-10"	5'-8"	0'-10"				
1P510	24	33'-6"	ECSR	839	STR							
1P601	228	16'-6"	ECSR	5651	3	3'-3"	4'-7"					
1P801	22	55'-3"	ECSR	3245	1	4'-1"	51'-4"					
1P802	22	20'-7"	ECSR	1209	1	4'-1"	16'-8"					
1P803	74	25'-7"	ECSR	5055	2	4'-2"	17'-8"	4'-2"				
1P1001	20	53'-9"	ECSR	4626	1	1'-10"	52'-3"					
1P1002	20	19'-1"	ECSR	1642	1	1'-10"	17'-7"					
1P1003	96	13'-2"	ECSR	5439	1	1'-10"	11'-8"					
1P1004	24	24'-9"	ECSR	2556	STR							
1P1005	24	23'-11"	ECSR	2470	STR							
1P1006	24	23'-2"	ECSR	2392	STR							
1P1007	24	22'-4"	ECSR	2306	STR							
1P1101	94	21'-0"	ECSR	10488	2	2'-0"	17'-8"	2'-0"				
1P1102	12	44'-10"	ECSR	2858	STR							
1P1103	12	27'-6"	ECSR	1753	STR							
1P1104	12	55'-11"	ECSR	3565	1	2'-0"	54'-3"					
1P1105	12	21'-3"	ECSR	1355	1	2'-0"	19'-7"					
SUB-TOTAL				64712	ITEM 509 - EPOXY COATED STEEL REINFORCEMENT							

MARK	NUMBER	LENGTH	MATERIAL	WEIGHT (LBS.)	TYPE	DIMENSIONS						
						A	B	C	D	E	R	INC.
PIER 2 (60 KSI, EPOXY COATED STEEL REINFORCEMENT)												
2P501	32	12'-8"	ECSR	423	STR							
2P502	32	17'-8"	ECSR	590	STR							
2P503	418	16'-2"	ECSR	7048	52	1'-4"					2'-1 ½"	
2P504	8	9'-0"	ECSR	75	2	0'-10"	7'-7"	0'-10"				
2P505	40	10'-4"	ECSR	431	1	0'-10"	9'-7"					
2P506	8	8'-11"	ECSR	74	1	0'-10"	8'-2"					
2P507	12	7'-1"	ECSR	89	2	0'-10"	5'-8"	0'-10"				
2P508	16	6'-1"	ECSR	102	2	0'-10"	4'-8"	0'-10"				
2P509	73	7'-1"	ECSR	539	2	0'-10"	5'-8"	0'-10"				
2P510	24	33'-0"	ECSR	826	STR							
2P601	228	16'-6"	ECSR	5651	3	3'-2"	4'-8"					
2P602	84	7'-4"	ECSR	925	2	1'-0"	5'-8"	1'-0"				
2P801	88	19'-1"	ECSR	4484	2	3'-6"	12'-6"	3'-6"				
2P802	64	24'-5"	ECSR	4172	2	3'-7"	17'-8"	3'-7"				
2P1001	100	15'-6"	ECSR	6670	2	1'-10"	12'-6"	1'-10"				
2P1002	96	12'-8"	ECSR	5232	1	1'-10"	11'-2"					
2P1003	24	31'-1"	ECSR	3210	STR							
2P1004	24	30'-3"	ECSR	3124	STR							
2P1005	24	29'-6"	ECSR	3047	STR							
2P1006	24	28'-9"	ECSR	2969	STR							
2P1101	72	21'-0"	ECSR	8033	2	2'-0"	17'-8"	2'-0"				
2P1102	12	44'-2"	ECSR	2816	STR							
2P1103	12	27'-2"	ECSR	1732	STR							
2P1104	12	22'-1"	ECSR	1408	16	20'-6"						
2P1105	12	54'-11"	ECSR	3501	1	2'-0"	53'-3"					
2P1106	12	20'-11"	ECSR	1334	1	2'-0"	19'-3"					
SUB-TOTAL				68505	ITEM 509 - EPOXY COATED STEEL REINFORCEMENT							

Preliminary Plans - For Reference Only

NOTES:

1. FOR GENERAL NOTES, SEE SHEETS 12 / 167 THRU 15 / 167 .
2. FOR BAR BENDING DIAGRAM AND ADDITIONAL NOTES, SEE SHEET 167 / 167 .

REINFORCEMENT LIST - (2 OF 9)
CUY-77-1587 (BRIDGE 9)
I.R. 77 SB OVER I.R. 90 AND CR-721 (E. 14TH ST.)

SFN 1806910
DESIGN AGENCY
DESIGNER JS | CHECKER BTA
REVIEWER DWW 01/11/24
PROJECT ID 82382
SUBSET 160 | TOTAL 167
SHEET 2028 | TOTAL 2696

CUY-90-16.28 (CCG3A)

MODEL: Sheet PAPERSIZE: 34x22 (in.) DATE: 3/28/2025 TIME: 10:27:40 AM USER: Rohit.Bk
pw:\\mb-us-pw.bentley.com:mb-us-pw-03\Documents\Cleveland_OH01_Projects\ODOT\District12\82382400-Engineering\Structures\SFN_1806910\Sheets\82382_SFN_1806910_SL002.dgn

MARK	NUMBER	LENGTH	MATERIAL	WEIGHT (LBS.)	TYPE	DIMENSIONS						
						A	B	C	D	E	R	INC.
PIER 3 (60 KSI, EPOXY COATED STEEL REINFORCEMENT)												
3P401	484	5'-6"	ECSR	1778	56	4'-6"						
3P501	10	9'-0"	ECSR	94	2	0'-10"	7'-7"	0'-10"				
3P502	50	10'-6"	ECSR	548	1	0'-10"	9'-9"					
3P503	10	9'-1"	ECSR	95	1	0'-10"	8'-4"					
3P504	9	7'-7"	ECSR	71	2	0'-10"	6'-2"	0'-10"				
3P505	9	5'-1"	ECSR	48	2	0'-10"	3'-8"	0'-10"				
3P506	14	7'-1"	ECSR	103	2	0'-10"	5'-8"	0'-10"				
3P507	95	7'-1"	ECSR	702	2	0'-10"	5'-8"	0'-10"				
3P601	12	35'-8"	ECSR	643	STR							
3P602	12	20'-8"	ECSR	372	STR							
3P603	88	10'-7"	ECSR	1399	53	1'-0"					2'-3"	
3P604	88	22'-8"	ECSR	2996	56	21'-2"						
3P605	2 SERIES OF 10	19'-6" TO 21'-6"	ECSR	616	3	3'-2"	6'-2" TO 7'-2"					0'-1 ½"
3P606	2 SERIES OF 30	21'-10" TO 31'-2"	ECSR	2388	3	3'-2"	7'-4" TO 12'-0"					0'-2"
3P607	1 SERIES OF 34	28'-6" TO 31'-2"	ECSR	1524	5	5'-8"	10'-9" TO 12'-1"	1'-0"				0'-1/2"
3P608	2 SERIES OF 10	13'-2" TO 15'-10"	ECSR	436	3	3'-2"	3'-0" TO 4'-4"					0'-1 ¾"
3P609	2 SERIES OF 30	16'-2" TO 28'-8"	ECSR	2020	3	3'-2"	4'-6" TO 10'-9"					0'-2 ½"
3P801	38	30'-5"	ECSR	3086	2	5'-1"	20'-8"	5'-1"				
3P802	24	45'-1"	ECSR	2889	2	5'-0"	35'-6"	5'-0"				
3P803	2 SERIES OF 8	31'-4" TO 55'-4"	ECSR	1851	STR							3'-5"
3P804	12	32'-3"	ECSR	1033	STR							
3P805	20	34'-1"	ECSR	1820	STR							
3P1101	66	24'-0"	ECSR	8416	2	2'-0"	20'-8"	2'-0"				
3P1102	37	38'-10"	ECSR	7634	2	2'-0"	35'-6"	2'-0"				
3P1103	116	15'-9"	ECSR	9707	1	2'-0"	14'-1"					
3P1104	116	32'-2"	ECSR	19825	STR							
3P1105	12	46'-2"	ECSR	2943	19	27'-0"	17'-10"	7'-0"				
3P1106	12	27'-10"	ECSR	1775	19	8'-8"	17'-10"	7'-0"				
3P1107	12	54'-3"	ECSR	3459	1	2'-0"	52'-7"					
3P1108	12	19'-6"	ECSR	1243	1	2'-0"	17'-10"					
3P1109	12	54'-9"	ECSR	3491	1	2'-0"	53'-1"					
3P1110	12	20'-0"	ECSR	1275	1	2'-0"	18'-4"					
3P1111	12	55'-3"	ECSR	3523	1	2'-0"	53'-7"					
3P1112	12	20'-6"	ECSR	1307	1	2'-0"	18'-10"					
SUB-TOTAL				91109	ITEM 509 - EPOXY COATED STEEL REINFORCEMENT							

MARK	NUMBER	LENGTH	MATERIAL	WEIGHT (LBS.)	TYPE	DIMENSIONS						
						A	B	C	D	E	R	INC.
PIER 4 (60 KSI, EPOXY COATED STEEL REINFORCEMENT)												
4P501	32	12'-8"	ECSR	423	STR							
4P502	32	17'-8"	ECSR	590	STR							
4P503	644	18'-6"	ECSR	12426	52	1'-4"					2'-6"	
4P504	12	9'-0"	ECSR	113	2	0'-10"	7'-7"	0'-10"				
4P505	60	10'-6"	ECSR	657	1	0'-10"	9'-9"					
4P506	12	9'-1"	ECSR	114	1	0'-10"	8'-4"					
4P507	12	9'-1"	ECSR	114	2	0'-10"	7'-8"	0'-10"				
4P508	24	6'-1"	ECSR	152	2	0'-10"	4'-8"	0'-10"				
4P509	73	9'-1"	ECSR	692	2	0'-10"	7'-8"	0'-10"				
4P510	24	33'-0"	ECSR	826	STR							
4P601	202	19'-8"	ECSR	5967	3	4'-11"	4'-6"					
4P801	88	19'-1"	ECSR	4484	2	3'-6"	12'-6"	3'-6"				
4P802	64	24'-5"	ECSR	4172	2	3'-7"	17'-8"	3'-7"				
4P1001	100	15'-6"	ECSR	6670	2	1'-10"	12'-6"	1'-10"				
4P1002	72	20'-8"	ECSR	6403	2	1'-10"	17'-8"	1'-10"				
4P1003	112	12'-7"	ECSR	6064	1	1'-10"	11'-1"					
4P1004	28	39'-0"	ECSR	4699	STR							
4P1005	28	38'-2"	ECSR	4598	STR							
4P1006	28	37'-3"	ECSR	4488	STR							
4P1007	28	36'-5"	ECSR	4388	STR							
4P1101	12	44'-2"	ECSR	2816	STR							
4P1102	12	27'-2"	ECSR	1732	STR							
4P1103	12	54'-11"	ECSR	3501	1	2'-0"	53'-3"					
4P1104	12	20'-11"	ECSR	1334	1	2'-0"	19'-3"					
SUB-TOTAL				77423	ITEM 509 - EPOXY COATED STEEL REINFORCEMENT							

Preliminary Plans - For Reference Only

NOTES:

1. FOR GENERAL NOTES, SEE SHEETS 12 / 167 THRU 15 / 167 .
2. FOR BAR BENDING DIAGRAM AND ADDITIONAL NOTES, SEE SHEET 167 / 167 .

REINFORCEMENT LIST - (3 OF 9)
CUY-77-1587 (BRIDGE 9)
I.R. 77 SB OVER I.R. 90 AND CR-721 (E. 14TH ST.)

SFN 1806910
DESIGN AGENCY
DESIGNER JS | CHECKER BTA
REVIEWER DWW 01/11/24
PROJECT ID 82382
SUBSET 161 | TOTAL 167
SHEET 2029 | TOTAL 2696

CUY-90-16.28 (CCG3A)

MODEL: Sheet PAPERSIZE: 34x22 (in.) DATE: 3/28/2025 TIME: 10:27:47 AM USER: RohitLBk
pw:\\mb-us-pw.bentley.com:mb-us-pw-03\Documents\Cleveland_OH\01_Projects\ODOT\District12\82382\400-Engineering\Structures\SFN_1806910\Sheets\82382_SL003.dgn

MARK	NUMBER	LENGTH	MATERIAL	WEIGHT (LBS.)	TYPE	DIMENSIONS						
						A	B	C	D	E	R	INC.
PIER 5 (60 KSI, EPOXY COATED STEEL REINFORCEMENT)												
5P501	32	12'-8"	ECSR	423	STR							
5P502	32	18'-8"	ECSR	623	STR							
5P503	666	18'-6"	ECSR	12851	52	1'-4"					2'-6"	
5P504	8	9'-0"	ECSR	75	2	0'-10"	7'-7"	0'-10"				
5P505	40	10'-6"	ECSR	438	1	0'-10"	9'-9"					
5P506	8	9'-1"	ECSR	76	1	0'-10"	8'-4"					
5P507	12	7'-1"	ECSR	89	2	0'-10"	5'-8"	0'-10"				
5P508	16	6'-1"	ECSR	102	2	0'-10"	4'-8"	0'-10"				
5P509	73	7'-1"	ECSR	539	2	0'-10"	5'-8"	0'-10"				
5P510	24	33'-0"	ECSR	826	STR							
5P601	202	16'-0"	ECSR	4855	3	3'-1"	4'-6"					
5P801	88	20'-1"	ECSR	4719	2	4'-0"	12'-6"	4'-0"				
5P802	64	26'-5"	ECSR	4514	2	4'-1"	18'-8"	4'-1"				
5P1001	96	15'-6"	ECSR	6403	2	1'-10"	12'-6"	1'-10"				
5P1002	112	13'-1"	ECSR	6305	1	1'-10"	11'-7"					
5P1003	28	38'-4"	ECSR	4619	STR							
5P1004	28	37'-5"	ECSR	4508	STR							
5P1005	28	40'-5"	ECSR	4870	STR							
5P1006	28	39'-6"	ECSR	4759	STR							
5P1101	96	22'-0"	ECSR	11221	2	2'-0"	18'-8"	2'-0"				
5P1102	12	44'-2"	ECSR	2816	STR							
5P1103	12	27'-2"	ECSR	1732	STR							
5P1104	12	54'-11"	ECSR	3501	1	2'-0"	53'-3"					
5P1105	12	20'-11"	ECSR	1334	1	2'-0"	19'-3"					
			SUB-TOTAL	82198	ITEM 509 - EPOXY COATED STEEL REINFORCEMENT							

MARK	NUMBER	LENGTH	MATERIAL	WEIGHT (LBS.)	TYPE	DIMENSIONS						
						A	B	C	D	E	R	INC.
PIER 6 (60 KSI, EPOXY COATED STEEL REINFORCEMENT)												
6P501	16	35'-6"	ECSR	592	STR							
6P502	8	20'-8"	ECSR	172	STR							
6P503	785	19'-1"	ECSR	15625	52	1'-11"					2'-6"	
6P504	8	9'-0"	ECSR	75	2	0'-10"	7'-7"	0'-10"				
6P505	40	10'-6"	ECSR	438	1	0'-10"	9'-9"					
6P506	8	9'-1"	ECSR	76	1	0'-10"	8'-4"					
6P507	12	7'-1"	ECSR	89	2	0'-10"	5'-8"	0'-10"				
6P508	16	6'-1"	ECSR	102	2	0'-10"	4'-8"	0'-10"				
6P509	73	7'-1"	ECSR	539	2	0'-10"	5'-8"	0'-10"				
6P510	24	33'-0"	ECSR	826	STR							
6P601	212	16'-2"	ECSR	5148	3	3'-2"	4'-6"					
6P602	84	7'-4"	ECSR	925	2	1'-0"	5'-8"	1'-0"				
6P801	24	57'-4"	ECSR	3674	1	4'-0"	53'-6"					
6P802	24	23'-4"	ECSR	1495	1	4'-0"	19'-6"					
6P803	77	28'-5"	ECSR	5842	2	4'-1"	20'-8"	4'-1"				
6P1001	24	55'-11"	ECSR	5775	1	1'-10"	54'-5"					
6P1002	24	21'-11"	ECSR	2263	1	1'-10"	20'-5"					
6P1101	108	24'-0"	ECSR	13771	2	2'-0"	20'-8"	2'-0"				
6P1102	80	16'-7"	ECSR	7049	1	2'-0"	14'-11"					
6P1103	80	27'-7"	ECSR	11724	1	2'-0"	25'-11"					
6P1104	80	20'-10"	ECSR	8855	1	2'-0"	19'-2"					
6P1105	20	46'-4"	ECSR	4923	STR							
6P1106	20	35'-4"	ECSR	3755	STR							
6P1107	20	45'-4"	ECSR	4817	STR							
6P1108	20	34'-4"	ECSR	3648	STR							
6P1109	20	44'-5"	ECSR	4720	STR							
6P1110	20	33'-5"	ECSR	3551	STR							
6P1111	20	43'-5"	ECSR	4613	STR							
6P1112	20	32'-5"	ECSR	3445	STR							
6P1113	12	44'-2"	ECSR	2816	STR							
6P1114	12	27'-2"	ECSR	1732	STR							
6P1115	12	21'-8"	ECSR	1381	16	20'-1"						
6P1116	12	54'-11"	ECSR	3501	1	2'-0"	53'-3"					
6P1117	12	20'-11"	ECSR	1334	1	2'-0"	19'-3"					
			SUB-TOTAL	129291	ITEM 509 - EPOXY COATED STEEL REINFORCEMENT							

Preliminary Plans - Not For Reference Only

NOTES:

1. FOR GENERAL NOTES, SEE SHEETS 12 / 167 THRU 15 / 167.
2. FOR BAR BENDING DIAGRAM AND ADDITIONAL NOTES, SEE SHEET 167 / 167.

REINFORCEMENT LIST - (4 OF 9)
CUY-77-1587 (BRIDGE 9)
I.R. 77 SB OVER I.R. 90 AND CR-721 (E. 14TH ST.)

SFN 1806910
DESIGN AGENCY
DESIGNER JS | CHECKER BTA
REVIEWER DWW 01/11/24
PROJECT ID 82382
SUBSET 162 | TOTAL 167
SHEET 2030 | TOTAL 2696

CUY-90-16.28 (CCG3A)

MODEL: Sheet PAPERSIZE: 34x22 (in.) DATE: 3/28/2025 TIME: 10:27:59 AM USER: RohitLBk
pw:\\mb-us-pw.bentley.com:mb-us-pw-03\Documents\Cleveland_OH\01_Projects\ODOT\District12\82382\400-Engineering\Structures\SFN_1806910\Sheets\82382_SFN_1806910_SL004.dgn

MARK	NUMBER	LENGTH	MATERIAL	WEIGHT (LBS.)	TYPE	DIMENSIONS						
						A	B	C	D	E	R	INC.
DRILLED SHAFTS (FOR INFORMATION ONLY)												
DS601	1920	23'-2"	ECSR	66809	52	1'-0"					3'-3"	
DS1103	600	30'-0"	ECSR	95634	STR							
DS1104	200	18'-0"	ECSR	19127	STR							
		SUB-TOTAL		181570	ITEM 509 - EPOXY COATED STEEL REINFORCEMENT							
PIER 7												
7P501	1093	15'-10"	ECSR	18050	52	1'-0"					2'-1 ½"	
7P502	18	8'-3"	ECSR	155	2	1'-6"	5'-6"	1'-6"				
7P503	18	7'-11"	ECSR	149	2	0'-10"	6'-6"	0'-10"				
7P601	350	19'-4"	ECSR	10164	3	3'-7"	5'-8"					
7P602	42	33'-2"	ECSR	2092	STR							
7P603	9	18'-2"	ECSR	246	2	1'-0"	16'-6"	1'-0"				
7P604	24	15'-0"	ECSR	541	1	1'-0"	14'-2"					
7P605	54	15'-11"	ECSR	1291	1	1'-0"	15'-1"					
7P606	93	9'-4"	ECSR	1304	2	2'-0"	5'-8"	2'-0"				
7P1101	100	21'-5"	ECSR	11379	STR							
7P1102	100	14'-9"	ECSR	7837	STR							
7P1103	20	46'-6"	ECSR	4941	STR							
7P1104	20	53'-2"	ECSR	5649	STR							
7P1105	20	45'-1"	ECSR	4791	STR							
7P1106	20	51'-9"	ECSR	5499	STR							
7P1107	20	44'-1"	ECSR	4684	STR							
7P1108	20	50'-9"	ECSR	5393	STR							
7P1109	20	43'-2"	ECSR	4587	STR							
7P1110	20	49'-10"	ECSR	5295	STR							
7P1111	20	42'-2"	ECSR	4481	STR							
7P1112	20	48'-10"	ECSR	5189	STR							
*7P1113	36	27'-9"	ECSR	5308	STR							
*7P1114	36	27'-8"	ECSR	5292	STR							
*7P1115	36	36'-9"	ECSR	7029	STR							
*7P1116	12	29'-5"	ECSR	1875	1	2'-0"	27'-9"					
*7P1117	12	27'-8"	ECSR	1764	STR							
*7P1118	12	38'-5"	ECSR	2449	1	2'-0"	36'-9"					
		SUB-TOTAL		127434	ITEM 509 - EPOXY COATED STEEL REINFORCEMENT							

* REINFORCING BAR UTILIZES A MECHANICAL CONNECTOR. BAR LENGTH ADJUSTMENT AND/OR END PREPARATION MAY BE NECESSARY DEPENDING UPON THE TYPE OF CONNECTOR USED.

MARK	NUMBER	LENGTH	MATERIAL	WEIGHT (LBS.)	TYPE	DIMENSIONS						
						A	B	C	D	E	R	INC.
PIER 8 (60 KSI, EPOXY COATED STEEL REINFORCEMENT)												
8P501	16	15'-9"	ECSR	263	2	5'-5"	5'-2"	5'-5"				
8P502	16	16'-7"	ECSR	277	2	5'-4"	6'-2"	5'-4"				
8P503	28	5'-2"	ECSR	151	STR							
8P504	28	6'-2"	ECSR	180	STR							
8P505	8	9'-2"	ECSR	76	STR							
8P506	8	2'-2"	ECSR	18	STR							
8P507	190	7'-4"	ECSR	1453	9	0'-4"	0'-4"	6'-2"	0'-10"			
8P508	18	4'-10"	ECSR	91	57	0'-11"	1'-6"					

MARK	NUMBER	LENGTH	MATERIAL	WEIGHT (LBS.)	TYPE	DIMENSIONS						
						A	B	C	D	E	R	INC.
PIER 8 (60 KSI, EPOXY COATED STEEL REINFORCEMENT)												
8P509	18	4'-11" TO 5'-3"	ECSR	94	57	0'-11"	1'-6" TO 1'-8"					0'-1"
8P510	24	4'-2"	ECSR	104	57	0'-11"	1'-2"					
8P601	16	21'-8"	ECSR	521	STR							
8P602	16	22'-8"	ECSR	545	STR							
8P603	16	24'-8"	ECSR	593	STR							
8P604	16	16'-2"	ECSR	389	STR							
8P605	204	21'-11"	ECSR	6715	52	1'-4"					3'-0"	
8P606	4	3'-11"	ECSR	24	STR							
8P607	4	5'-2"	ECSR	31	STR							
8P608	4	5'-9"	ECSR	35	STR							
8P609	2	6'-0"	ECSR	18	STR							
8P610	4	5'-11"	ECSR	36	STR							
8P611	4	5'-6"	ECSR	33	STR							
8P612	4	4'-8"	ECSR	28	STR							
8P613	44	30'-6"	ECSR	2016	STR							
8P614	22	21'-5"	ECSR	708	STR							
8P615	18	6'-6"	ECSR	176	STR							
8P616	230	26'-0"	ECSR	8982	3	3'-11"	8'-8"					
8P617	60	14'-8"	ECSR	1322	2	4'-11"	5'-2"	4'-11"				
8P618	32	15'-8"	ECSR	753	2	4'-11"	6'-2"	4'-11"				
8P619	20	8'-6"	ECSR	255	55	2'-2"	2'-8"					
8P620	8	16'-3"	ECSR	195	5	9'-2"	2'-10"	1'-0"				
8P621	32	13'-4"	ECSR	641	2	2'-6"	8'-8"	2'-6"				
8P622	8	10'-11"	ECSR	131	1	6'-1"	5'-0"					
8P623	52	7'-6"	ECSR	586	10	2'-0"	1'-6"	4'-2"	1'-0"			
8P624	52	6'-1"	ECSR	475	19	3'-7"	2'-0"	1'-6"				
8P625	18	6'-10"	ECSR	185	STR							
8P626	30	9'-2"	ECSR	413	STR							
8P701	60	22'-3"	ECSR	2729	52	1'-4"					3'-0"	
8P801	24	32'-5"	ECSR	2077	2	5'-7"	21'-8"	5'-7"				
8P802	24	33'-3"	ECSR	2131	2	5'-6"	22'-8"	5'-6"				
8P803	18	35'-5"	ECSR	1702	2	5'-7"	24'-8"	5'-7"				
8P804	26	26'-9"	ECSR	1857	2	5'-6"	16'-2"	5'-6"				
8P805	9	28'-3"	ECSR	679	1	1'-4"	27'-1"					
8P806	9	35'-2"	ECSR	845	STR							
8P807	9	23'-7"	ECSR	567	1	1'-4"	22'-5"					
8P808	9	22'-3"	ECSR	535	STR							
8P809	18	31'-5"	ECSR	1510	STR							
8P810	12	18'-3"	ECSR	585	2	5'-0"	8'-8"	5'-0"				
8P901	18	15'-7"	ECSR	954	2	5'-0"	6'-2"	5'-0"				
8P1101	30	25'-0"	ECSR	3985	2	2'-0"	21'-8"	2'-0"				
8P1102	30	26'-0"	ECSR	4144	2	2'-0"	22'-8"	2'-0"				
8P1103	32	28'-0"	ECSR	4760	2	2'-0"	24'-8"	2'-0"				
8P1104	26	19'-6"	ECSR	2694	2	2'-0"	16'-2"	2'-0"				
8P1105	72	15'-4"	ECSR	5866	1	2'-0"	13'-8"					
8P1106	72	28'-8"	ECSR	10966	STR							
8P1107	72	12'-10"	ECSR	4909	STR							
		SUB-TOTAL		82008	ITEM 509 - EPOXY COATED STEEL REINFORCEMENT							

Preliminary Plans - For Reference Only

REINFORCEMENT LIST - (5 OF 9)
CUY-77-1587 (BRIDGE 9)
I.R. 77 SB OVER I.R. 90 AND CR-721 (E. 14TH ST.)

NOTES:

1. FOR GENERAL NOTES, SEE SHEETS 12 / 167 THRU 15 / 167

2. FOR BAR BENDING DIAGRAM AND ADDITIONAL NOTES, SEE SHEET 167 / 167

SFN 1806910
DESIGN AGENCY HDR
DESIGNER JS | CHECKER BTA
REVIEWER DWW 01/11/24
PROJECT ID 82382
SUBSET 163 | TOTAL 167
SHEET 2031 | TOTAL 2696

CUY-90-16.28 (CCG3A)

MODEL: Sheet PAPERSIZE: 34x22 (in.) DATE: 3/28/2025 TIME: 10:28:05 AM USER: RohitLBk
pw:\\mb-us-pw.bentley.com:mb-us-pw-03\Documents\Cleveland_OH01_Projects\ODOT\District12\82382400-Engineering\Structures\SFN_1806910\Sheets\82382_SFN_1806910_SL005.dgn

MARK	NUMBER	LENGTH	MATERIAL	WEIGHT (LBS.)	TYPE	DIMENSIONS						
						A	B	C	D	E	R	INC.
PIER 9 (60 KSI, EPOXY COATED STEEL REINFORCEMENT)												
9P501	16	35'-6"	ECSR	592	STR							
9P502	8	20'-8"	ECSR	172	STR							
9P503	715	19'-1"	ECSR	14231	52	1'-11"					2'-6"	
9P504	8	8'-10"	ECSR	74	2	0'-10"	7'-5"	0'-10"				
9P505	40	10'-3"	ECSR	428	1	0'-10"	9'-7"					
9P506	16	8'-11"	ECSR	149	1	0'-10"	8'-3"					
9P507	12	6'-11"	ECSR	87	2	0'-10"	5'-6"	0'-10"				
9P508	16	6'-1"	ECSR	102	2	0'-10"	4'-8"	0'-10"				
9P509	74	7'-1"	ECSR	547	2	0'-10"	5'-8"	0'-10"				
9P510	24	35'-8"	ECSR	893	STR							
9P601	232	17'-0"	ECSR	5924	3	3'-6"	4'-7"					
9P602	96	7'-4"	ECSR	1058	2	1'-0"	5'-8"	1'-0"				
9P801	24	58'-5"	ECSR	3743	1	4'-0"	54'-8"					
9P802	24	22'-0"	ECSR	1410	1	4'-0"	18'-2"					
9P803	76	28'-5"	ECSR	5766	2	4'-1"	20'-8"	4'-1"				
9P1001	24	57'-1"	ECSR	5895	1	1'-10"	55'-7"					
9P1002	24	20'-7"	ECSR	2126	1	1'-10"	19'-1"					
9P1101	108	24'-0"	ECSR	13771	2	2'-0"	20'-8"	2'-0"				
9P1102	80	27'-7"	ECSR	11724	1	2'-0"	25'-11"					
9P1103	80	16'-7"	ECSR	7049	1	2'-0"	14'-11"					
9P1104	80	20'-10"	ECSR	8855	1	2'-0"	19'-2"					
9P1105	20	42'-7"	ECSR	4525	STR							
9P1106	20	31'-7"	ECSR	3356	STR							
9P1107	20	41'-8"	ECSR	4427	STR							
9P1108	20	30'-8"	ECSR	3259	STR							
9P1109	20	40'-8"	ECSR	4321	STR							
9P1110	20	29'-8"	ECSR	3152	STR							
9P1111	20	39'-9"	ECSR	4224	STR							
9P1112	20	28'-9"	ECSR	3055	STR							
9P1113	12	47'-5"	ECSR	3023	STR							
9P1114	12	29'-2"	ECSR	1860	STR							
9P1115	12	21'-7"	ECSR	1376	16	20'-0"						
9P1116	12	58'-9"	ECSR	3746	1	2'-0"	57'-1"					
9P1117	12	22'-3"	ECSR	1419	1	2'-0"	20'-7"					
SUB-TOTAL				126339	ITEM 509 - EPOXY COATED STEEL REINFORCEMENT							

MARK	NUMBER	LENGTH	MATERIAL	WEIGHT (LBS.)	TYPE	DIMENSIONS						
						A	B	C	D	E	R	INC.
PIER 10 (60 KSI, EPOXY COATED STEEL REINFORCEMENT)												
10P501	32	12'-8"	ECSR	423	STR							
10P502	32	19'-8"	ECSR	656	STR							
10P503	420	16'-2"	ECSR	7082	52	1'-4"					2'-1 ½"	
10P504	8	8'-8"	ECSR	72	2	0'-10"	7'-3"	0'-10"				
10P505	48	9'-11"	ECSR	496	1	0'-10"	9'-2"					
10P506	8	8'-9"	ECSR	73	1	0'-10"	8'-0"					
10P507	12	7'-1"	ECSR	89	2	0'-10"	5'-8"	0'-10"				
10P508	16	6'-1"	ECSR	102	2	0'-10"	4'-8"	0'-10"				
10P509	76	7'-1"	ECSR	561	2	0'-10"	5'-8"	0'-10"				
10P510	24	35'-8"	ECSR	893	STR							
10P601	232	16'-0"	ECSR	5575	3	3'-1"	4'-6"					
10P801	96	20'-1"	ECSR	5148	2	4'-0"	12'-6"	4'-0"				
10P802	64	27'-5"	ECSR	4685	2	4'-1"	19'-8"	4'-1"				
10P1001	96	15'-6"	ECSR	6403	2	1'-10"	12'-6"	1'-10"				
10P1101	96	23'-0"	ECSR	11731	2	2'-0"	19'-8"	2'-0"				
10P1102	96	14'-9"	ECSR	7523	1	2'-0"	13'-1"					
10P1103	24	30'-9"	ECSR	3921	STR							
10P1104	24	30'-3"	ECSR	3857	STR							
10P1105	24	29'-9"	ECSR	3793	STR							
10P1106	24	29'-3"	ECSR	3730	STR							
10P1107	12	47'-5"	ECSR	3023	STR							
10P1108	12	29'-2"	ECSR	1860	STR							
10P1109	6	49'-0"	ECSR	1562	16	47'-5"						
10P1110	6	30'-9"	ECSR	980	16	29'-2"						
10P1111	6	58'-8"	ECSR	1870	16	57'-1"						
10P1112	6	22'-2"	ECSR	707	16	20'-7"						
10P1113	12	58'-9"	ECSR	3746	1	2'-0"	57'-1"					
10P1114	12	22'-3"	ECSR	1419	1	2'-0"	20'-7"					
SUB-TOTAL				81980	ITEM 509 - EPOXY COATED STEEL REINFORCEMENT							

Preliminary Plans - For Reference Only

NOTES:

1. FOR GENERAL NOTES, SEE SHEETS 12 / 167 THRU 15 / 167.
2. FOR BAR BENDING DIAGRAM AND ADDITIONAL NOTES, SEE SHEET 167 / 167.

REINFORCEMENT LIST - (6 OF 9)
CUY-77-1587 (BRIDGE 9)
I.R. 77 SB OVER I.R. 90 AND CR-721 (E. 14TH ST.)

SFN 1806910
DESIGN AGENCY
DESIGNER JS | CHECKER BTA
REVIEWER DWW 01/11/24
PROJECT ID 82382
SUBSET 164 | TOTAL 167
SHEET 2032 | TOTAL 2696

CUY-90-16.28 (CCG3A)

MODEL: Sheet PAPERSIZE: 34x22 (in.) DATE: 3/28/2025 TIME: 10:28:11 AM USER: Rohit.Bk
pw:\\mb-us-pw.bentley.com:mb-us-pw-03\Documents\Cleveland_OH01_Projects\ODOT\District12\82382400-Engineering\Structures\SFN_1806910\Sheets\82382_SFN_1806910_SL006.dgn

MARK	NUMBER	LENGTH	MATERIAL	WEIGHT (LBS.)	TYPE	DIMENSIONS						
						A	B	C	D	E	R	INC.
UNIT 1 SUPERSTRUCTURE (60 KSI, EPOXY COATED STEEL REINFORCEMENT)												
S401	2977	10'-6"	ECSR	20881	2	2'-3"	0'-8"	7'-9"				
S402	1904	30'-0"	ECSR	38156	STR							
S403	1 SERIES OF 25	15'-11" TO 32'-5"	ECSR	404	STR							0'-8 1/4"
S404	1 SERIES OF 41	5'-0" TO 32'-6"	ECSR	514	STR							0'-8 1/4"
S405	11	11'-10"	ECSR	87	STR							
S406	1976	30'-0"	ECSR	39599	STR							
S407	152	30'-9"	ECSR	3122	STR							
S408	32	3'-0"	ECSR	64	STR							
S409	152	32'-10"	ECSR	3334	STR							
S410	152	12'-3"	ECSR	1244	STR							
S501	5013	30'-0"	ECSR	156857	STR							
S502	1 SERIES OF 32	11'-3" TO 31'-0"	ECSR	705	STR							0'-7 5/8"
S503	1 SERIES OF 32	4'-1" TO 23'-2"	ECSR	455	STR							0'-7 3/8"
S504	4	9'-7"	ECSR	40	STR							
S505	2937	30'-7"	ECSR	93686	16	30'-0"						
S506	1 SERIES OF 16	2'-6" TO 30'-3"	ECSR	274	16	1'-11" TO 29'-8"						1'-10 1/4"
S507	1 SERIES OF 16	1'-11" TO 29'-8"	ECSR	264	STR							1'-10 1/4"
S508	2 SERIES OF 15	4'-4" TO 29'-8"	ECSR	532	STR							1'-9 3/4"
S509	2 SERIES OF 8	4'-4" TO 17'-3"	ECSR	181	STR							1'-10 1/4"
S510	166	17'-4"	ECSR	3002	STR							
S511	212	14'-6"	ECSR	3207	STR							
S512	414	11'-8"	ECSR	5038	STR							
S513	2122	8'-10"	ECSR	19550	STR							
S521	3	14'-0"	ECSR	44	STR							
S528	1 SERIES OF 24	24'-3" TO 33'-10"	ECSR	727	STR							0'-5"
S536	96	4'-2"	ECSR	418	2	1'-11"	0'-7"	1'-11"				
S537	148	3'-7"	ECSR	553	19	1'-11"	1'-2"	1'-2"				
S538	82	6'-2"	ECSR	527	2	2'-11"	0'-7"	2'-11"				

MARK	NUMBER	LENGTH	MATERIAL	WEIGHT (LBS.)	TYPE	DIMENSIONS						
						A	B	C	D	E	R	INC.
UNIT 1 SUPERSTRUCTURE (60 KSI, EPOXY COATED STEEL REINFORCEMENT)												
S539	4	9'-8"	ECSR	41	STR							
S540	8	3'-0"	ECSR	25	STR							
S541	22	8'-11"	ECSR	205	STR							
S543	4	39'-1"	ECSR	163	STR							
S544	4	32'-9"	ECSR	137	STR							
S601	12	39'-8"	ECSR	715	STR							
S602	16	33'-4"	ECSR	802	STR							
S801	16	40'-3"	ECSR	1720	STR							
S802	24	33'-11"	ECSR	2174	STR							
SUB-TOTAL				399446	ITEM 509 - EPOXY COATED STEEL REINFORCEMENT							

MARK	NUMBER	LENGTH	MATERIAL	WEIGHT (LB.) OR LENGTH (FT.)	TYPE	DIMENSIONS						
						A	B	C	D	E	R	INC.
REAR APPROACH SLAB RAILING (60 KSI, EPOXY COATED)												
RAS601	79	8'-1"	ECSR	959	37	1'-2"	0'-9 1/2"	1'-5"	1'-0"	0'-7"		
RAS602	79	7'-0"	ECSR	831	23	0'-6"	3'-3"	3'-3"				
SUB-TOTAL				1790	ITEM 509 - EPOXY COATED STEEL REINFORCEMENT							
REAR APPROACH SLAB RAILING (GFRP)												
RAS401G	44	16'-10"	GFRP	740'-8"	STR							
RAS402G	22	1'-6"	GFRP	33'-0"	STR							
RAS403G	20	10'-0"	GFRP	200'-0"	STR							
RAS404G	4	10'-9"	GFRP	43'-0"	STR							
SUB-TOTAL				1016'-8"	ITEM 509 - NO. 4 GFRP DEFORMED BARS							

NOTES:

1. FOR GENERAL NOTES, SEE SHEETS 12 / 167 THRU 15 / 167 .
2. FOR BAR BENDING DIAGRAM AND ADDITIONAL NOTES, SEE SHEET 167 / 167 .

Preliminary Plans - For Reference Only

REINFORCEMENT LIST - (7 OF 9)
CUY-77-1587 (BRIDGE 9)
I.R. 77 SB OVER I.R. 90 AND CR-721 (E. 14TH ST.)

SFN 1806910
DESIGN AGENCY HDR
DESIGNER JS | CHECKER BTA
REVIEWER DWW 01/11/24
PROJECT ID 82382
SUBSET 165 | TOTAL 167
SHEET 2033 | TOTAL 2696

CUY-90-16.28 (CCG3A)

MODEL: Sheet PAPERSIZE: 34x22 (in.) DATE: 3/28/2025 TIME: 10:28:17 AM USER: Rohit.Bk
pw:\\mb-us-pw.bentley.com:mb-us-pw-03\Documents\Cleveland_OH101_Projects\ODOT\District12\82382\400-Engineering\Structures\SFN_1806910\Sheets\82382_SFN_1806910_SL007.dgn

MARK	NUMBER	LENGTH	MATERIAL	WEIGHT (LBS.)	TYPE	DIMENSIONS						
						A	B	C	D	E	R	INC.
UNIT 2 SUPERSTRUCTURE (60 KSI, EPOXY COATED STEEL REINFORCEMENT)												
S401	5676	10'-6"	ECSR	39811	2	2'-3"	0'-8"	7'-9"				
S402	3875	30'-0"	ECSR	77655	STR							
S406	6225	30'-0"	ECSR	124749	STR							
S408	96	3'-0"	ECSR	192	STR							
S411	312	19'-9"	ECSR	4117	16	19'-3"						
S412	156	30'-0"	ECSR	3127	STR							
S413	1 SERIES OF 21	4'-0" TO 27'-6"	ECSR	221	STR							1'-2 ⅛"
S414	1 SERIES OF 24	3'-11" TO 31'-0"	ECSR	280	STR							1'-2 ⅛"
S415	1 SERIES OF 24	3'-10" TO 30'-11"	ECSR	279	STR							1'-2 ⅛"
S416	1 SERIES OF 16	13'-2" TO 30'-10"	ECSR	235	STR							1'-2 ⅛"
S417	1 SERIES OF 51	13'-2" TO 34'-7"	ECSR	814	STR							0'-5 ⅛"
S418	1 SERIES OF 57	6'-11" TO 30'-10"	ECSR	719	STR							0'-5 ⅛"
S419	1 SERIES OF 61	3'-2" TO 28'-5"	ECSR	643	STR							0'-5 ⅛"
S501	9656	30'-0"	ECSR	302137	STR							
S505	5642	30'-7"	ECSR	179971	16	30'-0"						
S511	560	14'-6"	ECSR	8470	STR							
S512	182	11'-8"	ECSR	2215	STR							
S513	3006	8'-10"	ECSR	27695	STR							
S514	2	35'-9"	ECSR	75	STR							
S515	1 SERIES OF 14	4'-2" TO 20'-4"	ECSR	179	STR							1'-2 ⅞"
S516	1 SERIES OF 22	4'-8" TO 30'-4"	ECSR	402	STR							1'-2 ⅝"
S517	1 SERIES OF 16	13'-1" TO 30'-11"	ECSR	367	STR							1'-2 ¼"
S518	1 SERIES OF 12	6'-2" TO 15'-2"	ECSR	134	STR							0'-9 ⅞"
S519	1 SERIES OF 16	3'-0" TO 20'-8"	ECSR	198	STR							1'-2 ⅛"
S520	312	10'-6"	ECSR	3417	STR							
S521	3	14'-0"	ECSR	44	STR							
S522	562	15'-7"	ECSR	9135	STR							
S523	1019	14'-0"	ECSR	14880	STR							
S524	2	24'-3"	ECSR	51	STR							
S525	2	7'-6"	ECSR	16	STR							

MARK	NUMBER	LENGTH	MATERIAL	WEIGHT (LBS.)	TYPE	DIMENSIONS						
						A	B	C	D	E	R	INC.
UNIT 2 SUPERSTRUCTURE (60 KSI, EPOXY COATED STEEL REINFORCEMENT)												
S526	1	14'-7"	ECSR	16	16	14'-0"						
S527	2	6'-9"	ECSR	15	STR							
S529	1 SERIES OF 24	20'-0" TO 25'-9"	ECSR	573	STR							0'-3"
S537	139	3'-7"	ECSR	520	19	1'-11"	1'-2"	1'-2"				
S538	82	6'-2"	ECSR	527	2	2'-11"	0'-7"	2'-11"				
S540	8	3'-0"	ECSR	25	STR							
S541	12	8'-11"	ECSR	112	STR							
S542	14	8'-4"	ECSR	122	STR							
S544	4	32'-9"	ECSR	137	STR							
S545	4	35'-5"	ECSR	148	STR							
S546	87	6'-0"	ECSR	545	2	2'-10"	0'-7"	2'-10"				
S602	16	33'-4"	ECSR	802	STR							
S603	16	36'-0"	ECSR	866	STR							
S802	24	33'-11"	ECSR	2174	STR							
S803	24	36'-7"	ECSR	2345	STR							
				SUB-TOTAL		811154	ITEM 509 - EPOXY COATED STEEL REINFORCEMENT					

MARK	NUMBER	LENGTH	MATERIAL	WEIGHT (LB.) OR LENGTH (FT.)	TYPE	DIMENSIONS						
						A	B	C	D	E	R	INC.
FORWARD APPROACH SLAB RAILING (60 KSI, EPOXY COATED)												
FAS601	60	8'-1"	ECSR	728	37	1'-2"	0'-9 ½"	1'-5"	1'-0"	0'-7"		
FAS602	60	7'-0"	ECSR	631	23	0'-6"	3'-3"	3'-3"				
FAS603	2 SETS OF 11	4'-6" TO 5'-4"	ECSR	162	1	1'-0"	3'-8" TO 4'-6"					0'-1"
FAS604	8	4'-6"	ECSR	54	1	1'-0"	3'-8"					
			SUB-TOTAL	1575	ITEM 509 - EPOXY COATED STEEL REINFORCEMENT							
FORWARD APPROACH SLAB RAILING (GFRP)												
FAS401G	11	32'-2"	GFRP	353'-10"	STR							
FAS402G	11	1'-5"	GFRP	15'-7"	STR							
FAS403G	12	10'-0"	GFRP	120'-0"	STR							
FAS404G	11	19'-7"	GFRP	215'-5"	STR							
FAS405G	8	8'-0"	GFRP	64'-0"	STR							
FAS406G	12	10'-0"	GFRP	120'-0"	STR							
FAS407G	6	6'-4"	GFRP	38'-0"	25	2'-6"	2'-5"	1'-4 ¼"	0'-1 ½"	0'-5"		
FAS408G	6	5'-1"	GFRP	30'-6"	STR							
			SUB-TOTAL	957'-4"	ITEM 509 - NO. 4 GFRP DEFORMED BARS							

NOTES:

1. FOR GENERAL NOTES, SEE SHEETS 12 / 167 THRU 15 / 167.
2. FOR BAR BENDING DIAGRAM AND ADDITIONAL NOTES, SEE SHEET 167 / 167.

Preliminary Plans - For Reference Only

REINFORCEMENT LIST - (8 OF 9)
CUY-77-1587 (BRIDGE 9)
I.R. 77 SB OVER I.R. 90 AND CR-721 (E. 14TH ST.)

SFN 1806910
DESIGN AGENCY HDR
DESIGNER JS | CHECKER BTA
REVIEWER DWW 01/11/24
PROJECT ID 82382
SUBSET 166 | TOTAL 167
SHEET 2034 | TOTAL 2696

CUY-90-16.28 (CCG3A)
MODEL: Sheet PAPERSIZE: 34x22 (in.) DATE: 3/28/2025 TIME: 10:28:24 AM USER: RohitLBk
pw:\\mb-us-pw.bentley.com:mb-us-pw-03\Documents\Cleveland_OH\01_Projects\ODOT\District12\82382\400-Engineering\Structures\SFN_1806910\Sheets\82382_SFN_1806910_SL008.dgn

MARK	NUMBER	LENGTH	MATERIAL	WEIGHT (LB.) OR TOTAL LENGTH	TYPE	DIMENSIONS						
						A	B	C	D	E	R	INC.
BRIDGE RAILING (60 KSI, EPOXY COATED)												
R601	4395	7'-7"	ECSR	50060	37	0'-11 ½"	0'-9 ½"	1'-5"	1'-0"	0'-7"		
R602	4395	7'-0"	ECSR	46209	23	0'-6"	3'-3"	3'-3"				
SUB-TOTAL				96269	ITEM 509 - EPOXY COATED STEEL REINFORCEMENT							
BRIDGE RAILING (GFRP)												
R401G	1111	40'-0"	GFRP	44440'-0"	STR							
R402G	11	19'-0"	GFRP	209'-0"	STR							
R403G	11	4'-8"	GFRP	51'-4"	STR							
R404G	11	32'-8"	GFRP	359'-4"	STR							
R405G	11	10'-9"	GFRP	118'-3"	STR							
R406G	1556	10'-0"	GFRP	15560'-0"	STR							
R407G	4	14'-10"	GFRP	59'-4"	STR							
R408G	4	11'-6"	GFRP	46'-0"	STR							
R409G	16	15'-0"	GFRP	240'-0"	STR							
R410G	4	11'-4"	GFRP	45'-4"	STR							
R411G	4	11'-1"	GFRP	44'-4"	STR							
SUB-TOTAL				61172'-11"	ITEM 509 - NO. 4 GFRP DEFORMED BARS							

NOTES:

1. FOR GENERAL NOTES, SEE SHEETS 12 / 167 THRU 15 / 167.
2. THE LETTER PREFIX INDICATES BAR LOCATION. THE BAR SIZE NUMBER IS SPECIFIED ON THE PLANS IN THE BAR MARK COLUMN. THE FIRST DIGIT WHERE THREE DIGITS ARE USED, AND THE TWO DIGITS WHEN FOUR DIGITS ARE USED INDICATES BAR SIZE NUMBER. ALL REINFORCING IS ASSUMED EPOXY COATED UNLESS OTHERWISE INDICATED BY A LETTER SUFFIX. IF A LETTER SUFFIX IS PROVIDED, IT INDICATES BAR OR BAR COATING TYPE. EXAMPLE: R401G

   R: THE LOCATION OF THE BARS IN THE STRUCTURE (BRIDGE RAILING)
   4: BAR SIZE DIMENSION NO. 4
   01: SEQUENCE NUMBER
   G: GFRP

   THE FOLLOWING IS A LIST OF BAR LOCATION PREFIXES:
   S: SUPERSTRUCTURE
   R: BRIDGE RAILING
   RA: REAR ABUTMENT
   FA: FORWARD ABUTMENT
   1P: PIER 1
   2P: PIER 2
   3P: PIER 3
   4P: PIER 4
   5P: PIER 5
   6P: PIER 6
   7P: PIER 7
   8P: PIER 8
   9P: PIER 9
   10P: PIER 10

   THE FOLLOWING IS A LIST OF BAR MATERIAL SUFFIXES:
   G: GFRP
3. BAR DIMENSIONS ARE SHOWN OUT-TO-OUT UNLESS OTHERWISE NOTED. "STD." WRITTEN IN PLACE OF A DIMENSION INDICATES A STANDARD BAR BEND AT THE END OF THE BAR. STRAIGHT BARS ARE INDICATED BY "STR."
4. BAR MATERIAL:

   "ECSR" = EPOXY COATED STEEL REINFORCEMENT
   "GFRP" = GLASS FIBER REINFORCED POLYMER

BAR BENDING DIAGRAM

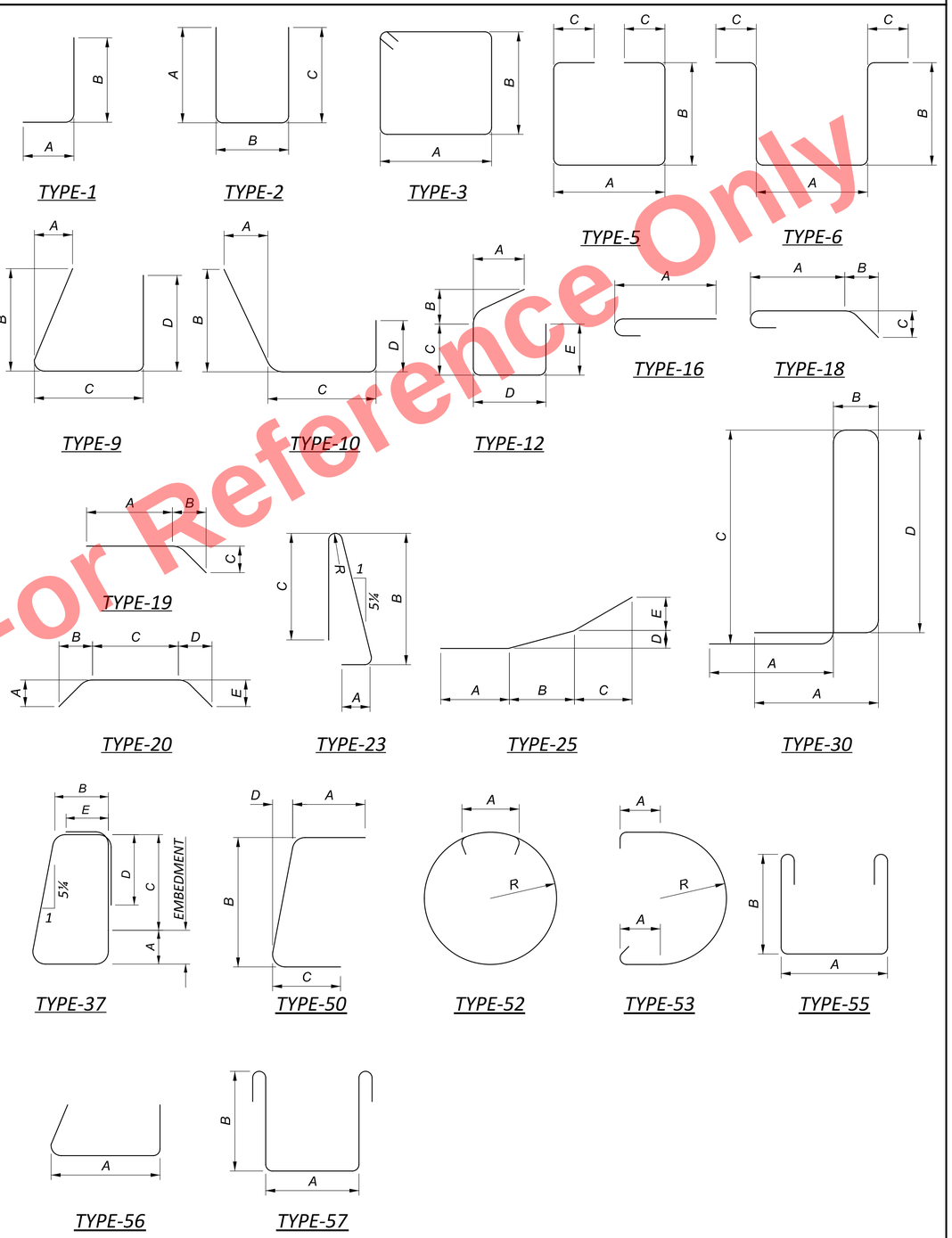

Preliminary Plans - For Reference Only

REINFORCEMENT LIST - (9 OF 9)
CUY-77-1587 (BRIDGE 9)
I.R. 77 SB OVER I.R. 90 AND CR-721 (E. 14TH ST.)

SFN 1806910
DESIGN AGENCY
HDR
DESIGNER JS | CHECKER BTA
REVIEWER DWW 01/11/24
PROJECT ID 82382
SUBSET 167 | TOTAL 167
SHEET 2035 | TOTAL 2696

CUY-90-16.28 (CCG3A)

MODEL: Sheet PAPERSIZE: 34x22 (in.) DATE: 3/28/2025 TIME: 10:28:32 AM USER: RohitBk
pw:\\mb-us-pw.bentley.com:mb-us-pw-03\Documents\Cleveland_OH\01_Projects\ODOT\District12\82382400-Engineering\Structures\SFN_1806910\Sheets\82382_SFN_1806910_SL009.dgn

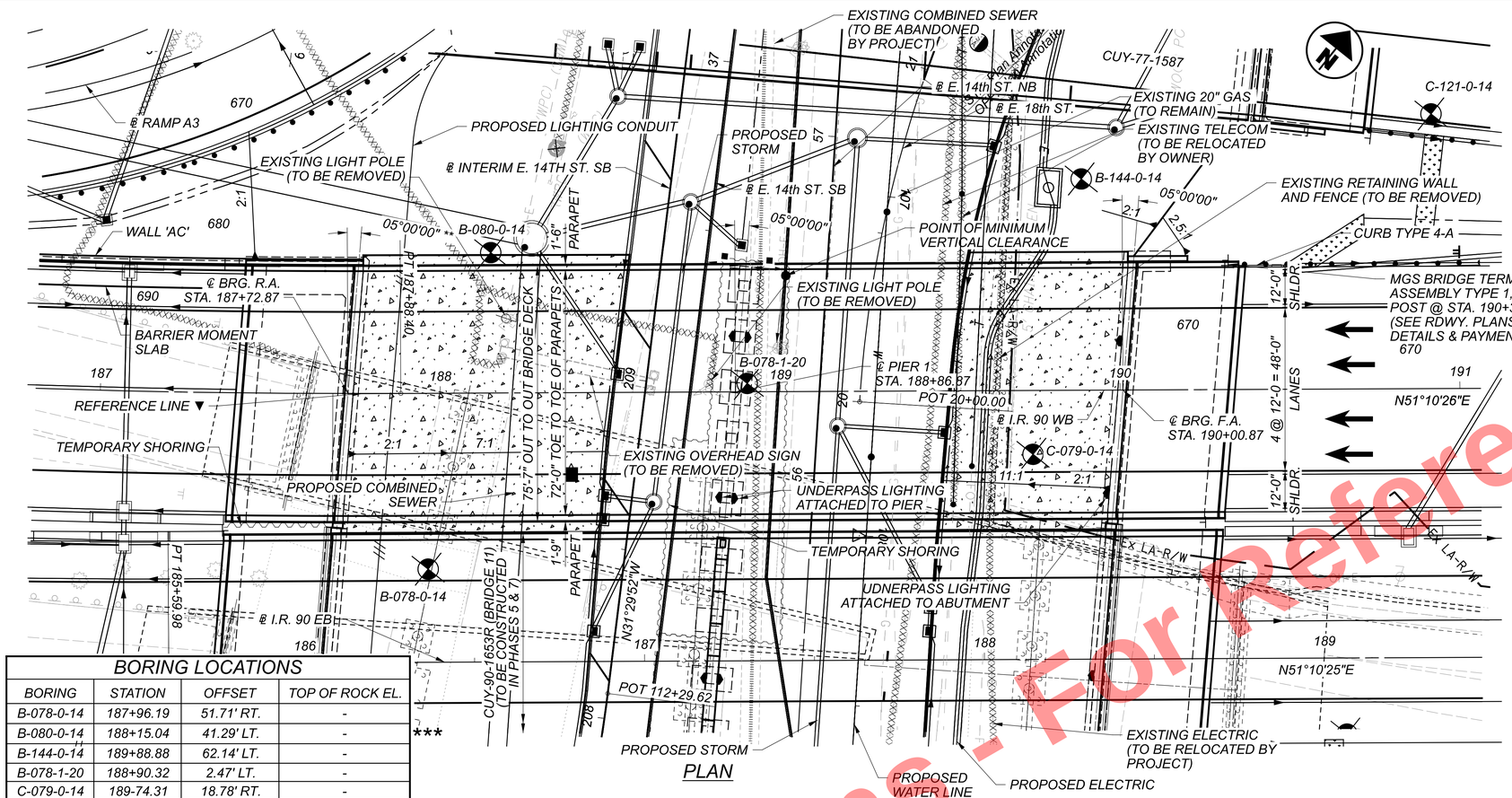

PLAN

BORING LOCATIONS			
BORING	STATION	OFFSET	TOP OF ROCK EL.
B-078-0-14	187+96.19	51.71' RT.	-
B-080-0-14	188+15.04	41.29' LT.	-
B-144-0-14	189+88.88	62.14' LT.	-
B-078-1-20	188+90.32	2.47' LT.	-
C-079-0-14	189-74.31	18.78' RT.	-

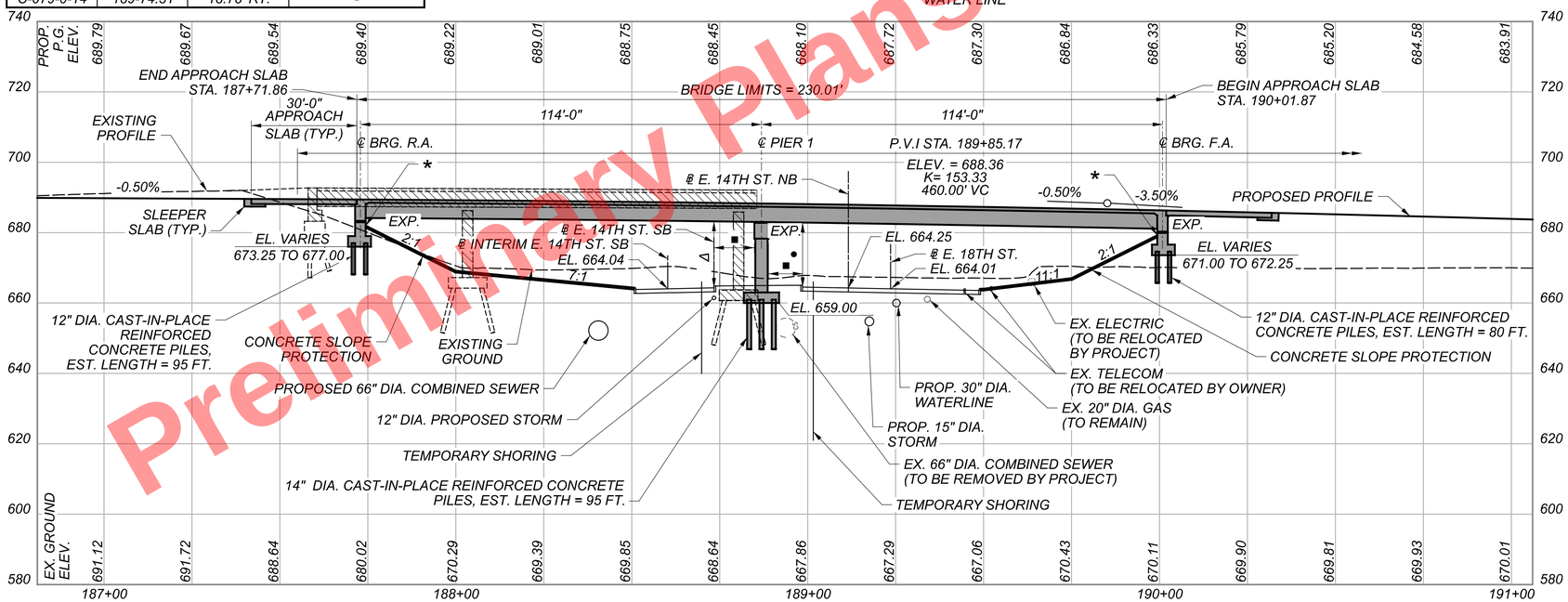

PROFILE ALONG ℄ I.R. 90 WB

BENCHMARK DATA

BM-59 STA. 188+46.10, ELEV. 660.15, OFFSET 342.36' RT.,
℄ I.R. 90 WB, MAG NAIL AT NOSE OF DRAINAGE CHANNEL
BM-61 STA. 183+21.08, ELEV. 674.03, OFFSET 454.85' LT.,
℄ I.R. 90 WB, RAILROAD SPIKE IN NORTH FACE OF POWER.LIGHT POLE
BM-62 STA. 191+78.84, ELEV. 672.11, OFFSET 484.13' LT.,
℄ I.R. 90 WB, RAILROAD SPIKE IN EAST FACE OF POWER/LIGHT POLE

FOR ADDITIONAL BENCHMARK INFORMATION. SEE ROADWAY PLANS

NOTES

EARTHWORK LIMITS SHOWN ARE APPROXIMATE. ACTUAL SLOPES SHALL CONFORM TO PLAN CROSS SECTIONS.

DESIGN TRAFFIC:
2015 ADT = 138,000 (EB & WB) 2015 ADTT = 12,420 (EB & WB)
2035 ADT = 148,000 (EB & WB) 2035 ADTT = 13,320 (EB & WB)
DIRECTIONAL DISTRIBUTION = 52%

LEGEND

- BORING LOCATION
- - PORTIONS OF EXISTING STRUCTURE TO BE REMOVED
- ● 15'-6" REQUIRED MINIMUM VERTICAL CLEARANCE
  16'-11¼" ACTUAL MINIMUM VERTICAL CLEARANCE (INTERIM AND FINAL)
- Δ 15'-6" REQUIRED MINIMUM VERTICAL CLEARANCE
  17'-3¾" ACTUAL MINIMUM VERTICAL CLEARANCE (INTERIM AND FINAL)
- ■ 4'-0" REQUIRED MINIMUM HORIZONTAL CLEARANCE
  9'-4" ACTUAL MINIMUM HORIZONTAL CLEARANCE (E 14TH ST. NB & SB)
- ▼ REFERENCE LINE (N51°10'25"E) EXTENSION OF ℄ I.R. 90 WB FROM PT STA. 187+88.40 TO ℄ BRG. R.A.
- * = TOP OF SLOPE ELEV. = VARIES FROM 679.48 TO 682.25(R.A.)
  TOP OF SLOPE ELEV. = VARIES FROM 676.37 TO 678.36 (F.A.)
- ** = MEASURED FROM ℄ BRGS. R.A. TO REFERENCE CHORD
- *** = SUBGRADE BORING

EXISTING STRUCTURE (EB-7)

TYPE: CONTINUOUS STEEL GIRDERS WITH REINFORCED CONCRETE DECK AND SUBSTRUCTURE

SPANS: 55'-0", 88'-6", 99'-0" & 60'-0"± c/c BEARINGS MEASURED ALONG ℄ I.R. 90 AND REFERENCE LINE

ROADWAY: VARIES

LOADING: CF-2000 - ADEQUATE FOR AASHTO ALTERNATE LOADING

SKEW: VARIES

WEARING SURFACE: 1" MONOLITHIC CONCRETE

APPROACH SLABS: AS-1-81 (MODIFIED) (25' LONG)

ALIGNMENT: CURVE 1°30'00" LT. AND TANGENT

CROWN: VARIES

STRUCTURE FILE NUMBER: 1807919, 1807900 AND 1807803

DATE BUILT: 1963, REHAB 1977 & 2011

DISPOSITION: TO BE REMOVED

PROPOSED STRUCTURE

TYPE: 2 SPAN CONTINUOUS STEEL PLATE GIRDERS WITH REINFORCED CONCRETE DECK AND REINFORCED CONCRETE SUBSTRUCTURE WITH SEMI-INTEGRAL ABUTMENTS SUPPORTED ON PILES

SPANS: 114'-0" & 114'-0" c/c BRGS. MEASURED ALONG ℄ I.R. 90 WB

ROADWAY: 72'-0" TOE/TOE PARAPET

LOADING: HL93 AND 60 PSF FUTURE WEARING SURFACE

SKEW: 5°00'00" LF (R.A. FROM REFERENCE LINE)
5°00'00" LF (PIER 1 AND F.A. FROM ℄ I.R. 90 WB)

WEARING SURFACE: 1" MONOLITHIC CONCRETE

APPROACH SLABS: 30' LONG (AS-1-15, AS-2-15) (MODIFIED)

ALIGNMENT: HORIZONTALLY CURVED (Dc = 02°00'00" LEFT) TO TANGENT

SUPERELEVATION: VARIES

DECK AREA: 17,384 SF

STRUCTURE FILE NUMBER: 1807901

COORDINATES: LATITUDE N41°29'46.70"
LONGITUDE W81°40'41.57"

SITE PLAN
CUY-90-1653L (BRIDGE 10)
I.R. 90 WB OVER CR-721 (E. 14TH ST.)

SFN 1807901
DESIGN AGENCY B&N burgessniple.com
DESIGNER MAB | CHECKER BCS
REVIEWER DWL 05/24/22
PROJECT ID 82382
SUBSET 1 | TOTAL 50
SHEET 2036 | TOTAL 2696

CUY-90-16.28 (CCG3A)

Preliminary Plans - For Reference Only

MODEL: 82382_SFN_0000010_SP001 PAPERSIZE: 34x22 (in.) DATE: 3/28/2025 TIME: 9:46:49 AM USER: Maia.Gallagher
pw:\\mb-us-pw.bentley.com:mb-us-pw-03\Documents\Cleveland_OH\01_Projects\ODOT\District12\82382\400-Engineering\Structures\SFN_1807901\Sheets\82382_SP002.dgn

INDEX OF SHEETS:

SITE PLAN	2036
BRIDGE SHEET INDEX	2037
BRIDGE LAYOUT DIAGRAM	2038
GENERAL NOTES	2039 - 2040
ESTIMATED QUANTITIES	2041
SUPERSTRUCTURE PHASED REMOVAL AND CONSTRUCTION DETAILS	2042 - 2043
ABUTMENT PHASED REMOVAL DETAILS	2044
PIER PHASED REMOVAL DETAILS	2045
TEMPORARY SHORING LAYOUT PLAN	2046
REAR ABUTMENT TEMPORARY SHORING DETAILS	2047
PIER TEMPORARY SHORING DETAILS	2048 - 2049
EXCAVATION AND EMBANKMENT DIAGRAM	2050
FOUNDATION PLAN	2051
REAR ABUTMENT FOOTING PLAN	2052
REAR ABUTMENT PLAN AND ELEVATION	2053
REAR ABUTMENT DETAILS	2054
REAR ABUTMENT WINGWALL DETAILS	2055 - 2056
FORWARD ABUTMENT FOOTING PLAN	2057
FORWARD ABUTMENT PLAN AND ELEVATION	2058
FORWARD ABUTMENT WINGWALL AND DETAILS	2059
FORWARD ABUTMENT DETAILS	2060
PIER 1 PLAN AND ELEVATION	2061
PIER 1 DETAILS	2062
ABUTMENT BEARING DETAILS	2063
PIER BEARING DETAILS	2064
TRANSVERSE SECTION	2065
FRAMING PLAN AND GIRDER ELEVATION	2066
GIRDER DETAILS	2067
CAMBER AND BLOCKING DIAGRAM	2068
DECK PLAN	2069
REAR ABUTMENT DIAPHRAGM PLAN AND ELEVATION	2070
FORWARD ABUTMENT DIAPHRAGM PLAN AND ELEVATION	2071
ABUTMENT DIAPHRAGM DETAILS	2072
CRITICAL BRIDGE POINT LOCATIONS	2073
TOP OF HAUNCH ELEVATIONS AND DETAILS	2074
SCREED AND FINAL DECK SURFACE ELEVATIONS	2075
SUPERELEVATION TRANSITION DIAGRAM	2076
LEFT RAILING ELEVATION	2077
LEFT RAILING DETAILS	2078
RIGHT RAILING ELEVATION	2079
RIGHT RAILING DETAILS	2080
APPROACH SLAB PLAN	2081
APPROACH SLAB DETAILS	2082
REINFORCING STEEL LIST	2083 - 2085

Preliminary Plans - For Reference Only

BRIDGE SHEET INDEX
CUY-90-1653L (BRIDGE 10)
I.R. 90 WB OVER CR-721 (E. 14TH ST.)

SFN 1807901

DESIGN AGENCY
B&N
burgessniple.com

DESIGNER	CHECKER
KMA	JAA

REVIEWER
DWL 08/21/24

PROJECT ID
82382

SUBSET	TOTAL
2	50

SHEET	TOTAL
2037	2696

CUY-90-16.28 (CCG3A)

MODEL: Sheet PAPERSIZE: 34x22 (in.) DATE: 3/28/2025 TIME: 9:48:06 AM USER: Mala.Gallagher
pw:\\mb-us-pw.bentley.com:mb-us-pw-03\Documents\Cleveland_OH\01_Projects\ODOT\District12\82382\400-Engineering\Structures\SFN_1807901\Sheets\82382_SFN_1807901_SM005.dgn

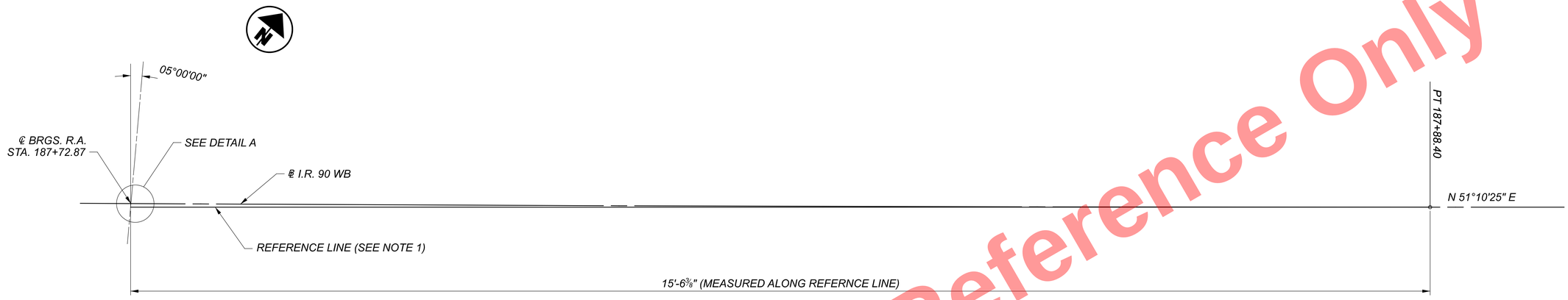

BRIDGE LAYOUT DIAGRAM

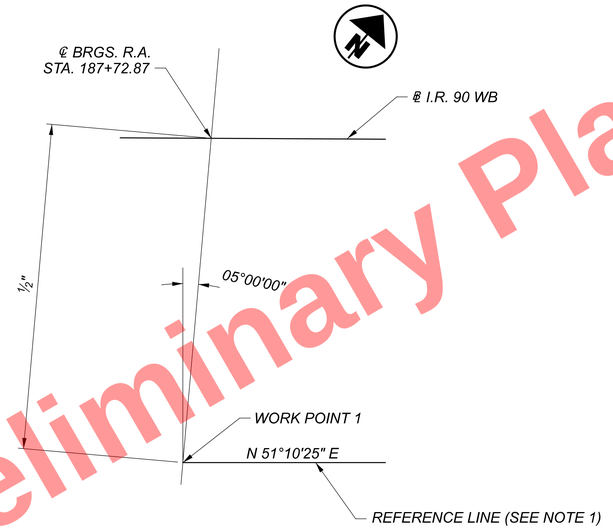

DETAIL A

CURVE PI090W-02 DATA

P.I. = Sta. 183+70.18
Δ = 16°51'04" LT
Dc = 02°00'00"
R = 2,864.79'
T = 424.34'
L = 842.55'
E = 31.26'
emax = 0.045
V = 60 mph

NOTES:

1. *REFERENCE LINE IS THE EXTENDED TANGENT OF ℄ I.R. 90 WB FROM STA. 187+88.40 TO THE ℄ BRGS. R.A.*

Preliminary Plans - For Reference Only

BRIDGE LAYOUT DIAGRAM
CUY-90-1653L (BRIDGE 10)
I.R. 90 WB OVER CR-721 (E. 14TH ST.)

SFN	1807901
DESIGN AGENCY	B&N burgessniple.com
DESIGNER	MAB
CHECKER	BCS
REVIEWER	DWL 05/24/22
PROJECT ID	82382
SUBSET	3
TOTAL	50
SHEET	2038
TOTAL	2696

CUY-90-16.28 (CCG3A)

MODEL: Sheet PAPERSIZE: 34x22 (in.) DATE: 3/28/2025 TIME: 9:48:16 AM USER: Mata.Gallagher
pw:\\mb-us-pw.bentley.com:mb-us-pw-03\Documents\Cleveland_OH101_Projects\ODOT\District12\82382\400-Engineering\Structures\SFN_1807901\Sheets\82382_SFN_1807901_SG001.dgn

STRUCTURE GENERAL NOTES:

REFER TO THE FOLLOWING STANDARD DRAWINGS:

AS-1-15 REVISED 01-20-23
AS-2-15 REVISED 07-21-23
GSD-1-19 REVISED 01-15-21
SBR-1-20 REVISED 07-19-24
SBR-2-20 REVISED 07-21-23
SICD-2-14 REVISED 01-15-21

AND TO THE FOLLOWING SUPPLEMENTAL SPECIFICATIONS:

800 DATED SEE TITLE SHEET

DESIGN SPECIFICATIONS:

THIS STRUCTURE CONFORMS TO THE 9TH EDITION OF THE "LRFD BRIDGE DESIGN SPECIFICATIONS" ADOPTED BY THE AMERICAN ASSOCIATION OF STATE HIGHWAY AND TRANSPORTATION OFFICIALS, 2020 AND THE ODOT BRIDGE DESIGN MANUAL, 2020.

OPERATIONAL IMPORTANCE:

A LOAD MODIFIER OF 1.05 HAS BEEN ASSUMED FOR THE DESIGN OF THIS STRUCTURE IN ACCORDANCE WITH THE AASHTO LRFD BRIDGE DESIGN SPECIFICATIONS, ARTICLE 1.3.5 AND THE ODOT BRIDGE DESIGN MANUAL.

DESIGN LOADING:

HL-93
FUTURE WEARING SURFACE (FWS) OF 0.060 KSF

DESIGN DATA:

CONCRETE CLASS QC2 - COMPRESSIVE STRENGTH 4.5 KSI (SUPERSTRUCTURE)

CONCRETE CLASS QC1 - COMPRESSIVE STRENGTH 4.0 KSI (SUBSTRUCTURE)

REINFORCING STEEL - MINIMUM YIELD STRENGTH 60 KSI

STRUCTURAL STEEL - ASTM A709 GRADE 50 - YIELD STRENGTH 50 KSI

STRUCTURAL STEEL - ASTM A252, GRADE 3 - YIELD STRENGTH 45 KSI
(CIP REINFORCED CONCRETE PILES)

STEEL SHEET PILING - ASTM A252 GRADE 50, YIELD STRENGTH 50 KSI

DECK PROTECTION METHOD:

EPOXY COATED REINFORCING STEEL
2½" CONCRETE COVER

MONOLITHIC WEARING SURFACE:

MONOLITHIC WEARING SURFACE IS ASSUMED, FOR DESIGN PURPOSES, TO BE ONE INCH (1") THICK.

MAINTENANCE OF TRAFFIC:

SEE THE ROADWAY PLANS FOR MAINTENANCE OF TRAFFIC REQUIREMENTS.

EXISTING STRUCTURE VERIFICATION:

DETAILS AND DIMENSIONS SHOWN ON THESE PLANS PERTAINING TO THE EXISTING STRUCTURE HAVE BEEN OBTAINED FROM PLANS OF THE EXISTING STRUCTURE AND/OR FIELD MEASUREMENTS. THEY ARE INDICATIVE OF THE EXISTING STRUCTURE AND PROPOSED WORK, BUT THEY SHALL BE CONSIDERED TENTATIVE AND APPROXIMATE. THE CONTRACTOR IS REFERRED TO CMS SECTION 102.05, 105.02, AND 513.04. BASE CONTRACT BID PRICES UPON A RECOGNITION OF THE UNCERTANTIES DESCRIBED ABOVE AND UPON A PREBID EXAMINATION OF THE EXISTING STRUCTURES. HOWEVER, THE DEPARTMENT WILL PAY FOR ALL PROJECT WORK BASED UPON ACTUAL DETAILS AND DIMENSIONS THAT HAVE BEEN VERIFIED IN THE FIELD.

EXISTING STRUCTURE PLANS:

CONSTRUCTION PLANS FOR EXISTING STRUCTURES ARE ON FILE AT THE OHIO DEPARTMENT OF TRANSPORTATION DISTRICT 12 OFFICE, 5500 E. 98TH ST., GARFIELD HEIGHTS, OHIO AND ARE AVAILABLE FOR REFERENCE.

CONCRETE COVER FOR REINFORCING STEEL:

MINIMUM CONCRETE COVER FOR ALL REINFORCING BARS SHALL BE TWO INCHES (2") UNLESS SHOWN OTHERWISE IN THE PLANS.

DECK PLACEMENT DESIGN ASSUMPTIONS:

THE FOLLOWING ASSUMPTIONS OF CONSTRUCTION MEANS AND METHODS WERE MADE FOR THE ANALYSIS AND DESIGN OF THE SUPERSTRUCTURE. THE CONTRACTOR IS RESPONSIBLE FOR THE DESIGN OF THE FALSEWORK SUPPORT SYSTEM WITHIN THESE PARAMETERS AND WILL ASSUME RESPONSIBILITY FOR SUPERSTRUCTURE ANALYSIS FOR DEVIATION FOR THESE DESIGN ASSUMPTIONS.

AN EIGHT WHEEL FINISHING MACHINE WITH A MAXIMUM WHEEL LOAD OF 2.68 KIPS.

A MINIMUM OUT-TO-OUT WHEEL SPACING AT EACH END OF THE MACHINE OF 103".

A MAXIMUM SPACING OF OVERHANG FALSEWORK BRACKETS OF 48".

A MAXIMUM DISTANCE FROM THE CENTERLINE OF THE FASCIA GIRDER TO THE FACE OF THE SAFETY HANDRAIL OF 65".

ITEM 202 - PORTIONS OF STRUCTURE REMOVED OVER 20 FOOT SPAN, AS PER PLAN:

THIS ITEM SHALL INCLUDE THE ELEMENTS INDICATED IN THE PLANS AND GENERAL NOTES AND THAT ARE NOT SEPERATELY LISTED FOR PAYMENT. LIMITS OF REMOVAL SHALL BE AS SHOWN ON THE PLANS FOR REMOVAL PHASES 5 AND 7 OR AS DIRECTED BY THE ENGINEER. ITEMS TO BE REMOVED INCLUDE PORTIONS OF THE SUBSTRUCTURE FOUNDATION PILES THAT INTERFERE WITH NEW CONSTRUCTION, AND MISCELLANEOUS ITEMS THAT ARE NOT SHOWN TO BE INCORPORATED INTO THE FINAL CONSTRUCTION AND ARE DIRECTED TO BE REMOVED BY THE ENGINEER. SUBMIT WORKING DRAWINGS AND CALCULATION IN ACCORDANCE WITH CMS 501.05.

ALL CONCRETE, REINFORCING STEEL, ASPHALT, ETC. REMOVED FROM THE STRUCTURE AND NOT REUSED SHALL, UNLESS OTHERWISE SPECIFIED, BECOME THE PROPERTY OF THE CONTRACTOR AND SHALL BE REMOVED BY HIM/HER FROM THE SITE. THE MATERIALS SHALL NOT BE PERMITTED TO REMAIN ON SITE, WITHIN THE RIGHT-OF-WAY OR ELSEWHERE UNLESS SPECIFIED BY THE ENGINEER.

ADDITIONAL SOILS INFORMATION:

IN ADDITION TO THE SOIL BORING INFORMATION GIVEN IN THE PLANS, THE STRUCTURE FOUNDATION EXPLORATION REPORT PREPARED BY NATIONAL ENGINEERING AND ARCHITECTURAL SERVICES (NEAS), INC. DATED 06/20/2022 HAS BEEN INCLUDED FOR REFERENCE.

ITEM 503 - COFFERDAMS AND EXCAVATION BRACING, AS PER PLAN:

THE DESIGN SHOWN ON THE PLANS FOR TEMPORARY SUPPORT OF EXCAVATION IS ONE REPRESENTATIVE DESIGN THAT MAY BE USED TO CONSTRUCT THE PROJECT. THE CONTRACTOR MAY CONSTRUCT THE DESIGN SHOWN ON THE PLANS FOR BRIDGE #10 REAR ABUTMENT AND PIER TEMPORARY SHORING OR PREPARE AN ALTERNATE DESIGN TO SUPPORT THE SIDES OF EXCAVATIONS. IF CONSTRUCTING AN ALTERNATE DESIGN FOR TEMPORARY SUPPORT OF EXCAVATION, PREPARE AND PROVIDE PLANS IN ACCORDANCE WITH CMS 501.05. THE DEPARTMENT WILL PAY FOR THE TEMPORARY SUPPORT OF EXCAVATION AT THE CONTRACT LUMP SUM PRICE FOR COFFERDAMS AND EXCAVATION BRACING. THE DEPARTMENT WILL NOT MAKE ADDITIONAL PAYMENT FOR AN ALTERNATE DESIGN.

PILE DRIVING CONSTRAINTS:

PRIOR TO DRIVING PILES, CONSTRUCT THE SPILL THROUGH SLOPES AND THE BRIDGE APPROACH EMBANKMENT BEHIND THE ABUTMENTS UP TO THE LEVEL OF THE SUBGRADE ELEVATION FOR A MINIMUM DISTANCE OF TWO HUNDRED FEET (200') BEHIND THE ABUTMENT. DO NOT BEGIN THE EXCAVATION FOR THE ABUTMENT FOOTINGS AND THE INSTALLATION OF THE ABUTMENT PILES UNTIL AFTER THE ABOVE REQUIRED EMBANKMENT HAS BEEN CONSTRUCTED AND A SEVEN (7) CALENDAR DAY WAITING PERIOD HAS ELAPSED. AFTER THE SPECIFIED WATING PERIOD HAS ELAPSED, DRIVE ABUTMENT PILES TO THE UBV.

SEQUENCE OF CONSTRUCTION:

SEE MOT NOTES IN ROADWAY PLANS.

STRUCTURE GROUNDING:

STRUCTURE TO BE GROUNDED AS PER LIGHTING GENERAL NOTES SHEET 1684 . QUANTITY CARRIED TO LIGHTING SUBSUMMARY.

PILE DESIGN LOADS (ULTIMATE BEARING VALUE):

THE ULTIMATE BEARING VALUE IS 324 KIPS PER PILE FOR THE REAR ABUTMENT PILES. THE ULTIMATE BEARING VALUE IS 361 KIPS PER PILE FOR THE PIER 1 PILES. THE ULTIMATE BEARING VALUE IS 253 KIPS PER PILE FOR THE FORWARD ABUTMENT PILES.

REAR ABUTMENT PILES:
38 - 12" DIA. CAST-IN-PLACE REINFORCED CONCRETE PILES 100 FEET LONG, ORDER LENGTH
1 DYNAMIC LOAD TESTING ITEM AND 1 RESTRIKE ITEM.

PIER 1 PILES:
33 - 14" DIA. CAST-IN-PLACE REINFORCED CONCRETE PILES 100 FEET LONG, ORDER LENGTH
1 DYNAMIC LOAD TESTING ITEM AND 1 RESTRIKE ITEM.

FORWARD ABUTMENT PILES:
27 - 12" DIA. CAST-IN-PLACE REINFORCED CONCRETE PILES 85 FEET LONG, ORDER LENGTH
1 DYNAMIC LOAD TESTING ITEM AND 1 RESTRIKE ITEM.

THE MINIMUM WALL THICKNESS PER CMS 507.06 FOR THE PROPOSED 14" CIP REINFORCED CONCRETE PILES AND THE 12" CIP REINFORCED CONCRETE PILES ARE AS FOLLOWS:

1/4" FOR THE 12" CIP PILES AT THE REAR ABUTMENT
1/4" FOR THE 14" CIP PILES AT PIER 1
1/4" FOR THE 12" CIP PILES AT THE FORWARD ABUTMENT

PILES DRIVEN TO FULL ESTIMATED LENGTH WITH PILE/SOIL SETUP:

THE ULTIMATE BEARING VALUE (UBV) IS:

324 KIPS PER 12" DIA. CIP PILE FOR THE REAR ABUTMENT PILES
361 KIPS PER 14" DIA. CIP PILE FOR THE PIER 1 PILES
253 KIPS PER 12" DIA. CIP PILE FOR THE FORWARD ABUTMENT PILES

PART OF THE UBV WILL BE ACHIEVED THROUGH PILE/SOIL SETUP, WHICH IS A TIME DEPENDENT INCREASE IN RESISTANCE THAT OCCURS IN SOME SOILS.

NOTIFY THE ENGINEER AT LEAST 5 DAYS BEFORE DRIVING PILES SO THAT THE ENGINEER CAN NOTIFY THE DISTRICT GEOTECHNICAL ENGINEER, THE OFFICE OF CONSTRUCTION ADMINISTRATION, AND THE OFFICE OF GEOTECHNICAL ENGINEERING.

DRIVE THE FIRST TWO PILES IN EACH SUBSTRUCTURE TO THE FULL ESTIMATED LENGTH OF:

95 FEET PER REAR ABUTMENT PILE
95 FEET PER PIER 1 PILE
80 FEET PER FORWARD ABUTMENT PILE

PERFORM DYNAMIC LOAD TESTING ON BOTH PILES WHILE DRIVING. IF THE DYNAMIC LOAD TESTING INDICATES A PILE HAS ACHIEVED THE REQUIRED UBV ABOVE THE TIP ELEVATION DURING THE INITIAL DRIVING (BEFORE THE WAITING PERIOD), STOP DRIVING AND NOTIFY THE ENGINEER. AFTER DRIVING AND DYNAMIC LOAD TESTING THE FIRST TWO PILES, DRIVE THE REMAINING PILES IN THE SUBSTRUCTURE TO THE SAME DEPTH AS THE FIRST TWO PILES. AFTER DRIVING ALL PILES TO THIS DEPTH, CEASE ALL DRIVING OPERATIONS AT THE SUBSTRUCTURE FOR A PERIOD OF 7 DAYS. INCLUDE THE WAITING PERIOD AS A SEPARATE ACTIVITY IN THE PROGRESS SCHEDULE. AFTER THE WAITING PERIOD, PERFORM PILE RESTRIKES ON BOTH OF THE FIRST TWO PILES (ONE RESTRIKE ITEM).

SUBMIT ALL TEST RESULTS TO THE ENGINEER. IF THE RESTRIKE TEST RESULTS INDICATE THAT BOTH PILES ACHIEVED THE REQUIRED UBV, ALL PILES IN THE SUBSTRUCTURE MAY BE ACCEPTED BY THE ENGINEER.

IF THE RESTRIKE TEST RESULTS INDICATE THAT EITHER OF THE TWO PILES DID NOT ACHIEVE THE REQUIRED UBV, IMMEDIATELY NOTIFY THE ENGINEER SO THAT THE ENGINEER CAN NOTIFY THE DISTRICT GEOTECHNICAL ENGINEER, THE OFFICE OF CONSTRUCTION ADMINISTRATION, AND THE OFFICE OF GEOTECHNICAL ENGINEERING. THE ENGINEER WILL REVIEW THE TEST RESULTS AND ESTABLISH ADDITIONAL RESTRIKE TESTING OR DRIVING CRITERIA FOR THE PILING IN THE SUBSTRUCTURE WITH ASSISTANCE OF THE DISTRICT GEOTECHNICAL ENGINEER, THE OFFICE OF CONSTRUCTION ADMINISTRATION, AND THE OFFICE OF GEOTECHNICAL ENGINEERING.

IF DIRECTED BY THE ENGINEER, PERFORM ADDITIONAL RESTRIKE TESTING OR DRIVE ALL PILES IN THE SUBSTRUCTURE TO THE ESTABLISHED DRIVING CRITERIA. THE DEPARMENT WILL PAY FOR SPLICING OF THE PILES BEYOND THE ESTIMATED LENGTH PROVIDED IN THE PLANS UNDER CMS 109.05 WITH A NEGOTIATED PRICE PER SPLICE.

THE PLAN NOTE INCLUDES A QUANTITY OF ONE EACH ITEM 523 DYNAMIC LOAD TESTING, AS PER PLAN AND A QUANTITY OF ONE EACH ITEM 523 RESTRIKE, AS PER PLAN PER EACH SUBSTRUCTURE UNIT.

For Reference Only
Preliminary Plans

GENERAL NOTES SHEET 1 OF 2
CUY-90-1653L (BRIDGE 10)
I.R. 90 WB OVER CR-721 (E. 14TH ST.)

SFN 1807901
DESIGN AGENCY B&N burgessniple.com
DESIGNER MAB | CHECKER BCS
REVIEWER DWL 05/24/22
PROJECT ID 82382
SUBSET 4 | TOTAL 50
SHEET 2039 | TOTAL 2696

CUY-90-16.28 (CCG3A)
MODEL: Sheet PAPERSIZE: 34x22 (in.) DATE: 6/9/2025 TIME: 1:02:57 PM USER: Tolga.Feran
pw:\\mb-us-pw.bentley.com:mb-us-pw-03\Documents\Cleveland_OH01_Projects\ODOT\District12\82382400-Engineering\Structures\SFN_1807901\Sheets\82382_SFN_1807901_SN001.dgn

STRUCTURE GENERAL NOTES (CONTINUED):

ITEM 511 - CLASS QC2 CONCRETE WITH QC/QA, BRIDGE DECK (PARAPET), AS PER PLAN:

THE EXTERIOR FACE OF THE BRIDGE PARAPET SHALL HAVE A GROOVE PATTERN APPLIED THAT MATCHES THE DETAILS SHOWN IN THE PLANS. THIS ITEM SHALL INCLUDE ALL MATERIALS, EQUIPMENT, AND LABOR NECESSARY TO CONSTRUCT THE PARAPET AND THE GROOVE PATTEREN. THIS ITEM SHALL ALSO INCLUDE THE PARAPET ON THE APPROACH SLABS AND BULKHEADS.

ITEM 511 - CLASS QC1 CONCRETE WITH QC/QA, ABUTMENT NOT INCLUDING FOOTING, AS PER PLAN:

THIS ITEM SHALL ALSO INCLUDE ALL MATERIALS, EQUIPMENT, AND LABOR NECESSARY TO CONSTRUCT THE AESTHETIC FACING ON WINGWALL A.

ITEM 512 - SEALING OF CONCRETE SURFACES (EPOXY-URETHANE), AS PER PLAN:

THE ADDITIONAL LABOR REQUIRED TO SEAL THE FORM LINER RELIEF SHALL BE INCLUDED IN THIS ITEM. TO ACCOUNT FOR THE SURFACE VARIATIONS DUE TO THE FORM LINERS, AN EXTRA 20 PERCENT HAS BEEN ADDED TO THE SEALING QUANTITIES FOR THE PURPOSE OF ESTIMATING.

TINT SO THE FINAL COLOR IS ALPACA 7022 (SHERWIN WILLIAMS).

ITEM 512 - SEALING OF CONCRETE SURFACES, AS PER PLAN, (PERMANENT GRAFFITI PROTECTION):

APPLY A PERMANENT GRAFFITI COATING QUALIFIED ACCORDING TO SUPPLEMENT 1083 THAT IS COMPATIBLE WITH THE CONCRETE SEALER OVER WHICH IT IS APPLIED. APPLY THE GRAFFITI COATING IN ACCORDANCE WITH THE MANUFACTURER'S PRINTED INSTRUCTIONS.

ITEM 516 - ARMORLESS PREFORMED JOINT SEAL, AS PER PLAN:

INSTALL SEAL FOR EACH JOINT IN ONE CONTINUOUS PIECE.

ITEM 526 - REINFORCED CONCRETE APPROACH SLABS (T=17"), AS PER PLAN:

THE REQUIREMENTS OF CMS 511.03 AND 511.04 SHALL APPLY TO THIS ITEM OF WORK. THIS ITEM SHALL INCLUDE, BUT IS NOT LIMITED TO THE CONCRETE AND STEEL REINFORCEMENT NECESSARY TO FORM AND PLACE THE APPROACH SLABS AS SHOWN IN THE PLANS. PAYMENT FOR THIS ITEM SHALL ALSO INCLUDE THE ITEMS LISTED ON STANDARD DRAWING AS-1-15 AND ALL OTHER NECESSARY MATERIALS, LABOR, AND EQUIPMENT AND SHALL BE INCLUDED IN THE UNIT PRICE PER SQUARE YARD FOR ITEM 526 - REINFORCED CONCRETE APPROACH SLABS WITH QC/QA (T=17"), AS PER PLAN.

THE COST OF THE PARAPET ON THE APPROACH SLABS SHALL BE INCLUDED WITH ITEM 509 AND ITEM 511 - CLASS QC2 CONCRETE WITH QC/QA, BRIDGE DECK (PARAPET), AS PER PLAN.

ITEM 526 - TYPE C INSTALLATION, AS PER PLAN:

THE REQUIREMENTS OF CMS 511.03 AND 511.04 SHALL APPLY TO THIS ITEM OF WORK. THIS ITEM SHALL INCLUDE, BUT IS NOT LIMITED TO THE CONCRETE, STEEL REINFORCEMENT, AND ARMORLESS PREFORMED JOINT SEAL NECESSARY TO FORM AND PLACE THE SLEEPER SLABS AND BULKHEADS AS SHOWN IN THE PLANS. PAYMENT FOR THIS ITEM SHALL ALSO INCLUDE THE ITEMS LISTED ON STANDARD DRAWING AS-2-15 AND ALL OTHER NECESSARY MATERIALS, LABOR, AND EQUIPMENT AND SHALL BE INCLUDED IN THE UNIT PRICE PER FOOT FOR ITEM 526 - TYPE C INSTALLATION, AS PER PLAN.

THE COST OF THE PARAPET ON THE BULKHEADS SHALL BE INCLUDED WITH ITEM 509 AND ITEM 511 - CLASS QC2 CONCRETE WITH QC/QA, BRIDGE DECK (PARAPET), AS PER PLAN.

ABBREVIATIONS:

THE FOLLOWING ABBREVIATIONS HAVE BEEN USED THROUGHOUT THESE PLANS TO INDICATE THE DESIGNATIONS CONTAINED IN THE LEGEND BELOW:

ABUT. - ABUTMENT
APPR. - APPROACH
℄ - BASELINE
BOT. - BOTTOM
BRG. - BEARING
BRGS. - BEARINGS
BTA - BRIDGE TERMINAL ASSEMBLY
℄ - CENTERLINE
C/C - CENTER TO CENTER
CIP - CAST-IN-PLACE
C.J. - CONTRUCTION JOINT
CLR. - CLEARANCE
CP - COMPLETE PENETRATION BUTT WELD
CMS - CONSTRUCTION AND MATERIAL SPECIFICATIONS
CONC. - CONCRETE
CONST. - CONSTRUCTION
C.P.P. - CORRUGATED PLASTIC PIPE
CS - INDICATES BUTT WELD SUBJECT TO COMPRESSIVE STRESSES ONLY
CU YD - CUBIC YARD
CVN - CHARPY V-NOTCH TESTING
DIA. - DIAMETER
E.F. - EACH FACE
ELEV., EL. - ELEVATION
EQ. - EQUAL
EX. - EXISTING
EXP. - EXPANSION
F.A. - FORWARD ABUTMENT
F.F. - FAR FACE
F/F - FACE TO FACE
F.S. - FIELD SPLICE
FT/FT - FOOT PER FOOT
FTG. - FOOTING
FWD. - FORWARD
GEN. - GENERAL
INT. - INTEGRAL
LF - LEFT FORWARD
LT. - LEFT
MAX. - MAXIMUM
M.E. - MATCH EXISTING
MIN. - MINIMUM
MISC. - MISCELLANEOUS
MOT - MAINTENANCE OF TRAFFIC
N.F. - NEAR FACE
NO./# - NUMBER
N.P.C.P.P - NON-PERFORATED CORRUGATED PLASTIC PIPE
O/O - OUT TO OUT
P.C.P.P - PERFORATED CORRUGATED PLASTIC PIPE
PCB - PORTABLE CONCRETE BARRIER
P.E.J.F. - PREFORMED EXPANSION JOINT FILLER
PG - PROFILE GRADE
PGL - PROFILE GRADE LINE
PROP. - PROPOSED
PT - POINT OF TANGENCY
PVC - POINT OF VERTICAL CURVATURE
PVI - POINT OF VERTICAL INTERSECTION
PVT - POINT OF VERTICAL TANGENCY
R. - RADIUS
R.A. - REAR ABUTMENT
RCP - ROCK CHANNEL PROTECTION
RF - RIGHT FORWARD
RT. - RIGHT
R/W - RIGHT OF WAY
SAN. - SANITARY
SER. - SERIES
SHLDR. - SHOULDER
SHT. - SHEET
S.O. - SERIES OF
SPA. - SPACES OR SPACING
SR - STATE ROUTE
STA. - STATION
STD. - STANDARD
STM. - STORM
STR. - STRAIGHT
TBM - TEMPORARY BENCH MARK
TEMP. - TEMPORARY
T.O.S. - TOE OF SLOPE
T/PARAPET - TOE OF PARAPET
T/T - TOE TO TOE
TYP. - TYPICAL
U.G. - UNDERGROUND
U.N.O - UNLESS NOTED OTHERWISE
VAR. - VARIES
VC - VERTICAL CURVE
VERT. - VERTICAL
W/O - WITHOUT

Preliminary Plans - For Reference Only

MODEL: Sheet PAPERSIZE: 34x22 (in.) DATE: 3/28/2025 TIME: 9:48:28 AM USER: Mala.Gallagher
pw:\\mb-us-pw.bentley.com:mb-us-pw-03\Documents\Cleveland_OH\01_Projects\ODOT\District12\82382\400-Engineering\Structures\SFN_1807901\Sheets\82382_SN002.dgn

CUY-90-16.28 (CCG3A)

GENERAL NOTES SHEET 2 OF 2
CUY-90-1653L (BRIDGE 10)
I.R. 90 WB OVER CR-721 (E. 14TH ST.)

SFN	1807901
DESIGN AGENCY	B&N burgessniple.com
DESIGNER	MAB
CHECKER	BCS
REVIEWER	DWL 05/24/22
PROJECT ID	82382
SUBSET	5
TOTAL	50
SHEET	2040
TOTAL	2696

ESTIMATED QUANTITIES

PARTICIPATION	ITEM	ITEM EXT.	TOTAL	UNIT	DESCRIPTION	ABUTMENTS	PIERS	SUPER.	GENERAL	REF. SHEET
02/IMS/10	202	11203	LS	-	PORTIONS OF STRUCTURE REMOVED, OVER 20 FOOT SPAN, AS PER PLAN				LS	4/50
02/IMS/10	202	22900	112	SY	APPROACH SLAB REMOVED				112	
02/IMS/10	202	32800	300	SY	CONCRETE SLOPE PROTECTION REMOVED				300	
02/IMS/10	503	11101	LS	-	COFFERDAMS AND EXCAVATION BRACING, AS PER PLAN	LS				4/50
02/IMS/10	503	21300	LS	-	UNCLASSIFIED EXCAVATION				LS	
02/IMS/10	505	11100	LS	-	PILE DRIVING EQUIPMENT MOBILIZATION				LS	
02/IMS/10	507	00500	5770	FT	12" CAST-IN-PLACE REINFORCED CONCRETE PILES, DRIVEN	5770				
02/IMS/10	507	00550	6095	FT	12" CAST-IN-PLACE REINFORCED CONCRETE PILES, FURNISHED	6095				
02/IMS/10	507	00600	3135	FT	14" CAST-IN-PLACE REINFORCED CONCRETE PILES, DRIVEN		3135			
02/IMS/10	507	00650	3300	FT	14" CAST-IN-PLACE REINFORCED CONCRETE PILES, FURNISHED		3300			
02/IMS/10	509	10000	228033	LB	EPOXY COATED STEEL REINFORCEMENT	35588	27931	164514		
02/IMS/10	509	30020	4453	FT	NO. 4 GFRP DEFORMED BARS			4453		
02/IMS/10	509	30040	4606	FT	NO. 6 GFRP DEFORMED BARS			4606		
02/IMS/10	511	33500	2	EACH	SEMI-INTEGRAL DIAPHRAGM GUIDE	2				
02/IMS/10	511	34446	606	CY	CLASS QC2 CONCRETE WITH QC/QA, BRIDGE DECK			606		
02/IMS/10	511	34451	111	CY	CLASS QC2 CONCRETE WITH QC/QA, BRIDGE DECK (PARAPET), AS PER PLAN			111		5/50
02/IMS/10	511	41012	83	CY	CLASS QC1 CONCRETE WITH QC/QA, PIER ABOVE FOOTINGS		83			
02/IMS/10	511	44113	119	CY	CLASS QC1 CONCRETE WITH QC/QA, ABUTMENT NOT INCLUDING FOOTING, AS PER PLAN	119				5/50
02/IMS/10	511	46512	235	CY	CLASS QC1 CONCRETE WITH QC/QA, FOOTING	168	67			
02/IMS/10	512	10001	240	SY	SEALING OF CONCRETE SURFACES, AS PER PLAN, PERMANENT GRAFFITI PROTECTION	171	69			5/50
02/IMS/10	512	10101	1005	SY	SEALING OF CONCRETE SURFACES (EPOXY-URETHANE), AS PER PLAN	126	191	557	131	5/50
02/IMS/10	512	33000	18	SY	TYPE 2 WATERPROOFING	3			15	
02/IMS/10	513	10280	548522	LB	STRUCTURAL STEEL MEMBERS, LEVEL 4			548522		
02/IMS/10	513	20000	5760	EACH	WELDED STUD SHEAR CONNECTORS			5760		
02/IMS/10	514	00060	29332	SF	FIELD PAINTING STRUCTURAL STEEL, INTERMEDIATE COAT			29332		
02/IMS/10	514	00066	29332	SF	FIELD PAINTING STRUCTURAL STEEL, FINISH COAT			29332		
02/IMS/10	516	10011	148	FT	ARMORLESS PREFORMED JOINT SEAL, AS PER PLAN				148	5/50
02/IMS/10	516	13600	100	SF	1" PREFORMED EXPANSION JOINT FILLER				100	
02/IMS/10	516	13900	143	SF	2" PREFORMED EXPANSION JOINT FILLER				143	
02/IMS/10	516	14200	152	FT	SEMI-INTEGRAL ABUTMENT EXPANSION JOINT SEAL			152		
02/IMS/10	516	44201	16	EACH	ELASTOMERIC BEARING WITH INTERNAL LAMINATES AND LOAD PLATE (NEOPRENE), AS PER PLAN (BEARING: 1'-2" x 1'-5" x 3 1/16", LOAD PLATE: 1'-3" x 1'-6" x 1 ½" AND 1'-7" x 11" x 1 1/2")	16				28/50
02/IMS/10	516	44201	8	EACH	ELASTOMERIC BEARING WITH INTERNAL LAMINATES AND LOAD PLATE (NEOPRENE), AS PER PLAN (BEARING: 1'-6" x 2'-0 ½" x 3 3/8", BEVELED LOAD PLATE: 1'-7" x 2'-1 1/2")		8			29/50
02/IMS/10	518	21200	147	CY	POROUS BACKFILL WITH GEOTEXTILE FABRIC	147				
02/IMS/10	518	40000	197	FT	6" PERFORATED CORRUGATED PLASTIC PIPE	197				
02/IMS/10	518	40010	59	FT	6" NON-PERFORATED CORRUGATED PLASTIC PIPE, INCLUDING SPECIALS	59				
02/IMS/10	523	20001	3	EACH	DYNAMIC LOAD TESTING, AS PER PLAN	2	1			4/50
02/IMS/10	523	20501	3	EACH	RESTRIKE, AS PER PLAN	2	1			4/50
02/IMS/10	526	30011	504	SY	REINFORCED CONCRETE APPROACH SLABS WITH QC/QA (T=17"), AS PER PLAN				504	5/50
02/IMS/10	526	90031	152	FT	TYPE C INSTALLATION, AS PER PLAN				152	5/50
02/IMS/10	601	21000	1263	SY	CONCRETE SLOPE PROTECTION	1263				

Preliminary Plans - For Reference Only

NOTES:

1. ITEM 513 STRUCTURAL STEEL MEMBERS, LEVEL 4: THIS TOTAL WEIGHT IS BASED ON THE USE OF TYPE A CROSSFRAMES. PROVIDE THE UNIT COST FOR STRUCTURAL STEEL USING THE TOTAL WEIGHT PROVIDED, REGARDLESS OF ANY CHANGE TO THE TOTAL WEIGHT RESULTING FROM THE SELECTION OF TYPE B OR TYPE C CROSSFRAMES IN LIEU OF TYPE A.

ESTIMATED QUANTITIES
CUY-90-1653L (BRIDGE 10)
I.R. 90 WB OVER CR-721 (E. 14TH ST.)

CUY-90-16.28 (CCG3A)

MODEL: Sheet PAPERSIZE: 34x22 (in.) DATE: 3/28/2025 TIME: 9:48:33 AM USER: Maia.Gallagher
pw:\\mb-us-pw.bentley.com:mb-us-pw-03\Documents\Cleveland_OH\01_Projects\ODOT\District12\82382\400-Engineering\Structures\SFN_1807901\Sheets\82382_SFN_1807901_SQ001.dgn

SFN 1807901

DESIGN AGENCY B&N burgessniple.com

DESIGNER	CHECKER
DBH	BCS

REVIEWER DWL 05/24/22

PROJECT ID 82382

SUBSET	TOTAL
6	50

SHEET	TOTAL
2041	2696

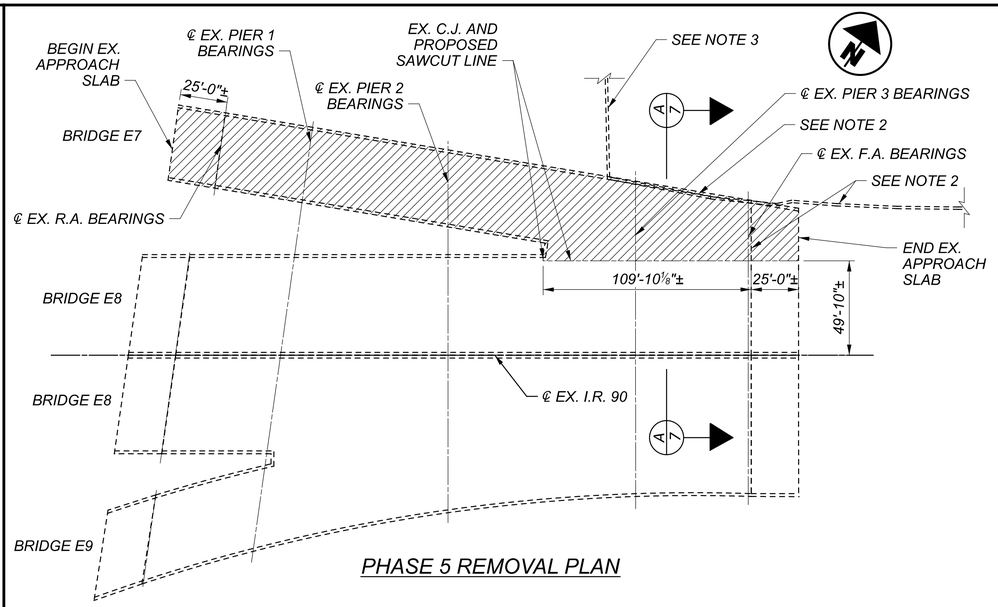

PHASE 5 REMOVAL PLAN

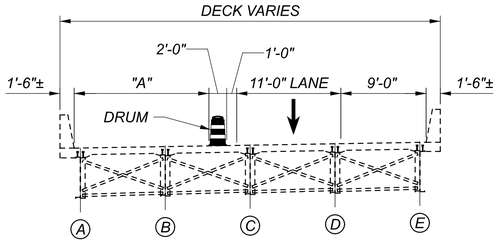

BRIDGE E7

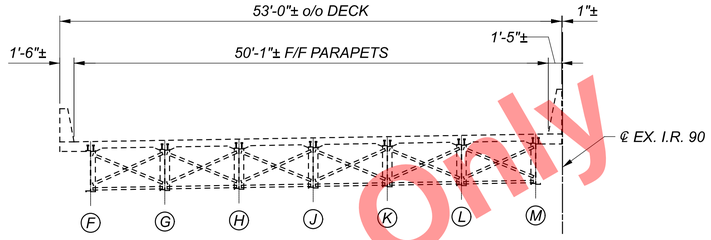

BRIDGE E8

PHASE 4 MOT

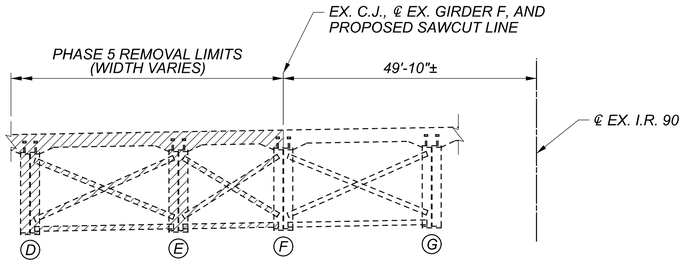

SECTION A-A

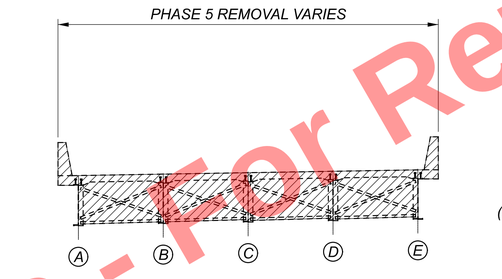

BRIDGE E7

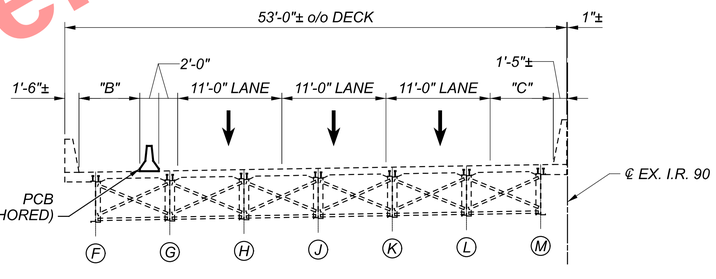

BRIDGE E8

PHASE 5 REMOVAL AND MOT

LEGEND:

▨	= PHASE 5 REMOVAL
Ⓐ	= EXISTING GIRDER LETTER
⑴	= PROPOSED GIRDER NUMBER
"A"	= VARIES FROM 12'-0"± TO 16'-6"±
"B"	= VARIES FROM 6'-5"± TO 6'-7"±
"C"	= VARIES FROM 4'-9"± TO 6'-7"±

NOTES:

1. SEE SHEETS 2091 & 2092 / 2696 FOR PHASED MOT AND CONSTRUCTION OF PROPOSED BRIDGE 11 AND FOR PHASED MOT AND REMOVAL OF EXISTING BRIDGES E8 AND E9 SOUTH OF ℄ EX. I.R. 90.
2. EXISTING BRIDGE E7 FORWARD ABUTMENT AND RETAINING WALLS ADJACENT TO I.R.90 SHALL NOT BE REMOVED IN PHASE 5. THEY SHALL BE REMOVED ALONG WITH THE NORTHERN PORTIONS OF EXISTING BRIDGE E8 IN PHASE 7. SEE SHEET 9/50 FOR FURTHER REMOVAL DETAILS.
3. REMOVE RETAINING WALL ADJACENT TO EAST 14TH ST. PRIOR TO PHASE 5. FOR DETAILS, SEE SHEET 682/2696.

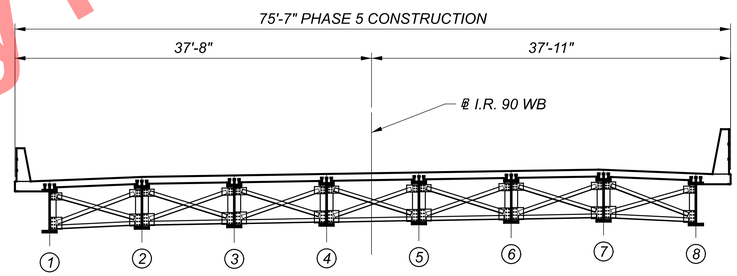

BRIDGE 10

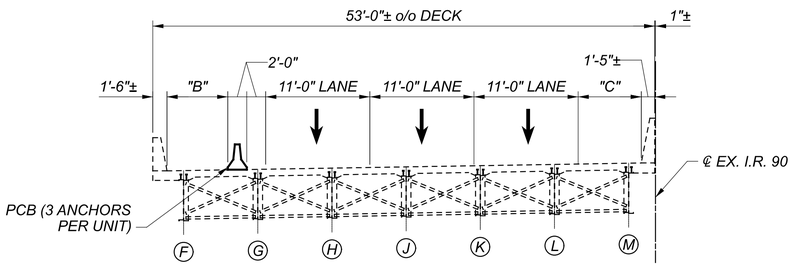

BRIDGE E8

PHASE 5 CONSTRUCTION AND MOT

Preliminary Plans - For Reference Only

SUPERSTRUCTURE PHASED REMOVAL AND CONSTRUCTION DETAILS - 1
CUY-90-1653L (BRIDGE 10)
I.R. 90 WB OVER CR-721 (E. 14TH ST.)

SFN 1807901
DESIGN AGENCY B&N burgessniple.com
DESIGNER KMA | CHECKER MAB
REVIEWER DWL 05/24/22
PROJECT ID 82382
SUBSET 7 | TOTAL 50
SHEET 2042 | TOTAL 2696

CUY-90-16.28 (CCG3A)

MODEL: Sheet PAPERSIZE: 34x22 (in.) DATE: 3/28/2025 TIME: 9:48:40 AM USER: Mala.Gallagher
pw:\\mb-us-pw.bentley.com:mb-us-pw-03\Documents\Cleveland_OH\01_Projects\ODOT\District12\82382\400-Engineering\Structures\SFN_1807901\Sheets\82382_SFN_1807901_SC001.dgn

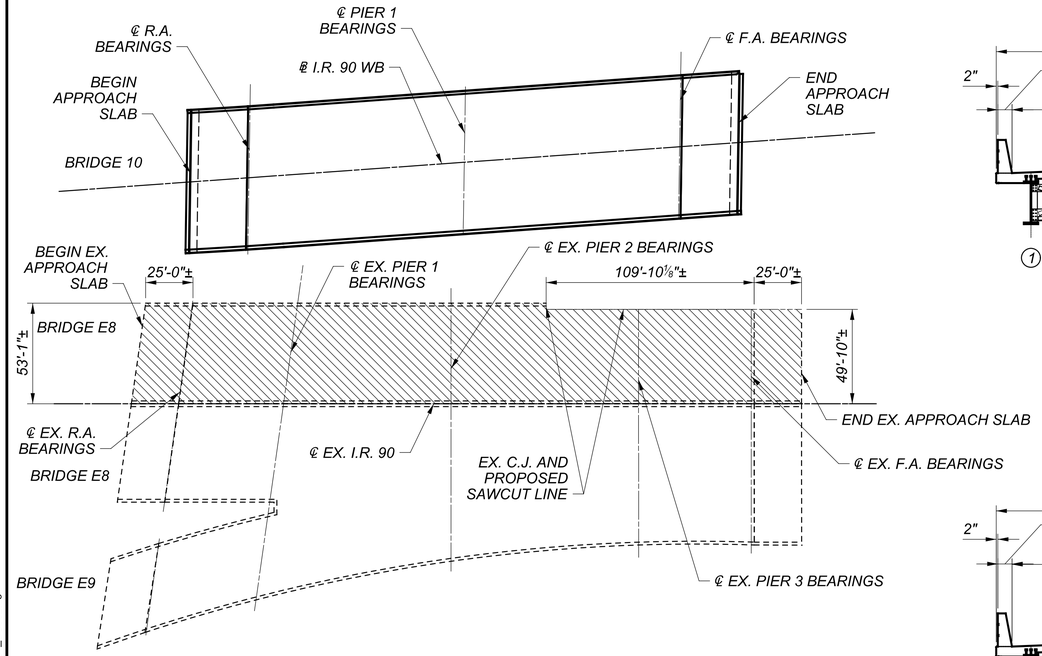

PHASE 7 REMOVAL PLAN

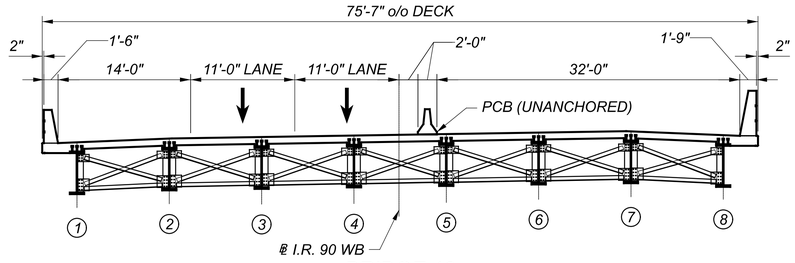

BRIDGE 10

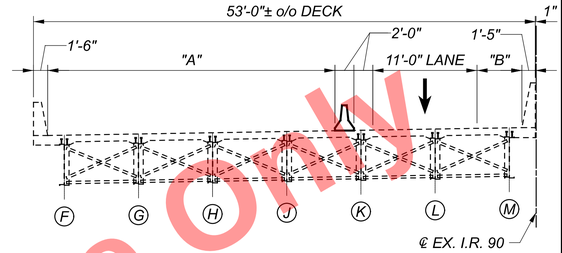

BRIDGE E8

PHASE 6 MOT

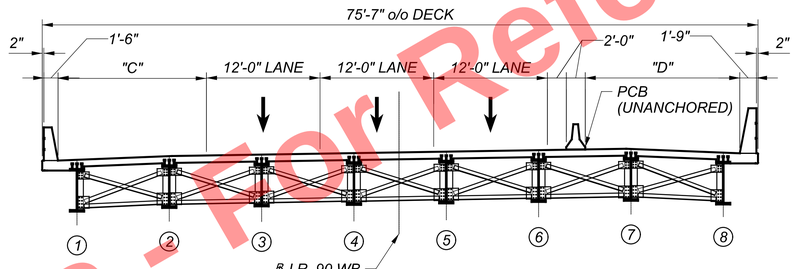

BRIDGE 10

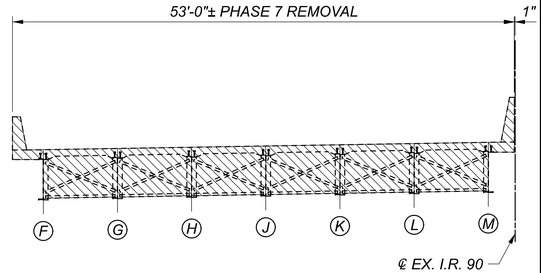

BRIDGE E8

PHASE 7 REMOVAL AND MOT

LEGEND:

▨	= PHASE 7 REMOVAL
Ⓐ	= EXISTING GIRDER LETTER
⑧	= PROPOSED GIRDER NUMBER
"A"	= VARIES FROM 28'-6"± TO 30'-7"±
"B"	= VARIES FROM 4'-6"± TO 8'-9"±
"C"	= VARIES FROM 15'-8" TO 19'-6"
"D"	= VARIES FROM 12'-6" TO 16'-4"

NOTES:

1. SEE SHEETS 2091& 2092/2696 FOR PHASED MOT AND CONSTRUCTION OF PROPOSED BRIDGE 11 AND FOR PHASED MOT AND REMOVAL OF EXISTING BRIDGES E8 AND E9 SOUTH OF ℄ EX. I.R. 90.

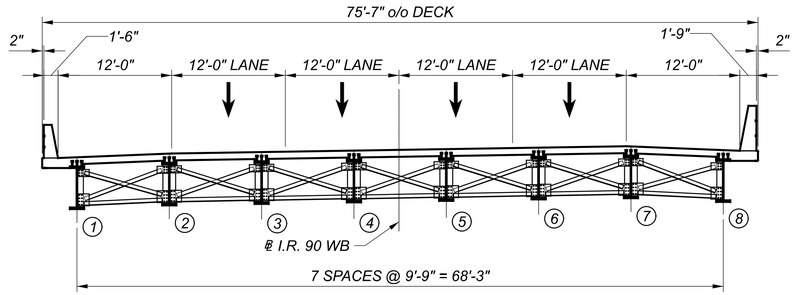

BRIDGE 10

FINAL CONDITION

Preliminary Plans - For Reference Only

SUPERSTRUCTURE PHASED REMOVAL AND CONSTRUCTION DETAILS - 2
CUY-90-1653L (BRIDGE 10)
I.R. 90 WB OVER CR-721 (E. 14TH ST.)

SFN 1807901
DESIGN AGENCY B&N burgessniple.com
DESIGNER KMA | CHECKER JAA
REVIEWER DWL 05/24/22
PROJECT ID 82382
SUBSET 8 | TOTAL 50
SHEET 2043 | TOTAL 2696

CUY-90-16.28 (CCG3A)

MODEL: Sheet PAPERSIZE: 34x22 (in.) DATE: 6/11/2025 TIME: 11:14:21 AM USER: Tolga.Feran
pw:\\mb-us-pw.bentley.com:mb-us-pw-03\Documents\Cleveland_OH\01_Projects\ODOT\District12\82382\400-Engineering\Structures\SFN_1807901\Sheets\82382_SFN_1807901_SC002.dgn

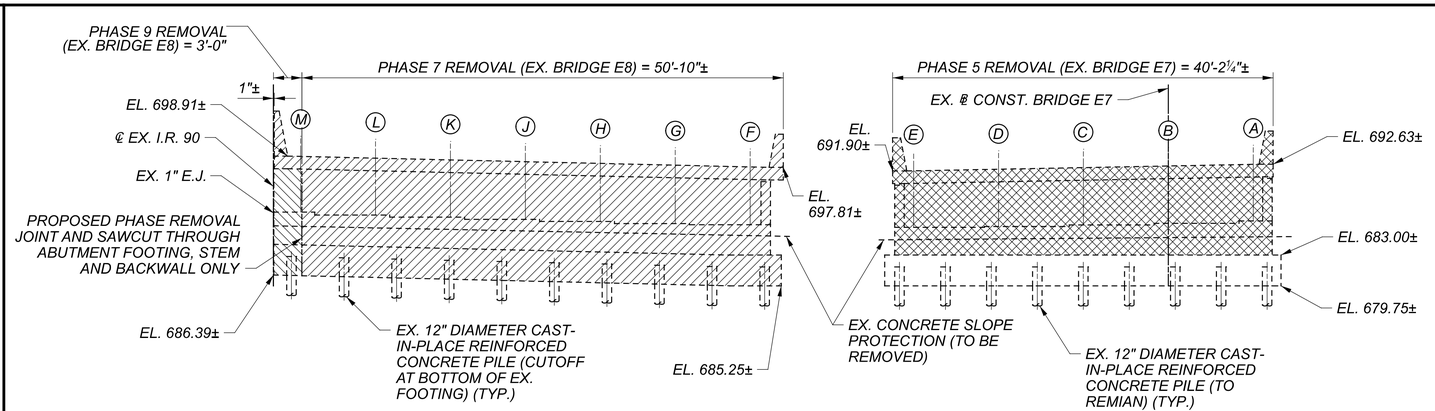

REAR ABUTMENT PHASED REMOVAL ELEVATION

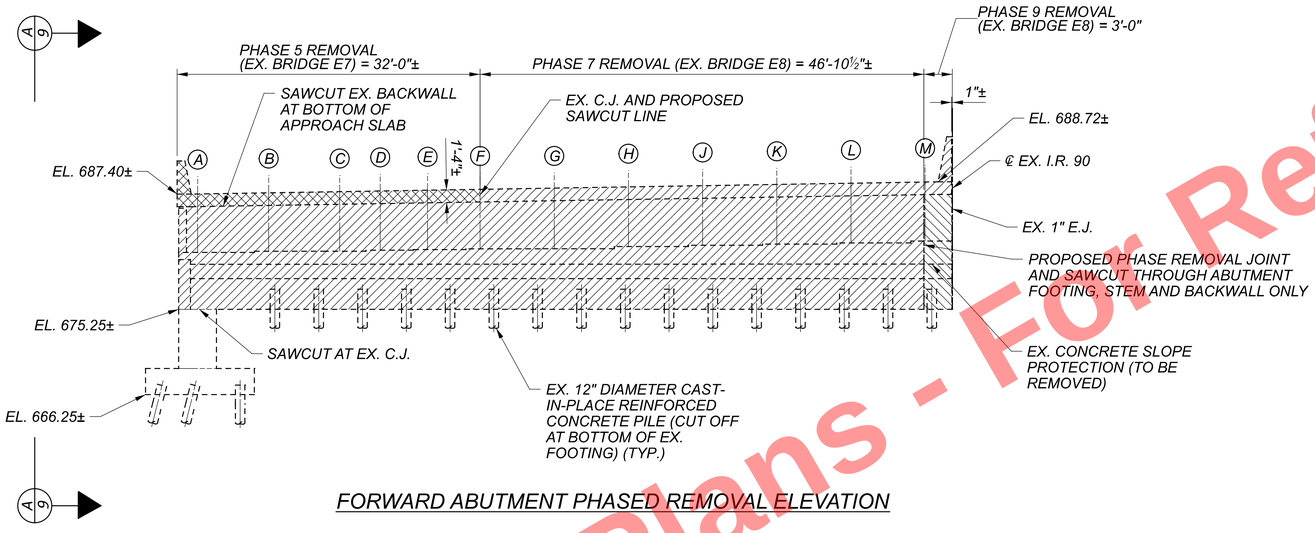

FORWARD ABUTMENT PHASED REMOVAL ELEVATION

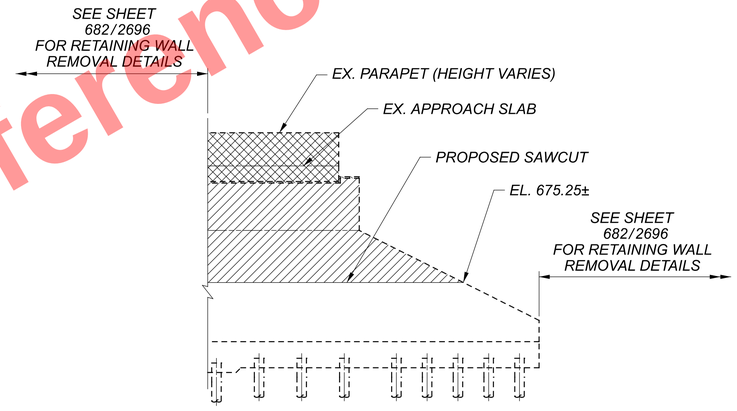

VIEW A-A

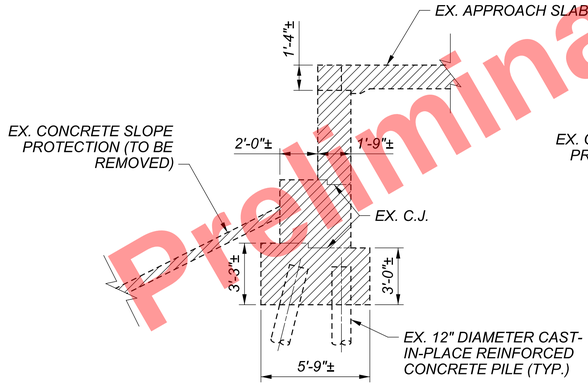

TYPICAL ABUTMENT SECTION

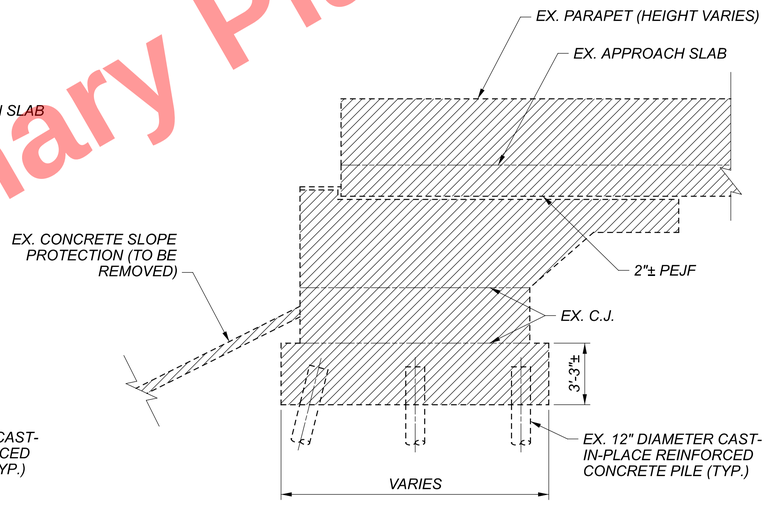

TYPICAL WINGWALL ELEVATION

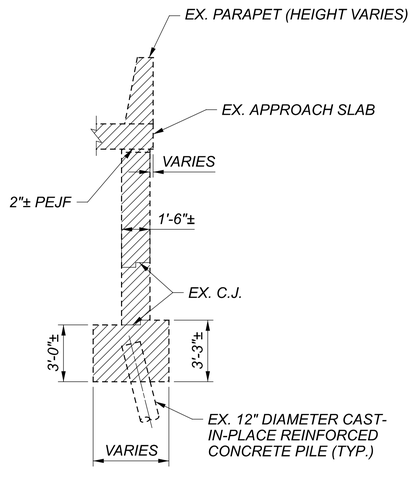

TYPICAL WINGWALL SECTION

LEGEND:

= PHASE 5 REMOVAL

= PHASE 7 REMOVAL

= PHASE 9 REMOVAL

(A) = EXISTING GIRDER LETTER

NOTES:

1. SEE SHEET 2093/2696 FOR PHASED REMOVAL OF EXISTING BRIDGE E8 PORTIONS SOUTH OF ℄ EX. I.R. 90 AND EXISTING BRIDGE E9.

Preliminary Plans - For Reference Only

ABUTMENT PHASED REMOVAL DETAILS
CUY-90-1653L (BRIDGE 10)
I.R. 90 WB OVER CR-721 (E. 14TH ST.)

SFN	1807901
DESIGN AGENCY	B&N burgessniple.com
DESIGNER	KMA
CHECKER	JAA
REVIEWER	DWL 05/24/22
PROJECT ID	82382
SUBSET	9
TOTAL	50
SHEET	2044
TOTAL	2696

CUY-90-16.28 (CCG3A)

MODEL: Sheet PAPERSIZE: 34x22 (in.) DATE: 3/28/2025 TIME: 9:48:54 AM USER: Mala.Gallagher
pw:\\mb-us-pw.bentley.com:mb-us-pw-03\Documents\Cleveland_OH101_Projects\ODOT\District12\82382\400-Engineering\Structures\SFN_1807901\Sheets\82382_SFN_1807901_SV001.dgn

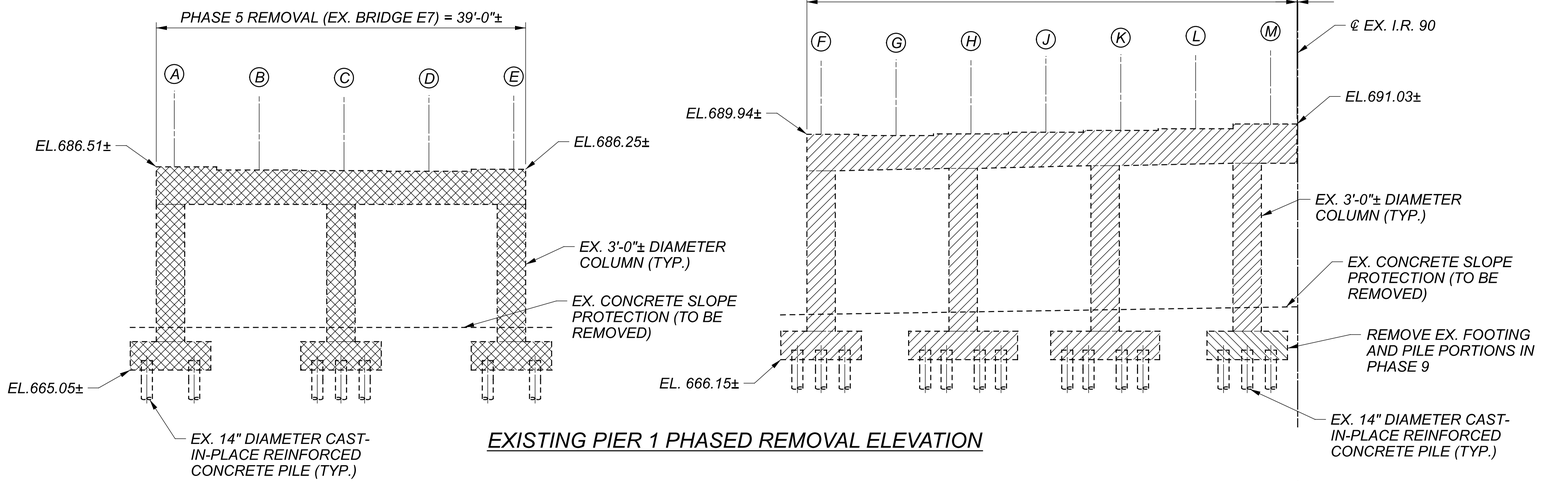

EXISTING PIER 1 PHASED REMOVAL ELEVATION

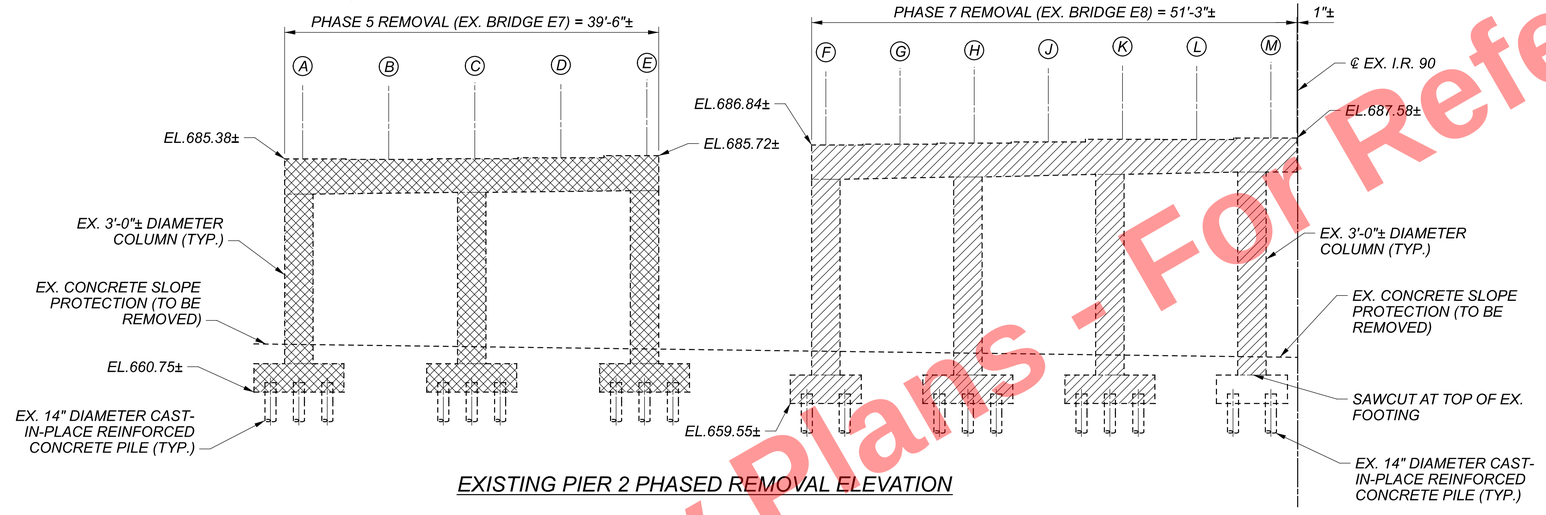

EXISTING PIER 2 PHASED REMOVAL ELEVATION

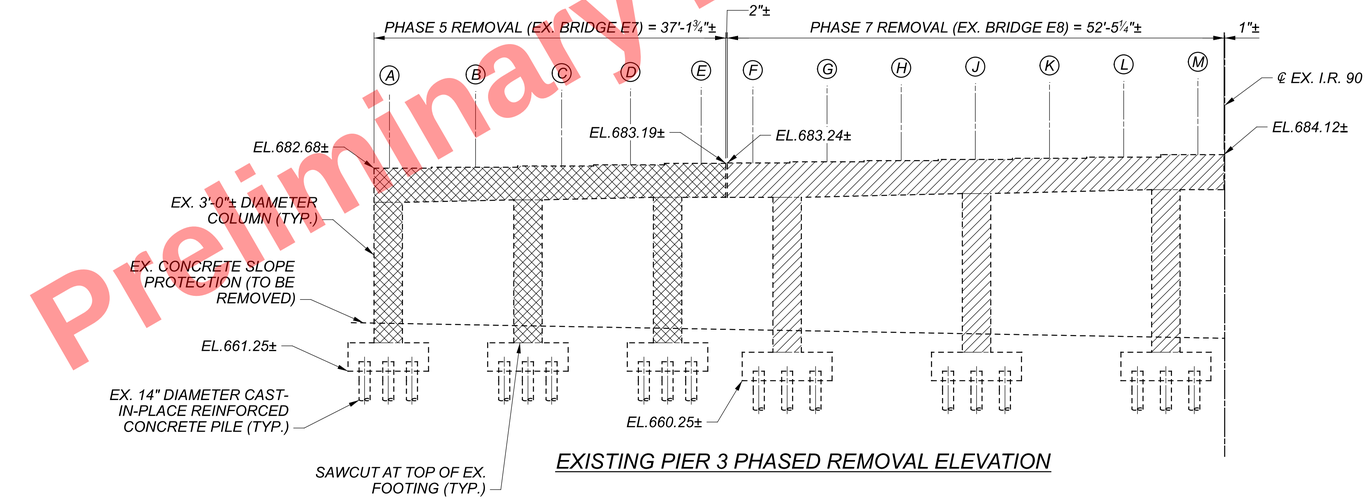

EXISTING PIER 3 PHASED REMOVAL ELEVATION

LEGEND:

= PHASE 5 REMOVAL

= PHASE 7 REMOVAL

= PHASE 9 REMOVAL

Ⓐ = EXISTING GIRDER LETTER

NOTES:

1. SEE SHEET 2094/2696 FOR PHASED REMOVAL OF EXISTING BRIDGE E8 PORTIONS SOUTH OF ℄ EX. I.R. 90 AND EXISTING BRIDGE E9.

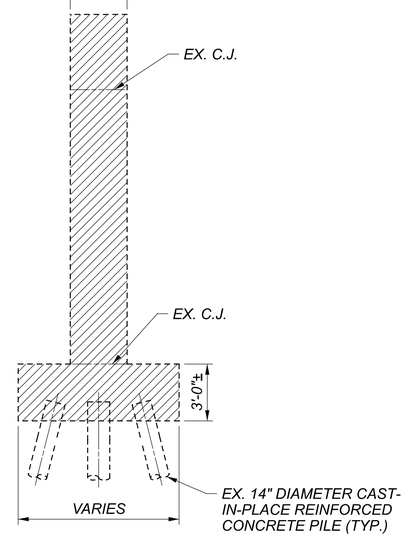

TYPICAL PIER SECTION

Preliminary Plans - For Reference Only

PIER PHASED REMOVAL DETAILS
CUY-90-1653L (BRIDGE 10)
I.R. 90 WB OVER CR-721 (E. 14TH ST.)

SFN	1807901
DESIGN AGENCY	B&N burgessniple.com
DESIGNER	KMA
CHECKER	JAA
REVIEWER	DWL 05/24/22
PROJECT ID	82382
SUBSET	10
TOTAL	50
SHEET	2045
TOTAL	2696

CUY-90-16.28 (CCG3A)
MODEL: Sheet PAPERSIZE: 34x22 (in.) DATE: 3/28/2025 TIME: 9:49:02 AM USER: Mala.Gallagher
pw:\\mb-us-pw.bentley.com:mb-us-pw-03\Documents\Cleveland_OH\01_Projects\ODOT\District12\82382\400-Engineering\Structures\SFN_1807901\Sheets\82382_SFN_1807901_SV002.dgn

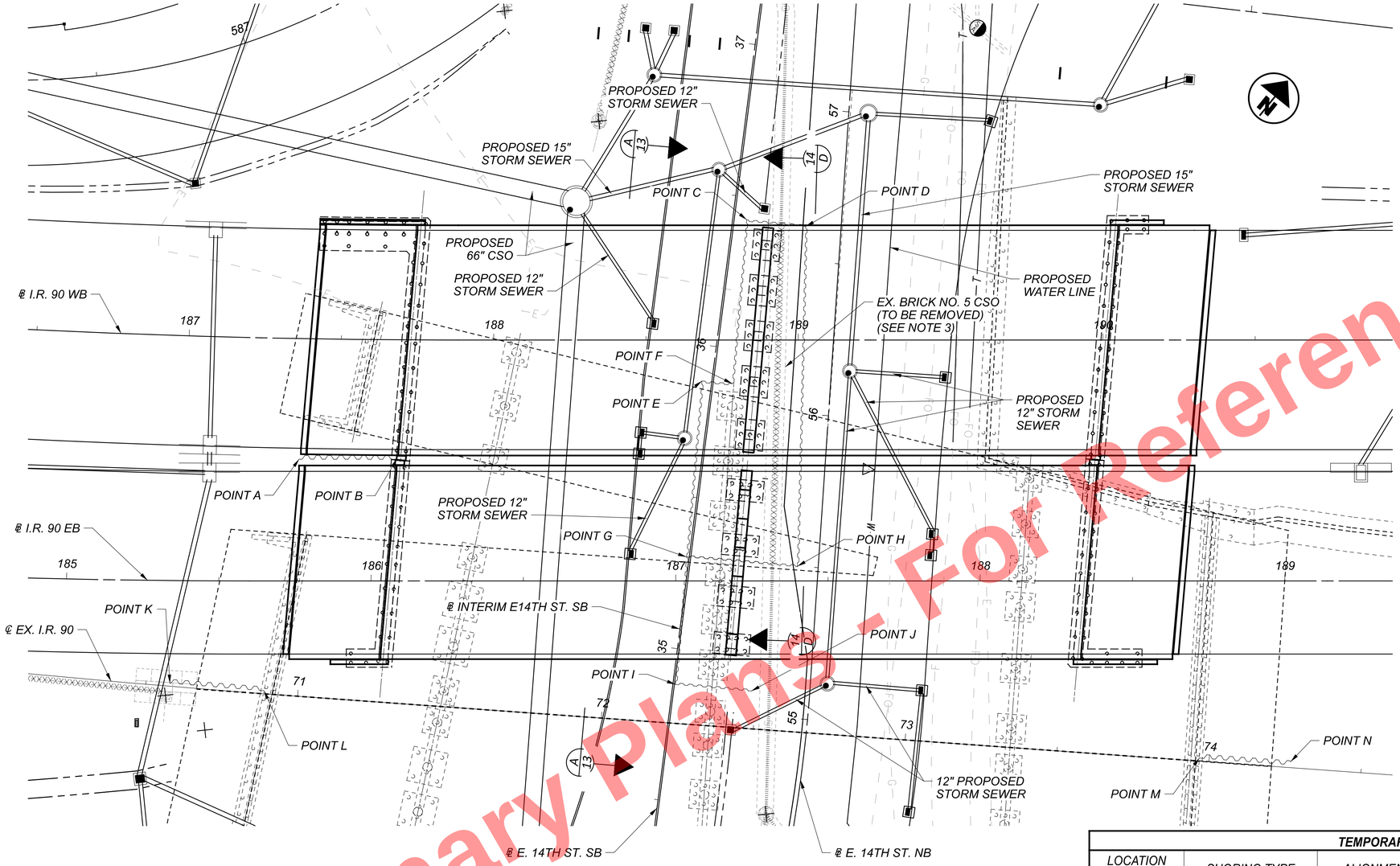

TEMPORARY SHORING LAYOUT PLAN

NOTES:

1. SEE SHEETS 2047, 2048, 2049, 2095/2696 FOR TEMPORARY SHORING DETAILS.
2. THE CONSTRCUTION SEQUENCE ON THIS SHEET IS NOT EXHAUSTIVE AND IS MEANT AS A GUIDE AND FOR INFORMATION PURPOSES ONLY. THE CONTRACTOR SHALL REFER AND COMPLY WITH MOT SEQUENCE OF CONSTRUCTION.
3. TEMPORARY SHORING PERPENDICULAR TO E. 14TH ST. MAY BE DRIVEN TO CONTACT WITH THE EX BRICK NUMBER 5 SEWER IN LIEU OF THE BOTTOM OF SHORING ELEVATIONS SHOWN IF CONFLICTS OCCUR. SEE SHEET 2049/2696 FOR SHORING DETAILS TO REMOVE EX BRICK NUMBER 5 SEWER.

LEGEND:

* = BOTTOM ELEVATION OF SHORING ALONG THE D-H, G-H, F-C, AND C-D SEGMENTS IS EL. 617.

PROPSED CONSTRUCTION SEQUENCE:

PRE-PHASE 5:

1. REMOVE PORTIONS OF EX. RETAINING WALL PARALLEL TO EAST 14TH ST.
2. CONSTRUCT PROPOSED ROADWAY, UTILITIES, DRAINAGE, AND GRADING OF PROPOSED EAST 14TH ST. NB AND SB.

PHASE 5:

1. REMOVE PHASE 5 PORTIONS OF EX. BRIDGE E7 SUPERSTRUCTURE, APPROACH SLABS, PIER 1 AND 3, AND REAR ABUTMENT.
2. INSTALL ABUTMENT SHORING SEGMENT A-B. INSTALL PIER SHORING SEGMENTS C-D, C-F, E-F, E-G, G-H AND D-H.
3. REMOVE PHASE 5 PORTIONS OF EX. BRIDGE E7 PIER 2 AND BRICK SEWER.
4. CONSTRUCT PROPOSED BRIDGE 10 SUBSTRUCTURE AND TWO NORTHERNMOST PIER FOOTINGS AND COLUMNS FOR PROPOSED BRIDGE 11 PIER 1.
5. REMOVE PIER SHORING SEGMENTS C-D, C-F, E-F, E-G AND D-H.
6. CONSTRUCT PROPOSED BRIDGE 10 SUPERSTRUCTURE AND APPROACH SLABS.

PHASE 7:

1. REMOVE PHASE 7 PORTIONS OF EX. BRIDGE E8 SUPERSTRUCTURE AND APPROACH SLABS.
2. INSTALL PIER SHORING SEGMENTS G-I AND I-J. INSTALL SHORING SEGMENTS K-L AND M-N AT EX. BRIDGE E8 REAR AND FORWARD ABUTMENTS.
3. REMOVE PHASE 7 PORTIONS OF EX. BRIDGE E7 FORWARD ABUTMENT, PHASE 7 PORTIONS OF EX. BRIDGE E8 SUBSTRUCTURE, AND RETAINING WALL PARALLEL TO ℄ EX. I.R.90.
4. CONSTRUCT PROPOSED BRIDGE 11 SUBSTRUCTURES INCLUDING THE REMAINING PIER 1 FOOTINGS AND COLUMNS. REMOVE ABUTMENT SHORING SEGMENT A-B. REMOVE PIER SHORING SEGMENTS G-H, G-I, AND I-J.
5. CONSTRUCT PROPOSED BRIDGE 11 SUPERSTRUCTURE AND APPROACH SLABS.

PHASE 9:

1. REMOVE PHASE 9 PORTIONS OF EX. BRIDGE E8 INCLUDING PIER 1 FOOTINGS AS INDICATED AND PHASE 9 PORTIONS OF EX. BRIDGE E9. REMOVE SHORING SEGMENTS K-L AND M-N.

TEMPORARY SHORING INFORMATION

LOCATION POINT	SHORING TYPE	ALIGNMENT	STATION	OFFSET	TOP OF SHORING EL.	BOTTOM OF SHORING EL.
A	STEEL SHEET PILE	BL I.R. 90 WB	187+36.86	39.58' RT	690.50	653.00
B	STEEL SHEET PILE	BL I.R. 90 WB	187+68.39	39.25' RT	690.00	653.00
C	STEEL SHEET PILE	BL E. 14TH ST. NB	56+62.38	31.11' LT	666.00	617.00
D	STEEL SHEET PILE	BL E. 14TH ST. NB	56+61.49	11.63' LT	666.00	617.00
E	STEEL SHEET PILE	BL E. 14TH ST. NB	56+08.59	42.19' LT	666.00	640.00
F	STEEL SHEET PILE	BL E. 14TH ST. NB	56+08.39	32.19' LT	666.00	640.00*
G	STEEL SHEET PILE	BL E. 14TH ST. NB	55+50.60	43.35' LT	666.00	640.00*
H	STEEL SHEET PILE	BL E. 14TH ST. NB	55+49.87	6.86' LT	666.00	617.00
I	STEEL SHEET PILE	BL E. 14TH ST. NB	55+08.25	44.18' LT	666.00	640.00
J	STEEL SHEET PILE	BL E. 14TH ST. NB	55+07.94	19.18' LT	666.00	640.00
K	STEEL SHEET PILE	CL EX. I.R. 90	SEE SHEET 2095/2696		700.00	660.00
L	STEEL SHEET PILE	CL EX. I.R. 90			699.50	660.00
M	STEEL SHEET PILE	CL EX. I.R. 90			689.50	649.00
N	STEEL SHEET PILE	CL EX. I.R. 90			688.50	649.00

Preliminary Plans - For Reference Only

TEMPORARY SHORING LAYOUT PLAN
CUY-90-1653L (BRIDGE 10)
I.R. 90 WB OVER CR-721 (E. 14TH ST.)

SFN 1807901
DESIGN AGENCY B&N burgessniple.com
DESIGNER KMA | CHECKER JAA
REVIEWER DWL 05/24/22
PROJECT ID 82382
SUBSET 11 | TOTAL 50
SHEET 2046 | TOTAL 2696

CUY-90-16.28 (CCG3A)

MODEL: Sheet PAPERSIZE: 34x22 (in.) DATE: 6/11/2025 TIME: 11:34:59 AM USER: Tolga.Feran
pw:\\mb-us-pw.bentley.com:mb-us-pw-03\Documents\Cleveland_OH01_Projects\ODOT\District12\82382400-Engineering\Structures\SFN_1807901\Sheets\82382_SFN_1807901_SH001.dgn

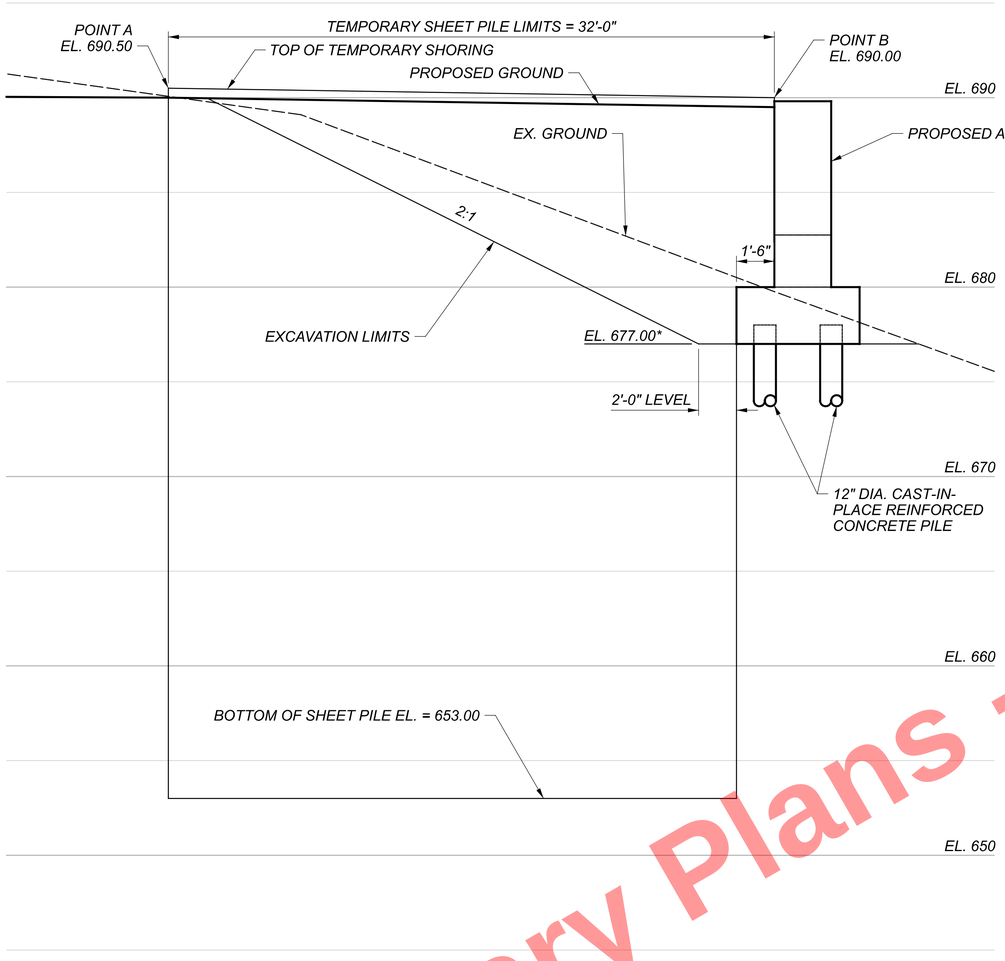

REAR ABUTMENT ELEVATION (BRIDGE 10)

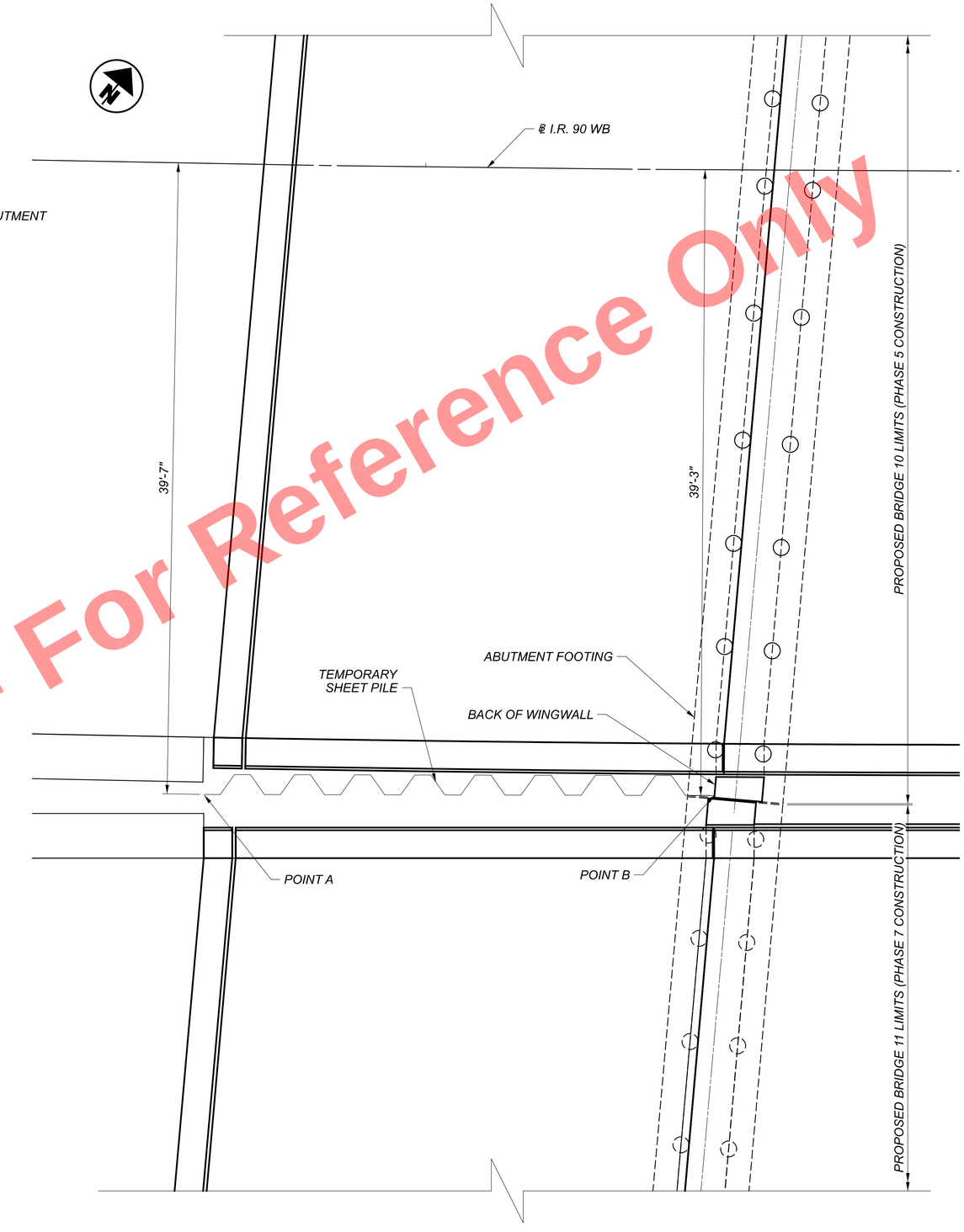

REAR ABUTMENT PLAN (BRIDGE 10)

NOTES:

1. SEE SHEET 11/50 FOR SHORING LAYOUT PLAN AND OTHER INFORMATION.
2. TEMPORARY STEEL SHEET PILING SHALL HAVE A MINIMUM STRENGTH OF 50 KSI AND SHALL HAVE A MINIMUM SECTION MODULUS OF 48 IN^3 AND A MINIMUM MOMENT OF INERTIA OF 361 IN^4. PAYMENT FOR SHEET PILING, INCLUDING REMOVAL OF ALL COMPONENTS AFTER NO LONGER NECESSARY AND ALL OTHER ITEMS ASSOCIATED WITH TEMPORARY SHORING WILL BE INCLUDED IN THE CONTRACT LUMP SUM PRICE FOR ITEM 503 - COFFERDAMS AND EXCAVATION BRACING, AS PER PLAN.

LEGEND:

* = BOTTOM OF FOOTING ELEVATION VARIES ALONG THE LENGTH OF THE FOOTING. THE BOTTOM OF FOOTING ELEVATION SHOWN IS THE ELEVATION AT THE LINE OF TEMPORARY SHORING.

Preliminary Plans - For Reference Only

REAR ABUTMENT TEMPORARY SHORING DETAILS
CUY-90-1653L (BRIDGE 10)
I.R. 90 WB OVER CR-721 (E. 14TH ST.)

SFN 1807901
DESIGN AGENCY B&N burgessniple.com
DESIGNER KMA | CHECKER MAB
REVIEWER DWL 05/24/22
PROJECT ID 82382
SUBSET 12 | TOTAL 50
SHEET 2047 | TOTAL 2696

CUY-90-16.28 (CCG3A)
MODEL: Sheet PAPERSIZE: 34x22 (in.) DATE: 3/28/2025 TIME: 9:49:42 AM USER: Mata.Gallagher
pw:\\mb-us-pw.bentley.com:mb-us-pw-03\Documents\Cleveland_OH01_Projects\ODOT\District12\82382\400-Engineering\Structures\SFN_1807901\Sheets\82382_SFN_1807901_SH002.dgn

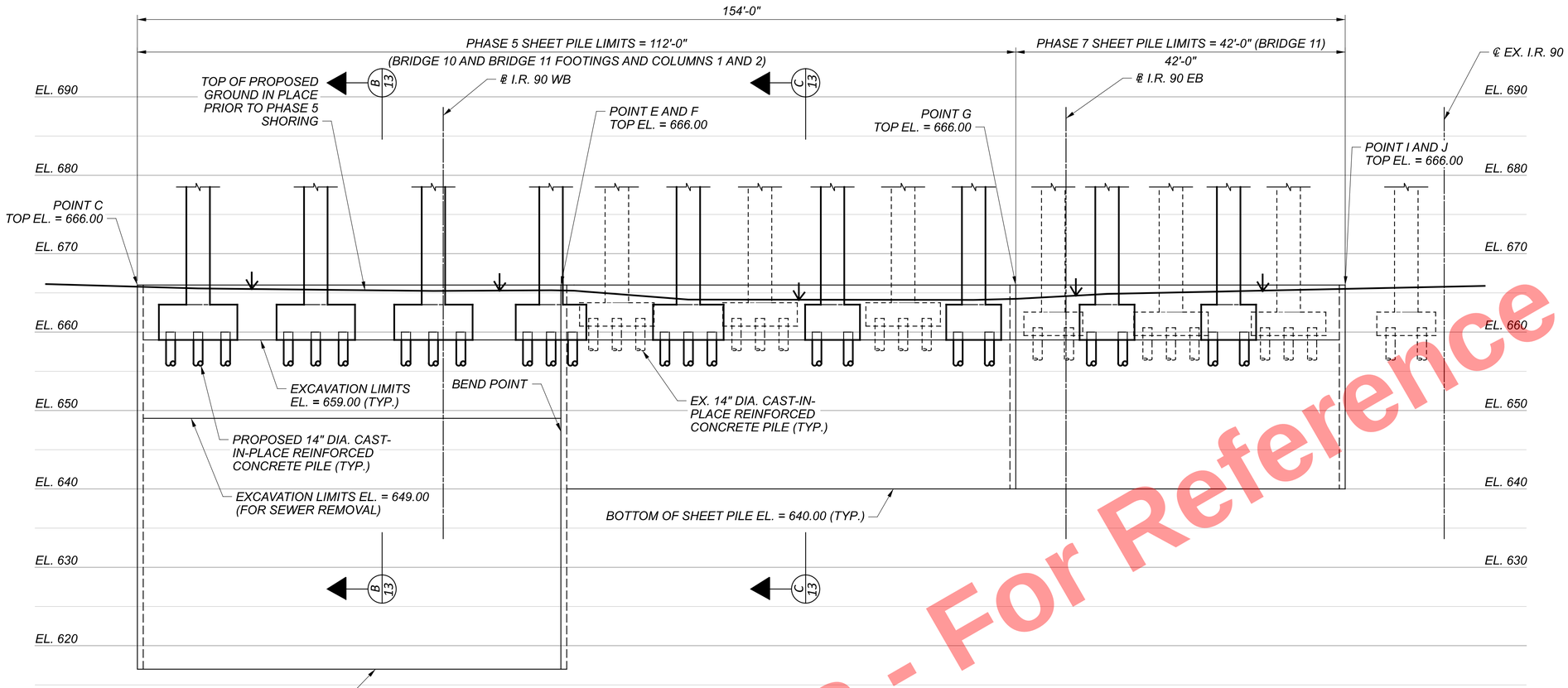

VIEW A-A

(EXISTING SEWER NOT SHOWN)

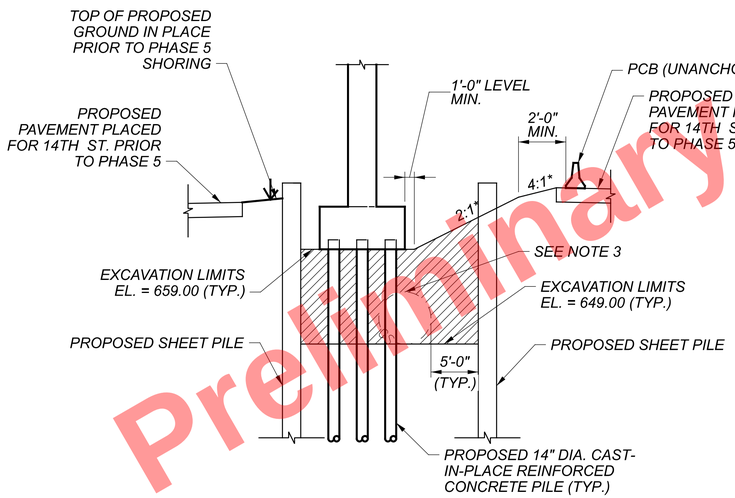

SECTION B-B

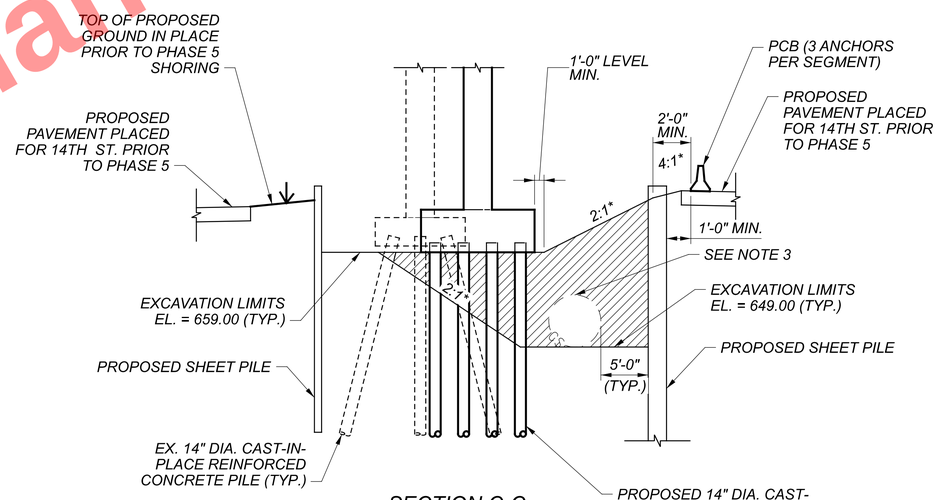

SECTION C-C

LEGEND:

* = OR FLATTER

▨ = SEWER REMOVAL AND BACKFILL AREA

NOTES:

1. SEE SHEET 11/50 FOR LOCATION OF VIEW A-A.
2. TEMPORARY STEEL SHEET PILING AT THE PIER SHALL HAVE A MINIMUM STRENGTH OF 50 KSI AND SHALL HAVE A MINIMUM SECTION MODULUS OF 60 IN^3 AND A MINIMUM MOMENT OF INERTIA OF 490 IN^4 OR A MINIMUM STRENGTH OF 50 KSI AND SHALL HAVE A MINIMUM SECTION MODULUS OF 85 IN^3 AND HAVE A MINIMUM MOMENT OF INERTIA OF 750 IN^4. PAYMENT FOR SHEET PILING, INCLUDING REMOVAL OF ALL COMPONENTS AFTER NO LONGER NECESSARY AND ALL OTHER ITEMS ASSOCIATED WITH TEMPORARY SHORING WILL BE INCLUDED IN THE CONTRACT LUMP SUM PRICE FOR ITEM 503 - COFFERDAMS AND EXCAVATION BRACING, AS PER PLAN.
3. EXCAVATE GROUND AS NECESSARY TO REMOVE EXISTING 66" SEWER. AFTER THE SEWER IS REMOVED, BACKFILL THE EXCAVATED AREA ACCORDING TO THE PROPOSED EXCAVATION AND LAYOUT. PAYMENT FOR THIS WORK SHALL BE INCLUDED IN ITEM 503 - COFFERDAMS AND EXCAVATION BRACING, AS PER PLAN.
4. SEE SHEET 14/50 FOR ADDITIONAL SHORING INFORMATION.

Preliminary Plans - For Reference Only

PIER TEMPORARY SHORING DETAILS
CUY-90-1653L (BRIDGE 10)
I.R. 90 WB OVER CR-721 (E. 14TH ST.)

SFN	1807901
DESIGN AGENCY	B&N burgessniple.com
DESIGNER	KMA
CHECKER	BCS
REVIEWER	DWL 05/24/22
PROJECT ID	82382
SUBSET	13
TOTAL	50
SHEET	2048
TOTAL	2696

CUY-90-16.28 (CCG3A)
MODEL: Sheet PAPERSIZE: 34x22 (in.) DATE: 3/28/2025 TIME: 9:50:08 AM USER: Mala.Gallagher
pw:\\mb-us-pw.bentley.com:mb-us-pw-03\Documents\Cleveland_OH\01_Projects\ODOT\District12\82382\400-Engineering\Structures\SFN_1807901\Sheets\82382_SFN_1807901_SH003.dgn

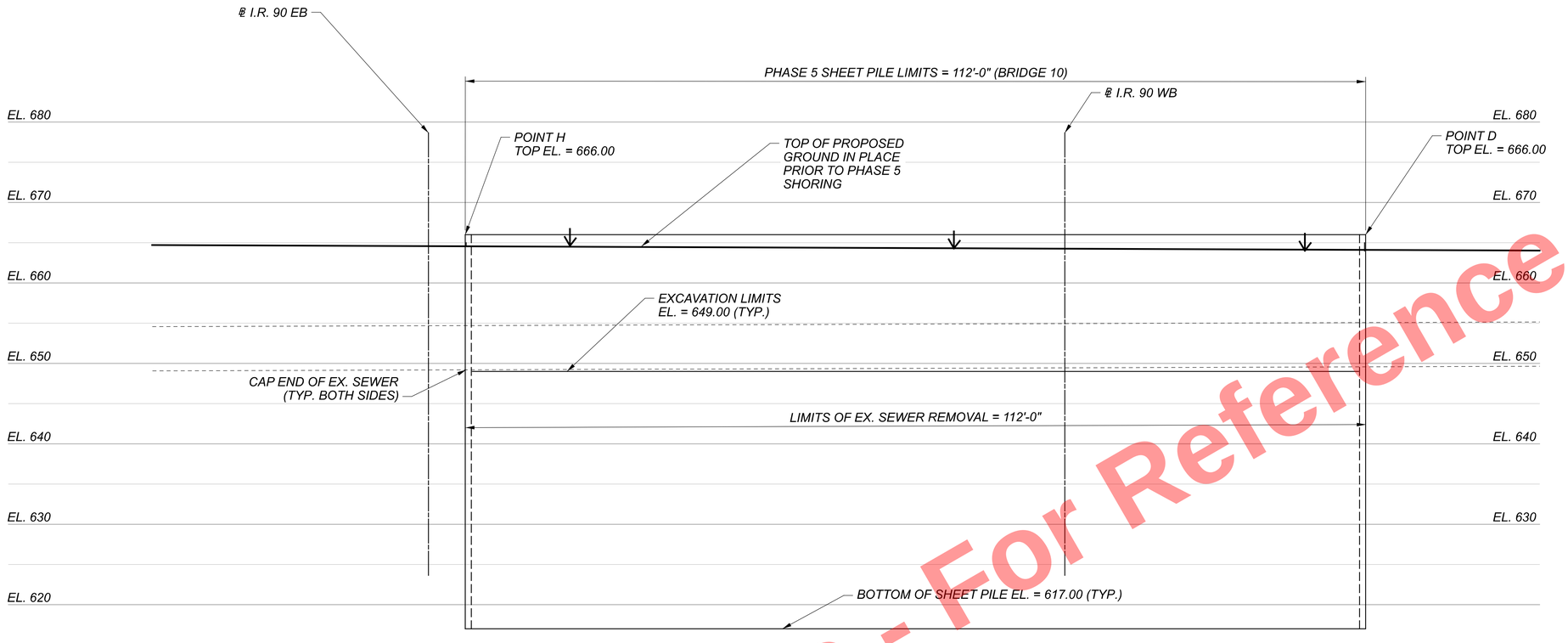

VIEW D-D

(EXISTING AND PROPOSED PIERS NOT SHOWN FOR CLARITY)

Preliminary Plans - For Reference Only

NOTES:

1. SEE SHEET 11, 13 /50 FOR PIER SHORING LAYOUT AND SECTIONS.
2. TEMPORARY STEEL SHEET PILING AT THE PIER SHALL HAVE A MINIMUM STRENGTH OF 50 KSI AND SHALL HAVE A MINIMUM SECTION MODULUS OF 60 IN^3 AND A MINIMUM MOMENT OF INERTIA OF 490 IN^4 OR A MINIMUM STRENGTH OF 50 KSI AND SHALL HAVE A MINIMUM SECTION MODULUS OF 85 IN^3 AND HAVE A MINIMUM MOMENT OF INERTIA OF 750 IN^4. PAYMENT FOR SHEET PILING, INCLUDING REMOVAL OF ALL COMPONENTS AFTER NO LONGER NECESSARY AND ALL OTHER ITEMS ASSOCIATED WITH TEMPORARY SHORING WILL BE INCLUDED IN THE CONTRACT LUMP SUM PRICE FOR ITEM 503 - COFFERDAMS AND EXCAVATION BRACING, AS PER PLAN.

PIER TEMPORARY SHORING DETAILS
CUY-90-1653L (BRIDGE 10)
I.R. 90 WB OVER CR-721 (E. 14TH ST.)

SFN	1807901
DESIGN AGENCY	B&N burgessniple.com
DESIGNER	DBH
CHECKER	BCS
REVIEWER	DWL 05/24/22
PROJECT ID	82382
SUBSET	14
TOTAL	50
SHEET	2049
TOTAL	2696

CUY-90-16.28 (CCG3A)

MODEL: Sheet PAPERSIZE: 34x22 (in.) DATE: 3/28/2025 TIME: 9:50:16 AM USER: Mala.Gallagher
pw:\\mb-us-pw.bentley.com:mb-us-pw-03\Documents\Cleveland_OH\01_Projects\ODOT\District12\82382\400-Engineering\Structures\SFN_1807901\Sheets\82382_SFN_1807901_SH004.dgn

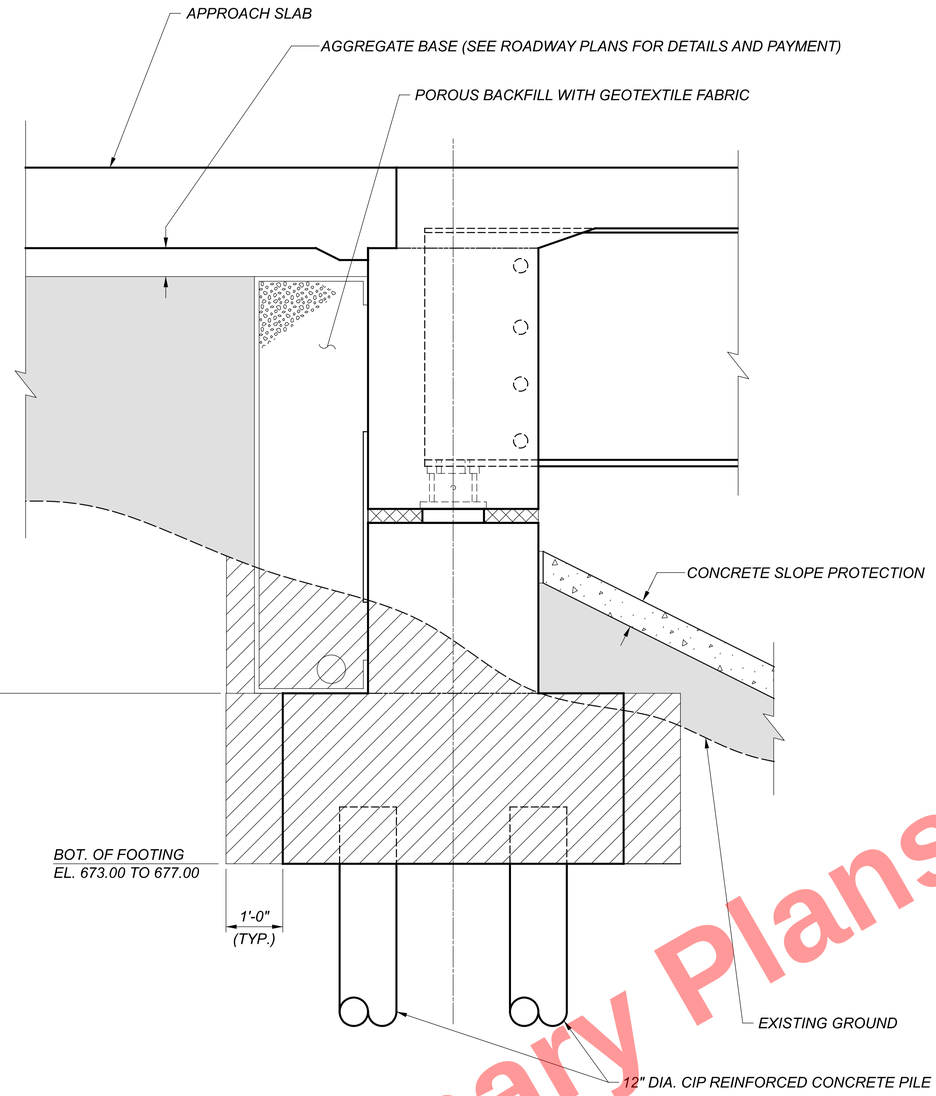

EXCAVATION AND EMBANKMENT DIAGRAM - REAR ABUTMENT

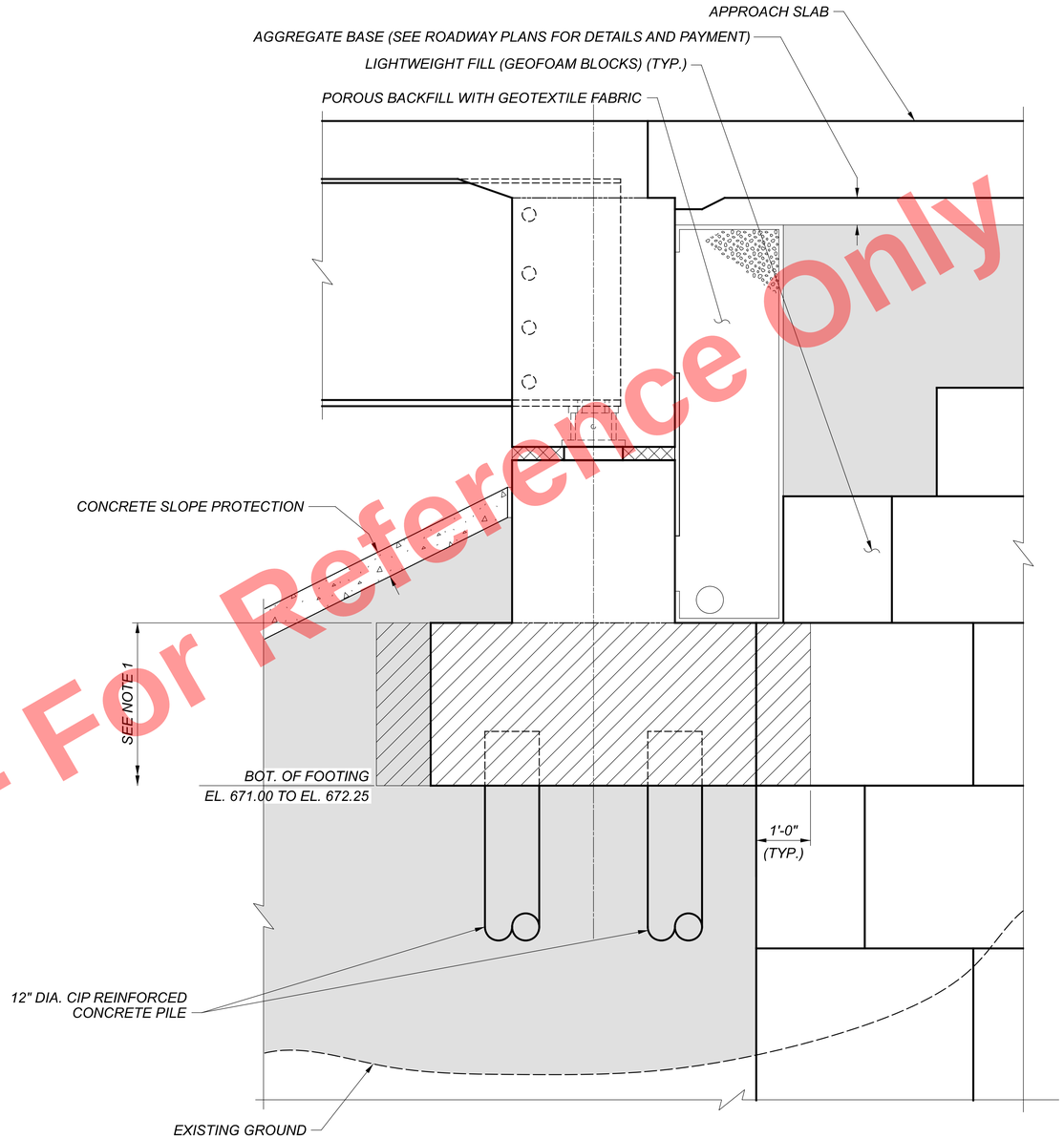

EXCAVATION AND EMBANKMENT DIAGRAM - FORWARD ABUTMENT

LEGEND:

= LIMITS OF ITEM 203 - EMBANKMENT, AS PER PLAN
SEE ROADWAY PLANS FOR ADDITIONAL DETAILS AND PAYMENT

= LIMITS OF ITEM 503 - UNCLASSIFIED EXCAVATION

NOTES:

1. SEE GENERAL NOTES FOR REQUIREMENTS REGARDING CONSTRUCTION OF EMBANKMENT BELOW TOP OF FOOTING, AND REQUIRED WAITING PERIOD PRIOR TO DRIVING PILES.

Preliminary Plans - For Reference Only

EXCAVATION AND EMBANKMENT DIAGRAM
CUY-90-1653L (BRIDGE 10)
I.R. 90 WB OVER CR-721 (E. 14TH ST.)

SFN 1807901
DESIGN AGENCY
B&N burgessniple.com
DESIGNER MAB | CHECKER BCS
REVIEWER DWL 05/24/22
PROJECT ID 82382
SUBSET 15 | TOTAL 50
SHEET 2050 | TOTAL 2696

CUY-90-16.28 (CCG3A)

MODEL: Sheet PAPERSIZE: 34x22 (in.) DATE: 3/28/2025 TIME: 9:50:23 AM USER: Mala.Gallagher
pw:\\mb-us-pw.bentley.com:mb-us-pw-03\Documents\Cleveland_OH\01_Projects\ODOT\District12\82382\400-Engineering\Structures\SFN_1807901\Sheets\82382_SFN_1807901_SM004.dgn

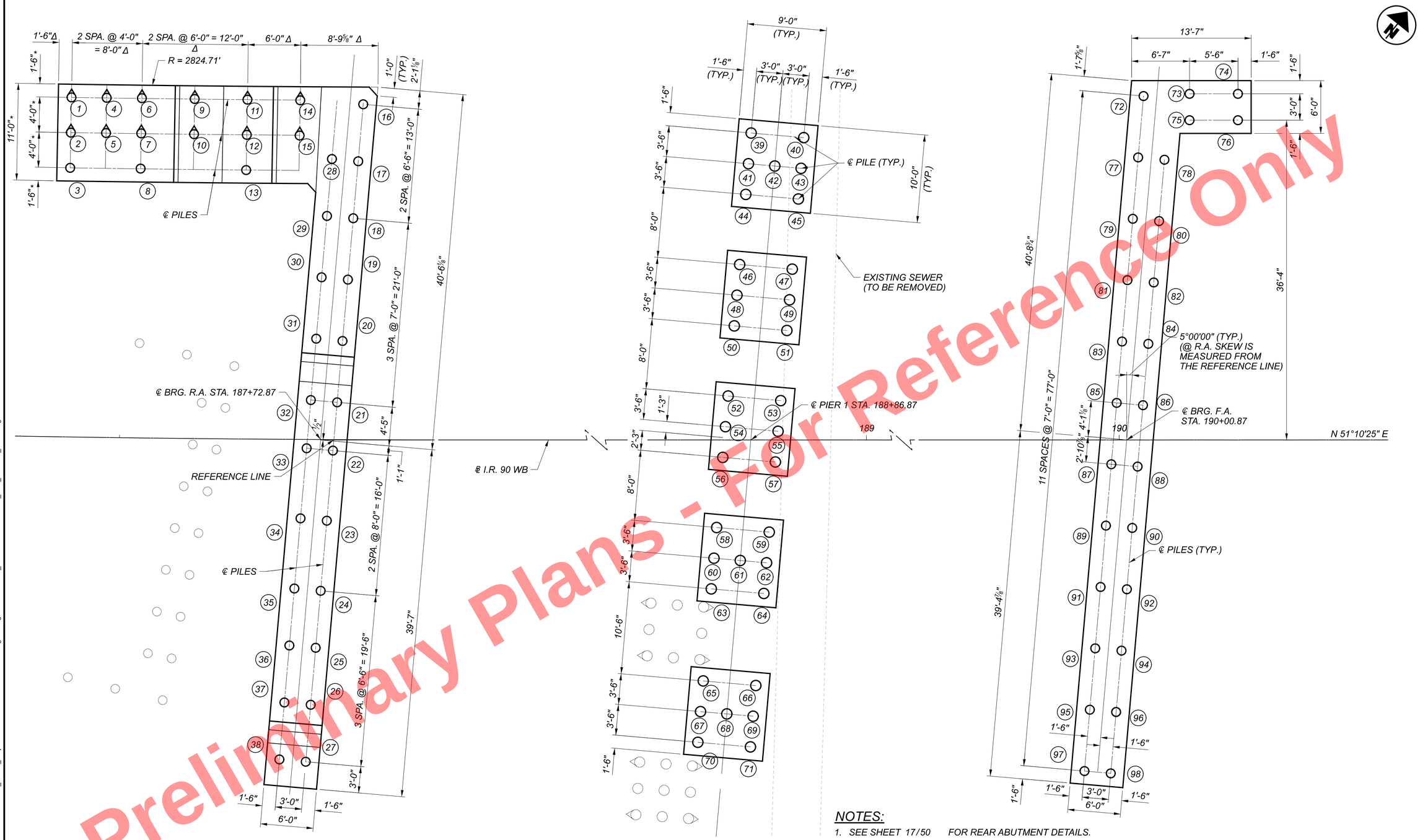

Preliminary Plans - For Reference Only

FOUNDATION PLAN

LEGEND:

- ○ = PROP. 12" DIA. CIP REINFORCED CONCRETE PILE (ABUTMENTS)
- ⌀ = PROP. 12" DIA. CIP REINFORCED CONCRETE PILE (BATTERED 3V:1H) (ABUTMENTS)
- ○ = PROP. 14" DIA. CIP REINFORCED CONCRETE PILE (PIER 1)
- ◌ = EX. 14" DIA. CIP REINFORCED CONCRETE PILE
- ◌ = EX. 14" DIA. CIP REINFORCED CONCRETE PILE (BATTERED 4V:1H)
- (##) = PROP. PILE NUMBER
- * = MEASURED RADIALLY
- Δ = MEASURED ALONG ℄ PILES AT R=2826.21'

NOTES:

1. SEE SHEET 17/50 FOR REAR ABUTMENT DETAILS.
2. SEE SHEETS 26/50 AND 27/50 FOR PIER 1 DETAILS.
3. SEE SHEET 22/50 FOR FORWARD ABUTMENT DETAILS.
4. EXISTING PILES ARE SHOWN BASED ON RECORD PLANS. CONTRACTOR SHALL VERIFY EXISTING PILE LOCATION PRIOIR TO PROPOSED PILE DRIVING OPERATIONS. ANY CONFLICTS WITH THE PROPOSED WORK SHALL BE BROUGHT TO THE ATTENTION OF THE ENGINEER IN A TIMELY MANNER.
5. WHERE AN EXISTING PILE CONFLICTS WITH A PROPOSED FOOTING, CUT THE PILE OFF TO 1'-0" BELOW THE PROPOSED BOTTOM OF FOOTING. THIS IS TO BE INCLUDED WITH ITEM 202 - PORTIONS OF STRUCTURE REMOVED, OVER 20 FOOT SPAN, AS PER PLAN FOR PAYMENT.
6. HORIZONTAL DIMENSIONS AT THE REAR ABUTMENT ARE MEASURED TO THE REFERENCE LINE.

FOUNDATION PLAN
CUY-90-1653L (BRIDGE 10)
I.R. 90 WB OVER CR-721 (E. 14TH ST.)

SFN 1807901
DESIGN AGENCY B&N burgessniple.com
DESIGNER MAB | CHECKER BCS
REVIEWER DWL 05/24/22
PROJECT ID 82382
SUBSET 16 | TOTAL 50
SHEET 2051 | TOTAL 2696

CUY-90-16.28 (CCG3A)

MODEL: Sheet PAPERSIZE: 34x22 (in.) DATE: 3/28/2025 TIME: 9:50:29 AM USER: Mala.Gallagher
pw:\\mb-us-pw.bentley.com:mb-us-pw-03\Documents\Cleveland_OH\01_Projects\ODOT\District12\82382400-Engineering\Structures\SFN_1807901\Sheets\82382_SFN_1807901_SO001.dgn

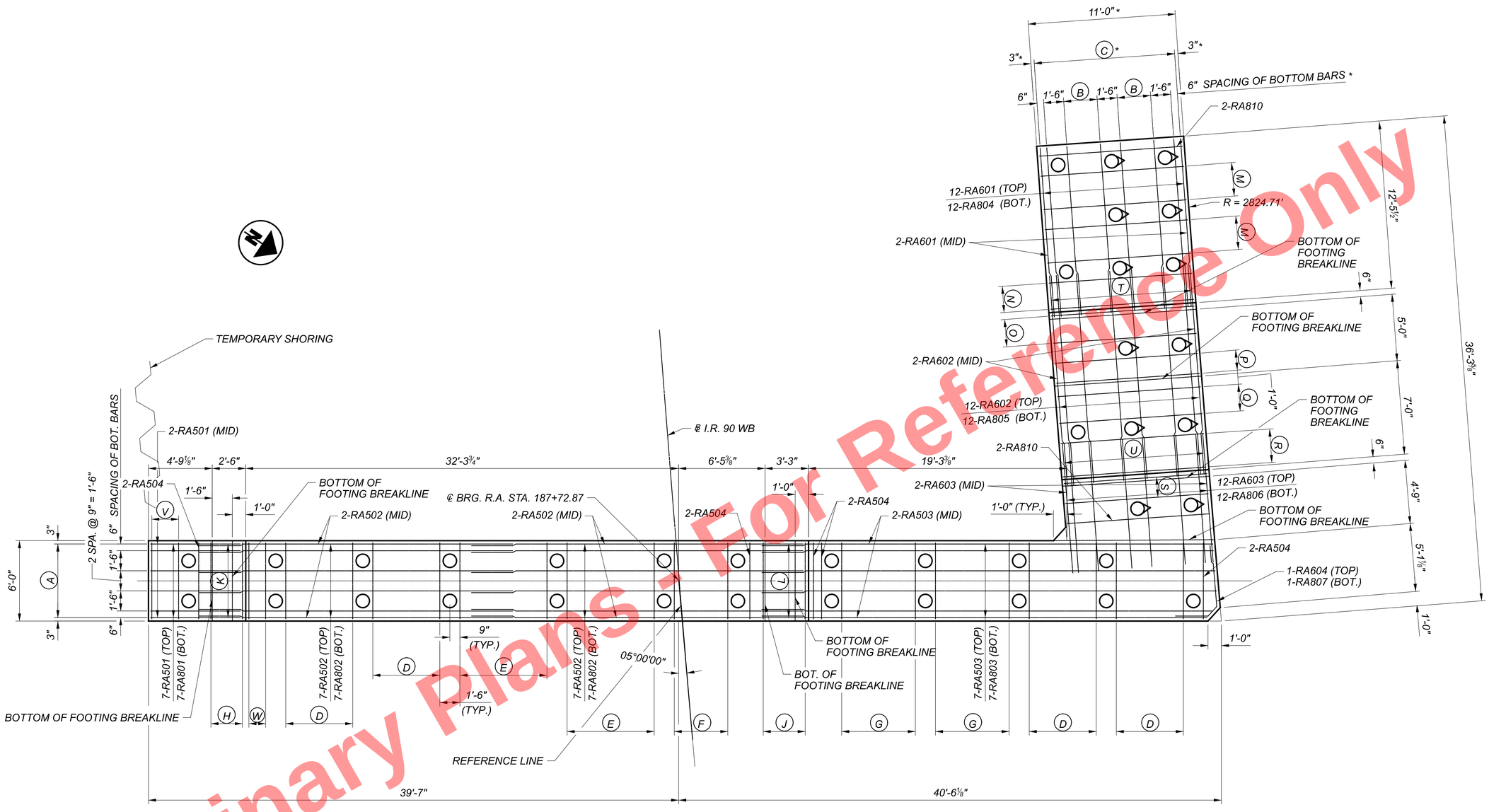

REAR ABUTMENT FOOTING PLAN

LEGEND:

- (A) = 6 SPACES @ 11" = 5'-6" (TOP BAR SPACING)
- (B) = 3 SPACES @ 10" = 2'-6"
- (C) = 11 SPACES @ 1'-0" MAX. = 10'-6" (TOP BAR SPACING)
- (D) = 6 SETS OF 2-RA504 @ 1'-0" = 5'-0"
- (E) = 8 SETS OF 2-RA504 @ 1'-0" MAX. = 6'-6"
- (F) = 5 SETS OF 2-RA504 @ 1'-0" = 4'-0"
- (G) = 7 SETS OF 2-RA504 @ 11" = 5'-6"
- (H) = 1 S.O. 4-RA505 (TOP & BOT.) @ 9" = 2'-3"
- (J) = 1 S.O. 4-RA506 (TOP & BOT.) @ 1'-0" MAX. = 3'-3"
- (K) = 7-RA808 (BOTTOM)
- (L) = 7-RA809 (BOTTOM)
- (M) = 4 SETS OF 2-RA810 @ 10" = 2'-6"
- (N) = 3 SETS OF 2-RA810 @ 1'-0" = 2'-0"
- (O) = 1 S.O. 3-RA811 (TOP & BOT.) @ 1'-0" = 2'-0"
- (P) = 1 S.O. 3-RA812 (TOP & BOT.) @ 9" = 1'-6"
- (Q) = 3 SETS OF 2-RA813 @ 1'-0" = 2'-0"
- (R) = 4 SETS OF 2-RA813 @ 10" = 2'-6"
- (S) = 1 S.O. 3-RA821 (TOP & BOT.) @ 9" = 1'-6"
- (T) = 12-RA814 (BOTTOM)
- (U) = 12-RA815 (BOTTOM)
- (V) = 3 SETS OF 2-RA504 @ 1'-0" = 2'-0"
- (W) = 3 SETS OF 2-RA504 @ 7½" = 1'-3"

* = MEASURED RADIALLY

NOTES:

1. SEE SHEET 16/50 FOR FOUNDATION LAYOUT.
2. SEE SHEET 18/50 FOR REAR ABUTMENT PLAN AND ELEVATION.
3. MINIMUM REINFORCING LAP LENGTHS:
   #5 VERTICAL = 2'-5"
   #5 HORIZONTAL = 3'-1"
   #8 = 3'-9"
4. HORIZONTAL DIMENSIONS AND SKEW ANGLE ARE MEASURED TO THE REFERENCE LINE.

Preliminary Plans - For Reference Only

REAR ABUTMENT FOOTING PLAN
CUY-90-1653L (BRIDGE 10)
I.R. 90 WB OVER CR-721 (E. 14TH ST.)

SFN	1807901
DESIGN AGENCY	B&N burgessniple.com
DESIGNER	MAB
CHECKER	BCS
REVIEWER	DWL 06/21/22
PROJECT ID	82382
SUBSET	17
TOTAL	50
SHEET	2052
TOTAL	2696

CUY-90-16.28 (CCG3A)

MODEL: Sheet PAPERSIZE: 34x22 (in.) DATE: 3/28/2025 TIME: 9:50:36 AM USER: Maia.Gallagher
pw:\\mb-us-pw.bentley.com:mb-us-pw-03\Documents\Cleveland_OH\01_Projects\ODOT\District12\82382\400-Engineering\Structures\SFN_1807901\Sheets\82382_SFN_1807901_SR002.dgn

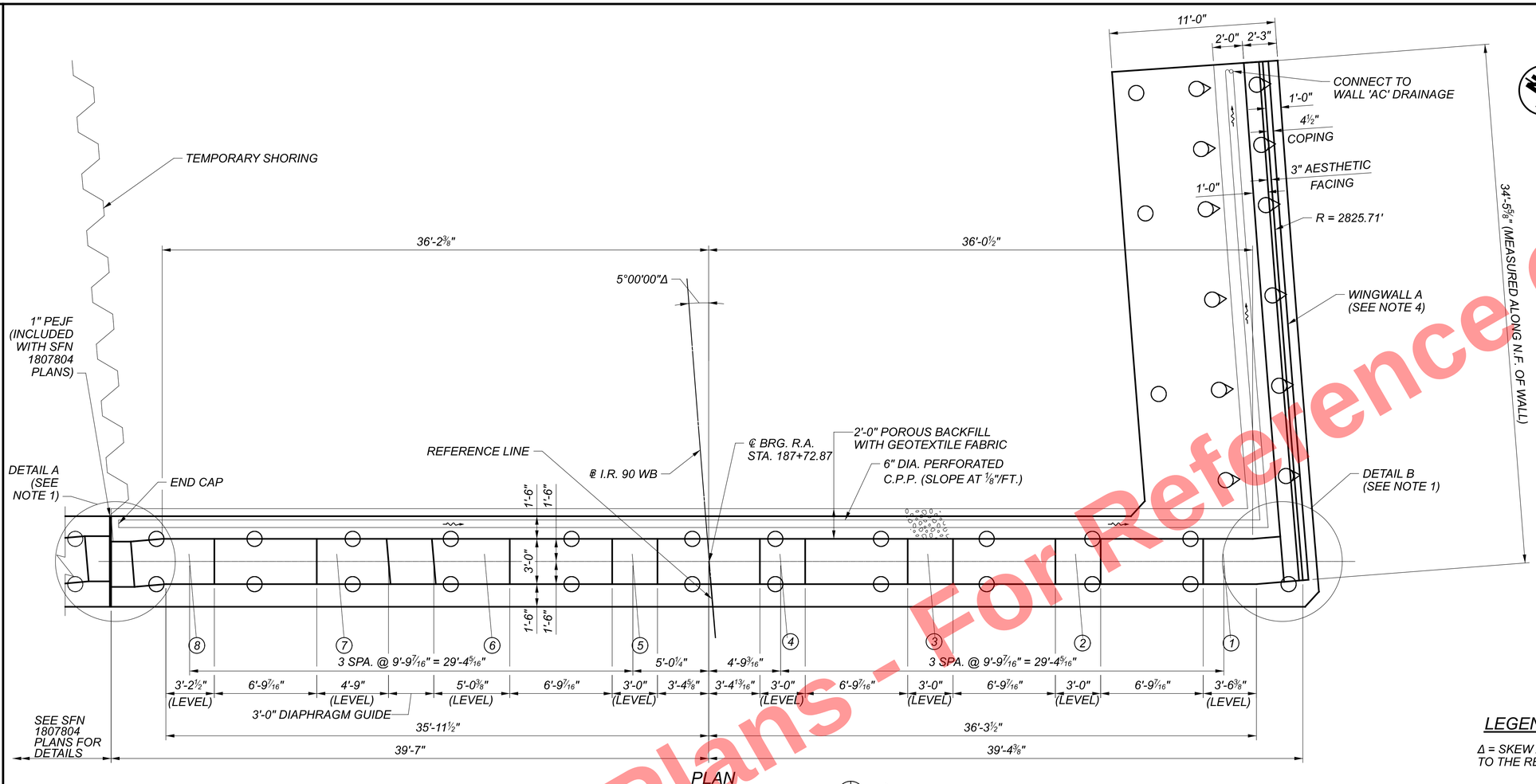

PLAN

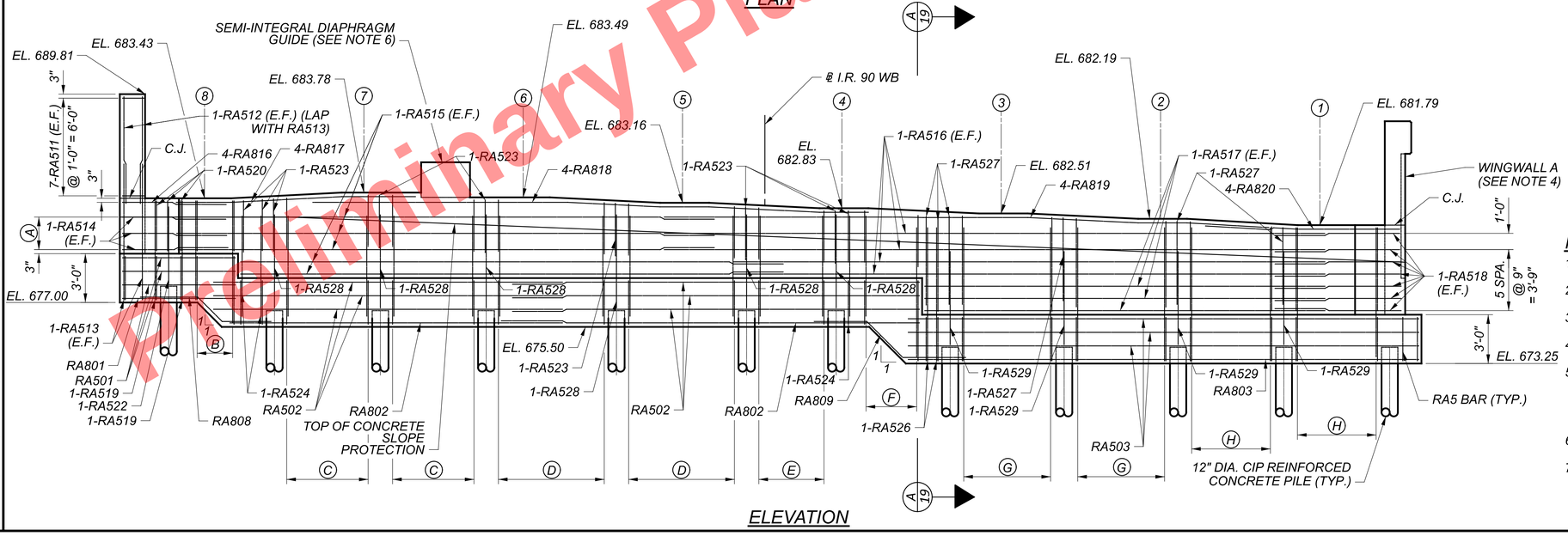

ELEVATION

LEGEND:

Δ = SKEW ANGLE IS MEASURED FROM ℄ BRG. R.A. TO THE REFERENCE LINE

(A) = 2 SPACES @ 1'-0" = 2'-0"

(B) = 1 S.O. 4-RA521 & 4-RA520 @ 9" = 2'-3"

(C) = 6-RA523 & 6-RA524 @ 1'-0" = 5'-0"

(D) = 8-RA523 & 8-RA524 @ 1'-0" MAX. = 6'-6"

(E) = 5-RA523 & 5-RA524 @ 1'-0" = 4'-0"

(F) = 1 S.O. 4-RA525 & 4-RA523 @ 1'-0" MAX. = 3'-3"

(G) = 7-RA526 & 7-RA527 @ 11" = 5'-6"

(H) = 6-RA526 & 6-RA527 @ 1'-0" = 5'-0"

NOTES:

1. SEE SHEET 19/50 FOR DETAILS A AND B.
2. SEE SHEET 17/50 FOR REAR ABUTMENT FOOTING PLAN.
3. SEE SHEET 19/50 FOR SECTION A-A.
4. SEE SHEET 20/50 FOR WINGWALL A DETAILS.
5. MINIMUM REINFORCING LAP LENGTHS:
   #5 VERTICAL = 2'-5"
   #5 HORIZONTAL = 3'-1"
   #8 = 5'-4"
6. SEE STD. BRIDGE DRAWING SICD-2-14 FOR ADDITIONAL DETAILS.
7. ALL HORIZONTAL DIMENSIONS MEASURED FROM THE REFERENCE LINE.

Preliminary Plans - For Reference Only

REAR ABUTMENT PLAN AND ELEVATION
CUY-90-1653L (BRIDGE 10)
I.R. 90 WB OVER CR-721 (E. 14TH ST.)

CUY-90-16.28 (CCG3A)

MODEL: Sheet PAPERSIZE: 34x22 (in.) DATE: 3/28/2025 TIME: 9:50:43 AM USER: Mala.Gallagher
pw:\\mb-us-pw.bentley.com:mb-us-pw-03\Documents\Cleveland_OH\01_Projects\ODOT\District12\82382\400-Engineering\Structures\SFN_1807901\Sheets\82382_SFN_1807901_SR001.dgn

SFN	1807901
DESIGN AGENCY	B&N burgessniple.com
DESIGNER	MAB
CHECKER	BCS
REVIEWER	DWL 06/21/22
PROJECT ID	82382
SUBSET	18
TOTAL	50
SHEET	2053
TOTAL	2696

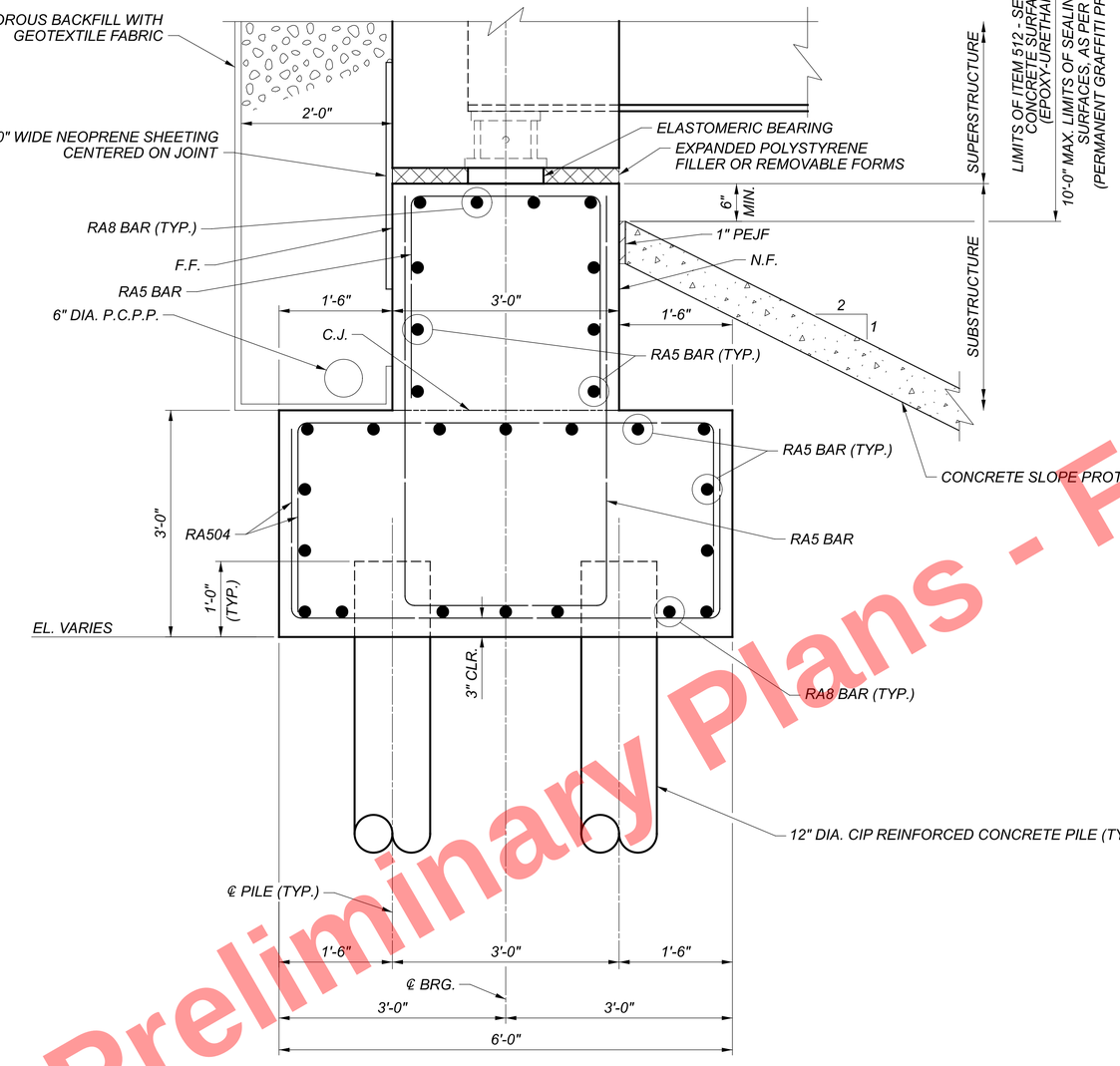

SECTION A-A

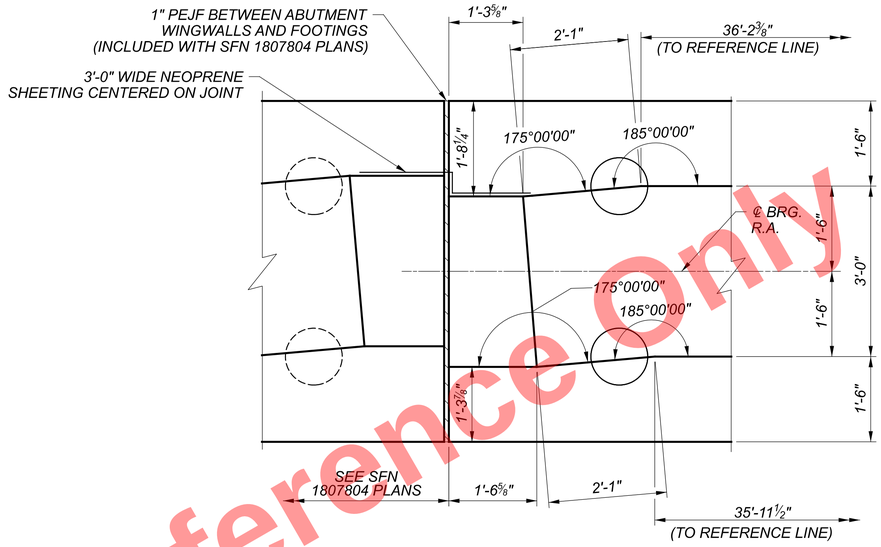

DETAIL A

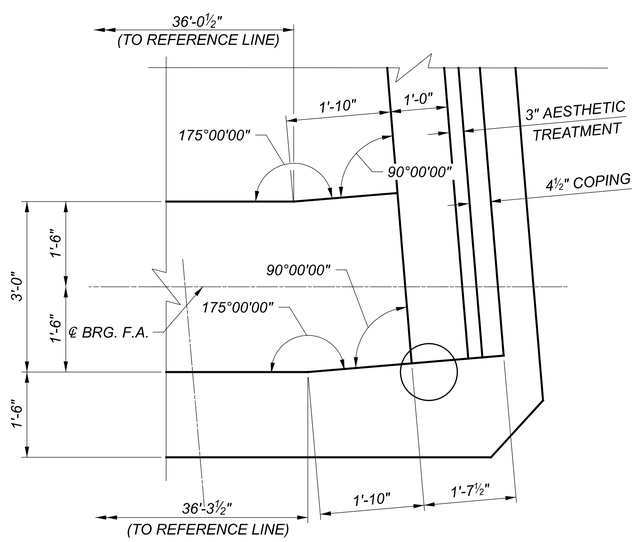

DETAIL B

NOTES:

1. SEE SHEET 18/50 FOR LOCATION OF SECTION A-A, DETAIL A AND DETAIL B.

Preliminary Plans - For Reference Only

REAR ABUTMENT DETAILS
CUY-90-1653L (BRIDGE 10)
I.R. 90 WB OVER CR-721 (E. 14TH ST.)

SFN	1807901
DESIGN AGENCY	B&N burgessniple.com
DESIGNER	MAB
CHECKER	BCS
REVIEWER	DWL 06/21/22
PROJECT ID	82382
SUBSET	19
TOTAL	50
SHEET	2054
TOTAL	2696

CUY-90-16.28 (CCG3A)

MODEL: Sheet PAPERSIZE: 34x22 (in.) DATE: 6/11/2025 TIME: 11:40:07 AM USER: Tolga.Feran
pw:\\mb-us-pw.bentley.com:mb-us-pw-03\Documents\Cleveland_OH01_Projects\ODOT\District12\82382400-Engineering\Structures\SFN_1807901\Sheets\82382_SFN_1807901_SR004.dgn

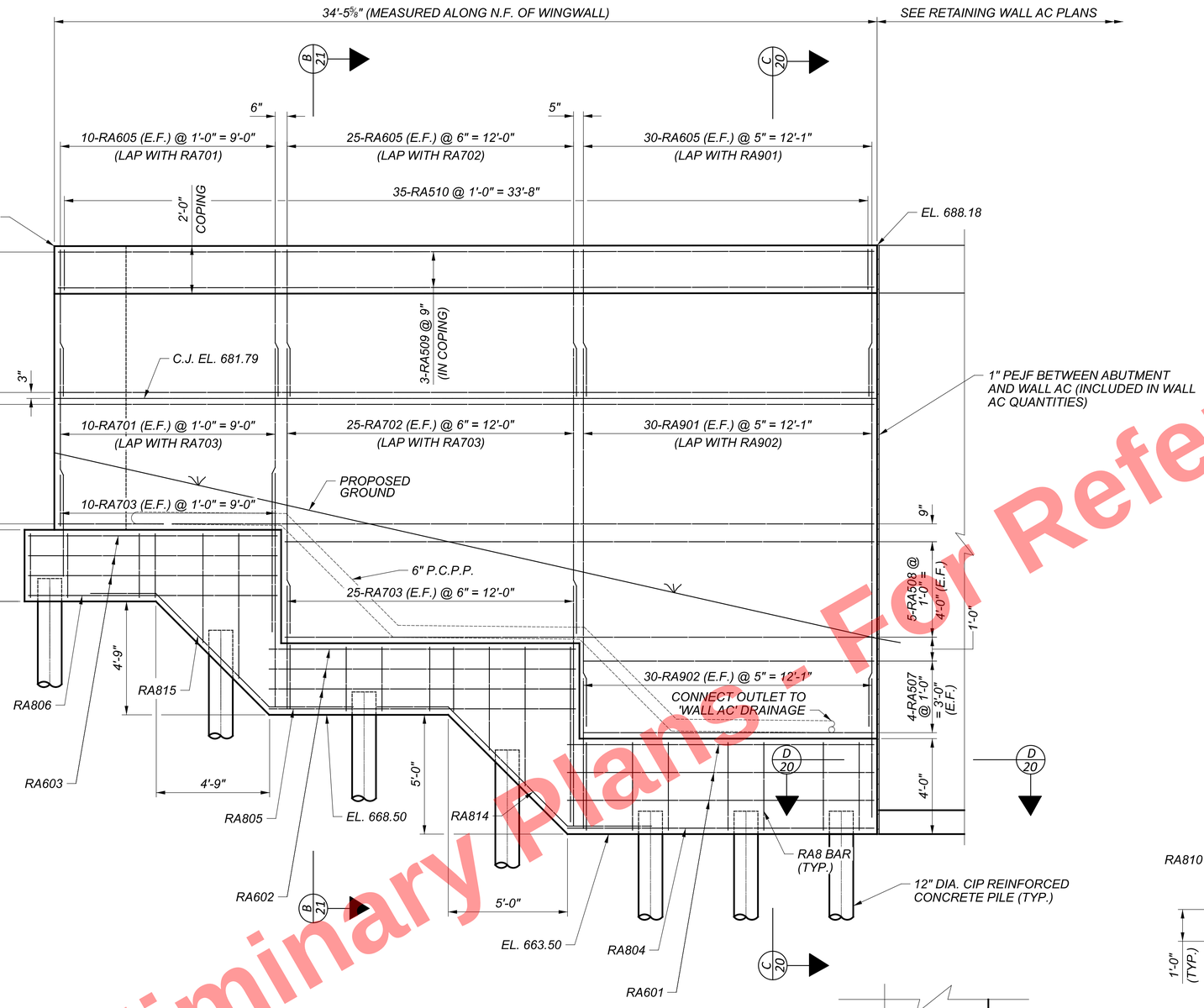

WINGWALL A DEVELOPED ELEVATION

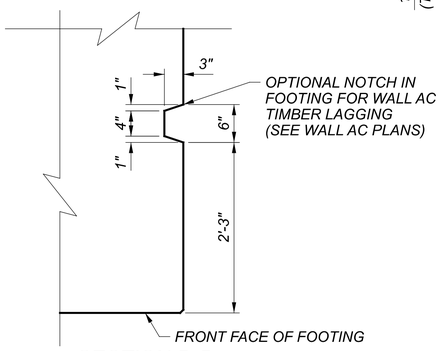

SECTION D-D

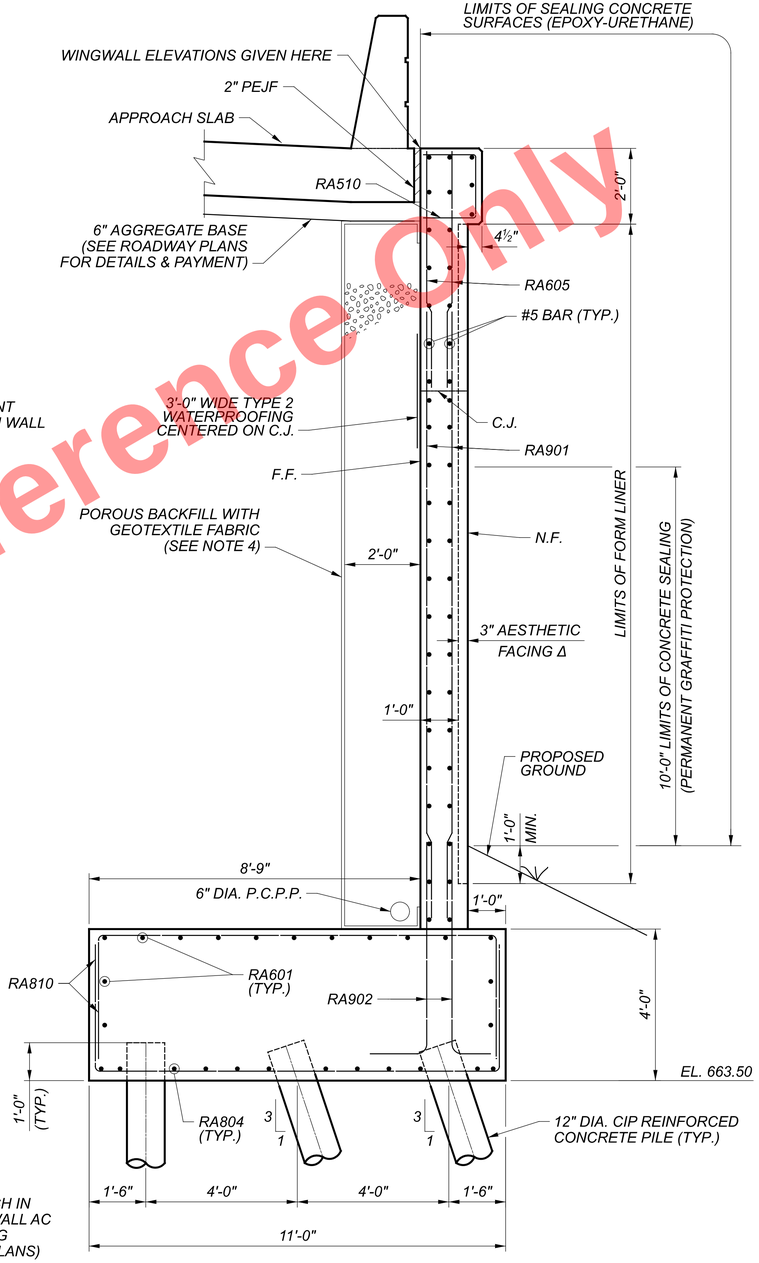

SECTION C-C

LEGEND:

Δ = SEE LANDSCAPE PLANS FOR ADDITIONAL DETAILS

NOTES:

1. SEE SHEET 18/50 FOR REAR ABUTMENT PLAN AND ELEVATION.
2. SEE SHEET 21/50 FOR SECTION B-B.
3. MINIMUM REINFORCING LAP LENGTHS:
   #5 = 2'-5" #7 = 4'-2"
   #6 = 3'-7" #9 = 5'-10"
4. TURN GEOTEXTILE FABRIC UP 6" AT BASE OF WALL AND DOWN 6" AT TOP OF WALL.

Preliminary Plans - Not For Reference Only

REAR ABUTMENT WINGWALL DETAILS - 1
CUY-90-1653L (BRIDGE 10)
I.R. 90 WB OVER CR-721 (E. 14TH ST.)

SFN	1807901
DESIGN AGENCY	B&N burgessniple.com
DESIGNER	MAB
CHECKER	BCS
REVIEWER	DWL 06/21/22
PROJECT ID	82382
SUBSET	20
TOTAL	50
SHEET	2055
TOTAL	2696

CUY-90-16.28 (CCG3A)
MODEL: Sheet PAPERSIZE: 34x22 (in.) DATE: 3/28/2025 TIME: 9:50:55 AM USER: Mala.Gallagher
pw:\\mb-us-pw.bentley.com:mb-us-pw-03\Documents\Cleveland_OH\01_Projects\ODOTDistrict12\82382400-Engineering\Structures\SFN_1807901\Sheets\82382_SFN_1807901_SR003.dgn

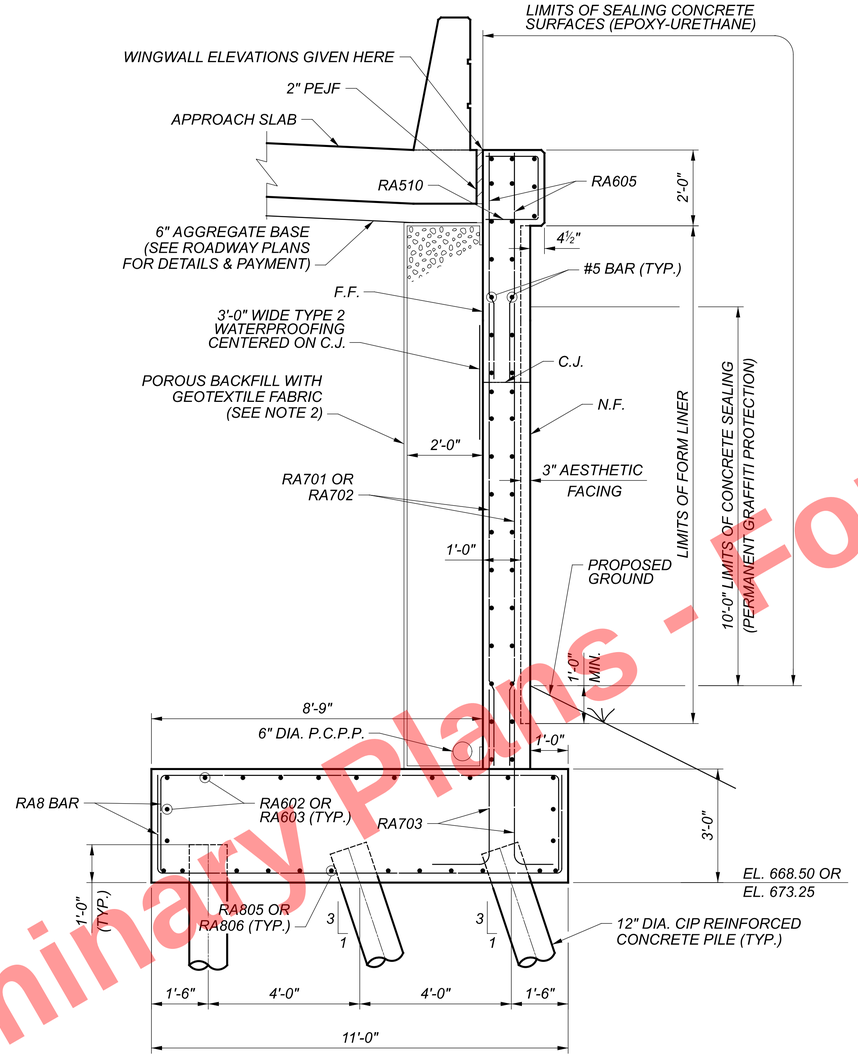

SECTION B-B

Preliminary Plans - Not For Reference Only

NOTES:

1. SEE SHEET 20/50 FOR LOCATION OF SECTION B-B.
2. TURN GEOTEXTILE FABRIC UP 6" AT BASE OF WALL AND DOWN 6" AT TOP OF WALL.

REAR ABUTMENT WINGWALL DETAILS - 2
CUY-90-1653L (BRIDGE 10)
I.R. 90 WB OVER CR-721 (E. 14TH ST.)

SFN	1807901
DESIGN AGENCY	B&N burgessniple.com
DESIGNER	MAB
CHECKER	BCS
REVIEWER	DWL 06/21/22
PROJECT ID	82382
SUBSET	21
TOTAL	50
SHEET	2056
TOTAL	2696

CUY-90-16.28 (CCG3A)
MODEL: Sheet PAPERSIZE: 34x22 (in.) DATE: 3/28/2025 TIME: 9:51:02 AM USER: Mata.Gallagher
pw:\\mb-us-pw.bentley.com:mb-us-pw-03\Documents\Cleveland_OH101_Projects\ODOT\District12\82382\400-Engineering\Structures\SFN_1807901\Sheets\82382_SFN_1807901_SR005.dgn

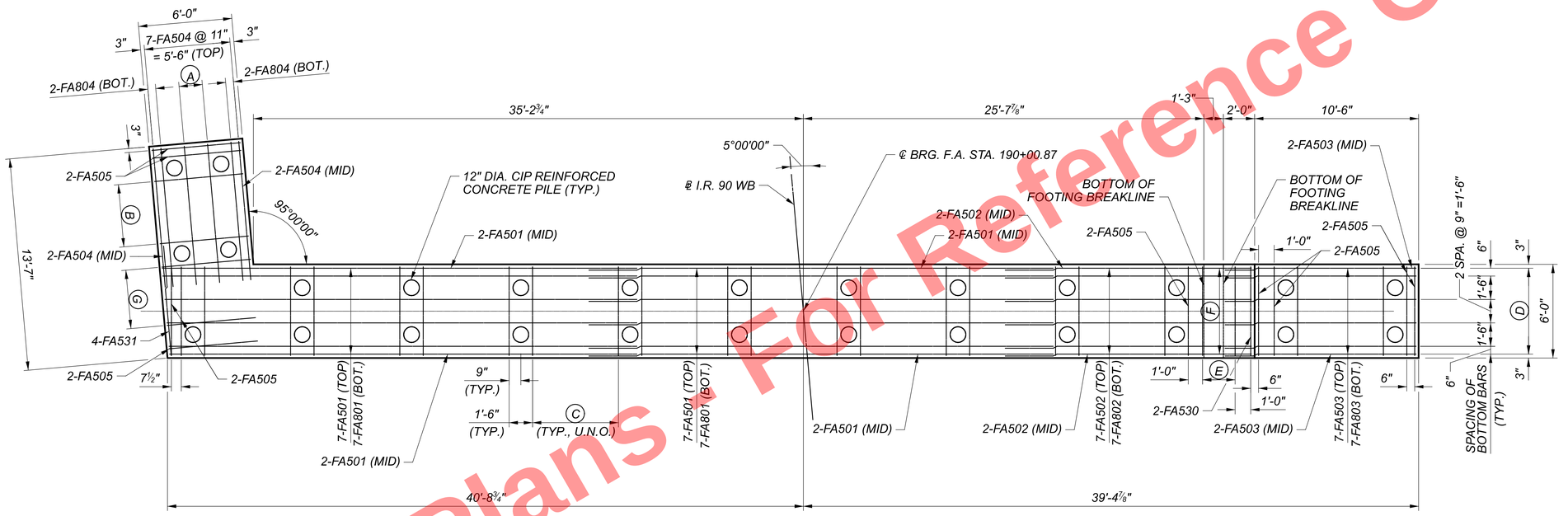

FORWARD ABUTMENT FOOTING PLAN

LEGEND:

(A) = 3-FA804 (BOT.) @ 9" = 1'-6"

(B) = 5 SETS OF 2-FA505 @ 1'-0" = 4'-0"

(C) = 7 SETS OF 2-FA505 @ 11" = 5'-6"

(D) = 6 SPACES @ 11" = 5'-6" (TYP. TOP BAR SPACING)

(E) = 1 S.O. 3-FA506 (T&B) @ 1'-0" = 2'-0"

(F) = 7-FA806 (BOT.)

(G) = 5 SETS OF 2-FA505 @ 11" = 3'-8"

NOTES:

1. SEE SHEET 16/50 FOR FOUNDATION LAYOUT.
2. SEE SHEET 23/50 FOR FORWARD ABUTMENT PLAN AND ELEVATION.
3. MINIMUM REINFORCING LAP LENGTHS:
   #5 VERTICAL = 2'-5"
   #5 HORIZONTAL = 3'-1"
   #8 = 3'-9"

Preliminary Plans - For Reference Only

FORWARD ABUTMENT FOOTING PLAN
CUY-90-1653L (BRIDGE 10)
I.R. 90 WB OVER CR-721 (E. 14TH ST.)

SFN	1807901
DESIGN AGENCY	B&N burgessniple.com
DESIGNER	MAB
CHECKER	BCS
REVIEWER	DWL 06/21/22
PROJECT ID	82382
SUBSET	22
TOTAL	50
SHEET	2057
TOTAL	2696

CUY-90-16.28 (CCG3A)
MODEL: Sheet PAPERSIZE: 34x22 (in.) DATE: 3/28/2025 TIME: 9:51:09 AM USER: Mata.Gallagher
pw:\\mb-us-pw.bentley.com:mb-us-pw-03\Documents\Cleveland_OH101_Projects\ODOT\District12\82382\400-Engineering\Structures\SFN_1807901\Sheets\82382_SFN_1807901_SF002.dgn

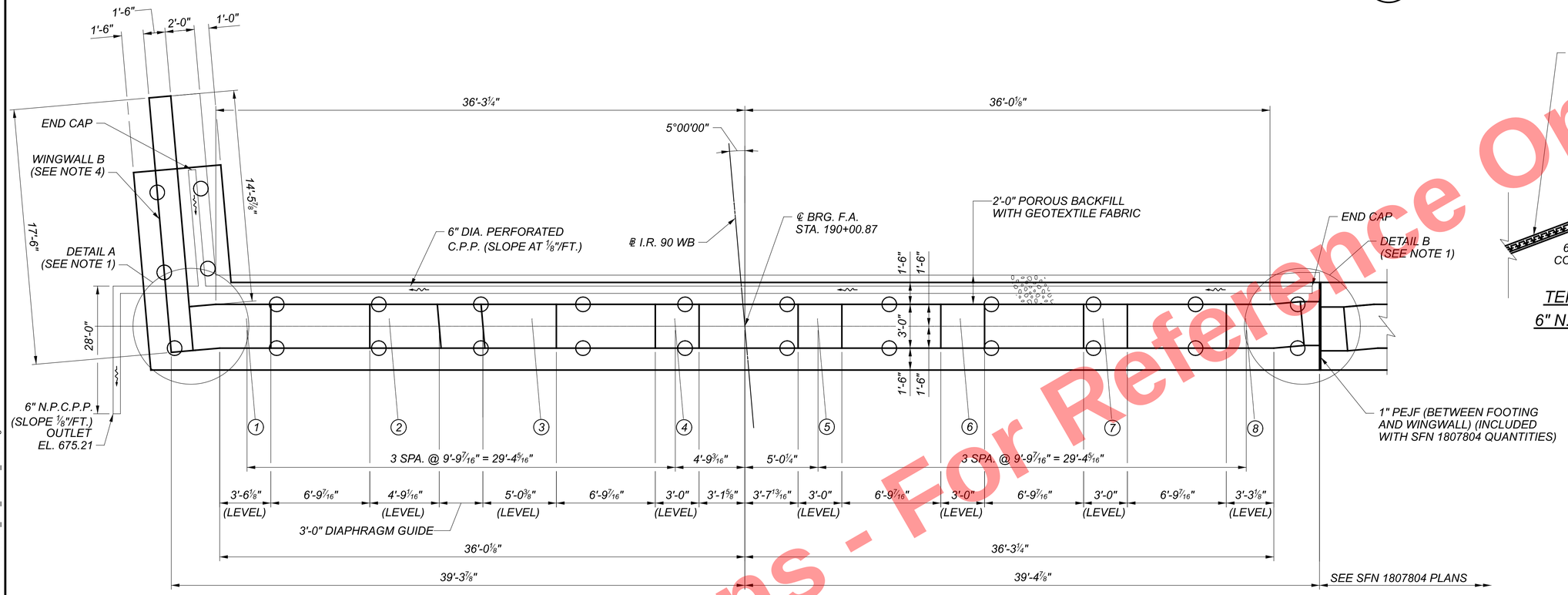

PLAN

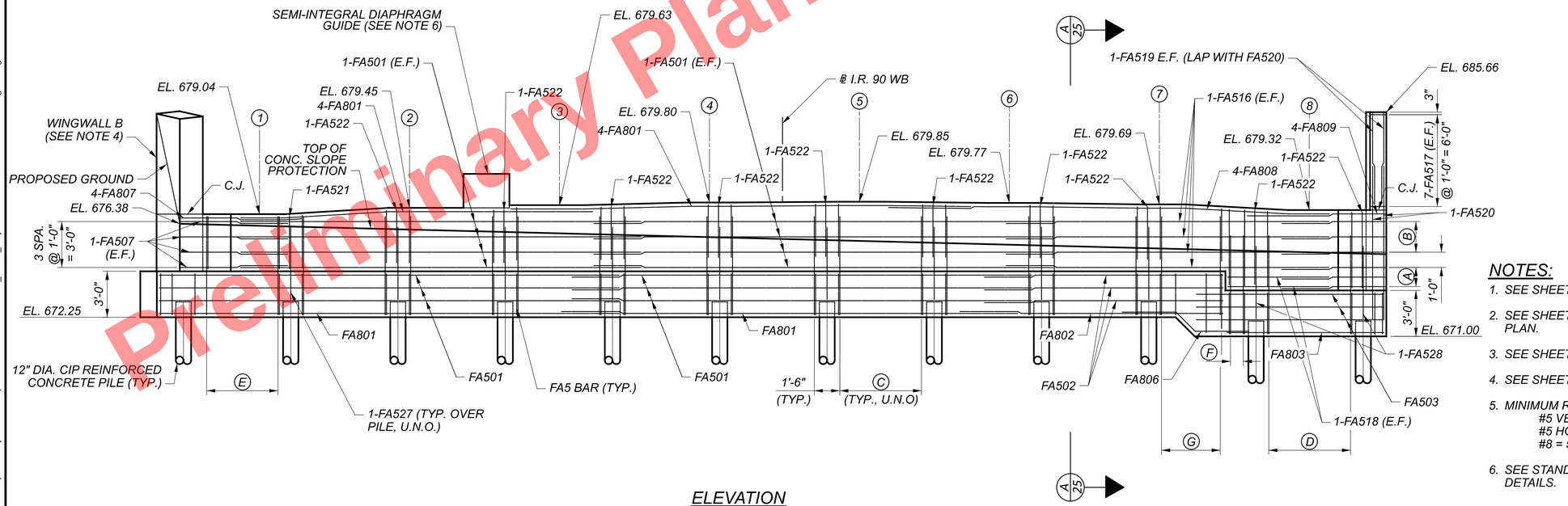

ELEVATION

LEGEND:

- (A) = 3-FA523 (E.F.) @ 7½" = 1'-3"
- (B) = 3-FA523 (E.F.) @ 1'-0" = 2'-0"
- (C) = 7-FA524 & 7-FA525 @ 11" = 5'-6"
- (D) = 7-FA524 & 7-FA526 @ 11" = 5'-6"
- (E) = 6-FA524 & 6-FA525 @ 1'-0" MAX. = 4'-6"
- (F) = 2-FA524 & 2-FA526 @ 1'-0" = 1'-0"
- (G) = 5-FA524 & 1 S.O. 5-FA529 @ 1'-0" = 4'-0"
- (#) = GIRDER DESIGNATION

NOTES:

1. SEE SHEET 24/50 FOR DETAILS A AND B.
2. SEE SHEET 22/50 FOR FORWARD ABUTMENT FOOTING PLAN.
3. SEE SHEET 25/50 FOR SECTION A-A.
4. SEE SHEET 24/50 FOR WINGWALL B DETAILS.
5. MINIMUM REINFORCING LAP LENGTHS:
   #5 VERTICAL = 2'-5"
   #5 HORIZONTAL = 3'-1"
   #8 = 5'-4"
6. SEE STANDARD BRIDGE DRAWING SICD-2-14 FOR ADDITIONAL DETAILS.

Preliminary Plans - For Reference Only

FORWARD ABUTMENT PLAN AND ELEVATION
CUY-90-1653L (BRIDGE 10)
I.R. 90 WB OVER CR-721 (E. 14TH ST.)

CUY-90-16.28 (CCG3A)

SFN 1807901
DESIGN AGENCY B&N burgessniple.com
DESIGNER MAB | CHECKER BCS
REVIEWER DWL 06/21/22
PROJECT ID 82382
SUBSET 23 | TOTAL 50
SHEET 2058 | TOTAL 2696

MODEL: Sheet PAPERSIZE: 34x22 (in.) DATE: 3/28/2025 TIME: 9:51:15 AM USER: Maia.Gallagher
pw:\\mb-us-pw.bentley.com:mb-us-pw-03\Documents\Cleveland_OH\01_Projects\ODOT\District12\82382\400-Engineering\Structures\SFN_1807901\Sheets\82382_SFN_1807901_SF001.dgn

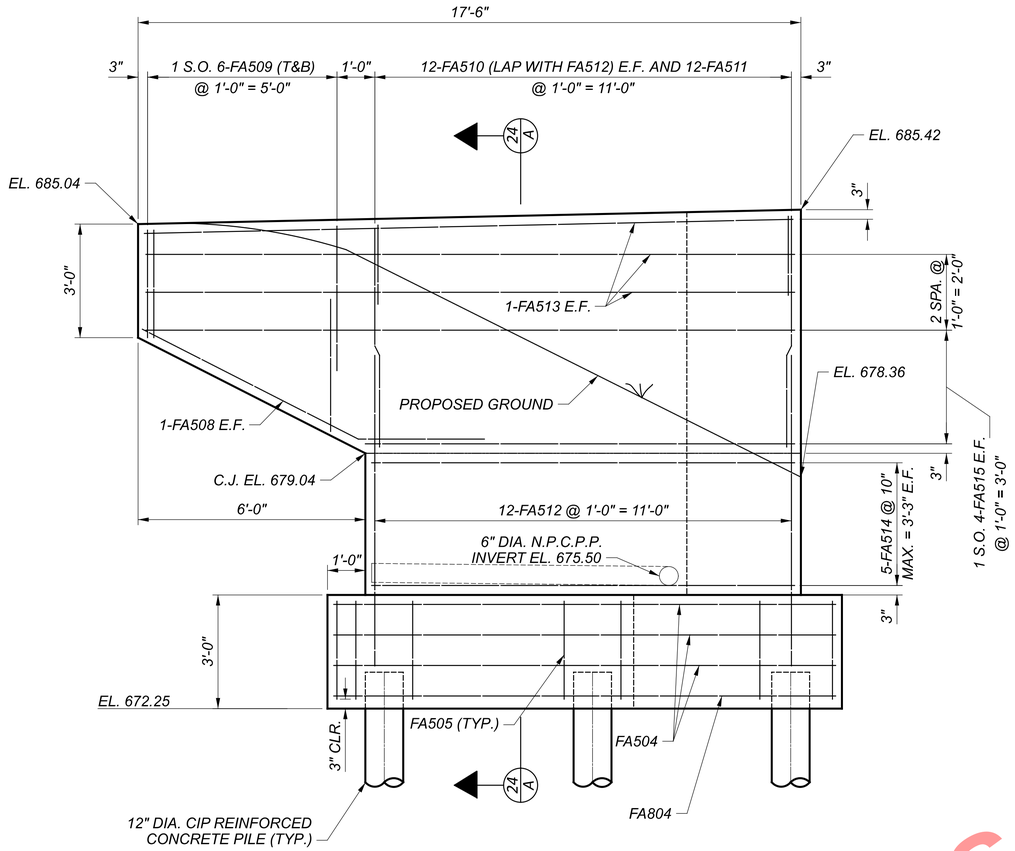

WINGWALL B ELEVATION

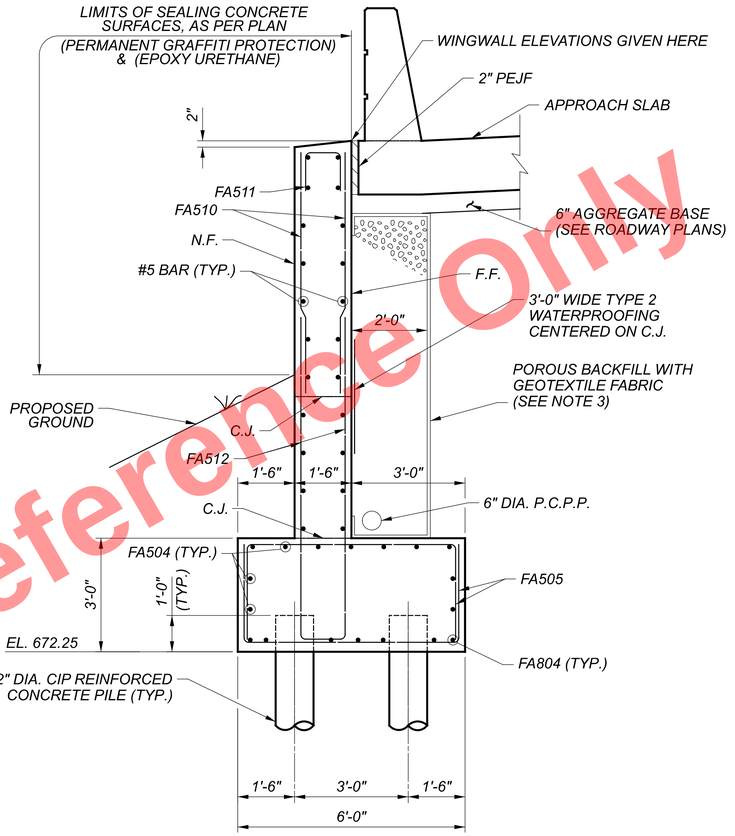

SECTION A-A

(LIGHTWEIGHT GEOFOAM BLOCKS NOT SHOWN)

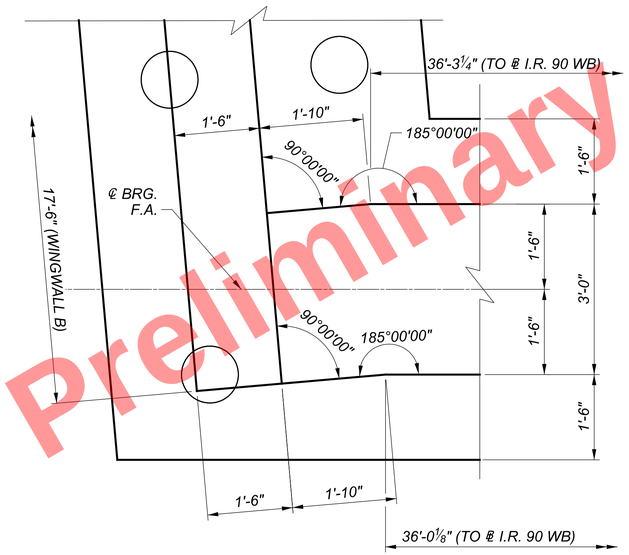

DETAIL A

(REINFORCING NOT SHOWN)

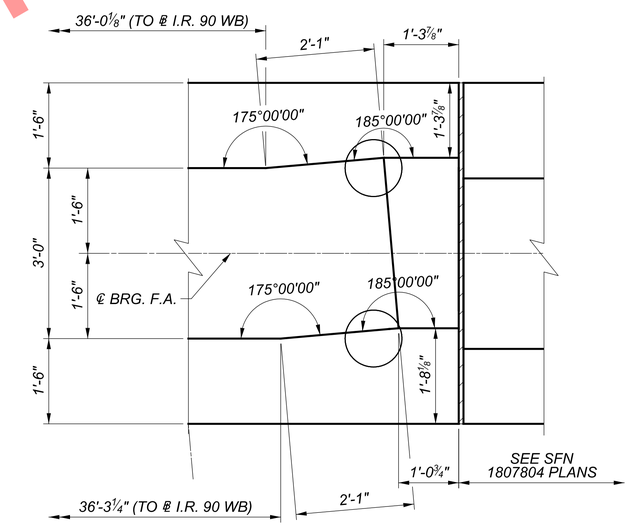

DETAIL B

(REINFORCING NOT SHOWN)

NOTES:

1. *SEE SHEET 23/50 FOR FORWARD ABUTMENT PLAN AND ELEVATION.*
2. *MINIMUM REINFORCING LAP LENGTHS:*
   #5 VERTICAL = 2'-5"
3. *TURN GEOTEXTILE FABRIC UP 6" AT BASE OF WALL AND DOWN 6" AT TOP OF WALL.*

Preliminary Plans - For Reference Only

FORWARD ABUTMENT WINGWALL AND DETAILS
CUY-90-1653L (BRIDGE 10)
I.R. 90 WB OVER CR-721 (E. 14TH ST.)

SFN	1807901
DESIGN AGENCY	B&N burgessniple.com
DESIGNER	MAB
CHECKER	BCS
REVIEWER	DWL 06/21/22
PROJECT ID	82382
SUBSET	24
TOTAL	50
SHEET	2059
TOTAL	2696

CUY-90-16.28 (CCG3A)
MODEL: Sheet PAPERSIZE: 34x22 (in.) DATE: 3/28/2025 TIME: 9:51:21 AM USER: Maia.Gallagher
pw:\\mb-us-pw.bentley.com:mb-us-pw-03\Documents\Cleveland_OH\01_Projects\ODOT\District12\82382\400-Engineering\Structures\SFN_1807901\Sheets\82382_SFN_1807901_SF003.dgn

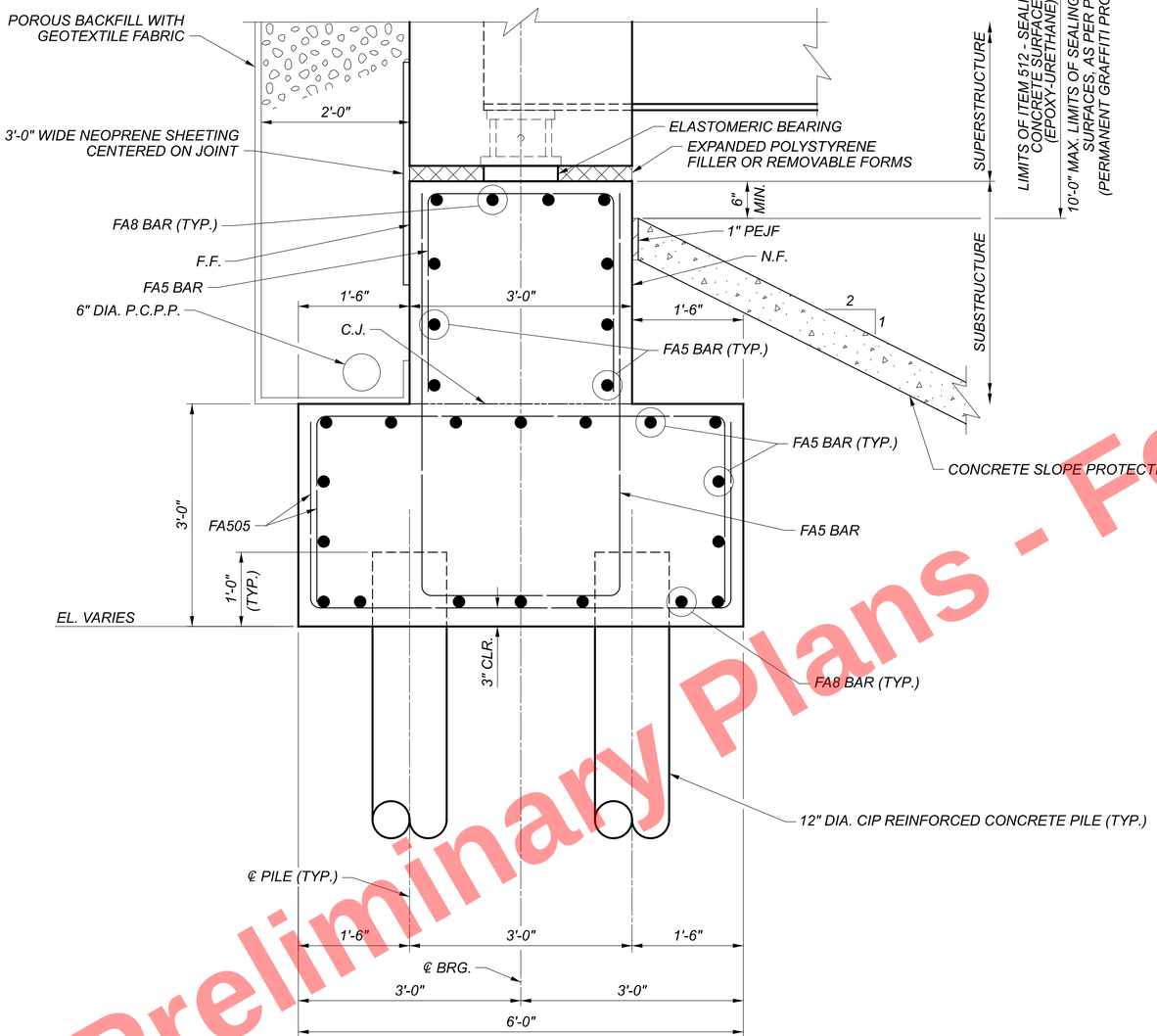

SECTION A-A

NOTES:

1. SEE SHEET 23/50 FOR LOCATION OF SECTION A-A.

Preliminary Plans - For Reference Only

FORWARD ABUTMENT DETAILS
CUY-90-1653L (BRIDGE 10)
I.R. 90 WB OVER CR-721 (E. 14TH ST.)

SFN	1807901
DESIGN AGENCY	B&N burgessniple.com
DESIGNER	MAB
CHECKER	BCS
REVIEWER	DWL 06/21/22
PROJECT ID	82382
SUBSET	25
TOTAL	50
SHEET	2060
TOTAL	2696

CUY-90-16.28 (CCG3A)

MODEL: Sheet PAPERSIZE: 34x22 (in.) DATE: 3/28/2025 TIME: 9:51:28 AM USER: Maia.Gallagher
pw:\\mb-us-pw.bentley.com:mb-us-pw-03\Documents\Cleveland_OH\01_Projects\ODOT\District12\82382\2400-Engineering\Structures\SFN_1807901\Sheets\82382_SFN_1807901_SF004.dgn

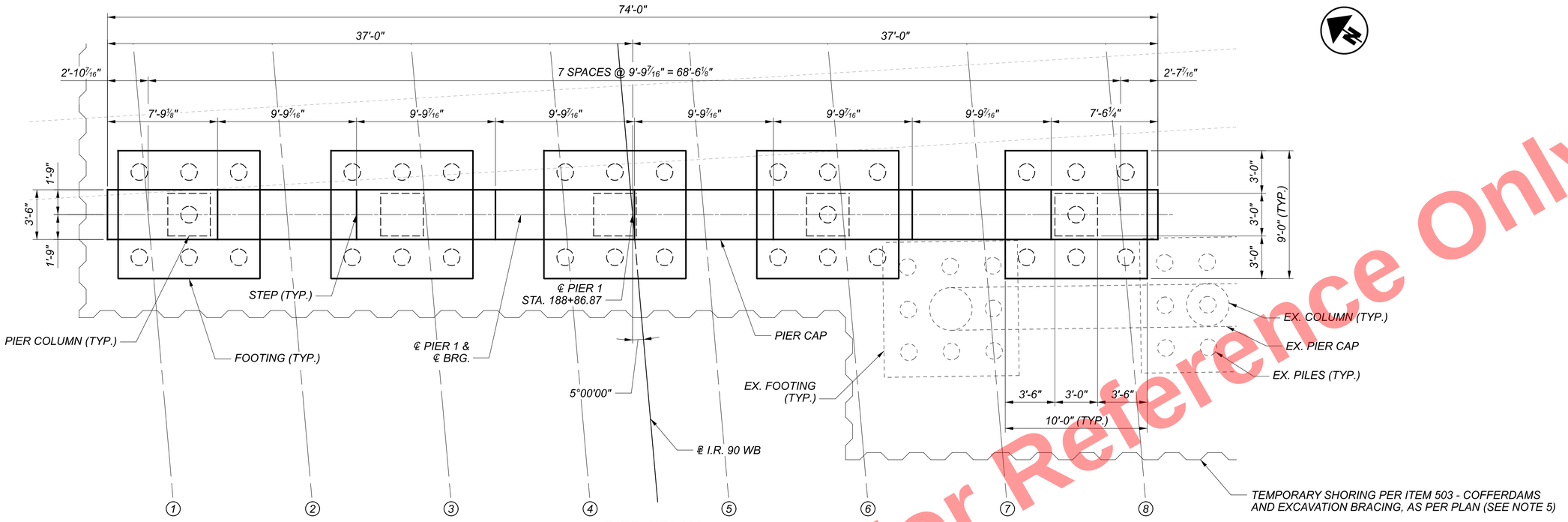

PIER 1 PLAN

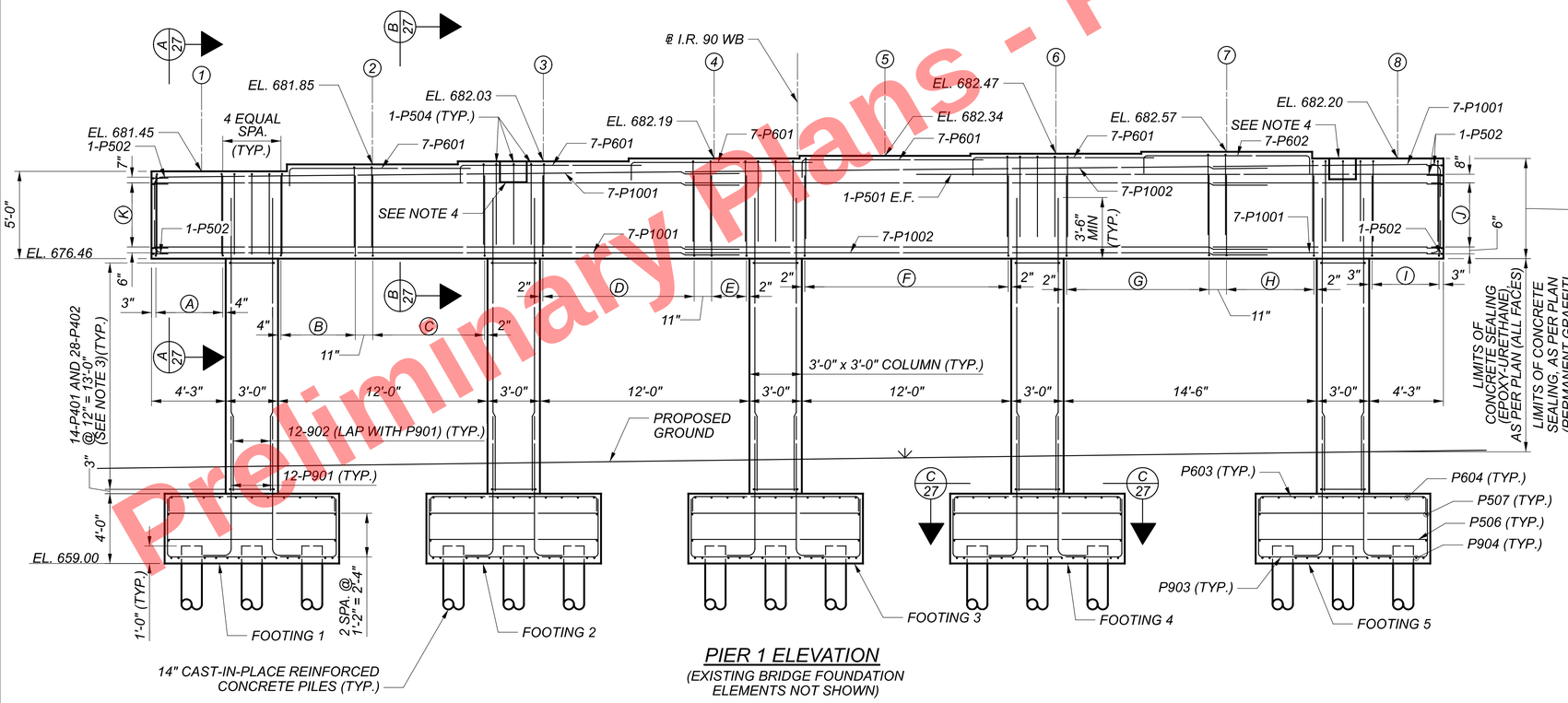

PIER 1 ELEVATION

(EXISTING BRIDGE FOUNDATION ELEMENTS NOT SHOWN)

LEGEND:

- (#) = GIRDER NUMBER
- (A) = 12 SETS OF 4-P606 @ 4" = 3'-8"
- (B) = 6 SETS OF 4-P606 @ 11" = 4'-7"
- (C) = 9 SETS OF 2-P605 @ 9" = 6'-0"
- (D) = 22 SETS OF 4-P605 @ 5" = 8'-9"
- (E) = 5 SETS OF 4-P605 @ 6" = 2'-0"
- (F) = 15 SETS OF 4-P605 @ 10" = 11'-8"
- (G) = 9 SETS OF 4-P605 @ 12" = 8'-0"
- (H) = 10 SETS OF 4-P605 @ 7" = 5'-3"
- (I) = 10 SETS OF 4-P605 @ 5" = 3'-9"
- (J) = 6-P503 E.F. (LAP WITH P501) AND 6-P502 (LAP WITH P503) @ 8" = 3'-4"
- (K) = 6-P501 E.F. (2 LENGTHS) AND 6-P502 (LAP WITH P501) @ 8" = 3'-4"

NOTES:

1. MINIMUM LAP LENGTHS:
   #5 = 3'-1" #8 = 5'-8"
   #6 = 3'-7" #9 = 4'-3"
   #7 = 3'-4" #10 = 7'-4"
2. SEE SHEET 27/50 FOR PIER 1 FOOTING DETAILS, SECTIONS A-A, B-B, C-C, AND D-D.
3. ALTERNATE HOOKED END OF P402 BAR AT EACH LEVEL.
4. SEE LIGHTING PLANS FOR LOCATION AND DETAILS FOR PROPOSED LIGHTING ATTACHED TO STRUCTURE.
5. SEE SHEET 13/50 FOR PIER TEMPORARY SHORING DETAILS.
6. SEE SHEET 10/50 FOR REMOVAL DETAILS.

PIER 1 PLAN AND ELEVATION
CUY-90-1653L (BRIDGE 10)
I.R. 90 WB OVER CR-721 (E. 14TH ST.)

SFN	1807901
DESIGN AGENCY	B&N burgessniple.com
DESIGNER	DBH
CHECKER	MAB
REVIEWER	DWL 06/21/22
PROJECT ID	82382
SUBSET	26
TOTAL	50
SHEET	2061
TOTAL	2696

CUY-90-16.28 (CCG3A)

MODEL: Sheet PAPERSIZE: 34x22 (in.) DATE: 3/28/2025 TIME: 9:51:35 AM USER: Mala.Gallagher
pw:\\mb-us-pw.bentley.com:mb-us-pw-03\Documents\Cleveland_OH\01_Projects\ODOT\District12\82382\400-Engineering\Structures\SFN_1807901\Sheets\82382_SFN_1807901_SI001.dgn

Preliminary Plans - For Reference Only

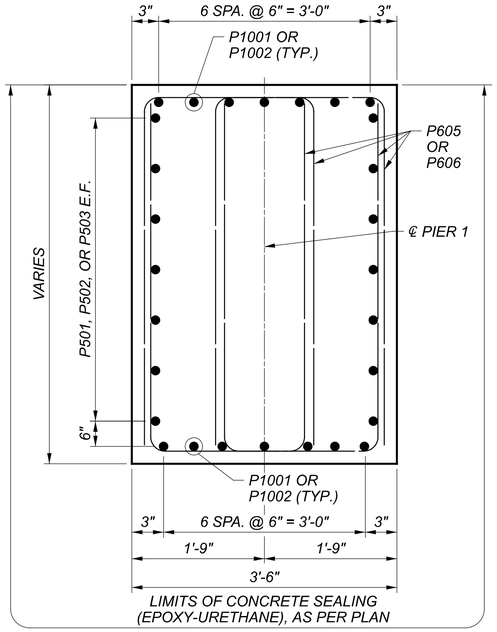

SECTION A-A

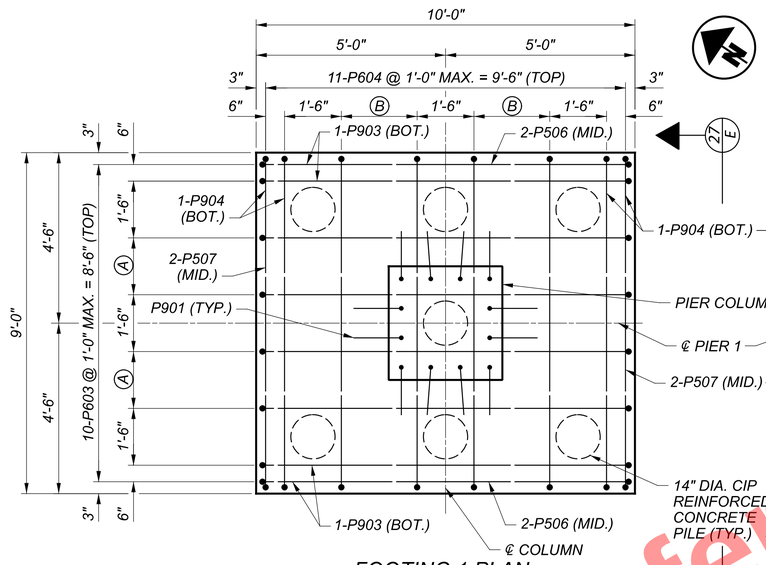

FOOTING 1 PLAN
(FOOTINGS 4 AND 5 SIMILAR)

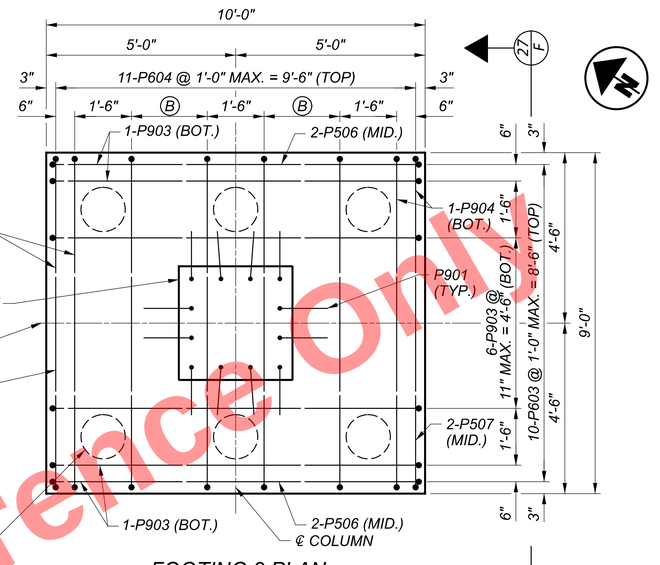

FOOTING 2 PLAN
(FOOTING 3 SIMILAR)

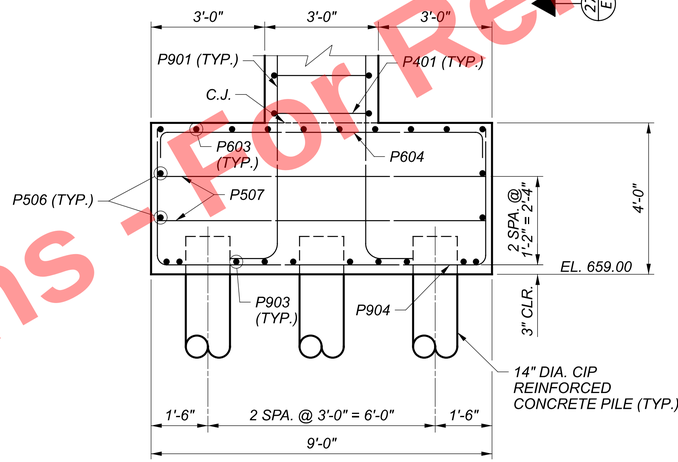

VIEW E-E

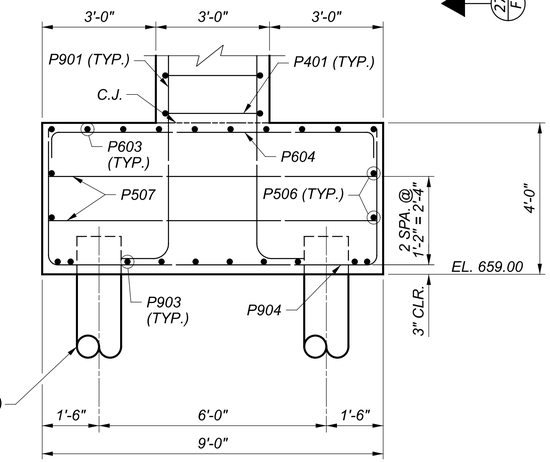

VIEW F-F

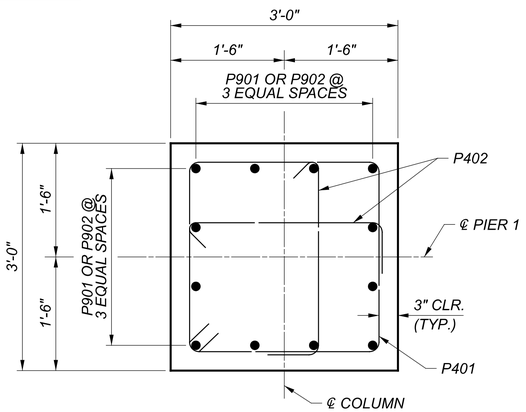

SECTION C-C

SECTION B-B

LEGEND:

Ⓐ = 3-P903 @ 9" = 1'-6" (BOT.)

Ⓑ = 4-P904 @ 8" = 2'-0" (BOT.)

NOTES:

1. SEE SHEET 26/50 FOR ADDITIONAL DETAILS AND LOCATIONS OF SECTIONS A-A, B-B, C-C, AND D-D.

PIER 1 DETAILS
CUY-90-1653L (BRIDGE 10)
I.R. 90 WB OVER CR-721 (E. 14TH ST.)

SFN	1807901
DESIGN AGENCY	B&N burgessniple.com
DESIGNER	DBH
CHECKER	MAB
REVIEWER	DWL 6/22/2022
PROJECT ID	82382
SUBSET	27
TOTAL	50
SHEET	2062
TOTAL	2696

CUY-90-16.28 (CCG3A)

MODEL: Sheet PAPERSIZE: 34x22 (in.) DATE: 3/28/2025 TIME: 9:51:44 AM USER: Mala.Gallagher
pw:\\mb-us-pw.bentley.com:mb-us-pw-03\Documents\Cleveland_OH\01_Projects\ODOT\District12\82382\400-Engineering\Structures\SFN_1807901\Sheets\82382_SFN_1807901_SI002.dgn

Preliminary Plans - For Reference Only

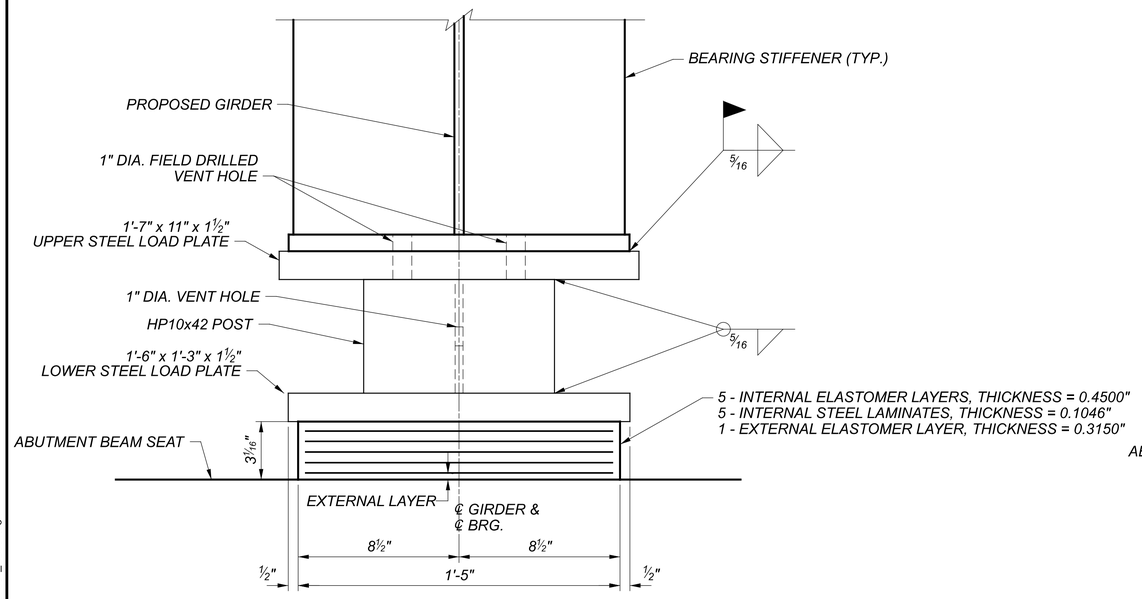

ABUTMENT BEARING ELEVATION

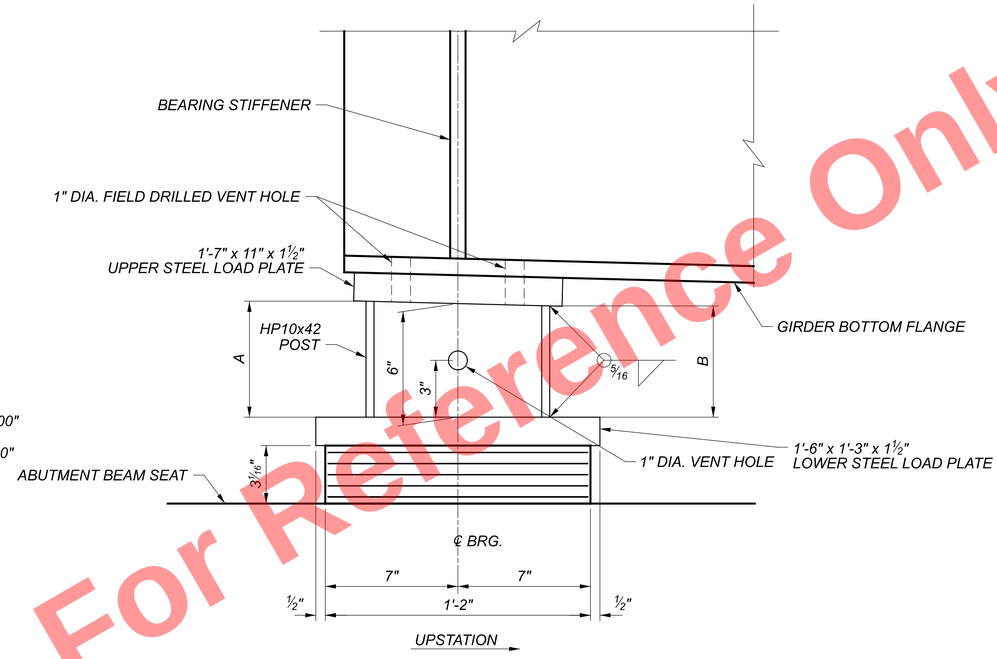

ABUTMENT BEARING SIDE ELEVATION

(REAR ABUTMENT SHOWN, FORWARD ABUTMENT SIMILAR)

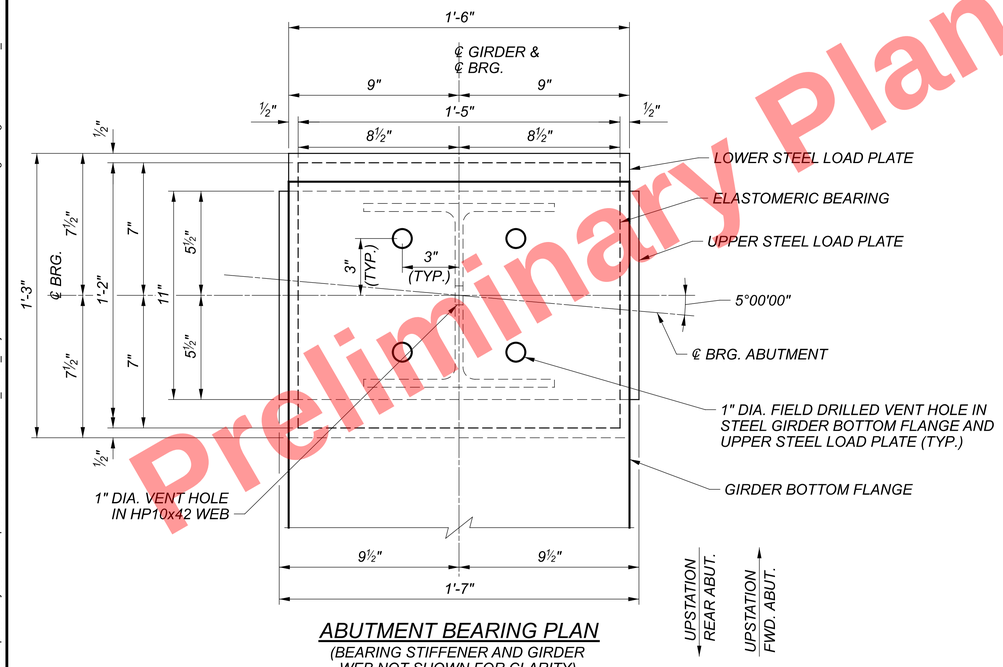

ABUTMENT BEARING PLAN

(BEARING STIFFENER AND GIRDER WEB NOT SHOWN FOR CLARITY)

ELASTOMERIC BEARING DATA							
LOCATION	TYPE	NO. REQ'D.	REACTION (KIPS) DL	REACTION (KIPS) LL**	MAX DESIGN LOAD (KIPS)	A	B
REAR ABUT.	EXP.	8	142	98	240	SEE TABLE	
FWD. ABUT.	EXP.	8	142	98	240	5⅞"	6⅛"

GIRDER #	A	B
G1 - G2	6 1/16"	5 15/16"
G3 - G8	6"	6"

LEGEND:

** = LIVE LOAD WITHOUT IMPACT

NOTES:

1. PRIOR TO SHIPPING EACH BEARING ASSEMBLY SHALL BE SHOP MARKED WITH THE FOLLOWING INFORMATION: TOP, UPSTATION DIRECTION, LOCATION, AND GIRDER NUMBER. ALL MARKS SHALL BE PERMANENT AND BE VISIBLE AFTER THE BEARING IS INSTALLED.
2. UPPER AND LOWER STEEL LOAD PLATES AND HP POSTS SHALL BE ASTM A709 GRADE 50 STEEL. THE LOWER STEEL LOAD PLATES SHALL BE BONDED BY VULCANIZATION TO THE ELASTOMER DURING THE MOLDING PROCESS.
3. ELASTOMERIC BEARINGS: THE ELASTOMER SHALL HAVE A HARDNESS OF 50 DUROMETER. THE BEARINGS WERE DESIGNED IN ACCORDANCE WITH SECTION 14.7.6 (METHOD A) OF AASHTO LRFD BRIDGE DESIGN SPECIFICATIONS. THE LONG-TERM COMPRESSION PROOF TEST (AASHTO STANDARD SPECIFICATIONS FOR HIGHWAY BRIDGES, DIVISION II, SECTION 18.7.2.6) IS NOT REQUIRED.
4. BASIS OF PAYMENT: THE UNIT BID PRICE SHALL INCLUDE ALL MATERIALS, LABOR, TESTING, AND INCIDENTALS NECESSARY TO FURNISH AND INSTALL LAMINATED ELASTOMERIC BEARINGS, INCLUDING LOAD PLATES, HP POSTS, AND MISC. HARDWARE. PAYMENT WILL BE AT THE UNIT PRICE FOR ITEM 516 - EACH, ELASTOMERIC BEARING WITH INTERNAL LAMINATES AND LOAD PLATE (NEOPRENE), AS PER PLAN.

Preliminary Plans - For Reference Only

ABUTMENT BEARING DETAILS
CUY-90-1653L (BRIDGE 10)
I.R. 90 WB OVER CR-721 (E. 14TH ST.)

SFN 1807901
DESIGN AGENCY B&N burgessniple.com
DESIGNER DBH | CHECKER BCS
REVIEWER DWL 05/24/22
PROJECT ID 82382
SUBSET 28 | TOTAL 50
SHEET 2063 | TOTAL 2696

CUY-90-16.28 (CCG3A)

MODEL: Sheet PAPERSIZE: 34x22 (in.) DATE: 3/28/2025 TIME: 9:51:49 AM USER: Mata.Gallagher
pw:\\mb-us-pw.bentley.com:mb-us-pw-03\Documents\Cleveland_OH101_Projects\ODOT\District12\82382\400-Engineering\Structures\SFN_1807901\Sheets\82382_SFN_1807901_SB001.dgn

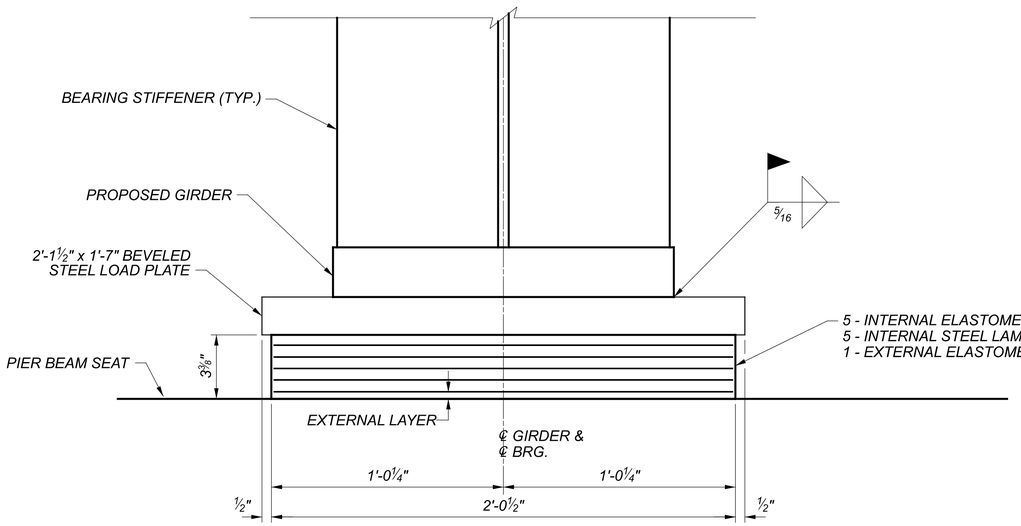

PIER BEARING ELEVATION

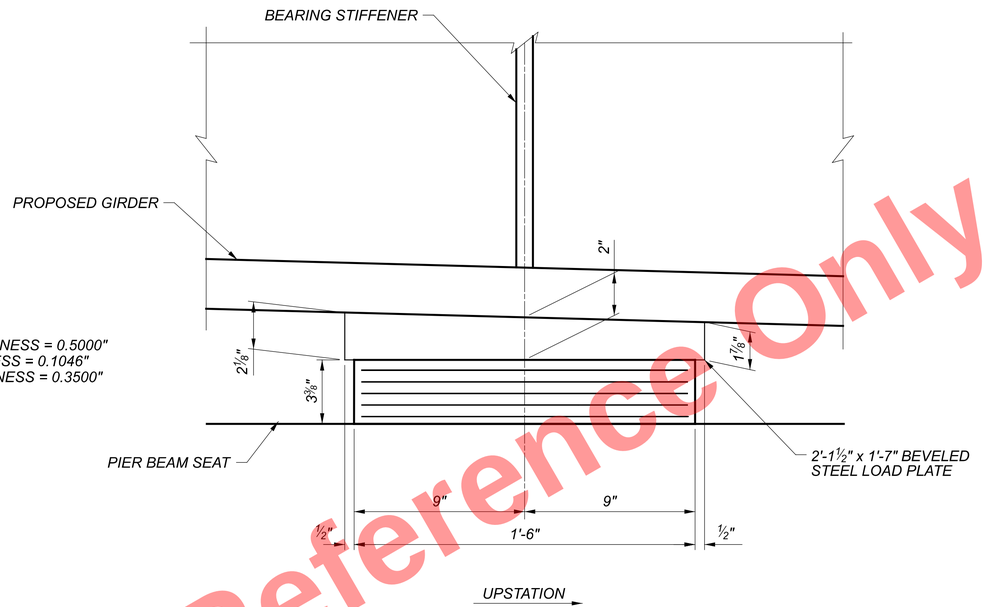

PIER BEARING SIDE ELEVATION

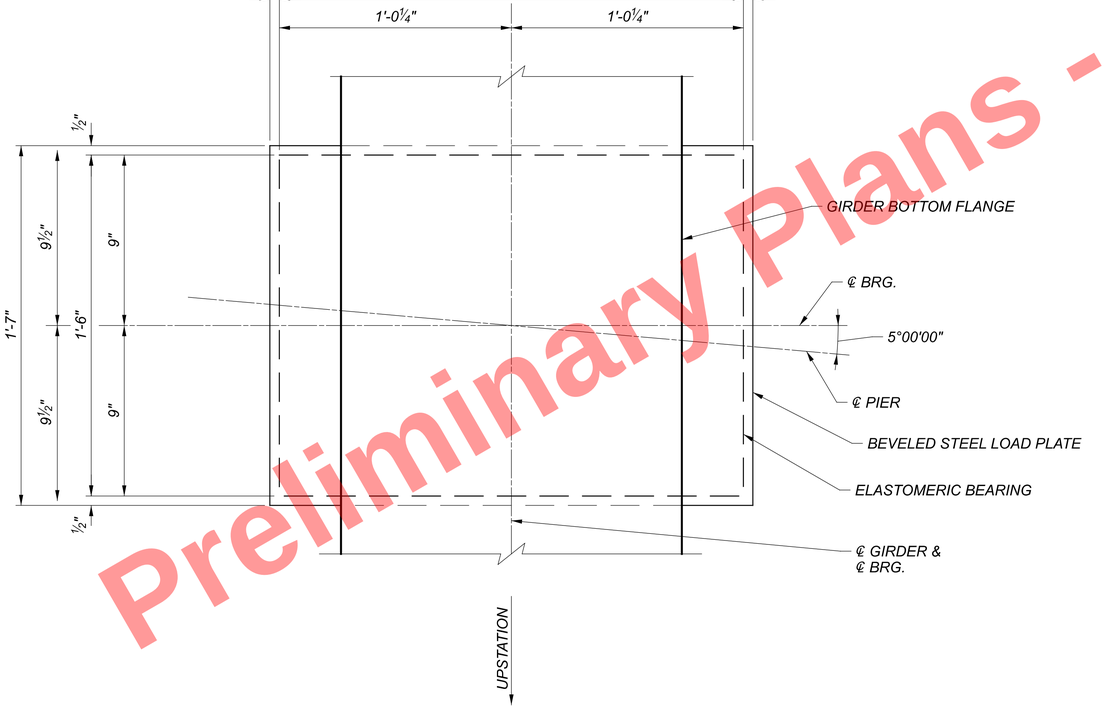

PIER BEARING PLAN

(BEARING STIFFENER AND GIRDER WEB NOT SHOWN FOR CLARITY)

ELASTOMERIC BEARING DATA					
LOCATION	TYPE	NO. REQ'D.	REACTION (KIPS) DL	REACTION (KIPS) LL**	MAX DESIGN LOAD (KIPS)
PIER 1	EXP.	8	375	184	559

LEGEND:

** = LIVE LOAD WITHOUT IMPACT

NOTES:

1. PRIOR TO SHIPPING EACH BEARING ASSEMBLY SHALL BE SHOP MARKED WITH THE FOLLOWING INFORMATION: TOP, UPSTATION DIRECTION, LOCATION, AND GIRDER NUMBER. ALL MARKS SHALL BE PERMANENT AND BE VISIBLE AFTER THE BEARING IS INSTALLED.
2. STEEL LOAD PLATES SHALL BE ASTM A709 GRADE 50 STEEL. THE STEEL LOAD PLATES SHALL BE BONDED BY VULCANIZATION TO THE ELASTOMER DURING THE MOLDING PROCESS.
3. ELASTOMERIC BEARINGS: THE ELASTOMER SHALL HAVE A HARDNESS OF 50 DUROMETER. THE BEARINGS WERE DESIGNED IN ACCORDANCE WITH SECTION 14.7.6 (METHOD A) OF AASHTO LRFD BRIDGE DESIGN SPECIFICATIONS. THE LONG-TERM COMPRESSION PROOF TEST (AASHTO STANDARD SPECIFICATIONS FOR HIGHWAY BRIDGES, DIVISION II, SECTION 18.7.2.6) IS NOT REQUIRED.
4. BASIS OF PAYMENT: THE UNIT BID PRICE SHALL INCLUDE ALL MATERIALS, LABOR, TESTING, AND INCIDENTALS NECESSARY TO FURNISH AND INSTALL LAMINATED ELASTOMERIC BEARINGS, INCLUDING LOAD PLATES, AND MISC. HARDWARE. PAYMENT WILL BE AT THE UNIT PRICE FOR ITEM 516 - EACH, ELASTOMERIC BEARING WITH INTERNAL LAMINATES AND LOAD PLATE (NEOPRENE), AS PER PLAN.

Preliminary Plans - For Reference Only

PIER BEARING DETAILS
CUY-90-1653L (BRIDGE 10)
I.R. 90 WB OVER CR-721 (E. 14TH ST.)

SFN 1807901
DESIGN AGENCY B&N burgessniple.com
DESIGNER DBH | CHECKER BCS
REVIEWER DWL 05/24/22
PROJECT ID 82382
SUBSET 29 | TOTAL 50
SHEET 2064 | TOTAL 2696

CUY-90-16.28 (CCG3A)

MODEL: Sheet PAPERSIZE: 34x22 (in.) DATE: 3/28/2025 TIME: 9:51:55 AM USER: Mata.Gallagher
pw:\\mb-us-pw.bentley.com:mb-us-pw-03\Documents\Cleveland_OH101_Projects\ODOT\District12\82382\400-Engineering\Structures\SFN_1807901\Sheets\82382_SFN_1807901_SB002.dgn

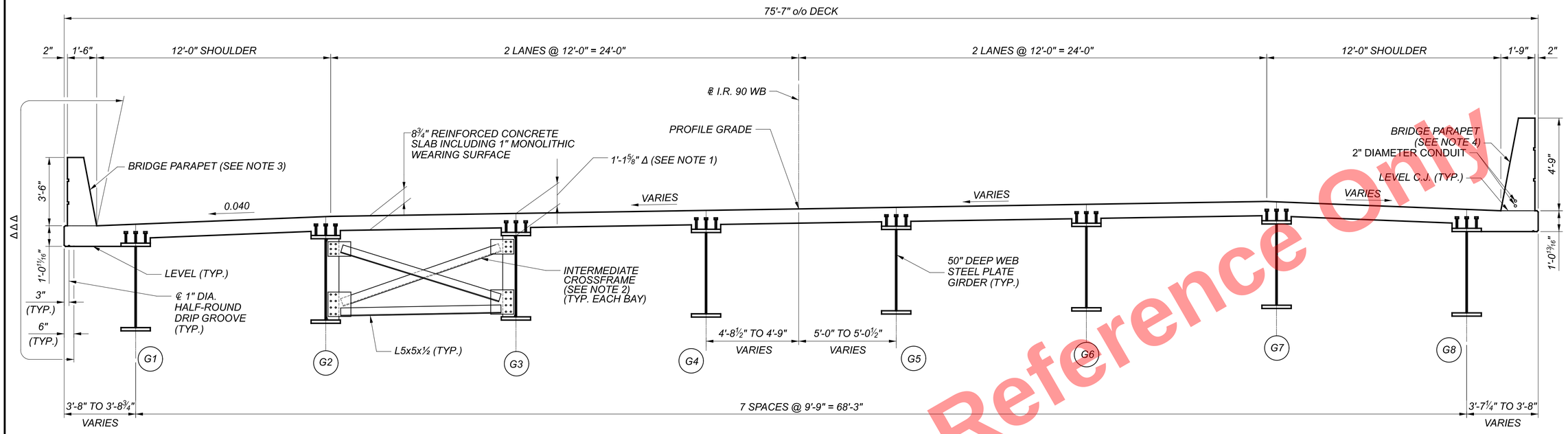

TRANSVERSE SECTION

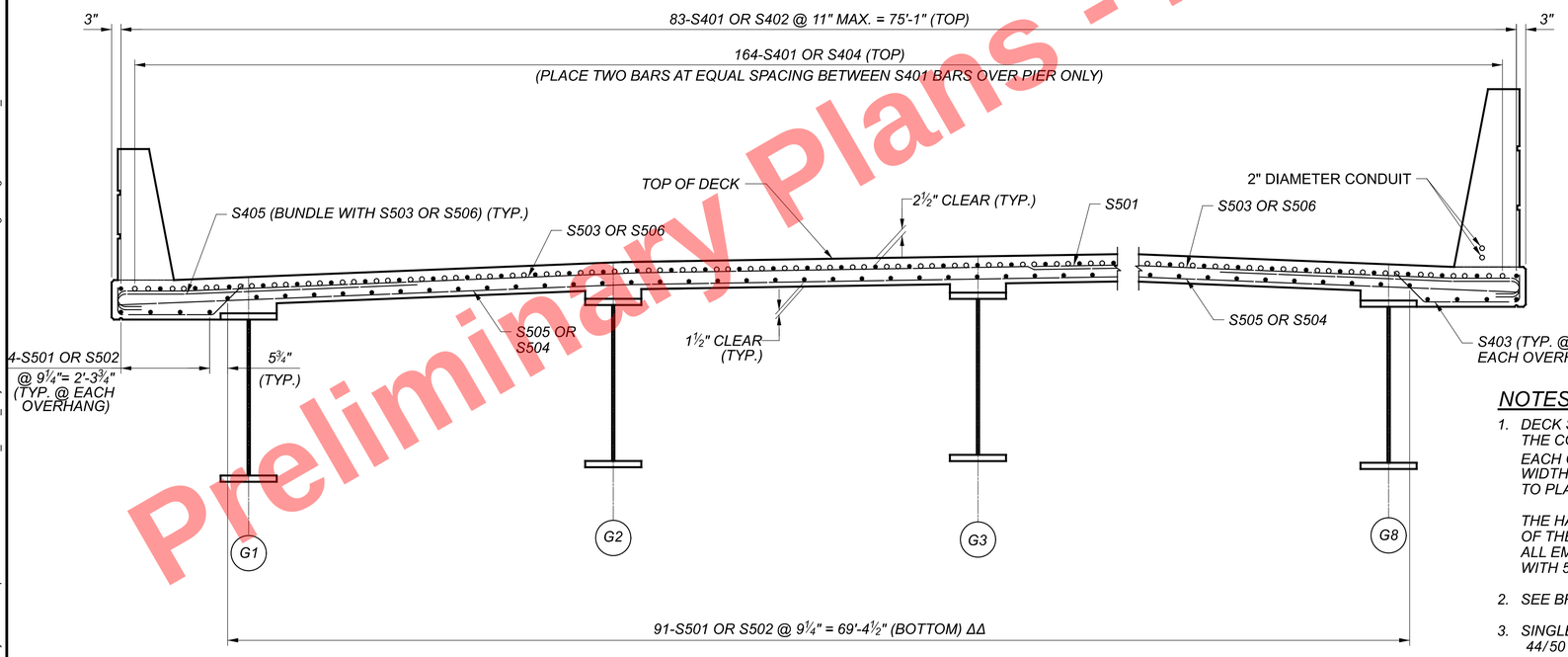

DECK SLAB REINFORCING STEEL DETAILS

(CROSSFRAMES AND SHEAR STUDS NOT SHOWN)

(PARAPET REINFORCING STEEL DETAILS NOT SHOWN)

LEGEND:

Δ = MEASURED FROM TOP OF DECK TO TOP OF WEB (TYP.)

ΔΔ = ADJUST BAR SPACING AS NEEDED TO CLEAR SHEAR STUDS

ΔΔΔ = LIMITS OF ITEM 512 - SEALING OF CONCRETE SURFACES (EPOXY URETHANE) (TYP.)

(G#) = GIRDER NUMBER

NOTES:

1. DECK SLAB CONCRETE QUANTITY: THE ESTIMATED QUANTITY OF DECK SLAB CONCRETE IS BASED ON THE CONSTANT DECK SLAB THICKNESS, AS SHOWN, PLUS THE QUANTITY OF CONCRETE THAT FORMS EACH GIRDER HAUNCH. THE ESTIMATE ASSUMES A CONSTANT HAUNCH THICKNESS OF 4⅞" AND A WIDTH EQUAL TO THE TOP FLANGE WIDTH. DEVIATE FROM THIS HAUNCH THICKNESS AS NECESSARY TO PLACE THE DECK SURFACE AT THE FINISHED GRADE.

   THE HAUNCH THICKNESS WAS MEASURED AT THE CENTERLINE OF THE GIRDER, FROM THE SURFACE OF THE DECK TO THE BOTTOM OF THE TOP FLANGE MINUS THE DECK SLAB THICKNESS. THE AREA OF ALL EMBEDDED STEEL PLATES HAS BEEN DEDUCTED FROM THE HAUNCH QUANTITY IN ACCORDANCE WITH 511.23.

2. SEE BRIDGE STANDARD DRAWING GSD-1-19 FOR INTERMEDIATE CROSSFRAME DETAILS.
3. SINGLE SLOPE CONCRETE BRIDGE PARAPET PER BRIDGE STANDARD DRAWING SBR-1-20. SEE SHEETS 44/50 TO 45/50 FOR PARAPET DETAILS.
4. SINGLE SLOPE CONCRETE BRIDGE PARAPET PER BRIDGE STANDARD DRAWING SBR-2-20. SEE SHEETS 36/43 TO 37/50 FOR PARAPET DETAILS.
5. SEE SHEET 41/50 FOR SUPERELEVATION TRANSITION DIAGRAM.

Preliminary Plans - For Reference Only

TRANSVERSE SECTION
CUY-90-1653L (BRIDGE 10)
I.R. 90 WB OVER CR-721 (E. 14TH ST.)

SFN 1807901
DESIGN AGENCY B&N burgessniple.com
DESIGNER MAB | CHECKER BCS
REVIEWER DWL 05/24/22
PROJECT ID 82382
SUBSET 30 | TOTAL 50
SHEET 2065 | TOTAL 2696

CUY-90-16.28 (CCG3A)

MODEL: Sheet PAPERSIZE: 34x22 (in.) DATE: 3/28/2025 TIME: 9:52:02 AM USER: Mala.Gallagher
pw:\\mb-us-pw.bentley.com:mb-us-pw-03\Documents\Cleveland_OH01_Projects\ODOT\District12\82382\400-Engineering\Structures\SFN_1807901\Sheets\82382_SFN_1807901_ST001.dgn

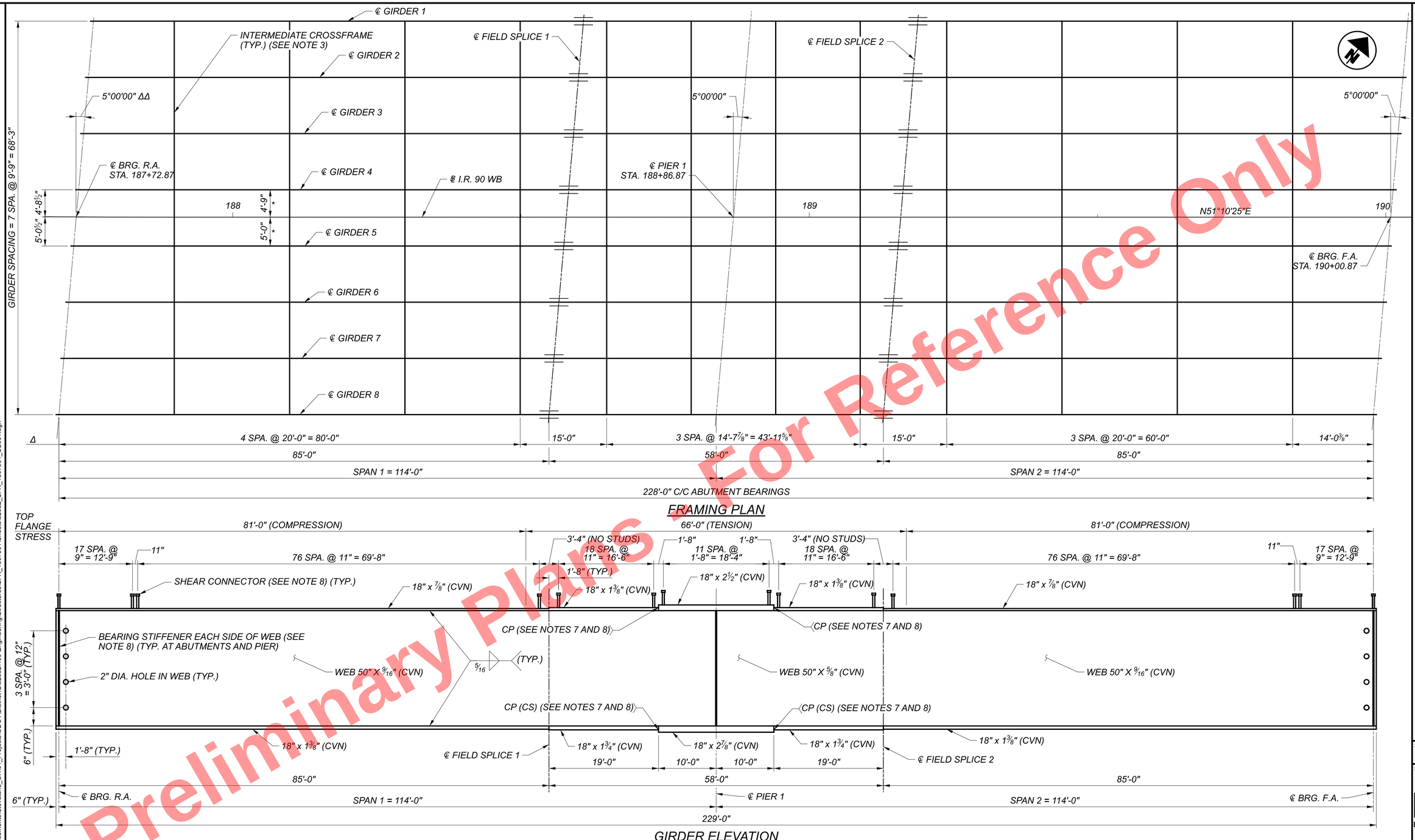

Preliminary Plans Not For Construction
For Reference Only

LEGEND:

Δ = INTERMEDIATE CROSSFRAME SPACING MEASURED ALONG ℄ GIRDER 8.

ΔΔ= MEASURED FROM REFERENCE LINE

* = @ STA. 187+88.40

CP = COMPLETE JONT PENETRATION WELD

CS = WELD SUBJECT TO COMPRESSIVE STRESS ONLY.

NOTES:

1. WHERE A SHAPE IS DESIGNATED (CVN), FURNISH MATERIAL THAT MEETS MINIMUM NOTCH TOUGHNESS REQUIREMENTS AS SPECIFIED IN CMS 711.01.
2. WELD ATTACHMENT OF SUPPORTS FOR CONCRETE DECK FINISHING MACHINE TO AREAS OF THE FASCIA GIRDER FLANGES DESIGNATED "COMPRESSION". DO NOT WELD ATTACHMENTS TO AREAS DESIGNATED "TENSION". FILLET WELDS TO COMPRESSION FLANGES SHALL BE AT LEAST 1" FROM EDGE OF FLANGE, BE NO MORE THAN 2" LONG, AND BE AT LEAST ¼" FOR THICKNESS UP TO ¾" OR 5/16" FOR GREATER THAN ¾" THICK.
3. SEE STANDARD BRIDGE DRAWING GSD-1-19 FOR INTERMEDIATE CROSSFRAME DETAILS. THE ESTIMATED QUANTITY FOR STRUCTURAL STEEL IS BASED ON THE USE OF TYPE A CROSSFRAMES.
4. CROSSFRAME CONNECTION PLATES NOT SHOWN IN GIRDER ELEVATION. SEE FRAMING PLAN FOR LOCATIONS.
5. ALL DIMENSIONS ARE HORIZONTAL AND REQUIRE ADJUSTMENT FOR CAMBER AND FINISHED GRADE.
6. ALL STRUCTURAL STEEL SHALL BE ASTM A709 GRADE 50 AND SHALL BE SHOP PRIMED AND FIELD PAINTED PER CMS 514. TOP COAT SHALL BE ALABASTER 7008 (SHERWIN WILLIAMS).
7. COMPLETE JOINT PENETRATION WELDS SHALL BE GROUND SMOOTH IN THE LONGITUDINAL DIRECTION TO REMOVE WELD REINFORCEMENT.
8. SEE SHEET 32/50 FOR ADDITIONAL GIRDER DETAILS.
9. ADJUST SHEAR CONNECTOR SPACING LOCALLY AS REQUIRED TO CLEAR FLANGE SHOP SPLICE.

FRAMING PLAN AND GIRDER ELEVATION
CUY-90-1653L (BRIDGE 10)
I.R. 90 WB OVER CR-721 (E. 14TH ST.)

SFN	1807901
DESIGN AGENCY	B&N burgessniple.com
DESIGNER	MAB
CHECKER	BCS
REVIEWER	DWL 05/24/22
PROJECT ID	82382
SUBSET	31
TOTAL	50
SHEET	2066
TOTAL	2696

CUY-90-16.28 (CCG3A)

MODEL: Sheet PAPERSIZE: 34x22 (in.) DATE: 3/28/2025 TIME: 9:52:11 AM USER: Maia.Gallagher
pw:\\mb-us-pw.bentley.com:mb-us-pw-03\Documents\Cleveland_OH\01_Projects\ODOT\District12\82382\400-Engineering\Structures\SFN_1807901\Sheets\82382_SFN_1807901_SS001.dgn

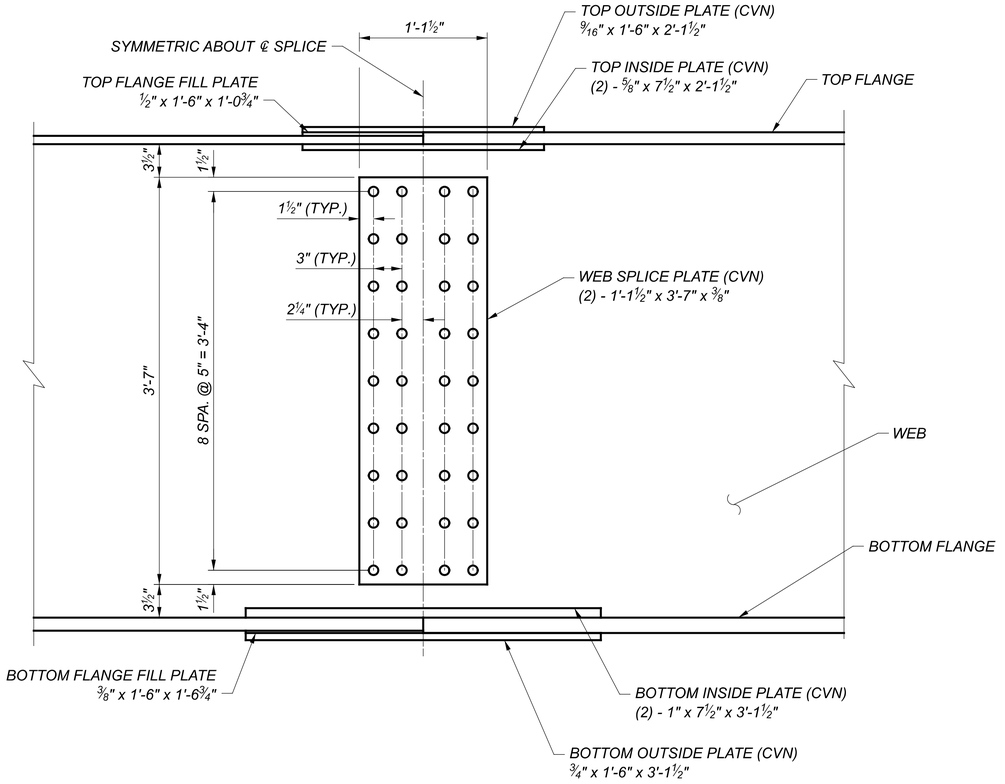

WEB FIELD SPLICE DETAIL

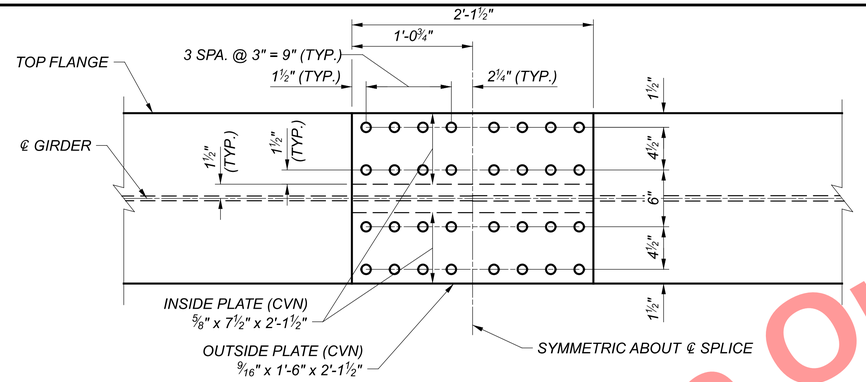

TOP FLANGE FIELD SPLICE DETAIL

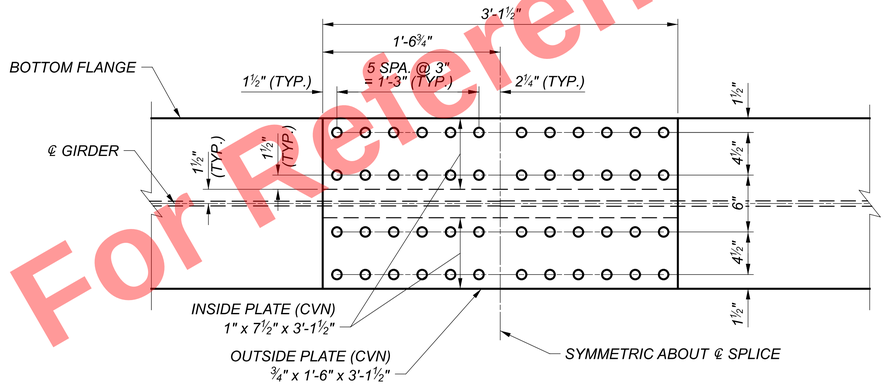

BOTTOM FLANGE FIELD SPLICE DETAIL

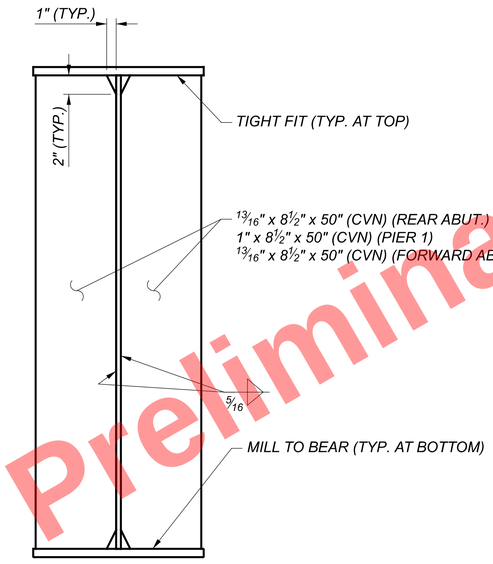

BEARING STIFFENER DETAIL

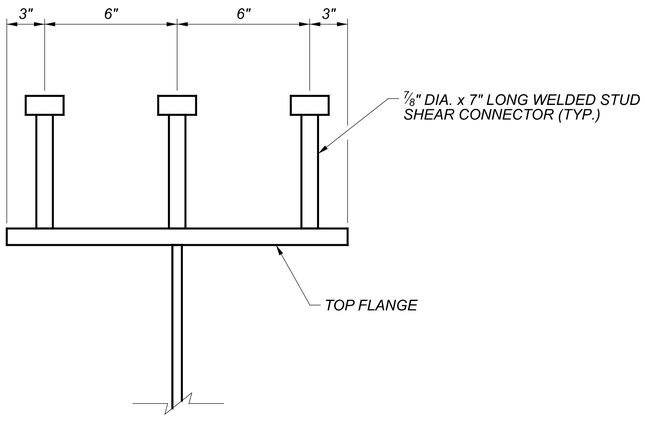

SHEAR CONNECTOR DETAIL

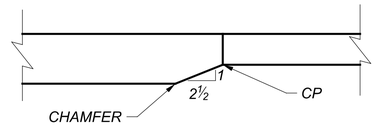

FLANGE SHOP SPLICE DETAIL

(BOTTOM FLANGE SHOWN, TOP FLANGE SIMILAR)

NOTES:

1. WHERE A SHAPE IS DESIGNATED (CVN), FURNISH MATERIAL THAT MEETS MINIMUM NOTCH TOUGHNESS REQUIREMENTS AS SPECIFIED IN CMS 711.01.
2. ALL STRUCTURAL STEEL SHALL BE ASTM A709 GRADE 50.
3. INSTALL STIFFENERS ACCORDING TO CMS 513.13.
4. HIGH STRENGTH BOLTS SHALL BE 1" DIAMETER.
5. ALL BOLTS, NUTS, AND WASHERS SHALL BE ASTM F3125 GRADE A325, TYPE I.
6. SPLICE PLATES HAVE BEEN DESIGNED FOR BOLT THREADS TO BE INCLUDED IN THE SHEAR PLAN AT ALL CONNECTIONS.

Preliminary Plans - For Reference Only

GIRDER DETAILS
CUY-90-1653L (BRIDGE 10)
I.R. 90 WB OVER CR-721 (E. 14TH ST.)

SFN 1807901
DESIGN AGENCY
B&N burgessniple.com
DESIGNER MAB | CHECKER BCS
REVIEWER DWL 05/24/22
PROJECT ID 82382
SUBSET 32 | TOTAL 50
SHEET 2067 | TOTAL 2696

CUY-90-16.28 (CCG3A)

MODEL: Sheet PAPERSIZE: 34x22 (in.) DATE: 3/28/2025 TIME: 9:52:18 AM USER: Mata.Gallagher
pw:\\mb-us-pw.bentley.com:mb-us-pw-03\Documents\Cleveland_OH101_Projects\ODOT\District12\82382\400-Engineering\Structures\SFN_1807901\Sheets\82382_SFN_1807901_SS002.dgn

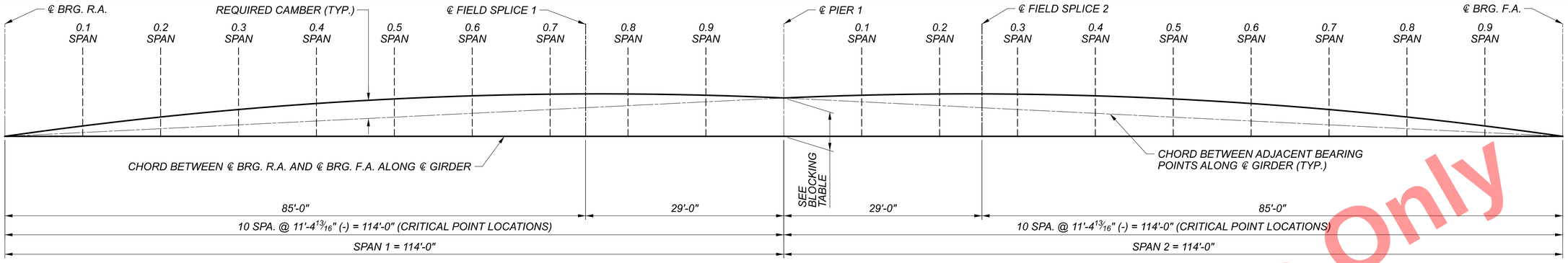

CAMBER AND BLOCKING DIAGRAM

(NOT TO SCALE)

GIRDER 1 DEFLECTION AND CAMBER TABLE (VALUES IN INCHES)

DESCRIPTION	CENTERLINE BRG. R.A.	SPAN 1										CENTERLINE PIER 1	SPAN 2									CENTERLINE BRG. F.A.
		0.1	0.2	0.3	0.4	0.5	0.6	0.7	FIELD SPLICE 1	0.8	0.9		0.1	0.2	FIELD SPLICE 2	0.3	0.4	0.5	0.6	0.7	0.8	0.9	
DEFLECTION DUE TO WEIGHT OF STEEL (A)	0.00	0.14	0.26	0.33	0.36	0.34	0.27	0.18	0.14	0.09	0.02	0.00	0.03	0.10	0.15	0.19	0.28	0.34	0.36	0.34	0.26	0.14	0.00
DEFLECTION DUE TO REMAINING DEAD LOAD (B)	0.00	0.68	1.25	1.61	1.74	1.62	1.30	0.87	0.67	0.43	0.12	0.00	0.12	0.43	0.67	0.87	1.30	1.62	1.74	1.61	1.25	0.68	0.00
ADJUSTMENT FOR VERTICAL CURVATURE (C)	0.00	0.60	1.10	1.50	1.80	1.99	2.09	2.08	2.05	1.75	0.93	0.00	0.46	0.81	0.96	1.07	1.22	1.27	1.22	1.07	0.81	0.46	0.00
TOTAL CAMBER (A+B+C)	0.00	1.42	2.60	3.44	3.89	3.95	3.67	3.13	2.85	2.28	1.06	0.00	0.60	1.34	1.78	2.13	2.80	3.23	3.32	3.02	2.32	1.28	0.00

GIRDER 2 DEFLECTION AND CAMBER TABLE (VALUES IN INCHES)

DESCRIPTION	CENTERLINE BRG. R.A.	SPAN 1										CENTERLINE PIER 1	SPAN 2									CENTERLINE BRG. F.A.
		0.1	0.2	0.3	0.4	0.5	0.6	0.7	FIELD SPLICE 1	0.8	0.9		0.1	0.2	FIELD SPLICE 2	0.3	0.4	0.5	0.6	0.7	0.8	0.9	
DEFLECTION DUE TO WEIGHT OF STEEL (A)	0.00	0.15	0.28	0.36	0.39	0.37	0.30	0.20	0.15	0.10	0.02	0.00	0.03	0.11	0.16	0.21	0.30	0.37	0.39	0.36	0.28	0.15	0.00
DEFLECTION DUE TO REMAINING DEAD LOAD (B)	0.00	0.75	1.36	1.76	1.90	1.77	1.43	0.95	0.73	0.47	0.12	0.00	0.13	0.47	0.73	0.95	1.43	1.77	1.90	1.76	1.36	0.75	0.00
ADJUSTMENT FOR VERTICAL CURVATURE (C)	0.00	0.59	1.09	1.48	1.78	1.97	2.06	2.05	2.01	1.76	0.93	0.00	0.46	0.81	0.96	1.07	1.22	1.27	1.22	1.07	0.81	0.46	0.00
TOTAL CAMBER (A+B+C)	0.00	1.49	2.73	3.61	4.07	4.11	3.78	3.20	2.89	2.33	1.08	0.00	0.61	1.39	1.86	2.22	2.95	3.41	3.51	3.19	2.46	1.36	0.00

GIRDER 3 DEFLECTION AND CAMBER TABLE (VALUES IN INCHES)

DESCRIPTION	CENTERLINE BRG. R.A.	SPAN 1										CENTERLINE PIER 1	SPAN 2									CENTERLINE BRG. F.A.
		0.1	0.2	0.3	0.4	0.5	0.6	0.7	FIELD SPLICE 1	0.8	0.9		0.1	0.2	FIELD SPLICE 2	0.3	0.4	0.5	0.6	0.7	0.8	0.9	
DEFLECTION DUE TO WEIGHT OF STEEL (A)	0.00	0.15	0.28	0.36	0.39	0.37	0.30	0.20	0.15	0.10	0.02	0.00	0.03	0.11	0.16	0.21	0.30	0.37	0.39	0.36	0.28	0.15	0.00
DEFLECTION DUE TO REMAINING DEAD LOAD (B)	0.00	0.75	1.36	1.76	1.90	1.77	1.43	0.95	0.73	0.47	0.12	0.00	0.13	0.47	0.73	0.95	1.43	1.77	1.90	1.76	1.36	0.75	0.00
ADJUSTMENT FOR VERTICAL CURVATURE (C)	0.00	0.53	0.97	1.31	1.54	1.68	1.71	1.64	1.57	1.39	0.75	0.00	0.46	0.81	0.96	1.07	1.22	1.27	1.22	1.07	0.81	0.46	0.00
TOTAL CAMBER (A+B+C)	0.00	1.43	2.61	3.43	3.83	3.81	3.43	2.79	2.46	1.96	0.89	0.00	0.61	1.39	1.86	2.22	2.95	3.41	3.51	3.19	2.46	1.36	0.00

GIRDER 4 DEFLECTION AND CAMBER TABLE (VALUES IN INCHES)

DESCRIPTION	CENTERLINE BRG. R.A.	SPAN 1										CENTERLINE PIER 1	SPAN 2									CENTERLINE BRG. F.A.
		0.1	0.2	0.3	0.4	0.5	0.6	0.7	FIELD SPLICE 1	0.8	0.9		0.1	0.2	FIELD SPLICE 2	0.3	0.4	0.5	0.6	0.7	0.8	0.9	
DEFLECTION DUE TO WEIGHT OF STEEL (A)	0.00	0.15	0.28	0.36	0.39	0.37	0.30	0.20	0.15	0.10	0.02	0.00	0.03	0.11	0.16	0.21	0.30	0.37	0.39	0.36	0.28	0.15	0.00
DEFLECTION DUE TO REMAINING DEAD LOAD (B)	0.00	0.75	1.36	1.76	1.90	1.77	1.43	0.95	0.73	0.47	0.12	0.00	0.13	0.47	0.73	0.95	1.43	1.77	1.90	1.76	1.36	0.75	0.00
ADJUSTMENT FOR VERTICAL CURVATURE (C)	0.00	0.47	0.85	1.14	1.32	1.39	1.37	1.25	1.15	1.00	0.55	0.00	0.46	0.81	0.96	1.07	1.22	1.27	1.22	1.07	0.81	0.46	0.00
TOTAL CAMBER (A+B+C)	0.00	1.37	2.50	3.26	3.60	3.53	3.09	2.39	2.04	1.57	0.70	0.00	0.61	1.39	1.86	2.22	2.95	3.41	3.51	3.19	2.46	1.36	0.00

GIRDER 5 DEFLECTION AND CAMBER TABLE (VALUES IN INCHES)

DESCRIPTION	CENTERLINE BRG. R.A.	SPAN 1										CENTERLINE PIER 1	SPAN 2									CENTERLINE BRG. F.A.
		0.1	0.2	0.3	0.4	0.5	0.6	0.7	FIELD SPLICE 1	0.8	0.9		0.1	0.2	FIELD SPLICE 2	0.3	0.4	0.5	0.6	0.7	0.8	0.9	
DEFLECTION DUE TO WEIGHT OF STEEL (A)	0.00	0.15	0.28	0.36	0.39	0.37	0.30	0.20	0.15	0.10	0.02	0.00	0.03	0.11	0.16	0.21	0.30	0.37	0.39	0.36	0.28	0.15	0.00
DEFLECTION DUE TO REMAINING DEAD LOAD (B)	0.00	0.75	1.36	1.76	1.90	1.77	1.43	0.95	0.73	0.47	0.12	0.00	0.13	0.47	0.73	0.95	1.43	1.77	1.90	1.76	1.36	0.75	0.00
ADJUSTMENT FOR VERTICAL CURVATURE (C)	0.00	0.44	0.80	1.06	1.21	1.26	1.21	1.06	0.96	0.81	0.46	0.00	0.46	0.81	0.96	1.07	1.22	1.27	1.22	1.07	0.81	0.46	0.00
TOTAL CAMBER (A+B+C)	0.00	1.34	2.44	3.18	3.50	3.40	2.93	2.21	1.84	1.38	0.60	0.00	0.61	1.39	1.86	2.22	2.95	3.41	3.51	3.19	2.46	1.36	0.00

GIRDER 6 DEFLECTION AND CAMBER TABLE (VALUES IN INCHES)

DESCRIPTION	CENTERLINE BRG. R.A.	SPAN 1										CENTERLINE PIER 1	SPAN 2									CENTERLINE BRG. F.A.
		0.1	0.2	0.3	0.4	0.5	0.6	0.7	FIELD SPLICE 1	0.8	0.9		0.1	0.2	FIELD SPLICE 2	0.3	0.4	0.5	0.6	0.7	0.8	0.9	
DEFLECTION DUE TO WEIGHT OF STEEL (A)	0.00	0.15	0.28	0.36	0.39	0.37	0.30	0.20	0.15	0.10	0.02	0.00	0.03	0.11	0.16	0.21	0.30	0.37	0.39	0.36	0.28	0.15	0.00
DEFLECTION DUE TO REMAINING DEAD LOAD (B)	0.00	0.75	1.36	1.76	1.90	1.77	1.43	0.95	0.73	0.47	0.12	0.00	0.13	0.47	0.73	0.95	1.43	1.77	1.90	1.76	1.36	0.75	0.00
ADJUSTMENT FOR VERTICAL CURVATURE (C)	0.00	0.46	0.81	1.07	1.22	1.27	1.22	1.07	0.96	0.81	0.46	0.00	0.46	0.81	0.96	1.07	1.22	1.27	1.22	1.07	0.81	0.46	0.00
TOTAL CAMBER (A+B+C)	0.00	1.36	2.45	3.19	3.51	3.40	2.94	2.21	1.85	1.38	0.60	0.00	0.61	1.39	1.86	2.22	2.95	3.41	3.51	3.19	2.46	1.36	0.00

GIRDER 7 DEFLECTION AND CAMBER TABLE (VALUES IN INCHES)

DESCRIPTION	CENTERLINE BRG. R.A.	SPAN 1										CENTERLINE PIER 1	SPAN 2									CENTERLINE BRG. F.A.
		0.1	0.2	0.3	0.4	0.5	0.6	0.7	FIELD SPLICE 1	0.8	0.9		0.1	0.2	FIELD SPLICE 2	0.3	0.4	0.5	0.6	0.7	0.8	0.9	
DEFLECTION DUE TO WEIGHT OF STEEL (A)	0.00	0.15	0.28	0.36	0.39	0.37	0.30	0.20	0.15	0.10	0.02	0.00	0.03	0.11	0.16	0.21	0.30	0.37	0.39	0.36	0.28	0.15	0.00
DEFLECTION DUE TO REMAINING DEAD LOAD (B)	0.00	0.75	1.36	1.76	1.90	1.77	1.43	0.95	0.73	0.47	0.12	0.00	0.13	0.47	0.73	0.95	1.43	1.77	1.90	1.76	1.36	0.75	0.00
ADJUSTMENT FOR VERTICAL CURVATURE (C)	0.00	0.46	0.81	1.07	1.22	1.27	1.22	1.07	0.96	0.81	0.46	0.00	0.46	0.81	0.96	1.07	1.22	1.27	1.22	1.07	0.81	0.46	0.00
TOTAL CAMBER (A+B+C)	0.00	1.36	2.45	3.19	3.51	3.40	2.94	2.21	1.85	1.38	0.60	0.00	0.61	1.39	1.86	2.22	2.95	3.41	3.51	3.19	2.46	1.36	0.00

GIRDER 8 DEFLECTION AND CAMBER TABLE (VALUES IN INCHES)

DESCRIPTION	CENTERLINE BRG. R.A.	SPAN 1										CENTERLINE PIER 1	SPAN 2									CENTERLINE BRG. F.A.
		0.1	0.2	0.3	0.4	0.5	0.6	0.7	FIELD SPLICE 1	0.8	0.9		0.1	0.2	FIELD SPLICE 2	0.3	0.4	0.5	0.6	0.7	0.8	0.9	
DEFLECTION DUE TO WEIGHT OF STEEL (A)	0.00	0.14	0.26	0.33	0.36	0.34	0.27	0.18	0.14	0.09	0.02	0.00	0.03	0.10	0.15	0.19	0.28	0.34	0.36	0.34	0.26	0.14	0.00
DEFLECTION DUE TO REMAINING DEAD LOAD (B)	0.00	0.68	1.25	1.61	1.74	1.62	1.30	0.87	0.67	0.43	0.12	0.00	0.12	0.43	0.67	0.87	1.30	1.62	1.74	1.61	1.25	0.68	0.00
ADJUSTMENT FOR VERTICAL CURVATURE (C)	0.00	0.19	0.41	0.71	0.91	1.02	1.02	0.91	0.83	0.71	0.41	0.00	0.46	0.81	0.96	1.07	1.22	1.27	1.22	1.07	0.81	0.46	0.00
TOTAL CAMBER (A+B+C)	0.00	1.02	1.91	2.66	3.01	2.97	2.59	1.97	1.64	1.23	0.54	0.00	0.60	1.34	1.78	2.13	2.80	3.23	3.32	3.02	2.32	1.28	0.00

BLOCKING TABLE

GIRDER	PIER 1 (IN.)
1	7.44
2	7.44
3	6.56
4	5.56
5	5.06
6	5.06
7	4.88
8	4.88

NOTES:

1. POSITIVE CAMBER VALUES INDICATE CAMBER ABOVE CHORD BETWEEN ADJACENT BEARINGS. NEGATIVE CAMBER VALUES INDICATE CAMBER BELOW CHORD BETWEEN ADJACENT BEARINGS.
2. ALL CHORDS REFERENCED TO TOP OF WEB.

Preliminary Plans - For Reference Only

CAMBER TABLE AND BLOCKING DIAGRAM
CUY-90-1653L (BRIDGE 10)
I.R. 90 WB OVER CR-721 (E. 14TH ST.)

SFN 1807901
DESIGN AGENCY B&N burgessniple.com
DESIGNER DBH | CHECKER BCS
REVIEWER DWL 05/24/22
PROJECT ID 82382
SUBSET 33 | TOTAL 50
SHEET 2068 | TOTAL 2696

CUY-90-16.28 (CCG3A)

MODEL: Sheet PAPERSIZE: 34x22 (in.) DATE: 3/28/2025 TIME: 9:52:29 AM USER: Mata.Gallagher
pw:\\tmb-us-pw.bentley.com:tmb-us-pw-03\Documents\Cleveland_OH\01_Projects\ODOT\District12\82382\400-Engineering\Structures\SFN_1807901\Sheets\82382_SS005.dgn

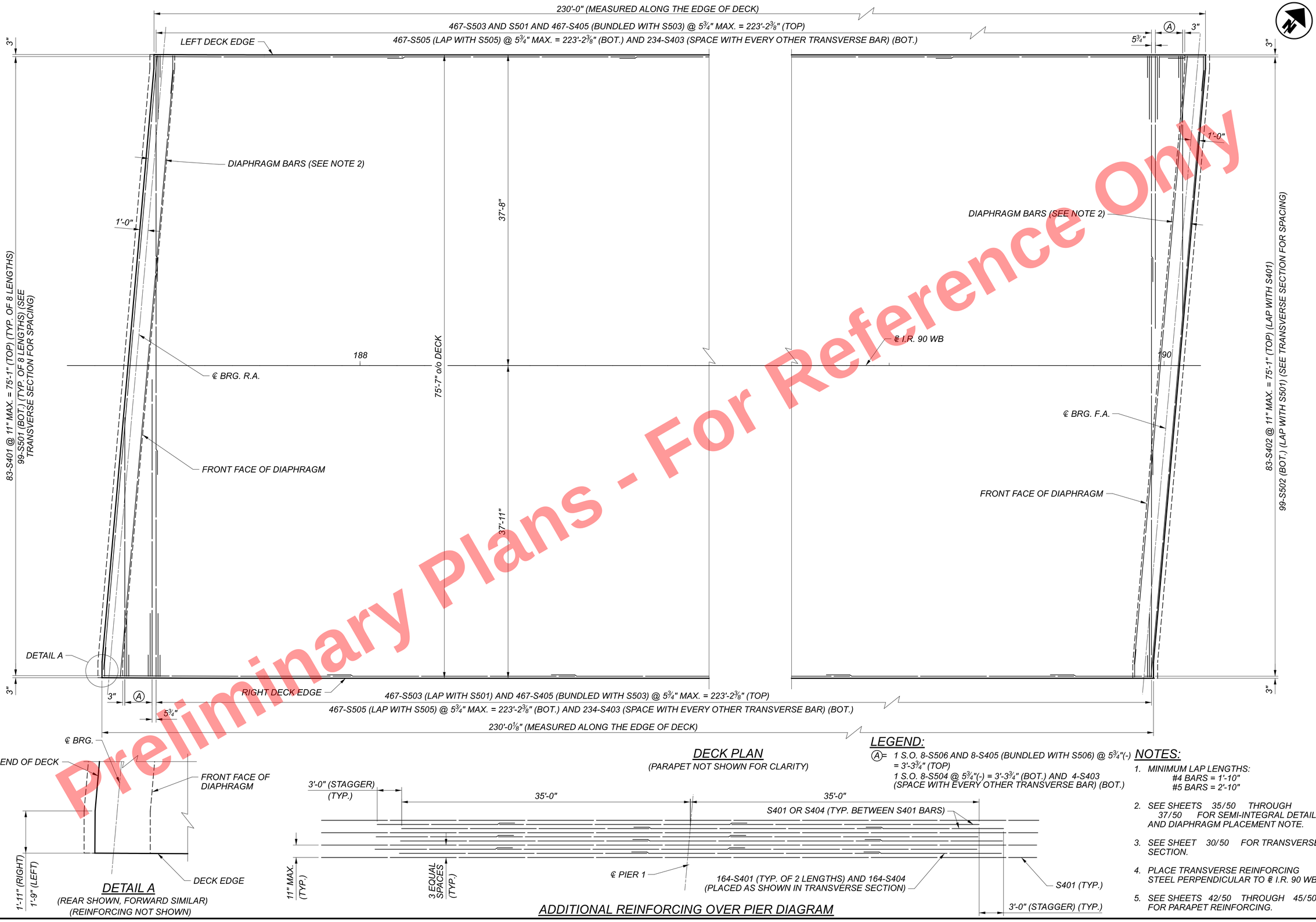

Preliminary Plans - For Reference Only

DECK PLAN
CUY-90-1653L (BRIDGE 10)
I.R. 90 EB OVER CR-721 (E. 14TH ST.)

SFN 1807901
DESIGN AGENCY
B&N burgessniple.com
DESIGNER MAB | CHECKER BCS
REVIEWER DWL 05/24/22
PROJECT ID 82382
SUBSET 34 | TOTAL 50
SHEET 2069 | TOTAL 2696

CUY-90-16.28 (CCG3A)

MODEL: Sheet PAPERSIZE: 34x22 (in.) DATE: 3/28/2025 TIME: 9:52:35 AM USER: Mala.Gallagher
pw:\\mb-us-pw.bentley.com:mb-us-pw-03\Documents\Cleveland_OH\01_Projects\ODOT\District12\82382\400-Engineering\Structures\SFN_1807901\Sheets\82382_Sheets\82382_SFN_1807901_SD001.dgn

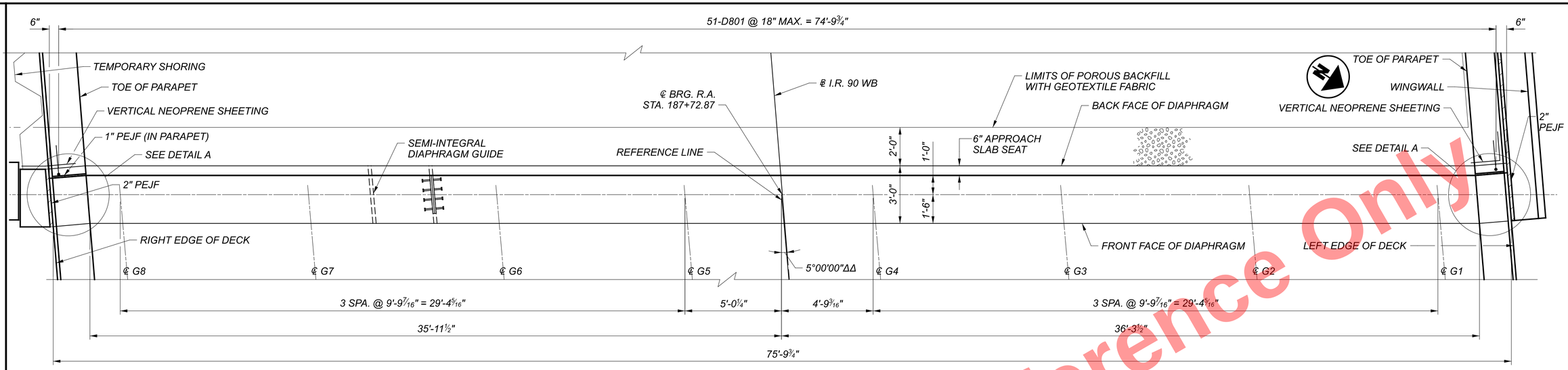

REAR ABUTMENT DIAPHRAGM PLAN

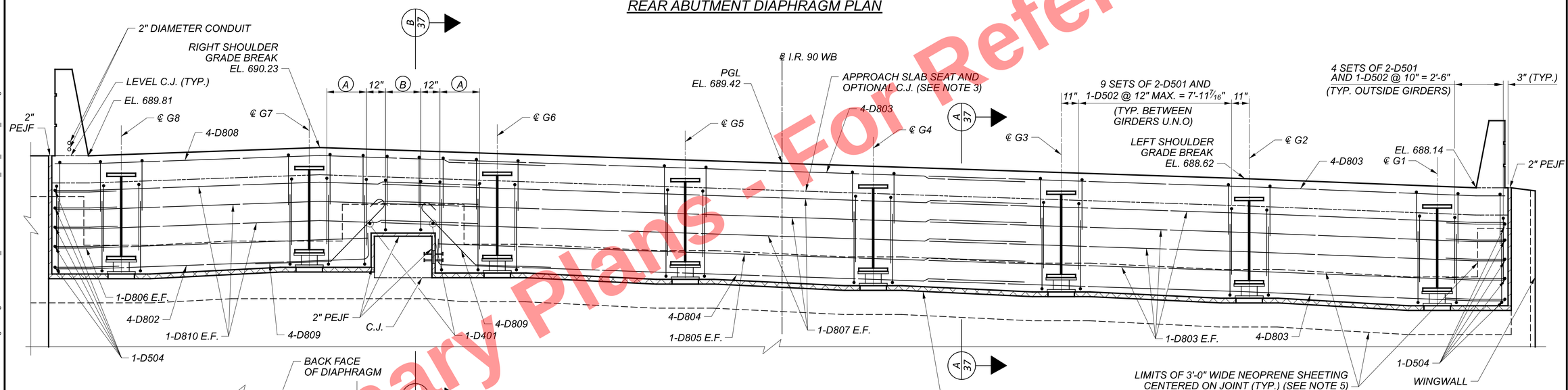

REAR ABUTMENT DIAPHRAGM ELEVATION

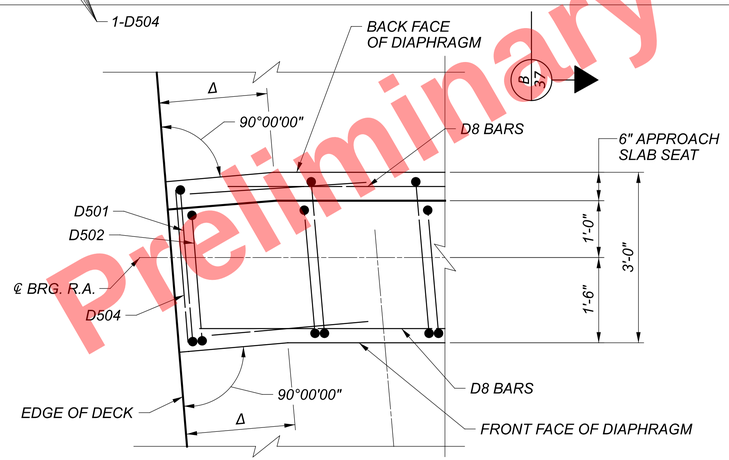

DETAIL A

(RIGHT SIDE SHOWN, LEFT SIDE SIMILAR)

LEGEND:

(A) = 3 SETS OF 2-D501 AND 1-D502 @ 1'-0½" = 2'-1"

(B) = 3 SETS OF 1-D503 AND 1-D502 @ 1'-0" MAX. = 1'-11 7/16"

Δ = 1'-11" (RIGHT), 1'-8" (LEFT)

ΔΔ = MEASURED TO REFERENCE LINE

NOTES:

1. SEE ODOT STANDARD BRIDGE DRAWINGS SICD-1-21 FOR DETAILS NOT SHOWN.
2. MINIMUM LAP LENGTHS:
   #5 BARS = 2'-3"
   #8 BARS = 5'-0"
3. PLACE THE DIAPHRAGM CONCRETE ENCASING THE STRUCTURAL MEMBER ENDS WITH THE DECK CONCRETE OR AT LEAST 48 HOURS BEFORE PLACEMENT OF THE DECK CONCRETE. IF PLACED SEPARATELY, LOCATE A HORIZONTAL CONSTRUCTION JOINT IN THE DIAPHRAGM AS SHOWN ON SICD-1-21 FOR STEEL SUPERSTRUCTURES AND PLACE REMAINING DIAPHRAGM CONCRETE WITH THE DECK.
4. ALL VERTICAL REINFORCING SHALL BE PLACED PARALLEL TO GIRDERS.
5. NEOPRENE SHEETING UPPER LIMIT AT DIAPHRAGM TO WINGWALL JOINT SHALL BE 6" BELOW APPROACH SLAB SEAT. PAYMENT FOR NEOPRENE SHEETING SHALL BE INCLUDED WITH ITEM 516 - SEMI-INTEGRAL ABUTMENT EXPANSION JOINT SEAL.
6. SEE SHEET 37/50 FOR SECTIONS A-A AND B-B.
7. ALL ABUTMENT DIAPHRAGM CONCRETE SHALL BE ITEM 511 - CLASS QC2 CONCRETE WITH QC/QA, BRIDGE DECK.
8. HORIZONTAL DIMENSIONS ARE MEASURED TO THE REFRENCE LINE.

Preliminary Plans - For Reference Only

REAR ABUTMENT DIAPHRAGM PLAN AND ELEVATION
CUY-90-1653L (BRIDGE 10)
I.R. 90 WB OVER CR-721 (E. 14TH ST.)

SFN	1807901
DESIGN AGENCY	B&N burgessniple.com
DESIGNER	MAB
CHECKER	BCS
REVIEWER	DWL 05/24/22
PROJECT ID	82382
SUBSET	35
TOTAL	50
SHEET	2070
TOTAL	2696

CUY-90-16.28 (CCG3A)

MODEL: Sheet PAPERSIZE: 34x22 (in.) DATE: 3/28/2025 TIME: 9:52:52 AM USER: Maia.Gallagher
pw:\\mb-us-pw.bentley.com:mb-us-pw-03\Documents\Cleveland_OH01_Projects\ODOTDistrict12\82382400-Engineering\Structures\SFN_1807901\Sheets\82382_SFN_1807901_SS007.dgn

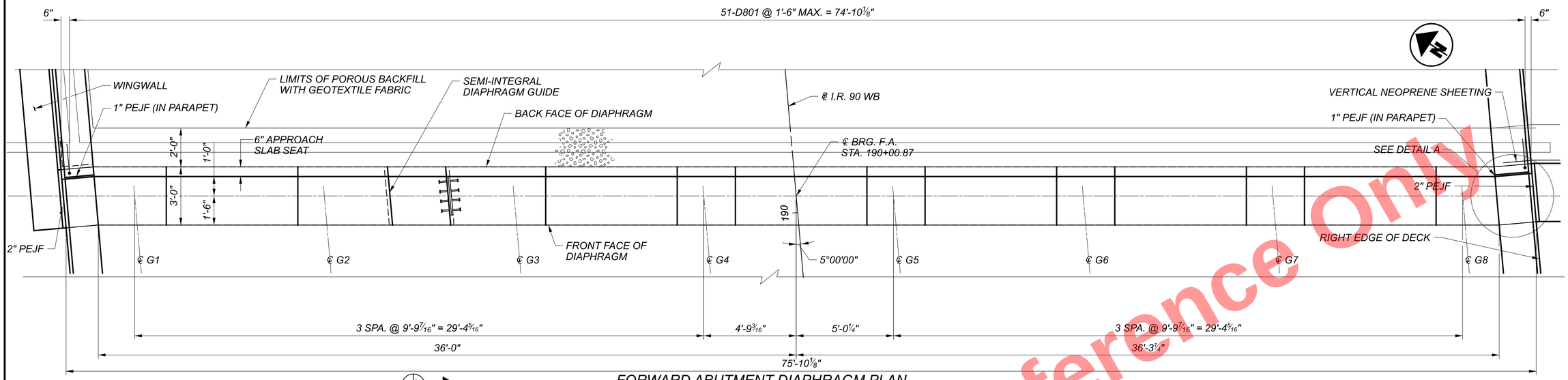

FORWARD ABUTMENT DIAPHRAGM PLAN

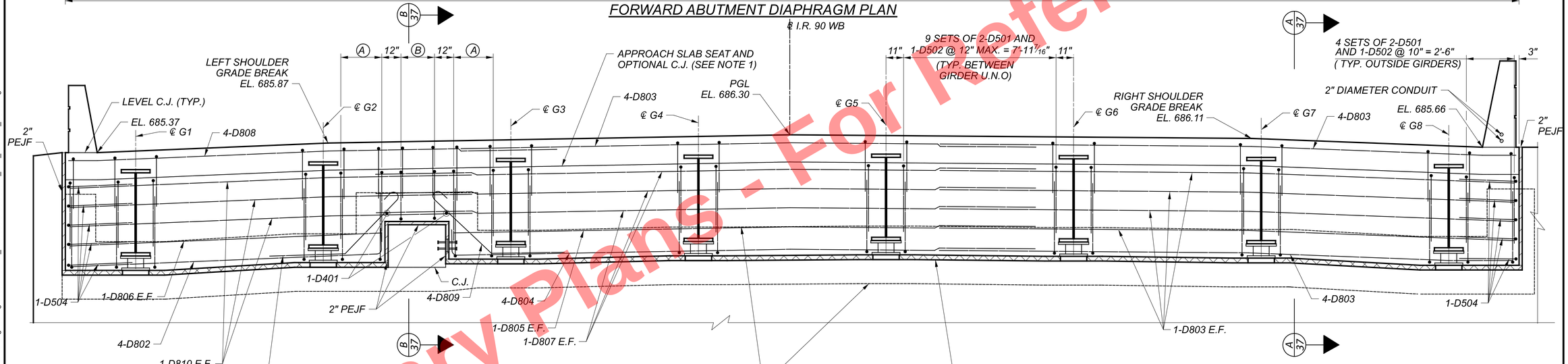

FORWARD ABUTMENT DIAPHRAGM ELEVATION

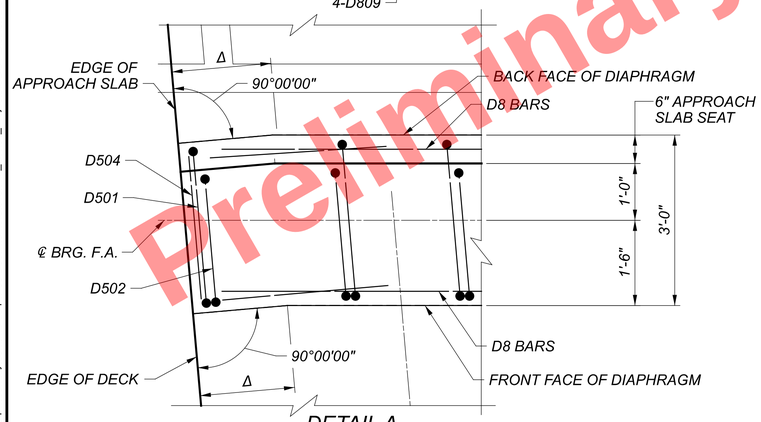

DETAIL A

(LEFT SIDE SHOWN, RIGHT SIDE SIMILAR)

LEGEND:

(A) = 3 SETS OF 2-D501 AND 1-D502 @ 1-0½" = 2'-1"

(B) = 3 SETS OF 1-D503 AND 1-D502 @ 1'-0" MAX.= 1'-11 7/16"

Δ = 1'-8" (LEFT), 1'-11" (RIGHT)

NOTES:

1. SEE SHEET 35/50 FOR NOTES.
2. SEE SHEET 37/50 FOR SECTIONS A-A AND B-B.

Preliminary Plans - For Reference Only

FORWARD ABUTMENT DIAPHRAGM PLAN AND ELEVATION
CUY-90-1653L (BRIDGE 10)
I.R. 90 WB OVER CR-721 (E. 14TH ST.)

SFN 1807901

DESIGN AGENCY
B&N
burgessniple.com

DESIGNER	CHECKER
MAB	BCS

REVIEWER
DWL 05/24/22

PROJECT ID
82382

SUBSET	TOTAL
36	50

SHEET	TOTAL
2071	2696

CUY-90-16.28 (CCG3A)

MODEL: Sheet PAPERSIZE: 34x22 (in.) DATE: 3/28/2025 TIME: 9:52:58 AM USER: Mala.Gallagher
pw:\\mb-us-pw.bentley.com:mb-us-pw-03\Documents\Cleveland_OH01_Projects\ODOT\District12\82382400-Engineering\Structures\SFN_1807901\Sheets\82382_SFN_1807901_SS008.dgn

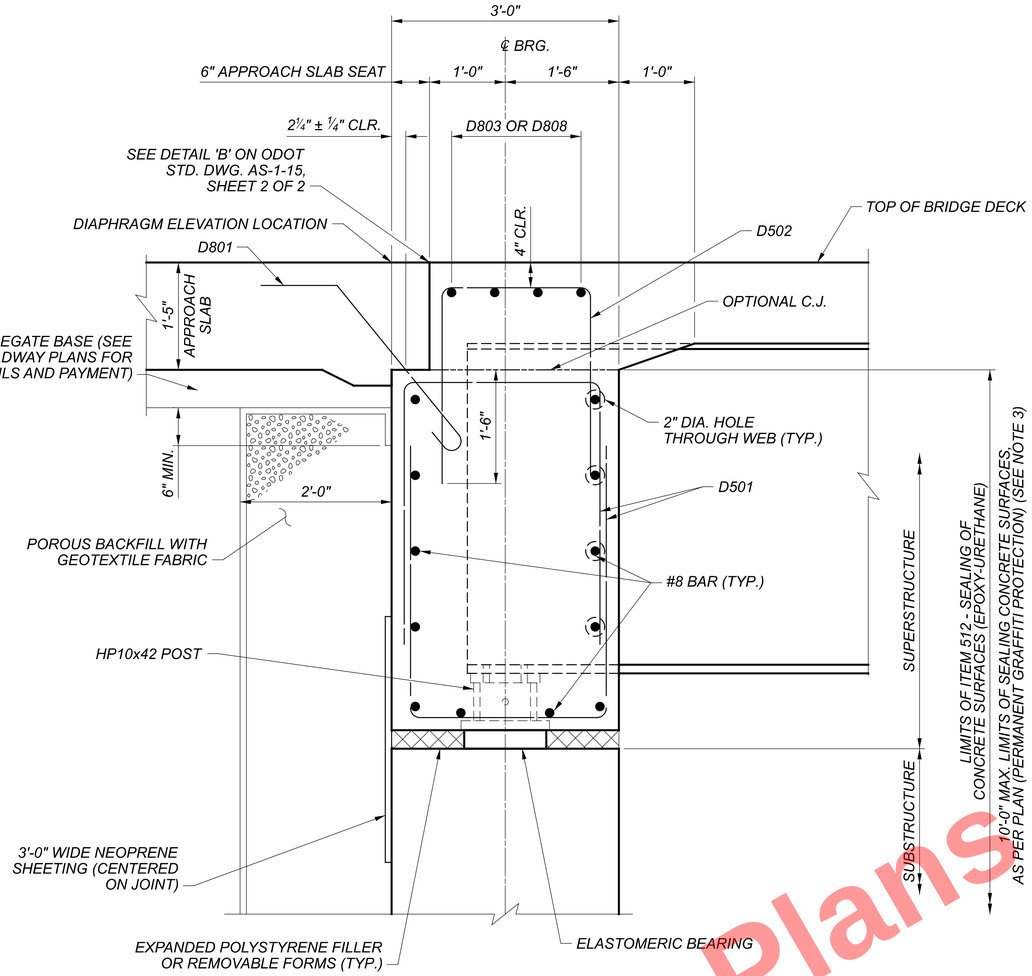

SECTION A-A

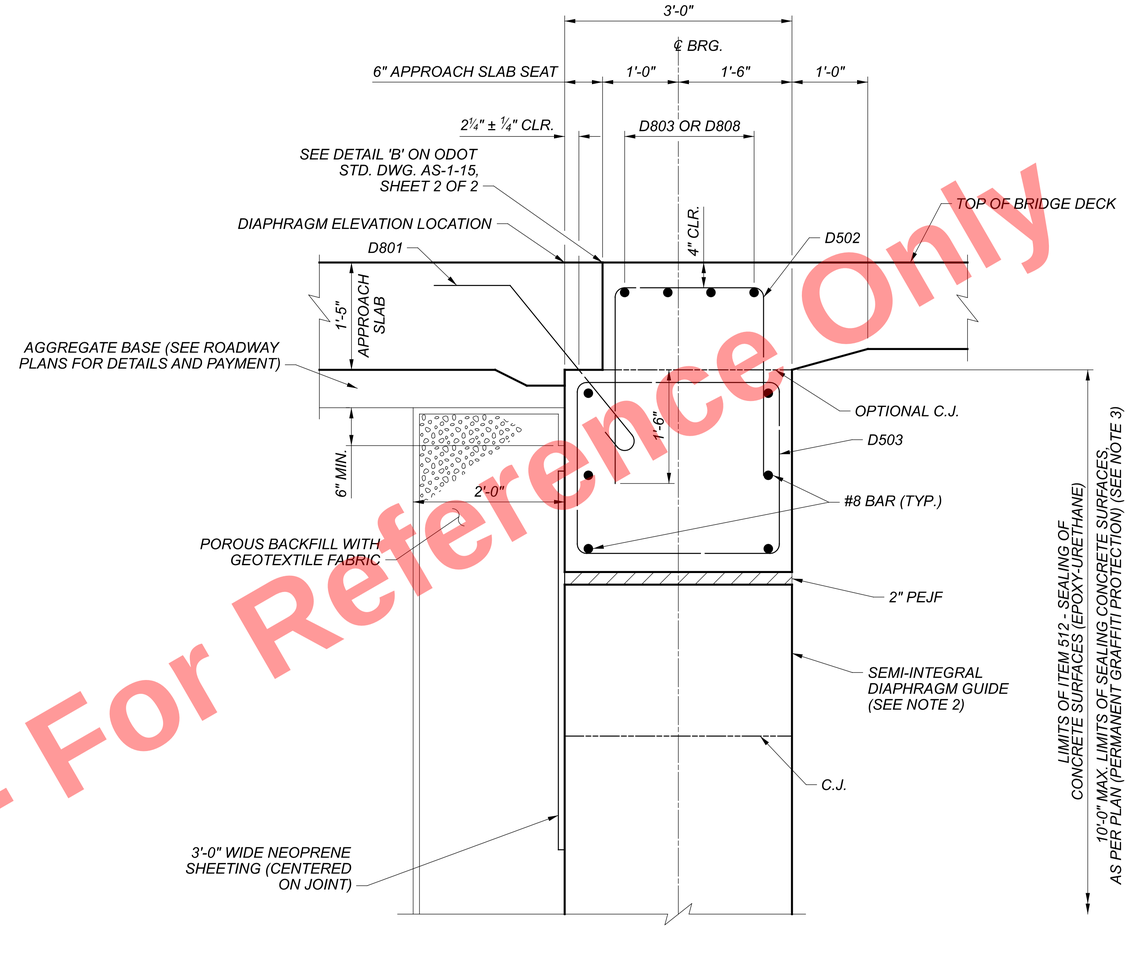

SECTION B-B

NOTES:

1. PAYMENT FOR NEOPRENE SHEETING WILL BE INCLUDED WITH ITEM 516 - SEMI-INTEGRAL ABUTMENT EXPANSION JOINT SEAL.
2. SEE STANDARD BRIDGE DRAWING SICD-2-14 FOR DIAPHRAGM GUIDE DETAILS.
3. THE 10'-0" MAXIMUM LIMIT OF THE PERMANENT GRAFFITI PROTECTION IS MEASURED FROM THE TOP OF THE CONCRETE SLOPE PROTECTION.

Preliminary Plans - For Reference Only

ABUTMENT DIAPHRAGM DETAILS
CUY-90-1653L (BRIDGE 10)
I.R. 90 WB OVER CR-721 (E. 14TH ST.)

SFN 1807901
DESIGN AGENCY B&N burgessniple.com
DESIGNER MAB | CHECKER BCS
REVIEWER DWL 05/24/22
PROJECT ID 82382
SUBSET 37 | TOTAL 50
SHEET 2072 | TOTAL 2696

CUY-90-16.28 (CCG3A)

MODEL: Sheet PAPERSIZE: 34x22 (in.) DATE: 3/28/2025 TIME: 9:53:04 AM USER: Mala.Gallagher
pw:\\mb-us-pw.bentley.com:mb-us-pw-03\Documents\Cleveland_OH\01_Projects\ODOT\District12\82382\400-Engineering\Structures\SFN_1807901\Sheets\82382_SFN_1807901_SS009.dgn



CRITICAL BRIDGE POINTS PLAN

(FOR USE WITH SCREED, TOP OF HAUNCH, AND FINAL DECK SURFACE ELEVATION TABLES)

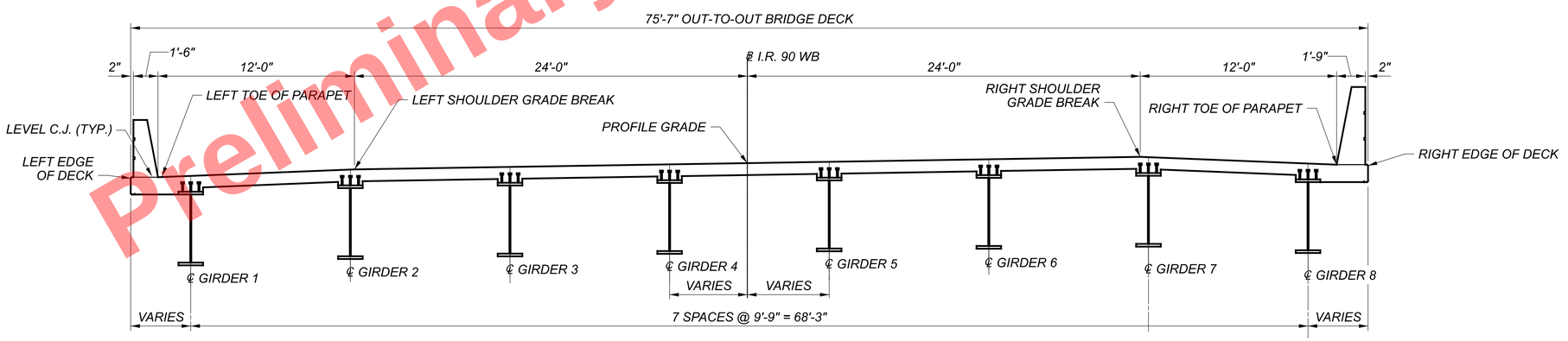

CRITICAL BRIDGE POINTS TRANSVERSE SECTION

(FOR USE WITH SCREED, TOP OF HAUNCH, AND FINAL DECK SURFACE ELEVATION TABLES)

Preliminary Plans - For Reference Only

CRITICAL BRIDGE POINT LOCATIONS
CUY-90-1653L (BRIDGE 10)
I.R. 90 WB OVER CR-721 (E. 14TH ST.)

SFN	1807901
DESIGN AGENCY	B&N burgessniple.com
DESIGNER	MAB
CHECKER	BCS
REVIEWER	DWL 05/24/22
PROJECT ID	82382
SUBSET	38
TOTAL	50
SHEET	2073
TOTAL	2696

CUY-90-16.28 (CCG3A)

MODEL: Sheet PAPERSIZE: 34x22 (in.) DATE: 3/28/2025 TIME: 9:53:12 AM USER: Mala.Gallagher
pw:\\mb-us-pw.bentley.com:mb-us-pw-03\Documents\Cleveland_OH\01_Projects\ODOT\District12\82382\400-Engineering\Structures\SFN_1807901\Sheets\82382_SFN_1807901_SS003.dgn

TOP OF HAUNCH ELEVATIONS																								
ELEVATION LINE	CENTERLINE BRG. R.A.		SPAN 1																				CENTERLINE PIER 1	
			0.1		0.2		0.3		0.4		0.5		0.6		0.7		FIELD SPLICE 1		0.8		0.9			
	STA.	EL.	STA.	EL.	STA.	EL.	STA.	EL.	STA.	EL.	STA.	EL.	STA.	EL.	STA.	EL.	STA.	EL.	STA.	EL.	STA.	EL.	STA.	EL.
GIRDER 1	187+75.69	687.49	187+87.23	687.52	187+98.64	687.53	188+10.04	687.52	188+21.44	687.48	188+32.84	687.41	188+44.24	687.32	188+55.64	687.20	188+60.84	687.15	188+67.04	687.07	188+78.44	686.89	188+89.84	686.73
GIRDER 2	187+74.87	687.88	187+86.37	687.92	187+97.79	687.93	188+09.19	687.93	188+20.59	687.89	188+31.99	687.82	188+43.39	687.72	188+54.79	687.61	188+59.99	687.55	188+66.19	687.47	188+77.59	687.30	188+88.99	687.13
GIRDER 3	187+74.06	688.20	187+85.52	688.22	187+96.94	688.22	188+08.34	688.19	188+19.74	688.13	188+31.14	688.04	188+42.54	687.93	188+53.94	687.79	188+59.14	687.73	188+65.34	687.64	188+76.74	687.47	188+88.14	687.31
GIRDER 4	187+73.25	688.53	187+84.67	688.52	187+96.09	688.50	188+07.49	688.45	188+18.89	688.37	188+30.29	688.26	188+41.69	688.13	188+53.09	687.97	188+58.29	687.90	188+64.49	687.81	188+75.89	687.64	188+87.29	687.48
GIRDER 5	187+72.45	688.85	187+83.84	688.83	187+95.23	688.79	188+06.63	688.72	188+18.03	688.62	188+29.43	688.49	188+40.83	688.33	188+52.23	688.16	188+57.43	688.07	188+63.63	687.97	188+75.03	687.79	188+86.43	687.62
GIRDER 6	187+71.66	689.18	187+83.00	689.14	187+94.38	689.07	188+05.78	688.99	188+17.18	688.87	188+28.58	688.72	188+39.98	688.54	188+51.38	688.35	188+56.58	688.25	188+62.78	688.14	188+74.18	687.94	188+85.58	687.75
GIRDER 7	187+70.87	689.47	187+82.17	689.41	187+93.53	689.33	188+04.93	689.22	188+16.33	689.09	188+27.73	688.92	188+39.13	688.72	188+50.53	688.51	188+55.73	688.41	188+61.93	688.28	188+73.33	688.06	188+84.73	687.85
GIRDER 8	187+70.08	689.12	187+81.35	689.04	187+92.67	688.94	188+04.07	688.83	188+15.47	688.69	188+26.87	688.53	188+38.27	688.33	188+49.67	688.12	188+54.87	688.02	188+61.07	687.90	188+72.47	687.69	188+83.87	687.48

TOP OF HAUNCH ELEVATIONS																								
ELEVATION LINE	CENTERLINE PIER 1		SPAN 2																				CENTERLINE BRG. F.A.	
			0.1		0.2		FIELD SPLICE 2		0.3		0.4		0.5		0.6		0.7		0.8		0.9			
	STA.	EL.	STA.	EL.	STA.	EL.	STA.	EL.	STA.	EL.	STA.	EL.	STA.	EL.	STA.	EL.	STA.	EL.	STA.	EL.	STA.	EL.	STA.	EL.
GIRDER 1	188+89.84	686.73	189+01.24	686.58	189+12.64	686.44	189+18.84	686.36	189+24.04	686.29	189+35.44	686.14	189+46.84	685.98	189+58.24	685.78	189+69.64	685.56	189+81.04	685.31	189+92.44	685.03	190+03.84	684.74
GIRDER 2	188+88.99	687.13	189+00.39	686.98	189+11.79	686.84	189+17.99	686.77	189+23.19	686.71	189+34.59	686.56	189+45.99	686.39	189+57.39	686.20	189+68.79	685.98	189+80.19	685.72	189+91.59	685.44	190+02.99	685.15
GIRDER 3	188+88.14	687.31	188+99.54	687.16	189+10.94	687.02	189+17.14	686.94	189+22.34	686.88	189+33.74	686.74	189+45.14	686.57	189+56.54	686.38	189+67.94	686.16	189+79.34	685.90	189+90.74	685.62	190+02.14	685.33
GIRDER 4	188+87.29	687.48	188+98.69	687.33	189+10.09	687.19	189+16.29	687.11	189+21.49	687.05	189+32.89	686.91	189+44.29	686.74	189+55.69	686.55	189+67.09	686.33	189+78.49	686.08	189+89.89	685.80	190+01.29	685.50
GIRDER 5	188+86.43	687.62	188+97.83	687.46	189+09.23	687.31	189+15.43	687.23	189+20.63	687.17	189+32.03	687.01	189+43.43	686.84	189+54.83	686.63	189+66.23	686.40	189+77.63	686.14	189+89.03	685.85	190+00.43	685.54
GIRDER 6	188+85.58	687.75	188+96.98	687.57	189+08.38	687.40	189+14.58	687.31	189+19.78	687.23	189+31.18	687.06	189+42.58	686.86	189+53.98	686.64	189+65.38	686.39	189+76.78	686.11	189+88.18	685.80	189+99.58	685.47
GIRDER 7	188+84.73	687.85	188+96.13	687.65	189+07.53	687.46	189+13.73	687.36	189+18.93	687.28	189+30.33	687.08	189+41.73	686.87	189+53.13	686.63	189+64.53	686.36	189+75.93	686.06	189+87.33	685.73	189+98.73	685.38
GIRDER 8	188+83.87	687.48	188+95.27	687.28	189+06.67	687.09	189+12.87	686.99	189+18.07	686.90	189+29.47	686.70	189+40.87	686.49	189+52.27	686.24	189+63.67	685.98	189+75.07	685.68	189+86.47	685.35	189+97.87	685.01

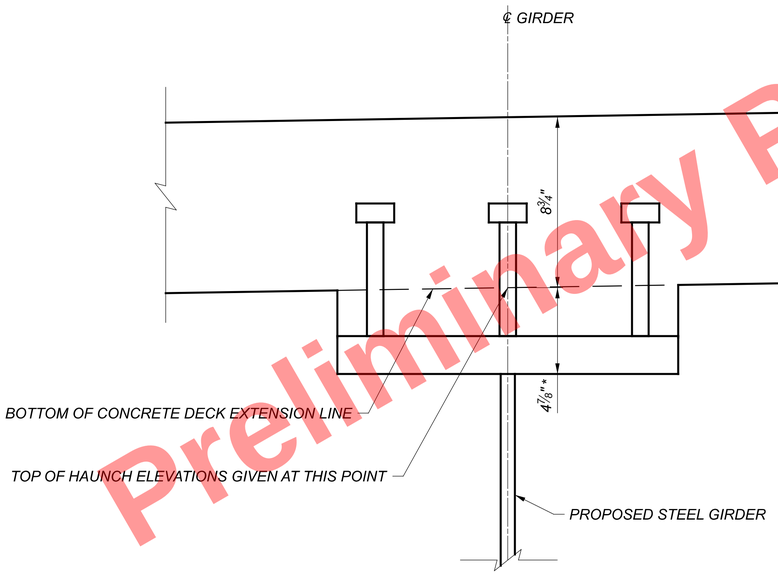

HAUNCH DETAIL

* = TOP OF WEB TO BOTTOM OF CONCRETE DECK EXTENSION LINE

NOTES:

1. SEE SHEET 38/50 FOR CRITICAL BRIDGE POINT ELEVATION LOCATIONS.
2. TOP OF HAUNCH ELEVATIONS SHOWN REPRESENT THE THEORETICAL LOCATION OF THE BOTTOM OF THE DECK ABOVE THE ℄ OF GIRDER HAUNCH PRIOR TO DEFLECTION CAUSED BY DECK PLACEMENT AND OTHER ANTICIPATED DEAD LOADS.

Preliminary Plans - For Reference Only

TOP OF HAUNCH ELEVATIONS AND DETAILS
CUY-90-1653L (BRIDGE 10)
I.R. 90 WB OVER CR-721 (E. 14TH ST.)

SFN 1807901
DESIGN AGENCY B&N burgessniple.com
DESIGNER MAB | CHECKER BCS
REVIEWER DWL 05/24/22
PROJECT ID 82382
SUBSET 39 | TOTAL 50
SHEET 2074 | TOTAL 2696

CUY-90-16.28 (CCG3A)

MODEL: Sheet PAPERSIZE: 34x22 (in.) DATE: 3/28/2025 TIME: 9:53:18 AM USER: Mala.Gallagher
pw:\\mb-us-pw.bentley.com:mb-us-pw-03\Documents\Cleveland_OH101_Projects\ODOT\District12\82382\400-Engineering\Structures\SFN_1807901\Sheets\82382_SFN_1807901_SS004.dgn

SCREED ELEVATIONS

ELEVATION LINE	CENTERLINE BRG. R.A.		SPAN 1																				CENTERLINE PIER 1	
			0.1		0.2		0.3		0.4		0.5		0.6		0.7		FIELD SPLICE 1		0.8		0.9			
	STA.	EL.	STA.	EL.	STA.	EL.	STA.	EL.	STA.	EL.	STA.	EL.	STA.	EL.	STA.	EL.	STA.	EL.	STA.	EL.	STA.	EL.	STA.	EL.
LEFT TOE OF PARAPET	187+75.86	688.14	187+87.40	688.17	187+98.82	688.18	188+10.22	688.17	188+21.62	688.13	188+33.02	688.06	188+44.42	687.97	188+55.82	687.85	188+61.02	687.80	188+67.22	687.71	188+78.62	687.54	188+90.02	687.38
LEFT SHOULDER GRADE BREAK	187+74.85	688.62	187+86.35	688.66	187+97.77	688.67	188+09.17	688.67	188+20.57	688.63	188+31.97	688.56	188+43.37	688.46	188+54.77	688.35	188+59.97	688.29	188+66.17	688.21	188+77.57	688.04	188+88.97	687.87
BASELINE I.R. 90 WB AND PGL	187+72.87	689.41	187+84.27	689.40	187+95.67	689.37	188+07.07	689.31	188+18.47	689.22	188+29.87	689.10	188+41.27	688.96	188+52.67	688.79	188+57.87	688.71	188+64.07	688.62	188+75.47	688.45	188+86.87	688.29
RIGHT SHOULDER GRADE BREAK	187+70.91	690.22	187+82.22	690.16	187+93.57	690.08	188+04.97	689.97	188+16.37	689.83	188+27.77	689.67	188+39.17	689.47	188+50.57	689.26	188+55.77	689.15	188+61.97	689.03	188+73.37	688.81	188+84.77	688.60
RIGHT TOE OF PARAPET	187+69.95	689.79	187+81.06	689.71	187+92.52	689.60	188+03.92	689.49	188+15.32	689.35	188+26.72	689.19	188+38.12	689.00	188+49.52	688.78	188+54.72	688.69	188+60.92	688.57	188+72.32	688.35	188+83.72	688.14

SCREED ELEVATIONS

ELEVATION LINE	CENTERLINE PIER 1		SPAN 2																				CENTERLINE BRG. F.A.	
			0.1		0.2		FIELD SPLICE 2		0.3		0.4		0.5		0.6		0.7		0.8		0.9			
	STA.	EL.	STA.	EL.	STA.	EL.	STA.	EL.	STA.	EL.	STA.	EL.	STA.	EL.	STA.	EL.	STA.	EL.	STA.	EL.	STA.	EL.	STA.	EL.
LEFT TOE OF PARAPET	188+90.02	687.38	189+01.42	687.23	189+12.82	687.08	189+19.02	687.01	189+24.22	686.94	189+35.62	686.79	189+47.02	686.62	189+58.42	686.43	189+69.82	686.20	189+81.22	685.95	189+92.62	685.68	190+04.02	685.38
LEFT SHOULDER GRADE BREAK	188+88.97	687.87	189+00.37	687.72	189+11.77	687.58	189+17.97	687.51	189+23.17	687.44	189+34.57	687.30	189+45.97	687.13	189+57.37	686.94	189+68.77	686.72	189+80.17	686.46	189+91.57	686.18	190+02.97	685.88
BASELINE I.R. 90 WB AND PGL	188+86.87	688.29	188+98.27	688.14	189+09.67	688.00	189+15.87	687.93	189+21.07	687.86	189+32.47	687.72	189+43.87	687.55	189+55.27	687.36	189+66.67	687.14	189+78.07	686.89	189+89.47	686.61	190+00.87	686.31
RIGHT SHOULDER GRADE BREAK	188+84.77	688.60	188+96.17	688.40	189+07.57	688.21	189+13.77	688.11	189+18.97	688.03	189+30.37	687.83	189+41.77	687.62	189+53.17	687.38	189+64.57	687.11	189+75.97	686.80	189+87.37	686.48	189+98.77	686.13
RIGHT TOE OF PARAPET	188+83.72	688.14	188+95.12	687.94	189+06.52	687.75	189+12.72	687.65	189+17.92	687.56	189+29.32	687.36	189+40.72	687.15	189+52.12	686.91	189+63.52	686.64	189+74.92	686.34	189+86.32	686.02	189+97.72	685.68

FINAL TOP OF DECK SURFACE ELEVATIONS

ELEVATION LINE	CENTERLINE BRG. R.A.		SPAN 1																				CENTERLINE PIER 1	
			0.1		0.2		0.3		0.4		0.5		0.6		0.7		FIELD SPLICE 1		0.8		0.9			
	STA.	EL.	STA.	EL.	STA.	EL.	STA.	EL.	STA.	EL.	STA.	EL.	STA.	EL.	STA.	EL.	STA.	EL.	STA.	EL.	STA.	EL.	STA.	EL.
LEFT TOE OF PARAPET	187+75.86	688.14	187+87.40	688.11	187+98.82	688.08	188+10.22	688.03	188+21.62	687.98	188+33.02	687.92	188+44.42	687.86	188+55.82	687.78	188+61.02	687.74	188+67.22	687.68	188+78.62	687.53	188+90.02	687.38
GIRDER 1	187+75.69	688.22	187+87.23	688.19	187+98.64	688.16	188+10.04	688.11	188+21.44	688.06	188+32.84	688.01	188+44.24	687.94	188+55.64	687.86	188+60.84	687.82	188+67.04	687.76	188+78.44	687.61	188+89.84	687.46
GIRDER 2	187+74.87	688.61	187+86.37	688.58	187+97.79	688.55	188+09.19	688.51	188+20.59	688.46	188+31.99	688.40	188+43.39	688.33	188+54.79	688.26	188+59.99	688.22	188+66.19	688.16	188+77.59	688.02	188+88.99	687.86
LEFT SHOULDER GRADE BREAK	187+74.85	688.62	187+86.35	688.59	187+97.77	688.56	188+09.17	688.52	188+20.57	688.47	188+31.97	688.41	188+43.37	688.34	188+54.77	688.27	188+59.97	688.23	188+66.17	688.17	188+77.57	688.03	188+88.97	687.87
GIRDER 3	187+74.06	688.93	187+85.52	688.89	187+96.94	688.83	188+08.34	688.77	188+19.74	688.70	188+31.14	688.62	188+42.54	688.54	188+53.94	688.44	188+59.14	688.40	188+65.34	688.33	188+76.74	688.19	188+88.14	688.04
GIRDER 4	187+73.25	689.25	187+84.67	689.19	187+96.09	689.12	188+07.49	689.03	188+18.89	688.94	188+30.29	688.85	188+41.69	688.74	188+53.09	688.62	188+58.29	688.57	188+64.49	688.50	188+75.89	688.36	188+87.29	688.20
BASELINE I.R. 90 WB AND PGL	187+72.87	689.41	187+84.27	689.34	187+95.67	689.25	188+07.07	689.16	188+18.47	689.06	188+29.87	688.95	188+41.27	688.84	188+52.67	688.71	188+57.87	688.65	188+64.07	688.58	188+75.47	688.44	188+86.87	688.29
GIRDER 5	187+72.45	689.58	187+83.84	689.49	187+95.23	689.40	188+06.63	689.30	188+18.03	689.19	188+29.43	689.07	188+40.83	688.94	188+52.23	688.81	188+57.43	688.74	188+63.63	688.66	188+75.03	688.51	188+86.43	688.35
GIRDER 6	187+71.66	689.91	187+83.00	689.80	187+94.38	689.69	188+05.78	689.57	188+17.18	689.44	188+28.58	689.30	188+39.98	689.15	188+51.38	689.00	188+56.58	688.92	188+62.78	688.83	188+74.18	688.66	188+85.58	688.48
RIGHT SHOULDER GRADE BREAK	187+70.91	690.22	187+82.22	690.10	187+93.57	689.97	188+04.97	689.83	188+16.37	689.68	188+27.77	689.52	188+39.17	689.35	188+50.57	689.18	188+55.77	689.09	188+61.97	688.99	188+73.37	688.80	188+84.77	688.60
GIRDER 7	187+70.87	690.20	187+82.17	690.08	187+93.53	689.95	188+04.93	689.81	188+16.33	689.66	188+27.73	689.50	188+39.13	689.33	188+50.53	689.16	188+55.73	689.07	188+61.93	688.97	188+73.33	688.78	188+84.73	688.58
GIRDER 8	187+70.08	689.85	187+81.35	689.71	187+92.67	689.57	188+04.07	689.43	188+15.47	689.28	188+26.87	689.12	188+38.27	688.95	188+49.67	688.78	188+54.87	688.70	188+61.07	688.60	188+72.47	688.41	188+83.87	688.21
RIGHT TOE OF PARAPET	187+69.95	689.79	187+81.06	689.65	187+92.52	689.50	188+03.92	689.36	188+15.32	689.21	188+26.72	689.05	188+38.12	688.89	188+49.52	688.71	188+54.72	688.63	188+60.92	688.53	188+72.32	688.34	188+83.72	688.14

FINAL TOP OF DECK SURFACE ELEVATIONS

ELEVATION LINE	CENTERLINE PIER 1		SPAN 2																				CENTERLINE BRG. F.A.	
			0.1		0.2		FIELD SPLICE 2		0.3		0.4		0.5		0.6		0.7		0.8		0.9			
	STA.	EL.	STA.	EL.	STA.	EL.	STA.	EL.	STA.	EL.	STA.	EL.	STA.	EL.	STA.	EL.	STA.	EL.	STA.	EL.	STA.	EL.	STA.	EL.
LEFT TOE OF PARAPET	188+90.02	687.38	189+01.42	687.22	189+12.82	687.05	189+19.02	686.95	189+24.22	686.87	189+35.62	686.68	189+47.02	686.49	189+58.42	686.28	189+69.82	686.07	189+81.22	685.85	189+92.62	685.62	190+04.02	685.38
GIRDER 1	188+89.84	687.46	189+01.24	687.30	189+12.64	687.13	189+18.84	687.03	189+24.04	686.95	189+35.44	686.76	189+46.84	686.57	189+58.24	686.37	189+69.64	686.15	189+81.04	685.93	189+92.44	685.70	190+03.84	685.47
GIRDER 2	188+88.99	687.86	189+00.39	687.70	189+11.79	687.53	189+17.99	687.44	189+23.19	687.36	189+34.59	687.17	189+45.99	686.97	189+57.39	686.77	189+68.79	686.56	189+80.19	686.34	189+91.59	686.11	190+02.99	685.87
LEFT SHOULDER GRADE BREAK	188+88.97	687.87	189+00.37	687.71	189+11.77	687.54	189+17.97	687.45	189+23.17	687.37	189+34.57	687.18	189+45.97	686.98	189+57.37	686.78	189+68.77	686.57	189+80.17	686.35	189+91.57	686.12	190+02.97	685.88
GIRDER 3	188+88.14	688.04	188+99.54	687.88	189+10.94	687.71	189+17.14	687.61	189+22.34	687.53	189+33.74	687.35	189+45.14	687.15	189+56.54	686.95	189+67.94	686.74	189+79.34	686.52	189+90.74	686.29	190+02.14	686.05
GIRDER 4	188+87.29	688.20	188+98.69	688.04	189+10.09	687.88	189+16.29	687.78	189+21.49	687.70	189+32.89	687.52	189+44.29	687.32	189+55.69	687.12	189+67.09	686.91	189+78.49	686.69	189+89.89	686.46	190+01.29	686.23
BASELINE I.R. 90 WB AND PGL	188+86.87	688.29	188+98.27	688.13	189+09.67	687.96	189+15.87	687.86	189+21.07	687.78	189+32.47	687.60	189+43.87	687.41	189+55.27	687.20	189+66.67	686.99	189+78.07	686.78	189+89.47	686.55	190+00.87	686.31
GIRDER 5	188+86.43	688.35	188+97.83	688.18	189+09.23	688.00	189+15.43	687.90	189+20.63	687.82	189+32.03	687.62	189+43.43	687.42	189+54.83	687.21	189+66.23	686.99	189+77.63	686.76	189+89.03	686.52	190+00.43	686.27
GIRDER 6	188+85.58	688.48	188+96.98	688.29	189+08.38	688.09	189+14.58	687.98	189+19.78	687.88	189+31.18	687.67	189+42.58	687.44	189+53.98	687.21	189+65.38	686.97	189+76.78	686.72	189+88.18	686.46	189+99.58	686.20
RIGHT SHOULDER GRADE BREAK	188+84.77	688.60	188+96.17	688.39	189+07.57	688.17	189+13.77	688.05	189+18.97	687.95	189+30.37	687.71	189+41.77	687.47	189+53.17	687.22	189+64.57	686.96	189+75.97	686.69	189+87.37	686.41	189+98.77	686.13
GIRDER 7	188+84.73	688.58	188+96.13	688.37	189+07.53	688.15	189+13.73	688.03	189+18.93	687.93	189+30.33	687.69	189+41.73	687.45	189+53.13	687.20	189+64.53	686.94	189+75.93	686.67	189+87.33	686.40	189+98.73	686.11
GIRDER 8	188+83.87	688.21	188+95.27	688.00	189+06.67	687.78	189+12.87	687.66	189+18.07	687.56	189+29.47	687.32	189+40.87	687.08	189+52.27	686.83	189+63.67	686.57	189+75.07	686.30	189+86.47	686.03	189+97.87	685.74
RIGHT TOE OF PARAPET	188+83.72	688.14	188+95.12	687.93	189+06.52	687.71	189+12.72	687.59	189+17.92	687.49	189+29.32	687.26	189+40.72	687.01	189+52.12	686.76	189+63.52	686.50	189+74.92	686.24	189+86.32	685.96	189+97.72	685.68

Preliminary Plans Not for Reference Only

NOTES:

1. SEE SHEET 38/50 FOR CRITICAL BRIDGE POINT ELEVATION LOCATIONS.
2. SCREED ELEVATIONS SHOWN REPRESENT THE THEORETICAL DECK SURFACE ELEVATION PRIOR TO DEFLECTIONS CAUSED BY DECK PLACEMENT AND OTHER ANTICIPATED DEAD LOADS.
3. FINAL DECK SURFACE ELEVATIONS SHOWN REPRESENT THE DECK SURFACE ELEVATION AFTER ALL ANTICIPATED DEAD LOAD DEFLECTIONS HAVE OCCURRED.

SCREED AND FINAL DECK SURFACE ELEVATIONS
CUY-90-1653L (BRIDGE 10)
I.R. 90 WB OVER CR-721 (E. 14TH ST.)

SFN 1807901
DESIGN AGENCY B&N burgessniple.com
DESIGNER DBH | CHECKER BCS
REVIEWER DWL 05/24/22
PROJECT ID 82382
SUBSET 40 | TOTAL 50
SHEET 2075 | TOTAL 2696

CUY-90-16.28 (CCG3A)

MODEL: Sheet PAPERSIZE: 34x22 (in.) DATE: 3/28/2025 TIME: 9:53:24 AM USER: Maia.Gallagher
pw:\\mb-us-pw.bentley.com:mb-us-pw-03\Documents\Cleveland_OH\01_Projects\ODOT\District12\82382400-Engineering\Structures\SFN_1807901\Sheets\82382_SFN_1807901_SS006.dgn

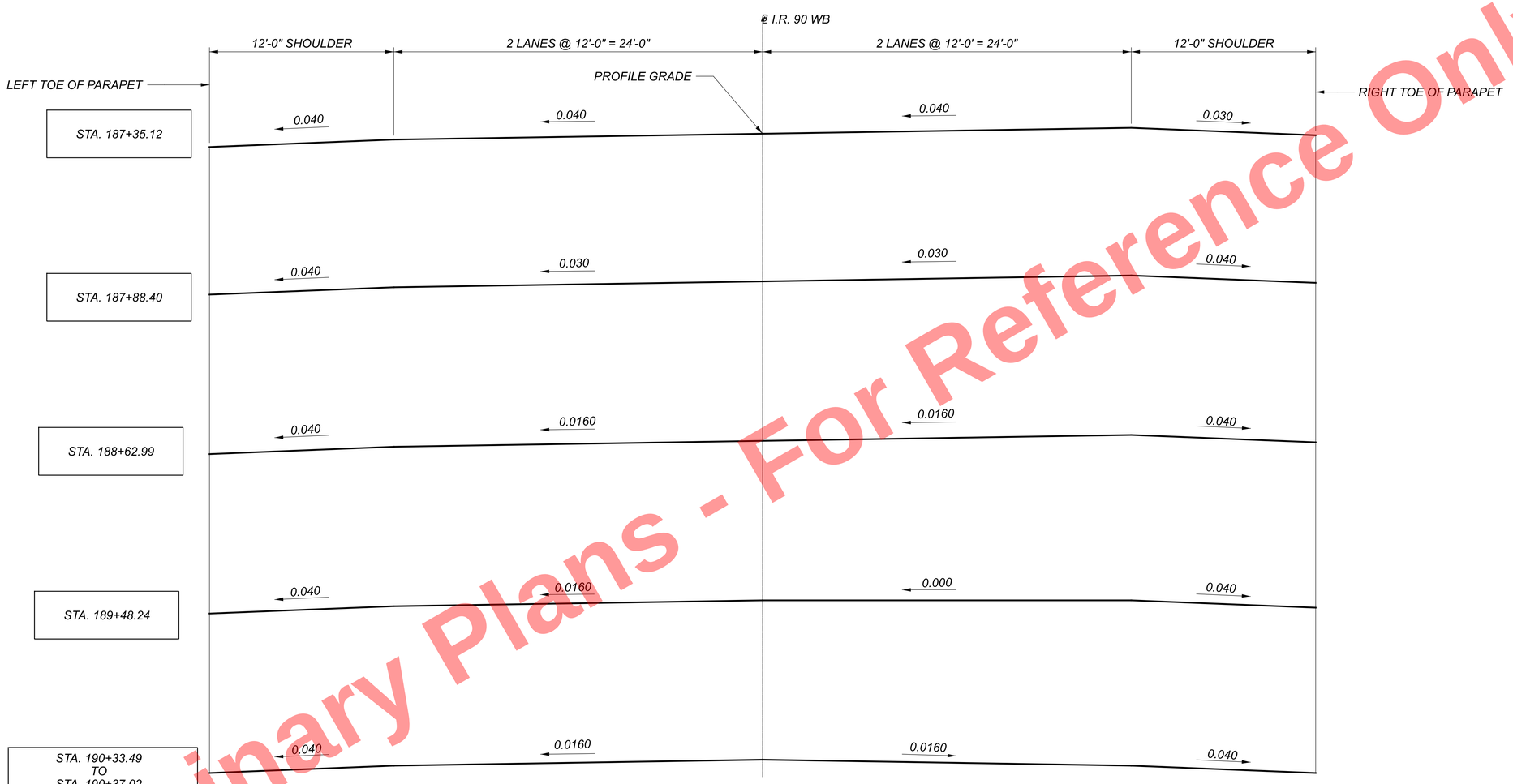

SUPERELEVATION TRANSITION DIAGRAM

Preliminary Plans - For Reference Only

SUPERELEVATION TRANSITION DIAGRAM
CUY-90-1653L (BRIDGE 10)
I.R. 90 WB OVER CR-721 (E. 14TH ST.)

SFN	1807901
DESIGN AGENCY	B&N burgessniple.com
DESIGNER	MAB
CHECKER	BCS
REVIEWER	DWL 05/24/22
PROJECT ID	82382
SUBSET	41
TOTAL	50
SHEET	2076
TOTAL	2696

CUY-90-16.28 (CCG3A)

MODEL: Sheet PAPERSIZE: 34x22 (in.) DATE: 3/28/2025 TIME: 9:53:31 AM USER: Mala.Gallagher
pw:\\mb-us-pw.bentley.com:mb-us-pw-03\Documents\Cleveland_OH01_Projects\ODOTDistrict12\82382400-Engineering\Structures\SFN_1807901\Sheets\82382_SFN_1807901_SM001.dgn

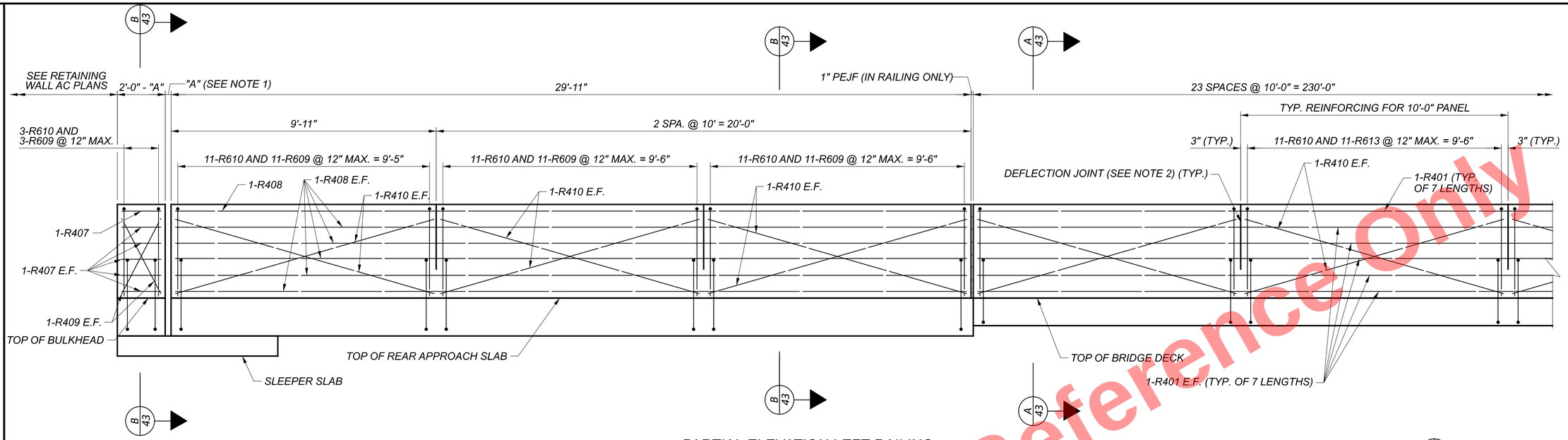

PARTIAL ELEVATION LEFT RAILING
(LOOKING AT INSIDE FACE OF RAILING)

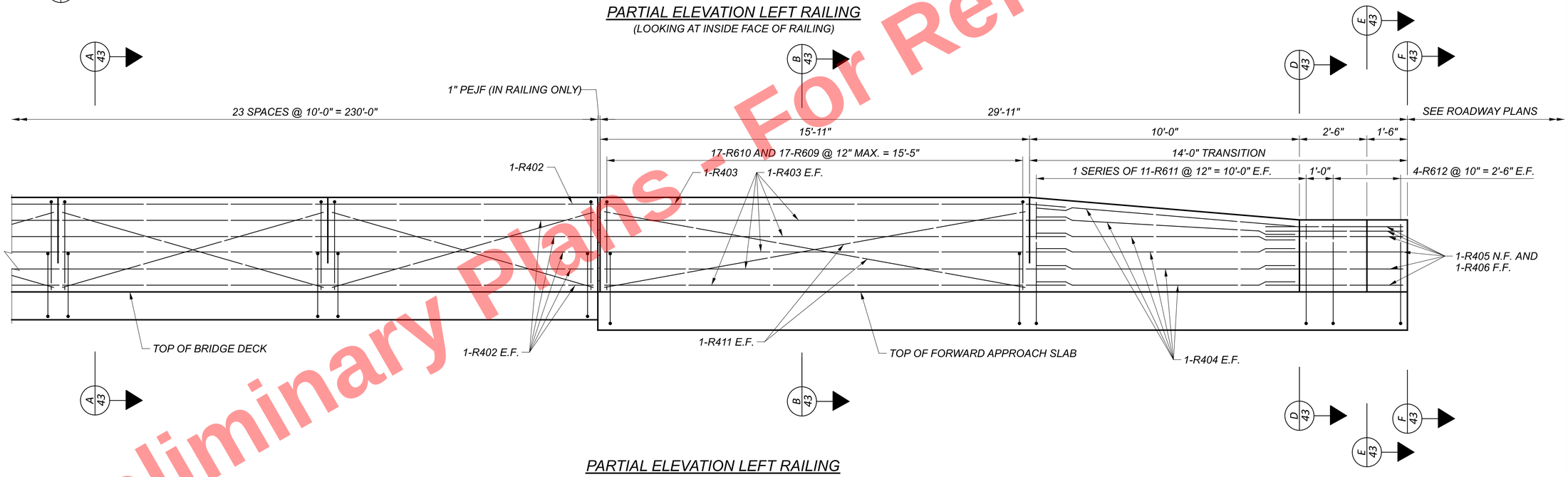

PARTIAL ELEVATION LEFT RAILING
(LOOKING AT INSIDE FACE OF RAILING)

NOTES:

1. SEE STANDARD BRIDGE DRAWING AS-2-15 FOR ADDITIONAL DETAILS.
2. SEE STANDARD BRIDGE DRAWING SBR-1-20 FOR ADDITIONAL DETAILS.
3. FOR SECTIONS A-A, B-B, C-C, D-D, AND E-E SEE SHEET 43/50 .
4. MINIMUM LAP LENGTHS:
   #4 GFRP = 1'-1"

Preliminary Plans - For Reference Only

LEFT RAILING ELEVATION
CUY-90-1653L (BRIDGE 10)
I.R. 90 WB OVER CR-721 (E. 14TH ST.)

CUY-90-16.28 (CCG3A)

MODEL: Sheet PAPERSIZE: 34x22 (in.) DATE: 3/28/2025 TIME: 9:53:37 AM USER: Mala.Gallagher
pw:\\mb-us-pw.bentley.com:mb-us-pw-03\Documents\Cleveland_OH\01_Projects\ODOTDistrict12\82382400-Engineering\Structures\SFN_1807901\Sheets\82382_SFN_1807901_SA001.dgn

SFN	1807901
DESIGN AGENCY	B&N burgessniple.com
DESIGNER	DBH
CHECKER	BCS
REVIEWER	DWL 05/24/22
PROJECT ID	82382
SUBSET	42
TOTAL	50
SHEET	2077
TOTAL	2696

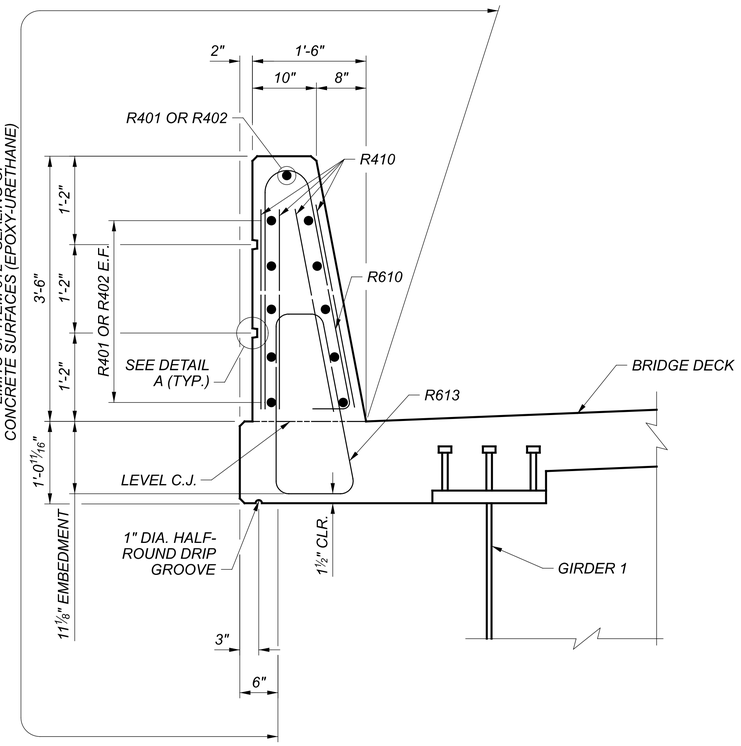

SECTION A-A

(DECK SLAB REINFORCING NOT SHOWN FOR CLARITY)

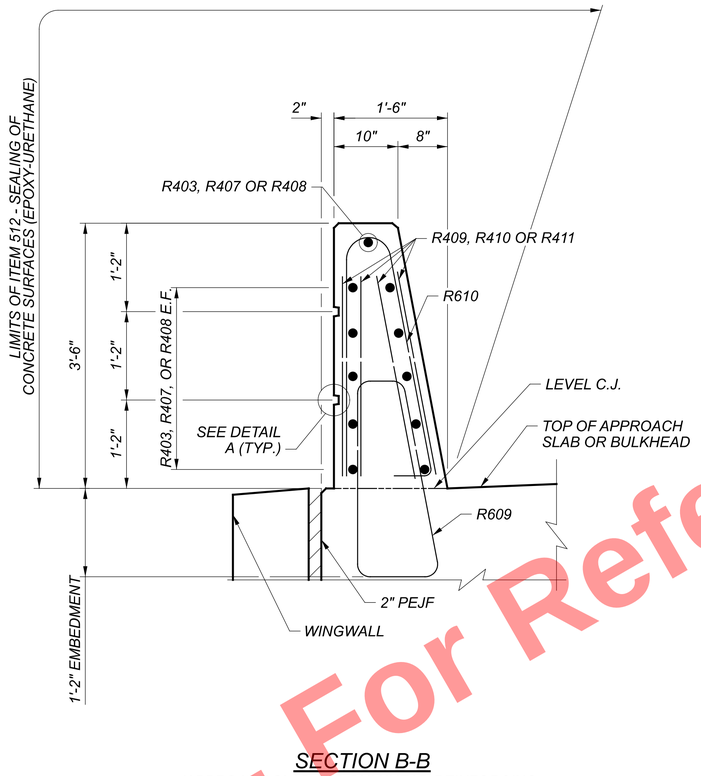

SECTION B-B

(APPROACH SLAB AND BULKHEAD REINFORCING NOT SHOWN FOR CLARITY)

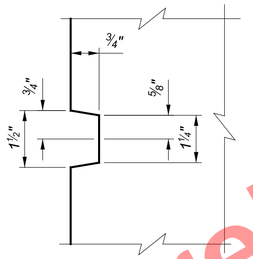

DETAIL A

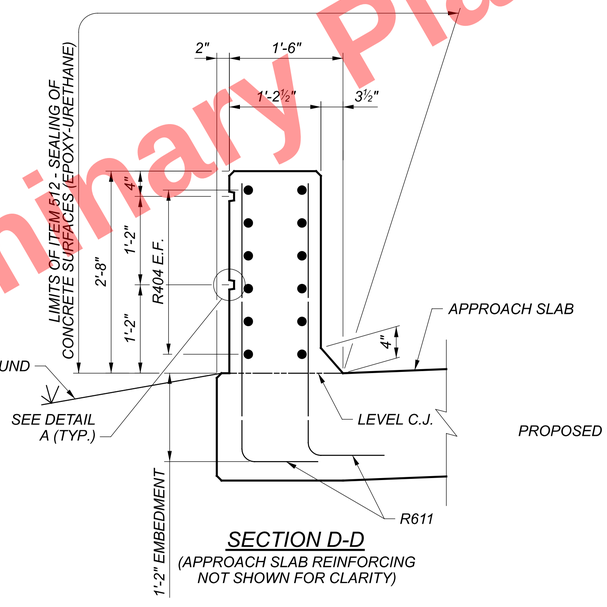

SECTION D-D

(APPROACH SLAB REINFORCING NOT SHOWN FOR CLARITY)

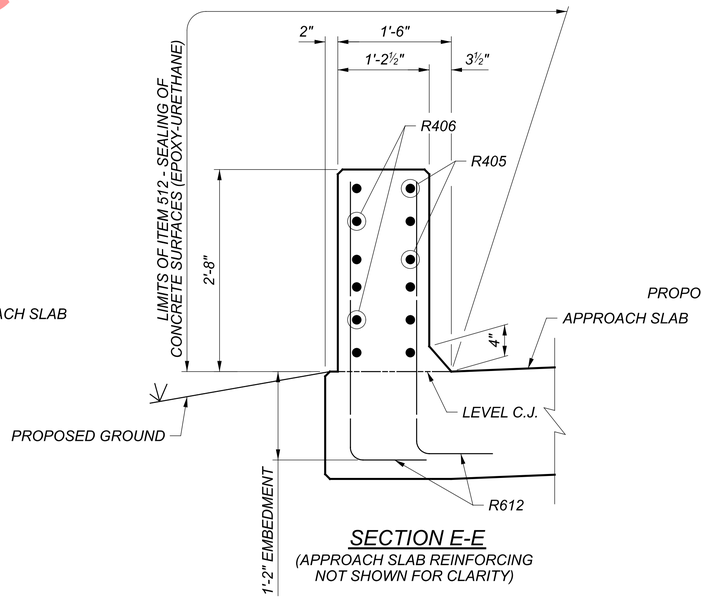

SECTION E-E

(APPROACH SLAB REINFORCING NOT SHOWN FOR CLARITY)

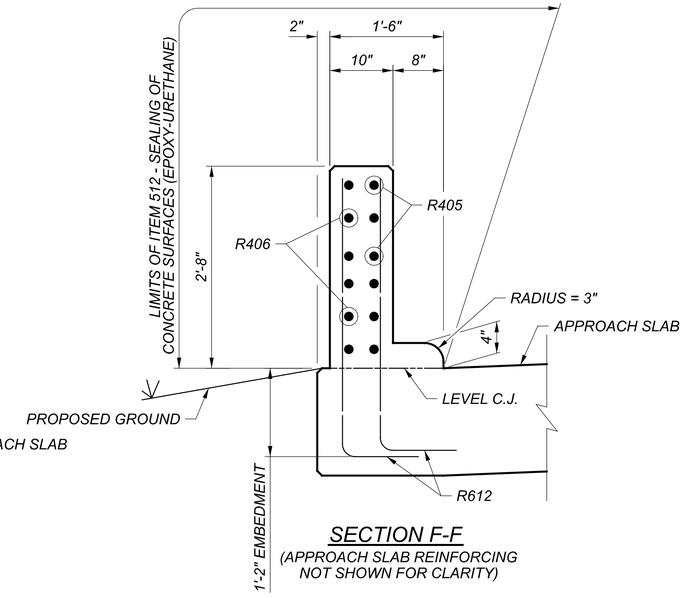

SECTION F-F

(APPROACH SLAB REINFORCING NOT SHOWN FOR CLARITY)

NOTES:

1. SEE STANDARD BRIDGE DRAWING AS-2-15 FOR ADDITIONAL DETAILS.
2. SEE SHEET 42/50 FOR LOCATION OF SECTION CUTS AND ADDITIONAL NOTES.

Preliminary Plans - For Reference Only

LEFT RAILING DETAILS
CUY-90-1653L (BRIDGE 10)
I.R. 90 WB OVER CR-721 (E. 14TH ST.)

SFN 1807901
DESIGN AGENCY B&N burgessniple.com
DESIGNER DBH | CHECKER BCS
REVIEWER DWL 05/24/22
PROJECT ID 82382
SUBSET 43 | TOTAL 50
SHEET 2078 | TOTAL 2696

CUY-90-16.28 (CCG3A)

MODEL: Sheet PAPERSIZE: 34x22 (in.) DATE: 3/28/2025 TIME: 9:53:43 AM USER: Mata.Gallagher
pw:\\mb-us-pw.bentley.com:mb-us-pw-03\Documents\Cleveland_OH101_Projects\ODOT\District12\82382\400-Engineering\Structures\SFN_1807901\Sheets\82382_SFN_1807901_SA002.dgn

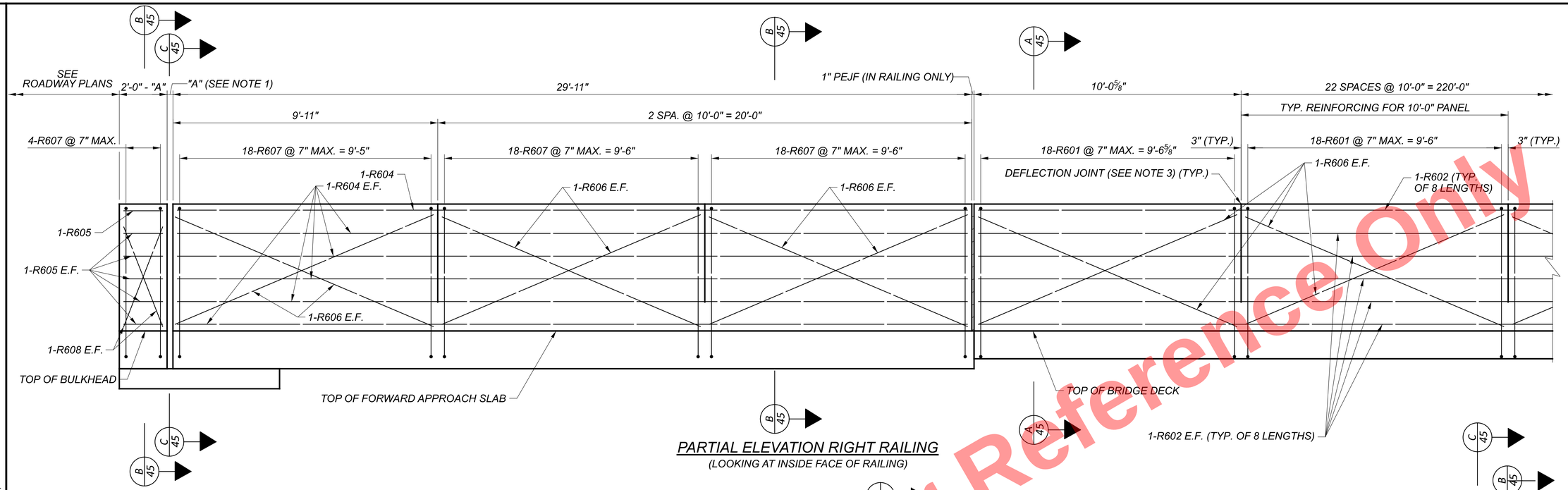

PARTIAL ELEVATION RIGHT RAILING
(LOOKING AT INSIDE FACE OF RAILING)

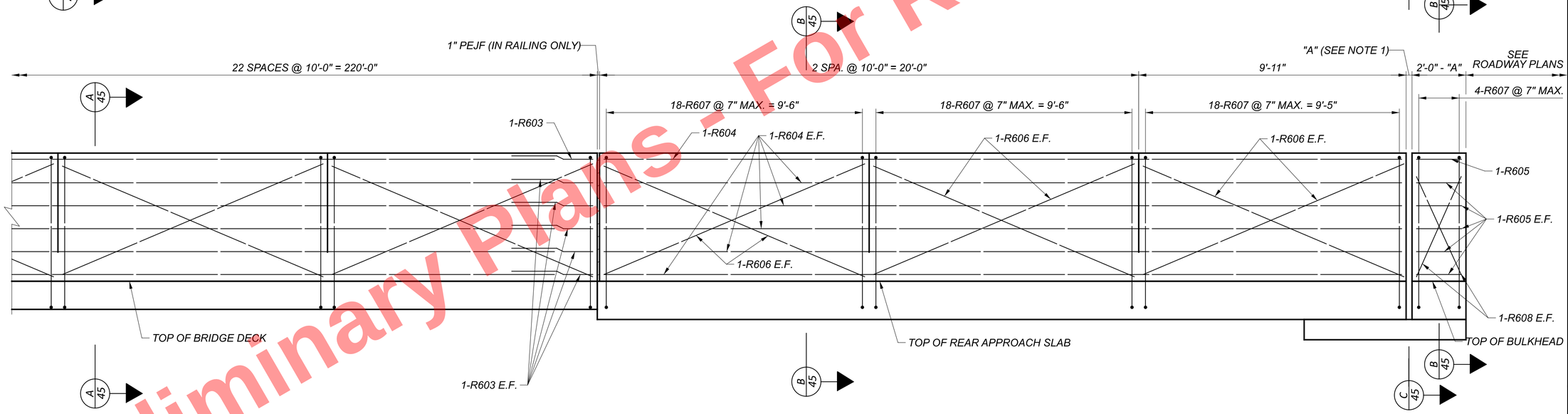

PARTIAL ELEVATION RIGHT RAILING
(LOOKING AT INSIDE FACE OF RAILING)

Preliminary Plans - For Reference Only

NOTES:

1. SEE STANDARD BRIDGE DRAWING AS-2-15 FOR ADDITIONAL DETAILS.
2. SEE STANDARD BRIDGE DRAWING SBR-2-20 FOR ADDITIONAL DETAILS.
3. FOR SECTIONS A-A, B-B, C-C AND DEFLECTION JOINT DETAIL SEE SHEET 45/50 .
4. MINIMUM LAP LENGTHS:
   #6 GFRP = 1'-8"

RIGHT RAILING ELEVATION
CUY-90-1653L (BRIDGE 10)
I.R. 90 WB OVER CR-721 (E. 14TH ST.)

SFN 1807901
DESIGN AGENCY B&N burgessniple.com
DESIGNER DBH | CHECKER BCS
REVIEWER DWL 05/24/22
PROJECT ID 82382
SUBSET 44 | TOTAL 50
SHEET 2079 | TOTAL 2696

CUY-90-16.28 (CCG3A)

MODEL: Sheet PAPERSIZE: 34x22 (in.) DATE: 3/28/2025 TIME: 9:53:55 AM USER: Mala.Gallagher
pw:\\mb-us-pw.bentley.com:mb-us-pw-03\Documents\Cleveland_OH\01_Projects\ODOT\District12\82382400-Engineering\Structures\SFN_1807901\Sheets\82382_SFN_1807901_SA003.dgn

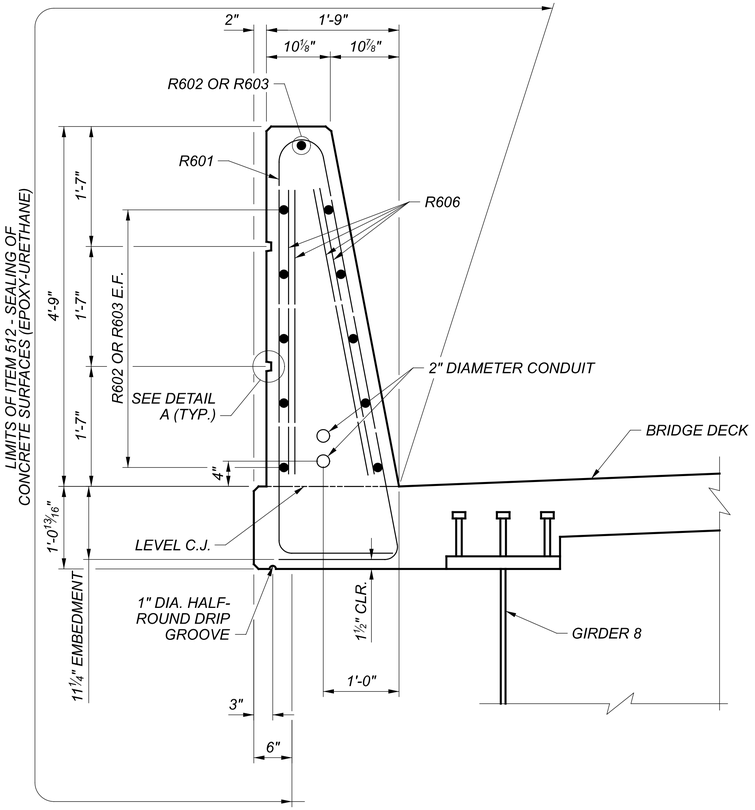

SECTION A-A

(DECK SLAB REINFORCEMENT NOT SHOWN FOR CLARITY)

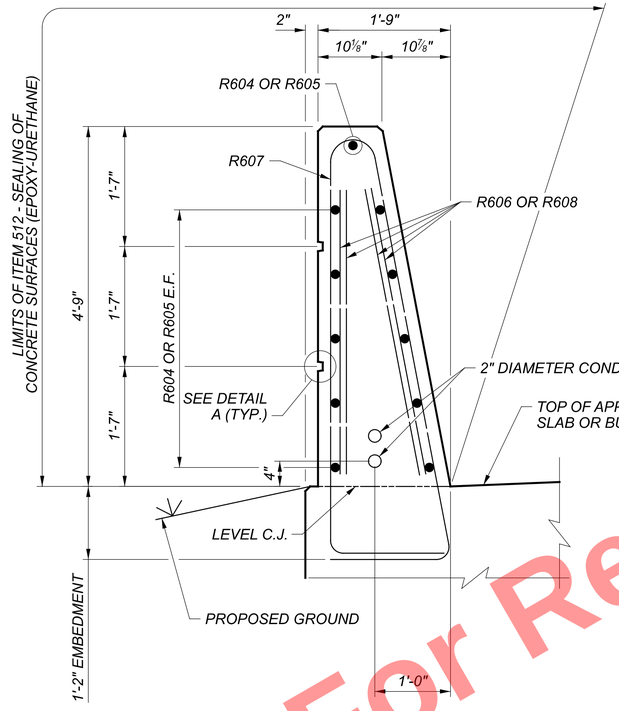

SECTION B-B

(APPROACH SLAB AND BULKHEAD REINFORCEMENT NOT SHOWN FOR CLARITY)

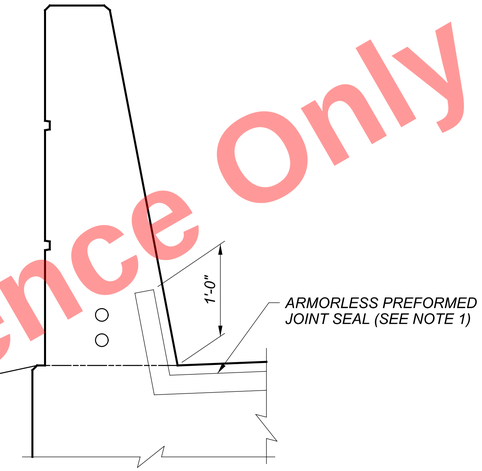

SECTION C-C

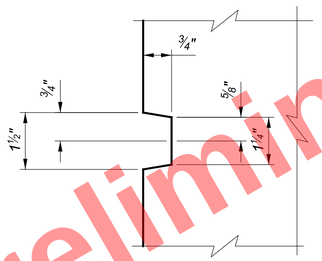

DETAIL A

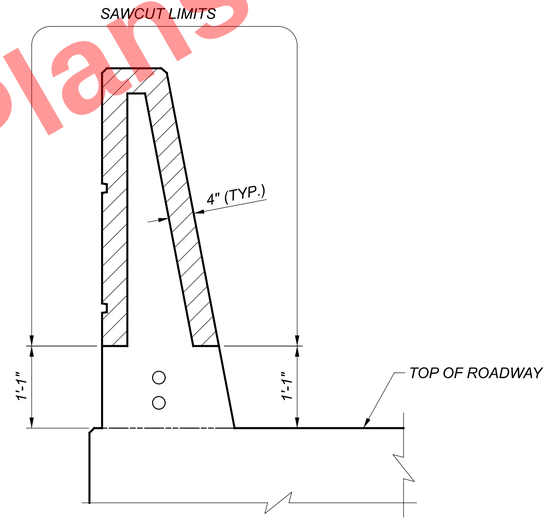

DEFLECTION JOINT DETAIL

NOTES:

1. SEE STANDARD BRIDGE DRAWING AS-2-15 FOR ADDITIONAL DETAILS.
2. SEE SHEET 44/50 FOR LOCATION OF SECTION CUTS AND ADDITIONAL NOTES.

Preliminary Plans - For Reference Only

RIGHT RAILING DETAILS
CUY-90-1653L (BRIDGE 10)
I.R. 90 WB OVER CR-721 (E. 14TH ST.)

SFN 1807901
DESIGN AGENCY B&N burgessniple.com
DESIGNER DBH | CHECKER BCS
REVIEWER DWL 05/24/22
PROJECT ID 82382
SUBSET 45 | TOTAL 50
SHEET 2080 | TOTAL 2696

CUY-90-16.28 (CCG3A)

MODEL: Sheet PAPERSIZE: 34x22 (in.) DATE: 3/28/2025 TIME: 9:54:01 AM USER: Mala.Gallagher
pw:\\mb-us-pw.bentley.com:mb-us-pw-03\Documents\Cleveland_OH\01_Projects\ODOT\District12\82382\400-Engineering\Structures\SFN_1807901\Sheets\82382_SFN_1807901_SA004.dgn

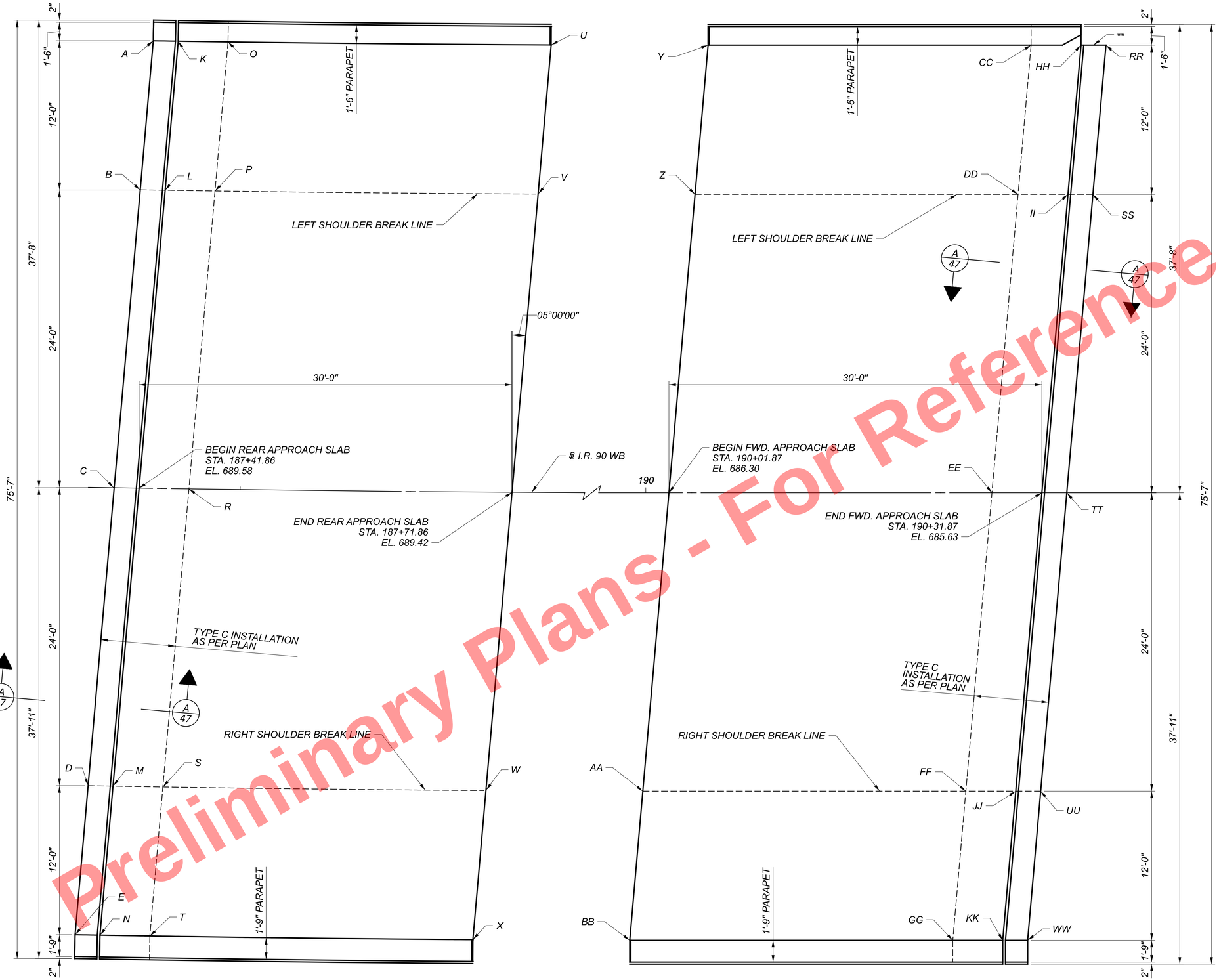

REAR

(MOMENT SLAB NOT SHOWN FOR CLARITY;
SEE RETAINING WALL AC PLANS FOR DETAILS AND PAYMENT)

APPROACH SLAB PLAN

FORWARD

** = 1'-8" x 2'-0" NOTCH IN SLEEPER SLAB
FOR GUARDRAIL POST

NOTES:

1. SEE SHEET 47/50 FOR SECTION A-A.
2. SEE BRIDGE STANDARD DRAWINGS AS-1-15 AND AS-2-15 FOR STANDARD REINFORCING AND INFORMATION NOT SHOWN.
3. SEE SHEETS 42/50 THROUGH 45/50 FOR PARAPET DETAILS.
4. SEE SHEET 41/50 FOR SUPERELEVATION TRANSITION DIAGRAM.

APPROACH SLAB PLAN
CUY-90-1653L (BRIDGE 10)
I.R. 90 WB OVER CR-721 (E. 14TH ST.)

SFN	1807901
DESIGN AGENCY	B&N burgessniple.com
DESIGNER	DBH
CHECKER	BCS
REVIEWER	DWL 05/24/22
PROJECT ID	82382
SUBSET	46
TOTAL	50
SHEET	2081
TOTAL	2696

CUY-90-16.28 (CCG3A)

MODEL: Sheet PAPERSIZE: 34x22 (in.) DATE: 3/28/2025 TIME: 9:54:06 AM USER: Mala.Gallagher
pw:\\mb-us-pw.bentley.com:mb-us-pw-03\Documents\Cleveland_OH\01_Projects\ODOT\District12\82382\400-Engineering\Structures\SFN_1807901\Sheets\82382_SFN_1807901_SM002.dgn

Preliminary Plans - For Reference Only

APPROACH SLAB DATA			
POINT	STA.	OFFSET.	EL.
K	187+44.46	36.00' LT.	688.17
L	187+43.59	24.00' LT.	688.65
M	187+40.17	24.00' RT.	690.52
N	187+39.33	36.00' RT.	690.16
U	187+74.84	36.00' LT.	688.14
V	187+73.84	24.00' LT.	688.62
W	187+69.92	24.00' RT.	690.23
X	187+68.96	36.00' RT.	689.81
Y	190+05.01	36.00' LT.	685.36
Z	190+03.97	24.00' LT.	685.86
AA	189+99.76	24.00' RT.	686.10
BB	189+98.72	36.00' RT.	685.65
HH	190+35.01	36.00' LT.	684.69
II	190+33.97	24.00' LT.	685.20
JJ	190+29.76	24.00' RT.	685.31
KK	190+28.72	36.00' RT.	684.86

BULKHEAD DATA			
POINT	STA.	OFFSET.	EL.
A	187+42.42	36.00' LT.	688.17
B	187+41.56	24.00' LT.	688.65
C	187+39.86	0.00'	689.59
D	187+38.18	24.00' RT.	690.54
E	187+37.35	36.00' RT.	690.18
RR	190+37.02	36.00' LT.	684.65
SS	190+35.98	24.00' LT.	685.15
TT	190+33.87	0.00'	685.58
UU	190+31.77	24.00' RT.	685.26
WW	190+30.72	36.00' RT.	684.80

SLEEPER SLAB DATA			
POINT	STA.	OFFSET.	EL.
A	187+42.42	36.00' LT.	686.75
B	187+41.56	24.00' LT.	687.23
C	187+39.86	0.00'	688.17
D	187+38.18	24.00' RT.	689.12
E	187+37.35	36.00' RT.	688.77
O	187+48.52	36.00' LT.	686.75
P	187+47.63	24.00' LT.	687.23
R	187+45.87	0.00'	688.14
S	187+44.15	24.00' RT.	689.07
T	187+43.29	36.00' RT.	688.70
CC	190+31.00	36.00' LT.	683.37
DD	190+29.95	24.00' LT.	683.87
EE	190+27.85	0.00'	684.31
FF	190+26.75	24.00' RT.	684.00
GG	190+24.70	36.00' RT.	683.55
RR	190+37.02	36.00' LT.	683.23
SS	190+35.98	24.00' LT.	683.73
TT	190+33.87	0.00'	684.17
UU	190+31.77	24.00' RT.	683.84
WW	190+30.72	36.00' RT.	683.39

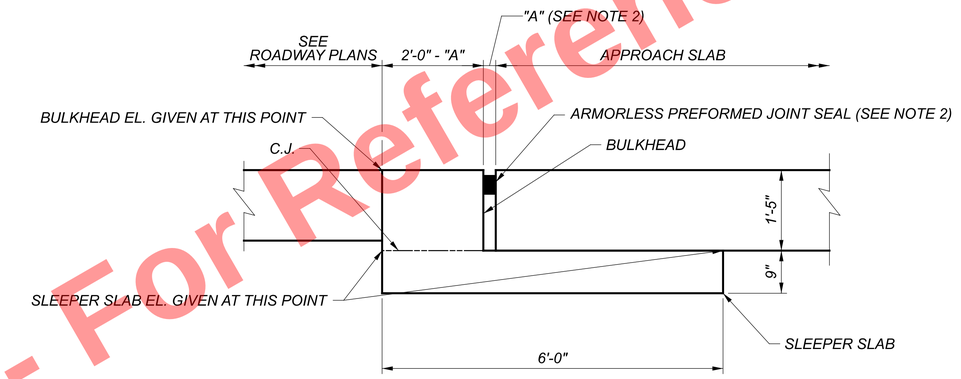

SECTION A-A

NOTES:

1. OFFSET IS MEASURED FROM ℄ I.R. 90 WB.
2. SEE STANDARD BRIDGE DRAWING AS-2-15 FOR ADDITIONAL DETAILS.

Preliminary Plans - For Reference Only

APPROACH SLAB DETAILS
CUY-90-1653L (BRIDGE 10)
I.R. 90 WB OVER CR-721 (E. 14TH ST.)

SFN 1807901

DESIGN AGENCY
B&N burgessniple.com

DESIGNER	CHECKER
DBH	BCS

REVIEWER: DWL 05/24/22

PROJECT ID: 82382

SUBSET	TOTAL
47	50

SHEET	TOTAL
2082	2696

CUY-90-16.28 (CCG3A)

MODEL: Sheet PAPERSIZE: 34x22 (in.) DATE: 3/28/2025 TIME: 9:54:26 AM USER: Mala.Gallagher
pw:\\mb-us-pw.bentley.com:mb-us-pw-03\Documents\Cleveland_OH\01_Projects\ODOT\District12\82382\400-Engineering\Structures\SFN_1807901\Sheets\82382_SFN_1807901_SM003.dgn

REAR ABUTMENT (EPOXY COATED STEEL REINFORCEMENT - ECSR)

MARK	MAT. TYPE	NO.	LENGTH	WEIGHT (LBS)	TYPE	DIMENSIONS					
						A	B	C	D	E	INC.
RA501	ECSR	11	6'-11"	79	STR						
RA502	ECSR	22	22'-11"	526	STR						
RA503	ECSR	11	30'-6"	350	STR						
RA504	ECSR	140	10'-7"	1545	18	5'-8"	2'-7"	2'-7"			
		2	10'-7"				2'-7"	2'-7"			
RA505	ECSR	S.O.	TO	101	18	5'-8"	TO	TO			1'-0"
		4	13'-7"				4'-1"	4'-1"			
		2	10'-7"				2'-7"	2'-7"			
RA506	ECSR	S.O.	TO	107	18	5'-8"	TO	TO			1'-6"
		4	15'-1"				4'-10"	4'-10"			
RA507	ECSR	8	12'-2"	102	STR						
RA508	ECSR	10	24'-8"	257	STR						
RA509	ECSR	29	34'-2"	1033	STR						
RA510	ECSR	35	3'-11"	143	18	1'-8"	1'-3"	1'-3"			
RA511	ECSR	14	1'-0"	15	STR						
RA512	ECSR	4	6'-0"	25	STR						
RA513	ECSR	4	19'-9"	82	18	2'-8"	8'-8"	8'-8"			
RA514	ECSR	6	6'-8"	42	20	0'-2"	3'-5"	3'-3"			
RA515	ECSR	10	30'-0"	313	STR						
RA516	ECSR	8	40'-0"	334	STR						
RA517	ECSR	6	26'-4"	165	STR						
RA518	ECSR	14	10'-9"	157	20	0'-3"	2'-8"	8'-1"			
RA519	ECSR	2	14'-5"	30	18	2'-8"	6'-0"	6'-0"			
RA520	ECSR	7	8'-7"	63	18	2'-8"	3'-1"	3'-1"			
		1	14'-5"				6'-0"	6'-0"			
RA521	ECSR	S.O.	TO	66	18	2'-8"	TO	TO			1'-0"
		4	17'-5"				7'-6"	7'-6"			
RA522	ECSR	1	11'-5"	12	18	2'-8"	4'-6"	4'-6"			
RA523	ECSR	47	9'-9"	478	18	2'-8"	3'-8"	3'-8"			
RA524	ECSR	36	15'-9"	591	18	2'-8"	6'-8"	6'-8"			
		1	15'-5"				6'-6"	6'-6"			
RA525	ECSR	S.O.	TO	74	18	2'-8"	TO	TO			1'-6"
		4	19'-11"				8'-9"	8'-9"			
RA526	ECSR	28	15'-1"	440	18	2'-8"	6'-4"	6'-4"			
RA527	ECSR	32	12'-11"	431	18	2'-8"	5'-3"	5'-3"			
RA528	ECSR	6	13'-11"	87	18	2'-8"	5'-9"	5'-9"			
RA529	ECSR	4	12'-9"	53	18	2'-8"	5'-2"	5'-2"			
RA601	ECSR	16	12'-9"	306	STR						
RA602	ECSR	16	12'-4"	296	STR						
RA603	ECSR	16	7'-3"	174	STR						
RA604	ECSR	1	7'-11"	12	26	1'-10"	1'-6"	1'-1"	3'-0"	3'-5"	
RA605	ECSR	130	6'-0"	1172	STR						
RA701	ECSR	20	9'-2"	375	STR						
RA702	ECSR	60	13'-11"	1707	STR						
RA703	ECSR	70	8'-1"	1157	1	1'-2"	7'-1"				
RA801	ECSR	7	6'-11"	129	STR						
RA802	ECSR	14	23'-3"	869	STR						
RA803	ECSR	7	30'-6"	570	STR						
RA804	ECSR	12	12'-7"	403	STR						
RA805	ECSR	12	12'-2"	390	STR						
RA806	ECSR	12	7'-3"	232	STR						
RA807	ECSR	1	9'-9"	26	26	2'-10"	2'-5"	1'-1"	3'-5"	3'-8"	
RA808	ECSR	7	9'-10"	184	33	3'-11"	1'-6"	3'-11"	1'-6"		
RA809	ECSR	7	10'-11"	204	33	3'-11"	2'-3"	3'-11"	2'-3"		
RA810	ECSR	26	17'-5"	1209	18	10'-8"	3'-7"	3'-7"			

REAR ABUTMENT (EPOXY COATED STEEL REINFORCEMENT - ECSR) (CONTINUED)

MARK	MAT. TYPE	NO.	LENGTH	WEIGHT (LBS)	TYPE	DIMENSIONS					
						A	B	C	D	E	INC.
		2	19'-3"				4'-6"	4'-6"			
RA811	ECSR	S.O.	TO	324	18	10'-8"	TO	TO			1'-0"
		3	21'-3"				5'-6"	5'-6"			
		2	15'-5"				2'-7"	2'-7"			
RA812	ECSR	S.O.	TO	266	18	10'-8"	TO	TO			1'-2"
		3	17'-9"				3'-9"	3'-9"			
RA813	ECSR	14	15'-5"	576	18	10'-8"	2'-7"	2'-7"			
RA814	ECSR	12	14'-10"	475	33	3'-11"	5'-0"	3'-11"	5'-0"		
RA815	ECSR	12	14'-6"	465	33	3'-11"	4'-9"	3'-11"	4'-9"		
RA816	ECSR	4	8'-11"	95	20	0'-2"	3'-5"	5'-6"			
RA817	ECSR	4	14'-5"	154	STR						
RA818	ECSR	4	34'-2"	365	STR						
RA819	ECSR	4	40'-0"	427	STR						
RA820	ECSR	4	13'-0"	139	20	0'-3"	2'-8"	10'-4"			
		2	19'-3"				4'-6"	4'-6"			
RA821	ECSR	S.O.	TO	316	18	10'-8"	TO	TO			0'-6"
		3	20'-3"				5'-0"	5'-0"			
RA901	ECSR	60	17'-11"	3655	STR						
RA902	ECSR	50	11'-0"	1870	1	1'-7"	9'-9"				
REAR ABUTMENT ECSR TOTAL				26243							

DECK (EPOXY COATED STEEL REINFORCEMENT - ECSR)

MARK	MAT. TYPE	NO.	LENGTH	WEIGHT (LBS)	TYPE	DIMENSIONS					
						A	B	C	D	E	INC.
S401	ECSR	992	30'-0"	19880	STR						
S402	ECSR	83	4'-9"	263	STR						
S403	ECSR	476	4'-3"	1351	3	0'-9"	0'-9"	2'-6"	0'-9"		
S404	ECSR	164	16'-8"	1826	STR						
S405	ECSR	950	8'-7"	5447	19	8'-1"					
S501	ECSR	1259	30'-0"	39394	STR						
S502	ECSR	99	12'-9"	1317	STR						
S503	ECSR	934	26'-1"	25409	19	25'-6"					
		2	20'-1"								
S504	ECSR	S.O.	TO	501	STR						2'-10 1/8"
		8	40'-0"								
S505	ECSR	934	39'-2"	38155	STR						
		2	20'-8"			20'-1"					
S506	ECSR	S.O.	TO	511	19	TO					2'-10 1/8"
		8	40'-7"			40'-0"					
DECK ECSR TOTAL				134054							

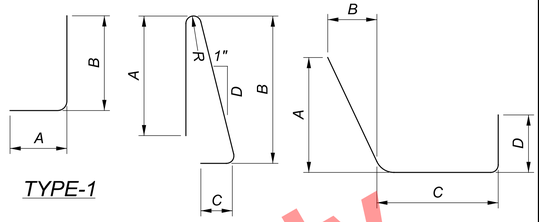

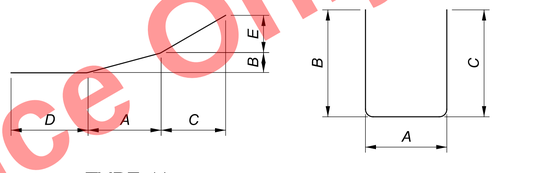

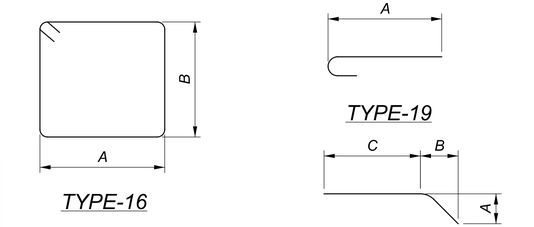

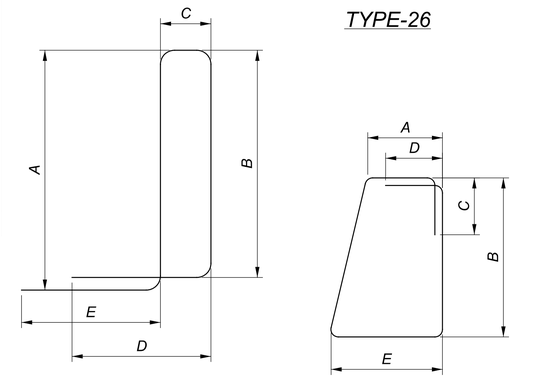

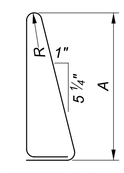

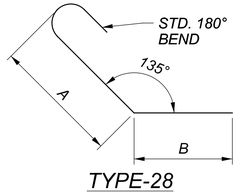

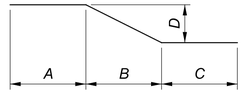

NOTES:

1. BAR SIZE: THE BAR SIZE IS INDICATED IN THE BAR MARK. THE MARK BEGINS WITH ONE OR TWO LETTERS THAT IDENTIFY THE BAR LOCATION. THE NEXT ONE OR TWO DIGITS ARE THE BAR SIZE. THE FINAL TWO DIGITS ARE THE SEQUENCE NUMBERS.

   EXAMPLE: A501
   A = ABUTMENT
   5 = #5 BAR
   01 = SEQUENCE NUMBER

2. BAR DIMENSIONS SHOWN ARE OUT TO OUT UNLESS NOTED OTHERWISE.
3. ALL STEEL REINFORCING IS TO BE EPOXY COATED.
4. STD. WRITTEN IN PLACE OF A DIMENSION INDICATES A STANDARD BEND AT THE END OF A BAR.
5. STR. IN THE BAR TYPE COLUMN INDICATES A STRAIGHT BAR.
6. RAD. INDICATES THE INSIDE RADIUS UNLESS OTHERWISE NOTED.
7. INCR. INDICATES THE LENGTH INCREMENT FOR SERIES BARS.

Preliminary Plans - Not For Reference Only

REINFORCING STEEL LIST 1 OF 3
CUY-90-1653L (BRIDGE 10)
I.R. 90 WB OVER CR-721 (E. 14TH ST.)

SFN 1807901
DESIGN AGENCY B&N burgessniple.com
DESIGNER DBH | CHECKER BCS
REVIEWER DWL 05/24/22
PROJECT ID 82382
SUBSET 48 | TOTAL 50
SHEET 2083 | TOTAL 2696

CUY-90-16.28 (CCG3A)

MODEL: Sheet PAPERSIZE: 34x22 (in.) DATE: 3/28/2025 TIME: 9:54:36 AM USER: Mala.Gallagher
pw:\\mb-us-pw.bentley.com:mb-us-pw-03\Documents\Cleveland_OH\01_Projects\ODOT\District12\82382\400-Engineering\Structures\SFN_1807901\Sheets\82382_SFN_1807901_SL001.dgn

FORWARD ABUTMENT (EPOXY COATED STEEL REINFORCEMENT - ECSR)

MARK	MAT. TYPE	NO.	LENGTH	WEIGHT (LBS)	TYPE	DIMENSIONS					
						A	B	C	D	E	INC.
FA501	ECSR	38	30'-0"	1189	STR						
FA502	ECSR	11	16'-0"	184	STR						
FA503	ECSR	11	12'-4"	142	STR						
FA504	ECSR	11	8'-10"	101	STR						
FA505	ECSR	180	10'-7"	1987	18	5'-8"	2'-7"	2'-7"			
		2	10'-7"				2'-7"	2'-7"			
FA506	ECSR	S.O.	TO	74	18	5'-8"	TO	TO			1'-3"
		3	13'-1"				3'-10"	3'-10"			
FA507	ECSR	8	6'-5"	54	20	0'-3"	3'-2"	3'-3"			
FA508	ECSR	2	8'-11"	19	20	3'-0"	5'-10"	2'-5"			
		2	6'-5"				2'-9"	2'-9"			
FA509	ECSR	S.O.	TO	96	18	1'-2"	TO	TO			0'-6"
		6	8'-11"				4'-0"	4'-0"			
FA510	ECSR	24	5'-9"	144	STR						
FA511	ECSR	12	5'-9"	72	18	1'-2"	2'-5"	2'-5"			
FA512	ECSR	12	17'-5"	218	18	1'-2"	8'-3"	8'-3"			
FA513	ECSR	6	17'-2"	107	STR						
FA514	ECSR	10	11'-2"	116	STR						
		2	11'-2"								
FA515	ECSR	S.O.	TO	118	STR						2'-0"
		4	17'-2"								
FA516	ECSR	8	18'-2"	152	STR						
FA517	ECSR	14	0'-8"	10	STR						
FA518	ECSR	4	7'-0"	29	STR						
FA519	ECSR	4	6'-0"	25	STR						
FA520	ECSR	2	23'-9"	50	18	2'-8"	10'-8"	10'-8"			
FA521	ECSR	1	9'-5"	10	18	2'-8"	3'-6"	3'-6"			
FA522	ECSR	10	10'-1"	105	18	2'-8"	3'-10"	3'-10"			
FA523	ECSR	12	6'-5"	80	20	0'-2"	3'-2"	3'-3"			
FA524	ECSR	76	9'-5"	746	18	2'-8"	3'-6"	3'-6"			
FA525	ECSR	62	15'-5"	997	18	2'-8"	6'-6"	6'-6"			
FA526	ECSR	9	16'-11"	159	18	2'-8"	7'-3"	7'-3"			
FA527	ECSR	9	12'-3"	115	18	2'-8"	4'-11"	4'-11"			
FA528	ECSR	2	13'-11"	29	18	2'-8"	5'-9"	5'-9"			
		1	15'-5"				6'-6"	6'-6"			
FA529	ECSR	S.O.	TO	84	18	2'-8"	TO	TO			0'-4 1/2"
		5	16'-11"				7'-3"	7'-3"			
FA530	ECSR	2	13'-1"	27	18	5'-8"	3'-10"	3'-10"			
FA531	ECSR	4	7'-6"	31	STR						
FA801	ECSR	22	30'-0"	1762	STR						
FA802	ECSR	7	17'-4"	324	STR						
FA803	ECSR	7	12'-2"	227	STR						
FA804	ECSR	7	8'-10"	165	STR						
FA806	ECSR	7	9'-6"	178	33	3'-11"	1'-3"	3'-11"	1'-3"		
FA807	ECSR	4	8'-8"	93	20	0'-3"	3'-2"	5'-6"			
FA808	ECSR	4	22'-8"	242	STR						
FA809	ECSR	4	6'-5"	69	20	0'-3"	3'-2"	3'-3"			
FORWARD ABUTMENT ECSR TOTAL				10330							

PARAPETS (EPOXY COATED STEEL REINFORCEMENT - ECSR)

MARK	MAT. TYPE	NO.	LENGTH	WEIGHT (LBS.)	TYPE	DIMENSIONS					
						A	B	C	D	E/RAD.	INC.
R601	ECSR	414	13'-5"	8343	98	5'-6"				0'-2"	
R607	ECSR	116	13'-10"	2410	98	5'-9"				0'-2"	
R609	ECSR	53	8'-0"	637	41	0'-9 1/2"	2'-7"	1'-0"	0'-7"	1'-3"	
R610	ECSR	306	6'-11"	3179	2	3'-3"	3'-3"	0'-6"	0'-5 1/4"	0'-2"	
		2	4'-6"				3'-8"				
R611	ECSR	S.O.	TO	162	1	1'-0"	TO				0'-1"
		11	5'-4"				4'-6"				
R612	ECSR	8	4'-6"	54	1	1'-0"	3'-8"				
R613	ECSR	253	7'-6"	2850	41	0'-9 1/2"	2'-4"	1'-0"	0'-7"	1'-3"	
PARAPET ECSR TOTAL				17635							

PARAPETS (GLASS FIBER REINFORCED POLYMER REINFORCEMENT - GFRP)

MARK	MAT. TYPE	NO.	LENGTH	TOTAL LENGTH	TYPE	DIMENSIONS				
						A	B	C	D	E
R401	GFRP	77	30'-0"	2310'-0"	STR					
R402	GFRP	11	28'-4"	311'-8"	STR					
R403	GFRP	11	17'-0"	187'-0"	STR					
R404	GFRP	12	9'-8"	116'-0"	STR					
R405	GFRP	6	6'-9"	40'-6"	11	2'-5"	1'-6"	1'-4"	2'-6"	0'-5"
R406	GFRP	6	5'-1"	30'-6"	STR					
R407	GFRP	11	1'-5"	15'-7"	STR					
R408	GFRP	11	29'-7"	325'-5"	STR					
R409	GFRP	4	3'-2"	12'-8"	STR					
R410	GFRP	104	10'-0"	1040'-0"	STR					
R411	GFRP	4	15'-10"	63'-4"	STR					
R602	GFRP	88	30'-0"	2640'-0"	STR					
R603	GFRP	11	3'-1"	33'-11"	STR					
R604	GFRP	22	29'-7"	650'-10"	STR					
R605	GFRP	22	1'-5"	31'-2"	STR					
R606	GFRP	116	10'-6"	1218'-0"	STR					
R608	GFRP	8	4'-0"	32'-0"	STR					
PARAPET NO. 4 GFRP TOTAL				4452'-8"						
PARAPET NO. 6 GFRP TOTAL				4605'-11"						

SEMI-INTEGRAL DIAPHRAGMS (EPOXY COATED STEEL REINFORCEMENT - ECSR)

MARK	MAT. TYPE	NO.	LENGTH	WEIGHT (LBS)	TYPE	DIMENSIONS					
						A	B	C	D	E	INC
D401	ECSR	4	2'-8"	7	STR						
D501	ECSR	272	9'-5"	2671	18	2'-8"	3'-6"	3'-6"			
D502	ECSR	142	7'-1"	1049	18	2'-2"	2'-7"	2'-7"			
D503	ECSR	6	10'-9"	67	16	2'-8"	2'-5"				
D504	ECSR	20	6'-11"	144	18	2'-8"	2'-3"	2'-3"			
D801	ECSR	102	5'-1"	1384	28	2'-10"	1'-5"				
D802	ECSR	8	17'-5"	372	1	1'-4"	16'-4"				
D803	ECSR	40	30'-0"	3204	STR						
D804	ECSR	8	31'-8"	676	1	1'-4"	30'-7"				
D805	ECSR	4	30'-6"	326	STR						
D806	ECSR	4	16'-4"	174	STR						
D807	ECSR	12	34'-5"	1103	STR						
D808	ECSR	8	25'-6"	545	STR						
D809	ECSR	16	10'-0"	427	28	4'-2"	5'-0"				
D810	ECSR	12	21'-1"	676	STR						
DIAPHRAGM ECSR TOTAL				12825							

Preliminary Plans - For Reference Only

NOTES:

1. SEE SHEET 48/50 FOR NOTES AND BAR BENDING DIAGRAMS.

REINFORCING STEEL LIST 2 OF 3
CUY-90-1653L (BRIDGE 10)
I.R. 90 WB OVER CR-721 (E. 14TH ST.)

SFN 1807901
DESIGN AGENCY B&N burgessniple.com
DESIGNER DBH | CHECKER BCS
REVIEWER DWL 05/24/22
PROJECT ID 82382
SUBSET 49 | TOTAL 50
SHEET 2084 | TOTAL 2696

CUY-90-16.28 (CCG3A)

MODEL: Sheet PAPERSIZE: 34x22 (in.) DATE: 3/28/2025 TIME: 9:54:42 AM USER: Mala.Gallagher
pw:\\mb-us-pw.bentley.com:mb-us-pw-03\Documents\Cleveland_OH\01_Projects\ODOT\District12\82382\400-Engineering\Structures\SFN_1807901\Sheets\82382_SFN_1807901_SL002.dgn

PIER (EPOXY COATED STEEL REINFORCEMENT - ECSR)											
MARK	MAT. TYPE	NO.	LENGTH	WEIGHT (LBS)	TYPE	DIMENSIONS					
						A	B	C	D	E	INC.
P401	ECSR	70	10'-6"	491	16	2'-6"	2'-6"				
P402	ECSR	140	3'-4"	312	99	2'-6"					
P501	ECSR	26	30'-0"	814	STR						
P502	ECSR	17	4'-7"	81	18	3'-2"	0'-10"	0'-10"			
P503	ECSR	12	19'-10"	248	STR						
P504	ECSR	15	12'-3"	192	18	3'-2"	4'-8"	4'-8"			
P506	ECSR	20	9'-8"	202	STR						
P507	ECSR	20	8'-8"	181	STR						
P601	ECSR	35	10'-10"	570	1	1'-0"	10'-0"				
P602	ECSR	7	11'-1"	117	18	9'-5"	1'-0"	1'-0"			
P603	ECSR	50	11'-4"	851	18	9'-8"	1'-0"	1'-0"			
P604	ECSR	55	10'-4"	854	18	8'-8"	1'-0"	1'-0"			
P605	ECSR	302	11'-4"	5141	18	2'-2"	4'-9"	4'-9"			
P606	ECSR	72	10'-6"	1136	18	2'-2"	4'-4"	4'-4"			
P901	ECSR	60	9'-5"	1921	1	1'-7"	8'-2"				
P902	ECSR	60	16'-10"	3434	STR						
P903	ECSR	50	16'-3"	2762	18	9'-8"	3'-7"	3'-7"			
P904	ECSR	60	15'-3"	3111	18	8'-8"	3'-7"	3'-7"			
P1001	ECSR	28	30'-0"	3615	1	1'-10"	28'-6"				
P1002	ECSR	14	31'-6"	1898	STR						
PIER ECSR TOTAL				27931							

Preliminary Plans - For Reference Only

NOTES:

1. SEE SHEET 48/50 FOR NOTES AND BAR BENDING DIAGRAMS.

REINFORCING STEEL LIST 3 OF 3
CUY-90-1653L (BRIDGE 10)
I.R. 90 WB OVER CR-721 (E. 14TH ST.)

SFN 1807901

DESIGN AGENCY
B&N
burgessniple.com

DESIGNER	CHECKER
DBH	BCS

REVIEWER
DWL 5/24/2022

PROJECT ID
82382

SUBSET	TOTAL
50	50

SHEET	TOTAL
2085	2696

CUY-90-16.28 (CCG3A)
MODEL: Sheet PAPERSIZE: 34x22 (in.) DATE: 3/28/2025 TIME: 9:54:48 AM USER: Maia.Gallagher
pw:\\mb-us-pw.bentley.com:mb-us-pw-03\Documents\Cleveland_OH\01_Projects\ODOT\District12\82382\400-Engineering\Structures\SFN_1807901\Sheets\82382_SFN_1807901_SL003.dgn

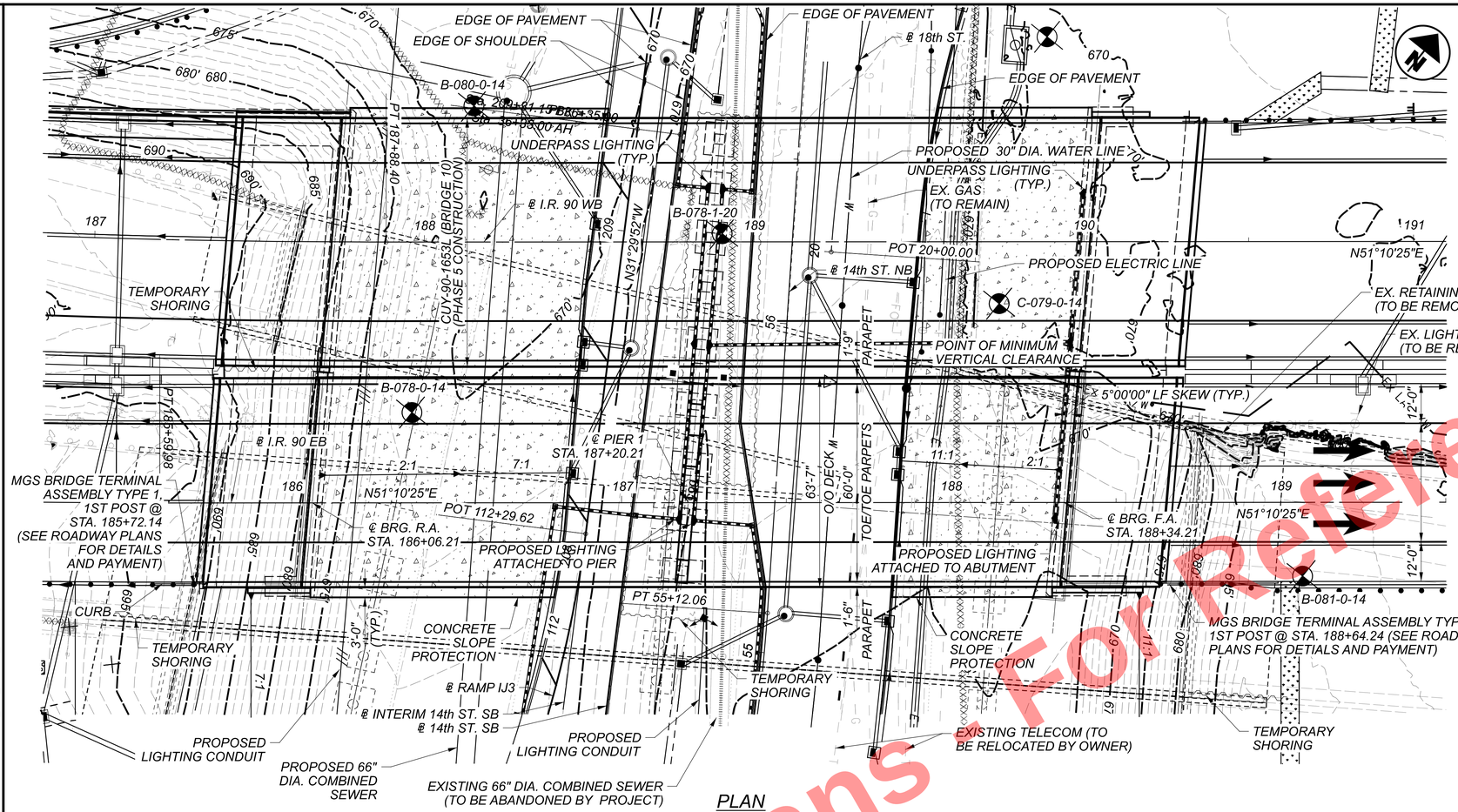

PLAN

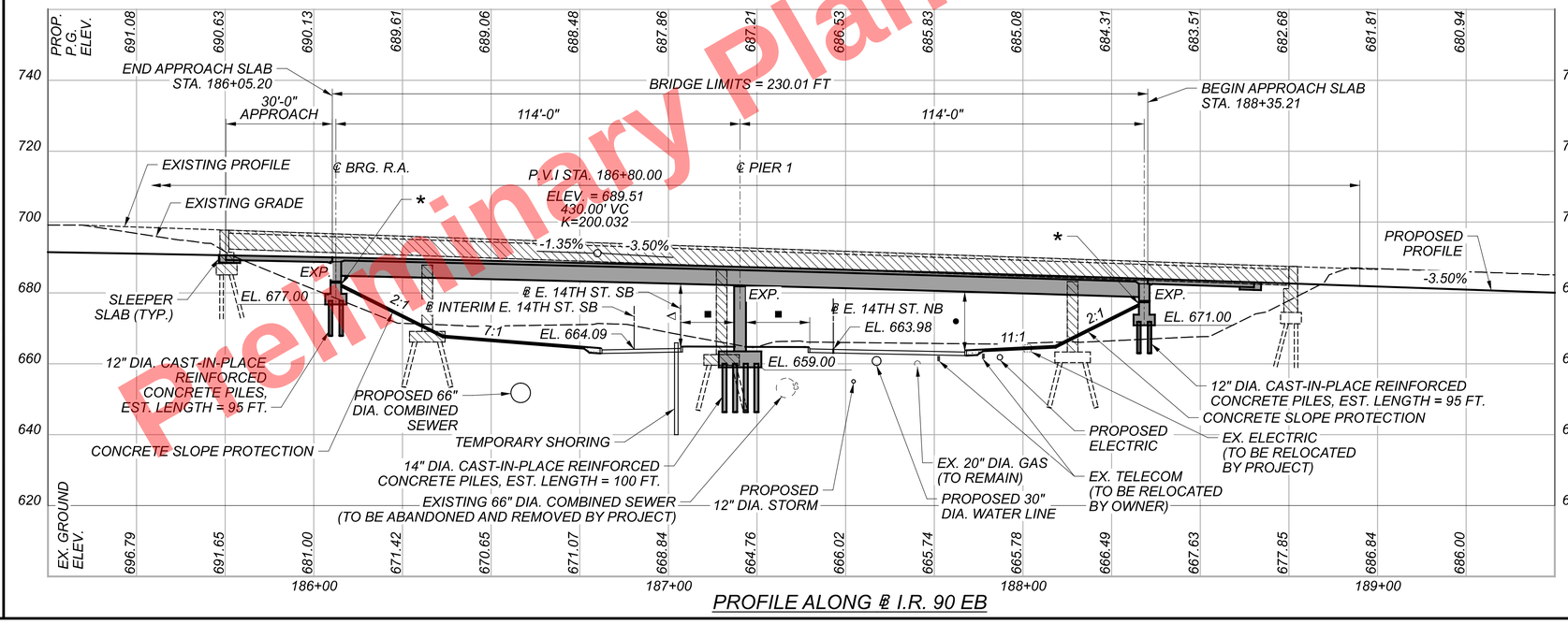

PROFILE ALONG ℄ I.R. 90 EB

BENCHMARK DATA

BM-59 STA. 188+86.37, ELEV. 660.15, OFFSET 263.25' RT.,
℄ I.R. 90 EB, MAG NAIL AT NOSE OF DRAINAGE CHANNEL
BM-61 STA. 181+52.67, ELEV. 674.03, OFFSET 541.05' LT.,
℄ I.R. 90 EB, RAILROAD SPIKE IN NORTH FACE OF POWER/LIGHT POLE
BM-62 STA. 190+19.10, ELEV. 672.11, OFFSET 563.24' LT.,
℄ I.R. 90 EB, RAILROAD SPIKE IN EAST FACE OF POWER/LIGHT POLE

FOR ADDITIONAL BENCHMARK INFORMATION SEE ROADWAY PLANS.

NOTES

EARTHWORK LIMITS SHOWN ARE APPROXIMATE. ACTUAL SLOPES SHALL CONFORM TO PLAN CROSS SECTIONS.

DESIGN TRAFFIC:
2015 ADT = 138,000 (EB & WB) 2015 ADTT = 12,420 (EB & WB)
2035 ADT = 148,000 (EB & WB) 2035 ADTT = 13,320 (EB & WB)
DIRECTIONAL DISTRIBUTION = 52%
SEE SHEET 3/43 FOR BORING LOCATIONS.

LEGEND

- BORING LOCATION
- - PORTION OF EXISTING STRUCTURE TO BE REMOVED
- ● 15'-6" REQUIRED MINIMUM VERTICAL CLEARANCE
  16'-2" ACTUAL MINIMUM VERTICAL CLEARANCE (INTERIM & FINAL)
- Δ 15'-6" REQUIRED MINIMUM VERTICAL CLEARANCE
  17'-5" ACTUAL MINIMUM VERTICAL CLEARANCE (INTERIM & FINAL)
- ■ 4'-0" REQUIRED MINIMUM HORIZONTAL CLEARANCE
  12'-10" ACTUAL MINIMUM HORIZONTAL CLEARANCE (E. 14TH ST. SB)
  11'-3" ACTUAL MINIMUM HORIZONTAL CLEARANCE (E. 14TH ST. NB)

* = TOP OF SLOPE ELEV. = VARIES FROM 682.12 TO 683.12 (R.A.)
TOP OF SLOPE ELEV. = VARIES FROM 676.37 TO 676.66 (F.A.)

EXISTING STRUCTURE (EB-8 & EB-9)

TYPE: CONTINUOUS STEEL GIRDERS WITH REINFORCED CONCRETE DECK AND SUBSTRUCTURE

SPANS: 55'-0", 88'-6", 99'-0" & 60'-0" ± c/c BEARINGS MEASURED ALONG ℄ I.R. 90 AND REFERENCE LINE

ROADWAY: VARIES
LOADING: CF 2000 - ADEQUATE FOR AASHTO ALTERNATE LOADING
SKEW: VARIES
WEARING SURFACE: 1" MONLITHIC CONCRETE
APPROACH SLABS: AS-1-81 (MODIFIED) (25' LONG)
ALIGNMENT: CURVE 1°30'00" LT. AND TANGENT
CROWN: VARIES
STRUCTURE FILE NUMBER: 1807919, 1807900 AND 1807803
DATE BUILT: 1963, REHAB 1977 & 2011
DISPOSITION: TO BE REMOVED

PROPOSED STRUCTURE

TYPE: 2 SPAN CONTINUOUS STEEL PLATE GIRDERS WITH REINFORCED CONCRETE DECK, REINFORCED CONCRETE PIERS ON PILES AND REINFORCED CONCRETE SEMI-INTEGRAL ABUTMENTS ON PILES
SPANS: 114'-0" & 114'-0" c/c BEARINGS MEASURED ALONG ℄ I.R. 90 EB
ROADWAY: 60'-0" TOE/TOE PARAPET
LOADING: HL93 AND 60 PSF FUTURE WEARING SURFACE
SKEW: 5°00'00" LF
WEARING SURFACE: 1" MONOLITHIC CONCRETE
APPROACH SLABS: 30' FT LONG (AS-1-15, AS-2-15) (MODIFIED)
ALIGNMENT: TANGENT
SUPERELEVATION: VARIES
DECK AREA: 14,624 SF
STRUCTURE FILE NUMBER: 1807804
COORDINATES: LATITUDE N 41°29'46.01"
LONGITUDE W 81°40'40.98"

Preliminary Plans - For Reference Only

SITE PLAN
CUY-90-1653R (BRIDGE 11)
I.R. 90 EB OVER CR-721 (E. 14TH ST.)

SFN 1807804
DESIGN AGENCY B&N burgessniple.com
DESIGNER BCS | CHECKER MAB
REVIEWER DWL 05/24/22
PROJECT ID 82382
SUBSET 1 | TOTAL 43
SHEET 2086 | TOTAL 2696

CUY-90-16.28 (CCG3A)

MODEL: 82382_SFN_0000011_SP002 PAPERSIZE: 34x22 (in.) DATE: 3/28/2025 TIME: 9:56:51 AM USER: Maia.Gallagher
pw:\\mb-us-pw.bentley.com:mb-us-pw-03\Documents\Cleveland_OH\01_Projects\ODOT\District12\82382\400-Engineering\Structures\SFN_1807804\Sheets\82382_SFN_1807804_SP002.dgn

INDEX OF SHEETS:

SITE PLAN	2086
BRIDGE SHEET INDEX	2087
GENERAL NOTES	2088 - 2089
ESTIMATED QUANTITIES	2090
SUPERSTRUCTURE PHASED REMOVAL AND CONSTRUCTION DETAILS	2091 - 2092
ABUTMENT PHASED REMOVAL DETAILS	2093
PIER PHASED REMOVAL DETAILS	2094
EXISTING ABUTMENT TEMPORARY SHORING DETAILS	2095
EXCAVATION AND EMBANKMENT DIAGRAM	2096
FOUNDATION PLAN	2097
REAR ABUTMENT FOOTING PLAN	2098
REAR ABUTMENT PLAN AND ELEVATION	2099
REAR ABUTMENT WINGWALL AND DETAILS	2100
FORWARD ABUTMENT FOOTING PLAN	2101
FORWARD ABUTMENT PLAN AND ELEVATION	2102
FORWARD ABUTMENT WINGWALL AND DETAILS	2103
ABUTMENT DETAILS	2104
PIER 1 PLAN AND ELEVATION	2105
PIER 1 DETAILS	2106
ABUTMENT BEARING DETAILS	2107
PIER BEARING DETAILS	2108
TRANSVERSE SECTION	2109
FRAMING PLAN AND GIRDER ELEVATION	2110
GIRDER DETAILS	2111
CAMBER TABLE AND BLOCKING DIAGRAM	2112
DECK PLAN	2113
REAR ABUTMENT DIAPHRAGM PLAN AND ELEVATION	2114
FORWARD ABUTMENT DIAPHRAGM PLAN AND ELEVATION	2115
ABUTMENT DIAPHRAGM DETAILS	2116
CRITICAL BRIDGE POINT LOCATIONS	2117
TOP OF HAUNCH ELEVATIONS AND DETAILS	2118
SCREED AND FINAL DECK SURFACE ELEVATIONS	2119
SUPERELEVATION TRANSITION DIAGRAM	2120
LEFT RAILING ELEVATION	2121
LEFT RAILING DETAILS	2122
RIGHT RAILING ELEVATION	2123
RIGHT RAILING DETAILS	2124
APPROACH SLAB PLAN	2125
APPROACH SLAB DETAILS	2126
REINFORCING STEEL LIST	2127 - 2128

Preliminary Plans - For Reference Only

BRIDGE SHEET INDEX
CUY-90-1653R (BRIDGE 11)
I.R. 90 EB OVER CR-721 (E. 14TH ST.)

SFN 1807804
DESIGN AGENCY B&N burgessniple.com
DESIGNER KMA | CHECKER JAA
REVIEWER DWL 08/21/24
PROJECT ID 82382
SUBSET 2 | TOTAL 43
SHEET 2087 | TOTAL 2696

CUY-90-16.28 (CCG3A)

MODEL: Sheet PAPERSIZE: 34x22 (in.) DATE: 3/28/2025 TIME: 9:57:53 AM USER: Mala.Gallagher
pw:\\mb-us-pw.bentley.com:mb-us-pw-03\Documents\Cleveland_OH\01_Projects\ODOT\District12\82382\400-Engineering\Structures\SFN_1807804\Sheets\82382_SFN_1807804_SM005.dgn

STRUCTURE GENERAL NOTES:

BORING LOCATIONS			
BORING	STATION	OFFSET	T.O.R. EL.
B-078-0-14	186+36.46	27.40' LT.	-
B-080-0-14	186+55.31	120.40' LT.	-
B-081-0-14	189+06.57	22.37 RT.	-
B-144-0-14	188+29.15	141.24' LT.	-
B-078-1-20	187+30.59	81.58' LT.	-
C-079-0-14	188+14.58	60.33' LT.	-

B-080-0-14 AND B-081-0-14 ARE SUBGRADE BORINGS

REFER TO THE FOLLOWING STANDARD DRAWINGS:

AS-1-15 REVISED 01-20-23
AS-2-15 REVISED 07-21-23
GSD-1-19 REVISED 01-15-21
SBR-1-20 REVISED 07-19-24
SBR-2-20 REVISED 07-21-23
SICD-2-14 REVISED 01-15-21

AND TO THE FOLLOWING SUPPLEMENTAL SPECIFICATIONS:

800 DATED SEE TITLE SHEET

DESIGN SPECIFICATIONS:

THIS STRUCTURE CONFORMS TO THE 9TH EDITION OF THE "LRFD BRIDGE DESIGN SPECIFICATIONS" ADOPTED BY THE AMERICAN ASSOCIATION OF STATE HIGHWAY AND TRANSPORTATION OFFICIALS, 2020 AND THE ODOT BRIDGE DESIGN MANUAL, 2020.

OPERATIONAL IMPORTANCE:

A LOAD MODIFIER OF 1.05 HAS BEEN ASSUMED FOR THE DESIGN OF THIS STRUCTURE IN ACCORDANCE WITH THE AASHTO LRFD BRIDGE DESIGN SPECIFICATIONS, ARTICLE 1.3.5 AND THE ODOT BRIDGE DESIGN MANUAL.

DESIGN LOADING:

HL-93
FUTURE WEARING SURFACE (FWS) OF 0.060 KSF

DESIGN DATA:

CONCRETE CLASS QC2 - COMPRESSIVE STRENGTH 4.5 KSI (SUPERSTRUCTURE)

CONCRETE CLASS QC1 - COMPRESSIVE STRENGTH 4.0 KSI (SUBSTRUCTURE)

REINFORCING STEEL - MINIMUM YIELD STRENGTH 60 KSI

STRUCTURAL STEEL - ASTM A709 GRADE 50 - YIELD STRENGTH 50 KSI

STRUCTURAL STEEL - ASTM A252, GRADE 3 - YIELD STRENGTH 45 KSI
(CIP REINFORCED CONCRETE PILES)

STEEL SHEET PILING - ASTM A252, GRADE 50 - YIELD STRENGTH 50 KSI

DECK PROTECTION METHOD:

EPOXY COATED REINFORCING STEEL
2½" CONCRETE COVER

MONOLITHIC WEARING SURFACE:

MONOLITHIC WEARING SURFACE IS ASSUMED, FOR DESIGN PURPOSES, TO BE ONE INCH (1") THICK.

MAINTENANCE OF TRAFFIC:

SEE THE ROADWAY PLANS FOR MAINTENANCE OF TRAFFIC REQUIREMENTS.

EXISTING STRUCTURE VERIFICATION:

DETAILS AND DIMENSIONS SHOWN ON THESE PLANS PERTAINING TO THE EXISTING STRUCTURE HAVE BEEN OBTAINED FROM PLANS OF THE EXISTING STRUCTURE AND/OR FIELD MEASUREMENTS. THEY ARE INDICATIVE OF THE EXISTING STRUCTURE AND PROPOSED WORK, BUT THEY SHALL BE CONSIDERED TENTATIVE AND APPROXIMATE. THE CONTRACTOR IS REFERRED TO CMS SECTION 102.05, 105.02, AND 513.04. BASE CONTRACT BID PRICES UPON A RECOGNITION OF THE UNCERTANTIES DESCRIBED ABOVE AND UPON A PREBID EXAMINATION OF THE EXISTING STRUCTURES. HOWEVER, THE DEPARTMENT WILL PAY FOR ALL PROJECT WORK BASED UPON ACTUAL DETAILS AND DIMENSIONS THAT HAVE BEEN VERIFIED IN THE FIELD.

EXISTING STRUCTURE PLANS:

CONSTRUCTION PLANS FOR EXISITING STRUCTURES ARE ON FILE AT THE DEPARTMENT OF TRANSPORTATION DISTRICT 12 OFFICE, 5500 E. 98TH ST., GARFIELD HEIGHTS, OHIO AND ARE AVAILABLE FOR REFERENCE.

CONCRETE COVER FOR REINFORCING STEEL:

MINIMUM CONCRETE COVER FOR ALL REINFORCING BARS SHALL BE TWO INCHES (2") UNLESS SHOWN OTHERWISE IN THE PLANS.

DECK PLACEMENT DESIGN ASSUMPTIONS:

THE FOLLOWING ASSUMPTIONS OF CONSTRUCTION MEANS AND METHODS WERE MADE FOR THE ANALYSIS AND DESIGN OF THE SUPERSTRUCTURE. THE CONTRACTOR IS RESPONSIBLE FOR THE DESIGN OF THE FALSEWORK SUPPORT SYSTEM WITHIN THESE PARAMETERS AND WILL ASSUME RESPONSIBILITY FOR SUPERSTRUCTURE ANALYSIS FOR DEVIATION FOR THESE DESIGN ASSUMPTIONS.

AN EIGHT WHEEL FINISHING MACHINE WITH A MAXIMUM WHEEL LOAD OF 2.54 KIPS.

A MINIMUM OUT-TO-OUT WHEEL SPACING AT EACH END OF THE MACHINE OF 103".

A MAXIMUM SPACING OF OVERHANG FALSEWORK BRACKETS OF 48".

A MAXIMUM DISTANCE FROM THE CENTERLINE OF THE FASCIA GIRDER TO THE FACE OF THE SAFETY HANDRAIL OF 65".

ADDITIONAL SOILS INFORMATION

IN ADDITION TO THE SOIL BORING INFORMATION GIVEN IN THE PLANS, THE STRUCTURE FOUNDATION EXPLORATION REPORT PREPARED BY NATIONAL ENGINEERING AND ARCHITECTURAL SERVICES (NEAS), INC. DATED 06/20/2022 HAS BEEN INCLUDED FOR REFERENCE.

SEQUENCE OF CONSTRUCTION

SEE MOT NOTES IN ROADWAY PLANS.

STRUCTURE GROUNDING:

STRUCTURE TO BE GROUNDED AS PER LIGHTING GENERAL NOTES SHEET 1684 . QUANTITY CARRIED TO LIGHTING SUBSUMMARY.

ITEM 202 - PORTIONS OF STRUCTURE REMOVED OVER 20 FOOT SPAN, AS PER PLAN:

THIS ITEM SHALL INCLUDE THE ELEMENTS INDICATED IN THE PLANS AND GENERAL NOTES AND THAT ARE NOT SEPERATELY LISTED FOR PAYMENT. LIMITS OF REMOVAL SHALL BE AS SHOWN ON THE PLANS FOR REMOVAL PHASE 9 OR AS DIRECTED BY THE ENGINEER. ITEMS TO BE REMOVED INCLUDE THE SUBSTRUCTURE FOUNDATION PILES THAT INTERFERE WITH NEW CONSTRUCTION, AND MISCELLANEOUS ITEMS THAT ARE NOT SHOWN TO BE INCORPORATED INTO THE FINAL CONSTRUCTION AND ARE DIRECTED TO BE REMOVED BY THE ENGINEER. SUBMIT WORKING DRAWINGS AND CALCULATION IN ACCORDANCE WITH CMS 501.05.

ALL CONCRETE, REINFORCING STEEL, ASPHALT, ETC. REMOVED FROM THE STRUCTURE AND NOT REUSED SHALL, UNLESS OTHERWISE SPECIFIED, BECOME THE PROPERTY OF THE CONTRACTOR AND SHALL BE REMOVED BY HIM/HER FROM THE SITE. THE MATERIALS SHALL NOT BE PERMITTED TO REMAIN ON SITE, WITHIN THE RIGHT-OF-WAY OR ELSEWHERE UNLESS SPECIFIED BY THE ENGINEER.

ITEM 503 - COFFERDAMS AND EXCAVATION BRACING, AS PER PLAN:

THE DESIGN SHOWN ON THE PLANS FOR TEMPORARY SUPPORT OF EXCAVATION AT BRIDGE E8 ABUTMENTS IS ONE REPRESENTATIVE DESIGN THAT MAY BE USED TO CONSTRUCT THE PROJECT. THE CONTRACTOR MAY CONSTRUCT THE DESIGN SHOWN ON THE PLANS OR PREPARE AN ALTERNATE DESIGN TO SUPPORT THE SIDES OF EXCAVATIONS. IF CONSTRUCTING AN ALTERNATE DESIGN FOR TEMPORARY SUPPORT OF EXCAVATION, PREPARE AND PROVIDE PLANS IN ACCORDANCE WITH CMS 501.05. THE DEPARTMENT WILL PAY FOR THE TEMPORARY SUPPORT OF EXCAVATION AT THE CONTRACT LUMP SUM PRICE FOR COFFERDAMS AND EXCAVATION BRACING. THE DEPARTMENT WILL NOT MAKE ADDITIONAL PAYMENT FOR AN ALTERNATE DESIGN.

SEE SHEET 2048/2696 FOR PIER TEMPORARY SHORING DETAILS .

PILE DRIVING CONSTRAINTS:

PRIOR TO DRIVING PILES, CONSTRUCT THE SPILL THROUGH SLOPES AND THE BRIDGE APPROACH EMBANKMENT BEHIND THE ABUTMENTS UP TO THE LEVEL OF THE SUBGRADE ELEVATION FOR A MINIMUM DISTANACE OF TWO HUNDRED FEET (200') BEHIND THE ABUTMENT. DO NOT BEGIN THE EXCAVATION FOR THE ABUTMENT FOOTINGS AND THE INSTALLATION OF THE ABUTMENT PILES UNTIL AFTER THE ABOVE REQUIRED EMBANKMENT HAS BEEN CONSTRUCTED AND A SEVEN (7) CALENDAR DAY WAITING PERIOD HAS ELAPSED. AFTER THE SPECIFIED WATING PERIOD HAS ELAPSED, DRIVE ABUTMENT PILES TO THE UBV.

PILE DESIGN LOADS (ULTIMATE BEARING VALUE):

THE ULTIMATE BEARING VALUE IS 316 KIPS PER PILE FOR THE REAR ABUTMENT PILES. THE ULTIMATE BEARING VALUE IS 384 KIPS PER PILE FOR THE PIER 1 PILES. THE ULTIMATE BEARING VALUE IS 309 KIPS PER PILE FOR THE FORWARD ABUTMENT PILES.

REAR ABUTMENT PILES:
23 - 12" DIA. CAST-IN-PLACE REINFORCED CONCRETE PILES 100 FEET LONG, ORDER LENGTH
1 DYNAMIC LOAD TESTING ITEM AND 1 RESTRIKE ITEM.

PIER 1 PILES:
32 - 14" DIA. CAST-IN-PLACE REINFORCED CONCRETE PILES 105 FEET LONG, ORDER LENGTH
1 DYNAMIC LOAD TESTING ITEM AND 1 RESTRIKE ITEM.

FORWARD ABUTMENT PILES:
26 - 12" DIA. CAST-IN-PLACE REINFORCED CONCRETE PILES 100 FEET LONG, ORDER LENGTH
1 DYNAMIC LOAD TESTING ITEM AND 1 RESTRIKE ITEM.

THE MINIMUM WALL THICKNESS PER CMS 507.06 FOR THE PROPOSED 14" CIP REINFORCED CONCRETE PILES AND THE 12" CIP REINFORCED CONCRETE PILES ARE AS FOLLOWS:

1/4" FOR THE 12" CIP PILES AT THE REAR ABUTMENT
1/4" FOR THE 14" CIP PILES AT PIER 1
1/4" FOR THE 12" CIP PILES AT THE FORWARD ABUTMENT

PILES DRIVEN TO FULL ESTIMATED LENGTH WITH PILE/SOIL SETUP:

THE ULTIMATE BEARING VALUE (UBV) IS:

316 KIPS PER 12" DIA. CIP PILE FOR THE REAR ABUTMENT PILES
384 KIPS PER 14" DIA. CIP PILE FOR THE PIER 1 PILES
309 KIPS PER 12" DIA. CIP PILE FOR THE FORWARD ABUTMENT PILES

PART OF THE UBV WILL BE ACHIEVED THROUGH PILE/SOIL SETUP, WHICH IS A TIME DEPENDENT INCREASE IN RESISTANCE THAT OCCURS IN SOME SOILS.

NOTIFY THE ENGINEER AT LEAST 5 DAYS BEFORE DRIVING PILES SO THAT THE ENGINEER CAN NOTIFY THE DISTRICT GEOTECHNICAL ENGINEER, THE OFFICE OF CONSTRUCTION ADMINISTRATION, AND THE OFFICE OF GEOTECHNICAL ENGINEERING.

DRIVE THE FIRST TWO PILES IN EACH SUBSTRUCTURE TO THE FULL ESTIMATED LENGTH OF:

95 FEET PER REAR ABUTMENT PILE
100 FEET PER PIER 1 PILE
95 FEET PER FORWARD ABUTMENT PILE

PERFORM DYNAMIC LOAD TESTING ON BOTH PILES WHILE DRIVING. IF THE DYNAMIC LOAD TESTING INDICATES A PILE HAS ACHIEVED THE REQUIRED UBV ABOVE THE TIP ELEVATION DURING THE INITIAL DRIVING (BEFORE THE WAITING PERIOD), STOP DRIVING AND NOTIFY THE ENGINEER. AFTER DRIVING AND DYNAMIC LOAD TESTING THE FIRST TWO PILES, DRIVE THE REMAINING PILES IN THE SUBSTRUCTURE TO THE SAME DEPTH AS THE FIRST TWO PILES. AFTER DRIVING ALL PILES TO THIS DEPTH, CEASE ALL DRIVING OPERATIONS AT THE SUBSTRUCTURE FOR A PERIOD OF 7 DAYS. INCLUDE THE WAITING PERIOD AS A SEPARATE ACTIVITY IN THE PROGRESS SCHEDULE. AFTER THE WAITING PERIOD, PERFORM PILE RESTRIKES ON BOTH OF THE FIRST TWO PILES (ONE RESTRIKE ITEM).

SUBMIT ALL TEST RESULTS TO THE ENGINEER. IF THE RESTRIKE TEST RESULTS INDICATE THAT BOTH PILES ACHIEVED THE REQUIRED UBV, ALL PILES IN THE SUBSTRUCTURE MAY BE ACCEPTED BY THE ENGINEER.

IF THE RESTRIKE TEST RESULTS INDICATE THAT EITHER OF THE TWO PILES DID NOT ACHIEVE THE REQUIRED UBV, IMMEDIATELY NOTIFY THE ENGINEER SO THAT THE ENGINEER CAN NOTIFY THE DISTRICT GEOTECHNICAL ENGINEER, THE OFFICE OF CONSTRUCTION ADMINISTRATION, AND THE OFFICE OF GEOTECHNICAL ENGINEERING. THE ENGINEER WILL REVIEW THE TEST RESULTS AND ESTABLISH ADDITIONAL RESTRIKE TESTING OR DRIVING CRITERIA FOR THE PILING IN THE SUBSTRUCTURE WITH ASSISTANCE OF THE DISTRICT GEOTECHNICAL ENGINEER, THE OFFICE OF CONSTRUCTION ADMINISTRATION, AND THE OFFICE OF GEOTECHNICAL ENGINEERING.

IF DIRECTED BY THE ENGINEER, PERFORM ADDITIONAL RESTRIKE TESTING OR DRIVE ALL PILES IN THE SUBSTRUCTURE TO THE ESTABLISHED DRIVING CRITERIA. THE DEPARMENT WILL PAY FOR SPLICING OF THE PILES BEYOND THE ESTIMATED LENGTH PROVIDED IN THE PLANS UNDER CMS 109.05 WITH A NEGOTIATED PRICE PER SPLICE.

THE PLAN NOTE INCLUDES A QUANTITY OF ONE EACH ITEM 523 DYNAMIC LOAD TESTING, AS PER PLAN AND A QUANTITY OF ONE EACH ITEM 523 RESTRIKE, AS PER PLAN PER EACH SUBSTRUCTURE UNIT.

For Reference Only
Preliminary Plans

GENERAL NOTES SHEET 1 OF 2
CUY-90-1653R (BRIDGE 11)
I.R. 90 EB OVER CR-721 (E. 14TH ST.)

SFN 1807804
DESIGN AGENCY B&N burgessniple.com
DESIGNER BCS | CHECKER MAB
REVIEWER DWL 05/24/22
PROJECT ID 82382
SUBSET 3 | TOTAL 43
SHEET 2088 | TOTAL 2696

CUY-90-16.28 (CCG3A)

MODEL: Sheet PAPERSIZE: 34x22 (in.) DATE: 6/9/2025 TIME: 2:22:53 PM USER: Tolga.Feran
pw:\\mb-us-pw.bentley.com:mb-us-pw-03\Documents\Cleveland_OH\01_Projects\ODOT\District12\82382\400-Engineering\Structures\SFN_1807804\Sheets\82382_Sheets\82382_SFN_1807804_SN001.dgn

STRUCTURE GENERAL NOTES (CONTINUED):

ITEM 511 - CLASS QC2 CONCRETE WITH QC/QA, BRIDGE DECK (PARAPET), AS PER PLAN:

THE EXTERIOR FACE OF THE BRIDGE PARAPET SHALL HAVE A GROOVE PATTERN APPLIED THAT MATCHES THE DETAILS SHOWN IN THE PLANS. THIS ITEM SHALL INCLUDE ALL MATERIALS, EQUIPMENT, AND LABOR NECESSARY TO CONSTRUCT THE PARAPET AND THE GROOVE PATTEREN. THIS ITEM SHALL ALSO INCLUDE THE PARAPET ON THE APPROACH SLABS AND BULKHEADS.

ITEM 512 - SEALING OF CONCRETE SURFACES, AS PER PLAN, (PERMANENT GRAFFITI PROTECTION):

APPLY A PERMANENT GRAFFITI COATING QUALIFIED ACCORDING TO SUPPLEMENT 1083 THAT IS COMPATIBLE WITH THE CONCRETE SEALER OVER WHICH IT IS APPLIED. APPLY THE GRAFFITI COATING IN ACCORDANCE WITH THE MANUFACTUREER'S PRINTED INSTRUCTIONS.

ITEM 512 - SEALING OF CONCRETE SURFACES (EPOXY-URETHANE), AS PER PLAN:

THE FINAL COLOR OF SEALING SHALL BE SHERWIN-WILLIAMS ALPACA 7022.

ITEM 516 - ARMORLESS PREFORMED JOINT SEAL, AS PER PLAN:

INSTALL SEAL FOR EACH JOINT IN ONE CONTINUOUS PIECE.

ITEM 516 - PREFORMED EXPANSION JOINT FILLER, MISC.: 4" THICK:

INSTALL PREFORMED EXPANSION JOINT FILLER PER ODOT CMS 516 EXCEPT THE THICKNESS OF THE PREFORMED EXPANSION JOINT FILLER SHALL BE 4 INCHES.

ITEM 526 - REINFORCED CONCRETE APPROACH SLABS (T=17"), AS PER PLAN:

THE REQUIREMENTS OF CMS 511.03 AND 511.04 SHALL APPLY TO THIS ITEM OF WORK. THIS ITEM SHALL INCLUDE, BUT IS NOT LIMITED TO THE CONCRETE AND STEEL REINFORCEMENT NECESSARY TO FORM AND PLACE THE APPROACH SLABS AS SHOWN IN THE PLANS. PAYMENT FOR THIS ITEM SHALL ALSO INCLUDE THE ITEMS LISTED ON STANDARD DRAWING AS-1-15 AND ALL OTHER NECESSARY MATERIALS, LABOR, AND EQUIPMENT AND SHALL BE INCLUDED IN THE UNIT PRICE PER SQUARE YARD FOR ITEM 526 - REINFORCED CONCRETE APPROACH SLABS WITH QC/QA (T=17"), AS PER PLAN.

THE COST OF THE PARAPET ON THE APPROACH SLABS SHALL BE INCLUDED WITH ITEM 509 AND ITEM 511 - CLASS QC2 CONCRETE WITH QC/QA, BRIDGE DECK (PARAPET), AS PER PLAN.

ITEM 526 - TYPE C INSTALLATION, AS PER PLAN:

THE REQUIREMENTS OF CMS 511.03 AND 511.04 SHALL APPLY TO THIS ITEM OF WORK. THIS ITEM SHALL INCLUDE, BUT IS NOT LIMITED TO THE CONCRETE, STEEL REINFORCEMENT, AND ARMORLESS PREFORMED JOINT SEAL NECESSARY TO FORM AND PLACE THE SLEEPER SLABS AND BULKHEADS AS SHOWN IN THE PLANS. PAYMENT FOR THIS ITEM SHALL ALSO INCLUDE THE ITEMS LISTED ON STANDARD DRAWING AS-2-15 AND ALL OTHER NECESSARY MATERIALS, LABOR, AND EQUIPMENT AND SHALL BE INCLUDED IN THE UNIT PRICE PER FOOT FOR ITEM 526 - TYPE C INSTALLATION, AS PER PLAN.

THE COST OF THE PARAPET ON THE BULKHEADS SHALL BE INCLUDED WITH ITEM 509 AND ITEM 511 - CLASS QC2 CONCRETE WITH QC/QA, BRIDGE DECK (PARAPET), AS PER PLAN.

ABBREVIATIONS:

THE FOLLOWING ABBREVIATIONS HAVE BEEN USED THROUGHOUT THESE PLANS TO INDICATE THE DESIGNATIONS CONTAINED IN THE LEGEND BELOW:

ABUT. - ABUTMENT
APPR. - APPROACH
℄ - BASELINE
BOT. - BOTTOM
BRG. - BEARING
BRGS. - BEARINGS
BTA - BRIDGE TERMINAL ASSEMBLY
℄ - CENTERLINE
C/C - CENTER TO CENTER
CIP - CAST-IN-PLACE
C.J. - CONTRUCTION JOINT
CLR. - CLEARANCE
CP - COMPLETE PENETRATION BUTT WELD
CMS - CONSTRUCTION AND MATERIAL SPECIFICATIONS
CONC. - CONCRETE
CONST. - CONSTRUCTION
C.P.P. - CORRUGATED PLASTIC PIPE
CS - INDICATES BUTT WELD SUBJECT TO COMPRESSIVE STRESSES ONLY
CU YD - CUBIC YARD
CVN - CHARPY V-NOTCH TESTING
DIA. - DIAMETER
E.F. - EACH FACE
E.J. - EXPANSION JOINT
ELEV., EL. - ELEVATION
EQ. - EQUAL
EX. - EXISTING
EXP. - EXPANSION
F.A. - FORWARD ABUTMENT
F.F. - FAR FACE
F/F - FACE TO FACE
F.S. - FIELD SPLICE
FT/FT - FOOT PER FOOT
FTG. - FOOTING
FWD. - FORWARD
GEN. - GENERAL
INT. - INTEGRAL
LF - LEFT FORWARD
LT. - LEFT
MAX. - MAXIMUM
M.E. - MATCH EXISTING
MIN. - MINIMUM
MISC. - MISCELLANEOUS
MOT - MAINTENANCE OF TRAFFIC
N.F. - NEAR FACE
NO./# - NUMBER
O/O - OUT TO OUT
P.C.P.P - PERFORATED CORRUGATED PLASTIC PIPE
PCB - PORTABLE CONCRETE BARRIER
P.E.J.F. - PREFORMED EXPANSION JOINT FILLER
PG - PROFILE GRADE
PGL - PROFILE GRADE LINE
PROP. - PROPOSED
PT - POINT OF TANGENCY
PVC - POINT OF VERTICAL CURVATURE
PVI - POINT OF VERTICAL INTERSECTION
PVT - POINT OF VERTICAL TANGENCY
R. - RADIUS
R.A. - REAR ABUTMENT
RCP - ROCK CHANNEL PROTECTION
RF - RIGHT FORWARD
RT. - RIGHT
R/W - RIGHT OF WAY
SAN. - SANITARY
SER. - SERIES
SHLDR. - SHOULDER
SHT. - SHEET
S.O. - SERIES OF
SPA. - SPACES OR SPACING
SR - STATE ROUTE
STA. - STATION
STD. - STANDARD
STM. - STORM
STR. - STRAIGHT
TBM - TEMPORARY BENCH MARK
TEMP. - TEMPORARY
T.O.S. - TOE OF SLOPE
T/PARAPET - TOE OF PARAPET
T/T - TOE TO TOE
TYP. - TYPICAL
U.G. - UNDERGROUND
U.N.O - UNLESS NOTED OTHERWISE
VAR. - VARIES
VC - VERTICAL CURVE
VERT. - VERTICAL
W/O - WITHOUT

Preliminary Plans - For Reference Only

MODEL: Sheet PAPERSIZE: 34x22 (in.) DATE: 3/28/2025 TIME: 9:58:08 AM USER: Maia.Gallagher
pw:\\mb-us-pw.bentley.com:mb-us-pw-03\Documents\Cleveland_OH\01_Projects\ODOT\District12\82382\400-Engineering\Structures\SFN_1807804\Sheets\82382_SFN_1807804_SN002.dgn

CUY-90-16.28 (CCG3A)

GENERAL NOTES SHEET 2 OF 2
CUY-90-1653R (BRIDGE 11)
I.R. 90 EB OVER CR-721 (E. 14TH ST.)

SFN 1807804

DESIGN AGENCY
B&N burgessniple.com

DESIGNER	CHECKER
BCS	JAA

REVIEWER
DWL 05/24/22

PROJECT ID
82382

SUBSET	TOTAL
4	43

SHEET	TOTAL
2089	2696

ESTIMATED QUANTITIES

PARTICIPATION	ITEM	ITEM EXT.	TOTAL	UNIT	DESCRIPTION	ABUTMENTS	PIERS	SUPER.	GENERAL	REF. SHEET
02/IMS/10	202	11203	LS	-	PORTIONS OF STRUCTURE REMOVED, OVER 20 FOOT SPAN, AS PER PLAN					3/43
02/IMS/10	202	22900	477	SY	APPROACH SLAB REMOVED				477	
02/IMS/10	202	32800	2410	SY	CONCRETE SLOPE PROTECTION REMOVED				2410	
02/IMS/10	503	11101	LS	-	COFFERDAMS AND EXCAVATION BRACING, AS PER PLAN					3/43
02/IMS/10	503	21300	LS	-	UNCLASSIFIED EXCAVATION					
02/IMS/10	505	11100	LS	-	PILE DRIVING EQUIPMENT MOBILIZATION					
02/IMS/10	507	00500	4655	FT	12" CAST-IN-PLACE REINFORCED CONCRETE PILES, DRIVEN	4655				
02/IMS/10	507	00550	4900	FT	12" CAST-IN-PLACE REINFORCED CONCRETE PILES, FURNISHED	4900				
02/IMS/10	507	00600	3200	FT	14" CAST-IN-PLACE REINFORCED CONCRETE PILES, DRIVEN		3200			
02/IMS/10	507	00650	3360	FT	14" CAST-IN-PLACE REINFORCED CONCRETE PILES, FURNISHED		3360			
02/IMS/10	509	10000	183054	LB	EPOXY COATED STEEL REINFORCEMENT	18907	22606	141541		
02/IMS/10	509	30020	4410	FT	NO. 4 GFRP DEFORMED BARS			4410		
02/IMS/10	509	30040	4604	FT	NO. 6 GFRP DEFORMED BARS			4604		
02/IMS/10	511	33500	2	EACH	SEMI-INTEGRAL DIAPHRAGM GUIDE	2				
02/IMS/10	511	34446	505	CY	CLASS QC2 CONCRETE WITH QC/QA, BRIDGE DECK			505		
02/IMS/10	511	34451	110	CY	CLASS QC2 CONCRETE WITH QC/QA, BRIDGE DECK (PARAPET), AS PER PLAN			110		4/43
02/IMS/10	511	41012	60	CY	CLASS QC1 CONCRETE WITH QC/QA, PIER ABOVE FOOTINGS		60			
02/IMS/10	511	44112	74	CY	CLASS QC1 CONCRETE WITH QC/QA, ABUTMENT NOT INCLUDING FOOTING	74				
02/IMS/10	511	46512	165	CY	CLASS QC1 CONCRETE WITH QC/QA, FOOTING	109	56			
02/IMS/10	512	10001	160	SY	SEALING OF CONCRETE SURFACES, AS PER PLAN, PERMANENT GRAFFITI PROTECTION	45	52	63		4/43
02/IMS/10	512	10101	932	SY	SEALING OF CONCRETE SURFACES (EPOXY-URETHANE), AS PER PLAN	45	151	607	129	4/43
02/IMS/10	512	33000	12	SY	TYPE 2 WATERPROOFING				12	
02/IMS/10	513	10280	449346	LB	STRUCTURAL STEEL MEMBERS, LEVEL 4			449346		
02/IMS/10	513	20000	4620	EACH	WELDED STUD SHEAR CONNECTORS			4620		
02/IMS/10	514	00060	25014	SF	FIELD PAINTING STRUCTURAL STEEL, INTERMEDIATE COAT			25014		
02/IMS/10	514	00066	25014	SF	FIELD PAINTING STRUCTURAL STEEL, FINISH COAT			25014		
02/IMS/10	516	10011	130	FT	ARMORLESS PREFORMED JOINT SEAL, AS PER PLAN				130	4/43
02/IMS/10	516	13600	181	SF	1" PREFORMED EXPANSION JOINT FILLER				181	
02/IMS/10	516	13900	130	SF	2" PREFORMED EXPANSION JOINT FILLER				130	
02/IMS/10	516	14000	10	SF	PREFORMED EXPANSION JOINT FILLER, MISC.: 4" THICK				10	4/43
02/IMS/10	516	14020	128	FT	SEMI-INTEGRAL ABUTMENT EXPANSION JOINT SEAL			128		
02/IMS/10	516	44201	14	EACH	ELASTOMERIC BEARING WITH INTERNAL LAMINATES AND LOAD PLATE (NEOPRENE), AS PER PLAN (BEARING: 1'-0 ½" x 1'-5" x 3", LOAD PLATE: 1'-1 ½" x 1'-6" x 1 ½" AND 1'-7" x 11" x 1 1/2")	14				22/43
02/IMS/10	516	44201	7	EACH	ELASTOMERIC BEARING WITH INTERNAL LAMINATES AND LOAD PLATE (NEOPRENE), AS PER PLAN (BEARING: 1'-5" x 2'-0 ½" x 3 1/8", BEVELED LOAD PLATE: 1'-6" x 2'-1 1/2")		7			23/43
02/IMS/10	518	21200	98	CY	POROUS BACKFILL WITH GEOTEXTILE FABRIC	98				
02/IMS/10	518	40000	170	FT	6" PERFORATED CORRUGATED PLASTIC PIPE	170				
02/IMS/10	518	40010	35	FT	6" NON-PERFORATED CORRUGATED PLASTIC PIPE, INCLUDING SPECIALS	35				
02/IMS/10	523	20001	3	EACH	DYNAMIC LOAD TESTING, AS PER PLAN	2	1			3/43
02/IMS/10	523	20501	3	EACH	RESTRIKE, AS PER PLAN	2	1			3/43
02/IMS/10	526	30011	422	SY	REINFORCED CONCRETE APPROACH SLABS WITH QC/QA (T=17"), AS PER PLAN				422	4/43
02/IMS/10	526	90031	131	FT	TYPE C INSTALLATION, AS PER PLAN				131	4/43
02/IMS/10	601	21000	972	SY	CONCRETE SLOPE PROTECTION	972				

Preliminary Plans - For Reference Only

NOTES:

1. ITEM 513 STRUCTURAL STEEL MEMBERS, LEVEL 4: THIS TOTAL WEIGHT IS BASED ON THE USE OF TYPE A CROSSFRAMES. PROVIDE THE UNIT COST FOR STRUCTURAL STEEL USING THE TOTAL WEIGHT PROVIDED, REGARDLESS OF ANY CHANGE TO THE TOTAL WEIGHT RESULTING FROM THE SELECTION OF TYPE B OR TYPE C CROSSFRAMES IN LIEU OF TYPE A.
2. SEE SHEET 2048/2696 FOR PIER TEMPORARY SHORING DETAILS AND PAYMENT.

ESTIMATED QUANTITIES
CUY-90-1653R (BRIDGE 11)
I.R. 90 EB OVER CR-721 (E. 14TH ST.)

SFN 1807804

DESIGN AGENCY
B&N
burgessniple.com

DESIGNER	CHECKER
BCS	DBH

REVIEWER
DWL 05/24/22

PROJECT ID
82382

SUBSET	TOTAL
5	43

SHEET	TOTAL
2090	2696

CUY-90-16.28 (CCG3A)

MODEL: Sheet PAPERSIZE: 34x22 (in.) DATE: 3/28/2025 TIME: 9:58:14 AM USER: Maia.Gallagher
pw:\\mb-us-pw.bentley.com:mb-us-pw-03\Documents\Cleveland_OH\01_Projects\ODOT\District12\82382\400-Engineering\Structures\SFN_1807804\Sheets\82382_SFN_1807804_SQ001.dgn

LEGEND:

(A)	= EXISTING GIRDER LETTER
(#)	= PROPOSED GIRDER NUMBER
"A"	= VARIES FROM 3'-3"± TO 5'-11"±
"B"	= VARIES FROM 12'-3"± TO 12'-9"±
"C"	= VARIES FROM 0'-8"± TO 8'-0"±
"D"	= VARIES FROM 7'-5"± TO 22'-11"±
"E"	= VARIES FROM 0'-0"± TO 8'-4"±
"F"	= VARIES FROM 2'-9"± TO 5'-6"±
"G"	= VARIES FROM 0'-0"± TO 3'-8"±
"H"	= VARIES FROM 26'-3"± TO 27'-2"±
"I"	= VARIES FROM 4'-11"± TO 25'-9"±
"J"	= VARIES FROM 0'-0"± TO 37'-5"±

NOTES:

1. SEE SHEETS 2042 & 2043/2696 FOR PHASED MOT AND CONSTRUCTION OF PROPOSED BRIDGE 10 AND FOR PHASED MOT AND REMOVAL OF EXISTING BRIDGES E7 AND E8 NORTH OF ℄ EX. I.R. 90.
2. SEE SHEETS 20 /43 , 2046 AND 2048 /2696 FOR PHASED CONSTRUCTION SEQUENCE OF BRIDGE 11 PIER.
3. BRIDGE MOUNTED PORTABLE BARRIERS SHALL BE AS PER STANDARD DRAWING PCB-91 OR RM-4.2. SEE MAINTENANCE OF TRAFFIC PLANS FOR PAYMENT OF PORTABLE BARRIERS.

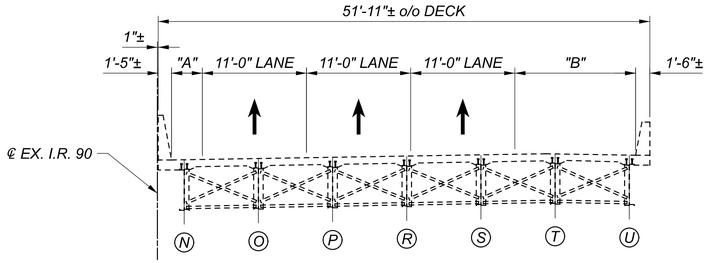

BRIDGE E8 EB

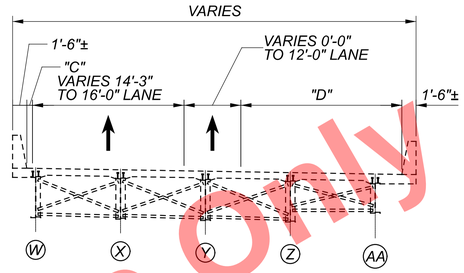

BRIDGE E9

PHASE 2-6 MOT

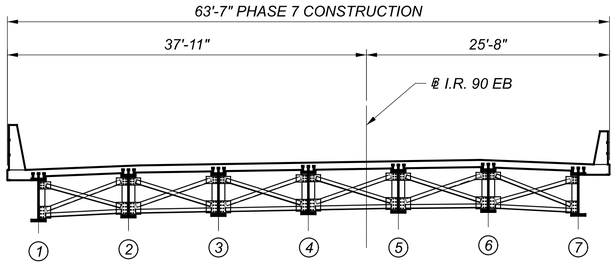

BRIDGE 11

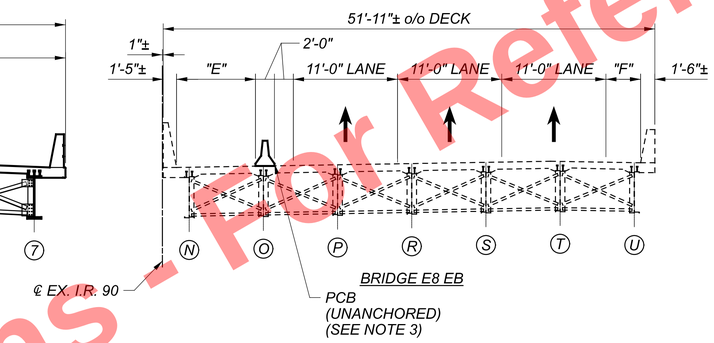

BRIDGE E8 EB

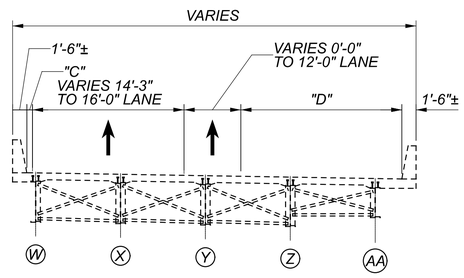

BRIDGE E9

PHASE 7 CONSTRUCTION AND MOT

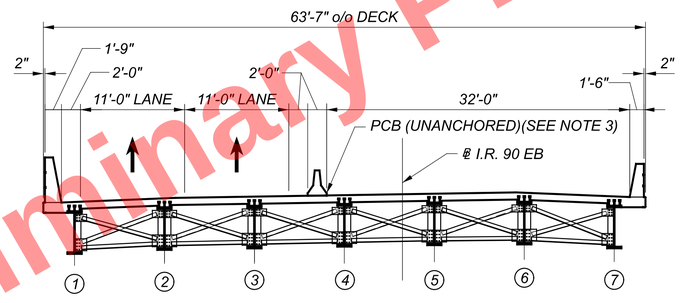

BRIDGE 11

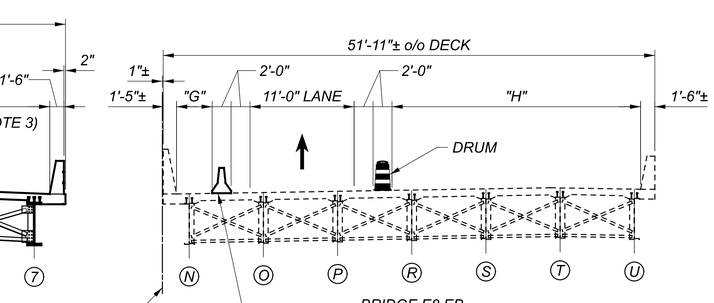

BRIDGE E8 EB

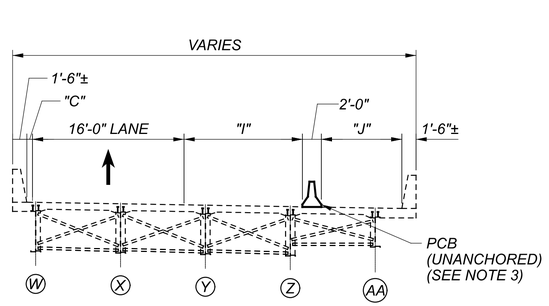

BRIDGE E9

PHASE 8 MOT

Preliminary Plans - For Reference Only

SUPERSTRUCTURE PHASED REMOVAL AND CONSTRUCTION DETAILS - 1
CUY-90-1653R (BRIDGE 11)
I.R. 90 EB OVER CR-721 (E. 14TH ST.)

SFN	1807804
DESIGN AGENCY	B&N burgessniple.com
DESIGNER	KMA
CHECKER	BCS
REVIEWER	DWL 05/24/22
PROJECT ID	82382
SUBSET	6
TOTAL	43
SHEET	2091
TOTAL	2696

CUY-90-16.28 (CCG3A)
MODEL: Sheet PAPERSIZE: 34x22 (in.) DATE: 3/28/2025 TIME: 9:58:21 AM USER: Maia.Gallagher
pw:\\mb-us-pw.bentley.com:mb-us-pw-03\Documents\Cleveland_OH\01_Projects\ODOT\District12\82382\400-Engineering\Structures\SFN_1807804\Sheets\82382_SFN_1807804_SC001.dgn

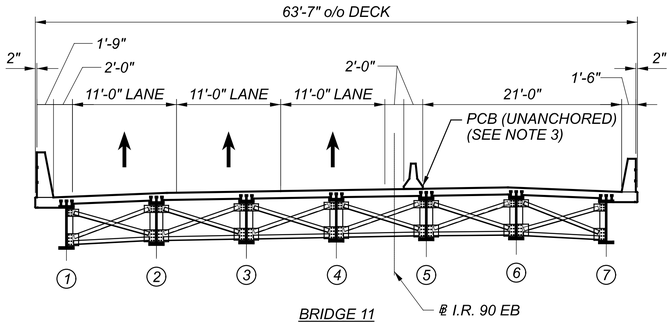

BRIDGE 11

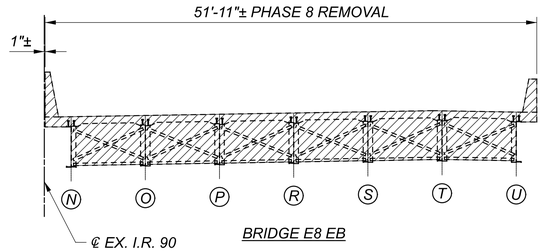

BRIDGE E8 EB

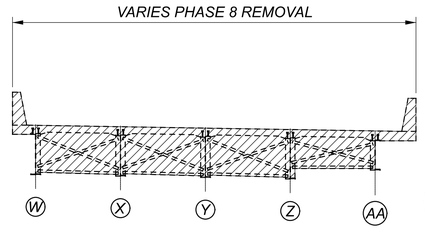

BRIDGE E9

PHASE 9 REMOVAL AND PHASE 9-10 MOT

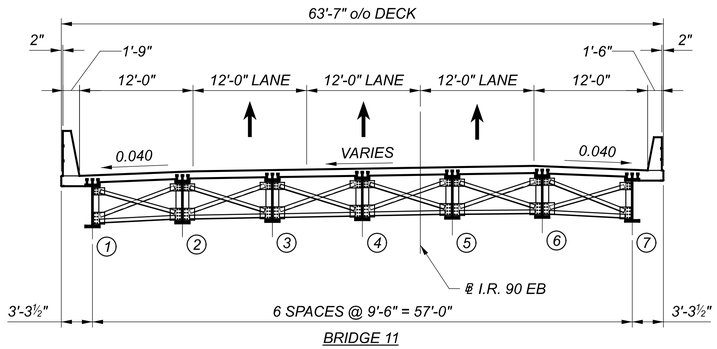

BRIDGE 11

FINAL CONDITION

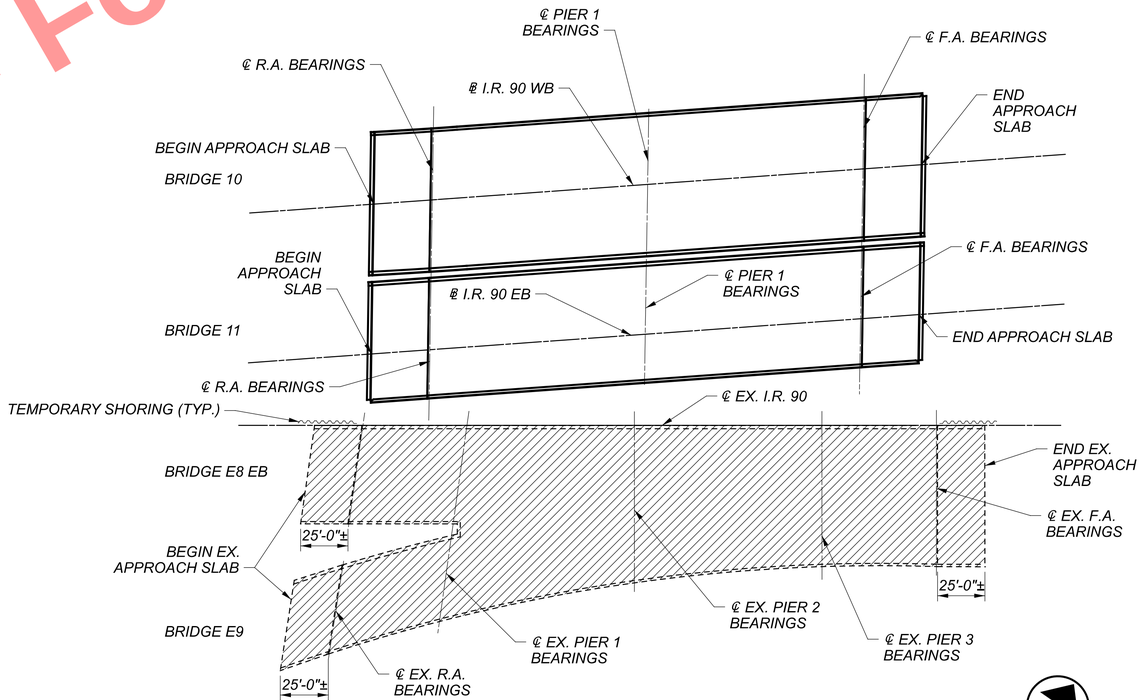

PHASE 9 REMOVAL PLAN

(MOT NOT SHOWN FOR CLARITY)

LEGEND:

= PHASE 9 REMOVAL

(A) = EXISTING GIRDER LETTER

(#) = PROPOSED GIRDER NUMBER

NOTES:

1. SEE SHEETS 2042 & 2043/2696 FOR PHASED MOT AND CONSTRUCTION OF PROPOSED BRIDGE 10 AND FOR PHASED MOT AND REMOVAL OF EXISTING BRIDGES E7 AND E8 NORTH OF ℄ EX. I.R. 90.
2. SEE SHEETS 20 /43 , 2046 AND 2048 /2696 FOR PHASED CONSTRUCTION SEQUENCE OF BRIDGE 11 PIER.
3. BRIDGE MOUNTED PORTABLE BARRIERS SHALL BE AS PER STANDARD DRAWING PCB-91 OR RM-4.2. SEE MAINTENANCE OF TRAFFIC PLANS FOR PAYMENT OF PORTABLE BARRIERS.

Preliminary Plans - For Reference Only

SUPERSTRUCTURE PHASED REMOVAL AND CONSTRUCTION DETAILS - 2
CUY-90-1653R (BRIDGE 11)
I.R. 90 EB OVER CR-721 (E. 14TH ST.)

SFN	1807804
DESIGN AGENCY	B&N burgessniple.com
DESIGNER	KMA
CHECKER	BCS
REVIEWER	DWL 05/24/22
PROJECT ID	82382
SUBSET	7
TOTAL	43
SHEET	2092
TOTAL	2696

CUY-90-16.28 (CCG3A)
MODEL: Sheet PAPERSIZE: 34x22 (in.) DATE: 3/28/2025 TIME: 9:58:27 AM USER: Mala.Gallagher
pw:\\mb-us-pw.bentley.com:mb-us-pw-03\Documents\Cleveland_OH\01_Projects\ODOT\District12\82382\400-Engineering\Structures\SFN_1807804\Sheets\82382_SFN_1807804_SC002.dgn

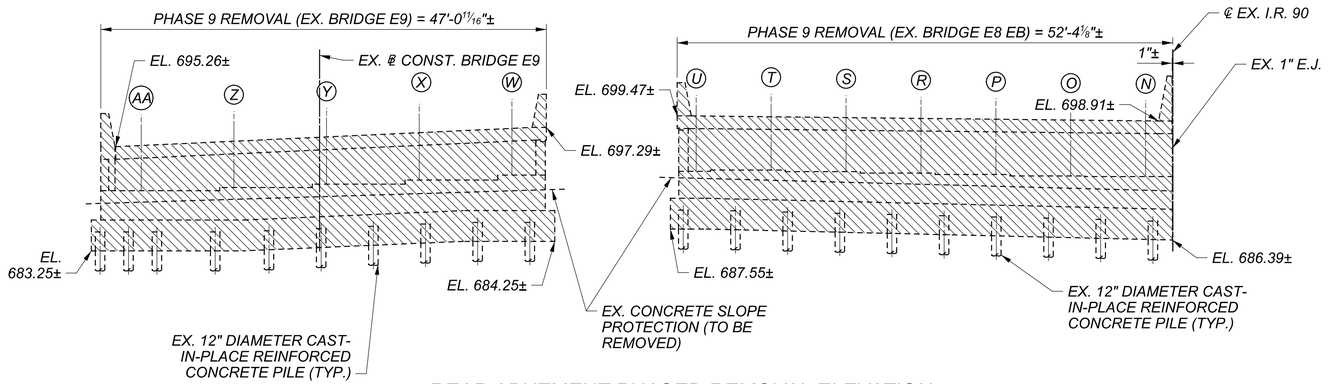

REAR ABUTMENT PHASED REMOVAL ELEVATION

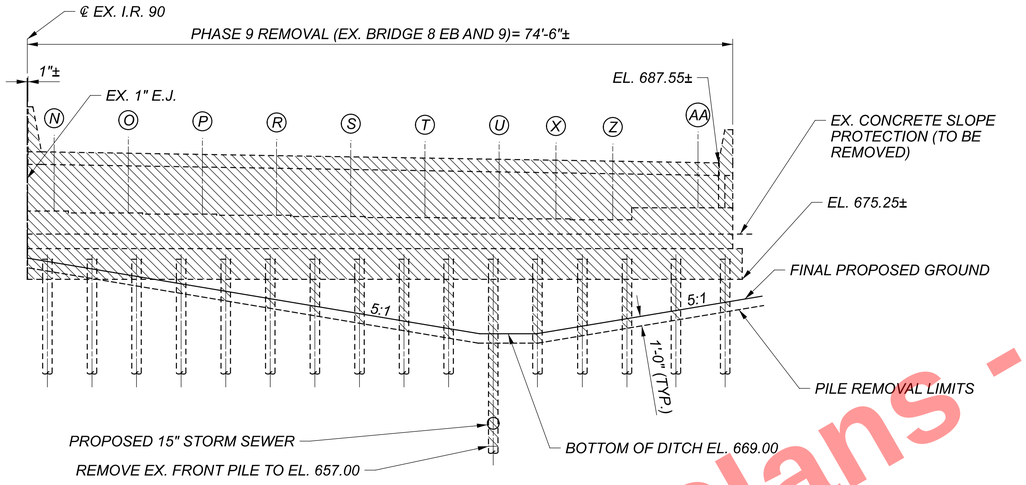

FORWARD ABUTMENT PHASED REMOVAL ELEVATION

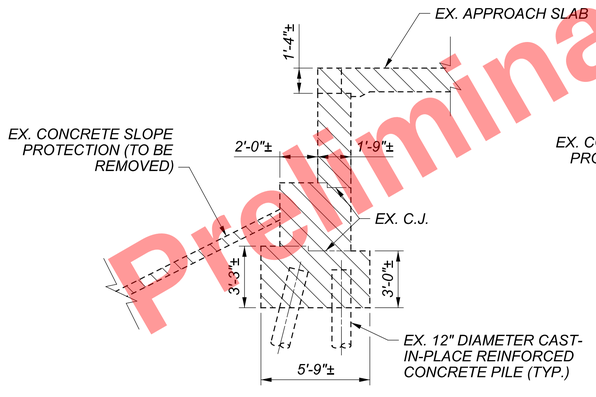

TYPICAL ABUTMENT SECTION

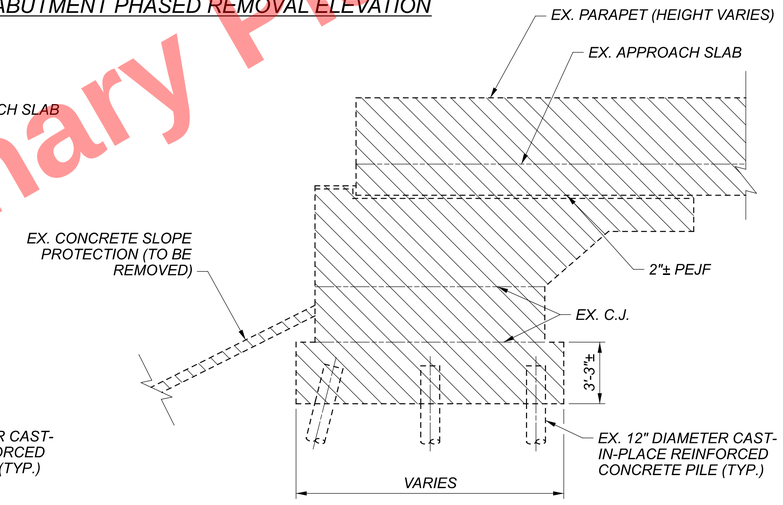

TYPICAL WINGWALL ELEVATION

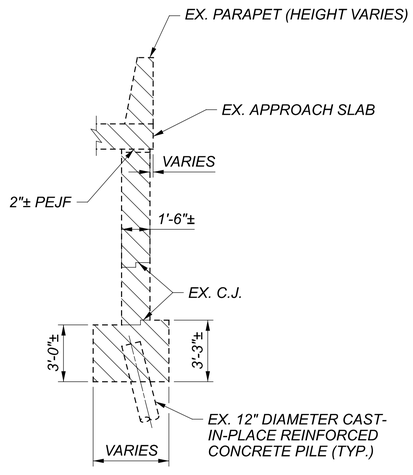

TYPICAL WINGWALL SECTION

LEGEND:

= PHASE 9 REMOVAL

(A) = EXISTING GIRDER LETTER

NOTES:

1. SEE SHEET 2044/2696 FOR PHASED REMOVAL OF EXISTING BRIDGE E8 PORTIONS NORTH OF ℄ EX. I.R. 90 AND EXISTING BRIDGE E7.

Preliminary Plans - For Reference Only

ABUTMENT PHASED REMOVAL DETAILS
CUY-90-1653R (BRIDGE 11)
I.R. 90 EB OVER CR-721 (E. 14TH ST.)

SFN	1807804
DESIGN AGENCY	B&N burgessniple.com
DESIGNER	KMA
CHECKER	BCS
REVIEWER	DWL 05/24/22
PROJECT ID	82382
SUBSET	8
TOTAL	43
SHEET	2093
TOTAL	2696

CUY-90-16.28 (CCG3A)

MODEL: Sheet PAPERSIZE: 34x22 (in.) DATE: 3/28/2025 TIME: 9:58:34 AM USER: Maia.Gallagher
pw:\\mb-us-pw.bentley.com:mb-us-pw-03\Documents\Cleveland_OH\01_Projects\ODOT\District12\82382400-Engineering\Structures\SFN_1807804\Sheets\82382_SFN_1807804_SV001.dgn

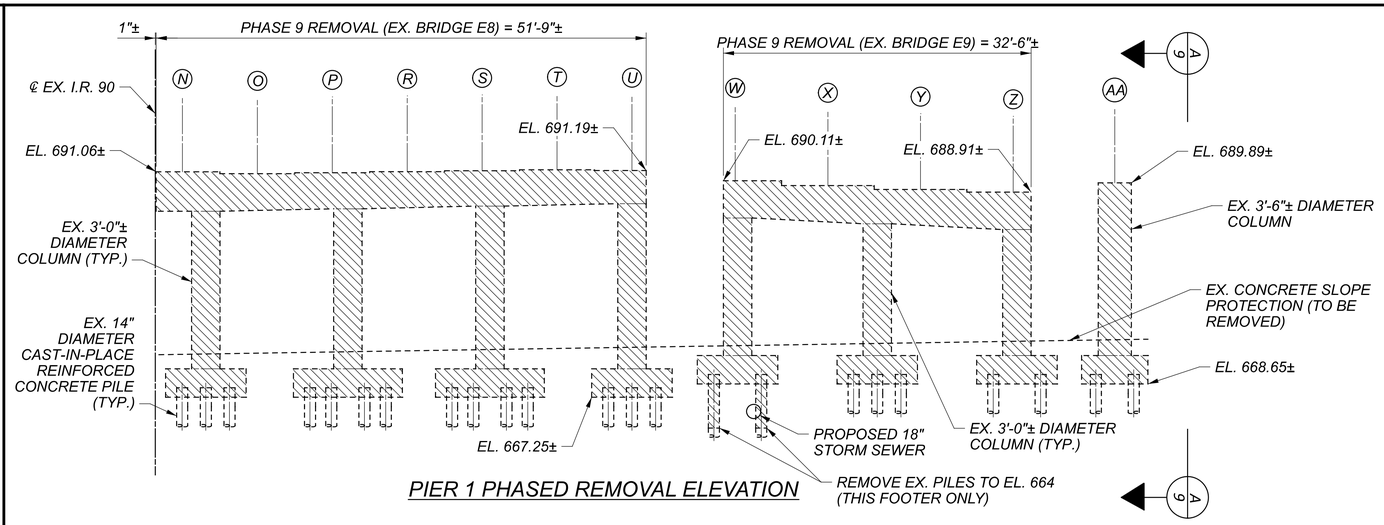

PIER 1 PHASED REMOVAL ELEVATION

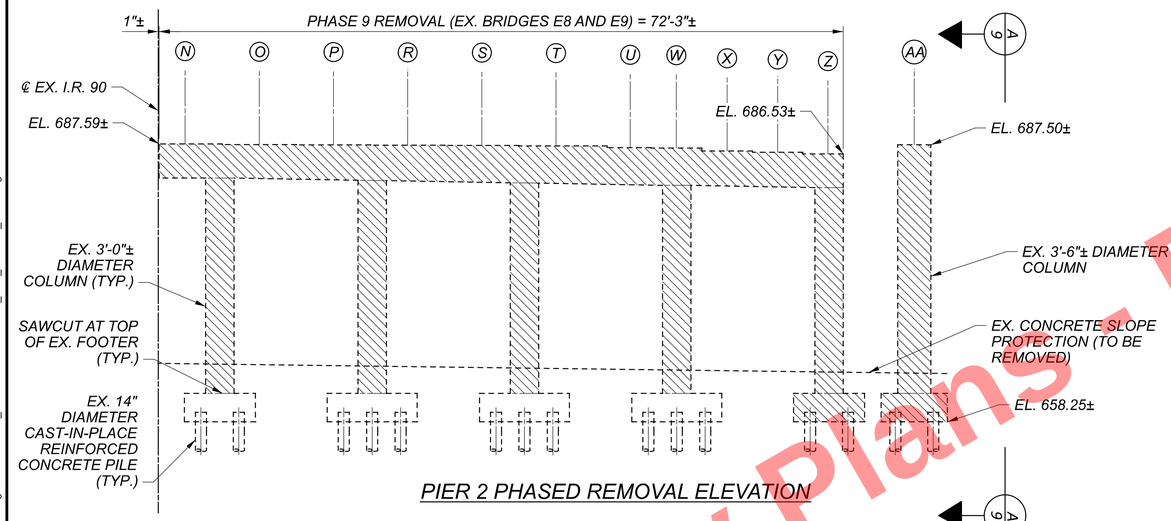

PIER 2 PHASED REMOVAL ELEVATION

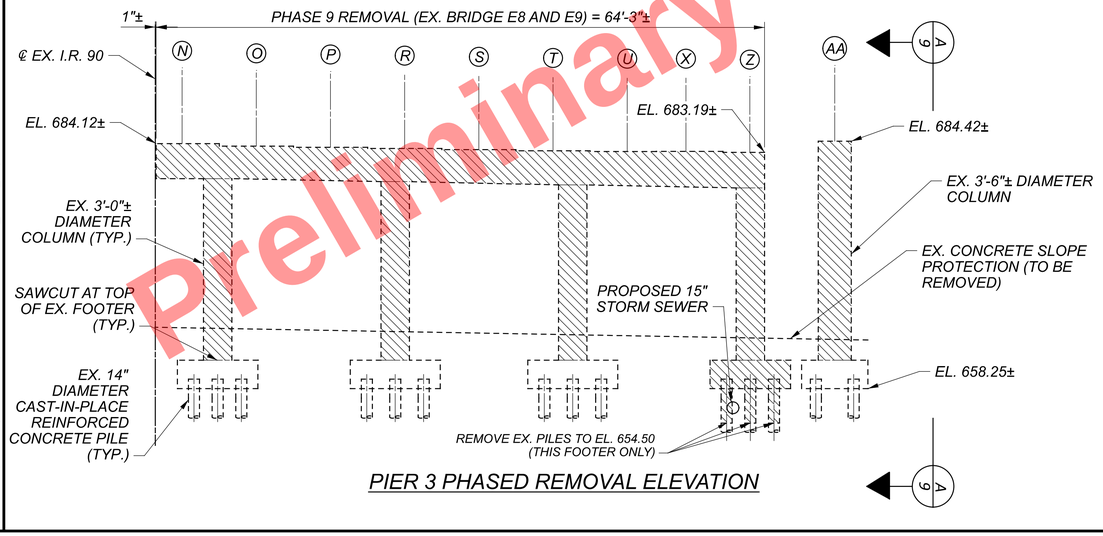

PIER 3 PHASED REMOVAL ELEVATION

LEGEND:

= PHASE 9 REMOVAL

(A) = EXISTING GIRDER LETTER

NOTES:

1. SEE SHEET 2045/2696 FOR PHASED REMOVAL OF EXISTING BRIDGE E8 PORTIONS NORTH OF ℄ EX. I.R. 90 AND EXISTING BRIDGE E7.

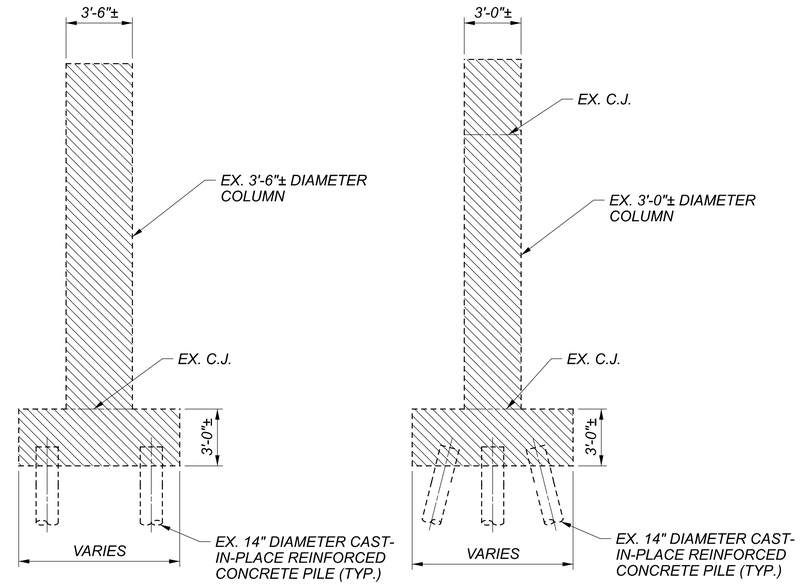

VIEW A-A

TYPICAL PIER SECTION

Preliminary Plans - For Reference Only

PIER PHASED REMOVAL DETAILS
CUY-90-1653R (BRIDGE 11)
I.R. 90 EB OVER CR-721 (E. 14TH ST.)

SFN	1807804
DESIGN AGENCY	B&N burgessniple.com
DESIGNER	KMA
CHECKER	BCS
REVIEWER	DWL 05/24/22
PROJECT ID	82382
SUBSET	9
TOTAL	43
SHEET	2094
TOTAL	2696

CUY-90-16.28 (CCG3A)

MODEL: Sheet PAPERSIZE: 34x22 (in.) DATE: 3/28/2025 TIME: 9:58:43 AM USER: Mala.Gallagher
pw:\\mb-us-pw.bentley.com:mb-us-pw-03\Documents\Cleveland_OH\01_Projects\ODOT\District12\82382400-Engineering\Structures\SFN_1807804\Sheets\82382_SFN_1807804_SV002.dgn

NOTES:

1. TEMPORARY STEEL SHEET PILING SHALL HAVE A MINIMUM STRENGTH OF 50 KSI AND SHALL HAVE A MINIMUM SECTION MODULUS OF 48 IN^3 AND A MINIMUM MOMENT OF INERTIA OF 361 IN^4. PAYMENT FOR SHEET PILING, INCLUDING REMOVAL OF ALL COMPONENTS AFTER NO LONGER NECESSARY AND ALL OTHER ITEMS ASSOCIATED WITH TEMPORARY SHORING WILL BE INCLUDED IN THE CONTRACT LUMP SUM PRICE FOR ITEM 503 - COFFERDAMS AND EXCAVATION BRACING, AS PER PLAN.
2. SEE SHEET 2046/2696 FOR SHORING LAYOUT PLAN.

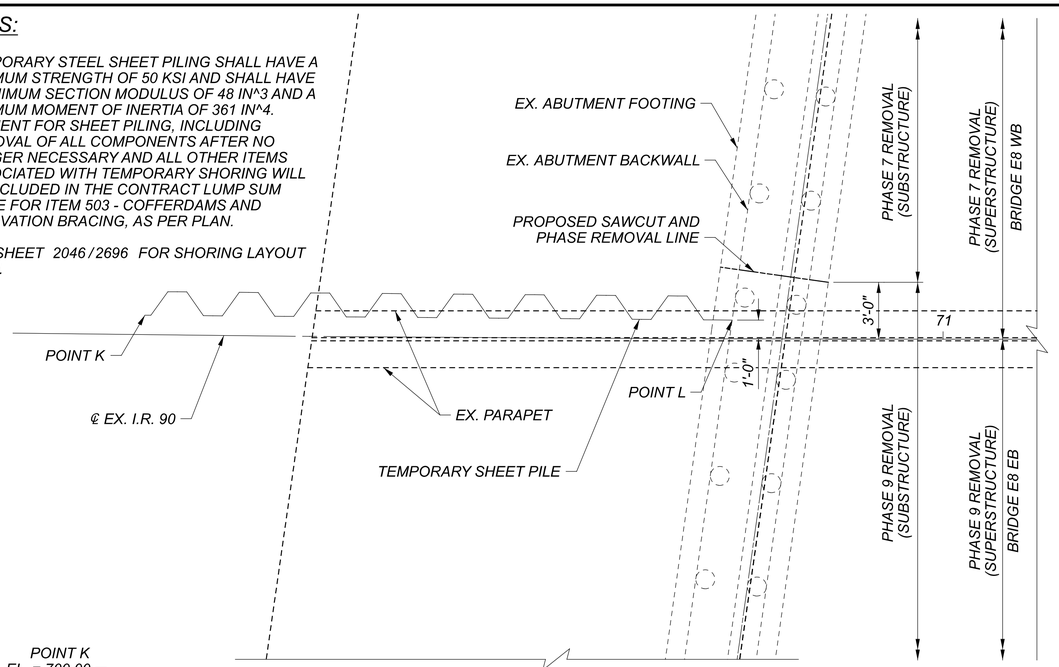

REAR ABUTMENT PLAN (EX. BRIDGE E8)

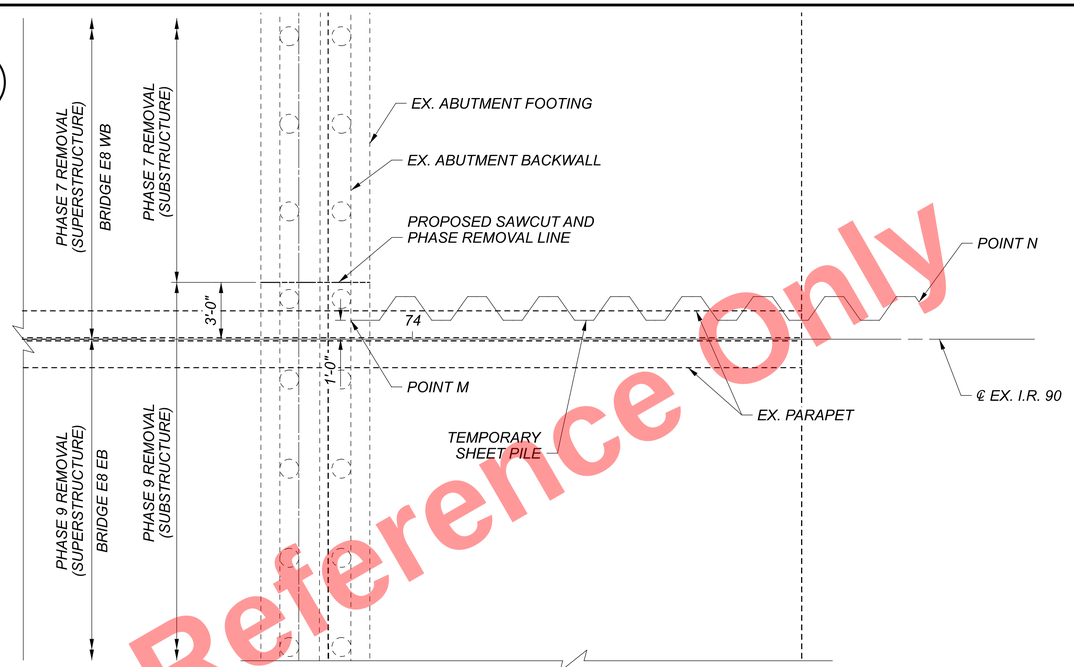

FORWARD ABUTMENT PLAN (EX. BRIDGE E8)

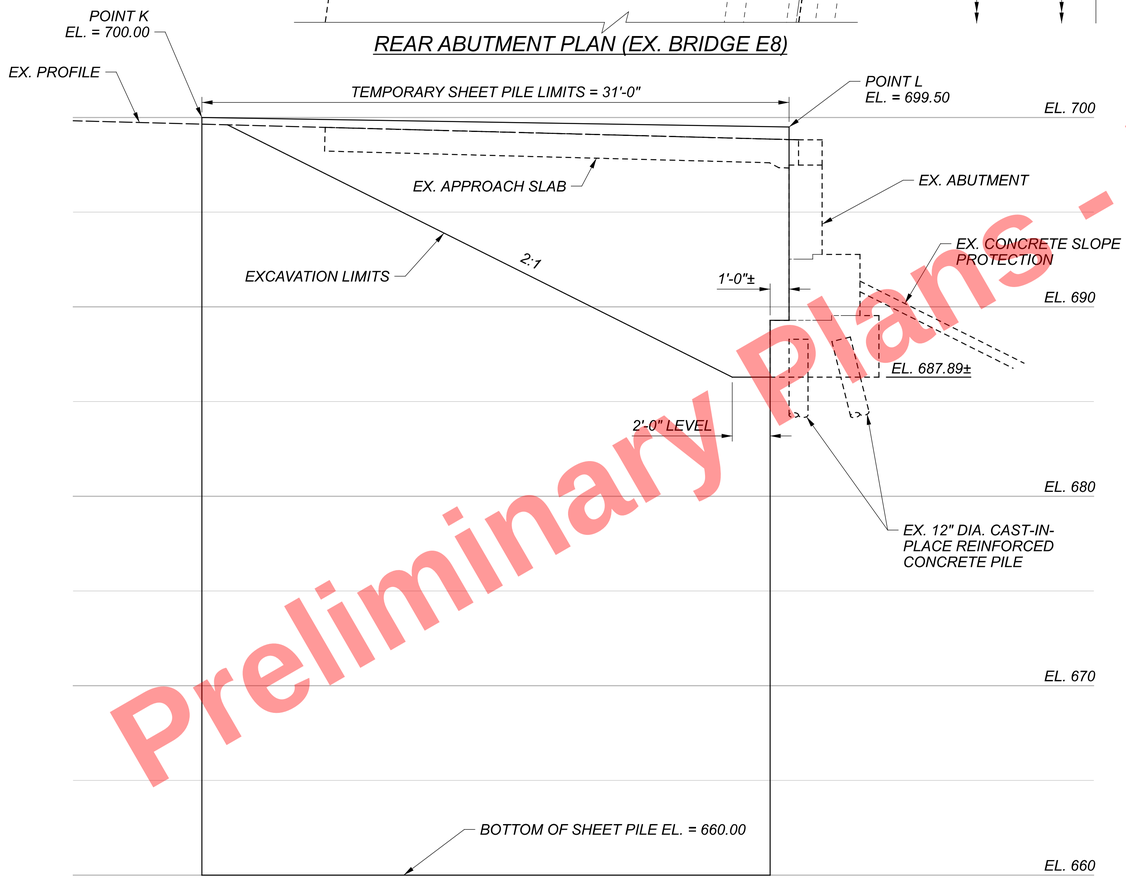

REAR ABUTMENT ELEVATION (EX. BRIDGE E8)

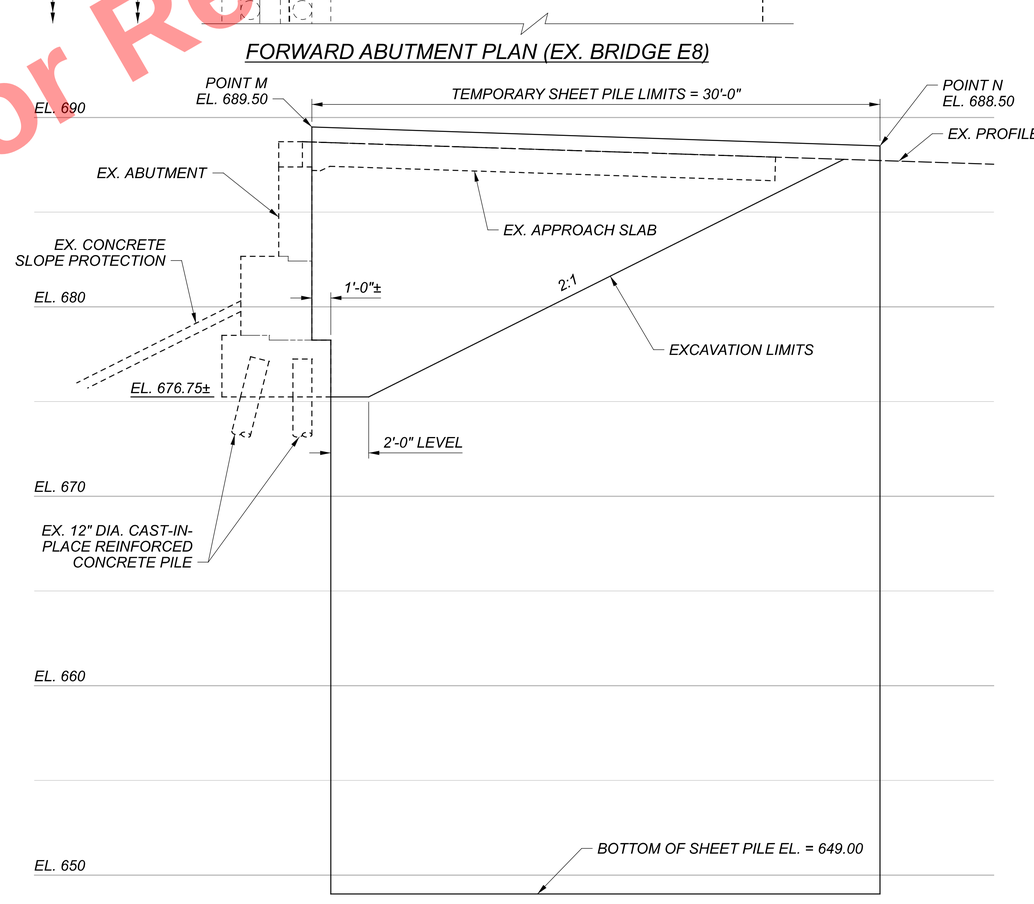

FORWARD ABUTMENT ELEVATION (EX. BRIDGE E8)

Preliminary Plans - For Reference Only

EXISTING ABUTMENT TEMPORARY SHORING DETAILS
CUY-90-1653R (BRIDGE 11)
I.R. 90 EB OVER CR-721 (E. 14TH ST.)

SFN	1807804
DESIGN AGENCY	B&N burgessniple.com
DESIGNER	KMA
CHECKER	MAB
REVIEWER	DWL 05/24/22
PROJECT ID	82382
SUBSET	10
TOTAL	43
SHEET	2095
TOTAL	2696

CUY-90-16.28 (CCG3A)

MODEL: Sheet PAPERSIZE: 34x22 (in.) DATE: 3/28/2025 TIME: 9:59:10 AM USER: Mala.Gallagher
pw:\\mb-us-pw.bentley.com:mb-us-pw-03\Documents\Cleveland_OH\01_Projects\ODOT\District12\82382\400-Engineering\Structures\SFN_1807804\Sheets\82382_SFN_1807804_SH001.dgn

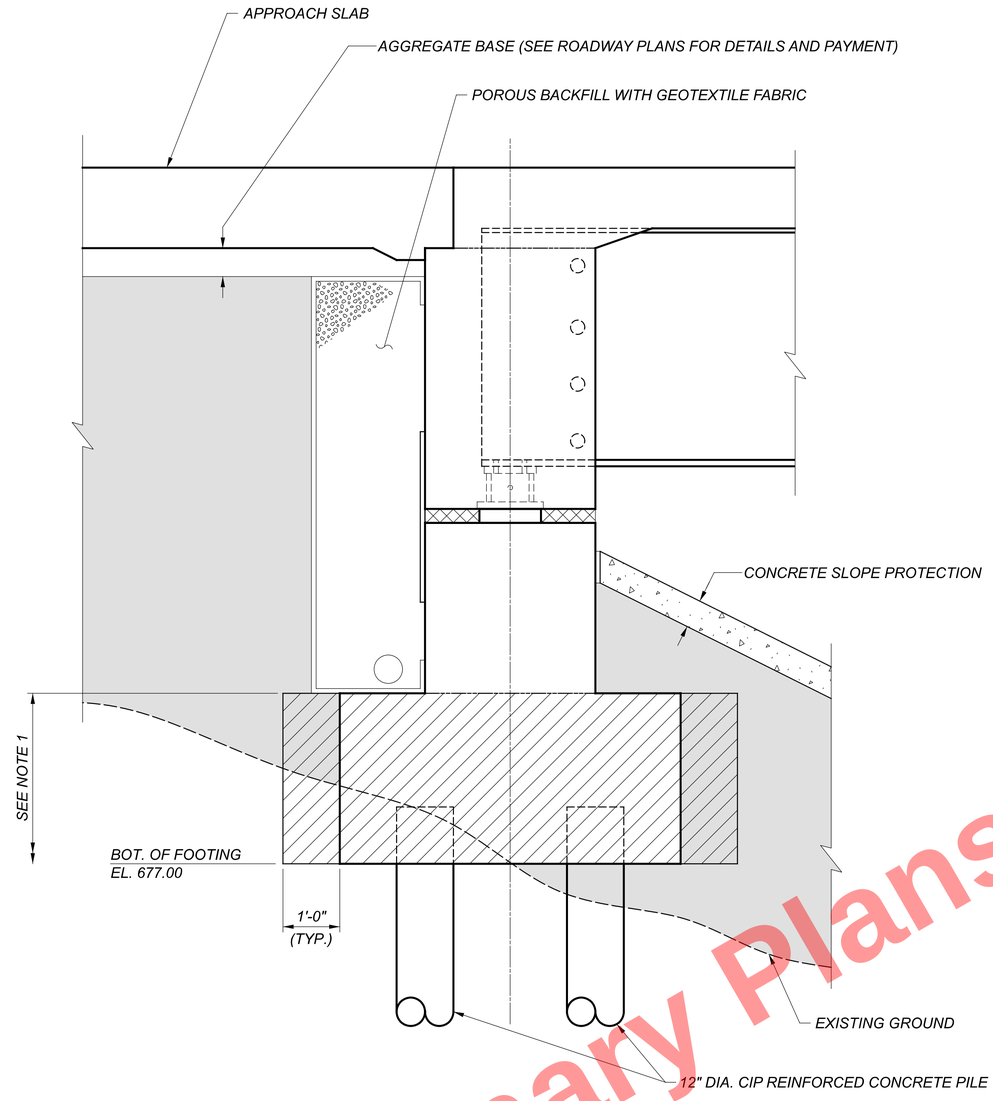

EXCAVATION AND EMBANKMENT DIAGRAM - REAR ABUTMENT

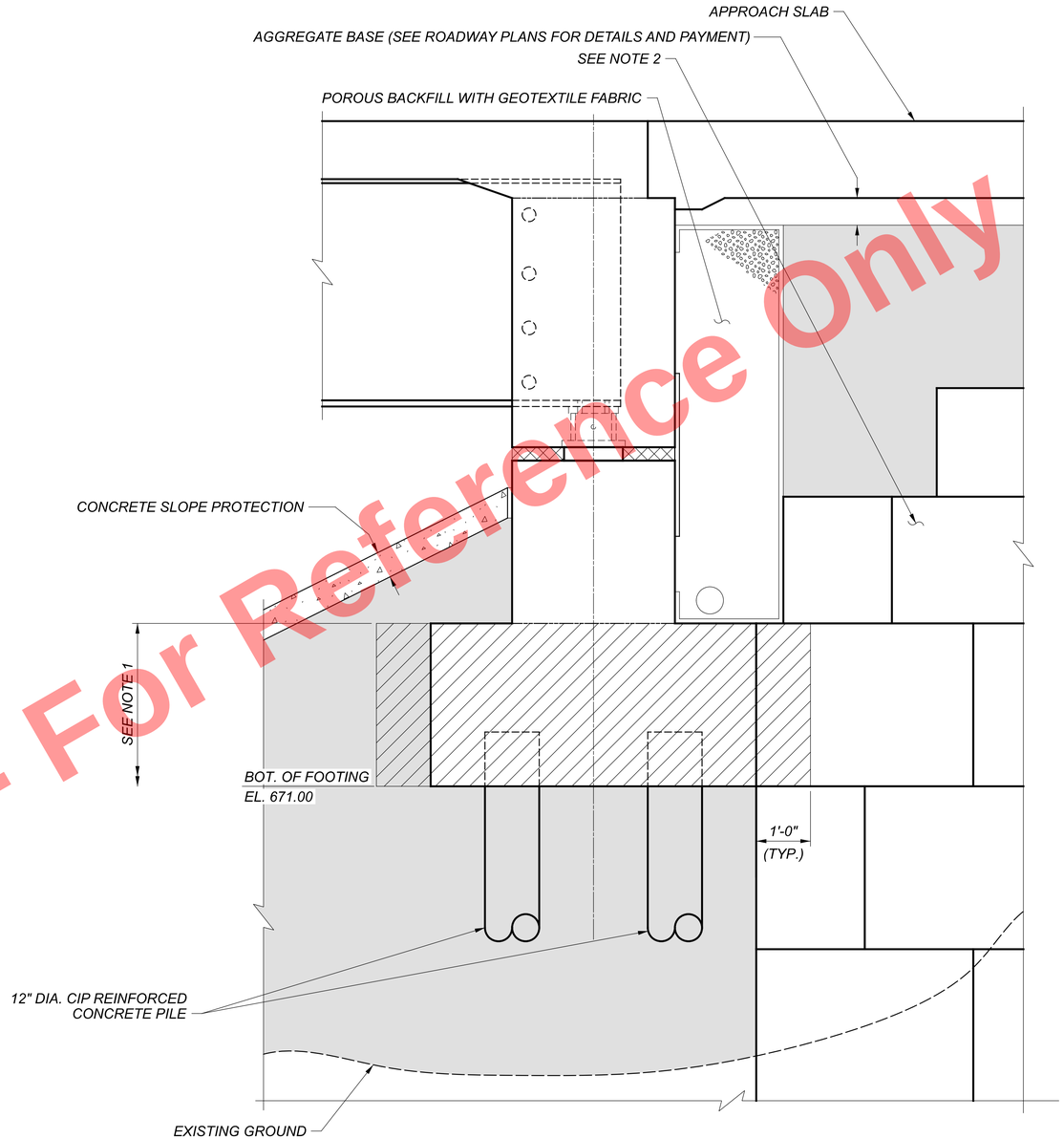

EXCAVATION AND EMBANKMENT DIAGRAM - FORWARD ABUTMENT

Preliminary Plans - For Reference Only

LEGEND:

= LIMITS OF ITEM 203 - EMBANKMENT, AS PER PLAN SEE ROADWAY PLANS FOR ADDITIONAL DETAILS AND PAYMENT

= LIMITS OF ITEM 503 - UNCLASSIFIED EXCAVATION

NOTES:

1. SEE GENERAL NOTES FOR REQUIREMENTS REGARDING CONSTRUCTION OF EMBANKMENT BELOW TOP OF FOOTING, AND REQUIRED WAITING PERIOD PRIOR TO DRIVING PILES.
2. LIGHTWEIGHT FILL (GEOFOAM BLOCKS) OR ITEM 203 - EMBANKMENT, AS PER PLAN BEHIND FORWARD ABUTMENT. FOR LIMITS OF LIGHTWEIGHT FILL AND EMBANKMENT SEE ROADWAY PLANS.

EXCAVATION AND EMBANKMENT DIAGRAM
CUY-90-1653R (BRIDGE 11)
I.R. 90 EB OVER CR-721 (E. 14TH ST.)

SFN 1807804
DESIGN AGENCY
B&N burgessniple.com
DESIGNER BCS | CHECKER MAB
REVIEWER DWL 05/24/22
PROJECT ID 82382
SUBSET 11 | TOTAL 43
SHEET 2096 | TOTAL 2696

CUY-90-16.28 (CCG3A)

MODEL: Sheet PAPERSIZE: 34x22 (in.) DATE: 3/28/2025 TIME: 9:59:33 AM USER: Mala.Gallagher
pw:\\mb-us-pw.bentley.com:mb-us-pw-03\Documents\Cleveland_OH101_Projects\ODOT\District12\82382\400-Engineering\Structures\SFN_1807804\Sheets\82382_SFN_1807804_SM004.dgn

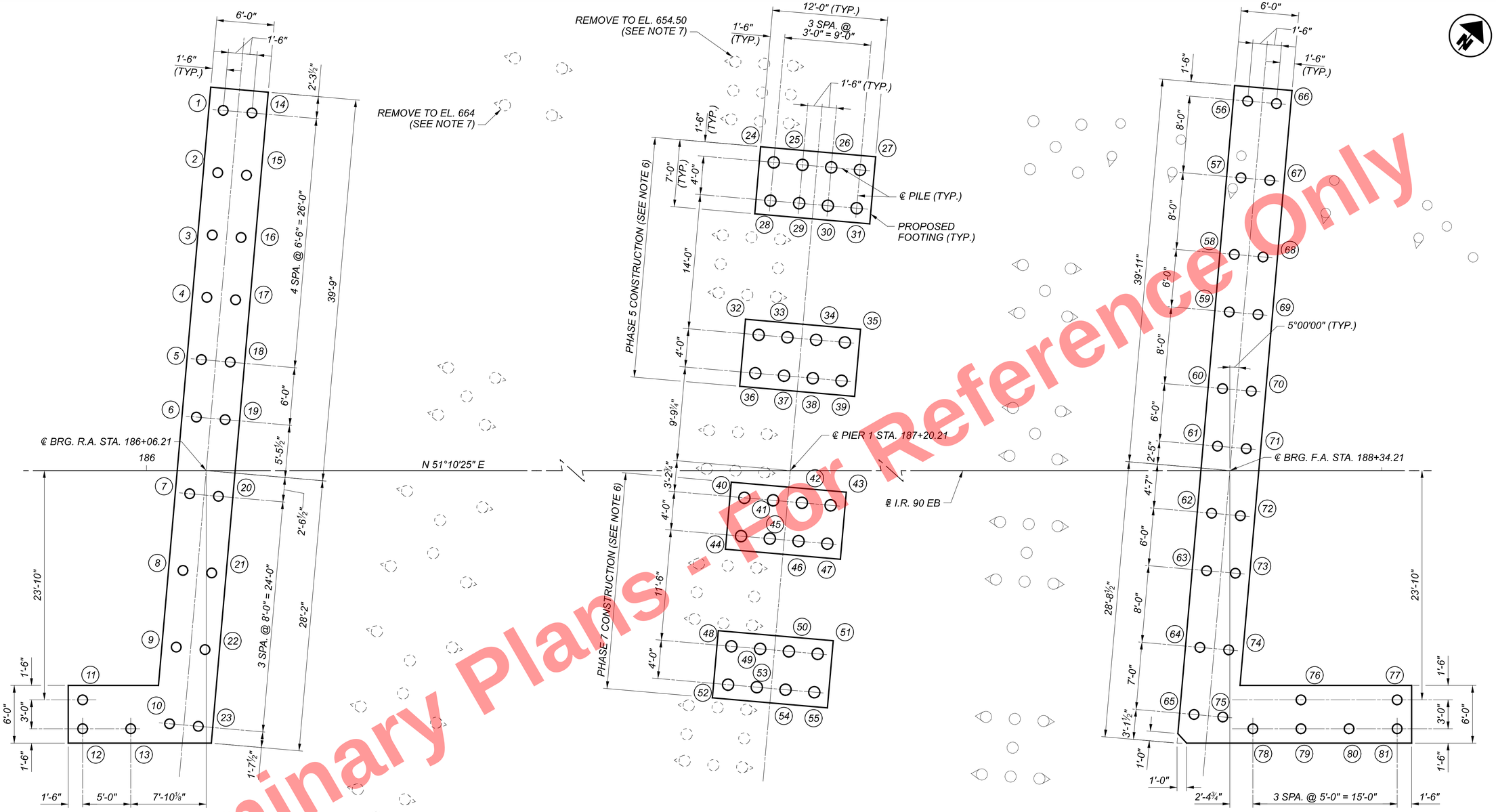

Preliminary Plans - For Reference Only

FOUNDATION PLAN

(EXISTING FOOTINGS NOT SHOWN FOR CLARITY)

LEGEND:

- = PROP. 12" DIA. CIP REINFORCED CONCRETE PILE (ABUTMENTS)
- = PROP. 14" DIA. CIP REINFORCED CONCRETE PILE (PIER 1)
- = EX. 14" DIA. CIP REINFORCED CONCRETE PILE
- = EX. 14" DIA. CIP REINFORCED CONCRETE PILE (BATTERED 4V:1H)
- (##) = PROP. PILE NUMBER

NOTES:

1. SEE SHEET 13/43 FOR REAR ABUTMENT DETAILS.
2. SEE SHEETS 21/43 AND 20/43 FOR PIER 1 DETAILS.
3. SEE SHEET 16/43 FOR FORWARD ABUTMENT DETAILS.
4. EXISTING PILES ARE SHOWN BASED ON RECORD PLANS. CONTRACTOR SHALL VERIFY EXISTING PILE LOCATION PRIOR TO PROPOSED PILE DRIVING OPERATIONS. ANY CONFLICTS WITH THE PROPOSED WORK SHALL BE BROUGHT TO THE ATTENTION OF THE ENGINEER IN A TIMELY MANNER.
5. WHERE AN EXISTING PILE CONFLICTS WITH A PROPOSED FOOTING, CUT THE PILE OFF TO 1'-0" BELOW THE PROPOSED BOTTOM OF FOOTING. THIS IS TO BE INCLUDED WITH ITEM 202 - PORTIONS OF STRUCTURE REMOVED, OVER 20 FOOT SPAN, AS PER PLAN FOR PAYMENT.
6. SEE SHEET 2048/2696 FOR PIER TEMPORARY SHORING DETAILS.
7. SEE SHEET 2045/2696 FOR REMOVAL DETAILS.

FOUNDATION PLAN
CUY-90-1653R (BRIDGE 11)
I.R. 90 EB OVER CR-721 (E. 14TH ST.)

SFN 1807804

DESIGN AGENCY

B&N burgessniple.com

DESIGNER	CHECKER
BCS	MAB

REVIEWER DWL 05/24/22

PROJECT ID 82382

SUBSET	TOTAL
12	43

SHEET	TOTAL
2097	2696

CUY-90-16.28 (CCG3A)
MODEL: Sheet PAPERSIZE: 34x22 (in.) DATE: 3/28/2025 TIME: 9:59:39 AM USER: Mala.Gallagher
pw:\\mb-us-pw.bentley.com:mb-us-pw-03\Documents\Cleveland_OH01_Projects\ODOT\District12\82382\400-Engineering\Structures\SFN_1807804\Sheets\82382_SFN_1807804_SO001.dgn

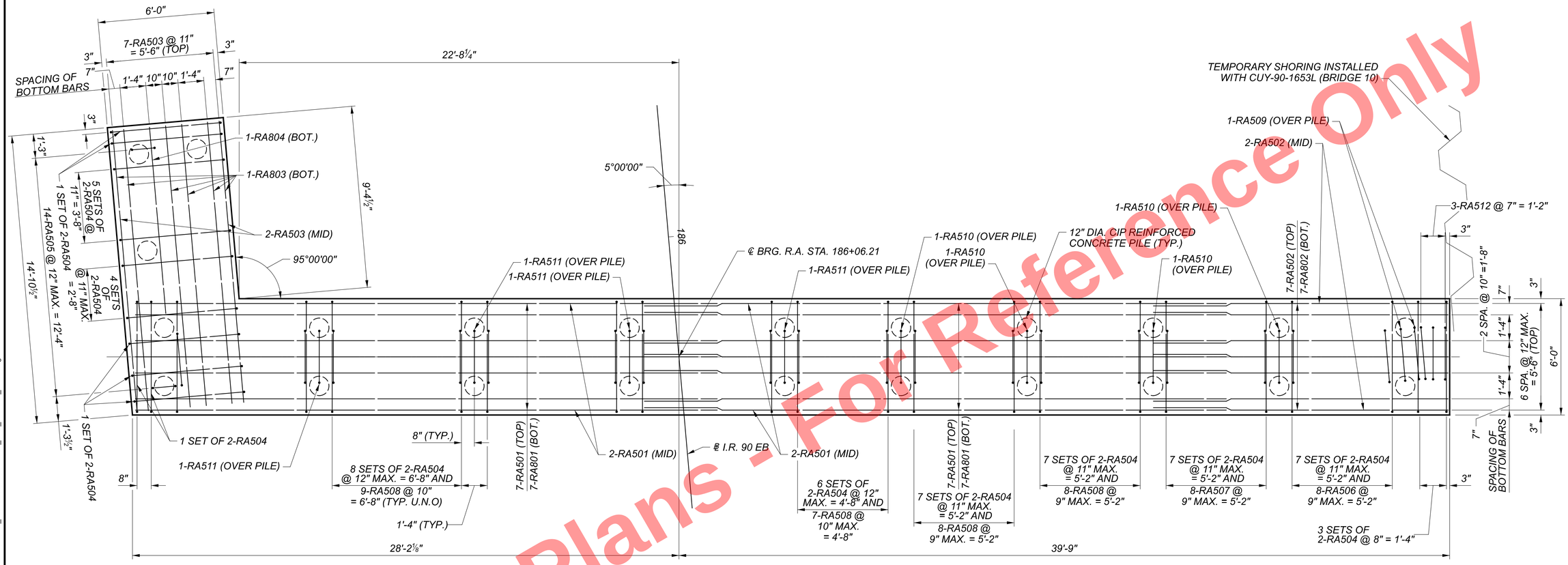

REAR ABUTMENT FOOTING PLAN

NOTES:

1. SEE SHEET 12/43 FOR FOUNDATION LAYOUT.
2. SEE SHEET 14/43 FOR REAR ABUTMENT PLAN AND ELEVATION.
3. MINIMUM REINFORCING LAP LENGTHS:
   #5 VERTICAL = 2'-5"
   #5 HORIZONTAL = 3'-1"
   #8 = 3'-9"

Preliminary Plans - For Reference Only

REAR ABUTMENT FOOTING PLAN
CUY-90-1653R (BRIDGE 11)
I.R. 90 EB OVER CR-721 (E. 14TH ST.)

SFN	1807804
DESIGN AGENCY	B&N burgessniple.com
DESIGNER	BCS
CHECKER	MAB
REVIEWER	DWL 05/24/22
PROJECT ID	82382
SUBSET	13
TOTAL	43
SHEET	2098
TOTAL	2696

CUY-90-16.28 (CCG3A)
MODEL: Sheet PAPERSIZE: 34x22 (in.) DATE: 3/28/2025 TIME: 9:58:47 AM USER: Mala.Gallagher
pw:\\mb-us-pw.bentley.com:mb-us-pw-03\Documents\Cleveland_OH101_Projects\ODOT\District12\82382\400-Engineering\Structures\SFN_1807804\Sheets\82382_SFN_1807804_SR001.dgn

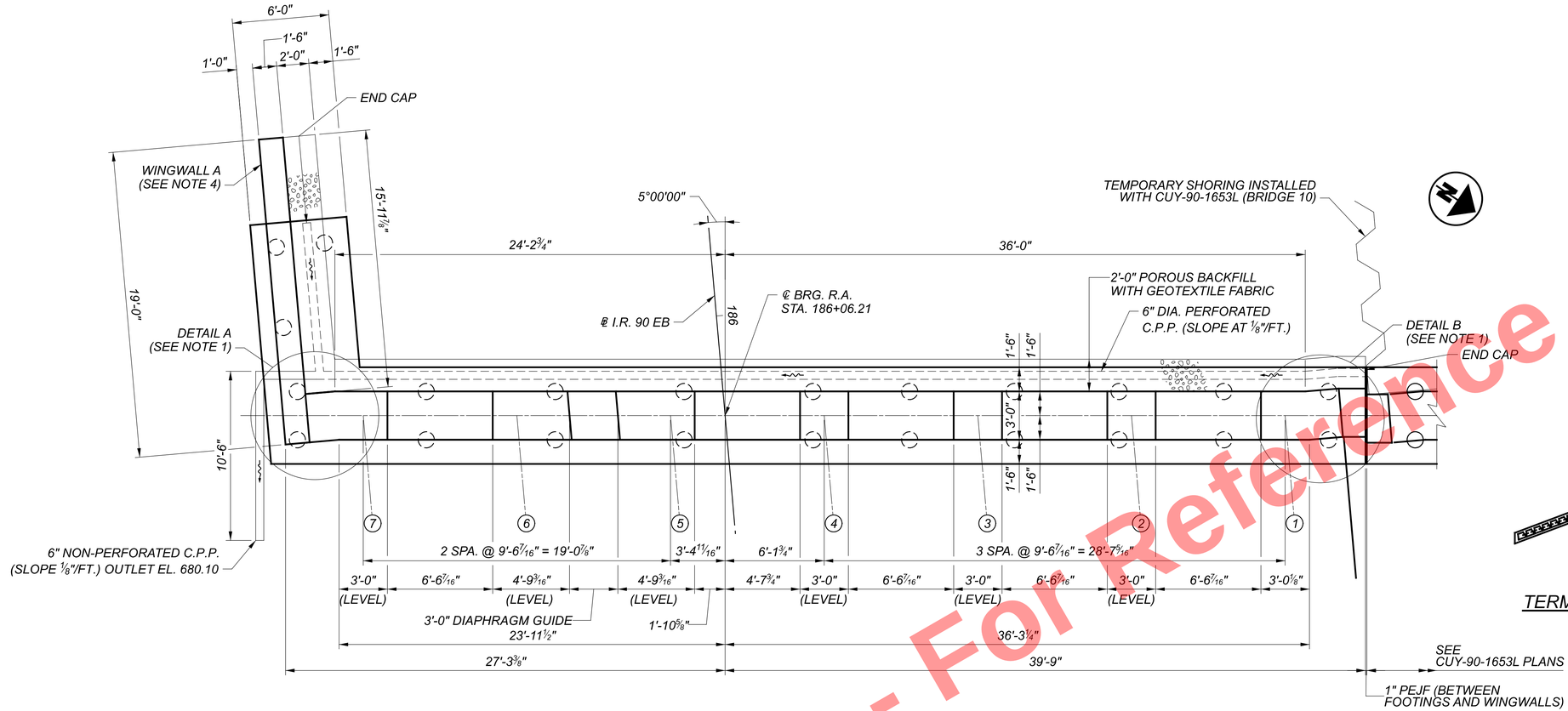

TERMINATION OF 6" N.P.C.P.P. DETAIL

PLAN

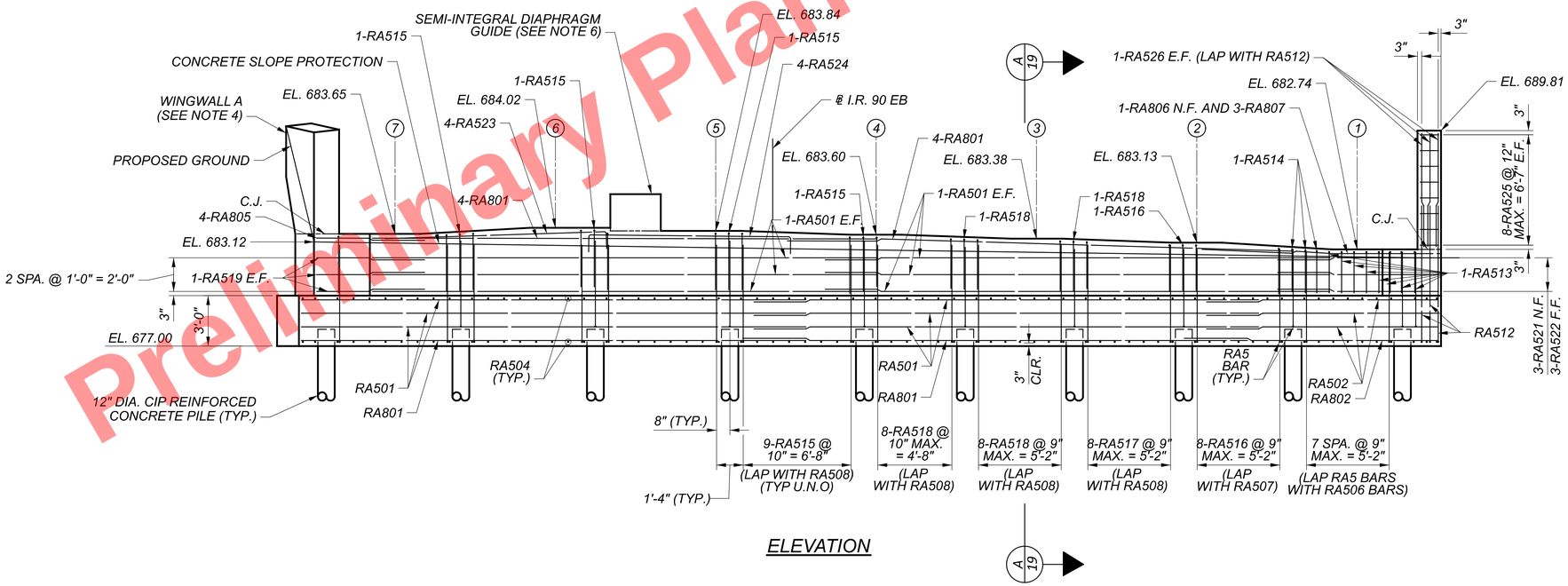

ELEVATION

LEGEND:

(#) = GIRDER NUMBER

NOTES:

1. SEE SHEET 15/43 FOR DETAILS A AND B.
2. SEE SHEET 13/43 FOR REAR ABUTMENT FOOTING PLAN.
3. SEE SHEET 19/43 FOR SECTION A-A.
4. SEE SHEET 15/43 FOR WINGWALL A DETAILS.
5. MINIMUM REINFORCING LAP LENGTHS:
   #5 VERTICAL = 2'-5"
   #5 HORIZONTAL = 3'-1"
   #8 = 5'-4"
6. SEE STANDARD BRIDGE DRAWING SICD-2-14 FOR ADDITIONAL DETAILS.

REAR ABUTMENT PLAN AND ELEVATION
CUY-90-1653R (BRIDGE 11)
I.R. 90 EB OVER CR-721 (E. 14TH ST.)

SFN	1807804
DESIGN AGENCY	B&N burgessniple.com
DESIGNER	BCS
CHECKER	JAA
REVIEWER	DWL 05/24/22
PROJECT ID	82382
SUBSET	14
TOTAL	43
SHEET	2099
TOTAL	2696

CUY-90-16.28 (CCG3A)

MODEL: Sheet PAPERSIZE: 34x22 (in.) DATE: 3/28/2025 TIME: 9:59:52 AM USER: Mala.Gallagher
pw:\\mb-us-pw.bentley.com:mb-us-pw-03\Documents\Cleveland_OH\01_Projects\ODOT\District12\82382400-Engineering\Structures\SFN_1807804\Sheets\82382_SFN_1807804_SR002.dgn

Preliminary Plans - For Reference Only

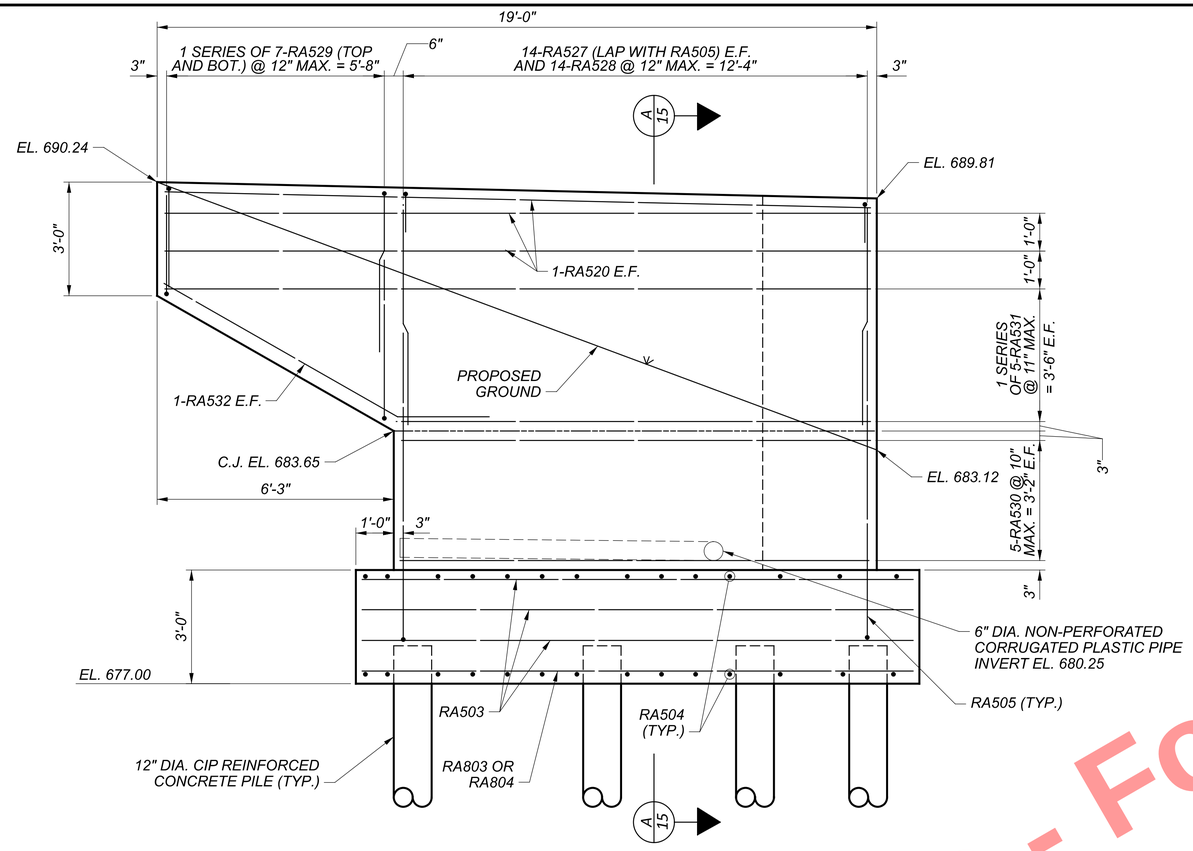

WINGWALL A ELEVATION

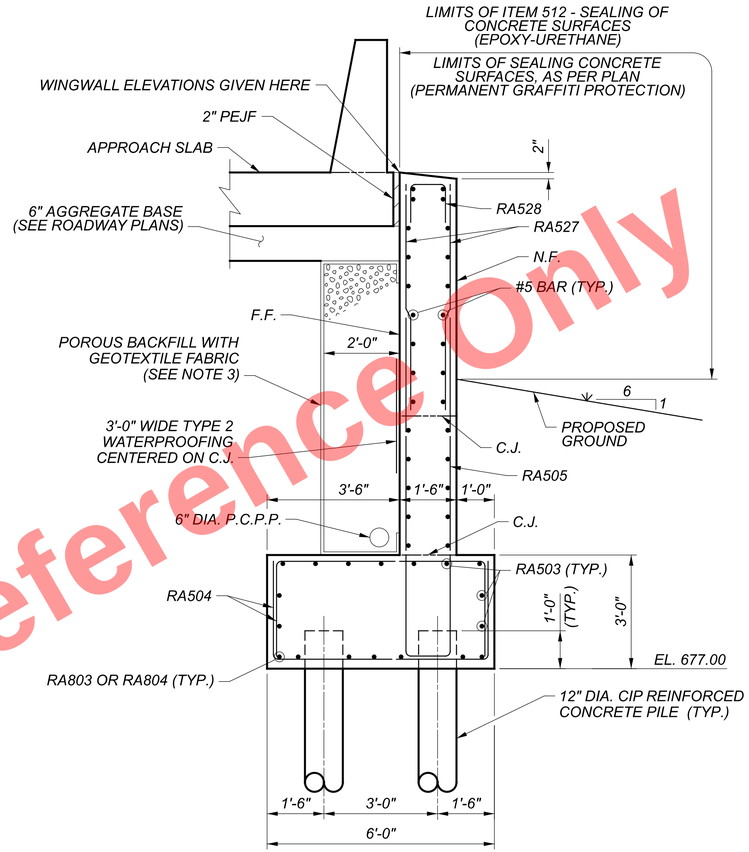

SECTION A-A

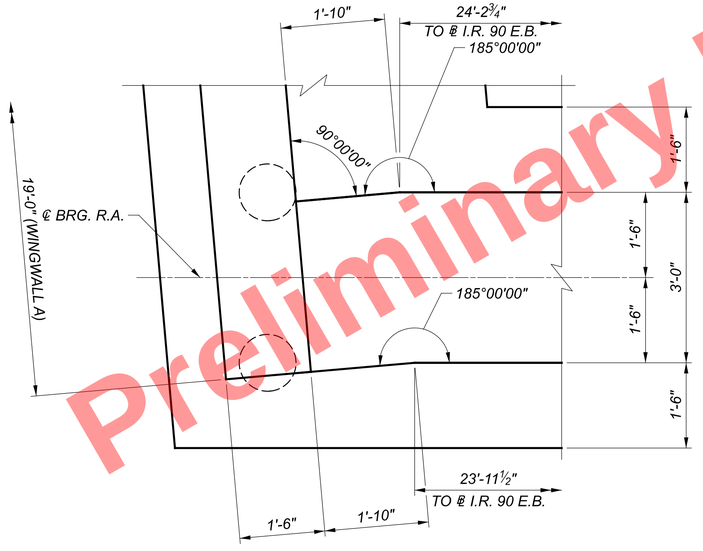

DETAIL A
(REINFORCING NOT SHOWN)

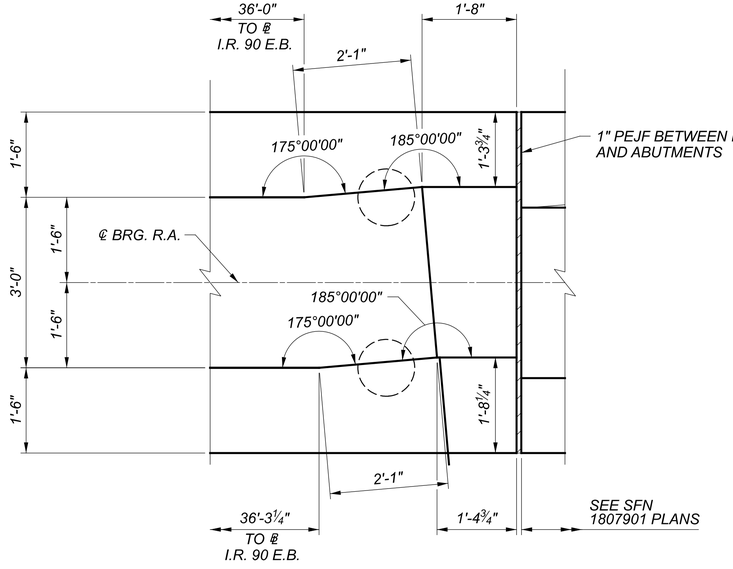

DETAIL B
(REINFORCING NOT SHOWN)

NOTES:

1. SEE SHEET 14/43 FOR REAR ABUTMENT PLAN AND ELEVATION AND LOCATION OF DETAILS A AND B.
2. MINIMUM REINFORCING LAP LENGTHS:
   #5 = 2'-5"
3. TURN GEOTEXTILE FABRIC UP 6" AT BASE OF WALL AND DOWN 6" AT TOP OF WALL.

Preliminary Plans - For Reference Only

REAR ABUTMENT WINGWALL AND DETAILS
CUY-90-1653R (BRIDGE 11)
I.R. 90 EB OVER CR-721 (E. 14TH ST.)

SFN	1807804
DESIGN AGENCY	B&N burgessniple.com
DESIGNER	BCS
CHECKER	MAB
REVIEWER	DWL 05/24/22
PROJECT ID	82382
SUBSET	15
TOTAL	43
SHEET	2100
TOTAL	2696

CUY-90-16.28 (CCG3A)

MODEL: Sheet PAPERSIZE: 34x22 (in.) DATE: 3/28/2025 TIME: 9:59:58 AM USER: Mala.Gallagher
pw:\\mb-us-pw.bentley.com:mb-us-pw-03\Documents\Cleveland_OH\01_Projects\ODOT\District12\82382\400-Engineering\Structures\SFN_1807804\Sheets\82382_SFN_1807804_SR003.dgn

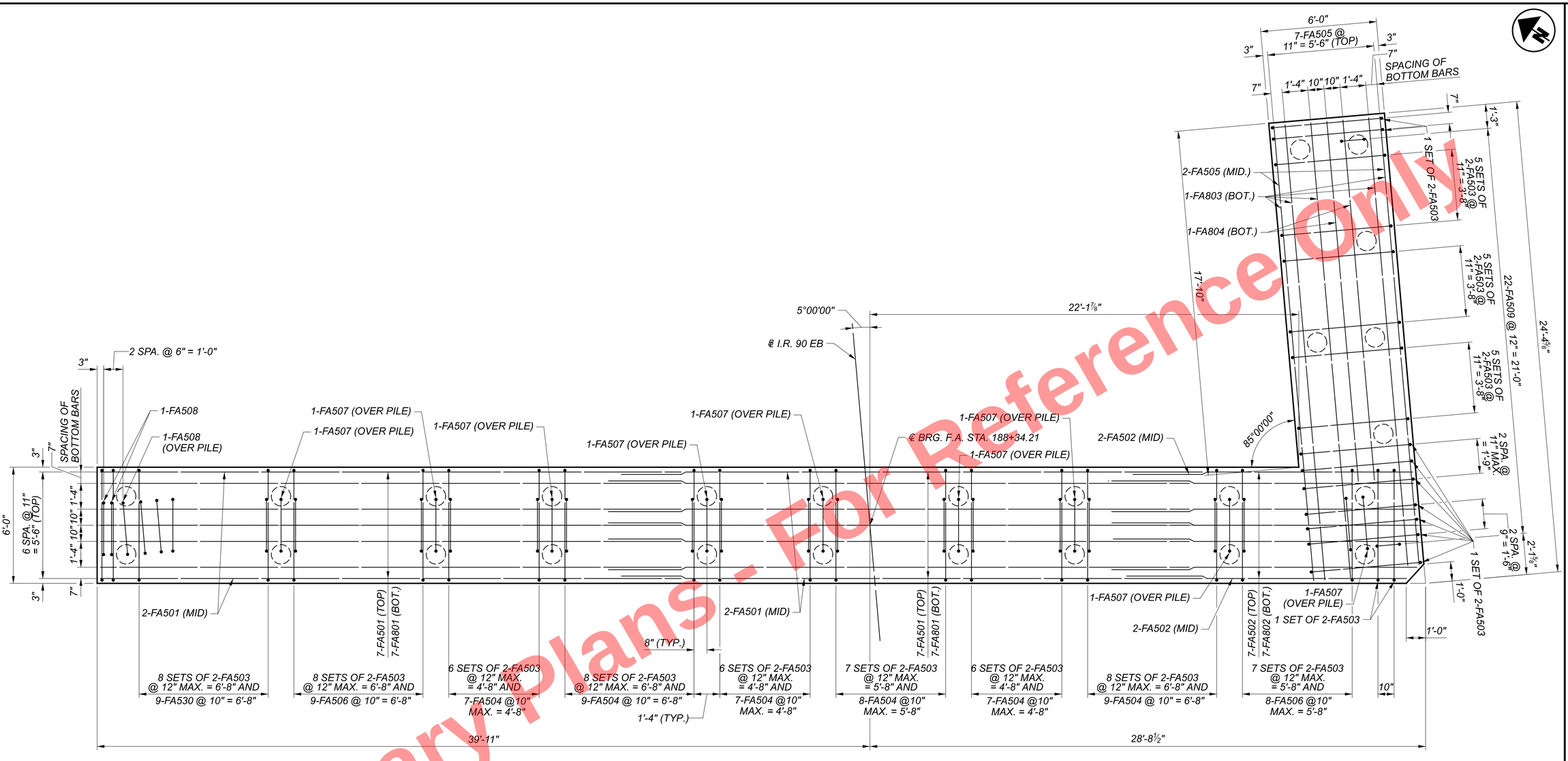

FORWARD ABUTMENT FOOTING PLAN

NOTES:

1. SEE SHEET 12/43 FOR FOUNDATION LAYOUT.
2. SEE SHEET 17/43 FOR FORWARD ABUTMENT PLAN AND ELEVATION.
3. MINIMUM REINFORCING LAP LENGTHS:
   #5 VERTICAL = 2'-5"
   #5 HORIZONTAL = 3'-1"
   #8 = 3'-9"

Preliminary Plans - For Reference Only

FORWARD ABUTMENT FOOTING PLAN
CUY-90-1653R (BRIDGE 11)
I.R. 90 EB OVER CR-721 (E. 14TH ST.)

SFN 1807804
DESIGN AGENCY B&N burgessniple.com
DESIGNER BCS | CHECKER MAB
REVIEWER DWL 05/24/22
PROJECT ID 82382
SUBSET 16 | TOTAL 43
SHEET 2101 | TOTAL 2696

CUY-90-16.28 (CCG3A)
MODEL: Sheet PAPERSIZE: 34x22 (in.) DATE: 3/28/2025 TIME: 10:00:04 AM USER: Mala.Gallagher
pw:\\mb-us-pw.bentley.com:mb-us-pw-03\Documents\Cleveland_OH\01_Projects\ODOT\District12\82382\400-Engineering\Structures\SFN_1807804\Sheets\82382_SFN_1807804_SF001.dgn

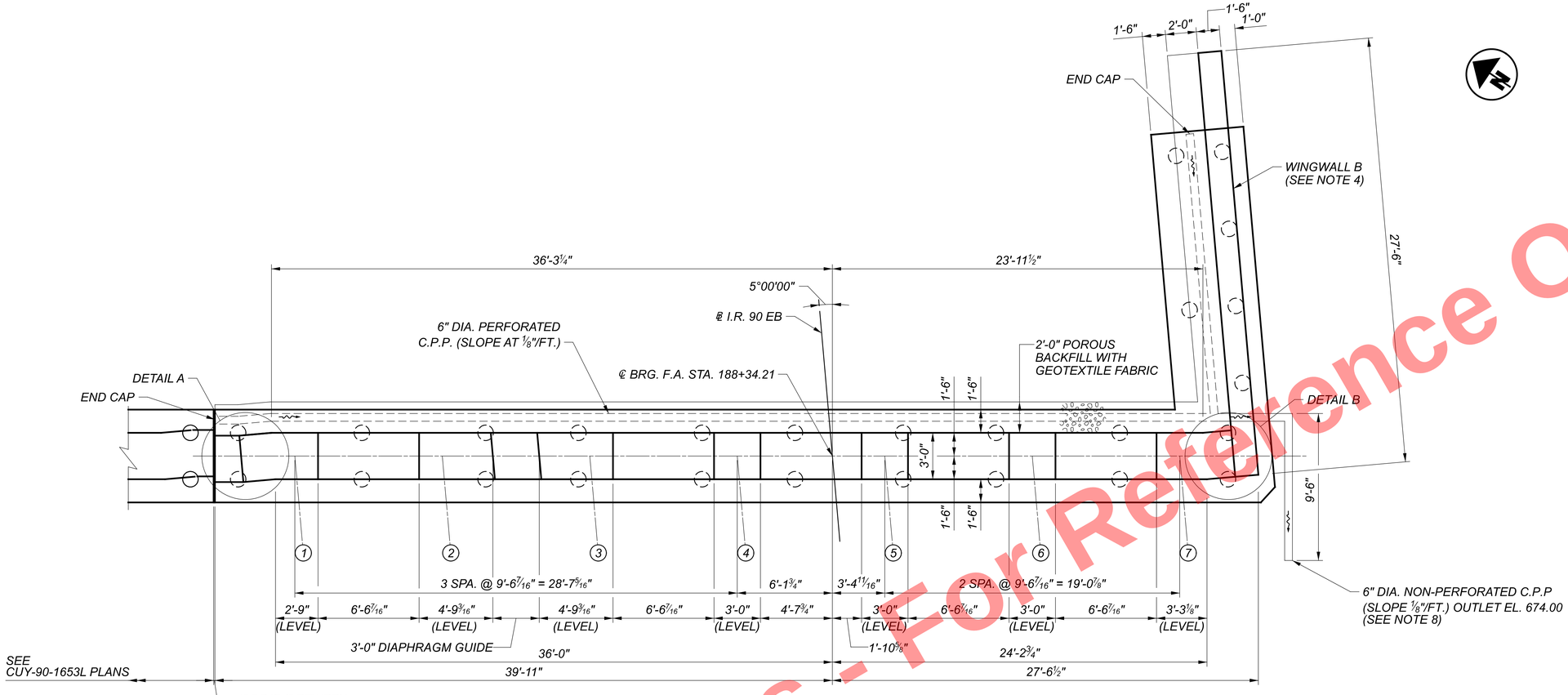

PLAN

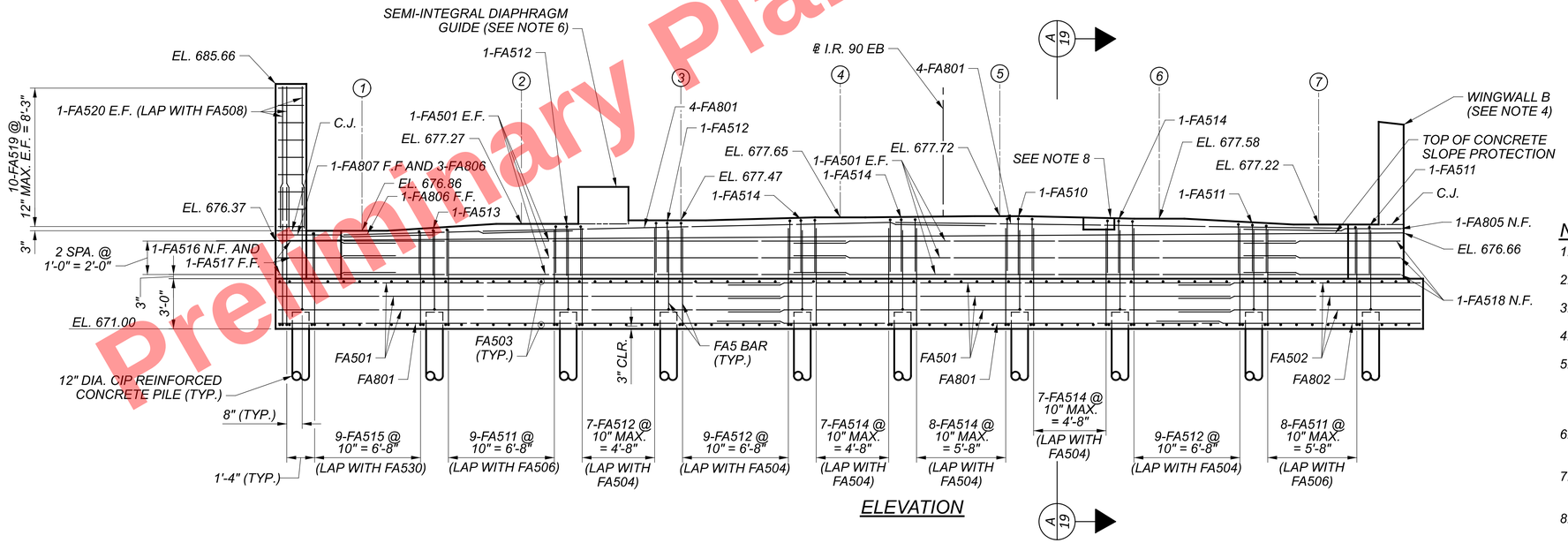

ELEVATION

LEGEND:

(#) = GIRDER NUMBER

NOTES:

1. SEE SHEET 18/43 FOR DETAILS A AND B.
2. SEE SHEET 16/43 FOR FORWARD ABUTMENT FOOTING PLAN.
3. SEE SHEET 19/43 FOR SECTION A-A.
4. SEE SHEET 18/43 FOR WINGWALL B DETAILS.
5. MINIMUM REINFORCING LAP LENGTHS:
   #5 VERTICAL = 2'-5"
   #5 HORIZONTAL = 3'-1"
   #8 = 5'-4"
6. SEE STANDARD BRIDGE DRAWING SICD-2-14 FOR ADDITIONAL DETAILS.
7. SEE LIGHTING PLANS FOR LOCATION AND DETAILS FOR LIGHITNG ATTACHED TO STRUCTURE.
8. SEE SHEET 14/43 FOR OUTLET DETAILS.

Preliminary Plans - For Reference Only

FORWARD ABUTMENT PLAN AND ELEVATION
CUY-90-1653R (BRIDGE 11)
I.R. 90 EB OVER CR-721 (E. 14TH ST.)

CUY-90-16.28 (CCG3A)

MODEL: Sheet PAPERSIZE: 34x22 (in.) DATE: 3/28/2025 TIME: 10:00:16 AM USER: Maia.Gallagher
pw:\\mb-us-pw.bentley.com:mb-us-pw-03\Documents\Cleveland_OH101_Projects\ODOT\District12\82382\400-Engineering\Structures\SFN_1807804\Sheets\82382_SFN_1807804_SF002.dgn

SFN	1807804
DESIGN AGENCY	B&N burgessniple.com
DESIGNER	BCS
CHECKER	MAB
REVIEWER	DWL 05/24/22
PROJECT ID	82382
SUBSET	17
TOTAL	43
SHEET	2102
TOTAL	2696

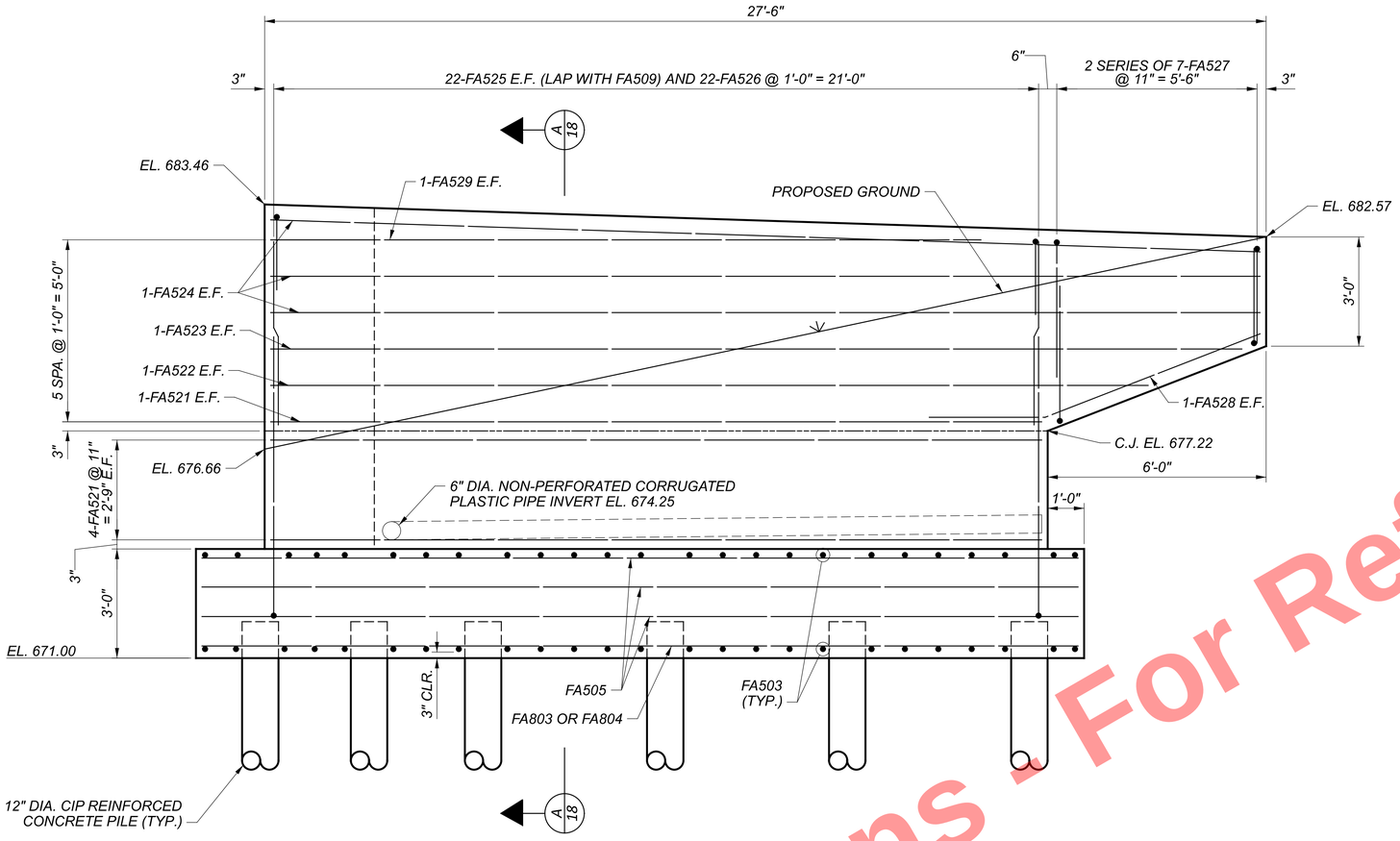

WINGWALL B ELEVATION

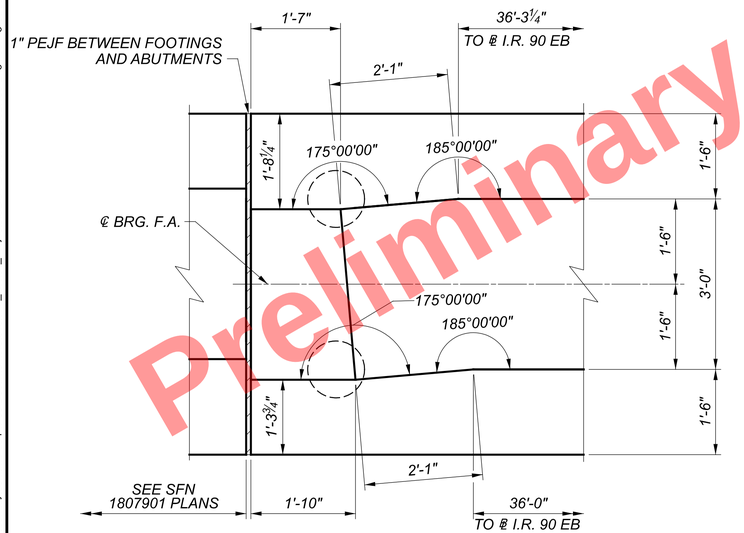

DETAIL A

(REINFORCING NOT SHOWN)

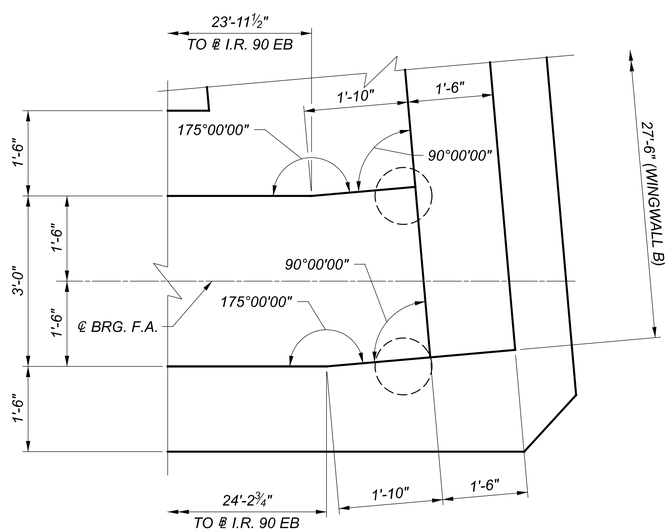

DETAIL B

(REINFORCING NOT SHOWN)

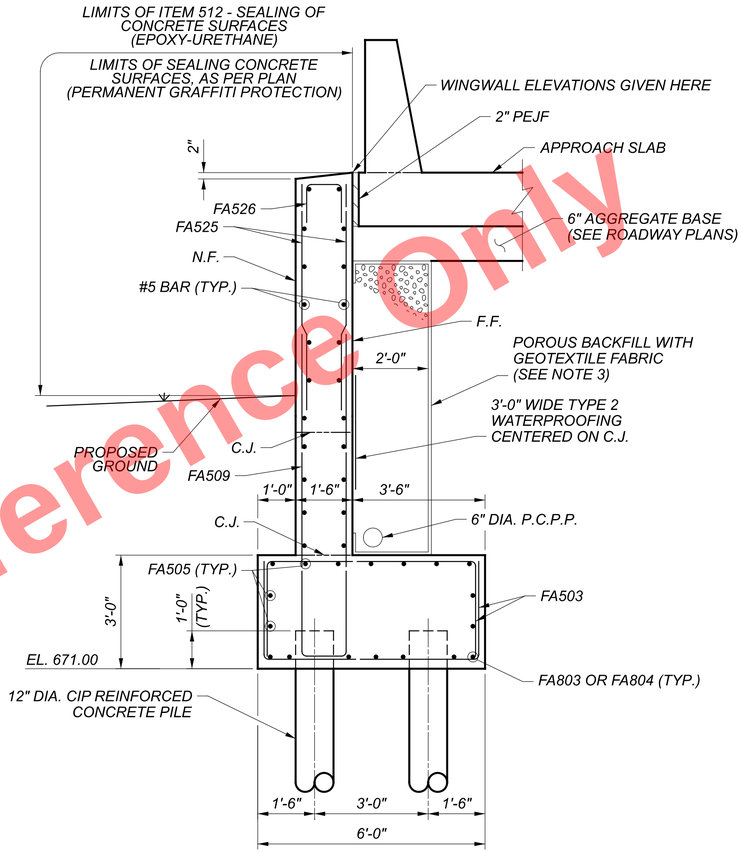

SECTION A-A

NOTES:

1. *SEE SHEET 17/43 FOR FORWARD ABUTMENT PLAN AND ELEVATION.*
2. *MINIMUM REINFORCING LAP LENGTHS:*
   #5 VERTICAL = 2'-5"
3. *TURN GEOTEXTILE FABRIC UP 6" AT BASE OF WALL AND DOWN 6" AT TOP OF WALL.*

Preliminary Plans - For Reference Only

FORWARD ABUTMENT WINGWALL AND DETAILS
CUY-90-1653R (BRIDGE 11)
I.R. 90 EB OVER CR-721 (E. 14TH ST.)

SFN	1807804
DESIGN AGENCY	B&N burgessniple.com
DESIGNER	BCS
CHECKER	MAB
REVIEWER	DWL 05/24/22
PROJECT ID	82382
SUBSET	18
TOTAL	43
SHEET	2103
TOTAL	2696

CUY-90-16.28 (CCG3A)

MODEL: Sheet PAPERSIZE: 34x22 (in.) DATE: 3/28/2025 TIME: 10:00:22 AM USER: Maia.Gallagher
pw:\\mb-us-pw.bentley.com:mb-us-pw-03\Documents\Cleveland_OH\01_Projects\ODOT\District12\82382400-Engineering\Structures\SFN_1807804\Sheets\82382_SF003.dgn

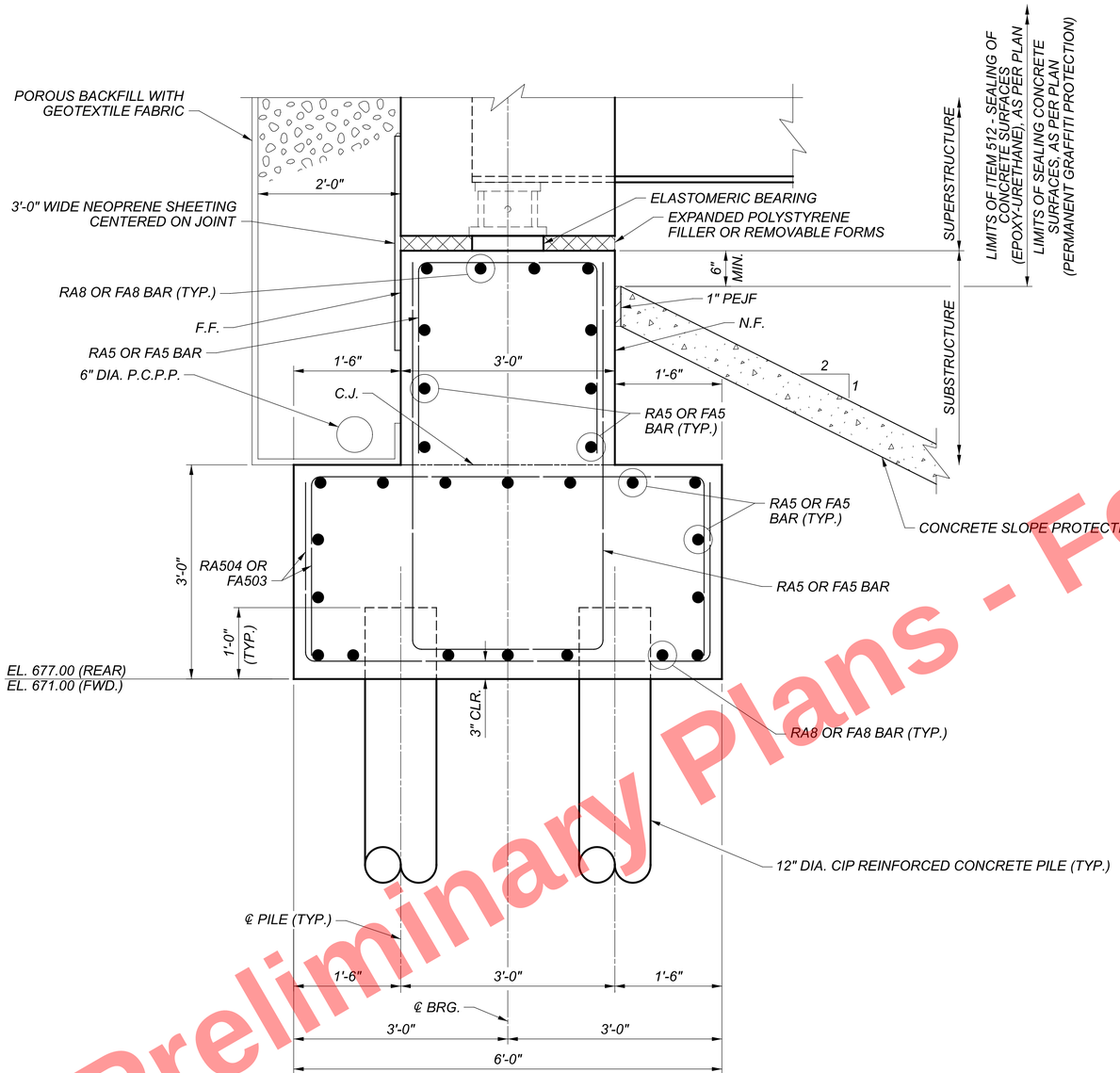

SECTION A-A

NOTES:

1. SEE SHEET 14/43 AND 17/43 FOR LOCATION OF SECTION A-A.

Preliminary Plans - For Reference Only

ABUTMENT DETAILS
CUY-90-1653R (BRIDGE 11)
I.R. 90 EB OVER CR-721 (E. 14TH ST.)

SFN	1807804
DESIGN AGENCY	B&N burgessniple.com
DESIGNER	BCS
CHECKER	MAB
REVIEWER	DWL 05/24/22
PROJECT ID	82382
SUBSET	19
TOTAL	43
SHEET	2104
TOTAL	2696

CUY-90-16.28 (CCG3A)

MODEL: Sheet PAPERSIZE: 34x22 (in.) DATE: 3/28/2025 TIME: 10:00:28 AM USER: Maia.Gallagher
pw:\\mb-us-pw.bentley.com:mb-us-pw-03\Documents\Cleveland_OH\01_Projects\ODOT\District12\82382\2400-Engineering\Structures\SFN_1807804\Sheets\82382_SFN_1807804_SR004.dgn

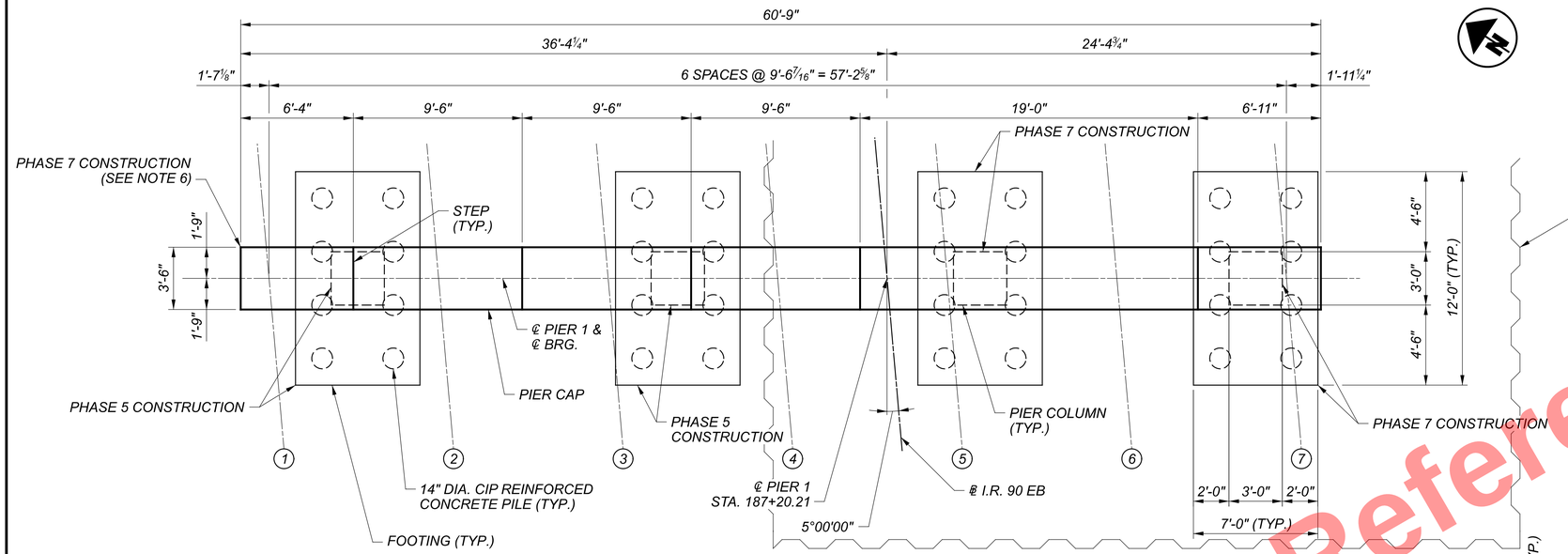

PIER 1 PLAN

(EXISTING BRIDGE FOUNDATION ELEMENTS NOT SHOWN FOR CLARITY)

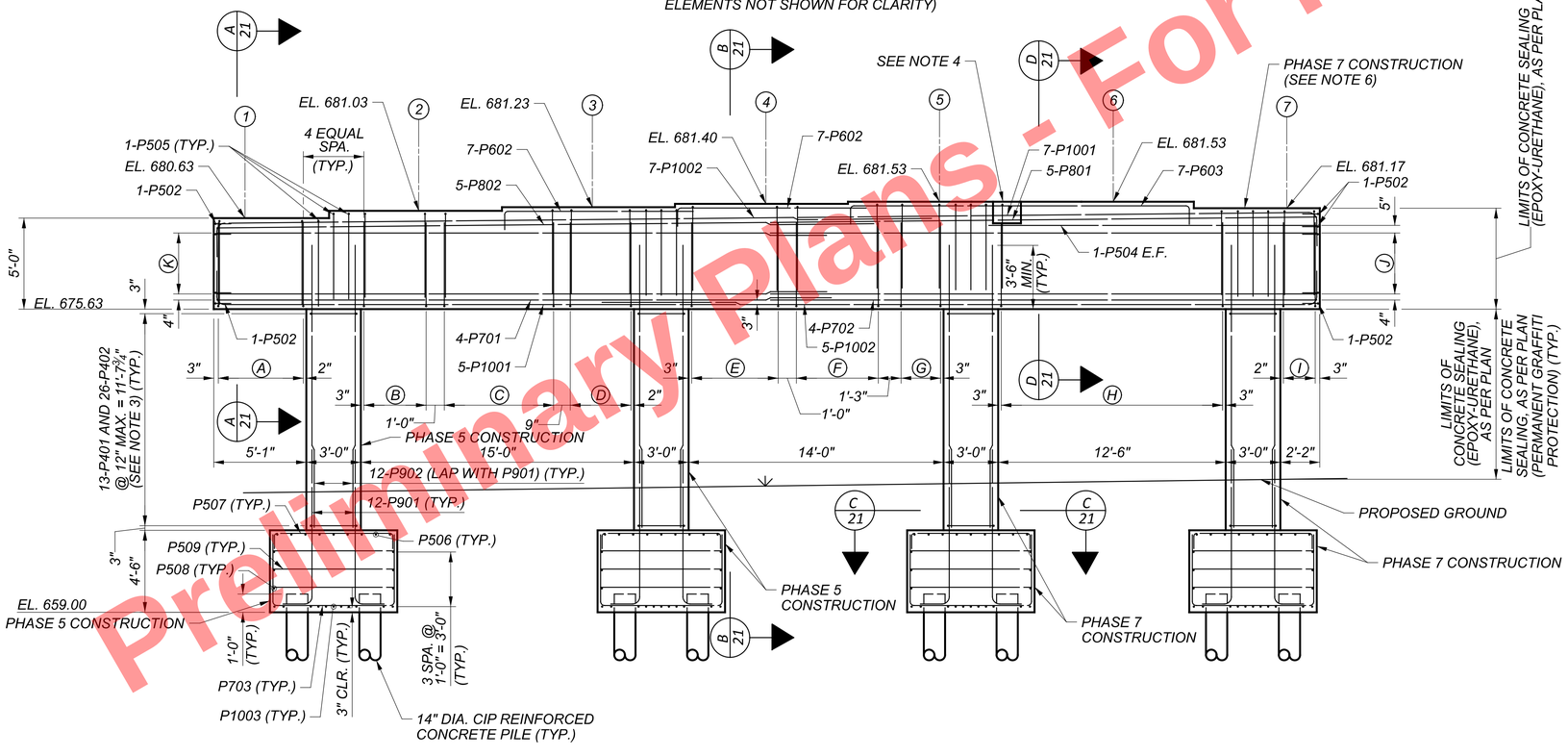

PIER 1 ELEVATION

LEGEND:

- (#) = GIRDER NUMBER
- (A) = 9 SETS OF 4-P601 @ 7" = 4'-8"
- (B) = 9 SETS OF 4-P601 @ 5" = 3'-4"
- (C) = 7 SETS OF 2-P604 @ 12" = 6'-0"
- (D) = 8 SETS OF 4-P601 @ 6" = 3'-6"
- (E) = 9 SETS OF 4-P601 @ 7" = 4'-8"
- (F) = 6 SETS OF 2-P604 @ 11" MAX. = 4'-6"
- (G) = 6 SETS OF 4-P601 @ 5" = 2'-1"
- (H) = 16 SETS OF 2-P604 @ 10" MAX. = 12'-0"
- (I) = 4 SETS OF 4-P601 @ 7" = 1'-9"
- (J) = 6-P501 E.F. (LAP WITH P503) AND 6-P502 (LAP WITH P501) @ 8" = 3'-4"
- (K) = 6-P503 E.F. (LAP WITH P501) AND 6-P502 (LAP WITH P501) @ 8" = 3'-4"

NOTES:

1. MINIMUM LAP LENGTHS:
   #5 = 3'-1"
   #6 = 3'-7"
   #7 = 3'-4"
   #8 = 5'-8"
   #9 = 4'-3"
   #10 = 7'-4"
2. SEE SHEET 21/43 FOR PIER 1 FOOTING DETAILS, SECTIONS A-A, B-B, C-C, AND D-D.
3. ALTERNATE HOOKED END OF P402 BAR AT EACH LEVEL.
4. SEE LIGHTING PLANS FOR LOCATION AND DETAILS FOR PROPOSED LIGHTING ATTACHED TO STRUCTURE.
5. SEE SHEET 2048/2696 FOR PIER TEMPORARY SHORING DETAILS.
6. ENTIRE PIER CAP IS BUILT IN PHASE 7 CONSTRUCTION.

Preliminary Plans - For Reference Only

PIER 1 PLAN AND ELEVATION
CUY-90-1653R (BRIDGE 11)
I.R. 90 EB OVER CR-721 (E. 14TH ST.)

SFN	1807804
DESIGN AGENCY	B&N burgessniple.com
DESIGNER	BCS
CHECKER	MAB
REVIEWER	DWL 05/24/22
PROJECT ID	82382
SUBSET	20
TOTAL	43
SHEET	2105
TOTAL	2696

CUY-90-16.28 (CCG3A)

MODEL: Sheet PAPERSIZE: 34x22 (in.) DATE: 3/28/2025 TIME: 10:00:34 AM USER: Mala.Gallagher
pw:\\mb-us-pw.bentley.com:mb-us-pw-03\Documents\Cleveland_OH\01_Projects\ODOT\District12\82382\400-Engineering\Structures\SFN_1807804\Sheets\82382_SFN_1807804_SI002.dgn

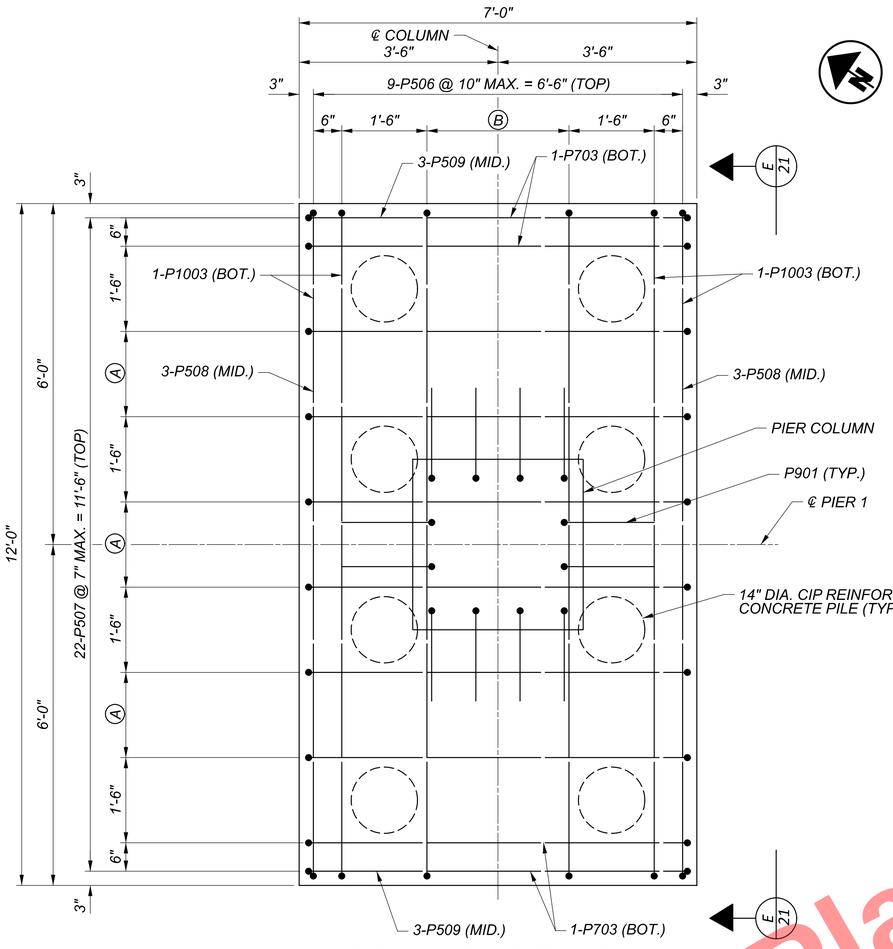

TYPICAL PIER FOOTING PLAN

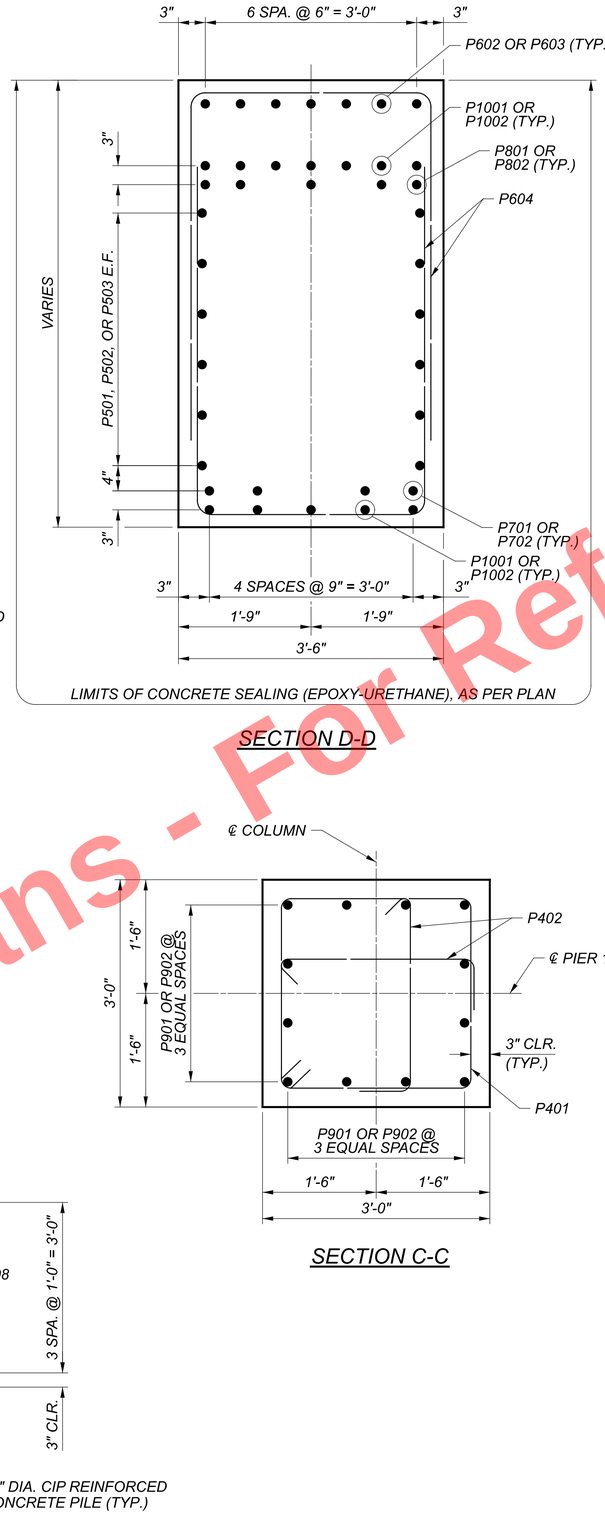

SECTION D-D

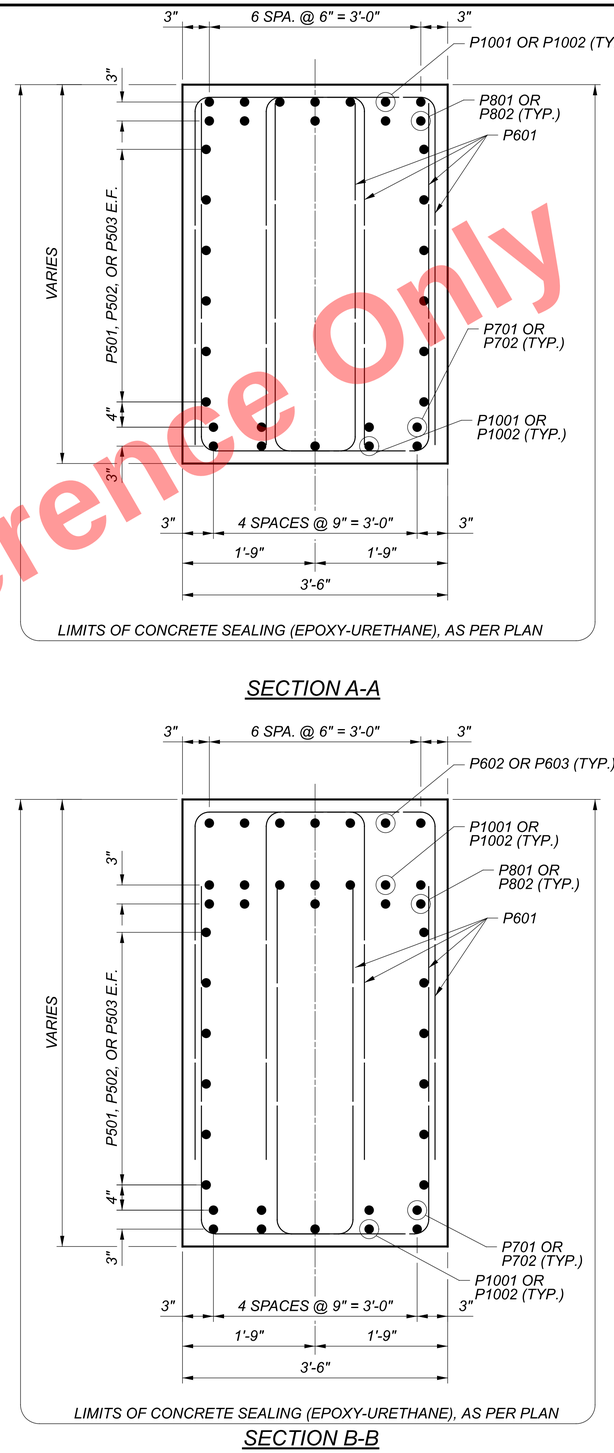

SECTION A-A

SECTION C-C

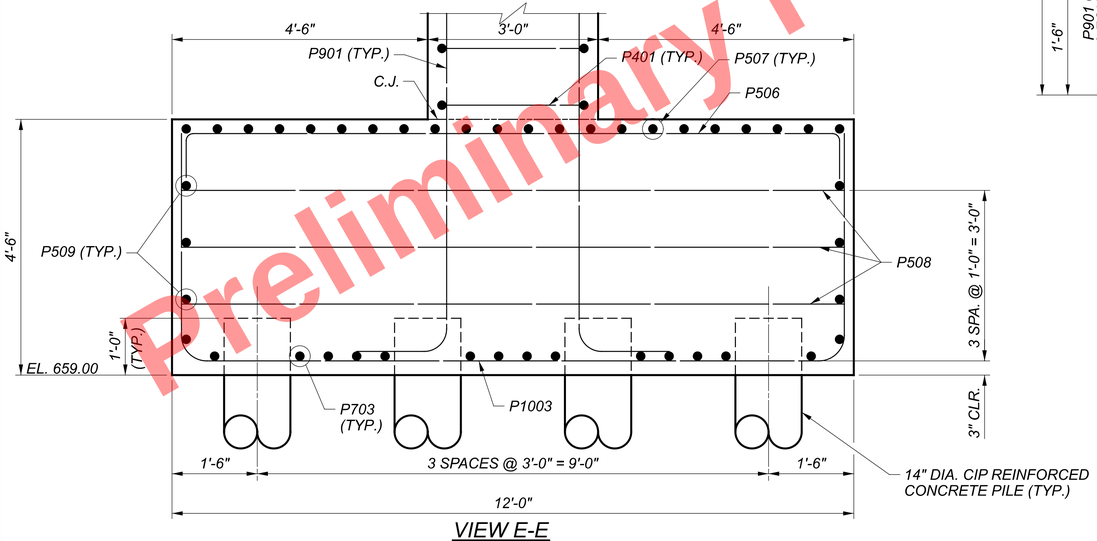

VIEW E-E

SECTION B-B

LEGEND:

(A) = 4-P703 @ 6" = 1'-6" (BOT.)

(B) = 7-P1003 @ 5" = 2'-6" (BOT.)

NOTES:

1. SEE SHEET 20/43 FOR ADDITIONAL DETAILS AND LOCATIONS OF SECTIONS A-A, B-B, C-C, AND D-D.

Preliminary Plans - For Reference Only

PIER 1 DETAILS
CUY-90-1653R (BRIDGE 11)
I.R. 90 EB OVER CR-721 (E. 14TH ST.)

SFN	1807804
DESIGN AGENCY	B&N burgessniple.com
DESIGNER	BCS
CHECKER	MAB
REVIEWER	DWL 05/24/22
PROJECT ID	82382
SUBSET	21
TOTAL	43
SHEET	2106
TOTAL	2696

CUY-90-16.28 (CCG3A)

MODEL: Sheet PAPERSIZE: 34x22 (in.) DATE: 3/28/2025 TIME: 10:00:41 AM USER: Mala.Gallagher
pw:\\mb-us-pw.bentley.com:mb-us-pw-03\Documents\Cleveland_OH\01_Projects\ODOT\District12\82382\400-Engineering\Structures\SFN_1807804\Sheets\82382_SFN_1807804_SI003.dgn

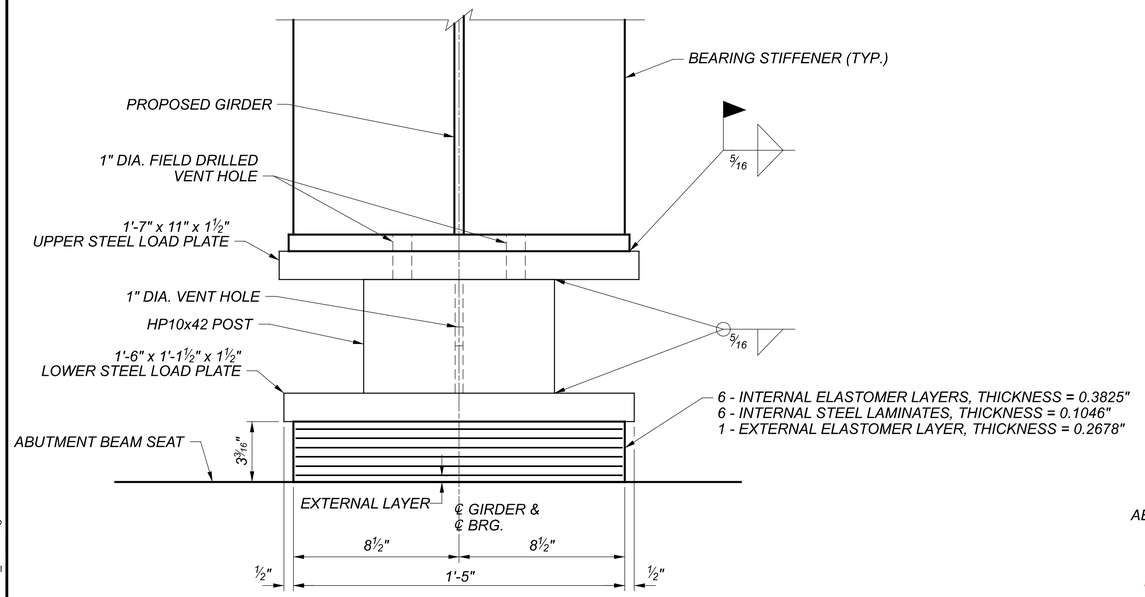

ABUTMENT BEARING ELEVATION

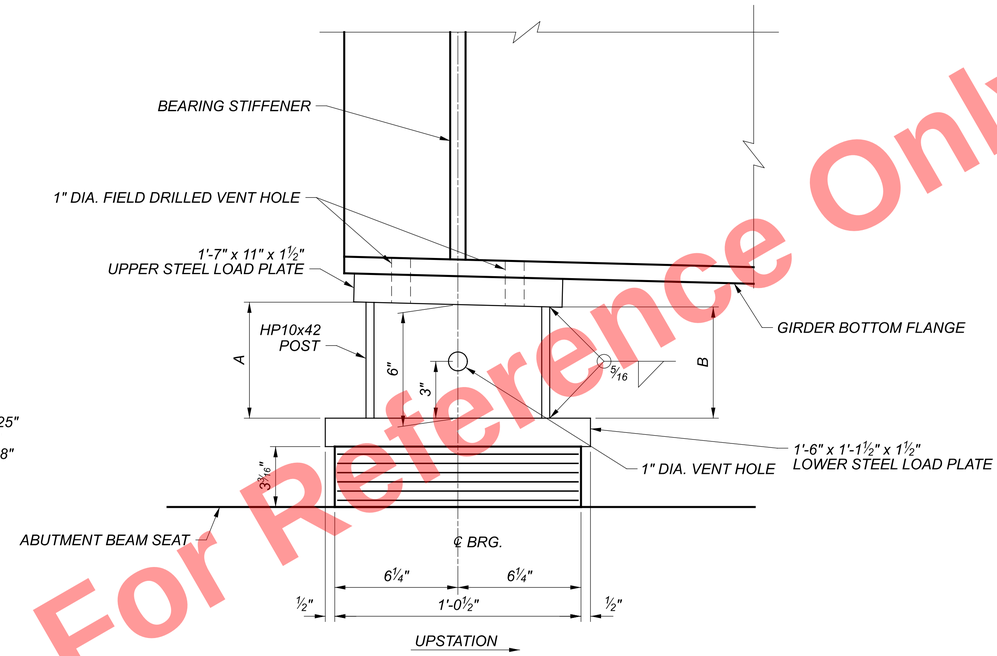

ABUTMENT BEARING SIDE ELEVATION

(REAR ABUTMENT SHOWN, FORWARD ABUTMENT SIMILAR)

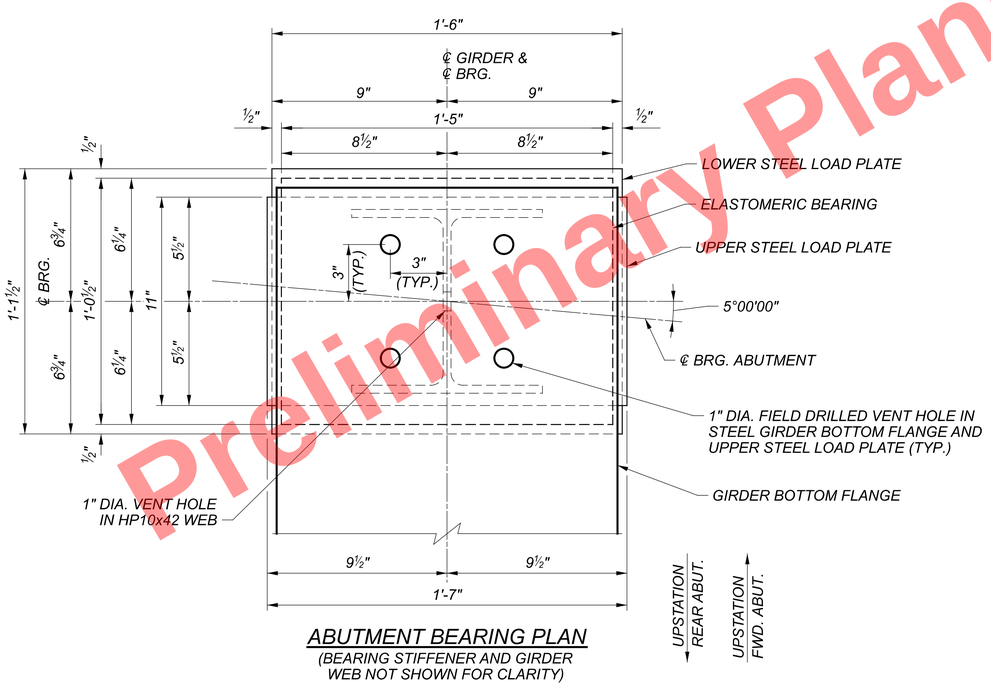

ABUTMENT BEARING PLAN

(BEARING STIFFENER AND GIRDER WEB NOT SHOWN FOR CLARITY)

ELASTOMERIC BEARING DATA							
LOCATION	TYPE	NO. REQ'D.	REACTION (KIPS) DL	REACTION (KIPS) LL**	MAX. DESIGN LOAD (KIPS)	A	B
REAR ABUT.	EXP.	7	135	96	231	6⅛"	5⅞"
FWD. ABUT.	EXP.	7	135	96	231	5 13/16"	6 3/16"

LEGEND:

** = LIVE LOAD WITHOUT IMPACT

NOTES:

1. PRIOR TO SHIPPING EACH BEARING ASSEMBLY SHALL BE SHOP MARKED WITH THE FOLLOWING INFORMATION: TOP, UPSTATION DIRECTION, LOCATION, AND GIRDER NUMBER. ALL MARKS SHALL BE PERMANENT AND BE VISIBLE AFTER THE BEARING IS INSTALLED.
2. UPPER AND LOWER STEEL LOAD PLATES AND HP POSTS SHALL BE ASTM A709 GRADE 50 STEEL. THE LOWER STEEL LOAD PLATES SHALL BE BONDED BY VULCANIZATION TO THE ELASTOMER DURING THE MOLDING PROCESS.
3. ELASTOMERIC BEARINGS: THE ELASTOMER SHALL HAVE A HARDNESS OF 50 DUROMETER. THE BEARINGS WERE DESIGNED IN ACCORDANCE WITH SECTION 14.7.6 (METHOD A) OF AASHTO LRFD BRIDGE DESIGN SPECIFICATIONS. THE LONG-TERM COMPRESSION PROOF TEST (AASHTO STANDARD SPECIFICATIONS FOR HIGHWAY BRIDGES, DIVISION II, SECTION 18.7.2.6) IS NOT REQUIRED.
4. BASIS OF PAYMENT: THE UNIT BID PRICE SHALL INCLUDE ALL MATERIALS, LABOR, TESTING, AND INCIDENTALS NECESSARY TO FURNISH AND INSTALL LAMINATED ELASTOMERIC BEARINGS, INCLUDING LOAD PLATES, HP POSTS, AND MISC. HARDWARE. PAYMENT WILL BE AT THE UNIT PRICE FOR ITEM 516 - EACH, ELASTOMERIC BEARING WITH INTERNAL LAMINATES AND LOAD PLATE (NEOPRENE), AS PER PLAN.

Preliminary Plans - For Reference Only

ABUTMENT BEARING DETAILS
CUY-90-1653R (BRIDGE 11)
I.R. 90 EB OVER CR-721 (E. 14TH ST.)

SFN 1807804
DESIGN AGENCY
B&N burgessniple.com
DESIGNER BCS | CHECKER MAB
REVIEWER DWL 05/24/22
PROJECT ID 82382
SUBSET 22 | TOTAL 43
SHEET 2107 | TOTAL 2696

CUY-90-16.28 (CCG3A)

MODEL: Sheet PAPERSIZE: 34x22 (in.) DATE: 3/28/2025 TIME: 10:00:50 AM USER: Mala.Gallagher
pw:\\mb-us-pw.bentley.com:mb-us-pw-03\Documents\Cleveland_OH\01_Projects\ODOT\District12\82382\400-Engineering\Structures\SFN_1807804\Sheets\82382_SFN_1807804_SB001.dgn

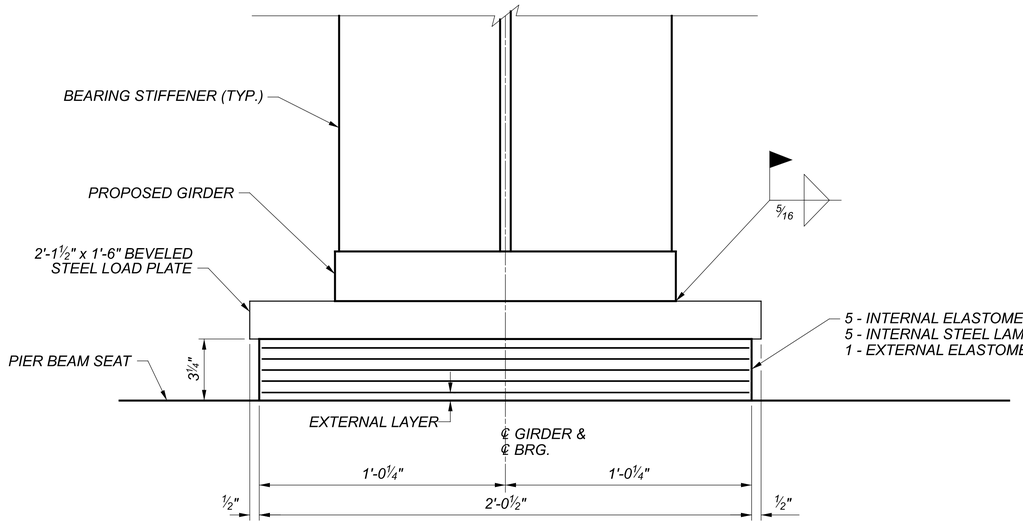

PIER BEARING ELEVATION

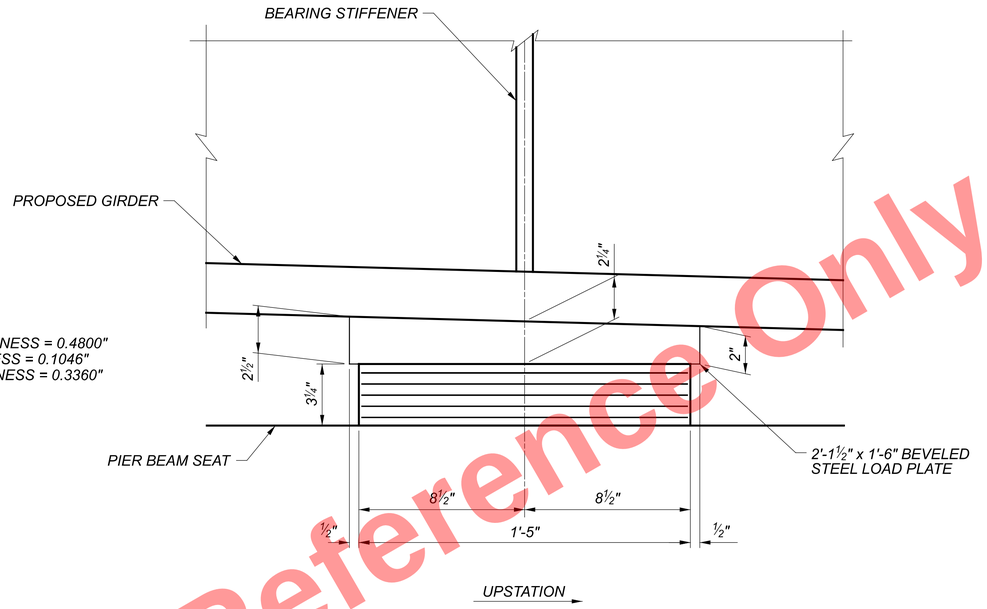

PIER BEARING SIDE ELEVATION

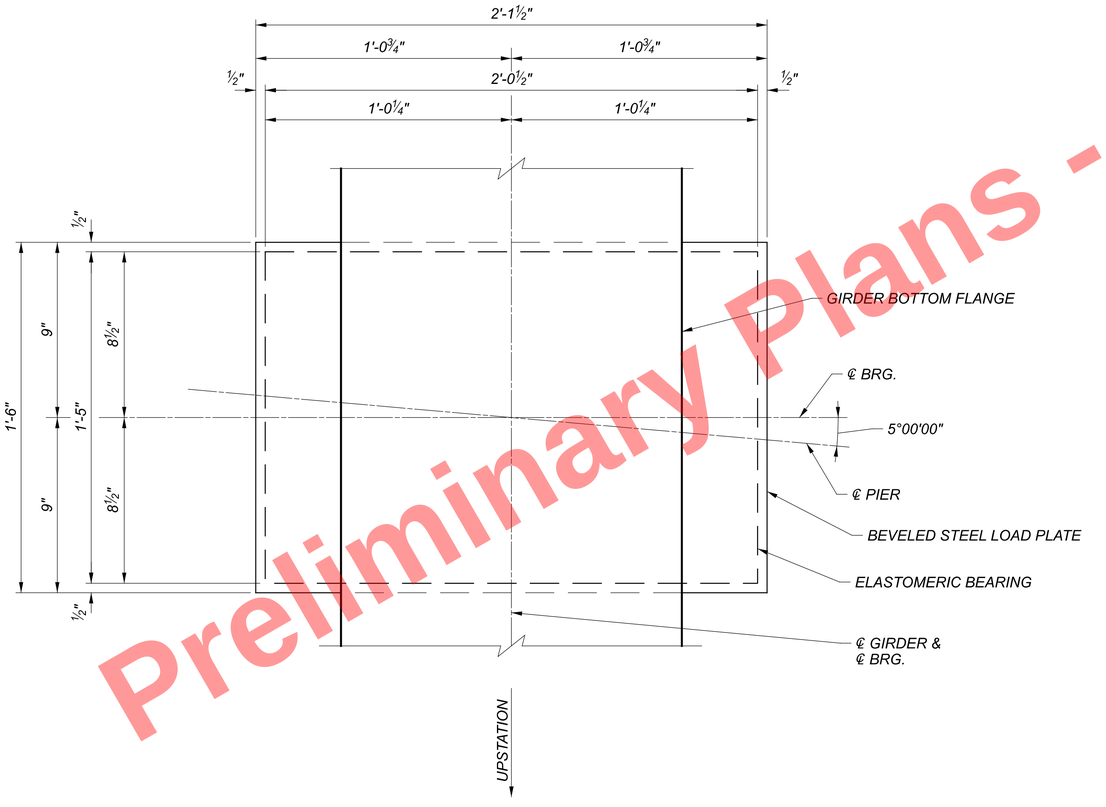

PIER BEARING PLAN

(BEARING STIFFENER AND GIRDER WEB NOT SHOWN FOR CLARITY)

ELASTOMERIC BEARING DATA					
LOCATION	TYPE	NO. REQ'D.	REACTION (KIPS) DL	REACTION (KIPS) LL**	MAX. DESIGN LOAD (KIPS)
PIER 1	EXP.	7	334	180	514

LEGEND:

** = LIVE LOAD WITHOUT IMPACT

NOTES:

1. PRIOR TO SHIPPING EACH BEARING ASSEMBLY SHALL BE SHOP MARKED WITH THE FOLLOWING INFORMATION: TOP, UPSTATION DIRECTION, LOCATION, AND GIRDER NUMBER. ALL MARKS SHALL BE PERMANENT AND BE VISIBLE AFTER THE BEARING IS INSTALLED.
2. STEEL LOAD PLATES SHALL BE ASTM A709 GRADE 50 STEEL. THE STEEL LOAD PLATES SHALL BE BONDED BY VULCANIZATION TO THE ELASTOMER DURING THE MOLDING PROCESS.
3. ELASTOMERIC BEARINGS: THE ELASTOMER SHALL HAVE A HARDNESS OF 50 DUROMETER. THE BEARINGS WERE DESIGNED IN ACCORDANCE WITH SECTION 14.7.6 (METHOD A) OF AASHTO LRFD BRIDGE DESIGN SPECIFICATIONS. THE LONG-TERM COMPRESSION PROOF TEST (AASHTO STANDARD SPECIFICATIONS FOR HIGHWAY BRIDGES, DIVISION II, SECTION 18.7.2.6) IS NOT REQUIRED.
4. BASIS OF PAYMENT: THE UNIT BID PRICE SHALL INCLUDE ALL MATERIALS, LABOR, TESTING, AND INCIDENTALS NECESSARY TO FURNISH AND INSTALL LAMINATED ELASTOMERIC BEARINGS, INCLUDING LOAD PLATES, AND MISC. HARDWARE. PAYMENT WILL BE AT THE UNIT PRICE FOR ITEM 516 - EACH, ELASTOMERIC BEARING WITH INTERNAL LAMINATES AND LOAD PLATE (NEOPRENE), AS PER PLAN.

Preliminary Plans - For Reference Only

PIER BEARING DETAILS
CUY-90-1653R (BRIDGE 11)
I.R. 90 EB OVER CR-721 (E. 14TH ST.)

SFN 1807804
DESIGN AGENCY B&N burgessniple.com
DESIGNER BCS | CHECKER MAB
REVIEWER DWL 05/24/22
PROJECT ID 82382
SUBSET 23 | TOTAL 43
SHEET 2108 | TOTAL 2696

CUY-90-16.28 (CCG3A)

MODEL: Sheet PAPERSIZE: 34x22 (in.) DATE: 3/28/2025 TIME: 10:00:56 AM USER: Mala.Gallagher
pw:\\mb-us-pw.bentley.com:mb-us-pw-03\Documents\Cleveland_OH01_Projects\ODOT\District12\82382400-Engineering\Structures\SFN_1807804\Sheets\82382_SFN_1807804_SB002.dgn

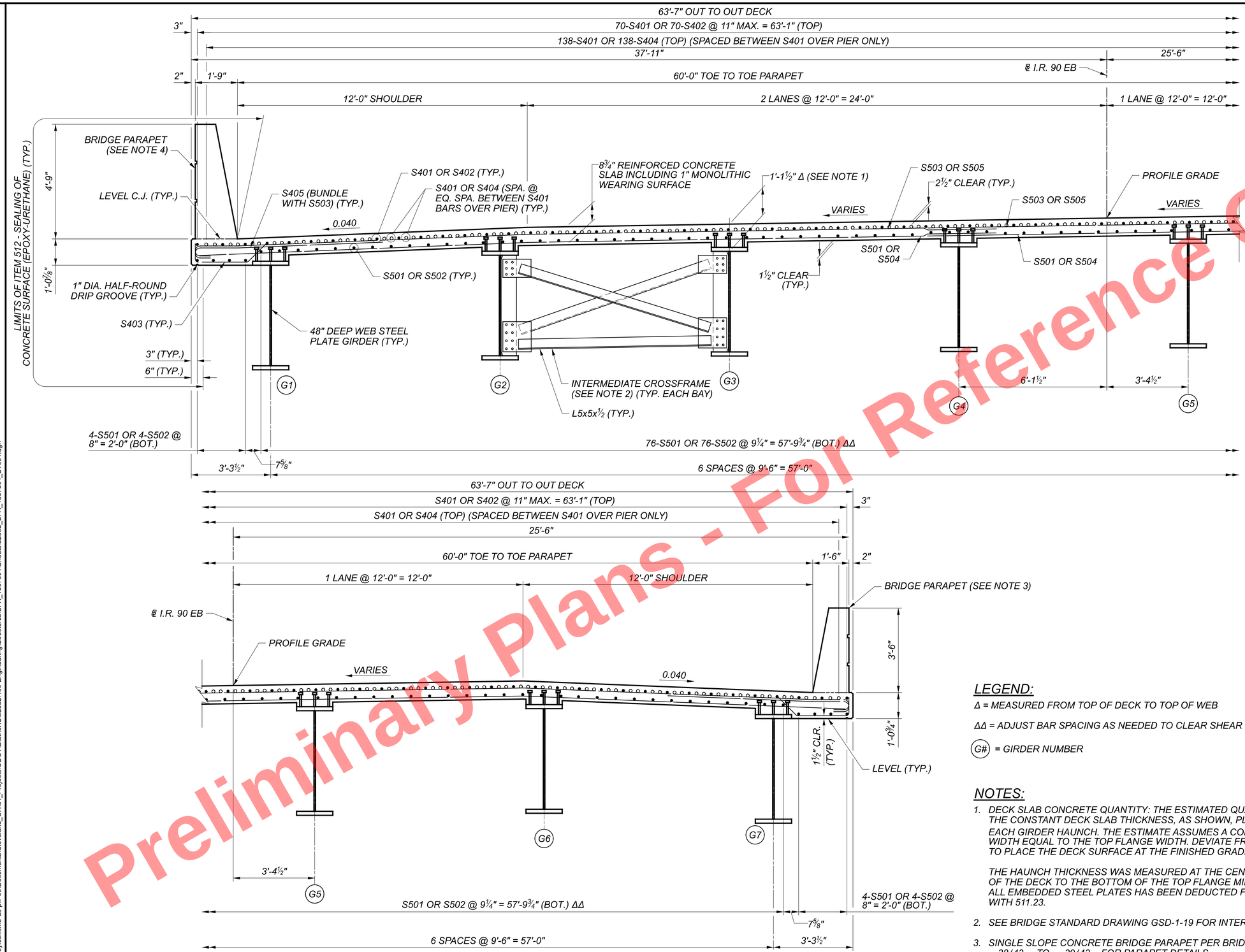

TRANSVERSE SECTION

(PARAPET REINFORCING NOT SHOWN)

LEGEND:

Δ = MEASURED FROM TOP OF DECK TO TOP OF WEB

ΔΔ = ADJUST BAR SPACING AS NEEDED TO CLEAR SHEAR STUDS

(G#) = GIRDER NUMBER

NOTES:

1. *DECK SLAB CONCRETE QUANTITY: THE ESTIMATED QUANTITY OF DECK SLAB CONCRETE IS BASED ON THE CONSTANT DECK SLAB THICKNESS, AS SHOWN, PLUS THE QUANTITY OF CONCRETE THAT FORMS EACH GIRDER HAUNCH. THE ESTIMATE ASSUMES A CONSTANT HAUNCH THICKNESS OF 4¾" AND A WIDTH EQUAL TO THE TOP FLANGE WIDTH. DEVIATE FROM THIS HAUNCH THICKNESS AS NECESSARY TO PLACE THE DECK SURFACE AT THE FINISHED GRADE.*

   THE HAUNCH THICKNESS WAS MEASURED AT THE CENTERLINE OF THE GIRDER, FROM THE SURFACE OF THE DECK TO THE BOTTOM OF THE TOP FLANGE MINUS THE DECK SLAB THICKNESS. THE AREA OF ALL EMBEDDED STEEL PLATES HAS BEEN DEDUCTED FROM THE HAUNCH QUANTITY IN ACCORDANCE WITH 511.23.
2. *SEE BRIDGE STANDARD DRAWING GSD-1-19 FOR INTERMEDIATE CROSSFRAME DETAILS.*
3. *SINGLE SLOPE CONCRETE BRIDGE PARAPET PER BRIDGE STANDARD DRAWING SBR-1-20. SEE SHEETS 38/43 TO 39/43 FOR PARAPET DETAILS.*
4. *SINGLE SLOPE CONCRETE BRIDGE PARAPET PER BRIDGE STANDARD DRAWING SBR-2-20. SEE SHEETS 36/43 TO 37/43 FOR PARAPET DETAILS.*
5. *SEE SHEET 35/43 FOR SUPERELEVATION TRANSITION DIAGRAM.*

Preliminary Plans - For Reference Only

TRANSVERSE SECTION
CUY-90-1653R (BRIDGE 11)
I.R. 90 EB OVER CR-721 (E. 14TH ST.)

SFN	1807804
DESIGN AGENCY	B&N burgessniple.com
DESIGNER	BCS
CHECKER	MAB
REVIEWER	DWL 05/24/22
PROJECT ID	82382
SUBSET	24
TOTAL	43
SHEET	2109
TOTAL	2696

CUY-90-16.28 (CCG3A)
MODEL: Sheet PAPERSIZE: 34x22 (in.) DATE: 3/28/2025 TIME: 10:01:02 AM USER: Maia.Gallagher
pw:\\mb-us-pw.bentley.com:mb-us-pw-03\Documents\Cleveland_OH\01_Projects\ODOT\District12\82382\400-Engineering\Structures\SFN_1807804\Sheets\82382_Sheets\82382_SFN_1807804_ST001.dgn

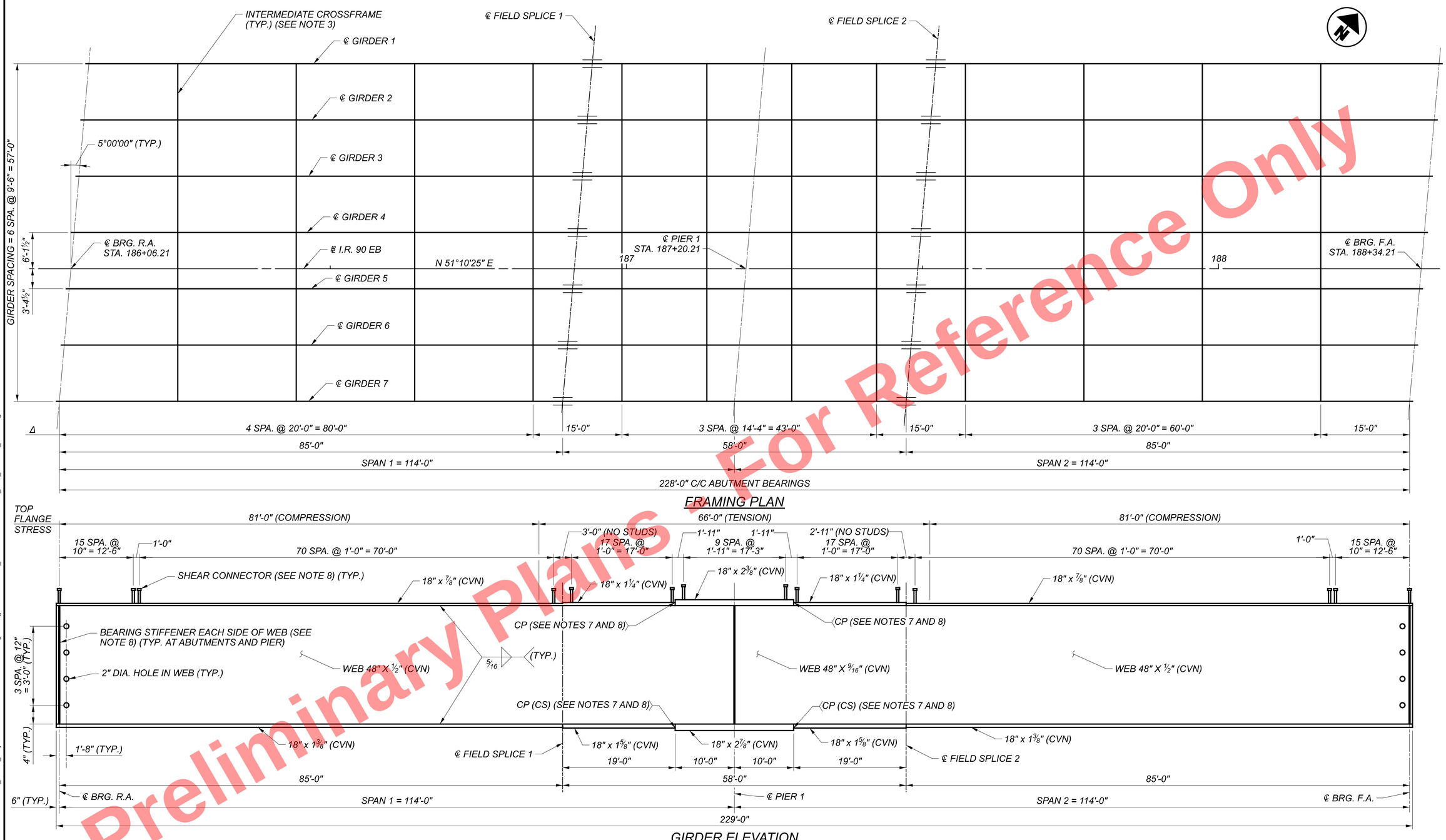

FRAMING PLAN

GIRDER ELEVATION

LEGEND:

Δ = INTERMEDIATE CROSSFRAME SPACING MEASURED ALONG ℄ GIRDER 7.

CS = WELD SUBJECT TO COMPRESSIVE STRESS ONLY.

CP = COMPLETE JOINT PENETRATION WELD.

NOTES:

1. *WHERE A SHAPE IS DESIGNATED (CVN), FURNISH MATERIAL THAT MEETS MINIMUM NOTCH TOUGHNESS REQUIREMENTS AS SPECIFIED IN CMS 711.01.*
2. *WELD ATTACHMENT OF SUPPORTS FOR CONCRETE DECK FINISHING MACHINE TO AREAS OF THE FASCIA GIRDER FLANGES DESIGNATED "COMPRESSION". DO NOT WELD ATTACHMENTS TO AREAS DESIGNATED "TENSION". FILLET WELDS TO COMPRESSION FLANGES SHALL BE AT LEAST 1" FROM EDGE OF FLANGE, BE NO MORE THAN 2" LONG, AND BE AT LEAST ¼" FOR THICKNESS UP TO ¾" OR 5/16" FOR GREATER THAN ¾" THICK.*
3. *SEE STANDARD BRIDGE DRAWING GSD-1-19 FOR INTERMEDIATE CROSSFRAME DETAILS. THE ESTIMATED QUANTITY FOR STRUCTURAL STEEL IS BASED ON THE USE OF TYPE A CROSSFRAMES.*
4. *CROSSFRAME CONNECTION PLATES NOT SHOWN IN GIRDER ELEVATION. SEE FRAMING PLAN FOR LOCATIONS.*
5. *ALL DIMENSIONS ARE HORIZONTAL AND REQUIRE ADJUSTMENT FOR CAMBER AND FINISHED GRADE.*
6. *ALL STRUCTURAL STEEL SHALL BE ASTM A709 GRADE 50 AND SHALL BE SHOP PRIMED AND FIELD PAINTED PER CMS 514. TOP COAT SHALL BE SHERWIN-WILLIAMS ALABASTER 7008.*
7. *COMPLETE JOINT PENETRATION WELDS SHALL BE GROUND SMOOTH IN THE LONGITUDINAL DIRECTION TO REMOVE WELD REINFORCEMENT.*
8. *SEE SHEET 26/43 FOR ADDITIONAL GIRDER DETAILS.*
9. *ADJUST SHEAR CONNECTOR SPACING LOCALLY AS REQUIRED TO CLEAR FLANGE SHOP SPLICE.*

For Reference Only
Preliminary Plans - Not for Construction

FRAMING PLAN AND GIRDER ELEVATION
CUY-90-1653R (BRIDGE 11)
I.R. 90 EB OVER CR-721 (E. 14TH ST.)

SFN	1807804
DESIGN AGENCY	B&N burgessniple.com
DESIGNER	BCS
CHECKER	MAB
REVIEWER	DWL 05/24/22
PROJECT ID	82382
SUBSET	25
TOTAL	43
SHEET	2110
TOTAL	2696

CUY-90-16.28 (CCG3A)

MODEL: Sheet PAPERSIZE: 34x22 (in.) DATE: 3/28/2025 TIME: 10:01:09 AM USER: Mala.Gallagher
pw:\\mb-us-pw.bentley.com:mb-us-pw-03\Documents\Cleveland_OH01_Projects\ODOT\District12\82382400-Engineering\Structures\SFN_1807804\Sheets\82382_SFN_1807804_SS002.dgn

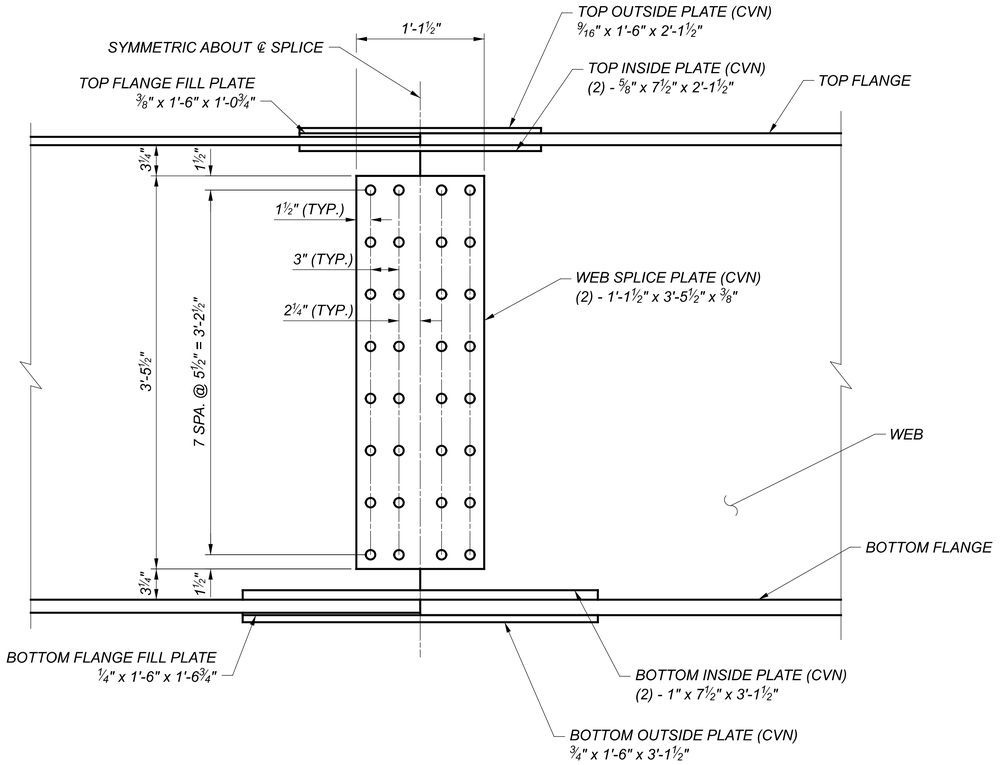

WEB FIELD SPLICE DETAIL

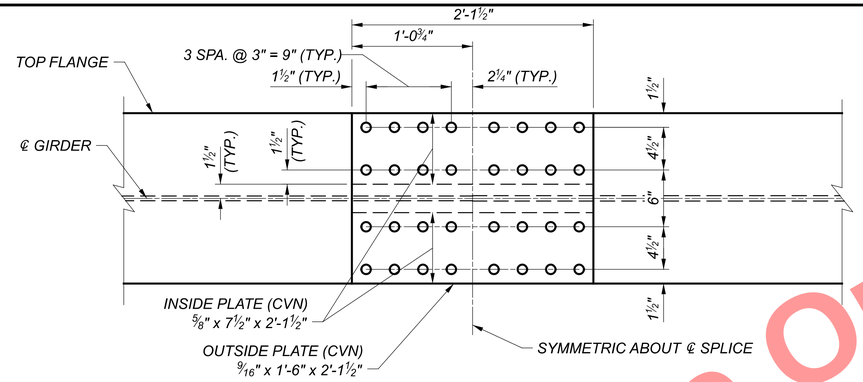

TOP FLANGE FIELD SPLICE DETAIL

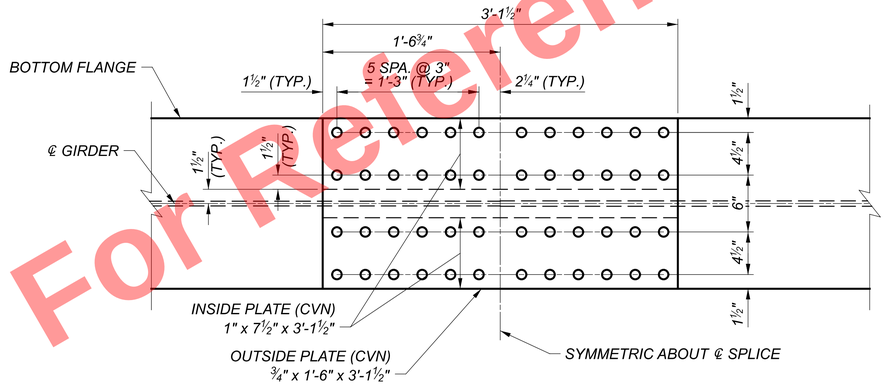

BOTTOM FLANGE FIELD SPLICE DETAIL

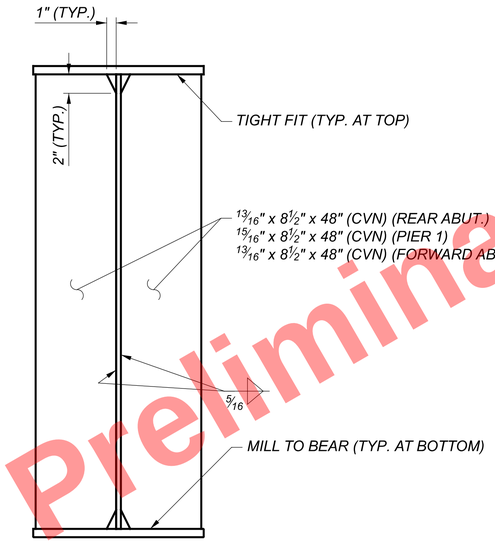

BEARING STIFFENER DETAIL

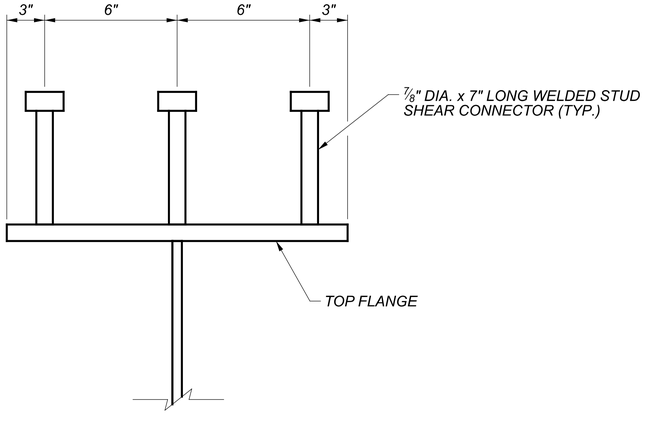

SHEAR CONNECTOR DETAIL

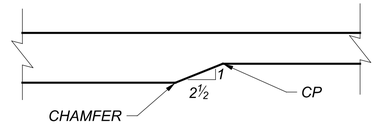

FLANGE SHOP SPLICE DETAIL
(BOTTOM FLANGE SHOWN, TOP FLANGE SIMILAR)

NOTES:

1. WHERE A SHAPE IS DESIGNATED (CVN), FURNISH MATERIAL THAT MEETS MINIMUM NOTCH TOUGHNESS REQUIREMENTS AS SPECIFIED IN CMS 711.01.
2. ALL STRUCTURAL STEEL SHALL BE ASTM A709 GRADE 50.
3. INSTALL STIFFENERS ACCORDING TO CMS 513.13.
4. HIGH STRENGTH BOLTS SHALL BE 1" DIAMETER.
5. ALL BOLTS, NUTS, AND WASHERS SHALL BE ASTM F3125 GRADE A325, TYPE I.
6. SPLICE PLATES HAVE BEEN DESIGNED FOR BOLT THREADS TO BE INCLUDED IN THE SHEAR PLAN AT ALL CONNECTIONS.

Preliminary Plans - For Reference Only

GIRDER DETAILS
CUY-90-1653R (BRIDGE 11)
I.R. 90 EB OVER CR-721 (E. 14TH ST.)

SFN 1807804
DESIGN AGENCY
B&N burgessniple.com

DESIGNER	CHECKER
BCS	MAB

REVIEWER DWL 05/24/22
PROJECT ID 82382
SUBSET 26 TOTAL 43
SHEET 2111 TOTAL 2696

CUY-90-16.28 (CCG3A)

MODEL: Sheet PAPERSIZE: 34x22 (in.) DATE: 3/28/2025 TIME: 10:01:15 AM USER: Maia.Gallagher
pw:\\mb-us-pw.bentley.com:mb-us-pw-03\Documents\Cleveland_OH\01_Projects\ODOT\District12\82382400-Engineering\Structures\SFN_1807804\Sheets\82382_SFN_1807804_SS001.dgn

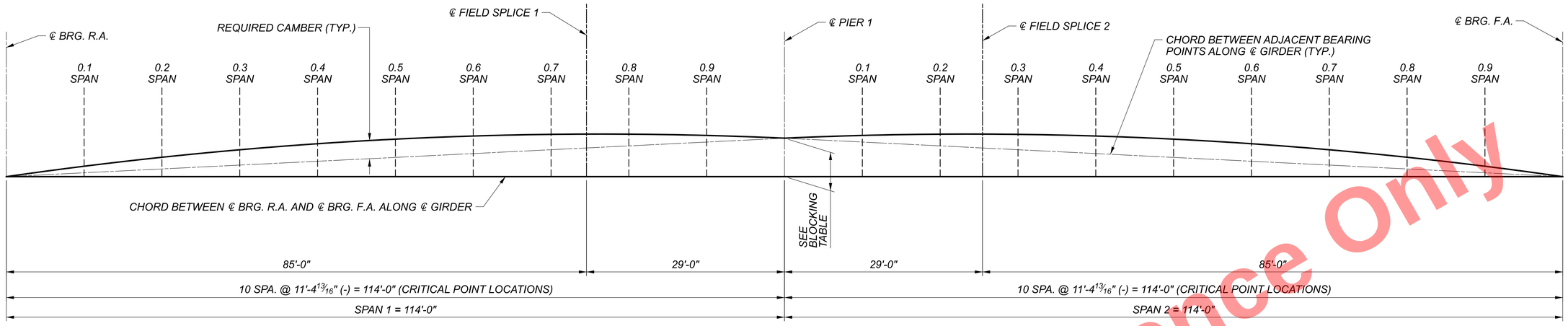

CAMBER AND BLOCKING DIAGRAM

(NOT TO SCALE)

GIRDER 1 DEFLECTION AND CAMBER TABLE (VALUES IN INCHES)

DESCRIPTION	CENTERLINE BRG. R.A.	SPAN 1										CENTERLINE PIER 1	SPAN 2									CENTERLINE BRG. F.A.
		0.1	0.2	0.3	0.4	0.5	0.6	0.7	FIELD SPLICE 1	0.8	0.9		0.1	0.2	FIELD SPLICE 2	0.3	0.4	0.5	0.6	0.7	0.8	0.9	
DEFLECTION DUE TO WEIGHT OF STEEL (A)	0.00	0.15	0.27	0.35	0.38	0.36	0.29	0.20	0.15	0.10	0.02	0.00	0.03	0.11	0.16	0.20	0.30	0.37	0.39	0.36	0.28	0.15	0.00
DEFLECTION DUE TO REMAINING DEAD LOAD (B)	0.00	0.73	1.33	1.72	1.86	1.74	1.40	0.93	0.72	0.46	0.12	0.00	0.12	0.46	0.72	0.93	1.40	1.73	1.86	1.72	1.33	0.73	0.00
ADJUSTMENT FOR VERTICAL CURVATURE (C)	0.00	0.79	1.50	2.04	1.98	1.85	1.63	1.34	1.18	0.97	0.52	0.00	0.35	0.62	0.74	0.82	0.94	0.97	0.94	0.82	0.62	0.35	0.00
TOTAL CAMBER (A+B+C)	0.00	1.67	3.10	4.11	4.22	3.94	3.32	2.47	2.05	1.53	0.67	0.00	0.50	1.19	1.61	1.95	2.63	3.07	3.18	2.90	2.23	1.23	0.00

GIRDER 2 DEFLECTION AND CAMBER TABLE (VALUES IN INCHES)

DESCRIPTION	CENTERLINE BRG. R.A.	SPAN 1										CENTERLINE PIER 1	SPAN 2									CENTERLINE BRG. F.A.
		0.1	0.2	0.3	0.4	0.5	0.6	0.7	FIELD SPLICE 1	0.8	0.9		0.1	0.2	FIELD SPLICE 2	0.3	0.4	0.5	0.6	0.7	0.8	0.9	
DEFLECTION DUE TO WEIGHT OF STEEL (A)	0.00	0.16	0.30	0.38	0.42	0.39	0.32	0.21	0.16	0.10	0.02	0.00	0.03	0.11	0.17	0.22	0.32	0.40	0.42	0.39	0.30	0.16	0.00
DEFLECTION DUE TO REMAINING DEAD LOAD (B)	0.00	0.74	1.35	1.74	1.88	1.76	1.42	0.94	0.73	0.47	0.12	0.00	0.12	0.47	0.73	0.94	1.42	1.76	1.88	1.74	1.35	0.74	0.00
ADJUSTMENT FOR VERTICAL CURVATURE (C)	0.00	0.78	1.49	2.07	2.01	1.87	1.65	1.35	1.19	0.98	0.53	0.00	0.35	0.62	0.74	0.82	0.94	0.97	0.94	0.82	0.62	0.35	0.00
TOTAL CAMBER (A+B+C)	0.00	1.68	3.13	4.19	4.30	4.01	3.38	2.51	2.08	1.55	0.67	0.00	0.51	1.20	1.64	1.98	2.67	3.12	3.23	2.95	2.27	1.25	0.00

GIRDER 3 DEFLECTION AND CAMBER TABLE (VALUES IN INCHES)

DESCRIPTION	CENTERLINE BRG. R.A.	SPAN 1										CENTERLINE PIER 1	SPAN 2									CENTERLINE BRG. F.A.
		0.1	0.2	0.3	0.4	0.5	0.6	0.7	FIELD SPLICE 1	0.8	0.9		0.1	0.2	FIELD SPLICE 2	0.3	0.4	0.5	0.6	0.7	0.8	0.9	
DEFLECTION DUE TO WEIGHT OF STEEL (A)	0.00	0.16	0.30	0.38	0.42	0.39	0.32	0.21	0.16	0.10	0.02	0.00	0.03	0.11	0.17	0.22	0.32	0.40	0.42	0.39	0.30	0.16	0.00
DEFLECTION DUE TO REMAINING DEAD LOAD (B)	0.00	0.74	1.35	1.74	1.88	1.76	1.42	0.94	0.73	0.47	0.12	0.00	0.12	0.47	0.73	0.94	1.42	1.76	1.88	1.74	1.35	0.74	0.00
ADJUSTMENT FOR VERTICAL CURVATURE (C)	0.00	0.63	1.18	1.65	1.65	1.57	1.41	1.18	1.04	0.86	0.47	0.00	0.35	0.62	0.74	0.82	0.94	0.97	0.94	0.82	0.62	0.35	0.00
TOTAL CAMBER (A+B+C)	0.00	1.53	2.82	3.78	3.94	3.71	3.14	2.33	1.93	1.43	0.62	0.00	0.51	1.20	1.64	1.98	2.67	3.12	3.23	2.95	2.27	1.25	0.00

GIRDER 4 DEFLECTION AND CAMBER TABLE (VALUES IN INCHES)

DESCRIPTION	CENTERLINE BRG. R.A.	SPAN 1										CENTERLINE PIER 1	SPAN 2									CENTERLINE BRG. F.A.
		0.1	0.2	0.3	0.4	0.5	0.6	0.7	FIELD SPLICE 1	0.8	0.9		0.1	0.2	FIELD SPLICE 2	0.3	0.4	0.5	0.6	0.7	0.8	0.9	
DEFLECTION DUE TO WEIGHT OF STEEL (A)	0.00	0.16	0.30	0.38	0.42	0.39	0.32	0.21	0.16	0.10	0.02	0.00	0.03	0.11	0.17	0.22	0.32	0.40	0.42	0.39	0.30	0.16	0.00
DEFLECTION DUE TO REMAINING DEAD LOAD (B)	0.00	0.74	1.35	1.74	1.88	1.76	1.42	0.94	0.73	0.47	0.12	0.00	0.12	0.47	0.73	0.94	1.42	1.76	1.88	1.74	1.35	0.74	0.00
ADJUSTMENT FOR VERTICAL CURVATURE (C)	0.00	0.46	0.84	1.14	1.22	1.21	1.13	0.96	0.86	0.72	0.40	0.00	0.35	0.62	0.74	0.82	0.94	0.97	0.94	0.82	0.62	0.35	0.00
TOTAL CAMBER (A+B+C)	0.00	1.36	2.48	3.27	3.52	3.36	2.86	2.12	1.75	1.29	0.54	0.00	0.51	1.20	1.64	1.98	2.67	3.12	3.23	2.95	2.27	1.25	0.00

GIRDER 5 DEFLECTION AND CAMBER TABLE (VALUES IN INCHES)

DESCRIPTION	CENTERLINE BRG. R.A.	SPAN 1										CENTERLINE PIER 1	SPAN 2									CENTERLINE BRG. F.A.
		0.1	0.2	0.3	0.4	0.5	0.6	0.7	FIELD SPLICE 1	0.8	0.9		0.1	0.2	FIELD SPLICE 2	0.3	0.4	0.5	0.6	0.7	0.8	0.9	
DEFLECTION DUE TO WEIGHT OF STEEL (A)	0.00	0.16	0.30	0.38	0.42	0.39	0.32	0.21	0.16	0.10	0.02	0.00	0.03	0.11	0.17	0.22	0.32	0.40	0.42	0.39	0.30	0.16	0.00
DEFLECTION DUE TO REMAINING DEAD LOAD (B)	0.00	0.74	1.35	1.74	1.88	1.76	1.42	0.94	0.73	0.47	0.12	0.00	0.12	0.47	0.73	0.94	1.42	1.76	1.88	1.74	1.35	0.74	0.00
ADJUSTMENT FOR VERTICAL CURVATURE (C)	0.00	0.35	0.62	0.82	0.94	0.98	0.94	0.82	0.74	0.62	0.35	0.00	0.33	0.59	0.70	0.77	0.87	0.89	0.84	0.70	0.49	0.28	0.00
TOTAL CAMBER (A+B+C)	0.00	1.25	2.27	2.95	3.23	3.12	2.67	1.97	1.63	1.19	0.50	0.00	0.49	1.17	1.59	1.93	2.61	3.04	3.13	2.83	2.14	1.18	0.00

GIRDER 6 DEFLECTION AND CAMBER TABLE (VALUES IN INCHES)

DESCRIPTION	CENTERLINE BRG. R.A.	SPAN 1										CENTERLINE PIER 1	SPAN 2									CENTERLINE BRG. F.A.
		0.1	0.2	0.3	0.4	0.5	0.6	0.7	FIELD SPLICE 1	0.8	0.9		0.1	0.2	FIELD SPLICE 2	0.3	0.4	0.5	0.6	0.7	0.8	0.9	
DEFLECTION DUE TO WEIGHT OF STEEL (A)	0.00	0.16	0.30	0.38	0.42	0.39	0.32	0.21	0.16	0.10	0.02	0.00	0.03	0.11	0.17	0.22	0.32	0.40	0.42	0.39	0.30	0.16	0.00
DEFLECTION DUE TO REMAINING DEAD LOAD (B)	0.00	0.74	1.35	1.74	1.88	1.76	1.42	0.94	0.73	0.47	0.12	0.00	0.12	0.47	0.73	0.94	1.42	1.76	1.88	1.74	1.35	0.74	0.00
ADJUSTMENT FOR VERTICAL CURVATURE (C)	0.00	0.35	0.63	0.82	0.94	0.98	0.94	0.82	0.74	0.63	0.35	0.00	0.29	0.51	0.60	0.65	0.71	0.69	0.60	0.42	0.17	0.10	0.00
TOTAL CAMBER (A+B+C)	0.00	1.25	2.27	2.95	3.23	3.12	2.67	1.98	1.63	1.20	0.50	0.00	0.45	1.09	1.49	1.81	2.45	2.84	2.89	2.55	1.82	1.00	0.00

GIRDER 7 DEFLECTION AND CAMBER TABLE (VALUES IN INCHES)

DESCRIPTION	CENTERLINE BRG. R.A.	SPAN 1										CENTERLINE PIER 1	SPAN 2									CENTERLINE BRG. F.A.
		0.1	0.2	0.3	0.4	0.5	0.6	0.7	FIELD SPLICE 1	0.8	0.9		0.1	0.2	FIELD SPLICE 2	0.3	0.4	0.5	0.6	0.7	0.8	0.9	
DEFLECTION DUE TO WEIGHT OF STEEL (A)	0.00	0.15	0.27	0.35	0.38	0.36	0.29	0.20	0.15	0.10	0.02	0.00	0.03	0.11	0.16	0.20	0.30	0.37	0.39	0.36	0.28	0.15	0.00
DEFLECTION DUE TO REMAINING DEAD LOAD (B)	0.00	0.73	1.33	1.72	1.86	1.74	1.40	0.93	0.72	0.46	0.12	0.00	0.12	0.46	0.72	0.93	1.40	1.73	1.86	1.72	1.33	0.73	0.00
ADJUSTMENT FOR VERTICAL CURVATURE (C)	0.00	0.35	0.63	0.82	0.94	0.98	0.94	0.82	0.74	0.63	0.35	0.00	0.30	0.52	0.60	0.66	0.72	0.70	0.61	0.44	0.19	0.10	0.00
TOTAL CAMBER (A+B+C)	0.00	1.23	2.23	2.90	3.18	3.07	2.63	1.95	1.61	1.18	0.49	0.00	0.45	1.08	1.48	1.79	2.41	2.80	2.85	2.52	1.80	0.98	0.00

BLOCKING TABLE

GIRDER	PIER 1 (IN.)
1	4.77
2	4.79
3	4.49
4	4.14
5	3.82
6	3.62
7	3.63

NOTES:

1. POSITIVE CAMBER VALUES INDICATE CAMBER ABOVE CHORD BETWEEN ADJACENT BEARINGS. NEGATIVE CAMBER VALUES INDICATE CAMBER BELOW CHORD BETWEEN ADJACENT BEARINGS.
2. ALL CHORDS REFERENCED TO TOP OF WEB.

Preliminary Plans - For Reference Only

CAMBER TABLE AND BLOCKING DIAGRAM
CUY-90-1653R (BRIDGE 11)
I.R. 90 EB OVER CR-721 (E. 14TH ST.)

SFN 1807804
DESIGN AGENCY B&N burgessniple.com
DESIGNER BCS | CHECKER MAB
REVIEWER DWL 05/24/22
PROJECT ID 82382
SUBSET 27 | TOTAL 43
SHEET 2112 | TOTAL 2696

CUY-90-16.28 (CCG3A)

MODEL: Sheet PAPERSIZE: 34x22 (in.) DATE: 3/28/2025 TIME: 10:01:20 AM USER: Mala.Gallagher
pw:\\mb-us-pw.bentley.com:mb-us-pw-03\Documents\Cleveland_OH\01_Projects\ODOT\District12\82382\400-Engineering\Structures\SFN_1807804\Sheets\82382_SFN_1807804_SS006.dgn

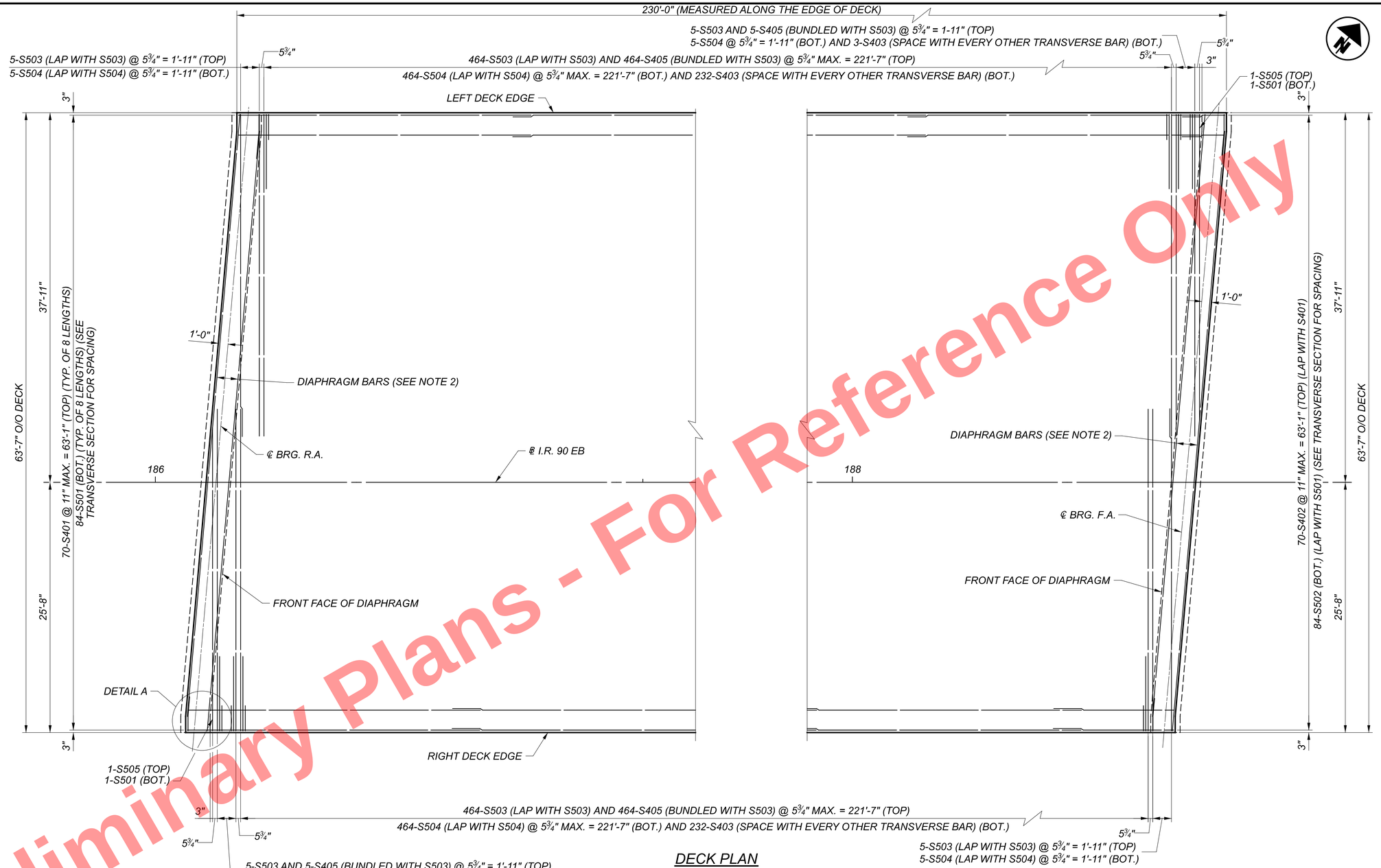

DECK PLAN
(PARAPET NOT SHOWN FOR CLARITY)

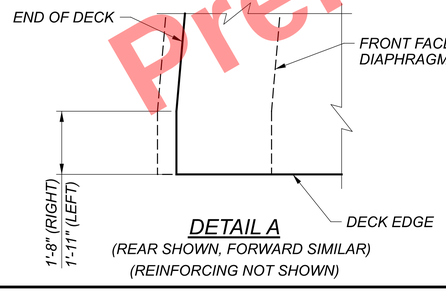

DETAIL A
(REAR SHOWN, FORWARD SIMILAR)
(REINFORCING NOT SHOWN)

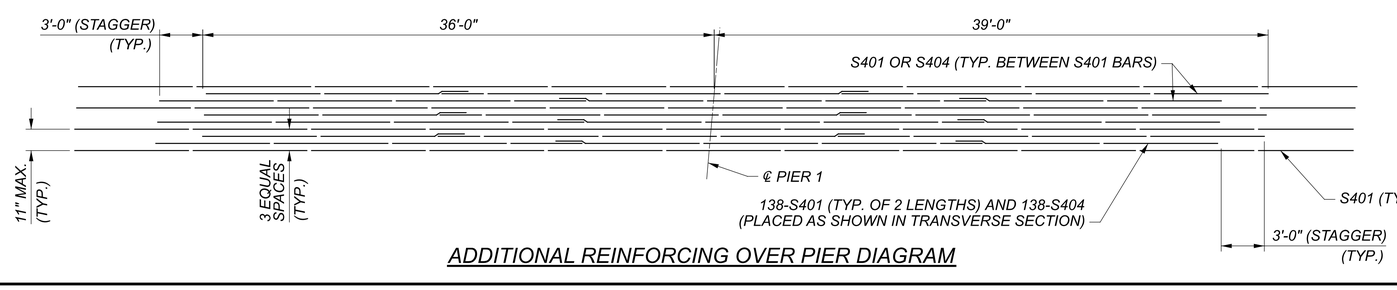

ADDITIONAL REINFORCING OVER PIER DIAGRAM

NOTES:

1. MINIMUM LAP LENGTHS:
   #4 BARS = 1'-10"
   #5 BARS = 2'-10"
2. SEE SHEETS 29/43 THROUGH 31/43 FOR SEMI-INTEGRAL DETAILS AND DIAPHRAGM PLACEMENT NOTE.
3. SEE SHEET 24/43 FOR TRANSVERSE SECTION.
4. PLACE TRANSVERSE REINFORCING STEEL PERPENDICULAR TO ℄ I.R. 90 EB.
5. SEE SHEETS 36/43 THROUGH 39/43 FOR PARAPET REINFORCING.

Preliminary Plans - For Reference Only

DECK PLAN
CUY-90-1653R (BRIDGE 11)
I.R. 90 EB OVER CR-721 (E. 14TH ST.)

SFN	1807804
DESIGN AGENCY	B&N burgessniple.com
DESIGNER	BCS
CHECKER	MAB
REVIEWER	DWL 05/24/22
PROJECT ID	82382
SUBSET	28
TOTAL	43
SHEET	2113
TOTAL	2696

CUY-90-16.28 (CCG3A)

MODEL: Sheet PAPERSIZE: 34x22 (in.) DATE: 3/28/2025 TIME: 10:01:27 AM USER: Mala.Gallagher
pw:\\mb-us-pw.bentley.com:mb-us-pw-03\Documents\Cleveland_OH\01_Projects\ODOT\District12\82382400-Engineering\Structures\SFN_1807804\Sheets\82382_SFN_1807804_SD001.dgn

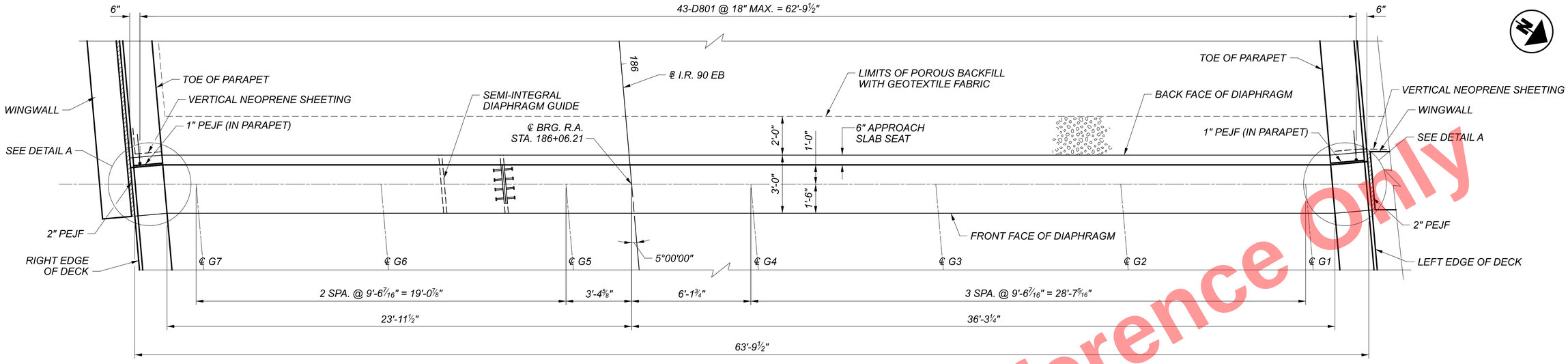

REAR ABUTMENT DIAPHRAGM PLAN

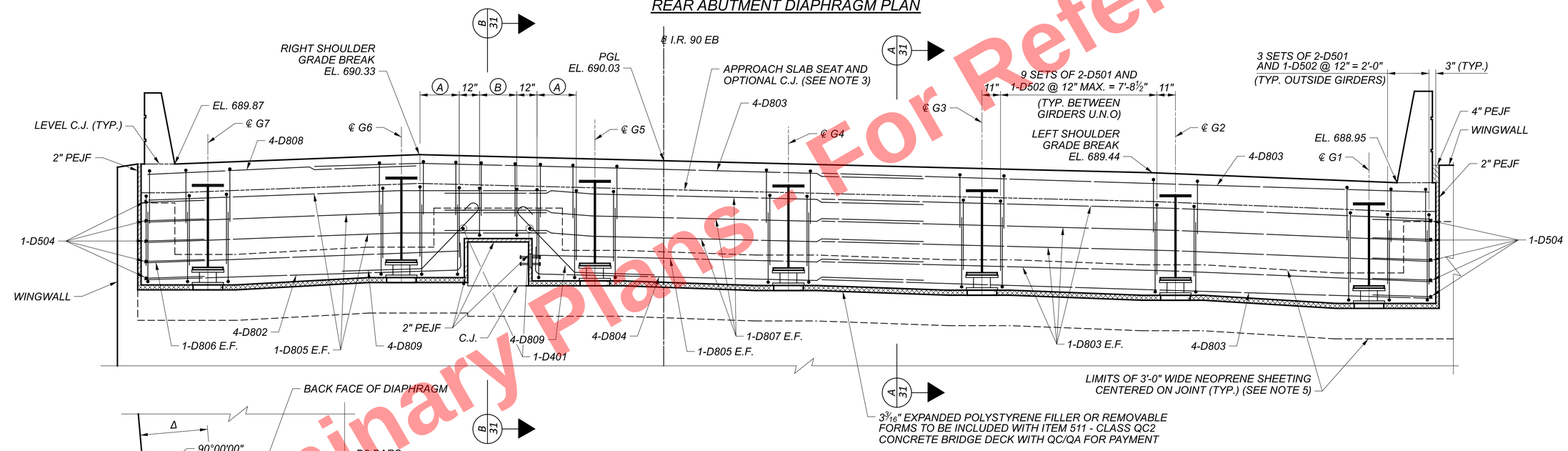

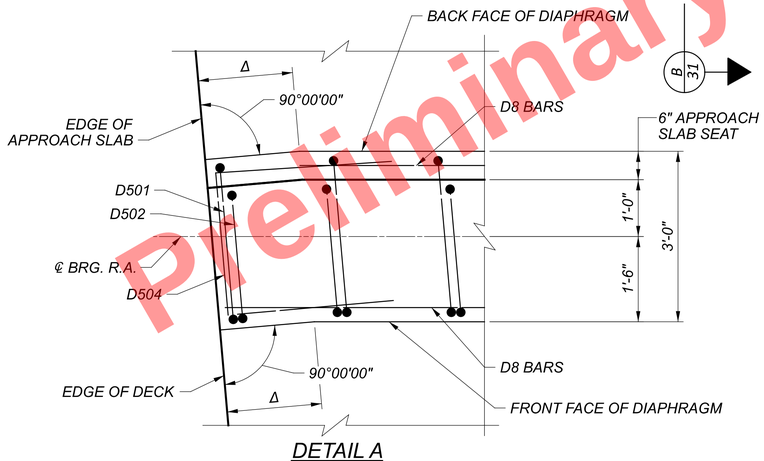

DETAIL A

(RIGHT SIDE SHOWN, LEFT SIDE SIMILAR)

REAR ABUTMENT DIAPHRAGM ELEVATION

LEGEND:

(A) = 3 SETS OF 2-D501 AND 1-D502 @ 12" = 2'-0"

(B) = 3 SETS OF 1-D503 AND 1-D502 @ 11" = 1'-10"

Δ = 1'-8" (RIGHT), 1'-11" (LEFT)

NOTES:

1. SEE ODOT STANDARD BRIDGE DRAWINGS SICD-1-21 FOR DETAILS NOT SHOWN.
2. MINIMUM LAP LENGTHS:
   #5 BARS = 2'-3"
   #8 BARS = 5'-0"
3. PLACE THE DIAPHRAGM CONCRETE ENCASING THE STRUCTURAL MEMBER ENDS WITH THE DECK CONCRETE OR AT LEAST 48 HOURS BEFORE PLACEMENT OF THE DECK CONCRETE. IF PLACED SEPARATELY, LOCATE A HORIZONTAL CONSTRUCTION JOINT IN THE DIAPHRAGM AS SHOWN ON SICD-1-21 FOR STEEL SUPERSTRUCTURES AND PLACE REMAINING DIAPHRAGM CONCRETE WITH THE DECK.
4. ALL VERTICAL REINFORCING SHALL BE PLACED PARALLEL TO GIRDERS.
5. NEOPRENE SHEETING UPPER LIMIT AT DIAPHRAGM TO WINGWALL JOINT SHALL BE 6" BELOW APPROACH SLAB SEAT. PAYMENT FOR NEOPRENE SHEETING SHALL BE INCLUDED WITH ITEM 516 - SEMI-INTEGRAL ABUTMENT EXPANSION JOINT SEAL.
6. SEE SHEET 31/43 FOR SECTIONS A-A AND B-B.
7. ALL ABUTMENT DIAPHRAGM CONCRETE SHALL BE ITEM 511 - CLASS QC2 CONCRETE BRIDGE DECK WITH QC/QA.

For Reference Only
Preliminary Plans - For

REAR ABUTMENT DIAPHRAGM PLAN AND ELEVATION
CUY-90-1653R (BRIDGE 11)
I.R. 90 EB OVER CR-721 (E. 14TH ST.)

SFN	1807804
DESIGN AGENCY	B&N burgessniple.com
DESIGNER	BCS
CHECKER	MAB
REVIEWER	DWL 05/24/22
PROJECT ID	82382
SUBSET	29
TOTAL	43
SHEET	2114
TOTAL	2696

CUY-90-16.28 (CCG3A)

MODEL: Sheet PAPERSIZE: 34x22 (in.) DATE: 3/28/2025 TIME: 10:01:39 AM USER: Mala.Gallagher
pw:\\mb-us-pw.bentley.com:mb-us-pw-03\Documents\Cleveland_OH\01_Projects\ODOT\District12\82382\400-Engineering\Structures\SFN_1807804\Sheets\82382_SFN_1807804_SS007.dgn

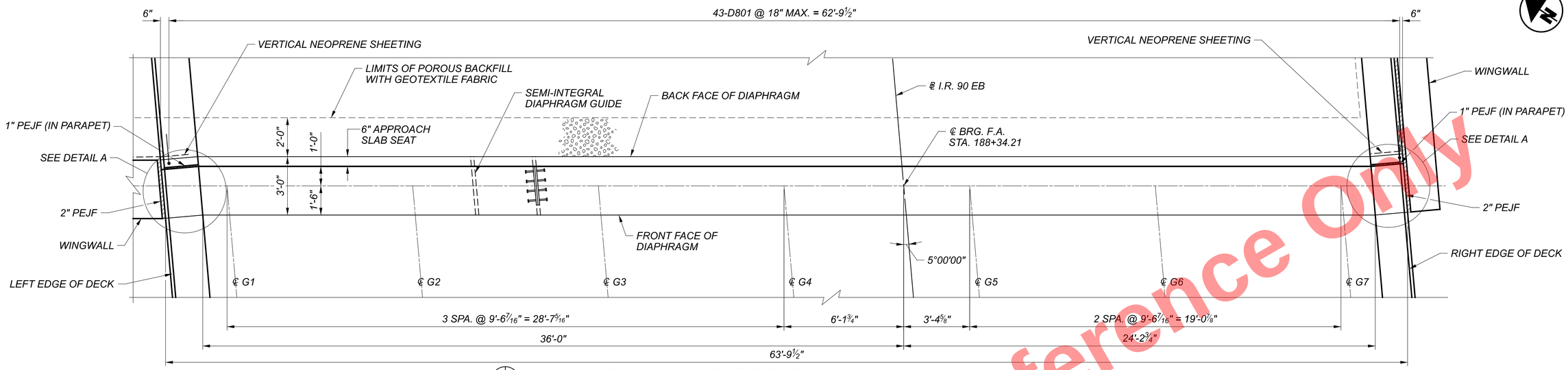

FORWARD ABUTMENT DIAPHRAGM PLAN

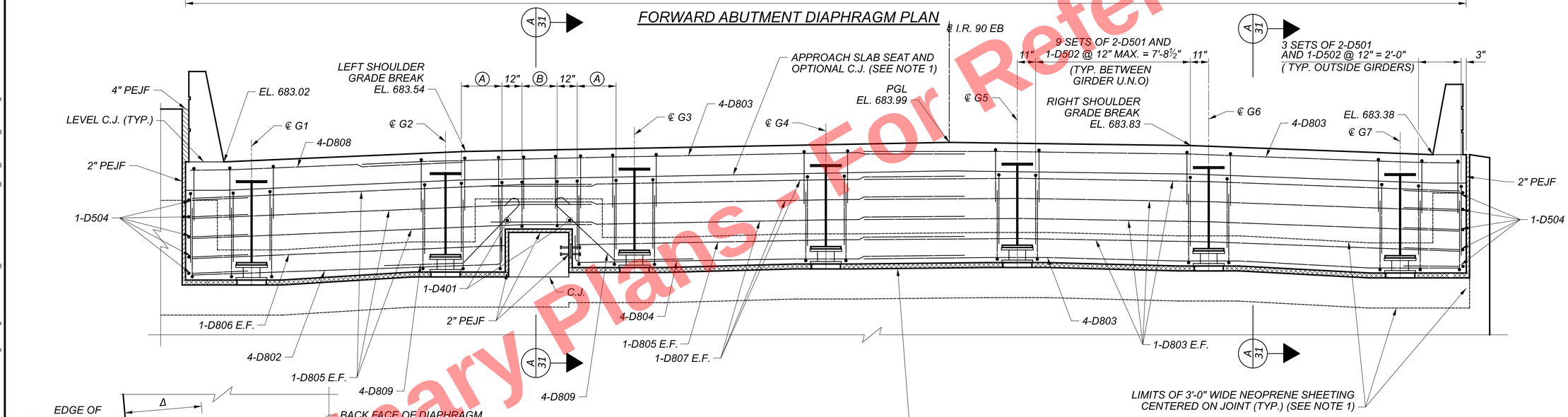

FORWARD ABUTMENT DIAPHRAGM ELEVATION

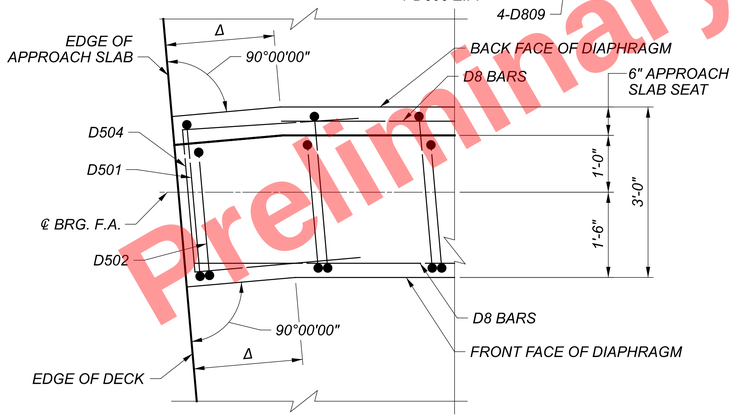

DETAIL A

(LEFT SIDE SHOWN, RIGHT SIDE SIMILAR)

LEGEND:

(A) = 3 SETS OF 2-D501 AND 1-D502 @ 12" = 2'-0"

(B) = 3 SETS OF 1-D503 AND 1-D502 @ 11" = 1'-10"

Δ = 1'-11" (LEFT), 1'-8" (RIGHT)

NOTES:

1. SEE SHEET 29/43 FOR NOTES.
2. SEE SHEET 31/43 FOR SECTIONS A-A AND B-B.

Preliminary Plans - For Reference Only

FORWARD ABUTMENT DIAPHRAGM PLAN AND ELEVATION
CUY-90-1653R (BRIDGE 11)
I.R. 90 EB OVER CR-721 (E. 14TH ST.)

SFN	1807804
DESIGN AGENCY	B&N burgessniple.com
DESIGNER	BCS
CHECKER	MAB
REVIEWER	DWL 05/24/22
PROJECT ID	82382
SUBSET	30
TOTAL	43
SHEET	2115
TOTAL	2696

CUY-90-16.28 (CCG3A)

MODEL: Sheet PAPERSIZE: 34x22 (in.) DATE: 3/28/2025 TIME: 10:01:46 AM USER: Maia.Gallagher
pw:\\mb-us-pw.bentley.com:mb-us-pw-03\Documents\Cleveland_OH\01_Projects\ODOT\District12\82382\400-Engineering\Structures\SFN_1807804\Sheets\82382_SFN_1807804_SS008.dgn

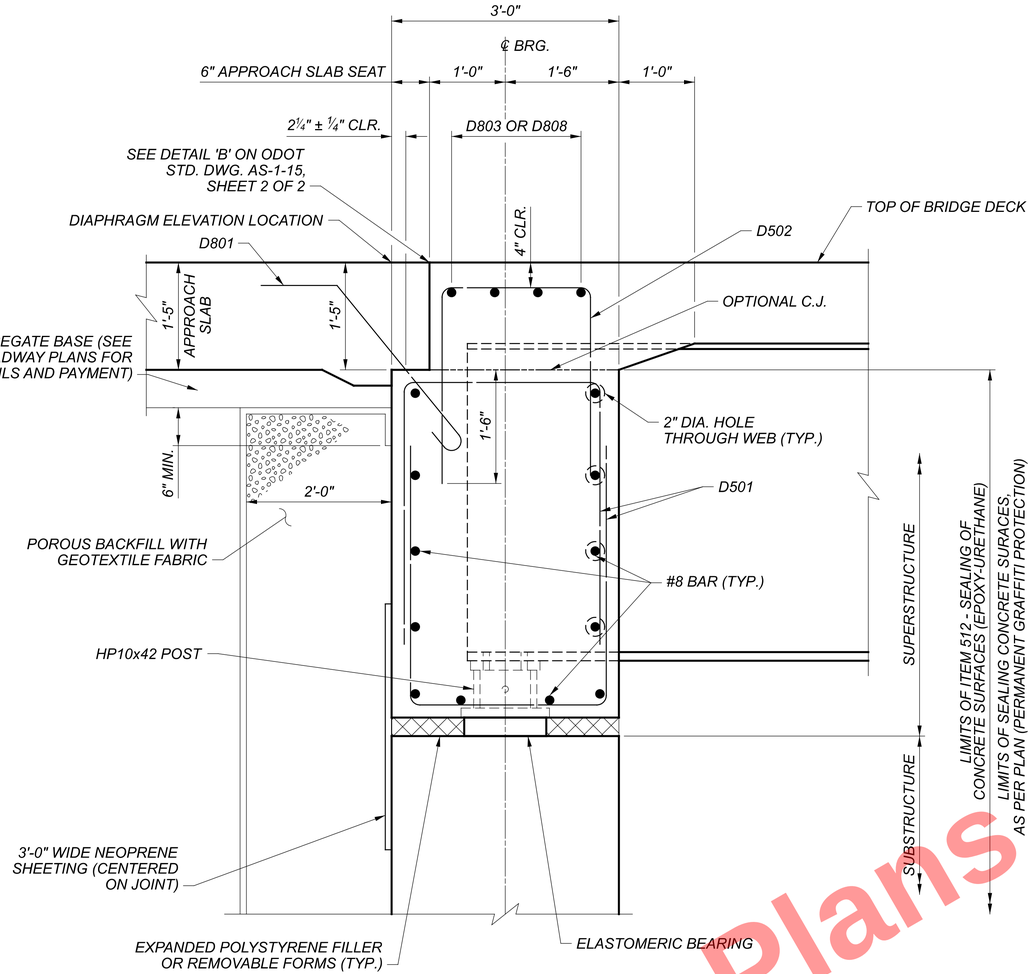

SECTION A-A

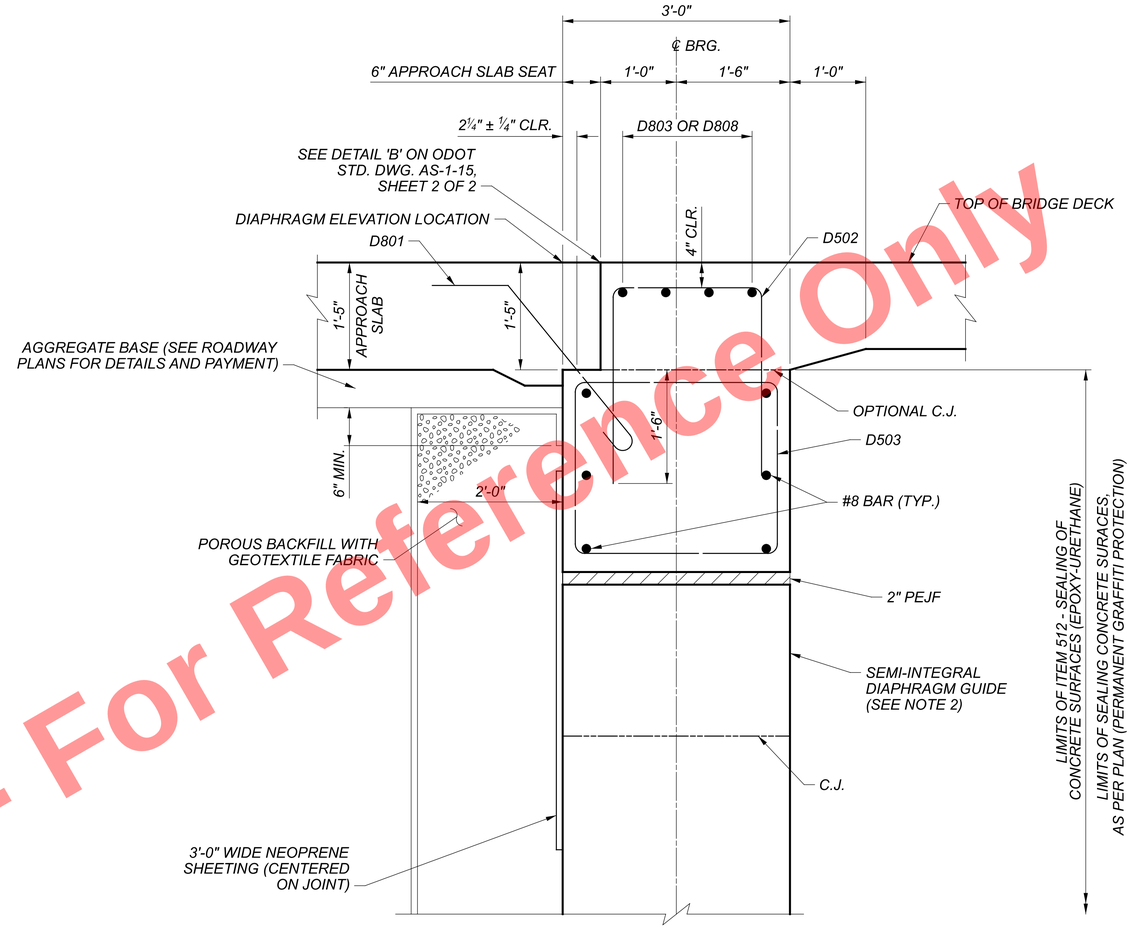

SECTION B-B

Preliminary Plans - For Reference Only

NOTES:

1. PAYMENT FOR NEOPRENE SHEETING WILL BE INCLUDED WITH ITEM 516 - SEMI-INTEGRAL ABUTMENT EXPANSION JOINT SEAL.
2. SEE STANDARD BRIDGE DRAWING SICD-2-14 FOR DIAPHRAGM GUIDE DETAILS.

ABUTMENT DIAPHRAGM DETAILS
CUY-90-1653R (BRIDGE 11)
I.R. 90 EB OVER CR-721 (E. 14TH ST.)

SFN 1807804
DESIGN AGENCY B&N burgessniple.com
DESIGNER BCS | CHECKER MAB
REVIEWER DWL 05/24/22
PROJECT ID 82382
SUBSET 31 | TOTAL 43
SHEET 2116 | TOTAL 2696

CUY-90-16.28 (CCG3A)

MODEL: Sheet PAPERSIZE: 34x22 (in.) DATE: 3/28/2025 TIME: 10:01:51 AM USER: Maia.Gallagher
pw:\\mb-us-pw.bentley.com:mb-us-pw-03\Documents\Cleveland_OH\01_Projects\ODOT\District12\82382\400-Engineering\Structures\SFN_1807804\Sheets\82382_SFN_1807804_SS009.dgn

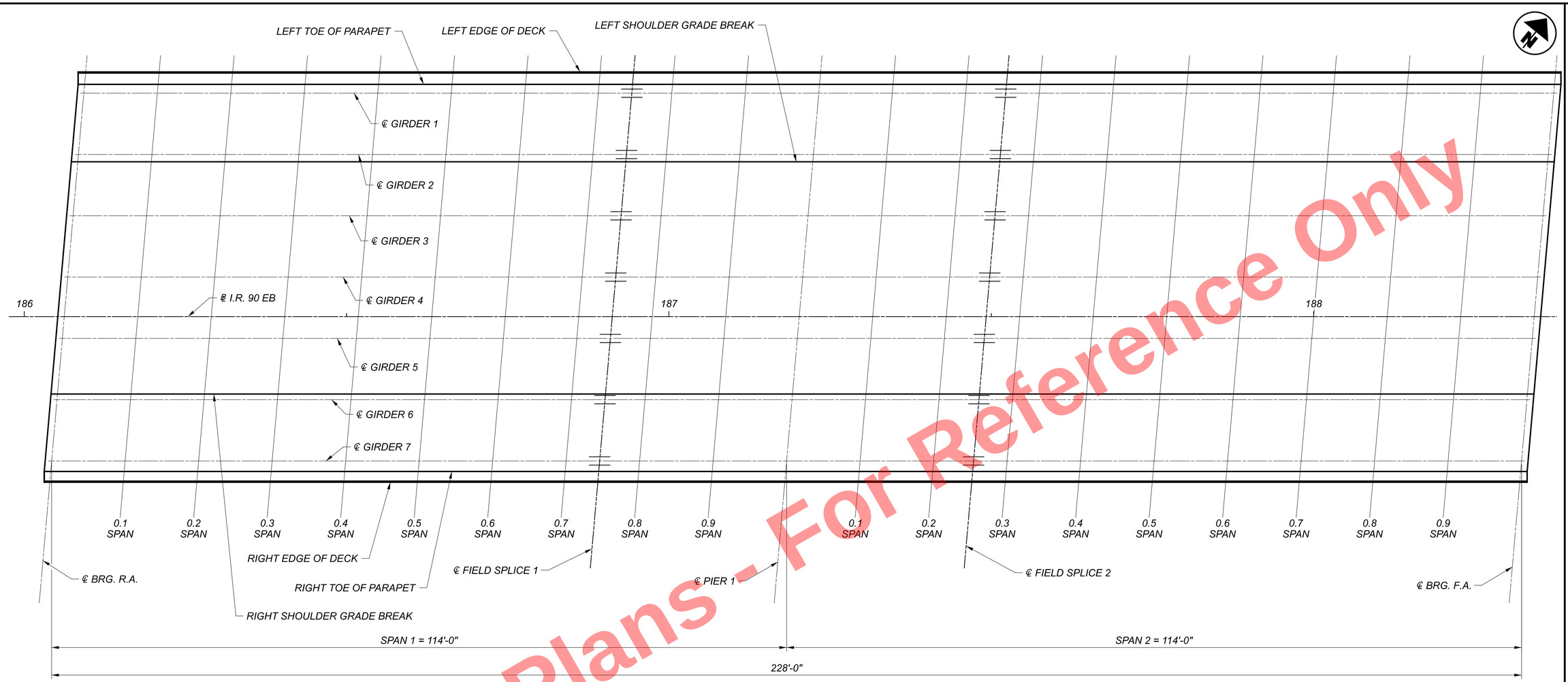

CRITICAL BRIDGE POINTS PLAN

(FOR USE WITH SCREED, TOP OF HAUNCH, AND FINAL DECK SURFACE ELEVATION TABLES)

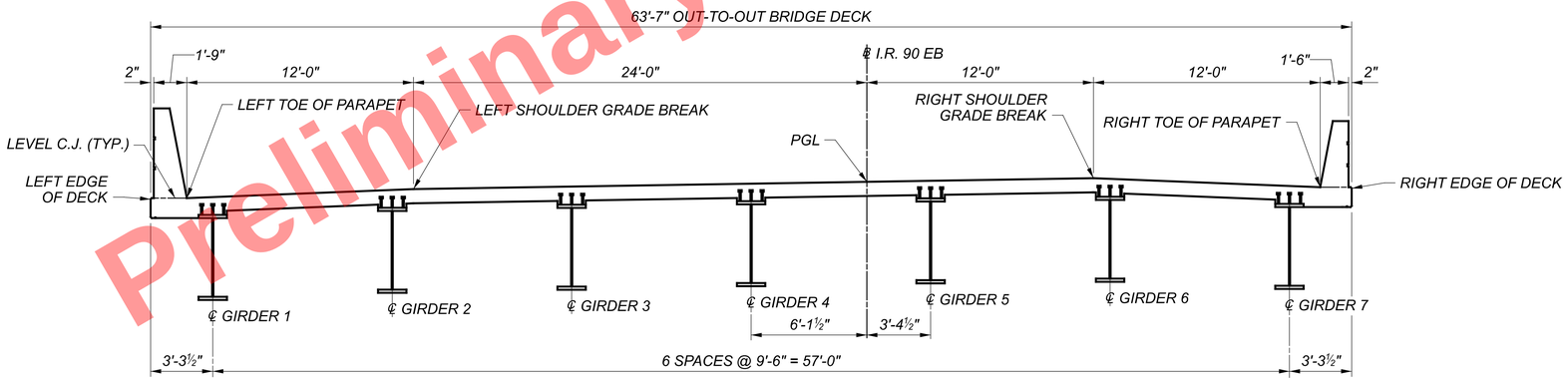

CRITICAL BRIDGE POINTS TRANSVERSE SECTION

(FOR USE WITH SCREED, TOP OF HAUNCH, AND FINAL DECK SURFACE ELEVATION TABLES)

Preliminary Plans - For Reference Only

CRITICAL BRIDGE POINTS LOCATIONS
CUY-90-1653R (BRIDGE 11)
I.R. 90 EB OVER CR-721 (E. 14TH ST.)

SFN	1807804
DESIGN AGENCY	B&N burgessniple.com
DESIGNER	BCS
CHECKER	MAB
REVIEWER	DWL 05/24/22
PROJECT ID	82382
SUBSET	32
TOTAL	43
SHEET	2117
TOTAL	2696

CUY-90-16.28 (CCG3A)

MODEL: Sheet PAPERSIZE: 34x22 (in.) DATE: 3/28/2025 TIME: 10:01:57 AM USER: Mala.Gallagher
pw:\\mb-us-pw.bentley.com:mb-us-pw-03\Documents\Cleveland_OH\01_Projects\ODOT\District12\82382\e00-Engineering\Structures\SFN_1807804\Sheets\82382_SFN_1807804_SS003.dgn

TOP OF HAUNCH ELEVATIONS																							
ELEVATION LINE	CENTERLINE BRG. R.A.		SPAN 1																				CENTERLINE PIER 1	
			0.1		0.2		0.3		0.4		0.5		0.6		0.7		FIELD SPLICE 1		0.8		0.9			
	STA.	EL.	STA.	EL.	STA.	EL.	STA.	EL.	STA.	EL.	STA.	EL.	STA.	EL.	STA.	EL.	STA.	EL.	STA.	EL.	STA.	EL.	STA.	EL.
GIRDER 1	186+09.24	688.26	186+20.64	688.13	186+32.04	687.99	186+43.44	687.81	186+54.84	687.57	186+66.24	687.29	186+77.64	686.99	186+89.04	686.67	186+94.24	686.53	187+00.44	686.35	187+11.84	686.03	187+23.24	685.72
GIRDER 2	186+08.41	688.66	186+19.81	688.53	186+31.21	688.39	186+42.61	688.21	186+54.01	687.97	186+65.41	687.69	186+76.81	687.39	186+88.21	687.07	186+93.41	686.93	186+99.61	686.75	187+11.01	686.43	187+22.41	686.12
GIRDER 3	186+07.58	688.90	186+18.98	688.76	186+30.38	688.60	186+41.78	688.41	186+53.18	688.16	186+64.58	687.89	186+75.98	687.59	186+87.38	687.27	186+92.58	687.13	186+98.78	686.95	187+10.18	686.63	187+21.58	686.32
GIRDER 4	186+06.75	689.13	186+18.15	688.97	186+29.55	688.79	186+40.95	688.58	186+52.35	688.34	186+63.75	688.06	186+75.15	687.76	186+86.55	687.45	186+91.75	687.30	186+97.95	687.12	187+09.35	686.80	187+20.75	686.50
GIRDER 5	186+05.91	689.36	186+17.31	689.18	186+28.71	688.98	186+40.11	688.75	186+51.51	688.50	186+62.91	688.22	186+74.31	687.91	186+85.71	687.59	186+90.91	687.44	186+97.11	687.26	187+08.51	686.94	187+19.91	686.62
GIRDER 6	186+05.08	689.54	186+16.48	689.34	186+27.88	689.12	186+39.28	688.88	186+50.68	688.61	186+62.08	688.31	186+73.48	687.99	186+84.88	687.64	186+90.08	687.49	186+96.28	687.30	187+07.68	686.95	187+19.08	686.62
GIRDER 7	186+04.25	689.18	186+15.65	688.98	186+27.05	688.76	186+38.45	688.52	186+49.85	688.25	186+61.25	687.95	186+72.65	687.63	186+84.05	687.29	186+89.25	687.13	186+95.45	686.94	187+06.85	686.60	187+18.25	686.27

TOP OF HAUNCH ELEVATIONS																							
ELEVATION LINE	CENTERLINE PIER 1		SPAN 2																				CENTERLINE BRG. F.A.	
			0.1		0.2		FIELD SPLICE 2		0.3		0.4		0.5		0.6		0.7		0.8		0.9			
	STA.	EL.	STA.	EL.	STA.	EL.	STA.	EL.	STA.	EL.	STA.	EL.	STA.	EL.	STA.	EL.	STA.	EL.	STA.	EL.	STA.	EL.	STA.	EL.
GIRDER 1	187+23.24	685.72	187+34.64	685.43	187+46.04	685.14	187+52.24	684.99	187+57.44	684.87	187+68.84	684.58	187+80.24	684.28	187+91.64	683.95	188+03.04	683.60	188+14.44	683.22	188+25.84	682.81	188+37.24	682.39
GIRDER 2	187+22.41	686.12	187+33.81	685.83	187+45.21	685.55	187+51.41	685.40	187+56.61	685.27	187+68.01	684.99	187+79.41	684.68	187+90.81	684.36	188+02.21	684.00	188+13.61	683.62	188+25.01	683.22	188+36.41	682.79
GIRDER 3	187+21.58	686.32	187+32.98	686.03	187+44.38	685.75	187+50.58	685.60	187+55.78	685.47	187+67.18	685.19	187+78.58	684.89	187+89.98	684.56	188+01.38	684.21	188+12.78	683.83	188+24.18	683.42	188+35.58	683.00
GIRDER 4	187+20.75	686.50	187+32.15	686.20	187+43.55	685.92	187+49.75	685.77	187+54.95	685.65	187+66.35	685.36	187+77.75	685.06	187+89.15	684.74	188+00.55	684.39	188+11.95	684.00	188+23.35	683.60	188+34.75	683.18
GIRDER 5	187+19.91	686.62	187+31.31	686.32	187+42.71	686.04	187+48.91	685.88	187+54.11	685.75	187+65.51	685.46	187+76.91	685.15	187+88.31	684.82	187+99.71	684.46	188+11.11	684.07	188+22.51	683.67	188+33.91	683.25
GIRDER 6	187+19.08	686.62	187+30.48	686.30	187+41.88	686.00	187+48.08	685.84	187+53.28	685.70	187+64.68	685.39	187+76.08	685.06	187+87.48	684.71	187+98.88	684.34	188+10.28	683.93	188+21.68	683.52	188+33.08	683.10
GIRDER 7	187+18.25	686.27	187+29.65	685.95	187+41.05	685.64	187+47.25	685.48	187+52.45	685.34	187+63.85	685.03	187+75.25	684.71	187+86.65	684.36	187+98.05	683.98	188+09.45	683.58	188+20.85	683.17	188+32.25	682.75

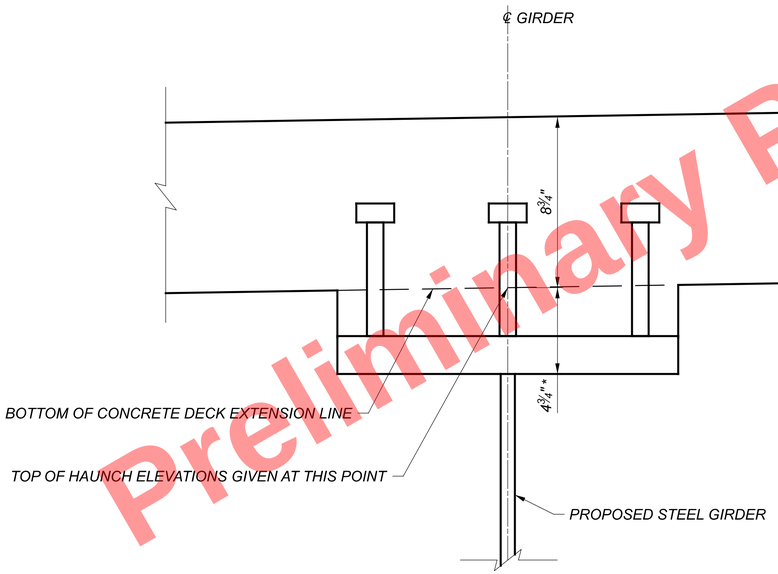

HAUNCH DETAIL

* = TOP OF WEB TO BOTTOM OF CONCRETE DECK EXTENSION LINE

NOTES:

1. SEE SHEET 32/43 FOR CRITICAL BRIDGE POINT ELEVATION LOCATIONS.
2. TOP OF HAUNCH ELEVATIONS SHOWN REPRESENT THE THEORETICAL LOCATION OF THE BOTTOM OF THE DECK ABOVE THE ℄ OF GIRDER HAUNCH PRIOR TO DEFLECTION CAUSED BY DECK PLACEMENT AND OTHER ANTICIPATED DEAD LOADS.

Preliminary Plans - For Reference Only

TOP OF HAUNCH ELEVATIONS AND DETAILS
CUY-90-1653R (BRIDGE 11)
I.R. 90 EB OVER CR-721 (E. 14TH ST.)

SFN 1807804
DESIGN AGENCY B&N burgessniple.com
DESIGNER BCS | CHECKER MAB
REVIEWER DWL 05/24/22
PROJECT ID 82382
SUBSET 33 | TOTAL 43
SHEET 2118 | TOTAL 2696

CUY-90-16.28 (CCG3A)

MODEL: Sheet PAPERSIZE: 34x22 (in.) DATE: 3/28/2025 TIME: 10:02:09 AM USER: Maia.Gallagher
pw:\\mb-us-pw.bentley.com:mb-us-pw-03\Documents\Cleveland_OH101_Projects\ODOT\District12\82382\400-Engineering\Structures\SFN_1807804\Sheets\82382_SFN_1807804_SS004.dgn

SCREED ELEVATIONS

ELEVATION LINE	CENTERLINE BRG. R.A.		SPAN 1																				CENTERLINE PIER 1	
			0.1		0.2		0.3		0.4		0.5		0.6		0.7		FIELD SPLICE 1		0.8		0.9			
	STA.	EL.	STA.	EL.	STA.	EL.	STA.	EL.	STA.	EL.	STA.	EL.	STA.	EL.	STA.	EL.	STA.	EL.	STA.	EL.	STA.	EL.	STA.	EL.
LEFT TOE OF PARAPET	186+09.36	688.93	186+20.76	688.81	186+32.16	688.66	186+43.56	688.48	186+54.96	688.24	186+66.36	687.96	186+77.76	687.66	186+89.16	687.34	186+94.36	687.20	187+00.56	687.02	187+11.96	686.70	187+23.36	686.39
LEFT SHOULDER GRADE BREAK	186+08.31	689.43	186+19.71	689.30	186+31.11	689.16	186+42.51	688.99	186+53.91	688.74	186+65.31	688.47	186+76.71	688.17	186+88.11	687.85	186+93.31	687.70	186+99.51	687.53	187+10.91	687.21	187+22.31	686.90
BASELINE I.R. 90 EB AND PGL	186+06.21	690.01	186+17.61	689.83	186+29.01	689.64	186+40.41	689.42	186+51.81	689.17	186+63.21	688.90	186+74.61	688.60	186+86.01	688.29	186+91.21	688.14	186+97.41	687.96	187+08.81	687.65	187+20.21	687.34
RIGHT SHOULDER GRADE BREAK	186+05.16	690.30	186+16.56	690.10	186+27.96	689.88	186+39.36	689.64	186+50.76	689.37	186+62.16	689.07	186+73.56	688.75	186+84.96	688.41	186+90.16	688.25	186+96.36	688.06	187+07.76	687.72	187+19.16	687.38
RIGHT TOE OF PARAPET	186+04.11	689.85	186+15.51	689.65	186+26.91	689.43	186+38.31	689.19	186+49.71	688.91	186+61.11	688.62	186+72.51	688.29	186+83.91	687.95	186+89.11	687.80	186+95.31	687.61	187+06.71	687.26	187+18.11	686.93

SCREED ELEVATIONS

ELEVATION LINE	CENTERLINE PIER 1		SPAN 2																				CENTERLINE BRG. F.A.	
			0.1		0.2		FIELD SPLICE 2		0.3		0.4		0.5		0.6		0.7		0.8		0.9			
	STA.	EL.	STA.	EL.	STA.	EL.	STA.	EL.	STA.	EL.	STA.	EL.	STA.	EL.	STA.	EL.	STA.	EL.	STA.	EL.	STA.	EL.	STA.	EL.
LEFT TOE OF PARAPET	187+23.36	686.39	187+34.76	686.10	187+46.16	685.82	187+52.36	685.66	187+57.56	685.54	187+68.96	685.25	187+80.36	684.95	187+91.76	684.62	188+03.16	684.27	188+14.56	683.89	188+25.96	683.48	188+37.36	683.06
LEFT SHOULDER GRADE BREAK	187+22.31	686.90	187+33.71	686.61	187+45.11	686.32	187+51.31	686.17	187+56.51	686.05	187+67.91	685.76	187+79.31	685.46	187+90.71	685.14	188+02.11	684.78	188+13.51	684.40	188+24.91	683.99	188+36.31	683.57
BASELINE I.R. 90 EB AND PGL	187+20.21	687.34	187+31.61	687.05	187+43.01	686.77	187+49.21	686.62	187+54.41	686.49	187+65.81	686.21	187+77.21	685.91	187+88.61	685.58	188+00.01	685.23	188+11.41	684.85	188+22.81	684.44	188+34.21	684.02
RIGHT SHOULDER GRADE BREAK	187+19.16	687.38	187+30.56	687.07	187+41.96	686.76	187+48.16	686.60	187+53.36	686.46	187+64.76	686.15	187+76.16	685.83	187+87.56	685.48	187+98.96	685.10	188+10.36	684.69	188+21.76	684.28	188+33.16	683.86
RIGHT TOE OF PARAPET	187+18.11	686.93	187+29.51	686.62	187+40.91	686.31	187+47.11	686.15	187+52.31	686.01	187+63.71	685.70	187+75.11	685.38	187+86.51	685.03	187+97.91	684.65	188+09.31	684.25	188+20.71	683.84	188+32.11	683.42

FINAL TOP OF DECK SURFACE ELEVATIONS

ELEVATION LINE	CENTERLINE BRG. R.A.		SPAN 1																				CENTERLINE PIER 1	
			0.1		0.2		0.3		0.4		0.5		0.6		0.7		FIELD SPLICE 1		0.8		0.9			
	STA.	EL.	STA.	EL.	STA.	EL.	STA.	EL.	STA.	EL.	STA.	EL.	STA.	EL.	STA.	EL.	STA.	EL.	STA.	EL.	STA.	EL.	STA.	EL.
LEFT TOE OF PARAPET	186+09.36	688.93	186+20.76	688.75	186+32.16	688.55	186+43.56	688.34	186+54.96	688.08	186+66.36	687.82	186+77.76	687.54	186+89.16	687.27	186+94.36	687.14	187+00.56	686.98	187+11.96	686.69	187+23.36	686.39
GIRDER 1	186+09.24	688.99	186+20.64	688.80	186+32.04	688.61	186+43.44	688.40	186+54.84	688.14	186+66.24	687.87	186+77.64	687.60	186+89.04	687.32	186+94.24	687.20	187+00.44	687.04	187+11.84	686.75	187+23.24	686.45
GIRDER 2	186+08.41	689.38	186+19.81	689.20	186+31.21	689.00	186+42.61	688.80	186+54.01	688.54	186+65.41	688.27	186+76.81	688.00	186+88.21	687.72	186+93.41	687.60	186+99.61	687.44	187+11.01	687.15	187+22.41	686.85
LEFT SHOULDER GRADE BREAK	186+08.31	689.43	186+19.71	689.24	186+31.11	689.05	186+42.51	688.84	186+53.91	688.59	186+65.31	688.32	186+76.71	688.05	186+88.11	687.77	186+93.31	687.64	186+99.51	687.49	187+10.91	687.20	187+22.31	686.90
GIRDER 3	186+07.58	689.63	186+18.98	689.43	186+30.38	689.21	186+41.78	689.00	186+53.18	688.74	186+64.58	688.47	186+75.98	688.20	186+87.38	687.92	186+92.58	687.80	186+98.78	687.64	187+10.18	687.35	187+21.58	687.05
GIRDER 4	186+06.75	689.86	186+18.15	689.63	186+29.55	689.40	186+40.95	689.16	186+52.35	688.91	186+63.75	688.64	186+75.15	688.37	186+86.55	688.10	186+91.75	687.97	186+97.95	687.81	187+09.35	687.52	187+20.75	687.23
BASELINE I.R. 90 EB AND PGL	186+06.21	690.01	186+17.61	689.77	186+29.01	689.53	186+40.41	689.28	186+51.81	689.02	186+63.21	688.75	186+74.61	688.48	186+86.01	688.21	186+91.21	688.08	186+97.41	687.92	187+08.81	687.64	187+20.21	687.34
GIRDER 5	186+05.91	690.09	186+17.31	689.85	186+28.71	689.59	186+40.11	689.34	186+51.51	689.07	186+62.91	688.80	186+74.31	688.52	186+85.71	688.24	186+90.91	688.11	186+97.11	687.95	187+08.51	687.65	187+19.91	687.35
RIGHT SHOULDER GRADE BREAK	186+05.16	690.30	186+16.56	690.04	186+27.96	689.77	186+39.36	689.50	186+50.76	689.21	186+62.16	688.93	186+73.56	688.63	186+84.96	688.33	186+90.16	688.19	186+96.36	688.02	187+07.76	687.71	187+19.16	687.38
GIRDER 6	186+05.08	690.27	186+16.48	690.01	186+27.88	689.74	186+39.28	689.46	186+50.68	689.18	186+62.08	688.89	186+73.48	688.60	186+84.88	688.30	186+90.08	688.16	186+96.28	687.99	187+07.68	687.67	187+19.08	687.35
GIRDER 7	186+04.25	689.91	186+15.65	689.65	186+27.05	689.38	186+38.45	689.10	186+49.85	688.82	186+61.25	688.53	186+72.65	688.24	186+84.05	687.94	186+89.25	687.80	186+95.45	687.63	187+06.85	687.32	187+18.25	686.99
RIGHT TOE OF PARAPET	186+04.11	689.85	186+15.51	689.59	186+26.91	689.32	186+38.31	689.04	186+49.71	688.76	186+61.11	688.47	186+72.51	688.18	186+83.91	687.88	186+89.11	687.74	186+95.31	687.57	187+06.71	687.25	187+18.11	686.93

FINAL TOP OF DECK SURFACE ELEVATIONS

ELEVATION LINE	CENTERLINE PIER 1		SPAN 2																				CENTERLINE BRG. F.A.	
			0.1		0.2		FIELD SPLICE 2		0.3		0.4		0.5		0.6		0.7		0.8		0.9			
	STA.	EL.	STA.	EL.	STA.	EL.	STA.	EL.	STA.	EL.	STA.	EL.	STA.	EL.	STA.	EL.	STA.	EL.	STA.	EL.	STA.	EL.	STA.	EL.
LEFT TOE OF PARAPET	187+23.36	686.39	187+34.76	686.09	187+46.16	685.78	187+52.36	685.60	187+57.56	685.46	187+68.96	685.14	187+80.36	684.80	187+91.76	684.47	188+03.16	684.12	188+14.56	683.77	188+25.96	683.42	188+37.36	683.06
GIRDER 1	187+23.24	686.45	187+34.64	686.15	187+46.04	685.83	187+52.24	685.66	187+57.44	685.52	187+68.84	685.19	187+80.24	684.86	187+91.64	684.53	188+03.04	684.18	188+14.44	683.83	188+25.84	683.48	188+37.24	683.11
GIRDER 2	187+22.41	686.85	187+33.81	686.55	187+45.21	686.24	187+51.41	686.07	187+56.61	685.92	187+68.01	685.60	187+79.41	685.27	187+90.81	684.93	188+02.21	684.59	188+13.61	684.24	188+25.01	683.88	188+36.41	683.52
LEFT SHOULDER GRADE BREAK	187+22.31	686.90	187+33.71	686.60	187+45.11	686.29	187+51.31	686.11	187+56.51	685.97	187+67.91	685.65	187+79.31	685.32	187+90.71	684.98	188+02.11	684.64	188+13.51	684.29	188+24.91	683.93	188+36.31	683.57
GIRDER 3	187+21.58	687.05	187+32.98	686.75	187+44.38	686.44	187+50.58	686.27	187+55.78	686.12	187+67.18	685.80	187+78.58	685.47	187+89.98	685.14	188+01.38	684.79	188+12.78	684.44	188+24.18	684.09	188+35.58	683.73
GIRDER 4	187+20.75	687.23	187+32.15	686.92	187+43.55	686.61	187+49.75	686.44	187+54.95	686.30	187+66.35	685.98	187+77.75	685.65	187+89.15	685.31	188+00.55	684.97	188+11.95	684.62	188+23.35	684.27	188+34.75	683.91
BASELINE I.R. 90 EB AND PGL	187+20.21	687.34	187+31.61	687.04	187+43.01	686.73	187+49.21	686.56	187+54.41	686.41	187+65.81	686.09	187+77.21	685.76	187+88.61	685.43	188+00.01	685.08	188+11.41	684.74	188+22.81	684.38	188+34.21	684.02
GIRDER 5	187+19.91	687.35	187+31.31	687.04	187+42.71	686.73	187+48.91	686.55	187+54.11	686.40	187+65.51	686.07	187+76.91	685.74	187+88.31	685.40	187+99.71	685.05	188+11.11	684.69	188+22.51	684.34	188+33.91	683.98
RIGHT SHOULDER GRADE BREAK	187+19.16	687.38	187+30.56	687.06	187+41.96	686.72	187+48.16	686.54	187+53.36	686.38	187+64.76	686.03	187+76.16	685.68	187+87.56	685.32	187+98.96	684.95	188+10.36	684.58	188+21.76	684.22	188+33.16	683.86
GIRDER 6	187+19.08	687.35	187+30.48	687.02	187+41.88	686.69	187+48.08	686.50	187+53.28	686.35	187+64.68	686.00	187+76.08	685.65	187+87.48	685.29	187+98.88	684.92	188+10.28	684.55	188+21.68	684.19	188+33.08	683.83
GIRDER 7	187+18.25	686.99	187+29.65	686.67	187+41.05	686.33	187+47.25	686.15	187+52.45	685.99	187+63.85	685.65	187+75.25	685.29	187+86.65	684.93	187+98.05	684.57	188+09.45	684.20	188+20.85	683.84	188+32.25	683.48
RIGHT TOE OF PARAPET	187+18.11	686.93	187+29.51	686.61	187+40.91	686.27	187+47.11	686.09	187+52.31	685.93	187+63.71	685.59	187+75.11	685.23	187+86.51	684.87	187+97.91	684.51	188+09.31	684.14	188+20.71	683.78	188+32.11	683.42

For Reference Only
Preliminary Plans

NOTES:

1. SEE SHEET 32/43 FOR CRITICAL BRIDGE POINT ELEVATION LOCATIONS.
2. SCREED ELEVATIONS SHOWN REPRESENT THE THEORETICAL DECK SURFACE ELEVATION PRIOR TO DEFLECTIONS CAUSED BY DECK PLACEMENT AND OTHER ANTICIPATED DEAD LOADS.
3. FINAL DECK SURFACE ELEVATIONS SHOWN REPRESENT THE DECK SURFACE ELEVATION AFTER ALL ANTICIPATED DEAD LOAD DEFLECTIONS HAVE OCCURRED.

SCREED AND FINAL DECK SURFACE ELEVATIONS
CUY-90-1653R (BRIDGE 11)
I.R. 90 EB OVER CR-721 (E. 14TH ST.)

SFN 1807804
DESIGN AGENCY B&N burgessniple.com
DESIGNER BCS | CHECKER MAB
REVIEWER DWL 05/24/22
PROJECT ID 82382
SUBSET 34 | TOTAL 43
SHEET 2119 | TOTAL 2696

CUY-90-16.28 (CCG3A)
MODEL: Sheet PAPERSIZE: 34x22 (in.) DATE: 3/28/2025 TIME: 10:02:15 AM USER: Mala.Gallagher
pw:\\mb-us-pw.bentley.com:mb-us-pw-03\Documents\Cleveland_OH01_Projects\ODOTDistrict12\82382400-Engineering\Structures\SFN_1807804\Sheets\82382_SFN_1807804_SS005.dgn

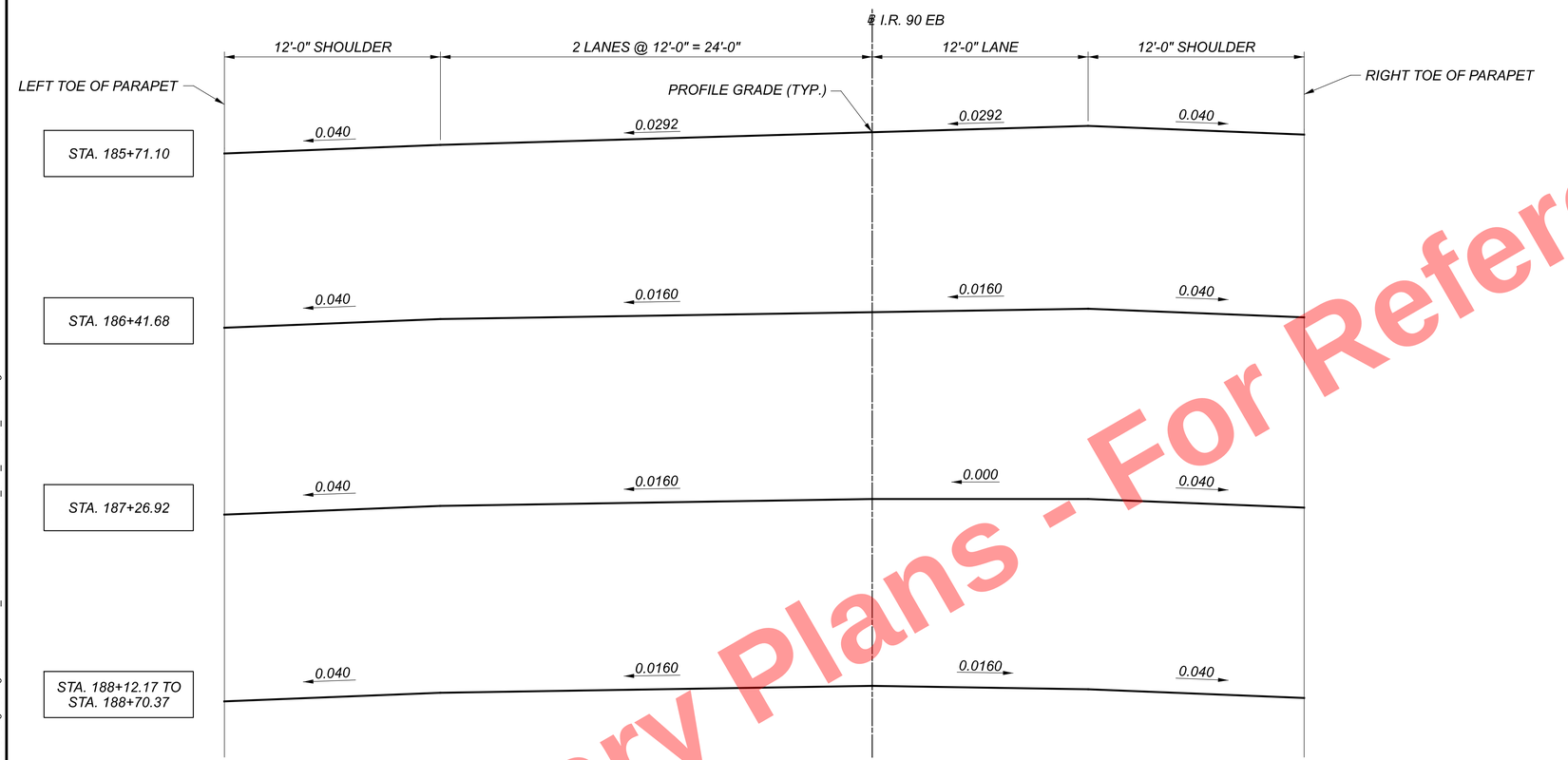

SUPERELEVATION TRANSITION DIAGRAM

Preliminary Plans - For Reference Only

SUPERELEVATION TRANSITION DIAGRAM
CUY-90-1653R (BRIDGE 11)
I.R. 90 EB OVER CR-721 (E. 14TH ST.)

SFN 1807804

DESIGN AGENCY
B&N
burgessniple.com

DESIGNER	CHECKER
BCS	MAB

REVIEWER
DWL 05/24/22

PROJECT ID
82382

SUBSET	TOTAL
35	43

SHEET	TOTAL
2120	2696

CUY-90-16.28 (CCG3A)

MODEL: Sheet PAPERSIZE: 34x22 (in.) DATE: 3/28/2025 TIME: 10:02:21 AM USER: Maia.Gallagher
pw:\\mb-us-pw.bentley.com:mb-us-pw-03\Documents\Cleveland_OH\01_Projects\ODOT\District12\82382\400-Engineering\Structures\SFN_1807804\Sheets\82382_SFN_1807804_SM001.dgn

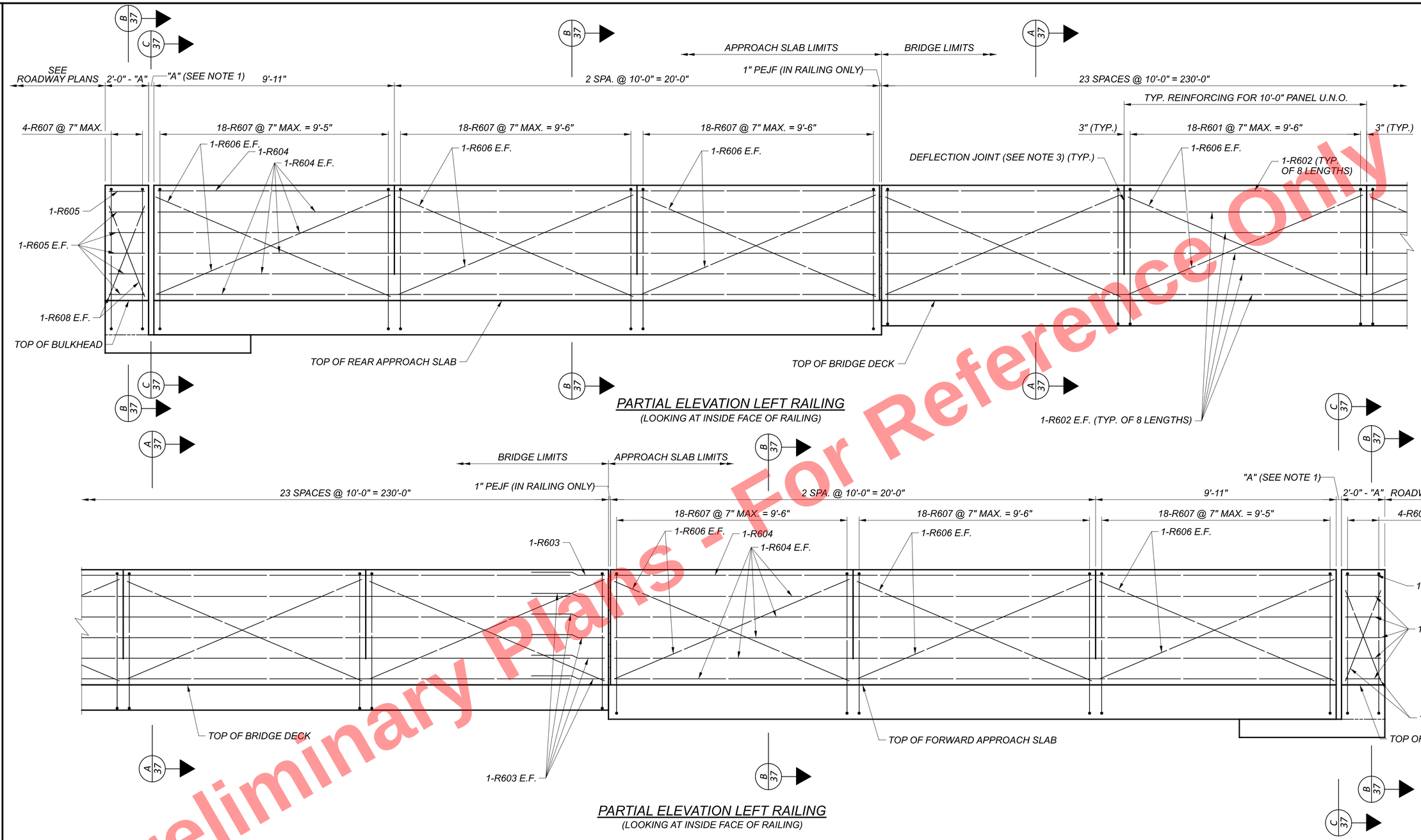

PARTIAL ELEVATION LEFT RAILING
(LOOKING AT INSIDE FACE OF RAILING)

PARTIAL ELEVATION LEFT RAILING
(LOOKING AT INSIDE FACE OF RAILING)

Preliminary Plans - For Reference Only

NOTES:

1. SEE STANDARD BRIDGE DRAWING AS-2-15 FOR ADDITIONAL DETAILS.
2. SEE STANDARD BRIDGE DRAWING SBR-2-20 FOR ADDITIONAL DETAILS.
3. SEE SHEET 37/43 FOR SECTIONS A-A, B-B, C-C, AND DEFLECTION JOINT DETAIL.
4. MINIMUM LAP LENGTHS:
   #6 GFRP = 1'-8"

LEFT RAILING ELEVATION
CUY-90-1653R (BRIDGE 11)
I.R. 90 EB OVER CR-721 (E. 14TH ST.)

CUY-90-16.28 (CCG3A)

MODEL: Sheet PAPERSIZE: 34x22 (in.) DATE: 3/28/2025 TIME: 10:02:26 AM USER: Maia.Gallagher
pw:\\mb-us-pw.bentley.com:mb-us-pw-03\Documents\Cleveland_OH\01_Projects\ODOT\District12\82382\400-Engineering\Structures\SFN_1807804\Sheets\82382_SFN_1807804_SA001.dgn

SFN	1807804
DESIGN AGENCY	B&N burgessniple.com
DESIGNER	BCS
CHECKER	MAB
REVIEWER	DWL 05/24/22
PROJECT ID	82382
SUBSET	36
TOTAL	43
SHEET	2121
TOTAL	2696

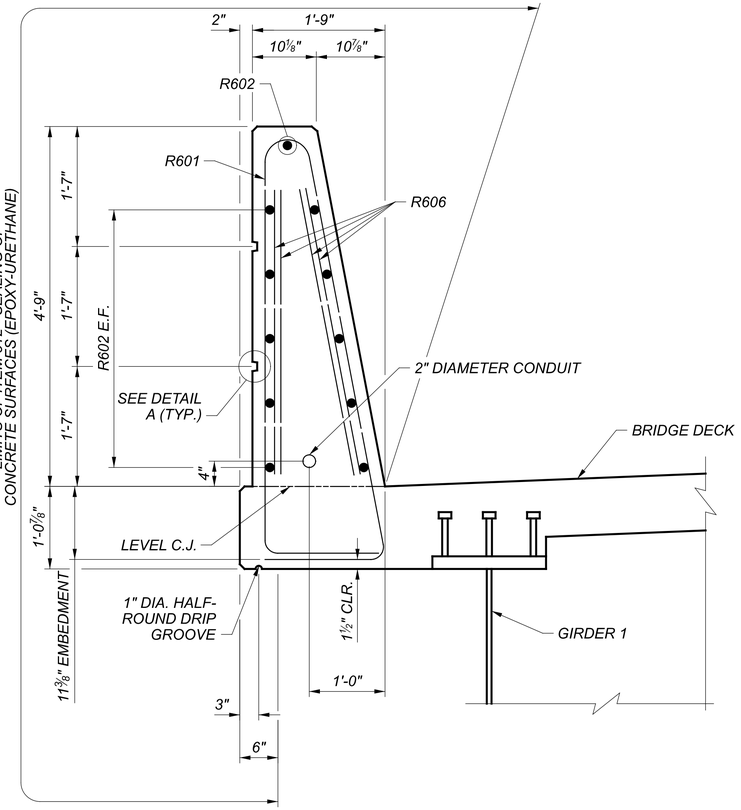

SECTION A-A

(DECK SLAB REINFORCING STEEL NOT SHOWN FOR CLARITY)

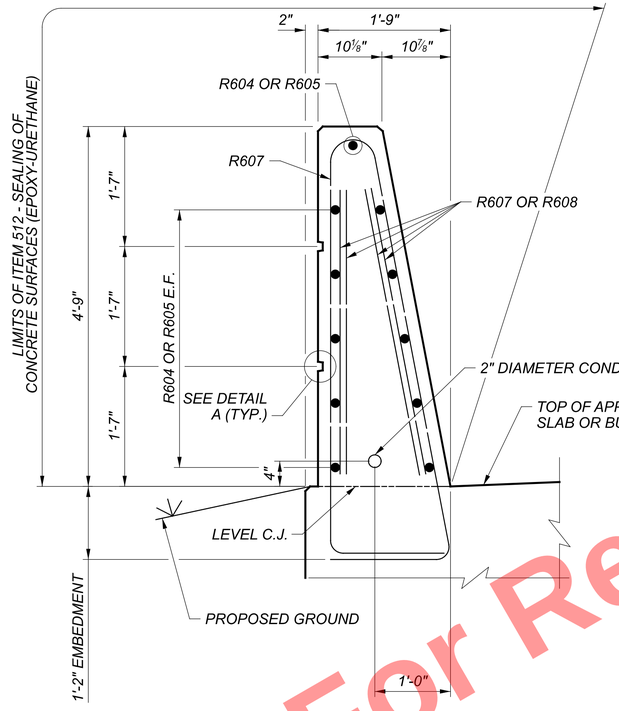

SECTION B-B

(APPROACH SLAB AND BULKHEAD REINFORCING STEEL NOT SHOWN FOR CLARITY)

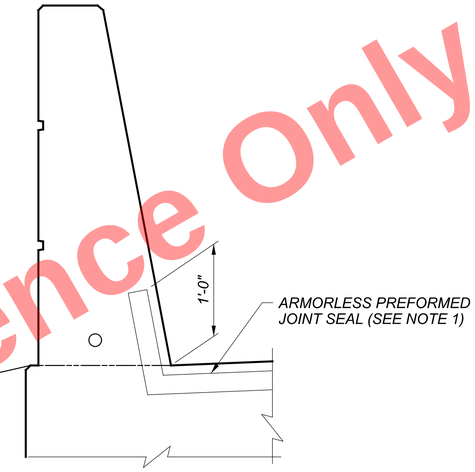

SECTION C-C

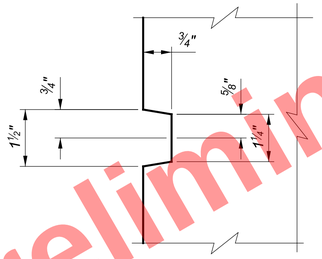

DETAIL A

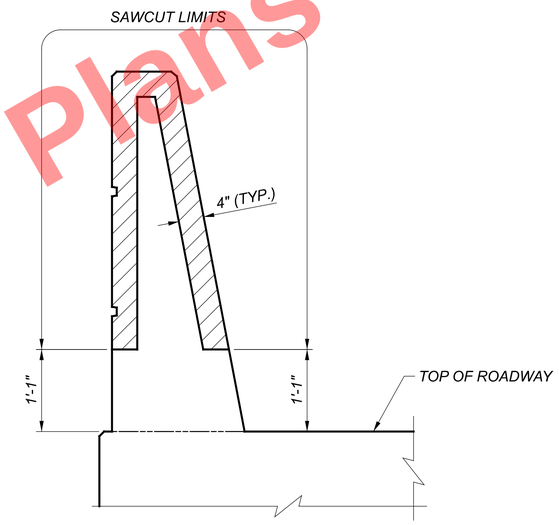

DEFLECTION JOINT DETAIL

NOTES:

1. SEE STANDARD BRIDGE DRAWING AS-2-15 FOR ADDITIONAL DETAILS.
2. SEE SHEET 36/43 FOR LOCATION OF SECTION CUTS AND ADDITIONAL NOTES.

Preliminary Plans - For Reference Only

LEFT RAILING DETAILS
CUY-90-1653R (BRIDGE 11)
I.R. 90 EB OVER CR-721 (E. 14TH ST.)

SFN	1807804
DESIGN AGENCY	B&N burgessniple.com
DESIGNER	BCS
CHECKER	MAB
REVIEWER	DWL 05/24/22
PROJECT ID	82382
SUBSET	37
TOTAL	43
SHEET	2122
TOTAL	2696

CUY-90-16.28 (CCG3A)

MODEL: Sheet PAPERSIZE: 34x22 (in.) DATE: 3/28/2025 TIME: 10:02:39 AM USER: Mala.Gallagher
pw:\\mb-us-pw.bentley.com:mb-us-pw-03\Documents\Cleveland_OH\01_Projects\ODOT\District12\82382\400-Engineering\Structures\SFN_1807804\Sheets\82382_SFN_1807804_SA002.dgn

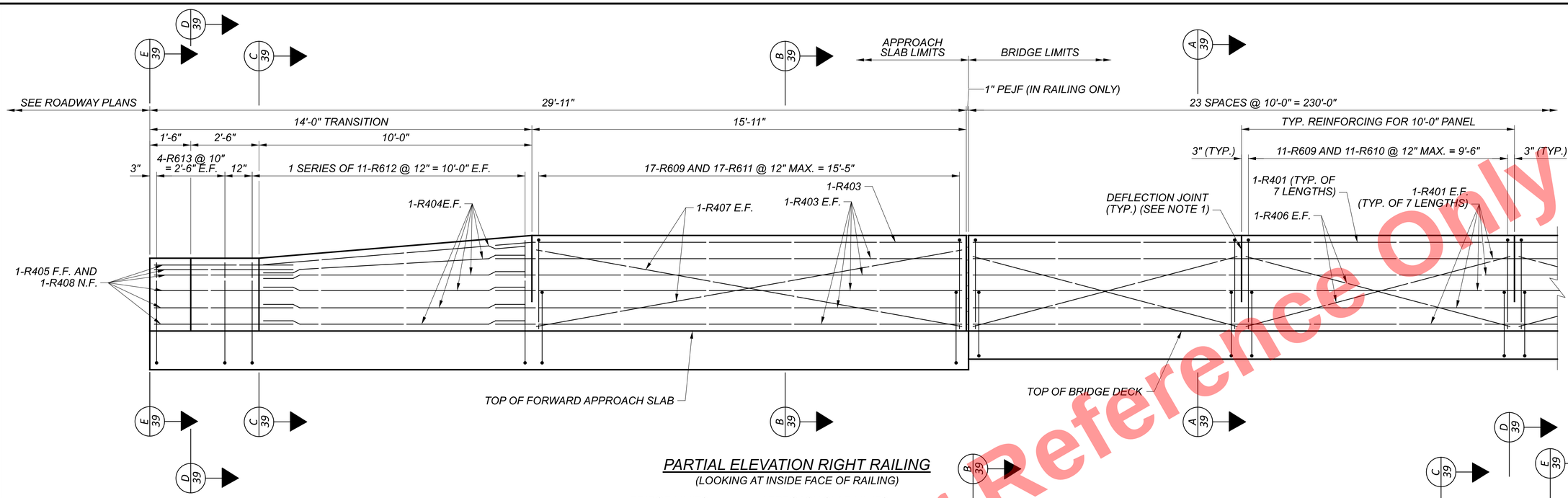

PARTIAL ELEVATION RIGHT RAILING
(LOOKING AT INSIDE FACE OF RAILING)

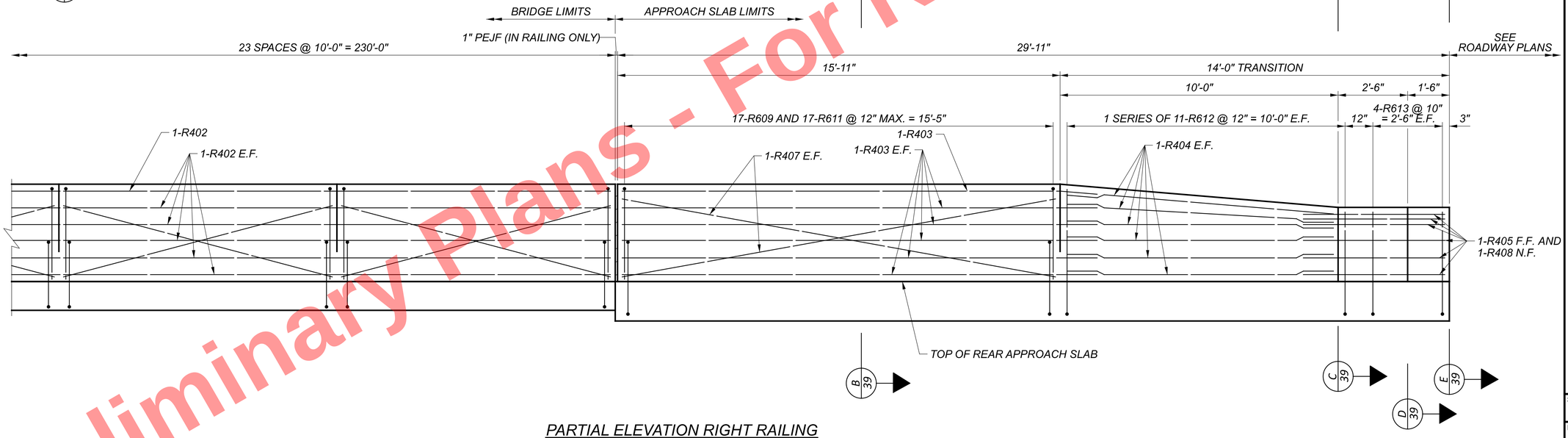

PARTIAL ELEVATION RIGHT RAILING
(LOOKING AT INSIDE FACE OF RAILING)

NOTES:

1. SEE STANDARD BRIDGE DRAWING SBR-1-20 FOR ADDITIONAL DETAILS.
2. SEE SHEET 39/43 FOR SECTIONS A-A, B-B, C-C, D-D, AND E-E.
3. MINIMUM LAP LENGTHS:
   #4 GFRP = 1'-1"

Preliminary Plans - For Reference Only

RIGHT RAILING ELEVATION
CUY-90-1653R (BRIDGE 11)
I.R. 90 EB OVER CR-721 (E. 14TH ST.)

SFN	1807804
DESIGN AGENCY	B&N burgessniple.com
DESIGNER	BCS
CHECKER	MAB
REVIEWER	DWL 05/24/22
PROJECT ID	82382
SUBSET	38
TOTAL	43
SHEET	2123
TOTAL	2696

CUY-90-16.28 (CCG3A)

MODEL: Sheet PAPERSIZE: 34x22 (in.) DATE: 3/28/2025 TIME: 10:02:45 AM USER: Maia.Gallagher
pw:\\mb-us-pw.bentley.com:mb-us-pw-03\Documents\Cleveland_OH01_Projects\ODOT\District12\82382400-Engineering\Structures\SFN_1807804\Sheets\82382_SFN_1807804_SA003.dgn

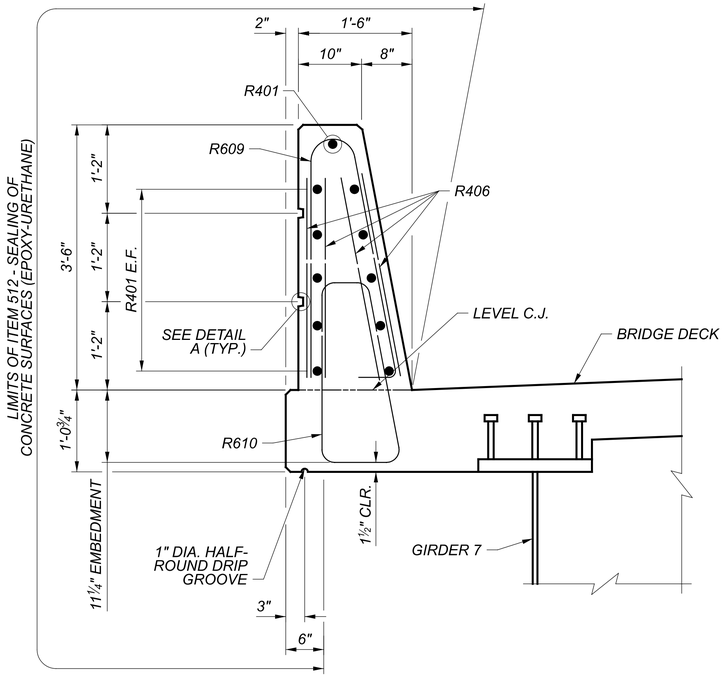

SECTION A-A

(DECK SLAB REINFORCING STEEL NOT SHOWN FOR CLARITY)

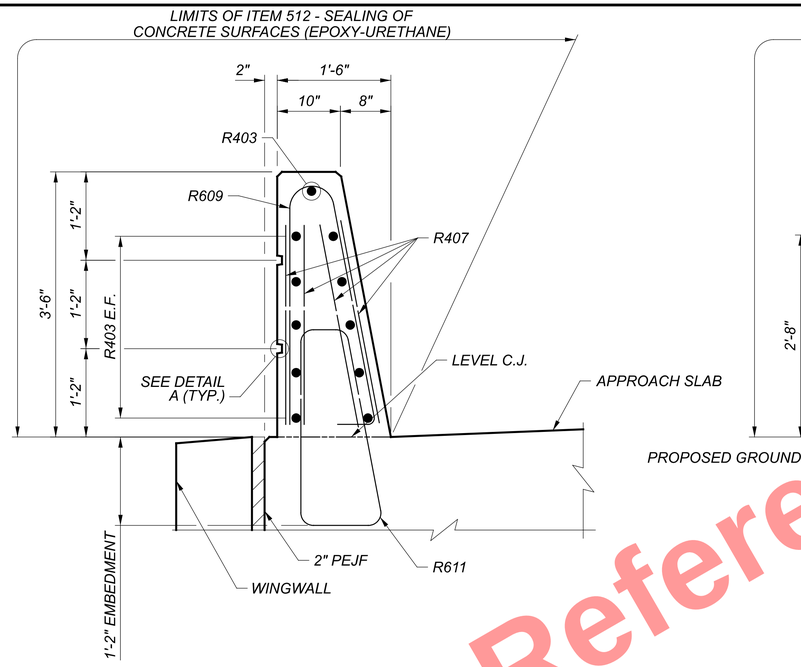

SECTION B-B

(APPROACH SLAB REINFORCING STEEL NOT SHOWN FOR CLARITY)

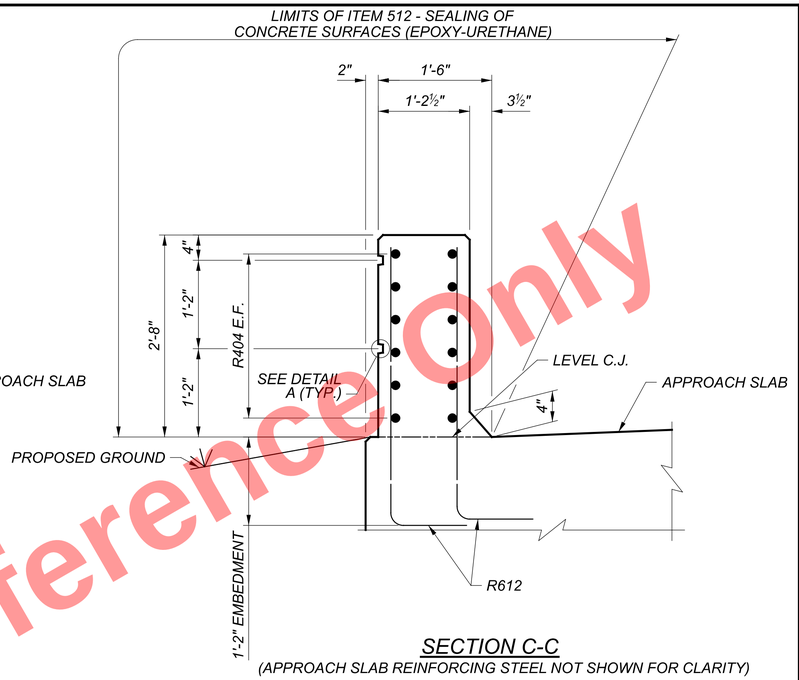

SECTION C-C

(APPROACH SLAB REINFORCING STEEL NOT SHOWN FOR CLARITY)

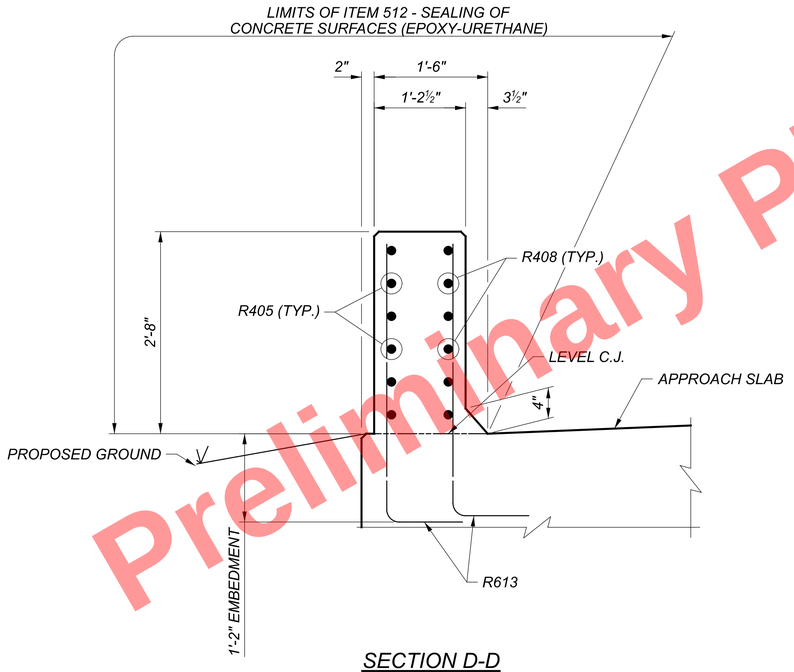

SECTION D-D

(APPROACH SLAB REINFORCING STEEL NOT SHOWN FOR CLARITY)

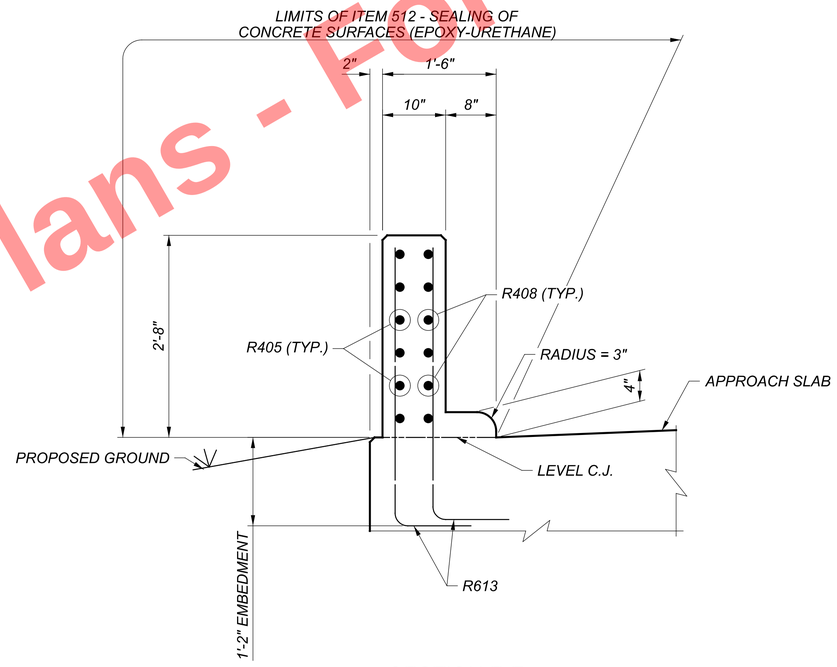

SECTION E-E

(APPROACH SLAB REINFORCING STEEL NOT SHOWN FOR CLARITY)

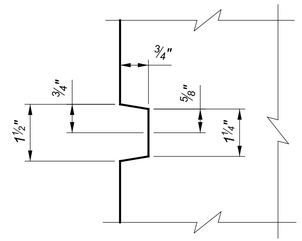

DETAIL A

NOTES:

1. SEE SHEET 38/43 FOR LOCATION OF SECTION CUTS AND ADDITIONAL NOTES.

Preliminary Plans - Not For Reference Only

RIGHT RAILING DETAILS
CUY-90-1653R (BRIDGE 11)
I.R. 90 EB OVER CR-721 (E. 14TH ST.)

SFN	1807804
DESIGN AGENCY	B&N burgessniple.com
DESIGNER	BCS
CHECKER	MAB
REVIEWER	DWL 05/24/22
PROJECT ID	82382
SUBSET	39
TOTAL	43
SHEET	2124
TOTAL	2696

CUY-90-16.28 (CCG3A)
MODEL: Sheet PAPERSIZE: 34x22 (in.) DATE: 3/28/2025 TIME: 10:02:50 AM USER: Maia.Gallagher
pw:\\mb-us-pw.bentley.com:mb-us-pw-03\Documents\Cleveland_OH101_Projects\ODOT\District12\82382\400-Engineering\Structures\SFN_1807804\Sheets\82382_SFN_1807804_SA004.dgn

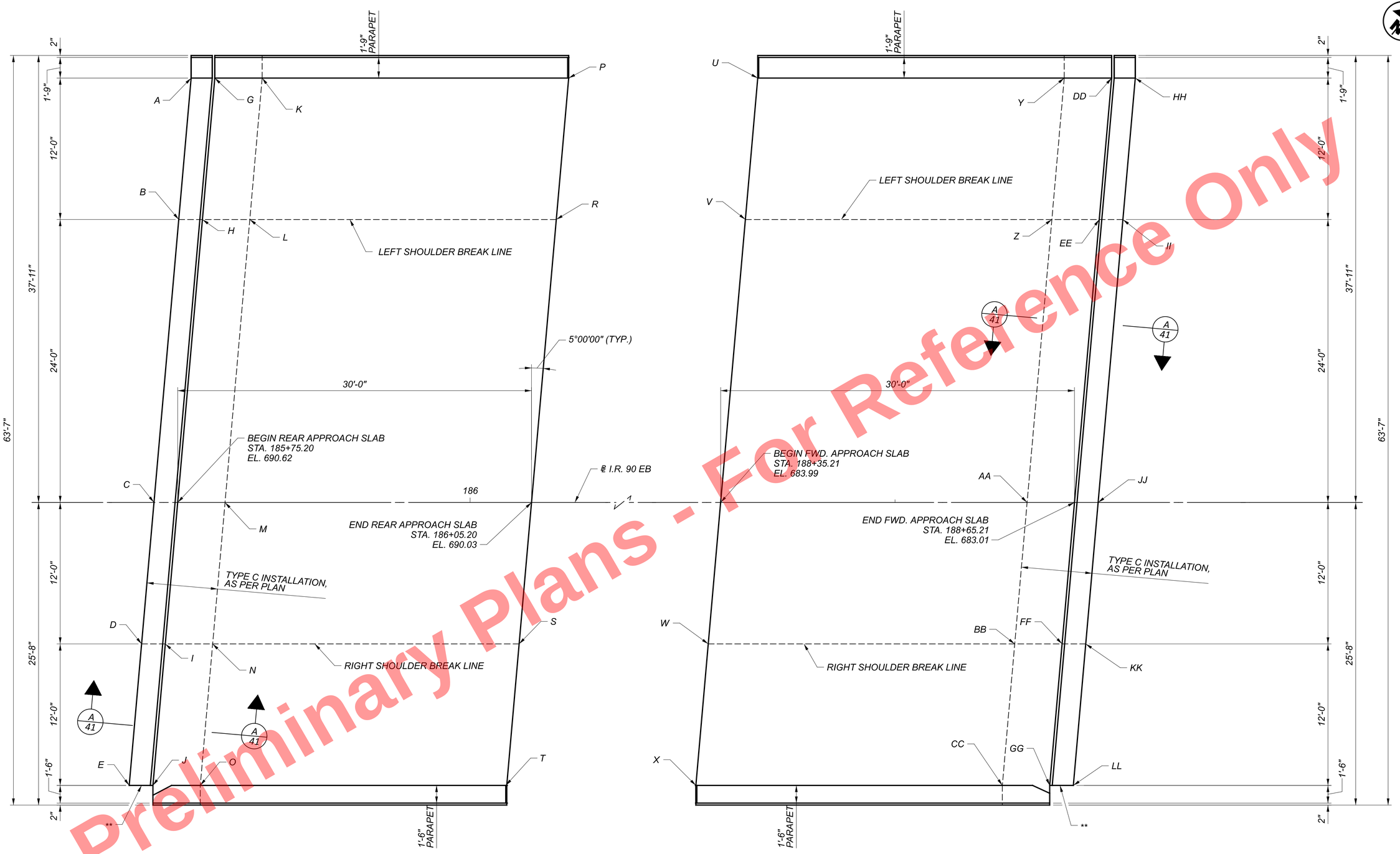

Preliminary Plans - For Reference Only

** = 1'-8" x 2'-0" NOTCH IN SLEEPER SLAB FOR GUARDRAIL POST

APPROACH SLAB PLAN

NOTES:

1. SEE SHEET 41/43 FOR SECTIONS A-A, B-B, AND TYPE C INSTALLATION, AS PER PLAN DETAILS AND ELEVATION TABLES.
2. SEE BRIDGE STANDARD DRAWINGS AS-1-15 AND AS-2-15 FOR REINFORCING AND INFORMATION NOT SHOWN.
3. SEE SHEETS 36/43 THROUGH 39/43 FOR PARAPET DETAILS.
4. SEE SHEET 35/43 FOR SUPERELEVATION TRANSITION DIAGRAM.
5. FOR CALCULATING REINFORCING STEEL BAR LENGTHS FOR SLEEPER SLABS PER STANDARD DRAWING AS-2-15, SHEET 9/14, USE APPROACH SLAB WIDTH, W2 OF 60'-0" AND USE A SKEW ANGLE OF 5°. FIELD CUT BARS AT NOTCH IN SLEEPER SLAB AS NEEDED TO PROVIDE 3" CLEAR COVER. REPAIR FIELD CUT BAR ENDS PER CMS 509.

APPROACH SLAB PLAN
CUY-90-1653R (BRIDGE 11)
I.R. 90 EB OVER CR-721 (E. 14TH ST.)

CUY-90-16.28 (CCG3A)

MODEL: Sheet PAPERSIZE: 34x22 (in.) DATE: 3/28/2025 TIME: 10:02:56 AM USER: Maia.Gallagher
pw:\\mb-us-pw.bentley.com:mb-us-pw-03\Documents\Cleveland_OH\01_Projects\ODOT\District12\82382400-Engineering\Structures\SFN_1807804\Sheets\82382_SFN_1807804_SM002.dgn

SFN	1807804
DESIGN AGENCY	B&N burgessniple.com
DESIGNER	BCS
CHECKER	MAB
REVIEWER	DWL 05/24/22
PROJECT ID	82382
SUBSET	40
TOTAL	43
SHEET	2125
TOTAL	2696

APPROACH SLAB DATA			
POINT	STA.	OFFSET	EL.
G	185+78.35	36.00' LT.	689.41
H	185+77.30	24.00' LT.	689.91
I	185+74.15	12.00' RT.	690.99
J	185+73.10	24.00' RT.	690.53
P	186+08.35	36.00' LT.	688.95
R	186+07.30	24.00' LT.	689.45
S	186+04.15	12.00' RT.	690.33
T	186+03.10	24.00' RT.	689.87
U	188+38.36	36.00' LT.	683.02
V	188+37.31	24.00' LT.	683.54
W	188+34.13	12.00' RT.	683.83
X	188+33.11	24.00' RT.	683.38
DD	188+68.36	36.00' LT.	682.04
EE	188+67.31	24.00' LT.	682.55
FF	188+64.16	12.00' RT.	682.85
GG	188+63.11	24.00' RT.	682.40

BULKHEAD DATA			
POINT	STA.	OFFSET	EL.
A	185+76.35	36.00' LT.	689.44
B	185+75.30	24.00' LT.	689.94
C	185+73.20	0.00'	690.66
D	185+72.15	12.00' RT.	691.03
E	185+71.10	24.00' RT.	690.57
HH	188+70.37	36.00' LT.	681.97
II	188+69.32	24.00' LT.	682.48
JJ	188+67.22	0.00'	682.94
KK	188+66.17	12.00' RT.	682.78
LL	188+65.12	24.00' RT.	682.34

SLEEPER SLAB DATA			
POINT	STA.	OFFSET	EL.
A	185+76.35	36.00' LT.	688.02
B	185+75.30	24.00' LT.	688.52
C	185+73.20	0.00'	689.24
D	185+72.15	12.00' RT.	689.61
E	185+71.10	24.00' RT.	689.15
K	185+82.37	36.00' LT.	687.93
L	185+81.32	24.00' LT.	688.43
M	185+79.22	0.00'	689.13
N	185+78.17	12.00' RT.	689.48
O	185+77.12	24.00' RT.	689.03
Y	188+64.35	36.00' LT.	680.75
Z	188+63.30	24.00' LT.	681.27
AA	188+61.20	0.00'	681.72
BB	188+60.15	12.00' RT.	681.56
CC	188+59.10	24.00' RT.	681.12
HH	188+70.37	36.00' LT.	680.55
II	188+69.32	24.00' LT.	681.06
JJ	188+67.22	0.00'	681.52
KK	188+66.17	12.00' RT.	681.36
LL	188+65.12	24.00' RT.	680.92

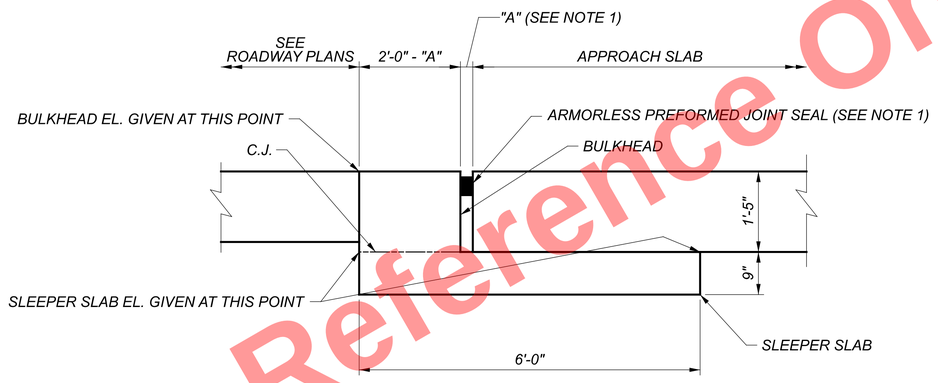

SECTION A-A

NOTES:

1. SEE STANDARD BRIDGE DRAWING AS-2-15 FOR ADDITIONAL DETAILS.
2. OFFSET IS MEASURED FROM ℄ I.R. 90 EB.

Preliminary Plans - For Reference Only

APPROACH SLAB DETAILS
CUY-90-1653R (BRIDGE 11)
I.R. 90 EB OVER CR-721 (E. 14TH ST.)

SFN 1807804
DESIGN AGENCY B&N burgessniple.com
DESIGNER BCS | CHECKER MAB
REVIEWER DWL 05/24/22
PROJECT ID 82382
SUBSET 41 | TOTAL 43
SHEET 2126 | TOTAL 2696

CUY-90-16.28 (CCG3A)

MODEL: Sheet PAPERSIZE: 34x22 (in.) DATE: 3/28/2025 TIME: 10:03:08 AM USER: Maia.Gallagher
pw:\\mb-us-pw.bentley.com:mb-us-pw-03\Documents\Cleveland_OH\01_Projects\ODOT\District12\82382\400-Engineering\Structures\SFN_1807804\Sheets\82382_SFN_1807804_SM003.dgn

FORWARD ABUTMENT (EPOXY COATED STEEL REINFORCEMENT - ECSR)											
MARK	MAT. TYPE	NO.	LENGTH	WEIGHT (LBS)	TYPE	DIMENSIONS					
						A	B	C	D	E	INC.
FA501	ECSR	34	30'-0"	1064	STR						
FA502	ECSR	11	14'-6"	166	STR						
FA503	ECSR	180	10'-7"	1987	18	5'-8"	2'-7"	2'-7"			
FA504	ECSR	47	13'-11"	682	18	2'-8"	5'-9"	5'-9"			
FA505	ECSR	11	23'-3"	267	STR						
FA506	ECSR	17	13'-9"	244	18	2'-8"	5'-8"	5'-8"			
FA507	ECSR	9	11'-11"	112	18	2'-8"	4'-9"	4'-9"			
FA508	ECSR	3	18'-11"	59	18	2'-8"	8'-3"	8'-3"			
FA509	ECSR	22	18'-3"	419	18	1'-2"	8'-8"	8'-8"			
FA510	ECSR	1	9'-1"	9	18	2'-8"	3'-4"	3'-4"			
FA511	ECSR	19	7'-11"	157	18	2'-8"	2'-9"	2'-9"			
FA512	ECSR	27	8'-3"	232	18	2'-8"	2'-11"	2'-11"			
FA513	ECSR	1	7'-9"	8	18	2'-8"	2'-8"	2'-8"			
FA514	ECSR	25	8'-7"	224	18	2'-8"	3'-1"	3'-1"			
FA515	ECSR	9	7'-5"	70	18	2'-8"	2'-6"	2'-6"			
FA516	ECSR	3	13'-1"	41	STR						
FA517	ECSR	3	6'-7"	21	20	0'-4"	3'-6"	3'-1"			
FA518	ECSR	3	6'-2"	19	20	0'-3"	3'-1"	3'-1"			
FA519	ECSR	20	1'-3"	26	STR						
FA520	ECSR	6	8'-5"	53	STR						
FA521	ECSR	10	21'-2"	221	STR						
FA522	ECSR	2	24'-1"	50	STR						
FA523	ECSR	2	26'-8"	56	STR						
FA524	ECSR	6	27'-2"	170	STR						
FA525	ECSR	44	5'-0"	229	STR						
FA526	ECSR	22	4'-11"	113	18	1'-2"	2'-0"	2'-0"			
		2	5'-11"				2'-6"	2'-6"			
FA527	ECSR	S.O.	TO	103	18	1'-2"	TO	TO			0'-4 5/8"
		7	8'-3"				3'-8"	3'-8"			
FA528	ECSR	2	8'-9"	18	20	2'-4"	5'-11"	2'-5"			
FA529	ECSR	8	19'-6"	163	STR						
FA530	ECSR	9	13'-5"	126	18	2'-8"	5'-6"	5'-6"			
FA801	ECSR	22	30'-0"	1762	STR						
FA802	ECSR	7	15'-10"	296	STR						
FA803	ECSR	5	23'-3"	310	STR						
FA804	ECSR	2	18'-8"	100	STR						
FA805	ECSR	1	8'-5"	22	20	0'-3"	3'-1"	5'-4"			
FA806	ECSR	4	13'-1"	140	STR						
FA807	ECSR	1	8'-10"	24	20	0'-4"	3'-6"	5'-4"			
FORWARD ABUTMENT ECSR TOTAL				9763							

DECK (EPOXY COATED STEEL REINFORCEMENT - ECSR)											
MARK	MAT. TYPE	NO.	LENGTH	WEIGHT (LBS)	TYPE	DIMENSIONS					
						A	B	C	D	E	INC.
S401	ECSR	836	30'-0"	16753	STR						
S402	ECSR	70	4'-4"	203	STR						
S403	ECSR	470	3'-10"	1204	3	0'-9"	0'-9"	2'-1"	0'-9"		
S404	ECSR	138	18'-8"	1721	STR						
S405	ECSR	938	8'-2"	5117	19	7'-8"					
S501	ECSR	674	30'-0"	21089	STR						
S502	ECSR	84	12'-4"	1081	STR						
S503	ECSR	948	33'-8"	33288	19	33'-1"					
S504	ECSR	948	33'-1"	32712	STR						
S505	ECSR	2	30'-0"	63	19	29'-5"					
DECK ECSR TOTAL				113231							

REAR ABUTMENT (EPOXY COATED STEEL REINFORCEMENT - ECSR)											
MARK	MAT. TYPE	NO.	LENGTH	WEIGHT (LBS)	TYPE	DIMENSIONS					
						A	B	C	D	E	INC.
RA501	ECSR	34	30'-0"	1064	STR						
RA502	ECSR	11	13'-9"	158	STR						
RA503	ECSR	11	14'-6"	166	STR						
RA504	ECSR	170	10'-7"	1877	18	5'-8"	2'-7"	2'-7"			
RA505	ECSR	14	19'-1"	279	18	1'-2"	9'-1"	9'-1"			
RA506	ECSR	8	13'-1"	109	18	2'-8"	5'-4"	5'-4"			
RA507	ECSR	8	13'-5"	112	18	2'-8"	5'-6"	5'-6"			
RA508	ECSR	59	13'-11"	856	18	2'-8"	5'-9"	5'-9"			
RA509	ECSR	2	11'-3"	23	18	2'-8"	4'-5"	4'-5"			
RA510	ECSR	4	11'-7"	48	18	2'-8"	4'-7"	4'-7"			
RA511	ECSR	4	12'-7"	52	18	2'-8"	5'-1"	5'-1"			
RA512	ECSR	3	18'-9"	59	18	2'-8"	8'-2"	8'-2"			
RA513	ECSR	8	7'-3"	60	18	2'-8"	2'-5"	2'-5"			
RA514	ECSR	3	7'-5"	23	18	2'-8"	2'-6"	2'-6"			
RA515	ECSR	40	9'-1"	379	18	2'-8"	3'-4"	3'-4"			
RA516	ECSR	9	7'-9"	73	18	2'-8"	2'-8"	2'-8"			
RA517	ECSR	8	7'-11"	66	18	2'-8"	2'-9"	2'-9"			
RA518	ECSR	18	8'-3"	155	18	2'-8"	2'-11"	2'-11"			
RA519	ECSR	6	6'-4"	40	20	0'-4"	3'-2"	3'-2"			
RA520	ECSR	6	18'-8"	117	STR						
RA521	ECSR	3	9'-7"	30	20	0'-3"	3'-2"	6'-5"			
RA522	ECSR	3	10'-1"	32	STR						
RA523	ECSR	4	14'-1"	59	1	1'-0"	13'-2"				
RA524	ECSR	4	13'-9"	57	18	12'-0"	1'-0"	1'-0"			
RA525	ECSR	16	1'-1"	18	STR						
RA526	ECSR	6	6'-8"	42	STR						
RA527	ECSR	28	5'-10"	170	STR						
RA528	ECSR	14	2'-11"	43	18	1'-2"	1'-0"	1'-0"			
		2	6'-1"				2'-7"	2'-7"			
RA529	ECSR	S.O.	TO	114	18	1'-2"	TO	TO			0'-7"
		7	9'-7"				4'-4"	4'-4"			
RA530	ECSR	10	12'-5"	130	STR						
		2	12'-5"								
RA531	ECSR	S.O.	TO	162	STR						1'-6 3/4"
		5	18'-8"								
RA532	ECSR	2	9'-7"	20	20	3'-7"	6'-3"	2'-5"			
RA801	ECSR	22	30'-0"	1762	STR						
RA802	ECSR	7	15'-1"	282	STR						
RA803	ECSR	6	14'-7"	234	STR						
RA804	ECSR	1	9'-8"	26	STR						
RA805	ECSR	4	8'-6"	91	20	0'-4"	3'-2"	5'-4"			
RA806	ECSR	1	14'-7"	39	20	0'-3"	3'-5"	11'-2"			
RA807	ECSR	3	14'-7"	117	STR						
REAR ABUTMENT ECSR TOTAL				9144							

NOTES:

1. BAR SIZE: THE BAR SIZE IS INDICATED IN THE BAR MARK. THE MARK BEGINS WITH ONE OR TWO LETTERS THAT IDENTIFY THE BAR LOCATION. THE NEXT ONE OR TWO DIGITS ARE THE BAR SIZE. THE FINAL TWO DIGITS ARE THE SEQUENCE NUMBERS.

   EXAMPLE: A501
   A = ABUTMENT
   5 = #5 BAR
   01 = SEQUENCE NUMBER

2. BAR DIMENSIONS SHOWN ARE OUT TO OUT UNLESS NOTED OTHERWISE.
3. ALL STEEL REINFORCING IS TO BE EPOXY COATED.
4. STD. WRITTEN IN PLACE OF A DIMENSION INDICATES A STANDARD BEND AT THE END OF A BAR.
5. STR. IN THE BAR TYPE COLUMN INDICATES A STRAIGHT BAR.
6. RAD. INDICATES THE INSIDE RADIUS UNLESS OTHERWISE NOTED.
7. INCR. INDICATES THE LENGTH INCREMENT FOR SERIES BARS.
8. SEE SHEET 43/43 FOR BAR BENDING DIAGRAMS.

Preliminary Plans - For Reference Only

REINFORCING STEEL LIST 1 OF 2
CUY-90-1653R (BRIDGE 11)
I.R. 90 EB OVER CR-721 (E. 14TH ST.)

SFN 1807804
DESIGN AGENCY
B&N burgessniple.com
DESIGNER BCS | CHECKER DBH
REVIEWER DWL 05/24/22
PROJECT ID 82382
SUBSET 42 | TOTAL 43
SHEET 2127 | TOTAL 2696

CUY-90-16.28 (CCG3A)

MODEL: Sheet PAPERSIZE: 34x22 (in.) DATE: 3/20/2025 TIME: 10:03:14 AM USER: Maia.Gallagher
pw:\\mb-us-pw.bentley.com:mb-us-pw-03\Documents\Cleveland_OH\01_Projects\ODOT\District12\82382\400-Engineering\Structures\SFN_1807804\Sheets\82382_SFN_1807804_SL001.dgn

PIER (EPOXY COATED STEEL REINFORCEMENT - ECSR)

MARK	MAT. TYPE	NO.	LENGTH	WEIGHT (LBS)	TYPE	DIMENSIONS A	B	C	D	E	INC.
P401	ECSR	52	10'-6"	365	16	2'-6"	2'-6"				
P402	ECSR	104	3'-4"	232	99	2'-6"					
P501	ECSR	12	30'-0"	375	STR						
P502	ECSR	17	4'-7"	81	18	3'-2"	0'-10"	0'-10"			
P503	ECSR	12	33'-6"	419	STR						
P504	ECSR	2	18'-0"	38	STR						
P505	ECSR	12	12'-3"	153	18	3'-2"	4'-8"	4'-8"			
P506	ECSR	36	13'-1"	491	18	11'-8"	0'-10"	0'-10"			
P507	ECSR	88	8'-1"	742	18	6'-8"	0'-10"	0'-10"			
P508	ECSR	24	11'-8"	292	STR						
P509	ECSR	24	6'-8"	167	STR						
P601	ECSR	180	11'-2"	3019	18	2'-2"	4'-8"	4'-8"			
P602	ECSR	14	11'-2"	235	1	1'-0"	10'-4"				
P603	ECSR	7	20'-4"	214	18	18'-8"	1'-0"	1'-0"			
P604	ECSR	58	12'-2"	1060	18	3'-2"	4'-8"	4'-8"			
P701	ECSR	4	33'-9"	276	STR						
P702	ECSR	4	30'-0"	245	STR						
P703	ECSR	64	14'-4"	1875	18	6'-8"	4'-0"	4'-0"			
P801	ECSR	5	30'-0"	401	STR						
P802	ECSR	5	36'-1"	482	STR						
P901	ECSR	48	10'-0"	1632	1	1'-7"	8'-9"				
P902	ECSR	48	15'-6"	2530	STR						
P1001	ECSR	12	30'-0"	1549	1	1'-10"	28'-6"				
P1002	ECSR	12	40'-9"	2104	1	1'-10"	39'-3"				
P1003	ECSR	44	19'-2"	3629	18	11'-8"	4'-1"	4'-1"			
			PIER ECSR TOTAL	22606							

SEMI-INTEGRAL DIAPHRAGMS (EPOXY COATED STEEL REINFORCEMENT - ECSR)

MARK	MAT. TYPE	NO.	LENGTH	WEIGHT (LBS)	TYPE	DIMENSIONS A	B	C	D	E	INC.
D401	ECSR	4	2'-8"	7	STR						
D501	ECSR	228	9'-1"	2160	18	2'-8"	3'-4"	3'-4"			
D502	ECSR	120	7'-1"	887	18	2'-2"	2'-7"	2'-7"			
D503	ECSR	6	10'-7"	66	16	2'-8"	2'-4"				
D504	ECSR	20	6'-8"	139	18	2'-5"	2'-3"	2'-3"			
D801	ECSR	86	5'-2"	1186	28	2'-11"	1'-5"				
D802	ECSR	8	16'-6"	352	1	1'-4"	15'-5"				
D803	ECSR	40	30'-0"	3204	STR						
D804	ECSR	8	20'-4"	434	1	1'-4"	19'-3"				
D805	ECSR	16	20'-0"	854	STR						
D806	ECSR	4	15'-6"	166	STR						
D807	ECSR	12	23'-7"	756	STR						
D808	ECSR	8	13'-6"	288	STR						
D809	ECSR	16	9'-0"	384	28	4'-2"	4'-0"				
			DIAPHRAGMS ECSR TOTAL	10883							

PARAPETS (GLASS FIBER REINFORCED POLYMER REINFORCEMENT - GFRP)

MARK	MAT. TYPE	NO.	LENGTH	TOTAL LENGTH	TYPE	DIMENSIONS A	B	C	D	E	INC.
R401	GFRP	77	30'-0"	2310'-0"	STR						
R402	GFRP	11	27'-3"	299'-9"	STR						
R403	GFRP	22	17'-1"	375'-10"	STR						
R404	GFRP	24	10'-0"	240'-0"	STR						
R405	GFRP	12	5'-1"	61'-0"	STR						
R406	GFRP	92	10'-0"	920'-0"	STR						
R407	GFRP	8	15'-10"	126'-8"	STR						
R408	GFRP	12	6'-4"	76'-0"	11	2'-5"	0'-1 1/2"	1'-4"	2'-6"	0'-5"	
R602	GFRP	88	30'-0"	2640'-0"	STR						
R603	GFRP	11	3'-0"	33'-0"	STR						
R604	GFRP	22	29'-7"	650'-10"	STR						
R605	GFRP	22	1'-4"	29'-4"	STR						
R606	GFRP	116	10'-6"	1218'-0"	STR						
R608	GFRP	8	4'-0"	32'-0"	STR						
			PARAPET NO. 4 GFRP TOTAL	4409'-3"							
			PARAPET NO. 6 GFRP TOTAL	4603'-2"							

PARAPETS (EPOXY COATED STEEL REINFORCEMENT - ECSR)

MARK	MAT. TYPE	NO.	LENGTH	WEIGHT (LBS.)	TYPE	DIMENSIONS A	B	C	D	E/RAD.	INC.
R601	ECSR	414	13'-5"	8343	98	5'-6"				0'-2"	
R607	ECSR	116	13'-10"	2410	98	5'-9"				0'-2"	
R609	ECSR	287	6'-11"	2982	2	3'-3"	3'-3"	0'-6"	0'-5 1/4"	0'-2"	
R610	ECSR	253	7'-6"	2850	41A	0'-9 1/2"	2'-4"	1'-0"	0'-7"	0'-5 1/4"	
R611	ECSR	34	8'-0"	409	41A	0'-9 1/2"	2'-7"	1'-0"	0'-7"	0'-5 1/4"	
		4	4'-6"				3'-8"				
R612	ECSR	S.O.	TO	325	1	1'-0"	TO				0'-1"
		11	5'-4"				4'-6"				
R613	ECSR	16	4'-6"	108	1	1'-0"	3'-8"				
			PARAPET ECSR TOTAL	17427							

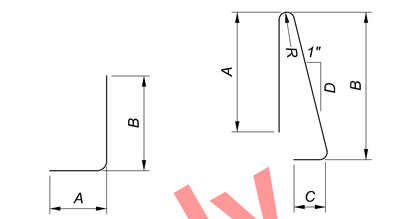

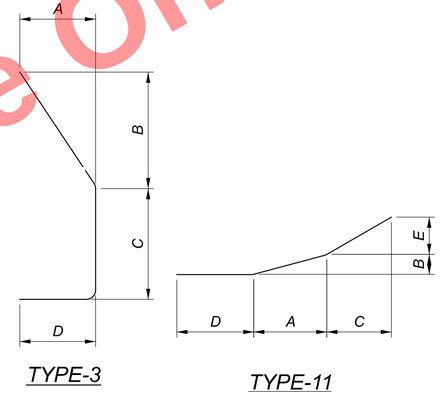

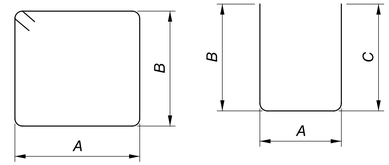

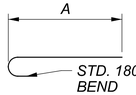

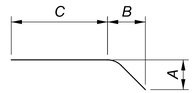

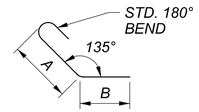

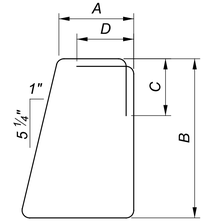

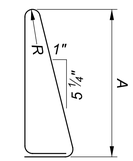

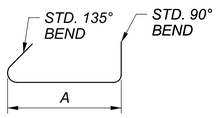

NOTES:

1. SEE SHEET 42/43 FOR NOTES.

Preliminary Plans - For Reference Only

REINFORCING STEEL LIST 2 OF 2
CUY-90-1653R (BRIDGE 11)
I.R. 90 EB OVER CR-721 (E. 14TH ST.)

SFN 1807804
DESIGN AGENCY B&N burgessniple.com
DESIGNER BCS | CHECKER DBH
REVIEWER DWL 05/24/22
PROJECT ID 82382
SUBSET 43 | TOTAL 43
SHEET 2128 | TOTAL 2696

CUY-90-16.28 (CCG3A)

MODEL: Sheet PAPERSIZE: 34x22 (in.) DATE: 3/28/2025 TIME: 10:03:20 AM USER: Maia.Gallagher
pw:\\mb-us-pw.bentley.com:mb-us-pw-03\Documents\Cleveland_OH\01_Projects\ODOT\District12\82382\400-Engineering\Structures\SFN_1807804\Sheets\82382_SFN_1807804_SL002.dgn

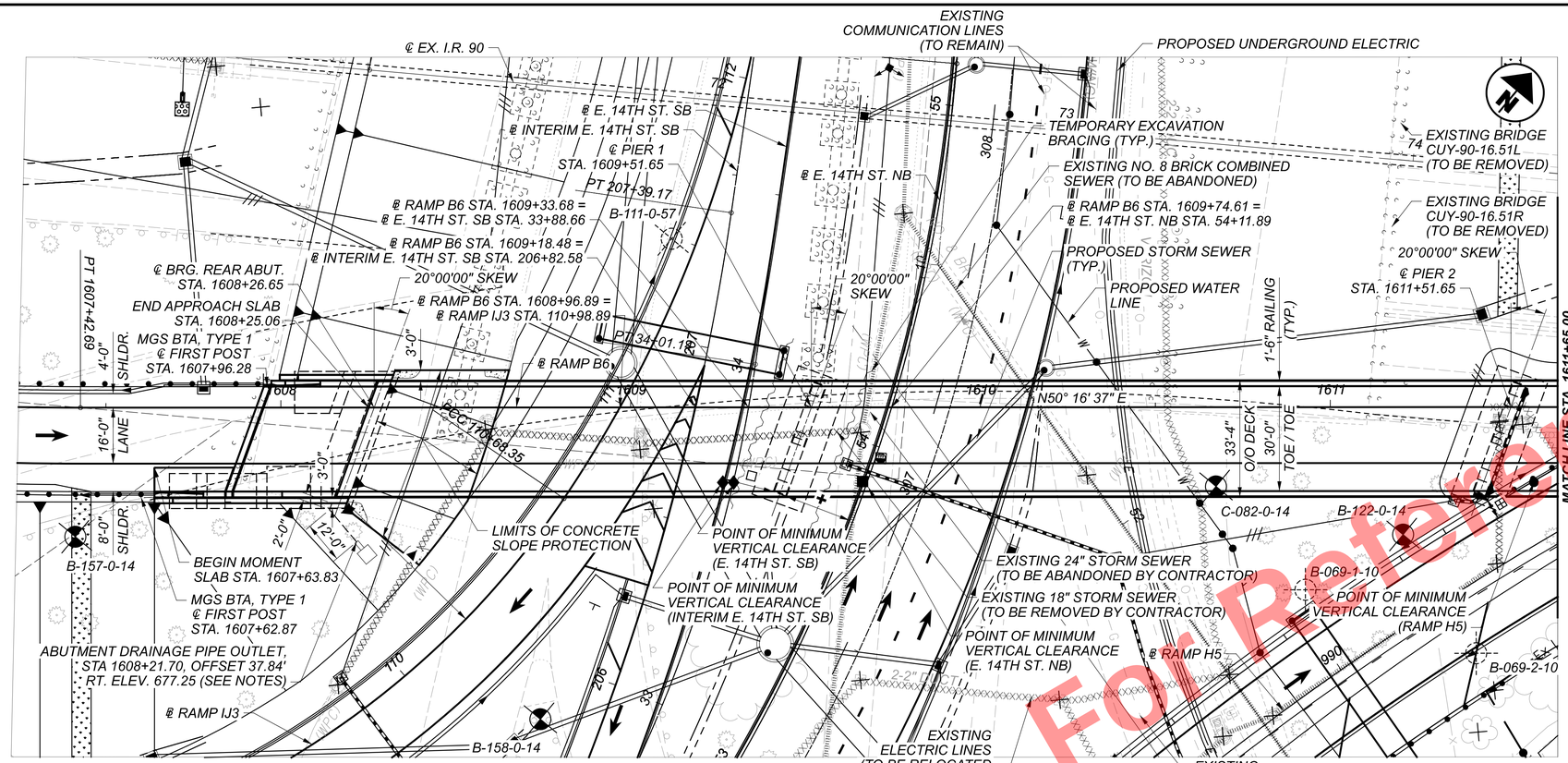

PLAN

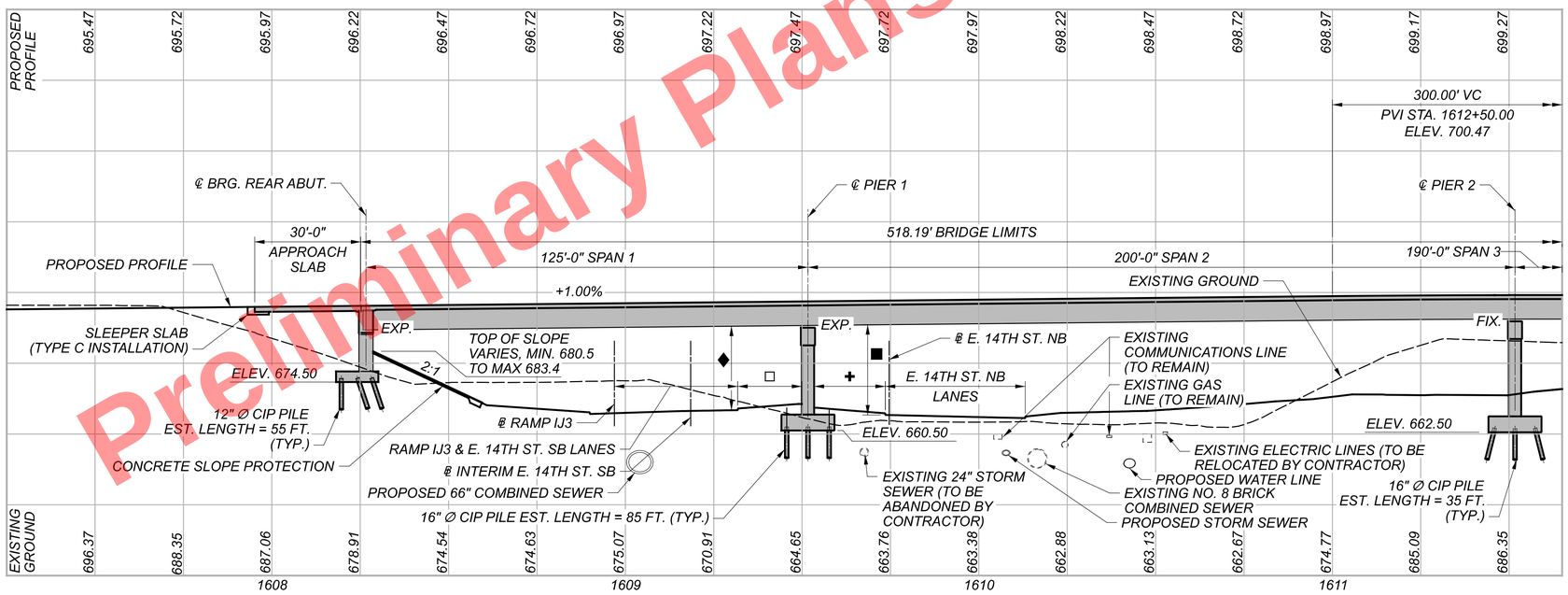

PROFILE ALONG ℄ RAMP B6

BENCHMARK DATA

BM-59 STA. 1610+31.80, ELEV. 660.15, OFFSET 132.17 RT. MAG NAIL SET AT NOSE OF CONCRETE DRAINAGE CHANNEL, BTWN E. 14TH ST. AND COMMUNITY COLLEGE AVE.

BM-62 STA. 1612+77.43, ELEV. 672.11, OFFSET 690.58 LT. RAILROAD SPIKE IN EAST FACE OF POWER POLE NO. 121784 AT NORTHWEST CORNER OF E. 18TH ST. AND CARNEGIE AVE.

FOR ADDITIONAL BENCHMARK INFORMATION, SEE ROADWAY PLANS

NOTES

EARTHWORK LIMITS SHOWN ARE APPROXIMATE. ACTUAL SLOPES SHALL CONFORM TO PLAN CROSS SECTIONS.

FOR HORIZONTAL CURVE DATA, SEE SHEET 2 / 53 .

FOR DRAINAGE PIPE OUTLET DETAILS, SEE SHEET 10 / 53 .

DESIGN TRAFFIC:
2015 ADT = 6400 *2015 ADTT = 512*
2035 ADT = 7500 *2035 ADTT = 600*
DIRECTIONAL DISTRIBUTION = N/A

LEGEND

- *BORING LOCATION*
- *HISTORIC BORING LOCATION*

RAMP IJ3 AND E. 14TH ST. S.B. (INTERIM AND FINAL)

- ◆ *16'-6" REQUIRED MINIMUM VERTICAL CLEARANCE*
  23'-2½" ACTUAL MINIMUM VERTICAL CLEARANCE (INTERIM)
  23'-9" ACTUAL MINIMUM VERTICAL CLEARANCE (FINAL)
- □ *REQUIRED CLEAR ZONE: 4'-0"*
  ACTUAL CLEARANCE: 14'-3" (INTERIM)
  ACTUAL CLEARANCE: 11'-8" (FINAL)
  PROTECTION PROVIDED: NO
- ▲ *REQUIRED CLEAR ZONE: 30'-0"*
  ACTUAL CLEARANCE: 41'-5"
  PROTECTION PROVIDED: NO

E. 14TH ST. N.B. (INTERIM AND FINAL)

- ■ *16'-6" REQUIRED MINIMUM VERTICAL CLEARANCE*
  25'-0" ACTUAL MINIMUM VERTICAL CLEARANCE
- ✚ *REQUIRED CLEAR ZONE: 4'-0"*
  ACTUAL CLEARANCE: 18'-6"
  PROTECTION PROVIDED: NO

RAMP H5

- ● *16'-6" REQUIRED MINIMUM VERTICAL CLEARANCE*
  16'-11¾" ACTUAL MINIMUM VERTICAL CLEARANCE
- ⊞ *REQUIRED CLEAR ZONE: 30'-0"*
  ACTUAL CLEARANCE: 7'-2"
  PROTECTION PROVIDED: TYPE D BARRIER

PROPOSED STRUCTURE

TYPE: 3-SPAN CONTINUOUS PLATE GIRDERS, A709 GRADE 50 (PAINTED) WITH COMPOSITE CONCRETE DECK, SUPPORTED ON REINFORCED CONCRETE SEMI-INTEGRAL ABUTMENTS AND PIERS

SPANS: 125'-0", 200'-0", 190'-0" C/C BEARINGS ALONG ℄ RAMP B6

ROADWAY: 30'-0" TOE/TOE PARAPET

LOADING: HL93 AND 60 PSF FUTURE WEARING SURFACE (FWS)

SKEW: 20°00'00" LEFT FORWARD

WEARING SURFACE: 1" MONOLITHIC CONCRETE

APPROACH SLABS: 30'-0" LONG, 17" THICK (AS-1-15) TYPE C INSTALLATION (AS-2-15)

ALIGNMENT: TANGENT

SUPERELEVATION: 0.016 FT./FT.

DECK AREA: 17273 SF

STRUCTURE FILE NUMBER: 1807806

COORDINATES: LATITUDE 41° 29' 44.80" N
LONGITUDE 81° 40' 40.56" W

Preliminary Plans - For Reference Only

SITE PLAN (1 OF 2)
CUY-90-1652S (BRIDGE 12)
OVER RAMP IJ3, CR-721 (E. 14TH ST.), AND RAMP H5
RAMP B6 OVER

SFN	1807806
DESIGN AGENCY	HDR
DESIGNER	CMR
CHECKER	JML
REVIEWER	DWW 1/08/24
PROJECT ID	82382
SUBSET	1
TOTAL	53
SHEET	2129
TOTAL	2696

CUY-90-16.28 (CCG3A)

MODEL: 82382_SFN_0000012_SP003 PAPERSIZE: 34x22 (in.) DATE: 3/28/2025 TIME: 7:25:37 AM USER: Rohit.Bk
pw:\\mb-us-pw.bentley.com:mb-us-pw-03\Documents\Cleveland_OH\01_Projects\ODOT\District12\82382400-Engineering\Structures\SFN_1807806\Sheets\82382_SFN_1807806_SP001.dgn

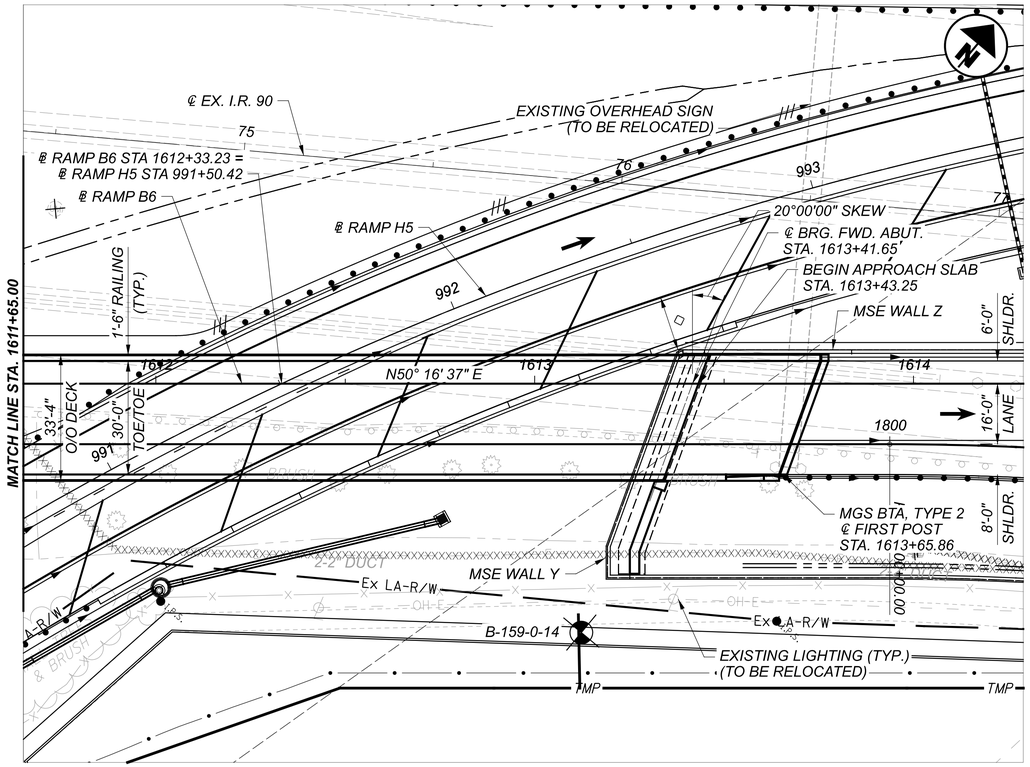

PLAN

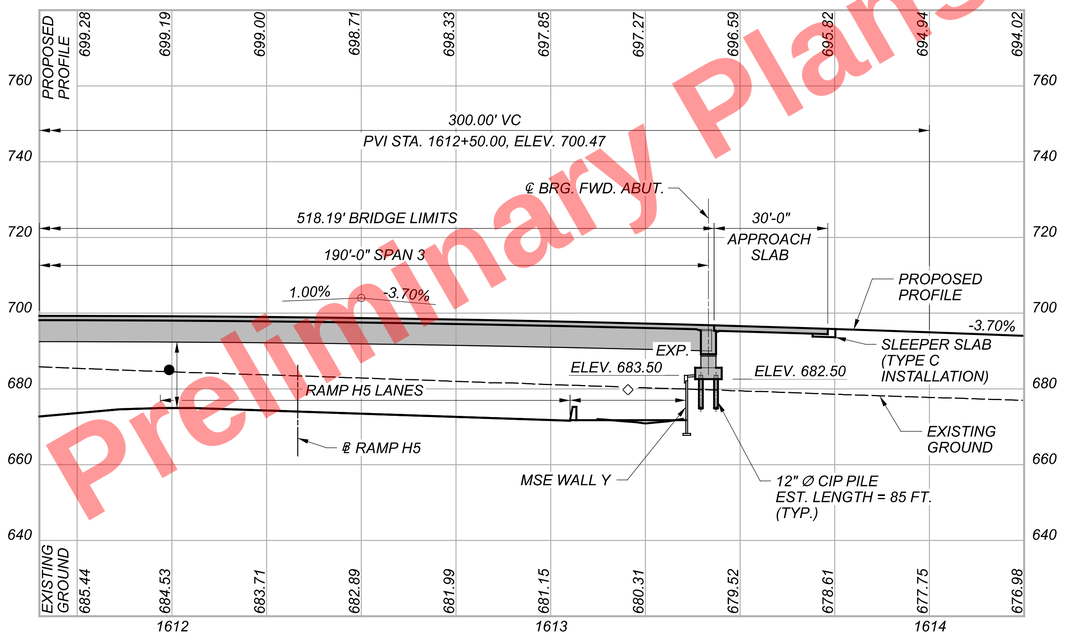

PROFILE ALONG ℄ RAMP B6

LEGEND

- BORING LOCATION
- HISTORIC BORING LOCATION

RAMP H5

- ● 16'-6" REQUIRED MINIMUM VERTICAL CLEARANCE
  16'-11¾" ACTUAL MINIMUM VERTICAL CLEARANCE
- ◇ REQUIRED CLEAR ZONE: 30'-0"
  ACTUAL CLEARANCE: 14'-4"
  PROTECTION PROVIDED: TYPE D BARRIER

RAMP IJ3 CURVE PRIJ3-04
P.I. = Sta. 109+39.13
Δ = 69°22'21" LT
Dc = 23°00'00"
R = 249.11'
T = 172.40'
L = 301.62'
E = 53.84'

RAMP IJ3 CURVE PRIJ3-05
P.I. = Sta. 111+50.37
Δ = 25°48'24" LT
Dc = 16°00'08"
R = 358.05'
T = 82.03'
L = 161.27'
E = 9.28'

RAMP H5 CURVE PRH5-03
P.I. = Sta. 992+53.42
Δ = 48°11'11" RT
Dc = 06°30'00"
R = 881.47'
T = 394.18'
L = 741.33'
E = 84.12'

RAMP B6 CURVE PRB6-01
P.I. = Sta. 1605+84.05
Δ = 20°30'15" LT
Dc = 07°00'00"
R = 818.51'
T = 162.84'
L = 321.49'
E = 16.04

INTERIM E. 14TH ST. SB CURVE PIE14S-02
P.I. = Sta. 205+12.19
Δ = 37°45'18" LT
Dc = 8°00'08"
R = 716.00'
T = 244.83'
L = 471.81'
E = 40.70'

E. 14TH ST. SB CURVE PE14S-01
P.I. = Sta. 32+71.61
Δ = 37°41'15" LT
Dc = 14°00'00"
R = 409.26'
T = 139.67'
L = 269.20'
E = 23.18'

E. 14TH ST. NB CURVE PE14N-01
P.I. = Sta. 53+84.42
Δ = 31°26'49" LT
Dc = 12°00'00"
R = 477.46'
T = 134.42'
L = 262.06'
E = 18.56

BORING DATA

BORING	STATION	OFFSET
B-157-0-14	1607+41.27	36.89' RT
B-158-0-14	1608+74.13	89.09' RT
B-159-0-14	1613+12.32	65.72' RT
B-122-0-14	1611+20.81	36.43' RT
C-082-0-14	1610+67.32	22.64' RT
B-111-0-57	1609+11.74	48.20' LT
B-069-1-10	1610+92.88	52.20' RT
B-069-2-10	1611+41.70	70.36' RT

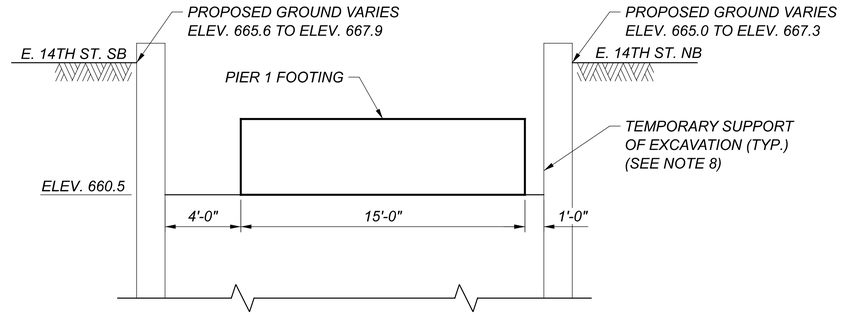

TEMPORARY EXCAVATION BRACING DETAIL

TEMPORARY EXCAVATION BRACING NOTES:

1. DESIGN IS IN ACCORDANCE WITH THE LOAD AND RESISTANCE FACTOR DESIGN METHODOLOGY.
2. THE STEEL SHEET PILING SHALL CONFORM TO ASTM A328 AND HAVE A MINIMUM SECTION MODULUS OF 13.2 IN^3/FT FOR FY = 38.5 KSI
3. THE TEMPORARY SHEET PILING SHALL HAVE THE FOLLOWING MINIMUM ELEVATIONS:
   TOP/WALL ELEV. 668.50
   BOTTOM/WALL ELEV. 640.80
4. THE TEMPORARY SHEET PILING SHALL BE PAID FOR UNDER ITEM 503 - COFFERDAMS AND EXCAVATION BRACING, AS PER PLAN.
5. ALTERNATE SHEET PILING MEETING THE FOLLOWING PROPERTIES ARE PERMITTED:

Fy (ksi)	SM (IN^3/FT)
50	10.2
60	8.5

6. THE CONTRACTOR, AT HIS OWN EXPENSE, MAY PROVIDE AN ALTERNATE DESIGN FOR THE TEMPORARY SHEETING CONFORMING TO SECTION 501.05 OF THE ODOT CMS. FOR THE ALTERNATE DESIGN, THE CONTRACTOR SHALL SUBMIT SIX (6) SETS OF CALCULATIONS AND DRAWINGS. THE DETAILED DRAWINGS SHALL SHOW SIZES OF ALL STRUCTURAL MEMBERS AND DETAILS OF THE CONNECTIONS. THE DRAWINGS AND CALCULATIONS SHALL BE PREPARED BY A PROFESSIONAL ENGINEER REGISTERED IN OHIO AND SHALL BEAR THEIR SEAL AND SIGNATURE. THE DRAWINGS AND CALCULATIONS SHALL BE SUBMITTED A MINIMUM OF SIX (6) WEEKS PRIOR TO THE START OF CONSTRUCTION.
7. THE SHEET PILING LAYOUT AND DESIGN WAS PERFORMED ASSUMING THE CONTRACTOR WILL GRADE THE EXCAVATION TO THE NORTH AND SOUTH OF THE PIER 1 FOUNDATION AT A 1.5:1 SLOPE UNTIL MEETING THE EXISTING GROUND.
8. FOR LIMITS OF TEMPORARY EXCAVATION BRACING, SEE SHEET 1/ 53.

Preliminary Plans - For Reference Only

SITE PLAN (2 OF 2)
CUY-90-1652S (BRIDGE 12)
RAMP B6 OVER RAMP IJ3, CR-721 (E. 14TH ST.), AND RAMP H5

SFN 1807806
DESIGN AGENCY HDR
DESIGNER CMR | CHECKER JML
REVIEWER DWW 1/08/24
PROJECT ID 82382
SUBSET 2 | TOTAL 53
SHEET 2130 | TOTAL 2696

CUY-90-16.28 (CCG3A)

MODEL: 82382_SFN_0000012_SP4 PAPERSIZE: 34x22 (in.) DATE: 3/28/2025 TIME: 7:26:06 AM USER: Rohit.Bk
pw:\\mb-us-pw.bentley.com:mb-us-pw-03\Documents\Cleveland_OH\01_Projects\ODOT\District12\82382\400-Engineering\Structures\SFN_1807806\Sheets\82382_SP002.dgn

SHEET	DESCRIPTION
1	SITE PLAN (1 OF 2)
2	SITE PLAN (2 OF 2)
3	SHEET INDEX
4	GENERAL NOTES (1 OF 2)
5	GENERAL NOTES (2 OF 2)
6	ESTIMATED QUANTITIES
7	FOUNDATION PLAN
8	REAR ABUTMENT PLAN AND ELEVATION
9	REAR ABUTMENT FOOTING PLAN
10	REAR ABUTMENT DETAILS
11	WINGWALL ELEVATION AND DETAILS (1 OF 2)
12	WINGWALL ELEVATION AND DETAILS (2 OF 2)
13	REAR ABUTMENT GEOSYNTHETIC WALL DETAILS
14	FORWARD ABUTMENT PLAN AND ELEVATION
15	FORWARD ABUTMENT FOOTING PLAN AND SECTIONS
16	FORWARD ABUTMENT SECTIONS
17	FORWARD ABUTMENT GEOSYNTHETIC WALL DETAILS
18	PIER 1 PLAN AND ELEVATION
19	PIER 1 DETAILS
20	PIER 2 PLAN AND ELEVATION
21	PIER 2 DETAILS
22	TRANSVERSE SECTION
23	FRAMING PLAN
24	GIRDER ELEVATION
25	GIRDER DETAILS (1 OF 2)
26	GIRDER DETAILS (2 OD 2)
27	FIELD SPLICE DETAILS
28	DEFLECTION AND CAMBER (1 OF 2)
29	DEFLECTION AND CAMBER (2 OF 2)
30	BEARING LOCATION PLAN
31	BEARING DETAILS (1 OF 3)
32	BEARING DETAILS (2 OF 3)
33	BEARING DETAILS (3 OF 3)
34	SLAB PLAN (1 OF 2)
35	SLAB PLAN (2 OF 2)
36	RAILING PLAN
37	APPROACH SLAB RAILING DETAILS (1 OF 2)
38	APPROACH SLAB RAILING DETAILS (2 OF 2)
39	REAR ABUTMENT END DIAPHRAGM DETAILS
40	FORWARD ABUTMENT END DIAPHRAGM DETAILS
41	END DIAPHRAGM DETAILS
42	SCREED AND TOP OF HAUNCH ELEVATIONS (1 OF 2)
43	SCREED AND TOP OF HAUNCH ELEVATIONS (2 OF 2)
44	FINAL DECK SURFACE ELEVATIONS (1 OF 2)
45	FINAL DECK SURFACE ELEVATIONS (2 OF 2)
46	REAR ABUTMENT APPROACH SLAB PLAN
47	FORWARD ABUTMENT APPROACH SLAB PLAN
48	MOMENT SLAB AND RAILING DETAILS
49	REINFORCEMENT LIST (1 OF 5)
50	REINFORCEMENT LIST (2 OF 5)
51	REINFORCEMENT LIST (3 OF 5)
52	REINFORCEMENT LIST (4 OF 5)
53	REINFORCEMENT LIST (5 OF 5)

Preliminary Plans - For Reference Only

CUY-90-16.28 (CCG3A)

MODEL: Sheet PAPERSIZE: 34x22 (in.) DATE: 3/28/2025 TIME: 7:26:39 AM USER: RohitLBk
pw:\\mb-us-pw.bentley.com:mb-us-pw-03\Documents\Cleveland_OH01_Projects\ODOT\District12\82382400-Engineering\Structures\SFN_1807806\Sheets\82382_SFN_1807806_SN003.dgn

SHEET INDEX

CUY-90-1652S (BRIDGE 12)

RAMP B6 OVER RAMP IJ3, CR-721 (E. 14TH ST.), AND RAMP H5

SFN	1807806
DESIGN AGENCY	HDR
DESIGNER	GDS
CHECKER	JTW
REVIEWER	DWW 1/08/24
PROJECT ID	82382
SUBSET	3
TOTAL	53
SHEET	2131
TOTAL	2696

STANDARD DRAWINGS AND SUPPLEMENTAL SPECIFICATIONS:
REFER TO THE FOLLOWING STANDARD BRIDGE DRAWINGS:

AS-1-15	REVISED	07-17-2015
AS-2-15	REVISED	01-18-2019
SBR-1-20	REVISED	07-19-2024
SICD-2-14	REVISED	01-15-2021

REFER TO THE FOLLOWING SUPPLEMENTAL SPECIFICATIONS:

800	DATED	SEE TITLE SHEET
840	DATED	04-15-2022
869	DATED	10-17-2014

DESIGN SPECIFICATIONS:
THIS STRUCTURE CONFORMS TO THE 9th EDITION OF THE "LRFD BRIDGE DESIGN SPECIFICATIONS" ADOPTED BY THE AMERICAN ASSOCIATION OF STATE HIGHWAY AND TRANSPORTATION OFFICIALS, 2020 AND THE ODOT BRIDGE DESIGN MANUAL, 2020.

SPECIAL DESIGN SPECIFICATIONS:
THIS BRIDGE REQUIRED THE USE OF A TWO-DIMENSIONAL PLATE AND ECCENTRIC BEAM (PEB) MODEL TO ANALYZE THE STRUCTURE. THE COMPUTER PROGRAM USED FOR THIS STRUCTURAL ANALYSIS WAS MDX. THIS MODEL ACCOUNTED FOR THE WARPING STIFFNESS OF THE GIRDERS ACCORDING TO ARTICLE 4.6.3.3.2 OF THE AASHTO LRFD BRIDGE DESIGN SPECIFICATIONS. THE BRIDGE COMPONENTS DESIGNED BY THIS MODEL INCLUDE THE STEEL GIRDERS AND INTERMEDIATE CROSS FRAMES.

DEAD LOAD DISTRIBUTION:
THE SELF-WEIGHT OF THE GIRDERS, BRACING MEMBERS, DECK SLAB, AND HAUNCHES ARE CALCULATED BY MDX. THE WEIGHT OF THE CROSS FRAME CONNECTIONS AND SHEAR CONNECTORS WERE CALCULATED AND APPLIED TO THE GIRDERS AS A UNIFORM DISTRIBUTED LOAD. WEIGHT OF THE BOLTED FIELD SPLICES WERE APPLIED TO THE GIRDERS AS POINT LOADS AT THE SPLICE LOCATIONS. THE ADDITIONAL WEIGHT OF THE THICKENED DECK OVERHANGS WAS APPLIED AS A DISTRIBUTED LOAD TO THE FASCIA GIRDERS. THE WEIGHT OF THE CONCRETE END DIAPHRAGMS WAS APPLIED AS A POINT LOAD AT THE ABUTMENT BEARING LOCATIONS BASED ON TRIBUTARY WIDTH. BRIDGE RAILING LOADS WERE DISTRIBUTED TO THE FASCIA GIRDER AND INTERIOR GIRDERS AT 70% AND 30% RESPECTIVELY. THE WEIGHT OF THE FUTURE WEARING SURFACE WAS DISTRIBUTED EQUALLY TO ALL GIRDERS.

LIVE LOAD DISTRIBUTION:
THE PEB MODEL USED AN INFLUENCE SURFACE FOR LIVE LOAD ANALYSIS. LIVE LOADS ARE DISTRIBUTED TO THE GIRDERS BASED ON THE RELATIVE STIFFNESS OF THE CROSS SECTION.

OPERATIONAL IMPORTANCE:
A LOAD MODIFIER OF 1.0 HAS BEEN ASSUMED FOR THE DESIGN OF THIS STRUCTURE IN ACCORDANCE WITH THE AASHTO LRFD BRIDGE DESIGN SPECIFICATIONS, ARTICLE 1.3.5, AND THE ODOT BRIDGE DESIGN MANUAL.

DESIGN LOADING:
VEHICULAR LIVE LOAD: HL93
FUTURE WEARING SURFACE (FWS) OF 0.060 KIPS/SQ. FT

MONOLITHIC WEARING SURFACE:
MONOLITHC WEARING SURFACE IS ASSUMED, FOR DESIGN PURPOSES TO BE 1" THICK.

DESIGN DATA:
CONCRETE CLASS QC2:
COMPRESSIVE STRENGTH 4.5 KSI (SUPERSTRUCTURE, MOMENT SLAB AND RAILING)
CONCRETE CLASS QC1:
COMPRESSURE STRENGTH 4.0 KSI (SUBSTRUCTURE)
EPOXY COATED STEEL REINFORCEMENT:
MINIMUM YIELD STRENGTH 60 KSI (DECK, RAILING, PIERS AND ABUTMENTS)
GFRP REINFORCEMENT:
C&MS 705.28 (MODULUS = 8700 KSI) (RAILING)
STRUCTURAL STEEL:
ASTM A709 GRADE 50: YIELD STRENGTH 50 KSI
STEEL CIP PILES:
ASTM A252, STEEL PIPE GRADE 3
MINIMUM YIELD STRENGTH 45 KSI

PILE DRIVING CONSTRAINTS:
PRIOR TO DRIVING FORWARD ABUTMENT PILES TO THE ULTIMATE BEARING VALUE (UBV), CONSTRUCT THE MSE WALL AND THE BRIDGE APPROACH EMBANKMENT BEHIND THE ABUTMENT UP TO THE BOTTOM OF THE FOOTING FOR A MINIMUM DISTANCE OF 200 FEET BEHIND THE FORWARD ABUTMENT. THE CONTRACTOR MAY PRE-DRIVE ABUTMENT PILES BEFORE CONSTRUCTING MSE WALLS. PRE-DRIVING CONSISTS OF INSTALLING THE ABUTMENT PILES INTO THE SOIL ONLY AS FAR AS NECESSARY SO THAT THE PILE WILL REMAIN VERTICAL DURING MSE WALL CONSTRUCTION. IF PRE-DRIVING PILES, INSTALL PILE SLEEVES AROUND PILES BEFORE CONSTRUCTING THE MSE WALL. PROVIDE AT LEAST 3-FT OF PILE ABOVE THE TOP OF THE PILE SLEEVE TO MEET THE REQUIREMENTS OF C&MS 507.09 REGARDING SPLICES.

IF NOT PRE-DRIVING ABUTMENT PILES, INSTALL THE ABUTMENT PILES THROUGH PILE SLEEVES AFTER THE ABOVE REQUIRED MSE WALL AND EMBANKMENT HAVE BEEN CONSTRUCTED AND THE SPECIFIED WAITING PERIOD HAS ELAPSED.

PILE DESIGN LOADS (ULTIMATE BEARING VALUE):
REAR ABUTMENT PILES:
THE ULTIMATE BEARING VALUE IS 227 KIPS PER PILE
12-IN DIAMETER PILES 60 FEET LONG, ORDER LENGTH
1 DYNAMIC LOAD TESTING ITEM, 1 RESTRIKE

PIER 1 PILES:
THE ULTIMATE BEARING VALUE IS 424 KIPS PER PILE
16-IN DIAMETER PILES 90 FEET LONG, ORDER LENGTH
1 DYNAMIC LOAD TESTING ITEM, 1 RESTRIKE

PIER 2 PILES:
THE ULTIMATE BEARING VALUE IS 414 KIPS PER PILE
16-IN DIAMETER PILES 40 FEET LONG, ORDER LENGTH
1 DYNAMIC LOAD TESTING ITEM, 1 RESTRIKE

FORWARD ABUTMENT PILES:
THE ULTIMATE BEARING VALUE IS 248 KIPS PER PILE
12-IN DIAMETER PILES 90 FEET LONG, ORDER LENGTH
1 DYNAMIC LOAD TESTING ITEM, 1 RESTRIKE

PROVIDE PLAIN CYLINDRICAL CASINGS WITH A MINIMUM PILE WALL THICKNESS NOTED BELOW, FOR THE CAST-IN-PLACE REINFORCED CONCRETE PILES.
REAR ABUTMENT THICKNESS = 0.25"
PIER 1 THICKNESS = 0.25"
PIER 2 THICKNESS = 0.25"
FORWARD ABUTMENT THICKNESS = 0.25"

PILES DRIVEN TO FULL ESTIMATED LENGTH WITH PILE/SOIL SETUP:
THE ULTIMATE BEARING VALUE (UBV) IS 227 KIPS PER PILE FOR THE 12-INCH DIAMETER CAST-IN-PLACE REAR ABUTMENT PILES, 424 KIPS PER PILE FOR THE 16-INCH DIAMETER CAST-IN-PLACE PIER 1 PILES, 414 KIPS PER PILE FOR THE 16-INCH DIAMETER CAST-IN-PLACE PIER 2 PILES, AND 248 KIPS PER PILE FOR THE 12-INCH DIAMETER CAST-IN-PLACE FORWARD ABUTMENT PILES. PART OF THE UBV WILL BE ACHIEVED THROUGH PILE/SOIL SETUP, WHICH IS A TIME DEPENDENT INCREASE IN RESISTANCE THAT OCCURS IN SOME SOILS.

NOTIFY THE ENGINEER AT LEAST 5 DAYS BEFORE DRIVING PILES SO THAT THE ENGINEER CAN NOTIFY THE DISTRICT GEOTECHNICAL ENGINEER, THE OFFICE OF CONSTRUCTION ADMINISTRATION, AND THE OFFICE OF GEOTECHNICAL ENGINEERING.

DRIVE THE FIRST TWO PILES AT THE REAR ABUTMENT TO THE FULL ESTIMATED LENGTH OF 55 FEET, PIER 1 TO THE FULL ESTIMATED LENGTH OF 85 FEET, PIER 2 TO THE FULL ESTIMATED LENGTH OF 75 FEET, AND THE FORWARD ABUTMENT TO THE FULL ESTIMATED LENGTH OF 85 FEET. PERFORM DYNAMIC LOAD TESTING ON BOTH PILES WHILE DRIVING. AFTER DRIVING AND TESTING THE FIRST TWO PILES, DRIVE THE REMAINING PILES IN THE SUBSTRUCTURE TO THE SAME DEPTH AS THE FIRST TWO PILES. AFTER DRIVING ALL PILES TO THE ESTIMATED LENGTH, CEASE ALL DRIVING OPERATIONS AT THE SUBSTRUCTURE FOR A PERIOD OF 14 DAYS. INCLUDE THE WAITING PERIOD AS A SEPARATE ACTIVITY IN THE PROGRESS SCHEDULE. AFTER THE WAITING PERIOD, PERFORM PILE RESTRIKES ON BOTH OF THE FIRST TWO PILES (ONE RESTRIKE ITEM).

SUBMIT ALL TEST RESULTS TO THE ENGINEER. IF THE RESTRIKE TEST RESULTS INDICATE THAT BOTH PILES ACHIEVED THE REQUIRED UBV, ALL PILES IN THE SUBSTRUCTURE MAY BE ACCEPTED BY THE ENGINEER.

IF THE RESTRIKE TEST RESULTS INDICATE THAT EITHER OF THE TWO PILES DID NOT ACHIEVE THE REQUIRED UBV, IMMEDIATELY NOTIFY THE ENGINEER SO THAT THE ENGINEER CAN NOTIFY THE DISTRICT GEOTECHNICAL ENGINEER, THE OFFICE OF CONSTRUCTION ADMINISTRATION, AND THE OFFICE OF GEOTECHNICAL ENGINEERING. THE ENGINEER WILL REVIEW THE TEST RESULTS AND ESTABLISH ADDITIONAL RESTRIKE TESTING OR DRIVING CRITERIA FOR THE PILING IN THE SUBSTRUCTURE WITH THE ASSISTANCE OF THE DISTRICT GEOTECHNICAL ENGINEER, THE OFFICE OF CONSTRUCTION ADMINISTRATION, AND THE OFFICE OF GEOTECHNICAL ENGINEERING.

IF DIRECTED BY THE ENGINEER, PERFORM ADDITIONAL RESTRIKE TESTING OR DRIVE ALL PILES IN THE SUBSTRUCTURE TO THE ESTABLISHED DRIVING CRITERIA. THE DEPARTMENT WILL PAY FOR SPLICING OF THE PILES BEYOND THE ESTIMATED LENGTH PROVIDED IN THE PLANS UNDER C&MS 109.05 WITH A NEGOTIATED PRICE PER SPLICE.

THIS PLAN NOTE INCLUDES A QUANTITY OF ONE EACH ITEM 523 DYNAMIC LOAD TESTING, AS PER PLAN AND A QUANTITY OF ONE EACH ITEM 523 RESTRIKE, AS PER PLAN PER EACH SUBSTRUCTURE UNIT.

PROPRIETARY RETAINING WALL DATA:
THE PROPRIETARY WALL SUPPLIER SHALL DESIGN THE INTERNAL STABILITY OF A MECHANICALLY STABILIZED EARTH (MSE) WALL IN ACCORDANCE WITH SS840 TO SUPPORT THE FORWARD ABUTMENT. THE DESIGN FOR INTERNAL STABILITY SHALL INCLUDE A NOMINAL (I.E. UNFACTORED) HORIZONTAL STRIP LOAD DUE TO FRICTION (FR) FROM THE SUPERSTRUCTURE OF 4.1 K/FT APPLIED PERPENDICULAR TO THE FACE OF WALL AT THE BASE OF THE CONCRETE FOOTING. THIS STRIP LOAD DOES NOT INCLUDE EARTH PRESSURE LOADS FROM THE ABUTMENT BACKFILL. HOWEVER, THE PROPRIETARY WALL SUPPLIER SHALL INCLUDE EARTH PRESSURE LOADS FROM THE ABUTMENT BACKFILL IN THE DESIGN CALCULATIONS.

DECK PLACEMENT DESIGN ASSUMPTIONS:
THE FOLLOWING ASSUMPTIONS OF STRUCTURE MEANS AND METHODS WERE MADE FOR THE ANALYSIS AND DESIGN OF THE SUPERSTRUCTURE. THE CONTRACTOR IS RESPONSIBLE FOR THE DESIGN OF THE FALSEWORK SUPPORT SYSTEM WITHIN THESE PARAMETERS AND WILL ASSUME RESPONSIBILITY FOR SUPERSTRUCTURE ANALYSIS FOR THE DEVIATION FROM THESE DESIGN ASSUMPTIONS.

AN EIGHT WHEEL FINISHING MACHINE WITH A MAXIMUM WHEEL LOAD OF 2.263 KIPS.

A MINIMUM OUT-TO-OUT WHEEL SPACING AT EACH END OF THE MACHINE OF 103".

A MAXIMUM SPACING OF OVERHANG FALSEWORK BRACKETS OF 48".

A MAXIMUM DISTANCE FROM THE CENTERLINE OF THE FASCIA GIRDER TO THE FACE OF THE SAFETY HANDRAIL OF 65".

ITEM 203 - EMBANKMENT, AS PER PLAN:
PLACE AND COMPACT EMBANKMENT MATERIAL IN 6 INCH LIFTS FOR THE CONSTRUCTION OF THE APPROACH EMBANKMENT BETWEEN STATIONS 1607+25.00 TO 1614+44.00.

ITEM 503 - COFFERDAMS AND EXCAVATION BRACING, AS PER PLAN:
THE DESIGN SHOWN ON THE PLANS FOR THE TEMPORARY SUPPORT OF EXCAVATION IS ONE REPRESENTATIVE DESIGN THAT MAY BE USED TO CONSTRUCT THE PROJECT. THE CONTRACTOR MAY CONSTRUCT THE DESIGN SHOWN ON THE PLANS OR PREPARE AN ALTERNATE DESIGN TO SUPPORT THE SIDES OF EXCAVATIONS. IF CONSTRUCTING AN ALTERNATE DESIGN FOR TEMPORARY SUPPORT OF EXCAVATION, PREPARE AND PROVIDE PLANS IN ACCORDANCE WITH C&MS 501.05. THE DEPARTMENT WILL PAY FOR THE TEMPORARY SUPPORT OF EXCAVATION AT THE CONTRACT LUMP SUM PRICE FOR COFFERDAMS AND EXCAVATION BRACING. THE DEPARTMENT WILL NOT MAKE ADDITIONAL PAYMENT FOR PROVIDING AN ALTERNATE DESIGN.

ITEM 512 - SEALING OF CONCRETE SURFACES, AS PER PLAN, (PERMANENT GRAFFITI PROTECTION):
APPLY A PERMANENT GRAFFITI COATING QUALIFIED ACCORDING TO S1083 THAT IS COMPATIBLE WITH THE CONCRETE SEALER OVER WHICH IT IS APPLIED. APPLY THE GRAFFITI COATING IN ACCORDANCE WITH THE MANUFACTURER'S PRINTED INSTRUCTIONS. GRAFFITI PROTECTION SHALL BE PLACED 10 FT ABOVE GRADE AT ALL ABUTMENTS, WINGWALLS, AND RETAINING WALLS.

ITEM 516 - ARMORLESS PREFORMED JOINT SEAL, AS PER PLAN:
DUE TO ANTICIPATED BRIDGE MOVEMENT, SET APPROACH SLAB JOINT OPENING (DIMENSION "A") TO 3" AT 60°F. THE MAXIMUM AND MINIMUM ANTICIPATED JOINT OPENING ARE 5¼" AND 1½" RESPECTIVELY. FOR ADDITIONAL NOTES AND DETAILS, SEE STANDARD DWG. AS-2-15.

COLORS AND SURFACE TREATMENT
ABUTMENTS, PIERS, PARAPETS AND DECK OVERHANGS: SEAL SURFACES AS NOTED IN THE BRIDGE PLANS WITH EPOXY-URETHANE USING FEDERAL STANDARD COLOR NUMBER SW 7022 (ALPACA).

STRUCTURAL STEEL: PAINT ALL STRUCTURAL STEEL FOR THE FULL LENGTH OF THE BRIDGE WITH SYSTEM IZEU. THE PRIME COAT SHALL BE PER CMS 708.01. THE FINISH COAT FOR ALL STRUCTURAL STEEL SHALL BE FEDERAL COLOR NUMBER SW 7008 (ALABASTER).

Preliminary Plans - Plans For Reference Only

GENERAL NOTES (1 OF 2)
CUY-90-1652S (BRIDGE 12)
RAMP IJ3, CR-721 (E. 14TH ST.), AND RAMP H5
RAMP B6 OVER RAMP H5

SFN	1807806
DESIGN AGENCY	HDR
DESIGNER	CMR
CHECKER	BTA
REVIEWER	DWW 1/08/24
PROJECT ID	82382
SUBSET	4
TOTAL	53
SHEET	2132
TOTAL	2696

CUY-90-16.28 (CCG3A)
MODEL: Sheet PAPERSIZE: 34x22 (in.) DATE: 6/9/2025 TIME: 1:15:52 PM USER: Tolga.Feran
pw:\\mb-us-pw.bentley.com:mb-us-pw-03\Documents\Cleveland_OH\01_Projects\ODOT\District12\82382\400-Engineering\Structures\SFN_1807806\Sheets\82382_SFN_1807806_SN001.dgn

ITEM 511, CLASS QC2 CONCRETE, MISC.: MOMENT SLAB AND RAILING:

ALL MATERIAL, LABOR AND INCIDENTALS NECESSARY TO FURNISH AND PLACE CONCRETE FOR THE MOMENT SLABS AND RAILINGS SHALL BE INCLUDED FOR PAYMENT WITH ITEM 511, CLASS QC2 CONCRETE. PAYMENT FOR THIS ITEM SHALL INCLUDE ALL JOINT MATERIALS IN CONTACT WITH THE MOMENT SLAB. ALL STEEL REINFORCEMENT EMBEDDED IN THE MOMENT SLAB AND WITHIN THE RAILING SHALL BE INCLUDED WITH ITEM 509, EPOXY COATED STEEL REINFORCEMENT FOR PAYMENT. ALL GFRP REINFORCEMENT IN THE RAILING SHALL BE INCLUDED WITH ITEM 509, NO. 4 DEFORMED GFRP REINFORCEMENT. THIS ITEM SHALL ALSO REQUIRE QUALITY CONTROL, MEETING THE REQUIREMENTS PER CMS 455 AND CMS 511.04.

STRUCTURE GROUNDING:

STRUCTURE TO BE GROUNDED AS PER LIGHTING GENERAL NOTES SHEET 1684.
QUANTITY CARRIED TO LIGHTING SUBSUMMARY.

ABBREVIATIONS:

THE FOLLOWING ABBREVIATIONS HAVE BEEN USED THROUGHOUT THESE PLANS TO INDICATE THE DESIGNATIONS CONTAINED IN THE LEGEND BELOW:

ABUT. - ABUTMENT
APPR. - APPROACH
℄ - BASELINE
BRG. - BEARING
BRGS. - BEARINGS
BTA - BRIDGE TERMINAL ASSEMBLY
℄ - CENTERLINE
C/C - CENTER TO CENTER
CIP - CAST-IN-PLACE
CP - COMPLETE PENETRATION BUTT WELD
CMS - CONSTRUCTION AND MATERIAL SPECIFICATIONS
CONC. - CONCRETE
CONST. - CONSTRUCTION
C.P.P. - CORRUGATED PLASTIC PIPE
CS - INDICATES BUTT WELD SUBJECT TO COMPRESSIVE STRESSES ONLY
CU YD - CUBIC YARD
CVN - CHARPY V-NOTCH TESTING
DIA. - DIAMETER
ELEV., EL. - ELEVATION
EX. - EXISTING
EXP. - EXPANSION
F.A. - FORWARD ABUTMENT
F/F - FACE TO FACE
F.S. - FIELD SPLICE
FT/FT - FOOT PER FOOT
FTG. - FOOTING
FWD. - FORWARD
GEN. - GENERAL
INT. - INTEGRAL
LF - LEFT FORWARD
LT. - LEFT
MAX. - MAXIMUM
M.E. - MATCH EXISTING
MIN. - MINIMUM
MISC. - MISCELLANEOUS
MOT - MAINTENANCE OF TRAFFIC
NO./# - NUMBER
O/O - OUT TO OUT
P.C.P.P - PERFORATED CORRUGATED PLASTIC PIPE
P.E.J.F. - PREFORMED EXPANSION JOINT FILLER
PG - PROFILE GRADE
PGL - PROFILE GRADE LINE
PROP. - PROPOSED
PT - POINT OF TANGENCY
PVC - POINT OF VERTICAL CURVATURE
PVI - POINT OF VERTICAL INTERSECTION
PVT - POINT OF VERTICAL TANGENCY
R. - RADIUS
R.A. - REAR ABUTMENT
RCP - ROCK CHANNEL PROTECTION
RF - RIGHT FORWARD
RT. - RIGHT
R/W - RIGHT OF WAY
SAN. - SANITARY
SER. - SERIES
SHLDR. - SHOULDER
SHT. - SHEET
S.O. - SERIES OF
SPA. - SPACES OR SPACING
SR - STATE ROUTE
STA. - STATION
STD. - STANDARD
STM. - STORM
STR. - STRAIGHT
TBM - TEMPORARY BENCH MARK
TEMP. - TEMPORARY
T.O.S. - TOE OF SLOPE
T/PARAPET - TOE OF PARAPET
T/T - TOE TO TOE
TYP. - TYPICAL
U.G. - UNDERGROUND
VAR. - VARIES
VC - VERTICAL CURVE
VERT. - VERTICAL
W/O - WITHOUT

Preliminary Plans - For Reference Only

GENERAL NOTES (2 OF 2)
CUY-90-1652S (BRIDGE 12)
RAMP B6 OVER RAMP IJ3, CR-721 (E. 14TH ST.), AND RAMP H5

SFN 1807806
DESIGN AGENCY HDR
DESIGNER CMR | CHECKER BTA
REVIEWER DWW 1/08/24
PROJECT ID 82382
SUBSET 5 | TOTAL 53
SHEET 2133 | TOTAL 2696

CUY-90-16.28 (CCG3A)

MODEL: Sheet PAPERSIZE: 34x22 (in.) DATE: 3/28/2025 TIME: 7:26:51 AM USER: RohitBk
pw:\\mb-us-pw.bentley.com:mb-us-pw-03\Documents\Cleveland_OH101_Projects\ODOT\District12\82382\400-Engineering\Structures\SFN_1807806\Sheets\82382_SFN_1807806_SN002.dgn

ESTIMATED QUANTITIES

CALCULATED BY: CMR DATE: 06/15/2022
CHECKED BY: DGJ DATE: 02/16/2024

PARTICIPATION	ITEM	EXTENSION	TOTAL	UNIT	DESCRIPTION	ABUTMENTS	PIERS	SUPERSTR.	GENERAL	SHEET REF.
03/IMS/08	203	20001	566	CY	EMBANKMENT, AS PER PLAN	566				4/53
03/IMS/08	204	30010	81	CY	GRANULAR MATERIAL, TYPE B	81				
03/IMS/08	204	50000	615	SY	GEOTEXTILE FABRIC	615				
03/IMS/08	503	11101	LS		COFFERDAMS AND EXCAVATION BRACING, AS PER PLAN				LS	4/53
03/IMS/08	503	21100	943	CY	UNCLASSIFIED EXCAVATION	291	652			
03/IMS/08	505	11100	LS		PILE DRIVING EQUIPMENT MOBILIZATION				LS	
03/IMS/08	507	00500	4120	FT	12" CAST-IN-PLACE REINFORCED CONCRETE PILES, DRIVEN	4120				
03/IMS/08	507	00550	4440	FT	12" CAST-IN-PLACE REINFORCED CONCRETE PILES, FURNISHED	4440				
03/IMS/08	507	00700	2370	FT	16" CAST-IN-PLACE REINFORCED CONCRETE PILES, DRIVEN		2370			
03/IMS/08	507	00750	2580	FT	16" CAST-IN-PLACE REINFORCED CONCRETE PILES, FURNISHED		2580			
03/IMS/08	509	10000	273631	LB	EPOXY COATED STEEL REINFORCEMENT	29539	65237	176586	2269	
03/IMS/08	509	30020	18062	FT	NO. 4 DEFORMED GFRP REINFORCEMENT			17768	294	
03/IMS/08	511	33500	2	EACH	SEMI-INTEGRAL DIAPHRAGM GUIDE	2				
03/IMS/08	511	34446	572	CY	CLASS QC2 CONCRETE WITH QC/QA, BRIDGE DECK			572		
03/IMS/08	511	34450	175	CY	CLASS QC2 CONCRETE WITH QC/QA, BRIDGE DECK (PARAPET)			175		
03/IMS/08	511	41012	106	CY	CLASS QC1 CONCRETE WITH QC/QA, PIER ABOVE FOOTINGS		106			
03/IMS/08	511	44112	161	CY	CLASS QC1 CONCRETE WITH QC/QA, ABUTMENT NOT INCLUDING FOOTING	161				
03/IMS/08	511	46512	361	CY	CLASS QC1 CONCRETE WITH QC/QA, FOOTING	176	185			
03/IMS/08	511	53012	13	CY	CLASS QC2 CONCRETE, MISC.: MOMENT SLAB AND RAILING WITH QC/QA				13	5/53
03/IMS/08	512	10001	149	SY	SEALING OF CONCRETE SURFACES, AS PER PLAN (PERMANENT GRAFFITI PROTECTION)	149				4/53
03/IMS/08	512	10100	1961	SY	SEALING OF CONCRETE SURFACES (EPOXY-URETHANE)	257	239	1298	167	
03/IMS/08	512	33000	35	SY	TYPE 2 WATERPROOFING	35				
03/IMS/08	513	10280	1073134	LB	STRUCTURAL STEEL MEMBERS, LEVEL 4			1073134		
03/IMS/08	513	20000	4992	EACH	WELDED STUD SHEAR CONNECTORS			4992		
03/IMS/08	514	00060	45370	SF	FIELD PAINTING STRUCTURAL STEEL, INTERMEDIATE COAT			45370		
03/IMS/08	514	00066	45370	SF	FIELD PAINTING STRUCTURAL STEEL, FINISH COAT			45370		
03/IMS/08	516	10011	71	FT	ARMORLESS PREFORMED JOINT SEAL, AS PER PLAN				71	4/53
03/IMS/08	516	13600	17	SF	1" PREFORMED EXPANSION JOINT FILLER				17	
03/IMS/08	516	13900	304	SF	2" PREFORMED EXPANSION JOINT FILLER	304				
03/IMS/08	516	14020	132	FT	SEMI-INTEGRAL ABUTMENT EXPANSION JOINT SEAL	132				
03/IMS/08	518	20000	134	SY	PREFABRICATED GEOCOMPOSITE DRAIN	134				
03/IMS/08	518	21200	52	CY	POROUS BACKFILL WITH GEOTEXTILE FABRIC	52				
03/IMS/08	518	40000	167	FT	6" PERFORATED CORRUGATED PLASTIC PIPE	167				
03/IMS/08	518	40011	16	FT	6" NON-PERFORATED CORRUGATED PLASTIC PIPE, INCLUDING SPECIALS, AS PER PLAN	16				10/53
03/IMS/08	523	20001	4	EACH	DYNAMIC LOAD TESTING, AS PER PLAN	2	2			4/53
03/IMS/08	523	20501	4	EACH	RESTRIKE, AS PER PLAN	2	2			4/53
03/IMS/08	526	30011	223	SY	REINFORCED CONCRETE APPROACH SLABS WITH QC/QA (T=17"), AS PER PLAN				223	46/53 AND 47/53
03/IMS/08	526	90031	70	FT	TYPE C INSTALLATION, AS PER PLAN				70	46/53 AND 47/53
03/IMS/08	601	21001	212	SY	CONCRETE SLOPE PROTECTION, AS PER PLAN				212	15/53
03/IMS/08	840	23001	513	CY	SELECT GRANULAR BACKFILL, AS PER PLAN	513				13/53 AND 17/53
03/IMS/08	863	00100	2276	SY	GEOGRID, TYPE P1	2276				
03/IMS/08	869	00101	16	EACH	HIGH LOAD MULTI-ROTATIONAL (HLMR) BEARINGS, AS PER PLAN			16		31/53 THRU 33/53

Preliminary Plans - For Reference Only

ESTIMATED QUANTITIES
CUY-90-1652S (BRIDGE 12)
RAMP IJ3, CR-721 (E. 14TH ST.), AND RAMP H5
RAMP B6 OVER RAMP H5

SFN 1807806
DESIGN AGENCY HDR
DESIGNER CMR | CHECKER JTW
REVIEWER DWW 1/08/24
PROJECT ID 82382
SUBSET 6 | TOTAL 53
SHEET 2134 | TOTAL 2696

CUY-90-16.28 (CCG3A)

MODEL: Sheet PAPERSIZE: 34x22 (in.) DATE: 3/28/2025 TIME: 7:26:56 AM USER: Rohit Bk
pw:\\mb-us-pw.bentley.com:mb-us-pw-03\Documents\Cleveland_OH\01_Projects\ODOT\District12\82382\400-Engineering\Structures\SFN_1807806\Sheets\82382_SFN_1807806_SQ001.dgn

PILE NO.	LOCATION	PILE SIZE	EST. LENGTH
1 - 44	REAR ABUT.	12" DIA. CIP	55'-0"
45 - 62	PIER 1	16" DIA. CIP	85'-0"
63 - 86	PIER 2	16" DIA. CIP	35'-0"
87 - 106	FWD. ABUT.	12" DIA. CIP	85'-0"

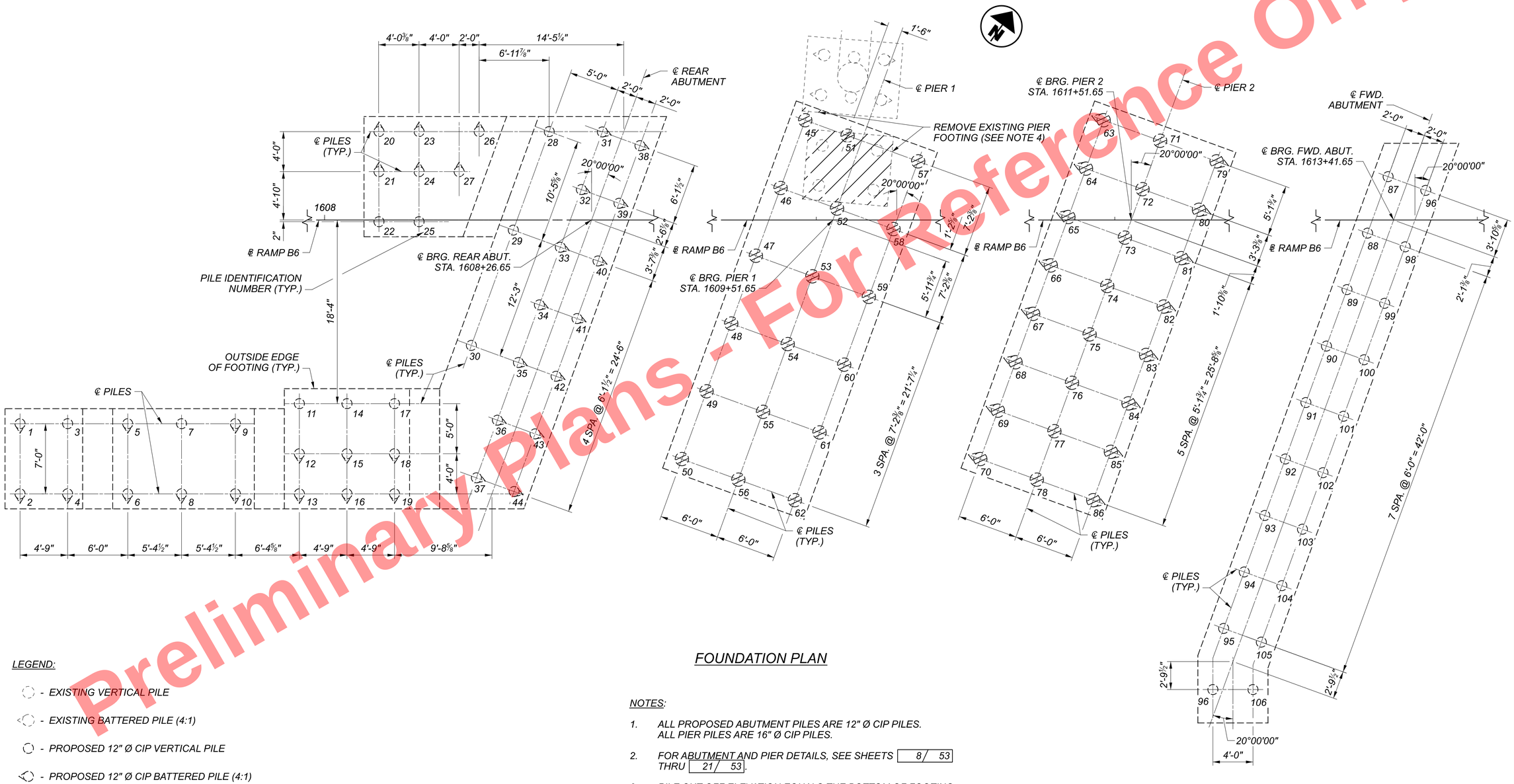

Preliminary Plans - For Reference Only

LEGEND:

- ◌ - *EXISTING VERTICAL PILE*
- ◌ - *EXISTING BATTERED PILE (4:1)*
- ◌ - *PROPOSED 12" Ø CIP VERTICAL PILE*
- ◌ - *PROPOSED 12" Ø CIP BATTERED PILE (4:1)*
- ◌ - *PROPOSED 16" Ø CIP VERTICAL PILE*
- ◌ - *PROPOSED 16" Ø CIP BATTERED PILE (4:1)*

FOUNDATION PLAN

NOTES:

1. *ALL PROPOSED ABUTMENT PILES ARE 12" Ø CIP PILES. ALL PIER PILES ARE 16" Ø CIP PILES.*
2. *FOR ABUTMENT AND PIER DETAILS, SEE SHEETS 8/53 THRU 21/53.*
3. *PILE CUT OFF ELEVATION EQUALS THE BOTTOM OF FOOTING PLUS 1'-0" EMBEDMENT.*
4. *EXISTING BRIDGE FOOTING REMOVAL IS REQUIRED TO CONTRUCT THE PROPOSED PIER 1 FOOTING. SEE PLANS FOR CUY-90-1653R (BRIDGE 11) FOR REMOVAL PAY ITEM AND ADDITIONAL NOTES.*

FOUNDATION PLAN
CUY-90-1652S (BRIDGE 12)
RAMP B6 OVER RAMP IJ3, CR-721 (E. 14TH ST.), AND RAMP H5

SFN	1807806
DESIGN AGENCY	HDR
DESIGNER	ADW
CHECKER	CMR
REVIEWER	DWW 1/08/24
PROJECT ID	82382
SUBSET	7
TOTAL	53
SHEET	2135
TOTAL	2696

CUY-90-16.28 (CCG3A)

MODEL: Sheet PAPERSIZE: 34x22 (in.) DATE: 3/28/2025 TIME: 7:27:02 AM USER: Rohit.Bk
pw:\\mb-us-pw.bentley.com:mb-us-pw-03\Documents\Cleveland_OH\01_Projects\ODOT\District12\82382\400-Engineering\Structures\SFN_1807806\Sheets\82382_SFN_1807806_SO001.dgn

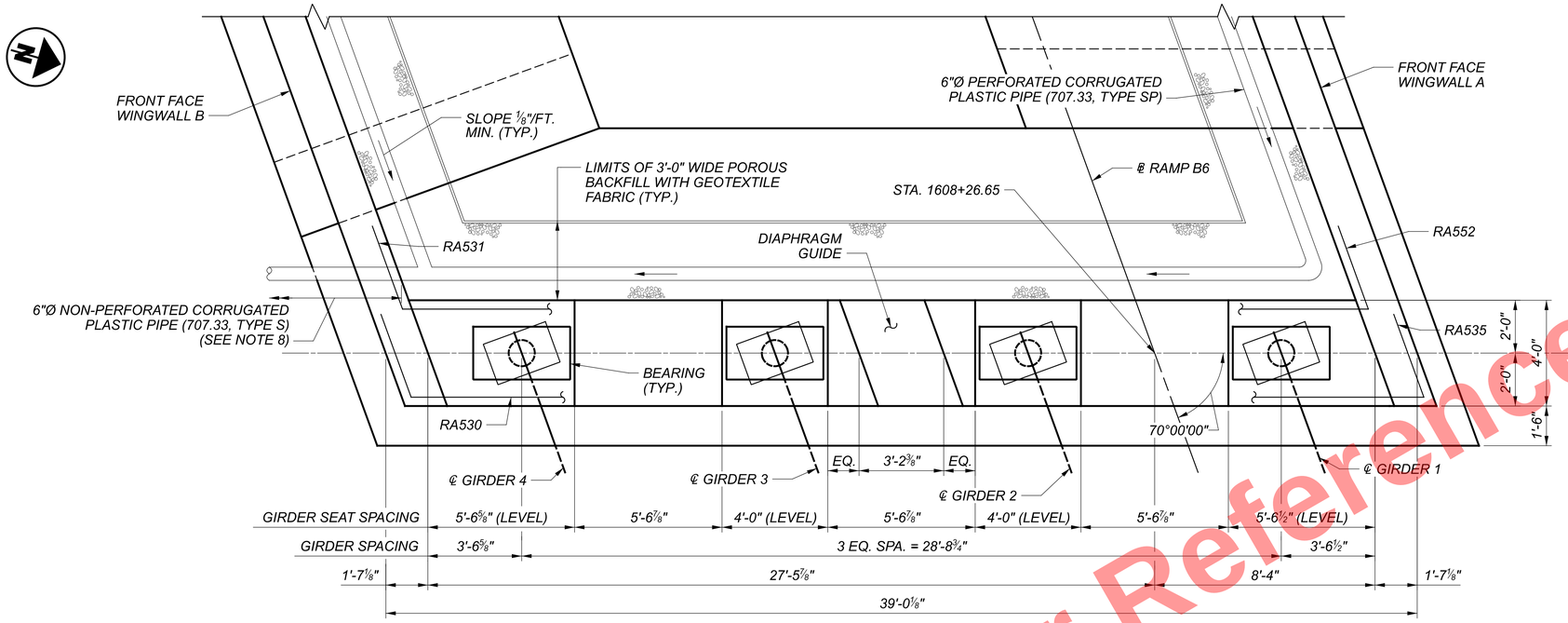

PLAN

(PILES, END DIAPHRAGM, AND PEJF NOT SHOWN FOR CLARITY)

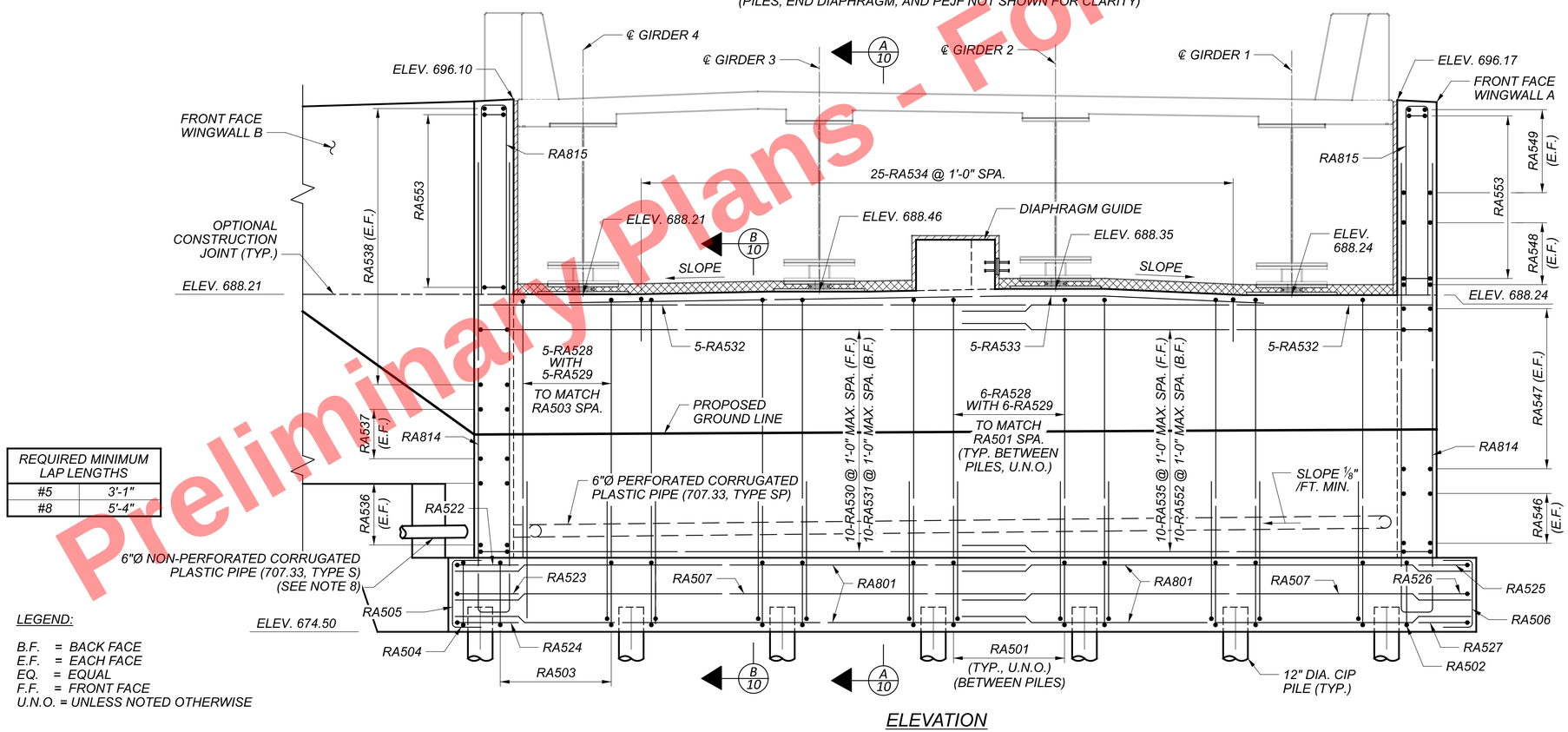

ELEVATION

REQUIRED MINIMUM LAP LENGTHS	
#5	3'-1"
#8	5'-4"

LEGEND:

B.F. = BACK FACE
E.F. = EACH FACE
EQ. = EQUAL
F.F. = FRONT FACE
U.N.O. = UNLESS NOTED OTHERWISE

NOTES:

1. FOR FOUNDATION PLAN, SEE SHEET 7/53.
2. FOR REAR ABUTMENT FOOTING PLAN, SEE SHEET 9/53.
3. FOR REAR ABUTMENT DETAILS, SEE SHEET 10/53.
4. FOR WINGWALL DETAILS, SEE SHEETS 11/53 THRU 12/53.
5. FOR GEOSYNTHETIC WALL DETAILS, SEE SHEET 13/53.
6. FOR END DIAPHRAGM DETAILS, SEE SHEET 39/53.
7. ADJUST BEAM SEAT ELEVATIONS BASED ON BEARING HEIGHT, SEE NOTE 14 ON SHEET 33/53.
8. FOR DRAINAGE PIPE OUTLET LOCATION AND DETAILS SEE SHEET 1/53 AND 10/53.

REAR ABUTMENT PLAN AND ELEVATION
CUY-90-1652S (BRIDGE 12)
RAMP IJ3, CR-721 (E. 14TH ST.), AND RAMP H5
RAMP B6 OVER RAMP H5

SFN	
1807806	
DESIGN AGENCY	
DESIGNER	CHECKER
PJC	DRS
REVIEWER	
DWW 1/08/24	
PROJECT ID	
82382	
SUBSET	TOTAL
8	53
SHEET	TOTAL
2136	2696

CUY-90-16.28 (CCG3A)

MODEL: Sheet PAPERSIZE: 34x22 (in.) DATE: 3/28/2025 TIME: 7:27:10 AM USER: Rohit.Bk
pw:\\mb-us-pw.bentley.com:mb-us-pw-03\Documents\Cleveland_OH01_Projects\ODOTDistrict12\82382400-Engineering\Structures\SFN_1807806\Sheets\82382_SFN_1807806_SR001.dgn

Preliminary Plans - Not For Reference Only

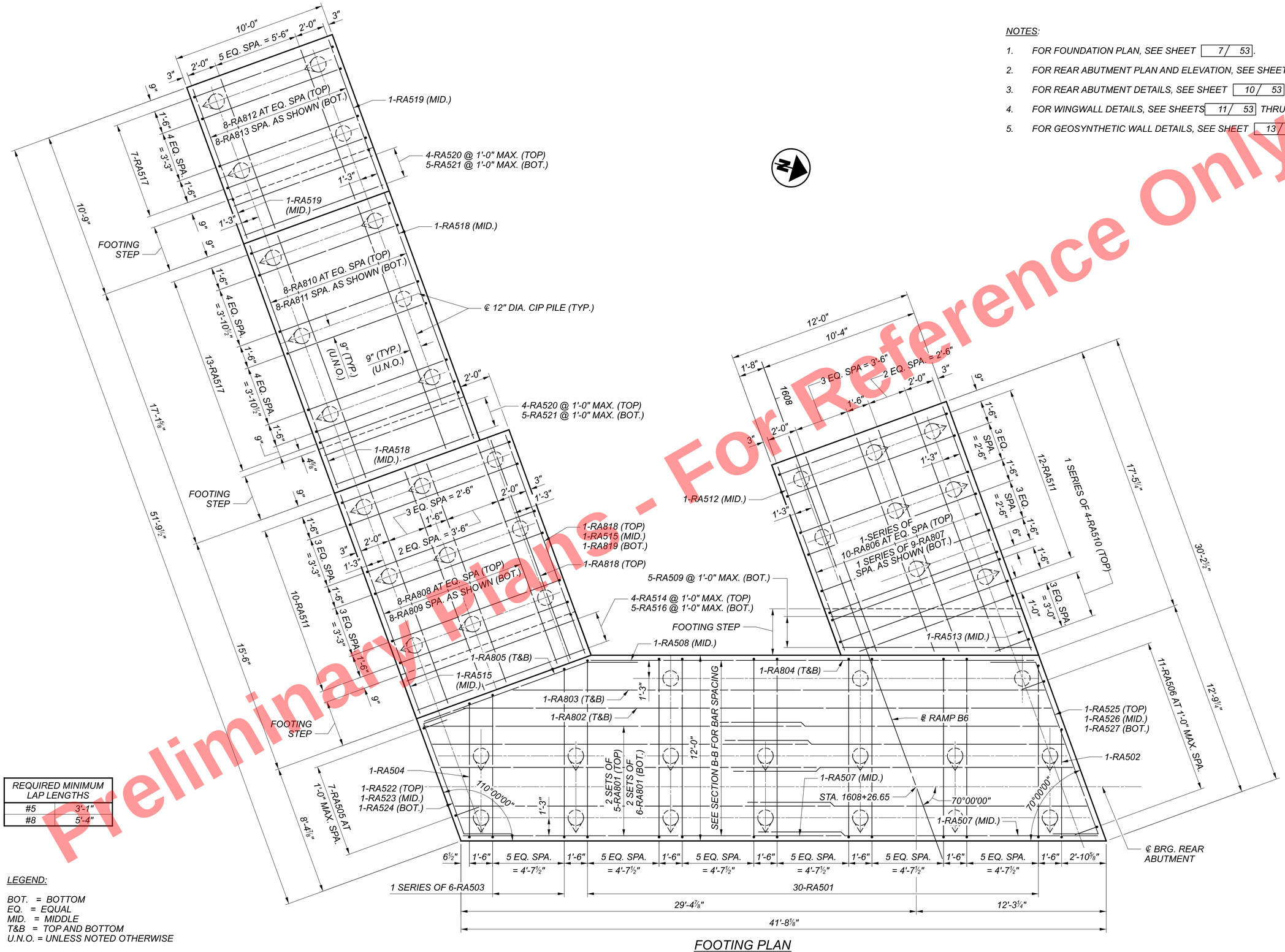

REQUIRED MINIMUM LAP LENGTHS	
#5	3'-1"
#8	5'-4"

LEGEND:

BOT. = BOTTOM
EQ. = EQUAL
MID. = MIDDLE
T&B = TOP AND BOTTOM
U.N.O. = UNLESS NOTED OTHERWISE

NOTES:

1. *FOR FOUNDATION PLAN, SEE SHEET* 7 / 53.
2. *FOR REAR ABUTMENT PLAN AND ELEVATION, SEE SHEET* 8 / 53.
3. *FOR REAR ABUTMENT DETAILS, SEE SHEET* 10 / 53.
4. *FOR WINGWALL DETAILS, SEE SHEETS* 11 / 53 *THRU* 12 / 53.
5. *FOR GEOSYNTHETIC WALL DETAILS, SEE SHEET* 13 / 53.

FOOTING PLAN

Preliminary Plans - For Reference Only

REAR ABUTMENT FOOTING PLAN
CUY-90-1652S (BRIDGE 12)
RAMP IJ3, CR-721 (E. 14TH ST.), AND RAMP H5
RAMP B6 OVER RAMP H5

CUY-90-16.28 (CCG3A)

MODEL: Sheet PAPERSIZE: 34x22 (in.) DATE: 3/28/2025 TIME: 7:27:17 AM USER: RohitLBk
pw:\\mb-us-pw.bentley.com:mb-us-pw-03\Documents\Cleveland_OH101_Projects\ODOT\District12\82382\400-Engineering\Structures\SFN_1807806\Sheets\82382_SFN_1807806_SR002.dgn

SFN	1807806
DESIGN AGENCY	HDR
DESIGNER	PJC
CHECKER	DRS
REVIEWER	DWW 1/08/24
PROJECT ID	82382
SUBSET	9
TOTAL	53
SHEET	2137
TOTAL	2696

EXPANSION GAP	
TEMP (F)	JOINT GAP (IN)
30	$6\frac{11}{16}$
40	$6\frac{7}{16}$
50	$6\frac{1}{4}$
60	6
70	$5\frac{3}{4}$
80	$5\frac{9}{16}$
90	$5\frac{5}{16}$

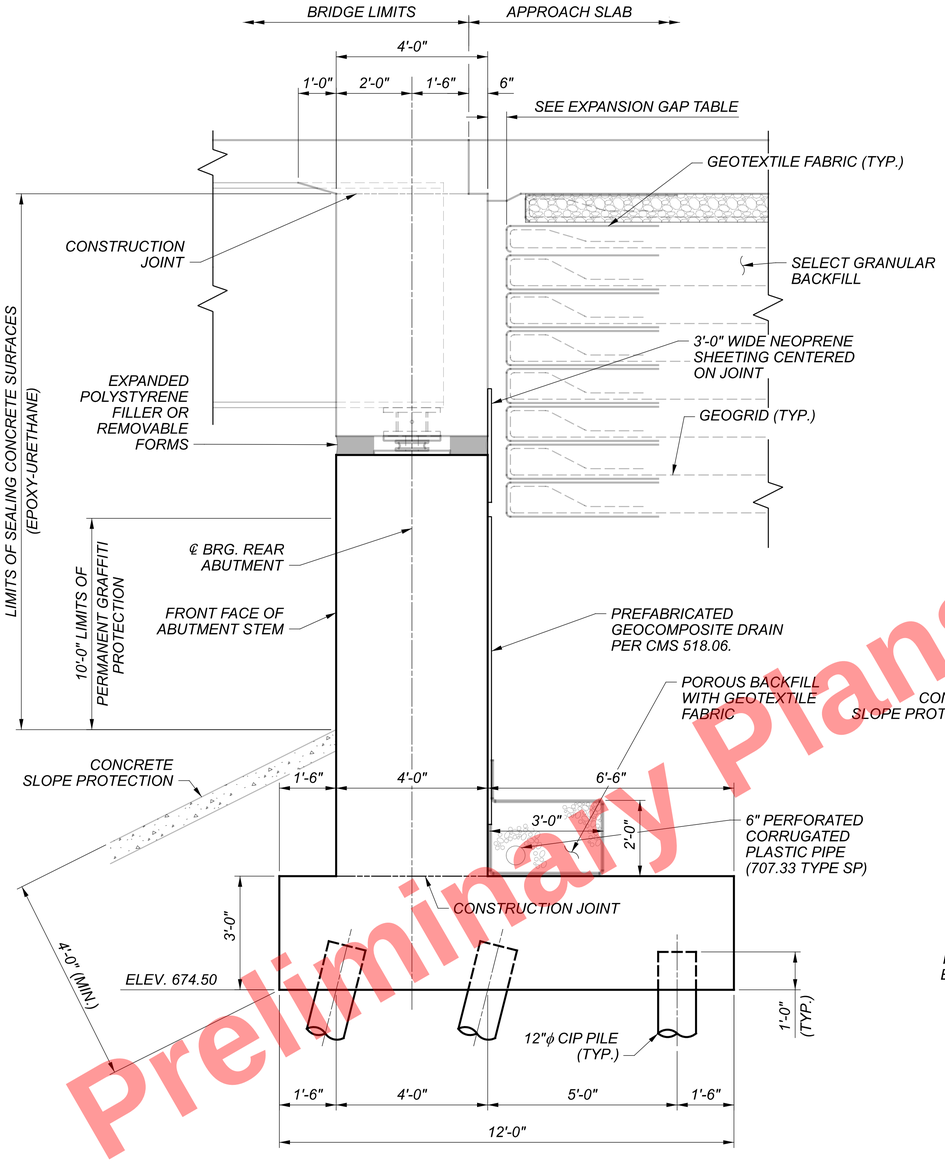

SECTION A-A

(FOR REINFORCING SEE SECTION B-B)

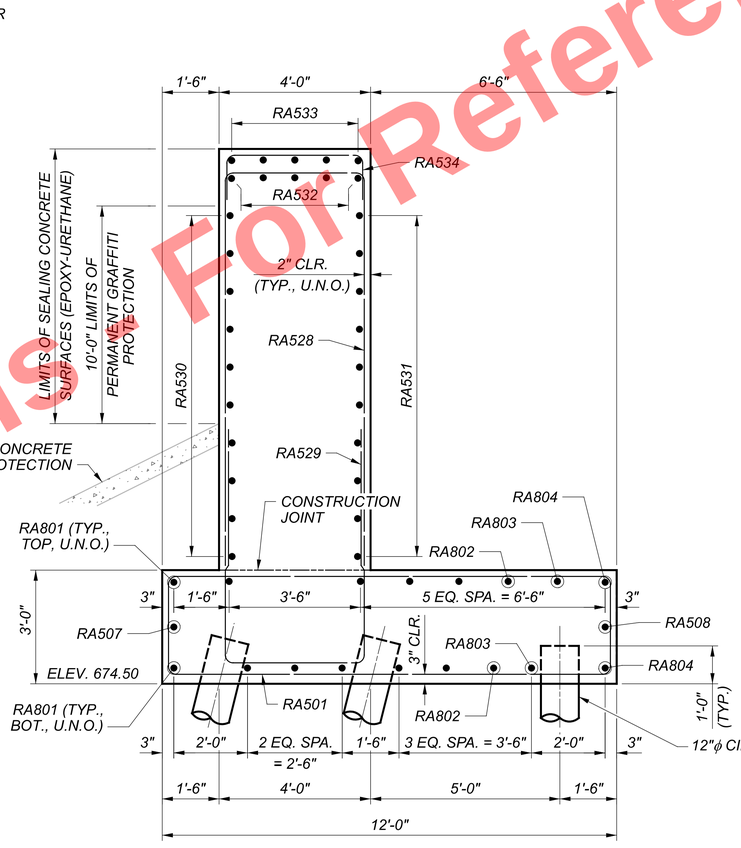

SECTION B-B

(SUPERSTRUCTURE AND ABUTMENT BACKFILL NOT SHOWN FOR CLARITY)

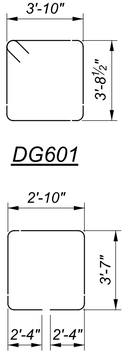

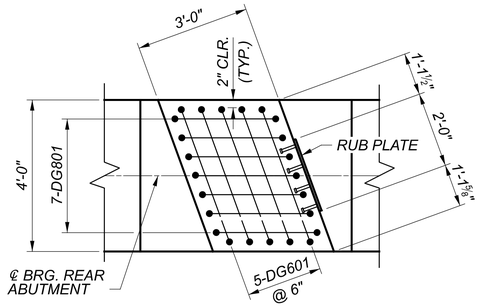

DIAPHRAGM GUIDE PLAN

(REAR ABUTMENT SHOWN, FORWARD ABUTMENT SIMILAR)
(ABUTMENT STEM REINFORCING NOT SHOWN FOR CLARITY)

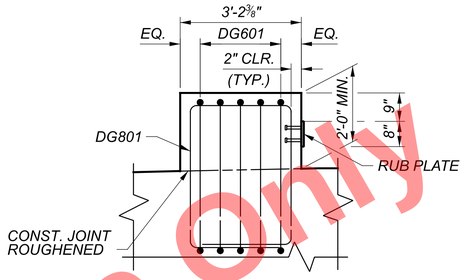

DIAPHRAGM GUIDE ELEVATION

(REAR ABUTMENT SHOWN, FORWARD ABUTMENT SIMILAR)
(ABUTMENT STEM REINFORCING NOT SHOWN FOR CLARITY)

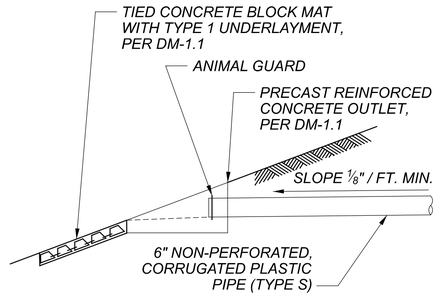

TERMINATION OF 6" N.P.C.P.P. DETAIL

REQUIRED MINIMUM LAP LENGTHS	
#5	3'-1"
#8	5'-4"

LEGEND:

BOT. = BOTTOM
CLR. = CLEAR
E.F. = EACH FACE
EQ. = EQUAL
U.N.O. = UNLESS NOTED OTHERWISE
N.P.C.P.P. = NON-PERFORATED CORRUGATED PLASTIC PIPE

NOTES:

1. FOR REAR ABUTMENT PLAN AND ELEVATION, SEE SHEET 8/53.
2. FOR REAR ABUTMENT FOOTING PLAN, SEE SHEET 9/53.
3. FOR WINGWALL DETAILS, SEE SHEETS 11/53 THRU 12/53.
4. FOR GEOSYNTHETIC WALL DETAILS, SEE SHEET 13/53.
5. PRECAST REINFORCED CONCRETE OUTLET, ANIMAL GUARD AND TIED CONCRETE BLOCK MAT WITH TYPE 1 UNDERLAYMENT, PER ODOT STD. DWG. DM-1.1, SHALL BE INCLUDED FOR PAYMENT WITH ITEM 518 - 6" NON-PERFORATED, CORRUGATED PLASTIC PIPE, INCLUDING SPECIALS, AS PER PLAN.
6. FOR ADDITIONAL SEMI-INTEGRAL DIAPHRAGM GUIDE INFORMATION, SEE ODOT STANDARD DRAWING SICD-2-14.

Preliminary Plans
Not For Reference Only

REAR ABUTMENT DETAILS
CUY-90-1652S (BRIDGE 12)
OVER RAMP IJ3, CR-721 (E. 14TH ST.), AND RAMP H5
RAMP B6 OVER

SFN 1807806
DESIGN AGENCY HDR
DESIGNER PJC | CHECKER DRS
REVIEWER DWW 1/08/24
PROJECT ID 82382
SUBSET 10 | TOTAL 53
SHEET 2138 | TOTAL 2696

CUY-90-16.28 (CCG3A)

MODEL: Sheet PAPERSIZE: 34x22 (in.) DATE: 3/28/2025 TIME: 7:27:23 AM USER: Rohit.Bk
pw:\\mb-us-pw.bentley.com:mb-us-pw-03\Documents\Cleveland_OH101_Projects\ODOT\District12\82382\400-Engineering\Structures\SFN_1807806\Sheets\82382_SFN_1807806_SR003.dgn

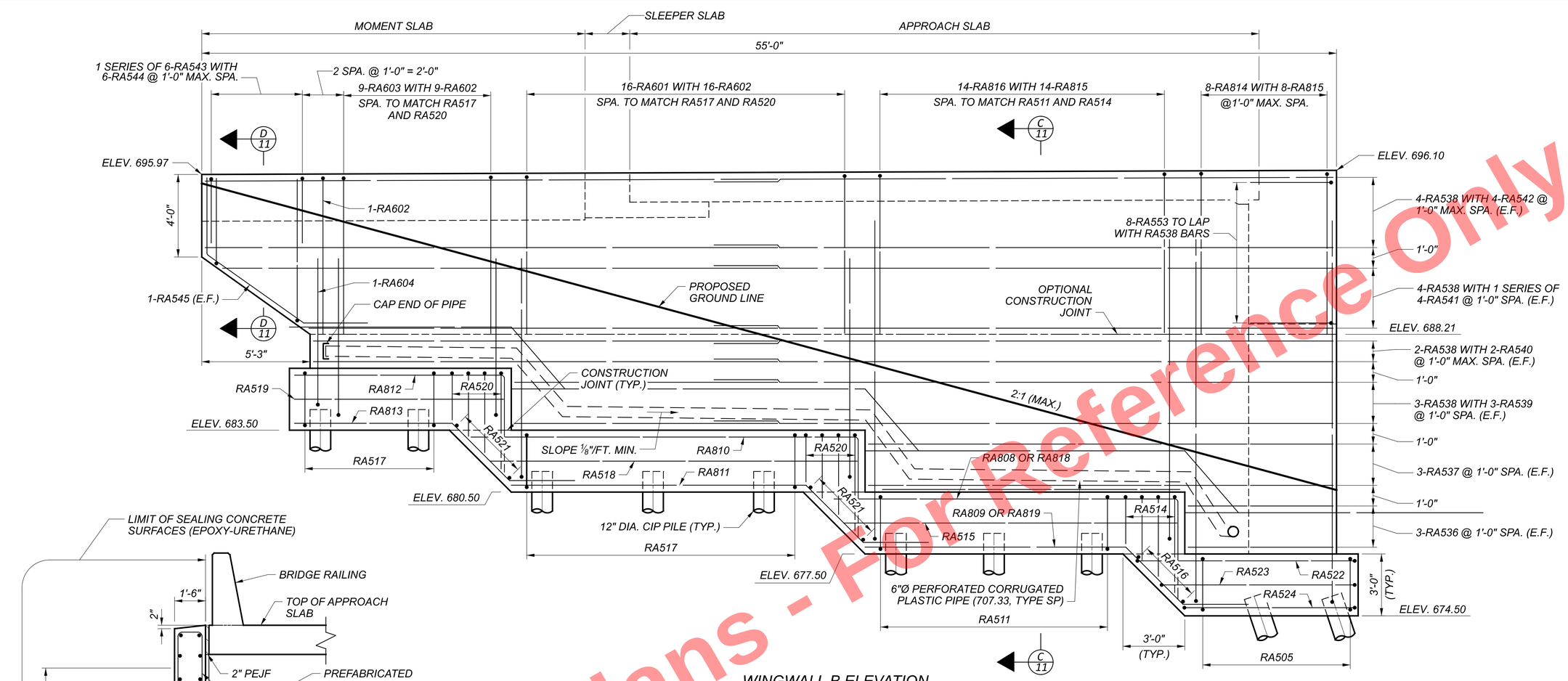

WINGWALL B ELEVATION

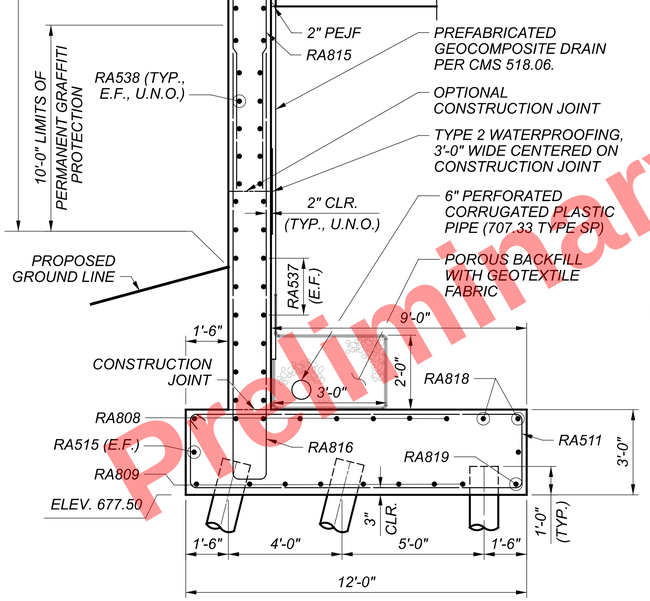

SECTION C-C

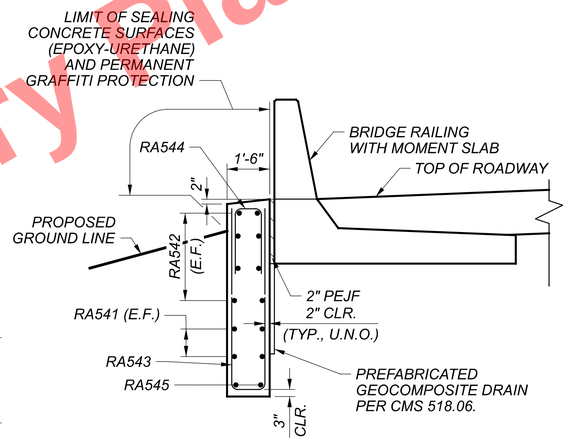

SECTION D-D

REQUIRED MINIMUM LAP LENGTHS	
#5	3'-1"
#6	3'-7"
#8	5'-4"

LEGEND:

CLR. = CLEAR
E.F. = EACH FACE
U.N.O. = UNLESS NOTED OTHERWISE

NOTES:

1. FOR REAR ABUTMENT PLAN AND ELEVATION, SEE SHEET 8 / 53.
2. FOR REAR ABUTMENT FOOTING PLAN, SEE SHEET 9 / 53.
3. FOR REAR ABUTMENT DETAILS, SEE SHEET 10 / 53.
4. FOR ADDITIONAL WINGWALL DETAILS, SEE SHEET 12 / 53.
5. FOR GEOSYNTHETIC WALL DETAILS, SEE SHEET 13 / 53.

Preliminary Plans - For Reference Only

WINGWALL ELEVATION AND DETAILS (1 OF 2)
CUY-90-1652S (BRIDGE 12)
RAMP B6 OVER RAMP IJ3, CR-721 (E. 14TH ST.), AND RAMP H5

SFN 1807806
DESIGN AGENCY HDR
DESIGNER PJC | CHECKER DRS
REVIEWER DWW 1/08/24
PROJECT ID 82382
SUBSET 11 | TOTAL 53
SHEET 2139 | TOTAL 2696

CUY-90-16.28 (CCG3A)

MODEL: Sheet PAPERSIZE: 34x22 (in.) DATE: 3/28/2025 TIME: 7:27:29 AM USER: Rohit.Bk
pw:\\mb-us-pw.bentley.com:mb-us-pw-03\Documents\Cleveland_OH101_Projects\ODOT\District12\82382\400-Engineering\Structures\SFN_1807806\Sheets\82382_SFN_1807806_SR004.dgn

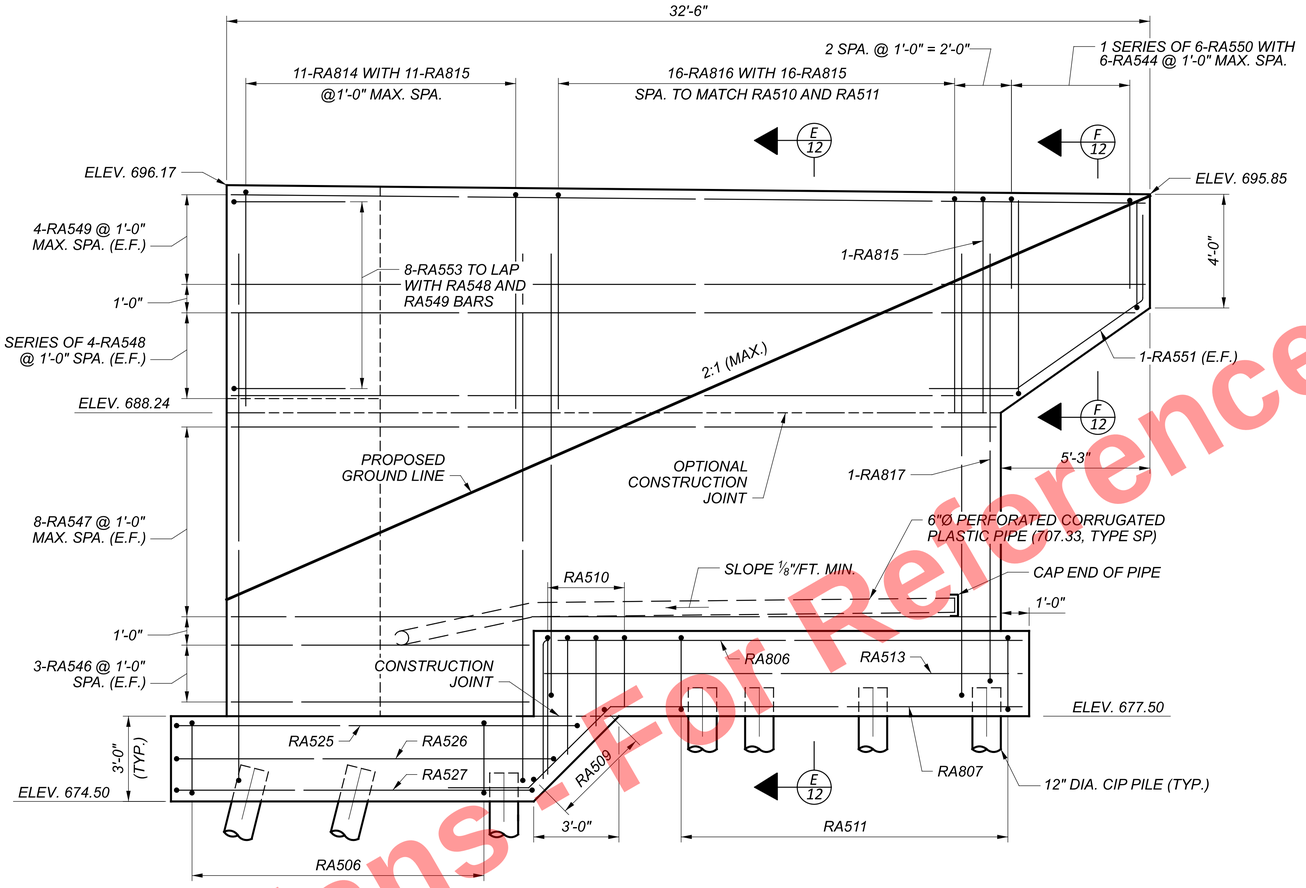

WINGWALL A ELEVATION

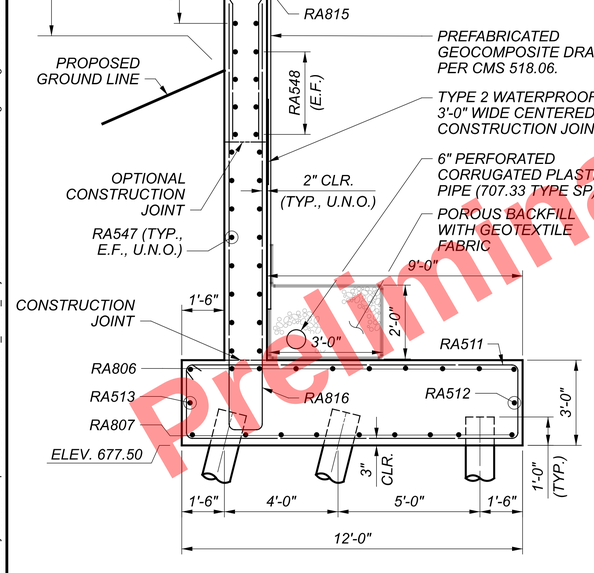

SECTION E-E

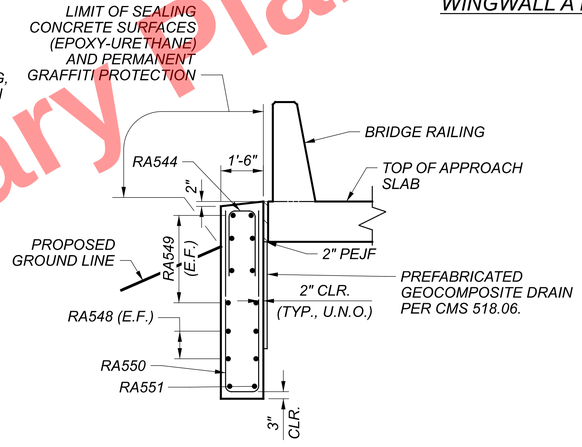

SECTION F-F

REQUIRED MINIMUM LAP LENGTHS	
#5	3'-1"
#8	5'-4"

LEGEND:

CLR. = CLEAR
E.F. = EACH FACE
U.N.O. = UNLESS NOTED OTHERWISE

NOTES:

1. FOR REAR ABUTMENT PLAN AND ELEVATION, SEE SHEET 8/53.
2. FOR REAR ABUTMENT FOOTING PLAN, SEE SHEET 9/53.
3. FOR REAR ABUTMENT DETAILS, SEE SHEET 10/53.
4. FOR ADDITIONAL WINGWALL DETAILS, SEE SHEET 11/53.
5. FOR GEOSYNTHETIC WALL DETAILS, SEE SHEET 13/53.

Preliminary Plans - Not For Reference Only

WINGWALL ELEVATION AND DETAILS (2 OF 2)
CUY-90-1652S (BRIDGE 12)
RAMP B6 OVER RAMP IJ3, CR-721 (E. 14TH ST.), AND RAMP H5

SFN	1807806
DESIGN AGENCY	HDR
DESIGNER	PJC
CHECKER	DRS
REVIEWER	DWW 1/08/24
PROJECT ID	82382
SUBSET	12
TOTAL	53
SHEET	2140
TOTAL	2696

CUY-90-16.28 (CCG3A)

MODEL: Sheet PAPERSIZE: 34x22 (in.) DATE: 3/28/2025 TIME: 7:27:34 AM USER: Rohit.Bk
pw:\\mb-us-pw.bentley.com:mb-us-pw-03\Documents\Cleveland_OH101_Projects\ODOT\District12\82382\400-Engineering\Structures\SFN_1807806\Sheets\82382_SFN_1807806_SR005.dgn

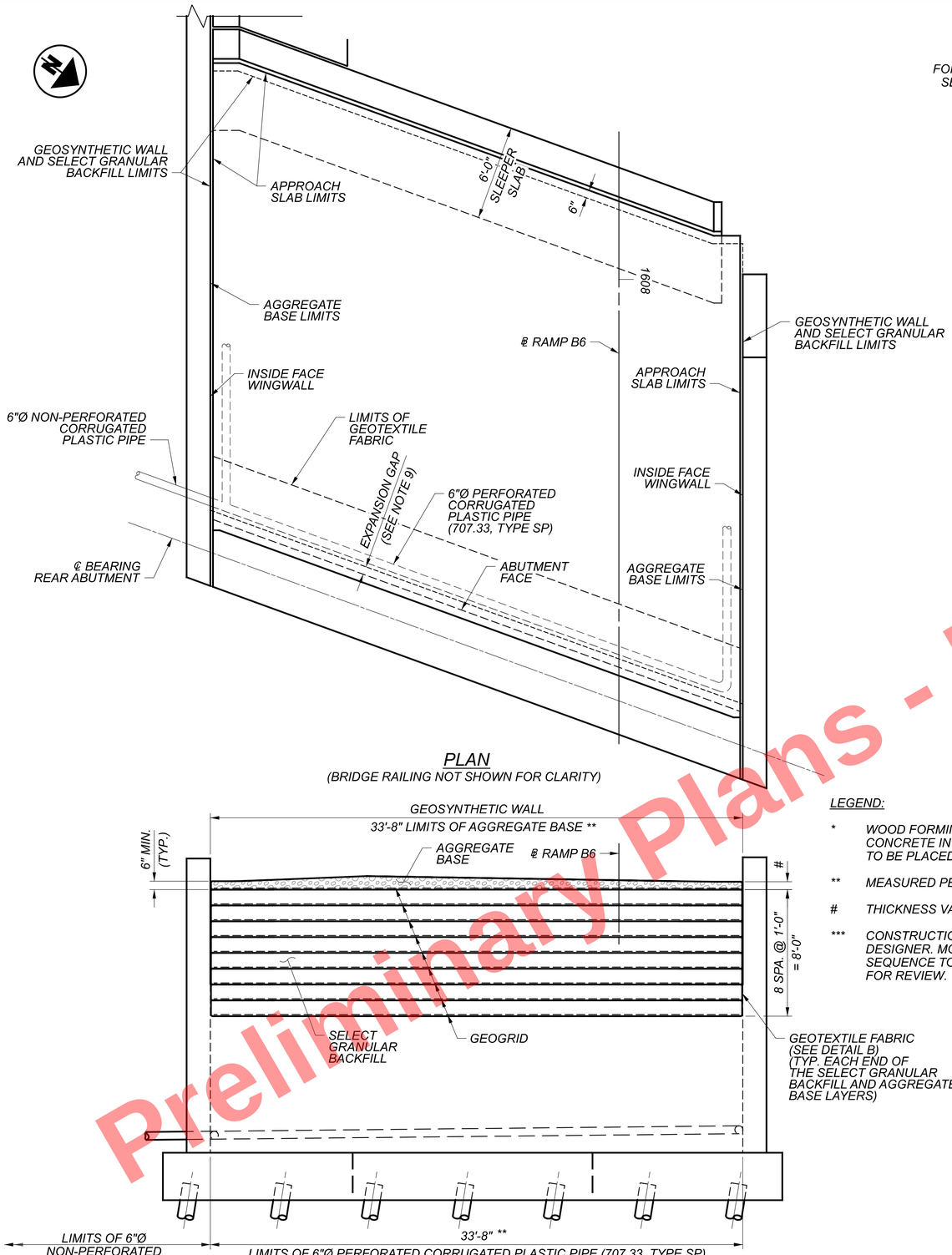

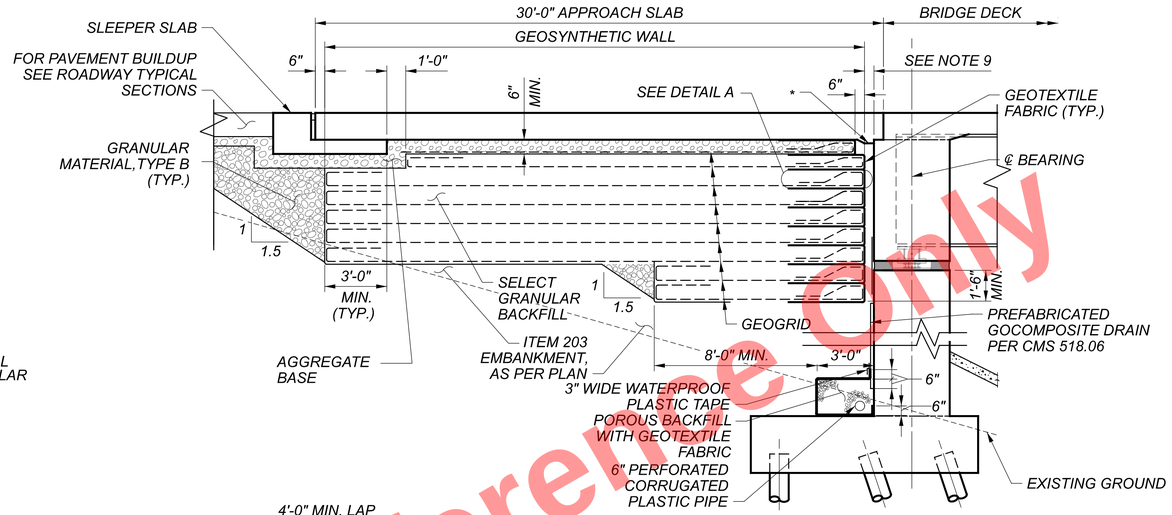

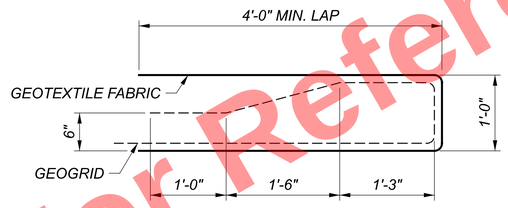

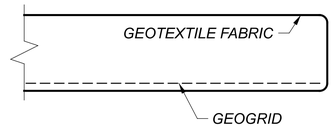

LEGEND:

* WOOD FORMING TO BE LEFT IN PLACE TO PREVENT CONCRETE INTRUSION INTO GAP. NO MATERIAL IS TO BE PLACED IN GAP.

** MEASURED PERPENDICULAR TO ℄ RAMP B6.

\# THICKNESS VARIES BETWEEN 6" & 11".

*** CONSTRUCTION SEQUENCE IS SUGGESTED BY DESIGNER. MODIFICATIONS TO THE CONSTRUCTION SEQUENCE TO BE SUBMITTED TO THE ENGINEER FOR REVIEW.

NOTES:

1. MINIMUM GEOTEXTILE FABRIC LAP LENGTH IS 4'-0". REFER TO DETAIL A.
2. GEOGRID REINFORCEMENT SHALL BE TYPE P1 AND CONFORM TO SUPPLEMENTAL SPECIFICATION 863.
3. SELECT GRANULAR MATERIAL SHALL CONFORM TO SUPLEMENTAL SPECIFICATION 840. PLACEMENT OF SELECT GRANULAR BACKFILL SHALL BE PER SUPPLEMENTAL SPECIFICATION 863 AND SHALL BE INCIDENTAL TO ITEM 840 - SELECT GRANULAR BACKFILL, AS PER PLAN.
4. GRANULAR MATERIAL, TYPE B AND GEOTEXTILE FABRIC SHALL CONFORM TO C&MS 204.
5. THE ESTIMATED QUANTITY FOR AGGREGATE BASE IS INCLUDED WITH THE ROADWAY QUANTITY FOR ITEM 304, AGGREGATE BASE.
6. FOR ABUTMENT DETAILS, SEE SHEETS 8 / 53 THRU 12 / 53.
7. FOR APPROACH SLAB AND SLEEPER SLAB DETAILS, SEE SHEET 46 / 53.
8. FOR POROUS BACKFILL LIMITS, SEE SHEETS 8 / 53 THRU 12 / 53.
9. FOR JOINT GAP SEE EXPANSION GAP TABLE ON SHEET 10 / 53.

CONCEPTUAL CONSTRUCTION SEQUENCE***

1. PERFORM EXCAVATION REQUIRED TO CONSTRUCT ABUTMENTS AND GEOSYNTHETIC WALL.
2. PLACE PILES AND CONSTRUCT ABUTMENTS UP TO THE LEVEL OF THE BEAM SEATS.
3. SET BEARING ASSEMBLIES, GIRDERS, AND EXPANDED POLYSTYRENE FILLER OR REMOVABLE FORMS.
4. CONSTRUCT SEMI-INTEGRAL END DIAPHRAGMS AND WINGWALLS ABOVE THE BEAM SEAT, SEE NOTE 8 ON SHEET 39 / 53.
5. ATTACH NEOPRENE SHEETING AND TYPE 2 WATERPROOFING TO THE REAR FACE OF THE ABUTMENTS TO PROTECT EXPANSION AND CONSTRUCTION JOINTS.
6. PLACE POROUS BACKFILL WITH GEOTEXTILE FABRIC AND PREFABRICATED GEOCOMPOSITE DRAIN BEHIND THE ABUTMENT AND WINGWALLS TO THE LIMITS SHOWN IN THE PLANS. CONSTRUCT THE GEOSYNTHETIC WALL IN 1 FOOT LIFTS LEAVING AN EXPANSION GAP BETWEEN THE BACK FACE OF THE ABUTMENT AND THE GEOSYNTHETIC WALL. PLACE THE GEOSYNTHETIC WALL UP TO THE BACK FACE OF THE WINGWALLS.
7. PLACE AGGREGATE BASE ON TOP OF THE GEOSYNTHETIC WALL.
8. WOOD FRAMING TO BE LEFT IN PLACE MUST BE PLACED OVER THE EXPANSION GAP TO PREVENT CONCRETE OR OTHER CONSTRUCTION MATERIAL OR DEBRIS FROM FALLING INTO THE GAP.
9. CONSTRUCT APPROACH SLAB AND DECK SLAB, IF DECK SLAB WAS NOT CONSTRUCTED WITH THE END DIAPHRAGMS. APPROACH SLABS AND DECK SLAB SHALL BE PLACED IN SEPARATE POURS.

Preliminary Plans - For Reference Only

REAR ABUTMENT GEOSYNTHETIC WALL DETAILS

CUY-90-1652S (BRIDGE 12)
RAMP B6 OVER RAMP IJ3, CR-721 (E. 14TH ST.), AND RAMP H5

SFN	1807806
DESIGN AGENCY	HDR
DESIGNER	ADW
CHECKER	CMR
REVIEWER	DWW 1/08/24
PROJECT ID	82382
SUBSET	13
TOTAL	53
SHEET	2141
TOTAL	2696

CUY-90-16.28 (CCG3A)
MODEL: Sheet PAPERSIZE: 34x22 (in.) DATE: 3/28/2025 TIME: 7:27:41 AM USER: Rohit.Bk
pw:\\mb-us-pw.bentley.com:mb-us-pw-03\Documents\Cleveland_OH\01_Projects\ODOT\District12\82382\400-Engineering\Structures\SFN_1807806\Sheets\82382_SFN_1807806_SR006.dgn

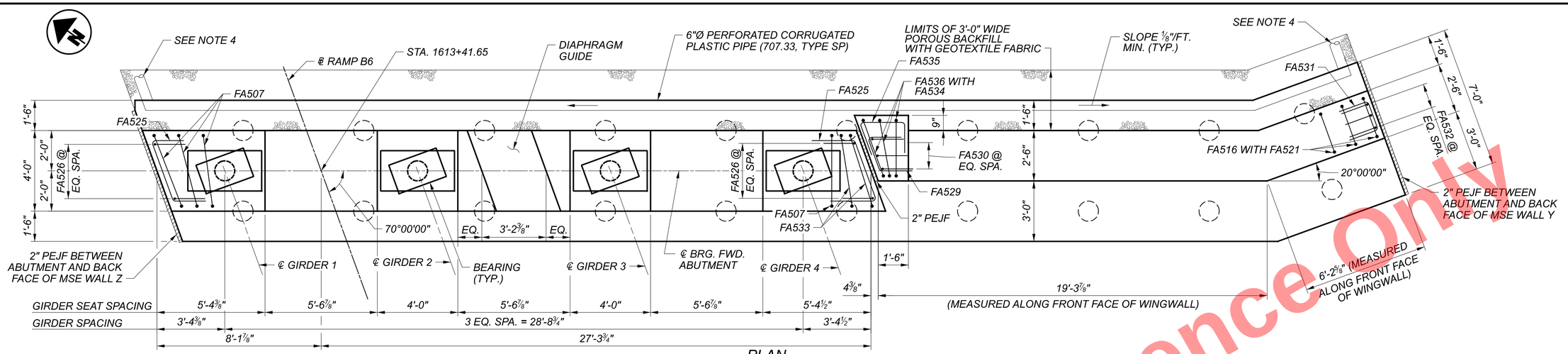

PLAN

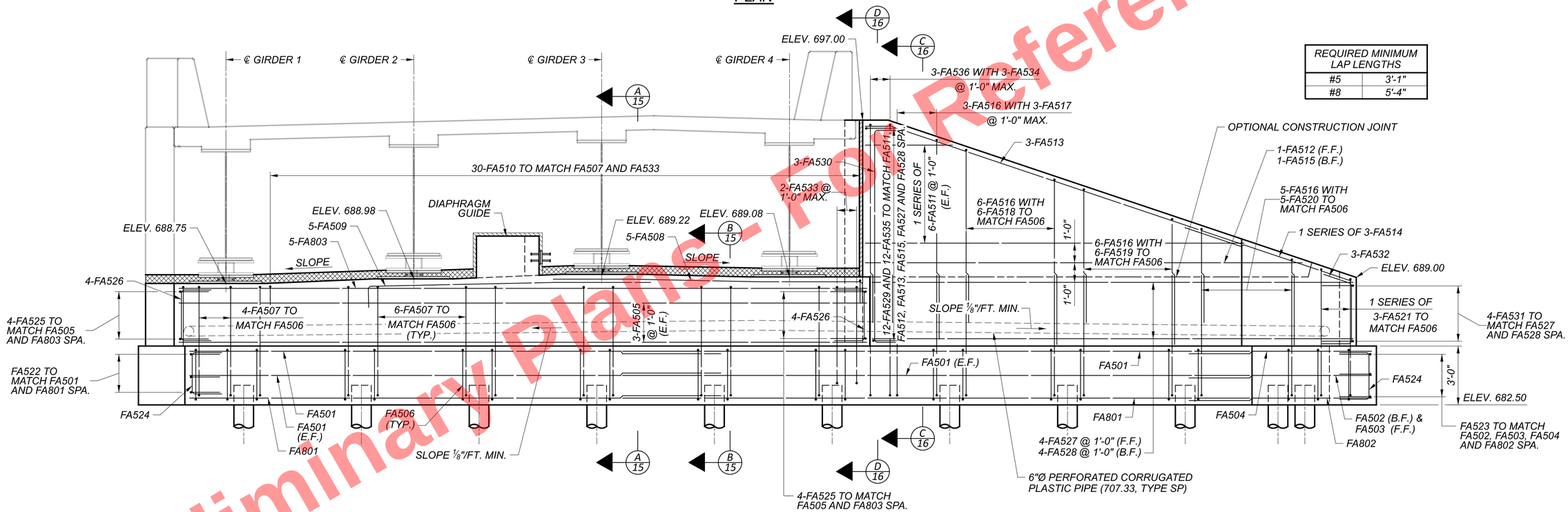

ELEVATION

(MSE WALL Y AND SELECT PEJF NOT SHOWN FOR CLARITY)

REQUIRED MINIMUM LAP LENGTHS	
#5	3'-1"
#8	5'-4"

LEGEND:

E.F. = EACH FACE
EQ. = EQUAL
B.F. = BACK FACE
F.F. = FRONT FACE

NOTES:

1. FOR END DIAPHRAGM DETAILS, SEE SHEET 40 / 53.
2. FOR GEOSYNTHETIC WALL DETAILS, SEE SHEET 17 / 53.
3. FOR DIAPHRAGM GUIDE DETAILS, SEE SHEET 10 / 53.
4. CONNECT ABUTMENT DRAINAGE PIPE TO MSE WALL Y AND WALL Z DRAINAGE.
5. FOR FOUNDATION PLAN, SEE SHEET 7 / 53.
6. FOR FOOTING PLAN AND ADDITIONAL FORWARD ABUTMENT DETAILS, SEE SHEET 15 / 53.
7. ADJUST BEAM SEAT ELEVATIONS ON BEARING HEIGHT, SEE NOTE 14 ON SHEET 33 / 53.

For Reference Only
Preliminary Plans - Not

FORWARD ABUTMENT PLAN AND ELEVATION
CUY-90-1652S (BRIDGE 12)
RAMP B6 OVER RAMP IJ3, CR-721 (E. 14TH ST.), AND RAMP H5

SFN 1807806
DESIGN AGENCY HDR
DESIGNER PJC | CHECKER JML
REVIEWER DWW 1/08/24
PROJECT ID 82382
SUBSET 14 | TOTAL 53
SHEET 2142 | TOTAL 2696

CUY-90-16.28 (CCG3A)

MODEL: Sheet PAPERSIZE: 34x22 (in.) DATE: 3/28/2025 TIME: 7:27:49 AM USER: RohitLBk
pw:\\mb-us-pw.bentley.com:mb-us-pw-03\Documents\Cleveland_OH01_Projects\ODOT\District12\82382\400-Engineering\Structures\SFN_1807806\Sheets\82382_SFN_1807806_SF001.dgn

EXPANSION GAP	
TEMP (F)	JOINT GAP (IN)
30	$6\frac{9}{16}$
40	$6\frac{3}{8}$
50	$6\frac{3}{16}$
60	6
70	$5\frac{13}{16}$
80	$5\frac{5}{8}$
90	$5\frac{7}{16}$

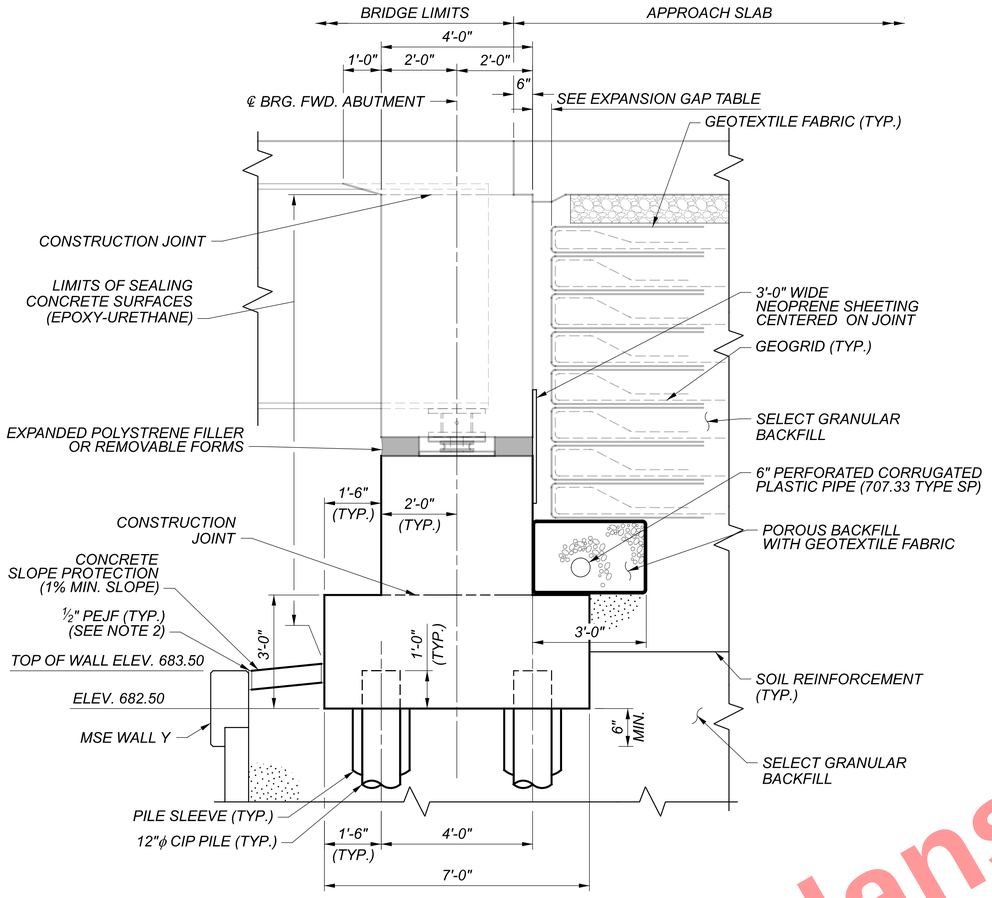

SECTION A-A
(FOR REINFORCING SEE SECTION B-B)

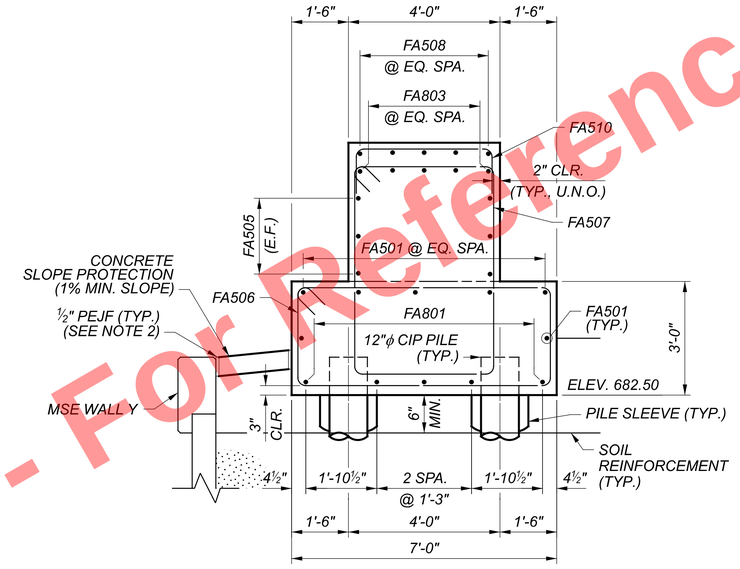

SECTION B-B
(SUPERSTRUCTURE AND ABUTMENT BACKFILL NOT SHOWN FOR CLARITY)

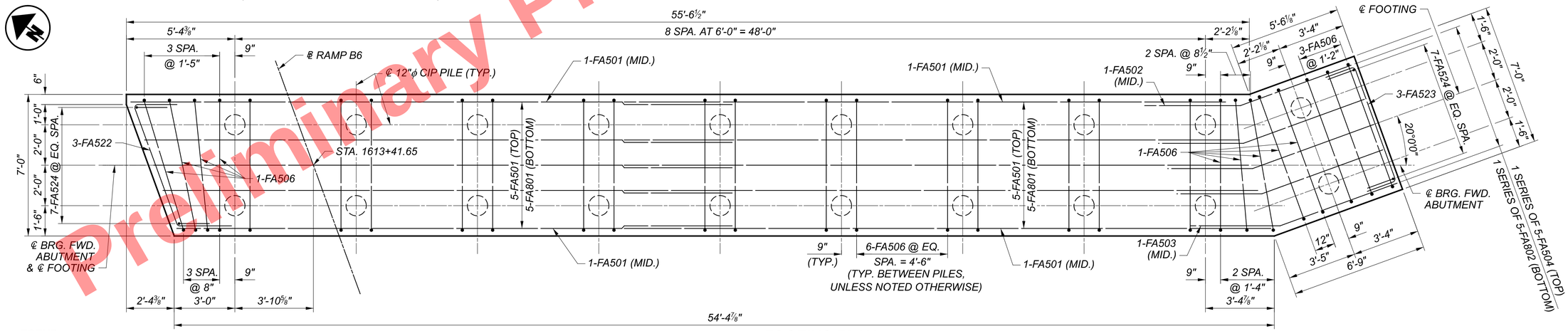

FOOTING PLAN

LEGEND:

E.F. = EACH FACE
EQ. = EQUAL
MID. = MIDDLE
U.N.O. = UNLESS NOTED OTHERWISE

NOTE:

1. FOR NOTES AND ADDITIONAL DETAILS, SEE SHEET 14/53.
2. ½" PEJF SHALL BE INCLUDED FOR PAYMENT WITH ITEM 601 CONCRETE SLOPE PROTECTION, AS PER PLAN.

Preliminary Plans - For Reference Only

FORWARD ABUTMENT FOOTING PLAN AND SECTIONS
CUY-90-1652S (BRIDGE 12)
OVER RAMP IJ3, CR-721 (E. 14TH ST.), AND RAMP H5
RAMP B6 OVE

SFN 1807806
DESIGN AGENCY HDR
DESIGNER PJC | CHECKER JMR
REVIEWER DWW 1/08/24
PROJECT ID 82382
SUBSET 15 | TOTAL 53
SHEET 2143 | TOTAL 2696

CUY-90-16.28 (CCG3A)

MODEL: Sheet PAPERSIZE: 34x22 (in.) DATE: 3/28/2025 TIME: 7:27:57 AM USER: RohitLBk
pw:\\mb-us-pw.bentley.com:mb-us-pw-03\Documents\Cleveland_OH01_Projects\ODOT\District12\82382400-Engineering\Structures\SFN_1807806\Sheets\82382_SFN_1807806_SF002.dgn

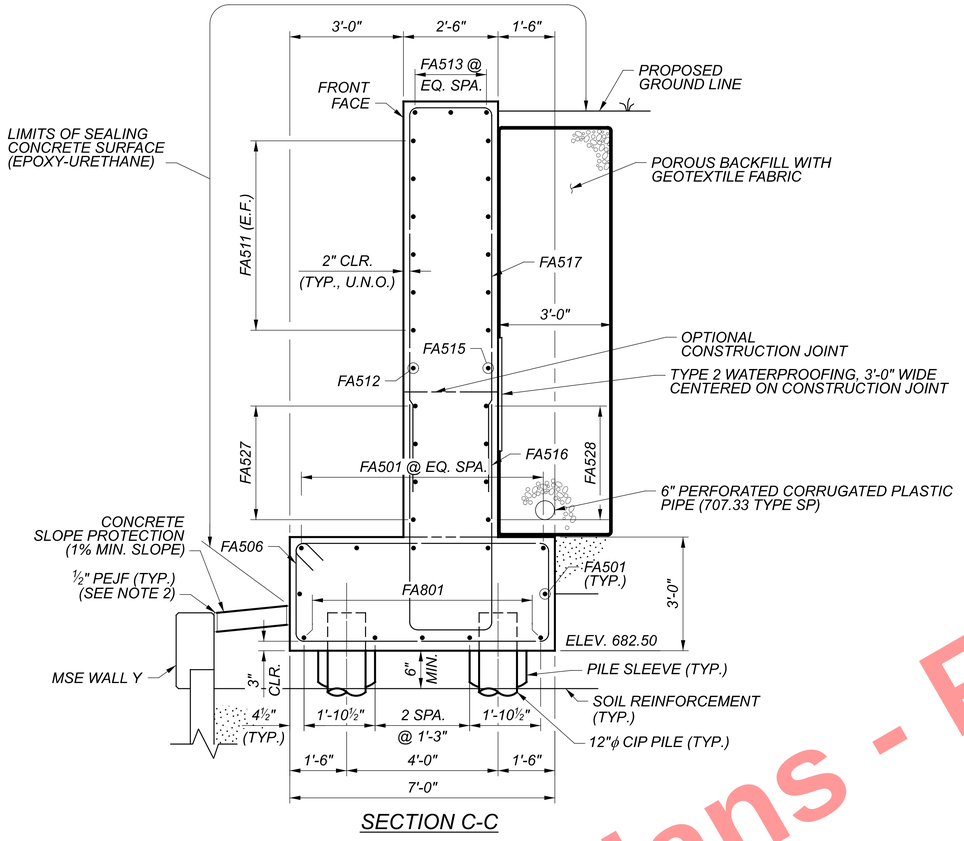

SECTION C-C

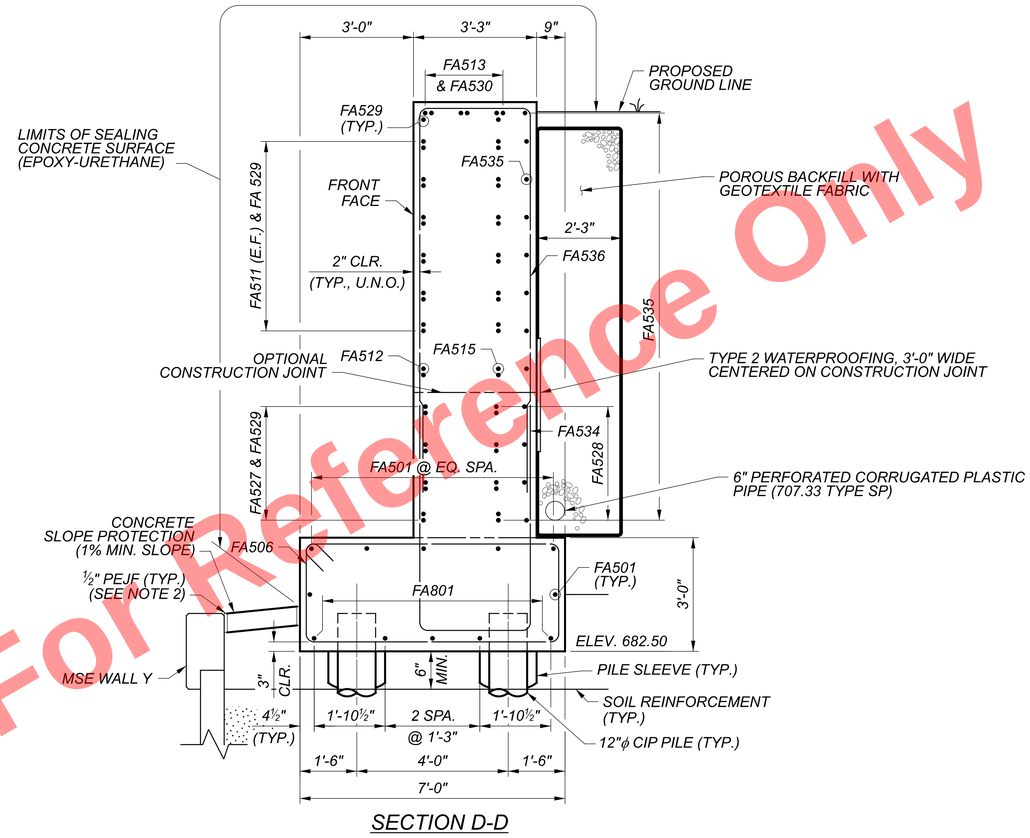

SECTION D-D

Preliminary Plans - For Reference Only

NOTE:

1. FOR NOTES AND ADDITIONAL DETAILS, SEE SHEET 14/53.
2. ½" PEJF SHALL BE INCLUDED FOR PAYMENT WITH ITEM 601 CONCRETE SLOPE PROTECTION, AS PER PLAN.

FORWARD ABUTMENT SECTIONS
CUY-90-1652S (BRIDGE 12)
RAMP B6 OVER RAMP IJ3, CR-721 (E. 14TH ST.), AND RAMP H5

SFN 1807806

DESIGN AGENCY

DESIGNER PJC | CHECKER JMR

REVIEWER DWW 1/08/24

PROJECT ID 82382

SUBSET 16 | TOTAL 53

SHEET 2144 | TOTAL 2696

CUY-90-16.28 (CCG3A)

MODEL: Sheet PAPERSIZE: 34x22 (in.) DATE: 3/28/2025 TIME: 7:28:03 AM USER: RohitLBk
pw:\\mb-us-pw.bentley.com:mb-us-pw-03\Documents\Cleveland_OH\01_Projects\ODOT\District12\82382\400-Engineering\Structures\SFN_1807806\Sheets\82382_SFN_1807806_SF005.dgn

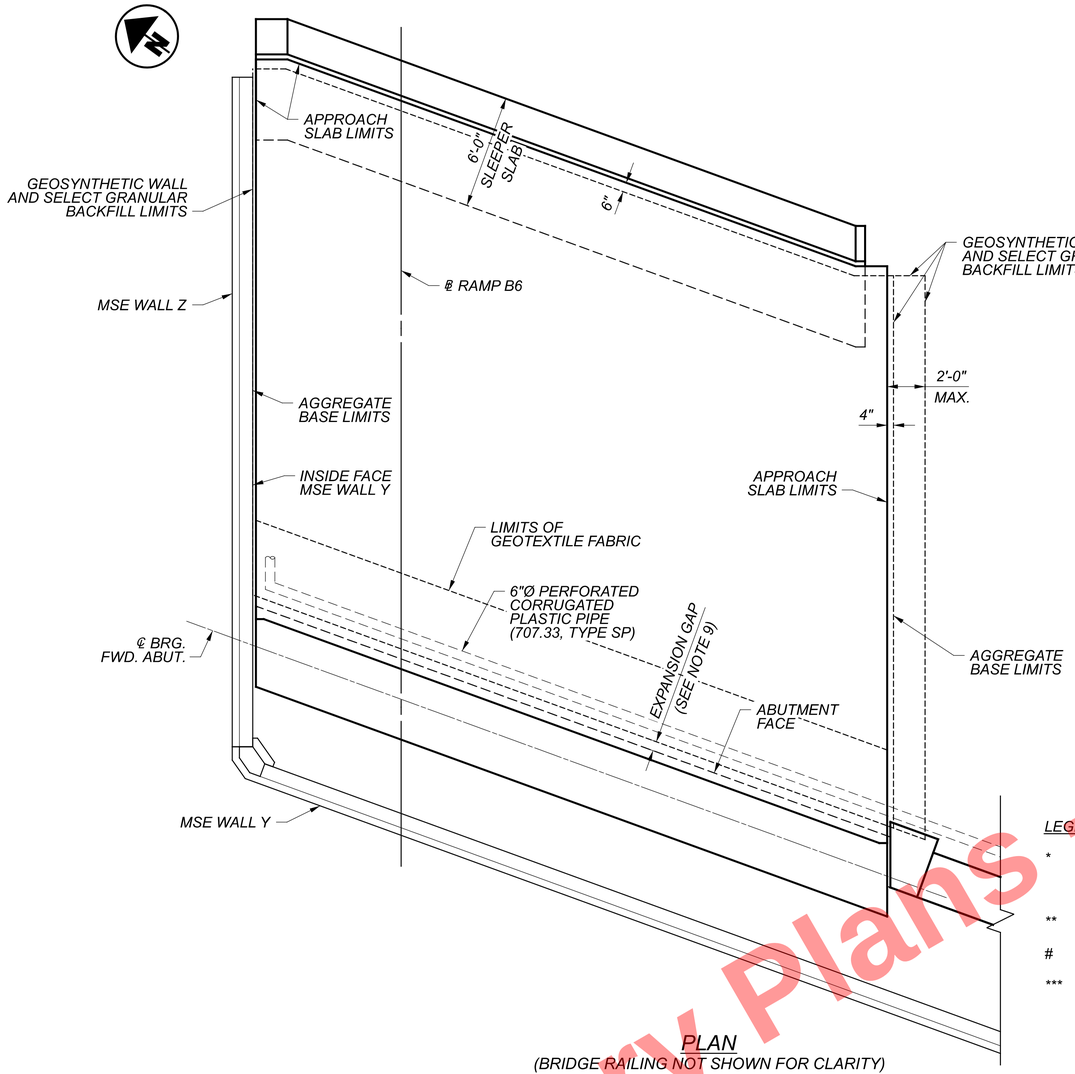

PLAN

(BRIDGE RAILING NOT SHOWN FOR CLARITY)

LEGEND:

* WOOD FORMING TO BE LEFT IN PLACE TO PREVENT CONCRETE INTRUSION INTO GAP. NO MATERIAL IS TO BE PLACED IN GAP.

** MEASURED PERPENDICULAR TO ℄ RAMP B6.

\# THICKNESS VARIES BETWEEN 6" & 1-2".

*** CONSTRUCTION SEQUENCE IS SUGGESTED BY DESIGNER. MODIFICATIONS TO THE CONSTRUCTION SEQUENCE TO BE SUBMITTED TO THE ENGINEER FOR REVIEW.

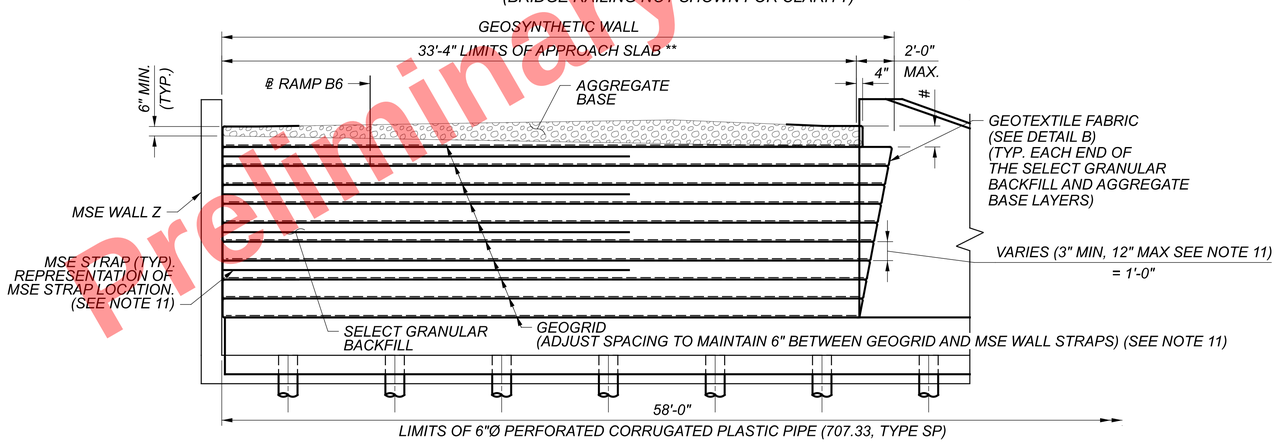

ELEVATION

(POROUS BACKFILL AND APPROACH SLAB NOT SHOWN FOR CLARITY)

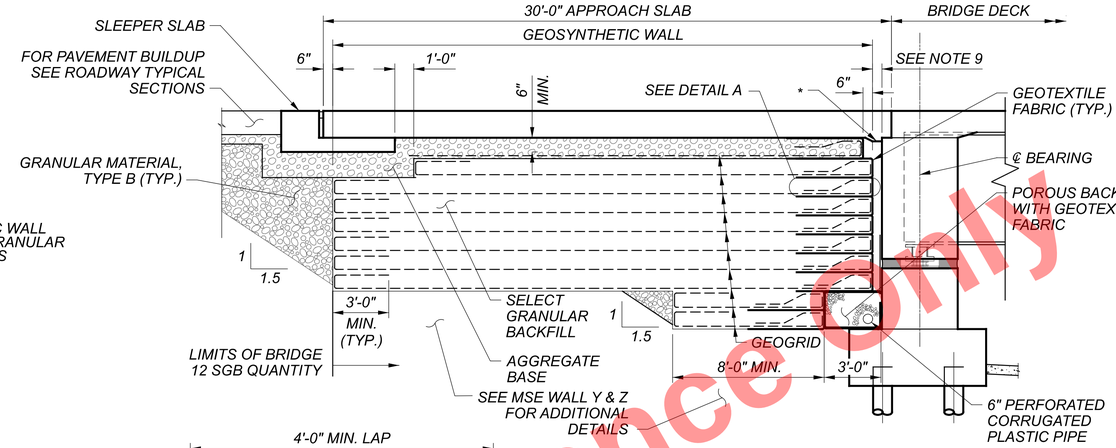

PROFILE

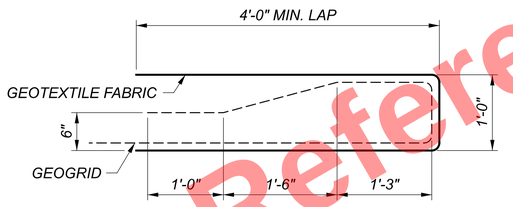

DETAIL A

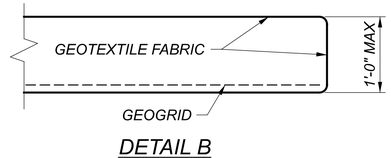

DETAIL B

NOTES:

1. MINIMUM GEOTEXTILE FABRIC LAP LENGTH IS 4'-0". REFER TO DETAIL A.
2. GEOGRID REINFORCEMENT SHALL BE TYPE P1 AND CONFORM TO SUPPLEMENTAL SPECIFICATION 863.
3. SELECT GRANULAR MATERIAL SHALL CONFIRM TO SUPPLEMENT SPECIFICATION 840. PLACEMENT OF SELECT GRANULAR BACKFILL SHALL BE PER SUPPLEMENTAL SPECIFICATION 863 AND SHALL BE INCIDENTAL TO ITEM 840 - SELECT GRANULAR BACKFILL, AS PER PLAN.
4. GRANULAR MATERIAL, TYPE B AND GEOTEXTILE FABRIC SHALL CONFORM TO C&MS 204.
5. THE ESTIMATED QUANTITY FOR AGGREGATE BASE IS INCLUDED WITH THE ROADWAY QUANTITY FOR ITEM 304, AGGREGATE BASE.
6. FOR ABUTMENT DETAILS, SEE SHEETS 14 / 53 THRU 16 / 53.
7. FOR APPROACH SLAB AND SLEEPER SLAB DETAILS, SEE SHEET 47 / 53.
8. FOR POROUS BACKFILL LIMITS, SEE SHEETS 14 / 53 THRU 15 / 53.
9. FOR JOINT GAP SEE EXPANSION GAP TABLE ON SHEET 15 / 53.
10. FOR MSE WALL Y PLANS SEE SHEETS 1310 / 2696 THRU 1316 / 2696.
11. LOCATION OF MSE WALL STRAPS SHALL BE BY WALL MANUFACTURER. LOCATION OF STRAPS SHOWN ARE A REPRESENTATION ONLY. MSE STRAPS SHALL BE CENTERED IN 12" GEOGRID LAYERS. GEOGRID LAYERS SHALL BE ADJUSTED TO A MINIMUM OF 3" AND MAXIMUM OF 12" SO MSE STRAPS FALL WITHIN A 12" GEOGRID LAYER.

*CONCEPTUAL CONSTRUCTION SEQUENCE****

1. CONSTRUCT MSE WALL AS NECESSARY TO CONSTRUCT ABUTMENTS AND GEOSYNTHETIC WALL.
2. PLACE PILES AND CONSTRUCT ABUTMENTS UP TO THE LEVEL OF THE BEAM SEATS.
3. SET BEARING ASSEMBLIES, GIRDERS, AND EXPANDED POLYSTYRENE FILLER OR REMOVABLE FORMS.
4. CONSTRUCT SEMI-INTEGRAL END DIAPHRAGM AND WINGWALL ABOVE THE BEAM SEAT, SEE NOTE 8 ON SHEET 40 / 53.
5. ATTACH NEOPRENE SHEETING AND TYPE 2 WATERPROOFING TO THE REAR FACE OF THE ABUTMENTS TO PROTECT EXPANSION AND CONSTRUCTION JOINTS.
6. CONSTRUCT THE GEOSYNTHETIC WALL IN 1 FOOT LIFTS LEAVING AN EXPANSION GAP BETWEEN THE BACK FACE OF THE ABUTMENT AND GEOSYNTHETIC WALL. PLACE POROUS BACKFILL WITH GEOTEXTILE FABRIC BEHIND WINGWALL.
7. PLACE AGGREGATE BASE ON TOP OF THE GEOSYNTHETIC WALL.
8. WOOD FRAMING TO BE LEFT IN PLACE MUST BE PLACED OVER THE EXPANSION GAP TO PREVENT CONCRETE OR OTHER CONSTRUCTION MATERIAL OR DEBRIS FROM FALLING INTO THE GAP.
9. CONSTRUCT APPROACH SLAB AND DECK SLAB, IF DECK SLAB WAS NOT CONSTRUCTED WITH THE END DIAPHRAGMS. APPROACH SLABS AND DECK SLAB SHALL BE PLACED IN SEPERATE POURS.

Preliminary Plans - For Reference Only

FORWARD ABUTMENT GEOSYNTHETIC WALL DETAILS

CUY-90-1652S (BRIDGE 12)

RAMP B6 OVER RAMP IJ3, CR-721 (E. 14TH ST.), AND RAMP H5

SFN	1807806
DESIGN AGENCY	HDR
DESIGNER	ADW
CHECKER	CMR
REVIEWER	DWW 1/08/24
PROJECT ID	82382
SUBSET	17
TOTAL	53
SHEET	2145
TOTAL	2696

CUY-90-16.28 (CCG3A)

MODEL: Sheet PAPERSIZE: 34x22 (in.) DATE: 5/15/2025 TIME: 12:06:59 PM USER: TSCHOEN
pw:\\mb-us-pw.bentley.com:mb-us-pw-03\Documents\Cleveland_OH\01_Projects\ODOT\District12\82382400-Engineering\Structures\SFN_1807806\Sheets\82382_SFN_1807806_SF004.dgn

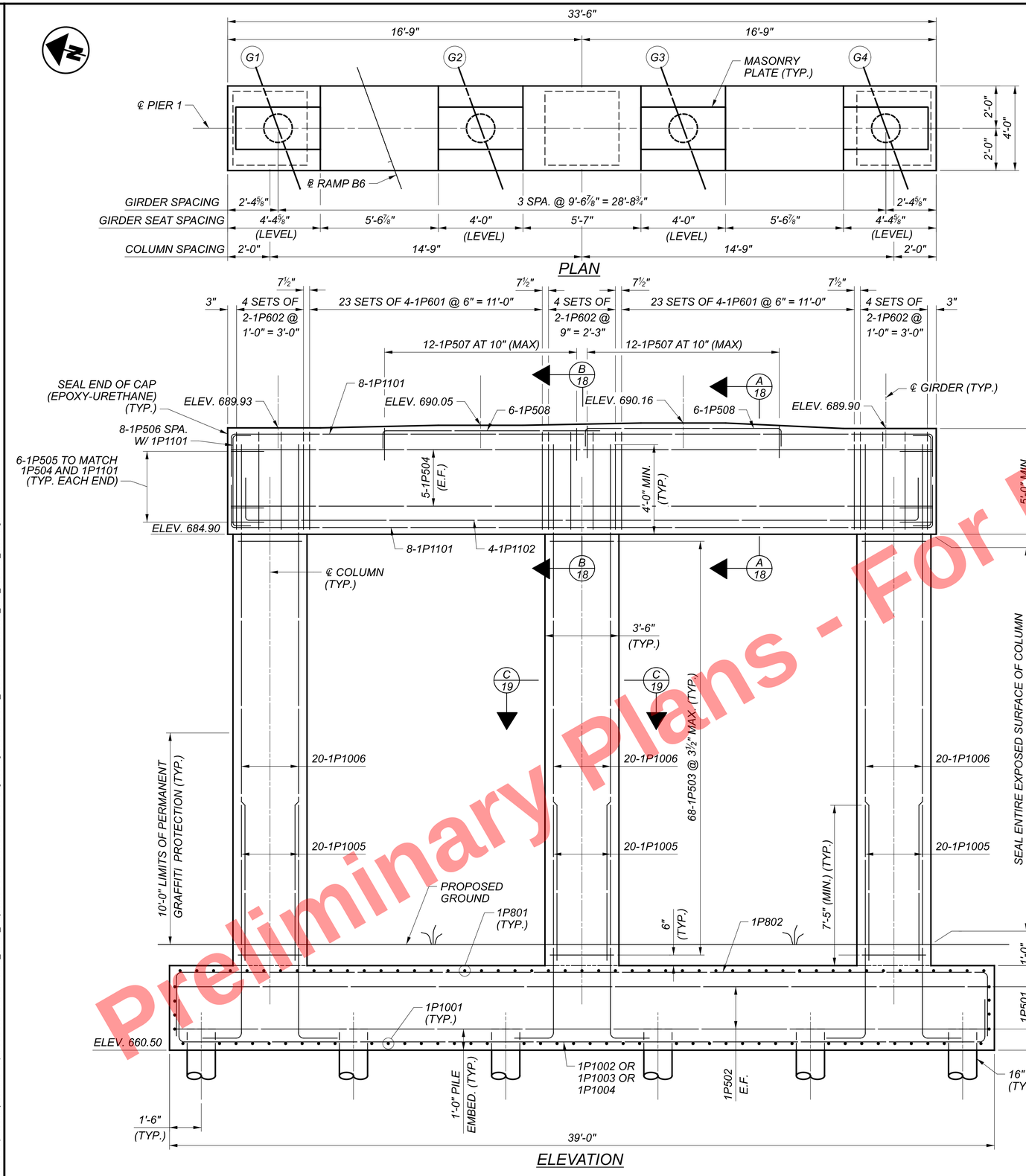

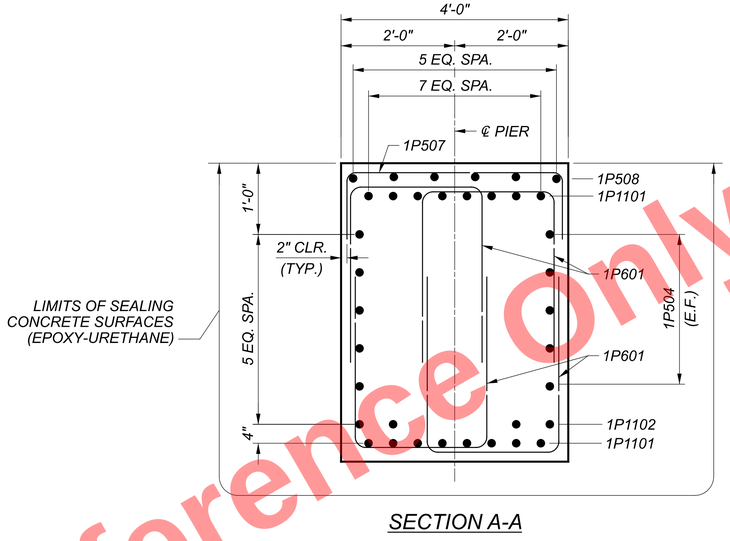

SECTION A-A

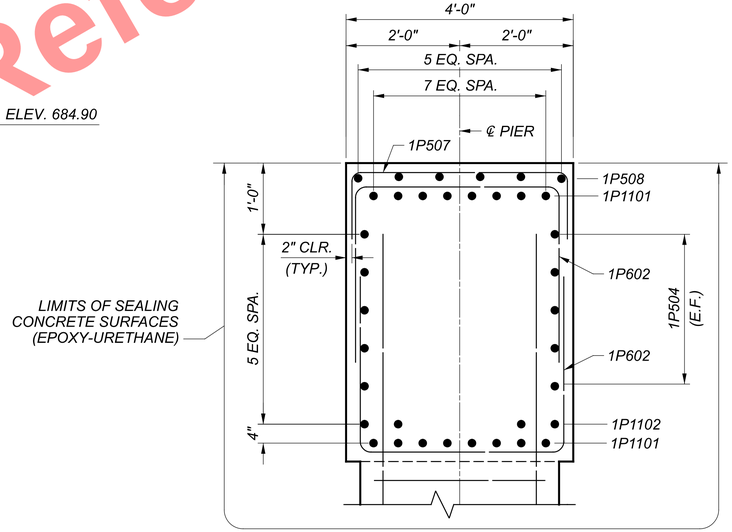

SECTION B-B

REQUIRED MINIMUM LAP LENGTHS	
#5	2'-5"
#10	7'-2"

NOTE:

1. FOR CAP, BEARING, AND COLUMN REINFORCING INTERFACE DETAIL, SEE SHEET 19 / 53.
2. FOR FOOTING PLAN AND ADDITIONAL DETAILS, SEE SHEET 19 / 53.
3. FOR PIER 2 DETAILS, SEE SHEETS 20 / 53 AND 21 / 53.
4. FOR BEARING DETAILS, 30 / 53 THRU 33 / 53.
5. FOR FOUNDATION PLAN, SEE SHEET 7 / 53.
6. FOR REINFORCEMENT LIST, SEE SHEET 52 / 53.
7. FOR SECTION C-C, SEE SHEET 19 / 53.
8. ADJUST BEAM SEAT ELEVATIONS BASED ON BEARING HEIGHT, SEE NOTE 14 ON SHEET 33 / 53.

Preliminary Plans - For Reference Only

PIER 1 PLAN AND ELEVATION
CUY-90-1652S (BRIDGE 12)
RAMP IJ3, CR-721 (E. 14TH ST.), AND RAMP H5
RAMP B6 OVER RAMP H5

SFN	1807806
DESIGN AGENCY	HDR
DESIGNER	PJC
CHECKER	CMR
REVIEWER	DWW 1/08/24
PROJECT ID	82382
SUBSET	18
TOTAL	53
SHEET	2146
TOTAL	2696

CUY-90-16.28 (CCG3A)
MODEL: Sheet PAPERSIZE: 34x22 (in.) DATE: 3/28/2025 TIME: 7:28:39 AM USER: Rohit.Bk
pw:\\mb-us-pw.bentley.com:mb-us-pw-03\Documents\Cleveland_OH101_Projects\ODOT\District12\82382\400-Engineering\Structures\SFN_1807806\Sheets\82382_SFN_1807806_SI001.dgn

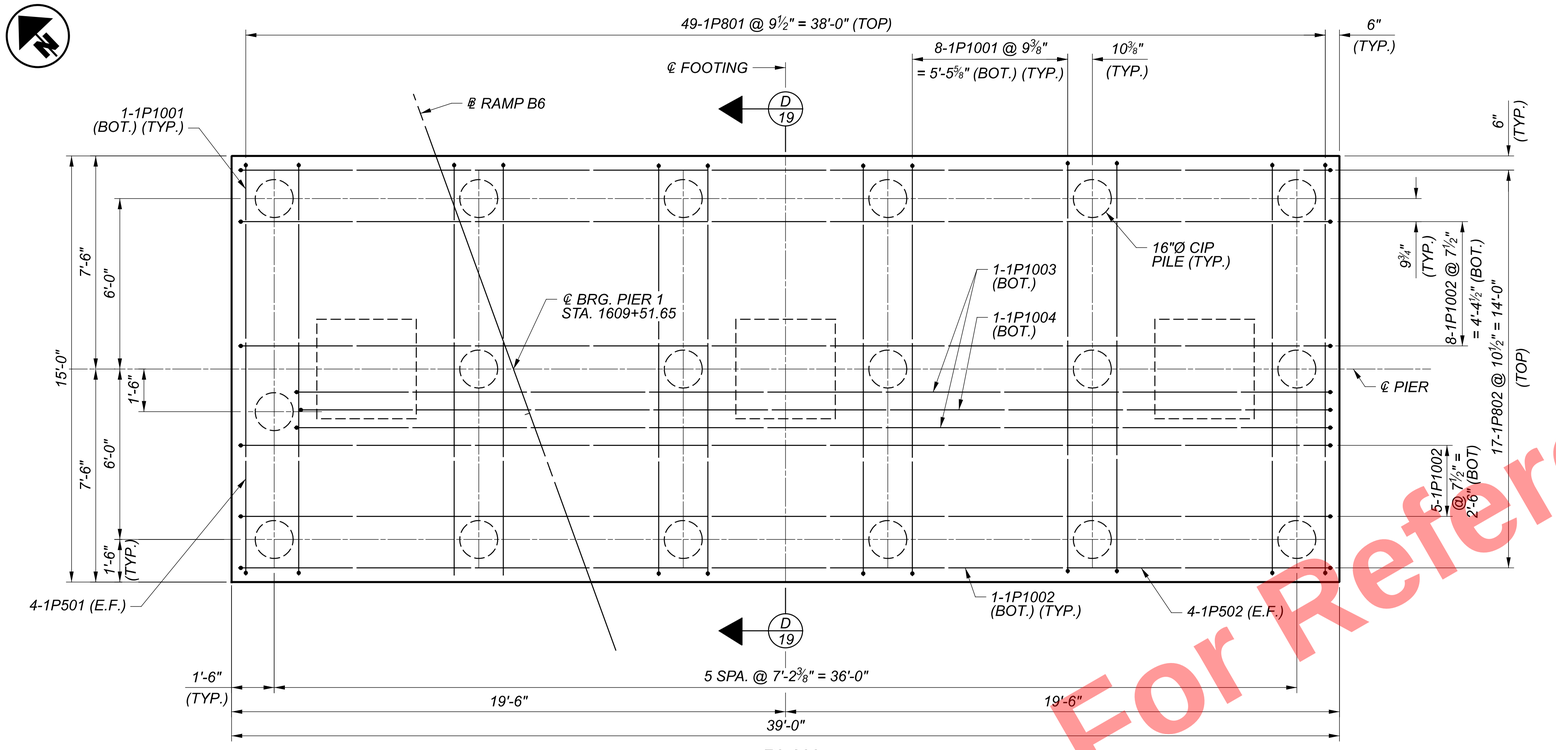

PLAN

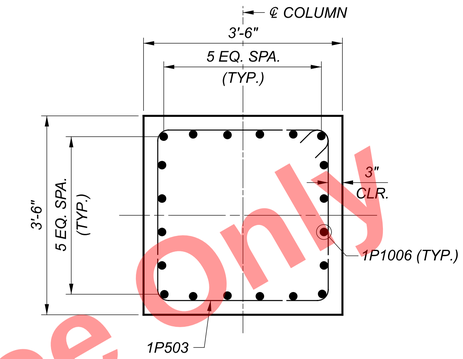

SECTION C-C

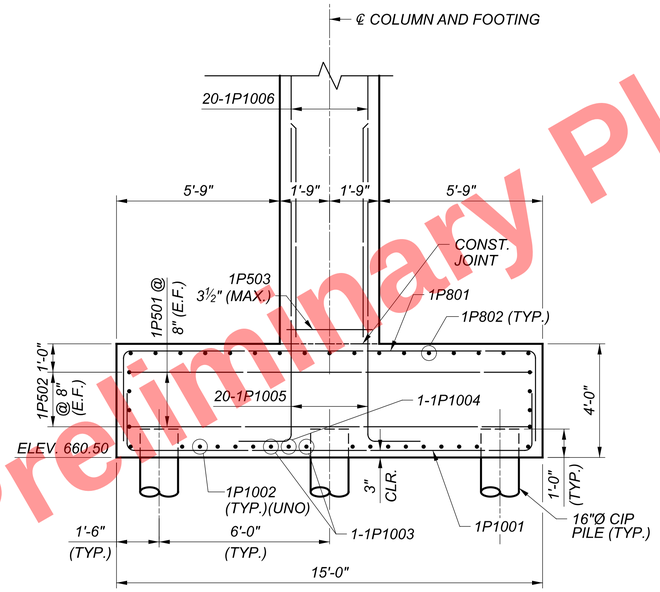

SECTION D-D

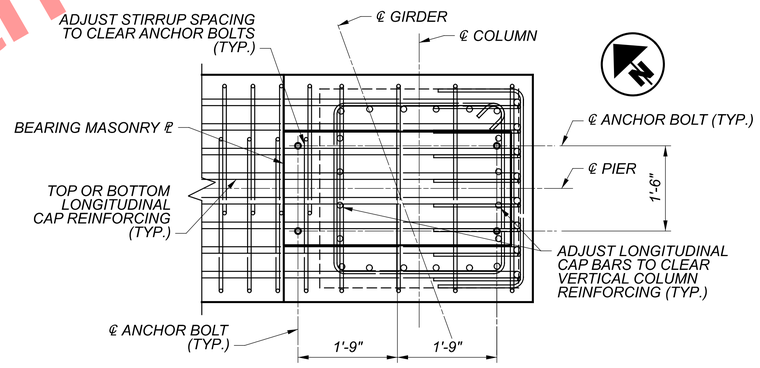

CAP, BEARING AND COLUMN INTERFACE DETAIL

NOTE:

1. FOR LOCATION OF SECTION C-C AND ADDITIONAL PIER DETAILS AND NOTES, SEE SHEET 18/53.

Preliminary Plans - For Reference Only

PIER 1 DETAILS
CUY-90-1652S (BRIDGE 12)
RAMP B6 OVER RAMP IJ3, CR-721 (E. 14TH ST.), AND RAMP H5

SFN	1807806
DESIGN AGENCY	HDR
DESIGNER	PJC
CHECKER	CMR
REVIEWER	DWW 1/08/24
PROJECT ID	82382
SUBSET	19
TOTAL	53
SHEET	2147
TOTAL	2696

CUY-90-16.28 (CCG3A)
MODEL: Sheet PAPERSIZE: 34x22 (in.) DATE: 3/28/2025 TIME: 7:28:56 AM USER: Rohit.Bk
pw:\\mb-us-pw.bentley.com:mb-us-pw-03\Documents\Cleveland_OH\01_Projects\ODOT\District12\82382400-Engineering\Structures\SFN_1807806\Sheets\82382_SFN_1807806_S1002.dgn

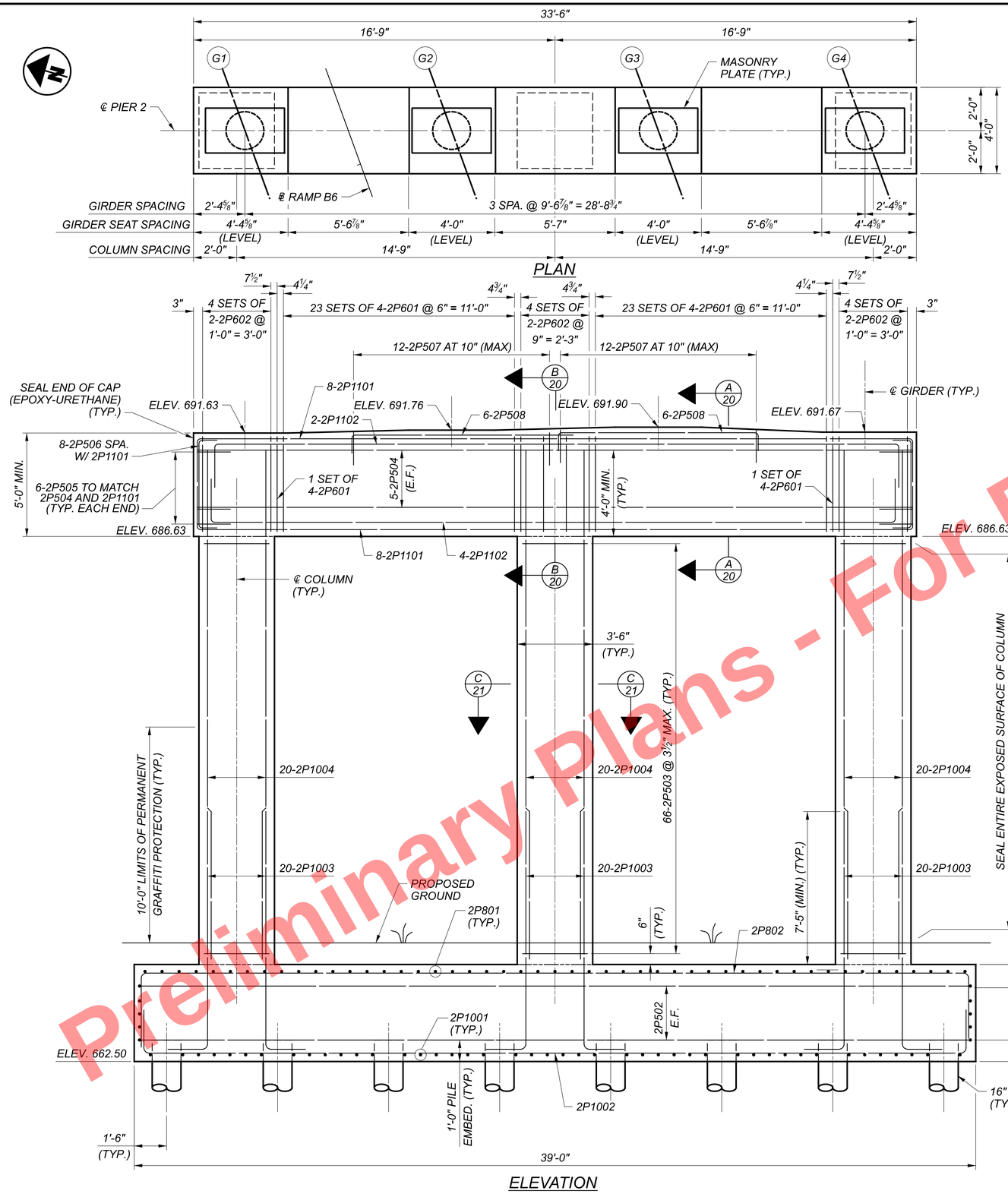

ELEVATION

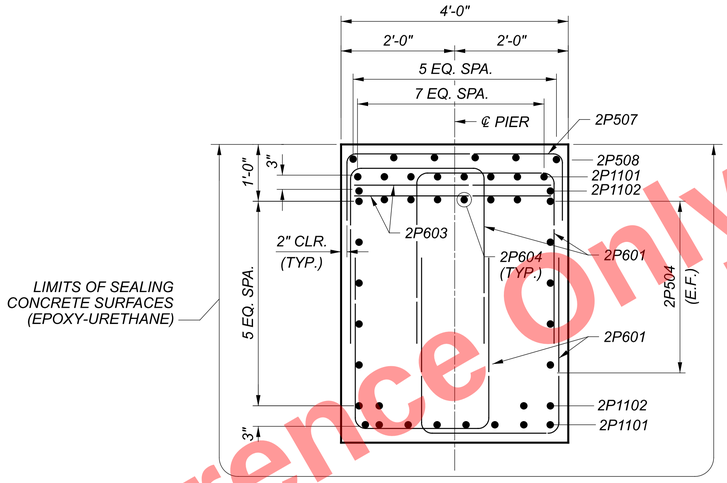

SECTION A-A

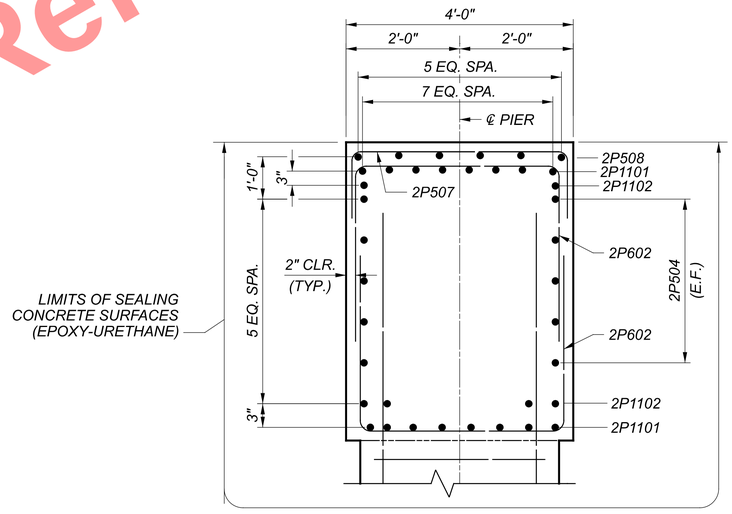

SECTION B-B

REQUIRED MINIMUM LAP LENGTHS	
#5	2'-5"
#10	7'-2"

NOTE:

1. FOR CAP, BEARING, AND COLUMN REINFORCING INTERFACE DETAIL, SEE SHEET 21 / 53.
2. FOR FOOTING PLAN AND ADDITIONAL DETAILS, SEE SHEET 21 / 53.
3. FOR PIER 1 DETAILS, SEE SHEETS 18 / 53 AND 19 / 53.
4. FOR BEARING DETAILS, 30 / 53 THRU 33 / 53.
5. FOR FOUNDATION PLAN, SEE SHEET 7 / 53.
6. FOR REINFORCEMENT LIST, SEE SHEET 52 / 53.
7. FOR SECTION C-C, SEE SHEET 21 / 53.
8. ADJUST BEAM SEAT ELEVATIONS BASED ON BEARING HEIGHT, SEE NOTE 14 ON SHEET 33 / 53.

Preliminary Plans - For Reference Only

PIER 2 PLAN AND ELEVATION
CUY-90-1652S (BRIDGE 12)
OVER RAMP IJ3, CR-721 (E. 14TH ST.), AND RAMP H5
RAMP B6

SFN	1807806
DESIGN AGENCY	HDR
DESIGNER	PJC
CHECKER	CMR
REVIEWER	DWW 1/08/24
PROJECT ID	82382
SUBSET	20
TOTAL	53
SHEET	2148
TOTAL	2696

CUY-90-16.28 (CCG3A)
MODEL: Sheet PAPERSIZE: 34x22 (in.) DATE: 3/28/2025 TIME: 7:29:12 AM USER: RohitBk
pw:\\mb-us-pw.bentley.com:mb-us-pw-03\Documents\Cleveland_OH\01_Projects\ODOT\District12\82382\400-Engineering\Structures\SFN_1807806\Sheets\82382_SFN_1807806_SI003.dgn

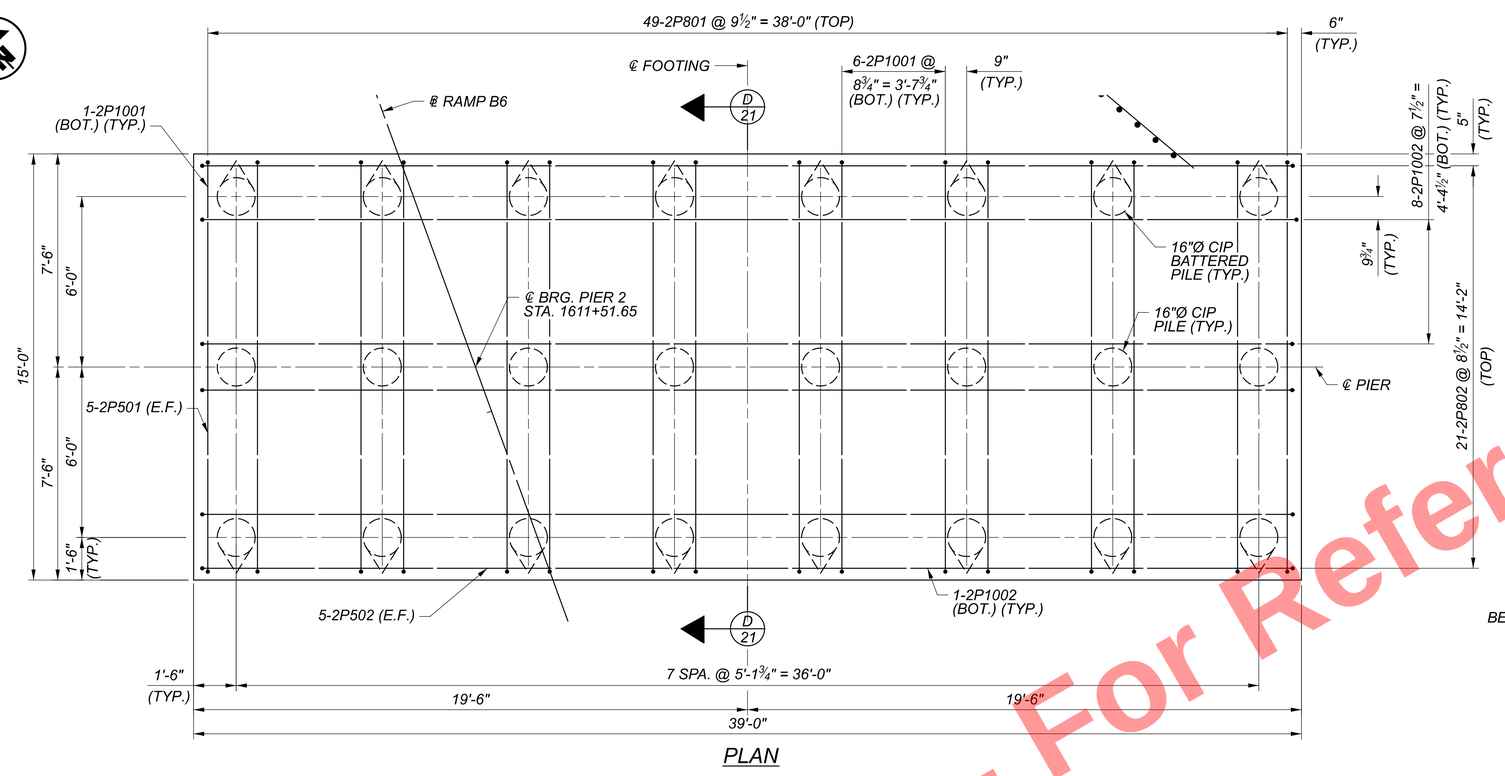

PLAN

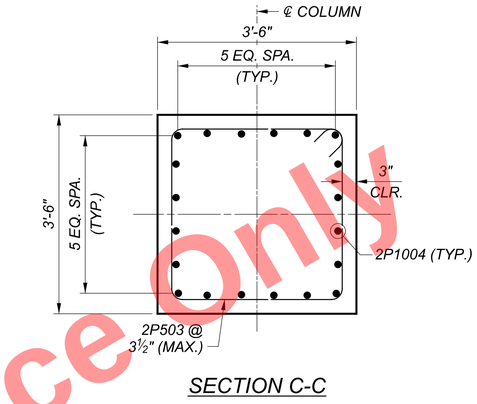

SECTION C-C

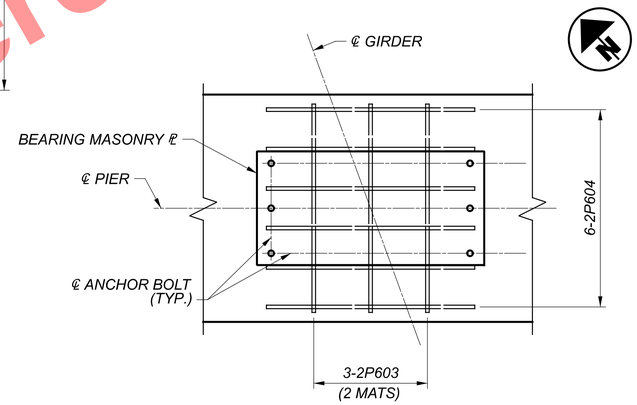

FIXED BEARING ANCHOR REINFORCING DETAIL

(MAIN CAP AND SEAT REINFORCING NOT SHOWN FOR CLARITY)
(TYP. AT EACH BEARING)

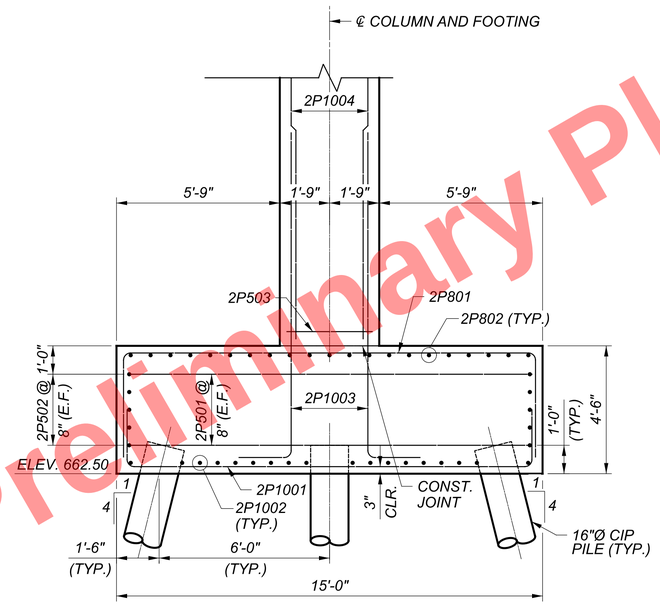

SECTION D-D

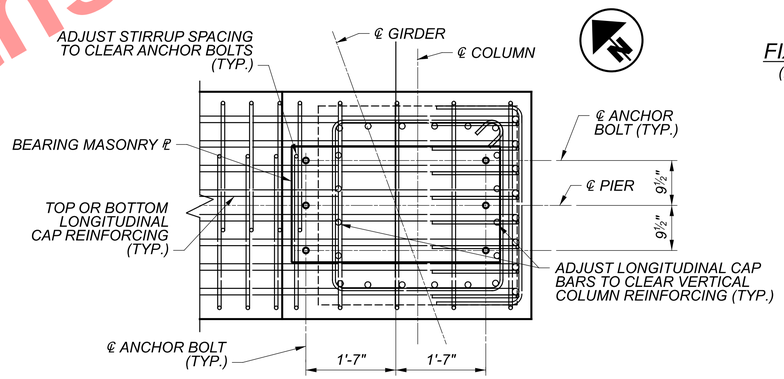

CAP, BEARING AND COLUMN INTERFACE DETAIL

NOTE:

1. FOR LOCATION OF SECTION C-C AND ADDITIONAL PIER DETAILS AND NOTES, SEE SHEET 20 / 53.

Preliminary Plans - For Reference Only

PIER 2 DETAILS
CUY-90-1652S (BRIDGE 12)
RAMP IJ3, CR-721 (E. 14TH ST.), AND RAMP H5 OVER RAMP B6

SFN 1807806
DESIGN AGENCY HDR
DESIGNER PJC | CHECKER CMR
REVIEWER DWW 1/08/24
PROJECT ID 82382
SUBSET 21 | TOTAL 53
SHEET 2149 | TOTAL 2696

CUY-90-16.28 (CCG3A)

MODEL: Sheet PAPERSIZE: 34x22 (in.) DATE: 3/28/2025 TIME: 7:29:29 AM USER: Rohit.Bk
pw:\\mb-us-pw.bentley.com:mb-us-pw-03\Documents\Cleveland_OH\01_Projects\ODOT\District12\82382\400-Engineering\Structures\SFN_1807806\Sheets\82382_SFN_1807806_SI004.dgn

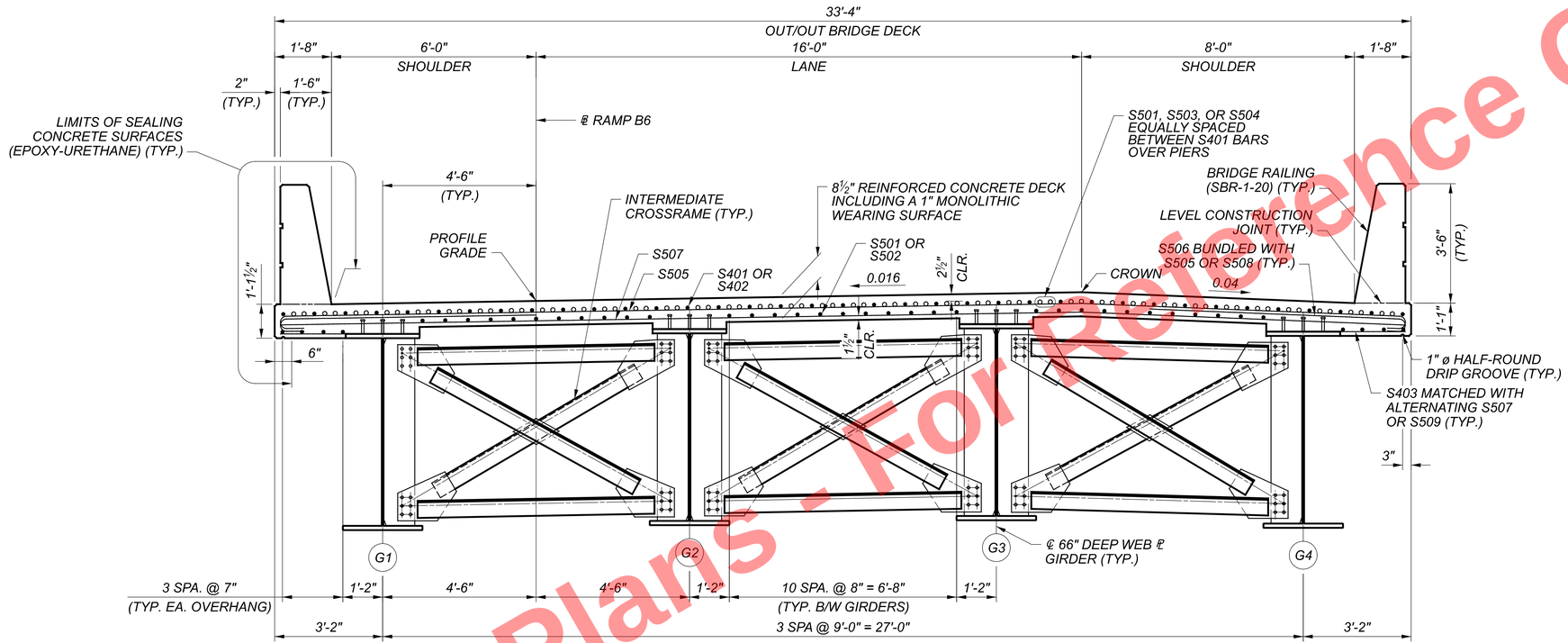

TYPICAL TRANSVERSE SECTION

(BRIDGE RAILING REINFORCING NOT SHOWN FOR CLARITY)

NOTES:

1. FOR FRAMING PLAN AND GIRDER ELEVATION, SEE SHEETS 23 / 53 AND 24 / 53.
2. FOR SCREED, TOP OF HAUNCH, AND FINAL DECK ELEVATIONS, SEE SHEET 42 / 53 THRU 45 / 53.
3. FOR DECK PLAN, SEE SHEET 34 / 53.
4. FOR BRIDGE RAILING PLAN AND DETAILS, SEE SHEET 36 / 53.
5. FOR CROSSFRAME DETAILS, SEE SHEET 26 / 53.
6. FOR REINFORCEMENT LISTS, SEE SHEETS 49 / 53 THRU 53 / 53.
7. DRIP GROOVES SHALL TERMINATE 2'-0" FROM THE FACE OF THE ABUTMENT END DIAPRAGMS.
8. DECK SLAB CONCRETE QUANTITY: THE ESTIMATED QUANTITY OF DECK SLAB CONCRETE IS BASED ON THE CONSTANT DECK SLAB THICKNESS, AS SHOWN, PLUS THE QUANTITY OF CONCRETE THAT FORMS EACH GIRDER HAUNCH. THE ESTIMATE ASSUMES A CONSTANT HAUNCH THICKNESS OF 5¼" INCHES AND HAUNCH WIDTH EQUAL TO TOP FLANGE WIDTH. DEVIATE FROM THIS HAUNCH THICKNESS AS NECESSARY TO PLACE THE DECK SURFACE AT THE FINISHED GRADE.

   THE HAUNCH THICKNESS WAS MEASURED AT THE CENTERLINE OF GIRDER, FROM THE SURFACE OF THE DECK TO THE BOTTOM OF THE TOP FLANGE MINUS THE DECK SLAB THICKNESS. THE AREA OF ALL EMBEDDED STEEL PLATES HAS BEEN DEDUCTED FROM THE HAUNCH QUANTITY IN ACCORDANCE WITH 511.23.
9. WELD ATTACHMENT OF SUPPORTS FOR CONCRETE DECK FINISHING MACHINE TO AREAS OF THE FASCIA STRINGER FLANGES DESIGNATED " COMPRESSION". DO NOT WELD ATTACHMENTS TO AREAS DESIGNATED "TENSION". FILLET WELDS TO COMPRESSION FLANGES SHALL BE AT LEAST 1" FROM EDGE OF FLANGE, BE NO MORE THAN 2" LONG, AND BE AT LEAST 1/4" FOR THICKNESSES UP TO 3/4" OR 5/16" FOR GREATER THAN 3/4" THICK.

Preliminary Plans - For Reference Only

TRANSVERSE SECTION
CUY-90-1652S (BRIDGE 12)
RAMP B6 OVER RAMP IJ3, CR-721 (E. 14TH ST.), AND RAMP H5

SFN 1807806
DESIGN AGENCY HDR
DESIGNER CMR | CHECKER JTW
REVIEWER DWW 1/08/24
PROJECT ID 82382
SUBSET 22 | TOTAL 53
SHEET 2150 | TOTAL 2696

CUY-90-16.28 (CCG3A)

MODEL: Sheet PAPERSIZE: 34x22 (in.) DATE: 3/28/2025 TIME: 7:29:55 AM USER: Rohit.Bk
pw:\\mb-us-pw.bentley.com:mb-us-pw-03\Documents\Cleveland_OH\01_Projects\ODOT\District12\82382\400-Engineering\Structures\SFN_1807806\Sheets\82382_SFN_1807806_ST001.dgn

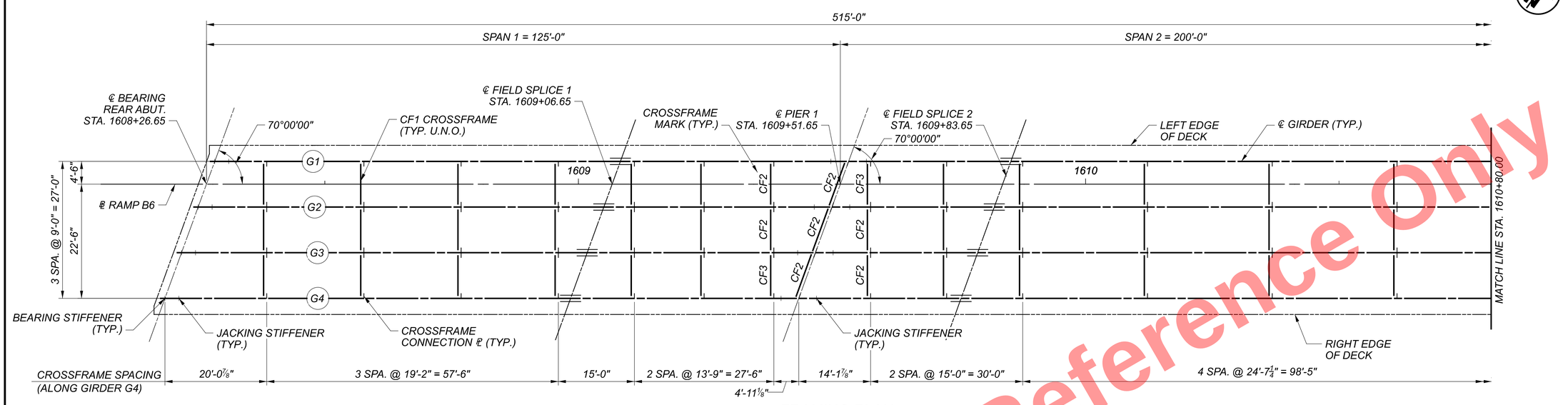

FRAMING PLAN

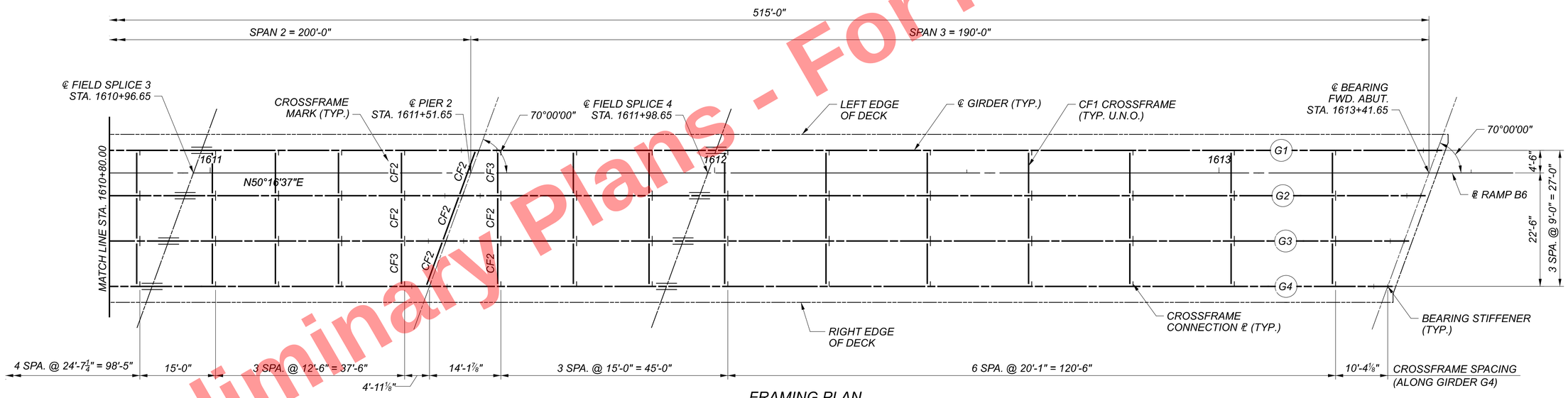

FRAMING PLAN

NOTES:

1. FOR GENERAL NOTES, SEE SHEET 4 / 53 THRU 5 / 53 .
2. FOR GIRDER ELEVATION AND ADDITIONAL NOTES, SEE SHEET 24 / 53 .
3. FOR GIRDER STEEL DETAILS, SEE SHEET 25 / 53 .
4. FOR CROSSFRAME DETAILS, SEE SHEET 26 / 53 .
5. FOR FIELD SPLICE DETAILS, SEE SHEET 27 / 53 .

Preliminary Plans - For Reference Only

FRAMING PLAN
CUY-90-1652S (BRIDGE 12)
RAMP IJ3, CR-721 (E. 14TH ST.), AND RAMP H5
RAMP B6 OVER

CUY-90-16.28 (CCG3A)

MODEL: Sheet PAPERSIZE: 34x22 (in.) DATE: 3/28/2025 TIME: 7:30:03 AM USER: Rohit.Bk
pw:\\mb-us-pw.bentley.com:mb-us-pw-03\Documents\Cleveland_OH101_Projects\ODOT\District12\82382\400-Engineering\Structures\SFN_1807806\Sheets\82382_SFN_1807806_SS001.dgn

SFN	1807806
DESIGN AGENCY	HDR
DESIGNER	CMR
CHECKER	JTW
REVIEWER	DWW 1/08/24
PROJECT ID	82382
SUBSET	23
TOTAL	53
SHEET	2151
TOTAL	2696

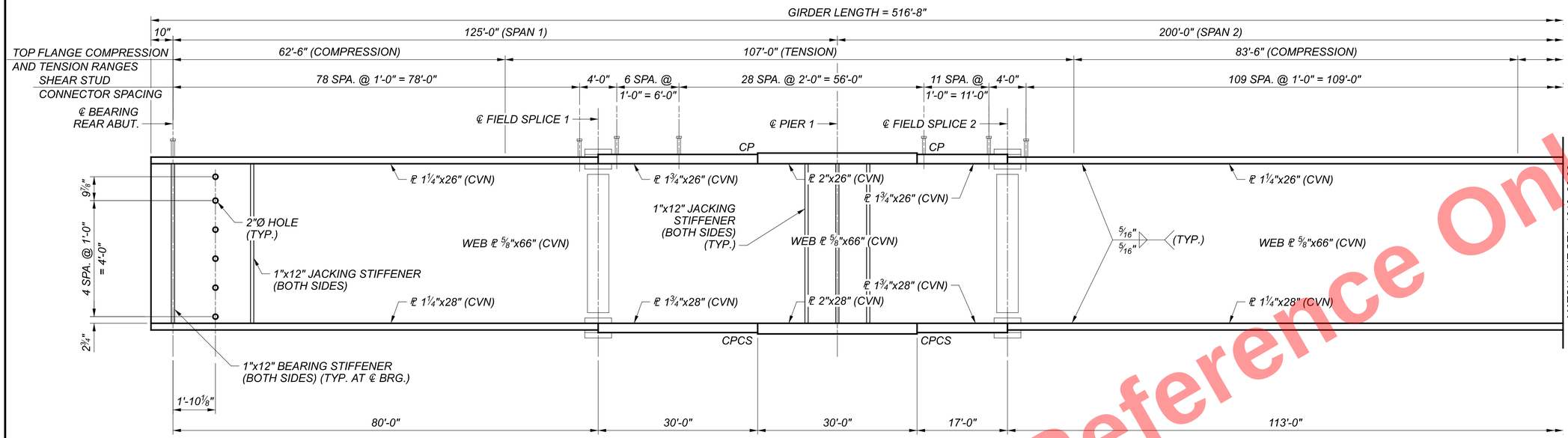

GIRDER ELEVATION

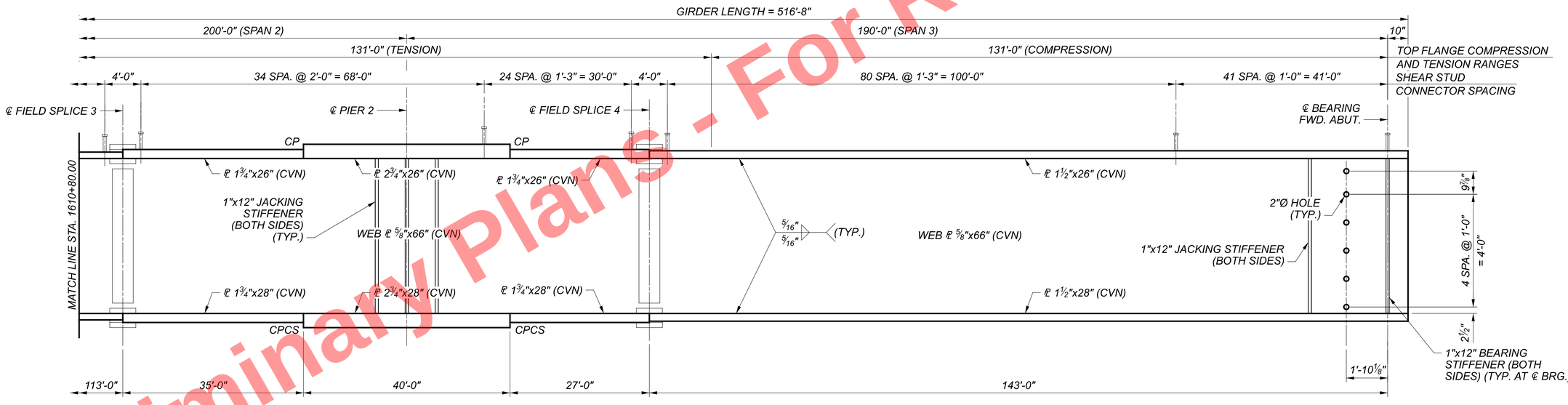

GIRDER ELEVATION

LEGEND:

CS - INDICATES BUTT WELD SUBJECT TO COMPRESSIVE STRESS ONLY.

CP - INDICATES COMPLETE JOINT PENETRATION WELD.

NOTES:

1. FOR GENERAL NOTES, SEE SHEET 4/53 THRU 5/53.
2. FOR FRAMING PLAN AND ADDITIONAL NOTES, SEE SHEET 23/53.
3. FOR ADDITIONAL STEEL DETAILS, SEE SHEETS 25/53 AND 26/53.
4. FOR FIELD SPLICE DETAILS, SEE SHEET 27/53.
5. FOR DEFLECTION AND CAMBER VALUES, SEE SHEETS 28/53 THRU 29/53.
6. FOR BEARING DETAILS, SEE SHEETS 30/53 THRU 33/53.

NOTES CONTINUED:

7. WELD ATTACHMENT OF SUPPORTS FOR CONCRETE DECK FINISHING MACHINE TO AREAS OF THE FASCIA STRINGER FLANGES DESIGNATED "COMPRESSION". DO NOT WELD ATTACHMENTS TO AREAS DESIGNATED "TENSION". FILLET WELDS TO COMPRESSION FLANGES SHALL BE AT LEAST 1" FROM THE EDGE OF FLANGE, BE NO MORE THAN 2" LONG, AND BE AT LEAST ¼" FOR THICKNESSES UP TO ¾" OR ⅝" FOR GREATER THAN ¾" THICK.
8. CVN: WHERE A SHAPE OR PLATE IS DESIGNATED (CVN), FURNISH MATERIAL THAT MEETS THE MINIMUM NOTCH TOUGHNESS REQUIREMENTS AS SPECIFIED IN C&MS 711.01.
9. PAINT PROPOSED STRUCTURAL STEEL PER ITEM 514. SEE GENERAL NOTES FOR ADDITIONAL INFORMATION.
10. SHEAR CONNECTORS SHALL NOT BE LOCATED OVER FLANGE TRANSITIONS. SHEAR CONNECTOR SPACING MAY BE ADJUSTED AS NEEDED AT FLANGE TRANSITIONS TO AVOID CONFLICT.

Preliminary Plans - For Reference Only

GIRDER ELEVATION
CUY-90-1652S (BRIDGE 12)
RAMP IJ3, CR-721 (E. 14TH ST.), AND RAMP H5
RAMP B6 OVER

SFN	1807806
DESIGN AGENCY	HDR
DESIGNER	CMR
CHECKER	JTW
REVIEWER	DWW 1/08/24
PROJECT ID	82382
SUBSET	24
TOTAL	53
SHEET	2152
TOTAL	2696

CUY-90-16.28 (CCG3A)
MODEL: Sheet PAPERSIZE: 34x22 (in.) DATE: 3/28/2025 TIME: 7:30:09 AM USER: RohitLBk
pw:\\mb-us-pw.bentley.com:mb-us-pw-03\Documents\Cleveland_OH\01_Projects\ODOT\District12\82382400-Engineering\Structures\SFN_1807806\Sheets\82382_SFN_1807806_SS002.dgn

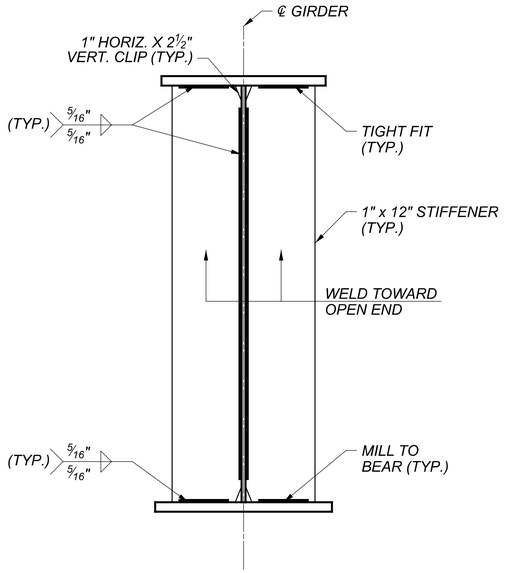

PIER BEARING STIFFENER DETAIL

(SEE NOTE 1)

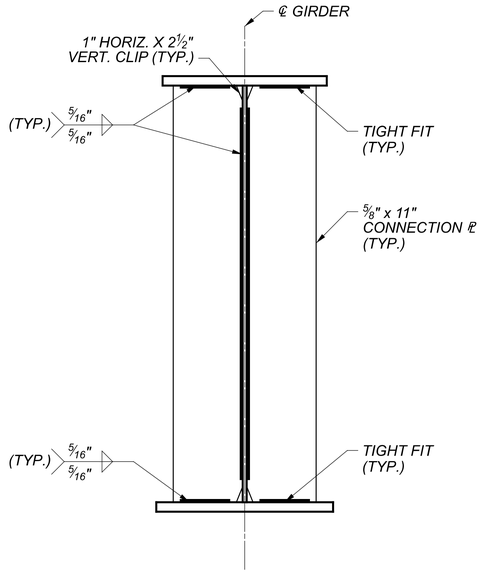

CROSSFRAME CONNECTION PLATE DETAILS

(INTERIOR GIRDER SHOWN)

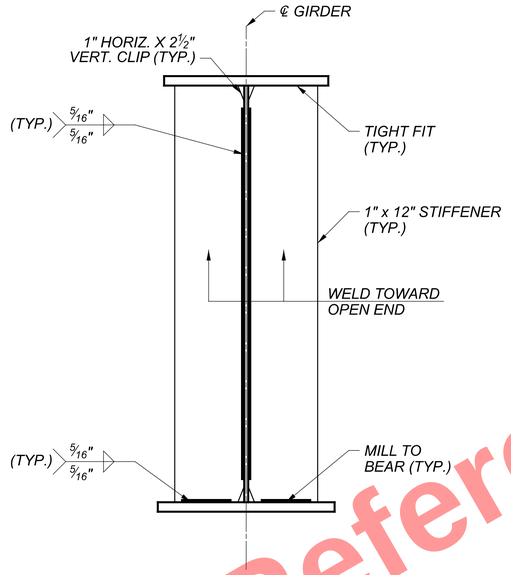

ABUTMENT BEARING & JACKING STIFFENER DETAIL

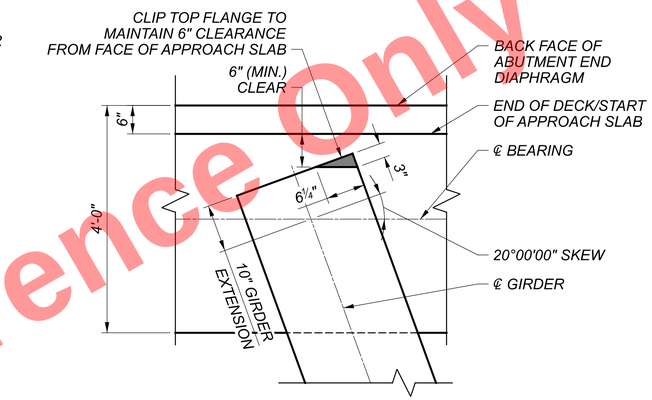

GIRDER TOP FLANGE CLIP DETAIL

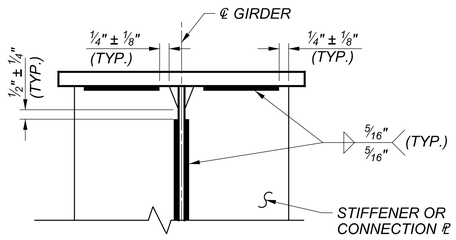

STIFFENER AND CONNECTION PLATE WELD TERMINATION DETAILS

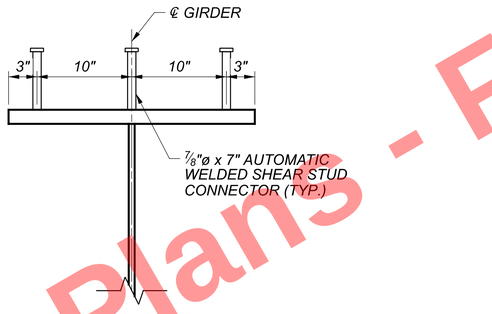

SHEAR STUD CONNECTOR DETAIL

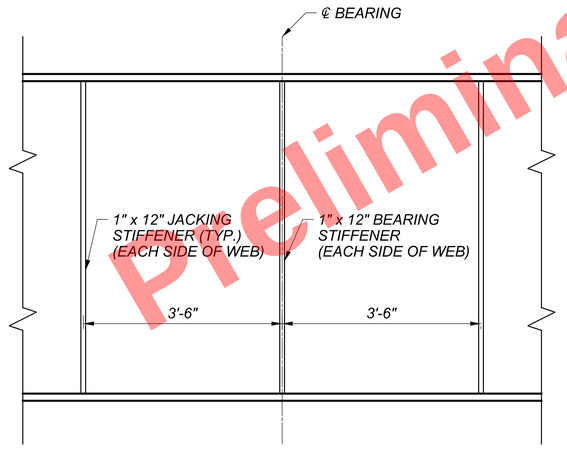

GIRDER PIER STIFFENER DETAIL

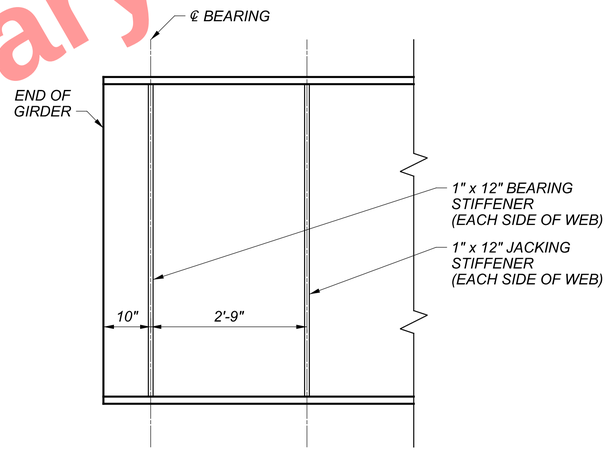

GIRDER ABUTMENT STIFFENER DETAIL

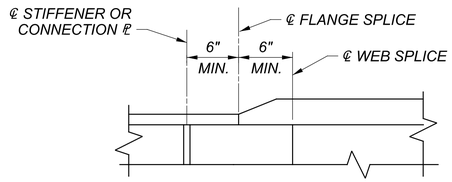

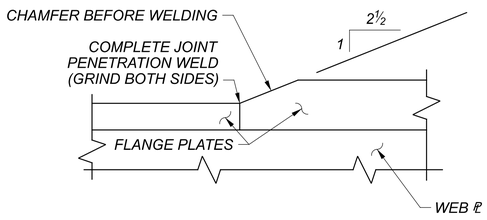

FLANGE SHOP SPLICE DETAIL

(TO BE USED AT FLANGE THICKNESS TRANSITIONS)

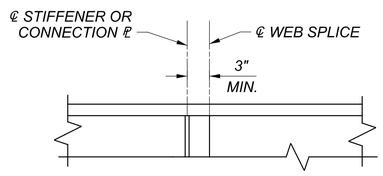

WELDED SHOP SPLICE CLEARANCE DETAILS

NOTES:

1. SKEW BEARING STIFFENERS ALONG SUBSTRUCTURE SKEW AT PIER 1 AND PIER 2.
2. ALL STIFFENER AND CONNECTIONS PLATES SHALL BE ASTM A709, GRADE 50 STEEL.
3. CROSSFRAME CONNECTION PLATES SHALL BE NORMAL TO THE TOP FLANGE UNLESS NOTED OTHERWISE. BEARING AND JACKING STIFFENERS SHALL BE VERTICAL AFTER ERECTION.
4. FOR GIRDER ELEVATION, SEE SHEET 24 / 53.
5. FOR FRAMING PLAN, SEE SHEET 23 / 53.

Preliminary Plans - For Reference Only

GIRDER DETAILS (1 OF 2)
CUY-90-1652S (BRIDGE 12)
RAMP B6 OVER RAMP IJ3, CR-721 (E. 14TH ST.), AND RAMP H5

SFN	1807806
DESIGN AGENCY	HDR
DESIGNER	CMR
CHECKER	JML
REVIEWER	DWW 1/08/24
PROJECT ID	82382
SUBSET	25
TOTAL	53
SHEET	2153
TOTAL	2696

CUY-90-16.28 (CCG3A)
MODEL: Sheet PAPERSIZE: 34x22 (in.) DATE: 3/28/2025 TIME: 7:30:15 AM USER: Rohit.Bk
pw:\\mb-us-pw.bentley.com:mb-us-pw-03\Documents\Cleveland_OH\01_Projects\ODOT\District12\82382\400-Engineering\Structures\SFN_1807806\Sheets\82382_SFN_1807806_SS003.dgn

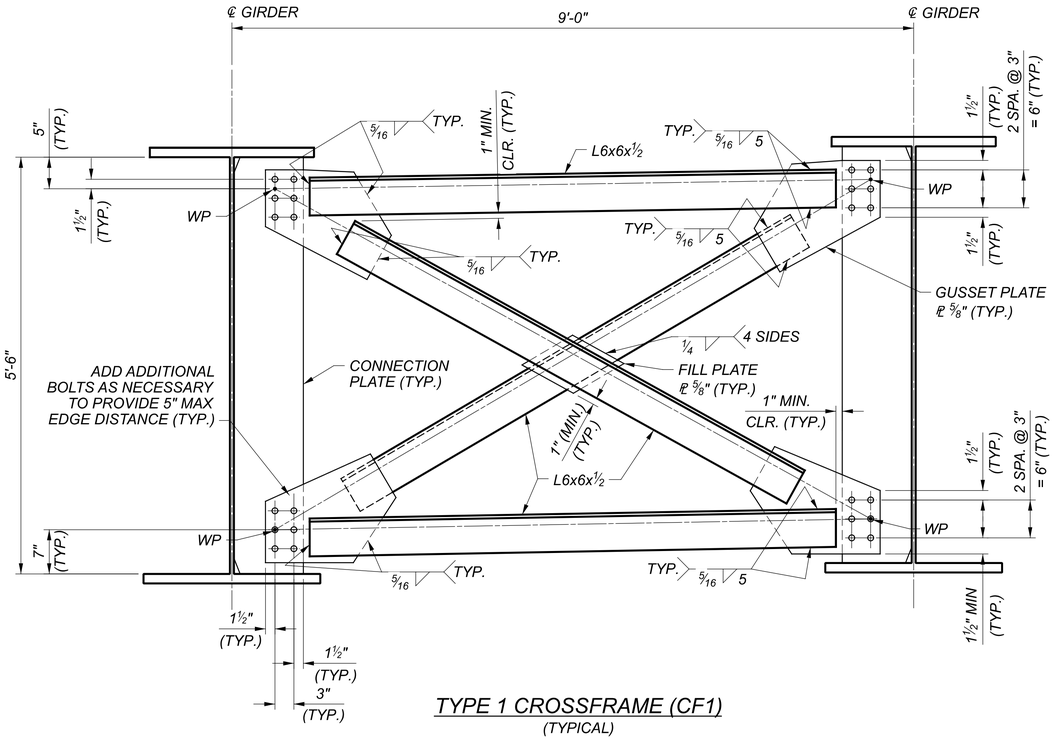

TYPE 1 CROSSFRAME (CF1)
(TYPICAL)

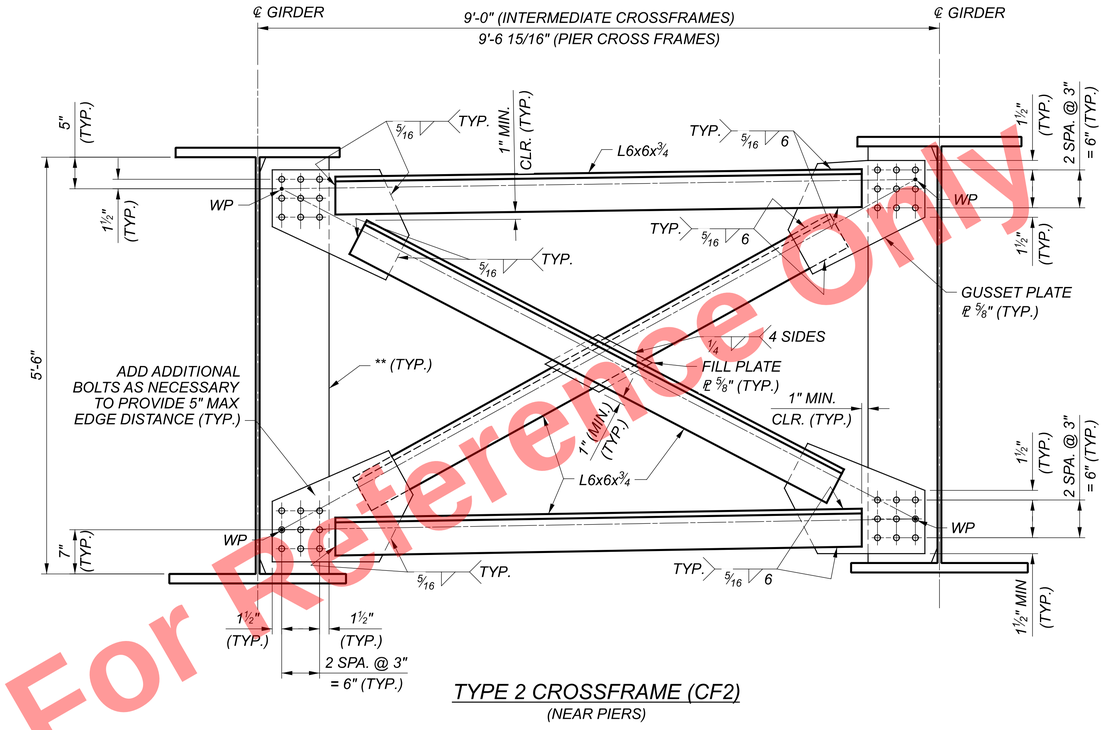

TYPE 2 CROSSFRAME (CF2)
(NEAR PIERS)

** CONNECTION PLATE AT INTERMEDIATE CROSSFRAMES
BEARING STIFFENER AT PIER CROSSFRAMES

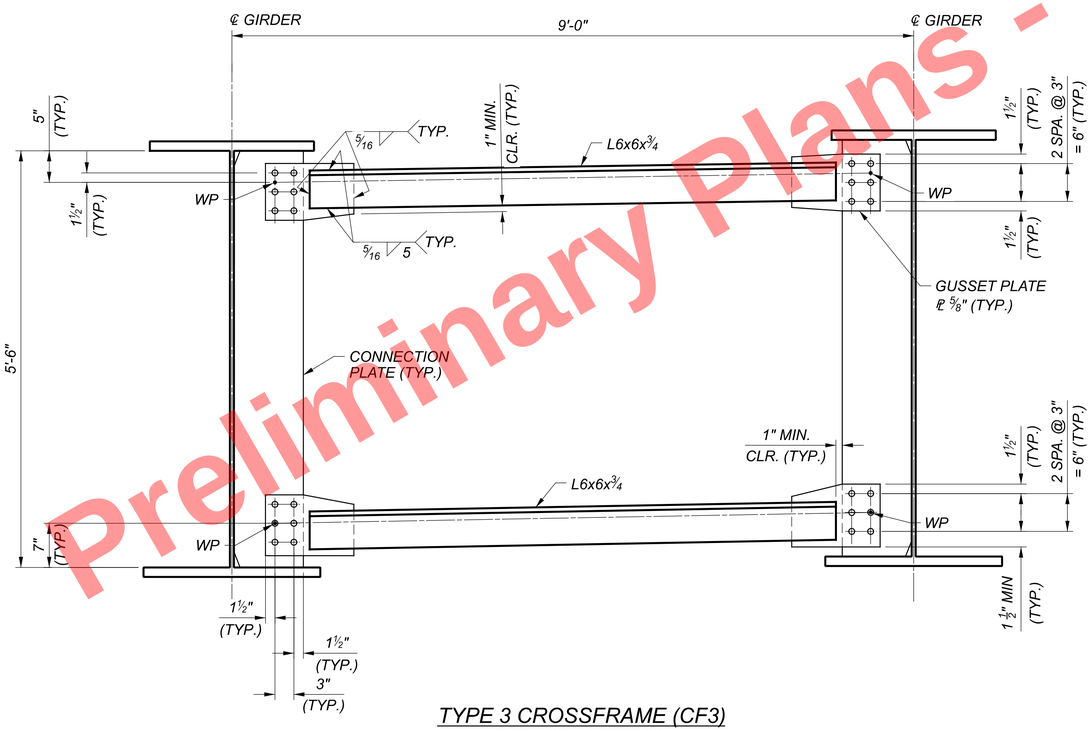

TYPE 3 CROSSFRAME (CF3)
(LEAN-ON NEAR PIERS)

NOTES:

1. FOR GENERAL NOTES, SEE SHEETS 4 / 53 THRU 5 / 53.
2. FOR LOCATION OF CROSSFRAMES, SEE SHEET 23 / 53.
3. FOR CONNECTION PLATE AND BEARING STIFFENER DETAILS, SEE SHEET 25 / 53.
4. HIGH STRENGTH BOLTS SHALL BE ⅞" DIA. ASTM F3125 GRADE A325, TYPE I IN 15/16" DIA. STANDARD HOLES. USE OVERSIZE HOLES IN CROSSFRAME GUSSET PLATES.
5. PROVIDE CLASS A SURFACE CONDITION FOR THE CONTACT AREA OF BOLTED PARTS.
6. LOCATE MEMBER NEUTRAL AXIS ALONG WORK LINE FROM WP TO WP.

Preliminary Plans - For Reference Only

GIRDER DETAILS (2 OF 2)
CUY-90-1652S (BRIDGE 12)
RAMP IJ3, CR-721 (E. 14TH ST.), AND RAMP H5
RAMP B6 OVER R

SFN	1807806
DESIGN AGENCY	HDR
DESIGNER	CMR
CHECKER	JTW
REVIEWER	DWW 1/08/24
PROJECT ID	82382
SUBSET	26
TOTAL	53
SHEET	2154
TOTAL	2696

CUY-90-16.28 (CCG3A)
MODEL: Sheet PAPERSIZE: 34x22 (in.) DATE: 3/28/2025 TIME: 7:30:21 AM USER: Rohit.Bk
pw:\\mb-us-pw.bentley.com:mb-us-pw-03\Documents\Cleveland_OH\01_Projects\ODOT\District12\82382400-Engineering\Structures\SFN_1807806\Sheets\82382_SFN_1807806_SS004.dgn

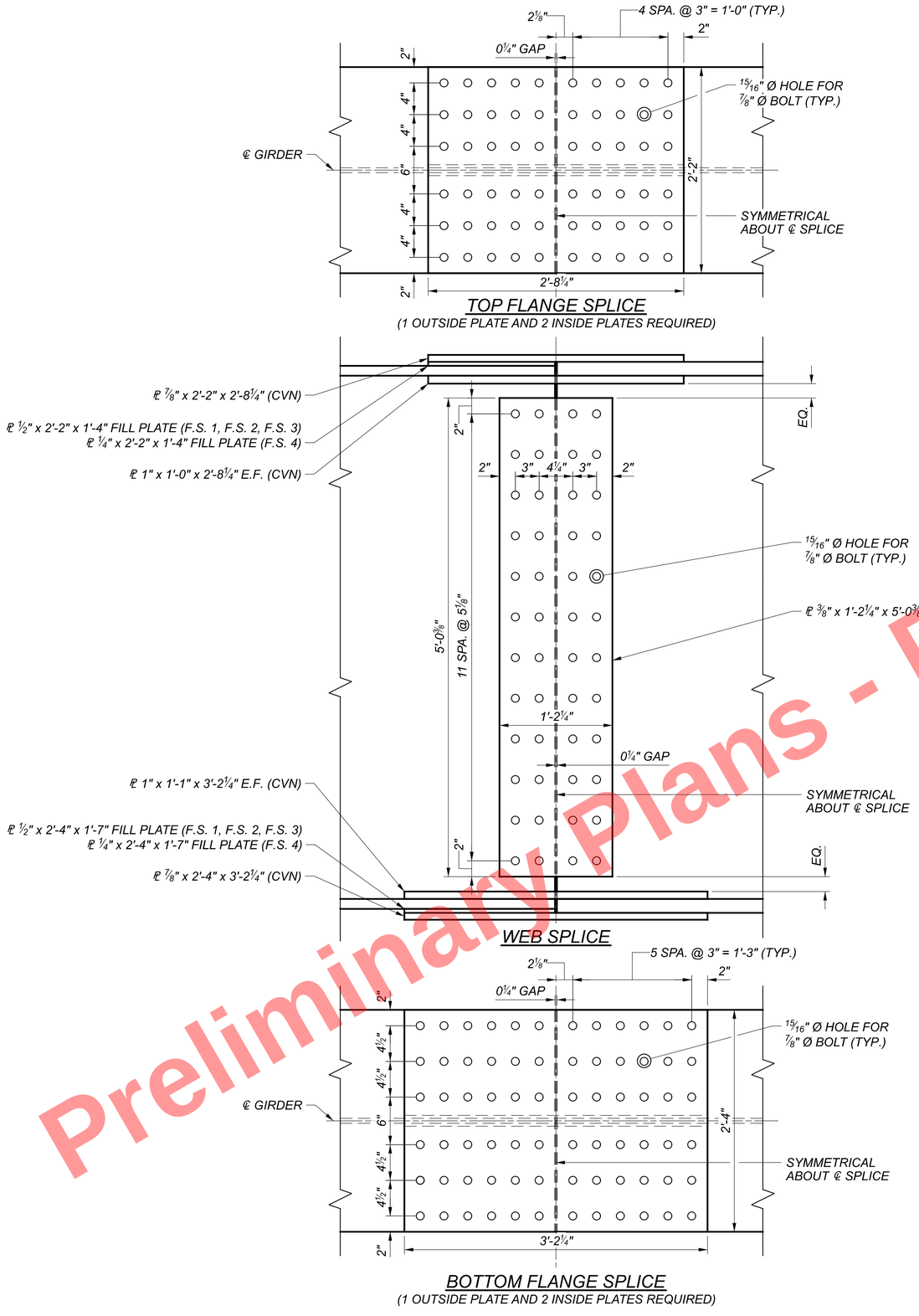

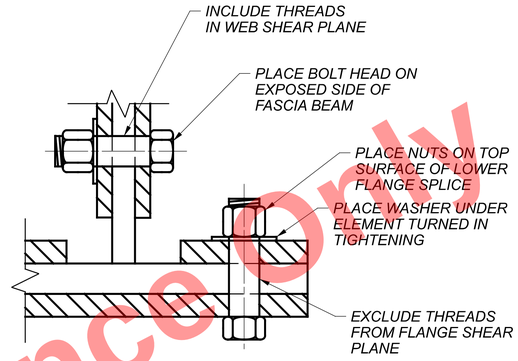

BOLT ORIENTATION DETAIL

Preliminary Plans - For Reference Only

LEGEND:

E.F. = EACH FACE

NOTES:

1. ALL BOLTS SHALL BE ⅞" DIA. ASTM F3125 GRADE A325, TYPE 1.

   THE BOLTED CONNECTION OF THE GIRDER WEB TO THE GIRDER WEB SPLICE PLATES IN THE BOLTED FIELD SPLICES WERE DESIGNED ASSUMING THREADS AND THREAD TRANSITIONS WERE INCLUDED IN THE SHEAR PLANE.

   THE BOLTED CONNECTION OF THE GIRDER FLANGE TO THE GIRDER FLANGE SPLICE PLATES IN THE BOLTED FIELD SPLICES WERE DESIGNED ASSUMING THREADS AND THREAD TRANSITIONS WERE EXCLUDED FROM IN THE SHEAR PLANE.
2. ALL SPLICE PLATES SHALL BE ASTM A709 GRADE 50.
3. FOR GENERAL NOTES, SEE SHEETS 4/53 THRU 5/53.
4. FOR DEFLECTION AND CAMBER TABLES, SEE SHEET 28/53 THRU 29/53.
5. FOR FIELD SPLICE LOCATIONS AND ADDITIONAL FRAMING DETAILS, SEE SHEET 23/53.
6. CVN: WHERE A PLATE IS DESIGNATED (CVN), FURNISH MATERIAL THAT MEETS THE MINIMUM NOTCH TOUGHNESS REQUIREMENTS SPECIFIED IN CMS 711.01.

FIELD SPLICE DETAILS
CUY-90-1652S (BRIDGE 12)
RAMP IJ3, CR-721 (E. 14TH ST.), AND RAMP H5
RAMP B6 OVER RAMP H5

SFN	1807806
DESIGN AGENCY	HDR
DESIGNER	CMR
CHECKER	RES
REVIEWER	DWW 1/08/24
PROJECT ID	82382
SUBSET	27
TOTAL	53
SHEET	2155
TOTAL	2696

CUY-90-16.28 (CCG3A)
MODEL: Sheet PAPERSIZE: 34x22 (in.) DATE: 3/28/2025 TIME: 7:30:26 AM USER: RohitLBk
pw:\\mb-us-pw.bentley.com:mb-us-pw-03\Documents\Cleveland_OH01_Projects\ODOT\District12\82382400-Engineering\Structures\SFN_1807806\Sheets\82382_SFN_1807806_SS005.dgn

DEFLECTION AND CAMBER (INCHES)

		SPAN 1											SPAN 2								
		CL BRG. REAR ABUT.	0.1	0.2	0.3	0.4	0.5	0.6	CL F.S. 1	0.7	0.8	0.9	CL BRG. PIER 1	0.1	CL F.S. 2	0.2	0.3	0.4	0.5	0.6	0.7	CL F.S. 3
GIRDER 1	DEFLECTION DUE TO WEIGHT OF STEEL	0"	1/8"	3/16"	1/4"	1/4"	1/4"	3/16"	1/8"	1/8"	0"	0"	0"	1/8"	5/16"	3/8"	5/8"	11/16"	11/16"	1/2"	1/4"	3/16"
	DEFLECTION DUE TO REMAINING DL	0"	3/8"	11/16"	7/8"	15/16"	7/8"	11/16"	5/8"	7/16"	3/16"	0"	0"	3/8"	3/4"	1"	1 9/16"	1 7/8"	1 13/16"	1 3/8"	11/16"	1/2"
	ADJUSTMENT FOR VERTICAL CURVE	0"	0"	0"	0"	0"	0"	0"	0"	0"	0"	0"	0"	1/4"	7/16"	9/16"	13/16"	1 1/16"	1 5/16"	1 5/8"	1 7/8"	1 15/16"
	REQUIRED SHOP CAMBER	**0"**	**1/2"**	**7/8"**	**1 1/8"**	**1 3/16"**	**1 1/8"**	**7/8"**	**3/4"**	**9/16"**	**3/16"**	**0"**	**0"**	**3/4"**	**1 1/2"**	**1 15/16"**	**3"**	**3 5/8"**	**3 13/16"**	**3 1/2"**	**2 13/16"**	**2 5/8"**
GIRDER 2	DEFLECTION DUE TO WEIGHT OF STEEL	0"	1/8"	3/16"	1/4"	1/4"	1/4"	3/16"	1/8"	1/8"	1/16"	0"	0"	1/8"	5/16"	3/8"	5/8"	11/16"	11/16"	9/16"	5/16"	1/4"
	DEFLECTION DUE TO REMAINING DL	0"	3/8"	5/8"	13/16"	7/8"	13/16"	11/16"	9/16"	7/16"	3/16"	0"	0"	3/8"	3/4"	1"	1 9/16"	1 7/8"	1 7/8"	1 7/16"	3/4"	9/16"
	ADJUSTMENT FOR VERTICAL CURVE	0"	0"	0"	0"	0"	0"	0"	0"	0"	0"	0"	0"	1/4"	3/8"	1/2"	11/16"	15/16"	1 3/16"	1 7/16"	1 5/8"	1 11/16"
	REQUIRED SHOP CAMBER	**0"**	**1/2"**	**13/16"**	**1 1/16"**	**1 1/8"**	**1 1/16"**	**7/8"**	**11/16"**	**9/16"**	**1/4"**	**0"**	**0"**	**3/4"**	**1 7/16"**	**1 7/8"**	**2 7/8"**	**3 1/2"**	**3 3/4"**	**3 7/16"**	**2 11/16"**	**2 1/2"**
GIRDER 3	DEFLECTION DUE TO WEIGHT OF STEEL	0"	1/8"	3/16"	1/4"	1/4"	1/4"	3/16"	3/16"	1/8"	1/16"	0"	0"	1/8"	5/16"	3/8"	5/8"	3/4"	3/4"	9/16"	5/16"	1/4"
	DEFLECTION DUE TO REMAINING DL	0"	3/8"	5/8"	13/16"	7/8"	13/16"	5/8"	9/16"	7/16"	3/16"	0"	0"	3/8"	3/4"	1"	1 9/16"	1 15/16"	1 15/16"	1 1/2"	13/16"	5/8"
	ADJUSTMENT FOR VERTICAL CURVE	0"	0"	0"	0"	0"	0"	0"	0"	0"	0"	0"	0"	3/16"	5/16"	7/16"	5/8"	13/16"	1"	1 1/4"	1 7/16"	1 1/2"
	REQUIRED SHOP CAMBER	**0"**	**1/2"**	**13/16"**	**1 1/16"**	**1 1/8"**	**1 1/16"**	**13/16"**	**3/4"**	**9/16"**	**1/4"**	**0"**	**0"**	**11/16"**	**1 3/8"**	**1 13/16"**	**2 13/16"**	**3 1/2"**	**3 11/16"**	**3 5/16"**	**2 9/16"**	**2 3/8"**
GIRDER 4	DEFLECTION DUE TO WEIGHT OF STEEL	0"	1/8"	3/16"	1/4"	1/4"	1/4"	3/16"	3/16"	1/8"	1/16"	0"	0"	1/8"	1/4"	3/8"	5/8"	3/4"	3/4"	5/8"	3/8"	5/16"
	DEFLECTION DUE TO REMAINING DL	0"	3/8"	5/8"	13/16"	7/8"	13/16"	5/8"	9/16"	7/16"	3/16"	0"	0"	3/8"	3/4"	1"	1 5/8"	2 1/16"	2"	1 5/8"	15/16"	3/4"
	ADJUSTMENT FOR VERTICAL CURVE	0"	0"	0"	0"	0"	0"	0"	0"	0"	0"	0"	0"	3/16"	5/16"	3/8"	1/2"	11/16"	7/8"	1 1/16"	1 1/4"	1 5/16"
	REQUIRED SHOP CAMBER	**0"**	**1/2"**	**13/16"**	**1 1/16"**	**1 1/8"**	**1 1/16"**	**13/16"**	**3/4"**	**9/16"**	**1/4"**	**0"**	**0"**	**11/16"**	**1 5/16"**	**1 3/4"**	**2 3/4"**	**3 1/2"**	**3 5/8"**	**3 5/16"**	**2 9/16"**	**2 3/8"**

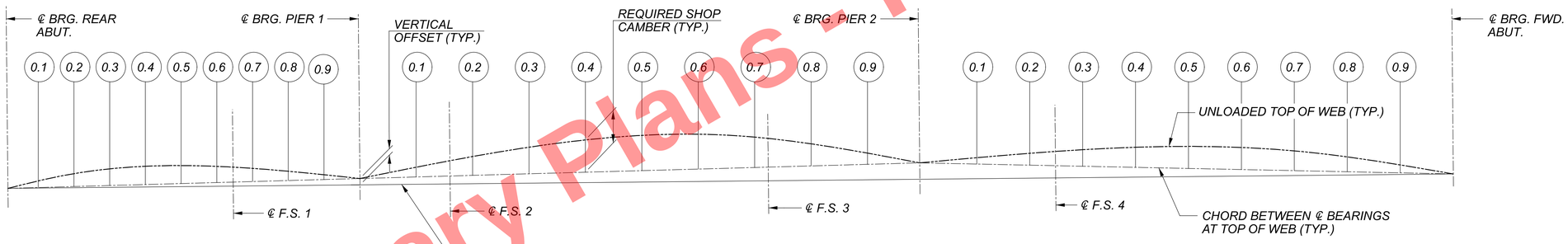

CAMBER DIAGRAM

VERTICAL OFFSET (INCHES)		
	PIER 1	PIER 2
GIRDER 1	13 7/16"	32 5/16"
GIRDER 2	13 1/8"	31 11/16"
GIRDER 3	12 3/4"	31 1/16"
GIRDER 4	12 3/8"	30 7/16"

NOTES:

1. NEGATIVE VALUES FOR DEFLECTIONS INDICATE DEFLECTIONS UPWARD. NEGATIVE VALUES FOR VERTICAL CURVE ADJUSTMENT AND TOTAL REQUIRED SHOP CAMBER INDICATE VALUES BELOW THE CHORD LINE.
2. DEFLECTIONS AND ADJUSTMENTS FOR VERTICAL CURVES ARE GIVEN TO THE NEAREST 1/16 INCH. THE ADJUSTMENT FOR HORIZONTAL CURVATURE IS ZERO AT ALL LOCATIONS.
3. FOR GENERAL NOTES, SEE SHEETS 4/53 THRU 5/53.
4. FOR FRAMING PLAN, SEE SHEET 23/53.
5. FOR ADDITIONAL DEFLECTION AND CAMBER VALUES, SEE SHEET 29/53.

Preliminary Plans - For Reference Only

DEFLECTION AND CAMBER (1 OF 2)
CUY-90-1652S (BRIDGE 12)
RAMP B6 OVER RAMP IJ3, CR-721 (E. 14TH ST.), AND RAMP H5

SFN 1807806
DESIGN AGENCY HDR
DESIGNER CMR | CHECKER ABO
REVIEWER DWW 1/08/24
PROJECT ID 82382
SUBSET 28 | TOTAL 53
SHEET 2156 | TOTAL 2696

CUY-90-16.28 (CCG3A)

MODEL: Sheet PAPERSIZE: 34x22 (in.) DATE: 3/28/2025 TIME: 7:30:31 AM USER: Rohit.Bk
pw:\\mb-us-pw.bentley.com:mb-us-pw-03\Documents\Cleveland_OH\01_Projects\ODOT\District12\82382400-Engineering\Structures\SFN_1807806\Sheets\82382_SFN_1807806_SS006.dgn

DEFLECTION AND CAMBER (INCHES)

		SPAN 2			SPAN 3										
		CL F.S. 3	0.8	0.9	CL BRG. PIER 2	0.1	0.2	CL F.S. 4	0.3	0.4	0.5	0.6	0.7	0.8	0.9	CL BRG. FWD. ABUT.
GIRDER 1	DEFLECTION DUE TO WEIGHT OF STEEL	3/16"	0"	-1/8"	0"	5/16"	13/16"	1"	1 5/16"	1 11/16"	2"	2"	1 13/16"	1 3/8"	3/4"	0"
	DEFLECTION DUE TO REMAINING DL	1/2"	0"	-5/16"	0"	7/8"	2 3/16"	2 7/8"	3 5/8"	4 7/8"	5 5/8"	5 3/4"	5 1/8"	3 7/8"	2 1/16"	0"
	ADJUSTMENT FOR VERTICAL CURVE	1 15/16"	1 15/16"	1 3/8"	0"	3 1/16"	5 7/16"	6 5/16"	7 1/8"	8 1/8"	8 7/16"	8 1/8"	7 1/8"	5 7/16"	3 1/16"	0"
	REQUIRED SHOP CAMBER	**2 5/8"**	**1 15/16"**	**15/16"**	**0"**	**4 1/4"**	**8 7/16"**	**10 3/16"**	**12 1/16"**	**14 11/16"**	**16 1/16"**	**15 7/8"**	**14 1/16"**	**10 11/16"**	**5 7/8"**	**0"**
GIRDER 2	DEFLECTION DUE TO WEIGHT OF STEEL	1/4"	1/16"	-1/16"	0"	5/16"	3/4"	1"	1 1/4"	1 11/16"	1 15/16"	2"	1 13/16"	1 3/8"	3/4"	0"
	DEFLECTION DUE TO REMAINING DL	9/16"	1/8"	-1/4"	0"	7/8"	2 1/8"	2 13/16"	3 9/16"	4 13/16"	5 1/2"	5 5/8"	5 1/16"	3 13/16"	2 1/16"	0"
	ADJUSTMENT FOR VERTICAL CURVE	1 11/16"	1 3/4"	1 1/4"	0"	3 1/16"	5 7/16"	6 5/16"	7 1/8"	8 1/8"	8 7/16"	8 1/8"	7 1/8"	5 7/16"	3 1/16"	0"
	REQUIRED SHOP CAMBER	**2 1/2"**	**1 15/16"**	**15/16"**	**0"**	**4 1/4"**	**8 5/16"**	**10 1/8"**	**11 15/16"**	**14 5/8"**	**15 7/8"**	**15 3/4"**	**14"**	**10 5/8"**	**5 7/8"**	**0"**
GIRDER 3	DEFLECTION DUE TO WEIGHT OF STEEL	1/4"	1/16"	-1/16"	0"	5/16"	3/4"	15/16"	1 1/4"	1 5/8"	1 15/16"	1 15/16"	1 3/4"	1 3/8"	3/4"	0"
	DEFLECTION DUE TO REMAINING DL	5/8"	1/8"	-1/4"	0"	13/16"	2 1/8"	2 3/4"	3 1/2"	4 3/4"	5 7/16"	5 9/16"	5"	3 3/4"	2 1/16"	0"
	ADJUSTMENT FOR VERTICAL CURVE	1 1/2"	1 5/8"	1 3/16"	0"	3 1/16"	5 7/16"	6 5/16"	7 1/8"	8 1/8"	8 7/16"	8 1/8"	7 1/8"	5 7/16"	3 1/16"	0"
	REQUIRED SHOP CAMBER	**2 3/8"**	**1 13/16"**	**7/8"**	**0"**	**4 3/16"**	**8 5/16"**	**10"**	**11 7/8"**	**14 1/2"**	**15 13/16"**	**15 5/8"**	**13 7/8"**	**10 9/16"**	**5 7/8"**	**0"**
GIRDER 4	DEFLECTION DUE TO WEIGHT OF STEEL	5/16"	1/8"	-1/16"	0"	5/16"	11/16"	15/16"	1 3/16"	1 5/8"	1 7/8"	1 15/16"	1 3/4"	1 5/16"	3/4"	0"
	DEFLECTION DUE TO REMAINING DL	3/4"	1/4"	-3/16"	0"	13/16"	2 1/16"	2 11/16"	3 1/2"	4 11/16"	5 7/16"	5 9/16"	5"	3 3/4"	2 1/16"	0"
	ADJUSTMENT FOR VERTICAL CURVE	1 5/16"	1 3/8"	1 1/16"	0"	3 1/16"	5 7/16"	6 5/16"	7 1/8"	8 1/8"	8 7/16"	8 1/8"	7 1/8"	5 7/16"	3 1/16"	0"
	REQUIRED SHOP CAMBER	**2 3/8"**	**1 3/4"**	**13/16"**	**0"**	**4 3/16"**	**8 3/16"**	**9 15/16"**	**11 13/16"**	**14 7/16"**	**15 3/4"**	**15 5/8"**	**13 7/8"**	**10 1/2"**	**5 7/8"**	**0"**

Preliminary Plans - For Reference Only

NOTES:

1. *NEGATIVE VALUES FOR DEFLECTIONS INDICATE DEFLECTIONS UPWARD. NEGATIVE VALUES FOR VERTICAL CURVE ADJUSTMENT AND TOTAL REQUIRED SHOP CAMBER INDICATE VALUES BELOW THE CHORD LINE.*
2. *DEFLECTIONS AND ADJUSTMENTS FOR VERTICAL CURVES ARE GIVEN TO THE NEAREST $1/16$ INCH. THE ADJUSTMENT FOR HORIZONTAL CURVATURE IS ZERO AT ALL LOCATIONS.*
3. *FOR GENERAL NOTES, SEE SHEETS* 4 / 53 *THRU* 5 / 53.
4. *FOR FRAMING PLAN, SEE SHEET* 23 / 53.
5. *FOR ADDITIONAL DEFLECTION AND CAMBER VALUES, SEE SHEET* 28 / 53.

DEFLECTION AND CAMBER (2 OF 2)
CUY-90-1652S (BRIDGE 12)
RAMP IJ3, CR-721 (E. 14TH ST.), AND RAMP H5
RAMP B6 OVER RAMP H5

SFN 1807806
DESIGN AGENCY HDR
DESIGNER CMR | CHECKER ABO
REVIEWER DWW 1/08/24
PROJECT ID 82382
SUBSET 29 | TOTAL 53
SHEET 2157 | TOTAL 2696

CUY-90-16.28 (CCG3A)

MODEL: Sheet PAPERSIZE: 34x22 (in.) DATE: 3/28/2025 TIME: 7:30:38 AM USER: Rohit.Bk
pw:\\mb-us-pw.bentley.com:mb-us-pw-03\Documents\Cleveland_OH01_Projects\ODOT\District12\82382\400-Engineering\Structures\SFN_1807806\Sheets\82382_SFN_1807806_SS007.dgn

LOCATION	GIRDER		BEARING TYPE	MASONRY PLATE							SOLE PLATE			STEEL LOAD PLATE				ANCHOR BOLTS		EST. HLMR DISC BEARING HEIGHT, 'H'	TOTAL BEARING HEIGHT, 'T'
	NO.	SKEW		'ML'	'MW'	'MT'	'A'	'B'	'C'	'D'	'SL'	'SW'	SLOPE	Lp	Tp	Wtp	Wbp	NO. OF BOLTS PER GIRDER	DIAMETER		
		(DEGREES)		(INCHES)	(INCHES)	(INCHES)	(SPA)	(INCHES)	(INCHES)	(INCHES)	(INCHES)	(INCHES)	(%)	(INCHES)	(INCHES)	(INCHES)	(INCHES)		(INCHES)	(INCHES)	(INCHES)
REAR ABUT	G1 - G4	20	NON-GUIDED	24.00	44.00	1.25	1	18.00	18.00	38.00	19.50	30.00	0.00	18.00	1.50	30.00	28.00	4	1.25	3.95	5.33
PIER 1	G1 - G4	20	GUIDED	24.00	48.00	1.25	1	18.00	18.00	42.00	28.50	30.00	1.00	--	--	--	--	4	1.25	6.83	8.21
PIER 2	G1	20	FIXED	25.00	44.00	1.25	2	9.50	19.00	38.00	21.00	30.00	0.17	--	--	--	--	6	1.25	7.13	8.51
	G2	20	FIXED	25.00	44.00	1.25	2	9.50	19.00	38.00	21.00	30.00	0.22	--	--	--	--	6	1.25	7.13	8.51
	G3	20	FIXED	25.00	44.00	1.25	2	9.50	19.00	38.00	21.00	30.00	0.27	--	--	--	--	6	1.25	7.13	8.51
	G4	20	FIXED	25.00	44.00	1.25	2	9.50	19.00	38.00	21.00	30.00	0.32	--	--	--	--	6	1.25	7.13	8.51
FWD ABUT	G1 - G4	20	NON-GUIDED	24.00	44.00	1.25	1	18.00	18.00	38.00	19.50	30.00	0.00	18.00	1.50	30.00	28.00	4	1.25	3.95	5.33

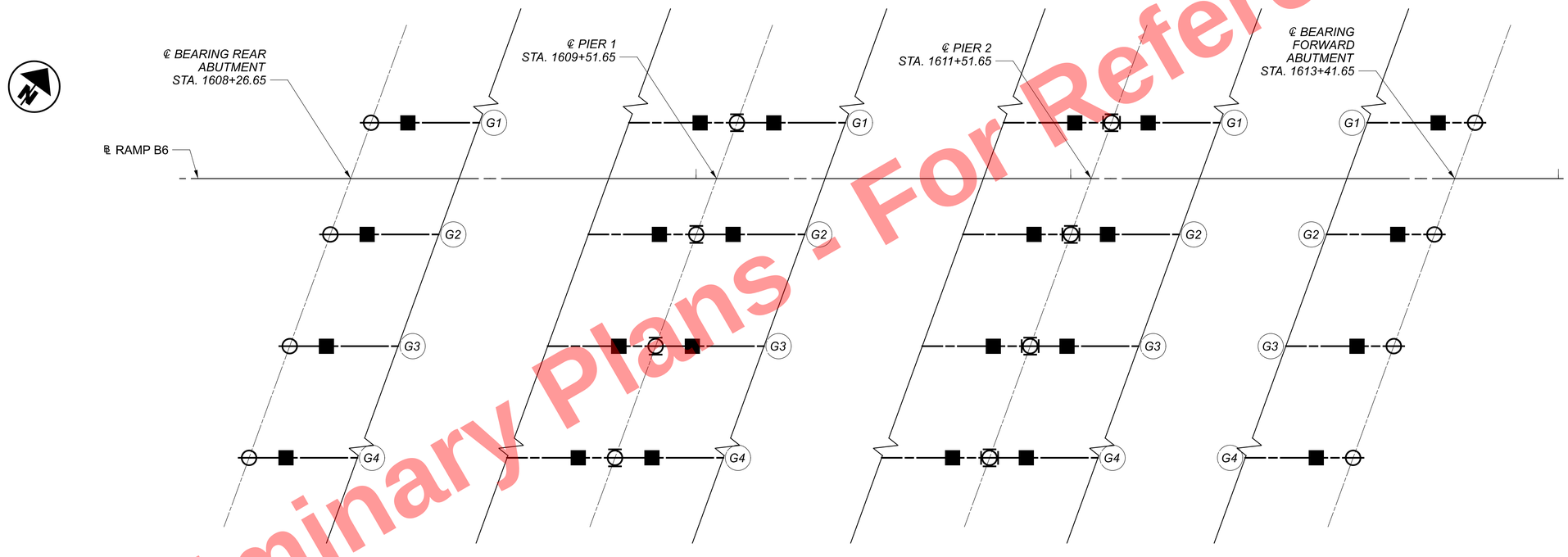

REAR ABUTMENT BEARINGS

PIER 1 BEARINGS

PIER 2 BEARINGS

FORWARD ABUTMENT BEARINGS

LEGEND:

- ○ - NON-GUIDED EXPANSION DISC BEARING
- ⊖ - GUIDED EXPANSION DISC BEARING
- ⊗ - FIXED DISC BEARING
- ■ - FUTURE JACKING POINT

NOTES:

1. FOR DETAILS ASSOCIATED WITH THE BEARING ASSEMBLIES, SEE SHEETS 31/53 THRU 32/53.
2. FOR FUTURE JACKING NOTES, SEE SHEET 33/53.

Preliminary Plans - For Reference Only

BEARING LOCATION PLAN
CUY-90-1652S (BRIDGE 12)
RAMP IJ3, CR-721 (E. 14TH ST.), AND RAMP H5
RAMP B6 OVER RAMP H5

SFN 1807806
DESIGN AGENCY
DESIGNER CMR | CHECKER ABO
REVIEWER DWW 1/08/24
PROJECT ID 82382
SUBSET 30 | TOTAL 53
SHEET 2158 | TOTAL 2696

CUY-90-16.28 (CCG3A)

MODEL: Sheet PAPERSIZE: 34x22 (in.) DATE: 3/28/2025 TIME: 7:30:43 AM USER: Rohit.Bk
pw:\\mb-us-pw.bentley.com:mb-us-pw-03\Documents\Cleveland_OH\01_Projects\ODOT\District12\82382400-Engineering\Structures\SFN_1807806\Sheets\82382_SFN_1807806_SB001.dgn

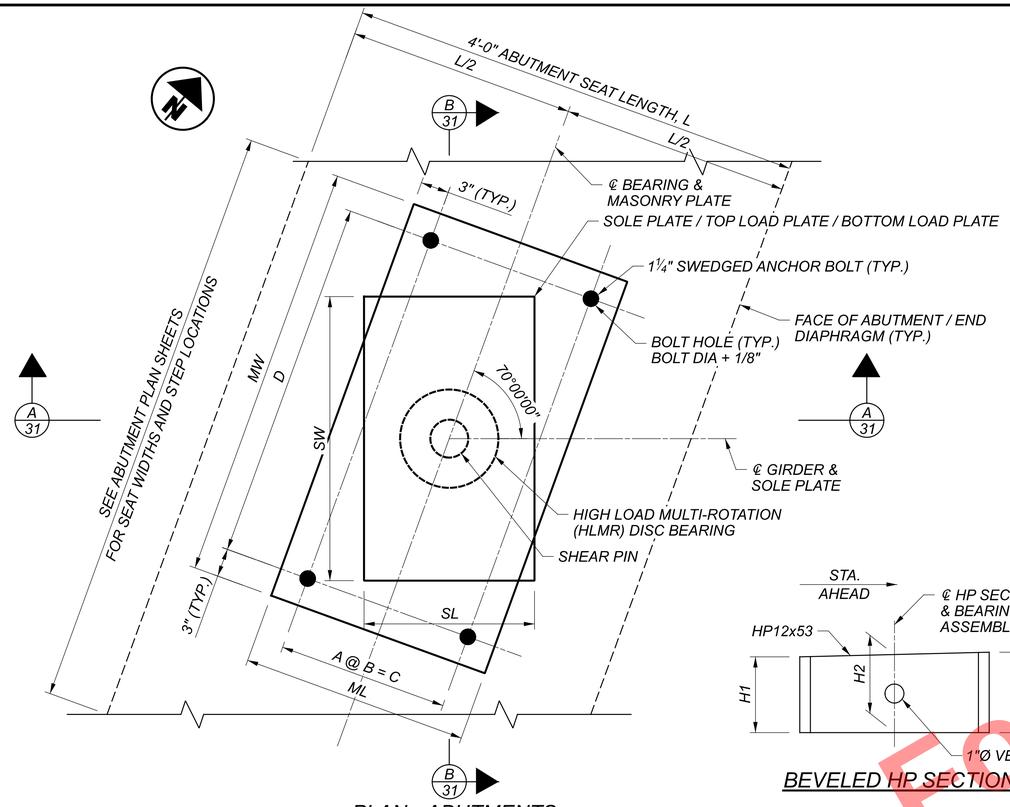

PLAN - ABUTMENTS

(REAR ABUTMENT SHOWN, FWD. ABUTMENT SIMILAR)

BEVELED HP SECTION

BEVELED HP SHAPE DATA					
REAR ABUTMENT			FWD. ABUTMENT		
H1	H2	H3	H1	H2	H3
5 15/16"	6"	6 1/16"	6 3/16"	6"	5 13/16"

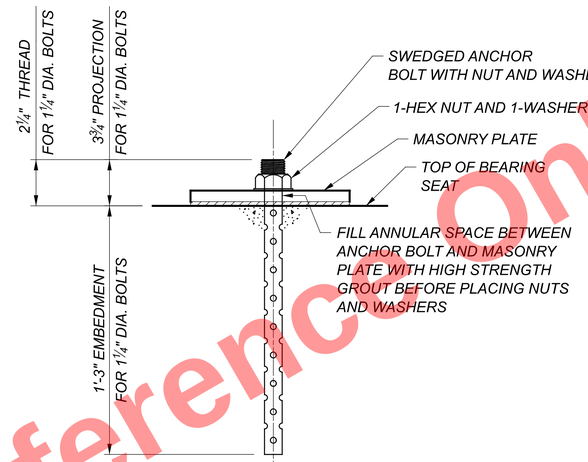

SWEDGED ANCHOR BOLT DETAIL

NOT TO SCALE

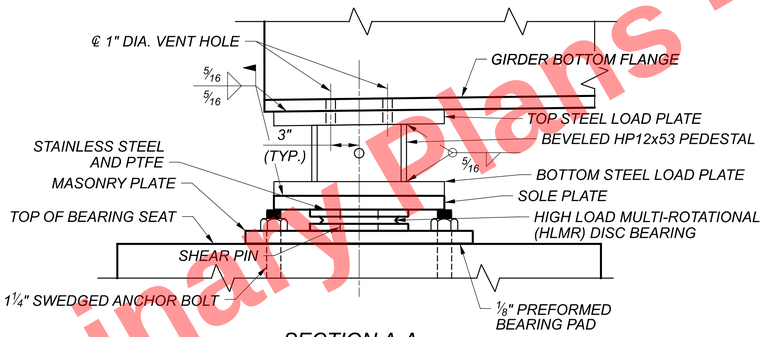

SECTION A-A

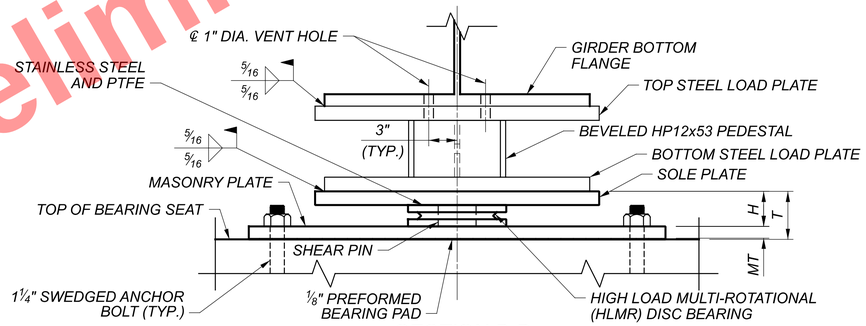

SECTION B-B

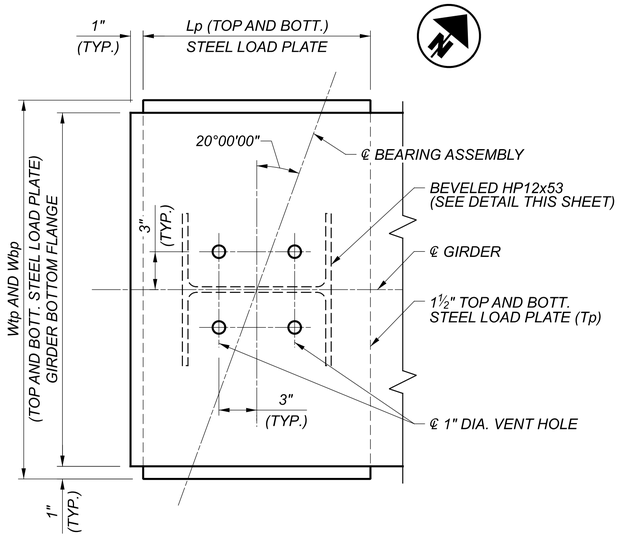

PLAN - REAR TOP STEEL LOAD PLATE

(REAR ABUTMENT SHOWN, FWD. ABUTMENT SIMILAR)

NOTES:

1. FOR INFORMATION ASSOCIATED WITH THE BEARING ASSEMBLIES, SEE SHEETS 30/53, 32/53 AND 33/53.
2. TOTAL BEARING HEIGHT, 'T', IS MEASURED FROM TOP OF SOLE PLATE TO TOP OF BEARING SEAT AT CENTERLINE OF BEARING.
3. EXERCISE CAUTION WHEN WELDING NEAR THE DISC BEARING PADS IN CONTACT WITH THE STEEL. WELD IN ACCORDANCE WITH THE MANUFACTURERS REQUIREMENTS TO MAINTAIN A SAFE TEMPERATURE SO AS NOT TO DAMAGE THE DISC BEARINGS. ANY DAMAGE DUE TO WELDING WILL BE CAUSE FOR REJECTION.
4. ALL BEARINGS SHALL BE MARKED PRIOR TO SHIPPING. THE MARKS SHALL INCLUDE THE BEARING LOCATION ON THE BRIDGE, GIRDER NUMBER, AND A DIRECTION ARROW THAT POINTS UPSTATION AND SHALL BE INCLUDED FOR PAYMENT WITH ITEM 869 - HIGH LOAD MULTI-ROTATIONAL (HLMR) BEARINGS, AS PER PLAN. ALL MARKS SHALL BE PERMANENT AND BE VISIBLE AFTER THE BEARING IS INSTALLED.

Preliminary Plans - Not For Reference Only

BEARING DETAILS (1 OF 3)
CUY-90-1652S (BRIDGE 12)
RAMP IJ3, CR-721 (E. 14TH ST.), AND RAMP H5
RAMP B6 OVER

SFN 1807806
DESIGN AGENCY HDR
DESIGNER CMR | CHECKER ABO
REVIEWER DWW 1/08/24
PROJECT ID 82382
SUBSET 31 | TOTAL 53
SHEET 2159 | TOTAL 2696

CUY-90-16.28 (CCG3A)
MODEL: Sheet PAPERSIZE: 34x22 (in.) DATE: 3/28/2025 TIME: 7:30:50 AM USER: RohitLBk
pw:\\mb-us-pw.bentley.com:mb-us-pw-03\Documents\Cleveland_OH\01_Projects\ODOT\District12\82382400-Engineering\Structures\SFN_1807806\Sheets\82382_SFN_1807806_SB002.dgn

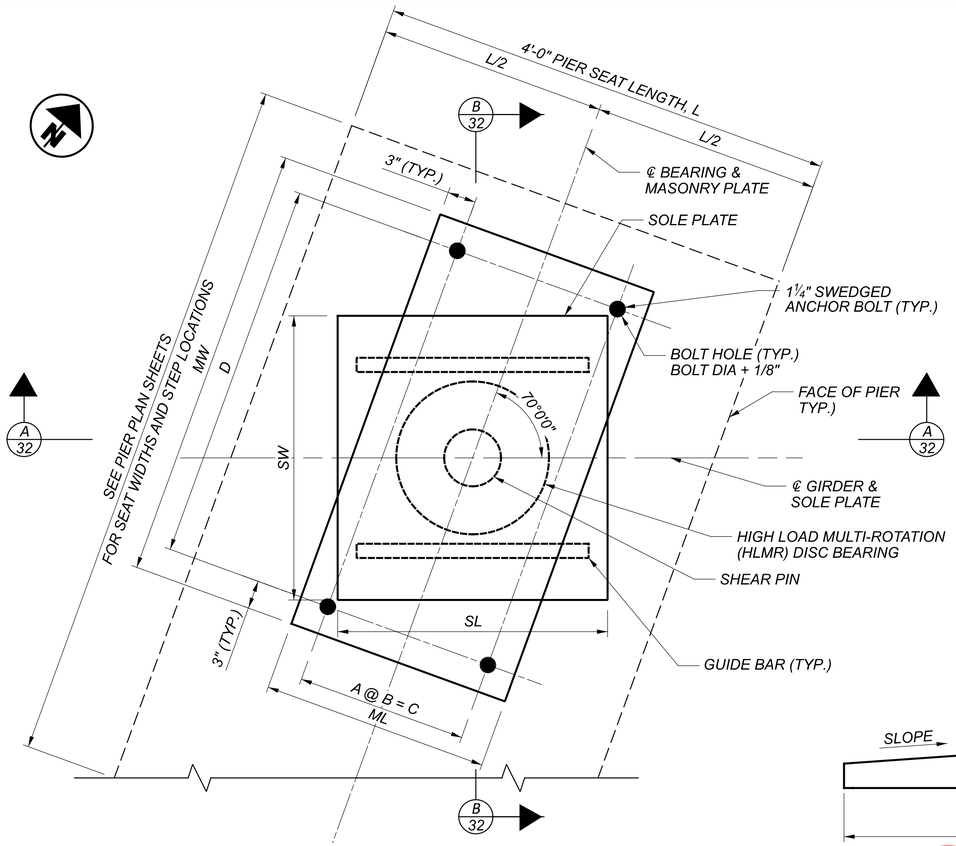

PLAN - PIER 1

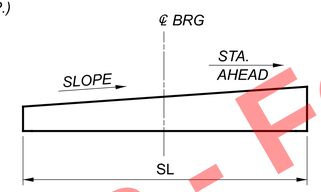

SOLE PLATE DETAIL

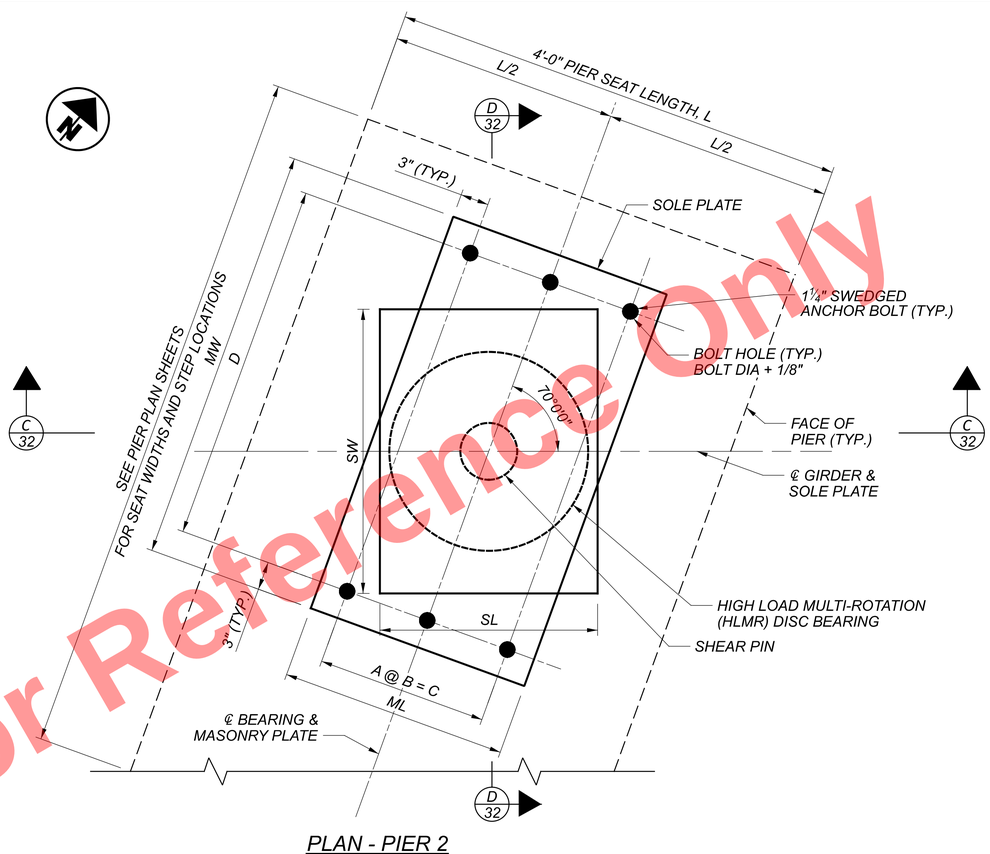

PLAN - PIER 2

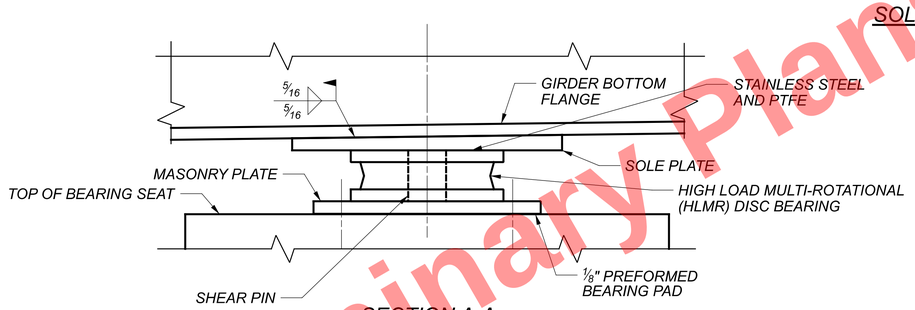

SECTION A-A

(ANCHOR BOLTS NOT SHOWN FOR CLARITY)

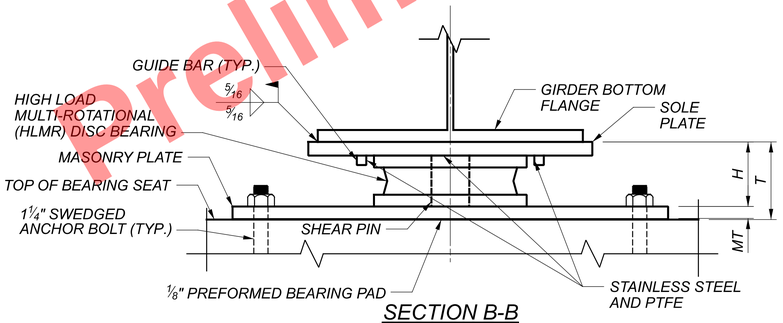

SECTION B-B

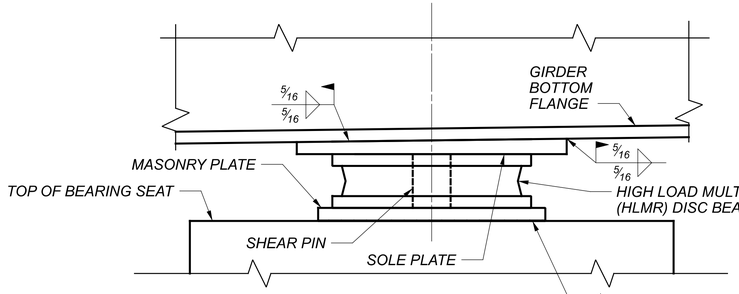

SECTION C-C

(ANCHOR BOLTS NOT SHOWN FOR CLARITY)

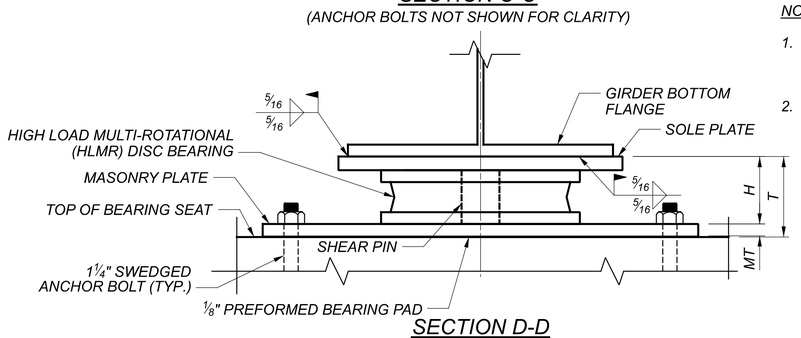

SECTION D-D

NOTES:

1. A POSITIVE (+) SOLE PLATE SLOPE INDICATES INCREASING THICKNESS AHEAD STATION.
2. FOR ADDITIONAL BEARING NOTES, SEE SHEETS 31 / 53 AND 33 / 53.

Preliminary Plans - For Reference Only

BEARING DETAILS (2 OF 3)
CUY-90-1652S (BRIDGE 12)
OVER RAMP IJ3, CR-721 (E. 14TH ST.), AND RAMP H5
RAMP B6

SFN 1807806
DESIGN AGENCY
DESIGNER CMR | CHECKER ABO
REVIEWER DWW 1/08/24
PROJECT ID 82382
SUBSET 32 | TOTAL 53
SHEET 2160 | TOTAL 2696

CUY-90-16.28 (CCG3A)

MODEL: Sheet PAPERSIZE: 34x22 (in.) DATE: 3/28/2025 TIME: 7:30:56 AM USER: RohitBk
pw:\\mb-us-pw.bentley.com:mb-us-pw-03\Documents\Cleveland_OH\01_Projects\ODOT\District12\82382\400-Engineering\Structures\SFN_1807806\Sheets\82382_SB003.dgn

DISC BEARING DATA TABLE											
LOCATION	GIRDER NO.	BEARING TYPE	MAXIMUM DESIGN LOADS (KIPS)					DESIGN MOVEMENTS (INCHES) PARALLEL TO CL GIRDER		DESIGN ROTATION (RADIANS)	DESIGN COEFFICIENT OF FRICTION
			STRENGTH LIMIT STATE		SERVICE LIMIT STATE						
			TOTAL VERTICAL LOAD	TOTAL HORIZONTAL LOAD	TOTAL VERTICAL LOAD	VERTICAL DEAD LOAD	TOTAL HORIZONTAL LOAD	CONTRACTION	EXPANSION		
REAR ABUT	G1 - G4	NON-GUIDED	346	--	270	140	--	2.89	1.93	0.0091	0.06
PIER 1	G1 - G4	GUIDED	900	105	690	420	11	1.84	1.23	0.0091	0.06
PIER 2	G1 - G4	FIXED	1130	330	860	560	193	--	--	0.0105	--
FWD ABUT	G1 - G4	NON-GUIDED	474	--	370	210	--	2.89	1.93	0.0138	0.06

BEARING HEIGHT				
	REAR ABUTMENT	PIER 1	PIER 2	FORWARD ABUTMENT
GIRDER 1	5.33	8.21	8.51	5.33
GIRDER 2	5.33	8.21	8.51	5.33
GIRDER 3	5.33	8.21	8.51	5.33
GIRDER 4	5.33	8.21	8.51	5.33

FUTURE JACKING NOTES:

1. SUBMIT THE PROPOSED JACKING AND/OR BEARING REPLACEMENT PROCEDURE TO THE DEPARTMENT FOR REVIEW AND APPROVAL PRIOR TO COMMENCEMENT OF ANY JACKING OPERATIONS.
2. JACK THE SUPERSTRUCTURE ONLY AT LOCATIONS SHOWN ON THE DRAWINGS. THE CONTRACTOR IS RESPONSIBLE FOR DESIGNING THE JACKS AND JACKING PROCEDURE, INCLUDING, BUT NOT LIMITED TO, CHECKING CONCRETE BEARING STRESSES, STABILITY, AND GIRDER AND DETAIL STRESSES. FOR LOADS, SEE MAXIMUM JACKING LOAD TABLE. NOTE THAT THE LOADS GIVEN ARE THOSE AT THE BEARINGS, NOT NECESSARILY THE JACKS. ANALYSIS MAY BE REQUIRED TO DETERMINE SOME JACKING LOADS.
3. JACK EACH GIRDER AT A GIVEN SUBSTRUCTURE LOCATION SIMULTANEOUSLY AND WITH THE SAME DISPLACEMENT AND RATE OF DISPLACEMENT. PROVIDE HYDRAULIC REGULATING DEVICES AS REQUIRED.
4. CENTER THE JACKS ON THE CENTERLINE OF THE GIRDER WEBS AND THE JACKING STIFFENER PLATES OR AS DETAILED IN THE JACKING PROCEDURE SUBMITTED TO THE DEPARTMENT.

MAXIMUM JACKING LOAD TABLE (TONS)					
	DL	JDL	LL	JLL	TOTAL
REAR ABUTMENT	69	90	49	85	175
PIER 1	208	270	104	182	452
PIER 2	276	360	118	206	566
FORWARD ABUTMENT	105	136	58	102	238

FUTURE JACKING NOTES: (CONT'D)

5. ACCOUNT FOR ANY THERMAL MOVEMENTS AND ANY HORIZONTAL FORCES THAT MAY BE ENCOUNTERED DURING THE PERIOD WHEN THE SUPERSTRUCTURE IS BEING JACKED OR IS SHORED ON TEMPORARY SUPPORTS.
6. IF TRAFFIC IS PERMITTED ON THE BRIDGE DURING JACKING, ACCOUNT FOR THE EFFECTS OF VIBRATIONS DUE TO TRAFFIC ON THE BRIDGE AND ALSO NEAR THE SUBSTRUCTURE UNIT ON WHICH JACKING IS TAKING PLACE OR WHILE THE SUPERSTRUCTURE IS BEING SHORED ON TEMPORARY SUPPORTS.
7. DO NOT DAMAGE THE SUPERSTRUCTURE OR SUBSTRUCTURE WHEN JACKING AND REPLACING THE BEARINGS.
8. THE MAXIMUM ALLOWABLE JACKING DISPLACEMENT OF THE SUPERSTRUCTURE IS ONE INCH (1") VERTICAL.
9. PROVIDE RESTRAINT AGAINST TRANSVERSE WIND LOADING DURING JACKING OPERATIONS.

JACKING LOAD NOTES:

JDL = 1.30DL
JLL = 1.75LL

WHERE:
DL DENOTES DEAD LOAD REACTIONS AT BEARING
JDL DENOTES JACKING DESIGN DEAD LOAD REACTIONS AT BEARING
LL DENOTES LIVE LOAD + IM REACTIONS AT BEARING
JLL DENOTES JACKING DESIGN LIVE LOAD + IM REACTIONS AT BEARING
TOTAL DENOTES JDL + JLL

LOADS SHOWN ARE PER BEARING AND IN UNITS OF TONS.

NOTES:

1. FOR INFORMATION AND DETAILS ASSOCIATED WITH THE BEARING ASSEMBLIES, SEE SHEETS 30 / 53 THRU 32 / 53.
2. DISC BEARINGS SHALL BE DESIGNED, FABRICATED, TESTED AND INSTALLED IN ACCORDANCE WITH SUPPLEMENTAL SPECIFICATION 869, CHAPTER 14 OF THE AASHTO LRFD BRIDGE DESIGN SPECIFICATION AND CHAPTER 18 OF THE AASHTO LRFD BRIDGE CONSTRUCTION SPECIFICATIONS. THE SHOP DRAWINGS SHALL BE SUBMITTED SHOWING MANUFACTURER, MATERIALS, AND DIMENSIONS OF ALL COMPONENTS OF THE BEARING ASSEMBLY TO THE ENGINEER FOR APPROVAL. THE MANUFACTURER SHALL SUBMIT CERTIFIED COPIES OF TEST REPORTS TO THE ENGINEER FOR REVIEW.
3. HIGH LOAD MULTI-ROTATIONAL BEARINGS SHALL BE DISC TYPE. POT BEARINGS ARE NOT PERMITTED. BEARING ASSEMBLIES SHOWN ARE SCHEMATIC.
4. ANCHOR BOLTS SHALL BE ASTM F1554, GRADE 105. NUTS SHALL CONFORM TO ASTM A563. WASHERS SHALL CONFORM TO ASTM F436. MASONRY PLATE SHALL CONFORM TO ASTM A709, GRADE 36 OR GRADE 50.
5. MARK THE THICKER EDGE OF THE SOLE PLATE AS SUCH FOR THE PURPOSE OF FIELD IDENTIFICATION. PLACE MARK ON THE EDGE OF THE SOLE PLATE SO THAT IT WILL BE VISIBLE AFTER BEARING INSTALLATION.
6. MARK EACH BEARING WITH THE NAME OF THE MANUFACTURER AND TYPE OR MODEL NUMBER. PLACE THE IDENTIFICATION MARK IN A PERMANENT MANNER AND LOCATION SO THAT IT IS VISIBLE AFTER ERECTION.
7. THE MANUFACTURER SHALL WELD OR PRESS FIT THE BEARING PLATE TO THE MASONRY PLATE TO ENSURE FULL LATERAL CAPACITY CAN BE TAKEN BY THE BEARING.
8. GUIDED AND NON-GUIDED BEARINGS MAY BE REQUIRED TO BE FIXED TEMPORARILY DURING ERECTION OF SUPERSTRUCTURE. THE CONTRACTOR SHALL DESIGN TEMPORARY FIXING DEVICES AND SUBMIT DETAILS FOR REVIEW BY THE ENGINEER.
9. TACK WELD OR SECURELY CLAMP THE BEVELED LOAD PLATE TO THE GIRDER BOTTOM FLANGE DURING DECK CASTING. AFTER A MINIMUM OF SEVEN DAYS AFTER DECK CASTING IS COMPLETE, THE BEARING SHALL BE RESET. THE BEARING RE-SETTING SHALL CENTER THE DISC (ACCOUNTING FOR SETTING TEMPERATURE) ON THE SOLE PLATE PRIOR TO COMPLETING THE BOTTOM FLANGE TO BEVELED LOAD PLATE WELD.
10. THE BEARING PROVIDER IS RESPONSIBLE FOR DESIGN AND SUPPLY OF PREFORMED BEARING PAD, MASONRY PLATE, LOWER BEARING PLATE, ELASTOMERIC DISC, UPPER BEARING PLATE, SOLE PLATE AND GUIDE BARS, ANY AND ALL PTFE AND STAINLESS STEEL SLIDING SURFACES, AND ANY OTHER REQUIRED COMPONENTS OF THE BEARING ASSEMBLY.
11. THE MINIMUM THICKNESS OF EACH BEARING PLATE AND SOLE PLATE SHALL BE AS REQUIRED BY DESIGN BUT MUST BE AT LEAST $\frac{3}{4}$".
12. PREFORMED BEARING PADS CONFORMING TO CMS 711.21 SHALL BE PROVIDED FOR EACH BEARING WHERE INDICATED AND PLACED AS SHOWN IN THE BEARING DETAILS.
13. ROTATION VALUES IN THE TABLE INCLUDE AN ALLOWANCE OF 0.005 RADIANS FOR UNCERTAINTIES.
14. THE PIER AND ABUTMENT BEAM SEAT ELEVATIONS ARE BASED ON BEARING HEIGHTS PROVIDED IN THE TABLE SHOWN. IF THE CONTRACTOR'S SELECTED BEARING MANUFACTURER HAS A DESIGN THAT DOES NOT CONFORM TO THE HEIGHTS PROVIDED IN THE TABLE, ADJUST THE BEARING SEAT ELEVATIONS AT NO ADDITIONAL COST TO THE STATE. ADJUST THE LOCATION OF REINFORCING STEEL HORIZONTALLY AS NECESSARY TO AVOID INTERFERENCE WITH THE BEARING ANCHOR BOLTS. MAINTAIN THE MINIMUM CONCRETE COVER AND MINIMUM SPACING REQUIRED BY THE PROJECT PLANS. IF THE REINFORCING STEEL CANNOT BE MOVED TO PROVIDE THE REQUIRED POSITION FOR THE ANCHOR BOLTS, THE CONTRACTOR'S BEARING MANUFACTURER SHALL RE-DESIGN THE BEARINGS TO ACCOMMODATE AN ACCEPTABLE ANCHOR BOLT CONFIGURATION.
15. ANCHOR BOLTS ARE TO BE SET BY USE OF A STEEL TEMPLATE WITH A MINIMUM THICKNESS OF $\frac{1}{4}$-IN.

Preliminary Plans - For Reference Only

BEARING DETAILS (3 OF 3)
CUY-90-1652S (BRIDGE 12)
RAMP IJ3, CR-721 (E. 14TH ST.), AND RAMP H5
RAM PB6 OVER

SFN 1807806
DESIGN AGENCY HDR
DESIGNER CMR | CHECKER ABO
REVIEWER DWW 1/08/24
PROJECT ID 82382
SUBSET 33 | TOTAL 53
SHEET 2161 | TOTAL 2696

CUY-90-16.28 (CCG3A)
MODEL: Sheet PAPERSIZE: 34x22 (in.) DATE: 3/28/2025 TIME: 7:31:01 AM USER: RohitBk
pw:\\mb-us-pw.bentley.com:mb-us-pw-03\Documents\Cleveland_OH101_Projects\ODOT\District12\82382\400-Engineering\Structures\SFN_1807806\Sheets\82382_SFN_1807806_SB004.dgn

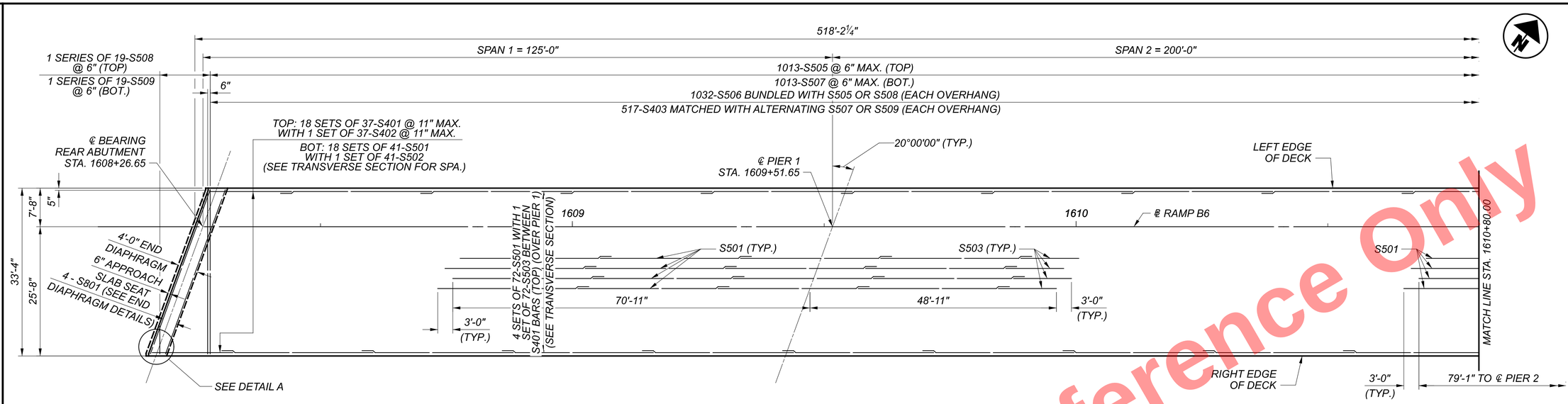

DECK PLAN

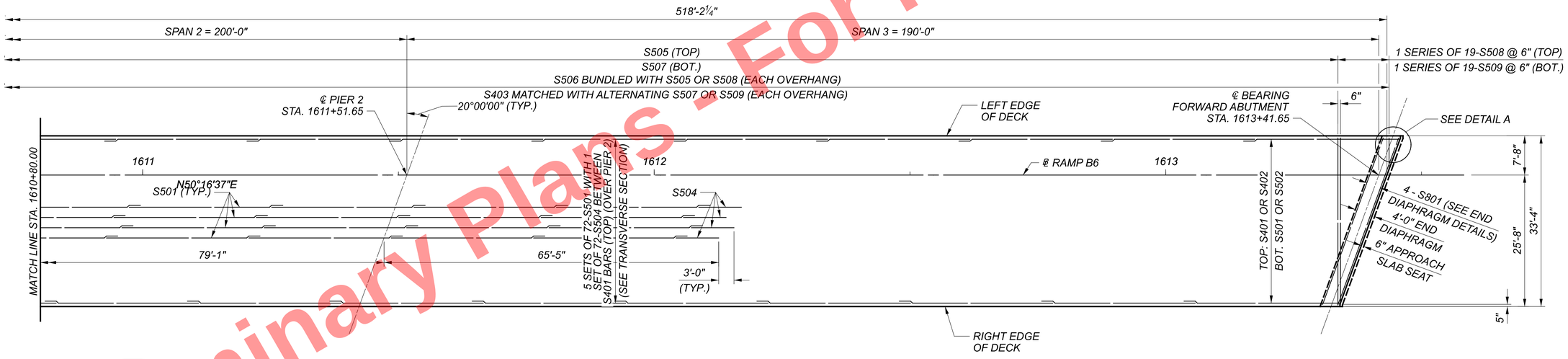

DECK PLAN

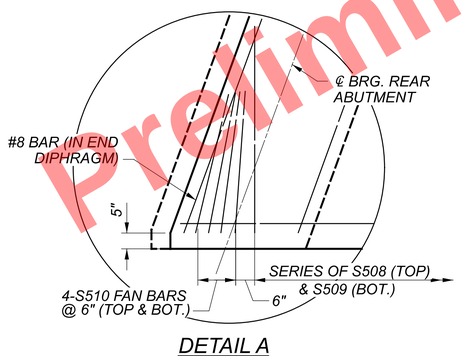

DETAIL A

(RIGHT REAR CORNER SHOWN,
LEFT FWD. CORNER SIMILAR)

REQUIRED MINIMUM LAP LENGTHS	
#4	1'-11"
#5	2'-5"
#8	4'-11"

NOTES:

1. FOR FRAMING PLAN AND BEAM ELEVATION, SEE SHEET 23/53 AND 24/53.
2. FOR SCREED, TOP OF HAUNCH, AND FINAL DECK ELEVATIONS, SEE SHEET 42/53 THRU 45/53.
3. FOR TRANSVERE SECTION, SEE SHEET 22/53.
4. FOR BRIDGE RAILING PLAN AND DETAILS, SEE SHEET 36/53.
5. FOR REINFORCEMENT LISTS, SEE SHEETS 49/53 THRU 53/53.
6. DRIP GROOVES SHALL TERMINATE 2'-0" FROM THE FACE OF THE ABUTMENT END DIAPHRAGMS.
7. FOR END DIAPHRAGM DETAILS, SEE SHEET 39/53 THRU 41/53.
8. FOR DECKPOUR SEQUENCE, SEE SHEET 35/53.

For Reference Only
Preliminary Plans - Not for Construction

SLAB PLAN (1 OF 2)
CUY-90-1652S (BRIDGE 12)
RAMP B6 OVER RAMP IJ3, CR-721 (E. 14TH ST.), AND RAMP H5

SFN	1807806
DESIGN AGENCY	HDR
DESIGNER	CMR
CHECKER	JTW
REVIEWER	DWW 1/08/24
PROJECT ID	82382
SUBSET	34
TOTAL	53
SHEET	2162
TOTAL	2696

CUY-90-16.28 (CCG3A)

MODEL: Sheet PAPERSIZE: 34x22 (in.) DATE: 3/28/2025 TIME: 7:31:09 AM USER: RohitLBk
pw:\\mb-us-pw.bentley.com:mb-us-pw-03\Documents\Cleveland_OH01_Projects\ODOT\District12\82382400-Engineering\Structures\SFN_1807806\Sheets\82382_SFN_1807806_SD001.dgn

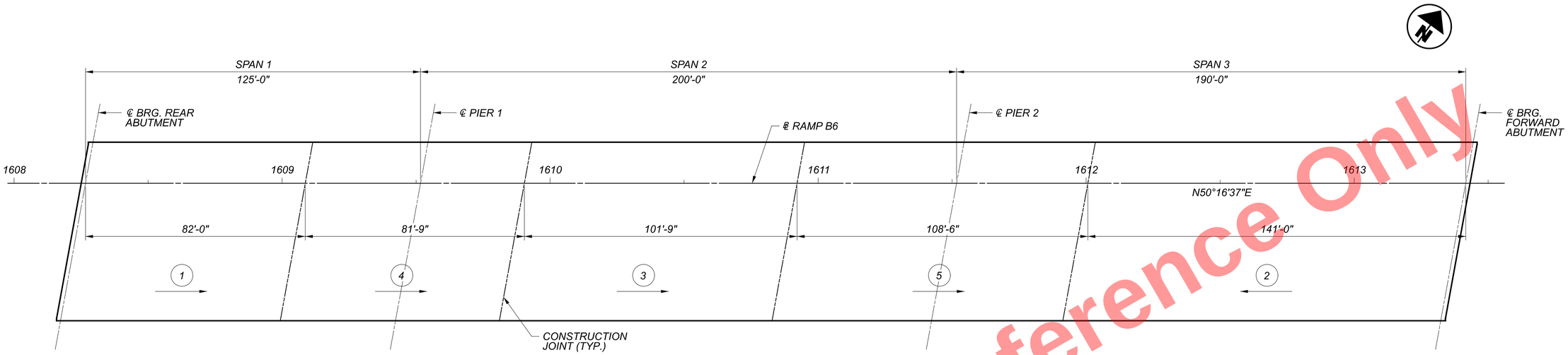

DECK POUR SEQUENCE

Preliminary Plans - For Reference Only

NOTES:

1. (#) INDICATES PLACEMENT SEQUENCE.
   → INDICATES DIRECTION OF POUR.
2. A MINIMUM OF TWO DAYS MUST ELAPSE BETWEEN POURS. TWO DAYS WILL BE MEASURED FROM THE END OF ONE POUR TO THE BEGINNING OF THE NEXT POUR.
3. DO NOT PLACE BRIDGE RAILING CONCRETE UNTIL ALL DECK POURS ARE COMPLETED.
4. NO OTHER DECK PLACEMENT SEQUENCE IS PERMITTED WITHOUT WRITTEN ACCEPTANCE FROM THE ENGINEER AND WITHOUT A DETAILED COMPUTER ANALYSIS OF THE SUPERSTRUCTURE TO DEMONSTRATE THAT NO UNACCEPTABLE OVERSTRESS WILL RESULT. SHOULD THE CONTRACTOR PROPOSE TO USE A DIFFERENT SEQUENCE. THE SUBMITTAL SHALL BE MADE IN ACCORDANCE WITH CMS ITEMS 501 AND 511.
5. THE CONTRACTOR IS RESPONSIBLE FOR THE STABILITY OF THE SUPERSTRUCTURE DURING THE DECK POUR.
6. APPROACH SLAB SHALL BE POURED SEPARATELY FROM POURS 1 AND 2.

SLAB PLAN (2 OF 2)
CUY-90-1652S (BRIDGE 12)
RAMP B6 OVER RAMP IJ3, CR-721 (E. 14TH ST.), AND RAMP H5

SFN	1807806
DESIGN AGENCY	HDR
DESIGNER	CMR
CHECKER	BTA
REVIEWER	DWW 1/08/24
PROJECT ID	82382
SUBSET	35
TOTAL	53
SHEET	2163
TOTAL	2696

CUY-90-16.28 (CCG3A)

MODEL: Sheet PAPERSIZE: 34x22 (in.) DATE: 3/28/2025 TIME: 7:31:15 AM USER: RohitBk
pw:\\mb-us-pw.bentley.com:mb-us-pw-03\Documents\Cleveland_OH101_Projects\ODOT\District12\82382\400-Engineering\Structures\SFN_1807806\Sheets\82382_SFN_1807806_SD006.dgn

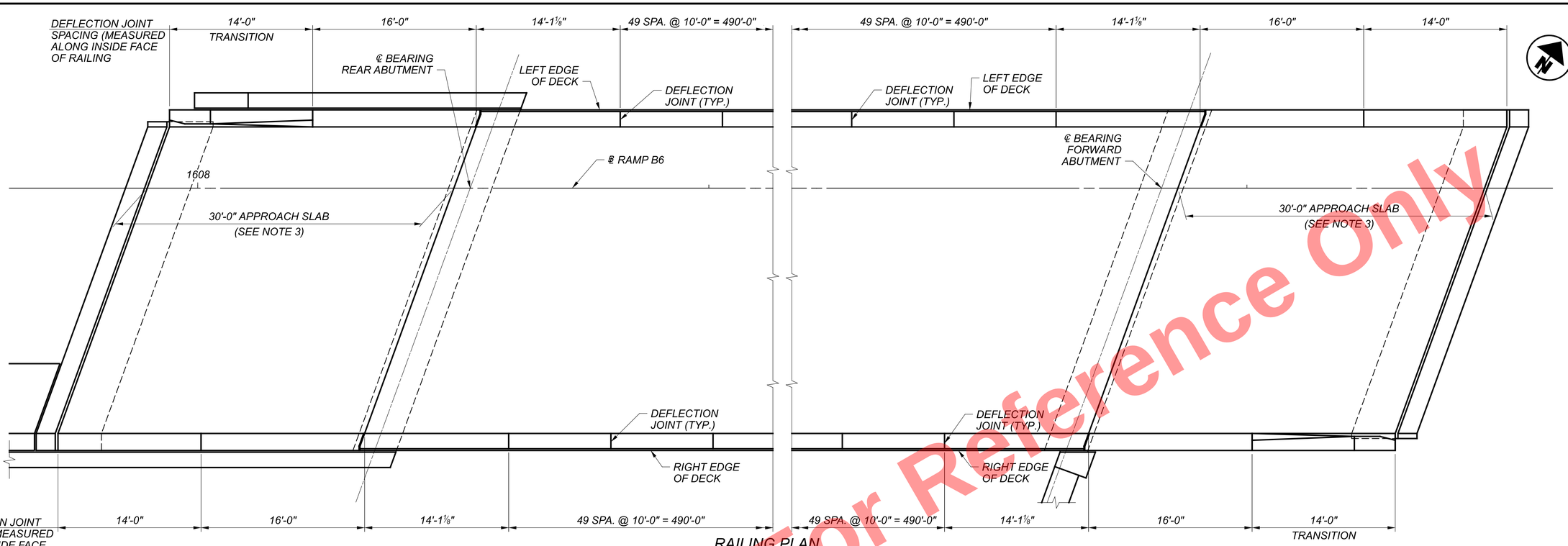

RAILING PLAN

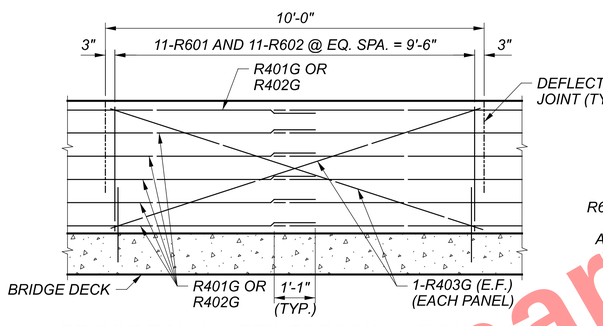

BRIDGE RAILING REINFORCING - 10'-0" PANEL

(98 PANELS)

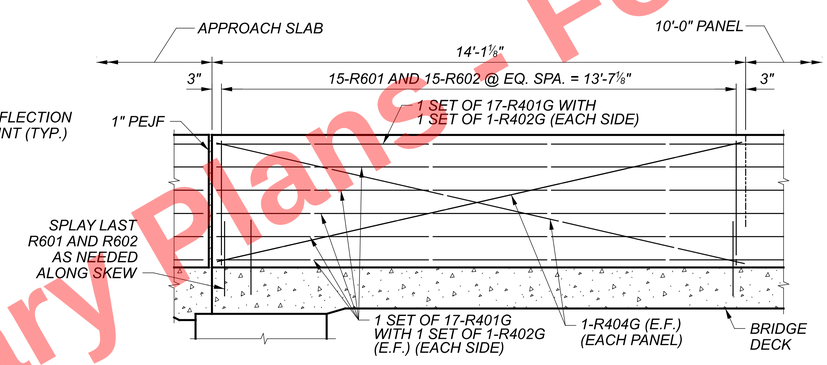

BRIDGE RAILING REINFORCING - 14'-1⅛" PANEL

(4 PANELS)

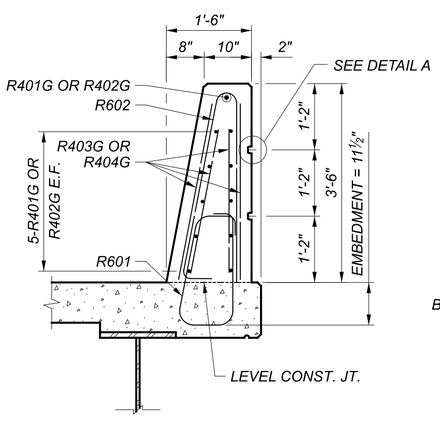

TYPICAL BRIDGE RAILING SECTION

(DECK REINFORCING NOT SHOWN)

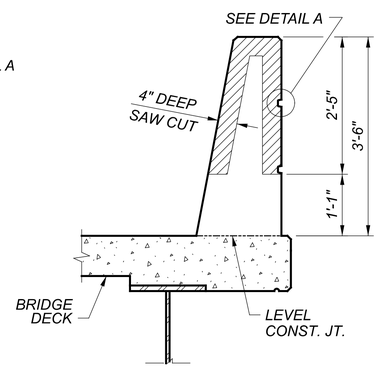

DEFLECTION JOINT DETAIL

(DECK AND RAIL REINFORCING NOT SHOWN)

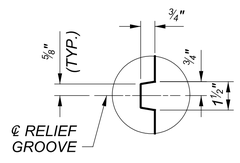

DETAIL A

LEGEND:

E.F.= EACH FACE
PEJF= PREFORMED EXPANSION JOINT FILLER

NOTES:

1. FOR ADDITIONAL RAILING NOTES AND DETAILS, SEE ODOT STD. DWG. SBR-1-20.
2. THE CONCRETE FOR THE RAILING (PARAPET), INCLUDING THE PORTIONS MOUNTED ON THE APPROACH SLAB SHALL BE PAID FOR WITH ITEM 511, CLASS QC2 CONCRETE WITH QC/QA, BRIDGE DECK (PARAPET). THE CONCRETE REINFORCEMENT FOR THE BRIDGE RAILING (PARAPET) SHALL BE INCLUDED WITH ITEM 509, EPOXY COATED STEEL REINFORCEMENT OR ITEM 509, NO. 4 DEFORMED GFRP REINFORCEMENT.
3. FOR APPROACH SLAB RAILING AND TRANSITION DETAILS, SEE SHEETS 37 / 53 AND 38 / 53.
4. FOR SLAB PLAN AND TRANSVERSE SECTION, SEE SHEETS 34 / 53 AND 22 / 53

Preliminary Plans - For Reference Only

RAILING PLAN
CUY-90-1652S (BRIDGE 12)
RAMP IJ3, CR-721 (E. 14TH ST.), AND RAMP H5
RAMP B6 OVER RA

SFN	1807806
DESIGN AGENCY	HDR
DESIGNER	ADW
CHECKER	CMR
REVIEWER	DWW 1/08/24
PROJECT ID	82382
SUBSET	36
TOTAL	53
SHEET	2164
TOTAL	2696

CUY-90-16.28 (CCG3A)

MODEL: Sheet PAPERSIZE: 34x22 (in.) DATE: 3/28/2025 TIME: 7:31:22 AM USER: Rohit.Bk
pw:\\mb-us-pw.bentley.com:mb-us-pw-03\Documents\Cleveland_OH101_Projects\ODOT\District12\82382\400-Engineering\Structures\SFN_1807806\Sheets\82382_SFN_1807806_SA001.dgn

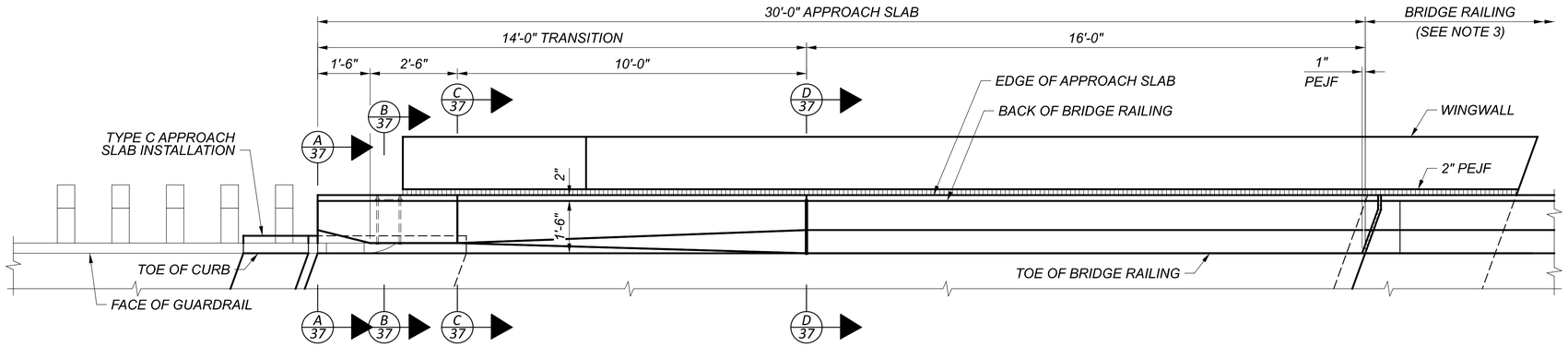

APPROACH SLAB BRIDGE RAILING PLAN

(LEFT REAR SHOWN, RIGHT FORWARD SIMILAR)

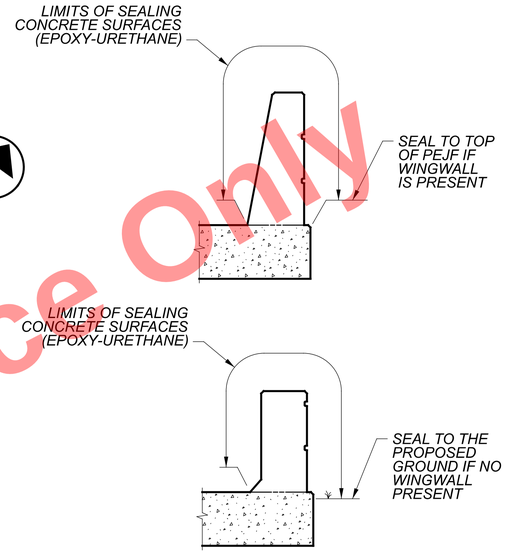

BRIDGE RAILING SEALING DETAIL

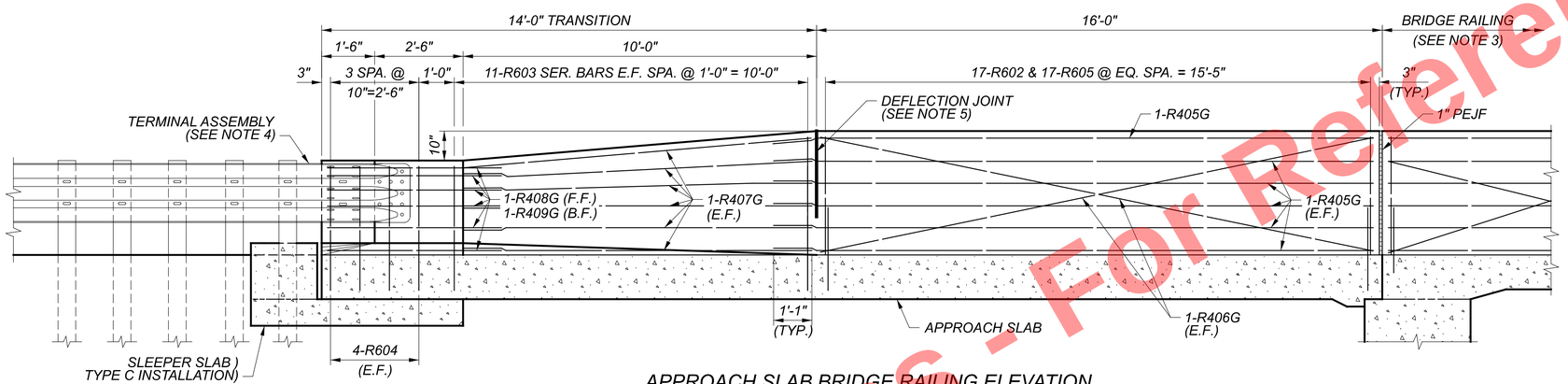

APPROACH SLAB BRIDGE RAILING ELEVATION

(LEFT REAR AND RIGHT FORWARD SHOWN)

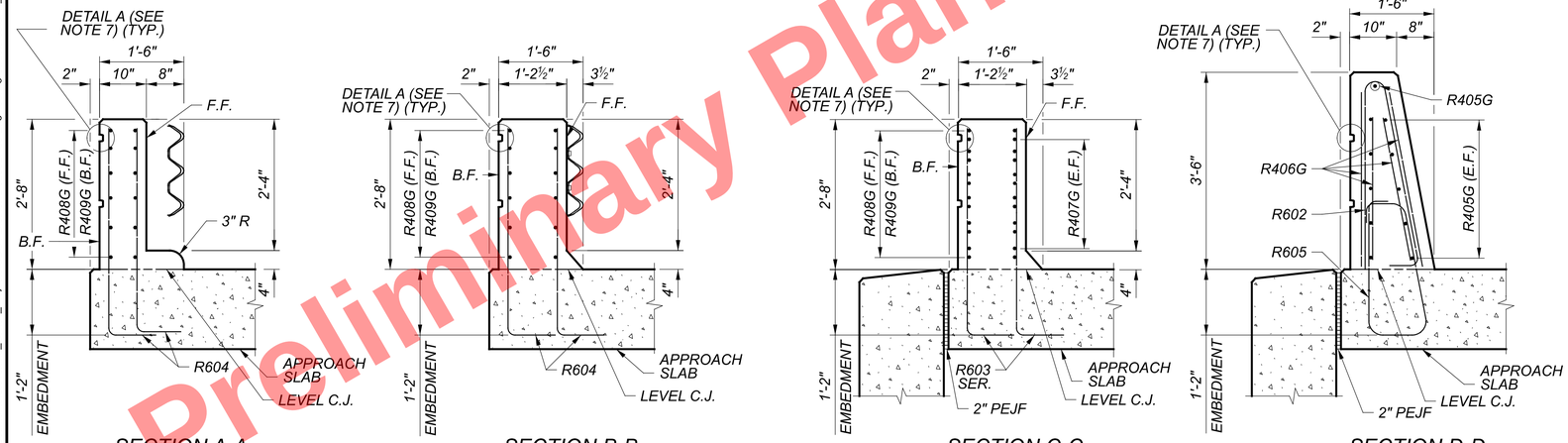

SECTION A-A

SECTION B-B

SECTION C-C

SECTION D-D

LEGEND:

E.F. = *EACH FACE*
B.F. = *BACK FACE*
F.F. = *FRONT FACE*
PEJF = *PREFORMED EXPANSION JOINT FILLER*
C.J. = *CONSTRUCTION JOINT*

NOTES:

1. *FOR ADDITIONAL BRIDGE RAILING NOTES AND DETAILS, SEE ODOT STD. DWG. SBR-1-20.*
2. *FOR APPROACH SLAB DETAILS, SEE SHEETS* 46 / 53 *AND* 47 / 53.
3. *FOR BRIDGE RAILING DETAILS WITHIN BRIDGE LIMITS, SEE SHEET* 36 / 53.
4. *FOR ADDITIONAL BRIDGE TERMINAL ASSEMBLY DETAILS, SEE ROADWAY SHEETS AND ODOT STD. DWG. MGS-3.1.*
5. *FOR DEFLECTION JOINT DETAIL, SEE SHEET* 36 / 53.
6. *FOR ADDITIONAL APPROACH SLAB RAILING DETAILS, SEE SHEET* 38 / 53.
7. *FOR AESTHETIC GROOVE DETAIL, SEE SHEET* 36 / 53.
8. *THE CONCRETE FOR THE BRIDGE RAILING (PARAPET), INCLUDING THE PORTIONS MOUNTED ON THE APPROACH SLAB SHALL BE PAID FOR WITH ITEM 511, CLASS QC2 CONCRETE WITH QC/QA, BRIDGE DECK (PARAPET). THE CONCRETE REINFORCEMENT FOR THE BRIDGE RAILING (PARAPET) SHALL BE INCLUDED WITH ITEM 509, EPOXY COATED STEEL REINFORCEMENT OR ITEM 509, NO. 4 DEFORMED GFRP REINFORCEMENT. THE CONCRETE SEALING OF RAILING SHALL BE INCLUDED WITH ITEM 512, SEALING OF CONCRETE SURFACES (EPOXY-URETHANE).*

Preliminary Plans - For Reference Only

APPROACH SLAB RAILING DETAILS (1 OF 2)
CUY-90-1652S (BRIDGE 12)
OVER RAMP IJ3, CR-721 (E. 14TH ST.), AND RAMP H5
RAMP B6 OVER

SFN	1807806
DESIGN AGENCY	HDR
DESIGNER	ADW
CHECKER	CMR
REVIEWER	DWW 1/08/24
PROJECT ID	82382
SUBSET	37
TOTAL	53
SHEET	2165
TOTAL	2696

CUY-90-16.28 (CCG3A)

MODEL: Sheet PAPERSIZE: 34x22 (in.) DATE: 3/28/2025 TIME: 7:31:30 AM USER: Rohit.Bk
pw:\\mb-us-pw.bentley.com:mb-us-pw-03\Documents\Cleveland_OH\01_Projects\ODOT\District12\82382400-Engineering\Structures\SFN_1807806\Sheets\82382_SA002.dgn

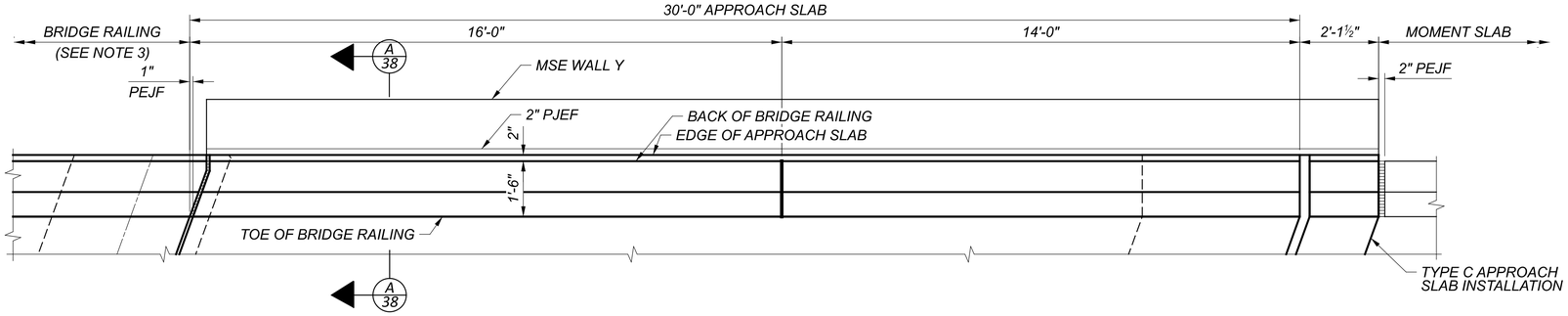

APPROACH SLAB BRIDGE RAILING PLAN

(LEFT FORWARD SHOWN, RIGHT REAR SIMILAR)

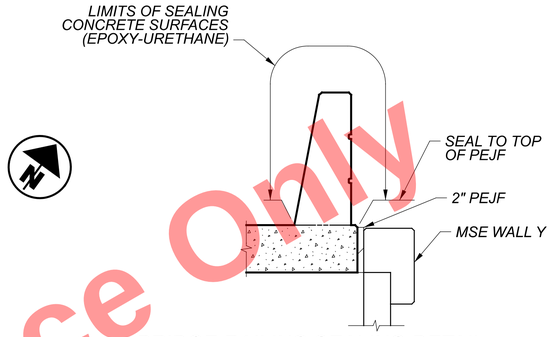

BRIDGE RAILING SEALING DETAIL

(LEFT FORWARD SHOWN, RIGHT REAR SIMILAR)

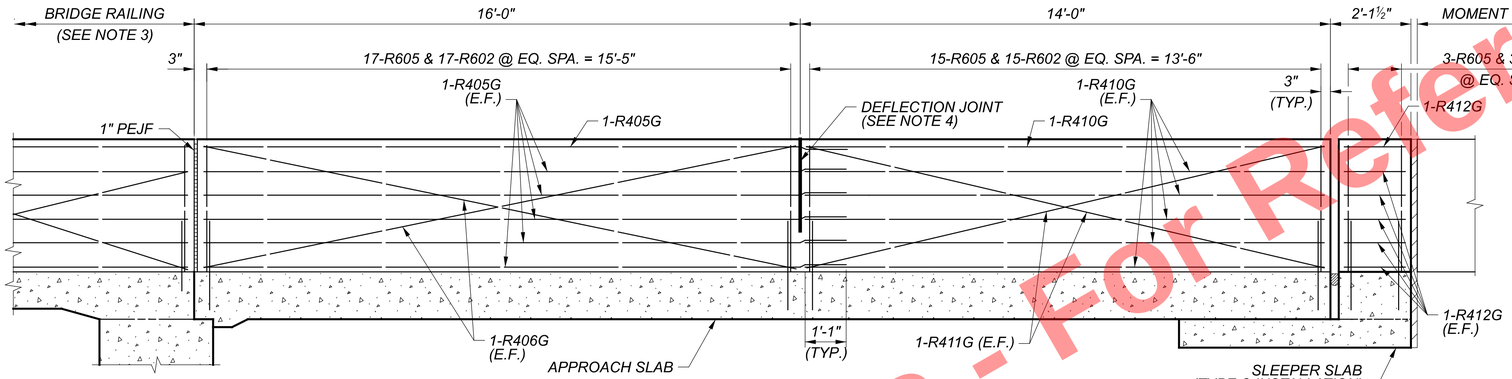

APPROACH SLAB BRIDGE RAILING ELEVATION

(LEFT FORWARD SHOWN, RIGHT REAR SIMILAR)

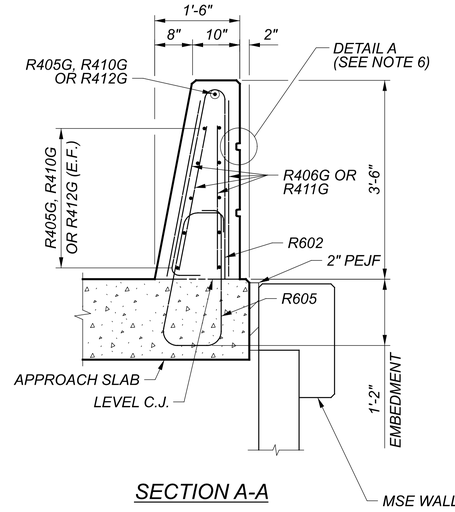

SECTION A-A

Preliminary Plans - For Reference Only

LEGEND:

E.F. = EACH FACE
B.F. = BACK FACE
F.F. = FRONT FACE
PEJF = PREFORMED EXPANSION JOINT FILLER
C.J. = CONSTRUCTION JOINT

NOTES:

1. FOR ADDITIONAL BRIDGE RAILING NOTES AND DETAILS, SEE ODOT STD. DWG. SBR-1-20.
2. FOR APPROACH SLAB DETAILS, SEE SHEETS 46 / 53 AND 47 / 53.
3. FOR BRIDGE RAILING DETAILS WITHIN BRIDGE LIMITS, SEE SHEET 36 / 53.
4. FOR DEFLECTION JOINT DETAIL, SEE SHEET 36 / 53.
5. FOR ADDITIONAL APPROACH SLAB RAILING DETAILS, SEE SHEET 37 / 53.
6. FOR AESTHETIC GROOVE DETAIL, SEE SHEET 36 / 53.
7. THE CONCRETE FOR THE BRIDGE RAILING (PARAPET), INCLUDING THE PORTIONS MOUNTED ON THE APPROACH SLAB SHALL BE PAID FOR WITH ITEM 511, CLASS QC2 CONCRETE WITH QC/QA, BRIDGE DECK (PARAPET). THE CONCRETE REINFORCEMENT FOR THE BRIDGE RAILING (PARAPET) SHALL BE INCLUDED WITH ITEM 509, EPOXY COATED STEEL REINFORCEMENT OR ITEM 509, NO. 4 DEFORMED GFRP REINFORCEMENT. THE CONCRETE SEALING OF RAILING SHALL BE INCLUDED WITH ITEM 512, SEALING OF CONCRETE SURFACES (EPOXY-URETHANE).

APPROACH SLAB RAILING DETAILS (2 OF 2)
CUY-90-1652S (BRIDGE 12)
RAMP B6 OVER RAMP IJ3, CR-721 (E. 14TH ST.), AND RAMP H5

SFN 1807806
DESIGN AGENCY HDR
DESIGNER ADW | CHECKER CMR
REVIEWER DWW 1/08/24
PROJECT ID 82382
SUBSET 38 | TOTAL 53
SHEET 2166 | TOTAL 2696

CUY-90-16.28 (CCG3A)
MODEL: Sheet PAPERSIZE: 34x22 (in.) DATE: 3/28/2025 TIME: 7:31:37 AM USER: RohitBk
pw:\\mb-us-pw.bentley.com:mb-us-pw-03\Documents\Cleveland_OH\01_Projects\ODOT\District12\82382\400-Engineering\Structures\SFN_1807806\Sheets\82382_SFN_1807806_SA003.dgn

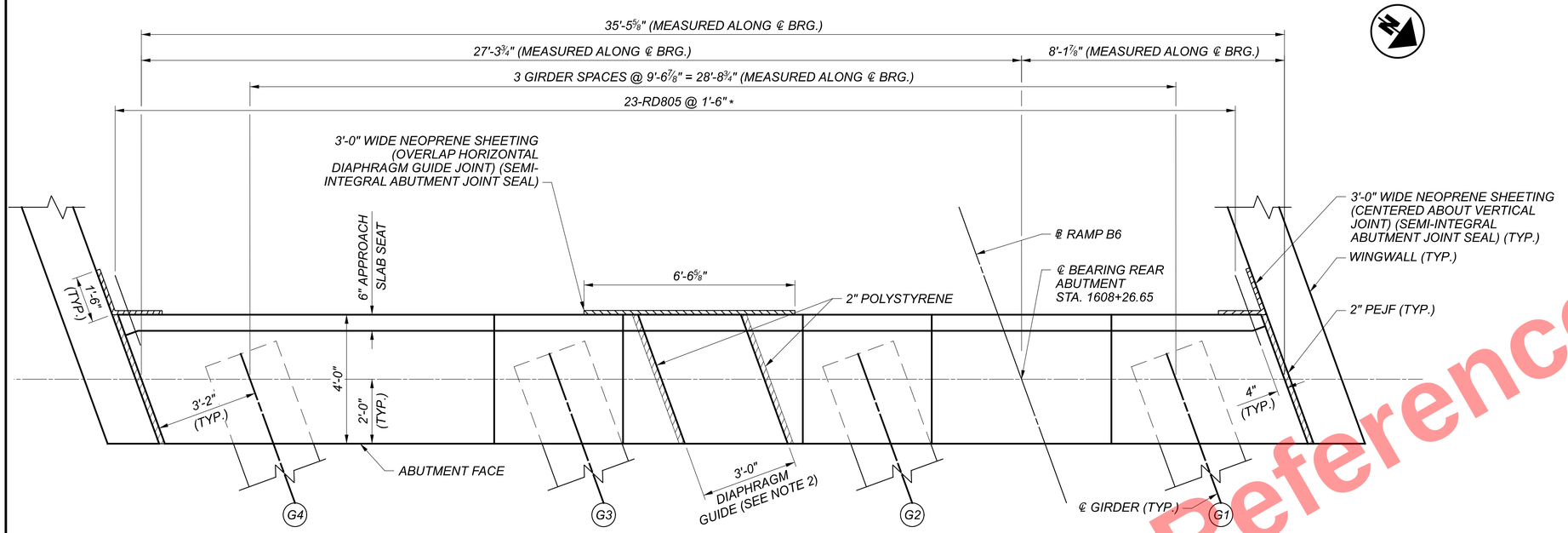

REAR ABUTMENT END DIAPHRAGM PLAN

(APPROACH SLAB NOT SHOWN FOR CLARITY)

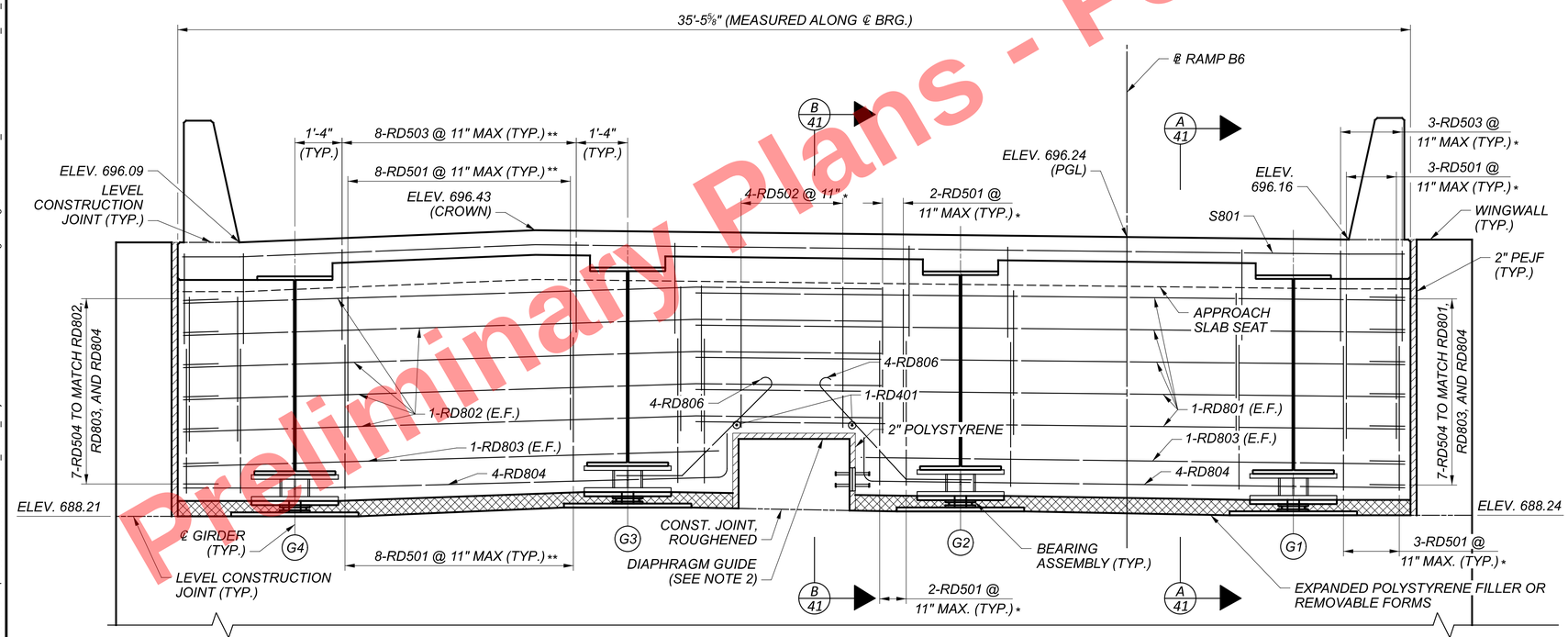

REAR ABUTMENT END DIAPHRAGM ELEVATION

(LOOKING DOWNSTATION)

LEGEND:

(GX) = GIRDER LINE DESIGNATION

* MEASURED AND PLACED PARALLEL TO GIRDERS

** TYP. BETWEEN GIRDERS, UNLESS NOTED OTHERWISE MEASURED AND PLACED PARALLEL TO GIRDERS

MIN. LAP LENGTH	
NO. 5 BARS	2'-5"
NO. 8 BARS	5'-4"

NOTES:

1. FOR ADDITIONAL END DIAPHRAGM DETAILS, SEE SHEET 41 / 53 .
2. FOR DIAPHRAGM GUIDE DETAILS, SEE SHEET 10 / 53 .
3. FOR SLAB PLAN, SEE SHEET 34 / 53 .
4. FOR BEARING DETAILS, SEE SHEETS 30 / 53 THRU 33 / 53 .
5. FOR REAR ABUTMENT DETAILS, SEE SHEETS 8 / 53 THRU 13 / 53 .
6. UNLESS OTHERWISE NOTED, ELEVATIONS ARE SHOWN AT THE ℄ BEARING.
7. FOR ADDITIONAL TOP OF DECK ELEVATIONS SEE SHEETS 44 / 53 THRU 45 / 53 .
8. ABUTMENT DIAPHRAGM CONCRETE: PLACE THE DIAPHRAGM CONCRETE ENCASING THE STRUCTURAL MEMBER ENDS WITH THE DECK CONCRETE OR AT LEAST 48 HOURS BEFORE PLACEMENT OF THE DECK CONCRETE. IF PLACED SEPARATELY, LOCATE A HORIZONTAL CONSTRUCTION JOINT IN THE DIAPHRAGM AS SHOWN ON SHEET 41 / 53 AND PLACE REMAINING DIAPHRAGM CONCRETE WITH THE DECK.
9. END DIAPHRAGM CONCRETE AND EXPANDED POLYSTYRENE FILLER OR REMOVABLE FORMS SHALL BE INCLUDED FOR PAYMENT WITH ITEM 511 - CLASS QC2 CONCRETE WITH QC/QA, BRIDGE DECK.

Preliminary Plans - For Reference Only

REAR ABUTMENT END DIAPHRAGM DETAILS
CUY-90-1652S (BRIDGE 12)
RAMP B6 OVER RAMP IJ3, CR-721 (E. 14TH ST.), AND RAMP H5

SFN 1807806
DESIGN AGENCY HDR
DESIGNER CMR | CHECKER JML
REVIEWER DWW 1/08/24
PROJECT ID 82382
SUBSET 39 | TOTAL 53
SHEET 2167 | TOTAL 2696

CUY-90-16.28 (CCG3A)

MODEL: Sheet PAPERSIZE: 34x22 (in.) DATE: 3/20/2025 TIME: 7:31:43 AM USER: Rohit.Bk
pw:\\mb-us-pw.bentley.com:mb-us-pw-03\Documents\Cleveland_OH\01_Projects\ODOT\District12\82382\400-Engineering\Structures\SFN_1807806\Sheets\82382_SFN_1807806_SR007.dgn

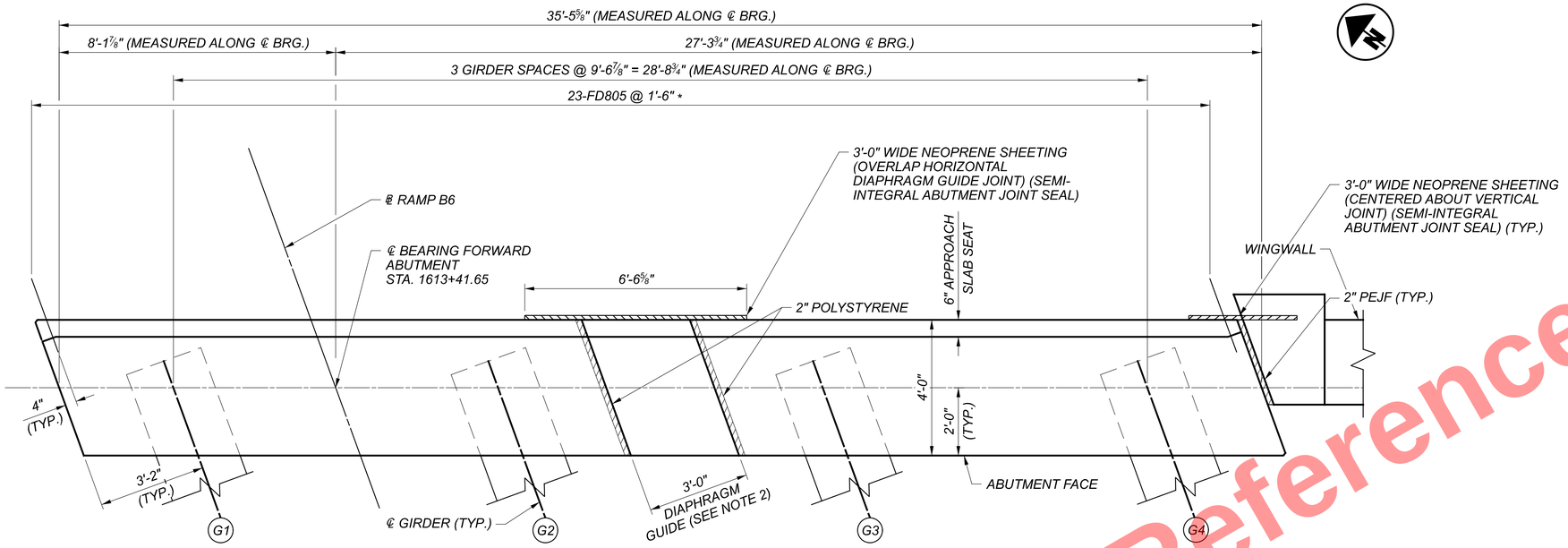

FORWARD ABUTMENT END DIAPHRAGM PLAN

(APPROACH SLAB NOT SHOWN FOR CLARITY)

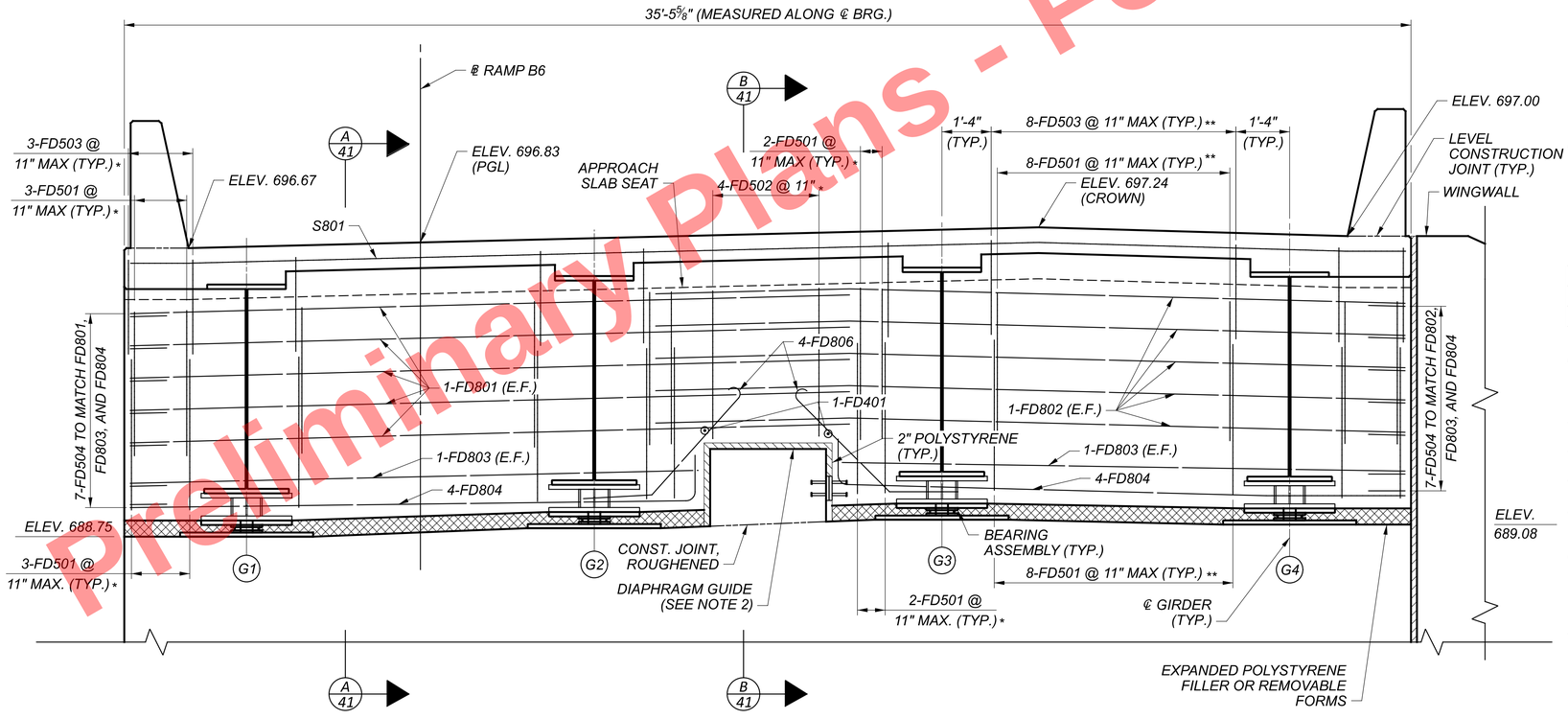

FORWARD ABUTMENT END DIAPHRAGM ELEVATION

(LOOKING UPSTATION)

LEGEND:

(GX) = GIRDER LINE DESIGNATION

* MEASURED AND PLACED PARALLEL TO GIRDERS

** TYP. BETWEEN GIRDERS, UNLESS NOTED OTHERWISE MEASURED AND PLACED PARALLEL TO GIRDERS

MIN. LAP LENGTH	
NO. 5 BARS	2'-5"
NO. 8 BARS	5'-4"

NOTES:

1. FOR ADDITIONAL END DIAPHRAGM DETAILS, SEE SHEET 41 / 53 .
2. FOR DIAPHRAGM GUIDE DETAILS, SEE SHEET 10 / 53 .
3. FOR SLAB PLAN, SEE SHEET 34 / 53 .
4. FOR BEARING DETAILS, SEE SHEETS 30 / 53 THRU 33 / 53 .
5. FOR FORWARD ABUTMENT DETAILS, SEE SHEETS 14 / 53 THRU 17 / 53 .
6. UNLESS OTHERWISE NOTED, ELEVATIONS ARE SHOWN AT THE ℄ BEARING.
7. FOR ADDITIONAL TOP OF DECK ELEVATIONS SEE SHEETS 44 / 53 THRU 45 / 53 .
8. ABUTMENT DIAPHRAGM CONCRETE: PLACE THE DIAPHRAGM CONCRETE ENCASING THE STRUCTURAL MEMBER ENDS WITH THE DECK CONCRETE OR AT LEAST 48 HOURS BEFORE PLACEMENT OF THE DECK CONCRETE. IF PLACED SEPARATELY, LOCATE A HORIZONTAL CONSTRUCTION JOINT IN THE DIAPHRAGM AS SHOWN ON SHEET 41 / 53 AND PLACE REMAINING DIAPHRAGM CONCRETE WITH THE DECK.
9. END DIAPHRAGM CONCRETE AND EXPANDED POLYSTYRENE FILLER OR REMOVABLE FORMS SHALL BE INCLUDED FOR PAYMENT WITH ITEM 511 - CLASS QC2 CONCRETE WITH QC/QA, BRIDGE DECK.

FORWARD ABUTMENT END DIAPHRAGM DETAILS
CUY-90-1652S (BRIDGE 12)
RAMP B6 OVER RAMP IJ3, CR-721 (E. 14TH ST.), AND RAMP H5

SFN	1807806
DESIGN AGENCY	HDR
DESIGNER	CMR
CHECKER	JML
REVIEWER	DWW 1/08/24
PROJECT ID	82382
SUBSET	40
TOTAL	53
SHEET	2168
TOTAL	2696

Preliminary Plans - For Reference Only

CUY-90-16.28 (CCG3A)
MODEL: Sheet PAPERSIZE: 34x22 (in.) DATE: 3/28/2025 TIME: 7:31:49 AM USER: RohitBk
pw:\\mb-us-pw.bentley.com:mb-us-pw-03\Documents\Cleveland_OH101_Projects\ODOT\District12\82382\400-Engineering\Structures\SFN_1807806\Sheets\82382_SFN_1807806_SF003.dgn

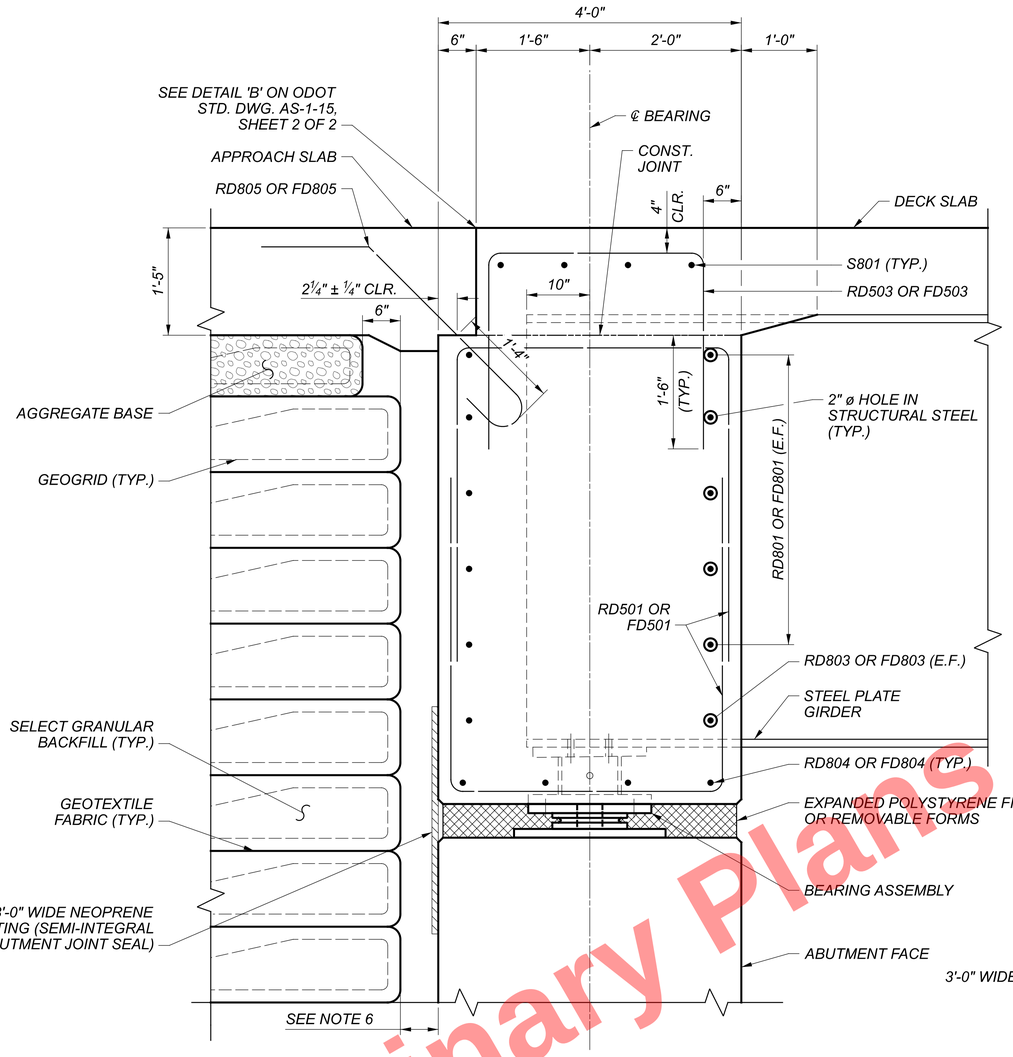

SECTION A-A

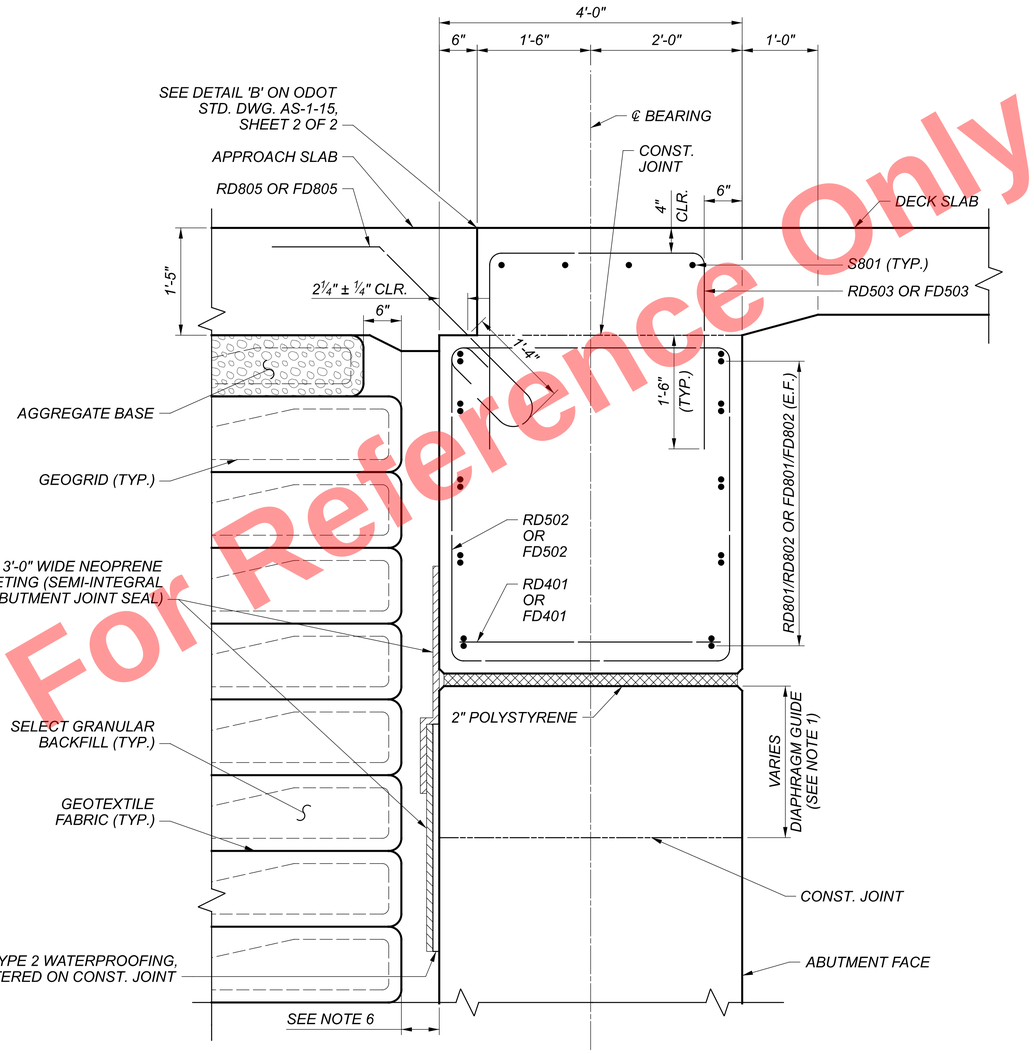

SECTION B-B

Preliminary Plans - For Reference Only

NOTES:

1. FOR ADDITIONAL END DIAPHRAGM DETAILS AND NOTES, SEE SHEETS 39 / 53 AND 40 / 53 .
2. FOR LOCATION OF 2" DIA. HOLES IN STRUCTURAL STEEL, SEE SHEET 24 / 53 .
3. FOR ABUTMENT DETAILS, SEE SHEETS 8 / 53 THRU 17 / 53 .
4. FOR SOIL REINFORCING DETAILS, SEE SHEETS 13 / 53 AND 17 / 53 .
5. FOR APPROACH SLAB DETAILS, SEE SHEETS 46 / 53 AND 47 / 53 .
6. FOR REAR ABUTMENT, SEE EXPANSION GAP TABLE ON SHEET 10 / 53 . FOR FORWARD ABUTMENT, SEE EXPANSION GAP TABLE ON SHEET 15 / 53 .

END DIAPHRAGM DETAILS
CUY-90-1652S (BRIDGE 12)
RAMP IJ3, CR-721 (E. 14TH ST.), AND RAMP H5
RAMP B6 OVER RAMP H5

SFN	1807806
DESIGN AGENCY	HDR
DESIGNER	CMR
CHECKER	JML
REVIEWER	DWW 1/08/24
PROJECT ID	82382
SUBSET	41
TOTAL	53
SHEET	2169
TOTAL	2696

CUY-90-16.28 (CCG3A)

MODEL: Sheet PAPERSIZE: 34x22 (in.) DATE: 3/28/2025 TIME: 7:31:55 AM USER: RohitBk
pw:\\mb-us-pw.bentley.com:mb-us-pw-03\Documents\Cleveland_OH101_Projects\ODOT\District12\82382\400-Engineering\Structures\SFN_1807806\Sheets\82382_SFN_1807806_SR008.dgn

SCREED ELEVATIONS

		SPAN 1												SPAN 2							
		CL BRG. REAR ABUT.	0.1	0.2	0.3	0.4	0.5	0.6	CL F.S. 1	0.7	0.8	0.9	CL BRG. PIER 1	0.1	CL F.S. 2	0.2	0.3	0.4	0.5	0.6	0.7	CL F.S. 3
LEFT TOE OF RAILING	STATION	1608+28.84	1608+41.34	1608+53.84	1608+66.34	1608+78.84	1608+91.34	1609+03.84	1609+08.84	1609+16.34	1609+28.84	1609+41.34	1609+53.84	1609+73.84	1609+85.84	1609+93.84	1610+13.84	1610+33.84	1610+53.84	1610+73.84	1610+93.84	1610+98.84
	ELEV.	696.16	696.32	696.47	696.61	696.74	696.86	696.97	697.01	697.07	697.18	697.29	697.41	697.64	697.79	697.89	698.14	698.37	698.56	698.72	698.87	698.90
BL RAMP B6	STATION	1608+26.65	1608+39.15	1608+51.65	1608+64.15	1608+76.65	1608+89.15	1609+01.65	1609+06.65	1609+14.15	1609+26.65	1609+39.15	1609+51.65	1609+71.65	1609+83.65	1609+91.65	1610+11.65	1610+31.65	1610+51.65	1610+71.65	1610+91.65	1610+96.65
	ELEV.	696.24	696.39	696.54	696.68	696.81	696.93	697.04	697.09	697.15	697.25	697.36	697.49	697.72	697.87	697.97	698.22	698.44	698.64	698.80	698.95	698.98
CROWN	STATION	1608+20.83	1608+33.33	1608+45.83	1608+58.33	1608+70.83	1608+83.33	1608+95.83	1609+00.83	1609+08.33	1609+20.83	1609+33.33	1609+45.83	1609+65.83	1609+77.83	1609+85.83	1610+05.83	1610+25.83	1610+45.83	1610+65.83	1610+85.83	1610+90.83
	ELEV.	696.43	696.59	696.74	696.88	697.01	697.13	697.24	697.28	697.34	697.45	697.56	697.68	697.91	698.07	698.17	698.42	698.65	698.85	699.01	699.16	699.19
RIGHT TOE OF RAILING	STATION	1608+17.92	1608+30.42	1608+42.92	1608+55.42	1608+67.92	1608+80.42	1608+92.92	1608+97.92	1609+05.42	1609+17.92	1609+30.42	1609+42.92	1609+62.92	1609+74.92	1609+82.92	1610+02.92	1610+22.92	1610+42.92	1610+62.92	1610+82.92	1610+87.92
	ELEV.	696.09	696.24	696.39	696.53	696.66	696.78	696.89	696.93	696.99	697.10	697.21	697.34	697.57	697.72	697.82	698.07	698.30	698.50	698.67	698.81	698.85

TOP OF HAUNCH ELEVATIONS

		SPAN 1												SPAN 2							
		CL BRG. REAR ABUT.	0.1	0.2	0.3	0.4	0.5	0.6	CL F.S. 1	0.7	0.8	0.9	CL BRG. PIER 1	0.1	CL F.S. 2	0.2	0.3	0.4	0.5	0.6	0.7	CL F.S. 3
GIRDER 1	STATION	1608+28.29	1608+40.79	1608+53.29	1608+65.79	1608+78.29	1608+90.79	1609+03.29	1609+08.29	1609+15.79	1609+28.29	1609+40.79	1609+53.29	1609+73.29	1609+85.29	1609+93.29	1610+13.29	1610+33.29	1610+53.29	1610+73.29	1610+93.29	1610+98.29
	ELEV.	695.47	695.63	695.78	695.92	696.05	696.17	696.28	696.32	696.39	696.49	696.60	696.72	696.95	697.10	697.20	697.45	697.68	697.87	698.03	698.18	698.22
GIRDER 2	STATION	1608+25.01	1608+37.51	1608+50.01	1608+62.51	1608+75.01	1608+87.51	1609+00.01	1609+05.01	1609+12.51	1609+25.01	1609+37.51	1609+50.01	1609+70.01	1609+82.01	1609+90.01	1610+10.01	1610+30.01	1610+50.01	1610+70.01	1610+90.01	1610+95.01
	ELEV.	695.58	695.74	695.89	696.03	696.16	696.28	696.39	696.43	696.49	696.60	696.71	696.83	697.06	697.21	697.31	697.56	697.79	697.99	698.15	698.30	698.33
GIRDER 3	STATION	1608+21.74	1608+34.24	1608+46.74	1608+59.24	1608+71.74	1608+84.24	1608+96.74	1609+01.74	1609+09.24	1609+21.74	1609+34.24	1609+46.74	1609+66.74	1609+78.74	1609+86.74	1610+06.74	1610+26.74	1610+46.74	1610+66.74	1610+86.74	1610+91.74
	ELEV.	695.70	695.85	696.00	696.14	696.27	696.39	696.50	696.54	696.60	696.71	696.82	696.95	697.17	697.33	697.43	697.68	697.91	698.10	698.27	698.41	698.45
GIRDER 4	STATION	1608+18.46	1608+30.96	1608+43.46	1608+55.96	1608+68.46	1608+80.96	1608+93.46	1608+98.46	1609+05.96	1609+18.46	1609+30.96	1609+43.46	1609+63.46	1609+75.46	1609+83.46	1610+03.46	1610+23.46	1610+43.46	1610+63.46	1610+83.46	1610+88.46
	ELEV.	695.44	695.60	695.75	695.89	696.02	696.14	696.25	696.29	696.35	696.46	696.57	696.69	696.92	697.08	697.18	697.43	697.66	697.86	698.03	698.17	698.20

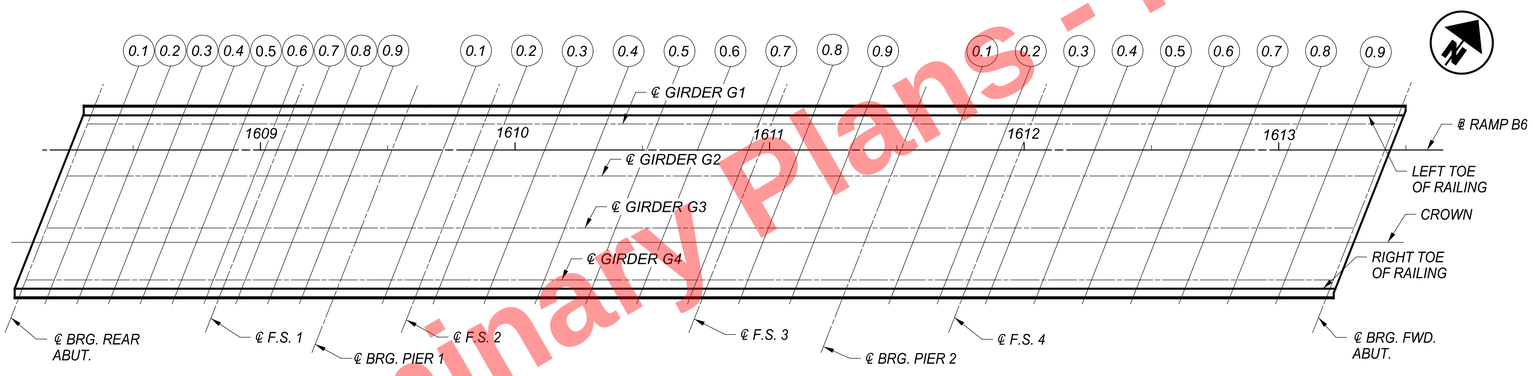

PLAN

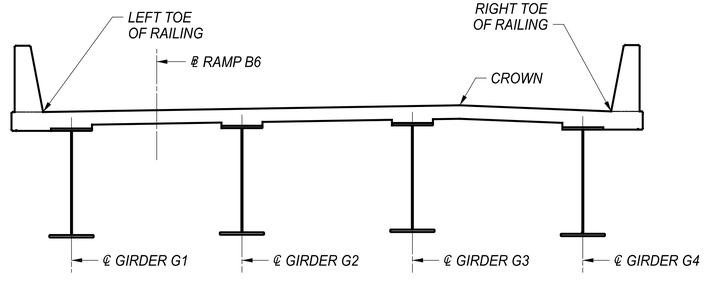

TRANSVERSE SECTION

NOTES:

1. SCREED ELEVATIONS SHOWN REPRESENT THE THEORETICAL DECK SURFACE LOCATION PRIOR TO DEFLECTIONS CAUSED BY DECK PLACEMENT AND OTHER ANTICIPATED DEAD LOADS. SEE DEFLECTION DETAIL ON SHEET 44/53.
2. TOP OF HAUNCH ELEVATIONS SHOWN REPRESENT THE THEORETICAL LOCATION OF THE BOTTOM OF THE DECK ABOVE THE GIRDER HAUNCH PRIOR TO DEFLECTIONS CAUSED BY DECK PLACEMENT AND OTHER ANTICIPATED DEAD LOADS. SEE DEFLECTION DETAIL ON SHEET 44/53.
3. FOR SLAB PLAN, SEE SHEET 34/53.
4. FOR RAILING PLAN, SEE SHEET 36/53.
5. FOR TRANSVERSE SECTION, SEE SHEET 22/53.
6. FOR FINAL DECK SURFACE ELEVATIONS, SEE SHEETS 44/53 AND 45/53.
7. FOR ADDITIONAL SCREED AND TOP OF HAUNCH ELEVATIONS, SEE SHEET 43/53.

Preliminary Plans - For Reference Only

SCREED AND TOP OF HAUNCH ELEVATIONS (1 OF 2)
CUY-90-1652S (BRIDGE 12)
RAMP B6 OVER RAMP IJ3, CR-721 (E. 14TH ST.), AND RAMP H5

SFN 1807806
DESIGN AGENCY HDR
DESIGNER CMR | CHECKER ABO
REVIEWER DWW 1/08/24
PROJECT ID 82382
SUBSET 42 | TOTAL 53
SHEET 2170 | TOTAL 2696

CUY-90-16.28 (CCG3A)

MODEL: Sheet PAPERSIZE: 34x22 (in.) DATE: 3/28/2025 TIME: 7:32:01 AM USER: Rohit.Bk
pw:\\mb-us-pw.bentley.com:mb-us-pw-03\Documents\Cleveland_OH\01_Projects\ODOT\District12\82382400-Engineering\Structures\SFN_1807806\Sheets\82382_SFN_1807806_SD002.dgn

SCREED ELEVATIONS

		SPAN 2				SPAN 3										
		CL F.S. 3	0.8	0.9	CL BRG. PIER 2	0.1	0.2	CL F.S. 4	0.3	0.4	0.5	0.6	0.7	0.8	0.9	CL BRG. FWD. ABUT.
LEFT TOE OF RAILING	STATION	1610+98.84	1611+13.84	1611+33.84	1611+53.84	1611+72.84	1611+91.84	1612+00.84	1612+10.84	1612+29.84	1612+48.84	1612+67.84	1612+86.84	1613+05.84	1613+24.84	1613+43.84
	ELEV.	698.90	699.00	699.10	699.19	699.26	699.32	699.33	699.33	699.26	699.10	698.83	698.44	697.95	697.35	696.67
BL RAMP B6	STATION	1610+96.65	1611+11.65	1611+31.65	1611+51.65	1611+70.65	1611+89.65	1611+98.65	1612+08.65	1612+27.65	1612+46.65	1612+65.65	1612+84.65	1613+03.65	1613+22.65	1613+41.65
	ELEV.	698.98	699.08	699.19	699.28	699.36	699.42	699.43	699.44	699.38	699.22	698.96	698.58	698.09	697.50	696.83
CROWN	STATION	1610+90.83	1611+05.83	1611+25.83	1611+45.83	1611+64.83	1611+83.83	1611+92.83	1612+02.83	1612+21.83	1612+40.83	1612+59.83	1612+78.83	1612+97.83	1613+16.83	1613+35.83
	ELEV.	699.19	699.30	699.41	699.52	699.62	699.69	699.71	699.72	699.68	699.54	699.29	698.93	698.46	697.89	697.24
RIGHT TOE OF RAILING	STATION	1610+87.92	1611+02.92	1611+22.92	1611+42.92	1611+61.92	1611+80.92	1611+89.92	1611+99.92	1612+18.92	1612+37.92	1612+56.92	1612+75.92	1612+94.92	1613+13.92	1613+32.92
	ELEV.	698.85	698.95	699.08	699.19	699.29	699.38	699.40	699.42	699.38	699.25	699.01	698.66	698.20	697.64	697.00

TOP OF HAUNCH ELEVATIONS

		SPAN 2				SPAN 3										
		CL F.S. 3	0.8	0.9	CL BRG. PIER 2	0.1	0.2	CL F.S. 4	0.3	0.4	0.5	0.6	0.7	0.8	0.9	CL BRG. FWD. ABUT.
GIRDER 1	STATION	1610+98.29	1611+13.29	1611+33.29	1611+53.29	1611+72.29	1611+91.29	1612+00.29	1612+10.29	1612+29.29	1612+48.29	1612+67.29	1612+86.29	1613+05.29	1613+24.29	1613+43.29
	ELEV.	698.22	698.31	698.41	698.50	698.58	698.64	698.65	698.65	698.58	698.42	698.15	697.77	697.27	696.68	696.00
GIRDER 2	STATION	1610+95.01	1611+10.01	1611+30.01	1611+50.01	1611+69.01	1611+88.01	1611+97.01	1612+07.01	1612+26.01	1612+45.01	1612+64.01	1612+83.01	1613+02.01	1613+21.01	1613+40.01
	ELEV.	698.33	698.43	698.54	698.64	698.72	698.79	698.80	698.81	698.75	698.60	698.34	697.97	697.48	696.90	696.24
GIRDER 3	STATION	1610+91.74	1611+06.74	1611+26.74	1611+46.74	1611+65.74	1611+84.74	1611+93.74	1612+03.74	1612+22.74	1612+41.74	1612+60.74	1612+79.74	1612+98.74	1613+17.74	1613+36.74
	ELEV.	698.45	698.55	698.67	698.77	698.87	698.94	698.96	698.97	698.92	698.78	698.53	698.17	697.70	697.12	696.47
GIRDER 4	STATION	1610+88.46	1611+03.46	1611+23.46	1611+43.46	1611+62.46	1611+81.46	1611+90.46	1612+00.46	1612+19.46	1612+38.46	1612+57.46	1612+76.46	1612+95.46	1613+14.46	1613+33.46
	ELEV.	698.20	698.31	698.43	698.54	698.65	698.73	698.75	698.76	698.73	698.60	698.36	698.01	697.54	696.98	696.34

Preliminary Plans - For Reference Only

NOTES:

1. SCREED ELEVATIONS SHOWN REPRESENT THE THEORETICAL DECK SURFACE LOCATION PRIOR TO DEFLECTIONS CAUSED BY DECK PLACEMENT AND OTHER ANTICIPATED DEAD LOADS. SEE DEFLECTION DETAIL ON SHEET 44/53.
2. TOP OF HAUNCH ELEVATIONS SHOWN REPRESENT THE THEORETICAL LOCATION OF THE BOTTOM OF THE DECK ABOVE THE GIRDER HAUNCH PRIOR TO DEFLECTIONS CAUSED BY DECK PLACEMENT AND OTHER ANTICIPATED DEAD LOADS. SEE DEFLECTION DETAIL ON SHEET 44/53.
3. FOR SLAB PLAN, SEE SHEET 34/53.
4. FOR RAILING PLAN, SEE SHEET 36/53.
5. FOR TRANSVERSE SECTION, SEE SHEET 22/53.
6. FOR FINAL DECK SURFACE ELEVATIONS, SEE SHEETS 44/53 AND 45/53.
7. FOR ADDITIONAL SCREED AND TOP OF HAUNCH ELEVATIONS, SEE SHEET 42/53.

SCREED AND TOP OF HAUNCH ELEVATIONS (2 OF 2)
CUY-90-1652S (BRIDGE 12)
RAMP B6 OVER RAMP IJ3, CR-721 (E. 14TH ST.), AND RAMP H5

SFN 1807806
DESIGN AGENCY HDR
DESIGNER CMR | CHECKER ABO
REVIEWER DWW 1/08/24
PROJECT ID 82382
SUBSET 43 | TOTAL 53
SHEET 2171 | TOTAL 2696

CUY-90-16.28 (CCG3A)

MODEL: Sheet PAPERSIZE: 34x22 (in.) DATE: 3/28/2025 TIME: 7:32:07 AM USER: RohitLBk
pw:\\mb-us-pw.bentley.com:mb-us-pw-03\Documents\Cleveland_OH\01_Projects\ODOT\District12\82382400-Engineering\Structures\SFN_1807806\Sheets\82382_SFN_1807806_SD003.dgn

FINAL DECK SURFACE ELEVATIONS

		SPAN 1												SPAN 2								
		CL BRG. REAR ABUT.	0.1	0.2	0.3	0.4	0.5	0.6	CL F.S. 1	0.7	0.8	0.9	CL BRG. PIER 1	0.1	CL F.S. 2	0.2	0.3	0.4	0.5	0.6	0.7	CL F.S. 3
LEFT TOE OF RAILING	STATION	1608+28.84	1608+41.34	1608+53.84	1608+66.34	1608+78.84	1608+91.34	1609+03.84	1609+08.84	1609+16.34	1609+28.84	1609+41.34	1609+53.84	1609+73.84	1609+85.84	1609+93.84	1610+13.84	1610+33.84	1610+53.84	1610+73.84	1610+93.84	1610+98.84
	ELEV.	696.16	696.29	696.41	696.54	696.66	696.79	696.91	696.96	697.04	697.16	697.29	697.41	697.61	697.73	697.81	698.01	698.21	698.41	698.61	698.81	698.86
GIRDER 1	STATION	1608+28.29	1608+40.79	1608+53.29	1608+65.79	1608+78.29	1608+90.79	1609+03.29	1609+08.29	1609+15.79	1609+28.29	1609+40.79	1609+53.29	1609+73.29	1609+85.29	1609+93.29	1610+13.29	1610+33.29	1610+53.29	1610+73.29	1610+93.29	1610+98.29
	ELEV.	696.18	696.31	696.43	696.56	696.68	696.81	696.93	696.98	697.06	697.18	697.31	697.43	697.63	697.75	697.83	698.03	698.23	698.43	698.63	698.83	698.88
BL RAMP B6	STATION	1608+26.65	1608+39.15	1608+51.65	1608+64.15	1608+76.65	1608+89.15	1609+01.65	1609+06.65	1609+14.15	1609+26.65	1609+39.15	1609+51.65	1609+71.65	1609+83.65	1609+91.65	1610+11.65	1610+31.65	1610+51.65	1610+71.65	1610+91.65	1610+96.65
	ELEV.	696.24	696.36	696.49	696.61	696.74	696.86	696.99	697.04	697.11	697.24	697.36	697.49	697.69	697.81	697.89	698.09	698.29	698.49	698.69	698.89	698.94
GIRDER 2	STATION	1608+25.01	1608+37.51	1608+50.01	1608+62.51	1608+75.01	1608+87.51	1609+00.01	1609+05.01	1609+12.51	1609+25.01	1609+37.51	1609+50.01	1609+70.01	1609+82.01	1609+90.01	1610+10.01	1610+30.01	1610+50.01	1610+70.01	1610+90.01	1610+95.01
	ELEV.	696.29	696.42	696.54	696.67	696.79	696.92	697.04	697.09	697.17	697.29	697.42	697.54	697.74	697.86	697.94	698.14	698.34	698.54	698.74	698.94	698.99
GIRDER 3	STATION	1608+21.74	1608+34.24	1608+46.74	1608+59.24	1608+71.74	1608+84.24	1608+96.74	1609+01.74	1609+09.24	1609+21.74	1609+34.24	1609+46.74	1609+66.74	1609+78.74	1609+86.74	1610+06.74	1610+26.74	1610+46.74	1610+66.74	1610+86.74	1610+91.74
	ELEV.	696.40	696.53	696.65	696.78	696.90	697.03	697.15	697.20	697.28	697.40	697.53	697.65	697.85	697.97	698.05	698.25	698.45	698.65	698.85	699.05	699.10
CROWN	STATION	1608+20.83	1608+33.33	1608+45.83	1608+58.33	1608+70.83	1608+83.33	1608+95.83	1609+00.83	1609+08.33	1609+20.83	1609+33.33	1609+45.83	1609+65.83	1609+77.83	1609+85.83	1610+05.83	1610+25.83	1610+45.83	1610+65.83	1610+85.83	1610+90.83
	ELEV.	696.43	696.56	696.68	696.81	696.93	697.06	697.18	697.23	697.31	697.43	697.56	697.68	697.88	698.00	698.08	698.28	698.48	698.68	698.88	699.08	699.13
GIRDER 4	STATION	1608+18.46	1608+30.96	1608+43.46	1608+55.96	1608+68.46	1608+80.96	1608+93.46	1608+98.46	1609+05.96	1609+18.46	1609+30.96	1609+43.46	1609+63.46	1609+75.46	1609+83.46	1610+03.46	1610+23.46	1610+43.46	1610+63.46	1610+83.46	1610+88.46
	ELEV.	696.15	696.28	696.40	696.53	696.65	696.78	696.90	696.95	697.03	697.15	697.28	697.40	697.60	697.72	697.80	698.00	698.20	698.40	698.60	698.80	698.85
RIGHT TOE OF RAILING	STATION	1608+17.92	1608+30.42	1608+42.92	1608+55.42	1608+67.92	1608+80.42	1608+92.92	1608+97.92	1609+05.42	1609+17.92	1609+30.42	1609+42.92	1609+62.92	1609+74.92	1609+82.92	1610+02.92	1610+22.92	1610+42.92	1610+62.92	1610+82.92	1610+87.92
	ELEV.	696.09	696.21	696.34	696.46	696.59	696.71	696.84	696.89	696.96	697.09	697.21	697.34	697.54	697.66	697.74	697.94	698.14	698.34	698.54	698.74	698.79

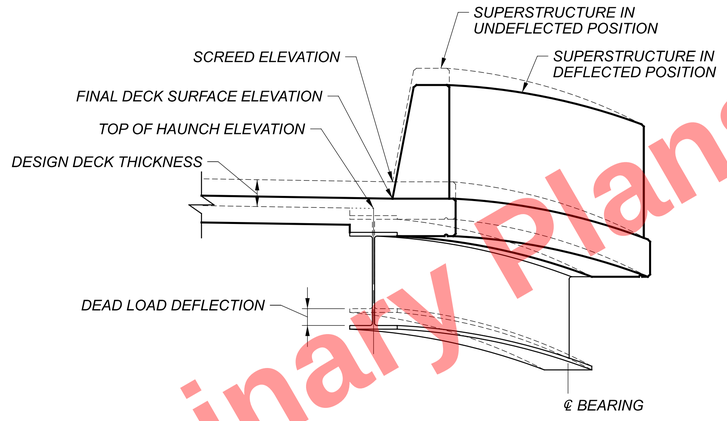

DEFLECTION DETAIL

NOTES:

1. FINAL DECK SURFACE ELEVATIONS SHOWN REPRESENT THE DECK SURFACE LOCATION AFTER ALL ANTICIPATED DEAD LOAD DEFLECTIONS HAVE OCCURRED.
2. FOR SLAB PLAN, SEE SHEET 34/53.
3. FOR RAILING PLAN, SEE SHEET 36/53.
4. FOR TRANSVERSE SECTION, SEE SHEET 22/53.
5. FOR SCREED AND TOP OF HAUNCH ELEVATIONS, SEE SHEETS 42/53 AND 43/53.
6. FOR ADDITIONAL FINAL DECK SURFACE ELEVATIONS, SEE SHEET 45/53.

Preliminary Plans - For Reference Only

FINAL DECK SURFACE ELEVATIONS (1 OF 2)
CUY-90-1652S (BRIDGE 12)
RAMP B6 OVER RAMP IJ3, CR-721 (E. 14TH ST.), AND RAMP H5

SFN 1807806
DESIGN AGENCY HDR
DESIGNER CMR | CHECKER ABO
REVIEWER DWW 1/08/24
PROJECT ID 82382
SUBSET 44 | TOTAL 53
SHEET 2172 | TOTAL 2696

CUY-90-16.28 (CCG3A)

MODEL: Sheet PAPERSIZE: 34x22 (in.) DATE: 3/28/2025 TIME: 7:32:14 AM USER: RohitBk
pw:\\mb-us-pw.bentley.com:mb-us-pw-03\Documents\Cleveland_OH101_Projects\ODOT\District12\82382\400-Engineering\Structures\SFN_1807806\Sheets\82382_SFN_1807806_SD004.dgn

FINAL DECK SURFACE ELEVATIONS

		SPAN 2				SPAN 3										
		CL F.S. 3	0.8	0.9	CL BRG. PIER 2	0.1	0.2	CL F.S. 4	0.3	0.4	0.5	0.6	0.7	0.8	0.9	CL BRG. FWD. ABUT.
LEFT TOE OF RAILING	STATION	1610+98.84	1611+13.84	1611+33.84	1611+53.84	1611+72.84	1611+91.84	1612+00.84	1612+10.84	1612+29.84	1612+48.84	1612+67.84	1612+86.84	1613+05.84	1613+24.84	1613+43.84
	ELEV.	698.86	699.00	699.12	699.19	699.19	699.13	699.09	699.02	698.86	698.63	698.35	698.02	697.62	697.18	696.67
GIRDER 1	STATION	1610+98.29	1611+13.29	1611+33.29	1611+53.29	1611+72.29	1611+91.29	1612+00.29	1612+10.29	1612+29.29	1612+48.29	1612+67.29	1612+86.29	1613+05.29	1613+24.29	1613+43.29
	ELEV.	698.88	699.02	699.14	699.21	699.21	699.16	699.12	699.05	698.89	698.66	698.39	698.05	697.66	697.21	696.71
BL RAMP B6	STATION	1610+96.65	1611+11.65	1611+31.65	1611+51.65	1611+70.65	1611+89.65	1611+98.65	1612+08.65	1612+27.65	1612+46.65	1612+65.65	1612+84.65	1613+03.65	1613+22.65	1613+41.65
	ELEV.	698.94	699.08	699.21	699.28	699.29	699.24	699.20	699.13	698.97	698.76	698.48	698.15	697.77	697.33	696.83
GIRDER 2	STATION	1610+95.01	1611+10.01	1611+30.01	1611+50.01	1611+69.01	1611+88.01	1611+97.01	1612+07.01	1612+26.01	1612+45.01	1612+64.01	1612+83.01	1613+02.01	1613+21.01	1613+40.01
	ELEV.	698.99	699.13	699.27	699.35	699.36	699.32	699.28	699.22	699.06	698.85	698.58	698.26	697.88	697.44	696.94
GIRDER 3	STATION	1610+91.74	1611+06.74	1611+26.74	1611+46.74	1611+65.74	1611+84.74	1611+93.74	1612+03.74	1612+22.74	1612+41.74	1612+60.74	1612+79.74	1612+98.74	1613+17.74	1613+36.74
	ELEV.	699.10	699.25	699.40	699.48	699.51	699.47	699.44	699.38	699.24	699.03	698.78	698.46	698.09	697.66	697.18
CROWN	STATION	1610+90.83	1611+05.83	1611+25.83	1611+45.83	1611+64.83	1611+83.83	1611+92.83	1612+02.83	1612+21.83	1612+40.83	1612+59.83	1612+78.83	1612+97.83	1613+16.83	1613+35.83
	ELEV.	699.13	699.28	699.43	699.52	699.55	699.52	699.48	699.43	699.29	699.09	698.83	698.52	698.15	697.72	697.24
GIRDER 4	STATION	1610+88.46	1611+03.46	1611+23.46	1611+43.46	1611+62.46	1611+81.46	1611+90.46	1612+00.46	1612+19.46	1612+38.46	1612+57.46	1612+76.46	1612+95.46	1613+14.46	1613+33.46
	ELEV.	698.85	699.00	699.16	699.25	699.29	699.26	699.23	699.18	699.05	698.85	698.60	698.30	697.94	697.52	697.05
RIGHT TOE OF RAILING	STATION	1610+87.92	1611+02.92	1611+22.92	1611+42.92	1611+61.92	1611+80.92	1611+89.92	1611+99.92	1612+18.92	1612+37.92	1612+56.92	1612+75.92	1612+94.92	1613+13.92	1613+32.92
	ELEV.	698.79	698.93	699.09	699.19	699.23	699.20	699.17	699.13	698.99	698.80	698.55	698.25	697.89	697.47	697.00

Preliminary Plans - For Reference Only

NOTES:

1. FINAL DECK SURFACE ELEVATIONS SHOWN REPRESENT THE DECK SURFACE LOCATION AFTER ALL ANTICIPATED DEAD LOAD DEFLECTIONS HAVE OCCURRED.
2. FOR SLAB PLAN, SEE SHEET 34 / 53.
3. FOR RAILING PLAN, SEE SHEET 36 / 53.
4. FOR TRANSVERSE SECTION, SEE SHEET 22 / 53.
5. FOR SCREED AND TOP OF HAUNCH ELEVATIONS, SEE SHEETS 42 / 53 AND 43 / 53.
6. FOR ADDITIONAL FINAL DECK SURFACE ELEVATIONS, SEE SHEET 44 / 53.

FINAL DECK SURFACE ELEVATIONS (2 OF 2)
CUY-90-1652S (BRIDGE 12)
RAMP B6 OVER RAMP IJ3, CR-721 (E. 14TH ST.), AND RAMP H5

SFN 1807806

DESIGN AGENCY

DESIGNER CMR | CHECKER ABO

REVIEWER DWW 1/08/24

PROJECT ID 82382

SUBSET 45 | TOTAL 53

SHEET 2173 | TOTAL 2696

CUY-90-16.28 (CCG3A)

MODEL: Sheet PAPERSIZE: 34x22 (in.) DATE: 3/28/2025 TIME: 7:32:21 AM USER: RohitBk
pw:\\mb-us-pw.bentley.com:mb-us-pw-03\Documents\Cleveland_OH101_Projects\ODOT\District12\82382\400-Engineering\Structures\SFN_1807806\Sheets\82382_SFN_1807806_SD005.dgn

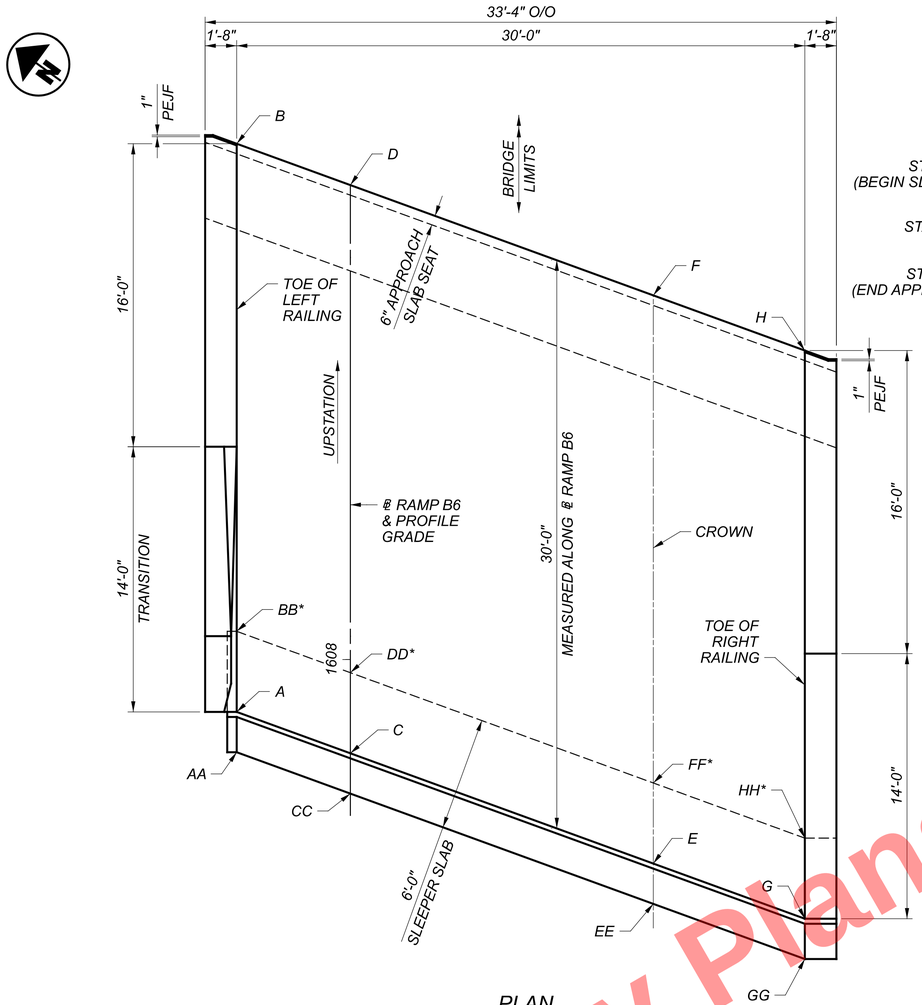

PLAN

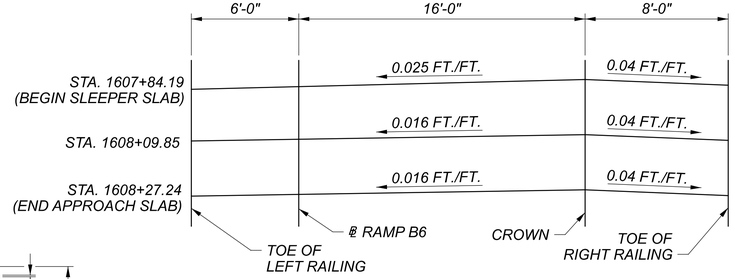

SUPERELEVATION TRANSITION DIAGRAM

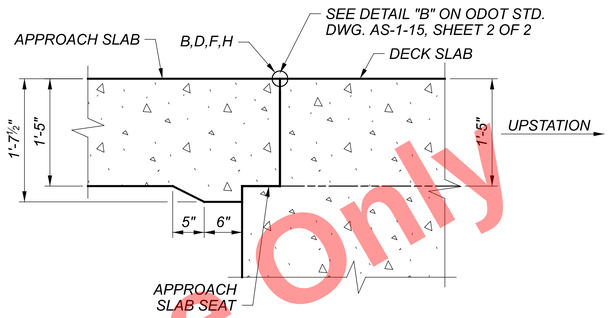

APPROACH SLAB AT ABUTMENT
(SEE NOTE 1)

EXPANSION JOINT OPENING	
TEMP (F)	JOINT GAP (IN)
30	3¾
40	3½
50	3¼
60	3
70	2¾
80	2½
90	2¼

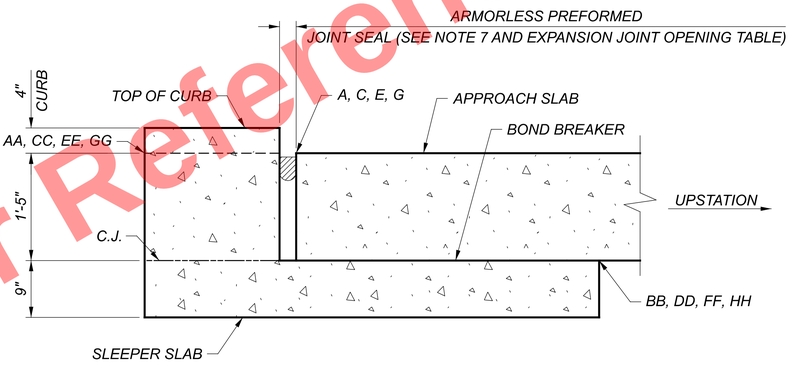

SLEEPER SLAB SECTION
(LEFT SIDE SHOWN) (SEE NOTE 2)

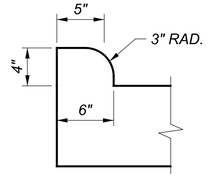

CONCRETE CURB DETAIL

REAR APPROACH SLAB							
MARK	STATION	OFFSET	ELEVATION	MARK	STATION	OFFSET	ELEVATION
A	1607+97.24	6.00' LT	695.82	E	1607+89.23	16.00' RT	696.23
B	1608+27.24	6.00' LT	696.15	F	1608+19.23	16.00' RT	696.42
C	1607+95.06	0.00'	695.92	G	1607+86.32	24.00' RT	695.90
D	1608+25.06	0.00'	696.22	H	1608+16.32	24.00' RT	696.07

REAR SLEEPER SLAB							
MARK	STATION	OFFSET	ELEVATION	MARK	STATION	OFFSET	ELEVATION
AA	1607+95.11	6.00' LT	695.80	EE	1607+87.10	16.00' RT	696.22
BB*	1608+01.50	6.00' LT	694.45	FF*	1607+93.49	16.00' RT	694.83
CC	1607+92.93	0.00'	695.90	GG	1607+84.19	24.00' RT	695.89
DD*	1607+99.31	0.00'	694.55	HH*	1607+90.58	24.00' RT	694.50

* DENOTES TOP OF SLEEPER SLAB UNDER APPROACH SLAB.

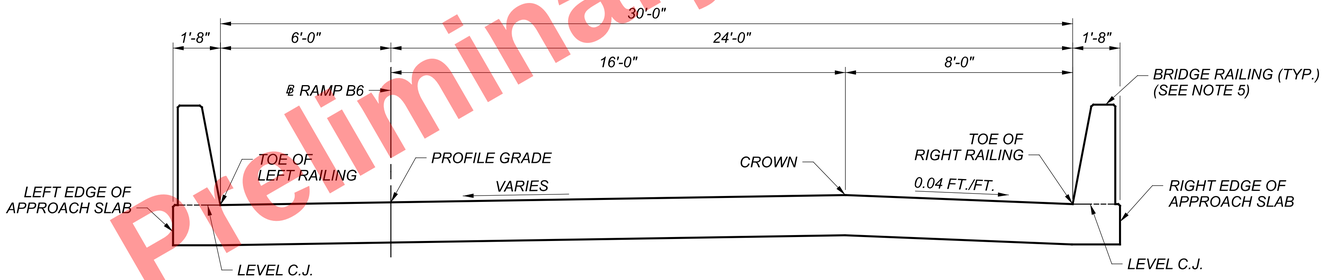

TYPICAL SECTION
(LOOKING UP STATION)

NOTES:

1. FOR ADDITIONAL DETAILS, REINFORCING AND NOTES ON APPROACH SLAB AND SLEEPER SLABS, SEE ODOT STD. DWG. AS-1-15 AND AS-2-15.
2. APPROACH SLAB INSTALLATION SHALL BE TYPE C, PER ODOT STD. DWG. AS-2-15.
3. STATION AND OFFSETS ARE MEASURED FROM ℄ RAMP B6.
4. FOR END DIAPHRAGM DETAILS, SEE SHEETS 39/53 THRU 41/53.
5. FOR APPROACH SLAB BRIDGE RAILING DETAILS, SEE SHEETS 37/53 THRU 38/53.
6. THE CONCRETE FOR THE BRIDGE RAILING MOUNTED ON THE APPROACH SLABS SHALL BE PAID FOR UNDER ITEM 511, CLASS QC2 CONCRETE WITH QC/QA, BRIDGE DECK (PARAPET). THE CONCRETE AND CONCRETE REINFORCEMENT FOR THE APPROACH SLAB SHALL BE PAID FOR UNDER ITEM 526, REINFORCED CONCRETE APPROACH SLABS WITH QC/QA (T=17"), AS PER PLAN. THE CONCRETE AND CONCRETE REINFORCEMENT FOR THE SLEEPER SLAB INCLUDING CURB AND RAILING SHALL BE PAID FOR UNDER ITEM 526, TYPE C INSTALLATION, AS PER PLAN.
7. THE ARMORLESS PREFORMED JOINT SEAL SHALL BE PAID FOR UNDER ITEM 516, ARMORLESS PREFORMED JOINT SEAL, AS PER PLAN.

Preliminary Plans - For Reference Only

REAR ABUTMENT APPROACH SLAB PLAN
CUY-90-1652S (BRIDGE 12)
RAMP B6 OVER RAMP IJ3, CR-721 (E. 14TH ST.), AND RAMP H5

SFN 1807806
DESIGN AGENCY HDR
DESIGNER CMR | CHECKER JML
REVIEWER DWW 1/08/24
PROJECT ID 82382
SUBSET 46 | TOTAL 53
SHEET 2174 | TOTAL 2696

CUY-90-16.28 (CCG3A)

MODEL: Sheet PAPERSIZE: 34x22 (in.) DATE: 3/28/2025 TIME: 7:32:28 AM USER: RohitLBk
pw:\\mb-us-pw.bentley.com:mb-us-pw-03\Documents\Cleveland_OH01_Projects\ODOT\District12\82382400-Engineering\Structures\SFN_1807806\Sheets\82382_SFN_1807806_SM001.dgn

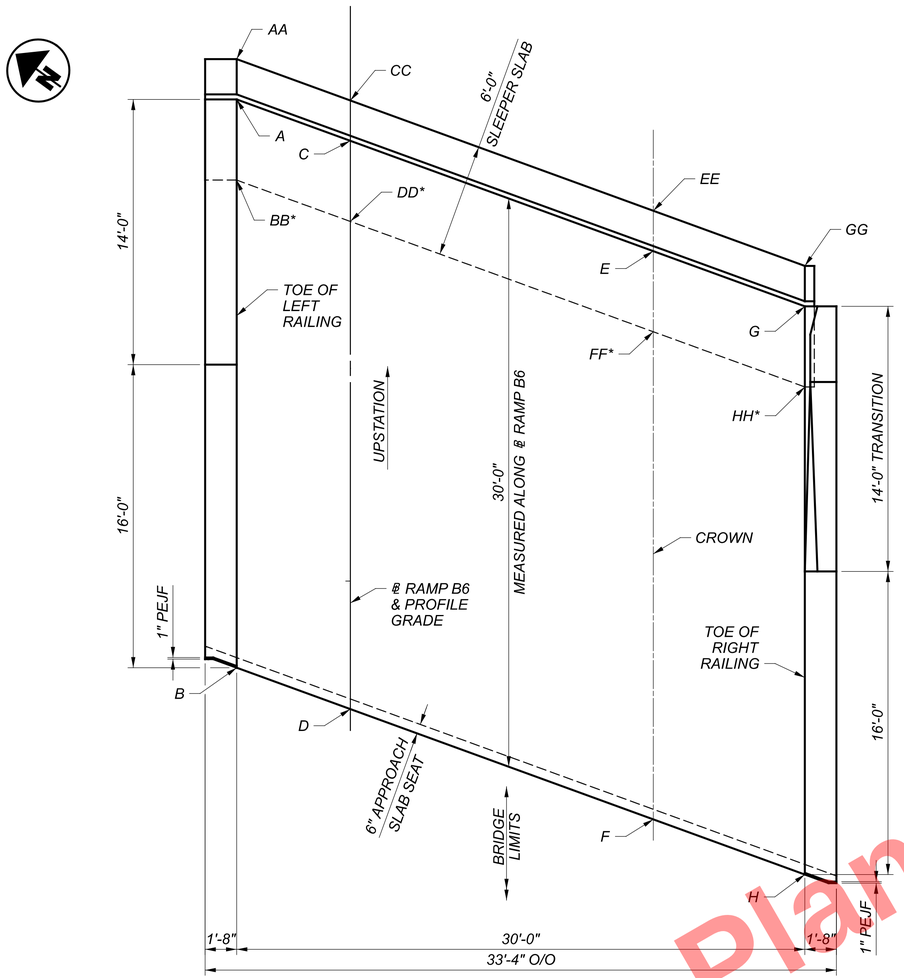

PLAN

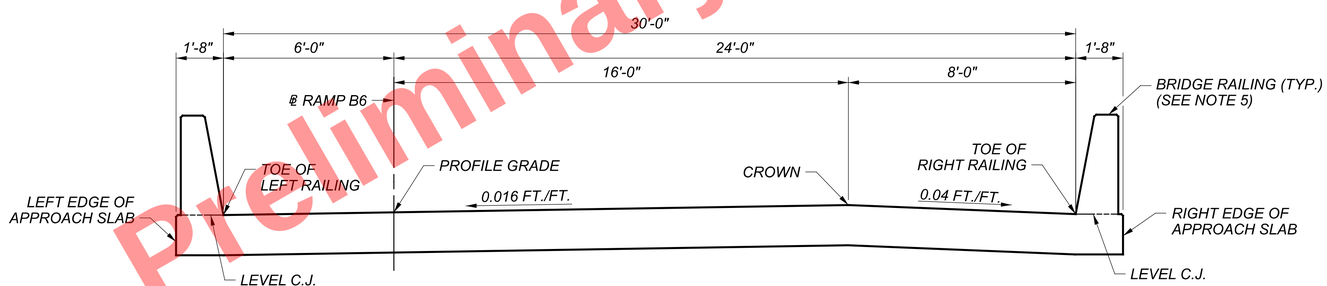

TYPICAL SECTION
(LOOKING UP STATION)

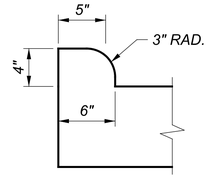

CONCRETE CURB DETAIL

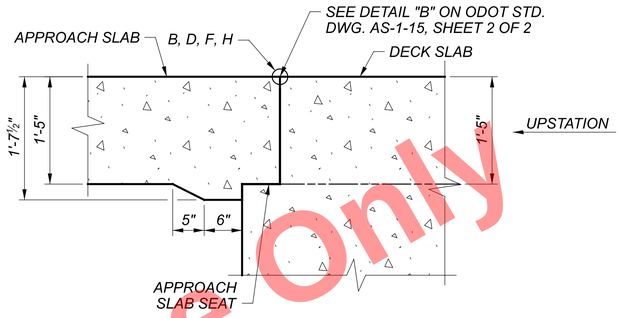

APPROACH SLAB AT ABUTMENT
(SEE NOTE 1)

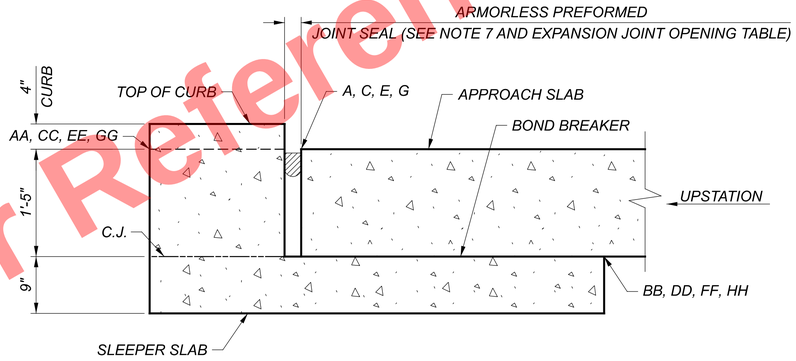

SLEEPER SLAB SECTION
(RIGHT SIDE SHOWN) (SEE NOTE 2)

EXPANSION JOINT OPENING	
TEMP (F)	JOINT GAP (IN)
30	$3\frac{5}{8}$
40	$3\frac{3}{8}$
50	$3\frac{3}{16}$
60	3
70	$2\frac{13}{16}$
80	$2\frac{5}{8}$
90	$2\frac{3}{8}$

FORWARD APPROACH SLAB							
MARK	STATION	OFFSET	ELEVATION	MARK	STATION	OFFSET	ELEVATION
A	1613+75.43	6.00' LT	695.71	E	1613+67.42	16.00' RT	696.32
B	1613+45.43	6.00' LT	696.63	F	1613+37.42	16.00' RT	697.20
C	1613+73.25	0.00'	695.87	G	1613+64.51	24.00' RT	696.09
D	1613+43.25	0.00'	696.78	H	1613+34.51	24.00' RT	696.96

FORWARD SLEEPER SLAB							
MARK	STATION	OFFSET	ELEVATION	MARK	STATION	OFFSET	ELEVATION
AA	1613+77.56	6.00' LT	696.63	EE	1613+69.55	16.00' RT	696.25
BB*	1613+71.17	6.00' LT	694.43	FF*	1613+63.17	16.00' RT	695.03
CC	1613+75.38	0.00'	695.80	GG	1613+66.64	24.00' RT	696.02
DD*	1613+68.99	0.00'	694.59	HH*	1613+60.26	24.00' RT	694.80

* DENOTES TOP OF SLEEPER SLAB UNDER APPROACH SLAB.

NOTES:

1. FOR ADDITIONAL DETAILS, REINFORCING AND NOTES ON APPROACH SLAB AND SLEEPER SLABS, SEE ODOT STD. DWG. AS-1-15 AND AS-2-15.
2. APPROACH SLAB INSTALLATION SHALL BE TYPE C, PER ODOT STD. DWG. AS-2-15.
3. STATION AND OFFSETS ARE MEASURED FROM ℄ RAMP B6.
4. FOR END DIAPHRAGM DETAILS, SEE SHEETS 39 / 53 THRU 41 / 53.
5. FOR APPROACH SLAB BRIDGE RAILING DETAILS, SEE SHEETS 37 / 53 THRU 38 / 53.
6. THE CONCRETE FOR THE BRIDGE RAILING MOUNTED ON THE APPROACH SLABS SHALL BE PAID FOR UNDER ITEM 511, CLASS QC2 CONCRETE WITH QC/QA, BRIDGE DECK (PARAPET). THE CONCRETE AND CONCRETE REINFORCEMENT FOR THE APPROACH SLAB SHALL BE PAID FOR UNDER ITEM 526, REINFORCED CONCRETE APPROACH SLABS WITH QC/QA (T=17"), AS PER PLAN. THE CONCRETE AND CONCRETE REINFORCEMENT FOR THE SLEEPER SLAB INCLUDING CURB AND RAILING SHALL BE PAID FOR UNDER ITEM 526, TYPE C INSTALLATION, AS PER PLAN.
7. THE ARMORLESS PREFORMED JOINT SEAL SHALL BE PAID FOR UNDER ITEM 516, ARMORLESS PREFORMED JOINT SEAL, AS PER PLAN.

FORWARD ABUTMENT APPROACH SLAB PLAN
CUY-90-1652S (BRIDGE 12)
RAMP B6 OVER RAMP IJ3, CR-721 (E. 14TH ST.), AND RAMP H5

SFN 1807806
DESIGN AGENCY
HDR
DESIGNER CMR | CHECKER JML
REVIEWER DWW 1/08/24
PROJECT ID 82382
SUBSET 47 | TOTAL 53
SHEET 2175 | TOTAL 2696

CUY-90-16.28 (CCG3A)

MODEL: Sheet PAPERSIZE: 34x22 (in.) DATE: 3/28/2025 TIME: 7:32:35 AM USER: Rohit Bk
pw:\\tnb-us-pw.bentley.com:tnb-us-pw-03\Documents\Cleveland_OH\01_Projects\ODOT\District12\82382\400-Engineering\Structures\SFN_1807806\Sheets\82382_SFN_1807806_SM002.dgn

Preliminary Plans - For Reference Only

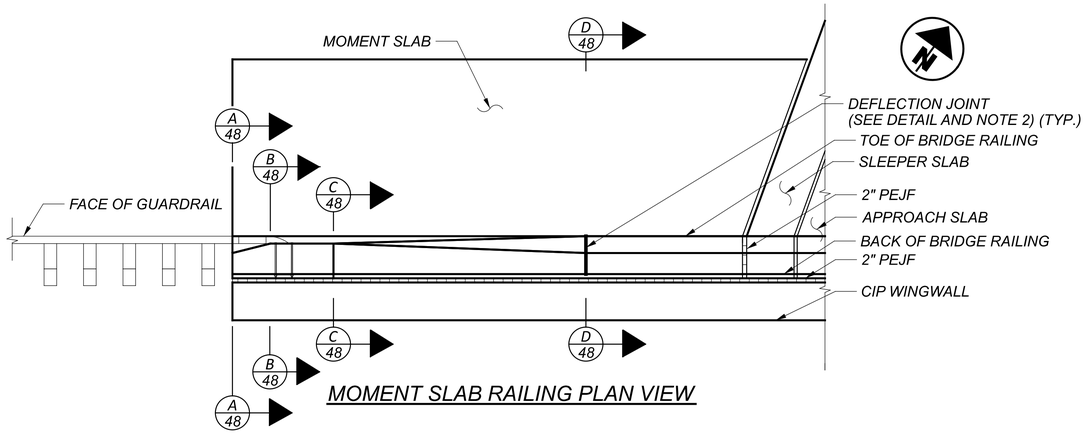

MOMENT SLAB RAILING PLAN VIEW

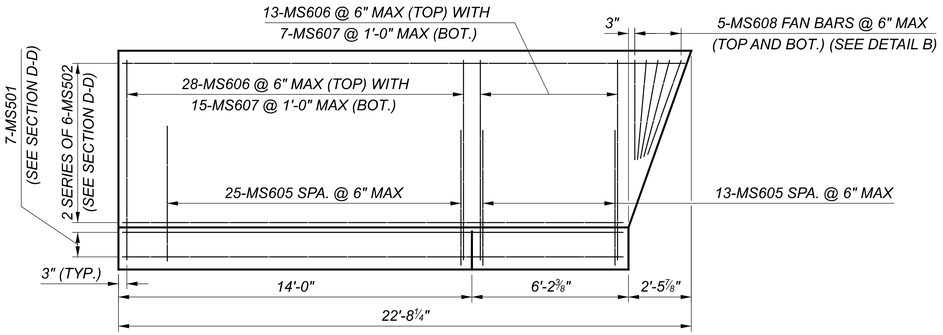

MOMENT SLAB PLAN VIEW

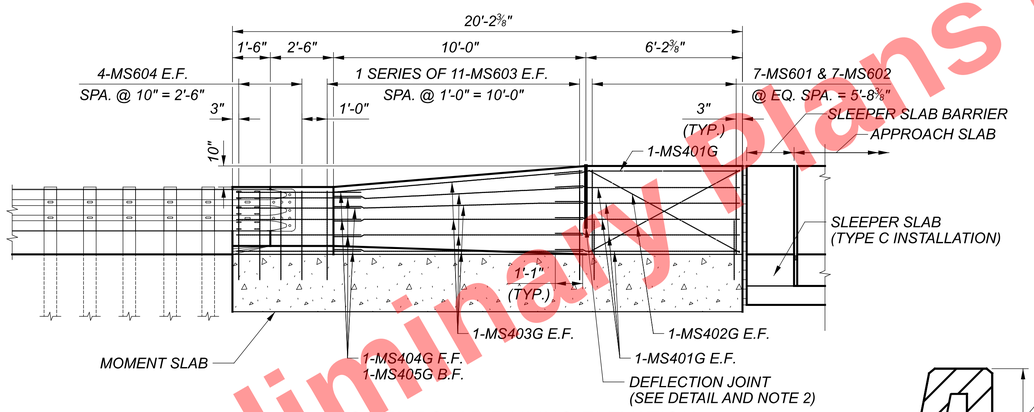

MOMENT SLAB RAILING ELEVATION

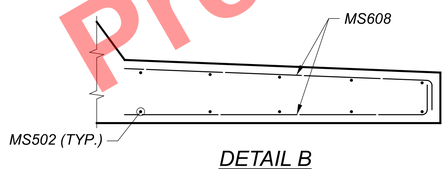

DETAIL B

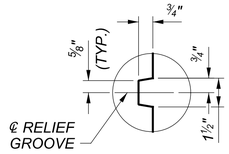

DETAIL A

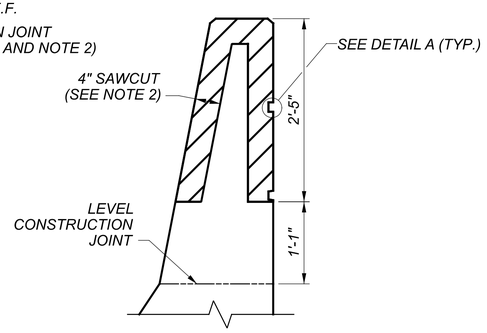

DEFLECTION JOINT DETAIL
(MOMENT SLAB AND RAILING REINFORCING NOT SHOWN)

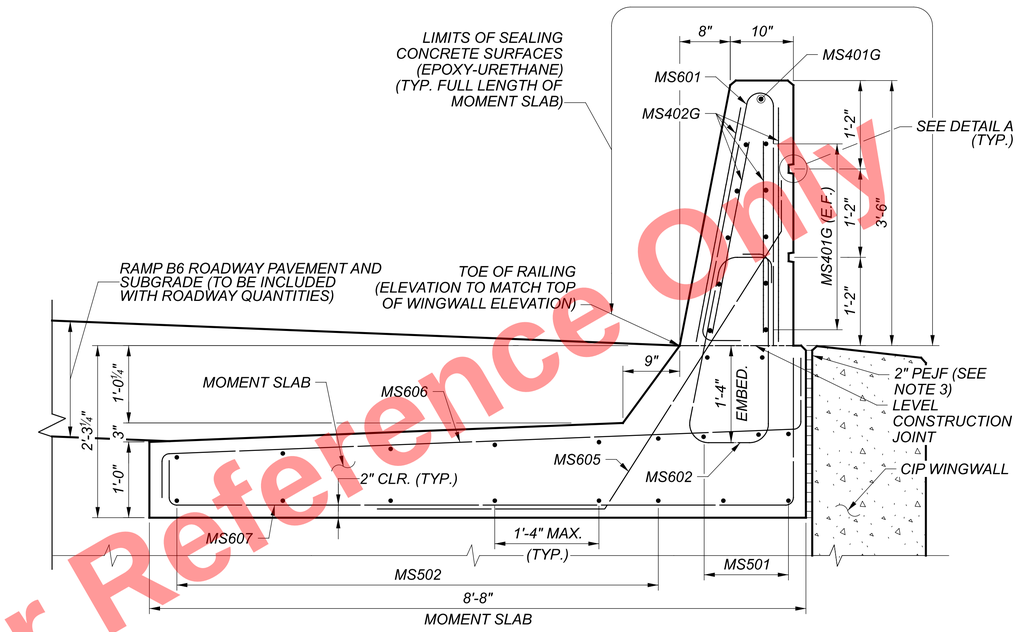

TYPICAL MOMENT SLAB SECTION
(SECTION D-D)

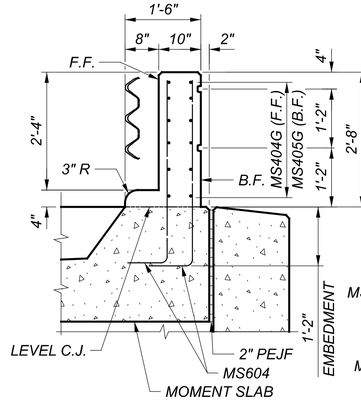

SECTION A-A

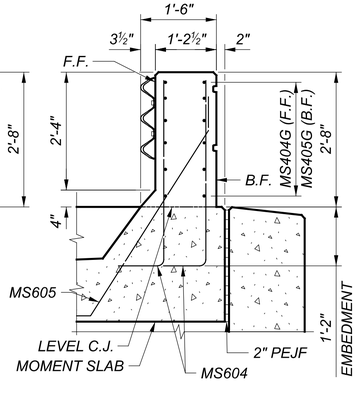

SECTION B-B

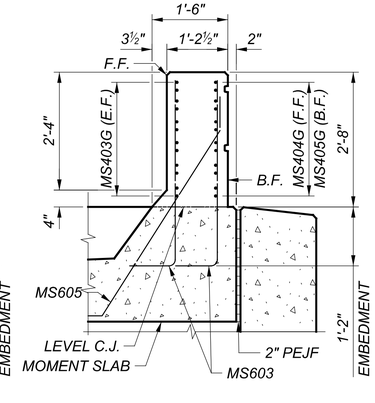

SECTION C-C

NOTES:

1. FOR REINFORCEMENT LIST, SEE SHEET 51/53.
2. FOR ADDITIONAL SAWCUT AND GFRP REINFORCEMENT DETAILS, SEE ODOT STANDARD DRAWING SBR-1-20.
3. 2" PEJF SHALL BE INCLUDED FOR PAYMENT WITH ITEM 511, CLASS QC2 CONCRETE, MISC.: MOMENT SLAB AND RAILING.

LEGEND:

E.F. = EACH FACE
B.F. = BACK FACE
F.F. = FRONT FACE
PEJF = PREFORMED EXPANSION JOINT FILLER
C.J. = CONSTRUCTION JOINT

MOMENT SLAB AND RAILING DETAILS
CUY-90-1652S (BRIDGE 12)
RAMP B6 OVER RAMP IJ3, CR-721 (E. 14TH ST.), AND RAMP H5

SFN	1807806
DESIGN AGENCY	HDR
DESIGNER	DGJ
CHECKER	RBK
REVIEWER	DWW 1/08/24
PROJECT ID	82382
SUBSET	48
TOTAL	53
SHEET	2176
TOTAL	2696

Preliminary Plans - For Reference Only

CUY-90-16.28 (CCG3A)
MODEL: Sheet PAPERSIZE: 34x22 (in.) DATE: 3/28/2025 TIME: 7:32:41 AM USER: RohitLBk
pw:\\mb-us-pw.bentley.com:mb-us-pw-03\Documents\Cleveland_OH\01_Projects\ODOT\District12\82382400-Engineering\Structures\SFN_1807806\Sheets\82382_SFN_1807806_MS001.dgn

MARK	NUMBER	LENGTH	MATERIAL	WEIGHT (LBS.)	TYPE	DIMENSIONS						
						A	B	C	D	E	R	INC.
REAR ABUTMENT												
RA501	30	29'-1"	ECSR	910	3	11'-8"	2'-7"					
RA502	1	20'-1"	ECSR	21	3	7'-2"	2'-7"					
	1	24'-5"				9'-4"						
RA503	SERIES OF	TO	ECSR	163	3	TO	2'-7"					0'-8"
	6	27'-9"				11'-0"						
RA504	1	23'-3"	ECSR	24	3	8'-9"	2'-7"					
RA505	7	7'-0"	ECSR	51	2	2'-5"	2'-5"	2'-5"				
RA506	11	5'-10"	ECSR	67	2	1'-10"	2'-5"	1'-10"				
RA507	2	22'-7"	ECSR	47	STR							
RA508	1	28'-9"	ECSR	30	STR							
RA509	5	12'-5"	ECSR	65	STR							
	1	7'-4"				4'-11"	2'-6"					
RA510	SERIES OF	TO	ECSR	43	1	TO	TO					1'-11 5/8"
	4	13'-3"				2'-7"	10'-9"					
RA511	22	29'-1"	ECSR	667	3	11'-8"	2'-7"					
RA512	1	12'-9"	ECSR	13	STR							
RA513	1	17'-0"	ECSR	18	STR							
	1	16'-7"				2'-7"		2'-7"				
RA514	SERIES OF	TO	ECSR	79	2	TO	11'-8"	TO				1'-6 5/8"
	4	21'-3"				4'-11"		4'-11"				
RA515	2	16'-5"	ECSR	34	STR							
RA516	5	11'-8"	ECSR	61	STR							
RA517	20	25'-1"	ECSR	523	3	9'-8"	2'-7"					
RA518	2	18'-1"	ECSR	38	STR							
RA519	2	10'-5"	ECSR	22	STR							
	2	14'-7"				2'-7"		2'-7"				
RA520	SERIES OF	TO	ECSR	141	2	TO	9'-8"	TO				1'-6 5/8"
	4	19'-3"				4'-11"		4'-11"				
RA521	10	9'-8"	ECSR	101	STR							
RA522	1	17'-2"	ECSR	18	10	1'-1 5/8"	3'-1 5/8"	10'-7 1/2"	3'-4"			
RA523	1	15'-10"	ECSR	17	10	1'-1 5/8"	3'-1 5/8"	9'-4"	3'-4"			
RA524	1	14'-9"	ECSR	15	10	1'-1 5/8"	3'-1 5/8"	8'-2"	3'-4"			
RA525	1	21'-4"	ECSR	22	50	3'-4"	14'-0"	3'-4"	5'-1 1/8"			
RA526	1	20'-0"	ECSR	21	50	3'-4"	12'-9"	3'-4"	4'-7 5/8"			
RA527	1	18'-11"	ECSR	20	50	3'-4"	11'-9"	3'-4"	4'-3 3/8"			
RA528	35	24'-5"	ECSR	891	2	10'-6"	3'-8"	10'-6"				
RA529	35	15'-1"	ECSR	551	2	5'-10"	3'-8"	5'-10"				
RA530	10	24'-5"	ECSR	255	19	21'-1"	1'-1 5/8"	3'-1 5/8"				
RA531	10	23'-3"	ECSR	242	19	19'-11"	1'-1 5/8"	3'-1 5/8"				
RA532	10	21'-1"	ECSR	220	STR							
RA533	5	28'-9"	ECSR	150	STR							
RA534	25	7'-5"	ECSR	193	2	2'-0"	3'-8"	2'-0"				
RA535	10	24'-9"	ECSR	258	11	1'-4 1/8"	3'-8 1/8"	21'-0"				
RA536	6	7'-0"	ECSR	44	STR							
RA537	6	22'-6"	ECSR	141	STR							
RA538	26	30'-0"	ECSR	814	STR							
RA539	6	13'-1"	ECSR	82	STR							
RA540	4	22'-10"	ECSR	95	STR							
	2	23'-1"										
RA541	SERIES OF	TO	ECSR	210	STR							1'-5"
	4	27'-4"										
RA542	8	28'-1"	ECSR	234	STR							
	1	8'-3"				3'-8"		3'-8"				
RA543	SERIES OF	TO	ECSR	69	2	TO	1'-2"	TO				1'-1 1/4"
	6	13'-9"				6'-5"		6'-5"				
RA544	12	7'-9"	ECSR	97	2	3'-5"	1'-2"	3'-5"				
RA545	2	13'-1"	ECSR	27	13	3'-7"	3'-4"	5'-3"	3'-4"			
RA546	6	10'-10"	ECSR	68	STR							
RA547	16	26'-5"	ECSR	441	STR							
	2	26'-6"										
RA548	SERIES OF	TO	ECSR	239	STR							1'-5"
	4	30'-9"										
RA549	8	31'-8"	ECSR	264	STR							
	1	8'-3"				3'-8"		3'-8"				
RA550	SERIES OF	TO	ECSR	70	2	TO	1'-2"	TO				1'-2 3/8"
	6	14'-3"				6'-8"		6'-8"				

MARK	NUMBER	LENGTH	MATERIAL	WEIGHT (LBS.)	TYPE	DIMENSIONS						
						A	B	C	D	E	R	INC.
REAR ABUTMENT CONTINUED...												
RA551	2	13'-0"	ECSR	27	13	3'-4"	3'-7"	5'-3"	3'-4"			
RA552	10	23'-3"	ECSR	242	11	1'-1 5/8"	3'-1 5/8"	20'-0"				
RA553	16	8'-1"	ECSR	135	50	3'-4"	1'-0"	3'-11"	0'-4 3/8"			
RA601	16	22'-6"	ECSR	541	2	10'-10"	1'-2"	10'-10"				
RA602	26	15'-0"	ECSR	586	2	7'-1"	1'-2"	7'-1"				
RA603	9	16'-6"	ECSR	223	2	7'-10"	1'-2"	7'-10"				
RA604	1	15'-2"	ECSR	23	2	7'-2"	1'-2"	7'-2"				
RA801	22	23'-7"	ECSR	1,385	STR							
RA802	2	38'-10"	ECSR	207	STR							
RA803	2	35'-3"	ECSR	188	STR							
RA804	2	29'-0"	ECSR	155	STR							
RA805	2	16'-10"	ECSR	90	19	11'-6 3/4"	5'-0 1/8"	1'-9 7/8"				
	1	17'-9"					12'-9"					
RA806	SERIES OF	TO	ECSR	531	1	5'-2"	TO					0'-5 5/8"
	10	22'-0"					17'-0"					
	1	19'-5"				9'-11"						
RA807	SERIES OF	TO	ECSR	517	25		3'-0"	5'-4"	3'-0"	0'-0"		0'-6 1/4"
	9	23'-7"				14'-1"						
RA808	8	22'-7"	ECSR	482	1	5'-2"	17'-8"					
RA809	8	22'-0"	ECSR	470	25	12'-6"	3'-0"	5'-4"	3'-0"	0'-0"		
RA810	8	24'-2"	ECSR	516	1	5'-2"	19'-2"					
RA811	8	23'-8"	ECSR	506	25	14'-2"	3'-0"	5'-4"	3'-0"	0'-0"		
RA812	8	15'-5"	ECSR	329	1	5'-2"	10'-5"					
RA813	8	17'-4"	ECSR	370	25	7'-10"	3'-0"	5'-4"	3'-0"	0'-0"		
RA814	19	37'-11"	ECSR	1,924	2	18'-7"	1'-2"	18'-7"				
RA815	50	15'-7"	ECSR	2,080	2	7'-5"	1'-2"	7'-5"				
RA816	30	31'-11"	ECSR	2,557	2	15'-7"	1'-2"	15'-7"				
RA817	1	30'-10"	ECSR	82	2	14'-10"	1'-2"	14'-10"				
RA818	2	20'-1"	ECSR	107	1	5'-2"	15'-2"					
RA819	1	21'-10"	ECSR	58	25	12'-4"	3'-0"	5'-4"	3'-0"	0'-0"		
			SUB-TOTAL	23,217	ITEM 509 - EPOXY COATED STEEL REINFORCEMENT							

Preliminary Plans - For Reference Only

NOTES:

1. FOR GENERAL NOTES, SEE SHEETS 4/53 THRU 5/53.
2. FOR BAR BENDING DIAGRAMS AND ADDITIONAL NOTES, SEE SHEET 53/53.

REINFORCMENT LIST (1 OF 5)
CUY-90-1652S (BRIDGE 12)
RAMP IJ3, CR-721 (E. 14TH ST.), AND RAMP H5
RAMP B6 OVER RAMP H5

SFN 1807806
DESIGN AGENCY HDR
DESIGNER ADW | CHECKER CMR
REVIEWER DWW 1/08/24
PROJECT ID 82382
SUBSET 49 | TOTAL 53
SHEET 2177 | TOTAL 2696

CUY-90-16.28 (CCG3A)

MODEL: Sheet PAPERSIZE: 34x22 (in.) DATE: 3/28/2025 TIME: 7:32:47 AM USER: RohitLBk
pw:\\mb-us-pw.bentley.com:mb-us-pw-03\Documents\Cleveland_OH\01_Projects\ODOT\District12\82382\400-Engineering\Structures\SFN_1807806\Sheets\82382_SFN_1807806_SL001.dgn

MARK	NUMBER	LENGTH	MATERIAL	WEIGHT (LBS.)	TYPE	DIMENSIONS						
						A	B	C	D	E	R	INC.
FORWARD ABUTMENT												
FA501	14	29'-4"	ECSR	428	STR							
FA502	1	8'-6"	ECSR	9	19	5'-4 5/8"	2'-10 3/4"	1'-0 5/8"				
FA503	1	9'-7"	ECSR	10	19	6'-6 3/8"	2'-10 3/4"	1'-0 5/8"				
	1	8'-6"				5'-4 5/8"						
FA504	SERIES OF	TO	ECSR	47	19	TO	2'-10 3/4"	1'-0 5/8"				0'-3 1/4"
	5	9'-7"				6'-6 3/8"						
FA505	6	35'-1"	ECSR	220	STR							
FA506	60	19'-1"	ECSR	1,194	3	6'-8"	2'-7"					
FA507	34	19'-1"	ECSR	677	3	3'-8"	5'-7"					
FA508	5	17'-9"	ECSR	93	1	2'-1"	15'-9"					
FA509	5	16'-6"	ECSR	86	1	2'-2"	14'-5"					
FA510	30	8'-1"	ECSR	253	2	2'-4"	3'-8"	2'-4"				
	2	4'-4"										
FA511	SERIES OF	TO	ECSR	148	STR							2'-11 3/4"
	6	19'-3"										
FA512	1	22'-4"	ECSR	23	19	19'-2 3/8"	3'-0 5/8"	1'-1 1/4"				
FA513	3	20'-2"	ECSR	63	19	19'-0 3/4"	1'-0 1/2"	0'-4 1/8"				
	1	9'-3"				5'-9"						
FA514	SERIES OF	TO	ECSR	30	19	TO	3'-3 1/2"	1'-2 3/8"				0'-2 1/2"
	3	9'-8"				6'-2"						
FA515	1	22'-4"	ECSR	23	19	19'-6"	2'-8 5/8"	0'-11 7/8"				
FA516	20	16'-5"	ECSR	342	2	7'-3"	2'-2"	7'-3"				
FA517	3	21'-3"	ECSR	66	2	9'-8"	2'-2"	9'-8"				
FA518	6	18'-11"	ECSR	118	2	8'-6"	2'-2"	8'-6"				
FA519	6	14'-11"	ECSR	93	2	6'-6"	2'-2"	6'-6"				
FA520	5	10'-11"	ECSR	57	2	4'-6"	2'-2"	4'-6"				
	1	16'-7"					5'-10"					
FA521	SERIES OF	TO	ECSR	53	3	2'-2"	TO					0'-6"
	3	17'-7"					6'-4"					
FA522	3	10'-4"	ECSR	32	50	1'-10"	6'-6"	1'-10"	2'-4 3/8"			
FA523	3	9'-11"	ECSR	31	2	1'-10"	6'-6"	1'-10"				
FA524	14	5'-10"	ECSR	85	2	1'-10"	2'-5"	1'-10"				
FA525	8	7'-2"	ECSR	60	50	1'-10"	3'-6"	1'-10"	1'-3 1/4"			
FA526	8	6'-3"	ECSR	52	2	1'-10"	2'-10"	1'-10"				
FA527	4	25'-2"	ECSR	105	19	19'-2"	5'-7 3/4"	2'-0 5/8"				
FA528	4	25'-1"	ECSR	105	19	19'-6"	5'-3 3/4"	1'-11 1/4"				
FA529	12	5'-1"	ECSR	64	50	1'-3"	2'-0"	2'-0"	0'-8 3/4"			
FA530	3	13'-11"	ECSR	44	2	1'-3"	11'-1"	1'-10"				
FA531	4	5'-5"	ECSR	23	2	1'-10"	2'-0"	1'-10"				
FA532	3	6'-8"	ECSR	21	10	0'-7"	1'-8 7/8"	3'-1"	1'-10"			
FA533	2	17'-7"	ECSR	37	3	3'-8"	4'-10"					
FA534	3	17'-2"	ECSR	54	2	7'-3"	2'-11"	7'-3"				
FA535	12	5'-9"	ECSR	72	9	0'-8"	1'-9"	2'-3"	1'-10"			
FA536	3	22'-8"	ECSR	71	2	0'-10"	2'-11"	0'-10"				
FA801	10	30'-6"	ECSR	814	STR							
	1	10'-9"				5'-4 5/8"						
FA802	SERIES OF	TO	ECSR	151	19	TO	5'-0 1/8"	1'-9 7/8"				0'-3 1/4"
	5	11'-10"				6'-6 3/8"						
FA803	5	35'-1"	ECSR	468	STR							
SUB-TOTAL				6,322	ITEM 509 - EPOXY COATED STEEL REINFORCEMENT							

Preliminary Plans - For Reference Only

NOTES:

1. FOR GENERAL NOTES, SEE SHEETS 4/ 53 THRU 5/ 53.
2. FOR BAR BENDING DIAGRAMS AND ADDITIONAL NOTES, SEE SHEET 53/ 53.

REINFORCMENT LIST (2 OF 5)
CUY-90-1652S (BRIDGE 12)
RAMP B6 OVER RAMP IJ3, CR-721 (E. 14TH ST.), AND RAMP H5

SFN 1807806
DESIGN AGENCY HDR
DESIGNER ADW | CHECKER CMR
REVIEWER DWW 1/08/24
PROJECT ID 82382
SUBSET 50 | TOTAL 53
SHEET 2178 | TOTAL 2696

CUY-90-16.28 (CCG3A)

MODEL: Sheet PAPERSIZE: 34x22 (in.) DATE: 3/28/2025 TIME: 7:32:54 AM USER: Rohit.Bk
pw:\\mb-us-pw.bentley.com:mb-us-pw-03\Documents\Cleveland_OH\01_Projects\ODOT\District12\82382\400-Engineering\Structures\SFN_1807806\Sheets\82382_SL002.dgn

MARK	NUMBER	LENGTH	MATERIAL	WEIGHT (LBS.)	TYPE	DIMENSIONS						
						A	B	C	D	E	R	INC.
FORWARD ABUTMENT END DIAPHRAGM												
FD401	2	3'-8"	ECSR	5	STR							
FD501	52	12'-0"	ECSR	651	2	4'-2"	3'-11"	4'-2"				
FD502	4	16'-5"	ECSR	68	3	3'-11"	4'-0"					
FD503	30	7'-9"	ECSR	242	2	2'-7"	2'-10"	2'-7"				
FD504	14	8'-6"	ECSR	124	50	2'-5"	3'-8"	2'-5"	1'-4"			
FD801	10	30'-6"	ECSR	814	19	25'-0"	5'-6"	3"				
FD802	10	10'-6"	ECSR	280	STR							
FD803	4	15'-7"	ECSR	166	STR							
FD804	8	16'-9"	ECSR	358	1	1'-4"	15'-7"					
FD805	23	5'-4"	ECSR	328	18	3'-0"	1'-0"	1'-0"				
FD806	8	6'-3"	ECSR	134	18	3'-11"	1'-0"	1'-0"				
			SUB-TOTAL	3170	ITEM 509E10000, EPOXY COATED STEEL REINFORCEMENT							

MARK	NUMBER	LENGTH	MATERIAL	WEIGHT (LBS.)	TYPE	DIMENSIONS						
						A	B	C	D	E	R	INC.
REAR ABUTMENT END DIAPHRAGM												
RD401	2	3'-8"	ECSR	5	STR							
RD501	52	12'-2"	ECSR	660	2	4'-3"	3'-11"	4'-3"				
RD502	4	16'-5"	ECSR	68	3	3'-11"	4'-0"					
RD503	30	7'-9"	ECSR	242	2	2'-7"	2'-10"	2'-7"				
RD504	14	8'-6"	ECSR	124	50	2'-5"	3'-8"	2'-5"	1'-4"			
RD801	10	30'-6"	ECSR	814	19	25'-0"	5'-6"	0'-3"				
RD802	10	10'-6"	ECSR	280	STR							
RD803	4	15'-7"	ECSR	166	STR							
RD804	8	16'-9"	ECSR	358	1	1'-4"	15'-7"					
RD805	23	5'-4"	ECSR	328	18	3'-0"	1'-0"	1'-0"				
RD806	8	6'-3"	ECSR	134	18	3'-11"	1'-0"	1'-0"				
			SUB-TOTAL	3179	ITEM 509E10000, EPOXY COATED STEEL REINFORCEMENT							

MARK	NUMBER	LENGTH	MATERIAL	WEIGHT (LBS.) OR LENGTH	TYPE	DIMENSIONS						
						A	B	C	D	E	R	INC.
MOMENT SLAB AND RAILING (60 KSI, EPOXY COATED)												
MS501	7	19'-10"	ECSR	145	STR							
MS502	2 SER. OF 6 = 12	VAR. 19'-10" TO 22'-3"	ECSR	263	STR							5 ¾"
MS601	7	7'-0"	ECSR	74	23	6"	3'-3"	3'-3"			2"	
MS602	7	8'-5"	ECSR	88	37	1'-4"	9 ½"	1'-5"	1'-0"	7"		
MS603	2 SER. OF 11 = 22	VAR. 4'-8" TO 5'-6"	ECSR	168	1	1'-0"	VAR. 3'-10" TO 4'-8"					1"
MS604	8	4'-8"	ECSR	56	1	1'-0"	3'-10"					
MS605	38	7'-10"	ECSR	447	13	1'-0"	3'-7"	2'-3"	2'-8"			
MS606	41	9'-4"	ECSR	575	54	8"	8'-4"	4"	8"			
MS607	22	10'-7"	ECSR	350	2	8"	8'-4"	1'-11"				
MS608	10	6'-10"	ECSR	103	1	8"	6'-4"					
			SUB-TOTAL	2269	ITEM 509 - EPOXY COATED STEEL REINFORCEMENT							
MOMENT SLAB AND RAILING (GFRP)												
MS401G	11	7'-4"	GFRP	80'-8"	STR							
MS402G	4	6'-2"	GFRP	24'-8"	STR							
MS403G	12	10'-0"	GFRP	120'-0"	STR							
MS404G	6	6'-4"	GFRP	38'-0"	25	2'-6"	2'-5"	1'-4 ¼"	1 ½"	5"		
MS405G	6	5'-1"	GFRP	30'-6"	STR							
			SUB-TOTAL	293'-10"	ITEM 509 - NO. 4 GFRP DEFORMED BARS							

Preliminary Plans - For Reference Only

NOTES:

1. FOR GENERAL NOTES, SEE SHEETS 4/53 THRU 5/53.
2. FOR BAR BENDING DIAGRAMS AND ADDITIONAL NOTES, SEE SHEET 53/53.

REINFORCMENT LIST (3 OF 5)
CUY-90-1652S (BRIDGE 12)
RAMP IJ3, CR-721 (E. 14TH ST.), AND RAMP H5
RAMP B6 OVER

SFN 1807806
DESIGN AGENCY HDR
DESIGNER ADW | CHECKER CMR
REVIEWER DWW 1/08/24
PROJECT ID 82382
SUBSET 51 | TOTAL 53
SHEET 2179 | TOTAL 2696

CUY-90-16.28 (CCG3A)
MODEL: Sheet PAPERSIZE: 34x22 (in.) DATE: 3/28/2025 TIME: 7:32:59 AM USER: Rohit.Bk
pw:\\mb-us-pw.bentley.com:mb-us-pw-03\Documents\Cleveland_OH\01_Projects\ODOT\District12\82382400-Engineering\Structures\SFN_1807806\Sheets\82382_SFN_1807806_SL003.dgn

MARK	NUMBER	LENGTH	MATERIAL	WEIGHT (LBS.)	TYPE	DIMENSIONS						
						A	B	C	D	E	R	INC.
PIER 1												
1P501	8	14'-8"	ECSR	122	STR							
1P502	8	38'-8"	ECSR	323	STR							
1P503	204	12'-7"	ECSR	2677	3	3'	3'					
1P504	10	33'-2"	ECSR	346	STR							
1P505	12	8'-3"	ECSR	103	2	2'-5"	3'-8"	2'-5"				
1P506	16	6'-1"	ECSR	102	2	10"	4'-8"	10"				
1P507	24	5'-1"	ECSR	127	2	10"	3'-8"	10"				
1P508	12	10'-7"	ECSR	132	2	10"	9'-2"	10"				
1P601	184	10'-10"	ECSR	2994	2	4'-3"	2'-8"	4'-3"				
1P602	24	11'-10"	ECSR	427	2	4'-3"	3'-8"	4'-3"				
1P801	49	21'-5"	ECSR	2802	2	3'-7"	14'-8"	3'-7"				
1P802	17	45'-1"	ECSR	2046	2	3'-6"	38-6"	3'-6"				
1P1001	42	17'-8"	ECSR	3193	2	1'-10"	14'-8"	1'-10"				
1P1002	15	41'-6"	ECSR	2679	2	1'-10"	38'-6"	1'-10"				
1P1003	2	39'-2"	ECSR	337	2	1'-10"	36'-2"	1'-10"				
1P1004	1	39'-1"	ECSR	168	2	1'-10"	36'-1"	1'-10"				
1P1005	60	12'-7"	ECSR	3249	1	1'-10"	11'-1"					
1P1006	60	24'-2"	ECSR	6239	STR							
1P1101	16	36'-4"	ECSR	3089	2	2'-0"	33'-0"	2'-0"				
1P1102	4	35'-4"	ECSR	751	2	2'-0"	32'-0"	2'-0"				
SUB-TOTAL				31906	ITEM 509E10000, EPOXY COATED STEEL REINFORCEMENT							

MARK	NUMBER	LENGTH	MATERIAL	WEIGHT (LBS.)	TYPE	DIMENSIONS						
						A	B	C	D	E	R	INC.
PIER 2												
2P501	10	14'-8"	ECSR	153	STR							
2P502	10	38'-8"	ECSR	403	STR							
2P503	198	12'-7"	ECSR	2599	3	3'	3'					
2P504	10	33'-2"	ECSR	346	STR							
2P505	12	8'-3"	ECSR	103	2	2'-5"	3'-8"	2'-5"				
2P506	16	6'-1"	ECSR	102	2	10"	4'-8"	10"				
2P507	24	5'-1"	ECSR	127	2	10"	3'-8"	10"				
2P508	12	10'-7"	ECSR	132	2	10"	9'-2"	10"				
2P601	192	10'-10"	ECSR	3124	2	4'-3"	2'-8"	4'-3"				
2P602	24	11'-10"	ECSR	427	2	4'-3"	3'-8"	4'-3"				
2P603	12	10'-10"	ECSR	195	2	3'-9"	3'-8"	3'-9"				
2P604	24	11'-0"	ECSR	397	2	3'-9"	3'-10"	3'-9"				
2P801	49	22'-5"	ECSR	2933	2	4'-1"	14'-8"	4'-1"				
2P802	17	46'-1"	ECSR	2092	2	4'	38'-6"	4'				
2P1001	44	17'-8"	ECSR	3345	2	1'-10"	14'-8"	1'-10"				
2P1002	18	41'-6"	ECSR	3214	2	1'-10"	38'-6"	1'-10"				
2P1003	60	13'-1"	ECSR	3378	1	1'-10"	11'-7"					
2P1004	60	23'-5"	ECSR	6046	STR							
2P1101	16	36'-4"	ECSR	3089	2	2'-0"	33'-0"	2'-0"				
2P1102	6	35'-4"	ECSR	1126	2	2'-0"	32'-0"	2'-0"				
SUB-TOTAL				33331	ITEM 509E10000, EPOXY COATED STEEL REINFORCEMENT							

Preliminary Plans - For Reference Only

NOTES:

1. FOR GENERAL NOTES, SEE SHEETS 4/ 53 THRU 5/ 53.
2. FOR BAR BENDING DIAGRAMS AND ADDITIONAL NOTES, SEE SHEET 53/ 53.

REINFORCMENT LIST (4 OF 5)
CUY-90-1652S (BRIDGE 12)
RAMP IJ3, CR-721 (E. 14TH ST.), AND RAMP H5
RAMP B6 OVER RAMP IJ3

SFN 1807806

DESIGN AGENCY

DESIGNER ADW | CHECKER CMR

REVIEWER DWW 1/08/24

PROJECT ID 82382

SUBSET 52 | TOTAL 53

SHEET 2180 | TOTAL 2696

CUY-90-16.28 (CCG3A)

MODEL: Sheet PAPERSIZE: 34x22 (in.) DATE: 3/28/2025 TIME: 7:33:05 AM USER: RohitBk
pw:\\mb-us-pw.bentley.com:mb-us-pw-03\Documents\Cleveland_OH101_Projects\ODOT\District12\82382\400-Engineering\Structures\SFN_1807806\Sheets\82382_SFN_1807806_SL004.dgn

MARK	NUMBER	LENGTH	MATERIAL	WEIGHT (LBS.)	TYPE	DIMENSIONS						
						A	B	C	D	E	R	INC.
SUPERSTRUCTURE												
S401	666	30'	ECSR	13347	STR							
S402	37	21'-5"	ECSR	529	STR							
S403	1032	1'-10"	ECSR	1264	STR							
S501	1386	30'	ECSR	43368	STR							
S502	41	21'-5"	ECSR	916	STR							
S503	72	12'-6"	ECSR	939	STR							
S504	72	9'-7"	ECSR	720	STR							
S505	1013	34'2"	ECSR	36099	17	33'-0"						
S506	2064	8'-1"	ECSR	17222	16	7'-6"						
S507	1013	33'	ECSR	34866	STR							
S508	2 SER of 19	8'-1" to 32'-3"	ECSR	799	16	7'-6" to 31'-8"						1'-4 ⅛"
S509	2 SER of 19	7'-6" to 31'-8"	ECSR	776	STR							1'-4 ⅛"
S510	16	6'	ECSR	100	STR							
S801	8	35'-1"	ECSR	293	STR							
SUB-TOTAL				151238	ITEM 509E10000, EPOXY COATED STEEL REINFORCEMENT							

MARK	NUMBER	LENGTH	MATERIAL	WEIGHT (LBS.) OR LENGTH (FT.)	TYPE	DIMENSIONS						
						A	B	C	D	E	R	INC.
RAILING												
R401G	374	30'	GFRP	11220.00	STR							
R402G	22	26'-3"	GFRP	577.50	STR							
R403G	392	10'	GFRP	3920.00	STR							
R404G	16	14'-1"	GFRP	225.33	STR							
R405G	44	17'-1"	GFRP	751.67	STR							
R406G	16	15'-11"	GFRP	254.67	STR							
R407G	24	9'-10"	GFRP	236.00	STR							
R408G	12	6'-4"	GFRP	76.00	25	2'-6"	2'-5"	1'-4 ¼"	0'-1 ½"	0'-5"		
R409G	12	5'-1"	GFRP	61.00	STR							
R410G	22	13'-8"	GFRP	300.67	STR							
R411G	8	14'	GFRP	112.00	STR							
R412G	22	1'-6"	GFRP	33.00	STR							
R601	1138	7'-7"	ECSR	9001	37	0'-11 ½"	0'-9 ½"	1'-5"	1'-0"	0'-7"		
R602	1208	7'-0"	ECSR	8820	23	0'-6"	3'-3"	3'-3"			0'-2"	
R603	4 SER. of 11	4'-6" to 5'-4"	ECSR	226	1	1'-0"	3'-8" To 4-6"					0'-1"
R604	16	4'-6"	ECSR	75	1	1'-0"	3'-8"					
R605	104	8'-1"	ECSR	877	37	1'-2"	0'-9 ½"	1'-5"	1'-0"	0'-7"		
SUB-TOTAL				18999	ITEM 509E10000, EPOXY COATED STEEL REINFORCEMENT							
SUB-TOTAL				17767.83	ITEM 509E30020, NO. 4 GFRP DEFORMED BARS							

BAR BENDING DIAGRAMS

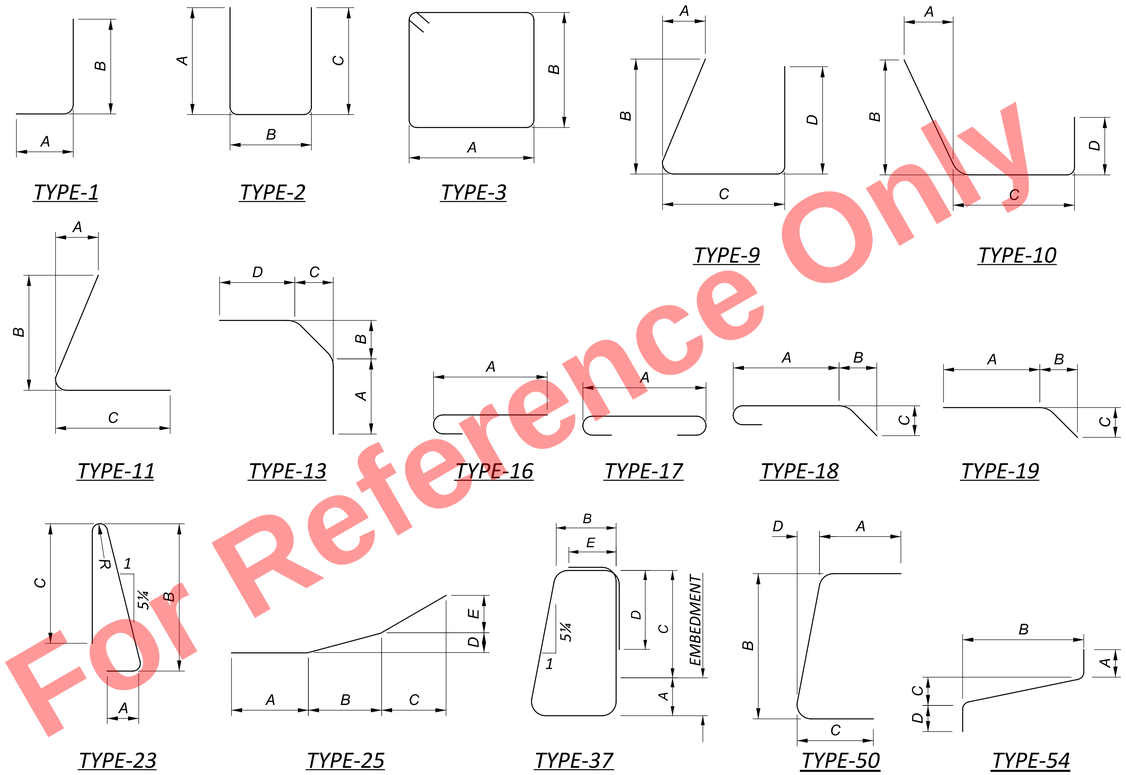

NOTES:

1. FOR GENERAL NOTES, SEE SHEETS 4/53 THRU 5/53.

2. THE LETTER PREFIX INDICATES BAR LOCATION. THE BAR SIZE NUMBER IS SPECIFIED ON THE PLANS IN THE BAR MARK COLUMN. THE FIRST DIGIT WHERE THREE DIGITS ARE USED, AND THE TWO DIGITS WHEN FOUR DIGITS ARE USED INDICATES BAR SIZE NUMBER. ALL REINFORCIMENT IS ASSUMED EPOXY COATED UNLESS OTHERWISE INDICATED BY A LETTER SUFFIX. IF A LETTER SUFFIX IS PROVIDED, IT INDICATES BAR OR BAR COATING TYPE. EXAMPLE: R401G

   R: THE LOCATION OF THE BARS IN THE STRUCTURE (BRIDGE RAILING)
   4: BAR SIZE DIMENSION NO. 4
   01: SEQUENCE NUMBER
   G: GFRP

   THE FOLLOWING IS A LIST OF BAR LOCATION PREFIXES:
   - S: SUPERSTRUCTURE
   - R: RAILING
   - RD: REAR ABUTMENT END DIAPHRAGM
   - FD: FORWARD ABUTMENT END DIAPHRAGM
   - RA: REAR ABUTMENT
   - FA: FORWARD ABUTMENT
   - 1P: PIER 1
   - 2P: PIER 2
   - DG: DIAPHRAGM GUIDE
   - MS: MOMENT SLAB

   THE FOLLOWING IS A LIST OF BAR MATERIAL SUFFIXES:
   - G: GFRP

3. BAR DIMENSIONS ARE SHOWN OUT-TO-OUT UNLESS OTHERWISE NOTED. "STD." WRITTEN IN PLACE OF A DIMENSION INDICATES A STANDARD BAR BEND AT THE END OF THE BAR. STRAIGHT BARS ARE INDICATED BY "STR."

4. BAR MATERIAL:

   "ECSR" = EPOXY COATED STEEL REINFORCEMENT
   "GFRP" = GLASS FIBER REINFORCED POLYMER

Preliminary Plans - Not For Reference Only

REINFORCMENT LIST (5 OF 5)
CUY-90-1652S (BRIDGE 12)
RAMP IJ3, CR-721 (E. 14TH ST.), AND RAMP H5
RAMP B6 OVER RAMP H5

SFN 1807806
DESIGN AGENCY HDR
DESIGNER ADW | CHECKER CMR
REVIEWER DWW 1/08/24
PROJECT ID 82382
SUBSET 53 | TOTAL 53
SHEET 2181 | TOTAL 2696

CUY-90-16.28 (CCG3A)

MODEL: Sheet PAPERSIZE: 34x22 (in.) DATE: 3/28/2025 TIME: 7:33:10 AM USER: Rohit.Bk
pw:\\mb-us-pw.bentley.com:mb-us-pw-03\Documents\Cleveland_OH\01_Projects\ODOT\District12\82382\400-Engineering\Structures\SFN_1807806\Sheets\82382_SFN_1807806_SL005.dgn

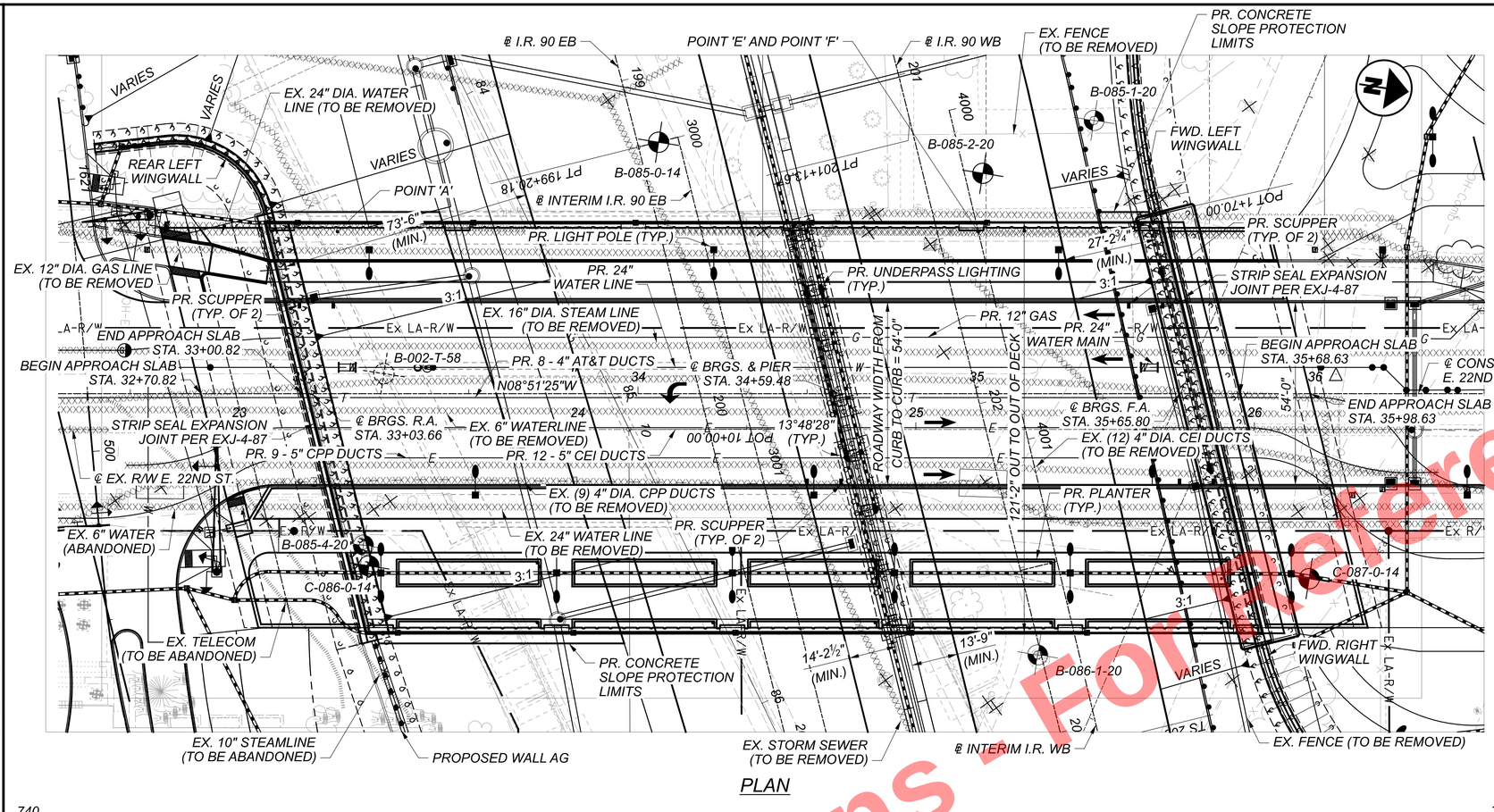

PLAN

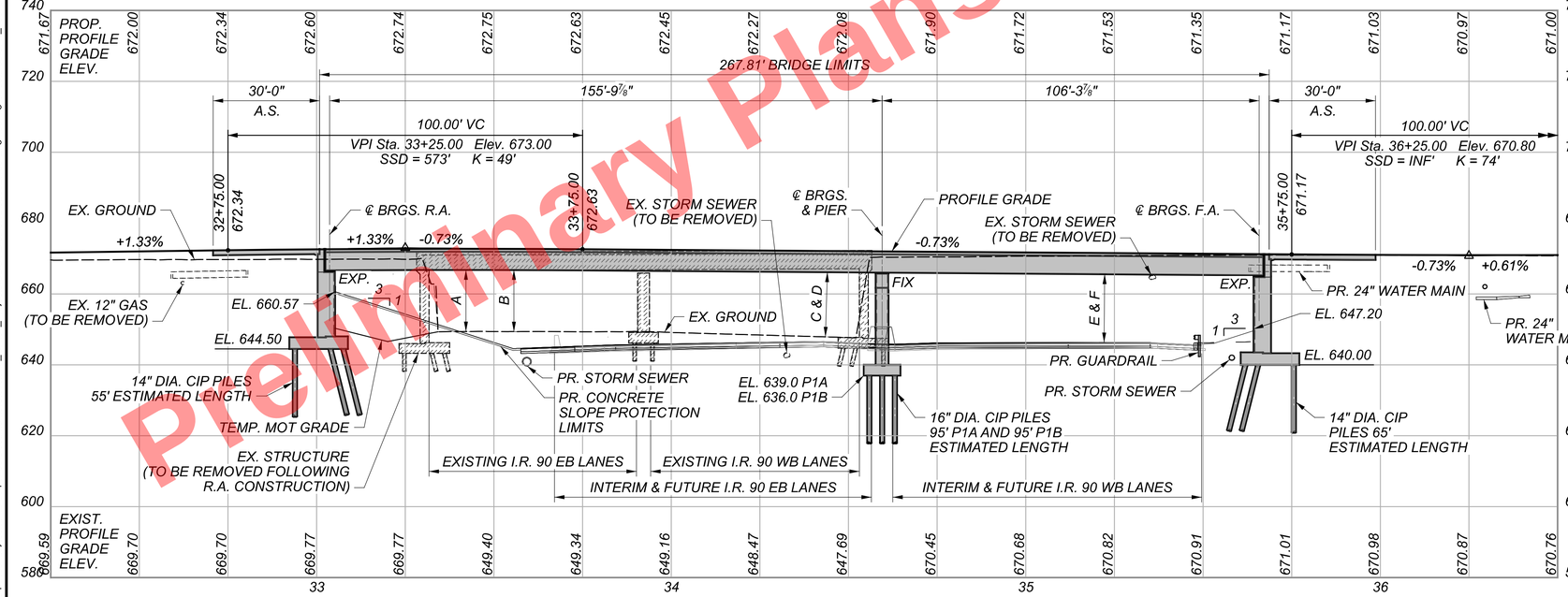

PROFILE GRADE ALONG CL CONST. E. 22ND ST.

BENCHMARK DATA

BM #54 STA. 33+03.27	ELEV. 672.54	OFFSET 36.13 RT.	CUT CROSS
BM #62 STA. 35+24.62	ELEV. 672.11	OFFSET 1174.60 LT.	RR SPIKE
BM #72 STA. 23+49.63	ELEV. 674.06	OFFSET 52.19 LT.	CUT CROSS
BM #73 STA. 37+05.22	ELEV. 671.90	OFFSET 407.77' LT.	CUT CROSS

FOR ADDITIONAL BENCHMARK INFORMATION. SEE ROADWAY PLAN SHEET 4 /2696.

NOTES

EARTHWORK LIMITS SHOWN ARE APPROXIMATE. ACTUAL SLOPES SHALL CONFORM TO PLAN CROSS SECTIONS.

DESIGN TRAFFIC:

2015 ADT = 13,400 2015 ADTT = 536
2035 ADT = 15,300 2035 ADTT = 612
DIRECTIONAL DISTRIBUTION = 0.57

LEGEND

TO BE REMOVED
HISTORIC BORING LOCATION
PROJECT BORING LOCATION
INSTRUMENTED BORING LOCATION

VERTICAL CLEARANCES

A = M.V.C. EX. STRUCTURE TO EX. I-90
B = PR. STRUCTURE TO EX. I-90
C = PR. STRUCTURE TO INTERIM I-90
D = PR. STRUCTURE TO FUTURE I-90
E = M.V.C. PR. STRUCTURE TO INTERIM I-90
F = M.V.C. PR. STRUCTURE TO INTERIM I-90

HORIZONTAL CLEARANCE

LOCATION	R.A.	PIER 1 SOUTH	PIER 1 NORTH	F.A.
REQ'D CLR. ZONE	30'-0"	30'-0"	30'-0"	30'-0"
PROVIDED MIN.	73'-6"	14'-2½"*	13'-9"*	27'-2¾"*

* BARRIER PROTECTION REQ'D & PROVIDED

VERTICAL CLEARANCE

LOCATION	A	B	C	D	E	F
REQUIRED MIN.	-	14'-6"	15'-6"	15'-6"	15'-6"	15'-6"
PROVIDED MIN.	14'-6"	14'-11"	18'-2"	18'-2"	17'-0"	17'-1"

LOCATIONS A, B, C, AND D ARE MEASURED TO EB I-90 LANES
LOCATIONS E AND F ARE MEASURED TO WB I-90 LANES

EXISTING STRUCTURE

TYPE: CONTINUOUS BEAMS WITH REINFORCED CONCRETE DECK AND SUBSTRUCTURE
SPANS: 61'-3"±, 61'-3"± C/C BEARINGS ALONG ℄ CONSTRUCTION
ROADWAY: 74'-0"±, F/F OF CURBS WITH TWO 8'-0" WALKS
LOADING: CF 2000 (51)
SKEW: 25°51'00" RF
WEARING SURFACE: 2"± CONCRETE OVERLAY
APPROACH SLABS: AS-1-54 (25'± LONG), 1'-6½" THICK
ALIGNMENT: TANGENT
CROWN: 0.0156±
STRUCTURE FILE NUMBER: 1807838
DATE BUILT: 1958
DISPOSITION: TO BE REMOVED

PROPOSED STRUCTURE

TYPE: CONTINUOUS STEEL PLATE GIRDER WITH COMPOSITE REINFORCED CONCRETE DECK SUPPORTED ON REINFORCED CONCRETE PIER & ABUTMENTS ON PILES
SPANS: 155'-9⅞" & 106'-3⅞" C/C BRGS. ALONG ℄ CONST. E. 22ND ST.
ROADWAY: 54'-0" TOE/TOE CURB WITH 9'-6" AND 22'-2" SIDEWALKS
LOADING: HL93, 60 PSF FUTURE WEARING SURFACE, & SIDEWALK PEDESTRIAN LL
SKEW: 13°48'28" RIGHT FORWARD
WEARING SURFACE: 1" MONOLITHIC CONCRETE
APPROACH SLABS: 30'-0" LONG (AS-1-15, AS-2-15), TYPE A, INSTALLATION, 1'-5" THICK
ALIGNMENT: TANGENT
CROWN: 0.02 FT/FT
DECK AREA: 32,042 SF
STRUCTURE FILE NUMBER: 1807839
COORDINATES: LATITUDE N 41°29'52.40"
LONGITUDE W 81°40'25.98"

SITE PLAN
CUY-90-1678 (BRIDGE 13)
CR-710 (E. 22ND ST.) OVER I.R. 90

SFN 1807839
DESIGN AGENCY
Michael Baker INTERNATIONAL
DESIGNER ZES | CHECKER ETB
REVIEWER CDC 05/10/24
PROJECT ID 82382
SUBSET 1 | TOTAL 99
SHEET 2182 | TOTAL 2696

Preliminary Plans - For Reference Only

CUY-90-16.28 (CCG3A)
MODEL: CLP_E 22ND ST - Bridge 13 Plan PAPERSIZE: 34x22 (in.) DATE: 3/28/2025 TIME: 7:34:03 AM USER: Rohit Bk
pw:\\mb-us-pw.bentley.com:mb-us-pw-03\Documents\Cleveland_OH\01_Projects\ODOT\District12\82382\400-Engineering\Structures\SFN_1807839\Sheets\82382_SFN_1807839_SP001.dgn

SHEET	DESCRIPTION
1	SITE PLAN
2	INDEX
3	GENERAL NOTES (1 OF 4)
4	GENERAL NOTES (2 OF 4)
5	GENERAL NOTES (3 OF 4)
6	GENERAL NOTES (4 OF 4)
7	ESTIMATED QUANTITIES (1 OF 2)
8	ESTIMATED QUANTITIES (2 OF 2)
9	STRUCTURE REMOVAL DETAILS (1 OF 6)
10	STRUCTURE REMOVAL DETAILS (2 OF 6)
11	STRUCTURE REMOVAL DETAILS (3 OF 6)
12	STRUCTURE REMOVAL DETAILS (4 OF 6)
13	STRUCTURE REMOVAL DETAILS (5 OF 6)
14	STRUCTURE REMOVAL DETAILS (6 OF 6)
15	TEMPORARY SHORING DETAILS
16	REAR ABUTMENT FOUNDATION PLAN (1 OF 2)
17	REAR ABUTMENT FOUNDATION PLAN (2 OF 2)
18	REAR ABUTMENT PLAN AND ELEVATION (1 OF 2)
19	REAR ABUTMENT PLAN AND ELEVATION (2 OF 2)
20	REAR ABUTMENT SECTION
21	REAR ABUTMENT DETAILS
22	REAR LEFT WINGWALL PLAN AND ELEVATION
23	REAR LEFT WINGWALL SECTION
24	FORWARD ABUTMENT FOUNDATION PLAN
25	FORWARD ABUTMENT PLAN AND ELEVATION (1 OF 2)
26	FORWARD ABUTMENT PLAN AND ELEVATION (2 OF 2)
27	FORWARD ABUTMENT SECTION
28	FORWARD ABUTMENT DETAILS
29	FORWARD LEFT WINGWALL FOUNDATION PLAN
30	FORWARD LEFT WINGWALL PLAN AND ELEVATION (1 OF 2)
31	FORWARD LEFT WINGWALL PLAN AND ELEVATION (2 OF 2)
32	FORWARD LEFT WINGWALL SECTION
33	FORWARD RIGHT WINGWALL FOUNDATION PLAN
34	FORWARD RIGHT WINGWALL PLAN AND ELEVATION
35	FORWARD RIGHT WINGWALL SECTION
36	PIER FOUNDATION PLAN (1 OF 2)
37	PIER FOUNDATION PLAN (2 OF 2)
38	PIER 1A PLAN AND ELEVATION
39	PIER 1B PLAN AND ELEVATION
40	PIER 1 SECTIONS
41	TRANSVERSE SECTION
42	FRAMING PLAN
43	GIRDER ELEVATION
44	GIRDER SPLICE DETAILS
45	DEFLECTION AND CAMBER TABLE (1 OF 7)
46	DEFLECTION AND CAMBER TABLE (2 OF 7)
47	DEFLECTION AND CAMBER TABLE (3 OF 7)
48	DEFLECTION AND CAMBER TABLE (4 OF 7)
49	DEFLECTION AND CAMBER TABLE (5 OF 7)
50	DEFLECTION AND CAMBER TABLE (6 OF 7)
51	DEFLECTION AND CAMBER TABLE (7 OF 7)

SHEET	DESCRIPTION
52	INTERMEDIATE K-FRAMES AND UTILITY SUPPORT DETAILS
54	ABUTMENT K-FRAME DETAILS
55	PIER K-FRAME DETAILS
56	ELASTOMERIC BEARING DETAILS (1 OF 2)
57	ELASTOMERIC BEARING DETAILS (2 OF 2)
58	DECK PLAN
59	DECK ELEVATION SCHEMATIC
60	FINAL DECK SURFACE ELEVATION TABLE (1 OF 2)
61	FINAL DECK SURFACE ELEVATION TABLE (2 OF 2)
62	FINAL DECK SCREED ELEVATION TABLE (1 OF 2)
63	FINAL DECK SCREED ELEVATION TABLE (2 OF 2)
64	TOP OF HAUCH ELEVATION TABLE
65	AESTHETICS KEY PLAN
66	WEST SIDEWALK PLAN & DETAILS (1 OF 2)
67	WEST SIDEWALK PLAN & DETAILS (2 OF 2)
68	EAST SIDEWALK PLAN & DETAILS (1 OF 2)
69	EAST SIDEWALK PLAN & DETAILS (2 OF 2)
70	SIDEWALK DETAILS
71	WEST RAILING PLAN & ELEVATION (1 OF 5)
72	WEST RAILING PLAN & ELEVATION (2 OF 5)
73	WEST RAILING PLAN & ELEVATION (3 OF 5)
74	WEST RAILING PLAN & ELEVATION (4 OF 5)
75	WEST RAILING PLAN & ELEVATION (5 OF 5)
76	EAST RAILING PLAN & ELEVATION (1 OF 5)
77	EAST RAILING PLAN & ELEVATION (2 OF 5)
78	EAST RAILING PLAN & ELEVATION (3 OF 5)
79	EAST RAILING PLAN & ELEVATION (4 OF 5)
80	EAST RAILING PLAN & ELEVATION (5 OF 5)
81	PILASTER DETAILS
82	SCREEN WALL DETAILS
83	PLANTER DETAILS (1 OF 3)
84	PLANTER DETAILS (2 OF 3)
85	PLANTER DETAILS (3 OF 3)
86	MISCELLANEOUS DETAILS
87	EXPANSION JOINT DETAILS
88	SCUPPER AND DOWNSPOUT DETAILS
89	APPROACH SLAB DETAILS (1 OF 6)
90	APPROACH SLAB DETAILS (2 OF 6)
91	APPROACH SLAB DETAILS (3 OF 6)
92	APPROACH SLAB DETAILS (4 OF 6)
93	APPROACH SLAB DETAILS (5 OF 6)
94	APPROACH SLAB DETAILS (6 OF 6)
95	REINFORCING SCHEDULE (1 OF 4)
96	REINFORCING SCHEDULE (2 OF 4)
97	REINFORCING SCHEDULE (3 OF 4)
98	REINFORCING SCHEDULE (4 OF 4)

Preliminary Plans - For Reference Only

SHEET INDEX
CUY-90-1678 (BRIDGE 13)
CR-710 (E. 22ND ST.) OVER I.R. 90

SFN 1807839

DESIGN AGENCY
Michael Baker INTERNATIONAL

DESIGNER	CHECKER
JNR	KAG

REVIEWER
CDC 05/10/24

PROJECT ID 82382

SUBSET	TOTAL
2	99

SHEET	TOTAL
2183	2696

CUY-90-16.28 (CCG3A)

MODEL: Sheet Index PAPERSIZE: 34x22 (in.) DATE: 3/28/2025 TIME: 7:34:27 AM USER: Rohit Bk
pw:\\mb-us-pw.bentley.com:mb-us-pw-03\Documents\Cleveland_OH\01_Projects\ODOT\District12\82382\400-Engineering\Structures\SFN_1807839\Sheets\82382_SFN_1807839_SN001.dgn

STANDARD DRAWINGS AND SUPPLEMENTAL SPECIFICATIONS

REFER TO THE FOLLOWING STANDARD BRIDGE DRAWING(S):
AS-1-15 DATED (REVISED) 01-20-23
AS-2-15 DATED (REVISED) 07-21-23
BR-2-15 DATED (REVISED) 07-19-24
EXJ-4-87 DATED (REVISED) 01-19-24
GSD-1-19 DATED (REVISED) 01-15-21
VPF-1-90 DATED (REVISED) 07-21-23

AND TO THE FOLLOWING SUPPLEMENTAL SPECIFICATIONS:
800 DATED SEE TITLE SHEET
1083 DATED 01-20-17

DESIGN SPECIFICATIONS

THIS STRUCTURE CONFORMS TO THE 9th EDITION OF THE "LRFD BRIDGE DESIGN SPECIFICATIONS" ADOPTED BY THE AMERICAN ASSOCIATION OF STATE HIGHWAY AND TRANSPORTATION OFFICIALS, 2020 AND THE ODOT BRIDGE DESIGN MANUAL, 2020.

SPECIAL DESIGN SPECIFICATIONS

THIS BRIDGE REQUIRED THE USE OF A THREE-DIMENSIONAL FINITE ELEMENT MODEL TO ANALYZE THE STRUCTURE. THE COMPLETED STRUCTURE WAS MODELED USING THE PLATE-AND-ECCENTRIC-BEAM METHOD FOR THE GIRDERS, BEAM ELEMENTS FOR ALL CROSSFRAME COMPONENTS, AND SHELL ELEMENTS FOR THE DECK. THE COMPUTER PROGRAM USED FOR THE STRUCTURAL ANALYSIS WAS MIDAS CIVIL 2023. THE BRIDGE COMPONENTS DESIGNED FROM THE STRUCTURAL ANALYSIS RESULTS INCLUDE THE STEEL PLATE GIRDERS, STEEL PLATE GIRDER SPLICES, K-FRAME BRACING MEMBERS, AND STEEL PLATE GIRDER BEARINGS.
DEAD LOAD DISTRIBUTION: SUPERSTRUCTURE DEAD LOADS WERE DISTRIBUTED BASED UPON RELATIVE STIFFNESS IN THE MIDAS CIVIL MODEL.
NONCOMPOSITE DEAD LOADS (DC1) INCLUDED STEEL PLATE GIRDER SELF-WEIGHT, CROSSFRAME SELF-WEIGHT, END DIAPHRAGM SELF-WEIGHT, AND A 15% INCREASE IN ALL STEEL DC1 LOADING TO ACCOUNT FOR GIRDER STIFFENERS, CONNECTION PLATES, SPLICES, ETC. NONCOMPOSITE LOADS ALSO INCLUDED 24" WATERLINE PIPE AND CLAMP STEEL WEIGHT, WET WEIGHT OF GIRDER CONCRETE HAUNCHES, AND WET WEIGHT OF CONCRETE DECK.
COMPOSITE DEAD LOADS (DC2) INCLUDED THE WEIGHT OF SIDEWALKS, VARYING HEIGHT BARRIERS WITH AESTHETIC PANELS, PILASTERS, LIGHT POLES, BOLLARDS, BUS SHELTER, PLANTERS INCLUDING SOIL AND TREE WEIGHT, AND UTILITIES. LIGHT POLES, BOLLARDS, BUS SHELTER, PLANTERS, AND UTILITIES WERE FACTORED TO ACCOUNT FOR THE DIFFERENCE BETWEEN DC AND DW LOAD LRFD STRENGTH LOAD FACTORS.
DW LOADS INCLUDED THE WEIGHT OF THE FUTURE WEARING SURFACE.
LIVE LOAD DISTRIBUTION: LIVE LOADS WERE CONSIDERED WITH SIDEWALKS PRESENT. MIDAS CIVIL'S MOVING LOAD FUNCTION DETERMINES THE MAXIMUM LIVE LOAD FORCE EFFECTS FOR EACH MEMBER BASED UPON AASHTO PROVISIONS FOR TRANSVERSE LOAD PLACEMENT AND MULTIPLE PRESENCE FACTORS. THE GOVERNING EFFECTS FROM UP TO FOUR (4) DESIGN LANES OF HL-93 LIVE LOAD WERE COMBINED WITH TWO (2) DISTRIBUTED SIDEWALK PEDESTRIAN LIVE LOADS OF 75 PSF. THE ADDITION OF THE SIDEWALK PEDESTRIAN LOADS DID NOT AFFECT THE MULTIPLE PRESENCE FACTOR APPLIED TO THE VEHICULAR LIVE LOAD.

OPERATIONAL IMPORTANCE

A LOAD MODIFIER OF 1.0 HAS BEEN ASSUMED FOR THE DESIGN OF THIS STRUCTURE IN ACCORDANCE WITH THE AASHTO LRFD BRIDGE DESIGN SPECIFICATIONS, ARTICLE 1.3.5 AND THE ODOT BRIDGE DESIGN MANUAL.

DESIGN LOADING

DESIGN LOADING INCLUDES:
VEHICULAR LIVE LOAD: HL-93
FUTURE WEARING SURFACE (FWS) OF 0.060 KIPS/SQ.FT
SIDEWALK PEDESTRIAN LIVE LOAD WITH VEHICULAR LIVE LOAD = 0.075 KIPS/SQ.FT
SIDEWALK PEDESTRIAN LIVE LOAD WITHOUT VEHICULAR LIVE LOAD = 0.090 KIPS/SQ.FT

DESIGN DATA

CONCRETE CLASS (QC2):
COMPRESSIVE STRENGTH 4.5 KSI (SUPERSTRUCTURE)

CONCRETE CLASS (QC1):
COMPRESSIVE STRENGTH 4.0 KSI (SUBSTRUCTURE)

REINFORCING STEEL MINIMUM YIELD STRENGTH 60 KSI

STRUCTURAL STEEL - ASTM A709 GRADE 50:
YIELD STRENGTH = 50 KSI

STEEL SHEET PILING - ASTM A572, GRADE 50:
YIELD STRENGTH = 50 KSI

STEEL PIPE PILES - ASTM A252 GRADE 3: YIELD STRENGTH = 45 KSI, ½" THICK CASING

MONOLITHIC WEARING SURFACE

MONOLITHIC WEARING SURFACE IS ASSUMED, FOR DESIGN PURPOSES, TO BE 1 INCH THICK.

PILE DESIGN LOADS (ULTIMATE BEARING VALUE)

THE ULTIMATE BEARING VALUE IS 356 KIPS PER PILE FOR THE PIER 1A PILES.
THE ULTIMATE BEARING VALUE IS 427 KIPS PER PILE FOR THE PIER 1B PILES.
THE ULTIMATE BEARING VALUE IS 214 KIPS PER PILE FOR THE REAR ABUTMENT.
THE ULTIMATE BEARING VALUE IS 221 KIPS PER PILE FOR THE FORWARD ABUTMENT.

PIER PILES:
PIER 1A, 16" DIAMETER CIP PILES 100 FEET LONG, ORDER LENGTH
PIER 1B, 16" DIAMETER CIP PILES 100 FEET LONG, ORDER LENGTH
2 DYNAMIC LOAD TESTING ITEM(S)
2 RESTRIKES

REAR ABUTMENT PILES:
14" DIAMETER CIP PILES 60 FEET LONG, ORDER LENGTH
1 DYNAMIC LOAD TESTING ITEM(S)
1 RESTRIKE

FORWARD ABUTMENT PILES:
14" DIAMETER CIP PILES 70 FEET LONG, ORDER LENGTH
1 DYNAMIC LOAD TESTING ITEM(S)
1 RESTRIKE

ITEM SPECIAL - STRUCTURAL SURVEY AND MONITORING OF VIBRATION

MONITOR GROUND VIBRATIONS CAUSED BY PILE DRIVING TO MINIMIZE THE POTENTIAL DAMAGE TO EXISTING STRUCTURES.

RETAIN AN EXPERIENCED VIBRATION SPECIALIST TO ESTABLISH THE ACCEPTABLE VIBRATION LIMITS AND TO PERFORM THE VIBRATION MONITORING. USE A VIBRATION SPECIALIST THAT IS AN EXPERT IN THE INTERPRETATION OF VIBRATION DATA, AND WHO MEETS ONE OF THE FOLLOWING CRITERIA:1) IS A REGISTERED ENGINEER WITH AT LEAST TWO YEARS OF PROVEN EXPERIENCE IN MONITORING VIBRATIONS ON SIMILAR CONSTRUCTION PROJECTS, OR 2) HAS AT LEAST FIVE YEARS OF PROVEN EXPERIENCE IN MONITORING VIBRATIONS ON SIMILAR CONSTRUCTION PROJECTS. DO NOT USE A VIBRATION SPECIALIST THAT IS AN EMPLOYEE OF THE CONTRACTOR.

SUBMIT A RESUME OF THE CREDENTIALS OF THE PROPOSED VIBRATION SPECIALIST AT, OR BEFORE, THE PRECONSTRUCTION MEETING. INCLUDE IN THE RESUME A LIST OF CONSTRUCTION PROJECTS ON WHICH THE VIBRATION SPECIALIST WAS RESPONSIBLY IN CHARGE OF MONITORING THE VIBRATIONS. LIST A DESCRIPTION OF THE PROJECTS, WITH DETAILS OF THE VIBRATION INTERPRETATIONS MADE ON THE PROJECT. LIST THE NAMES AND TELEPHONE NUMBERS OF PROJECT OWNERS WITH SUFFICIENT KNOWLEDGE OF THE PROJECTS TO VERIFY THE SUBMITTED INFORMATATION. OBTAIN THE ENGINEER'S ACCEPTANCE OF THE VIBRATION SPECIALIST BEFORE BEGINNING ANY PILE DRIVING WORK. ALLOW 30 DAYS FOR THE REVIEW OF THIS DOCUMENTATION.

USE SEISMOGRAPHS CAPABLE OF CONTINUOUSLY RECORDING THE PEAK PARTICLE VELOCITY FOR THREE MUTUALLY PERPENDICULAR COMPONENTS OF VIBRATION, AND OF PROVIDING A PERMANENT RECORD OF THE ENTIRE VIBRATION EVENT.

USE A SUFFICIENT NUMBER OF SEISMOGRAPHS TO PROVIDE REDUNDANCY IN CASE ONE DEVICE SHOULD FAIL. SUBMIT A PLAN OF THE PROPOSED SEISMOGRAPH LOCATIONS TO THE ENGINEER FOR REVIEW.

THE VIBRATION SPECIALIST SHALL PERFORM THE FOLLOWING:

1. MEASURE THE AMBIENT GROUND VIBRATIONS NEAR EXISTING STRUCTURES BEFORE PILE DRIVING BEGINS.
2. ESTABLISH VIBRATION LIMITS TO MINIMIZE POTENTIAL DAMAGE TO EXISTING STRUCTURES AND EXPLAIN WHY THEY ARE BEING USED TO THE ENGINEER BEFORE DRIVING PILES NEAR EXISTING STRUCTURES.
3. MONITOR GROUND VIBRATIONS DURING PILE DRIVING.
4. IMMEDIATELY INFORM THE CONTRACTOR AND ENGINEER IF THE VIBRATION LIMITS ARE REACHED OR EXCEEDED.
5. FURNISH THE DATA RECORDED AND INCLUDE THE FOLLOWING:
   A. IDENTIFICATION OF SEISMOGRAPH.
   B. DISTANCE AND DIRECTION OF SEISMOGRAPH FROM PILE DRIVING.
   C. START TIME AND DURATION OF PILE DRIVING.
   D. LIST OF PILES DRIVEN DURING EACH MONITORING INTERVAL.

IMMEDIATELY SUSPEND ALL PILE DRIVING IF THE VIBRATION LIMITS ARE REACHED OR EXCEEDED. EVALUATE ALTERNATIVE CONSTRUCTION PROCEDURES, SUCH AS PREBORED HOLES, TO REDUCE THE VIBRATIONS. PREBORED HOLES ARE INCIDENTAL TO ITEM SPECIAL - STRUCTURE MISC.: VIBRATION MONITORING.

SUBMIT THREE COPIES OF THE FINAL REPORT WHICH CONTAINS ALL MEASUREMENTS, INTERPRETATIONS, AND RECOMMENDATIONS TO THE ENGINEER.

THE DEPARTMENT WILL PAY FOR THIS ITEM AT THE CONTRACT LUMP SUM PRICE FOR ITEM SPECIAL - STRUCTURE MISC.: VIBRATION MONITORING. THE DEPARTMENT WILL PAY THE FINAL TWENTY PERCENT AFTER THE ENGINEER RECEIVES THE FINAL REPORT.

THE DEPARTMENT WILL PAY ACCORDING TO C&MS 109.05 FOR ALTERNATIVE CONSTRUCTION PROCEDURES THAT THE ENGINEER DETERMINES ARE NECESSARY TO REDUCE VIBRATIONS.

ITEM SPECIAL - STRUCTURES: PRECONSTRUCTION CONDITION SURVEY

BEFORE PILE DRIVING BEGINS, CONDUCT A CONDITION SURVEY OF ALL EXISTING BUILDINGS, STRUCTURES, AND UTILITIES WITHIN 200 FT OF THE PILE DRIVING WORK. THE PURPOSE OF THE SURVEY IS TO DOCUMENT THE CONDITION OF THE BUILDINGS, STRUCTURES, OR UTILITIES PRIOR TO PILE DRIVING, SO THAT CLAIMS OF DAMAGE CAUSED BY THE PILE DRIVING CAN BE VERIFIED.

RETAIN AN EXPERIENCED VIBRATION SPECIALIST TO PERFORM OR SUPERVISE THE CONDITION SURVEY. USE A VIBRATION SPECIALIST THAT MEETS THE QUALIFICATION REQUIREMENTS FOR VIBRATION MONITORING.

RECORD THE CONDITION OF EXISTING STRUCTURES AND BUILDING MATERIALS, USING WRITTEN TEXT, PHOTOGRAPHS, AND VIDEO RECORDINGS. INSPECT INTERIOR WALLS, CEILINGS, AND FLOORS THAT ARE ACCESSIBLE. INSPECT THE EXTERIOR OF THE BUILDING THAT IS VISIBLE FROM GROUND LEVEL. ALSO RECORD THE LOCATION, SIZE, AND TYPE OF ALL CRACKS AND OTHER STRUCTURAL DEFICIENCIES.

IF OWNERS, OR OCCUPANTS, FAIL TO ALLOW ACCESS TO THE PROPERTY FOR THE PRECONSTRUCTION CONDITION SURVEY, SEND A CERTIFIED LETTER TO THE OWNER OR OCCUPANT. DOCUMENT THE NOTIFICATION EFFORT AND THE CERTIFIED LETTER IN THE REPORT.

SUBMIT THREE COPIES OF THE REPORT TO THE ENGINEER THAT SUMMARIZES THE PRECONSTRUCTION CONDITION OF THE BUILDINGS, STRUCTURES, AND UTILITIES, AND THAT DENTIFIES AREAS OF CONCERN.

THE DEPARTMENT WILL PAY FOR THIS ITEM AT THE CONTRACT LUMP SUM PRICE FOR ITEM SPECIAL - STRUCTURES: PRECONSTRUCTION CONDITION SURVEY.

DECK PLACEMENT DESIGN ASSUMPTIONS:

THE FOLLOWING ASSUMPTIONS OF CONSTRUCTION MEANS AND METHODS WERE MADE FOR THE ANALYSIS AND DESIGN OF THE SUPERSTRUCTURE. THE CONTRACTOR IS RESPONSIBLE FOR THE DESIGN OF THE FALSEWORK SUPPORT SYSTEM WITHIN THESE PARAMETERS AND WILL ASSUME RESPONSIBILITY FOR THE SUPERSTRUCTURE ANALYSIS FOR DEVIATION FROM THESE DESIGN ASSUMPTIONS.

AN EIGHT WHEEL FINISHING MACHINE WITH A MAXIMUM WHEEL LOAD OF 3.35 KIPS.

A MINIMUM OUT-TO-OUT WHEEL SPACING AT EACH END OF THE MACHINE OF 103 INCHES.

A MAXIMUM SPACING OF OVERHANG FALSEWORK BRACKETS OF 48 INCHES.

A MAXIMUM DISTANCE FROM THE CENTERLINE OF THE FASCIA GIRDER TO THE FACE OF THE SAFETY HANDRAIL OF 65 INCHES.

Preliminary Plans - For Reference Only

GENERAL NOTES (1 OF 4)
CUY-90-1678 (BRIDGE 13)
CR-710 (E. 22ND ST.) OVER I.R. 90

SFN 1807839
DESIGN AGENCY
Michael Baker INTERNATIONAL
DESIGNER ZES | CHECKER KAG
REVIEWER CDC 05/10/24
PROJECT ID 82382
SUBSET 3 | TOTAL 99
SHEET 2184 | TOTAL 2696

CUY-90-16.28 (CCG3A)

MODEL: Sheet (1 of 4) PAPERSIZE: 34x22 (in.) DATE: 6/9/2025 TIME: 1:47:30 PM USER: Tolga.Feran
pw:\\mb-us-pw.bentley.com:mb-us-pw-03\Documents\Cleveland_OH\01_Projects\ODOT\District12\82382\400-Engineering\Structures\SFN_1807839\Sheets\82382_Sheets\82382_SFN_1807839_SN001.dgn

ASBESTOS NOTIFICATION

A CERTIFIED ASBESTOS HAZARD EVALUATION SPECIALIST SURVEYED THE BRIDGE STRUCTURE SCHEDULED FOR DEMOLITION AND/OR REHABILITATION; THE SURVEY DETERMINED THAT APPROXIMATELY 150 LINEAR FEET OF ASBESTOS IS PRESENT ON THE EXISTING E. 22ND STREET BRIDGE STRUCTURE WITHIN EXISTING CPP DUCTS. THE CONTRACTOR SHALL VERIFY THE LENGTH OF DUCTS TO BE REMOVED SEE SHEET 1777 OF 2696 FOR ADDITIONAL INFORMATION. NO ASBESTOS WAS IDENTIFIED ON THE CEDAR AVENUE STRUCTURE.

ODOT SHALL PROVIDE A COPY OF THE OHIO ENVIRONMENTAL PROTECTION AGENCY (OEPA) NOTIFICATION OF DEMOLITION AND RENOVATION FORM, PARTIALLY COMPLETED AND SIGNED BY THE BRIDGE OWNER, TO THE SUCCESSFUL BIDDER. THE CONTRACTOR SHALL COMPLETE THE FORM AND SUBMIT IT TO ONE THE ADDRESSES BELOW AT LEAST TEN (10) WORKING DAYS PRIOR TO THE START OF ANY DEMOLITION AND/OR RENOVATION.

ASBESTOS PROGRAM
OHIO EPA, DAPC
P.O. BOX 1049
COLUMBUS, OH 43216-1049

OR

ASBESTOS PROGRAM
OHIO EPA, DAPC
50 W. TOWN ST., SUITE 700
COLUMBUS, OH 43215

THE CONTRACTOR SHALL PROVIDE A COPY OF THE COMPLETED FORM TO THE ENGINEER AT LEAST TEN (10) WORKING DAYS PRIOR TO THE START OF ANY DEMOLITION AND/OR RENOVATION. THE FORM SHALL INCLUDE: 1) THE CONTRACTORS NAME AND ADDRESS, 2) THE SCHEDULED DATES FOR THE START AND COMPLETION OF THE BRIDGE REMOVAL AND 3) A DESCRIPTION OF THE PLANNED DEMOLITION WORK AND THE METHOD(S) TO BE USED. COPIES OF THE OEPA FORM AND BRIDGE INSPECTION REPORT ARE AVAILABLE FOR REVIEW AT THE ODOT DISTRICT 12 OFFICE, 5500 TRANSPORTATION BOULEVARD, GARFIELD HEIGHTS, OHIO 44125.

BASIS FOR PAYMENT THE CONTRACTOR SHALL FURNISH ALL FEES, LABOR, AND MATERIAL NECESSARY TO COMPLETE AND SUBMIT THE OEPA NOTIFICATION FORM. PAYMENT FOR THIS WORK SHALL BE PER SHEET 75 OF THE ENVIRONMENTAL GENERAL NOTES.

MAINTENANCE OF TRAFFIC

MAINTENANCE OF TRAFFIC FOR THE STRUCTURE WORK SHALL BE COORDINATED WITH THE OVERALL PROJECT. REFER TO MAINTENANCE OF TRAFFIC NOTES AND DETAILS ELSEWHERE IN PLANS.

UTILITY LINES

THE PRIVATE UTILITIES SHALL BEAR ALL EXPENSE INVOLVED IN RELOCATING (INSTALLING) THE AFFECTED UTILITY LINES. THE CONTRACTOR AND UTILITY(IES) ARE TO COOPERATE BY ARRANGING THEIR WORK IN SUCH A MANNER THAT INCONVENIENCE TO EITHER PARTY WILL BE HELD TO A MINIMUM. ANTICIPATED PRIVATE UTILITIES INCLUDE CEI, ENBRIDGE AND AT&T.

STRUCTURE GROUNDING

STRUCTURE TO BE GROUNDED AS PER LIGHTING GENERAL NOTES SHEET 1684 . QUANTITY CARRIED TO LIGHTING SUBSUMMARY.

NOTIFICATION OF MINIMUM VERTICAL CLEARANCE REDUCTION

SEE MAINTENANCE OF TRAFFIC NOTES FOR INFORMATION REGARDING TEMPORARY REDUCTION OF THE VERTICAL CLEARANCE AT THIS STRUCTURE LOCATION.

EXISTING STRUCTURE VERIFICATION

DETAILS AND DIMENSIONS SHOWN ON THESE PLANS PERTAINING TO THE EXISTING STRUCTURE HAVE BEEN OBTAINED FROM PLANS OF THE EXISTING STRUCTURE AND FROM FIELD OBSERVATIONS AND MEASUREMENTS. CONSEQUENTLY, THEY ARE INDICATIVE OF THE EXISTING STRUCTURE AND THE PROPOSED WORK BUT THEY SHALL BE CONSIDERED TENTATIVE AND APPROXIMATE. THE CONTRACTOR IS REFERRED TO C&MS, SECTIONS 102.05, 105.02, AND 513.04. BASE CONTRACT BID PRICES UPON A RECOGNITION OF THE UNCERTAINTIES DESCRIBED ABOVE AND UPON A PREBID EXAMINATION OF THE EXISTING STRUCTURE. HOWEVER, THE DEPARTMENT WILL PAY FOR ALL PROJECT WORK BASED UPON ACTUAL DETAILS AND DIMENSIONS THAT HAVE BEEN VERIFIED IN THE FIELD.

GROUND WATER

GROUNDWATER LEVELS FLUCTUATE SEASONALLY AS A FUNCTION OF THE PRECIPITATION AND OTHER HYDROLOGICAL FACTORS. THEREFORE, THERE MAY CONSIDERABLE CHANGE IN THE WATER TABLE OR THE OCCURRENCE OF WATER WHERE NOT PREVIOUSLY ENCOUNTERED. SHEET PILE CONNECTIONS FOR TEMPORARY EARTH RETENTION SYSTEMS SHALL BE AS WATER-TIGHT AS PRACTICAL. CARE SHOULD BE TAKEN AT ALL TIMES TO MITIGATE THE LOSS OF NATIVE SOIL THROUGH SHORING WALL JOINTS AND/OR OPENINGS. THE CONTRACTOR SHALL DEWATER ALL EXCAVATIONS AS NECESSARY TO PERFORM THE PROPOSED WORK.

SCREENWALL NOTES:

THE ENTIRE SYSTEM OF PANELS, HARDWARE, LIGHTING, AND STRUCTURAL STEEL FRAME SHALL BE ENGINEERED AND FABRICATED BY A SINGLE ENTITY.

THE ENTIRE SYSTEM IS TO BE ANALYZED AND DESIGNED FOR STRUCTURAL STABILITY, INCLUDING MINIMIZING DEFLECTION IN THE PANELS, THE HARDWARE CONNECTIONS AND SCREEN WALL, AND THE CONNECTIONS TO THE PARAPET. USE AN OHIO REGISTERED PROFESSIONAL ENGINEER TO PREPARE, SIGN, SEAL AND DATE THE CALCULATIONS. USE A SECOND OHIO REGISTERED PROFESSIONAL ENGINEER TO CHECK AND DATE THE CALCULATIONS. CONTRACTOR SHALL SUBMIT THE BASE PLATE, THREADED ANCHOR AND CONCRETE ANCHORAGE DESIGN CALCULATIONS AND SUPPLEMENTAL DRAWINGS TO ODOT 90 DAYS PRIOR TO FABRICATING MOCK-UP. ODOT WILL REVIEW THE CALCULATIONS AND RETURN COMMENTS WITHIN 15 WORKING DAYS. ACCEPTANCE OF FINAL CALCULATIONS IS NOT REQUIRED TO BEGIN FABRICATION OF SCREENWALL MOCK UP.

THE THREADED ROD FOR ADHESIVE ANCHORS SHALL BE ASTM F1554, GRADE 36, WITH ASTM A563 NUTS AND ASTM F436 WASHERS. MECHANICALLY GALVANIZE ALL ANCHOR HARDWARE ACCORDING TO ASTM B695, CLASS 65.

THE CONTRACTOR SHALL SUPPLY DOCUMENTATION SEALED BY AN OHIO REGISTERED PROFESSIONAL ENGINEER ENSURING THAT THE ADHESIVE ANCHOR/DOWEL SYSTEM SPECIFIED BY THE CONTRACTOR PROVIDES SUFFICIENT CAPACITY FOR THIS APPLICATION IN ACCORDANCE WITH AASHTO LRFD SECTION 5.13. THE ADHESIVE ANCHOR/DOWEL SYSTEM SHALL MEET THE ACCEPTANCE CRITERIA OF ICEES AC308 - POST-INSTALLED ADHESIVE ANCHORS IN CONCRETE ELEMENTS. INSTALL THE ANCHORS ACCORDING TO THE MANUFACTURER'S INSTALLATION INSTRUCTIONS PUBLISHED IN THE ICC-ES REPORT.

THE HOLES FOR THE ADHESIVE ANCHORS SHALL BE DRILLED WITH A HAMMER DRILL AND CARBIDE PRIOR TO THE INSTALLATION OF THE ANCHORS, CLEAN AND DRY THE HOLES IN A MANNER CONSISTENT WITH THE MANUFACTURE'S REQUIREMENTS FOR DRY CONCRETE.

HTTPS://ICC-ES.ORG/EVALUATION-REPORT-PROGRAM/REPORTS-DIRECTORY/

THE CONTRACTOR MAY USE A SUBSTITUTE ADHESIVE ANCHOR/DOWEL SYSTEM THAT MEETS THE ACCEPTANCE CRITERIA OF ICEES AC308 - POST-INSTALLED ADHESIVE ANCHORS IN CONCRETE ELEMENTS. THE SUBSTITUTE ANCHORS SHALL MEET OR EXCEED THE CAPACITY REQUIRED PER THE CONTRACTOR'S ACCEPTED ANCHOR DESIGN.

ADHESIVE ANCHORS/DOWELS SHALL NOT BE SUBSTITUTED WITH MECHANICAL ANCHORS.

ALL EXPOSED PORTIONS OF THE FRAMEWORK WILL BE POWDERCOATED.

MAX PERMISSIBLE DEAD LOAD = 75 LBS/FT FOR SCREEN WALL SYSTEM. DESIGN SCREENWALL FOR WIND AND PEDESTRIAN LOADS APPLIED PER BDM 309.5.5.2 AND LRFD 3.8.

ALL CONNECTIONS FROM THE PANELS TO THE STRUCTURE TO BE GASKETED TO PROTECT THE MATERIAL AND PREVENT LIGHT LEAKAGE. LIGHTING TO EVENLY ILLUMINATE THE PANELS.

A FULL SIZE MOCKUP OF ONE COMPLETE PANEL IS REQUIRED DUE TO COMPLEXITY OF HARDWARE AND PANEL SYSTEMS. FOR SCREENWALL MOCKUP DETAILS, SEE HARDSCAPE SHEET 1847 / 2696

PAYMENT AND ADDITIONAL REQUIREMENTS FOR SCREENWALL SYSTEM IS INCLUDED IN THE HARDSCAPE PLANS.

SEQUENCE OF CONSTRUCTION

REMOVE EXISTING STRUCTURES AND CONSTRUCT BRIDGE 13 DURING MOT PHASE 2.

SEE THE ROADWAY PLANS FOR MAINTENANCE OF TRAFFIC REQUIREMENTS AND FOR ADDITIONAL PHASES ANDINFORMATION.

PILES DRIVEN TO FULL ESTIMATED LENGTH WITH PILE/SOIL SETUP

THE ULTIMATE BEARING VALUE (UBV) IS 214 KIPS PER PILE FOR THE 14" DIA. REAR ABUTMENT PILES, 330 KIPS PER PILE FOR THE 16" DIA. PIER 1A PILES, 431 KIPS PER PILE FOR THE 16" DIA. PIER 1B PILES AND 221 KIPS PER PILE FOR THE 14" DIA. FORWARD ABUTMENT PILES. PART OF THE UBV WILL BE ACHIEVED THROUGH PILE/SOIL SETUP, WHICH IS A TIME DEPENDENT INCREASE IN RESISTANCE THAT OCCURS IN SOME SOILS.

NOTIFY THE ENGINEER AT LEAST 5 DAYS BEFORE DRIVING PILES SO THAT THE ENGINEER CAN NOTIFY THE DISTRICT GEOTECHNICAL ENGINEER, THE OFFICE OF CONSTRUCTION ADMINISTRATION, AND THE OFFICE OF GEOTECHNICAL ENGINEERING.

DRIVE THE FIRST TWO PILES AT EACH SUBSTRUCTURE UNIT TO THE FULL ESTIMATED LENGTH SHOWN ON THE SITE PLAN. PERFORM DYNAMIC LOAD TESTING ON BOTH PILES WHILE DRIVING. AFTER DRIVING AND TESTING THE FIRST TWO PILES, DRIVE THE REMAINING PILES IN THE SUBSTRUCTURE TO THE SAME DEPTH AS THE FIRST TWO PILES. AFTER DRIVING ALL PILES TO THE ESTIMATED LENGTH, CEASE ALL DRIVING OPERATIONS AT THE SUBSTRUCTURE FOR A PERIOD OF 14 DAYS. INCLUDE THE WAITING PERIOD AS A SEPARATE ACTIVITY IN THE PROGRESS SCHEDULE. AFTER THE WAITING PERIOD, PERFORM PILE RESTRIKES ON BOTH OF THE FIRST TWO PILES (ONE RESTRIKE ITEM).

SUBMIT ALL TEST RESULTS TO THE ENGINEER. IF THE RESTRIKE TEST RESULTS INDICATE THAT BOTH PILES ACHIEVED THE REQUIRED UBV, ALL PILES IN THE SUBSTRUCTURE MAY BE ACCEPTED BY THE ENGINEER.

IF THE RESTRIKE TEST RESULTS INDICATE THAT EITHER OF THE TWO PILES DID NOT ACHIEVE THE REQUIRED UBV, IMMEDIATELY NOTIFY THE ENGINEER SO THAT THE ENGINEER CAN NOTIFY THE DISTRICT GEOTECHNICAL ENGINEER, THE OFFICE OF CONSTRUCTION ADMINISTRATION, AND THE OFFICE OF GEOTECHNICAL ENGINEERING. THE ENGINEER WILL REVIEW THE TEST RESULTS AND ESTABLISH ADDITIONAL RESTRIKE TESTING OR DRIVING CRITERIA FOR THE PILING IN THE SUBSTRUCTURE WITH THE ASSISTANCE OF THE DISTRICT GEOTECHNICAL ENGINEER, THE OFFICE OF CONSTRUCTION ADMINISTRATION, AND THE OFFICE OF GEOTECHNICAL ENGINEERING.

IF DIRECTED BY THE ENGINEER, PERFORM ADDITIONAL RESTRIKE TESTING OR DRIVE ALL PILES IN THE SUBSTRUCTURE TO THE ESTABLISHED DRIVING CRITERIA. THE DEPARTMENT WILL PAY FOR SPLICING OF THE PILES BEYOND THE ESTIMATED LENGTH PROVIDED IN THE PLANS UNDER C&MS 109.05 WITH A NEGOTIATED PRICE PER SPLICE.

THIS PLAN NOTE INCLUDES A QUANTITY OF ONE EACH ITEM 523 DYNAMIC LOAD TESTING, AS PER PLAN AND A QUANTITY OF ONE EACH ITEM 523 RESTRIKE, AS PER PLAN PER EACH SUBSTRUCTURE UNIT

ITEM 202 - PORTIONS OF STRUCTURE REMOVED, OVER 20 FOOT SPAN, AS PER PLAN

THIS ITEM SHALL INCLUDE THE ELEMENTS INDICATED IN THE PLANS AND GENERAL NOTES AND THAT ARE NOT SEPARATELY LISTED FOR PAYMENT. LIMITS OF REMOVAL SHALL BE AS SHOWN ON THE PLANS OR AS DIRECTED BY THE ENGINEER. ITEMS TO BE REMOVED INCLUDE MISCELLANEOUS ITEMS THAT ARE NOT SHOWN TO BE INCORPORATED INTO THE FINAL CONSTRUCTION AND ARE DIRECTED TO BE REMOVED BY THE ENGINEER. SUBMIT WORKING DRAWINGS AND CALCULATIONS IN ACCORDANCE WITH CMS 501.55.

ALL CONCRETE, REINFORCING STEEL, ASPHALT, ETC. REMOVED FROM THE STRUCTURE AND NOT REUSED SHALL, UNLESS OTHERWISE SPECIFIED, BECOME THE PROPERTY OF THE CONTRACTOR AND SHALL BE REMOVED BY HIM/HER FROM THE SITE. THE MATERIALS SHALL NOT BE PERMITTED TO REMAIN ON SITE, WITHIN THE RIGHT-OF-WAY OR ELSEWHERE UNLESS SPECIFIED BY THE ENGINEER.

THE USE OF EXPLOSIVES AND HEADACHE BALLS WILL NOT BE PERMITTED. THE METHOD OF REMOVAL AND THE WEIGHT OF HAMMER SHALL BE APPROVED BY THE ENGINEER.

A LUMP SUM QUANTITY HAS BEEN CARRIED TO THE GENERAL SUMMARY FOR ITEM 202 - PORTIONS OF STRUCTURE REMOVED, OVER 20 FOOT SPAN, AS PER PLAN.

ITEM 503 - COFFERDAMS AND EXCAVATION BRACING, AS PER PLAN

THE DESIGN SHOWN ON THE PLANS FOR TEMPORARY SUPPORT OF EXCAVATION IS ONE REPRESENTATIVE DESIGN THAT MAY BE USED TO CONSTRUCT THE PROJECT. THE CONTRACTOR MAY CONSTRUCT THE DESIGN SHOWN ON THE PLANS OR PREPARE AN ALTERNATE DESIGN TO SUPPORT THE SIDES OF EXCAVATION. IF CONSTRUCTING AN

ALTERNATE DESIGN FOR TEMPORARY SUPPORT OF EXCAVATION, PREPARE AND PROVIDE PLANS IN ACCORDANCE WITH C&MS 501.05. THE DEPARTMENT WILL PAY FOR THE TEMPORARY SUPPORT OF EXCAVATION AT THE CONTRACT LUMP SUM PRICE FOR COFFERDAMS AND EXCAVATION BRACING. THE DEPARTMENT WILL NOT MAKE ADDITIONAL PAYMENT FOR PROVIDING AN ALTERNATE DESIGN.

ITEM 503 - UNCLASSIFIED EXCAVATION, AS PER PLAN

THE CONTRACTOR SHALL EXCAVATE TEMPORARY SLOPES PER THE FOLLOWING:

TEMPORARY SLOPES SHALL BE NO STEEPER THAN 2.5H:1V DURING CONSTRUCTION AT THE REAR ABUTMENT AND WINGWALL.

TEMPORARY SLOPES SHALL BE NO STEEPER THAN 2.75H:1V DURING CONSTRUCTION AT THE FORWARD ABUTMENT AND WINGWALLS.

THE CONTRACTOR SHALL DEWATER ALL EXCAVATIONS AS NECESSARY TO PERFORM THE PROPOSED WORK.

Preliminary Plans - For Reference Only

GENERAL NOTES (2 OF 4)
CUY-90-1678 (BRIDGE 13)
CR-710 (E. 22ND ST.) OVER I.R. 90

SFN 1807839
DESIGN AGENCY
Michael Baker INTERNATIONAL
DESIGNER ZES | CHECKER KAG
REVIEWER CDC 05/10/24
PROJECT ID 82382
SUBSET 4 | TOTAL 99
SHEET 2185 | TOTAL 2696

CUY-90-16.28 (CCG3A)

MODEL: Sheet (2 of 4) PAPERSIZE: 34x22 (in.) DATE: 6/16/2025 TIME: 4:50:23 PM USER: Mala.Gallagher
pw:\\mb-us-pw.bentley.com:mb-us-pw-03\Documents\Cleveland_OH\01_Projects\ODOT\District12\82382\400-Engineering\Structures\SFN_1807839\Sheets\82382_SFN_1807839_SN001.dgn

ITEM 506 - STATIC LOAD TEST, AS PER PLAN

AT THE REAR AND FORWARD ABUTMENTS, PERFORM DYNAMIC TESTING ON THE FIRST TWO PRODUCTION PILES. PERFORM THE STATIC LOAD TEST ON EITHER PILE. ALSO PERFORM DYNAMIC TESTING ON TWO OTHER PILES, TO BE USED AS ANCHOR PILES. DRIVE ALL PILES TO THE FULL ESTIMATED LENGTH FOR THE REAR & FORWARD ABUTMENT SUBSTRUCTURE UNITS (55 FT & 65 FT), IN ACCORDANCE WITH THE PLAN NOTE "PILES DRIVEN TO FULL ESTIMATED LENGTH WITH PILE/SOIL SETUP." OTHER PRODUCTION PILES IN THE SAME SUBSTRUCTURE UNIT MAY BE USED AS ANCHOR PILES. THE STATIC LOAD TEST PILE AND ALL ANCHOR PILES SHALL NOT BE BATTERED. AFTER DRIVING ALL PILES TO THE FULL ESTIMATED LENGTH, CEASE ALL DRIVING OPERATIONS AT THE SUBSTRUCTURE FOR A MINIMUM OF 14 DAYS. AFTER THE WAITING PERIOD, PERFORM THE STATIC LOAD TEST, AND THEN PERFORM PILE RESTRIKES ON THE FOUR DYNAMIC LOAD TEST PILES (TWO RESTRIKE TEST ITEMS). PERFORM A CAPWAP ANALYSIS ON EACH PILE TESTED IN THE SAME SUBSTRUCTURE UNIT FOR EVERY DYNAMIC LOAD TEST AND EVERY RESTRIKE TEST. THE ENGINEER WILL REVIEW THE RESULTS OF THE PILE RESTRIKES AND ESTABLISH THE DRIVING CRITERIA FOR THE PILING IN THE SUBSTRUCTURE IN ACCORDANCE WITH THE PLAN NOTE "PILES DRIVEN TO FULL ESTIMATED LENGTH WITH PILE/SOIL SETUP." SUBMIT ALL TEST RESULTS TO THE OFFICE OF GEOTECHNICAL ENGINEERING.

IF THE RESTRIKE TEST RESULTS INDICATE THAT ANY OF THE PILES DID NOT ACHIEVE THE REQUIRED UBV, DRIVE THE PILE TO THE ESTABLISHED DRIVING CRITERIA IN ACCORDANCE WITH THE PLAN NOTE "PILES DRIVEN TO FULL ESTIMATED LENGTH WITH PILE/SOIL SETUP."

THE CONTRACTOR HAS THREE ALTERNATIVES TO PERFORM THE STATIC LOAD TEST, AS PER PLAN:

1. PERFORM THE STATIC LOAD TEST ON A PRODUCTION PILE IN THE REAR ABUTMENT AND FORWARD ABUTMENT SUBSTRUCTURE UNITS AND USE OTHER PRODUCTION PILES IN THE SAME SUBSTRUCTURE UNIT AS ANCHOR PILES, PER THE NOTE ABOVE.
2. PERFORM THE STATIC LOAD TEST ON A PRODUCTION PILE IN THE REAR ABUTMENT AND FORWARD ABUTMENT SUBSTRUCTURE UNITS AND DRIVE SUPPLEMENTAL PILES FOR ANCHOR PILES. STILL DRIVE ALL PILES TO THE FULL ESTIMATED LENGTH FOR THE ABUTMENT SUBSTRUCTURE UNIT. IN THIS CASE, PERFORM DYNAMIC LOAD TESTING AND RESTRIKE TESTING ON THE STATIC LOAD TEST PILE, ONE OTHER PILE IN THE SAME SUBSTRUCTURE UNIT, AND ON TWO OF THE ANCHOR PILES.
3. PERFORM THE STATIC LOAD TEST OFFLINE, ON A SUPPLEMENTAL TEST PILE WITHIN 50 FEET OF BOTH THE REAR ABUTMENT AND FORWARD ABUTMENT AND DRIVE AN ARRAY OF SUPPLEMENTAL PILES AS ANCHOR PILES. STILL DRIVE ALL PILES TO THE FULL ESTIMATED LENGTH FOR THE ABUTMENT SUBSTRUCTURE UNIT. IN THIS CASE, PERFORM DYNAMIC LOAD TESTING AND RESTRIKE TESTING ON THE STATIC LOAD TEST PILE, ONE OF THE ANCHOR PILES, AND ON TWO PRODUCTION PILES IN THE ABUTMENT SUBSTRUCTURE UNIT, IN ACCORDANCE WITH THE PLAN NOTE "PILES DRIVEN TO FULL ESTIMATED LENGTH WITH PILE/SOIL SETUP."

INCLUDE FOR PAYMENT WITHIN THIS ITEM A QUANTITY OF TWO (2)- ITEM 523 DYNAMIC LOAD TESTING, AS PER PLAN AND TWO (2)- ITEM 523 RESTRIKE, AS PER PLAN, ONE EACH FOR THE REAR AND FORWARD ABUTMENT SUBSTRUCTURE UNITS. EACH OF THESE INCLUDES TESTING ON TWO PILES, IN ACCORDANCE WITH ITEM 523. ANY SUPPLEMENTAL PILES DRIVEN FOR THE STATIC LOAD TEST ARE INCIDENTAL TO ITEM 506 STATIC LOAD TEST, AS PER PLAN.

ITEM 511 - CLASS QC2 CONCRETE WITH QC/QA, BRIDGE DECK, AS PER PLAN:

PROVIDE BUFF WASH FINISH ON EDGES AND BOTTOM OF DECK OVERHANGS AS DETAILED IN THE LANDSCAPE PLANS.

ITEM 511 - CLASS QC2 CONCRETE WITH QC/QA, SIDEWALK, AS PER PLAN:

PLACE CONTROL JOINTS PER THE AESTHETIC ENHANCEMENT PLANS. PROVIDE PEJF AND SEALANT AROUND LUMINAIRES AT SIDEWALK PENETRATIONS AS SHOWN IN THESE PLANS.

ITEM 511 - CLASS QC2 CONCRETE WITH QC/QA, BRIDGE DECK (PARAPET), AS PER PLAN:

ALL BRIDGE RAILS (PARAPETS), PILASTERS AND PLANTERS SHALL RECIEVE A BUFF WASH FINISH WITH CLEAR SEALER (NON-EPOXY) PER THE LANDSCAPE PLANS AND DETAILS.

PRIOR TO CONSTRUCTING ANY OF THE CONCRETE PARAPET, INCLUDING THE PILASTERS AND PLANTERS, THE CONTRACTOR SHALL CAST THE PARAPET, PILASTER AND PLANTERS TEST PIECES REQUIRED IN THE LANDSCAPE PLANS AND MEET THE APPROVAL STANDARDS THEREIN.

THE FINAL APPROVED TEST PIECES WILL SERVE AS A JOB SITE STANDARD FROM WHICH THE ACCEPTANCE OF ALL OTHER WORK WILL BE DETERMINED. THOSE PIECES OF WORK DETERMINED BY THE ENGINEER TO BE UNSATISFACTORY IN TERMS OF CONFORMANCE TO THE QUALITY AND REPRESENTATIVE APPEARANCE OF THE JOB STANDARD TEST PIECES WILL BE REPAIRED OR REPLACED AS DIRECTED BY THE ENGINEER AT NO ADDITIONAL COST OF THE PROJECT.

ITEM 511 - CONCRETE, MISC.: ARCHITECHTURAL TREATMENT, ABUTMENT

FORMLINER FIELD PATTERN ON SHEET 1867

ITEM 511 - CONCRETE, MISC.: ARCHITECHTURAL TREATMENT, PIER

FORMLINER FIELD PATTERN ON SHEET 1867

ITEM 511 - CONCRETE, MISC.: ARCHITECHTURAL TREATMENT, PLANTER AESTHETIC TREATMENT

SHEET 1850

ITEM 511 - CONCRETE, MISC.: ARCHITECHTURAL TREATMENT, RAILING LETTERING

SHEET 1850 AND 1851

ITEM 512 - SEALING OF CONCRETE SURFACES, AS PER PLAN (PERMANENT GRAFFITI PROTECTION)

APPLY A PERMANENT GRAFFITI COATING MEETING THE REQUIREMENTS OF SUPPLEMENT 1083. THE GRAFFITI COATING MUST BE COMPATIBLE WITH THE UNDERLYING CONCRETE SEALER. APPLY THE GRAFFITI COATING ACCORDING TO THE MANUFACTURE'S REQUIREMENTS. THE ADDITIONAL MATERIAL AND LABOR REQUIRED TO SEAL THE FORM LINER RELIEF SHALL BE INCLUDED IN THIS ITEM. TO ACCOUNT FOR THE SURFACE VARIATIONS DUE TO THE FORM LINERS, AN EXTRA 20 PERCENT HAS BEEN ADDED TO THE SEALING QUANTITIES FOR THE PURPOSE OF ESTIMATING. PROVIDE A COATING THAT MEETS THE REQUIREMENTS LISTED BELOW.

THE MATERIAL SHALL BE A SINGLE COMPONENT, RTV (ROOM TEMPERATURE VULCANIZED) NEUTRAL MOISTURE CURE, PERMANENT (NON-SACRIFICIAL), TYPE III (WATER CLEANABLE) POLYSILOXANE (SILICONE) ANTI-GRAFFITI COATING, FREE OF ANY WAXES, EPOXIES OR POLYURETHANE COMPONENTS.

THE COATING SHALL BE A ONE COAT SYSTEM (NO PRIMER) CAPABLE OFBEING SPRAY APPLIED TO A DRY FILM THICKNESS OF 15 MILS (375 MICRONS) WITHOUT RUNS OR SAGS (MULTIPLE COAT APPLICATION ACCEPTABLE FOR BRUSH/ROLLER USAGE AND PRIMER USAGE ACCEPTABLE FOR SPECIALTY SUBSTRATES SUCH AS GALVANIZED METAL).

THE COATING SHALL EMIT LESS THAN 300 G/L (2.5 POUNDS PER GALLON) OF VOLATILE ORGANIC COMPOUNDS (EPA METHOD 24).

THE COATING SHALL MEET THE FOLLOWING PERFORMANCE REQUIREMENTS:

CLEANABILITY LEVEL 1 (GRAFFITI COMPLETELY REMOVED WITH COLD WATER POWER WASH) AS PER ASTM D7089 WITH LOW PRESSURE (1200 PSI) COLD WATER WASH AFTER 2000 HOURS ACCELERATED UV-CONDENSATION EXPOSURE IN ACCORDANCE WITH ASTM D4587.

GRAFFITI RESISTANCE LESS THAN 7.5 AS PER ASTM D6578 AFTER 2000 HOURS ACCELERATED UV-CONDENSATION EXPOSURE IN ACCORDANCE WITH ASTM D4587.

NO SIGNS OF GRAFFITI OR GRAFFITI STAINING AND MUST BE INTACT AND EXHIBIT NO SIGNS OF STREAKING, CRACKING, PINHOLING, DISCOLORING OR OTHER VISIBLE COATING DEGRADATION UPON CASUAL OBSERVATION WHEN TESTED IN ACCORDANCE WITH TXDOT TEX 890-B, TYPE III METHOD.

BREATHABILITY OF 10 PERMS (+/- 3) PER ASTM D1653 USING "WET CUP METHOD".

ELONGATION AT BREAK GREATER THAN 100% AS PER ASTM D412 (USING DIE "D").

ADHESION RATING OF "8 - DIFFICULT TO REMOVE" AS PER ASTM D6677 (ADHESION BY KNIFE).

FINISH COLORS:

ITEM 514 - FIELD PAINTING OF STURCUTRAL STEEL, FINISH COAT, AS PER PLAN

PAINT COLORS SHALL BE AS FOLLOWS:

BLACK FOX (SW 7020) - FASCIA GIRDERS (OUTER FACE AND BOTTOM FLANGE ONLY)

ALABASTER (SW 7008) - INSIDE GIRDERS, BRACING MEMBERS AND INSIDE FACE OF FASCIA GIRDERS

ITEM 512 - SEALING OF CONCRETE SURFACES (EPOXY-URETHANE), AS PER PLAN

CONCRETE SEALER COLORS SHALL BE AS FOLLOWS:

BLACK FOX (SW 7020) - STREET NAME LETTERING ON RAILINGS

ALABASTER (SW 7008) - SUBSTRUCTURE - PIERS, ABUTMENTS AND ABUTMENT WALLS

ALPACA (SW 7022) - ABUTMENT AND WINGWALL ACCENTS

ALL COLOR NAME AND NUMBER REFERENCES ARE TAKEN FROM THE SHERWIN WILLIAMS COLOR PALATE. THE CONTRACTOR MAY SUBSTITUTE SIMILAR COLORS FROM ALTERNATIVE SUPPLIER'S COLOR PALATE.

ITEM 526 - REINFORCED CONCRETE APPROACH SLABS (T=17"), AS PER PLAN

CONSTRUCT REAR APPROACH SLAB AS DETAILED ON SHEET 89. SEE LANDSCAPING PLANS FOR INTEGRALLY COLORED CONCRETE DETAILS.

ITEM 607, VANDAL PROTECTION FENCE, 8' STRAIGHT, COATED FABRIC, AS PER PLAN

CANTILEVER FENCE PANELS AT CHEEKWALL LOCATIONS TO ENSURE AN OPENING GREATER THAN OR EQUAL TO 1" AND LESS THAN 4" EXISTS BETWEEN THE FENCE AND THE BACK FACE OF THE PILASTER. FENCE FABRIC SHALL BE BLACK.

ITEM 625, LIGHT POLE ANCHOR BOLTS ON STRUCTURE, AS PER PLAN
ITEM 625, LIGHTING, MISC.: PEDESTRIAN POLE ANCHORAGE

WHEN A LIGHT POLE OR PEDESTRIAN POLE IS MOUNTED ON A STRUCTURE, THE REQUIRED ANCHOR BOLTS MAY DIFFER IN LENGTH AND/OR SHAPE FROM THOSE REQUIRED WHEN THE POLE IS MOUNTED ON A CAST-IN-PLACE DRILLED SHAFT FOUNDATION. THE COST DIFFERENTIAL FOR FURNISHING SUCH BOLTS IS INCLUDED HEREIN.

IN ADDITION, THERE IS NO FOUNDATION CONSTRUCTION ITEM IN WHICH TO INCLUDE THE SETTING OF ANCHOR BOLTS. THUS, THE SETTING OF THE ANCHOR BOLTS INTO THE STRUCTURE IS ALSO PART OF THIS WORK.

PAYMENT SHALL BE AT THE UNIT PRICE FOR THE ITEM INCLUDING PLATE(S), ANCHOR ASSEMBLY, LABOR, EQUIPMENT, CONNECTIONS, INSPECTIONS, AND INCIDENTALS NECESSARY TO COMPLETE THE WORK.

ITEM 625 - CONDUIT MISC.: 12" GAS CONDUIT INSTALLATION

THIS ITEM INCLUDES PAYMENT FOR INSTALLATION OF 12" GAS LINE ON THE STRUCTURE, AS SHOWN IN THE PLANS. ENBRIDGE GAS OHIO WILL INSTALL LINK SEALS, SPACERS AND BOOT SEAL WHEN INSTALLING THE PIPELINE.

ITEM 625 - CONDUIT MISC.: AT&T 4" CONDUIT INSTALLATION

THIS ITEM INCLUDES PAYMENT FOR INSTALLATION OF THE AT&T CONDUIT ON THE STRUCTURE, AS SHOWN IN THE PLANS. MATERIALS WILL BE SUPPLIED TO THE GENERAL CONTRACTOR FOR INSTALLATION. AT&T WILL PROVIDE CONDUIT RACKS, FIBERGLASS CONDUITS TO ENDS OF APPROACH SLAB, FITTINGS AND EXPANSION JOINTS. CONTRACTOR TO INSTALL ALL MATERIALS ON BRIDGE. AT&T WILL INSTALL CONDUITS OUTSIDE OF APPROACH SLABS TO MANHOLES. AT&T WILL COMPLETE THE CABLE WORK.

ITEM 625 - CONDUIT, MISC.: CEI 4" CONDUIT INSTALLATION

THIS ITEM INCLUDES INSTALLATION OF THE CONDUIT ON THE STRUCTURE. CEI WILL PROVIDE ALL MATERIALS. CEI PULLS ALL CABLES. CEI CONTRACTOR WILL COMPLETE WORK UP TO THE OUTSIDE EDGE OF THE APPROACH SLABS (ALL CONDUIT OFF THE BRIDGE). CONTRACTOR WILL INSTALL THE CONDUIT BETWEEN THE OUTSIDE EDGES OF APPROACH SLABS (ALL CONDUIT UNDER APPROACH SLABS, ON THE BRIDGE AND THROUGH THE ABUTMENTS).

ITEM 625 - CONDUIT, MISC.: CPP 4" CONDUIT INSTALLATION

THIS ITEM INCLUDES INSTALLATION OF THE CPP CONDUIT ON THE STRUCTURE, AS SHOWN IN THE PLANS, AND PULLING THE WIRE. CPP WILL MAKE THE FINAL CONNECTION. CONTRACTOR TO PERFORM INTERMEDIATE (DEAD) SPLICING WITH CPP INSPECTION. CPP WILL COMPLETE CUT OVER SPLICING. CPP WILL REQUIRE NOTIFICATION OF SCHEDULE FOR THE PULLING OF CONDUIT. CPP TO INSPECT ALL WORK BEFORE FINAL CONNECTIONS ARE MADE IN MANHOLES.

ITEM 690 - ROLLER SUPPORTS (GAS LINE)

THIS ITEM INCLUDES INSTALLATION OF ALL GAS LINE SUPPORTS ON THE BRIDGE, AS SHOWN IN THE PLANS.

ITEM 690 - UTILITY SUPPORTS (AT&T DUCTS)

THIS ITEM INCLUDES INSTALLATION OF ALL AT&T DUCT SUPPORT HANGERS ON THE BRIDGE, AS SHOWN IN THE PLANS. AT&T WILL PROVIDE CONDUIT RACKS, FIBERGLASS CONDUITS TO ENDS OF APPROACH SLAB, FITTINGS AND EXPANSION JOINTS. CONTRACTOR TO INSTALL ALL MATERIALS ON BRIDGE.

ITEM 690 - UTILITY SUPPORTS (CEI DUCTS)

THIS ITEM INCLUDES INSTALLATION OF ALL CEI DUCT SUPPORT HANGERS ON THE BRIDGE, AS SHOWN IN THE PLANS. MATERIAL PROVIDED BY CEI FOR THIS WORK INCLUDES UTILITY HANGERS, CONDUIT RACKS, EXPANSION JOINTS AND SLEEVES. STEEL ANGLE SUPPORTS PROVIDED BY CONTRACTOR. CONTRACTOR TO INSTALL HANGERS AND CONDUIT RACKS. CONTRACTOR TO WORK WITH CEI TO GUARANTEE THAT THERE IS A PROPER ARRANGEMENT FOR THE DELIVERY OF MATERIALS.

ITEM 690 - UTILITY SUPPORTS (CPP DUCTS)

THIS ITEM INCLUDES INSTALLATION OF ALL CPP DUCT SUPPORT HANGERS ON THE BRIDGE, AS SHOWN IN THE PLANS.

Preliminary Plans - Not For Reference Only

GENERAL NOTES (3 OF 4)
CUY-90-1678 (BRIDGE 13)
CR-710 (E. 22ND ST.) OVER I.R. 90

SFN 1807839
DESIGN AGENCY
Michael Baker INTERNATIONAL
DESIGNER ZES | CHECKER KAG
REVIEWER CDC 05/10/24
PROJECT ID 82382
SUBSET 5 | TOTAL 99
SHEET 2186 | TOTAL 2696

CUY-90-16.28 (CCG3A)
MODEL: Sheet (3 of 4) PAPERSIZE: 34x22 (in.) DATE: 3/28/2025 TIME: 7:34:30 AM USER: Rohit.Bk
pw:\\mb-us-pw.bentley.com:mb-us-pw-03\Documents\Cleveland_OH\01_Projects\ODOT\District12\82382400-Engineering\Structures\SFN_1807839\Sheets\82382_SFN_1807839_SN001.dgn

ABBREVIATIONS

BOT.	= BOTTOM
BRGS.	= BEARINGS
C.J.	= CONSTRUCTION JOINT
CLR.	= CLEAR
CONST.	= CONSTRUCTION
DIA.	= DIAMETER
E.F.	= EACH FACE
ELEV.	= ELEVATION
E.S.	= EACH SIDE
EX.	= EXISTING
F.A.	= FORWARD ABUTMENT
F.F.	= FAR FACE
HORIZ.	= HORIZONTAL
I.R.	= INTERSTATE ROUTE
LT	= LEFT
MAX.	= MAXIMUM
MIN.	= MINIMUM
N.F.	= NEAR FACE
PR.	= PROPOSED
R.A.	= REAR ABUTMENT
RT	= RIGHT
SER.	= SERIES
S.O.	= SERIES OF
SPA.	= SPACED / SPACING / SPACES
S.R.	= STATE ROUTE
TYP.	= TYPICAL
U.N.O.	= UNLESS NOTED OTHERWISE
VERT.	= VERTICAL
W.P.	= WORK POINT
W.W.	= WING WALL

SECTION / DETAIL / VIEW CALLOUTS



(SEE SECTION A ON SHEET 10)



(SECTION A CUT FROM SHEET 9)

Preliminary Plans - For Reference Only

GENERAL NOTES (4 OF 4)
CUY-90-1678 (BRIDGE 13)
CR-710 (E. 22ND ST.) OVER I.R. 90

SFN 1807839

DESIGN AGENCY
Michael Baker INTERNATIONAL

DESIGNER	CHECKER
ZES	KAG

REVIEWER
CDC 05/10/24

PROJECT ID
82382

SUBSET	TOTAL
6	99

SHEET	TOTAL
2187	2696

CUY-90-16.28 (CCG3A)

MODEL: Sheet (4 of 4) PAPERSIZE: 34x22 (in.) DATE: 3/28/2025 TIME: 7:34:31 AM USER: RohitBk
pw:\\mb-us-pw.bentley.com:mb-us-pw-03\Documents\Cleveland_OH\01_Projects\ODOT\District12\82382\400-Engineering\Structures\SFN_1807839\Sheets\82382_SFN_1807839_SN001.dgn

ESTIMATED QUANTITIES

CALCULATED BY: ZES DATE: 03/20/24
CHECKED BY: DAF DATE: 04/12/24

PARTICIPATION	ITEM	ITEM EXT.	TOTAL	UNIT	DESCRIPTION	ABUTMENTS	PIERS	SUPERSTR.	GENERAL	SHEET REF.
02/IMS/10	202	11203	LS		PORTIONS OF STRUCTURE REMOVED, OVER 20 FOOT SPAN, AS PER PLAN				LS	4, 9-14
02/IMS/10	202	11501	8	EACH	PORTIONS OF STRUCTURE REMOVED, AS PER PLAN	8				16-17
02/IMS/10	202	22900	678	SY	APPROACH SLAB REMOVED				678	
02/IMS/10	503	11101	LS		COFFERDAMS AND EXCAVATION BRACING, AS PER PLAN				LS	4
02/IMS/10	503	21101	11,081	CY	UNCLASSIFIED EXCAVATION, AS PER PLAN				11,081	4
02/IMS/10	505	11100	LS		PILE DRIVING EQUIPMENT MOBILIZATION				LS	
02/IMS/10	506	11101	LS		STATIC LOAD TEST, AS PER PLAN				LS	5
02/IMS/10	507	00600	22,230	FT	14" CAST-IN-PLACE REINFORCED CONCRETE PILES, DRIVEN	22,230				
02/IMS/10	507	00650	24,040	FT	14" CAST-IN-PLACE REINFORCED CONCRETE PILES, FURNISHED	24,040				
02/IMS/10	507	00700	6,935	FT	16" CAST-IN-PLACE REINFORCED CONCRETE PILES, DRIVEN			6,935		
02/IMS/10	507	00750	7,300	FT	16" CAST-IN-PLACE REINFORCED CONCRETE PILES, FURNISHED			7,300		
02/IMS/10	509	10000	711,695	LB	EPOXY COATED STEEL REINFORCEMENT	272,681	104,588	334,426		
02/IMS/10	511	34447	910	CY	CLASS QC2 CONCRETE WITH QC/QA, BRIDGE DECK, AS PER PLAN			910		5
02/IMS/10	511	34451	259	CY	CLASS QC2 CONCRETE WITH QC/QA, BRIDGE DECK (PARAPET), AS PER PLAN			259		5
02/IMS/10	511	41012	129	CY	CLASS QC1 CONCRETE WITH QC/QA, PIER ABOVE FOOTINGS		129			
02/IMS/10	511	44112	1,696	CY	CLASS QC1 CONCRETE WITH QC/QA, ABUTMENT NOT INCLUDING FOOTING	1,696				
02/IMS/10	511	46512	1,471	CY	CLASS QC1 CONCRETE WITH QC/QA, FOOTING	1,315	156			
02/IMS/10	511	51513	484	CY	CLASS QC2 CONCRETE WITH QC/QA, SIDEWALK, AS PER PLAN			484		5
02/IMS/10	511	71200	13,047	SF	CONCRETE, MISC.: ARCHITECTURAL TREATMENT, ABUTMENT	13,047				5
02/IMS/10	511	71200	1,532	SF	CONCRETE, MISC.: ARCHITECTURAL TREATMENT, PLANTER AESTHETIC TREATMENT			1,532		5
02/IMS/10	511	71200	3,218	SF	CONCRETE, MISC.: ARCHITECTURAL TREATMENT, PIER		3,218			5
02/IMS/10	511	71200	295	SF	CONCRETE, MISC.: ARCHITECTURAL TREATMENT, RAILING LETTERING			295		5
02/IMS/10	512	10001	656	SY	SEALING OF CONCRETE SURFACES, AS PER PLAN (PERMANENT GRAFFITI PROTECTION)	656				5
02/IMS/10	512	10050	3,848	SY	SEALING OF CONCRETE SURFACES (NON-EPOXY)			3,336	512	
02/IMS/10	512	10101	1,947	SY	SEALING OF CONCRETE SURFACES (EPOXY-URETHANE), AS PER PLAN	1,744	203			5
02/IMS/10	512	33000	32	SY	TYPE 2 WATERPROOFING				32	
02/IMS/10	512	33010	1,727	SY	TYPE 3 WATERPROOFING				1,727	
02/IMS/10	513	10280	1,924,400	LB	STRUCTURAL STEEL MEMBERS, LEVEL 4			1,924,400		
02/IMS/10	513	20000	8,656	EACH	WELDED STUD SHEAR CONNECTORS			8,656		
02/IMS/10	514	00060	87,648	SF	FIELD PAINTING STRUCTURAL STEEL, INTERMEDIATE COAT			87,648		
02/IMS/10	514	00067	87,648	SF	FIELD PAINTING STRUCTURAL STEEL, FINISH COAT, AS PER PLAN			87,648		5
02/IMS/10	516	11210	251	FT	STRUCTURAL EXPANSION JOINT INCLUDING ELASTOMERIC STRIP SEAL				251	
02/IMS/10	516	13600	736	SF	1" PREFORMED EXPANSION JOINT FILLER	384	352			
02/IMS/10	516	44101	14	EACH	ELASTOMERIC BEARING WITH INTERNAL LAMINATES AND LOAD PLATE (NEOPRENE), AS PER PLAN (1'-8" W X 0'-10" L X 2.65" T)				14	56-57
02/IMS/10	516	44301	14	EACH	ELASTOMERIC BEARING WITH INTERNAL LAMINATES AND LOAD PLATE (NEOPRENE), AS PER PLAN (1'-8" W X 1'-5" L X 4.09" T)				14	56-57
02/IMS/10	516	44401	14	EACH	ELASTOMERIC BEARING WITH INTERNAL LAMINATES AND LOAD PLATE (NEOPRENE), AS PER PLAN (2'-5" W X 2'-2" L X 5.69" T)				14	56-57

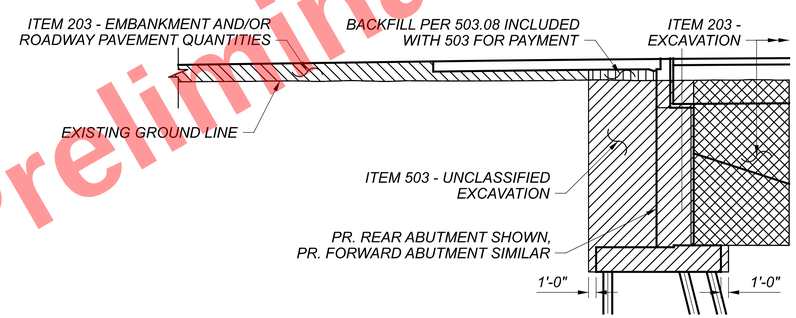

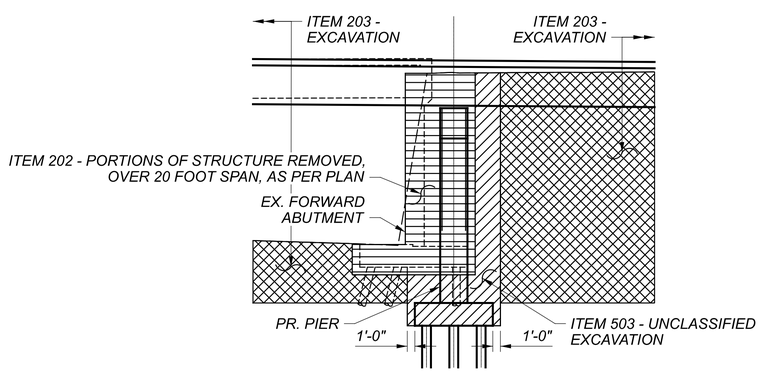

ITEM 503 PAY LIMIT DIAGRAM

Preliminary Plans - For Reference Only

ESTIMATED QUANTITIES (1 OF 2)
CUY-90-1678 (BRIDGE 13)
CR-710 (E. 22ND ST.) OVER I.R. 90

SFN 1807839
DESIGN AGENCY
Michael Baker INTERNATIONAL
DESIGNER ZES | CHECKER KAG
REVIEWER CDC 05/10/24
PROJECT ID 82382
SUBSET 7 | TOTAL 99
SHEET 2188 | TOTAL 2696

CUY-90-16.28 (CCG3A)

MODEL: Sheet PAPERSIZE: 34x22 (in.) DATE: 6/13/2025 TIME: 3:25:49 PM USER: David.Fell
pw:\\mb-us-pw.bentley.com:mb-us-pw-03\Documents\Cleveland_OH\01_Projects\ODOT\District12\82382\400-Engineering\Structures\SFN_1807839\Sheets\82382_SFN_1807839_SQ001.dgn

ESTIMATED QUANTITIES

CALCULATED BY: ZES DATE: 03/20/24
CHECKED BY: DAF DATE: 04/12/24

PARTICIPATION	ITEM	ITEM EXT.	TOTAL	UNIT	DESCRIPTION	ABUTMENTS	PIERS	SUPERSTR.	GENERAL	SHEET REF.
02/IMS/10	518	12200	8	EACH	SCUPPERS, INCLUDING SUPPORTS				8	
02/IMS/10	518	21200	1,035	CY	POROUS BACKFILL WITH GEOTEXTILE FABRIC	1,035				
02/IMS/10	518	40000	697	FT	6" PERFORATED CORRUGATED PLASTIC PIPE	697				
02/IMS/10	518	40011	33	FT	6" NON-PERFORATED CORRUGATED PLASTIC PIPE, INCLUDING SPECIALS, AS PER PLAN	33				85
02/IMS/10	518	43301	304	FT	6" PIPE DOWNSPOUT, INCLUDING SPECIALS, AS PER PLAN	66	130	108		85 & 88
02/IMS/10	518	62100	53	FT	STRUCTURE DRAINAGE, MISC.: 4" NON-PERFORATED PVC PIPE,INCLUDING SPECIALS			53		85
02/IMS/10	518	62100	406	FT	STRUCTURE DRAINAGE, MISC.: 4" PERFORATED PVC PIPE			406		85
02/IMS/10	518	62100	176	FT	STRUCTURE DRAINAGE, MISC.: 6" NON-PERFORATED PVC DRAIN PIPE, INCLUDING SPECIALS			176		85
02/IMS/10	523	20001	4	EACH	DYNAMIC LOAD TESTING, AS PER PLAN				4	3
02/IMS/10	523	20501	4	EACH	RESTRIKE, AS PER PLAN				4	3
02/IMS/10	526	30001		SY	REINFORCED CONCRETE APPROACH SLABS (T=17"), AS PER PLAN					5
02/IMS/10	526	30010	394	SY	REINFORCED CONCRETE APPROACH SLABS WITH QC/QA (T=17")				394	
02/IMS/10	526	90010	244	FT	TYPE A INSTALLATION				244	
02/IMS/10	SPECIAL	530E00200	LS		STRUCTURES: PRECONSTRUCTION CONDITION SURVEY				LS	3
02/IMS/10	SPECIAL	530E00400	280	EACH	STRUCTURES: BOLLARD ANCHORAGE				280	86
02/IMS/10	SPECIAL	530E14000	LS		STRUCTURAL SURVEY AND MONITORING OF VIBRATION				LS	3
02/IMS/10	601	21000	1,092	SY	CONCRETE SLOPE PROTECTION				1,092	
02/IMS/10	607	39911	319	FT	VANDAL PROTECTION FENCE, 8' STRAIGHT, COATED FABRIC, AS PER PLAN				319	5
02/IMS/10	625	10615	28	EACH	LIGHT POLE ANCHOR BOLTS ON STRUCTURE, AS PER PLAN				28	5
02/IMS/10	625	25920	268	FT	CONDUIT, MISC.: 12" GAS CONDUIT INSTALLATION				268	5
02/IMS/10	625	25920	2,144	FT	CONDUIT, MISC.: AT&T 4" CONDUIT INSTALLATION				2,144	5
02/IMS/10	625	25920	3,216	FT	CONDUIT, MISC.: CEI 4" CONDUIT INSTALLATION				3,216	5
02/IMS/10	625	25920	2,412	FT	CONDUIT, MISC.: CPP 4" CONDUIT INSTALLATION				2,412	5
02/IMS/10	625	98000	24	EACH	LIGHTING, MISC.: PEDESTRIAN POLE ANCHORAGE			24		5
02/IMS/10	SPECIAL	690E50600	70	EACH	BOLLARD				70	1826
02/IMS/10	SPECIAL	690E98000	29	EACH	ROLLER SUPPORTS (GAS LINE)			29		5
02/IMS/10	SPECIAL	690E98000	29	EACH	UTILITY SUPPORTS (AT&T DUCTS)			29		5
02/IMS/10	SPECIAL	690E98000	29	EACH	UTILITY SUPPORTS (CEI DUCTS)			29		5
02/IMS/10	SPECIAL	690E98000	29	EACH	UTILITY SUPPORTS (CPP DUCTS)			29		5
02/IMS/10	SPECIAL	690E98000	27	EACH	UTILITY SUPPORTS (WATER LINE)			27		5

Preliminary Plans - For Reference Only

ESTIMATED QUANTITIES (2 OF 2)
CUY-90-1678 (BRIDGE 13)
CR-710 (E. 22ND ST.) OVER I.R. 90

SFN 1807839
DESIGN AGENCY Michael Baker INTERNATIONAL
DESIGNER ZES | CHECKER KAG
REVIEWER CDC 05/10/24
PROJECT ID 82382
SUBSET 8 | TOTAL 99
SHEET 2189 | TOTAL 2696

CUY-90-16.28 (CCG3A)

MODEL: Sheet PAPERSIZE: 34x22 (in.) DATE: 6/13/2025 TIME: 3:25:55 PM USER: David.Fell
pw:\\mb-us-pw.bentley.com:mb-us-pw-03\Documents\Cleveland_OH\01_Projects\ODOT\District12\82382\400-Engineering\Structures\SFN_1807839\Sheets\82382_SQ002.dgn

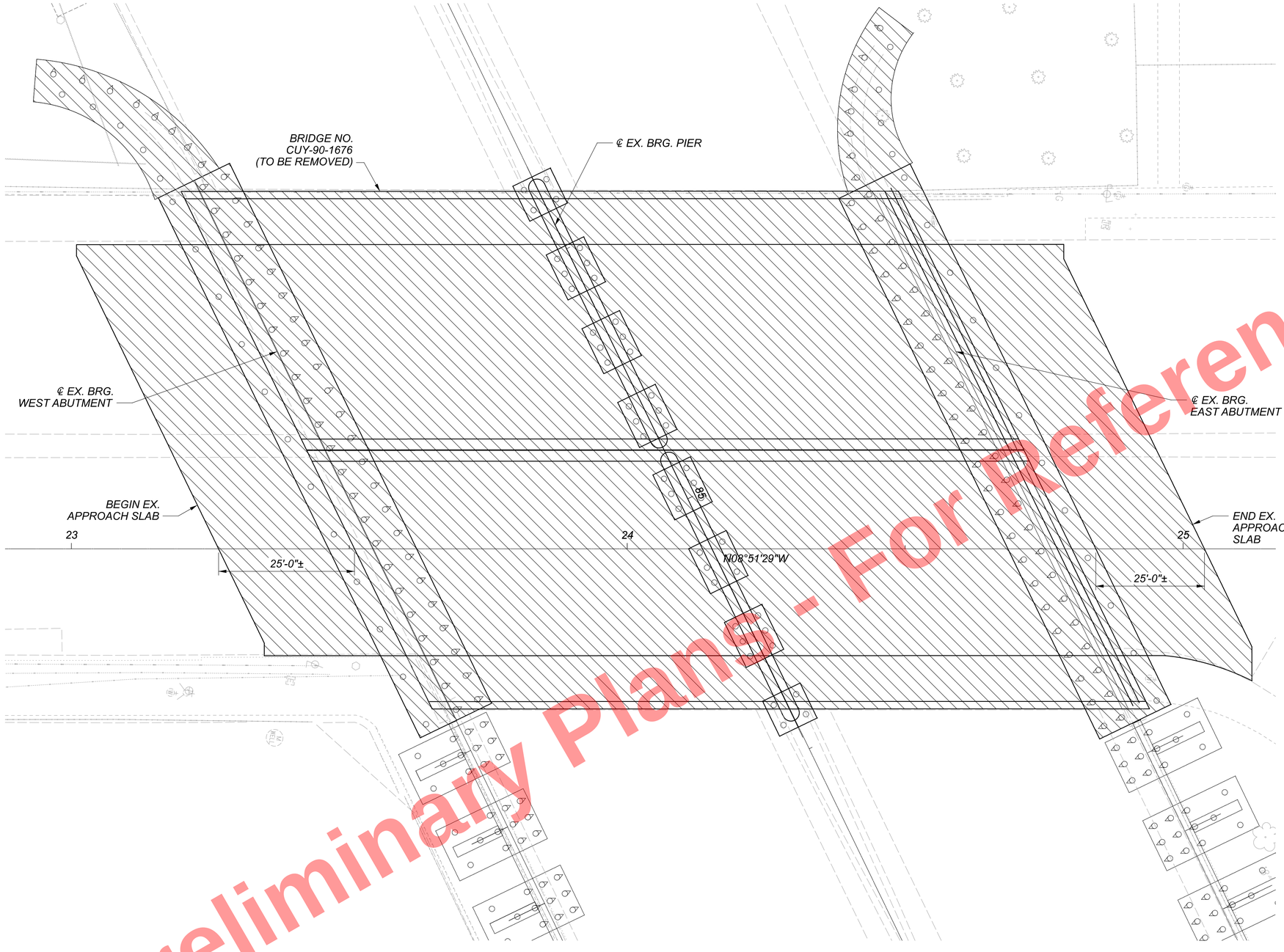

REMOVAL PLAN

NOTES:

1. SEE SHEET 10/99 FOR ABUTMENT AND PIER REMOVAL DETAILS.
2. THE PROPOSED PILE ARRANGEMENT WAS DEVELOPED WITH THE INTENTION TO ELIMINATE CONFLICTS BETWEEN THE PROPOSED AND EXISTING PILES.
3. EXISTING PILE LOCATIONS ARE DEPICTED IN ACCORDANCE WITH AVAILABLE EXISTING PLAN INFORMATION. CONTRACTOR TO VERIFY LOCATION OF EXISTING PILES FOLLOWING REMOVAL OF EXISTING PILE CAP. NO PILES SHALL BE DRIVEN UNTIL CLEARANCE BETWEEN EXISTING AND PROPOSED PILES IS VERIFIED. THE CONTRACTOR SHALL NOTIFY THE STATE/ENGINEER OF ANY CONFLICTS AND PROVIDE FIELD SKETCHES OF THE CONFLICT SO THE PROPOSED PILE ARRANGEMENT AND PILE CAP REINFORCING MAY BE ADJUSTED AS NECESSARY TO MITIGATE CONFLICTS.
4. SEE FOUNDATION PLAN FOR LOCATIONS OF EXISTING PILES TO BE FULLY REMOVED.

LEGEND:

= REMOVAL PER ITEM 202 - PORTIONS OF STRUCTURE REMOVED OVER 20 FOOT SPAN, AS PER PLAN

EXISTING STRUCTURE

TYPE: CONTINUOUS BEAMS WITH REINFORCED CONCRETE DECK AND SUBSTRUCTURE
SPANS: 61'-3"±, 61'-3"± C/C BEARINGS ALONG ℄ CONSTRUCTION
ROADWAY: 74'-0"±, F/F OF CURBS WITH TWO 8'-0" WALKS
LOADING: CF 2000 (51)
SKEW: 25°51'00" RF
DECK THICKNESS: 11¼"±
WEARING SURFACE: 2"± CONCRETE OVERLAY
APPROACH SLABS: AS-1-54 (25'± LONG)
ALIGNMENT: TANGENT
CROWN: 0.0156±
STRUCTURE FILE NUMBER: 1807838
DATE BUILT: 1958
DISPOSITION: TO BE REMOVED

Preliminary Plans - For Reference Only

STRUCTURE REMOVAL DETAILS (1 OF 6)
CUY-90-1678 (BRIDGE 13)
CR-710 (E. 22ND ST.) OVER I.R. 90

SFN 1807839
DESIGN AGENCY
Michael Baker INTERNATIONAL
DESIGNER ZES | CHECKER SSW
REVIEWER CDC 05/10/24
PROJECT ID 82382
SUBSET 9 | TOTAL 99
SHEET 2190 | TOTAL 2696

CUY-90-16.28 (CCG3A)

MODEL: Sheet PAPERSIZE: 34x22 (in.) DATE: 3/28/2025 TIME: 7:34:55 AM USER: RohitBk
pw:\\mb-us-pw.bentley.com:mb-us-pw-03\Documents\Cleveland_OH\01_Projects\ODOT\District12\82382\400-Engineering\Structures\SFN_1807839\Sheets\82382_SFN_1807839_SV001.dgn

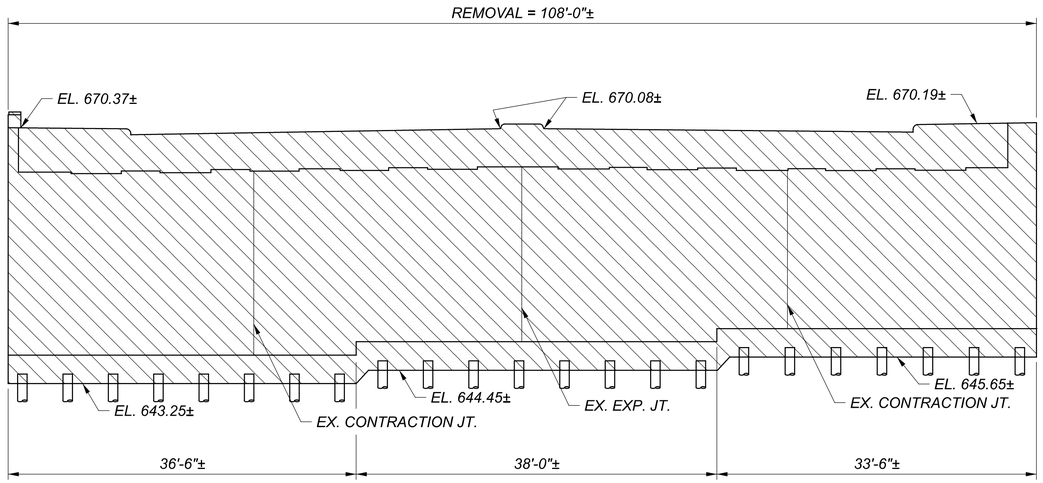

REAR ABUTMENT REMOVAL ELEVATION

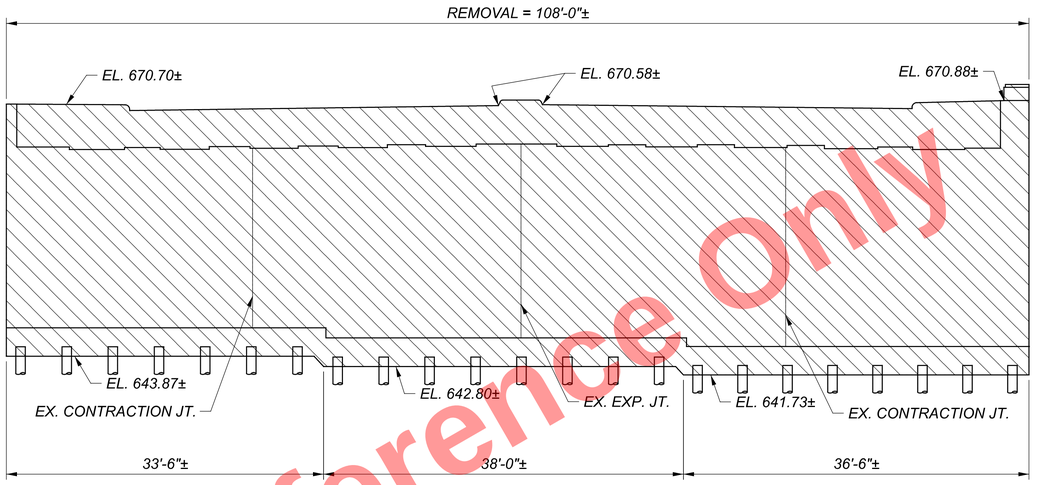

FORWARD ABUTMENT REMOVAL ELEVATION

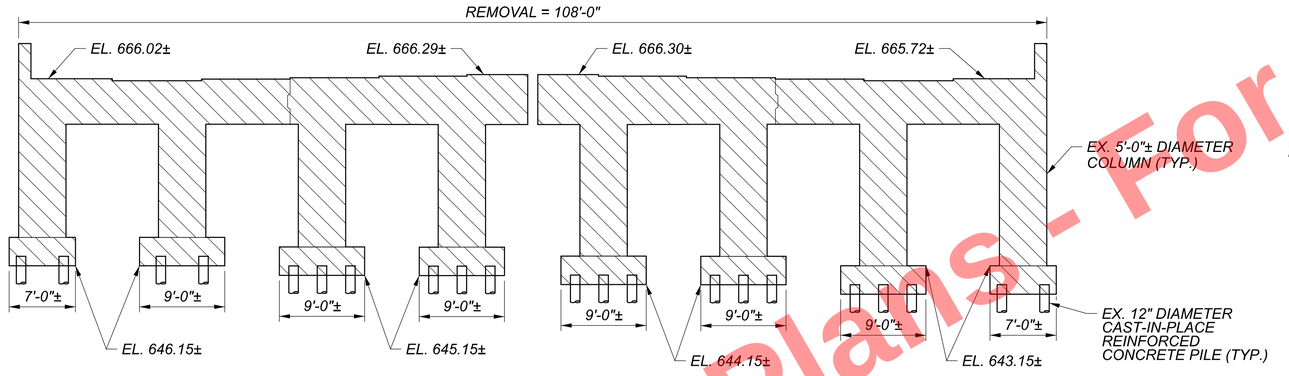

PIER REMOVAL ELEVATION

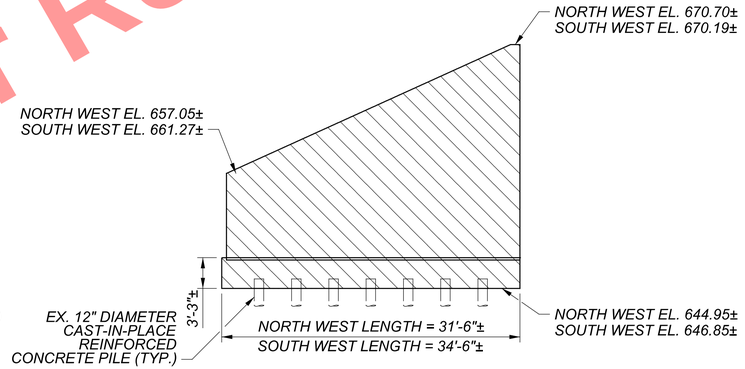

WINGWALL REMOVAL ELEVATION

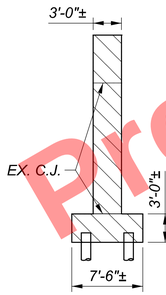

TYPICAL PIER SECTION

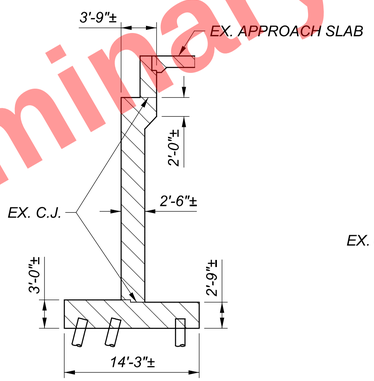

TYPICAL ABUTMENT SECTION

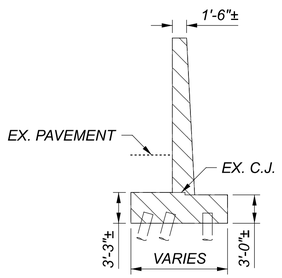

TYPICAL WINGWALL SECTION

LEGEND:

= REMOVAL PER ITEM 202 - PORTIONS OF STRUCTURE REMOVED OVER 20 FOOT SPAN AS PER PLAN

NOTES:

1. REFER TO EXISTING PLANS FOR ADDITIONAL DETAILS AND DIMENSIONS.
2. SEE GENERAL NOTES:
   EXISTING STRUCTURE VERIFICATION

   PORTIONS OF STRUCTURE REMOVED, OVER 20 FOOT SPAN, AS PER PLAN
3. REMOVE EXISTING PILES UNDER PROPOSED PIER PILE CAP LIMITS 6" - 12" BELOW DREDGE LINE ELEVATION FOR PROPOSED PILE CAP.:
   PIER 1A: EL. 639.00
   PIER 1B: EL. 636.00
4. REMOVE EXISTING PILES OUTSIDE OF PROPOSED PILE CAP LIMITS TO 1' BELOW PROPOSED SUBGRADE ELEVATION.
5. CONTRACTOR MAY MODIFY REMOVAL LIMITS TO ACCOMMODATE THEIR PROPOSED REMOVAL AND FOUNDATION INSTALLATION PLAN.
6. SEE FOUNDATION PLAN FOR LOCATIONS OF EXISTING PILES TO BE FULLY REMOVED.

Preliminary Plans - For Reference Only

STRUCTURE REMOVAL DETAILS (2 OF 6)
CUY-90-1678 (BRIDGE 13)
CR-710 (E. 22ND ST.) OVER I.R. 90

SFN 1807839
DESIGN AGENCY
Michael Baker INTERNATIONAL
DESIGNER ZES | CHECKER SSW
REVIEWER CDC 05/10/24
PROJECT ID 82382
SUBSET 10 | TOTAL 99
SHEET 2191 | TOTAL 2696

CUY-90-16.28 (CCG3A)

MODEL: Sheet PAPERSIZE: 34x22 (in.) DATE: 3/28/2025 TIME: 7:35:02 AM USER: RohitLBk
pw:\\mb-us-pw.bentley.com:mb-us-pw-03\Documents\Cleveland_OH\01_Projects\ODOT\District12\82382400-Engineering\Structures\SFN_1807839\Sheets\82382_SFN_1807839_SV002.dgn

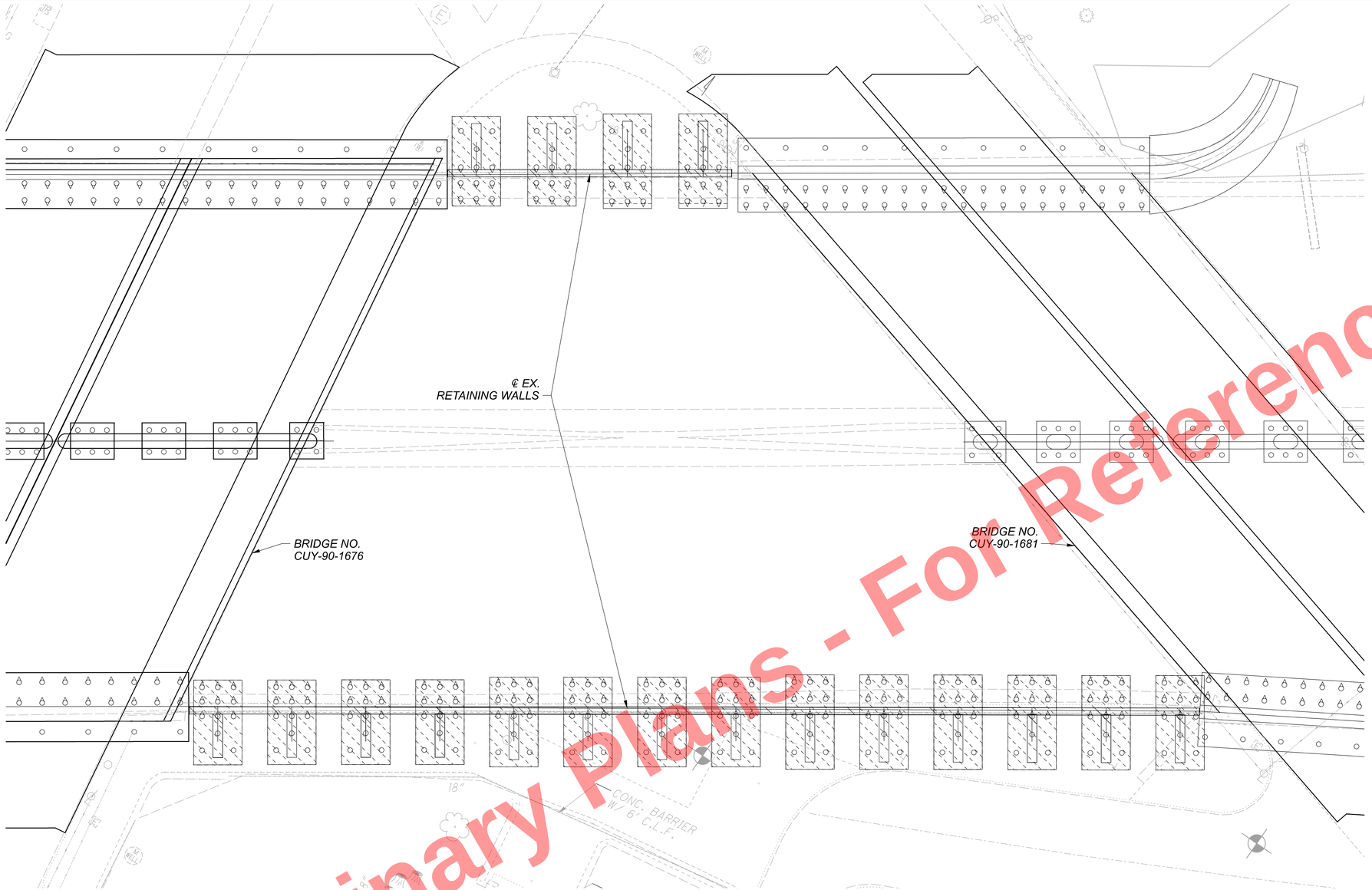

REMOVAL PLAN

LEGEND:

= REMOVAL PER ITEM 202 - PORTIONS OF STRUCTURE REMOVED OVER 20 FOOT SPAN AS PER PLAN

NOTES:

1. SEE SHEET 12/99 FOR RETAINING WALL REMOVAL DETAILS.
2. THE PROPOSED PILE ARRANGEMENT WAS DEVELOPED WITH THE INTENTION TO ELIMINATE CONFLICTS BETWEEN THE PROPOSED AND EXISTING PILES.
3. EXISTING PILE LOCATIONS ARE DEPICTED IN ACCORDANCE WITH AVAILABLE EXISTING PLAN INFORMATION. CONTRACTOR TO VERIFY LOCATION OF EXISTING PILES FOLLOWING REMOVAL OF EXISTING PILE CAP. NO PILES SHALL BE DRIVEN UNTIL CLEARANCE BETWEEN EXISTING AND PROPOSED PILES IS VERIFIED. THE CONTRACTOR SHALL NOTIFY THE STATE/ENGINEER OF ANY CONFLICTS AND PROVIDE FIELD SKETCHES OF THE CONFLICT SO THE PROPOSED PILE ARRANGEMENT AND PILE CAP REINFORCING MAY BE ADJUSTED AS NECESSARY TO MITIGATE CONFLICTS.
4. SEE FOUNDATION PLAN FOR LOCATIONS OF EXISTING PILES TO BE FULLY REMOVED.

Preliminary Plans - For Reference Only

STRUCTURE REMOVAL DETAILS (3 OF 6)
CUY-90-1678 (BRIDGE 13)
CR-710 (E. 22ND ST.) OVER I.R. 90

SFN 1807839

DESIGN AGENCY
Michael Baker INTERNATIONAL

DESIGNER	CHECKER
ZES	SSW

REVIEWER
CDC 05/10/24

PROJECT ID 82382

SUBSET	TOTAL
11	99

SHEET	TOTAL
2192	2696

CUY-90-16.28 (CCG3A)

MODEL: Sheet PAPERSIZE: 34x22 (in.) DATE: 3/28/2025 TIME: 7:35:09 AM USER: RohitBk
pw:\\mb-us-pw.bentley.com:mb-us-pw-03\Documents\Cleveland_OH101_Projects\ODOT\District12\82382\400-Engineering\Structures\SFN_1807839\Sheets\82382_SFN_1807839_SV003.dgn

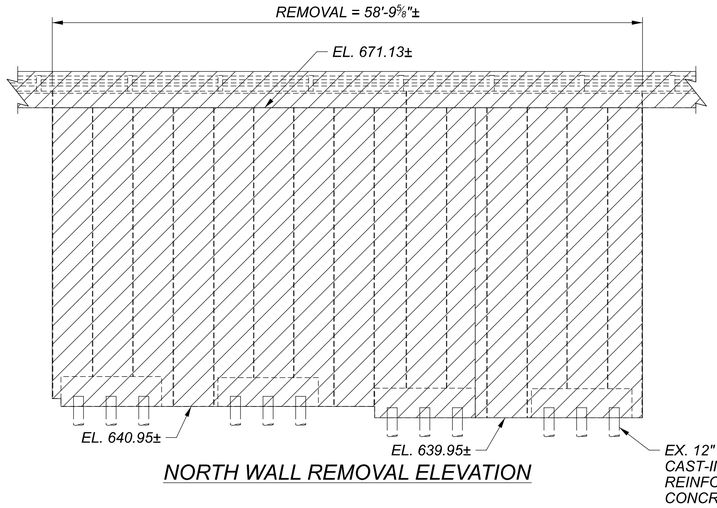

NORTH WALL REMOVAL ELEVATION

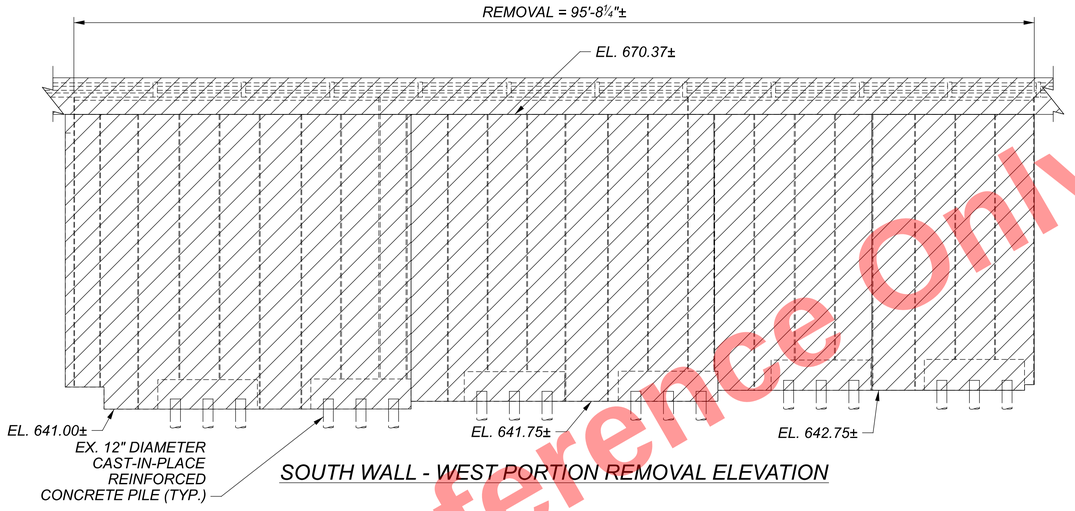

SOUTH WALL - WEST PORTION REMOVAL ELEVATION

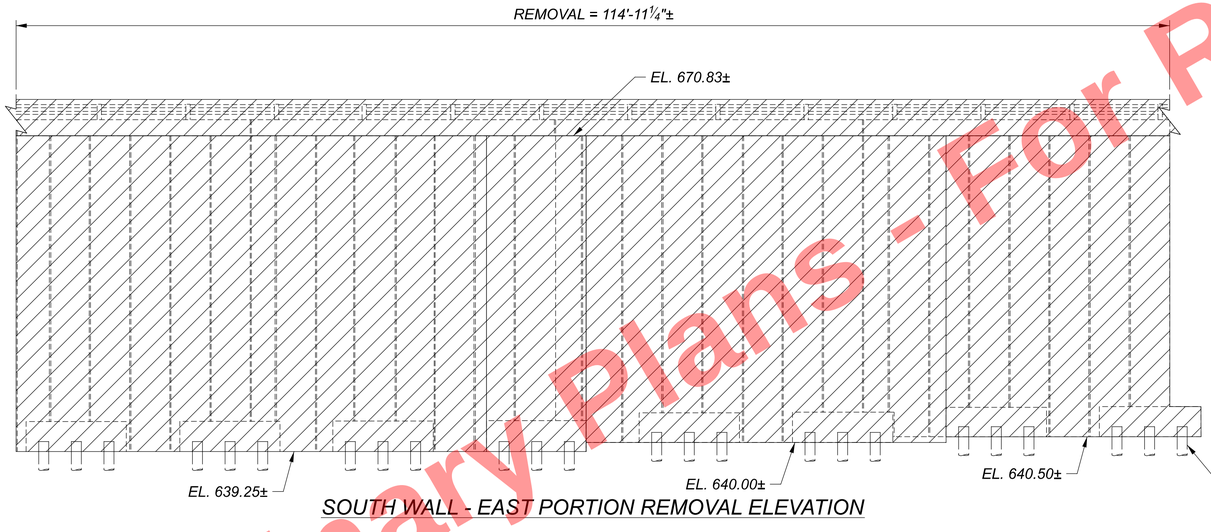

SOUTH WALL - EAST PORTION REMOVAL ELEVATION

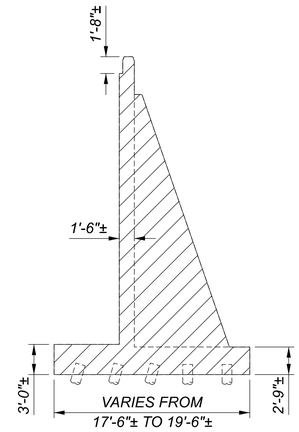

TYPICAL COUNTERFORT SECTION

LEGEND:

= REMOVAL PER ITEM 202 - PORTIONS OF STRUCTURE REMOVED OVER 20 FOOT SPAN AS PER PLAN

NOTES:

1. REFER TO EXISTING PLANS FOR ADDITIONAL DETAILS AND DIMENSIONS.
2. SEE GENERAL NOTES:
   EXISTING STRUCTURE VERIFICATION

   PORTIONS OF STRUCTURE REMOVED, OVER 20 FOOT SPAN, AS PER PLAN
3. REMOVE EXISTING PILES UNDER PROPOSED PIER PILE CAP LIMITS 6" - 12" BELOW DREDGE LINE ELEVATION FOR PROPOSED PILE CAP.:
   PIER 1A: EL. 639.00
   PIER 1B: EL. 636.00
4. REMOVE EXISTING PILES OUTSIDE OF PROPOSED PILE CAP LIMITS TO 1' BELOW PROPOSED SUBGRADE ELEVATION.
5. CONTRACTOR MAY MODIFY REMOVAL LIMITS TO ACCOMMODATE THEIR PROPOSED REMOVAL AND FOUNDATION INSTALLATION PLAN.

Preliminary Plans - For Reference Only

STRUCTURE REMOVAL DETAILS (4 OF 6)
CUY-90-1678 (BRIDGE 13)
CR-710 (E. 22ND ST.) OVER I.R. 90

SFN	1807839
DESIGN AGENCY	Michael Baker INTERNATIONAL
DESIGNER	ZES
CHECKER	SSW
REVIEWER	CDC 05/10/24
PROJECT ID	82382
SUBSET	12
TOTAL	99
SHEET	2193
TOTAL	2696

CUY-90-16.28 (CCG3A)
MODEL: Sheet PAPERSIZE: 34x22 (in.) DATE: 3/28/2025 TIME: 7:35:16 AM USER: RohitLBk
pw:\\mb-us-pw.bentley.com:mb-us-pw-03\Documents\Cleveland_OH01_Projects\ODOT\District12\82382400-Engineering\Structures\SFN_1807839\Sheets\82382_SFN_1807839_SV004.dgn

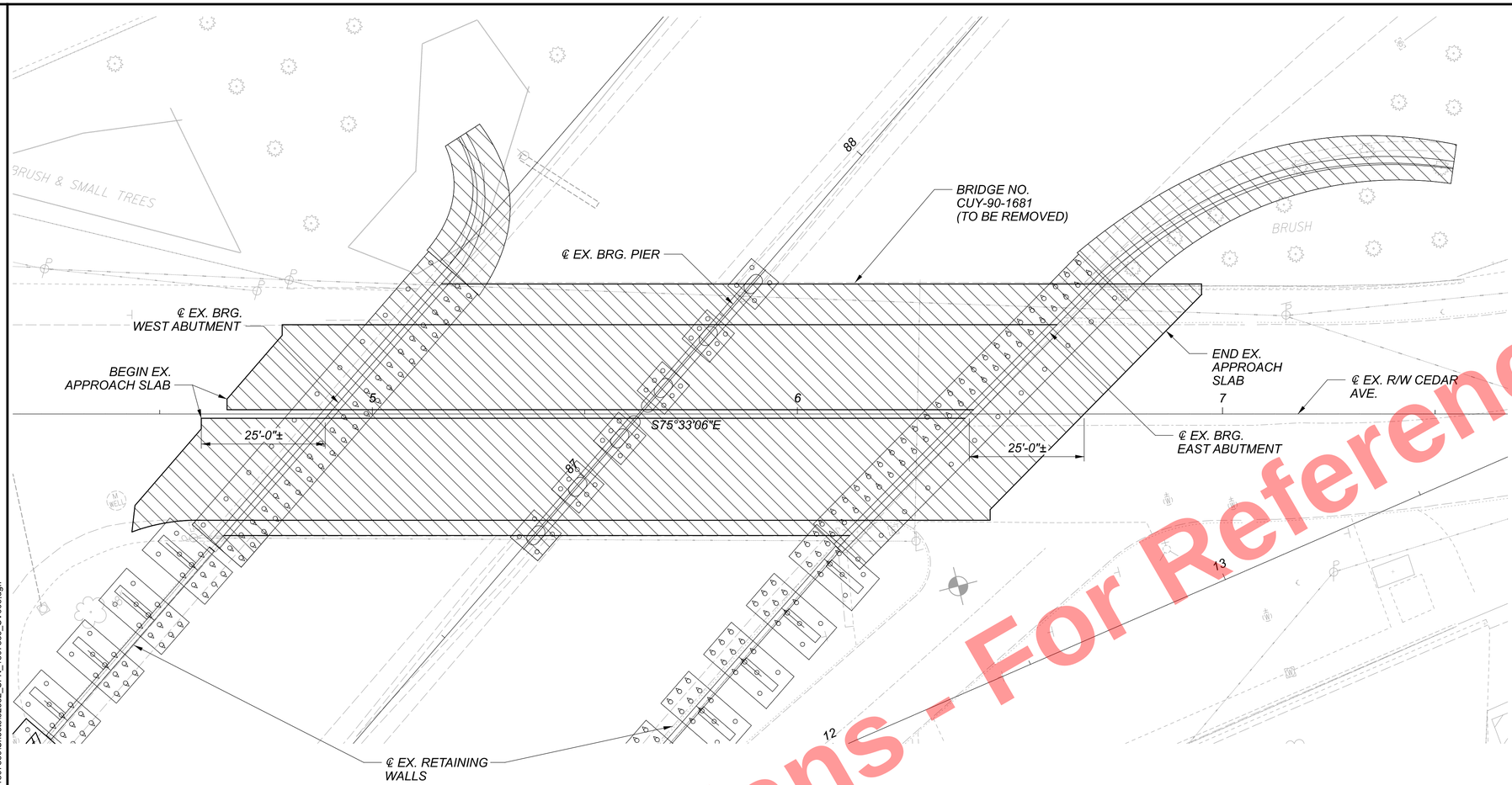

REMOVAL PLAN

NOTES:

1. SEE SHEET 14 / 99 FOR ABUTMENT AND PIER REMOVAL DETAILS.

LEGEND:

= REMOVAL PER ITEM 202 - PORTIONS OF STRUCTURE REMOVED OVER 20 FOOT SPAN AS PER PLAN

EXISTING STRUCTURE

TYPE: CONTINUOUS BEAMS WITH REINFORCED CONCRETE DECK AND SUBSTRUCTURE

SPANS: 73.37'± AND VARIABLE (74.18' TO 80.57') C/C BEARINGS ALONG ℄ CONSTRUCTION

ROADWAY: 46'-0"±, F/F OF CURBS WITH 8'-0" WALK ON NORTH AND 2'-0" SAFETY CURB ON SOUTH

LOADING: CF 2000 (51)

SKEW: 40°51'00" & 44°30'00"

DECK THICKNESS: 10¾"±

WEARING SURFACE: MONOLITHIC CONCRETE

APPROACH SLABS: AS-1-54 (25'± LONG)

ALIGNMENT: TANGENT

CROWN: 0.0156±

STRUCTURE FILE NUMBER: 1807862

DATE BUILT: 1958

DISPOSITION: TO BE REMOVED

Preliminary Plans - For Reference Only

STRUCTURE REMOVAL DETAILS (5 OF 6)
CUY-90-1678 (BRIDGE 13)
CR-710 (E. 22ND ST.) OVER I.R. 90

SFN	1807839
DESIGN AGENCY	Michael Baker INTERNATIONAL
DESIGNER	ZES
CHECKER	SSW
REVIEWER	CDC 05/10/24
PROJECT ID	82383
SUBSET	13
TOTAL	99
SHEET	2194
TOTAL	2696

CUY-90-16.28 (CCG3A)

MODEL: Sheet PAPERSIZE: 34x22 (in.) DATE: 3/28/2025 TIME: 7:35:28 AM USER: RohitBk
pw:\\mb-us-pw.bentley.com:mb-us-pw-03\Documents\Cleveland_OH\01_Projects\ODOT\District12\82382\400-Engineering\Structures\SFN_1807839\Sheets\82382_SFN_1807839_SV005.dgn

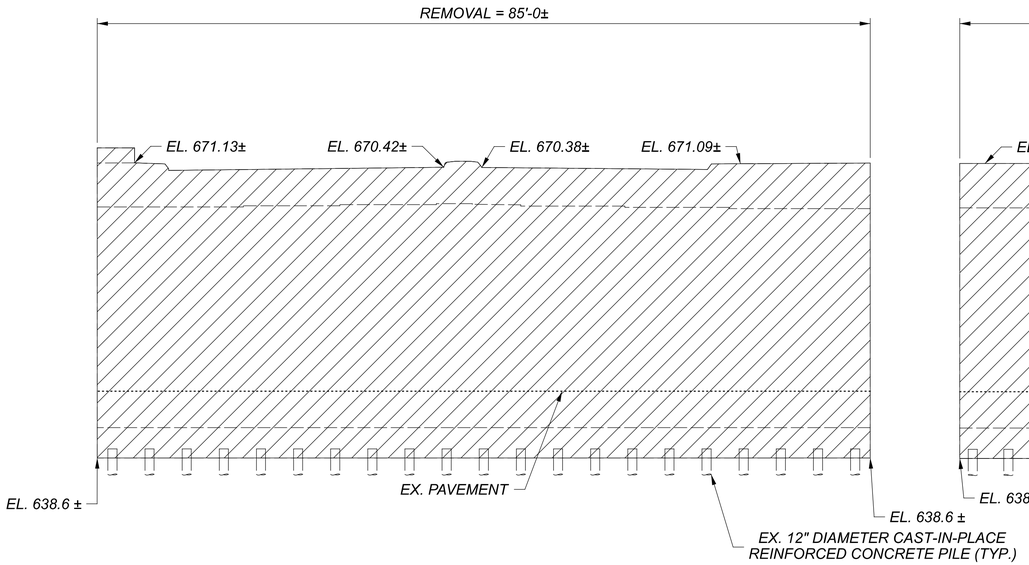

WEST ABUTMENT REMOVAL ELEVATION

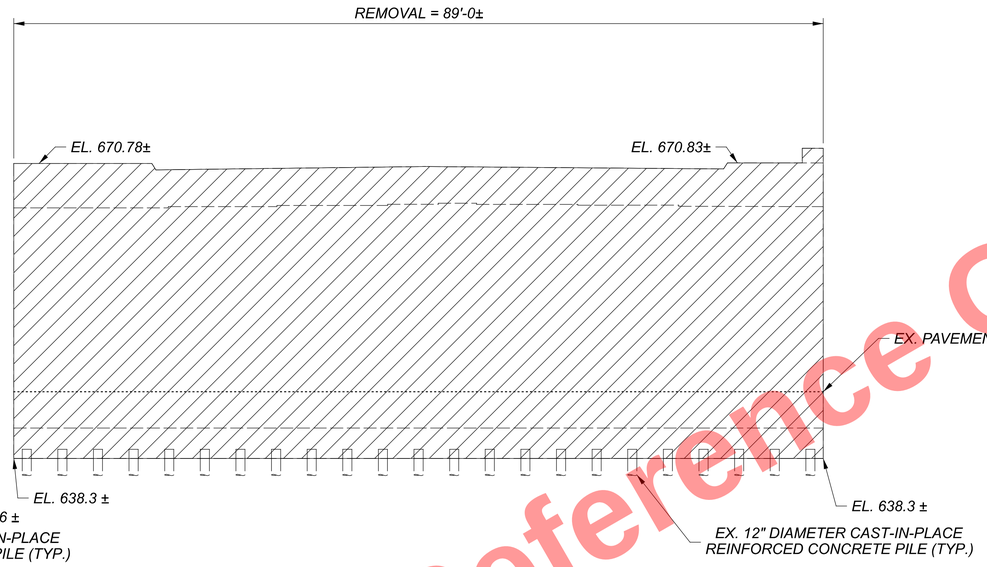

EAST ABUTMENT REMOVAL ELEVATION

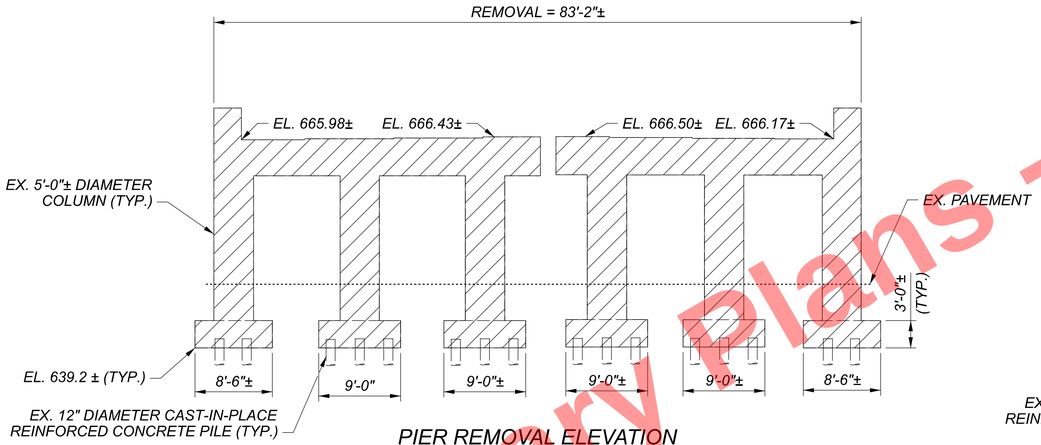

PIER REMOVAL ELEVATION

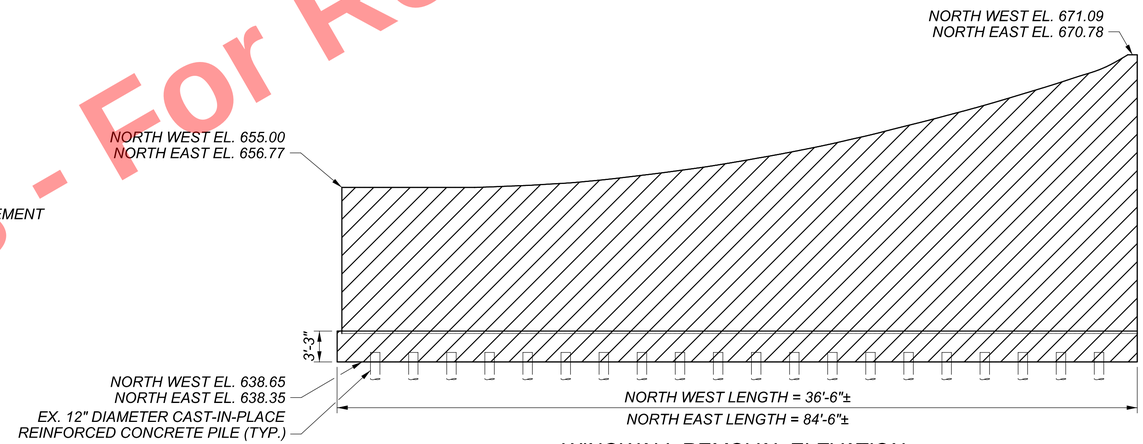

WINGWALL REMOVAL ELEVATION

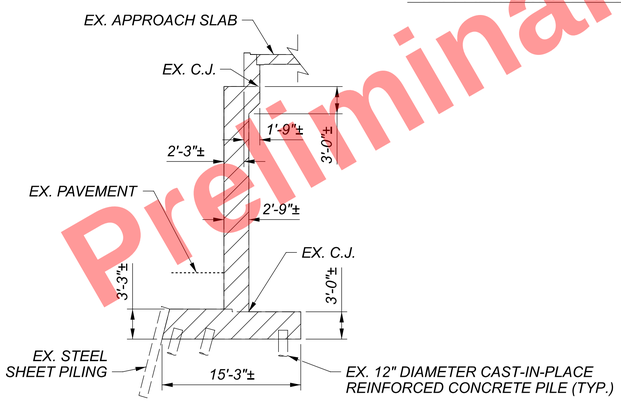

TYPICAL ABUTMENT SECTION

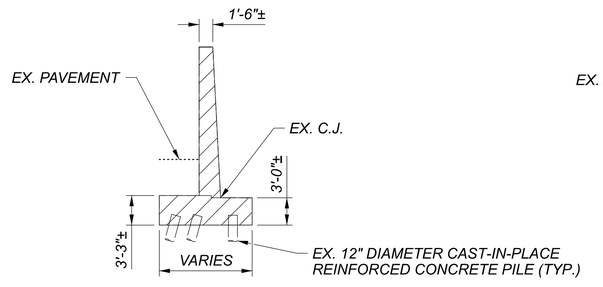

TYPICAL WINGWALL SECTION

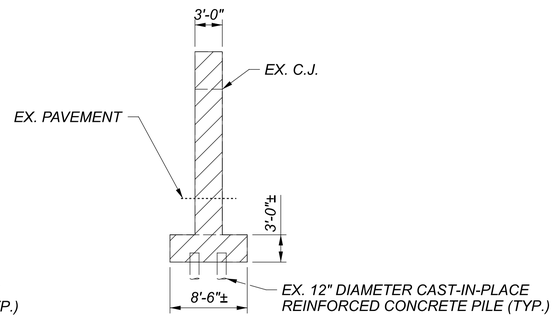

TYPICAL PIER SECTION

NOTES:

1. REFER TO EXISTING PLANS FOR ADDITIONAL DETAILS AND DIMENSIONS.
2. SEE GENERAL NOTES:
   EXISTING STRUCTURE VERIFICATION

   PORTIONS OF STRUCTURE REMOVED, OVER 20 FOOT SPAN, AS PER PLAN
3. REMOVE EXISTING PILES OUTSIDE OF PROPOSED PILE CAP LIMITS TO 1' BELOW PROPOSED SUBGRADE ELEVATION.

LEGEND:

= REMOVAL PER ITEM 202 - PORTIONS OF STRUCTURE REMOVED OVER 20 FOOT SPAN AS PER PLAN

Preliminary Plans - For Reference Only

STRUCTURE REMOVAL DETAILS (6 OF 6)
CUY-90-1678 (BRIDGE 13)
CR-710 (E. 22ND ST.) OVER I.R. 90

SFN 1807839
DESIGN AGENCY
Michael Baker INTERNATIONAL
DESIGNER ZES | CHECKER SSW
REVIEWER CDC 05/10/24
PROJECT ID 82382
SUBSET 14 | TOTAL 99
SHEET 2195 | TOTAL 2696

CUY-90-16.28 (CCG3A)

MODEL: Sheet PAPERSIZE: 34x22 (in.) DATE: 3/28/2025 TIME: 7:35:38 AM USER: RohitLBk
pw:\\mb-us-pw.bentley.com:mb-us-pw-03\Documents\Cleveland_OH01_Projects\ODOT\District12\82382400-Engineering\Structures\SFN_1807839\Sheets\82382_SFN_1807839_SV006.dgn

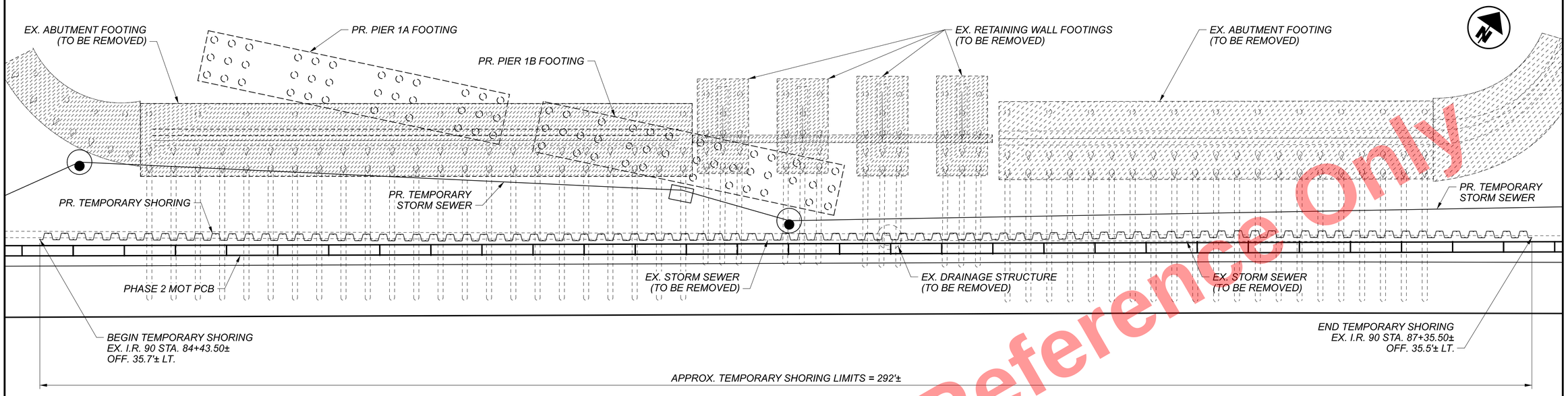

TEMPORARY SHORING PLAN

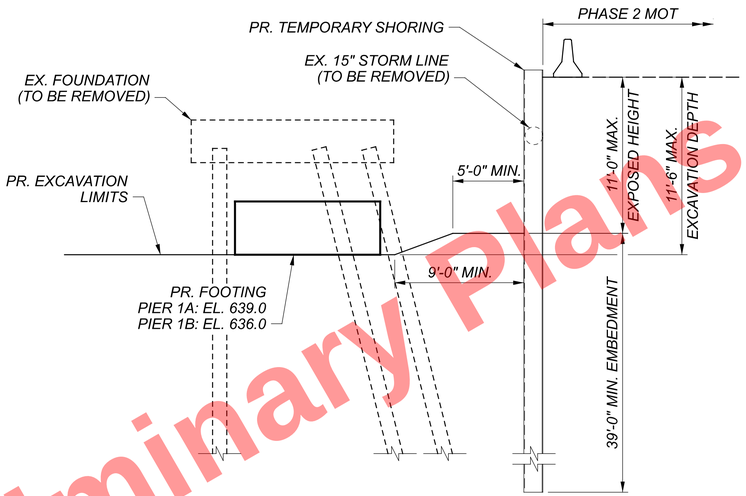

(EX. I.R. 90 STA 84+43.50± TO STA. 85+59.10±)

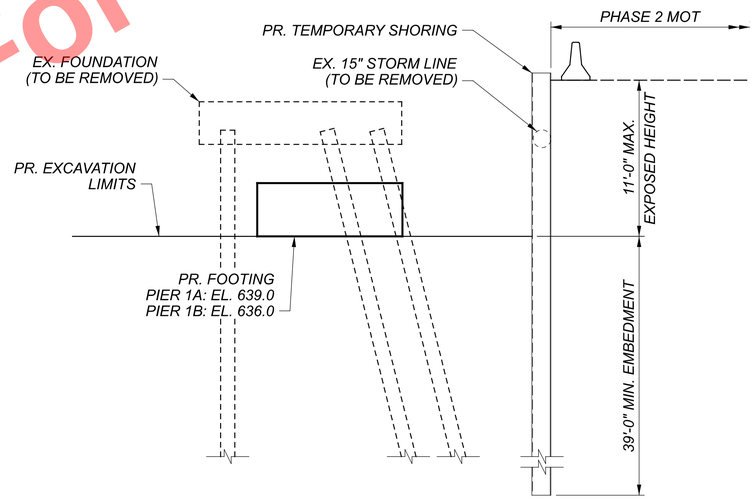

(EX. I.R. 90 STA 85+59.10± TO STA. 87+35.25±)

TEMPORARY SHORING TYPICAL SECTION DESIGN ALTERNATIVES

NOTES:

1. THE MINIMUM ELASTIC SECTION MODULUS FOR TEMPORARY CANTILEVERED SHEET PILE WALL (FOR YIELD STRENGTH = 50 KSI) SHALL BE 60.7 IN^3 / FT. THE CHOSEN SHEETING SECTION SHALL HAVE SUFFICIENT SECTION PROPERTIES TO LIMIT DEFLECTION AT THE TOP OF SHORING TO 1" OR LESS.
2. TEMPORARY SHEETING SHALL BE INSTALLED BEFORE EXCAVATION AND ABUTMENT / RETAINING WALL REMOVAL IN PHASE 2 CONSTRUCTION. THE SHEETING SHALL REMAIN IN PLACE UNTIL PHASE 2 PIERS HAVE BEEN CONSTRUCTED AND THE EMBANKMENT IS SUFFICIENTLY PLACED AND COMPACTED TO THE LEVEL OF THE PROPOSED SUBGRADE.
3. THE CONTRACTOR MAY PROVIDE AN ALTERNATE MEANS OF SHORING FOR EXCAVATION AND CONSTRUCTION IN ACCORDANCE WITH ITEM 503.
4. ALL MATERIALS EQUIPMENT, LABOR, AND INCIDENTALS NECESSARY TO INSTALL AND SUBSEQUENTLY REMOVE THE TEMPORARY SHORING SHALL BE INCLUDED FOR PAYMENT IN THE LUMP SUM PRICE BID FOR ITEM 503 - COFFERDAMS AND EXCAVATION BRACING, AS PER PLAN.
5. TEMPORARY SLOPES SHALL BE NO STEEPER THAN 2.75H:1V.

Preliminary Plans - For Reference Only

TEMPORARY SHORING DETAILS
CUY-90-1678 (BRIDGE 13)
CR-710 (E. 22ND ST.) OVER I.R. 90

SFN	1807839
DESIGN AGENCY	Michael Baker INTERNATIONAL
DESIGNER	SSW
CHECKER	KAG
REVIEWER	CDC 05/10/24
PROJECT ID	82382
SUBSET	15
TOTAL	99
SHEET	2196
TOTAL	2696

CUY-90-16.28 (CCG3A)

MODEL: Sheet PAPERSIZE: 34x22 (in.) DATE: 3/28/2025 TIME: 7:35:49 AM USER: RohitLBk
pw:\\mb-us-pw.bentley.com:mb-us-pw-03\Documents\Cleveland_OH01_Projects\ODOTDistrict12\82382400-Engineering\Structures\SFN_1807839\Sheets\82382_SFN_1807839_SH001.dgn

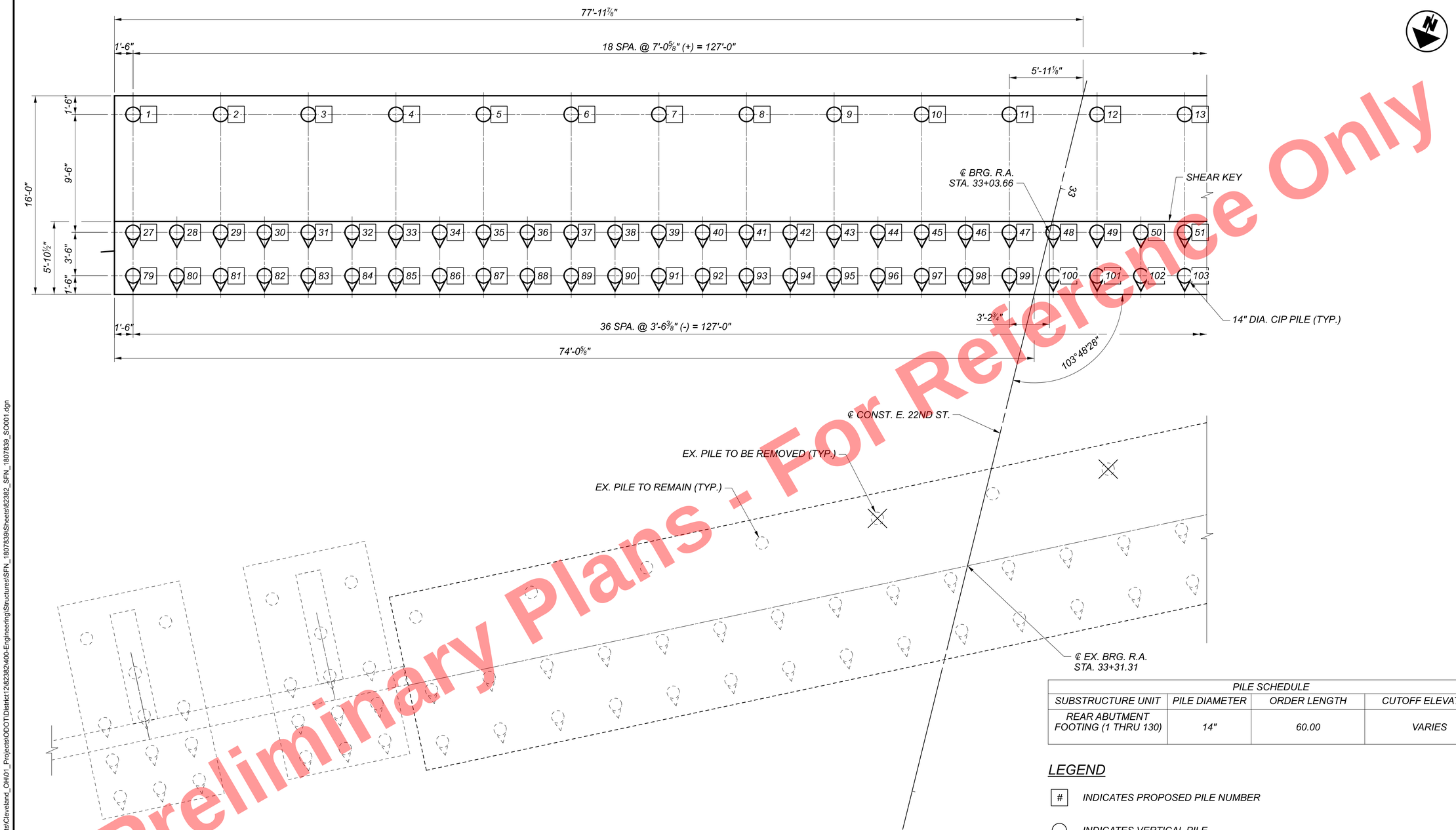

PILE SCHEDULE			
SUBSTRUCTURE UNIT	PILE DIAMETER	ORDER LENGTH	CUTOFF ELEVATION
REAR ABUTMENT FOOTING (1 THRU 130)	14"	60.00	VARIES

LEGEND

[#] INDICATES PROPOSED PILE NUMBER

INDICATES VERTICAL PILE

INDICATES BATTERED PILE

NOTES:

1. PILES TO BE REMOVED WILL BE PAID FOR UNDER ITEM 202 - PORTIONS OF STRUCTURE REMOVED, AS PER PLAN. ANY ADDITIONAL PILES THAT ARE NOT SHOWN TO BE REMOVED, BUT REQUIRE REMOVAL, WILL BE PAID FOR AT THE CONTRACT UNIT PRICE FOR THIS ITEM UNDER A CHANGE ORDER.

Preliminary Plans - For Reference Only

REAR ABUTMENT FOUNDATION PLAN (1 OF 2)
CUY-90-1678 (BRIDGE 13)
CR-710 (E. 22ND ST.) OVER I.R. 90

CUY-90-16.28 (CCG3A)

MODEL: Sheet PAPERSIZE: 34x22 (in.) DATE: 3/28/2025 TIME: 7:35:57 AM USER: Rohit.Bk
pw:\\mb-us-pw.bentley.com:mb-us-pw-03\Documents\Cleveland_OH\01_Projects\ODOT\District12\82382\400-Engineering\Structures\SFN_1807839\Sheets\82382_SFN_1807839_SO001.dgn

SFN	1807839
DESIGN AGENCY	Michael Baker INTERNATIONAL
DESIGNER	DAF
CHECKER	JRK
REVIEWER	CDC 05/10/24
PROJECT ID	82382
SUBSET	16
TOTAL	99
SHEET	2197
TOTAL	2696

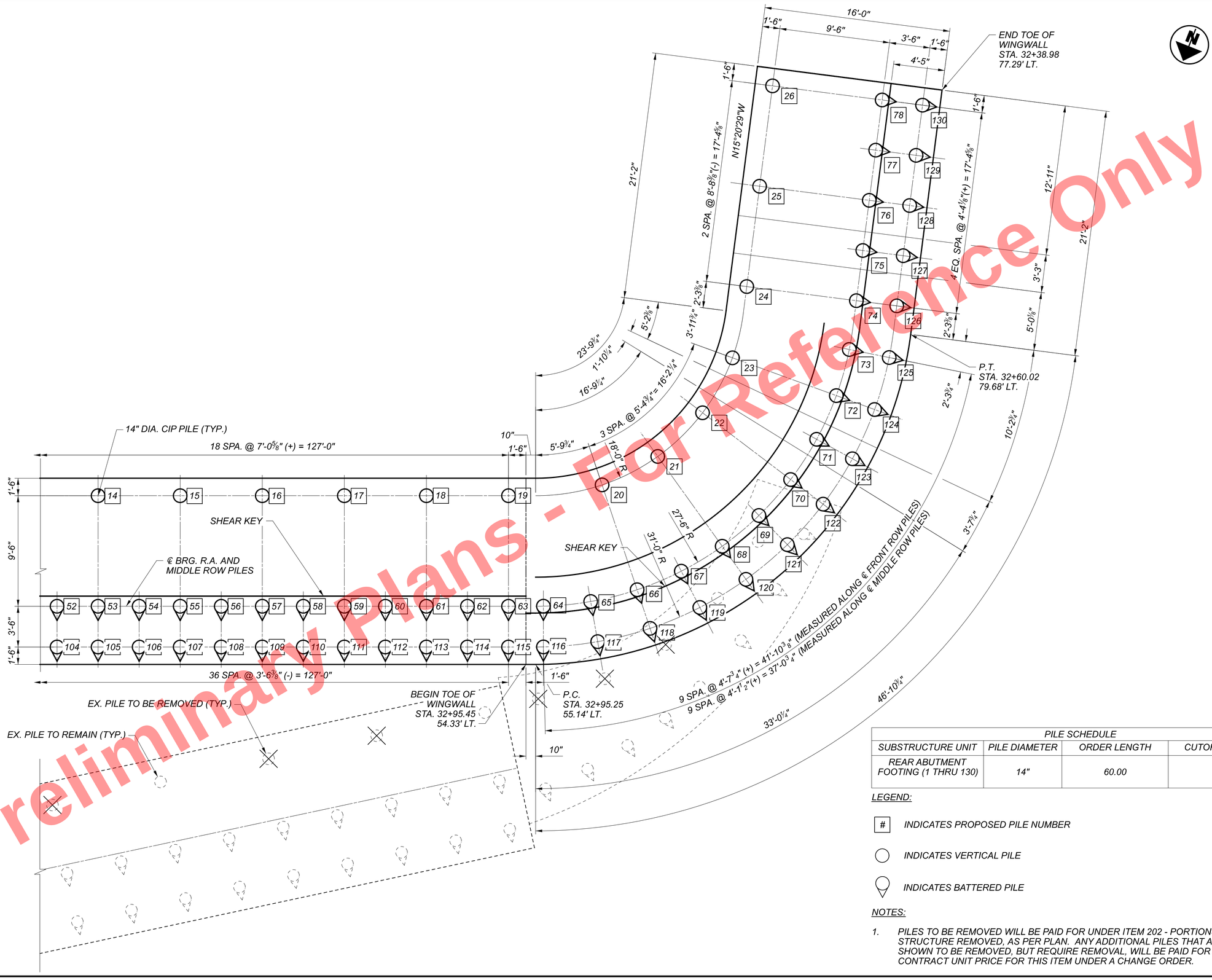

PILE SCHEDULE			
SUBSTRUCTURE UNIT	PILE DIAMETER	ORDER LENGTH	CUTOFF ELEVATION
REAR ABUTMENT FOOTING (1 THRU 130)	14"	60.00	VARIES

LEGEND:

[#] INDICATES PROPOSED PILE NUMBER

INDICATES VERTICAL PILE

INDICATES BATTERED PILE

NOTES:

1. PILES TO BE REMOVED WILL BE PAID FOR UNDER ITEM 202 - PORTIONS OF STRUCTURE REMOVED, AS PER PLAN. ANY ADDITIONAL PILES THAT ARE NOT SHOWN TO BE REMOVED, BUT REQUIRE REMOVAL, WILL BE PAID FOR AT THE CONTRACT UNIT PRICE FOR THIS ITEM UNDER A CHANGE ORDER.

REAR ABUTMENT FOUNDATION PLAN (2 OF 2)
CUY-90-1678 (BRIDGE 13)
CR-710 (E. 22ND ST.) OVER I.R. 90

SFN 1807839
DESIGN AGENCY
Michael Baker INTERNATIONAL
DESIGNER DAF | CHECKER JRK
REVIEWER CDC 05/10/24
PROJECT ID 82382
SUBSET 17 | TOTAL 99
SHEET 2198 | TOTAL 2696

Preliminary Plans - For Reference Only

CUY-90-16.28 (CCG3A)
MODEL: Sheet PAPERSIZE: 34x22 (in.) DATE: 3/28/2025 TIME: 7:36:08 AM USER: Rohit.Bk
pw:\\mb-us-pw.bentley.com:mb-us-pw-03\Documents\Cleveland_OH\01_Projects\ODOT\District12\82382\400-Engineering\Structures\SFN_1807839\Sheets\82382_SFN_1807839_SO002.dgn

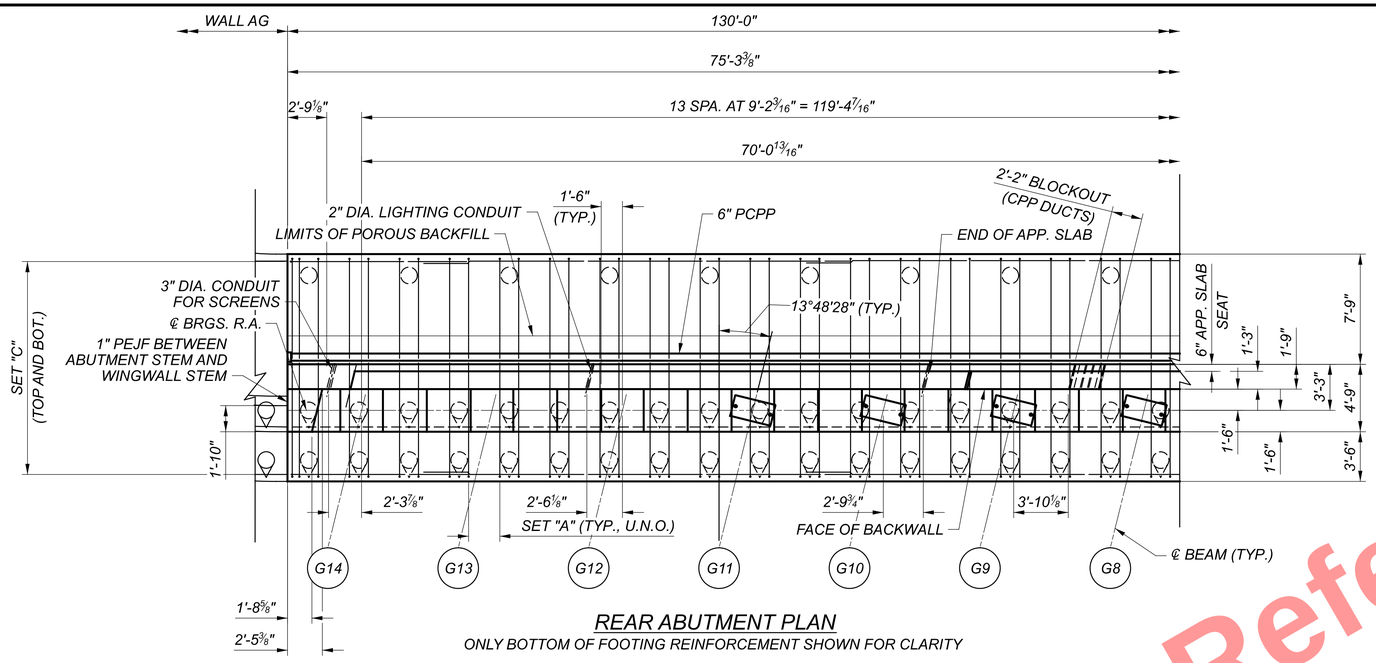

REAR ABUTMENT PLAN

ONLY BOTTOM OF FOOTING REINFORCEMENT SHOWN FOR CLARITY

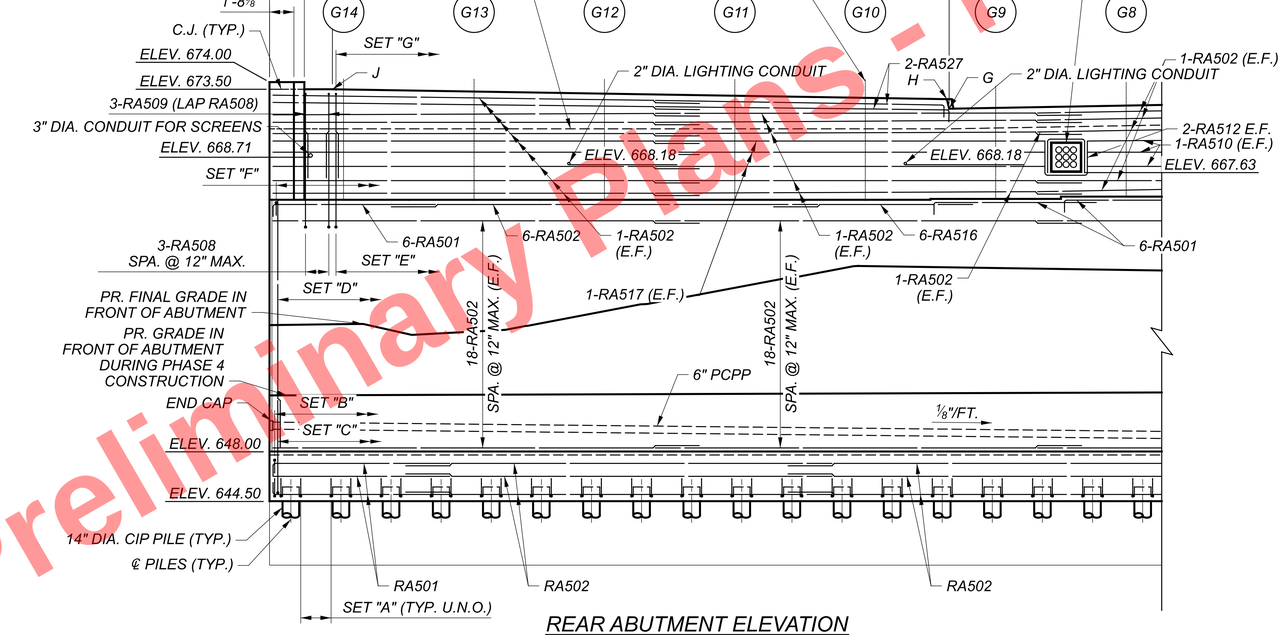

REAR ABUTMENT ELEVATION

REAR ABUTMENT	
POINT	ELEVATION
G	672.13
H	672.80
J	673.50
G8 (AT BEAM SEAT)	665.94
G9 (AT BEAM SEAT)	665.78
G10 (AT BEAM SEAT)	665.72
G11 (AT BEAM SEAT)	665.72
G12 (AT BEAM SEAT)	665.72
G13 (AT BEAM SEAT)	665.72
G14 (AT BEAM SEAT)	665.72

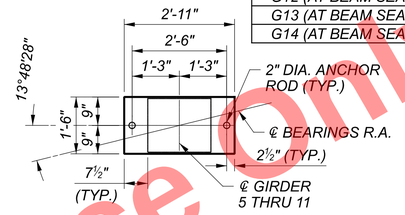

GUIDED BEARING LOAD PLATE DETAIL

REINFORCING LEGEND

SET "A" = 4-RA801 SPA. @ 12" MAX. (BOT., TYP. BETWEEN PILES U.N.O.), 36 SETS TOTAL

SET "B" = 131-RA601 SPA. @ 12" MAX. (TOP)

SET "C = 131-RA504 SPA. @ 12" MAX. (N.F.)
261-RA701 SPA. @ 6" MAX. (F.F.)

SET "D" = 131-RA505 SPA. @ 12" MAX. (N.F.)
261-RA702 SPA. @ 6" MAX. (F.F.)
(LAP SET "C" BARS)

SET "E" = 126-RA508 SPA. @ 12" MAX.

SET "F" = 131-RA507 SPA. @ 12" MAX.

SET "G" = 126-RA509 (LAP SET "E" BARS)

LEGEND

NPCPP - NON-PERFORATED CORRUGATED POLYETHYLENE PIPE (C&MS 707.33, TYPE S)

PCPP - PERFORATED CORRUGATED POLYETHYLENE PIPE (C&MS 707.33, TYPE SP)

MIN. LAP LENGTHS:

#5 - 3'-1"
#6 - 3'-7"
#7 - 4'-8"
#8 - 5'-4"

NOTES

1. FOR ADDITIONAL DETAILS, SEE SHEET 20 & 21 / 99
2. SEE FOUNDATION PLAN FOR PILE LAYOUT.
3. SLOPE 6" NPCPP AND PCPP 1/8" / FT. MIN.
4. CHEEK WALL REINFORCING NOT SHOWN FOR CLARITY. SEE SHEET 21/99 FOR CHEEK WALL REINFORCING DETAILS.

Preliminary Plans - For Reference Only

REAR ABUTMENT PLAN AND ELEVATION (1 OF 2)
CUY-90-1678 (BRIDGE 13)
CR-710 (E. 22ND ST.) OVER I.R. 90

SFN 1807839
DESIGN AGENCY
Michael Baker INTERNATIONAL
DESIGNER LPC | CHECKER GZ
REVIEWER CDC 05/10/24
PROJECT ID 82382
SUBSET 18 | TOTAL 99
SHEET 2199 | TOTAL 2696

CUY-90-16.28 (CCG3A)

MODEL: Sheet PAPERSIZE: 34x22 (in.) DATE: 3/28/2025 TIME: 7:36:33 AM USER: RohitBk
pw:\\mb-us-pw.bentley.com:mb-us-pw-03\Documents\Cleveland_OH\01_Projects\ODOT\District12\82382\400-Engineering\Structures\SFN_1807839\Sheets\82382_SFN_1807839_SR002.dgn

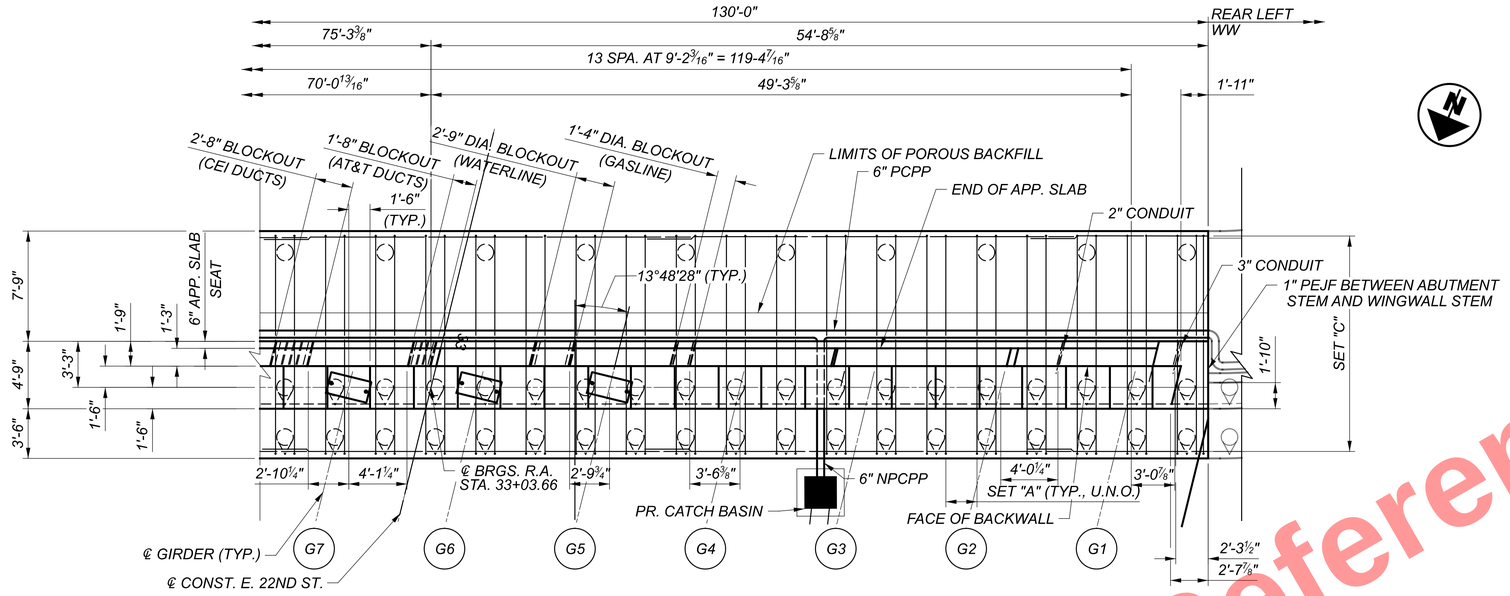

REAR ABUTMENT PLAN

ONLY BOTTOM OF FOOTING REINFORCEMENT SHOWN FOR CLARITY

REAR ABUTMENT	
POINT	ELEVATION
A	673.12
B	673.01
C	672.85
D	672.70
E	672.03
F	672.62
G1 (AT BEAM SEAT)	665.57
G2 (AT BEAM SEAT)	665.57
G3 (AT BEAM SEAT)	665.57
G4 (AT BEAM SEAT)	665.74
G5 (AT BEAM SEAT)	665.94
G6 (AT BEAM SEAT)	666.14
G7 (AT BEAM SEAT)	666.11

UTILITIES	
POINT	ELEVATION
U1	667.79
U2	667.81
U3	667.47
U4	668.18
U5	668.52
U6	668.60

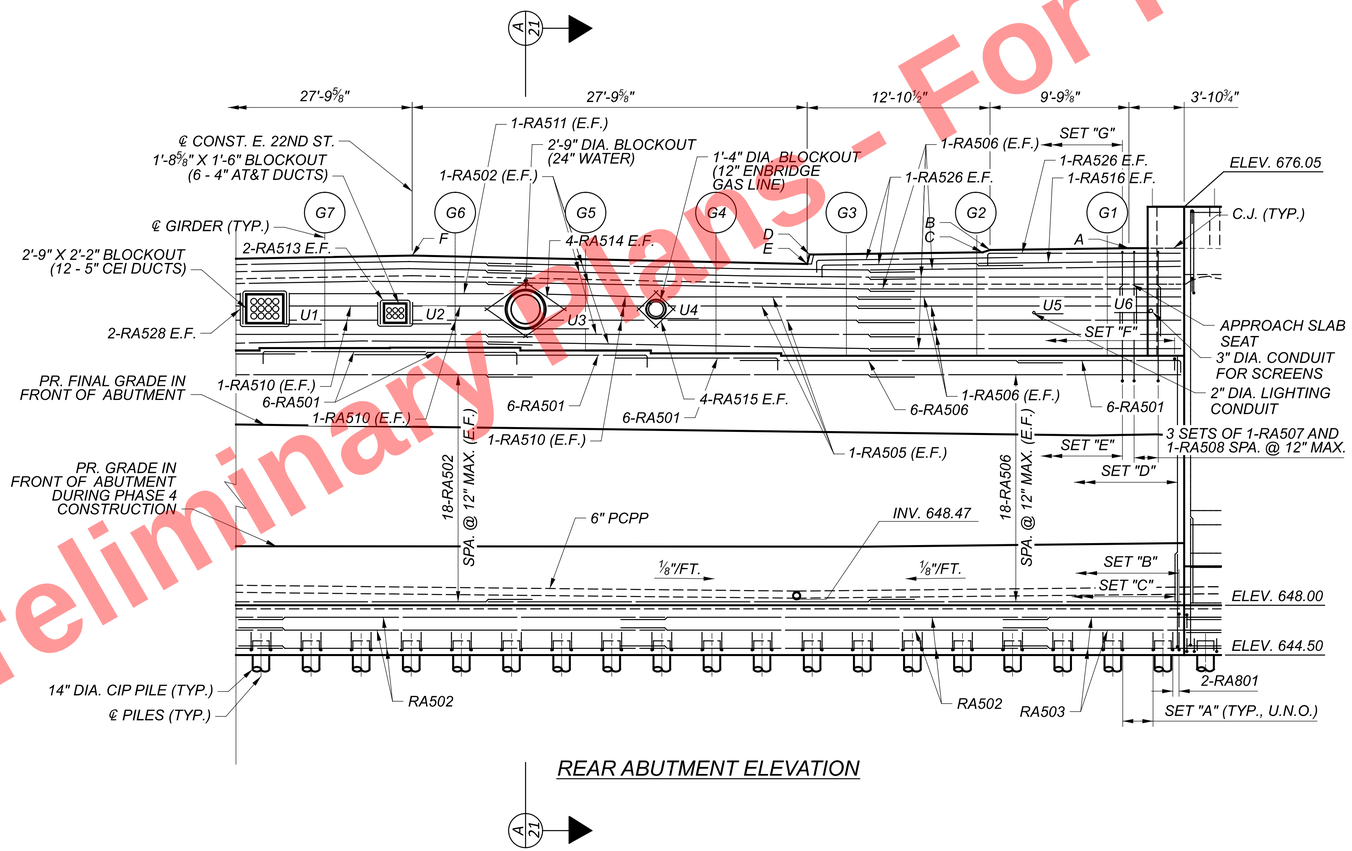

REAR ABUTMENT ELEVATION



REINFORCING LEGEND

SET "A" = 4-RA801 SPA. @ 12" MAX. (BOT., TYP. BETWEEN PILES U.N.O.), 36 SETS TOTAL

SET "B" = 131-RA601 SPA. @ 12" MAX. (TOP)

SET "C = 131-RA504 SPA. @ 12" MAX. (N.F.)
261-RA701 SPA. @ 6" MAX. (F.F.)

SET "D" = 131-RA505 SPA. @ 12" MAX. (N.F.)
261-RA702 SPA. @ 6" MAX. (F.F.)
(LAP SET "C" BARS)

SET "E" = 126-RA508 SPA. @ 12" MAX.

SET "F" = 131-RA507 SPA. @ 12" MAX.

SET "G" = 126-RA509 (LAP SET "E" BARS)

MIN. LAP LENGTHS:

#5 - 3'-1"
#6 - 3'-7"
#7 - 4'-8"
#8 - 5'-4"

LEGEND

NPCPP - NON-PERFORATED CORRUGATED POLYETHYLENE PIPE (C&MS 707.33, TYPE S)

PCPP - PERFORATED CORRUGATED POLYETHYLENE PIPE (C&MS 707.33, TYPE SP)

NOTES

1. FOR ADDITIONAL DETAILS, SEE SHEET 20 & 21 / 99
2. SEE FOUNDATION PLAN FOR PILE LAYOUT.
3. SLOPE 6" NPCPP AND PCPP ⅛" / FT. MIN.
4. CHEEK WALL REINFORCING NOT SHOWN FOR CLARITY. SEE SHEET 21/99 FOR CHEEK WALL REINFORCING DETAILS.
5. IN THE FINAL CONDITION, THE NON-PERFORATED DRAINAGE PIPE SHALL BE OUTLET INTO THE CATCH BASIN. THE PIPE INVERT AT THE CATCH BASIN IS PROVIDED ON THIS SHEET. THE CONTRACTOR SHALL ENSURE THE DRAINAGE PIPE CAN OUTLET PROPERLY IF THE CATCH BASIN IS NOT CONSTRUCTED IN THE SAME PHASE AT THE ABUTMENT. REFER TO DRAINAGE SHEETS FOR CATCH BASIN DETAILS.

Preliminary Plans - For Reference Only

REAR ABUTMENT PLAN AND ELEVATION (2 OF 2)
CUY-90-1678 (BRIDGE 13)
CR-710 (E. 22ND ST.) OVER I.R. 90

SFN 1807839
DESIGN AGENCY Michael Baker INTERNATIONAL
DESIGNER LPC | CHECKER GZ
REVIEWER CDC 05/10/24
PROJECT ID 82382
SUBSET 19 | TOTAL 99
SHEET 2200 | TOTAL 2696

CUY-90-16.28 (CCG3A)

MODEL: Sheet PAPERSIZE: 34x22 (in.) DATE: 6/9/2025 TIME: 2:43:34 PM USER: Julie.Ross
pw:\\mb-us-pw.bentley.com:mb-us-pw-03\Documents\Cleveland_OH\01_Projects\ODOT\District12\82382\400-Engineering\Structures\SFN_1807839\Sheets\82382_SFN_1807839_SR003.dgn

Preliminary Plans - For Reference Only

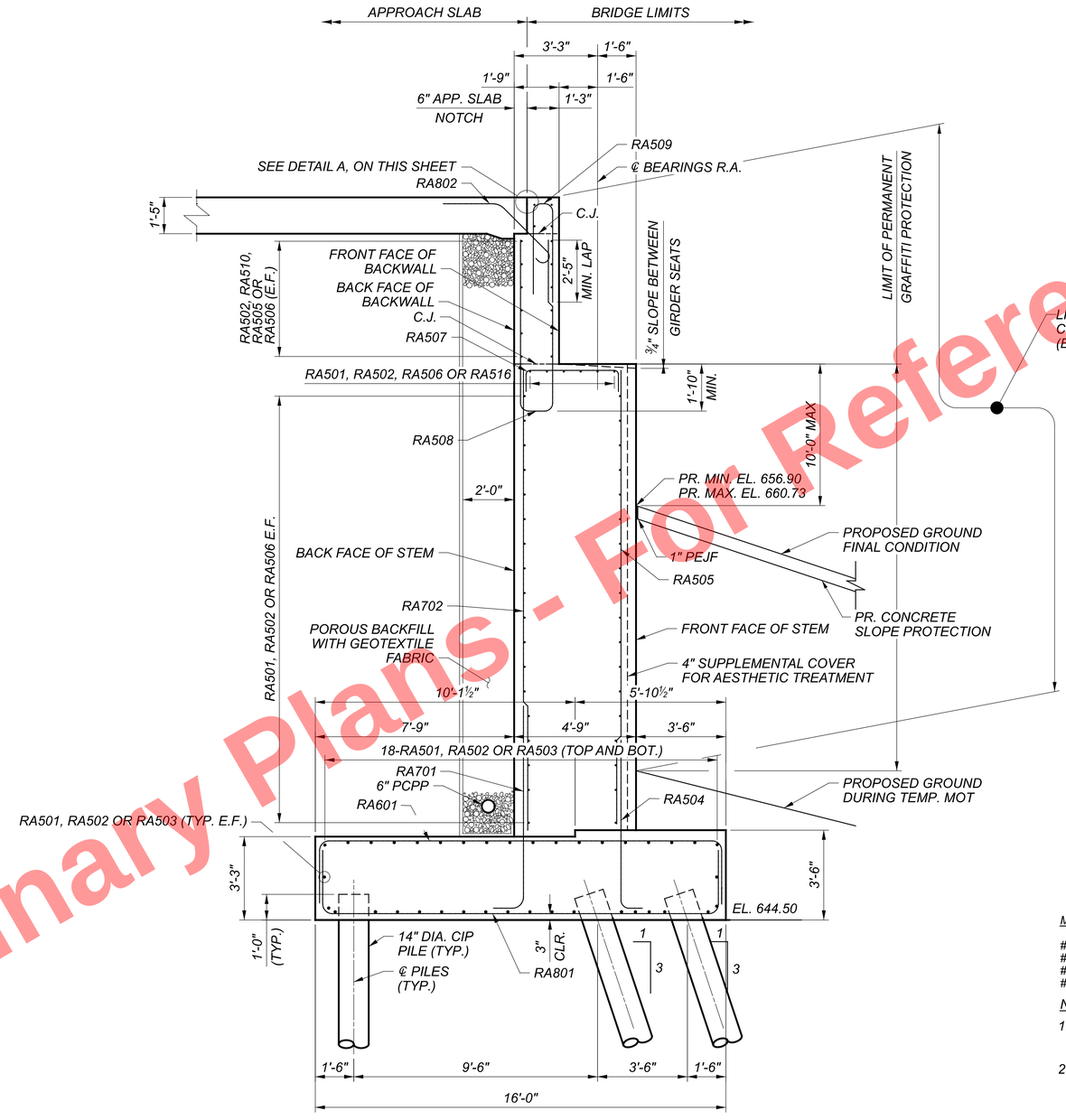

TYPICAL REAR ABUTMENT SECTION

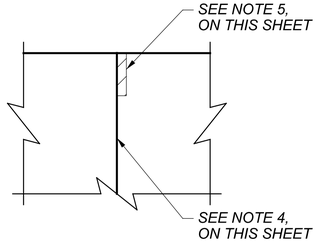

DETAIL A

MIN. LAP LENGTHS:

#5 - 3'-1"
#6 - 3'-7"
#7 - 4'-8"
#8 - 5'-4"

NOTES:

1. PROVIDE 2" CONCRETE COVER ON REINFORCEMENT BARS UNLESS NOTED OTHERWISE.
2. BRIDGE SEAT REINFORCING, SETTING ANCHORS: ACCURATELY PLACE REINFORCING STEEL IN THE VICINITY OF THE BRIDGE SEAT TO AVOID INTERFERENCE WITH THE DRILLING OF BEARING ANCHOR HOLES OR THE PRE-SETTING OF BEARING ANCHORS.
3. SEE LANDSCAPING PLANS FOR AESTHETIC TREATMENT DETAILS.
4. TYPE "A" OR TYPE "E" WATERPROOFING.
5. PREFORMED ELASTOMERIC COMPRESSION JOINT SEAL, 705.11 (1 ¼" WIDE FOR A ½" WIDE GROOVE) PLACED IN ½" x 2 ¼" GROOVE.
6. SEE SHEET 87 /99 FOR EXPANSION JOINT DETAILS.

REAR ABUTMENT SECTION
CUY-90-1678 (BRIDGE 13)
CR-710 (E. 22ND ST.) OVER I.R. 90

SFN	1807839
DESIGN AGENCY	Michael Baker INTERNATIONAL
DESIGNER	BWC
CHECKER	JRK
REVIEWER	CDC 05/10/24
PROJECT ID	82382
SUBSET	20
TOTAL	99
SHEET	2201
TOTAL	2696

CUY-90-16.28 (CCG3A)

MODEL: Sheet PAPERSIZE: 34x22 (in.) DATE: 3/28/2025 TIME: 7:37:20 AM USER: Rohit.Bk
pw:\\mb-us-pw.bentley.com:mb-us-pw-03\Documents\Cleveland_OH\01_Projects\ODOT\District12\82382400-Engineering\Structures\SFN_1807839\Sheets\82382_SFN_1807839_SR001.dgn

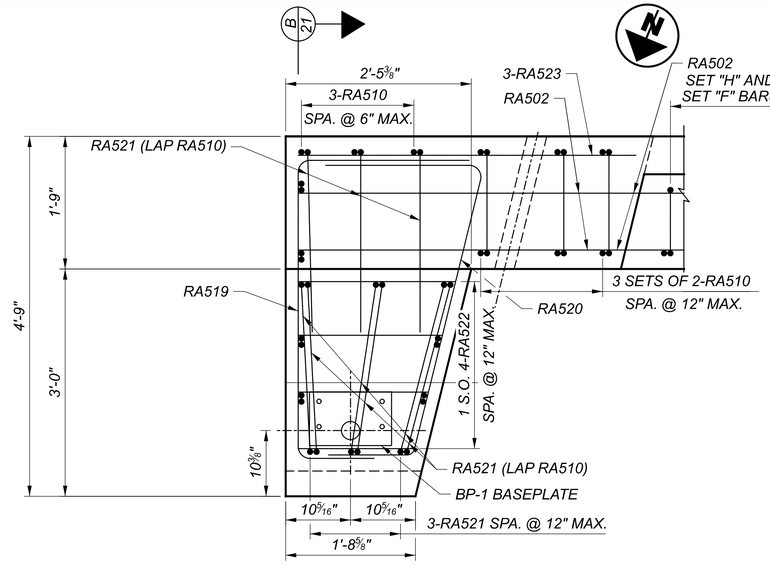

RIGHT CHEEK WALL PLAN

BEAM SEAT BARS NOT SHOWN FOR CLARITY

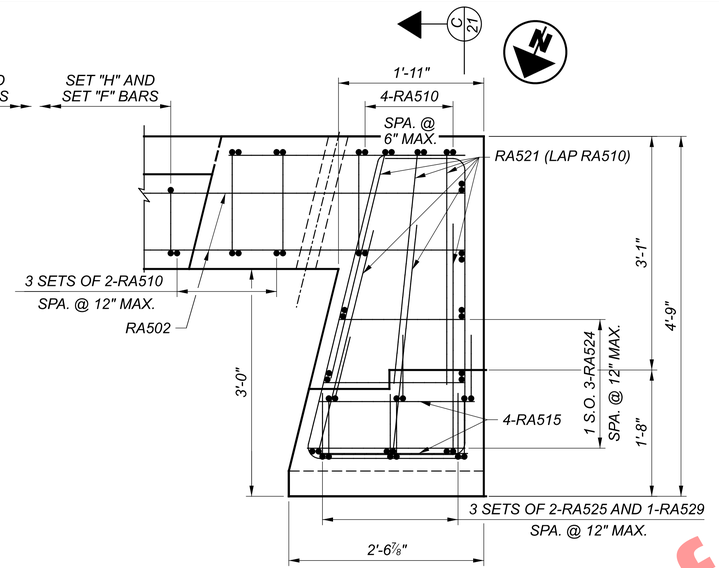

LEFT CHEEK WALL PLAN

BEAM SEAT BARS NOT SHOWN FOR CLARITY

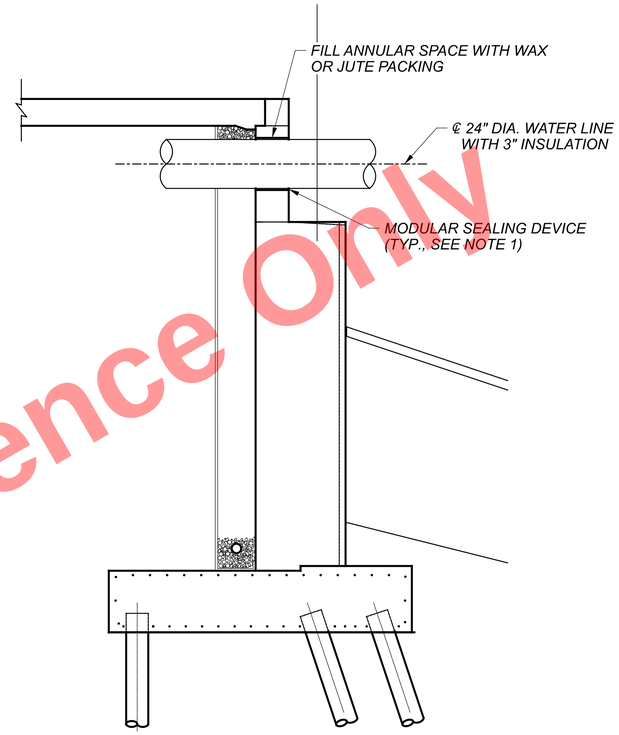

A 19 SECTION A
WATER LINE SHOWN, GAS LINE SIMILAR

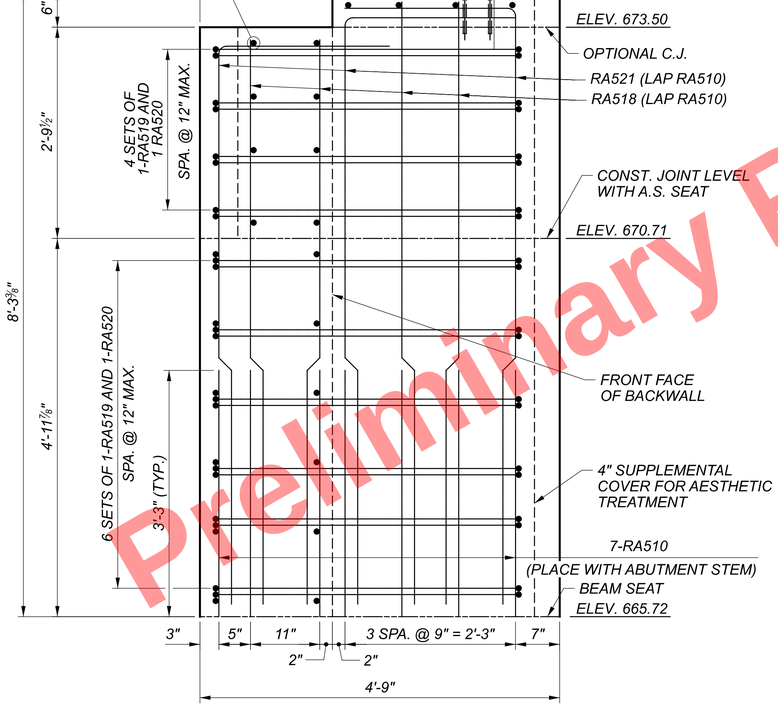

B 21 SECTION B
RIGHT CHEEK WALL

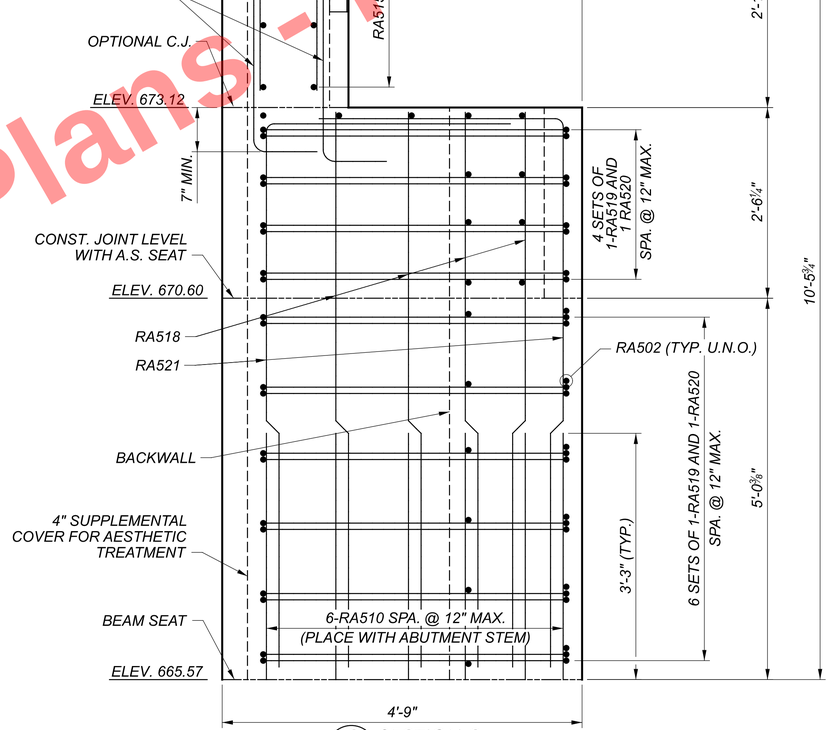

C 21 SECTION C
LEFT CHEEK WALL

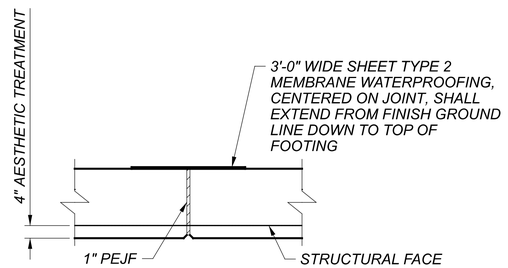

EXPANSION JOINT DETAIL

MIN. LAP LENGTHS:

#5 - 3'-1"
#6 - 3'-7"
#7 - 4'-8"
#8 - 5'-4"

NOTES:

1. MODULAR SEALING DEVICE SHALL BE LINK-SEAL, INNERLYNX, OR APPROVED EQUAL. SIZE THE SEALING DEVICE AND SLEEVE BASED ON THE MANUFACTURER'S RECOMMENDATIONS. USE LOW DUROMETER SEALS FOR THE 24" WATER LINE AND 12" GAS LINE.

Preliminary Plans - For Reference Only

REAR ABUTMENT DETAILS
CUY-90-1678 (BRIDGE 13)
CR-710 (E. 22ND ST.) OVER I.R. 90

SFN 1807839
DESIGN AGENCY
Michael Baker INTERNATIONAL
DESIGNER DAF | CHECKER JRK
REVIEWER CDC 05/10/24
PROJECT ID 82382
SUBSET 21 | TOTAL 99
SHEET 2202 | TOTAL 2696

CUY-90-16.28 (CCG3A)

MODEL: Sheet PAPERSIZE: 34x22 (in.) DATE: 3/28/2025 TIME: 7:37:59 AM USER: Rohit Bk
pw:\\mb-us-pw.bentley.com:mb-us-pw-03\Documents\Cleveland_OH\01_Projects\ODOT\District12\82382\400-Engineering\Structures\SFN_1807839\Sheets\82382_Sheets\82382_SFN_1807839_SR004.dgn

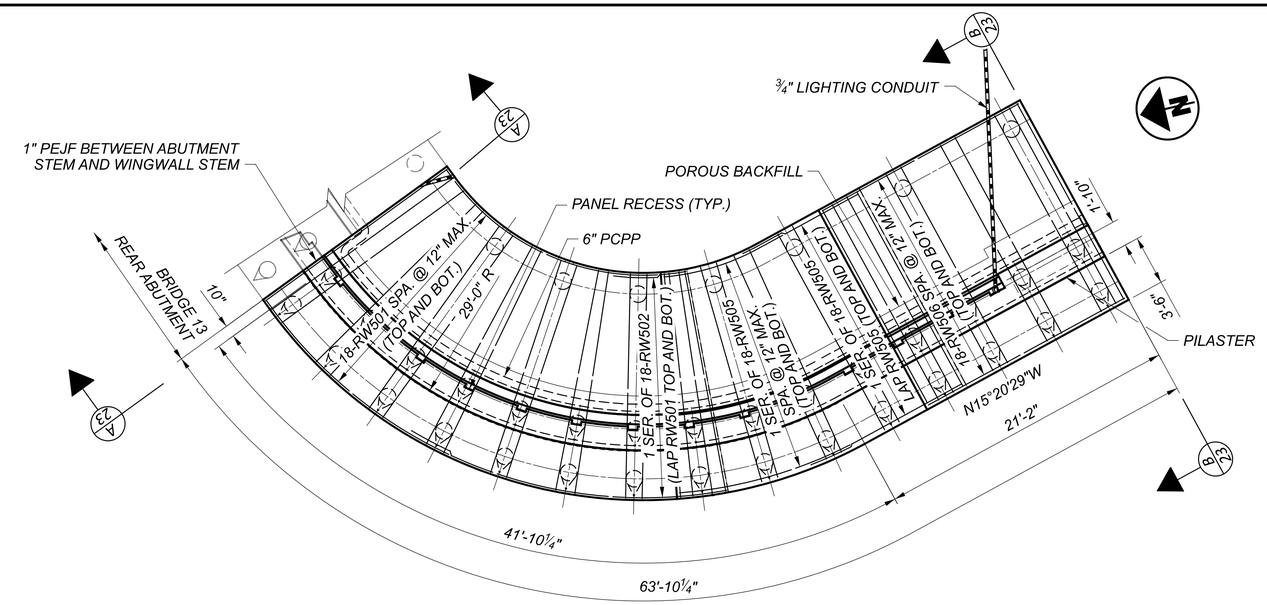

PLAN

(LENGTH MEASURED ALONG FRONT FACE OF WINGWALL)

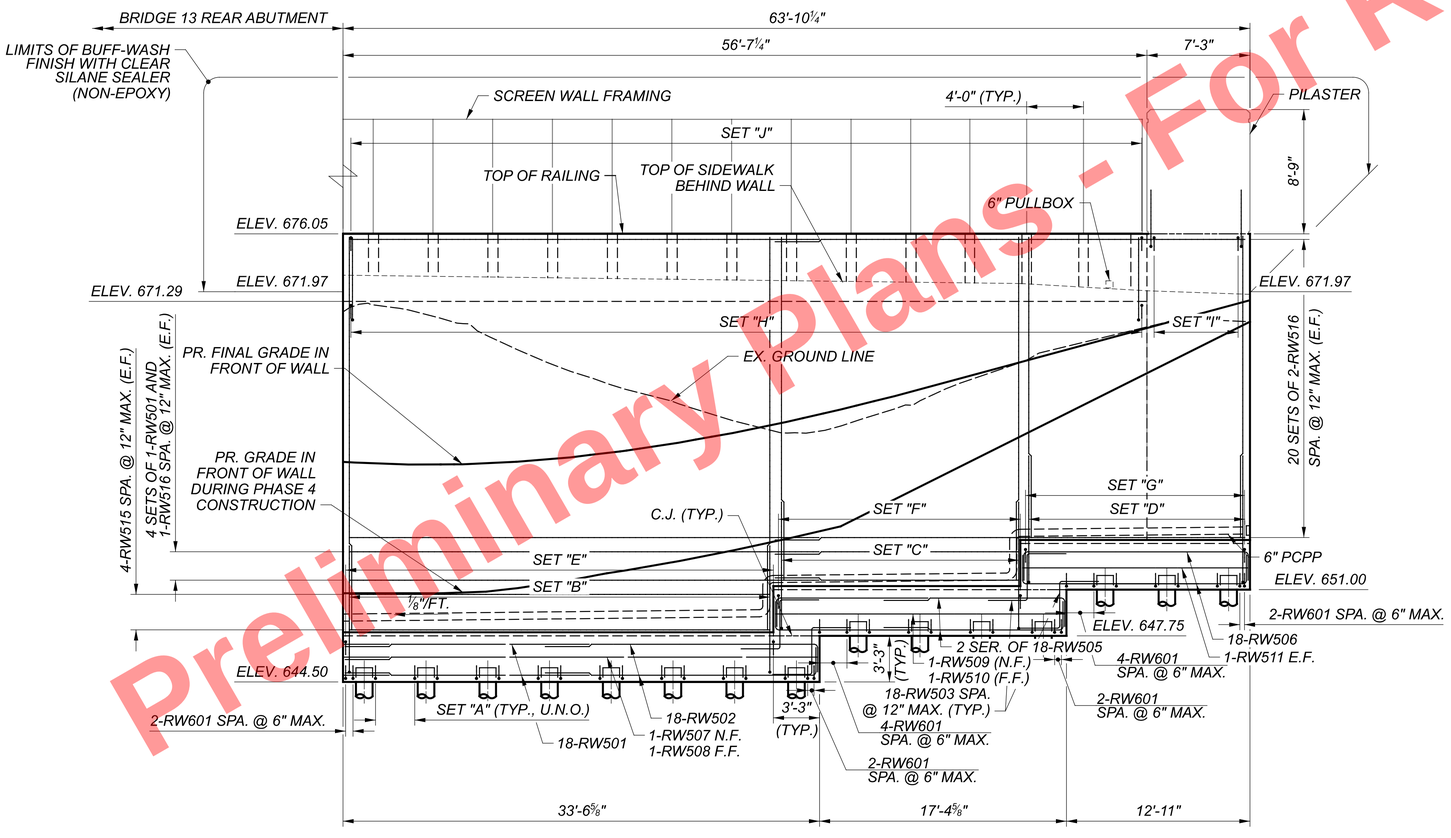

ELEVATION

(DEVELOPED ALONG FRONT FACE OF WINGWALL)

Preliminary Plans - For Reference Only

MIN. LAP LENGTHS:

#5 - 3'-1"
#6 - 3'-7"
#7 - 4'-8"
#8 - 5'-4"

REINFORCING LEGEND

SET "A" = 6-RW601 SPA. @ 9" MAX. (BOT., TYP. BETWEEN PILES U.N.O.), 12 SETS TOTAL

SET "B" = 31 SETS OF 1-RW504 AND 1-RW512 SPA. @ 12" MAX. (N.F.)
61 SETS OF 1-RW901 AND 1-RW902 SPA. @ 6" MAX. (F.F.)

SET "C" = 19 SETS OF 1-RW504 AND 1-RW513 SPA. @ 12" MAX. (N.F.)
36 SETS OF 1-RW901 AND 1-RW903 SPA. @ 6" MAX. (F.F.)

SET "D" = 17 SETS OF 1-RW504 AND 1-RW514 SPA. @ 12" MAX. (N.F.)
33 SETS OF 1-RW901 AND 1-RW904 SPA. @ 6" MAX. (F.F.)

SET "E" = 76-RW601 SPA. @ 6" MAX. (TOP)

SET "F" = 45-RW601 SPA. @ 6" MAX. (TOP)

SET "G" = 33-RW601 SPA. @ 6" MAX. (TOP)

SET "H" = 67 SETS OF 1-RW518 AND 1-RW519 SPA. @ 12" MAX.

SET "I" = 8 SETS OF 1-RW519 AND 1-RW520 SPA. @ 12" MAX.

SET "J" = 67-RW521 SPA. @ 12" MAX.

LEGEND

NPCPP - NON-PERFORATED CORRUGATED POLYETHYLENE PIPE (C&MS 707.33, TYPE S)

PCPP - PERFORATED CORRUGATED POLYETHYLENE PIPE (C&MS 707.33, TYPE SP)

NOTES:

1. FOR WINGWALL SECTIONS, SEE SHEET 21 / 99 .
2. FOR REAR ABUTMENT DETAILS, SEE SHEET 18 / 99 .
3. FIELD BEND RW501, RW502, RW505, RW506, RW515 AND RW516.

REAR LEFT WINGWALL PLAN AND ELEVATION
CUY-90-1678 (BRIDGE 13)
CR-710 (E. 22ND ST.) OVER I.R. 90

SFN	1807839
DESIGN AGENCY	Michael Baker INTERNATIONAL
DESIGNER	DAF
CHECKER	JRK
REVIEWER	CDC 05/10/24
PROJECT ID	82382
SUBSET	22
TOTAL	99
SHEET	2203
TOTAL	2696

CUY-90-16.28 (CCG3A)

MODEL: Sheet PAPERSIZE: 34x22 (in.) DATE: 3/28/2025 TIME: 7:38:35 AM USER: Rohit.Bk
pw:\\mb-us-pw.bentley.com:mb-us-pw-03\Documents\Cleveland_OH\01_Projects\ODOT\District12\82382400-Engineering\Structures\SFN_1807839\Sheets\82382_SFN_1807839_SR005.dgn

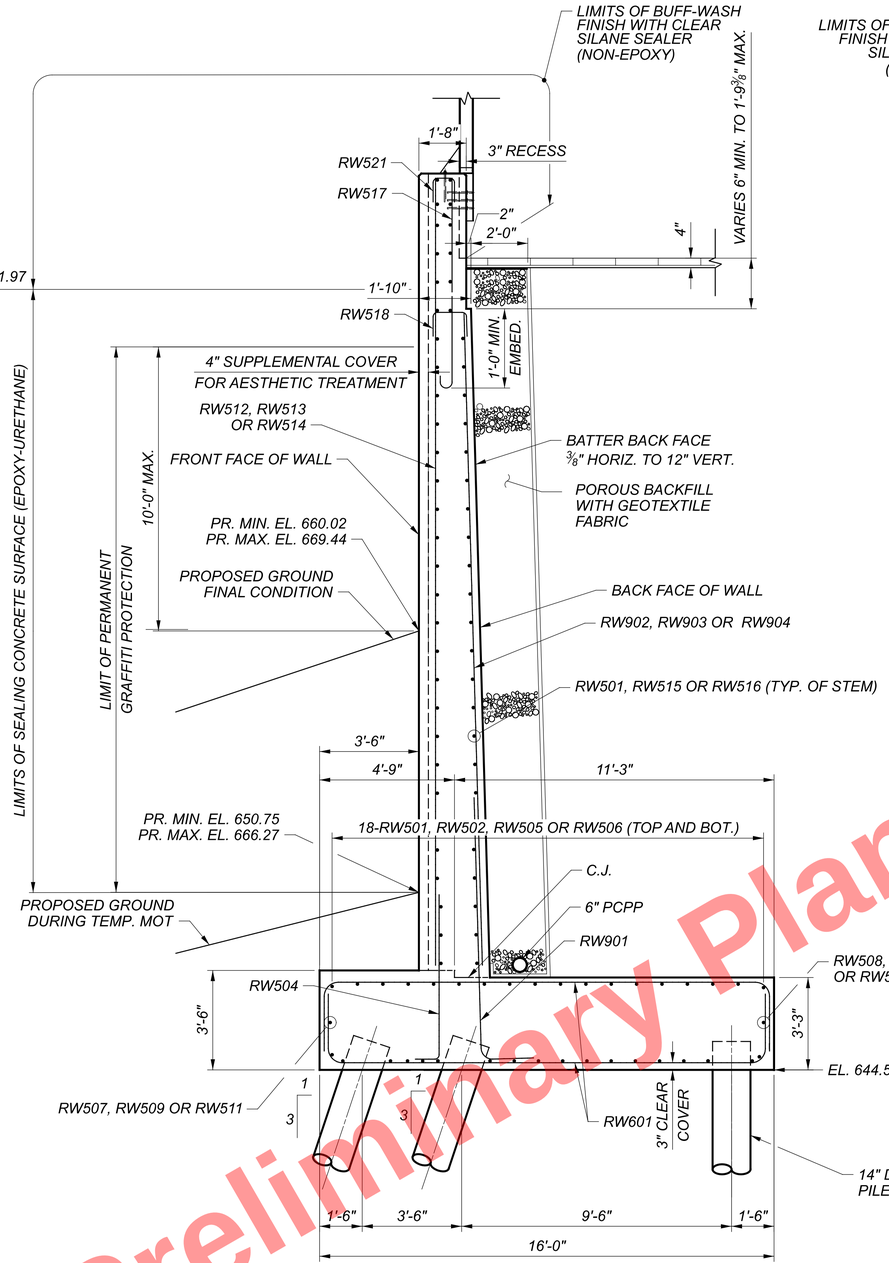

A/22 SECTION

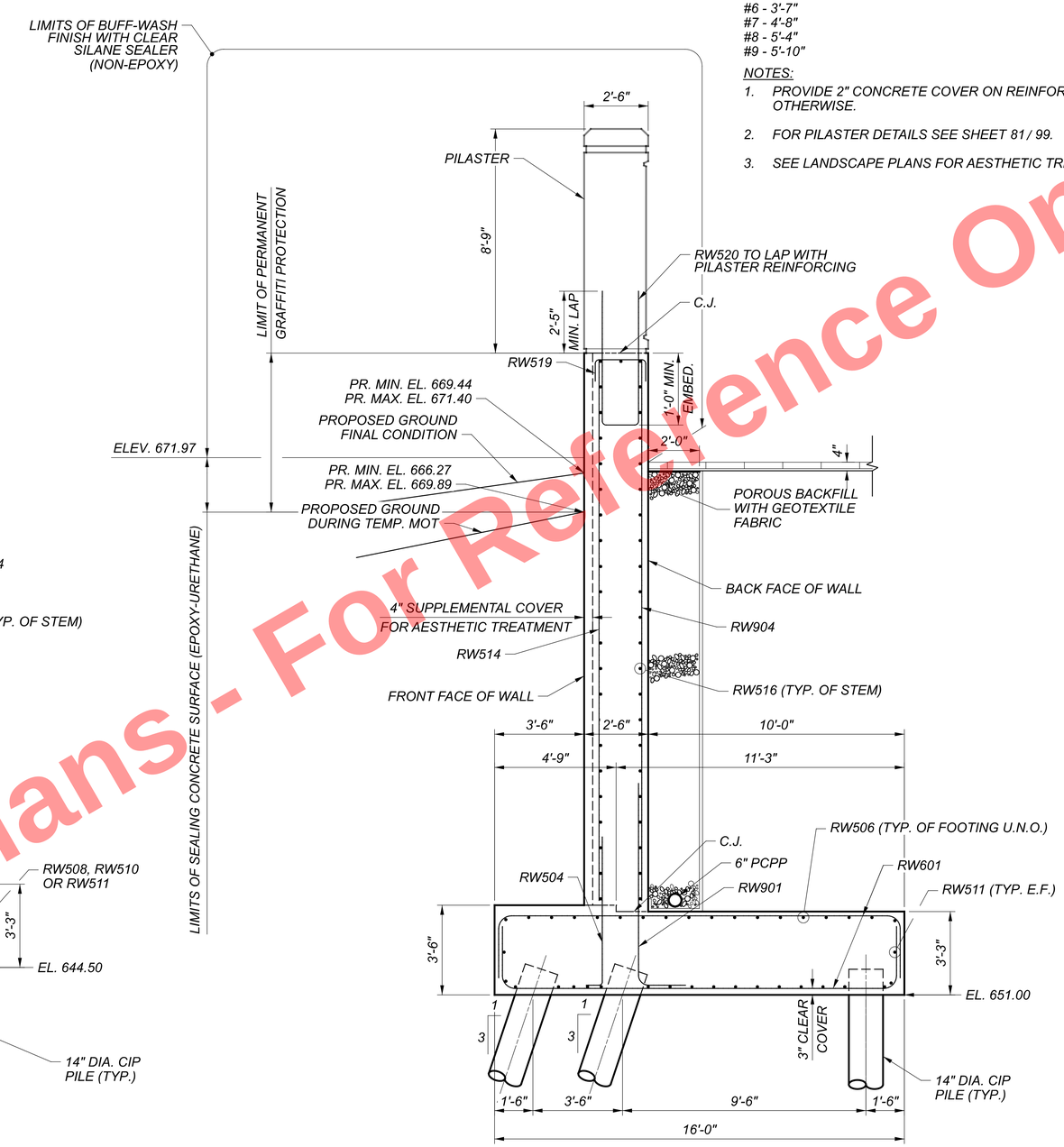

B/22 SECTION

MIN. LAP LENGTHS:

#5 - 3'-1"
#6 - 3'-7"
#7 - 4'-8"
#8 - 5'-4"
#9 - 5'-10"

NOTES:

1. PROVIDE 2" CONCRETE COVER ON REINFORCEMENT BARS UNLESS NOTED OTHERWISE.
2. FOR PILASTER DETAILS SEE SHEET 81 / 99.
3. SEE LANDSCAPE PLANS FOR AESTHETIC TREATMENT DETAILS.

Preliminary Plans - For Reference Only

REAR LEFT WINGWALL SECTION
CUY-90-1678 (BRIDGE 13)
CR-710 (E. 22ND ST.) OVER I.R. 90

CUY-90-16.28 (CCG3A)

MODEL: Sheet PAPERSIZE: 34x22 (in.) DATE: 3/28/2025 TIME: 7:38:55 AM USER: Rohit.Bk
pw:\\mb-us-pw.bentley.com:mb-us-pw-03\Documents\Cleveland_OH\01_Projects\ODOT\District12\82382\400-Engineering\Structures\SFN_1807839\Sheets\82382_SR006.dgn

SFN	1807839
DESIGN AGENCY	Michael Baker INTERNATIONAL
DESIGNER	BWC
CHECKER	JRK
REVIEWER	CDC 05/10/24
PROJECT ID	82382
SUBSET	23
TOTAL	99
SHEET	2204
TOTAL	2696

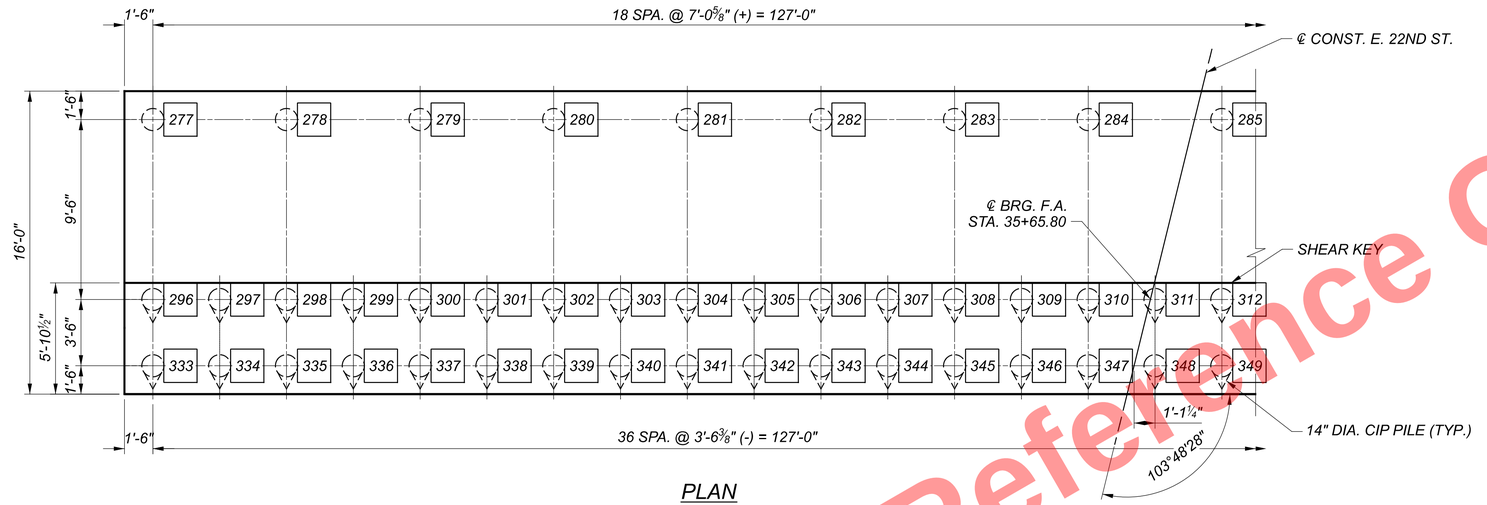

PLAN

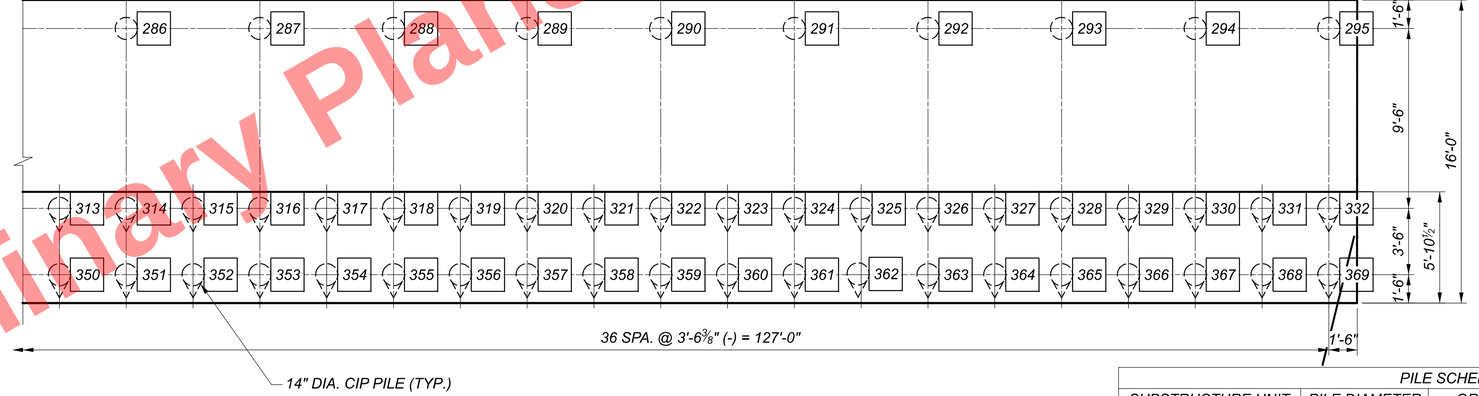

PLAN

PILE SCHEDULE			
SUBSTRUCTURE UNIT	PILE DIAMETER	ORDER LENGTH	CUTOFF ELEVATION
FORWARD ABUTMENT FOOTING (277 THRU 369)	14"	70.00	641.00

LEGEND

- [#] INDICATES PROPOSED PILE NUMBER
- ◯ INDICATES VERTICAL PILE
- INDICATES BATTERED PILE

Preliminary Plans - For Reference Only

FORWARD ABUTMENT FOUNDATION PLAN
CUY-90-1678 (BRIDGE 13)
CR-710 (E. 22ND ST.) OVER I.R. 90

SFN 1807839

DESIGN AGENCY
Michael Baker INTERNATIONAL

DESIGNER	CHECKER
DAF	JRK

REVIEWER
CDC 05/10/24

PROJECT ID
82382

SUBSET	TOTAL
24	99

SHEET	TOTAL
2205	2696

CUY-90-16.28 (CCG3A)

MODEL: Sheet PAPERSIZE: 34x22 (in.) DATE: 3/28/2025 TIME: 7:39:04 AM USER: Rohit.Bk
pw:\\mb-us-pw.bentley.com:mb-us-pw-03\Documents\Cleveland_OH101_Projects\ODOT\District12\82382\400-Engineering\Structures\SFN_1807839\Sheets\82382_SFN_1807839_SO003.dgn

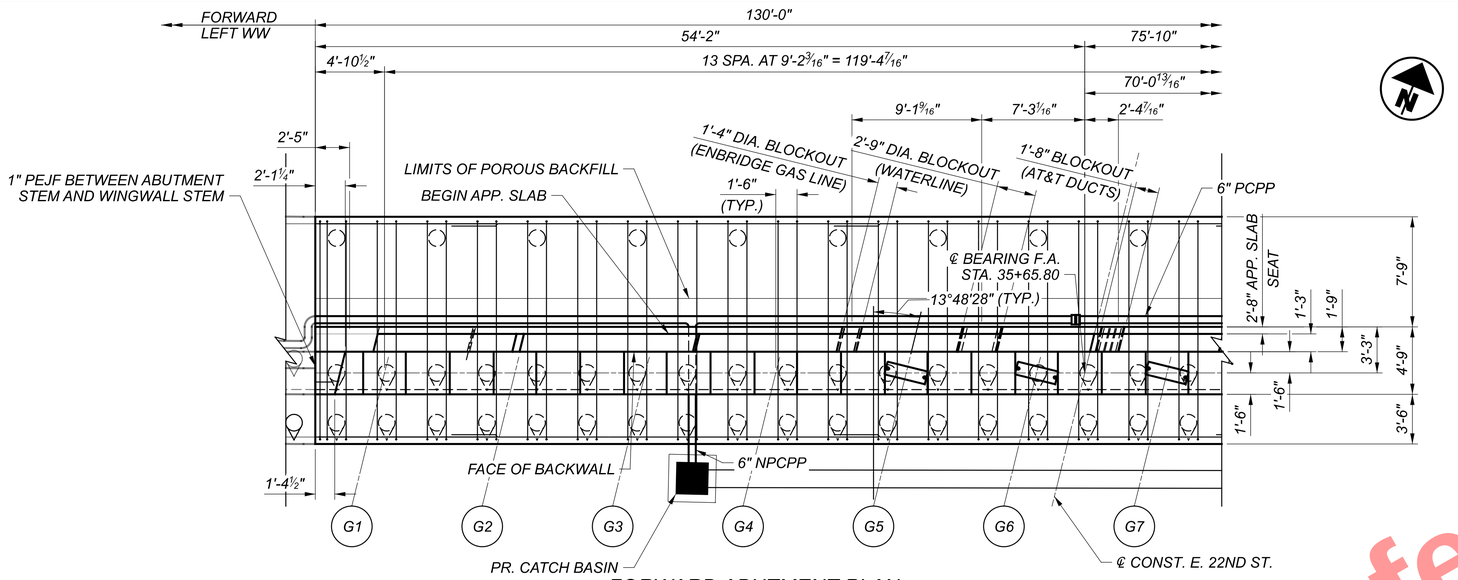

FORWARD ABUTMENT PLAN

ONLY BOTTOM OF FOOTING REINFORCEMENT SHOWN FOR CLARITY

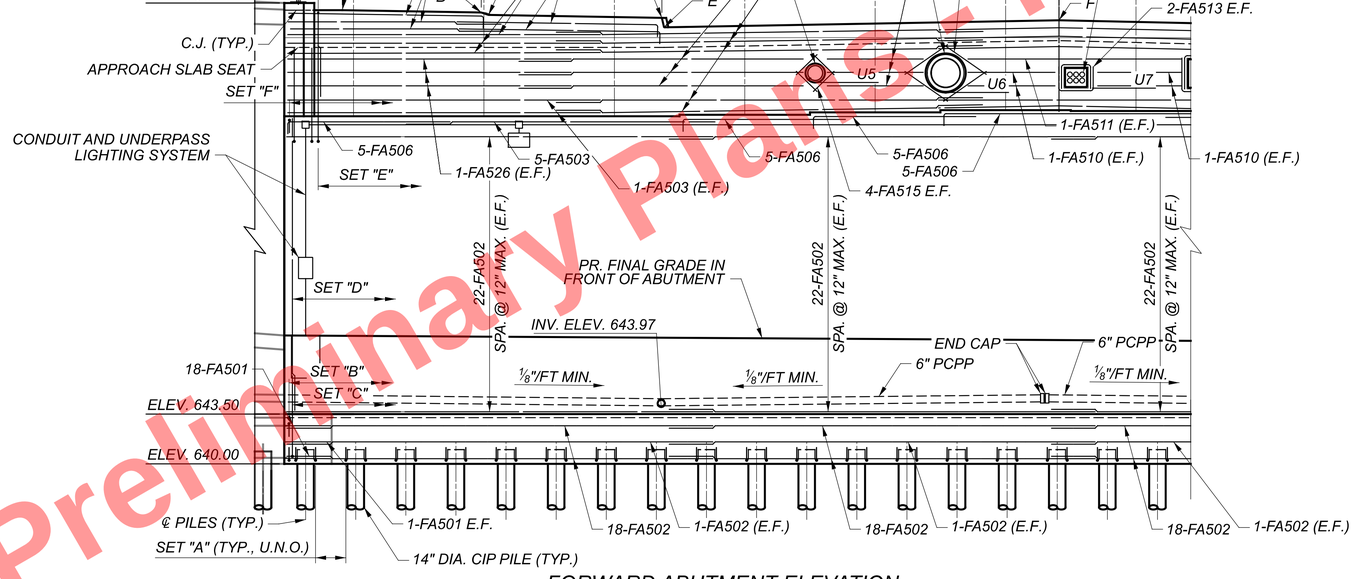

FORWARD ABUTMENT ELEVATION

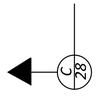

FORWARD ABUTMENT	
POINT	ELEVATION
A	671.94
B	671.77
C	671.61
D	671.40
E	670.73
F	671.22
G1 (AT BEAM SEAT)	664.47
G2 (AT BEAM SEAT)	664.47
G3 (AT BEAM SEAT)	664.47
G4 (AT BEAM SEAT)	664.57
G5 (AT BEAM SEAT)	664.74
G6 (AT BEAM SEAT)	664.90
G7 (AT BEAM SEAT)	664.84

UTILITIES	
POINT	ELEVATION
U5	666.84
U6	666.14
U7	666.44

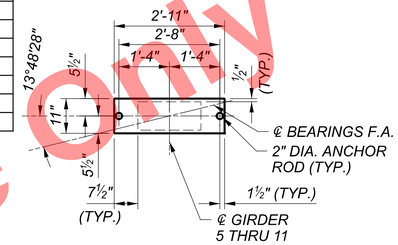

GUIDED BEARING LOAD PLATE DETAIL

Preliminary Plans - For Reference Only

REINFORCING LEGEND

SET "A" = 4-FA801 SPA. @ 12" MAX. (BOT., TYP. BETWEEN PILES U.N.O.), 36 SETS TOTAL

SET "B" = 260-FA601 SPA. @ 6" MAX. (TOP)

SET "C" = 131-FA504 SPA. @ 12" MAX. (N.F.)
261-FA701 SPA. @ 6" MAX. (F.F.)

SET "D" = 131-FA505 SPA. @ 12" MAX. (N.F.)
261-FA702 SPA. @ 6" MAX. (F.F.)
(LAP SET "D" BARS)

SET "E" = 126-FA508 SPA. @ 12" MAX.

SET "F" = 131-FA507 SPA. @ 12" MAX.

SET "G" = 126-FA509 (LAP SET "E" BARS)

MIN. LAP LENGTHS:

#5 - 3'-1"
#6 - 3'-7"
#7 - 4'-8"
#8 - 5'-4"

LEGEND

NPCPP - NON-PERFORATED CORRUGATED POLYETHYLENE PIPE (C&MS 707.33, TYPE S)

PCPP - PERFORATED CORRUGATED POLYETHYLENE PIPE (C&MS 707.33, TYPE SP)

NOTES

1. FOR ADDITIONAL DETAILS, SEE SHEET 26 & 27 /99
2. SEE FOUNDATION PLAN FOR PILE LAYOUT.
3. SLOPE 6" NPCPP AND PCPP ⅛" / FT. MIN.
4. CHEEK WALL REINFORCING NOT SHOWN FOR CLARITY. SEE SHEET 28/99 FOR CHEEK WALL REINFORCING DETAILS.
5. ACCURATELY PLACE REINFORCING STEEL IN THE VICINITY OF THE BRIDGE SEAT TO AVOID INTERFERENCE WITH THE DRILLING OF BEARING ANCHOR HOLES OR THE PRE SETTING OF BEARING ANCHORS.
6. FOR UNDERPASS LIGHTING DETAILS, SEE SHEET 1747 / 2696 .

FORWARD ABUTMENT PLAN AND ELEVATION (1 OF 2)
CUY-90-1678 (BRIDGE 13)
CR-710 (E. 22ND ST.) OVER I.R. 90

SFN 1807839
DESIGN AGENCY
Michael Baker INTERNATIONAL
DESIGNER LPC | CHECKER GZ
REVIEWER CDC 05/10/24
PROJECT ID 82382
SUBSET 25 | TOTAL 99
SHEET 2206 | TOTAL 2696

CUY-90-16.28 (CCG3A)

MODEL: Sheet PAPERSIZE: 34x22 (in.) DATE: 6/9/2025 TIME: 2:44:14 PM USER: Julie.Ross
pw:\\mb-us-pw.bentley.com:mb-us-pw-03\Documents\Cleveland_OH01_Projects\ODOT\District12\82382\400-Engineering\Structures\SFN_1807839\Sheets\82382_SFN_1807839_SF002.dgn

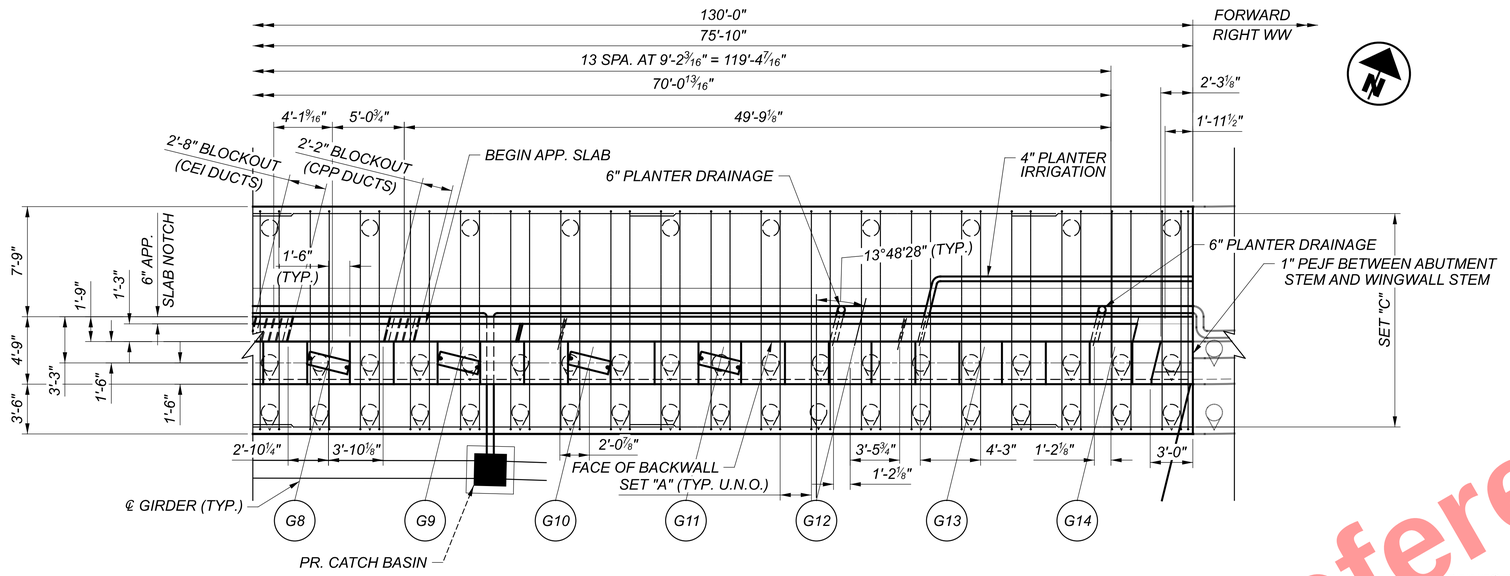

FORWARD ABUTMENT PLAN

ONLY BOTTOM OF FOOTING REINFORCEMENT SHOWN FOR CLARITY

FORWARD ABUTMENT	
POINT	ELEVATION
G	670.63
H	671.30
I	671.89
G8 (AT BEAM SEAT)	664.64
G9 (AT BEAM SEAT)	664.45
G10 (AT BEAM SEAT)	664.30
G11 (AT BEAM SEAT)	664.30
G12 (AT BEAM SEAT)	664.30
G13 (AT BEAM SEAT)	664.30
G14 (AT BEAM SEAT)	664.30

UTILITIES	
POINT	ELEVATION
U8	666.39
U9	666.21
U10	668.38
U11	667.78
U12	668.38

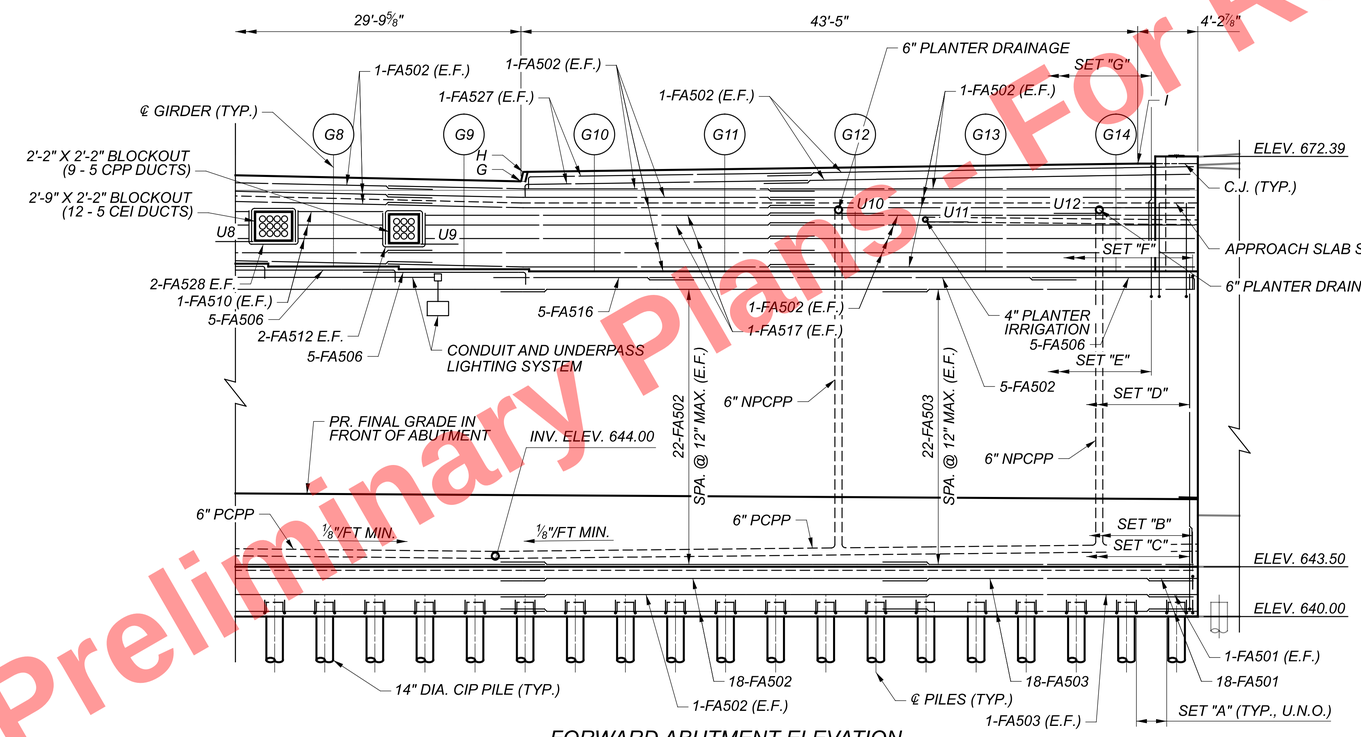

FORWARD ABUTMENT ELEVATION

REINFORCING LEGEND

SET "A" = 4-FA801 SPA. @ 12" MAX. (BOT., TYP. BETWEEN PILES U.N.O.), 36 SETS TOTAL

SET "B" = 260-FA601 SPA. @ 6" MAX. (TOP)

SET "C" = 131-FA504 SPA. @ 12" MAX. (N.F.)
261-FA701 SPA. @ 6" MAX. (F.F.)

SET "D" = 131-FA505 SPA. @ 12" MAX. (N.F.)
261-FA702 SPA. @ 6" MAX. (F.F.)
(LAP SET "D" BARS)

SET "E" = 126-FA508 SPA. @ 12" MAX.

SET "F" = 131-FA507 SPA. @ 12" MAX.

SET "G" = 126-FA509 (LAP SET "E" BARS)

LEGEND

NPCPP - NON-PERFORATED CORRUGATED POLYETHYLENE PIPE (C&MS 707.33, TYPE S)

PCPP - PERFORATED CORRUGATED POLYETHYLENE PIPE (C&MS 707.33, TYPE SP)

MIN. LAP LENGTHS:

#5 - 3'-1"
#6 - 3'-7"
#7 - 4'-8"
#8 - 5'-4"

NOTE:

1. ACCURATELY PLACE REINFORCING STEEL IN THE VICINITY OF THE BRIDGE SEAT TO AVOID INTERFERENCE WITH THE DRILLING OF BEARING ANCHOR HOLES OR THE PRE SETTING OF BEARING ANCHORS.
2. FOR UNDERPASS LIGHTING DETAILS, SEE SHEET 1747 / 2696 .

Preliminary Plans - For Reference Only

FORWARD ABUTMENT PLAN AND ELEVATION (2 OF 2)
CUY-90-1678 (BRIDGE 13)
CR-710 (E. 22ND ST.) OVER I.R. 90

SFN	1807839
DESIGN AGENCY	Michael Baker INTERNATIONAL
DESIGNER	LPC
CHECKER	GZ
REVIEWER	CDC 05/10/24
PROJECT ID	82382
SUBSET	26
TOTAL	99
SHEET	2207
TOTAL	2696

CUY-90-16.28 (CCG3A)

MODEL: Sheet PAPERSIZE: 34x22 (in.) DATE: 3/28/2025 TIME: 7:40:14 AM USER: RohitBk
pw:\\mb-us-pw.bentley.com:mb-us-pw-03\Documents\Cleveland_OH\01_Projects\ODOT\District12\82382\400-Engineering\Structures\SFN_1807839\Sheets\82382_SFN_1807839_SF003.dgn

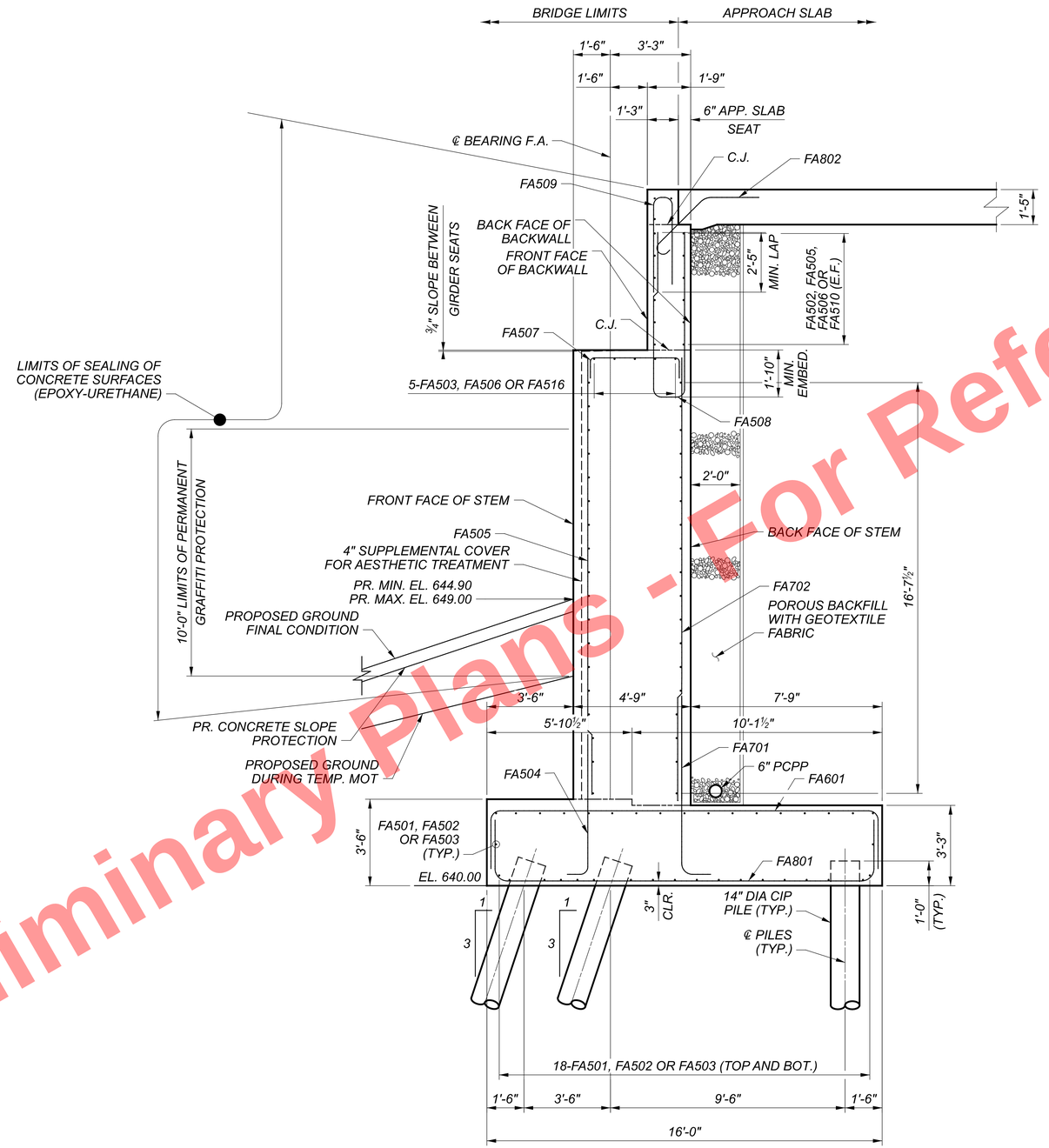

TYPICAL FORWARD ABUTMENT SECTION

MIN. LAP LENGTHS:

#5 - 3'-1"
#6 - 3'-7"
#7 - 4'-8"
#8 - 5'-4"

NOTES:

1. PROVIDE 2" CONCRETE COVER ON REINFORCEMENT BARS UNLESS NOTED OTHERWISE.
2. BRIDGE SEAT REINFORCING, SETTING ANCHORS: ACCURATELY PLACE REINFORCING STEEL IN THE VICINITY OF THE BRIDGE SEAT TO AVOID INTERFERENCE WITH THE DRILLING OF BEARING ANCHOR HOLES OR THE PRE-SETTING OF BEARING ANCHORS.
3. SEE LANDSCAPING PLANS FOR AESTHETIC TREATMENT DETAILS.
4. FOR EXPANSION JOINT DETAILS, SEE SHEET 87 / 99.

Preliminary Plans - For Reference Only

FORWARD ABUTMENT SECTION
CUY-90-1678 (BRIDGE 13)
CR-710 (E. 22ND ST.) OVER I.R. 90

SFN 1807839
DESIGN AGENCY Michael Baker INTERNATIONAL
DESIGNER ZES | CHECKER ETB
REVIEWER CDC 05/10/24
PROJECT ID 82382
SUBSET 27 | TOTAL 99
SHEET 2208 | TOTAL 2696

CUY-90-16.28 (CCG3A)

MODEL: Sheet PAPERSIZE: 34x22 (in.) DATE: 3/28/2025 TIME: 7:40:40 AM USER: RohitLBk
pw:\\mb-us-pw.bentley.com:mb-us-pw-03\Documents\Cleveland_OH\01_Projects\ODOT\District12\82382\400-Engineering\Structures\SFN_1807839\Sheets\82382_Sheets\82382_SFN_1807839_SF001.dgn

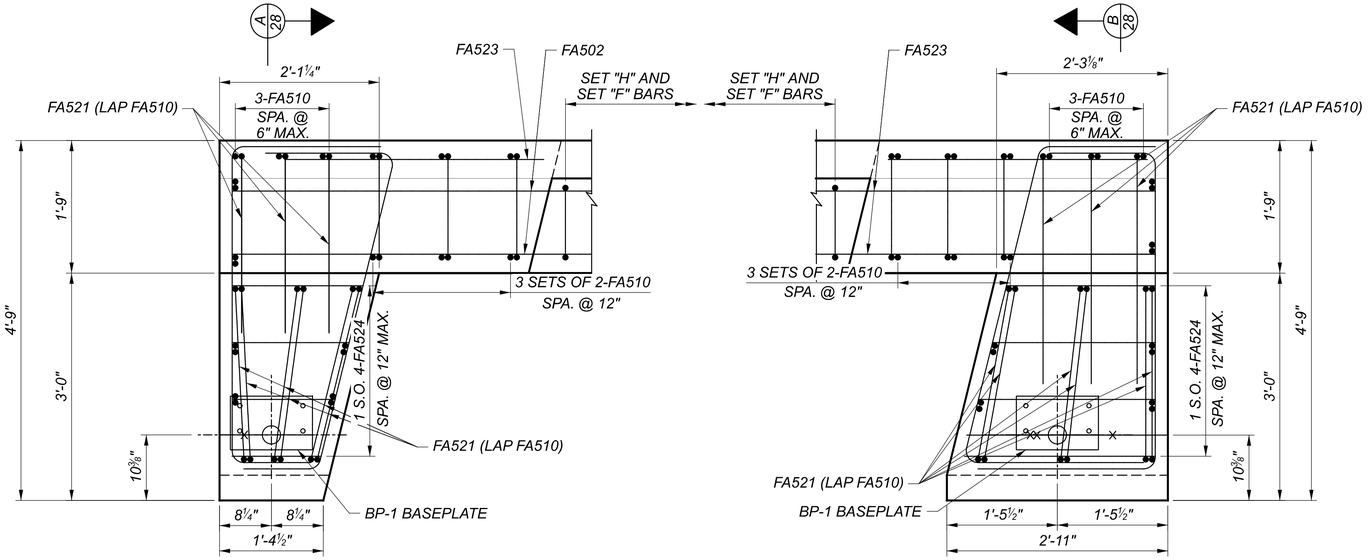

LEFT CHEEK WALL PLAN

BEAM SEAT BARS NOT SHOWN FOR CLARITY

RIGHT CHEEK WALL PLAN

BEAM SEAT BARS NOT SHOWN FOR CLARITY

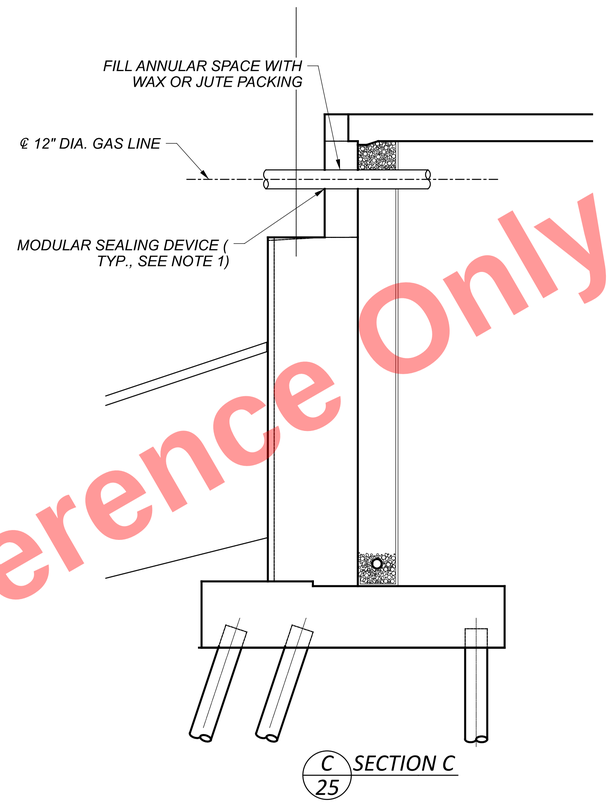

C 25 SECTION C

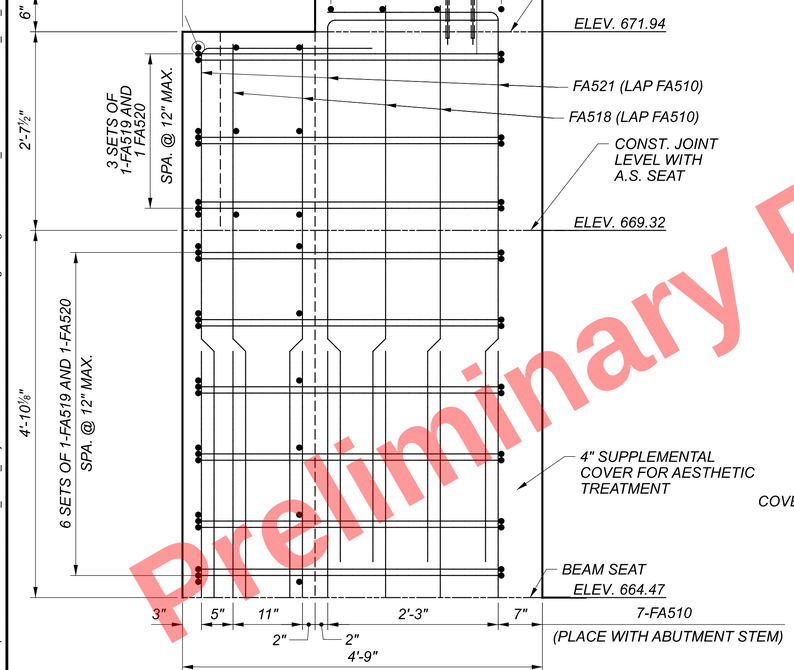

A 28 SECTION A

LEFT CHEEK WALL

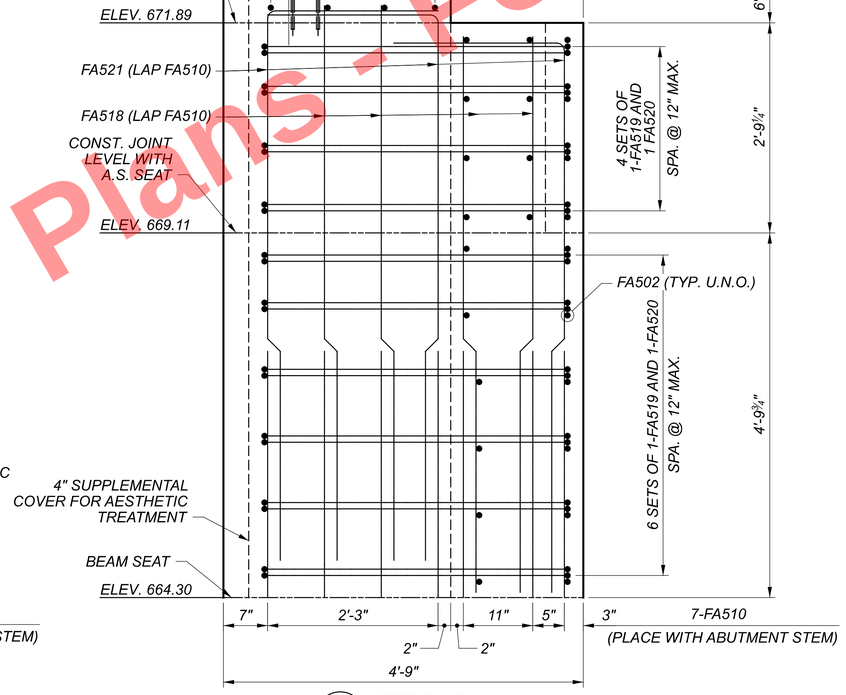

B 28 SECTION B

RIGHT CHEEK WALL

MIN. LAP LENGTHS:

#5 - 3'-1"
#6 - 3'-7"
#7 - 4'-8"
#8 - 5'-4"

NOTES:

1. MODULAR SEALING DEVICE SHALL BE LINK-SEAL, INNERLYNX, OR APPROVED EQUAL. SIZE THE SEALING DEVICE AND SLEEVE BASED ON THE MANUFACTURER'S RECOMMENDATIONS. USE LOW DUROMETER SEALS FOR THE 24" WATER LINE AND 12" GAS LINE.

Preliminary Plans - For Reference Only

FORWARD ABUTMENT DETAILS
CUY-90-1678 (BRIDGE 13)
CR-710 (E. 22ND ST.) OVER I.R. 90

SFN	1807839
DESIGN AGENCY	Michael Baker INTERNATIONAL
DESIGNER	DAF
CHECKER	JRK
REVIEWER	CDC 05/10/24
PROJECT ID	82382
SUBSET	28
TOTAL	99
SHEET	2209
TOTAL	2696

CUY-90-16.28 (CCG3A)

MODEL: Sheet PAPERSIZE: 34x22 (in.) DATE: 3/28/2025 TIME: 7:40:55 AM USER: Rohit.Bk
pw:\\mb-us-pw.bentley.com:mb-us-pw-03\Documents\Cleveland_OH\01_Projects\ODOT\District12\82382400-Engineering\Structures\SFN_1807839\Sheets\82382_SFN_1807839_SF005.dgn

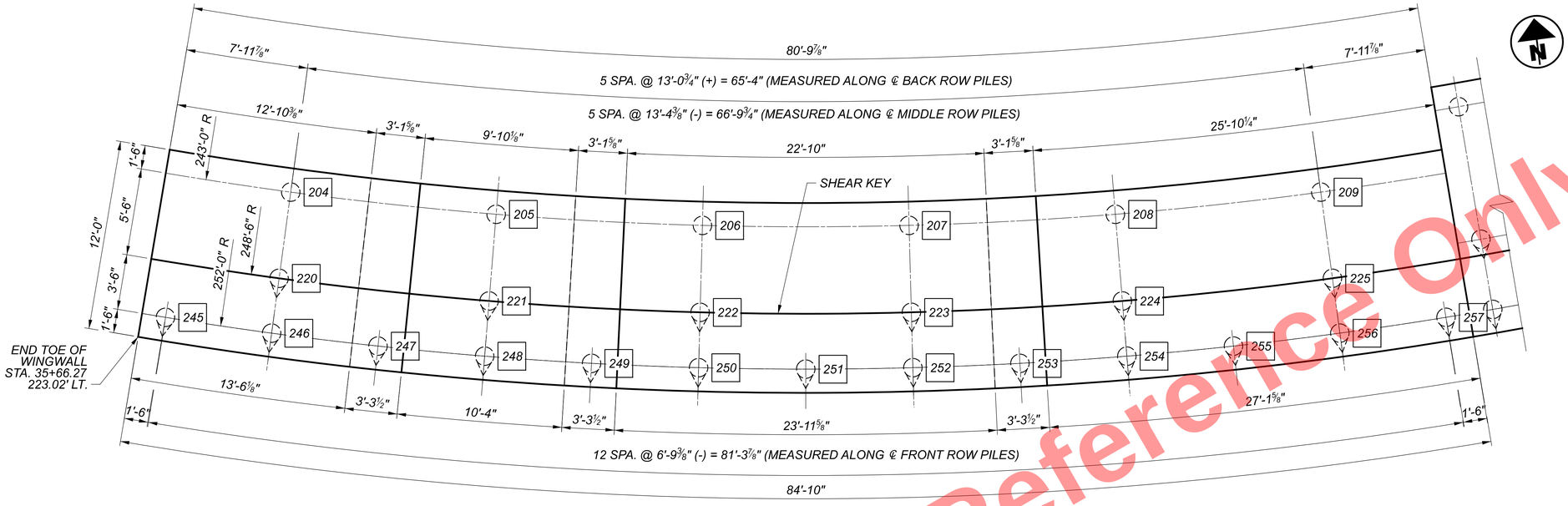

PLAN

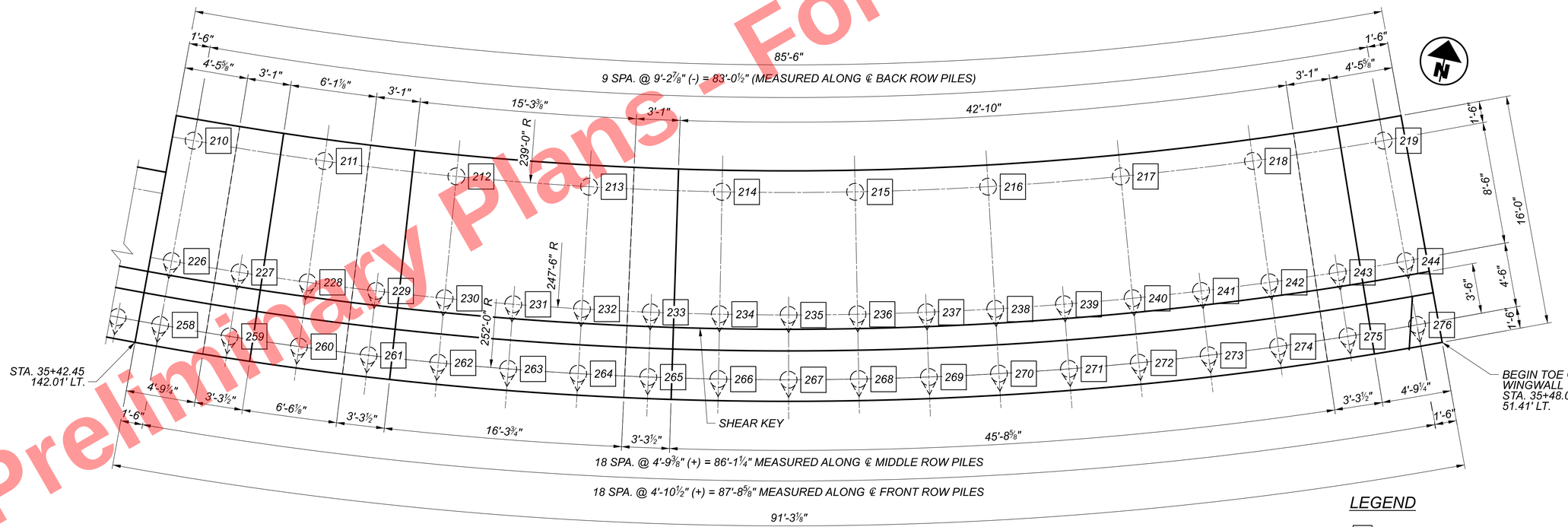

PLAN

PILE SCHEDULE			
SUBSTRUCTURE UNIT	PILE DIAMETER	ORDER LENGTH	CUTOFF ELEVATION
FORWARD LEFT WINGWALL FOOTING (204 THRU 276)	14"	70.00	VARIES

LEGEND

- [#] INDICATES PROPOSED PILE NUMBER
- ○ INDICATES VERTICAL PILE
- INDICATES BATTERED PILE

Preliminary Plans - For Reference Only

FORWARD LEFT WINGWALL FOUNDATION PLAN
CUY-90-1678 (BRIDGE 13)
CR-710 (E. 22ND ST.) OVER I.R. 90

SFN 1807839

DESIGN AGENCY
Michael Baker INTERNATIONAL

DESIGNER	CHECKER
DAF	JRK

REVIEWER
CDC 05/10/24

PROJECT ID
82382

SUBSET	TOTAL
29	99

SHEET	TOTAL
2210	2696

CUY-90-16.28 (CCG3A)

MODEL: Sheet PAPERSIZE: 34x22 (in.) DATE: 3/28/2025 TIME: 7:41:24 AM USER: RohitLBk
pw:\\mb-us-pw.bentley.com:mb-us-pw-03\Documents\Cleveland_OH\01_Projects\ODOT\District12\82382\400-Engineering\Structures\SFN_1807839\Sheets\82382_SFN_1807839_SO006.dgn

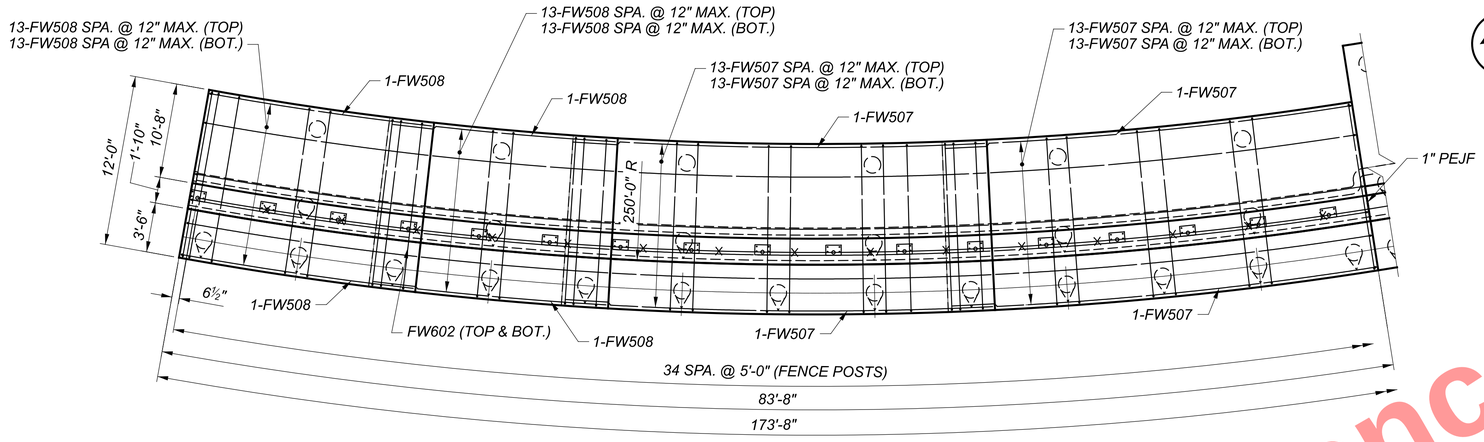

PLAN

(MEASURED ALONG FRONT FACE OF WINGWALL)

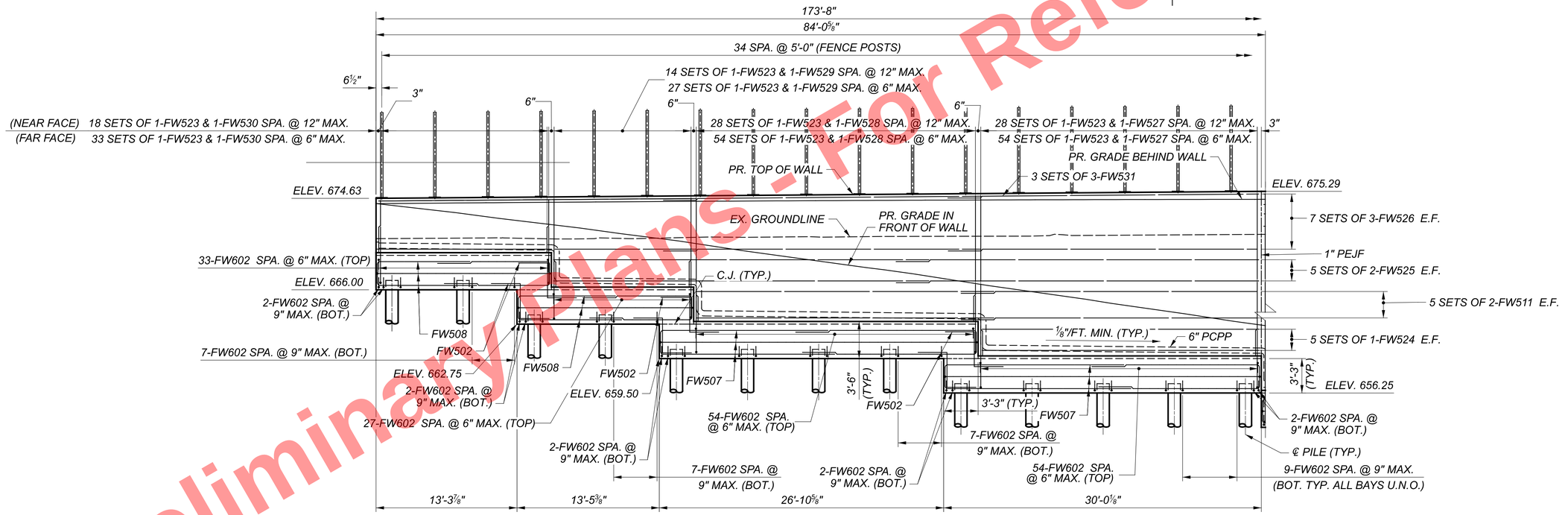

ELEVATION

(DEVELOPED ALONG FRONT FACE OF WINGWALL)

MIN. LAP LENGTHS:

#5 - 3'-1"
#6 - 3'-7"
#7 - 4'-8"
#8 - 5'-4"
#9 - 5'-10"

NOTES:

1. FOR FORWARD ABUTMENT DETAILS, SEE SHEET 28 / 99.

Preliminary Plans - For Reference Only

FORWARD LEFT WINGWALL PLAN AND ELEVATION (1 OF 2)
CUY-90-1678 (BRIDGE 13)
CR-710 (E. 22ND ST.) OVER I.R. 90

SFN	1807839
DESIGN AGENCY	Michael Baker INTERNATIONAL
DESIGNER	ZES
CHECKER	SSW
REVIEWER	CDC 05/10/24
PROJECT ID	82382
SUBSET	30
TOTAL	99
SHEET	2211
TOTAL	2696

CUY-90-16.28 (CCG3A)

MODEL: Sheet PAPERSIZE: 34x22 (in.) DATE: 3/28/2025 TIME: 7:41:55 AM USER: RohitLBk
pw:\\mb-us-pw.bentley.com:mb-us-pw-03\Documents\Cleveland_OH\01_Projects\ODOT\District12\82382400-Engineering\Structures\SFN_1807839\Sheets\82382_SFN_1807839_SF008.dgn

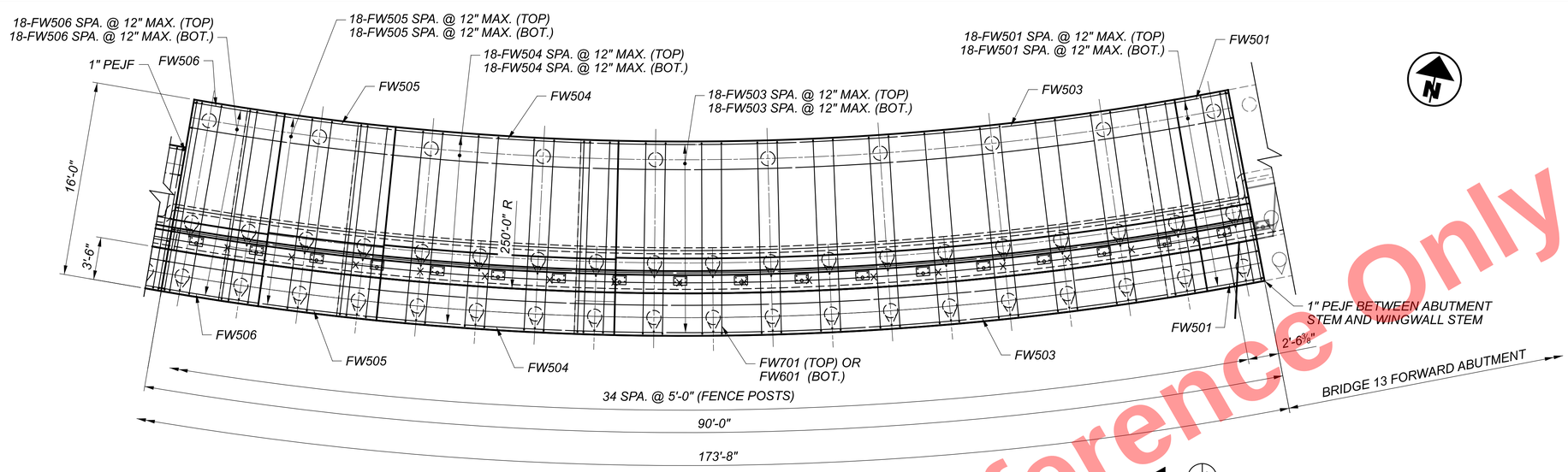

PLAN

(MEASURED ALONG FRONT FACE OF WINGWALL)

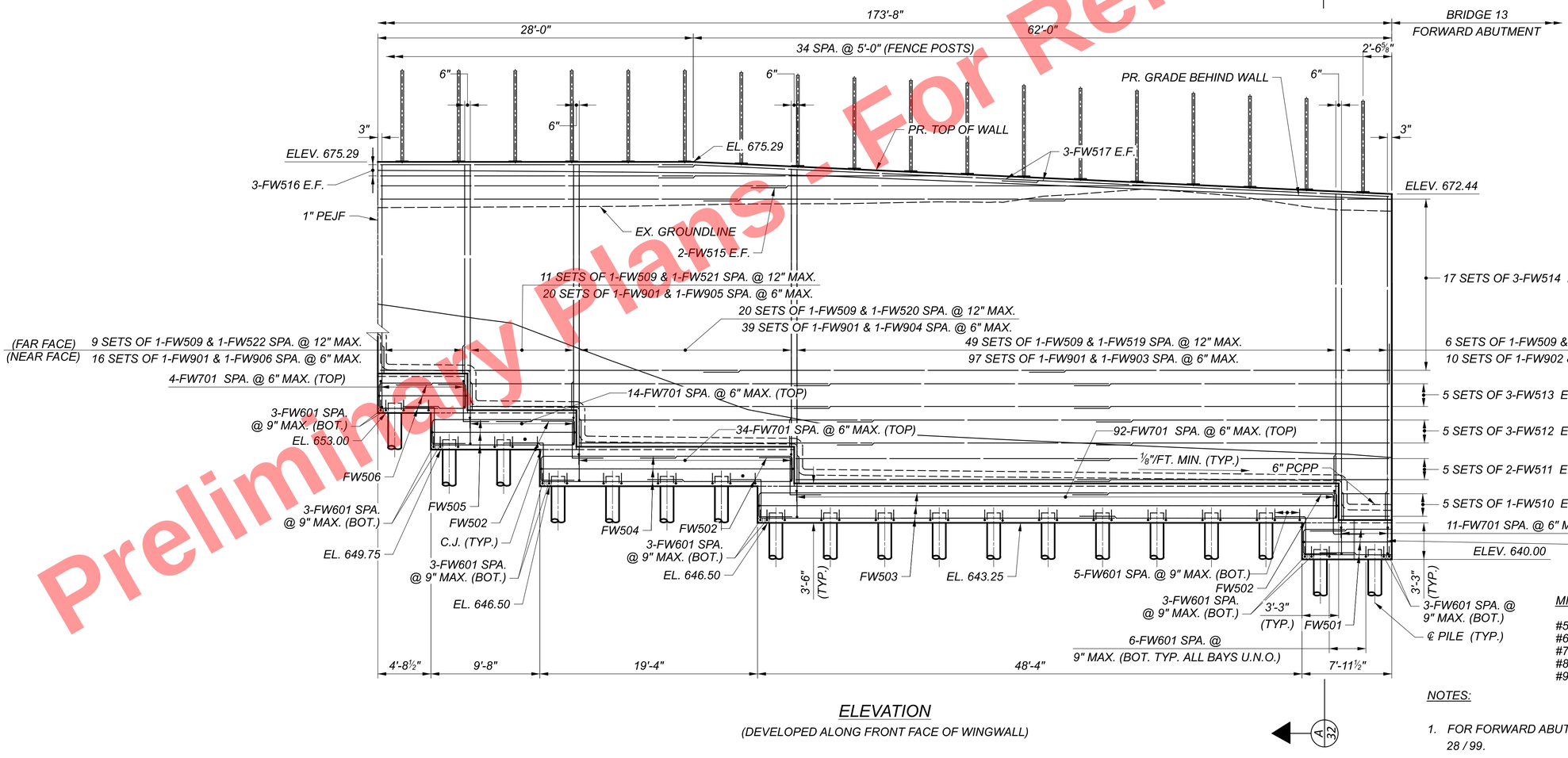

ELEVATION

(DEVELOPED ALONG FRONT FACE OF WINGWALL)

NOTES:

1. FOR FORWARD ABUTMENT DETAILS, SEE SHEET 28 / 99.

Preliminary Plans - For Reference Only

FORWARD LEFT WINGWALL PLAN AND ELEVATION (2 OF 2)
CUY-90-1678 (BRIDGE 13)
CR-710 (E. 22ND ST.) OVER I.R. 90

SFN 1807839
DESIGN AGENCY Michael Baker INTERNATIONAL
DESIGNER ZES | CHECKER SSW
REVIEWER CDC 05/10/24
PROJECT ID 82382
SUBSET 31 | TOTAL 99
SHEET 2212 | TOTAL 2696

CUY-90-16.28 (CCG3A)

MODEL: Sheet PAPERSIZE: 34x22 (in.) DATE: 3/28/2025 TIME: 7:42:12 AM USER: Rohit.Bk
pw:\\mb-us-pw.bentley.com:mb-us-pw-03\Documents\Cleveland_OH\01_Projects\ODOT\District12\82382400-Engineering\Structures\SFN_1807839\Sheets\82382_SFN_1807839_SF009.dgn

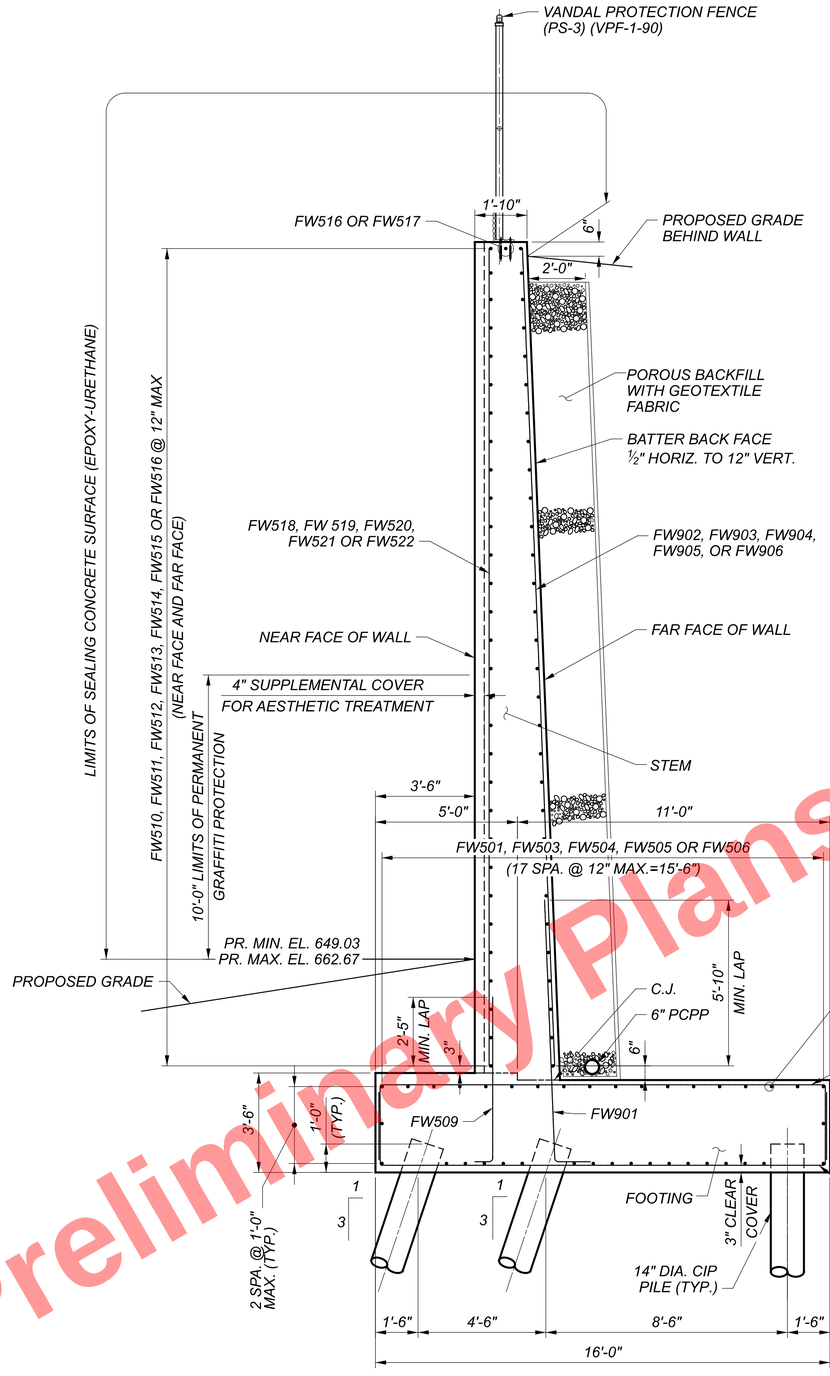

A 31 SECTION

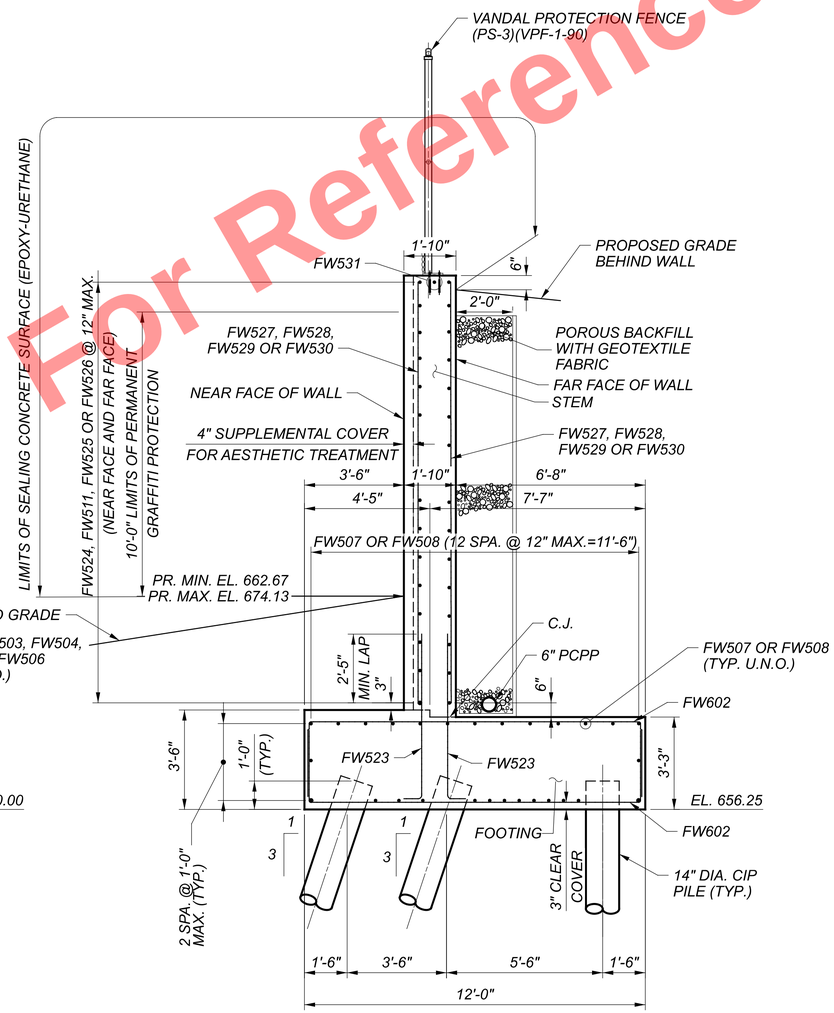

B 30 SECTION

MIN. LAP LENGTHS:

#5 - 3'-1"
#6 - 3'-7"
#7 - 4'-8"
#8 - 5'-4"
#9 - 5'-10"

NOTES:

1. PROVIDE 2" CONCRETE COVER ON REINFORCEMENT BARS UNLESS NOTED OTHERWISE.
2. SEE LANDSCAPING PLANS FOR AESTHETIC TREATMENT DETAILS.

Preliminary Plans - For Reference Only

FORWARD LEFT WINGWALL SECTION
CUY-90-1678 (BRIDGE 13)
CR-710 (E. 22ND ST.) OVER I.R. 90

CUY-90-16.28 (CCG3A)

MODEL: Sheet PAPERSIZE: 34x22 (in.) DATE: 3/28/2025 TIME: 7:42:28 AM USER: RohitLBk
pw:\\mb-us-pw.bentley.com:mb-us-pw-03\Documents\Cleveland_OH01_Projects\ODOT\District12\82382400-Engineering\Structures\SFN_1807839\Sheets\82382_SFN_1807839_SF011.dgn

SFN	1807839
DESIGN AGENCY	Michael Baker INTERNATIONAL
DESIGNER	DAF
CHECKER	JRK
REVIEWER	CDC 05/10/24
PROJECT ID	82382
SUBSET	32
TOTAL	99
SHEET	2213
TOTAL	2696

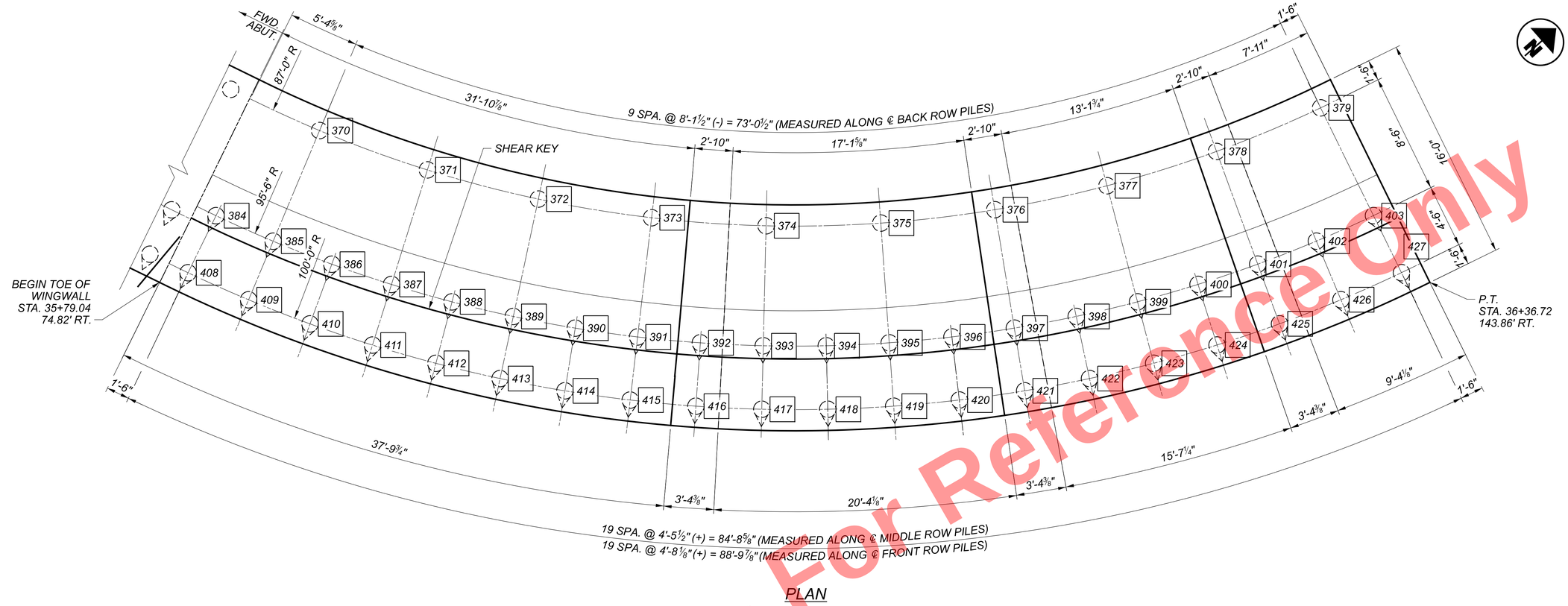

PLAN

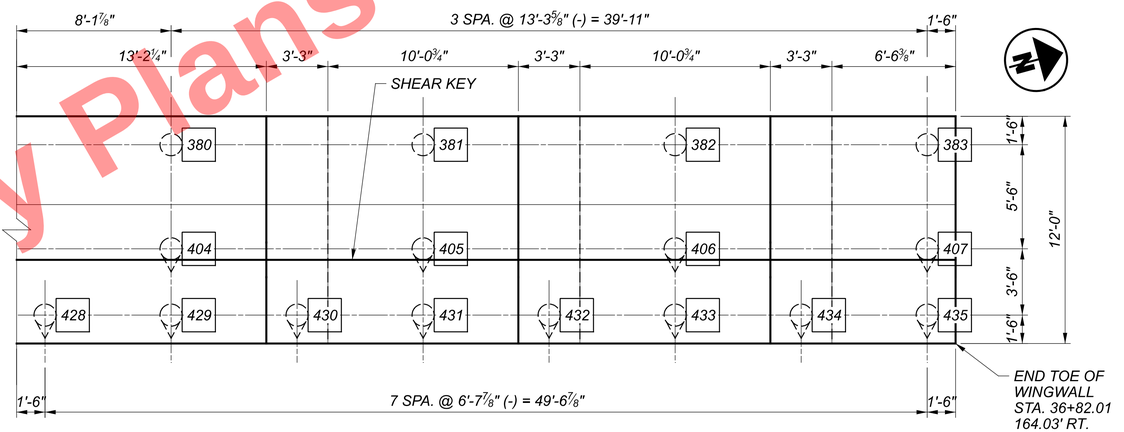

PLAN

PILE SCHEDULE			
SUBSTRUCTURE UNIT	PILE DIAMETER	ORDER LENGTH	CUTOFF ELEVATION
FORWARD RIGHT WINGWALL FOOTING (370 THRU 435)	14"	75.00	VARIES

LEGEND

- # — INDICATES PROPOSED PILE NUMBER
- ◯ — INDICATES VERTICAL PILE
- ⏚ — INDICATES BATTERED PILE

Preliminary Plans - For Reference Only

FORWARD RIGHT WINGWALL FOUNDATION PLAN

CUY-90-1678 (BRIDGE 13)
CR-710 (E. 22ND ST.) OVER I.R. 90

SFN 1807839
DESIGN AGENCY
Michael Baker INTERNATIONAL
DESIGNER DAF | CHECKER JRK
REVIEWER CDC 05/10/24
PROJECT ID 82382
SUBSET 33 | TOTAL 99
SHEET 2214 | TOTAL 2696

CUY-90-16.28 (CCG3A)

MODEL: Sheet PAPERSIZE: 34x22 (in.) DATE: 3/28/2025 TIME: 7:43:03 AM USER: Rohit.Bk
pw:\\mb-us-pw.bentley.com:mb-us-pw-03\Documents\Cleveland_OH\01_Projects\ODOT\District12\82382\400-Engineering\Structures\SFN_1807839\Sheets\82382_SFN_1807839_SO007.dgn

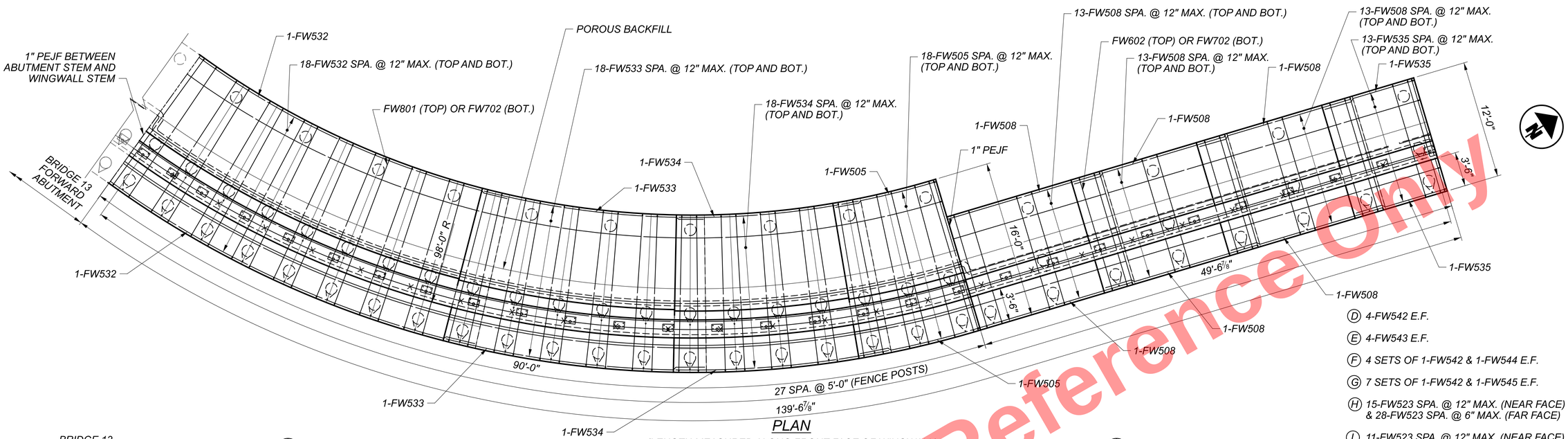

PLAN

(LENGTH MEASURED ALONG FRONT FACE OF WINGWALL)

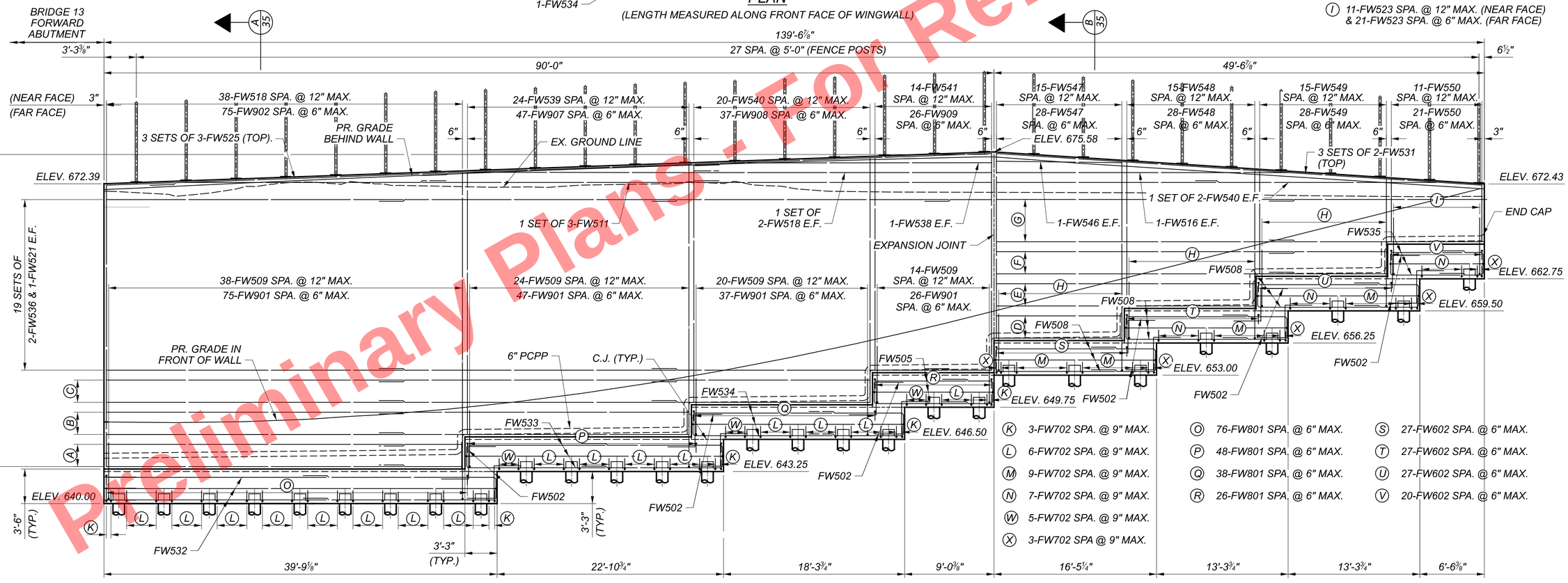

ELEVATION

(DEVELOPED ALONG FRONT FACE OF WINGWALL)

MIN. LAP LENGTHS:

#5 - 3'-1"
#6 - 4'-0"
#7 - 4'-8"
#8 - 5'-4"
#9 - 5'-10"

NOTES:

1. FOR FORWARD ABUTMENT DETAILS, SEE SHEET 28 / 99.

Preliminary Plans - For Reference Only

FORWARD RIGHT WINGWALL PLAN AND ELEVATION
CUY-90-1678 (BRIDGE 13)
CR-710 (E. 22ND ST.) OVER I.R. 90

CUY-90-16.28 (CCG3A)

SFN 1807839
DESIGN AGENCY: Michael Baker INTERNATIONAL
DESIGNER DAF | CHECKER SSW
REVIEWER CDC 05/10/24
PROJECT ID 82382
SUBSET 34 | TOTAL 99
SHEET 2215 | TOTAL 2696

MODEL: Sheet PAPERSIZE: 34x22 (in.) DATE: 3/28/2025 TIME: 7:43:25 AM USER: Rohit.Bk
pw:\\mb-us-pw.bentley.com:mb-us-pw-03\Documents\Cleveland_OH\01_Projects\ODOT\District12\82382400-Engineering\Structures\SFN_1807839\Sheets\82382_SFN_1807839_SF010.dgn

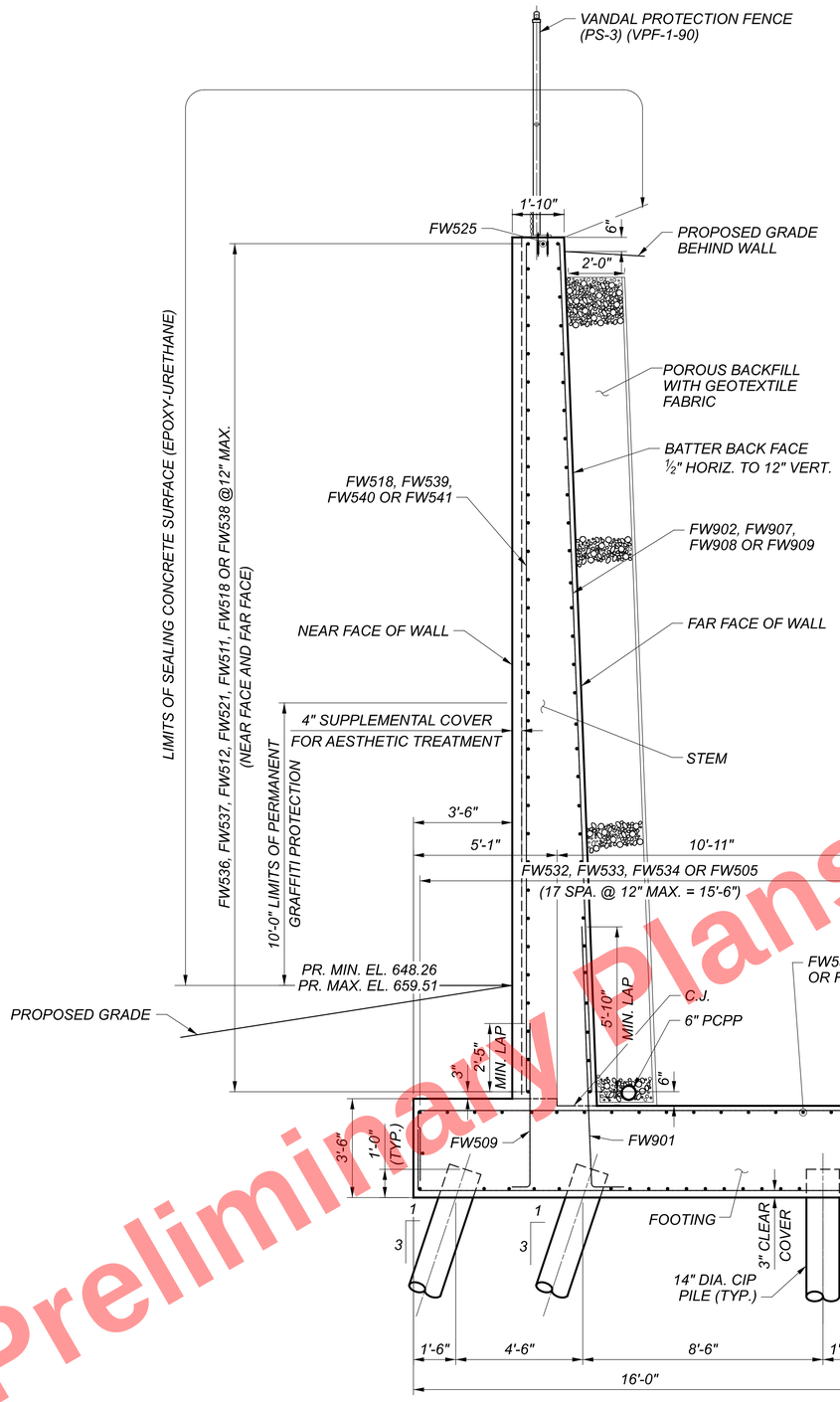

A 34 SECTION

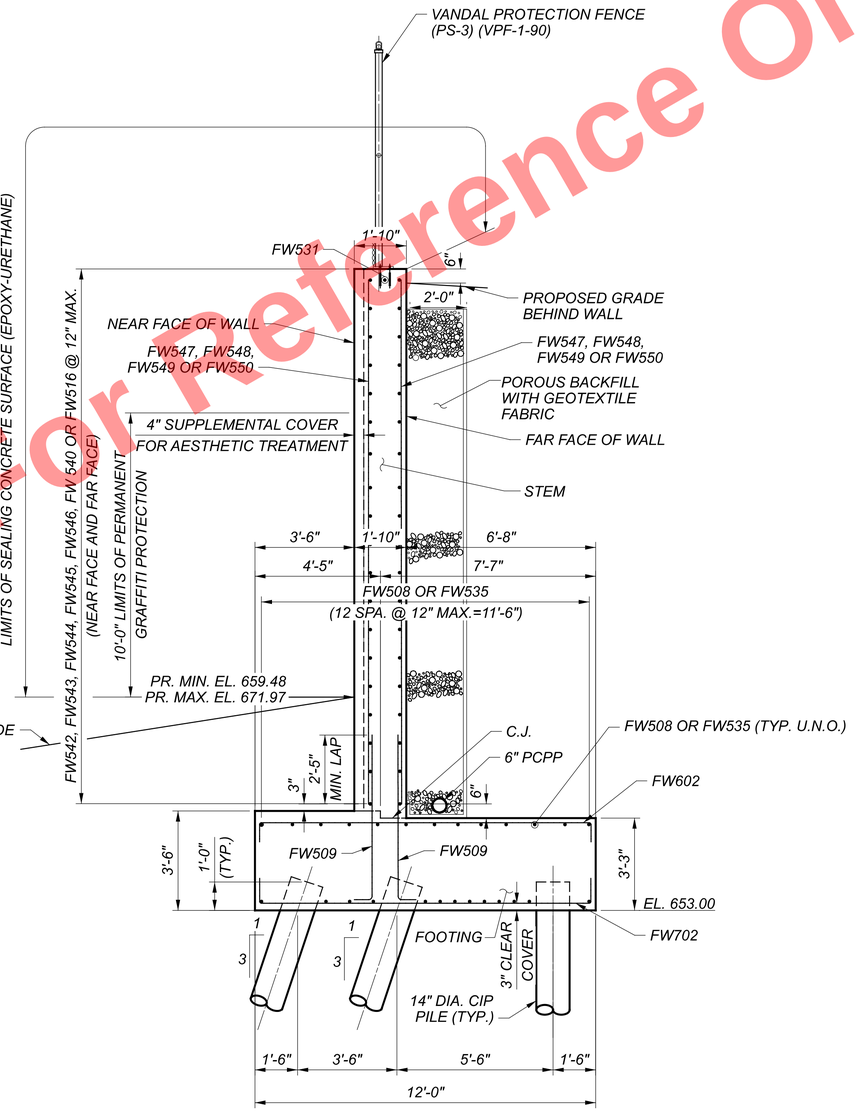

B 34 SECTION

MIN. LAP LENGTHS:

#5 - 3'-1"
#6 - 3'-7"
#7 - 4'-8"
#8 - 5'-4"
#9 - 5'-10"

NOTES:

1. *PROVIDE 2" CONCRETE COVER ON REINFORCEMENT BARS UNLESS NOTED OTHERWISE.*
2. *SEE LANDSCAPING PLANS FOR AESTHETIC TREATMENT DETAILS.*

Preliminary Plans - For Reference Only

FORWARD RIGHT WINGWALL SECTION
CUY-90-1678 (BRIDGE 13)
CR-710 (E. 22ND ST.) OVER I.R. 90

SFN	1807839
DESIGN AGENCY	Michael Baker INTERNATIONAL
DESIGNER	DAF
CHECKER	JRK
REVIEWER	CDC 05/10/24
PROJECT ID	82382
SUBSET	35
TOTAL	99
SHEET	2216
TOTAL	2696

CUY-90-16.28 (CCG3A)

MODEL: Sheet PAPERSIZE: 34x22 (in.) DATE: 3/28/2025 TIME: 7:43:36 AM USER: Rohit.Bk
pw:\\mb-us-pw.bentley.com:mb-us-pw-03\Documents\Cleveland_OH\01_Projects\ODOT\District12\82382\400-Engineering\Structures\SFN_1807839\Sheets\82382_SFN_1807839_SF012.dgn

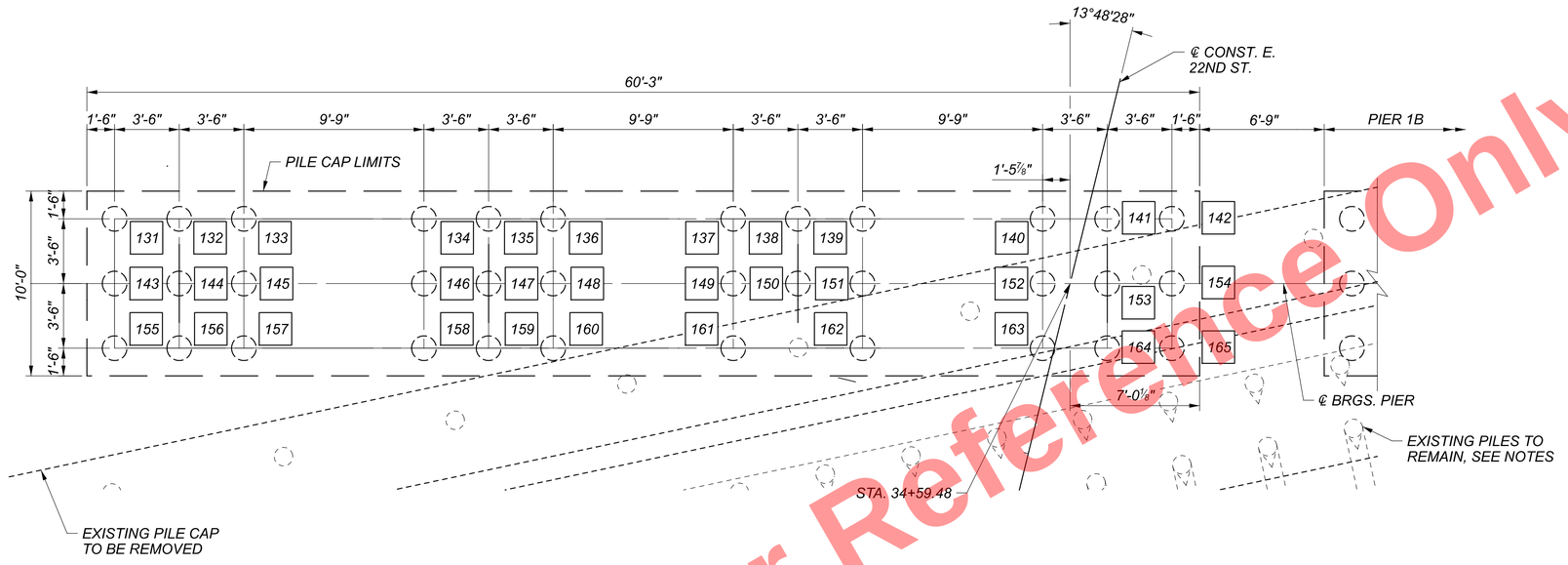

PIER 1A FOUNDATION PLAN

PILE SCHEDULE			
SUBSTRUCTURE UNIT	PILE DIAMETER	ORDER LENGTH	CUTOFF ELEVATION
PIER 1A FOOTING (131 THRU 165)	16"	100.00	640.00

NOTES:

1. SEE GENERAL PLAN SHEET 1 FOR COMPLETE LAYOUT.
2. SEE PIER PLAN AND ELEVATION SHEET 38 FOR ADDITIONAL INFORMATION.
3. THE PROPOSED PILE ARRANGEMENT WAS DEVELOPED WITH THE INTENTION TO ELIMINATE CONFLICTS BETWEEN THE PROPOSED AND EXISTING PILES.
4. EXISTING PILE LOCATIONS ARE DEPICTED IN ACCORDANCE WITH AVAILABLE EXISTING PLAN INFORMATION. CONTRACTOR TO VERIFY LOCATION OF EXISTING PILES FOLLOWING REMOVAL OF EXISTING PILE CAP. NO PILES SHALL BE DRIVEN UNTIL CLEARANCE BETWEEN EXISTING AND PROPOSED PILES IS VERIFIED. THE CONTRACTOR SHALL NOTIFY THE STATE/ENGINEER OF ANY CONFLICTS AND PROVIDE FIELD SKETCHES OF THE CONFLICT SO THE PROPOSED PILE ARRANGEMENT AND PILE CAP REINFORCING MAY BE ADJUSTED AS NECESSARY TO MITIGATE CONFLICTS.
5. REMOVE EXISTING PILES UNDER PROPOSED PILE CAP LIMITS TO DREDGE LINE ELEVATION FOR PROPOSED PILE CAP.
6. REMOVE EXISTING PILES OUTSIDE OF PROPOSED PILE CAP LIMITS TO 1' BELOW PROPOSED SUBGRADE ELEVATION.

LEGEND

- # — INDICATES PROPOSED PILE NUMBER
- INDICATES PROPOSED VERTICAL PILE
- INDICATES EXISTING VERTICAL PILE
- INDICATES EXISTING BATTERED PILE (ARROW SHOWS DIRECTION OF BATTER)

Preliminary Plans - For Reference Only

PIER FOUNDATION PLAN (1 OF 2)
CUY-90-1678 (BRIDGE 13)
CR-710 (E. 22ND ST.) OVER I.R. 90

SFN 1807839
DESIGN AGENCY
Michael Baker INTERNATIONAL
DESIGNER ABP | CHECKER MBC
REVIEWER CDC 05/10/24
PROJECT ID 82382
SUBSET 36 | TOTAL 99
SHEET 2217 | TOTAL 2696

CUY-90-16.28 (CCG3A)

MODEL: Sheet PAPERSIZE: 34x22 (in.) DATE: 3/20/2025 TIME: 7:43:47 AM USER: Rohit.Bk
pw:\\mb-us-pw.bentley.com:mb-us-pw-03\Documents\Cleveland_OH\01_Projects\ODOT\District12\82382\400-Engineering\Structures\SFN_1807839\Sheets\82382_SI006.dgn

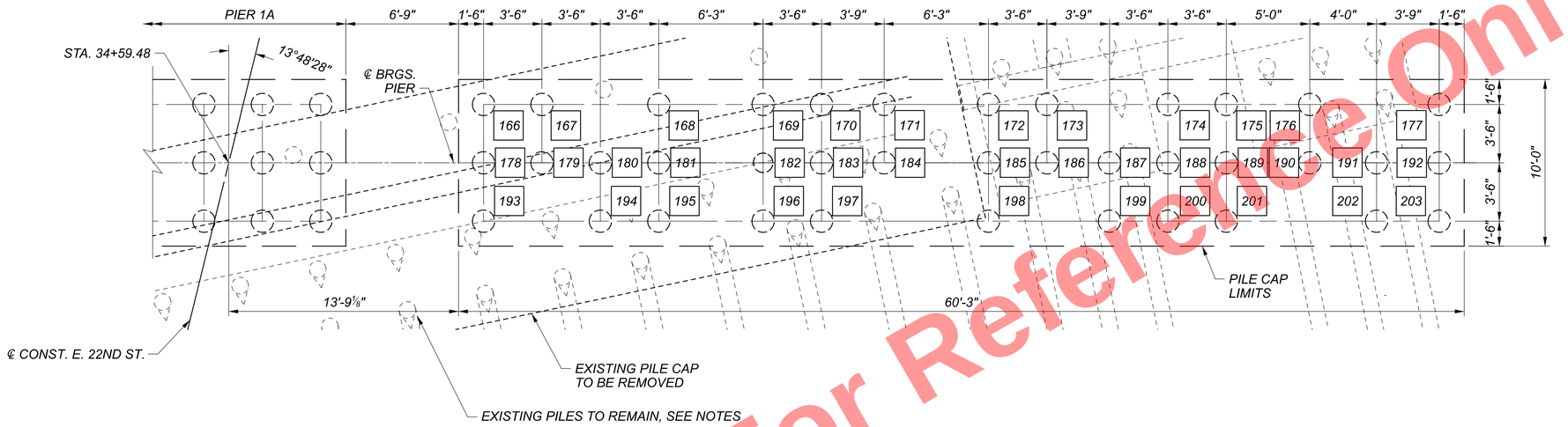

PIER 1B FOUNDATION PLAN

PILE SCHEDULE			
SUBSTRUCTURE UNIT	PILE DIAMETER	ORDER LENGTH	CUTOFF ELEVATION
PIER 1B FOOTING (166 THRU 203)	16"	100.00	637.00

NOTES:

1. SEE GENERAL PLAN SHEET 1 FOR COMPLETE LAYOUT.
2. SEE PIER PLAN AND ELEVATION SHEET 39 FOR ADDITIONAL INFORMATION.
3. THE PROPOSED PILE ARRANGEMENT WAS DEVELOPED WITH THE INTENTION TO ELIMINATE CONFLICTS BETWEEN THE PROPOSED AND EXISTING PILES.
4. EXISTING PILE LOCATIONS ARE DEPICTED IN ACCORDANCE WITH AVAILABLE EXISTING PLAN INFORMATION. CONTRACTOR TO VERIFY LOCATION OF EXISTING PILES FOLLOWING REMOVAL OF EXISTING PILE CAP. NO PILES SHALL BE DRIVEN UNTIL CLEARANCE BETWEEN EXISTING AND PROPOSED PILES IS VERIFIED. THE CONTRACTOR SHALL NOTIFY THE STATE/ENGINEER OF ANY CONFLICTS AND PROVIDE FIELD SKETCHES OF THE CONFLICT SO THE PROPOSED PILE ARRANGEMENT AND PILE CAP REINFORCING MAY BE ADJUSTED AS NECESSARY TO MITIGATE CONFLICTS.
5. REMOVE EXISTING PILES UNDER PROPOSED PILE CAP LIMITS TO DREDGE LINE ELEVATION FOR PROPOSED PILE CAP.
6. REMOVE EXISTING PILES OUTSIDE OF PROPOSED PILE CAP LIMITS TO 1' BELOW PROPOSED SUBGRADE ELEVATION.

LEGEND

#	INDICATES PROPOSED PILE NUMBER
	INDICATES PROPOSED VERTICAL PILE
	INDICATES EXISTING VERTICAL PILE
	INDICATES EXISTING BATTERED PILE (ARROW SHOWS DIRECTION OF BATTER)

Preliminary Plans - For Reference Only

PIER FOUDATION PLAN (2 OF 2)
CUY-90-1678 (BRIDGE 13)
CR-710 (E. 22ND ST,) OVER I.R. 90

SFN 1807839
DESIGN AGENCY
Michael Baker INTERNATIONAL
DESIGNER ABP | CHECKER MBC
REVIEWER CDC 05/10/24
PROJECT ID 82382
SUBSET 37 | TOTAL 99
SHEET 2218 | TOTAL 2696

CUY-90-16.28 (CCG3A)

MODEL: Sheet PAPERSIZE: 34x22 (in.) DATE: 3/28/2025 TIME: 7:43:57 AM USER: Rohit.Bk
pw:\\mb-us-pw.bentley.com:mb-us-pw-03\Documents\Cleveland_OH\01_Projects\ODOT\District12\82382\400-Engineering\Structures\SFN_1807839\Sheets\82382_SFN_1807839_SI007.dgn

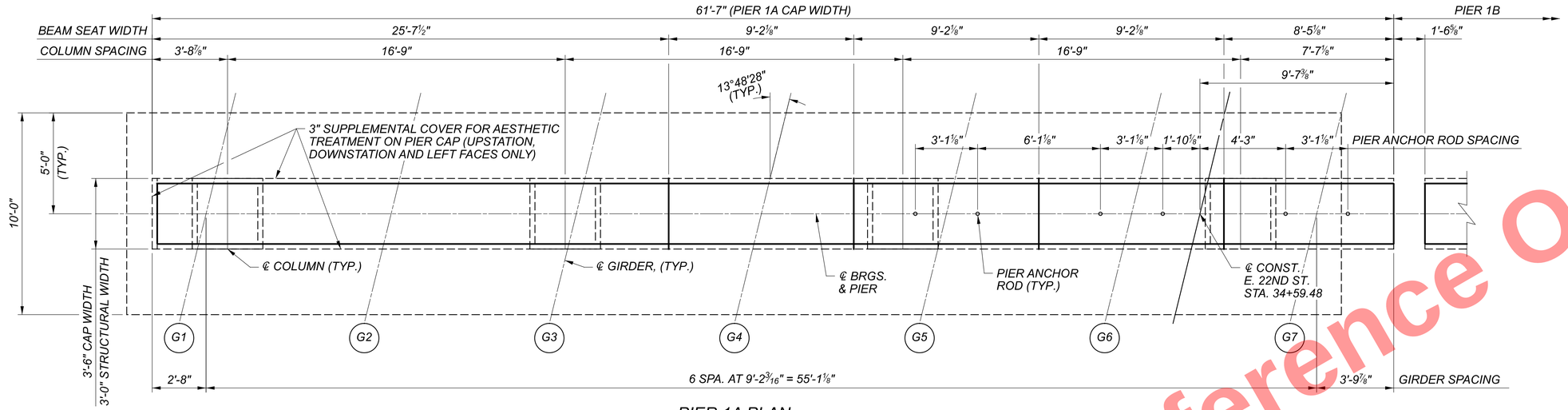

PIER 1A PLAN

PIER 1A	
POINT	ELEVATION
A	664.78
B	664.78
C	664.78
D	664.88
E	665.05
F	665.21
G	665.15

MIN. SPLICE LENGTHS	
BAR	LENGTH
#5 HORZ.	3'-1"
#8 HORZ.	5'-4"
#11 VERT.	6'-8"
#11 HORZ.	7'-2"

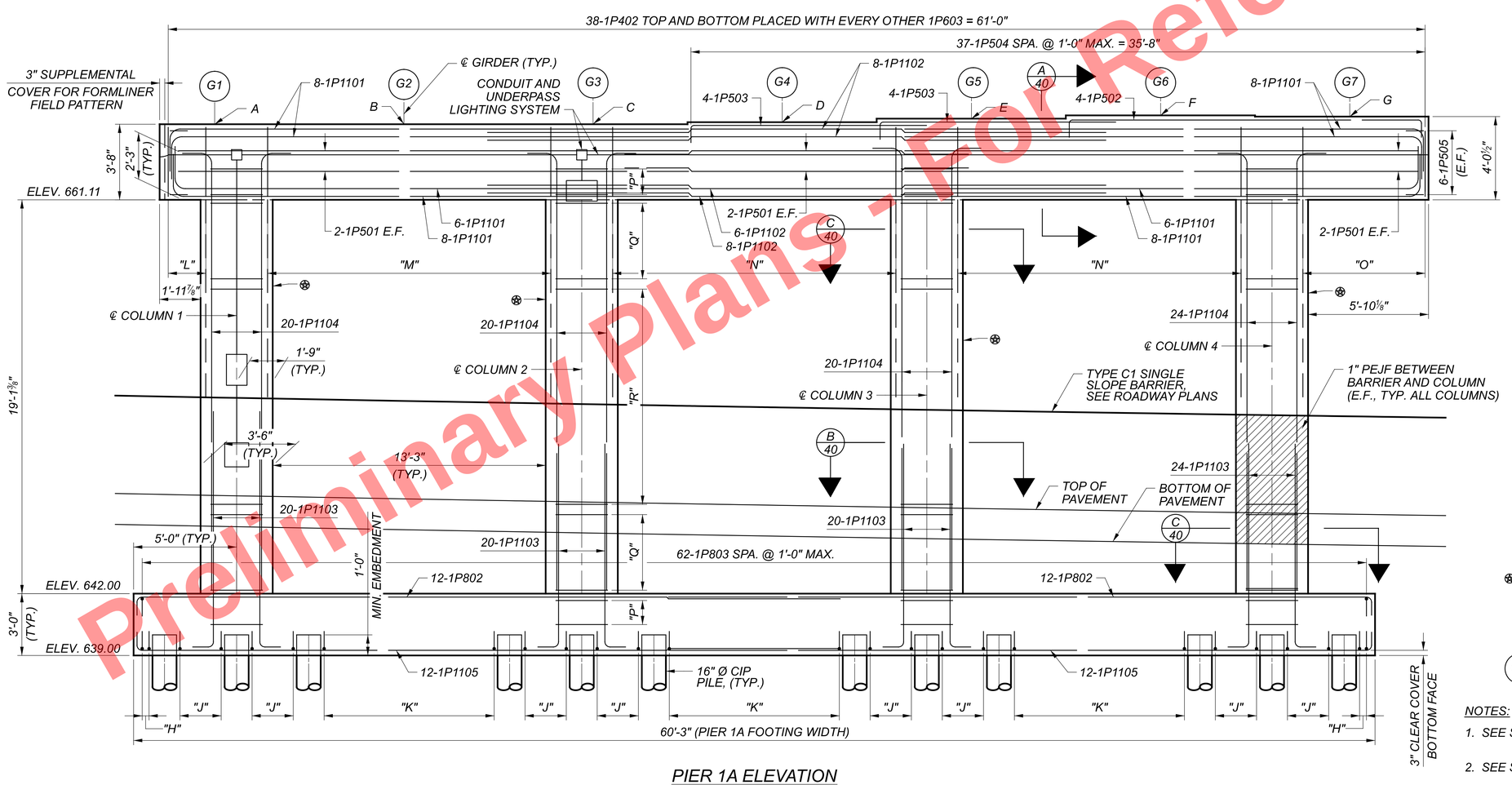

PIER 1A ELEVATION
LOOKING UPSTATION

PIER 1A CAP STIRRUP REBAR SETS:

SET "L" = 5-1P603 SPA. @ 6" MAX. = 1'-10"
SET "M" = 29 SETS OF 1-1P603 & 1-1P604 SPA. @ 6" MAX. = 13'-9"
SET "N" = 29 SETS OF 1-1P603, 1-1P604 & 2-1P605 SPA. @ 6" MAX. = 13'-9"
SET "O" = 13 SETS OF 1-1P603, 1-1P604 & 2-1P605 SPA. @ 6" MAX. = 6'-0"

PIER 1A COLUMN TIE REBAR:

SET "P" - 5-1P602 & 5-1P401 (LOCATION ALTERNATES WITH LAYER) SPA. @ 4" MAX. = 1'-4" (TYP.)
SET "Q" - 12-1P602 & 12-1P401 LOCATION ALTERNATES WITH LAYER) SPA. @ 4" MAX. = 3'-8" (TYP.)
SET "R" - 22-1P602 SPA. @ 6" MAX. = 10'-6" (TYP.)

PIER 1A FOOTING REBAR:

SET "H" = 2-1P801 = 6"
SET "J" = 4-1P801 SPA. @ 8" MAX. = 2'-0"
SET "K" = 16-1P801 SPA @ 7" MAX. = 8'-3"

LEGEND

⊛ NOMINAL 3'-6" X 3'-6" SQUARE COLUMN WITH 3" SUPPLEMENTAL COVER FOR AESTHETIC TREATMENT. COLUMN DESIGN DIMENSIONS 3'-0" X 3'-0" (TYP.). SEE LANDSCAPE PLANS FOR AESTHETIC TREATMENT DETAILS.

(G#) GIRDER NUMBER

NOTES:

1. SEE SHEET 40 / 99 FOR TYPICAL END SECTION.
2. SEE SHEET 88 / 99 FOR SCUPPER DETAILS AT PIER.
3. FOR UNDERPASS LIGHTING DETAILS, SEE SHEET 1748 / 2696 .

Preliminary Plans - For Reference Only

PIER 1A PLAN AND ELEVATION
CUY-90-1678 (BRIDGE 13)
CR-710 (E. 22ND ST.) OVER I.R. 90

SFN 1807839
DESIGN AGENCY
Michael Baker INTERNATIONAL
DESIGNER JCC | CHECKER MBC
REVIEWER CDC 05/10/24
PROJECT ID 82382
SUBSET 38 | TOTAL 99
SHEET 2219 | TOTAL 2696

CUY-90-16.28 (CCG3A)

MODEL: Sheet PAPERSIZE: 34x22 (in.) DATE: 3/28/2025 TIME: 7:44:14 AM USER: RohitLBk
pw:\\mb-us-pw.bentley.com:mb-us-pw-03\Documents\Cleveland_OH01_Projects\ODOT\District12\82382400-Engineering\Structures\SFN_1807839\Sheets\82382_SFN_1807839_SI001.dgn

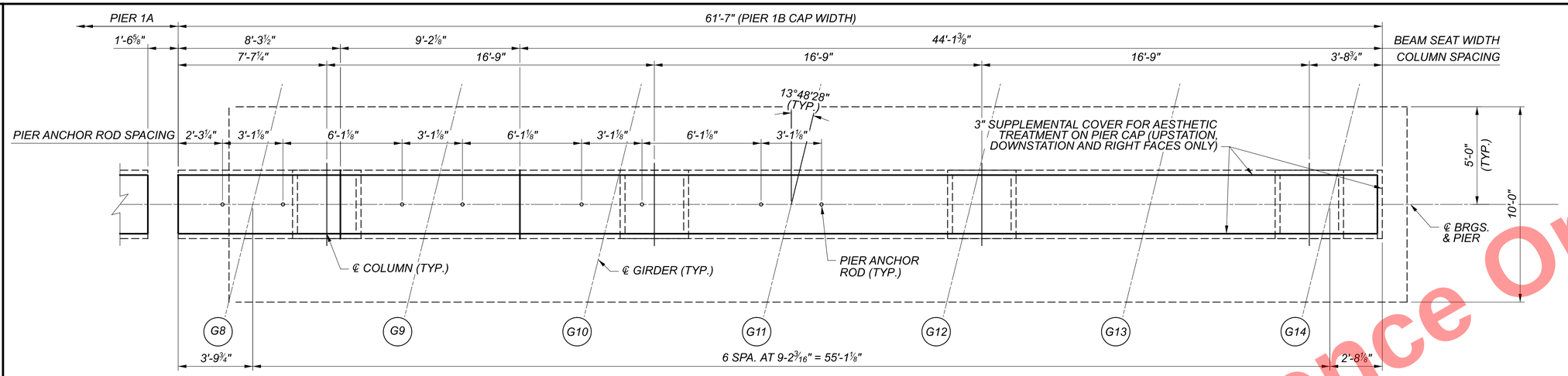

PIER 1B	
POINT	ELEVATION
H	664.95
I	664.76
J	664.61
K	664.61
L	664.61
M	664.61
N	664.61

MIN. SPLICE LENGTHS	
BAR	LENGTH
#5 HORZ.	3'-1"
#8 HORZ.	5'-4"
#11 VERT.	6'-8"
#11 HORZ.	7'-2"

PIER 1B PLAN

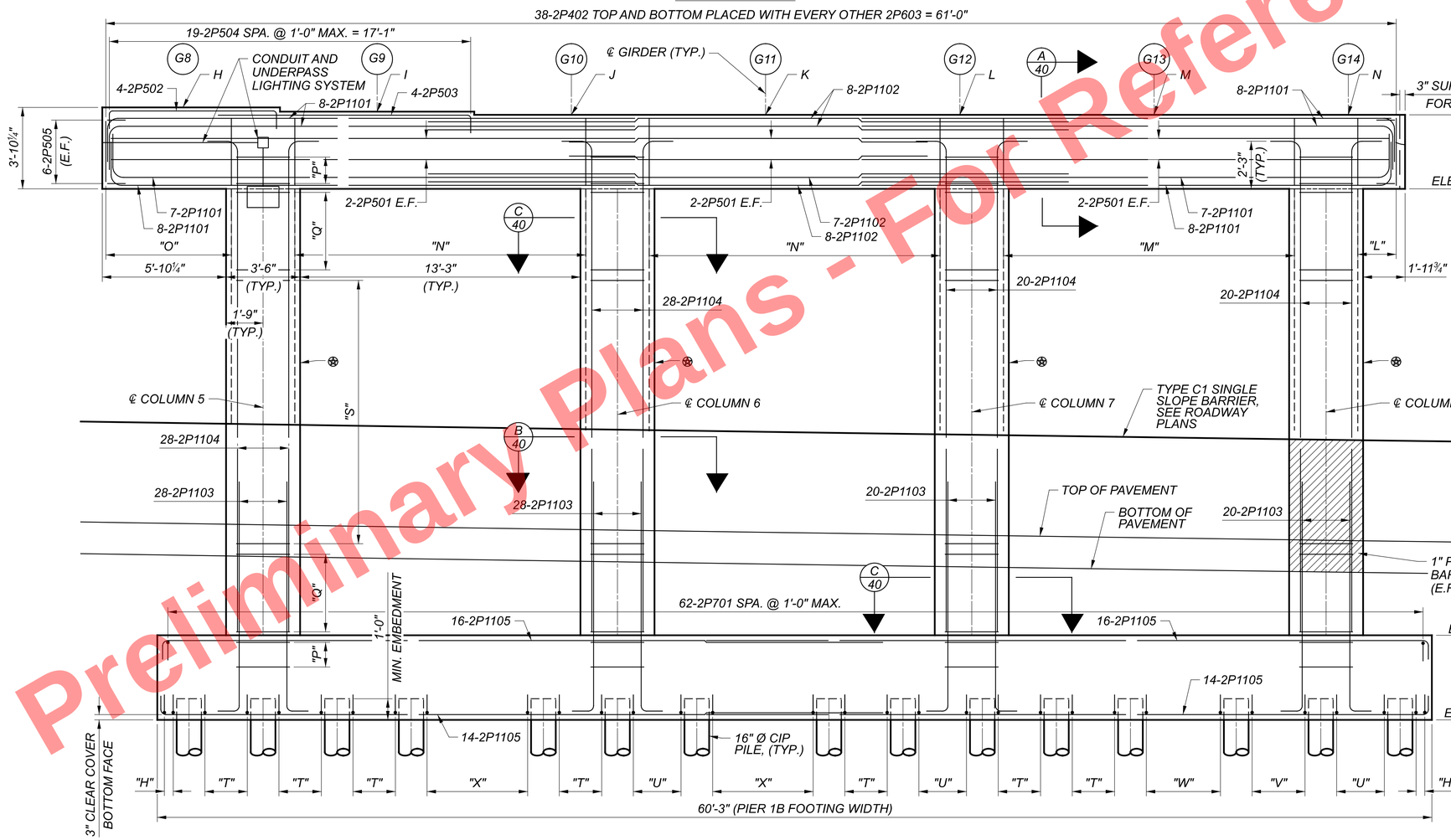

PIER 1B ELEVATION
LOOKING UPSTATION

PIER 1B CAP STIRRUP REBAR SETS:

SET "L" = 5-2P603 SPA. @ 6" MAX. = 1'-10"
SET "M" = 29 SETS OF 1-2P603 & 1-2P604 SPA. @ 6" MAX. = 13'-9"
SET "N" = 29 SETS OF 1-2P603, 1-2P604 & 2-2P605 SPA. @ 6" MAX. = 13'-9"
SET "O" = 13 SETS OF 1-2P603, 1-2P604 & 2-2P605 SPA. @ 6" MAX. = 6'-0"

PIER 1B COLUMN TIE REBAR:

SET "P" - 5-2P602 & 5-2P401 (LOCATION ALTERNATES WITH LAYER) SPA. @ 4" MAX. = 1'-4" (TYP.)
SET "Q" - 12-2P602 & 12-2P401 (LOCATION ALTERNATES WITH LAYER) SPA. @ 4" MAX. = 3'-8" (TYP.)
SET "S" - 26-2P602 SPA. @ 6" MAX. = 12'-5⅜" (TYP.)

PIER 1B FOOTING REBAR:

SET "H" = 2-2P801 = 6"
SET "T" = 3-2P801 SPA. @ 1'-0" MAX. = 2'-0"
SET "U" = 4-2P801 SPA. @ 9" MAX. = 2'-3"
SET "V" = 4-2P801 SPA. @ 10" MAX. = 2'-6"
SET "W" = 5-2P801 SPA. @ 10½" MAX. = 3'-6"
SET "X" = 8-2P801 SPA. @ = 9" MAX. = 4'-9"

LEGEND

⊛ NOMINAL 3'-6" X 3'-6"" SQUARE COLUMN WITH 3" SUPPLEMENTAL COVER FOR AESTHETIC TREATMENT. COLUMN DESIGN DIMENSIONS 3'-0" X 3'-0" (TYP.). SEE LANDSCAPE PLANS FOR AESTHETIC TREATMENT DETAILS.

(G#) GIRDER NUMBER

NOTES:

1. SEE SHEET 40 / 99 FOR TYPICAL END SECTION.
2. SEE SHEET 88 / 99 FOR SCUPPER DETAILS AT PIER.
3. FOR UNDERPASS LIGHTING DETAILS, SEE SHEET 1748/ 2696 .

PIER 1B PLAN AND ELEVATION
CUY-90-1678 (BRIDGE 13)
CR-710 (E. 22ND ST.) OVER I.R. 90

SFN	1807839
DESIGN AGENCY	Michael Baker INTERNATIONAL
DESIGNER	ABP
CHECKER	MBC
REVIEWER	CDC 05/10/24
PROJECT ID	82382
SUBSET	39
TOTAL	99
SHEET	2220
TOTAL	2696

Preliminary Plans - For Reference Only

CUY-90-16.28 (CCG3A)
MODEL: Sheet PAPERSIZE: 34x22 (in.) DATE: 3/28/2025 TIME: 7:44:28 AM USER: Rohit Bk
pw:\\mb-us-pw.bentley.com:mb-us-pw-03\Documents\Cleveland_OH\01_Projects\ODOT\District12\82382\400-Engineering\Structures\SFN_1807839\Sheets\82382_Sheets\82382_SFN_1807839_SI002.dgn

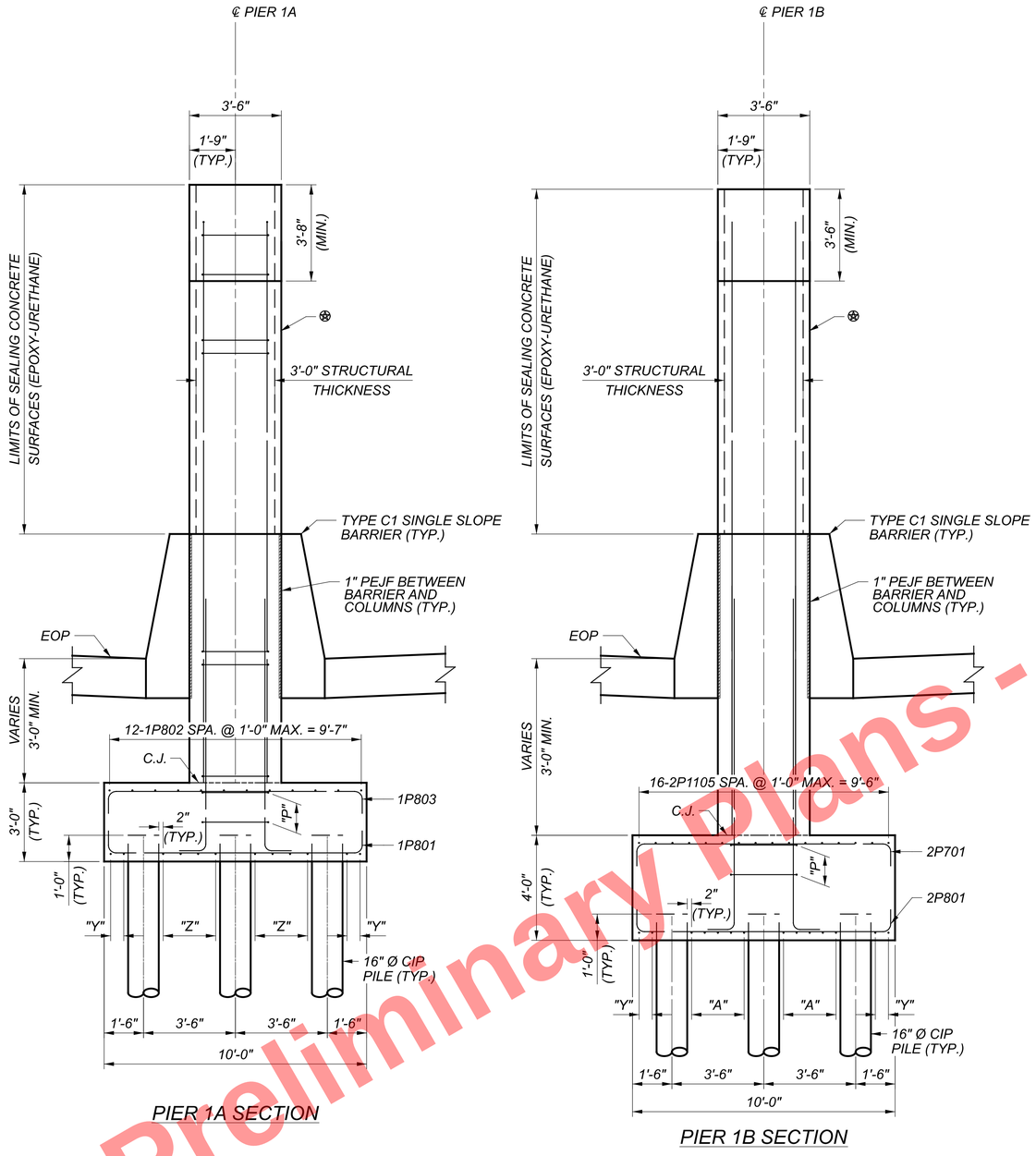

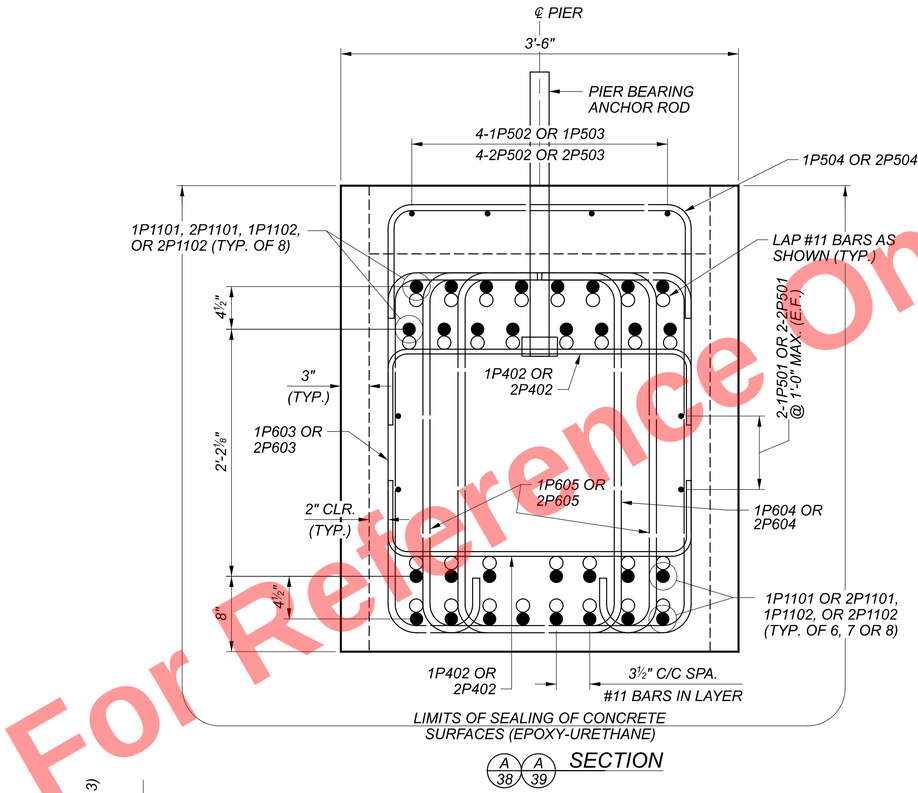

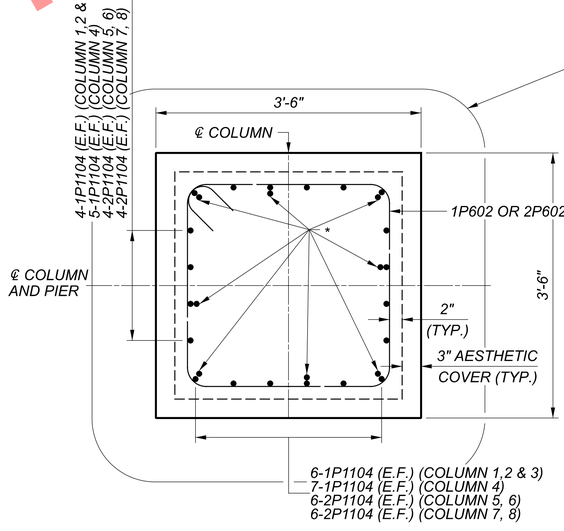

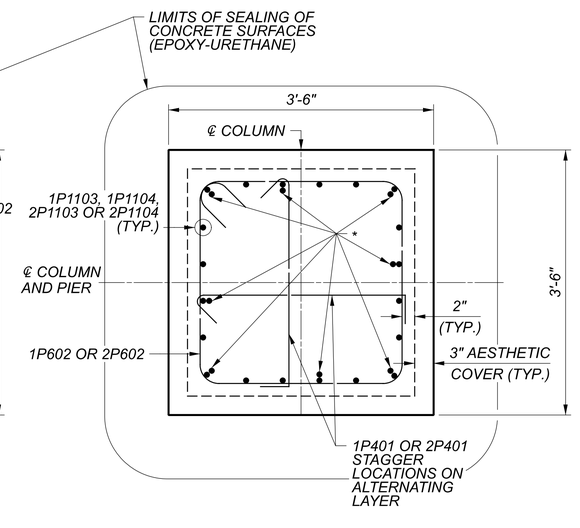

BOTTOM OF FOOTING REBAR SETS:

SET "P" = 6-1P602 & 6-1P401 (PIER 1A)
6-2P602 & 6-2P401 (PIER 1B)
(LOCATION ALTERNATES WITH LAYER) SPA. @ 4" MAX. = 1'-4" (TYP.)
SET "Y" = 2-1P1105 OR 2-2P1105 = 5½"
SET "Z" = 4-1P1105 SPA. @ 8" MAX. = 2'-0"
SET "A" = 5-2P1105 SPA. @ 6" MAX. = 2'-0"

LEGEND

⊛ *NOMINAL 3'-6" X 3'-6" SQUARE COLUMN WITH 3" SUPPLEMENTAL COVER FOR AESTHETIC TREATMENT. COLUMN DESIGN DIMENSIONS 3'-0" X 3'-0" (TYP.). SEE LANDSCAPE PLANS FOR AESTHETIC TREATMENT DETAILS.*

* *ADDITIONAL 2P1103 & 2P1104 BUNDLED AS SHOWN (COLUMNS 5 & 6 ONLY)*

Preliminary Plans - For Reference Only

PIER SECTIONS
CUY-90-1678 (BRIDGE 13)
CR-710 (E. 22ND ST.) OVER I.R. 90

SFN	1807839
DESIGN AGENCY	Michael Baker INTERNATIONAL
DESIGNER	JCC
CHECKER	MBC
REVIEWER	CDC 05/10/24
PROJECT ID	82382
SUBSET	40
TOTAL	99
SHEET	2221
TOTAL	2696

CUY-90-16.28 (CCG3A)

MODEL: Sheet PAPERSIZE: 34x22 (in.) DATE: 3/28/2025 TIME: 7:44:39 AM USER: Rohit.Bk
pw:\\mb-us-pw.bentley.com:mb-us-pw-03\Documents\Cleveland_OH101_Projects\ODOT\District12\82382\400-Engineering\Structures\SFN_1807839\Sheets\82382_SFN_1807839_SI004.dgn

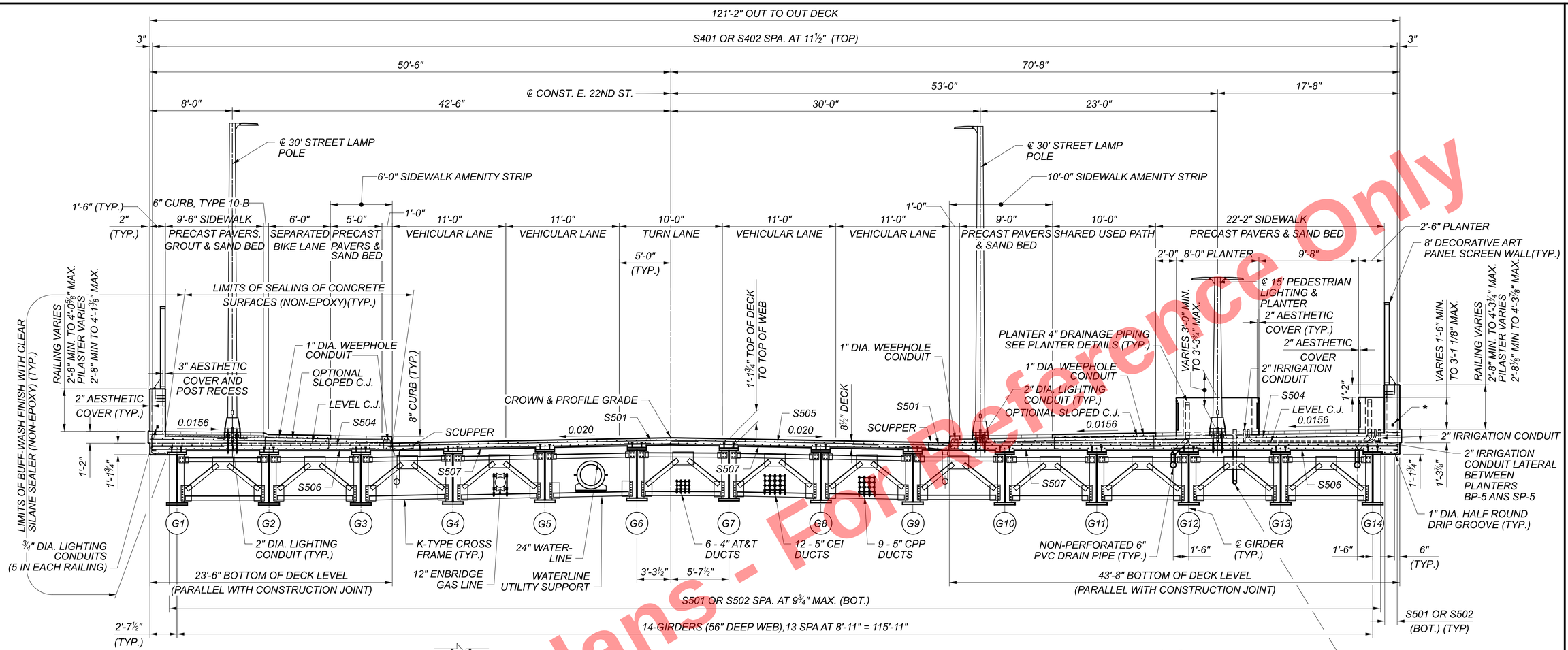

TRANSVERSE SECTION

(PILASTERS AND BOLLARDS NOT SHOWN)

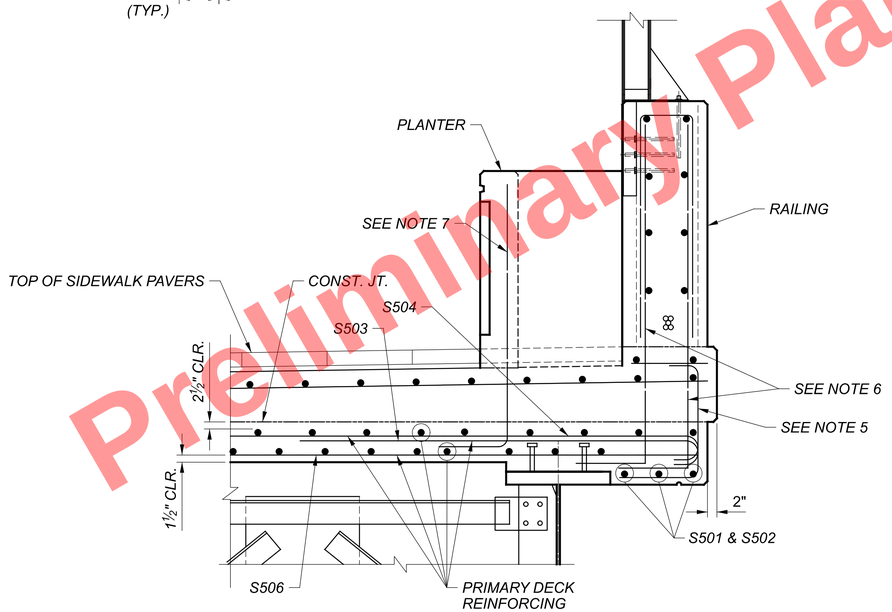

OVERHANG REINFORCING DETAIL

NOTES:

1. FOR ANCHORAGE OF LIGHT POLES, COORDINATE WITH MANUFACTURER FOR ANCHOR BOLT MATERIAL SPECIFICATIONS, STRENGTH, DIAMETER, LENGTH AND SPACING.
2. PAYMENT FOR LIGHT POLE ANCHORAGE, INCLUDING ALL LABOR, EQUIPMENT, MATERIAL, AND INCIDENTALS NECESSARY TO FURNISH AND INSTALL LIGHT POLE ANCHORAGE ASSEMBLY AS SHOWN ON THE PLANS, SHALL BE PAID FOR UNDER ITEM 625 - LIGHT POLE ANCHOR BOLTS ON STRUCTURE, AS PER PLAN. FOR PAYMENTS ASSOCIATED WITH LIGHT POLE, SEE LIGHTING PLANS.
3. 2" DIA. LIGHTING CONDUITS ARE INCLUDED WITH LIGHTING ITEMS FOR PAYMENT.
4. FOR LIGHT POLE DETAILS, REFER TO LIGHTING PLANS.
5. FOR SIDEWALK REBAR CAST WITH THE DECK. SEE SHEETS 66 - 70 /99 .
6. FOR RAILING REBAR CAST WITH THE DECK. SEE SHEETS 71 - 80 /99 .
7. FOR PLANTER REBAR CAST WITH THE DECK, SEE SHEETS 83 - 84 /99 .
8. DECK SLAB CONCRETE QUANTITY: THE ESTIMATED QUANTITY OF DECK SLAB CONCRETE IS BASED ON THE CONSTANT DECK SLAB THICKNESS, AS SHOWN, PLUS THE QUANITY OF CONCRETE THAT FORMS EACH BEAM/GIRDER HAUNCH. THE ESTIMATE ASSUMES A CONSTANT HAUNCH THICKNESS OF 5¼" AND A HAUNCH WIDTH EQUAL TO THE TOP FLANGE WIDTH. DEVIATE FROM THE HAUNCH THICKNESS AS NECESSARY TO PLACE THE DECK SURFACE AT THE FINISHED GRADE.

   THE HAUNCH THICKNESS WAS MEASURED AT THE CENTERLINE OF THE BEAM/GIRDER, FROM THE SURFACE OF THE DECK TO THE BOTTOM OF THE TOP FLANGE MINUS THE DECK SLAB THICKNESS. THE AREA OF ALL EMBEDDED STEELPLATES HAS BEEN DEDUCTED FROM THE HAUNCH QUANTITY IN ACCORDANCE WITH 511.23.
9. PROVIDE GROUNDING PER STANDARD DRAWING HL-50.21. THE FOLLOWING BRIDGE COMPONENTS SHALL BE CONNECTED TO THE GROUNDING SYSTEM: STRUCTURAL STEEL, SCREEN WALL POSTS, LIGHT POLES, AND ALUMINUM PLANTERS.

Preliminary Plans - For Reference Only

TRANSVERSE SECTION
CUY-90-1678 (BRIDGE 13)
CR-710 (E. 22ND ST.) OVER I.R. 90

SFN 1807839
DESIGN AGENCY
Michael Baker INTERNATIONAL
DESIGNER ZES | CHECKER ETB
REVIEWER CDC 05/10/24
PROJECT ID 82382
SUBSET 41 | TOTAL 99
SHEET 2222 | TOTAL 2696

CUY-90-16.28 (CCG3A)

MODEL: Sheet PAPERSIZE: 34x22 (in.) DATE: 6/9/2025 TIME: 2:45:04 PM USER: Julie Ross
pw:\\mb-us-pw.bentley.com:mb-us-pw-03\Documents\Cleveland_OH\01_Projects\ODOT\District12\82382\400-Engineering\Structures\SFN_1807839\Sheets\82382_SFN_1807839_ST001.dgn

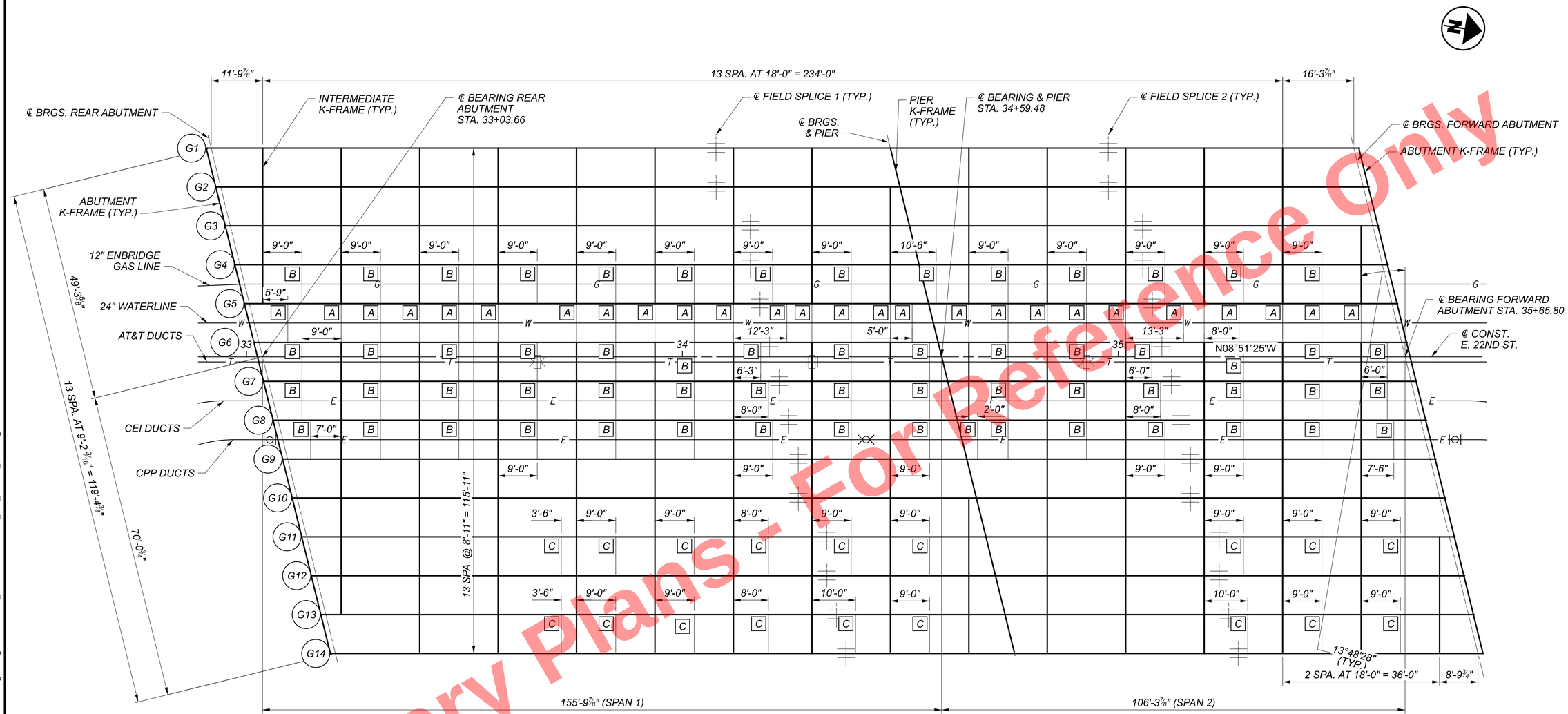

FRAMING PLAN

UTILITY HANGER TABLE			
UTILITY	HOLE DIA.	HOLE QTY.	HOLE SPA.
GAS	1"	2	16⅛"
AT&T	15/16"	4	6½"
CEI	15/16"	5	7½"
CPP	15/16"	4	7½"

LEGEND

- A TYPE A UTILITY SUPPORT
- B TYPE B UTILITY SUPPORT
- C TYPE C DRAIN PIPE SUPPORT
- AT&T ANCHOR TYPE HANGER WITH STOP RINGS
- AT&T ANCHOR TYPE HANGER WITH O-RING EXPANSION JOINTS
- CPP HANGER WITH FIXED END AT BACKWALL
- CPP HANGER WITH EXPANSION JOINT

NOTES:

1. ALL UTILITIES ARE CENTERED HORIZONTALLY IN GIRDER BAYS. FOR VERTICAL LOCATION DETAILS REFER TO TRANSVERSE SECTION SHEET 41 / 99.
2. FOR GIRDER ELEVATION DETAILS, SEE SHEET 43 / 99.
3. FOR GIRDER SPLICE DETAILS, SEE SHEET 44 / 99.
4. FOR INTERMEDIATE K-FRAME, UTILITY SUPPORT AND DRAINAGE SUPPORT DETAILS AND ADDITIONAL UTILITY HANGER TABLE INFORMATION, SEE SHEET 52 / 99.
5. FOR PIER K-FRAME AND ABUTMENT K-FRAME DETAILS, SEE SHEETS 54 - 55 / 99.

Preliminary Plans - For Reference Only

FRAMING PLAN
CUY-90-1678 (BRIDGE 13)
CR-710 (E. 22ND ST.) OVER I.R. 90

SFN 1807839
DESIGN AGENCY Michael Baker INTERNATIONAL
DESIGNER ZES | CHECKER ETB
REVIEWER CDC 05/10/24
PROJECT ID 82382
SUBSET 42 | TOTAL 99
SHEET 2223 | TOTAL 2696

CUY-90-16.28 (CCG3A)

MODEL: Sheet PAPERSIZE: 34x22 (in.) DATE: 6/9/2025 TIME: 2:45:26 PM USER: Julie.Ross
pw:\\mb-us-pw.bentley.com:mb-us-pw-03\Documents\Cleveland_OH\01_Projects\ODOT\District12\82382\400-Engineering\Structures\SFN_1807839\Sheets\82382_SFN_1807839_SS001.dgn

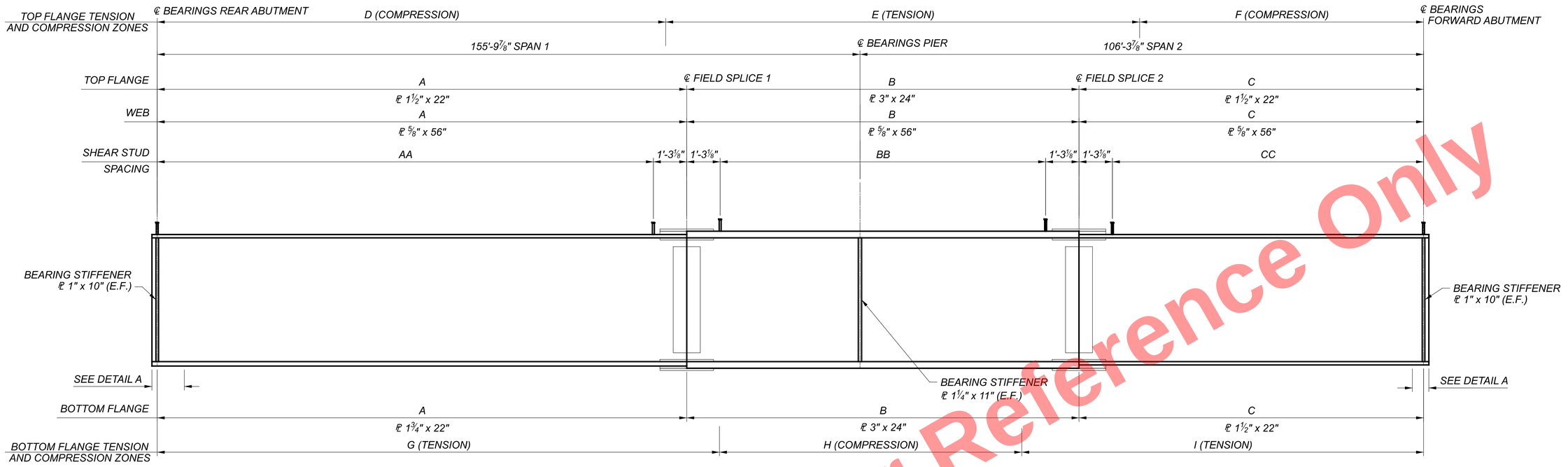

GIRDER ELEVATION

GIRDER	FIELD SECTION LENGTHS			TENSION & COMPRESSION ZONES					
	A	B	C	D	E	F	G	H	I
G1	115'-9 7/8"	90'-0"	56'-3 7/8"	118'-0 1/2"	91'-8 11/16"	52'-4 9/16"	119'-9 3/16"	83'-5 1/8"	58'-11 7/16"
G2	113'-7 7/8"	90'-0"	58'-5 7/8"	117'-1 3/4"	95'-3 3/8"	49'-8 5/8"	120'-2 13/16"	80'-9 3/16"	61'-1 3/4"
G3	119'-3 7/8"	90'-0"	52'-9 7/8"	115'-10 1/4"	100'-11 1/2"	45'-4 1/16"	120'-2 13/16"	78'-6 7/8"	63'-4 1/16"
G4	117'-1 7/8"	90'-0"	54'-11 7/8"	113'-7 15/16"	107'-6 3/8"	40'-11 7/16"	122'-5 1/8"	74'-2 5/16"	65'-6 5/16"
G5	117'-1 7/8"	90'-0"	54'-11 7/8"	113'-7 15/16"	109'-8 11/16"	38'-9 1/8"	122'-5 1/8"	72'-0"	67'-8 5/8"
G6	117'-1 7/8"	90'-0"	54'-11 7/8"	115'-4 5/8"	110'-2 5/16"	36'-6 7/8"	124'-7 7/16"	69'-9 11/16"	67'-8 5/8"
G7	117'-1 7/8"	90'-0"	54'-11 7/8"	115'-4 5/8"	112'-4 9/16"	34'-4 9/16"	124'-7 7/16"	72'-0"	65'-6 5/16"
G8	117'-1 7/8"	90'-0"	54'-11 7/8"	115'-10 1/4"	109'-8 11/16"	36'-6 7/8"	124'-7 7/16"	72'-0"	65'-6 5/16"
G9	117'-1 7/8"	90'-0"	54'-11 7/8"	115'-10 1/4"	105'-4 1/16"	40'-11 7/16"	122'-5 1/8"	76'-4 5/8"	63'-4 1/16"
G10	114'-11 7/8"	90'-0"	57'-1 7/8"	117'-6 7/8"	99'-2 13/16"	45'-4 1/16"	120'-2 13/16"	80'-9 3/16"	61'-1 3/4"
G11	119'-3 7/8"	90'-0"	52'-9 7/8"	118'-0 1/2"	94'-4 9/16"	49'-8 5/8"	120'-2 13/16"	82'-11 1/2"	58'-11 7/16"
G12	117'-1 7/8"	90'-0"	54'-11 7/8"	118'-0 1/2"	91'-8 11/16"	52'-4 9/16"	118'-0 1/2"	87'-4 1/16"	56'-9 1/8"
G13	117'-1 7/8"	90'-0"	54'-11 7/8"	118'-0 1/2"	89'-1 1/4"	55'-0"	118'-0 1/2"	87'-4 1/16"	56'-9 1/8"
G14	117'-1 7/8"	90'-0"	54'-11 7/8"	118'-0 1/2"	89'-1 1/4"	55'-0"	118'-0 1/2"	87'-4 1/16"	56'-9 1/8"

GIRDER	SHEAR STUD SPACING (MEASURED ALONG CENTERLINE OF GIRDER)		
	AA	BB	CC
G1	81 SPA. @ 17"	75 SPA. @ 14"	78 SPA. @ 8 1/2"
G2	97 SPA. @ 14"	132 SPA. @ 8"	92 SPA. @ 7 1/2"
G3	102 SPA. @ 14"	132 SPA. @ 8"	83 SPA. @ 7 1/2"
G4	100 SPA. @ 14"	132 SPA. @ 8"	86 SPA. @ 7 1/2"
G5	100 SPA. @ 14"	132 SPA. @ 8"	86 SPA. @ 7 1/2"
G6	100 SPA. @ 14"	132 SPA. @ 8"	86 SPA. @ 7 1/2"
G7	100 SPA. @ 14"	132 SPA. @ 8"	86 SPA. @ 7 1/2"
G8	100 SPA. @ 14"	132 SPA. @ 8"	86 SPA. @ 7 1/2"
G9	100 SPA. @ 14"	132 SPA. @ 8"	86 SPA. @ 7 1/2"
G10	98 SPA. @ 14"	132 SPA. @ 8"	90 SPA. @ 7 1/2"
G11	102 SPA. @ 14"	132 SPA. @ 8"	83 SPA. @ 7 1/2"
G12	100 SPA. @ 14"	132 SPA. @ 8"	86 SPA. @ 7 1/2"
G13	100 SPA. @ 14"	132 SPA. @ 8"	86 SPA. @ 7 1/2"
G14	82 SPA. @ 17"	75 SPA. @ 14"	76 SPA. @ 8 1/2"

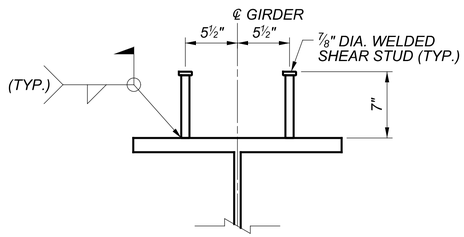

SHEAR STUD DETAIL

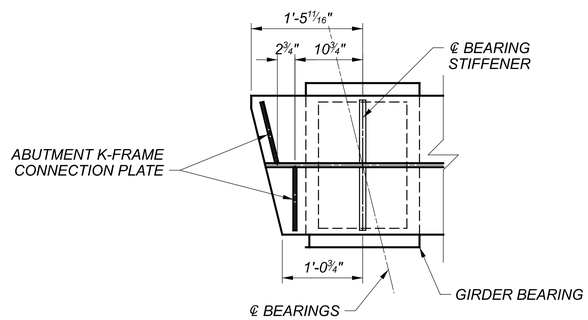

DETAIL A

BEAM END DETAILS AT ABUTMENTS
REAR ABUTMENT SHOWN, FORWARD ABUTMENT SIMILAR

NOTES:

1. FOR ADDITIONAL INFORMATION SEE FRAMING PLAN SHEET 42 / 99 .
2. ALL FLANGE, WEB, AND FIELD SPLICE PLATES SHALL BE DESIGNATED "CVN". WHERE A SHAPE OR PLATE IS DESIGNATED (CVN), FURNISH MATERIAL THAT MEETS THE MINIMUM NOTCH TOUGHNESS REQUIREMENTS AS SPECIFIED IN ODOT CM&S 711.01.R PAYMENT.
3. WELD ATTACHMENT OF SUPPORTS FOR CONCRETE DECK FINISHING MACHINE TO AREAS OF THE FASCIA GIRDER FLANGES DESIGNATED COMPRESSION. DO NOT WELD ATTACHMENTS TO AREAS DESIGNATED TENSION. FILLET WELDS TO COMPRESSION FLANGES SHALL BE AT LEAST 1" FROM THE EDGE OF FLANGE, BE NO MORE THAN 2" LONG, AND BE AT LEAST ¼" FOR THE THICKNESS UP TO ¾" OR 5/16" FOR GREATER THAN ¾" THICK.

For Reference Only
Preliminary Plans

GIRDER ELEVATION
CUY-90-1678 (BRIDGE 13)
CR-710 (E. 22ND ST.) OVER I.R. 90

SFN 1807839
DESIGN AGENCY
Michael Baker INTERNATIONAL
DESIGNER JTB | CHECKER ETB
REVIEWER CDC 05/10/24
PROJECT ID 82382
SUBSET 43 | TOTAL 99
SHEET 2224 | TOTAL 2696

CUY-90-16.28

MODEL: Sheet PAPERSIZE: 34x22 (in.) DATE: 3/28/2025 TIME: 7:45:42 AM USER: RohitLBk
pw:\\mb-us-pw.bentley.com:mb-us-pw-03\Documents\Cleveland_OH\01_Projects\ODOT\District12\82382\400-Engineering\Structures\SFN_1807839\Sheets\82382_SFN_1807839_SS003.dgn

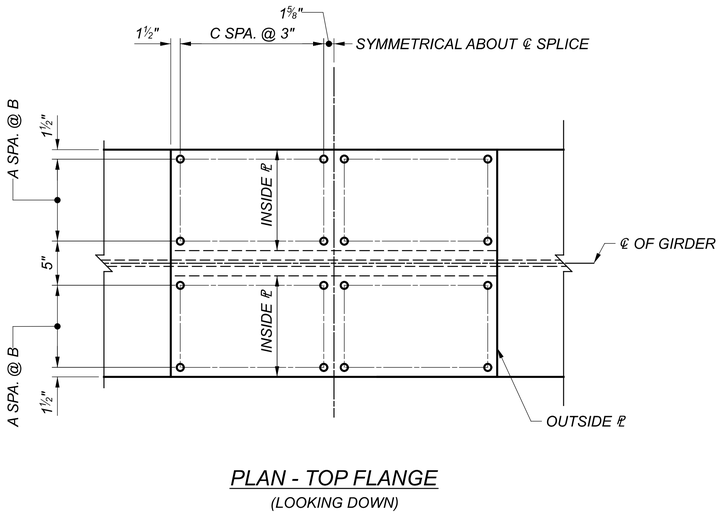

PLAN - TOP FLANGE

(LOOKING DOWN)

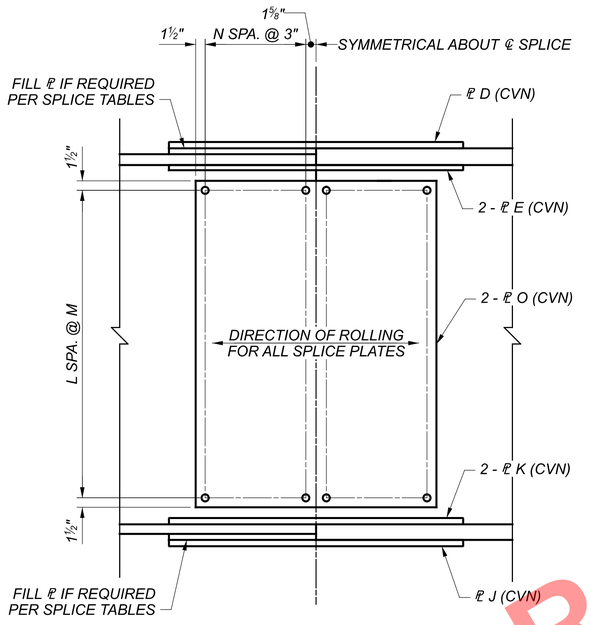

ELEVATION

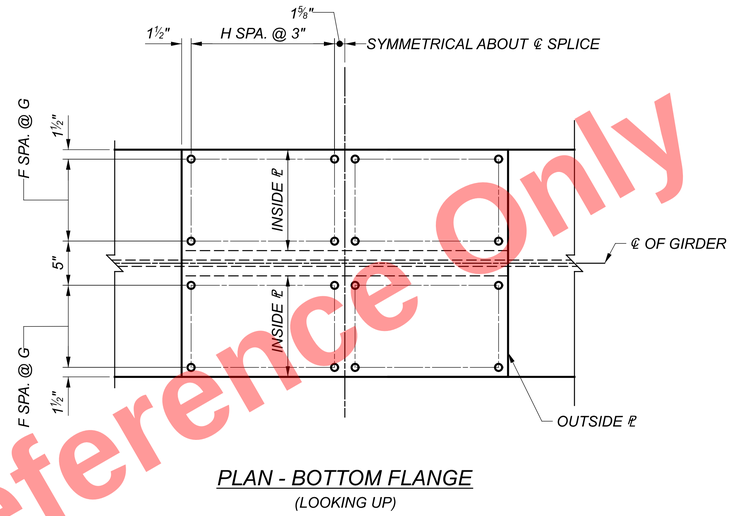

PLAN - BOTTOM FLANGE

(LOOKING UP)

FIELD SPLICE VARIABLE TABLE

FS #	TOP FLANGE						BOTTOM FLANGE					
	A	B	C	D	E	FILL PLATE	F	G	H	J	K	FILL PLATE
1	2	3 1/2"	3	1" x 1'-10" x 2'-0 1/4"	1" x 10" x 2'-0 1/4"	1 1/2" x 1'-10" x 1'-0"	2	3 1/2"	4	1 1/8" x 1'-10" x 2'-6 1/4"	1 1/8" x 10" x 2'-6 1/4"	1 1/4" x 1'-10" x 1'-3"
2	2	3 1/2"	3	1" x 1'-10" x 2'-0 1/4"	1" x 10" x 2'-0 1/4"	1 1/2" x 1'-10" x 1'-0"	2	3 1/2"	3	1" x 1'-10" x 2'-0 1/4"	1" x 10" x 2'-0 1/4"	1 1/2" x 1'-10" x 1'-0"

FIELD SPLICE VARIABLE TABLE

FS #	WEB				
	L	M	N	O	FILL PLATE
1	9	5"	1	3/8" x 1'-0 1/4" x 4'-0"	NO FILL PLATE
2	9	5"	1	3/8" x 1'-0 1/4" x 4'-0"	NO FILL PLATE

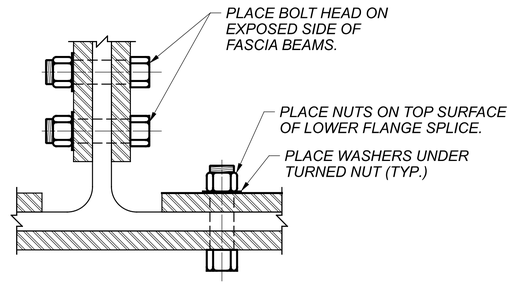

BOLTED SPLICE
PARTIAL SECTION

LEGEND:

℄	CENTERLINE
DIA.	DIAMETER
FS	FIELD SPLICE
SPA.	SPACES
TYP.	TYPICAL

NOTES:

1. ALL SPLICE MATERIAL IS ASTM A709 GRADE (50) UNLESS NOTED OTHERWISE.
2. HIGH STRENGTH BOLTS SHALL BE 1" DIAMETER, ASTM F3125 GRADE A325, TYPE 1, GALVANIZED. ALL BOLTS SHALL BE SIZED TO EXCLUDE THREADS FROM SHEAR PLANES.
3. CVN: WHERE A SHAPE OR PLATE IS DESIGNATED (CVN), FURNISH MATERIAL THAT MEETS THE MINIMUM NOTCH TOUGHNESS REQUIREMENTS AS SPECIFIED IN C&MS 711.01.
4. FOR FIELD SPLICE LOCATIONS, SEE FRAMING PLAN SHEET 42 / 99.
5. WEB SPLICE PLATES AND BOLT GROUPS SHALL BE CENTERED VERTICALLY ON WEB.

Preliminary Plans - For Reference Only

GIRDER SPLICE DETAILS
CUY-90-1678 (BRIDGE 13)
CR-710 (E. 22ND ST.) OVER I.R. 90

SFN 1807839
DESIGN AGENCY
Michael Baker INTERNATIONAL
DESIGNER JCC | CHECKER ETB
REVIEWER CDC 05/10/24
PROJECT ID 82382
SUBSET 44 | TOTAL 99
SHEET 2225 | TOTAL 2696

CUY-90-16.28 (CCG3A)

MODEL: Sheet PAPERSIZE: 34x22 (in.) DATE: 3/28/2025 TIME: 7:45:51 AM USER: Rohit.Bk
pw:\\mb-us-pw.bentley.com:mb-us-pw-03\Documents\Cleveland_OH\01_Projects\ODOT\District12\82382\400-Engineering\Structures\SFN_1807839\Sheets\82382_SFN_1807839_SS002.dgn

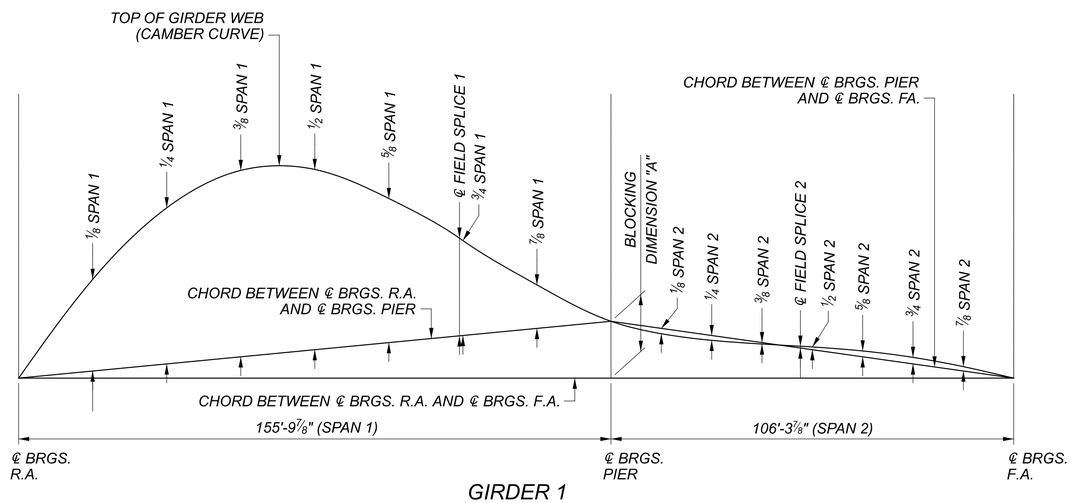

GIRDER 1

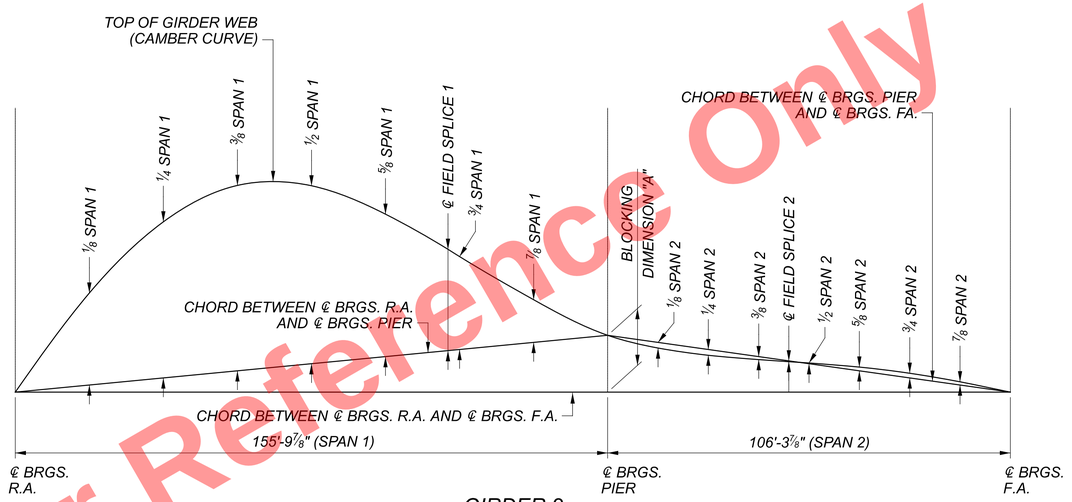

GIRDER 2

	DEFLECTION AND CAMBER (INCHES) - GIRDER 1									
	SPAN 1									
CAMBER DESCRIPTION	CL BRGS R.A.	⅛ SPAN	¼ SPAN	⅜ SPAN	½ SPAN	⅝ SPAN	FIELD SPLICE 1	¾ SPAN	⅞ SPAN	CL BRGS PIER
DEFLECTION DUE TO WEIGHT OF STEEL	0	⅝	1 ⅛	1 ⅜	1 ⅜	1 ⅛	¾	¾	5/16	0
DEFLECTION DUE TO REMAINING DEAD LOAD	0	2 ½	4 ⅜	5 7/16	5 ⅜	4 ½	3	2 15/16	1 9/16	0
ADJUSTMENT DUE TO VERTICAL CURVE	0	2 7/16	4	4 9/16	4 ¼	3 3/16	2 3/16	2 ⅛	1 1/16	0
REQUIRED SHOP CAMBER	0	5 9/16	9 ½	11 ⅜	11	8 13/16	5 15/16	5 13/16	2 11/16	0
GIRDER 1										

	DEFLECTION AND CAMBER (INCHES) - GIRDER 1									
	SPAN 2									
CAMBER DESCRIPTION	CL BRGS PIER	⅛ SPAN	¼ SPAN	⅜ SPAN	FIELD SPLICE 2	½ SPAN	⅝ SPAN	¾ SPAN	⅞ SPAN	CL BRGS F.A.
DEFLECTION DUE TO WEIGHT OF STEEL	0	- 1/16	- 1/16	- 1/16	0	0	1/16	1/16	1/16	0
DEFLECTION DUE TO REMAINING DEAD LOAD	0	- ¼	- ¼	0	⅛	3/16	5/16	5/16	3/16	0
ADJUSTMENT DUE TO VERTICAL CURVE	0	0	0	0	0	0	0	0	0	0
REQUIRED SHOP CAMBER	0	- 5/16	- 5/16	- 1/16	⅛	3/16	⅜	⅜	¼	0

	DEFLECTION AND CAMBER (INCHES) - GIRDER 2									
	SPAN 1									
CAMBER DESCRIPTION	CL BRGS R.A.	⅛ SPAN	¼ SPAN	⅜ SPAN	½ SPAN	⅝ SPAN	FIELD SPLICE 1	¾ SPAN	⅞ SPAN	CL BRGS PIER
DEFLECTION DUE TO WEIGHT OF STEEL	0	⅝	1 ⅛	1 ⅜	1 ⅜	1 3/16	13/16	¾	5/16	0
DEFLECTION DUE TO REMAINING DEAD LOAD	0	2 ¼	4	4 ⅞	4 ⅞	3 15/16	2 ⅞	2 ⅝	1 ⅛	0
ADJUSTMENT DUE TO VERTICAL CURVE	0	2 7/16	3 ⅜	4 7/16	4 1/16	3 1/16	2 3/16	2	1	0
REQUIRED SHOP CAMBER	0	5 5/16	9	10 11/16	10 5/16	8 3/16	5 ⅞	5 ⅜	2 7/16	0
GIRDER 2										

	DEFLECTION AND CAMBER (INCHES) - GIRDER 2									
	SPAN 2									
CAMBER DESCRIPTION	CL BRGS PIER	⅛ SPAN	¼ SPAN	⅜ SPAN	FIELD SPLICE 2	½ SPAN	⅝ SPAN	¾ SPAN	⅞ SPAN	CL BRGS F.A.
DEFLECTION DUE TO WEIGHT OF STEEL	0	- 1/16	- 1/16	- 1/16	0	0	1/16	1/16	1/16	0
DEFLECTION DUE TO REMAINING DEAD LOAD	0	- ¼	- ¼	- ⅛	- 1/16	1/16	⅛	3/16	⅛	0
ADJUSTMENT DUE TO VERTICAL CURVE	0	0	0	0	0	0	0	0	0	0
REQUIRED SHOP CAMBER	0	- 5/16	- 5/16	- 3/16	- 1/16	1/16	3/16	¼	3/16	0

	BLOCKING DIMENSIONS
	DIM. "A"
GIRDER 1	3 7/16"
GIRDER 2	3 5/16"

CAMBER SIGN CONVENTION:

POSITIVE UPWARD
NEGATIVE DOWNWARD

NOTES:

1. FOR GIRDER ELEVATION SEE SHEET 43 / 99.

Preliminary Plans - For Reference Only

DEFLECTION AND CAMBER TABLE (1 OF 7)
CUY-90-1678 (BRIDGE 13)
CR-710 (E. 22ND ST.) OVER I.R. 90

SFN 1807839
DESIGN AGENCY
Michael Baker INTERNATIONAL
DESIGNER JCC | CHECKER JTB
REVIEWER CDC 05/10/24
PROJECT ID 82382
SUBSET 45 | TOTAL 99
SHEET 2226 | TOTAL 2696

CUY-90-16.28 (CCG3A)
MODEL: Sheet PAPERSIZE: 34x22 (in.) DATE: 3/28/2025 TIME: 7:45:58 AM USER: Rohit.Bk
pw:\\mb-us-pw.bentley.com:mb-us-pw-03\Documents\Cleveland_OH\01_Projects\ODOT\District12\82382\400-Engineering\Structures\SFN_1807839\Sheets\82382_SFN_1807839_SS007.dgn

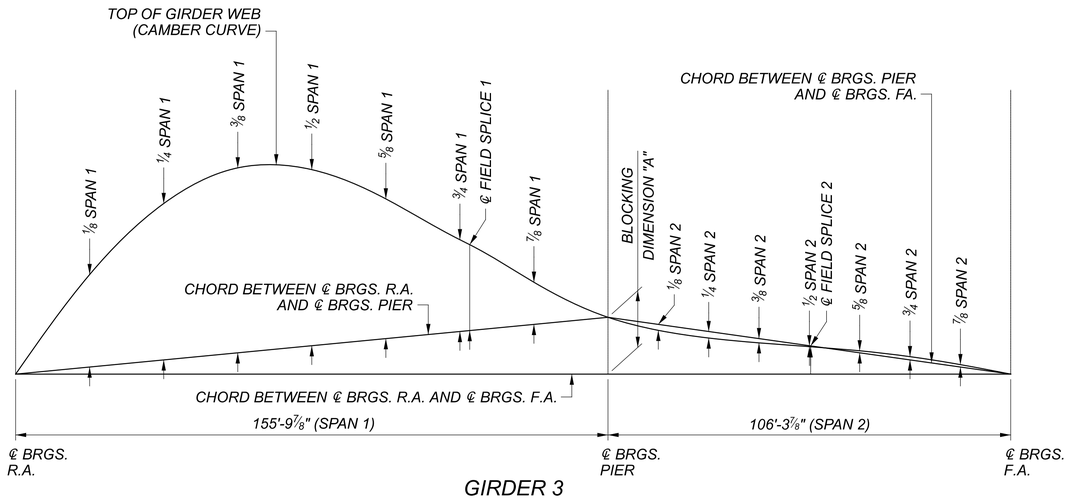

GIRDER 3

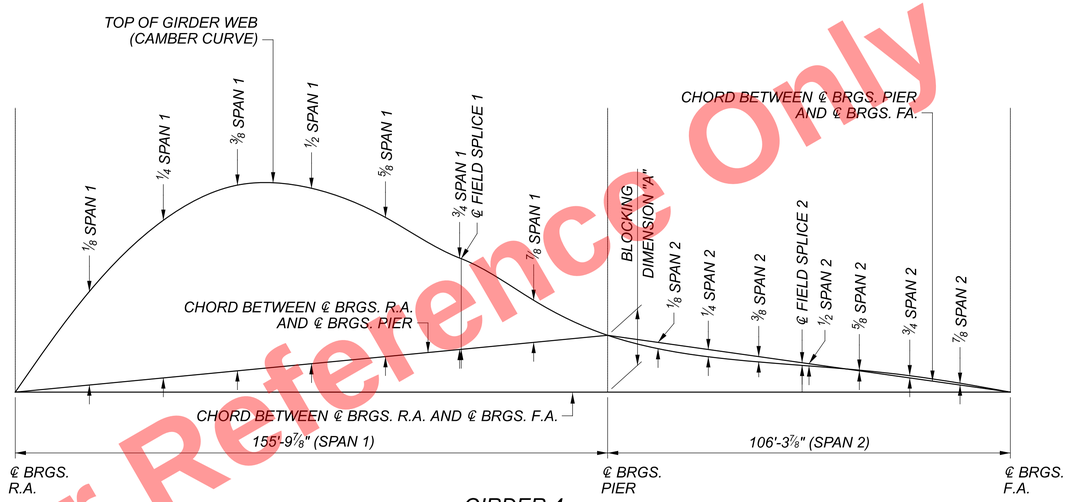

GIRDER 4

	DEFLECTION AND CAMBER (INCHES) - GIRDER 3									
	SPAN 1									
CAMBER DESCRIPTION	CL BRGS R.A.	⅛ SPAN	¼ SPAN	⅜ SPAN	½ SPAN	⅝ SPAN	FIELD SPLICE 1	¾ SPAN	⅞ SPAN	CL BRGS PIER
DEFLECTION DUE TO WEIGHT OF STEEL	0	11/16	1 3/16	1 7/16	1 7/16	1 3/16	3/4	13/16	5/16	0
DEFLECTION DUE TO REMAINING DEAD LOAD	0	2	3 9/16	4 3/8	4 3/8	3 9/16	2 1/8	2 1/4	1 1/16	0
ADJUSTMENT DUE TO VERTICAL CURVE	0	2 3/8	3 13/16	4 5/16	3 13/16	2 7/8	1 13/16	1 15/16	15/16	0
REQUIRED SHOP CAMBER	0	5 1/16	8 9/16	10 1/8	9 5/8	7 5/8	4 11/16	5	2 5/16	0
GIRDER 3										

	DEFLECTION AND CAMBER (INCHES) - GIRDER 3									
	SPAN 2									
CAMBER DESCRIPTION	CL BRGS PIER	⅛ SPAN	¼ SPAN	⅜ SPAN	FIELD SPLICE 2	½ SPAN	⅝ SPAN	¾ SPAN	⅞ SPAN	CL BRGS F.A.
DEFLECTION DUE TO WEIGHT OF STEEL	0	- 1/16	- 1/16	- 1/16	0	0	1/16	1/16	1/16	0
DEFLECTION DUE TO REMAINING DEAD LOAD	0	- 1/4	- 5/16	- 3/16	- 1/16	- 1/16	1/16	1/8	1/16	0
ADJUSTMENT DUE TO VERTICAL CURVE	0	0	0	0	0	0	0	0	0	0
REQUIRED SHOP CAMBER	0	- 5/16	- 3/8	- 1/4	- 1/16	- 1/16	1/8	3/16	1/8	0

	DEFLECTION AND CAMBER (INCHES) - GIRDER 4									
	SPAN 1									
CAMBER DESCRIPTION	CL BRGS R.A.	⅛ SPAN	¼ SPAN	⅜ SPAN	½ SPAN	⅝ SPAN	FIELD SPLICE 1	¾ SPAN	⅞ SPAN	CL BRGS PIER
DEFLECTION DUE TO WEIGHT OF STEEL	0	11/16	1 3/16	1 1/2	1 1/2	1 1/4	13/16	13/16	3/8	0
DEFLECTION DUE TO REMAINING DEAD LOAD	0	1 13/16	3 1/4	4	3 15/16	3 1/4	2 1/16	2 1/8	15/16	0
ADJUSTMENT DUE TO VERTICAL CURVE	0	2 5/16	3 11/16	4 1/8	3 5/8	2 11/16	1 13/16	1 13/16	7/8	0
REQUIRED SHOP CAMBER	0	4 13/16	8 1/8	9 5/8	9 1/16	7 3/16	4 11/16	4 3/4	2 3/16	0
GIRDER 4										

	DEFLECTION AND CAMBER (INCHES) - GIRDER 4									
	SPAN 2									
CAMBER DESCRIPTION	CL BRGS PIER	⅛ SPAN	¼ SPAN	⅜ SPAN	FIELD SPLICE 2	½ SPAN	⅝ SPAN	¾ SPAN	⅞ SPAN	CL BRGS F.A.
DEFLECTION DUE TO WEIGHT OF STEEL	0	- 1/16	- 1/16	- 1/16	0	0	1/16	1/16	1/16	0
DEFLECTION DUE TO REMAINING DEAD LOAD	0	- 1/4	- 5/16	- 3/16	- 1/8	- 1/8	0	1/16	1/16	0
ADJUSTMENT DUE TO VERTICAL CURVE	0	0	0	0	0	0	0	0	0	0
REQUIRED SHOP CAMBER	0	- 5/16	- 3/8	- 1/4	- 1/8	- 1/8	1/16	1/8	1/8	0

	BLOCKING DIMENSIONS
	DIM. "A"
GIRDER 3	3 1/8"
GIRDER 4	2 15/16"

CAMBER SIGN CONVENTION:

POSITIVE UPWARD
NEGATIVE DOWNWARD

NOTES:

1. FOR GIRDER ELEVATION SEE SHEET 43 / 99.

Preliminary Plans - For Reference Only

DEFLECTION AND CAMBER TABLE (2 OF 7)
CUY-90-1678 (BRIDGE 13)
CR-710 (E. 22ND ST.) OVER I.R. 90

SFN 1807839
DESIGN AGENCY
Michael Baker INTERNATIONAL
DESIGNER JCC | CHECKER JTB
REVIEWER CDC 05/10/24
PROJECT ID 82382
SUBSET 46 | TOTAL 99
SHEET 2227 | TOTAL 2696

CUY-90-16.28 (CCG3A)
MODEL: Sheet PAPERSIZE: 34x22 (in.) DATE: 3/28/2025 TIME: 7:46:05 AM USER: Rohit.Bk
pw:\\mb-us-pw.bentley.com:mb-us-pw-03\Documents\Cleveland_OH\01_Projects\ODOT\District12\82382400-Engineering\Structures\SFN_1807839\Sheets\82382_SFN_1807839_SS008.dgn

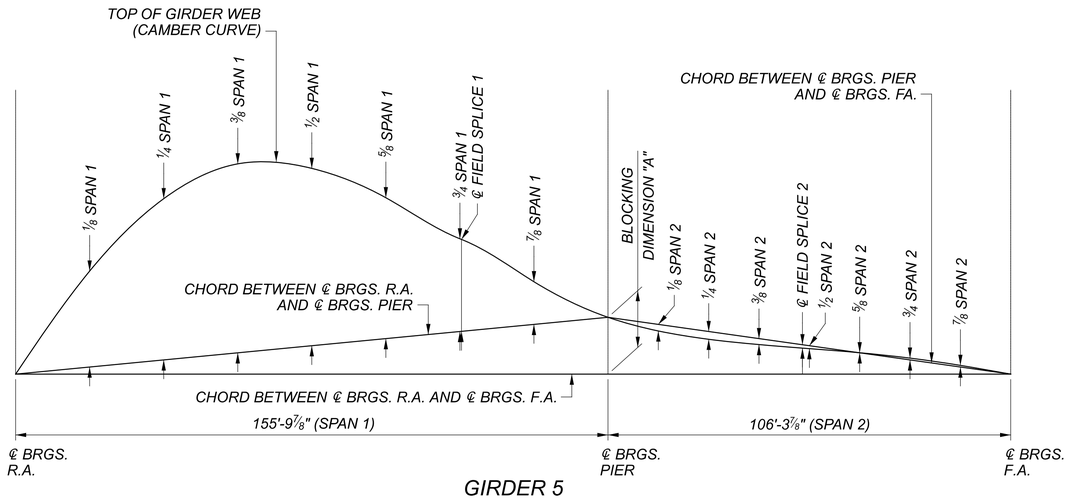

GIRDER 5

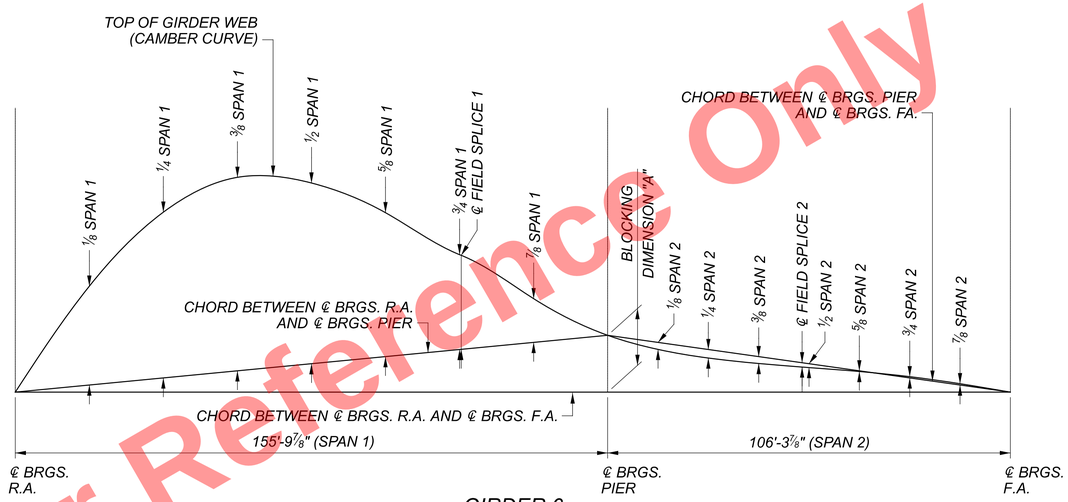

GIRDER 6

	DEFLECTION AND CAMBER (INCHES) - GIRDER 5									
	SPAN 1									
	CAMBER DESCRIPTION	CL BRGS R.A.	⅛ SPAN	¼ SPAN	⅜ SPAN	½ SPAN	⅝ SPAN	FIELD SPLICE 1	¾ SPAN	⅞ SPAN	CL BRGS PIER
GIRDER 5	DEFLECTION DUE TO WEIGHT OF STEEL	0	11/16	1 1/4	1 9/16	1 9/16	1 1/4	13/16	13/16	3/8	0
	DEFLECTION DUE TO REMAINING DEAD LOAD	0	1 3/4	3 1/16	3 11/16	3 5/8	3 1/16	2	2	13/16	0
	ADJUSTMENT DUE TO VERTICAL CURVE	0	2 1/4	3 9/16	3 15/16	3 7/16	2 9/16	1 11/16	1 11/16	7/8	0
	REQUIRED SHOP CAMBER	0	4 11/16	7 7/8	9 3/16	8 5/8	6 7/8	4 1/2	4 1/2	2 1/16	0

	DEFLECTION AND CAMBER (INCHES) - GIRDER 5									
	SPAN 2									
	CAMBER DESCRIPTION	CL BRGS PIER	⅛ SPAN	¼ SPAN	⅜ SPAN	FIELD SPLICE 2	½ SPAN	⅝ SPAN	¾ SPAN	⅞ SPAN	CL BRGS F.A.
GIRDER 5	DEFLECTION DUE TO WEIGHT OF STEEL	0	- 1/16	- 1/16	0	0	1/16	1/16	1/16	1/16	0
	DEFLECTION DUE TO REMAINING DEAD LOAD	0	- 1/4	- 5/16	- 5/16	- 3/16	- 3/16	- 1/16	0	0	0
	ADJUSTMENT DUE TO VERTICAL CURVE	0	0	0	0	0	0	0	0	0	0
	REQUIRED SHOP CAMBER	0	- 5/16	- 3/8	- 5/16	- 3/16	- 1/8	0	1/16	1/16	0

	DEFLECTION AND CAMBER (INCHES) - GIRDER 6									
	SPAN 1									
	CAMBER DESCRIPTION	CL BRGS R.A.	⅛ SPAN	¼ SPAN	⅜ SPAN	½ SPAN	⅝ SPAN	FIELD SPLICE 1	¾ SPAN	⅞ SPAN	CL BRGS PIER
GIRDER 6	DEFLECTION DUE TO WEIGHT OF STEEL	0	11/16	1 1/4	1 1/2	1 1/2	1 1/4	13/16	13/16	3/8	0
	DEFLECTION DUE TO REMAINING DEAD LOAD	0	1 11/16	2 15/16	3 9/16	3 9/16	2 15/16	1 7/8	1 15/16	13/16	0
	ADJUSTMENT DUE TO VERTICAL CURVE	0	2 3/16	3 7/16	3 13/16	3 1/4	2 7/16	1 5/8	1 5/8	13/16	0
	REQUIRED SHOP CAMBER	0	4 9/16	7 5/8	8 7/8	8 5/16	6 5/8	4 5/16	4 3/8	2	0

	DEFLECTION AND CAMBER (INCHES) - GIRDER 6									
	SPAN 2									
	CAMBER DESCRIPTION	CL BRGS PIER	⅛ SPAN	¼ SPAN	⅜ SPAN	FIELD SPLICE 2	½ SPAN	⅝ SPAN	¾ SPAN	⅞ SPAN	CL BRGS F.A.
GIRDER 6	DEFLECTION DUE TO WEIGHT OF STEEL	0	- 1/16	- 1/16	0	0	0	1/16	1/16	1/16	0
	DEFLECTION DUE TO REMAINING DEAD LOAD	0	- 1/4	- 5/16	- 5/16	- 3/16	- 3/16	- 1/16	0	0	0
	ADJUSTMENT DUE TO VERTICAL CURVE	0	0	0	0	0	0	0	0	0	0
	REQUIRED SHOP CAMBER	0	- 5/16	- 3/8	- 5/16	- 3/16	- 3/16	0	1/16	1/16	0

	BLOCKING DIMENSIONS
	DIM. "A"
GIRDER 5	2 3/4"
GIRDER 6	2 5/8"

CAMBER SIGN CONVENTION:

POSITIVE UPWARD
NEGATIVE DOWNWARD

NOTES:

1. FOR GIRDER ELEVATION SEE SHEET 43 / 99.

Preliminary Plans - For Reference Only

DEFLECTION AND CAMBER TABLE (3 OF 7)
CUY-90-1678 (BRIDGE 13)
CR-710 (E. 22ND ST.) OVER I.R. 90

SFN 1807839
DESIGN AGENCY
Michael Baker INTERNATIONAL
DESIGNER JCC | CHECKER JTB
REVIEWER CDC 05/10/24
PROJECT ID 82382
SUBSET 47 | TOTAL 99
SHEET 2228 | TOTAL 2696

CUY-90-16.28 (CCG3A)
MODEL: Sheet PAPERSIZE: 34x22 (in.) DATE: 3/28/2025 TIME: 7:46:12 AM USER: Rohit.Bk
pw:\\mb-us-pw.bentley.com:mb-us-pw-03\Documents\Cleveland_OH\01_Projects\ODOT\District12\82382400-Engineering\Structures\SFN_1807839\Sheets\82382_SFN_1807839_SS012.dgn

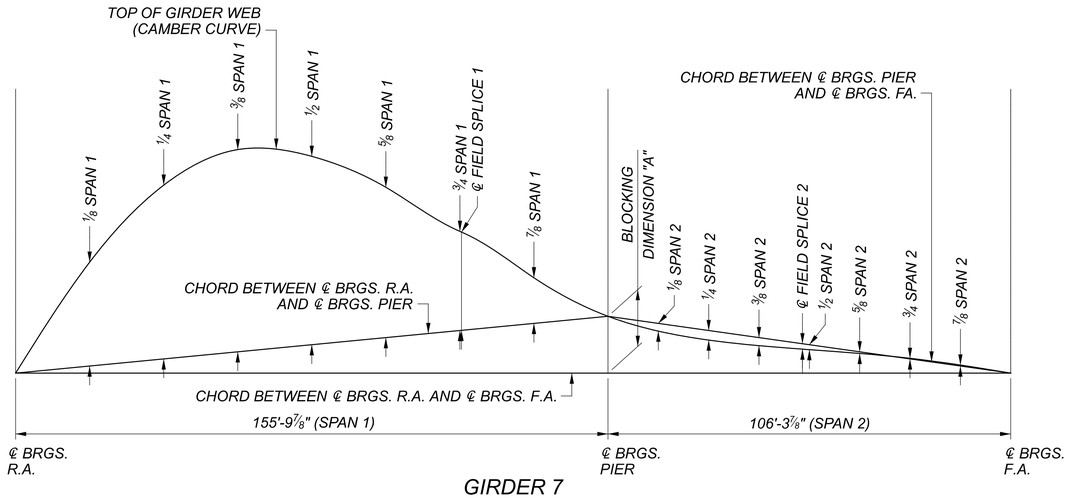

GIRDER 7

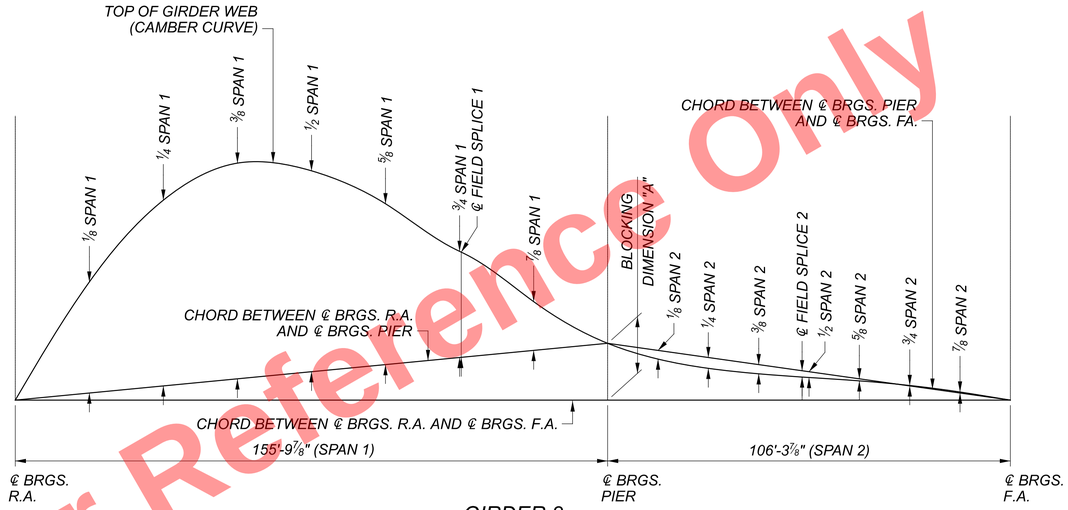

GIRDER 8

	DEFLECTION AND CAMBER (INCHES) - GIRDER 7									
	SPAN 1									
CAMBER DESCRIPTION	CL BRGS R.A.	1/8 SPAN	1/4 SPAN	3/8 SPAN	1/2 SPAN	5/8 SPAN	FIELD SPLICE 1	3/4 SPAN	7/8 SPAN	CL BRGS PIER
DEFLECTION DUE TO WEIGHT OF STEEL	0	11/16	1 3/16	1 1/2	1 1/2	1 1/4	13/16	13/16	3/8	0
DEFLECTION DUE TO REMAINING DEAD LOAD	0	1 11/16	2 15/16	3 5/8	3 5/8	3	1 15/16	2	7/8	0
ADJUSTMENT DUE TO VERTICAL CURVE	0	2 1/8	3 3/8	3 5/8	3	2 1/4	1 1/2	1 1/2	3/4	0
REQUIRED SHOP CAMBER	0	4 1/2	7 1/2	8 3/4	8 1/8	6 1/2	4 1/4	4 5/16	2	0

GIRDER 7

	DEFLECTION AND CAMBER (INCHES) - GIRDER 7									
	SPAN 2									
CAMBER DESCRIPTION	CL BRGS PIER	1/8 SPAN	1/4 SPAN	3/8 SPAN	FIELD SPLICE 2	1/2 SPAN	5/8 SPAN	3/4 SPAN	7/8 SPAN	CL BRGS F.A.
DEFLECTION DUE TO WEIGHT OF STEEL	0	- 1/16	- 1/16	- 1/16	0	0	1/16	1/16	1/16	0
DEFLECTION DUE TO REMAINING DEAD LOAD	0	- 1/4	- 3/8	- 5/16	- 1/4	- 3/16	- 1/8	- 1/16	0	0
ADJUSTMENT DUE TO VERTICAL CURVE	0	0	0	0	0	0	0	0	0	0
REQUIRED SHOP CAMBER	0	- 5/16	- 7/16	- 3/8	- 1/4	- 3/16	- 1/16	0	1/16	0

	DEFLECTION AND CAMBER (INCHES) - GIRDER 8									
	SPAN 1									
CAMBER DESCRIPTION	CL BRGS R.A.	1/8 SPAN	1/4 SPAN	3/8 SPAN	1/2 SPAN	5/8 SPAN	FIELD SPLICE 1	3/4 SPAN	7/8 SPAN	CL BRGS PIER
DEFLECTION DUE TO WEIGHT OF STEEL	0	11/16	1 3/16	1 7/16	1 7/16	1 3/16	3/4	13/16	5/16	0
DEFLECTION DUE TO REMAINING DEAD LOAD	0	1 3/4	3 1/16	3 7/8	3 7/8	3 3/16	2 1/16	2 1/16	1	0
ADJUSTMENT DUE TO VERTICAL CURVE	0	2 1/16	3 1/4	3 7/16	2 13/16	2 1/8	1 7/16	1 7/16	11/16	0
REQUIRED SHOP CAMBER	0	4 1/2	7 1/2	8 3/4	8 1/8	6 1/2	4 1/4	4 5/16	2	0

GIRDER 8

	DEFLECTION AND CAMBER (INCHES) - GIRDER 8									
	SPAN 2									
CAMBER DESCRIPTION	CL BRGS PIER	1/8 SPAN	1/4 SPAN	3/8 SPAN	FIELD SPLICE 2	1/2 SPAN	5/8 SPAN	3/4 SPAN	7/8 SPAN	CL BRGS F.A.
DEFLECTION DUE TO WEIGHT OF STEEL	0	- 1/16	- 1/16	- 1/16	0	0	1/16	1/16	1/16	0
DEFLECTION DUE TO REMAINING DEAD LOAD	0	- 5/16	- 3/8	- 5/16	- 1/4	- 1/4	- 1/8	- 1/16	0	0
ADJUSTMENT DUE TO VERTICAL CURVE	0	0	0	0	0	0	0	0	0	0
REQUIRED SHOP CAMBER	0	- 3/8	- 7/16	- 3/8	- 1/4	- 1/4	- 1/16	0	1/16	0

	BLOCKING DIMENSIONS
	DIM. "A"
GIRDER 7	2 7/16"
GIRDER 8	2 5/16"

CAMBER SIGN CONVENTION:

POSITIVE UPWARD
NEGATIVE DOWNWARD

NOTES:

1. FOR GIRDER ELEVATION SEE SHEET 43 / 99.

Preliminary Plans - For Reference Only

DEFLECTION AND CAMBER TABLE (4 OF 7)
CUY-90-1678 (BRIDGE 13)
CR-710 (E. 22ND ST.) OVER I.R. 90

SFN 1807839
DESIGN AGENCY
Michael Baker INTERNATIONAL
DESIGNER JCC | CHECKER JTB
REVIEWER CDC 05/10/24
PROJECT ID 82382
SUBSET 48 | TOTAL 99
SHEET 2229 | TOTAL 2696

CUY-90-16.28 (CCG3A)

MODEL: Sheet PAPERSIZE: 34x22 (in.) DATE: 3/28/2025 TIME: 7:46:22 AM USER: Rohit.Bk
pw:\\mb-us-pw.bentley.com:mb-us-pw-03\Documents\Cleveland_OH\01_Projects\ODOT\District12\82382\400-Engineering\Structures\SFN_1807839\Sheets\82382_SFN_1807839_SS013.dgn

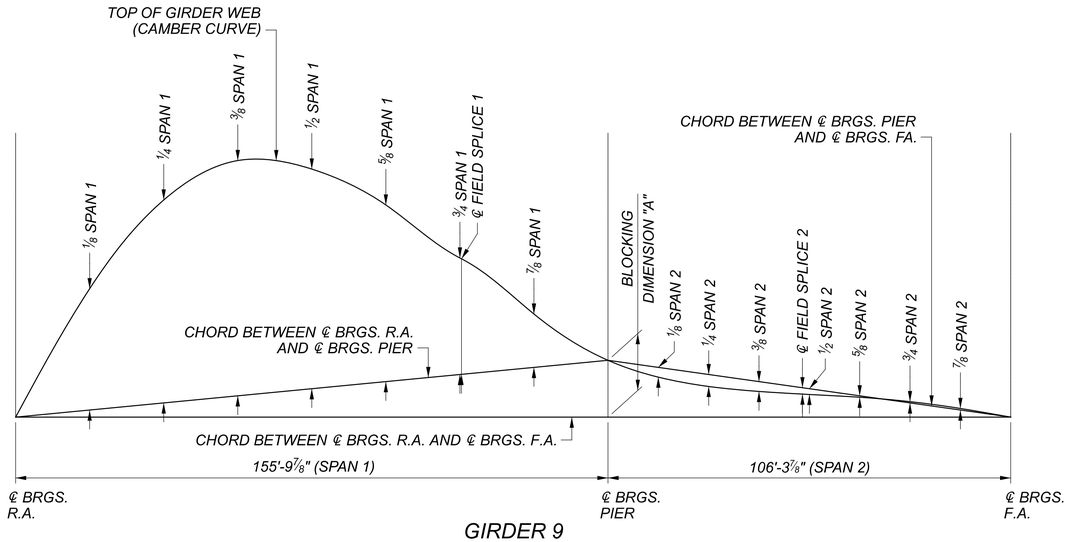

GIRDER 9

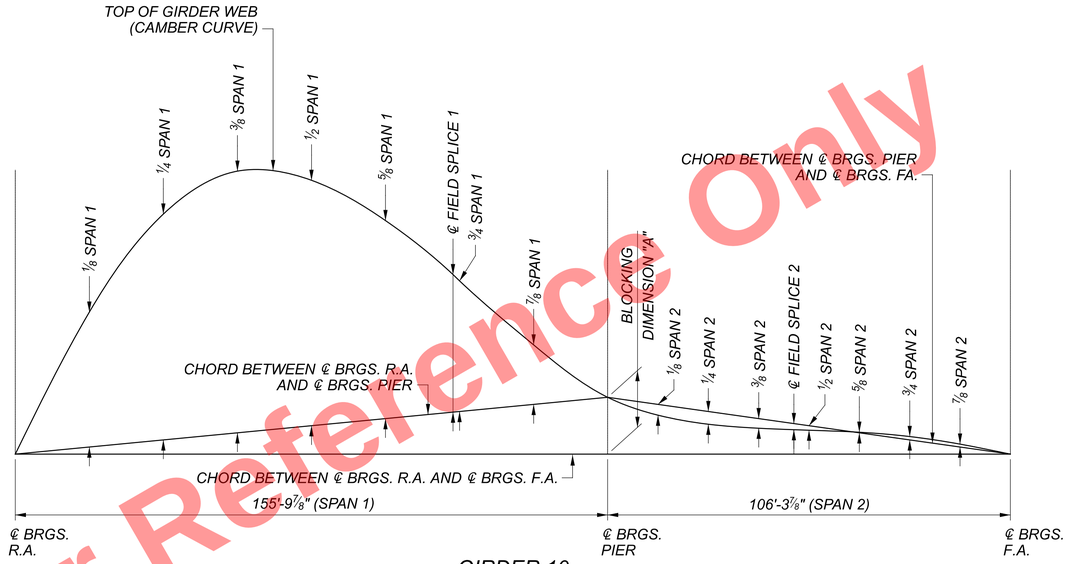

GIRDER 10

	DEFLECTION AND CAMBER (INCHES) - GIRDER 9									
	SPAN 1									
CAMBER DESCRIPTION	CL BRGS R.A.	⅛ SPAN	¼ SPAN	⅜ SPAN	½ SPAN	⅝ SPAN	FIELD SPLICE 1	¾ SPAN	⅞ SPAN	CL BRGS PIER
DEFLECTION DUE TO WEIGHT OF STEEL	0	⅝	1 ⅛	1 7/16	1 7/16	1 3/16	¾	¾	5/16	0
DEFLECTION DUE TO REMAINING DEAD LOAD	0	2	3 7/16	4 ¼	4 3/16	3 ½	2 9/16	2 ⅜	1	0
ADJUSTMENT DUE TO VERTICAL CURVE	0	2	3 ⅛	3 ¼	2 11/16	2	1 5/16	1 5/16	11/16	0
REQUIRED SHOP CAMBER	0	4 ⅝	7 11/16	8 15/16	8 5/16	6 11/16	4 ⅜	4 7/16	2	0
GIRDER 9										

	DEFLECTION AND CAMBER (INCHES) - GIRDER 9									
	SPAN 2									
CAMBER DESCRIPTION	CL BRGS PIER	⅛ SPAN	¼ SPAN	⅜ SPAN	FIELD SPLICE 2	½ SPAN	⅝ SPAN	¾ SPAN	⅞ SPAN	CL BRGS F.A.
DEFLECTION DUE TO WEIGHT OF STEEL	0	- 1/16	- 1/16	- 1/16	0	0	1/16	1/16	1/16	0
DEFLECTION DUE TO REMAINING DEAD LOAD	0	- 5/16	- ⅜	- 5/16	- ¼	- 3/16	- ⅛	0	0	0
ADJUSTMENT DUE TO VERTICAL CURVE	0	0	0	0	0	0	0	0	0	0
REQUIRED SHOP CAMBER	0	- ⅜	- 7/16	- ⅜	- ¼	- 3/16	- 1/16	1/16	1/16	0

	DEFLECTION AND CAMBER (INCHES) - GIRDER 10									
	SPAN 1									
CAMBER DESCRIPTION	CL BRGS R.A.	⅛ SPAN	¼ SPAN	⅜ SPAN	½ SPAN	⅝ SPAN	FIELD SPLICE 1	¾ SPAN	⅞ SPAN	CL BRGS PIER
DEFLECTION DUE TO WEIGHT OF STEEL	0	⅝	1 ⅛	1 ⅜	1 ⅜	1 ⅛	13/16	¾	5/16	0
DEFLECTION DUE TO REMAINING DEAD LOAD	0	2 ¼	3 ⅞	4 13/16	4 13/16	4	2 ¾	2 ⅝	1 3/16	0
ADJUSTMENT DUE TO VERTICAL CURVE	0	1 15/16	3	3 1/16	2 ½	1 ⅞	1 5/16	1 ¼	⅝	0
REQUIRED SHOP CAMBER	0	4 13/16	8	9 ¼	8 11/16	7	4 ⅞	4 ⅝	2 ⅛	0
GIRDER 10										

	DEFLECTION AND CAMBER (INCHES) - GIRDER 10									
	SPAN 2									
CAMBER DESCRIPTION	CL BRGS PIER	⅛ SPAN	¼ SPAN	⅜ SPAN	FIELD SPLICE 2	½ SPAN	⅝ SPAN	¾ SPAN	⅞ SPAN	CL BRGS F.A.
DEFLECTION DUE TO WEIGHT OF STEEL	0	- 1/16	- 1/16	- 1/16	0	0	1/16	1/16	1/16	0
DEFLECTION DUE TO REMAINING DEAD LOAD	0	- 5/16	- ⅜	- ¼	- 3/16	- 3/16	- 1/16	1/16	1/16	0
ADJUSTMENT DUE TO VERTICAL CURVE	0	0	0	0	0	0	0	0	0	0
REQUIRED SHOP CAMBER	0	- ⅜	- 7/16	- 5/16	- 3/16	- 3/16	0	⅛	⅛	0

	BLOCKING DIMENSIONS
	DIM. "A"
GIRDER 9	2 3/16"
GIRDER 10	2"

CAMBER SIGN CONVENTION:

POSITIVE UPWARD
NEGATIVE DOWNWARD

NOTES:

1. FOR GIRDER ELEVATION SEE SHEET 43 / 99.

Preliminary Plans - For Reference Only

DEFLECTION AND CAMBER TABLE (5 OF 7)
CUY-90-1678 (BRIDGE 13)
CR-710 (E. 22ND ST.) OVER I.R. 90

SFN 1807839
DESIGN AGENCY
Michael Baker INTERNATIONAL
DESIGNER JCC | CHECKER JTB
REVIEWER CDC 05/10/24
PROJECT ID 82382
SUBSET 49 | TOTAL 99
SHEET 2230 | TOTAL 2696

CUY-90-16.28 (CCG3A)
MODEL: Sheet PAPERSIZE: 34x22 (in.) DATE: 3/28/2025 TIME: 7:46:29 AM USER: Rohit.Bk
pw:\\mb-us-pw.bentley.com:mb-us-pw-03\Documents\Cleveland_OH\01_Projects\ODOT\District12\82382\400-Engineering\Structures\SFN_1807839\Sheets\82382_SFN_1807839_SS014.dgn

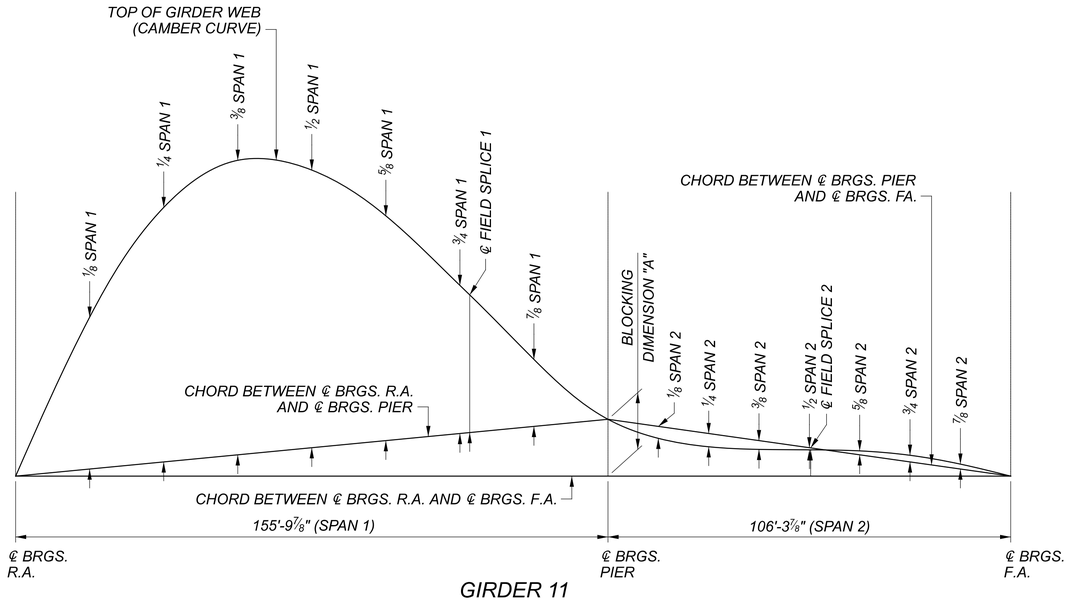

GIRDER 11

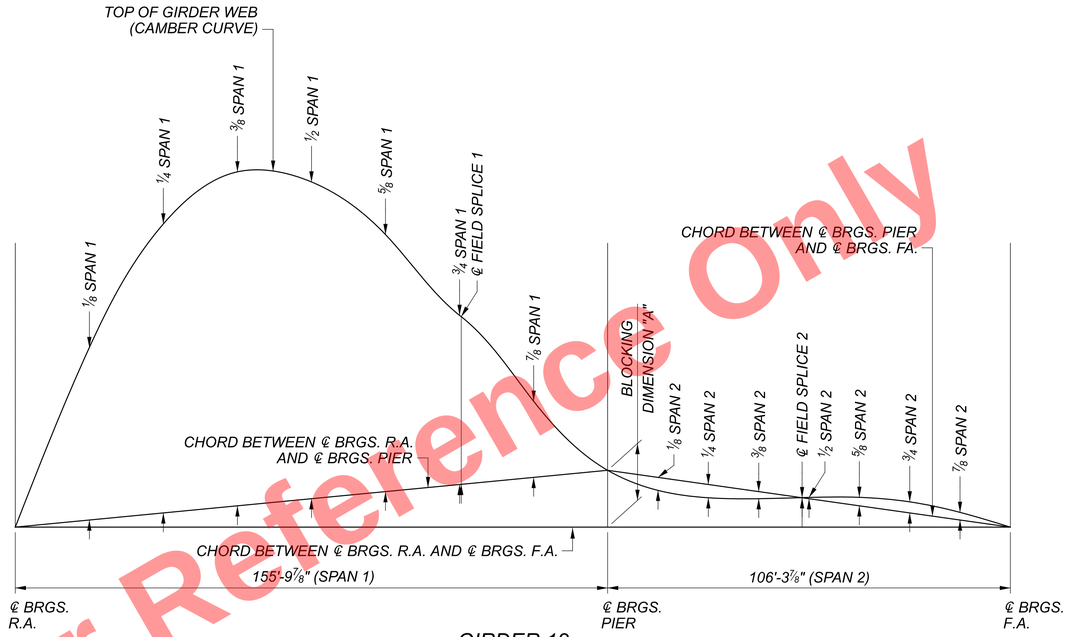

GIRDER 12

	DEFLECTION AND CAMBER (INCHES) - GIRDER 11									
	SPAN 1									
	CAMBER DESCRIPTION	CL BRGS R.A.	⅛ SPAN	¼ SPAN	⅜ SPAN	½ SPAN	⅝ SPAN	FIELD SPLICE 1	¾ SPAN	⅞ SPAN	CL BRGS PIER
GIRDER 11	DEFLECTION DUE TO WEIGHT OF STEEL	0	5/8	1 1/8	1 3/8	1 3/8	1 1/8	11/16	3/4	5/16	0
	DEFLECTION DUE TO REMAINING DEAD LOAD	0	2 1/2	4 3/8	5 1/2	5 1/2	4 9/16	2 13/16	2 15/16	1 9/16	0
	ADJUSTMENT DUE TO VERTICAL CURVE	0	1 7/8	2 7/8	2 7/8	2 5/16	1 3/4	1 1/16	1 3/16	9/16	0
	REQUIRED SHOP CAMBER	0	5	8 3/8	9 3/4	9 3/16	7 7/16	4 9/16	4 7/8	2 3/16	0

	DEFLECTION AND CAMBER (INCHES) - GIRDER 11									
	SPAN 2									
	CAMBER DESCRIPTION	CL BRGS PIER	⅛ SPAN	¼ SPAN	⅜ SPAN	FIELD SPLICE 2	½ SPAN	⅝ SPAN	¾ SPAN	⅞ SPAN	CL BRGS F.A.
GIRDER 11	DEFLECTION DUE TO WEIGHT OF STEEL	0	- 1/16	- 1/16	0	0	0	1/16	1/16	1/16	0
	DEFLECTION DUE TO REMAINING DEAD LOAD	0	- 5/16	- 3/8	- 5/16	- 1/16	- 1/16	1/16	3/16	1/8	0
	ADJUSTMENT DUE TO VERTICAL CURVE	0	0	0	0	0	0	0	0	0	0
	REQUIRED SHOP CAMBER	0	- 3/8	- 7/16	- 5/16	- 1/16	- 1/16	1/8	1/4	3/16	0

	DEFLECTION AND CAMBER (INCHES) - GIRDER 12									
	SPAN 1									
	CAMBER DESCRIPTION	CL BRGS R.A.	⅛ SPAN	¼ SPAN	⅜ SPAN	½ SPAN	⅝ SPAN	FIELD SPLICE 1	¾ SPAN	⅞ SPAN	CL BRGS PIER
GIRDER 12	DEFLECTION DUE TO WEIGHT OF STEEL	0	5/8	1 1/8	1 3/8	1 3/8	1 1/8	3/4	3/4	5/16	0
	DEFLECTION DUE TO REMAINING DEAD LOAD	0	2 7/8	5	6 3/16	6 3/16	5 1/8	3 5/16	3 3/8	1 7/16	0
	ADJUSTMENT DUE TO VERTICAL CURVE	0	1 13/16	2 3/4	2 11/16	2 1/8	1 5/8	1 1/16	1 1/16	9/16	0
	REQUIRED SHOP CAMBER	0	5 5/16	8 7/8	10 1/4	9 11/16	7 7/8	5 1/8	5 3/16	2 5/16	0

	DEFLECTION AND CAMBER (INCHES) - GIRDER 12									
	SPAN 2									
	CAMBER DESCRIPTION	CL BRGS PIER	⅛ SPAN	¼ SPAN	⅜ SPAN	FIELD SPLICE 2	½ SPAN	⅝ SPAN	¾ SPAN	⅞ SPAN	CL BRGS F.A.
GIRDER 12	DEFLECTION DUE TO WEIGHT OF STEEL	0	- 1/16	- 1/16	0	0	0	1/16	1/16	1/16	0
	DEFLECTION DUE TO REMAINING DEAD LOAD	0	- 5/16	- 3/8	- 3/16	0	1/16	3/16	1/4	3/16	0
	ADJUSTMENT DUE TO VERTICAL CURVE	0	0	0	0	0	0	0	0	0	0
	REQUIRED SHOP CAMBER	0	- 3/8	- 7/16	- 3/16	0	1/16	1/4	5/16	1/4	0

	BLOCKING DIMENSIONS
	DIM. "A"
GIRDER 11	1 7/8"
GIRDER 12	1 3/4"

CAMBER SIGN CONVENTION:

POSITIVE UPWARD
NEGATIVE DOWNWARD

NOTES:

1. FOR GIRDER ELEVATION SEE SHEET 43 / 99.

Preliminary Plans - For Reference Only

DEFLECTION AND CAMBER TABLE (6 OF 7)
CUY-90-1678 (BRIDGE 13)
CR-710 (E. 22ND ST.) OVER I.R. 90

SFN 1807839
DESIGN AGENCY
Michael Baker INTERNATIONAL
DESIGNER JCC | CHECKER JTB
REVIEWER CDC 05/10/24
PROJECT ID 82382
SUBSET 50 | TOTAL 99
SHEET 2231 | TOTAL 2696

CUY-90-16.28 (CCG3A)

MODEL: Sheet PAPERSIZE: 34x22 (in.) DATE: 3/28/2025 TIME: 7:46:35 AM USER: Rohit.Bk
pw:\\mb-us-pw.bentley.com:mb-us-pw-03\Documents\Cleveland_OH\01_Projects\ODOT\District12\82382400-Engineering\Structures\SFN_1807839\Sheets\82382_SFN_1807839_SS015.dgn

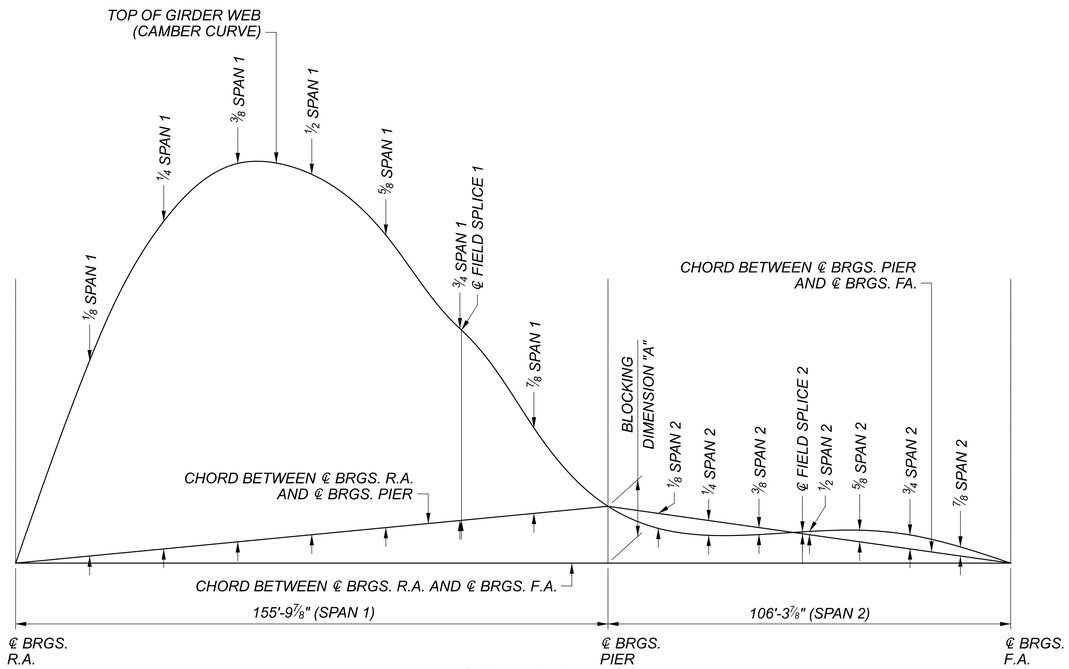

GIRDER 13

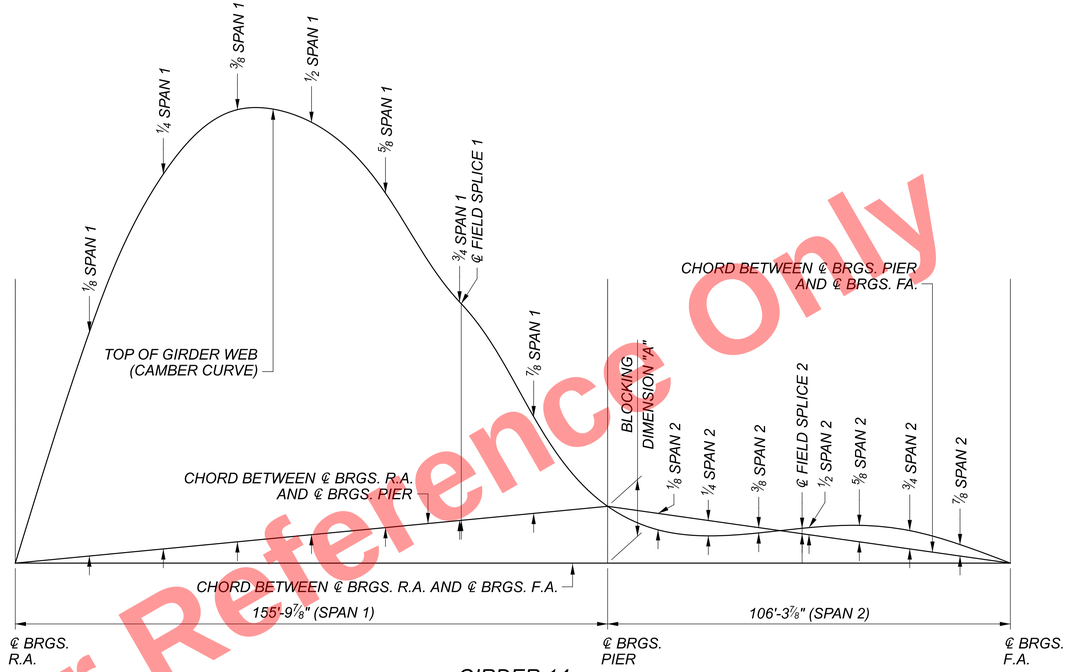

GIRDER 14

	DEFLECTION AND CAMBER (INCHES) - GIRDER 13									
	SPAN 1									
	CAMBER DESCRIPTION	CL BRGS R.A.	⅛ SPAN	¼ SPAN	⅜ SPAN	½ SPAN	⅝ SPAN	FIELD SPLICE 1	¾ SPAN	⅞ SPAN	CL BRGS PIER
GIRDER 13	DEFLECTION DUE TO WEIGHT OF STEEL	0	⅝	1 ⅛	1 ⅜	1 ⅜	1 ⅛	¾	¾	⅝	0
	DEFLECTION DUE TO REMAINING DEAD LOAD	0	3 ⅛	5 ½	6 13/16	6 13/16	5 ⅝	3 ⅝	3 11/16	1 ⅝	0
	ADJUSTMENT DUE TO VERTICAL CURVE	0	1 ¾	2 ⅝	2 ½	2	1 ½	1	1	½	0
	REQUIRED SHOP CAMBER	0	5 ½	9 ¼	10 11/16	10 3/16	8 ¼	5 ⅜	5 7/16	2 7/16	0

	DEFLECTION AND CAMBER (INCHES) - GIRDER 13									
	SPAN 2									
	CAMBER DESCRIPTION	CL BRGS PIER	⅛ SPAN	¼ SPAN	⅜ SPAN	FIELD SPLICE 2	½ SPAN	⅝ SPAN	¾ SPAN	⅞ SPAN	CL BRGS F.A.
GIRDER 13	DEFLECTION DUE TO WEIGHT OF STEEL	0	- 1/16	- 1/16	0	0	0	1/16	1/16	1/16	0
	DEFLECTION DUE TO REMAINING DEAD LOAD	0	- ⅜	- ⅜	- 3/16	1/16	⅛	¼	5/16	3/16	0
	ADJUSTMENT DUE TO VERTICAL CURVE	0	0	0	0	0	0	0	0	0	0
	REQUIRED SHOP CAMBER	0	- 7/16	- 7/16	- 3/16	1/16	⅛	5/16	⅜	¼	0

	DEFLECTION AND CAMBER (INCHES) - GIRDER 14									
	SPAN 1									
	CAMBER DESCRIPTION	CL BRGS R.A.	⅛ SPAN	¼ SPAN	⅜ SPAN	½ SPAN	⅝ SPAN	FIELD SPLICE 1	¾ SPAN	⅞ SPAN	CL BRGS PIER
GIRDER 14	DEFLECTION DUE TO WEIGHT OF STEEL	0	⅝	1 1/16	1 5/16	1 5/16	1 ⅛	11/16	¾	5/16	0
	DEFLECTION DUE TO REMAINING DEAD LOAD	0	3 ½	6 3/16	7 9/16	7 ½	6 ⅛	4	3 15/16	1 ¾	0
	ADJUSTMENT DUE TO VERTICAL CURVE	0	1 11/16	2 7/16	2 5/16	1 ⅞	1 ⅜	15/16	15/16	7/16	0
	REQUIRED SHOP CAMBER	0	5 13/16	9 11/16	11 3/16	10 11/16	8 ⅝	5 ⅝	5 ⅝	2 ½	0

	DEFLECTION AND CAMBER (INCHES) - GIRDER 14									
	SPAN 2									
	CAMBER DESCRIPTION	CL BRGS PIER	⅛ SPAN	¼ SPAN	⅜ SPAN	FIELD SPLICE 2	½ SPAN	⅝ SPAN	¾ SPAN	⅞ SPAN	CL BRGS F.A.
GIRDER 14	DEFLECTION DUE TO WEIGHT OF STEEL	0	- 1/16	- 1/16	0	0	0	1/16	1/16	1/16	0
	DEFLECTION DUE TO REMAINING DEAD LOAD	0	- ⅜	- 5/16	- ⅛	⅛	3/16	⅜	½	5/16	0
	ADJUSTMENT DUE TO VERTICAL CURVE	0	0	0	0	0	0	0	- 1/16	- 1/16	0
	REQUIRED SHOP CAMBER	0	- 7/16	- ⅜	- ⅛	⅛	3/16	7/16	½	5/16	0

	BLOCKING DIMENSIONS
	DIM. "A"
GIRDER 13	1 5/8"
GIRDER 14	1 1/2"

CAMBER SIGN CONVENTION:

POSITIVE UPWARD
NEGATIVE DOWNWARD

NOTES:

1. *FOR GIRDER ELEVATION SEE SHEET 43 / 99.*

Preliminary Plans - For Reference Only

DEFLECTION AND CAMBER TABLE (7 OF 7)
CUY-90-1678 (BRIDGE 13)
CR-710 (E. 22ND ST.) OVER I.R. 90

SFN 1807839
DESIGN AGENCY
Michael Baker INTERNATIONAL
DESIGNER JCC | CHECKER JTB
REVIEWER CDC 05/10/24
PROJECT ID 82382
SUBSET 51 | TOTAL 99
SHEET 2232 | TOTAL 2696

CUY-90-16.28 (CCG3A)
MODEL: Sheet PAPERSIZE: 34x22 (in.) DATE: 3/28/2025 TIME: 7:46:45 AM USER: RohitBk
pw:\\mb-us-pw.bentley.com:mb-us-pw-03\Documents\Cleveland_OH\01_Projects\ODOT\District12\82382\400-Engineering\Structures\SFN_1807839\Sheets\82382_SFN_1807839_SS017.dgn

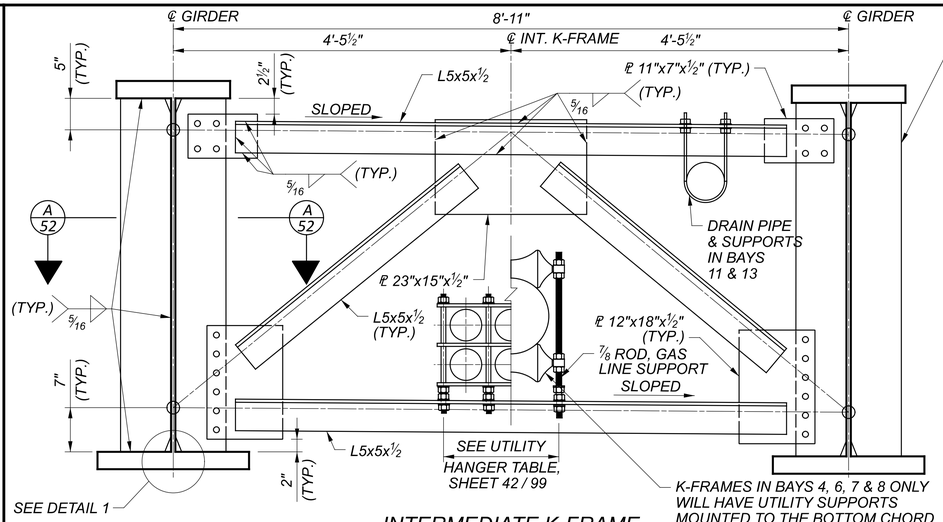

INTERMEDIATE K-FRAME

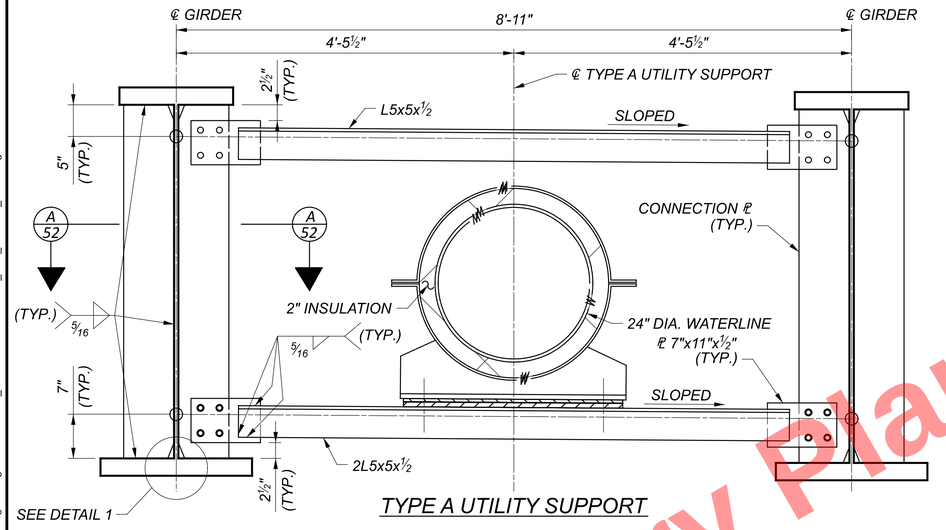

TYPE A UTILITY SUPPORT

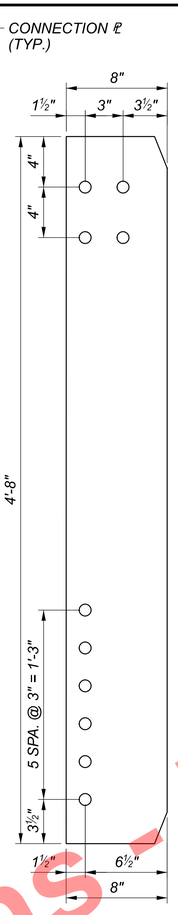

INTERMEDIATE K-FRAME CONNECTION PLATE

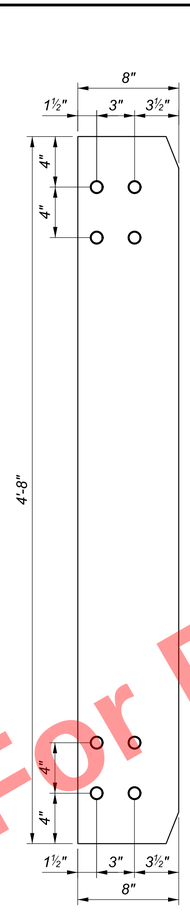

TYPE A UTILITY SUPPORT CONNECTION PLATE



TYPE B UTILITY SUPPORT CONNECTION PLATE

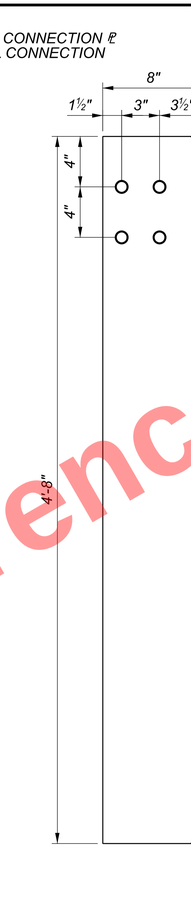

TYPE C DRAIN PIPE SUPPORT CONNECTION PLATE

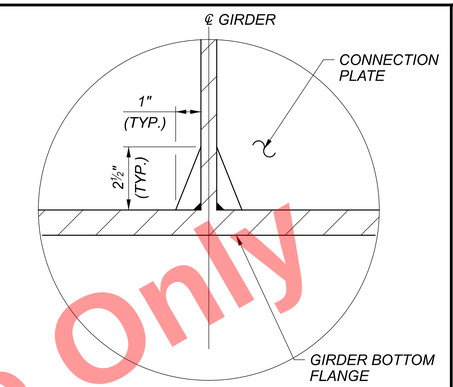

DETAIL 1

(TYP. BOTH TOP AND BOTTOM FLANGES. WELD HOLDBACKS SHALL BE ¼" ±⅛")

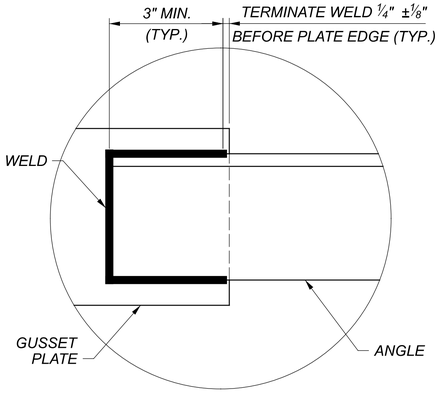

DETAIL 2

(TYP. ALL WELDED ANGLE CONNECTIONS)

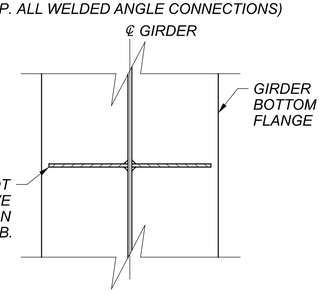

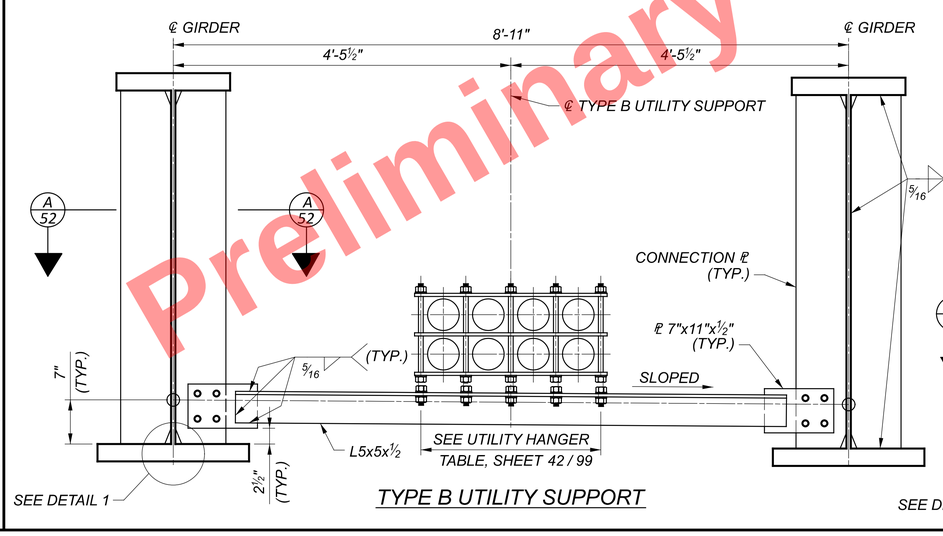

TYPE B UTILITY SUPPORT

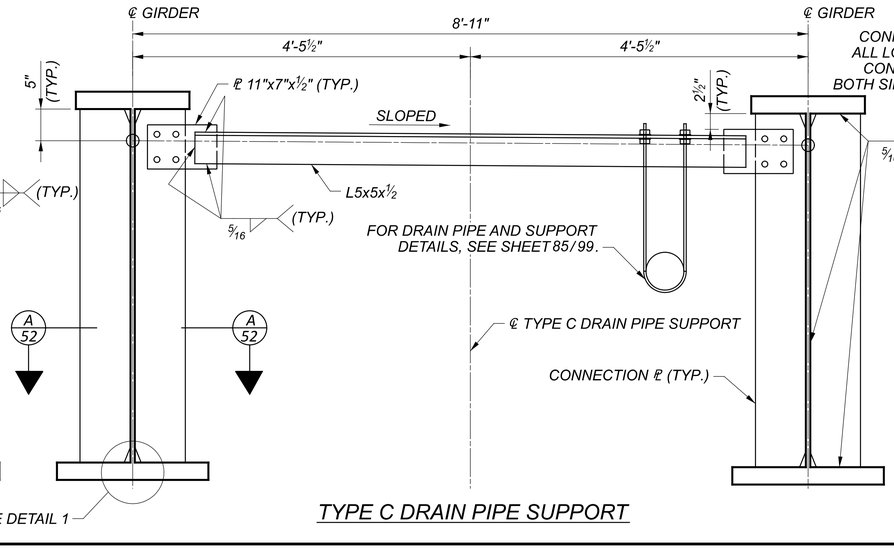

TYPE C DRAIN PIPE SUPPORT

NOTES:

1. ALL STEEL IS ASTM 709 GRADE 50, UNLESS NOTED OTHERWISE.
2. HIGH STRENGTH BOLTS SHALL BE 1" DIAMETER, ASTM F3125 GRADE A325,TYPE 1, GALVANIZED. ALL BOLTS SHALL BE SIZED TO EXCLUDE THREADS FROM SHEAR PLANES.
3. ALL BOLT HOLES SHALL BE 1⅛" DIAMETER.
4. PREPARE FAYING SURFACES FOR ALL BOLTED CONNECTIONS TO PROVIDE CLASS B SURFACES.
5. MINIMUM EDGE DISTANCE FOR BOLTS SHALL BE 1½".
6. CONTRACTOR TO COORDINATE UTILITY SUPPORT INSTALLATION DETAILS WITH UTILITY OWNERS. PAYMENT FOR FIELD DRILLING BOLT HOLES AND INSTALLATION OF UTILITY SUPPORTS IS INCLUDED WITH ITEM 690.

Preliminary Plans - For Reference Only

INTERMEDIATE K-FRAME AND UTILITY SUPPORT DETAILS

CUY-90-1678 (BRIDGE 13)
CR-710 (E. 22ND ST.) OVER I.R. 90

SFN	1807839
DESIGN AGENCY	Michael Baker INTERNATIONAL
DESIGNER	JBT
CHECKER	BWC
REVIEWER	CDC 05/10/24
PROJECT ID	82382
SUBSET	52
TOTAL	99
SHEET	2233
TOTAL	2696

CUY-90-16.28 (CCG3A)

MODEL: Sheet PAPERSIZE: 34x22 (in.) DATE: 3/28/2025 TIME: 7:46:58 AM USER: RohitLBk
pw:\\mb-us-pw.bentley.com:mb-us-pw-03\Documents\Cleveland_OH01_Projects\ODOT\District12\82382\400-Engineering\Structures\SFN_1807839\Sheets\82382_SFN_1807839_SS005.dgn

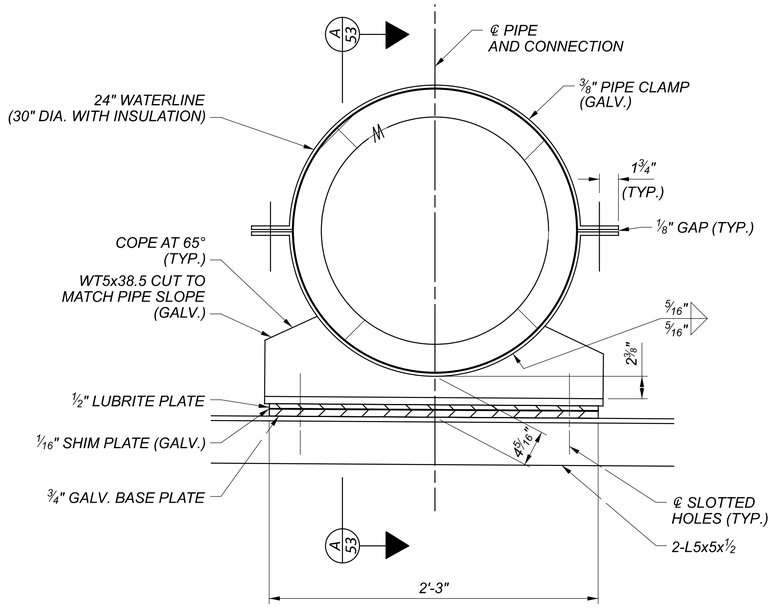

24" WATERLINE (30" DIAMETER WITH INSULATION)

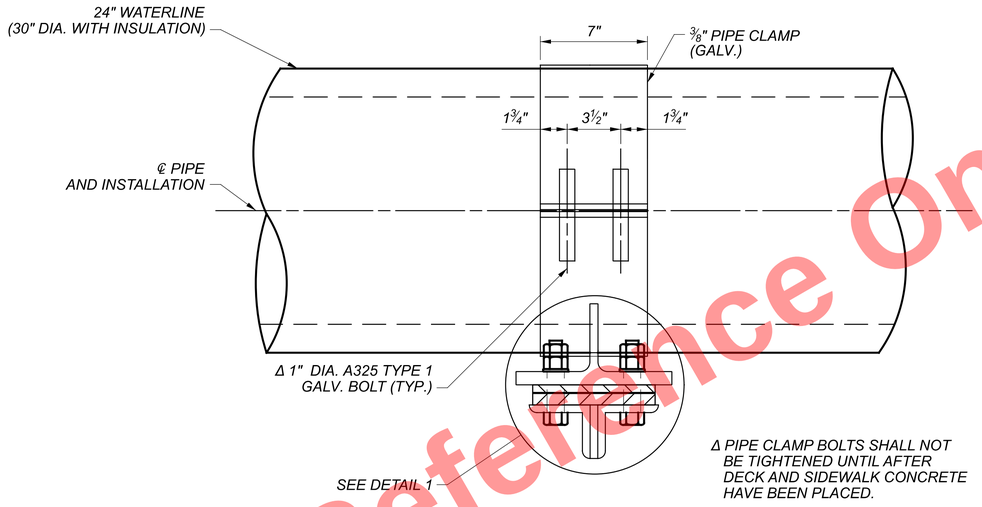

Δ PIPE CLAMP BOLTS SHALL NOT BE TIGHTENED UNTIL AFTER DECK AND SIDEWALK CONCRETE HAVE BEEN PLACED.

A/53 SECTION

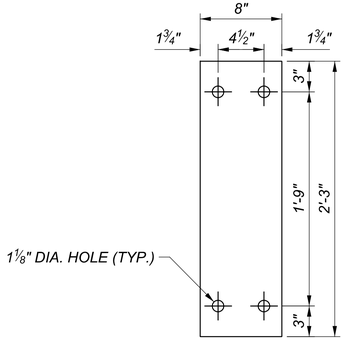

BASE PLATE, LUBRITE PLATE AND SHIM PLATE

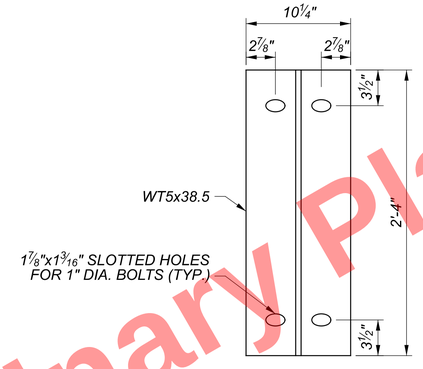

PIPE SUPPORT BASE

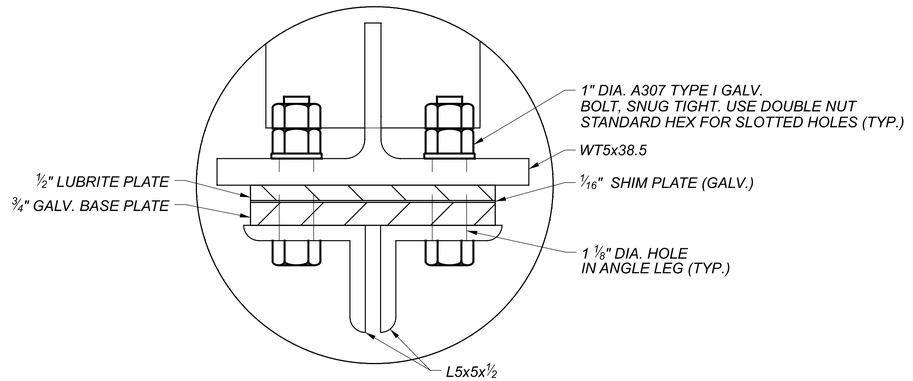

DETAIL 1

NOTES:

1. WORK THIS SHEET WITH SHEETS 42 & 52/99.
2. ALL UTILITY SUPPORT MATERIAL SHALL CONFORM TO ASTM A709 GRADE 50, UNLESS NOTED OTHERWISE.
3. HIGH STRENGTH BOLTS SHALL BE 1" DIAMETER , ASTM F3125, GRADE A325, TYPE 1, GALVANIZED. ALL BOLTS SHALL BE SIZED TO EXCLUDE THREADS FROM SHEAR PLANES.
4. ALL BOLT HOLES SHALL BE 1 1/8" DIAMETER FOR 1" DIA. BOLTS.
5. CONTRACTOR TO COORDINATE UTILITY SUPPORT INSTALLATION DETAILS WITH UTILITY OWNERS. PAYMENT FOR FIELD DRILLING BOLT HOLES AND INSTALLATION OF UTILITY SUPPORTS IS INCLUDED WITH ITEM 690.

Preliminary Plans - For Reference Only

UTILITY SUPPORT DETAILS
CUY-90-1678 (BRIDGE 13)
CR-710 (E. 22ND ST.) OVER I.R. 90

SFN	1807839
DESIGN AGENCY	Michael Baker INTERNATIONAL
DESIGNER	ZES
CHECKER	ETB
REVIEWER	CDC 05/10/24
PROJECT ID	82382
SUBSET	53
TOTAL	99
SHEET	2234
TOTAL	2696

CUY-90-16.28 (CCG3A)
MODEL: Sheet PAPERSIZE: 34x22 (in.) DATE: 3/28/2025 TIME: 7:47:08 AM USER: RohitLBk
pw:\\mb-us-pw.bentley.com:mb-us-pw-03\Documents\Cleveland_OH01_Projects\ODOT\District12\82382400-Engineering\Structures\SFN_1807839\Sheets\82382_SFN_1807839_SS018.dgn

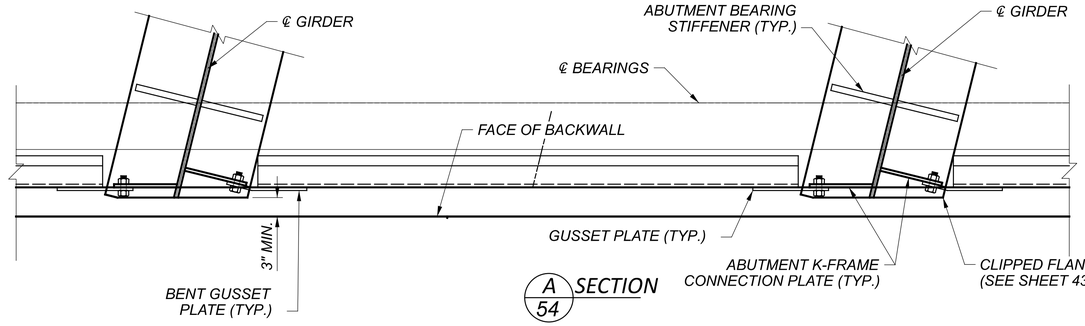

A 54 SECTION

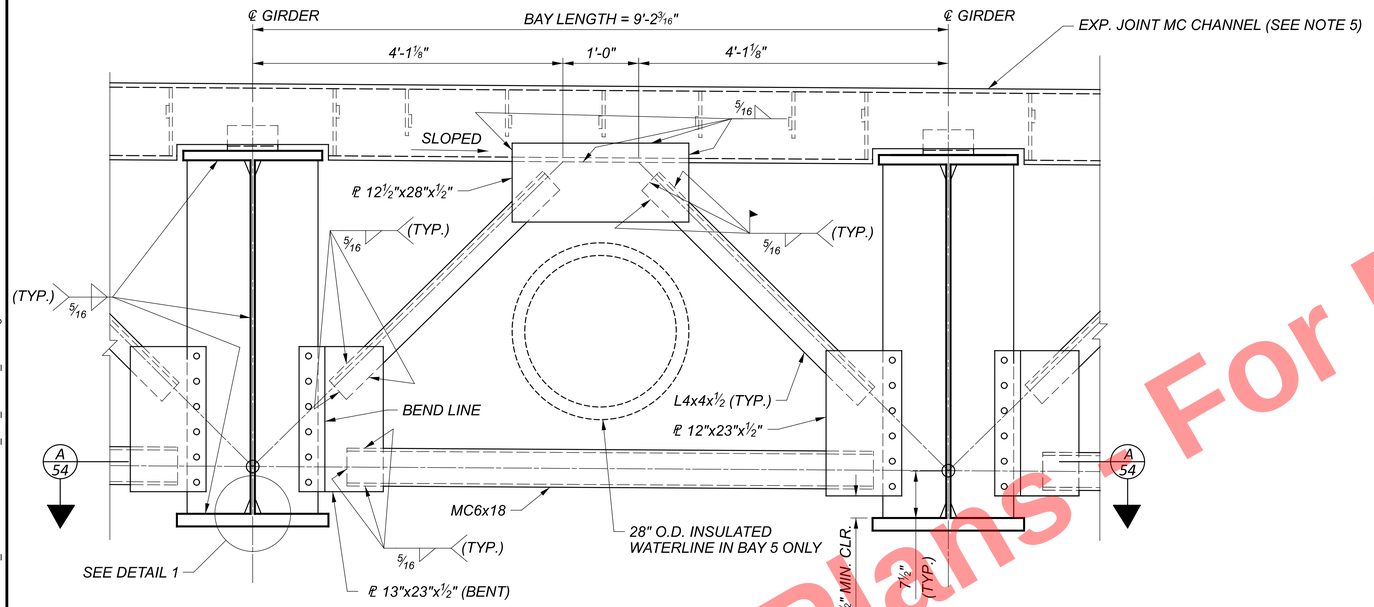

ABUTMENT K-FRAME
(VIEW LOOKING INTO SPAN)

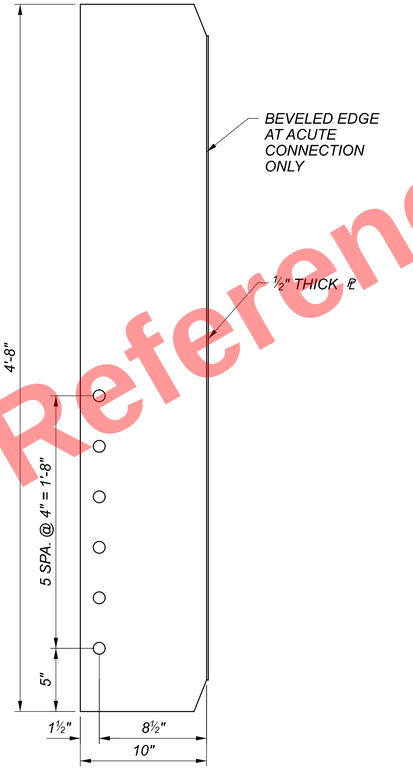

ABUTMENT K-FRAME CONNECTION PLATE

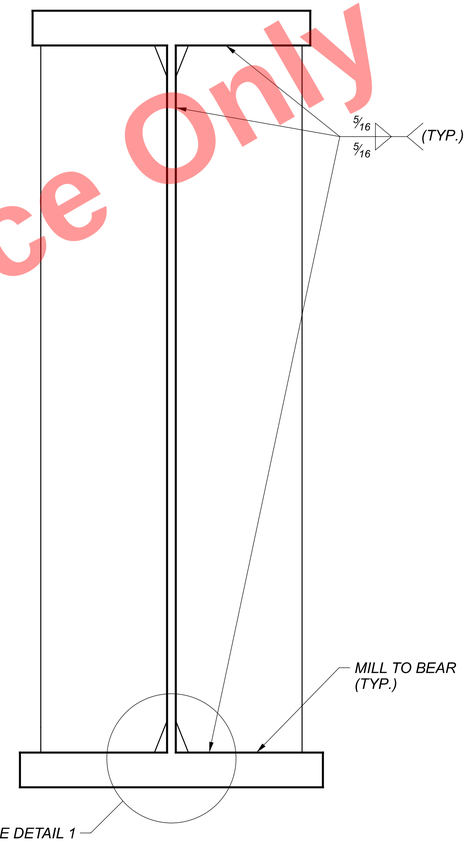

ABUTMENT BEARING STIFFENER

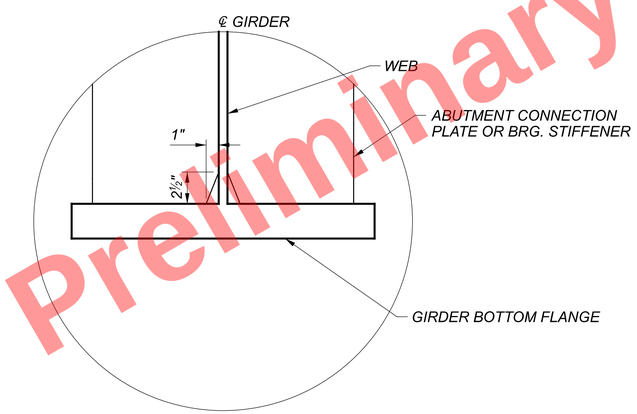

DETAIL 1
(TYP. BOTH TOP AND BOTTOM FLANGES. WELD HOLDBACKS SHALL BE 1/4" ±1/8")

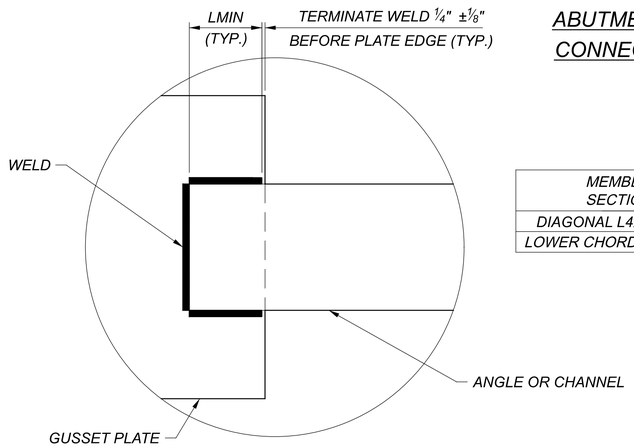

DETAIL 2
(TYP. ALL WELDED ANGLE AND CHANNEL TO GUSSET CONNECTIONS)

MEMBER SECTION	MINIMUM WELD LENGTH, LMIN
DIAGONAL L4x4x1/2	4 1/2"
LOWER CHORD MC6x18	4"

NOTES:

1. SEE SHEET 43/99 FOR GIRDER END DETAILS AND DIMENSIONS, AND SEE SHEET 87/99 FOR EXPANSION JOINT DETAILS.
2. ALL STEEL IS ASTM 709 GRADE 50, UNLESS NOTED OTHERWISE.
3. HIGH STRENGTH BOLTS SHALL BE 1" DIAMETER, ASTM F3125 GRADE A325, TYPE 1, GALVANIZED. ALL BOLTS SHALL BE SIZED TO EXCLUDE THREADS FROM SHEAR PLANES. ALL BOLT HOLES SHALL BE 1 1/8" DIAMETER.
4. PREPARE FAYING SURFACES OF ABUTMENT K-FRAME BOLTED CONNECTIONS TO PROVIDE CLASS B SURFACES.
5. THE TOP CHORD MC CHANNEL WITH ATTACHED CHANNEL WEB PLATES IS PART OF THE EXPANSION JOINT SYSTEM. REFER TO EXJ-4-87, DATED 7-21-23, FOR DETAILS, MATERIAL AND COATING REQUIREMENTS.
6. MINIMUM EDGE DISTANCE FOR BOLTS SHALL BE 1 1/2".

Preliminary Plans - For Reference Only

ABUTMENT K-FRAME DETAILS
CUY-90-1678 (BRIDGE 13)
CR-710 (E. 22ND ST.) OVER I.R. 90

SFN 1807839
DESIGN AGENCY Michael Baker INTERNATIONAL
DESIGNER JBT | CHECKER ETB
REVIEWER CDC 05/10/24
PROJECT ID 82382
SUBSET 54 | TOTAL 99
SHEET 2235 | TOTAL 2696

CUY-90-16.28 (CCG3A)

MODEL: Sheet PAPERSIZE: 34x22 (in.) DATE: 3/28/2025 TIME: 7:47:22 AM USER: RohitLBk
pw:\\mb-us-pw.bentley.com:mb-us-pw-03\Documents\Cleveland_OH\01_Projects\ODOT\District12\82382400-Engineering\Structures\SFN_1807839\Sheets\82382_SFN_1807839_SS004.dgn

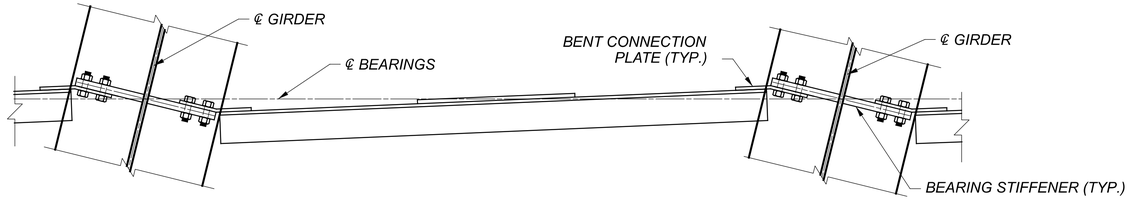

A/55 SECTION

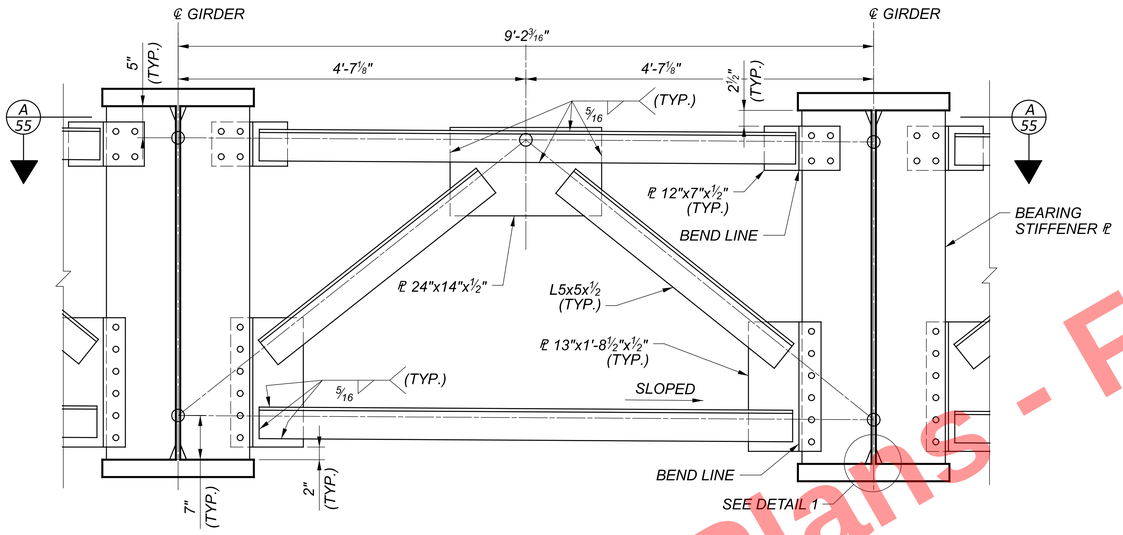

PIER K-FRAME

(DIAGONAL ANGLES NOT PRESENT IN BAY 5)

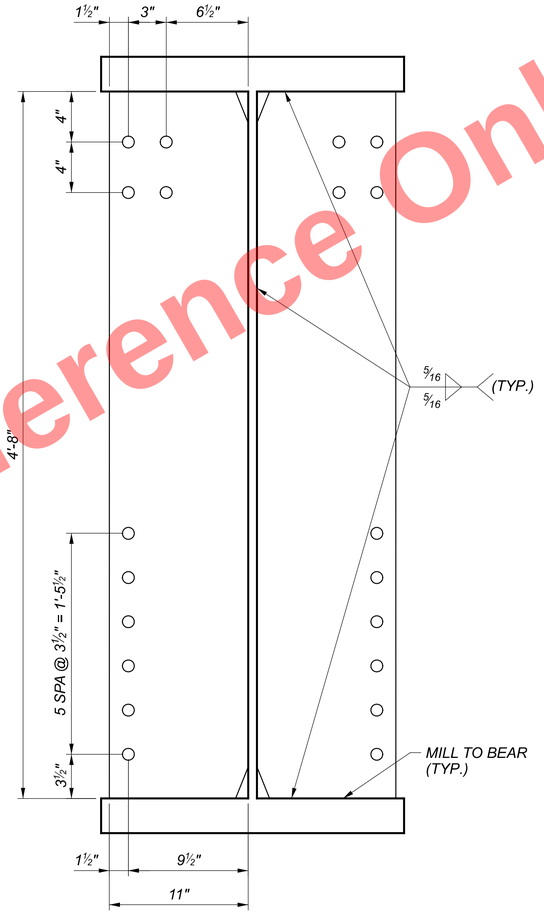

PIER BEARING STIFFENER

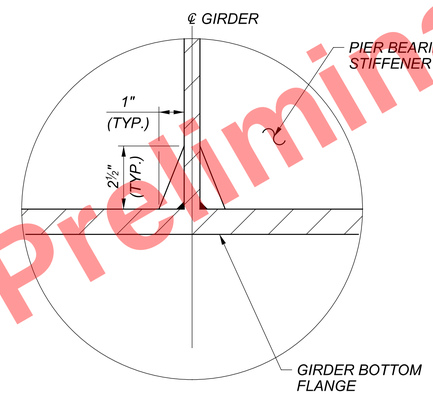

DETAIL 1

(TYP. BOTH TOP AND BOTTOM FLANGES WELD HOLDBACKS SHALL BE 1/4" ±1/8")

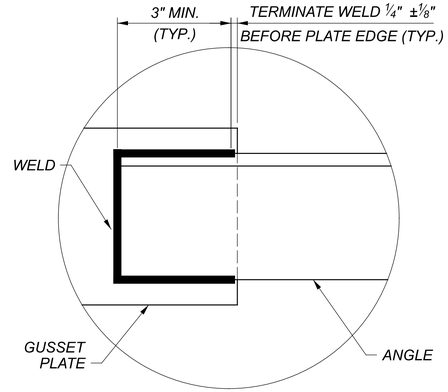

DETAIL 2

(TYP. ALL WELDED ANGLE CONNECTIONS)

NOTES:

1. ALL STEEL IS ASTM 709 GRADE 50, UNLESS NOTED OTHERWISE.
2. HIGH STRENGTH BOLTS SHALL BE 1" DIAMETER, ASTM F3125 GRADE ASTM A325, TYPE 1, GALVANIZED. ALL BOLTS SHALL BE SIZED TO EXCLUDE THREADS FROM THE SHEAR PLANE.
3. ALL BOLT HOLES SHALL BE 1 1/8" DIAMETER.
4. PREPARE FAYING SURFACES FOR INTERMEDIATE K-FRAME BOLTED CONNECTIONS TO PROVIDE CLASS B SURFACES.
5. MINIMUM EDGE DISTANCE FOR BOLTS SHALL BE 1 1/2".

Preliminary Plans - For Reference Only

PIER K-FRAME DETAILS
CUY-90-1678 (BRIDGE 13)
CR-710 (E. 22ND ST.) OVER I.R. 90

SFN 1807839
DESIGN AGENCY
Michael Baker INTERNATIONAL
DESIGNER JBT | CHECKER ETB
REVIEWER CDC 05/10/24
PROJECT ID 82382
SUBSET 55 | TOTAL 99
SHEET 2236 | TOTAL 2696

CTY-RTE-SECTION

MODEL: Sheet PAPERSIZE: 34x22 (in.) DATE: 3/28/2025 TIME: 7:48:05 AM USER: RohitLBk
pw:\\mb-us-pw.bentley.com:mb-us-pw-03\Documents\Cleveland_OH\01_Projects\ODOT\District12\82382\400-Engineering\Structures\SFN_1807839\Sheets\82382_SFN_1807839_SS016.dgn



BEARING SCHEMATIC LAYOUT

LEGEND:

= NON-GUIDED EXPANSION BEARING

= GUIDED EXPANSION BEARING

= FIXED BEARING

UNFACTORED BEARING DESIGN LOADS (KIPS)			
	R.A.	PIER	F.A.
DEAD LOAD	283	813	152
LIVE LOAD	35	79	12
TOTAL DESIGN LOAD	318	892	164

NOTES:

1. THE ELASTOMER SHALL HAVE A HARDNESS OF 50 DUROMETER. THE BEARINGS WERE DESIGNED IN ACCORDANCE WITH SECTION 14.7.6 (METHOD A) OF THE AASHTO LRFD DESIGN SPECIFICATIONS. THE LONG-TERM COMPRESSION PROOF LOAD TEST (AASHTO STANDARD SPECIFICATIONS FOR HIGHWAY BRIDGES, DIVISION II, SECTION 18.7.2.6) IS NOT REQUIRED.
2. THE STEEL LOAD PLATE SHALL BE ASTM A709 GRADE 50 STEEL AND SHALL BE COATED IN ACCORDANCE WITH ITEMS 513 AND 514.
3. THE STEEL LOAD PLATE SHALL BE BONDED BY VULCANIZATION TO THE ELASTOMER DURING THE MOLDING PROCESS. CONTROL WELDING OF THE LOAD PLATE TO THE SUPERSTRUCTURE SO THAT THE PLATE TEMPERATURE AT THE ELASTOMER BONDED SURFACE DOES NOT EXCEED 300°F AS DETERMINED BY THE USE OF PYROMETRIC STICKS OR OTHER TEMPERATURE MONITORING DEVICES.
4. ALL BEARINGS SHALL BE MARKED PRIOR TO SHIPPING. THE MARKS SHALL INCLUDE THE BEARING LOCATION ON THE BRIDGE, AND A DIRECTION ARROW THAT POINTS UP-STATION. ALL MARKS SHALL BE PERMANENT AND BE VISIBLE AFTER THE BEARING IS INSTALLED.
5. FURNISH AND INSTALL ELASTOMERIC BEARINGS PERS ITEM 516 - ELASTOMERIC BEARING WITH INTERNAL LAMINATES AND LOAD PLATE.
6. ANCHOR RODS SHALL BE ASTM F1554, GRADE 105. NUTS SHALL CONFORM TO ASTM A563 FOR APPROPRIATE GRADE AND SIZE OF ANCHOR BOLT. WASHERS SHALL CONFORM TO ASTM F436.
7. INSTALL LOWER ANCHOR ROD NUT IN CONTACT WITH TOP PLATE AND THEN BACK OFF ½ TURN. INSTALL UPPER NUT SNUG TIGHT TO PREVENT LOWER NUTS FROM LOOSENING.
8. FOR MORE DETAILS SEE SHEET 57 /99

Preliminary Plans - Not For Reference Only

ELASTOMERIC BEARING DETAILS (1 OF 2)
CUY-90-1678 (BRIDGE 13)
CR-710 (E. 22ND ST.) OVER I.R. 90

SFN 1807839
DESIGN AGENCY
Michael Baker INTERNATIONAL
DESIGNER EM | CHECKER ETB
REVIEWER CDC 05/10/24
PROJECT ID 82382
SUBSET 56 | TOTAL 99
SHEET 2237 | TOTAL 2696

CUY-90-16.28 (CCG3A)

MODEL: Sheet (1 of 2) PAPERSIZE: 34x22 (in.) DATE: 3/28/2025 TIME: 7:48:20 AM USER: Rohit.Bk
pw:\\mb-us-pw.bentley.com:mb-us-pw-03\Documents\Cleveland_OH01_Projects\ODOT\District12\82382400-Engineering\Structures\SFN_1807839\Sheets\82382_SFN_1807839_SB001.dgn

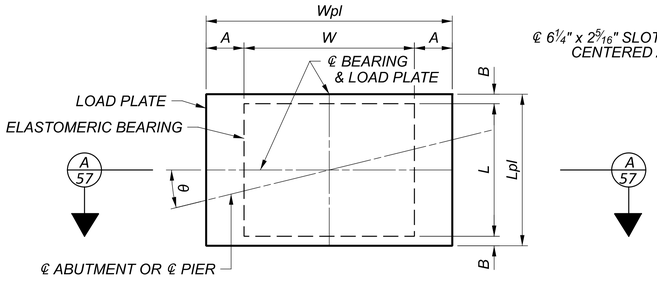

NON-GUIDED BEARING PLAN VIEW

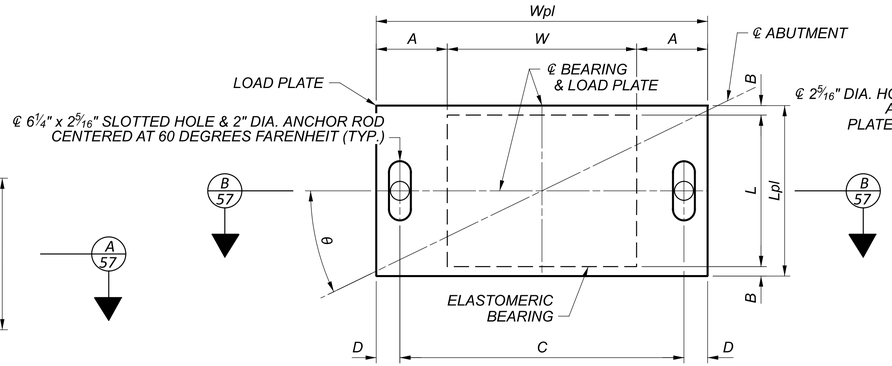

GUIDED BEARING PLAN VIEW

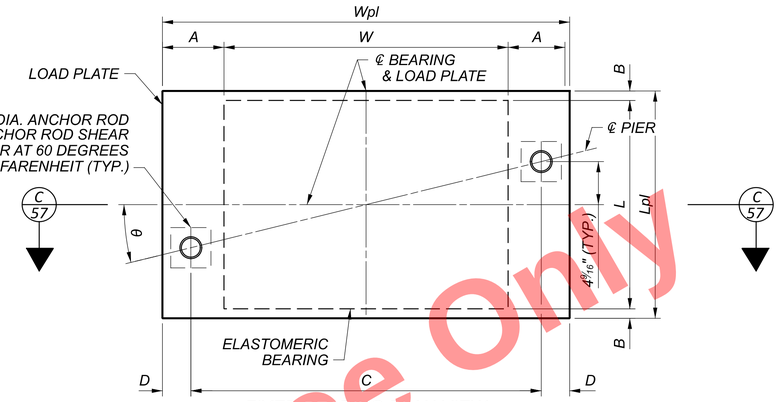

FIXED BEARING PLAN VIEW

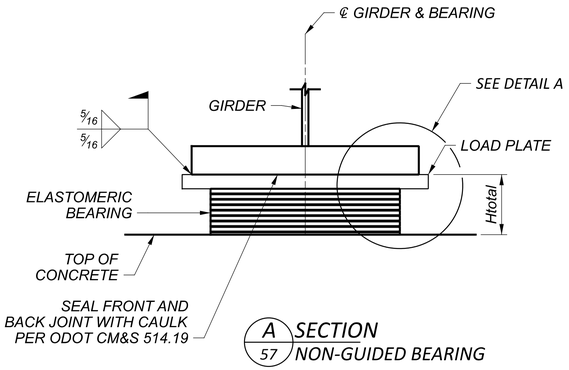

A 57 SECTION NON-GUIDED BEARING

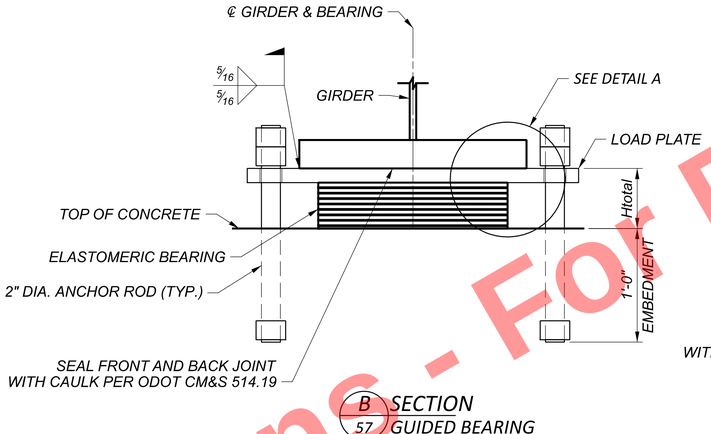

B 57 SECTION GUIDED BEARING

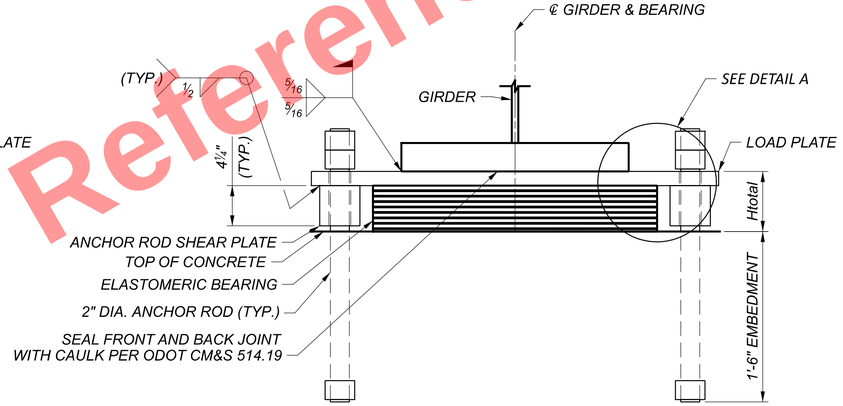

C 57 SECTION FIXED BEARING

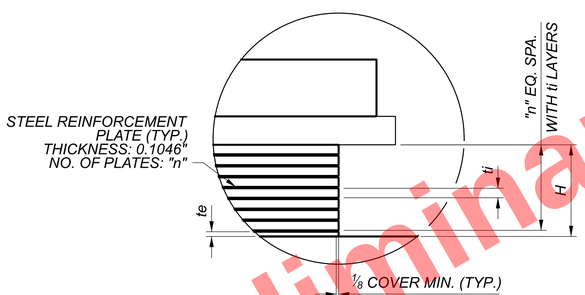

DETAIL A
ANCHOR ROD DETAILS NOT SHOWN FOR CLARITY

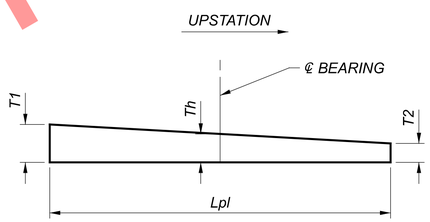

LOAD PLATE BEVEL
ALONG Lpl

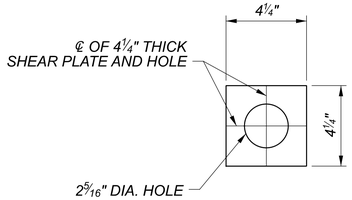

ANCHOR ROD SHEAR PLATE DETAIL

BEARING DATA									
BEARING LOCATION		W	L	te	ti	n	H	Htotal	θ
RA	NON-GUIDED	1'-8"	1'-5"	1/4"	3/8"	8	4.09"	SEE TOTAL BEARING HEIGHT TABLE	13°48'28"
	GUIDED								
PIER	NON-GUIDED	2'-5"	2'-2"	1/4"	1/2"	9	5.69"		13°48'28"
	FIXED								
FA	NON-GUIDED	1'-8"	0'-10"	1/4"	3/8"	5	2.65"		13°48'28"
	GUIDED								

LOAD PLATE DIMENSIONS								
BEARING LOCATION		A	B	C	D	Wpl	Lpl	T1, Th, T2
RA	NON-GUIDED	2"	0.5"	-	-	2'-0"	1'-6"	SEE LOAD PLATE THICKNESS TABLE
	GUIDED	7.5"		2'-6"	2 1/2"	2'-11"		
PIER	NON-GUIDED	1"	0.5"	-	-	2'-7"	2'-3"	
	FIXED	7"		3'-0"	3 1/2"	3'-7"		
FA	NON-GUIDED	2"	0.5"	-	-	2'-0"	0'-11"	
	GUIDED	7.5"		2'-8"	1 1/2"	2'-11"		

LOAD PLATE THICKNESS AND TOTAL BEARING HEIGHT TABLE					
	GIRDER	T1	Th	T2	Htotal
REAR ABUTMENT	G1, G4, G5, G6, G7, G8, G9, G10	1 7/16"	1 1/2"	1 9/16"	5.59"
	G2, G12	1 11/16"	1 3/4"	1 13/16"	5.84"
	G3, G14	1 15/16"	2"	2 1/16"	6.09"
	G11	1 9/16"	1 5/8"	1 11/16"	5.71"
	G13	1 13/16"	1 7/8"	1 15/16"	5.96"
PIER	GIRDER	T1	Th	T2	Htotal
	G1, G12	3"	2 7/8"	2 3/4"	8.57"
	G2, G13	2 13/16"	2 11/16"	2 9/16"	8.38"
	G3, G4, G5, G6, G7, G8, G9, G14	2 5/8"	2 1/2"	2 3/8"	8.19"
	G10	3 3/8"	3 1/4"	3 1/8"	8.94"
	G11	3 3/16"	3 1/16"	2 15/16"	8.75"
FORWARD ABUTMENT	GIRDER	T1	Th	T2	Htotal
	G1, G12	1 15/16"	1 7/8"	1 13/16"	4.52"
	G2, G13	1 3/4"	1 11/16"	1 5/8"	4.34"
	G3, G4, G5, G6, G7, G8, G9, G14	1 9/16"	1 1/2"	1 7/16"	4.15"
	G10	2 5/16"	2 1/4"	2 3/16"	4.90"
	G11	2 1/8"	2 1/16"	2"	4.71"

NOTES:

1. FOR MORE DETAILS AND NOTES SEE SHEET 56 / 99
2. BASIS OF PAYMENT: THE UNIT BID PRICE INCLUDES ALL MATERIALS, LABOR, TESTING, AND INCIDENTALS NECESSARY TO FURNISH AND INSTALL LAMINATED ELASTOMERIC BEARINGS INCLUDING STEEL LOAD PLATES AND ANCHOR RODS. PAYMENT WILL BE INCLUDED WITH THE APPROPRIATE 516 ITEM.

Preliminary Plans - For Reference Only

ELASTOMERIC BEARING DETAILS (2 OF 2)
CUY-90-1678 (BRIDGE 13)
CR-710 (E. 22ND ST.) OVER I.R. 90

SFN 1807839
DESIGN AGENCY
Michael Baker INTERNATIONAL
DESIGNER EM | CHECKER ETB
REVIEWER CDC 05/10/24
PROJECT ID 82382
SUBSET 57 | TOTAL 99
SHEET 2238 | TOTAL 2696

CUY-90-16.28 (CCG3A)

MODEL: Sheet (2 of 2) PAPERSIZE: 34x22 (in.) DATE: 3/28/2025 TIME: 7:48:22 AM USER: Rohit.Bk
pw:\\mb-us-pw.bentley.com:mb-us-pw-03\Documents\Cleveland_OH\01_Projects\ODOT\District12\82382\400-Engineering\Structures\SFN_1807839\Sheets\82382_Sheets\82382_SFN_1807839_SB001.dgn

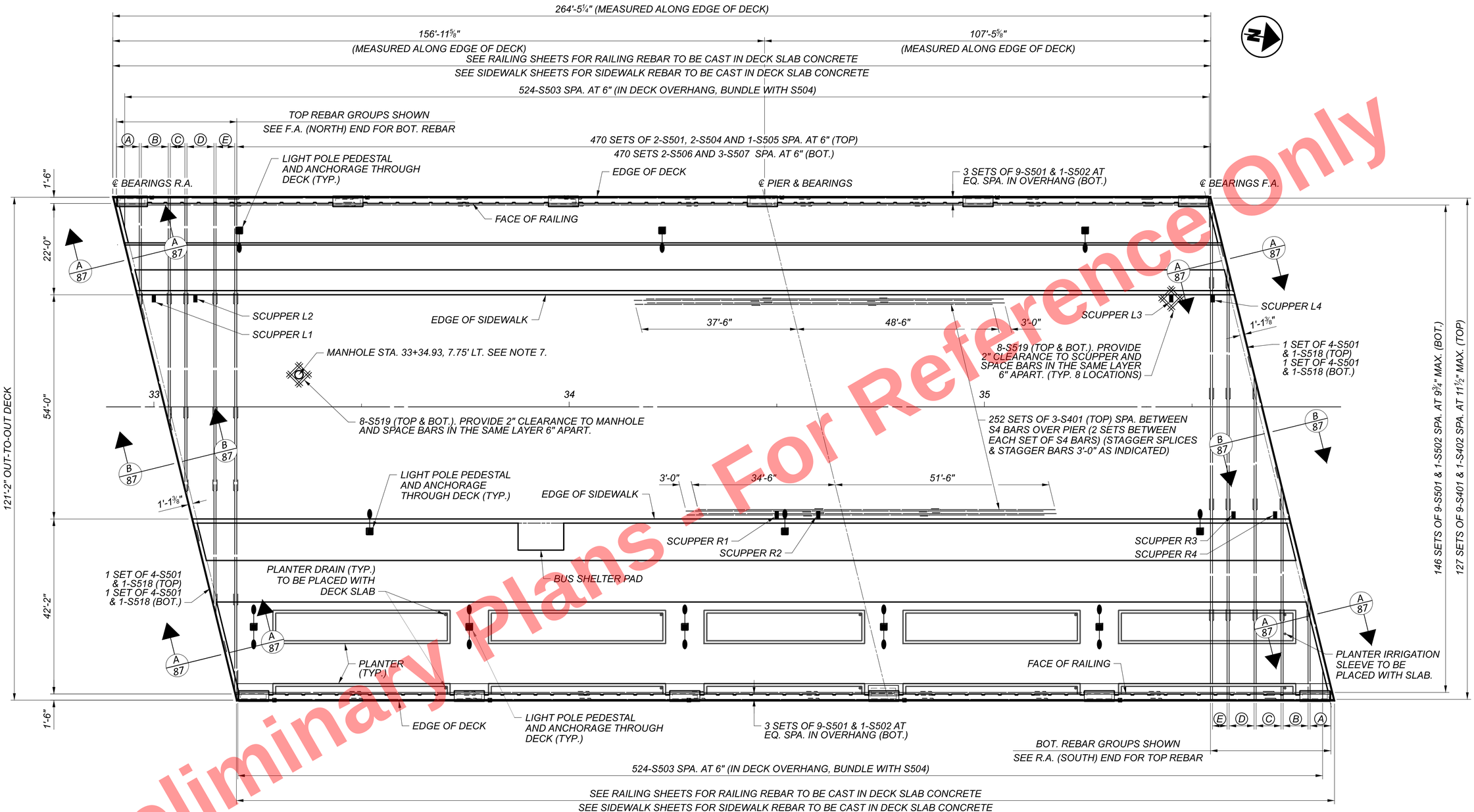

Preliminary Plans - For Reference Only

Ⓐ 1 SERIES OF 12-S508 (TOP)
1 SERIES OF 11-S513 (BOT.)

Ⓑ 1 SERIES OF 14-S509 & 14 SETS OF 1-S504 (TOP)
1 SERIES OF 13-S514 & 13 SETS OF 1-S506 (BOT.)

Ⓒ 1 SERIES OF 8-S510 & 8 SETS OF 1-S504 & 1-S501 (TOP)
1 SERIES OF 13-S515 & 13 SETS OF 1-S506 & 1-S507

Ⓓ 1 SERIES OF 14-S511 & 14 SETS OF 1-S504, 1-S501 & 1-S505 (TOP)
1 SERIES OF 13-S516 & 13 SETS OF 1-S506 & 2-S507

Ⓔ 1 SERIES OF 10-S512 & 10 SETS OF 1-S504, 2-S501 & 1-S505 (TOP)
1 SERIES OF 8-S517 & 8 SETS OF 1-S506 & 3-S507

SCUPPER NO.	STATION	OFFSET
L1	33+00.00	26.08' LT
L2	33+10.00	26.08' LT
L3	35+45.00	26.08' LT
L4	35+55.00	26.08' LT
R1	34+50.00	26.08' RT
R2	34+60.00	26.08' RT
R3	35+60.00	26.08' RT
R4	35+70.00	26.08' RT

DECK SLAB REINFORCING

NOTES:

1. PROVIDE 2" CONCRETE COVER ON REINFORCEMENT BARS UNLESS NOTED OTHERWISE.
2. FOR BRIDGE SIDEWALK DETAILS, INCLUDING SIDEWALK & BUS SHELTER PAD REBAR TO BE CAST INTO THE BRIDGE DECK CONCRETE, SEE SHEETS 66-70/99 .
3. FOR BRIDGE RAILING DETAILS, INCLUDING RAILING REBAR TO BE CAST INTO THE BRIDGE DECK CONCRETE, SEE SHEETS 71-80/99.
4. FOR BRIDGE PLANTER DETAILS, INCLUDING PLANTER REBAR TO BE CAST INTO THE BRIDGE DECK CONCRETE, SEE SHEETS 83-85/99 .

MINIMUM LAP LENGTHS:

#4 BAR 1'-11"
#5 BAR 2'-6"

5. FOR LIGHT POLE PEDESTALS, INCLUDING 1¼" PVC PIPE SLEEVE TO BE CAST INTO THE BRIDGE DECK CONCRETE, SEE SHEET 86/99.
6. FOR SCUPPER AND DOWNSPOUT DETAILS, SEE SHEET 88/99.
7. MANHOLE SHALL BE 3718ZPT A2 ASSEMBLY PRODUCED BY EJ OR APPROVED EQUAL. AT SCUPPER AND MANHOLE LOCATIONS, CUT LONGITUDINAL AND TRANSVERSE REBAR TO PROVIDE A 2" CLEAR DISTANCE BETWEEN MANHOLE OR SCUPPER AND REBAR ENDS. REPAIR CUT ENDS PER C&MS 509.10.

DECK PLAN
CUY-90-1678 (BRIDGE 13)
CR-710 (E. 22ND ST.) OVER I.R. 90

SFN 1807839
DESIGN AGENCY Michael Baker INTERNATIONAL
DESIGNER JNR | CHECKER ETB
REVIEWER CDC 05/10/24
PROJECT ID 82382
SUBSET 58 | TOTAL 99
SHEET 2239 | TOTAL 2696

CUY-90-16.28 (CCG3A)

MODEL: Sheet PAPERSIZE: 34x22 (in.) DATE: 3/28/2025 TIME: 7:48:33 AM USER: RohitLBk
pw:\\mb-us-pw.bentley.com:mb-us-pw-03\Documents\Cleveland_OH\01_Projects\ODOT\District12\82382400-Engineering\Structures\SFN_1807839\Sheets\82382_SD001.dgn

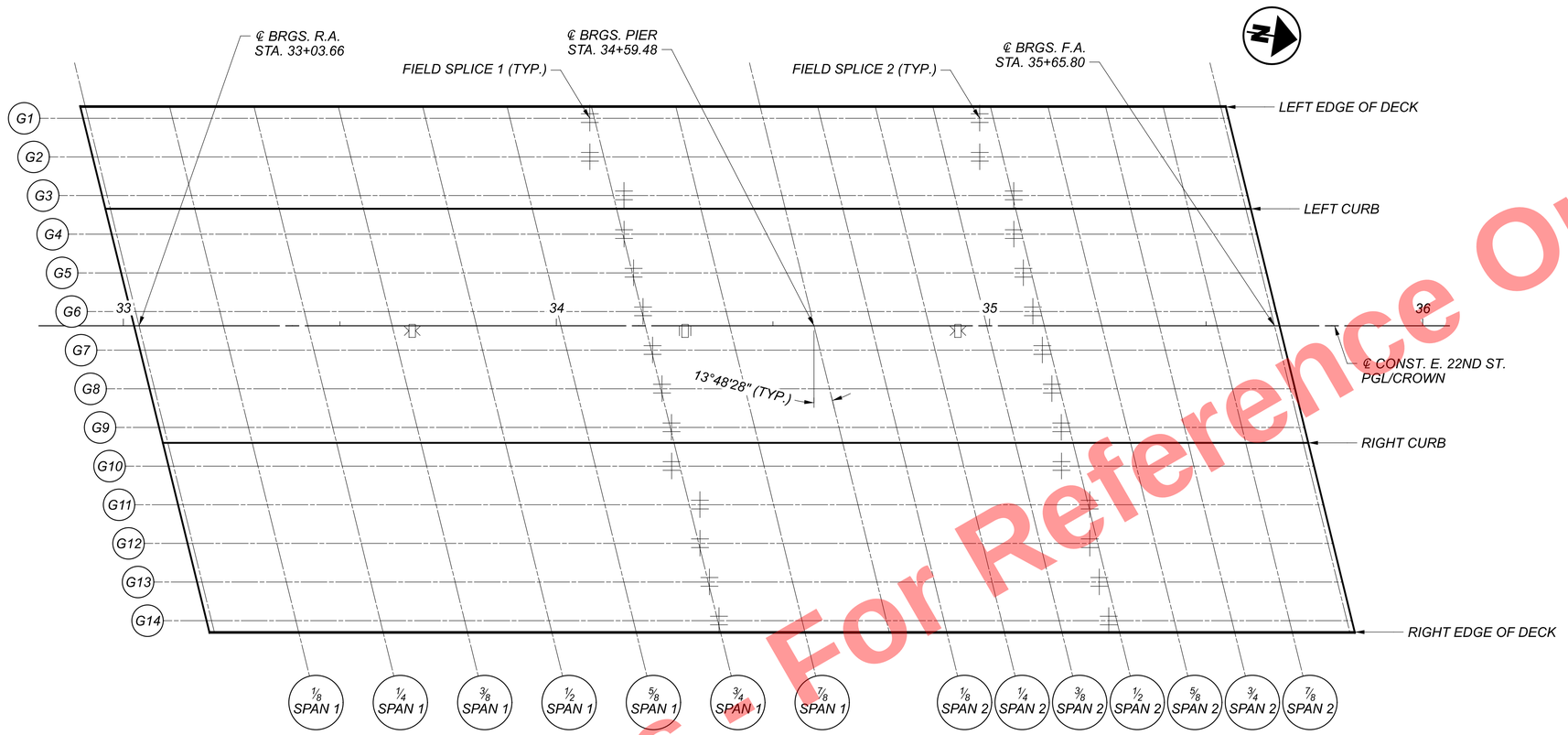

DECK ELEVATION SCHEMATIC (PLAN)

FOR USE WITH SCREED, TOP OF HAUNCH, AND FINISHED DECK TABLES

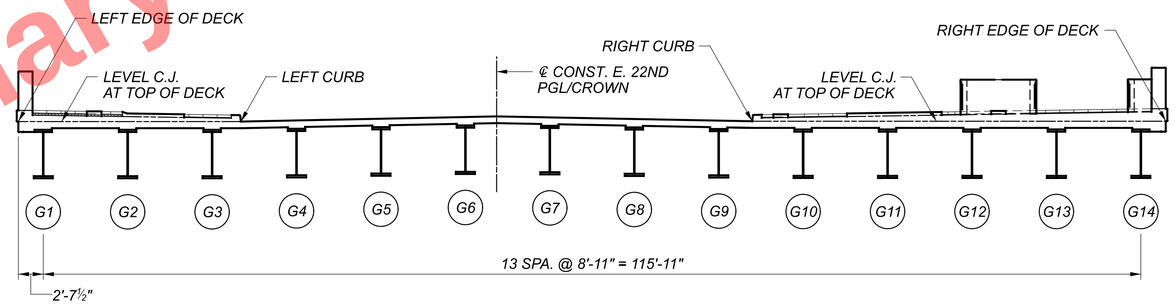

DECK ELEVATION SCHEMATIC (TRANSVERSE SECTION)

FOR USE WITH SCREED, TOP OF HAUNCH, AND FINISHED DECK TABLES

Preliminary Plans - For Reference Only

DECK ELEVATION SCHEMATIC
CUY-90-1678 (BRIDGE 13)
CR-710 (E. 22ND ST.) OVER I.R. 90

SFN	1807839
DESIGN AGENCY	Michael Baker INTERNATIONAL
DESIGNER	JCC
CHECKER	JTB
REVIEWER	CDC 05/10/24
PROJECT ID	82382
SUBSET	59
TOTAL	99
SHEET	2240
TOTAL	2696

CUY-90-16.28 (CCG3A)

MODEL: Sheet PAPERSIZE: 34x22 (in.) DATE: 3/28/2025 TIME: 7:48:45 AM USER: RohitBk
pw:\\mb-us-pw.bentley.com:mb-us-pw-03\Documents\Cleveland_OH\01_Projects\ODOT\District12\82382\400-Engineering\Structures\SFN_1807839\Sheets\82382_SFN_1807839_SD014.dgn

FINAL DECK SURFACE STATIONS, OFFSETS & ELEVATIONS

SPAN 1

ELEVATION LINE	CL BRGS R.A.	1/8 SPAN	1/4 SPAN	3/8 SPAN	1/2 SPAN	5/8 SPAN	FIELD SPLICE 1	3/4 SPAN	7/8 SPAN	CL BRGS PIER
LEFT EDGE OF DECK	32+91.25 50.50' LT. 671.98'	33+10.73 50.50' LT. 672.14'	33+30.20 50.50' LT. 672.21'	33+49.68 50.50' LT. 672.21'	33+69.16 50.50' LT. 672.13'	33+88.64 50.50' LT. 671.99'	- -	34+08.11 50.50' LT. 671.85'	34+27.59 50.50' LT. 671.71'	34+47.07 50.50' LT. 671.56'
GIRDER G1	32+91.89 47.88' LT. 671.99'	33+11.37 47.88' LT. 672.14'	33+30.85 47.88' LT. 672.22'	33+50.33 47.88' LT. 672.21'	33+69.80 47.88' LT. 672.13'	33+89.28 47.88' LT. 671.99'	34+07.72 47.88' LT. 671.85'	34+08.76 47.88' LT. 671.85'	34+28.24 47.88' LT. 671.70'	34+47.71 47.88' LT. 671.56'
GIRDER G2	32+94.09 38.96' LT. 672.01'	33+13.56 38.96' LT. 672.15'	33+33.04 38.96' LT. 672.22'	33+52.52 38.96' LT. 672.21'	33+72.00 38.96' LT. 672.11'	33+91.47 38.96' LT. 671.97'	34+07.74 38.96' LT. 671.85'	34+10.95 38.96' LT. 671.83'	34+30.43 38.96' LT. 671.69'	34+49.91 38.96' LT. 671.54'
GIRDER G3	32+96.28 30.04' LT. 672.03'	33+15.75 30.04' LT. 672.17'	33+35.23 30.04' LT. 672.22'	33+54.71 30.04' LT. 672.20'	33+74.19 30.04' LT. 672.10'	33+93.66 30.04' LT. 671.96'	34+15.60 30.04' LT. 671.80'	34+13.14 30.04' LT. 671.81'	34+32.62 30.04' LT. 671.67'	34+52.10 30.04' LT. 671.53'
LEFT CURB	32+97.02 27.00' LT. 672.04'	33+16.50 27.00' LT. 672.17'	33+35.98 27.00' LT. 672.22'	33+55.46 27.00' LT. 672.20'	33+74.93 27.00' LT. 672.09'	33+94.41 27.00' LT. 671.95'	- -	34+13.89 27.00' LT. 671.81'	34+33.37 27.00' LT. 671.67'	34+52.84 27.00' LT. 671.52'
GIRDER G4	32+98.47 21.13' LT. 672.17'	33+17.95 21.13' LT. 672.29'	33+37.42 21.13' LT. 672.34'	33+56.90 21.13' LT. 672.31'	33+76.38 21.13' LT. 672.20'	33+95.86 21.13' LT. 672.06'	34+15.62 21.13' LT. 671.91'	34+15.33 21.13' LT. 671.92'	34+34.81 21.13' LT. 671.77'	34+54.29 21.13' LT. 671.63'
GIRDER G5	33+00.66 12.21' LT. 672.36'	33+20.14 12.21' LT. 672.48'	33+39.61 12.21' LT. 672.52'	33+59.09 12.21' LT. 672.48'	33+78.57 12.21' LT. 672.36'	33+98.05 12.21' LT. 672.22'	34+17.82 12.21' LT. 672.08'	34+17.52 12.21' LT. 672.08'	34+37.00 12.21' LT. 671.93'	34+56.48 12.21' LT. 671.79'
GIRDER G6	33+02.85 3.29' LT. 672.56'	33+22.33 3.29' LT. 672.67'	33+41.81 3.29' LT. 672.70'	33+61.28 3.29' LT. 672.65'	33+80.76 3.29' LT. 672.53'	34+00.24 3.29' LT. 672.38'	34+20.01 3.29' LT. 672.24'	34+19.72 3.29' LT. 672.24'	34+39.19 3.29' LT. 672.10'	34+58.67 3.29' LT. 671.95'
PGL/CROWN	33+03.66 - 672.63'	33+23.14 - 672.74'	33+42.62 - 672.76'	33+62.09 - 672.71'	33+81.57 - 672.59'	34+01.05 - 672.44'	- -	34+20.53 - 672.30'	34+40.00 - 672.16'	34+59.48 - 672.01'
GIRDER G7	33+05.04 5.63' RT. 672.53'	33+24.52 5.63' RT. 672.63'	33+44.00 5.63' RT. 672.65'	33+63.47 5.63' RT. 672.59'	33+82.95 5.63' RT. 672.46'	34+02.43 5.63' RT. 672.32'	34+22.20 5.63' RT. 672.17'	34+21.91 5.63' RT. 672.18'	34+41.38 5.63' RT. 672.03'	34+60.86 5.63' RT. 671.89'
GIRDER G8	33+07.23 14.54' RT. 672.37'	33+26.71 14.54' RT. 672.46'	33+46.19 14.54' RT. 672.47'	33+65.67 14.54' RT. 672.40'	33+85.14 14.54' RT. 672.27'	34+04.62 14.54' RT. 672.13'	34+24.39 14.54' RT. 671.98'	34+24.10 14.54' RT. 671.98'	34+43.58 14.54' RT. 671.84'	34+63.05 14.54' RT. 671.70'
GIRDER G9	33+09.43 23.46' RT. 672.20'	33+28.90 23.46' RT. 672.28'	33+48.38 23.46' RT. 672.29'	33+67.86 23.46' RT. 672.21'	33+87.34 23.46' RT. 672.07'	34+06.81 23.46' RT. 671.93'	34+26.58 23.46' RT. 671.79'	34+26.29 23.46' RT. 671.79'	34+45.77 23.46' RT. 671.65'	34+65.25 23.46' RT. 671.50'
RIGHT CURB	33+10.30 27.00' RT. 672.14'	33+29.77 27.00' RT. 672.21'	33+49.25 27.00' RT. 672.21'	33+68.73 27.00' RT. 672.14'	33+88.21 27.00' RT. 672.00'	34+07.68 27.00' RT. 671.85'	- -	34+27.16 27.00' RT. 671.71'	34+46.64 27.00' RT. 671.57'	34+66.12 27.00' RT. 671.43'
GIRDER G10	33+11.62 32.38' RT. 672.14'	33+31.09 32.38' RT. 672.22'	33+50.57 32.38' RT. 672.21'	33+70.05 32.38' RT. 672.13'	33+89.53 32.38' RT. 671.99'	34+09.00 32.38' RT. 671.84'	34+26.61 32.38' RT. 671.71'	34+28.48 32.38' RT. 671.70'	34+47.96 32.38' RT. 671.56'	34+67.44 32.38' RT. 671.42'
GIRDER G11	33+13.81 41.29' RT. 672.16'	33+33.29 41.29' RT. 672.22'	33+52.76 41.29' RT. 672.21'	33+72.24 41.29' RT. 672.11'	33+91.72 41.29' RT. 671.97'	34+11.20 41.29' RT. 671.83'	34+33.13 41.29' RT. 671.67'	34+30.67 41.29' RT. 671.69'	34+50.15 41.29' RT. 671.54'	34+69.63 41.29' RT. 671.40'
GIRDER G12	33+16.00 50.21' RT. 672.17'	33+35.48 50.21' RT. 672.22'	33+54.95 50.21' RT. 672.20'	33+74.43 50.21' RT. 672.10'	33+93.91 50.21' RT. 671.95'	34+13.39 50.21' RT. 671.81'	34+33.16 50.21' RT. 671.67'	34+32.86 50.21' RT. 671.67'	34+52.34 50.21' RT. 671.53'	34+71.82 50.21' RT. 671.38'
GIRDER G13	33+18.19 59.13' RT. 672.18'	33+37.67 59.13' RT. 672.22'	33+57.15 59.13' RT. 672.19'	33+76.62 59.13' RT. 672.08'	33+96.10 59.13' RT. 671.94'	34+15.58 59.13' RT. 671.80'	34+35.35 59.13' RT. 671.65'	34+35.06 59.13' RT. 671.65'	34+54.53 59.13' RT. 671.51'	34+74.01 59.13' RT. 671.37'
GIRDER G14	33+20.38 68.04' RT. 672.19'	33+39.86 68.04' RT. 672.22'	33+59.34 68.04' RT. 672.18'	33+78.81 68.04' RT. 672.07'	33+98.29 68.04' RT. 671.92'	34+17.77 68.04' RT. 671.78'	34+37.54 68.04' RT. 671.63'	34+37.25 68.04' RT. 671.64'	34+56.72 68.04' RT. 671.49'	34+76.20 68.04' RT. 671.35'
RIGHT EDGE OF DECK	33+21.03 70.67' RT. 672.19'	33+40.51 70.67' RT. 672.22'	33+59.98 70.67' RT. 672.18'	33+79.46 70.67' RT. 672.06'	33+98.94 70.67' RT. 671.92'	34+18.42 70.67' RT. 671.77'	- -	34+37.89 70.67' RT. 671.63'	34+57.37 70.67' RT. 671.49'	34+76.85 70.67' RT. 671.35'

Preliminary Plans - For Reference Only

NOTES:

1. FINAL DECK ELEVATIONS SHOWN REPRESENT THE DECK SURFACE LOCATION AFTER ALL ANTICIPATED DEAD LOAD DEFLECTIONS HAVE OCCURED.

FINAL DECK SURFACE ELEVATION TABLE (1 OF 2)
CUY-90-1678 (BRIDGE 13)
CR-710 (E. 22ND ST.) OVER I.R. 90

SFN 1807839

DESIGN AGENCY
Michael Baker INTERNATIONAL

DESIGNER	CHECKER
JCC	JTB

REVIEWER
CDC 05/10/24

PROJECT ID 82382

SUBSET	TOTAL
60	99

SHEET	TOTAL
2241	2696

CUY-90-16.28 (CCG3A)
MODEL: Sheet PAPERSIZE: 34x22 (in.) DATE: 3/28/2025 TIME: 7:48:52 AM USER: RohitLBk
pw:\\mb-us-pw.bentley.com:mb-us-pw-03\Documents\Cleveland_OH01_Projects\ODOT\District12\82382\400-Engineering\Structures\SFN_1807839\Sheets\82382_SFN_1807839_SD005.dgn

FINAL DECK SURFACE STATIONS, OFFSETS & ELEVATIONS

	ELEVATION LINE	CL BRGS PIER	1/8 SPAN	1/4 SPAN	3/8 SPAN	FIELD SPLICE 2	1/2 SPAN	5/8 SPAN	3/4 SPAN	7/8 SPAN	CL BRGS F.A.
SPAN 2	LEFT EDGE OF DECK	34+47.07 50.50' LT. 671.56'	34+60.36 50.50' LT. 671.47'	34+73.65 50.50' LT. 671.37'	34+86.94 50.50' LT. 671.27'	- -	35+00.23 50.50' LT. 671.17'	35+13.52 50.50' LT. 671.08'	35+26.81 50.50' LT. 670.98'	35+40.10 50.50' LT. 670.88'	35+53.39 50.50' LT. 670.79'
	GIRDER G1	34+47.71 47.88' LT. 671.56'	34+61.00 47.88' LT. 671.46'	34+74.29 47.88' LT. 671.37'	34+87.58 47.88' LT. 671.27'	34+97.72 47.88' LT. 671.19'	35+00.87 47.88' LT. 671.17'	35+14.16 47.88' LT. 671.07'	35+27.45 47.88' LT. 670.98'	35+40.74 47.88' LT. 670.88'	35+54.03 47.88' LT. 670.78'
	GIRDER G2	34+49.91 38.96' LT. 671.54'	34+63.20 38.96' LT. 671.45'	34+76.49 38.96' LT. 671.35'	34+89.78 38.96' LT. 671.25'	34+97.74 38.96' LT. 671.19'	35+03.07 38.96' LT. 671.15'	35+16.36 38.96' LT. 671.06'	35+29.65 38.96' LT. 670.96'	35+42.94 38.96' LT. 670.86'	35+56.23 38.96' LT. 670.76'
	GIRDER G3	34+52.10 30.04' LT. 671.53'	34+65.39 30.04' LT. 671.43'	34+78.68 30.04' LT. 671.33'	34+91.97 30.04' LT. 671.24'	35+05.60 30.04' LT. 671.14'	35+05.26 30.04' LT. 671.14'	35+18.55 30.04' LT. 671.04'	35+31.84 30.04' LT. 670.94'	35+45.13 30.04' LT. 670.85'	35+58.42 30.04' LT. 670.75'
	LEFT CURB	34+52.84 27.00' LT. 671.52'	34+66.13 27.00' LT. 671.43'	34+79.42 27.00' LT. 671.33'	34+92.71 27.00' LT. 671.23'	- -	35+06.00 27.00' LT. 671.13'	35+19.29 27.00' LT. 671.04'	35+32.58 27.00' LT. 670.94'	35+45.87 27.00' LT. 670.84'	35+59.16 27.00' LT. 670.74'
	GIRDER G4	34+54.29 21.13' LT. 671.63'	34+67.58 21.13' LT. 671.53'	34+80.87 21.13' LT. 671.43'	34+94.16 21.13' LT. 671.34'	35+05.62 21.13' LT. 671.25'	35+07.45 21.13' LT. 671.24'	35+20.74 21.13' LT. 671.14'	35+34.03 21.13' LT. 671.04'	35+47.32 21.13' LT. 670.95'	35+60.61 21.13' LT. 670.85'
	GIRDER G5	34+56.48 12.21' LT. 671.79'	34+69.77 12.21' LT. 671.69'	34+83.06 12.21' LT. 671.60'	34+96.35 12.21' LT. 671.50'	35+07.82 12.21' LT. 671.42'	35+09.64 12.21' LT. 671.40'	35+22.93 12.21' LT. 671.30'	35+36.22 12.21' LT. 671.21'	35+49.51 12.21' LT. 671.11'	35+62.80 12.21' LT. 671.01'
	GIRDER G6	34+58.67 3.29' LT. 671.95'	34+71.96 3.29' LT. 671.86'	34+85.25 3.29' LT. 671.76'	34+98.54 3.29' LT. 671.66'	35+10.01 3.29' LT. 671.58'	35+11.83 3.29' LT. 671.56'	35+25.12 3.29' LT. 671.47'	35+38.41 3.29' LT. 671.37'	35+51.70 3.29' LT. 671.27'	35+64.99 3.29' LT. 671.17'
	PGL/CROWN	34+59.48 - 672.01'	34+72.77 - 671.92'	34+86.06 - 671.82'	34+99.35 - 671.72'	- -	35+12.64 - 671.62'	35+25.93 - 671.53'	35+39.22 - 671.43'	35+52.51 - 671.33'	35+65.80 - 671.23'
	GIRDER G7	34+60.86 5.63' RT. 671.89'	34+74.15 5.63' RT. 671.79'	34+87.44 5.63' RT. 671.70'	35+00.73 5.63' RT. 671.60'	35+12.20 5.63' RT. 671.51'	35+14.02 5.63' RT. 671.50'	35+27.31 5.63' RT. 671.40'	35+40.60 5.63' RT. 671.31'	35+53.89 5.63' RT. 671.21'	35+67.18 5.63' RT. 671.11'
	GIRDER G8	34+63.05 14.54' RT. 671.70'	34+76.34 14.54' RT. 671.60'	34+89.63 14.54' RT. 671.50'	35+02.92 14.54' RT. 671.40'	35+14.39 14.54' RT. 671.32'	35+16.21 14.54' RT. 671.31'	35+29.50 14.54' RT. 671.21'	35+42.79 14.54' RT. 671.11'	35+56.08 14.54' RT. 671.01'	35+69.37 14.54' RT. 670.92'
	GIRDER G9	34+65.25 23.46' RT. 671.50'	34+78.54 23.46' RT. 671.40'	34+91.83 23.46' RT. 671.31'	35+05.12 23.46' RT. 671.21'	35+16.58 23.46' RT. 671.13'	35+18.41 23.46' RT. 671.11'	35+31.70 23.46' RT. 671.02'	35+44.99 23.46' RT. 670.92'	35+58.28 23.46' RT. 670.82'	35+71.57 23.46' RT. 670.72'
	RIGHT CURB	34+66.12 27.00' RT. 671.43'	34+79.41 27.00' RT. 671.33'	34+92.70 27.00' RT. 671.23'	35+05.99 27.00' RT. 671.13'	- -	35+19.28 27.00' RT. 671.04'	35+32.57 27.00' RT. 670.94'	35+45.86 27.00' RT. 670.84'	35+59.15 27.00' RT. 670.74'	35+72.44 27.00' RT. 670.65'
	GIRDER G10	34+67.44 32.38' RT. 671.42'	34+80.73 32.38' RT. 671.32'	34+94.02 32.38' RT. 671.22'	35+07.31 32.38' RT. 671.12'	35+16.61 32.38' RT. 671.05'	35+20.60 32.38' RT. 671.03'	35+33.89 32.38' RT. 670.93'	35+47.18 32.38' RT. 670.83'	35+60.47 32.38' RT. 670.73'	35+73.76 32.38' RT. 670.64'
	GIRDER G11	34+69.63 41.29' RT. 671.40'	34+82.92 41.29' RT. 671.30'	34+96.21 41.29' RT. 671.20'	35+09.50 41.29' RT. 671.11'	35+23.13 41.29' RT. 671.01'	35+22.79 41.29' RT. 671.01'	35+36.08 41.29' RT. 670.91'	35+49.37 41.29' RT. 670.81'	35+62.66 41.29' RT. 670.72'	35+75.95 41.29' RT. 670.62'
	GIRDER G12	34+71.82 50.21' RT. 671.38'	34+85.11 50.21' RT. 671.29'	34+98.40 50.21' RT. 671.19'	35+11.69 50.21' RT. 671.09'	35+23.16 50.21' RT. 671.01'	35+24.98 50.21' RT. 670.99'	35+38.27 50.21' RT. 670.90'	35+51.56 50.21' RT. 670.80'	35+64.85 50.21' RT. 670.70'	35+78.14 50.21' RT. 670.60'
	GIRDER G13	34+74.01 59.13' RT. 671.37'	34+87.30 59.13' RT. 671.27'	35+00.59 59.13' RT. 671.17'	35+13.88 59.13' RT. 671.07'	35+25.35 59.13' RT. 670.99'	35+27.17 59.13' RT. 670.98'	35+40.46 59.13' RT. 670.88'	35+53.75 59.13' RT. 670.78'	35+67.04 59.13' RT. 670.69'	35+80.33 59.13' RT. 670.59'
	GIRDER G14	34+76.20 68.04' RT. 671.35'	34+89.49 68.04' RT. 671.25'	35+02.78 68.04' RT. 671.16'	35+16.07 68.04' RT. 671.06'	35+27.54 68.04' RT. 670.97'	35+29.36 68.04' RT. 670.96'	35+42.65 68.04' RT. 670.86'	35+55.94 68.04' RT. 670.77'	35+69.23 68.04' RT. 670.67'	35+82.52 68.04' RT. 670.58'
	RIGHT EDGE OF DECK	34+76.85 70.67' RT. 671.35'	34+90.14 70.67' RT. 671.25'	35+03.43 70.67' RT. 671.15'	35+16.72 70.67' RT. 671.05'	- -	35+30.01 70.67' RT. 670.96'	35+43.30 70.67' RT. 670.86'	35+56.59 70.67' RT. 670.76'	35+69.88 70.67' RT. 670.66'	35+83.17 70.67' RT. 670.57'

Preliminary Plans - For Reference Only

NOTES:

1. FINAL DECK ELEVATIONS SHOWN REPRESENT THE DECK SURFACE LOCATION AFTER ALL ANTICIPATED DEAD LOAD DEFLECTIONS HAVE OCCURED.

FINAL DECK SURFACE ELEVATION TABLE (2 OF 2)

CUY-90-1678 (BRIDGE 13)
CR-710 (E. 22ND ST.) OVER I.R. 90

SFN 1807839

DESIGN AGENCY
Michael Baker INTERNATIONAL

DESIGNER	CHECKER
JCC	JTB

REVIEWER
CDC 05/10/24

PROJECT ID 82382

SUBSET	TOTAL
61	99

SHEET	TOTAL
2242	2696

CUY-90-16.28 (CCG3A)
MODEL: Sheet PAPERSIZE: 34x22 (in.) DATE: 3/28/2025 TIME: 7:48:59 AM USER: RohitLBk
pw:\\mb-us-pw.bentley.com:mb-us-pw-03\Documents\Cleveland_OH01_Projects\ODOT\District12\82382\400-Engineering\Structures\SFN_1807839\Sheets\82382_SFN_1807839_SD006.dgn

DECK SCREED SURFACE STATIONS, OFFSETS & ELEVATIONS

SPAN 1

ELEVATION LINE	CL BRGS R.A.	1/8 SPAN	1/4 SPAN	3/8 SPAN	1/2 SPAN	5/8 SPAN	FIELD SPLICE 1	3/4 SPAN	7/8 SPAN	CL BRGS PIER
LEFT EDGE OF DECK	32+91.25 50.50' LT. 671.98'	33+10.73 50.50' LT. 672.35'	33+30.20 50.50' LT. 672.58'	33+49.68 50.50' LT. 672.66'	33+69.16 50.50' LT. 672.58'	33+88.64 50.50' LT. 672.36'	- -	34+08.11 50.50' LT. 672.10'	34+27.59 50.50' LT. 671.81'	34+47.07 50.50' LT. 671.56'
GIRDER G1	32+91.89 47.88' LT. 671.99'	33+11.37 47.88' LT. 672.35'	33+30.85 47.88' LT. 672.58'	33+50.33 47.88' LT. 672.66'	33+69.80 47.88' LT. 672.58'	33+89.28 47.88' LT. 672.36'	34+07.72 47.88' LT. 672.10'	34+08.76 47.88' LT. 672.10'	34+28.24 47.88' LT. 671.81'	34+47.71 47.88' LT. 671.56'
GIRDER G2	32+94.09 38.96' LT. 672.01'	33+13.56 38.96' LT. 672.34'	33+33.04 38.96' LT. 672.55'	33+52.52 38.96' LT. 672.61'	33+72.00 38.96' LT. 672.52'	33+91.47 38.96' LT. 672.30'	34+07.74 38.96' LT. 672.09'	34+10.95 38.96' LT. 672.05'	34+30.43 38.96' LT. 671.78'	34+49.91 38.96' LT. 671.54'
GIRDER G3	32+96.28 30.04' LT. 672.03'	33+15.75 30.04' LT. 672.34'	33+35.23 30.04' LT. 672.52'	33+54.71 30.04' LT. 672.57'	33+74.19 30.04' LT. 672.46'	33+93.66 30.04' LT. 672.25'	34+15.60 30.04' LT. 671.98'	34+13.14 30.04' LT. 672.01'	34+32.62 30.04' LT. 671.75'	34+52.10 30.04' LT. 671.53'
LEFT CURB	32+97.02 27.00' LT. 672.04'	33+16.50 27.00' LT. 672.33'	33+35.98 27.00' LT. 672.51'	33+55.46 27.00' LT. 672.55'	33+74.93 27.00' LT. 672.45'	33+94.41 27.00' LT. 672.24'	- -	34+13.89 27.00' LT. 672.00'	34+33.37 27.00' LT. 671.75'	34+52.84 27.00' LT. 671.52'
GIRDER G4	32+98.47 21.13' LT. 672.17'	33+17.95 21.13' LT. 672.45'	33+37.42 21.13' LT. 672.61'	33+56.90 21.13' LT. 672.64'	33+76.38 21.13' LT. 672.53'	33+95.86 21.13' LT. 672.33'	34+15.62 21.13' LT. 672.09'	34+15.33 21.13' LT. 672.09'	34+34.81 21.13' LT. 671.85'	34+54.29 21.13' LT. 671.63'
GIRDER G5	33+00.66 12.21' LT. 672.36'	33+20.14 12.21' LT. 672.62'	33+39.61 12.21' LT. 672.77'	33+59.09 12.21' LT. 672.79'	33+78.57 12.21' LT. 672.67'	33+98.05 12.21' LT. 672.47'	34+17.82 12.21' LT. 672.24'	34+17.52 12.21' LT. 672.24'	34+37.00 12.21' LT. 672.01'	34+56.48 12.21' LT. 671.79'
GIRDER G6	33+02.85 3.29' LT. 672.56'	33+22.33 3.29' LT. 672.80'	33+41.81 3.29' LT. 672.94'	33+61.28 3.29' LT. 672.95'	33+80.76 3.29' LT. 672.82'	34+00.24 3.29' LT. 672.63'	34+20.01 3.29' LT. 672.40'	34+19.72 3.29' LT. 672.40'	34+39.19 3.29' LT. 672.17'	34+58.67 3.29' LT. 671.95'
PGL/CROWN	33+03.66 - 672.63'	33+23.14 - 672.87'	33+42.62 - 673.01'	33+62.09 - 673.01'	33+81.57 - 672.88'	34+01.05 - 672.69'	- -	34+20.53 - 672.46'	34+40.00 - 672.23'	34+59.48 - 672.01'
GIRDER G7	33+05.04 5.63' RT. 672.53'	33+24.52 5.63' RT. 672.77'	33+44.00 5.63' RT. 672.89'	33+63.47 5.63' RT. 672.89'	33+82.95 5.63' RT. 672.76'	34+02.43 5.63' RT. 672.57'	34+22.20 5.63' RT. 672.34'	34+21.91 5.63' RT. 672.34'	34+41.38 5.63' RT. 672.11'	34+60.86 5.63' RT. 671.89'
GIRDER G8	33+07.23 14.54' RT. 672.37'	33+26.71 14.54' RT. 672.60'	33+46.19 14.54' RT. 672.73'	33+65.67 14.54' RT. 672.72'	33+85.14 14.54' RT. 672.59'	34+04.62 14.54' RT. 672.39'	34+24.39 14.54' RT. 672.16'	34+24.10 14.54' RT. 672.16'	34+43.58 14.54' RT. 671.92'	34+63.05 14.54' RT. 671.70'
GIRDER G9	33+09.43 23.46' RT. 672.20'	33+28.90 23.46' RT. 672.44'	33+48.38 23.46' RT. 672.57'	33+67.86 23.46' RT. 672.57'	33+87.34 23.46' RT. 672.43'	34+06.81 23.46' RT. 672.23'	34+26.58 23.46' RT. 671.98'	34+26.29 23.46' RT. 671.98'	34+45.77 23.46' RT. 671.73'	34+65.25 23.46' RT. 671.50'
RIGHT CURB	33+10.30 27.00' RT. 672.14'	33+29.77 27.00' RT. 672.38'	33+49.25 27.00' RT. 672.51'	33+68.73 27.00' RT. 672.51'	33+88.21 27.00' RT. 672.37'	34+07.68 27.00' RT. 672.16'	- -	34+27.16 27.00' RT. 671.92'	34+46.64 27.00' RT. 671.66'	34+66.12 27.00' RT. 671.43'
GIRDER G10	33+11.62 32.38' RT. 672.14'	33+31.09 32.38' RT. 672.40'	33+50.57 32.38' RT. 672.53'	33+70.05 32.38' RT. 672.53'	33+89.53 32.38' RT. 672.39'	34+09.00 32.38' RT. 672.18'	34+26.61 32.38' RT. 671.93'	34+28.48 32.38' RT. 671.93'	34+47.96 32.38' RT. 671.65'	34+67.44 32.38' RT. 671.42'
GIRDER G11	33+13.81 41.29' RT. 672.16'	33+33.29 41.29' RT. 672.43'	33+52.76 41.29' RT. 672.57'	33+72.24 41.29' RT. 672.57'	33+91.72 41.29' RT. 672.43'	34+11.20 41.29' RT. 672.21'	34+33.13 41.29' RT. 671.92'	34+30.67 41.29' RT. 671.92'	34+50.15 41.29' RT. 671.65'	34+69.63 41.29' RT. 671.40'
GIRDER G12	33+16.00 50.21' RT. 672.17'	33+35.48 50.21' RT. 672.46'	33+54.95 50.21' RT. 672.62'	33+74.43 50.21' RT. 672.61'	33+93.91 50.21' RT. 672.47'	34+13.39 50.21' RT. 672.24'	34+33.16 50.21' RT. 671.95'	34+32.86 50.21' RT. 671.95'	34+52.34 50.21' RT. 671.65'	34+71.82 50.21' RT. 671.38'
GIRDER G13	33+18.19 59.13' RT. 672.18'	33+37.67 59.13' RT. 672.48'	33+57.15 59.13' RT. 672.65'	33+76.62 59.13' RT. 672.65'	33+96.10 59.13' RT. 672.51'	34+15.58 59.13' RT. 672.27'	34+35.35 59.13' RT. 671.96'	34+35.06 59.13' RT. 671.96'	34+54.53 59.13' RT. 671.64'	34+74.01 59.13' RT. 671.37'
GIRDER G14	33+20.38 68.04' RT. 672.19'	33+39.86 68.04' RT. 672.51'	33+59.34 68.04' RT. 672.69'	33+78.81 68.04' RT. 672.69'	33+98.29 68.04' RT. 672.55'	34+17.77 68.04' RT. 672.29'	34+37.54 68.04' RT. 671.97'	34+37.25 68.04' RT. 671.97'	34+56.72 68.04' RT. 671.64'	34+76.20 68.04' RT. 671.35'
RIGHT EDGE OF DECK	33+21.03 70.67' RT. 672.19'	33+40.51 70.67' RT. 672.51'	33+59.98 70.67' RT. 672.69'	33+79.46 70.67' RT. 672.69'	33+98.94 70.67' RT. 672.54'	34+18.42 70.67' RT. 672.29'	- -	34+37.89 70.67' RT. 671.97'	34+57.37 70.67' RT. 671.63'	34+76.85 70.67' RT. 671.35'

Preliminary Plans - For Reference Only

NOTES:

1. SCREED ELEVATIONS SHOWN REPRESENT THE THEORETICAL DECK SURFACE LOCATION PRIOR TO DEFLECTIONS CAUSED BY DECK PLACEMENT AND OTHER ANTICIPATED DEAD LOADS.

2. FOR DECK ELEVATION SCHEMATICS, SEE SHEET 59 / 99

3. SCREED ELEVATIONS ARE GIVEN AT SUPPORTS, FIELD SPLICES, 1/8, 1/4, 3/8, 1/2, 5/8, & 7/8 POINTS ALONG ℄ OF EACH GIRDER AND ALONG THE BRIDGE DECK LENGTH FOR THE DECK EDGES, CURBS, PGL/CROWN. SEE SHEET 59 / 99 FOR MORE DETAILS.

DECK SCREED ELEVATION TABLE (1 OF 2)
CUY-90-1678 (BRIDGE 13)
CR-710 (E. 22ND ST.) OVER I.R. 90

SFN 1807839

DESIGN AGENCY
Michael Baker INTERNATIONAL

DESIGNER	CHECKER
JCC	JTB

REVIEWER
CDC 05/10/24

PROJECT ID 82382

SUBSET	TOTAL
62	99

SHEET	TOTAL
2243	2696

CUY-90-16.28 (CCG3A)

MODEL: Sheet PAPERSIZE: 34x22 (in.) DATE: 3/28/2025 TIME: 7:49:05 AM USER: Rohit.Bk
pw:\\mb-us-pw.bentley.com:mb-us-pw-03\Documents\Cleveland_OH01_Projects\ODOT\District12\82382400-Engineering\Structures\SFN_1807839\Sheets\82382_SFN_1807839_SD007.dgn

DECK SCREED SURFACE STATIONS, OFFSETS & ELEVATIONS

SPAN 2

ELEVATION LINE	CL BRGS PIER	1/8 SPAN	1/4 SPAN	3/8 SPAN	FIELD SPLICE 2	1/2 SPAN	5/8 SPAN	3/4 SPAN	7/8 SPAN	CL BRGS F.A.
LEFT EDGE OF DECK	34+47.07 50.50' LT.	34+60.36 50.50' LT.	34+73.65 50.50' LT.	34+86.94 50.50' LT.	- -	35+00.23 50.50' LT.	35+13.52 50.50' LT.	35+26.81 50.50' LT.	35+40.10 50.50' LT.	35+53.39 50.50' LT.
	671.56'	671.45'	671.35'	671.27'	-	671.19'	671.10'	671.01'	670.90'	670.79'
GIRDER G1	34+47.71 47.88' LT.	34+61.00 47.88' LT.	34+74.29 47.88' LT.	34+87.58 47.88' LT.	34+97.72 47.88' LT.	35+00.87 47.88' LT.	35+14.16 47.88' LT.	35+27.45 47.88' LT.	35+40.74 47.88' LT.	35+54.03 47.88' LT.
	671.56'	671.44'	671.35'	671.26'	671.20'	671.18'	671.10'	671.00'	670.90'	670.78'
GIRDER G2	34+49.91 38.96' LT.	34+63.20 38.96' LT.	34+76.49 38.96' LT.	34+89.78 38.96' LT.	34+97.74 38.96' LT.	35+03.07 38.96' LT.	35+16.36 38.96' LT.	35+29.65 38.96' LT.	35+42.94 38.96' LT.	35+56.23 38.96' LT.
	671.54'	671.43'	671.33'	671.24'	671.19'	671.16'	671.07'	670.98'	670.87'	670.76'
GIRDER G3	34+52.10 30.04' LT.	34+65.39 30.04' LT.	34+78.68 30.04' LT.	34+91.97 30.04' LT.	35+05.60 30.04' LT.	35+05.26 30.04' LT.	35+18.55 30.04' LT.	35+31.84 30.04' LT.	35+45.13 30.04' LT.	35+58.42 30.04' LT.
	671.53'	671.41'	671.31'	671.22'	671.13'	671.13'	671.05'	670.95'	670.85'	670.75'
LEFT CURB	34+52.84 27.00' LT.	34+66.13 27.00' LT.	34+79.42 27.00' LT.	34+92.71 27.00' LT.	- -	35+06.00 27.00' LT.	35+19.29 27.00' LT.	35+32.58 27.00' LT.	35+45.87 27.00' LT.	35+59.16 27.00' LT.
	671.52'	671.40'	671.30'	671.21'	-	671.13'	671.04'	670.95'	670.85'	670.74'
GIRDER G4	34+54.29 21.13' LT.	34+67.58 21.13' LT.	34+80.87 21.13' LT.	34+94.16 21.13' LT.	35+05.62 21.13' LT.	35+07.45 21.13' LT.	35+20.74 21.13' LT.	35+34.03 21.13' LT.	35+47.32 21.13' LT.	35+60.61 21.13' LT.
	671.63'	671.51'	671.41'	671.32'	671.24'	671.23'	671.14'	671.05'	670.95'	670.85'
GIRDER G5	34+56.48 12.21' LT.	34+69.77 12.21' LT.	34+83.06 12.21' LT.	34+96.35 12.21' LT.	35+07.82 12.21' LT.	35+09.64 12.21' LT.	35+22.93 12.21' LT.	35+36.22 12.21' LT.	35+49.51 12.21' LT.	35+62.80 12.21' LT.
	671.79'	671.67'	671.57'	671.48'	671.40'	671.39'	671.30'	671.21'	671.11'	671.01'
GIRDER G6	34+58.67 3.29' LT.	34+71.96 3.29' LT.	34+85.25 3.29' LT.	34+98.54 3.29' LT.	35+10.01 3.29' LT.	35+11.83 3.29' LT.	35+25.12 3.29' LT.	35+38.41 3.29' LT.	35+51.70 3.29' LT.	35+64.99 3.29' LT.
	671.95'	671.84'	671.73'	671.64'	671.56'	671.55'	671.46'	671.37'	671.27'	671.17'
PGL/CROWN	34+59.48 -	34+72.77 -	34+86.06 -	34+99.35 -	- -	35+12.64 -	35+25.93 -	35+39.22 -	35+52.51 -	35+65.80 -
	672.01'	671.90'	671.79'	671.70'	-	671.61'	671.52'	671.43'	671.33'	671.23'
GIRDER G7	34+60.86 5.63' RT.	34+74.15 5.63' RT.	34+87.44 5.63' RT.	35+00.73 5.63' RT.	35+12.20 5.63' RT.	35+14.02 5.63' RT.	35+27.31 5.63' RT.	35+40.60 5.63' RT.	35+53.89 5.63' RT.	35+67.18 5.63' RT.
	671.89'	671.77'	671.67'	671.57'	671.49'	671.48'	671.39'	671.30'	671.21'	671.11'
GIRDER G8	34+63.05 14.54' RT.	34+76.34 14.54' RT.	34+89.63 14.54' RT.	35+02.92 14.54' RT.	35+14.39 14.54' RT.	35+16.21 14.54' RT.	35+29.50 14.54' RT.	35+42.79 14.54' RT.	35+56.08 14.54' RT.	35+69.37 14.54' RT.
	671.70'	671.58'	671.47'	671.38'	671.30'	671.29'	671.20'	671.11'	671.01'	670.92'
GIRDER G9	34+65.25 23.46' RT.	34+78.54 23.46' RT.	34+91.83 23.46' RT.	35+05.12 23.46' RT.	35+16.58 23.46' RT.	35+18.41 23.46' RT.	35+31.70 23.46' RT.	35+44.99 23.46' RT.	35+58.28 23.46' RT.	35+71.57 23.46' RT.
	671.50'	671.38'	671.28'	671.18'	671.11'	671.09'	671.01'	670.92'	670.82'	670.72'
RIGHT CURB	34+66.12 27.00' RT.	34+79.41 27.00' RT.	34+92.70 27.00' RT.	35+05.99 27.00' RT.	- -	35+19.28 27.00' RT.	35+32.57 27.00' RT.	35+45.86 27.00' RT.	35+59.15 27.00' RT.	35+72.44 27.00' RT.
	671.43'	671.30'	671.20'	671.11'	-	671.02'	670.93'	670.84'	670.75'	670.65'
GIRDER G10	34+67.44 32.38' RT.	34+80.73 32.38' RT.	34+94.02 32.38' RT.	35+07.31 32.38' RT.	35+16.61 32.38' RT.	35+20.60 32.38' RT.	35+33.89 32.38' RT.	35+47.18 32.38' RT.	35+60.47 32.38' RT.	35+73.76 32.38' RT.
	671.42'	671.29'	671.19'	671.10'	671.04'	671.01'	670.93'	670.84'	670.74'	670.64'
GIRDER G11	34+69.63 41.29' RT.	34+82.92 41.29' RT.	34+96.21 41.29' RT.	35+09.50 41.29' RT.	35+23.13 41.29' RT.	35+22.79 41.29' RT.	35+36.08 41.29' RT.	35+49.37 41.29' RT.	35+62.66 41.29' RT.	35+75.95 41.29' RT.
	671.40'	671.27'	671.17'	671.09'	671.00'	671.00'	670.92'	670.83'	670.73'	670.62'
GIRDER G12	34+71.82 50.21' RT.	34+85.11 50.21' RT.	34+98.40 50.21' RT.	35+11.69 50.21' RT.	35+23.16 50.21' RT.	35+24.98 50.21' RT.	35+38.27 50.21' RT.	35+51.56 50.21' RT.	35+64.85 50.21' RT.	35+78.14 50.21' RT.
	671.38'	671.26'	671.16'	671.08'	671.01'	671.00'	670.91'	670.82'	670.72'	670.60'
GIRDER G13	34+74.01 59.13' RT.	34+87.30 59.13' RT.	35+00.59 59.13' RT.	35+13.88 59.13' RT.	35+25.35 59.13' RT.	35+27.17 59.13' RT.	35+40.46 59.13' RT.	35+53.75 59.13' RT.	35+67.04 59.13' RT.	35+80.33 59.13' RT.
	671.37'	671.24'	671.14'	671.06'	671.00'	670.98'	670.90'	670.81'	670.70'	670.59'
GIRDER G14	34+76.20 68.04' RT.	34+89.49 68.04' RT.	35+02.78 68.04' RT.	35+16.07 68.04' RT.	35+27.54 68.04' RT.	35+29.36 68.04' RT.	35+42.65 68.04' RT.	35+55.94 68.04' RT.	35+69.23 68.04' RT.	35+82.52 68.04' RT.
	671.35'	671.22'	671.13'	671.05'	670.99'	670.98'	670.90'	670.80'	670.69'	670.58'
RIGHT EDGE OF DECK	34+76.85 70.67' RT.	34+90.14 70.67' RT.	35+03.43 70.67' RT.	35+16.72 70.67' RT.	- -	35+30.01 70.67' RT.	35+43.30 70.67' RT.	35+56.59 70.67' RT.	35+69.88 70.67' RT.	35+83.17 70.67' RT.
	671.35'	671.22'	671.12'	671.05'	-	670.97'	670.89'	670.80'	670.69'	670.57'

Preliminary Plans - For Reference Only

NOTES:

1. SCREED ELEVATIONS SHOWN REPRESENT THE THEORETICAL DECK SURFACE LOCATION PRIOR TO DEFLECTIONS CAUSED BY DECK PLACEMENT AND OTHER ANTICIPATED DEAD LOADS.

2. FOR DECK ELEVATION SCHEMATICS, SEE SHEET 59 / 99

3. SCREED ELEVATIONS ARE GIVEN AT SUPPORTS, FIELD SPLICES, 1/8, 1/4, 3/8, 1/2, 5/8, & 7/8 POINTS ALONG ℄ OF EACH GIRDER AND ALONG THE BRIDGE DECK LENGTH FOR THE DECK EDGES, CURBS, PGL/CROWN. SEE SHEET 59 / 99 FOR MORE DETAILS.

DECK SCREED ELEVATION TABLE (2 OF 2)
CUY-90-1678 (BRIDGE 13)
CR-710 (E. 22ND ST.) OVER I.R. 90

SFN 1807839
DESIGN AGENCY
Michael Baker INTERNATIONAL
DESIGNER JCC | CHECKER JTB
REVIEWER CDC 05/10/24
PROJECT ID 82382
SUBSET 63 | TOTAL 99
SHEET 2244 | TOTAL 2696

CUY-90-16.28 (CCG3A)

MODEL: Sheet PAPERSIZE: 34x22 (in.) DATE: 3/28/2025 TIME: 7:49:17 AM USER: Rohit.Bk
pw:\\mb-us-pw.bentley.com:mb-us-pw-03\Documents\Cleveland_OH\01_Projects\ODOT\District12\82382\400-Engineering\Structures\SFN_1807839\Sheets\82382_SFN_1807839_SD008.dgn

TOP OF HAUNCH STATIONS, OFFSETS & ELEVATIONS

SPAN 1

ELEVATION LINE	CL BRGS R.A.	1/8 SPAN	1/4 SPAN	3/8 SPAN	1/2 SPAN	5/8 SPAN	FIELD SPLICE 1	3/4 SPAN	7/8 SPAN	CL BRGS PIER
GIRDER G1	32+91.89 47.88' LT.	33+11.37 47.88' LT.	33+30.85 47.88' LT.	33+50.33 47.88' LT.	33+69.80 47.88' LT.	33+89.28 47.88' LT.	34+07.72 47.88' LT.	34+08.76 47.88' LT.	34+28.24 47.88' LT.	34+47.71 47.88' LT.
	671.28'	671.64'	671.88'	671.95'	671.87'	671.65'	671.39'	671.39'	671.10'	670.85'
GIRDER G2	32+94.09 38.96' LT.	33+13.56 38.96' LT.	33+33.04 38.96' LT.	33+52.52 38.96' LT.	33+72.00 38.96' LT.	33+91.47 38.96' LT.	34+07.74 38.96' LT.	34+10.95 38.96' LT.	34+30.43 38.96' LT.	34+49.91 38.96' LT.
	671.30'	671.63'	671.84'	671.90'	671.81'	671.60'	671.38'	671.34'	671.07'	670.84'
GIRDER G3	32+96.28 30.04' LT.	33+15.75 30.04' LT.	33+35.23 30.04' LT.	33+54.71 30.04' LT.	33+74.19 30.04' LT.	33+93.66 30.04' LT.	34+15.60 30.04' LT.	34+13.14 30.04' LT.	34+32.62 30.04' LT.	34+52.10 30.04' LT.
	671.32'	671.63'	671.81'	671.86'	671.75'	671.55'	671.27'	671.30'	671.05'	670.82'
GIRDER G4	32+98.47 21.13' LT.	33+17.95 21.13' LT.	33+37.42 21.13' LT.	33+56.90 21.13' LT.	33+76.38 21.13' LT.	33+95.86 21.13' LT.	34+15.62 21.13' LT.	34+15.33 21.13' LT.	34+34.81 21.13' LT.	34+54.29 21.13' LT.
	671.46'	671.74'	671.90'	671.93'	671.82'	671.62'	671.38'	671.38'	671.14'	670.92'
GIRDER G5	33+00.66 12.21' LT.	33+20.14 12.21' LT.	33+39.61 12.21' LT.	33+59.09 12.21' LT.	33+78.57 12.21' LT.	33+98.05 12.21' LT.	34+17.82 12.21' LT.	34+17.52 12.21' LT.	34+37.00 12.21' LT.	34+56.48 12.21' LT.
	671.66'	671.92'	672.06'	672.08'	671.96'	671.77'	671.53'	671.53'	671.30'	671.08'
GIRDER G6	33+02.85 3.29' LT.	33+22.33 3.29' LT.	33+41.81 3.29' LT.	33+61.28 3.29' LT.	33+80.76 3.29' LT.	34+00.24 3.29' LT.	34+20.01 3.29' LT.	34+19.72 3.29' LT.	34+39.19 3.29' LT.	34+58.67 3.29' LT.
	671.85'	672.10'	672.23'	672.24'	672.11'	671.92'	671.69'	671.69'	671.46'	671.25'
GIRDER G7	33+05.04 5.63' RT.	33+24.52 5.63' RT.	33+44.00 5.63' RT.	33+63.47 5.63' RT.	33+82.95 5.63' RT.	34+02.43 5.63' RT.	34+22.20 5.63' RT.	34+21.91 5.63' RT.	34+41.38 5.63' RT.	34+60.86 5.63' RT.
	671.82'	672.06'	672.19'	672.19'	672.06'	671.86'	671.63'	671.63'	671.40'	671.18'
GIRDER G8	33+07.23 14.54' RT.	33+26.71 14.54' RT.	33+46.19 14.54' RT.	33+65.67 14.54' RT.	33+85.14 14.54' RT.	34+04.62 14.54' RT.	34+24.39 14.54' RT.	34+24.10 14.54' RT.	34+43.58 14.54' RT.	34+63.05 14.54' RT.
	671.66'	671.89'	672.02'	672.01'	671.88'	671.68'	671.45'	671.45'	671.21'	670.99'
GIRDER G9	33+09.43 23.46' RT.	33+28.90 23.46' RT.	33+48.38 23.46' RT.	33+67.86 23.46' RT.	33+87.34 23.46' RT.	34+06.81 23.46' RT.	34+26.58 23.46' RT.	34+26.29 23.46' RT.	34+45.77 23.46' RT.	34+65.25 23.46' RT.
	671.49'	671.74'	671.86'	671.86'	671.72'	671.52'	671.27'	671.27'	671.02'	670.79'
GIRDER G10	33+11.62 32.38' RT.	33+31.09 32.38' RT.	33+50.57 32.38' RT.	33+70.05 32.38' RT.	33+89.53 32.38' RT.	34+09.00 32.38' RT.	34+26.61 32.38' RT.	34+28.48 32.38' RT.	34+47.96 32.38' RT.	34+67.44 32.38' RT.
	671.44'	671.69'	671.83'	671.82'	671.68'	671.47'	671.23'	671.22'	670.95'	670.71'
GIRDER G11	33+13.81 41.29' RT.	33+33.29 41.29' RT.	33+52.76 41.29' RT.	33+72.24 41.29' RT.	33+91.72 41.29' RT.	34+11.20 41.29' RT.	34+33.13 41.29' RT.	34+30.67 41.29' RT.	34+50.15 41.29' RT.	34+69.63 41.29' RT.
	671.45'	671.72'	671.87'	671.86'	671.72'	671.50'	671.21'	671.21'	670.94'	670.69'
GIRDER G12	33+16.00 50.21' RT.	33+35.48 50.21' RT.	33+54.95 50.21' RT.	33+74.43 50.21' RT.	33+93.91 50.21' RT.	34+13.39 50.21' RT.	34+33.16 50.21' RT.	34+32.86 50.21' RT.	34+52.34 50.21' RT.	34+71.82 50.21' RT.
	671.46'	671.75'	671.91'	671.90'	671.76'	671.53'	671.24'	671.24'	670.94'	670.67'
GIRDER G13	33+18.19 59.13' RT.	33+37.67 59.13' RT.	33+57.15 59.13' RT.	33+76.62 59.13' RT.	33+96.10 59.13' RT.	34+15.58 59.13' RT.	34+35.35 59.13' RT.	34+35.06 59.13' RT.	34+54.53 59.13' RT.	34+74.01 59.13' RT.
	671.47'	671.78'	671.95'	671.94'	671.80'	671.56'	671.25'	671.25'	670.94'	670.66'
GIRDER G14	33+20.38 68.04' RT.	33+39.86 68.04' RT.	33+59.34 68.04' RT.	33+78.81 68.04' RT.	33+98.29 68.04' RT.	34+17.77 68.04' RT.	34+37.54 68.04' RT.	34+37.25 68.04' RT.	34+56.72 68.04' RT.	34+76.20 68.04' RT.
	671.48'	671.80'	671.99'	671.98'	671.84'	671.58'	671.26'	671.26'	670.93'	670.64'

TOP OF HAUNCH STATIONS, OFFSETS & ELEVATIONS

SPAN 2

ELEVATION LINE	CL BRGS PIER	1/8 SPAN	1/4 SPAN	3/8 SPAN	FIELD SPLICE 2	1/2 SPAN	5/8 SPAN	3/4 SPAN	7/8 SPAN	CL BRGS F.A.
GIRDER G1	34+47.71 47.88' LT.	34+61.00 47.88' LT.	34+74.29 47.88' LT.	34+87.58 47.88' LT.	34+97.72 47.88' LT.	35+00.87 47.88' LT.	35+14.16 47.88' LT.	35+27.45 47.88' LT.	35+40.74 47.88' LT.	35+54.03 47.88' LT.
	670.85'	670.73'	670.64'	670.56'	670.50'	670.48'	670.39'	670.30'	670.19'	670.07'
GIRDER G2	34+49.91 38.96' LT.	34+63.20 38.96' LT.	34+76.49 38.96' LT.	34+89.78 38.96' LT.	34+97.74 38.96' LT.	35+03.07 38.96' LT.	35+16.36 38.96' LT.	35+29.65 38.96' LT.	35+42.94 38.96' LT.	35+56.23 38.96' LT.
	670.84'	670.72'	670.62'	670.53'	670.48'	670.45'	670.36'	670.27'	670.17'	670.06'
GIRDER G3	34+52.10 30.04' LT.	34+65.39 30.04' LT.	34+78.68 30.04' LT.	34+91.97 30.04' LT.	35+05.60 30.04' LT.	35+05.26 30.04' LT.	35+18.55 30.04' LT.	35+31.84 30.04' LT.	35+45.13 30.04' LT.	35+58.42 30.04' LT.
	670.82'	670.70'	670.60'	670.51'	670.42'	670.43'	670.34'	670.25'	670.15'	670.04'
GIRDER G4	34+54.29 21.13' LT.	34+67.58 21.13' LT.	34+80.87 21.13' LT.	34+94.16 21.13' LT.	35+05.62 21.13' LT.	35+07.45 21.13' LT.	35+20.74 21.13' LT.	35+34.03 21.13' LT.	35+47.32 21.13' LT.	35+60.61 21.13' LT.
	670.92'	670.80'	670.70'	670.61'	670.53'	670.52'	670.43'	670.34'	670.24'	670.14'
GIRDER G5	34+56.48 12.21' LT.	34+69.77 12.21' LT.	34+83.06 12.21' LT.	34+96.35 12.21' LT.	35+07.82 12.21' LT.	35+09.64 12.21' LT.	35+22.93 12.21' LT.	35+36.22 12.21' LT.	35+49.51 12.21' LT.	35+62.80 12.21' LT.
	671.08'	670.97'	670.86'	670.77'	670.69'	670.68'	670.59'	670.50'	670.40'	670.30'
GIRDER G6	34+58.67 3.29' LT.	34+71.96 3.29' LT.	34+85.25 3.29' LT.	34+98.54 3.29' LT.	35+10.01 3.29' LT.	35+11.83 3.29' LT.	35+25.12 3.29' LT.	35+38.41 3.29' LT.	35+51.70 3.29' LT.	35+64.99 3.29' LT.
	671.25'	671.13'	671.02'	670.93'	670.85'	670.84'	670.75'	670.66'	670.56'	670.47'
GIRDER G7	34+60.86 5.63' RT.	34+74.15 5.63' RT.	34+87.44 5.63' RT.	35+00.73 5.63' RT.	35+12.20 5.63' RT.	35+14.02 5.63' RT.	35+27.31 5.63' RT.	35+40.60 5.63' RT.	35+53.89 5.63' RT.	35+67.18 5.63' RT.
	671.18'	671.06'	670.96'	670.86'	670.79'	670.77'	670.69'	670.59'	670.50'	670.40'
GIRDER G8	34+63.05 14.54' RT.	34+76.34 14.54' RT.	34+89.63 14.54' RT.	35+02.92 14.54' RT.	35+14.39 14.54' RT.	35+16.21 14.54' RT.	35+29.50 14.54' RT.	35+42.79 14.54' RT.	35+56.08 14.54' RT.	35+69.37 14.54' RT.
	670.99'	670.87'	670.76'	670.67'	670.59'	670.58'	670.49'	670.40'	670.31'	670.21'
GIRDER G9	34+65.25 23.46' RT.	34+78.54 23.46' RT.	34+91.83 23.46' RT.	35+05.12 23.46' RT.	35+16.58 23.46' RT.	35+18.41 23.46' RT.	35+31.70 23.46' RT.	35+44.99 23.46' RT.	35+58.28 23.46' RT.	35+71.57 23.46' RT.
	670.79'	670.67'	670.57'	670.47'	670.40'	670.39'	670.30'	670.21'	670.11'	670.01'
GIRDER G10	34+67.44 32.38' RT.	34+80.73 32.38' RT.	34+94.02 32.38' RT.	35+07.31 32.38' RT.	35+16.61 32.38' RT.	35+20.60 32.38' RT.	35+33.89 32.38' RT.	35+47.18 32.38' RT.	35+60.47 32.38' RT.	35+73.76 32.38' RT.
	670.71'	670.58'	670.48'	670.39'	670.33'	670.30'	670.22'	670.13'	670.03'	669.93'
GIRDER G11	34+69.63 41.29' RT.	34+82.92 41.29' RT.	34+96.21 41.29' RT.	35+09.50 41.29' RT.	35+23.13 41.29' RT.	35+22.79 41.29' RT.	35+36.08 41.29' RT.	35+49.37 41.29' RT.	35+62.66 41.29' RT.	35+75.95 41.29' RT.
	670.69'	670.57'	670.47'	670.38'	670.29'	670.29'	670.21'	670.12'	670.02'	669.91'
GIRDER G12	34+71.82 50.21' RT.	34+85.11 50.21' RT.	34+98.40 50.21' RT.	35+11.69 50.21' RT.	35+23.16 50.21' RT.	35+24.98 50.21' RT.	35+38.27 50.21' RT.	35+51.56 50.21' RT.	35+64.85 50.21' RT.	35+78.14 50.21' RT.
	670.67'	670.55'	670.45'	670.37'	670.30'	670.29'	670.21'	670.11'	670.01'	669.90'
GIRDER G13	34+74.01 59.13' RT.	34+87.30 59.13' RT.	35+00.59 59.13' RT.	35+13.88 59.13' RT.	35+25.35 59.13' RT.	35+27.17 59.13' RT.	35+40.46 59.13' RT.	35+53.75 59.13' RT.	35+67.04 59.13' RT.	35+80.33 59.13' RT.
	670.66'	670.53'	670.43'	670.35'	670.29'	670.28'	670.20'	670.10'	670.00'	669.88'
GIRDER G14	34+76.20 68.04' RT.	34+89.49 68.04' RT.	35+02.78 68.04' RT.	35+16.07 68.04' RT.	35+27.54 68.04' RT.	35+29.36 68.04' RT.	35+42.65 68.04' RT.	35+55.94 68.04' RT.	35+69.23 68.04' RT.	35+82.52 68.04' RT.
	670.64'	670.52'	670.42'	670.34'	670.28'	670.27'	670.19'	670.10'	669.99'	669.87'

Preliminary Plans - Not For Reference Only

NOTES:

1. TOP OF HAUNCH ELEVATIONS SHOWN REPRESENT THE THEORETICAL DECK SURFACE LOCATION OF THE BOTTOM OF THE DECK ABOVE THE GIRDER HAUNCH PRIOR TO DEFLECTIONS CAUSED BY DECK PLACEMENT AND OTHER ANTICIPATED DEAD LOADS.

2. FOR DECK ELEVATIONS SCHEMATICS, SEE SHEET 59 / 99

TOP OF HAUNCH ELEVATION TABLE
CUY-90-1678 (BRIDGE 13)
CR-710 (E. 22ND ST.) OVER I.R. 90

SFN 1807839

DESIGN AGENCY
Michael Baker INTERNATIONAL

DESIGNER	CHECKER
JCC	JTB

REVIEWER
CDC 05/10/24

PROJECT ID
82382

SUBSET	TOTAL
64	99

SHEET	TOTAL
2245	2696

CUY-90-16.28 (CCG3A)
MODEL: Sheet PAPERSIZE: 34x22 (in.) DATE: 3/28/2025 TIME: 7:49:25 AM USER: Rohit.Bk
pw:\\mb-us-pw.bentley.com:mb-us-pw-03\Documents\Cleveland_OH\01_Projects\ODOT\District12\82382\400-Engineering\Structures\SFN_1807839\Sheets\82382_SFN_1807839_SD009.dgn

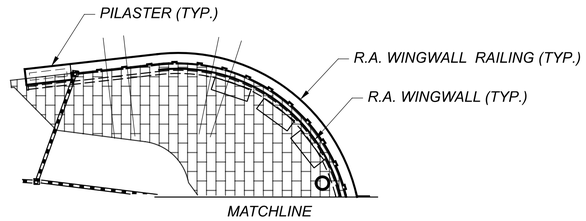

REAR ABUTMENT WINGWALL PLAN

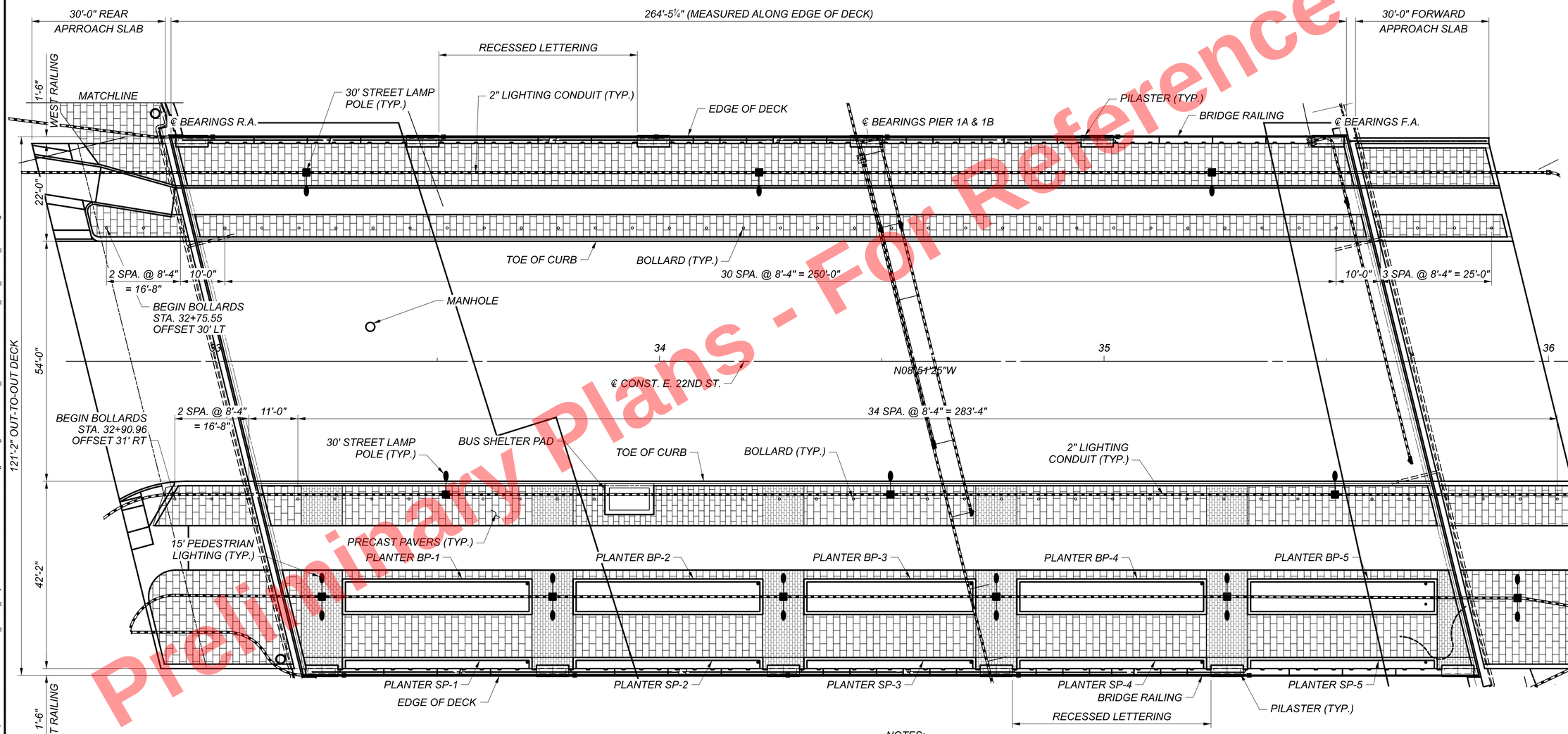

AESTHETIC KEY PLAN

NOTES:

1. FOR BRIDGE RAILING DETAILS, SEE SHEETS 71-80/99.
2. FOR BRIDGE SIDEWALK DETAILS, SEE SHEETS 65 - 70/99.
3. SEE LANDSCAPE PLANS FOR ADDITIONAL DETAILS.
4. FOR DECK PLAN, SEE SHEET 58/99.
5. FOR TRANSVERSE SECTION, SEE SHEET 41/99.
6. FOR PLANTER DETAILS, SEE SHEETS 83 - 85/99.
7. FOR BOLLARD DETAILS, SEE SHEET 86/99.
8. SEE LIGHTING PLANS FOR ADDITIONAL DETAILS
9. FOR APPROACH SLAB DETAILS, SEE SHEETS 89 - 94/99.

Preliminary Plans - For Reference Only

AESTHETIC KEY PLAN
CUY-90-1678 (BRIDGE 13)
CR-710 (E. 22ND ST.) OVER I.R. 90

SFN 1807839

DESIGN AGENCY
Michael Baker INTERNATIONAL

DESIGNER	CHECKER
SWB	MKB

REVIEWER
CDC 05/10/24

PROJECT ID
82382

SUBSET	TOTAL
65	99

SHEET	TOTAL
2246	2696

CUY-90-16.28 (CCG3A)

MODEL: Sheet PAPERSIZE: 34x22 (in.) DATE: 3/28/2025 TIME: 7:49:40 AM USER: RohitBk
pw:\\mb-us-pw.bentley.com:mb-us-pw-03\Documents\Cleveland_OH101_Projects\ODOT\District12\82382\400-Engineering\Structures\SFN_1807839\Sheets\82382_SFN_1807839_SD010.dgn

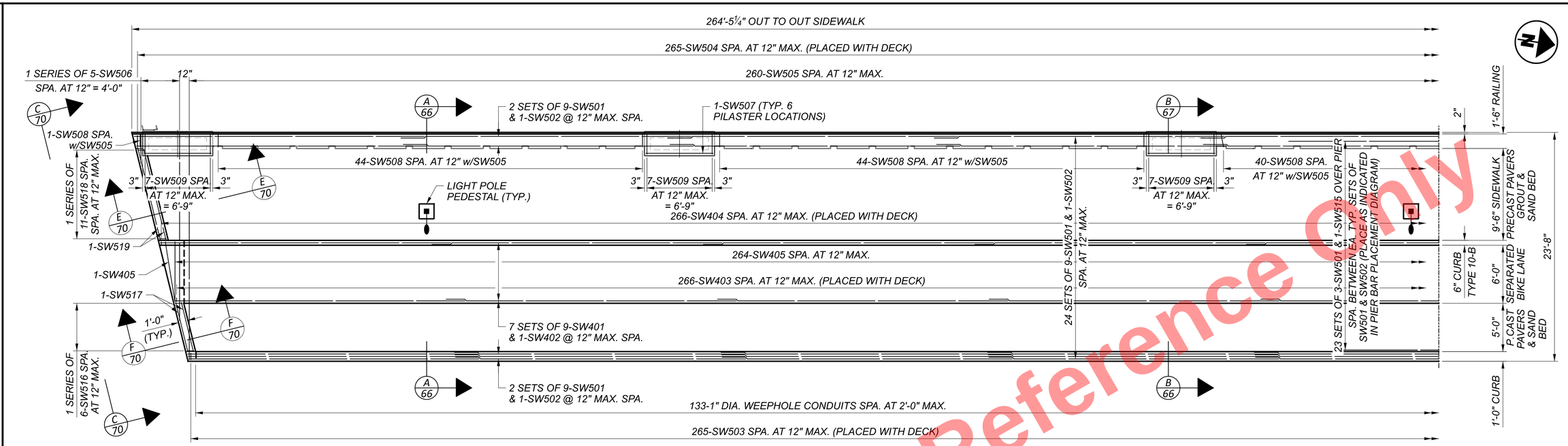

WEST PARTIAL SIDEWALK PLAN

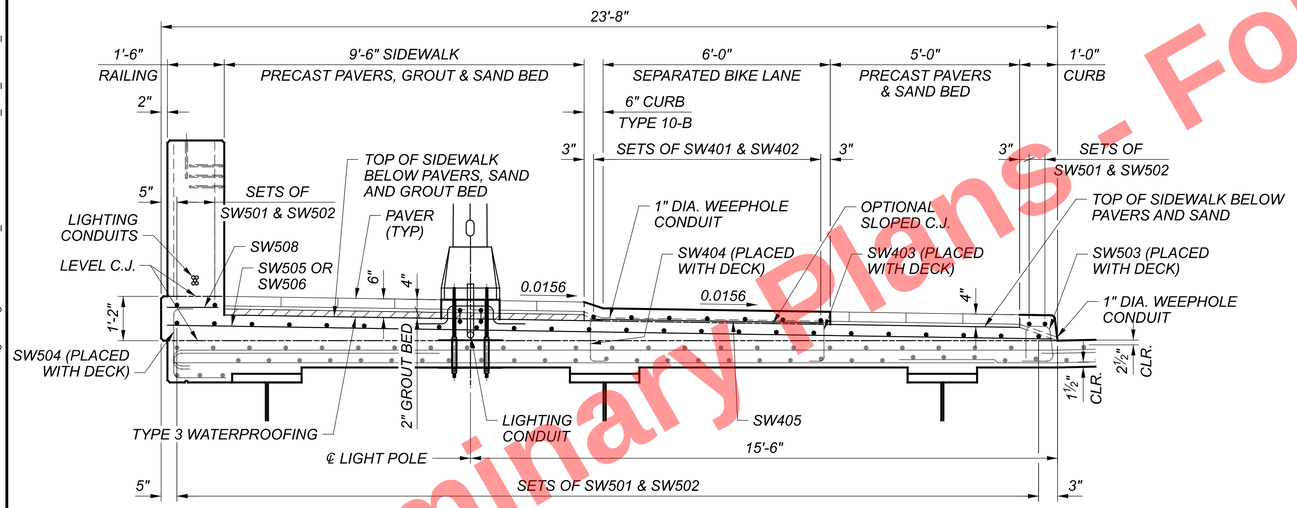

A 66 / 67 SECTION

(RAILING AND PILASTER BARS NOT SHOWN FOR CLARITY)

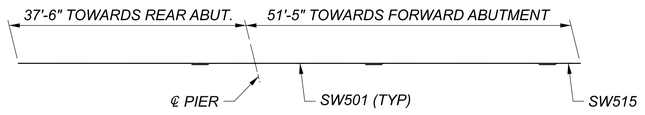

PIER BAR PLACEMENT DIAGRAM

(NOT TO SCALE)

NOTES:

1. PROVIDE 2" CONCRETE COVER ON REINFORCEMENT BAR UNLESS NOTED OTHERWISE.
2. FOR LIGHT POLE PEDSTALS, INCLUDING PEDESTAL REBAR TO BE CAST INTO THE SIDEWALK, SEE 86/99.
3. FOR CONCRETE SEALING LIMITS, SEE SHEET 41/99.

MINIMUM LAP LENGTHS:

#5 BAR	2'-5"
#4 BAR	1'-11"

Preliminary Plans - For Reference Only

WEST SIDEWALK PLAN & DETAILS (1 OF 2)

CUY-90-1678 (BRIDGE 13)

CR-710 (E. 22ND ST.) OVER I.R. 90

SFN	1807839
DESIGN AGENCY	Michael Baker INTERNATIONAL
DESIGNER	JNR
CHECKER	MKB
REVIEWER	CDC 05/10/24
PROJECT ID	82382
SUBSET	66
TOTAL	99
SHEET	2247
TOTAL	2696

CUY-90-16.28 (CCG3A)
MODEL: Sheet PAPERSIZE: 34x22 (in.) DATE: 3/28/2025 TIME: 7:49:56 AM USER: RohitBk
pw:\\mb-us-pw.bentley.com:mb-us-pw-03\Documents\Cleveland_OH101_Projects\ODOT\District12\82382\400-Engineering\Structures\SFN_1807839\Sheets\82382_SFN_1807839_SD003.dgn

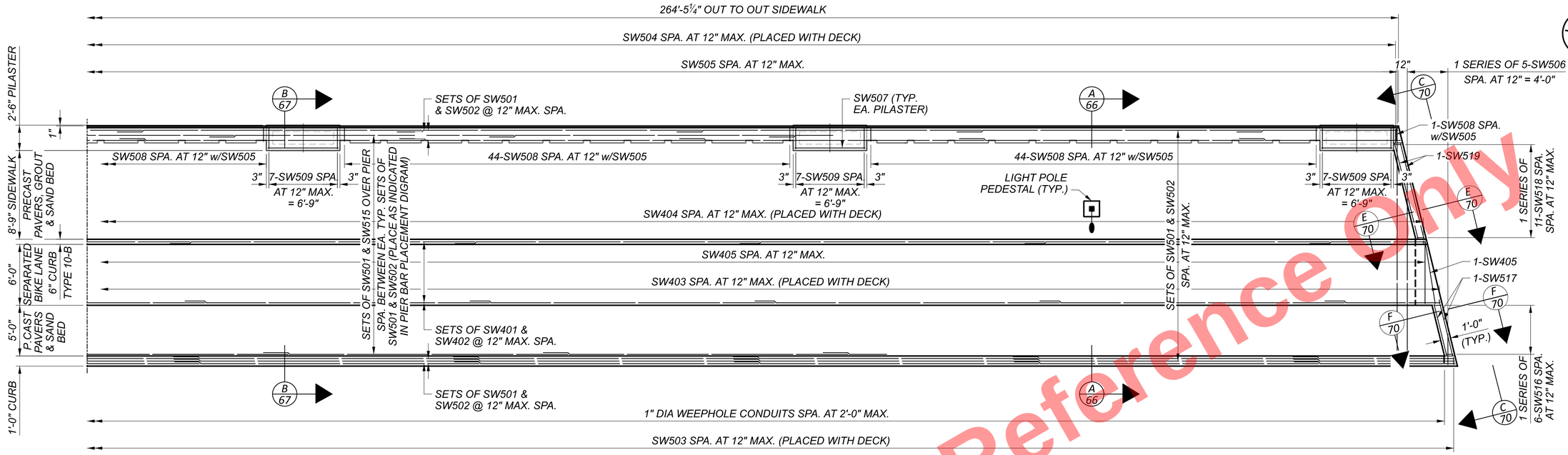

WEST PARTIAL SIDEWALK PLAN

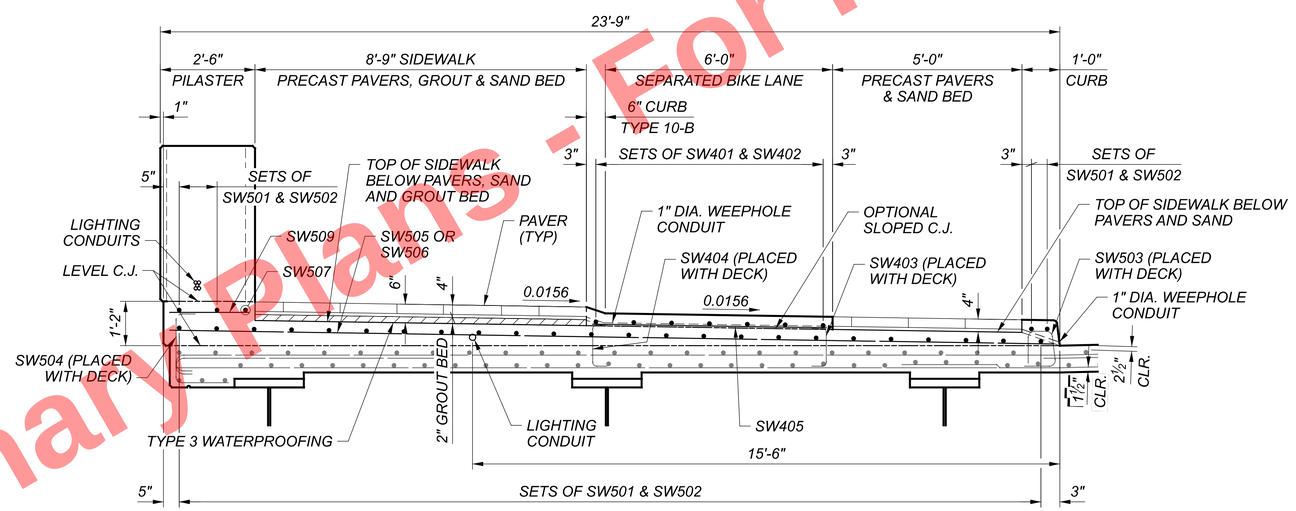

B 66 67 SECTION

(RAILING AND PILASTER BARS NOT SHOWN FOR CLARITY)

Preliminary Plans - For Reference Only

NOTES:

1. PROVIDE 2" CONCRETE COVER ON REINFORCEMENT BAR UNLESS NOTED OTHERWISE.
2. FOR LIGHT POLE PEDSTALS, INCLUDING PEDESTAL REBAR TO BE CAST INTO THE SIDEWALK, SEE 86/99.
3. FOR CONCRETE SEALING LIMITS, SEE SHEET 41/99.

MINIMUM LAP LENGTHS:

#5 BAR	2'-5"
#4 BAR	1'-11"

WEST SIDEWALK PLAN & DETAILS (2 OF 2)

CUY-90-1678 (BRIDGE 13)
CR-710 (E. 22ND ST.) OVER I.R. 90

SFN	1807839
DESIGN AGENCY	Michael Baker INTERNATIONAL
DESIGNER	JNR
CHECKER	MKB
REVIEWER	CDC 05/10/24
PROJECT ID	82382
SUBSET	67
TOTAL	99
SHEET	2248
TOTAL	2696

CUY-90-16.28 (CCG3A)

MODEL: Sheet PAPERSIZE: 34x22 (in.) DATE: 3/28/2025 TIME: 7:50:08 AM USER: RohitBk
pw:\\mb-us-pw.bentley.com:mb-us-pw-03\Documents\Cleveland_OH101_Projects\ODOT\District12\82382\400-Engineering\Structures\SFN_1807839\Sheets\82382_SFN_1807839_SD004.dgn

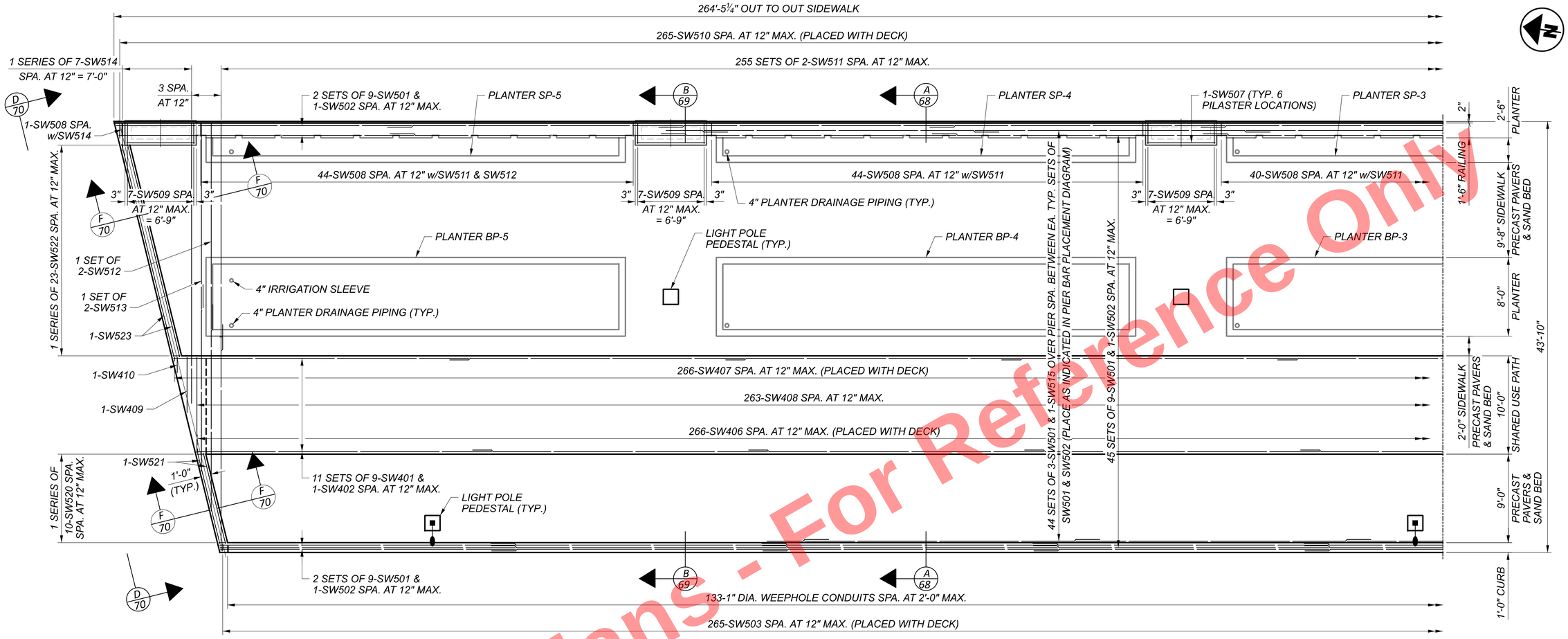

EAST PARTIAL SIDEWALK PLAN

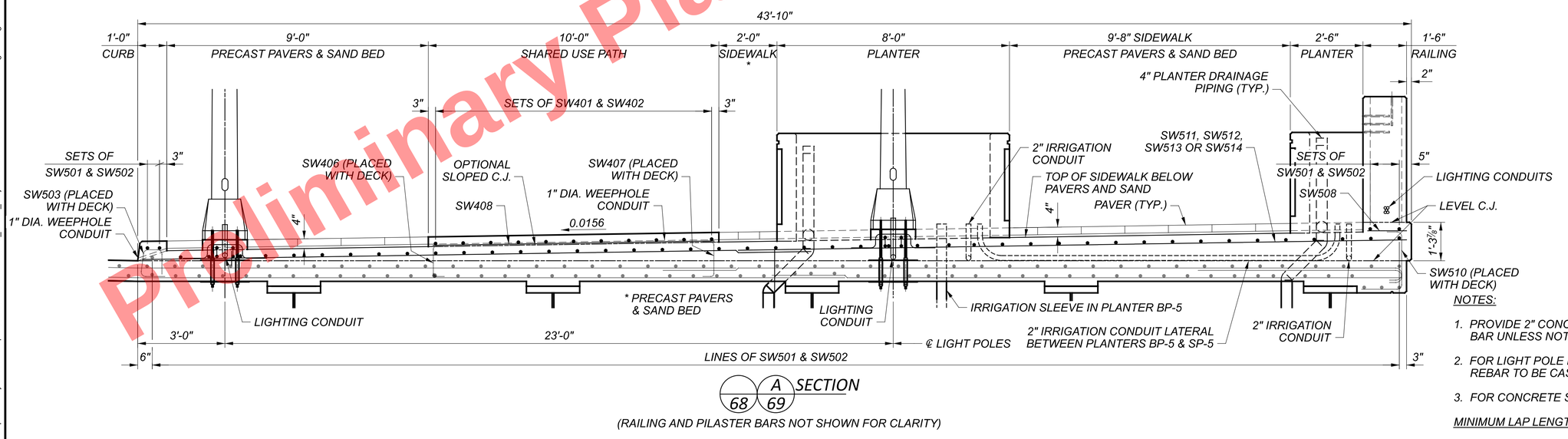

A SECTION
68 / 69

(RAILING AND PILASTER BARS NOT SHOWN FOR CLARITY)

NOTES:

1. PROVIDE 2" CONCRETE COVER ON REINFORCEMENT BAR UNLESS NOTED OTHERWISE.
2. FOR LIGHT POLE PEDSTALS, INCLUDING PEDESTAL REBAR TO BE CAST INTO THE SIDEWALK, SEE 86/99.
3. FOR CONCRETE SEALING LIMITS, SEE SHEET 41/99.

MINIMUM LAP LENGTHS:

#5 BAR	2'-5"
#4 BAR	1'-11"

Preliminary Plans - For Reference Only

EAST SIDEWALK PLAN & DETAILS (1 OF 2)
CUY-90-1678 (BRIDGE 13)
CR-710 (E. 22ND ST.) OVER I.R. 90

SFN	1807839
DESIGN AGENCY	Michael Baker INTERNATIONAL
DESIGNER	JNR
CHECKER	MKB
REVIEWER	CDC 05/10/24
PROJECT ID	82382
SUBSET	68
TOTAL	99
SHEET	2249
TOTAL	2696

CUY-90-16.28 (CCG3A)

MODEL: Sheet PAPERSIZE: 34x22 (in.) DATE: 3/28/2025 TIME: 7:50:23 AM USER: Rohit.Bk
pw:\\mb-us-pw.bentley.com:mb-us-pw-03\Documents\Cleveland_OH101_Projects\ODOT\District12\82382\400-Engineering\Structures\SFN_1807839\Sheets\82382_SFN_1807839_SD011.dgn

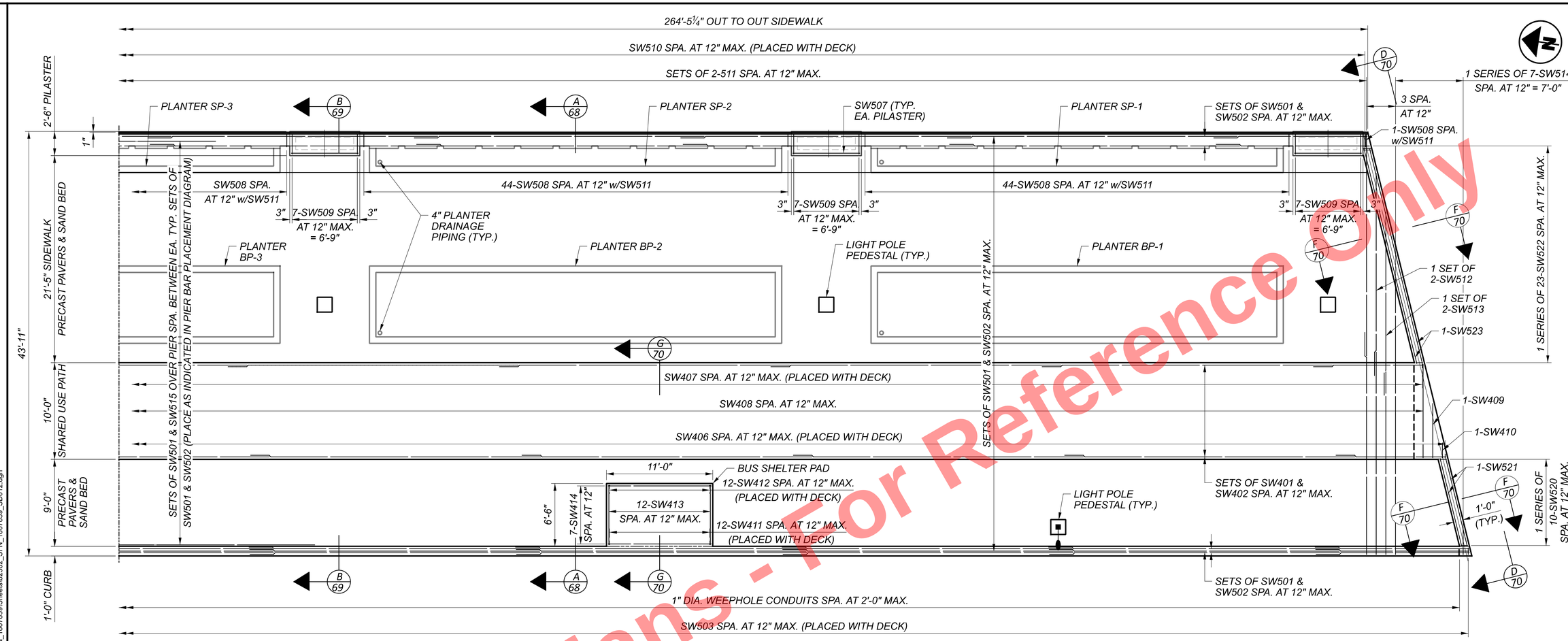

EAST PARTIAL SIDEWALK PLAN

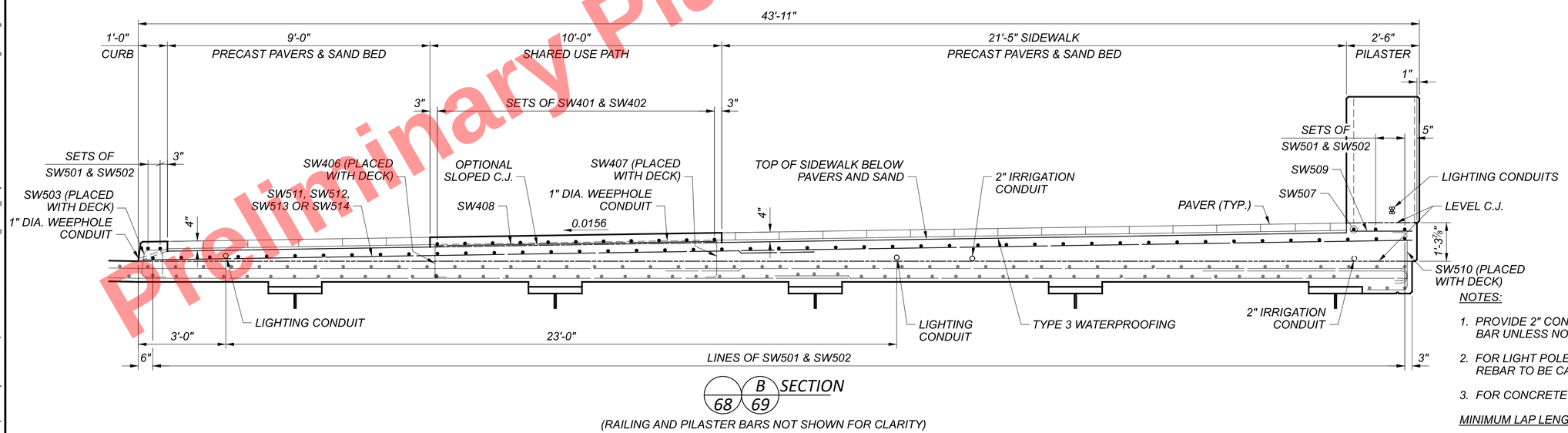

B / 68 / 69 SECTION

(RAILING AND PILASTER BARS NOT SHOWN FOR CLARITY)

NOTES:

1. PROVIDE 2" CONCRETE COVER ON REINFORCEMENT BAR UNLESS NOTED OTHERWISE.
2. FOR LIGHT POLE PEDSTALS, INCLUDING PEDESTAL REBAR TO BE CAST INTO THE SIDEWALK, SEE 86/99.
3. FOR CONCRETE SEALING LIMITS, SEE SHEET 41/99.

MINIMUM LAP LENGTHS:

#5 BAR	2'-5"
#4 BAR	1'-11"

Preliminary Plans - Not For Reference Only

EAST SIDEWALK PLAN & DETAILS (2 OF 2)
CUY-90-1678 (BRIDGE 13)
CR-710 (E. 22ND ST.) OVER I.R. 90

SFN	1807839
DESIGN AGENCY	Michael Baker INTERNATIONAL
DESIGNER	JNR
CHECKER	MKB
REVIEWER	CDC 05/10/24
PROJECT ID	82382
SUBSET	69
TOTAL	99
SHEET	2250
TOTAL	2696

CUY-90-16.28 (CCG3A)

MODEL: Sheet PAPERSIZE: 34x22 (in.) DATE: 3/28/2025 TIME: 7:50:34 AM USER: RohitLBk
pw:\\mb-us-pw.bentley.com:mb-us-pw-03\Documents\Cleveland_OH\01_Projects\ODOT\District12\82382400-Engineering\Structures\SFN_1807839\Sheets\82382_SFN_1807839_SD012.dgn

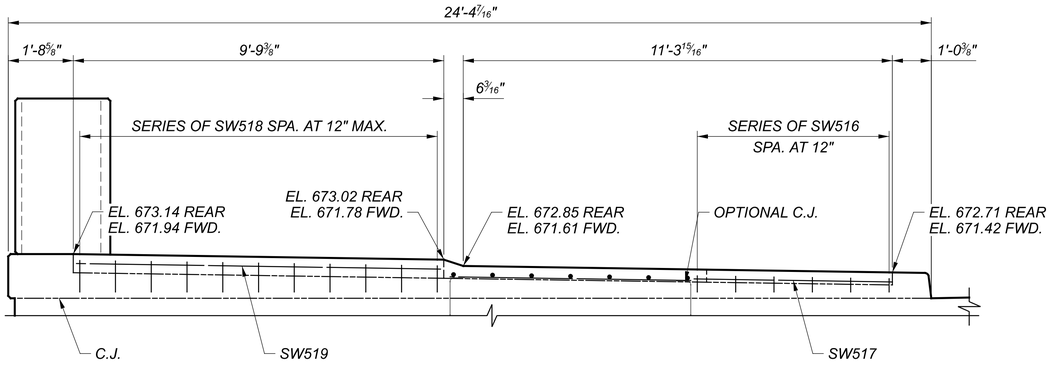

66 67 C VIEW
END PAVER FRAME
(REAR SHOWN, FWD. OPPOSITE HAND)

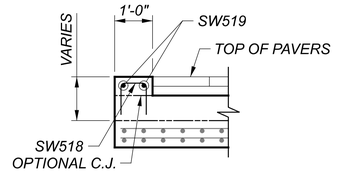

66 67 E SECTION
SLIDING PLATE NOT SHOWN FOR CLARITY,
SEE SECTION A ON 87/99 FOR DETAILS

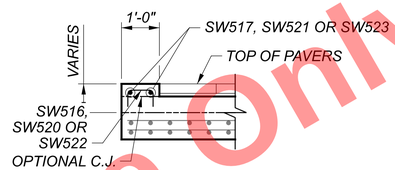

66 67 68 69 F SECTION
SLIDING PLATE NOT SHOWN FOR CLARITY,
SEE SECTION A ON 87/99 FOR DETAILS

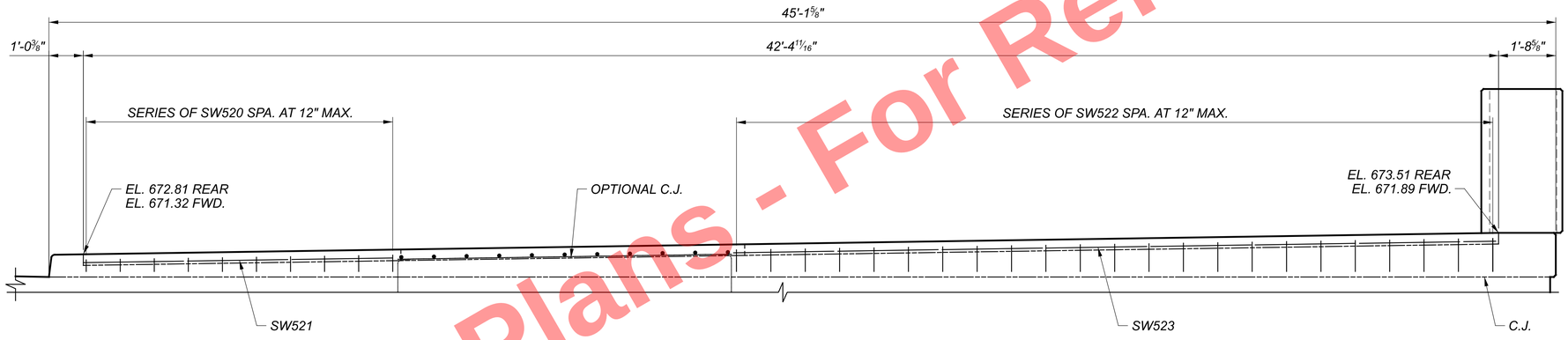

68 69 D VIEW
END PAVER FRAME
(REAR SHOWN, FWD. OPPOSITE HAND)

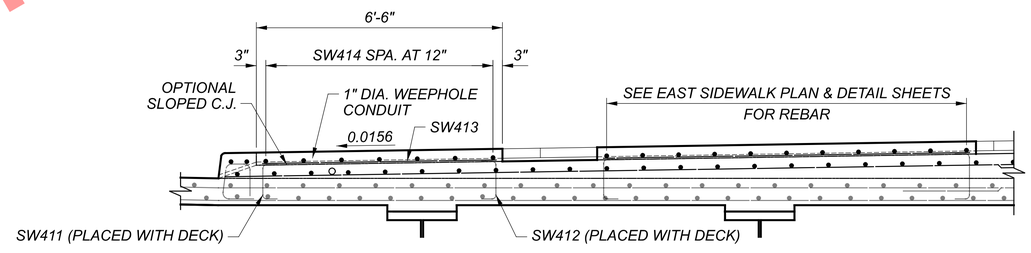

69 G SECTION

NOTES:

1. PROVIDE 2" CONCRETE COVER ON REINFORCEMENT BARS UNLESS NOTED OTHERWISE.
2. FOR CONCRETE SEALING LIMITS, SEE SHEET 41/99.

MINIMUM LAP LENGTHS:

#5 BAR 2'-5"
#4 BAR 1'-11"

Preliminary Plans - For Reference Only

SIDEWALK DETAILS
CUY-90-1678 (BRIDGE 13)
CR-710 (E. 22ND ST.) OVER I.R. 90

SFN 1807839
DESIGN AGENCY Michael Baker INTERNATIONAL
DESIGNER JNR | CHECKER MKB
REVIEWER CDC 05/10/24
PROJECT ID 82382
SUBSET 70 | TOTAL 99
SHEET 2251 | TOTAL 2696

CUY-90-16.28 (CCG3A)

MODEL: Sheet PAPERSIZE: 34x22 (in.) DATE: 3/28/2025 TIME: 7:50:46 AM USER: RohitLBk
pw:\\mb-us-pw.bentley.com:mb-us-pw-03\Documents\Cleveland_OH101_Projects\ODOT\District12\82382400-Engineering\Structures\SFN_1807839\Sheets\82382_SFN_1807839_SD013.dgn

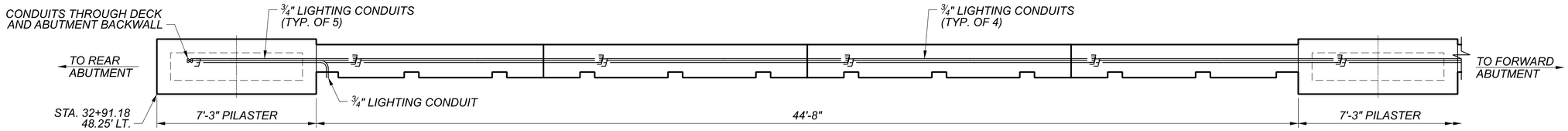

PARTIAL PLAN

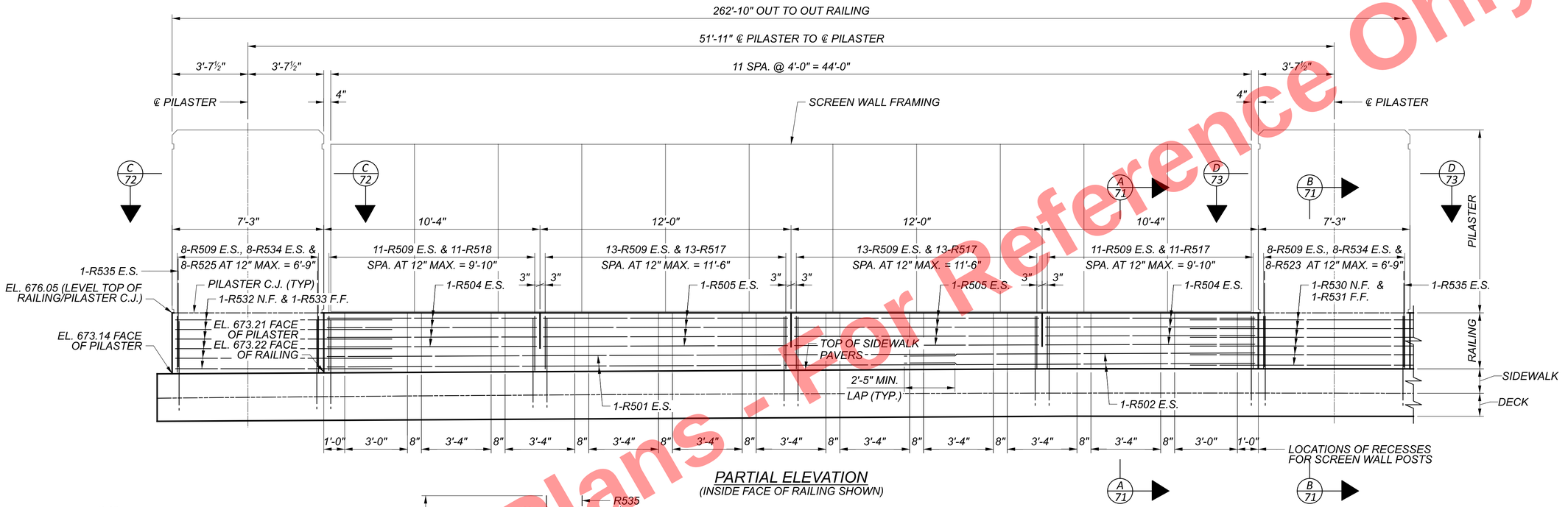

PARTIAL ELEVATION
(INSIDE FACE OF RAILING SHOWN)

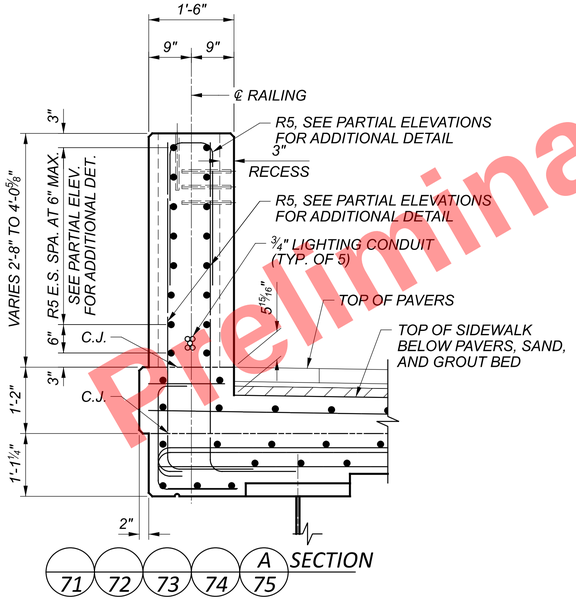

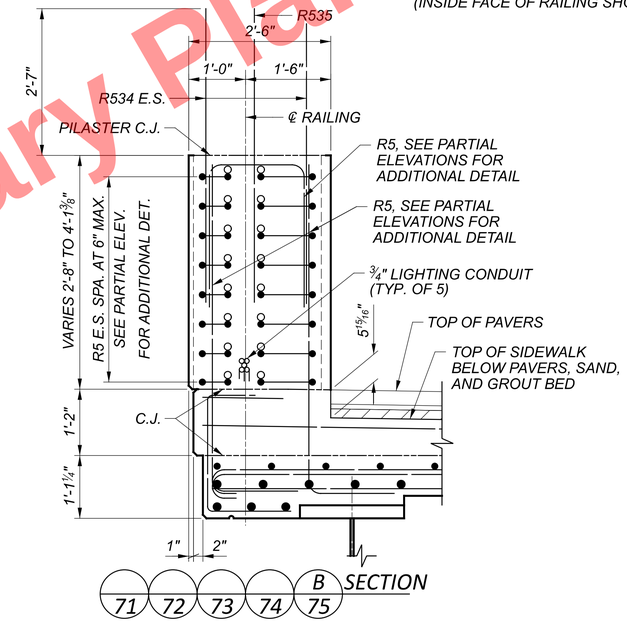

Preliminary Plans - For Reference Only

NOTES:

1. *PROVIDE 2" CONCRETE COVER ON REINFORCEMENT BARS UNLESS NOTED OTHERWISE.*
2. *FOR ADDITIONAL RAILING SAWCUT DETAILS, SEE ODOT STANDARD DRAWING BR-2-15.*
3. *FOR DECK SLAB REINFORCING DETAILS, SEE SHEET 58 /99.*
4. *FOR SIDEWALK SLAB DETAILS, SEE SHEETS 66 - 69 / 99.*
5. *FOR SCREEN WALL DETAILS, SEE SHEET 82 / 99.*
6. *CONTRACTOR SHALL NOT CAST RAILING UNTIL SCREENWALL POSTS, BASEPLATE AND ANCHORAGE DESIGNS ARE ACCEPTED BY THE ENGINEER AND THE WIDTH OF THE RECESS IS VERIFIED.*

MINIMUM LAP LENGTHS:

#5 BAR (HORIZONTAL) 3'-1" U.N.O.
#5 BAR (VERTICAL) 2'-5"

WEST RAILING PLAN & ELEVATION (1 OF 5)
CUY-90-1678 (BRIDGE 13)
CR-710 (E. 22ND ST.) OVER I.R. 90

SFN	1807839
DESIGN AGENCY	Michael Baker INTERNATIONAL
DESIGNER	JNR
CHECKER	MKB
REVIEWER	CDC 05-10-24
PROJECT ID	82382
SUBSET	71
TOTAL	99
SHEET	2252
TOTAL	2696

CUY-90-16.28 (CCG3A)

MODEL: Railing Plan and Elevation PAPERSIZE: 34x22 (in.) DATE: 6/12/2025 TIME: 12:55:48 PM USER: David.Fell
pw:\\mb-us-pw.bentley.com:mb-us-pw-03\Documents\Cleveland_OH101_Projects\ODOT\District12\82382\400-Engineering\Structures\SFN_1807839\Sheets\82382_SFN_1807839_SA001.dgn

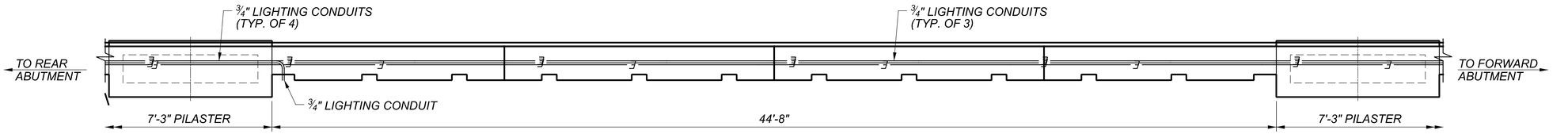

PARTIAL PLAN

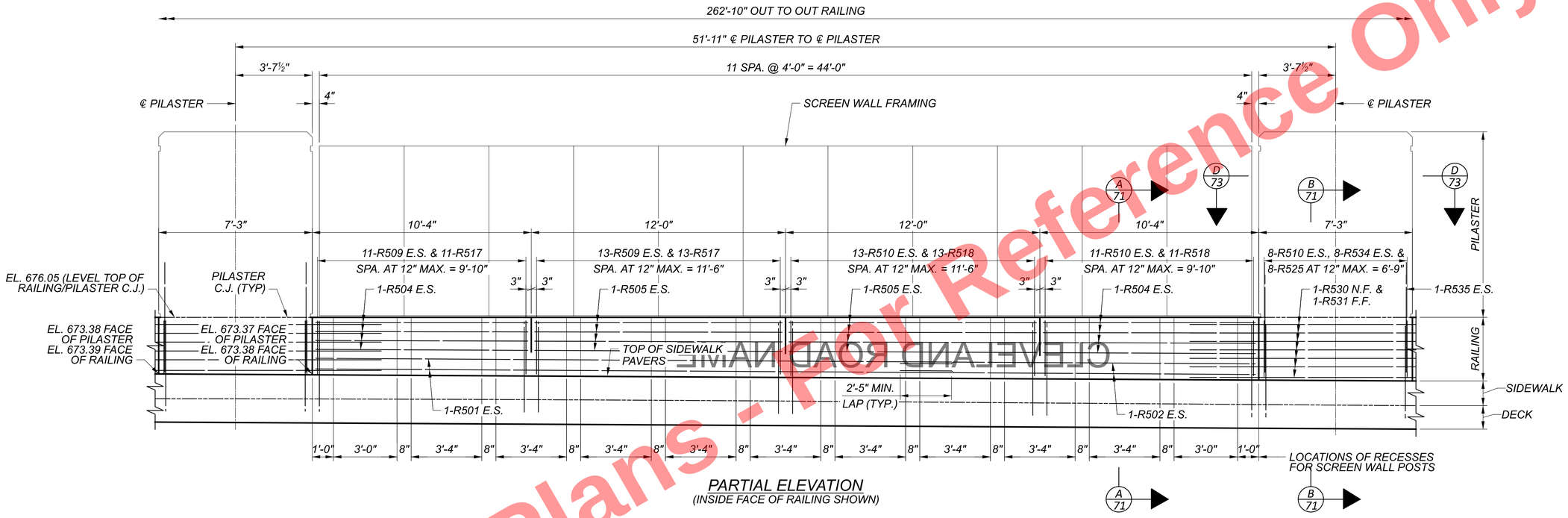

PARTIAL ELEVATION
(INSIDE FACE OF RAILING SHOWN)

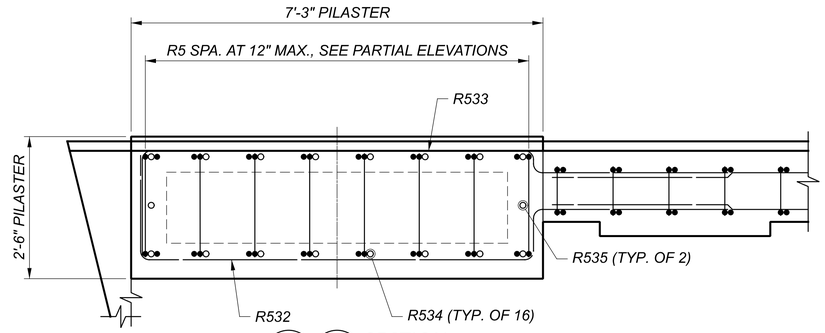

71 C 75 SECTION

(PILASTER AT REAR ABUTMENT SHOWN, PILASTER AT FORWARD ABUTMENT OPPOSITE HAND)

Preliminary Plans - For Reference Only

NOTES:

1. *PROVIDE 2" CONCRETE COVER ON REINFORCEMENT BARS UNLESS NOTED OTHERWISE.*
2. *FOR ADDITIONAL RAILING SAWCUT DETAILS, SEE ODOT STANDARD DRAWING BR-2-15.*
3. *FOR DECK SLAB REINFORCING DETAILS, SEE SHEET 58 /99.*
4. *FOR SIDEWALK SLAB DETAILS, SEE SHEETS 66 - 69 / 99.*
5. *FOR SCREEN WALL DETAILS, SEE SHEET 82 / 99.*
6. *CONTRACTOR SHALL NOT CAST RAILING UNTIL SCREENWALL POSTS, BASEPLATE AND ANCHORAGE DESIGNS ARE ACCEPTED BY THE ENGINEER AND THE WIDTH OF THE RECESS IS VERIFIED.*

MINIMUM LAP LENGTHS:

#5 BAR (HORIZONTAL) 3'-1" U.N.O.
#5 BAR (VERTICAL) 2'-5"

WEST RAILING PLAN & ELEVATION (2 OF 5)
CUY-90-1678 (BRIDGE 13)
CR-710 (E. 22ND ST.) OVER I.R. 90

SFN	1807839
DESIGN AGENCY	Michael Baker INTERNATIONAL
DESIGNER	JNR
CHECKER	MKB
REVIEWER	CDC 05/10/24
PROJECT ID	82382
SUBSET	72
TOTAL	99
SHEET	2253
TOTAL	2696

CUY-90-16.28 (CCG3A)

MODEL: Railing Plan and Elevation PAPERSIZE: 34x22 (in.) DATE: 6/12/2025 TIME: 12:55:59 PM USER: David.Fell
pw:\\mb-us-pw.bentley.com:mb-us-pw-03\Documents\Cleveland_OH\01_Projects\ODOT\District12\82382\400-Engineering\Structures\SFN_1807839\Sheets\82382_SA002.dgn

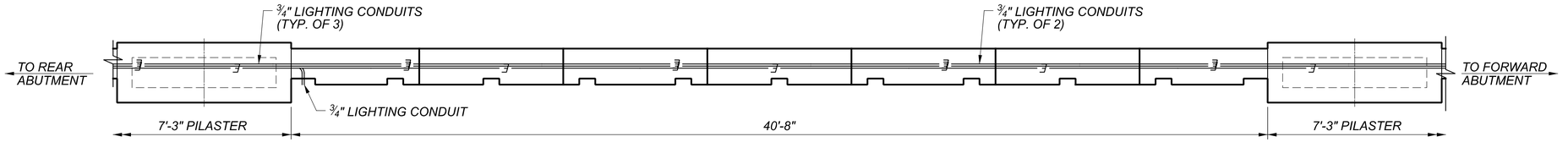

PARTIAL PLAN

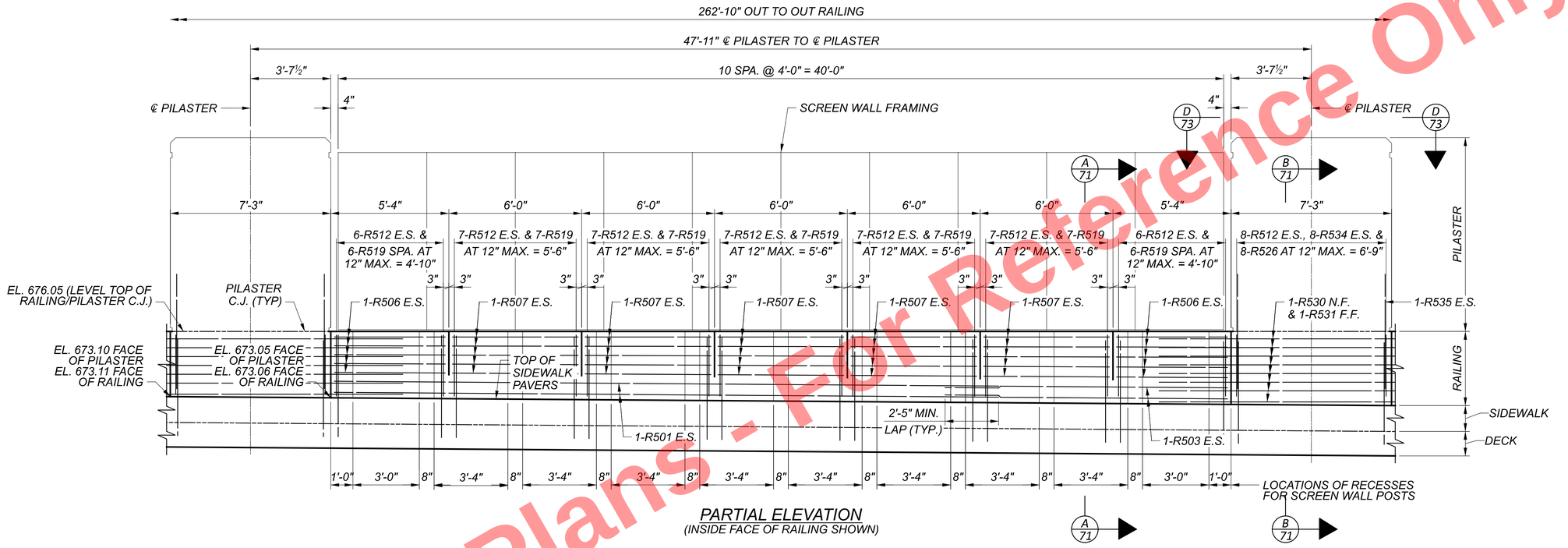

PARTIAL ELEVATION
(INSIDE FACE OF RAILING SHOWN)

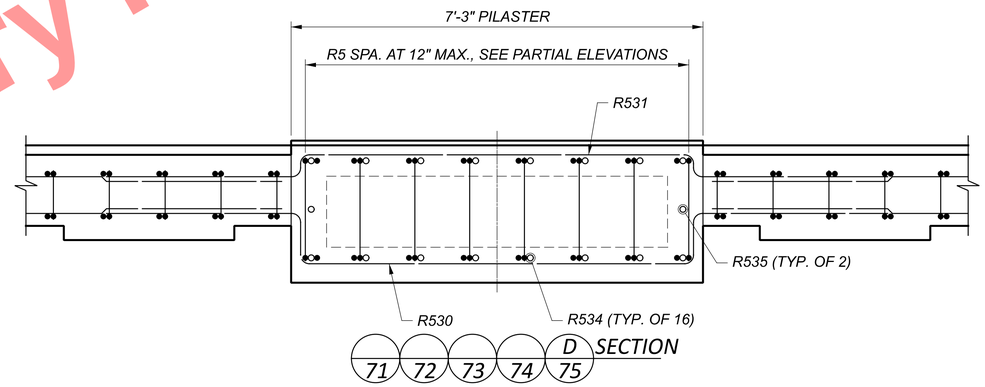

Preliminary Plans - For Reference Only

NOTES:

1. PROVIDE 2" CONCRETE COVER ON REINFORCEMENT BARS UNLESS NOTED OTHERWISE.
2. FOR ADDITIONAL RAILING SAWCUT DETAILS, SEE ODOT STANDARD DRAWING BR-2-15.
3. FOR DECK SLAB REINFORCING DETAILS, SEE SHEET 58 /99.
4. FOR SIDEWALK SLAB DETAILS, SEE SHEETS 66 - 69 / 99.
5. FOR SCREEN WALL DETAILS, SEE SHEET 82 / 99.
6. CONTRACTOR SHALL NOT CAST RAILING UNTIL SCREENWALL POSTS, BASEPLATE AND ANCHORAGE DESIGNS ARE ACCEPTED BY THE ENGINEER AND THE WIDTH OF THE RECESS IS VERIFIED.

MINIMUM LAP LENGTHS:

#5 BAR (HORIZONTAL) 3'-1" U.N.O.
#5 BAR (VERTICAL) 2'-5"

WEST RAILING PLAN & ELEVATION (3 OF 5)
CUY-90-1678 (BRIDGE 13)
CR-710 (E. 22ND ST.) OVER I.R. 90

SFN	1807839
DESIGN AGENCY	Michael Baker INTERNATIONAL
DESIGNER	JNR
CHECKER	MKB
REVIEWER	CDC 05/10/24
PROJECT ID	82382
SUBSET	73
TOTAL	99
SHEET	2254
TOTAL	2696

CUY-90-16.28 (CCG3A)

MODEL: Railing Plan and Elevation PAPERSIZE: 34x22 (in.) DATE: 6/12/2025 TIME: 12:56:10 PM USER: David.Fell
pw:\\mb-us-pw.bentley.com:mb-us-pw-03\Documents\Cleveland_OH\01_Projects\ODOT\District12\82382400-Engineering\Structures\SFN_1807839\Sheets\82382_SFN_1807839_SA003.dgn

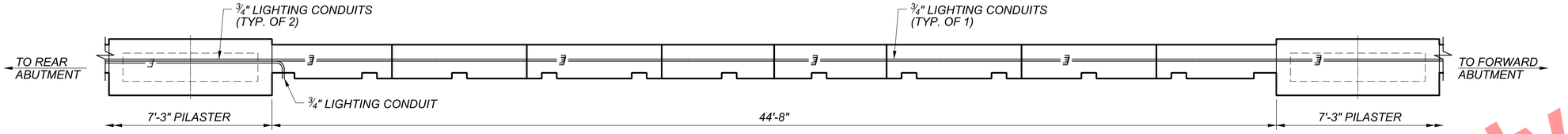

PARTIAL PLAN

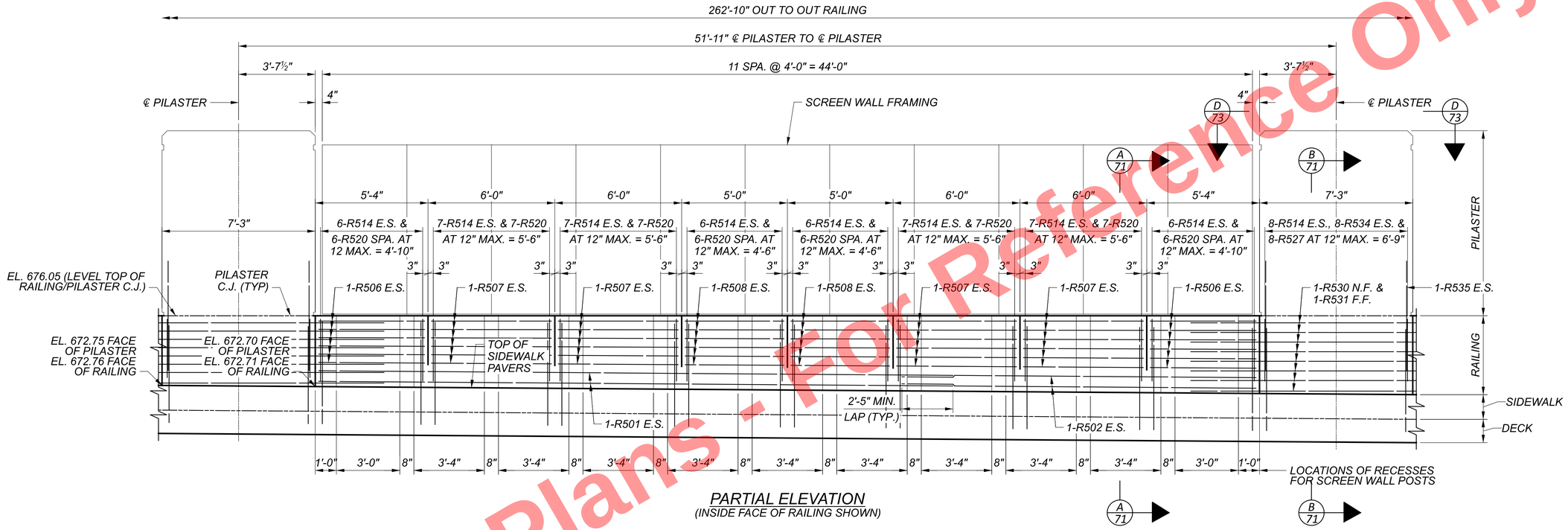

PARTIAL ELEVATION
(INSIDE FACE OF RAILING SHOWN)

Preliminary Plans - For Reference Only

NOTES:

1. PROVIDE 2" CONCRETE COVER ON REINFORCEMENT BARS UNLESS NOTED OTHERWISE.
2. FOR ADDITIONAL RAILING SAWCUT DETAILS, SEE ODOT STANDARD DRAWING BR-2-15.
3. FOR DECK SLAB REINFORCING DETAILS, SEE SHEET 58 /99.
4. FOR SIDEWALK SLAB DETAILS, SEE SHEETS 66 - 69 / 99.
5. FOR SCREEN WALL DETAILS, SEE SHEET 82 / 99.
6. CONTRACTOR SHALL NOT CAST RAILING UNTIL SCREENWALL POSTS, BASEPLATE AND ANCHORAGE DESIGNS ARE ACCEPTED BY THE ENGINEER AND THE WIDTH OF THE RECESS IS VERIFIED.

MINIMUM LAP LENGTHS:

#5 BAR (HORIZONTAL) 3'-1" U.N.O.
#5 BAR (VERTICAL) 2'-5"

WEST RAILING PLAN & ELEVATION (4 OF 5)
CUY-90-1678 (BRIDGE 13)
CR-710 (E. 22ND ST.) OVER I.R. 90

SFN 1807839
DESIGN AGENCY
Michael Baker INTERNATIONAL
DESIGNER JNR | CHECKER MKB
REVIEWER CDC 05/10/24
PROJECT ID 82382
SUBSET 74 | TOTAL 99
SHEET 2255 | TOTAL 2696

CUY-90-16.28 (CCG3A)

MODEL: Railing Plan and Elevation PAPERSIZE: 34x22 (in.) DATE: 6/12/2025 TIME: 12:56:20 PM USER: David.Fell
pw:\\mb-us-pw.bentley.com:mb-us-pw-03\Documents\Cleveland_OH\01_Projects\ODOT\District12\82382\400-Engineering\Structures\SFN_1807839\Sheets\82382_SFN_1807839_SA004.dgn

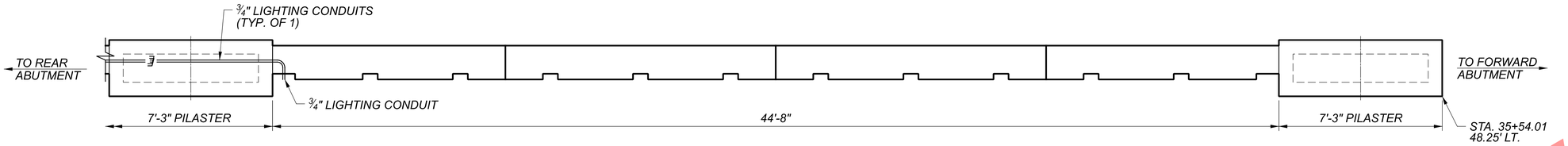

PARTIAL PLAN

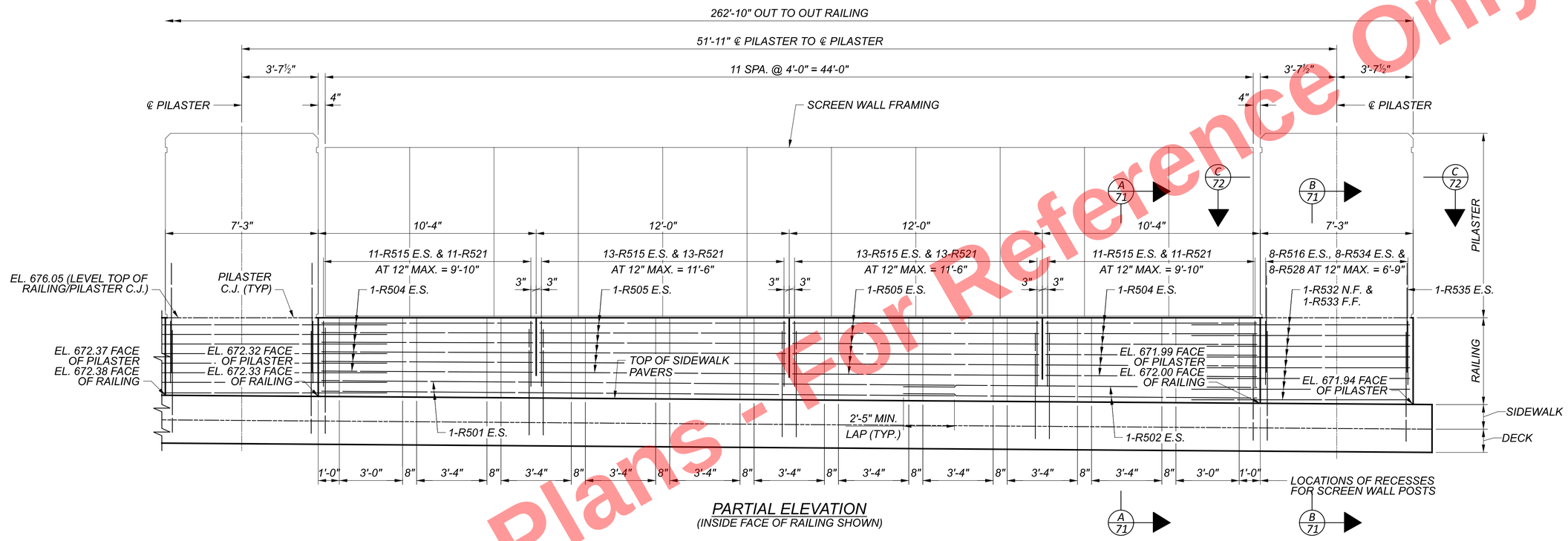

PARTIAL ELEVATION
(INSIDE FACE OF RAILING SHOWN)

Preliminary Plans - For Reference Only

NOTES:

1. PROVIDE 2" CONCRETE COVER ON REINFORCEMENT BARS UNLESS NOTED OTHERWISE.
2. FOR ADDITIONAL RAILING SAWCUT DETAILS, SEE ODOT STANDARD DRAWING BR-2-15.
3. FOR DECK SLAB REINFORCING DETAILS, SEE SHEET 58 /99.
4. FOR SIDEWALK SLAB DETAILS, SEE SHEETS 66 - 69 / 99.
5. FOR SCREEN WALL DETAILS, SEE SHEET 82 / 99.
6. CONTRACTOR SHALL NOT CAST RAILING UNTIL SCREENWALL POSTS, BASEPLATE AND ANCHORAGE DESIGNS ARE ACCEPTED BY THE ENGINEER AND THE WIDTH OF THE RECESS IS VERIFIED.

MINIMUM LAP LENGTHS:

#5 BAR (HORIZONTAL) 3'-1" U.N.O.
#5 BAR (VERTICAL) 2'-5"

WEST RAILING PLAN & ELEVATION (5 OF 5)
CUY-90-1678 (BRIDGE 13)
CR-710 (E. 22ND ST.) OVER I.R. 90

SFN 1807839
DESIGN AGENCY Michael Baker INTERNATIONAL
DESIGNER JNR | CHECKER MKB
REVIEWER CDC 05/10/24
PROJECT ID 82382
SUBSET 75 | TOTAL 99
SHEET 2256 | TOTAL 2696

CUY-90-16.28 (CCG3A)

MODEL: Railing Plan and Elevation PAPERSIZE: 34x22 (in.) DATE: 6/12/2025 TIME: 12:56:31 PM USER: David.Fell
pw:\\mb-us-pw.bentley.com:mb-us-pw-03\Documents\Cleveland_OH\01_Projects\ODOT\Distrct12\82382400-Engineering\Structures\SFN_1807839\Sheets\82382_SFN_1807839_SA005.dgn

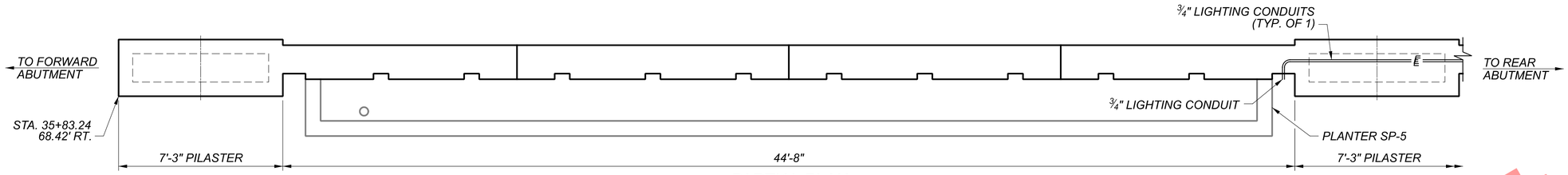

PARTIAL PLAN

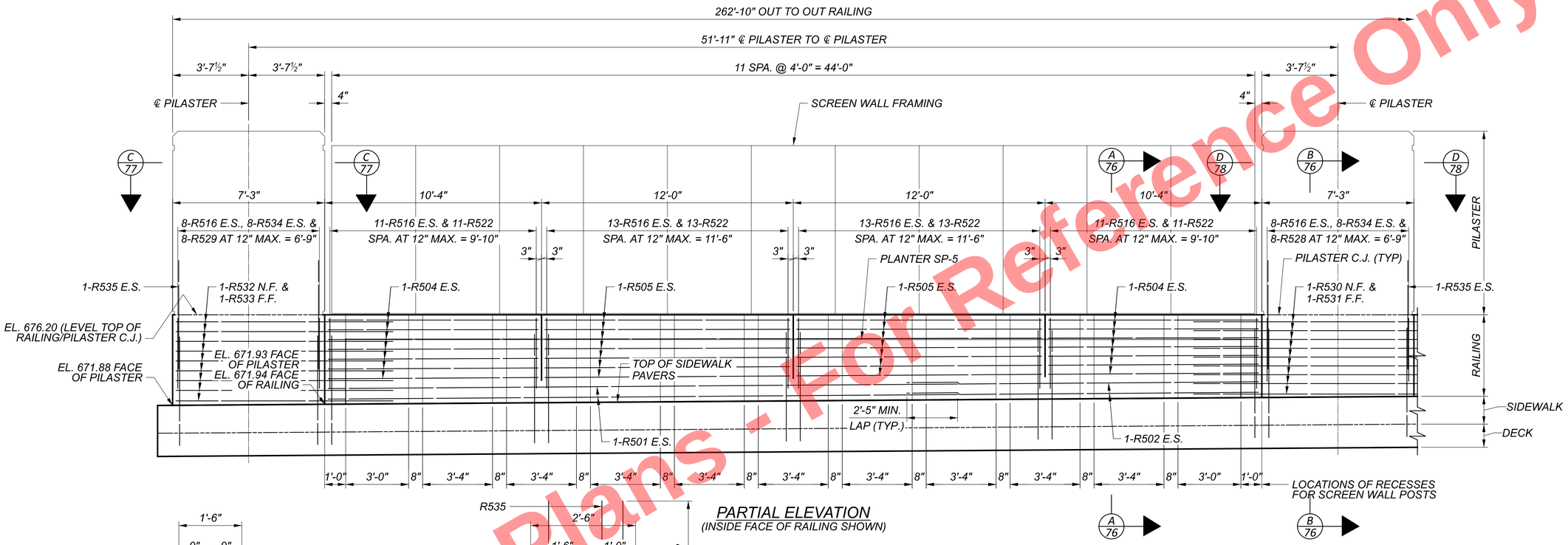

PARTIAL ELEVATION
(INSIDE FACE OF RAILING SHOWN)

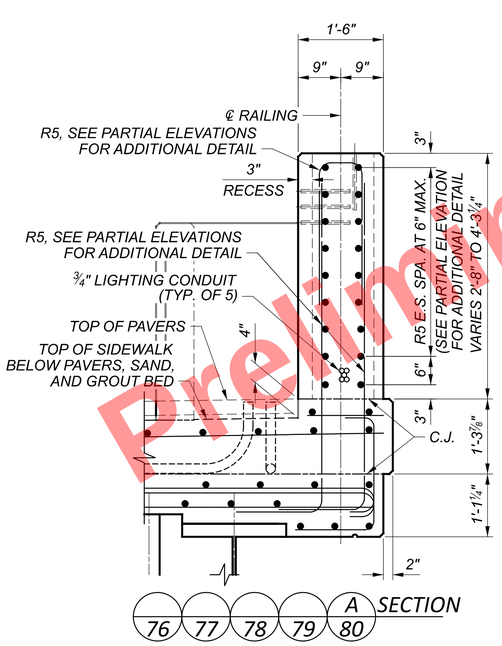

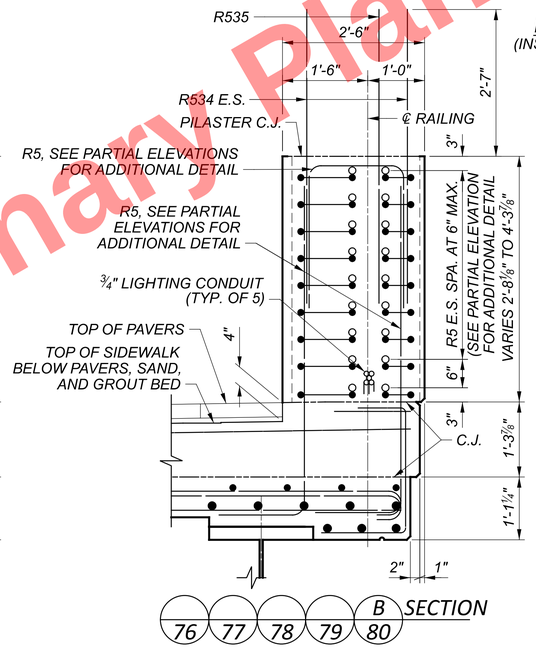

NOTES:

1. PROVIDE 2" CONCRETE COVER ON REINFORCEMENT BARS UNLESS NOTED OTHERWISE.
2. FOR ADDITIONAL RAILING SAWCUT DETAILS, SEE ODOT STANDARD DRAWING BR-2-15.
3. FOR DECK SLAB REINFORCING DETAILS, SEE SHEET 58 /99.
4. FOR SIDEWALK SLAB DETAILS, SEE SHEETS 66 -69 / 99.
5. FOR SCREEN WALL DETAILS, SEE SHEET 82 / 99.
6. CONTRACTOR SHALL NOT CAST RAILING UNTIL SCREENWALL POSTS, BASEPLATE AND ANCHORAGE DESIGNS ARE ACCEPTED BY THE ENGINEER AND THE WIDTH OF THE RECESS IS VERIFIED.

MINIMUM LAP LENGTHS:

#5 BAR (HORIZONTAL) 3'-1" U.N.O.
#5 BAR (VERTICAL) 2'-5"

Preliminary Plans - For Reference Only

EAST RAILING PLAN & ELEVATION (1 OF 5)
CUY-90-1678 (BRIDGE 13)
CR-710 (E. 22ND ST.) OVER I.R. 90

SFN 1807839
DESIGN AGENCY
Michael Baker INTERNATIONAL
DESIGNER JNR | CHECKER MKB
REVIEWER CDC 05/10/24
PROJECT ID 82382
SUBSET 76 | TOTAL 99
SHEET 2257 | TOTAL 2696

CUY-90-16.28 (CCG3A)

MODEL: Railing Plan and Elevation PAPERSIZE: 34x22 (in.) DATE: 6/12/2025 TIME: 12:56:43 PM USER: David.Fell
pw:\\mb-us-pw.bentley.com:mb-us-pw-03\Documents\Cleveland_OH\01_Projects\ODOT\District12\82382\400-Engineering\Structures\SFN_1807839\Sheets\82382_SFN_1807839_SA006.dgn

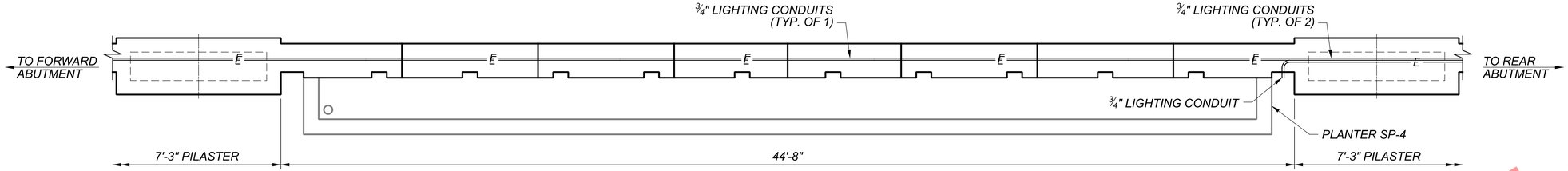

PARTIAL PLAN

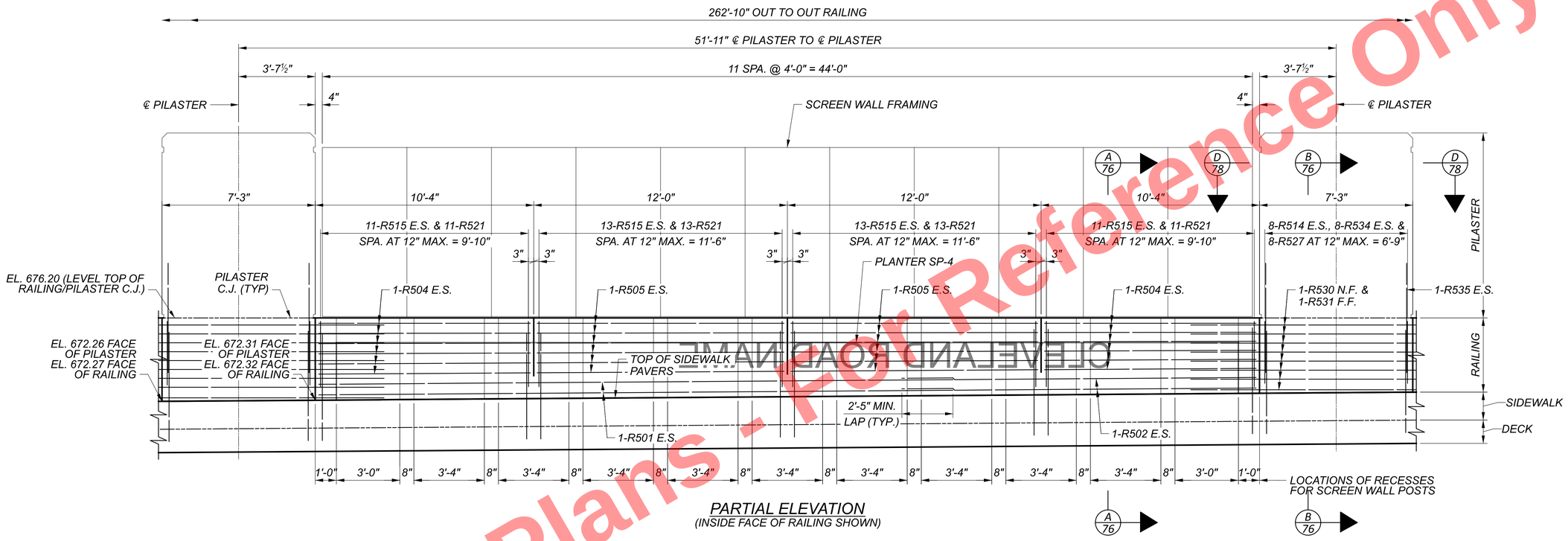

PARTIAL ELEVATION
(INSIDE FACE OF RAILING SHOWN)

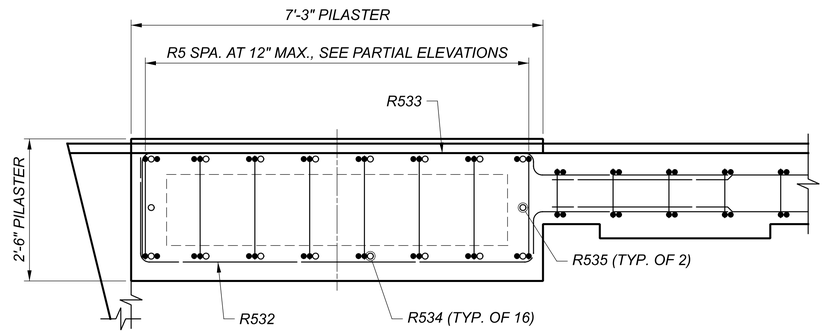

C 76 80 SECTION

(PILASTER AT FORWARD ABUTMENT SHOWN, PILASTER AT REAR ABUTMENT OPPOSITE HAND)

NOTES:

1. PROVIDE 2" CONCRETE COVER ON REINFORCEMENT BARS UNLESS NOTED OTHERWISE.
2. FOR ADDITIONAL RAILING SAWCUT DETAILS, SEE ODOT STANDARD DRAWING BR-2-15.
3. FOR DECK SLAB REINFORCING DETAILS, SEE SHEET 58 /99.
4. FOR SIDEWALK SLAB DETAILS, SEE SHEETS 66 - 69 / 99.
5. FOR SCREEN WALL DETAILS, SEE SHEET 82 / 99.
6. CONTRACTOR SHALL NOT CAST RAILING UNTIL SCREENWALL POSTS, BASEPLATE AND ANCHORAGE DESIGNS ARE ACCEPTED BY THE ENGINEER AND THE WIDTH OF THE RECESS IS VERIFIED.

MINIMUM LAP LENGTHS:

#5 BAR (HORIZONTAL) 3'-1" U.N.O.
#5 BAR (VERTICAL) 2'-5"

Preliminary Plans - For Reference Only

EAST RAILING PLAN & ELEVATION (2 OF 5)
CUY-90-1678 (BRIDGE 13)
CR-710 (E. 22ND ST.) OVER I.R. 90

SFN 1807839
DESIGN AGENCY
Michael Baker INTERNATIONAL
DESIGNER JNR | CHECKER MKB
REVIEWER CDC 05/10/24
PROJECT ID 82382
SUBSET 77 | TOTAL 99
SHEET 2258 | TOTAL 2696

CUY-90-16.28 (CCG3A)

MODEL: Railing Plan and Elevation PAPERSIZE: 34x22 (in.) DATE: 6/12/2025 TIME: 12:56:56 PM USER: David.Fell
pw:\\mb-us-pw.bentley.com:mb-us-pw-03\Documents\Cleveland_OH01_Projects\ODOT\District12\82382400-Engineering\Structures\SFN_1807839\Sheets\82382_SFN_1807839_SA007.dgn

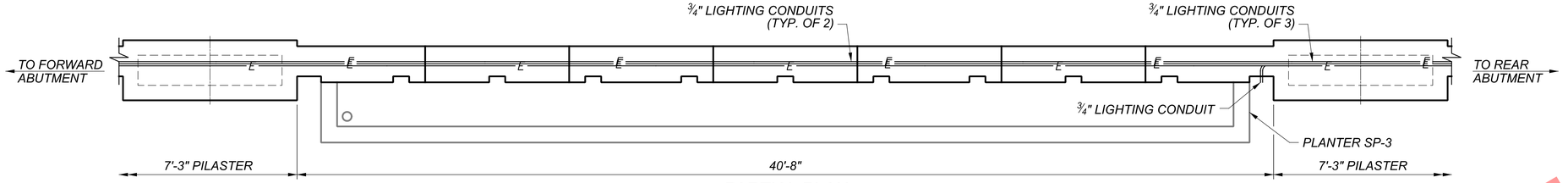

PARTIAL PLAN

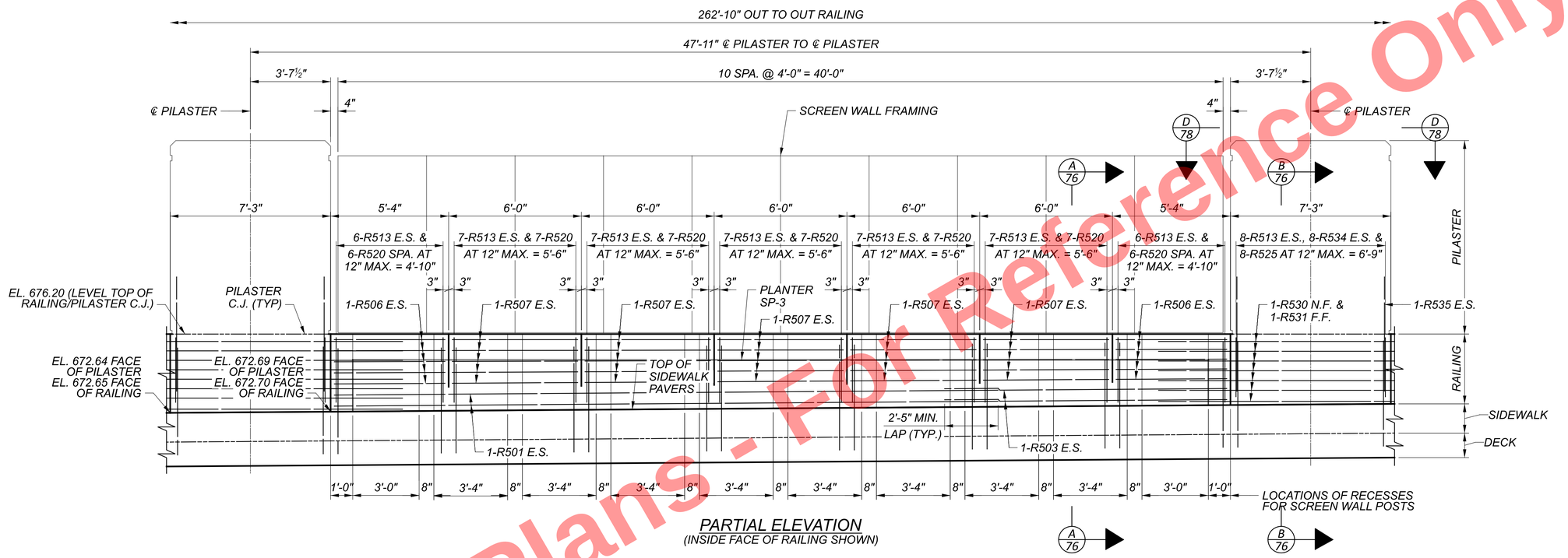

PARTIAL ELEVATION
(INSIDE FACE OF RAILING SHOWN)

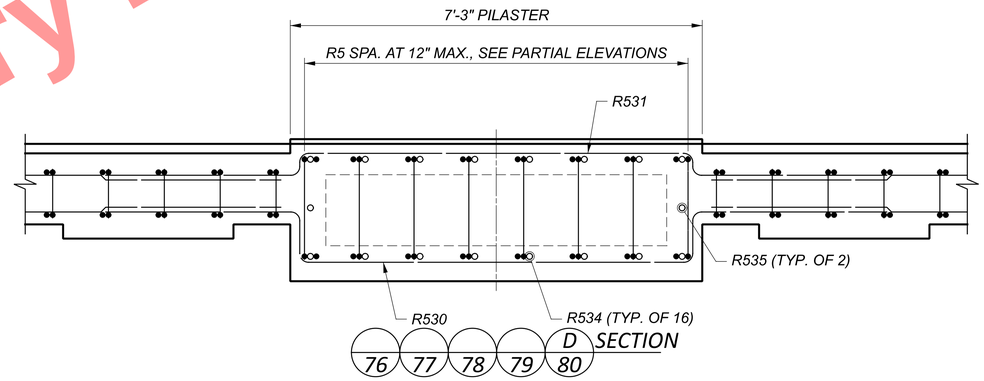

NOTES:

1. PROVIDE 2" CONCRETE COVER ON REINFORCEMENT BARS UNLESS NOTED OTHERWISE.
2. FOR ADDITIONAL RAILING SAWCUT DETAILS, SEE ODOT STANDARD DRAWING BR-2-15.
3. FOR DECK SLAB REINFORCING DETAILS, SEE SHEET 58 /99.
4. FOR SIDEWALK SLAB DETAILS, SEE SHEETS 66 - 69 / 99.
5. FOR SCREEN WALL DETAILS, SEE SHEET 82 / 99.
6. CONTRACTOR SHALL NOT CAST RAILING UNTIL SCREENWALL POSTS, BASEPLATE AND ANCHORAGE DESIGNS ARE ACCEPTED BY THE ENGINEER AND THE WIDTH OF THE RECESS IS VERIFIED.

MINIMUM LAP LENGTHS:

#5 BAR (HORIZONTAL) 3'-1" U.N.O.
#5 BAR (VERTICAL) 2'-5"

Preliminary Plans - For Reference Only

EAST RAILING PLAN & ELEVATION (3 OF 5)
CUY-90-1678 (BRIDGE 13)
CR-710 (E. 22ND ST.) OVER I.R. 90

SFN 1807839
DESIGN AGENCY
Michael Baker INTERNATIONAL
DESIGNER JNR | CHECKER MKB
REVIEWER CDC 05/10/24
PROJECT ID 82382
SUBSET 78 | TOTAL 99
SHEET 2259 | TOTAL 2696

CUY-90-16.28 (CCG3A)

MODEL: Railing Plan and Elevation PAPERSIZE: 34x22 (in.) DATE: 6/12/2025 TIME: 12:57:06 PM USER: David.Fell
pw:\\mb-us-pw.bentley.com:mb-us-pw-03\Documents\Cleveland_OH\01_Projects\ODOT\District12\82382\400-Engineering\Structures\SFN_1807839\Sheets\82382_SFN_1807839_SA008.dgn

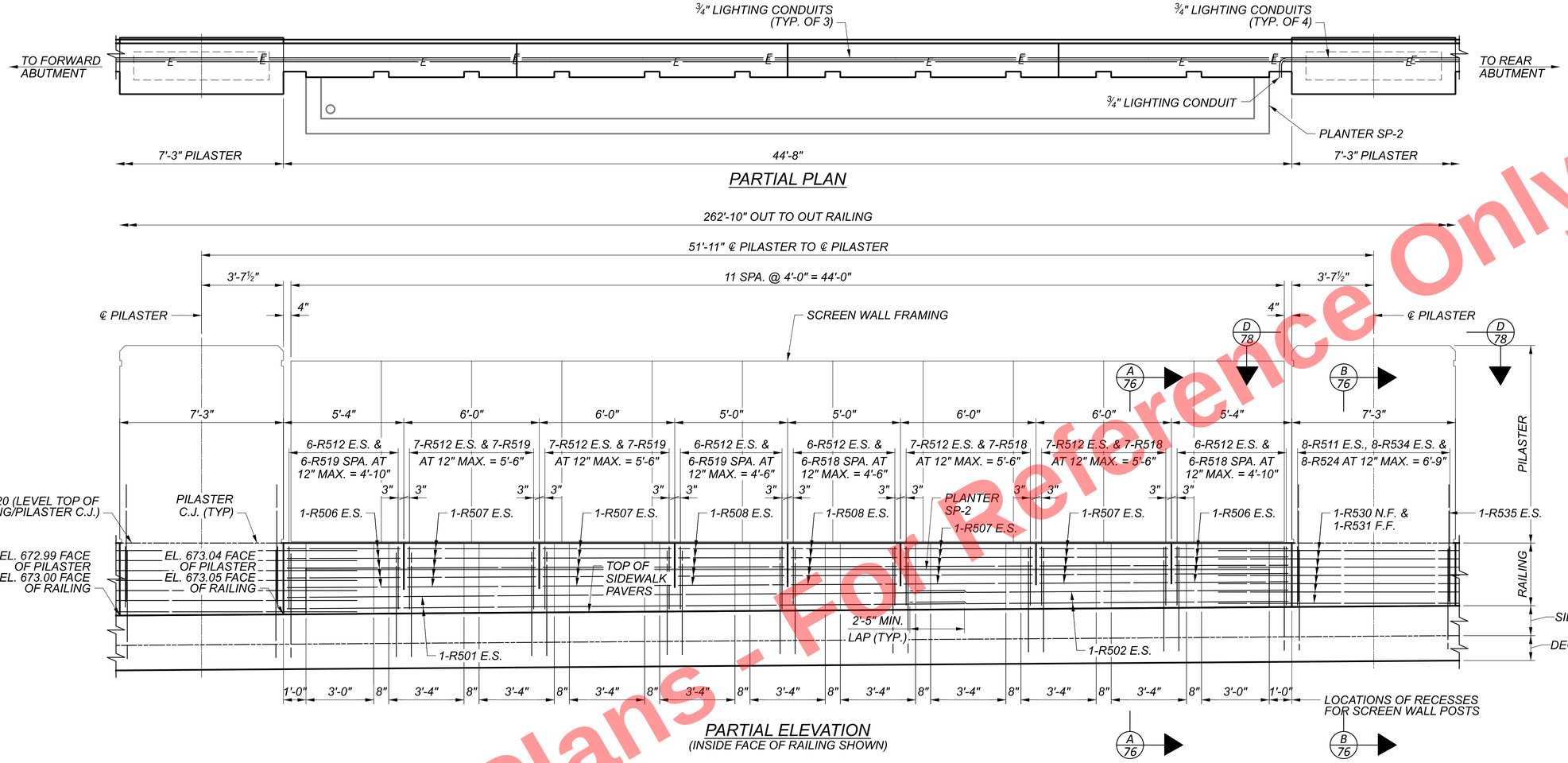

PARTIAL PLAN

PARTIAL ELEVATION
(INSIDE FACE OF RAILING SHOWN)

Preliminary Plans - For Reference Only

NOTES:

1. PROVIDE 2" CONCRETE COVER ON REINFORCEMENT BARS UNLESS NOTED OTHERWISE.
2. FOR ADDITIONAL RAILING SAWCUT DETAILS, SEE ODOT STANDARD DRAWING BR-2-15.
3. FOR DECK SLAB REINFORCING DETAILS, SEE SHEET 58 /99.
4. FOR SIDEWALK SLAB DETAILS, SEE SHEETS 66 - 69 / 99.
5. FOR SCREEN WALL DETAILS, SEE SHEET 82 / 99.
6. CONTRACTOR SHALL NOT CAST RAILING UNTIL SCREENWALL POSTS, BASEPLATE AND ANCHORAGE DESIGNS ARE ACCEPTED BY THE ENGINEER AND THE WIDTH OF THE RECESS IS VERIFIED.

MINIMUM LAP LENGTHS:

#5 BAR (HORIZONTAL) 3'-1" U.N.O.
#5 BAR (VERTICAL) 2'-5"

EAST RAILING PLAN & ELEVATION (4 OF 5)
CUY-90-1678 (BRIDGE 13)
CR-710 (E. 22ND ST.) OVER I.R. 90

SFN 1807839
DESIGN AGENCY
Michael Baker INTERNATIONAL
DESIGNER JNR | CHECKER MKB
REVIEWER CDC 05/10/24
PROJECT ID 82382
SUBSET 79 | TOTAL 99
SHEET 2260 | TOTAL 2696

CUY-90-16.28 (CCG3A)

MODEL: Railing Plan and Elevation PAPERSIZE: 34x22 (in.) DATE: 6/12/2025 TIME: 12:57:17 PM USER: David.Fell
pw:\\mb-us-pw.bentley.com:mb-us-pw-03\Documents\Cleveland_Off\01_Projects\ODOT\District12\82382\400-Engineering\Structures\SFN_1807839\Sheets\82382_SFN_1807839_SA009.dgn

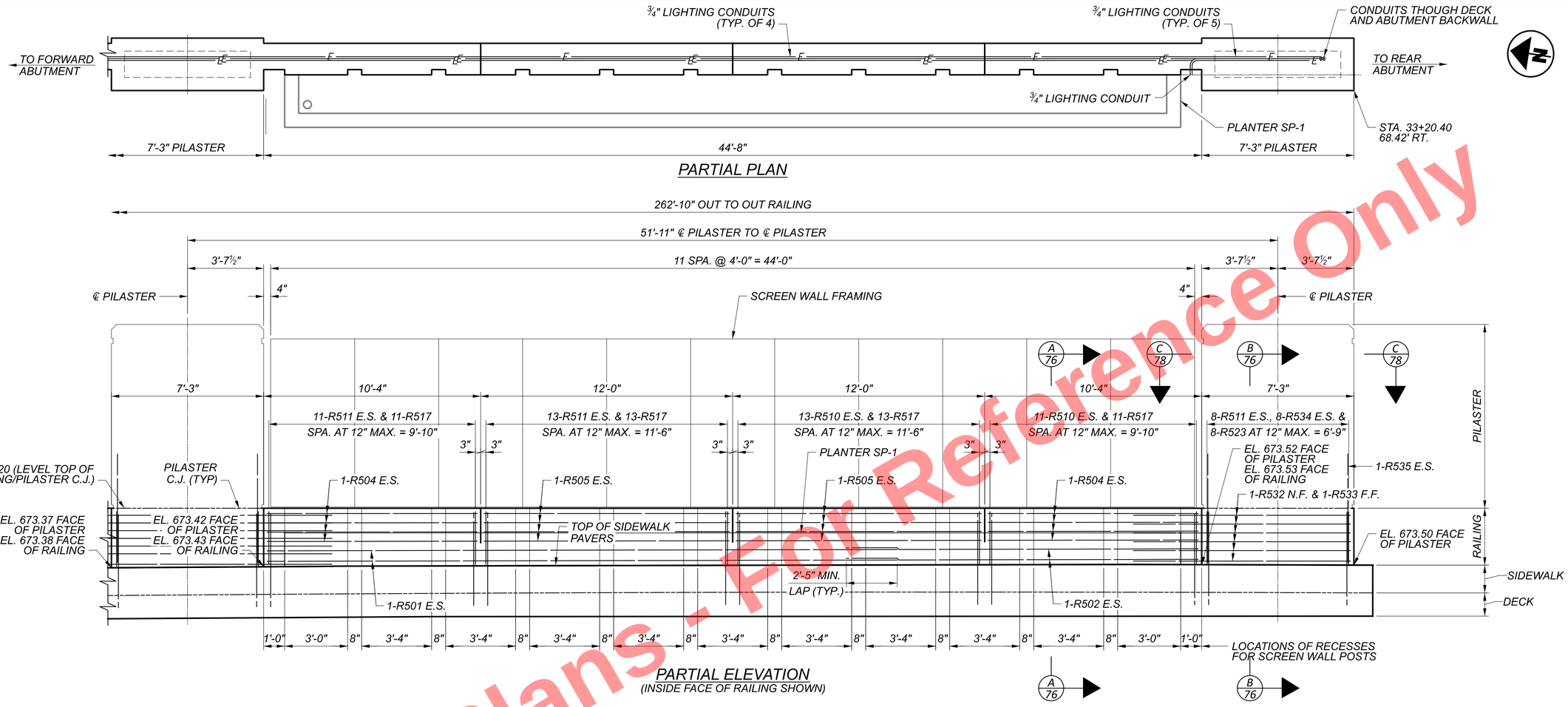

PARTIAL PLAN

PARTIAL ELEVATION
(INSIDE FACE OF RAILING SHOWN)

Preliminary Plans - For Reference Only

NOTES:

1. PROVIDE 2" CONCRETE COVER ON REINFORCEMENT BARS UNLESS NOTED OTHERWISE.
2. FOR ADDITIONAL RAILING SAWCUT DETAILS, SEE ODOT STANDARD DRAWING BR-2-15.
3. FOR DECK SLAB REINFORCING DETAILS, SEE SHEET 58 /99.
4. FOR SIDEWALK SLAB DETAILS, SEE SHEETS 66 - 69 / 99.
5. FOR SCREEN WALL DETAILS, SEE SHEET 82 / 99.
6. CONTRACTOR SHALL NOT CAST RAILING UNTIL SCREENWALL POSTS, BASEPLATE AND ANCHORAGE DESIGNS ARE ACCEPTED BY THE ENGINEER AND THE WIDTH OF THE RECESS IS VERIFIED.

MINIMUM LAP LENGTHS:

#5 BAR (HORIZONTAL) 3'-1" U.N.O.
#5 BAR (VERTICAL) 2'-5"

EAST RAILING PLAN & ELEVATION (5 OF 5)
CUY-90-1678 (BRIDGE 13)
CR-710 (E. 22ND ST.) OVER I.R. 90

SFN	1807839
DESIGN AGENCY	Michael Baker INTERNATIONAL
DESIGNER	JNR
CHECKER	MKB
REVIEWER	CDC 05/10/24
PROJECT ID	82382
SUBSET	80
TOTAL	99
SHEET	2261
TOTAL	2696

CUY-90-16.28 (CCG3A)

MODEL: Railing Plan and Elevation PAPERSIZE: 34x22 (in.) DATE: 6/12/2025 TIME: 12:57:28 PM USER: David.Fell
pw:\\mb-us-pw.bentley.com:mb-us-pw-03\Documents\Cleveland_OH01_Projects\ODOT\District12\82382400-Engineering\Structures\SFN_1807839\Sheets\82382_SFN_1807839_SA010.dgn

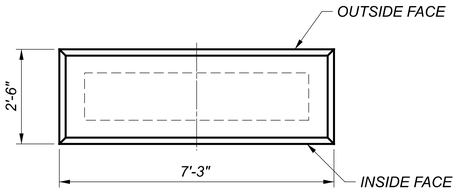

PILASTER PLAN

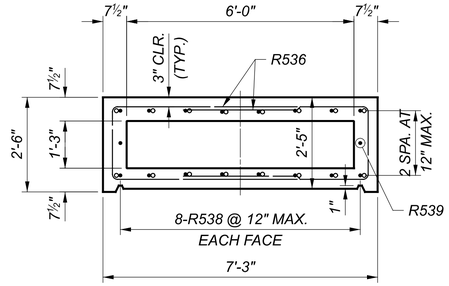

B / 81 SECTION

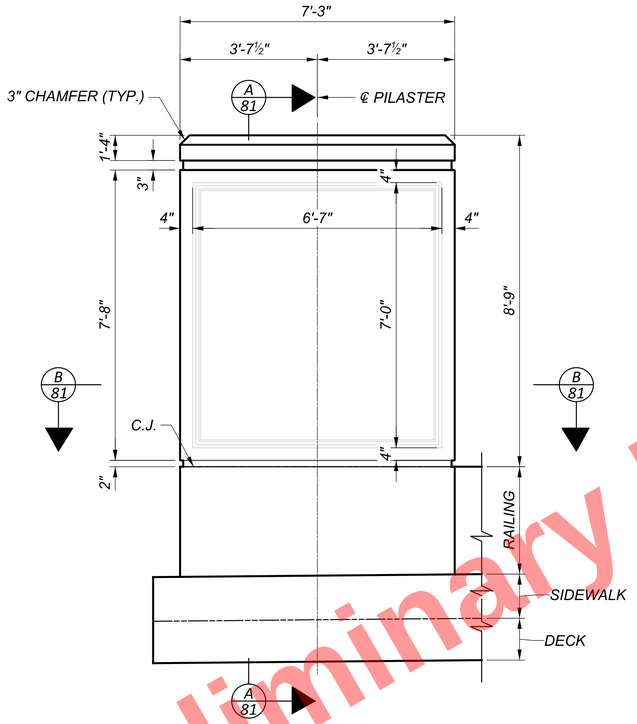

PILASTER ELEVATION
(INSIDE FACE OF RAILING SHOWN)
(REINFORCING NOT SHOWN FOR CLARITY)

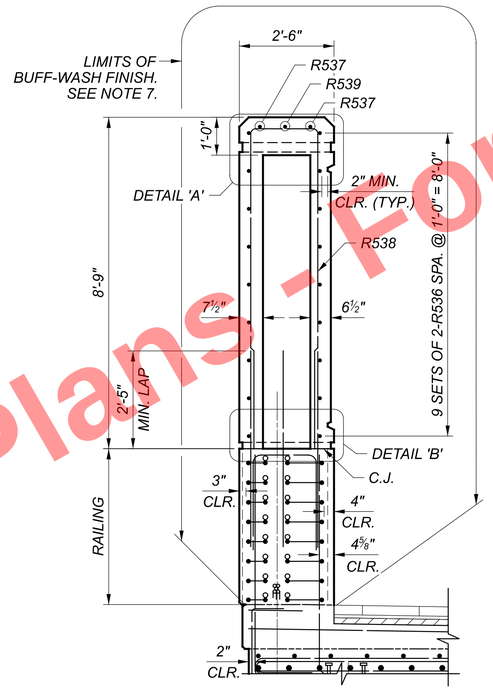

A / 81 SECTION

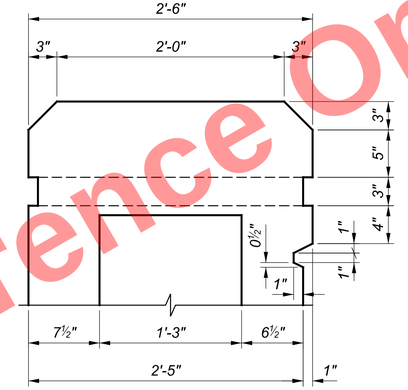

DETAIL 'A'

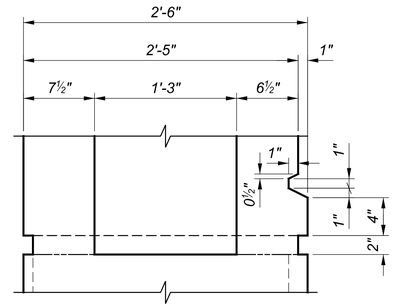

DETAIL 'B'

NOTES:

1. PROVIDE 2" CONCRETE COVER ON REINFORCEMENT BARS UNLESS NOTED OTHERWISE.
2. SEE LANDSCAPE PLANS FOR ADDITIONAL DETAILS.
3. FOR RAILING DETAILS, SEE SHEETS 71 - 80 / 99.
4. FOR SIDEWALK DETAILS, SEE SHEETS 66 - 70 / 99.
5. FOR DECK PLAN, SEE SHEET 58 / 99.
6. FOR TRANSVERSE SECTION, SEE SHEET 41 / 99.
7. BUFF-WASH FINISH WITH CLEAR SILANE SEALER TO BE APPLIED TO ALL EXPOSED SURFACE FOR, RAILINGS, PILASTERS AND PLANTERS. SEE AESTHETIC ENHANCEMENT PLANS FOR DETAILS OF SURFACE FINISH.
8. FOR ADDITIONAL PILASTER DETAILS, SEE LANDSCAPE PLANS AND AESTHETIC DETAILS.
9. ALL RIGHT-ANGLE CORNERS SHOWN WITHIN THE PILASTER DETAILS ON THIS SHEET SHALL RECIEVE 1/2" X 1/2" CHAMFERS.

MINIMUM LAP LENGTHS

#5 BAR HORIZONTAL LAP = 3'-1"
#5 BAR VERTICAL LAP = 2'-5"

Preliminary Plans - For Reference Only

PILASTER DETAILS
CUY-90-1678 (BRIDGE 13)
CR-710 (E. 22ND ST,) OVER I,R, 90

SFN	1807839
DESIGN AGENCY	Michael Baker INTERNATIONAL
DESIGNER	SWB
CHECKER	MKB
REVIEWER	CDC 05/10/24
PROJECT ID	82382
SUBSET	81
TOTAL	99
SHEET	2262
TOTAL	2696

CUY-90-16.28 (CCG3A)

MODEL: Railing Plan and Elevation PAPERSIZE: 34x22 (in.) DATE: 3/28/2025 TIME: 7:53:15 AM USER: RohitBk
pw:\\mb-us-pw.bentley.com:mb-us-pw-03\Documents\Cleveland_OH\01_Projects\ODOT\District12\82382\400-Engineering\Structures\SFN_1807839\Sheets\82382_SFN_1807839_SM011.dgn

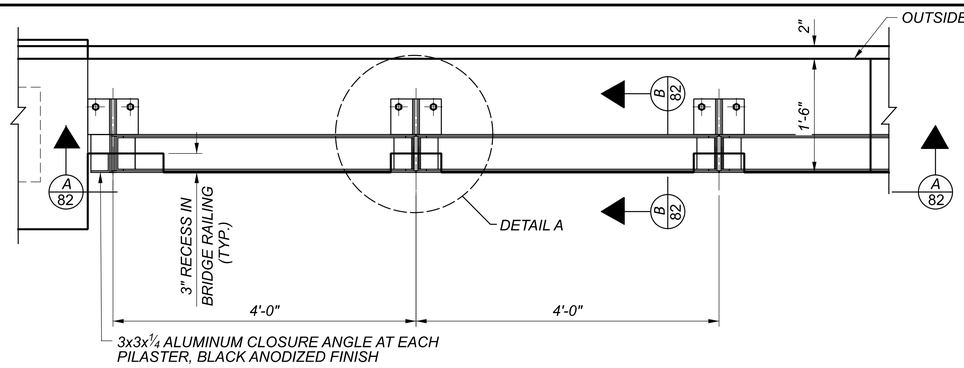

SCREEN WALL FRAMING - TOP PLAN

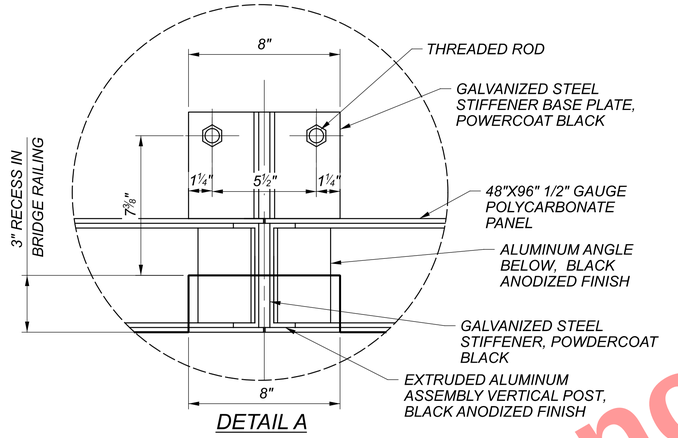

DETAIL A

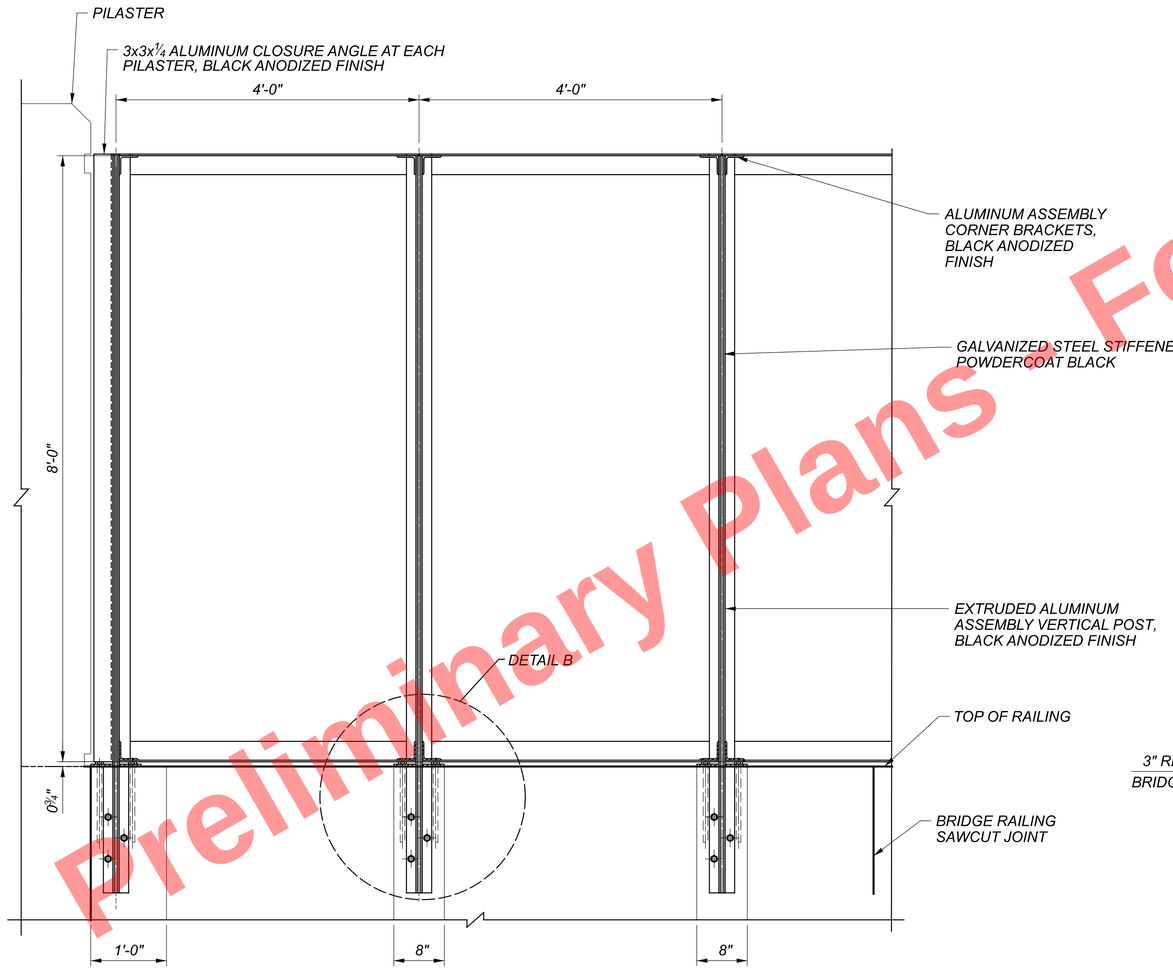

A 82 SCREEN WALL FRAMING - TYPICAL ELEVATION

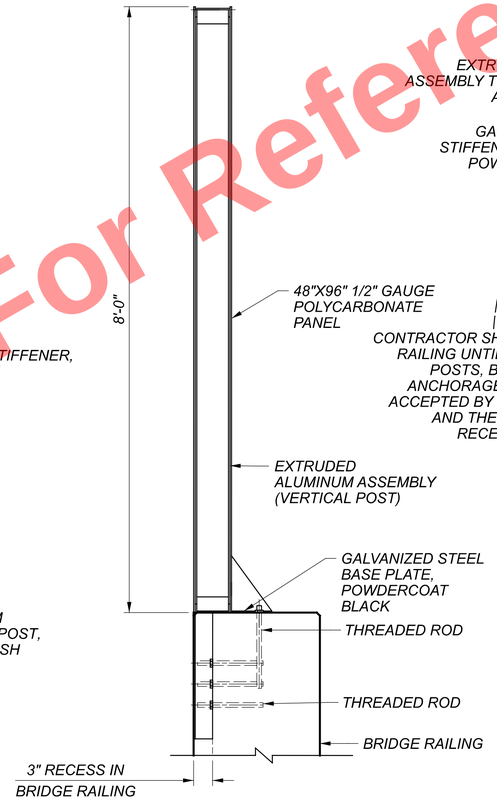

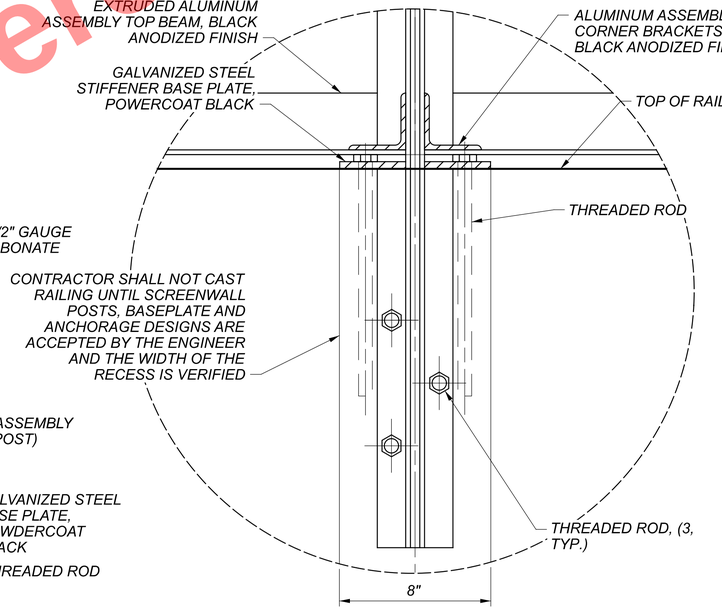

DETAIL B

B 82 SCREEN WALL - TYPICAL SECTION

NOTES:

1. SCREEN WALL POSTS SHALL BE PLUMB.
2. FOR ADDITIONAL SCREEN WALL DESIGN NOTES, SEE 4/99 .
3. SEE LIGHTING PLANS FOR LED STRIP LIGHT SPECIFICATIONS AND ADDITIONAL INFORMATION.
4. SEE ADDITIONAL LANDSCAPING DETAIL SHEETS FOR ADDITIONAL SCREEN WALL DETAILS AND PAYMENT FOR THIS ITEM.
5. THREADED ROD DETAILS SHOWN ARE FOR ILLUSTRATIVE PURPOSES ONLY AND THE CONTRACTOR SHALL BE RESPONSIBLE FOR THE ANCHORAGE DESIGN.
6. THE THREADED RODS SHALL BE DESIGNED AS ADHESIVE ANCHORS PER AASHTO LRFD BRIDGE DESIGN SPECIFICATION SECTION 5.13. SEE THE ADHESIVE ANCHOR/DOWEL SYSTEM ON SHEET 4/99 FOR ADDITIONAL REQUIREMENTS.

For Reference Only
Preliminary Plans - Not for Construction

SCREEN WALL DETAILS
CUY-90-1678 (BRIDGE 13)
CR-710 (E. 22ND ST.) OVER I.R. 90

CUY-90-16.28 (CCG3A)

MODEL: Sheet PAPERSIZE: 34x22 (in.) DATE: 6/16/2025 TIME: 1:31:20 PM USER: Tolga.Feran
pw:\\mb-us-pw.bentley.com:mb-us-pw-03\Documents\Cleveland_OH\01_Projects\ODOT\District12\82382400-Engineering\Structures\SFN_1807839\Sheets\82382_SFN_1807839_SA011.dgn

SFN	1807839
DESIGN AGENCY	Michael Baker INTERNATIONAL
DESIGNER	SWB
CHECKER	MKB
REVIEWER	CDC 05/10/24
PROJECT ID	82382
SUBSET	82
TOTAL	99
SHEET	2263
TOTAL	2696

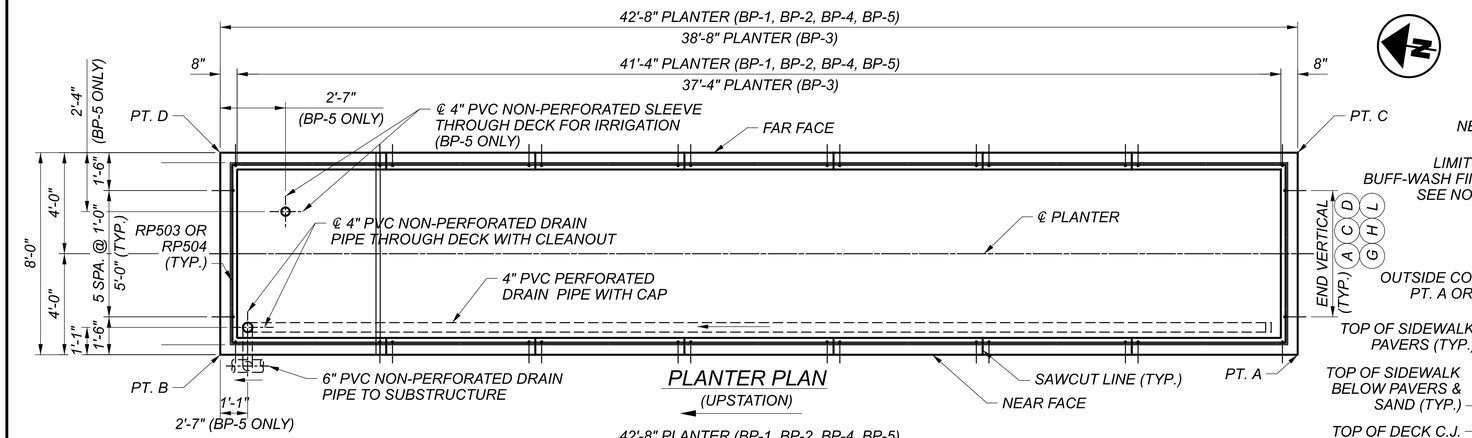

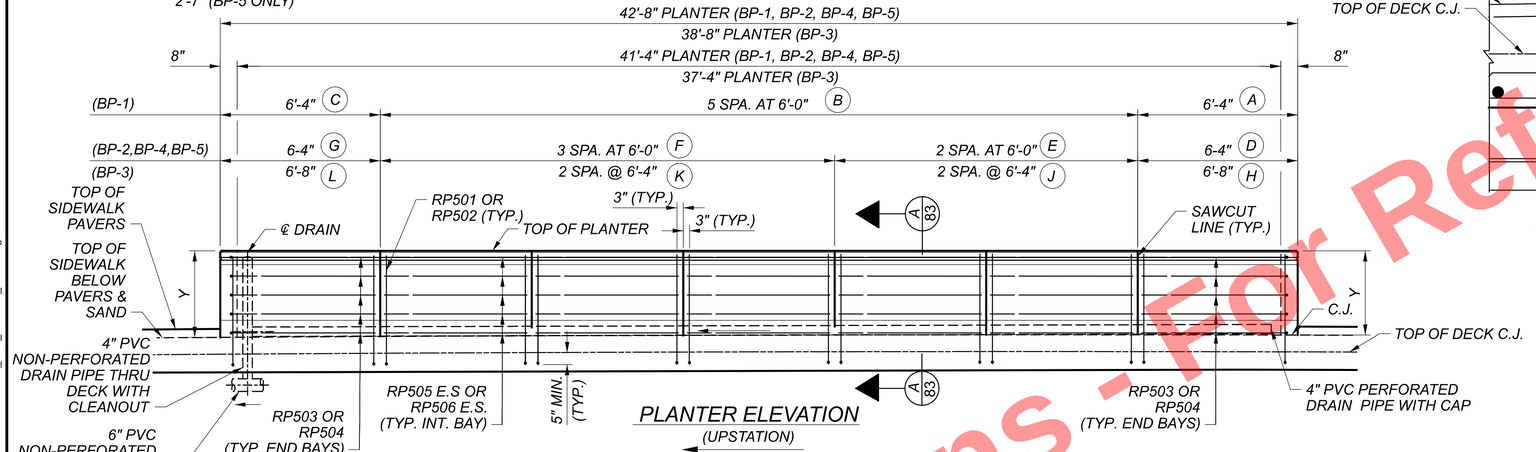

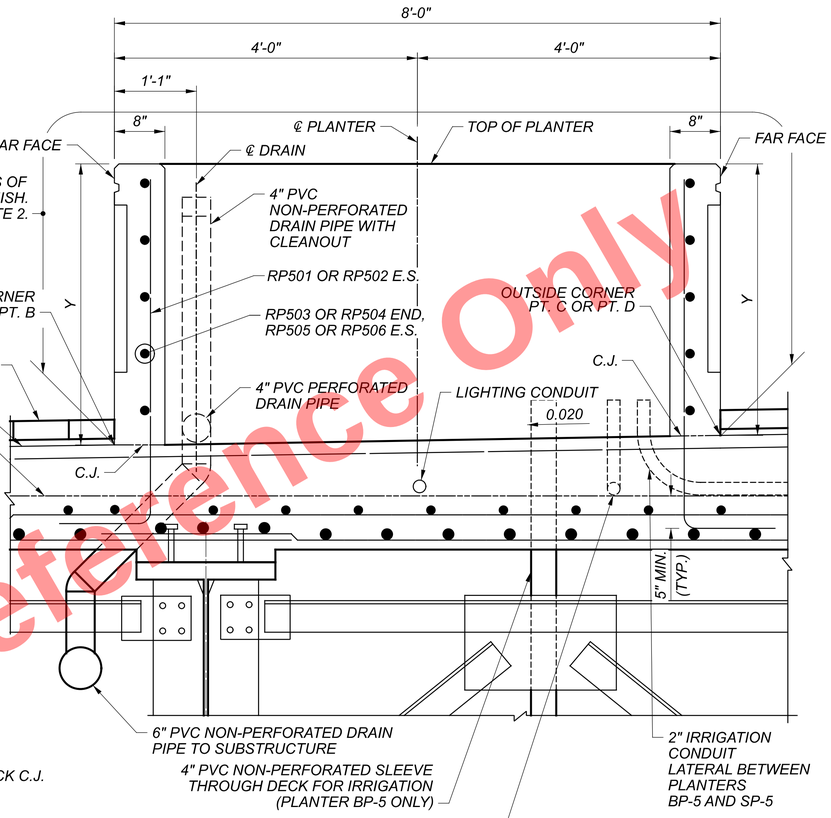

A 83 SECTION

TYPICAL END BAY

- C — 5-RP503, 6-RP501 SPA. @ 1'-0" = 5'-0" END, & 7-RP501 SPA. @ 1'-0" MAX. E.S.= 5'-7"
- G — 5-RP503, 6-RP502 SPA. @ 1'-0" = 5'-0" END, & 7-RP502 SPA. @ 1'-0" MAX. E.S.= 5'-7"
- L — 5-RP504, 6-RP502 SPA. @ 1'-0" = 5'-0" END, & 7-RP502 SPA. @ 1'-0" MAX. E.S.= 5'-11"

TYPICAL INTERIOR BAY

- B — 5-RP505 E.S. & 7-RP501 SPA. @ 1'-0" MAX. E.S.= 5'-6"
- F — 5-RP505 E.S. & 7-RP502 SPA. @ 1'-0" MAX. E.S.= 5'-6"
- K — 5-RP506 E.S. & 7-RP502 SPA. @ 1'-0" MAX. E.S.= 5'-10"

TYPICAL INTERIOR BAY

- B — 5-RP505 E.S. & 7-RP501 SPA. @ 1'-0" MAX. E.S.= 5'-6"
- E — 5-RP505 E.S. & 7-RP501 SPA. @ 1'-0" MAX. E.S.= 5'-6"
- J — 5-RP506 E.S. & 7-RP501 SPA. @ 1'-0" MAX. E.S.= 5'-10"

TYPICAL END BAY

- A — 5-RP503, 6-RP501 SPA. @ 1'-0" = 5'-0" END, & 7-RP501 SPA. @ 1'-0" MAX. E.S.= 5'-7"
- D — 5-RP503, 6-RP501 SPA. @ 1'-0" = 5'-0" END, & 7-RP501 SPA. @ 1'-0" MAX. E.S.= 5'-7"
- H — 5-RP504, 6-RP501 SPA. @ 1'-0" = 5'-0" END, & 7-RP501 SPA. @ 1'-0" MAX. E.S.= 5'-11"

PLANTER	LOCATION PT.	LOCATION PT. STATION / OFFSET	TOP OF SIDEWALK BELOW PAVERS & SAND EL.	TOP OF SIDEWALK PAVERS EL.	TOP OF PLANTER EL.	DIMENSION "Y" (FT.)	DRAIN THROUGH DECK LOCATION STATION / OFFSET
BP-1	PT. A	STA. 33+28.65 OFF. 49.00' RT	672.89	673.22	676.28	3.39	STA. 33+70.24 OFF. 50.08' RT
	PT. B	STA. 33+71.32 OFF. 49.00' RT	672.80	673.13		3.48	
	PT. C	STA. 33+28.65 OFF. 57.00' RT	673.01	673.34		3.27	
	PT. D	STA. 33+71.32 OFF. 57.00' RT	672.92	673.25		3.36	
BP-2	PT. A	STA. 33+80.57 OFF. 49.00' RT	672.73	673.06	676.12	3.39	STA. 34+22.15 OFF. 50.08' RT
	PT. B	STA. 34+23.24 OFF. 49.00' RT	672.42	672.75		3.70	
	PT. C	STA. 33+80.57 OFF. 57.00' RT	672.86	673.19		3.26	
	PT. D	STA. 34+23.24 OFF. 57.00' RT	672.54	672.87		3.58	
BP-3	PT. A	STA. 34+32.49 OFF. 49.00' RT	672.35	672.68	675.74	3.39	STA. 34+70.07 OFF. 50.08' RT
	PT. B	STA. 34+71.15 OFF. 49.00' RT	672.07	672.40		3.67	
	PT. C	STA. 34+32.49 OFF. 57.00' RT	672.47	672.80		3.27	
	PT. D	STA. 34+71.15 OFF. 57.00' RT	672.19	672.52		3.55	
BP-4	PT. A	STA. 34+80.40 OFF. 49.00' RT	672.00	672.33	675.39	3.39	STA. 35+21.99 OFF. 50.08' RT
	PT. B	STA. 35+23.07 OFF. 49.00' RT	671.69	672.02		3.70	
	PT. C	STA. 34+80.40 OFF. 57.00' RT	672.12	672.45		3.27	
	PT. D	STA. 35+23.07 OFF. 57.00' RT	671.81	672.14		3.58	
BP-5	PT. A	STA. 35+32.32 OFF. 49.00' RT	671.62	671.95	675.01	3.39	STA. 35+72.40 OFF. 50.08' RT
	PT. B	STA. 35+74.99 OFF. 49.00' RT	671.31	671.64		3.70	
	PT. C	STA. 35+32.32 OFF. 57.00' RT	671.74	672.07		3.27	
	PT. D	STA. 35+74.99 OFF. 57.00' RT	671.43	671.76		3.58	
4" SLEEVE FOR IRRIGATION THROUGH DECK STA. 35+72.40, OFFSET 54.67' RT							

NOTES:

1. PROVIDE 2" CONCRETE COVER ON REINFORCEMENT BARS UNLESS NOTED OTHERWISE.
2. BUFF-WASH FINISH WITH CLEAR SILANE SEALER TO BE APPLIED TO ALL EXPOSED SURFACE FOR, RAILINGS, PILASTERS AND PLANTERS. SEE AESTHETIC ENHANCEMENT PLANS FOR DETAILS OF SURFACE FINISH.
3. FOR ADDITIONAL PLANTER DETAILS, SEE LANDSCAPE PLANS AND AESTHETIC DETAILS.

Preliminary Plans - For Reference Only

PLANTER DETAILS (1 OF 3)
CUY-90-1678 (BRIDGE 13)
CR-710 (E. 22ND ST.) OVER I.R. 90

SFN 1807839
DESIGN AGENCY Michael Baker INTERNATIONAL
DESIGNER SWB | CHECKER MKB
REVIEWER CDC 05/10/24
PROJECT ID 82382
SUBSET 83 | TOTAL 99
SHEET 2264 | TOTAL 2696

CUY-90-16.28 (CCG3A)

MODEL: Sheet PAPERSIZE: 34x22 (in.) DATE: 3/28/2025 TIME: 7:53:51 AM USER: Rohit.Bk
pw:\\mb-us-pw.bentley.com:mb-us-pw-03\Documents\Cleveland_OH\01_Projects\ODOT\District12\82382\400-Engineering\Structures\SFN_1807839\Sheets\82382_SFN_1807839_SM007.dgn

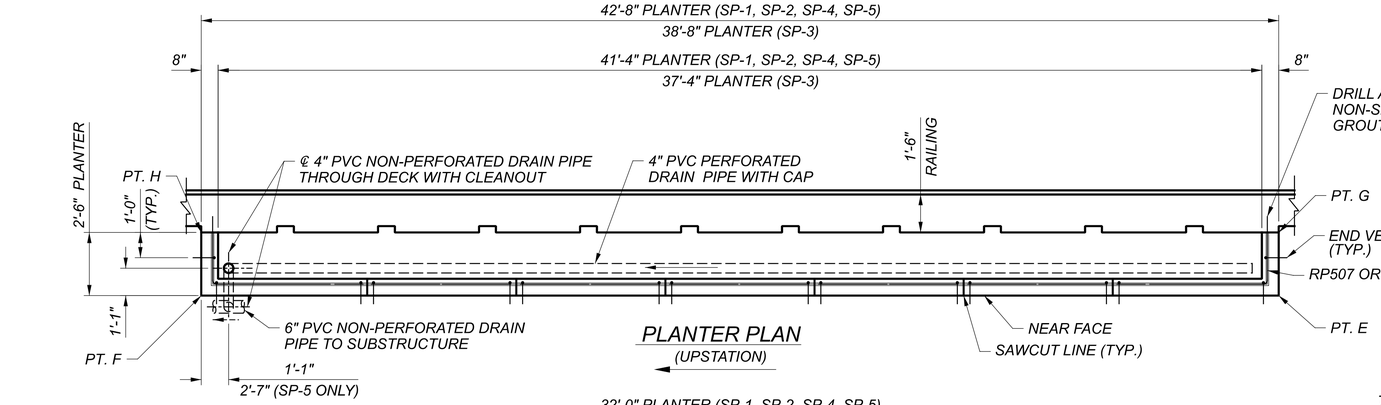

PLANTER PLAN
(UPSTATION)

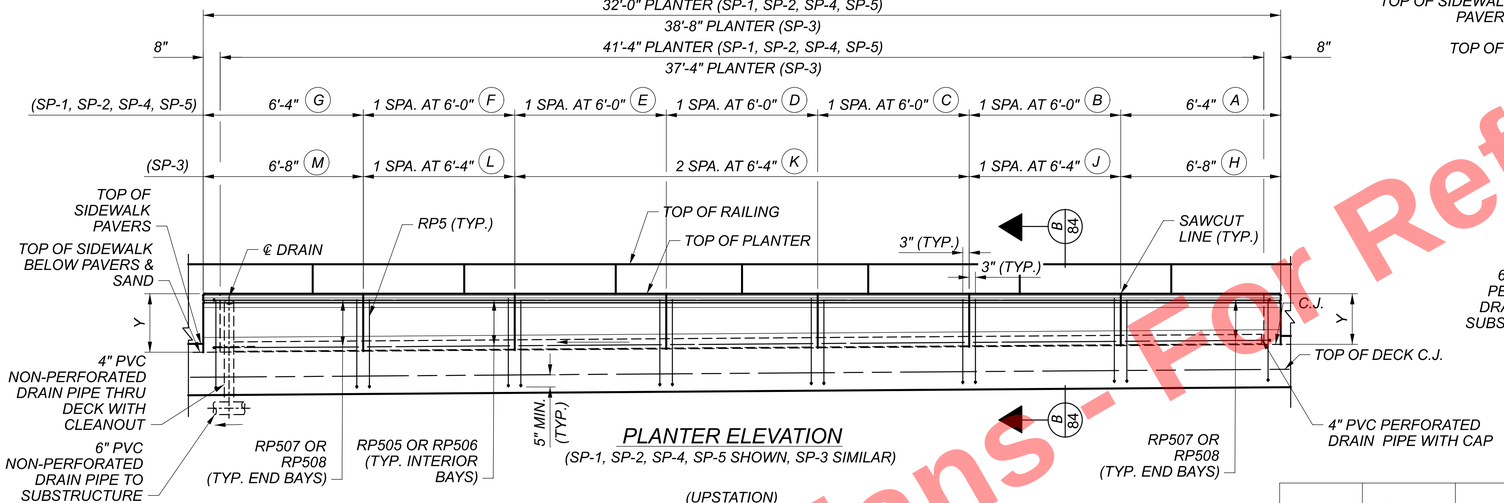

PLANTER ELEVATION
(SP-1, SP-2, SP-4, SP-5 SHOWN, SP-3 SIMILAR)

(UPSTATION)

G	F	E	D	C	B	A
SP-1: 3-RP507 & 7-RP510 SPA. @ 1'-0" MAX. = 5'-6" & 1-RP510 END	SP-1: 3-RP505 & 7-RP510 SPA. @ 1'-0" MAX. = 5'-6"	SP-1: 3-RP505 & 7-RP509 SPA. @ 1'-0" MAX. = 5'-6"	SP-1: 3-RP505 & 7-RP509 SPA. @ 1'-0" MAX. = 5'-6"	SP-1: 3-RP505 & 7-RP509 SPA. @ 1'-0" MAX. = 5'-6"	SP-1: 3-RP505 & 7-RP509 SPA. @ 1'-0" MAX. = 5'-6"	SP-1: 3-RP507 & 7-RP509 SPA. @ 1'-0" MAX. = 5'-6" & 1-RP509 END
SP-2: 3-RP507 & 7-RP514 SPA. @ 1'-0" MAX. = 5'-6" & 1-RP514 END	SP-2: 3-RP505 & 7-RP514 SPA. @ 1'-0" MAX. = 5'-6"	SP-2: 3-RP505 & 7-RP513 SPA. @ 1'-0" MAX. = 5'-6"	SP-2: 3-RP505 & 7-RP513 SPA. @ 1'-0" MAX. = 5'-6"	SP-2: 3-RP505 & 7-RP512 SPA. @ 1'-0" MAX. = 5'-6"	SP-2: 3-RP505 & 7-RP512 SPA. @ 1'-0" MAX. = 5'-6"	SP-2: 3-RP507 & 7-RP511 SPA. @ 1'-0" MAX. = 5'-6" & 1-RP511 END
SP-4: 4-RP507 & 7-RP522 SPA. @ 1'-0" MAX. = 5'-6" & 1-RP522 END	SP-4: 4-RP505 & 7-RP522 SPA. @ 1'-0" MAX. = 5'-6"	SP-4: 4-RP505 & 7-RP521 SPA. @ 1'-0" MAX. = 5'-6"	SP-4: 4-RP505 & 7-RP521 SPA. @ 1'-0" MAX. = 5'-6"	SP-4: 4-RP505 & 7-RP520 SPA. @ 1'-0" MAX. = 5'-6"	SP-4: 4-RP505 & 7-RP520 SPA. @ 1'-0" MAX. = 5'-6"	SP-4: 4-RP507 & 7-RP519 SPA. @ 1'-0" MAX. = 5'-6" & 1-RP519 END
SP-5: 5-RP507 & 7-RP525 SPA. @ 1'-0" MAX. = 5'-6" & 1-RP525 END	SP-5: 5-RP505 & 7-RP524 SPA. @ 1'-0" MAX. = 5'-6"	SP-5: 5-RP505 & 7-RP524 SPA. @ 1'-0" MAX. = 5'-6"	SP-5: 5-RP505 & 7-RP502 SPA. @ 1'-0" MAX. = 5'-6"	SP-5: 5-RP505 & 7-RP502 SPA. @ 1'-0" MAX. = 5'-6"	SP-5: 5-RP505 & 7-RP523 SPA. @ 1'-0" MAX. = 5'-6"	SP-5: 5-RP507 & 7-RP523 SPA. @ 1'-0" MAX. = 5'-6" & 1-RP523 END

M	L	K	J	H
SP-3: 4-RP508 & 7-RP518 SPA. @ 1'-0" MAX. = 5'-6" & 1-RP518 END	SP-3: 4-RP506 & 7-RP517 SPA. @ 1'-0" MAX. = 5'-6"	SP-3: 4-RP506 & 7-RP516 SPA. @ 1'-0" MAX. = 5'-6"	SP-3: 4-RP506 & 7-RP515 SPA. @ 1'-0" MAX. = 5'-6"	SP-3: 4-RP508 & 7-RP515 SPA. @ 1'-0" MAX. = 5'-6" & 1-RP515 END

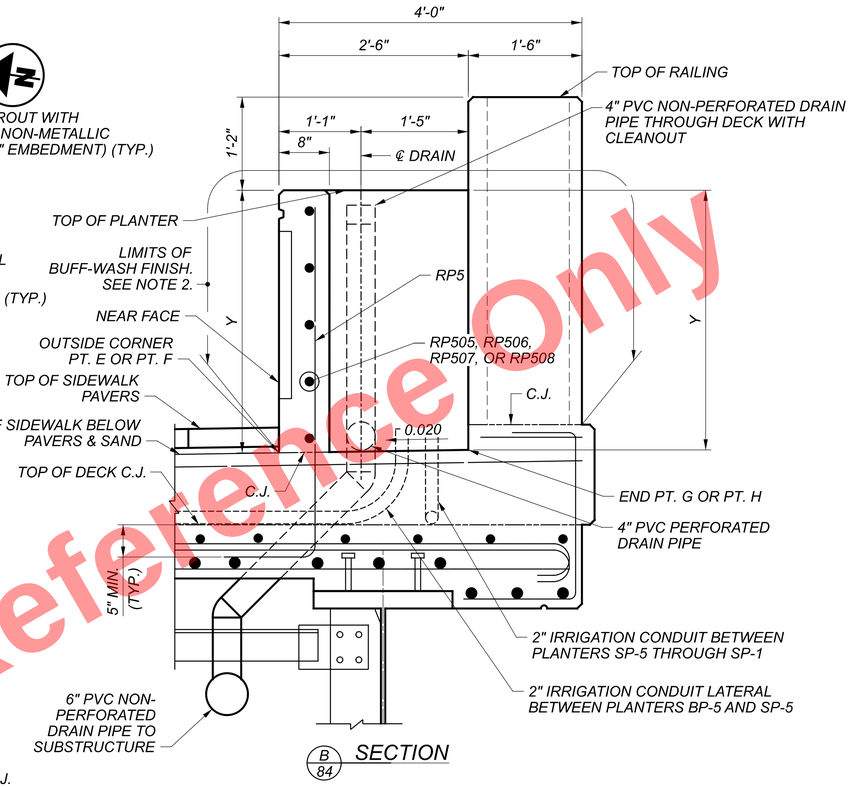

B 84 SECTION

PLANTER	LOCATION PT.	LOCATION PT. STATION / OFFSET	TOP OF SIDEWALK BELOW PAVERS & SAND EL.	TOP OF SIDEWALK PAVERS EL.	TOP OF PLANTER EL.	DIMENSION "Y" (FT.)	DRAIN THROUGH DECK LOCATION STATION / OFFSET
SP-1	PT. E	STA. 33+28.65 OFF. 66.68' RT	673.17	673.50	675.03	1.87	STA. 33+70.24 OFF. 67.75' RT
	PT. F	STA. 33+71.32 OFF. 66.68' RT	673.07	673.40		1.97	
	PT. G	STA. 33+28.65 OFF. 69.17' RT	673.20	673.53		1.84	
	PT. H	STA. 33+71.32 OFF. 69.17' RT	673.11	673.44		1.93	
SP-2	PT. E	STA. 33+80.57 OFF. 66.68' RT	673.01	673.34	675.03	2.03	STA. 34+22.15 OFF. 67.75' RT
	PT. F	STA. 34+23.24 OFF. 66.68' RT	672.69	673.02		2.35	
	PT. G	STA. 33+80.57 OFF. 69.17' RT	673.05	673.38		1.99	
	PT. H	STA. 34+23.24 OFF. 69.17' RT	672.73	673.06		2.31	
SP-3	PT. E	STA. 34+32.49 OFF. 66.68' RT	672.63	672.96	675.03	2.41	STA. 34+70.07 OFF. 67.75' RT
	PT. F	STA. 34+71.15 OFF. 66.68' RT	672.34	672.67		2.70	
	PT. G	STA. 34+32.49 OFF. 69.17' RT	672.66	672.99		2.38	
	PT. H	STA. 34+71.15 OFF. 69.17' RT	672.38	672.71		2.66	
SP-4	PT. E	STA. 34+80.40 OFF. 66.68' RT	672.27	672.60	675.03	2.77	STA. 35+21.99 OFF. 67.75' RT
	PT. F	STA. 35+23.07 OFF. 66.68' RT	671.96	672.29		3.08	
	PT. G	STA. 34+80.40 OFF. 69.17' RT	672.31	672.64		2.73	
	PT. H	STA. 35+23.07 OFF. 69.17' RT	672.00	672.33		3.04	
SP-5	PT. E	STA. 35+32.32 OFF. 66.68' RT	671.89	672.22	675.03	3.15	STA. 35+72.40 OFF. 67.75' RT
	PT. F	STA. 35+74.99 OFF. 66.68' RT	671.58	671.91		3.46	
	PT. G	STA. 35+32.32 OFF. 69.17' RT	671.93	672.26		3.11	
	PT. H	STA. 35+74.99 OFF. 69.17' RT	671.62	671.95		3.42	

NOTES:

1. PROVIDE 2" CONCRETE COVER ON REINFORCEMENT BARS UNLESS NOTED OTHERWISE.
2. BUFF-WASH FINISH WITH CLEAR SILANE SEALER TO BE APPLIED TO ALL EXPOSED SURFACE FOR, RAILINGS, PILASTERS AND PLANTERS. SEE AESTHETIC ENHANCEMENT PLANS FOR DETAILS OF SURFACE FINISH.

Preliminary Plans - For Reference Only

PLANTER DETAILS (2 OF 3)
CUY-90-1678 (BRIDGE 13)
CR-710 (E. 22ND ST.) OVER I.R. 90

SFN 1807839
DESIGN AGENCY
Michael Baker INTERNATIONAL
DESIGNER SWB | CHECKER MKB
REVIEWER CDC 05/10/24
PROJECT ID 82382
SUBSET 84 | TOTAL 99
SHEET 2265 | TOTAL 2696

CUY-90-16.28 (CCG3A)

MODEL: Sheet PAPERSIZE: 34x22 (in.) DATE: 3/28/2025 TIME: 7:54:13 AM USER: Rohit.Bk
pw:\\mb-us-pw.bentley.com:mb-us-pw-03\Documents\Cleveland_OH\01_Projects\ODOT\District12\82382\400-Engineering\Structures\SFN_1807839\Sheets\82382_SFN_1807839_SM008.dgn

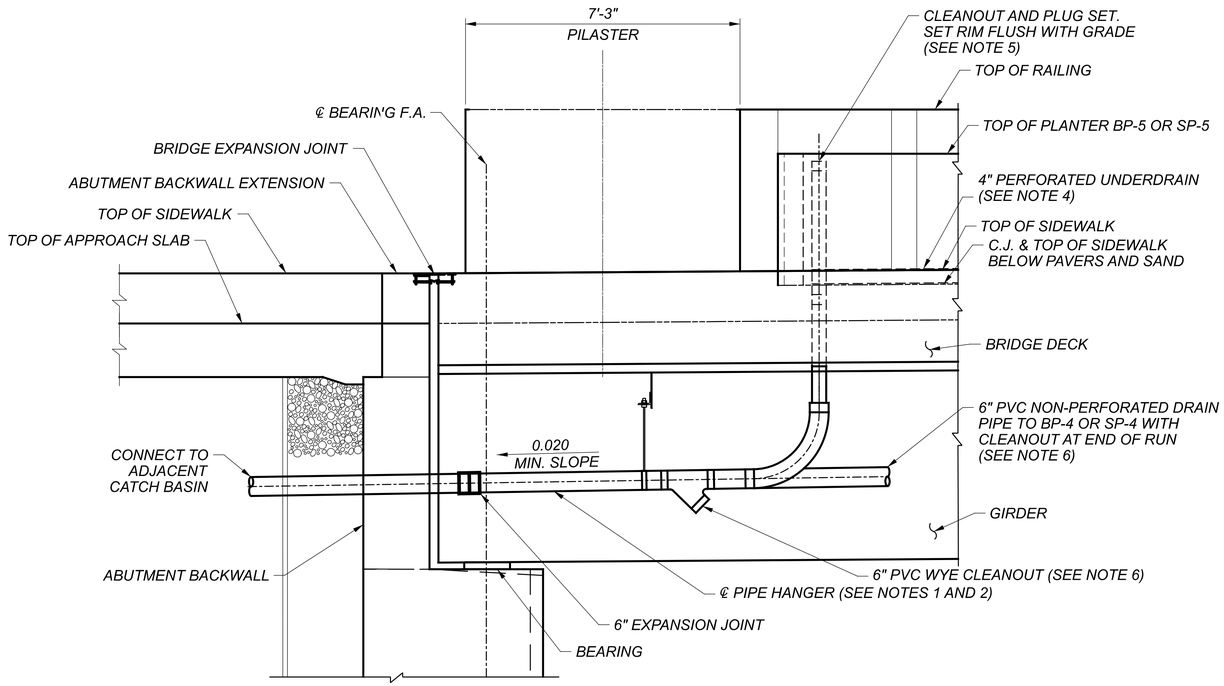

PLANTER DRAINAGE THROUGH ABUTMENT DETAIL

PLANTERS BP-4, BP-5, SP-4 AND SP-5

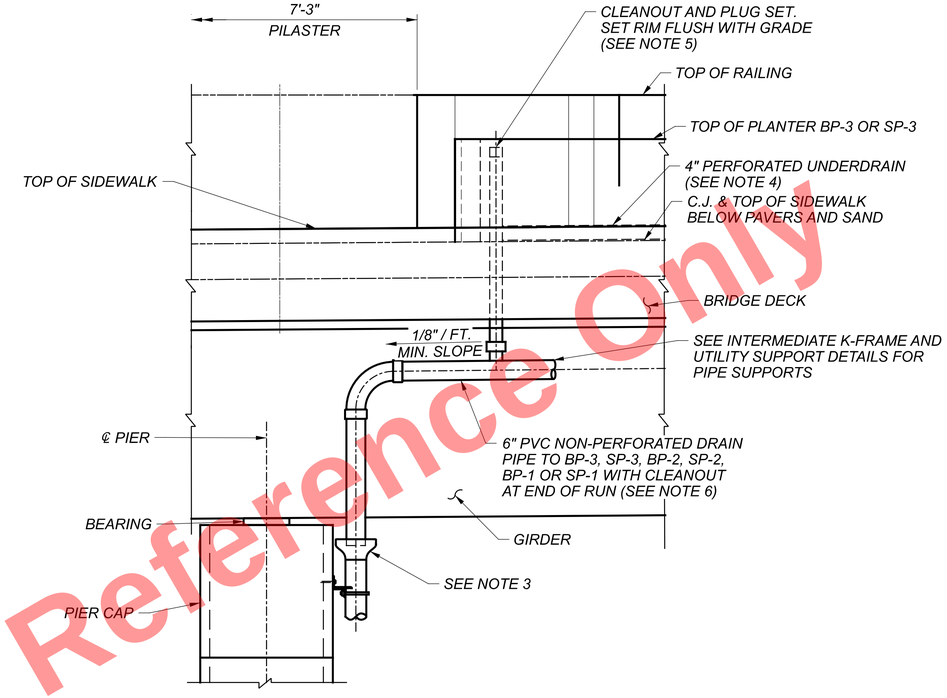

PLANTER DRAINAGE AT PIER 1B DETAIL

PLANTERS BP-1, BP-2, BP-3, SP-1, SP-2 AND SP-3

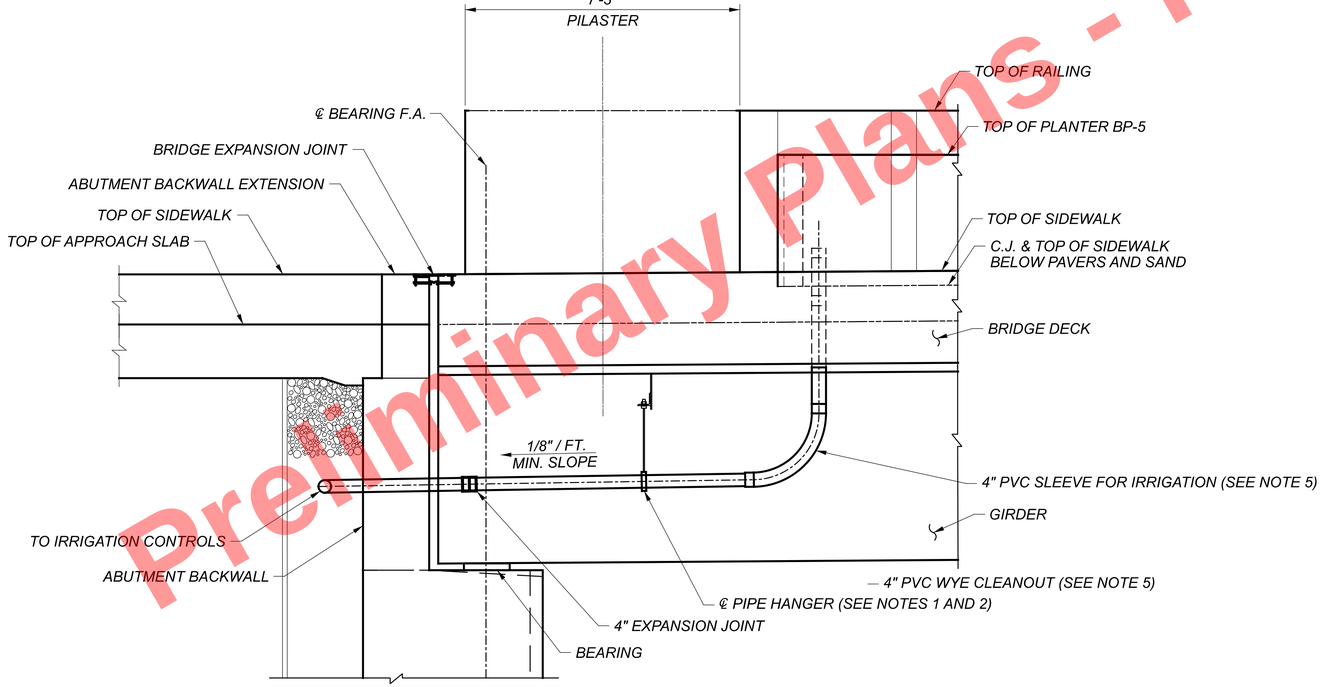

PLANTER IRRIGATION SLEEVE DETAIL

PLANTER BP-5 TO FORWARD ABUTMENT

NOTES:

1. THE HANGER FOR THE PLANTER DRAINAGE/IRRIGATION SYSTEM SHALL BE LOCATED MID-WAY BETWEEN THE VERTICAL DRAINAGE/IRRIGATION PIPE AND THE FACE OF THE ABUTMENT BACKWALL. THE STYLE OF HANGER SHOWN IS CONCEPTUAL. ANY TYPE OF HANGER THAT MEETS THE ODOT CMS REQUIREMENTS SHOWN ON THE PLANS IS ACCEPTABLE.
2. THE HANGER ASSEMBLY AND ROD SHALL BE GALVANIZED. THE REQUIRED MINIMUM SAFE WORKING LOAD CAPACITY OF THE SYSTEM IS 500 POUNDS. THE HANGER SHALL BE CAPABLE OF PREVENTING ROTATION OF THE DRAINAGE PIPE. THE STRAPS OF THE HANGERS SHALL MEET THE FOLLOWING REQUIREMENTS:
   A. PROVIDE A MINIMUM OF 120 DEGREES OF CONTACT WITH THE PIPE
   B. THE STRAPS SHALL BE A MINIMUM OF A 1 1/2" WIDE AND 3/16" THICK.
3. INCLUDE ALL LABOR, MATERIALS AND INCIDENTALS REQUIRED TO FURNISH AND INSTALL THE PLANTER DRAINAGE/IRRIGATION SYSTEM HANGERS AND DOWNSPOUTS AS DETAILED AND NOTED IN NOTES 1 THROUGH 2 IN ITEM 518 "6" PIPE DOWNSPOUT, INCLUDING SPECIALS, AS PER PLAN" FOR PAYMENT.
4. INCLUDE WITH ITEM SPECIAL " STRUCTURE DRAINAGE, MISC.: 4" PERFORATED PVC PIPE" FOR PAYMENT.
5. INCLUDE WITH ITEM SPECIAL " STRUCTURE DRAINAGE, MISC.: 4" NON-PERFORATED PVC PIPE, INCLUDING SPECIALS" FOR PAYMENT.
6. INCLUDE WITH ITEM SPECIAL " STRUCTURE DRAINAGE, MISC.: 6" NON-PERFORATED PVC PIPE, INCLUDING SPECIALS" FOR PAYMENT.
7. SEE SCUPPER AND DOWNSPOUT DETAIL SHEET 88 / 99 FOR ADDITIONAL INFORMATION.
8. FOR INTERMEDIATE K-FRAME AND UTILITY SUPPORT DETAILS, SEE SHEET 52 / 99

Preliminary Plans - For Reference Only

PLANTER DETAILS (3 OF 3)
CUY-90-1678 (BRIDGE 13)
CR-710 (E. 22ND ST.) OVER I.R. 90

SFN 1807839
DESIGN AGENCY
Michael Baker INTERNATIONAL
DESIGNER SWB | CHECKER MKB
REVIEWER CDC 05/10/24
PROJECT ID 82382
SUBSET 85 | TOTAL 99
SHEET 2266 | TOTAL 2696

CUY-90-16.28 (CCG3A)

MODEL: Sheet PAPERSIZE: 34x22 (in.) DATE: 3/28/2025 TIME: 7:54:27 AM USER: Rohit.Bk
pw:\\mb-us-pw.bentley.com:mb-us-pw-03\Documents\Cleveland_OH\01_Projects\ODOT\District12\82382\400-Engineering\Structures\SFN_1807839\Sheets\82382_SW009.dgn

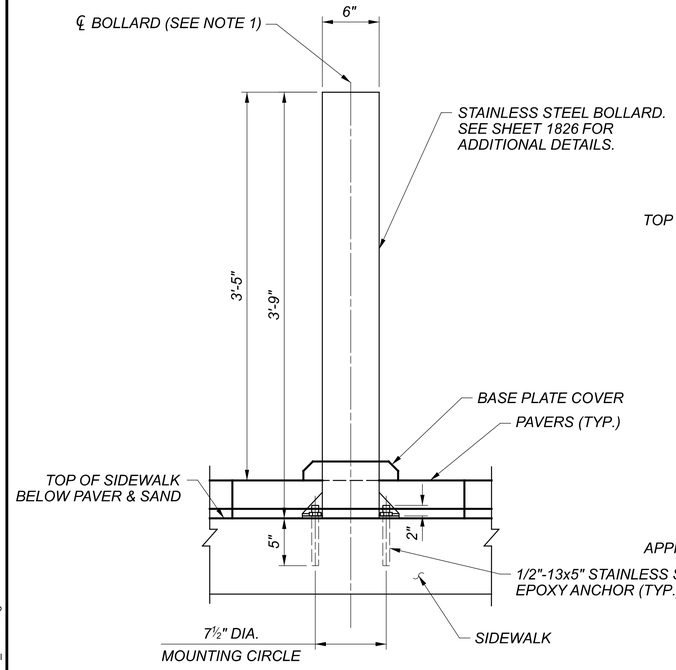

ITEM SPECIAL - STRUCTURES: BOLLARD ANCHORAGE

SIDEWALK REINFORCING NOT SHOWN

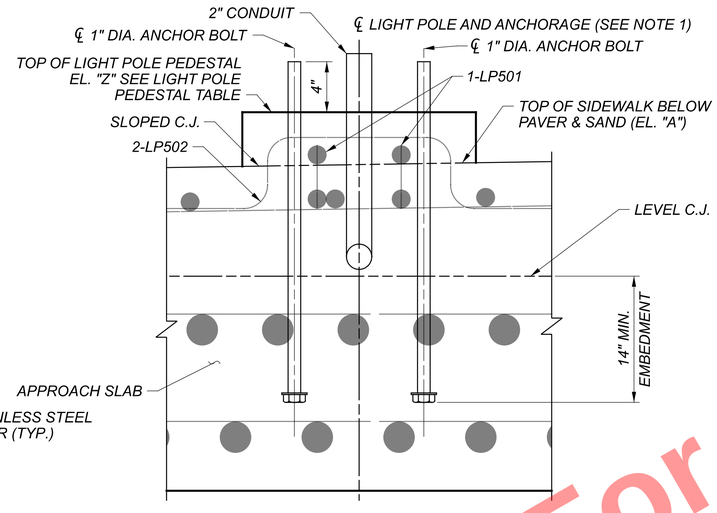

APPROACH SLAB MOUNTED LIGHT POLE ANCHORAGE DETAIL

PAVERS NOT SHOWN FOR CLARITY

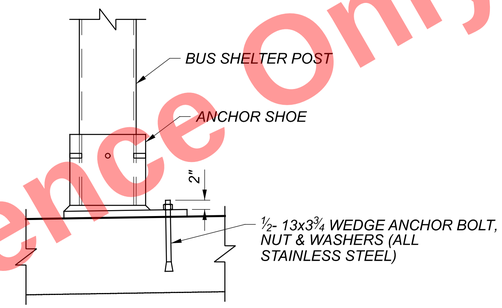

BUS SHELTER ANCHORAGE DETAIL (BY OTHERS)

1. DETAIL PROVIDED FOR INFORMATION ONLY. BUS SHELTER, ANCHOR SHOES, AND ANCHOR BOLTS INCLUDING INSTALLATION WILL BE PROVIDED BY OTHERS.

2. THE BOLTS ANCHORING THE RTA SHELTER ON THE BRIDGE DECK MUST ONLY BE EMBEDDED IN THE SIDEWALK LAYER. THEY MUST NOT EXTEND INTO OR THROUGH THE BRIDGE DECK.

3. THE ANCHORAGE OF THE SHELTER SHALL FOLLOW THE DETAILS PROVIDED BY THE SHELTER MANUFACTURER OR SUPPLIER.

4. THE SHELTER INSTALLATION CONTRACTOR SHALL SUBMIT THE ANCHORAGE PLAN/DETAILS TO ODOT, THE GREATER CLEVELAND REGIONAL TRANSIT AUTHORITY (GCRTA), AND THE CITY OF CLEVELAND ENGINEERING & CONSTRUCTION FOR APPROVAL. PLEASE ALLOW FOR A MINIMUM REVIEW DURATION OF 45 DAYS.

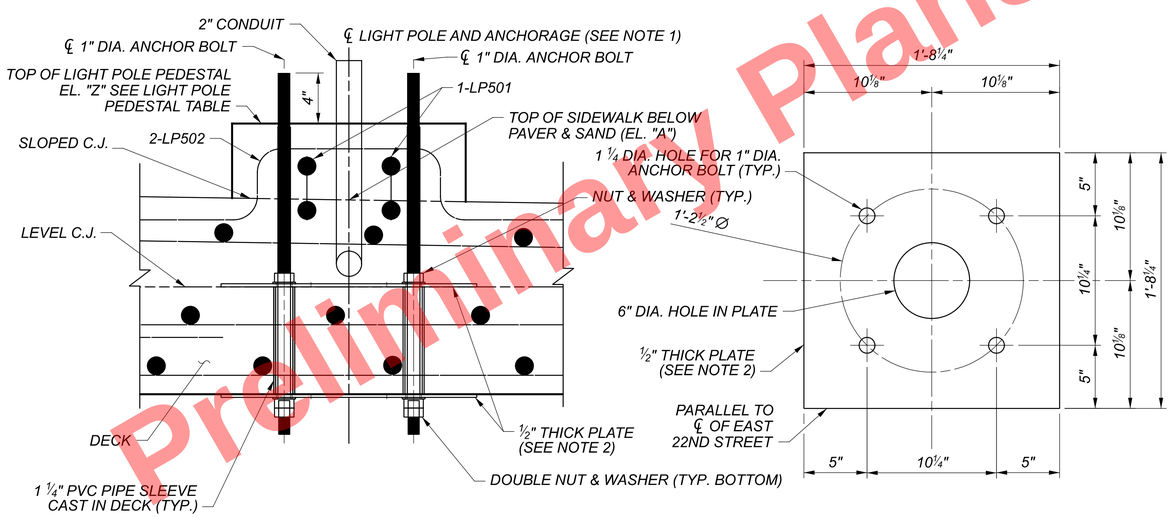

BRIDGE MOUNTED LIGHT POLE ANCHORAGE DETAIL

PAVERS NOT SHOWN FOR CLARITY

LIGHT POLE PEDESTAL TABLE				
LIGHT POLE	LOCATION PT. STATION / OFFSET	ELEVATION "Z"	TOP OF SIDEWALK BELOW PAVERS AND SAND EL. "A"	PEDESTAL HEIGHT AT CENTERLINE (IN.)
D1-4	STA. 33+20.56 OFF. 42.50' LT	673.27	672.92	4 1/4
D1-5	STA. 34+22.39 OFF. 42.50' LT	672.83	672.48	4 1/4
D1-6	STA. 35+24.27 OFF. 42.50' LT	672.08	671.73	4 1/4
D1-11	STA. 33+51.96 OFF. 30.00' RT	672.93	672.59	4 1/8
D1-12	STA. 34+51.96 OFF. 30.00' RT	672.26	671.91	4 1/4
D1-13	STA. 35+51.96 OFF. 30.00' RT	671.52	671.18	4 1/8
E1-9	STA. 33+24.03 OFF. 53.00' RT	673.28	672.94	4 1/8
E1-10	STA. 33+75+94 OFF. 53.00' RT	673.17	672.83	4 1/8
E1-11	STA. 34+27.86 OFF. 53.00' RT	672.79	672.45	4 1/8
E1-12	STA. 34+75.78 OFF. 53.00' RT	672.44	672.09	4 1/4
E1-13	STA. 35+27.69 OFF. 53.00' RT	672.06	671.71	4 1/4
E1-14	STA. 35+93.04 OFF. 53.28' RT	671.61	671.26	4 1/4

NOTES:

1. BOLLARDS, LIGHT POLES, AND LIGHT POLE ANCHOR BOLTS SHALL BE PLUMB.
2. PLATE SHALL BE ASTM A36 HOT DIP GALVANIZED. ANCHOR RODS SHALL BE ASTM-F-1554 55 PSI MIN. YIELD STRENGTH HOT DIP GALVANIZED PER ASTM A-153. WASHERS AND NUTS SHALL BE HOT DIP GALVANIZED PER ASTM A-153.
3. SEE LIGHTING PLANS FOR LIGHT POLE SPECIFICATIONS AND ADDITIONAL INFORMATION.

Preliminary Plans - For Reference Only

MISCELLANEOUS DETAILS
CUY-90-1678 (BRIDGE 13)
CR-710 (E. 22ND ST.) OVER I.R. 90

SFN 1807839
DESIGN AGENCY
Michael Baker INTERNATIONAL
DESIGNER SWB | CHECKER MKB
REVIEWER CDC 05/10/24
PROJECT ID 82382
SUBSET 86 | TOTAL 99
SHEET 2267 | TOTAL 2696

CUY-90-16.28 (CCG3A)

MODEL: Sheet PAPERSIZE: 34x22 (in.) DATE: 3/20/2025 TIME: 12:43:48 PM USER: Joseph.Hogan
pw:\\mb-us-pw.bentley.com:mb-us-pw-03\Documents\Cleveland_OH\01_Projects\ODOT\District12\82382\400-Engineering\Structures\SFN_1807839\Sheets\82382_SW010.dgn

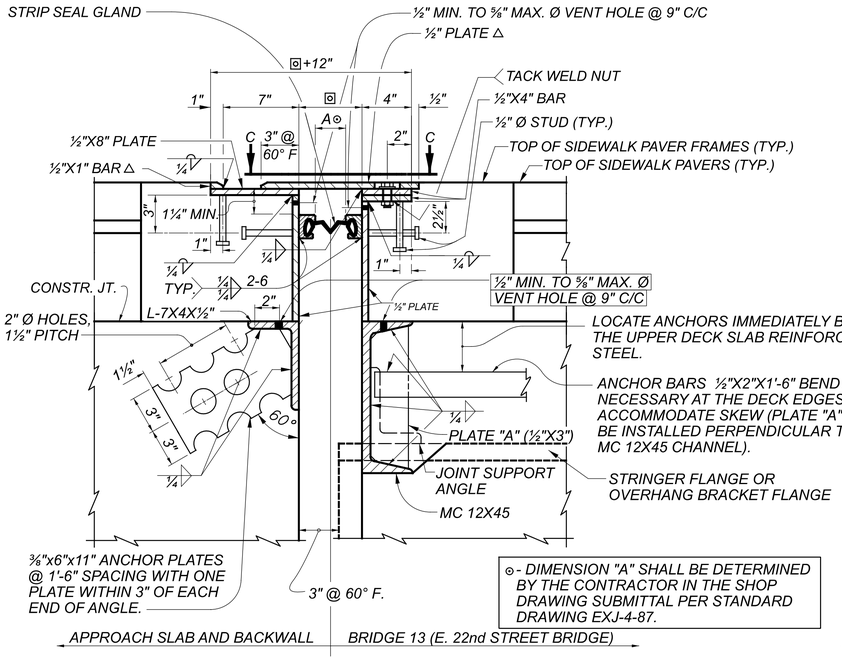

A/58 SECTION

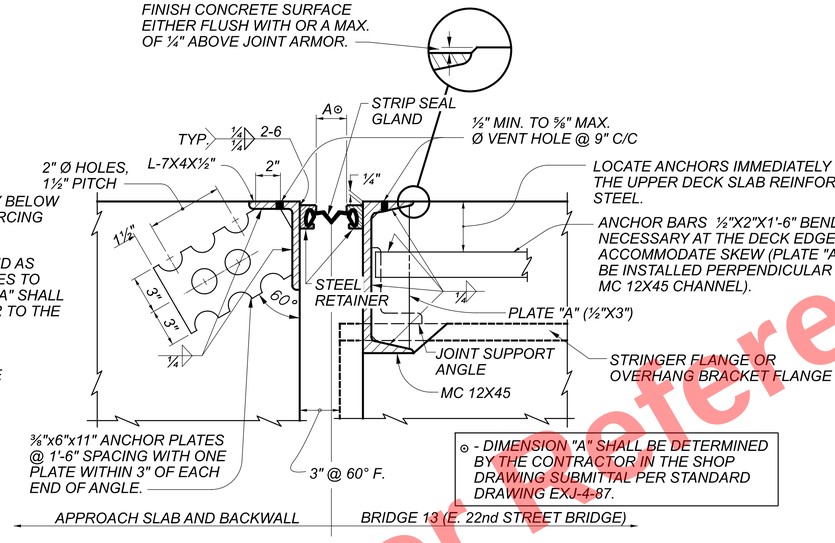

B/58 SECTION

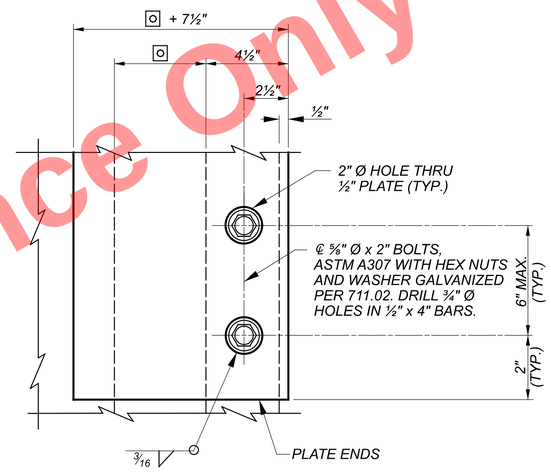

C/87 SECTION

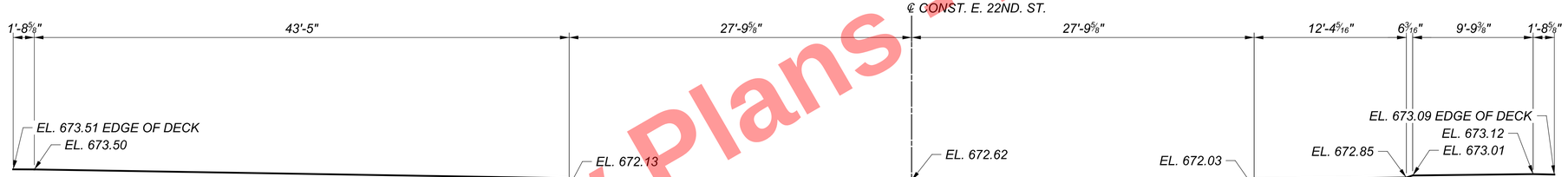

REAR ABUTMENT EXPANSION JOINT PROFILE
(DIMENSIONS MEASURED ALONG FACE OF BACKWALL)
(LOOKING DOWNSTATION)

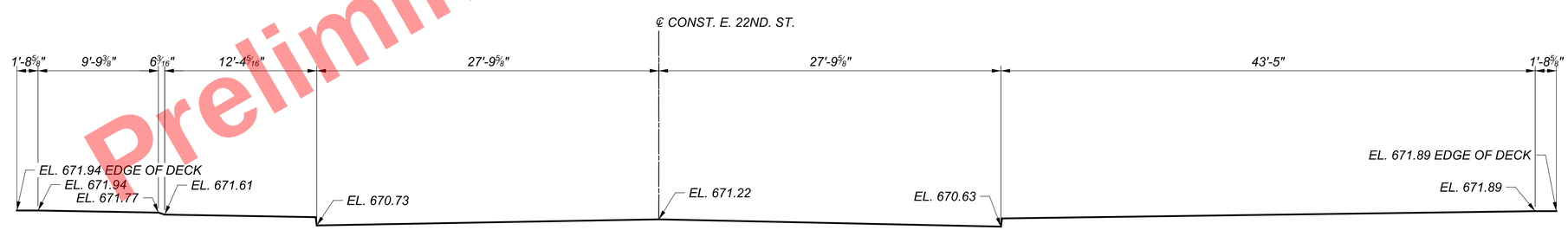

FORWARD ABUTMENT EXPANSION JOINT PROFILE
(DIMENSIONS MEASURED ALONG FACE OF BACKWALL)
(LOOKING UPSTATION)

LEGEND

△ - PROVIDE A 1/2" HORIZONTAL X 1/4" VERTICAL BEVEL AT THE EXPOSED EDGE OF THE 1/2" COVER PLATE AND 1/2" X 1" BAR.

⊡ - THIS DIMENSION IS THE SUM OF (2 X STEEL RETAINER + WIDTH DIM. "A").

NOTES:

1. COORDINATE ADJUSTMENTS TO DECK DIMENSION IF JOINT MANUFACTURER USES DIFFERENT SIZE RETAINER.
2. FOR ADDITIONAL DETAILS SEE ODOT STANDARD DRAWING EXJ-4-87.

Preliminary Plans - For Reference Only

EXPANSION JOINT DETAILS
CUY-90-1678 (BRIDGE 13)
CR-710 (E. 22ND ST.) OVER I.R. 90

SFN	1807839
DESIGN AGENCY	Michael Baker INTERNATIONAL
DESIGNER	EM
CHECKER	ETB
REVIEWER	CDC 05/10/24
PROJECT ID	82382
SUBSET	87
TOTAL	99
SHEET	2268
TOTAL	2696

CUY-90-16.28 (CCG3A)

MODEL: Sheet PAPERSIZE: 34x22 (in.) DATE: 3/28/2025 TIME: 7:54:58 AM USER: Rohit.Bk
pw:\\mb-us-pw.bentley.com:mb-us-pw-03\Documents\Cleveland_OH\01_Projects\ODOT\District12\82382\400-Engineering\Structures\SFN_1807839\Sheets\82382_SFN_1807839_SX005.dgn

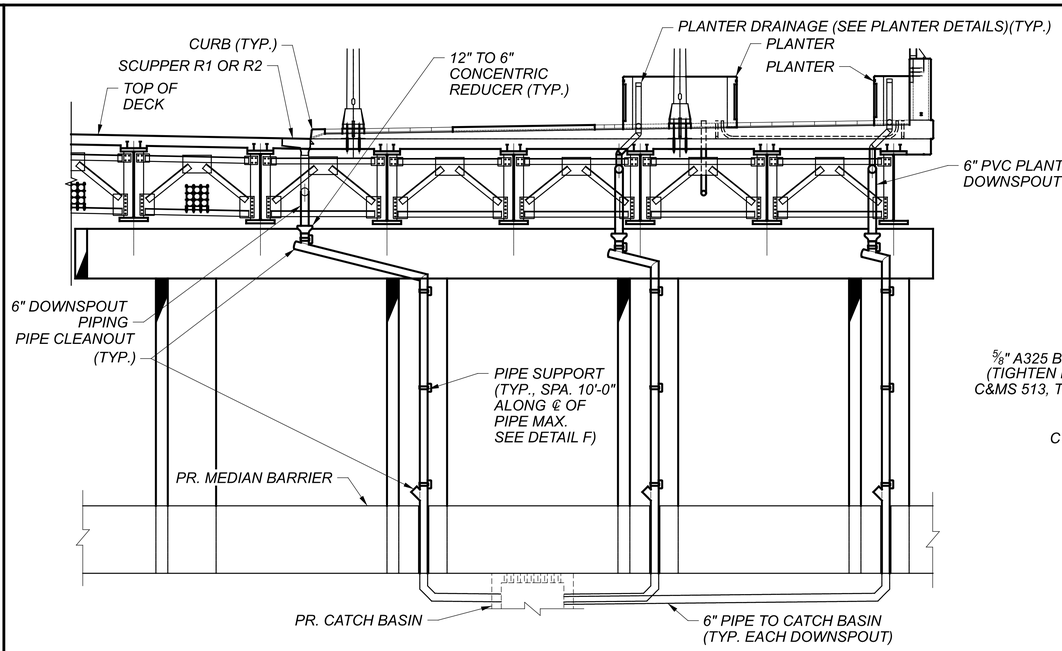

ELEVATION AT PIER 1B

(LOOKING UPSTATION)

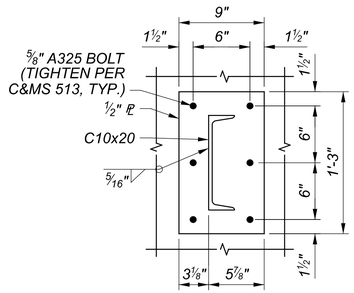

CONNECTION PLATE DETAIL

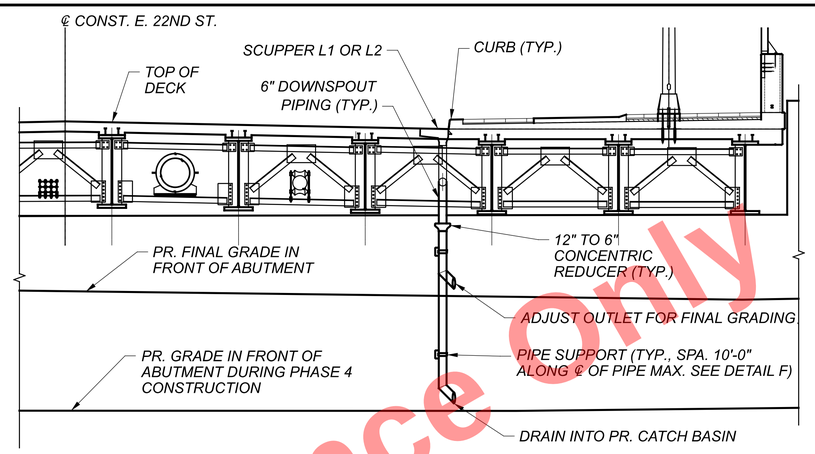

ELEVATION AT REAR ABUTMENT

(LOOKING DOWN-STATION)

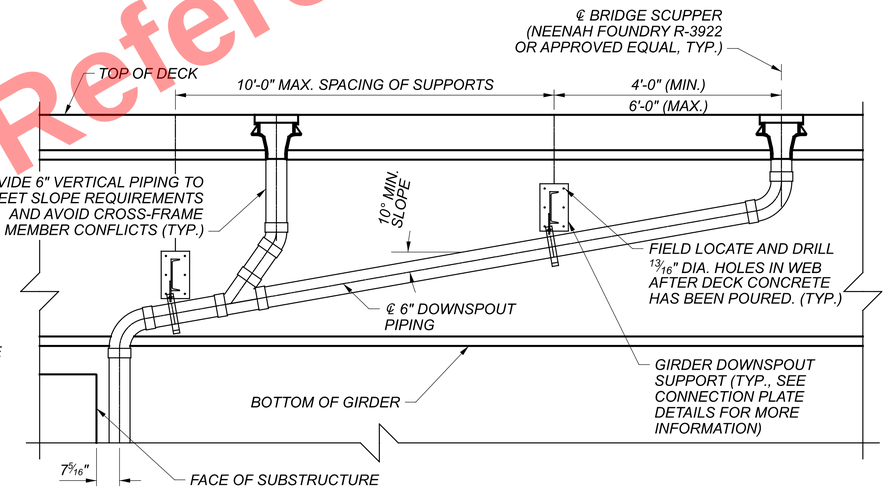

TYPICAL ELEVATION OF DECK SCUPPER TO SUBSTRUCTURE DRAINAGE

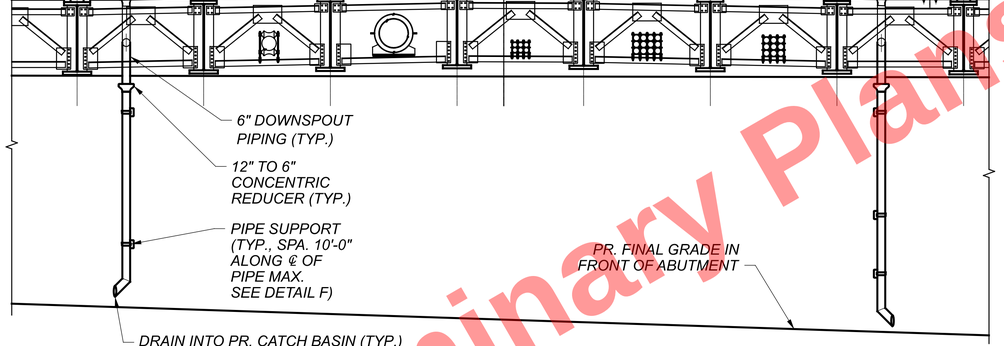

ELEVATION AT FORWARD ABUTMENT

(LOOKING UPSTATION)

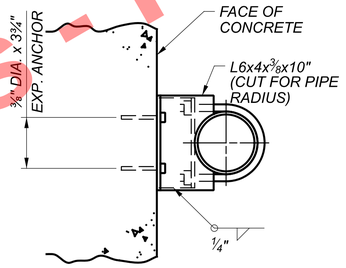

DETAIL F - PLAN

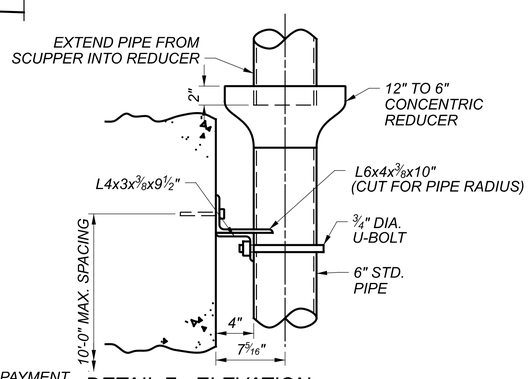

DETAIL F - ELEVATION

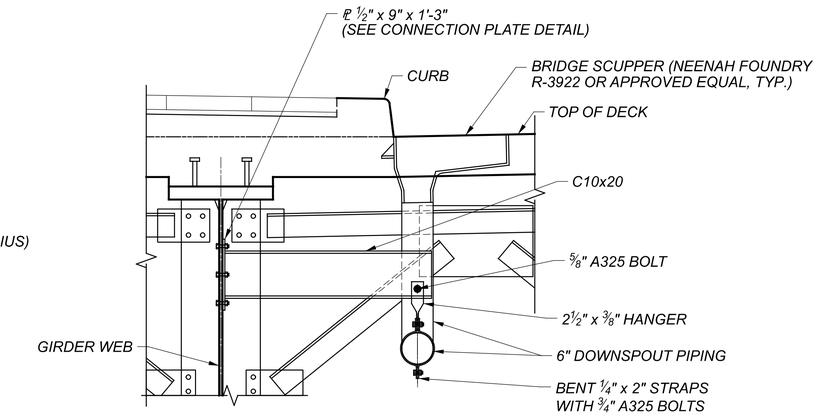

GIRDER DOWNSPOUT SUPPORT DETAIL

NOTES:

1. PROVIDE STRUCTURAL STEEL FOR DOWNSPOUT SUPPORTS CONFORMING TO ASTM A709 GRADE 36. GALVANIZE ALL MATERIAL AFTER FABRICATION ACCORDING TO ASTM A123. GALVANIZE HARDWARE PER A153.
2. PROVIDE 6" DIAMETER DOWNSPOUT STEEL PIPE CONFORMING TO ASTM A53 WITH MECHANICAL FITTINGS RECOMMENDED BY THE SCUPPER AND DOWNSPOUT MANUFACTURER.
3. PROVIDE FASTENERS CONFORMING TO ASTM F3125 GRADE A325 TYPE 1 GALVANIZED OF THE DIAMETERS NOTED.
4. PROVIDE GIRDER- AND CONCRETE-MOUNTED DOWNSPOUT SUPPORT BRACKETS AT 10'-0" MAXIMUM CENTERS. INSTALL CONCRETE-MOUNTED DOWNSPOUT SUPPORTS USING ⅜" x 3¾" EXPANSION ANCHORS.
5. TERMINATE DOWNSPOUT RUNS APPROXIMATELY 1'-0" ABOVE FINISHED GRADE USING A 45° ELBOW UNLESS NOTED OTHERWISE.
6. INCLUDE ALL LABOR, MATERIALS AND INCIDENTALS REQUIRED TO FURNISH AND INSTALL THE SCUPPER DOWNSPOUTS AS DETAILED AND NOTED IN NOTES 1 THROUGH 5 IN ITEM 518 "6" PIPE DOWNSPOUT, INCLUDING SPECIALS, AS PER PLAN" FOR PAYMENT.
7. SEE SHEET 58/99 FOR SCUPPER STATIONING AND OFFSETS

Preliminary Plans - For Reference Only

SCUPPER AND DOWNSPOUT DETAILS

CUY-90-1678 (BRIDGE 13)
CR-710 (E. 22ND ST.) OVER I.R. 90

SFN	1807839
DESIGN AGENCY	Michael Baker INTERNATIONAL
DESIGNER	MKB
CHECKER	JCC
REVIEWER	CDC 05/10/24
PROJECT ID	82382
SUBSET	88
TOTAL	99
SHEET	2269
TOTAL	2696

CUY-90-16.28 (CCG3A)

MODEL: Sheet PAPERSIZE: 34x22 (in.) DATE: 3/28/2025 TIME: 7:55:10 AM USER: Rohit.Bk
pw:\\mb-us-pw.bentley.com:mb-us-pw-03\Documents\Cleveland_OH\01_Projects\ODOT\District12\82382400-Engineering\Structures\SFN_1807839\Sheets\82382_SFN_1807839_SX006.dgn

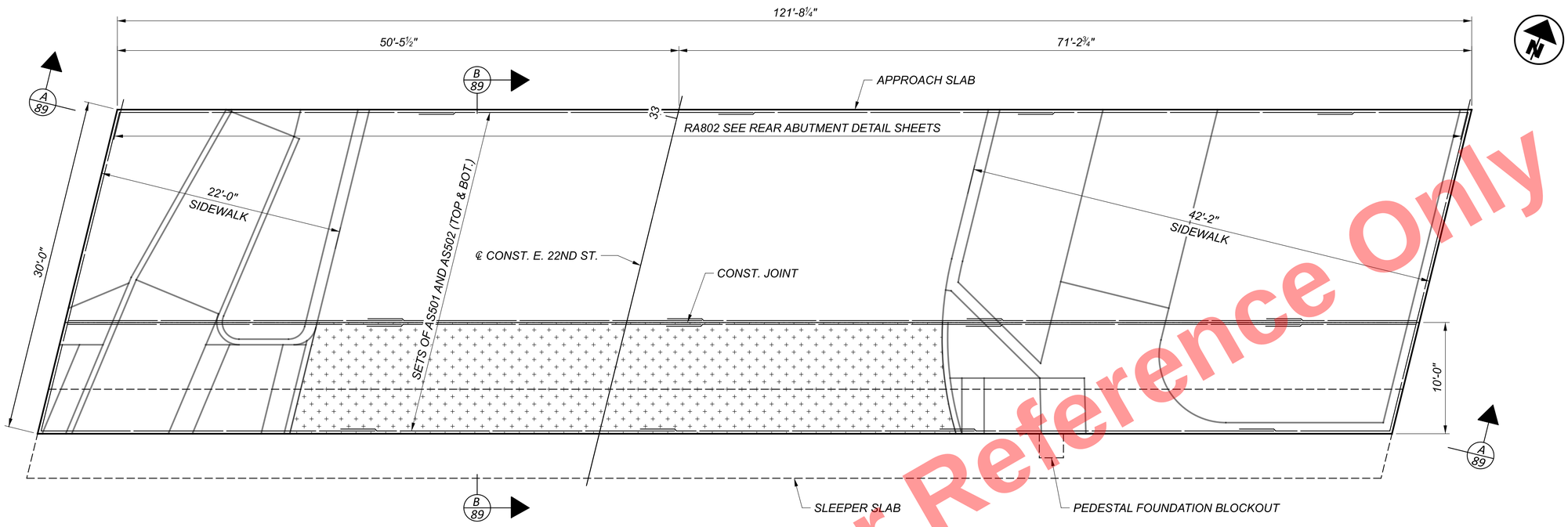

REAR APPROACH SLAB PLAN

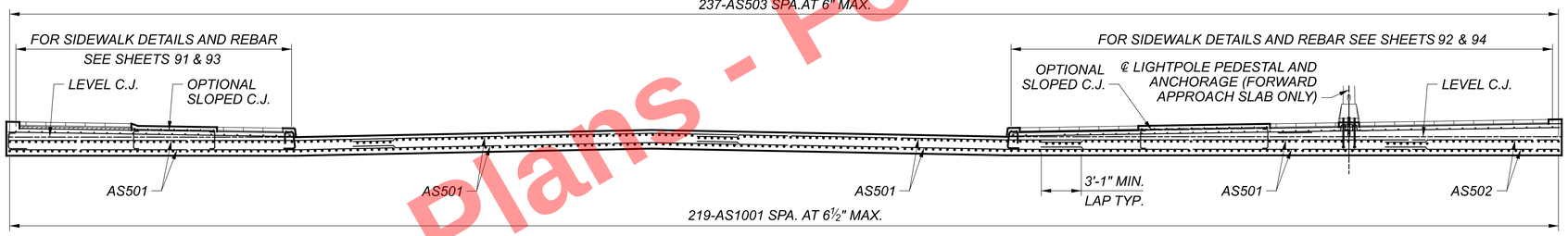

A 89 / A 90 SECTION

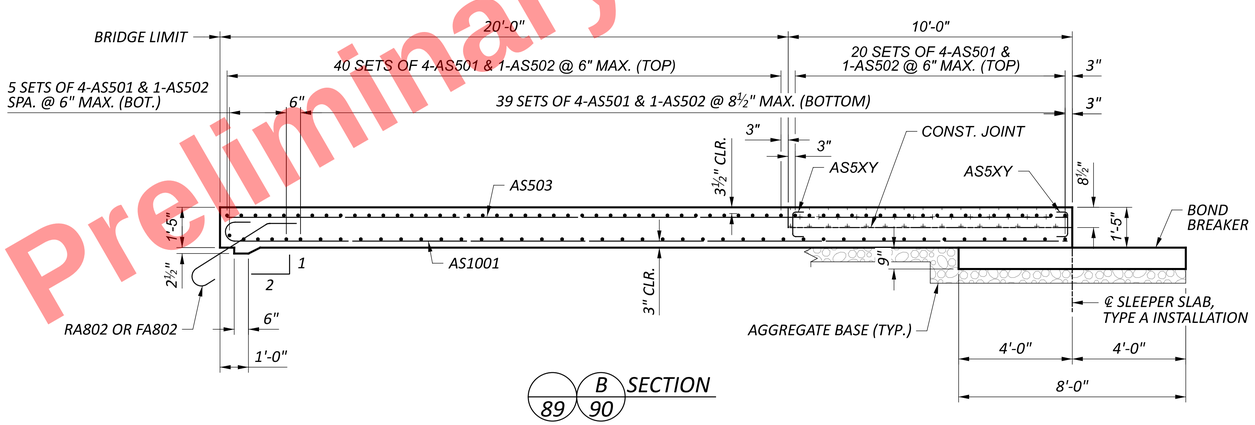

B 89 / B 90 SECTION

NOTES:

1. SEE SHEET 41/99 FOR STREET LAMP POLE BASEPLATE AND DETAILS.
2. APPROACH SLAB AND SLEEPER SLAB LONGITUDINAL BARS SHALL BE PLACED PARALLEL TO THE ℄ OF THE ROADWAY. TRANSVERSE BARS SHALL BE PLACED PARALLEL TO THE ABUTMENT.
3. FOR INFORMATION NOT SHOWN, SEE STANDARD BRIDGE DRAWING AS-1-15 AND AS-2-15.
4. PROVIDE 2" CONCRETE COVER ON REINFORCEMENT BARS UNLESS NOTED OTHERWISE.
5. FOR LIGHTPOLE AND PEDESTAL ANCHOR BOLT DETAILS, SEE SHEET 86/99 .

LAP LENGTHS:

#4 BAR 1'-11"
#5 BAR 3'-1"

LEGEND:

INTEGRALLY COLORED CONCRETE, INCLUDE WITH ITEM 526 - REINFORCED CONCRETE APPROACH SLABS WITH QC/QA (T = 17"), AS PER PLAN

Preliminary Plans - For Reference Only

APPROACH SLAB DETAILS (1 OF 6)
CUY-90-1678 (BRIDGE 13)
CR-710 (E. 22ND ST.) OVER I.R. 90

SFN 1807839
DESIGN AGENCY
Michael Baker INTERNATIONAL
DESIGNER JNR | CHECKER MKB
REVIEWER CDC 05/10/24
PROJECT ID 82382
SUBSET 89 | TOTAL 99
SHEET 2270 | TOTAL 2696

CUY-90-16.28 (CCG3A)

MODEL: Sheet PAPERSIZE: 34x22 (in.) DATE: 3/28/2025 TIME: 7:55:18 AM USER: RohitLBk
pw:\\mb-us-pw.bentley.com:mb-us-pw-03\Documents\Cleveland_OH\01_Projects\ODOT\District12\82382\400-Engineering\Structures\SFN_1807839\Sheets\82382_SHEETS_SFN_1807839_SM001.dgn

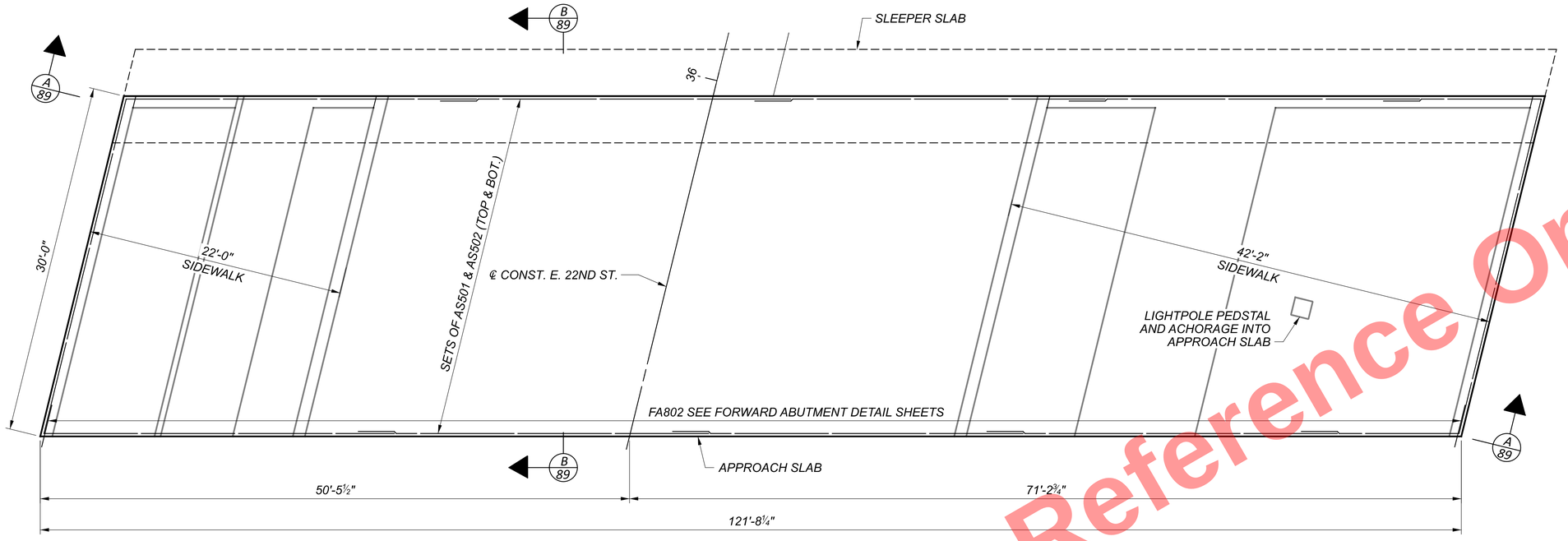

FORWARD APPROACH SLAB PLAN

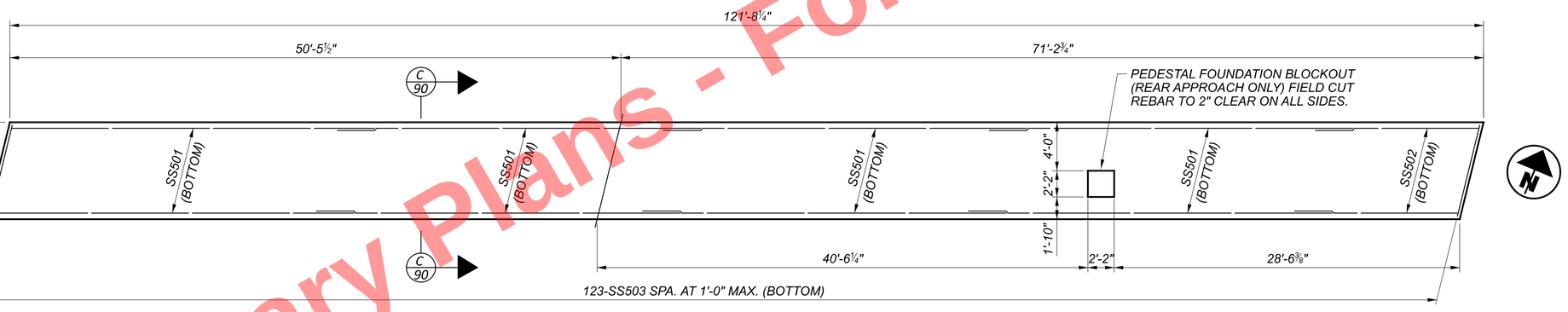

SLEEPER SLAB PLAN

REAR APPROACH SHOWN,
FORWARD APPROACH SIMILAR WITHOUT PEDESTAL FOUNDATION BLOCKOUT

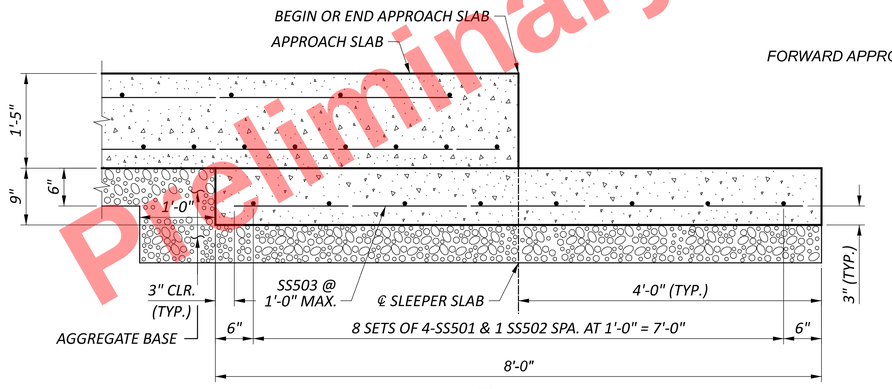

C 90 SECTION

REAR APPROACH SHOWN, FORWARD APPROACH OPPOSITE HAND

NOTES:

1. *APPROACH SLAB AND SLEEPER SLAB LONGITUDINAL BARS SHALL BE PLACED PARALLEL TO THE ℄ OF THE ROADWAY. TRANSVERSE BARS SHALL BE PLACED PARALLEL TO THE ABUTMENT.*
2. *FOR INFORMATION NOT SHOWN, SEE STANDARD BRIDGE DRAWING AS-1-15 AND AS-2-15.*
3. *PROVIDE 2" CONCRETE COVER ON REINFORCEMENT BARS UNLESS NOTED OTHERWISE.*
4. *FOR LIGHTPOLE PEDESTAL AND ANCHOR BOLT DETAILS, SEE SHEET 86/99 .*

LAP LENGTHS:

#4 BAR 1'-11"
#5 BAR 3'-1"

Preliminary Plans - For Reference Only

APPROACH SLAB DETAILS (2 OF 6)
CUY-90-1678 (BRIDGE 13)
CR-710 (E. 22ND ST.) OVER I.R. 90

SFN 1807839
DESIGN AGENCY
Michael Baker INTERNATIONAL
DESIGNER JNR | CHECKER MKB
REVIEWER CDC 05/10/24
PROJECT ID 82382
SUBSET 90 | TOTAL 99
SHEET 2271 | TOTAL 2696

CUY-90-16.28 (CCG3A)

MODEL: Sheet PAPERSIZE: 34x22 (in.) DATE: 3/28/2025 TIME: 7:55:28 AM USER: RohitLBk
pw:\\mb-us-pw.bentley.com:mb-us-pw-03\Documents\Cleveland_OH\01_Projects\ODOT\District12\82382400-Engineering\Structures\SFN_1807839\Sheets\82382_SFN_1807839_SM002.dgn

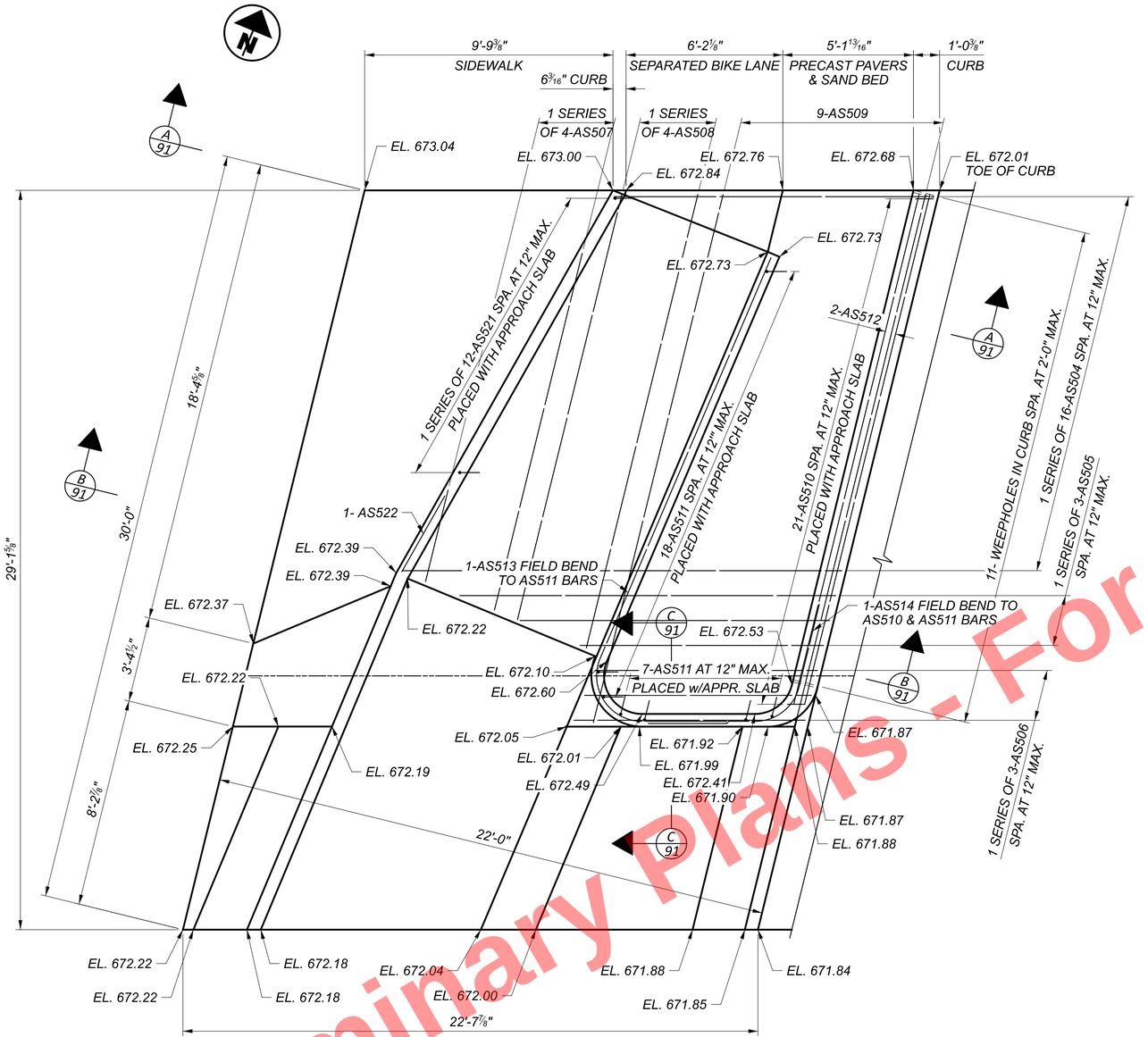

REAR APPROACH SLAB WEST SIDEWALK PLAN

(ELEVATIONS SHOWN ARE TOP OF PAVERS, TOP OF CURB, TOP OF SHARED USE PATH, OR TOP OF CURB RAMP UNLESS NOTED OTHERWISE)

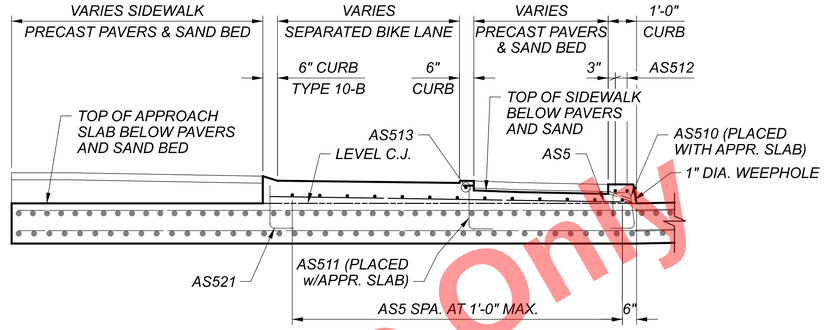

A 91 SECTION

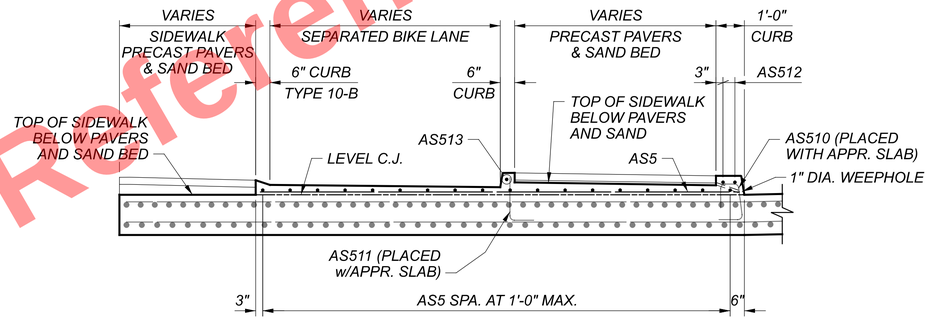

B 91 SECTION

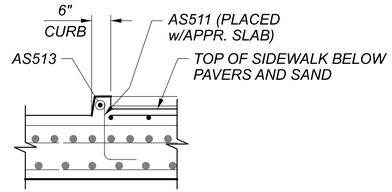

C 91 SECTION

NOTES:

1. *SEE SHEET 41/99 FOR STREET LAMP POLE BASEPLATE AND DETAILS.*
2. *APPROACH SLAB AND SLEEPER SLAB LONGITUDINAL BARS SHALL BE PLACED PARALLEL TO THE ℄ OF THE ROADWAY. TRANSVERSE BARS SHALL BE PLACED PARALLEL TO THE ABUTMENT.*
3. *FOR INFORMATION NOT SHOWN, SEE STANDARD BRIDGE DRAWING AS-1-15 AND AS-2-15.*
4. *PROVIDE 2" CONCRETE COVER ON REINFORCEMENT BARS UNLESS NOTED OTHERWISE.*
5. *FOR ADDITIONAL SIDEWALK DIMENSIONS, SEE SHEET1067.*

LAP LENGTHS:

#4 BAR 1'-11"
#5 BAR 3'-1"

Preliminary Plans - For Reference Only

APPROACH SLAB DETAILS (3 OF 6)
CUY-90-1678 (BRIDGE 13)
CR-710 (E. 22ND ST.) OVER I.R. 90

SFN 1807839
DESIGN AGENCY
Michael Baker INTERNATIONAL
DESIGNER JNR | CHECKER MKB
REVIEWER CDC 05/10/24
PROJECT ID 82382
SUBSET 91 | TOTAL 99
SHEET 2272 | TOTAL 2696

CUY-90-16.28 (CCG3A)

MODEL: Sheet PAPERSIZE: 34x22 (in.) DATE: 3/28/2025 TIME: 7:55:40 AM USER: Rohit.Bk
pw:\\mb-us-pw.bentley.com:mb-us-pw-03\Documents\Cleveland_OH\01_Projects\ODOT\District12\82382\400-Engineering\Structures\SFN_1807839\Sheets\82382_SFN_1807839_SM003.dgn

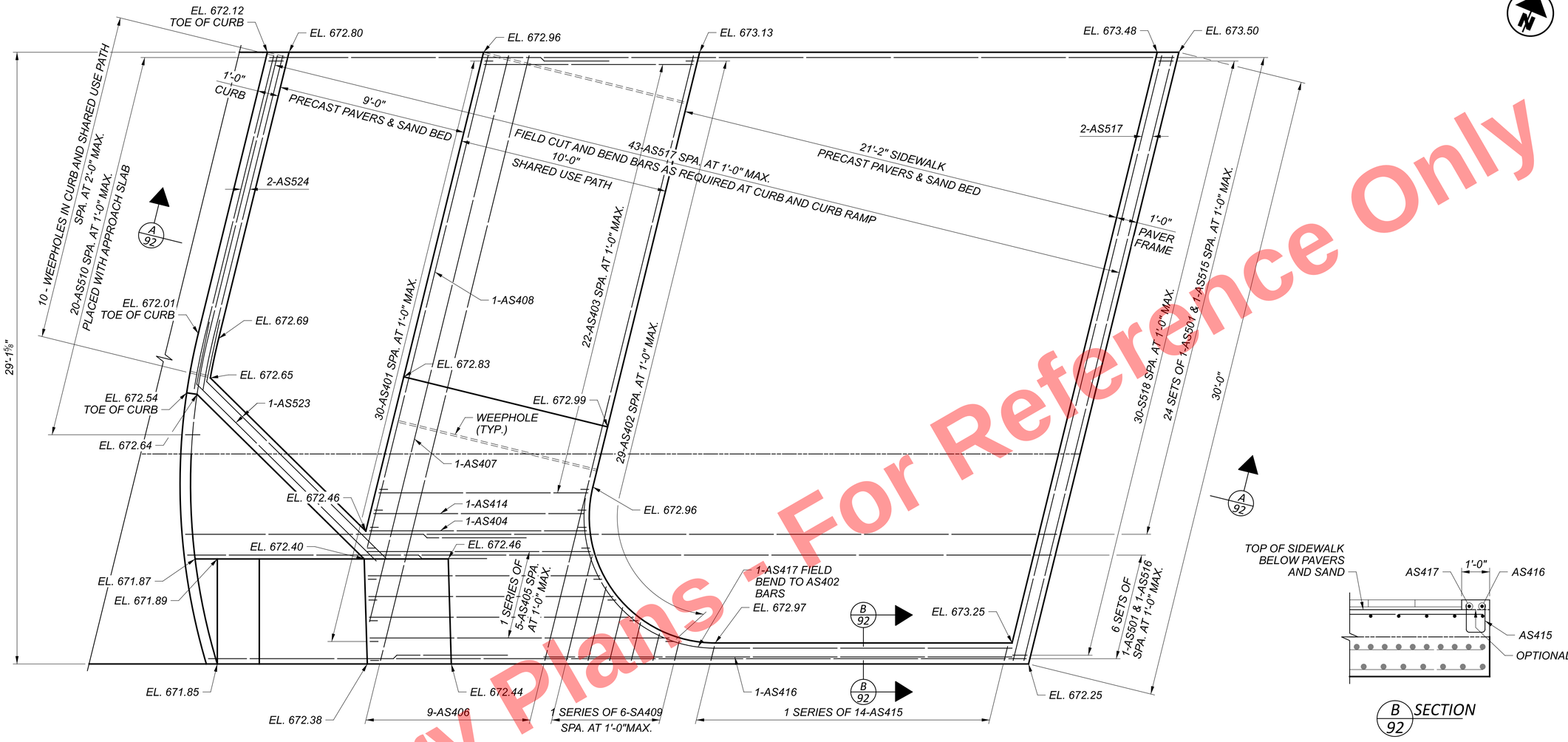

REAR APPROACH SLAB EAST SIDEWALK PLAN

(ELEVATIONS SHOWN ARE TOP OF PAVERS, TOP OF CURB, TOP OF SHARED USE PATH, OR TOP OF CURB RAMP UNLESS NOTED OTHERWISE)

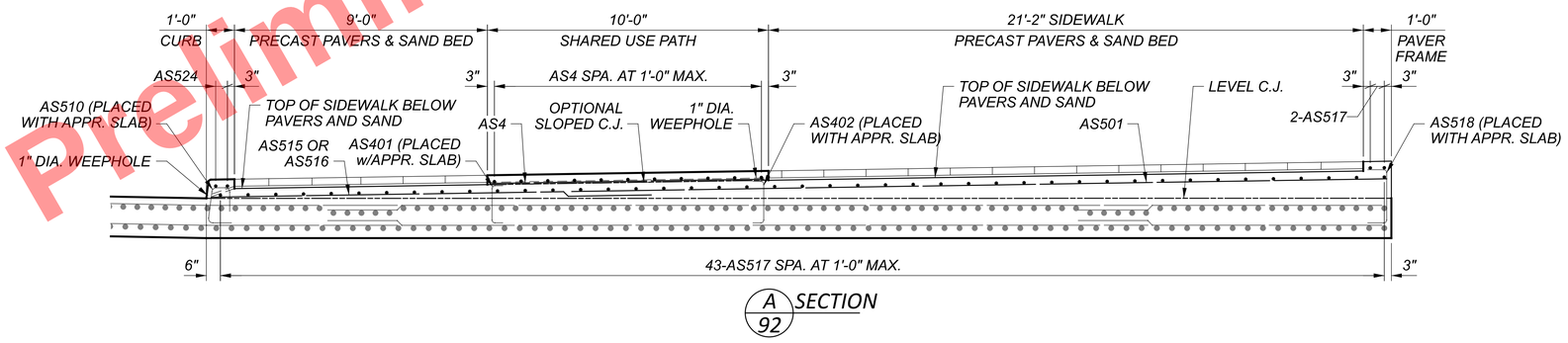

NOTES:

1. *SEE SHEET 41/99 FOR STREET LAMP POLE BASEPLATE AND DETAILS.*
2. *APPROACH SLAB AND SLEEPER SLAB LONGITUDINAL BARS SHALL BE PLACED PARALLEL TO THE ℄ OF THE ROADWAY. TRANSVERSE BARS SHALL BE PLACED PARALLEL TO THE ABUTMENT.*
3. *FOR INFORMATION NOT SHOWN, SEE STANDARD BRIDGE DRAWING AS-1-15 AND AS-2-15.*
4. *PROVIDE 2" CONCRETE COVER ON REINFORCEMENT BARS UNLESS NOTED OTHERWISE.*
5. *FOR ADDITIONAL SIDEWALK DIMENSIONS, SEE SHEET1067.*

LAP LENGTHS:

#4 BAR 1'-11"
#5 BAR 3'-1"

Preliminary Plans - For Reference Only

APPROACH SLAB DETAILS (4 OF 6)
CUY-90-1678 (BRIDGE 13)
CR-710 (E. 22ND ST.) OVER I.R. 90

SFN	1807839
DESIGN AGENCY	Michael Baker INTERNATIONAL
DESIGNER	JNR
CHECKER	MKB
REVIEWER	CDC 05/10/24
PROJECT ID	82382
SUBSET	92
TOTAL	99
SHEET	2273
TOTAL	2696

CUY-90-16.28 (CCG3A)

MODEL: Sheet PAPERSIZE: 34x22 (in.) DATE: 3/28/2025 TIME: 7:55:48 AM USER: RohitBk
pw:\\mb-us-pw.bentley.com:mb-us-pw-03\Documents\Cleveland_OH\01_Projects\ODOT\District12\82382\400-Engineering\Structures\SFN_1807839\Sheets\82382_SFN_1807839_SM004.dgn

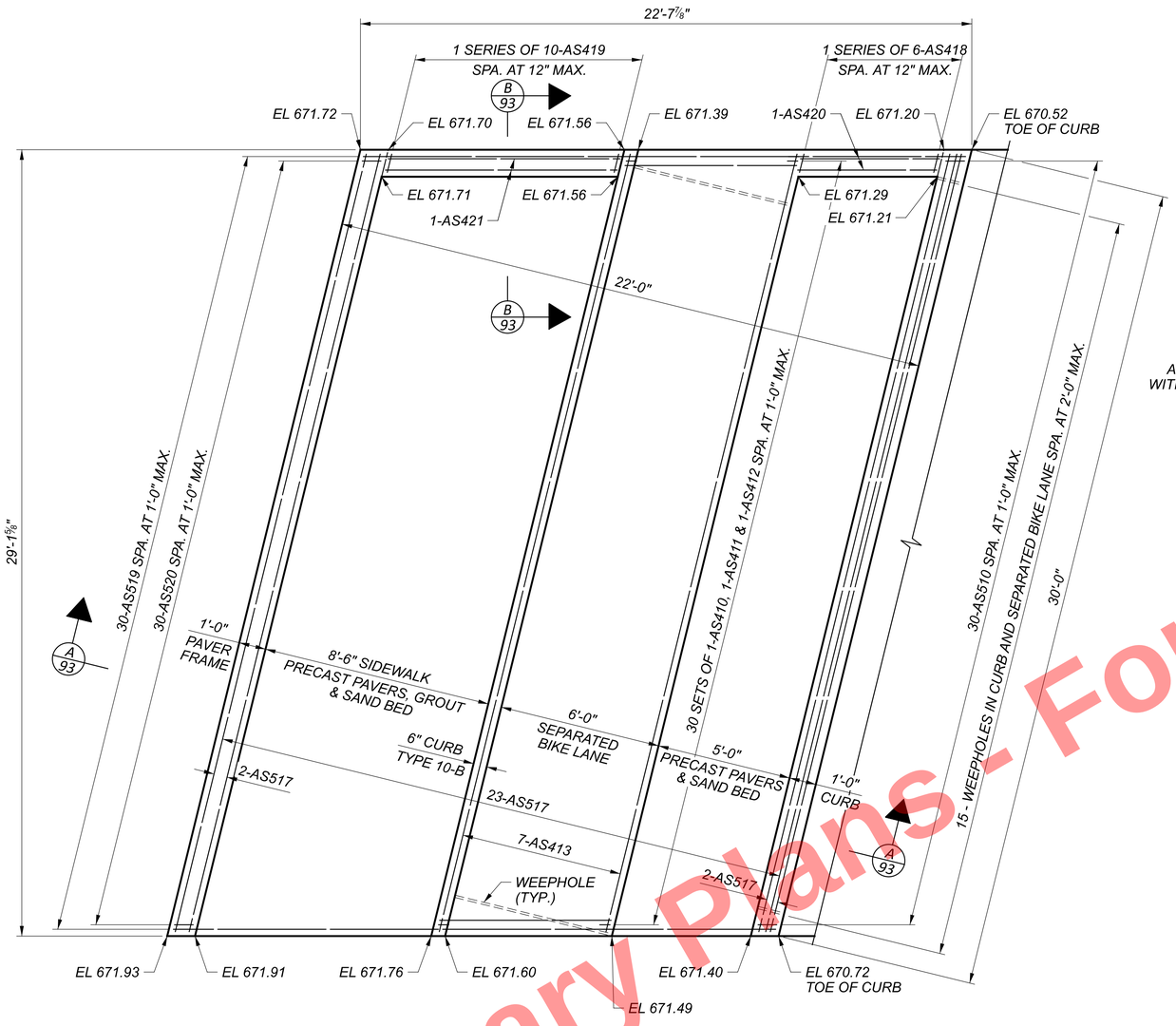

FORWARD APPROACH SLAB WEST SIDEWALK PLAN

(ELEVATIONS SHOWN ARE TOP OF PAVERS, TOP OF CURB, TOP OF SHARED USE PATH, OR TOP OF CURB RAMP UNLESS NOTED OTHERWISE)

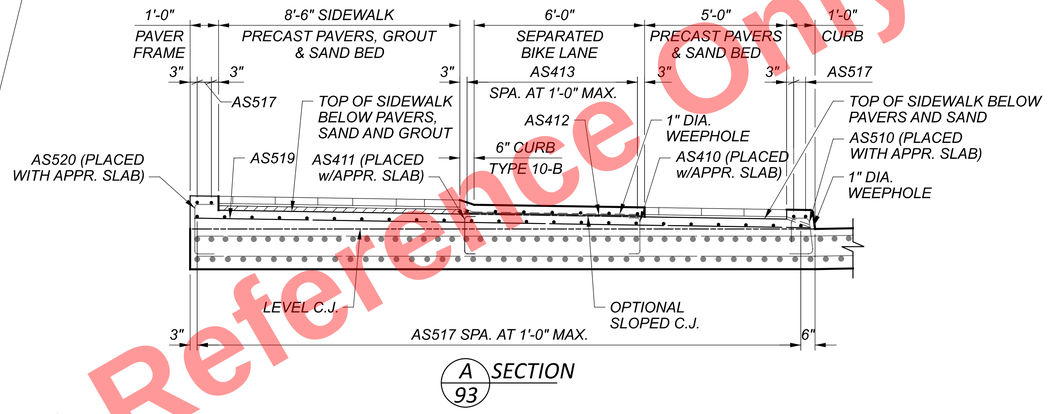

A 93 SECTION

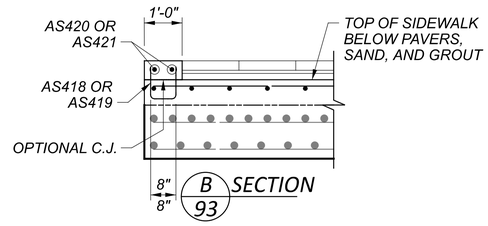

B 93 SECTION

Preliminary Plans - For Reference Only

NOTES:

1. SEE SHEET 41.99 FOR STREET LAMP POLE BASEPLATE AND DETAILS.
2. APPROACH SLAB AND SLEEPER SLAB LONGITUDINAL BARS SHALL BE PLACED PARALLEL TO THE ℄ OF THE ROADWAY. TRANSVERSE BARS SHALL BE PLACED PARALLEL TO THE ABUTMENT.
3. FOR INFORMATION NOT SHOWN, SEE STANDARD BRIDGE DRAWING AS-1-15 AND AS-2-15.
4. PROVIDE 2" CONCRETE COVER ON REINFORCEMENT BARS UNLESS NOTED OTHERWISE.

LAP LENGTHS:

#4 BAR 1'-11"
#5 BAR 3'-1"

APPROACH SLAB DETAILS (5 OF 6)
CUY-90-1678 (BRIDGE 13)
CR-710 (E. 22ND ST.) OVER I.R. 90

SFN 1807839
DESIGN AGENCY
Michael Baker INTERNATIONAL
DESIGNER JNR | CHECKER MKB
REVIEWER CDC 05/10/24
PROJECT ID 82382
SUBSET 93 | TOTAL 99
SHEET 2274 | TOTAL 2696

CUY-90-16.28 (CCG3A)

MODEL: Sheet PAPERSIZE: 34x22 (in.) DATE: 3/28/2025 TIME: 7:55:55 AM USER: RohitLBk
pw:\\mb-us-pw.bentley.com:mb-us-pw-03\Documents\Cleveland_OH01_Projects\ODOT\District12\82382400-Engineering\Structures\SFN_1807839\Sheets\82382_SFN_1807839_SW005.dgn

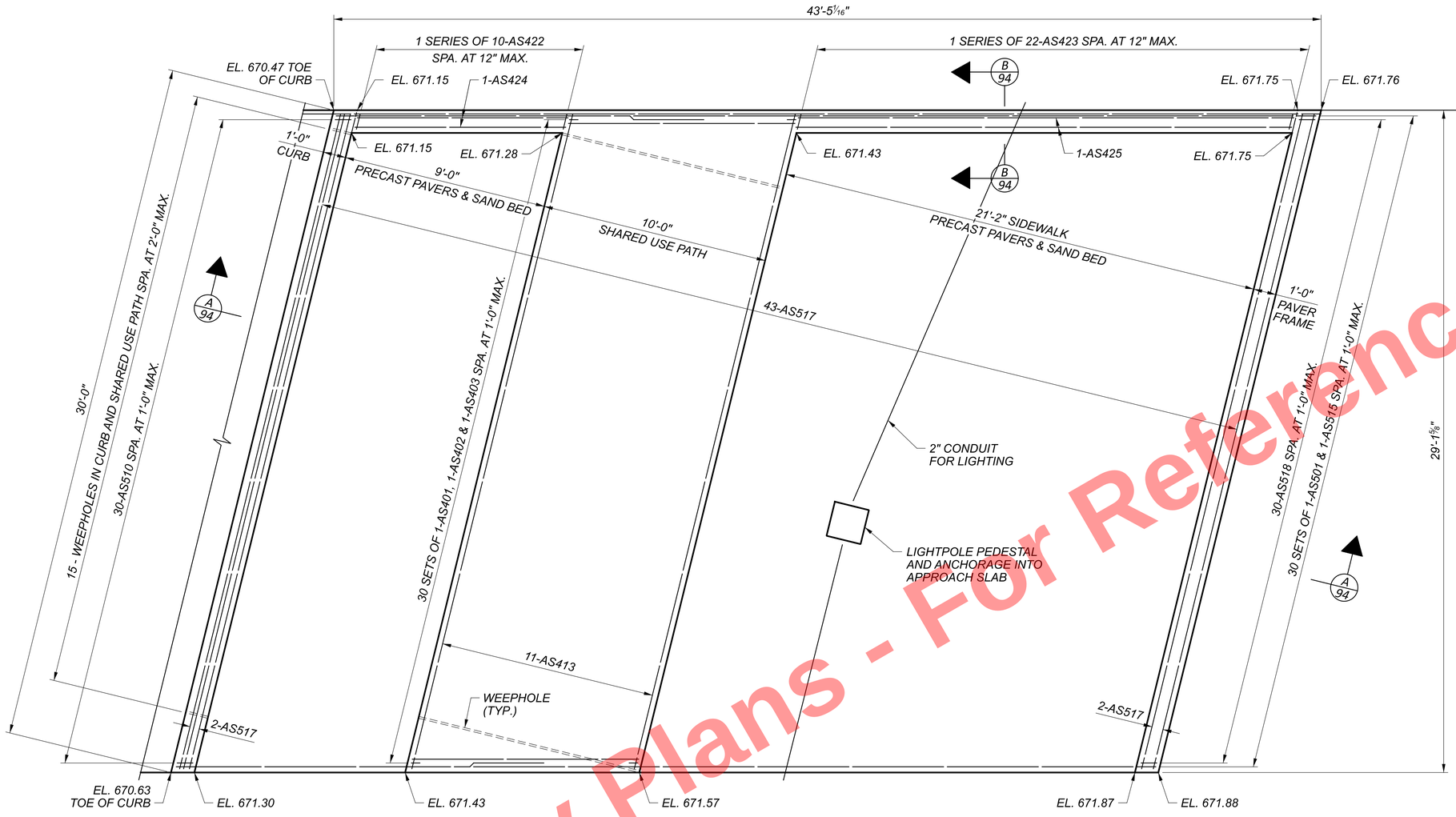

FORWARD APPROACH SLAB EAST SIDEWALK PLAN

(ELEVATIONS SHOWN ARE TOP OF PAVERS, TOP OF CURB, TOP OF SHARED USE PATH, OR TOP OF CURB RAMP UNLESS NOTED OTHERWISE)

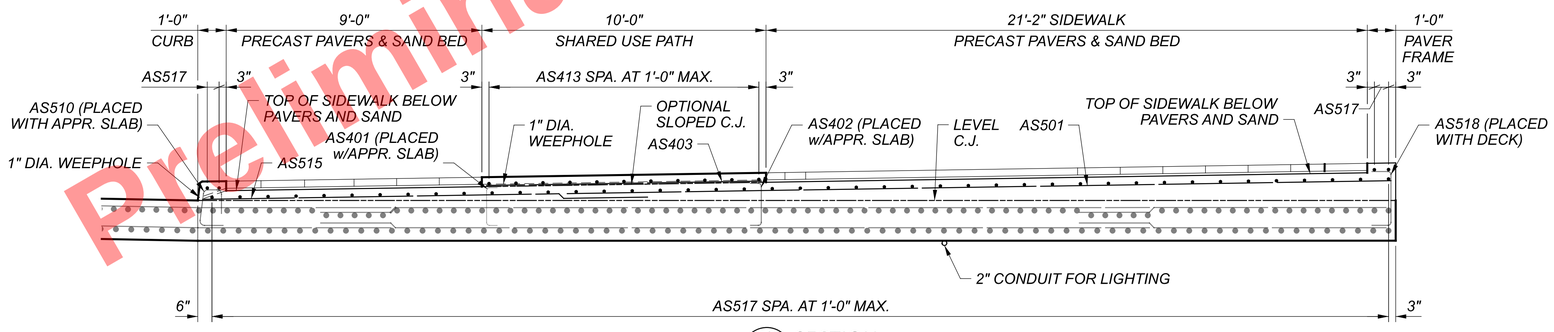

A 94 SECTION

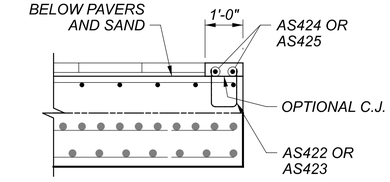

B 94 SECTION

NOTES:

1. SEE SHEET 41/99 FOR STREET LAMP POLE BASEPLATE AND DETAILS.
2. APPROACH SLAB AND SLEEPER SLAB LONGITUDINAL BARS SHALL BE PLACED PARALLEL TO THE ℄ OF THE ROADWAY. TRANSVERSE BARS SHALL BE PLACED PARALLEL TO THE ABUTMENT.
3. FOR INFORMATION NOT SHOWN, SEE STANDARD BRIDGE DRAWING AS-1-15 AND AS-2-15.
4. PROVIDE 2" CONCRETE COVER ON REINFORCEMENT BARS UNLESS NOTED OTHERWISE.
5. FOR LIGHTPOLE PEDESTAL AND ANCHOR BOLT DETAILS, SEE SHEET 86/99 .

LAP LENGTHS:

#4 BAR 1'-11"
#5 BAR 3'-1"

Preliminary Plans - For Reference Only

APPROACH SLAB DETAILS (6 OF 6)
CUY-90-1678 (BRIDGE 13)
CR-710 (E. 22ND ST.) OVER I.R. 90

SFN	1807839
DESIGN AGENCY	Michael Baker INTERNATIONAL
DESIGNER	JNR
CHECKER	MKB
REVIEWER	CDC 05/10/24
PROJECT ID	82382
SUBSET	94
TOTAL	99
SHEET	2275
TOTAL	2696

CUY-90-16.28 (CCG3A)
MODEL: Sheet PAPERSIZE: 34x22 (in.) DATE: 3/28/2025 TIME: 7:56:03 AM USER: Rohit.Bk
pw:\\mb-us-pw.bentley.com:mb-us-pw-03\Documents\Cleveland_OH\01_Projects\ODOT\District12\82382400-Engineering\Structures\SFN_1807839\Sheets\82382_SFN_1807839_SM006.dgn

MARK	MAT'RL TYPE	NUMBER REAR	NUMBER FWD.	NUMBER TOTAL	LENGTH	WEIGHT (LBS.)	TYPE	DIMENSIONS A	B	C	D	E	R	SER INC.
REAR ABUTMENT (EPOXY COATED STEEL REINFORCING ECSR)														
RA501	ECSR	124		124	12'-3"	1584	1	0'-10"	11'-6"					
RA502	ECSR	440		440	30'-0"	13768	STR.							
RA503	ECSR	38		38	13'-7"	538	STR.							
RA504	ECSR	131		131	8'-6"	1161	1	0'-10"	7'-9"					
RA505	ECSR	131		131	17'-0"	2323	STR.							
RA506	ECSR	56		56	22'-0"	1285	STR.							
RA507	ECSR	131		131	5'-6"	751	2	0'-10"	4'-1"	0'-10"				
RA508	ECSR	131		131	12'-6"	1708	2	5'-8"	1'-5"	5'-8"				
RA509	ECSR	131		131	8'-4"	1139	2	3'-10"	0'-11"	3'-10"				
RA510	ECSR	39		39	6'-3"	254	STR.							
RA511	ECSR	2		2	15'-2"	32	STR.							
RA512	ECSR	4		4	7'-3"	30	2	2'-6"	2'-6"	2'-6"				
RA513	ECSR	4		4	5'-6"	23	2	1'-10"	2'-0 5/8"	1'-10"				
RA514	ECSR	8		8	3'-5"	29	STR.							
RA515	ECSR	8		8	2'-0"	17	STR.							
RA516	ECSR	8		8	14'-0"	117	STR.							
RA517	ECSR	6		6	27'-9"	174	STR.							
RA518	ECSR	8		8	7'-7"	63	STR.							
RA519	ECSR	20		20	6'-9"	141	2	2'-13/8"	4'-1"	0'-10"				
RA520	ECSR	20		20	7'-6"	157	38	4'-1"	0'-8 3/4"	0'-10"	2'-13/8"			
RA521	ECSR	9		9	9'-10"	92	1	2'-4"	7'-7"					
		1		1	1'-4"									
RA522	ECSR	SER. OF		SER. OF	TO	7	STR.							3"
		4		4	2'-1"									
RA523	ECSR	3		3	4'-5"	14	STR.							
		1		1	1'-6"									
RA524	ECSR	SER. OF		SER. OF	TO	5	STR.							3"
		3		3	2'-0"									
RA525	ECSR	6		6	4'-3"	27	1	0'-10"	3'-6"					
RA526	ECSR	6		6	14'-1"	88	1	13'-4 1/8"	0'-10"					
RA527	ECSR	4		4	21'-8"	90	1	20'-11 1/8"	0'-10"					
RA528	ECSR	4		4	5'-10"	24	2	1'-10"	2'-5"	1'-10"				
RA529	ECSR	3		3	5'-11"	19	2	2'-7 1/8"	1'-0"	2'-7 1/8"				
RA601	ECSR	131		131	17'-4"	3411	2	1'-0"	15'-8"	1'-0"				
RA701	ECSR	261		261	10'-4"	5513	1	1'-2"	9'-4"					
RA702	ECSR	261		261	17'-0"	9069	STR.							
RA801	ECSR	148		148	17'-11"	7080	2	1'-4"	15'-8"	1'-4"				
RA802	ECSR	82		82	5'-2"	1131	18	2'-10 7/8"	1'-0"	1'-0"				
REAR ABUTMENT ECSR SUBTOTAL						51864	LBS							

MARK	MAT'RL TYPE	NUMBER REAR	NUMBER FWD.	NUMBER TOTAL	LENGTH	WEIGHT (LBS.)	TYPE	DIMENSIONS A	B	C	D	E	R	SER INC.
FORWARD ABUTMENT (EPOXY COATED STEEL REINFORCING ECSR)														
FA501	ECSR		76	76	6'-8"	528	STR.							
FA502	ECSR		285	285	30'-0"	8918	STR.							
FA503	ECSR		92	92	22'-0"	2111	STR.							
FA504	ECSR		131	131	8'-6"	1161	1	0'-10"	7'-9"					
FA505	ECSR		131	131	20'-6"	2801	STR.							
FA506	ECSR		40	40	12'-3"	511	1	0'-10"	11'-6"					
FA507	ECSR		131	131	5'-6"	751	2	0'-10"	4'-1"	0'-10"				
FA508	ECSR		131	131	14'-6"	1981	2	6'-8"	1'-5"	6'-8"				
FA509	ECSR		131	131	7'-8"	1048	2	3'-6"	0'-11"	3'-6"				
FA510	ECSR		39	39	6'-4"	258	STR.							
FA511	ECSR		2	2	15'-2"	32	STR.							
FA512	ECSR		4	4	7'-3"	30	2	2'-6"	2'-6"	2'-6"				
FA513	ECSR		4	4	5'-6"	23	2	1'-10"	2'-0 5/8"	1'-10"				
FA514	ECSR		8	8	3'-5"	29	STR.							
FA515	ECSR		8	8	2'-0"	17	STR.							
FA516	ECSR		8	8	13'-7"	113	STR.							
FA517	ECSR		6	6	27'-9"	174	STR.							
FA518	ECSR		16	16	7'-3"	121	STR.							
FA519	ECSR		20	20	6'-7"	137	2	1'-11 1/8"	4'-1"	0'-10"				
FA520	ECSR		20	20	7'-6"	156	38	4'-1"	0'-10 5/8"	0'-10"	1'-11 1/8"			
FA521	ECSR		18	18	9'-6"	178	1	2'-4"	7'-3"					
			1	1	1'-4"									
FA522	ECSR		SER. OF	SER. OF	TO	7	STR.							3"
			4	4	2'-1"									
FA523	ECSR		6	6	3'-5"	21	STR.							
			1	1	1'-2"									
FA524	ECSR		SER. OF	SER. OF	TO	6	STR.							2 5/16"
			4	4	1'-9"									
FA525	ECSR		12	12	20'-0"	250	STR.							
FA526	ECSR		6	6	14'-1"	88	1	13'-4 1/8"	0'-10"					
FA527	ECSR		4	4	21'-5"	89	1	20'-8 7/8"	0'-10"					
FA528	ECSR		4	4	5'-10"	24	2	1'-10"	2'-5"	1'-10"				
FA601	ECSR		260	260	17'-4"	6769	2	1'-0"	15'-8"	1'-0"				
FA701	ECSR		261	261	10'-4"	5513	1	1'-2"	9'-4"					
FA702	ECSR		261	261	17'-0"	9069	STR.							
FA801	ECSR		148	148	17'-11"	7080	2	1'-4"	15'-8"	1'-4"				
FA802	ECSR		82	82	5'-2"	1131	18	2'-10 7/8"	1'-0"	1'-0"				
FORWARD ABUTMENT ECSR SUBTOTAL						51125	LBS							

Preliminary Plans - For Reference Only

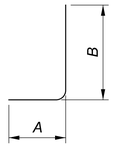

TYPE-1

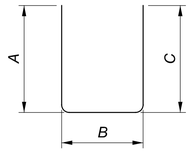

TYPE-2

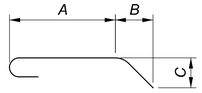

TYPE-18

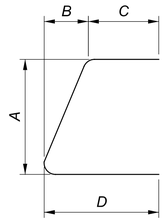

TYPE-38

NOTES:

1. *SERIES BARS - EACH BAR VARIES BY TABULATED AMOUNT.*
2. *ALL DIMENSIONS ARE OUT TO OUT.*
3. *TYPE "STR" INDICATES STRAIGHT BAR.*
4. *THE BAR SIZE NUMBER IS SPECIFIED IN THE "MARK" COLUMN. THE FIRST DIGIT INDICATES THE BAR SIZE NUMBER.*
5. *ALL BARS SHALL BE EPOXY COATED UNLESS NOTED OTHERWISE.*
6. *SUBTOTALS AND TOTAL WEIGHTS ARE FOR INFORMATIONAL PURPOSES ONLY. IF THE REINFORCING LIST PROVIDED IN THE PLANS IS USED, IT SHALL BE VERIFIED BY THE CONTRACTOR. ANY REVISIONS IN THE REINFORCING STEEL LIST AS SHOWN IN THE PLANS WILL NOT BE REASON FOR ADJUSTMENT IN THE BID PRICE FOR STRUCTURAL CONCRETE.*
7. *USE STANDARD HOOKS FOR ENDS OF BARS NOT SPECIFICALLY DIMENSIONED IN DETAILS.*

REINFORCING SCHEDULE (1 OF 5)
CUY-90-1678 (BRIDGE 13)
CR-710 (E. 22ND ST.) OVER I.R. 90

SFN 1807839
DESIGN AGENCY
Michael Baker INTERNATIONAL
DESIGNER DAF | CHECKER ETB
REVIEWER CDC 05/10/24
PROJECT ID 82382
SUBSET 95 | TOTAL 99
SHEET 2276 | TOTAL 2696

CUY-90-16.28 (CCG3A)

MODEL: Sheet PAPERSIZE: 34x22 (in.) DATE: 3/28/2025 TIME: 7:56:16 AM USER: RohitLBk
pw:\\mb-us-pw.bentley.com:mb-us-pw-03\Documents\Cleveland_OH\01_Projects\ODOT\District12\82382400-Engineering\Structures\SFN_1807839\Sheets\82382_SFN_1807839_SL001.dgn

MARK	MAT'RL TYPE	NUMBER REAR	NUMBER FWD.	NUMBER TOTAL	LENGTH	WEIGHT (LBS.)	TYPE	DIMENSIONS A	B	C	D	E	R	SER INC.
PIER 1A (EPOXY COATED STEEL REINFORCING ECSR)														
1P401	ECSR			136	3'-8"	333	34	2'-8"						
1P402	ECSR			76	3'-10"	195	2	0'-8"	2'-8"	0'-8"				
1P501	ECSR			12	22'-5"	281	STR.							
1P502	ECSR			4	18'-8"	78	2	0'-10"	17'-3"	0'-10"				
1P503	ECSR			8	12'-3"	102	1	0'-10"	11'-6"					
1P504	ECSR			37	4'-1"	158	2	0'-10"	2'-8"	0'-10"				
1P505	ECSR			12	3'-11"	49	2	0'-10"	2'-6"	0'-10"				
1P601	NOT USED													
1P602	ECSR			224	11'-2"	3757	3	2'-8"	2'-8"					
1P603	ECSR			105	12'-6"	1971	3	2'-8"	3'-4"					
1P604	ECSR			100	10'-1"	1515	3	1'-5 1/4"	3'-4"					
1P605	ECSR			142	4'-10"	1031	18	3'-4"	0"	0'-10"				
1P801	ECSR			84	11'-11"	2673	2	1'-4"	9'-8"	1'-4"				
1P802	ECSR			24	33'-10"	2168	1	1'-4"	32'-8"					
1P803	ECSR			62	11'-11"	1973	2	1'-4"	9'-8"	1'-4"				
1P1101	ECSR			60	24'-4"	7757	1	2'-0"	22'-8"					
1P1102	ECSR			30	30'-0"	4782	STR.							
1P1103	ECSR			84	11'-1"	4946	1	2'-0"	9'-5"					
1P1104	ECSR			84	23'-1"	10302	1	2'-0"	21'-5"					
1P1105	ECSR			24	35'-3"	4495	1	2'-0"	33'-7"					
PIER 1A ECSR SUBTOTAL						48566								

MARK	MAT'RL TYPE	NUMBER REAR	NUMBER FWD.	NUMBER TOTAL	LENGTH	WEIGHT (LBS.)	TYPE	DIMENSIONS A	B	C	D	E	R	SER INC.
PIER 1B (EPOXY COATED STEEL REINFORCING ECSR)														
2P401	ECSR			136	3'-8"	333	34	2'-8"						
2P402	ECSR			76	3'-10"	195	2	0'-8"	2'-8"	0'-8"				
2P501	ECSR			12	22'-5"	281	STR.							
2P502	ECSR			4	9'-5"	39	2	0'-10"	8'-0"	0'-10"				
2P503	ECSR			4	12'-3"	51	1	0'-10"	11'-6"					
2P504	ECSR			19	4'-1"	81	2	0'-10"	2'-8"	0'-10"				
2P505	ECSR			12	3'-11"	49	2	0'-10"	2'-6"	0'-10"				
2P601	NOT USED													
2P602	ECSR			240	11'-2"	4025	3	2'-8"	2'-8"					
2P603	ECSR			105	12'-2"	1919	3	2'-8"	3'-2"					
2P604	ECSR			100	9'-8"	1452	3	1'-5 1/4"	3'-2"					
2P605	ECSR			142	4'-8"	995	18	3'-2"	0"	0'-10"				
2P701	ECSR			62	11'-8"	1478	2	1'-2"	9'-8"	1'-2"				
2P801	ECSR			62	11'-11"	1973	2	1'-4"	9'-8"	1'-4"				
2P1101	ECSR			62	24'-4"	8016	1	2'-0"	22'-8"					
2P1102	ECSR			31	30'-0"	4941	STR.							
2P1103	ECSR			96	12'-1"	6163	1	2'-0"	10'-5"					
2P1104	ECSR			96	25'-1"	12794	1	2'-0"	23'-5"					
2P1105	ECSR			60	35'-3"	11237	1	2'-0"	33'-7"					
PIER 1B ECSR SUBTOTAL						56022	LBS							

MARK	MAT'RL TYPE	NUMBER REAR	NUMBER FWD.	NUMBER TOTAL	LENGTH	WEIGHT (LBS.)	TYPE	DIMENSIONS A	B	C	D	E	R	SER INC.
DECK (EPOXY COATED STEEL REINFORCING ECSR)														
S401	ECSR			1899	30'-0"	38056	STR.							
S402	ECSR			127	11'-5"	969	STR.							
S501	ECSR			2408	30'-0"	75346	STR.							
S502	ECSR			152	16'-8"	2642	STR.							
S503	ECSR			1048	7'-7"	8289	16	7'-0"						
S504	ECSR			1032	26'-0"	27986	16	25'-5"						
S505	ECSR			518	20'-0"	10805	STR.							
S506	ECSR			1034	21'-8"	23367	STR.							
S507	ECSR			1536	29'-2"	46726	STR.							
				2	2'-3"									
S508	ECSR			SER. OF	TO	337	STR.							2'-0 7/16"
				12	24'-8"									
				2	3'-10"									
S509	ECSR			SER. OF	TO	494	STR.							2'-0 1/8"
				14	30'-0"									
				2	4'-10"									
S510	ECSR			SER. OF	TO	200	STR.							2'-0 7/16"
				8	19'-1"									
				2	3'-7"									
S511	ECSR			SER. OF	TO	490	STR.							2'-0 3/8"
				14	30'-0"									
				2	4'-7"									
S512	ECSR			SER. OF	TO	286	STR.							2'-0 5/16"
				10	22'-10"									
				2	2'-1"									
S513	ECSR			SER. OF	TO	281	STR.							2'-0 3/8"
				11	22'-5"									
				2	5'-4"									
S514	ECSR			SER. OF	TO	476	STR.							2'-0 7/16"
				13	29'-9"									
				2	5'-2"									
S515	ECSR			SER. OF	TO	471	STR.							2'-0 7/16"
				13	29'-7"									
				2	4'-11"									
S516	ECSR			SER. OF	TO	462	STR.							2'-0 1/4"
				13	29'-2"									
				2	4'-11"									
S517	ECSR			SER. OF	TO	200	STR.							2'-0 5/16"
				8	19'-1"									
S518	ECSR			4	14'-6"	60	STR.							
S519	ECSR			144	5'-0"	751	STR.							
DECK ECSR SUBTOTAL						238694	LBS							

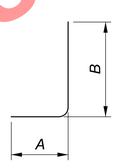

TYPE-1

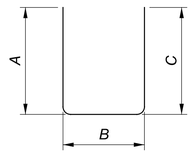

TYPE-2

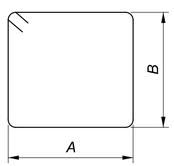

TYPE-3

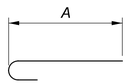

TYPE-16

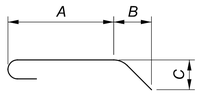

TYPE-18

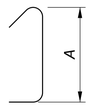

TYPE-34

NOTES:

1. *SERIES BARS - EACH BAR VARIES BY TABULATED AMOUNT.*
2. *ALL DIMENSIONS ARE OUT TO OUT.*
3. *TYPE "STR" INDICATES STRAIGHT BAR.*
4. *THE BAR SIZE NUMBER IS SPECIFIED IN THE "MARK" COLUMN. THE FIRST DIGIT INDICATES THE BAR SIZE NUMBER.*
5. *ALL BARS SHALL BE EPOXY COATED UNLESS NOTED OTHERWISE.*
6. *SUBTOTALS AND TOTAL WEIGHTS ARE FOR INFORMATIONAL PURPOSES ONLY. IF THE REINFORCING LIST PROVIDED IN THE PLANS IS USED, IT SHALL BE VERIFIED BY THE CONTRACTOR. ANY REVISIONS IN THE REINFORCING STEEL LIST AS SHOWN IN THE PLANS WILL NOT BE REASON FOR ADJUSTMENT IN THE BID PRICE FOR STRUCTURAL CONCRETE.*
7. *USE STANDARD HOOKS FOR ENDS OF BARS NOT SPECIFICALLY DIMENSIONED IN DETAILS.*

Preliminary Plans - For Reference Only

REINFORCING SCHEDULE (2 OF 5)
CUY-90-1678 (BRIDGE 13)
CR-710 (E. 22ND ST.) OVER I.R. 90

SFN 1807839
DESIGN AGENCY
Michael Baker INTERNATIONAL
DESIGNER DAF | CHECKER ETB
REVIEWER CDC 05/10/24
PROJECT ID 82382
SUBSET 96 | TOTAL 99
SHEET 2277 | TOTAL 2696

CUY-90-16.28 (CCG3A)

MODEL: Sheet PAPERSIZE: 34x22 (in.) DATE: 3/28/2025 TIME: 7:56:23 AM USER: Rohit.Bk
pw:\\mb-us-pw.bentley.com:mb-us-pw-03\Documents\Cleveland_OH\01_Projects\ODOT\District12\82382\400-Engineering\Structures\SFN_1807839\Sheets\82382_SFN_1807839_SL002.dgn

MARK	MAT'RL TYPE	NUMBER REAR	NUMBER FWD.	NUMBER TOTAL	LENGTH	WEIGHT (LBS.)	TYPE	DIMENSIONS A	B	C	D	E	R	SER INC.
RAILING (EPOXY COATED STEEL REINFORCING ECSR)														
R501	ECSR			40	30'-0"	1252	STR.							
R502	ECSR			32	16'-9"	559	STR.							
R503	ECSR			8	12'-9"	106	STR.							
R504	ECSR			124	10'-0"	1293	STR.							
R505	ECSR			124	11'-8"	1509	STR.							
R506	ECSR			84	5'-0"	438	STR.							
R507	ECSR			188	5'-8"	1111	STR.							
R508	ECSR			44	4'-8"	214	STR.							
R509	ECSR			176	5'-8"	1040	1	1'-6"	4'-3"					
R510	ECSR			112	5'-9"	672	1	1'-6"	4'-4"					
R511	ECSR			80	5'-10"	487	1	1'-6"	4'-5"					
R512	ECSR			214	6'-0"	1339	1	1'-6"	4'-7"					
R513	ECSR			110	6'-2"	708	1	1'-6"	4'-9"					
R514	ECSR			136	6'-3"	887	1	1'-6"	4'-10"					
R515	ECSR			192	6'-5"	1285	1	1'-6"	5'-0"					
R516	ECSR			144	6'-7"	989	1	1'-6"	5'-2"					
R517	ECSR			109	5'-6"	625	2	2'-6"	0'-9"	2'-6"				
R518	ECSR			61	5'-8"	361	2	2'-7"	0'-9"	2'-7"				
R519	ECSR			73	6'-0"	457	2	2'-9"	0'-9"	2'-9"				
R520	ECSR			99	6'-4"	654	2	2'-11"	0'-9"	2'-11"				
R521	ECSR			96	6'-8"	668	2	3'-1"	0'-9"	3'-1"				
R522	ECSR			48	7'-2"	359	2	3'-4"	0'-9"	3'-4"				
R523	ECSR			16	6'-7"	110	2	2'-6"	1'-9 3/4"	2'-6"				
R524	ECSR			8	6'-9"	56	2	2'-7"	1'-9 3/4"	2'-7"				
R525	ECSR			24	6'-11"	173	2	2'-8"	1'-9 3/4"	2'-8"				
R526	ECSR			8	7'-1"	59	2	2'-9"	1'-9 3/4"	2'-9"				
R527	ECSR			16	7'-5"	124	2	2'-11"	1'-9 3/4"	2'-11"				
R528	ECSR			16	7'-7"	127	2	3'-0"	1'-9 3/4"	3'-0"				
R529	ECSR			8	8'-3"	69	2	3'-4"	1'-9 3/4"	3'-4"				
R530	ECSR			60	15'-4"	960	6	6'-11"	0'-11 1/4"	3'-6"				
R531	ECSR			60	14'-4"	897	6	6'-11"	0'-5 1/4"	3'-6"				
R532	ECSR			29	12'-10"	388	35	6'-11"	0'-11 1/4"	3'-6"	1'-10"			
R533	ECSR			29	12'-4"	372	35	6'-11"	0'-5 1/4"	3'-6"	1'-10"			
R534	ECSR			192	5'-2"	1035	STR.							
R535	ECSR			24	5'-0"	125	STR.							
R536	ECSR			216	11'-6"	2591	2	4'-11"	1'-11"	4'-11"				
R537	ECSR			24	6'-5"	161	STR.							
R538	ECSR			96	18'-5"	1844	2	8'-5"	1'-9 3/4"	8'-5"				
R539	ECSR			12	23'-4"	292	2	8'-5 5/8"	6'-7 1/2"	8'-5 5/8"				
RAILING ECSR SUBTOTAL						26396	LBS							

MARK	MAT'RL TYPE	NUMBER REAR	NUMBER FWD.	NUMBER TOTAL	LENGTH	WEIGHT (LBS.)	TYPE	DIMENSIONS A	B	C	D	E	R	SER INC.
PLANTERS (EPOXY COATED STEEL REINFORCING ECSR)														
RP501	ECSR			302	5'-0"	1575	1	0'-10"	4'-4"					
RP502	ECSR			248	5'-3"	1358	1	0'-10"	4'-6"					
RP503	ECSR			40	18'-6"	772	2	5'-9"	7'-2 1/2"	5'-9"				
RP504	ECSR			10	19'-2"	200	2	6'-1"	7'-2 1/2"	6'-1"				
RP505	ECSR			275	5'-8"	1625	STR.							
RP506	ECSR			56	6'-0"	350	STR.							
RP507	ECSR			30	8'-4"	261	1	2'-8 3/4"	5'-9"					
RP508	ECSR			8	8'-8"	72	1	2'-8 3/4"	6'-1"					
RP509	ECSR			36	3'-10"	144	1	0'-10"	3'-1"					
RP510	ECSR			15	3'-11"	61	1	0'-10"	3'-2"					
RP511	ECSR			8	4'-0"	33	1	0'-10"	3'-3"					
RP512	ECSR			14	4'-1"	60	1	0'-10"	3'-4"					
RP513	ECSR			14	4'-2"	61	1	0'-10"	3'-5"					
RP514	ECSR			15	4'-3"	66	1	0'-10"	3'-6"					
RP515	ECSR			15	4'-5"	69	1	0'-10"	3'-8"					
RP516	ECSR			14	4'-6"	66	1	0'-10"	3'-9"					
RP517	ECSR			7	4'-7"	33	1	0'-10"	3'-10"					
RP518	ECSR			8	4'-8"	39	1	0'-10"	3'-11"					
RP519	ECSR			8	4'-9"	40	1	0'-10"	4'-0"					
RP520	ECSR			14	4'-9"	69	1	0'-10"	4'-1"					
RP521	ECSR			14	4'-11"	72	1	0'-10"	4'-2"					
RP522	ECSR			15	5'-0"	78	1	0'-10"	4'-3"					
RP523	ECSR			15	5'-2"	81	1	0'-10"	4'-5"					
RP524	ECSR			14	5'-3"	77	1	0'-10"	4'-7"					
RP525	ECSR			8	5'-5"	45	1	0'-10"	4'-8"					
PLANTERS ECSR SUBTOTAL						7307	LBS							

MARK	MAT'RL TYPE	NUMBER REAR	NUMBER FWD.	NUMBER TOTAL	LENGTH	WEIGHT (LBS.)	TYPE	DIMENSIONS A	B	C	D	E	R	SER INC.
SIDEWALK (EPOXY COATED STEEL REINFORCING ECSR)														
SW401	ECSR			162	30'-0"	3246	STR.							
SW402	ECSR			18	11'-5"	137	STR.							
SW403	ECSR			266	2'-4"	415	2	0'-8"	1'-1 3/4"	0'-8"				
SW404	ECSR			266	2'-5"	429	2	0'-8"	1'-2 3/4"	0'-8"				
SW405	ECSR			266	6'-2"	1096	STR.							
SW406	ECSR			266	2'-4"	415	2	0'-8"	1'-2 1/4"	0'-8"				
SW407	ECSR			266	2'-6"	444	2	0'-8"	1'-4"	0'-8"				
SW408	ECSR			263	9'-8"	1698	STR.							
SW409	ECSR			2	5'-7"	7	STR.							
SW410	ECSR			2	1'-6"	2	STR.							
SW411	ECSR			12	2'-3"	18	2	0'-8"	1'-0 3/4"	0'-8"				
SW412	ECSR			12	2'-4"	19	2	0'-8"	1'-1 3/4"	0'-8"				
SW413	ECSR			12	6'-2"	49	STR.							
SW414	ECSR			7	10'-8"	50	STR.							
SW501	ECSR			894	30'-0"	27973	STR.							
SW502	ECSR			77	15'-11"	1278	STR.							
SW503	ECSR			530	3'-0"	1669	36	0'-9 3/4"	0'-7 1/2"	1'-0 3/8"	0'-11"			
SW504	ECSR			265	3'-10"	1060	2	0'-10"	1'-11"	1'-3 1/2"				
SW505	ECSR			260	23'-4"	6328	STR.							
				2	2'-11"									
SW506	ECSR			SER. OF	TO	116	STR.							4'-1"
				5	19'-3"									
SW507	ECSR			12	6'-11"	87	STR.							
SW508	ECSR			436	1'-4"	606	STR.							
SW509	ECSR			84	2'-1"	183	STR.							
SW510	ECSR			265	4'-0"	1106	2	0'-10"	2'-1"	1'-3 1/2"				
SW511	ECSR			510	23'-0"	12234	STR.							
SW512	ECSR			4	21'-0"	88	STR.							
SW513	ECSR			4	18'-11"	79	STR.							
				2	2'-9"									
SW514	ECSR			SER. OF	TO	228	STR.							4'-3 5/16"
				7	28'-5"									
SW515	ECSR			67	6'-3"	437	STR.							
				2	1'-2"			0'-4 1/8"		0'-4 1/8"				
SW516	ECSR			SER. OF	TO	15	2	TO	0'-8 1/4"	TO				0 3/16"
				6	1'-3"			0'-5"		0'-5"				
SW517	ECSR			4	5'-2"	22	STR.							
				2	1'-10"			0'-8 1/8"		0'-8 1/8"				
SW518	ECSR			SER. OF	TO	44	2	TO	0'-8 1/4"	TO				0 1/8"
				11	2'-1"			0'-9 5/8"		0'-9 5/8"				
SW519	ECSR			4	9'-7"	40	STR.							
				2	1'-2"			0'-4 1/4"		0'-4 1/4"				
SW520	ECSR			SER. OF	TO	27	2	TO	0'-8 1/4"	TO				0 3/16"
				10	1'-5"			0'-5 7/8"		0'-5 7/8"				
SW521	ECSR			4	9'-4"	39	STR.							
				2	1'-9"			0'-7 3/4"		0'-7 3/4"				
SW522	ECSR			SER. OF	TO	99	2	TO	0'-8 1/4"	TO				0 3/16"
				23	2'-5"			0'-11 7/8"		0'-11 7/8"				
SW523	ECSR			4	22'-10"	95	STR.							
LP501	ECSR			22	3'-3"	75	6	1'-2 1/2"	0'-5"	0'-10"				
LP502	ECSR			22	3'-4"	76	6	1'-2 1/2"	0'-5 5/8"	0'-10"				
SIDEWALK ECSR SUBTOTAL						62029								

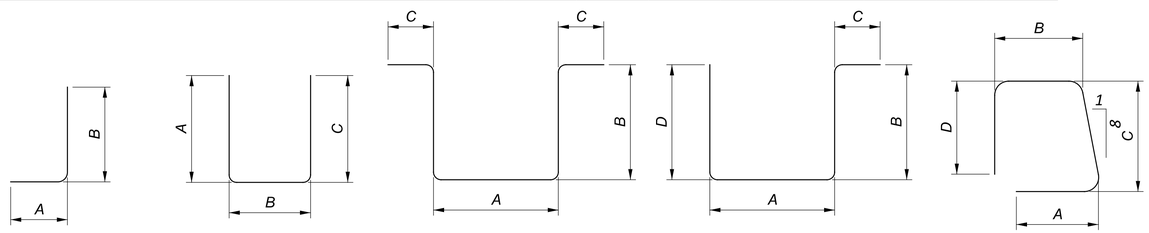

TYPE-1 TYPE-2 TYPE-6 TYPE-35 TYPE-36

NOTES:

1. SERIES BARS - EACH BAR VARIES BY TABULATED AMOUNT.
2. ALL DIMENSIONS ARE OUT TO OUT.
3. TYPE "STR" INDICATES STRAIGHT BAR.
4. THE BAR SIZE NUMBER IS SPECIFIED IN THE "MARK" COLUMN. THE FIRST DIGIT INDICATES THE BAR SIZE NUMBER.
5. ALL BARS SHALL BE EPOXY COATED UNLESS NOTED OTHERWISE.
6. SUBTOTALS AND TOTAL WEIGHTS ARE FOR INFORMATIONAL PURPOSES ONLY. IF THE REINFORCING LIST PROVIDED IN THE PLANS IS USED, IT SHALL BE VERIFIED BY THE CONTRACTOR. ANY REVISIONS IN THE REINFORCING STEEL LIST AS SHOWN IN THE PLANS WILL NOT BE REASON FOR ADJUSTMENT IN THE BID PRICE FOR STRUCTURAL CONCRETE.
7. USE STANDARD HOOKS FOR ENDS OF BARS NOT SPECIFICALLY DIMENSIONED IN DETAILS.

Preliminary Plans - For Reference Only

REINFORCING SCHEDULE (3 OF 5)
CUY-90-1678 (BRIDGE 13)
CR-710 (E. 22ND ST.) OVER I.R. 90

SFN 1807839
DESIGN AGENCY
Michael Baker INTERNATIONAL
DESIGNER DAF | CHECKER ETB
REVIEWER CDC 05/10/24
PROJECT ID 82382
SUBSET 97 | TOTAL 99
SHEET 2278 | TOTAL 2696

CUY-90-16.28 (CCG3A)

MODEL: Sheet PAPERSIZE: 34x22 (in.) DATE: 3/28/2025 TIME: 7:56:30 AM USER: RohitBk
pw:\\mb-us-pw.bentley.com:mb-us-pw-03\Documents\Cleveland_OH\01_Projects\ODOT\District12\82382\400-Engineering\Structures\SFN_1807839\Sheets\82382_SL003.dgn

MARK	MAT'RL TYPE	NUMBER REAR	NUMBER FWD.	NUMBER TOTAL	LENGTH	WEIGHT (LBS.)	TYPE	DIMENSIONS A	B	C	D	E	R	SER INC.
REAR APPROACH SLAB (FOR INFORMATION ONLY)														
AS401	ECSR			30	2'-10"	57	2	0'-8"	1'-8"	0'-8"				
AS402	ECSR			29	3'-0"	58	2	0'-8"	1'-9 3/4"	0'-8"				
AS403	ECSR			22	9'-11"	146	STR.							
AS404	ECSR			1	10'-4"	7	STR.							
				1	10'-7"									
AS405	ECSR			SER. OF	TO	41	STR.							11"
				5	14'-3"									
AS406	ECSR			9	29'-7"	178	STR.							
AS407	ECSR			1	27'-9"	19	STR.							
AS408	ECSR			1	24'-1"	16	STR.							
				1	0'-11"									
AS409	ECSR			SER. OF	TO	12	STR.							10"
				6	5'-1"									
AS410 THRU AS413 NOT USED														
AS414	ECSR			1	10'-0"	7	STR.							
				1	2'-1"			0'-9 1/4"		0'-9 1/4"				
AS415	ECSR			SER. OF	TO	21	2	TO	0'-8"	TO				0 3/16"
				14	2'-6"			0'-11 7/8"		0'-11 7/8"				
AS416	ECSR			1	22'-4"	15	STR.							
AS417	ECSR			1	25'-0"	17	STR.							
AS501	ECSR			446	30'-0"	13955	STR.							
AS502	ECSR			104	13'-6"	1464	STR.							
AS503	ECSR			237	29'-6"	7292	STR.							
				1	12'-7"									
AS504	ECSR			SER. OF	TO	249	STR.							3 3/4"
				16	17'-3"									
				1	9'-6"									
AS505	ECSR			SER. OF	TO	38	STR.							2'-7 1/2"
				3	14'-9"									
				1	8'-9"									
AS506	ECSR			SER. OF	TO	28	STR.							2"
				3	9'-1"									
				1	3'-8"									
AS507	ECSR			SER. OF	TO	38	STR.							3'-7"
				4	14'-5"									
				1	17'-2"									
AS508	ECSR			SER. OF	TO	74	STR.							4 11/16"
				4	18'-4"									
AS509	ECSR			9	21'-5"	201	STR.							
AS510	ECSR			41	3'-6"	150	36	0'-9 3/4"	0'-7 1/2"	1'-6 1/8"	0'-11"			
AS511	ECSR			25	2'-4"	61	1	0'-10"	1'-7 1/4"					
AS512	ECSR			2	20'-8"	43	STR.							
AS513	ECSR			1	24'-0"	25	STR.							
AS514	ECSR			1	10'-0"	10	STR.							
AS515	ECSR			24	16'-2"	405	STR.							
AS516	ECSR			6	14'-3"	89	STR.							
AS517	ECSR			45	29'-7"	1388	STR.							
AS518	ECSR			30	3'-3"	102	2	0'-8"	2'-1 3/4"	0'-8"				
AS519 THRU AS520 NOT USED														
				1	2'-1"				1'-4"					
AS521	ECSR			SER. OF	TO	28	1	0'-10"	TO					0 7/16"
				12	2'-6"				1'-9"					
AS522	ECSR			1	3'-5"	4	STR.							
AS523	ECSR			2	15'-0"	31	19	12'-0"	1'-7 5/8"	2'-6 1/8"				
AS524	ECSR			2	16'-4"	34	STR.							
SS501	ECSR			32	30'-0"	1001	STR.							
SS502	ECSR			8	13'-6"	113	STR.							
SS503	ECSR			123	7'-8"	984	STR.							
AS1001	ECSR			219	30'-11"	29135	16	29'-6"						
REAR APPROACH SLAB ECSR SUBTOTAL						57536	LBS							

MARK	MAT'RL TYPE	NUMBER REAR	NUMBER FWD.	NUMBER TOTAL	LENGTH	WEIGHT (LBS.)	TYPE	DIMENSIONS A	B	C	D	E	R	SER INC.
FORWARD APPROACH SLAB (FOR INFORMATION ONLY)														
AS401	ECSR			30	2'-10"	57	2	0'-8"	1'-8"	0'-8"				
AS402	ECSR			30	3'-0"	60	2	0'-8"	1'-9 3/4"	0'-8"				
AS403	ECSR			30	9'-11"	199	STR.							
AS404 THRU AS409 NOT USED														
AS410	ECSR			30	2'-9"	55	2	0'-8"	1'-7 3/8"	0'-8"				
AS411	ECSR			30	2'-11"	58	2	0'-8"	1'-8 1/2"	0'-8"				
AS412	ECSR			30	6'-4"	127	STR.							
AS413	ECSR			18	29'-7"	356	STR.							
AS414 THRU AS417 NOT USED														
				1	1'-3"			0'-4 1/8"		0'-4 1/8"				
AS418	ECSR			SER. OF	TO	5	2	TO	0'-8 1/4"	TO				0 3/16"
				6	1'-4"			0'-5"		0'-5"				
				1	1'-11"			0'-8 1/8"		0'-8 1/8"				
AS419	ECSR			SER. OF	TO	13	2	TO	0'-8 1/4"	TO				0 1/8"
				10	2'-1"			0'-9 3/8"		0'-9 3/8"				
AS420	ECSR			2	5'-1"	7	STR.							
AS421	ECSR			2	8'-7"	11	STR.							
				1	1'-3"			0'-4 1/4"		0'-4 1/4"				
AS422	ECSR			SER. OF	TO	9	2	TO	0'-8 1/4"	TO				0 3/16"
				10	1'-6"			0'-5 7/8"		0'-5 7/8"				
				1	1'-10"			0'-7 3/4"		0'-7 3/4"				
AS423	ECSR			SER. OF	TO	31	2	TO	0'-8 1/4"	TO				0 3/16"
				22	2'-6"			0'-11 5/8"		0'-11 5/8"				
AS424	ECSR			2	9'-3"	12	STR.							
AS425	ECSR			2	21'-9"	29	STR.							
AS501	ECSR			446	30'-0"	13955	STR.							
AS502	ECSR			104	13'-6"	1464	STR.							
AS503	ECSR			237	29'-6"	7292	STR.							
AS504 THRU AS509 NOT USED														
AS510	ECSR			60	3'-6"	219	36	0'-9 3/4"	0'-7 1/2"	1'-6 1/8"	0'-11"			
AS511 THRU AS514 NOT USED														
AS515	ECSR			30	16'-2"	506	STR.							
AS516 NOT USED														
AS517	ECSR			74	29'-7"	2283	STR.							
AS518	ECSR			30	3'-3"	102	2	0'-8"	2'-1 3/4"	0'-8"				
AS519	ECSR			30	22'-3"	696	STR.							
AS520	ECSR			30	3'-1"	96	2	0'-8"	2'-0"	0'-8"				
SS501	ECSR			32	30'-0"	1001	STR.							
SS502	ECSR			8	13'-6"	113	STR.							
SS503	ECSR			123	7'-8"	984	STR.							
LP501	ECSR			2	3'-7"	7	6	1'-2 1/2"	0'-5"	1'-0"				
LP502	ECSR			2	3'-8"	8	6	1'-2 1/2"	0'-5 5/8"	1'-0"				
AS1001	ECSR			219	30'-11"	29135	16	29'-6"						
FORWARD APPROACH SLAB ECSR SUBTOTAL						58890	LBS							

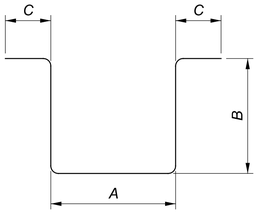

TYPE-6

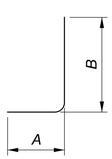

TYPE-1

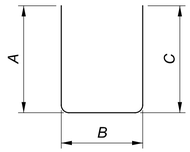

TYPE-2

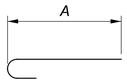

TYPE-16

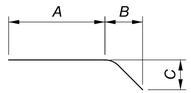

TYPE-19

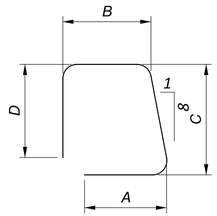

TYPE-36

NOTES:

1. *SERIES BARS - EACH BAR VARIES BY TABULATED AMOUNT.*
2. *ALL DIMENSIONS ARE OUT TO OUT.*
3. *TYPE "STR" INDICATES STRAIGHT BAR.*
4. *THE BAR SIZE NUMBER IS SPECIFIED IN THE "MARK" COLUMN. THE FIRST DIGIT INDICATES THE BAR SIZE NUMBER.*
5. *ALL BARS SHALL BE EPOXY COATED UNLESS NOTED OTHERWISE.*
6. *SUBTOTALS AND TOTAL WEIGHTS ARE FOR INFORMATIONAL PURPOSES ONLY. IF THE REINFORCING LIST PROVIDED IN THE PLANS IS USED, IT SHALL BE VERIFIED BY THE CONTRACTOR. ANY REVISIONS IN THE REINFORCING STEEL LIST AS SHOWN IN THE PLANS WILL NOT BE REASON FOR ADJUSTMENT IN THE BID PRICE FOR STRUCTURAL CONCRETE.*
7. *USE STANDARD HOOKS FOR ENDS OF BARS NOT SPECIFICALLY DIMENSIONED IN DETAILS.*

Preliminary Plans - For Reference Only

REINFORCING SCHEDULE (4 OF 5)
CUY-90-1678 (BRIDGE 13)
CR-710 (E. 22ND ST.) OVER I.R. 90

SFN 1807839
DESIGN AGENCY
Michael Baker INTERNATIONAL
DESIGNER DAF | CHECKER ETB
REVIEWER CDC 05/10/24
PROJECT ID 82382
SUBSET 98 | TOTAL 99
SHEET 2279 | TOTAL 2696

CUY-90-16.28 (CCG3A)

MODEL: Sheet PAPERSIZE: 34x22 (in.) DATE: 3/28/2025 TIME: 7:56:36 AM USER: RohitLBk
pw:\\mb-us-pw.bentley.com:mb-us-pw-03\Documents\Cleveland_OH\01_Projects\ODOT\District12\82382400-Engineering\Structures\SFN_1807839\Sheets\82382_SFN_1807839_SL004.dgn

MARK	MAT'RL TYPE	NUMBER			LENGTH	WEIGHT (LBS.)	TYPE	DIMENSIONS						SER INC.
		LEFT	RIGHT	TOTAL				A	B	C	D	E	R	
REAR LEFT WINGWALL (EPOXY COATED STEEL REINFORCING-ECSR)														
RW501	ECSR	44		44	17'-2"	788	STR.							
		2		2	7'-4"				5'-0"					
RW502	ECSR	SER. OF		SER. OF	TO	613	1	2'-5"	TO					1'-0 3/4"
		18		18	25'-5"				23'-1"					
RW503	ECSR	72		72	7'-10"	588	8	2'-5"	3'-3"	2'-5"				
RW504	ECSR	67		67	7'-9"	542	1	0'-10"	7'-0"					
		4		4	11'-5"				9'-1"					
RW505	ECSR	SER. OF		SER. OF	TO	983	1	2'-5"	TO					2 7/16"
		18		18	14'-10"				12'-6"					
RW506	ECSR	36		36	20'-5"	767	2	2'-5"	15'-10"	2'-5"				
RW507	ECSR	1		1	37'-2"	39	STR.							
RW508	ECSR	1		1	19'-1"	20	STR.							
RW509	ECSR	1		1	21'-9"	23	STR.							
RW510	ECSR	1		1	14'-11"	16	STR.							
RW511	ECSR	2		2	15'-10"	33	STR.							
RW512	ECSR	31		31	27'-10"	900	STR.							
RW513	ECSR	19		19	24'-4"	482	STR.							
RW514	ECSR	17		17	20'-10"	369	STR.							
RW515	ECSR	4		4	29'-11"	125	STR.							
RW516	ECSR	96		96	34'-11"	3496	STR.							
RW517	ECSR	67		67	6'-3"	437	16	5'-8"						
RW518	ECSR	67		67	5'-9"	402	2	2'-5"	1'-2"	2'-5"				
RW519	ECSR	8		8	6'-5"	54	2	2'-5"	1'-10"	2'-5"				
RW520	ECSR	8		8	8'-9"	73	2	3'-7"	1'-10"	3'-7"				
RW521	ECSR	67		67	5'-7"	390	2	2'-5"	1'-0"	2'-5"				
RW601	ECSR	242		242	17'-4"	6300	2	1'-0"	15'-8"	1'-0"				
RW901	ECSR	130		130	10'-4"	4567	1	1'-9"	8'-10"					
RW902	ECSR	61		61	23'-4"	4848	STR.							
RW903	ECSR	36		36	20'-1"	2463	STR.							
RW904	ECSR	33		33	16'-10"	1893	STR.							
REAR LEFT WINGWALL ECSR SUBTOTAL						31211	LBS							

MARK	MAT'RL TYPE	NUMBER			LENGTH	WEIGHT (LBS.)	TYPE	DIMENSIONS						SER INC.
		LEFT	RIGHT	TOTAL				A	B	C	D	E	R	
FORWARD LEFT & RIGHT WINGWALL (EPOXY COATED STEEL REINFORCING-ECSR)														
FW501	ECSR	66		66	9'-2"	631	1	2'-5"	6'-10 3/4"					
FW502	ECSR	214	180	394	8'-2"	3356	8	2'-7"	3'-3"	2'-7"				
FW503	ECSR	66		66	31'-4"	2157	1	2'-5"	29'-0 3/4"					
FW504	ECSR	66		66	16'-8"	1147	1	2'-5"	14'-4 3/8"					
FW505	ECSR	66	76	142	11'-8"	1728	1	2'-5"	9'-4 1/2"					
FW506	ECSR	66		66	9'-2"	631	1	2'-5"	6'-10 3/4"					
FW507	ECSR	100		100	22'-0"	2295	1	2'-5"	18'-2 3/8"					
FW508	ECSR	100	168	268	22'-0"	6150	1	2'-5"	11'-2"					
FW509	ECSR	94	96	190	9'-2"	1817	1	0'-10"	8'-5"					
FW510	ECSR	10		10	4'-5"	46	STR.							
FW511	ECSR	40	6	46	29'-6"	1415	STR.							
FW512	ECSR	30	8	38	26'-11"	1065	STR.							
FW513	ECSR	30		30	30'-1"	942	STR.							
FW514	ECSR	102		102	32'-9"	3484	STR.							
FW515	ECSR	4		4	37'-8"	157	STR.							
FW516	ECSR	6	2	8	28'-0"	234	STR.							
FW517	ECSR	6		6	33'-10"	212	STR.							
FW518	ECSR	6	42	48	34'-0"	1703	STR.							
FW519	ECSR	49		49	25'-3"	1290	STR.							
FW520	ECSR	20		20	24'-0"	500	STR.							
FW521	ECSR	11	8	19	20'-11"	414	STR.							
FW522	ECSR	9		9	17'-5"	163	STR.							
FW523	ECSR	262	161	423	7'-10"	3456	1	0'-10"	7'-1"					
FW524	ECSR	10		10	12'-11"	134	STR.							
FW525	ECSR	20	9	29	33'-1"	1000	STR.							
FW526	ECSR	42		42	27'-5"	1200	STR.							
FW527	ECSR	82		82	14'-8"	1253	STR.							
FW528	ECSR	82		82	10'-11"	936	STR.							
FW529	ECSR	41		41	7'-4"	314	STR.							
FW530	ECSR	52		52	3'-9"	202	STR.							

MARK	MAT'RL TYPE	NUMBER			LENGTH	WEIGHT (LBS.)	TYPE	DIMENSIONS						SER INC.
		LEFT	RIGHT	TOTAL				A	B	C	D	E	R	
FORWARD LEFT & RIGHT WINGWALL (EPOXY COATED STEEL REINFORCING-ECSR)														
FW531	ECSR	9	6	15	27'-8"	433	STR.							
FW532	ECSR	76		76	25'-10"	2048	1	2'-5"	23'-6 1/8"					
FW533	ECSR		76	76	18'-9"	1486	1	2'-5"	16'-5 1/2"					
FW534	ECSR		76	76	16'-5"	1301	1	2'-5"	14'-1"					
FW535	ECSR		66	66	14'-10"	1021	1	2'-5"	12'-6 3/8"					
FW536	ECSR		78	78	36'-2"	2943	STR.							
FW537	ECSR		8	8	8'-1"	68	STR.							
FW538	ECSR		2	2	22'-8"	47	STR.							
FW539	ECSR		24	24	26'-3"	658	STR.							
FW540	ECSR		24	24	23'-7"	591	STR.							
FW541	ECSR		14	14	20'-9"	303	STR.							
FW542	ECSR		14	14	12'-10"	188	STR.							
FW543	ECSR		8	8	26'-2"	218	STR.							
FW544	ECSR		8	8	30'-1"	251	STR.							
FW545	ECSR		14	14	39'-10"	582	STR.							
FW546	ECSR		2	2	12'-5"	26	STR.							
FW547	ECSR		43	43	17'-7"	790	STR.							
FW548	ECSR		43	43	13'-9"	615	STR.							
FW549	ECSR		43	43	9'-7"	431	STR.							
FW550	ECSR		32	32	5'-9"	191	STR.							
FW601	ECSR	122		122	17'-4"	3176	2	1'-0"	15'-8"	1'-0"				
FW602	ECSR	293	101	394	16'-2"	9567	2	2'-5"	11'-8"	2'-5"				
FW701	ECSR	155	126	281	20'-2"	11583	2	2'-5"	15'-8"	2'-5"				
FW702	ECSR		72	72	16'-2"	2379	2	2'-5"	11'-8"	2'-5"				
FW801	ECSR		188	188	20'-1"	10081	2	2'-5"	15'-8"	2'-5"				
FW901	ECSR	181	186	367	13'-2"	16429	1	1'-7"	11'-10"					
FW902	ECSR	10	75	85	28'-6"	8243	STR.							
FW903	ECSR	97		97	25'-3"	8324	STR.							
FW904	ECSR	39		39	24'-0"	3178	STR.							
FW905	ECSR	20		20	20'-11"	1420	STR.							
FW906	ECSR	16		16	17'-5"	945	STR.							
FW907	ECSR		47	47	26'-3"	4198	STR.							
FW908	ECSR		37	37	23'-7"	2970	STR.							
FW909	ECSR		25	25	20'-9"	1765	STR.							
FORWARD LEFT & RIGHT WINGWALL ECSR SUBTOTAL						138481	LBS							

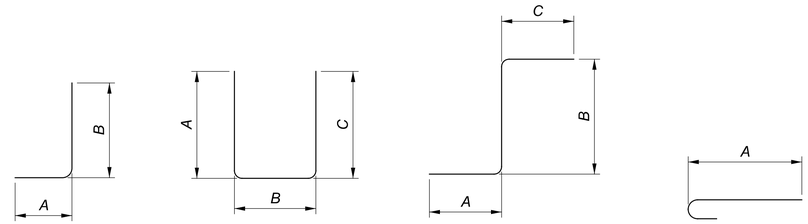

TYPE-1 TYPE-2 TYPE-8 TYPE-16

NOTES:

1. SERIES BARS - EACH BAR VARIES BY TABULATED AMOUNT.
2. ALL DIMENSIONS ARE OUT TO OUT.
3. TYPE "STR" INDICATES STRAIGHT BAR.
4. THE BAR SIZE NUMBER IS SPECIFIED IN THE "MARK" COLUMN. THE FIRST DIGIT INDICATES THE BAR SIZE NUMBER.
5. ALL BARS SHALL BE EPOXY COATED UNLESS NOTED OTHERWISE.
6. SUBTOTALS AND TOTAL WEIGHTS ARE FOR INFORMATIONAL PURPOSES ONLY. IF THE REINFORCING LIST PROVIDED IN THE PLANS IS USED, IT SHALL BE VERIFIED BY THE CONTRACTOR. ANY REVISIONS IN THE REINFORCING STEEL LIST AS SHOWN IN THE PLANS WILL NOT BE REASON FOR ADJUSTMENT IN THE BID PRICE FOR STRUCTURAL CONCRETE.
7. USE STANDARD HOOKS FOR ENDS OF BARS NOT SPECIFICALLY DIMENSIONED IN DETAILS.

Preliminary Plans - Not for Construction
For Reference Only

REINFORCING SCHEDULE (5 OF 5)
CUY-90-1678 (BRIDGE 13)
CR-710 (E. 22ND ST.) OVER I.R. 90

SFN 1807839
DESIGN AGENCY
Michael Baker INTERNATIONAL
DESIGNER JTC | CHECKER DAF
REVIEWER CDC 05/10/24
PROJECT ID 82382
SUBSET 99 | TOTAL 99
SHEET 2280 | TOTAL 2696

CUY-90-16.28 (CCG3A)

MODEL: Sheet PAPERSIZE: 34x22 (in.) DATE: 3/28/2025 TIME: 7:56:50 AM USER: Rohit.Bk
pw:\\mb-us-pw.bentley.com:mb-us-pw-03\Documents\Cleveland_OH101_Projects\ODOT\District12\82382\400-Engineering\Structures\SFN_1807839\Sheets\82382_SFN_1807839_SL005.dgn

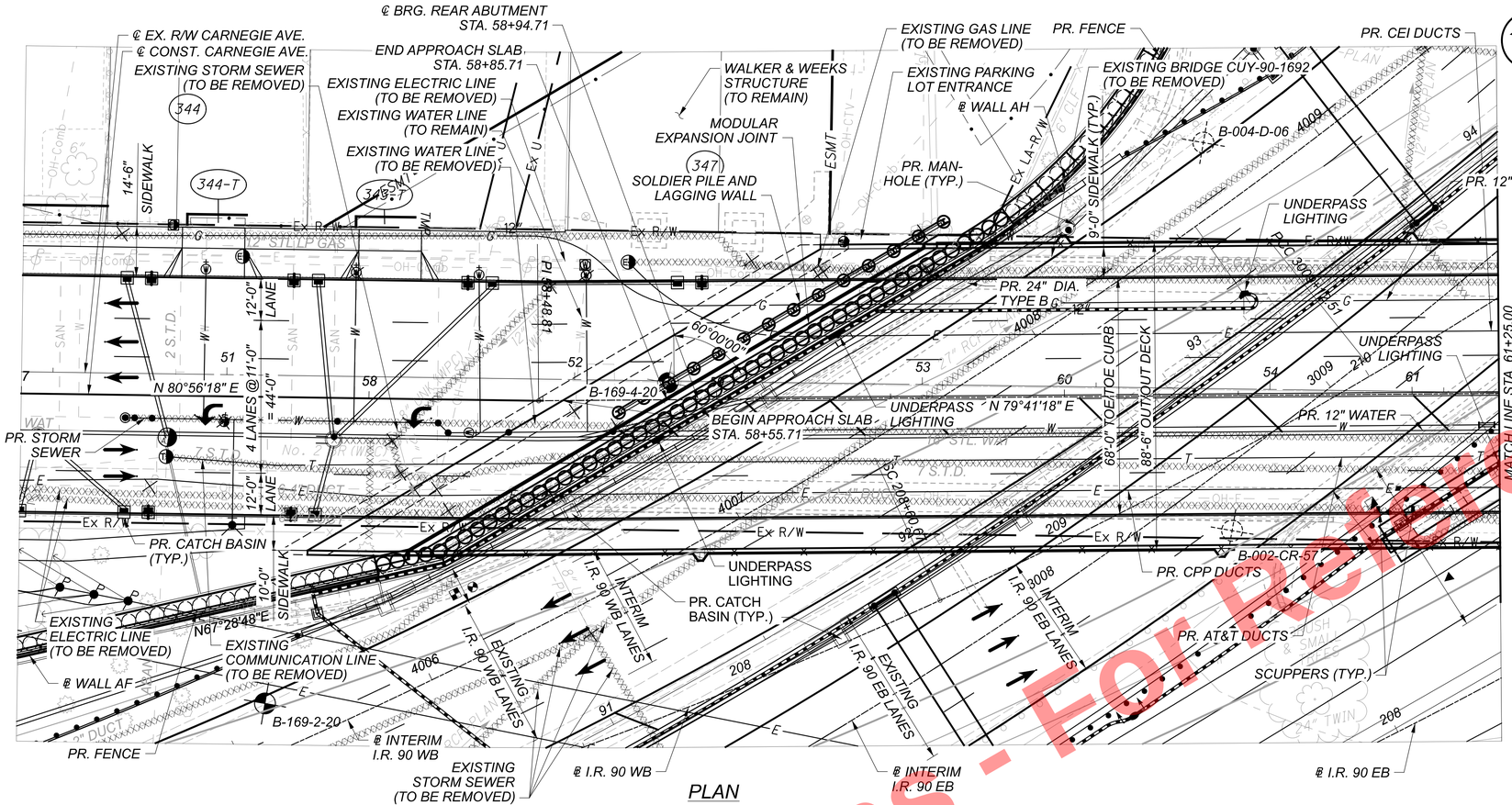

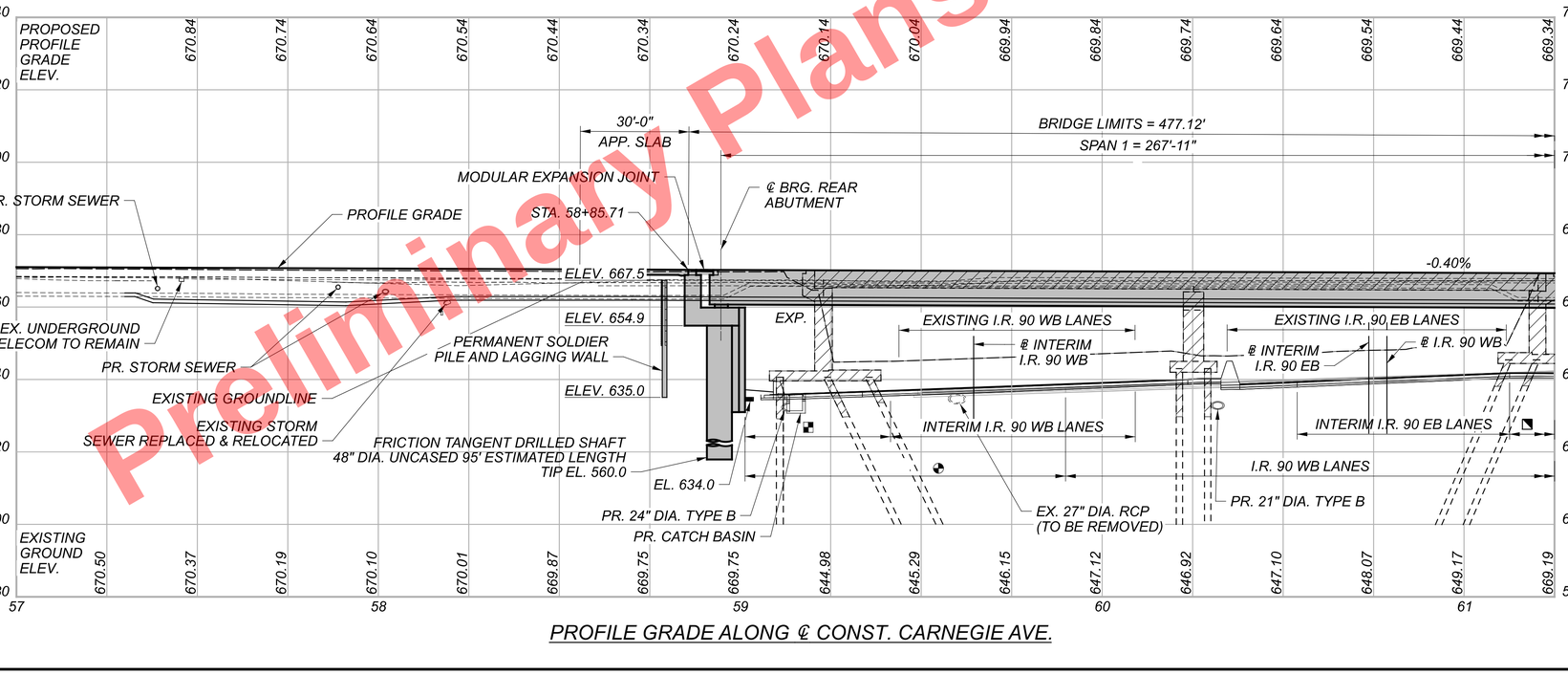

BENCHMARK DATA

BM #62 STA.	41+38.42,	ELEV.	672.11,	OFFSET 75.42 LT.,	RR SPIKE
BM #64 STA.	58+35.86,	ELEV.	671.25,	OFFSET 47.90 LT.,	RR SPIKE
BM #65 STA.	66+35.73,	ELEV.	668.92,	OFFSET 38.62 RT.,	RR SPIKE
BM #73 STA.	49+25.90,	ELEV.	671.90,	OFFSET 31.86 LT.,	CUT CROSS

FOR ADDITIONAL BENCHMARK INFORMATION. SEE ROADWAY PLAN SHEET 4 / 2696

NOTES

EARTHWORK LIMITS SHOWN ARE APPROXIMATE. ACTUAL SLOPES SHALL CONFORM TO PLAN CROSS SECTIONS.

DESIGN TRAFFIC:

2015 ADT = 25,700 2015 ADTT = TBD
2035 ADT = 30,500 2035 ADTT = TBD
DIRECTIONAL DISTRIBUTION = 0.56

LEGEND

- TO BE REMOVED
- HISTORIC BORING LOCATION
- INSTRUMENTED BORING LOCATION
- PROJECT BORING LOCATION

FOR MINIMUM VERTICAL CLEARANCE LOCATION, SEE SITE PLAN 2 OF 2

FOR MINIMUM HORIZONTAL CLEARANCE LOCATION, SEE SITE PLAN 2 OF 2

FOR PROFILE LOCATIONS OF ♦, ◥ AND ▼ SEE SITE PLAN 2 OF 2

EXISTING STRUCTURE

TYPE: TWO SPAN CONTINUOUS STEEL PLATE GIRDER BRIDGE WITH REINFORCED CONCRETE DECK AND SUBSTRUCTURE

SPANS: 98'-0 1/2"± AND 92'-4 3/8"± C/C BEARINGS ALONG ℄ CARNEGIE AVE.

ROADWAY: 56'-0"± TOE/TOE CURB WITH TWO 8'-3"± SIDEWALKS

LOADING: CF = 2000 (51)

SKEW: VARIES

WEARING SURFACE: LATEX MODIFIED CONCRETE OVERLAY

APPROACH SLABS: 25'-0"± (AS-1-54)

ALIGNMENT: TANGENT

CROWN: 0.016± FT/FT

STRUCTURE FILE NUMBER: 1807897

DATE BUILT: 1958 (OVERLAY 1987)

DISPOSITION: TO BE REPLACED

PROPOSED STRUCTURE

TYPE: TWO SPAN CONTINUOUS STEEL PLATE GIRDER, WITH COMPOSITE REINFORCED CONCRETE DECK, SUPPORTED ON A TANGENT DRILLED SHAFT ABUTMENT, A REINFORCED CONCRETE ABUTMENT AND CAP AND COLUMN PIER

SPANS: 267'-11" & 192'-8 5/8" C/C BRGS. ALONG ℄ CONST. CARNEGIE AVE.

ROADWAY: 68'-0" TOE/TOE CURB WITH TWO 9'-0" SIDEWALKS

LOADING: HL93, PEDESTRIAN LL, AND 60 PSF FUTURE WEARING SURFACE (FWS)

SKEW: VARIES LEFT FORWARD

WEARING SURFACE: 1" MONOLITHIC CONCRETE

APPROACH SLABS: 30'-0" LONG (AS-1-15, AS-2-15) TYPE B INSTALLATION

ALIGNMENT: TANGENT

CROWN: 0.02 FT/FT

DECK AREA: 41,987 SF

SFN: 1807898

COORDINATES: LATITUDE 41°29'57.61" N
LONGITUDE 81°40'19.52" W

SITE PLAN (1 OF 2)
CUY-90-1696 (BRIDGE 14)
CR-722 (CARNEGIE AVE.) OVER I.R. 90

SFN	1807898
DESIGN AGENCY	Michael Baker INTERNATIONAL
DESIGNER	ZES
CHECKER	DBW
REVIEWER	KAG 12-26-23
PROJECT ID	82382
SUBSET	1
TOTAL	90
SHEET	2281
TOTAL	2696

Preliminary Plans - For Reference Only

CUY-90-16.28 (CCG3A)
MODEL: 82382_SFN_0000014_SP001 PAPERSIZE: 34x22 (in.) DATE: 3/28/2025 TIME: 7:57:08 AM USER: RohitLBk
pw:\\mb-us-pw.bentley.com:mb-us-pw-03\Documents\Cleveland_OH\01_Projects\ODOT\District12\82382400-Engineering\Structures\SFN_1807898\Sheets\82382_SP001.dgn

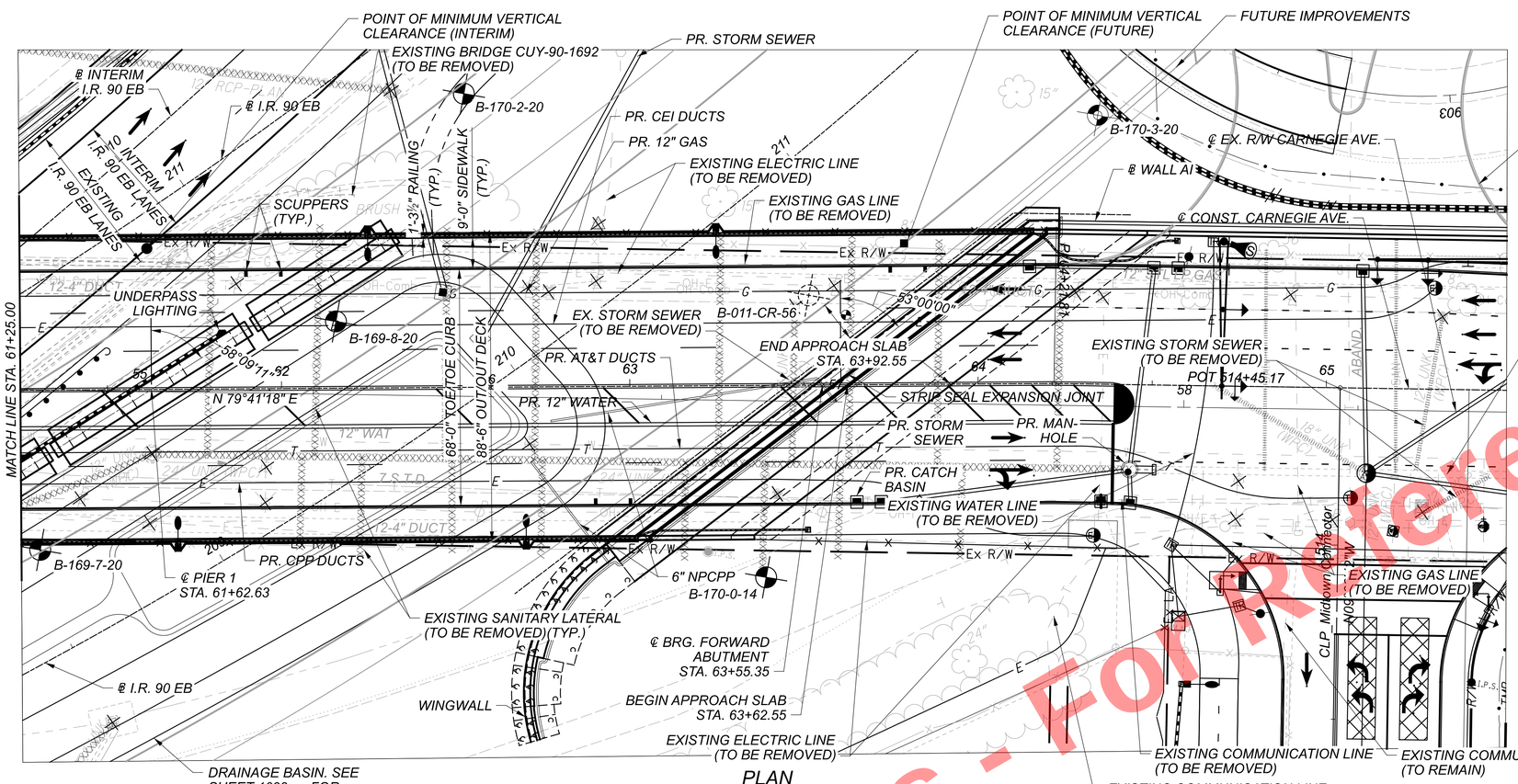

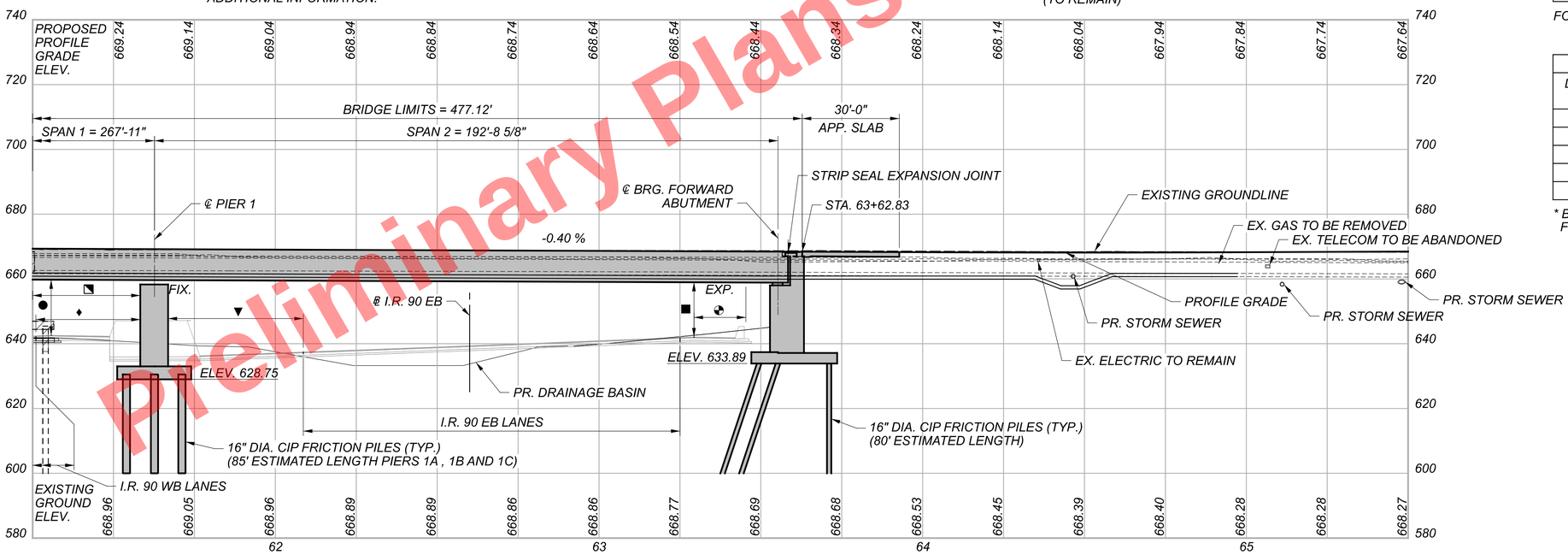

PROFILE GRADE ALONG ℄ CONST. CARNEGIE AVE.

LEGEND

- TO BE REMOVED
- HISTORIC BORING LOCATION
- INSTRUMENTED BORING LOCATION
- PROJECT BORING LOCATION

● 15'-6" REQUIRED MINIMUM VERTICAL CLEARANCE
16'-0" PREFERRED MINIMUM VERTICAL CLEARANCE
15'-7" ACTUAL MINIMUM VERTICAL CLEARANCE (INTERIM)

■ 15'-6" REQUIRED MINIMUM VERTICAL CLEARANCE
16'-0" PREFERRED MINIMUM VERTICAL CLEARANCE
16'-0" ACTUAL MINIMUM VERTICAL CLEARANCE (FUTURE)

HORIZONTAL CLEARANCES

LOCATION	REQUIRED	ACTUAL	PHASE
◕	11'-8"	11'-9"	FUTURE
♦	13'-8"	18'-3"	FUTURE
▼	13'-8"	18'-6"	FUTURE
◥	13'-8"	20'-1"	INTERIM

FOR PLAN LOCATIONS OF ♦, ◥ AND ▼ SEE SITE PLAN 1 OF 2

MINIMUM HORIZONTAL CLEARANCES

LOCATION	REQUIRED CLEAR ZONE	ACTUAL	PHASE
◕	30'-0"	20'-8" *	FUTURE
◪	30'-0"	14'-1" *	INTERIM
♦	30'-0"	18'-3" *	FUTURE
▼	30'-0"	18'-6" *	FUTURE
◥	30'-0"	20'-1" *	INTERIM

* BARRIER PROTECTION REQUIRED FOR PLAN LOCATIONS OF ♦, ◥ AND ▼ SEE SITE PLAN 1 OF 2

Preliminary Plans - For Reference Only

SITE PLAN (2 OF 2)
CUY-90-1696 (BRIDGE 14)
CR-722 (CARNEGIE AVE.) OVER I.R. 90

SFN 1807898
DESIGN AGENCY Michael Baker INTERNATIONAL
DESIGNER ZES | CHECKER DBW
REVIEWER KAG 12/26/23
PROJECT ID 82382
SUBSET 2 | TOTAL 90
SHEET 2282 | TOTAL 2696

CUY-90-16.28 (CCG3A)

MODEL: 82382_SFN_0000014_SP2 PAPERSIZE: 34x22 (in.) DATE: 3/28/2025 TIME: 7:57:36 AM USER: RohitBk
pw:\\mb-us-pw.bentley.com:mb-us-pw-03\Documents\Cleveland_OH101_Projects\ODOT\District12\82382\400-Engineering\Structures\SFN_1807898\Sheets\82382_SFN_1807898_SP002.dgn

SHEET	DESCRIPTION
1	SITE PLAN (1 OF 2)
2	SITE PLAN (2 OF 2)
3	SHEET INDEX
4	GENERAL NOTES (1 OF 7)
5	GENERAL NOTES (2 OF 7)
6	GENERAL NOTES (3 OF 7)
7	GENERAL NOTES (4 OF 7)
8	GENERAL NOTES (5 OF 7)
9	GENERAL NOTES (6 OF 7)
10	GENERAL NOTES (7 OF 7)
11	ESTIMATED QUANTITIES (1 OF 2)
12	ESTIMATED QUANTITIES (2 OF 2)
13	REAR ABUTMENT STAGED CONSTRUCTION DETAILS (1 OF 2)
14	REAR ABUTMENT STAGED CONSTRUCTION DETAILS (2 OF 2)
15	STRUCTURE REMOVAL DETAILS (1 OF 4)
16	STRUCTURE REMOVAL DETAILS (2 OF 4)
17	STRUCTURE REMOVAL DETAILS (3 OF 4)
18	STRUCTURE REMOVAL DETAILS (4 OF 4)
19	REAR ABUTMENT FOUNDATION PLAN
30	REAR ABUTMENT DRILLED SHAFT DETAILS
21	DEMONSTRATION SHAFT FOR BI-DIRECTIONAL LOAD TEST DETAILS - 1
22	DEMONSTRATION SHAFT FOR BI-DIRECTIONAL LOAD TEST DETAILS - 2
23	REAR ABUTMENT DRILLED SHAFT & SOLIDER PILE SCHEDULE
24	REAR ABUTMENT SOLIDER PILE DETAILS
25	REAR ABUTMENT GROUND ANCHOR DETAILS
26	PIER FOUNDATION PLAN
27	FORWARD ABUTMENT FOUNDATION PLAN
28	REAR ABUTMENT PLAN AND ELEVATION (1 OF 2)
29	REAR ABUTMENT PLAN AND ELEVATION (2 OF 2)
30	REAR ABUTMENT SECTIONS (1 OF 2)
31	REAR ABUTMENT SECTIONS (2 OF 2)
32	REAR ABUTMENT STRUT & WALER DETAILS (1 OF 2)
33	REAR ABUTMENT STRUT & WALER DETAILS (2 OF 2)
34	FORWARD ABUTMENT PLAN AND ELEVATION (1 OF 2)
35	FORWARD ABUTMENT PLAN AND ELEVATION (2 OF 2)
36	FORWARD ABUTMENT DETAILS (1 OF 2)
37	FORWARD ABUTMENT DETAILS (2 OF 2)
38	FORWARD RIGHT WINGWALL FOUNDATION PLAN
39	FORWARD RIGHT WINGWALL PLAN AND ELEVATION
40	FORWARD RIGHT ABUTMENT WINGWALL SECTION (1 OF 2)
41	FORWARD RIGHT ABUTMENT WINGWALL SECTION (2 OF 2)
42	PIER 1A PLAN AND ELEVATION
43	PIER 1B PLAN AND ELEVATION
44	PIER 1C PLAN AND ELEVATION
45	PIER SECTIONS
46	TRANSVERSE SECTION
47	FRAMING PLAN (1 OF 2)
48	FRAMING PLAN (2 OF 2)
49	GIRDER ELEVATION (1 OF 2)
50	GIRDER ELEVATION (2 OF 2)
51	GIRDER DETAILS
52	GIRDER SPLICE DETAILS
53	DEFLECTION AND CAMBER TABLE (1 OF 4)
54	DEFLECTION AND CAMBER TABLE (2 OF 4)
55	DEFLECTION AND CAMBER TABLE (3 OF 4)
56	DEFLECTION AND CAMBER TABLE (4 OF 4)
57	CROSSFRAME DETAILS (1 OF 2)
58	CROSSFRAME DETAILS (2 OF 2)
59	UTILITY CROSS FRAME & SUPPORT DETAILS (1 OF 2)
60	UTILITY CROSS FRAME & SUPPORT DETAILS (2 OF 2)

SHEET	DESCRIPTION
61	BEARING DETAILS (1 OF 2)
62	BEARING DETAILS (2 OF 2)
63	DECK PLAN (1 OF 2)
64	DECK PLAN (2 OF 2)
65	SIDEWALK PLAN & DETAILS (1 OF 2)
66	SIDEWALK PLAN & DETAILS (2 OF 2)
67	FINAL DECK SURFACE ELEVATION TABLE (1 OF 2)
68	FINAL DECK SURFACE ELEVATION TABLE (2 OF 2)
69	DECK SCREED ELEVATION TABLE (1 OF 2)
70	DECK SCREED ELEVATION TABLE (2 OF 2)
71	TOP OF HAUNCH ELEVATION TABLE (1 OF 2)
72	TOP OF HAUNCH ELEVATION TABLE (2 OF 2)
73	LEFT RAILING PLAN & ELEVATION (1 OF 2)
74	LEFT RAILING PLAN & ELEVATION (2 OF 2)
75	RIGHT RAILING PLAN & ELEVATION (1 OF 2)
76	RIGHT RAILING PLAN & ELEVATION (2 OF 2)
77	MISCELLANEOUS RAILING DETAILS
78	RAILING ARCHITECTURAL DETAILS
79	EXPANSION JOINT DETAILS (1 OF 3)
80	EXPANSION JOINT DETAILS (2 OF 3)
81	EXPANSION JOINT DETAILS (3 OF 3)
82	SCUPPER AND DOWNSPOUT DETAILS
83	APPROACH SLAB DETAILS (1 OF 3)
84	APPROACH SLAB DETAILS (2 OF 3)
85	APPROACH SLAB DETAILS (3 OF 3)
86	REINFORCING SCHEDULE (1 OF 4)
87	REINFORCING SCHEDULE (2 OF 4)
89	REINFORCING SCHEDULE (3 OF 4)
90	REINFORCING SCHEDULE (4 OF 4)

Preliminary Plans - For Reference Only

SHEET INDEX
CUY-90-1696 (BRIDGE 14)
CR-722 (CARNEGIE AVE.) OVER I.R. 90

SFN 1807898

DESIGN AGENCY
Michael Baker INTERNATIONAL

DESIGNER	CHECKER
ZES	BC

REVIEWER: KAG 05/15/24

PROJECT ID: 82382

SUBSET	TOTAL
3	90

SHEET	TOTAL
2283	2696

CUY-90-16.28 (CCG3A)

MODEL: Sheet PAPERSIZE: 34x22 (in.) DATE: 3/28/2025 TIME: 7:57:58 AM USER: RohitLBk
pw:\\mb-us-pw.bentley.com:mb-us-pw-03\Documents\Cleveland_OH\01_Projects\ODOT\District12\82382\400-Engineering\Structures\SFN_1807898\Sheets\82382_SFN_1807898_SN008.dgn

STANDARD DRAWINGS AND SUPPLEMENTAL SPECIFICATIONS

REFER TO THE FOLLOWING STANDARD BRIDGE DRAWING(S):

AS-1-15 DATED (REVISED) 1/20/2023
AS-2-15 DATED (REVISED) 7/21/2023
BR-2-15 DATED (REVISED) 7/19/2024
GSD-1-19 DATED (REVISED) 1/15/2021
VPF-1-90 DATED (REVISED) 7/21/2023

AND TO THE FOLLOWING SUPPLEMENTAL SPECIFICATIONS:

800 DATED SEE TITLE SHEET
813 DATED 7/21/2023
846 DATED 4/17/2015
869 DATED 10/17/2014
894 DATED 4/16/2021
913 DATED 4/16/2021
1083 DATED 1/20/2017

AND THE FOLLOWING SPECIAL PROVISIONS

DEMONSTRATION DRILLED SHAFT AND BI-DIRECTIONAL STATIC LOAD TESTING OF DRILLED SHAFTS DATED 3/25/2025
HIGH-STRAIN DYNAMIC TESTING OF DRILLED SHAFTS DATED 9/20/2021
MODULAR EXPANSION JOINTS DATED 6/29/2021
CROSSHOLE SONIC LOGGING (CSL) TESTING FOR DRILLED SHAFTS DATED 6/11/2019

DESIGN SPECIFICATIONS

THIS STRUCTURE CONFORMS TO THE 9th EDITION OF THE "LRFD BRIDGE DESIGN SPECIFICATIONS" ADOPTED BY THE AMERICAN ASSOCIATION OF STATE HIGHWAY AND TRANSPORTATION OFFICIALS, 2020 AND THE ODOT BRIDGE DESIGN MANUAL, 2020.

SPECIAL DESIGN SPECIFICATIONS

THIS BRIDGE REQUIRED THE USE OF A TWO DIMENSIONAL MODEL TO ANALYZE THE STRUCTURE. THE COMPLETED STRUCTURE WAS MODELED USING THE PLATE-AND-ECCENTRIC-BEAM METHOD, AND CONCRETE DECK POURING ANALYSIS USED THE GRILLAGE METHOD. THE COMPUTER PROGRAM USED FOR STRUCTURAL ANALYSIS WAS MDX. THE BRIDGE COMPONENTS DESIGNED BY THESE METHODS WERE THE LONGITUDINAL STEEL PLATE GIRDERS, INTERMEDIATE CROSSFRAMES AND SUBSTRUCTURE DIAPHRAGMS

DEAD LOAD DISTRIBUTION: SUPERSTRUCTURE DEAD LOADS WERE COMPUTED FOR EACH GIRDER LINE.

NONCOMPOSITE DEAD LOADS (DC1) INCLUDED STEEL GIRDER SELF-WEIGHTS, WEIGHTS OF CROSSFRAMES, DIAPHRAGMS, STIFFENERS, CONNECTION PLATES, PROPOSED UTILITY SUPPORT MATERIAL AND WEIGHT OF WET CONCRETE DECK SLAB AND HAUNCHES.

COMPOSITE DEAD LOADS (DC2) INCLUDED WEIGHTS OF SIDEWALKS, MODIFIED BR-2-15 RAILINGS, FENCES AND PROPOSED UTILITY CONDUITS AND CONTENTS. UTILITY LOADS WERE FACTORED TO ACCOUNT FOR THE DIFFERENCE BETWEEN DC AND DW LOAD LRFD STRENGTH LOAD FACTORS.

DW LOADS INCLUDED THE WEIGHT OF FUTURE WEARING SURFACE.

LIVE LOAD DISTRIBUTION: LIVE LOADS WERE CONSIDERED BOTH WITH AND WITHOUT SIDEWALKS PRESENT. WHERE SIDEWALKS WERE CONSIDERED, THE GOVERNING EFFECTS OF UP TO FIVE (5) DESIGN LANES OF HL-93 LIVE LOAD WERE COMBINED WITH TWO (2) DISTRIBUTED SIDEWALK LOADS OF 0.075 KSF. WHERE SIDEWALKS WERE NOT CONSIDERED, THE GOVERNING EFFECTS OF UP TO SEVEN (7) DESIGN LANES OF HL-93 LIVE LOAD WERE ANALYZED.

OPERATIONAL IMPORTANCE

A LOAD MODIFIER OF 1.00 HAS BEEN ASSUMED FOR THE DESIGN OF THIS STRUCTURE IN ACCORDANCE WITH THE AASHTO LRFD BRIDGE DESIGN SPECIFICATIONS, ARTICLE 1.3.5 AND THE ODOT BRIDGE DESIGN MANUAL.

DESIGN LOADING

DESIGN LOADING INCLUDES:
- VEHICULAR LIVE LOAD: HL-93
- SIDEWALK PEDESTRIAN LIVE LOAD WITH VEHICULAR LL: 0.075 KIPS/SQ.FT
- SIDEWALK PEDESTRIAN LIVE LOAD WITHOUT VEHICULAR LL: 0.090 KIPS/SQ.FT
- FUTURE WEARING SURFACE (FWS) OF 0.060 KIPS/SQ.FT

DESIGN DATA

CONCRETE CLASS QC2:
COMPRESSIVE STRENGTH 4.5 KSI (SUPERSTRUCTURE)
CONCRETE CLASS QC1:
COMPRESSIVE STRENGTH 4.0 KSI (SUBSTRUCTURE)
CONCRETE CLASS QC5, WITH ⅜ IN MAX AGGREGATE SIZE:
COMPRESSIVE STRENGTH 4.5 KSI (42" DRILLED SHAFT)
CONCRETE CLASS QC SCC, WITH ⅜ IN MAX AGGREGATE SIZE:
COMPRESSIVE STRENGTH 4.5 KSI (48" DRILLED SHAFT)

REINFORCING STEEL MINIMUM YIELD STRENGTH 60 KSI

STRUCTURAL STEEL - ASTM A709 GRADE 50:
YIELD STRENGTH = 50 KSI

STEEL CIP PILES - ASTM A252 GRADE 3 - YIELD STRENGTH = 45 KSI, ½" THICK CASING

MONOLITHIC WEARING SURFACE

MONOLITHIC WEARING SURFACE IS ASSUMED, FOR DESIGN PURPOSES, TO BE 1 INCH THICK.

PILE DESIGN LOADS (ULTIMATE BEARING VALUE)

THE ULTIMATE BEARING VALUE IS 341 KIPS PER PILE FOR THE FORWARD ABUTMENT PILES. THE ULTIMATE BEARING VALUE IS 380 KIPS PER PILE FOR THE PIER PILES.

FORWARD ABUTMENT PILES:
16" Ø PILES 85 FEET LONG, ORDER LENGTH
1 DYNAMIC LOAD TESTING ITEMS
1 RESTRIKE

PIER PILES:
16" Ø PILES 90 FEET LONG, ORDER LENGTH
1 DYNAMIC LOAD TESTING ITEMS
1 RESTRIKE

PILES DRIVEN TO FULL ESTIMATED LENGTH WITH PILE/SOIL SETUP

THE ULTIMATE BEARING VALUE IS 341 KIPS PER PILE FOR THE FORWARD ABUTMENT AND 380 KIPS PER PILE FOR THE PIER FOR THE 16" PILES.

PART OF THE UBV WILL BE ACHIEVED THROUGH PILE/SOIL SETUP, WHICH IS A TIME DEPENDENT INCREASE IN RESISTANCE THAT OCCURS IN SOME SOILS.

NOTIFY THE ENGINEER AT LEAST 5 DAYS BEFORE DRIVING PILES SO THE ENGINEER CAN NOTIFY THE DISTRICT GEOTECHNICAL ENGINEER, THE OFFICE OF CONSTRUCTION ADMINISTRATION, AND THE OFFICE OF GEOTECHNICAL ENGINEERING.

DRIVE THE FIRST TWO PILES AT THE FORWARD ABUTMENT AND AT THE PIER TO THE FULL ESTIMATED LENGTH OF 80 FT AND 85 FT.

PERFORM DYNAMIC LOAD TESTING ON BOTH PILES WHILE DRIVING.

AFTER DRIVING AND TESTING THE FIRST TWO PILES, DRIVE THE REMAINING PILES IN THE SUBSTRUCTURE TO THE SAME DEPTH AS THE FIRST TWO PILES. AFTER DRIVING ALL PILES TO THE ESTIMATED LENGTH, CEASE ALL DRIVING OPERATIONS AT THE SUBSTRUCTURE FOR A PERIOD OF 14 DAYS. INCLUDE THE WAITING PERIOD AS A SEPARATE ACTIVITY IN THE PROGRESS SCHEDULE. AFTER THE WAITING PERIOD, PERFORM PILE RESTRIKES ON BOTH OF THE FIRST TWO PILES (ONE RESTRIKE ITEM).

SUBMIT ALL TEST RESULTS TO THE ENGINEER. IF THE RESTRIKE TEST RESULTS INDICATE THAT BOTH PILES ACHIEVED THE REQUIRED UBV, ALL PILES IN THE SUBSTRUCTURE MAY BE ACCEPTED BY THE ENGINEER.

IF THE RESTRIKE TEST RESULTS INDICATE THAT EITHER OF THE TWO PILES DID NOT ACHIEVE THE REQUIRED UBV, IMMEDIATELY NOTIFY THE ENGINEER SO THAT THE ENGINEER CAN NOTIFY THE DISTRICT GEOTECHNICAL ENGINEER, THE OFFICE OF CONSTRUCTION ADMINISTRATION, AND THE OFFICE OF GEOTECHNICAL ENGINEERING. THE ENGINEER WILL REVIEW THE TEST RESULTS AND ESTABLISH ADDITIONAL RESTRIKE TESTING OR DRIVING CRITERIA FOR THE PILING IN THE SUBSTRUCTURE WITH THE ASSISTANCE OF THE DISTRICT GEOTECHNICAL ENGINEER, THE OFFICE OF CONSTRUCTION ADMINISTRATION, AND THE OFFICE OF GEOTECHNICAL ENGINEERING.

IF DIRECTED BY THE ENGINEER, PERFORM ADDITIONAL RESTRIKE TESTING OR DRIVE ALL PILES IN THE SUBSTRUCTURE TO THE ESTABLISHED DRIVING CRITERIA. THE DEPARTMENT WILL PAY FOR SPLICING OF THE PILES BEYOND THE ESTIMATED LENGTH PROVIDED IN THE PLANS UNDER C&MS 109.05 WITH A NEGOTIATED PRICE PER SPLICE.

THIS PLAN NOTE INCLUDES A QUANTITY OF ONE EACH ITEM 523 DYNAMIC LOAD TESTING, AS PER PLAN AND A QUANTITY OF ONE EACH ITEM 523 RESTRIKE, AS PER PLAN PER EACH SUBSTRUCTURE UNIT.

ITEM SPECIAL - STRUCTURES: VIBRATION MONITORING

THIS PAY ITEM IS SPECIFICALLY INTENDED FOR THE PROTECTION OF THE WALKER WEEKS BUILDING, 2351 CARNEGIE AVENUE, CLEVELAND OH, 44115.

MONITOR GROUND VIBRATIONS CAUSED BY PILE DRIVING AND DRILLED SHAFT INSTALLATION TO MINIMIZE THE POTENTIAL DAMAGE TO EXISTING STRUCTURES.

RETAIN AN EXPERIENCED VIBRATION SPECIALIST TO ESTABLISH THE ACCEPTABLE VIBRATION LIMITS AND TO PERFORM THE VIBRATION MONITORING. USE A VIBRATION SPECIALIST THAT IS AN EXPERT IN THE INTERPRETATION OF VIBRATION DATA, AND WHO MEETS ONE OF THE FOLLOWING CRITERIA: 1) IS A REGISTERED ENGINEER WITH AT LEAST TWO YEARS OF PROVEN EXPERIENCE IN MONITORING VIBRATIONS ON SIMILAR CONSTRUCTION PROJECTS, OR 2) HAS AT LEAST FIVE YEARS OF PROVEN EXPERIENCE IN MONITORING VIBRATIONS ON SIMILAR CONSTRUCTION PROECTS. DO NOT USE A VIBRATION SPECIALIST THAT IS AN EMPLOYEE OF THE CONTRACTOR.

SUBMIT A RESUME OF THE CREDENTIALS OF THE PROPOSED VIBRATION SPECIALIST AT, OR BEFORE, THE PRECONSTRUCTION MEETING. INCLUDE IN THE RESUME A LIST OF CONSTRUCTION PROJECTS ON WHICH THE VIBRATION SPECIALTY WAS RESPONSIBLY IN CHARGE OF MONITORING THE VIBRATIONS. LIST A DESCRIPTION OF THE PROJECTS, WITH DETAILS OF THE VIBRATION INTERPRETATIONS MADE ON THE PROJECT. LIST THE NAMES AND TELEPHONE NUMBERS OF PROJECT OWNERS WITH SUFFICIENT KNOWLEDGE OF THE PROJECTS TO VERIFY THE SUBMITTED INFORMATION. OBTAIN THE ENGINEER'S ACCEPTANCE OF THE VIBRATION SPECIALIST BEFORE BEGINNING ANY PILE DRIVING WORK. ALLOW 30 DAYS FOR THE REVIEW OF THIS DOCUMENTATION.

USE SEISMOGRAPHS CAPABLE OF CONTINUOUSLY RECORDING THE PEAK PARTICLE VELOCITY FOR THREE MUTUALLY PERPENDICULAR COMPONENTS OF VIBRATION, AND OF PROVIDING A PERMANENT RECORD OF THE ENTIRE VIBRATION EVENT. USE A SUFFICIENT NUMBER OF SEISMOGRAPHS TO PROVIDE REDUNDANCY IN CASE ONE DEVICE SHOULD FAIL. SUBMIT A PLAN OF THE PROPOSED SEISMOGRAPH LOCATIONS TO THE ENGINEER FOR REVIEW.

THE VIBRATION SPECIALIST SHALL PERFORM THE FOLLOWING:

1. MEASURE THE AMBIENT GROUND VIBRATIONS NEAR EXISTING STRUCTURES BEFORE PILE DRIVING BEGINS.

2. PRIOR TO DRIVING PILES NEAR EXISTING STRUCTURES, SUBMIT THE PRE-CONSTRUCTION SURVEY REPORT AND PROJECT SCHEDULE TO THE ENGINEER TO COORDINATE WITH SHPO FOR APPROVAL.

3. MONITOR GROUND VIBRATIONS DURING PILE DRIVING.

4. IMMEDIATELY INFORM THE CONTRACTOR AND ENGINEER IF THE VIBRATION LIMITS ARE REACHED OR EXCEEDED.

5. FURNISH THE DATA RECORDED AND INCLUDE THE FOLLOWING:
   A. IDENTIFICATION OF SEISMOGRAPH.
   B. DISTANCE AND DIRECTION OF SEISMOGRAPH FROM PILE DRIVING.
   C. START TIME AND DURATION OF PILE DRIVING.
   D. LIST OF PILES DRIVEN DURING EACH MONITORING INTERVAL.

IMMEDIATELY SUSPEND ALL PILE DRIVING OR DRILLED SHAFT INSTALLATION OF THE VIBRATION LIMITS ARE REACHED OR EXCEEDED. EVALUATE ALTERNATIVE CONSTRUCTION PROCEDURES, SUCH AS PREBORED HOLES, TO REDUCE THE VIBRATIONS.

SUBMIT AN ELECTRONIC COPY OF THE FINAL REPORT WHICH CONTAINS ALL MEASUREMENTS, INTERPRETATIONS, AND RECOMMENDATIONS TO THE ENGINEER. PREBORED HOLES ARE INCIDENTAL TO ITEM SPECIAL - STRUCTURE MISC.: VIBRATION MONITORING.

THE DEPARTMENT WILL PAY FOR THIS ITEM AT THE CONTRACT LUMP SUM PRICE FOR ITEM SPECIAL - STRUCTURE: VIBRATION MONITORING. THE DEPARTMENT WILL PAY THE FINAL TWENTY PERCENT AFTER THE ENGINEER RECEIVES THE FINAL REPORT.

THE DEPARTMENT WILL PAY ACCORDING TO C&MS 109.05 FOR ALTERNATIVE CONSTRUCTION PROCEDURES THAT THE ENGINEER DETERMINES ARE NECESSARY TO REDUCE VIBRATIONS.

ITEM SPECIAL - STRUCTURES: PRECONSTRUCTION/POST CONSTRUCTION CONDITION SURVEY

THIS PAY ITEM IS SPECIFICALLY INTENDED FOR THE PROTECTION OF THE WALKER WEEKS BUILDING, 2351 CARNEGIE AVENUE, CLEVELAND OH, 44115.

DAVID NAKONECZNY
DIRECTOR OF FIELD OPERATIONS
VANGUARD PROPERTY MANAGEMENT
OFFICE: (216) 521-8222 EXT 104
CELL: (440) 454-0748
DAVIDN@VANGUARDCLEVELAND.COM

BEFORE FOUNDATION CONSTRUCTION BEGINS AND AFTER CONSTRUCTION OF CUY-00090-16.960 (BRIDGE 14) IS COMPLETE, CONDUCT A CONDITION SURVEY OF ALL EXISTING BUILDINGS, STRUCTURES, AND UTILITIES WITHIN 200-FT OF THE DEEP FOUNDATION WORK. THE PURPOSE OF THE SURVEY IS TO DOCUMENT THE CON- DITION OF THE BUILDINGS, STRUCTURES, OR UTILITIES PRIOR TO DEEP FOUNDATION INSTALLATION, SO THAT CLAIMS OF DAMAGE CAUSED BY DRILLED SHAFT INSTALLATION OR PILE DRIVING, SO THAT CLAIMS OF DAMAGE CAUSED BY THE PILE DRIVING GROUND ANCHOR INSTALLATION OR DRILLED SHAFT INSTALLATION CAN BE VERIFIED.

RETAIN AN EXPERIENCED VIBRATION SPECIALIST TO PERFORM OR SUPERVISE THE CONDION SURVEY. USE A VIBRATION SPECIALIST THAT MEETS THE QUALIFICATION REQUIREMENTS FOR VIBRATION MONITORING.

RECORD THE CONDITION OF EXISTING STRUCTURES AND BUILDING MATERIALS, USING WRITTEN TEXT, PHOTOGRAPHS, AND VIDEO RECORDINGS. INSPECT INTERIOR WALLS, CEILINGS, AND FLOORS THAT ARE ACCESSIBLE. INSPECT THE EXTERIOR OF THE BUILDING THAT IS VISIBLE FROM GROUND LEVEL. ALSO RECORD THE LOCATION, SIZE, AND TYPE OF ALL CRACKS AND OTHER STRUCTURAL DEFICIENCIES.

Preliminary Plans - For Reference Only

GENERAL NOTES (1 OF 7)
CUY-90-1696 (BRIDGE 14)
CR-722 (CARNEGIE AVE.) OVER I.R. 90

SFN 1807898
DESIGN AGENCY
Michael Baker INTERNATIONAL
DESIGNER ZES | CHECKER MKB
REVIEWER KAG 12/26/23
PROJECT ID 82382
SUBSET 4 | TOTAL 90
SHEET 2284 | TOTAL 2696

CUY-90-16.28 (CCG3A)

MODEL: Sheet PAPERSIZE: 34x22 (in.) DATE: 6/16/2025 TIME: 2:06:42 PM USER: Shane.Weiss
pw:\\mb-us-pw.bentley.com:mb-us-pw-03\Documents\Cleveland_OH\01_Projects\ODOT\District12\82382\400-Engineering\Structures\SFN_1807898\Sheets\82382_SFN_1807898_SN001.dgn

ITEM SPECIAL - STRUCTURES MISC.: PRECONSTRUCTION/POST CONSTRUCTION CONDITION SURVEY (CONT.)

IF OWNERS, OR OCCUPANTS, FAIL TO ALLOW ACCESS TO THE PROPERTY FOR THE PRECONSTRUCTION CONDITION SURVEY, SEND A CERTIFIED LETTER TO THE OWNER OR OCCUPANT. DOCUMENT THE NOTIFICATION EFFORT AND THE CERTIFIED LETTER IN THE REPORT.

ELECTRONICALLY SUBMIT THE PRE-CONSTRUCTION AND POST - CONSTRUCTION SURVEY TO THE ENGINEER FOR COORDINATION WITH SHPO. SHPO WILL BE PROVIDED A REVIEW OF PRE-CONSTRUCTION AND POST-CONSTRUCTION STRUCTURAL SURVEYS ON THE WALKER WEEKS BUILDING TO DETERMINE IF ANY DAMAGE WAS CAUSED BY CONSTRUCTION.

THE DEPARTMENT WILL PAY FOR THIS ITEM AT THE CONTRACT LUMP SUM PRICE FOR ITEM SPECIAL - STRUCTURE MISC: PRECONSTRUCTION/POST CONSTRUCTION CONDITION SURVEY.

DRILLED SHAFT LENGTH

AXIAL RESISTANCE.
THE OVERALL LENGTH OF THE DRILLED SHAFTS IS CONTROLLED BY REQUIRED EMBEDMENT LENGTH TO PROVIDE GEOTECHNICAL

FRICTION DRILLED SHAFTS

THE MAXIMUM FACTORED LOAD TO BE SUPPORTED BY EACH DRILLED SHAFT IS 468 KIPS AT THE REAR ABUTMENT. THE LOAD IS RESISTED BY FRICTIONAL SIDE RESISTANCE ALONG THE LENGTH OF THE DRILLED SHAFT AND BY TIP RESISTANCE. AT THE ABUTMENTS, THE FACTORED SIDE RESISTANCE IS 394 KIPS, ASSUMED TO ACT ALONG THE BOTTOM 64 FEET OF THE DRILLED SHAFT, AND THE FACTORED TIP RESISTANCE IS 81 KIPS.
MAXIMUM FACTORED LOAD = MAXIMUM FACTOR LOAD AT TOP OF SHAFT + FACTORED EFFECTIVE SELF-WEIGHT OF THE SHAFT = 422 KIPS + 46 KIPS = 468 KIPS

MAXIMUM FACTORED SIDE RESISTANCE = RESISTANCE FACTOR X GROUP REDUCTION FACTOR X NOMINAL SIDE RESISTANCE = 0.7 X 0.66 X 853 KIPS = 394 KIPS
MAXIMUM FACTORED TIP RESISTANCE = RESISTANCE FACTOR X GROUP REDUCTION FACTOR X NOMINAL SIDE RESISTANCE = 0.7 X 0.5 X 231 KIPS = 81 KIPS

LATERALLY LOADED DRILLED SHAFTS

THE MAXIMUM FACTORED LOAD AND BENDING MOMENT TO BE SUPPORTED BY EACH DRILLED SHAFT ARE 95 KIPS, AND 955 KIP-FEET, RESPECTIVELY. THESE LOADS PRODUCE A MAXIMUM FACTORED BENDING MOMENT OF 955 KIP-FEET, AND A MAXIMUM FACTORED SHEAR OF 95 KIPS, WITHIN THE DRILLED SHAFT.

ITEM 524 - DRILLED SHAFTS, 48" DIAMETER, AS PER PLAN

GENERAL:

THE CONTRACTOR SHALL PROVIDE ALL LABOR, MATERIALS AND EQUIPMENT TO INSTALL DRILLED SHAFTS AS DETAILED IN THE PLANS IN ACCORDANCE WITH THE REQUIREMENTS OF ODOT C&MS SECTION 524, AND WITH THE ADDITIONAL REQUIREMENTS DEFINED BELOW.

ANTICIPATED DRILLED SHAFT DEFLECTIONS:

TANGENT DRILLED SHAFTS ("SHAFT", "SHAFTS") ARE INCORPORATED AS WALLS IN VARIOUS STRUCTURAL ELEMENTS FOR THIS BRIDGE. AS DESIGNED AND DETAILED THE SHAFTS ARE EXPECTED TO DEFLECT UNDER THE APPLIED PERMANENT LOADS (DC, DW, EH, WA) AND TRANSIENT LOADS (LL, LS, TU) AT THE SERVICE LIMIT STATE. MEASURES FOR ACCOMMODATING THESE DEFLECTIONS ARE DETAILED BELOW.

THE SHAFT HEAD IS CONSIDERED TO BE THE DESIGN BEAM SEAT ELEVATION FOR SHAFTS INCORPORATED IN ABUTMENTS. THE SHAFT HEAD IS CONSIDERED TO BE THE DESIGN TOP OF CAP ELEVATION FOR SHAFTS INCORPORATED IN RETAINING WALLS. IN BOTH CASES THE FINISHED TOP OF SHAFT IS LOWER THAN THE SHAFT HEAD ELEVATION.

THE MAXIMUM ANTICIPATED DEFLECTION AT THE SHAFT HEAD ELEVATION RELATIVE TO THE SHAFT TIP ELEVATION DUE TO PERMANENT LOADS AND TRANSIENT LOADS ARE AS FOLLOWS:

REAR ABUTMENT 1¼ INCHES

ANTICIPATED TRANSIENT LOAD DEFLECTIONS ARE ACCOMODATED BY ADDITIONAL MOVEMENT CAPACITY IN THE ABUTMENT EXPANSION JOINTS AND BEARINGS.

DESIGN ASSUMPTIONS:

BEHAVIOR OF THE DRILLED SHAFTS AS DESCRIBED ABOVE IS PREDICATED UPON THE FOLLOWING DESIGN ASSUMPTIONS:

1. DESIGN HEIGHT OF DRILLED SHAFT IS THE DISTANCE FROM THE SHAFT HEAD ELEVATION TO THE DREDGE LINE ELEVATION

2. PERMANENT LOAD DEFLECTIONS ARE ASSUMED TO OCCUR FOLLOWING REMOVAL OF SOIL IN FRONT OF THE TANGENT SHAFT WALLS

3. ADDITIONAL ASSUMPTIONS AND CONSTRAINTS ARE DETAILED IN THE PLANS.

DREDGE LINE ELEVATIONS:

REAR ABUTMENT ELEV. 630.00
FOR DRAINAGE STRUCTURE EXCAVATION

DRILLED SHAFT LOCATION SURVEY:

THE CORRECT LOCATION OF SHAFT IS CRITICAL TO ESTABLISHING AND MAINTAINING THE STRUCTURE GEOMETRY. THE CONTRACTOR SHALL EMPLOY THE SERVICES OF A OHIO REGISTERED PROFESSIONAL SURVEYOR ("THE SURVEYOR") TO ESTABLISH, MAINTAIN AND VERIFY HORIZONTAL AND VERTICAL SHAFT GEOMETRY. THE SURVEYOR SHALL BE READILY AVAILABLE TO ESTABLISH GEOMETRIC CONTROL AND PERFORM THE SURVEYS REQUIRED BELOW.

THE SURVEYOR SHALL ESTABLISH THE LOCATION OF THE CENTER OF EACH DRILLED SHAFT FOR INSTALLATION AND VERIFY PLUMBNESS OF THE DRILLING RIG PRIOR TO COMMENCING DRILLING OPERATIONS. THE SURVEYOR SHALL LOCATE AND ALIGN THE DRILLING TEMPLATES USED TO ENSURE PROPER SHAFT LOCATION AND ALIGNMENT.

THE CONTRACTOR SHALL SURVEY AND DOCUMENT THE AS-INSTALLED LOCATION AND PLUMBNESS (HORIZONTAL AND VERTICAL ALIGNMENT) OF EACH SHAFT IMMEDIATELY FOLLOWING COMPLETION OF THE SHAFT INSTALLATION. THE CONTRACTOR AND SURVEYOR SHALL COMPARE AS-BUILT LOCATION TO PLAN LOCATION SO THAT THE NEED FOR REMIDIAL ACTION CAN BE ASSESSED BY THE ENGINEER. WORK ON ADDITIONAL SHAFTS IN THE INSTALLATION SHALL NOT PROCEED UNTIL THE ENGINEER HAS COMPLETED THIS ASSESSMENT.

THE CONTRACTOR SHALL PERFORM AN INITIAL SHAFT BASELINE SURVEY OF THE AS-INSTALLED LOCATION OF THE SHAFTS IMMEDIATELY FOLLOWING COMPLETION OF ALL SHAFT INSTALLATIONS. THE INITIAL SHAFT BASELINE SURVEY WILL ESTABLISH THE SHAFT LOCATION BASELINE. THE SHAFT LOCATION BASELINE WILL BE ESTABLISHED FOR ALL SHAFTS IDENTIFIED IN THE SUGGESTED SEQUENCE OF OPERATIONS.

THE CONTRACTOR SHALL PERFORM A SECOND SHAFT BASELINE SURVEY AFTER INSTALLATION AND EXCAVATION TO DREDGE LINE ELEVATION TO CONFIRM THAT ANTICIPATED PERMANENT LOAD DEFLECTION HAS OCCURED. A MINIMUM PERIOD OF 30 DAYS MUST ELAPSE BETWEEN THE INITIAL AND FINAL SHAFT BASELINE SURVEY.

THE CONTRACTOR SHALL PROVIDE THE RESULTS OF THE INDIVIDUAL SHAFT LOCATION SURVEY; AND INITIAL AND SECOND SHAFT BASELINE SURVEYS IN REPORT FORM TO THE ENGINEER WITHIN TWO (2) WORKING DAYS OF COMPLETION. EACH SURVEY REPORT SHALL INCLUDE THE FOLLOWING INFORMATION PROVIDED IN ELECTRONIC FORMAT:

1. X, Y COORDINATES OF EACH SHAFT IN ODOT STATE PLANE COORDINATE SYSTEM TABULATED IN EXCEL SPREADSHEET

2. ALIGNMENT OF SHAFT LOCATION BASELINE ESTABLISHED BETWEEN SHAFTS XX AND YY

3. A NARRATIVE COMPARISON OF THE SURVEYED BASELINE TO THE PLAN BASELINE

4. LISTING OF ALL SHAFT LOCATION DEVIATIONS FROM BASELINE

THE SECOND SHAFT BASELINE SURVEY SHALL ALSO INCLUDE:

5. A NARRATIVE COMPARISON OF THE SECOND SURVEYED SHAFT BASELINE TO THE INITIAL SHAFT BASELINE

6. THE CONTRACTOR SHALL IDENTIFY THE POTENTIAL NEED FOR MITIGATION MEASURES TO MAINTAIN THE PLAN CENTERLINE OF BEARING LOCATION

THE ENGINEER WILL REVIEW THE RESULTS OF EACH SURVEY REPORT TO DETERMINE WHAT MITIGATION MEASURES, IF ANY, ARE REQUIRED TO MAINTAIN THE REQUIRED CENTERLINE OF BEARING LOCATIONS.

THE ENGINEER WILL PROVIDE APPROVAL OF THE SURVEYS AND REQUIRED MITIGATION MEASURES WITHIN THREE (3) WORKING DAYS OF RECEIPT OF THE SURVEYS. SURVEYS SHALL BE PERFORMED BY A SURVEYOR LICENSED IN THE STATE OF OHIO. CONTRACTOR'S SURVEY SUBMITTAL SHALL CONFORM TO THE SUBMITTAL REQUIREMENTS OF C&MS 105.02

CONSTRUCTION TOLERANCES:

DRILLED SHAFTS SHALL BE INSTALLED TO THE TOLERANCES SPECIFIED IN ODOT C&MS SECTION 524.14 EXCEPT AS MODIFIED BELOW. ADDITIONAL CONSTRUCTION TOLERANCE REQUIREMENTS ARE AS FOLLOWS:

POSITION EACH DRILLED SHAFT WITHIN 1" OF THE PLAN LOCATION IN THE HORIZONTAL PLANE AT THE PLAN ELEVATION FOR THE TOP OF SHAFT.

VERTICAL TOLERANCE SHALL CONFORM TO ODOT C&MS SECTION 524.14.

THE USE OF A DRILLING TEMPLATE IS REQUIRED TO ESTABLISH AND MAINTAIN DRILLED SHAFT LOCATIONS. THE CONTRACTOR'S ON-SITE SURVEYOR SHALL BE RESPONSIBLE FOR VERIFYING AND MAINTAINING ADHERENCE TO THE REQUISITE CONSTRUCTION TOLERANCES.

MITIGATION MEASURES:

IN THE EVENT THAT THE SECOND SHAFT BASELINE SURVEY INDICATES THAT THE SHAFTS HAVE NOT DEFLECTED THE ANTICIPATED AMOUNTS, THE ENGINEER WILL PROVIDE RECOMMENDED MITIGATION MEASURES TO MAINTAIN THE PLAN CENTERLINE OF BEARING LOCATION AND LOCATION. IT IS ANTICIPATED THAT THE MITIGATION MEASURES MAY CONSIST OF ADJUSTING THE PLAN DIMENSIONS OF THE ABUTMENT SEAT AND BACKWALL LOCATIONS. THE CONTRACTOR WILL CONSTRUCT THE ABUTMENT SEAT AND BACKWALL IN THE LOCATION AND WITH THE DIMENSIONS NECESSARY TO MAINTAIN THE PLAN CENTERLINE OF BEARING LOCATION AND ALIGNMENT.

ADDITIONAL CONCRETE AND REINFORCING STEEL REQUIRED BY MITIGATION WILL BE PAID FOR VIA CHANGE ORDER AT THE

CONTRACT UNIT PRICE BID FOR THESE ITEMS. ADDITIONAL COMPENSATION WILL NOT BE MADE FOR THESE MITIGATION MEASURES IF THE SHAFTS WERE NOT INSTALLED WITHIN THE REQUIRED CONSTRUCTION TOLERANCES.

CONTRACTOR'S INSTALLATION PLAN:

THE CONTRACTOR SHALL PROVIDE AN INSTALLATION PLAN AS REQUIRED BY ODOT C&MS SECTION 524.03. THE INSTALLATION PLAN SHALL ALSO INCLUDE:

1. CONTRACTOR'S PROPOSED METHODS TO MAINTAIN LOCATION AND ALIGNMENT OF SHAFTS

2. CONTRACTOR'S PROPOSED METHODS FOR PERFORMING THE DRILLED SHAFT LOCATION SURVEY

MATERIALS:

CONCRETE AND REINFORCING STEEL FOR DRILLED SHAFTS SHALL CONFORM TO ODOT C&MS SECTION 524.02.

A SELF-CONSOLIDATING CONCRETE MIX SHALL BE INCORPORATED

THE MAXIMUM COARSE AGGREGATE SIZE SHALL BE: $\frac{3}{8}$"

MEASUREMENT AND PAYMENT:

MEASUREMENT FOR DRILLED SHAFTS INSTALLED IN ACCORDANCE WITH THESE SPECIFICATIONS WILL BE MADE IN ACCORDANCE WITH THE PROVISIONS OF ODOT C&MS SECTION 524.16.

PAYMENT FOR DRILLED SHAFTS INSTALLED IN ACCORDANCE WITH THESE SPECIFICATIONS WILL BE MADE IN ACCORDANCE WITH PROVISIONS OF ODOT C&MS SECTION 524.17.

PAYMENT FOR ACCEPTED QUANTITIES WILL BE MADE AT THE CONTRACT UNIT PRICE BID FOR:

ITEM	UNIT	DESCRIPTION
524	FOOT	DRILLED SHAFTS, 48" DIAMETER, AS PER PLAN

ITEM 524 - DRILLED SHAFTS, MISC.: 48" DIAMETER, THROUGH OBSTRUCTIONS

GENERAL:

THE CONTRACTOR SHALL PROVIDE ALL LABOR, MATERIALS AND EQUIPMENT TO INSTALL DRILLED SHAFTS AS DETAILED IN THE PLANS IN ACCORDANCE WITH THE REQUIREMENTS OF ODOT C&MS SECTION 524, AND WITH THE ADDITIONAL REQUIREMENTS DEFINED BELOW.

Preliminary Plans - Not For Reference Only

GENERAL NOTES (2 OF 7)
CUY-90-1696 (BRIDGE 14)
CR-722 (CARNEGIE AVE.) OVER I.R. 90

SFN 1807898
DESIGN AGENCY
Michael Baker INTERNATIONAL
DESIGNER ZES | CHECKER MKB
REVIEWER KAG 12/26/23
PROJECT ID 82382
SUBSET 5 | TOTAL 90
SHEET 2285 | TOTAL 2696

CUY-90-16.28 (CCG3A)
MODEL: Sheet PAPERSIZE: 34x22 (in.) DATE: 6/13/2025 TIME: 3:08:49 PM USER: Mala.Gallagher
pw:\\mb-us-pw.bentley.com:mb-us-pw-03\Documents\Cleveland_OH\01_Projects\ODOT\District12\82382\400-Engineering\Structures\SFN_1807898\Sheets\82382_SFN_1807898_SN002.dgn

CONSTRUCTION CONSTRAINTS:

THE CONTRACTOR IS ADVISED THAT THE PROPOSED DRILLED SHAFT INSTALLATIONS MAY REQUIRE ADVANCING SHAFTS THROUGH OBSTRUCTIONS SUCH AS EXISTING FOUNDATIONS AND PILES. EXISTING FOUNDATION AND PILE LOCATIONS ARE DEPICTED IN ACCORDANCE WITH AVAILABLE EXISTING PLAN INFORMATION.

THE PROPOSED DRILLED SHAFT ARRANGEMENT WAS DEVELOPED WITH THE INTENT TO ELIMINATE OR MINIMIZE CONFLICTS BETWEEN THE PROPOSED DRILLED SHAFTS AND IDENTIFIED OBSTRUCTIONS. COMPLETE ELIMINATION OF ALL CONFLICTS BETWEEN THE PROPOSED DRILLED SHAFTS AND OBSTRUCTIONS WAS NOT POSSIBLE.

THE CONTRACTOR IS ADVISED THAT THEY MUST ADAPT THEIR PROPOSED MEANS AND METHODS FOR INSTALLING DRILLED SHAFTS IN CONFLICT WITH OBSTRUCTIONS. SUCH MEANS AND METHODS MAY INCLUDE, BUT ARE NOT LIMITED TO, SPECIALIZED CUTTING HEADS, DOWN DRIVE HAMMERS, ETC.

DRILLED SHAFTS IN CONFLICT WITH EXISTING PILES ARE AS FOLLOWS:

NONE IDENTIFIED
A CONTINGENCY VALUE OF 2 EACH IS INCLUDED

THE CONTRACTOR SHALL FIELD VERIFY LOCATION OF EXISTING PILES FOLLOWING REMOVAL OF EXISTING PILE CAP. NO DRILLED SHAFTS SHALL BE INSTALLED UNTIL NUMBER AND LOCATION OF CONFLICTS WITH THE PROPOSED DRILLED SHAFTS IS VERIFIED. THE CONTRACTOR SHALL NOTIFY THE ENGINEER OF ALL VERIFIED CONFLICTS AND IDENTIFY ANY ADDITIONAL CONFLICTS. THE CONTRACTOR SHALL PROVIDE A MARKED-UP PLAN SHEET DEPICTING ALL CONFLICTS.

BASIS FOR CLAIMS:

THE CONTRACTOR IS ADVISED THAT IDENTIFICATION OF ADDITIONAL PILES IN CONFLICT WITH PROPOSED DRILLED SHAFTS WILL NOT BE CONSIDERED AS BASIS FOR DELAY OR CHANGED CONDITION CLAIMS.

CONTRACTOR'S INSTALLATION PLAN:

THE CONTRACTOR SHALL PROVIDE AN INSTALLATION PLAN AS REQUIRED BY ODOT C&MS SECTION 524.03. THE INSTALLATION PLAN SHALL ALSO INCLUDE:

1. CONTRACTOR'S PROPOSED METHODS TO ADVANCE DRILLED SHAFTS THROUGH OBSTRUCTIONS (CONFLICTING PILES, EXISTING FOUNDATIONS, ETC.)

MEASUREMENT AND PAYMENT:

MEASUREMENT FOR DRILLED SHAFTS INSTALLED IN ACCORDANCE WITH THESE SPECIFICATIONS WILL BE MADE ON A PER EACH BASIS.

PAYMENT FOR DRILLED SHAFTS INSTALLED IN ACCORDANCE WITH THESE SPECIFICATIONS WILL BE CONSIDERED COMPLETE COMPENSATION FOR ADDITIONAL LABOR, MATERIALS AND EQUIPMENT REQUIRED TO ADVANCE DRILLED SHAFTS THROUGH OBSTRUCTIONS BEYOND THAT REQUIRED FOR NORMAL INSTALLATIONS.

PAYMENT FOR ACCEPTED QUANTITIES WILL BE MADE AT THE CONTRACT UNIT PRICE BID FOR:

ITEM	UNIT	DESCRIPTION
524	EACH	DRILLED SHAFTS, 48" DIAMETER, THROUGH OBSTRUCTIONS, AS PER PLAN

MAINTENANCE OF TRAFFIC

MAINTENANCE OF TRAFFIC FOR THE STRUCTURE WORK SHALL BE COORDINATED WITH THE OVERALL PROJECT. REFER TO MAINTENANCE OF TRAFFIC NOTES AND DETAILS ELSEWHERE IN PLANS.

UTILITY LINES

THE UTILITIES SHALL BEAR ALL EXPENSE INVOLVED IN RELOCATING (INSTALLING) THE AFFECTED UTILITY LINES. THE CONTRACTOR AND UTILITY(IES) ARE TO COOPERATE BY ARRANGING THEIR WORK IN SUCH A MANNER THAT INCONVENIENCE TO EITHER PARTY WILL BE HELD TO A MINIMUM.

EXISTING STRUCTURE VERIFICATION

DETAILS AND DIMENSIONS SHOWN ON THESE PLANS PERTAINING TO THE EXISTING STRUCTURE HAVE BEEN OBTAINED FROM PLANS OF THE EXISTING STRUCTURE AND FROM FIELD OBSERVATIONS AND MEASUREMENTS. CONSEQUENTLY, THEY ARE INDICATIVE OF THE EXISTING STRUCTURE AND THE PROPOSED WORK BUT THEY SHALL BE CONSIDERED TENTATIVE AND APPROXIMATE. THE CONTRACTOR IS REFERRED TO C&MS, SECTIONS 102.05, 105.02, AND 513.04. BASE CONTRACT BID PRICES UPON A RECOGNITION OF THE UNCERTAINTIES DESCRIBED ABOVE AND UPON A PREBID EXAMINATION OF THE EXISTING STRUCTURE. HOWEVER, THE DEPARTMENT WILL PAY FOR ALL PROJECT WORK BASED UPON ACTUAL DETAILS AND DIMENSIONS THAT HAVE BEEN VERIFIED IN THE FIELD.

STRUCTURE GROUNDING

STRUCTURE TO BE GROUNDED AS PER LIGHTING GENERAL NOTES SHEET 1684 . QUANTITY CARRIED TO LIGHTING SUBSUMMARY.

ITEM 511 - CLASS QC2 CONCRETE, DECK, AS PER PLAN

LOCATE THE LOWER CONTACT POINT OF THE OVERHANG FALSEWORK A MAXIMUM OF 18 INCHES ± 2 INCHES ABOVE THE TOP OF THE GIRDER'S BOTTOM FLANGE. THE BRACING CONTACT POINT REQUIREMENTS OF C&MS 508 DO NOT APPLY.

ITEM 503 - UNCLASSIFIED EXCAVATION, AS PER PLAN

TEMPORARY EXCAVATIONS SHALL MAINTAIN A MINIMUM OF A 2.5:1 SLOPE. REFER TO THE GEOTECHNICAL REPORTS FOR ADDITIONAL DETAILS.

GROUND WATER LEVELS FLUCTUATE SEASONALLY AS A FUNCTION OF THE PRECIPITATION AND OTHER HYDROLOGICAL FACTORS. THEREFORE, THERE MAY BE CONSIDERABLE CHANGE IN THE WATER TABLE OR THE OCCURRENCE OF WATER WHERE NOT PREVIOUSLY ENCOUNTERED. THE CONTRACTOR SHALL DEWATER ALL EXCAVATIONS AS NECESSARY TO PERFORM THE PROPOSED WORK.

DECK PLACEMENT DESIGN ASSUMPTIONS

THE FOLLOWING ASSUMPTIONS OF CONSTRUCTION MEANS AND METHODS WERE MADE FOR THE ANALYSIS AND DESIGN OF THE SUPERSTRUCTURE. THE CONTRACTOR IS RESPONSIBLE FOR THE DESIGN OF THE FALSEWORK SUPPORT SYSTEM WITHIN THESE PARAMETERS AND WILL ASSUME RESPONSIBILITY FOR SUPERSTRUCTURE ANALYSIS FOR DEVIATION FROM THESE DESIGN ASSUMPTIONS.

AN EIGHT WHEEL FINISHING MACHINE WITH A MAXIMUM WHEEL LOAD OF 2.84 KIPS.

A MINIMUM OUT-TO-OUT WHEEL SPACING AT EACH END OF THE FINISHING MACHINE OF 103 INCHES.

A MAXIMUM SPACING OF OVERHANG BRACKETS OF 18 INCHES.

A MAXIMUM DISTANCE FROM THE CENTERLINE OF FASCIA GIRDER TO THE FACE OF THE SAFETY HANDRAIL OF 66¼ INCHES.

CONCRETE SHALL BE PLACED PARALLEL ON A SKEW AS INDICATED IN THE PROPOSED DECK PLACEMENT SEQUENCE ON SHEET 63 / 90 AND SHALL BE PLACED AND FINISHED FULL-WIDTH. DO NOT PERMIT A DIFFERENCE OF MORE THAN TEN (10) FEET LONGITUDINALLY IN PLACEMENT OF CONCRETE FROM ONE SIDE OF THE BRIDGE TO THE OTHER AT ANY TIME. FINISHING OF THE CONCRETE SHALL BE PERPENDICULAR TO THE CARNEGIE AVENUE CONSTRUCTION CENTERLINE.

ALLOW 48 HOURS OF PROPER CURING TO ELAPSE FROM THE COMPLETION OF ONE DECK PLACEMENT BEFORE BEGINNING THE NEXT PLACEMENT.

PLACE CONCRETE IN THE SEQUENCE AND DIRECTIONS INDICATED ON THE PROPOSED DECK PLACEMENT SEQUENCE ON SHEET 63 / 90 .

GIRDER ERECTION AND FIT-UP:
GIRDERS, CROSSFRAMES, DIAPHRAGMS AND CONNECTION PLATES SHALL BE DETAILED FOR THE "STEEL DEAD LOAD FIT" (SDLF) OR "ERECTED FIT" CONDITION. GIRDER WEBS SHALL BE PLUMB AFTER ERECTION OF STRUCTURAL STEEL IS COMPLETE. HLMR BEARINGS SHALL BE DESIGNED TO ACCOMMODATE GIRDER ROLL AND LAYOVER DURING THE ERECTION PROCESS AND PLACEMENT OF COMPOSITE DEAD LOADS.-

FINISH COLORS:

ITEM 514 - FIELD PAINTING STRUCTURAL STEEL, FINISH COAT, AS PER PLAN

PAINT COLORS SHALL BE AS FOLLOWS:

BLACK FOX (SW 7020) - FASCIA GIRDERS (OUTER FACE AND BOTTOM FLANGE ONLY)

ALABASTER (SW 7008) - INSIDE GIRDERS, BRACING MEMBERS AND INSIDE FACE OF FASCIA GIRDERS

ITEM - 512 SEALING OF CONCRETE SURFACES (EPOXY-URETHANE), AS PER PLAN

CONCRETE SEALER COLORS SHALL BE AS FOLLOWS:

ALABASTER (SW 7008) - SUBSTRUCTURE - PIERS, ABUTMENTS AND ABUTMENT WALLS

ALPACA (SW 7022) - ABUTMENT AND WINGWALL ACCENTS

ALL COLOR NAME AND NUMBER REFERENCES ARE TAKEN FROM THE SHERWIN WILLIAMS COLOR PALATE. THE CONTRACTOR MAY SUBSTITUTE SIMILAR COLORS FROM ALTERNATIVE SUPPLIER'S COLOR PALATE.

ITEM SPECIAL - PERMANENT SHORING PRECAST CONCRETE LAGGING

THIS WORK CONSISTS OF FURNISHING AND PLACING PRECAST REINFORCED CONCRETE PANELS BETWEEN THE SOLDIER PILES TO FUNCTION AS LAGGING FOR THE RETAINING WALL. PROVIDE PRECAST CONCRETE LAGGING FROM A PRECAST CONCRETE MANUFACTURER CERTIFIED ACCORDING TO SUPPLEMENT 1073. PROVIDE CLASS QC1 CONCRETE ACCORDING TO C&MS 499. PROVIDE EPOXY COATED REINFORCING STEEL ACCORDING TO C&MS 709.00. IN LIEU OF EPOXY COATING, A CORROSION INHIBITING CONCRETE ADMIXTURE MAY BE USED AT THE SPECIFIED DOASAGE RATE. A QUALIFIED PRODUCT LIST OF CORROSION INHIBITING ADMIXTURES IS ON FILE AT THE LABORATORY. MANUFACTURUERS SHOULD RECOGNIZE THAT THE CORROSION INHABITOR MAY AFFECT THE STRENGTH, ENTRAINED AIR CONTENT, WORKABILITY, ETC OF THEIR CONCRETE MIXES. THE MANUFACTURER'S CHOICE TO USE ONE OF THESE CORROSION INHIBITORS DOES NOT ALLEVIATE MEETING ALL DESIGN REQUIREMENTS. DO NOT ALLOW THE DIMENSIONS OF THE LAGGING OR LOCATION OF THE REINFORCEMENT STEEL TO VARY BY MORE THAN 1/4-INCH. CAST THREADED INSERTS INTO THE TOP OF EACH PANEL FOR LIFTING AND PLACEMENT.

FINISH THE FACES OF THE PRECAST CONCRETE LAGGING PANELS TO A UNIFORM SURFACE, FREE OF OPEN POCKETS OF AGGREGATE.

PERMANENTLY MARK EACH PRECAST CONCRETE LAGGING PANEL TO INDICATE WHICH FACE WILL BE PLACED AGAINST THE SOIL. PLACE THE PANEL ON THE FRONT COVER PLATES OF THE SOLDIER PILES AND BEARING AGAINST THE FLANGES ON THE EXPOSED SIDE OF THE WALL SO THAT THE SOLDIER PILE FLANGE OVERLAPS THE END OF THE LAGGING BY AT LEAST ONE INCH MORE THAN THE CONCRETE COVER OVER THE REINFORCING STEEL AT BOTH ENDS OF THE LAGGING.

HANDLE, STORE, AND SHIP THE PRECAST CONCRETE LAGGING PANELS TO AVOID CHIPPING CRACKING AND FRACTURING THE PANELS. SUPPORT THE PANELS ON FIRM BLOCKING WHILE STORING AND SHIPPING. DO NOT SHIP PANELS UNTIL CONCRETE HAS ATTAINED THE REQUIRED COMPRESSIVE STRENGTH. SUBMIT SHIPMENT DOCUMENTATION TO THE ENGINEER AS THE PANELS ARE DELIVERED TO THE PROJECT, INCLUDING THE PRECASTER'S RECORD OF INSPECTION, THE MEASUREMENT AND TOLERANCES, STRENGTH, AND DIMENSIONS OF EACH PANEL, ALONG WITH THE TE-24 SHIPPING DOCUMENT.

INSPECT ALL PRECAST CONCRETE PANELS AND REJECT PANELS HAVING ANY OF THE FOLLOWING:

1. DEFECTS THAT INDICATE IMPERFECT MOLDING.
2. DEFECTS THAT INDICATE HONEYCOMB OR OPEN TEXTURE CONCRETE.
3. DEFECTS IN THE PHYSICAL CHARACTERISTICS OF THE CONCRETE, OR DAMAGE TO THE AESTHETIC SURFACE TREATMENT.
4. CONCRETE CHIPS OR SPALLS THAT ARE LARGER THAN 4 INCHES WIDE OR 2 INCHES DEEP. REPAIR ALL CHIPS AND SPALLS THAT ARE SMALLER.
5. STAINED FORM FACES, DUE TO FORM OIL, CURING OR OTHER CONTAMINANTS.
6. SIGNS OF AGGREGATE SEGREGATION.
7. CRACKS WIDER THAN 0.01 INCH OR PENETRATING MORE THAN 1 INCH OR LONGER THAN 20 PERCENT OF THE LENGTH OF THE FACE CONTAINING THE CRACK.
8. PANELS THAT DO NOT MEET THE SPECIFIED DIMENSIONAL TOLERANCES.
9. UNUSABLE LIFTING INSERTS.
10. EXPOSED REINFORCING STEEL.
11. INSUFFICIENT CONCRETE COMPRESSIVE STRENGTH.

EITHER REPLACE DAMAGED PRECAST CONCRETE LAGGING PANELS OR DOCUMENT AND PROPOSE TO THE ENGINEER A REPAIR METHOD FOR THE DAMAGED PANEL. PROVIDE ACCEPTABLE REPLACEMENT PANELS FOR ANY THAT ARE REJECTED.

WHEN INSTALLING THE PRECAST CONCRETE LAGGING PANELS, PLACE HARDWOOD WEDGES NEAR THE TOP AND BOTTOM ON EACH SIDE TO HOLD THE LAGGING PANELS ON THE FRONT COVER PLATES OF THE STEEL PILES.

PAYMENT FOR ALL LABOR, EQUIPMENT, AND MATERIAL REQUIRED TO FABRICATE, TRANSPORT, AND INSTALL THE PRECAST REINFORCED CONCRETE PANELS SHALL BE MADE AT THE CONTRACT UNIT PRICE PER SQUARE FOOT FOR ITEM 530-SPECIAL-PERMANENT SHORING, PRECAST CONCRETE LAGGING.

Preliminary Plans - For Reference Only

GENERAL NOTES (3 OF 7)
CUY-90-1696 (BRIDGE 14)
CR-722 (CARNEGIE AVE.) OVER I.R. 90

SFN 1807898
DESIGN AGENCY
Michael Baker INTERNATIONAL
DESIGNER ZES | CHECKER MKB
REVIEWER KAG 12/26/23
PROJECT ID 82382
SUBSET 6 | TOTAL 90
SHEET 2286 | TOTAL 2696

CUY-90-16.28 (CCG3A)
MODEL: Sheet PAPERSIZE: 34x22 (in.) DATE: 6/13/2025 TIME: 2:26:29 PM USER: David.Fell
pw:\\mb-us-pw.bentley.com:mb-us-pw-03\Documents\Cleveland_OH101_Projects\ODOT\District12\82382\400-Engineering\Structures\SFN_1807898\Sheets\82382_SFN_1807898_SN003.dgn

ITEM 524 - DRILLED SHAFTS, MISC.: DEMONSTRATION DRILLED SHAFT

PART 1: DESCRIPTION

THIS WORK CONSISTS OF ALL LABOR, MATERIALS, EQUIPMENT AND INCIDENTALS TO CONSTRUCT A DEMONSTRATION DRILLED SHAFT FOR TESTING AND EVALUATION TO VERIFY THE PROPOSED CONSTRUCTION METHODS FOR THE PRODUCTION DRILLED SHAFTS.

COMPLETE THE INSTALLATION OF THE DEMONSTRATION DRILLED SHAFT WITHIN 90 DAYS OF CONTRACT AWARD DATE. THE DEPARTMENT WILL CONSIDER THE DEMONSTRATION DRILLED SHAFT INSTALLATION COMPLETE AFTER RECEIVING WRITTEN ACCEPTANCE FROM THE ENGINEER.

IF THE VERTICAL DEFLECTION OF THE DEMONSTRATION DRILLED SHAFT DURING LOAD TESTING IS LESS THAN 5% OF THE DRILLED SHAFT NOMINAL DIAMETER, IT MAY BE REUSED AS A PRODUCTION DRILLED SHAFT.

PART 2: MATERIALS

THE DEMONSTRATION DRILLED SHAFT SHALL USE THE SAME CONCRETE MIX DESIGN AND STEEL REINFORCEMENT AS THE PRODUCTION DRILLED SHAFTS.

PART 3: EXECUTION

SUBMIT A DRILLED SHAFT INSTALLATION PLAN TO THE ENGINEER FOR ACCEPTANCE IN ACCORDANCE WITH THE REQUIREMENTS OF C&MS 524.03. CONSTRUCT AT LEAST ONE DEMONSTRATION DRILLED SHAFT WHERE DESIGNATED ON THE PLANS AND IN ACCORDANCE WITH THE ACCEPTED WRITTEN INSTALLATION. UPON CONSTRUCTION OF THE DEMONSTRATION DRILLED SHAFT, AND RECEIPT OF TESTING AND EVALUATION RESULTS CONFIRMING THE DEMONSTRATION DRILLED SHAFT HAS BEEN INSTALLED IN ACCORDANCE WITH CONTRACT DOCUMENTS, THE ENGINEER WILL ISSUE A LETTER ACCEPTING THE INSTALLATION PLAN FOR THE CONSTRUCTION OF THE SUBSEQUENT PRODUCTION DRILLED SHAFTS.

IF MODIFICATION(S) TO THE INSTALLATION PLAN ARE MADE, WHETHER DUE TO THE TESTING AND EVALUATION RESULTS OR FOR OTHER REASON, THE DEPARTMENT WILL REQUIRE CONSTRUCTION OF AN ADDITIONAL DEMONSTRATION SHAFT CONSTRUCTED IN ACCORDANCE WITH THE MODIFIED INSTALLATION PLAN, AT NO ADDITIONAL COST. THE DIAMETER, LENGTH, REINFORCING, INSTALLATION METHODS, AND OTHER MISCELLANEOUS DETAILS OF THE DEMONSTRATION SHAFT SHALL BE THE SAME AS THE PRODUCTION DRILLED SHAFTS.

SUBMIT THE LOCATION OF THE DEMONSTRATION SHAFT TO THE ENGINEER FOR ACCEPTANCE. A PRODUCTION DRILLED SHAFT SHALL BE USED AS THE DEMONSTRATION SHAFT.

LOCATE THE DEMONSTRATION DRILLED SHAFT SO THAT TESTING DOES NOT DAMAGE THE WALKER WEEKS BUILDING.

TEST THE DEMONSTRATION DRILLED SHAFT, BY CROSSHOLE SONIC LOGGING (CSL) ACCORDING TO ASTM D6760, BY HIGH-STRAIN DYNAMIC TESTING ACCORDING TO ASTM D4945, AND BY BI-DIRECTIONAL STATIC AXIAL COMPRESSIVE LOAD TESTING ACCORDING TO ASTM D8169.

PART 4: MEASUREMENT AND PAYMENT

THE DEPARTMENT WILL MEASURE DEMONSTRATION DRILLED SHAFT BY THE NUMBER OF FEET, MEASURED ALONG THE AXIS OF THE DRILLED SHAFT FROM THE REQUIRED BOTTOM ELEVATI0N OF THE SHAFT TO THE PROPOSED TOP PLAN ELEVATION.

ITEM 524 - DRILLED SHAFTS, MISC.: DEMONSTRATION DRILLED SHAFT, CONTINUED

IN ADDITION TO THE PROVISIONS OF C&MS 524.17, THE DEPARTMENT WILL PAY FOR ACCEPTED QUANTITIES OF DEMONSTRATION DRILLED SHAFT AFTER INSTALLATION OF THE DEMONSTRATION SHAFT AND AFTER BEING PROVIDED WITH WRITTEN TESTING AND EVALUATION RESULTS ACCEPTABLE TO THE ENGINEER.

THE CONTRACT PRICE IS FULL COMPENSATION FOR FURNISHING AND INSTALLING DRILLED SHAFTS IN ACCORDANCE WITH THE ABOVE REQUIREMENTS, INCLUDING MOBILIZATION AND SITE ACCESS.

THE DEPARTMENT WILL PAY FOR TESTING AND EVALUATION OF THE ACCEPTED DEMONSTRATION SHAFT SEPARATELY.

THE DEPARTMENT WILL NOT PAY FOR TESTING AND EVALUATION FOR ADDITIONAL DEMONSTRATION DRILLED SHAFTS.

THE DEPARTMENT WILL PAY FOR ACCEPTED QUANTITIES AT THE CONTRACT PRICE AS FOLLOWS: ITEM 524 - DRILLED SHAFTS, MISC.: DEMONSTRATION DRILLED SHAFT.

ITEM 524 - DRILLED SHAFTS, MISC.: CSL TESTING, 48" DIA. SHAFT

PERFORM CROSSHOLE SONIC LOGGING TESTING ON THE DEMONSTRATION DRILLED SHAFT AT THE REAR ABUTMENT. PERFORM CROSSHOLE SONIC LOGGING PER PROJECT SPECIAL PROVISIONS.

ITEM 524 - DRILLED SHAFTS, MISC.: BI-DIRECTIONAL TESTING OF DRILLED SHAFTS

PERFORM FIELD VERIFICATION OF AXIAL RESISTANCE ON THE DEMONSTRATION DRILLED SHAFT AT THE REAR ABUTMENT BY BI-DIRECTIONAL STATIC AXIAL COMPRESSIVE LOAD TESTING. PERFORM BI-DIRECTIONAL STATIC AXIAL COMPRESSIVE LOAD TESTING PER ASTM D8169 AND THE PROJECT SPECIAL PROVISIONS.

ITEM 524 - DRILLED SHAFTS, MISC.: HIGH-STRAIN DYNAMIC TESTING OF DRILLED SHAFTS

PERFORM FIELD VERIFICATION OF NOMINAL AXIAL RESISTANCE ON 3 OF THE DRILLED SHAFTS AT THE REAR ABUTMENT BY HIGH-STRAIN DYNAMIC TESTING. PERFORM HIGH STRAIN DYNAMIC TESTING PER ASTM D4945, "STANDARD TEST METHOD FOR HIGH-STRAIN DYNAMIC TESTING OF DEEP FOUNDATIONS" AND THE PROJECT SPECIAL PROVISIONS. PERFORM HIGH-STRAIN DYNAMIC TEST ON THE DEMONSTRATION SHAFT AND TWO ADDITIONAL DRILLED SHAFTS PRIOR TO BEGINNING EXCAVATION AT ANY DRILLED SHAFT LOCATION. HIGH STRAIN DYNAMIC LOAD TESTING OF TWO (2) PRODUCTION REAR ABUTMENT DRILLED SHAFTS SHALL BE PERFORMED. THE PRODUCTION DRILLED SHAFTS TO BE TESTED SHALL BE FARTHEST AWAY FROM THE BUILDING AND THE TEST SHAFTS SHALL BE A MINIMUM OF 48 FEET AWAY FROM EACH OTHER. WING WALL DRILLED SHAFTS (DS01-DS04) SHALL NOT BE TESTED.

ITEM 512 - SEALING OF CONCRETE SURFACES, AS PER PLAN (PERMANENT GRAFFITI PROTECTION)

APPLY A PERMANENT GRAFFITI COATING MEETING THE REQUIREMENTS OF SUPPLEMENT 1083. THE GRAFFITI COATING MUST BE COMPATIBLE WITH THE UNDERLYING CONCRETE SEALER. APPLY THE GRAFFITI COATING ACCORDING TO THE MANUFACTURE'S REQUIREMENTS. THE ADDITIONAL MATERIAL AND LABOR REQUIRED TO SEAL THE FORM LINER RELIEF SHALL BE INCLUDED IN THIS ITEM. TO ACCOUNT FOR THE SURFACE VARIATIONS DUE TO THE FORM LINERS, AN EXTRA 20 PERCENT HAS BEEN ADDED TO THE SEALING QUANTITIES FOR THE PURPOSE OF ESTIMATING. PROVIDE A COATING THAT MEETS THE REQUIREMENTS LISTED BELOW.

THE MATERIAL SHALL BE A SINGLE COMPONENT, RTV (ROOM TEMPERATURE VULCANIZED) NEUTRAL MOISTURE CURE, PERMANENT (NON-SACRIFICIAL), TYPE III (WATER CLEANABLE) POLYSILOXANE (SILICONE) ANTI-GRAFFITI COATING, FREE OF ANY WAXES, EPOXIES OR POLYURETHANE COMPONENTS.

THE COATING SHALL BE A ONE COAT SYSTEM (NO PRIMER) CAPABLE OF BEING SPRAY APPLIED TO A DRY FILM THICKNESS OF 15 MILS (375 MICRONS) WITHOUT RUNS OR SAGS (MULTIPLE COAT APPLICATION ACCEPTABLE FOR BRUSH/ROLLER USAGE AND PRIMER USAGE ACCEPTABLE FOR SPECIALTY SUBSTRATES SUCH AS GALVANIZED METAL).

THE COATING SHALL EMIT LESS THAN 300 G/L (2.5 POUNDS PER GALLON) OF VOLATILE ORGANIC COMPOUNDS (EPA METHOD 24).

THE COATING SHALL MEET THE FOLLOWING PERFORMANCE REQUIREMENTS:

CLEANABILITY LEVEL 1 (GRAFFITI COMPLETELY REMOVED WITH COLD WATER POWER WASH) AS PER ASTM D7089 WITH LOW PRESSURE (1200 PSI) COLD WATER WASH AFTER 2000 HOURS ACCELERATED UV-CONDENSATION EXPOSURE IN ACCORDANCE WITH ASTM D4587.

GRAFFITI RESISTANCE LESS THAN 7.5 AS PER ASTM D6578 AFTER 2000 HOURS ACCELERATED UV-CONDENSATION EXPOSURE IN ACCORDANCE WITH ASTM D4587.

NO SIGNS OF GRAFFITI OR GRAFFITI STAINING AND MUST BE INTACT AND EXHIBIT NO SIGNS OF STREAKING, CRACKING, PINHOLING, DISCOLORING OR OTHER VISIBLE COATING DEGRADATION UPON CASUAL OBSERVATION WHEN TESTED IN ACCORDANCE WITH TXDOT TEX 890-B, TYPE III METHOD.

BREATHABILITY OF 10 PERMS (+/- 3) PER ASTM D1653 USING "WET CUP METHOD".

ELONGATION AT BREAK GREATER THAN 100% AS PER ASTM D412 (USING DIE "D").

ADHESION RATING OF "8 - DIFFICULT TO REMOVE" AS PER ASTM D6677 (ADHESION BY KNIFE).

ITEM 518 - PREFABRICATED GEOCOMPOSITE DRAIN

THIS WORK CONSISTS OF FURNISHING AND PLACING PREFABRICATED GEOCOMPOSITE DRAIN (PGD) AGAINST THE TANGENT DRILLED SHAFTS.

FURNISH PGD CONSISTING OF A DRAINAGE CORE WITH A GEOTEXTILE FABRIC BONDED TO AT LEAST ONE SIDE. USE CORE MATERIAL THAT CONSISTS OF A STABLE, POLYMER PLASTIC MATERIAL WITH A CUSPATED OR GEONET STRUCTURE. THE CORE MATERIAL SHALL HAVE SUFFICIENT FLEXIBILITY TO WITHSTAND BENDING AND HANDLING DURING INSTALLATION WITHOUT DAMAGE. FURNISH GEOTEXTILE COMPOSED OF STRONG ROT-PROOF POLYMERIC FIBERS FORMED INTO A WOVEN OR NON-WOVENFABRIC. FURNISH PGD CONFORMING TO THE FOLLOWING REQUIREMENTS.
FURNISH MANUFACTURER'S CERTIFIED TEST DATA.

	PROPERTY	TEST METHOD	VALUE
CORE	THICKNESS	ASTM D5199	0.4 INCH
	COMPRESSIVE STRENGTH	ASTM D1621	13,650 PSF MIN.
	FLOW RATE	ASTM D4716	9 TO 25 GPM/FT.
FABRIC	APPARENT OPENING SIZE	ASTM D4751	0.3 MM MAX.
	FLOW RATE	ASTM D4491	40 GPM/ SQ.FT. MIN.
	GRAB TENSILE STRENGTH	ASTM D4632	90 LBS MIN.
	CBR PUNCTURE	ASTM D6241	65 LBS MIN.

PLACE PGD BETWEEN THE DRILLED SHAFTS. PLACE THE SIDE FACED WITH THE GEOTEXTILE AGAINST THE DRILLED SHAFTS, FACING TOWARDS THE RETAINED GROUND, AND SECURE THE PGD TO THE SACRIFICIAL PLYWOOD FORMS BETWEEN THE DRILLED SHAFTS.

SPLICE ABUTTING SECTIONS TOGETHER BY OVERLAPPING THE GEOTEXTILE FLAP (IF PROVIDED) ON ONE SECTION WITH THE ADJACENT SECTION OF PGD. OVERLAP THE GEOTEXTILE IN A SHINGLED OVERLAP SO THAT THE UPPER GEOTEXTILE IS ON TOP OF THE LOWER GEOTEXTILE. IF A GEOTEXTILE FLAP IS NOT PROVIDED, COVER THE SEAM WITH A 12 INCH WIDE STRIP OF GEOTEXTILE FABRIC CENTERED OVER THE SEAM AND SECURED IN PLACE USING 3 INCH WIDE WATERPROOF PLASTIC TAPE.

SEAL ALL EXPOSED EDGES OF THE CORE MATERIAL TO PREVENT SOIL INTRUSION. SEAL EXPOSED EDGES BY FOLDING THE GEOTEXTILE FLAPS OVER AND AROUND THE PGD OR, IF A FLAP IS NOT PROVIDED, COVERING THE EXPOSED EDGE WITH A 12 INCH WIDE STRIP OF GEOTEXTILE FABRIC, TAPING THE STRIP TO THE PGD GEOTEXTILE 8 INCHES FROM THE EXPOSED EDGE, AND FOLDING THE REMAINING 4 INCHES OVER AND AROUND THE PGD. SECURE LOOSE EDGES OF THE GEOTEXTILE FABRIC WITH 3 INCH WIDE WATERPROOF PLASTIC TAPE.

REPAIR ANY DAMAGE TO THE GEOTEXTILE FABRIC BY COVERING WITH A PATCH WHICH OVERLAPS THE DAMAGED AREA AND EXTENDS AT LEAST 6 INCHES BEYOND THE EDGE OF THE DAMAGED AREA. TAPE THE EDGES OF THE PATCH IN PLACE USING 3 INCH WIDE WATERPROOF PLASTIC TAPE. IF THE CORE OF THE PGD IS DAMAGED, REPLACE IT WITH A NEW SECTION OF PGD AND SPLICE AS DESCRIBED ABOVE.

ITEM 513 - STRUCTURAL STEEL MEMBERS, LEVEL UF, AS PER PLAN (SOLDIER PILE STRUT AND WALER)

MISCELLANEOUS STRUCTURAL STEEL MEMBERS SHALL BE FABRICATED, DELIVERED AND INSTALLED IN ACCORDANCE WITH ALL PROVISIONS OF ODOT C&MS ITEM 513.

FURNISH STEEL MEMBERS THAT MEET THE REQUIREMENTS AND CONFORM TO ASTM A572, GRADE 50 IN ACCORDANCE WITH C&MS 711.01. GALVANIZE STEEL MEMBERS AS SHOWN ON THE PLANS AND IN ACCORDANCE WITH C&MS 711.02. THESE MISCELLANEOUS STRUCTURAL STEEL MEMBERS INCLUDE:

- WALER MEMBERS
- STRUT MEMBERS
- SHIM PLATES
- ALL MISCELLANEOUS METAL, REINFORCEMENT PLATES, CONNECTIONS, FABRICATIONS, BEARING PLATES, HYDRAULIC JACKS AND PUMPS, ETC. NECESSARY TO COMPLETE THE WALER AND STRUT INSTALLATION AND JACKING.

PAYMENT FOR THIS ITEM SHALL BE MADE AT THE CONTRACT UNIT PRICE PER POUND FOR ITEM 513 - STRUCTURAL STEEL MEMBERS, LEVEL UF, AS PER PLAN (SOLDIER PILE STRUT & WALER). PRICE SHALL CONSTITUTE FULL COMPENSATION FOR ALL LABOR, MATERIALS AND EQUIPMENT NECESSARY TO FURNISH, DELIVER AND INSTALL THE PROPOSED STRUCTURAL STEEL MEMBERS AND COMPLETE THE JACKING TO THE SPECIFIED LOADS IN ACCORDANCE WITH THE PLANS AND SPECIFICATIONS.

ITEM 507 - STEEL PILES, MISC.: SOLDIER PILES HP16x101

THIS WORK CONSISTS OF FURNISHING AND PLACING STEEL SOLDIER PILES INTO DRILLED HOLES AND INCLUDES MONITORING PLUMBNESS. FURNISH SOLDIER PILES CONSISTING OF STRUCTURAL STEEL MEMBERS THAT MEET THE PLAN REQUIREMENTS AND CONFORM TO ASTM A572 GRADE 50 IN ACCORDANCE WITH C&MS 711.01. GALVANIZE SOLDIER PILES AS SHOWN ON THE PLANS AND IN ACCORDANCE WITH C&MS 711.02. DO NOT FIELD WELD OR SPLICE STEEL SOLDIER PILES. THE ANCHOR DETAIL WHERE THE TIE BACK ANCHOR PASSES THROUGH THE FLANGES AND WEB SHALL BE SHOP FABRICATED AND NOT BE WELDED ON SITE.

MEASUREMENT FOR PAYMENT WILL BE THE DISTANCE FROM THE TOP OF THE PILE TO THE BOTTOM OF THE DRILLED SHAFT, AS DETERMINED BY THE ENGINEER. PAYMENT IS FULL COMPENSATION FOR FURNISHING AND PLACING THE SOLDIER PILES AND MONITORING THEIR PLUMBNESS UNTIL BACKFILL IN FRONT OF THE SOLDIER PILE WALL IS COMPLETE. THE DEPARTMENT WILL PAY FOR SOLDIER PILES AT THE CONTRACT UNIT PRICE PER FOOT OF ITEM 507 - STEEL PILES, MISC.: SOLDIER PILES HP16x101.

ITEM SPECIAL - PERMANENT SHORING TIMBER LAGGING

THIS ITEM CONSISTS OF FURNISHING AND INSTALLING UNTREATED HARDWOOD LAGGING TO SERVE AS TEMPORARY LAGGING FOR THE SOLDIER PILE WALL. THE LAGGING SHALL CONSIST OF HARDWOOD TIMBER WITH 3 INCH BY 8 INCH DIMENSIONS AND SHALL BE OF A GRADE AND TYPE WITH AN ALLOWABLE EXTREME FIBER STRESS IN BENDING OF A MINIMUM OF 1 KSI. THE TIMBER MATERIAL SHALL BE DOUGLASS FIR-LARCH DENSE NO. 1, SELECT STRUCTURAL OR DENSE SELECT STRUCTURAL. THE WOOD SHALL BE SEASONED, SOUND, AND FREE FROM DECAY AND INSECT ATTACK, WITH NO LOOSE AND/OR CLUSTER KNOTS. THE ENDS OF THE TIMBER SHALL BE SAWED SQUARE WITH THE AXIS OF THE TIMBER. THE TIMBER MEMBERS SHALL ALSO CONFORM TO C&MS 711.26. PROVIDE CERTIFICATION THAT THE TIMBER CONFORMS TO THE GRADE, SPECIES AND OTHER SPECIFIED REQUIREMENTS.

LAGGING SHALL BE PLACED IN A TOP-DOWN MANNER AS EXCAVATION PROCEEDS DOWNWARD. AT NO TIME SHOULD MORE THAN 3 FEET OF UNSUPPORTED EXCAVATION BE PERMITTED. REDUCE THE UNSUPPORTED HEIGHT AS NECESSARY TO PREVENT CAVING AND SLOUGHING OF THE SOIL BETWEEN THE SOLIDER PILES. PROVIDE WOOD SPACERS TO PROVIDE HORIZONTAL JOINT SPACING BETWEEN THE LAGGING BOARDS TO PERMIT DRAINAGE.

Preliminary Plans - For Reference Only

GENERAL NOTES (4 OF 7)
CUY-90-1696 (BRIDGE 14)
CR-722 (CARNEGIE AVE.) OVER I.R. 90

SFN 1807898
DESIGN AGENCY
Michael Baker INTERNATIONAL
DESIGNER ZES | CHECKER MKB
REVIEWER KAG 12/26/23
PROJECT ID 82382
SUBSET 7 | TOTAL 90
SHEET 2287 | TOTAL 2696

CUY-90-16.28 (CCG3A)
MODEL: Sheet PAPERSIZE: 34x22 (in.) DATE: 6/16/2025 TIME: 1:26:35 PM USER: Shane.Weiss
pw:\\mb-us-pw.bentley.com:mb-us-pw-03\Documents\Cleveland_OH\01_Projects\ODOT\District12\82382400-Engineering\Structures\SFN_1807898\Sheets\82382_SFN_1807898_SN004.dgn

HARDWOOD SHIMMING SHALL BE USED AS NEEDED TO MAINTAIN THE POSITIONING OF THE TIMBER MEMBERS AGAINST THE FLANGE FACE OF THE SOLIDER PILE DURING CONSTRUCTION OF THE RETAINING WALL SYSTEM. NO SHIM SHALL EXTEND BEYOND THE FLANGE OF THE H-PILE MORE THAN ¼ INCH AND NO SHIM SHALL EXTEND BEYOND THE TOP FACE OF THE TOP LAGGING.

THE DEPARTMENT WILL MEASURE THE TEMPORARY HARDWOOD LAGGING BY THE NUMBER OF SQUARE FEET. PAYMENT SHALL INCLUDE ALL LABOR, MATERIAL AND INCIDENTALS (INCLUDING HARDWOOD SHIMMING AND WOOD SPACERS) NECESSARY TO FURNISH AND INSTALL THE TEMPORARY HARDWOOD LAGGING.

ITEM 524 - DRILLED SHAFTS, 42" DIAMETER, ABOVE BEDROCK, AS PER PLAN

THIS WORK CONSISTS OF FURNISHING AND INSTALLING DRILLED SHAFTS FOR SOLDIER PILE WALLS. THE DRILLED SHAFTS ARE REINFORCED WITH SOLDIER PILES INSTEAD OF REINFORCING STEEL CAGES. THE SOLDIER PILES EXTEND ABOVE THE TOP OF THE DRILLED SHAFTS. FURNISH AND INSTALL THE DRILLED SHAFTS ACCORDING TO C&MS 524 EXCEPT AS MODIFIED AND SUPPLEMENTED BELOW.

EXCAVATE THE HOLE FOR THE DRILLED SHAFT WITHIN 3 INCHES OF THE PLAN LOCATION. PLACE THE SOLDIER PILE SO THAT THE FLANGES ARE PARALLEL TO THE CENTERLINE OF THE ROW OF DRILLED SHAFTS. DO NOT ALLOW THE ORIENTATION OF THE FLANGES TO VARY BY MORE THAN 10 DEGREES. SUPPORT THE PILES SO THAT IT DOES NOT MOVE DURING CONCRETE PLACEMENT.

USE CONCRETE CLASS QC SCC, WITH ⅜ IN MAX AGGREGATE SIZE ACCORDING TO C&MS 511 TO FILL THE HOLE TO THE TOP OF THE DRILLED SHAFT (ELEVATION "A"). THE CONTRACTOR MAY PLACE CONCRETE USING THE FREE FALL METHOD PROVIDING THE DEPTH OF WATER IN THE SHAFT IS LESS THAN 6 INCHES AND THE CONCRETE FALLS WITHOUT STRIKING THE SIDES OF THE HOLE. POURING THE CONCRETE ALONG THE WEB OF THE SOLDIER PILE IS ACCEPTABLE.

CHECK THE POSITION, THE VERTICAL ALIGNMENT AND THE ORIENTATION OF THE SOLDIER PILE IMMEDIATELY AFTER CONCRETE PLACEMENT. MAKE CORRECTIONS AS NECESSARY TO THE ABOVE TOLERANCES.
FILL THE HOLE ABOVE THE CONCRETE TO THE EXISITNG GROUND SURFACE WITH ITEM 613 LOW STRENGTH MORTAR BACKFILL (LSM).

REMOVE CONCRETE AND LSM AS NECESSARY FROM AROUND THE SOLDIER PILE IN ORDER TO PLACE THE LAGGING. WAIT AT LEAST 12 HOURS AFTER PLACING CONCRETE BEFORE PLACING LAGGING.

PROTECTION OF UNATTENDED OPEN SHAFTS: CARE SHALL BE EXERCISED AS TO COVER UNATTENDED OPEN SHAFTS. TEMPORARY COVERS SHALL BE OF ADEQUATE STRENGTH TO PREVENT A PERSON OR ANIMAL FROM FALLING IN. NO DRILLED SHAFT EXCAVATION SHALL BE LEFT UN-POURED OVERNIGHT.

THE CONTRACTOR SHALL BE RESPONSIBLE FOR THE MEANS AND METHODS USED TO CONSTRUCT THE DRILLED SHAFTS AND PLACE LAGGING. ANY TEMPORARY GRADING, EXCAVATION, EMBANKMENT, AGGREGATE, DRAINAGE, SHEETING, ETC. NEEDED TO COMPLETE THE WORK SHALL BE INCLUDED IN THE BID PRICE FOR THE DRILLED SHAFTS. THE COST OF ANY EXCAVATION AND SUBSEQUENT REPLACEMENT OF EMBANKMENT (PER ITEM 203 EMBANKMENT) SHALL BE INCLUDED IN THE VARIOUS BID ITEMS FOR THE DRILLED SHAFTS AND LAGGING, UNLESS SEPARATELY ITEMIZED. NO SEPARATE PAYMENT WILL BE MADE.

METHOD OF MEASUREMENT: THE DEPARTMENT WILL MEASURE DRILLED SHAFTS ABOVE BEDROCK, AS PER PLAN, ALONG THE AXIS OF THE DRILLED SHAFT FROM THE EXISTING GROUND SURFACE TO THE BOTTOM OF THE DRILLED SHAFT, AS DETERMINED BY THE ENGINEER.

PAYMENT IS FULL COMPENSATION FOR CONSTRUCTING THE DRILLED SHAFTS, INCLUDING FURNISHING AND PLACING CONCRETE AND LSM, AND REMOVAL OF CONRETE OR LSM FROM AROUND THE SOLDIER PILE IN ORDER TO PLACE LAGGING.

ASBESTOS NOTIFICATION

A CERTIFIED ASBESTOS HAZARD EVALUATION SPECIALIST SURVEYED THE BRIDGE STRUCTURE SCHEDULED FOR DEMOLITION AND/OR REHABILITATION; THE SURVEY DETERMINED THAT APPROXIMATELY 225 LINEAR FEET OF ASBESTOS IS PRESENT ON THE BRIDGE STRUCTURE WITHIN EXISTING CPP DUCTS. THE CONTRACTOR SHALL VERIFY THE LENGTH OF DUCTS TO BE REMOVED SEE SHEET 1777 OF 2696 FOR ADDITIONAL INFORMATION.

ODOT SHALL PROVIDE A COPY OF THE OHIO ENVIRONMENTAL PROTECTION AGENCY (OEPA) NOTIFICATION OF DEMOLITION AND RENOVATION FORM, PARTIALLY COMPLETED AND SIGNED BY THE BRIDGE OWNER, TO THE SUCCESSFUL BIDDER. THE CONTRACTOR SHALL COMPLETE THE FORM AND SUBMIT IT TO ONE THE ADDRESSES BELOW AT LEAST TEN (10) WORKING DAYS PRIOR TO THE START OF ANY DEMOLITION AND/OR RENOVATION.

ASBESTOS PROGRAM
OHIO EPA, DAPC
P.O. BOX 1049
COLUMBUS, OH 43216-1049

OR

ASBESTOS PROGRAM
OHIO EPA, DAPC
50 W. TOWN ST., SUITE 700
COLUMBUS, OH 43215

THE CONTRACTOR SHALL PROVIDE A COPY OF THE COMPLETED FORM TO THE ENGINEER AT LEAST TEN (10) WORKING DAYS PRIOR TO THE START OF ANY DEMOLITION AND/OR RENOVATION. THE FORM SHALL INCLUDE: 1) THE CONTRACTORS NAME AND ADDRESS, 2) THE SCHEDULED DATES FOR THE START AND COMPLETION OF THE BRIDGE REMOVAL AND 3) A DESCRIPTION OF THE PLANNED DEMOLITION WORK AND THE METHOD(S) TO BE USED. COPIES OF THE OEPA FORM AND BRIDGE INSPECTION REPORT ARE AVAILABLE FOR REVIEW AT THE ODOT DISTRICT 12 OFFICE, 5500 TRANSPORTATION BOULEVARD, GARFIELD HEIGHTS, OHIO 44125.

BASIS FOR PAYMENT THE CONTRACTOR SHALL FURNISH ALL FEES, LABOR, AND MATERIAL NECESSARY TO COMPLETE AND SUBMIT THE OEPA NOTIFICATION FORM. PAYMENT FOR THIS WORK SHALL BE PER SHEET 75 OF THE ENVIRONMENTAL GENERAL NOTES.

ITEM 511 - CLASS QC2 CONCRETE WITH QC/QA, BRIDGE DECK, AS PER PLAN

PROVIDE BUFF WASH FINISH ON EDGES AND BOTTOM OF DECK OVERHANGS AS DETAILED.

LOCATE THE LOWER CONTACT POINT OF THE OVERHANG FALSEWORK A MAXIMUM OF 18 INCHES ± 2 INCHES ABOVE THE TOP OF THE GIRDER'S BOTTOM FLANGE. THE BRACING CONTACT POINT REQUIREMENTS OF C&MS 508 DO NOT APPLY.

ITEM 511 - CLASS QC2 CONCRETE WITH QC/QA, SIDEWALK, AS PER PLAN

FINISH SIDEWALKS WITH A BUFF WASH FINISH AND PLACE CONTROL JOINTS PER THE AESTHETIC ENHANCEMENT PLANS. PROVIDE PEJF AND SEALANT AROUND LUMINAIRES AT SIDEWALK PENETRATIONS AS SHOWN IN THESE PLANS.

ITEM 511 - CLASS QC2 CONCRETE WITH QC/QA, BRIDGE DECK (PARAPET), AS PER PLAN

ALL BRIDGE RAILS (PARAPETS) SHALL RECIEVE A BUFF WASH FINISH WITH CLEAR SEALER (NON-EPOXY) PER THE LANDSCAPE PLANS AND DETAILS.

PRIOR TO CONSTRUCTING ANY OF THE CONCRETE PARAPET, INCLUDING THE PILASTERS AND PYLONS, THE CONTRACTOR SHALL CAST THE PARAPET, PILASTER AND PYLON TEST PIECES REQUIRED IN THE PLANS AND MEET THE APPROVAL STANDARDS THEREIN.

THE FINAL APPROVED TEST PIECES WILL SERVE AS A JOB SITE STANDARD FROM WHICH THE ACCEPTANCE OF ALL OTHER WORK WILL BE DETERMINED. THOSE PIECES OF WORK DETERMINED BY THE ENGINEER TO BE UNSATISFACTORY IN TERMS OF CONFORMANCE

ITEM 506 - STATIC LOAD TEST, AS PER PLAN

AT THE FORWARD ABUTMENT, PERFORM DYNAMIC TESTING ON THE FIRST TWO PRODUCTION PILES. PERFORM THE STATIC LOAD TEST ON EITHER PILE. ALSO PERFORM DYNAMIC TESTING ON TWO OTHER PILES, TO BE USED AS ANCHOR PILES. DRIVE ALL PILES TO THE FULL ESTIMATED LENGTH FOR THE FORWARD ABUTMENT SUBSTRUCTURE UNIT (80 FEET), IN ACCORDANCE WITH THE PLAN NOTE "PILES DRIVEN TO FULL ESTIMATED LENGTH WITH PILE/SOIL SETUP." OTHER PRODUCTION PILES IN THE SAME SUBSTRUCTURE UNIT MAY BE USED AS ANCHOR PILES. THE STATIC LOAD TEST PILE AND ALL ANCHOR PILES SHALL NOT BE BATTERED. AFTER DRIVING ALL PILES TO THE FULL ESTIMATED LENGTH, CEASE ALL DRIVING OPERATIONS AT THE SUBSTRUCTURE FOR A MINIMUM OF 14 DAYS. AFTER THE WAITING PERIOD, PERFORM THE STATIC LOAD TEST, AND THEN PERFORM PILE RESTRIKES ON THE FOUR DYNAMIC LOAD TEST PILES (TWO RESTRIKE TEST ITEMS). PERFORM A CAPWAP ANALYSIS ON EACH PILE TESTED IN THE SAME SUBSTRUCTURE UNIT FOR EVERY DYNAMIC LOAD TEST AND EVERY RESTRIKE TEST. THE ENGINEER WILL REVIEW THE RESULTS OF THE PILE RESTRIKES AND ESTABLISH THE DRIVING CRITERIA FOR THE PILING IN THE SUBSTRUCTURE IN ACCORDANCE WITH THE PLAN NOTE "PILES DRIVEN TO FULL ESTIMATED LENGTH WITH PILE/SOILSETUP." SUBMIT ALL TEST RESULTS TO THE OFFICE OF GEOTECHNICAL ENGINEERING.

IF THE RESTRIKE TEST RESULTS INDICATE THAT ANY OF THE PILES DID NOT ACHIEVE THE REQUIRED UBV, DRIVE THE PILE TO THE ESTABLISHED DRIVING CRITERIA IN ACCORDANCE WITH THE PLAN NOTE "PILES DRIVEN TO FULL ESTIMATED LENGTH WITH PILE/SOIL SETUP"

THE CONTRACTOR HAS THREE ALTERNATIVES TO PERFORM THE STATIC LOAD TEST, AS PER PLAN:

1. PERFORM THE STATIC LOAD TEST ON A PRODUCTION PILE IN THE FORWARD ABUTMENT SUBSTRUCTURE UNIT AND USE OTHER PRODUCTION PILES IN THE SAME SUBSTRUCTURE UNIT AS ANCHOR PILES, PER THE NOTE ABOVE.

2. PERFORM THE STATIC LOAD TEST ON A PRODUCTION PILE IN THE FORWARD ABUTMENT SUBSTRUCTURE UNIT AND DRIVE SUPPLEMENTAL PILES FOR ANCHOR PILES. STILL DRIVE ALL PILES TO THE FULL ESTIMATED LENGTH FOR THE FORWARD ABUTMENT SUBSTRUCTURE UNIT. IN THIS CASE, PERFORM DYNAMIC LOAD TESTING AND RESTRIKE TESTING ON THE STATIC LOAD TEST PILE, ONE OTHER PILE IN THE SAME SUBSTRUCTURE UNIT, AND ON TWO OF THE ANCHOR PILES.

3. PERFORM THE STATIC LOAD TEST OFFLINE, ON A SUPPLEMENTAL TEST PILE WITHIN 50 FEET OF THE FORWARD ABUTMENT AND DRIVE AN ARRAY OF SUPPLEMENTAL PILES AS ANCHOR PILES. STILL DRIVE ALL PILES TO THE FULL ESTIMATED LENGTH FOR THE FORWARD ABUTMENT SUBSTRUCTURE UNIT. IN THIS CASE, PERFORM DYNAMIC LOAD TESTING AND RESTRIKE TESTING ON THE STATIC LOAD TEST PILE, ONE OF THE ANCHOR PILES, AND ON TWO PRODUCTION PILES IN THE FORWARD ABUTMENT SUBSTRUCTURE UNIT, IN ACCORDANCE WITH THE PLAN NOTE "PILES DRIVEN TO FULL ESTIMATED LENGTH WITH PILE/SOIL SETUP."

THIS PLAN NOTE INCLUDES AN ADDITIONAL QUANTITY OF ONE ITEM 523 DYNAMIC LOAD TESTING, AS PER PLAN AND ONE ITEM 523 RESTRIKE, AS PER PLAN FOR THE FORWARD ABUTMENT SUBSTRUCTURE UNIT. EACH OF THESE TESTING ON TWO PILES, IN ACCORDANCE WITH ITEM 523. ANY SUPPLEMENTAL PILES DRIVEN FOR THE STATIC LOAD TEST ARE INCIDENTAL TO ITEM 506 STATIC LOAD TEST, AS PER PLAN.

Preliminary plans - For Reference Only

GENERAL NOTES (5 OF 7)
CUY-90-1696 (BRIDGE 14)
CR-722 (CARNEGIE AVE.) OVER I.R. 90

SFN	1807898
DESIGN AGENCY	Michael Baker INTERNATIONAL
DESIGNER	ZES
CHECKER	MKB
REVIEWER	KAG 12/26/23
PROJECT ID	82382
SUBSET	8
TOTAL	90
SHEET	2288
TOTAL	2696

CUY-90-16.28 (CCG3A)
MODEL: Sheet PAPERSIZE: 34x22 (in.) DATE: 3/28/2025 TIME: 7:58:50 AM USER: Rohit.Bk
pw:\\mb-us-pw.bentley.com:mb-us-pw-03\Documents\Cleveland_OH\01_Projects\ODOT\District12\82382400-Engineering\Structures\SFN_1807898\Sheets\82382_SFN_1807898_SN005.dgn

ITEM 625 - CONDUIT, MISC.: 12" GAS CONDUIT INSTALLATION

THIS ITEM INCLUDES PAYMENT FOR INSTALLATION OF 12" GAS LINE ON THE STRUCTURE, AS SHOWN IN THE PLANS. ENBRIDGE GAS OHIO WILL INSTALL LINK SEALS, SPACERS AND BOOT SEAL WHEN INSTALLING THE PIPELINE.

ITEM 625 - CONDUIT, MISC.: AT&T 4" CONDUIT INSTALLATION

THIS ITEM INCLUDES PAYMENT FOR INSTALLTION OF THE AT&T CONDUIT ON THE STRUCTURE, AS SHOWN IN THE PLANS. MATERIALS WILL BE SUPPLIED TO THE GENERAL CONTRACTOR FOR INSTALLATION. AT&T WILL PROVIDE CONDUIT RACKS, FIBERGLASS CONDUITS TO ENDS OF APPROACH SLAB, FITTINGS AND EXPANSION JOINTS. CONTRACTOR TO INSTALL ALL MATERIALS ON BRIDGE. AT&T WILL INSTALL CONDUITS OUTSIDE OF APPROACH SLABS TO MANHOLES. AT&T WILL COMPLETE THE CABLE WORK.

ITEM 625 - CONDUIT, MISC.: CEI 4" CONDUIT INSTALLATION

THIS ITEM INCLUDES INSTALLATION OF THE CONDUIT ON THE STRUCTURE. CEI WILL PROVIDE ALL MATERIALS. CEI PULLS ALL CABLES. CEI CONTRACTOR WILL COMPLETE WORK UP TO THE OUTSIDE EDGE OF THE APPROACH SLABS (ALL CONDUIT OFF THE BRIDGE). CONTRACTOR WILL INSTALL THE CONDUIT BETWEEN THE OUTSIDE EDGES OF APPROACH SLABS (ALL CONDUIT UNDER APPROACH SLABS, ON THE BRIDGE AND THROUGH THE ABUTMENTS).

ITEM 625 - CONDUIT, MISC.: CPP 4" CONDUIT INSTALLATION

THIS ITEM INCLUDES INSTALLATION OF THE CPP CONDUIT ON THE STRUCTURE, AS SHOWN IN THE PLANS, AND PULLING THE WIRE. CPP WILL MAKE THE FINAL CONNECTION. CONTRACTOR TO PERFORM INTERMEDIATE (DEAD) SPLICING WITH CPP INSPECTION. CPP WILL COMPLETE CUT OVER SPLICING. CPP WILL REQUIRE NOTIFICATION OF SCHEDULE FOR THE PULLING OF CONDUIT. CPP TO INSPECT ALL WORK BEFORE FINAL CONNECTIONS ARE MADE IN MANHOLES.

ITEM 690 - ROLLER SUPPORTS (GAS LINE)

THIS ITEM INCLUDES INSTALLATION OF ALL GAS LINE SUPPORTS ON THE BRIDGE, AS SHOWN IN THE PLANS.

ITEM 690 - UTILITY SUPPORTS (AT&T DUCTS)

THIS ITEM INCLUDES INSTALLATION OF ALL AT&T DUCT SUPPORT HANGERS ON THE BRIDGE, AS SHOWN IN THE PLANS. AT&T WILL PROVIDE CONDUIT RACKS, FIBERGLASS CONDUITS TO ENDS OF APPROACH SLAB, FITTINGS AND EXPANSION JOINTS. CONTRACTOR TO INSTALL ALL MATERIALS ON BRIDGE.

ITEM 690 - UTILITY SUPPORTS (CEI DUCTS)

THIS ITEM INCLUDES INSTALLATION OF ALL CEI DUCT SUPPORT HANGERS ON THE BRIDGE, AS SHOWN IN THE PLANS. MATERIAL PROVIDED BY CEI FOR THIS WORK INCLUDES UTILITY HANGERS, CONDUIT RACKS, EXPANSION JOINTS AND SLEEVES. STEEL ANGLE SUPPORTS PROVIDED BY CONTRACTOR. CONTRACTOR TO INSTALL HANGERS AND CONDUIT RACKS. CONTRACTOR TO WORK WITH CEI TO GUARANTEE THAT THERE IS A PROPER ARRANGEMENT FOR THE DELIVERY OF MATERIALS.

ITEM 690 - UTILITY SUPPORTS (CPP DUCTS)

THIS ITEM INCLUDES INSTALLATION OF ALL CPP DUCT SUPPORT HANGERS ON THE BRIDGE, AS SHOWN IN THE PLANS.

ITEM 690 - UTILITY SUPPORTS (WATER LINE)

THIS ITEM INCLUDES INSTALLATION OF ALL WATER LINE SUPPORT HANGERS ON THE BRIDGE, AS SHOWN IN THE PLANS. CONTRACTOR SHALL PROVIDE ALL MATERIALS AND ELEMENTS SHOWN IN THE PLANS FOR THE WATER LINE.

ITEM 511 - CLASS QC1 CONCRETE, MISC.: CONCRETE FACING
ITEM 511 - CONCRETE, MISC.: ARCHITECHTURAL TREATMENT, ABUTMENT
ITEM 511 - CONCRETE, MISC.: ARCHITECHTURAL TREATMENT, PIER
ITEM 511 - CONCRETE, MISC.: ARCHITECHTURAL TREATMENT, RAILING

FORMLINER FIELD PATTERN ON SHEET 1867

ABBREVIATIONS

BOT.	*= BOTTOM*
BRGS.	*= BEARINGS*
C.J.	*= CONSTRUCTION JOINT*
CLR.	*= CLEAR*
CONST.	*= CONSTRUCTION*
DIA.	*= DIAMETER*
E.F.	*= EACH FACE*
ELEV.	*= ELEVATION*
EX.	*= EXISTING*
F.A.	*= FORWARD ABUTMENT*
F.F.	*= FAR FACE*
HORIZ.	*= HORIZONTAL*
I.R.	*= INTERSTATE ROUTE*
	= LEFT
MAX.	*= MAXIMUM*
MIN.	*= MINIMUM*
N.F.	*= NEAR FACE*
PR.	*= PROPOSED*
R.A.	*= REAR ABUTMENT*
RT	*= RIGHT*
SER.	*= SERIES*
S.O.	*= SERIES OF*
SPA.	*= SPACED / SPACING / SPACES*
S.R.	*= STATE ROUTE*
TYP.	*= TYPICAL*
VERT.	*= VERTICAL*
W.P.	*= WORK POINT*
W.W.	*= WING WALL*

SECTION / DETAIL / VIEW CALLOUTS



(SEE SECTION A ON SHEET 10)



(SECTION A CUT FROM SHEET 9)

Preliminary Plans - For Reference Only

GENERAL NOTES (6 OF 7)
CUY-90-1696 (BRIDGE 14)
CR-722 (CARNEGIE AVE.) OVER I.R. 90

CUY-90-16.28 (CCG3A)

MODEL: Sheet PAPERSIZE: 34x22 (in.) DATE: 3/28/2025 TIME: 7:58:57 AM USER: Rohit.Bk
pw:\\mb-us-pw.bentley.com:mb-us-pw-03\Documents\Cleveland_OH\01_Projects\ODOT\District12\82382\400-Engineering\Structures\SFN_1807898\Sheets\82382_SFN_1807898_SN006.dgn

SFN 1807898

DESIGN AGENCY
Michael Baker INTERNATIONAL

DESIGNER	CHECKER
ZES	MKB

REVIEWER
KAG 12/26/23

PROJECT ID 82382

SUBSET	TOTAL
9	90

SHEET	TOTAL
2289	2696

ITEM 866 - GROUND ANCHOR, AS PER PLAN, 159 KIP MAX. LOAD TEST (SOLDIER PILE & LAGGING WALL)
ITEM 866 - GROUND ANCHOR, AS PER PLAN, 159 KIP MAX. LOAD TEST (TANGENT WALL)

A. ANCHOR MATERIAL:

i. THE TENDON OF GROUND ANCHORS SHALL CONSIST OF 0.6-INCH DIAMETER, SEVEN-WIRE UNCOATED, AND LOW RELAXATION STRAND CONFORMING TO ASTM A416 (INCLUDING SUPPLEMENTARY REQUIREMENTS S1), GRADE 270 (270 KSI GUARANTEED ULTIMATE TENSILE STRENGTH - 58.6 KIPS PER STRAND)

ii. GROUND ANCHORS SHALL BE EQUIPPED WITH MANCHETTES TO PERMIT REPEATED LOCALIZED HIGH PRESSURE GROUTING AND TO REPEAT GROUTING AFTER TENSIONING, IF NEEDED.

iii. FURNISH AND INSTALL GROUND ANCHORS WITH CLASS I CORROSION PROTECTION IN ACCORDANCE WITH PTI DC 35.1-14 (STRESSING LENGTH OF STRAND PROVIDED WITH SEAMLESS EXTRUDED SHEATH (40 MILS) THAT IS FILLED WITH CORROSION INHIBITOR, AND THE TENDON IS INSTALLED WITHIN A CORRUGATED PLASTIC SHEATH THAT IS FILLED WITH CEMENT GROUT).

iv. ANCHOR GROUT: PUMPABLE NON-SHRINK GROUT THAT IS MIXED WITH TYPE I OR TYPE III PORTLAND CEMENT WITH A MINIMUM COMPRESSIVE CUBE STRENGTH (AASHTO M 85) OF 3,500 PSI AT 7 DAYS. NON-SHRINK GROUT SHALL BE A ODOT APPROVED QUALITY PRODUCT.

v. CORROSION PROTECTION ELEMENTS: ENCAPSULATION, SHEATH, AND CORROSION-INHIBITING GREASE IN ACCORDANCE WITH THE AASHTO LRFD BRIDGE CONSTRUCTION SPECIFICATIONS, SECTION 6.3.4.

vi. SPACERS AND CENTRALIZERS: PLASTIC OR STEEL TO MAINTAIN A MINIMUM 0.5- INCH GROUT COVER IN ACCORDANCE WITH THE AASHTO LRFD BRIDGE CONSTRUCTION SPECIFICATIONS, SECTION 6.3.5.

B. ANCHOR LENGTH:

i. MINIMUM STRESSING LENGTH: SEE ANCHOR SCHEDULE. AT EACH ANCHOR LOCATION, INCLUDE A MINIMUM OF 5 FEET OF TAIL LENGTH TO FACILITATE ANCHOR STRESSING.

ii. FOR ORDERING TENDON MATERIAL PURPOSES ASSUME A TOTAL TENDON LENGTH OF 90 FT WHICH CONSISTS OF 7 FT OF TAIL LENGTH, 40 FT OF BOND LENGTH PLUS AN 43 FT OF MAXIMUM STRESSING LENGTH.

iii. MINIMUM ANCHOR BOND LENGTH: 40 FEET (FOR A 10.75-INCH MINIMUM DIAMETER BOREHOLE).

iv. SINCE ANCHOR ACCEPTANCE SHALL BE BASED ON THE ANCHOR LOAD TEST RESULTS, THE CONTRACTOR SHALL BE RESPONSIBLE FOR THE FINAL SELECTION OF THE TOTAL LENGTH OF EACH ANCHOR AND THE ACTUAL DIAMETER OF THE BOREHOLE INSTALLED OVER THE LENGTH OF THE BOND ZONE. THE MAXIMUM PERMISSIBLE ANCHOR LENGTH IS 100 FT DUE TO RIGHT OF WAY RESTRICTIONS.

C. ANCHOR LOAD:

i. FACTORED DESIGN LOAD (FDL): 159 KIPS PER 4-STRAND TENDON.

ii. TEST LOAD IS EQUAL TO FACTORED DESIGN LOAD. THE MAXIMUM PERMISSIBLE STRESS AT THE TEST LOAD SHALL NOT EXCEED 75% OF THE GUARANTEED ULTIMATE TENSILE STRENGTH OF THE ANCHOR TENDON. UNDER NO CIRCUMSTANCE SHALL ANY TENDON BE STRESSED BEYOND 80% OF THE GUARANTEED ULTIMATE TENSILE STRENGTH OF THE ANCHOR TENDON.

iii. LOCK-OFF LOAD (LO): 117 KIPS PER TENDON (= 50% OF GUARANTEED ULTIMATE TENSILE STRENGTH OF STRAND TENDON PER SS866).

D. INSTALLATION TOLERANCE:

i. INCLINATION AND ALIGNMENT OF EACH GROUND ANCHOR SHALL BE WITHIN ± 2 DEGREES OF THE PLANNED ANGLE AT THE BEARING PLATE, AND WITHIN ±6 INCHES OF THE PLANNED LOCATION AT THE GROUND SURFACE (POINT OF ENTRY AT FACE OF EXISTING RETAINING WALL).

E. WORKING DRAWINGS:

i. AT LEAST 4 WEEKS BEFORE COMMENCEMENT OF INTRUSIVE ACTIVITY TO INSTALL GROUND ANCHORS, SUBMIT TO THE ENGINEER FOR REVIEW AND APPROVAL COMPLETE WORKING DRAWINGS DESCRIBING THE GROUND ANCHOR SYSTEM IN ACCORDANCE WITH THE AASHTO LRFD BRIDGE CONSTRUCTION SPECIFICATIONS, SECTION 6.2.

F. ANCHOR INSTALLATION IN ACCORDANCE WITH THE AASHTO LRFD BRIDGE CONSTRUCTION SPECIFICATION, SECTION 6.5:

i. SELECT THE DRILLING METHOD, GROUTING PROCEDURE, AND GROUTING PRESSURE TO BE USED FOR THE INSTALLATION OF THE GROUND ANCHOR AS NECESSARY TO SATISFY ANCHOR LOAD TEST REQUIREMENTS.

ii. DO NOT EXCEED A GROUT PRESSURE OF 1 PSI PER FOOT OF VERTICAL DEPTH BELOW THE EXISTING GROUND SURFACE (MEASURED AT THE TOP OF THE BOND ZONE) UNLESS OTHERWISE APPROVED BY THE ENGINEER.

iii. TENDON INSERTION: THE TENDON SHALL BE INSERTED INTO THE DRILL HOLE FULL-DEPTH WITHOUT DIFFICULTY.

iv. GROUTING: INJECT GROUT FROM THE LOWEST POINT OF THE DRILL HOLE. THE GROUT MAY BE PUMPED THROUGH 3/4-INCH ID GROUT TUBES. GROUT MAY BE PLACED BEFORE OR AFTER THE INSERTION OF THE ANCHOR TENDON. CONTROL GROUT PRESSURES AND GROUT TAKES TO PREVENT EXCESSIVE HEAVE OF THE GROUND.

G. ANCHOR TESTING AND STRESSING:

i. LOAD-TEST EACH GROUND ANCHOR USING EITHER THE PERFORMANCE TEST OR PROOF TEST PROCEDURES SPECIFIED IN THE AASHTO LRFD BRIDGE CONSTRUCTION SPECIFICATIONS, SECTION 6.5.5, EXCEPT AS NOTED OTHERWISE HEREIN.

ii. ANCHOR TESTING SHALL INCLUDE DISPLACEMENT MEASUREMENT OF THE BEARING PLATE THAT IS PLACED AT THE TOP OF THE HYDRAULIC JACK USING A MINIMUM OF TWO (2) DIAL INDICATORS (MEASURING DISPLACEMENT TO THE NEAREST 0.001 INCH). USE AN INDEPENDENT VERIFICATION REFERENCE (PIANO WIRE, MACHINIST RULER GRADUATED TO THE 4TH OF AN INCH, AND A MIRROR) DURING ANCHOR STRESSING TO MEASURE MOVEMENT OF THE BEARING PLATE. MEASURE JACK STROKE TO THE NEAREST 6TH OF AN INCH TO VERIFY AND CROSS-CHECK DISPLACEMENT MEASUREMENTS.

iii. MEASURE THE APPLIED LOAD WITH A CALIBRATED BOURDON PRESSURE GAUGE AND HYDRAULIC JACK (DURING PERFORMANCE AND PROOF TESTING) AND A CALIBRATED LOAD CELL (DURING CREEP TESTING).

iv. PERFORMANCE TEST: COMPLETE PERFORMANCE TEST ON FIVE PERCENT OF THE GROUND ANCHORS BUT NOT LESS THAN THREE (3) PERFORMANCE TESTS TO A MAXIMUM OF 1.0 TIMES THE FACTORED DESIGN LOAD. COMPLETE A CREEP TEST ON EACH ANCHOR THAT IS PERFORMANCE TESTED. THE ENGINEER SHALL SELECT THE GROUND ANCHORS TO BE PERFORMANCE TESTED.

v. PERFORMANCE TEST STEPS (CYCLES): COMPLETE PERFORMANCE TESTS USING THE TEST STEPS THAT ARE CITED IN SS866 TABLE 866.06-2 (SEE TABLE 1 ON THIS SHEET). MEASURE AND RECORD THE MOVEMENT OF THE BEARING PLATE AT THE TOP OF JACK, THE BEARING PLATE AT THE BOTTOM OF JACK, AND THE RAM STROKE. REDUCE THE TEST DATA AND PLOT BOTH THE ELASTIC AND RESIDUAL MOVEMENT IN TABULAR AND GRAPHICAL FORMAT IN ACCORDANCE WITH PTI DC35.1-14 FIGURES 8.1a AND 8.1b.

vi. PROOF TEST: COMPLETE A PROOF TEST ON THE REMAINDER OF THE GROUND ANCHORS TO 1.0 TIMES FACTORED DESIGN LOAD (NO CREEP TEST, UNLESS DIRECTED OTHERWISE BY THE ENGINEER).

vii. PROOF TEST STEPS (CYCLES): COMPLETE PROOF TESTS USING THE TEST STEPS THAT ARE CITED IN SS866 TABLE 866.06-1 (SEE TABLE 2 ON THIS SHEET). MEASURE AND RECORD THE MOVEMENT OF THE BEARING PLATE AT THE TOP OF JACK, THE BEARING PLATE AT THE BOTTOM OF JACK, AND THE RAM STROKE. REDUCE THE TEST DATA AND PLOT BOTH THE ELASTIC AND RESIDUAL MOVEMENT IN TABULAR AND GRAPHICAL FORMAT IN ACCORDANCE WITH PTI DC35.1-14 FIGURES 8.3a AND 8.3b.

viii. CREEP TEST: HOLD THE TL FOR 10 MINUTES. RECORD ANCHOR MOVEMENT AT 1, 2, 3, 4, 5, 6, AND 10 MINUTES. IF THE TOTAL CREEP MOVEMENT BETWEEN 1 AND 10 MINUTES EXCEEDS 0.04 INCHES, MAINTAIN THE TL FOR AN ADDITIONAL 50 MINUTES, AND RECORD THE MOVEMENT AT 20, 30, 40, 50, AND 60 MINUTES. DURING TARGET JACK PRESSURE. REPUMPING BACK TO THE TARGET JACK PRESSURE IS PERMISSIBLE TO COMPENSATE FOR SMALL MOVEMENT.

H. ANCHOR ACCEPTANCE CRITERIA:

i. THE ENGINEER WILL EVALUATE THE TEST DATA AND DETERMINE WHETHER A GROUND ANCHOR IS ACCEPTABLE.

ii. MINIMUM APPARENT ELASTIC MOVEMENT (δ) OF THE TENDON AT THE FDL: 80 PERCENT OF THE THEORETICAL ELASTIC ELONGATION OF THE UNBONDED LENGTH PLUS THE JACK LENGTH.

iii. MAXIMUM APPARENT ELASTIC MOVEMENT (δ) OF THE TENDON AT THE FDL: 100 PERCENT OF THE THEORETICAL ELASTIC ELONGATION OF THE UNBONDED LENGTH AND JACK LENGTH PLUS 50 PERCENT OF THE BONDED LENGTH.

iv. CREEP MOVEMENT: THE GROUND ANCHOR RESISTS THE MAXIMUM TEST LOAD WITH LESS THAN 0.04 INCHES OF CREEP MOVEMENT BETWEEN 1 AND 10 MINUTES. IF THIS VALUE IS EXCEEDED, THEN THE TOTAL CREEP MOVEMENT SHALL NOT EXCEED 0.08 INCHES WITHIN THE LAST LOG CYCLE OF TIME (BETWEEN 6 AND 60 MINUTES).

v. WHEN A GROUND ANCHOR FAILS TO MEET THE ACCEPTANCE CRITERIA, THE CONTRACTOR SHALL MODIFY THE ANCHOR DESIGN, INSTALLATION PROCEDURE, OR BOTH. THESE MODIFICATIONS MAY INCLUDE, BUT ARE NOT LIMITED TO, INSTALLING A REPLACEMENT ANCHOR, MODIFYING THE INSTALLATION METHOD, INCREASING THE BOND LENGTH, OR INCREASING THE DIAMETER OF THE BOND ZONE. ANY MODIFICATION WHICH REQUIRES CHANGES TO THE STRUCTURE SHALL BE APPROVED BY THE ENGINEER OF RECORD. ANY MODIFICATION OF DESIGN OR CONSTRUCTION PROCEDURES SHALL BE COMPLETED AT NO ADDITIONAL COST TO THE DEPARTMENT.

vi. IF THE GROUND ANCHOR CANNOT HOLD THE MAXIMUM TEST LOAD, THE CONTRACTOR MAY POST-GROUT THE GROUND ANCHOR THROUGH MANCHETTES AND REPEAT THE TESTING USING THE ORIGINAL ACCEPTANCE CRITERIA.

vii. IF THE GROUND ANCHOR HOLDS THE MAXIMUM TEST LOAD BUT DOES NOT MEET THE ACCEPTANCE CRITERIA FOR CREEP MOVEMENT AT THE MAXIMUM TEST LOAD, THE CONTRACTOR MAY POST-GROUT THE GROUND ANCHOR THROUGH MANCHETTES AND REPEAT THE TESTING USING AN ENCHANCED ACCEPTANCE CRITERIA FOR CREEP MOVEMENT. THE ENHANCED ACCEPTANCE CRITERIA CONSISTS OF NO MORE THAN 0.04 INCHES OF CREEP MOVEMENT BETWEEN THE 1 AND 60 MINIUTE DISPLACEMENT READINGS AT THE MAXIMUM TEST LOAD.

I. LOCK-OFF TEST AND LIFT-OFF TEST:

i. AFTER ANCHOR TESTING HAS BEEN COMPLETED, ADJUST THE LOAD IN THE ANCHOR TENDON TO THE SPECIFIED LOCK-OFF LOAD.

ii. AVOID REGRIPPING THE ANCHOR STRANDS.

iii. AFTER TRANSFERRING THE LOAD TO THE ANCHOR HEAD AND BEFORE THE JACK IS REMOVED, COMPLETE A LIFT-OFF TEST. ENSURE THAT THE LIFT-OFF LOAD IS WITHIN 10 PERCENT OF THE LOCK-OFF LOAD.

iv. IF THE LIFT-OFF LOAD DEVIATES MORE THAN 10 PERCENT OF THE LOCK-OFF LOAD, THEN READJUST THE TENDON LOAD, RESET THE STRESSING WEDGES, AND REPEAT THE LIFT-OFF TEST.

v. WITHIN 48 HOURS OF COMPLETION OF EACH LIFT-OFF TEST, COVER THE EXPOSED ANCHOR HEAD, BARE STRANDS, AND STRESSING WEDGES WITH GREASE TO MITIGATE AGAINST EXPOSURE TO PRECIPITATION.

J. SECONDARY POST-GROUTING:

i. COMPLETE SECONDARY POST-GROUTING TO FILL ANY VOIDS THAT MAY BE PRESENT WITHIN THE ANNULAR SPACE BETWEEN THE ANCHOR TENDON AND TENDON PATH WITHIN THE SOLDIER PILE OR DRILLED SHAFT (UNDER THE BEARING PLATE).

K. CUT-OFF TENDON TAILS:

i. CUT-OFF TENDON TAILS AFTER RECEIPT OF WRITTEN ACCEPTANCE OF ANCHOR TEST RESULTS BY THE ENGINEER (TEST RESULTS COMPLY WITH ACCEPTANCE CRITERIA).

L. ANCHOR CAPS:

i. INSTALL ANCHOR CAPS AND FILL THE ANNULUS BETWEEN THE ANCHOR HEAD(S)AND EACH ANCHOR CAP WITH CORROSION INHIBITING GREASE.

M. METHOD OF MEASUREMENT:

i. THE DEPARTMENT WILL MEASURE THE QUANTITY OF GROUND ANCHORS BY THE NUMBER OF EACH ANCHOR THAT IS INSTALLED AND ACCEPTED. THE DEPARTMENT WILL MEASURE THE QUANTITY OF PERFORMANCE TESTS AND EXTENDED CREEP TESTS BY THE NUMBER OF SUCCESSFUL TESTS PERFORMED ON GROUND ANCHORS THAT MEET THE ACCEPTANCE CRITERIA. THE DEPARTMENT WILL PAY FOR A TESTING ITEM AFTER THE CONTRATOR SUBMITS A WRITTEN TEST REPORT FOR THAT TESTING ITEM. INCLUDE THE COST OF PROOF TESTING IN THE CONTRACT UNIT PRICE FOR GROUND ANCHORS.

GROUND ANCHORING CONTRACTOR REQUIREMENTS:

A. CONTRACTOR SHALL SUBMIT ANCHOR DESIGNER, FABRICATOR, AND INSTALLER QUALIFICATIONS FOR APPROVAL. THE SUBMITTALS SHALL, WHERE APPLICABLE, IDENTIFY INDIVIDUALS WHO WILL BE WORKING ON THIS CONTRACT AND THEIR RELEVANT EXPERIENCE. NO CHANGES SHALL BE MADE IN APPROVED PERSONNEL WITHOUT PRIOR APPROVAL OF THE ENGINEER.

B. THE ANCHORS SHALL BE DESIGNED BY PROFESSIONAL ENGINEERS WHO HAVE DESIGNED A MINIMUM THREE GROUND ANCHOR PROJECTS SIMILAR IN SIZE AND SCOPE TO THIS PROJECT WITHIN THE PAST TEN YEARS. THE DRAWINGS AND CALCULATIONS SHALL BE SEALED AND SIGNED BY THE PROFESSIONAL ENGINEER.

C. THE ANCHORS SHALL BE FABRICATED BY A MANUFACTURER THAT HAS BEEN IN THE PRACTICE OF DESIGNING AND FABRICATING GROUND ANCHORS SIMILAR IN SIZE AND SCOPE TO THIS PROJECT FOR AT LEAST TEN YEARS

D. CONTRACTOR SHALL SUBMIT THE EXPERIENCE RECORDS FOR APPROVAL. EXPERIENCE RECORDS SHALL IDENTIFY ALL THE INDIVIDUALS RESPONSIBLE FOR THE ANCHORS AND SHALL INCLUDE A LIST OF PROJECTS OF SIMILAR SCOPE PERFORMED WITHIN THE SPECIFIED PERIOD ALONG WITH POINTS OF CONTACT. QUALIFICATIONS PRIOR TO THE INSTALLATION OF ANY ANCHORS SPECIFIED IN THIS CONTRACT. THE ANCHORS SHALL BE INSTALLED BY A FIRM WHICH IS REGULARLY ENGAGED IN THE INSTALLATION OF GROUND ANCHORS AND HAS AT LEAST TEN YEARS EXPERIENCE IN THE INSTALLATION OF SIMILAR ANCHORS. THE SUPERINTENDENT SHALL HAVE INSTALLED ANCHORS ON AT LEAST FIVE PROJECTS OF SIMILAR SCOPE AND SIZE.

E. CONTRACTOR SHALL SUBMIT THE QUALIFICATIONS REQUIREMENTS AS STATED ABOVE FOR ENGINEER'S APPROVAL.

TABLE 1 PERFORMANCE TEST SCHEDULE

LOAD CYCLE	LOAD INCREMENT FOR LRFD	HOLD PERIOD (MINUTES)	TIME FOR DISPLACEMENT READING (MINITES)
	AL	---	*
1	0.20 FDL	*	1
	AL	---	*
2	0.20 FDL	*	*
	0.40 FDL	*	*
	AL	---	1
	0.20 FDL	*	*
3	0.40 FDL	*	*
	0.60 FDL	*	*
	AL	---	1
	0.20 FDL	*	*
4	0.40 FDL	*	*
	0.60 FDL	*	*
	0.75 FDL	*	*
	AL	---	1
	0.20 FDL	*	*
	0.40 FDL	*	*
5	0.60 FDL	*	*
	0.75 FDL	*	*
	0.90 FDL	*	*
	AL	---	1
	0.20 FDL	*	*
	0.40 FDL	*	*
	0.60 FDL	*	*
6	0.75 FDL	*	*
	0.90 FDL	*	*
	1.0 FDL	10 (60)[1]	1,2,3,4,5,6,10 (20,30, 40, 50, 60)[1]
	AL	---	1

TABLE 2 PROOF TEST SCHEDULE

LOAD INCREMENT FOR LRFD	HOLD PERIOD (MINUTES)	TIME FOR DISPLACEMENT READING
AL	---	INITIAL READING
0.20 FDL	*	*
0.40 FDL	*	*
0.60 FDL	*	*
0.75 FDL	*	*
0.90 FDL	*	*
1.0 FDL	10 (60)[1]	1, 2, 3, 4, 5, 6, 10 (20, 30, 40, 50, 60)[1]
AL	---	1

* - HOLD FOR JUST LONG ENOUGH TO READ DISPLACEMENT, BUT NOT LONGER THAN ONE MINUTE.

[1] - IF THE AMOUNT OF MOVEMENT BETWEEN THE 1 MINUTE AND 10 MINUTE DISPLACEMENT READINGS EXCEEDS 0.04 INCH (1 mm) THEN HOLD THE LOAD FOR 60 MINUTES AND TAKE ADDITIONAL DISPLACEMENT READINGS AT THE TIMES SHOWN IN PARENTHESES.

AL = ALIGNMENT LOAD

FDL = FINAL DESIGN LOAD

For Reference Only
Preliminary Plans

GENERAL NOTES (7 OF 7)
CUY-90-1696 (BRIDGE 14)
CR-722 (CARNEGIE AVE.) OVER I.R. 90

SFN 1807898
DESIGN AGENCY
Michael Baker INTERNATIONAL
DESIGNER ZES | CHECKER MKB
REVIEWER KAG 12/26/23
PROJECT ID 82382
SUBSET 10 | TOTAL 90
SHEET 2290 | TOTAL 2696

CUY-90-16.28 (CCG3A)
MODEL: Sheet PAPERSIZE: 34x22 (in.) DATE: 3/28/2025 TIME: 7:59:04 AM USER: RohitBk
pw:\\mb-us-pw.bentley.com:mb-us-pw-03\Documents\Cleveland_OH\01_Projects\ODOT\District12\82382\400-Engineering\Structures\SFN_1807898\Sheets\82382_SFN_1807898_SN007.dgn

ESTIMATED QUANTITIES

CALCULATED BY: ZES DATE: 03/20/24
CHECKED BY: DAF DATE: 05/15/24

PARTICIPATION	ITEM	ITEM EXT.	TOTAL	UNIT	DESCRIPTION	ABUTMENTS	PIERS	SUPERSTR.	GENERAL	SHEET REF.
02/IMS/10	202	11003	LS		STRUCTURE REMOVED, OVER 20 FOOT SPAN, AS PER PLAN				LS	15-18
02/IMS/10	503	21101	10,842	CY	UNCLASSIFIED EXCAVATION, AS PER PLAN	7,516	3,326			6
02/IMS/10	505	11100	LS		PILE DRIVING EQUIPMENT MOBILIZATION				LS	
02/IMS/10	506	11101	LS		STATIC LOAD TEST, AS PER PLAN				LS	8
02/IMS/10	507	00400	490	FT	STEEL PILES, MISC.: SOLIDER PILES HP16x101				490	7
02/IMS/10	507	00700	19,735	FT	16" CAST-IN-PLACE REINFORCED CONCRETE PILES, DRIVEN	19,735				
02/IMS/10	507	00750	20,910	FT	16" CAST-IN-PLACE REINFORCED CONCRETE PILES, FURNISHED	20,910				
02/IMS/10	509	10000	742,913	LB	EPOXY COATED STEEL REINFORCEMENT				742,913	
02/IMS/10	510	10000	800	EACH	DOWEL HOLES WITH NONSHRINK, NONMETALLIC GROUT				800	
02/IMS/10	511	34447	1,320	CY	CLASS QC2 CONCRETE WITH QC/QA, BRIDGE DECK, AS PER PLAN			1,320		8
02/IMS/10	511	34451	137	CY	CLASS QC2 CONCRETE WITH QC/QA, BRIDGE DECK (PARAPET), AS PER PLAN			137		8
02/IMS/10	511	42012	307	CY	CLASS QC1 CONCRETE WITH QC/QA, PIER ABOVE FOOTINGS		307			
02/IMS/10	511	44112	835	CY	CLASS QC1 CONCRETE WITH QC/QA, ABUTMENT NOT INCLUDING FOOTING	835				
02/IMS/10	511	45602	794	CY	CLASS QC4 MASS CONCRETE, SUBSTRUCTURE WITH QC/QA				794	
02/IMS/10	511	46512	738	CY	CLASS QC1 CONCRETE WITH QC/QA, FOOTING	336	290		112	
02/IMS/10	511	51513	242	CY	CLASS QC2 CONCRETE WITH QC/QA, SIDEWALK, AS PER PLAN			242		8
02/IMS/10	511	53010	243	CY	CLASS QC1 CONCRETE, MISC.: CONCRETE FACING	243				9
02/IMS/10	511	71200	13,986	SF	CONCRETE, MISC.: ARCHITECTURAL TREATMENT, ABUTMENT	13,986				9
02/IMS/10	511	71200	5,945	SF	CONCRETE, MISC.: ARCHITECTURAL TREATMENT, PIER		5,945			9
02/IMS/10	511	71200	2,851	SF	CONCRETE, MISC.: ARCHITECTURAL TREATMENT, RAILING			2,851		9
02/IMS/10	512	10001	688	SY	SEALING OF CONCRETE SURFACES, AS PER PLAN (PERMANENT GRAFFITI PROTECTION)				688	7
02/IMS/10	512	10050	2,142	SY	SEALING OF CONCRETE SURFACES (NON-EPOXY)				2,142	
02/IMS/10	512	10101	2,563	SY	SEALING OF CONCRETE SURFACES (EPOXY-URETHANE), AS PER PLAN				2,563	6
02/IMS/10	513	10201	13,000	LB	STRUCTURAL STEEL MEMBERS, LEVEL UF, AS PER PLAN (SOLDIER PILE STRUT AND WALER)			13,000		7
02/IMS/10	513	10280	4,419,100	LB	STRUCTURAL STEEL MEMBERS, LEVEL 4			4,419,100		
02/IMS/10	513	20000	8,872	EACH	WELDED STUD SHEAR CONNECTORS			8,872		
02/IMS/10	514	00060	157,200	SF	FIELD PAINTING STRUCTURAL STEEL, INTERMEDIATE COAT			157,200		
02/IMS/10	514	00067	157,200	SF	FIELD PAINTING STRUCTURAL STEEL, FINISH COAT, AS PER PLAN			157,200		6
02/IMS/10	516	11210	145	FT	STRUCTURAL EXPANSION JOINT INCLUDING ELASTOMERIC STRIP SEAL			145		
02/IMS/10	SPECIAL	516E12400	173	FT	MODULAR EXPANSION JOINT			173		79
02/IMS/10	516	42000	130	EACH	ELASTOMERIC BEARING PAD, MISC.: 6" x 9" x $\frac{3}{8}$" THICK				130	33
02/IMS/10	518	12200	8	EACH	SCUPPERS, INCLUDING SUPPORTS				8	
02/IMS/10	518	20000	888	SY	PREFABRICATED GEOCOMPOSITE DRAIN				888	

Preliminary Plans - For Reference Only

ESTIMATED QUANTITIES (1 OF 2)
CUY-90-1696 (BRIDGE 14)
CR-722 (CARNEGIE AVE.) OVER I.R. 90

SFN 1807898
DESIGN AGENCY
Michael Baker INTERNATIONAL
DESIGNER DBW | CHECKER MKB
REVIEWER KAG 12/26/23
PROJECT ID 82382
SUBSET 11 | TOTAL 90
SHEET 2291 | TOTAL 2696

CUY-90-16.28 (CCG3A)
MODEL: Sheet PAPERSIZE: 34x22 (in.) DATE: 6/13/2025 TIME: 2:26:38 PM USER: David.Fell
pw:\\mb-us-pw.bentley.com:mb-us-pw-03\Documents\Cleveland_OH\01_Projects\ODOT\District12\82382\400-Engineering\Structures\SFN_1807898\Sheets\82382_SFN_1807898_SQ001.dgn

ESTIMATED QUANTITIES

CALCULATED BY: ZES DATE: 03/20/24
CHECKED BY: DAF DATE: 05/15/24

PARTICIPATION	ITEM	ITEM EXT.	TOTAL	UNIT	DESCRIPTION	ABUTMENTS	PIERS	SUPERSTR.	GENERAL	SHEET REF.
02/IMS/10	518	21200	618	CY	POROUS BACKFILL WITH GEOTEXTILE FABRIC				618	
02/IMS/10	518	40000	907	FT	6" PERFORATED CORRUGATED PLASTIC PIPE	907				
02/IMS/10	518	40010	658	FT	6" NON-PERFORATED CORRUGATED PLASTIC PIPE, INCLUDING SPECIALS	658				
02/IMS/10	518	43300	185	FT	6" PIPE DOWNSPOUT, INCLUDING SPECIALS	101	84			
02/IMS/10	523	20001	4	EACH	DYNAMIC LOAD TESTING, AS PER PLAN				4	4
02/IMS/10	523	20501	2	EACH	RESTRIKE, AS PER PLAN				2	4
02/IMS/10	524	94803	238	FT	DRILLED SHAFTS, 42" DIAMETER, ABOVE BEDROCK, AS PER PLAN				238	8
02/IMS/10	524	94901	4,750	FT	DRILLED SHAFTS, 48" DIAMETER, AS PER PLAN				4,750	5
02/IMS/10	524	95100	2	EACH	DRILLED SHAFTS, MISC.: 48" DIAMETER, THROUGH OBSTRUCTIONS				2	5
02/IMS/10	524	95100	2	EACH	DRILLED SHAFTS, MISC.: BI DIRECTIONAL TESTING OF DRILLED SHAFTS				2	7
02/IMS/10	524	95100	1	EACH	DRILLED SHAFTS, MISC.: CSL TESTING, 48" DIA. SHAFT				1	7
02/IMS/10	524	95100	1	EACH	DRILLED SHAFTS, MISC.: DEMONSTRATION DRILLED SHAFT				1	7
02/IMS/10	524	95100	3	EACH	DRILLED SHAFTS, MISC.: HIGH STRAIN DYNAMIC TESTING OF DRILLED SHAFTS				3	7
02/IMS/10	526	30010	592	SY	REINFORCED CONCRETE APPROACH SLABS WITH QC/QA (T=17")				592	
02/IMS/10	SPECIAL	530E00200	LS		STRUCTURES: PRECONSTRUCTION/POST CONSTRUCTION CONDITION SURVEY				LS	4-5
02/IMS/10	SPECIAL	530E00200	LS		STRUCTURES: VIBRATION MONITORING				LS	4
02/IMS/10	SPECIAL	530E00600	1,349	SF	STRUCTURES: PERMANENT SHORING PRECAST CONCRETE LAGGING				1,349	6
02/IMS/10	SPECIAL	530E00600	1,516	SF	STRUCTURES: PERMANENT SHORING TIMBER LAGGING				1,516	7-8
02/IMS/10	607	39910	1,180	FT	VANDAL PROTECTION FENCE, 8' STRAIGHT, COATED FABRIC				1,180	
02/IMS/10	625	25920	478	FT	CONDUIT, MISC.: 12" GAS CONDUIT INSTALLATION			478		9
02/IMS/10	625	25920	2,863	FT	CONDUIT, MISC.: AT&T 4" CONDUIT INSTALLATION			2,863		9
02/IMS/10	625	25920	5,726	FT	CONDUIT, MISC.: CEI 4" CONDUIT INSTALLATION			5,726		9
02/IMS/10	625	25920	5,726	FT	CONDUIT, MISC.: CPP 4" CONDUIT INSTALLATION			5,726		9
02/IMS/10	SPECIAL	690E98000	36	EACH	ROLLER SUPPORTS (GAS LINE)				36	9
02/IMS/10	SPECIAL	690E98000	29	EACH	UTILITY SUPPORTS (AT&T DUCTS)				29	9
02/IMS/10	SPECIAL	690E98000	29	EACH	UTILITY SUPPORTS (CEI DUCTS)				29	9
02/IMS/10	SPECIAL	690E98000	29	EACH	UTILITY SUPPORTS (CPP DUCTS)				29	9
02/IMS/10	SPECIAL	690E98000	31	EACH	UTILITY SUPPORTS (WATER LINE)				31	9
02/IMS/10	866	00101	14	EACH	GROUND ANCHOR, AS PER PLAN, 159 KIP MAX LOAD TEST (SOLIDER PILE AND LAGGING WALL)				14	10
02/IMS/10	866	00101	100	EACH	GROUND ANCHOR, AS PER PLAN, 159 KIP MAX LOAD TEST (TANGENT WALL)				100	10
02/IMS/10	866	00400	6	EACH	PERFORMANCE TEST				6	
02/IMS/10	866	00500	6	EACH	EXTENDED CREEP TEST				6	
02/IMS/10	869	00100	30	EACH	HIGH LOAD MULTI-ROTATIONAL (HLMR) BEARINGS				30	

Preliminary Plans - For Reference Only

ESTIMATED QUANTITIES (2 OF 2)
CUY-90-1696 (BRIDGE 14)
CR-722 (CARNEGIE AVE.) OVER I.R. 90

SFN 1807898
DESIGN AGENCY Michael Baker INTERNATIONAL
DESIGNER DBW | CHECKER MKB
REVIEWER KAG 12/26/23
PROJECT ID 82382
SUBSET 12 | TOTAL 90
SHEET 2292 | TOTAL 2696

CUY-90-16.28 (CCG3A)

MODEL: Sheet PAPERSIZE: 34x22 (in.) DATE: 6/16/2025 TIME: 2:59:09 PM USER: Shane.Weiss
pw:\\mb-us-pw.bentley.com:mb-us-pw-03\Documents\Cleveland_OH\01_Projects\ODOT\District12\82382\400-Engineering\Structures\SFN_1807898\Sheets\82382_SFN_1807898_SQ002.dgn

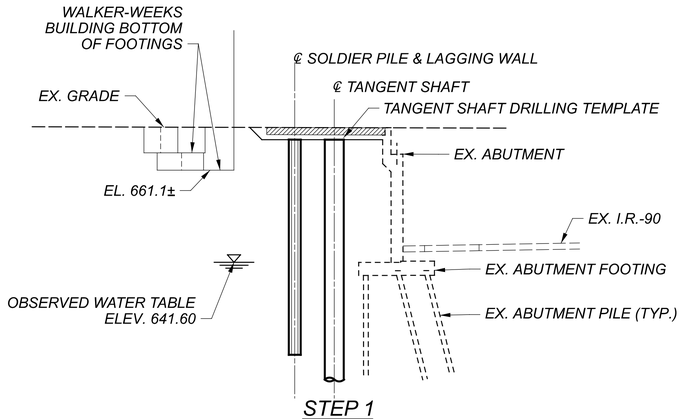

STEP 1

PERFORM PRECONSTRUCTION CONDITION SURVEY. CLOSE CARNEGIE AVE. REMOVE EXISTING APPROACH SLAB. EXCAVATE TO APPROXIMATE ELEV. 667.50. INSTALL SOLDIER PILES AT LOCATIONS SHOWN IN THE FOUNDATION PLAN. INSTALL TANGENT SHAFTS AT LOCATIONS SHOWN IN THE FOUNDATION PLAN USING DRILLING TEMPLATE. MONITOR VIBRATIONS, MOVEMENT, ETC.

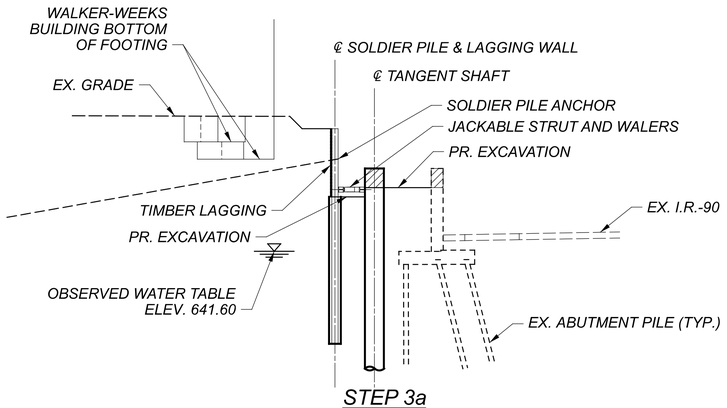

STEP 3a

EXCAVATE & INSTALL LAGGING TO ELEVATION SHOWN IN SOLDIER PILE AND LAGGING DETAILS, AND REMOVE PORTION OF EXISTING ABUTMENT STEM. TRIM DRILLED SHAFTS TO EXCAVATION ELEVATION. INSTALL WALERS, JACKABLE STRUTS AND PRELOAD STRUTS. MEASURE AND DOCUMENT SOLDIER PILE DEFLECTION. MONITOR VIBRATIONS, MOVEMENT, ETC.

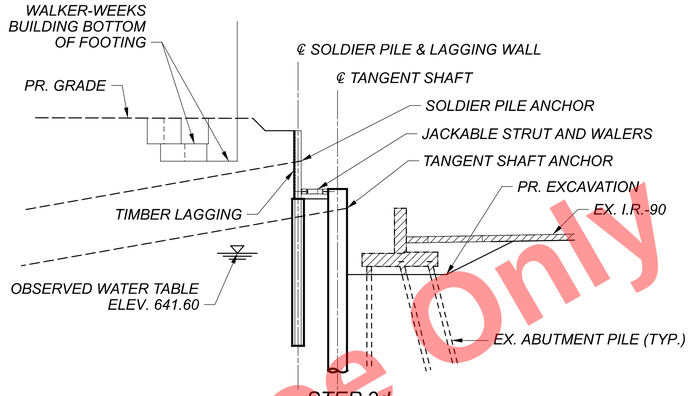

STEP 3d

EXCAVATE TO ELEVATION SHOWN IN ANCHORED TANGENT SHAFT DETAILS, AND REMOVE PORTION OF EXISTING ABUTMENT STEM, FOOTING AND PILES. PERFORM JACKING IN STRUTS TO MINIMIZE LATERAL DEFLECTION IN THE SOLDIER PILE WALL. MEASURE AND DOCUMENT SOLDIER PILE AND TANGENT SHAFT DEFLECTION. MONITOR VIBRATIONS, MOVEMENT, ETC.

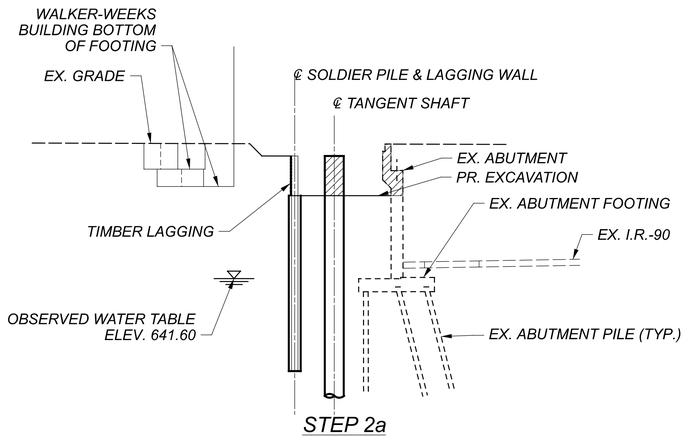

STEP 2a

PERFORM I.R.-90 MOT OPERATIONS, EXCAVATE & INSTALL TIMBER LAGGING TO ELEVATION SHOWN IN SOLDIER PILE AND LAGGING DETAILS, AND REMOVE PORTION OF EXISTING ABUTMENT BACKWALL AND PORTION OF STEM. TRIM DRILLED SHAFTS TO EXCAVATION ELEVATION. MEASURE AND DOCUMENT SOLDIER PILE DEFLECTION. MONITOR VIBRATIONS, MOVEMENT, ETC.

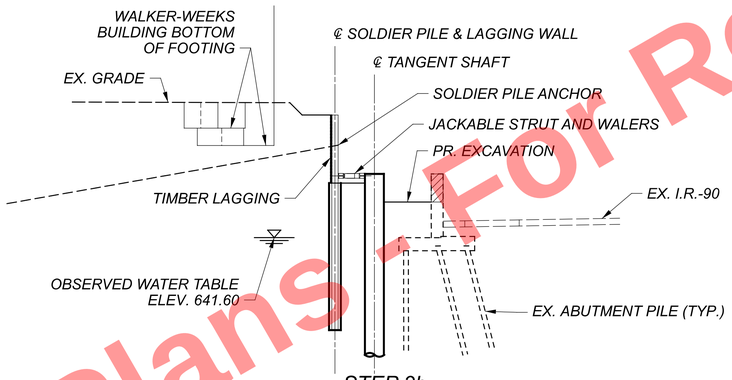

STEP 3b

EXCAVATE TO ELEVATION SHOWN IN ANCHORED TANGENT SHAFT DETAILS, AND REMOVE PORTION OF EXISTING ABUTMENT STEM. PERFORM JACKING IN STRUTS TO MINIMIZE LATERAL DEFLECTION IN THE SOLDIER PILE WALL, INCREASING THE JACKING FORCE UNTIL THE TOTAL LATERAL DEFECTION OF THE SOLDIER PILE AT THE STRUT LOCATION IS LESS THAN 1/2". (TYPICAL FOR ALL CONSTRUCTION STEPS.) MEASURE AND DOCUMENT SOLDIER PILE AND TANGENT SHAFT DEFLECTION. MONITOR VIBRATIONS, MOVEMENT, ETC.

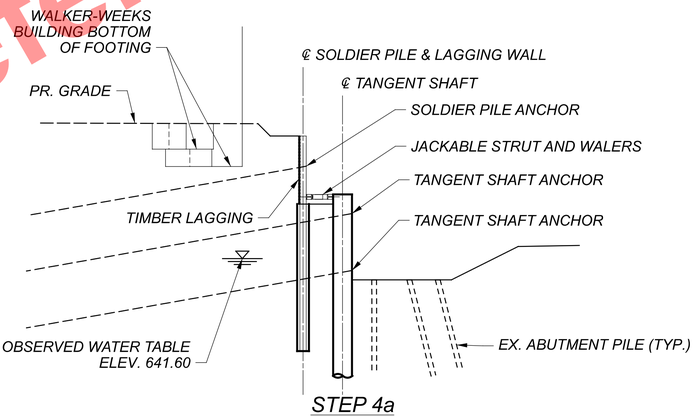

STEP 4a

INSTALL BOTTOM ROW OF TANGENT SHAFT ANCHORS. MEASURE AND DOCUMENT SOLDIER PILE AND TANGENT SHAFT DEFLECTION. MONITOR VIBRATIONS, MOVEMENT, ETC.

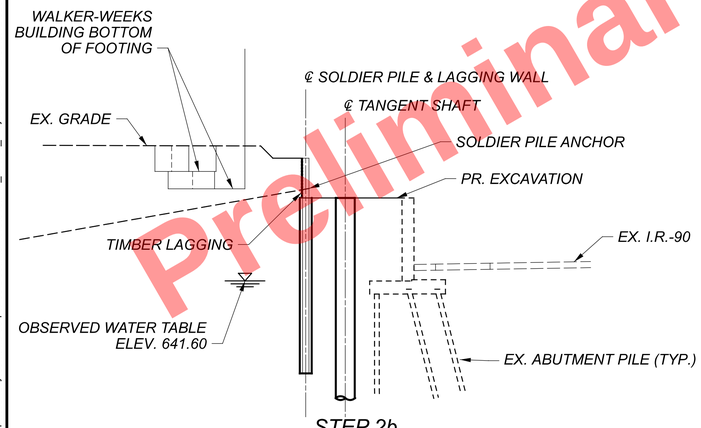

STEP 2b

INSTALL SOLDIER PILE ANCHORS. MEASURE AND DOCUMENT SOLDIER PILE DEFLECTION. MONITOR VIBRATIONS, MOVEMENT, ETC.

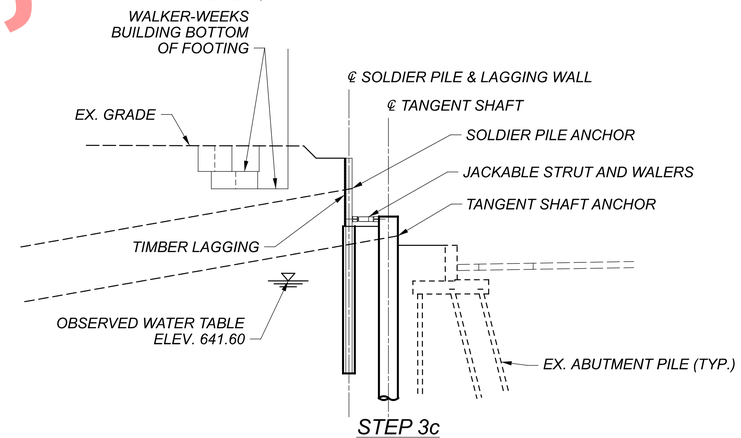

STEP 3c

INSTALL TOP ROW OF TANGENT SHAFT ANCHORS. PERFORM JACKING IN STRUTS TO MINIMIZE LATERAL DEFLECTIONS IN THE SOLDIER PILE WALL. MEASURE AND DOCUMENT SOLDIER PILE AND TANGENT SHAFT DEFLECTION. MONITOR VIBRATIONS, MOVEMENT, ETC.

NOTES:

1. STAGED CONSTRUCTION DETAILS SHOWN HERE-IN ARE A SUGGESTED SEQUENCE BASED ON THE ANALYSIS AND DESIGN APPROACH OF THE SOLDIER PILE AND LAGGING WALL AND TANGENT SHAFT ABUTMENT. ADDITIONAL STEPS MAY BE NECESSARY TO COMPLETE THE WORK.

2. SEE ROADWAY AND DRAINAGE PLANS FOR ADDITIONAL DETAILS.

LEGEND:

= PORTIONS OF EXISTING STRUCTURE REMOVED

Preliminary Plans - For Reference Only

REAR ABUTMENT STAGED CONSTRUCTION DETAILS (1 OF 2)

CUY-90-1696 (BRIDGE 14)

CR-722 (CARNEGIE AVE.) OVER I.R. 90

SFN	1807898
DESIGN AGENCY	Michael Baker INTERNATIONAL
DESIGNER	MKB
CHECKER	DRG
REVIEWER	KAG 12/26/23
PROJECT ID	82382
SUBSET	13
TOTAL	90
SHEET	2293
TOTAL	2696

CUY-90-16.28 (CCG3A)
MODEL: Sheet PAPERSIZE: 34x22 (in.) DATE: 3/28/2025 TIME: 7:59:36 AM USER: Rohit.Bk
pw:\\mb-us-pw.bentley.com:mb-us-pw-03\Documents\Cleveland_OH101_Projects\ODOT\District12\82382\400-Engineering\Structures\SFN_1807898\Sheets\82382_SFN_1807898_SC001.dgn

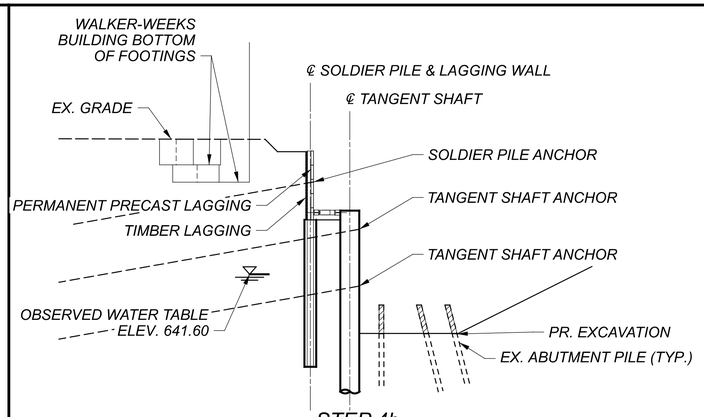

STEP 4b

EXCAVATE TO PR. DRAINAGE BEDDING ELEVATION, REMOVE PORTIONS OF EXISTING PILES. MEASURE AND DOCUMENT SOLDIER PILE AND TANGENT SHAFT DEFLECTION. MONITOR VIBRATIONS, MOVEMENT, ETC. INSTALL PERMANENT PRECAST LAGGING AT SOLDIER PILES.

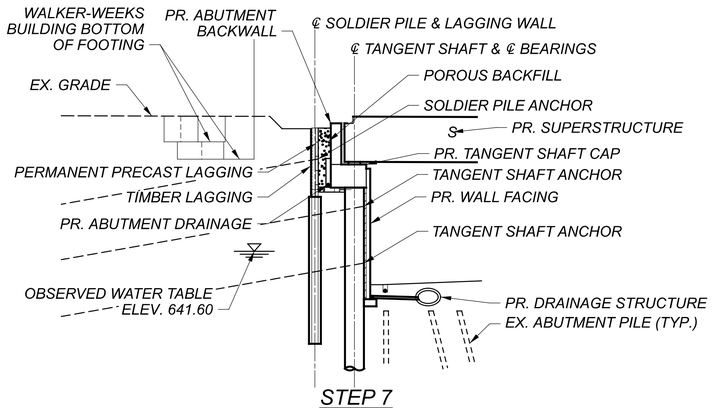

STEP 7

BACKFILL & COMPACT TO BOTTOM OF PROPOSED ROADWAY SUBGRADE ELEVATION. INSTALL ROADWAY UNDERDRAIN AND BRIDGE 14 SUPERSTRUCTURE. BACKFILL ABUTMENT STEM WITH POROUS BACKFILL MATERIAL. MONITOR VIBRATIONS, MOVEMENT, ETC.

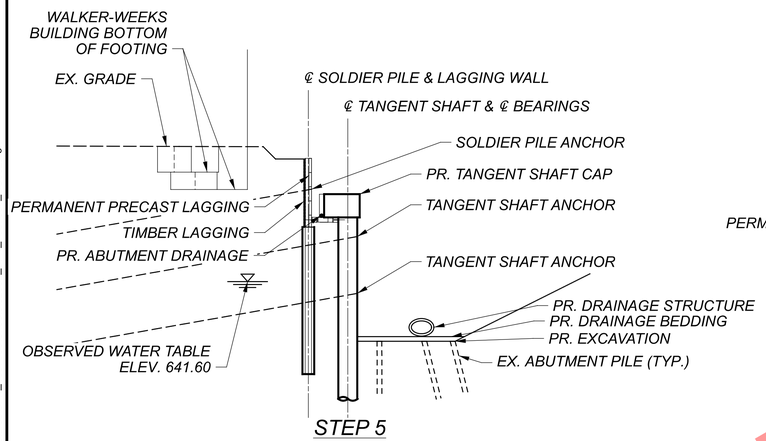

STEP 5

INSTALL PR. DRAINAGE BEDDING AND DRAINAGE STRUCTURES. ESTABLISH PLAN ℄ BEARINGS LOCATION WITH RESPECT TO ℄ DEFLECTED TANGENT SHAFTS. IF SHAFTS DEFLECT MORE OR LESS THAN ANTICIPATED, ADJUST TANGENT SHAFT CAP AND ABUTMENT BACKWALL AS NECESSARY TO ENSURE ℄ BEARINGS PLAN LOCATION. INSTALL TANGENT SHAFT CAP AND PR. ABUTMENT DRAINAGE. BACKFILL WITH FLOWABLE FILL. MONITOR VIBRATIONS, MOVEMENT, ETC.

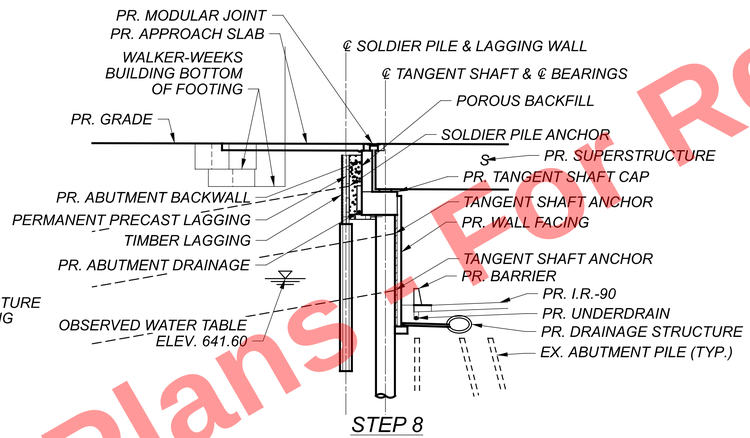

STEP 8

INSTALL APPROACH SLABS, MODULAR EXPANSION JOINT, AND REMAINING PORTION OF ABUTMENT BACKWALL INSTALL I.R.-90 SUBGRADE, ROADWAY & BARRIER.

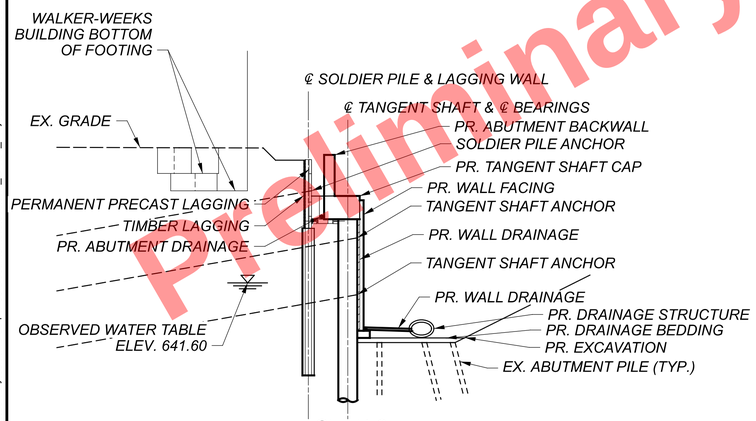

STEP 6

INSTALL PR. ABUTMENT BACKWALL, PR. WALL FACING, AND PR. WALL DRAINAGE. MONITOR VIBRATIONS, MOVEMENT, ETC.

NOTES:

1. STAGED CONSTRUCTION DETAILS SHOWN HERE-IN ARE A SUGGESTED SEQUENCE BASED ON THE ANALYSIS AND DESIGN APPROACH OF THE SOLDIER PILE AND LAGGING WALL AND TANGENT SHAFT ABUTMENT. ADDITIONAL STEPS MAY BE NECESSARY TO COMPLETE THE WORK.
2. SEE ROADWAY AND DRAINAGE PLANS FOR ADDITIONAL DETAILS.

LEGEND:

= PORTIONS OF EXISTING STRUCTURE REMOVED

Preliminary Plans - Not For Reference Only

REAR ABUTMENT STAGED CONSTRUCTION DETAILS (2 OF 2)
CUY-90-1696 (BRIDGE 14)
CR-722 (CARNEGIE AVE.) OVER I.R. 90

SFN 1807898
DESIGN AGENCY
Michael Baker INTERNATIONAL
DESIGNER MKB | CHECKER DRG
REVIEWER KAG 12/26/23
PROJECT ID 82382
SUBSET 14 | TOTAL 90
SHEET 2294 | TOTAL 2696

CUY-90-16.28 (CCG3A)

MODEL: Sheet PAPERSIZE: 34x22 (in.) DATE: 3/28/2025 TIME: 7:59:45 AM USER: RohitLBk
pw:\\mb-us-pw.bentley.com:mb-us-pw-03\Documents\Cleveland_OH\01_Projects\ODOT\District12\82382400-Engineering\Structures\SFN_1807898\Sheets\82382_SFN_1807898_SC002.dgn

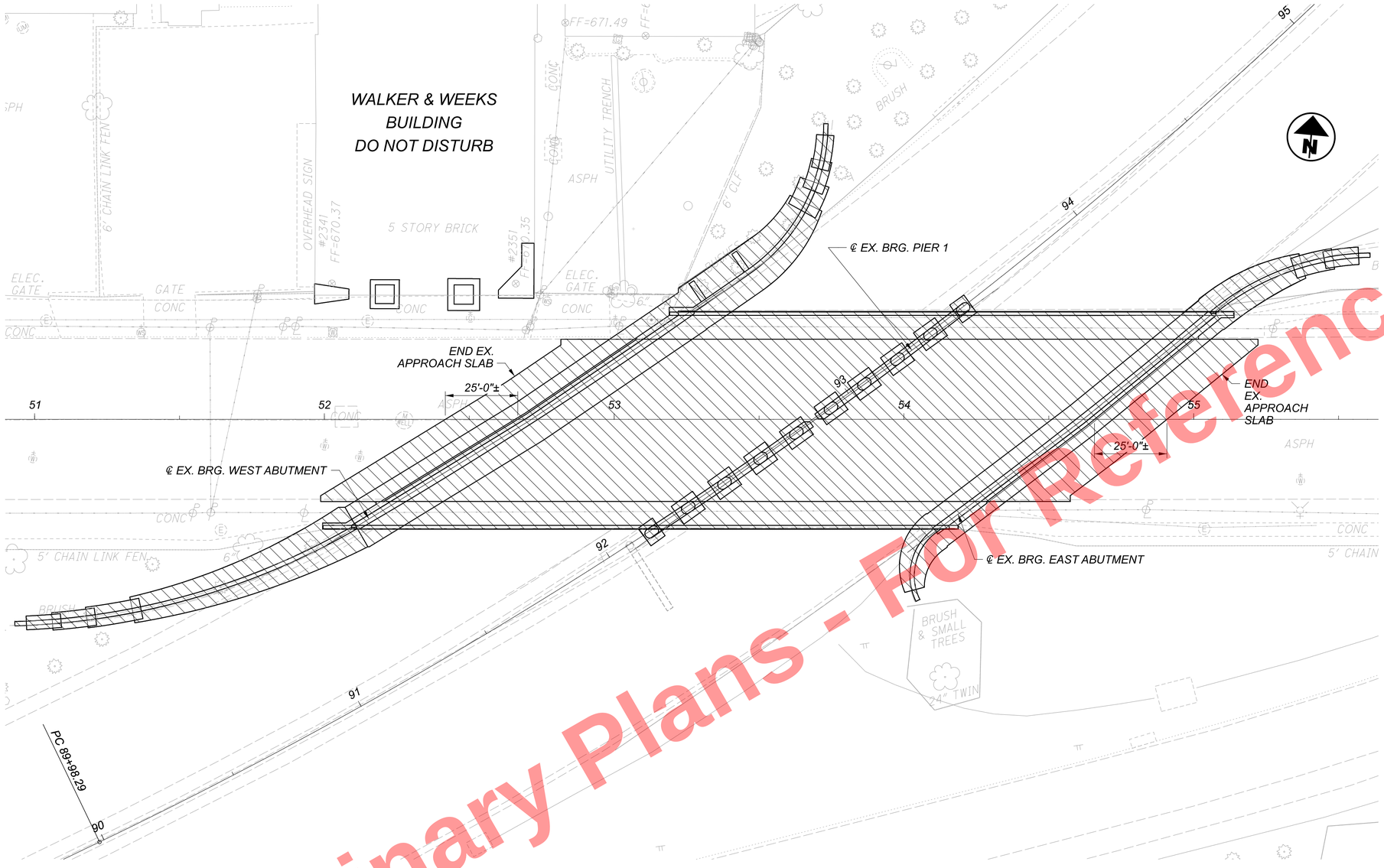

Preliminary Plans - For Reference Only

REMOVAL PLAN

LEGEND:

▨ = REMOVAL

NOTES:

1. SEE SHEETS 16 - 18 / 90 FOR ABUTMENT AND PIER REMOVAL DETAILS.

STRUCTURE GENERAL NOTES:

MAINTENANCE OF TRAFFIC:
SEE THE ROADWAY PLANS FOR MAINTENANCE OF TRAFFIC REQUIREMENTS.

EXISTING STRUCTURE VERIFICATION:
SEE STRUCTURE GENERAL NOTES.

EXISTING STRUCTURE PLANS:
CONSTRUCTION PLANS FOR EXISTING STRUCTURES ARE ON FILE AT THE DEPARTMENT OF TRANSPORTATION DISTRICT 12 OFFICE, 5500 E. 98TH ST., GARFIELD HEIGHTS, OHIO AND ARE AVAILABLE FOR REFERENCE.

SEQUENCE OF CONSTRUCTION:
SEE MOT NOTES IN ROADWAY PLANS.

PORTIONS OF STRUCTURE REMOVED, OVER 20 FOOT SPAN, AS PER PLAN:
THIS ITEM SHALL INCLUDE THE ELEMENTS INDICATED IN THE PLANS AND GENERAL NOTES AND THAT ARE NOT SEPARATELY LISTED FOR PAYMENT. LIMITS OF REMOVAL SHALL BE AS SHOWN ON THE PLANS OR AS DIRECTED BY THE ENGINEER. ITEMS TO BE REMOVED INCLUDE THE SUBSTRUCTURE FOUNDATION PILES THAT INTERFERE WITH NEW CONSTRUCTION AND MISCELLANEOUS ITEMS THAT ARE NOT SHOWN TO BE INCORPORATED INTO THE FINAL CONSTRUCTION AND ARE DIRECTED TO BE REMOVED BY THE ENGINEER. SUBMIT WORKING DRAWINGS AND CALCULATIONS IN ACCORDANCE WITH CMS 501.55.

ALL CONCRETE, REINFORCING STEEL, ASPHALT, ETC. REMOVED FROM THE STRUCTURE AND NOT REUSED SHALL, UNLESS OTHERWISE SPECIFIED, BECOME THE PROPERTY OF THE CONTRACTOR AND SHALL BE REMOVED BY HIM/HER FROM THE SITE. THE MATERIALS SHALL NOT BE PERMITTED TO REMAIN ON SITE, WITHIN THE RIGHT-OF-WAY OR ELSEWHERE UNLESS SPECIFIED BY THE ENGINEER.

THE USE OF EXPLOSIVES AND HEADACHE BALLS WILL NOT BE PERMITTED. THE METHOD OF REMOVAL AND THE WEIGHT OF HAMMER SHALL BE APPROVED BY THE ENGINEER. PERFORM ALL WORK IN A MANNER THAT WILL NOT CUT, ELONGATE, OR DAMAGE THE EXISTING REINFORCING STEEL TO BE PRESERVED.

A LUMP SUM QUANTITY HAS BEEN CARRIED TO THE GENERAL SUMMARY FOR ITEM 202 - PORTIONS OF STRUCTURE REMOVED, OVER 20 FOOT SPAN, AS PER PLAN.

THIS STRUCTURE TO BE REMOVED DURING MOT PHASE 3.

EXISTING STRUCTURE

TYPE: TWO SPAN CONTINUOUS STEEL PLATE GIRDER BRIDGE WITH REINFORCED CONCRETE DECK AND SUBSTRUCTURE

SPANS: 98'-0 1/2"± AND 92'-4 3/8"± C/C BEARINGS ALONG ℄ CARNEGIE AVE.

ROADWAY: 56'-0"± TOE/TOE CURB WITH TWO 8'-3"± SIDEWALKS

LOADING: CF = 2000 (51)

SKEW: VARIES

WEARING SURFACE: LATEX MODIFIED CONCRETE OVERLAY

APPROACH SLABS: 25'-0"± (AS-1-54)

ALIGNMENT: TANGENT

CROWN: 0.016± FT/FT

STRUCTURE FILE NUMBER: 1807897

DATE BUILT: 1958 (OVERLAY 1987)

DISPOSITION: TO BE REPLACED

STRUCTURE REMOVAL DETAILS (1 OF 4)
CUY-90-1696 (BRIDGE 14)
CR-722 (CARNEGIE AVE.) OVER I.R. 90

SFN	1807898
DESIGN AGENCY	Michael Baker INTERNATIONAL
DESIGNER	CEM
CHECKER	MKB
REVIEWER	KAG 12/26/23
PROJECT ID	82382
SUBSET	15
TOTAL	90
SHEET	2295
TOTAL	2696

CUY-90-16.28 (CCG3A)

MODEL: Sheet PAPERSIZE: 34x22 (in.) DATE: 3/28/2025 TIME: 8:00:02 AM USER: RohitLBk
pw:\\mb-us-pw.bentley.com:mb-us-pw-03\Documents\Cleveland_OH01_Projects\ODOT\District12\82382400-Engineering\Structures\SFN_1807898\Sheets\82382_SFN_1807898_SV001.dgn

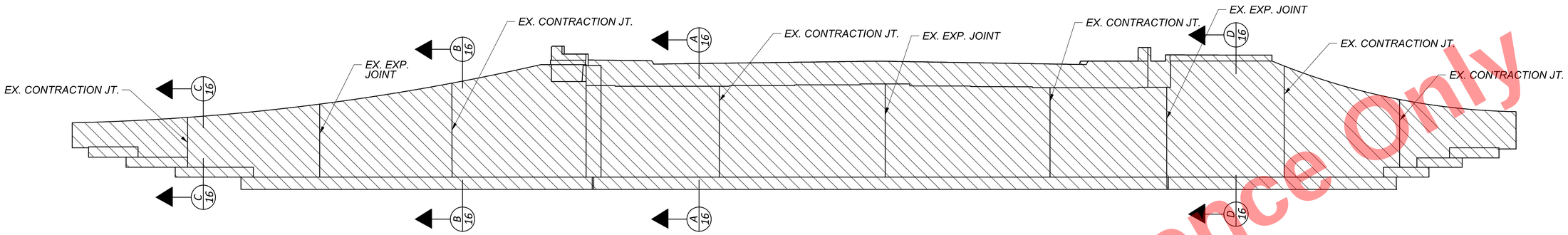

REAR ABUTMENT REMOVAL ELEVATION
(PILES NOT SHOWN)

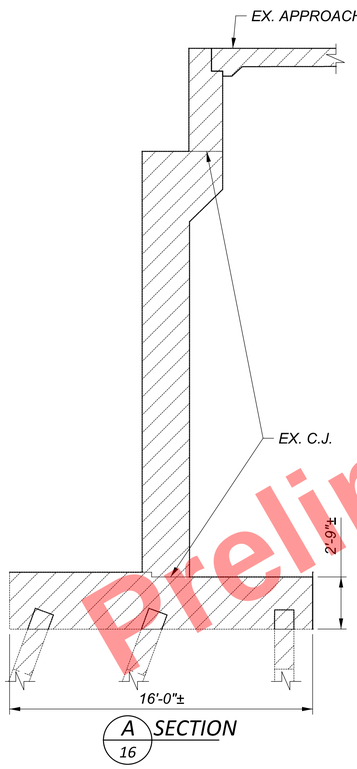

A SECTION 16

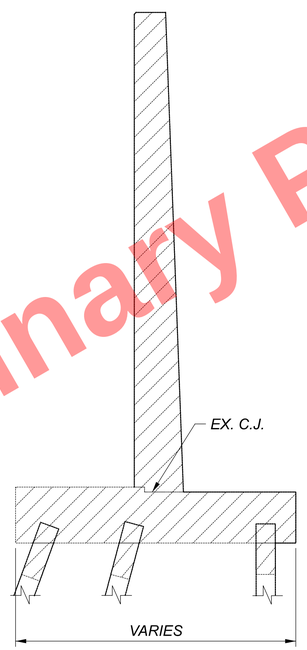

B SECTION 16

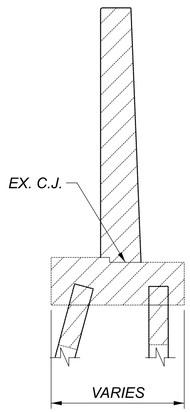

C SECTION 16

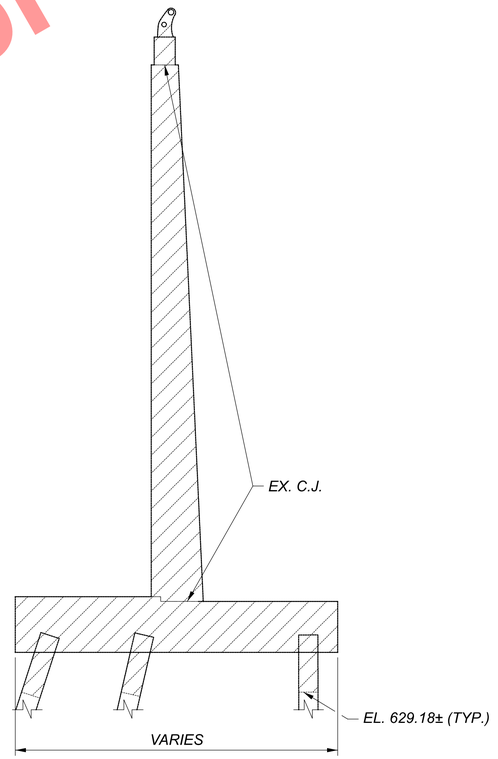

D SECTION 16

NOTES:

1. THIS STRUCTURE TO BE REMOVED DURING MOT PHASE 3.

LEGEND:

= REMOVAL

Preliminary Plans - For Reference Only

STRUCTURE REMOVAL DETAILS (2 OF 4)
CUY-90-1696 (BRIDGE 14)
CR-722 (CARNEGIE AVE.) OVER I.R. 90

SFN	1807898
DESIGN AGENCY	Michael Baker INTERNATIONAL
DESIGNER	CEM
CHECKER	MKB
REVIEWER	KAG 12/26/23
PROJECT ID	82382
SUBSET	16
TOTAL	90
SHEET	2296
TOTAL	2696

CUY-90-16.28 (CCG3A)

MODEL: Sheet PAPERSIZE: 34x22 (in.) DATE: 3/28/2025 TIME: 8:00:13 AM USER: RohitLBk
pw:\\mb-us-pw.bentley.com:mb-us-pw-03\Documents\Cleveland_OH\01_Projects\ODOT\District12\82382400-Engineering\Structures\SFN_1807898\Sheets\82382_SFN_1807898_SV002.dgn

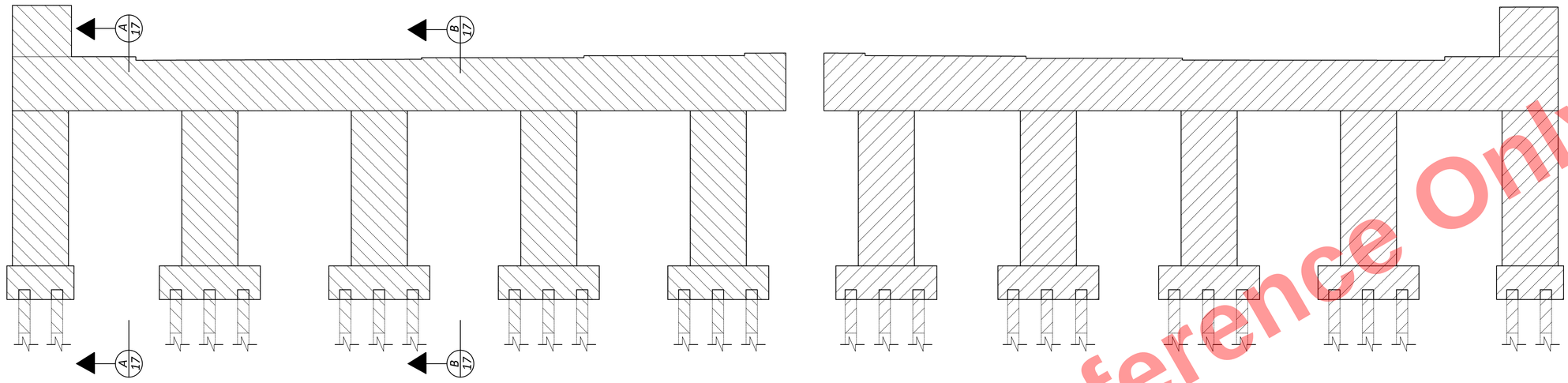

PIER REMOVAL ELEVATION

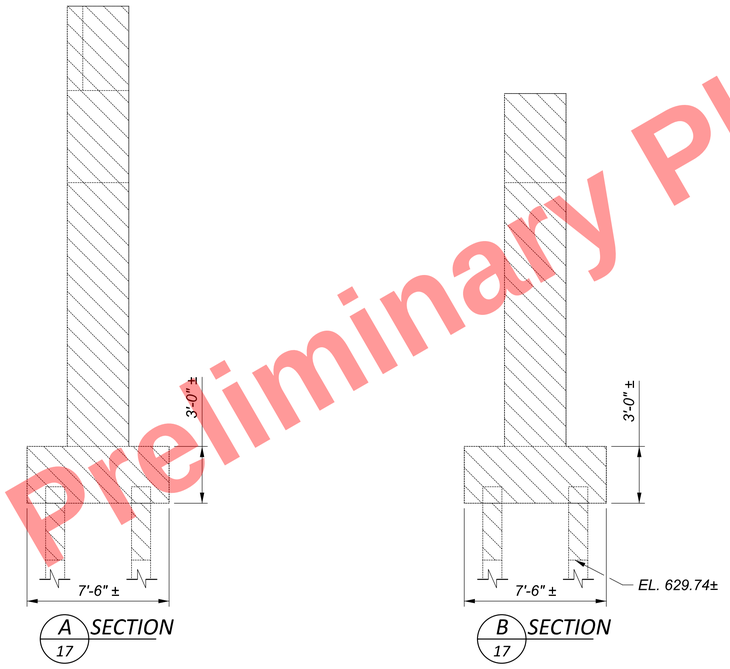

NOTES:

1. THIS STRUCTURE TO BE REMOVED DURING MOT PHASE 3.

LEGEND:

= REMOVAL

Preliminary Plans - For Reference Only

STRUCTURE REMOVAL DETAILS (3 OF 4)
CUY-90-1696 (BRIDGE 14)
CR-722 (CARNEGIE AVE.) OVER I.R. 90

SFN	1807898
DESIGN AGENCY	Michael Baker INTERNATIONAL
DESIGNER	CEM
CHECKER	MKB
REVIEWER	KAG 12/26/23
PROJECT ID	82382
SUBSET	17
TOTAL	90
SHEET	2297
TOTAL	2696

CUY-90-16.28 (CCG3A)

MODEL: Sheet PAPERSIZE: 34x22 (in.) DATE: 3/28/2025 TIME: 8:00:29 AM USER: RohitLBk
pw:\\mb-us-pw.bentley.com:mb-us-pw-03\Documents\Cleveland_OH\01_Projects\ODOT\District12\82382400-Engineering\Structures\SFN_1807898\Sheets\82382_SFN_1807898_SV003.dgn

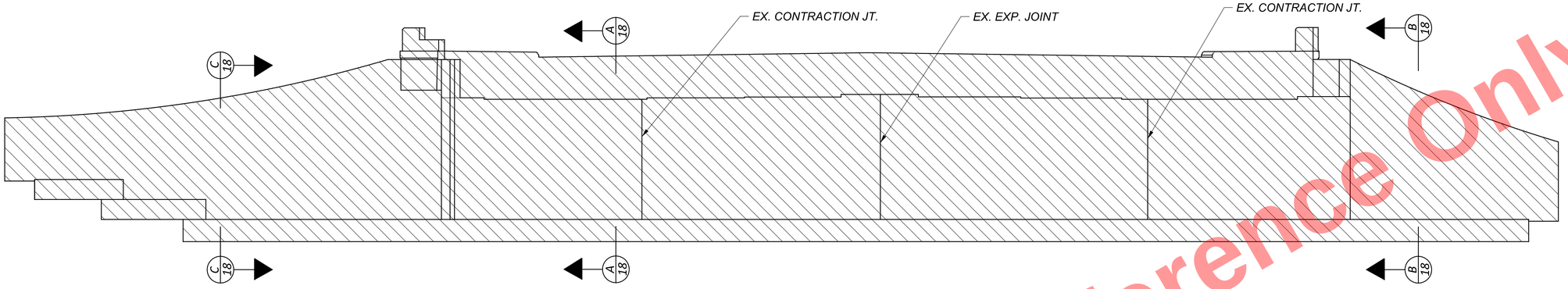

FORWARD ABUTMENT REMOVAL ELEVATION
(PILES NOT SHOWN)

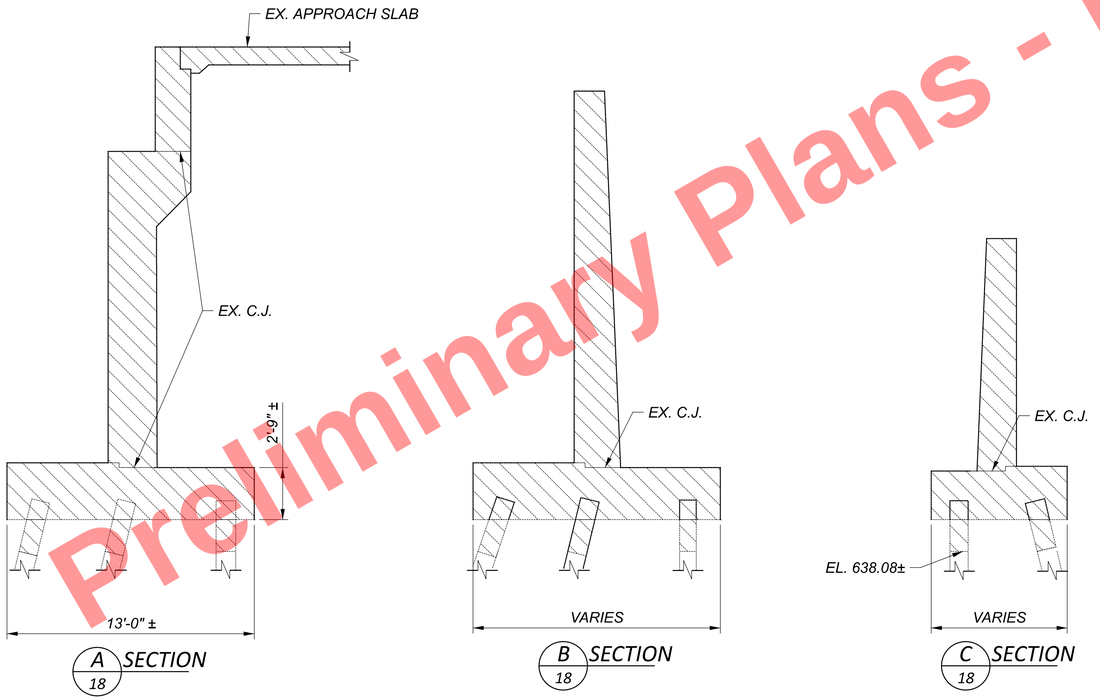

NOTES:

1. THIS STRUCTURE TO BE REMOVED DURING MOT PHASE 3.

LEGEND:

= REMOVAL

Preliminary Plans - For Reference Only

STRUCTURE REMOVAL DETAILS (4 OF 4)
CUY-90-1696 (BRIDGE 14)
CR-722 (CARNEGIE AVE.) OVER I.R. 90

SFN	1807898
DESIGN AGENCY	Michael Baker INTERNATIONAL
DESIGNER	CEM
CHECKER	MKB
REVIEWER	KAG 12/26/23
PROJECT ID	82382
SUBSET	18
TOTAL	90
SHEET	2298
TOTAL	2696

CUY-90-16.28 (CCG3A)

MODEL: Sheet PAPERSIZE: 34x22 (in.) DATE: 3/28/2025 TIME: 8:00:36 AM USER: Rohit.Bk
pw:\\mb-us-pw.bentley.com:mb-us-pw-03\Documents\Cleveland_OH\01_Projects\ODOT\District12\82382400-Engineering\Structures\SFN_1807898\Sheets\82382_SFN_1807898_SV004.dgn

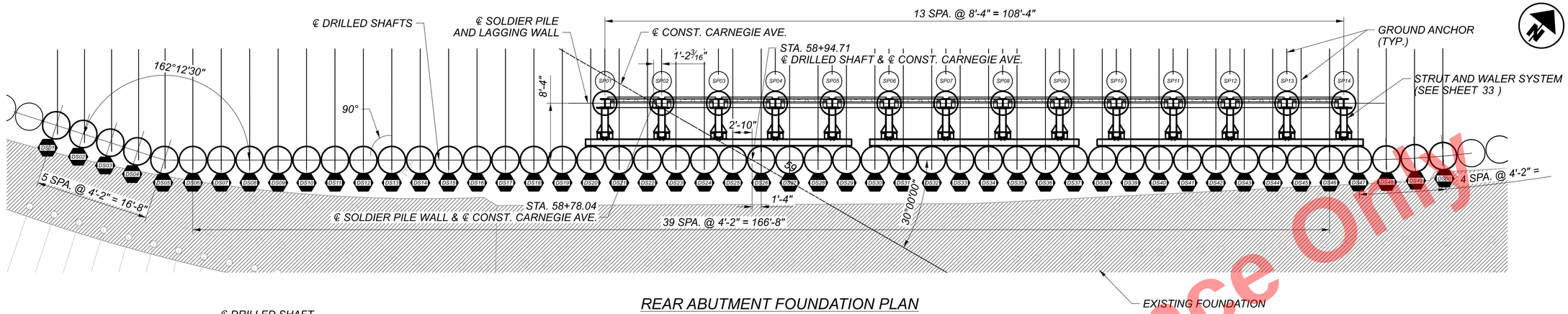

REAR ABUTMENT FOUNDATION PLAN

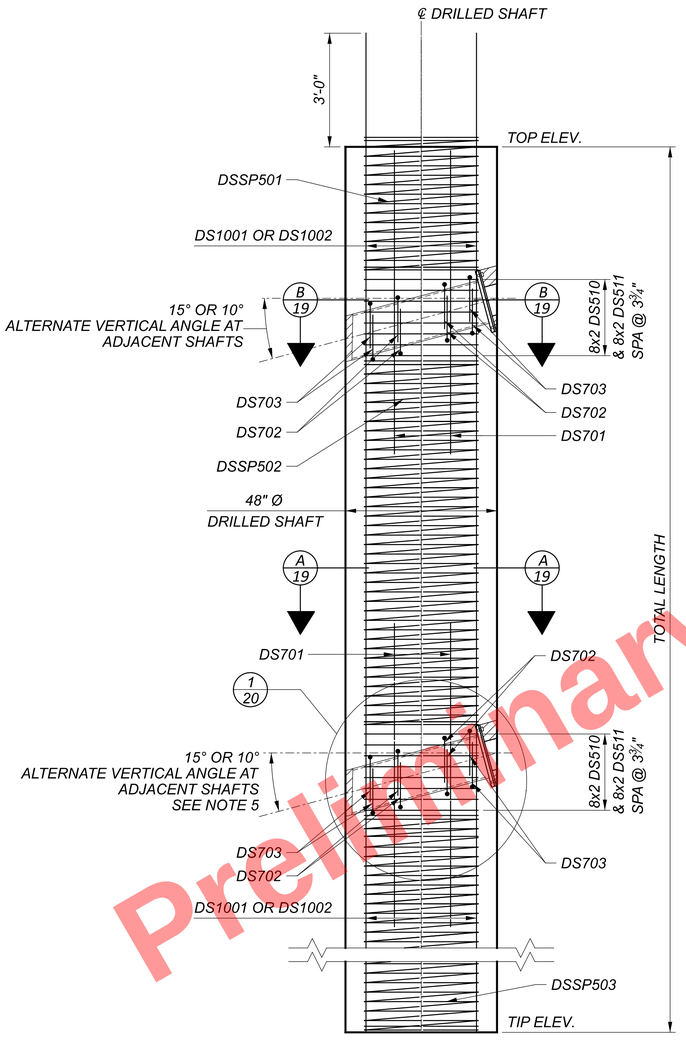

DRILLED SHAFT

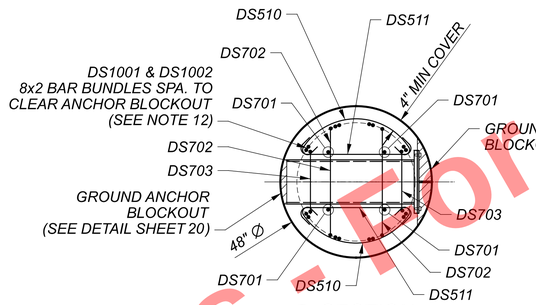

B 19 SECTION

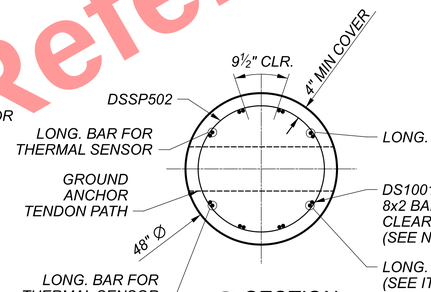

A 19 SECTION

LEGEND

DSXX INDICATES PROPOSED DRILLED SHAFT NUMBER

SPXX INDICATES PROPOSED SOLDIER PILE NUMBER

DRILLED SHAFT REINFORCING SCHEDULE (FOR REFERENCE ONLY)

BAR MARK	LENGTH	TYPE	A	B	C	G	H	K	R
DS1001	58'-0"	STR.	58'-0"						
DS1002	49'-0"	STR.	49'-0"						
DSSP501	149'-7"	27	3 3/4"	3'-4"	3'-7"				
DSSP502	351'-8"	27	3 3/4"	3'-4"	9'-8 1/2"				
DSSP503	2584'-6"	27	3 3/4"	3'-4"	77'-4 1/2"				
DS510	4'-6 5/8"	36	5 1/2"	3'-7 5/8"		5 1/2"	1'-0"		1'-8"
DS511	3'-9"	35	5 1/2"	2'-10"		5 1/2"			
DS701	8'-0"	STR.	8'-0"						
DS702	5'-2 1/2"	2	1'-2"	2'-10"		1'-2"			
DS703	3'-11"	2	1'-2"	2'-2"		1'-2"			

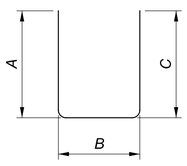

TYPE-2

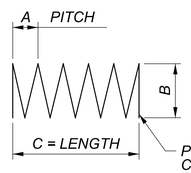

TYPE-27

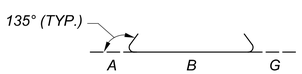

TYPE-T35

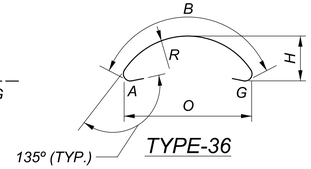

TYPE-36

NOTES:

1. DRILLED SHAFTS ARE TO BE INSTALLED IN THE POSITION INDICATED IN THE FOUNDATION PLAN. REFER TO THE GENERAL NOTES ON SHEETS 4 -10/90 FOR DETAILS.
2. THE CONTRACTOR IS ADVISED THAT THE PROPOSED DRILLED SHAFT INSTALLATIONS MAY REQUIRE ADVANCING SHAFTS THROUGH OBSTRUCTIONS SUCH AS EXISTING FOUNDATIONS AND PILES. EXISTING FOUNDATION AND PILE LOCATIONS ARE DEPICTED IN ACCORDANCE WITH AVAILABLE EXISTING PLAN INFORMATION.
3. PAYMENT FOR DRILLED SHAFTS INSTALLED IN ACCORDANCE WITH THE PLANS AND SPECIFICATIONS SHALL BE MADE UNDER ITEM 524-DRILLED SHAFTS, 48" DIAMETER, AS PER PLAN. REFER TO GENERAL NOTES ON SHEETS 4 -10/90.
4. INSTALL ALL GROUND ANCHORS IN THE VERTICAL PLANE PERPENDICULAR TO THE CENTERLINE OF BEARINGS AT THE REAR ABUTMENT.
5. SOLDIER PILE WALL GROUND ANCHORS SHALL BE INSTALLED AT 10 DEG. INCLINATION FROM HORIZONTAL. TANGENT WALL GROUND ANCHORS AT ADJACENT DRILLED SHAFTS SHALL BE INSTALLED AT ALTERNATING 10 DEG. AND 15 DEG. INCLINATION FROM HORIZONTAL.
6. INSTALL REINFORCING STEEL CAGE WITH GROUND ANCHOR BLOCKOUTS AT PROPER ELEVATION AND ORIENTATION WITHIN THE SHAFT TO ALLOW FUTURE DRILLING OF THE GROUND ANCHOR AT THE CORRECT LOCATION.
7. ALL REINFORCING IS EPOXY COATED.
8. CONTRACTOR SHALL PROVIDE ADDITIONAL REINFORCEMENT BARS OR OTHER MEANS FOR GUIDING TREMIE PIPE ADJACENT TO GROUND ANCHOR BLOCKOUT. USE TREMIE PIPE NO GREATER THAN 8" ID.
9. CONTRACTOR SHALL PROVIDE ADDITIONAL MEANS TO ENSURE ALIGNMENT OF THE REINFORCEMENT CAGE AND GROUND ANCHOR BLOCKOUT WITHIN THE SHAFT DURING CONCRETE PLACEMENT. TEMPLATES, ADDITIONAL REINFORCING STEEL, OR OTHER METHODS TO ENSURE ALIGNMENT ARE INCLUDED IN ITEM 524 - DRILLED SHAFTS, 48" DIAMETER, AS PER PLAN.
10. SEE SHEET 25 / 90 FOR GROUND ANCHOR DETAILS.
11. SEE SHEET 23 / 90 FOR DRILLED SHAFT AND SOLDIER PILE SCHEDULES.
12. ALTERNATE DS1001 & DS1002 BARS WITHIN A BUNDLE SUCH THAT INDIVIDUAL BAR SPLICES WITHIN THE BUNDLE DO NOT OVERLAP. MINIMUM LAP LENGTH FOR DS1001 & DS1002 BARS IS 8'-6".

Preliminary Plans - For Reference Only

REAR ABUTMENT FOUNDATION PLAN
CUY-90-1696 (BRIDGE 14)
CR-722 (CARNEGIE AVE.) OVER I.R. 90

SFN 1807898
DESIGN AGENCY
Michael Baker INTERNATIONAL
DESIGNER GZ | CHECKER JML
REVIEWER KAG 12/26/23
PROJECT ID 82382
SUBSET 19 | TOTAL 90
SHEET 2299 | TOTAL 2696

CUY-90-16.28 (CCG3A)
MODEL: Sheet PAPERSIZE: 34x22 (in.) DATE: 3/28/2025 TIME: 8:01:02 AM USER: Rohit.Bk
pw:\\mb-us-pw.bentley.com:mb-us-pw-03\Documents\Cleveland_OH\01_Projects\ODOT\District12\82382\400-Engineering\Structures\SFN_1807898\Sheets\82382_SFN_1807898_SR002.dgn

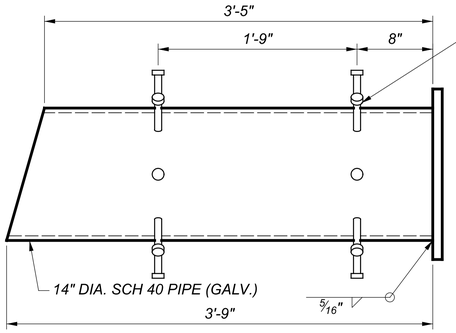

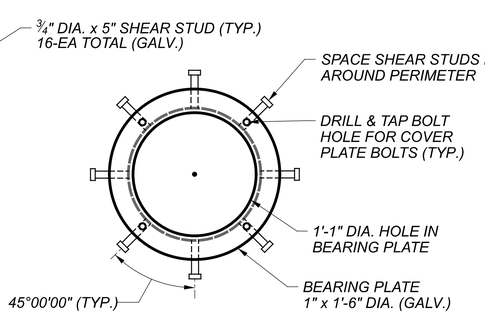

GROUND ANCHOR BLOCKOUT (15° ANGLE)

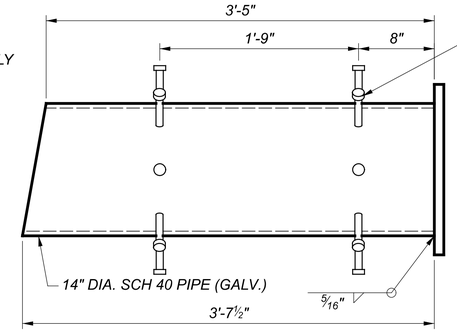

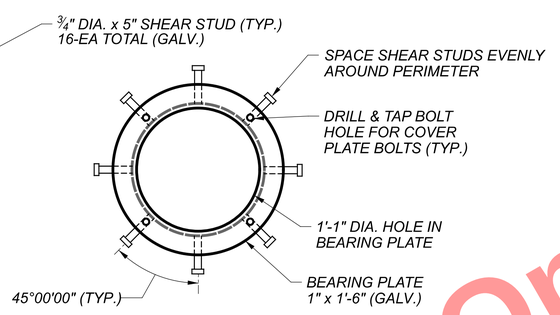

GROUND ANCHOR BLOCKOUT (10° ANGLE)

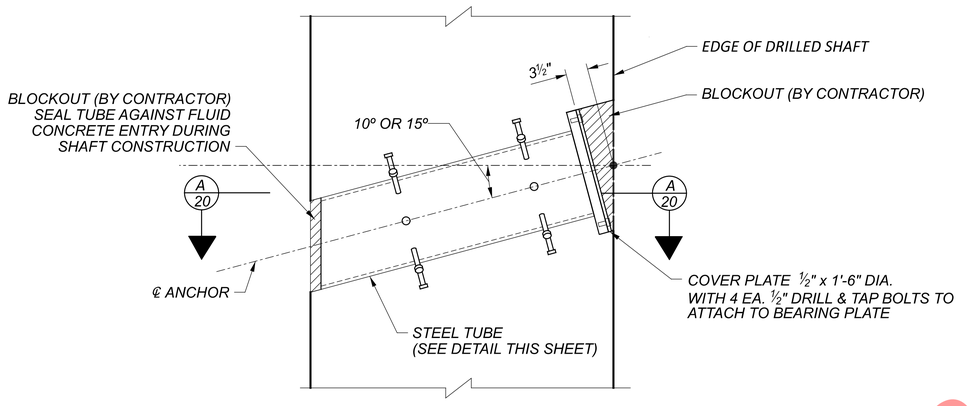

1/20 DETAIL (DURING SHAFT CONSTRUCTION)

(SHAFT REINFORCEMENT NOT SHOWN)

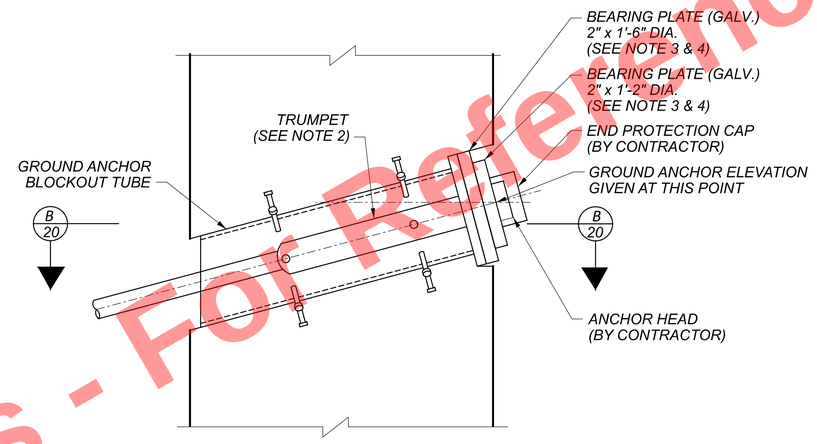

1/20 DETAIL (WITH GROUND ANCHOR INSTALLED)

(SHAFT REINFORCEMENT NOT SHOWN)

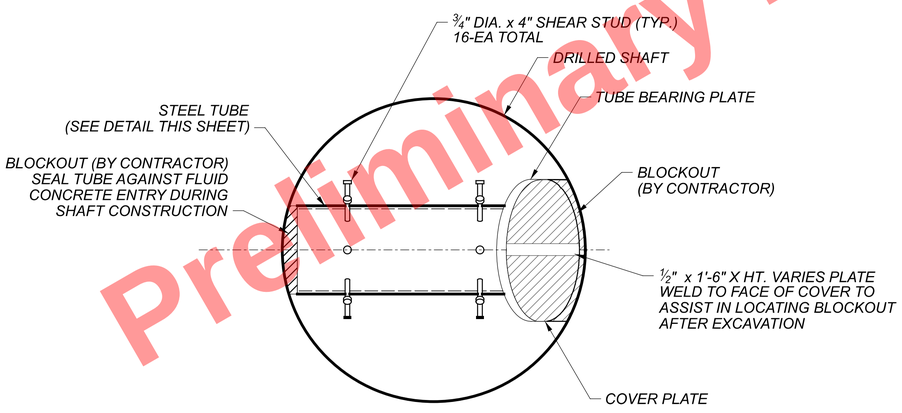

A/20 SECTION

(SHAFT REINFORCEMENT NOT SHOWN)

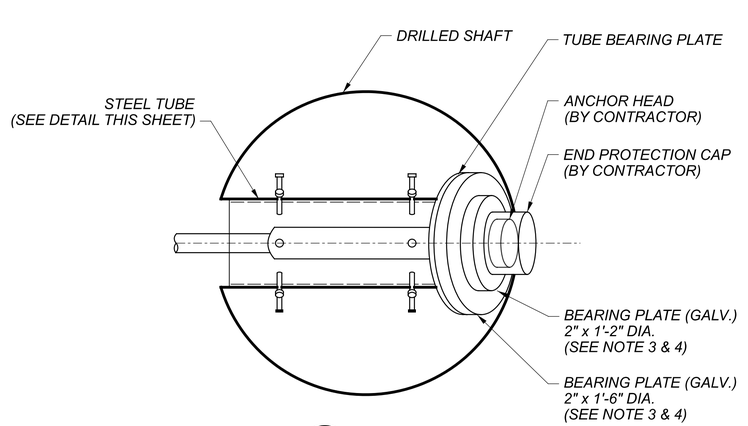

B/20 SECTION

(SHAFT REINFORCEMENT NOT SHOWN)

NOTES:

1. SEE SHEET 25 /90 FOR GROUND ANCHOR DETAILS.
2. SIZE, WALL THICKNESS, AND GRADE OF TRUMPET TO BE DETERMINED BY CONTRACTOR.
3. WEDGE PLATE AND ANCHOR BEARING PLATES SHALL BE CENTERED ON THE GROUND ANCHOR BLOCKOUT.
4. STEEL BEARING PLATES SHALL MEET THE REQUIREMENTS AND CONFORM TO ASTM A572, GRADE 50 IN ACCORDANCE WITH C&MS 711.01. STEEL PIPE SHALL MEET THE REQUIREMENTS AND CONFORM AT ASTM A53, GRADE B, IN ACCORDANCE WITH C&MS 707.70.
5. FABRICATED STEEL BLOCKOUT ASSEMBLY AND THE MEANS AND METHODS TO ALIGN THE ASSEMBLY, SEAL THE ENDS, AND LOCATE AFTER EXCAVATION SHALL BE INCLUDED IN THE BID ITEM 524-DRILLED SHAFTS, 48" DIAMETER, AS PER PLAN.
6. ALL GROUND ANCHOR BEARING PLATES AND THE FABRICATED BLOCKOUT ASSEMBLY (PIPE, SHEAR STUDS, AND BEARING PLATE) SHALL BE GALVANIZED IN ACCORDANCE WITH C&MS 711.02.
7. MAXIMUM HOLE SIZE IN BEARING PLATES FOR GROUND IS ANCHOR 5" DIA. CONTRACTOR TO COORINATE BEARING PLATE DESIGN WITH TRUMPET AND WEDGE PLATE DESIGN AND DETAILS.
8. ALL COMPONENTS OF THE ANCHORAGE, INCLUDING ANCHOR HEAD, TRUMPET AND BEARING PLATES IS INCLUDED IN THE BID ITEM GROUND ANCHOR, TANGENT WALL, 159 KIP MAX. TEST LOAD, AS PER PLAN.

Preliminary Plans - For Reference Only

REAR ABUTMENT DRILLED SHAFT DETAILS
CUY-90-1696 (BRIDGE 14)
CR-722 (CARNEGIE AVE,) OVER I.R. 90

SFN 1807898
DESIGN AGENCY
Michael Baker INTERNATIONAL
DESIGNER DBW | CHECKER MKB
REVIEWER KAG 12/26/23
PROJECT ID 82382
SUBSET 20 | TOTAL 90
SHEET 2300 | TOTAL 2696

CUY-90-16.28 (CCG3A)

MODEL: Sheet PAPERSIZE: 34x22 (in.) DATE: 3/28/2025 TIME: 8:01:28 AM USER: RohitBk
pw:\\mb-us-pw.bentley.com:mb-us-pw-03\Documents\Cleveland_OH101_Projects\ODOT\District12\82382\400-Engineering\Structures\SFN_1807898\Sheets\82382_SFN_1807898_SR011.dgn

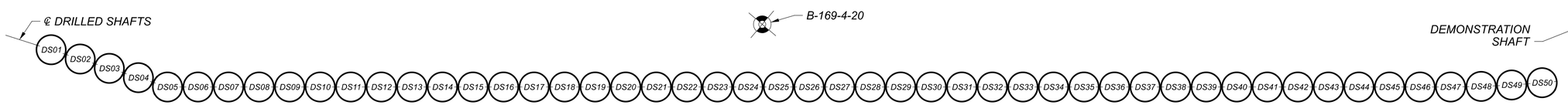

PLAN - DEMONSTRATION SHAFT LOCATION

INSTALL DEMONSTRATION SHAFT AS FAR AS PRACTICAL FROM THE WALKER WEEKS BUILDING

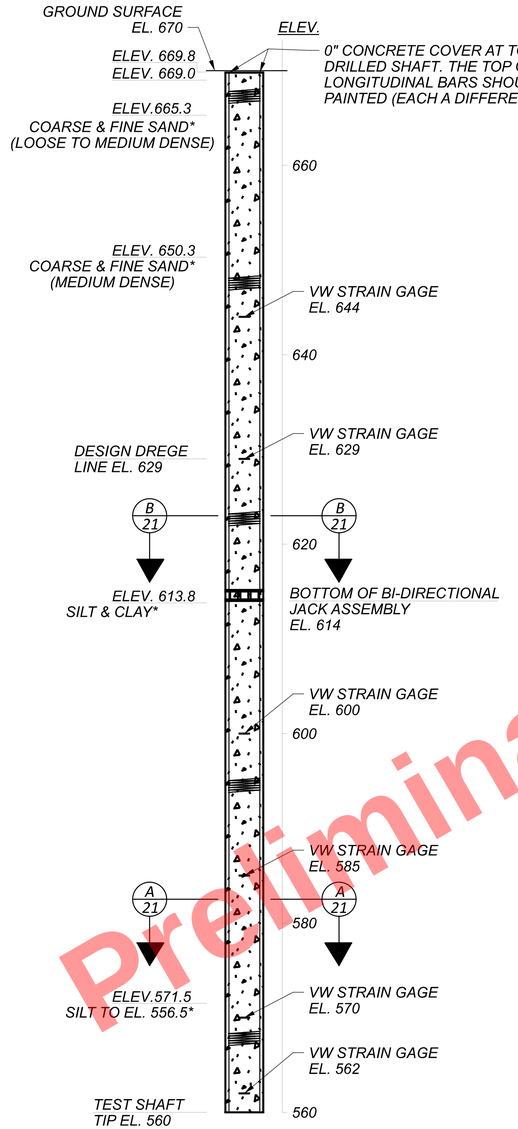

ELEVATION

** SEE SOIL BORINGS FOR ODOT SOIL CLASSIFICATIONS AND ADDITIONAL INFORMATION*

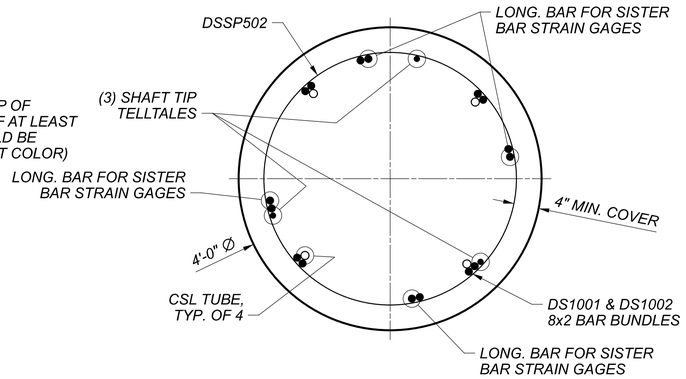

A / 21 SECTION

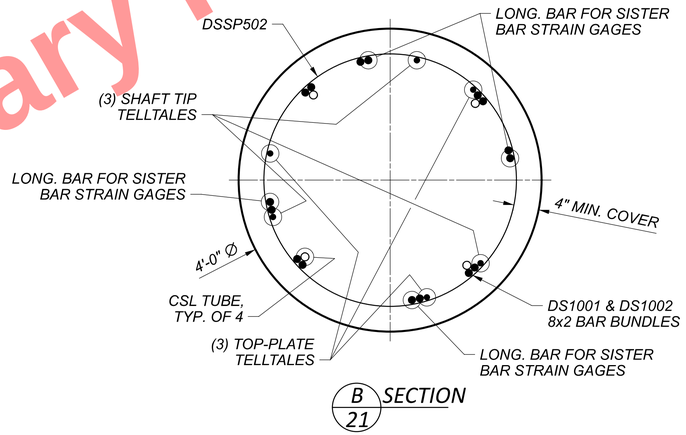

B / 21 SECTION

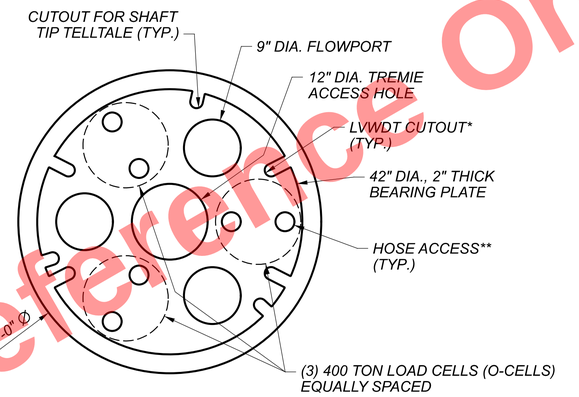

**LVWDT = LINEAR VIBRATING WIRE DISPLACEMENT (EXPANSION) TRANSDUCERS. CUTOUTS ARE ONLY REQUIRED FOR TOP BEARING PLATE.*

***HOSE ACCESS HOLES ARE ONLY REQUIRED FOR TOP BEARING PLATE.*

****REBARS, STRAIN GAGES, AND THERMAL INTEGRITY PROFILING (TIP) WIRE STRINGS ARE NOT SHOWN FOR CLARITY.*

BI-DIRECTIONAL JACK ASSEMBLY

TYPICAL SECTIONS FOR DEMONSTRATION SHAFT

NOTES:

1. *FOR LOAD TESTING REQUIREMENTS; SEE SPECIAL PROVISIONS 5201 "ITEM 524 DRILLED SHAFTS, MISC.: DEMONSTRATION DRILLED SHAFT AND BIDRECTIONAL STATIC LOAD TESTING OF DRILLED SHAFTS, BRIDGE NO. CUY-90-1696", DATED MARCH 25, 2025.*
2. *THE TOP ELEVATION OF THE DEMONSTRATION SHAFT IS TO BE DETERMINED BY THE CONTRACTOR.*
3. *INSTALL 2 PAIR OF VIBRATING WIRE (VW) STRAIN GAGES (WITH SISTER BARS) ORTHOGONALLY OPPOSITE EACH OTHER AT EACH STRAIN GAGE LEVEL (TOTAL OF 24 STRAIN GAGES REQUIRED).*
4. *PROVIDE A PAIR OF AUTOMATED DIGITAL SURVEY LEVELS (E.G. LEICA MODEL DNA 03, SOKIA MODEL SDL 30, OR EQUAL) IN ACCORDANCE WITH ASTM D8169-18, INSTEAD OF AN INDEPENDENT REFERENCE BEAM. USE EACH SURVEY LEVEL TO MONITOR A SEPARATE INVAR-GRADE SURVEY ROD (INVAR ROD) WITH A PRECISION OF 0.001 INCH. RIGIDLY-MOUNT THE INVAR RODS TO THE TOP OF SHAFT FROM A MINIMUM OF 5 SHAFT DIAMETERS AWAY FROM THE CENTER OF THE DEMONSTRATION SHAFT.*
5. *PROVIDE AND INSTALL LVWDT TO MONITOR JACK COMPRESSION AND JACK EXPANSION.*
6. *PROVIDE AND INSTALL TOP-PLATE AND SHAFT TIP TELLTALES TO MONITOR SHAFT MOVEMENTS WHICH CAN BE USED TO ESTIMATE SHAFT COMPRESSIONS ALONG WITH THE LVWDT AND TOP OF SHAFT DISPLACEMENT MEASUREMENTS.*
7. *CONTRACTOR SHALL VERIFY ALL UTILITY LOCATIONS PRIOR TO FINALIZING THE LOCATION OF THE DEMONSTRATION SHAFT.*
8. *DRILLING SLURRY IF USED MUST BE A POLYMER TYPE (MINERAL TYPE IS NOT ACCEPTABLE DUE TO RISK OF FORMATION OF A MUD CAKE ON THE SIDEWALL OF THE DRILLED SHAFT).*
9. *HIGH STRAIN DYNAMIC LOAD TESTING OF THE DEMONSTRATION DRILLED SHAFT TO BE PERFORMED AFTER THE BI-DIRECTIONAL STATIC LOAD TEST HAS BEEN COMPLETED.*
10. *THE CONTRACTOR MAY PROPOSE AN ALTERNATE LOCATION FOR THE DEMONSTRATION SHAFT, WITH THE ACCEPTANCE OF THE ENGINEER. THE PROPOSED LOCATION MUST BE A MINIMUM OF 5 DRILLED SHAFT DIAMETERS AWAY FROM ANY PRODUCTION DRILLED SHAFT. INSTALL THE DEMONSTRATION DRILLED SHAFT AS FAR AS PRACTICAL FROM THE WALKER WEEKS BUILDING.*
11. *THE DEMONSTRATION DRILLED SHAFT REINFORCEMENT AND CONCRETE MIX, INCLUDING THE CONCRETE MAXIMUM AGGREGATE SIZE REQUIREMENT, SHALL BE THE SAME AS THE REAR ABUTMENT PRODUCTION DRILLED SHAFT.*
12. *FOR MORE INFORMATION ON CSL TESTING REQUIREMENTS FOR THE DEMONSTRATION SHAFT, SEE GENERAL NOTES SHEETS 4 THRU 10 OF 90.*

Preliminary Plans - For Reference Only

DEMONSTRATION SHAFT FOR BI-DIRECTIONAL LOAD TEST DETAILS (1 OF 2)
CUY-90-1696 (BRIDGE 14)
CR-722 (CARNEGIE AVE.) OVER I.R. 90

SFN 1807898
DESIGN AGENCY
Michael Baker INTERNATIONAL
DESIGNER JNR | CHECKER KAG
REVIEWER GZ 05/15/24
PROJECT ID 82382
SUBSET 21 | TOTAL 90
SHEET 2301 | TOTAL 2696

CUY-90-16.28 (CCG3A)

MODEL: Sheet PAPERSIZE: 34x22 (in.) DATE: 6/13/2025 TIME: 2:28:08 PM USER: David.Fell
pw:\\mb-us-pw.bentley.com:mb-us-pw-03\Documents\Cleveland_OH101_Projects\ODOT\District12\82382\400-Engineering\Structures\SFN_1807898\Sheets\82382_SFN_1807898_SM002.dgn

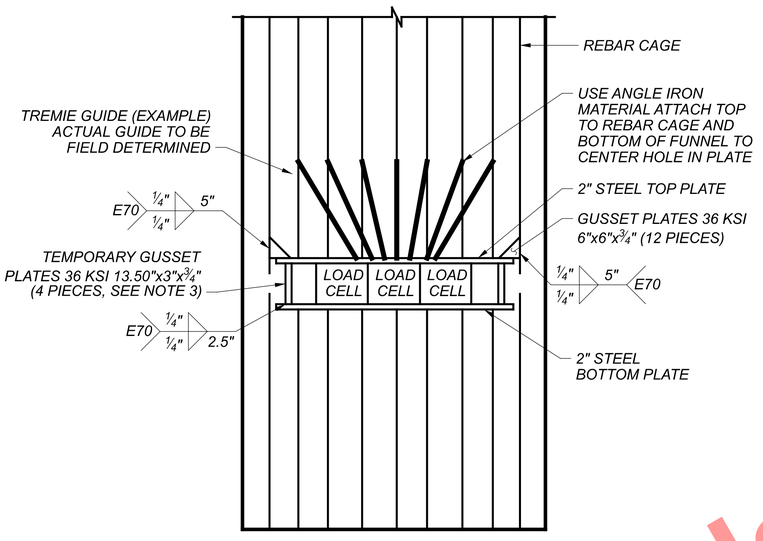

BI-DIRECTIONAL JACK ASSEMBLY
(NOT TO SCALE)

1. STEEL PLATES ARE WELDED TO REINFORCING CAGE WITH FILLET WELDS ON BOTH SIDES OF REBAR AND GUSSET PLATES.
2. A TREMIE PIPE GUIDE FUNNEL IS CONSTRUCTED AND WELDED TO THE REBAR CAGE AND BEARING PLATE TO ALLOW CONCRETE PLACEMENT BELOW THE BI-DIRECTIONAL JACK ASSEMBLY.
3. TEMPORARY STEEL GUSSET PLATES INSTALLED DURING HANDLING AND LIFTING OF CAGE. TO BE CUT ONCE CAGE IS VERTICAL.

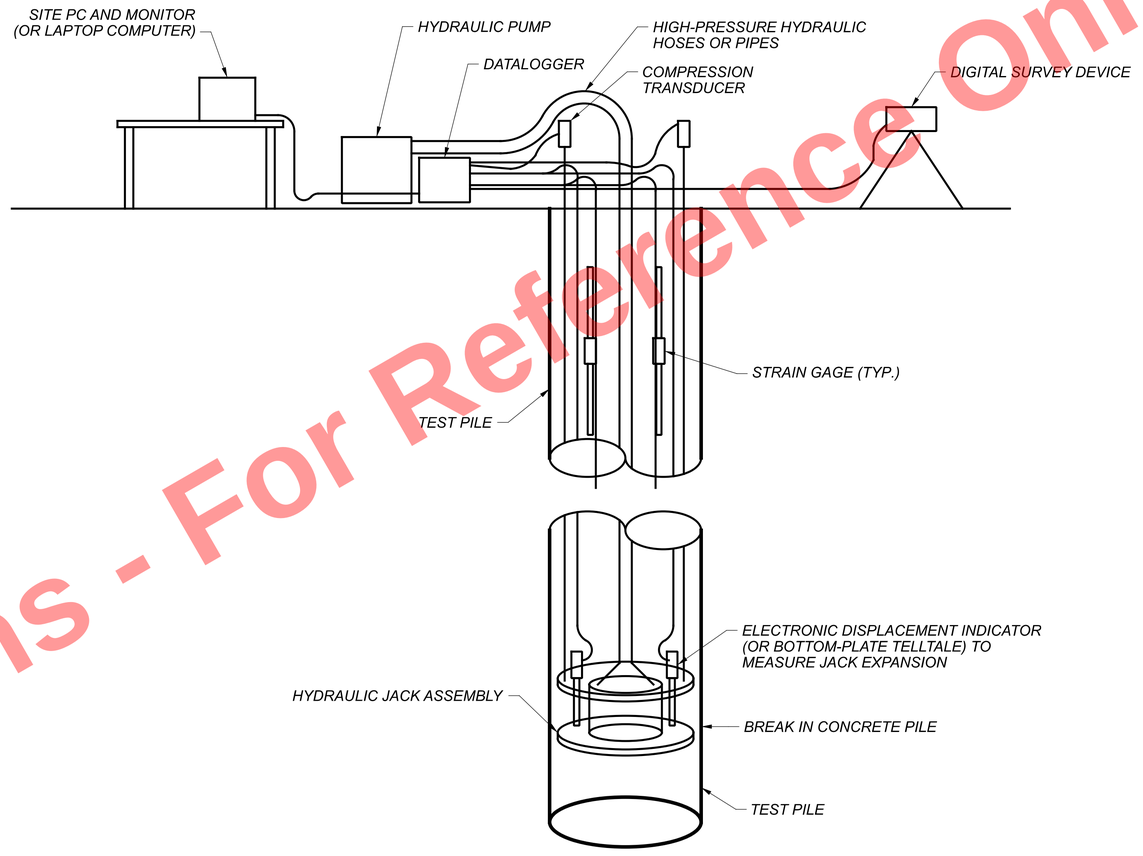

BI-DIRECTIONAL LOAD TEST INSTRUMENTATION SCHEMATIC
(NOT TO SCALE)

Preliminary Plans - For Reference Only

DEMONSTRATION SHAFT FOR BI-DIRECTIONAL LOAD TEST DETAILS (2 OF 2)
CUY-90-1696 (BRIDGE 14)
CR-722 (CARNEGIE AVE.) OVER I.R. 90

SFN 1807898
DESIGN AGENCY
Michael Baker INTERNATIONAL
DESIGNER JNR | CHECKER KAG
REVIEWER GZ 05/15/24
PROJECT ID 82382
SUBSET 22 | TOTAL 90
SHEET 2302 | TOTAL 2696

CUY-90-16.28 (CCG3A)

MODEL: Sheet PAPERSIZE: 34x22 (in.) DATE: 6/13/2025 TIME: 2:28:35 PM USER: David.Fell
pw:\\mb-us-pw.bentley.com:mb-us-pw-03\Documents\Cleveland_OH\01_Projects\ODOT\District12\82382\400-Engineering\Structures\SFN_1807898\Sheets\82382_SFN_1807898_SM003.dgn

DRILLED SHAFT SCHEDULE

DESIGNATION	NORTHING	EASTING	DIAMETER (IN.)	TOP ELEV.	TIP ELEV.	TOTAL LENGTH (FT.)	PRIMARY REINFORCING	CONFINEMENT REINFORCING
DS01	668749.225'	2195337.027'	48"	654.96	560.00	95.0	2 SETS OF 8-DS1001 & 2 SETS OF 8-DS1002	1-DSSP501, 1-DSSP502 & 1-DSSP503, 2 SETS OF 8x2-DS510 & 8x2-DS511
DS02	668750.820'	2195340.876'	48"	654.96	560.00	95.0	2 SETS OF 8-DS1001 & 2 SETS OF 8-DS1002	1-DSSP501, 1-DSSP502 & 1-DSSP503, 2 SETS OF 8x2-DS510 & 8x2-DS511
DS03	668752.416'	2195344.725'	48"	654.96	560.00	95.0	2 SETS OF 8-DS1001 & 2 SETS OF 8-DS1002	1-DSSP501, 1-DSSP502 & 1-DSSP503, 2 SETS OF 8x2-DS510 & 8x2-DS511
DS04	668754.012'	2195348.573'	48"	654.96	560.00	95.0	2 SETS OF 8-DS1001 & 2 SETS OF 8-DS1002	1-DSSP501, 1-DSSP502 & 1-DSSP503, 2 SETS OF 8x2-DS510 & 8x2-DS511
DS05	668755.608'	2195352.422'	48"	654.96	560.00	95.0	2 SETS OF 8-DS1001 & 2 SETS OF 8-DS1002	1-DSSP501, 1-DSSP502 & 1-DSSP503, 2 SETS OF 8x2-DS510 & 8x2-DS511
DS06	668758.304'	2195355.600'	48"	654.96	560.00	95.0	2 SETS OF 8-DS1001 & 2 SETS OF 8-DS1002	1-DSSP501, 1-DSSP502 & 1-DSSP503, 2 SETS OF 8x2-DS510 & 8x2-DS511
DS07	668760.999'	2195358.777'	48"	654.96	560.00	95.0	2 SETS OF 8-DS1001 & 2 SETS OF 8-DS1002	1-DSSP501, 1-DSSP502 & 1-DSSP503, 2 SETS OF 8x2-DS510 & 8x2-DS511
DS08	668763.695'	2195361.954'	48"	654.96	560.00	95.0	2 SETS OF 8-DS1001 & 2 SETS OF 8-DS1002	1-DSSP501, 1-DSSP502 & 1-DSSP503, 2 SETS OF 8x2-DS510 & 8x2-DS511
DS09	668766.391'	2195365.131'	48"	654.96	560.00	95.0	2 SETS OF 8-DS1001 & 2 SETS OF 8-DS1002	1-DSSP501, 1-DSSP502 & 1-DSSP503, 2 SETS OF 8x2-DS510 & 8x2-DS511
DS10	668769.086'	2195368.309'	48"	654.96	560.00	95.0	2 SETS OF 8-DS1001 & 2 SETS OF 8-DS1002	1-DSSP501, 1-DSSP502 & 1-DSSP503, 2 SETS OF 8x2-DS510 & 8x2-DS511
DS11	668771.782'	2195371.486'	48"	654.96	560.00	95.0	2 SETS OF 8-DS1001 & 2 SETS OF 8-DS1002	1-DSSP501, 1-DSSP502 & 1-DSSP503, 2 SETS OF 8x2-DS510 & 8x2-DS511
DS12	668774.477'	2195374.663'	48"	654.96	560.00	95.0	2 SETS OF 8-DS1001 & 2 SETS OF 8-DS1002	1-DSSP501, 1-DSSP502 & 1-DSSP503, 2 SETS OF 8x2-DS510 & 8x2-DS511
DS13	668777.173'	2195377.840'	48"	654.96	560.00	95.0	2 SETS OF 8-DS1001 & 2 SETS OF 8-DS1002	1-DSSP501, 1-DSSP502 & 1-DSSP503, 2 SETS OF 8x2-DS510 & 8x2-DS511
DS14	668779.869'	2195381.018'	48"	654.96	560.00	95.0	2 SETS OF 8-DS1001 & 2 SETS OF 8-DS1002	1-DSSP501, 1-DSSP502 & 1-DSSP503, 2 SETS OF 8x2-DS510 & 8x2-DS511
DS15	668782.564'	2195384.195'	48"	654.96	560.00	95.0	2 SETS OF 8-DS1001 & 2 SETS OF 8-DS1002	1-DSSP501, 1-DSSP502 & 1-DSSP503, 2 SETS OF 8x2-DS510 & 8x2-DS511
DS16	668785.260'	2195387.372'	48"	654.96	560.00	95.0	2 SETS OF 8-DS1001 & 2 SETS OF 8-DS1002	1-DSSP501, 1-DSSP502 & 1-DSSP503, 2 SETS OF 8x2-DS510 & 8x2-DS511
DS17	668787.955'	2195390.549'	48"	654.96	560.00	95.0	2 SETS OF 8-DS1001 & 2 SETS OF 8-DS1002	1-DSSP501, 1-DSSP502 & 1-DSSP503, 2 SETS OF 8x2-DS510 & 8x2-DS511
DS18	668790.651'	2195393.726'	48"	654.96	560.00	95.0	2 SETS OF 8-DS1001 & 2 SETS OF 8-DS1002	1-DSSP501, 1-DSSP502 & 1-DSSP503, 2 SETS OF 8x2-DS510 & 8x2-DS511
DS19	668793.347'	2195396.904'	48"	654.96	560.00	95.0	2 SETS OF 8-DS1001 & 2 SETS OF 8-DS1002	1-DSSP501, 1-DSSP502 & 1-DSSP503, 2 SETS OF 8x2-DS510 & 8x2-DS511
DS20	668796.042'	2195400.081'	48"	654.96	560.00	95.0	2 SETS OF 8-DS1001 & 2 SETS OF 8-DS1002	1-DSSP501, 1-DSSP502 & 1-DSSP503, 2 SETS OF 8x2-DS510 & 8x2-DS511
DS21	668798.738'	2195403.258'	48"	654.96	560.00	95.0	2 SETS OF 8-DS1001 & 2 SETS OF 8-DS1002	1-DSSP501, 1-DSSP502 & 1-DSSP503, 2 SETS OF 8x2-DS510 & 8x2-DS511
DS22	668801.433'	2195406.435'	48"	654.96	560.00	95.0	2 SETS OF 8-DS1001 & 2 SETS OF 8-DS1002	1-DSSP501, 1-DSSP502 & 1-DSSP503, 2 SETS OF 8x2-DS510 & 8x2-DS511
DS23	668804.129'	2195409.613'	48"	654.96	560.00	95.0	2 SETS OF 8-DS1001 & 2 SETS OF 8-DS1002	1-DSSP501, 1-DSSP502 & 1-DSSP503, 2 SETS OF 8x2-DS510 & 8x2-DS511
DS24	668806.825'	2195412.790'	48"	654.96	560.00	95.0	2 SETS OF 8-DS1001 & 2 SETS OF 8-DS1002	1-DSSP501, 1-DSSP502 & 1-DSSP503, 2 SETS OF 8x2-DS510 & 8x2-DS511
DS25	668809.520'	2195415.967'	48"	654.96	560.00	95.0	2 SETS OF 8-DS1001 & 2 SETS OF 8-DS1002	1-DSSP501, 1-DSSP502 & 1-DSSP503, 2 SETS OF 8x2-DS510 & 8x2-DS511
DS26	668812.216'	2195419.144'	48"	654.96	560.00	95.0	2 SETS OF 8-DS1001 & 2 SETS OF 8-DS1002	1-DSSP501, 1-DSSP502 & 1-DSSP503, 2 SETS OF 8x2-DS510 & 8x2-DS511
DS27	668814.911'	2195422.322'	48"	654.96	560.00	95.0	2 SETS OF 8-DS1001 & 2 SETS OF 8-DS1002	1-DSSP501, 1-DSSP502 & 1-DSSP503, 2 SETS OF 8x2-DS510 & 8x2-DS511
DS28	668817.607'	2195425.499'	48"	654.96	560.00	95.0	2 SETS OF 8-DS1001 & 2 SETS OF 8-DS1002	1-DSSP501, 1-DSSP502 & 1-DSSP503, 2 SETS OF 8x2-DS510 & 8x2-DS511
DS29	668820.303'	2195428.676'	48"	654.96	560.00	95.0	2 SETS OF 8-DS1001 & 2 SETS OF 8-DS1002	1-DSSP501, 1-DSSP502 & 1-DSSP503, 2 SETS OF 8x2-DS510 & 8x2-DS511
DS30	668822.998'	2195431.853'	48"	654.96	560.00	95.0	2 SETS OF 8-DS1001 & 2 SETS OF 8-DS1002	1-DSSP501, 1-DSSP502 & 1-DSSP503, 2 SETS OF 8x2-DS510 & 8x2-DS511
DS31	668825.694'	2195435.031'	48"	654.96	560.00	95.0	2 SETS OF 8-DS1001 & 2 SETS OF 8-DS1002	1-DSSP501, 1-DSSP502 & 1-DSSP503, 2 SETS OF 8x2-DS510 & 8x2-DS511
DS32	668828.389'	2195438.208'	48"	654.96	560.00	95.0	2 SETS OF 8-DS1001 & 2 SETS OF 8-DS1002	1-DSSP501, 1-DSSP502 & 1-DSSP503, 2 SETS OF 8x2-DS510 & 8x2-DS511
DS33	668831.085'	2195441.385'	48"	654.96	560.00	95.0	2 SETS OF 8-DS1001 & 2 SETS OF 8-DS1002	1-DSSP501, 1-DSSP502 & 1-DSSP503, 2 SETS OF 8x2-DS510 & 8x2-DS511
DS34	668833.781'	2195444.562'	48"	654.96	560.00	95.0	2 SETS OF 8-DS1001 & 2 SETS OF 8-DS1002	1-DSSP501, 1-DSSP502 & 1-DSSP503, 2 SETS OF 8x2-DS510 & 8x2-DS511
DS35	668836.476'	2195447.739'	48"	654.96	560.00	95.0	2 SETS OF 8-DS1001 & 2 SETS OF 8-DS1002	1-DSSP501, 1-DSSP502 & 1-DSSP503, 2 SETS OF 8x2-DS510 & 8x2-DS511
DS36	668839.172'	2195450.917'	48"	654.96	560.00	95.0	2 SETS OF 8-DS1001 & 2 SETS OF 8-DS1002	1-DSSP501, 1-DSSP502 & 1-DSSP503, 2 SETS OF 8x2-DS510 & 8x2-DS511
DS37	668841.867'	2195454.094'	48"	654.96	560.00	95.0	2 SETS OF 8-DS1001 & 2 SETS OF 8-DS1002	1-DSSP501, 1-DSSP502 & 1-DSSP503, 2 SETS OF 8x2-DS510 & 8x2-DS511
DS38	668844.563'	2195457.271'	48"	654.96	560.00	95.0	2 SETS OF 8-DS1001 & 2 SETS OF 8-DS1002	1-DSSP501, 1-DSSP502 & 1-DSSP503, 2 SETS OF 8x2-DS510 & 8x2-DS511
DS39	668847.259'	2195460.448'	48"	654.96	560.00	95.0	2 SETS OF 8-DS1001 & 2 SETS OF 8-DS1002	1-DSSP501, 1-DSSP502 & 1-DSSP503, 2 SETS OF 8x2-DS510 & 8x2-DS511
DS40	668849.954'	2195463.626'	48"	654.96	560.00	95.0	2 SETS OF 8-DS1001 & 2 SETS OF 8-DS1002	1-DSSP501, 1-DSSP502 & 1-DSSP503, 2 SETS OF 8x2-DS510 & 8x2-DS511
DS41	668852.650'	2195466.803'	48"	654.96	560.00	95.0	2 SETS OF 8-DS1001 & 2 SETS OF 8-DS1002	1-DSSP501, 1-DSSP502 & 1-DSSP503, 2 SETS OF 8x2-DS510 & 8x2-DS511
DS42	668855.345'	2195469.980'	48"	654.96	560.00	95.0	2 SETS OF 8-DS1001 & 2 SETS OF 8-DS1002	1-DSSP501, 1-DSSP502 & 1-DSSP503, 2 SETS OF 8x2-DS510 & 8x2-DS511
DS43	668858.041'	2195473.157'	48"	654.96	560.00	95.0	2 SETS OF 8-DS1001 & 2 SETS OF 8-DS1002	1-DSSP501, 1-DSSP502 & 1-DSSP503, 2 SETS OF 8x2-DS510 & 8x2-DS511
DS44	668860.737'	2195476.335'	48"	654.96	560.00	95.0	2 SETS OF 8-DS1001 & 2 SETS OF 8-DS1002	1-DSSP501, 1-DSSP502 & 1-DSSP503, 2 SETS OF 8x2-DS510 & 8x2-DS511
DS45	668863.432'	2195479.512'	48"	654.96	560.00	95.0	2 SETS OF 8-DS1001 & 2 SETS OF 8-DS1002	1-DSSP501, 1-DSSP502 & 1-DSSP503, 2 SETS OF 8x2-DS510 & 8x2-DS511
DS46	668866.128'	2195482.689'	48"	654.96	560.00	95.0	2 SETS OF 8-DS1001 & 2 SETS OF 8-DS1002	1-DSSP501, 1-DSSP502 & 1-DSSP503, 2 SETS OF 8x2-DS510 & 8x2-DS511
DS47	668868.825'	2195485.866'	48"	654.96	560.00	95.0	2 SETS OF 8-DS1001 & 2 SETS OF 8-DS1002	1-DSSP501, 1-DSSP502 & 1-DSSP503, 2 SETS OF 8x2-DS510 & 8x2-DS511
DS48	668871.579'	2195488.992'	48"	654.96	560.00	95.0	2 SETS OF 8-DS1001 & 2 SETS OF 8-DS1002	1-DSSP501, 1-DSSP502 & 1-DSSP503, 2 SETS OF 8x2-DS510 & 8x2-DS511
DS49	668874.419'	2195492.041'	48"	654.96	560.00	95.0	2 SETS OF 8-DS1001 & 2 SETS OF 8-DS1002	1-DSSP501, 1-DSSP502 & 1-DSSP503, 2 SETS OF 8x2-DS510 & 8x2-DS511
DS50	668877.343'	2195495.010'	48"	654.96	560.00	95.0	2 SETS OF 8-DS1001 & 2 SETS OF 8-DS1002	1-DSSP501, 1-DSSP502 & 1-DSSP503, 2 SETS OF 8x2-DS510 & 8x2-DS511

SOLDIER PILE SCHEDULE

DESIGNATION	NORTHING	EASTING	DRILL HOLE DIA. (FT.)	SHAPE	TOP ELEV.	TIP ELEV.	TOTAL LENGTH (FT.)
SP1	668803.744'	2195396.278'	3.5	HP16x101	667.50	635.0	32.5
SP2	668809.135'	2195402.632'	3.5	HP16x101	667.50	635.0	32.5
SP3	668814.526'	2195408.987'	3.5	HP16x101	667.50	635.0	32.5
SP4	668819.917'	2195415.341'	3.5	HP16x101	667.50	635.0	32.5
SP5	668825.309'	2195421.695'	3.5	HP16x101	667.50	635.0	32.5
SP6	668830.700'	2195428.050'	3.5	HP16x101	667.50	635.0	32.5
SP7	668836.091'	2195434.404'	3.5	HP16x101	667.50	635.0	32.5
SP8	668841.482'	2195440.759'	3.5	HP16x101	667.50	635.0	32.5
SP9	668846.873'	2195447.113'	3.5	HP16x101	667.50	635.0	32.5
SP10	668852.265'	2195453.468'	3.5	HP16x101	667.50	635.0	32.5
SP11	668857.656'	2195459.822'	3.5	HP16x101	667.50	635.0	32.5
SP12	668863.047'	2195466.177'	3.5	HP16x101	667.50	635.0	32.5
SP13	668868.438'	2195472.531'	3.5	HP16x101	667.50	635.0	32.5
SP14	668873.830'	2195478.886'	3.5	HP16x101	667.50	635.0	32.5

Preliminary plans - Not for Construction

NOTES:

1. SEE SHEET 24 / 90 FOR SOLDIER PILE DETAILS.
2. SEE SHEET 25 / 90 FOR GROUND ANCHOR DETAILS.
3. SEE SHEET 20 / 90 FOR DRILLED SHAFT DETAILS.

REAR ABUTMENT DRILLED SHAFT & SOLDIER PILE SCHEDULE

CUY-90-1696 (BRIDGE 14)

CR-722 (CARNEGIE AVE.) OVER I.R. 90

SFN 1807898

DESIGN AGENCY

Michael Baker INTERNATIONAL

DESIGNER	CHECKER
GZ	MKB

REVIEWER KAG 12/26/23

PROJECT ID 82382

SUBSET	TOTAL
23	90

SHEET	TOTAL
2303	2696

CUY-90-16.28 (CCG3A)
MODEL: Sheet PAPERSIZE: 34x22 (in.) DATE: 3/28/2025 TIME: 8:02:11 AM USER: Rohit.Bk
pw:\\mb-us-pw.bentley.com:mb-us-pw-03\Documents\Cleveland_OH\01_Projects\ODOT\District12\82382400-Engineering\Structures\SFN_1807898\Sheets\82382_SR006.dgn

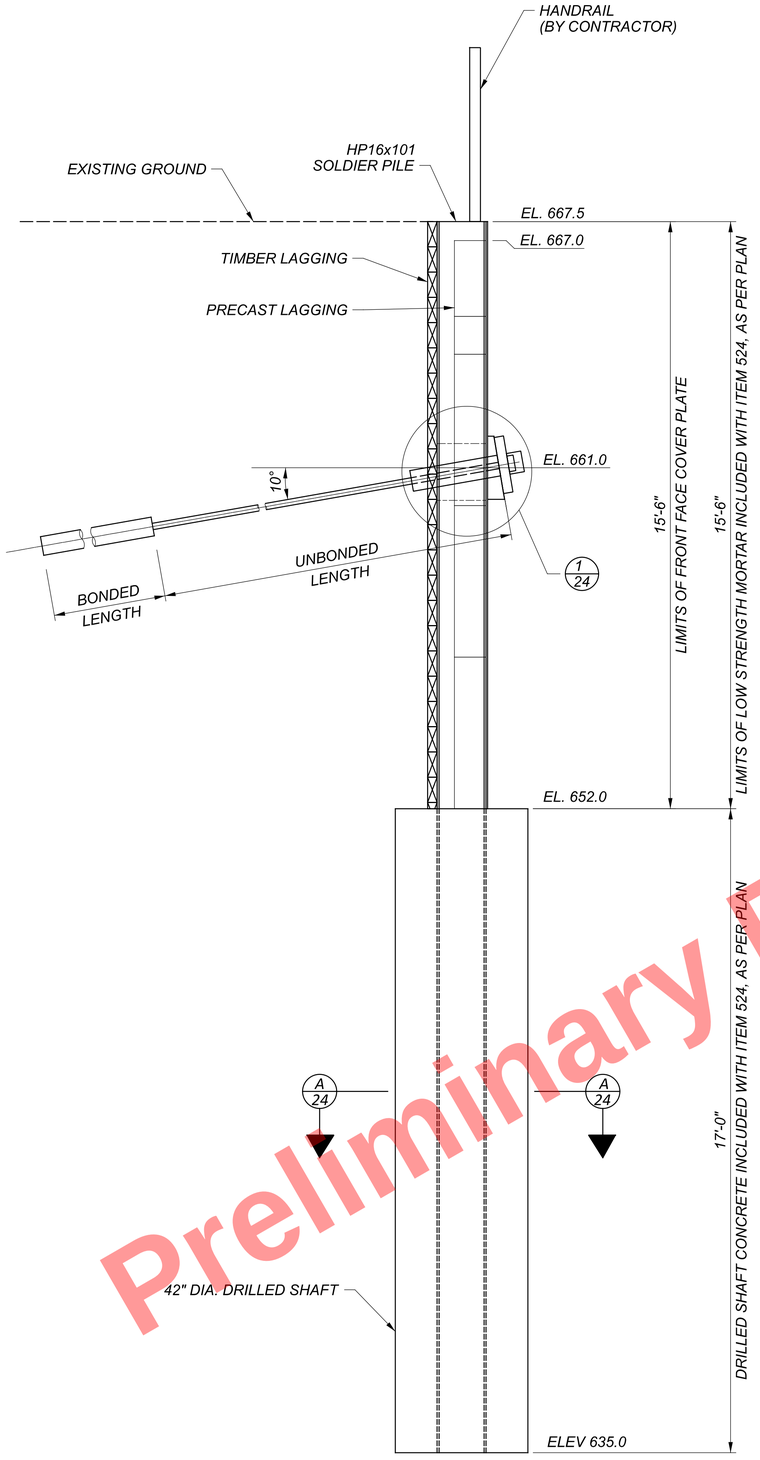

TYPICAL SECTION AT SOLDIER PILE

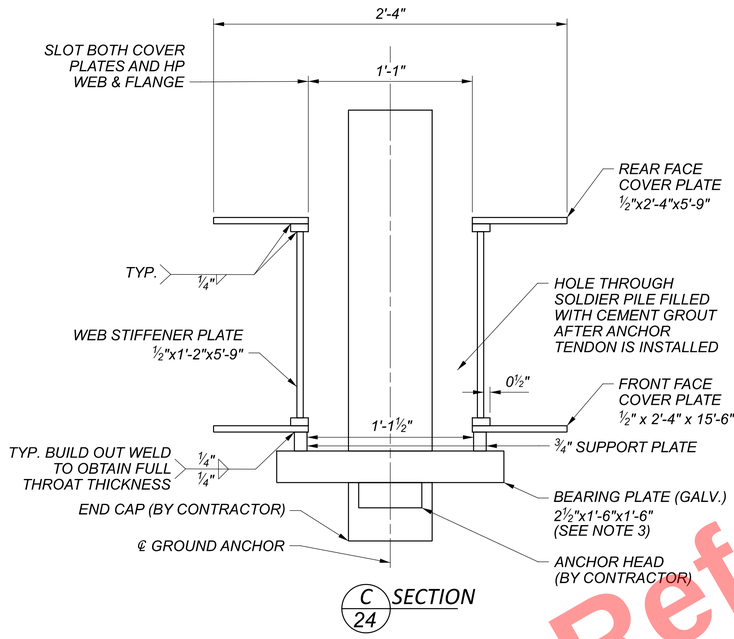

C / 24 SECTION

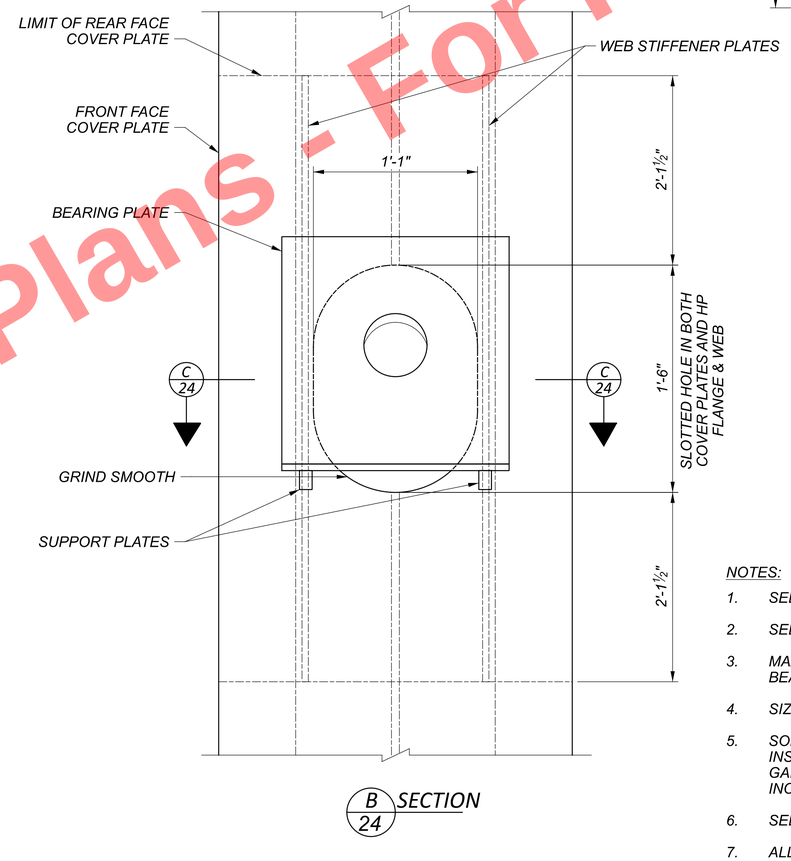

B / 24 SECTION

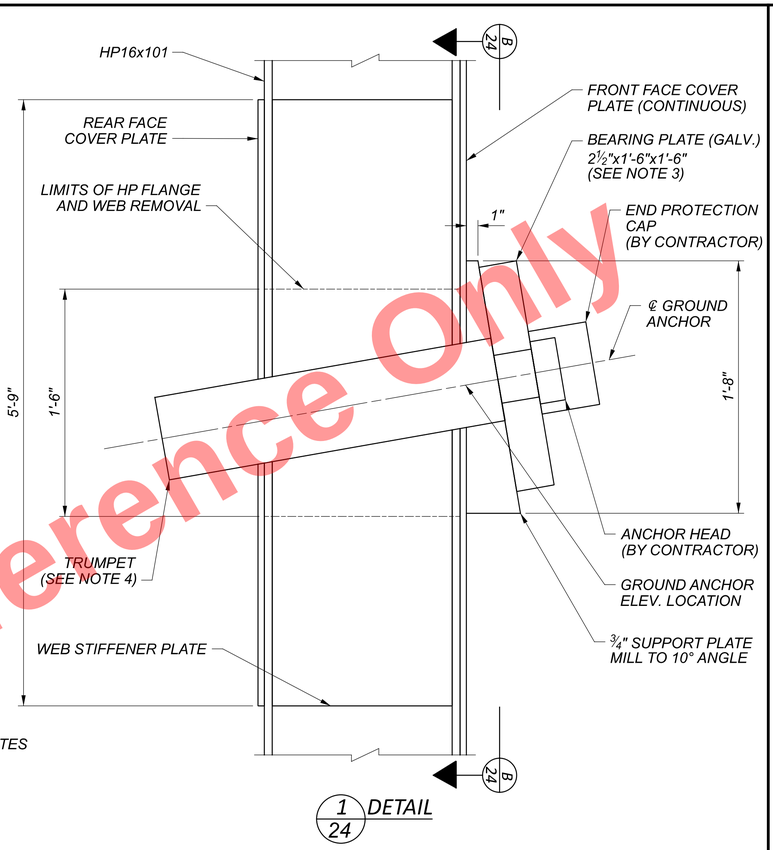

1 / 24 DETAIL

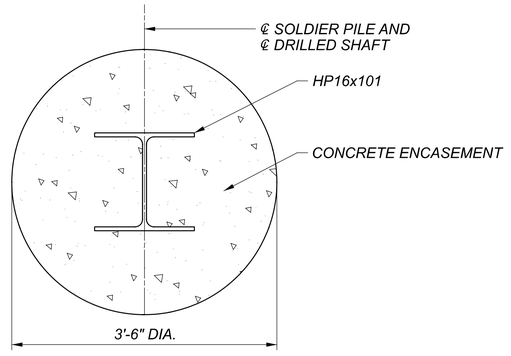

A / 24 SECTION

NOTES:

1. SEE SHEET 25 / 90 FOR GROUND ANCHOR DETAILS.
2. SEE SHEET 33 / 90 FOR LAGGING DETAILS.
3. MAXIMUM HOLE SIZE IN BEARING PLATE FOR STRANDS IS 5" DIA. CONTRACTOR TO COORDINATE BEARING PLATE DESIGN WITH TRUMPET AND WEDGE PLATE DESIGN AND DETAILS.
4. SIZE, WALL THICKNESS, AND GRADE OF TRUMPET TO BE DETERMINED BY CONTRACTOR.
5. SOLDIER PILES SHALL BE PRE-FABRICATED WITH THE ANCHOR DETAIL SHOWN BEFORE INSTALLATION INTO THE DRILLED SHAFT. SUPPORT PLATES, COVER PLATES, STIFFENERS, GALVANIZING, AND ANY ADDITIONAL ANCHOR MODIFICATIONS TO THE SOLDIER PILES ARE INCLUDED WITH ITEM 507 - STEEL PILES, MISC.: SOLDIER PILES HP16x101.
6. SEE SHEET 32 / 90 FOR DETAILS OF STRUT AND WALER SYSTEM.
7. ALL COMPONENTS OF THE ANCHORAGE, INCLUDING ANCHOR HEAD, TRUMPET AND BEARING PLATE IS INCLUDED IN THE BID ITEM GROUND ANCHOR, SOLDIER PILE AND LAGGING WALL, 159 KIP MAX. TEST LOAD, AS PER PLAN.

Preliminary Plans - For Reference Only

REAR ABUTMENT SOLDIER PILE DETAILS
CUY-90-1696 (BRIDGE 14)
CR-722 (CARNEGIE AVE.) OVER I.R. 90

SFN	1807898
DESIGN AGENCY	Michael Baker INTERNATIONAL
DESIGNER	DWB
CHECKER	MKB
REVIEWER	KAG 12/26/23
PROJECT ID	82382
SUBSET	24
TOTAL	90
SHEET	2304
TOTAL	2696

CUY-90-16.28 (CCG3A)
MODEL: Sheet PAPERSIZE: 34x22 (in.) DATE: 3/28/2025 TIME: 8:02:28 AM USER: Rohit.Bk
pw:\\mb-us-pw.bentley.com:mb-us-pw-03\Documents\Cleveland_OH\01_Projects\ODOT\District12\82382\400-Engineering\Structures\SFN_1807898\Sheets\82382_SFN_1807898_SR007.dgn

48" DRILLED SHAFT GROUND ANCHOR SCHEDULE						
DESIGNATION	ANCHOR ELEV.	INCLINATION FROM HORIZONTAL (DEG.)	BONDED LENGTH (FT)	UNBONDED LENGTH (FT)	LOCK OFF LOAD (KIP)	FACTORED DESIGN LOAD (KIP)
DS01	651.00	10.0	40.0	43.0	117.0	159.0
	639.00	10.0	40.0	33.0	117.0	159.0
DS02	651.00	15.0	40.0	43.0	117.0	159.0
	639.00	15.0	40.0	33.0	117.0	159.0
DS03	651.00	10.0	40.0	43.0	117.0	159.0
	639.00	10.0	40.0	33.0	117.0	159.0
DS04	651.00	15.0	40.0	43.0	117.0	159.0
	639.00	15.0	40.0	33.0	117.0	159.0
DS05	651.00	10.0	40.0	43.0	117.0	159.0
	639.00	10.0	40.0	33.0	117.0	159.0
DS06	651.00	15.0	40.0	43.0	117.0	159.0
	639.00	15.0	40.0	33.0	117.0	159.0
DS07	651.00	10.0	40.0	43.0	117.0	159.0
	639.00	10.0	40.0	33.0	117.0	159.0
DS08	651.00	15.0	40.0	43.0	117.0	159.0
	639.00	15.0	40.0	33.0	117.0	159.0
DS09	651.00	10.0	40.0	43.0	117.0	159.0
	639.00	10.0	40.0	33.0	117.0	159.0
DS10	651.00	15.0	40.0	43.0	117.0	159.0
	639.00	15.0	40.0	33.0	117.0	159.0
DS11	651.00	10.0	40.0	43.0	117.0	159.0
	639.00	10.0	40.0	33.0	117.0	159.0
DS12	651.00	15.0	40.0	43.0	117.0	159.0
	639.00	15.0	40.0	33.0	117.0	159.0
DS13	651.00	10.0	40.0	43.0	117.0	159.0
	639.00	10.0	40.0	33.0	117.0	159.0
DS14	651.00	15.0	40.0	43.0	117.0	159.0
	639.00	15.0	40.0	33.0	117.0	159.0
DS15	651.00	10.0	40.0	43.0	117.0	159.0
	639.00	10.0	40.0	33.0	117.0	159.0
DS16	651.00	15.0	40.0	43.0	117.0	159.0
	639.00	15.0	40.0	33.0	117.0	159.0
DS17	651.00	10.0	40.0	43.0	117.0	159.0
	639.00	10.0	40.0	33.0	117.0	159.0
DS18	651.00	15.0	40.0	43.0	117.0	159.0
	639.00	15.0	40.0	33.0	117.0	159.0
DS19	651.00	10.0	40.0	43.0	117.0	159.0
	639.00	10.0	40.0	33.0.	117.0	159.0
DS20	651.00	15.0	40.0	43.0	117.0	159.0
	639.00	15.0	40.0	33.0	117.0	159.0
DS21	651.00	10.0	40.0	43.0	117.0	159.0
	639.00	10.0	40.0	33.0	117.0	159.0
DS22	651.00	15.0	40.0	43.0	117.0	159.0
	639.00	15.0	40.0	33.0	117.0	159.0
DS23	651.00	10.0	40.0	43.0	117.0	159.0
	639.00	10.0	40.0	33.0	117.0	159.0
DS24	651.00	15.0	40.0	43.0	117.0	159.0
	639.00	15.0	40.0	33.0.	117.0	159.0
DS25	651.00	10.0	40.0	43.0	117.0	159.0
	639.00	10.0	40.0	33.0	117.0	159.0
DS26	651.00	15.0	40.0	43.0	117.0	159.0
	639.00	15.0	40.0	33.0	117.0	159.0
DS27	651.00	10.0	40.0	43.0	117.0	159.0
	639.00	10.0	40.0	33.0	117.0	159.0
DS28	651.00	15.0	40.0	43.0	117.0	159.0
	639.00	15.0	40.0	33.0	117.0	159.0
DS29	651.00	10.0	40.0	43.0	117.0	159.0
	639.00	10.0	40.0	33.0	117.0	159.0
DS30	651.00	15.0	40.0	43.0	117.0	159.0
	639.00	15.0	40.0	33.0.	117.0	159.0
DS31	651.00	10.0	40.0	43.0	117.0	159.0
	639.00	10.0	40.0	33.0	117.0	159.0
DS32	651.00	15.0	40.0	43.0	117.0	159.0
	639.00	15.0	40.0	33.0	117.0	159.0
DS33	651.00	10.0	40.0	43.0	117.0	159.0
	639.00	10.0	40.0	33.0	117.0	159.0

48" DRILLED SHAFT GROUND ANCHOR SCHEDULE (CONTINUED)						
DESIGNATION	ANCHOR ELEV.	INCLINATION FROM HORIZONTAL (DEG.)	BONDED LENGTH (FT)	UNBONDED LENGTH (FT)	LOCK OFF LOAD (KIP)	FACTORED DESIGN LOAD (KIP)
DS34	651.00	15.0	40.0	43.0	117.0	159.0
	639.00	15.0	40.0	33.0	117.0	159.0
DS35	651.00	10.0	40.0	43.0	117.0	159.0
	639.00	10.0	40.0	33.0	117.0	159.0
DS36	651.00	15.0	40.0	43.0	117.0	159.0
	639.00	15.0	40.0	33.0	117.0	159.0
DS37	651.00	10.0	40.0	43.0	117.0	159.0
	639.00	10.0	40.0	33.0	117.0	159.0
DS38	651.00	15.0	40.0	43.0	117.0	159.0
	639.00	15.0	40.0	33.0	117.0	159.0
DS39	651.00	10.0	40.0	43.0	117.0	159.0
	639.00	10.0	40.0	33.0	117.0	159.0
DS40	651.00	15.0	40.0	43.0	117.0	159.0
	639.00	15.0	40.0	33.0	117.0	159.0
DS41	651.00	10.0	40.0	43.0	117.0	159.0
	639.00	10.0	40.0	33.0	117.0	159.0
DS42	651.00	15.0	40.0	43.0	117.0	159.0
	639.00	15.0	40.0	33.0	117.0	159.0
DS43	651.00	10.0	40.0	43.0	117.0	159.0
	639.00	10.0	40.0	33.0	117.0	159.0
DS44	651.00	15.0	40.0	43.0	117.0	159.0
	639.00	15.0	40.0	33.0	117.0	159.0
DS45	651.00	10.0	40.0	43.0	117.0	159.0
	639.00	10.0	40.0	33.0	117.0	159.0
DS46	651.00	15.0	40.0	43.0	117.0	159.0
	639.00	15.0	40.0	33.0	117.0	159.0
DS47	651.00	10.0	40.0	43.0	117.0	159.0
	639.00	10.0	40.0	33.0	117.0	159.0
DS48	651.00	15.0	40.0	43.0	117.0	159.0
	639.00	15.0	40.0	33.0	117.0	159.0
DS49	651.00	10.0	40.0	43.0	117.0	159.0
	639.00	10.0	40.0	33.0	117.0	159.0
DS50	651.00	15.0	40.0	43.0	117.0	159.0
	639.00	15.0	40.0	33.0	117.0	159.0

SOLDIER PILE GROUND ANCHOR SCHEDULE						
DESIGNATION	ANCHOR ELEV.	INCLINATION FROM HORIZONTAL (DEG.)	BONDED LENGTH (FT)	UNBONDED LENGTH (FT)	LOCK OFF LOAD (KIP)	FACTORED DESIGN LOAD (KIP)
SP1	661.00	10.0	40.0	43.0	117.0	159.0
SP2	661.00	10.0	40.0	43.0	117.0	159.0
SP3	661.00	10.0	40.0	43.0	117.0	159.0
SP4	661.00	10.0	40.0	43.0	117.0	159.0
SP5	661.00	10.0	40.0	43.0	117.0	159.0
SP6	661.00	10.0	40.0	43.0	117.0	159.0
SP7	661.00	10.0	40.0	43.0	117.0	159.0
SP8	661.00	10.0	40.0	43.0	117.0	159.0
SP9	661.00	10.0	40.0	43.0	117.0	159.0
SP10	661.00	10.0	40.0	43.0	117.0	159.0
SP11	661.00	10.0	40.0	43.0	117.0	159.0
SP12	661.00	10.0	40.0	43.0	117.0	159.0
SP13	661.00	10.0	40.0	43.0	117.0	159.0
SP14	661.00	10.0	40.0	43.0	117.0	159.0

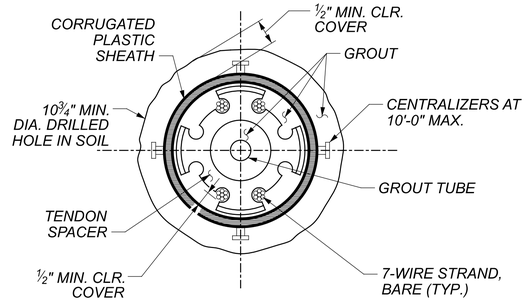

SECTION THROUGH GROUND ANCHOR, BONDED

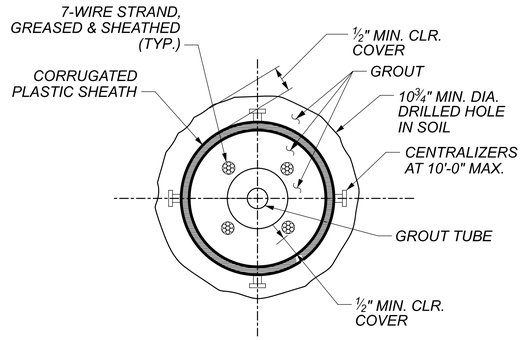

SECTION THROUGH GROUND ANCHOR, UNBONDED

Preliminary Plans - For Reference Only

REAR ABUTMENT GROUND ANCHOR DETAILS
CUY-90-1696 (BRIDGE 14)
CR-722 (CARNEGIE AVE.) OVER I.R. 90

SFN 18807839
DESIGN AGENCY
Michael Baker INTERNATIONAL
DESIGNER DBW | CHECKER MKB
REVIEWER KAG 12/26/23
PROJECT ID 82382
SUBSET 25 | TOTAL 90
SHEET 2305 | TOTAL 2696

CUY-16-16.28 (CCG3A)

MODEL: Sheet PAPERSIZE: 34x22 (in.) DATE: 3/28/2025 TIME: 8:02:35 AM USER: Rohit.Bk
pw:\\mb-us-pw.bentley.com:mb-us-pw-03\Documents\Cleveland_OH101_Projects\ODOT\District12\82382\400-Engineering\Structures\SFN_18078986\Sheets\82382_SFN_1807898_SR008.dgn

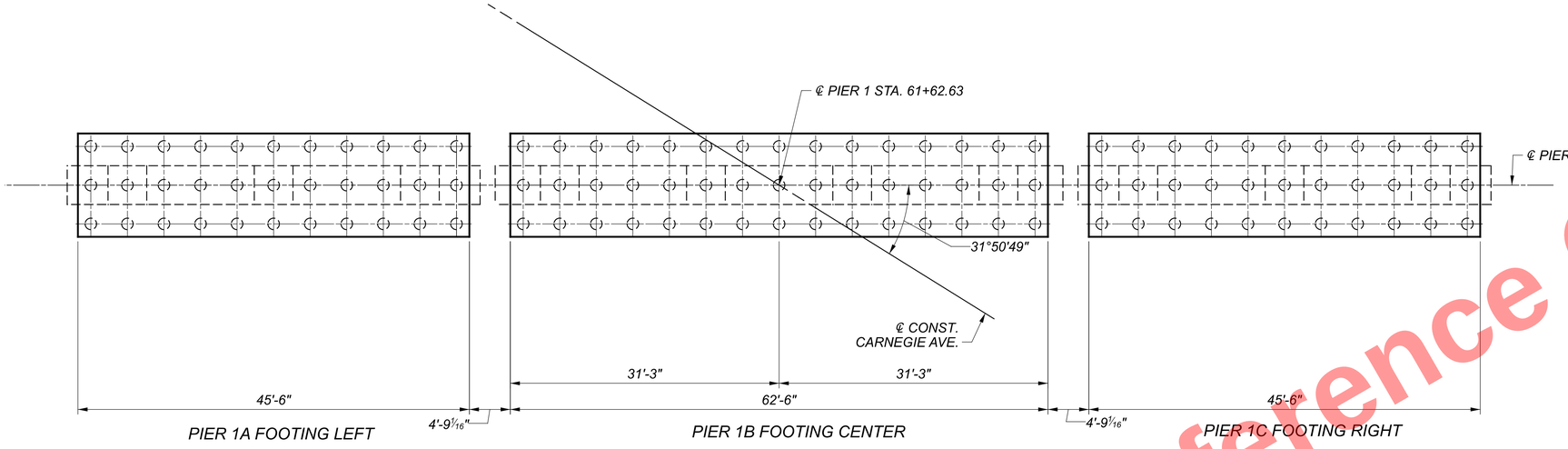

PLAN

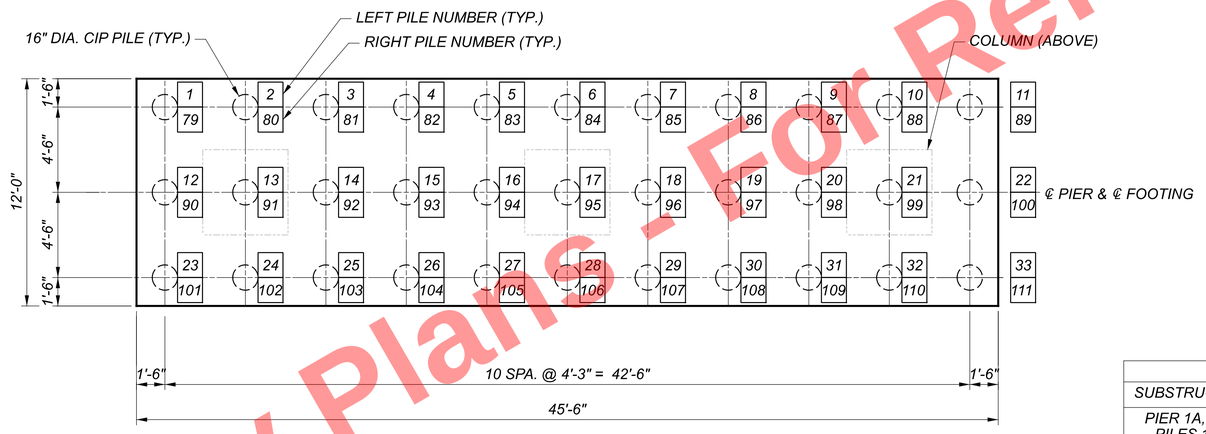

FOOTING LEFT & RIGHT SECTION

PILE SCHEDULE			
SUBSTRUCTURE UNIT	PILE DIAMETER	ESTIMATED LENGTH	CUTOFF ELEVATION
PIER 1A, FTG. LEFT PILES 1 THRU 33	16"	85.00	629.75
PIER 1B, FTG. CENTER PILES 34-78	16"	85.00	629.75
PIER 1C, FTG. RIGHT PILES 79 THRU 111	16"	85.00	629.75

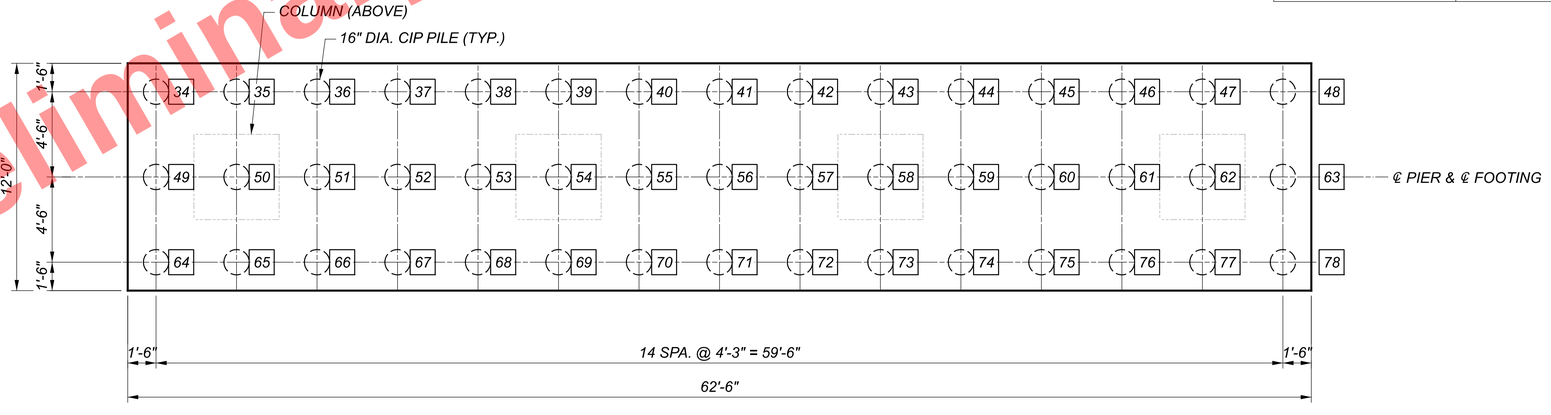

FOOTING CENTER SECTION

NOTES:

1. SEE SHEETS 4 -10 / 90 FOR GENERAL NOTES.

LEGEND:

#	INDICATES PROPOSED PILE NUMBER

Preliminary Plans - For Reference Only

PIER FOUNDATION PLAN
CUY-90-1696 (BRIDGE 14)
CR-722 (CARNEGIE AVE.) OVER I.R. 90

SFN 1807898
DESIGN AGENCY
Michael Baker INTERNATIONAL
DESIGNER AHS | CHECKER TAG
REVIEWER LPC 06/23/22
PROJECT ID 82382
SUBSET 26 | TOTAL 90
SHEET 2306 | TOTAL 2696

CUY-90-16.28 (CCG3A)

MODEL: Sheet PAPERSIZE: 34x22 (in.) DATE: 3/28/2025 TIME: 8:02:46 AM USER: RohitBk
pw:\\mb-us-pw.bentley.com:mb-us-pw-03\Documents\Cleveland_OH\01_Projects\ODOT\District12\82382\400-Engineering\Structures\SFN_1807898\Sheets\82382_SFN_1807898_SI001.dgn

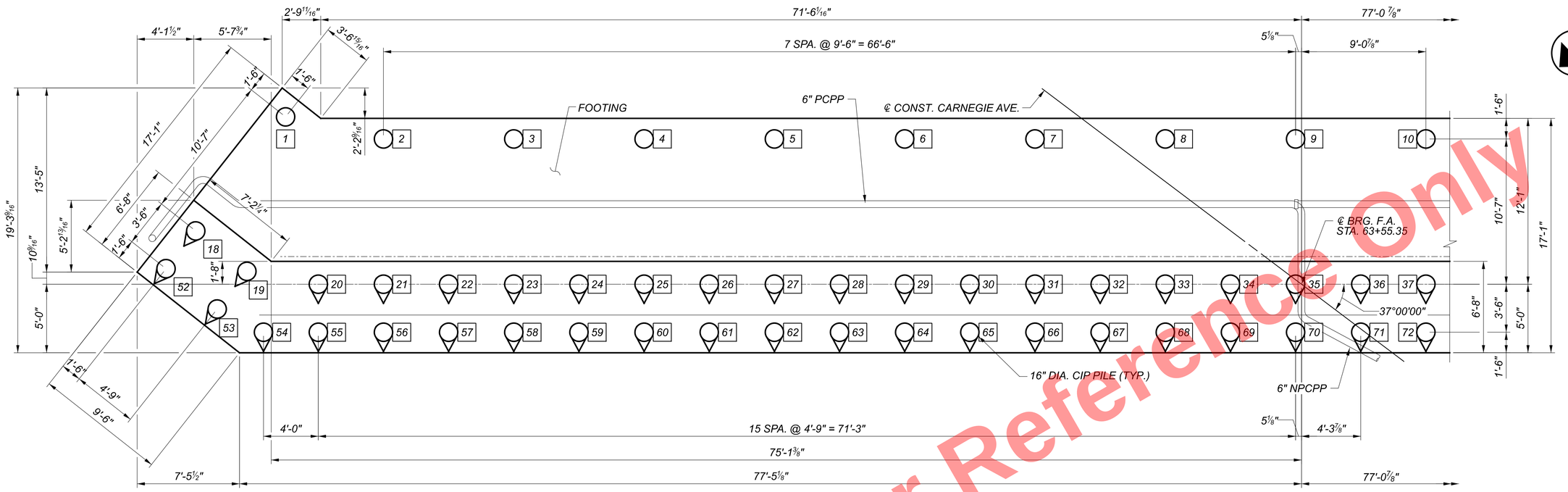

PLAN

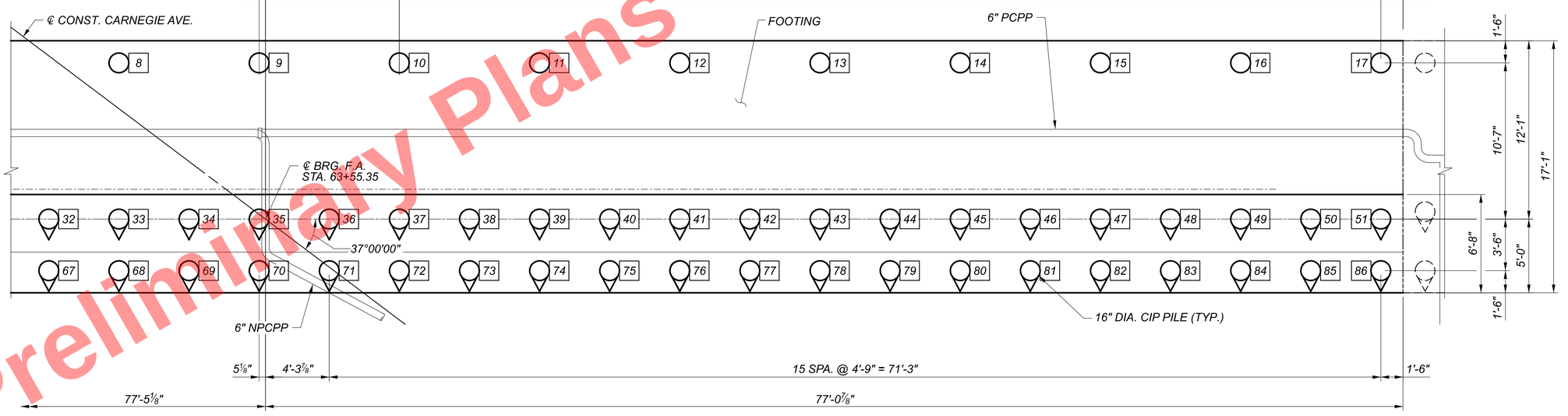

PLAN

PILE SCHEDULE			
SUBSTRUCTURE UNIT	PILE DIAMETER	ESTIMATED LENGTH	CUTOFF ELEVATION
FORWARD ABUTMENT FOOTING (1 THRU 86)	16"	80.00	634.89

LEGEND:

- # — INDICATES PROPOSED PILE NUMBER
- ○ — INDICATES VERTICAL PILE
- ⏚ — INDICATES BATTERED PILE

NOTES:

1. SEE SHEETS 4 -10 / 90 FOR GENERAL NOTES.

Preliminary Plans - For Reference Only

FORWARD ABUTMENT FOUNDATION PLAN
CUY-90-1696 (BRIDGE 14)
CR-722 (CARNEGIE AVE.) OVER I.R. 90

CUY-90-16.28 (CCG3A)

MODEL: Sheet PAPERSIZE: 34x22 (in.) DATE: 3/28/2025 TIME: 8:03:01 AM USER: Rohit.Bk
pw:\\mb-us-pw.bentley.com:mb-us-pw-03\Documents\Cleveland_OH101_Projects\ODOT\District12\82382\400-Engineering\Structures\SFN_1807898\Sheets\82382_SFN_1807898_SF001.dgn

SFN	1807898
DESIGN AGENCY	Michael Baker INTERNATIONAL
DESIGNER	TMG
CHECKER	AHS
REVIEWER	LPC 06/23/22
PROJECT ID	82382
SUBSET	27
TOTAL	90
SHEET	2307
TOTAL	2696

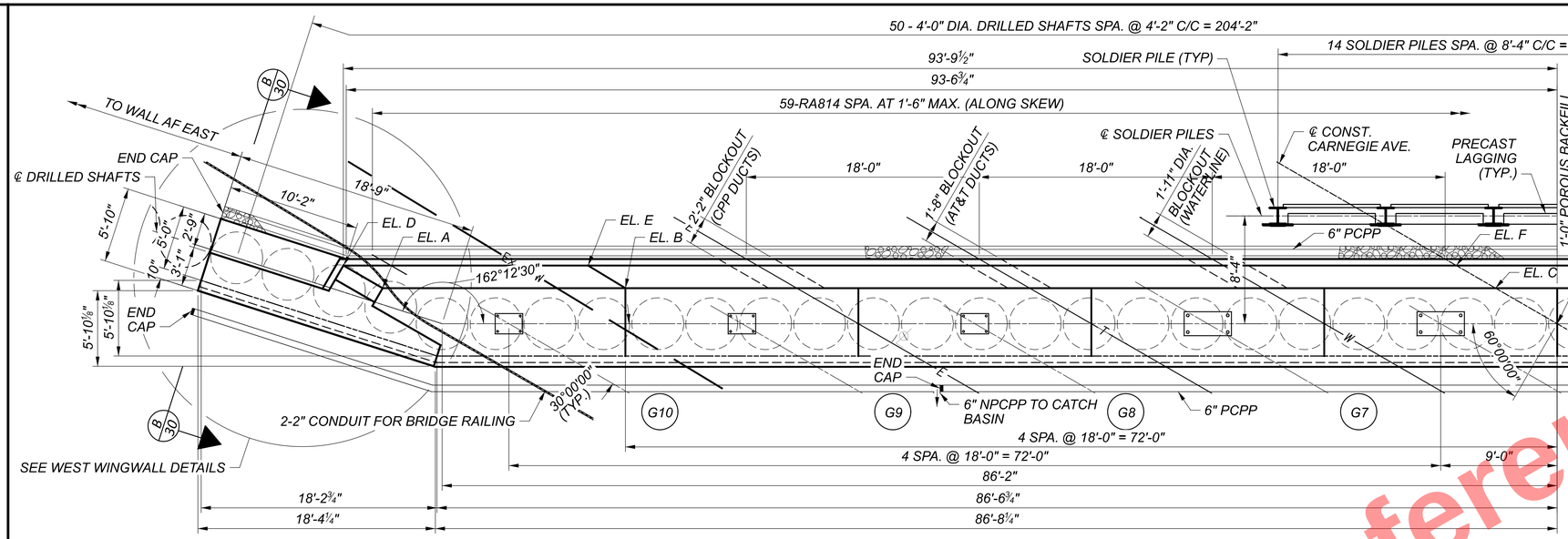

ABUTMENT BACKWALL ELEVATIONS (FT.)	
LOCATION	ELEVATION
A	670.76
B	669.84
C	670.29
D	670.77
E	669.85
F	670.30

ABUTMENT BEAM SEAT ELEVATIONS (FT.)	
LOCATION	ELEVATION
G10	659.52
G9	659.51
G8	659.63
G7	659.75
G6	659.86
G5	659.80

UTILITY BLOCKOUT ELEVATIONS (FT.)	
LOCATION	ELEVATION
U3	661.94
U4	661.74
U5	661.62

SET "A" = 14-SETS OF 1-RA501, 2-RA601 & 1-RA609 SPA. @ 11"

SET "B" = 7-SETS OF 1-RA501, 2-RA601 & 1-RA609 SPA. @ 11" & 1 S.O. 7-RA610 SPA. @ 11"

SET "C" = 17-SETS OF 1-RA501, 2-RA602 & 1-RA609 SPA. @ 11"

SET "D" = 20-SETS OF 1-RA501, 2-RA602 & 1-RA609 SPA. @ 11"

SET "E" = 20-SETS OF 1-RA501, 2-RA603 & 1-RA609 SPA. @ 11"

BACKWALL SETS TO SPLICE AT ℄ CONST. CARNEGIE AVE.:

SET "1" = 3 SETS OF 1-RA511, 1-RA515, 1-RA516, 1-RA518, 1-RA513, 1-RA517, 3-RA505 E.F.

SET "2" = 1 SET OF 1-RA511, 1-RA515, 1-RA516, 1-RA518, 1-RA513, 1-RA517, 1-RA529 E.F., 1-RA530 E.F., 1-RA531 E.F., 1-RA532 E.F.

SET "3" = 6 SETS OF 1-RA511, 1-RA515, 1-RA516, 1-RA518, 1-RA513, 1-RA517, 3-RA505 E.F.

SET "4" = 2 SETS OF 1-RA511, 1-RA515, 1-RA516, 1-RA518, 1-RA514, 1-RA517, 3-RA505 E.F.

SET "5" = 1 SET OF 1-RA511, 1-RA515, 1-RA516, 1-RA518, 1-RA514, 1-RA517, 4-RA536

SET "6" = 1 SET OF 1-RA511, 1-RA515, 1-RA516, 1-RA518, 1-RA514, 1-RA517

SET "7" = 1 SET OF 2-RA511, 1-RA512, 1-RA515, 1-RA516, 1-RA518, 1-RA514, 1-RA517, 1-RA510

MIN. LAP LENGTHS:

#5 - 3'-1"
#6 - 3'-7"
#8 - 5'-4"

NOTES:

1. SEE SHEET 29 /90 FOR ADDITIONAL PLAN AND ELEVATION.
2. SEE FOUNDATION PLAN ON SHEET 19 / 90 FOR DRILLED SHAFT LAYOUT.
3. SEE WALL AF PLANS FOR AF BASELINE GEOMETETRY AND WALL DETAILS.
4. BRIDGE SEAT REINFORCEMENT, SETTING ANCHORS: ACCURATELY PLACE CONCRETE REINFORCEMENT IN THE VICINITY OF THE BRIDGE SEAT TO AVOID INTERFERENCE WITH THE DRILLING OF BEARING ANCHOR HOLES OR THE PRE-SETTING OF BEARING ANCHORS.
5. STRUT AND WALER SYSTEM AT REAR ABUTMENT SOLDIER PILE WALL NOT SHOWN. SEE SHEET 33/90 FOR DETAILS.
6. GROUND ANCHORS AND ANCHOR HARDWARE NOT SHOWN.
7. FOR UNDERPASS LIGHTING DETALS, SEE SHEET 1745/2696 .

Preliminary Plans - For Reference Only

REAR ABUTMENT PLAN & ELEVATION (1 OF 2)
CUY-90-1696 (BRIDGE 14)
CR-722 (CARNEGIE AVE.) OVER I.R. 90

SFN 1807898
DESIGN AGENCY
Michael Baker INTERNATIONAL
DESIGNER GZ | CHECKER JML
REVIEWER KAG 12/26/23
PROJECT ID 82382
SUBSET 28 | TOTAL 90
SHEET 2308 | TOTAL 2696

CUY-90-16.28 (CCG3A)
MODEL: Sheet PAPERSIZE: 34x22 (in.) DATE: 3/28/2025 TIME: 8:03:21 AM USER: RohitBk
pw:\\mb-us-pw.bentley.com:mb-us-pw-03\Documents\Cleveland_OH\01_Projects\ODOT\District12\82382\400-Engineering\Structures\SFN_1807898\Sheets\82382_SFN_1807898_SR003.dgn

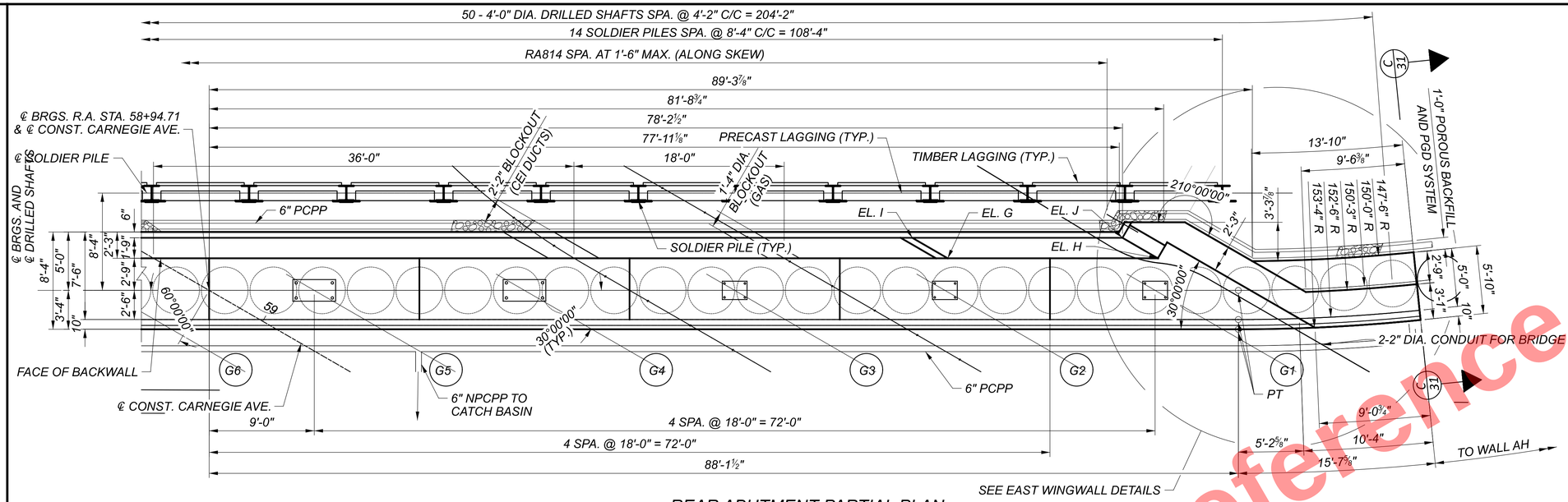

REAR ABUTMENT PARTIAL PLAN

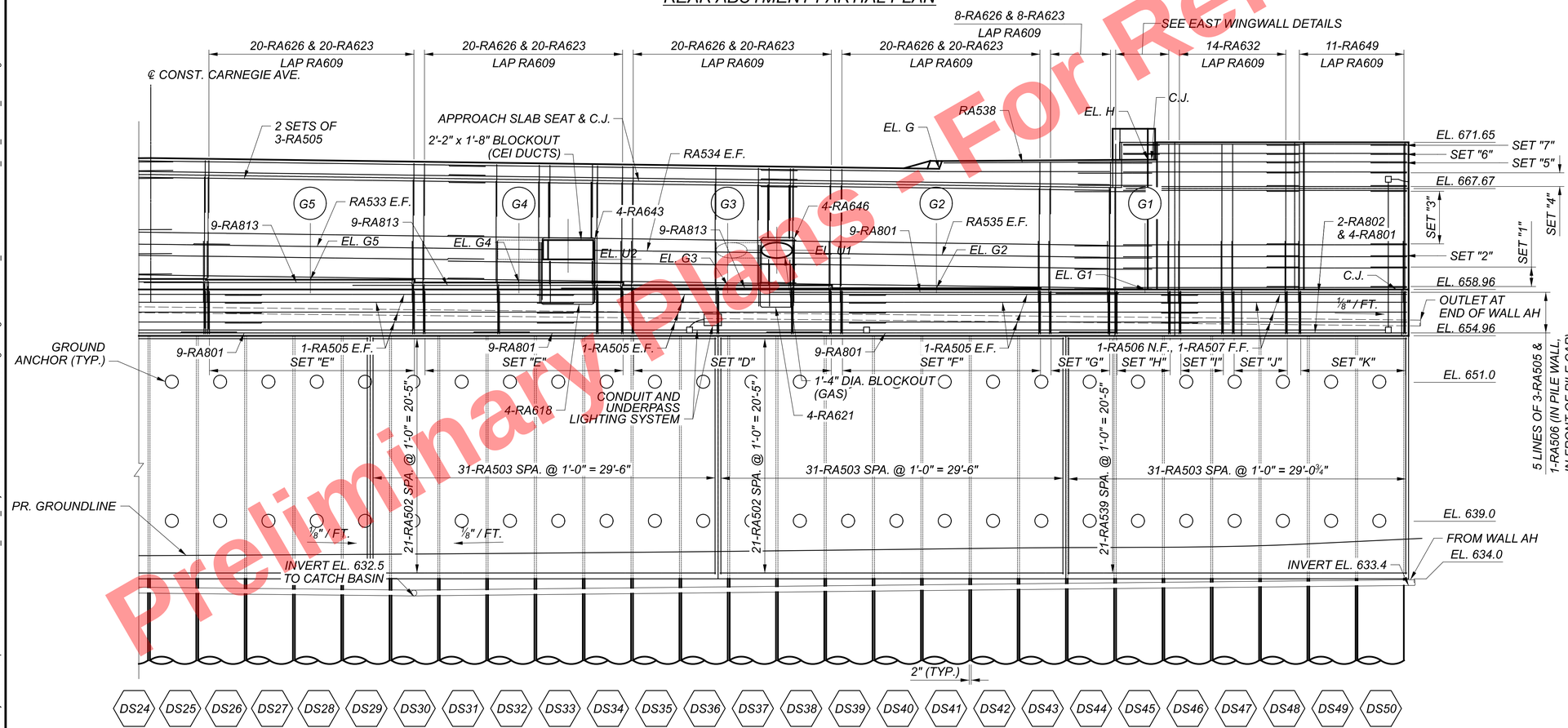

REAR ABUTMENT PARTIAL ELEVATION

ABUTMENT BACKWALL ELEVATIONS (FT.)	
LOCATION	ELEVATION
G	669.37
H	670.15
I	669.38
J	TBD

ABUTMENT BEAM SEAT ELEVATIONS (FT.)	
LOCATION	ELEVATION
G5	659.80
G4	659.56
G3	659.32
G2	659.07
G1	658.96

UTILITY BLOCKOUT ELEVATIONS (FT.)	
LOCATION	ELEVATION
U1	661.67
U2	661.55

SET "E" = 20-SETS OF 1-RA501, 2-RA603 & 1-RA609 SPA. @ 11"

SET "D" = 20-SETS OF 1-RA501, 2-RA602 & 1-RA609 SPA. @ 11"

SET "F" = 20-SETS OF 1-RA501, 2-RA604 & 1-RA609 SPA. @ 11"

SET "G" = 8-SETS OF 1-RA501, 2-RA605 & 1-RA609 SPA. @ 11"

SET "H" = 6-SETS OF 1-RA501, 2-RA606 & SPA. @ 11"

SET "I" = 5-SETS OF 1-RA501 SPA. @ 11" & 2 S.O. 5-RA607

SET "J" = 6-SETS OF 1-RA501, 2-RA608 & SPA. @ 11"

SET "K" = 11-SETS OF 1-RA501, 2-RA608 & 1-RA609 SPA. @ 11"

BACKWALL SETS TO SPLICE AT ℄ CONST. CARNEGIE AVE.:

SET "1" = 3 SETS 3-RA505 E.F., 1-RA525, 1-RA523, 1-RA519, 1-RA518, 1-RA522, 1-RA524, 1-RA526

SET "2" = 1 SET OF 1-RA533 E.F., 1-RA534 E.F., 1-RA535 E.F., 1-RA525, 1-RA523, 1-RA519, 1-RA518, 1-RA522, 1-RA524, 1-RA526

SET "3" = 6 SETS OF 3-RA505 E.F., 1-RA525, 1-RA523, 1-RA519, 1-RA518, 1-RA522, 1-RA524, 1-RA526

SET "4" = 2 SETS OF 3-RA505 E.F., 1-RA525, 1-RA523, 1-RA519, 1-RA518, 1-RA522, 1-RA524, 1-RA540

SET "5" = 1 SET OF 1-RA525, 1-RA523, 1-RA519, 1-RA518, 1-RA522, 1-RA524, 1-RA540, 4-RA538

SET "6" = 1 SET OF 1-RA525, 1-RA523, 1-RA519, 1-RA518, 1-RA522, 1-RA524, 1-RA540, 1-RA528

SET "7" = 1 SET OF 1-RA525, 2-RA523, 1-RA519, 1-RA520, 1-RA521, 1-RA518, 1-RA522, 1-RA524, 1-RA526, 1-RA528

Preliminary Plans - For Reference Only

REAR ABUTMENT PLAN & ELEVATION (2 OF 2)
CUY-90-1696 (BRIDGE 14)
CR-722 (CARNEGIE AVE.) OVER I.R. 90

SFN 1807898
DESIGN AGENCY
Michael Baker INTERNATIONAL
DESIGNER GZ | CHECKER JML
REVIEWER KAG 12/26/23
PROJECT ID 82382
SUBSET 29 | TOTAL 90
SHEET 2309 | TOTAL 2696

CUY-90-16.28 (CCG3A)

MODEL: Sheet PAPERSIZE: 34x22 (in.) DATE: 3/28/2025 TIME: 8:03:49 AM USER: RohitLBk
pw:\\mb-us-pw.bentley.com:mb-us-pw-03\Documents\Cleveland_OH\01_Projects\ODOT\District12\82382\400-Engineering\Structures\SFN_1807898\Sheets\82382_SFN_1807898_SR004.dgn

RA505 PLACE IN RELATION TO MODULAR JOINT BLOCKOUTS (TYP. OF 4)
LIMITS OF SEALING OF CONCRETE SURFACES (EPOXY-URETHANE)
℄ BRGS. R.A. & TANGENT DRILLED SHAFTS
2'-3"
6" 1'-9" 2'-9" 2'-6" 10"
C.J.
RA814
WORK POUR AND REBAR LOCATION WITH MODULAR JOINT BLOCKOUTS
RA623 PLACE IN RELATION TO MODULAR JOINT BLOCKOUTS
PREFABRICATED GEOCOMPOSITE DRAINAGE (PGD) SYSTEM IN ACCORDANCE WITH CMS 518
RA505
RA505 SPA. @ 1'-0" E.F.
RA626
RA529 THRU RA535
RA801, RA802, RA810 (TOP & BTM), RA812 OR RA813
RA801, RA802, RA809 (TOP & BTM.), RA812 OR RA813
RA801, RA806 (TOP & BTM.), RA812 OR RA813
RA801, RA805 (TOP & BTM.), RA812 OR RA813
RA801, RA804 (TOP & BTM.), RA812 OR RA813
RA801, RA803 (TOP & BTM.), RA812 OT RA813
RA602, RA603, RA604, OR RA605
(SEE DRAINAGE DETAIL ON SHEET 31)
RA801, RA808 (TOP & BTM.), RA812,OR RA813
RA801, RA807 (TOP & BTM.), RA812, OR RA813
RA801, RA811, (TOP & BTM.), RA812, OR RA813
RA609, RA614, RA615, OR RA616
RA505 OR RA509
6" PCPP
RA501
RA504 OR RA505 (TYP. OF 4)
RA504, RA505 OR RA506 (TYP. OF 5)
4'-0" VARIES 4'-0" MIN. TO 4'-10 3/4" MAX.
1'-0" 5'-0" 2'-6" 7'-6"
EL. 651.0
PGD DRAINAGE SYSTEM & SACRIFICIAL PLYWOOD FORM
BONDED LENGTH
UNBONDED LENGTH
1'-4" CIP WALL FACING WITH 4" ADDITIONAL CLEAR COVER FOR AESTHETIC TREATMENTS
DS1002
RA503
10'-0" LIMITS OF PERMANENT GRAFFITI PROTECTION
11-RA537 SPA. @ 1'-0" (TYP. 50 DRILLED SHAFTS)
RA502 SPA. @ 1'-0"
3-RA537 SPA. @1'-0" (TYP. 50 DRILLED SHAFTS)
GROUND ANCHOR (TYP.)
EL. 639.0
4" COVER TO ANCHOR CAP
POROUS BACKFILL WITH FILTER FABRIC (SEE FACING DRAINAGE DETAIL)
1'-6"
3'-3"
6" PCPP
5-RA537 SPA. @ 1'-0" (TYP. 50 DRILLED SHAFTS)
4'-0" UNCASED
A 28 SECTION

℄ TANGENT DRILLED SHAFTS
LIMITS OF SEALING OF CONCRETE SURFACES (EPOXY-URETHANE)
2'-9"
RA512
RA511
5-RA514 SPA. @ 1'-0"
5-RA511 SPA. @ 1'-0"
C.J.
PREFABRICATED GEOCOMPOSITE DRAINAGE (PGD) SYSTEM IN ACCORDANCE WITH CMS 518
RA622
RA513 SPA. @ 1'-0"
RA511 SPA. @ 1'-0"
RA806 (TOP & BTM.)
RA807 (TOP & BTM.)
RA808 (TOP & BTM.)
RA509 (TYP. OF 4)
4'-6¾"
RA501
RA609, RA610 OR RA611
RA504 (TYP. OF 5)
4'-0"
6" PCPP
1'-0" 2'-6" 2'-6" 5'-0" 10"
RA601
RA803 (TOP & BTM.)
RA804 (TOP & BTM.)
RA805 (TOP & BTM.)
EL. 651.0
PGD DRAINAGE SYSTEM & SACRIFICIAL PLYWOOD FORM
BONDED LENGTH
UNBONDED LENGTH
1'-4" CIP WALL FACING WITH 4" ADDITIONAL CLEAR COVER FOR AESTHETIC TREATMENTS
DS1002
RA503
10'-0" LIMITS OF PERMANENT GRAFFITI PROTECTION
RA537 SPA. @ 1'-0"
RA504 SPA. @ 1'-0"
GROUND ANCHOR (TYP.)
EL. 639.0
4" COVER TO ANCHOR CAP
POROUS BACKFILL WITH FILTER FABRIC (SEE FACING DRAINAGE DETAIL)
RA537 SPA. @ 1'-0"
1'-6"
3'-3"
6" PCPP
4'-0" UNCASED
B 28 SECTION

WALL FACING
PREFABRICATED GEOCOMPOSITE DRAINAGE (PGD) SYSTEM EXTENDS INTO POROUS BACKFILL
DRILLED SHAFT
6" PCPP
FACING DRAINAGE DETAIL

RA808 (TOP & BTM.) OR RA509
RA807 (TOP & BTM.)
RA806 (TOP & BTM.)
RA805 (TOP & BTM.)
℄ TANGENT DRILLED SHAFTS
RA804 (TOP & BTM.)
RA803 (TOP & BTM.) OR RA504
RA501 (TYP.)
10'-2"
5'-0"
10"
BUNDLED DS1002 (TYP.) ORIENT BARS AS REQUIRED FOR GROUND ANCHOR INSTALLATION
1 S.O. 7-RA612 SPA. @ 11"
1-RA613 (10 LOCATIONS)
5-RA609 SPA. @ 11"
RA601 (TYP.)
C.J.
RA504
1-RA811 (TOP & BTM.)
1-RA810 (TOP & BTM.)
1-RA809 (TOP & BTM.)
19'-3¼"
S.O. RA610 SPA. @ 11"
SEE PLAN & ELEVATION FOR REINFORCING
1-RA611
WEST WINGWALL SHAFT CAP PLAN

1 S.O. 4-RA627 LAP RA609 & RA613
SEE PLAN & ELEVATION FOR REINFORCING
D 31
RA648
1-RA631 LAP RA613
D801 (TYP.)
1-RA631 LAP RA613
RA626 LAP RA609 (TYP.)
RA623 (TYP.)
RA517
RA514
RA512
RA518
RA511
RA513
RA510
2'-9"
1'-3"
1-RA633
1-RA634
RA516
1-S.O. 4-RA630
1 S.O. 4-RA629 LAP RA609 & RA613
RA622 LAP RA609
1-RA647 (TYP.)
RA515
19'-1¾"
1 S.O. 7-RA624 LAP RA610
1-RA625 LAP RA611
WEST WINGWALL STEM PLAN

℄ BEARINGS AND DRILLED SHAFT
DRILLED SHAFT (TYP.)
BACK FACE OF ABUTMENT
PGD DRAINAGE SYSTEM (TYP.)
POROUS BACKFILL
RA537 DOWELS, 12" MIN. EMBEDMENT (TYP.) CONTRACTOR SHALL USE PACHOMETER OR OTHER SIMILAR METHOD TO LOCATE AND AVOID DRILLED SHAFT REINFORCEMENT
SACRIFICAL PLYWOOD FORM (TYP. BETWEEN SHAFTS)
FRONT FACE OF C.I.P. ABUTMENT FACING
TYPICAL DRILLED SHAFT PLAN

Preliminary Plans - Not For Reference Only

REAR ABUTMENT SECTIONS (1 OF 2)
CUY-90-1696 (BRIDGE 14)
CR-722 (CARNEGIE AVE.) OVER I.R. 90

SFN 1807898
DESIGN AGENCY
Michael Baker INTERNATIONAL
DESIGNER DBW | CHECKER MKB
REVIEWER KAG 12/26/23
PROJECT ID 82382
SUBSET 30 | TOTAL 90
SHEET 2310 | TOTAL 2696

CUY-90-16.28 (CCG3A)
MODEL: Sheet PAPERSIZE: 34x22 (in.) DATE: 3/28/2025 TIME: 8:04:13 AM USER: Rohit.Bk
pw:\\mb-us-pw.bentley.com:mb-us-pw-03\Documents\Cleveland_OH\01_Projects\ODOT\District12\82382\400-Engineering\Structures\SFN_1807898\Sheets\82382_SFN_1807898_SR001.dgn

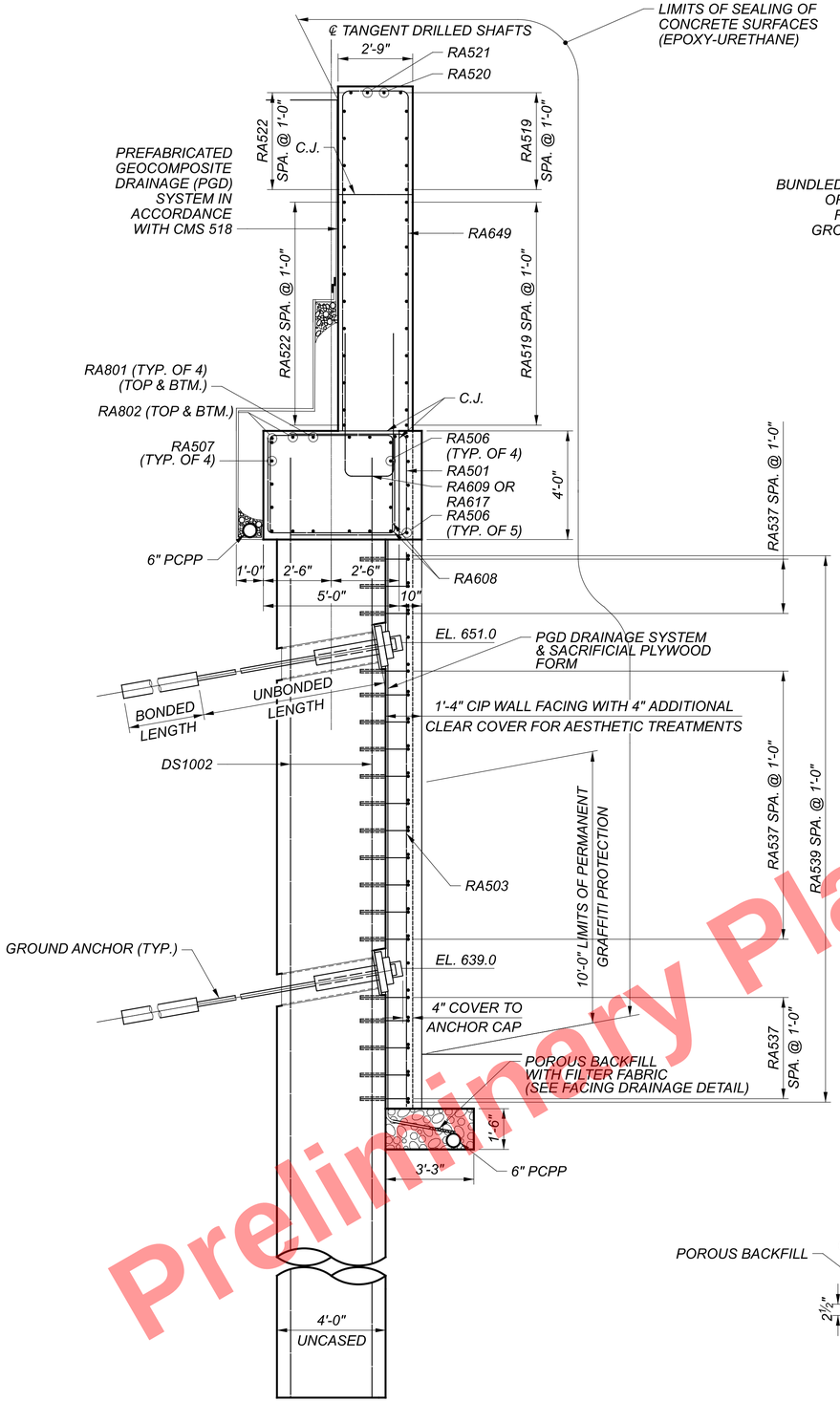

C 29 SECTION

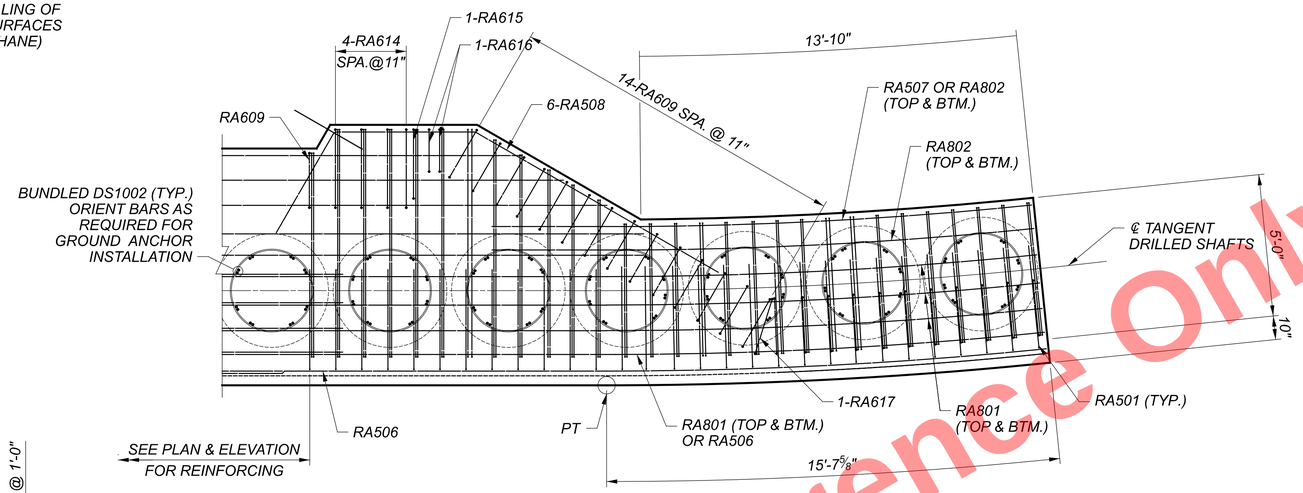

EAST WINGWALL SHAFT CAP PLAN

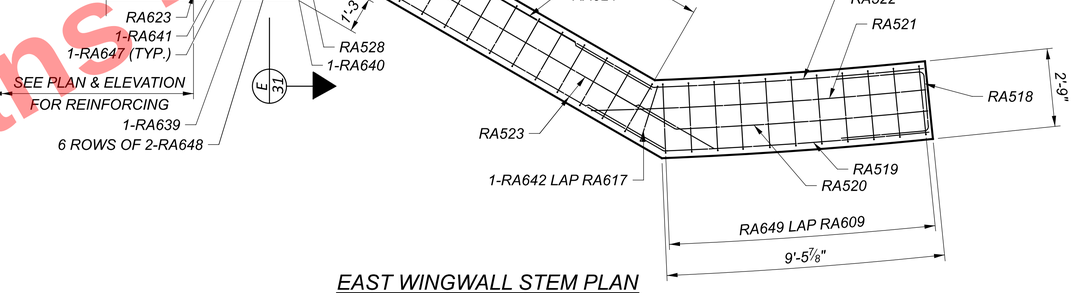

EAST WINGWALL STEM PLAN

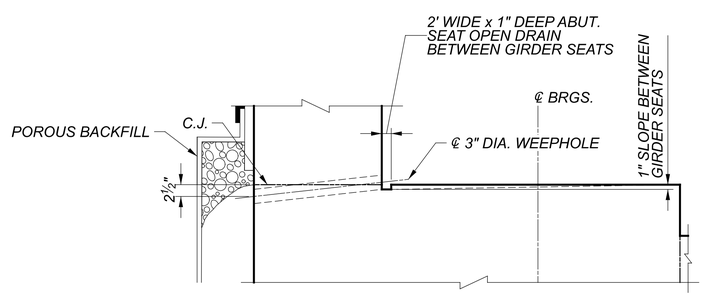

DRAINAGE DETAIL

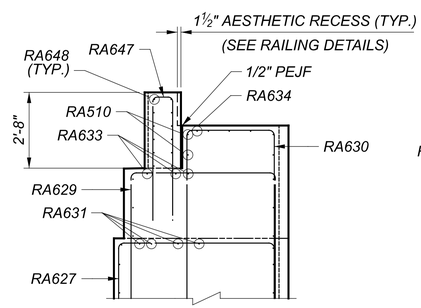

D 30 SECTION

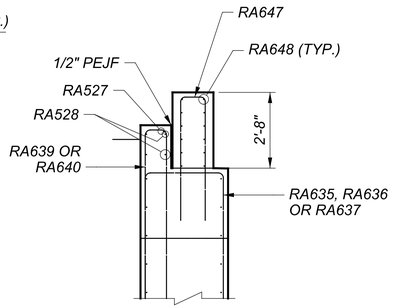

E 31 SECTION

Preliminary Plans - Not for Reference Only

REAR ABUTMENT SECTIONS (2 OF 2)
CUY-90-1696 (BRIDGE 14)
CR-722 (CARNEGIE AVE.) OVER I.R. 90

SFN 1807898
DESIGN AGENCY
Michael Baker INTERNATIONAL
DESIGNER DBW | CHECKER MKB
REVIEWER KAG 12/26/23
PROJECT ID 82382
SUBSET 31 | TOTAL 90
SHEET 2311 | TOTAL 2696

CUY-90-16.28 (CCG3A)

MODEL: Sheet PAPERSIZE: 34x22 (in.) DATE: 3/28/2025 TIME: 8:04:23 AM USER: Rohit.Bk
pw:\\mb-us-pw.bentley.com:mb-us-pw-03\Documents\Cleveland_OH101_Projects\ODOT\District12\82382\400-Engineering\Structures\SFN_1807898\Sheets\82382_SR005.dgn

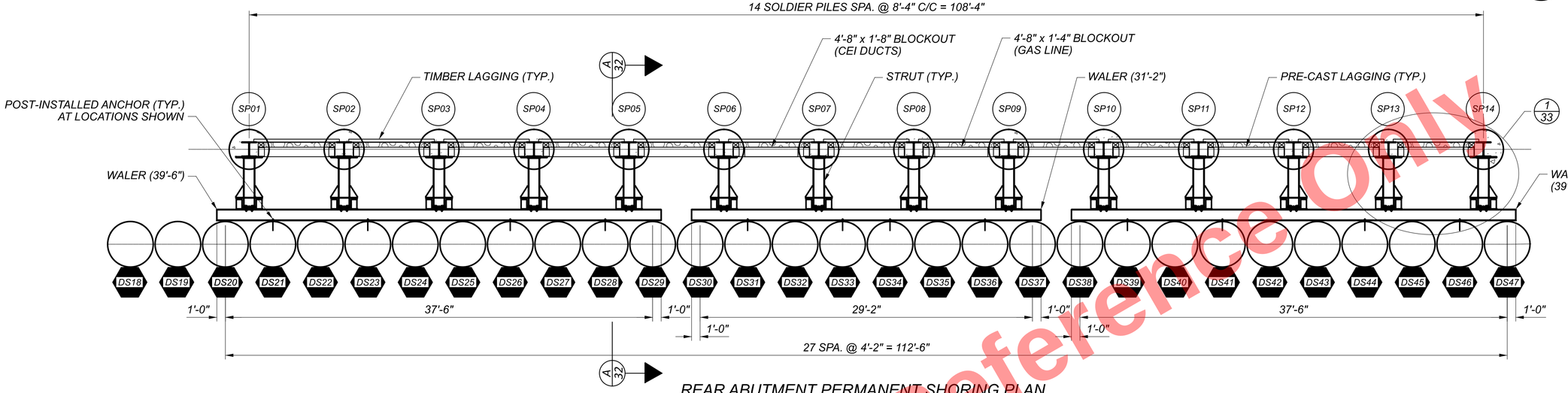

REAR ABUTMENT PERMANENT SHORING PLAN

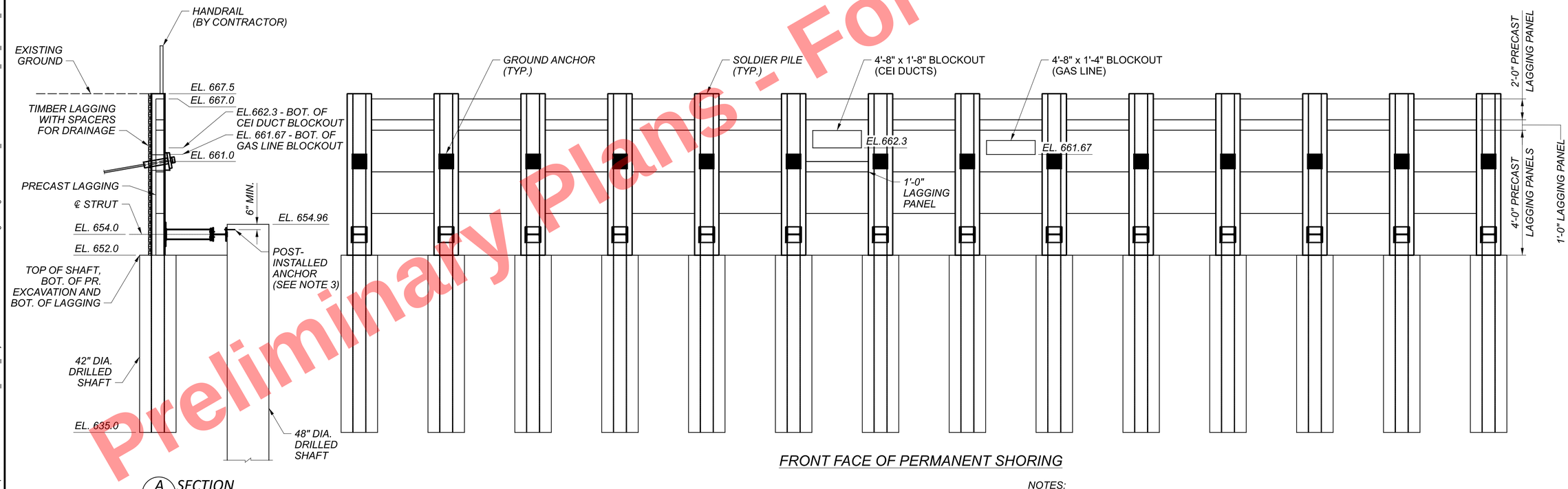

A 32 SECTION

FRONT FACE OF PERMANENT SHORING

LEGEND:

DSXX INDICATES PROPOSED DRILLED SHAFT NUMBER

SPXX INDICATES PROPOSED SOLDIER PILE NUMBER

NOTES:

1. SEE CONSTRUCTION DETAILS FOR INSTALLATION AND JACKING STAGES.
2. JACK ALL STRUTS CONNECTED TO AN INDIVIDUAL WALER SECTION SIMULTANEOUSLY.
3. POST-INSTALLED ANCHORS SHALL BE ¾" DIA. ASTM F1554 GR. 55 WITH MINIMUM 6" EMBEDMENT. GALVANIZE ANCHOR AND HARDWARE PER C&MS 711.02. INSTALL WITH HILTI HIT RE-500 V3 NON-SHRINK, NON-METALLIC MATERIAL OR APPROVED EQUAL. ANCHOR AND ANCHOR INSTALLATION IS INCLUDED IN ITEM 513-STRUCTURAL STEEL MEMBERS, LEVEL UF, SOLDIER PILE STRUT & WALER, AS PER PLAN.

Preliminary Plans - For Reference Only

REAR ABUTMENT STRUT & WALER DETAILS (1 OF 2)
CUY-90-1696 (BRIDGE 14)
CR-722 (CARNEGIE AVE.) OVER I.R. 90

SFN 82382
DESIGN AGENCY Michael Baker INTERNATIONAL
DESIGNER DBW | CHECKER MKB
REVIEWER KAG 12/26/23
PROJECT ID 82382
SUBSET 32 | TOTAL 90
SHEET 2312 | TOTAL 2696

CUY-90-16.28 (CCG3A)

MODEL: Sheet PAPERSIZE: 34x22 (in.) DATE: 3/28/2025 TIME: 8:04:30 AM USER: RohitLBk
pw:\\mb-us-pw.bentley.com:mb-us-pw-03\Documents\Cleveland_OH01_Projects\ODOTDistrict12\82382400-Engineering\Structures\SFN_1807698\Sheets\82382_SFN_1807698_SR009.dgn

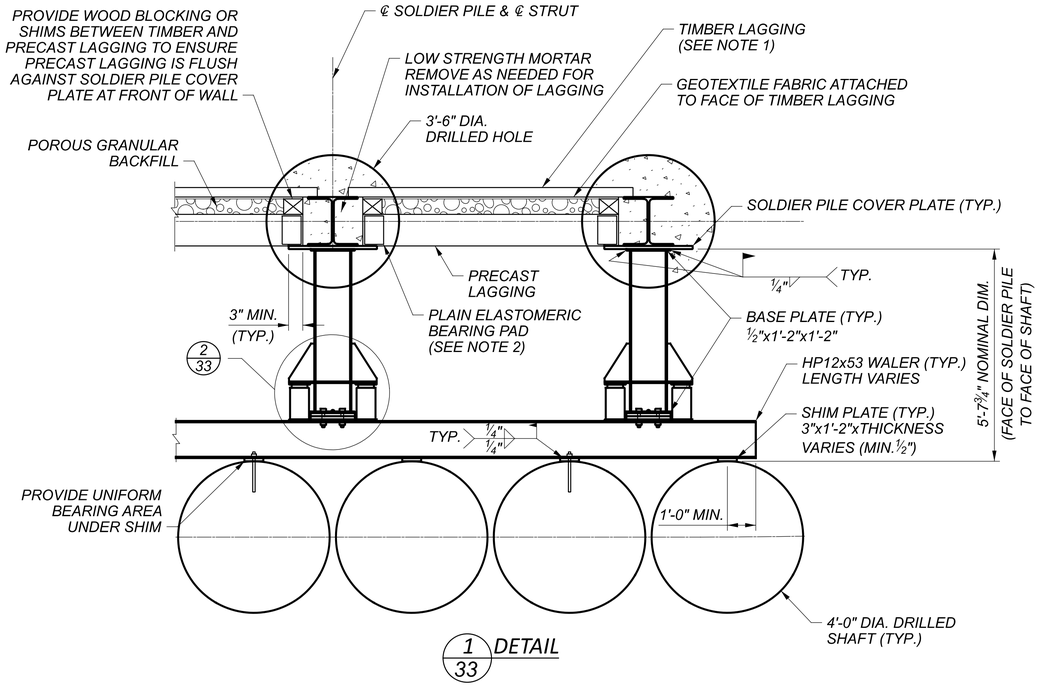

1 33 DETAIL

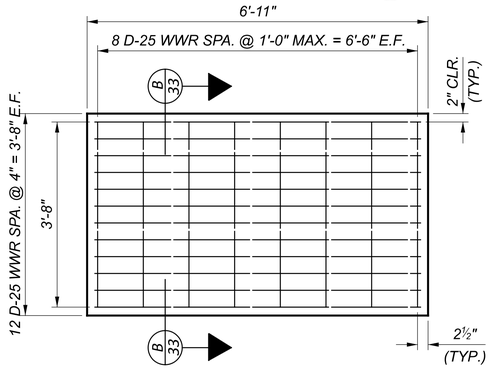

4'-0" PRECAST LAGGING ELEVATION

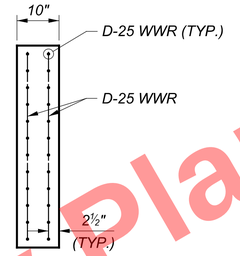

B 33 SECTION

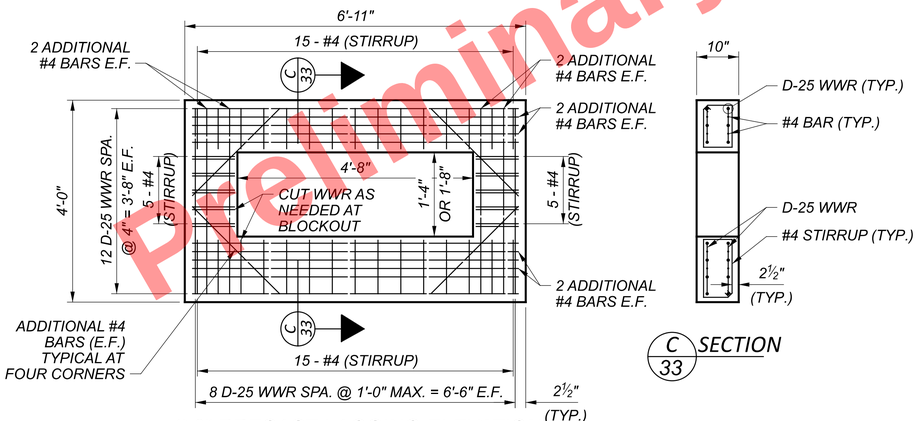

4'-0" PRECAST LAGGING ELEVATION
(WITH BLOCKOUT, SEE SHEET 32 FOR LOCATIONS)

C 33 SECTION

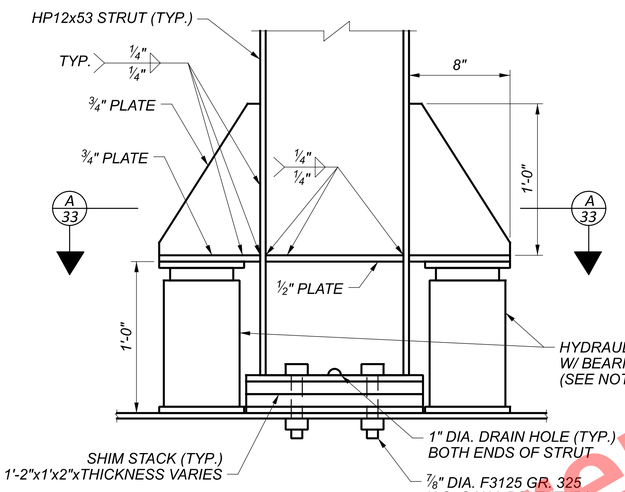

2 33 DETAIL

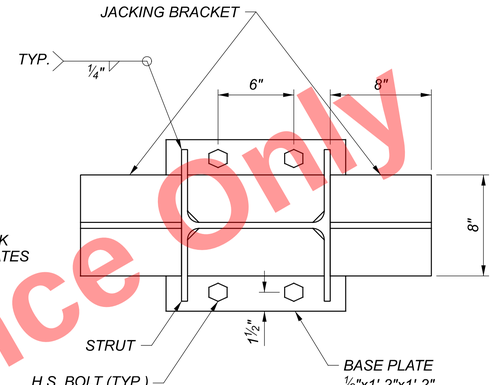

A 33 SECTION

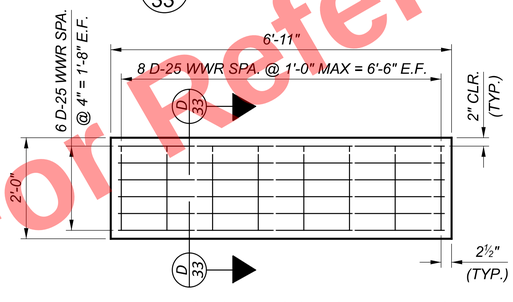

2'-0" PRECAST LAGGING ELEVATION

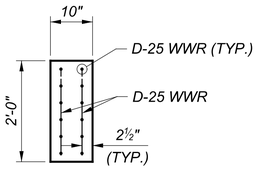

D 33 SECTION

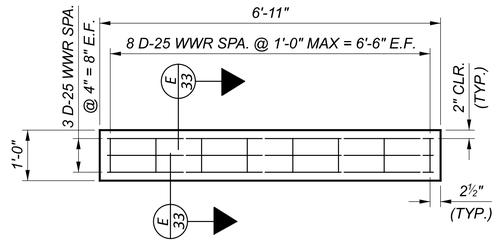

1'-0" PRECAST LAGGING ELEVATION

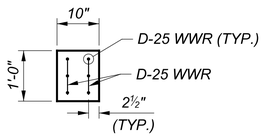

E 33 SECTION

NOTES:

1. PROVIDE TIMBER LAGGING AS REQUIRED WITH TIMBER BLOCKS BETWEEN INDIVIDUAL LAGGING TIMBERS. BLOCKS SHALL BE AT LEAST 3" LONG x 3" WIDE x 3/8" TALL. TIMBER LAGGING DESIGN BY CONTRACTOR. SEE SHEET 7 /90 FOR ADDITIONAL NOTES.
2. INSTALL ELASTOMERIC BEARING PAD UNDER BOTTOM PANEL AND BETWEEN INDIVIDUAL PANELS. ELASTOMERIC BEARING PADS SHALL BE 6"x9"x3/8" AND SHALL BE NEOPRENE HARDNESS OF 55+/- 5, HIGH DENSITY POLYETHYLENE PADS WITH A MINIMUM DENSITY OF 59 pcf OR EQUIVALENT. SUPPLY CERTIFIED TEST DATA TO THE ENGINEER UPON DELIVERY OF THE MATERIAL TO THE PROJECT. BEARING PADS WILL BE PAID FOR UNDER ITEM 516 ELASTOMERIC BEARING PAD, MISC.
3. REINFORCEMENT IN PRECAST LAGGING PANELS SHALL BE INCLUDED WITH ITEM 530 - STRUCTURES: PERMANENT SHORING PRECAST CONCRETE LAGGING FOR PAYMENT.
4. PROVIDE 1"x 1" CHAMFER AT EXPOSED TOP AND BOTTOM EDGE OF LAGGING PANELS.
5. CENTER LAGGING PANELS BETWEEN PILES WEBS.
6. PRELOAD EACH STRUT TO 65 KIPS / STRUT IN CONSTRUCTION STEP 3a. PERFORM JACKING AT STRUTS IN CONSTRUCTION STEPS 3b, 3c, AND 3d AS SHOWN IN THE CONSTRUCTION DETAILS. JACK AND SHIM AS NEEDED TO MAINTAIN MINIMUM OF 65 KIPS/STRUT REACTION.
7. JACKS SHALL BE MINIMUM 25 ton CAPACITY. PAIRS OF JACKS AT AN INDIVIDUAL STRUT SHALL BE OPERATED SIMULTANEOUSLY
8. DESIGN OF HYDRAULIC JACK SYSTEM AND JACK BEARING PLATES IS BY THE CONTRACTOR. CONTRACTOR SHALL CONFIRM JACKING BRACKET DETAILS ARE COMPATIBLE WITH ACTUAL JACKS PROVIDED.
9. ALL STRUCTURAL STEEL MEMBERS OF THE STRUT & WALER, INCLUDING HP SECTIONS, PLATES, AND SHIMS SHALL BE GALVANIZED. SEE ITEM 513 - STRUCTURAL STEEL MEMBERS, SOLDIER PILE STRUT & WALER, AS PER PLAN.

Preliminary Plans - For Reference Only

REAR ABUTMENT STRUT & WALER DETAILS (2 OF 2)
CUY-90-1696 (BRIDGE 14)
CR-722 (CARNEGIE AVE.) OVER I.R. 90

SFN	1807898
DESIGN AGENCY	Michael Baker INTERNATIONAL
DESIGNER	DBW
CHECKER	MKB
REVIEWER	KAG 12/26/23
PROJECT ID	82382
SUBSET	33
TOTAL	90
SHEET	2313
TOTAL	2696

CUY-90-16.28 (CCG3A)
MODEL: Sheet PAPERSIZE: 34x22 (in.) DATE: 3/28/2025 TIME: 8:04:37 AM USER: Rohit.Bk
pw:\\mb-us-pw.bentley.com:mb-us-pw-03\Documents\Cleveland_OH\01_Projects\ODOT\District12\82382\400-Engineering\Structures\SFN_1807898\Sheets\82382_SFN_1807898_SR010.dgn

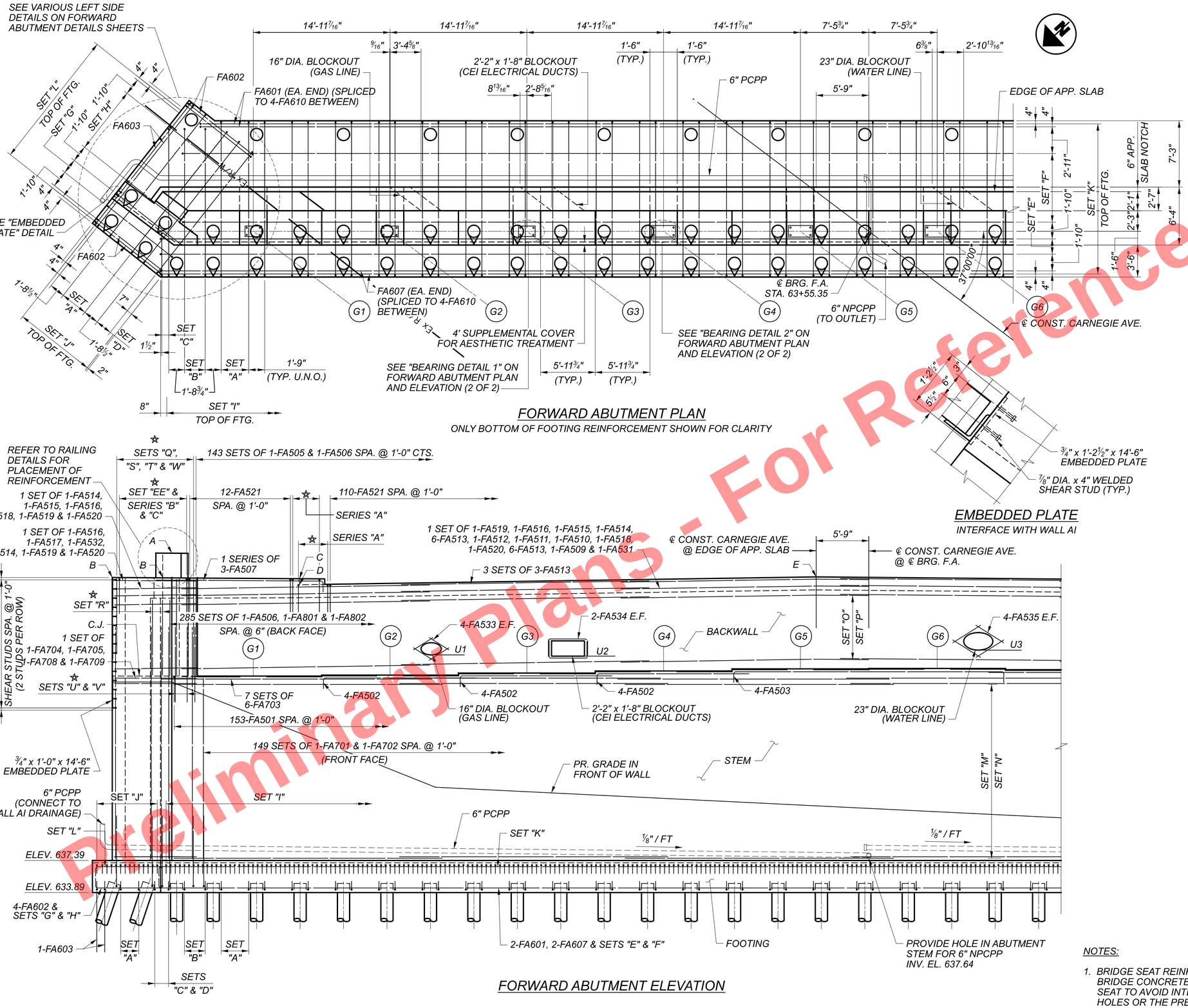

FORWARD ABUTMENT PLAN

ONLY BOTTOM OF FOOTING REINFORCEMENT SHOWN FOR CLARITY

EMBEDDED PLATE

INTERFACE WITH WALL AI

FORWARD ABUTMENT ELEVATION

FORWARD ABUTMENT	
POINT	ELEVATION
A	670.99
B	668.32
C	668.19
D	667.53
E	668.39
G1	657.55
G2	657.65
G3	657.88
G4	658.11
G5	658.33
G6	658.38

UTILITIES	
POINT	ELEVATION
U1	659.86
U2	659.73
U3	660.09

BOTTOM OF FOOTING REINFORCEMENT SETS:

SET "A" = 7-FA603 SPA. @ 6" MAX. (TYP. BETWEEN PILES UNLESS NOTED OTHERWISE, 32 SETS TOTAL)

SET "B" = 6-FA605 SPA. @ 5½" MAX.

SET "C" = 3-FA604 SPA. @ 4½" MAX.

SET "D" = 5-FA603 SPA. @ 5½" MAX.

SET "E" = 3 SETS OF 2-FA607 & 4-FA610 (FA607 PLACED AT ENDS) SPA. @ 10" MAX.

SET "F" = 13 SETS OF 2-FA606 & 4FA610 (FA606 PLACED AT ENDS) SPA. @ 10" MAX.

SET "G" = 3-FA602 SPA. @ 10" MAX.

SET "H" = 10-FA602 SPA. @ 10" MAX.

TOP OF FOOTING REINFORCEMENT SETS:

SET "I" = 308-FA603 SPA. @ 6" MAX.

SET "J" = 19-FA603 SPA. @ 6" MAX.

SET "K" = 1 SET OF 19 RUNS (EA. RUN = FA608 EA. END SPLICED TO 4-FA610 BETWEEN) SPA. @ 11" MAX.

SET "L" = 19-FA609 SPA. @ 11" MAX.

STEM REINFORCEMENT SETS:

SET "M" = 20 SETS OF 1-FA704, 1-FA705, 6-FA706 & 1-FA707 SPA. @ 1'-0" MAX. (SIDE & FRONT FACES OF STEM)

SET "N" = 20 SETS OF 1-FA708, 1-FA709, 6-FA710, 1-FA711 & 1-FA712 SPA. @ 1'-0" MAX. (BACK FACE OF STEM)

BACKWALL REINFORCEMENT SETS:

SET "O" = 8 SETS OF 1-FA519, 1-FA516, 1-FA515, 1-FA514, 6-FA513, 1-FA512, 1-FA511 & 1-FA510 SPA. @ 1'-0" MAX. (SIDE & FRONT FACES OF BACKWALL)

SET "P" = 8 SETS OF 1-FA518, 1-FA520, 6-FA508 & 1-FA509 SPA. @ 1'-0" MAX. (BACK FACE OF BACKWALL)

☆ *SEE REINFORCEMENT SETS AND SERIES ON FORWARD ABUTMENT DETAILS SHEET (2 OF 2)*

NOTES:

1. *BRIDGE SEAT REINFORCEMENT, SETTING ANCHORS: ACCURATELY PLACE BRIDGE CONCRETE REINFORCEMENT IN THE VICINITY OF THE BRIDGE SEAT TO AVOID INTERFERENCE WITH THE DRILLING OF BEARING ANCHOR HOLES OR THE PRE-SETTING OF BEARING ANCHORS.*

Preliminary Plans - For Reference Only

FORWARD ABUTMENT PLAN AND ELEVATION (1 OF 2)
CUY-90-1696 (BRIDGE 14)
CR-722 (CARNEGIE AVE.) OVER I.R. 90

SFN	1807898
DESIGN AGENCY	Michael Baker INTERNATIONAL
DESIGNER	TMG
CHECKER	AHS
REVIEWER	LPC 06/23/22
PROJECT ID	82382
SUBSET	34
TOTAL	90
SHEET	2314
TOTAL	2696

CUY-90-16.28 (CCG3A)

MODEL: Sheet PAPERSIZE: 34x22 (in.) DATE: 3/28/2025 TIME: 8:05:02 AM USER: Rohit.Bk
pw:\\mb-us-pw.bentley.com:mb-us-pw-03\Documents\Cleveland_OH\01_Projects\ODOT\District12\82382\400-Engineering\Structures\SFN_1807898\Sheets\82382_SF

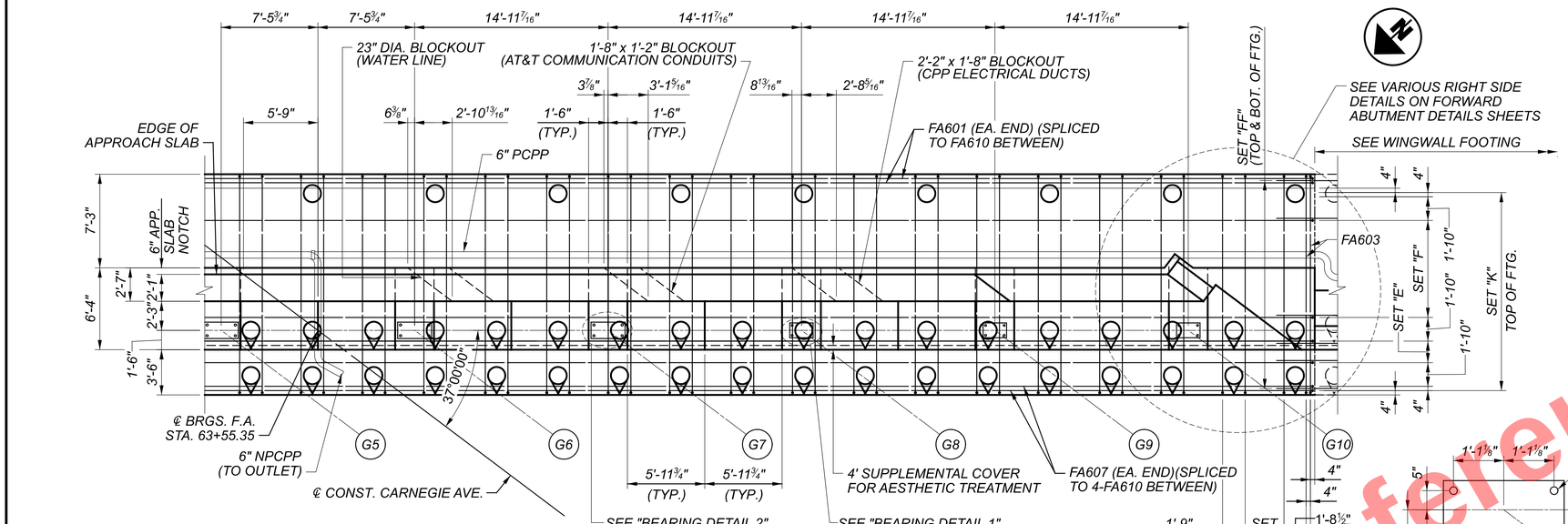

FORWARD ABUTMENT PLAN

ONLY BOTTOM OF FOOTING REINFORCEMENT SHOWN FOR CLARITY.

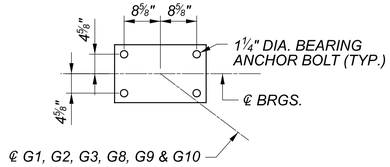

BEARING DETAIL 1

BEARING DETAIL 2

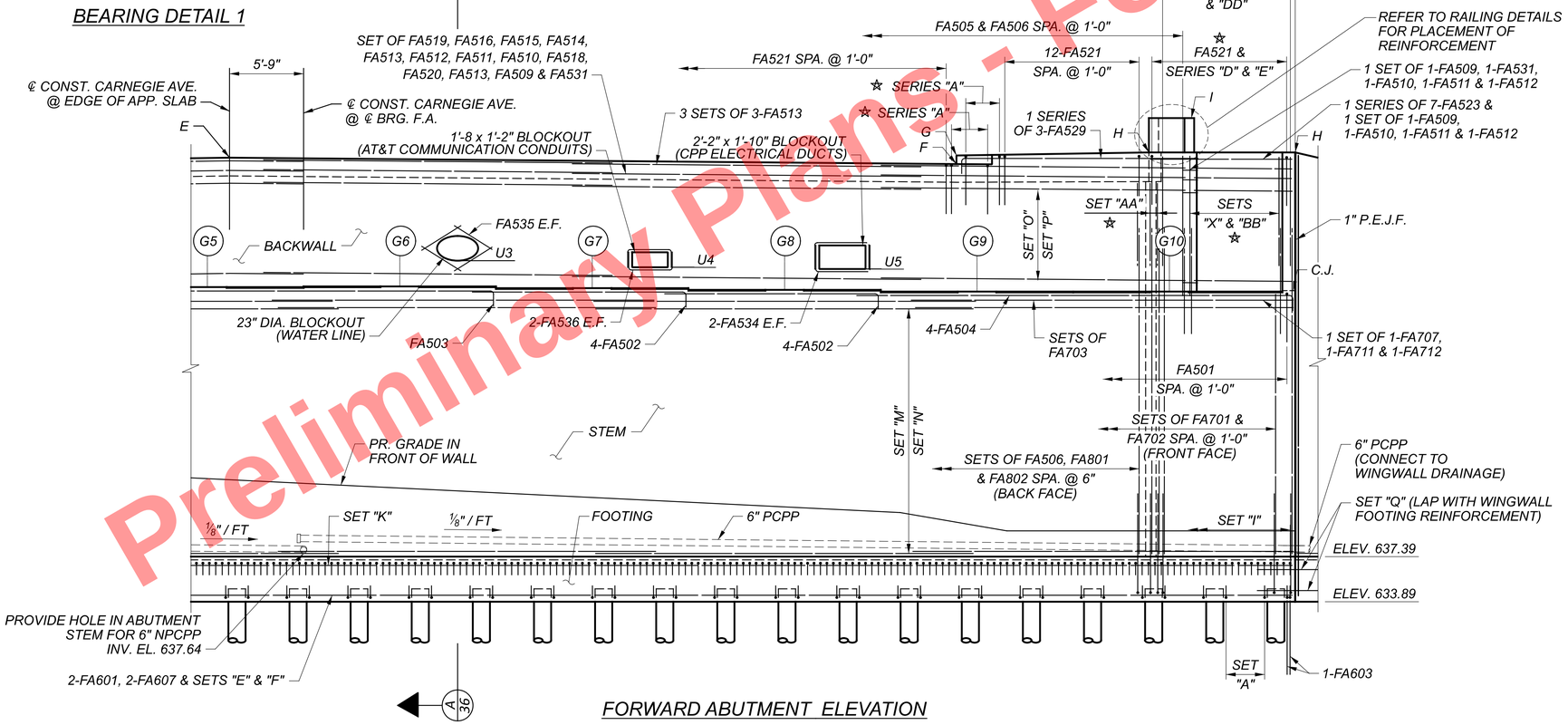

FORWARD ABUTMENT ELEVATION

FORWARD ABUTMENT	
POINT	ELEVATION
E	668.39
F	667.89
G	668.56
H	668.79
I	671.46
G5	658.33
G6	658.38
G7	658.25
G8	658.12
G9	657.98
G10	657.98

UTILITIES	
POINT	ELEVATION
U3	660.09
U4	659.87
U5	659.74

BOTTOM OF FOOTING REINFORCEMENT SETS:

SET "A" = 7-FA603 SPA. @ 6" MAX. (TYP. BETWEEN PILES UNLESS NOTED OTHERWISE, 32 SETS TOTAL)

SET "B" = 6-FA605 SPA. @ 5½" MAX.

SET "C" = 3-FA604 SPA. @ 4½" MAX.

SET "D" = 5-FA603 SPA. @ 5½" MAX.

SET "E" = 3 SETS OF 2-FA607 & 4-FA610 (FA607 PLACED AT ENDS) SPA. @ 10" MAX.

SET "F" = 13 SETS OF 2-FA606 & 4FA610 (FA606 PLACED AT ENDS) SPA. @ 10" MAX.

SET "G" = 3-FA602 SPA. @ 10" MAX.

SET "H" = 10-FA602 SPA. @ 10" MAX.

TOP OF FOOTING REINFORCEMENT SETS:

SET "I" = 308-FA603 SPA. @ 6" MAX.

SET "J" = 19-FA603 SPA. @ 6" MAX.

SET "K" = 1 SET OF 19 RUNS (EA. RUN = FA608 EA. END SPLICED TO 4-FA610 BETWEEN) SPA. @ 11" MAX.

SET "L" = 19-FA609 SPA. @ 11" MAX.

STEM REINFORCEMENT SETS:

SET "M" = 20 SETS OF 1-FA704, 1-FA705, 6-FA706 & 1-FA707 SPA. @ 1'-0" MAX. (SIDE & FRONT FACES OF STEM)

SET "N" = 20 SETS OF 1-FA708, 1-FA709, 6-FA710, 1-FA711 & 1-FA712 SPA. @ 1'-0" MAX. (BACK FACE OF STEM)

BACKWALL REINFORCEMENT SETS:

SET "O" = 8 SETS OF 1-FA519, 1-FA516, 1-FA515, 1-FA514, 6-FA513, 1-FA512, 1-FA511 & 1-FA510 SPA. @ 1'-0" MAX. (SIDE & FRONT FACES OF BACKWALL)

SET "P" = 8 SETS OF 1-FA518, 1-FA520, 6-FA508 & 1-FA509 SPA. @ 1'-0" MAX. (BACK FACE OF BACKWALL)

WINGWALL FOOTING INTERFACE REINFORCEMENT SETS:

SET "FF" = 18-FA611, LAP WITH FA608 (TOP OF FTG.)
19-FA611, LAP WITH FA601, FA606, OR FA607 (BOT. OF FTG.)

☆ SEE REINFORCEMENT SETS AND SERIES ON FORWARD ABUTMENT DETAILS SHEET (2 OF 2)

NOTES:

1. BRIDGE SEAT REINFORCEMENT, SEETING ANCHORS: ACCURATELY PLACE CONCRETE REINFORCEMENT IN THE VICINITY OF THE BRIDGE SEAT TO AVOID INTERFERENCE WITH THE DRILLING OF THE BEARING ANCHOR HOLES OR THE PRE-SETTING OF BEARING ANCHORS.

Preliminary Plans - Not For Reference Only

FORWARD ABUTMENT PLAN AND ELEVATION (2 OF 2)
CUY-90-1696 (BRIDGE 14)
CR-722 (CARNEGIE AVE.) OVER I.R. 90

SFN 1807898
DESIGN AGENCY Michael Baker INTERNATIONAL
DESIGNER TMG | CHECKER AHS
REVIEWER LPC 06/23/22
PROJECT ID 82382
SUBSET 35 | TOTAL 90
SHEET 2315 | TOTAL 2696

CUY-90-16.28 (CCG3A)
MODEL: Sheet PAPERSIZE: 34x22 (in.) DATE: 3/28/2025 TIME: 8:05:22 AM USER: RohitLBk
pw:\\mb-us-pw.bentley.com:mb-us-pw-03\Documents\Cleveland_OH\01_Projects\ODOT\District12\82382\400-Engineering\Structures\SFN_1807898\Sheets\82382_SFN_1807898_SF003.dgn

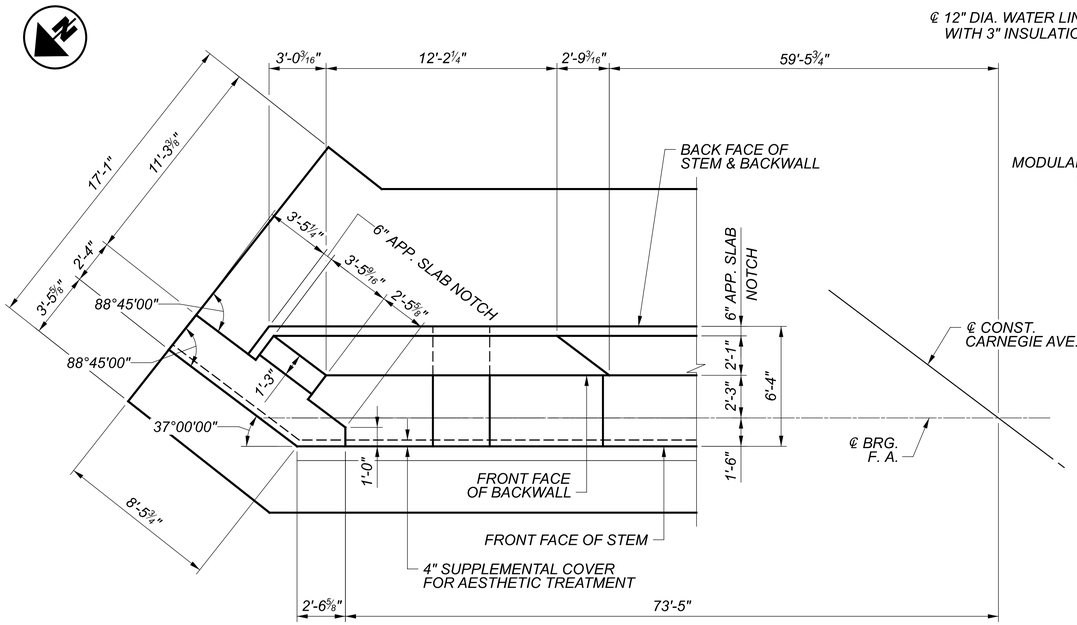

LEFT SIDE GEOMETRIC LAYOUT

PILES NOT SHOWN FOR CLARITY

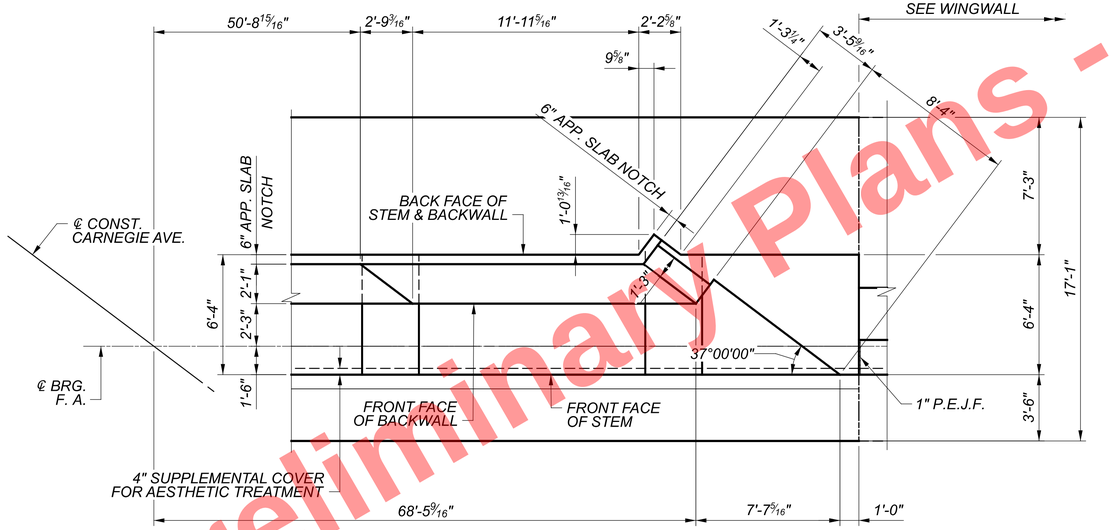

RIGHT SIDE GEOMETRIC LAYOUT

PILES NOT SHOWN FOR CLARITY

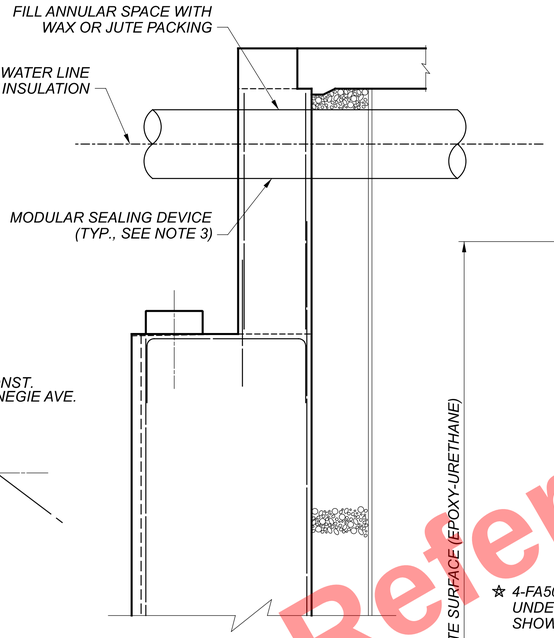

A 35 SECTION

WATER LINE SHOWN, GAS LINE SIMILAR FORWARD ABUTMENT SHOWN, REAR ABUTMENT SIMILAR

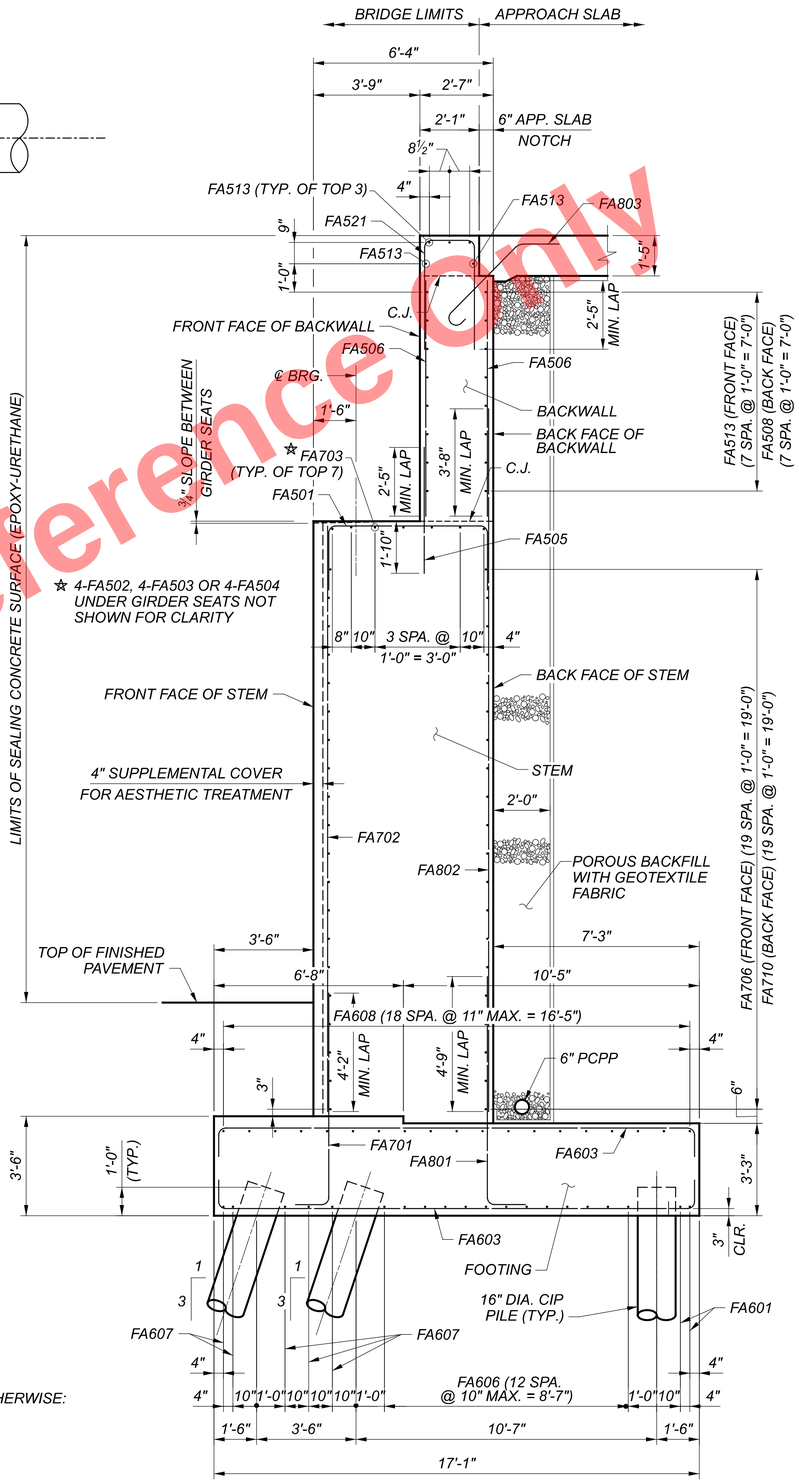

TYPICAL ABUTMENT SECTION

NOTES:

1. *PROVIDE 2" CONCRETE COVER ON REINFORCEMENT BARS UNLESS NOTED OTHERWISE.*
2. *BRIDGE SEAT REINFORCING, SETTING ANCHORS: ACCURATELY PLACE REINFORCING STEEL IN THE VICINITY OF THE BRIDGE SEAT TO AVOID INTERFERENCE WITH THE DRILLING OF BEARING ANCHOR HOLES OR THE PRE-SETTING OF BEARING ANCHORS.*
3. *MODULAR SEALING DEVICE SHALL BE LINK-SEAL, INNERLYNX, OR APPROVED EQUAL. SIZE THE SEALING DEVICE AND SLEEVE BASED ON THE MANUFACTURER'S RECOMMENDATIONS. USE LOW DUROMETER SEALS FOR THE 12" WATER LINE AND 12" GAS LINE.*

MINIMUM REBAR LAP SPLICES SHALL BE AS FOLLOWS, UNLESS NOTED OTHERWISE:

#5 LAP SPLICE: 3'-1"
#6 LAP SPLICE (IN TOP OF FOOTING): 3'-8"
#6 LAP SPLICE (IN BOTTOM OF FOOTING): 2'-10"
#7 LAP SPLICE: 4'-8"
#8 LAP SPLICE: 4'-9"

SEE WALL AI SHEETS 1250 -1261 FOR WALL DETAILS.

Preliminary Plans - For Reference Only

FORWARD ABUTMENT DETAILS (1 OF 2)
CUY-90-1696 (BRIDGE 14)
CR-722 (CARNEGIE AVE.) OVER I.R. 90

SFN	1807898
DESIGN AGENCY	Michael Baker INTERNATIONAL
DESIGNER	TMG
CHECKER	AHS
REVIEWER	LPC 06/23/22
PROJECT ID	82382
SUBSET	36
TOTAL	90
SHEET	2316
TOTAL	2696

CUY-90-16.28 (CCG3A)
MODEL: Sheet PAPERSIZE: 34x22 (in.) DATE: 3/28/2025 TIME: 8:05:34 AM USER: RohitLBk
pw:\\mb-us-pw.bentley.com:mb-us-pw-03\Documents\Cleveland_Oh\01_Projects\ODOT\District12\82382\400-Engineering\Structures\SFN_1807898\Sheets\82382_SFN_1807898_SF004.dgn

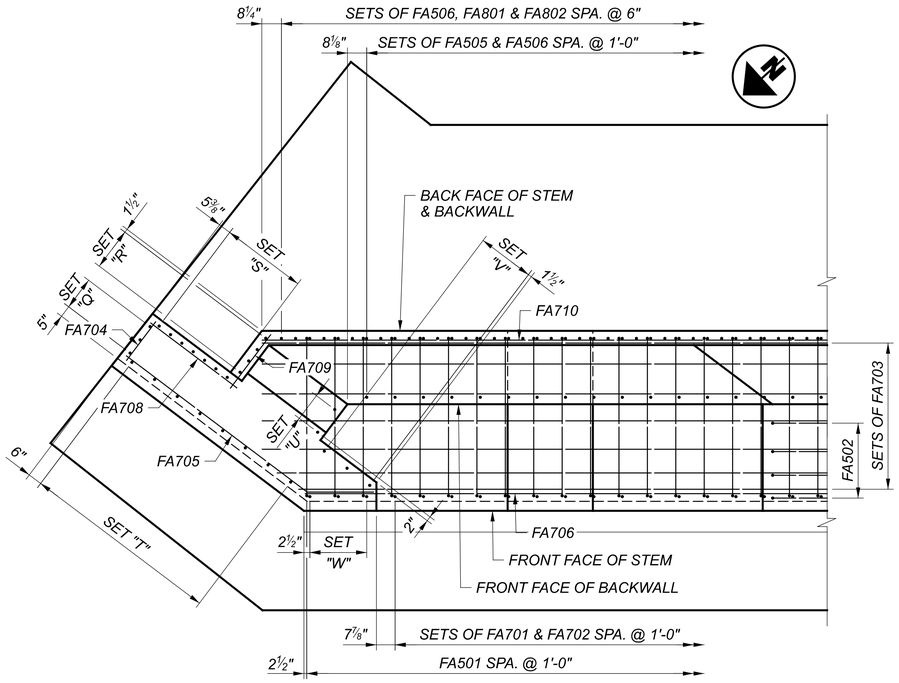

LEFT SIDE STEM REINFORCEMENT DETAIL

PILES NOT SHOWN FOR CLARITY

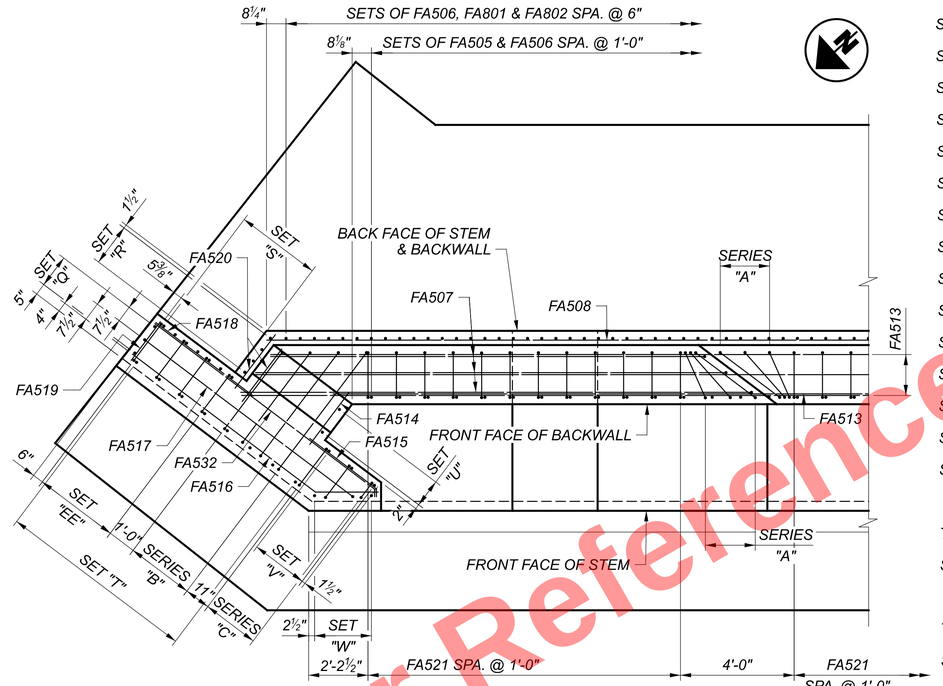

LEFT SIDE BACKWALL REINFORCEMENT DETAIL

PILES NOT SHOWN FOR CLARITY

STEM & BACKWALL REINFORCEMENT SETS:

SET "Q" = 3 SETS OF 1-FA506, 1-FA701 & 1-FA713 SPA. @ 9"
SET "R" = 4 SETS OF 1-FA506, 1-FA801 & 1-FA802 SPA. @ 6"
SET "S" = 7 SETS OF 1-FA506, 1-FA801 & 1-FA802 SPA. @ 6"
SET "T" = 8 SETS OF 1-FA506, 1-FA701 & 1-FA713 SPA. @ 1'-0"
SET "U" = 2 SETS OF 1-FA505 & 1-FA506 SPA. @ 1'-0"
SET "V" = 3 SETS OF 1-FA505 & 1-FA506 SPA. @ 1'-0"
SET "W" = 3 SETS OF 1-FA506, 1-FA701 & 1-FA713 SPA. @ 1'-0"
SET "X" = 8 SETS OF 1-FA505 & 1-FA506 SPA. @ 1'-0"
SET "Y" = 3 SETS OF 1-FA506, 1-FA801 & 1-FA802 SPA. @ 6"
SET "Z" = 19 SETS OF 1-FA506, 1-FA801 & 1-FA802 SPA. @ 6"
SET "AA" = 3 SETS OF 1-FA506, 1-FA801 & 1-FA802 SPA. @ 6"
SET "BB" = 2 SETS OF 1-FA505 & 1-FA506 SPA. @ 1'-0"
SET "CC" = 6 SETS OF 1-FA506, 1-FA701 & 1-FA713 SPA. @ 1'-0"
SET "DD" = 2 SETS OF 1-FA506, 1-FA701 & 1-FA713 SPA. @ 6"

TOP OF BACKWALL REINFORCEMENT SETS:

SET "EE" = 1 SET OF 4-FA524 SPA. @ 1'-0"

TOP OF BACKWALL REINFORCEMENT SERIES:

SERIES "A" = 1 SERIES OF 3-FA522 (FANNED)
SERIES "B" = 1 SERIES OF 4-FA525 SPA. @ 9½"
SERIES "C" = 1 SERIES OF 3-FA526 SPA. @ 1'-0"
SERIES "D" = 1 SERIES OF 8-FA527 SPA. @ 1'-0"
SERIES "E" = 1 SERIES OF 2-FA528 SPA. @ 1'-0"

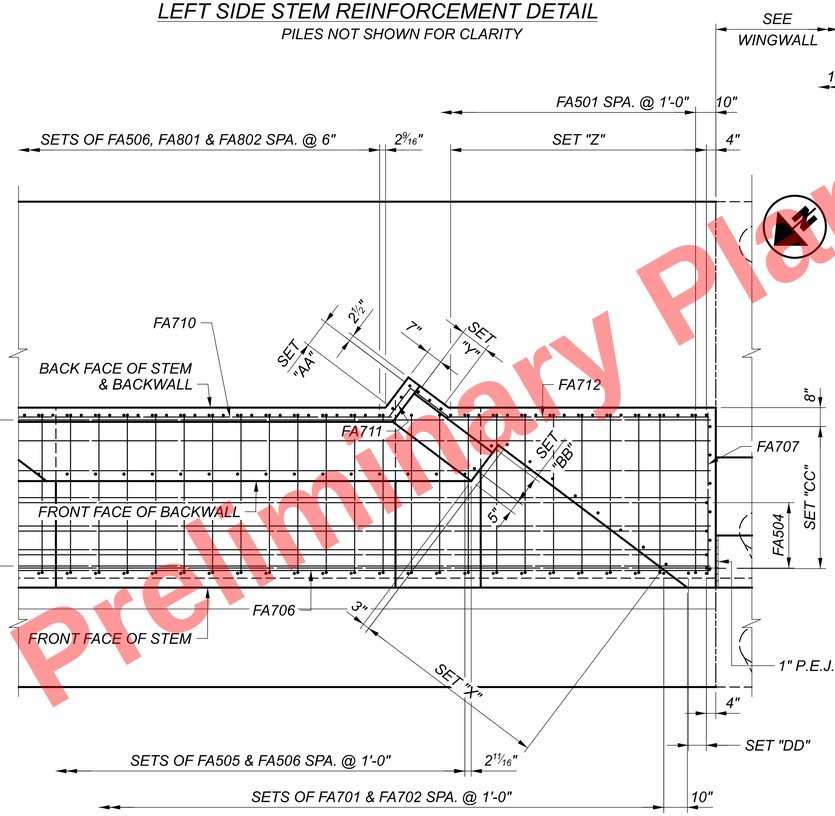

RIGHT SIDE STEM REINFORCEMENT DETAIL

PILES NOT SHOWN FOR CLARITY

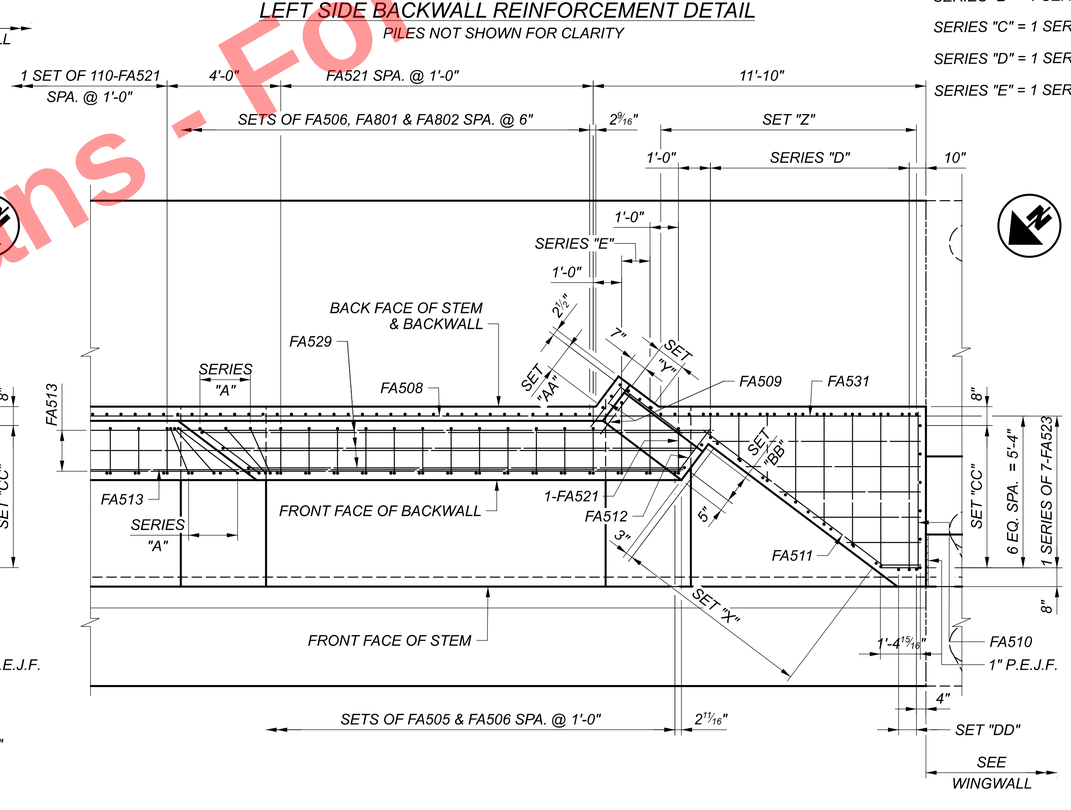

RIGHT SIDE BACKWALL REINFORCEMENT DETAIL

PILES NOT SHOWN FOR CLARITY

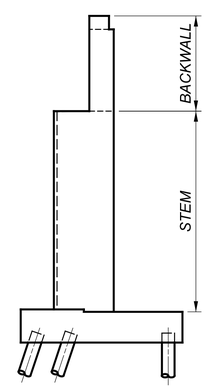

KEY

Preliminary Plans - For Reference Only

FORWARD ABUTMENT DETAILS (2 OF 2)
CUY-90-1696 (BRIDGE 14)
CR-722 (CARNEGIE AVE.) OVER I.R. 90

SFN	1807898
DESIGN AGENCY	Michael Baker INTERNATIONAL
DESIGNER	TMG
CHECKER	AHS
REVIEWER	LPC 06/23/22
PROJECT ID	82382
SUBSET	37
TOTAL	90
SHEET	2317
TOTAL	2696

CUY-90-16.28 (CCG3A)
MODEL: Sheet PAPERSIZE: 34x22 (in.) DATE: 3/28/2025 TIME: 8:05:44 AM USER: Rohit.Bk
pw:\\mb-us-pw.bentley.com:mb-us-pw-03\Documents\Cleveland_OH\01_Projects\ODOT\District12\82382\400-Engineering\Structures\SFN_1807898\Sheets\82382_SFN_1807898_SF005.dgn

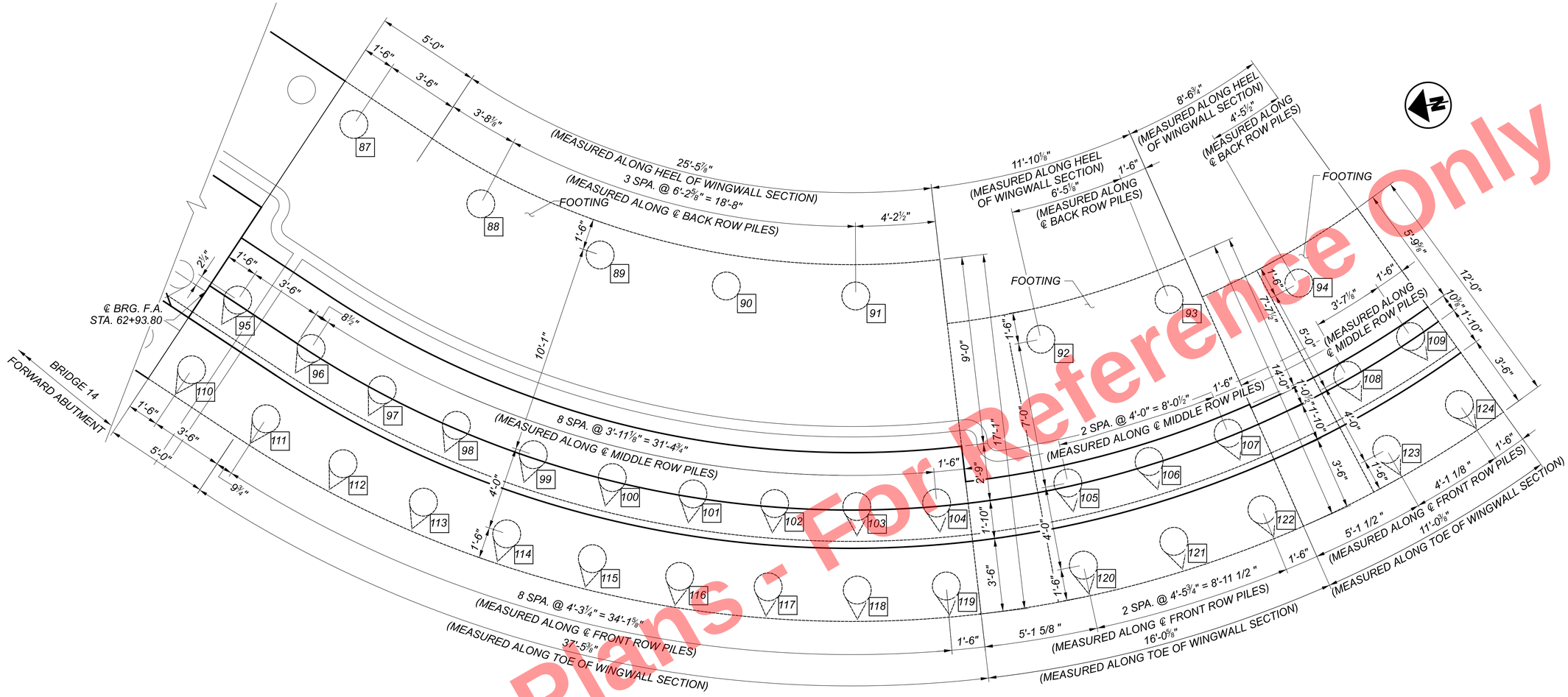

PLAN

PILE SCHEDULE			
SUBSTRUCTURE UNIT	PILE DIAMETER	ESTIMATED LENGTH	CUTOFF ELEVATION
FORWARD RIGHT WINGWALL FOOTING (87 THRU 124)	16"	80.00	VARIES

LEGEND:

[#] INDICATES PROPOSED PILE NUMBER

INDICATES VERTICAL PILE

INDICATES BATTERED PILE

Preliminary Plans - For Reference Only

FORWARD RIGHT WINGWALL FOUNDATION PLAN
CUY-90-1696 (BRIDGE 14)
CR-722 (CARNEGIE AVE.) OVER I.R. 90

SFN 1807898
DESIGN AGENCY Michael Baker INTERNATIONAL
DESIGNER BDC | CHECKER MBC
REVIEWER KAG 12/26/23
PROJECT ID 82382
SUBSET 38 | TOTAL 90
SHEET 2318 | TOTAL 2696

CUY-90-16.28 (CCG3A)

MODEL: Pile Layout PAPERSIZE: 34x22 (in.) DATE: 3/28/2025 TIME: 8:05:58 AM USER: Rohit.Bk
pw:\\mb-us-pw.bentley.com:mb-us-pw-03\Documents\Cleveland_OH01_Projects\ODOT\District12\82382\400-Engineering\Structures\SFN_1807898\Sheets\82382_SFN_1807898_SF009.dgn

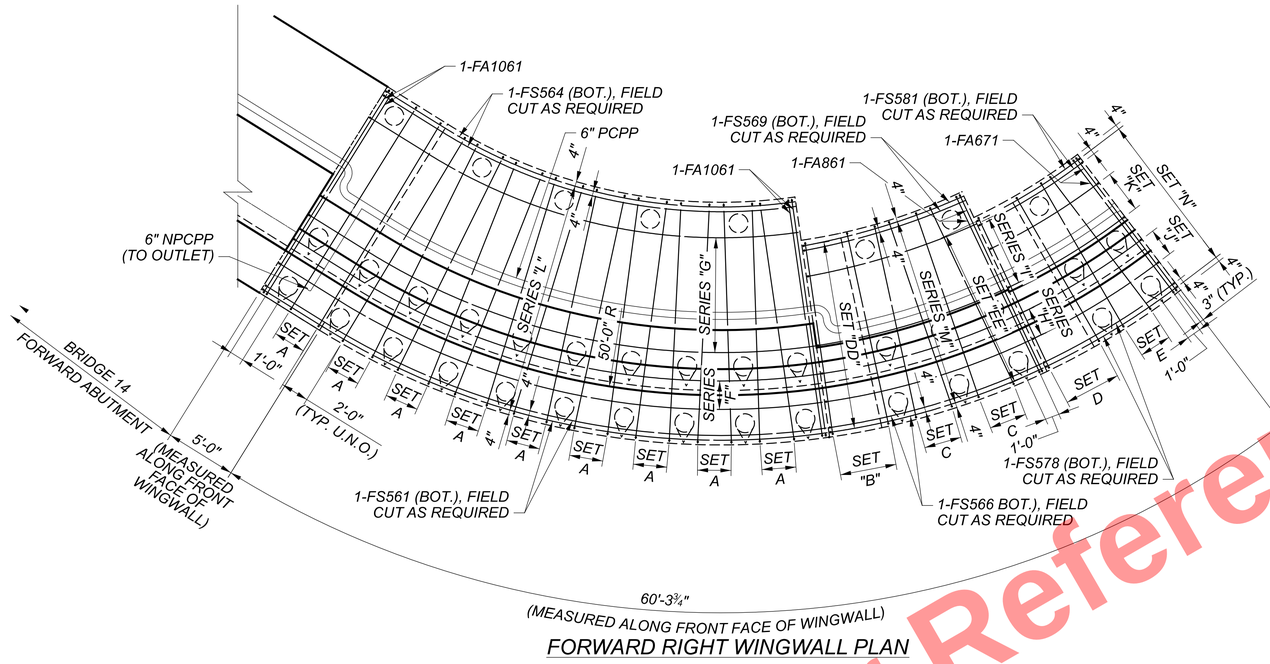

FORWARD RIGHT WINGWALL PLAN

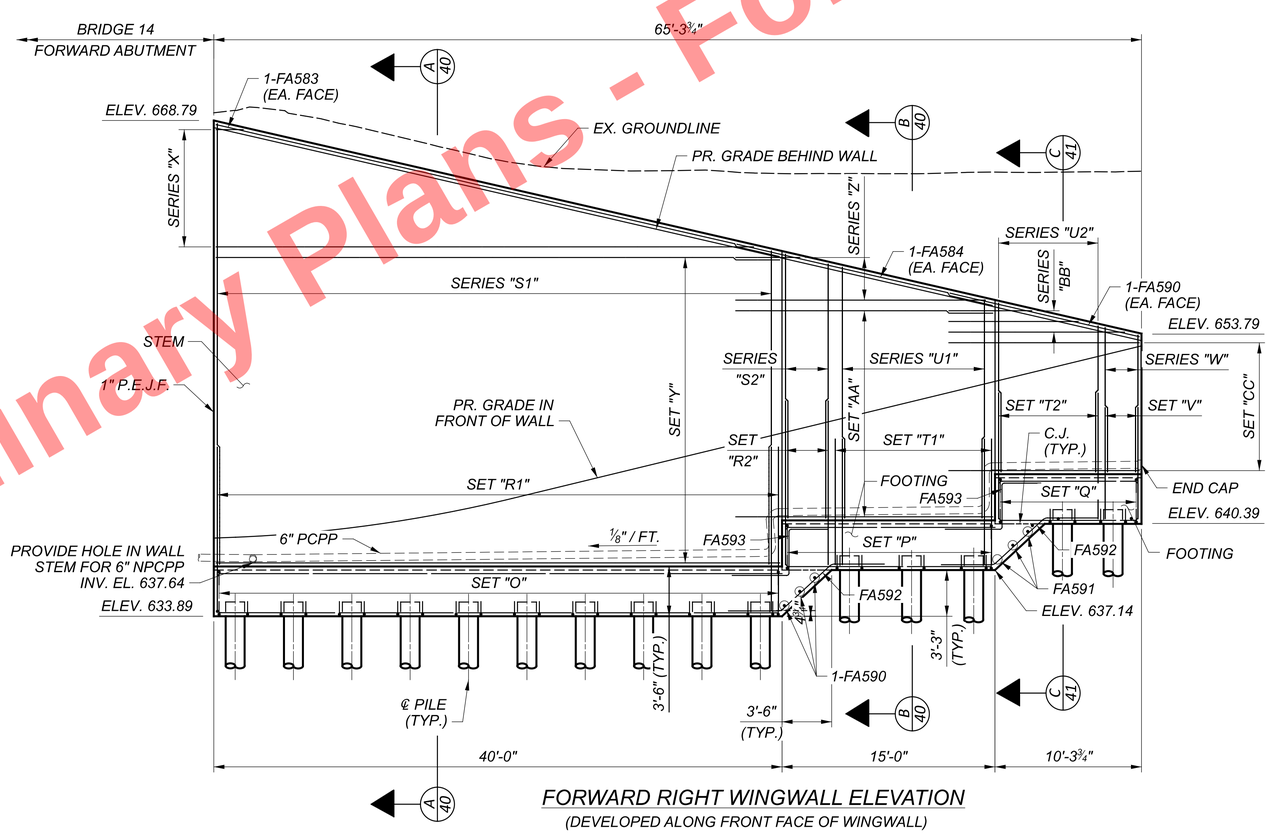

FORWARD RIGHT WINGWALL ELEVATION

(DEVELOPED ALONG FRONT FACE OF WINGWALL)

BOTTOM OF FOOTING REINFORCEMENT SETS:

SET "A" = 8-FA1061 SPA. @ 6" MAX
SET "B" = 8-FA861 SPA. @ 8" MAX
SET "C" = 7-FA861 SPA. @ 8" MAX
SET "D" = 7-FA671 SPA. @ 9" MAX
SET "E" = 6-FA671 SPA. @ 9" MAX
SERIES "F" = 1 SERIES OF 4-FA562 SPA. @ 8" MAX = 2'-0"
SERIES "G" = 1 SERIES OF 14-FA563 SPA. @ 8" MAX = 8'-1"
SERIES "H" = 1 SERIES OF 4-FA567 SPA. @ 8" MAX = 2'-0"
SERIES "I" = 1 SERIES OF 9-FA568 SPA. @ 8" MAX = 5'-0"
SET "J" = 4-FA579 SPA. @ 8" MAX
SET "K" = 6-FA580 SPA. @ 8" MAX
SET "DD" = 1 SET OF 17-FA592 & 1 SET OF 17-FA593 SPA. @ 8" MAX
SET "EE" = 1 SET OF 14-FA592 & 1 SET OF 14-FA593 SPA. @ 8" MAX

TOP OF FOOTING REINFORCEMENT SETS:

SERIES "L" = 1 SERIES OF 26-FA565 SPA. @ 8" MAX = 16'-8"
SERIES "M" = 1 SERIES OF 22-FA577 SPA. @ 8" MAX = 13'-8"
SET "N" = 19-FA582 SPA. @ 8" MAX = 11'-8"
SET "O" = 85-FA1061 SPA. @ 6" MAX
SET "P" = 25-FA861 SPA. @ 8" MAX
SET "Q" = 16-FA671 SPA. @ 9" MAX

STEM REINFORCEMENT SETS:

SET "R1" = 80-FA903 (FRONT FACE) & 80-FA904 (BACK FACE) SPA. @ 6" = 39'-6".

SET "R2" = 7-FA903 (FRONT FACE) & 7-FA904 (BACK FACE) SPA. @ 6" = 3'-0".

SERIES "S1" = 1 SERIES OF 40-FA901 (FRONT FACE) & 1 SERIES OF 40-FA902 (BACK FACE) SPA. @ 1'-0" = 39'-0".

SERIES "S2" = 1 SERIES OF 4-FA907 (FRONT FACE) & 1 SERIES OF 4-FA908 (BACK FACE) SPA. @ 1'-0" = 3'-0".

SET "T1" = 23-FA661 (FRONT FACE) & 23-FA662 (BACK FACE) SPA. @ 6" = 11'-0".

SET "T2" = 15-FA661 (FRONT FACE) & 15-FA662 (BACK FACE) SPA. @ 6" = 7'-0".

SERIES "U1" = 1 SERIES OF 11-FA665 (FRONT FACE) & 1 SERIES OF 11-FA666 (BACK FACE) SPA. @ 1'-0" = 10'-0".

SERIES "U2" = 1 SERIES OF 8-FA667 (FRONT FACE) & 1 SERIES OF 8-FA668 (BACK FACE) SPA. @ 1'-0" = 7'-0".

SET "V" = 4-FA570 (FRONT FACE) & 4-FA571 (BACK FACE) SPA. @ 9" = 2'-3" .

SERIES "W" = 1 SERIES OF 4-FA572 (FRONT FACE) & 4-FA573 (BACK FACE) SPA. @ 9" = 2'-3".

SERIES "X" = 1 SERIES OF 12-FA574 (EACH FACE) SPA. @ 9" MAX = 9'-0".

SET "Y" = 31-FA594 (EACH FACE) SPA. @ 9" MAX = 21'-6".

SERIES "Z" = 1 SERIES OF 5-FA575 (EACH FACE) SPA. @ 9" MAX = 3'-0".

SET "AA" = 21-FA596 (EACH FACE) SPA. @ 9" MAX = 14'-6".

SERIES "BB" = 1 SERIES OF 3-FA576 (EACH FACE) SPA. @ 9" MAX.

SET "CC" = 13-FA598 (EACH FACE) SPA. @ 9" MAX. = 9'-0".

NOTES:

1. *FOR WINGWALL SECTIONS, SEE SHEETS 40 & 41 / 90.*
2. *FOR FORWARD ABUTMENT DETAILS, SEE SHEETS 36 & 37 / 90.*
3. *#5 MIN. LAP SPLICE = 3'-1"*
4. *CONTRACTOR CAN FIELD BEND CURVED BARS.*

Preliminary Plans - For Reference Only

FORWARD RIGHT WINGWALL PLAN AND ELEVATION
CUY-90-1696 (BRIDGE 14)
CR-722 (CARNEGIE AVE.) OVER I.R. 90

SFN	1807898
DESIGN AGENCY	Michael Baker INTERNATIONAL
DESIGNER	BDC
CHECKER	MBC
REVIEWER	KAG 12/26/23
PROJECT ID	82382
SUBSET	39
TOTAL	90
SHEET	2319
TOTAL	2696

CUY-90-16.28 (CCG3A)

MODEL: Sheet PAPERSIZE: 34x22 (in.) DATE: 3/28/2025 TIME: 8:06:17 AM USER: RohitLBk
pw:\\mb-us-pw.bentley.com:mb-us-pw-03\Documents\Cleveland_OH01_Projects\ODOTDistrict12\82382400-Engineering\Structures\SFN_1807898\Sheets\82382_SFN_1807898_SF007.dgn

NOTES:

1. PROVIDE 2" CONCRETE COVER ON REINFORCEMENT BARS UNLESS NOTED OTHERWISE.

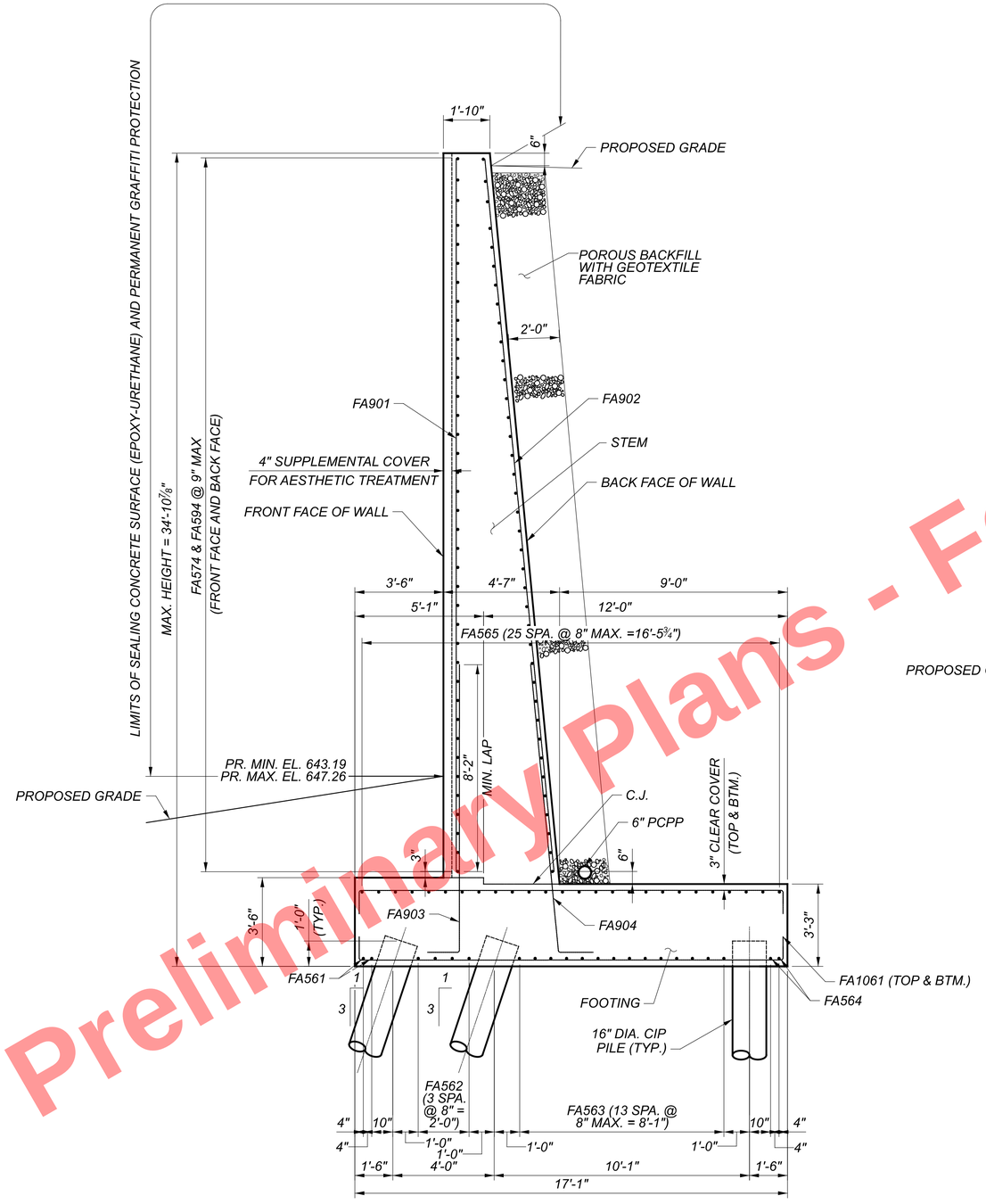

A 39 SECTION

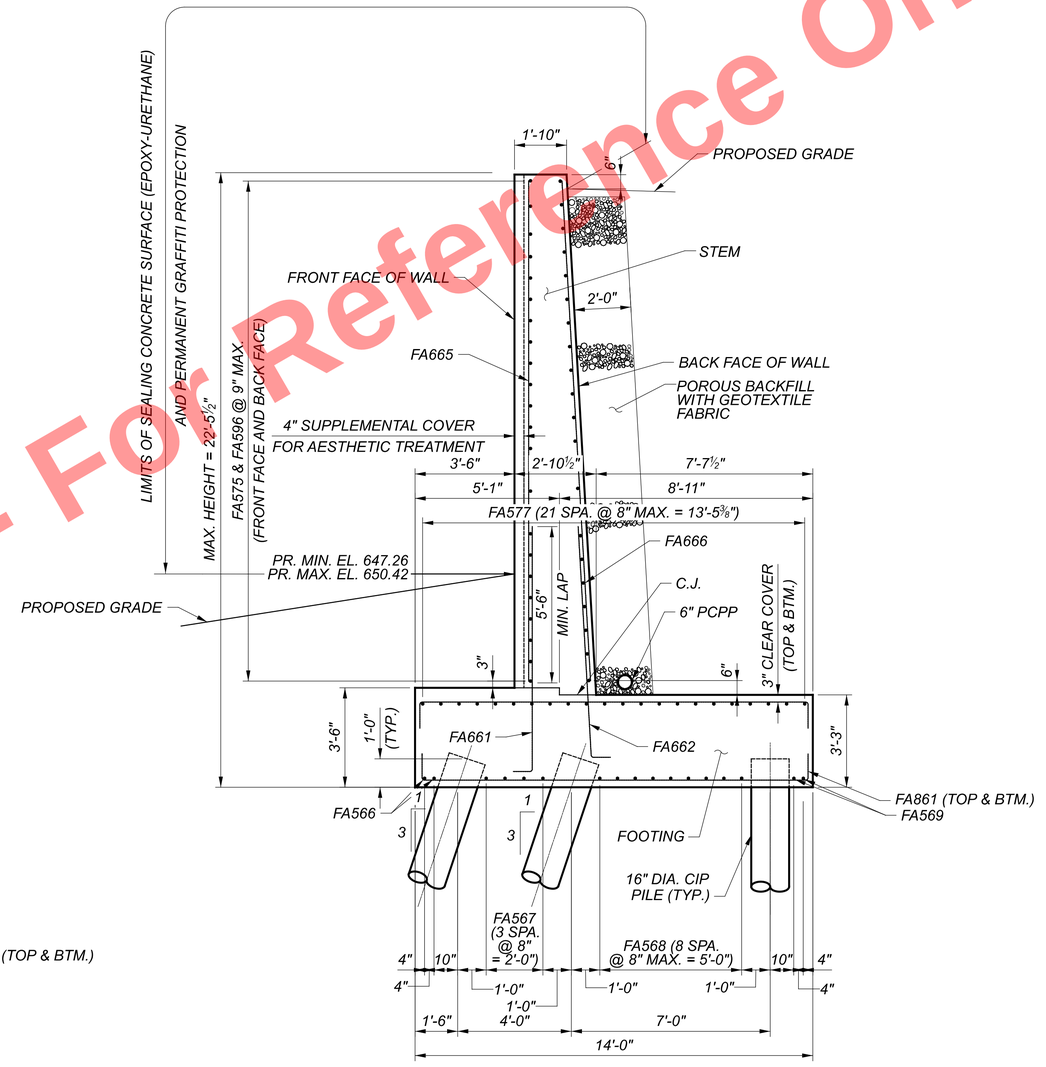

B 39 SECTION

Preliminary Plans - For Reference Only

FORWARD RIGHT WINGWALL SECTION (1 OF 2)
CUY-90-1696 (BRIDGE 14)
CR-722 (CARNEGIE AVE.) OVER I.R. 90

SFN	1807898
DESIGN AGENCY	Michael Baker INTERNATIONAL
DESIGNER	BDC
CHECKER	MBC
REVIEWER	KAG 12/26/23
PROJECT ID	82382
SUBSET	40
TOTAL	90
SHEET	2320
TOTAL	2696

CUY-90-16.28 (CCG3A)

MODEL: Sheet PAPERSIZE: 34x22 (in.) DATE: 3/28/2025 TIME: 8:06:42 AM USER: RohitBk
pw:\\mb-us-pw.bentley.com:mb-us-pw-03\Documents\Cleveland_OH\01_Projects\ODOT\District12\82382\400-Engineering\Structures\SFN_1807898\Sheets\82382_SFN_1807898_SF006.dgn

NOTES:

1. PROVIDE 2" CONCRETE COVER ON REINFORCEMENT BARS UNLESS NOTED OTHERWISE.

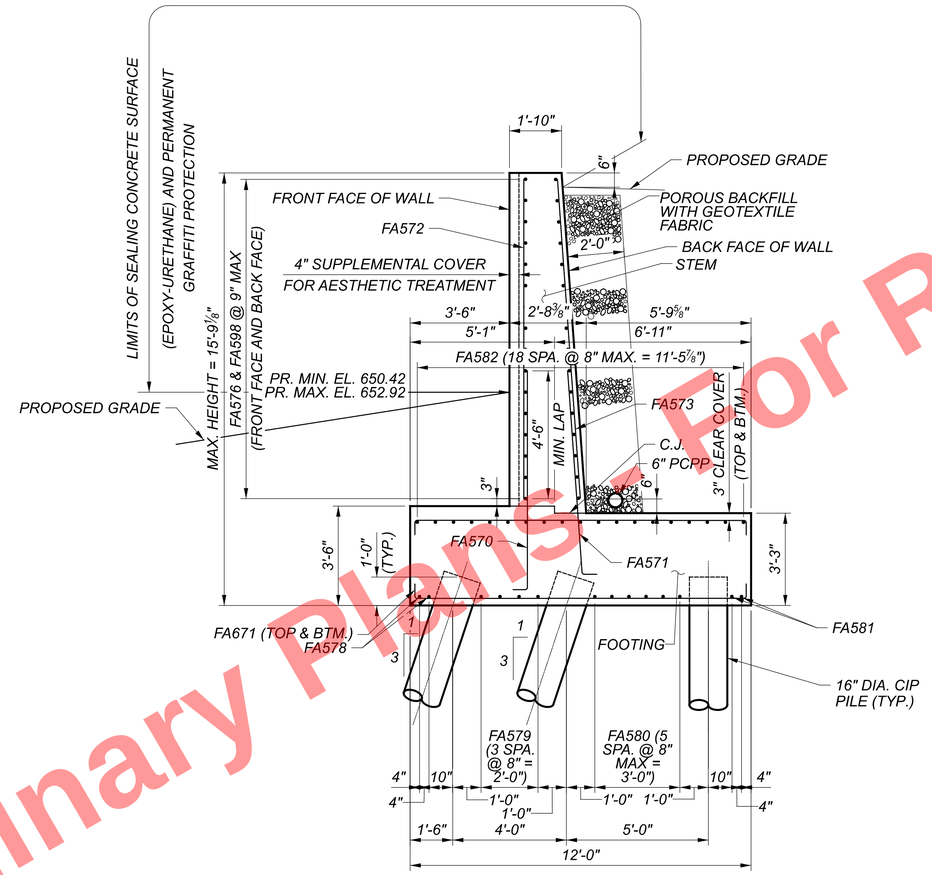

C 39 SECTION

Preliminary Plans For Reference Only

FORWARD RIGHT WINGWALL SECTION (2 OF 2)
CUY-90-1696 (BRIDGE 14)
CR-722 (CARNEGIE AVE.) OVER I.R. 90

SFN	1807898
DESIGN AGENCY	Michael Baker INTERNATIONAL
DESIGNER	BDC
CHECKER	MBC
REVIEWER	KAG 12/26/23
PROJECT ID	82382
SUBSET	41
TOTAL	90
SHEET	2321
TOTAL	2696

CUY-90-16.28 (CCG3A)

MODEL: Sheet PAPERSIZE: 34x22 (in.) DATE: 3/28/2025 TIME: 8:06:54 AM USER: RohitLBk
pw:\\mb-us-pw.bentley.com:mb-us-pw-03\Documents\Cleveland_OH\01_Projects\ODOT\District12\82382400-Engineering\Structures\SFN_1807898\Sheets\82382_SFN_1807898_SF008.dgn

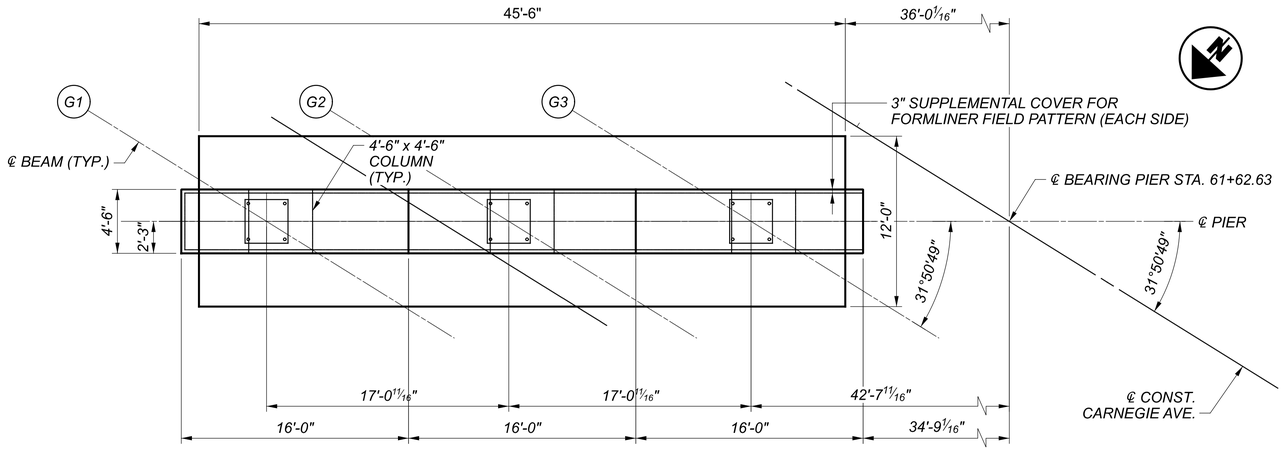

PIER LEFT PLAN

PILES NOT SHOWN FOR CLARITY

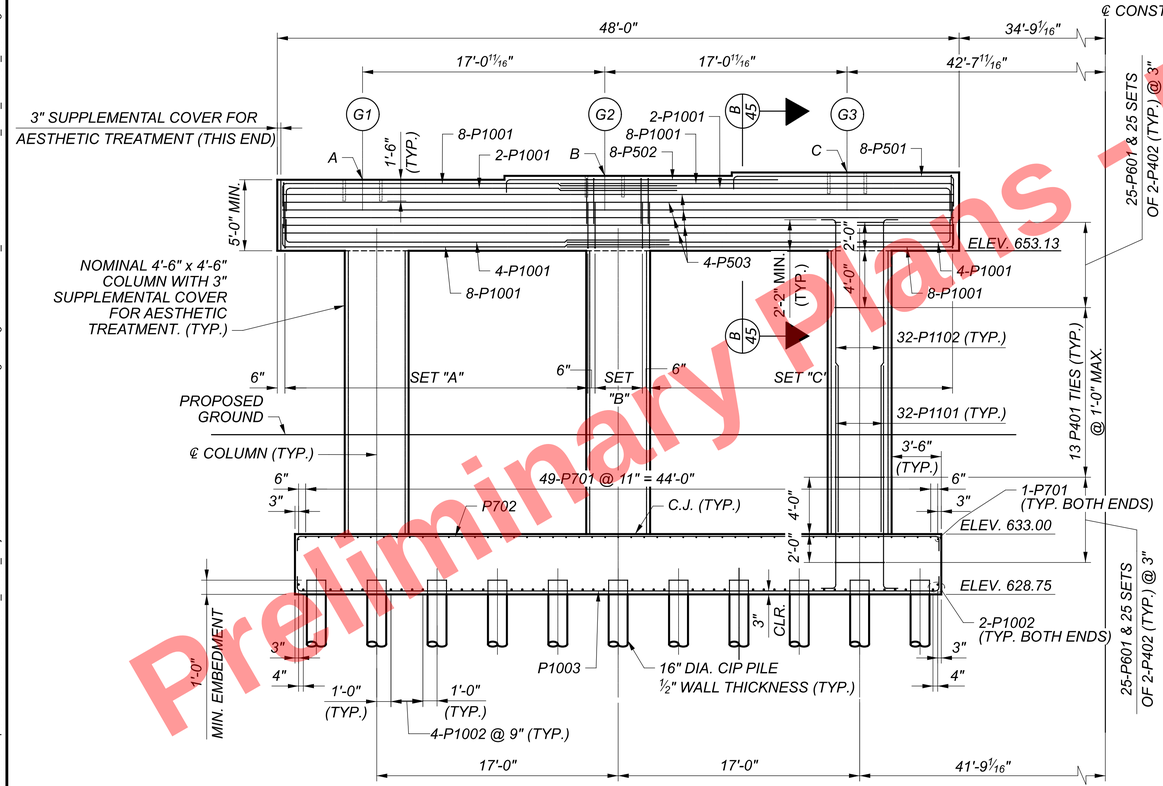

PIER LEFT ELEVATION

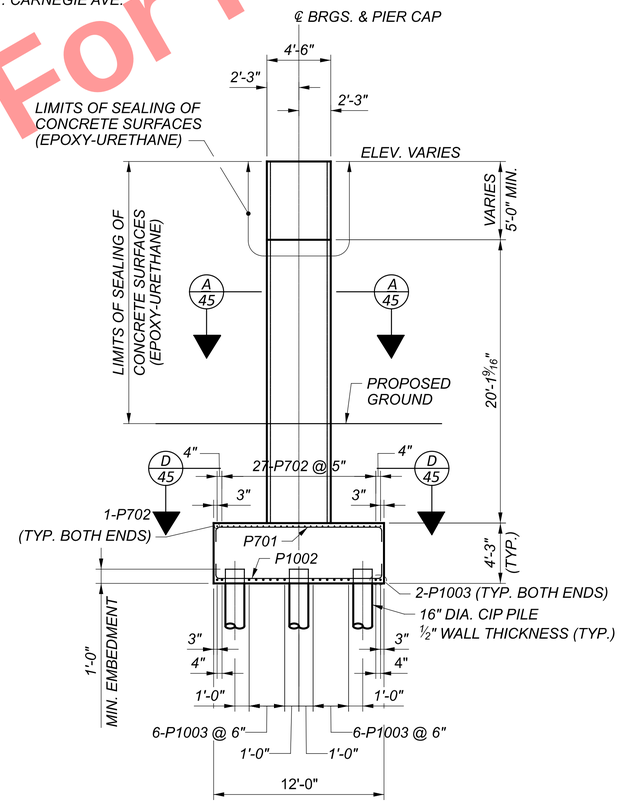

PIER END ELEVATION

COL. & CAP REINFORCEMENT NOT SHOWN FOR CLARITY

PIER CAP SHEAR STIRRUP SETS:
SET ``A`` = 33 SETS OF 4-P504 SPA. @ 8"
SET ``B`` = 7 SETS OF 4-P504 SPA. @ 8"
SET ``C`` = 33 SETS OF 4-P504 SPA. @ 8"

MIN. SPLICE LENGTHS

BAR	LENGTH
5	2'-5"
10	8'-2"
11	11'-8"

PIER - LEFT	
POINT	ELEVATION
A	658.13
B	658.24
C	658.47

NOTES:

1. *INTERIM PROPOSED GROUND SHOWN. PROPOSED GROUND TO BE LOWERED AND TYPE C1 SINGLE SLOPE BARRIER TO BE ADDED AROUND PIER IN FUTURE I-90.*
2. *BRIDGE SEAT REINFORCEMENT, SETTING ANCHORS: ACCURATELY PLACE CONCRETE REINFORCEMENT IN THE VICINITY OF THE BRIDGE SEAT TO AVOID INTERFERENCE WITH THE DRILLING OF BEARING ANCHOR HOLES OR THE PRE-SETTING OF BEARING ANCHORS.*
3. *PROVIDE 2" CONCRETE COVER ON REINFORCEMENT BARS UNLESS NOTED OTHERWISE.*

Preliminary Plans - For Reference Only

PIER 1A PLAN AND ELEVATION
CUY-90-1696 (BRIDGE 14)
CR-722 (CARNEGIE AVE.) OVER I.R. 90

SFN	1807898
DESIGN AGENCY	Michael Baker INTERNATIONAL
DESIGNER	AHS
CHECKER	TAG
REVIEWER	LPC 06/23/22
PROJECT ID	82382
SUBSET	42
TOTAL	90
SHEET	2322
TOTAL	2696

CUY-90-16.28 (CCG3A)
MODEL: Sheet PAPERSIZE: 34x22 (in.) DATE: 3/28/2025 TIME: 8:07:08 AM USER: RohitBk
pw:\\mb-us-pw.bentley.com:mb-us-pw-03\Documents\Cleveland_OH\01_Projects\ODOT\District12\82382\400-Engineering\Structures\SFN_1807898\Sheets\82382_SFN_1807898_SI002.dgn

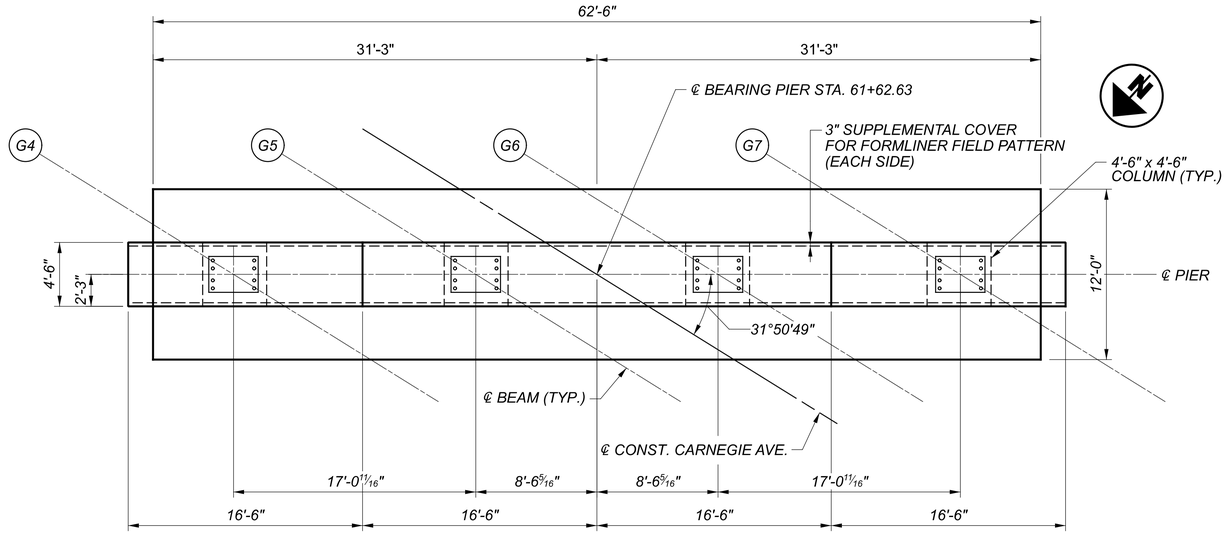

PIER CENTER PLAN

PILES NOT SHOWN FOR CLARITY

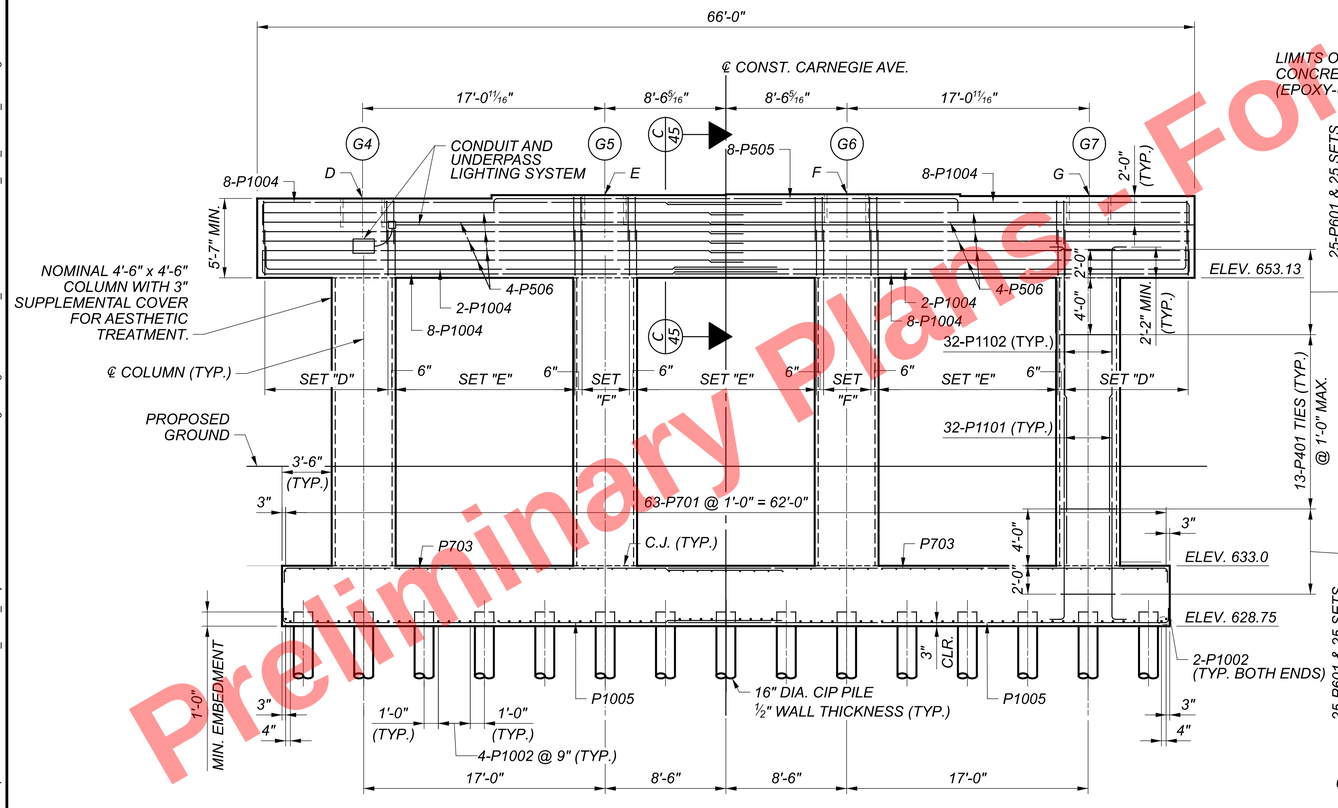

PIER CENTER ELEVATION

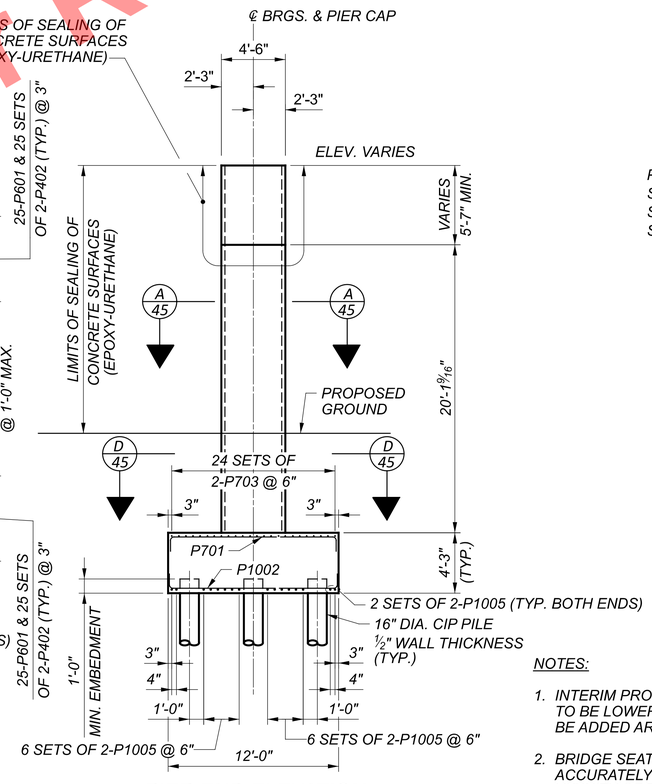

PIER END ELEVATION

COL. & CAP REINFORCEMENT NOT SHOWN FOR CLARITY

PIER CAP SHEAR STIRRUP SETS:
SET "D" = 14 SETS OF 4-P507 SPA. @ 8"
SET "E" = 20 SETS OF 4-P507 SPA. @ 8"
SET "F" = 6 SETS OF 4-P507 SPA. @ 8"

MIN. SPLICE LENGTHS

BAR	LENGTH
5	2'-5"
7	4'-8"
10	8'-2"
11	11'-8"

PIER - CENTER	
POINT	ELEVATION
D	658.71
E	658.95
F	659.01
G	658.89

NOTES:

1. *INTERIM PROPOSED GROUND SHOWN. PROPOSED GROUND TO BE LOWERED AND TYPE C1 SINGLE SLOPE BARRIER TO BE ADDED AROUND PIER IN FUTURE I-90.*
2. *BRIDGE SEAT REINFORCEMENT, SETTING ANCHORS: ACCURATELY PLACE CONCRETE REINFORCEMENT IN THE VICINITY OF THE BRIDGE SEAT TO AVOID INTERFERENCE WITH THE DRILLING OF BEARING ANCHOR HOLESOR THE PRE-SETTING OF BEARING ANCHORS.*
3. *PROVIDE 2" CONCRETE COVER ON REINFORCEMENT BARS UNLESS NOTED OTHERWISE.*
4. *FOR UNDERPASS LIGHTING DETALS, SEE SHEET 1745/2696 .*

Preliminary Plans - For Reference Only

PIER 1B PLAN AND ELEVATION
CUY-90-1696 (BRIDGE 14)
CR-722 (CARNEGIE AVE.) OVER I.R. 90

SFN	1807898
DESIGN AGENCY	Michael Baker INTERNATIONAL
DESIGNER	AHS
CHECKER	TAG
REVIEWER	LPC 06/23/22
PROJECT ID	82382
SUBSET	43
TOTAL	90
SHEET	2323
TOTAL	2696

CUY-90-16.28 (CCG3A)
MODEL: Sheet PAPERSIZE: 34x22 (in.) DATE: 3/28/2025 TIME: 8:07:29 AM USER: RohitLBk
pw:\\mb-us-pw.bentley.com:mb-us-pw-03\Documents\Cleveland_OH\01_Projects\ODOT\District12\82382\400-Engineering\Structures\SFN_1807898\Sheets\82382_SFN_1807898_S1003.dgn

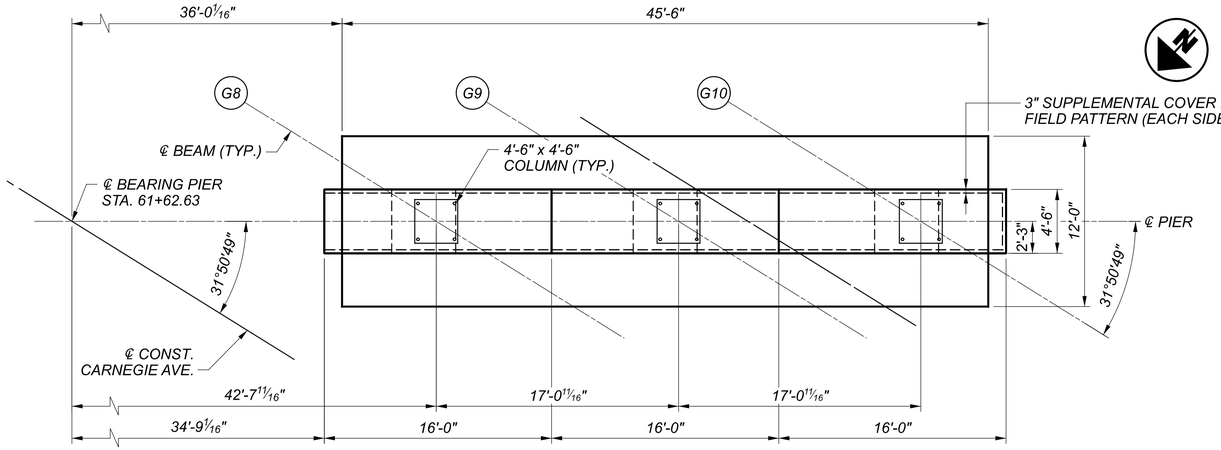

PIER RIGHT PLAN

PILES NOT SHOWN FOR CLARITY

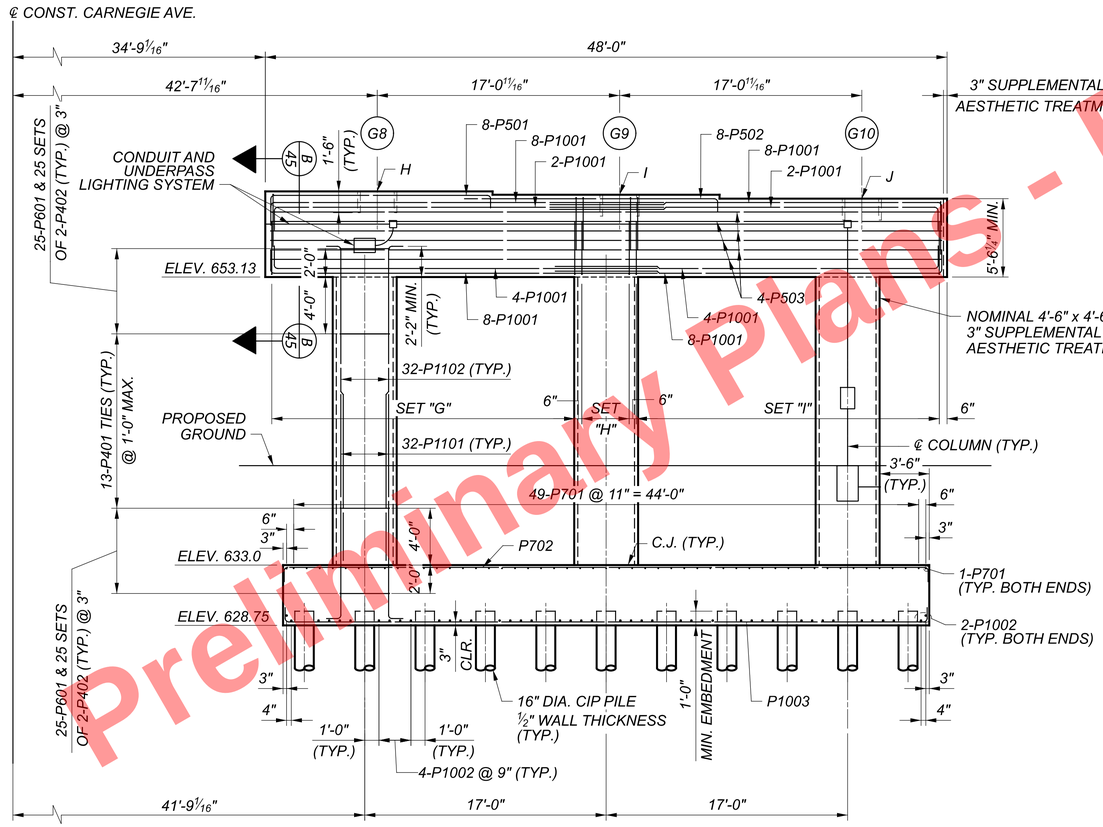

PIER RIGHT ELEVATION

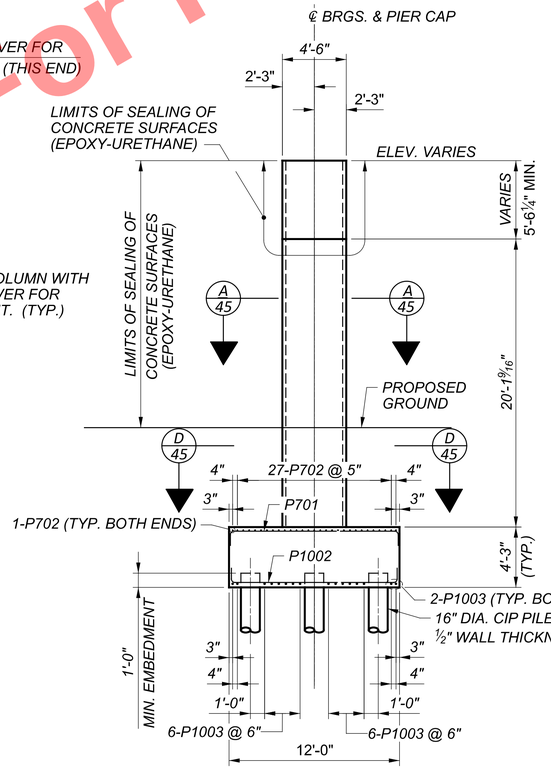

PIER END ELEVATION

COL. & CAP REINFORCEMENT NOT SHOWN FOR CLARITY

PIER CAP SHEAR STIRRUP SETS:
SET "G" = 33 SETS OF 4-P508 SPA. @ 8"
SET "H" = 7 SETS OF 4-P508 SPA. @ 8"
SET "I" = 33 SETS OF 4-P508 SPA. @ 8"

MIN. SPLICE LENGTHS

BAR	LENGTH
5	2'-5"
10	8'-2"
11	11'-8"

PIER - RIGHT	
POINT	ELEVATION
H	658.76
I	658.64
J	658.65

NOTES:

1. *INTERIM PROPOSED GROUND SHOWN. PROPOSED GROUND TO BE LOWERED AND TYPE C1 SINGLE SLOPE BARRIER TO BE ADDED AROUND PIER IN FUTURE I-90.*
2. *BRIDGE SEAT REINFORCEMENT, SETTING ANCHORS: ACCURATELY PLACE CONCRETE REINFORCEMENT IN THE VICINITY OF THE BRIDGE SEAT TO AVOID INTERFERENCE WITH THE DRILLING OF BEARING ANCHOR HOLES OR THE PRE-SETTING OF BEARING ANCHORS.*
3. *PROVIDE 2" CONCRETE COVER ON REINFORCEMENT BARS UNLESS NOTED OTHERWISE.*
4. *FOR UNDERPASS LIGHTING DETALS, SEE SHEET 1745/2696 .*

Preliminary Plans - For Reference Only

PIER 1C PLAN AND ELEVATION
CUY-90-1696 (BRIDGE 14)
CR-722 (CARNEGIE AVE.) OVER I.R. 90

CUY-90-16.28 (CCG3A)

SFN 1807898
DESIGN AGENCY
Michael Baker INTERNATIONAL
DESIGNER AHS | CHECKER TAG
REVIEWER LPC 06/23/22
PROJECT ID 82382
SUBSET 44 | TOTAL 90
SHEET 2324 | TOTAL 2696

MODEL: Sheet PAPERSIZE: 34x22 (in.) DATE: 3/28/2025 TIME: 8:07:45 AM USER: Rohit.Bk
pw:\\mb-us-pw.bentley.com:mb-us-pw-03\Documents\Cleveland_OH\01_Projects\ODOT\District12\82382\400-Engineering\Structures\SFN_1807898\Sheets\82382_SFN_1807898_SI004.dgn

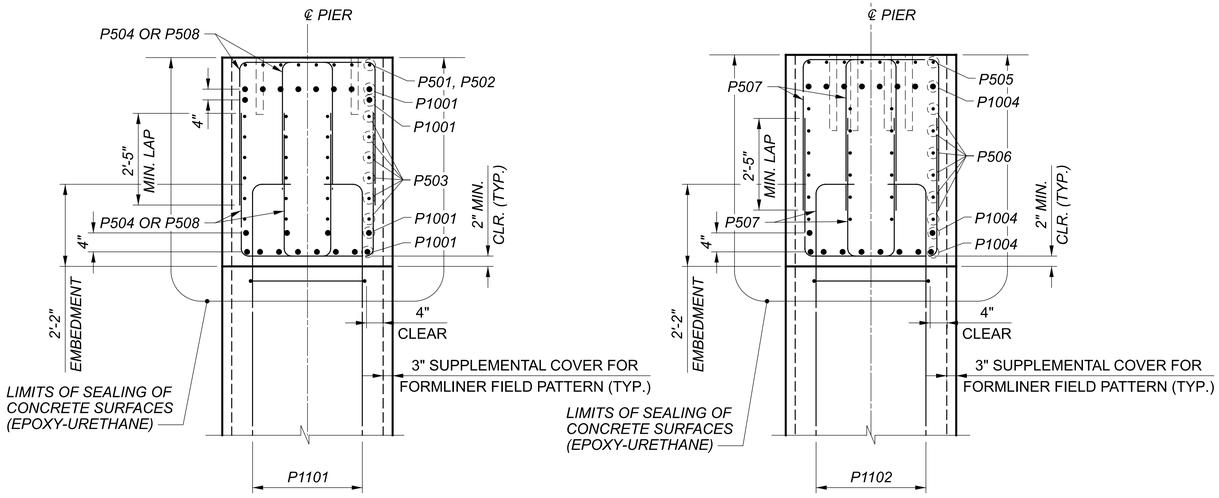

B 42 B 44 SECTION

C 43 SECTION

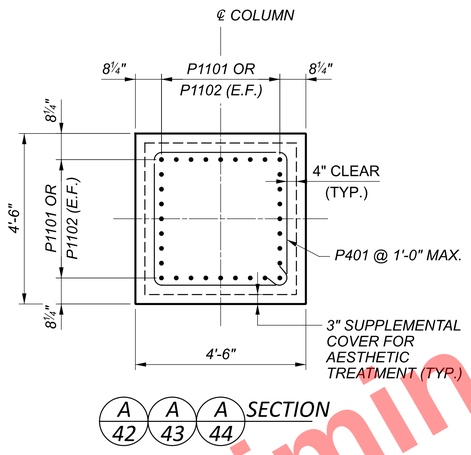

A 42 A 43 A 44 SECTION

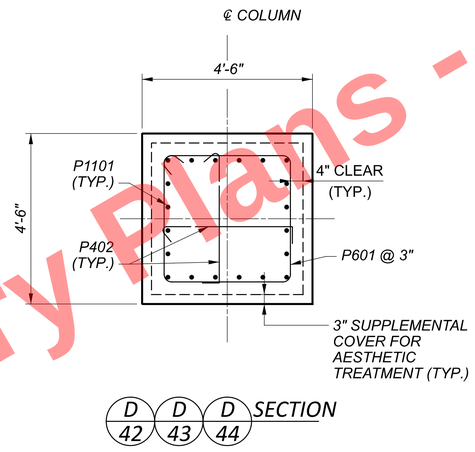

D 42 D 43 D 44 SECTION

Preliminary Plans - For Reference Only

NOTES:

1. BRIDGE SEAT REINFORCEMENT, SETTING ANCHORS: ACCURATELY PLACE CONCRETE REINFORCEMENT IN THE VICINITY OF THE BRIDGE SEAT TO AVOID INTERFERENCE WITH THE DRILLING OF BEARING ANCHOR HOLES OR THE PRE-SETTING OF BEARING ANCHORS.
2. SEE SHEETS 61 & 62/90 OR ADDITIONAL BEARING, AND ANCHOR ROD INFORMATION.
3. PROVIDE 2" CONCRETE COVER ON REINFORCEMENT BARS UNLESS NOTED OTHERWISE.

PIER SECTIONS
CUY-90-1696 (BRIDGE 14)
CR-722 (CARNEGIE AVE.) OVER I.R. 90

SFN	1807898
DESIGN AGENCY	Michael Baker INTERNATIONAL
DESIGNER	AHS
CHECKER	TAG
REVIEWER	LPC 06/23/22
PROJECT ID	82382
SUBSET	45
TOTAL	90
SHEET	2325
TOTAL	2696

CUY-90-16.28 (CCG3A)
MODEL: Sheet PAPERSIZE: 34x22 (in.) DATE: 3/28/2025 TIME: 8:08:10 AM USER: RohitBk
pw:\\mb-us-pw.bentley.com:mb-us-pw-03\Documents\Cleveland_OH101_Projects\ODOT\District12\82382\400-Engineering\Structures\SFN_1807898\Sheets\82382_SFN_1807898_SI005.dgn

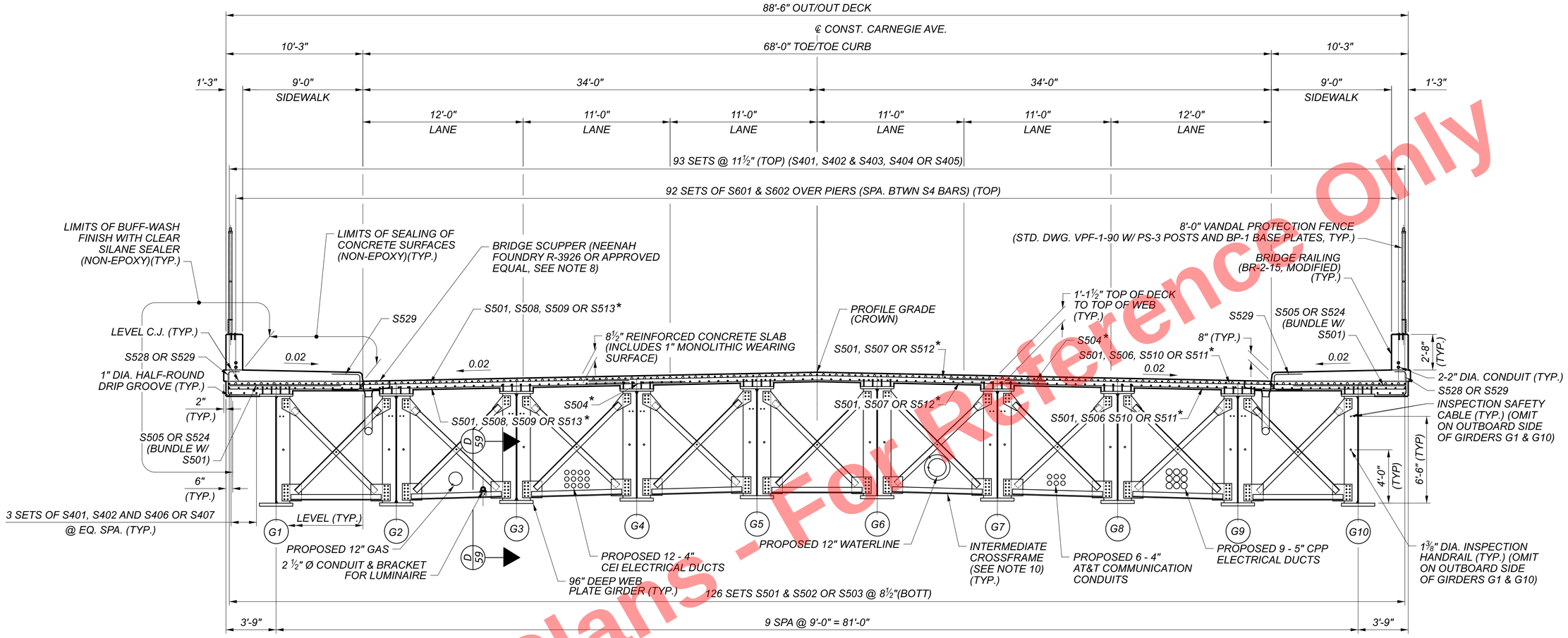

TRANSVERSE SECTION

(SIDEWALK AND RAILING REINFORCING NOT SHOWN FOR CLARITY)

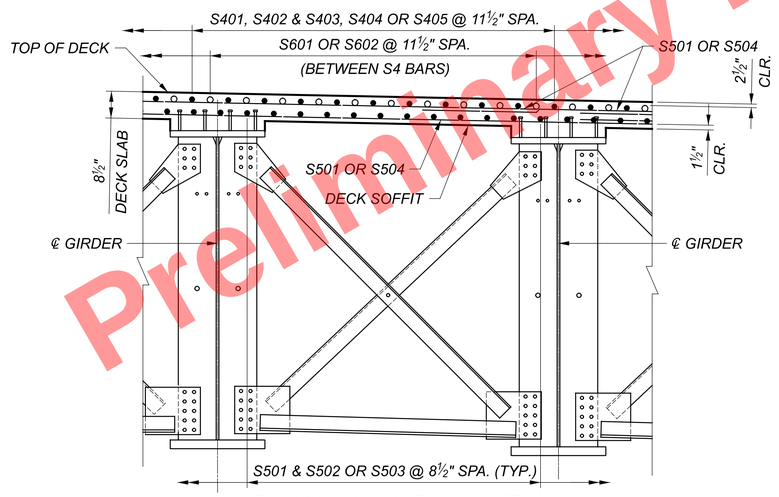

TYPICAL GIRDER BAY DETAIL

UTILITIES NOT SHOWN FOR CLARITY

MINIMUM LAP LENGTHS:

NO. 4 BARS = 1'-11"
NO. 5 BARS = 3'-0"
NO. 6 BARS = 3'-7"

LEGEND:

* ALTERNATE LOCATIONS OF S5XX IN TOP & BOTTOM MATS

NOTES:

1. FOR DECK PLANS, SEE SHEETS 63 & 64/90.
2. FOR RAILING DETAILS, SEE SHEETS 73 -76/90.
3. FOR FRAMING PLANS, SEE SHEETS 47 & 48/90.
4. REINFORCING MAY BE FIELD-BENT OR SHOP-BENT TO CONFORM TO DECK CROSS SLOPES. PAYMENT SHALL BE INCLUDED WITH ITEM 509, EPOXY COATED REINFORCING STEEL.
5. FOR GIRDER CAMBER DEFLECTION TABLES, SEE SHEETS 53-56/90.
6. FOR SIDEWALK DETAILS, SEE SHEETS 65 & 66/90.
7. FOR SCUPPER AND DOWNSPOUTING DETAILS, SEE SHEET 82/90.
8. ADJUST DECK REINFORCING TO CLEAR DECK SCUPPERS AND SHEAR STUDS. MAINTAIN A MINIMUM OF 2" CLEAR TO DECK OBSTRUCTIONS.
9. FOR ADDITIONAL DECK PLACEMENT NOTES, SEE GENERAL NOTES AND DECK PLANS.
10. INTERMEDIATE CROSSFRAME MEMBERS VARY BY GIRDER BAY. SEE CROSSFRAME AND UTILITY SUPPORT DETAILS ON SHEETS 57 - 60/90.
11. DECK SLAB CONCRETE QUANTITY: THE ESTIMATED QUANTITY OF DECK SLAB CONCRETE IS BASED ON THE CONSTANT DECK SLAB THICKNESS, AS SHOWN, PLUS THE QUANTITY OF CONCRETE THAT FORMS EACH GIRDER HAUNCH. THE ESTIMATE ASSUMES A CONSTANT HAUNCH THICKNESS OF 5 INCHES AND A HAUNCH WIDTH EQUAL TO THE TOP FLANGE WIDTH. DEVIATE FROM THIS HAUNCH THICKNESS AS NECESSARY TO PLACE THE DECK SURFACE AT THE FINISHED GRADE.
12. THE HAUNCH THICKNESS WAS MEASURED AT THE CENTERLINE OF THE GIRDER, FROM THE SURFACE OF THE DECK TO THE BOTTOM OF THE TOP FLANGE MINUS THE DECK SLAB THICKNESS. THE AREA OF ALL EMBEDDED STEEL PLATES HAS BEEN DEDUCTED FROM THE HAUNCH QUANTITY IN ACCORDANCE WITH 511.23.
13. PROVIDE GROUNDING PER STANDARD DRAWING HL-50.21. THE FOLLOWING BRIDGE COMPONENTS SHALL BE CONNECTED TO THE GROUNDING SYSTEM: STRUCTURAL STEEL AND LIGHT POLES.

Preliminary Plans - For Reference Only

TRANSVERSE SECTION
CUY-90-1696 (BRIDGE 14)
CR-722 (CARNEGIE AVE.) OVER I.R. 90

SFN 1807898
DESIGN AGENCY
Michael Baker INTERNATIONAL
DESIGNER ABC | CHECKER BWC
REVIEWER LPC 06/23/22
PROJECT ID 82382
SUBSET 46 | TOTAL 90
SHEET 2326 | TOTAL 2696

CUY-90-16.28 (CCG3A)
MODEL: 82382_SFN_0000014_ST001 PAPERSIZE: 34x22 (in.) DATE: 3/28/2025 TIME: 8:08:22 AM USER: Rohit.Bk
pw:\\mb-us-pw.bentley.com:mb-us-pw-03\Documents\Cleveland_OH\01_Projects\ODOT\District12\82382\400-Engineering\Structures\SFN_1807898\Sheets\82382_SFN_1807898_ST001.dgn

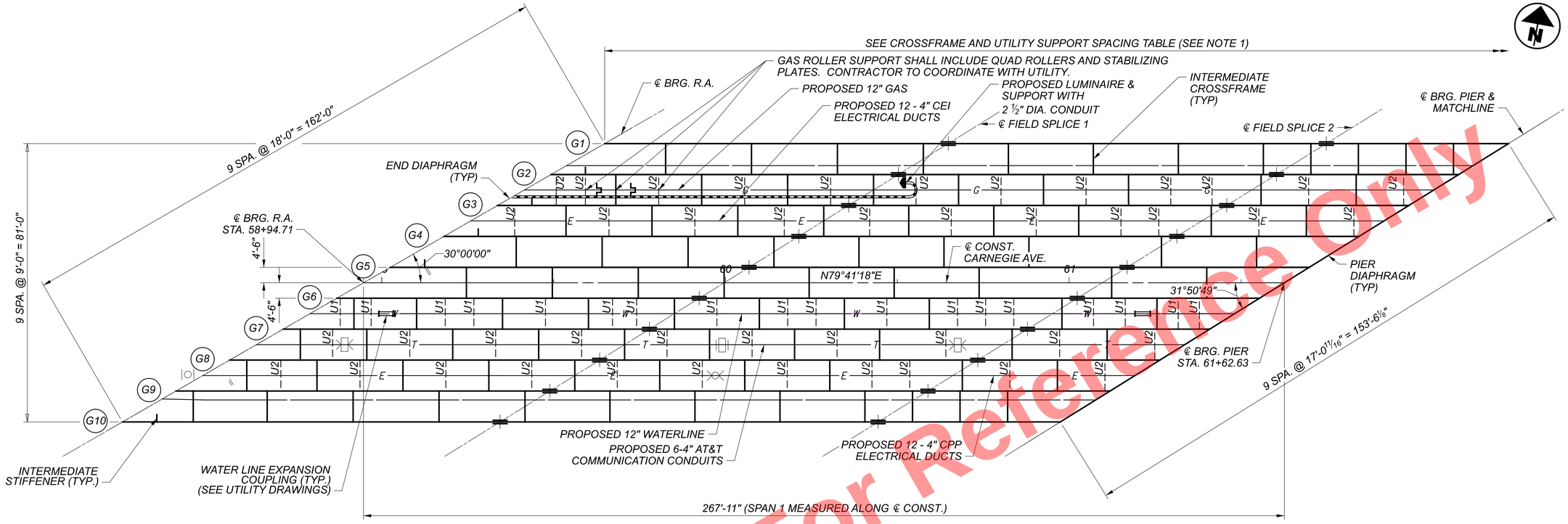

FRAMING PLAN SPAN 1

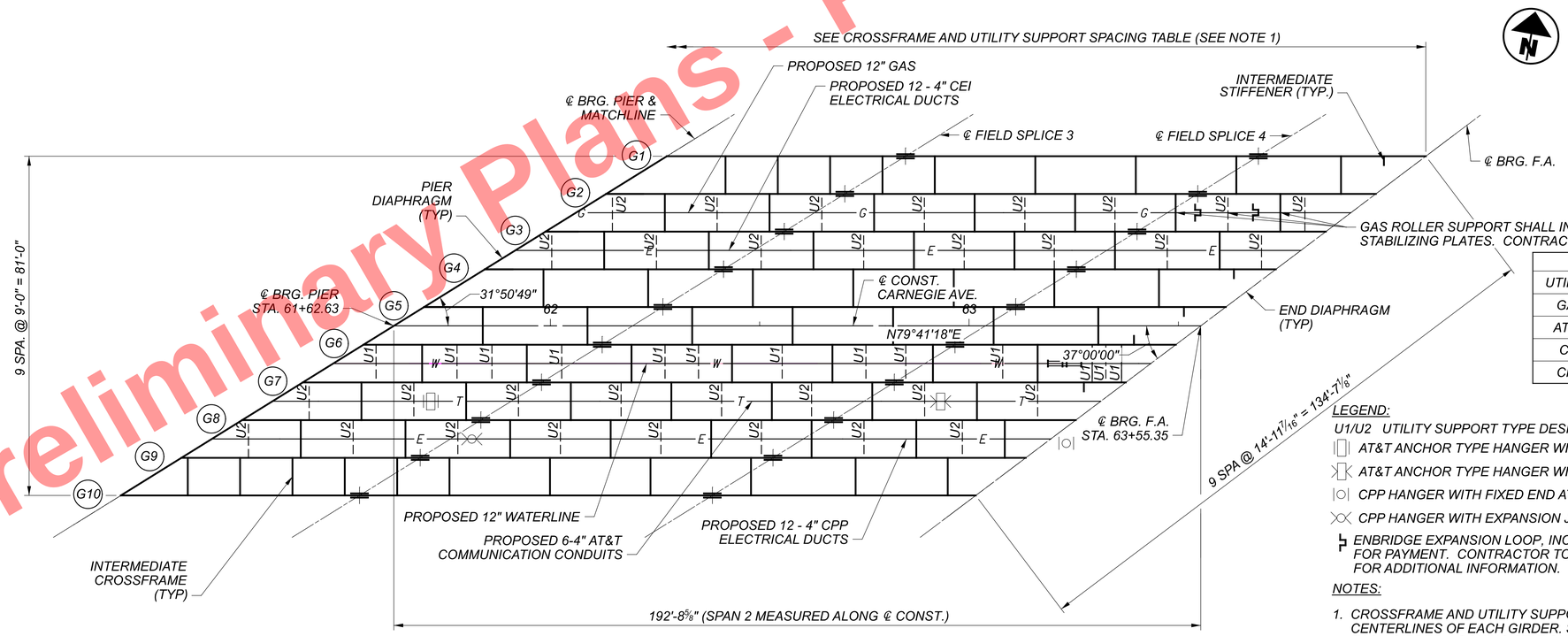

FRAMING PLAN SPAN 2

UTILITY HANGER TABLE			
UTILITY	HOLE DIA.	HOLE QTY.	HOLE SPA.
GAS	1"	2	16½"
AT&T	1 5/16"	4	6½"
CEI	1 5/16"	5	6½"
CPP	1 5/16"	4	7¾"

LEGEND:

U1/U2 UTILITY SUPPORT TYPE DESIGNATION

AT&T ANCHOR TYPE HANGER WITH STOP RINGS

AT&T ANCHOR TYPE HANGER WITH O-RING EXPANSION JOINTS

CPP HANGER WITH FIXED END AT BACKWALL

CPP HANGER WITH EXPANSION JOINT

ENBRIDGE EXPANSION LOOP, INCLUDED WITH 12" PIPE/CONDUIT FOR PAYMENT. CONTRACTOR TO COORDINATE WITH UTILITY FOR ADDITIONAL INFORMATION.

NOTES:

1. CROSSFRAME AND UTILITY SUPPORT SPACINGS GIVEN ALONG THE CENTERLINES OF EACH GIRDER. SPACINGS GIVEN ON THE RIGHT SIDE OF EACH GIRDER, LOOKING STATIONS AHEAD. SEE SHEET 48/90 FOR CROSSFRAME AND UTILITY SUPPORT SPACING TABLE.
2. SEE SHEETS 57 - 60 / 90 FOR CROSSFRAME AND UTILITY SUPPORT DETAILS.

Preliminary Plans - For Reference Only

FRAMING PLAN (1 OF 2)
CUY-90-1696 (BRIDGE 14)
CR-722 (CARNEGIE AVE.) OVER I.R. 90

SFN 1807898
DESIGN AGENCY
Michael Baker INTERNATIONAL
DESIGNER ABC | CHECKER BWC
REVIEWER LPC 06-23-22
PROJECT ID 82382
SUBSET 47 | TOTAL 90
SHEET 2327 | TOTAL 2696

CUY-90-16.28 (CCG3A)

MODEL: Sheet PAPERSIZE: 34x22 (in.) DATE: 3/28/2025 TIME: 8:08:39 AM USER: Rohit.Bk
pw:\\mb-us-pw.bentley.com:mb-us-pw-03\Documents\Cleveland_OH\01_Projects\ODOT\District12\82382400-Engineering\Structures\SFN_1807898\Sheets\82382_SFN_1807898_SS001.dgn

INTERMEDIATE CROSSFRAME AND UTILITY SUPPORT LOCATIONS

GIRDER NO.	LOCATIONS, SPACINGS, AND TYPES																								
	1	2	3	4	5	6	7	8	9	10	11	12	13	14	15	16	17	18	19	20	21	22	23	24	25
G1	0'-0"	17'-8 13/16"	25'-0"	25'-0"	25'-0"	24'-8 3/4"	24'-8 3/4"	24'-8 3/4"	24'-8 3/4"	13'-10"	13'-10"	13'-10"	13'-10"	15'-11 7/8"	14'-0"	12'-6"	12'-6"	12'-6"	12'-6"	24'-0"	24'-0"	24'-0"	25'-0"	20'-3 3/16"	---
	CL BRG.	XFRAME	XFRAME	XFRAME	XFRAME	XFRAME	XFRAME	XFRAME	XFRAME	XFRAME	XFRAME	XFRAME	XFRAME	PIER DIA.	XFRAME	XFRAME	XFRAME	XFRAME	XFRAME	XFRAME	XFRAME	XFRAME	XFRAME	CL BRG.	---
G2	0'-0"	1'-6"	8'-6"	8'-10"	12'-6"	12'-6"	12'-6"	12'-6"	12'-6"	12'-6"	12'-4 3/8"	12'-4 3/8"	12'-4 3/8"	12'-4 3/8"	12'-4 3/8"	12'-4 3/8"	12'-3 3/8"	12'-0"	14'-3 3/8"	13'-10"	13'-10"	13'-10"	15'-11 7/8"	1'-6"	12'-6"
	CL BRG.	U2	U2	XFRAME	U2	XFRAME	U2	XFRAME	U2	XFRAME	U2	XFRAME	U2	XFRAME	U2	XFRAME	U2	U2	XFRAME	U2	XFRAME	U2	PIER DIA.	U2	XFRAME
G3	0'-0"	5'-0"	14'-11 3/16"	12'-6"	12'-6"	12'-6"	12'-6"	13'-5 15/16"	11'-6 1/16"	13'-4 5/16"	11'-4 7/16"	12'-4 3/8"	12'-4 3/8"	12'-4 3/8"	12'-4 3/8"	12'-4 3/8"	12'-3 3/8"	11'-0"	15"-3 3/8"	13'-10"	13'-10"	13'-10"	15'-11 7/8"	1'-6"	12'-6"	12'-6"
	CL BRG.	U2	XFRAME	U2	XFRAME	U2	XFRAME	U2	XFRAME	U2	XFRAME	U2	XFRAME	U2	XFRAME	U2	XFRAME	U2	U2	XFRAME	U2	XFRAME	U2	PIER DIA.	U2	XFRAME	U2
G4	0'-0"	21'-0 3/8"	25'-0"	25'-0"	25'-0"	24'-8 3/4"	24'-8 3/4"	24'-8 3/4"	38'-6 3/4"	27'-8"	29'-9 7/8"	14'-0"	25'-0"	25'-0"	24'-0"	24'-0"	24'-0"	25'-0"	27'-10 13/16"	---	---	---	---	---	---
	CL BRG.	XFRAME	XFRAME	XFRAME	XFRAME	XFRAME	XFRAME	XFRAME	XFRAME	XFRAME	PIER DIA.	XFRAME	XFRAME	XFRAME	XFRAME	XFRAME	XFRAME	XFRAME	CL BRG.	---	---	---	---	---	---
G5	0'-0"	22'-1 9/16"	25'-0"	25'-0"	25'-0"	24'-8 3/4"	24'-8 3/4"	24'-8 3/4"	38'-6 3/4"	27'-8"	29'-9 7/8"	14'-0"	25'-0"	25'-0"	24'-0"	24'-0"	24'-0"	25'-0"	30'-5 3/8"	---	---	---	---	---	---
	CL BRG.	XFRAME	XFRAME	XFRAME	XFRAME	XFRAME	XFRAME	XFRAME	XFRAME	XFRAME	PIER DIA.	XFRAME	XFRAME	XFRAME	XFRAME	XFRAME	XFRAME	XFRAME	CL BRG.	---	---	---	---	---	---
G6	0'-0"	1'-0"	4'-0"	5'-0"	13'-2 3/4"	8'-4"	8'-4"	8'-4"	12'-6"	12'-6"	7'-0"	7'-0"	11'-0"	12'-4 3/8"	12'-4 3/8"	8'-2 15/16"	8'-2 15/16"	8'-2 15/16"	12'-4 3/8"	12'-4 3/8"	8'-2 1/4"	8'-2 1/4"	8'-2 1/4"	14'-0"	9'-2 11/16"
	CL BRG.	U1	XFRAME	U1	XFRAME	U1	U1	U1	XFRAME	U1	U1	U1	XFRAME	U1	XFRAME	U1	U1	U1	XFRAME	U2	XFRAME	U1	U1	U1	XFRAME	U1
G7	0'-0"	5'-0"	9'-4 7/16"	9'-11 1/2"	12'-6"	12'-6"	12'-6"	12'-6"	12'-6"	12'-6"	12'-4 3/8"	12'-4 3/8"	12'-4 3/8"	12'-4 3/8"	12'-4 3/8"	12'-4 3/8"	19'-3 3/8"	19'-3 3/8"	13'-10"	13'-10"	13'-10"	15'-11 7/8"	1'-6"	12'-6"	12'-6"
	CL BRG.	XFRAME	U2	XFRAME	U2	XFRAME	U2	XFRAME	U2	XFRAME	U2	XFRAME	U2	XFRAME	U2	XFRAME	U2	XFRAME	U2	XFRAME	U2	PIER DIA.	U2	XFRAME	U2	
G8	0'-0"	5'-0"	9'-11 1/16"	10'-6 1/8"	12'-6"	12'-6"	12'-6"	12'-6"	12'-6"	12'-6"	12'-4 3/8"	12'-4 3/8"	12'-4 3/8"	12'-4 3/8"	12'-4 3/8"	12'-4 3/8"	12'-3 3/8"	11'-0"	15'-3 3/8"	13'-10"	13'-10"	13'-10"	15'-11 7/8"	1'-6"	12'-6"
	CL BRG.	XFRAME	U2	XFRAME	U2	XFRAME	U2	XFRAME	U2	XFRAME	U2	XFRAME	U2	XFRAME	U2	XFRAME	U2	XFRAME	U2	XFRAME	U2	XFRAME	U2	PIER DIA.	U2	XFRAME
G9	0'-0"	5'-0"	21'-6 3/8"	25'-0"	25'-0"	25'-0"	24'-8 3/4"	24'-8 3/4"	24'-8 3/4"	24'-8 3/4"	13'-10"	13'-10"	13'-10"	29'-9 7/8"	1'-6"	12'-6"	12'-6"	12'-6"	12'-6"	12'-6"	24'-0"	24'-0"	24'-0"	25'-0"	22'-0"
	CL BRG.	XFRAME	XFRAME	XFRAME	XFRAME	XFRAME	XFRAME	XFRAME	XFRAME	XFRAME	XFRAME	XFRAME	XFRAME	PIER DIA.	XFRAME	XFRAME	XFRAME	XFRAME	XFRAME	XFRAME	XFRAME	XFRAME	XFRAME	XFRAME	XFRAME

INTERMEDIATE CROSSFRAME AND UTILITY SUPPORT LOCATIONS

GIRDER NO.	LOCATIONS, SPACINGS, AND TYPES																								
	26	27	28	29	30	31	32	33	34	35	36	37	38	39	40	41	42	43	44	45	46	47	48	49	50
G1	---	---	---	---	---	---	---	---	---	---	---	---	---	---	---	---	---	---	---	---	---	---	---	---	---
	---	---	---	---	---	---	---	---	---	---	---	---	---	---	---	---	---	---	---	---	---	---	---	---	---
G2	12'-6"	12'-6"	12'-6"	12'-6"	12'-0"	12'-0"	12'-0"	12'-0"	9'-6 1/8"	14'-5 7/8"	12'-6"	12'-6"	5'-10 7/16"	16'-11 5/16"	---	---	---	---	---	---	---	---	---	---	---
	U2	XFRAME	U2	XFRAME	U2	XFRAME	U2	XFRAME	U2	XFRAME	U2	XFRAME	U2	CL BRG.	---	---	---	---	---	---	---	---	---	---	---
G3	12'-6"	12'-6"	12'-6"	12'-0"	12'-0"	12'-0"	12'-0"	9'-6 1/8"	14'-5 7/8"	12'-6"	10'-0"	15'-4 5/16"	---	---	---	---	---	---	---	---	---	---	---	---	---
	XFRAME	U2	XFRAME	U2	XFRAME	U2	XFRAME	U2	XFRAME	U2	U2	CL BRG.	---	---	---	---	---	---	---	---	---	---	---	---	---
G4	---	---	---	---	---	---	---	---	---	---	---	---	---	---	---	---	---	---	---	---	---	---	---	---	---
	---	---	---	---	---	---	---	---	---	---	---	---	---	---	---	---	---	---	---	---	---	---	---	---	---
G5	---	---	---	---	---	---	---	---	---	---	---	---	---	---	---	---	---	---	---	---	---	---	---	---	---
	---	---	---	---	---	---	---	---	---	---	---	---	---	---	---	---	---	---	---	---	---	---	---	---	---
G6	9'-2 11/16"	9'-2 11/16"	6'-2"	6'-2"	17'-5 7/8	3'-0"	11'-0"	8'-4"	8'-4"	8'-4"	8'-4"	16'-8"	8'-0"	8'-0"	8'-0"	12'-0"	12'-0"	8'-0"	9'-6"	6'-6"	16'-8"	8'-4"	13'-0 5/8"	3'-3"	3'-9"
	U1	XFRAME	U1	U1	PIER DIA.	U1	XFRAME	U1	U1	XFRAME	U1	XFRAME	U1	U1	XFRAME	U1	XFRAME	U1	U1	XFRAME	U1	XFRAME	U1	U1	U1
G7	12'-6"	12'-6"	12'-6"	12'-0"	12'-0"	12'-0"	12'-0"	9'-6 1/8"	14'-5 7/8"	12'-6"	12'-6"	14'-5 7/8"	21'-0 5/8"	---	---	---	---	---	---	---	---	---	---	---	---
	XFRAME	U2	XFRAME	U2	XFRAME	U2	XFRAME	U2	XFRAME	U2	XFRAME	U2	CL BRG.	---	---	---	---	---	---	---	---	---	---	---	---
G8	12'-6"	12'-6"	12'-6"	12'-6"	12'-0"	12'-0"	12'-0"	12'-0"	12'-0"	12'-0"	12'-6"	12'-6"	11'-0"	10'-1 11/16"	16'-11 5/16"	---	---	---	---	---	---	---	---	---	---
	U2	XFRAME	U2	XFRAME	U2	XFRAME	U2	XFRAME	U2	XFRAME	U2	XFRAME	U2	XFRAME	CL BRG.	---	---	---	---	---	---	---	---	---	---
G9	18'-7 9/16"	---	---	---	---	---	---	---	---	---	---	---	---	---	---	---	---	---	---	---	---	---	---	---	---
	CL BRG.	---	---	---	---	---	---	---	---	---	---	---	---	---	---	---	---	---	---	---	---	---	---	---	---

INTERMEDIATE CROSSFRAME AND UTILITY SUPPORT LOCATIONS

GIRDER NO.	LOCATIONS, SPACINGS, AND TYPES								
	51	52	53	54	55	56	57	58	59
G1	---	---	---	---	---	---	---	---	---
	---	---	---	---	---	---	---	---	---
G2	---	---	---	---	---	---	---	---	---
	---	---	---	---	---	---	---	---	---
G3	---	---	---	---	---	---	---	---	---
	---	---	---	---	---	---	---	---	---
G4	---	---	---	---	---	---	---	---	---
	---	---	---	---	---	---	---	---	---
G5	---	---	---	---	---	---	---	---	---
	---	---	---	---	---	---	---	---	---
G6	12'-11 5/16"	---	---	---	---	---	---	---	---
	CL BRG.	---	---	---	---	---	---	---	---
G7	---	---	---	---	---	---	---	---	---
	---	---	---	---	---	---	---	---	---
G8	---	---	---	---	---	---	---	---	---
	---	---	---	---	---	---	---	---	---
G9	---	---	---	---	---	---	---	---	---
	---	---	---	---	---	---	---	---	---

Preliminary Plans Not For Reference Only

LEGEND:

CL BRG.	CENTERLINE OF ABUTMENT BEARINGS
XFRAME	INTERMEDIATE CROSSFRAME
PIER DIA.	PIER DIAPHRAGM
U1	UTILITY SUPPORT TYPE 1
U2	UTILITY SUPPORT TYPE 2

NOTES:

1. CROSSFRAME AND UTILITY SUPPORT SPACINGS GIVEN ALONG THE CENTERLINES OF EACH GIRDER. SPACINGS GIVEN ON THE RIGHT SIDE OF EACH GIRDER, LOOKING STATIONS AHEAD.
2. PROVIDE END DIAPHRAGMS ALONG EACH ABUTMENT CENTERLINE OF BEARING. SPACINGS GIVEN IN TABLES ARE GIVEN TO CENTERLINES OF ABUTMENT BEARINGS. SEE SHEET 57 / 90 FOR RELATION BETWEEN LOCATIONS OF END DIAPHRAGM CONNECTION PLATES AND ABUTMENT CENTERLINES OF BEARING.
3. SEE SHEET 47 / 90 FOR FRAMING PLAN.
4. SEE SHEETS 57 - 60 / 90 FOR CROSSFRAME AND UTILITY SUPPORT DETAILS.

FRAMING PLAN (2 OF 2)
CUY-90-1696 (BRIDGE 14)
CR-722 (CARNEGIE AVE.) OVER I.R. 90

SFN 1807898
DESIGN AGENCY
Michael Baker INTERNATIONAL
DESIGNER ABC | CHECKER MEM
REVIEWER LPC 06-23-22
PROJECT ID 82382
SUBSET 48 | TOTAL 90
SHEET 2328 | TOTAL 2696

CUY-90-16.28 (CCG3A)
MODEL: Framing Plan - 2 PAPERSIZE: 34x22 (in.) DATE: 3/28/2025 TIME: 8:08:40 AM USER: RohitLBk
pw:\\mb-us-pw.bentley.com:mb-us-pw-03\Documents\Cleveland_OH101_Projects\ODOT\District12\82382\400-Engineering\Structures\SFN_1807898\Sheets\82382_SFN_1807898_SS001.dgn

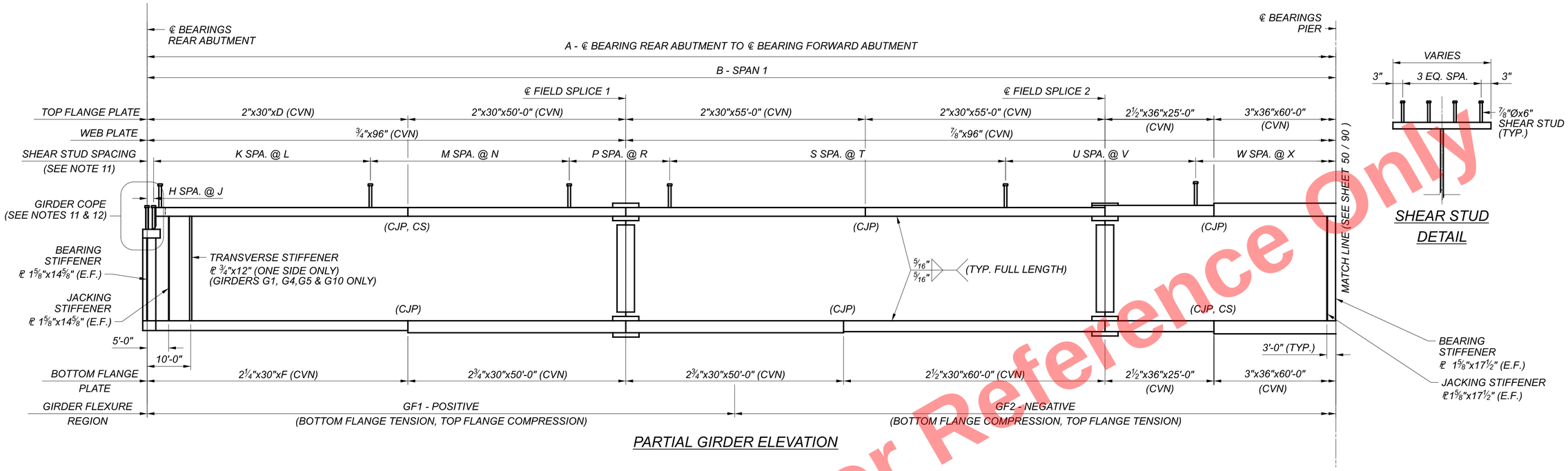

PARTIAL GIRDER ELEVATION

SHEAR STUD DETAIL

WELDED STEEL PLATE GIRDER DESIGN DATA

GIRDER	A	B	C	D	E	F	G
G1	444'-2 7/8"	262'-11 11/16"	181'-3 3/16"	49'-11 11/16"	40'-0"	49'-11 11/16"	40'-0"
G2	447'-10 5/8"	264'-0 7/8"	183'-9 3/4"	51'-0 7/8"	42'-6 9/16"	51'-0 7/8"	42'-6 9/16"
G3	451'-6 5/16"	265'-2"	186'-4 5/16"	52'-2 1/16"	45'-1 1/8"	52'-2 1/16"	45'-1 1/8"
G4	455'-2 1/16"	266'-3 1/4"	188'-10 13/16"	53'-3 1/4"	47'-7 5/8"	53'-3 1/4"	47'-7 5/8"
G5	458'-9 13/16"	267'-4 7/16"	191'-5 3/8"	54'-4 7/16"	50'-2 3/16"	54'-4 7/16"	50'-2 3/16"
G6	462'-5 9/16"	268'-5 5/8"	193'-11 15/16"	55'-5 5/8"	52'-8 3/4"	55'-5 5/8"	52'-8 3/4"
G7	466'-15/16"	269'-6 13/16"	196'-6 1/2"	56'-6 13/16"	55'-3 5/16"	56'-6 13/16"	55'-3 5/16"
G8	469'-9 1/16"	270'-8"	199'-1 1/16"	57'-8"	57'-9 13/16"	57'-8"	57'-9 13/16"
G9	473'-4 13/16"	271'-9 3/16"	201'-7 9/16"	58'-9 3/16"	60'-4 3/8"	58'-9 3/16"	60'-4 3/8"
G10	477'-0 1/2"	272'-10 3/8"	204'-2 1/8"	59'-10 7/16"	62'-10 15/16"	59'-10 7/16"	62'-10 15/16"

GIRDER FLEXURE REGIONS

GIRDER	GF1	GF2	GF3
G1	193'-7 9/16"	178'-13/16"	72'-6 1/8"
G2	196'-6 1/8"	177'-2 3/8"	74'-2 1/8"
G3	198'-3 15/16"	175'-11 1/16"	77'-3 5/16"
G4	198'-5 1/4"	179'-7 15/16"	77'-7/8"
G5	198'-17/16"	183'-2 1/16"	77'-6 5/16"
G6	198'-5 3/8"	184'-2 7/8"	79'-9 5/16"
G7	197'-115/8"	184'-7 1/16"	83'-6 9/16"
G8	199'-117/8"	181'-1/2"	88'-8 11/16"
G9	201'-3"	181'-6"	90'-7 13/16"
G10	199'-6 13/16"	191'-3 13/16"	86'-1 13/16"

WELDED SHEAR STUD LAYOUT DATA

GIRDER	H	J	K	L	M	N	P	R	S	T	U	V	W	X	Y	Z	AA	BB	CC	DD	EE	FF	GG	HH
G1	1	1'-2 1/4"	31	1'-3"	26	2'-0"	14	2'-11"	31	1'-8"	28	1'-5"	56	1'-10"	24	1'-6"	18	2'-0"	18	2'-0"	7	1'-3"	1	8 5/8"
G2	1	1'-2"	31	1'-3"	26	2'-0"	14	2'-11"	31	1'-8"	28	1'-5"	57	1'-10"	24	1'-6"	19	2'-0"	19	2'-0"	5	1'-3"	1	1'-0 5/8"
G3	1	1'-2"	31	1'-3"	26	2'-0"	14	2'-11"	32	1'-8"	28	1'-5"	57	1'-10"	25	1'-6"	19	2'-0"	18	2'-0"	7	1'-3"	1	1'-0 5/16"
G4	1	1'-8"	18	2'-2"	16	3'-4"	12	3'-4"	20	2'-8"	14	2'-8"	27	4'-0"	16	2'-5"	13	2'-8"	12	3'-4"	3	2'-4"	1	2'-2 1/16"
G5	1	1'-8"	18	2'-2"	16	3'-4"	12	3'-4"	20	2'-8"	15	2'-8"	27	4'-0"	15	2'-5"	14	2'-8"	9	3'-4"	8	2'-4"	1	1'-2 13/16"
G6	1	1'-8"	18	2'-2"	16	3'-4"	12	3'-4"	17	2'-8"	18	2'-8"	27	4'-0"	17	2'-5"	14	2'-8"	10	3'-4"	6	2'-4"	1	1'-4 9/16"
G7	1	1'-8"	18	2'-2"	16	3'-4"	13	3'-4"	19	2'-8"	16	2'-8"	27	4'-0"	16	2'-5"	15	2'-8"	12	3'-4"	3	2'-4"	1	1'-9 5/16"
G8	1	1'-2 1/2"	32	1'-3"	27	2'-0"	14	2'-11"	32	1'-8"	29	1'-5"	60	1'-10"	27	1'-6"	20	2'-0"	20	2'-0"	6	1'-3"	1	1'-3 9/16"
G9	1	9 3/16"	32	1'-3"	27	2'-0"	14	2'-11"	33	1'-8"	29	1'-5"	60	1'-10"	27	1'-6"	20	2'-0"	20	2'-0"	8	1'-3"	1	1'-2 5/8"
G10	1	10 3/8"	32	1'-3"	28	2'-0"	14	2'-11"	32	1'-8"	29	1'-5"	62	1'-10"	27	1'-6"	20	2'-0"	20	2'-0"	8	1'-3"	1	9 1/8"

LEGEND:

CJP COMPLETE JOINT PENETRATION WELD (SEE NOTES 13 & 14)

CS INDICATES A BUTT WELD SUBJECT TO COMPRESSIVE STRESSES ONLY

NOTES:

1. SEE SHEET 50 / 90 FOR SPAN 2 GIRDER ELEVATION.
2. ALL GIRDER MATERIAL SHALL CONFORM TO ASTM A709 GRADE 50, UNLESS NOTED OTHERWISE.
3. CROSSFRAME CONNECTION PLATES NOT SHOWN FOR CLARITY. SEE FRAMING PLAN FOR CROSSFRAME LOCATIONS.
4. GIRDER INSPECTION HARDWARE NOT SHOWN FOR CLARITY. SEE SHEET 51 / 90 FOR MISCELLANEOUS GIRDER DETAILS.
5. CVN: WHERE A SHAPE OR PLATE IS DESIGNATED (CVN), FURNISH MATERIAL THAT MEETS THE MINIMUM NOTCH TOUGHNESS REQUIREMENTS AS SPECIFIED IN C&MS 711.01. ALL INTERMEDIATE STIFFENERS, JACKING STIFFENERS, BEARING STIFFENERS, AND CONNECTION PLATE MATERIAL SHALL BE DESIGNATED (CVN).
6. FOR FRAMING PLANS AND TABLES, SEE SHEETS 47 & 48 / 90.
7. FOR DEFLECTION AND CAMBER TABLES, SEE SHEETS 53 - 56 / 90.
8. FOR FIELD SPLICE DETAILS, SEE SHEET 52 / 90.
9. FOR CROSSFRAME AND UTILITY SUPPORT DETAILS, SEE SHEETS 57 - 60 / 90.

NOTES (CONT'D):

10. WELD ATTACHMENT OF SUPPORTS FOR CONCRETE DECK FINISHING MACHINE TO AREAS OF THE FASCIA STRINGER FLANGES DESGINATED "COMPRESSION". DO NOT WELD ATTACHMENTS TO GIRDER FLANGES MARKED "TENSION". FILLET WELDS ON COMPRESSION FLANGES SHALL BE AT LEAST 1 INCH FROM THE EDGE OF THE FLANGE, BE NO MORE THAN 2 INCHES LONG AND BE A MINIMUM OF ¼ INCH FOR FLANGES UP TO ¾ INCH THICK AND A MINIMUM OF 5/16 INCH FOR FLANGES GREATER THAN ¾ INCH THICK.
11. ADJUST SPACING OF SHEAR STUDS AROUND GIRDER COPE, EXPANSION JOINT SUPPORT MATERIAL AND FIELD SPLICES AS REQUIRED TO PROVIDE THE REQUIRED NUMBER OF SHEAR STUDS IN THE RANGES INDICATED.
12. GIRDERS MUST BE COPED AT REAR ABUTMENT TO ACCOMMODATE THE MODULAR EXPANSION JOINT. SEE SHEETS 79 - 81 / 90 FOR EXPANSION JOINT AND GIRDER COPE DETAILS.
13. COMPLETE JOINT PENETRATION WELDS SHALL BE GROUND SMOOTH IN THE LONGITUDINAL GIRDER DIRECTION TO REMOVE WELD REINFORCEMENT.
14. SEE FLANGE TRANSITION DETAIL ON SHEET 51 / 90.

Preliminary Plans Only
For Reference Only

GIRDER ELEVATION (1 OF 2)
CUY-90-1696 (BRIDGE 14)
CR-722 (CARNEGIE AVE.) OVER I.R. 90

SFN 1807898
DESIGN AGENCY Michael Baker INTERNATIONAL
DESIGNER ABC | CHECKER BWC
REVIEWER LPC 06/23/22
PROJECT ID 82382
SUBSET 49 | TOTAL 90
SHEET 2329 | TOTAL 2696

CUY-90-16.28 (CCG3A)
MODEL: girder elevation 1 PAPERSIZE: 34x22 (in.) DATE: 3/28/2025 TIME: 8:08:53 AM USER: Rohit.Bk
pw:\\mb-us-pw.bentley.com:mb-us-pw-03\Documents\Cleveland_OH\01_Projects\ODOT\District12\82382400-Engineering\Structures\SFN_1807898\Sheets\82382_SFN_1807898_SS002.dgn

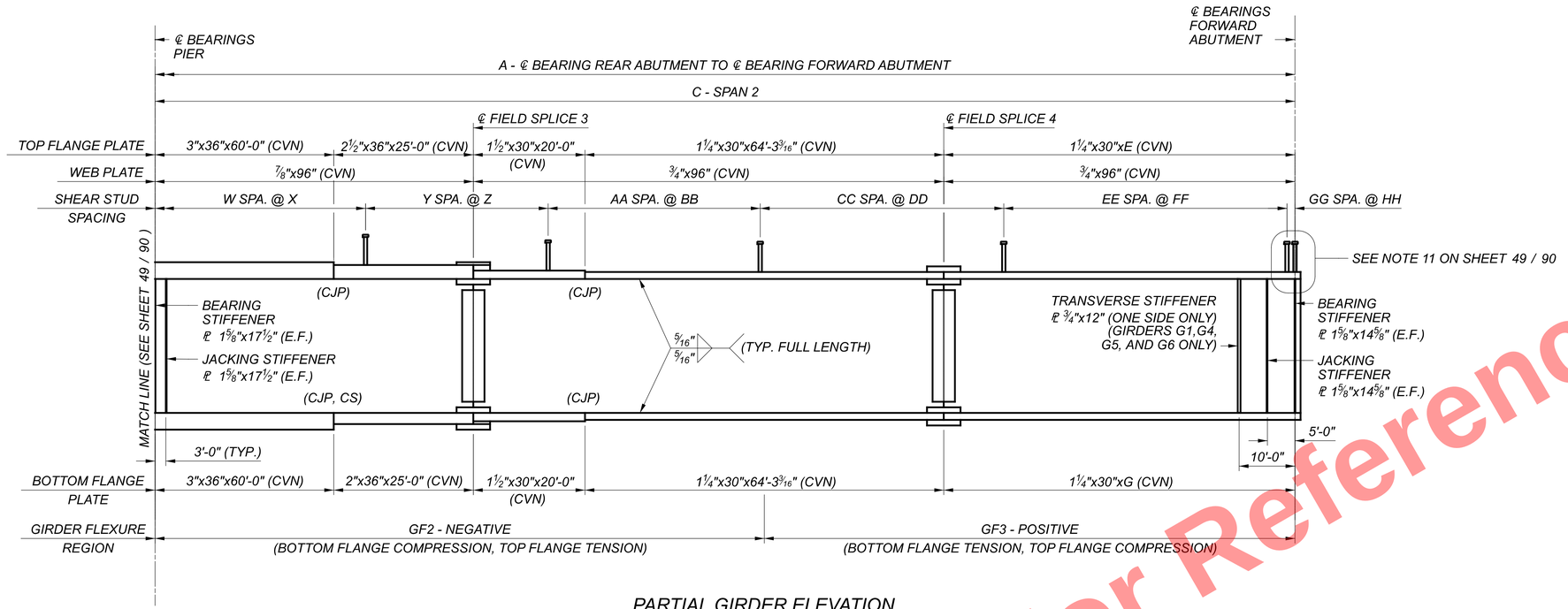

PARTIAL GIRDER ELEVATION

Preliminary Plans - For Reference Only

LEGEND:

CJP COMPLETE JOINT PENETRATION WELD (SEE NOTES 13 & 14 ON SHEET 49 / 90)

CS INDICATES A BUTT WELD SUBJECT TO COMPRESSIVE STRESSES ONLY

NOTES:

1. FOR GIRDER DIMENSION TABLES AND NOTES, SEE SHEET 49 / 90.

GIRDER ELEVATION (2 OF 2)
CUY-90-1696 (BRIDGE 14)
CR-722 (CARNEGIE AVE.) OVER I.R. 90

SFN	1807898
DESIGN AGENCY	Michael Baker INTERNATIONAL
DESIGNER / CHECKER	ABC / BWC
REVIEWER	LPC 06/23/22
PROJECT ID	82382
SUBSET / TOTAL	50 / 90
SHEET / TOTAL	2330 / 2696

CUY-90-16.28 (CCG3A)

MODEL: girder elevation 2 PAPERSIZE: 34x22 (in.) DATE: 3/28/2025 TIME: 8:08:55 AM USER: Rohit.Bk
pw:\\mb-us-pw.bentley.com:mb-us-pw-03\Documents\Cleveland_OH\01_Projects\ODOT\District12\82382\400-Engineering\Structures\SFN_1807898\Sheets\82382_SFN_1807898_SS002.dgn

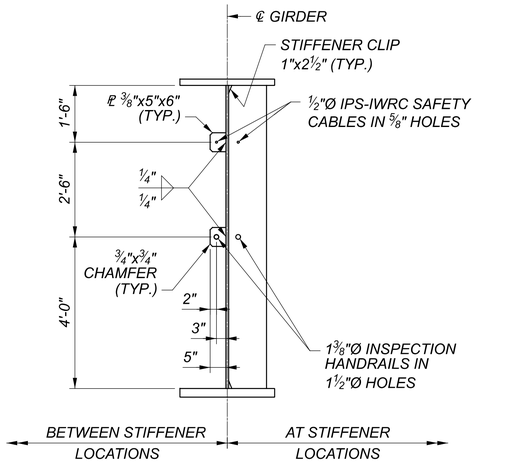

TYPICAL GIRDER SECTION - INSPECTION HARDWARE

(NO HARDWARE ON OUTSIDE FACE OF FASCIA GIRDER)

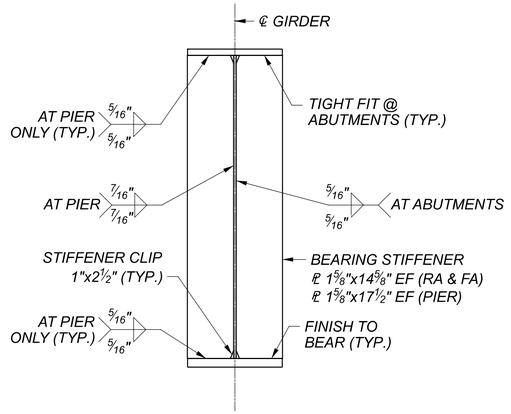

BEARING & JACKING STIFFENER DETAIL

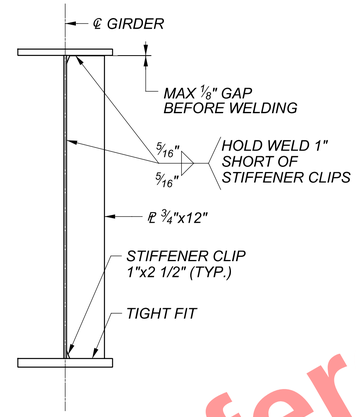

INTERMEDIATE STIFFENER DETAIL

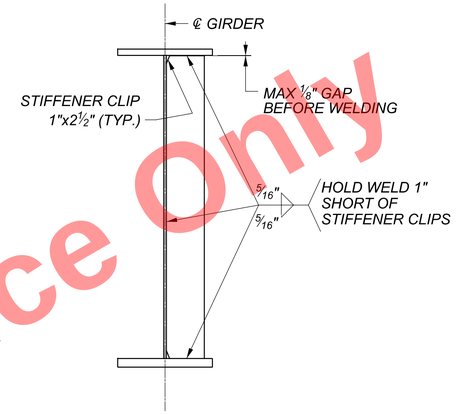

CROSSFRAME CONNECTION PLATE DETAIL

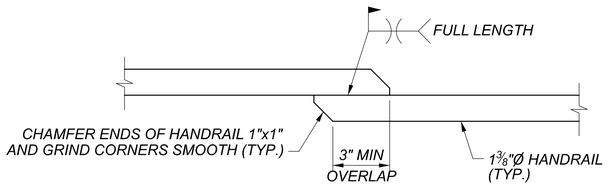

WELDED HANDRAIL SPLICE DETAIL

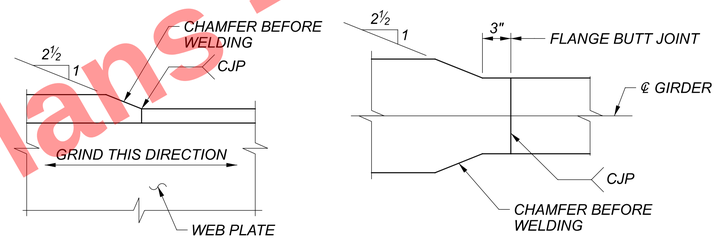

ELEVATION PLAN

FLANGE TRANSITION DETAILS

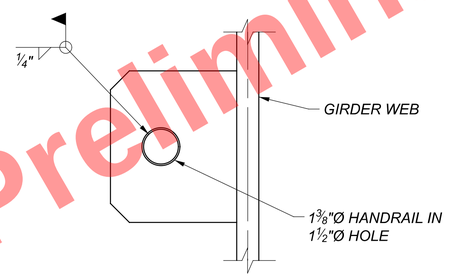

INSPECTION HANDRAIL CONNECTION PLATE DETAIL

(SHOWN AT SUPPORT BETWEEN STIFFENERS, DETAIL AT STIFFENERS SIMILAR)

LEGEND:

CJP COMPLETE JOINT PENETRATION WELD

NOTES:

1. FOR GIRDER ELEVATIONS, SEE SHEETS 49 & 50 / 90.
2. FOR CROSSFRAME AND UTILITY SUPPORT DETAILS, SEE SHEETS 57 - 60 / 90.
3. STIFFENER MATERIAL SHALL CONFORM TO ASTM A709 GRADE 50.
4. BAR AND PLATE MATERIAL FOR INSPECTION HARDWARE SHALL CONFORM TO ASTM A709 GRADE 50.
5. WIRE ROPE FOR INSPECTION SAFETY CABLES SHALL BE ⅜" DIAMETER IMPROVED PLOW STEEL (IPS), 6x19 CONSTRUCTION, INDEPENDENT WIRE ROPE CORE (IWRC) WIRE ROPE, GALVANIZED. PROVIDE WIRE ROPE HARDWARE, INCLUDING TERMINATIONS, SPLICES, WIRE ROPE SLEEVES, WIRE ROPE CLIPS, ETC., CAPABLE OF DEVELOPING THE ULTIMATE TENSILE STRENGTH (BREAKING LOAD) OF THE INSPECTION SAFETY CABLE.
6. PROVIDE WIRE ROPE SUPPORTS AT A MAXIMUM OF 6'-3" CENTERS ALONG EACH GIRDER.
7. HOLD ALL STIFFENER AND CONNECTION PLATE WELDS 1" SHORT OF STIFFENER CLIPS.

Preliminary Plans - For Reference Only

GIRDER DETAILS
CUY-90-1696 (BRIDGE 14)
CR-722 (CARNEGIE AVE.) OVER I.R. 90

SFN	1807898
DESIGN AGENCY	Michael Baker INTERNATIONAL
DESIGNER	ABC
CHECKER	KTS
REVIEWER	LPC 06/23/22
PROJECT ID	82382
SUBSET	51
TOTAL	90
SHEET	2331
TOTAL	2696

CUY-90-16.28 (CCG3A)
MODEL: Girder Details PAPERSIZE: 34x22 (in.) DATE: 3/28/2025 TIME: 8:09:11 AM USER: RohitLBk
pw:\\mb-us-pw.bentley.com:mb-us-pw-03\Documents\Cleveland_OH\01_Projects\ODOT\District12\82382\400-Engineering\Structures\SFN_1807898\Sheets\82382_SFN_1807898_SS003.dgn

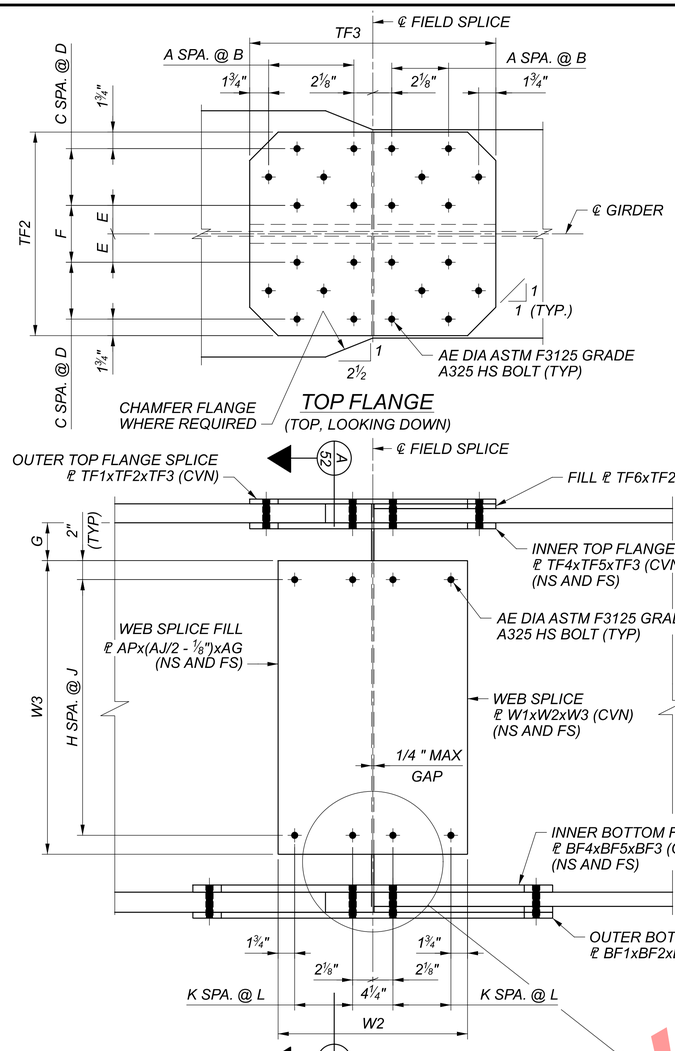

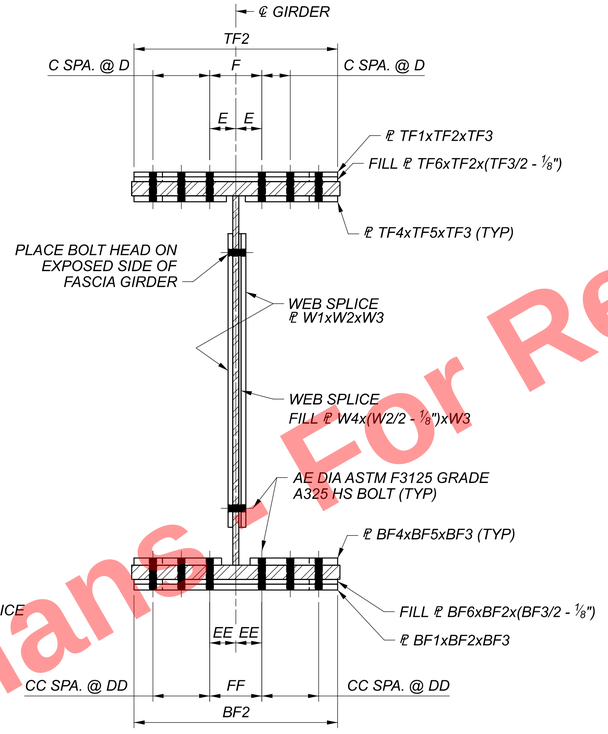

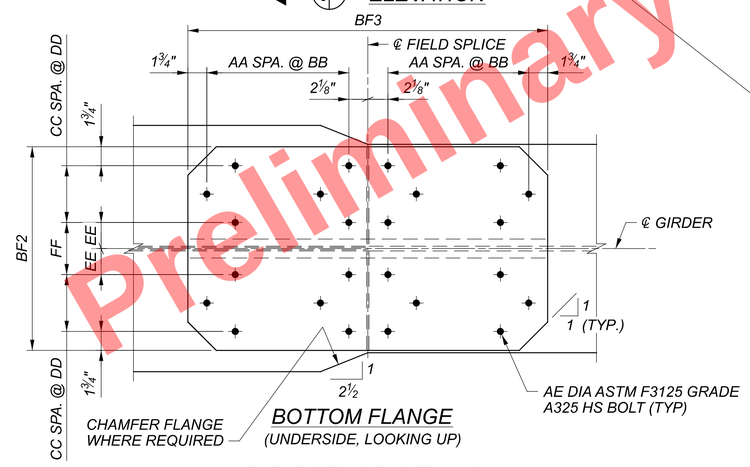

FIELD SPLICE DETAILS

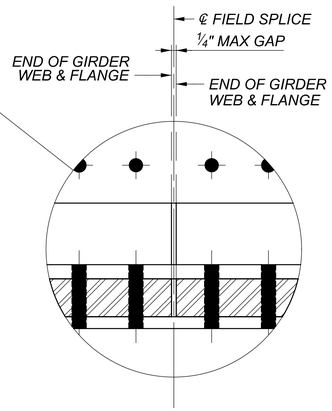

FIELD SPLICE DIMENSIONS

LOCATION	VALUE	FIELD SPLICE 1	FIELD SPLICE 2	FIELD SPLICE 3	FIELD SPLICE 4
TOP FLANGE	TF1	1 1/8"	1 1/8"	7/8"	7/8"
	TF2	30"	30"	30"	30"
	TF3	61 3/4"	49 3/4"	43 3/4"	31 3/4"
	TF4	1 1/4"	1 1/4"	1"	1"
	TF5	13 7/8"	13 7/8"	13 7/8"	14"
	TF6	--	1/2"	1"	--
	A	8	6	5	3
	B	3"	3"	3"	3"
	E	2 7/8"	2 7/8"	2 7/8"	2 7/8"
	F	5 3/4"	5 3/4"	5 3/4"	5 3/4"
	C	2	2	2	2
	D	5 3/16"	5 3/16"	5 3/16"	5 3/16"
BOTTOM FLANGE	BF1	1 1/2"	1 1/2"	1"	1"
	BF2	30"	30"	30"	30"
	BF3	61 3/4"	49 3/4"	43 3/4"	31 3/4"
	BF4	15/8"	15/8"	1"	1"
	BF5	13 7/8"	13 7/8"	13 7/8"	14"
	BF6	--	--	1/2"	--
	AA	8	6	5	3
	BB	3"	3"	3"	3"
	EE	2 7/8"	2 7/8"	2 7/8"	2 7/8"
	FF	5 3/4"	5 3/4"	5 3/4"	5 3/4"
	CC	2	2	2	2
	DD	5 3/16"	5 3/16"	5 3/16"	5 3/16"
BOLTS	AE	1"	1"	1"	1"
WEB	W1	1/2"	1/2"	1/2"	1/2"
	W2	19 3/4"	13 3/4"	13 3/4"	13 3/4"
	W3	88"	90 1/4"	89 1/2"	91 1/8"
	W4	1/8"	--	1/8"	--
	G	4"	2 7/8"	3 1/4"	2 7/16"
	H	24	15	19	17
	J	3 1/2"	5 3/4"	4 1/2"	5 1/8"
	K	2	1	1	1
	L	3"	3"	3"	3"

NOTES:

1. ALL SPLICE MATERIAL SHALL CONFORM TO ASTM A709 GRADE 50.
2. HIGH STRENGTH BOLTS SHALL BE 1" DIAMETER A325 UNLESS NOTED OTHERWISE.
3. CVN: WHERE A SHAPE OR PLATE IS DESIGNATED (CVN), PROVIDE MATERIAL MEETING THE MINIMUM NOTCH TOUGHNESS REQUIREMENTS SPECIFIED IN C&MS 711.01.
4. FOR SPLICE LOCATIONS, SEE FRAMING PLAN SHEET 47 / 90 AND GIRDER ELEVATIONS SHEETS 49 & 50 / 90.
5. FOR MISCELLANEOUS GIRDER DETAILS, SEE SHEET 16872696

Preliminary Plans - For Reference Only

GIRDER SPLICE DETAILS
CUY-90-1696 (BRIDGE 14)
CR-722 (CARNEGIE AVE.) OVER I.R. 90

SFN 1807898
DESIGN AGENCY
Michael Baker INTERNATIONAL
DESIGNER ZRS | CHECKER BWC
REVIEWER LPC 06/23/22
PROJECT ID 82382
SUBSET 52 | TOTAL 90
SHEET 2332 | TOTAL 2696

CUY-90-16.28 (CCG3A)

MODEL: Girder Splice Details PAPERSIZE: 34x22 (in.) DATE: 3/28/2025 TIME: 8:09:22 AM USER: Rohit.Bk
pw:\\mb-us-pw.bentley.com:mb-us-pw-03\Documents\Cleveland_OH101_Projects\ODOT\District12\82382\400-Engineering\Structures\SFN_1807898\Sheets\82382_SFN_1807898_SS005.dgn

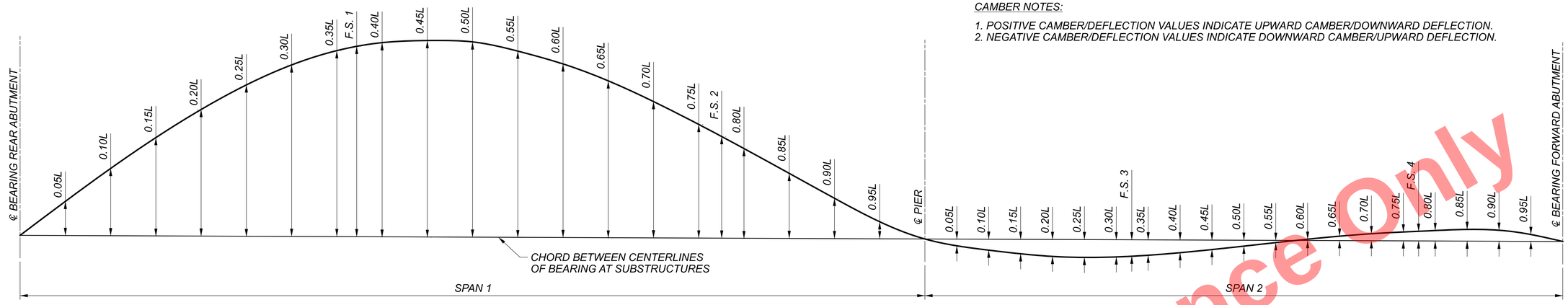

CAMBER DIAGRAM

GIRDER G1

DEFLECTION COMPONENT	C.L. BRG. REAR ABUT.	SPAN 1																				C.L. PIER
		0.05 L	0.10 L	0.15 L	0.20 L	0.25 L	0.30 L	0.35 L	F.S. 1	0.40 L	0.45 L	0.50 L	0.55 L	0.60 L	0.65 L	0.70 L	0.75 L	F.S. 2	0.80 L	0.85 L	0.90 L	0.95 L	
STEEL DEAD LOAD ONLY	0	3/4	1 7/16	2 1/8	2 11/16	3 3/16	3 5/8	3 7/8	4	4 1/16	4 1/8	4 1/16	3 7/8	3 5/8	3 1/4	2 13/16	2 5/16	1 13/16	1 13/16	1 5/16	13/16	3/8	0
SLAB AND HAUNCH DEAD LOAD	0	1 1/16	2 1/16	2 15/16	3 13/16	4 9/16	5 1/8	5 9/16	5 3/4	5 7/8	5 15/16	5 7/8	5 9/16	5 3/16	4 5/8	4	3 1/4	2 1/2	2 1/2	1 3/4	1 1/16	1/2	0
COMPOSITE DEAD LOAD	0	9/16	1 1/16	1 9/16	1 15/16	2 5/16	2 9/16	2 3/4	2 7/8	2 7/8	2 7/8	2 13/16	2 11/16	2 7/16	2 3/16	1 7/8	1 1/2	1 1/8	1 1/8	13/16	7/16	3/16	0
GEOMETRIC CORRECTION	0	0	0	0	0	0	0	0	0	0	0	0	0	0	0	0	0	0	0	0	0	0	0
TOTAL CAMBER	0	2 3/8	4 9/16	6 5/8	8 1/2	10 1/8	11 5/16	12 1/4	12 5/8	12 13/16	12 15/16	12 3/4	12 1/8	11 1/4	10 1/16	8 5/8	7	5 7/16	5 3/8	3 7/8	2 5/16	1 1/16	0

DEFLECTION COMPONENT	C.L. PIER	SPAN 2																				C.L. BRG. FWD. ABUT.
		0.05 L	0.10 L	0.15 L	0.20 L	0.25 L	0.30 L	F.S. 3	0.35 L	0.40 L	0.45 L	0.50 L	0.55 L	0.60 L	0.65 L	0.70 L	0.75 L	F.S. 4	0.80 L	0.85 L	0.90 L	0.95 L	
STEEL DEAD LOAD ONLY	0	- 3/16	- 5/16	- 7/16	- 1/2	- 9/16	- 9/16	- 9/16	- 9/16	- 1/2	- 1/2	- 7/16	- 3/8	- 5/16	- 1/4	- 3/16	- 1/8	- 1/8	- 1/16	- 1/16	0	0	0
SLAB AND HAUNCH DEAD LOAD	0	- 1/4	- 7/16	- 1/2	- 9/16	- 5/8	- 9/16	- 9/16	- 9/16	- 7/16	- 3/8	- 1/4	- 3/16	- 1/8	- 1/16	1/16	1/16	1/16	1/8	1/8	1/16	1/16	0
COMPOSITE DEAD LOAD	0	- 1/16	- 1/8	- 1/8	- 1/8	- 1/8	- 1/16	- 1/16	0	1/16	1/8	3/16	1/4	5/16	5/16	5/16	5/16	5/16	1/4	1/4	3/16	1/16	0
GEOMETRIC CORRECTION	0	0	0	0	0	0	0	0	0	0	0	0	0	0	0	0	0	0	0	0	0	0	0
TOTAL CAMBER	0	- 1/2	- 7/8	-1 1/8	-1 1/4	-1 1/4	-1 3/16	-1 3/16	-1 1/16	- 15/16	- 3/4	- 1/2	- 5/16	- 1/8	1/16	3/16	1/4	5/16	5/16	1/4	3/16	1/8	0

GIRDER G2

DEFLECTION COMPONENT	C.L. BRG. REAR ABUT.	SPAN 1																				C.L. PIER
		0.05 L	0.10 L	0.15 L	0.20 L	0.25 L	0.30 L	0.35 L	F.S. 1	0.40 L	0.45 L	0.50 L	0.55 L	0.60 L	0.65 L	0.70 L	0.75 L	F.S. 2	0.80 L	0.85 L	0.90 L	0.95 L	
STEEL DEAD LOAD ONLY	0	3/4	1 1/2	2 3/16	2 3/4	3 1/4	3 11/16	3 15/16	4 1/16	4 1/8	4 3/16	4 1/8	3 15/16	3 5/8	3 5/16	2 13/16	2 5/16	1 13/16	1 13/16	1 5/16	13/16	3/8	0
SLAB AND HAUNCH DEAD LOAD	0	1	1 15/16	2 13/16	3 9/16	4 1/4	4 3/4	5 3/16	5 3/8	5 7/16	5 9/16	5 1/2	5 1/4	4 7/8	4 5/16	3 3/4	3 1/16	2 3/8	2 3/8	1 11/16	1	1/2	0
COMPOSITE DEAD LOAD	0	7/16	13/16	1 3/16	1 1/2	1 3/4	2	2 3/16	2 1/4	2 1/4	2 5/16	2 1/4	2 3/16	2 1/16	1 13/16	1 9/16	1 5/16	1	1	11/16	7/16	3/16	0
GEOMETRIC CORRECTION	0	0	0	0	0	0	0	0	0	0	0	0	0	0	0	0	0	0	0	0	0	0	0
TOTAL CAMBER	0	2 3/16	4 3/16	6 1/8	7 13/16	9 5/16	10 7/16	11 5/16	11 11/16	11 7/8	12	11 7/8	11 3/8	10 9/16	9 7/16	8 3/16	6 11/16	5 3/16	5 3/16	3 11/16	2 1/4	1 1/16	0

DEFLECTION COMPONENT	C.L. PIER	SPAN 2																				C.L. BRG. FWD. ABUT.
		0.05 L	0.10 L	0.15 L	0.20 L	0.25 L	0.30 L	F.S. 3	0.35 L	0.40 L	0.45 L	0.50 L	0.55 L	0.60 L	0.65 L	0.70 L	0.75 L	F.S. 4	0.80 L	0.85 L	0.90 L	0.95 L	
STEEL DEAD LOAD ONLY	0	- 3/16	- 5/16	- 7/16	- 1/2	- 1/2	- 1/2	- 1/2	- 1/2	- 1/2	- 7/16	- 3/8	- 5/16	- 1/4	- 3/16	- 1/8	- 1/16	- 1/16	0	0	0	0	0
SLAB AND HAUNCH DEAD LOAD	0	- 3/16	- 3/8	- 7/16	- 1/2	- 1/2	- 1/2	- 1/2	- 7/16	- 5/16	- 1/4	- 1/8	- 1/16	0	1/16	1/8	1/8	3/16	3/16	1/8	1/8	1/16	0
COMPOSITE DEAD LOAD	0	- 1/16	- 1/8	- 3/16	- 3/16	- 3/16	- 3/16	- 3/16	- 3/16	- 1/8	- 1/8	- 1/16	0	0	1/16	1/16	1/16	1/16	1/16	1/16	1/16	0	0
GEOMETRIC CORRECTION	0	0	0	0	0	0	0	0	0	0	0	0	0	0	0	0	0	0	0	0	0	0	0
TOTAL CAMBER	0	- 1/2	- 13/16	-1 1/16	-1 3/16	-1 3/16	-1 3/16	-1 3/16	-1 1/16	- 15/16	- 3/4	- 9/16	- 5/16	- 3/16	0	1/8	3/16	3/16	1/4	1/4	3/16	1/8	0

GIRDER G3

DEFLECTION COMPONENT	C.L. BRG. REAR ABUT.	SPAN 1																				C.L. PIER
		0.05 L	0.10 L	0.15 L	0.20 L	0.25 L	0.30 L	0.35 L	F.S. 1	0.40 L	0.45 L	0.50 L	0.55 L	0.60 L	0.65 L	0.70 L	0.75 L	F.S. 2	0.80 L	0.85 L	0.90 L	0.95 L	
STEEL DEAD LOAD ONLY	0	13/16	1 1/2	2 1/4	2 13/16	3 3/8	3 3/4	4 1/16	4 3/16	4 3/16	4 1/4	4 3/16	4	3 11/16	3 5/16	2 7/8	2 3/8	1 13/16	1 13/16	1 5/16	13/16	3/8	0
SLAB AND HAUNCH DEAD LOAD	0	1	1 7/8	2 3/4	3 1/2	4 3/16	4 11/16	5 1/8	5 5/16	5 3/8	5 7/16	5 3/8	5 1/8	4 3/4	4 1/4	3 5/8	2 15/16	2 1/4	2 1/4	1 9/16	1	7/16	0
COMPOSITE DEAD LOAD	0	5/16	9/16	13/16	1 1/16	1 5/16	1 7/16	1 9/16	1 5/8	1 11/16	1 11/16	1 11/16	1 5/8	1 1/2	1 3/8	1 3/16	1	3/4	3/4	9/16	5/16	3/16	0
GEOMETRIC CORRECTION	0	0	0	0	0	0	0	0	0	0	0	0	0	0	0	0	0	0	0	0	0	0	0
TOTAL CAMBER	0	2 1/16	4	5 13/16	7 3/8	8 13/16	9 7/8	10 3/4	11 1/8	11 1/4	11 3/8	11 1/4	10 3/4	9 15/16	8 7/8	7 11/16	6 1/4	4 7/8	4 7/8	3 7/16	2 1/8	1	0

DEFLECTION COMPONENT	C.L. PIER	SPAN 2																				C.L. BRG. FWD. ABUT.
		0.05 L	0.10 L	0.15 L	0.20 L	0.25 L	0.30 L	F.S. 3	0.35 L	0.40 L	0.45 L	0.50 L	0.55 L	0.60 L	0.65 L	0.70 L	0.75 L	F.S. 4	0.80 L	0.85 L	0.90 L	0.95 L	
STEEL DEAD LOAD ONLY	0	- 3/16	- 5/16	- 7/16	- 1/2	- 1/2	- 1/2	- 1/2	- 1/2	- 7/16	- 3/8	- 5/16	- 1/4	- 3/16	- 1/8	- 1/16	- 1/16	0	0	0	0	0	0
SLAB AND HAUNCH DEAD LOAD	0	- 3/16	- 3/8	- 7/16	- 1/2	- 1/2	- 1/2	- 1/2	- 7/16	- 5/16	- 1/4	- 1/8	- 1/16	0	1/16	1/8	1/8	3/16	3/16	1/8	1/8	1/16	0
COMPOSITE DEAD LOAD	0	- 1/16	- 1/8	- 3/16	- 3/16	- 3/16	- 3/16	- 3/16	- 3/16	- 1/8	- 1/8	- 1/16	0	0	1/16	1/16	1/16	1/16	1/16	1/16	1/16	0	0
GEOMETRIC CORRECTION	0	0	0	0	0	0	0	0	0	0	0	0	0	0	0	0	0	0	0	0	0	0	0
TOTAL CAMBER	0	- 1/2	- 13/16	-1 1/16	-1 3/16	-1 3/16	-1 3/16	-1 3/16	-1 1/16	- 15/16	- 3/4	- 9/16	- 5/16	- 3/16	0	1/8	3/16	3/16	1/4	1/4	3/16	1/8	0

Preliminary Plans - For Reference Only

DEFLECTION AND CAMBER TABLES (1 OF 4)
CUY-90-1696 (BRIDGE 14)
CR-722 (CARNEGIE AVE.) OVER I.R. 90

SFN 1807898
DESIGN AGENCY
Michael Baker INTERNATIONAL
DESIGNER ABC | CHECKER MEM
REVIEWER LPC 06/23/22
PROJECT ID 82382
SUBSET 53 | TOTAL 90
SHEET 2333 | TOTAL 2696

CUY-90-16.28 (CCG3A)
MODEL: deflect and camber table 1 PAPERSIZE: 34x22 (in.) DATE: 3/28/2025 TIME: 8:09:36 AM USER: Rohit.Bk
pw:\\mb-us-pw.bentley.com:mb-us-pw-03\Documents\Cleveland_OH\01_Projects\ODOT\District12\82382\400-Engineering\Structures\SFN_1807898\Sheets\82382_SFN_1807898_SS004.dgn

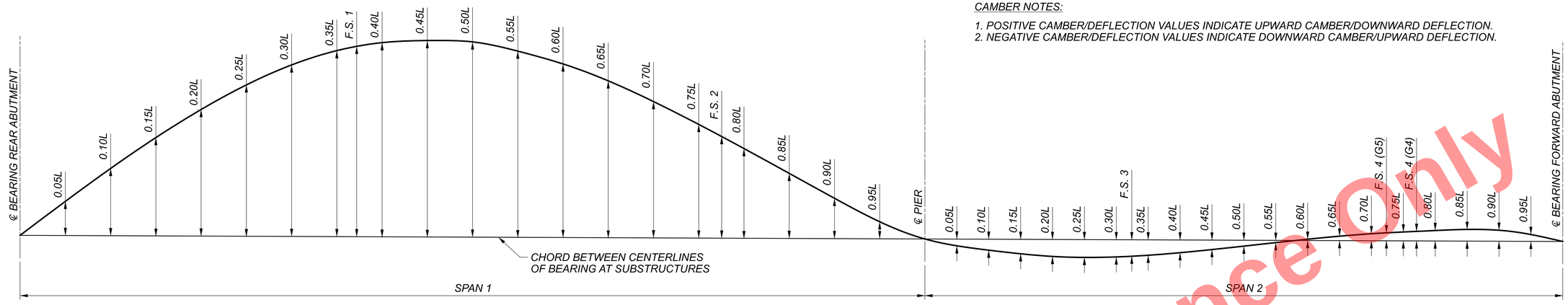

CAMBER NOTES:

1. POSITIVE CAMBER/DEFLECTION VALUES INDICATE UPWARD CAMBER/DOWNWARD DEFLECTION.
2. NEGATIVE CAMBER/DEFLECTION VALUES INDICATE DOWNWARD CAMBER/UPWARD DEFLECTION.

CAMBER DIAGRAM

GIRDER G4

DEFLECTION COMPONENT	C.L. BRG. REAR ABUT.	SPAN 1																				C.L. PIER
		0.05 L	0.10 L	0.15 L	0.20 L	0.25 L	0.30 L	0.35 L	F.S. 1	0.40 L	0.45 L	0.50 L	0.55 L	0.60 L	0.65 L	0.70 L	0.75 L	F.S. 2	0.80 L	0.85 L	0.90 L	0.95 L	
STEEL DEAD LOAD ONLY	0	13/16	1 9/16	2 1/4	2 7/8	3 7/16	3 13/16	4 1/8	4 1/4	4 5/16	4 3/8	4 1/4	4 1/16	3 13/16	3 3/8	2 15/16	2 3/8	1 7/8	1 7/8	1 5/16	13/16	3/8	0
SLAB AND HAUNCH DEAD LOAD	0	1	1 15/16	2 3/4	3 9/16	4 3/16	4 3/4	5 3/16	5 3/8	5 3/8	5 1/2	5 3/8	5 1/8	4 3/4	4 1/4	3 11/16	3	2 5/16	2 5/16	1 9/16	1	7/16	0
COMPOSITE DEAD LOAD	0	3/16	7/16	5/8	3/4	15/16	1 1/16	1 1/8	1 3/16	1 3/16	1 3/16	1 3/16	1 1/8	1 1/16	1	7/8	11/16	9/16	9/16	7/16	1/4	1/8	0
GEOMETRIC CORRECTION	0	0	0	0	0	0	0	0	0	0	0	0	0	0	0	0	0	0	0	0	0	0	0
TOTAL CAMBER	0	2	3 7/8	5 5/8	7 1/4	8 9/16	9 5/8	10 7/16	10 13/16	10 7/8	11 1/16	10 7/8	10 3/8	9 5/8	8 5/8	7 7/16	6 1/16	4 11/16	4 3/4	3 5/16	2 1/16	15/16	0

DEFLECTION COMPONENT	C.L. PIER	SPAN 2																				C.L. BRG. FWD. ABUT.
		0.05 L	0.10 L	0.15 L	0.20 L	0.25 L	0.30 L	F.S. 3	0.35 L	0.40 L	0.45 L	0.50 L	0.55 L	0.60 L	0.65 L	0.70 L	0.75 L	F.S. 4	0.80 L	0.85 L	0.90 L	0.95 L	
STEEL DEAD LOAD ONLY	0	- 3/16	- 5/16	- 7/16	- 1/2	- 1/2	- 1/2	- 1/2	- 1/2	- 7/16	- 3/8	- 5/16	- 1/4	- 3/16	- 1/8	- 1/16	0	0	0	0	0	0	0
SLAB AND HAUNCH DEAD LOAD	0	- 3/16	- 3/8	- 7/16	- 1/2	- 1/2	- 7/16	- 7/16	- 3/8	- 5/16	- 3/16	- 1/16	0	1/16	1/8	3/16	3/16	3/16	3/16	3/16	1/8	1/16	0
COMPOSITE DEAD LOAD	0	- 1/16	- 1/8	- 1/8	- 3/16	- 3/16	- 3/16	- 3/16	- 3/16	- 3/16	- 1/8	- 1/8	- 1/8	- 1/16	- 1/16	- 1/16	0	0	0	0	0	0	0
GEOMETRIC CORRECTION	0	0	0	0	0	0	0	0	0	0	0	0	0	0	0	0	0	0	0	0	0	0	0
TOTAL CAMBER	0	- 7/16	- 13/16	-1 1/16	-1 3/16	-1 3/16	-1 3/16	-1 3/16	-1 1/16	- 15/16	- 3/4	- 9/16	- 3/8	- 3/16	0	1/8	3/16	3/16	3/16	3/16	3/16	1/8	0

GIRDER G5

DEFLECTION COMPONENT	C.L. BRG. REAR ABUT.	SPAN 1																				C.L. PIER
		0.05 L	0.10 L	0.15 L	0.20 L	0.25 L	0.30 L	0.35 L	F.S. 1	0.40 L	0.45 L	0.50 L	0.55 L	0.60 L	0.65 L	0.70 L	0.75 L	F.S. 2	0.80 L	0.85 L	0.90 L	0.95 L	
STEEL DEAD LOAD ONLY	0	13/16	1 5/8	2 5/16	2 15/16	3 1/2	3 15/16	4 1/4	4 3/8	4 7/16	4 7/16	4 3/8	4 3/16	3 7/8	3 1/2	3	2 1/2	1 15/16	1 15/16	1 3/8	7/8	3/8	0
SLAB AND HAUNCH DEAD LOAD	0	1	1 15/16	2 13/16	3 5/8	4 5/16	4 13/16	5 1/4	5 1/2	5 1/2	5 9/16	5 1/2	5 1/4	4 7/8	4 3/8	3 3/4	3 1/16	2 5/16	2 3/8	1 11/16	1	7/16	0
COMPOSITE DEAD LOAD	0	3/16	5/16	1/2	5/8	3/4	13/16	7/8	7/8	7/8	15/16	7/8	7/8	13/16	11/16	5/8	1/2	3/8	3/8	5/16	3/16	1/16	0
GEOMETRIC CORRECTION	0	0	0	0	0	0	0	0	0	0	0	0	0	0	0	0	0	0	0	0	0	0	0
TOTAL CAMBER	0	2	3 7/8	5 5/8	7 3/16	8 1/2	9 9/16	10 3/8	10 3/4	10 13/16	10 15/16	10 13/16	10 5/16	9 9/16	8 5/8	7 3/8	6 1/8	4 5/8	4 11/16	3 3/8	2 1/16	15/16	0

DEFLECTION COMPONENT	C.L. PIER	SPAN 2																				C.L. BRG. FWD. ABUT.
		0.05 L	0.10 L	0.15 L	0.20 L	0.25 L	0.30 L	F.S. 3	0.35 L	0.40 L	0.45 L	0.50 L	0.55 L	0.60 L	0.65 L	0.70 L	F.S. 4	0.75 L	0.80 L	0.85 L	0.90 L	0.95 L	
STEEL DEAD LOAD ONLY	0	- 3/16	- 3/8	- 1/2	- 9/16	- 5/8	- 5/8	- 5/8	- 9/16	- 1/2	- 7/16	- 3/8	- 5/16	- 3/16	- 1/8	- 1/16	- 1/16	0	0	0	0	0	0
SLAB AND HAUNCH DEAD LOAD	0	- 1/4	- 3/8	- 1/2	- 1/2	- 1/2	- 1/2	- 1/2	- 3/8	- 5/16	- 3/16	- 1/16	1/16	1/8	3/16	1/4	1/4	1/4	1/4	1/4	3/16	1/16	0
COMPOSITE DEAD LOAD	0	- 1/16	- 1/16	- 1/8	- 1/8	- 3/16	- 3/16	- 3/16	- 3/16	- 3/16	- 3/16	- 1/8	- 1/8	- 1/8	- 1/8	- 1/16	- 1/16	- 1/16	- 1/16	0	0	0	0
GEOMETRIC CORRECTION	0	0	0	0	0	0	0	0	0	0	0	0	0	0	0	0	0	0	0	0	0	0	0
TOTAL CAMBER	0	- 1/2	- 7/8	-1 1/8	-1 1/4	-1 5/16	-1 1/4	-1 1/4	-1 3/16	-1	- 13/16	- 9/16	- 3/8	- 3/16	0	1/16	3/16	3/16	3/16	3/16	3/16	1/8	0

Preliminary Plans - For Reference Only

DEFLECTION AND CAMBER TABLES (2 OF 4)
CUY-90-1696 (BRIDGE 14)
CR-722 (CARNEGIE AVE.) OVER I.R. 90

SFN 1807898
DESIGN AGENCY
Michael Baker INTERNATIONAL
DESIGNER ABC | CHECKER MEM
REVIEWER LPC 06/23/22
PROJECT ID 82382
SUBSET 54 | TOTAL 90
SHEET 2334 | TOTAL 2696

CUY-90-16.28 (CCG3A)

MODEL: deflect and camber table 2 PAPERSIZE: 34x22 (in.) DATE: 3/28/2025 TIME: 8:09:37 AM USER: Rohit.Bk
pw:\\mb-us-pw.bentley.com:mb-us-pw-03\Documents\Cleveland_OH\01_Projects\ODOT\District12\82382\400-Engineering\Structures\SFN_1807898\Sheets\82382_SFN_1807898_SS004.dgn

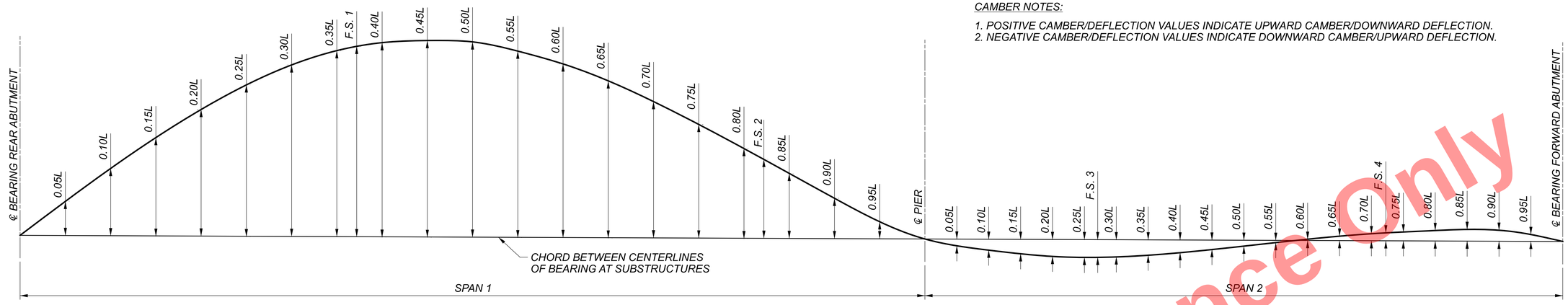

CAMBER NOTES:

1. POSITIVE CAMBER/DEFLECTION VALUES INDICATE UPWARD CAMBER/DOWNWARD DEFLECTION.
2. NEGATIVE CAMBER/DEFLECTION VALUES INDICATE DOWNWARD CAMBER/UPWARD DEFLECTION.

CAMBER DIAGRAM

GIRDER G6

DEFLECTION COMPONENT	C.L. BRG. REAR ABUT.	SPAN 1																				C.L. PIER
		0.05 L	0.10 L	0.15 L	0.20 L	0.25 L	0.30 L	0.35 L	F.S. 1	0.40 L	0.45 L	0.50 L	0.55 L	0.60 L	0.65 L	0.70 L	0.75 L	0.80 L	F.S. 2	0.85 L	0.90 L	0.95 L	
STEEL DEAD LOAD ONLY	0	7/8	1 5/8	2 3/8	3	3 9/16	4	4 5/16	4 1/2	4 1/2	4 9/16	4 1/2	4 1/4	4	3 9/16	3 1/16	2 1/2	2	1 15/16	1 3/8	7/8	7/16	0
SLAB AND HAUNCH DEAD LOAD	0	1	2	2 7/8	3 11/16	4 3/8	4 7/8	5 5/16	5 9/16	5 9/16	5 11/16	5 9/16	5 5/16	4 15/16	4 7/16	3 13/16	3 1/16	2 3/8	2 3/8	1 3/4	1	7/16	0
COMPOSITE DEAD LOAD	0	3/16	3/8	9/16	11/16	3/4	7/8	15/16	15/16	15/16	15/16	7/8	7/8	3/4	11/16	9/16	7/16	3/8	3/8	1/4	1/8	1/16	0
GEOMETRIC CORRECTION	0	0	0	0	0	0	0	0	0	0	0	0	0	0	0	0	0	0	0	0	0	0	0
TOTAL CAMBER	0	2 1/16	4	5 13/16	7 3/8	8 11/16	9 3/4	10 9/16	10 15/16	11	11 1/8	10 15/16	10 7/16	9 11/16	8 5/8	7 7/16	6 1/16	4 11/16	4 5/8	3 3/8	2 1/16	15/16	0
DEFLECTION COMPONENT	C.L. PIER	SPAN 2																				C.L. BRG. FWD. ABUT.
		0.05 L	0.10 L	0.15 L	0.20 L	0.25 L	F.S. 3	0.30 L	0.35 L	0.40 L	0.45 L	0.50 L	0.55 L	0.60 L	0.65 L	0.70 L	F.S. 4	0.75 L	0.80 L	0.85 L	0.90 L	0.95 L	
STEEL DEAD LOAD ONLY	0	- 3/16	- 3/8	- 1/2	- 9/16	- 5/8	- 5/8	- 5/8	- 5/8	- 9/16	- 1/2	- 3/8	- 5/16	- 3/16	- 1/8	- 1/16	- 1/16	0	0	0	0	0	0
SLAB AND HAUNCH DEAD LOAD	0	- 1/4	- 3/8	- 1/2	- 9/16	- 1/2	- 1/2	- 1/2	- 3/8	- 1/4	- 1/8	0	1/16	3/16	1/4	1/4	5/16	5/16	5/16	1/4	3/16	1/8	0
COMPOSITE DEAD LOAD	0	- 1/16	- 1/16	- 1/16	- 1/8	- 1/8	- 1/8	- 1/8	- 1/8	- 1/8	- 1/16	- 1/16	- 1/16	- 1/16	0	0	0	0	0	0	0	0	0
GEOMETRIC CORRECTION	0	0	0	0	0	0	0	0	0	0	0	0	0	0	0	0	0	0	0	0	0	0	0
TOTAL CAMBER	0	- 1/2	- 7/8	-1 1/16	-1 1/4	-1 1/4	-1 1/4	-1 1/4	-1 1/16	- 15/16	- 11/16	- 1/2	- 5/16	- 1/16	1/16	3/16	1/4	1/4	5/16	1/4	3/16	1/8	0

GIRDER G7

DEFLECTION COMPONENT	C.L. BRG. REAR ABUT.	SPAN 1																				C.L. PIER
		0.05 L	0.10 L	0.15 L	0.20 L	0.25 L	0.30 L	0.35 L	F.S. 1	0.40 L	0.45 L	0.50 L	0.55 L	0.60 L	0.65 L	0.70 L	0.75 L	0.80 L	F.S. 2	0.85 L	0.90 L	0.95 L	
STEEL DEAD LOAD ONLY	0	7/8	1 5/8	2 7/16	3 1/16	3 5/8	4 1/16	4 3/8	4 1/2	4 9/16	4 9/16	4 1/2	4 5/16	4	3 5/8	3 1/8	2 9/16	2	1 15/16	1 3/8	7/8	3/8	0
SLAB AND HAUNCH DEAD LOAD	0	1 1/16	2	2 15/16	3 11/16	4 3/8	4 15/16	5 3/8	5 5/8	5 5/8	5 3/4	5 5/8	5 3/8	5	4 7/16	3 13/16	3 1/8	2 3/8	2 3/8	1 11/16	1	7/16	0
COMPOSITE DEAD LOAD	0	1/4	1/2	3/4	15/16	1 1/8	1 1/4	1 5/16	1 5/16	1 5/16	1 5/16	1 1/4	1 3/16	1 1/16	15/16	3/4	5/8	7/16	7/16	5/16	3/16	1/16	0
GEOMETRIC CORRECTION	0	0	0	0	0	0	0	0	0	0	0	0	0	0	0	0	0	0	0	0	0	0	0
TOTAL CAMBER	0	2 3/16	4 3/16	6 1/16	7 3/4	9 1/8	10 1/4	11	11 7/16	11 1/2	11 5/8	11 7/16	10 7/8	10 1/16	8 15/16	7 11/16	6 1/4	4 13/16	4 3/4	3 3/8	2 1/16	15/16	0
DEFLECTION COMPONENT	C.L. PIER	SPAN 2																				C.L. BRG. FWD. ABUT.
		0.05 L	0.10 L	0.15 L	0.20 L	0.25 L	F.S. 3	0.30 L	0.35 L	0.40 L	0.45 L	0.50 L	0.55 L	0.60 L	0.65 L	0.70 L	F.S. 4	0.75 L	0.80 L	0.85 L	0.90 L	0.95 L	
STEEL DEAD LOAD ONLY	0	- 3/16	- 3/8	- 1/2	- 9/16	- 5/8	- 5/8	- 5/8	- 9/16	- 9/16	- 7/16	- 3/8	- 5/16	- 3/16	- 1/8	- 1/16	- 1/16	0	0	1/16	1/16	0	0
SLAB AND HAUNCH DEAD LOAD	0	- 1/4	- 3/8	- 1/2	- 1/2	- 1/2	- 7/16	- 7/16	- 3/8	- 1/4	- 1/8	0	1/8	3/16	1/4	5/16	5/16	5/16	5/16	1/4	3/16	1/8	0
COMPOSITE DEAD LOAD	0	- 1/16	- 1/16	- 1/16	- 1/16	- 1/16	0	0	0	1/16	1/16	1/16	1/8	1/8	1/8	1/8	1/8	1/8	1/8	1/16	1/16	0	0
GEOMETRIC CORRECTION	0	0	0	0	0	0	0	0	0	0	0	0	0	0	0	0	0	0	0	0	0	0	0
TOTAL CAMBER	0	- 7/16	- 13/16	-1	-1 1/8	-1 1/8	-1 1/8	-1 1/16	- 15/16	- 3/4	- 1/2	- 1/4	- 1/16	1/8	1/4	3/8	7/16	7/16	7/16	3/8	5/16	3/16	0

GIRDER G8

DEFLECTION COMPONENT	C.L. BRG. REAR ABUT.	SPAN 1																				C.L. PIER
		0.05 L	0.10 L	0.15 L	0.20 L	0.25 L	0.30 L	0.35 L	F.S. 1	0.40 L	0.45 L	0.50 L	0.55 L	0.60 L	0.65 L	0.70 L	0.75 L	0.80 L	F.S. 2	0.85 L	0.90 L	0.95 L	
STEEL DEAD LOAD ONLY	0	7/8	1 11/16	2 7/16	3 1/16	3 5/8	4 1/16	4 3/8	4 9/16	4 9/16	4 5/8	4 9/16	4 3/8	4 1/16	3 5/8	3 1/8	2 9/16	2	1 15/16	1 3/8	7/8	3/8	0
SLAB AND HAUNCH DEAD LOAD	0	1 1/16	2 1/16	3	3 13/16	4 1/2	5 1/16	5 1/2	5 3/4	5 3/4	5 7/8	5 3/4	5 1/2	5 1/8	4 9/16	3 15/16	3 3/16	2 7/16	2 3/8	1 3/4	1 1/16	1/2	0
COMPOSITE DEAD LOAD	0	7/16	13/16	1 1/8	1 7/16	1 11/16	1 13/16	1 15/16	2	2	2	1 7/8	1 3/4	1 5/8	1 3/8	1 3/16	15/16	11/16	11/16	7/16	1/4	1/8	0
GEOMETRIC CORRECTION	0	0	0	0	0	0	0	0	0	0	0	0	0	0	0	0	0	0	0	0	0	0	0
TOTAL CAMBER	0	2 5/16	4 1/2	6 9/16	8 5/16	9 13/16	11	11 13/16	12 5/16	12 5/16	12 7/16	12 1/4	11 5/8	10 3/4	9 9/16	8 3/16	6 3/4	5 1/8	5	3 5/8	2 3/16	1	0
DEFLECTION COMPONENT	C.L. PIER	SPAN 2																				C.L. BRG. FWD. ABUT.
		0.05 L	0.10 L	0.15 L	0.20 L	0.25 L	F.S. 3	0.30 L	0.35 L	0.40 L	0.45 L	0.50 L	0.55 L	0.60 L	0.65 L	0.70 L	F.S. 4	0.75 L	0.80 L	0.85 L	0.90 L	0.95 L	
STEEL DEAD LOAD ONLY	0	- 3/16	- 3/8	- 1/2	- 9/16	- 5/8	- 5/8	- 5/8	- 9/16	- 1/2	- 7/16	- 5/16	- 1/4	- 1/8	- 1/16	0	0	1/16	1/16	1/16	1/16	1/16	0
SLAB AND HAUNCH DEAD LOAD	0	- 1/4	- 3/8	- 1/2	- 1/2	- 1/2	- 7/16	- 7/16	- 3/8	- 1/4	- 1/8	0	1/8	3/16	5/16	5/16	5/16	3/8	5/16	1/4	3/16	1/8	0
COMPOSITE DEAD LOAD	0	- 1/16	- 1/16	- 1/16	0	0	1/16	1/16	1/8	3/16	1/4	5/16	3/8	3/8	3/8	3/8	3/8	5/16	5/16	1/4	1/8	1/16	0
GEOMETRIC CORRECTION	0	0	0	0	0	0	0	0	0	0	0	0	0	0	0	0	0	0	0	0	0	0	0
TOTAL CAMBER	0	- 1/2	- 13/16	-1	-1 1/16	-1 1/16	-1	- 15/16	- 3/4	- 1/2	- 1/4	0	1/4	7/16	9/16	11/16	11/16	11/16	11/16	9/16	7/16	1/4	0

Preliminary Plans - For Reference Only

DEFLECTION AND CAMBER TABLES (3 OF 4)
CUY-90-1696 (BRIDGE 14)
CR-722 (CARNEGIE AVE.) OVER I.R. 90

SFN 1807898
DESIGN AGENCY
Michael Baker INTERNATIONAL
DESIGNER ABC | CHECKER MEM
REVIEWER LPC 06/23/22
PROJECT ID 82382
SUBSET 55 | TOTAL 90
SHEET 2335 | TOTAL 2696

CUY-90-16.28 (CCG3A)
MODEL: deflect and camber table 3 PAPERSIZE: 34x22 (in.) DATE: 3/28/2025 TIME: 8:09:38 AM USER: Rohit.Bk
pw:\\mb-us-pw.bentley.com:mb-us-pw-03\Documents\Cleveland_OH\01_Projects\ODOT\District12\82382\400-Engineering\Structures\SFN_1807898\Sheets\82382_SFN_1807898_SS004.dgn

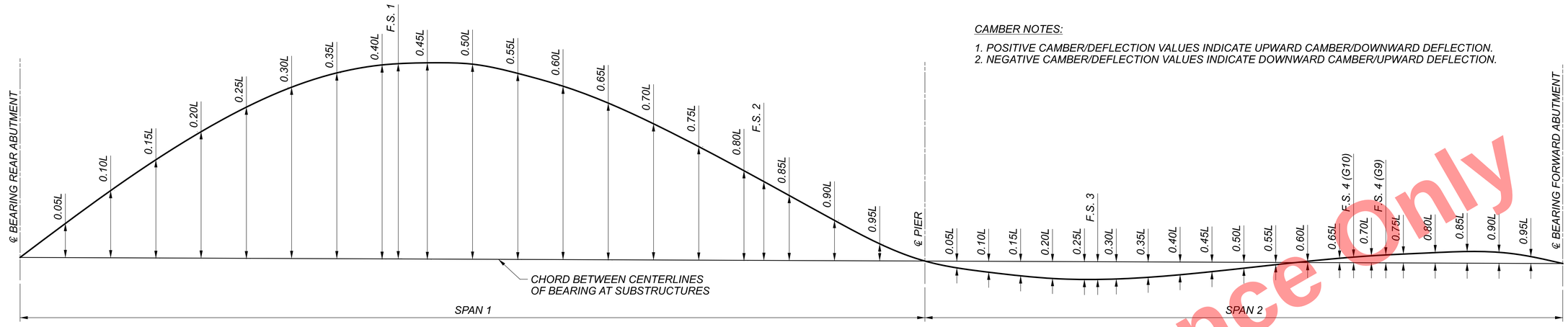

CAMBER NOTES:

1. POSITIVE CAMBER/DEFLECTION VALUES INDICATE UPWARD CAMBER/DOWNWARD DEFLECTION.
2. NEGATIVE CAMBER/DEFLECTION VALUES INDICATE DOWNWARD CAMBER/UPWARD DEFLECTION.

CAMBER DIAGRAM

GIRDER G9

DEFLECTION COMPONENT	C.L. BRG. REAR ABUT.	SPAN 1																				C.L. PIER
		0.05 L	0.10 L	0.15 L	0.20 L	0.25 L	0.30 L	0.35 L	0.40 L	F.S. 1	0.45 L	0.50 L	0.55 L	0.60 L	0.65 L	0.70 L	0.75 L	0.80 L	F.S. 2	0.85 L	0.90 L	0.95 L	
STEEL DEAD LOAD ONLY	0	7/8	1 11/16	2 7/16	3 1/8	3 11/16	4 1/8	4 7/16	4 5/8	4 5/8	4 11/16	4 9/16	4 3/8	4 1/16	3 5/8	3 1/8	2 9/16	2	1 15/16	1 7/16	7/8	7/16	0
SLAB AND HAUNCH DEAD LOAD	0	1 1/8	2 3/16	3 3/16	4	4 3/4	5 3/8	5 13/16	6 1/8	6 1/8	6 3/16	6 1/8	5 13/16	5 3/8	4 13/16	4 1/8	3 3/8	2 9/16	2 1/2	1 13/16	1 1/8	1/2	0
COMPOSITE DEAD LOAD	0	9/16	1 1/16	1 9/16	2	2 5/16	2 9/16	2 3/4	2 13/16	2 13/16	2 13/16	2 3/4	2 9/16	2 5/16	2 1/16	1 3/4	1 3/8	1 1/16	1	11/16	7/16	3/16	0
GEOMETRIC CORRECTION	0	0	0	0	0	0	0	0	0	0	0	0	0	0	0	0	0	0	0	0	0	0	0
TOTAL CAMBER	0	2 9/16	4 15/16	7 3/16	9 1/8	10 3/4	12 1/16	13	13 9/16	13 9/16	13 11/16	13 7/16	12 3/4	11 13/16	10 1/2	9	7 5/16	5 5/8	5 7/16	3 7/8	2 3/8	1 1/16	0

DEFLECTION COMPONENT	C.L. PIER	SPAN 2																				C.L. BRG. FWD. ABUT.
		0.05 L	0.10 L	0.15 L	0.20 L	0.25 L	F.S. 3	0.30 L	0.35 L	0.40 L	0.45 L	0.50 L	0.55 L	0.60 L	0.65 L	0.70 L	F.S. 4	0.75 L	0.80 L	0.85 L	0.90 L	0.95 L	
STEEL DEAD LOAD ONLY	0	- 3/16	- 3/8	- 1/2	- 9/16	- 5/8	- 5/8	- 5/8	- 9/16	- 1/2	- 3/8	- 5/16	- 3/16	- 1/8	0	0	0	1/16	1/16	1/16	1/16	1/16	0
SLAB AND HAUNCH DEAD LOAD	0	- 1/4	- 7/16	- 1/2	- 9/16	- 9/16	- 1/2	- 1/2	- 3/8	- 1/4	- 1/8	0	1/8	3/16	5/16	5/16	5/16	3/8	5/16	5/16	3/16	1/8	0
COMPOSITE DEAD LOAD	0	- 1/16	- 1/16	- 1/16	0	1/16	1/8	1/8	1/4	5/16	7/16	1/2	9/16	5/8	5/8	5/8	5/8	9/16	1/2	3/8	1/4	1/8	0
GEOMETRIC CORRECTION	0	0	0	0	0	0	0	0	0	0	0	0	0	0	0	0	0	0	0	0	0	0	0
TOTAL CAMBER	0	- 1/2	- 7/8	-1 1/16	-1 1/8	-1 1/8	-1	- 15/16	- 11/16	- 7/16	- 1/8	3/16	1/2	11/16	7/8	15/16	15/16	1	7/8	3/4	9/16	5/16	0

GIRDER G10

DEFLECTION COMPONENT	C.L. BRG. REAR ABUT.	SPAN 1																				C.L. PIER
		0.05 L	0.10 L	0.15 L	0.20 L	0.25 L	0.30 L	0.35 L	0.40 L	F.S. 1	0.45 L	0.50 L	0.55 L	0.60 L	0.65 L	0.70 L	0.75 L	0.80 L	F.S. 2	0.85 L	0.90 L	0.95 L	
STEEL DEAD LOAD ONLY	0	7/8	1 11/16	2 7/16	3 1/8	3 11/16	4 1/8	4 1/2	4 11/16	4 11/16	4 3/4	4 5/8	4 7/16	4 1/8	3 3/4	3 3/16	2 11/16	2 1/16	2	1 7/16	15/16	7/16	0
SLAB AND HAUNCH DEAD LOAD	0	1 1/4	2 7/16	3 1/2	4 1/2	5 5/16	6	6 9/16	6 13/16	6 13/16	6 15/16	6 13/16	6 1/2	6	5 3/8	4 5/8	3 11/16	2 7/8	2 3/4	2	1 1/4	9/16	0
COMPOSITE DEAD LOAD	0	11/16	1 5/16	1 7/8	2 3/8	2 13/16	3 3/16	3 7/16	3 9/16	3 9/16	3 9/16	3 1/2	3 5/16	3 1/16	2 3/4	2 3/8	1 15/16	1 7/16	1 7/16	1	5/8	1/4	0
GEOMETRIC CORRECTION	0	0	0	0	0	0	0	0	0	0	0	0	0	0	0	0	0	0	0	0	0	0	0
TOTAL CAMBER	0	2 13/16	5 3/8	7 7/8	10	11 7/8	13 3/8	14 7/16	15 1/16	15 1/16	15 1/4	15	14 5/16	13 1/4	11 7/8	10 3/16	8 5/16	6 3/8	6 3/16	4 7/16	2 3/4	1 1/4	0

DEFLECTION COMPONENT	C.L. PIER	SPAN 2																				C.L. BRG. FWD. ABUT.
		0.05 L	0.10 L	0.15 L	0.20 L	0.25 L	F.S. 3	0.30 L	0.35 L	0.40 L	0.45 L	0.50 L	0.55 L	0.60 L	0.65 L	F.S. 4	0.70 L	0.75 L	0.80 L	0.85 L	0.90 L	0.95 L	
STEEL DEAD LOAD ONLY	0	- 1/4	- 7/16	- 9/16	- 5/8	- 5/8	- 5/8	- 5/8	- 5/8	- 9/16	- 7/16	- 5/16	- 1/4	- 1/8	- 1/16	0	0	1/16	1/16	1/16	1/16	1/16	0
SLAB AND HAUNCH DEAD LOAD	0	- 5/16	- 1/2	- 5/8	- 11/16	- 5/8	- 5/8	- 9/16	- 1/2	- 5/16	- 3/16	0	1/8	3/16	5/16	3/8	3/8	3/8	3/8	5/16	1/4	1/8	0
COMPOSITE DEAD LOAD	0	- 1/8	- 3/16	- 3/16	- 3/16	- 1/8	- 1/16	0	1/8	1/4	3/8	1/2	5/8	11/16	11/16	11/16	11/16	11/16	9/16	1/2	5/16	3/16	0
GEOMETRIC CORRECTION	0	0	0	0	0	0	0	0	0	0	0	0	0	0	0	0	0	0	0	0	0	0	0
TOTAL CAMBER	0	- 5/8	-1 1/16	-1 3/8	-1 7/16	-1 3/8	-1 5/16	-1 1/4	- 15/16	- 5/8	- 3/16	1/8	7/16	3/4	15/16	1 1/16	1 1/16	1 1/8	1 1/16	7/8	5/8	3/8	0

Preliminary Plans - For Reference Only

DEFLECTION AND CAMBER TABLES (4 OF 4)
CUY-90-1696 (BRIDGE 14)
CR-722 (CARNEGIE AVE.) OVER I.R. 90

SFN 1807898
DESIGN AGENCY
Michael Baker INTERNATIONAL
DESIGNER ABC | CHECKER MEM
REVIEWER LPC 06/23/22
PROJECT ID 82382
SUBSET 56 | TOTAL 90
SHEET 2336 | TOTAL 2696

CUY-90-16.28 (CCG3A)

MODEL: deflect and camber table 4 PAPERSIZE: 34x22 (in.) DATE: 3/28/2025 TIME: 8:09:39 AM USER: Rohit.Bk
pw:\\mb-us-pw.bentley.com:mb-us-pw-03\Documents\Cleveland_OH\01_Projects\ODOT\District12\82382\400-Engineering\Structures\SFN_1807898\Sheets\82382_SFN_1807898_SS004.dgn

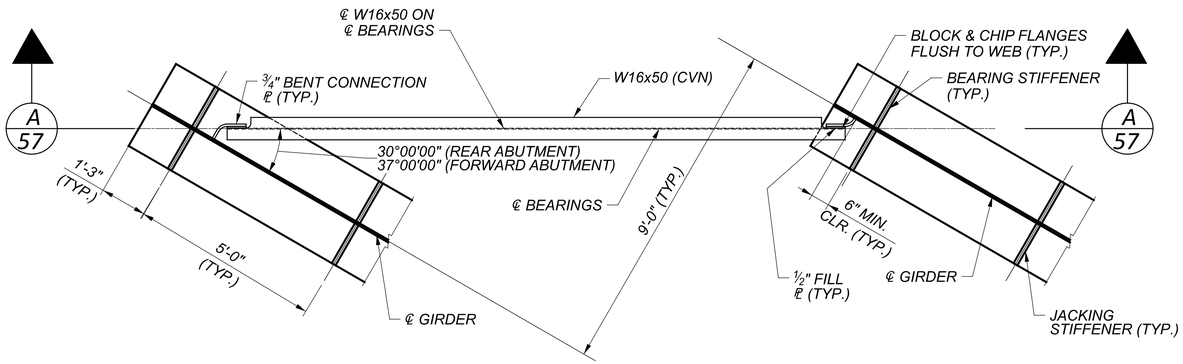

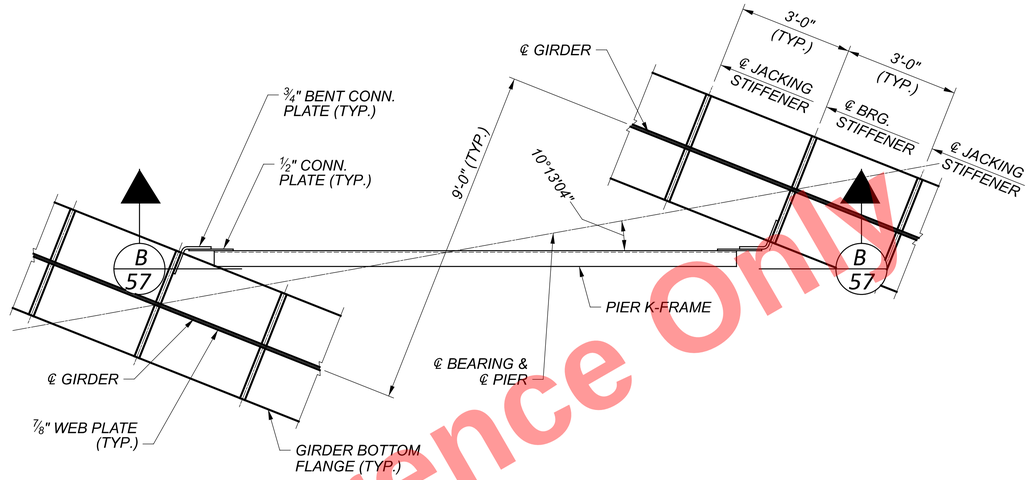

ABUTMENT END K-FRAME PLAN

(REAR ABUTMENT SHOWN, FORWARD ABUTMENT SIMILAR)

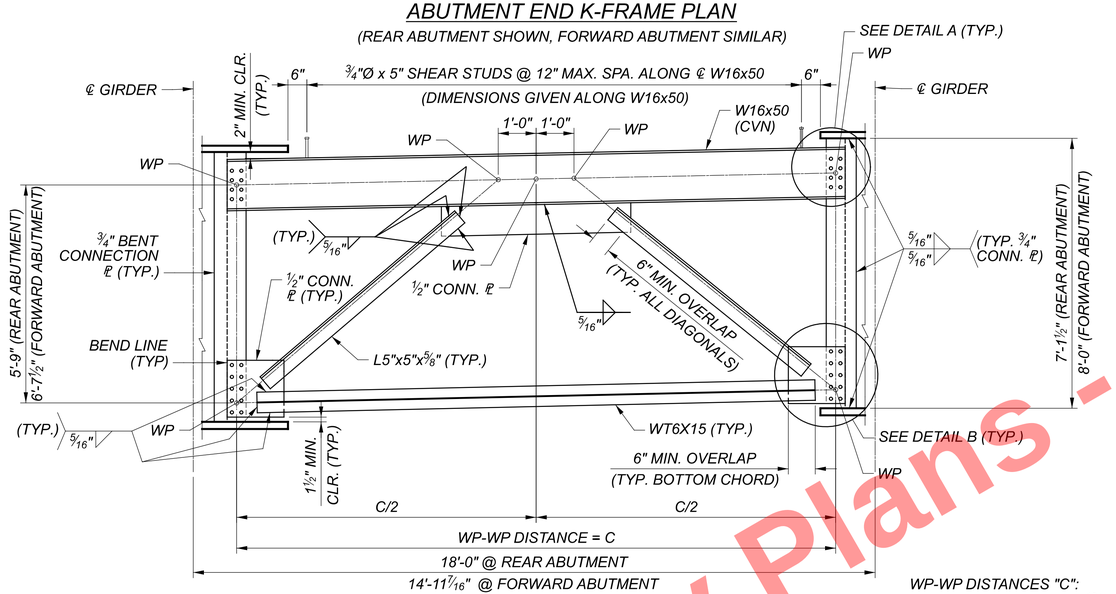

WP-WP DISTANCES "C":
REAR ABUTMENT = 15'-9 13/16"
FWD. ABUTMENT = 13'-1 11/16"

PIER K-FRAME PLAN

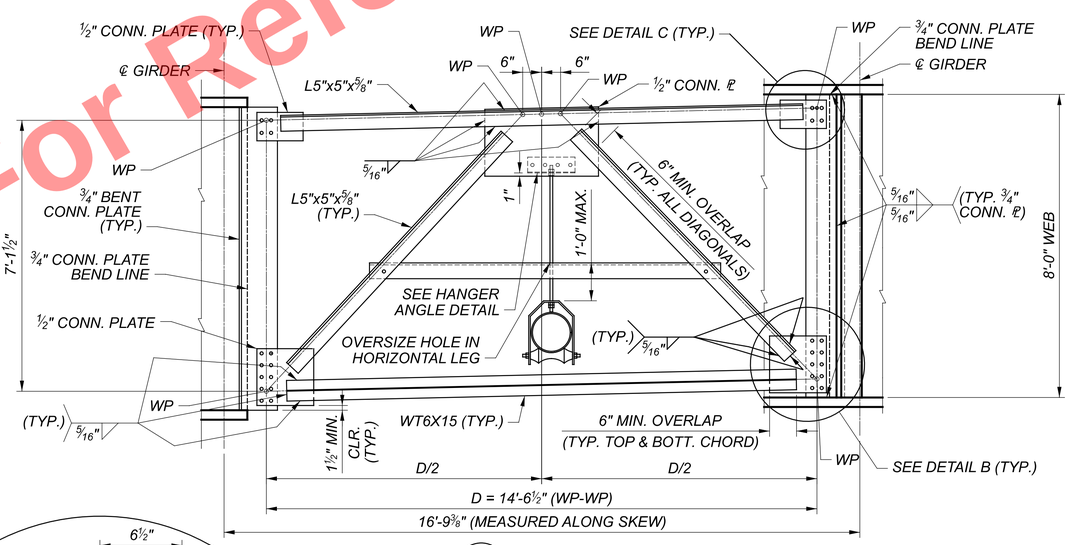

A 57 SECTION END K-FRAME TYPICAL SECTION

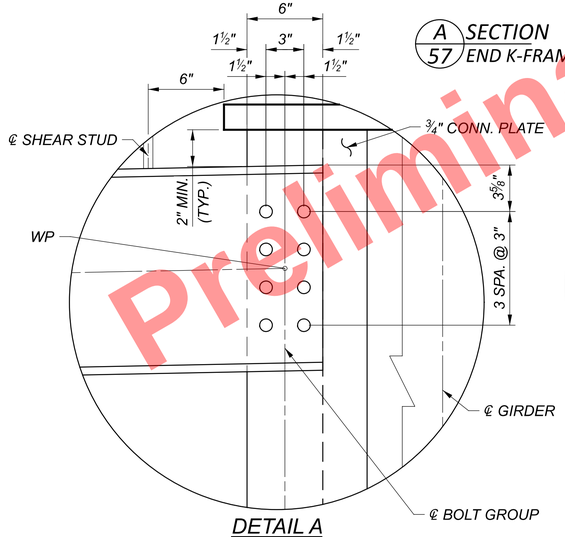

DETAIL A

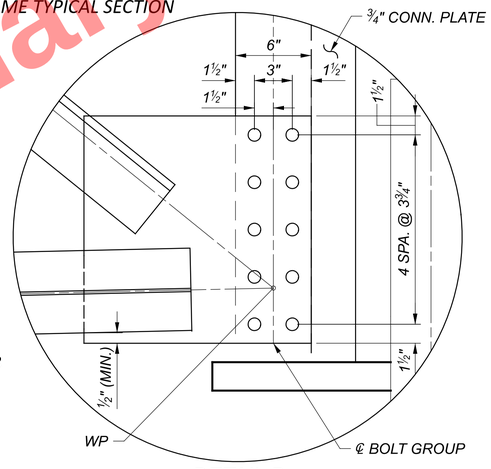

DETAIL B

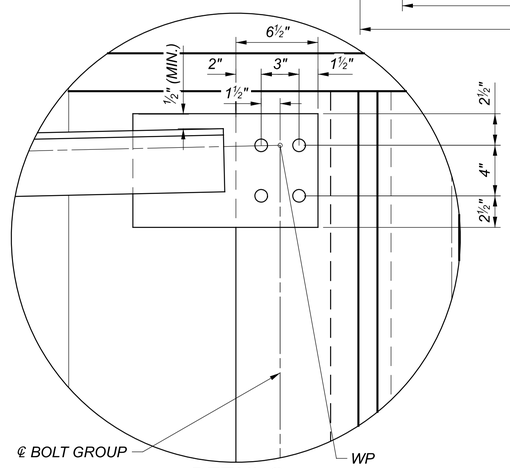

DETAIL C

B 57 SECTION PIER K-FRAME TYPICAL SECTION

(UTILITY HANGARS & HORIZONTAL L5X5X⅝ PRESENT IN BAYS 2 & 6 ONLY)

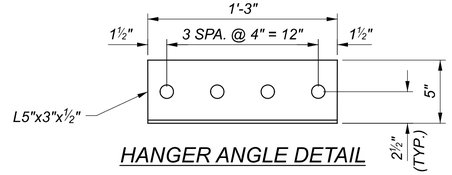

HANGER ANGLE DETAIL

NOTES:

1. WORK THIS SHEET WITH SHEET 58/90.
2. FOR EXPANSION JOINT DETAILS, SEE SHEETS 79-81/90.
3. CVN: WHERE A SHAPE OR PLATE IS DESIGNATED (CVN), FURNISH MATERIAL THAT MEETS THE MINIMUM NOTCH TOUGHNESS REQUIREMENTS AS SPECIFIED IN C&MS 711.01.
4. HIGH STRENGTH BOLTS SHALL BE 1" DIA., ASTM F3125 GRADE A325, TYPE 1. EXCLUDE ALL THREADS FROM THE SHEAR PLANES.
5. BOLT HOLES SHALL BE 1⅛" DIA. UNLESS NOTED OTHERWISE. MINIMUM BOLT HOLE EDGE DISTANCE SHALL BE 1½".

Preliminary Plans - For Reference Only

CROSS FRAME DETAILS (1 OF 2)
CUY-90-1696 (BRIDGE 14)
CR-722 (CARNEGIE AVE.) OVER I.R. 90

SFN 1807898
DESIGN AGENCY
Michael Baker INTERNATIONAL
DESIGNER ETB | CHECKER BWC
REVIEWER LPC 06/23/22
PROJECT ID 82382
SUBSET 57 | TOTAL 90
SHEET 2337 | TOTAL 2696

CUY-90-16.28 (CCG3A)

MODEL: standard cross frame details PAPERSIZE: 34x22 (in.) DATE: 3/28/2025 TIME: 8:09:50 AM USER: Rohit.Bk
pw:\\mb-us-pw.bentley.com:mb-us-pw-03\Documents\Cleveland_OH101_Projects\ODOT\District12\82382\400-Engineering\Structures\SFN_1807898\Sheets\82382_SFN_1807898_SS006.dgn

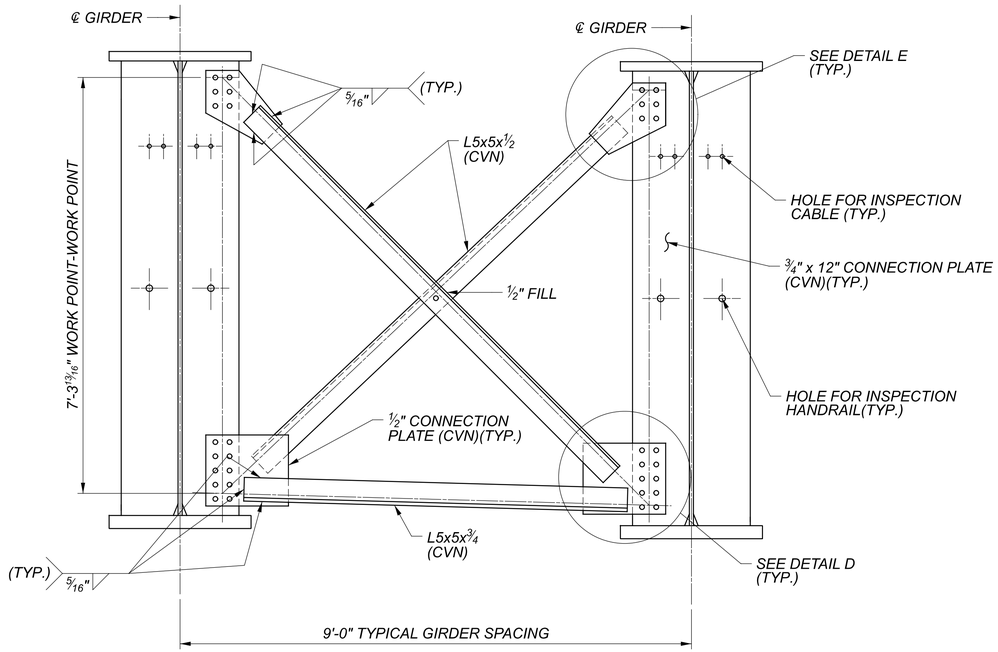

TYPICAL INTERMEDIATE CROSSFRAME
(NO UTILITY SUPPORT)
(SEE NOTE 8)

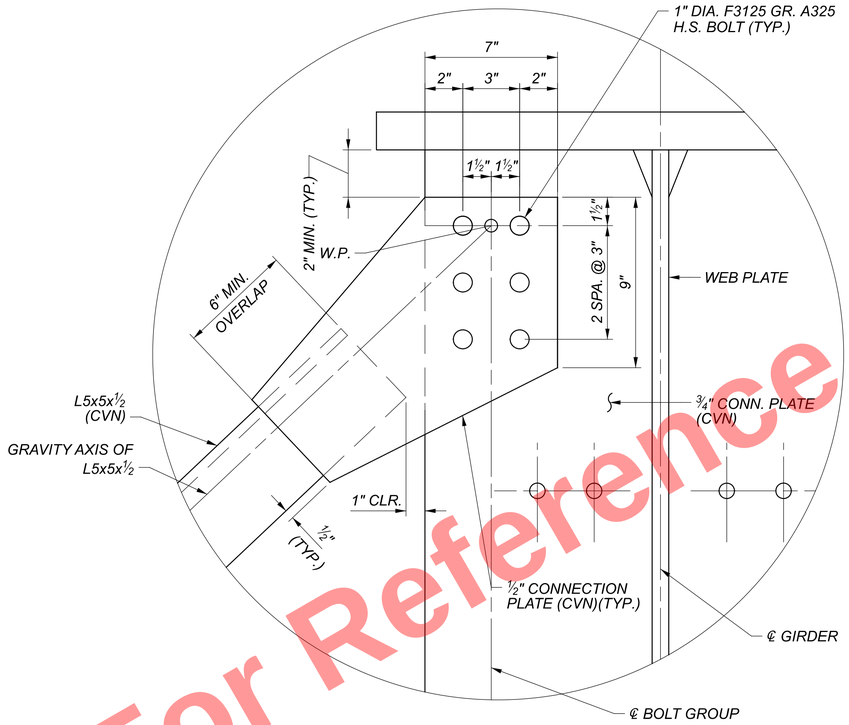

DETAIL E

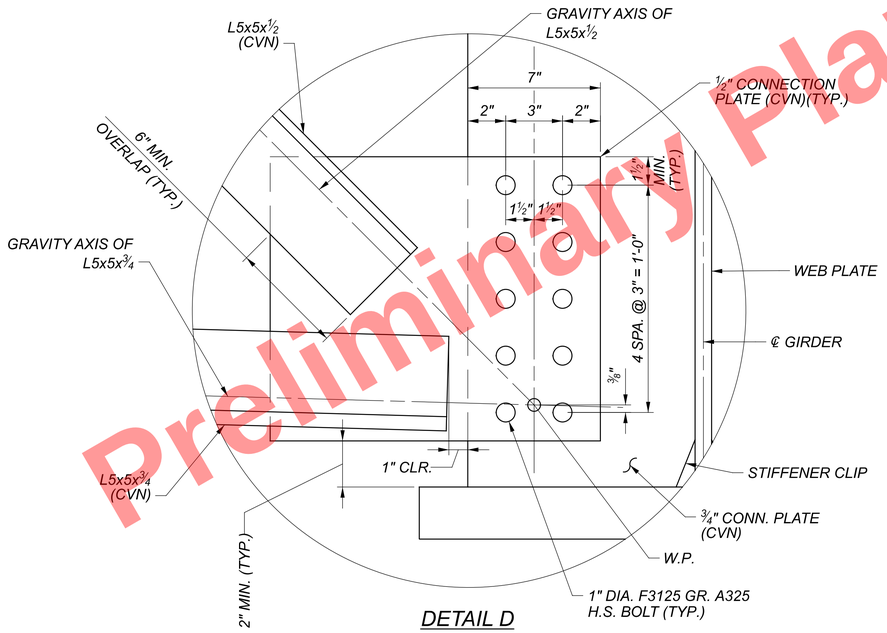

DETAIL D

NOTES:

1. *WORK THIS SHEET WITH SHEET 57/90.*
2. *FOR INSPECTION ACCESS HARDWARE DETAILS, SEE SHEET 51/90.*
3. *ALL CROSSFRAME MATERIAL SHALL CONFORM TO ASTM A709 GRADE 50.*
4. *HIGH STRENGTH BOLTS SHALL BE 1" DIAMETER A325 UNLESS OTHERWISE NOTED. EXCLUDE ALL THREADS FROM THE SHEAR PLANES.*
5. *ALL BOLT HOLES SHALL BE 1 1/8" DIAMETER. INTERMEDIATE CROSSFRAMES AND GIRDERS SHALL BE SHOP-ASSEMBLED TO VERIFY FIT, UNLESS OTHER METHODS OF CHECKING HOLE ALIGNMENT ARE APPROVED BY THE ODOT OFFICE OF MATERIAL MANAGEMENT, IN ACCORDANCE WITH CMS 513.19 AND 513.24.*
6. *CVN: WHERE A SHAPE OR PLATE IS DESIGNATED (CVN), FURNISH MATERIAL THAT MEETS THE MINIMUM NOTCH TOUGHNESS REQUIREMENTS AS SPECIFIED IN C&MS 711.01.*
7. *PREPARE FAYING SURFACES FOR INTERMEDIATE CROSSFRAME BOLTED CONNECTIONS TO PROVIDE CLASS B SURFACE CONDITIONS.*
8. *USE THE CROSSFRAME DETAILS ON THIS SHEET IN GIRDER BAYS WHERE NO UTILITIES ARE PRESENT. SEE SHEETS 59&60/90 FOR CROSSFRAME DETAILS IN GIRDER BAYS WHERE UTILITIES ARE PRESENT.*

Preliminary Plans - For Reference Only

CROSSFRAME DETAILS (2 OF 2)
CUY-90-1696 (BRIDGE 14)
CR-722 (CARNEGIE AVE.) OVER I.R. 90

SFN 1807898
DESIGN AGENCY
Michael Baker INTERNATIONAL
DESIGNER ABC | CHECKER MEM
REVIEWER LPC 06/23/22
PROJECT ID 82382
SUBSET 58 | TOTAL 90
SHEET 2338 | TOTAL 2696

CUY-90-16.28 (CCG3A)

MODEL: crossframe details 2 of 2 PAPERSIZE: 34x22 (in.) DATE: 3/28/2025 TIME: 8:09:57 AM USER: Rohit.Bk
pw:\\mb-us-pw.bentley.com:mb-us-pw-03\Documents\Cleveland_OH\01_Projects\ODOT\District12\82382\400-Engineering\Structures\SFN_1807898\Sheets\82382_SFN_1807898_SS009.dgn

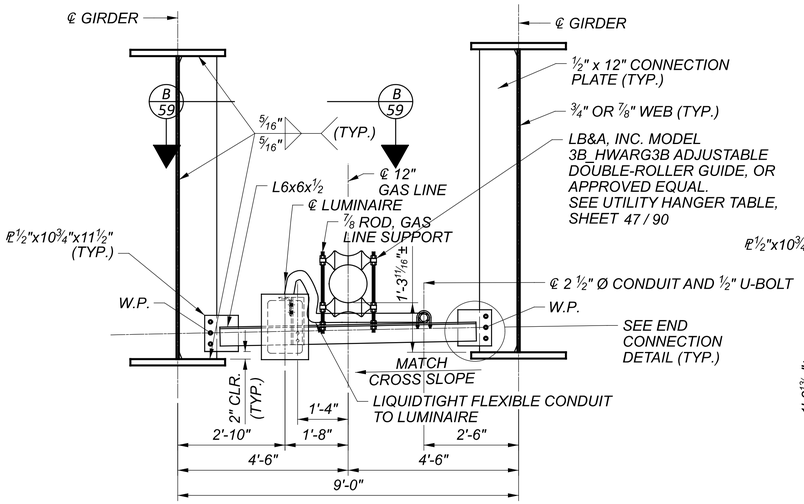

GAS LINE & LUMINAIRE UTILITY SUPPORT DETAIL

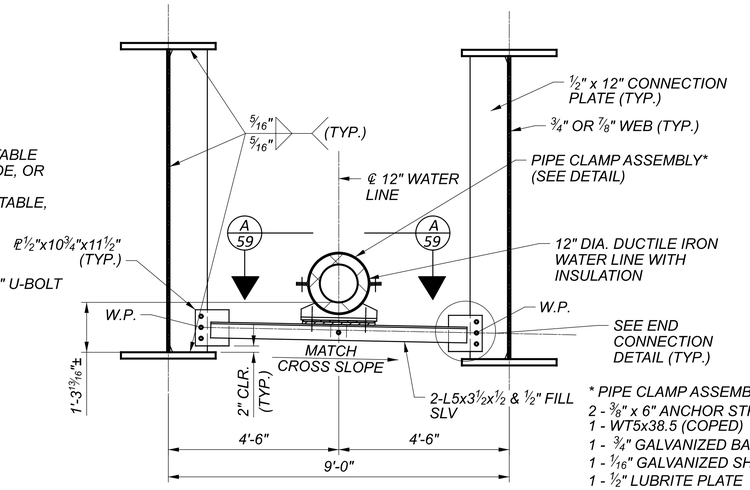

WATER LINE UTILITY SUPPORT DETAIL

* PIPE CLAMP ASSEMBLY CONSISTS OF:
2 - ⅜" x 6" ANCHOR STRAPS
1 - WT5x38.5 (COPED)
1 - ¾" GALVANIZED BASE PLATE
1 - 1/16" GALVANIZED SHIM PLATE
1 - ½" LUBRITE PLATE

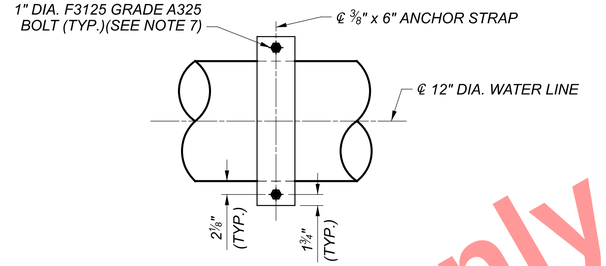

A 59 PIPE CLAMP TOP VIEW (LOOKING DOWN)

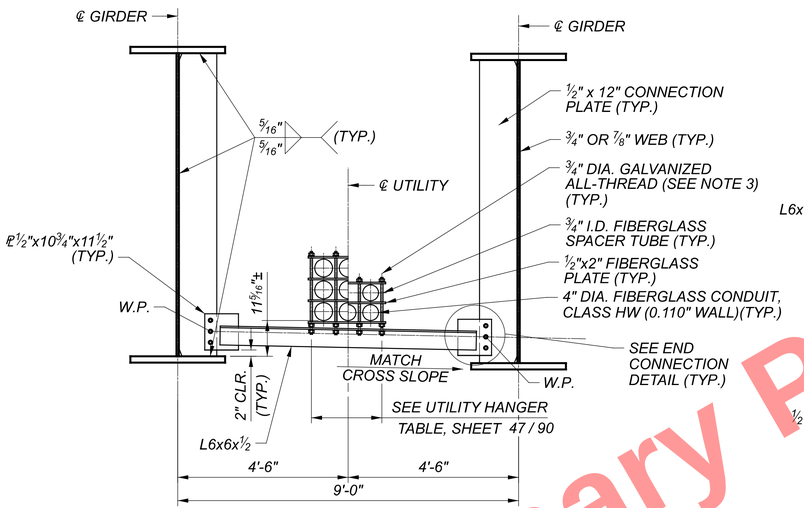

ELECTRIC OR TELECOMM. UTILITY SUPPORT DETAIL

END CONNECTION DETAIL

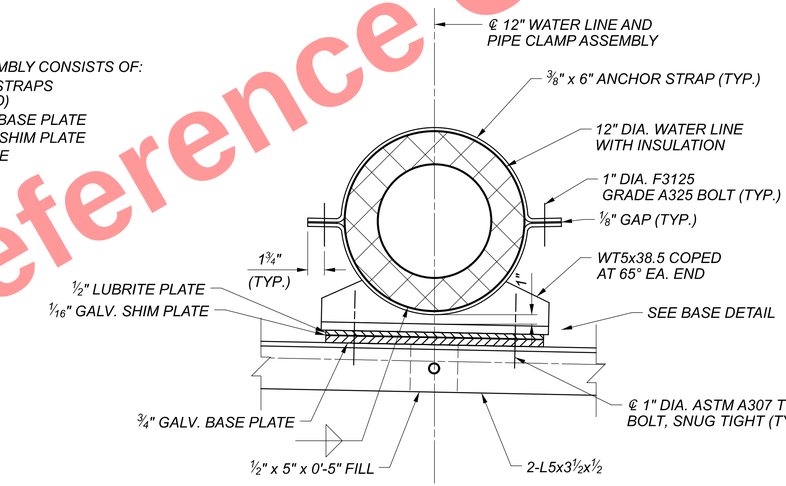

PIPE CLAMP ASSEMBLY DETAIL

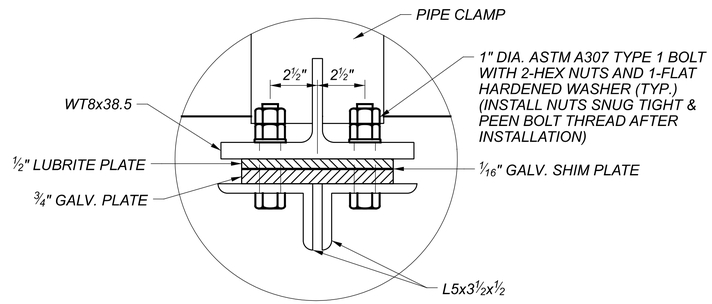

PIPE CLAMP ASSEMBLY BASE DETAIL

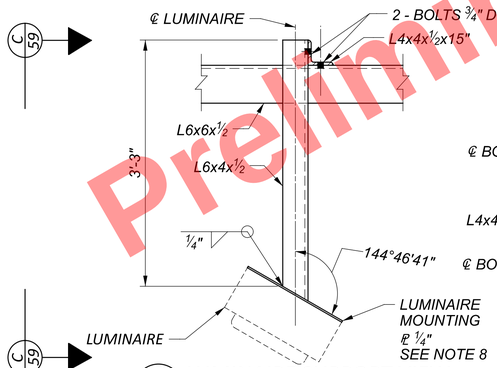

B 59 LUMINAIRE SUPPORT VIEW
CONDUIT NOT SHOWN

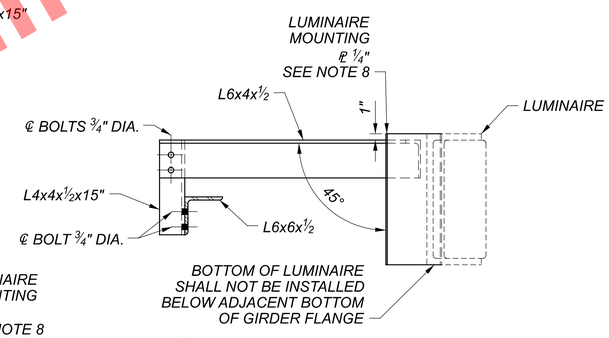

C 59 LUMINAIRE SUPPORT VIEW
CONDUIT NOT SHOWN

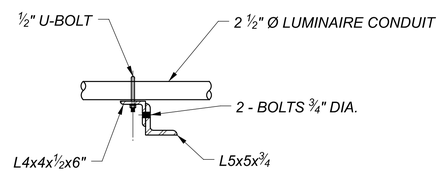

D 46 LUMINAIRE CONDUIT BRACKET VIEW
CONNECTION TO BRIDGE CROSS FRAMES

NOTES:

1. WORK THIS SHEET WITH SHEET 60/90.
2. ALL UTILITY SUPPORT MATERIAL SHALL CONFORM TO ASTM A709 GRADE 50, UNLESS NOTED OTHERWISE.
3. HIGH STRENGTH BOLTS SHALL BE 1" DIAMETER A325, UNLESS OTHERWISE NOTED. EXCLUDE ALL THREADS FROM THE SHEAR PLANES.
4. ALL BOLT HOLES SHALL BE 1⅛" DIAMETER FOR 1" DIA. BOLTS..
5. PROVIDE ¾" DIA. HOT-DIPPED GALVANIZED THREADED RODS WITH GALVANIZED NUTS, 2" DIA. FLAT WASHERS AND LOCK WASHERS. TIGHTEN NUTS TO WASHERS AND FIBERGLASS SPACER TUBES WITHOUT CRUSHING OR DISTORTING THE FIBERGLASS TUBES.
6. DO NOT TIGHTEN ANCHOR STRAP BOLTS UNTIL AFTER CONCRETE DECK HAS BEEN PLACED AND FULLY CURED.
7. CONTRACTOR TO COORDINATE SUPPORT DIMENSIONS WITH UTILITY OWNERS AND FIELD DRILL UTILITY SUPPORT BOLT HOLES AS REQUIRED.
8. THE CONTRACTOR SHALL SIZE PLATE PER LUMINARE SPECIFICATIONS ON SHEET 1684/2696 .

Preliminary Plans - For Reference Only

UTILITY CROSS FRAME & SUPPORT DETAILS (1 OF 2)
CUY-90-1696 (BRIDGE 14)
CR-722 (CARNEGIE AVE.) OVER I.R. 90

SFN 1807898
DESIGN AGENCY Michael Baker INTERNATIONAL
DESIGNER ABC | CHECKER MEM
REVIEWER LPC 06/23/22
PROJECT ID 82382
SUBSET 59 | TOTAL 90
SHEET 2339 | TOTAL 2696

CUY-90-16.28 (CCG3A)
MODEL: utility cross frame and support details PAPERSIZE: 34x22 (in.) DATE: 3/28/2025 TIME: 8:10:04 AM USER: Rohit.Bk
pw:\\mb-us-pw.bentley.com:mb-us-pw-03\Documents\Cleveland_OH\01_Projects\ODOT\District12\82382400-Engineering\Structures\SFN_1807898\Sheets\82382_SFN_1807898_SS007.dgn

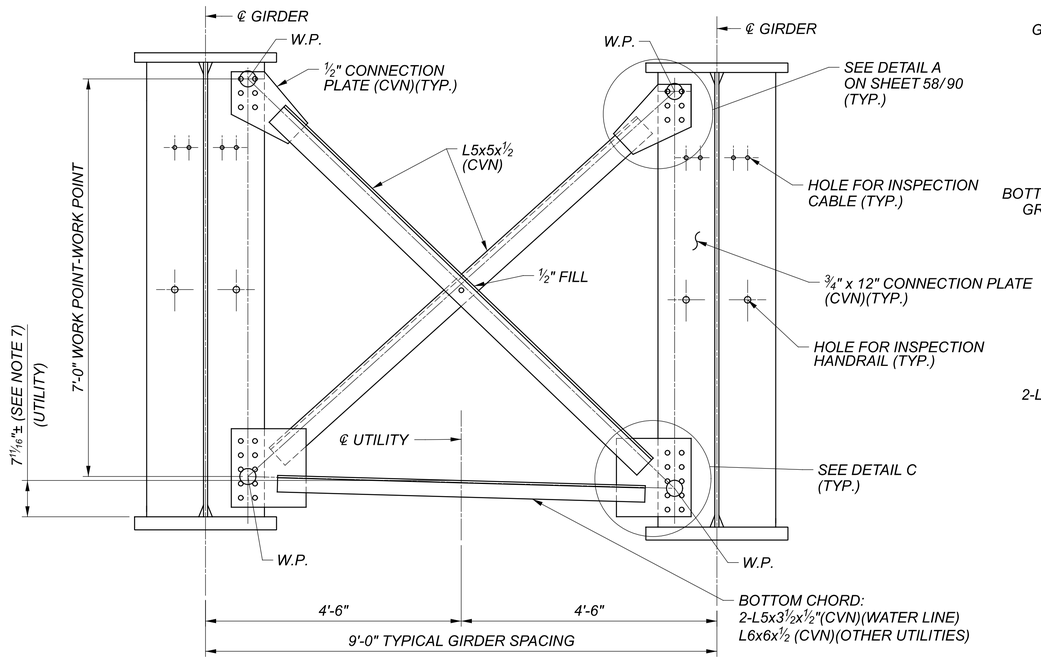

TYPICAL INTERMEDIATE CROSSFRAME

TYPICAL INTERMEDIATE CROSSFRAME
(WITH UTILITY SUPPORT)

(SEE NOTE 6)

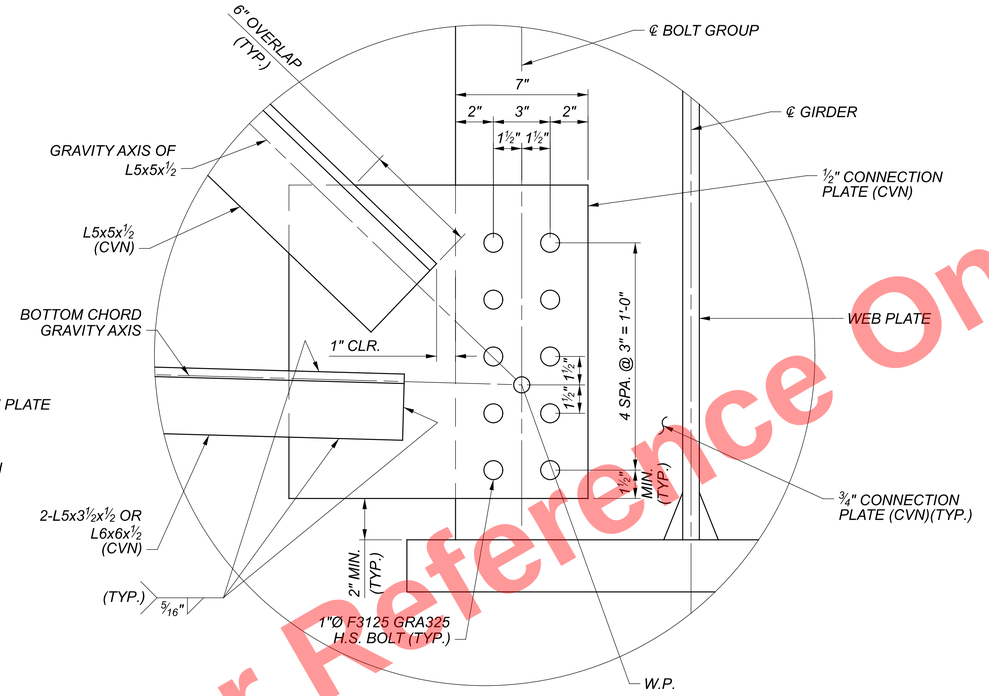

DETAIL C

NOTES:

1. WORK THIS SHEET WITH SHEET 59 /90 .
2. ALL UTILITY SUPPORT MATERIAL SHALL CONFORM TO ASTM A709 GRADE 50, UNLESS NOTED OTHERWISE.
3. HIGH STRENGTH BOLTS SHALL BE 1" DIAMETER A325 UNLESS NOTED OTHERWISE. EXCLUDE ALL THREADS FROM THE SHEAR PLANES.
4. ALL BOLT HOLES SHALL BE 1⅛" DIAMETER.
5. CVN: WHERE A SHAPE OR PLATE IS DESIGNATED (CVN), FURNISH MATERIAL THAT MEETS THE MINIMUM NOTCH TOUGHNESS REQUIREMENTS OF C&MS 711.01.
6. IN GIRDER BAYS WHERE UTILITIES ARE PRESENT, PROVIDE THE INTERMEDIATE CROSSFRAME DETAILED ON THIS SHEET. WORK INDIVIDUAL UTILITY SUPPORT DETAILS ON SHEET 59 / 90 WITH THE CROSSFRAME DETAILS SHOWN ON THIS SHEET AND UTILITY HANGER TABLE ON SHEET 47 / 90 .
7. COORDINATE DIMENSION FROM TOP OF BOTTOM FLANGE TO TOP OF UTILITY SUPPORT WITH UTILITY SUPPORTS SHOWN IN SHEET 45/72.ADJUST AS REQUIRED PER THE INDIVIDUAL UTILITY TO MAINTAIN A CONSTANT DISTANCE FROM TOP OF BOTTOM FLANGE TO TOP OF UTILITY SUPPORT.

Preliminary Plans - For Reference Only

UTILITY CROSSFRAME & SUPPORT DETAILS (2 OF 2)
CUY-90-1696 (BRIDGE 14)
CR-722 (CARNEGIE AVE.) OVER I.R. 90

SFN	1807898
DESIGN AGENCY	Michael Baker INTERNATIONAL
DESIGNER	ABC
CHECKER	MEM
REVIEWER	LPC 06/23/22
PROJECT ID	82382
SUBSET	60
TOTAL	90
SHEET	2340
TOTAL	2696

*CUY-90-16.28 (CCG3A)
MODEL: Sheet PAPERSIZE: 34x22 (in.) DATE: 3/28/2025 TIME: 8:10:12 AM USER: RohitLBk
pw:\\mb-us-pw.bentley.com:mb-us-pw-03\Documents\Cleveland_OH\01_Projects\ODOT\District12\82382400-Engineering\Structures\SFN_1807898\Sheets\82382_SFN_1807898_SS010.dgn

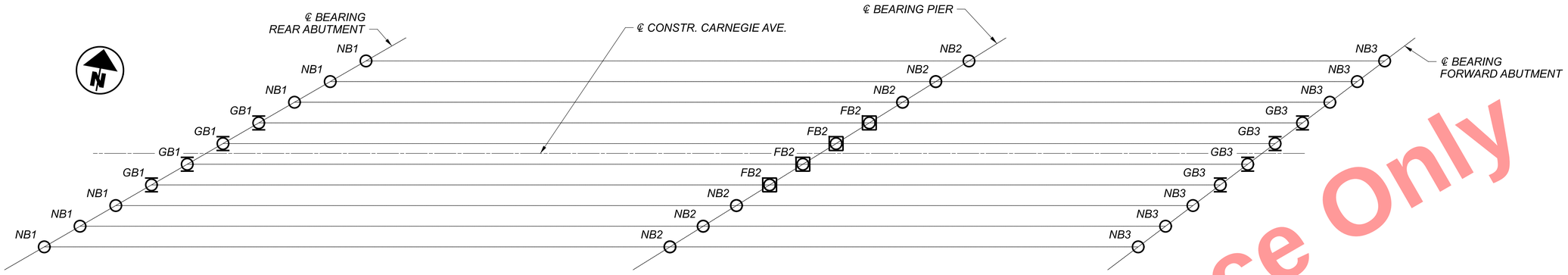

HLMR BEARING KEY PLAN

LEGEND:

NBx ○ NON-GUIDED HLMR BEARING

GBx ⊘ GUIDED HLMR BEARING

FBx ⊠ FIXED HLMR BEARING

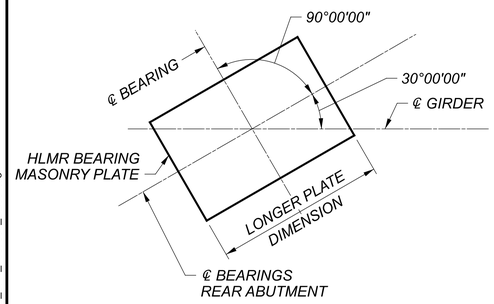

BEARING ORIENTATION PLAN
REAR ABUTMENT

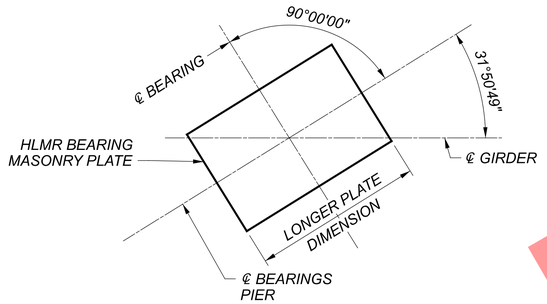

BEARING ORIENTATION PLAN
PIER

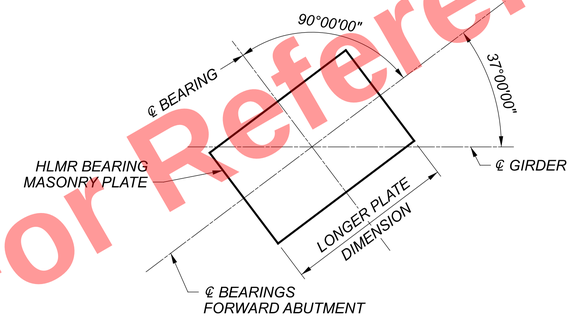

BEARING ORIENTATION PLAN
FORWARD ABUTMENT

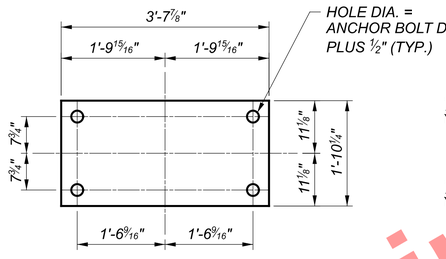

PROPOSED MASONRY PLATE
BEARING mk. GB1

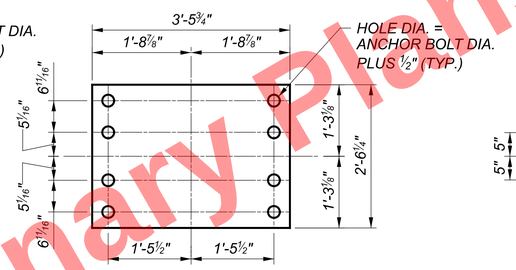

PROPOSED MASONRY PLATE
BEARING mk. FB2

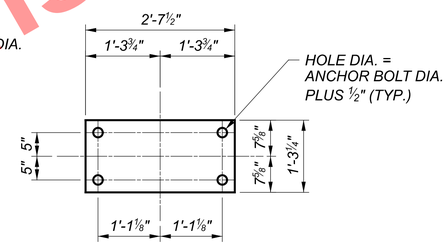

PROPOSED MASONRY PLATE
BEARING mk. GB3

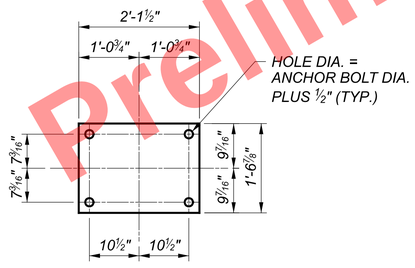

PROPOSED MASONRY PLATE
BEARING mk. NB1

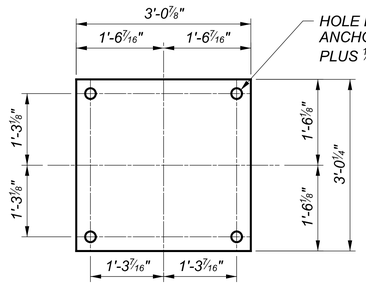

PROPOSED MASONRY PLATE
BEARING mk. NB2

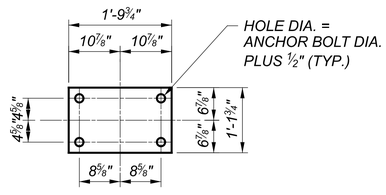

PROPOSED MASONRY PLATE
BEARING mk. NB3

NOTES:

1. SEE SHEET 62/90 FOR HLMR BEARING DESIGN TABLES AND NOTES.
2. GUIDED BEARINGS SHALL BE GUIDED PARALLEL TO THE GIRDER CENTERLINE.

Preliminary Plans - For Reference Only

BEARING DETAILS (1 OF 2)
CUY-90-1696 (BRIDGE 14)
CR-722 (CARNEGIE AVE.) OVER I.R. 90

SFN 1807898
DESIGN AGENCY Michael Baker INTERNATIONAL
DESIGNER MEM | CHECKER ABC
REVIEWER LPC 06/23/22
PROJECT ID 82382
SUBSET 61 | TOTAL 90
SHEET 2341 | TOTAL 2696

CUY-90-16.28 (CCG3A)
MODEL: Sheet PAPERSIZE: 34x22 (in.) DATE: 3/28/2025 TIME: 8:10:22 AM USER: RohitBk
pw:\\mb-us-pw.bentley.com:mb-us-pw-03\Documents\Cleveland_OH\01_Projects\ODOT\District12\82382\400-Engineering\Structures\SFN_1807898\Sheets\82382_SFN_1807898_SB001.dgn

HLMR BEARING DESIGN LOAD DATA

BEARING LOCATION	BEARING TYPE	BEARING MARK	QUANTITY	VERTICAL LOADS (KIPS)									HORIZONTAL LOADS (KIPS)				ASSUMED BEARING HEIGHT (IN)
				SERVICE						EXTREME EVENT**			SERVICE		EXTREME EVENT**		
				DL*		LL + IM***		HORIZONTAL****									
				MAX	MIN	MAX	MIN	MAX	MIN	DL*	LL + IM	HORIZ.****	LONG.	TRANS.	LONG.	TRANS.	
REAR ABUT.	NON-GUIDED EXP.	NB1	6	361	237	129	-26	2	-2	361	0	0	20	20	20	20	12.3125
REAR ABUT.	GUIDED EXP.	GB1	4	281	205	122	-10	3	-3	281	0	0	20	42	20	130	12.3125
PIER	NON-GUIDED EXP.	NB2	6	1047	693	279	-35	4	-4	1047	0	0	55	55	55	55	8.9375
PIER	FIXED	FB2	4	811	603	249	-10	5	-5	811	0	0	112	74	88	370	8.9375
FWD. ABUT.	NON-GUIDED EXP.	NB3	6	185	96	129	-32	2	-2	185	0	0	10	10	10	10	8.9063
FWD. ABUT.	GUIDED EXP.	GB3	4	131	92	110	-17	2	-2	131	0	0	10	32	10	60	8.9063

* DL VALUES INCLUDE DC1, DC2 AND DW LOAD EFFECTS.

** VALUES GIVEN IN THE "EXTREME EVENT" COLUMNS ARE DUE TO AASHTO LRFD LOAD COMBINATION EXT-I.

*** LIVE LOAD VALUES INCLUDE EFFECTS OF VEHICULAR LOADS AND SIDEWALK LIVE LOADS.

**** VERTICAL REACTIONS RESULTING FROM HORIZONTAL LOADS.

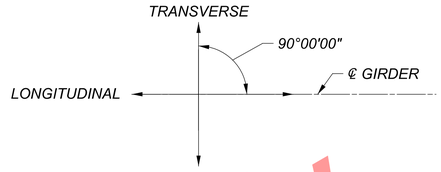

GIRDER LOAD & MOVEMENT DIAGRAM

HLMR BEARING DESIGN MOVEMENT DATA

BEARING LOCATION	BEARING TYPE	BEARING MARK	SERVICE MOVEMENTS*		
			LONGITUDINAL		TRANS.
			THERMAL	LS**	THERMAL
			(IN)	(IN)	(IN)
REAR ABUT.	NON-GUIDED EXP.	NB1	4.75	3.25	1.00
REAR ABUT.	GUIDED EXP.	GB1	4.75	3.25	0.00
PIER	NON-GUIDED EXP.	NB2	0.00	0.00	0.56
PIER	FIXED	FB2	0.00	0.00	0.00
FWD. ABUT.	NON-GUIDED EXP.	NB3	3.69	0.00	1.00
FWD. ABUT.	GUIDED EXP.	GB3	3.69	0.00	0.00

* MOVEMENTS GIVEN ARE SUM OF EXPANSION AND CONTRACTION. MOVEMENTS ROUNDED UP TO THE NEXT 1/16".

** ADDITIONAL ONE-WAY MOVEMENT DUE TO ABUTMENT DEFLECTION. MOVEMENT IS IN ADDITION TO THERMAL MOVEMENTS AND ACTS IN THE STATIONS-AHEAD DIRECTION.

HLMR BEARING ROTATION DATA

BEARING LOCATION	GIRDER	BEARING MARK	SERVICE ROTATIONS (DEGREES)*							
			NON-COMPOSITE DEAD LOADS**		COMPOSITE DEAD LOADS***		LL+IM****			
							LONG.		TRANS.	
			LONG.	TRANS.	LONG.	TRANS.	MIN.	MAX.	MIN.	MAX.
REAR ABUT.	G1	NB1	1.06	0.61	0.50	0.30	-0.19	0.06	-0.03	0.18
REAR ABUT.	G2	NB1	1.05	0.61	0.43	0.25	-0.20	0.06	-0.03	0.16
REAR ABUT.	G3	NB1	1.06	0.61	0.34	0.20	-0.21	0.05	-0.03	0.14
REAR ABUT.	G4	GB1	1.08	0.62	0.30	0.17	-0.23	0.05	-0.03	0.13
REAR ABUT.	G5	GB1	1.10	0.63	0.29	0.17	-0.24	0.06	-0.03	0.14
REAR ABUT.	G6	GB1	1.11	0.64	0.31	0.17	-0.24	0.05	-0.03	0.14
REAR ABUT.	G7	GB1	1.12	0.65	0.35	0.20	-0.24	0.05	-0.03	0.14
REAR ABUT.	G8	NB1	1.13	0.65	0.44	0.25	-0.21	0.04	-0.02	0.13
REAR ABUT.	G9	NB1	1.15	0.66	0.54	0.31	-0.20	0.04	-0.02	0.12
REAR ABUT.	G10	NB1	1.19	0.69	0.59	0.35	-0.19	0.04	-0.02	0.11
PIER	G1	NB2	-0.35	-0.22	-0.12	-0.08	-0.07	0.14	-0.05	0.06
PIER	G2	NB2	-0.37	-0.22	-0.15	-0.08	-0.07	0.15	-0.06	0.06
PIER	G3	NB2	-0.34	-0.21	-0.12	-0.08	-0.08	0.14	-0.07	0.06
PIER	G4	FB2	-0.35	-0.22	-0.11	-0.07	-0.09	0.13	-0.08	0.06
PIER	G5	FB2	-0.36	-0.23	-0.09	-0.06	-0.09	0.13	-0.08	0.06
PIER	G6	FB2	-0.37	-0.23	-0.08	-0.05	-0.10	0.14	-0.09	0.06
PIER	G7	FB2	-0.36	-0.22	-0.08	-0.05	-0.10	0.14	-0.09	0.06
PIER	G8	NB2	-0.36	-0.22	-0.09	-0.06	-0.09	0.13	-0.08	0.06
PIER	G9	NB2	-0.35	-0.22	-0.13	-0.08	-0.08	0.13	-0.08	0.05
PIER	G10	NB2	-0.39	-0.24	-0.18	-0.11	-0.07	0.14	-0.08	0.05
FWD. ABUT.	G1	NB3	-0.06	-0.05	-0.08	-0.06	-0.05	0.12	-0.05	0.06
FWD. ABUT.	G2	NB3	-0.07	-0.06	-0.07	-0.05	-0.05	0.13	-0.07	0.05
FWD. ABUT.	G3	NB3	-0.09	-0.07	-0.04	-0.03	-0.05	0.13	-0.08	0.05
FWD. ABUT.	G4	GB3	-0.10	-0.07	-0.04	-0.03	-0.06	0.12	-0.09	0.05
FWD. ABUT.	G5	GB3	-0.11	-0.08	-0.03	-0.03	-0.07	0.12	-0.09	0.05
FWD. ABUT.	G6	GB3	-0.12	-0.09	-0.04	-0.03	-0.07	0.12	-0.09	0.05
FWD. ABUT.	G7	GB3	-0.13	-0.10	-0.05	-0.04	-0.07	0.13	-0.09	0.05
FWD. ABUT.	G8	NB3	-0.14	-0.11	-0.08	-0.06	-0.06	0.13	-0.10	0.05
FWD. ABUT.	G9	NB3	-0.16	-0.12	-0.12	-0.09	-0.07	0.12	-0.09	0.05
FWD. ABUT.	G10	NB3	-0.17	-0.13	-0.15	-0.11	-0.08	0.11	-0.08	0.06

* SERVICE ROTATIONS ARE GIVEN ABOUT THE GIRDER LONGITUDINAL AXIS (LONG.) AND ABOUT AN AXIS TRANSVERSE TO THE GIRDER CENTERLINE (TRANS.) POSITIVE ROTATIONS ARE CLOCKWISE LOOKING STATIONS AHEAD ALONG THE GIRDER LONGITUDINAL AXIS.

** NONCOMPOSITE DEAD LOADS INCLUDE STEEL SELF WEIGHT AND WET CONCRETE DECK SLAB LOADS.

*** COMPOSITE DEAD LOADS INCLUDE RAILING, FENCE AND SIDEWALK SELF WEIGHTS AND FUTURE WEARING SURFACE LOADS.

**** LIVE LOAD EFFECTS INCLUDE VEHICULAR LIVE LOADS AND SIDEWALK LIVE LOADS.

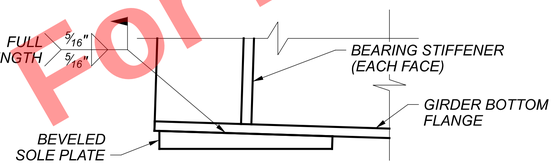

SOLE PLATE WELD DETAIL

(REAR ABUTMENT BEARING SHOWN, OTHER BEARINGS SIMILAR)

HLMR BEARING ANCHOR BOLT DATA

BEARING LOCATION	BEARING MARK	NUMBER OF ANCHOR BOLTS REQUIRED	ANCHOR BOLT DIAMETER (IN)	MINIMUM EMBEDMENT LENGTH (IN)
REAR ABUT.	NB1	4	1.25	18.00
REAR ABUT.	GB1	4	2.00	18.00
PIER	NB2	4	1.75	18.00
PIER	FB2	8	2.00	24.00
FWD. ABUT.	NB3	4	1.25	18.00
FWD. ABUT.	GB3	4	1.50	18.00

BEARING GENERAL NOTES:

1. BEARING SEAT ADJUSTMENTS: THE PIER AND ABUTMENT BEAM SEAT ELEVATIONS ARE BASED ON THE BEARING HEIGHTS PROVIDED IN THE TABLE ABOVE. IF THE CONTRACTOR'S SELECTED BEARING MANUFACTURER HAS A DESIGN THAT DOES NOT CONFORM TO THE HEIGHTS PROVIDED IN THE TABLE, ADJUST THE NEARING SEAT ELEVATIONS AT NO ADDITIONAL COST TO THE STATE. ADJUST THE LOCATION OF REINFORCING STEEL HORIZONTALLY AS NECESSARY TO AVOID INTERFERENCE WITH THE BEARING ANCHOR BOLTS. MAINTAIN THE MINIMUM CONCRETE COVER AND MINIMUM SPACING REQUIRED BY THE PROJECT PLANS. IF THE REINFORCING STEEL CANNOT BE MOVED TO PROVIDE THE REQUIRED POSITION FOR THE ANCHOR BOLTS, THE CONTRACTOR'S BEARING MANUFACTURER SHALL REDESIGN THE BEARINGS TO ACCOMMODATE AN ACCEPTABLE ANCHOR BOLT CONFIGURATION. ANCHOR BOLTS SHALL BE INSTALLED WITH THE REBAR OR VIA BLOCKOUTS, NOT DRILLED AND GROUTED INTO PLACE.
2. PROVIDE BEVELED SOLE PLATES. GIRDERS WEBS SHALL BE PLUMB AFTER ALL STEEL HAS BEEN ERECTED. GIRDERS SHALL BE DETAILED FOR THE "STEEL DEAD LOAD FIT" (SDLF) OR "ERECTED FIT" CONDITION. GIRDER WEBS SHALL BE PLUMB AFTER ERECTION IS COMPLETE. HLMR BEARINGS SHALL BE DESIGNED TO ACCOMMODATE GIRDER ROLL AND LAYOVER DURING THE ERECTION PROCESS AND PLACEMENT OF COMPOSITE DEAD LOADS.
3. PROVIDE FILLET WELDS BETWEEN GIRDER BOTTOM FLANGES AND BEARING SOLE PLATES PER THE HLMR BEARING WELD DATA TABLE. USE LOW-HYDROGEN, GRADE E70XX ELECTRODES TO MAKE ALL WELDS. REPAIR GIRDER PRIMER DAMAGED BY WELDING AT NO ADDITIONAL COST TO THE STATE.
4. FOR ADDITIONAL INFORMATION, SEE SUPPLEMENTAL SPECIFICATION 869: "HIGH LOAD MULTI ROTATIONAL (HLMR) BEARINGS".
5. SANDBLAST IN ACCORDANCE WITH SSPC-SP10 TO REMOVE MILL SCALE FROM ALL BEARINGS.
6. GRIND ALL STEEL SURFACES SMOOTH AND REMOVE ANY SHARP PROTRUSIONS. FABRICATION TOLERANCES AND LIMITATIONS ON SURFACE FINISH SHALL BE IN ACCORDANCE WITH SUPPLEMENTAL SPECIFICATION 869.
7. PAINT ALL STEEL SURFACES. DO NOT PAINT PTFE, STAINLESS STEEL, OR INNER SURFACES OF POT BEARINGS. APPLY ONLY PRIMER COATS TO STEEL SURFACES TO BE IN CONTACT WITH THE GIRDER BOTTOM FLANGE.
8. ROUND ALL PTFE CORNERS TO ACCOMMODATE THE MACHINED RECESS IN STEEL GUIDE PLATES AND PISTONS (IF USED).
9. ETCH PTFE ON ONE SIDE FOR BONDING INTO MACHINED RECESSES.
10. PIGMENT THE PTFE ON THE SIDE OF GUIDE PLATES.
11. PRIOR TO APPLICATION OF ADHESIVE, CLEAN ALL MATING STEEL AND PTFE SURFACES BY GRIT BLASTING AND DEGREASING. APPLY ADHESIVE PER THE MANUFACTURER'S RECOMMENDATIONS.
12. POT BEARINGS: LUBRICATE ALL SURFACES OF NEOPRENE DISCS WITH SILICONE GREASE IN ACCORDANCE WITH MILITARY SPEC. SAE-AS8660. CUT CUT FLAT BRASS SEALING RING ENDS AT 45° WITH A MAXIMUM GAP OF 0.05". STAGGER OPENINGS IN THE BRASS RINGS 120° APART.
13. MARK THE THICKER EDGES OF SOLE PLATES FOR IDENTIFICATION IN THE FIELD. PLACE MARKS SO THEY WILL BE VISIBLE AFTER INSTALLATION. MARK CENTERLINES OF GUIDED AND NONGUIDED BEARINGS ON THE SIDES OF THE MASONRY PLATE AND SOLE PLATE. THESE WILL BE USED TO SET OFFSET DISTANCES IN THE FIELD. USE INDELIBLE INK TO PLACE ALL MARKS. MARK EACH BEARING WITH THE NAME OF THE MANUFACTURER AND BEARING TYPE OR MODEL NUMBER. PLACE THE MARKS IN A PERMANENT MANNER AND IN A LOCATION VISIBLE AFTER INSTALLATION.

ANCHOR BOLT INSTALLATION NOTES:

1. INSTALL ANCHOR BOLTS USING A METAL TEMPLATE OR OTHER METHOD TO POSITIVELY LOCATE ANCHOR BOLTS IN THE FIELD, OR DRILL AND GROUT.
2. IF BLOCKOUTS ARE USED FOR ANCHOR BOLTS, REMOVE BLOCKOUT FORM AND DEBRIS FROM HOLE PRIOR TO GROUTING. DO NOT GROUT ANCHOR BOLT HOLES UNTIL ALL GIRDERS HAVE BEEN COMPLETELY PLACED.
3. PREVENT WATER FROM ACCUMULATING IN PREFORMED ANCHOR BOLT HOLES AND ENSURE HOLES ARE COMPLETELY FILLED WITH GROUT.
4. INSTALL ANCHOR BOLT HEX NUTS FINGER TIGHT, THEN BACK OFF ONE-QUARTER TURN. PEEN OR BURR THREADS AFTER NUT INSTALLATION.

Preliminary Plans - For Reference Only

BEARING DETAILS (2 OF 2)
CUY-90-1696 (BRIDGE 14)
CR-722 (CARNEGIE AVE.) OVER I.R. 90

SFN 1807898
DESIGN AGENCY
Michael Baker INTERNATIONAL
DESIGNER MEM | CHECKER ABC
REVIEWER LPC 06/23/22
PROJECT ID 82382
SUBSET 62 | TOTAL 90
SHEET 2342 | TOTAL 2696

CUY-90-16.28 (CCG3A)
MODEL: Sheet PAPERSIZE: 34x22 (in.) DATE: 3/20/2025 TIME: 8:10:35 AM USER: Rohit.Bk
pw:\\mb-us-pw.bentley.com:mb-us-pw-03\Documents\Cleveland_OH\01_Projects\ODOT\District12\82382\400-Engineering\Structures\SFN_1807898\Sheets\82382_SFN_1807898_SB002.dgn

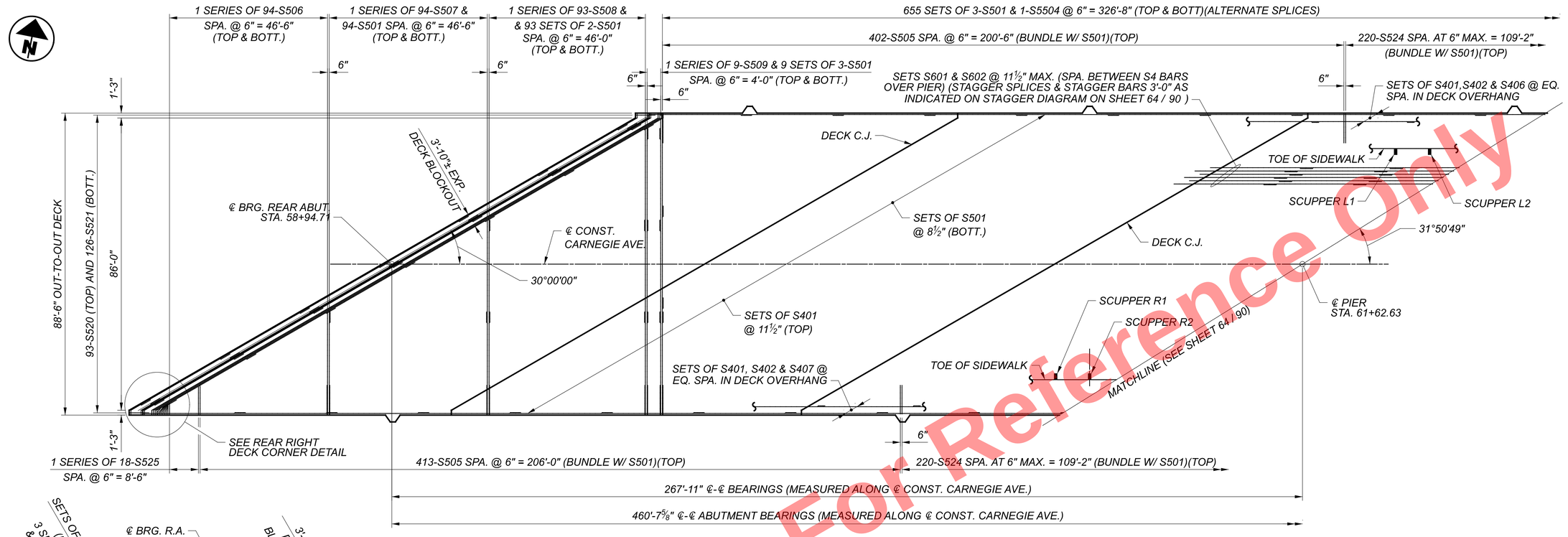

PART DECK PLAN

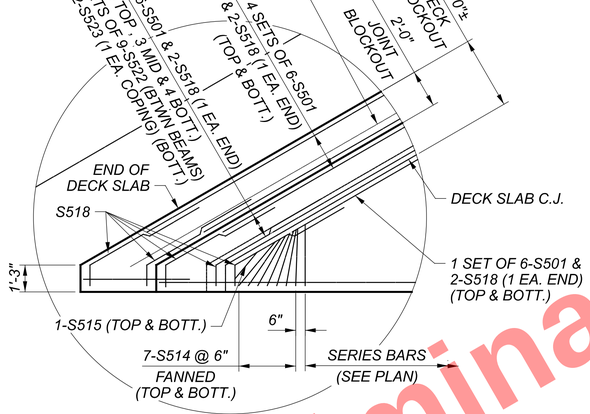

REAR RIGHT DECK CORNER DETAIL

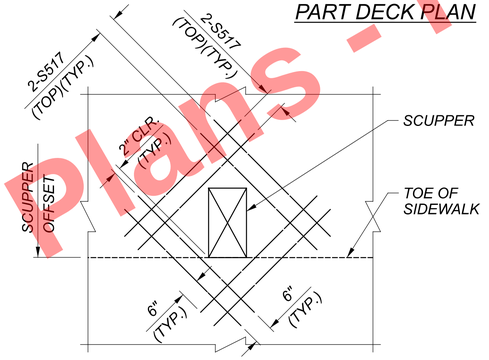

SCUPPER REINFORCING DETAIL

8 LOCATIONS

SCUPPER LOCATIONS

SCUPPER NO.	STATION	OFFSET (FT)	
L1	61+90.00	34.00	LEFT
L2	62+00.00	34.00	LEFT
L3	63+75.00	34.00	LEFT
L4	63+85.00	34.00	LEFT
R1	60+90.00	34.00	RIGHT
R2	61+00.00	34.00	RIGHT
R3	62+90.00	34.00	RIGHT
R4	63+00.00	34.00	RIGHT

MINIMUM LAP LENGTHS

NO. 4 BARS 1'-11"
NO. 5 BARS 3'-0"
NO. 6 BARS 3'-7"

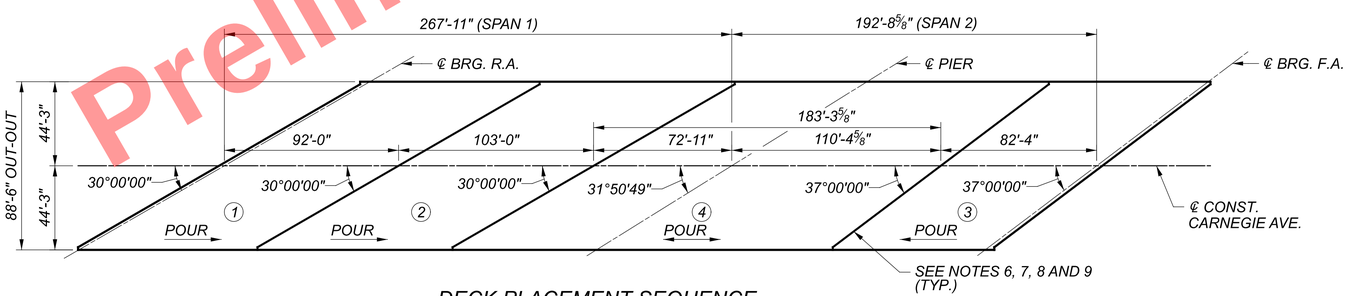

DECK PLACEMENT SEQUENCE

NOTES:

1. ALL REINFORCING IS TO BE EPOXY-COATED.
2. WORK THIS SHEET WITH SHEET 64 / 90.
3. REINFORCING IN SIDEWALKS AND RAILINGS NOT SHOWN FOR CLARITY.
4. SEE SHEETS 65&66 / 90 FOR SIDEWALK DETAILS.
5. SEE SHEETS 73 - 76/90 FOR RAILING DETAILS.
6. PLACE DECK CONCRETE AND DECK CONSTRUCTION JOINTS PARALLEL TO THE SUBSTRUCTURE CENTERLINES OF BEARINGS AS INDICATED BELOW:
   BETWEEN POUR 1 & POUR 2: PARALLEL TO REAR ABUTMENT ℄ BEARING
   BETWEEN POUR 2 & POUR 3: PARALLEL TO REAR ABUTMENT ℄ BEARING
   BETWEEN POUR 3 & POUR 4: PARALLEL TO FWD. ABUTMENT ℄ BEARING
7. PLACE DECK CONCRETE IN THE SEQUENCE INDICATED IN THE DECK PLACEMENT SEQUENCE DETAIL. PLACE DECK CONCRETE FULL-WIDTH. SEE GENERAL NOTES FOR ADDITIONAL DECK CONCRETE PLACEMENT NOTES AND DESIGN ASSUMPTIONS.
8. CIRCLED NUMBERS IN THE DECK PLACEMENT SEQUENCE DETAIL INDICATE THE ORDER OF CONCRETE DECK PLACEMENTS.
9. PLACE CONCRETE IN POUR NUMBERS 1, 2 AND 3 FROM THE ABUTMENT TOWARD THE PIER.
10. SEAL CONSTRUCTION JOINTS WITH A 2'-0" WIDE STRIP OF HIGH MOLECULAR WEIGHT METHACRYLATE RESIN ACCORDING TO 511.22.
11. FOR REINFORCEMENT SCHEDULES, SEE SHEETS 86-90 / 90.
12. SEE EXPANSION JOINT DETAILS ON SHEETS 79 - 81/90 FOR REINFORCMENT LAYOUT DETAILS. THE CONTRACTOR'S MODULAR JOINT ENGINEER IS RESPONSIBLE DESIGNING AND DETAILING REINFORCING WITHIN THE MODULAR EXPANSION JOINT BLOCKOUT.
13. SEE TYPICAL TRANSVERSE SECTION ON SHEET46 / 90 FOR LOCATIONS OF S4 BARS.
14. DECK SLAB CONCRETE QUANTITY: THE ESTIMATED QUANTITY OF DECK SLAB CONCRETE IS BASED ON THE CONSTANT DECK SLAB THICKNESS, AS SHOWN, PLUS THE QUANTITY OF CONCRETE THAT FORMS EACH GIRDER HAUNCH. THE ESTIMATE ASSUMES A CONSTANT HAUNCH THICKNESS OF 5 INCHES AND A HAUNCH WIDTH EQUAL TO THE TOP FLANGE WIDTH. DEVIATE FROM THIS HAUNCH THICKNESS AS NECESSARY TO PLACE THE DECK SURFACE AT THE FINISHED GRADE.
15. THE HAUNCH THICKNESS WAS MEASURED AT THE CENTERLINE OF THE GIRDER, FROM THE SURFACE OF THE DECK TO THE BOTTOM OF THE TOP FLANGE MINUS THE DECK SLAB THICKNESS. THE AREA OF ALL EMBEDDED STEEL PLATES HAS BEEN DEDUCTED FROM THE HAUNCH QUANTITY IN ACCORDANCE WITH 511.23.

Preliminary Plans - For Reference Only

DECK PLAN (1 OF 2)
CUY-90-1696 (BRIDGE 14)
CR-722 (CARNEGIE AVE.) OVER I.R. 90

SFN 1807898
DESIGN AGENCY Michael Baker INTERNATIONAL
DESIGNER ABC | CHECKER MEM
REVIEWER LPC 06/23/22
PROJECT ID 82382
SUBSET 63 | TOTAL 90
SHEET 2343 | TOTAL 2696

CUY-90-16.28 (CCG3A)
MODEL: deck plan 1 of 2 PAPERSIZE: 34x22 (in.) DATE: 3/28/2025 TIME: 8:10:43 AM USER: Rohit.Bk
pw:\\mb-us-pw.bentley.com:mb-us-pw-03\Documents\Cleveland_OH\01_Projects\ODOT\District12\82382\400-Engineering\Structures\SFN_1807898\Sheets\82382_SFN_1807898_SD001.dgn

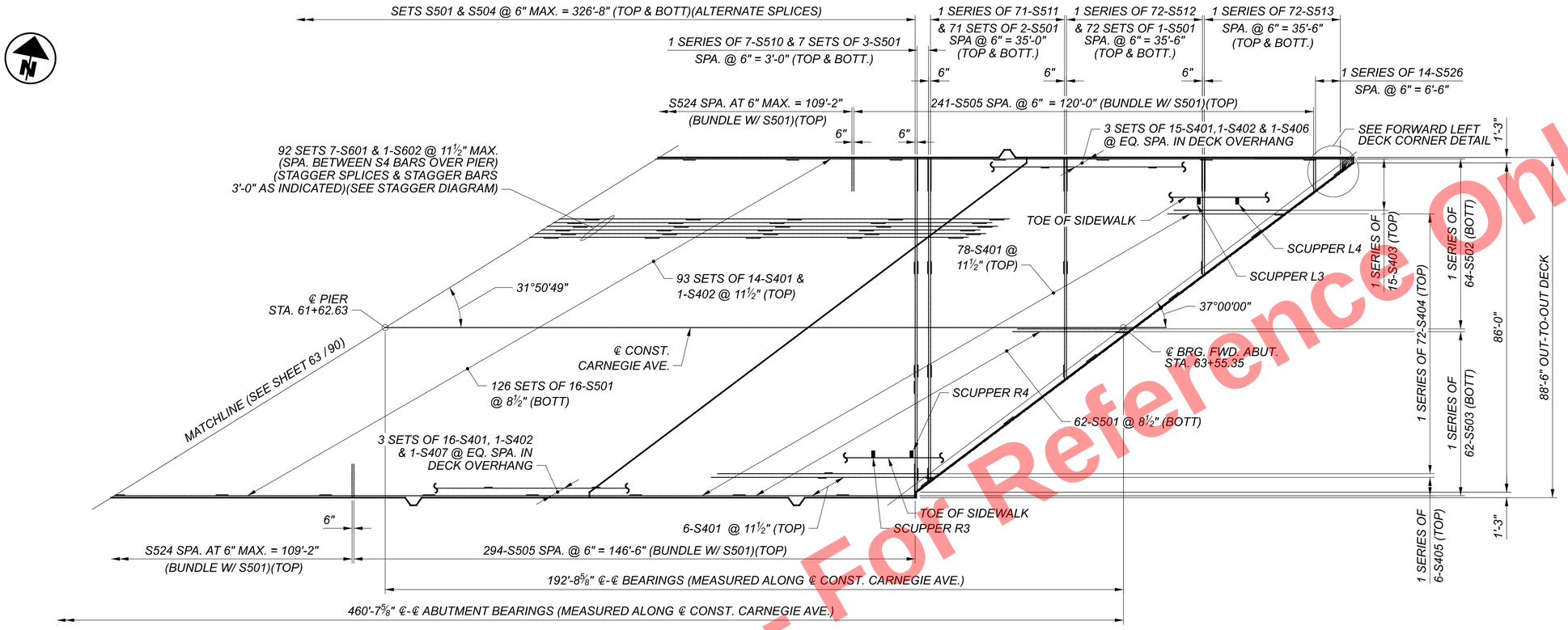

PART DECK PLAN

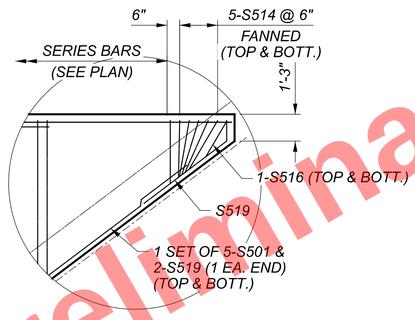

FORWARD LEFT DECK CORNER DETAIL

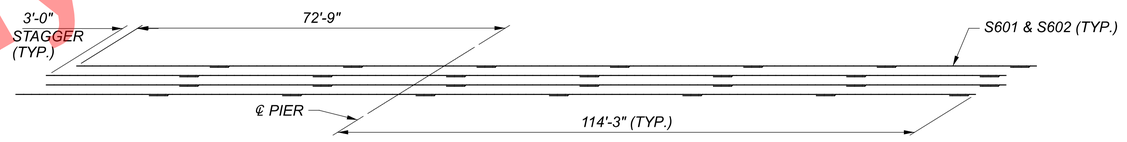

S6 BAR STAGGER DIAGRAM

(NOT TO SCALE)

MINIMUM LAP LENGTHS

NO. 4 BARS 1'-11"
NO. 5 BARS 3'-0"
NO. 6 BARS 3'-7"

NOTES:

1. ALL REINFORCING IS TO BE EPOXY-COATED.
2. WORK THIS SHEET WITH SHEET 63/90 .
3. REINFORCING IN SIDEWALKS AND RAILINGS NOT SHOWN FOR CLARITY.
4. SEE SHEETS 65 - 66 / 90 FOR SIDEWALK DETAILS.
5. SEE SHEETS 73 - 76 / 90 FOR RAILING DETAILS.
6. FOR DECK REINFORCEMENT SCHEDULES, SEE SHEETS 86-90/90 .
7. SEE SHEET 63 / 90 FOR ADDITIONAL DECK NOTES.

Preliminary Plans - For Reference Only

DECK PLAN (2 OF 2)
CUY-90-1696 (BRIDGE 14)
CR-722 (CARNEGIE AVE.) OVER I.R. 90

SFN 1807898
DESIGN AGENCY
Michael Baker INTERNATIONAL
DESIGNER ABC | CHECKER MEM
REVIEWER LPC 06/23/22
PROJECT ID 82382
SUBSET 64 | TOTAL 90
SHEET 2344 | TOTAL 2696

CUY-90-16.28 (CCG3A)
MODEL: deck plan 2 of 2 PAPERSIZE: 34x22 (in.) DATE: 3/28/2025 TIME: 8:10:44 AM USER: Rohit.Bk
pw:\\mb-us-pw.bentley.com:mb-us-pw-03\Documents\Cleveland_OH101_Projects\ODOT\District12\82382\400-Engineering\Structures\SFN_1807898\Sheets\82382_SFN_1807898_SD001.dgn

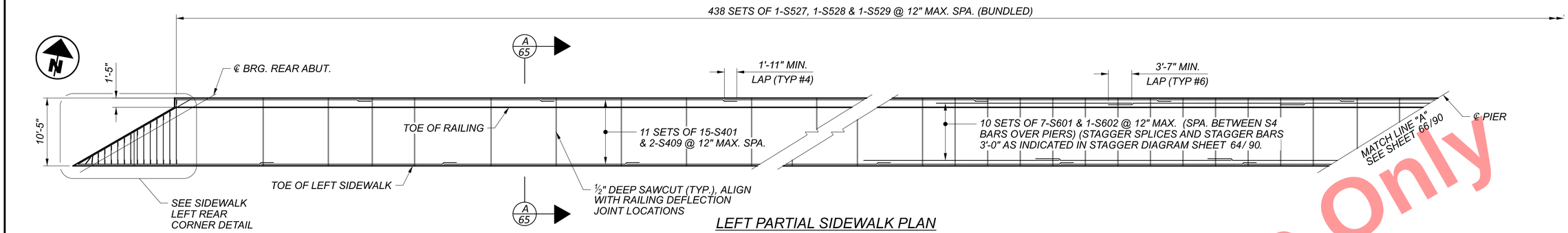

LEFT PARTIAL SIDEWALK PLAN

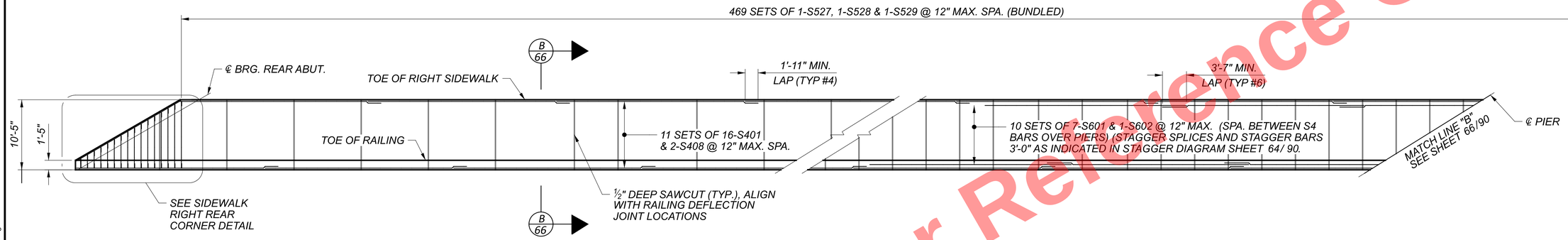

RIGHT PARTIAL SIDEWALK PLAN

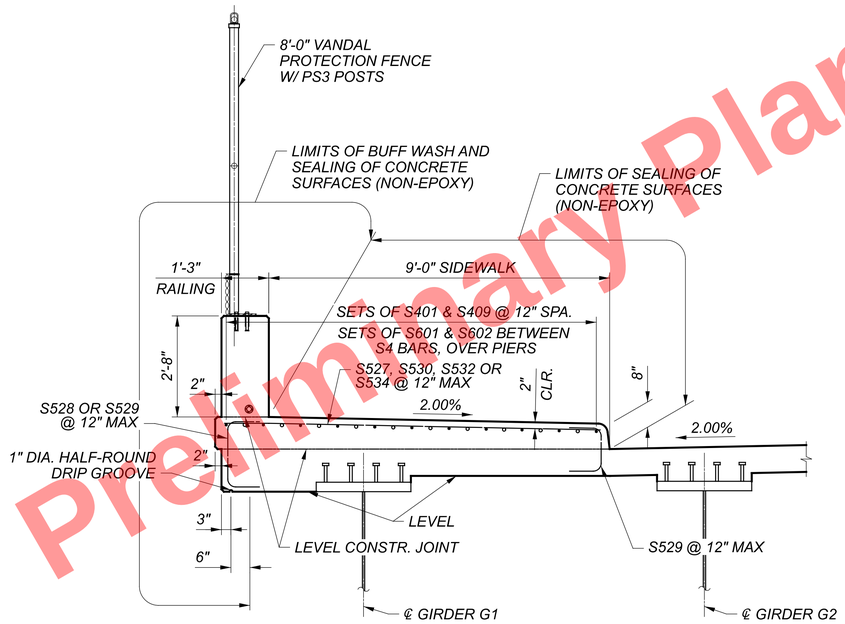

A/65 SECTION
TYPICAL LEFT SIDEWALK SECTION
(RAILING REINFORCEMENT NOT SHOWN FOR CLARITY)

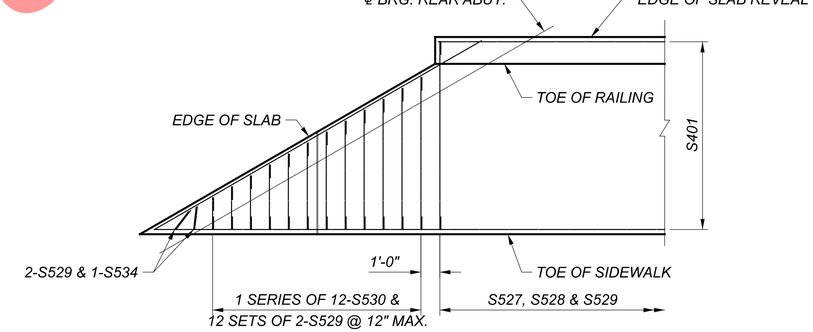

SIDEWALK LEFT REAR CORNER DETAIL

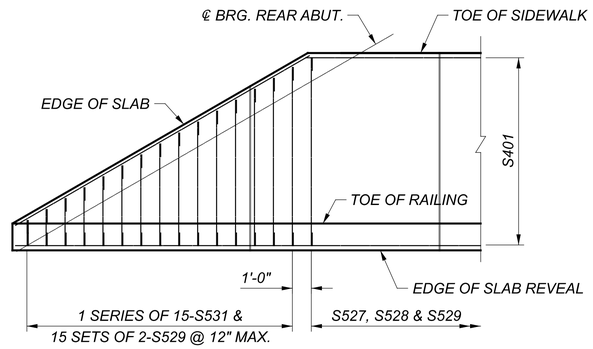

SIDEWALK RIGHT REAR CORNER DETAIL

Preliminary Plans - Not For Reference Only

SIDEWALK PLAN & DETAILS (1 OF 2)
CUY-90-1696 (BRIDGE 14)
CR-722 (CARNEGIE AVE.) OVER I.R. 90

SFN	1807898
DESIGN AGENCY	Michael Baker INTERNATIONAL
DESIGNER	ABC
CHECKER	MEM
REVIEWER	LPC 06/23/22
PROJECT ID	82382
SUBSET	65
TOTAL	90
SHEET	2345
TOTAL	2696

CUY-90-16.28 (CCG3A)

MODEL: sidewalk plan and details 1 PAPERSIZE: 34x22 (in.) DATE: 3/28/2025 TIME: 8:10:52 AM USER: Rohit.Bk
pw:\\mb-us-pw.bentley.com:mb-us-pw-03\Documents\Cleveland_OH\01_Projects\ODOT\District12\82382\400-Engineering\Structures\SFN_1807898\Sheets\82382_SFN_1807898_SD002.dgn

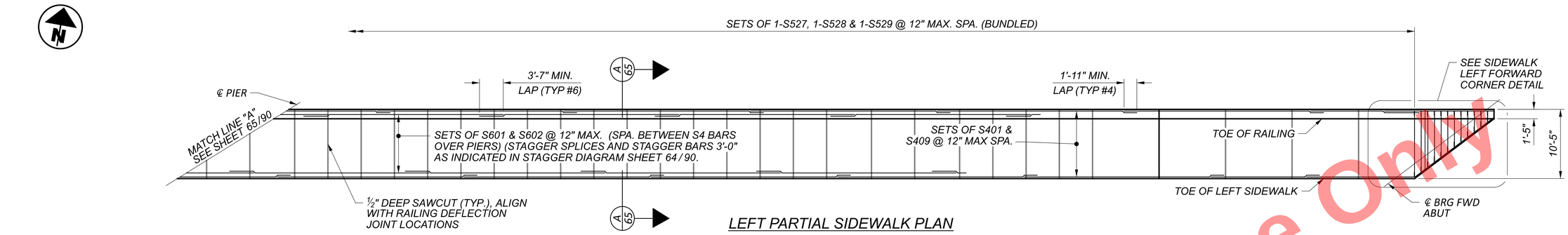

LEFT PARTIAL SIDEWALK PLAN

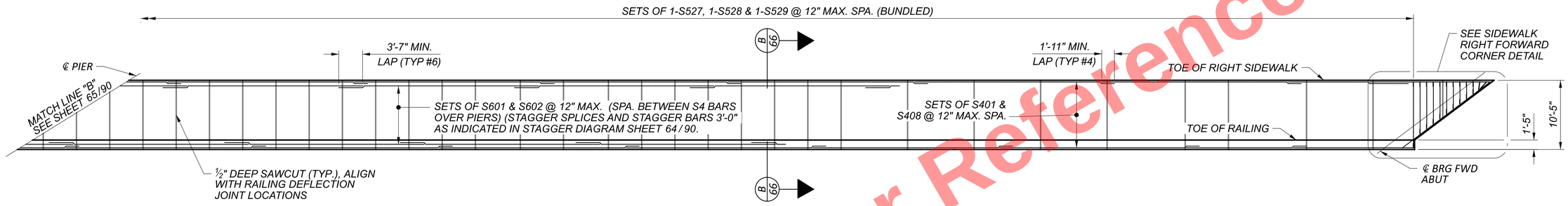

RIGHT PARTIAL SIDEWALK PLAN

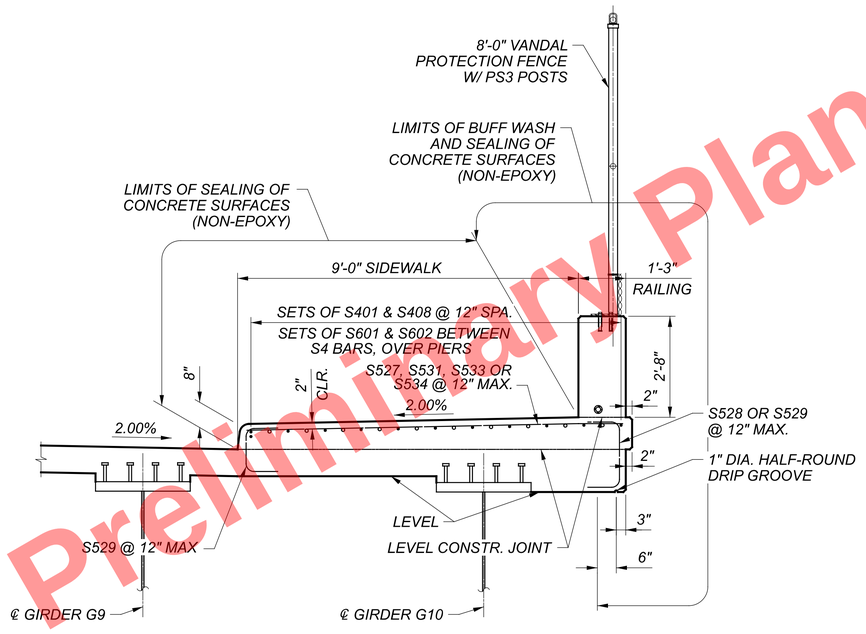

B / 66 SECTION
TYPICAL RIGHT SIDEWALK SECTION
(RAILING REINFORCEMENT NOT SHOWN FOR CLARITY)

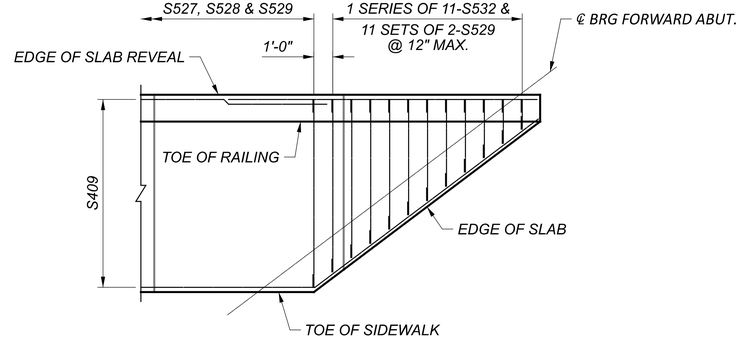

SIDEWALK LEFT FORWARD CORNER DETAIL

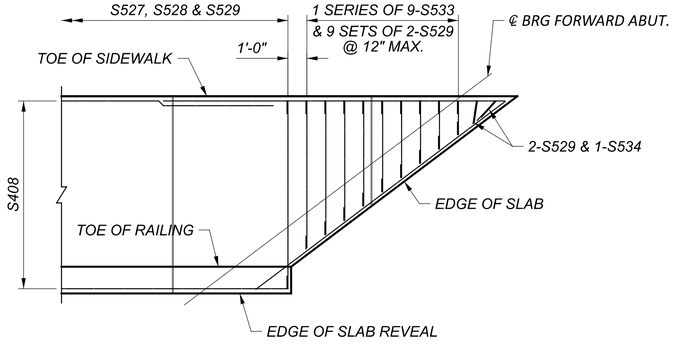

SIDEWALK RIGHT FORWARD CORNER DETAIL

Preliminary Plans - For Reference Only

SIDEWALK PLAN & DETAILS (2 OF 2)
CUY-90-1696 (BRIDGE 14)
CR-722 (CARNEGIE AVE.) OVER I.R. 90

SFN	1807898
DESIGN AGENCY	Michael Baker INTERNATIONAL
DESIGNER	ABC
CHECKER	MEM
REVIEWER	LPC 06/23/22
PROJECT ID	82382
SUBSET	66
TOTAL	90
SHEET	2346
TOTAL	2696

CUY-90-16.28 (CCG3A)

MODEL: sidewalk plan and details 2 PAPERSIZE: 34x22 (in.) DATE: 3/26/2025 TIME: 8:10:53 AM USER: Rohit.Bk
pw:\\mb-us-pw.bentley.com:mb-us-pw-03\Documents\Cleveland_OH01_Projects\ODOT\District12\82382400-Engineering\Structures\SFN_1807898\Sheets\82382_SFN_1807898_SD002.dgn

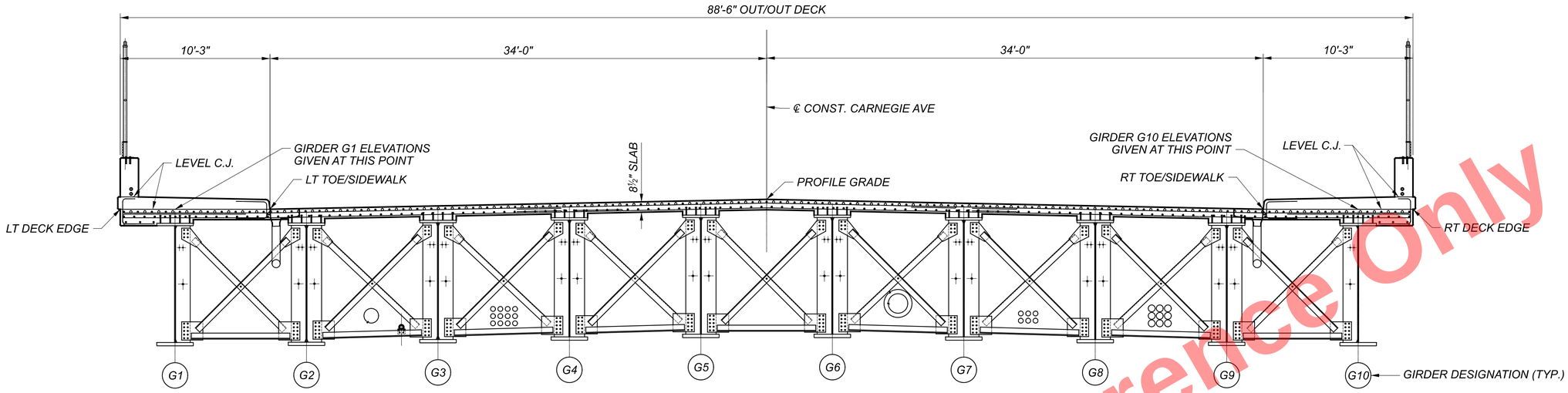

FINAL DECK ELEVATIONS, STATIONS, AND OFFSETS

	LT DECK EDGE	GIRDER G1	LT TOE/SIDEWALK	GIRDER G2	GIRDER G3	GIRDER G4	GIRDER G5	PROFILE GRADE	GIRDER G6	GIRDER G7	GIRDER G8	GIRDER G9	RT TOE/SIDEWALK	GIRDER G10	RT DECK EDGE
C.L. BRG. R.A.	59+71.35 | 44.25' LT	59+64.86 | 40.50' LT	59+53.60 | 34.00' LT	59+49.27 | 31.50' LT	59+33.68 | 22.50' LT	59+18.09 | 13.50' LT	59+02.50 | 4.50' LT	58+94.71	58+86.92 | 4.50' RT	58+71.33 | 13.50' RT	58+55.74 | 22.50' RT	58+40.15 | 31.50' RT	58+35.82 | 34.00' RT	58+24.56 | 40.50' RT	58+18.07 | 44.25' RT
	669.28	669.30	669.35	669.41	669.66	669.90	670.14	670.26	670.20	670.09	669.97	669.85	669.82	669.86	669.89
0.05 "B"	59+84.48 | 44.25' LT	59+78.01 | 40.50' LT	59+66.79 | 34.00' LT	59+62.47 | 31.50' LT	59+46.94 | 22.50' LT	59+31.41 | 13.50' LT	59+15.87 | 4.50' LT	59+08.11	59+00.34 | 4.50' RT	58+84.81 | 13.50' RT	58+69.27 | 22.50' RT	58+53.74 | 31.50' RT	58+49.42 | 34.00' RT	58+38.21 | 40.50' RT	58+31.73 | 44.25' RT
	669.22	669.25	669.29	669.36	669.60	669.85	670.09	670.21	670.15	670.03	669.91	669.80	669.76	669.81	669.83
0.10 "B"	59+97.60 | 44.25' LT	59+91.16 | 40.50' LT	59+79.98 | 34.00' LT	59+75.68 | 31.50' LT	59+60.20 | 22.50' LT	59+44.72 | 13.50' LT	59+29.24 | 4.50' LT	59+21.50	59+13.76 | 4.50' RT	58+98.28 | 13.50' RT	58+82.81 | 22.50' RT	58+67.33 | 31.50' RT	58+63.03 | 34.00' RT	58+51.85 | 40.50' RT	58+45.40 | 44.25' RT
	669.17	669.20	669.24	669.31	669.55	669.79	670.03	670.15	670.10	669.98	669.86	669.74	669.71	669.75	669.78
0.15 "B"	60+10.73 | 44.25' LT	60+04.30 | 40.50' LT	59+93.16 | 34.00' LT	59+88.88 | 31.50' LT	59+73.46 | 22.50' LT	59+58.03 | 13.50' LT	59+42.61 | 4.50' LT	59+34.90	59+27.19 | 4.50' RT	59+11.76 | 13.50' RT	58+96.34 | 22.50' RT	58+80.92 | 31.50' RT	58+76.63 | 34.00' RT	58+65.49 | 40.50' RT	58+59.07 | 44.25' RT
	669.12	669.14	669.19	669.26	669.50	669.74	669.98	670.10	670.04	669.92	669.81	669.69	669.65	669.70	669.72
0.20 "B"	60+23.86 | 44.25' LT	60+17.45 | 40.50' LT	60+06.35 | 34.00' LT	60+02.08 | 31.50' LT	59+86.72 | 22.50' LT	59+71.35 | 13.50' LT	59+55.98 | 4.50' LT	59+48.29	59+40.61 | 4.50' RT	59+25.24 | 13.50' RT	59+09.87 | 22.50' RT	58+94.50 | 31.50' RT	58+90.23 | 34.00' RT	58+79.14 | 40.50' RT	58+72.73 | 44.25' RT
	669.07	669.09	669.14	669.20	669.44	669.69	669.93	670.05	669.99	669.87	669.75	669.63	669.60	669.64	669.67
0.25 "B"	60+36.98 | 44.25' LT	60+30.60 | 40.50' LT	60+19.54 | 34.00' LT	60+15.29 | 31.50' LT	59+99.97 | 22.50' LT	59+84.66 | 13.50' LT	59+69.35 | 4.50' LT	59+61.69	59+54.03 | 4.50' RT	59+38.72 | 13.50' RT	59+23.41 | 22.50' RT	59+08.09 | 31.50' RT	59+03.84 | 34.00' RT	58+92.78 | 40.50' RT	58+86.40 | 44.25' RT
	669.01	669.04	669.08	669.15	669.39	669.63	669.87	669.99	669.93	669.82	669.70	669.58	669.55	669.59	669.62
0.30 "B"	60+50.11 | 44.25' LT	60+43.75 | 40.50' LT	60+32.73 | 34.00' LT	60+28.49 | 31.50' LT	60+13.23 | 22.50' LT	59+97.97 | 13.50' LT	59+82.72 | 4.50' LT	59+75.09	59+67.46 | 4.50' RT	59+52.20 | 13.50' RT	59+36.94 | 22.50' RT	59+21.68 | 31.50' RT	59+17.44 | 34.00' RT	59+06.42 | 40.50' RT	59+00.06 | 44.25' RT
	668.96	668.99	669.03	669.10	669.34	669.58	669.82	669.94	669.88	669.76	669.64	669.52	669.49	669.54	669.56
0.35 "B"	60+63.23 | 44.25' LT	60+56.90 | 40.50' LT	60+45.92 | 34.00' LT	60+41.69 | 31.50' LT	60+26.49 | 22.50' LT	60+11.29 | 13.50' LT	59+96.08 | 4.50' LT	59+88.48	59+80.88 | 4.50' RT	59+65.68 | 13.50' RT	59+50.47 | 22.50' RT	59+35.27 | 31.50' RT	59+31.05 | 34.00' RT	59+20.07 | 40.50' RT	59+13.73 | 44.25' RT
	668.91	668.93	668.98	669.04	669.29	669.53	669.77	669.89	669.83	669.71	669.59	669.47	669.44	669.48	669.51
0.40 "B"/ F.S. 1	60+76.36 | 44.25' LT	60+70.05 | 40.50' LT	60+59.11 | 34.00' LT	60+54.90 | 31.50' LT	60+39.75 | 22.50' LT	60+24.60 | 13.50' LT	60+09.45 | 4.50' LT	60+01.88	59+94.30 | 4.50' RT	59+79.15 | 13.50' RT	59+64.01 | 22.50' RT	59+48.86 | 31.50' RT	59+44.65 | 34.00' RT	59+33.71 | 40.50' RT	59+27.40 | 44.25' RT
	668.86	668.88	668.92	668.99	669.23	669.47	669.71	669.83	669.77	669.65	669.53	669.42	669.38	669.43	669.45
0.45 "B"	60+89.48 | 44.25' LT	60+83.20 | 40.50' LT	60+72.29 | 34.00' LT	60+68.10 | 31.50' LT	60+53.01 | 22.50' LT	60+37.91 | 13.50' LT	60+22.82 | 4.50' LT	60+15.27	60+07.73 | 4.50' RT	59+92.63 | 13.50' RT	59+77.54 | 22.50' RT	59+62.45 | 31.50' RT	59+58.25 | 34.00' RT	59+47.35 | 40.50' RT	59+41.06 | 44.25' RT
	668.80	668.83	668.87	668.94	669.18	669.42	669.66	669.78	669.72	669.60	669.48	669.36	669.33	669.37	669.40
0.50 "B"	61+02.61 | 44.25' LT	60+96.34 | 40.50' LT	60+85.48 | 34.00' LT	60+81.31 | 31.50' LT	60+66.27 | 22.50' LT	60+51.23 | 13.50' LT	60+36.19 | 4.50' LT	60+28.67	60+21.15 | 4.50' RT	60+06.11 | 13.50' RT	59+91.07 | 22.50' RT	59+76.03 | 31.50' RT	59+71.86 | 34.00' RT	59+61.00 | 40.50' RT	59+54.73 | 44.25' RT
	668.75	668.78	668.82	668.89	669.13	669.37	669.61	669.73	669.67	669.55	669.43	669.31	669.27	669.32	669.34
0.55 "B"	61+15.74 | 44.25' LT	61+09.49 | 40.50' LT	60+98.67 | 34.00' LT	60+94.51 | 31.50' LT	60+79.53 | 22.50' LT	60+64.54 | 13.50' LT	60+49.56 | 4.50' LT	60+42.07	60+34.57 | 4.50' RT	60+19.59 | 13.50' RT	60+04.61 | 22.50' RT	59+89.62 | 31.50' RT	59+85.46 | 34.00' RT	59+74.64 | 40.50' RT	59+68.40 | 44.25' RT
	668.70	668.72	668.77	668.83	669.07	669.31	669.55	669.67	669.61	669.49	669.37	669.25	669.22	669.26	669.29
0.60 "B"	61+28.86 | 44.25' LT	61+22.64 | 40.50' LT	61+11.86 | 34.00' LT	61+07.71 | 31.50' LT	60+92.78 | 22.50' LT	60+77.86 | 13.50' LT	60+62.93 | 4.50' LT	60+55.46	60+48.00 | 4.50' RT	60+33.07 | 13.50' RT	60+18.14 | 22.50' RT	60+03.21 | 31.50' RT	59+99.06 | 34.00' RT	59+88.28 | 40.50' RT	59+82.06 | 44.25' RT
	668.65	668.67	668.71	668.78	669.02	669.26	669.50	669.62	669.56	669.44	669.32	669.20	669.16	669.21	669.23
0.65 "B"	61+41.99 | 44.25' LT	61+35.79 | 40.50' LT	61+25.05 | 34.00' LT	61+20.92 | 31.50' LT	61+06.04 | 22.50' LT	60+91.17 | 13.50' LT	60+76.29 | 4.50' LT	60+68.86	60+61.42 | 4.50' RT	60+46.55 | 13.50' RT	60+31.67 | 22.50' RT	60+16.80 | 31.50' RT	60+12.67 | 34.00' RT	60+01.93 | 40.50' RT	59+95.73 | 44.25' RT
	668.59	668.62	668.66	668.73	668.97	669.21	669.45	669.57	669.51	669.38	669.26	669.14	669.11	669.15	669.18
0.70 "B"	61+55.11 | 44.25' LT	61+48.94 | 40.50' LT	61+38.24 | 34.00' LT	61+34.12 | 31.50' LT	61+19.30 | 22.50' LT	61+04.48 | 13.50' LT	60+89.66 | 4.50' LT	60+82.25	60+74.84 | 4.50' RT	60+60.03 | 13.50' RT	60+45.21 | 22.50' RT	60+30.39 | 31.50' RT	60+26.27 | 34.00' RT	60+15.57 | 40.50' RT	60+09.39 | 44.25' RT
	668.54	668.57	668.61	668.67	668.91	669.15	669.39	669.51	669.45	669.33	669.21	669.09	669.06	669.10	669.12
0.75 "B"	61+68.24 | 44.25' LT	61+62.09 | 40.50' LT	61+51.42 | 34.00' LT	61+47.32 | 31.50' LT	61+32.56 | 22.50' LT	61+17.80 | 13.50' LT	61+03.03 | 4.50' LT	60+95.65	60+88.27 | 4.50' RT	60+73.50 | 13.50' RT	60+58.74 | 22.50' RT	60+43.98 | 31.50' RT	60+39.88 | 34.00' RT	60+29.21 | 40.50' RT	60+23.06 | 44.25' RT
	668.49	668.51	668.56	668.62	668.86	669.10	669.34	669.46	669.40	669.28	669.16	669.04	669.00	669.04	669.07
0.80 "B"/ F.S. 2	61+81.36 | 44.25' LT	61+75.24 | 40.50' LT	61+64.61 | 34.00' LT	61+60.53 | 31.50' LT	61+45.82 | 22.50' LT	61+31.11 | 13.50' LT	61+16.40 | 4.50' LT	61+09.05	61+01.69 | 4.50' RT	60+86.98 | 13.50' RT	60+72.27 | 22.50' RT	60+57.56 | 31.50' RT	60+53.48 | 34.00' RT	60+42.86 | 40.50' RT	60+36.73 | 44.25' RT
	668.44	668.46	668.50	668.57	668.81	669.05	669.29	669.40	669.34	669.22	669.10	668.98	668.95	668.99	669.01
0.85 "B"	61+94.49 | 44.25' LT	61+88.38 | 40.50' LT	61+77.80 | 34.00' LT	61+73.73 | 31.50' LT	61+59.08 | 22.50' LT	61+44.42 | 13.50' LT	61+29.77 | 4.50' LT	61+22.44	61+15.12 | 4.50' RT	61+00.46 | 13.50' RT	60+85.81 | 22.50' RT	60+71.15 | 31.50' RT	60+67.08 | 34.00' RT	60+56.50 | 40.50' RT	60+50.39 | 44.25' RT
	668.38	668.41	668.45	668.52	668.75	668.99	669.23	669.35	669.29	669.17	669.05	668.93	668.89	668.94	668.96
0.90 "B"	62+07.62 | 44.25' LT	62+01.53 | 40.50' LT	61+90.99 | 34.00' LT	61+86.93 | 31.50' LT	61+72.34 | 22.50' LT	61+57.74 | 13.50' LT	61+43.14 | 4.50' LT	61+35.84	61+28.54 | 4.50' RT	61+13.94 | 13.50' RT	60+99.34 | 22.50' RT	60+84.74 | 31.50' RT	60+80.69 | 34.00' RT	60+70.14 | 40.50' RT	60+64.06 | 44.25' RT
	668.33	668.35	668.40	668.46	668.70	668.94	669.18	669.30	669.24	669.12	668.99	668.87	668.84	668.88	668.90
0.95 "B"	62+20.74 | 44.25' LT	62+14.68 | 40.50' LT	62+04.18 | 34.00' LT	62+00.14 | 31.50' LT	61+85.59 | 22.50' LT	61+71.05 | 13.50' LT	61+56.51 | 4.50' LT	61+49.23	61+41.96 | 4.50' RT	61+27.42 | 13.50' RT	61+12.87 | 22.50' RT	60+98.33 | 31.50' RT	60+94.29 | 34.00' RT	60+83.79 | 40.50' RT	60+77.73 | 44.25' RT
	668.28	668.30	668.34	668.41	668.65	668.89	669.12	669.24	669.18	669.06	668.94	668.82	668.78	668.83	668.85
C.L. PIER	62+33.87 | 44.25' LT	62+27.83 | 40.50' LT	62+17.37 | 34.00' LT	62+13.34 | 31.50' LT	61+98.85 | 22.50' LT	61+84.36 | 13.50' LT	61+69.87 | 4.50' LT	61+62.63	61+55.39 | 4.50' RT	61+40.90 | 13.50' RT	61+26.41 | 22.50' RT	61+11.92 | 31.50' RT	61+07.89 | 34.00' RT	60+97.43 | 40.50' RT	60+91.39 | 44.25' RT
	668.23	668.25	668.29	668.36	668.60	668.83	669.07	669.19	669.13	669.01	668.89	668.76	668.73	668.77	668.80

Preliminary Plans - Not for Reference Only

LEGEND:

"B" LENGTH OF SPAN 1 MEASURED ALONG ℄ GIRDER OR DECK FEATURE

NOTES:

1. WORK THIS SHEET WITH SHEET 68 / 90.
2. SEE GIRDER ELEVATION SHEET 49 / 90 FOR GIRDER LENGTHS "B".
3. SEE SHEETS 65 & 66 / 90 FOR SIDEWALK DETAILS.
4. FINAL DECK SURFACE ELEVATIONS SHOWN REPRESENT THE DECK SURFACE LOCATION AFTER ALL ANTICIPATED DEAD LOAD DEFLECTIONS HAVE OCCURRED.

FINAL DECK SURFACE ELEVATION TABLE (1 OF 2)
CUY-90-1696 (BRIDGE 14)
CR-722 (CARNEGIE AVE.) OVER I.R. 90

SFN 1807898
DESIGN AGENCY
Michael Baker INTERNATIONAL
DESIGNER ABC | CHECKER MEM
REVIEWER LPC 06/23/22
PROJECT ID 82382
SUBSET 67 | TOTAL 90
SHEET 2347 | TOTAL 2696

CUY-90-16.28 (CCG3A)

MODEL: final deck surface elev 1 PAPERSIZE: 34x22 (in.) DATE: 3/28/2025 TIME: 8:11:00 AM USER: Rohit Bk
pw:\\mb-us-pw.bentley.com:mb-us-pw-03\Documents\Cleveland_OH\01_Projects\ODOT\District12\82382400-Engineering\Structures\SFN_1807898\Sheets\82382_SD003.dgn

FINAL DECK ELEVATIONS, STATIONS, AND OFFSETS

	LT DECK EDGE	GIRDER G1	LT TOE/SIDEWALK	GIRDER G2	GIRDER G3	GIRDER G4	GIRDER G5	PROFILE GRADE	GIRDER G6	GIRDER G7	GIRDER G8	GIRDER G9	RT TOE/SIDEWALK	GIRDER G10	RT DECK EDGE
C.L. PIER	62+33.87 44.25' LT	62+27.83 40.50' LT	62+17.37 34.00' LT	62+13.34 31.50' LT	61+98.85 22.50' LT	61+84.36 13.50' LT	61+69.87 4.50' LT	63+62.63	61+55.39 4.50' RT	61+40.90 13.50' RT	61+26.41 22.50' RT	61+11.92 31.50' RT	61+07.89 34.00' RT	60+97.43 40.50' RT	60+91.39 44.25' RT
	668.23	668.25	668.29	668.36	668.60	668.83	669.07	669.19	669.13	669.01	668.89	668.76	668.73	668.77	668.80
0.05 "C"	62+42.88 44.25' LT	62+36.89 40.50' LT	62+26.52 34.00' LT	62+22.53 31.50' LT	62+08.17 22.50' LT	61+93.81 13.50' LT	61+79.45 4.50' LT	61+72.27	61+65.09 4.50' RT	61+50.72 13.50' RT	61+36.36 22.50' RT	61+22.00 31.50' RT	61+18.01 34.00' RT	61+07.64 40.50' RT	61+01.65 44.25' RT
	668.19	668.21	668.25	668.32	668.56	668.80	669.03	669.15	669.09	668.97	668.85	668.72	668.69	668.73	668.75
0.10 "C"	62+51.89 44.25' LT	62+45.96 40.50' LT	62+35.68 34.00' LT	62+31.72 31.50' LT	62+17.49 22.50' LT	62+03.25 13.50' LT	61+89.02 4.50' LT	61+81.90	61+74.78 4.50' RT	61+60.55 13.50' RT	61+46.32 22.50' RT	61+32.08 31.50' RT	61+28.13 34.00' RT	61+17.85 40.50' RT	61+11.92 44.25' RT
	668.15	668.18	668.22	668.28	668.52	668.76	668.99	669.11	669.05	668.93	668.81	668.68	668.65	668.69	668.71
0.15 "C"	62+60.90 44.25' LT	62+55.02 40.50' LT	62+44.83 34.00' LT	62+40.91 31.50' LT	62+26.81 22.50' LT	62+12.70 13.50' LT	61+98.59 4.50' LT	61+91.54	61+84.48 4.50' RT	61+70.38 13.50' RT	61+56.27 22.50' RT	61+42.16 31.50' RT	61+38.24 34.00' RT	61+28.06 40.50' RT	61+22.18 44.25' RT
	668.12	668.14	668.18	668.25	668.48	668.72	668.96	669.07	669.01	668.89	668.77	668.64	668.61	668.65	668.67
0.20 "C"	62+69.91 44.25' LT	62+64.08 40.50' LT	62+53.99 34.00' LT	62+50.10 31.50' LT	62+36.12 22.50' LT	62+22.14 13.50' LT	62+08.16 4.50' LT	62+01.17	61+94.18 4.50' RT	61+80.20 13.50' RT	61+66.22 22.50' RT	61+52.24 31.50' RT	61+48.36 34.00' RT	61+38.26 40.50' RT	61+32.44 44.25' RT
	668.08	668.10	668.15	668.21	668.45	668.68	668.92	669.04	668.97	668.85	668.73	668.60	668.57	668.61	668.63
0.25 "C"	62+78.92 44.25' LT	62+73.15 40.50' LT	62+63.14 34.00' LT	62+59.29 31.50' LT	62+45.44 22.50' LT	62+31.59 13.50' LT	62+17.74 4.50' LT	62+10.81	62+03.88 4.50' RT	61+90.03 13.50' RT	61+76.18 22.50' RT	61+62.33 31.50' RT	61+58.48 34.00' RT	61+48.47 40.50' RT	61+42.70 44.25' RT
	668.05	668.07	668.11	668.17	668.41	668.64	668.88	669.00	668.94	668.81	668.69	668.56	668.53	668.57	668.59
0.30 "C"/ F.S. 3	62+87.93 44.25' LT	62+82.21 40.50' LT	62+72.30 34.00' LT	62+68.48 31.50' LT	62+54.76 22.50' LT	62+41.03 13.50' LT	62+27.31 4.50' LT	62+20.45	62+13.58 4.50' RT	61+99.86 13.50' RT	61+86.13 22.50' RT	61+72.41 31.50' RT	61+68.59 34.00' RT	61+58.68 40.50' RT	61+52.96 44.25' RT
	668.01	668.03	668.07	668.14	668.37	668.61	668.84	668.96	668.90	668.77	668.65	668.52	668.49	668.53	668.55
0.35 "C"	62+96.94 44.25' LT	62+91.27 40.50' LT	62+81.45 34.00' LT	62+77.68 31.50' LT	62+64.08 22.50' LT	62+50.48 13.50' LT	62+36.88 4.50' LT	62+30.08	62+23.28 4.50' RT	62+09.68 13.50' RT	61+96.09 22.50' RT	61+82.49 31.50' RT	61+78.71 34.00' RT	61+68.89 40.50' RT	61+63.22 44.25' RT
	667.97	668.00	668.04	668.10	668.33	668.57	668.80	668.92	668.86	668.73	668.61	668.48	668.45	668.49	668.51
0.40 "C"	63+05.95 44.25' LT	63+00.34 40.50' LT	62+90.61 34.00' LT	62+86.87 31.50' LT	62+73.39 22.50' LT	62+59.92 13.50' LT	62+46.45 4.50' LT	62+39.72	62+32.98 4.50' RT	62+19.51 13.50' RT	62+06.04 22.50' RT	61+92.57 31.50' RT	61+88.83 34.00' RT	61+79.10 40.50' RT	61+73.49 44.25' RT
	667.94	667.96	668.00	668.06	668.30	668.53	668.77	668.88	668.82	668.69	668.57	668.44	668.41	668.44	668.47
0.45 "C"	63+14.96 44.25' LT	63+09.40 40.50' LT	62+99.76 34.00' LT	62+96.06 31.50' LT	62+82.71 22.50' LT	62+69.37 13.50' LT	62+56.03 4.50' LT	62+49.35	62+42.68 4.50' RT	62+29.34 13.50' RT	62+16.00 22.50' RT	62+02.65 31.50' RT	61+98.95 34.00' RT	61+89.31 40.50' RT	61+83.75 44.25' RT
	667.90	667.92	667.96	668.03	668.26	668.49	668.73	668.84	668.78	668.65	668.53	668.40	668.37	668.40	668.43
0.50 "C"	63+23.97 44.25' LT	63+18.46 40.50' LT	63+08.92 34.00' LT	63+05.25 31.50' LT	62+92.03 22.50' LT	62+78.81 13.50' LT	62+65.60 4.50' LT	62+58.99	62+52.38 4.50' RT	62+39.17 13.50' RT	62+25.95 22.50' RT	62+12.73 31.50' RT	62+09.06 34.00' RT	61+99.52 40.50' RT	61+94.01 44.25' RT
	667.87	667.89	667.93	667.99	668.22	668.46	668.69	668.81	668.74	668.61	668.49	668.36	668.32	668.36	668.38
0.55 "C"	63+32.98 44.25' LT	63+27.53 40.50' LT	63+18.07 34.00' LT	63+14.44 31.50' LT	63+01.35 22.50' LT	62+88.26 13.50' LT	62+75.17 4.50' LT	62+68.63	62+62.08 4.50' RT	62+48.99 13.50' RT	62+35.90 22.50' RT	62+22.81 31.50' RT	62+19.18 34.00' RT	62+09.73 40.50' RT	62+04.27 44.25' RT
	667.83	667.85	667.89	667.95	668.19	668.42	668.65	668.77	668.70	668.58	668.45	668.32	668.28	668.32	668.34
0.60 "C"	63+41.99 44.25' LT	63+36.59 40.50' LT	63+27.23 34.00' LT	63+23.63 31.50' LT	63+10.67 22.50' LT	62+97.70 13.50' LT	62+84.74 4.50' LT	62+78.26	62+71.78 4.50' RT	62+58.82 13.50' RT	62+45.86 22.50' RT	62+32.90 31.50' RT	62+29.30 34.00' RT	62+19.93 40.50' RT	62+14.53 44.25' RT
	667.79	667.81	667.85	667.92	668.15	668.38	668.61	668.73	668.66	668.54	668.41	668.28	668.24	668.28	668.30
0.65 "C"	63+51.00 44.25' LT	63+45.65 40.50' LT	63+36.38 34.00' LT	63+32.82 31.50' LT	63+19.98 22.50' LT	63+07.15 13.50' LT	62+94.32 4.50' LT	62+87.90	62+81.48 4.50' RT	62+68.65 13.50' RT	62+55.81 22.50' RT	62+42.98 31.50' RT	62+39.41 34.00' RT	62+30.14 40.50' RT	62+24.80 44.25' RT
	667.76	667.78	667.82	667.88	668.11	668.34	668.57	668.69	668.63	668.50	668.37	668.24	668.20	668.24	668.26
F.S. 4	--- ---	--- ---	--- ---	--- ---	--- ---	--- ---	--- ---	---	--- ---	--- ---	--- ---	--- ---	--- ---	62+38.69 40.50' RT	--- ---
	---	---	---	---	---	---	---	---	---	---	---	---	---	668.21	---
0.70 "C"	63+60.01 44.25' LT	63+54.72 40.50' LT	63+45.54 34.00' LT	63+42.01 31.50' LT	63+29.30 22.50' LT	63+16.59 13.50' LT	63+03.89 4.50' LT	62+97.53	62+91.18 4.50' RT	62+78.47 13.50' RT	62+65.77 22.50' RT	62+53.06 31.50' RT	62+49.53 34.00' RT	62+40.35 40.50' RT	62+35.06 44.25' RT
	667.72	667.74	667.78	667.84	668.07	668.30	668.54	668.65	668.59	668.46	668.33	668.20	668.16	668.20	668.22
F.S. 4	--- ---	--- ---	--- ---	--- ---	--- ---	63+25.63 13.50' LT	63+11.31 4.50' LT	---	62+96.65 4.50' RT	62+82.16 13.50' RT	62+67.67 22.50' RT	62+53.18 31.50' RT	--- ---	--- ---	--- ---
	---	---	---	---	---	668.27	668.51	---	668.56	668.44	668.32	668.20	---	---	---
0.75 "C"	63+69.02 44.25' LT	63+63.78 40.50' LT	63+54.69 34.00' LT	63+51.20 31.50' LT	63+38.62 22.50' LT	63+26.04 13.50' LT	63+13.46 4.50' LT	63+07.17	63+00.88 4.50' RT	62+88.30 13.50' RT	62+75.72 22.50' RT	62+63.14 31.50' RT	62+59.65 34.00' RT	62+50.56 40.50' RT	62+45.32 44.25' RT
	667.68	667.71	667.74	667.81	668.04	668.27	668.50	668.61	668.55	668.42	668.29	668.16	668.12	668.16	668.18
F.S. 4	--- ---	63+69.10 40.50' LT	--- ---	63+54.61 31.50' LT	63+40.12 22.50' LT	--- ---	--- ---	---	--- ---	--- ---	--- ---	--- ---	--- ---	--- ---	--- ---
	---	667.68	---	667.79	668.03	---	---	---	---	---	---	---	---	---	---
0.80 "C"	63+78.03 44.25' LT	63+72.84 40.50' LT	63+63.85 34.00' LT	63+60.39 31.50' LT	63+47.94 22.50' LT	63+35.48 13.50' LT	63+23.03 4.50' LT	63+16.81	63+10.58 4.50' RT	62+98.13 13.50' RT	62+85.67 22.50' RT	62+73.22 31.50' RT	62+69.76 34.00' RT	62+60.77 40.50' RT	62+55.58 44.25' RT
	667.65	667.67	667.71	667.77	668.00	668.23	668.46	668.57	668.51	668.38	668.25	668.12	668.08	668.12	668.14
0.85 "C"	63+87.04 44.25' LT	63+81.91 40.50' LT	63+73.00 34.00' LT	63+69.58 31.50' LT	63+57.26 22.50' LT	63+44.93 13.50' LT	63+32.60 4.50' LT	63+26.44	63+20.28 4.50' RT	63+07.95 13.50' RT	62+95.63 22.50' RT	62+83.30 31.50' RT	62+79.88 34.00' RT	62+70.98 40.50' RT	62+65.84 44.25' RT
	667.61	667.63	667.67	667.73	667.96	668.19	668.42	668.54	668.47	668.34	668.21	668.08	668.04	668.08	668.10
0.90 "C"	63+96.05 44.25' LT	63+90.97 40.50' LT	63+82.16 34.00' LT	63+78.77 31.50' LT	63+66.57 22.50' LT	63+54.37 13.50' LT	63+42.18 4.50' LT	63+36.08	63+29.98 4.50' RT	63+17.78 13.50' RT	63+05.58 22.50' RT	62+93.39 31.50' RT	62+90.00 34.00' RT	62+81.19 40.50' RT	62+76.10 44.25' RT
	667.58	667.60	667.63	667.70	667.92	668.15	668.38	668.50	668.43	668.30	668.17	668.04	668.00	668.04	668.06
0.95 "C"	64+05.06 44.25' LT	64+00.03 40.50' LT	63+91.31 34.00' LT	63+87.96 31.50' LT	63+75.89 22.50' LT	63+63.82 13.50' LT	63+51.75 4.50' LT	63+45.71	63+39.68 4.50' RT	63+27.61 13.50' RT	63+15.54 22.50' RT	63+03.47 31.50' RT	63+00.11 34.00' RT	62+91.40 40.50' RT	62+86.37 44.25' RT
	667.54	667.56	667.60	667.66	667.89	668.12	668.34	668.46	668.39	668.26	668.13	668.00	667.96	668.00	668.02
C.L. BRG. F.A.	64+14.07 44.25' LT	64+09.10 40.50' LT	64+00.47 34.00' LT	63+97.15 31.50' LT	63+85.21 22.50' LT	63+73.27 13.50' LT	63+61.32 4.50' LT	63+55.35	63+49.38 4.50' RT	63+37.43 13.50' RT	63+25.49 22.50' RT	63+13.55 31.50' RT	63+10.23 34.00' RT	63+01.60 40.50' RT	62+96.63 44.25' RT
	667.51	667.53	667.56	667.62	667.85	668.08	668.31	668.42	668.35	668.22	668.09	667.96	667.92	667.95	667.97

Preliminary plans - Not For Reference Only

LEGEND:

"C" LENGTH OF SPAN 2 MEASURED ALONG ℄ GIRDER OR DECK FEATURE

NOTES:

1. *WORK THIS SHEET WITH SHEET 67 / 90.*
2. *SEE GIRDER ELEVATION SHEET 50 / 90 FOR GIRDER LENGTHS "C".*
3. *SEE SHEETS 65 & 66 / 90 FOR SIDEWALK DETAILS.*
4. *FINAL DECK SURFACE ELEVATIONS SHOWN REPRESENT THE DECK SURFACE LOCATION AFTER ALL ANTICIPATED DEAD LOAD DEFLECTIONS HAVE OCCURRED.*

FINAL DECK SURFACE ELEVATION TABLE (2 OF 2)
CUY-90-1696 (BRIDGE 14)
CR-722 (CARNEGIE AVE.) OVER I.R. 90

SFN 1807898
DESIGN AGENCY
Michael Baker INTERNATIONAL
DESIGNER ABC | CHECKER MEM
REVIEWER LPC 06/23/22
PROJECT ID 82382
SUBSET 68 | TOTAL 90
SHEET 2348 | TOTAL 2696

CUY-90-16.28 (CCG3A)

MODEL: final deck surface elev 2 PAPERSIZE: 34x22 (in.) DATE: 3/28/2025 TIME: 8:11:01 AM USER: Rohit.Bk
pw:\\mb-us-pw.bentley.com:mb-us-pw-03\Documents\Cleveland_OH\01_Projects\ODOT\District12\82382\400-Engineering\Structures\SFN_1807898\Sheets\82382_SFN_1807898_SD003.dgn

FINAL DECK ELEVATIONS, STATIONS, AND OFFSETS

	LT DECK EDGE	GIRDER G1	LT TOE/SIDEWALK	GIRDER G2	GIRDER G3	GIRDER G4	GIRDER G5	PROFILE GRADE	GIRDER G6	GIRDER G7	GIRDER G8	GIRDER G9	RT TOE/SIDEWALK	GIRDER G10	RT DECK EDGE
C.L. BRG. R.A.	59+71.35 | 44.25' LT	59+64.86 | 40.50' LT	59+53.60 | 34.00' LT	59+49.27 | 31.50' LT	59+33.68 | 22.50' LT	59+18.09 | 13.50' LT	59+02.50 | 4.50' LT	58+94.71	58+86.92 | 4.50' RT	58+71.33 | 13.50' RT	58+55.74 | 22.50' RT	58+40.15 | 31.50' RT	58+35.82 | 34.00' RT	58+24.56 | 40.50' RT	58+18.07 | 44.25' RT
	669.28	669.30	669.35	669.41	669.66	669.90	670.14	670.26	670.20	670.09	669.97	669.85	669.82	669.86	669.89
0.05 "B"	59+84.48 | 44.25' LT	59+78.01 | 40.50' LT	59+66.79 | 34.00' LT	59+62.47 | 31.50' LT	59+46.94 | 22.50' LT	59+31.41 | 13.50' LT	59+15.87 | 4.50' LT	59+08.11	59+00.34 | 4.50' RT	58+84.81 | 13.50' RT	58+69.27 | 22.50' RT	58+53.74 | 31.50' RT	58+49.42 | 34.00' RT	58+38.21 | 40.50' RT	58+31.73 | 44.25' RT
	669.22	669.25	669.29	669.36	669.60	669.85	670.09	670.21	670.15	670.03	669.91	669.80	669.76	669.81	669.83
0.10 "B"	59+97.60 | 44.25' LT	59+91.16 | 40.50' LT	59+79.98 | 34.00' LT	59+75.68 | 31.50' LT	59+60.20 | 22.50' LT	59+44.72 | 13.50' LT	59+29.24 | 4.50' LT	59+21.50	59+13.76 | 4.50' RT	58+98.28 | 13.50' RT	58+82.81 | 22.50' RT	58+67.33 | 31.50' RT	58+63.03 | 34.00' RT	58+51.85 | 40.50' RT	58+45.40 | 44.25' RT
	669.17	669.20	669.24	669.31	669.55	669.79	670.03	670.15	670.10	669.98	669.86	669.74	669.71	669.75	669.78
0.15 "B"	60+10.73 | 44.25' LT	60+04.30 | 40.50' LT	59+93.16 | 34.00' LT	59+88.88 | 31.50' LT	59+73.46 | 22.50' LT	59+58.03 | 13.50' LT	59+42.61 | 4.50' LT	59+34.90	59+27.19 | 4.50' RT	59+11.76 | 13.50' RT	58+96.34 | 22.50' RT	58+80.92 | 31.50' RT	58+76.63 | 34.00' RT	58+65.49 | 40.50' RT	58+59.07 | 44.25' RT
	669.12	669.14	669.19	669.26	669.50	669.74	669.98	670.10	670.04	669.92	669.81	669.69	669.65	669.70	669.72
0.20 "B"	60+23.86 | 44.25' LT	60+17.45 | 40.50' LT	60+06.35 | 34.00' LT	60+02.08 | 31.50' LT	59+86.72 | 22.50' LT	59+71.35 | 13.50' LT	59+55.98 | 4.50' LT	59+48.29	59+40.61 | 4.50' RT	59+25.24 | 13.50' RT	59+09.87 | 22.50' RT	58+94.50 | 31.50' RT	58+90.23 | 34.00' RT	58+79.14 | 40.50' RT	58+72.73 | 44.25' RT
	669.07	669.09	669.14	669.20	669.44	669.69	669.93	670.05	669.99	669.87	669.75	669.63	669.60	669.64	669.67
0.25 "B"	60+36.98 | 44.25' LT	60+30.60 | 40.50' LT	60+19.54 | 34.00' LT	60+15.29 | 31.50' LT	59+99.97 | 22.50' LT	59+84.66 | 13.50' LT	59+69.35 | 4.50' LT	59+61.69	59+54.03 | 4.50' RT	59+38.72 | 13.50' RT	59+23.41 | 22.50' RT	59+08.09 | 31.50' RT	59+03.84 | 34.00' RT	58+92.78 | 40.50' RT	58+86.40 | 44.25' RT
	669.01	669.04	669.08	669.15	669.39	669.63	669.87	669.99	669.93	669.82	669.70	669.58	669.55	669.59	669.62
0.30 "B"	60+50.11 | 44.25' LT	60+43.75 | 40.50' LT	60+32.73 | 34.00' LT	60+28.49 | 31.50' LT	60+13.23 | 22.50' LT	59+97.97 | 13.50' LT	59+82.72 | 4.50' LT	59+75.09	59+67.46 | 4.50' RT	59+52.20 | 13.50' RT	59+36.94 | 22.50' RT	59+21.68 | 31.50' RT	59+17.44 | 34.00' RT	59+06.42 | 40.50' RT	59+00.06 | 44.25' RT
	668.96	668.99	669.03	669.10	669.34	669.58	669.82	669.94	669.88	669.76	669.64	669.52	669.49	669.54	669.56
0.35 "B"	60+63.23 | 44.25' LT	60+56.90 | 40.50' LT	60+45.92 | 34.00' LT	60+41.69 | 31.50' LT	60+26.49 | 22.50' LT	60+11.29 | 13.50' LT	59+96.08 | 4.50' LT	59+88.48	59+80.88 | 4.50' RT	59+65.68 | 13.50' RT	59+50.47 | 22.50' RT	59+35.27 | 31.50' RT	59+31.05 | 34.00' RT	59+20.07 | 40.50' RT	59+13.73 | 44.25' RT
	668.91	668.93	668.98	669.04	669.29	669.53	669.77	669.89	669.83	669.71	669.59	669.47	669.44	669.48	669.51
0.40 "B"/ F.S. 1	60+76.36 | 44.25' LT	60+70.05 | 40.50' LT	60+59.11 | 34.00' LT	60+54.90 | 31.50' LT	60+39.75 | 22.50' LT	60+24.60 | 13.50' LT	60+09.45 | 4.50' LT	60+01.88	59+94.30 | 4.50' RT	59+79.15 | 13.50' RT	59+64.01 | 22.50' RT	59+48.86 | 31.50' RT	59+44.65 | 34.00' RT	59+33.71 | 40.50' RT	59+27.40 | 44.25' RT
	668.86	668.88	668.92	668.99	669.23	669.47	669.71	669.83	669.77	669.65	669.53	669.42	669.38	669.43	669.45
0.45 "B"	60+89.48 | 44.25' LT	60+83.20 | 40.50' LT	60+72.29 | 34.00' LT	60+68.10 | 31.50' LT	60+53.01 | 22.50' LT	60+37.91 | 13.50' LT	60+22.82 | 4.50' LT	60+15.27	60+07.73 | 4.50' RT	59+92.63 | 13.50' RT	59+77.54 | 22.50' RT	59+62.45 | 31.50' RT	59+58.25 | 34.00' RT	59+47.35 | 40.50' RT	59+41.06 | 44.25' RT
	668.80	668.83	668.87	668.94	669.18	669.42	669.66	669.78	669.72	669.60	669.48	669.36	669.33	669.37	669.40
0.50 "B"	61+02.61 | 44.25' LT	60+96.34 | 40.50' LT	60+85.48 | 34.00' LT	60+81.31 | 31.50' LT	60+66.27 | 22.50' LT	60+51.23 | 13.50' LT	60+36.19 | 4.50' LT	60+28.67	60+21.15 | 4.50' RT	60+06.11 | 13.50' RT	59+91.07 | 22.50' RT	59+76.03 | 31.50' RT	59+71.86 | 34.00' RT	59+61.00 | 40.50' RT	59+54.73 | 44.25' RT
	668.75	668.78	668.82	668.89	669.13	669.37	669.61	669.73	669.67	669.55	669.43	669.31	669.27	669.32	669.34
0.55 "B"	61+15.74 | 44.25' LT	61+09.49 | 40.50' LT	60+98.67 | 34.00' LT	60+94.51 | 31.50' LT	60+79.53 | 22.50' LT	60+64.54 | 13.50' LT	60+49.56 | 4.50' LT	60+42.07	60+34.57 | 4.50' RT	60+19.59 | 13.50' RT	60+04.61 | 22.50' RT	59+89.62 | 31.50' RT	59+85.46 | 34.00' RT	59+74.64 | 40.50' RT	59+68.40 | 44.25' RT
	668.70	668.72	668.77	668.83	669.07	669.31	669.55	669.67	669.61	669.49	669.37	669.25	669.22	669.26	669.29
0.60 "B"	61+28.86 | 44.25' LT	61+22.64 | 40.50' LT	61+11.86 | 34.00' LT	61+07.71 | 31.50' LT	60+92.78 | 22.50' LT	60+77.86 | 13.50' LT	60+62.93 | 4.50' LT	60+55.46	60+48.00 | 4.50' RT	60+33.07 | 13.50' RT	60+18.14 | 22.50' RT	60+03.21 | 31.50' RT	59+99.06 | 34.00' RT	59+88.28 | 40.50' RT	59+82.06 | 44.25' RT
	668.65	668.67	668.71	668.78	669.02	669.26	669.50	669.62	669.56	669.44	669.32	669.20	669.16	669.21	669.23
0.65 "B"	61+41.99 | 44.25' LT	61+35.79 | 40.50' LT	61+25.05 | 34.00' LT	61+20.92 | 31.50' LT	61+06.04 | 22.50' LT	60+91.17 | 13.50' LT	60+76.29 | 4.50' LT	60+68.86	60+61.42 | 4.50' RT	60+46.55 | 13.50' RT	60+31.67 | 22.50' RT	60+16.80 | 31.50' RT	60+12.67 | 34.00' RT	60+01.93 | 40.50' RT	59+95.73 | 44.25' RT
	668.59	668.62	668.66	668.73	668.97	669.21	669.45	669.57	669.51	669.38	669.26	669.14	669.11	669.15	669.18
0.70 "B"	61+55.11 | 44.25' LT	61+48.94 | 40.50' LT	61+38.24 | 34.00' LT	61+34.12 | 31.50' LT	61+19.30 | 22.50' LT	61+04.48 | 13.50' LT	60+89.66 | 4.50' LT	60+82.25	60+74.84 | 4.50' RT	60+60.03 | 13.50' RT	60+45.21 | 22.50' RT	60+30.39 | 31.50' RT	60+26.27 | 34.00' RT	60+15.57 | 40.50' RT	60+09.39 | 44.25' RT
	668.54	668.57	668.61	668.67	668.91	669.15	669.39	669.51	669.45	669.33	669.21	669.09	669.06	669.10	669.12
0.75 "B"	61+68.24 | 44.25' LT	61+62.09 | 40.50' LT	61+51.42 | 34.00' LT	61+47.32 | 31.50' LT	61+32.56 | 22.50' LT	61+17.80 | 13.50' LT	61+03.03 | 4.50' LT	60+95.65	60+88.27 | 4.50' RT	60+73.50 | 13.50' RT	60+58.74 | 22.50' RT	60+43.98 | 31.50' RT	60+39.88 | 34.00' RT	60+29.21 | 40.50' RT	60+23.06 | 44.25' RT
	668.49	668.51	668.56	668.62	668.86	669.10	669.34	669.46	669.40	669.28	669.16	669.04	669.00	669.04	669.07
0.80 "B"/ F.S. 2	61+81.36 | 44.25' LT	61+75.24 | 40.50' LT	61+64.61 | 34.00' LT	61+60.53 | 31.50' LT	61+45.82 | 22.50' LT	61+31.11 | 13.50' LT	61+16.40 | 4.50' LT	61+09.05	61+01.69 | 4.50' RT	60+86.98 | 13.50' RT	60+72.27 | 22.50' RT	60+57.56 | 31.50' RT	60+53.48 | 34.00' RT	60+42.86 | 40.50' RT	60+36.73 | 44.25' RT
	668.44	668.46	668.50	668.57	668.81	669.05	669.29	669.40	669.34	669.22	669.10	668.98	668.95	668.99	669.01
0.85 "B"	61+94.49 | 44.25' LT	61+88.38 | 40.50' LT	61+77.80 | 34.00' LT	61+73.73 | 31.50' LT	61+59.08 | 22.50' LT	61+44.42 | 13.50' LT	61+29.77 | 4.50' LT	61+22.44	61+15.12 | 4.50' RT	61+00.46 | 13.50' RT	60+85.81 | 22.50' RT	60+71.15 | 31.50' RT	60+67.08 | 34.00' RT	60+56.50 | 40.50' RT	60+50.39 | 44.25' RT
	668.38	668.41	668.45	668.52	668.75	668.99	669.23	669.35	669.29	669.17	669.05	668.93	668.89	668.94	668.96
0.90 "B"	62+07.62 | 44.25' LT	62+01.53 | 40.50' LT	61+90.99 | 34.00' LT	61+86.93 | 31.50' LT	61+72.34 | 22.50' LT	61+57.74 | 13.50' LT	61+43.14 | 4.50' LT	61+35.84	61+28.54 | 4.50' RT	61+13.94 | 13.50' RT	60+99.34 | 22.50' RT	60+84.74 | 31.50' RT	60+80.69 | 34.00' RT	60+70.14 | 40.50' RT	60+64.06 | 44.25' RT
	668.33	668.35	668.40	668.46	668.70	668.94	669.18	669.30	669.24	669.12	668.99	668.87	668.84	668.88	668.90
0.95 "B"	62+20.74 | 44.25' LT	62+14.68 | 40.50' LT	62+04.18 | 34.00' LT	62+00.14 | 31.50' LT	61+85.59 | 22.50' LT	61+71.05 | 13.50' LT	61+56.51 | 4.50' LT	61+49.23	61+41.96 | 4.50' RT	61+27.42 | 13.50' RT	61+12.87 | 22.50' RT	60+98.33 | 31.50' RT	60+94.29 | 34.00' RT	60+83.79 | 40.50' RT	60+77.73 | 44.25' RT
	668.28	668.30	668.34	668.41	668.65	668.89	669.12	669.24	669.18	669.06	668.94	668.82	668.78	668.83	668.85
C.L. PIER	62+33.87 | 44.25' LT	62+27.83 | 40.50' LT	62+17.37 | 34.00' LT	62+13.34 | 31.50' LT	61+98.85 | 22.50' LT	61+84.36 | 13.50' LT	61+69.87 | 4.50' LT	61+62.63	61+55.39 | 4.50' RT	61+40.90 | 13.50' RT	61+26.41 | 22.50' RT	61+11.92 | 31.50' RT	61+07.89 | 34.00' RT	60+97.43 | 40.50' RT	60+91.39 | 44.25' RT
	668.23	668.25	668.29	668.36	668.60	668.83	669.07	669.19	669.13	669.01	668.89	668.76	668.73	668.77	668.80

Preliminary Plans - Not For Reference Only

LEGEND:

"B" LENGTH OF SPAN 1 MEASURED ALONG ℄ GIRDER OR DECK FEATURE

NOTES:

1. WORK THIS SHEET WITH SHEET 70/90.
2. SEE GIRDER ELEVATION SHEET 49/90 FOR GIRDER LENGTHS "B".
3. SEE SHEETS 65 & 66/90 FOR SIDEWALK DETAILS.
4. SCREED ELEVATIONS SHOWN REPRESENT THE THEORETICAL DECK SURFACE LOCATION PRIOR TO DEFLECTIONS CAUSED BY DECK PLACEMENT AND OTHER ANTICIPATED DEAD LOADS.

DECK SCREED ELEVATION TABLE (1 OF 2)
CUY-90-1696 (BRIDGE 14)
CR-722 (CARNEGIE AVE.) OVER I.R. 90

SFN 1807898
DESIGN AGENCY
Michael Baker INTERNATIONAL
DESIGNER ABC | CHECKER MEM
REVIEWER LPC 06/23/22
PROJECT ID 82382
SUBSET 69 | TOTAL 90
SHEET 2349 | TOTAL 2696

CUY-90-16.28 (CCG3A)
MODEL: deck screed elev table 1 PAPERSIZE: 34x22 (in.) DATE: 3/28/2025 TIME: 8:11:10 AM USER: Rohit.Bk
pw:\\mb-us-pw.bentley.com:mb-us-pw-03\Documents\Cleveland_OH\01_Projects\ODOT\District12\82382\400-Engineering\Structures\SFN_1807898\Sheets\82382_SFN_1807898_SD004.dgn

FINAL DECK ELEVATIONS, STATIONS, AND OFFSETS

	LT DECK EDGE	GIRDER G1	LT TOE/SIDEWALK	GIRDER G2	GIRDER G3	GIRDER G4	GIRDER G5	PROFILE GRADE	GIRDER G6	GIRDER G7	GIRDER G8	GIRDER G9	RT TOE/SIDEWALK	GIRDER G10	RT DECK EDGE
C.L. PIER	62+33.87 44.25' LT	62+27.83 40.50' LT	62+17.37 34.00' LT	62+13.34 31.50' LT	61+98.85 22.50' LT	61+84.36 13.50' LT	61+69.87 4.50' LT	61+62.63	61+55.39 4.50' RT	61+40.90 13.50' RT	61+26.41 22.50' RT	61+11.92 31.50' RT	61+07.89 34.00' RT	60+97.43 40.50' RT	60+91.39 44.25' RT
	668.23	668.25	668.29	668.36	668.60	668.83	669.07	669.19	669.13	669.01	668.89	668.76	668.73	668.77	668.80
0.05 "C"	62+42.88 44.25' LT	62+36.89 40.50' LT	62+26.52 34.00' LT	62+22.53 31.50' LT	62+08.17 22.50' LT	61+93.81 13.50' LT	61+79.45 4.50' LT	61+72.27	61+65.09 4.50' RT	61+50.72 13.50' RT	61+36.36 22.50' RT	61+22.00 31.50' RT	61+18.01 34.00' RT	61+07.64 40.50' RT	61+01.65 44.25' RT
	668.19	668.21	668.25	668.32	668.56	668.80	669.03	669.15	669.09	668.97	668.85	668.72	668.69	668.73	668.75
0.10 "C"	62+51.89 44.25' LT	62+45.96 40.50' LT	62+35.68 34.00' LT	62+31.72 31.50' LT	62+17.49 22.50' LT	62+03.25 13.50' LT	61+89.02 4.50' LT	61+81.90	61+74.78 4.50' RT	61+60.55 13.50' RT	61+46.32 22.50' RT	61+32.08 31.50' RT	61+28.13 34.00' RT	61+17.85 40.50' RT	61+11.92 44.25' RT
	668.15	668.18	668.22	668.28	668.52	668.76	668.99	669.11	669.05	668.93	668.81	668.68	668.65	668.69	668.71
0.15 "C"	62+60.90 44.25' LT	62+55.02 40.50' LT	62+44.83 34.00' LT	62+40.91 31.50' LT	62+26.81 22.50' LT	62+12.70 13.50' LT	61+98.59 4.50' LT	61+91.54	61+84.48 4.50' RT	61+70.38 13.50' RT	61+56.27 22.50' RT	61+42.16 31.50' RT	61+38.24 34.00' RT	61+28.06 40.50' RT	61+22.18 44.25' RT
	668.12	668.14	668.18	668.25	668.48	668.72	668.96	669.07	669.01	668.89	668.77	668.64	668.61	668.65	668.67
0.20 "C"	62+69.91 44.25' LT	62+64.08 40.50' LT	62+53.99 34.00' LT	62+50.10 31.50' LT	62+36.12 22.50' LT	62+22.14 13.50' LT	62+08.16 4.50' LT	62+01.17	61+94.18 4.50' RT	61+80.20 13.50' RT	61+66.22 22.50' RT	61+52.24 31.50' RT	61+48.36 34.00' RT	61+38.26 40.50' RT	61+32.44 44.25' RT
	668.08	668.10	668.15	668.21	668.45	668.68	668.92	669.04	668.97	668.85	668.73	668.60	668.57	668.61	668.63
0.25 "C"	62+78.92 44.25' LT	62+73.15 40.50' LT	62+63.14 34.00' LT	62+59.29 31.50' LT	62+45.44 22.50' LT	62+31.59 13.50' LT	62+17.74 4.50' LT	62+10.81	62+03.88 4.50' RT	61+90.03 13.50' RT	61+76.18 22.50' RT	61+62.33 31.50' RT	61+58.48 34.00' RT	61+48.47 40.50' RT	61+42.70 44.25' RT
	668.05	668.07	668.11	668.17	668.41	668.64	668.88	669.00	668.94	668.81	668.69	668.56	668.53	668.57	668.59
0.30 "C"/ F.S. 3	62+87.93 44.25' LT	62+82.21 40.50' LT	62+72.30 34.00' LT	62+68.48 31.50' LT	62+54.76 22.50' LT	62+41.03 13.50' LT	62+27.31 4.50' LT	62+20.45	62+13.58 4.50' RT	61+99.86 13.50' RT	61+86.13 22.50' RT	61+72.41 31.50' RT	61+68.59 34.00' RT	61+58.68 40.50' RT	61+52.96 44.25' RT
	668.01	668.03	668.07	668.14	668.37	668.61	668.84	668.96	668.90	668.77	668.65	668.52	668.49	668.53	668.55
0.35 "C"	62+96.94 44.25' LT	62+91.27 40.50' LT	62+81.45 34.00' LT	62+77.68 31.50' LT	62+64.08 22.50' LT	62+50.48 13.50' LT	62+36.88 4.50' LT	62+30.08	62+23.28 4.50' RT	62+09.68 13.50' RT	61+96.09 22.50' RT	61+82.49 31.50' RT	61+78.71 34.00' RT	61+68.89 40.50' RT	61+63.22 44.25' RT
	667.97	668.00	668.04	668.10	668.33	668.57	668.80	668.92	668.86	668.73	668.61	668.48	668.45	668.49	668.51
0.40 "C"	63+05.95 44.25' LT	63+00.34 40.50' LT	62+90.61 34.00' LT	62+86.87 31.50' LT	62+73.39 22.50' LT	62+59.92 13.50' LT	62+46.45 4.50' LT	62+39.72	62+32.98 4.50' RT	62+19.51 13.50' RT	62+06.04 22.50' RT	61+92.57 31.50' RT	61+88.83 34.00' RT	61+79.10 40.50' RT	61+73.49 44.25' RT
	667.94	667.96	668.00	668.06	668.30	668.53	668.77	668.88	668.82	668.69	668.57	668.44	668.41	668.44	668.47
0.45 "C"	63+14.96 44.25' LT	63+09.40 40.50' LT	62+99.76 34.00' LT	62+96.06 31.50' LT	62+82.71 22.50' LT	62+69.37 13.50' LT	62+56.03 4.50' LT	62+49.35	62+42.68 4.50' RT	62+29.34 13.50' RT	62+16.00 22.50' RT	62+02.65 31.50' RT	61+98.95 34.00' RT	61+89.31 40.50' RT	61+83.75 44.25' RT
	667.90	667.92	667.96	668.03	668.26	668.49	668.73	668.84	668.78	668.65	668.53	668.40	668.37	668.40	668.43
0.50 "C"	63+23.97 44.25' LT	63+18.46 40.50' LT	63+08.92 34.00' LT	63+05.25 31.50' LT	62+92.03 22.50' LT	62+78.81 13.50' LT	62+65.60 4.50' LT	62+58.99	62+52.38 4.50' RT	62+39.17 13.50' RT	62+25.95 22.50' RT	62+12.73 31.50' RT	62+09.06 34.00' RT	61+99.52 40.50' RT	61+94.01 44.25' RT
	667.87	667.89	667.93	667.99	668.22	668.46	668.69	668.81	668.74	668.61	668.49	668.36	668.32	668.36	668.38
0.55 "C"	63+32.98 44.25' LT	63+27.53 40.50' LT	63+18.07 34.00' LT	63+14.44 31.50' LT	63+01.35 22.50' LT	62+88.26 13.50' LT	62+75.17 4.50' LT	62+68.63	62+62.08 4.50' RT	62+48.99 13.50' RT	62+35.90 22.50' RT	62+22.81 31.50' RT	62+19.18 34.00' RT	62+09.73 40.50' RT	62+04.27 44.25' RT
	667.83	667.85	667.89	667.95	668.19	668.42	668.65	668.77	668.70	668.58	668.45	668.32	668.28	668.32	668.34
0.60 "C"	63+41.99 44.25' LT	63+36.59 40.50' LT	63+27.23 34.00' LT	63+23.63 31.50' LT	63+10.67 22.50' LT	62+97.70 13.50' LT	62+84.74 4.50' LT	62+78.26	62+71.78 4.50' RT	62+58.82 13.50' RT	62+45.86 22.50' RT	62+32.90 31.50' RT	62+29.30 34.00' RT	62+19.93 40.50' RT	62+14.53 44.25' RT
	667.79	667.81	667.85	667.92	668.15	668.38	668.61	668.73	668.66	668.54	668.41	668.28	668.24	668.28	668.30
0.65 "C"	63+51.00 44.25' LT	63+45.65 40.50' LT	63+36.38 34.00' LT	63+32.82 31.50' LT	63+19.98 22.50' LT	63+07.15 13.50' LT	62+94.32 4.50' LT	62+87.90	62+81.48 4.50' RT	62+68.65 13.50' RT	62+55.81 22.50' RT	62+42.98 31.50' RT	62+39.41 34.00' RT	62+30.14 40.50' RT	62+24.80 44.25' RT
	667.76	667.78	667.82	667.88	668.11	668.34	668.57	668.69	668.63	668.50	668.37	668.24	668.20	668.24	668.26
F.S. 4	--- ---	--- ---	--- ---	--- ---	--- ---	--- ---	--- ---	---	--- ---	--- ---	--- ---	--- ---	--- ---	62+38.69 40.50' RT	--- ---
	---	---	---	---	---	---	---	---	---	---	---	---	---	668.21	---
0.70 "C"	63+60.01 44.25' LT	63+54.72 40.50' LT	63+45.54 34.00' LT	63+42.01 31.50' LT	63+29.30 22.50' LT	63+16.59 13.50' LT	63+03.89 4.50' LT	62+97.53	62+91.18 4.50' RT	62+78.47 13.50' RT	62+65.77 22.50' RT	62+53.06 31.50' RT	62+49.53 34.00' RT	62+40.35 40.50' RT	62+35.06 44.25' RT
	667.72	667.74	667.78	667.84	668.07	668.30	668.54	668.65	668.59	668.46	668.33	668.20	668.16	668.20	668.22
F.S. 4	--- ---	--- ---	--- ---	--- ---	--- ---	63+25.63 13.50' LT	63+11.31 4.50' LT	---	62+96.65 4.50' RT	62+82.16 13.50' RT	62+67.67 22.50' RT	62+53.18 31.50' RT	--- ---	--- ---	--- ---
	---	---	---	---	---	668.27	668.51	---	668.56	668.44	668.32	668.20	---	---	---
0.75 "C"	63+69.02 44.25' LT	63+63.78 40.50' LT	63+54.69 34.00' LT	63+51.20 31.50' LT	63+38.62 22.50' LT	63+26.04 13.50' LT	63+13.46 4.50' LT	63+07.17	63+00.88 4.50' RT	62+88.30 13.50' RT	62+75.72 22.50' RT	62+63.14 31.50' RT	62+59.65 34.00' RT	62+50.56 40.50' RT	62+45.32 44.25' RT
	667.68	667.71	667.74	667.81	668.04	668.27	668.50	668.61	668.55	668.42	668.29	668.16	668.12	668.16	668.18
F.S. 4	--- ---	63+69.10 40.50' LT	--- ---	63+54.61 31.50' LT	63+40.12 22.50' LT	--- ---	--- ---	---	--- ---	--- ---	--- ---	--- ---	--- ---	--- ---	--- ---
	---	667.68	---	667.79	668.03	---	---	---	---	---	---	---	---	---	---
0.80 "C"	63+78.03 44.25' LT	63+72.84 40.50' LT	63+63.85 34.00' LT	63+60.39 31.50' LT	63+47.94 22.50' LT	63+35.48 13.50' LT	63+23.03 4.50' LT	63+16.81	63+10.58 4.50' RT	62+98.13 13.50' RT	62+85.67 22.50' RT	62+73.22 31.50' RT	62+69.76 34.00' RT	62+60.77 40.50' RT	62+55.58 44.25' RT
	667.65	667.67	667.71	667.77	668.00	668.23	668.46	668.57	668.51	668.38	668.25	668.12	668.08	668.12	668.14
0.85 "C"	63+87.04 44.25' LT	63+81.91 40.50' LT	63+73.00 34.00' LT	63+69.58 31.50' LT	63+57.26 22.50' LT	63+44.93 13.50' LT	63+32.60 4.50' LT	63+26.44	63+20.28 4.50' RT	63+07.95 13.50' RT	62+95.63 22.50' RT	62+83.30 31.50' RT	62+79.88 34.00' RT	62+70.98 40.50' RT	62+65.84 44.25' RT
	667.61	667.63	667.67	667.73	667.96	668.19	668.42	668.54	668.47	668.34	668.21	668.08	668.04	668.08	668.10
0.90 "C"	63+96.05 44.25' LT	63+90.97 40.50' LT	63+82.16 34.00' LT	63+78.77 31.50' LT	63+66.57 22.50' LT	63+54.37 13.50' LT	63+42.18 4.50' LT	63+36.08	63+29.98 4.50' RT	63+17.78 13.50' RT	63+05.58 22.50' RT	62+93.39 31.50' RT	62+90.00 34.00' RT	62+81.19 40.50' RT	62+76.10 44.25' RT
	667.58	667.60	667.63	667.70	667.92	668.15	668.38	668.50	668.43	668.30	668.17	668.04	668.00	668.04	668.06
0.95 "C"	64+05.06 44.25' LT	64+00.03 40.50' LT	63+91.31 34.00' LT	63+87.96 31.50' LT	63+75.89 22.50' LT	63+63.82 13.50' LT	63+51.75 4.50' LT	63+45.71	63+39.68 4.50' RT	63+27.61 13.50' RT	63+15.54 22.50' RT	63+03.47 31.50' RT	63+00.11 34.00' RT	62+91.40 40.50' RT	62+86.37 44.25' RT
	667.54	667.56	667.60	667.66	667.89	668.12	668.34	668.46	668.39	668.26	668.13	668.00	667.96	668.00	668.02
C.L. BRG. F.A.	64+14.07 44.25' LT	64+09.10 40.50' LT	64+00.47 34.00' LT	63+97.15 31.50' LT	63+85.21 22.50' LT	63+73.27 13.50' LT	63+61.32 4.50' LT	63+55.35	63+49.38 4.50' RT	63+37.43 13.50' RT	63+25.49 22.50' RT	63+13.55 31.50' RT	63+10.23 34.00' RT	63+01.60 40.50' RT	62+96.63 44.25' RT
	667.51	667.53	667.56	667.62	667.85	668.08	668.31	668.42	668.35	668.22	668.09	667.96	667.92	667.95	667.97

Preliminary Plans - For Reference Only

LEGEND:

"C" LENGTH OF SPAN 2 MEASURED ALONG ℄ GIRDER OR DECK FEATURE

NOTES:

1. *WORK THIS SHEET WITH SHEET 69 / 90.*
2. *SEE GIRDER ELEVATION SHEET 50 / 90 FOR GIRDER LENGTHS "C".*
3. *SEE SHEETS 65 & 66 / 90 FOR SIDEWALK DETAILS.*
4. *SCREED ELEVATIONS SHOWN REPRESENT THE THEORETICAL DECK SURFACE LOCATION PRIOR TO DEFLECTIONS CAUSED BY DECK PLACEMENT AND OTHER ANTICIPATED DEAD LOADS.*

DECK SCREED ELEVATION TABLE (2 OF 2)
CUY-90-1696 (BRIDGE 14)
CR-722 (CARNEGIE AVE.) OVER I.R. 90

SFN 1807898
DESIGN AGENCY
Michael Baker INTERNATIONAL
DESIGNER ABC | CHECKER MEM
REVIEWER LPC 06/23/22
PROJECT ID 82382
SUBSET 70 | TOTAL 90
SHEET 2350 | TOTAL 2696

CUY-90-16.28 (CCG3A)

MODEL: deck screed elev table 2 PAPERSIZE: 34x22 (in.) DATE: 3/28/2025 TIME: 8:11:11 AM USER: Rohit.Bk
pw:\\mb-us-pw.bentley.com:mb-us-pw-03\Documents\Cleveland_OH\01_Projects\ODOT\District12\82382\400-Engineering\Structures\SFN_1807898\Sheets\82382_SFN_1807898_SD004.dgn

TOP OF HAUNCH ELEVATIONS, STATIONS, AND OFFSETS

	GIRDER G1	GIRDER G2	GIRDER G3	GIRDER G4	GIRDER G5	GIRDER G6	GIRDER G7	GIRDER G8	GIRDER G9	GIRDER G10
C.L. BRG. R.A.	59+64.86 40.50' LT	59+49.27 31.50' LT	59+33.68 22.50' LT	59+18.09 13.50' LT	59+02.50 4.50' LT	58+86.92 4.50' RT	58+71.33 13.50' RT	58+55.74 22.50' RT	58+40.15 31.50' RT	58+24.56 40.50' RT
	668.59	668.71	668.95	669.19	669.43	669.50	669.38	669.26	669.14	669.15
0.05 "B"	59+78.01 40.50' LT	59+62.47 31.50' LT	59+46.94 22.50' LT	59+31.41 13.50' LT	59+15.87 4.50' LT	59+00.34 4.50' RT	58+84.81 13.50' RT	58+69.27 22.50' RT	58+53.74 31.50' RT	58+38.21 40.50' RT
	668.74	668.84	669.07	669.30	669.55	669.61	669.51	669.40	669.30	669.33
0.10 "B"	59+91.16 40.50' LT	59+75.68 31.50' LT	59+60.20 22.50' LT	59+44.72 13.50' LT	59+29.24 4.50' LT	59+13.76 4.50' RT	58+98.28 13.50' RT	58+82.81 22.50' RT	58+67.33 31.50' RT	58+51.85 40.50' RT
	668.87	668.95	669.18	669.41	669.65	669.72	669.62	669.53	669.44	669.49
0.15 "B"	60+04.30 40.50' LT	59+88.88 31.50' LT	59+73.46 22.50' LT	59+58.03 13.50' LT	59+42.61 4.50' LT	59+27.19 4.50' RT	59+11.76 13.50' RT	58+96.34 22.50' RT	58+80.92 31.50' RT	58+65.49 40.50' RT
	668.99	669.06	669.27	669.50	669.74	669.82	669.72	669.64	669.58	669.65
0.20 "B"	60+17.45 40.50' LT	60+02.08 31.50' LT	59+86.72 22.50' LT	59+71.35 13.50' LT	59+55.98 4.50' LT	59+40.61 4.50' RT	59+25.24 13.50' RT	59+09.87 22.50' RT	58+94.50 31.50' RT	58+79.14 40.50' RT
	669.09	669.15	669.35	669.58	669.82	669.89	669.81	669.74	669.69	669.77
0.25 "B"	60+30.60 40.50' LT	60+15.29 31.50' LT	59+99.97 22.50' LT	59+84.66 13.50' LT	59+69.35 4.50' LT	59+54.03 4.50' RT	59+38.72 13.50' RT	59+23.41 22.50' RT	59+08.09 31.50' RT	58+92.78 40.50' RT
	669.17	669.22	669.42	669.64	669.87	669.95	669.87	669.81	669.77	669.87
0.30 "B"	60+43.75 40.50' LT	60+28.49 31.50' LT	60+13.23 22.50' LT	59+97.97 13.50' LT	59+82.72 4.50' LT	59+67.46 4.50' RT	59+52.20 13.50' RT	59+36.94 22.50' RT	59+21.68 31.50' RT	59+06.42 40.50' RT
	669.22	669.26	669.45	669.67	669.91	669.99	669.91	669.85	669.82	669.94
0.35 "B"	60+56.90 40.50' LT	60+41.69 31.50' LT	60+26.49 22.50' LT	60+11.29 13.50' LT	59+96.08 4.50' LT	59+80.88 4.50' RT	59+65.68 13.50' RT	59+50.47 22.50' RT	59+35.27 31.50' RT	59+20.07 40.50' RT
	669.25	669.28	669.47	669.69	669.92	670.00	669.92	669.87	669.84	669.98
0.40 "B"/ F.S. 1	60+70.05 40.50' LT	60+54.90 31.50' LT	60+39.75 22.50' LT	60+24.60 13.50' LT	60+09.45 4.50' LT	59+94.30 4.50' RT	59+79.15 13.50' RT	59+64.01 22.50' RT	59+48.86 31.50' RT	59+33.71 40.50' RT
	669.24	669.27	669.46	669.67	669.91	669.98	669.90	669.85	669.84	669.97
0.45 "B"	60+83.20 40.50' LT	60+68.10 31.50' LT	60+53.01 22.50' LT	60+37.91 13.50' LT	60+22.82 4.50' LT	60+07.73 4.50' RT	59+92.63 13.50' RT	59+77.54 22.50' RT	59+62.45 31.50' RT	59+47.35 40.50' RT
	669.20	669.23	669.42	669.63	669.86	669.94	669.86	669.81	669.79	669.93
0.50 "B"	60+96.34 40.50' LT	60+81.31 31.50' LT	60+66.27 22.50' LT	60+51.23 13.50' LT	60+36.19 4.50' LT	60+21.15 4.50' RT	60+06.11 13.50' RT	59+91.07 22.50' RT	59+76.03 31.50' RT	59+61.00 40.50' RT
	669.13	669.17	669.36	669.56	669.80	669.87	669.79	669.74	669.72	669.86
0.55 "B"	61+09.49 40.50' LT	60+94.51 31.50' LT	60+79.53 22.50' LT	60+64.54 13.50' LT	60+49.56 4.50' LT	60+34.57 4.50' RT	60+19.59 13.50' RT	60+04.61 22.50' RT	59+89.62 31.50' RT	59+74.64 40.50' RT
	669.03	669.07	669.26	669.47	669.70	669.77	669.69	669.63	669.61	669.75
0.60 "B"	61+22.64 40.50' LT	61+07.71 31.50' LT	60+92.78 22.50' LT	60+77.86 13.50' LT	60+62.93 4.50' LT	60+48.00 4.50' RT	60+33.07 13.50' RT	60+18.14 22.50' RT	60+03.21 31.50' RT	59+88.28 40.50' RT
	668.90	668.95	669.14	669.35	669.59	669.66	669.57	669.51	669.47	669.60
0.65 "B"	61+35.79 40.50' LT	61+20.92 31.50' LT	61+06.04 22.50' LT	60+91.17 13.50' LT	60+76.29 4.50' LT	60+61.42 4.50' RT	60+46.55 13.50' RT	60+31.67 22.50' RT	60+16.80 31.50' RT	60+01.93 40.50' RT
	668.75	668.81	669.00	669.22	669.46	669.52	669.42	669.35	669.31	669.43
0.70 "B"	61+48.94 40.50' LT	61+34.12 31.50' LT	61+19.30 22.50' LT	61+04.48 13.50' LT	60+89.66 4.50' LT	60+74.84 4.50' RT	60+60.03 13.50' RT	60+45.21 22.50' RT	60+30.39 31.50' RT	60+15.57 40.50' RT
	668.58	668.65	668.85	669.06	669.30	669.36	669.26	669.18	669.13	669.24
0.75 "B"	61+62.09 40.50' LT	61+47.32 31.50' LT	61+32.56 22.50' LT	61+17.80 13.50' LT	61+03.03 4.50' LT	60+88.27 4.50' RT	60+73.50 13.50' RT	60+58.74 22.50' RT	60+43.98 31.50' RT	60+29.21 40.50' RT
	668.39	668.47	668.67	668.90	669.14	669.19	669.09	669.01	668.94	669.03
0.80 "B"/ F.S. 2	61+75.24 40.50' LT	61+60.53 31.50' LT	61+45.82 22.50' LT	61+31.11 13.50' LT	61+16.40 4.50' LT	61+01.69 4.50' RT	60+86.98 13.50' RT	60+72.27 22.50' RT	60+57.56 31.50' RT	60+42.86 40.50' RT
	668.20	668.29	668.51	668.73	668.97	669.03	668.92	668.82	668.74	668.81
0.85 "B"	61+88.38 40.50' LT	61+73.73 31.50' LT	61+59.08 22.50' LT	61+44.42 13.50' LT	61+29.77 4.50' LT	61+15.12 4.50' RT	61+00.46 13.50' RT	60+85.81 22.50' RT	60+71.15 31.50' RT	60+56.50 40.50' RT
	668.02	668.12	668.33	668.56	668.80	668.86	668.74	668.64	668.54	668.60
0.90 "B"	62+01.53 40.50' LT	61+86.93 31.50' LT	61+72.34 22.50' LT	61+57.74 13.50' LT	61+43.14 4.50' LT	61+28.54 4.50' RT	61+13.94 13.50' RT	60+99.34 22.50' RT	60+84.74 31.50' RT	60+70.14 40.50' RT
	667.84	667.94	668.17	668.40	668.64	668.70	668.58	668.47	668.36	668.40
0.95 "B"	62+14.68 40.50' LT	62+00.14 31.50' LT	61+85.59 22.50' LT	61+71.05 13.50' LT	61+56.51 4.50' LT	61+41.96 4.50' RT	61+27.42 13.50' RT	61+12.87 22.50' RT	60+98.33 31.50' RT	60+83.79 40.50' RT
	667.68	667.79	668.02	668.26	668.49	668.55	668.43	668.31	668.20	668.22
C.L. PIER	62+27.83 40.50' LT	62+13.34 31.50' LT	61+98.85 22.50' LT	61+84.36 13.50' LT	61+69.87 4.50' LT	61+55.39 4.50' RT	61+40.90 13.50' RT	61+26.41 22.50' RT	61+11.92 31.50' RT	60+97.43 40.50' RT
	667.54	667.65	667.89	668.13	668.36	668.42	668.30	668.18	668.05	668.06

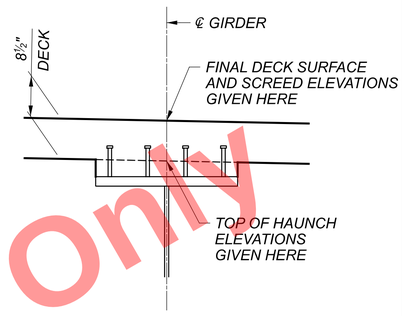

DECK HAUNCH DETAIL

Preliminary Plans - For Reference Only

LEGEND:

"B" LENGTH OF SPAN 1 MEASURED ALONG ℄ GIRDER OR DECK FEATURE

NOTES:

1. WORK THIS SHEET WITH SHEET 71/90.
2. SEE GIRDER ELEVATION SHEET 49/90 FOR GIRDER LENGTHS "B".
3. SEE SHEETS 65 & 66/90 FOR SIDEWALK DETAILS.
4. TOP OF HAUNCH ELEVATIONS SHOWN REPRESENT THE THEORETICAL LOCATION OF THE BOTTOM OF THE DECK ABOVE THE GIRDER HAUNCH PRIOR TO DEFLECTIONS CAUSED BY DECK PLACEMENT AND OTHER ANTICIPATED DEAD LOADS.

TOP OF HAUNCH ELEVATION TABLE (1 OF 2)
CUY-90-1696 (BRIDGE 14)
CR-722 (CARNEGIE AVE.) OVER I.R. 90

SFN 1807898
DESIGN AGENCY Michael Baker INTERNATIONAL
DESIGNER ABC | CHECKER MEM
REVIEWER LPC 06/23/22
PROJECT ID 82382
SUBSET 71 | TOTAL 90
SHEET 2351 | TOTAL 2696

CUY-90-16.28 (CCG3A)

MODEL: top of haunch elev table 1 PAPERSIZE: 34x22 (in.) DATE: 3/28/2025 TIME: 8:11:20 AM USER: RohitI.Bk
pw:\\mb-us-pw.bentley.com:mb-us-pw-03\Documents\Cleveland_OH\01_Projects\ODOT\District12\82382\400-Engineering\Structures\SFN_1807898\Sheets\82382_SFN_1807898_SD005.dgn

TOP OF HAUNCH ELEVATIONS, STATIONS, AND OFFSETS

	GIRDER G1	GIRDER G2	GIRDER G3	GIRDER G4	GIRDER G5	GIRDER G6	GIRDER G7	GIRDER G8	GIRDER G9	GIRDER G10
C.L. PIER	62+27.83 40.50' LT	62+13.34 31.50' LT	61+98.85 22.50' LT	61+84.36 13.50' LT	61+69.87 4.50' LT	61+55.39 4.50' RT	61+40.90 13.50' RT	61+26.41 22.50' RT	61+11.92 31.50' RT	60+97.43 40.50' RT
	667.54	667.65	667.89	668.13	668.36	668.42	668.30	668.18	668.05	668.06
0.05 "C"	62+36.89 40.50' LT	62+22.53 31.50' LT	62+08.17 22.50' LT	61+93.81 13.50' LT	61+79.45 4.50' LT	61+65.09 4.50' RT	61+50.72 13.50' RT	61+36.36 22.50' RT	61+22.00 31.50' RT	61+07.64 40.50' RT
	667.46	667.57	667.81	668.05	668.28	668.34	668.22	668.10	667.97	667.97
0.10 "C"	62+45.96 40.50' LT	62+31.72 31.50' LT	62+17.49 22.50' LT	62+03.25 13.50' LT	61+89.02 4.50' LT	61+74.78 4.50' RT	61+60.55 13.50' RT	61+46.32 22.50' RT	61+32.08 31.50' RT	61+17.85 40.50' RT
	667.40	667.50	667.75	667.98	668.21	668.27	668.15	668.03	667.90	667.89
0.15 "C"	62+55.02 40.50' LT	62+40.91 31.50' LT	62+26.81 22.50' LT	62+12.70 13.50' LT	61+98.59 4.50' LT	61+84.48 4.50' RT	61+70.38 13.50' RT	61+56.27 22.50' RT	61+42.16 31.50' RT	61+28.06 40.50' RT
	667.34	667.45	667.69	667.92	668.15	668.22	668.10	667.97	667.85	667.83
0.20 "C"	62+64.08 40.50' LT	62+50.10 31.50' LT	62+36.12 22.50' LT	62+22.14 13.50' LT	62+08.16 4.50' LT	61+94.18 4.50' RT	61+80.20 13.50' RT	61+66.22 22.50' RT	61+52.24 31.50' RT	61+38.26 40.50' RT
	667.29	667.40	667.64	667.88	668.11	668.16	668.05	667.93	667.80	667.78
0.25 "C"	62+73.15 40.50' LT	62+59.29 31.50' LT	62+45.44 22.50' LT	62+31.59 13.50' LT	62+17.74 4.50' LT	62+03.88 4.50' RT	61+90.03 13.50' RT	61+76.18 22.50' RT	61+62.33 31.50' RT	61+48.47 40.50' RT
	667.26	667.36	667.60	667.84	668.06	668.12	668.01	667.89	667.76	667.74
0.30 "C"/ F.S. 3	62+82.21 40.50' LT	62+68.48 31.50' LT	62+54.76 22.50' LT	62+41.03 13.50' LT	62+27.31 4.50' LT	62+13.58 4.50' RT	61+99.86 13.50' RT	61+86.13 22.50' RT	61+72.41 31.50' RT	61+58.68 40.50' RT
	667.22	667.33	667.56	667.80	668.03	668.08	667.97	667.86	667.73	667.71
0.35 "C"	62+91.27 40.50' LT	62+77.68 31.50' LT	62+64.08 22.50' LT	62+50.48 13.50' LT	62+36.88 4.50' LT	62+23.28 4.50' RT	62+09.68 13.50' RT	61+96.09 22.50' RT	61+82.49 31.50' RT	61+68.89 40.50' RT
	667.20	667.30	667.54	667.77	668.00	668.06	667.95	667.84	667.72	667.70
0.40 "C"	63+00.34 40.50' LT	62+86.87 31.50' LT	62+73.39 22.50' LT	62+59.92 13.50' LT	62+46.45 4.50' LT	62+32.98 4.50' RT	62+19.51 13.50' RT	62+06.04 22.50' RT	61+92.57 31.50' RT	61+79.10 40.50' RT
	667.17	667.28	667.51	667.74	667.97	668.03	667.92	667.82	667.70	667.68
0.45 "C"	63+09.40 40.50' LT	62+96.06 31.50' LT	62+82.71 22.50' LT	62+69.37 13.50' LT	62+56.03 4.50' LT	62+42.68 4.50' RT	62+29.34 13.50' RT	62+16.00 22.50' RT	62+02.65 31.50' RT	61+89.31 40.50' RT
	667.15	667.26	667.49	667.72	667.95	668.01	667.90	667.80	667.68	667.68
0.50 "C"	63+18.46 40.50' LT	63+05.25 31.50' LT	62+92.03 22.50' LT	62+78.81 13.50' LT	62+65.60 4.50' LT	62+52.38 4.50' RT	62+39.17 13.50' RT	62+25.95 22.50' RT	62+12.73 31.50' RT	61+99.52 40.50' RT
	667.14	667.24	667.47	667.70	667.93	667.99	667.89	667.78	667.67	667.67
0.55 "C"	63+27.53 40.50' LT	63+14.44 31.50' LT	63+01.35 22.50' LT	62+88.26 13.50' LT	62+75.17 4.50' LT	62+62.08 4.50' RT	62+48.99 13.50' RT	62+35.90 22.50' RT	62+22.81 31.50' RT	62+09.73 40.50' RT
	667.12	667.22	667.45	667.68	667.91	667.97	667.86	667.76	667.65	667.65
0.60 "C"	63+36.59 40.50' LT	63+23.63 31.50' LT	63+10.67 22.50' LT	62+97.70 13.50' LT	62+84.74 4.50' LT	62+71.78 4.50' RT	62+58.82 13.50' RT	62+45.86 22.50' RT	62+32.90 31.50' RT	62+19.93 40.50' RT
	667.10	667.20	667.42	667.66	667.89	667.95	667.84	667.74	667.63	667.64
0.65 "C"	63+45.65 40.50' LT	63+32.82 31.50' LT	63+19.98 22.50' LT	63+07.15 13.50' LT	62+94.32 4.50' LT	62+81.48 4.50' RT	62+68.65 13.50' RT	62+55.81 22.50' RT	62+42.98 31.50' RT	62+30.14 40.50' RT
	667.08	667.18	667.40	667.63	667.87	667.92	667.81	667.71	667.60	667.61
F.S. 4	--- ---	--- ---	--- ---	--- ---	--- ---	--- ---	--- ---	--- ---	--- ---	62+38.69 40.50' LT
	---	---	---	---	---	---	---	---	---	667.59
0.70 "C"	63+54.72 40.50' LT	63+42.01 31.50' LT	63+29.30 22.50' LT	63+16.59 13.50' LT	63+03.89 4.50' LT	62+91.18 4.50' RT	62+78.47 13.50' RT	62+65.77 22.50' RT	62+53.06 31.50' RT	62+40.35 40.50' RT
	667.05	667.15	667.38	667.61	667.83	667.89	667.78	667.68	667.57	667.58
F.S. 4	--- ---	--- ---	--- ---	63+25.63 13.50' LT	63+11.31 4.50' LT	62+96.65 4.50' LT	62+82.16 13.50' LT	62+67.67 22.50' LT	62+53.18 31.50' LT	--- ---
	---	---	---	667.58	667.81	667.88	667.77	667.67	667.57	---
0.75 "C"	63+63.78 40.50' LT	63+51.20 31.50' LT	63+38.62 22.50' LT	63+26.04 13.50' LT	63+13.46 4.50' LT	63+00.88 4.50' RT	62+88.30 13.50' RT	62+75.72 22.50' RT	62+63.14 31.50' RT	62+50.56 40.50' RT
	667.02	667.12	667.34	667.57	667.80	667.86	667.75	667.64	667.53	667.54
F.S. 4	63+69.10 40.50' LT	63+54.61 31.50' LT	63+40.12 22.50' LT	--- ---	--- ---	--- ---	--- ---	--- ---	--- ---	--- ---
	667.00	667.11	667.34	---	---	---	---	---	---	---
0.80 "C"	63+72.84 40.50' LT	63+60.39 31.50' LT	63+47.94 22.50' LT	63+35.48 13.50' LT	63+23.03 4.50' LT	63+10.58 4.50' RT	62+98.13 13.50' RT	62+85.67 22.50' RT	62+73.22 31.50' RT	62+60.77 40.50' RT
	666.99	667.08	667.31	667.54	667.77	667.83	667.71	667.60	667.48	667.50
0.85 "C"	63+81.91 40.50' LT	63+69.58 31.50' LT	63+57.26 22.50' LT	63+44.93 13.50' LT	63+32.60 4.50' LT	63+20.28 4.50' RT	63+07.95 13.50' RT	62+95.63 22.50' RT	62+83.30 31.50' RT	62+70.98 40.50' RT
	666.95	667.05	667.27	667.50	667.73	667.78	667.66	667.55	667.43	667.44
0.90 "C"	63+90.97 40.50' LT	63+78.77 31.50' LT	63+66.57 22.50' LT	63+54.37 13.50' LT	63+42.18 4.50' LT	63+29.98 4.50' RT	63+17.78 13.50' RT	63+05.58 22.50' RT	62+93.39 31.50' RT	62+81.19 40.50' RT
	666.90	667.00	667.23	667.46	667.69	667.74	667.62	667.50	667.38	667.38
0.95 "C"	64+00.03 40.50' LT	63+87.96 31.50' LT	63+75.89 22.50' LT	63+63.82 13.50' LT	63+51.75 4.50' LT	63+39.68 4.50' RT	63+27.61 13.50' RT	63+15.54 22.50' RT	63+03.47 31.50' RT	62+91.40 40.50' RT
	666.86	666.96	667.19	667.42	667.65	667.69	667.57	667.44	667.31	667.32
C.L. BRG. F.A.	64+09.10 40.50' LT	63+97.15 31.50' LT	63+85.21 22.50' LT	63+73.27 13.50' LT	63+61.32 4.50' LT	63+49.38 4.50' RT	63+37.43 13.50' RT	63+25.49 22.50' RT	63+13.55 31.50' RT	63+01.60 40.50' RT
	666.82	666.91	667.14	667.37	667.60	667.65	667.51	667.38	667.25	667.25

Preliminary Plans - For Reference Only

LEGEND:

"C" LENGTH OF SPAN 2 MEASURED ALONG ℄ GIRDER OR DECK FEATURE

NOTES:

1. *WORK THIS SHEET WITH SHEET 71 / 90.*
2. *SEE GIRDER ELEVATION SHEET50 / 90 FOR GIRDER LENGTHS "C".*
3. *SEE SHEETS 65 & 66 / 90 FOR SIDEWALK DETAILS.*
4. *TOP OF HAUNCH ELEVATIONS SHOWN REPRESENT THE THEORETICAL LOCATION OF THE BOTTOM OF THE DECK ABOVE THE GIRDER HAUNCH PRIOR TO DEFLECTIONS CAUSED BY DECK PLACEMENT AND OTHER ANTICIPATED DEAD LOADS.*

TOP OF HAUNCH ELEVATION TABLE (2 OF 2)
CUY-90-1696 (BRIDGE 14)
CR-722 (CARNEGIE AVE.) OVER I.R. 90

SFN 1807898

DESIGN AGENCY
Michael Baker INTERNATIONAL

DESIGNER	CHECKER
ABC	MEM

REVIEWER LPC 06/23/22

PROJECT ID 82382

SUBSET	TOTAL
72	90

SHEET	TOTAL
2352	2696

CUY-90-16.28 (CCG3A)

MODEL: top of haunch elev table 2 PAPERSIZE: 34x22 (in.) DATE: 3/28/2025 TIME: 8:11:22 AM USER: RohitLBk
pw:\\mb-us-pw.bentley.com:mb-us-pw-03\Documents\Cleveland_OH\01_Projects\ODOT\District12\82382\400-Engineering\Structures\SFN_1807898\Sheets\82382_SFN_1807898_SD005.dgn

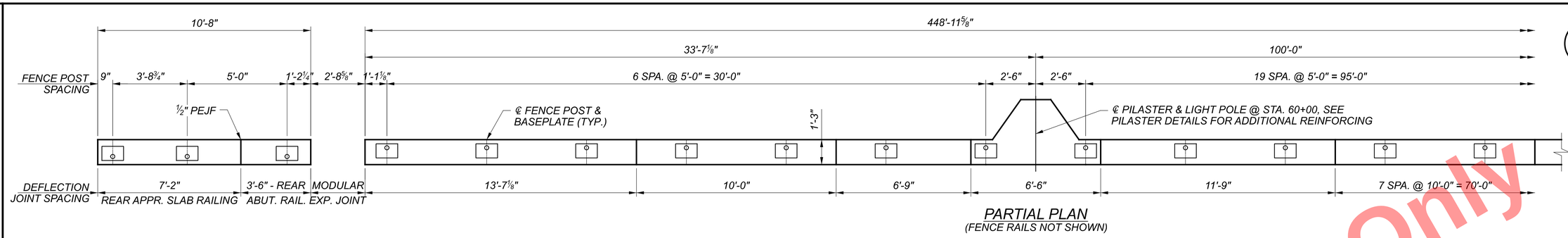

PARTIAL PLAN
(FENCE RAILS NOT SHOWN)

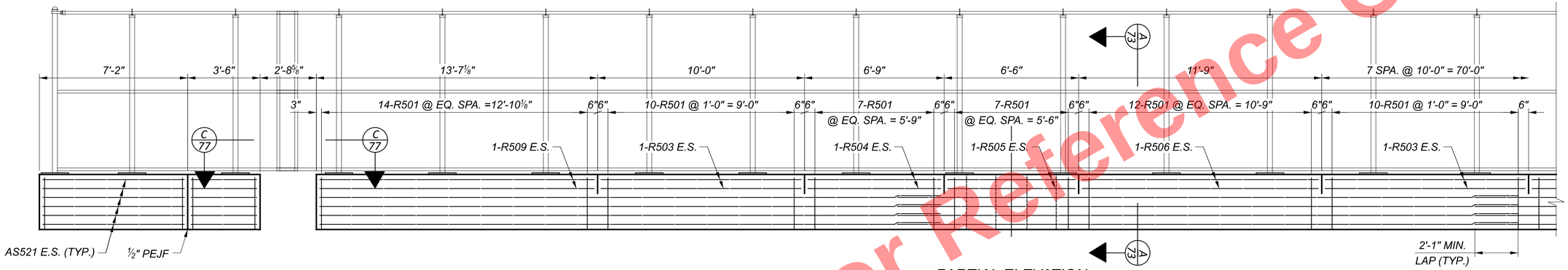

PARTIAL ELEVATION

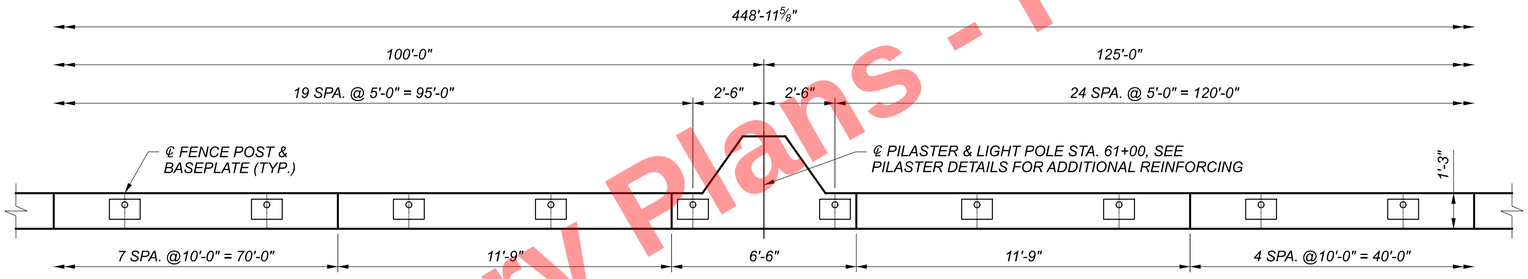

PARTIAL PLAN
(FENCE RAILS NOT SHOWN)

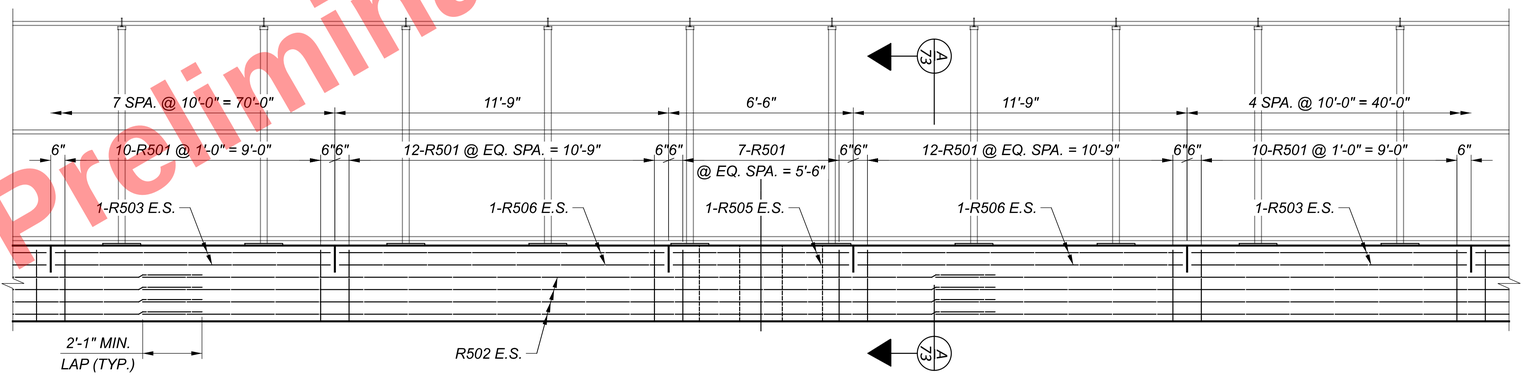

PARTIAL ELEVATION

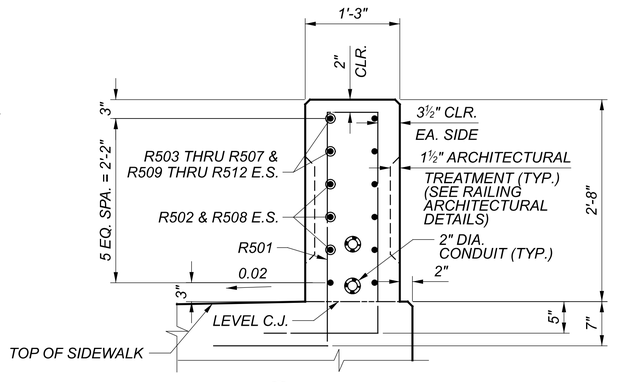

A 73 SECTION
RAILING TYPICAL SECTION

NOTES:

1. WORK THIS SHEET WITH SHEET 74 / 90.
2. FOR DETAILS NOT SHOWN, SEE STANDARD DRAWINGS BR-2-15 AND HL-20.14.
3. FOR LIGHT POLE ANCHOR BOLT DETAILS, SEE STANDARD DRAWING HL-10.13.
4. SEE STANDARD DRAWING VPF-1-90 FOR VANDAL PROTECTION FENCE, BASEPLATE AND BASEPLATE ANCHOR DETAILS.

LEFT RAIL PLAN & ELEVATION (1 OF 2)
CUY-90-1696 (BRIDGE 14)
CR-722 (CARNEGIE AVE.) OVER I.R. 90

SFN	1807898
DESIGN AGENCY	Michael Baker INTERNATIONAL
DESIGNER	ABC
CHECKER	MEM
REVIEWER	LPC 06/23/22
PROJECT ID	82382
SUBSET	73
TOTAL	90
SHEET	2353
TOTAL	2696

Preliminary Plans - For Reference Only

CUY-90-16.28 (CCG3A)
MODEL: LEFT RAIL 1 PAPERSIZE: 34x22 (in.) DATE: 3/28/2025 TIME: 8:11:36 AM USER: RohitBk
pw:\\mb-us-pw.bentley.com:mb-us-pw-03\Documents\Cleveland_OH101_Projects\ODOT\District12\82382\400-Engineering\Structures\SFN_1807898\Sheets\82382_SFN_1807898_SA001.dgn

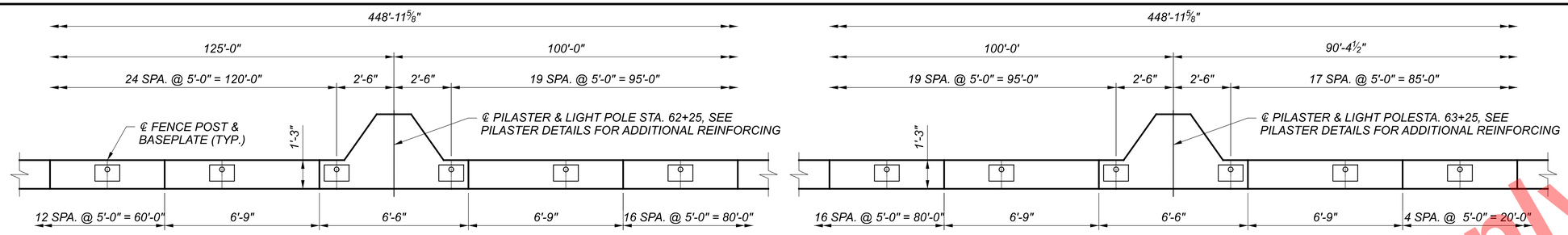

PARTIAL PLAN
(FENCE RAILS NOT SHOWN)

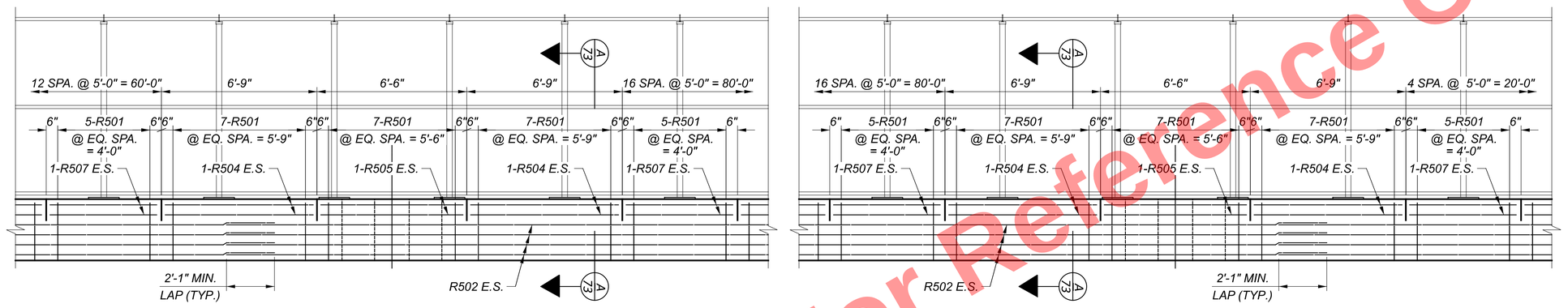

PARTIAL ELEVATION

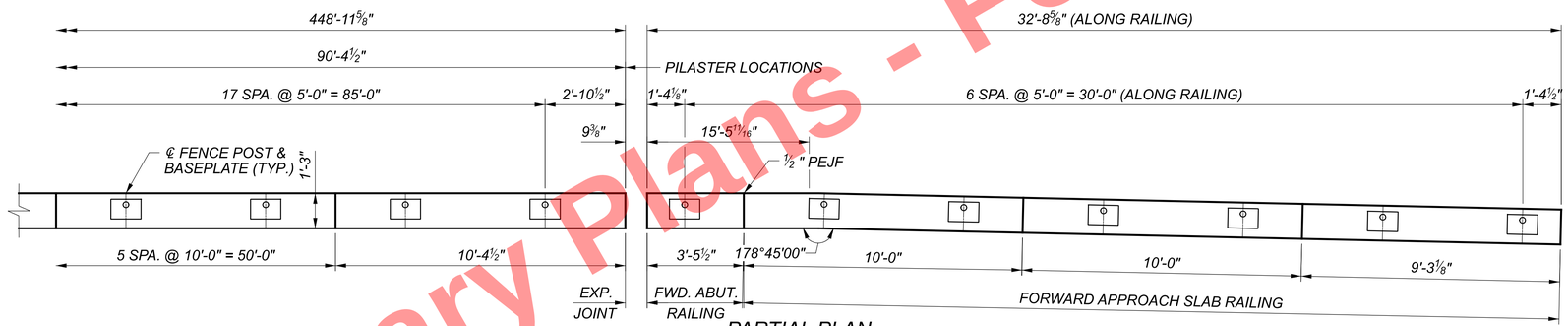

PARTIAL PLAN
(FENCE RAILS NOT SHOWN)

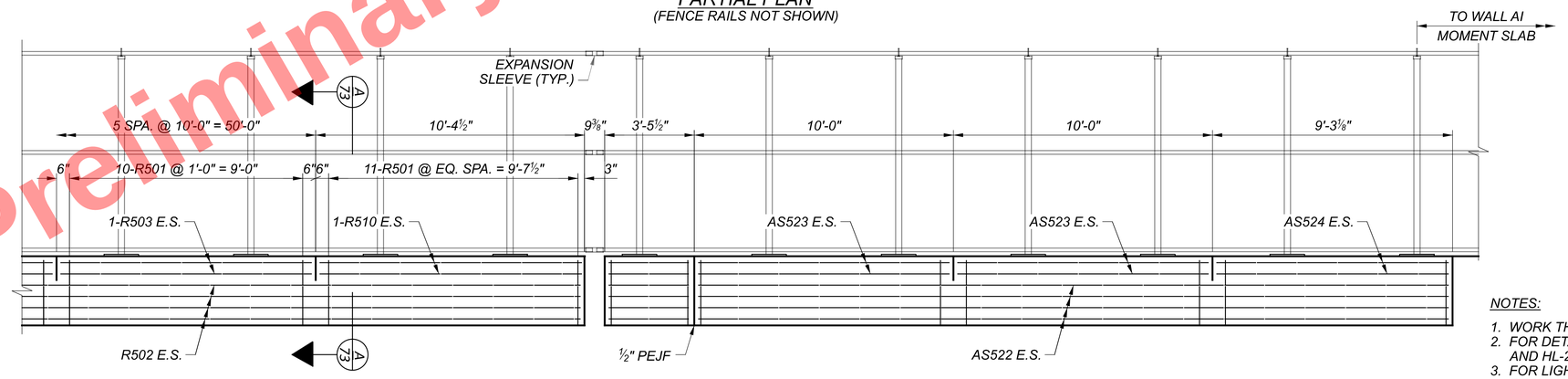

PARTIAL ELEVATION

NOTES:

1. WORK THIS SHEET WITH SHEET 73 / 90.
2. FOR DETAILS NOT SHOWN, SEE STANDARD DRAWINGS BR-2-15 AND HL-20.14.
3. FOR LIGHT POLE ANCHOR BOLT DETAILS, SEE STANDARD DRAWING HL-10.13.
4. SEE STANDARD DRAWING VPF-1-90 FOR VANDAL PROTECTION FENCE, BASEPLATE AND BASEPLATE ANCHOR DETAILS.

LEFT RAILING PLAN & ELEVATION (2 OF 2)
CUY-90-1696 (BRIDGE 14)
CR-722 (CARNEGIE AVE.) OVER I.R. 90

SFN	1807898
DESIGN AGENCY	Michael Baker INTERNATIONAL
DESIGNER	ABC
CHECKER	MEM
REVIEWER	LPC 06/23/22
PROJECT ID	82382
SUBSET	74
TOTAL	90
SHEET	2354
TOTAL	2696

CUY-90-16.28 (CCG3A)

MODEL: LEFT RAIL 2 PAPERSIZE: 34x22 (in.) DATE: 3/28/2025 TIME: 8:11:37 AM USER: Rohit.Bk
pw:\\mb-us-pw.bentley.com:mb-us-pw-03\Documents\Cleveland_OH\01_Projects\ODOT\District12\82382\400-Engineering\Structures\SFN_1807898\Sheets\82382_SFN_1807898_SA001.dgn

Preliminary Plans - For Reference Only

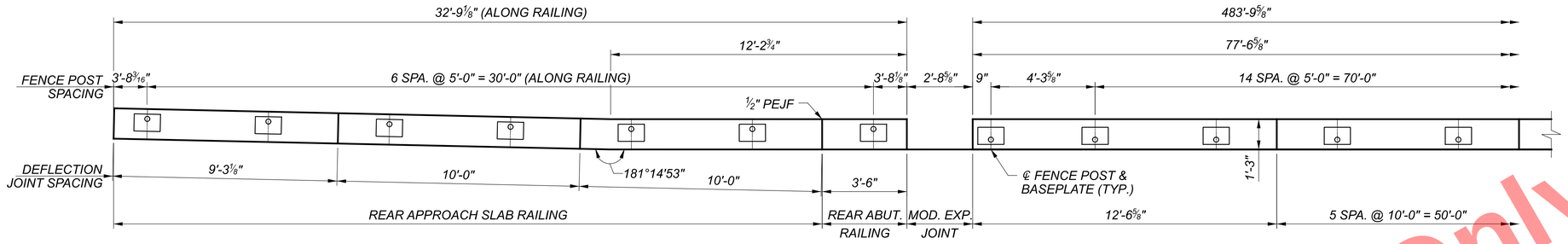

PARTIAL PLAN
(FENCE RAILS NOT SHOWN)

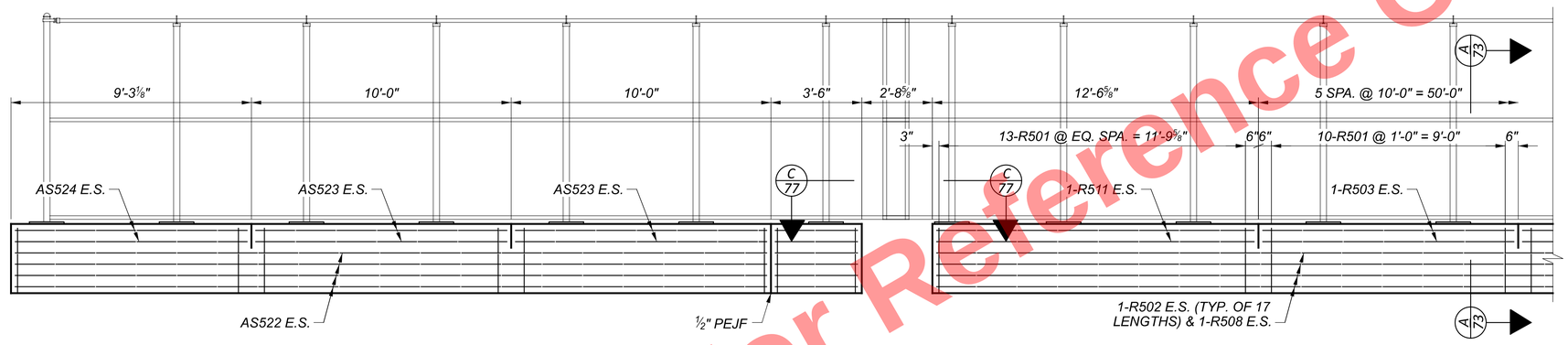

PARTIAL ELEVATION

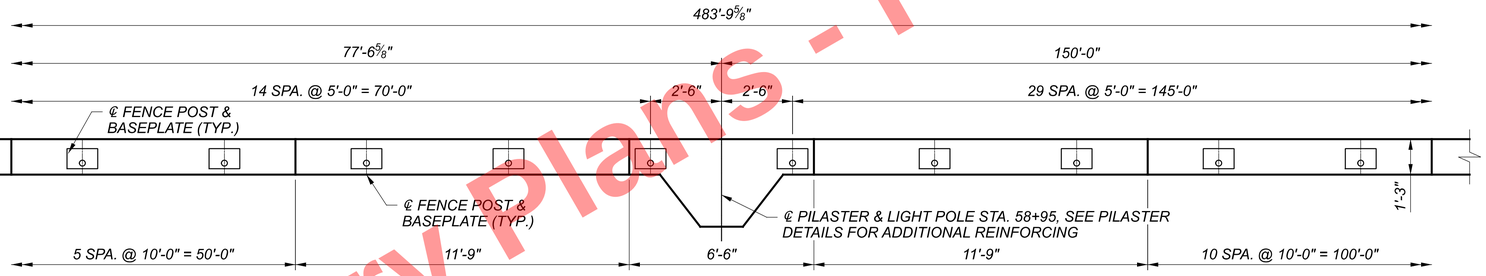

PARTIAL PLAN
(FENCE RAILS NOT SHOWN)

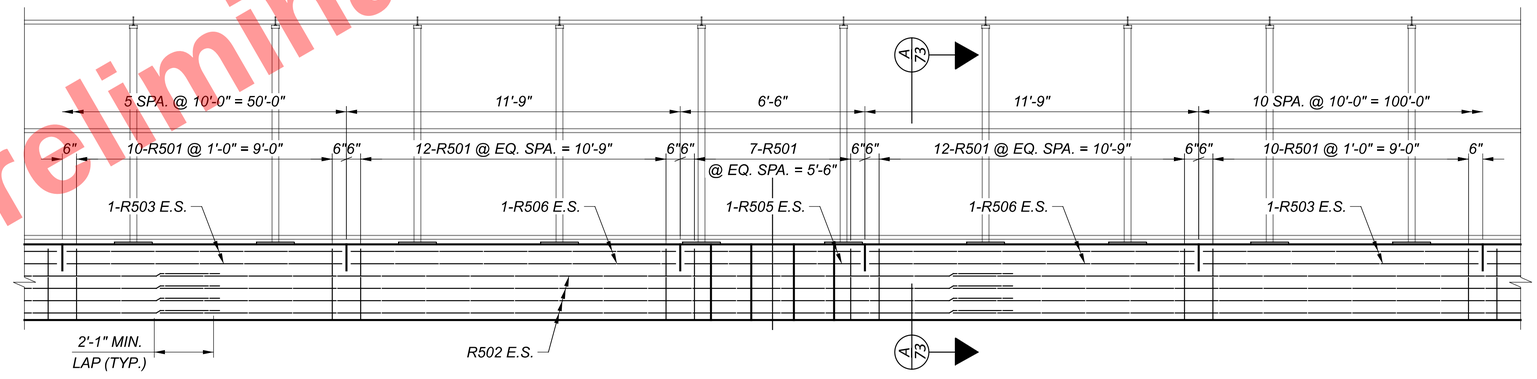

PARTIAL ELEVATION

NOTES:

1. WORK THIS SHEET WITH SHEET 76 / 90.
2. FOR DETAILS NOT SHOWN, SEE STANDARD DRAWINGS BR-2-15 AND HL-20.14.
3. FOR LIGHT POLE ANCHOR BOLT DETAILS, SEE STANDARD DRAWING HL-10.13.
4. SEE STANDARD DRAWING VPF-1-90 FOR VANDAL PROTECTION FENCE, BASEPLATE AND BASEPLATE ANCHOR DETAILS.

Preliminary Plans - For Reference Only

RIGHT RAIL RAILING PLAN & ELEVATION (1 OF 2)
CUY-90-1696 (BRIDGE 14)
CR-722 (CARNEGIE AVE.) OVER I.R. 90

SFN	1807898
DESIGN AGENCY	Michael Baker INTERNATIONAL
DESIGNER	ABC
CHECKER	MEM
REVIEWER	LPC 06/23/22
PROJECT ID	82382
SUBSET	75
TOTAL	90
SHEET	2355
TOTAL	2696

CUY-90-16.28 (CCG3A)

MODEL: RIGHT RAIL 1 PAPERSIZE: 34x22 (in.) DATE: 3/28/2025 TIME: 8:11:38 AM USER: Rohit.Bk
pw:\\mb-us-pw.bentley.com:mb-us-pw-03\Documents\Cleveland_OH01_Projects\ODOTDistrict12\82382400-Engineering\Structures\SFN_1807898\Sheets\82382_SFN_1807898_SA001.dgn

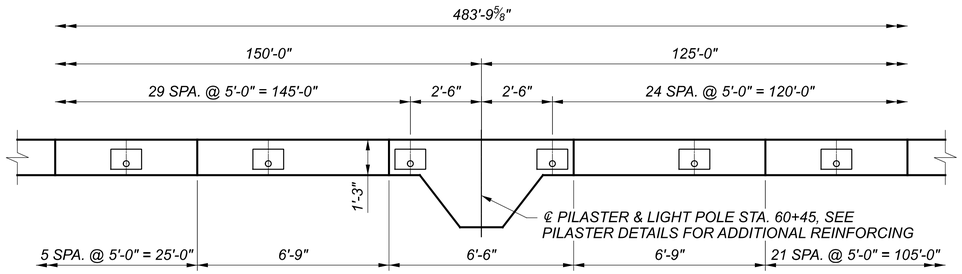

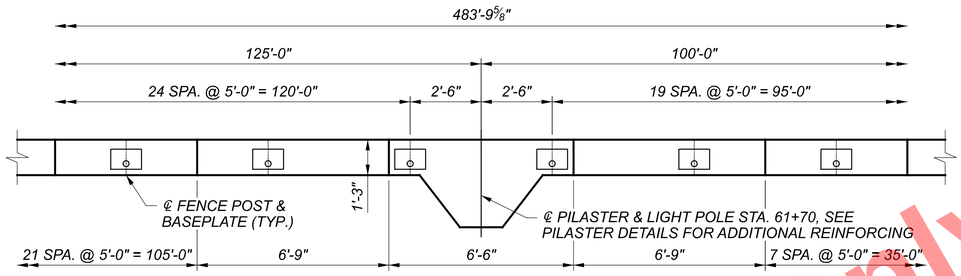

PARTIAL PLAN
(FENCE RAILS NOT SHOWN)

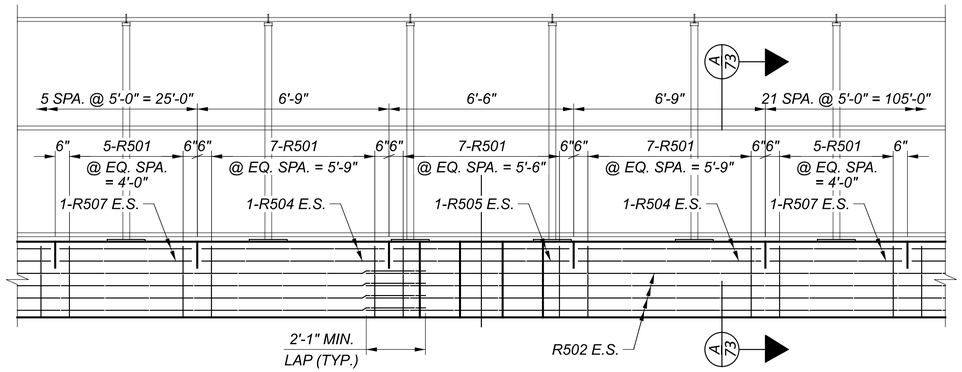

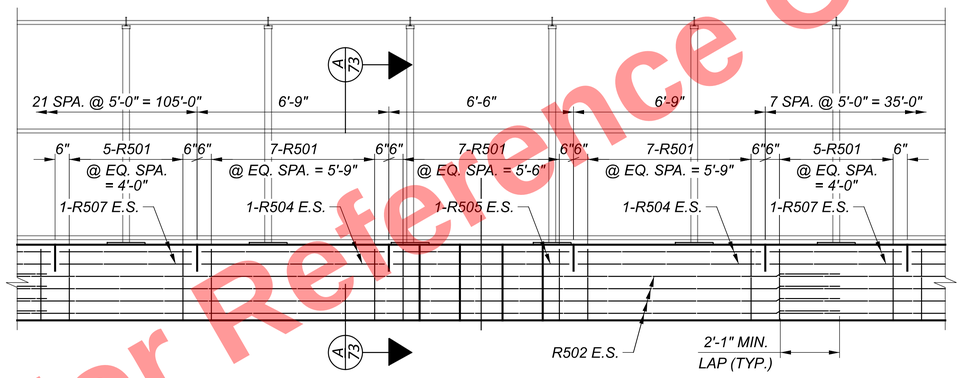

PARTIAL ELEVATION

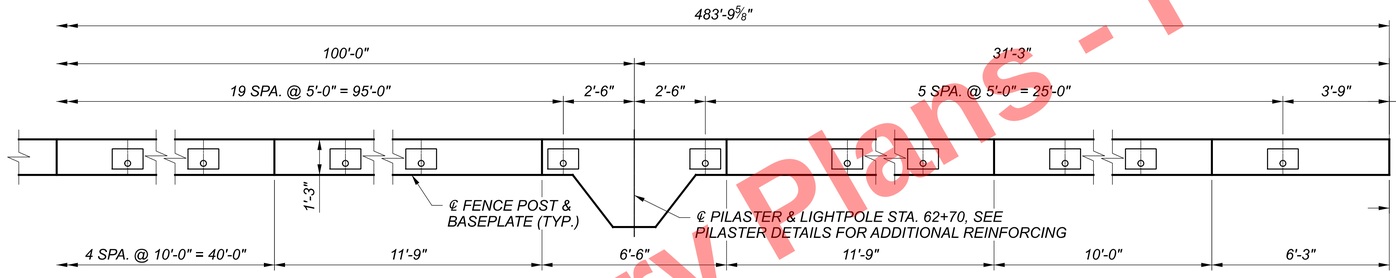

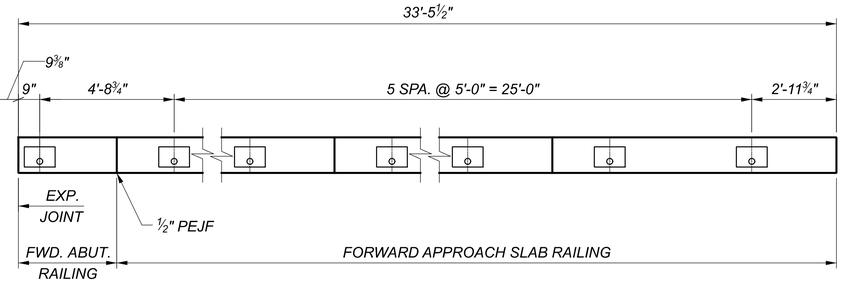

PARTIAL PLAN
(FENCE RAILS NOT SHOWN)

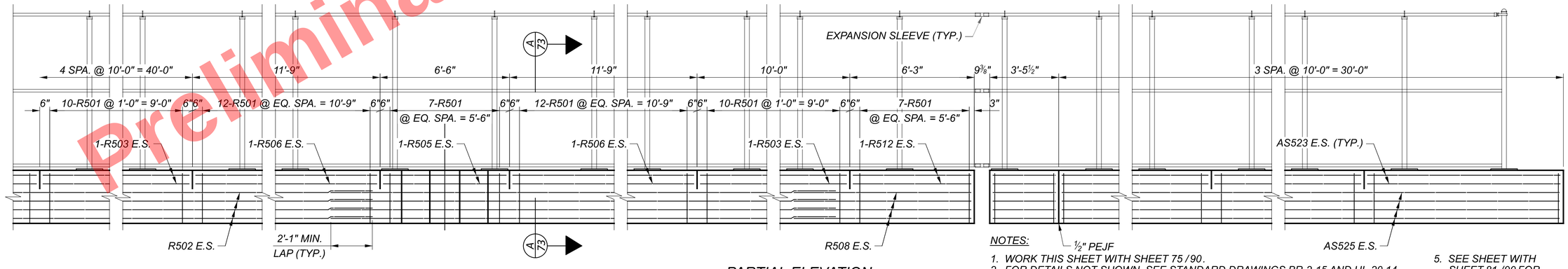

PARTIAL ELEVATION

NOTES:

1. WORK THIS SHEET WITH SHEET 75 /90.
2. FOR DETAILS NOT SHOWN, SEE STANDARD DRAWINGS BR-2-15 AND HL-20.14.
3. FOR LIGHT POLE ANCHOR BOLT DETAILS, SEE STANDARD DRAWING HL-10.13.
4. SEE STANDARD DRAWING VPF-1-90 FOR VANDAL PROTECTION FENCE, BASEPLATE AND BASEPLATE ANCHOR DETAILS.
5. SEE SHEET WITH SHEET 81 /90 FOR COVER PLATE DETAILS.

Preliminary Plans - For Reference Only

RIGHT RAIL & ELEVATION (2 OF 2)
CUY-90-1696 (BRIDGE 14)
CR-722 (CARNEGIE AVE.) OVER I.R. 90

SFN	1807898
DESIGN AGENCY	Michael Baker INTERNATIONAL
DESIGNER	ABC
CHECKER	MEM
REVIEWER	LPC 06/23/22
PROJECT ID	82382
SUBSET	76
TOTAL	90
SHEET	2356
TOTAL	2696

CUY-90-16.28 (CCG3A)
MODEL: RIGHT RAIL 2 PAPERSIZE: 34x22 (in.) DATE: 3/28/2025 TIME: 8:11:39 AM USER: Rohit.Bk
pw:\\mb-us-pw.bentley.com:mb-us-pw-03\Documents\Cleveland_OH\01_Projects\ODOT\District12\82382400-Engineering\Structures\SFN_1807898\Sheets\82382_SFN_1807898_SA001.dgn

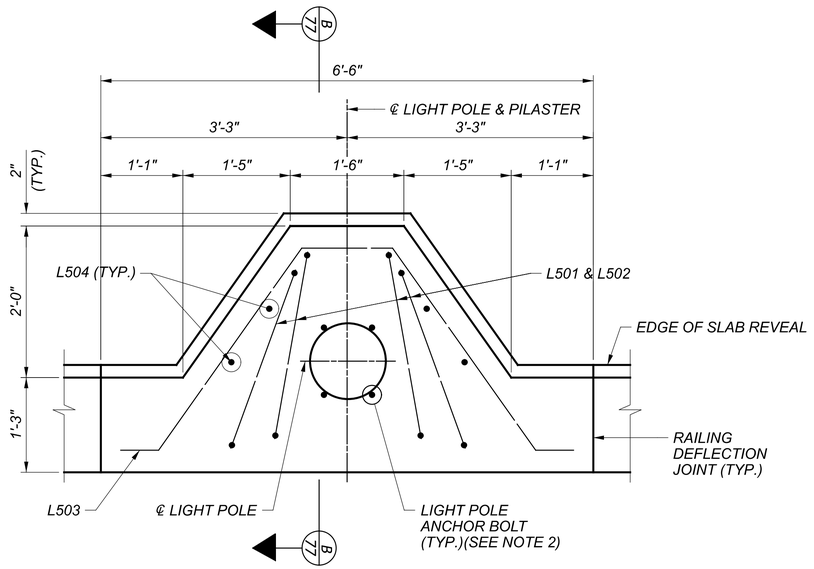

PILASTER DETAIL

(JUNCTION BOX AND CONDUITS NOT SHOWN FOR CLARITY)

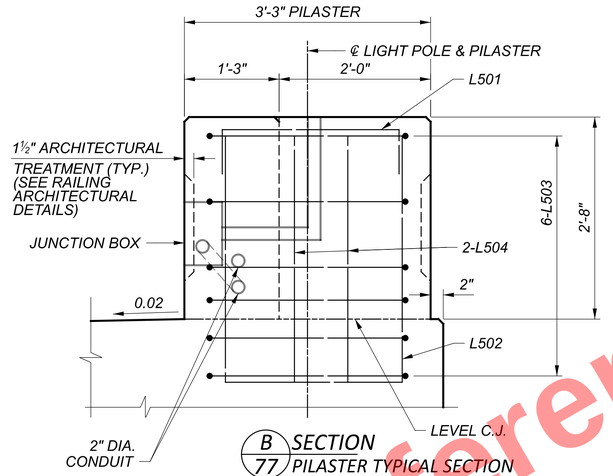

B/77 SECTION PILASTER TYPICAL SECTION

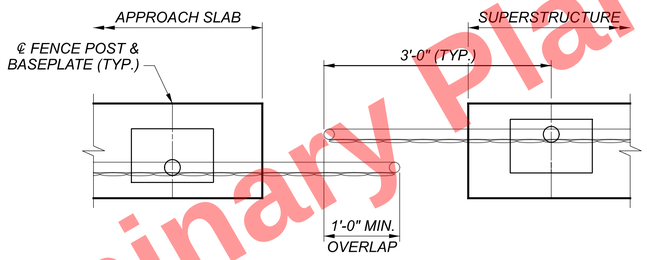

C/73 C/75 SECTION LEFT RAIL SHOWN RIGHT RAIL OPPOSITE HAND

(BASEPLATE ANCHORS NOT SHOWN)

NOTES:

1. FOR DETAILS NOT SHOWN, SEE STANDARD DRAWINGS BR-2-15 AND HL-20.14.
2. FOR LIGHT POLE ANCHOR BOLT DETAILS, SEE STANDARD DRAWING HL-10.13.
3. SEE STANDARD DRAWING VPF-1-90 FOR VANDAL PROTECTION FENCE, BASEPLATE AND BASEPLATE ANCHOR DETAILS.

Preliminary Plans - For Reference Only

MISCELLANEOUS RAILING DETAILS
CUY-90-1696 (BRIDGE 14)
CR-722 (CARNEGIE AVE.) OVER I.R. 90

SFN 1807898

DESIGN AGENCY

Michael Baker INTERNATIONAL

DESIGNER	CHECKER
ABC	MEM

REVIEWER
LPC 06/23/22

PROJECT ID 82382

SUBSET	TOTAL
77	90

SHEET	TOTAL
2357	2696

CUY-90-16.28 (CCG3A)

MODEL: MISCELLANEOUS DETAILS PAPERSIZE: 34x22 (in.) DATE: 3/28/2025 TIME: 8:11:40 AM USER: RohitBk
pw:\\mb-us-pw.bentley.com:mb-us-pw-03\Documents\Cleveland_OH\01_Projects\ODOT\District12\82382\400-Engineering\Structures\SFN_1807898\Sheets\82382_SFN_1807898_SA001.dgn

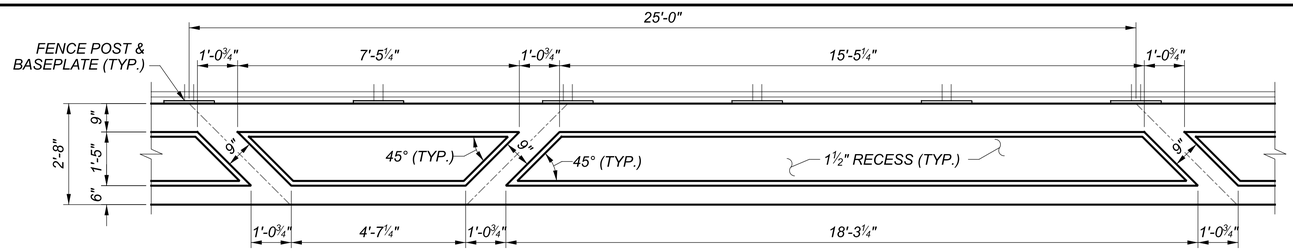

RAILING PARTIAL ELEVATION - TYPICAL ARCHITECTURAL DETAIL

(INSIDE FACE SHOWN, OUTSIDE FACE SIMILAR)

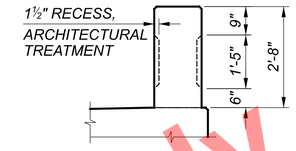

ARCHITECTURAL SECTION TYPICAL RECESS

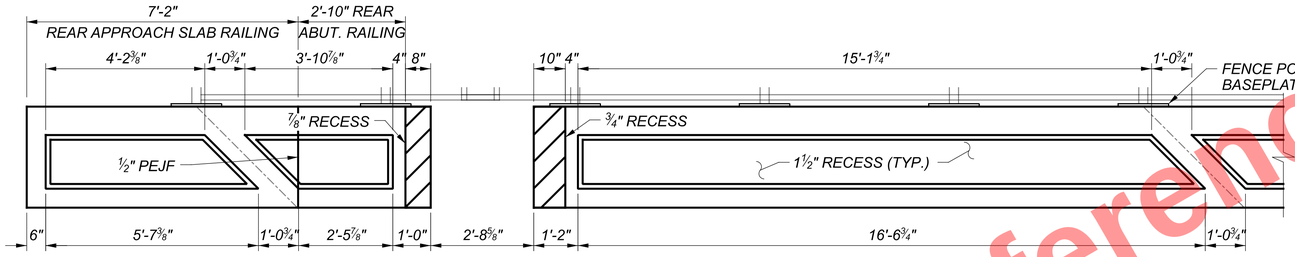

PARTIAL LEFT RAILING ELEVATION - REAR APPROACH SLAB, REAR ABUTMENT & BEGIN SUPERSTRUCTURE

(INSIDE FACE SHOWN, OUTSIDE FACE SIMILAR)

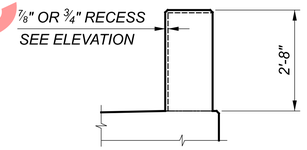

ARCHITECTURAL SECTION EXPANSION JOINT RECESS

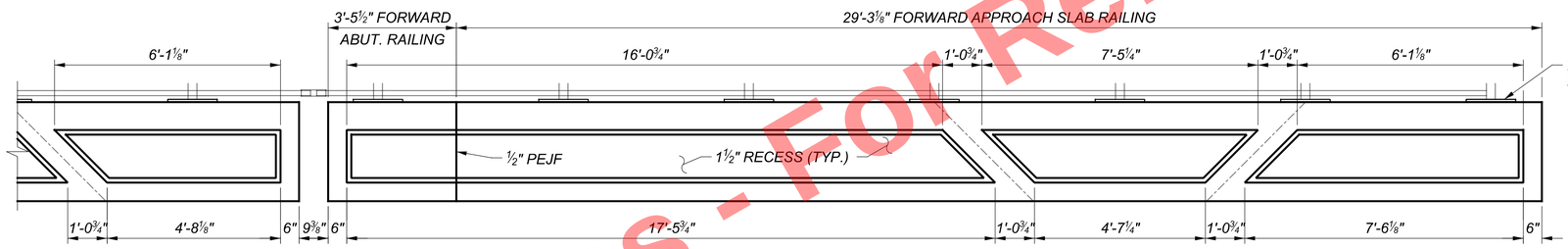

PARTIAL LEFT RAILING ELEVATION - END SUPERSTRUCTURE, FORWARD ABUTMENT & FORWARD APPROACH SLAB

(INSIDE FACE SHOWN, OUTSIDE FACE SIMILAR)

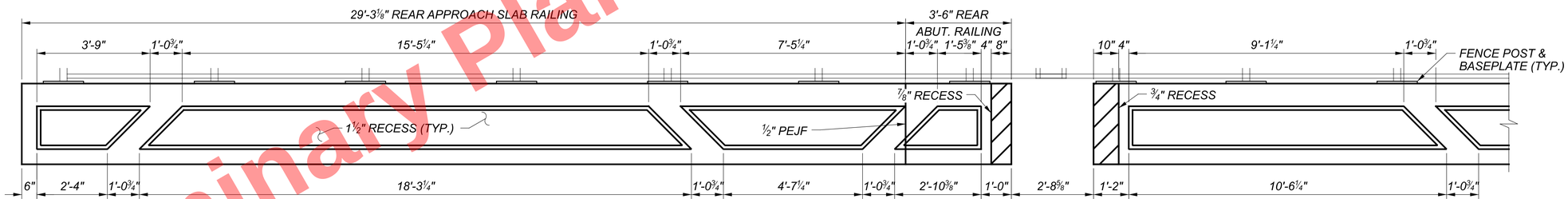

PARTIAL RIGHT RAILING ELEVATION - REAR APPROACH SLAB, REAR ABUTMENT & BEGIN SUPERSTRUCTURE

(OUTSIDE FACE SHOWN, INSIDE FACE SIMILAR)

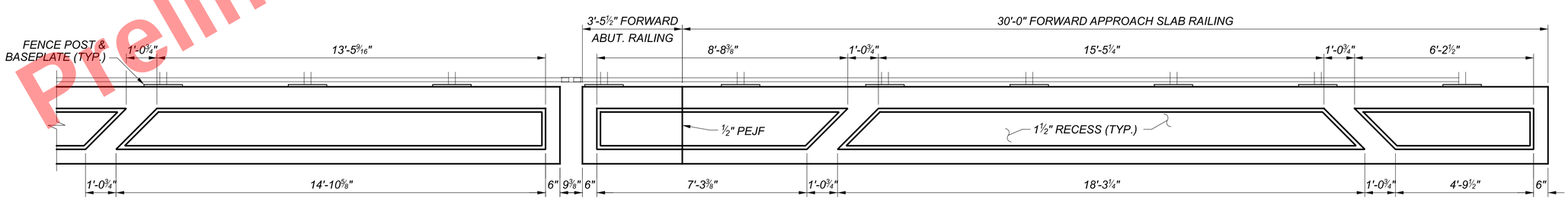

PARTIAL RIGHT RAILING ELEVATION - END SUPERSTRUCTURE, FORWARD ABUTMENT & FORWARD APPROACH SLAB

(OUTSIDE FACE SHOWN, INSIDE FACE SIMILAR)

Preliminary Plans - For Reference Only

RAILING ARCHITECTURAL DETAILS
CUY-90-1696 (BRIDGE 14)
CR-722 (CARNEGIE AVE.) OVER I.R. 90

SFN	1807898
DESIGN AGENCY	Michael Baker INTERNATIONAL
DESIGNER	ABC
CHECKER	MEM
REVIEWER	LPC 06/23/22
PROJECT ID	82382
SUBSET	78
TOTAL	90
SHEET	2358
TOTAL	2696

CUY-90-16.28 (CCG3A)

MODEL: RAILING ARCHITECTURAL DETAILS PAPERSIZE: 34x22 (in.) DATE: 3/28/2025 TIME: 8:11:41 AM USER: RohitLBk
pw:\\mb-us-pw.bentley.com:mb-us-pw-03\Documents\Cleveland_OH\01_Projects\ODOT\District12\82382\400-Engineering\Structures\SFN_1807898\Sheets\82382_SFN_1807898_SA001.dgn

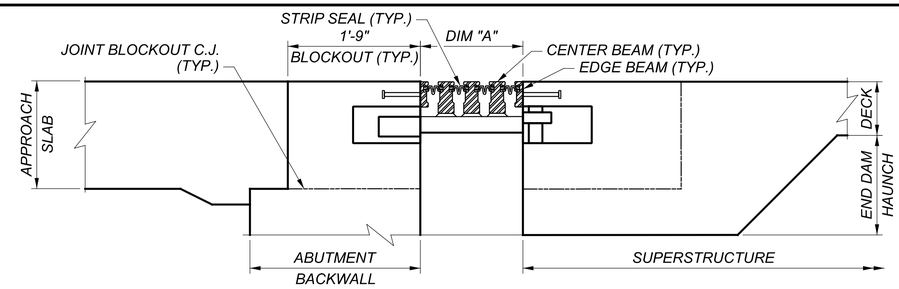

REAR ABUTMENT - TYPICAL SECTION THRU MODULAR EXPANSION JOINT

(DETAIL SHOWN PERPENDICULAR TO MODULAR JOINT)

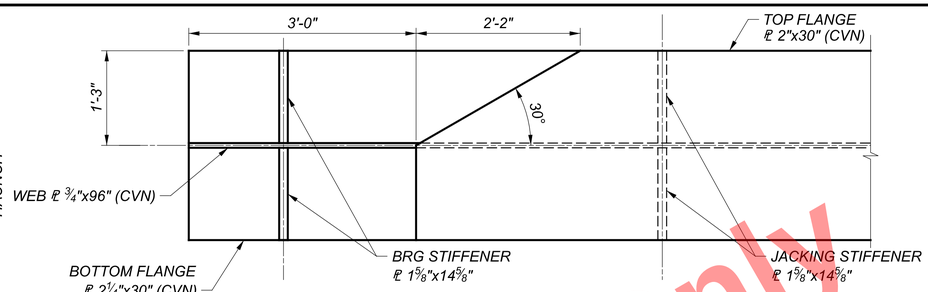

TOP FLANGE CLIP DETAIL

(SUB-FLANGE NOT SHOWN FOR CLARITY, LOOKING DOWN)

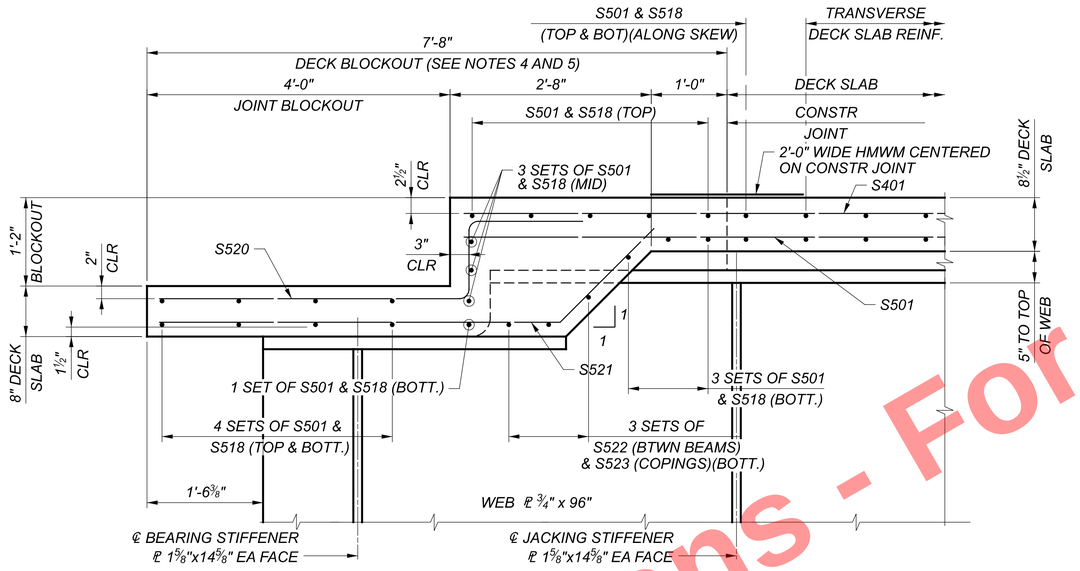

REAR ABUTMENT - TYPICAL SECTION THRU MODULAR EXPANSION JOINT

(END DIAPHRAGM CONNECTION PLATES NOT SHOWN FOR CLARITY)
(DETAIL SHOWN PARALLEL TO GIRDER CENTERLINE)

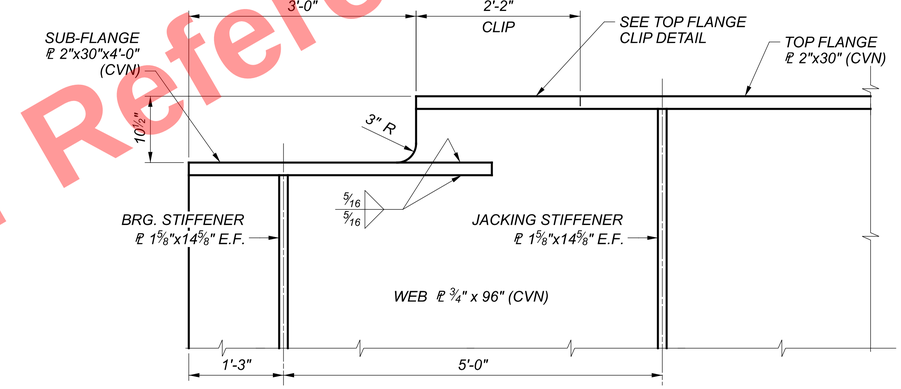

REAR ABUTMENT - GIRDER COPE DETAIL

(END DIAPHRAGM CONNECTION PLATES NOT SHOWN FOR CLARITY)
(DETAIL SHOWN PARALLEL TO GIRDER CENTERLINE)

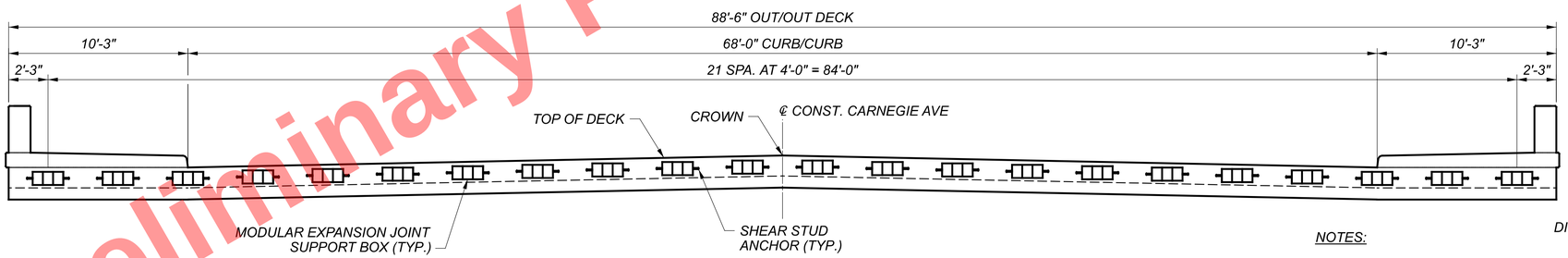

TYPICAL SECTION THROUGH REAR ABUTMENT MODULAR EXPANSION JOINT

(NORMAL TO ℄ CONST. CARNEGIE AVE)

JOINT OPENING TABLE	
TEMPERATURE °F	DIMENSION "A"
30	16⅝"
40	16½"
50	16⅜"
60	16⅜"
70	16¼"
80	16⅛"
90	16"

DIMENSION "A" IS MEASURED PERPENDICULAR TO THE JOINT.

NOTES:

1. THE MODULAR EXPANSION JOINT SYSTEM AND BLOCKOUT DETAILS SHOWN ARE SUGGESTED CONCEPTUAL DETAILS FOR A "DUAL-SUPPORT BAR" MODULAR JOINT. DUE TO VARIATIONS IN MODULAR JOINTS BETWEEN MANUFACTURERS, THE CONTRACTOR SHALL BE RESPONSIBLE FOR THE FINAL DESIGN AND DETAILING OF THE DECK SLAB BLOCKOUTS BASED ON THE SELECTED MODULAR JOINT. THIS DESIGN SHALL INCLUDE THE REINFORCING LAYOUT IN THE DECK SLAB BLOCKOUT.
2. MODULAR EXPANSION JOINT DESIGN SHOWN IS BASED ON A D.S. BROWN "STEELFLEX" D-320 MODULAR EXPANSION JOINT.
3. WORK THIS SHEET WITH SHEETS 80 & 81 / 90.
4. THE CONTRACTOR SHALL COORDINATE DECK AND ABUTMENT BLOCKOUT DIMENSIONS FOR THE MODULAR EXPANSION JOINT SELECTED PRIOR TO POURING AND CASTING OF THE CONCRETE ABUTMENT BACKWALL, APPROACH SLABS AND DECK SLAB WITHIN THE BLOCKOUT AREA.
5. ADJUST BRIDGE RAILING, SIDEWALK AND DECK SLAB REINFORCEMENT TO CLEAR MODULAR EXPANSION JOINT.
6. MODULAR EXPANSION JOINTS SHALL FULLY COMPLY WITH "SPECIAL PROVISION: MODULAR EXPANSION JOINTS".

Preliminary Plans - For Reference Only

EXPANSION JOINT DETAILS (1 OF 3)
CUY-90-1696 (BRIDGE 14)
CR-722 (CARNEGIE AVE.) OVER I.R. 90

SFN 1807898
DESIGN AGENCY
Michael Baker INTERNATIONAL
DESIGNER ABC | CHECKER MEM
REVIEWER LPC 06/23/22
PROJECT ID 82382
SUBSET 79 | TOTAL 90
SHEET 2359 | TOTAL 2696

CUY-90-16.28 (CCG3A)

MODEL: Expansion Joint Details 1 PAPERSIZE: 34x22 (in.) DATE: 3/28/2025 TIME: 8:11:56 AM USER: Rohit.Bk
pw:\\mb-us-pw.bentley.com:mb-us-pw-03\Documents\Cleveland_OH101_Projects\ODOT\District12\82382\400-Engineering\Structures\SFN_1807898\Sheets\82382_SFN_1807898_SX001.dgn

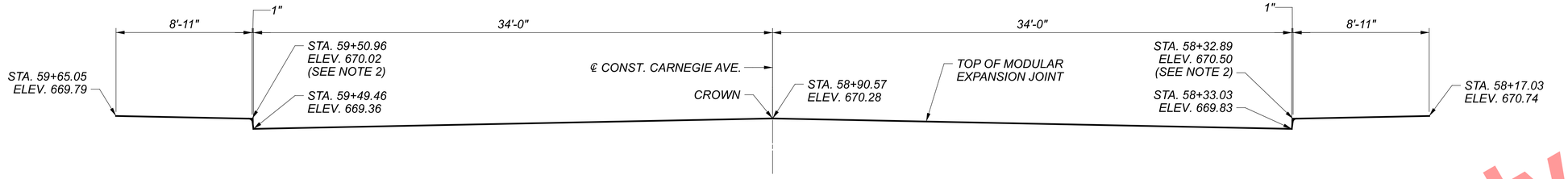

REAR ABUTMENT MODULAR EXPANSION JOINT PROFILE

(PERPENDICULAR TO ℄ CONST. CARNEGIE AVE., LOOKING STATIONS AHEAD)

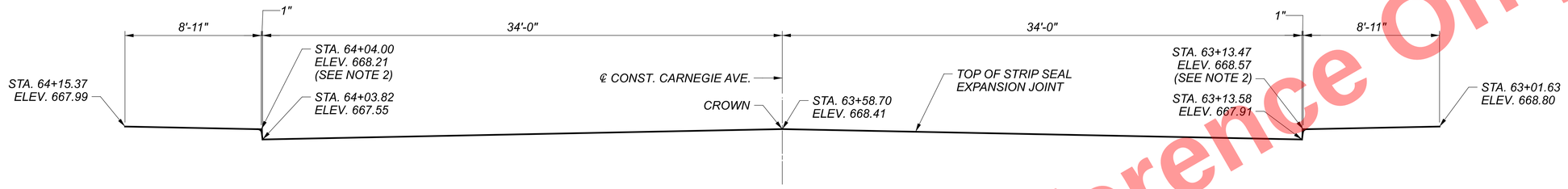

FORWARD ABUTMENT STRIP SEAL EXPANSION JOINT PROFILE

(PERPENDICULAR TO ℄ CONST. CARNEGIE AVE., LOOKING STATIONS AHEAD)

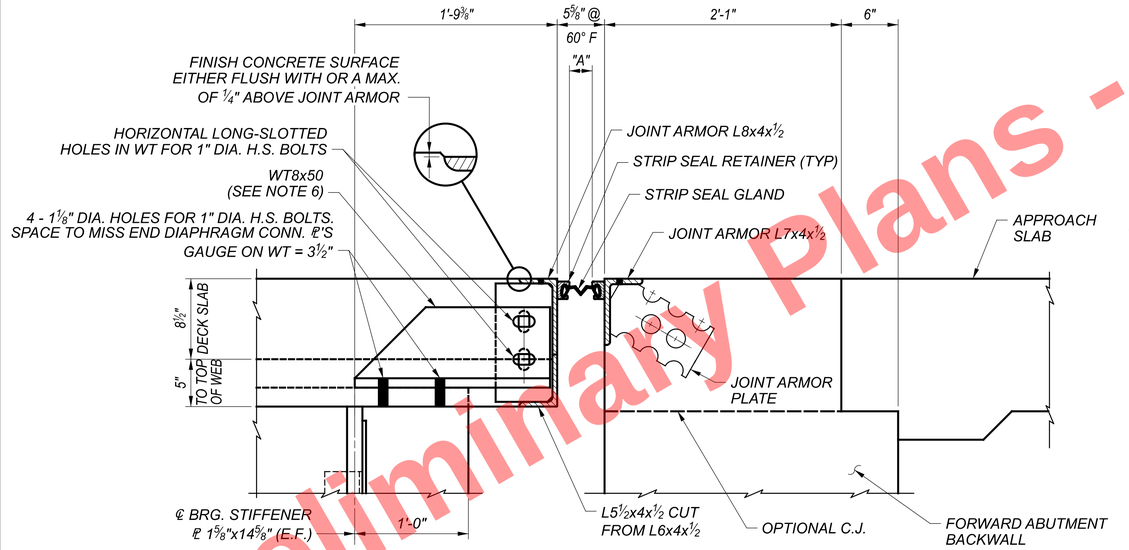

TYPICAL SECTION THRU FORWARD ABUTMENT STRIP SEAL EXPANSION JOINT

(DIMENSIONS GIVEN PERPENDICULAR TO ℄ EXPANSION JOINT)

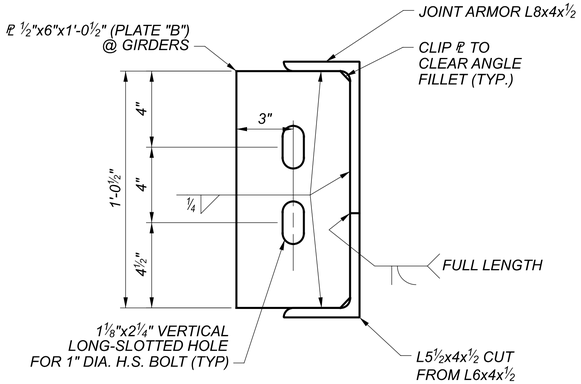

PLATE "B" DETAIL

NOTES:

1. WORK THIS SHEET WITH SHEETS 79 & 81 / 90 .
2. ELEVATIONS AT THE TOP OF CURB ARE THEORETICAL ELEVATIONS GIVEN AT THE INTERSECTION OF THE VERTICAL CURB AND THE HORIZONTAL SIDEWALK SLOPES.
3. EXPANSION JOINT PROFILE STATIONS AND ELEVATIONS GIVEN ALONG PROPOSED CENTERLINES OF EXPANSION JOINTS. ADJUST EXPANSION JOINT ELEVATIONS AS REQUIRED IN THE SIDEWALK AND CURB AREAS TO ACCOMMODATE STEEL SLIDING COVER PLATES. SEE SHEET 81 / 90 AND STANDARD DRAWING EXJ-4-87 FOR ADDITIONAL DETAILS.
4. FOR EXPANSION JOINT DETAILS NOT SHOWN, SEE STANDARD DRAWING EXJ-4-87.
5. PROVIDE PLATES "B" AT GIRDER LOCATIONS FOR FIELD-ADJUSTMENT OF EXPANSION JOINT. PROVIDE PLATES "A" PER STANDARD DRAWING EXJ-4-87 ELSEWHERE.
6. FIELD DRILL EXPANSION JOINT SUPPORT TEES (WT8x50) FOR DECK SLAB REINFORCING. HOLE DIAMETER SHALL EQUAL REINFORCING BAR DIAMETER + 1/4". BLOCK WT FLANGES AT PLATE "B" LOCATIONS TO FACILITATE INSTALLATION.
7. STRIP SEAL JOINT SETTING DIMENSION "A" SHALL BE DETERMINED BY THE CONTRACTOR IN THE SHOP DRAWING SUBMITTAL PER STANDARD DRAWING EXJ-4-87.

Preliminary Plans - For Reference Only

EXPANSION JOINT DETAILS (2 OF 3)
CUY-90-1696 (BRIDGE 14)
CR-722 (CARNEGIE AVE.) OVER I.R. 90

SFN 1807898
DESIGN AGENCY
Michael Baker INTERNATIONAL
DESIGNER ABC | CHECKER MEM
REVIEWER LPC 06/23/22
PROJECT ID 82382
SUBSET 80 | TOTAL 90
SHEET 2360 | TOTAL 2696

CUY-90-16.28 (CCG3A)
MODEL: Expansion Joint Details 2 PAPERSIZE: 34x22 (In.) DATE: 3/28/2025 TIME: 8:11:57 AM USER: Rohit.Bk
pw:\\mb-us-pw.bentley.com:mb-us-pw-03\Documents\Cleveland_OH\01_Projects\ODOT\District12\82382\400-Engineering\Structures\SFN_1807898\Sheets\82382_SFN_1807898_SX001.dgn

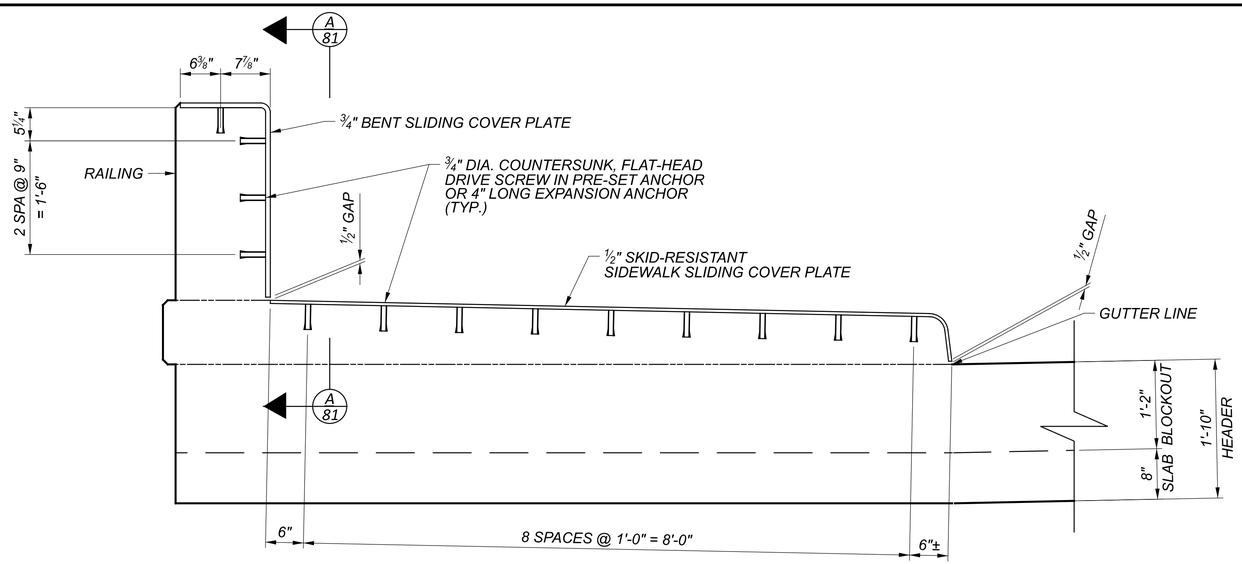

SECTION THRU RAILING AND SIDEWALK COVER PLATES

(DIMENSIONS PERPENDICULAR TO ℄ CONST. CARNEGIE AVE.)

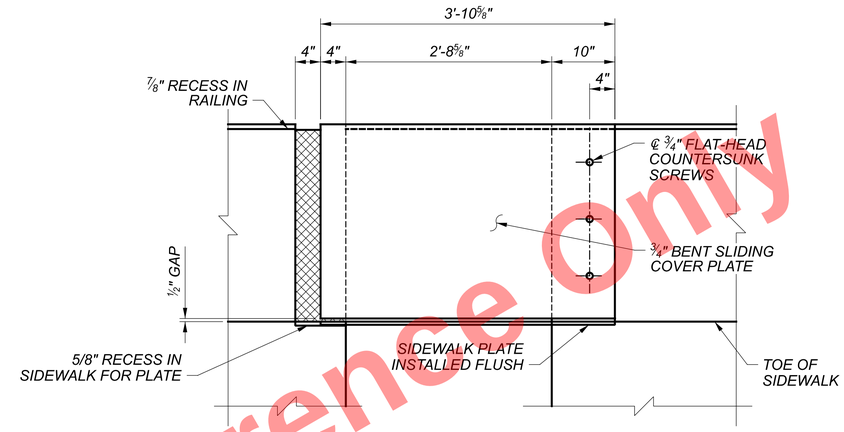

A 81 RAILING COVER PLATE ELEVATION
REAR ABUTMENT MODULAR EXPANSION JOINT

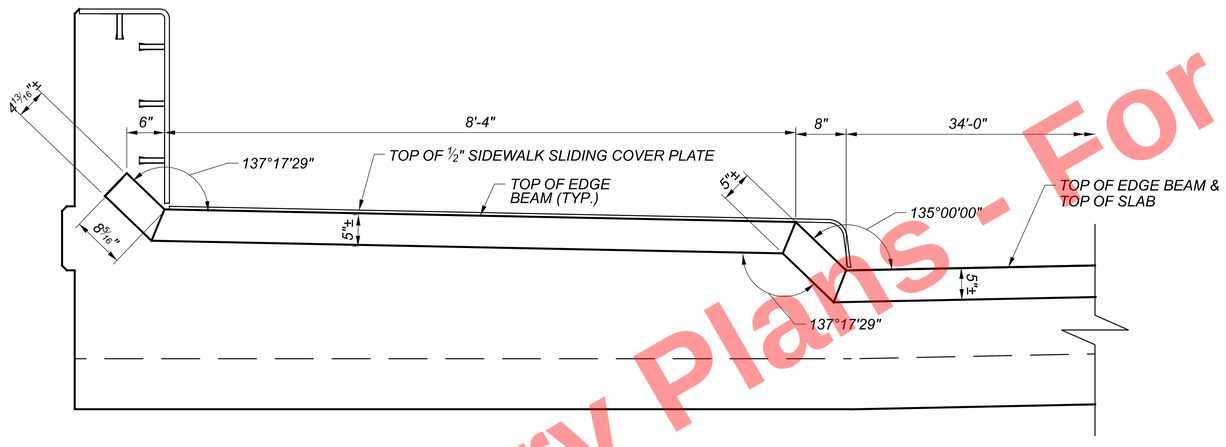

MODULAR EXPANSION JOINT BEAM PROFILE AT SIDEWALK

(DIMENSIONS PERPENDICULAR TO ℄ CONST. CARNEGIE AVE.)

Preliminary Plans - For Reference Only

NOTES:

1. *WORK THIS SHEET WITH SHEETS 79 & 80 / 90.*
2. *FOR EXPANSION JOINT DETAILS NOT SHOWN, SEE STANDARD DRAWING EXJ-4-87.*
3. *COORDINATE DEVELOPMENT OF MODULAR EXPANSION JOINT SHOP DRAWINGS WITH CURB, SIDEWALK AND BARRIER ARMOR DETAILS.*
4. *SIDEWALK AND BARRIER COVER PLATES SHALL BE INSTALLED FLUSH WITH ADJOINING CONCRETE SURFACES USING ¾" DIA. COUNTERSUNK, FLAT-HEAD DRIVE SCREWS IN PRE-SET ANCHORS OR POST-INSTALLED, 4" LONG EXPANSION ANCHORS.*
5. *SIDEWALK COVER PLATES SHALL HAVE A SKID-RESISTANT SURFACE FINISH. THE AVERAGE SURFACE TEXTURE OF THE COVER PLATES SHALL BE SIMILAR TO 100 GRIT SANDPAPER.*

EXPANSION JOINT DETAILS (3 OF 3)
CUY-90-1696 (BRIDGE 14)
CR-722 (CARNEGIE AVE.) OVER I.R. 90

SFN	1807898
DESIGN AGENCY	Michael Baker INTERNATIONAL
DESIGNER	ABC
CHECKER	MEM
REVIEWER	LPC 06/23/22
PROJECT ID	82382
SUBSET	81
TOTAL	90
SHEET	2361
TOTAL	2696

CUY-90-16.28 (CCG3A)

MODEL: Expansion Joint Details 3 PAPERSIZE: 34x22 (in.) DATE: 3/28/2025 TIME: 8:11:58 AM USER: Rohit.Bk
pw:\\mb-us-pw.bentley.com:mb-us-pw-03\Documents\Cleveland_OH\01_Projects\ODOT\District12\82382\400-Engineering\Structures\SFN_1807898\Sheets\82382_SFN_1807898_SX001.dgn

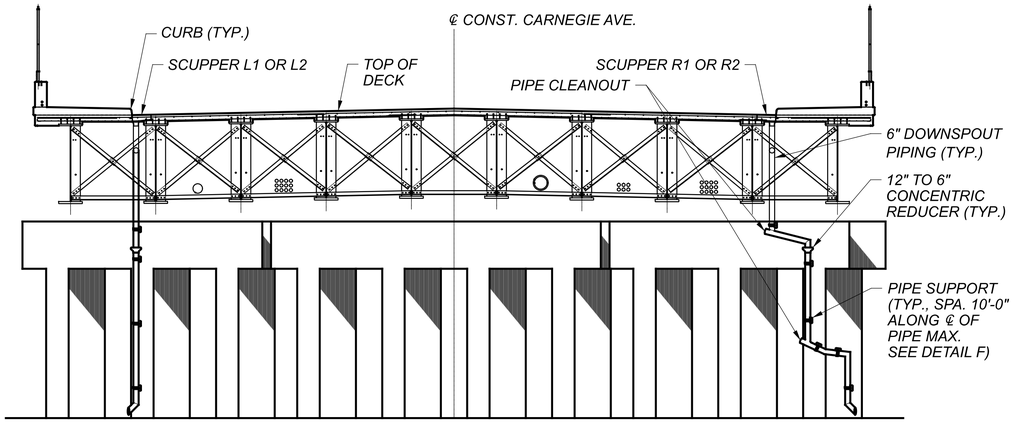

ELEVATION AT PIER
(LOOKING UPSTATION)

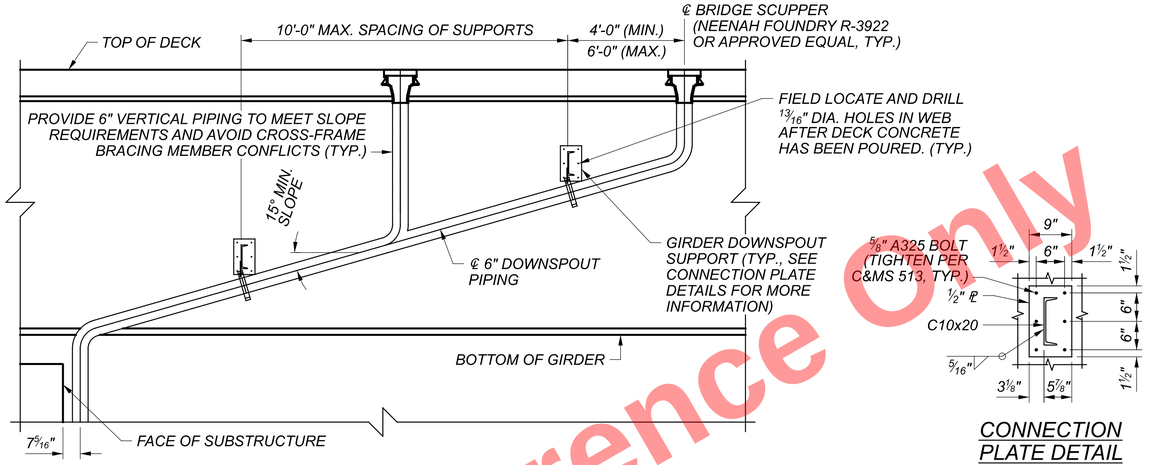

TYPICAL ELEVATION OF DECK TO SUBSTRUCTURE DRAINAGE
(LOOKING SOUTH)

CONNECTION PLATE DETAIL

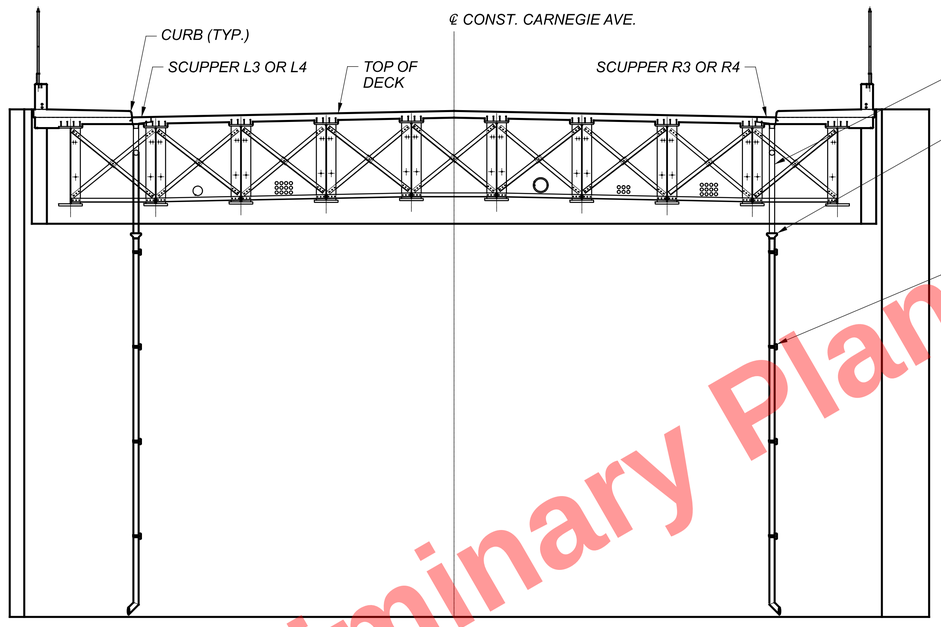

ELEVATION AT FORWARD ABUTMENT
(LOOKING UPSTATION)

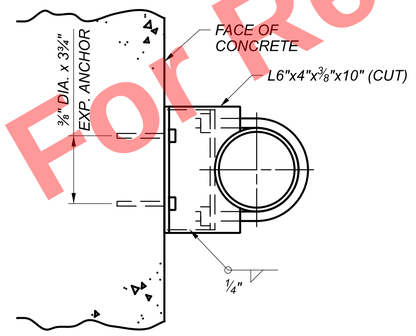

DETAIL F - PLAN

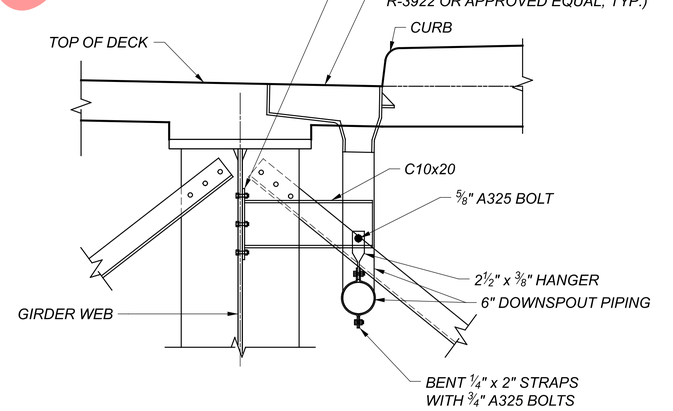

GIRDER DOWNSPOUT SUPPORT DETAIL

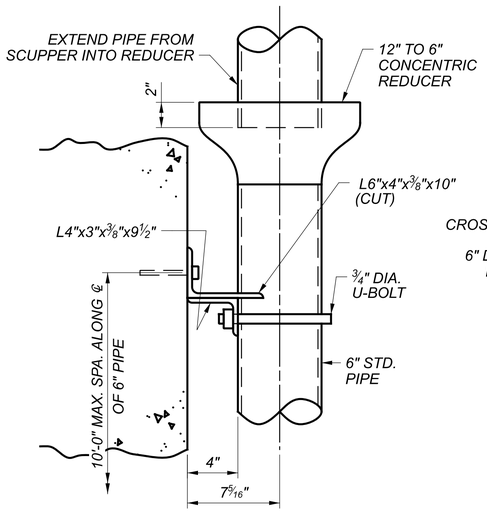

DETAIL F - ELEVATION

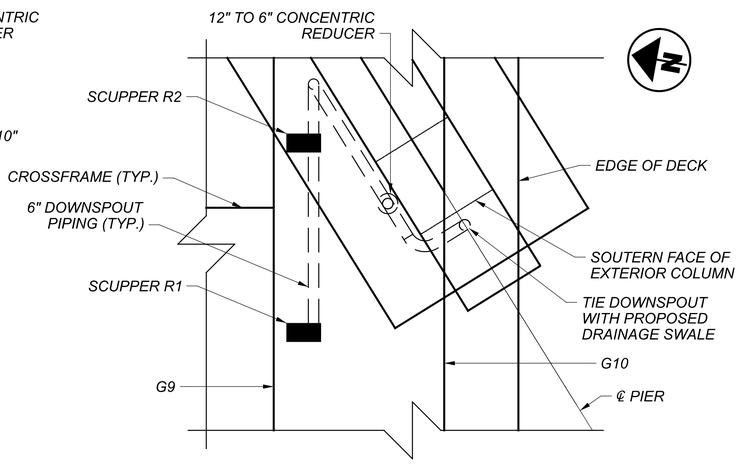

PLAN VIEW OF SCUPPER R1 AND R2 SYSTEM
(OTHER SCUPPER SYSTEMS ARE COLLINEAR IN SIMILAR PLAN VIEWS)

NOTES:

1. PROVIDE STRUCTURAL STEEL FOR DOWNSPOUT SUPPORTS CONFORMING TO ASTM A709 GRADE 36. GALVANIZE ALL MATERIAL AFTER FABRICATION ACCORDING TO ASTM A123.
2. PROVIDE 6" DIAMETER DOWNSPOUT STEEL PIPE CONFORMING TO ASTM A53 WITH MECHANICAL FITTINGS RECOMMENDED BY THE SCUPPER AND DOWNSPOUT MANUFACTURER.
3. PROVIDE FASTENERS CONFORMING TO ASTM F3125 GRADE A325 TYPE 1 GALVANIZED OF THE DIAMETERS NOTED.
4. PROVIDE GIRDER- AND CONCRETE-MOUNTED DOWNSPOUT SUPPORT BRACKETS AT 10'-0" MAXIMUM CENTERS. INSTALL CONCRETE-MOUNTED DOWNSPOUT SUPPORTS USING ⅜" x 3¾" EXPANSION ANCHORS.
5. TERMINATE DOWNPOUT RUNS APPROXIMATELY 1'-0" ABOVE FINISHED GRADE USING A 45° ELBOW.
6. SEE SHEET 63/90 FOR SCUPPER STATIONING AND OFFSETS.

Preliminary Plans - For Reference Only

SCUPPER AND DOWNSPOUT DETAILS
CUY-90-1696 (BRIDGE 14)
CR-722 (CARNEGIE AVE.) OVER I.R. 90

SFN 1807898
DESIGN AGENCY
Michael Baker INTERNATIONAL
DESIGNER ZRS | CHECKER ABC
REVIEWER LPC 06/23/22
PROJECT ID 82382
SUBSET 82 | TOTAL 90
SHEET 2362 | TOTAL 2696

CUY-90-16.28 (CCG3A)

MODEL: Scupper Details PAPERSIZE: 34x22 (in.) DATE: 3/28/2025 TIME: 8:12:12 AM USER: Rohit.Bk
pw:\\mb-us-pw.bentley.com:mb-us-pw-03\Documents\Cleveland_OH101_Projects\ODOT\District12\82382\400-Engineering\Structures\SFN_1807898\Sheets\82382_SFN_1807898_SS003.dgn

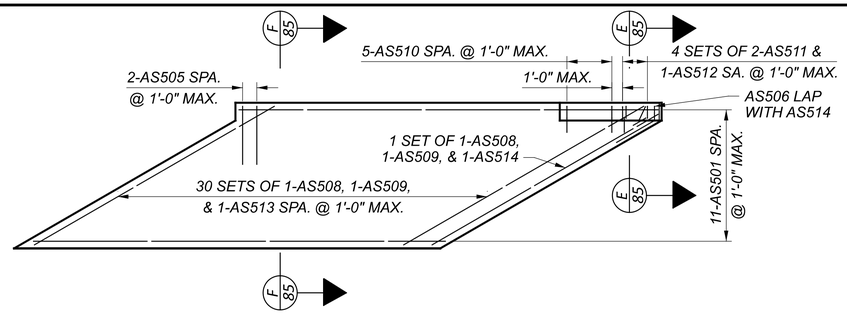

REAR APPROACH SLAB SIDEWALK PLAN (LEFT)

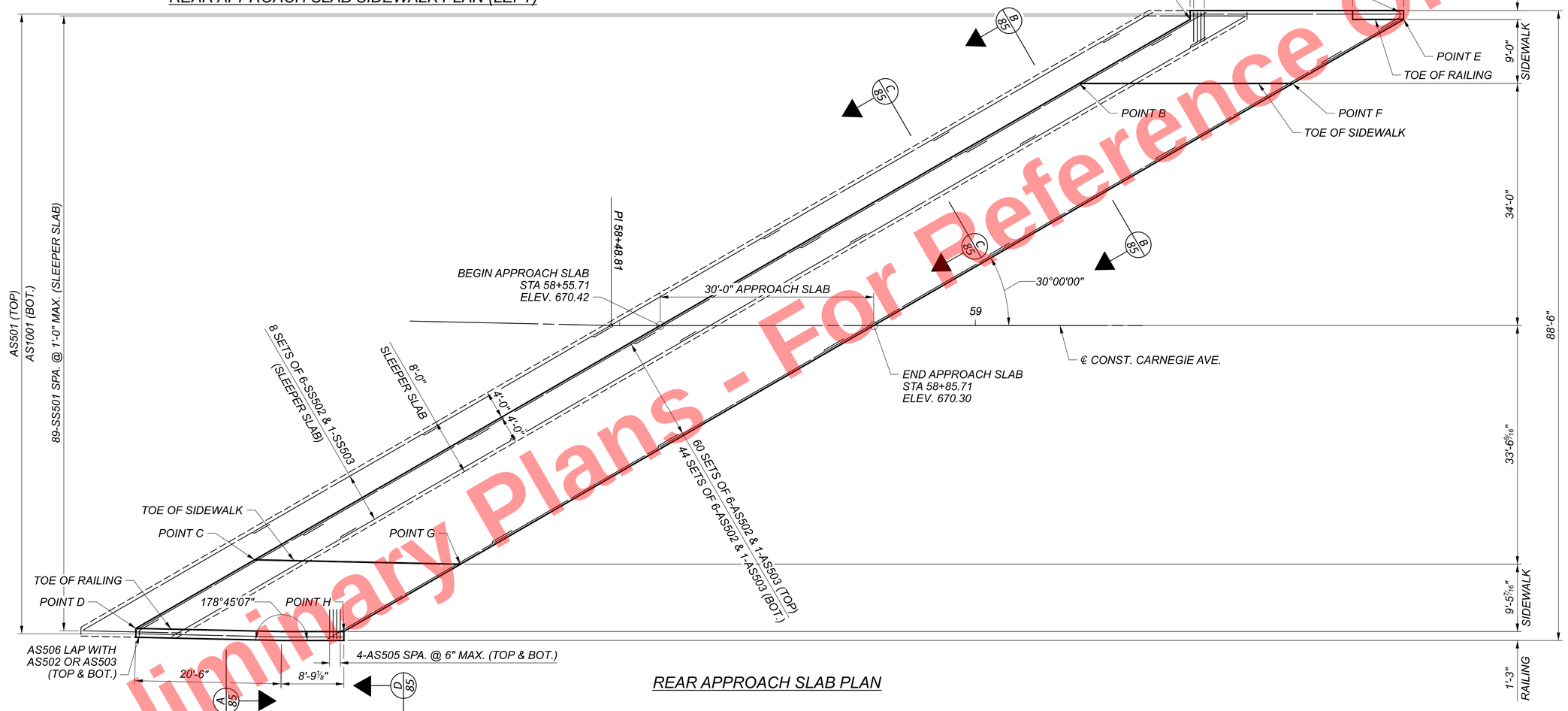

REAR APPROACH SLAB PLAN

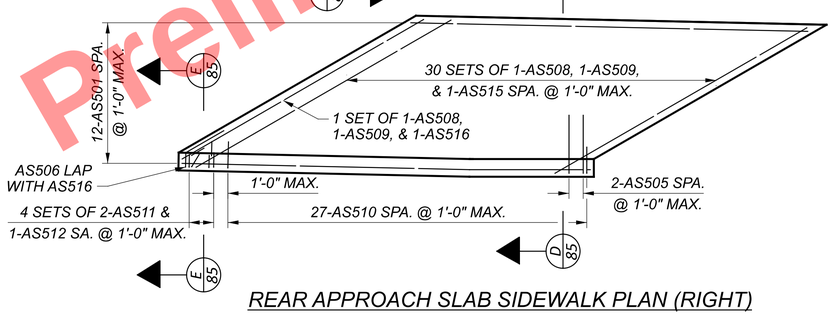

REAR APPROACH SLAB SIDEWALK PLAN (RIGHT)

APPROACH SLAB KEY POINTS

POINT	STATION	OFFSET		ELEVATION
A	59+30.18	43.00	LT	670.21
B	59+14.60	34.00'	LT	669.50
C	57+99.43	34.00'	RT	669.96
D	57+82.95	44.00'	RT	670.68
E	59+60.19	43.00'	LT	670.17
F	59+44.60	34.00'	LT	669.38
G	58+28.34	34.00'	RT	669.85
H	58+12.18	43.81'	RT	670.78

MIN. LAP LENGTHS:

#5 (SLEEPER SLAB): 2'-5"

#5 (APPROACH SLAB): 3'-1"

NOTES:

1. FOR ADDITIONAL APPROACH SLAB DETAILS, SEE ODOT STANDARD DRAWINGS AS-1-15 AND AS-2-15, TYPE A INSTALLATION.
2. FOR RAILING ELEVATIONS AND DETAILS, SEE SHEETS 73 - 76 / 90.

Preliminary Plans - For Reference Only

APPROACH SLAB DETAILS (1 OF 3)
CUY-90-1696 (BRIDGE 14)
CR-722 (CARNEGIE AVE.) OVER I.R. 90

SFN 1807898
DESIGN AGENCY
Michael Baker INTERNATIONAL
DESIGNER ABC | CHECKER MEM
REVIEWER LPC 06/23/22
PROJECT ID 82382
SUBSET 83 | TOTAL 90
SHEET 2363 | TOTAL 2696

CUY-90-16.28 (CCG3A)

MODEL: Approach Slab Details 1 PAPERSIZE: 34x22 (in.) DATE: 3/28/2025 TIME: 8:12:24 AM USER: RohitBk
pw:\\mb-us-pw.bentley.com:mb-us-pw-03\Documents\Cleveland_OH\01_Projects\ODOT\District12\82382\400-Engineering\Structures\SFN_1807898\Sheets\82382_SFN_1807898_SM001.dgn

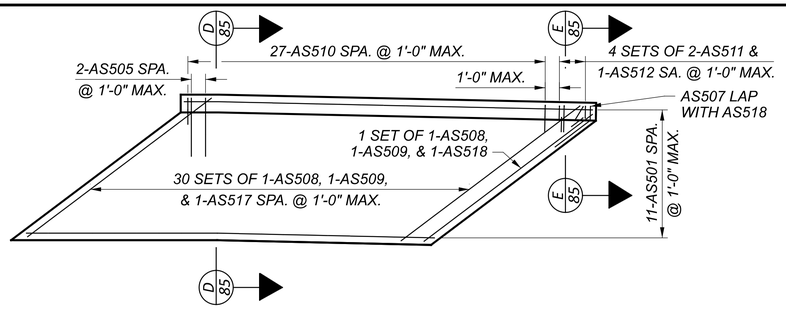

FORWARD APPROACH SLAB SIDEWALK PLAN (LEFT)

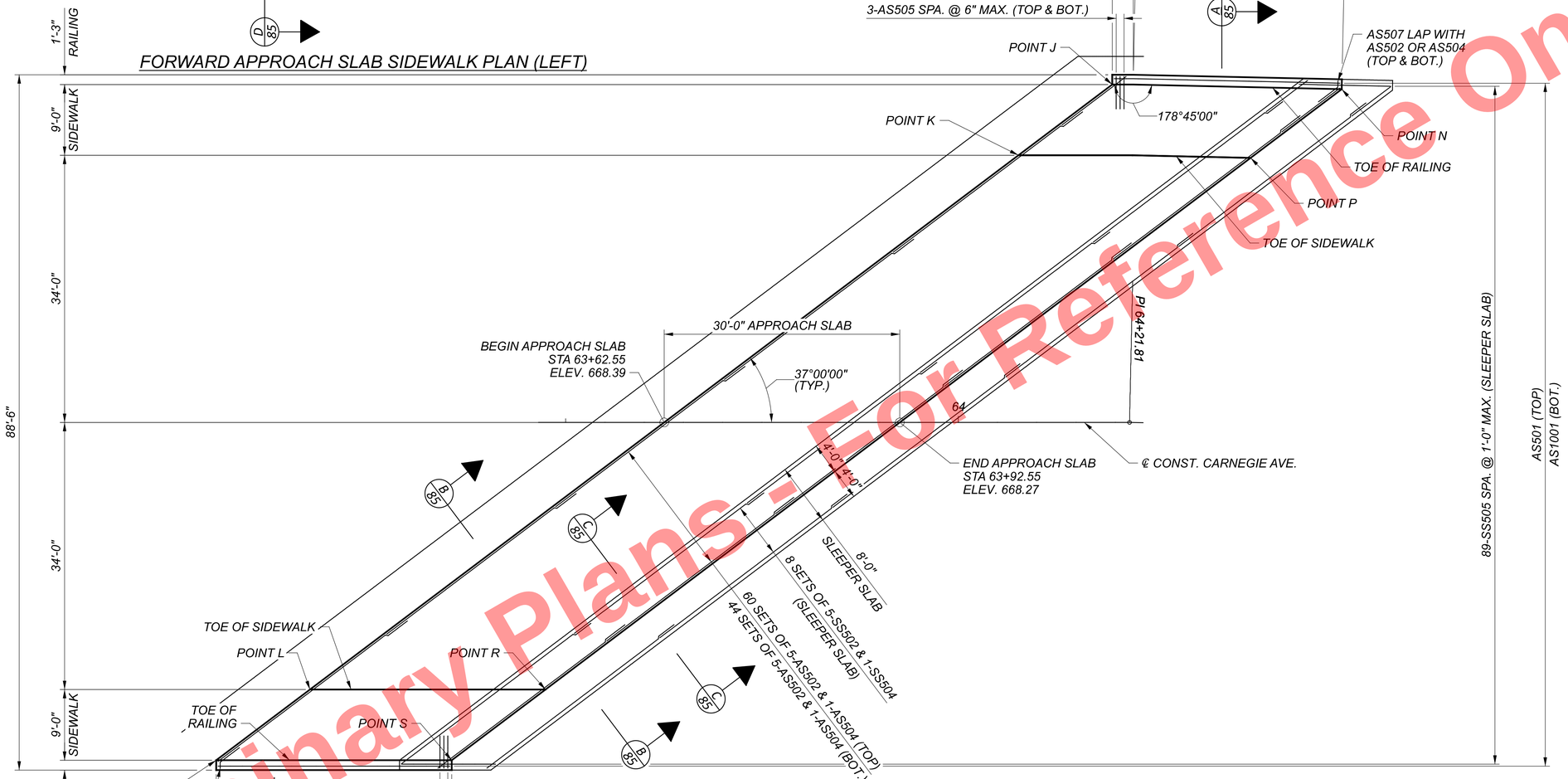

FORWARD APPROACH SLAB PLAN

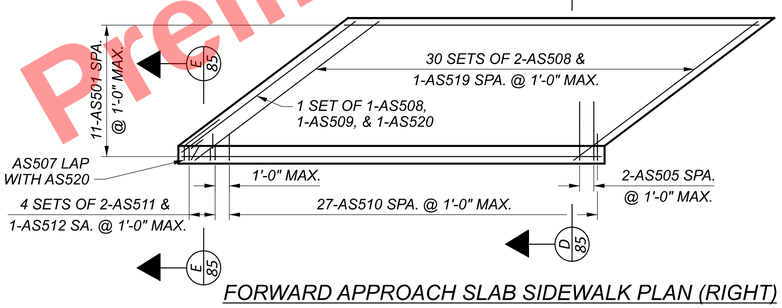

FORWARD APPROACH SLAB SIDEWALK PLAN (RIGHT)

APPROACH SLAB KEY POINTS

POINT	STATION	OFFSET		ELEVATION
J	64+19.61	43.00'	LT	668.34
K	64+07.67	34.00'	LT	667.53
L	63+17.43	34.00'	RT	667.89
M	63+05.49	43.00'	RT	668.79
N	64+47.91	43.00'	LT	668.26
P	64+36.49	34.00'	LT	667.56
R	63+47.43	34.00'	RT	667.77
S	63+35.49	43.00'	RT	668.52

MIN. LAP LENGTHS:

#5 (SLEEPER SLAB): 2'-5"

#5 (APPROACH SLAB): 3'-1"

NOTES:

1. *FOR ADDITIONAL APPROACH SLAB DETAILS, SEE ODOT STANDARD DRAWINGS AS-1-15 AND AS-2-15, TYPE A INSTALLATION.*
2. *FOR RAILING ELEVATIONS AND DETAILS, SEE SHEETS 73 - 76 / 90.*

Preliminary Plans - Not For Reference Only

APPROACH SLAB DETAILS (2 OF 3)
CUY-90-1696 (BRIDGE 14)
CR-722 (CARNEGIE AVE.) OVER I.R. 90

SFN 1807898
DESIGN AGENCY
Michael Baker INTERNATIONAL
DESIGNER ABC | CHECKER MEM
REVIEWER LPC 06/23/22
PROJECT ID 82382
SUBSET 84 | TOTAL 90
SHEET 2364 | TOTAL 2696

CUY-90-16.28 (CCG3A)

MODEL: Approach Slab Details 2 PAPERSIZE: 34x22 (in.) DATE: 3/28/2025 TIME: 8:12:25 AM USER: Rohit.Bk
pw:\\mb-us-pw.bentley.com:mb-us-pw-03\Documents\Cleveland_OH\01_Projects\ODOT\District12\82382\400-Engineering\Structures\SFN_1807898\Sheets\82382_SFN_1807898_SM001.dgn

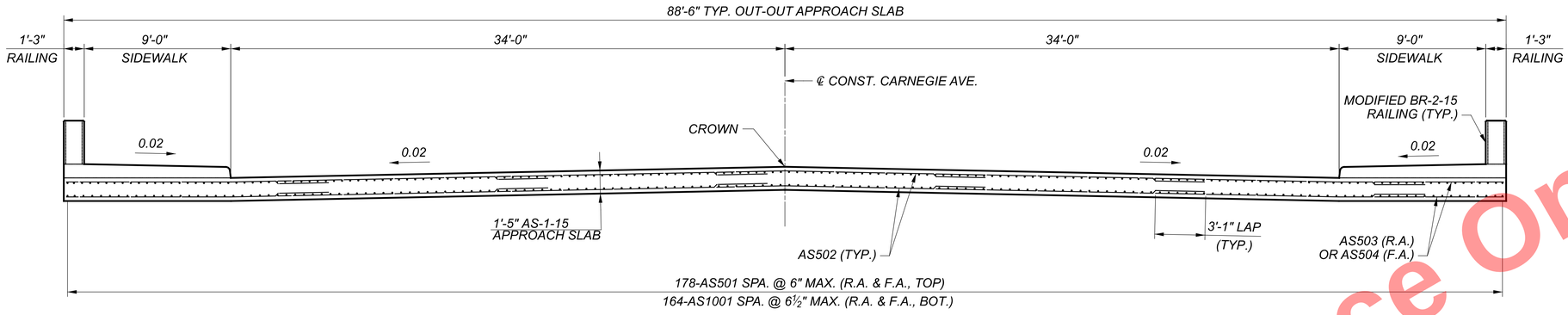

A 83 A 84 SECTION

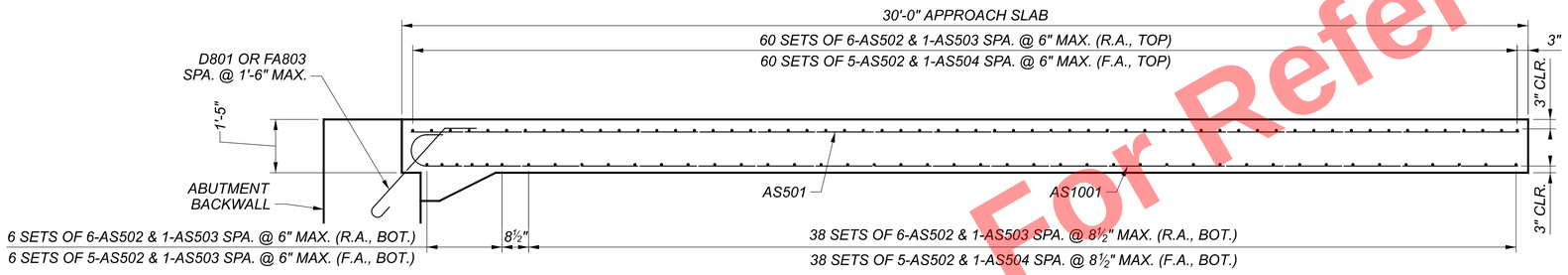

B 83 B 84 SECTION

(SLEEPER SLAB NOT SHOWN)

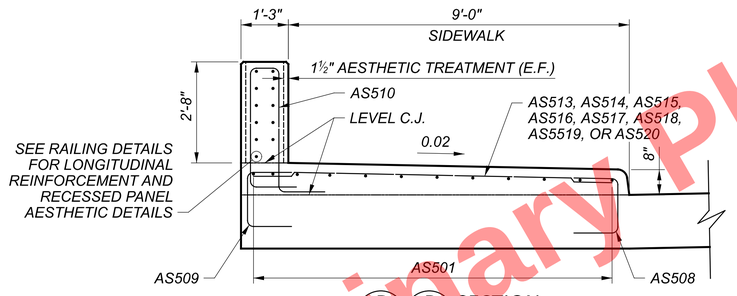

D 83 D 84 SECTION

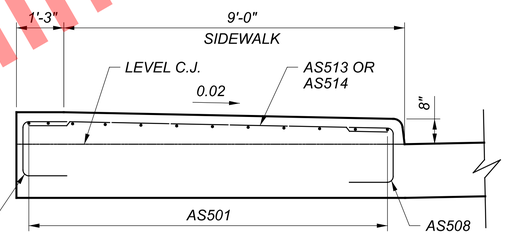

F 83 SECTION

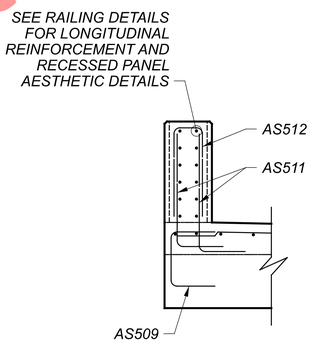

E 83 E 84 SECTION

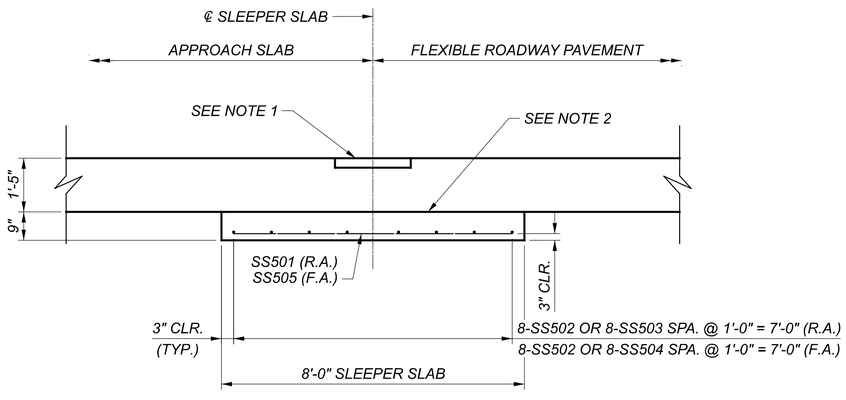

C 83 C 84 SECTION

MIN. LAP LENGTHS:

#5 (SLEEPER SLAB): 2'-5"

#5 (APPROACH SLAB): 3'-1"

NOTES:

1. POLYMER MODIFIED ASPHALT JOINT SYSTEM (SEE SUPPLEMENTAL SPECIFICATION 846) AND STD. DWG. AS-1-15 SHEET 2/2, DETAIL D.
2. APPLY BOND BREAKER TO THE ENTIRE TOP SURFACE OF THE CONCRETE SLEEPER SLAB. SEE "REINFORCED CONCRETE SLEEPER SLAB SURFACE FINISH AND BOND BREAKER" NOTES ON STD. DWG. AS-2-15 SHEET 14/14.
3. FOR RAILING ELEVATIONS AND DETAILS, SEE SHEETS 73 - 76 / 90.

Preliminary Plans - For Reference Only

APPROACH SLAB DETAILS (3 OF 3)
CUY-90-1696 (BRIDGE 14)
CR-722 (CARNEGIE AVE.) OVER I.R. 90

SFN 1807898
DESIGN AGENCY
Michael Baker INTERNATIONAL
DESIGNER ABC | CHECKER MEM
REVIEWER LPC 06/23/22
PROJECT ID 82382
SUBSET 85 | TOTAL 90
SHEET 2365 | TOTAL 2696

CUY-90-16.28 (CCG3A)

MODEL: Approach Slab Details 3 PAPERSIZE: 34x22 (in.) DATE: 6/16/2025 TIME: 1:54:11 PM USER: Shane.Weiss
pw:\\mb-us-pw.bentley.com:mb-us-pw-03\Documents\Cleveland_OH01_Projects\ODOT\District12\82382400-Engineering\Structures\SFN_1807898\Sheets\82382_SFN_1807898_SM001.dgn

MARK	MAT'RL TYPE	NUMBER			LENGTH	WEIGHT (LBS.)	TYPE	DIMENSIONS						SER INC.
		REAR	FWD.	TOTAL				A	B	C	D	E	R	
REAR ABUTMENT (EPOXY COATED STEEL REINFORCEMENT-ECSR)														
RA501	ECSR	234		234	8'-11"	2176	2	2'-9"	3'-8"	2'-9"				
RA502	ECSR	105		105	29'-8"	3249	STR.							
RA503	ECSR	217		217	20'-6"	4640	STR.							
RA504	ECSR	30		30	29'-6"	923	19	18'-10	10'-1 5/8"	3'-2 7/8"				
RA505	ECSR	222		222	30'-0"	6946	STR.							
RA506	ECSR	9		9	23'-5"	220	STR.							
RA507	ECSR	4		4	19'-0"	79	STR.							
RA508	ECSR	6		6	18'-10"	118	20	4'-11 1/4"	8'-7 1/4"	4'-9 1/2"	2'-1 7/8"	3'-6 1/2"		
RA509	ECSR	4		4	28'-4"	118	19	18'-3 1/4"	9'-7 1/8"	3'-0 7/8"				
RA510	ECSR	1		1	7'-3"	8	2	1'-10"	3'-2"	2'-6"				
RA511	ECSR	16		16	18'-10"	314	STR.							
RA512	ECSR	1		1	16'-5"	17	STR.							
RA513	ECSR	10		10	12'-0"	125	19	9'-6 3/8"	0'-8 1/4"	2'-5"				
RA514	ECSR	5		5	11'-9"	61	19	9'-0 1/4"	0'-9"	2'-8 1/4"				
RA515	ECSR	15		15	7'-0"	110	10	0'-7 3/8"	2'-11 7/8"	0'-11 7/8"	3'-1"			
RA516	ECSR	15		15	11'-3"	176	10	1'-5 3/4"	2'-8 5/8"	2'-1"	6'-2 5/8"			
RA517	ECSR	15		15	5'-10"	91	19	3'-0 5/8"	1'-5 7/8"	2'-4 1/2"				
RA518	ECSR	30		30	8'-3"	258	2	3'-1"	2'-3 1/2"	3'-1"				
RA519	ECSR	15		15	12'-4"	193	19	9'-3"	2'-7 3/8"	1'-8 3/4"				
RA520	ECSR	1		1	11'-9"	12	19	8'-9"	2'-6 1/2"	1'-8 1/4"				
RA521	ECSR	1		1	11'-9"	12	STR.							
RA522	ECSR	15		15	12'-6"	196	19	9'-4 7/8"	2'-7 1/4"	1'-8 3/4"				
RA523	ECSR	16		16	16'-6"	275	STR.							
RA524	ECSR	15		15	16'-4"	256	19	11'-10	3'-10 3/8"	2'-2 3/8"				
RA525	ECSR	15		15	8'-0"	125	25	3'-1 5/8"	0"	2'-8 3/8"	1'-9 1/2"	1'-6 3/8"		
RA526	ECSR	11		11	7'-0"	80	25	2'-11 7/8"	0'-8 1/4"	2'-11 1/2"	0'-10 5/8"	0"		
RA527	ECSR	1		1	27'-5"	29	2	12'-4"	3'-0"	12'-4"				
RA528	ECSR	2		2	3'-1"	6	STR.							
RA529	ECSR	4		4	29'-9"	124	STR.							
RA530	ECSR	4		4	13'-6"	56	STR.							
RA531	ECSR	4		4	13'-9"	57	STR.							
RA532	ECSR	4		4	18'-0"	75	STR.							
RA533	ECSR	4		4	34'-4"	143	STR.							
RA534	ECSR	4		4	13'-10"	58	STR.							
RA535	ECSR	4		4	30'-7"	128	STR.							
RA536	ECSR	4		4	19'-5"	81	19	18'-4 1/2"	0'-7 1/2"	0'-10 3/8"				
RA537	ECSR	800		800	2'-6"	2086	1	0'-10"	1'-9"					
RA538	ECSR	4		4	18'-5"	77	19	17'-4 1/2"	0'-7 1/2"	0'-10 3/8"				
RA539	ECSR	21		21	29'-2"	639	STR.							
RA540	ECSR	5		5	29'-2"	152	25	2'-11 7/8"	0'-11 3/4"	2'-11 1/2"	1'-4 5/8"	0"		
RA601	ECSR	42		42	12'-2"	768	2	3'-11"	4'-8"	3'-11"				
RA602	ECSR	114		114	14'-8"	2511	2	3'-11"	7'-2"	3'-11"				
RA603	ECSR	160		160	15'-0"	3605	2	4'-1"	7'-2"	4'-1"				
RA604	ECSR	40		40	14'-4"	861	2	3'-9"	7'-2"	3'-9"				
RA605	ECSR	16		16	14'-2"	340	2	3'-8"	7'-2"	3'-8"				
RA606	ECSR	12		12	15'-0"	270	2	3'-8"	8'-0"	3'-8"				
		2		2	12'-6"				5'-5 3/4"					
RA607	ECSR	SER. OF		SER. OF	TO	285	2	3'-8"	TO	3'-8"				4 3/16"
		7		7	14'-7"				7'-7"					
RA608	ECSR	34		34	11'-8"	596	2	3'-8"	4'-8"	3'-8"				
RA609	ECSR	231		231	12'-1"	4192	2	5'-3"	1'-11"	5'-3"				
		1		1	10'-10"				0'-7 7/8"					
RA610	ECSR	SER. OF		SER. OF	TO	120	2	5'-3"	TO	5'-3"				2 3/8"
		7		7	12'-0"				1'-10 1/8"					
RA611	ECSR	1		1	10'-9"	16	2	5'-3"	0'-7"	5'-3"				
		1		1	9'-8"			3'-2"		3'-2"				
RA612	ECSR	SER. OF		SER. OF	TO	120	2	TO	3'-8"	TO				3 1/2"
		7		7	13'-2"			4'-11"		4'-11"				
RA613	ECSR	10		10	8'-11"	134	1	1'-0"	8'-1"					
RA614	ECSR	4		4	12'-11"	78	2	5'-3"	2'-9"	5'-3"				
RA615	ECSR	1		1	12'-7"	19	2	5'-3"	2'-5"	5'-3"				
RA616	ECSR	2		2	11'-8"	35	2	5'-3"	1'-5 3/4"	5'-3"				
RA617	ECSR	1		1	12'-2"	18	2	5'-3"	2'-0"	5'-3"				
RA618	ECSR	8		8	15'-10"	190	2	5'-8"	4'-10"	5'-8"				
RA619	ECSR	4		4	14'-6"	87	2	5'-6"	3'-10"	5'-6"				
RA620	ECSR	4		4	15'-0"	90	2	5'-6"	4'-4"	5'-6"				
RA621	ECSR	4		4	14'-2"	85	2	5'-8"	3'-2"	5'-8"				
RA622	ECSR	11		11	27'-4"	452	2	12'-11"	2'-5"	12'-4"				
RA623	ECSR	185		185	8'-1"	2246	2	3'-6"	1'-5"	3'-6"				

MARK	MAT'RL TYPE	NUMBER			LENGTH	WEIGHT (LBS.)	TYPE	DIMENSIONS						SER INC.
		REAR	FWD.	TOTAL				A	B	C	D	E	R	
REAR ABUTMENT (EPOXY COATED STEEL REINFORCEMENT-ECSR)														
		1		1	25'-7"				0'-7 7/8"					
RA624	ECSR	SER. OF		SER. OF	TO	275	2	12'-11"	TO	12'-4"				2 3/8"
		7		7	26'-9"				1'-10 1/8"					
RA625	ECSR	1		1	26'-7"	40	2	12'-11"	1'-8"	12'-4"				
RA626	ECSR	185		185	18'-9"	5210	2	8'-7"	1'-11"	8'-7"				
		1		1	22'-0"				5'-2 3/8"					
RA627	ECSR	SER. OF		SER. OF	TO	134	2	8'-7"	TO	8'-7"				2 3/8"
		4		4	22'-8"				5'-9 1/2"					
RA628	NOT USED													
		1		1	11'-4"				4'-7 5/8"					
RA629	ECSR	SER. OF		SER. OF	TO	70	2	3'-6"	TO	3'-6"				3 3/16"
		4		4	12'-1"				5'-5 1/4"					
		1		1	27'-8"				2'-8 3/4"					
RA630	ECSR	SER. OF		SER. OF	TO	168	2	12'-11"	TO	12'-4"				2 5/16"
		4		4	28'-3"				3'-3 3/4"					
RA631	ECSR	4		4	20'-6"	123	2	8'-7"	3'-8"	8'-7"				
RA632	ECSR	14		14	26'-3"	552	2	12'-4"	1'-11"	12'-4"				
RA633	ECSR	3		3	9'-10"	44	2	3'-6"	3'-2"	3'-6"				
RA634	ECSR	1		1	27'-6"	41	2	12'-4"	3'-2"	12'-4"				
RA635	ECSR	3		3	9'-5"	42	2	3'-6"	2'-9"	3'-6"				
RA636	ECSR	1		1	9'-1"	14	2	3'-6"	2'-5"	3'-6"				
RA637	ECSR	2		2	8'-2"	25	2	3'-6"	1'-5 3/4"	3'-6"				
RA638	ECSR	1		1	19'-7"	29	2	8'-7"	2'-9"	8'-7"				
RA639	ECSR	1		1	25'-1"	38	2	12'-4"	0'-8 5/8"	12'-4"				
RA640	ECSR	1		1	25'-5"	38	2	12'-4"	1'-1 1/4"	12'-4"				
RA641	ECSR	1		1	8'-8"	13	2	3'-6"	1'-11 3/4"	3'-6"				
RA642	ECSR	1		1	26'-4"	40	2	12'-4"	2'-0"	12'-4"				
RA643	ECSR	8		8	12'-2"	146	2	3'-10"	4'-10"	3'-10"				
RA644	ECSR	4		4	10'-8"	64	2	3'-7"	3'-10"	3'-7"				
RA645	ECSR	4		4	12'-6"	75	2	4'-3"	4'-4"	4'-3"				
RA646	ECSR	4		4	10'-8"	64	2	4'-0"	3'-0"	4'-0"				
RA647	ECSR	10		10	9'-0"	135	2	4'-4"	0'-8"	4'-4"				
RA648	ECSR	12		12	3'-4"	60	STR.							
RA649	ECSR	11		11	26'-9"	442	2	12'-4"	2'-5"	12'-4"				
RA801	ECSR	89		89	30'-0"	7129	STR.							
RA802	ECSR	4		4	19'-2"	205	STR.							
RA803	ECSR	2		2	30'-10"	165	19	18'-10	11'-5"	3'-7 3/4"				
RA804	ECSR	2		2	30'-7"	163	19	18'-9 1/8"	11'-3 1/2"	3'-7 3/8"				
RA805	ECSR	2		2	30'-3"	162	19	18'-7 1/8"	11'-1 7/8"	3'-6 3/4"				
RA806	ECSR	2		2	35'-5"	189	19	18'-5 1/2"	16'-2 1/8"	5'-2 1/8"				
RA807	ECSR	2		2	17'-10"	95	19	10'-3 1/8"	7'-3"	2'-3 3/4"				
RA808	ECSR	2		2	16'-1"	86	19	9'-11 7/8"	5'-9 3/4"	1'-10 1/4"				
RA809	ECSR	2		2	9'-4"	50	STR.							
RA810	ECSR	2		2	11'-3"	60	STR.							
RA811	ECSR	2		2	13'-6"	72	STR.							
RA812	ECSR	9		9	19'-11"	479	2	1'-4"	17'-8"	1'-4"				
RA813	ECSR	45		45	24'-4"	2924	1	1'-4"	23'-2"					
RA814	ECSR	59		59	4'-6"	709	18	2'-3"	1'-0"	1'-0"				
REAR ABUTMENT ECSR SUBTOTAL						61977	LBS.							

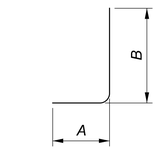

TYPE-1

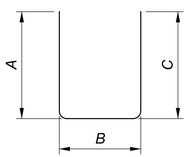

TYPE-2

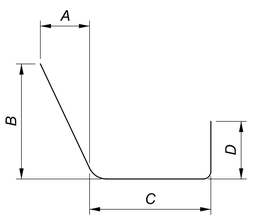

TYPE-10

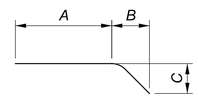

TYPE-19

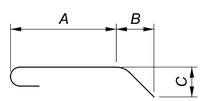

TYPE-18

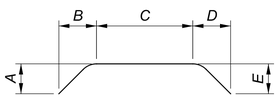

TYPE-20

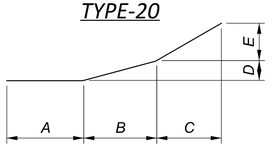

TYPE-25

Preliminary Plans - For Reference Only

REINFORCING SCHEDULE (1 OF 5)
CUY-90-1696 (BRIDGE 14)
CR-722 (CARNEGIE AVE.) OVER I.R. 90

SFN 1807898
DESIGN AGENCY
Michael Baker INTERNATIONAL
DESIGNER JNR | CHECKER MKB
REVIEWER LPC 06/23/22
PROJECT ID 82382
SUBSET 86 | TOTAL 90
SHEET 2366 | TOTAL 2696

CUY-90-16.28 (CCG3A)

MODEL: Sheet PAPERSIZE: 34x22 (in.) DATE: 3/28/2025 TIME: 8:12:39 AM USER: Rohit.Bk
pw:\\mb-us-pw.bentley.com:mb-us-pw-03\Documents\Cleveland_OH\01_Projects\ODOT\District12\82382\400-Engineering\Structures\SFN_1807898\Sheets\82382_SFN_1807898_SL001.dgn

MARK	MAT'RL TYPE	NUMBER REAR	NUMBER FWD.	NUMBER TOTAL	LENGTH	WEIGHT (LBS.)	TYPE	DIMENSIONS A	DIMENSIONS B	DIMENSIONS C	DIMENSIONS D	DIMENSIONS E	DIMENSIONS R	SER INC.
FORWARD ABUTMENT (EPOXY COATED STEEL REINFORCEMENT-ECSR)														
FA501	ECSR		153	153	7'-1"	1130	2	0'-10"	5'-8"	0'-10"				
FA502	ECSR		20	20	17'-5"	363	1	0'-10"	16'-8"					
FA503	ECSR		4	4	30'-11"	129	2	0'-10"	29'-6"	0'-10"				
FA504	ECSR		4	4	34'-8"	145	1	0'-10"	33'-11"					
FA505	ECSR		158	158	4'-6"	742	STR.							
FA506	ECSR		501	501	8'-1"	4224	STR.							
			1	1	16'-0"				15'-3"					
FA507	ECSR		SER. OF	SER. OF	TO	54	1	0'-10"	TO					1'-4"
			3	3	18'-8"				17'-11"					
FA508	ECSR		48	48	28'-4"	1418	STR.							
FA509	ECSR		11	11	3'-11"	45	1	1'-9"	2'-3"					
FA510	ECSR		11	11	5'-8"	65	STR.							
FA511	ECSR		11	11	9'-2"	105	19	8'-1 1/8"	1'-0 1/4"	0'-5 5/8"				
FA512	ECSR		11	11	2'-0"	23	STR.							
FA513	ECSR		78	78	27'-1"	2203	STR.							
FA514	ECSR		11	11	2'-3"	26	STR.							
FA515	ECSR		10	10	3'-2"	33	19	2'-9 3/4"	0'-3 1/4"	0'-2 5/8"				
FA516	ECSR		11	11	10'-3"	118	19	8'-0 1/8"	1'-10"	1'-4"				
FA517	ECSR		1	1	16'-8"	17	2	3'-10"	9'-2 3/4"	3'-10"				
FA518	ECSR		10	10	4'-4"	45	STR.							
FA519	ECSR		11	11	1'-8"	19	STR.							
FA520	ECSR		11	11	2'-4"	27	STR.							
FA521	ECSR		135	135	9'-8"	1361	2	4'-1"	1'-9"	4'-1"				
			4	4	9'-4"				1'-11"					
FA522	ECSR		SER. OF	SER. OF	TO	185	2	3'-10"	TO	3'-10"				5'-5 3/4"
			3	3	20'-3"				12'-10					
			1	1	1'-5"									
FA523	ECSR		SER. OF	SER. OF	TO	36	STR.							1'-2 3/16"
			7	7	8'-6"									
FA524	ECSR		4	4	9'-1"	38	2	3'-10"	1'-8"	3'-10"				
			1	1					3'-6 1/8"					
FA525	ECSR		SER. OF	SER. OF	TO	49	2	3'-10"	TO	3'-10"				7 3/16"
			4	4	12'-9"				5'-3 5/8"					
			1	1	8'-1"				0'-7 3/4"					
FA526	ECSR		SER. OF	SER. OF	TO	27	2	3'-10"	TO	3'-10"				6 1/8"
			3	3	9'-1"				1'-8"					
			1	1	8'-5"				0'-11 7/8"					
FA527	ECSR		SER. OF	SER. OF	TO	89	2	3'-10"	TO	3'-10"				7 3/4"
			8	8	12'-11"				5'-6 1/8"					
			1	1	9'-10"				2'-5 1/4"					
FA528	ECSR		SER. OF	SER. OF	TO	21	2	3'-10"	TO	3'-10"				1"
			2	2	9'-11"				2'-6 1/4"					
			1	1	16'-1"				15'-4"					
FA529	ECSR		SER. OF	SER. OF	TO	54	1	0'-10"	TO					1'-3"
			3	3	18'-6"				17'-10"					
FA530	NOT USED													
FA531	ECSR		2	2	9'-4"	19	STR.							
FA532	ECSR		1	1	9'-11"	10	19	9'-7 1/4"	0'-3 1/4"	0'-2 5/8"				
FA533	ECSR		8	8	2'-6"	21	STR.							
FA534	ECSR		8	8	7'-10"	65	2	1'-11"	4'-3"	1'-11"				
FA535	ECSR		8	8	3'-7"	30	STR.							
FA536	ECSR		4	4	6'-0"	25	2	1'-5"	3'-5"	1'-5"				
FA601	ECSR		4	4	22'-11"	138	1	1'-0"	22'-1"					
FA602	ECSR		36	36	10'-7"	572	2	1'-0"	8'-11"	1'-0"				
FA603	ECSR		560	560	18'-5"	15491	2	1'-0"	16'-9"	1'-0"				
			1	1	6'-3"				4'-7"					
FA604	ECSR		SER. OF	SER. OF	TO	54	2	1'-0"	TO	1'-0"				5'-8 1/2"
			3	3	17'-8"				16'-0"					
FA605	ECSR		6	6	17'-8"	159	2	1'-0"	16'-0"	1'-0"				
FA606	ECSR		26	26	23'-11"	934	1	1'-0"	23'-1"					
FA607	ECSR		10	10	25'-1"	377	1	1'-0"	24'-3"					
FA608	ECSR		38	38	27'-0"	1541	2	1'-0"	26'-4"					
FA609	NOT USED													
FA610	ECSR		156	156	30'-0"	7029	STR.							
FA611	ECSR		37	37	7'-4"	408	STR.							

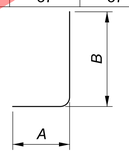

TYPE-1

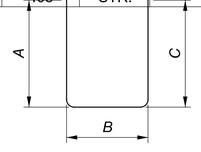

TYPE-2

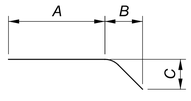

TYPE-19

MARK	MAT'RL TYPE	NUMBER REAR	NUMBER FWD.	NUMBER TOTAL	LENGTH	WEIGHT (LBS.)	TYPE	DIMENSIONS A	DIMENSIONS B	DIMENSIONS C	DIMENSIONS D	DIMENSIONS E	DIMENSIONS R	SER INC.
FORWARD ABUTMENT (EPOXY COATED STEEL REINFORCEMENT-ECSR)														
FA701	ECSR		171	171	9'-8"	3379	1	1'-2"	8'-8"					
FA702	ECSR		149	149	20'-0"	6091	STR.							
FA703	ECSR		42	42	29'-8"	2547	STR.							
FA704	ECSR		21	21	1'-8"	72	STR.							
FA705	ECSR		21	21	10'-4"	444	19	7'-11 7/8"	1'-11 1/2"	1'-4 7/8"				
FA706	ECSR		120	120	29'-4"	7195	STR.							
FA707	ECSR		21	21	5'-8"	243	STR.							
FA708	ECSR		21	21	3'-9"	161	STR.							
FA709	ECSR		21	21	2'-3"	97	STR.							
FA710	ECSR		120	120	27'-10"	6827	STR.							
FA711	ECSR		21	21	4'-0"		1	2'-5"	1'-9"					
FA712	ECSR		21	21	9'-5"	404	STR.							
FA713	ECSR		22	22	25'-0"	1124	STR.							
FA801	ECSR		321	321	9'-3"	7928	1	1'-4"	8'-1"					
FA802	ECSR		321	321	24'-10"	21284	STR.							
FORWARD ABUTMENT ECSR SUBTOTAL						97460	LBS.							

MARK	MAT'RL TYPE	NUMBER REAR	NUMBER FWD.	NUMBER TOTAL	LENGTH	WEIGHT (LBS.)	TYPE	DIMENSIONS A	DIMENSIONS B	DIMENSIONS C	DIMENSIONS D	DIMENSIONS E	DIMENSIONS R	SER INC.
FORWARD ABUTMENT WINGWALL (EPOXY COATED STEEL REINFORCEMENT-ECSR)														
FA561	ECSR		2	2	42'-7"	89	1	0'-10"	41'-10					
			1	1	39'-8"				38'-11 5/8"					
FA562	ECSR		SER. OF	SER. OF	TO	168	1	0'-10"	TO					
			4	4	41'-1"				40'-4 3/8"					
			1	1	32'-7"				31'-10					
FA563	ECSR		SER. OF	SER. OF	TO	518	1	0'-10"	TO					5 1/4"
			14	14	38'-3"				37'-6 3/4"					
FA564	ECSR		2	2	31'-3"	65	1	0'-10"	30'-6 1/2"					
			1	1	31'-1"				30'-4 3/4"					
FA565	ECSR		SER. OF	SER. OF	TO	999	1	0'-10"	TO					5 1/2"
			26	26	42'-7"				41'-10					
FA566	ECSR		2	2	16'-4"	34	1	0'-10"	15'-7 3/8"					
			1	1	15'-1"				14'-4 3/8"					
FA567	ECSR		SER. OF	SER. OF	TO	64	1	0'-10"	TO					2 7/16"
			4	4	15'-8"				14'-11 5/8"					
			1	1	13'-0"				12'-3 1/4"					
FA568	ECSR		SER. OF	SER. OF	TO	129	1	0'-10"	TO					2 1/4"
			9	9	14'-6"				13'-9 1/4"					
FA569	ECSR		2	2	12'-5"	26	1	0'-10"	11'-8 5/8"					
FA570	ECSR		4	4	8'-7"	36	1	0'-10"	7'-10"					
FA571	ECSR		4	4	8'-6"	35	19	7'-7 7/8"	0'-3"	0'-10"				
			1	1	9'-7"									
FA572	ECSR		SER. OF	SER. OF	TO	41	STR.							2 1/8"
			4	4	10'-2"									
			1	1	9'-8"									
FA573	ECSR		SER. OF	SER. OF	TO	41	STR.							2 3/16"
			4	4	10'-2"									
			2	2	1'-10"									
FA574	ECSR		SER. OF	SER. OF	TO	537	STR.							2'-11
			13	13	37'-9"									
			2	2	4'-6"									
FA575	ECSR		SER. OF	SER. OF	TO	115	STR.							3'-3 1/4"
			5	5	17'-7"									
			2	2	5'-10"									
FA576	ECSR		SER. OF	SER. OF	TO	38	STR.							6'-7"
			2	2	12'-5"									
			1	1	12'-4"				11'-7 3/8"					
FA577	ECSR		SER. OF	SER. OF	TO	329	1	0'-10"	TO					2 5/16"
			22	22	16'-4"				15'-7 3/8"					
FA578	ECSR		2	2	11'-4"	24	1	0'-10"	10'-7 5/8"					
			1	1	10'-6"				9'-9 1/4"					
FA579	ECSR		SER. OF	SER. OF	TO	45	1	0'-10"	TO					1 11/16"
			4	4	10'-11"				10'-2 1/4"					
			1	1	9'-5"				8'-8 7/8"					
FA580	ECSR		SER. OF	SER. OF	TO	61	1	0'-10"	TO					1 1/2"
			6	6	10'-1"				9'-4 3/8"					
FA581	ECSR		2	2	9'-1"	19	1	0'-10"	8'-4 3/8"					
			1	1	9'-0"				8'-3 1/2"					
FA582	ECSR		SER. OF	SER. OF	TO	202	1	0'-10"	TO					1 9/16"
			19	19	11'-4"				10'-7 5/8"					
FA583	ECSR		2	2	40'-8"	85	STR.							
FA584	ECSR		2	2	18'-6"	39	STR.							

Preliminary Plans - Not For Reference Only

REINFORCING SCHEDULE (2 OF 5)
CUY-90-1696 (BRIDGE 14)
CR-722 (CARNEGIE AVE.) OVER I.R. 90

SFN 1807898
DESIGN AGENCY
Michael Baker INTERNATIONAL
DESIGNER JNR | CHECKER MKB
REVIEWER LPC 06/23/22
PROJECT ID 82382
SUBSET 87 | TOTAL 90
SHEET 2367 | TOTAL 2696

CUY-90-16.28 (CCG3A)
MODEL: Sheet PAPERSIZE: 34x22 (in.) DATE: 3/28/2025 TIME: 8:12:47 AM USER: Rohit.Bk
pw:\\mb-us-pw.bentley.com:mb-us-pw-03\Documents\Cleveland_OH\01_Projects\ODOT\District12\82382\400-Engineering\Structures\SFN_1807898\Sheets\82382_SFN_1807898_SL002.dgn

MARK	MAT'RL TYPE	NUMBER REAR	NUMBER FWD.	NUMBER TOTAL	LENGTH	WEIGHT (LBS.)	TYPE	DIMENSIONS A	B	C	D	E	R	SER INC.
FORWARD ABUTMENT WINGWALL CONT. (EPOXY COATED STEEL REINFORCEMENT-ECSR)														
FA590	ECSR		5	5	13'-8"	71	STR.							
FA591	ECSR		3	3	11'-8"	37	STR.							
FA592	ECSR		31	31	6'-5"	207	25	0'-10"	3'-6"	0'-10"	3'-3"	0"		
FA593	ECSR		31	31	4'-8"	151	8	0'-10"	3'-3"	0'-10"				
FA594	ECSR		62	62	39'-8"	2565	STR.							
FA595	NOT USED													
FA596	ECSR		42	42	18'-1"	792	STR.							
FA597	NOT USED													
FA598	ECSR		26	26	13'-5"	364	STR.							
FA661	ECSR		38	38	9'-8"	552	1	1'-0"	8'-10"					
FA662	ECSR		38	38	9'-8"	552	19	8'-7 3/8"	0'-3 1/2"	1'-0"				
FA663	NOT USED													
FA664	NOT USED													
			1	1	15'-4"									
FA665	ECSR		SER. OF	SER. OF	TO	273	STR.							2 3/4"
			11	11	17'-8"									
			1	1	15'-5"									
FA666	ECSR		SER. OF	SER. OF	TO	273	STR.							2 3/4"
			11	11	17'-8"									
			1	1	10'-3"									
FA667	ECSR		SER. OF	SER. OF	TO	133	STR.							2 3/4"
			8	8	11'-11"									
			1	1	10'-4"									
FA668	ECSR		SER. OF	SER. OF	TO	133	STR.							2 3/4"
			8	8	11'-11"									
FA669	NOT USED													
FA670	NOT USED													
FA671	ECSR		31	31	13'-4"	621	2	1'-0"	11'-8"	1'-0"				
FA861	ECSR		49	49	15'-11"	2082	2	1'-4"	13'-8"	1'-4"				
			1	1	22'-1"									
FA901	ECSR		SER. OF	SER. OF	TO	3615	STR.							2 3/4"
			40	40	31'-1"									
			1	1	22'-2"									
FA902	ECSR		SER. OF	SER. OF	TO	3627	STR.							2 3/4"
			40	40	31'-2"									
FA903	ECSR		87	87	12'-10"	3796	1	1'-7"	11'-6"					
FA904	ECSR		87	87	12'-9"	3771	19	11'-1 3/4"	0'-6 3/4"	1'-6 7/8"				
FA905	NOT USED													
FA906	NOT USED													
			1	1	17'-11"									
FA907	ECSR		SER. OF	SER. OF	TO	248	STR.							2 11/16"
			4	4	18'-7"									
			1	1	18'-0"									
FA908	ECSR		SER. OF	SER. OF	TO	249	STR.							2 11/16"
			4	4	18'-8"									
FA1061	ECSR		161	161	19'-9"	13682	2	1'-10"	16'-9"	1'-10"				
FWD ABUT WINGWALL ECSR SUBTOTAL						41533	LBS.							

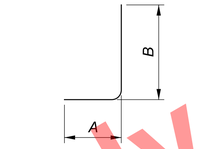

TYPE-1

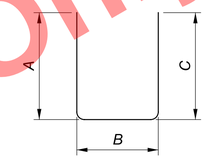

TYPE-2

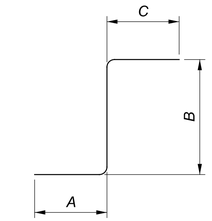

TYPE-8

TYPE-19

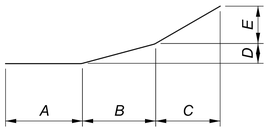

TYPE-25

Preliminary Plans - For Reference Only

REINFORCING SCHEDULE (3 OF 5)
CUY-90-1696 (BRIDGE 14)
CR-722 (CARNEGIE AVE.) OVER I.R. 90

SFN 1807898

DESIGN AGENCY
Michael Baker INTERNATIONAL

DESIGNER	CHECKER
JNR	MKB

REVIEWER
LPC 06/23/22

PROJECT ID
1807898

SUBSET	TOTAL
88	90

SHEET	TOTAL
2368	2696

CUY-90-16.28 (CCG3A)
MODEL: Sheet-2 PAPERSIZE: 34x22 (in.) DATE: 3/28/2025 TIME: 8:12:48 AM USER: RohitLBk
pw:\\mb-us-pw.bentley.com:mb-us-pw-03\Documents\Cleveland_OH\01_Projects\ODOT\District12\82382\400-Engineering\Structures\SFN_1807898\Sheets\82382_SFN_1807898_SL002.dgn

MARK	MAT'RL TYPE	NUMBER REAR	NUMBER FWD.	NUMBER TOTAL	LENGTH	WEIGHT (LBS.)	TYPE	DIMENSIONS A	B	C	D	E	R	SER INC.
PIER (EPOXY COATED STEEL REINFORCEMENT-ECSR)														
P401	ECSR			130	13'-10"	1201	3	3'-4"	3'-4"					
P402	ECSR			1000	1'-0"	668	34							
P501	ECSR			16	17'-1"	285	2	0'-10"	15'-8"	0'-10"				
P502	ECSR			16	19'-9"	330	1	0'-10"	19'-1"					
P503	ECSR			48	47'-5"	2374	STR.							
P504	ECSR			292	9'-10"	2995	2	3'-10"	2'-5"	3'-10"				
P505	ECSR			8	34'-1"	284	2	0'-10"	32'-8"	0'-10"				
P506	ECSR			48	34'-1"	1706	STR.							
P507	ECSR			400	10'-4"	4311	2	4'-1"	2'-5"	4'-1"				
P508	ECSR			292	10'-2"	3096	2	4'-0"	2'-5"	4'-0"				
P601	ECSR			500	13'-10"	10389	3	3'-4"	3'-4"					
P701	ECSR			165	13'-8"	4609	2	1'-2"	11'-8"	1'-2"				
P702	ECSR			58	47'-2"	5592	2	1'-2"	45'-2"	1'-2"				
P703	ECSR			48	34'-5"	3377	1	1'-2"	33'-5"					
P1001	ECSR			88	29'-4"	11107	1	1'-10"	27'-10"					
P1002	ECSR			148	14'-8"	9340	2	1'-10"	11'-8"	1'-10"				
P1003	ECSR			32	48'-2"	6632	2	1'-10"	45'-2"	1'-10"				
P1004	ECSR			36	38'-5"	5951	1	1'-10"	36'-11"					
P1005	ECSR			32	36'-8"	5049	1	1'-10"	35'-2"					
P1101	ECSR			320	17'-4"	29469	1	2'-0"	15'-8"					
P1102	ECSR			320	24'-0"	40804	1	2'-0"	22'-4"					
PIER ECSR SUBTOTAL						149569	LBS.							

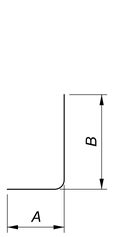

TYPE-1

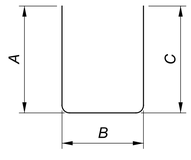

TYPE-2

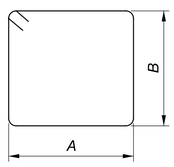

TYPE-3

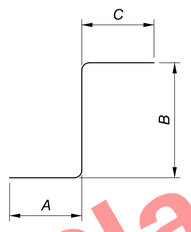

TYPE-8



TYPE-16

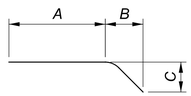

TYPE-19

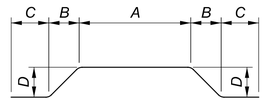

TYPE-21

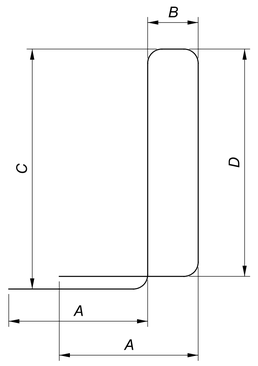

TYPE-30

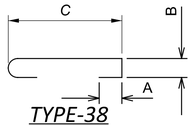

TYPE-38

NOTES:

1. SERIES BARS - EACH BAR VARIES BY TABULATED AMOUNT.
2. ALL DIMENSIONS ARE OUT TO OUT.
3. TYPE "STR" INDICATES STRAIGHT BAR.
4. THE BAR SIZE NUMBER IS SPECIFIED IN THE "MARK" COLUMN. THE FIRST DIGIT INDICATES THE BAR SIZE NUMBER.
5. ALL BARS SHALL BE EPOXY COATED UNLESS NOTED OTHERWISE.
6. SUBTOTALS AND TOTAL WEIGHTS ARE FOR INFORMATIONAL PURPOSES ONLY. IF THE REINFORCING LIST PROVIDED IN THE PLANS IS USED, IT SHALL BE VERIFIED BY THE CONTRACTOR. ANY REVISIONS IN THE REINFORCING STELL LIST AS SHOWN IN THE PLANS WILL NOT BE REASON FOR ADJUSTMENT IN THE BID PRICE FOR STRUCTURAL CONCRETE.
7. USE STANDARD HOOKS FOR ENDS OF BARS NOT SPECIFICALLY DIMENSIONED IN DETAILS.

Preliminary Plans - For Reference Only

REINFORCING SCHEDULE (4 OF 5)
CUY-90-1696 (BRIDGE 14)
CR-722 (CARNEGIE AVE.) OVER I.R. 90

SFN 1807898
DESIGN AGENCY
Michael Baker INTERNATIONAL
DESIGNER JNR | CHECKER MKB
REVIEWER LPC 06/23/22
PROJECT ID 82382
SUBSET 89 | TOTAL 90
SHEET 2369 | TOTAL 2696

CUY-90-16.28 (CCG3A)

MODEL: Sheet PAPERSIZE: 34x22 (in.) DATE: 3/28/2025 TIME: 8:12:54 AM USER: Rohit.Bk
pw:\\mb-us-pw.bentley.com:mb-us-pw-03\Documents\Cleveland_OH101_Projects\ODOT\District12\82382\400-Engineering\Structures\SFN_1807898\Sheets\82382_SFN_1807898_SL003.dgn

MARK	MAT'RL TYPE	NUMBER REAR	NUMBER FWD.	NUMBER TOTAL	LENGTH	WEIGHT (LBS.)	TYPE	DIMENSIONS A	B	C	D	E	R	SER INC.
SUPERSTRUCTURE (EPOXY COATED STEEL REINFORCEMENT-ECSR)														
S401	ECSR			1820	30'-0"	36473	STR.							
S402	ECSR			99	28'-0"	1852	STR.							
				1	25'-5"									
S403	ECSR			SER. OF	TO	278	STR.							3 15/16"
				15	30'-0"									
				1	2'-6"									
S404	ECSR			SER. OF	TO	780	STR.							4 5/8"
				72	29'-11"									
				1	2'-3"									
S405	ECSR			SER. OF	TO	11	STR.							2"
				6	3'-1"									
S406	ECSR			3	25'-6"	51	STR.							
S407	ECSR			3	3'-1"	6	STR.							
S408	ECSR			22	18'-1"	266	STR.							
S409	ECSR			22	16'-4"	240	STR.							
S501	ECSR			7234	30'-0"	226352	STR.							
				1	12'-8"									
S502	ECSR			SER. OF	TO	1424	STR.							3 5/16"
				64	30'-0"									
				1	3'-3"									
S503	ECSR			SER. OF	TO	768	STR.							3 3/8"
				62	20'-6"									
S504	ECSR			1310	7'-2"	9792	STR.							
S505	ECSR			1350	11'-1"	15606	2	2'-2"	0'-8 3/4"	8'-5"				
				2	3'-2"									
S506	ECSR			SER. OF	TO	3252	STR.							3 7/16"
				94	30'-0"									
				2	3'-5"									
S507	ECSR			SER.OF	TO	3276	STR.							3 7/16"
				94	30'-0"									
				2	3'-6"									
S508	ECSR			SER. OF	TO	3249	STR.							3 7/16"
				93	30'-0"									
				2	3'-5"									
S509	ECSR			SER. OF	TO	85	STR.							3 3/8"
				9	5'-8"									
				2	3'-4"									
S510	ECSR			SER. OF	TO	66	STR.							4 11/16"
				7	5'-8"									
				2	3'-7"									
S511	ECSR			SER. OF	TO	2487	STR.							4 1/2"
				71	30'-0"									
				2	3'-6"									
S512	ECSR			SER.OF	TO	2516	STR.							4 1/2"
				72	30'-0"									
				2	3'-3"									
S513	ECSR			SER. OF	TO	2497	STR.							4 1/2"
				72	30'-0"									
S514	ECSR			24	3'-0"	75	STR.							
S515	ECSR			2	1'-9"	4	STR.							
S516	ECSR			2	2'-2"	5	STR.							
S517	ECSR			64	4'-4"	289	STR.							
S518	ECSR			44	7'-7"	348	19	6'-6"	0'-6 1/2"	0'-11 1/4"				
S519	ECSR			4	6'-7"	27	19	5'-6"	0'-7 3/4"	0'-10 3/8"				
S520	ECSR			93	6'-6"	630	8	4'-1"	1'-1 1/2"	1'-6"				
S521	ECSR			126	6'-11"	909	19	5'-3"	1'-2 3/4"	1'-2 3/4"				
S522	ECSR			27	17'-2"	483	STR.							
S523	ECSR			6	5'-8"	35	19	4'-7"	0'-6 1/2"	0'-11 1/4"				
S524	ECSR			440	10'-10"	4972	2	1'-11"	0'-8 3/4"	8'-5"				
				1	6'-5"					3'-2"				
S525	ECSR			SER. OF	TO	166	38	2'-2"	0'-8 3/4"	TO				3 1/2"
				18	11'-4"					8'-1"				
				1	6'-6"					3'-3"				
S526	ECSR			SER. OF	TO	131	38	2'-2"	0'-8 3/4"	TO				4 9/16"
				14	11'-5"					8'-2"				
S527	ECSR			907	10'-0"	9460	STR.							
S528	ECSR			907	3'-1"	2917	2	0'-10"	1'-8"	0'-10"				
S529	ECSR			1009	2'-6"	2631	2	0'-10"	1'-1"	0'-10"				
				1	1'-8"									
S530	ECSR			SER. OF	TO	60	STR.							6 15/16"
				12	8'-0"									
				1	1'-3"									
S531	ECSR			SER. OF	TO	83	STR.							6 15/16"
				15	9'-4"									

MARK	MAT'RL TYPE	NUMBER REAR	NUMBER FWD.	NUMBER TOTAL	LENGTH	WEIGHT (LBS.)	TYPE	DIMENSIONS A	B	C	D	E	R	SER INC.
SUPERSTRUCTURE (EPOXY COATED STEEL REINFORCEMENT-ECSR)														
				1	1'-6"									
S532	ECSR			SER. OF	TO	61	STR.							9 1/8"
				11	9'-1"									
				1	1'-9"									
S533	ECSR			SER. OF	TO	45	STR.							9"
				9	7'-9"									
S534	ECSR			4	1'-2"	5	STR.							
R501	ECSR			893	9'-2"	8538	30	1'-6"	0'-8"	3'-1"	2'-11"			
R502	ECSR			264	30'-0"	8261	STR.							
R503	ECSR			148	9'-8"	1492	STR.							
R504	ECSR			36	6'-5"	241	STR.							
R505	ECSR			32	6'-2"	206	STR.							
R506	ECSR			28	11'-5"	333	STR.							
R507	ECSR			260	4'-8"	1266	STR.							
R508	ECSR			8	9'-0"	75	STR.							
R509	ECSR			4	13'-3"	55	STR.							
R510	ECSR			4	10'-1"	42	STR.							
R511	ECSR			4	12'-2"	51	STR.							
R512	ECSR			4	5'-11"	25	STR.							
L501	ECSR			32	3'-5"	114	2	0'-7"	2'-6"	0'-7"				
L502	ECSR			32	8'-9"	292	2	3'-3"	2'-6"	3'-3"				
L503	ECSR			48	8'-7"	430	21	1'-2 3/8"	1'-10 5/8"	0'-6"	2'-8"			
L504	ECSR			32	3'-3"	108	STR.							
S601	ECSR			784	30'-0"	35327	STR.							
S602	ECSR			112	5'-1"	855	STR.							
SUPERSTRUCTURE ECSR SUBTOTAL						392374	LBS.							

MARK	MAT'RL TYPE	NUMBER REAR	NUMBER FWD.	NUMBER TOTAL	LENGTH	WEIGHT (LBS.)	TYPE	DIMENSIONS A	B	C	D	E	R	SER INC.
APPROACH SLAB (EPOXY COATED STEEL REINFORCEMENT-ECSR, FOR INFORMATION ONLY)														
AS501	ECSR	201	200	401	29'-6"	12338	STR.							
AS502	ECSR	624	520	1144	30'-0"	35796	STR.							
AS503	ECSR	104		104	14'-10"	1609	STR.							
AS504	ECSR		104	104	10'-11"	1184	STR.							
AS505	ECSR	20	16	36	4'-2"	156	STR.							
AS506	ECSR	6		6	4'-0"	25	19	3'-1"	0'-6"	0'-10"				
AS507	ECSR		6	6	4'-1"	26	19	3'-1"	0'-8"	0'-10"				
AS508	ECSR	62	62	124	4'-3"	550	2	1'-6"	1'-6"	1'-6"				
AS509	ECSR	62	62	124	4'-5"	571	2	1'-6"	1'-8"	1'-6"				
AS510	ECSR	32	54	86	9'-2"	822	30	1'-6"	0'-8"	3'-1"	2'-11"			
AS511	ECSR	16	16	32	4'-6"	150	1	1'-6"	3'-1"					
AS512	ECSR	8	8	16	5'-5"	90	2	2'-6"	0'-8"	2'-6"				
AS513	ECSR	30		30	19'-10"	621	STR.							
AS514	ECSR	1		1	17'-10"	19	STR.							
AS515	ECSR	30		30	20'-9"	650	STR.							
AS516	ECSR	1		1	19'-1"	20	STR.							
AS517	ECSR		30	30	16'-0"	501	STR.							
AS518	ECSR		1	1	14'-5"	15	STR.							
AS519	ECSR		30	30	16'-6"	516	STR.							
AS520	ECSR		1	1	14'-10"	15	STR.							
AS521	ECSR	12		12	6'-10"	86	STR.							
AS522	ECSR	8	8	16	28'-11"	483	STR.							
AS523	ECSR	8	20	28	9'-8"	282	STR.							
AS524	ECSR	4	4	8	8'-11"	74	STR.							
AS525	ECSR		8	8	29'-8"	248	STR.							
AS1001	ECSR	164	164	328	30'-11"	43635	16	29'-6"						
APPROACH SLAB ECSR SUBTOTAL						100482	LBS.							

MARK	MAT'RL TYPE	NUMBER REAR	NUMBER FWD.	NUMBER TOTAL	LENGTH	WEIGHT (LBS.)	TYPE	DIMENSIONS A	B	C	D	E	R	SER INC.
SLEEPER SLAB (EPOXY COATED STEEL REINFORCEMENT-ECSR, FOR INFORMATION ONLY)														
SS501	ECSR	89		89	15'-0"	1392	STR.							
SS502	ECSR	48	40	88	30'-0"	2754	STR.							
SS503	ECSR	8		8	9'-10"	82	STR.							
SS504	ECSR		8	8	7'-7"	63	STR.							
SS505	ECSR		89	89	12'-6"	1156	STR.							
SLEEPER SLAB ECSR SUBTOTAL						5447	LBS.							

NOTES:

1. FOR BAR NOTES AND BENDING DIAGRAMS, SEE SHEET 89/90.

Preliminary Plans - For Reference Only

REINFORCING SCHEDULE (5 OF 5)
CUY-90-1696 (BRIDGE 14)
CR-722 (CARNEGIE AVE.) OVER I.R. 90

SFN 1807898
DESIGN AGENCY
Michael Baker INTERNATIONAL
DESIGNER JNR | CHECKER MKB
REVIEWER LPC 06/23/22
PROJECT ID 82382
SUBSET 90 | TOTAL 90
SHEET 2370 | TOTAL 2696

CUY-90-16.28 (CCG3A)
MODEL: Untitled Sheet PAPERSIZE: 34x22 (in.) DATE: 3/28/2025 TIME: 8:13:02 AM USER: Rohit.Bk
pw:\\mb-us-pw.bentley.com:mb-us-pw-03\Documents\Cleveland_OH101_Projects\ODOT\District12\82382\400-Engineering\Structures\SFN_1807898\Sheets\82382_SFN_1807898_SL004.dgn

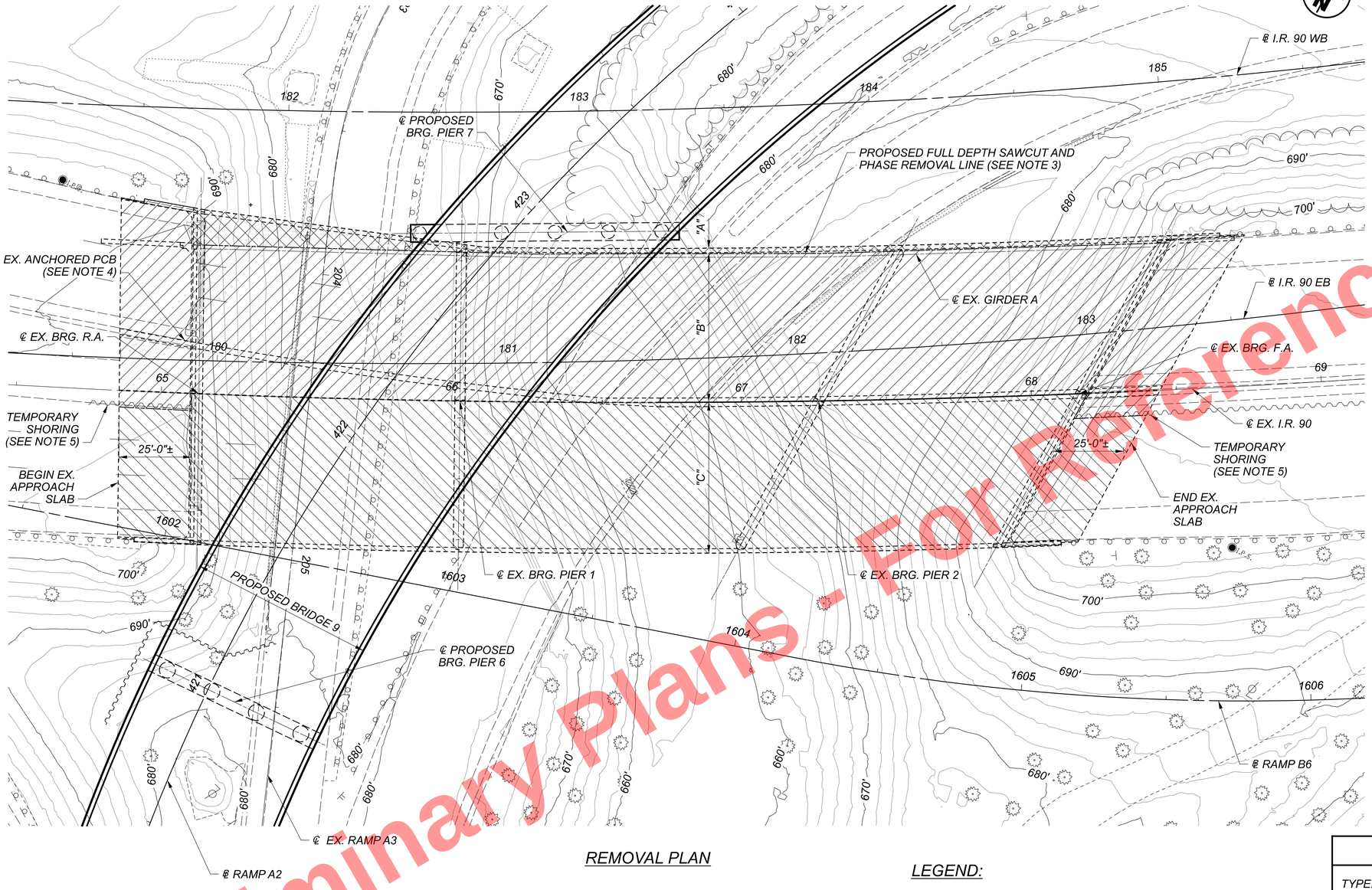

REMOVAL PLAN

NOTES:

1. SEE SHEET 2/7 FOR PHASED MOT AND REMOVAL DETAILS.
2. SEE SHEET 3/7 FOR ABUTMENT AND PIER REMOVAL DETAILS.
3. FULL DEPTH SAWCUT SHALL FOLLOW EX. GIRDER A AT AN OFFSET OF 1'-3" FROM THE ℄ TO THE NORTH FOR THE FULL LENGTH OF BRIDGE.
4. REMOVE EX. MEDIAN ANCHORED PCB FROM BEGINNING OF REAR APPROACH SLAB TO ℄ EX. I.R. 90 STA. 66+61.00 IN PHASE 4.
5. SEE SHEET 5/7 FOR TEMPORARY SHORING DETAILS. REMOVE PORTIONS OF EXISTNG APPROACH SLABS REQUIRED TO INSTALL PROPOSED TEMPORARY SHORING IN PHASE 7.
6. SEE SHEET 2/7 FOR LOCATION OF PCB.

LEGEND:

= PHASE 4 REMOVAL

= PHASE 7 REMOVAL

= PHASE 9 REMOVAL

"A" = VARIES FROM 1'-10"± TO 12'-9"± PHASE 4 REMOVAL
"B" = VARIES FROM 50'-9"± TO 51'-4"± PHASE 7 REMOVAL
"C" = 51'-11"± PHASE 9 REMOVAL

ESTIMATED QUANTITIES

PARTICIPATION	ITEM	ITEM EXT.	TOTAL	UNIT	DESCRIPTION	REF. SHEET
02/IMS/10	202	11203	LS	-	PORTIONS OF STRUCTURE REMOVED, OVER 20 FOOT SPAN, AS PER PLAN	1/ 7
02/IMS/10	202	22900	620	SY	APPROACH SLAB REMOVED	
02/IMS/10	503	11101	LS	-	COFFERDAMS AND EXCAVATION BRACING, AS PER PLAN	5- 7/ 7

STRUCTURE GENERAL NOTES:

MAINTENANCE OF TRAFFIC:
SEE THE ROADWAY PLANS FOR MAINTENANCE OF TRAFFIC REQUIREMENTS.

EXISTING STRUCTURE VERIFICATION:
DETAILS AND DIMENSIONS SHOWN ON THESE PLANS PERTAINING TO THE EXISTING STRUCTURE HAVE BEEN OBTAINED FROM PLANS OF THE EXISTING STRUCTURE AND/OR FIELD MEASUREMENTS. THEY ARE INDICATIVE OF THE EXISTING STRUCTURE AND PROPOSED WORK, BUT THEY SHALL BE CONSIDERED TENTATIVE AND APPROXIMATE. THE CONTRACTOR IS REFERRED TO CMS SECTION 102.05, 105.02 AND 513.04. BASE CONTRACT BID PRICES UPON A RECOGNITION OF THE UNCERTAINTIES DESCRIBED ABOVE AND UPON A PREBID EXAMINATION OF THE EXISTING STRUCTURES. HOWEVER, THE DEPARTMENT WILL PAY FOR ALL PROJECT WORK BASED UPON ACTUAL DETAILS AND DIMENSIONS THAT HAVE BEEN VERIFIED IN THE FIELD.

EXISTING STRUCTURE PLANS:
CONSTRUCTION PLANS FOR EXISTING STRUCTURES ARE ON FILE AT THE DEPARTMENT OF TRANSPORTATION DISTRICT 12 OFFICE, 5500 E. 98TH ST., GARFIELD HEIGHTS, OHIO AND ARE AVAILABLE FOR REFERENCE.

SEQUENCE OF CONSTRUCTION:
SEE MOT NOTES IN ROADWAY PLANS.

PORTIONS OF STRUCTURE REMOVED, OVER 20 FOOT SPAN, AS PER PLAN:
THIS ITEM SHALL INCLUDE THE ELEMENTS INDICATED IN THE PLANS AND GENERAL NOTES AND THAT ARE NOT SEPARATELY LISTED FOR PAYMENT. LIMITS OF REMOVAL SHALL BE AS SHOWN ON THE PLANS FOR BRIDGE E5 OR AS DIRECTED BY THE ENGINEER. ITEMS TO BE REMOVED INCLUDE THE SUBSTRUCTURE FOUNDATION PILES THAT INTERFERE WITH NEW CONSTRUCTION AND MISCELLANEOUS ITEMS THAT ARE NOT SHOWN TO BE INCORPORATED INTO THE FINAL CONSTRUCTION AND ARE DIRECTED TO BE REMOVED BY THE ENGINEER. SUBMIT WORKING DRAWINGS AND CALCULATIONS IN ACCORDANCE WITH CMS 501.55.

ALL CONCRETE, REINFORCING STEEL, ASPHALT, ETC. REMOVED FROM THE STRUCTURE AND NOT REUSED SHALL, UNLESS OTHERWISE SPECIFIED, BECOME THE PROPERTY OF THE CONTRACTOR AND SHALL BE REMOVED BY HIM/HER FROM THE SITE. THE MATERIALS SHALL NOT BE PERMITTED TO REMAIN ON SITE, WITHIN THE RIGHT-OF-WAY OR ELSEWHERE UNLESS SPECIFIED BY THE ENGINEER.

THE USE OF EXPLOSIVES AND HEADACHE BALLS WILL NOT BE PERMITTED. THE METHOD OF REMOVAL AND THE WEIGHT OF HAMMER SHALL BE APPROVED BY THE ENGINEER. PERFORM ALL WORK IN A MANNER THAT WILL NOT CUT, ELONGATE, OR DAMAGE THE EXISTING REINFORCING STEEL TO BE PRESERVED.

THE WORK DETAILED ABOVE SHALL BE INCLUDED FOR PAYMENT IN THE LUMP SUM BID PRICE FOR ITEM 202 - PORTIONS OF STRUCTURE REMOVED, OVER 20 FOOT SPAN, AS PER PLAN.

EXISTING STRUCTURE

TYPE: CONTINUOUS WELDED STEEL GIRDER WITH COMPOSITE REINFORCED CONCRETE DECK AND SUBSTRUCTURE

SPANS: 89'-11⅞"±, 125'-0¼"±, 88'-4⅜"± c/c BEARINGS (MEASURED ALONG EX. REFERENCE CHORD)

ROADWAY: VARIES 62'-3⅝"± TO 50'-1"± (LEFT STRUCTURE) T/T PARAPETS
49'-0"± (RIGHT STRUCTURE) T/T PARAPETS

LOADING: HS20 CASE 1 AND ALTERNATE MILITARY LOADING WITH A FUTURE WEARING SURFACE (FWS) OF 60 PSF

SKEW: VARIES

WEARING SURFACE: 1" MONOLITHIC CONCRETE

APPROACH SLABS: AS-1-81 (MODIFIED) (25 FEET LONG)

ALIGNMENT: 01°30'00" CURVE LEFT

CROWN: 0.03 FT PER FT (SUPERELEVATED)

STRUCTURE FILE NUMBER: 1807773

DATE BUILT: 1963, 2011 REHABILITATION, 2014 WIDENING

DISPOSITION: TO BE REMOVED

Preliminary Plans - Not For Reference Only

REMOVAL PLAN
CUY-90-1640 (BRIDGE E5)
I.R. 90 OVER I.R. 77 SB RAMPS

SFN 1807773
DESIGN AGENCY B&N burgessniple.com
DESIGNER KMA | CHECKER BCS
REVIEWER DWL 06/02/22
PROJECT ID 82382
SUBSET 1 | TOTAL 7
SHEET 2371 | TOTAL 2696

CUY-90-16.28 (CCG3A)

MODEL: Sheet PAPERSIZE: 34x22 (in.) DATE: 3/28/2025 TIME: 8:15:19 AM USER: Rohit.Bk
pw:\\mb-us-pw.bentley.com:mb-us-pw-03\Documents\Cleveland_OH\01_Projects\ODOT\District12\82382400-Engineering\Structures\SFN_1807773\Sheets\82382_SFN_1807773_SV001.dgn

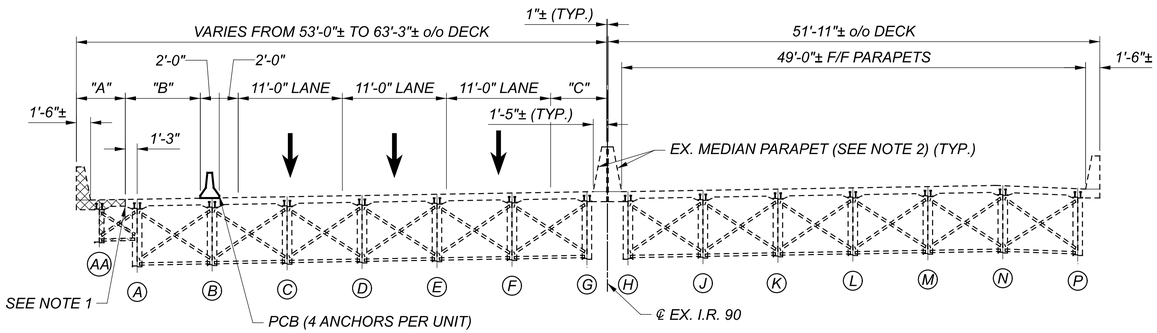

PHASE 4 REMOVAL AND MOT

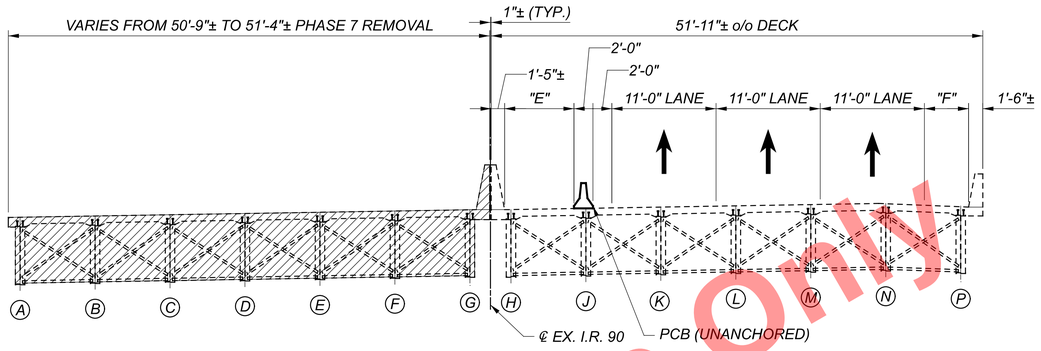

PHASE 7 REMOVAL AND MOT

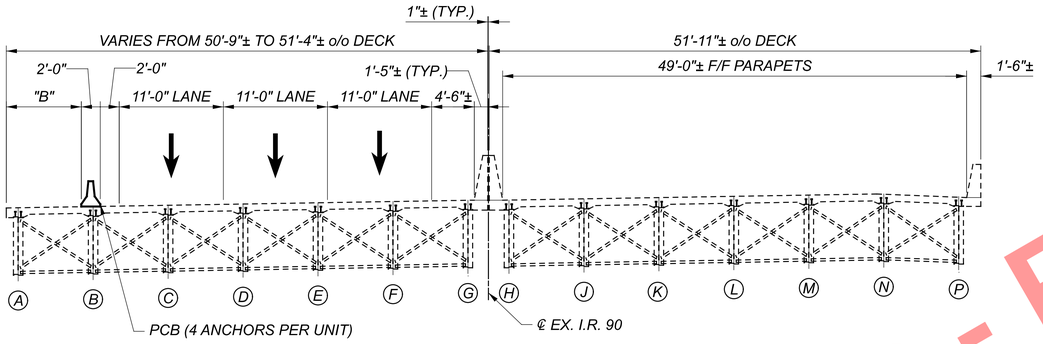

PHASE 5 MOT

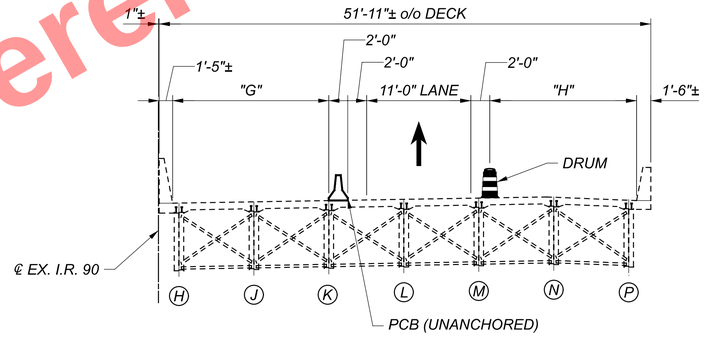

PHASE 8 MOT

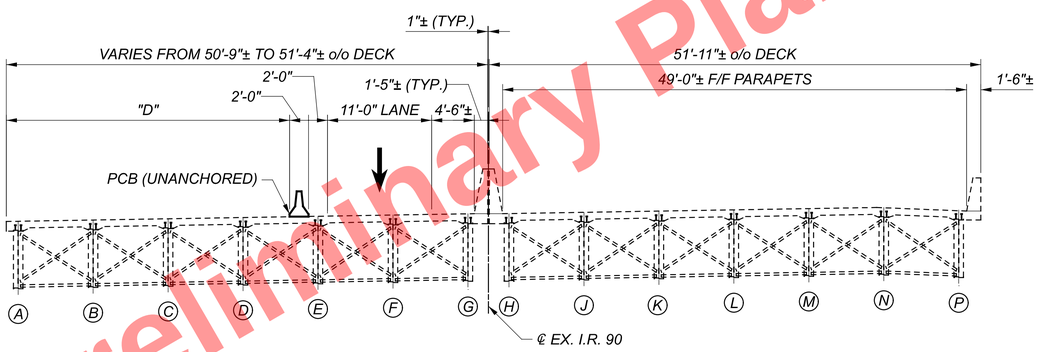

PHASE 6 MOT

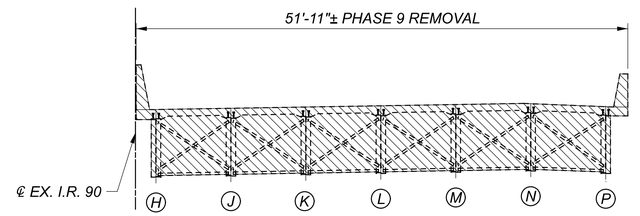

PHASE 9 REMOVAL

NOTES:

1. PROPOSED FULL DEPTH SAWCUT AND PHASE REMOVAL LINE LOCATION. SAWCUT SHALL BE PARALLEL WITH ℄ GIRDER A FOR THE FULL BRIDGE LENGTH. REMOVE GIRDER AA AND ITS CROSSFRAME CONNECTIONS TO GIRDER A IN PHASE 4.
2. SEE SHEET 2371/2696 FOR EXISTING MEDIAN PARAPET DETAILS. THE MEDIAN PARAPETS SHOWN ON THIS SHEET ARE FOR THE TYPICAL EXISTING CONDITION.

LEGEND:

	= PHASE 4 REMOVAL
	= PHASE 7 REMOVAL
	= PHASE 9 REMOVAL
(A)	= EXISTING GIRDER LETTER
"A"	= VARIES FROM 1'-10"± TO 12'-9"± PHASE 4 REMOVAL
"B"	= VARIES FROM 1'-5"± TO 8'-3"±
"C"	= VARIES FROM 4'-6"± TO 12'-4"±
"D"	= 29'-11"± TO 32'-4"±
"E"	= VARIES FROM 7'-4"± TO 8'-11"±
"F"	= VARIES FROM 2'-3"± TO 1'-8"±
"G"	= VARIES FROM 12'-10"± TO 18'-5"±
"H"	= VARIES FROM 12'-6"± TO 17'-10"±

Preliminary Plans - For Reference Only

SUPERSTRUCTURE PHASED REMOVAL DETAILS
CUY-90-1640 (BRIDGE E5)
I.R. 90 OVER I.R. 77 SB RAMPS

SFN 1807773
DESIGN AGENCY B&N burgessniple.com
DESIGNER KMA | CHECKER BCS
REVIEWER DWL 06/17/22
PROJECT ID 82382
SUBSET 2 | TOTAL 7
SHEET 2372 | TOTAL 2696

CUY-90-16.28 (CCG3A)

MODEL: Sheet PAPERSIZE: 34x22 (in.) DATE: 3/28/2025 TIME: 8:15:31 AM USER: RohitLBk
pw:\\mb-us-pw.bentley.com:mb-us-pw-03\Documents\Cleveland_OH\01_Projects\ODOT\District12\82382\400-Engineering\Structures\SFN_1807773\Sheets\82382_SFN_1807773_SV002.dgn

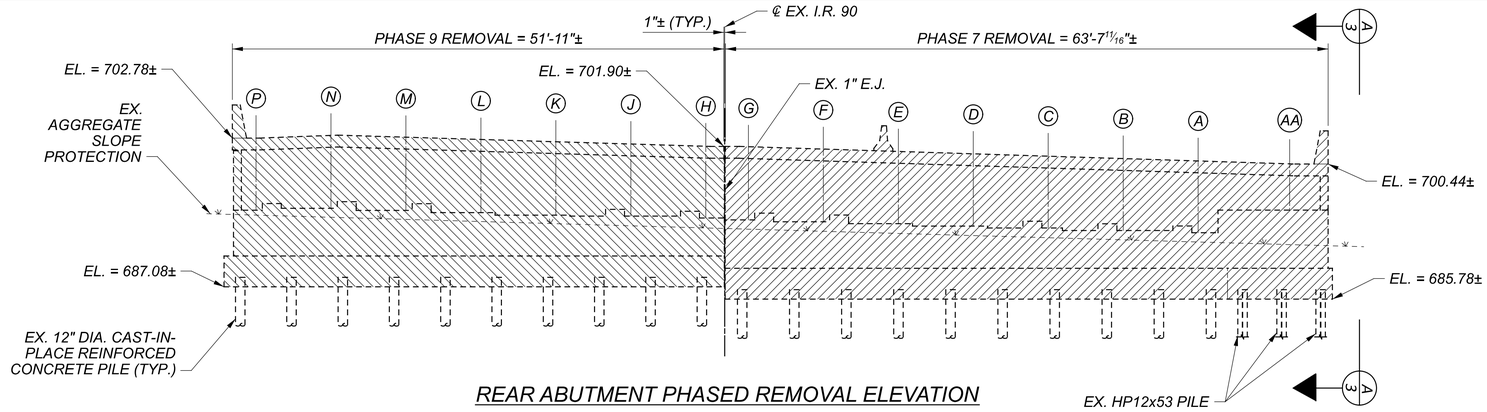

REAR ABUTMENT PHASED REMOVAL ELEVATION

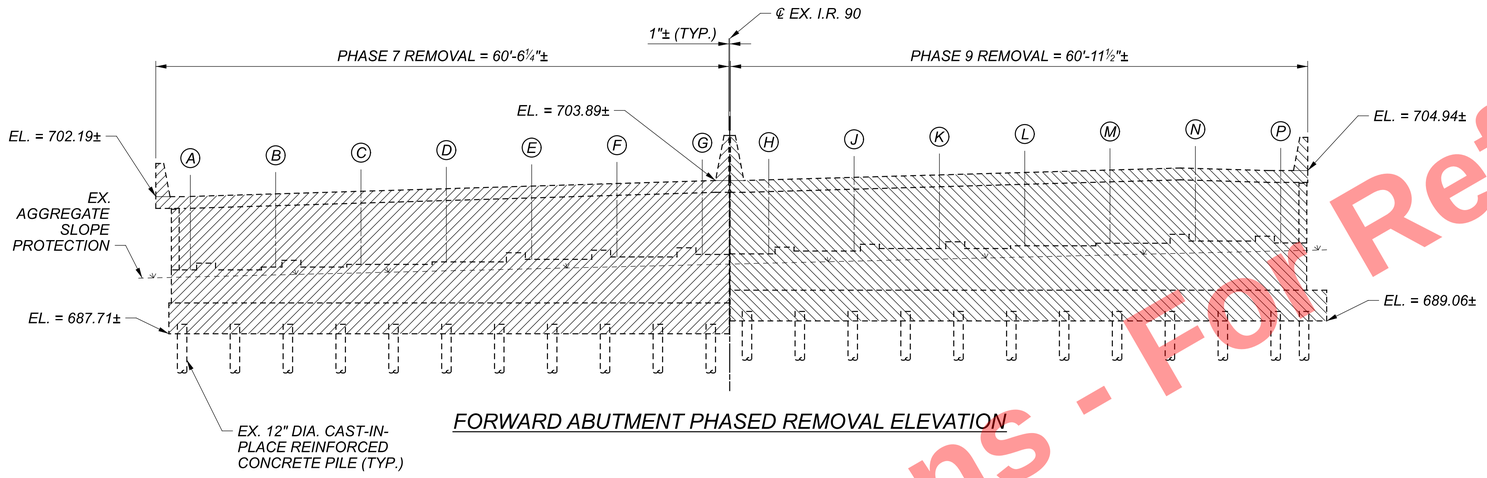

FORWARD ABUTMENT PHASED REMOVAL ELEVATION

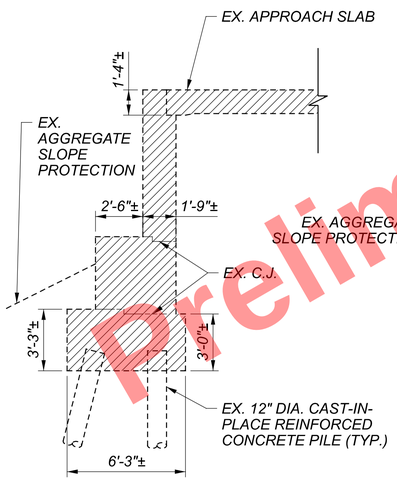

TYPICAL ABUTMENT SECTION

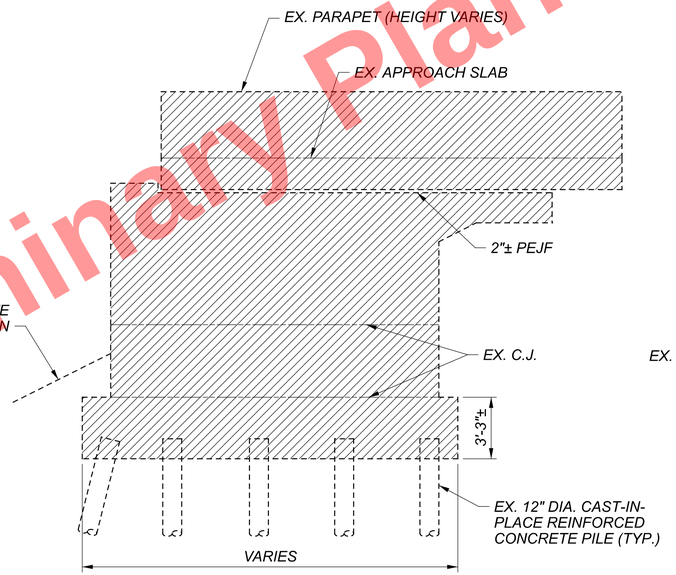

TYPICAL WINGWALL ELEVATION

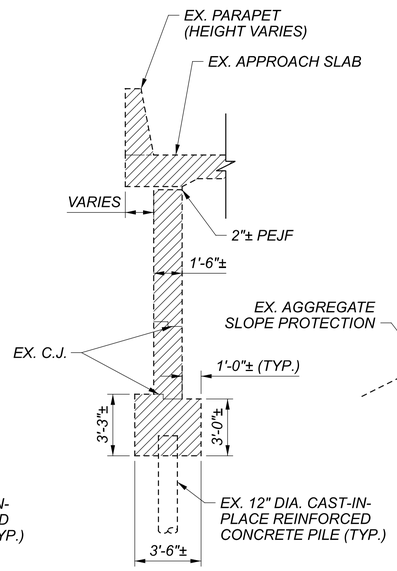

TYPICAL WINGWALL SECTION

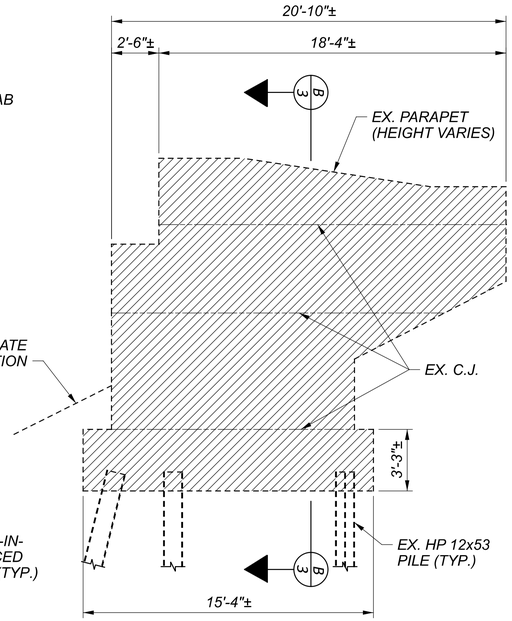

VIEW A-A

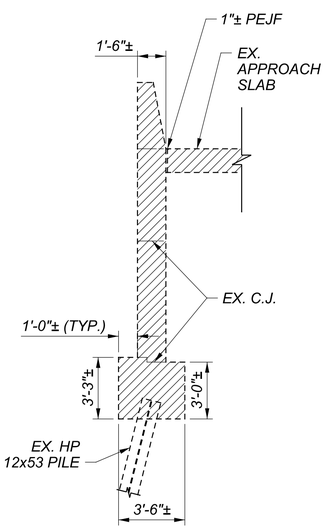

SECTION B-B

Preliminary Plans - For Reference Only

ABUTMENT PHASED REMOVAL DETAILS
CUY-90-1640 (BRIDGE E5)
I.R. 90 OVER I.R. 77 SB RAMPS

CUY-90-16.28 (CCG3A)

SFN 1807773
DESIGN AGENCY B&N burgessniple.com
DESIGNER KMA | CHECKER BCS
REVIEWER DWL 06/17/22
PROJECT ID 82382
SUBSET 3 | TOTAL 7
SHEET 2373 | TOTAL 2696

MODEL: Sheet PAPERSIZE: 34x22 (in.) DATE: 3/28/2025 TIME: 8:15:39 AM USER: RohitLBk
pw:\\mb-us-pw.bentley.com:mb-us-pw-03\Documents\Cleveland_OH\01_Projects\ODOT\District12\82382400-Engineering\Structures\SFN_1807773\Sheets\82382_SFN_1807773_SV003.dgn

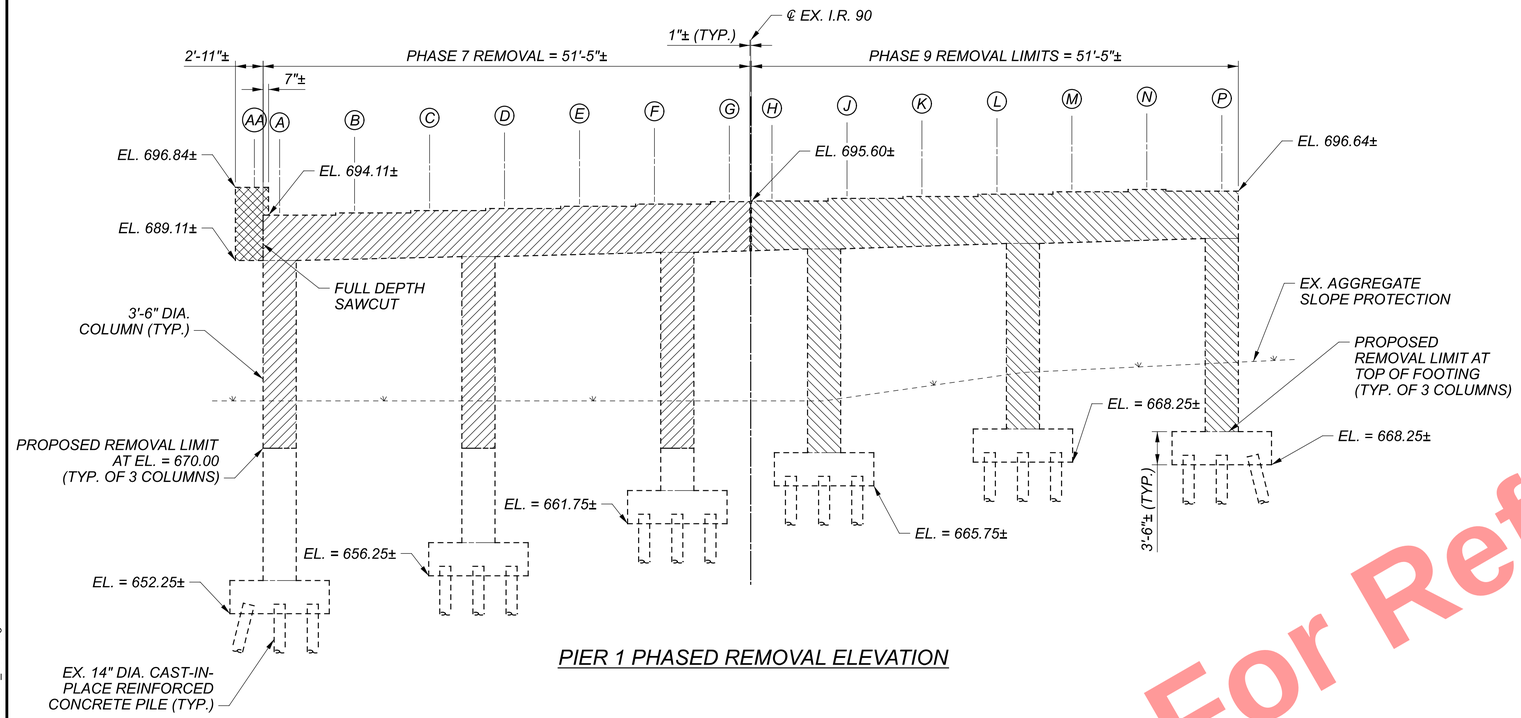

PIER 1 PHASED REMOVAL ELEVATION

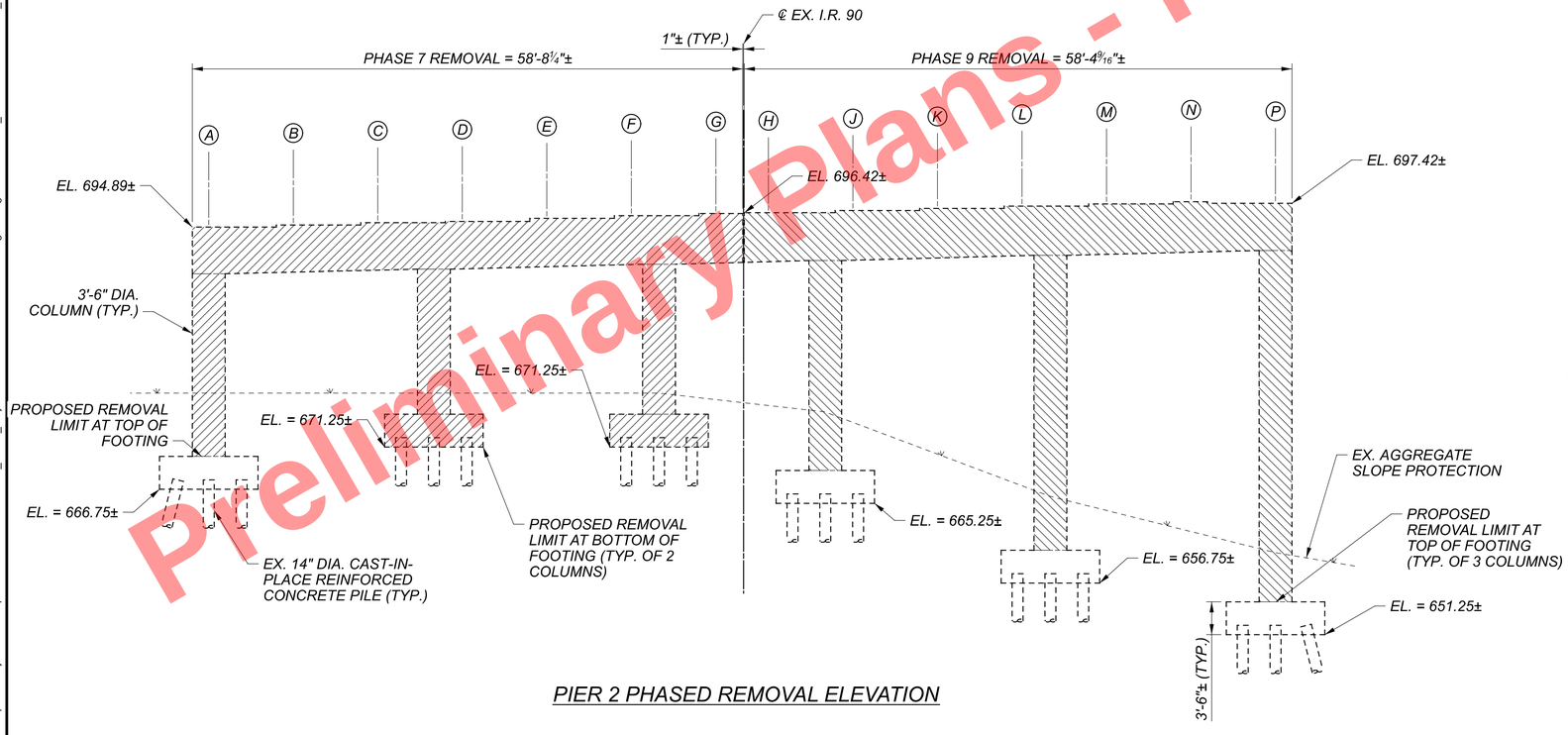

PIER 2 PHASED REMOVAL ELEVATION

LEGEND:

- = PHASE 4 REMOVAL
- = PHASE 7 REMOVAL
- = PHASE 9 REMOVAL
- (A) = EXISTING GIRDER LETTER

NOTES:

1. THE EXISTING PIER COLUMN AND FOOTING REMOVAL LIMITS SHOWN REPRESENT THE LIMITS REQUIRED TO CONSTRUCT THE PROPOSED LIGHTWEIGHT FILL. THE CONTRACTOR SHALL VERIFY THESE LIMITS AND MAY ADJUST THEM, AT NO ADDITIONAL COST TO THE PROJECT, TO ACCOMMODATE THE CONSTRUCTION OF THE PROPOSED LIGHTWEIGHT FILL.

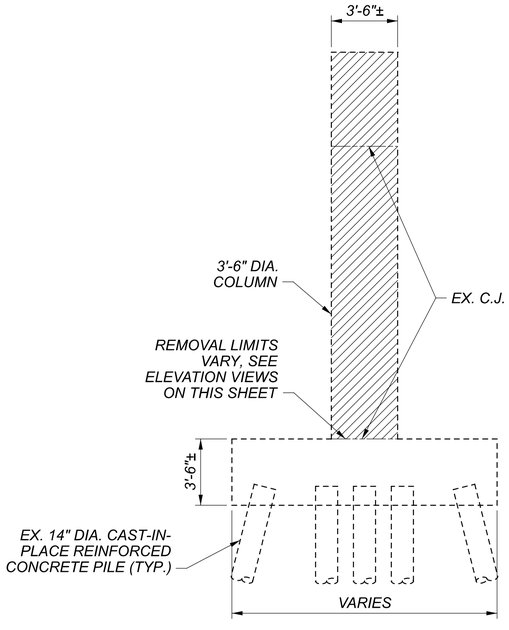

TYPICAL PIER SECTION

Preliminary Plans - For Reference Only

PIER PHASED REMOVAL DETAILS
CUY-90-1640 (BRIDGE E5)
I.R. 90 OVER I.R. 77 SB RAMPS

SFN	1807773
DESIGN AGENCY	B&N burgessniple.com
DESIGNER	KMA
CHECKER	BCS
REVIEWER	DWL 06/17/22
PROJECT ID	82382
SUBSET	4
TOTAL	7
SHEET	2374
TOTAL	2696

CUY-90-16.28 (CCG3A)

MODEL: Sheet PAPERSIZE: 34x22 (in.) DATE: 3/28/2025 TIME: 8:15:46 AM USER: RohitLBk
pw:\\mb-us-pw.bentley.com:mb-us-pw-03\Documents\Cleveland_OH\01_Projects\ODOT\District12\82382400-Engineering\Structures\SFN_1807773\Sheets\82382_SFN_1807773_SV004.dgn

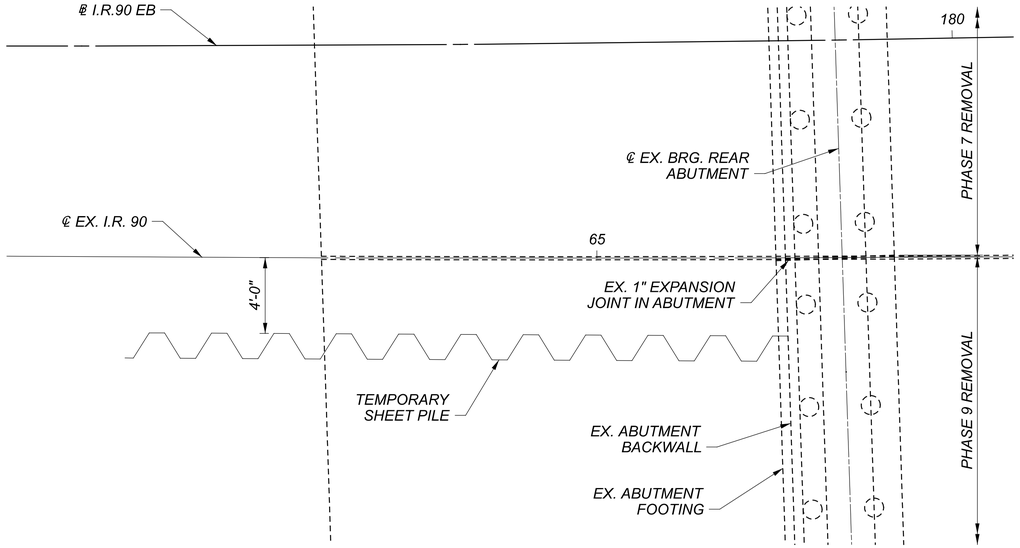

REAR ABUTMENT PLAN

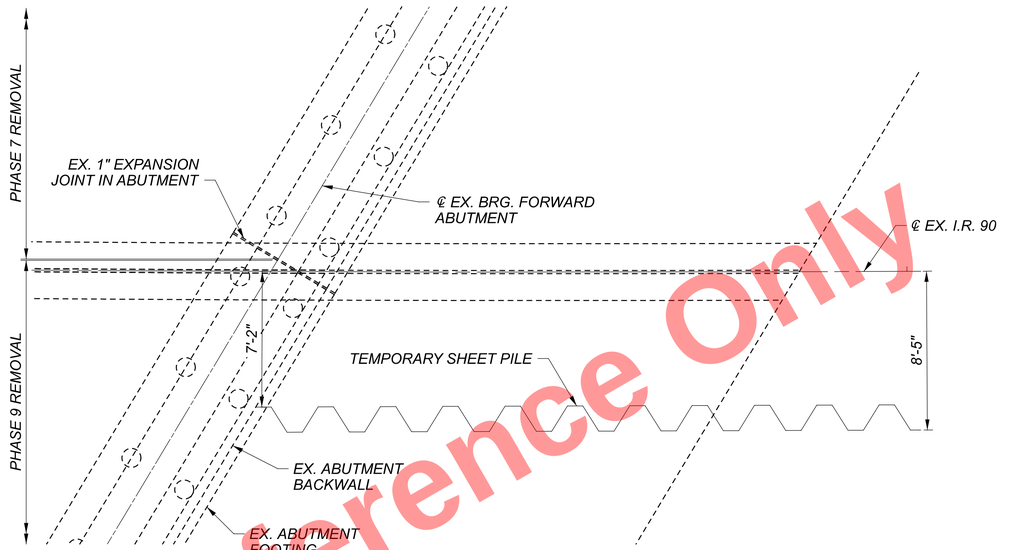

FORWARD ABUTMENT PLAN

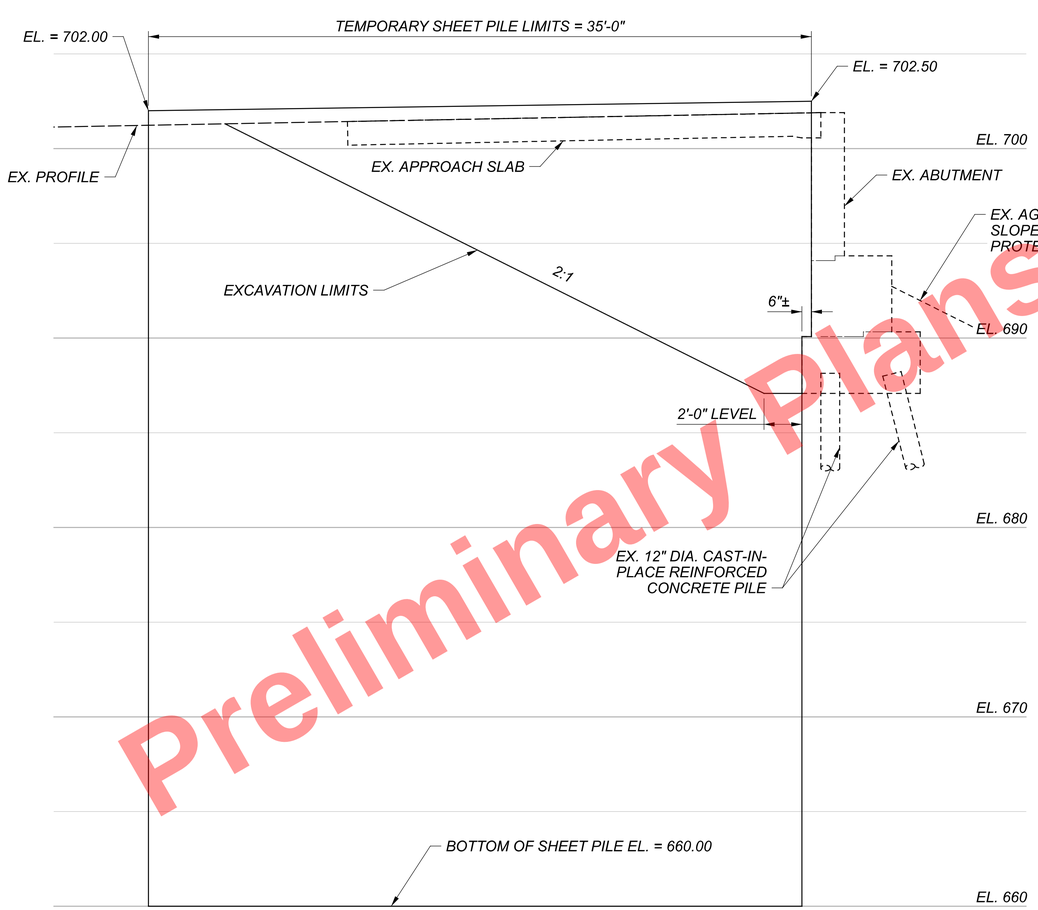

REAR ABUTMENT ELEVATION

NOTES:

1. TEMPORARY STEEL SHEET PILING SHALL HAVE A MINIMUM STRENGTH OF 39 KSI AND SHALL HAVE A MINIMUM ELASTIC SECTION MODULUS OF 60 IN^3 AND A MINIMUM MOMENT OF INERTIA OF 490 IN^4. PAYMENT FOR SHEET PILING, INCLUDING REMOVAL OF ALL COMPONENTS AFTER NO LONGER NECESSARY AND ALL OTHER ITEMS ASSOCIATED WITH TEMPORARY SHORING WILL BE INCLUDED IN THE CONTRACT LUMP SUM BID PRICE FOR ITEM 503 - COFFERDAMS AND EXCAVATION BRACING, AS PER PLAN.
2. SEE SHEET 6 /7 FOR SHORING LOCATION AND OTHER DETAILS.

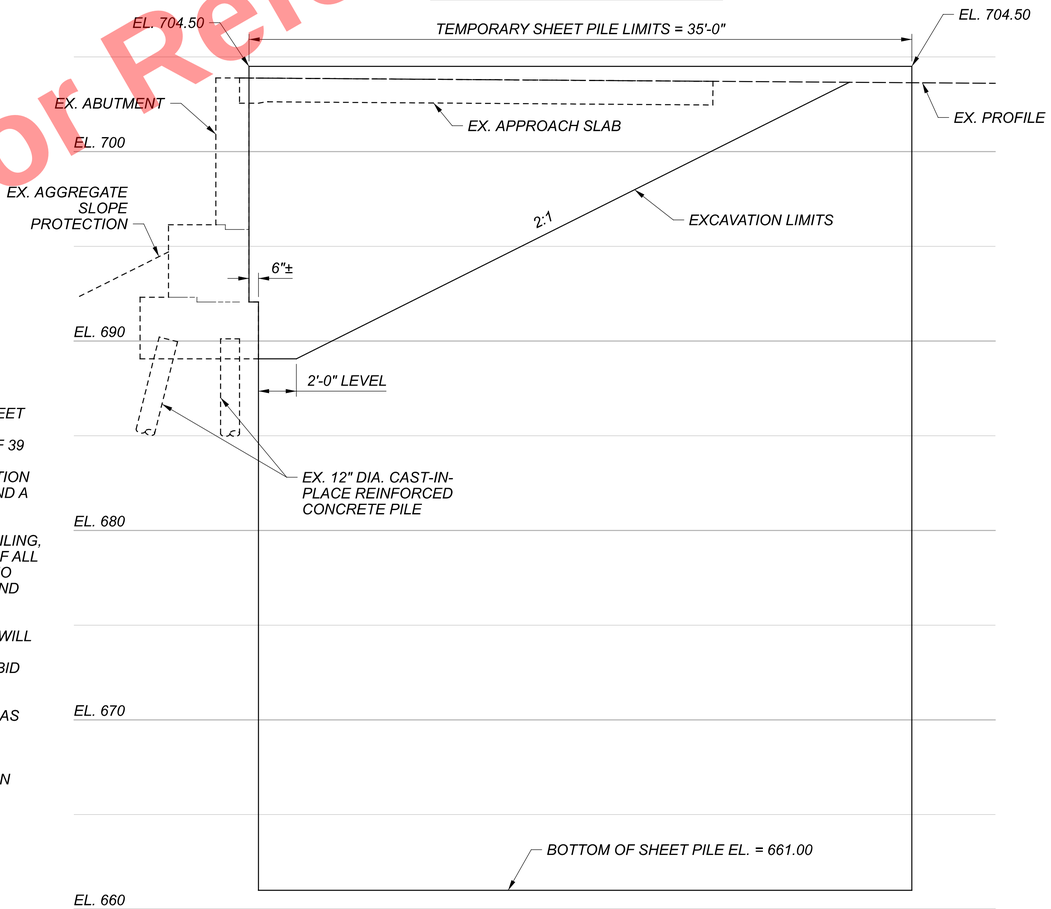

FORWARD ABUTMENT ELEVATION

Preliminary Plans - For Reference Only

ABUTMENT TEMPORARY SHORING DETAILS
CUY-90-1640 (BRIDGE E5)
I.R. 90 OVER I.R. 77 SB RAMPS

SFN 1807773
DESIGN AGENCY B&N burgessniple.com
DESIGNER KMA | CHECKER BCS
REVIEWER DWL 06/17/22
PROJECT ID 82382
SUBSET 5 | TOTAL 7
SHEET 2375 | TOTAL 2696

CUY-90-16.28 (CCG3A)

MODEL: Sheet PAPERSIZE: 34x22 (in.) DATE: 3/28/2025 TIME: 8:16:00 AM USER: RohitLBk
pw:\\mb-us-pw.bentley.com:mb-us-pw-03\Documents\Cleveland_OH\01_Projects\ODOT\District12\82382\400-Engineering\Structures\SFN_1807773\Sheets\82382_SFN_1807773_SH001.dgn

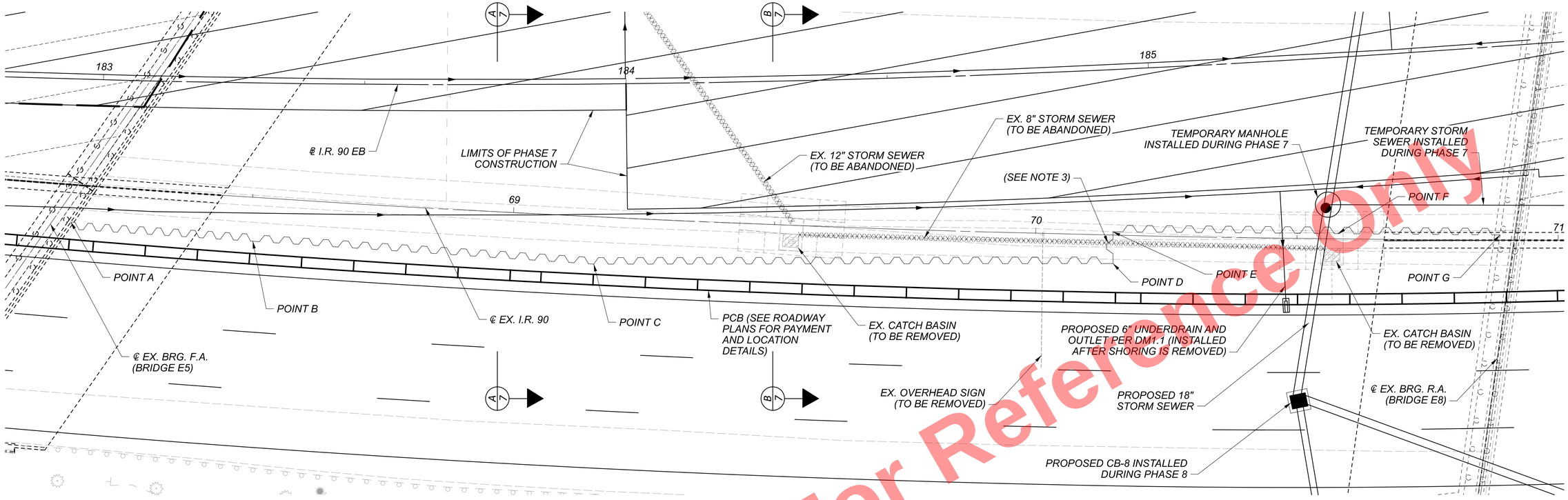

TEMPORARY SHORING PLAN

TEMPORARY SHORING INFORMATION						
LOCATION POINT	SHORING TYPE	ALIGNMENT	STATION	OFFSET	TOP OF SHORING EL.	BOTTOM OF SHORING EL.
A	STEEL SHEET PILE	CL EX. I.R. 90	68+15.64	7.16' RT	704.50	661.00
B	STEEL SHEET PILE	CL EX. I.R. 90	68+50.88	8.38' RT	704.50	661.00 / 670.50
C	STEEL SHEET PILE	CL EX. I.R. 90	69+15.82	9.04' RT	703.50	669.50
D	STEEL SHEET PILE	CL EX. I.R. 90	70+14.93	5.42' RT	701.50	667.50
E	STEEL SHEET PILE	CL EX. I.R. 90	70+14.77	0.66' LT	701.50	667.50
F	STEEL SHEET PILE	CL EX. I.R. 90	70+57.84	1.00' LT	700.00	680.00 / 660.00
G	STEEL SHEET PILE	CL EX. I.R. 90	70+88.86	1.00' LT	699.50	660.00

NOTES:

1. TEMPORARY STEEL SHEET PILING SEGMENTS BETWEEN POINT B-F SHALL HAVE A MINIMUM STRENGTH OF 39 KSI AND SHALL HAVE A MINIMUM ELASTIC SECTION MODULUS OF 48 IN^3 AND A MINIMUM MOMENT OF INERTIA OF 361 IN^4.
2. PAYMENT FOR SHEET PILING, INCLUDING REMOVAL OF ALL COMPONENTS AFTER NO LONGER NECESSARY AND ALL OTHER ITEMS ASSOCIATED WITH TEMPORARY SHORING WILL BE INCLUDED IN THE CONTRACT LUMP SUM BID PRICE FOR ITEM 503 - COFFERDAMS AND EXCAVATION BRACING, AS PER PLAN. THE WORK REQUIRED FOR SHORING SEGMENTS BETWEEN POINTS B-F HAS BEEN INCLUDED IN THE LUMP SUM QUANTITY FOR EXISTING BRIDGE E5.
3. REMOVE PORTION OF EX. 8" STORM SEWER IN CONFLICT WITH SHORING AS NECESSARY.
4. TEMPORARY SHORING SHOWN SHALL BE INSTALLED IN PHASE 7 AND REMOVED IN PHASE 9.

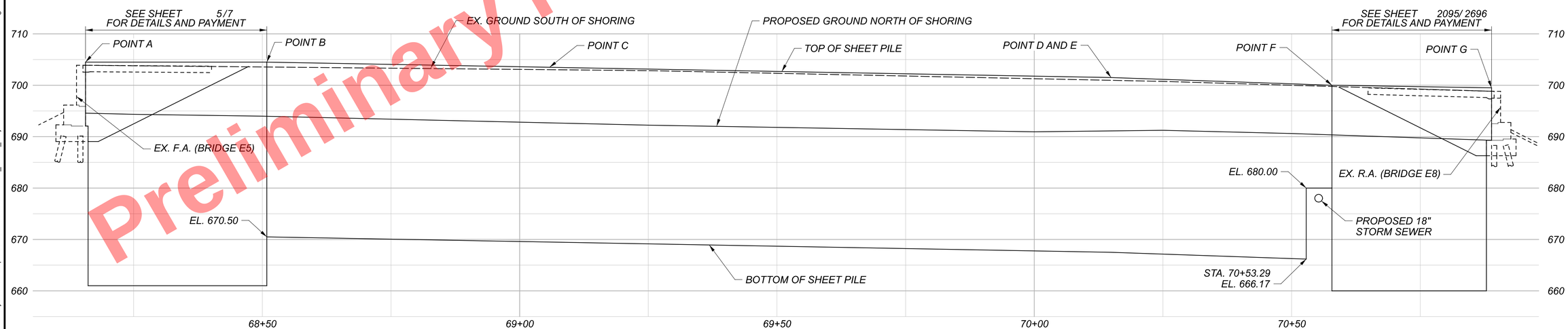

TEMPORARY SHORING ELEVATION ALONG ℄ EX. I.R. 90

Preliminary Plans - For Reference Only

I.R. 90 MEDIAN TEMPORARY SHORING PLAN AND ELEVATION
CUY-90-1640 (BRIDGE E5)
I.R. 90 OVER I.R. 77 SB RAMPS

SFN 1807773
DESIGN AGENCY B&N burgessniple.com
DESIGNER KMA | CHECKER BCS
REVIEWER DWL 06/17/22
PROJECT ID 82382
SUBSET 6 | TOTAL 7
SHEET 2376 | TOTAL 2696

CUY-90-16.28 (CCG3A)

MODEL: Sheet PAPERSIZE: 34x22 (in.) DATE: 3/28/2025 TIME: 8:16:14 AM USER: Rohit.Bk
pw:\\mb-us-pw.bentley.com:mb-us-pw-03\Documents\Cleveland_OH\01_Projects\ODOT\District12\82382\400-Engineering\Structures\SFN_1807773\Sheets\82382_Sheets\82382_SFN_1807773_SH002.dgn

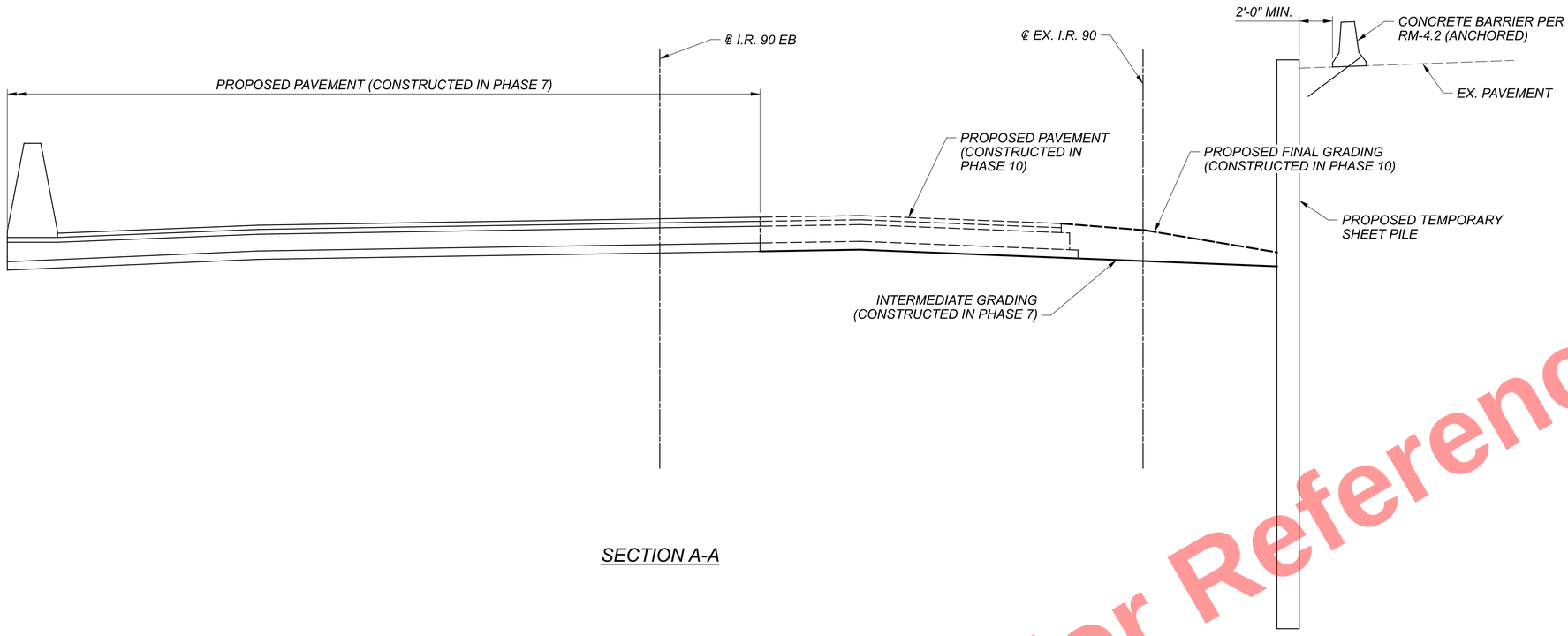

SECTION A-A

NOTES:

1. SEE SHEET 6/7 FOR LOCATION OF SECTIONS A-A AND B-B.
2. PAYMENT FOR SHEET PILING, INCLUDING REMOVAL OF ALL COMPONENTS AFTER NO LONGER NECESSARY AND ALL OTHER ITEMS ASSOCIATED WITH TEMPORARY SHORING WILL BE INCLUDED IN THE CONTRACT LUMP SUM BID PRICE FOR ITEM 503 - COFFERDAMS AND EXCAVATION BRACING, AS PER PLAN. THE WORK REQUIRED FOR SHORING SHOWN ON THIS SHEET HAS BEEN INCLUDED IN THE LUMP SUM QUANTITY FOR EXISTING BRIDGE E5.

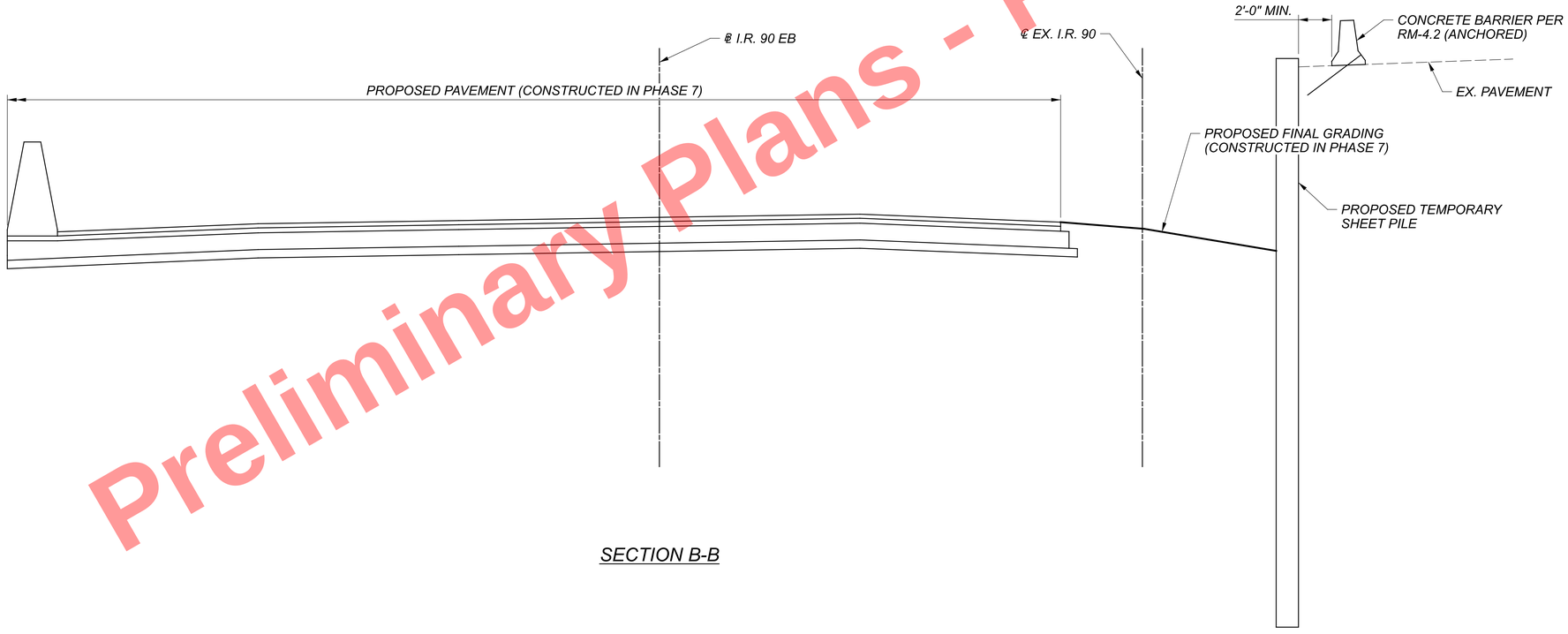

SECTION B-B

Preliminary Plans - For Reference Only

CUY-90-16.28 (CCG3A)

MODEL: Sheet PAPERSIZE: 34x22 (in.) DATE: 3/28/2025 TIME: 8:16:28 AM USER: RohitLBk
pw:\\mb-us-pw.bentley.com:mb-us-pw-03\Documents\Cleveland_OH01_Projects\ODOTDistrict12\82382400-Engineering\Structures\SFN_1807773\Sheets\82382_SFN_1807773_SH003.dgn

I.R. 90 MEDIAN TEMPORARY SHORING DETAILS
CUY-90-1640 (BRIDGE E5)
I.R. 90 OVER I.R. 77 SB RAMPS

SFN	1807773
DESIGN AGENCY	B&N burgessniple.com
DESIGNER	KMA
CHECKER	BCS
REVIEWER	DWL 06/17/22
PROJECT ID	82382
SUBSET	7
TOTAL	7
SHEET	2377
TOTAL	2696

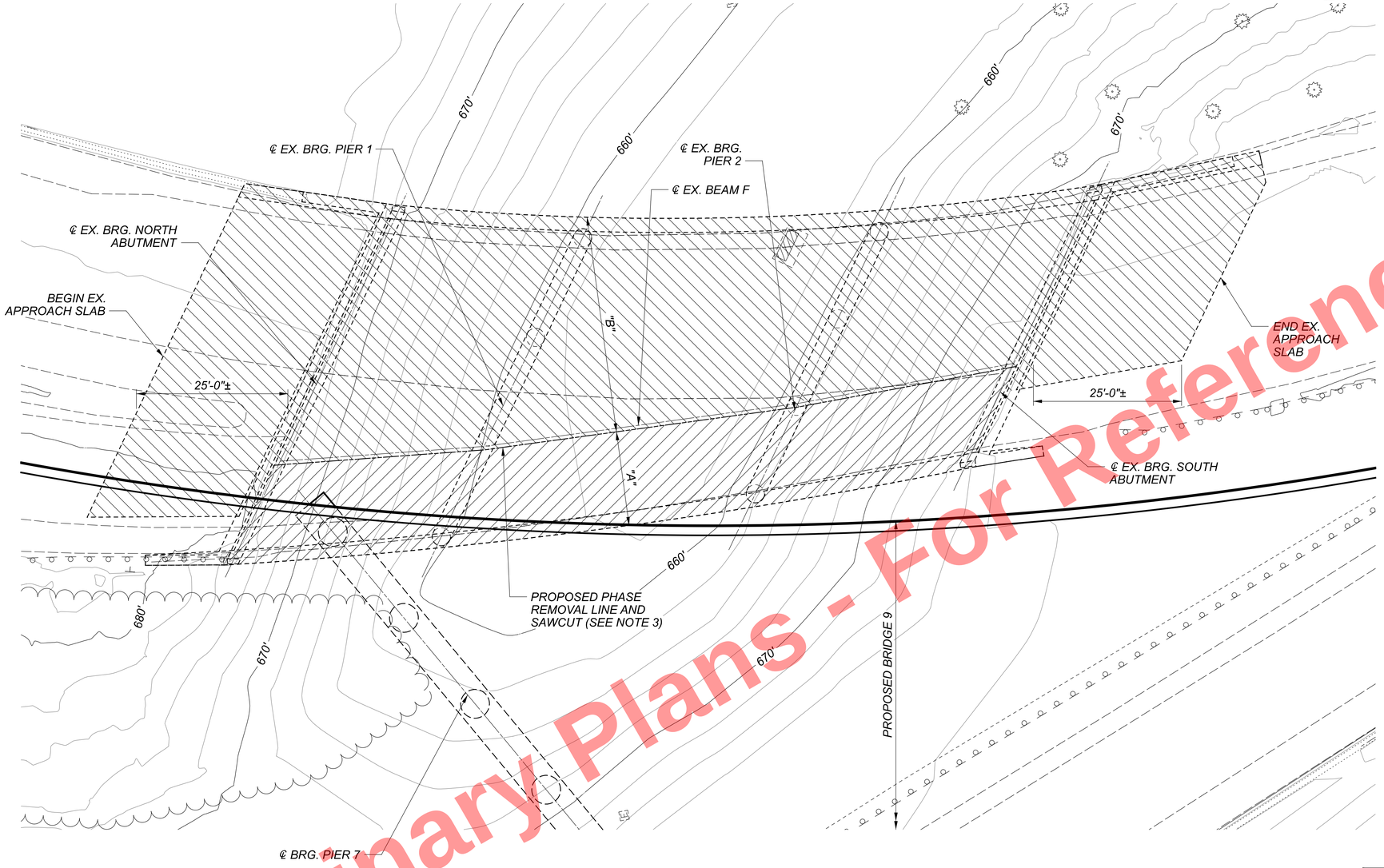

REMOVAL PLAN

LEGEND:

= PHASE 4 REMOVAL

= PHASE 5 REMOVAL

"A" = VARIES FROM 15'-4"± TO 15'-11"± PHASE 4 REMOVAL
"B" = VARIES FROM 27'-1"± TO 43'-2"± PHASE 5 REMOVAL

NOTES:

1. SEE SHEET 2/3 FOR PHASED MOT AND REMOVAL DETAILS.
2. SEE SHEET 3/3 FOR ABUTMENT AND PIER REMOVAL DETAILS.
3. FULL DEPTH SAWCUT SHALL FOLLOW EX. BEAM F AT AN OFFSET FROM THE ℄ OF 7" TO THE WEST FOR THE FULL LENGTH OF BRIDGE.
4. SEE SHEET 2/3 FOR PCB LOCATION.

ESTIMATED QUANTITIES

PARTICIPATION	ITEM	ITEM EXT.	TOTAL	UNIT	DESCRIPTION	REF. SHEET
02/IMS/10	202	11203	LS	-	PORTIONS OF STRUCTURE REMOVED, OVER 20 FOOT SPAN, AS PER PLAN	1/3
02/IMS/10	202	22900	255	SY	APPROACH SLAB REMOVED	

STRUCTURE GENERAL NOTES:

MAINTENANCE OF TRAFFIC:
SEE THE ROADWAY PLANS FOR MAINTENANCE OF TRAFFIC REQUIREMENTS.

EXISTING STRUCTURE VERIFICATION:
DETAILS AND DIMENSIONS SHOWN ON THESE PLANS PERTAINING TO THE EXISTING STRUCTURE HAVE BEEN OBTAINED FROM PLANS OF THE EXISTING STRUCTURE AND/OR FIELD MEASUREMENTS. THEY ARE INDICATIVE OF THE EXISTING STRUCTURE AND PROPOSED WORK, BUT THEY SHALL BE CONSIDERED TENTATIVE AND APPROXIMATE. THE CONTRACTOR IS REFERRED TO CMS SECTION 102.05, 105.02 AND 513.04. BASE CONTRACT BID PRICES UPON A RECOGNITION OF THE UNCERTAINTIES DESCRIBED ABOVE AND UPON A PREBID EXAMINATION OF THE EXISTING STRUCTURES. HOWEVER, THE DEPARTMENT WILL PAY FOR ALL PROJECT WORK BASED UPON ACTUAL DETAILS AND DIMENSIONS THAT HAVE BEEN VERIFIED IN THE FIELD.

EXISTING STRUCTURE PLANS:
CONSTRUCTION PLANS FOR EXISTING STRUCTURES ARE ON FILE AT THE DEPARTMENT OF TRANSPORTATION DISTRICT 12 OFFICE, 5500 E. 98TH ST., GARFIELD HEIGHTS, OHIO AND ARE AVAILABLE FOR REFERENCE.

SEQUENCE OF CONSTRUCTION:
SEE MOT NOTES IN ROADWAY PLANS.

PORTIONS OF STRUCTURE REMOVED, OVER 20 FOOT SPAN, AS PER PLAN:
THIS ITEM SHALL INCLUDE THE ELEMENTS INDICATED IN THE PLANS AND GENERAL NOTES AND THAT ARE NOT SEPARATELY LISTED FOR PAYMENT. LIMITS OF REMOVAL SHALL BE AS SHOWN ON THE PLANS FOR BRIDGE E6 OR AS DIRECTED BY THE ENGINEER. ITEMS TO BE REMOVED INCLUDE THE SUBSTRUCTURE FOUNDATION PILES THAT INTERFERE WITH NEW CONSTRUCTION AND MISCELLANEOUS ITEMS THAT ARE NOT SHOWN TO BE INCORPORATED INTO THE FINAL CONSTRUCTION AND ARE DIRECTED TO BE REMOVED BY THE ENGINEER. SUBMIT WORKING DRAWINGS AND CALCULATIONS IN ACCORDANCE WITH CMS 501.55.

ALL CONCRETE, REINFORCING STEEL, ASPHALT, ETC. REMOVED FROM THE STRUCTURE AND NOT REUSED SHALL, UNLESS OTHERWISE SPECIFIED, BECOME THE PROPERTY OF THE CONTRACTOR AND SHALL BE REMOVED BY HIM/HER FROM THE SITE. THE MATERIALS SHALL NOT BE PERMITTED TO REMAIN ON SITE, WITHIN THE RIGHT-OF-WAY OR ELSEWHERE UNLESS SPECIFIED BY THE ENGINEER.

THE USE OF EXPLOSIVES AND HEADACHE BALLS WILL NOT BE PERMITTED. THE METHOD OF REMOVAL AND THE WEIGHT OF HAMMER SHALL BE APPROVED BY THE ENGINEER. PERFORM ALL WORK IN A MANNER THAT WILL NOT CUT, ELONGATE, OR DAMAGE THE EXISTING REINFORCING STEEL TO BE PRESERVED.

THE WORK DETAILED ABOVE SHALL BE INCLUDED FOR PAYMENT IN THE LUMP SUM BID PRICE FOR ITEM 202 - PORTIONS OF STRUCTURE REMOVED, OVER 20 FOOT SPAN, AS PER PLAN.

EXISTING STRUCTURE

TYPE: CONTINUOUS STEEL BEAM WITH REINFORCED CONCRETE DECK AND SUBSTRUCTURE

SPANS: 31'-0⅜"±, 48'-2¼"±, 34'-1"± c/c BEARINGS MEASURED ALONG EX. ℄
ROADWAY: VARIES
LOADING: CF - 2000 ADEQUATE FOR A.A.S.H.O. ALTERNATE LOADING
SKEW: VARIES
WEARING SURFACE: 1½"± CONCRETE OVERLAY
APPROACH SLABS: AS-1-54 (25 FEET LONG)
ALIGNMENT: 14°30'00" CURVE LEFT
CROWN: 0.08 FT PER FT (SUPERELEVATED)
STRUCTURE FILE NUMBER: 1806939
DATE BUILT: 1962, REHABILITATIONS
DISPOSITION: TO BE REMOVED

Preliminary Plans - Not For Reference

REMOVAL PLAN
CUY-77-1593L (BRIDGE E6)
RAMP I.R. 90 WB TO I.R. 77 SB OVER ABANDONED RAMP E8

SFN 1806939
DESIGN AGENCY
B&N burgessniple.com
DESIGNER KMA | CHECKER BCS
REVIEWER DWL 06/17/22
PROJECT ID 82382
SUBSET 1 | TOTAL 3
SHEET 2378 | TOTAL 2696

CUY-90-16.28 (CCG3A)

MODEL: Sheet PAPERSIZE: 34x22 (in.) DATE: 3/28/2025 TIME: 8:16:46 AM USER: RohitBk
pw:\\mb-us-pw.bentley.com:mb-us-pw-03\Documents\Cleveland_OH101_Projects\ODOT\District12\82382\400-Engineering\Structures\SFN_1806939\Sheets\82382_SFN_1806939_SV001.dgn

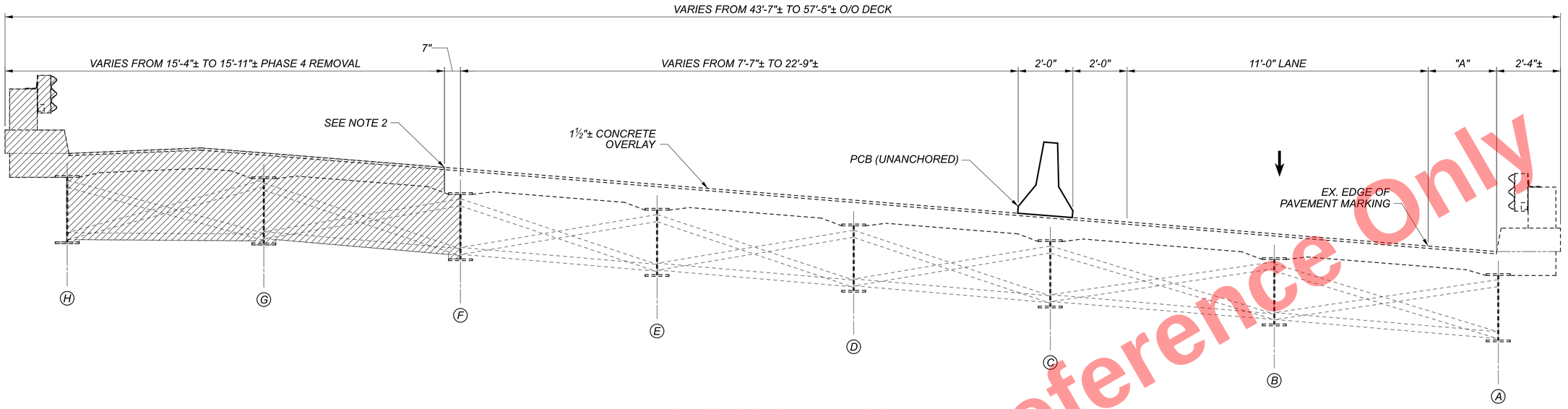

PHASE 4 REMOVAL AND MOT

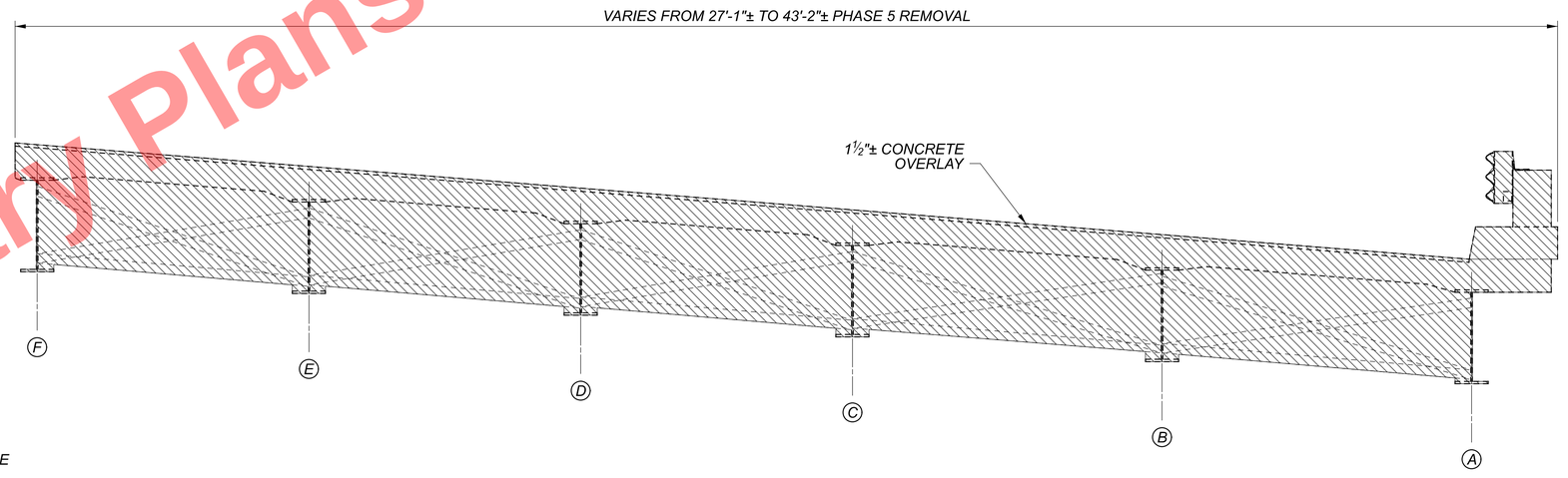

PHASE 5 REMOVAL

LEGEND:

= PHASE 4 REMOVAL

= PHASE 5 REMOVAL

Ⓐ = EXISTING BEAM LETTER

"A" = VARIES FROM 1'-7"± TO 2'-6"±

NOTES:

1. SECTIONS SHOWN ON THIS SHEET ARE CUT PERPENDICULAR TO THE SUPERSTRUCTURE AND ARE LOOKING NORTH.
2. FULL DEPTH SAWCUT SHALL FOLLOW EX. BEAM F AT AN OFFSET FROM THE ℄ OF 7" TO THE WEST FOR THE FULL LENGTH OF BRIDGE.

Preliminary Plans - For Reference Only

SUPERSTRUCTURE PHASED REMOVAL DETAILS
CUY-77-1593L (BRIDGE E6)
RAMP I.R. 90 WB TO I.R. 77 SB OVER ABANDONED RAMP E8

SFN	1806939
DESIGN AGENCY	B&N burgessniple.com
DESIGNER	KMA
CHECKER	BCS
REVIEWER	DWL 06/17/22
PROJECT ID	82382
SUBSET	2
TOTAL	3
SHEET	2379
TOTAL	2696

CUY-90-16.28 (CCG3A)

MODEL: Sheet PAPERSIZE: 34x22 (in.) DATE: 3/28/2025 TIME: 8:16:55 AM USER: Rohit.Bk
pw:\\mb-us-pw.bentley.com:mb-us-pw-03\Documents\Cleveland_OH\01_Projects\ODOT\District12\82382\400-Engineering\Structures\SFN_1806939\Sheets\82382_SFN_1806939_SV002.dgn

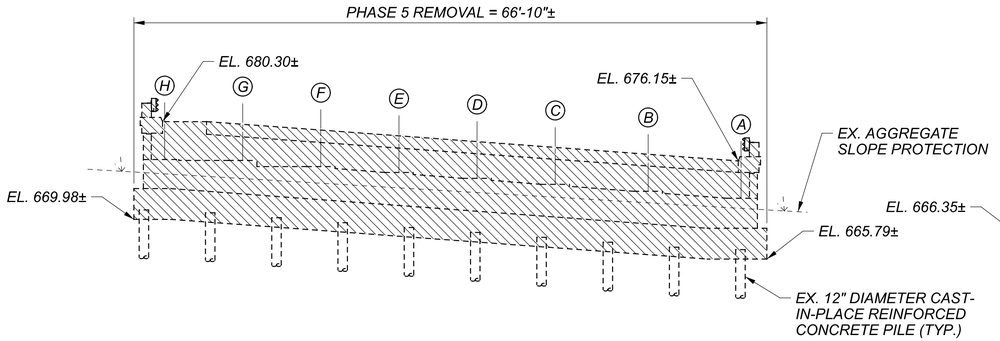

NORTH ABUTMENT REMOVAL ELEVATION (LOOKING NORTH)

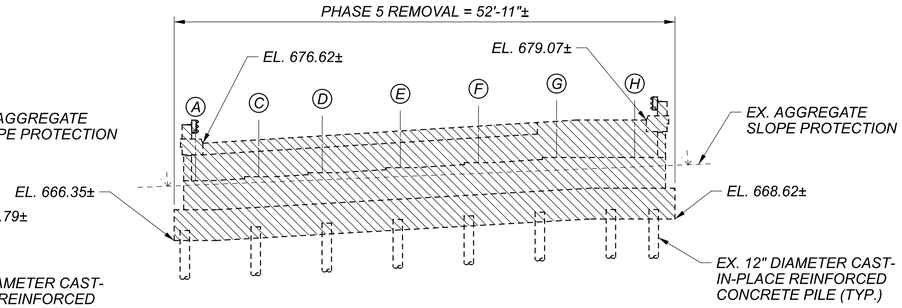

SOUTH ABUTMENT REMOVAL ELEVATION (LOOKING SOUTH)

LEGEND:

= PHASE 5 REMOVAL

A = EXISTING BEAM LETTER

NOTES:

1. CONTRACTOR MAY ADJUST REMOVAL LIMITS TO ACCOMMODATE LIGHTWEIGHT FILL LIMITS AND INSTALLATION.

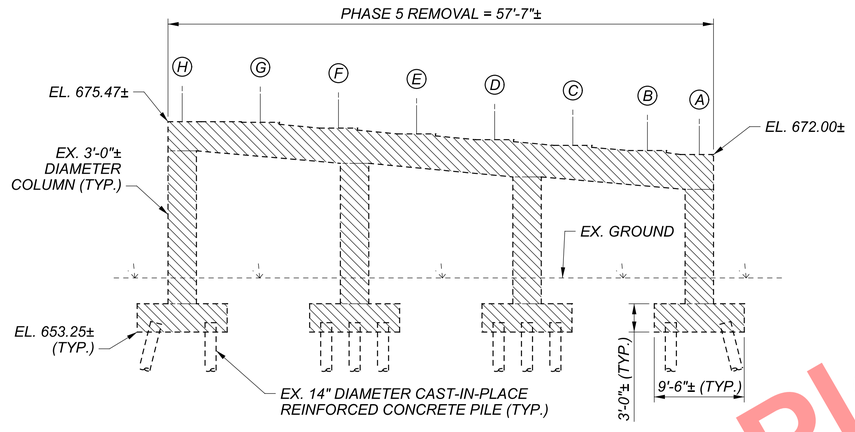

PIER 1 REMOVAL ELEVATION (LOOKING NORTH)

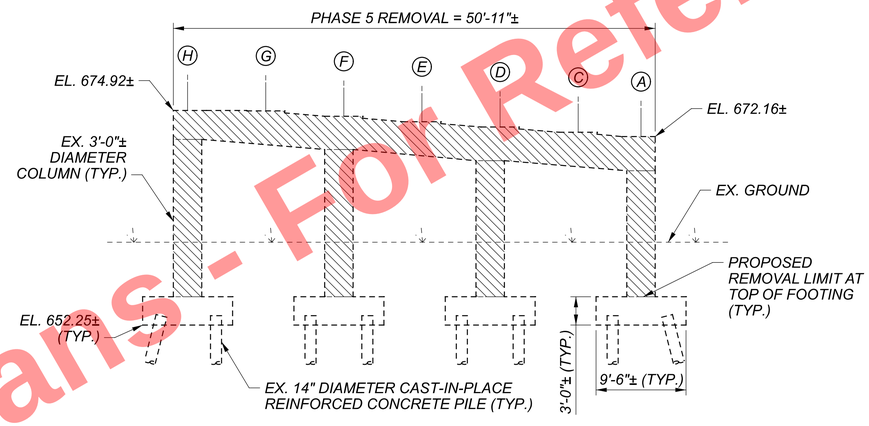

PIER 2 REMOVAL ELEVATION (LOOKING NORTH)

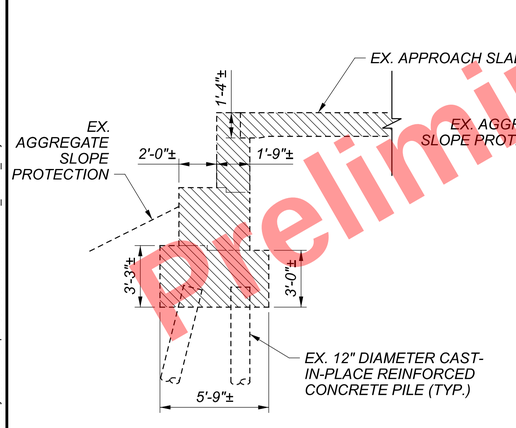

TYPICAL ABUTMENT SECTION

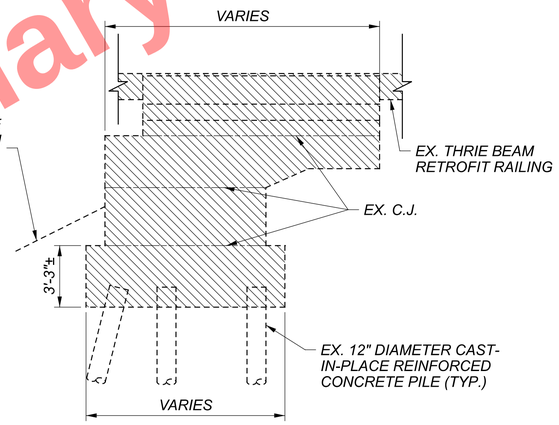

TYPICAL WINGWALL ELEVATION

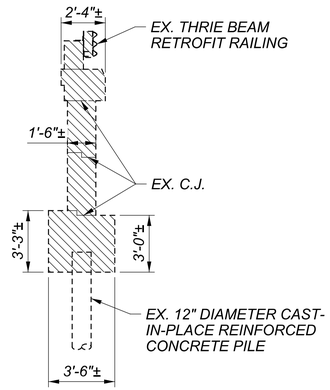

TYPICAL WINGWALL SECTION

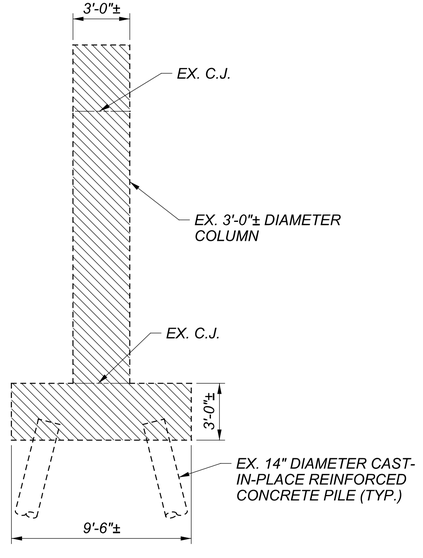

TYPICAL PIER SECTION

Preliminary Plans - For Reference Only

ABUTMENT AND PIER REMOVAL DETAILS
CUY-77-1593L (BRIDGE E6)
RAMP I.R. 90 WB TO I.R. 77 SB OVER ABANDONED RAMP E8

SFN	1806939
DESIGN AGENCY	B&N burgessniple.com
DESIGNER	KMA
CHECKER	BCS
REVIEWER	DWL 06/17/22
PROJECT ID	82382
SUBSET	3
TOTAL	3
SHEET	2380
TOTAL	2696

CUY-90-16.28 (CCG3A)

MODEL: Sheet PAPERSIZE: 34x22 (in.) DATE: 3/28/2025 TIME: 8:17:02 AM USER: Rohit.Bk
pw:\\mb-us-pw.bentley.com:mb-us-pw-03\Documents\Cleveland_OH\01_Projects\ODOT\District12\82382\400-Engineering\Structures\SFN_1806939\Sheets\82382_SFN_1806939_SV003.dgn

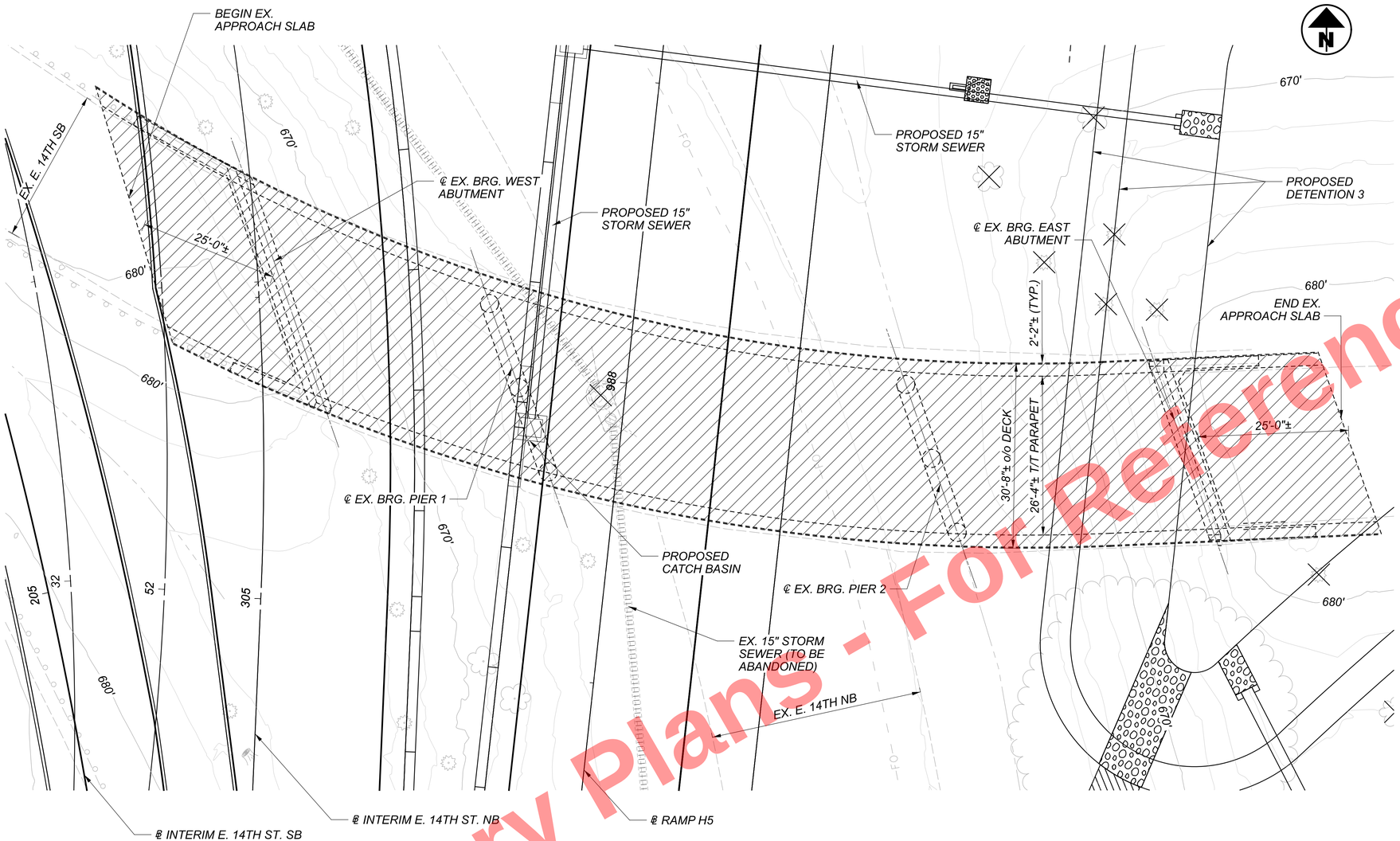

REMOVAL PLAN

LEGEND:

= PHASE 1 REMOVAL

NOTES:

1. SEE SHEET 2/2 FOR ABUTMENT AND PIER REMOVAL DETAILS.

STRUCTURE GENERAL NOTES:

MAINTENANCE OF TRAFFIC:
SEE THE ROADWAY PLANS FOR MAINTENANCE OF TRAFFIC REQUIREMENTS.

EXISTING STRUCTURE VERIFICATION:
DETAILS AND DIMENSIONS SHOWN ON THESE PLANS PERTAINING TO THE EXISTING STRUCTURE HAVE BEEN OBTAINED FROM PLANS OF THE EXISTING STRUCTURE AND/OR FIELD MEASUREMENTS. THEY ARE INDICATIVE OF THE EXISTING STRUCTURE AND PROPOSED WORK, BUT THEY SHALL BE CONSIDERED TENTATIVE AND APPROXIMATE. THE CONTRACTOR IS REFERRED TO CMS SECTION 102.05, 105.02 AND 513.04. BASE CONTRACT BID PRICES UPON A RECOGNITION OF THE UNCERTAINTIES DESCRIBED ABOVE AND UPON A PREBID EXAMINATION OF THE EXISTING STRUCTURES. HOWEVER, THE DEPARTMENT WILL PAY FOR ALL PROJECT WORK BASED UPON ACTUAL DETAILS AND DIMENSIONS THAT HAVE BEEN VERIFIED IN THE FIELD.

EXISTING STRUCTURE PLANS:
CONSTRUCTION PLANS FOR EXISTING STRUCTURES ARE ON FILE AT THE DEPARTMENT OF TRANSPORTATION DISTRICT 12 OFFICE, 5500 E. 98TH ST., GARFIELD HEIGHTS, OHIO AND ARE AVAILABLE FOR REFERENCE.

SEQUENCE OF CONSTRUCTION:
SEE MOT NOTES IN ROADWAY PLANS.

PORTIONS OF STRUCTURE REMOVED, OVER 20 FOOT SPAN, AS PER PLAN:
THIS ITEM SHALL INCLUDE THE ELEMENTS INDICATED IN THE PLANS AND GENERAL NOTES AND THAT ARE NOT SEPARATELY LISTED FOR PAYMENT. LIMITS OF REMOVAL SHALL BE AS SHOWN ON THE PLANS FOR BRIDGE E10 OR AS DIRECTED BY THE ENGINEER. ITEMS TO BE REMOVED INCLUDE THE SUBSTRUCTURE FOUNDATION PILES THAT INTERFERE WITH NEW CONSTRUCTION, TIMBER SUBDECK, AND MISCELLANEOUS ITEMS THAT ARE NOT SHOWN TO BE INCORPORATED INTO THE FINAL CONSTRUCTION AND ARE DIRECTED TO BE REMOVED BY THE ENGINEER. SUBMIT WORKING DRAWINGS AND CALCULATIONS IN ACCORDANCE WITH CMS 501.55.

ALL CONCRETE, REINFORCING STEEL, TIMBER SUBDECK, ASPHALT, ETC. REMOVED FROM THE STRUCTURE AND NOT REUSED SHALL, UNLESS OTHERWISE SPECIFIED, BECOME THE PROPERTY OF THE CONTRACTOR AND SHALL BE REMOVED BY HIM/HER FROM THE SITE. THE MATERIALS SHALL NOT BE PERMITTED TO REMAIN ON SITE, WITHIN THE RIGHT-OF-WAY OR ELSEWHERE UNLESS SPECIFIED BY THE ENGINEER.

THE USE OF EXPLOSIVES AND HEADACHE BALLS WILL NOT BE PERMITTED. THE METHOD OF REMOVAL AND THE WEIGHT OF HAMMER SHALL BE APPROVED BY THE ENGINEER.

THE WORK DESCRIBED ABOVE SHALL BE INCLUDED FOR PAYMENT IN THE LUMP SUM BID PRICE FOR ITEM 202 - PORTIONS OF STRUCTURE REMOVED, OVER 20 FOOT SPAN, AS PER PLAN.

ESTIMATED QUANTITIES

PARTICIPATION	ITEM	ITEM EXT.	TOTAL	UNIT	DESCRIPTION	REF. SHEET
02/IMS/10	202	11203	LS	-	PORTIONS OF STRUCTURE REMOVED, OVER 20 FOOT SPAN, AS PER PLAN	1/2
02/IMS/10	202	22900	134	SY	APPROACH SLAB REMOVED	

EXISTING STRUCTURE

TYPE: CONTINUOUS STEEL BEAM WITH REINFORCED CONCRETE DECK AND SUBSTRUCTURE

SPANS: 42'-1 5/16"±, 70'-7 1/16"±, 42'-6 1/2"± c/c BEARINGS MEASURED ALONG EX. ℄

ROADWAY: 26'-4"± T/T PARAPETS

LOADING: CF - 2000 ADEQUATE FOR A.A.S.H.O. ALTERNATE LOADING

SKEW: VARIES

WEARING SURFACE: 1 1/2"± CONCRETE OVERLAY

APPROACH SLABS: AS-1-54 (25 FEET LONG)

ALIGNMENT: 20°00'00" CURVE LEFT

CROWN: VARIES (SUPERELEVATED)

STRUCTURE FILE NUMBER: 1806912

DATE BUILT: 1960, REHABILITATIONS

DISPOSITION: TO BE REMOVED

Preliminary Plans - For Reference

REMOVAL PLAN
CUY-E14TH-0002SN (BRIDGE E10)
EAST 14TH ST. SB OVER EAST 14TH ST. NB

SFN	1806912
DESIGN AGENCY	B&N burgessniple.com
DESIGNER	KMA
CHECKER	BCS
REVIEWER	DWL 06/17/22
PROJECT ID	82382
SUBSET	1
TOTAL	2
SHEET	2381
TOTAL	2696

CUY-90-16.28 (CCG3A)
MODEL: Sheet PAPERSIZE: 34x22 (in.) DATE: 3/28/2025 TIME: 8:17:11 AM USER: RohitLBk
pw:\\mb-us-pw.bentley.com:mb-us-pw-03\Documents\Cleveland_OH\01_Projects\ODOT\District12\82382\400-Engineering\Structures\SFN_1806912\Sheets\82382_SFN_1806912_SV001.dgn

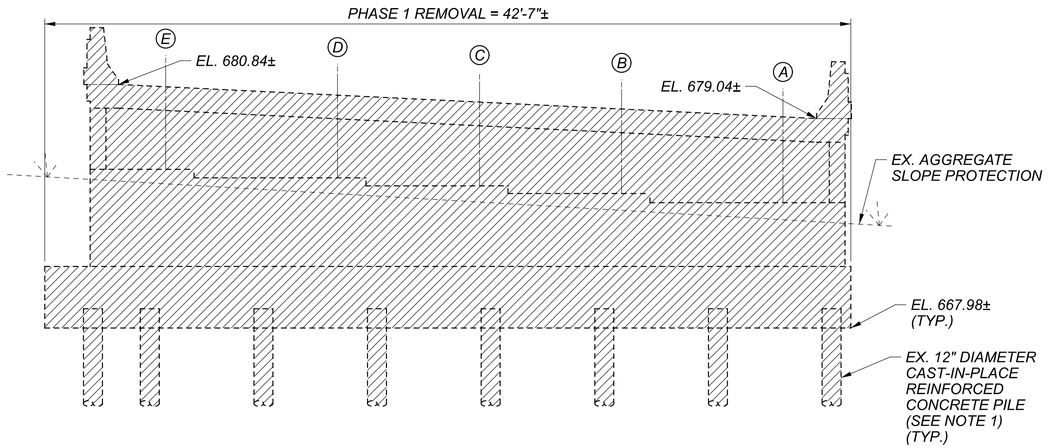

WEST ABUTMENT REMOVAL ELEVATION (LOOKING WEST)

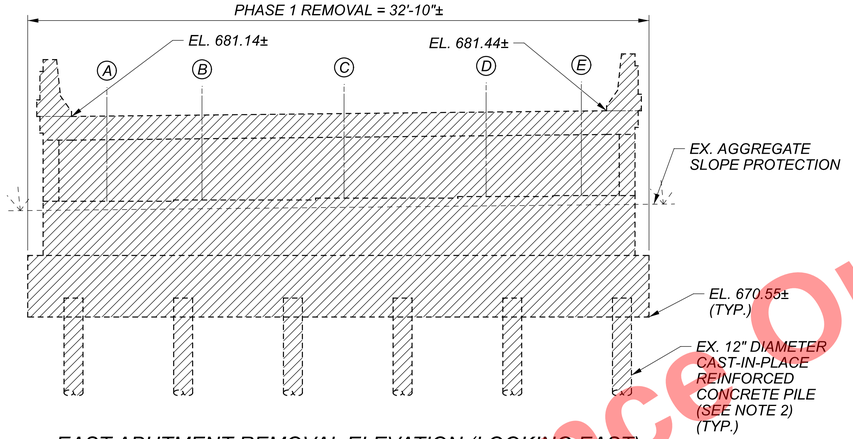

EAST ABUTMENT REMOVAL ELEVATION (LOOKING EAST)

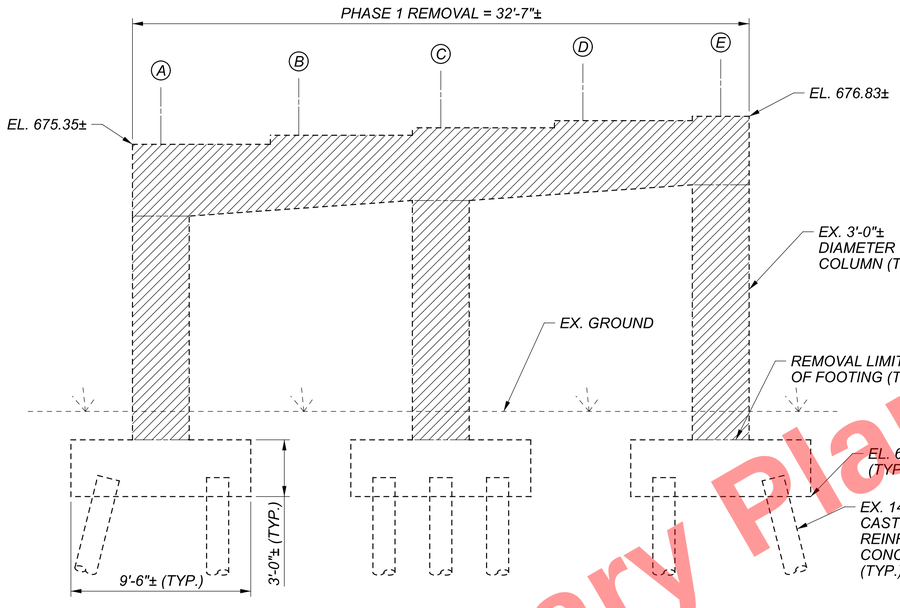

PIER 1 REMOVAL ELEVATION (LOOKING EAST)

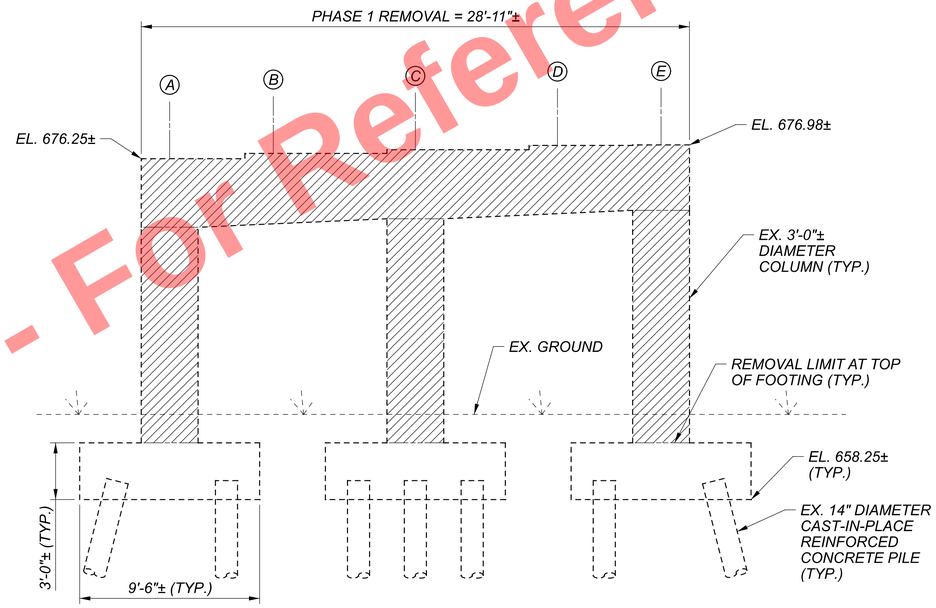

PIER 2 REMOVAL ELEVATION (LOOKING EAST)

LEGEND:

= PHASE 1 REMOVAL

Ⓐ = EXISTING BEAM LETTER

NOTES:

1. REMOVE ALL WEST ABUTMENT AND WINGWALL 14" CAST-IN-PLACE REINFORCED CONCRETE PILES TO EL. 661.00.
2. REMOVE ALL EAST ABUTMENT AND WINGWALL 14" CAST-IN-PLACE REINFORCED CONCRETE PILES TO EL. 656.50.

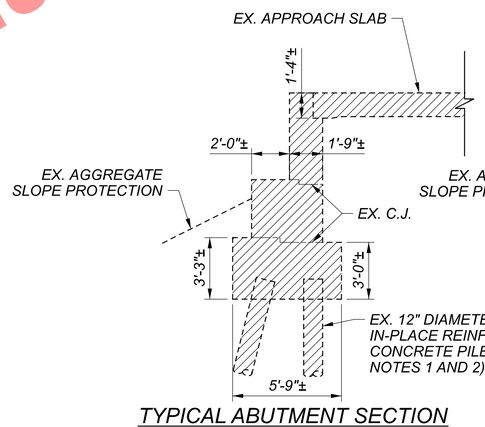

TYPICAL ABUTMENT SECTION

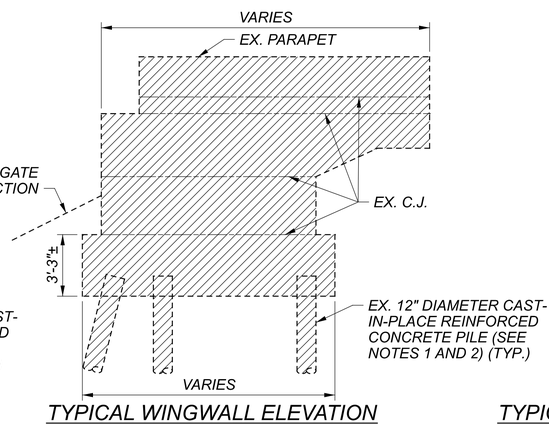

TYPICAL WINGWALL ELEVATION

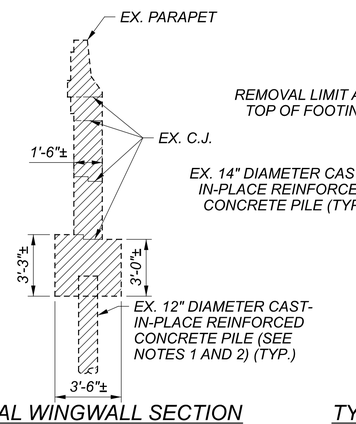

TYPICAL WINGWALL SECTION

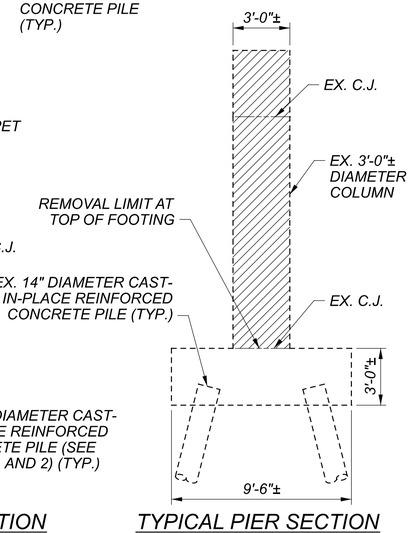

TYPICAL PIER SECTION

Preliminary Plans - Not For Reference Only

CUY-90-16.28 (CCG3A)

MODEL: Sheet PAPERSIZE: 34x22 (in.) DATE: 3/28/2025 TIME: 8:17:23 AM USER: Rohit.Bk
pw:\\mb-us-pw.bentley.com:mb-us-pw-03\Documents\Cleveland_OH101_Projects\ODOT\District12\82382400-Engineering\Structures\SFN_1806912\Sheets\82382_SFN_1806912_SV002.dgn

ABUTMENT AND PIER REMOVAL DETAILS
CUY-E14TH-0002SN (BRIDGE E10)
EAST 14TH ST. SB OVER EAST 14TH ST. NB

SFN	1806912
DESIGN AGENCY	B&N burgessniple.com
DESIGNER	KMA
CHECKER	BCS
REVIEWER	DWL 06/17/22
PROJECT ID	82382
SUBSET	2
TOTAL	2
SHEET	2382
TOTAL	2696

Preliminary Plans - For Reference Only

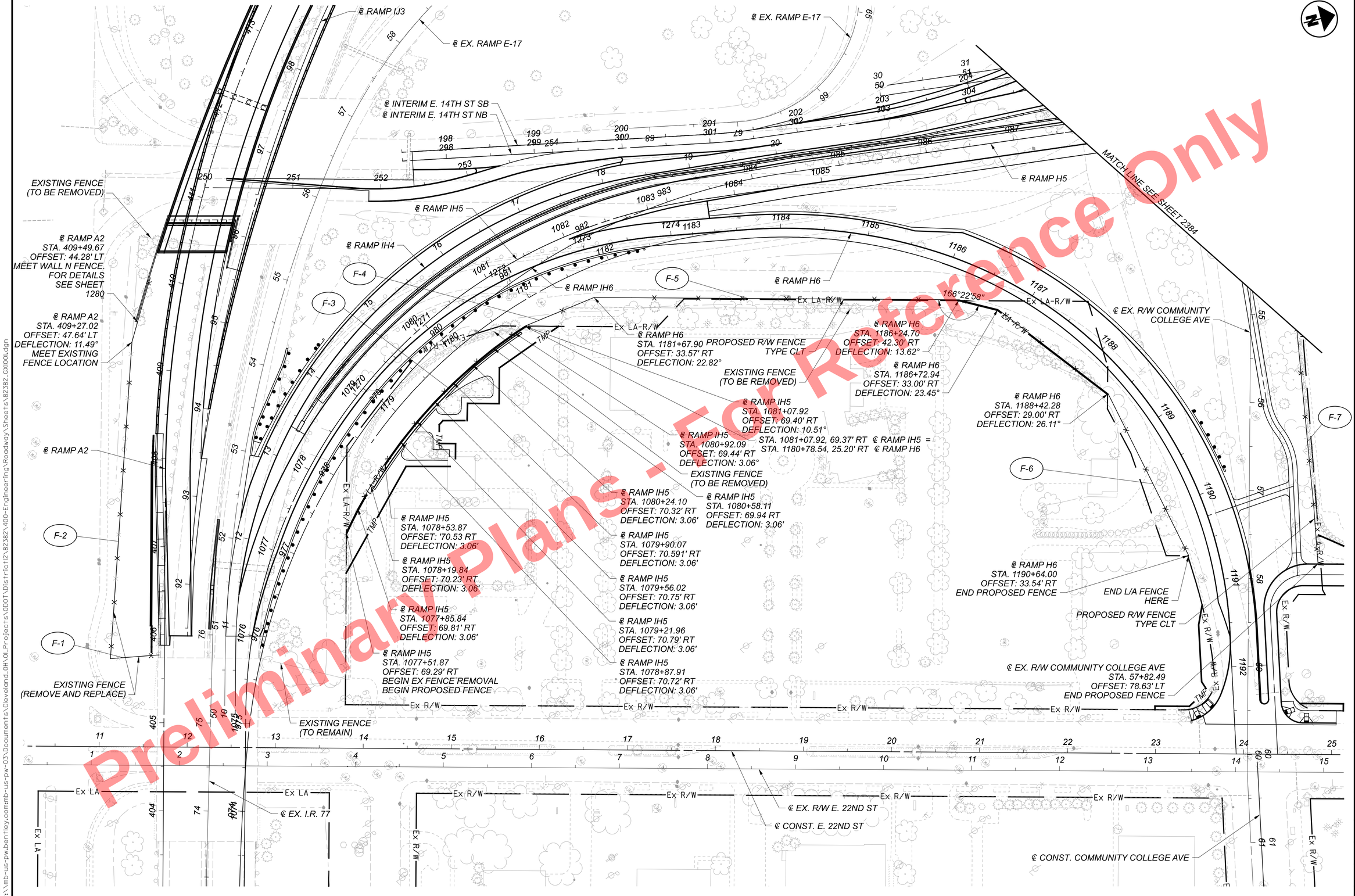

HORIZONTAL SCALE IN FEET
0 25 50 100

FENCE PLAN SHEET 1

CUY-90-16.28 (CCG3A)

MODEL: GX100 PAPERSIZE: 34x22 (in.) DATE: 3/28/2025 TIME: 8:38:38 AM USER: RohitBK
pw:\\mb-us-pw.bentley.com:mb-us-pw-03\Documents\Cleveland_OH\OL_Projects\ODOT\District12\82382\400-Engineering\Roadway\Sheets\82382_GX100l.dgn

DESIGN AGENCY
Michael Baker INTERNATIONAL

DESIGNER KJM
REVIEWER KGJ 05/22/24
PROJECT ID 82382
SHEET 2383 TOTAL 2696

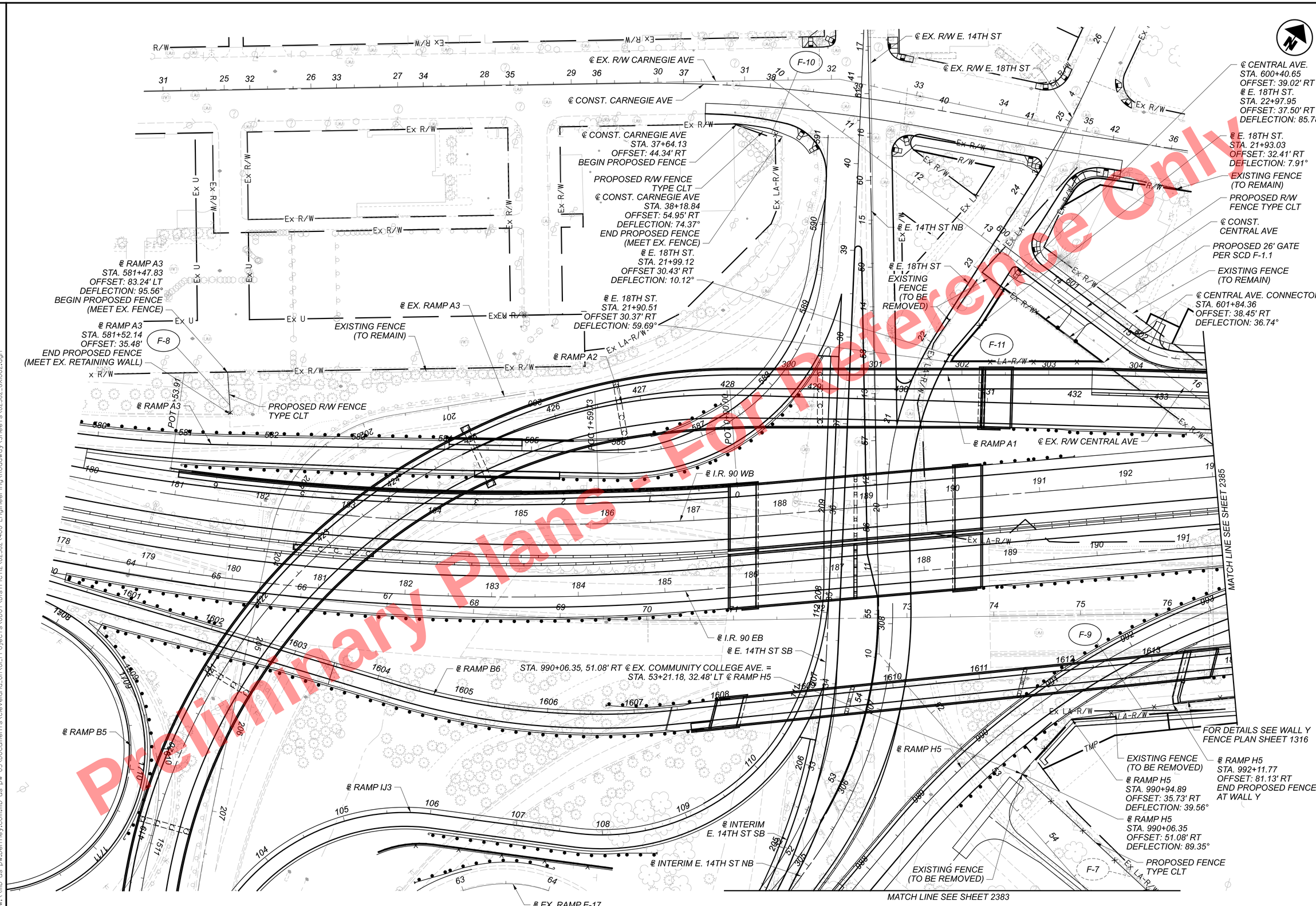

Preliminary Plans - For Reference Only

HORIZONTAL SCALE IN FEET
0 25 50 100

FENCE PLAN SHEET 2

DESIGN AGENCY
Michael Baker INTERNATIONAL

DESIGNER
KJM

REVIEWER
KGJ 05/22/24

PROJECT ID
82382

SHEET 2384 TOTAL 2696

CUY-90-16.28 (CCG3A)

MODEL: GXI002 PAPERSIZE: 34x22 (in.) DATE: 3/28/2025 TIME: 8:18:59 AM USER: Rohit.Bk
pw:\\mb-us-pw.bentley.com:mb-us-pw-03\Documents\Cleveland_OH\OI_Projects\ODOT\District12\82382\400-Engineering\Roadway\Sheets\82382_GXI002.dgn

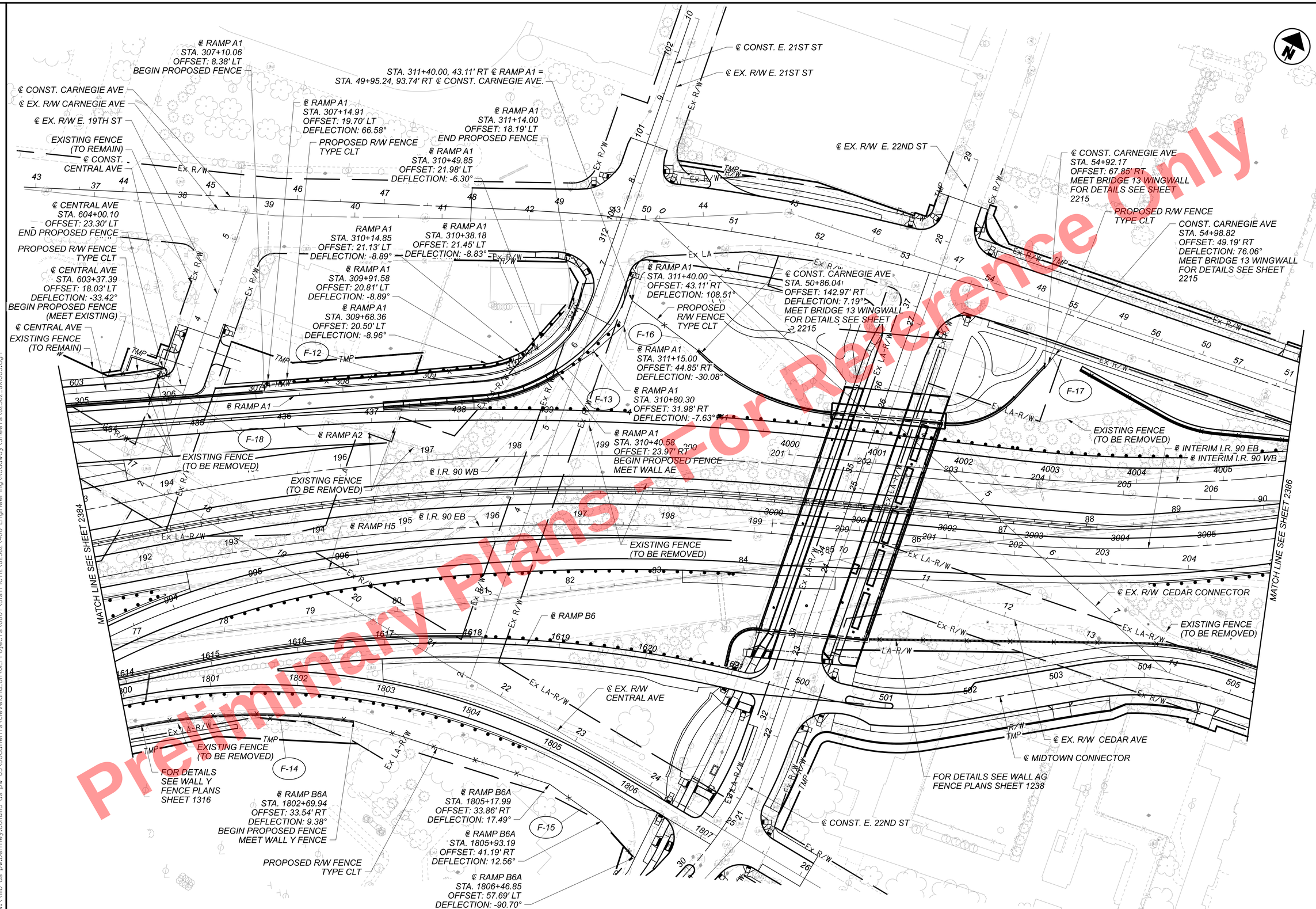

HORIZONTAL SCALE IN FEET
0 25 50 100

FENCE PLAN
SHEET 3

DESIGN AGENCY
Michael Baker INTERNATIONAL

DESIGNER
KJM

REVIEWER
KGJ 05/22/24

PROJECT ID
82382

SHEET 2385 TOTAL 2696

CUY-90-16.28 (CCG3A)

MODEL: GXI003 PAPERSIZE: 34x22 (in.) DATE: 3/28/2025 TIME: 8:19:16 AM USER: Rohit.Bk
pw:\\mb-us-pw.bentley.com:mb-us-pw-03\Documents\Cleveland_OH\OI_Projects\ODOT\District12\82382\400-Engineering\Roadway\Sheets\82382_GXI003.dgn

℄ CONST. CARNEGIE AVE
STA. 60+10.88
OFFSET: 109.31' LT
DEFLECTION: -19.14°

PROPOSED R/W FENCE
TYPE CLT

℄ CONST. CARNEGIE AVE
STA. 59+88.04
OFFSET: 63.22' LT
DEFLECTION: -33.64°

℄ CONST. CARNEGIE AVE
STA. 59+60.00
OFFSET: 47.03' LT
DEFLECTION: -30.08°

℄ CONST. CARNEGIE AVE
STA. 59+52.23
OFFSET: 47.04' LT
BEGIN PROPOSED FENCE

℄ CONST. CARNEGIE AVE
STA. 60+14.53
OFFSET: 137.96' LT
END PROPOSED FENCE
(MEET EX. FENCE)

℄ INTERIM I.R. 90 WB

℄ INTERIM I.R. 90 EB

℄ I.R. 90 WB

℄ I.R. 90 EB

℄ CONST. CARNEGIE AVE
STA. 63+35.49
OFFSET: 44.25' RT
DEFLECTION: 40.38°

℄ CONST. CARNEGIE AVE
STA. 64+42.65
OFFSET: 47.00' RT
DEFLECTION: 45.00°

℄ CONST. CARNEGIE AVE
STA. 65+83.43
OFFSET: 43.97' LT
MEET WALL T FENCING.
FOR DETAILS SEE SHEET
1308

℄ CONST. CARNEGIE AVE
STA. 65+97.19
OFFSET: 43.97' LT
DEFLECTION: 7.25°

℄ CONST. CARNEGIE AVE
STA. 66+24.76
OFFSET: 40.46' LT
DEFLECTION: -5.13°

PROPOSED R/W FENCE
TYPE CLT

℄ CONST. CARNEGIE AVE
STA. 66+71.01
OFFSET: 50.75' LT
END PROPOSED FENCE
(MEET EX. FENCE)

℄ CONST. CARNEGIE AVE
STA. 66+71.01
OFFSET: 38.75' LT
DEFLECTION: -92.12°

℄ CONST. CARNEGIE AVE

℄ EX. R/W CARNEGIE AVE

STA. 64+42.65, 47.00' RT ℄ CONST. CARNEGIE AVE. =
STA. 513+98.17, 61.35' LT ℄ MIDTOWN CONNECTOR

℄ MIDTOWN CONNECTOR
STA. 512+41.21
OFFSET: 90.14' LT
DEFLECTION: 38.18°

EXISTING FENCE
(TO BE REMOVED)

℄ MIDTOWN CONNECTOR
STA. 513+85.94
OFFSET: 49.32' LT
DEFLECTION: -44.61°

PROPOSED FENCE GATE,
PER SCD F-1.1

℄ MIDTOWN CONNECTOR

PROPOSED R/W FENCE
TYPE CLT

℄ MIDTOWN CONNECTOR
STA. 512+63.19
OFFSET: 41.47' LT
DEFLECTION: -90.00°

℄ EX. R/W E. 28TH ST

℄ MIDTOWN CONNECTOR
STA. 510+24.77
OFFSET: 105.57' LT
DEFLECTION: -23.40°

℄ MIDTOWN CONNECTOR
STA. 507+03.16
OFFSET: 38.18' LT
DEFLECTION: -20.70°

℄ MIDTOWN CONNECTOR
STA. 506+82.32
OFFSET: 38.25' LT
BEGIN PROPOSED R/W FENCE
MEET WALL AG FENCE
FOR DETAILS SEE SHEET
1238

℄ MIDTOWN CONNECTOR
STA. 507+12.78
OFFSET: 41.78' LT
DEFLECTION: 5.74°

℄ CONST. CEDAR AVE

℄ EX. R/W CEDAR AVE

MATCH LINE SEE SHEET 2385

F-19 F-20 F-21 F-22

Ex R/W · Ex LA-R/W · Ex LA · ESMT · ESMT - TMP · Ex U · TMP · R/W · LA-R/W

Preliminary Plans - For Reference Only

HORIZONTAL SCALE IN FEET
0 25 50 100

FENCE PLAN
SHEET 4

DESIGN AGENCY
Michael Baker INTERNATIONAL

DESIGNER
KJM

REVIEWER
KGJ 05/22/24

PROJECT ID
82382

SHEET 2386 TOTAL 2696

CUY-90-16.28 (CCG3A)

MODEL: GXI004 PAPERSIZE: 34x22 (in.) DATE: 3/28/2025 TIME: 8:09:38 AM USER: RohlfBk
pw:\\mb-us-pw.bentley.com:mb-us-pw-03\Documents\Cleveland_OH\DL_Projects\ODOT\District2\82382\400-Engineering\Roadway\Sheets\82382_GXI004.dgn

PROJECT DESCRIPTION

FOR REBUILDING AND MODERNIZING THE CLEVELAND INNERBELT CORRIDOR INTO DOWNTOWN, HAS PROPOSED IMPROVEMENTS TO PORTIONS OF INTERSTATE ROUTE 90 AND IR-77 LOCATED IN THE GREATER CLEVELAND, OHIO AREA. THE CCG3 IMPROVEMENTS INCLUDE: 1) THE RECONSTRUCTION/REHABILITATION OF THE MAINLINE FREEWAY SEGMENTS, AS WELL AS 9 DIFFERENT SECTIONS OF ADJACENT SURFACE STREETS; 2) THE REMOVAL OF 11 EXISTING BRIDGES; AND, 3) THE CONSTRUCTION/RECONSTRUCTION OF 16 BRIDGES, 23 RETAINING WALLS, AND 14 CONNECTING RAMPS. THE PROJECT LIMITS EXTEND WEST TO EAST ALONG IR-90 FROM APPROXIMATELY EAST 9TH STREET TO PROSPECT AVENUE EAST, AND SOUTH TO NORTH ALONG IR-77 FROM APPROXIMATELY CROTON AVENUE TO THE IR-77 / IR-90 INTERCHANGE.

HISTORIC RECORDS

A HISTORIC RECORD SEARCH WAS PERFORMED THROUGH ODOT'S TRANSPORTATION INFORMATION MAPPING SYSTEM (TIMS). EIGHT (8) HISTORICAL SOIL BORINGS (B-106-0-58, B-121-0-58, B-111-0-57, B-069-1-10, B-069-2-10, B-002-T-58, B-002-CR-57 AND B-011-CR-56) WERE REVIEWED AND WERE CONSIDERED IN OUR EVALUATION OF THE PROPOSED STRUCTURES SUBSURFACE CONDITIONS.

ODOT DISTRICT 12 PROVIDED NEAS WITH "REPORT OF SUBSURFACE EXPLORATION FOR CUY-INNERBELT, INNERBELT CORRIDOR PROJECT – RETAINING WALLS, PID 77510 & 25795" DATED MARCH 16, 2007, SUBMITTED BY DLZ OHIO, INC. (DLZ). THREE SOIL BORINGS PERFORMED AS PART OF THE DLZ EXPLORATION WERE REVIEWED AND WERE CONSIDERED IN OUR EVALUATION OF THE PROPOSED STRUCTURE SUBSURFACE CONDITIONS. IT SHOULD BE NOTED THAT THE LOCATION INFORMATION REGARDING THESE BORINGS WAS ASSUMED BASED ON FIGURE 1 PROVIDED WITH THE REFERENCED REPORT.

GEOLOGY

THE PROJECT SITE LIES IN THE ERIE LAKE PLAIN PHYSIOGRAPHIC REGION OF OHIO WHERE PREDOMINANTLY FINE GRAINED LAKE DEPOSITS ACCUMULATED UP TO SEVERAL HUNDRED FEET IN THICKNESS DURING POST GLACIAL PERIODS. IN THIS REGION, PLEISTOCENE-AGE LACUSTRINE SAND, SILT, AND CLAY ARE PRESENT, AS WELL AS WAVE PLANED TILL OVERLYING DEVONIAN AND MISSISSIPPIAN AGE SHALE AND SANDSTONE. THE SURFICIAL GEOLOGY IN THIS AREA IS MAPPED AS LATE WISCONSINAN LACUSTRINE SAND DEPOSITED IN GLACIAL LAKES AS SHALLOW-WATER DELTAS OR NEAR SHORE BARS AND SHEETS WITH THE MAJORITY OF MAINLINE IR-77 UNDERLAIN BY BEACH RIDGES THAT WERE FORMED ALONG SHORES OF FORMER GLACIAL LAKES AND IS COMPRISED OF FINE SAND TO COARSE GRAVEL AND COBBLE DEPOSITS AND INCLUDES SMALL AREAS OF DUNES AND NEAR SHORE SAND.

RECONNAISSANCE

ROADWAY SUBGRADE

LAND USE AND COVER

THE LAND USE OF THE MAJORITY OF THE PROJECT AREA CONSISTS OF COMMERCIAL PROPERTY, INCLUDING VARIOUS SHOPS, RESTAURANTS, EDUCATIONAL/INSTITUTIONAL FACILITIES, AS WELL AS A LARGE U.S. POST OFFICE FACILITY. OTHER LAND USES OF THE AREA SURROUNDING THE PROJECT INCLUDE RECREATIONAL (I.E., BASEBALL STADIUM, SPORTS FIELDS, THEATRE, ETC.), AND SMALL INDUSTRIAL AREAS CONSISTING OF SMALL CONSTRUCTION STORAGE LOTS.

INTERSTATE ROUTES

IN GENERAL, THE PAVEMENT ALONG IR-77 AND IR-90 WAS OBSERVED TO BE IN FAIR TO GOOD CONDITION WITH MARGINAL SIGNS OF WEATHERING AND SURFACE WEAR. LOW TO MODERATE SEVERITY LONGITUDINAL AND TRANSVERSE CRACKING WAS COMMON ALONG THESE SECTIONS, AS WELL AS A FEW LOW SEVERITY POTHOLES AND POTHOLE PATCHING. BOTH SECTIONS OF INTERSTATE APPEAR TO BE WELL-DRAINED TO EITHER STORM DRAINS, DRAINAGE SWALES, AND/OR ALONG GRASSY/VEGETATED EMBANKMENT SLOPES. NO PONDING WATER OR OBVIOUS DRAINAGE DEFICIENCIES WERE OBSERVED.

CONNECTING RAMPS

MANY OF THE PROPOSED RAMPS, WITH THE EXCEPTION OF RAMPS H1, H3, H6 AND J4, ARE PLANNED TO BE VERTICALLY AND/OR HORIZONTALLY REALIGNED AS PART OF THE PROJECT AND THEREFORE NEW SUBGRADE SOIL WILL BE MADE UP OF SOIL IN WHICH CUT INTO EXISTING GRADE WAS PERFORMED, OR BE MADE UP OF PRIMARILY NEW EMBANKMENT FILL CONSTRUCTED ATOP PORTIONS OF OLD RAMPS, ROADWAYS, AND COMMERCIAL PROPERTY.

THE PAVEMENT ALONG CONNECTING RAMPS H1 AND J4 WAS GENERALLY OBSERVED TO BE IN FAIR TO GOOD CONDITION WITH SOME LOW SEVERITY LONGITUDINAL AND TRANSVERSE CRACKING AND BOTH APPEAR TO MAINTAIN ADEQUATE DRAINAGE. CONVERSELY, THE PAVEMENT CONDITION ALONG CONNECTING RAMPS H3 AND H6 WAS OBSERVED TO BE IN OVERALL POOR CONDITION. THE RECONNAISSANCE OF RAMP H3 AND H6 ENCOUNTERED: 1) VERY FREQUENT, HIGH SEVERITY TRANSVERSE AND LONGITUDINAL CRACKING; 2) VERY FREQUENT, POTHOLES AND POTHOLE PATCHING; AND, 3) VERY FREQUENT, MODERATE SEVERITY ALLIGATOR CRACKING. A LARGE DEPRESSION WAS ALSO ENCOUNTERED ON RAMP H3 THAT APPEARED TO BE A RESULT OF SUBGRADE DEFICIENCY AND/OR FAILURE. DURING THE TIME OF THE RECONNAISSANCE, RAMP H3 AND SECTIONS OF THE SHOULDER OF RAMP H6 WERE CLOSED TO TRAFFIC. WITH RESPECT TO DRAINAGE, RAMP H6 WAS OBSERVED TO BE WELL DRAINED WHILE RAMP H3 APPEARED TO HAVE AREAS TOWARD THE BOTTOM OF THE RAMP THAT LACKED ADEQUATE DRAINAGE WITH NOTED PONDING ON THE SHOULDER/EDGE OF THE RAMP.

SURFACE STREETS

THE PAVEMENT CONDITION ALONG THE SURFACE STREETS WAS GENERALLY OBSERVED TO BE IN FAIR TO GOOD CONDITION WITH VERY LITTLE DISTRESS IN SOME AREAS AND FREQUENT LOW SEVERITY CRACKING IN OTHER AREAS. IN GENERAL, THE SURFACE STREETS APPEAR TO BE WELL DRAINED TO STORM SEWER INLETS ON BOTH SIDES OF THE

LEGEND

	DESCRIPTION	ODOT CLASS	CLASSIFIED MECH./VISUAL	
	GRAVEL AND/OR STONE FRAGMENTS	A-1-a	4	14
	GRAVEL AND/OR STONE FRAGMENTS WITH SAND	A-1-b	62	113
	GRAVEL AND/OR STONE FRAGMENTS W/ SAND & SILT	A-2-4	5	8
	FINE SAND	A-3	65	174
	COARSE AND FINE SAND	A-3a	210	782
	SANDY SILT	A-4a	61	84
	SILT	A-4b	228	254
	SILT AND CLAY	A-6a	88	130
	SILTY CLAY	A-6b	14	24
	CLAY	A-7-6	9	13
		TOTAL	746	1596
	PAVEMENT OR BASE = X = APPROXIMATE THICKNESS	VISUAL		
	SOD AND TOPSOIL = X = APPROXIMATE THICKNESS	VISUAL		

BORING LOCATION - PLAN VIEW.

HISTORIC BORING LOCATION - PLAN VIEW.

DRIVE SAMPLE AND/OR ROCK CORE BORING PLOTTED TO VERTICAL SCALE ONLY. HORIZONTAL BAR INDICATES A CHANGE IN STRATIGRAPHY.

WC — INDICATES WATER CONTENT IN PERCENT.

N — INDICATES NON-NORMALIZED STANDARD PENETRATION RESISTANCE

N_{60} — INDICATES STANDARD PENETRATION RESISTANCE NORMALIZED TO 60% DRILL ROD ENERGY RATIO.

X/Y/D" — NUMBER OF BLOWS FOR STANDARD PENETRATION TEST (SPT):
X= NUMBER OF BLOWS FOR FIRST 6 INCHES.
Y/D"= NUMBER OF BLOWS (UNCORRECTED) FOR D INCHES OF PENETRATION AT REFUSAL.

X/Y/Z — NUMBER OF BLOWS FOR STANDARD PENETRATION TEST (SPT):
X= NUMBER OF BLOWS FOR FIRST 6 INCHES.
Y= NUMBER OF BLOWS SECOND 6 INCHES.
Z= NUMBER OF BLOWS THIRD 6 INCHES.

INDICATES FREE WATER ELEVATION.

INDICATES WATER ELEVATION AFTER DRILLING.

INDICATES A PLASTIC MATERIAL WITH A MOISTURE CONTENT EQUAL TO OR GREATER THAN THE LIQUID LIMIT MINUS 3.

INDICATES A NON-PLASTIC MATERIAL WITH A MOISTURE CONTENT GREATER THAN 25 % OR GREATER THAN 19 % WITH A WET APPEARANCE.

SS — INDICATES A SPLIT SPOON SAMPLE.

NP — INDICATES A NON-PLASTIC SAMPLE.



LOCATION MAP

SCALE IN MILES

0 1 2 3 4

N

PARTICLE SIZE DEFINITIONS

12"	3"	2.0 mm	0.42 mm	0.074 mm	0.005 mm
BOULDERS	COBBLES	GRAVEL	COARSE SAND	FINE SAND	SILT	CLAY
		No. 10 SIEVE	No. 40 SIEVE	No. 200 SIEVE		

LEGEND

	HISTORIC BORING DESCRIPTION	ODOT CLASS	CLASSIFIED MECH./VISUAL	
	GRAVEL AND/OR STONE FRAGMENTS	A-1-a	0	5
	GRAVEL AND/OR STONE FRAGMENTS WITH SAND	A-1-b	0	5
	GRAVEL AND/OR STONE FRAGMENTS W/ SAND & SILT	A-2-4	6	36
	COARSE AND FINE SAND	A-3a	0	73
	SANDY SILT	A-4a	1	35
	SILT	A-4b	5	103
	SILT AND CLAY	A-6a	8	43
	SILTY CLAY	A-6b	2	26
	CLAY	A-7-6	1	8
		TOTAL	23	334

RECON. - EB, 05-20-15 - 17-10-15

DRILLING - TG, PS, DS, JG, JH, CA, 10-21-14 - 07-02-21

DRAWN - MWJ, AI, DT 12-22-21 - 06-23-22- 01-10-24

REVIEWED - BPA, 06-23-22- 01-12-24

Preliminary Plans - For Reference Only

GEOTECHNICAL PROFILE - ROADWAY

DESIGN AGENCY
NEAS
National Engineering & Architectural Services Inc.
2800 CORPORATE EXCHANGE DR, SUITE 240
COLUMBUS, OH, 43231
TEL:614.714.0299
WWW.NEASINC.COM

DESIGNER MWJ & DT

REVIEWER BPA 08/23/24

PROJECT ID 82382

SUBSET 1 | TOTAL 310

SHEET P.2387 | TOTAL 2696

CUY-90-16.28 (CCG3A)

MODEL: Sheet PAPERSIZE: 34x22 (in.) DATE: 3/28/2025 TIME: 11:38:16 AM USER: Asiddiqi
pw:\\mb-us-pw.bentley.com:mb-us-pw-03\Documents\Cleveland_OH\01_Projects\ODOT\District12\82382\400-Engineering\Geotechnical\Sheets\82382_IC001.dgn

RECONNAISSANCE (CONTINUED)

ROADWAY (I.E., NO AREAS OBSERVED WITH SIGNIFICANT PONDING WATER OR OBVIOUS DRAINAGE DEFICIENCIES); HOWEVER, SMALL AREAS OF PONDING ON THE SHOULDER OR IN EXISTING PAVEMENT RUTS WERE OBSERVED AT SELECT LOCATIONS.

SELECT SURFACE STREETS WHERE THE PAVEMENT WAS OBSERVED TO BE IN POOR OR VERY POOR CONDITION INCLUDED SECTIONS OF: EAST 30TH STREET, WOODLAND AVENUE, AND EAST 22ND STREET. THE SECTION OF EAST 30TH STREET SOUTH OF ORANGE AVENUE WHICH CONSISTED OF CONCRETE PAVEMENT APPEARED TO BE IN POOR CONDITION WITH SOME AREAS OF HIGH SEVERITY DIVIDED SLAB AND LINEAR CRACKING, AND FREQUENT LOW SEVERITY CORNER BREAKS, POTHOLES AND UTILITY PATCHING. THE SECTION OF WOODLAND AVENUE TO THE EAST OF EAST 30TH STREET ALSO APPEARED TO BE IN POOR CONDITION WITH FREQUENT MEDIUM TO HIGH SEVERITY TRANSVERSE, LONGITUDINAL, ALLIGATOR AND BLOCK CRACKING, AS WELL AS SOME MEDIUM SEVERITY POTHOLES AND UTILITY PATCHING. THE SECTION OF EAST 22ND STREET NORTH OF CARNEGIE AVENUE APPEARED TO BE IN VERY POOR CONDITION WITH HIGH TO VERY HIGH SEVERITY TRANSVERSE, LONGITUDINAL, ALLIGATOR AND BLOCK CRACKING, SWELLING, DEPRESSIONS, AND MEDIUM TO HIGH SEVERITY POTHOLE AND UTILITY PATCHING. SOME OF THESE NOTED SECTIONS OF POOR TO VERY POOR PAVEMENT CONDITION HAD SMALL AREAS OF OBSERVABLE PONDING WATER DUE TO THE ENCOUNTERED DISTRESS.

BRIDGE 9, WALL N, WALL AD

FIELD RECONNAISSANCE VISITS FOR THE PROPOSED RAMP A2 STRUCTURES WERE CONDUCTED BETWEEN MAY 20, 2015 AND JULY 9, 2015, ALONG THE PROPOSED RAMP A2 ALIGNMENT AND THE SURROUNDING RAMPS, SURFACE STREETS AND ADJACENT PROPERTIES.

RETAINING WALL N

THE LOCATION OF THE PROPOSED MSE WALL (RW-N) ENCOMPASSES THE AREA LOCATED IN THE NORTHEAST QUADRANT OF THE EAST 14TH STREET AND ORANGE AVENUE INTERSECTION AS WELL AS THE EAST APPROACH EMBANKMENT FOR THE EXISTING IR 77 BRIDGE OVER EAST 14TH STREET. AT THE TIME OF OUR SITE VISIT, THE AREA LOCATED ALONG THE RW-N ALIGNMENT WAS OBSERVED TO BE A GRASSY AREA WITH THE TERRAIN GRADUALLY SLOPING DOWNWARD FROM IR-77 TO EITHER ORANGE AVENUE OR EAST 14TH STREET WITH A MAXIMUM SLOPE OF ABOUT 2 HORIZONTAL TO 1 VERTICAL. IT WAS ALSO NOTED THAT CONSTRUCTION HAD RECENTLY TAKEN PLACE ON THE SOUTH SIDE OF THE REFERENCED EXISTING IR-77 BRIDGE. THE EMBANKMENT SLOPES GENERALLY APPEARED TO BE IN GOOD CONDITION WITH NO VISIBLE SIGNS OF INSTABILITY. NO EROSION OR POOR DRAINAGE WAS OBSERVED ALONG THE SLOPE. THE UPSLOPE IR-77 PAVEMENT SHOWED NO SIGNIFICANT SIGNS OF PAVEMENT DISTRESS WITHIN THE LENGTH OF THE PROPOSED WALL. IN GENERAL, THE SITE APPEARED TO BE WELL-DRAINED WITH NO APPARENT SIGNS OF PONDING ON OR NEAR THE REFERENCED ROADWAYS.

RETAINING WALL AD

THE LOCATION OF THE PROPOSED MSE AND CIP WALL (RW-AD) ENCOMPASSES THE AREA LOCATED SOUTH OF CARNEGIE AVENUE BETWEEN THE EXISTING RAMP A1 AND EAST 14TH STREET WHICH IS CURRENTLY COMPRISED OF A COMMERCIAL PROPERTY PARKING LOT, EAST 19TH STREET, CENTRAL AVENUE, AND A VACANT GRAVEL LOT. ALONG THE PROPOSED WALL ALIGNMENT EXISTING GRADES ARE RELATIVELY FLAT, WITH A MAXIMUM GRADE CHANGE OF ABOUT 5 FT EXTENDING FROM THE REFERENCED PARKING LOT AT THE START OF THE WALL TO SURFACE STREETS AND ENDING IN THE VACANT LOT. PAVEMENT WITHIN THE PARKING LOT AND ON THE SURFACE STREETS (EAST 19TH STREET, CENTRAL AVE) WAS OBSERVED TO BE IN FAIR TO POOR CONDITION WITH FREQUENT MODERATE SEVERITY TRANSVERSE AND LONGITUDINAL CRACKING AS WELL AS WHEEL TRACK CRACKING, EDGE CRACKING, MAP CRACKING AND CRACK-SEALING DEFICIENCIES. WITH RESPECT TO DRAINAGE, THE PAVEMENT APPEARED TO BE POORLY DRAINED, WITH SIGNS OF PONDING OR DRAINAGE ISSUES OBSERVED DURING OUR FIELD VISIT. AT THE TIME OF OUR SITE VISIT, THE REFERENCED VACANT GRAVEL LOT WAS BEING USED AS A CONSTRUCTION STAGING AREA FOR NEARBY CONSTRUCTION. EACH AREA GENERALLY APPEARED TO BE IN FAIR CONDITION WITH NO VISIBLE SIGNS OF INSTABILITY WITH RESPECT TO THE PROPOSED PROJECT.

BRIDGE NO. CUY-77-1587

THE PROPOSED BRIDGE SITE SPANS A LARGE AREA ALONG THE WESTERN LIMITS OF THE OVERALL CCG3A PROJECT, WITH THE PROPOSED BRIDGE ALIGNMENT PLANNED TO CARRY RAMP A2 TRAFFIC OVER EAST 18TH STREET, EAST 14TH STREET, RAMP A3, IR-90 EB AND WB, RAMP B6, RAMP B5, AND EAST 14TH STREET AGAIN. A SIGNIFICANT PORTION OF THE PROPOSED RAMP A2 ALIGNMENT IS ADJACENT TO THE EXISTING RAMP A2 ALIGNMENT, WITH THE NOTABLE CHANGE BEING THE VERTICAL ALIGNMENT AS A RESULT OF THE PROPOSED OVERPASS BRIDGE. BESIDES CROSSING OVER THE REFERENCED ROADWAYS/RAMPS, THE PROPOSED BRIDGE CUY-77-1587 GENERALLY CROSSES OVER GRASSY MEDIANS AND EMBANKMENTS ASSOCIATED WITH THE REFERENCED ROADWAYS/RAMPS.

CURRENTLY THERE ARE NO STRUCTURES OF BRIDGE CUY-77-1587'S SIZE IN THIS AREA, THOUGH WHERE THE PROPOSED BRIDGE IS PLANNED TO CROSS OVER IR-90 EB & WB TWO EXISTING STRUCTURES EXIST. ONE OF THE EXISTING STRUCTURES CARRIES IR-90 WB & EB OVER THE EXISTING RAMP A2 AS WELL AS THE PREVIOUS RAMP A3/J3 ALIGNMENTS WHILE ANOTHER BRIDGE CARRIES THE EXISTING RAMP A2 OVER A PREVIOUS RAMP ALIGNMENT THAT HAS SINCE BEEN ABANDONED. THE STRUCTURES IN THIS AREA GENERALLY APPEAR TO BE IN GOOD CONDITION WITH NO SIGNS OF DISTRESS DUE TO GEOTECHNICAL INSTABILITY. BOTH STRUCTURES WILL BE REMOVED AS PART OF THE CCG3A PROJECT. THE EMBANKMENTS ALONG THE PROPOSED BRIDGE ALIGNMENT ARE GENERALLY AROUND 3 HORIZONTAL TO 1 VERTICAL TO 2 HORIZONTAL TO 1 VERTICAL SLOPES AND APPEAR TO BE STABLE. HOWEVER, THERE ARE SEVERAL AREAS ALONG THE PROPOSED ALIGNMENT THAT SEEM TO HAVE EXPERIENCE SOME RUNOFF EROSION. WITH RESPECT TO DRAINAGE, THE MAJORITY OF THE PROPOSED BRIDGE SITE APPEARED TO BE WELL DRAINED WITH THE EXCEPTION OF A FEW AREAS AT THE TOE OF THE EXISTING EMBANKMENT SLOPES WHERE STANDING WATER WAS OBSERVED DURING OUR VISIT.

BRIDGES 10 & 11, WALL AC

A FIELD RECONNAISSANCE VISIT FOR THE PROPOSED STRUCTURES WAS CONDUCTED ON JULY 10, 2015, ALONG IR-90, EAST 14TH STREET AND THE SURROUNDING RAMPS.

RETAINING WALL AC

THE LOCATION OF THE PROPOSED WALL RW-AC ENCOMPASSES THE AREA LOCATED TO THE NORTH OF THE EXISTING IR-90 WB AND EXTENDING WEST FROM EAST 14TH STREET APPROXIMATELY 619 FT. ALONG THIS ALIGNMENT THE PROPOSED WALL TRAVERSES VARIOUS ACTIVE AND FORMER IR-90/IR-77 INTERCHANGE RAMPS. THE SPL WALL PORTION OF RW-AC BEGINS NEAR EAST 14TH STREET AT THE NORTHERN EDGE OF THE EXISTING BRIDGE CUY-90-1652'S REAR ABUTMENT AND EXTENDS APPROXIMATELY 352.5 FT TO THE WEST ALONG THE EXISTING EMBANKMENT SLOPES WHICH SUPPORT THE IR-90 WB RAMP TO IR-77 SB AND THE FORMER RAMP FROM EAST 14TH STREET TO IR-77 SB. THE MSE WALL PORTION OF RW-AC EXTENDS WEST APPROXIMATELY 266.5 FT FROM THE END OF THE SPL WALL PORTION, ACROSS THE EXISTING AND FORMER RAMPS FROM EAST 14TH STREET TO IR-77 SB, AND THROUGH MULTIPLE EXISTING DRAINAGE SWALES ADJACENT TO THE REFERENCED RAMPS.

THE EXISTING EMBANKMENT SLOPES ALONG THE SPL WALL PORTION OF THE PROPOSED RW-AC ALIGNMENT WERE OBSERVED TO BE EITHER GRASSY OR HEAVILY VEGETATED SLOPING DOWNWARD FROM SOUTH TO NORTH AT ABOUT 2 HORIZONTAL TO 1 VERTICAL. THE INDICATED AREA APPEARED TO BE STABLE WITH NO APPARENT SIGNS OF INSTABILITY OBSERVED DURING OUR VISIT EITHER ALONG THE SLOPES OR WITHIN THE EXISTING PAVEMENTS ALONG THE LENGTH OF THE PROPOSED SPL WALL SEGMENT. THE EXISTING EMBANKMENT SLOPES ALONG THE MSE WALL PORTION OF RW-AC WERE ALSO OBSERVED TO BE EITHER GRASSY OR VEGETATED, SLOPING AWAY FROM THE REFERENCED INTERCHANGE RAMPS MORE GRADUALLY AT ABOUT 4 HORIZONTAL TO 1 VERTICAL TO 5 HORIZONTAL TO 1 VERTICAL. THESE SLOPES ALSO APPEARED STABLE WITH NO APPARENT SIGNS OF INSTABILITY OBSERVED DURING OUR VISIT. ADDITIONALLY, THE ASPHALT AND CONCRETE PAVEMENTS OF THE REFERENCED EXISTING AND FORMER RAMPS ALONG THE PROPOSED RW-AC ALIGNMENT WERE OBSERVED TO BE IN GOOD CONDITION WITH NO SIGNIFICANT SIGNS OF PAVEMENT DISTRESS OBSERVED DURING OUR VISIT.

BRIDGE CUY-90-1653L&R

THE SITE OF THE PROPOSED BRIDGE CUY-90-1653L&R LOCATION ENCOMPASSES THE NORTHERN HALF OF AND THE AREA IMMEDIATELY TO THE NORTH OF THE EXISTING BRIDGE CUY-90-1652 STRUCTURE CARRYING IR-90 OVER EAST 14TH STREET. THE EXISTING BRIDGE IS A CONTINUOUS STEEL BEAM BRIDGE WITH REINFORCED CONCRETE DECK AND STUB ABUTMENTS. EXISTING SPILL-THROUGH SLOPES AT BOTH THE REAR AND FORWARD ABUTMENTS WERE OBSERVED TO BE APPROXIMATELY 2 HORIZONTAL TO 1 VERTICAL AND GENERALLY APPEARED TO BE IN GOOD CONDITION WITH NO VISIBLE SLOPE INSTABILITY. THE EMBANKMENT SLOPES WERE HEAVILY VEGETATED ON EITHER SIDE OF THE ABUTMENTS WITH VARIOUS GRASSES AND BRUSH, WHILE SPILL THROUGH SLOPES UNDERNEATH THE BRIDGE WERE CONCRETE PROTECTED.

OVERALL, THE BRIDGE APPEARED TO BE IN GOOD CONDITION WITH NO APPARENT SIGNS OF STRUCTURAL DISTRESS DUE TO GEOTECHNICAL CONCERNS OBSERVED DURING OUR FIELD RECONNAISSANCE VISIT. THE DECK SURFACE OF THE BRIDGE WAS OBSERVED TO BE IN GOOD CONDITION SHOWING LITTLE SIGNS OF DISTRESS. IN GENERAL, THE BRIDGE STRUCTURE APPEARED TO BE WELL-DRAINED WITH NO SIGNS OF STANDING WATER OBSERVED.

BRIDGE 12, WALL Y, WALL Z

FIELD RECONNAISSANCE VISITS FOR THE PROPOSED RAMP B6 STRUCTURES WERE CONDUCTED BETWEEN JULY 9, 2015 AND JULY 10, 2015, ALONG THE EXISTING IR-90, THE PROPOSED RAMP B6 ALIGNMENT AND THE SAINT VINCENT MEDICAL BUILDING PARKING LOT AT THIS LOCATION.

RETAINING WALLS Y AND Z

THE LOCATION OF THE PROPOSED MSE WALLS (RW-Y & RW-Z) ENCOMPASSES THE AREA LOCATED ALONG THE NORTHWEST SIDE OF THE SAINT VINCENT MEDICAL BUILDING PARKING LOT AND THE IMMEDIATELY ADJACENT IR-77 NB EXIT RAMP TO IR-90 EB, WITH RW-Z EXTENDING ALONG IR-90 EB TO THE PROPOSED EAST 22ND STREET AND IR-90 EB OVERPASS. AT THE TIME OF OUR SITE VISIT, THE AREA LOCATED JUST NORTH OF THE SAINT VINCENT MEDICAL BUILDING PARKING LOT AND WITHIN THE LIMITS OF THE PROPOSED WALLS WAS OBSERVED TO BE A GRASSY AREA WITH THE TERRAIN GRADUALLY SLOPING DOWNWARD FROM NORTH TO SOUTH WITH A MAXIMUM SLOPE OF ABOUT 3 HORIZONTAL TO 1 VERTICAL. THE REMAINDER OF THE PROPOSED RW-Y & RW-Z SITE WAS OBSERVED TO CONSIST OF ASPHALT PAVEMENT AT THE SURFACE AND GRADUALLY SLOPED DOWNWARD FROM WEST TO EAST. EACH AREA GENERALLY APPEARED TO BE IN GOOD CONDITION WITH NO VISIBLE SIGNS OF INSTABILITY. IN THE PAVEMENT AREAS, NO SIGNIFICANT SIGNS OF PAVEMENT DISTRESS WITHIN THE LENGTH OF THE PROPOSED WALLS WERE OBSERVED. IN GENERAL, THE SITE APPEARED TO BE WELL-DRAINED WITH NO APPARENT SIGNS OF PONDING OBSERVED AT THE TIME OF OUR VISIT ON OR NEAR THE REFERENCED ROADWAYS.

BRIDGE NO. CUY-90-1652S

THE PROPOSED BRIDGE SITE SPANS AN AREA ALONG THE SOUTHEAST EDGE OF THE EXISTING BRIDGE NO. CUY-90-1652. THE PROPOSED RAMP B6 BRIDGE BEGINS AT THE EXISTING SPILL-THROUGH SLOPES AT THE REAR ABUTMENT OF BRIDGE NO. CUY-90-1652, CROSSES OVER EAST 14TH STREET AND ASSOCIATED RAMPS, INCLUDING THE GRASSY MEDIANS, AND CONTINUES PAST THE FORWARD ABUTMENT SPILL-THROUGH SLOPE FOR ABOUT 220 FT TO TERMINATE ALONG THE SOUTHERN SIDE OF IR-90 EB ENCOMPASSING THE SUPPORTING IR-90 EMBANKMENT SLOPE.

THE EXISTING ABUTMENT SPILL-THROUGH SLOPES IN THIS AREA BOTH APPEARED TO BE GENERALLY STABLE AND CAN BE DESCRIBED AS EITHER GRASSY, HEAVILY VEGETATED OR CONCRETE-PROTECTED WITH SLOPES FROM ABOUT 2.5 HORIZONTAL TO 1 VERTICAL TO ABOUT 2 HORIZONTAL TO 1 VERTICAL AT THE STEEPEST. THE EXISTING EMBANKMENT SLOPES SUPPORTING THE SEGMENT OF IR 90 EB AT THIS LOCATION ALSO APPEARED TO BE GENERALLY STABLE. THESE EMBANKMENTS SLOPE AT APPROXIMATELY 3 HORIZONTAL TO 1 VERTICAL AND CAN BE DESCRIBED AS GRASSY OR HEAVILY VEGETATED. THE MAJORITY OF THE PROPOSED BRIDGE SITE IS GENERALLY WELL DRAINED WITH THE EXCEPTION OF ONE SMALL AREA AT THE TOE OF THE EXISTING REAR ABUTMENT SPILL-THROUGH SLOPE WHERE STANDING WATER WAS OBSERVED DURING OUR VISIT.

THE EXISTING STRUCTURE IMMEDIATELY ADJACENT TO THIS AREA APPEARED TO BE PERFORMING WELL WITH NO APPARENT SIGNS OF GEOTECHNICAL RELATED INSTABILITY OBSERVED AT THE TIME OF OUR VISIT.

BRIDGE 13, WALL AF, WALL AE

FIELD RECONNAISSANCE VISIT FOR THE PROPOSED BRIDGE CUY-90-1678 AND RETAINING WALLS RW-AE AND RW-AF WERE CONDUCTED ON JULY 9, 2015, ALONG THE EXISTING IR-90 ALIGNMENT AT THIS LOCATION.

BRIDGE NO. CUY 90-1678

THE EXISTING BRIDGE CARRYING EAST 22ND STREET OVER IR-90 IS A TWO SPAN, CONTINUOUS STEEL BEAM BRIDGE WITH A REINFORCED CONCRETE DECK SUPPORTED BY WALL TYPE ABUTMENTS AND A CAP AND COLUMN TYPE PIER. ON THE EAST SIDE OF THE REAR ABUTMENT IS A FULL HEIGHT WING WALL WHICH EXTENDS TO THE EXISTING CEDAR AVENUE BRIDGE. THE WEST SIDE OF THE REAR ABUTMENT CONSISTS OF A SHORT WING WALL AND AN EXISTING EMBANKMENT SLOPE WHICH SUPPORTS IR-90 EXIST RAMP PAVEMENT. SIMILAR TO THE REAR ABUTMENT LOCATION, ON THE EAST SIDE OF THE FORWARD ABUTMENT IS A FULL HEIGHT WING WALL WHICH EXTENDS TO THE EXISTING CEDAR AVENUE BRIDGE WHILE THE WEST SIDE CONSISTS OF A SHORT WING WALL AND AN EXISTING EMBANKMENT SLOPE WHICH SUPPORTS AN UPSLOPE PARKING LOT. THE EXISTING WING WALLS WERE OBSERVED TO BE IN GOOD CONDITION. THE EMBANKMENT SLOPES AT THE BRIDGE SITE WERE OBSERVED TO BE APPROXIMATELY TWO HORIZONTAL TO ONE VERTICAL AND GENERALLY APPEARED TO BE IN GOOD CONDITION WITH NO VISIBLE SLOPE INSTABILITY. THE EMBANKMENT SLOPES NEAR THE ABUTMENTS WERE HEAVILY VEGETATED PRIMARILY WITH VARIOUS GRASSES AND BRUSH, HOWEVER, SOME TREES WERE PRESENT.

OVERALL, THE BRIDGE APPEARED TO BE IN GOOD CONDITION WITH NO SIGNS OF DISTRESS OBSERVED. NO APPARENT SIGNS OF STRUCTURAL DISTRESS DUE TO GEOTECHNICAL CONCERNS WERE NOTED DURING OUR FIELD RECONNAISSANCE VISIT. THE DECK SURFACE OF THE BRIDGE WAS OBSERVED TO BE IN GOOD CONDITION SHOWING MINOR SIGNS OF DISTRESS INCLUDING ONE SMALL AREA OF LOW TO MEDIUM SEVERITY JOINT ALLIGATOR TRANSVERSE CRACKING. MINOR JOINT CRACKING NEAR THE ABUTMENTS, AND SOME LONGITUDINAL CRACKING. SURFACE WATER DRAINS TO EITHER SIDE OF THE BRIDGE WHICH IS DIRECTED TO STORM DRAINS ALONG THE CURBS. SMALL AMOUNTS OF PONDING AND STANDING WATER WERE OBSERVED IN THE ROADWAY ON THE EAST SIDE OF THE BRIDGE, HOWEVER, THE RECONNAISSANCE WAS CONDUCTED ON A RAINY DAY.

RETAINING WALL AE

THE LOCATION OF THE PROPOSED RW-AE (EAST AND WEST) ENCOMPASSES THE AREA LOCATED ALONG THE PROPOSED NORTHERN LIMITS OF IR-90 FROM ABOUT EAST 19TH STREET TO EAST 22ND STREET. THIS AREA GENERALLY INCLUDES CURRENT PRIVATE PARKING LOT PROPERTY AS WELL AS PAVEMENT AND EMBANKMENTS OF THE EXISTING IR-90 WESTBOUND ENTRANCE RAMP FROM CARNEGIE AVENUE. AT THE TIME OF OUR SITE VISIT, THE AREA LOCATED ADJACENT TO THE EXISTING BRIDGE CUY-90-1678 AND WITHIN THE LIMITS OF THE PROPOSED WALLS WERE OBSERVED TO BE A GRASSY AREA WITH A FEW SMALL TREES WHERE THE TERRAIN SLOPES DOWNWARD FROM NORTH TO SOUTH WITH A MAXIMUM SLOPE OF ABOUT 2 HORIZONTAL TO 1 VERTICAL. THE REMAINDER OF THE PROPOSED RW-AE SITE TRAVERSES TWO PARKING LOTS AND THE REFERENCED IR-90 ENTRANCE RAMP. THIS AREA WAS OBSERVED TO CONSIST OF ASPHALT PAVEMENT AT THE RAMP WITH GRASS COVERED SLOPES RANGING FROM RELATIVELY FLAT TO 3 HORIZONTAL TO 1 VERTICAL. EACH AREA GENERALLY APPEARED TO BE IN GOOD CONDITION WITH NO VISIBLE SIGNS OF INSTABILITY. IN THE PAVEMENT AREAS (PARKING LOT OR RAMP), NO SIGNIFICANT SIGNS OF PAVEMENT DISTRESS WITHIN THE LENGTH OF THE PROPOSED WALLS WERE OBSERVED. IN GENERAL, THE SITE APPEARED TO BE WELL-DRAINED WITH NO APPARENT SIGNS OF PONDING OBSERVED AT THE TIME OF OUR VISIT.

RETAINING WALL AF

THE LOCATION OF THE PROPOSED RW-AF (EAST AND WEST) ENCOMPASSES THE AREA LOCATED ALONG THE NORTHERN LIMITS OF IR-90 FROM BRIDGE CUY-90-1678 (EAST 22ND STREET) TO BRIDGE CUY-90-1696 (CARNEGIE AVE). THIS AREA CONSISTS OF PROPERTY WHICH CURRENTLY INCLUDES THE EXISTING CEDAR AVENUE BRIDGE AS WELL AS EXISTING EMBANKMENT SLOPES WHICH SUPPORT THE SURROUNDING SURFACE STREETS AND PRIVATE PROPERTY. AT THE TIME OF OUR SITE VISIT, THE AREA LOCATED ADJACENT TO THE EXISTING CEDAR AVENUE BRIDGE AND WITHIN THE LIMITS OF THE PROPOSED WALL WAS OBSERVED TO BE A HEAVILY VEGETATED AREA WITH GRASSES AND BUSHES AS WELL AS MATURE TREES. THE TERRAIN SLOPES DOWNWARD FROM NORTH TO SOUTH WITH A MAXIMUM SLOPE OF ABOUT 2 HORIZONTAL TO 1 VERTICAL. THIS AREA GENERALLY APPEARED TO BE WELL-DRAINED AND IN GOOD CONDITION WITH NO VISIBLE SIGN OF INSTABILITY OR PONDING OBSERVED AT THE TIME OF OUR VISIT.

BRIDGE 14, WALL AG, WALL AH, WALL AI

FIELD RECONNAISSANCE VISITS FOR THE PROPOSED BRIDGE CUY 90-1696 AND RETAINING WALLS RW-AG, RW-AH AND RW-AI WERE CONDUCTED BETWEEN JULY 6, 2015 AND JULY 10, 2015, ALONG THE EXISTING IR-90 ALIGNMENT AT THIS LOCATION.

BRIDGE NO. CUY 90-1696 AND RETAINING WALLS AH & AI

THE EXISTING BRIDGE CARRYING CARNEGIE AVENUE OVER IR-90 IS A TWO SPAN, CONTINUOUS STEEL BEAM BRIDGE WITH A REINFORCED CONCRETE DECK SUPPORTED BY WALL TYPE ABUTMENTS AND A CAP AND COLUMN TYPE PIER. EXISTING EMBANKMENT SLOPES ON EITHER SIDE OF THE REAR ABUTMENT WING WALLS (RW-AH SITE) WERE OBSERVED TO BE APPROXIMATELY TWO HORIZONTAL TO ONE VERTICAL AND GENERALLY APPEARED TO BE IN GOOD CONDITION WITH NO VISIBLE SLOPE INSTABILITY. THE EMBANKMENT SLOPES NEAR THE REAR ABUTMENT WERE HEAVILY VEGETATED PRIMARILY

For Preliminary Plans Only

GEOTECHNICAL PROFILE - ROADWAY

DESIGN AGENCY
NEAS
National Engineering & Architectural Services Inc.
2800 CORPORATE EXCHANGE DR, SUITE 240
COLUMBUS, OH, 43231
TEL:614.714.0299
WWW.NEASINC.COM

DESIGNER MWJ & DT

REVIEWER BPA 08/23/24

PROJECT ID 82382

SUBSET 2 | TOTAL 310

SHEET P.2388 | TOTAL 2696

MODEL: Sheet PAPERSIZE: 34x22 (in.) DATE: 3/28/2025 TIME: 8:31:14 AM USER: Asiddiqi
pw:\\mb-us-pw.bentley.com:mb-us-pw-03\Documents\Cleveland_OH\01_Projects\ODOT\District12\82382400-Engineering\Geotechnical\Sheets\82382_IC002.dgn

RECONNAISSANCE (CONTINUED)

WITH VARIOUS GRASSES AND BRUSH, HOWEVER, SOME MATURE TREES ARE PRESENT. EXISTING EMBANKMENT SLOPES ON EITHER SIDE OF THE FORWARD ABUTMENT WING WALLS (RW-AI SITE) WERE OBSERVED TO RANGE FROM APPROXIMATELY 2 HORIZONTAL TO 1 VERTICAL TO 4 HORIZONTAL TO 1 VERTICAL AND GENERALLY APPEARED TO BE IN GOOD CONDITION WITH NO VISIBLE SLOPE INSTABILITY. THE EMBANKMENT SLOPES NEAR THE FORWARD ABUTMENT WERE HEAVILY VEGETATED PRIMARILY WITH VARIOUS GRASSES AND BRUSH.

OVERALL, THE BRIDGE APPEARED TO BE IN GOOD CONDITION WITH NO SIGNS OF DISTRESS OBSERVED. NO APPARENT SIGNS OF STRUCTURAL DISTRESS DUE TO GEOTECHNICAL CONCERNS WERE NOTED DURING OUR FIELD RECONNAISSANCE VISIT. THE DECK SURFACE OF THE BRIDGE WAS OBSERVED TO BE IN GOOD CONDITION SHOWING LITTLE SIGNS OF DISTRESS INCLUDING MINOR JOINT CRACKING NEAR THE ABUTMENTS, MINOR PAVEMENT PATCHES ALONG THE CENTER OF THE DECK AND SOME LONGITUDINAL CRACKING. SURFACE WATER DRAINS TO EITHER SIDE OF THE BRIDGE WHICH IS DIRECTED TO STORM DRAINS ALONG THE CURBS. SOME PONDING WATER WAS OBSERVED ON THE ROADWAY SHOULDERS AS WELL AS ON THE NORTH SIDE OF THE ROADWAY BEYOND THE REAR ABUTMENT, HOWEVER, THE RECONNAISSANCE WAS CONDUCTED ON A RAINY DAY.

RETAINING WALL AG

THE LOCATION OF THE PROPOSED RW-AG ENCOMPASSES THE AREA LOCATED ALONG THE SOUTHEAST LIMITS OF IR-90 FROM THE EXISTING CEDAR AVENUE BRIDGE TO THE EXISTING CARNEGIE AVENUE BRIDGE (CUY 90-1696). THIS AREA INCLUDES THE PROPERTY WHICH IS CURRENTLY THE IR-90 EB EXIT RAMP TO CARNEGIE AVENUE AS WELL AS THE PROPERTY IMMEDIATELY ADJACENT TO THE EXISTING PARKING LOT LOCATED OFF CEDAR AVENUE. AT THE TIME OF OUR SITE VISIT, THE AREA LOCATED ADJACENT TO THE EXISTING CEDAR AVENUE BRIDGE AND WITHIN THE LIMITS OF THE PROPOSED WALLS WAS OBSERVED TO BE A GRASSY AREA WITH VARIOUS MATURE TREES WHERE THE TERRAIN SLOPES DOWNWARD FROM SOUTH TO NORTH WITH A MAXIMUM SLOPE OF ABOUT 2 HORIZONTAL TO 1 VERTICAL. THE REMAINDER OF THE PROPOSED RW-AG SITE TRAVERSES THE EXISTING IR-90 EB EXIT RAMP TO CARNEGIE AVENUE AND WAS OBSERVED TO CONSIST OF ASPHALT PAVEMENT AT THE RAMP WITH GRASS COVERED GRADUAL SLOPES. EACH AREA GENERALLY APPEARED TO BE IN GOOD CONDITION WITH NO VISIBLE SIGNS OF INSTABILITY. IN THE PAVEMENT AREAS, NO SIGNIFICANT SIGNS OF PAVEMENT DISTRESS WITHIN THE LENGTH OF THE PROPOSED WALLS WERE OBSERVED. IN GENERAL, THE SITE APPEARED TO BE WELL-DRAINED WITH NO APPARENT SIGNS OF PONDING OBSERVED AT THE TIME OF OUR VISIT ON OR NEAR THE REFERENCED ROADWAYS.

BRIDGE 16

FIELD RECONNAISSANCE VISIT FOR THE PROPOSED BRIDGE CUY-90-1680 STRUCTURE WAS ON JULY 9, 2015 ALONG THE EXISTING IR-90, EAST 22ND STREET AND CEDAR AVENUE, AT THE PROPOSED BRIDGE LOCATION.

BRIDGE NO. CUY-90-1680

THE PROPOSED BRIDGE SITE ENCOMPASSES PORTIONS OF THE EXISTING IR-90 AND CEDAR AVENUE ROADWAYS AS WELL AS A SMALL AREA WITHIN THE ADJACENT JUVENILE JUSTICE CENTER PROPERTY. THE PROPOSED BRIDGE FOOTPRINT IS AN APPROXIMATELY 95 FT WIDE RECTANGLE THAT IS BETWEEN 218 TO 247 FT LONG. IT BEGINS ABOUT 14 FT EAST OF THE EXISTING EAST 22ND STREET BRIDGE AND EXTENDS PERPENDICULAR FROM THE BRIDGE OVER THE EXISTING IR-90 FOR ITS LENGTH. THE PORTION OF IR-90 ROADWAY WITHIN THE PROPOSED STRUCTURE FOOTPRINT IS AT GRADES APPROXIMATELY 25 TO 30 FT BELOW THE ADJACENT SURROUNDING PROPERTY (JUVENILE JUSTICE CENTER, CEDAR AVENUE, ETC.). THE GRADE SEPARATION IS PROVIDED BY THE FULL HEIGHT WALL TYPE ABUTMENTS OF THE EAST 22ND STREET AND CEDAR AVENUE BRIDGES AS WELL AS THE REINFORCED CONCRETE RETAINING WALL LOCATED BETWEEN THE TWO INDICATED BRIDGES. OVERALL, THE REFERENCED ABUTMENTS AND RETAINING WALL APPEARED TO BE IN GOOD CONDITION WITH NO APPARENT SIGNS OF DISTRESS DUE TO GEOTECHNICAL CONCERNS. THE ROADWAY PAVEMENTS WITHIN THIS AREA WERE OBSERVED TO BE IN GOOD CONDITION WITH LITTLE SIGNS OF MINOR SURFACE WEAR. THE AREA APPEARED TO BE WELL DRAINED EXCEPT FOR MINOR PONDING OBSERVED IN THE MEDIAN AND RIGHT SHOULDER OF IR 90 EB UNDER THE CEDAR AVENUE BRIDGE, HOWEVER, THE RECONNAISSANCE WAS CONDUCTED ON A RAINY DAY.

WALL M

A FIELD RECONNAISSANCE VISIT FOR THE PROPOSED RW-M SITE WAS CONDUCTED ON MAY 20, 2015. NO GEOHAZARDS WERE OBSERVED WITHIN THE IMMEDIATE VICINITY OF THE REFERENCED WALL SITE.

THE EXISTING RAMP H5 EMBANKMENT SLOPE BEGINS AT THE EXISTING BRIDGE OVER EAST 22ND STREET AND EXTENDS THOUGH THE LIMITS OF THE PROPOSED RW-M. AT THE START OF THE PROPOSED WALL, SLOPES APPEARED TO HAVE AN ESTIMATED AVERAGE SLOPE OF ABOUT 2 HORIZONTAL TO 1 VERTICAL WITH GRADES RANGING FROM 2 HORIZONTAL TO 1 VERTICAL TO 3 HORIZONTAL TO 1 VERTICAL. THE EXISTING SLOPE GRADES TRANSITION TO BEING FLATTER EXTENDING SOUTH TO NORTH ALONG THE PROPOSED WALL ALIGNMENT. THIS AREA CURRENTLY CONSISTS OF EMBANKMENT SLOPES THAT ARE GRASS COVERED WITH SOME VEGETATION. NO EROSION OR DRAINAGE ISSUES WERE OBSERVED ALONG THE SLOPE.

THE PAVEMENT OF RAMP H5/H6 NEAR THE WALL SITE APPEARED TO BE IN FAIR CONDITION WITH MINOR SIGNS OF DISTRESS. THE ROADWAYS APPEARED TO BE WELL DRAINED WITH NO OBSERVABLE SIGNS OF STANDING WATER. NEARBY SIGNS, LIGHT POLES AND EXISTING BRIDGES APPEARED TO BE IN FAIR TO GOOD CONDITION WITHOUT APPARENT SIGNS OF DISTRESS RELATED TO THE UNDERLYING SOIL CONDITIONS.

WALL S

A FIELD RECONNAISSANCE VISIT FOR THE PROPOSED RW-S SITE WAS CONDUCTED. DURING THE SITE VISIT, SITE CONDITIONS WERE NOTED ALONG THE PROPOSED RW-S ALIGNMENT. NO GEOHAZARDS WERE OBSERVED WITHIN THE IMMEDIATE VICINITY OF THE REFERENCED WALL SITE.

THE EXISTING TOPOGRAPHY AT THE WALL LOCATION CONSISTS OF A SLOPE THAT EXTENDS DOWNWARD FROM IR-77 SB GRADES TO THE LOWER LYING ORANGE AVENUE. THE EXISTING EMBANKMENT SLOPE WAS OBSERVED TO HAVE AN AVERAGE SLOPE OF ABOUT 2 HORIZONTAL TO 1 VERTICAL. FROM THE BEGINNING OF RW-S AT STA. 450+14 TO STA. 452+94.53, SLOPES APPEARED TO VARY WITH GRADES RANGING FROM 2 HORIZONTAL TO 1 VERTICAL TO 3 HORIZONTAL TO 1 VERTICAL. THE EMBANKMENT SLOPES IN THIS AREA ARE VEGETATED WITH WHAT APPEARS TO BE MOWED GRASS. AT THE TOE OF THE EMBANKMENT SLOPE, OVERHEAD UTILITIES AND ASSOCIATED UTILITY POLES ARE PRESENT. NO EROSION OR POOR DRAINAGE WAS OBSERVED ALONG THE SLOPE.

THE PAVEMENT AT THE EXISTING IR-77 SB NEAR THE WALL SITE APPEARED TO BE IN FAIR CONDITION WITH MINOR SIGNS OF DISTRESS. THE ROADWAYS APPEARED TO BE WELL DRAINED WITH NO OBSERVABLE SIGNS OF STANDING WATER. NEARBY SIGNS AND LIGHT POLES APPEARED TO BE IN FAIR TO GOOD CONDITION WITHOUT APPARENT SIGNS OF DISTRESS RELATED TO THE UNDERLYING SOIL CONDITIONS.

WALL T AND INTERIM WALL T

A FIELD RECONNAISSANCE VISIT FOR THE PROPOSED RW-T SITE WAS CONDUCTED ON MAY 20, 2015. NO GEOHAZARDS WERE OBSERVED WITHIN THE IMMEDIATE VICINITY OF THE REFERENCED WALL SITE.

THE PROPOSED RW-T ALIGNMENT EXTENDS FROM THE EASTERN EDGE OF THE EXISTING RAMP H5, ACROSS RAMP H5, DOWN THE NORTH RAMP H5 EMBANKMENT, ACROSS THE SOUTHBOUND EAST 14TH STREET LANE, AND ENDING WITHIN THE GRASS MEDIAN BETWEEN NORTHBOUND AND SOUTHBOUND EAST 14TH STREET. THE EXISTING RAMP H5 EMBANKMENT SLOPE AT THE BEGINNING OF THE WALL AND AT THE POINT WHERE THE PROPOSED WALL EXTENDS DOWN THE SLOPE TO EAST 14TH STREET APPEARED TO HAVE AN ESTIMATED AVERAGE SLOPE OF ABOUT 2 HORIZONTAL TO 1 VERTICAL WITH GRADES RANGING FROM 2 HORIZONTAL TO 1 VERTICAL TO 3 HORIZONTAL TO 1 VERTICAL. THE SLOPES ARE GRASS COVERED WITH A FEW BUSHES AND/OR SHRUBS. THE MEDIAN AREA BETWEEN NORTHBOUND AND SOUTHBOUND EAST 14TH STREET CONSISTS OF AN EXISTING EMBANKMENT FOR NORTHBOUND EAST 14TH STREET WHICH SLOPES DOWNWARD FROM NORTHBOUND TO SOUTHBOUND AT GRADES RANGING FROM 2 HORIZONTAL TO 1 VERTICAL TO 3 HORIZONTAL TO 1 VERTICAL. THIS SLOPE IS VEGETATED WITH GRASSES, BUSHES, AND THE OCCASIONAL MATURE TREE. EACH OF THE EMBANKMENT SLOPES APPEARED TO BE IN GOOD CONDITION WITH NO VISIBLE SLOPE INSTABILITY.

THE PAVEMENT OF RAMP H5 AND EAST 14TH STREET NEAR THE WALL SITE APPEARED TO BE IN FAIR CONDITION WITH MINOR SIGNS OF DISTRESS. THE ROADWAYS APPEARED TO BE WELL DRAINED WITH NO OBSERVABLE SIGNS OF STANDING WATER. NEARBY SIGNS AND LIGHT POLES APPEARED TO BE IN FAIR TO GOOD CONDITION WITHOUT APPARENT SIGNS OF DISTRESS RELATED TO THE UNDERLYING SOIL CONDITIONS.

WALL IJ (A1-AJ)

A FIELD RECONNAISSANCE VISIT FOR THE PROPOSED RW-AJ SITE WAS CONDUCTED. DURING THE SITE VISIT, SITE CONDITIONS WERE NOTED ALONG PROPOSED RAMP IJ3 AND EXISTING IR-77 NB EXIT RAMP WITHIN THE LIMITS OF THE REFERENCED WALL SITE. NO GEOHAZARDS WERE OBSERVED WITHIN THE IMMEDIATE VICINITY OF THE REFERENCED WALL SITE.

THE EXISTING TOPOGRAPHY AT THE WALL LOCATION CONSISTS OF EMBANKMENT SLOPES FOR BOTH THE EXISTING IR-77 NB EXIT RAMP TO EAST 14TH STREET AS WELL AS ANOTHER EXISTING RAMP THAT IS TO BE REMOVED AS PART OF CCG3A. AT THE BEGINNING PORTIONS OF THE PROPOSED WALL, SLOPES APPEARED TO HAVE AN ESTIMATED AVERAGE SLOPE OF ABOUT 2 HORIZONTAL TO 1 VERTICAL WITH GRADES RANGING FROM 2 HORIZONTAL TO 1 VERTICAL TO 3 HORIZONTAL TO 1 VERTICAL. THE EXISTING SLOPE GRADES TRANSITION TO BEING FLATTER AT THE MIDDLE PORTIONS OF THE PROPOSED WALL. THE PROPOSED WALL WILL END ON THE EMBANKMENT SLOPES OF THE EXISTING IR-77 NB EXIT RAMP TO EAST 14TH STREET, WHICH APPEARED TO HAVE AN ESTIMATED AVERAGE SLOPE OF ABOUT 3 HORIZONTAL TO 1 VERTICAL. THE EMBANKMENT SLOPES AT THE SITE ARE GRASSY WITH SOME VEGETATION. NO EROSION OR POOR DRAINAGE WAS OBSERVED ALONG THE SLOPE.

THE PAVEMENT AT THE EXISTING IR-77 NB EXIT RAMP NEAR THE WALL SITE APPEARED TO BE IN FAIR CONDITION WITH MINOR SIGNS OF DISTRESS. THE ROADWAYS APPEARED TO BE WELL DRAINED WITH NO OBSERVABLE SIGNS OF STANDING WATER. NEARBY SIGNS, LIGHT POLES AND EXISTING BRIDGES APPEARED TO BE IN FAIR TO GOOD CONDITION WITHOUT APPARENT SIGNS OF DISTRESS RELATED TO THE UNDERLYING SOIL CONDITIONS.

SUBSURFACE EXPLORATION

ROADWAY SUBGRADE

THE SUBSURFACE EXPLORATION WAS CONDUCTED BY NEAS BETWEEN OCTOBER 21, 2014 AND APRIL 15, 2015 AND INCLUDED 138 BORINGS DRILLED TO DEPTHS BETWEEN 9 AND 111.5 FT BGS. A NUMBER OF THE BORINGS WERE DRILLED FOR OTHER PROJECT STRUCTURES (I.E., BRIDGES, RETAINING WALLS, ETC.), BUT CAN SERVE AS BOTH STRUCTURE AND ROADWAY BORINGS.

BORINGS WERE DRILLED USING EITHER A MOBILE B-58, CME 45B, CME 55 OR CME 55X, TRUCK-MOUNTED OR TRACK MOUNTED DRILLING RIG UTILIZING EITHER 3.25-INCH OR 4.25-INCH (INNER DIAMETER) HOLLOW STEM AUGERS. SOIL SAMPLES FOR ROADWAY BORINGS WERE TYPICALLY RECOVERED CONTINUOUSLY TO A DEPTH OF 9 FT BGS USING AN 18 INCH SPLIT SPOON SAMPLER (AASHTO T-206). SAMPLES FROM JOINT ROADWAY STRUCTURE BORINGS WERE RECOVERED AT 2.5-FT INTERVALS TO A DEPTH OF 30 FT BGS AND AT 5.0-FT INTERVALS BELOW 30 FT BGS. STANDARD PENETRATION TESTS WERE CONDUCTED USING CME AUTO HAMMERS THAT HAVE BEEN CALIBRATED TO BE BETWEEN 77.4% AND 92.2% EFFICIENT.

BRIDGE 9, WALL N, WALL AD

THE EXPLORATION FOR THE PROPOSED BRIDGE CUY-77-1587 AND ASSOCIATED RETAINING WALL (RW-N & RW-AD) STRUCTURES WAS CONDUCTED BY NEAS BETWEEN OCTOBER 21, 2014 AND JUNE 30, 2021. THE EXPLORATION FOR THE REFERENCED STRUCTURES INCLUDED 21 BORINGS DRILLED TO DEPTHS RANGING FROM OF 30.0 TO 125 FT BGS AND 7 CPT SOUNDINGS THAT WERE EXTENDED TO DEPTHS RANGING FROM 47.9 TO 119.8 FT BGS.

THE BORING WAS DRILLED USING A EITHER A CME 45B, CME 55, CME 55X, CME75 OR MOBILE B-58 TRUCK OR TRACK MOUNTED DRILLING RIG UTILIZING 3.25-INCH DIAMETER HOLLOW STEM AUGERS. SOIL SAMPLES WERE GENERALLY RECOVERED AT 2.5-FT INTERVALS TO A DEPTH OF 30 FT BGS AND AT 5.0-FT INTERVALS THEREAFTER USING A SPLIT SPOON SAMPLER (AASHTO T-206). STANDARD PENETRATION TESRS WERE CONDUCTED USING CME AUTO HAMMERS THAT HAD BEEN CALIBRATED TO BE BETWEEN 68.4% AND 92.2% EFFICIENT.
THE CPT SOUNDINGS WERE PERFORMED BY ODOT UTILIZING A A.P. VAN DEN BERG TWIN-CYLINDER H-FORM HYSON 200-KN (45-KIP) TRACK MOUNTED PENETROMETER WITH A MODEL ELCI-CFXYP20-15 SEISMIC PIEZOCONE. DURING TESTING, DATA WAS COLLECTED CONTINUOUSLY BY A GONSITE! DATA ACQUISITION SYSTEM. THE CPT SOUNDINGS WERE CONDUCTED IN ACCORDANCE WITH ASTM D5778. IN GENERAL, THE 15-CM2 (2.3-IN2) SEISMIC PIEZOCONE WAS ADVANCED AT A RATE OF 20 MM/SEC (0.8 IN/SEC) UTILIZING 1-M (3.3-FT) LONG CONNECTOR RODS EXTENDING TO THE TARGET TERMINATION DEPTHS. AFTER THE COMPLETION OF THE CPT SOUNDING, THE CPT LOG WAS GENERATING BY ODOT UTILIZING THE SOFTWARE ENTITLED CPET-IT BY GEOLOGISMIKI.

BRIDGES 10 & 11, WALL AC

THE EXPLORATION FOR THE PROPOSED BRIDGE CUY-90-1653L&R AND ASSOCIATED RETAINING WALL (WALL AC) STRUCTURES WAS CONDUCTED BY NEAS BETWEEN OCTOBER 21, 2014 AND MARCH 15, 2021 AND INCLUDED 10 BORINGS DRILLED TO DEPTHS RANGING FROM OF 9 TO 125 FT BGS AND 1 CPT SOUNDING THAT WAS EXTENDED TO A DEPTH OF 110.6 FT BGS.

THE BORING WAS DRILLED USING A EITHER A CME 45B, CME 55, CME 75T OR MOBILE B-58 TRUCK MOUNTED DRILLING RIG UTILIZING 3.25-INCH DIAMETER HOLLOW STEM AUGERS. SOIL SAMPLES WERE GENERALLY RECOVERED AT 2.5-FT INTERVALS TO A DEPTH OF 30 FT BGS AND AT 5.0-FT INTERVALS THEREAFTER USING A SPLIT SPOON SAMPLER (AASHTO T-206). STANDARD PENETRATION TESTS WERE CONDUCTED USING CME AUTO HAMMERS THAT HAD BEEN CALIBRATED TO BE BETWEEN 77.4% AND 92.2% EFFICIENT.

THE CPT SOUNDING WAS PERFORMED BY ODOT UTILIZING A A.P. VAN DEN BERG TWIN-CYLINDER H-FORM HYSON 200-KN (45-KIP) TRACK MOUNTED PENETROMETER WITH A MODEL ELCI-CFXYP20-15 SEISMIC PIEZOCONE. DURING TESTING, DATA WAS COLLECTED CONTINUOUSLY BY A GONSITE! DATA ACQUISITION SYSTEM. THE CPT SOUNDING WAS CONDUCTED IN ACCORDANCE WITH ASTM D5778. IN GENERAL, THE 15-CM2 (2.3-IN2) SEISMIC PIEZOCONE WAS ADVANCED AT A RATE OF 20 MM/SEC (0.8 IN/SEC) UTILIZING 1-M (3.3-FT) LONG CONNECTOR RODS EXTENDING TO THE TARGET TERMINATION DEPTH. AFTER THE COMPLETION OF THE CPT SOUNDING, THE CPT LOG WAS GENERATING BY ODOT UTILIZING THE SOFTWARE ENTITLED CPET-IT BY GEOLOGISMIKI.

BRIDGE 12, WALL Y, WALL Z

THE EXPLORATION FOR THE PROPOSED BRIDGE CUY-90-1652S AND ASSOCIATED RETAINING WALL (RW-Y & RW-Z) STRUCTURES WAS CONDUCTED BY NEAS BETWEEN NOVEMBER 7, 2014 AND MARCH 17, 2021. THE EXPLORATION FOR THE REFERENCED STRUCTURES INCLUDED 8 BORINGS DRILLED TO DEPTHS RANGING FROM OF 51.5 TO 112 FT BGS AND 1 CPT SOUNDING THAT WAS EXTENDED TO A DEPTH OF 116.8 FT BGS.

THE BORING WAS DRILLED USING A EITHER A CME 55, CME 55X OR CME 45B TRUCK MOUNTED DRILLING RIG UTILIZING 3.25-INCH DIAMETER HOLLOW STEM AUGERS. SOIL SAMPLES WERE GENERALLY RECOVERED AT 2.5-FT INTERVALS TO A DEPTH OF 30 FT BGS AND AT 5.0-FT INTERVALS THEREAFTER USING A SPLIT SPOON SAMPLER (AASHTO T-206). STANDARD PENETRATION TESTS WERE CONDUCTED USING CME AUTO HAMMERS THAT HAD BEEN CALIBRATED TO BE BETWEEN 68.4% AND 81.2% EFFICIENT.

THE CPT SOUNDING WAS PERFORMED BY ODOT UTILIZING A A.P. VAN DEN BERG TWIN-CYLINDER H-FORM HYSON 200-KN (45-KIP) TRACK MOUNTED PENETROMETER WITH A MODEL ELCI-CFXYP20-15 SEISMIC PIEZOCONE. DURING TESTING, DATA WAS COLLECTED CONTINUOUSLY BY A GONSITE! DATA ACQUISITION SYSTEM. THE CPT SOUNDING WAS CONDUCTED IN ACCORDANCE WITH ASTM D5778. IN GENERAL, THE 15-CM2 (2.3-IN2) SEISMIC PIEZOCONE WAS ADVANCED AT A RATE OF 20 MM/SEC (0.8 IN/SEC) UTILIZING 1-M (3.3-FT) LONG CONNECTOR RODS EXTENDING TO THE TARGET TERMINATION DEPTH. AFTER THE COMPLETION OF THE CPT SOUNDING, THE CPT LOG WAS GENERATING BY ODOT UTILIZING THE SOFTWARE ENTITLED CPET-IT BY GEOLOGISMIKI.

BRIDGE 13, WALL AF, WALL AE

THE EXPLORATION FOR THE PROPOSED BRIDGE CUY-90-1678 AND ASSOCIATED RETAINING WALLS (RW-AE & RW-AF) STRUCTURES WAS CONDUCTED BY NEAS BETWEEN OCTOBER 23, 2014, AND JUNE 3, 2021. THE EXPLORATION FOR THE REFERENCED STRUCTURES INCLUDED 11 BORINGS DRILLED TO DEPTHS RANGING FROM OF 51.5 TO 141.5 FT BGS AND 4 CPT SOUNDINGS THAT WERE EXTENDED TO DEPTHS RANGING FROM 64.0 AND 117 FT BGS.

THE BORING WAS DRILLED USING A EITHER A CME 55, MOBILE B-58, CME 75 OR CME 45B TRUCK MOUNTED DRILLING RIG UTILIZING 3.25-INCH DIAMETER HOLLOW STEM AUGERS. SOIL SAMPLES WERE GENERALLY RECOVERED AT 2.5 FT INTERVALS TO DEPTHS RANGING FROM 30 FT TO 61.5 BGS AND AT 5.0-FT INTERVALS THEREAFTER USING A SPLIT SPOON SAMPLER (AASHTO T-206). STANDARD PENETRATION TESTS WERE CONDUCTED USING AUTO HAMMERS THAT HAD BEEN CALIBRATED TO BE BETWEEN 68.4% AND 92.2% EFFICIENT.

THE CPT SOUNDINGS WERE PERFORMED BY ODOT UTILIZING A A.P. VAN DEN BERG TWIN-CYLINDER H-FORM HYSON 200-KN (45-KIP) TRACK MOUNTED PENETROMETER WITH A MODEL ELCI-CFXYP20-15 SEISMIC PIEZOCONE. DURING TESTING, DATA WAS COLLECTED CONTINUOUSLY BY A GONSITE! DATA ACQUISITION SYSTEM. THE CPT SOUNDINGS WERE CONDUCTED IN ACCORDANCE WITH ASTM D5778. IN GENERAL, THE 15-CM2 (2.3-IN2) SEISMIC PIEZOCONE WAS ADVANCED AT A RATE OF 20 MM/SEC (0.8 IN/SEC) UTILIZING 1-M (3.3-FT) LONG CONNECTOR RODS EXTENDING TO THE TARGET TERMINATION DEPTH. AFTER THE COMPLETION OF THE CPT SOUNDINGS, A CPT LOG WAS GENERATING BY ODOT UTILIZING THE SOFTWARE ENTITLED CPET-IT BY GEOLOGISMIKI.EFFICIENT.

Preliminary Plans - Not For Reference Or Bidding

GEOTECHNICAL PROFILE - ROADWAY

DESIGN AGENCY
NEAS
National Engineering & Architectural Services Inc.
2800 CORPORATE EXCHANGE DR, SUITE 240
COLUMBUS, OH, 43231
TEL:614.714.0299
WWW.NEASINC.COM
DESIGNER
MWJ & DT
REVIEWER
BPA 08/23/24

PROJECT ID
82382
SUBSET 3 TOTAL 310
SHEET P.2389 TOTAL 2696

CUY-90-16.28 (CCG3A)
MODEL: Sheet PAPERSIZE: 34x22 (in.) DATE: 3/20/2025 TIME: 8:31:20 AM USER: Askidiqi
pw:\\mb-us-pw.bentley.com:mb-us-pw-03\Documents\Cleveland_OH\01_Projects\ODOT\District12\82382\400-Engineering\Geotechnical\Sheets\82382_IC003.dgn

SUBSURFACE EXPLORATION (CONTINUED)

BRIDGE 14, WALL AG, WALL AH, WALL AI

THE EXPLORATION FOR THE PROPOSED BRIDGE CUY 90-1696 AND ASSOCIATED RETAINING WALL (RW-AG, RW-AH AND RW-AI) STRUCTURES WAS CONDUCTED BY NEAS BETWEEN FEBRUARY 25, 2015 AND JUNE 3, 2021. THE EXPLORATION FOR THE REFERENCED STRUCTURES INCLUDED 9 BORINGS DRILLED TO DEPTHS RANGING FROM OF 25.5 TO 141.5 FT BGS.

THE BORING WAS DRILLED USING A EITHER A CME 55T TRUCK MOUNTER, CME 75T TRUCK MOUNTED OR CME 55X TRACK MOUNTED DRILLING RIG EACH UTILIZING 3.25-INCH DIAMETER HOLLOW STEM AUGERS. SOIL SAMPLES WERE GENERALLY RECOVERED AT 2.5-FT INTERVALS TO DEPTHS RANGING FROM 30 FT TO 60 FT BGS AND AT 5.0-FT INTERVALS THEREAFTER USING A SPLIT SPOON SAMPLER (AASHTO T-206). BORING B-087-3-20 WAS SAMPLED CONTINUOUSLY TO A DEPTH OF 9 FT BGS FOR SUBGRADE PURPOSES. THE SOIL SAMPLES OBTAINED FROM THE EXPLORATION PROGRAM WERE VISUALLY OBSERVED IN THE FIELD BY THE NEAS FIELD REPRESENTATIVE AND PRESERVED FOR REVIEW BY A GEOLOGIST AND POSSIBLE LABORATORY TESTING. STANDARD PENETRATION TESTS WERE CONDUCTED USING CME AUTO HAMMERS THAT HAD BEEN CALIBRATED TO BE BETWEEN 68.4% AND 89.0% EFFICIENT.

WALL S

THE EXPLORATION FOR THIS RETAINING WALL WAS CONDUCTED BY NEAS BETWEEN DECEMBER 2, 2014 AND MAY 20, 2021 AND INCLUDED 2 BORINGS EACH DRILLED TO A DEPTH OF 61.5 FT BGS AND 2 CPT SOUNDINGS THAT WERE EXTENDED TO DEPTHS RANGING FROM 113.5 TO 113.7 FT BGS.

THE BORING WAS DRILLED USING A CME 45B TRUCK MOUNTED DRILLING RIG UTILIZING 3.25-INCH DIAMETER HOLLOW STEM AUGERS. SOIL SAMPLES WERE GENERALLY RECOVERED AT 2.5-FT INTERVALS TO A DEPTH OF 30 FT BGS AND AT 5.0-FT INTERVALS THEREAFTER USING A SPLIT SPOON SAMPLER (AASHTO T-206). STANDARD PENETRATION TESTS WERE CONDUCTED USING CME AUTO HAMMERS THAT HAD BEEN CALIBRATED TO BE 77.4% EFFICIENT.

THE CPT SOUNDINGS WERE PERFORMED BY ODOT UTILIZING A A.P. VAN DEN BERG TWIN-CYLINDER H-FORM HYSON 200-KN (45-KIP) TRACK MOUNTED PENETROMETER WITH A MODEL ELCI-CFXYP20-15 SEISMIC PIEZOCONE. DURING TESTING, DATA WAS COLLECTED CONTINUOUSLY BY A GONSITE! DATA ACQUISITION SYSTEM. THE CPT SOUNDINGS WERE CONDUCTED IN ACCORDANCE WITH ASTM D5778. IN GENERAL, THE 15-CM2 (2.3-IN2) SEISMIC PIEZOCONE WAS ADVANCED AT A RATE OF 20 MM/SEC (0.8 IN/SEC) UTILIZING 1-M (3.3-FT) LONG CONNECTOR RODS EXTENDING TO THE TARGET TERMINATION DEPTH. AFTER THE COMPLETION OF THE CPT SOUNDINGS, THE CPT LOG WAS GENERATING BY ODOT UTILIZING THE SOFTWARE ENTITLED CPET-IT BY GEOLOGISMIKI.

WALL T AND INTERIM WALL T

THE EXPLORATION FOR THIS RETAINING WALL WAS CONDUCTED BY NEAS BETWEEN DECEMBER 3, 2014, AND MAY 19, 2021, AND INCLUDED 5 BORINGS DRILLED TO DEPTHS BETWEEN OF 30.5 FT AND 62.5 FT BGS.

THE BORINGS WERE DRILLED USING A EITHER A CME 55 TRACK MOUNTED OR CME 55, CME 75, OR MOBILE B-58 TRUCK MOUNTED DRILLING RIG WITH EACH UTILIZING 3.25-INCH DIAMETER HOLLOW STEM AUGERS. SOIL SAMPLES WERE GENERALLY RECOVERED AT 2.5-FT INTERVALS TO A DEPTH OF 30 FT BGS AND AT 5.0-FT INTERVALS THEREAFTER USING A SPLIT SPOON SAMPLER (AASHTO T-206). STANDARD PENETRATION TESTS WERE CONDUCTED USING AUTO HAMMERS THAT HAD BEEN CALIBRATED TO BE BETWEEN 78.8% AND 92.2% EFFICIENT.

WALL IJ (A1-AJ)

THE EXPLORATION FOR THIS RETAINING WALL WAS CONDUCTED BY NEAS BETWEEN MAY 19, 2021 AND JULY 2, 2021 AND INCLUDED 2 BORINGS DRILLED TO DEPTHS BETWEEN OF 25.0 FT AND 66.5 FT BGS.

THE BORING WAS DRILLED USING A EITHER A CME 55T OR CME 75T TRUCK MOUNTED DRILLING RIG UTILIZING 3.25-INCH DIAMETER HOLLOW STEM AUGERS. SOIL SAMPLES WERE GENERALLY RECOVERED AT 2.5-FT INTERVALS TO A DEPTH OF 30 FT BGS AND AT 5.0-FT INTERVALS THEREAFTER USING A SPLIT SPOON SAMPLER (AASHTO T-206). STANDARD PENETRATION TESTS WERE CONDUCTED USING CME AUTO HAMMERS THAT HAD BEEN CALIBRATED TO BE BETWEEN 68.4% AND 89% EFFICIENT.

EXPLORATION FINDINGS

ROADWAY SUBGRADE

THE SUBGRADE CONDITIONS IN THE PROJECT AREA ARE RELATIVELY CONSISTENT AND ARE GENERALLY COMPRISED OF EITHER FILL SOILS (I.E., EMBANKMENT FILL, HISTORICAL/URBAN FILL, ETC.) OR NATURAL SOILS BOTH CONSISTING OF COARSE AND FINE SAND AND/OR GRAVEL WITH VARYING AMOUNTS OF SILT AND CLAY. THE SUBGRADE SOILS ENCOUNTERED WITHIN THE PROJECT LIMITS ARE GENERALLY CLASSIFIED AS A-3a, A-3, A-1-b, A-4a, A-2-4 OR A-1-a WITH THE EXCEPTION OF ISOLATED AREAS IN WHICH SUBGRADE SOILS CONSISTED OF FINE-GRAINED FILL SOILS CLASSIFIED AS A-6A AND A-6B.
BRIDGE 9, WALL N, WALL AD

THE GENERAL SUBSURFACE PROFILE IS RELATIVELY UNIFORM AND CONSISTENT WITH THE GEOLOGICAL MODEL FOR THE PROJECT. THE SUBSURFACE PROFILE AT THE SITE OF PROPOSED BRIDGE CUY-77-1587 AND ASSOCIATED RETAINING WALLS GENERALLY CONSISTS OF SURFICIAL MATERIALS (I.E., TOPSOIL OR PAVEMENT) UNDERLAIN BY EXISTING EMBANKMENT OR HISTORICAL FILL SOILS FOLLOWED BY NATURAL SANDS AND GRAVELS UNDERLAIN BY NATURAL LACUSTRINE AND/OR TILL SOILS. WHERE ENCOUNTERED, THE EMBANKMENT FILL AT THE SITE CAN GENERALLY BE DESCRIBED AS VERY LOOSE TO VERY DENSE NON-COHESIVE, GRANULAR SOILS. THE NATURAL SANDS AND GRAVELS ENCOUNTERED AT THE SITE WERE GENERALLY COMPRISED OF VERY LOOSE TO VERY DENSE NON-COHESIVE, GRANULAR MATERIAL. THE LACUSTRINE/TILL SOILS AT THE SITE WERE HIGHLY VARIABLE THOUGH CAN GENERALLY BE DESCRIBED AS MEDIUM DENSE TO VERY DENSE COARSE- AND FINE-GRAINED, NON-COHESIVE MATERIAL IN THE UPPER PORTION OF THE STRATUM AND SOFT TO HARD FINE-GRAINED, COHESIVE AND NON-COHESIVE MATERIAL IN THE LOWER PORTION OF THE STRATUM. BEDROCK WAS NOT ENCOUNTERED WITHIN THE DEPTHS OF THE EXPLORATIONS PERFORMED.

BRIDGES 10 & 11 , WALL AC

THE GENERAL SUBSURFACE PROFILE IS RELATIVELY UNIFORM AND CONSISTENT WITH THE GEOLOGICAL MODEL FOR THE PROJECT. THE SUBSURFACE PROFILE AT THE SITE OF PROPOSED BRIDGE CUY-90-1653L&R AND ASSOCIATED RW-AC GENERALLY CONSISTS OF SURFICIAL MATERIALS (I.E., TOPSOIL OR PAVEMENT) UNDERLAIN BY EXISTING EMBANKMENT OR HISTORICAL FILL SOILS FOLLOWED BY NATURAL SANDS AND GRAVELS UNDERLAIN BY NATURAL LACUSTRINE AND/OR TILL SOILS. WHERE ENCOUNTERED, THE EMBANKMENT FILL AT THE SITE CAN GENERALLY BE DESCRIBED AS LOOSE TO VERY DENSE NON COHESIVE, GRANULAR SOILS. THE NATURAL SANDS AND GRAVELS ENCOUNTERED AT THE SITE WERE GENERALLY COMPRISED OF VERY LOOSE TO VERY DENSE NON-COHESIVE, GRANULAR MATERIAL. THE LACUSTRINE/TILL SOILS AT THE SITE WERE HIGHLY VARIABLE THOUGH CAN GENERALLY BE DESCRIBED AS MEDIUM DENSE TO VERY DENSE COARSE- AND FINE-GRAINED, NON-COHESIVE MATERIAL IN THE UPPER PORTION OF THE STRATUM AND SOFT TO HARD FINE-GRAINED, COHESIVE AND NON-COHESIVE MATERIAL IN THE LOWER PORTION OF THE STRATUM. BEDROCK WAS NOT ENCOUNTERED WITHIN THE DEPTHS OF THE EXPLORATIONS PERFORMED.

BRIDGE 12, WALL Y, WALL Z

THE GENERAL SUBSURFACE PROFILE IS RELATIVELY UNIFORM AND CONSISTENT WITH THE GEOLOGICAL MODEL FOR THE PROJECT. THE SUBSURFACE PROFILE AT THE SITE OF PROPOSED BRIDGE CUY-90-1652S AND ASSOCIATED RETAINING WALLS GENERALLY CONSISTS OF SURFICIAL MATERIALS (I.E., TOPSOIL OR PAVEMENT) UNDERLAIN BY EXISTING EMBANKMENT OR HISTORICAL FILL SOILS FOLLOWED BY NATURAL SANDS AND GRAVELS UNDERLAIN BY NATURAL LACUSTRINE AND/OR TILL SOILS. WHERE ENCOUNTERED, THE EMBANKMENT FILL AT THE SITE CAN GENERALLY BE DESCRIBED AS LOOSE TO VERY DENSE NON COHESIVE, GRANULAR SOILS. THE NATURAL SANDS AND GRAVELS ENCOUNTERED AT THE SITE WERE GENERALLY COMPRISED OF VERY LOOSE TO VERY DENSE NON-COHESIVE, GRANULAR MATERIAL. THE LACUSTRINE/TILL SOILS AT THE SITE WERE HIGHLY VARIABLE THOUGH CAN GENERALLY BE DESCRIBED AS MEDIUM DENSE TO VERY DENSE COARSE- AND FINE-GRAINED, NON-COHESIVE MATERIAL IN THE UPPER PORTION OF THE STRATUM AND SOFT TO HARD FINE-GRAINED, COHESIVE AND NON-COHESIVE MATERIAL IN THE LOWER PORTION OF THE STRATUM. BEDROCK WAS NOT ENCOUNTERED WITHIN THE DEPTHS OF THE EXPLORATIONS PERFORMED.

BRIDGE 13, WALL AF, WALL AE

THE GENERAL SUBSURFACE PROFILE IS RELATIVELY UNIFORM AND CONSISTENT WITH THE GEOLOGICAL MODEL FOR THE PROJECT. THE SUBSURFACE PROFILE AT THE SITE OF PROPOSED BRIDGE CUY-90-1678 AND ASSOCIATED RETAINING WALLS GENERALLY CONSISTS OF SURFICIAL MATERIALS (I.E., TOPSOIL OR PAVEMENT) UNDERLAIN BY EXISTING EMBANKMENT OR HISTORICAL FILL SOILS FOLLOWED BY NATURAL SANDS AND GRAVELS UNDERLAIN BY NATURAL LACUSTRINE AND/OR TILL SOILS. WHERE ENCOUNTERED, THE EMBANKMENT FILL AT THE SITE CAN GENERALLY BE DESCRIBED AS VERY LOOSE TO VERY DENSE NON COHESIVE, GRANULAR SOILS. THE NATURAL SANDS AND GRAVELS ENCOUNTERED AT THE SITE WERE GENERALLY COMPRISED OF LOOSE TO VERY DENSE NON-COHESIVE, GRANULAR MATERIAL. THE LACUSTRINE/TILL SOILS AT THE SITE WERE HIGHLY VARIABLE THOUGH CAN GENERALLY BE DESCRIBED AS LOOSE TO DENSE COARSE- AND FINE-GRAINED, NON COHESIVE MATERIAL IN THE UPPER PORTION OF THE STRATUM AND MEDIUM STIFF TO HARD FINE-GRAINED, COHESIVE MATERIAL IN THE LOWER PORTION OF THE STRATUM. BEDROCK WAS NOT ENCOUNTERED WITHIN THE DEPTHS OF THE EXPLORATIONS PERFORMED.

BRIDGE 14, WALL AG, WALL AH, WALL AI

THE GENERAL SUBSURFACE PROFILE IS RELATIVELY UNIFORM AND CONSISTENT WITH THE GEOLOGICAL MODEL FOR THE PROJECT. THE SUBSURFACE PROFILE AT THE SITE OF PROPOSED BRIDGE CUY-90-1696 AND ASSOCIATED RETAINING WALLS GENERALLY CONSISTS OF SURFICIAL MATERIALS (I.E., TOPSOIL OR PAVEMENT) UNDERLAIN BY EXISTING EMBANKMENT OR HISTORICAL FILL SOILS FOLLOWED BY NATURAL SANDS AND GRAVELS UNDERLAIN BY NATURAL LACUSTRINE AND/OR TILL SOILS. WHERE ENCOUNTERED, THE EMBANKMENT FILL AT THE SITE CAN GENERALLY BE DESCRIBED AS LOOSE TO VERY DENSE NON COHESIVE, GRANULAR SOILS. THE NATURAL SANDS AND GRAVELS ENCOUNTERED AT THE SITE WERE GENERALLY COMPRISED OF LOOSE TO VERY DENSE NON-COHESIVE, GRANULAR MATERIAL. THE LACUSTRINE/TILL SOILS AT THE SITE WERE HIGHLY VARIABLE THOUGH CAN GENERALLY BE DESCRIBED AS VERY SOFT TO HARD FINE-GRAINED, COHESIVE MATERIAL. BEDROCK WAS NOT ENCOUNTERED WITHIN THE DEPTHS OF THE EXPLORATIONS PERFORMED.

WALL S

THE GENERAL SUBSURFACE PROFILE IS RELATIVELY UNIFORM AND CONSISTENT WITH THE GEOLOGICAL MODEL FOR THE PROJECT. THE SUBSURFACE PROFILE AT THE RW-S SITE GENERALLY CONSISTS OF SURFICIAL MATERIALS (I.E., PAVEMENT SECTION) UNDERLAIN BY EXISTING EMBANKMENT FILL SOILS FOLLOWED BY NATURAL SANDS AND GRAVELS UNDERLAIN BY NATURAL LACUSTRINE SOILS. THE EMBANKMENT FILLS AT THE SITE CAN GENERALLY BE DESCRIBED AS VERY LOOSE TO VERY DENSE NON-COHESIVE, GRANULAR SOILS WHILE THE NATURAL SANDS AND GRAVELS ENCOUNTERED AT THE SITE WERE COMPRISED OF VERY LOOSE TO DENSE, GRANULAR MATERIAL. THE NATURAL LACUSTRINE SOILS AT THE SITE WERE VARIABLE, THOUGH CAN GENERALLY BE DESCRIBED AS MEDIUM DENSE TO DENSE COARSE- AND FINE-GRAINED, NON-COHESIVE MATERIAL IN THE UPPER PORTION OF THE STRATUM AND STIFF TO HARD FINE-GRAINED, COHESIVE AND NON-COHESIVE MATERIAL IN THE LOWER PORTION. BEDROCK WAS NOT ENCOUNTERED WITHIN THE DEPTHS OF THE EXPLORATIONS PERFORMED.

WALL T AND INTERIM WALL T

THE GENERAL SUBSURFACE PROFILE IS RELATIVELY UNIFORM AND CONSISTENT WITH THE GEOLOGICAL MODEL FOR THE PROJECT. THE SUBSURFACE PROFILE AT THE RW-T SITE GENERALLY CONSISTS OF SURFICIAL MATERIALS (I.E., PAVEMENT SECTION) UNDERLAIN BY EXISTING EMBANKMENT FILL SOILS FOLLOWED BY NATURAL SANDS AND GRAVELS UNDERLAIN BY NATURAL LACUSTRINE SOILS. THE EMBANKMENT FILL AT THE SITE CAN GENERALLY BE DESCRIBED AS VERY LOOSE TO VERY DENSE NON COHESIVE, GRANULAR SOILS. THE NATURAL SANDS AND GRAVELS ENCOUNTERED AT THE SITE WERE COMPRISED OF GRANULAR MATERIAL THAT CAN BE DESCRIBED AS VERY LOOSE TO MEDIUM DENSE IN THE UPPER PORTION OF THE STRATA AND MEDIUM DENSE TO DENSE IN THE LOWER PORTION OF THE STRATA. THE NATURAL LACUSTRINE SOILS AT THE SITE WERE VARIABLE, THOUGH PREDOMINANTLY COHESIVE, FINE-GRAINED SOILS THAT CAN BE DESCRIBED AS HAVING A CONSISTENCY OF VERY STIFF TO HARD. BEDROCK WAS NOT ENCOUNTERED WITHIN THE DEPTHS OF THE EXPLORATIONS PERFORMED.

WALL IJ (A1-AJ)

THE GENERAL SUBSURFACE PROFILE IS RELATIVELY UNIFORM AND CONSISTENT WITH THE GEOLOGICAL MODEL FOR THE PROJECT. THE SUBSURFACE PROFILE AT THE RW-AJ SITE GENERALLY CONSISTS OF SURFICIAL MATERIALS (I.E., PAVEMENT SECTION) UNDERLAIN BY EXISTING EMBANKMENT FILL SOILS FOLLOWED BY NATURAL SANDS AND GRAVELS. THE EMBANKMENT FILLS AT THE SITE CAN GENERALLY BE DESCRIBED AS MEDIUM DENSE TO DENSE NON COHESIVE, GRANULAR SOILS WHILE THE NATURAL SANDS AND GRAVELS ENCOUNTERED AT THE SITE WERE COMPRISED OF LOOSE TO DENSE, GRANULAR MATERIAL. BEDROCK WAS NOT ENCOUNTERED WITHIN THE DEPTHS OF THE EXPLORATIONS PERFORMED.

SPECIFICATIONS

THIS GEOTECHNICAL EXPLORATION WAS PERFORMED IN ACCORDANCE WITH THE STATE OF OHIO, DEPARTMENT OF TRANSPORTATION, OFFICE OF GEOTECHNICAL ENGINEERING, SPECIFICATIONS FOR GEOTECHNICAL EXPLORATIONS, DATED JANUARY 2022.

AVAILABLE INFORMATION

THE SOIL, BEDROCK, AND GROUNDWATER INFORMATION COLLECTED FOR THIS SUBSURFACE EXPLORATION THAT CAN BE CONVENIENTLY DISPLAYED ON THE GEOTECHNICAL PROFILE SHEETS HAS BEEN PRESENTED. GEOTECHNICAL REPORTS, IF PREPARED, ARE AVAILABLE FOR REVIEW ON THE OFFICE OF CONTRACT SALES WEBSITE.

Preliminary Plans - Reference Only

GEOTECHNICAL PROFILE - ROADWAY

DESIGN AGENCY
NEAS
National Engineering & Architectural Services Inc.
2800 CORPORATE EXCHANGE DR, SUITE 240
COLUMBUS, OH, 43231
TEL:614.714.0299
WWW.NEASINC.COM

DESIGNER MWJ & DT
REVIEWER BPA 08/23/24
PROJECT ID 82382
SUBSET 4 TOTAL 310
SHEET P.2390 TOTAL 2696

CUY-90-16.28 (CCG3A)

MODEL: Sheet PAPERSIZE: 34x22 (in.) DATE: 3/28/2025 TIME: 8:31:25 AM USER: Askdidi
pw:\\mb-us-pw.bentley.com:mb-us-pw-03\Documents\Cleveland_OH\01_Projects\ODOT\District12\82382400-Engineering\Geotechnical\Sheets\82382_IC004.dgn

INDEX OF SHEETS				
EXPLORATION NOTES (CONT.), SHEETS 2-5.				
SUMMARY OF SOIL TEST DATA, SHEETS 6-10.				
LABBORATORY TEST DATA, SHEETS 11-17.				
LOCATION		**PLAN**	**PROFILE**	**CROSS SECTION**
FROM STA.	**TO STA.**			
IR-90 EB				
173+00	185+50	18	19	
185+50	190+50	20	21	
190+50	203+00	22	23	
203+00	215+50	24	25	
IR-90 WB				
173+50	186+00	26	27	
186+00	191+00	28	29	
191+00	203+50	30	31	
203+50	216+00	32	33	
RAMP A1				
BEGIN	END	34	35	
RAMP A2				
400+00	405+00	36	37	
405+00	410+00	38	39	
410+00	415+00	40	41	
415+00	420+00	42	43	
420+00	425+00	44	45	
425+00	430+00	46	47	
430+00	435+00	48	49	
RAMP A3				
BEGIN	END	50	51	
RAMP B6				
1597+61	1610+11	52	53	
1610+11	END	54	55	
RAMP H5 INTERIM				
1070+00	1075+40	56	57	
1075+40	1080+80	58	59	
1080+80	1086+20	60	61	
RAMP H5				
970+00	983+50	62	63	
983+50	997+00	64	65	
RAMP H6 INTERIM				
BEGIN	END	66	66	
RAMP H6				
BEGIN	END	67	68	
EAST 14TH STREET SB				
290+00	302+50	69	70	
EAST 14TH STREET INTERIM SB				
196+70	210+20	71	72	
EAST 14TH STREET NB				
BEGIN	END	73	74	
EAST 14TH STREET INTERIM NB				
BEGIN	END	75	76	
RAMP 4				
BEGIN	END	77	78	
EAST 18TH STREET				
20+00	25+00	79	80	
EAST 22ND STREET				
9+50	22+00	81	82	
28+50	41+00	83	84	

INDEX OF SHEETS (CONT.)				
LOCATION		**PLAN**	**PROFILE**	**CROSS SECTION**
FROM STA.	**TO STA.**			
CARNEGIE AVENUE				
21+00	33+50	85	85	
33+50	46+00	86	86	
46+00	55+00	87	87	
55+00	67+50	88	89	
WALL AC				
BEGIN	END	90	91	
WALL AD				
BEGIN	END	92	93	
WALL AE				
BEGIN	END	94	94	
WALL AF				
BEGIN	END	95	96	
WALL AG				
BEGIN	END	97	98	
WALL AH				
BEGIN	END	99	100	
WALL AI				
BEGIN	END	101	102	
WALL AJ				
BEGIN	END	103	103	
WALL N				
BEGIN	END	104	105	
WALL S				
BEGIN	END	106	107	
WALL T				
BEGIN	END	108	109	
WALL Y				
BEGIN	END	110	111	
WALL Z				
BEGIN	END	112	113	
MOMENT SLAB				
BEGIN	END	114	114	
PROJECT & HISTORICAL BORING LOGS, SHEETS 115-310				

Preliminary Plans - Not For Reference Only

GEOTECHNICAL PROFILE - ROADWAY

DESIGN AGENCY
NEAS
National Engineering & Architectural Services Inc.
2800 CORPORATE EXCHANGE DR, SUITE 240
COLUMBUS, OH, 43231
TEL:614.714.0299
WWW.NEASINC.COM

DESIGNER
MWJ & DT

REVIEWER
BPA 08/23/24

PROJECT ID
82382

SUBSET 5 | TOTAL 310

SHEET P.2391 | TOTAL 2696

CUY-90-16.28 (CCG3A)

MODEL: Sheet PAPERSIZE: 34x22 (in.) DATE: 3/28/2025 TIME: 8:31:30 AM USER: Asiddiqi
pw:\\mb-us-pw.bentley.com:mb-us-pw-03\Documents\Cleveland_OH\01_Projects\ODOT\District12\82382\400-Engineering\Geotechnical\Sheets\82382_IC005.dgn

MODEL: Sheet PAPERSIZE: 34x22 (In.) DATE: 3/28/2025 TIME: 8:31:43 AM USER: Asiddiqi
pw:\\mb-us-pw.bentley.com:mb-us-pw-03\Documents\Cleveland_OH\01_Projects\ODOT\District2\82382\400-Engineering\Geotechnical\Sheets\82382_ID001.dgn

SUMMARY OF SOIL TEST DATA
IR-90 EB

EXPLORATION NO., STATION & OFFSET	FROM		TO	SAMPLE ID	N60	% REC	HP tsf	% GR	% CS	% FS	% SILT	% CLAY	LL	PL	PI	% WC	ODOT CLASS (GI)	ppm SO4
B-076-0-14	02.50	-	04.00	SS-1	20	100	-	32	17	33	13	5	NP	NP	NP	8	A-3a (0)	1667
STA. 179+55, 49' LT.	05.00	-	06.50	SS-2	11	56	-	10	21	37	22	10	NP	NP	NP	18	A-3a (0)	-
LATITUDE = 41.495287	07.50	-	09.00	SS-3	14	56	-				SAME AS SS-2					12	A-3a (VISUAL)	-
LONGITUDE = -81.680237																		
B-077-0-14	01.00	-	02.50	SS-1	27	100	-				SAME AS SS-2					7	A-3a (VISUAL)	13
STA. 184+01, 65' RT.	02.50	-	04.00	SS-2	39	100	-	11	14	62	8	5	NP	NP	NP	8	A-3a (0)	-
LATITUDE = 41.495631	04.00	-	05.50	SS-3	32	100	-				SAME AS SS-2					12	A-3a (VISUAL)	-
LONGITUDE = -81.678618	05.50	-	07.00	SS-4	50	100	-	27	20	32	14	7	NP	NP	NP	10	A-3a (0)	-
	07.00	-	08.50	SS-5	37	100	-				SAME AS SS-4					8	A-3a (VISUAL)	-
B-081-0-14	02.50	-	04.00	SS-1	36	100	-	4	18	59	13	6	NP	NP	NP	9	A-3a (0)	142
STA. 189+07, 22' RT.	05.00	-	06.50	SS-2	53	100	-				SAME AS SS-1					9	A-3a (VISUAL)	-
LATITUDE = 41.496578	07.50	-	09.00	SS-3	90	100	-				SAME AS SS-1					8	A-3a (VISUAL)	-
LONGITUDE = -81.677243																		
B-083-0-14	02.00	-	03.50	SS-1	29	100	-	64	18	11	5	2	NP	NP	NP	6	A-1-a (0)	260
STA. 192+12, 13' RT.	03.50	-	05.00	SS-2	38	100	-				SAME AS SS-4					10	A-3a (VISUAL)	-
LATITUDE = 41.497118	05.00	-	06.50	SS-3	29	100	-				SAME AS SS-4					11	A-3a (VISUAL)	-
LONGITUDE = -81.676387	06.50	-	08.00	SS-4	37	100	-	11	15	43	23	8	NP	NP	NP	15	A-3a (0)	-
B-084-0-14	02.50	-	04.00	SS-1	24	100	-	17	14	55	9	5	NP	NP	NP	12	A-3a (0)	13
STA. 196+29, 133' RT.	05.00	-	06.50	SS-2	11	100	-			BROWN, GRAVEL WITH SAND, TRACE SILT, TRACE CLAY						14	A-1-b (VISUAL)	-
LATITUDE = 41.497464	07.50	-	09.00	SS-3	5	100	-				SAME AS SS-2					10	A-1-b (VISUAL)	-
LONGITUDE = -81.674920																		
B-085-0-14	01.20	-	02.70	SS-1	27	94	-				SAME AS SS-2					7	A-3a (VISUAL)	-
STA. 199+20, 6' LT.	02.70	-	04.20	SS-2	31	67	-	10	16	52	15	7	NP	NP	NP	11	A-3a (0)	13
LATITUDE = 41.498146	04.20	-	05.70	SS-3	28	78	-				SAME AS SS-2					21	A-3a (VISUAL)	-
LONGITUDE = -81.674208	05.70	-	07.20	SS-4	34	100	-	0	1	85	12	2	NP	NP	NP	23	A-3a (0)	-
	07.20	-	08.70	SS-5	49	100	-				SAME AS SS-4					18	A-3a (VISUAL)	-
B-094-0-14	02.00	-	03.50	SS-1	43	100		21	25	37	11	6	NP	NP	NP	6	A-3a (0)	373
STA. 174+96, 9' LT.	03.50	-	05.00	SS-2	28	100		-	-	-	-	-	-	-	-	6	A-3a (VISUAL)	-
LATITUDE = 41.494700	05.00	-	06.50	SS-3	16	100		-	-	-	-	-	-	-	-	8	A-3a (VISUAL)	-
LONGITUDE = -81.681719	06.50	-	08.00	SS-4	8	100		20	38	29	8	5	NP	NP	NP	7	A-1-b (0)	-

SUMMARY OF SOIL TEST DATA
IR-90 WB

EXPLORATION NO., STATION & OFFSET	FROM		TO	SAMPLE ID	N60	% REC	HP tsf	% GR	% CS	% FS	% SILT	% CLAY	LL	PL	PI	% WC	ODOT CLASS (GI)	ppm SO4
B-076-0-14	02.50	-	04.00	SS-1	20	100	-	32	17	33	13	5	NP	NP	NP	8	A-3a (0)	1667
STA. 181+34, 38' RT.	05.00	-	06.50	SS-2	11	56	-	10	21	37	22	10	NP	NP	NP	18	A-3a (0)	-
LATITUDE = 41.495287	07.50	-	09.00	SS-3	14	56	-				SAME AS SS-2					12	A-3a (VISUAL)	-
LONGITUDE = -81.680237																		
B-080-0-14	00.00	-	01.50	SS-1	14	100	3.25	11	15	32	26	16	33	21	12	18	A-6a (2)	13
STA. 188+15, 41' LT.	02.50	-	04.00	SS-2	15	100	-	8	13	59	12	8	NP	NP	NP	12	A-3a (0)	-
LATITUDE = 41.496459	05.00	-	06.50	SS-3	9	100	-	BROWN, FINE SAND, LITTLE COARSE SAND, TRACE GRAVEL, TRACE SILT, TRACE CLAY								8	A-3 (VISUAL)	-
LONGITUDE = -81.678286	07.50	-	09.00	SS-4	6	100	-	BROWN, COARSE AND FINE SAND, LITTLE SILT, LITTLE GRAVEL, TRACE CLAY								9	A-3a (VISUAL)	-
B-081-0-14	02.50	-	04.00	SS-1	36	100	-	4	18	59	13	6	NP	NP	NP	9	A-3a (0)	142
STA. 190+66, 101' RT.	05.00	-	06.50	SS-2	53	100	-				SAME AS SS-1					9	A-3a (VISUAL)	-
LATITUDE = 41.496578	07.50	-	09.00	SS-3	90	100	-				SAME AS SS-1					8	A-3a (VISUAL)	-
LONGITUDE = -81.677243																		
B-083-0-14	02.00	-	03.50	SS-1	29	100	-	64	18	11	5	2	NP	NP	NP	6	A-1-a (0)	260
STA. 193+72, 93' RT.	03.50	-	05.00	SS-2	38	100	-				SAME AS SS-4					10	A-3a (VISUAL)	-
LATITUDE = 41.497118	05.00	-	06.50	SS-3	29	100	-				SAME AS SS-4					11	A-3a (VISUAL)	-
LONGITUDE = -81.676387	06.50	-	08.00	SS-4	37	100	-	11	15	43	23	8	NP	NP	NP	15	A-3a (0)	-
B-084-0-14	02.50	-	04.00	SS-1	24	100	-	17	14	55	9	5	NP	NP	NP	12	A-3a (0)	13
STA. 198+01, 213' RT.	05.00	-	06.50	SS-2	11	100	-			BROWN, GRAVEL WITH SAND, TRACE SILT, TRACE CLAY						14	A-1-b (VISUAL)	-
LATITUDE = 41.497464	07.50	-	09.00	SS-3	5	100	-				SAME AS SS-2					10	A-1-b (VISUAL)	-
LONGITUDE = -81.674920																		
B-085-0-14	01.20	-	02.70	SS-1	27	94	-				SAME AS SS-2					7	A-3a (VISUAL)	-
STA. 201+02, 74' RT.	02.70	-	04.20	SS-2	31	67	-	10	16	52	15	7	NP	NP	NP	11	A-3a (0)	13
LATITUDE = 41.498146	04.20	-	05.70	SS-3	28	78	-				SAME AS SS-2					21	A-3a (VISUAL)	-
LONGITUDE = -81.674208	05.70	-	07.20	SS-4	34	100	-	0	1	85	12	2	NP	NP	NP	23	A-3a (0)	-
	07.20	-	08.70	SS-5	49	100	-				SAME AS SS-4					18	A-3a (VISUAL)	-

Preliminary Plans - For Reference Only

GEOTECHNICAL PROFILE - ROADWAY
SUMMARY OF SOIL TEST DATA

SUMMARY OF SOIL TEST DATA
RAMP A2

EXPLORATION NO., STATION & OFFSET	FROM		TO	SAMPLE ID	N60	% REC	HP tsf	% GR	% CS	% FS	% SILT	% CLAY	LL	PL	PI	% WC	ODOT CLASS (GI)	ppm SO4
B-089-0-14	01.50	-	03.00	SS-1	18	100					SAME AS SS-2					8	A-3a (VISUAL)	27
STA. 412+93, 207' LT.	03.00	-	04.50	SS-2	21	100		6	15	65	9	5	NP	NP	NP	8	A-3a (0)	-
LATITUDE = 41.492649	04.50	-	06.00	SS-3	17	100					SAME AS SS-2					10	A-3a (VISUAL)	-
LONGITUDE = -81.678837	06.00	-	07.50	SS-4	15	100		2	8	82	4	4	NP	NP	NP	8	A-3 (0)	-
	07.50	-	09.00	SS-5	21	89					SAME AS SS-4					9	A-3 (VISUAL)	-
B-090-0-14	02.00	-	03.50	SS-1	25	100		40	27	18	10	5	NP	NP	NP	7	A-1-b (0)	260
STA. 415+65, 424' LT.	03.50	-	05.00	SS-2	25	17					SAME AS SS-1					9	A-1-b (VISUAL)	-
LATITUDE = 41.492879	05.00	-	06.50	SS-3	8	100					SAME AS SS-4					6	A-3a (VISUAL)	-
LONGITUDE = -81.680269	06.50	-	08.00	SS-4	8	100		5	18	56	12	9	NP	NP	NP	21	A-3a (0)	-

SUMMARY OF SOIL TEST DATA
RAMP A3

EXPLORATION NO., STATION & OFFSET	FROM		TO	SAMPLE ID	N60	% REC	HP tsf	% GR	% CS	% FS	% SILT	% CLAY	LL	PL	PI	% WC	ODOT CLASS (GI)	ppm SO4
B-080-0-14	00.00	-	01.50	SS-1	14	100	3.25	11	15	32	26	16	33	21	12	18	A-6a (2)	0
STA. 587+53, 93' RT.	02.50	-	04.00	SS-2	15	100	-	8	13	59	12	8	NP	NP	NP	12	A-3a (0)	-
LATITUDE = 41.496459	05.00	-	06.50	SS-3	9	100	-	BROWN, FINE SAND, LITTLE COARSE SAND, TRACE GRAVEL, TRACE SILT, TRACE CLAY								8	A-3 (VISUAL)	-
LONGITUDE = -81.678286	07.50	-	09.00	SS-4	6	100	-	BROWN, COARSE AND FINE SAND, LITTLE SILT, LITTLE GRAVEL, TRACE CLAY								9	A-3a (VISUAL)	-

SUMMARY OF SOIL TEST DATA
RAMP H5

EXPLORATION NO., STATION & OFFSET	FROM		TO	SAMPLE ID	N60	% REC	HP tsf	% GR	% CS	% FS	% SILT	% CLAY	LL	PL	PI	% WC	ODOT CLASS (GI)	ppm SO4
B-066-0-14	02.50	-	04.00	SS-1	49	100	-	18	12	40	21	9	NP	NP	NP	10	A-3a (0)	240
STA. 973+32, 29' LT.	05.00	-	06.50	SS-2	48	100	-	5	16	57	14	8	NP	NP	NP	9	A-3a (0)	-
LATITUDE = 41.492293	07.50	-	09.00	SS-3	43	100	-				SAME AS SS-2					9	A-3a (VISUAL)	-
LONGITUDE = -81.675076																		

SUMMARY OF SOIL TEST DATA
SB E. 14TH STREET

EXPLORATION NO., STATION & OFFSET	FROM		TO	SAMPLE ID	N60	% REC	HP tsf	% GR	% CS	% FS	% SILT	% CLAY	LL	PL	PI	% WC	ODOT CLASS (GI)	ppm SO4
B-080-0-14	00.00	-	01.50	SS-1	14	100	3.25	11	15	32	26	16	33	21	12	18	A-6a (2)	0
STA. 36+36, 63' LT.	02.50	-	04.00	SS-2	15	100	-	8	13	59	12	8	NP	NP	NP	12	A-3a (0)	-
LATITUDE = 41.496459	05.00	-	06.50	SS-3	9	100	-	BROWN, FINE SAND, LITTLE COARSE SAND, TRACE GRAVEL, TRACE SILT, TRACE CLAY								8	A-3 (VISUAL)	-
LONGITUDE = -81.678286	07.50	-	09.00	SS-4	6	100	-	BROWN, COARSE AND FINE SAND, LITTLE SILT, LITTLE GRAVEL, TRACE CLAY								9	A-3a (VISUAL)	-
B-098-0-14	02.00	-	03.50	SS-1	8	100	-	BROWN, FINE SAND, LITTLE COARSE SAND, TRACE GRAVEL, TRACE SILT, TRACE CLAY								7	A-3 (VISUAL)	40
STA. 40+84, 46' RT.	03.50	-	05.00	SS-2	8	100	-	14	48	29	5	4	NP	NP	NP	7	A-1-b (0)	-
LATITUDE = 41.497667	05.00	-	06.50	SS-3	13	100	-				SAME AS SS-4					8	A-3 (VISUAL)	-
LONGITUDE = -81.678786	06.50	-	08.00	SS-4	12	100	-	2	15	76	4	3	NP	NP	NP	6	A-3 (0)	-

SUMMARY OF SOIL TEST DATA
SB E. 14TH STREET INTERIM

EXPLORATION NO., STATION & OFFSET	FROM		TO	SAMPLE ID	N60	% REC	HP tsf	% GR	% CS	% FS	% SILT	% CLAY	LL	PL	PI	% WC	ODOT CLASS (GI)	ppm SO4
B-080-0-14	00.00	-	01.50	SS-1	14	100	3.25	11	15	32	26	16	33	21	12	18	A-6a (2)	0
STA. 209+32, 50' LT.	02.50	-	04.00	SS-2	15	100	-	8	13	59	12	8	NP	NP	NP	12	A-3a (0)	-
LATITUDE = 41.496459	05.00	-	06.50	SS-3	9	100	-	BROWN, FINE SAND, LITTLE COARSE SAND, TRACE GRAVEL, TRACE SILT, TRACE CLAY								8	A-3 (VISUAL)	-
LONGITUDE = -81.678286	07.50	-	09.00	SS-4	6	100	-	BROWN, COARSE AND FINE SAND, LITTLE SILT, LITTLE GRAVEL, TRACE CLAY								9	A-3a (VISUAL)	-
B-103-0-14	00.00	-	01.50	SS-1	13	100	-				SAME AS SS-2					12	A-3a (VISUAL)	-
STA. 202+45, 9' LT.	01.50	-	03.00	SS-2	22	100	-	12	18	57	8	5	NP	NP	NP	12	A-3a (0)	13
LATITUDE = 41.494776	03.00	-	04.50	SS-3	32	100	-	13	21	43	16	7	NP	NP	NP	27	A-3a (0)	-
LONGITUDE = -81.677457	04.50	-	06.00	SS-4	23	100	-				SAME AS SS-3					11	A-3a (VISUAL)	-
	06.00	-	07.50	SS-5	17	100	-	1	30	63	4	2	NP	NP	NP	6	A-3 (0)	-
	07.50	-	09.00	SS-6	9	100	-				SAME AS SS-5					9	A-3 (VISUAL)	-
B-104-0-14	02.00	-	03.50	SS-1	22	100	-	3	7	78	9	3	NP	NP	NP	8	A-3a (0)	13
STA. 198+03, 55' RT.	03.50	-	05.00	SS-2	19	100	-				SAME AS SS-1					6	A-3a (VISUAL)	-
LATITUDE = 41.493549	05.00	-	06.50	SS-3	21	6	-				SAME AS SS-4					9	A-1-b (VISUAL)	-
LONGITUDE = -81.677515	06.50	-	08.00	SS-4	14	11	-	27	24	38	8	3	NP	NP	NP	7	A-1-b (0)	-

Preliminary Plans - For Reference Only

GEOTECHNICAL PROFILE - ROADWAY
SUMMARY OF SOIL TEST DATA

MODEL: Sheet PAPERSIZE: 34x22 (in.) DATE: 3/28/2025 TIME: 8:31:53 AM USER: Asiddiqi
pw:\\mb-us-pw.bentley.com:mb-us-pw-03\Documents\Cleveland_OH\01_Projects\ODOT\District2\82382\400-Engineering\Geotechnical\Sheets\82382_ID003.dgn

SUMMARY OF SOIL TEST DATA
NB E. 14TH STREET

EXPLORATION NO., STATION & OFFSET	FROM		TO	SAMPLE ID	N60	% REC	HP tsf	% GR	% CS	% FS	% SILT	% CLAY	LL	PL	PI	% WC	ODOT CLASS (GI)	ppm SO4
B-080-0-14	00.00	-	01.50	SS-1	14	100	3.25	11	15	32	26	16	33	21	12	18	A-6a (2)	0
STA. 56+60, 99' LT.	02.50	-	04.00	SS-2	15	100	-	8	13	59	12	8	NP	NP	NP	12	A-3a (0)	-
LATITUDE = 41.496459	05.00	-	06.50	SS-3	9	100	-	BROWN, FINE SAND, LITTLE COARSE SAND, TRACE GRAVEL, TRACE SILT, TRACE CLAY								8	A-3 (VISUAL)	-
LONGITUDE = -81.678286	07.50	-	09.00	SS-4	6	100	-	BROWN, COARSE AND FINE SAND, LITTLE SILT, LITTLE GRAVEL, TRACE CLAY								9	A-3a (VISUAL)	-
B-098-0-14	02.00	-	03.50	SS-1	8	100	-	BROWN, FINE SAND, LITTLE COARSE SAND, TRACE GRAVEL, TRACE SILT, TRACE CLAY								7	A-3 (VISUAL)	40
STA. 61+00, 37' RT.	03.50	-	05.00	SS-2	8	100	-	14	48	29	5	4	NP	NP	NP	7	A-1-b (0)	-
LATITUDE = 41.497667	05.00	-	06.50	SS-3	13	100	-	SAME AS SS-4								8	A-3 (VISUAL)	-
LONGITUDE = -81.678786	06.50	-	08.00	SS-4	12	100	-	2	15	76	4	3	NP	NP	NP	6	A-3 (0)	-
B-103-0-14	00.00	-	01.50	SS-1	13	100	-	SAME AS SS-2								12	A-3a (VISUAL)	-
STA. 46+66, 345' RT.	01.50	-	03.00	SS-2	22	100	-	12	18	57	8	5	NP	NP	NP	12	A-3a (0)	13
LATITUDE = 41.494776	03.00	-	04.50	SS-3	32	100	-	13	21	43	16	7	NP	NP	NP	27	A-3a (0)	-
LONGITUDE = -81.677457	04.50	-	06.00	SS-4	23	100	-	SAME AS SS-3								11	A-3a (VISUAL)	-
	06.00	-	07.50	SS-5	17	100	-	1	30	63	4	2	NP	NP	NP	6	A-3 (0)	-
	07.50	-	09.00	SS-6	9	100	-	SAME AS SS-5								9	A-3 (VISUAL)	-
B-104-0-14	02.00	-	03.50	SS-1	22	100	-	3	7	78	9	3	NP	NP	NP	8	A-3a (0)	13
STA. 46+97, 324' LT.	03.50	-	05.00	SS-2	19	100	-	SAME AS SS-1								6	A-3a (VISUAL)	-
LATITUDE = 41.493549	05.00	-	06.50	SS-3	21	6	-	SAME AS SS-4								9	A-1-b (VISUAL)	-
LONGITUDE = -81.677515	06.50	-	08.00	SS-4	14	11	-	27	24	38	8	3	NP	NP	NP	7	A-1-b (0)	-

SUMMARY OF SOIL TEST DATA
NB E. 14TH STREET INTERIM

EXPLORATION NO., STATION & OFFSET	FROM		TO	SAMPLE ID	N60	% REC	HP tsf	% GR	% CS	% FS	% SILT	% CLAY	LL	PL	PI	% WC	ODOT CLASS (GI)	ppm SO4
B-080-0-14	00.00	-	01.50	SS-1	14	100	3.25	11	15	32	26	16	33	21	12	18	A-6a (2)	0
STA. 309+71, 187' LT.	02.50	-	04.00	SS-2	15	100	-	8	13	59	12	8	NP	NP	NP	12	A-3a (0)	-
LATITUDE = 41.496459	05.00	-	06.50	SS-3	9	100	-	BROWN, FINE SAND, LITTLE COARSE SAND, TRACE GRAVEL, TRACE SILT, TRACE CLAY								8	A-3 (VISUAL)	-
LONGITUDE = -81.678286	07.50	-	09.00	SS-4	6	100	-	BROWN, COARSE AND FINE SAND, LITTLE SILT, LITTLE GRAVEL, TRACE CLAY								9	A-3a (VISUAL)	-
B-103-0-14	00.00	-	01.50	SS-1	13	100	-	SAME AS SS-2								12	A-3a (VISUAL)	-
STA. 302+46, 19' LT.	01.50	-	03.00	SS-2	22	100	-	12	18	57	8	5	NP	NP	NP	12	A-3a (0)	13
LATITUDE = 41.494776	03.00	-	04.50	SS-3	32	100	-	13	21	43	16	7	NP	NP	NP	27	A-3a (0)	-
LONGITUDE = -81.677457	04.50	-	06.00	SS-4	23	100	-	SAME AS SS-3								11	A-3a (VISUAL)	-
	06.00	-	07.50	SS-5	17	100	-	1	30	63	4	2	NP	NP	NP	6	A-3 (0)	-
	07.50	-	09.00	SS-6	9	100	-	SAME AS SS-5								9	A-3 (VISUAL)	-
B-104-0-14	02.00	-	03.50	SS-1	22	100	-	3	7	78	9	3	NP	NP	NP	8	A-3a (0)	13
STA. 298+03, 45' RT.	03.50	-	05.00	SS-2	19	100	-	SAME AS SS-1								6	A-3a (VISUAL)	-
LATITUDE = 41.493549	05.00	-	06.50	SS-3	21	6	-	SAME AS SS-4								9	A-1-b (VISUAL)	-
LONGITUDE = -81.677515	06.50	-	08.00	SS-4	14	11	-	27	24	38	8	3	NP	NP	NP	7	A-1-b (0)	-

SUMMARY OF SOIL TEST DATA
E 18TH STREET

EXPLORATION NO., STATION & OFFSET	FROM		TO	SAMPLE ID	N60	% REC	HP tsf	% GR	% CS	% FS	% SILT	% CLAY	LL	PL	PI	% WC	ODOT CLASS (GI)	ppm SO4
B-098-0-14	02.00	-	03.50	SS-1	8	100	-	BROWN, FINE SAND, LITTLE COARSE SAND, TRACE GRAVEL, TRACE SILT, TRACE CLAY								7	A-3 (VISUAL)	40
STA. 24+23, 183' LT.	03.50	-	05.00	SS-2	8	100	-	14	48	29	5	4	NP	NP	NP	7	A-1-b (0)	-
LATITUDE = 41.497667	05.00	-	06.50	SS-3	13	100	-	SAME AS SS-4								8	A-3 (VISUAL)	-
LONGITUDE = -81.678786	06.50	-	08.00	SS-4	12	100	-	2	15	76	4	3	NP	NP	NP	6	A-3 (0)	-

Preliminary Plans - For Reference Only

GEOTECHNICAL PROFILE - ROADWAY
SUMMARY OF SOIL TEST DATA

SUMMARY OF SOIL TEST DATA
E 22ND STREET

EXPLORATION NO., STATION & OFFSET	FROM		TO	SAMPLE ID	N60	% REC	HP tsf	% GR	% CS	% FS	% SILT	% CLAY	LL	PL	PI	% WC	ODOT CLASS (GI)	ppm SO4
B-070-0-14	00.50	-	02.00	SS-1	8	100	-	17	21	40	14	8	NP	NP	NP	12	A-3a (0)	13
STA. 14+64, 61' RT.	02.00	-	03.50	SS-2	5	100	-	18	30	35	10	7	NP	NP	NP	15	A-3a (0)	-
LATITUDE = 41.492964	03.50	-	05.00	SS-3	6	67	-				SAME AS SS-2					14	A-3a (VISUAL)	-
LONGITUDE = -81.675131	05.00	-	06.50	SS-4	6	100	-	1	16	78	3	2	NP	NP	NP	8	A-3 (0)	-
	06.50	-	08.00	SS-5	10	100	-	BROWN, COARSE AND FINE SAND, TRACE GRAVEL, TRACE SILT, TRACE CLAY								8	A-3a (VISUAL)	-
B-071-0-14	00.50	-	02.00	SS-1	14	100	-	29	20	26	17	8	NP	NP	NP	13	A-2-4 (0)	449
STA. 9+72, 26' LT.	02.00	-	03.50	SS-2	14	100	-				SAME AS SS-3					10	A-3a (VISUAL)	-
LATITUDE = 41.491724	03.50	-	05.00	SS-3	8	100	-	5	16	60	13	6	NP	NP	NP	12	A-3a (0)	-
LONGITUDE = -81.675914	05.00	-	06.50	SS-4	9	100	-				SAME AS SS-3					7	A-3a (VISUAL)	-
	06.50	-	08.00	SS-5	9	100	-	BROWN, FINE SAND, TRACE COARSE SAND, TRACE SILT, TRACE CLAY, TRACE GRAVEL								12	A-3 (VISUAL)	-
B-072-0-14	02.00	-	03.50	SS-1	8	100	-	5	5	82	4	4	NP	NP	NP	7	A-3 (0)	133
STA. 16+30, 9' LT.	03.50	-	05.00	SS-2	5	100	-				SAME AS SS-1					6	A-3 (VISUAL)	-
LATITUDE = 41.493452	05.00	-	06.50	SS-3	3	100	-	6	34	54	3	3	NP	NP	NP	7	A-3 (0)	-
LONGITUDE = -81.675216	06.50	-	08.00	SS-4	6	100	-				SAME AS SS-3					7	A-3 (VISUAL)	-
B-105-0-14	02.00	-	03.50	SS-1	13	89	-	7	19	59	10	5	NP	NP	NP	6	A-3a (0)	22
STA. 28+96, 36' RT.	03.50	-	05.00	SS-2	10	100	-				SAME AS SS-3					5	A-3 (VISUAL)	-
LATITUDE = 41.496770	05.00	-	06.50	SS-3	8	100	-	6	17	69	5	3	NP	NP	NP	8	A-3 (0)	-
LONGITUDE = -81.673828	06.50	-	08.00	SS-4	9	100	-				SAME AS SS-3					5	A-3 (VISUAL)	-
B-106-0-14	02.00	-	03.50	SS-1	14	0	-				NO RECOVERY					-	-	-
STA. 30+65, 112' RT.	03.50	-	05.00	SS-2	13	11	-				SAME AS SS-3					6	A-3a (VISUAL)	18
LATITUDE = 41.497213	05.00	-	06.50	SS-3	6	100	-	0	2	77	13	8	NP	NP	NP	12	A-3a (0)	-
LONGITUDE = -81.673404	06.50	-	07.40	SS-4A	8	100	-				SAME AS SS-3					9	A-3a (VISUAL)	-
	07.40	-	08.00	SS-4B	-	-	-	0	1	19	56	24	29	18	11	24	A-6a (8)	-
B-107-0-14	02.00	-	03.50	SS-1	22	100	-	9	11	51	22	7	NP	NP	NP	10	A-3a (0)	13
STA. 31+91, 37' LT.	03.50	-	05.00	SS-2	10	56	-				SAME AS SS-3					9	A-3 (VISUAL)	-
LATITUDE = 41.497575	05.00	-	06.50	SS-3	10	100	-	0	7	85	6	2	NP	NP	NP	7	A-3 (0)	-
LONGITUDE = -81.673961	06.50	-	08.00	SS-4	12	100	-				SAME AS SS-3					5	A-3 (VISUAL)	-
B-108-0-14	02.00	-	03.50	SS-1	11	100	-	8	24	53	8	7	NP	NP	NP	7	A-3a (0)	160
STA. 37+55, 66' RT.	03.50	-	05.00	SS-2	13	100	-				SAME AS SS-1					5	A-3a (VISUAL)	-
LATITUDE = 41.499148	05.00	-	06.50	SS-3	14	100	-				SAME AS SS-1					5	A-3a (VISUAL)	-
LONGITUDE = -81.673887	06.50	-	08.00	SS-4	11	100	-	0	8	86	3	3	NP	NP	NP	5	A-3 (0)	-
B-109-0-14	02.00	-	03.50	SS-1	5	100	-	5	35	43	11	6	NP	NP	NP	9	A-3a (0)	133
STA. 37+53, 76' RT.	03.50	-	05.00	SS-2	8	100	-				SAME AS SS-1					6	A-3a (VISUAL)	-
LATITUDE = 41.499682	05.00	-	06.50	SS-3	11	100	-	40	16	38	4	2	NP	NP	NP	6	A-1-b (0)	-
LONGITUDE = -81.674243	06.50	-	08.00	SS-4	9	100	-	ORANGISH BROWN, COARSE AND FINE SAND, LITTLE SILT, TRACE CLAY, TRACE GRAVEL								7	A-3a (VISUAL)	-

Preliminary Plans - For Reference Only

GEOTECHNICAL PROFILE - ROADWAY
SUMMARY OF SOIL TEST DATA

MODEL: Sheet PAPERSIZE: 34x22 (In.) DATE: 3/28/2025 TIME: 8:32:02 AM USER: AsIddIq!
pw:\\mb-us-pw.bentley.com:mb-us-pw-03\Documents\Cleveland_OH\OI_Projects\ODOT\District2\82382\400-Engineering\Geotechnical\Sheets\82382_ID005.dgn

SUMMARY OF SOIL TEST DATA
CARNEGIE AVENUE

EXPLORATION NO., STATION & OFFSET	FROM		TO	SAMPLE ID	N60	% REC	HP tsf	% GR	% CS	% FS	% SILT	% CLAY	LL	PL	PI	% WC	ODOT CLASS (GI)	ppm SO4
B-091-0-14	00.00	-	00.00								AUGER REFUSAL AT 3.0'							
STA. 21+73, 38' LT.	00.00	-	00.00															
LATITUDE = 41.495042	00.00	-	00.00															
LONGITUDE = -81.684256	00.00	-	00.00															
B-092-0-14	02.00	-	03.50	SS-1	18	100		14	31	40	10	5	NP	NP	NP	6	A-3a (0)	67
STA. 26+82, 264' LT.	03.50	-	05.00	SS-2	8	100		-	-	-	-	-	-	-	-	6	A-3a (VISUAL)	-
LATITUDE = 41.496341	05.00	-	06.50	SS-3	5	100		-	-	-	-	-	-	-	-	8	A-3a (VISUAL)	-
LONGITUDE = -81.683187	06.50	-	08.00	SS-4	5	100		12	25	54	6	3	NP	NP	NP	7	A-3 (0)	-
B-093-0-14	01.00	-	02.50	SS-1	41	100		-	-	-	-	-	-	-	-	7	A-1-b (VISUAL)	262
STA. 22+69, 32' RT.	02.50	-	04.00	SS-2	15	100		23	26	29	14	8	NP	NP	NP	9	A-3a (0)	-
LATITUDE = 41.495030	04.00	-	05.50	SS-3	13	100		42	20	15	18	5	NP	NP	NP	8	A-1-b (0)	-
LONGITUDE = -81.683824	05.50	-	07.00	SS-4	10	89					SAME AS SS-3					10	A-1-b (VISUAL)	-
B-095-0-14	02.00	-	03.50	SS-1	9	33	-									5	A-1-b (VISUAL)	924
STA. 29+11, 29' RT.	03.50	-	05.00	SS-2	4	78	-				SAME AS SS-3					5	A-1-b (VISUAL)	-
LATITUDE = 41.496030	05.00	-	06.50	SS-3	3	44	-	26	36	27	7	4	NP	NP	NP	5	A-1-b (0)	-
LONGITUDE = -81.681895	06.50	-	08.00	SS-4	3	89	-	19	29	43	6	3	NP	NP	NP	6	A-3 (0)	-
B-096-0-14	02.00	-	03.50	SS-1	12	100	-				SAME AS SS-2					7	A-3a (VISUAL)	182
STA. 31+14, 0' RT.	03.50	-	05.00	SS-2	5	100	-	16	33	37	8	6	NP	NP	NP	6	A-3a (0)	-
LATITUDE = 41.496409	05.00	-	06.50	SS-3	12	100	-				SAME AS SS-2					6	A-3a (VISUAL)	-
LONGITUDE = -81.681341	06.50	-	08.00	SS-4	7	100	-	10	26	40	15	9	NP	NP	NP	9	A-3a (0)	-
B-097-0-14	02.00	-	03.50	SS-1	13	0	-				NO RECOVERY					-	-	-
STA. 36+06, 32' RT.	03.50	-	05.00	SS-2	8	0	-				NO RECOVERY					-	-	-
LATITUDE = 41.497097	05.00	-	06.50	SS-3	7	67	-	16	22	50	7	5	NP	NP	NP	9	A-3a (0)	-
LONGITUDE = -81.679790	06.50	-	08.00	SS-4	16	100	-				SAME AS SS-3					7	A-3a (VISUAL)	-
B-098-0-14	02.00	-	03.50	SS-1	8	100	-	BROWN, FINE SAND, LITTLE COARSE SAND, TRACE GRAVEL, TRACE SILT, TRACE CLAY								7	A-3 (VISUAL)	40
STA. 39+50, 12' LT.	03.50	-	05.00	SS-2	8	100	-	14	48	29	5	4	NP	NP	NP	7	A-1-b (0)	-
LATITUDE = 41.497667	05.00	-	06.50	SS-3	13	100	-				SAME AS SS-4					8	A-3 (VISUAL)	-
LONGITUDE = -81.678786	06.50	-	08.00	SS-4	12	100	-	2	15	76	4	3	NP	NP	NP	6	A-3 (0)	-
B-099-0-14	02.00	-	03.50	SS-1	8	100	-	12	26	46	10	6	NP	NP	NP	8	A-3a (0)	40
STA. 43+78, 8' RT.	03.50	-	05.00	SS-2	18	100	-	9	30	47	8	6	NP	NP	NP	7	A-3a (0)	-
LATITUDE = 41.498096	05.00	-	06.50	SS-3	12	11	-				SAME AS SS-2					7	A-3a (VISUAL)	-
LONGITUDE = -81.677330	06.50	-	08.00	SS-4	5	11	-				SAME AS SS-2					7	A-3a (VISUAL)	-
B-100-0-14	02.00	-	03.50	SS-1	11	100	-	BROWN, COARSE AND FINE SAND, LITTLE GRAVEL, TRACE SILT, TRACE CLAY								7	A-3a (VISUAL)	240
STA. 47+10, 46' RT.	03.50	-	05.00	SS-2	7	100	-	22	42	26	6	4	NP	NP	NP	7	A-1-b (0)	-
LATITUDE = 41.498385	05.00	-	06.50	SS-3	9	100	-	10	33	34	15	8	NP	NP	NP	7	A-3a (0)	-
LONGITUDE = -81.676170	06.50	-	08.00	SS-4	9	100	-				SAME AS SS-3					8	A-3a (VISUAL)	-
B-101-0-14	02.00	-	03.50	SS-1	14	100	-	11	20	57	7	5	NP	NP	NP	6	A-3a (0)	62
STA. 50+04, 110' LT.	03.50	-	05.00	SS-2	11	17	-				SAME AS SS-1					9	A-3a (VISUAL)	-
LATITUDE = 41.499108	05.00	-	06.50	SS-3	11	100	-	2	12	74	7	5	NP	NP	NP	5	A-3a (0)	-
LONGITUDE = -81.675407	06.50	-	08.00	SS-4	11	100	-				SAME AS SS-3					6	A-3a (VISUAL)	-
B-108-0-14	02.00	-	03.50	SS-1	11	100	-	8	24	53	8	7	NP	NP	NP	7	A-3a (0)	160
STA. 53+98, 9' LT.	03.50	-	05.00	SS-2	13	100	-				SAME AS SS-1					5	A-3a (VISUAL)	-
LATITUDE = 41.499148	05.00	-	06.50	SS-3	14	100	-				SAME AS SS-1					5	A-3a (VISUAL)	-
LONGITUDE = -81.673887	06.50	-	08.00	SS-4	11	100	-	0	8	86	3	3	NP	NP	NP	5	A-3 (0)	-

Preliminary Plans - For Reference Only

GEOTECHNICAL PROFILE - ROADWAY
SUMMARY OF SOIL TEST DATA

NEAS
National Engineering & Architectural Services Inc.

5710 Westbourne Avenue
Columbus, OH 43213
614.892.0162

Consolidation Test

Project Name: CUY-90-16.28 (CCG3A) | Prepared by: LR
Source: B-134-2-20 ST-1 (59.1' - 59.2') | Checked by: ZM
Description: Very stiff, gray, SILT, some clay, trace sand, trace gravel, damp. | Date: 4/26/2021

Test Specification: ASTM D 2435
Initial Void Ratio: 0.573 | Initial Bulk Unit Weight (lb/ft^3): 129
In-situ Vertical Effective Stress (psf): 7100 | Dry Unit Weight (lb/ft^3): 107

Compression and Swelling Index

Compression Index (*Cc*): 0.062 | Preconsolidation Pressure (σ_c') (psf): **9500**
Recompression Index (*Cr*): 0.008 | Over-Consolidation Ratio (*OCR*): **1.34**

Consolidation Curve

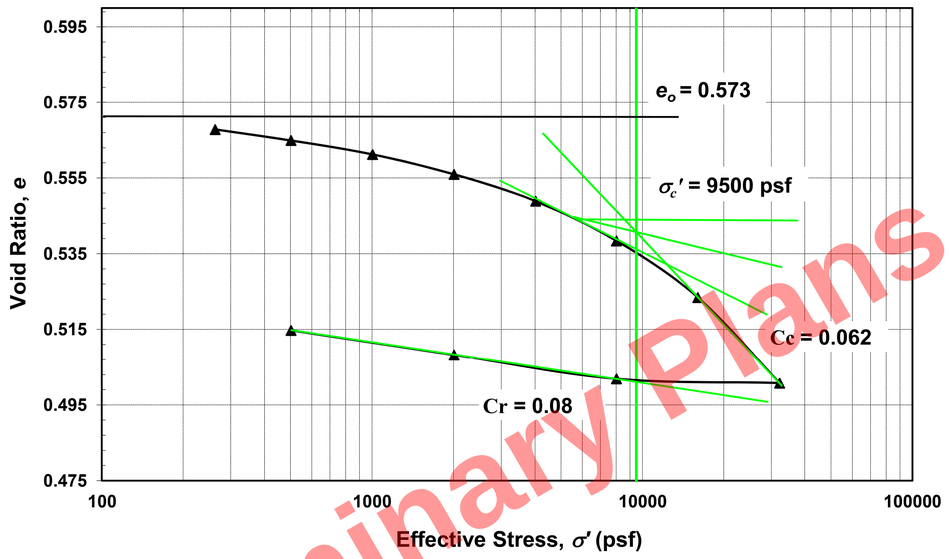

Loading

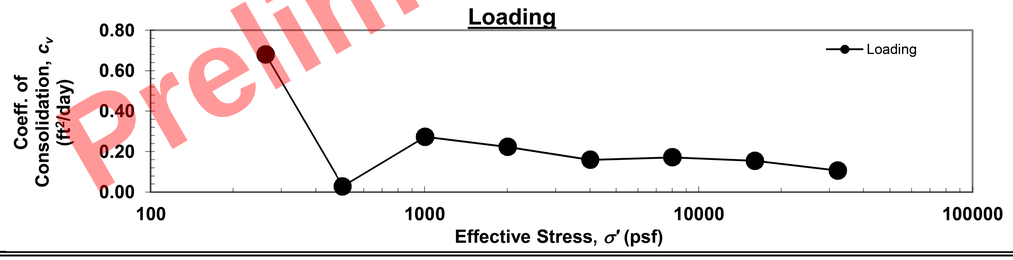

NEAS
National Engineering & Architectural Services Inc.

5710 Westbourne Avenue
Columbus, OH 43213
614.892.0162

Consolidation Test

Project Name: CUY-90-16.28 (CCG3A) | Prepared by: LR
Source: B-139-1-20 ST-1 (81.7' - 81.8') | Checked by: ZM
Description: Very stiff, gray, SILT, some clay, trace sand, trace gravel, moist. | Date: 8/2/2021

Test Specification: ASTM D 2435
Initial Void Ratio: 0.570 | Initial Bulk Unit Weight (lb/ft^3): 130
In-situ Vertical Effective Stress (psf): 7300 | Dry Unit Weight (lb/ft^3): 107

Compression and Swelling Index

Compression Index (*Cc*): 0.091 | Preconsolidation Pressure (σ_c') (psf): **8000**
Recompression Index (*Cr*): 0.010 | Over-Consolidation Ratio (*OCR*): **1.10**

Consolidation Curve

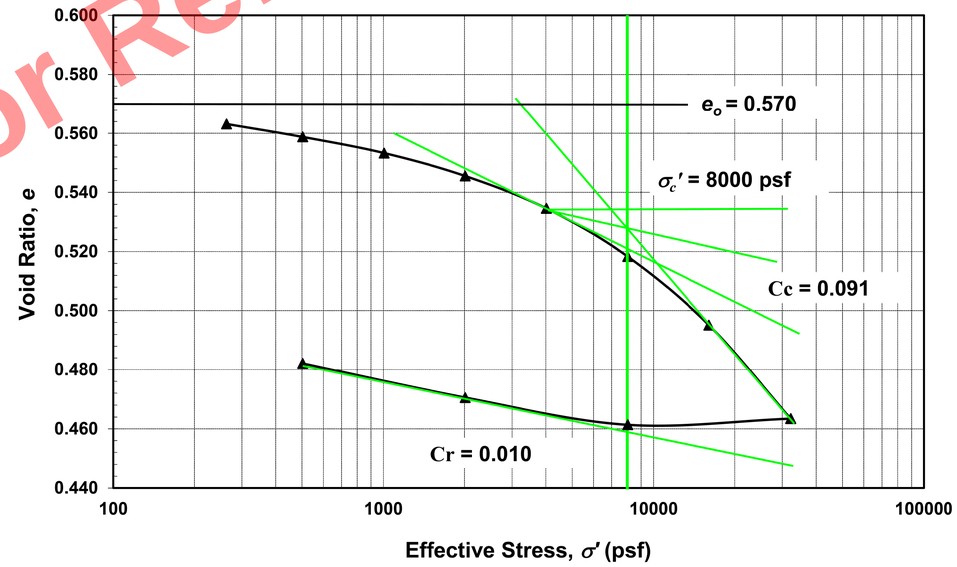

Loading

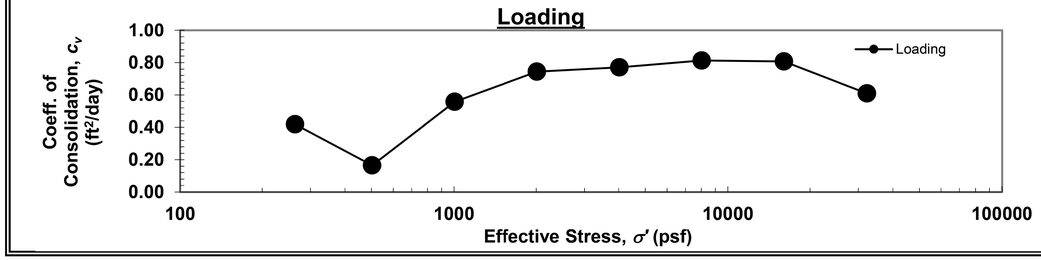

Preliminary Plans - For Reference Only

CUY-90-16.28 (CCG3A)

GEOTECHNICAL PROFILE - ROADWAY
LABORATORY TEST DATA

DESIGN AGENCY
NEAS
National Engineering & Architectural Services Inc.
2800 CORPORATE EXCHANGE DR, SUITE 240
COLUMBUS, OH, 43231
TEL:614.714.0299
WWW.NEASINC.COM

DESIGNER	MWJ & DT
REVIEWER	BPA 08/23/24
PROJECT ID	82382
SUBSET	11
TOTAL	310
SHEET	P.2397
TOTAL	2696

MODEL: Sheet PAPERSIZE: 34x22 (in.) DATE: 3/28/2025 TIME: 8:32:08 AM USER: AsiddiqI
pw:\\mb-us-pw.bentley.com:mb-us-pw-03\Documents\Cleveland.OH\DgnProjects\D0OT\District2\82382\400-Engineering\Geotechnical\Sheets\82382_ZD001.dgn

NEAS
National Engineering & Architectural Services Inc.

5710 Westbourne Avenue
Columbus, OH 43213
614.892.0162

Consolidation Test

Project Name: CUY-90-16.28 (CCG3A) | Prepared by: LR
Source: B-139-1-20 ST-2 (104.6' - 104.7') | Checked by: ZM
Description: Hard, gray, SILT, some clay, trace sand, trace gravel, damp. | Date: 8/2/2021

Test Specification: ASTM D 2435
Initial Void Ratio: 0.480 | Initial Bulk Unit Weight (lb/ft^3): 134
In-situ Vertical Effective Stress (psf): 8700 | Dry Unit Weight (lb/ft^3): 114

Compression and Swelling Index

Compression Index (*Cc*): 0.059 | Preconsolidation Pressure (σ_c') (psf): **9000**
Recompression Index (*Cr*): 0.008 | Over-Consolidation Ratio (*OCR*): **1.03**

Consolidation Curve

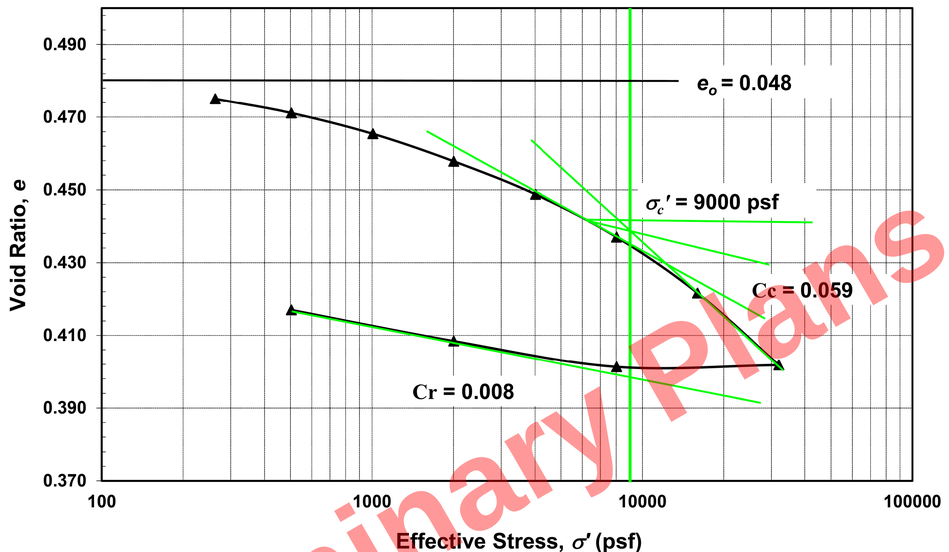

Loading

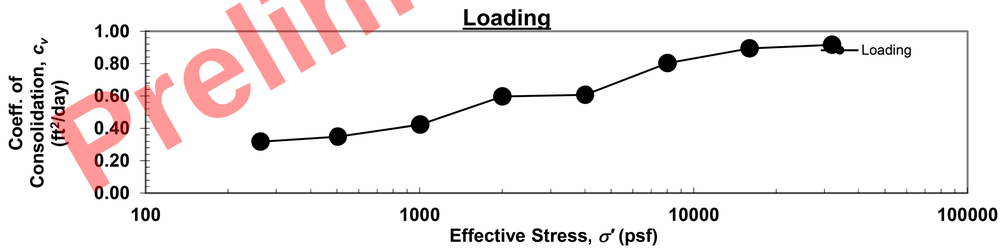

Consolidation Test

Project Name: CUY-90-16.28 (CCG3A) | Prepared by: LR
Source: B-141-1-20 ST-1 (49.8'-49.9') | Checked by: ZM
Description: Medium stiff, gray, SILT, some clay, trace sand, trace gravel, moist. | Date: 6/24/2021

Test Specification: ASTM D 2435
Initial Void Ratio: 0.564 | Initial Bulk Unit Weight (lb/ft^3): 131
In-situ Vertical Effective Stress (psf): 4400 | Dry Unit Weight (lb/ft^3): 108

Compression and Swelling Index

Compression Index (*Cc*): 0.043 | Preconsolidation Pressure (σ_c')(psf): **7000**
Recompression Index (*Cr*): 0.003 | Over-Consolidation Ratio (*OCR*): **1.6**

Consolidation Curve

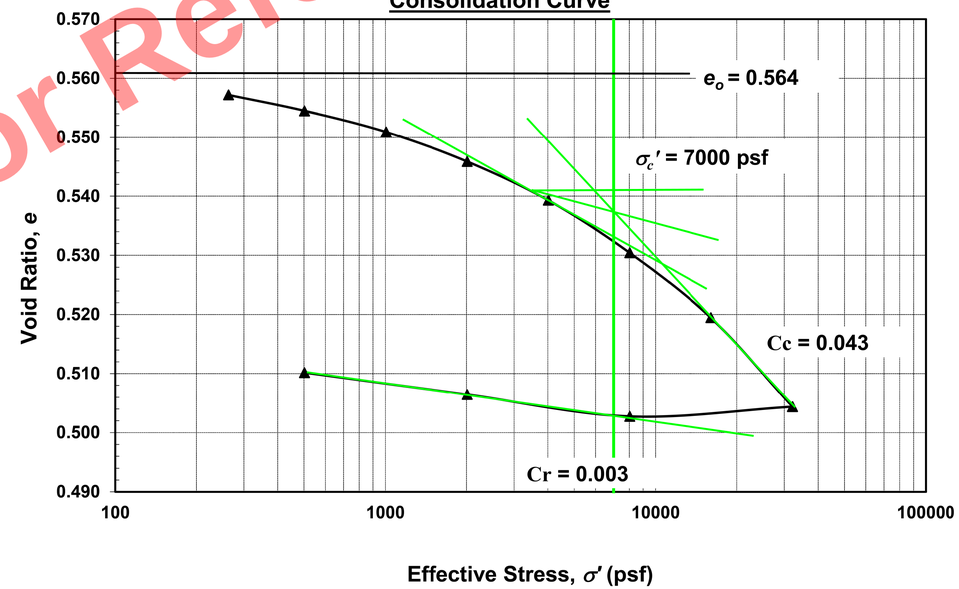

Loading

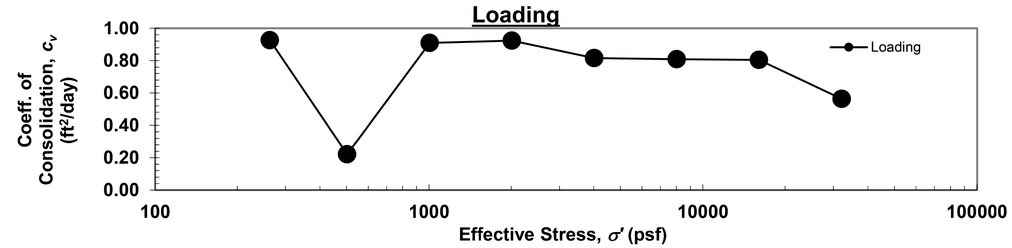

Preliminary Plans - For Reference Only

CUY-90-16.28 (CCG3A)

MODEL: Sheet PAPERSIZE: 34x22 (in.) DATE: 3/28/2025 TIME: 8:32:29 AM USER: Asiddiqi
pw:\\mb-us-pw.bentley.com:mb-us-pw-03\Documents\Cleveland.OH\OiL_Projects\ODOT\District2\82382\400-Engineering\Geotechnical\Sheets\82382_ZD002.dgn

GEOTECHNICAL PROFILE - ROADWAY
LABORATORY TEST DATA

DESIGN AGENCY
NEAS
National Engineering & Architectural Services Inc.
2800 CORPORATE EXCHANGE DR, SUITE 240
COLUMBUS, OH, 43231
TEL:614.714.0299
WWW.NEASINC.COM

DESIGNER: MWJ & DT
REVIEWER: BPA 08/23/24
PROJECT ID: 82382
SUBSET 12 | TOTAL 310
SHEET P.2398 | TOTAL 2696

NEAS
National Engineering & Architectural Services Inc.

5710 Westbourne Avenue
Columbus, OH 43213
614.892.0162

Consolidation Test

Project Name: CUY-90-16.28 (CCG3A) | Prepared by: LR
Source: B-141-1-20 ST-2 (64.1'-64.2') | Checked by: ZM
Description: Stiff, gray, SILT, some clay, trace sand, trace gravel, damp. | Date: 6/24/2021

Test Specification: ASTM D 2435
Initial Void Ratio: 0.519 | Initial Bulk Unit Weight (lb/ft^3): 134
In-situ Vertical Effective Stress (psf): 5300 | Dry Unit Weight (lb/ft^3): 111

Compression and Swelling Index

Compression Index (Cc): 0.079 | Preconsolidation Pressure (σ_c')(psf): **7600**
Recompression Index (Cr): 0.007 | Over-Consolidation Ratio (OCR): **1.4**

Consolidation Curve

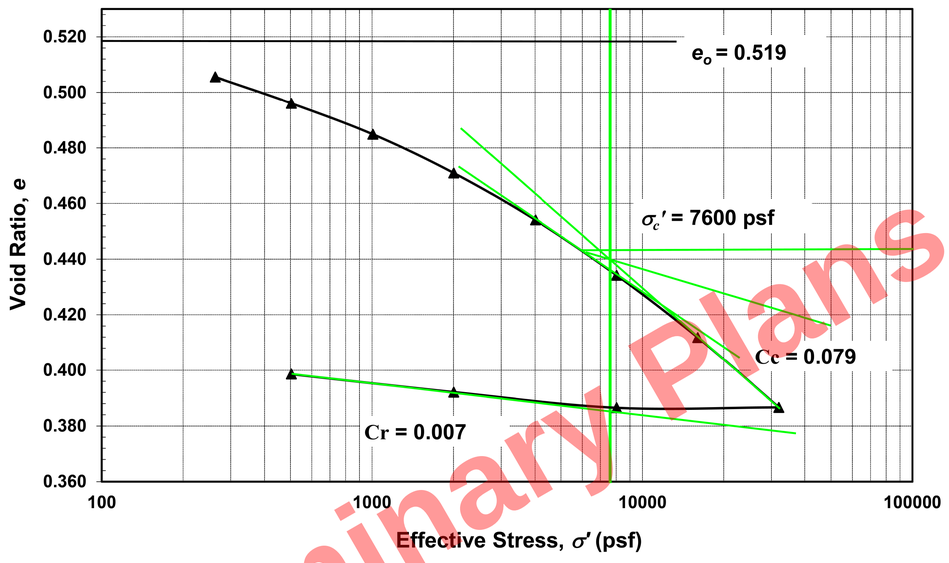

Loading

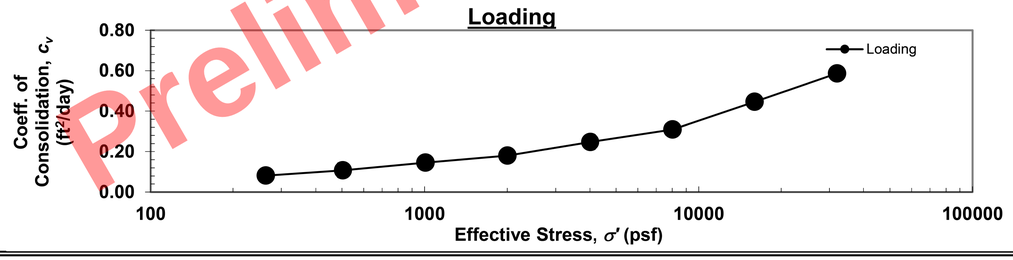

NEAS
National Engineering & Architectural Services Inc.

5710 Westbourne Avenue
Columbus, OH 43213
614.892.0162

Consolidation Test

Project Name: CUY-90-16.28 (CCG3A) | Prepared by: LR
Source: B-142-1-20 ST-1 (69.2' - 69.3') | Checked by: ZM
Description: Medium stiff, gray, SILT, some clay, trace sand, trace gravel, moist. | Date: 4/26/2021

Test Specification: ASTM D 2435
Initial Void Ratio: 0.600 | Initial Bulk Unit Weight (lb/ft^3): 130
In-situ Vertical Effective Stress (psf): 8300 | Dry Unit Weight (lb/ft^3): 105

Compression and Swelling Index

Compression Index (Cc): 0.092 | Preconsolidation Pressure (σ_c') (psf): **9000**
Recompression Index (Cr): 0.013 | Over-Consolidation Ratio (OCR): **1.1**

Consolidation Curve

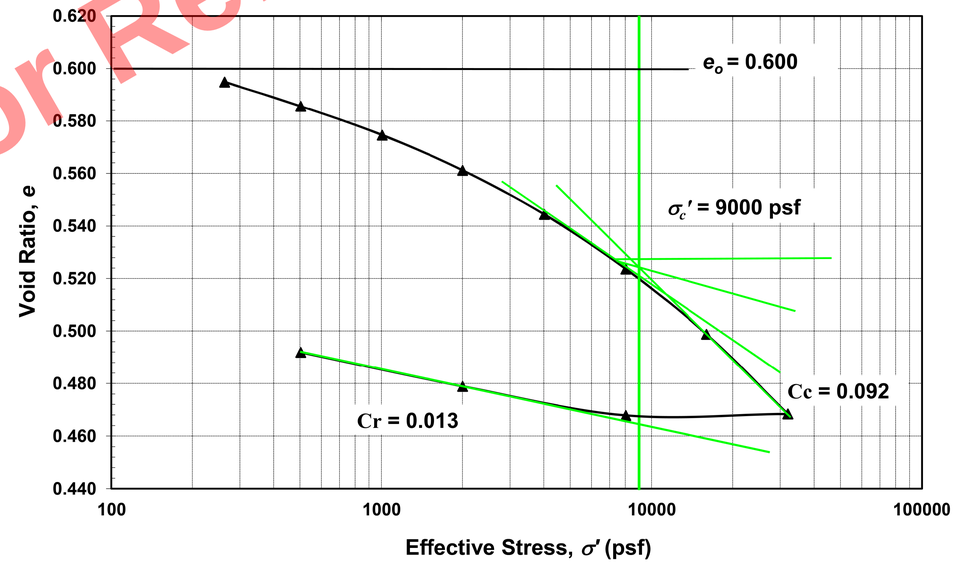

Loading

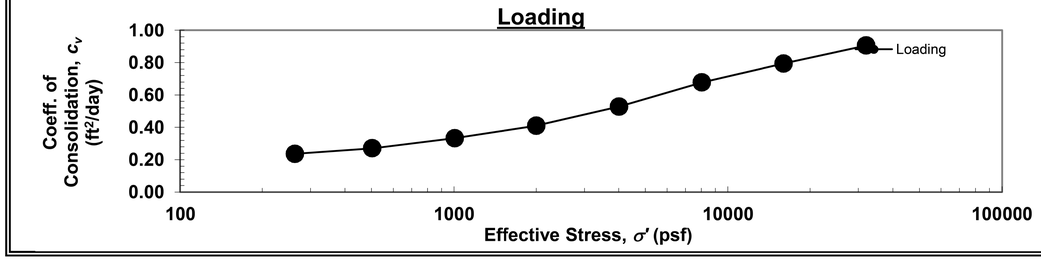

Preliminary Plans - For Reference Only

CUY-90-16.28 (CCG3A)

MODEL: Sheet PAPERSIZE: 34x22 (in.) DATE: 3/28/2025 TIME: 8:32:48 AM USER: AsiddiqI
pw:\\mb-us-pw.bentley.com:mb-us-pw-03\Documents\Cleveland_OHIO\Projects\ODOT\District2\82382\400-Engineering\Geotechnical\Sheets\8238Z_ZD003.dgn

GEOTECHNICAL PROFILE - ROADWAY
LABORATORY TEST DATA

DESIGN AGENCY
NEAS
National Engineering & Architectural Services Inc.
2800 CORPORATE EXCHANGE DR, SUITE 240
COLUMBUS, OH, 43231
TEL:614.714.0299
WWW.NEASINC.COM

DESIGNER: MWJ & DT
REVIEWER: BPA 08/23/24
PROJECT ID: 82382
SUBSET: 13 | TOTAL: 310
SHEET: P.2399 | TOTAL: 2696

BARR & PREVOST
ENGINEERING | TESTING | SURVEYING

5710 Westbourne Avenue
Columbus, OH 43213
614-892-0162

Consolidation Test

Project Name: CUY-77-13.80
Source: B-144-0-14, ST-21, 71.2' - 71.4'
Description: Very stiff, SILT, some clay, trace sand.

Prepared by: CH
Checked by:
Date: 12/9/2014

Test Specification: ASTM D 2435-04
Initial Void Ratio: 0.585
In-situ Vertical Effective Stress: 5900 psf

Initial Bulk Unit Weight (lb/ft^3): 128
Dry Unit Weight (lb/ft^3): 106

Compression and Swelling Index

Compression Index (Cc): 0.103
Recompression Index (Cr): 0.020

Preconsolidation Pressure (σ_c'): **7000 psf**
Over-Consolidation Ratio (OCR): **1.2**

Consolidation Curve

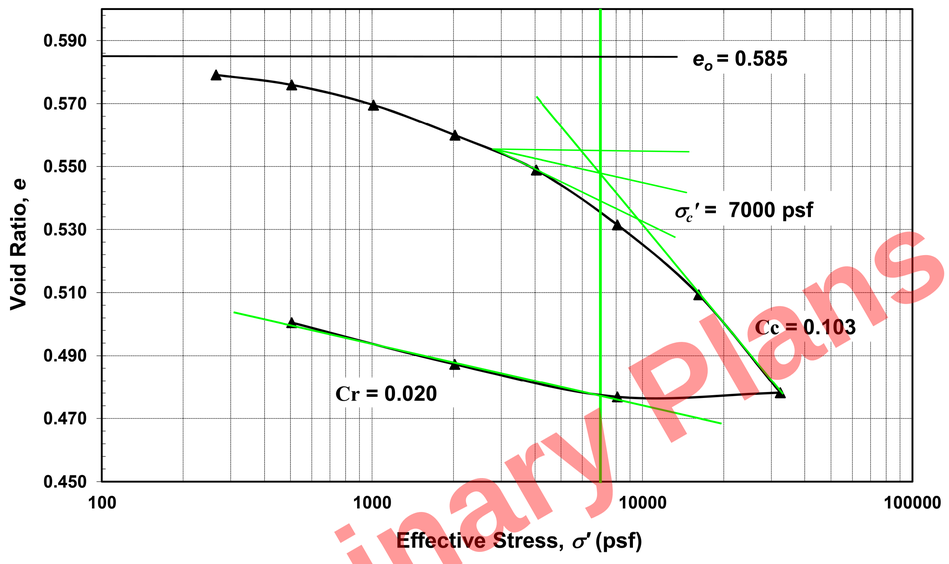

Loading

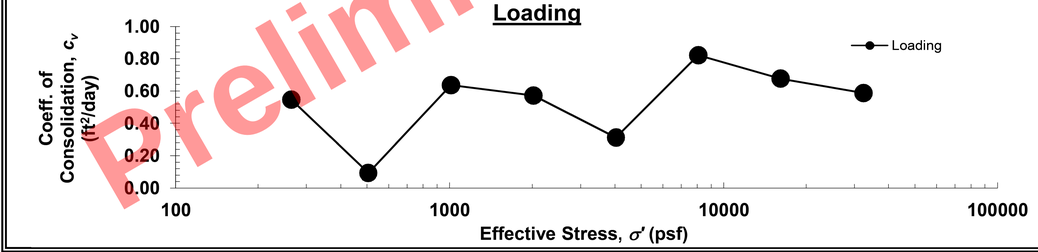

BARR ENGINEERING, INC.

5710 Westbourne Avenue
Columbus, OH 43213
614-892-0162

Unconfined Compressive Strength of Cohesive Soil

(Project: CUY-CCG3, Boring Location: B-126-0-14, ST-25, Depth: 86.7 - 87.2 ft)

Tested Date: 2/9/2015

Specimen Properties

Average Dia., D_{avg} (in): 2.80
Average Height H_{avg} (in): 5.76
Area, A (in^2): 6.16
Volume, V (in^3): 35.47
Wet Mass of Specimen (lb): 2.7
Moisture Content (%): 20.8
Dry Mass of Specimen (lb): 2.2
Wet Unit Weight, γ (lb/ft^3): 130.2
Dry Unit Weight, γ_d (lb/ft^3): 107.8

Final Specimen Figure



Results

Unconfined Compressive Strength (psf): **3873**
Strain (%): **8.5**

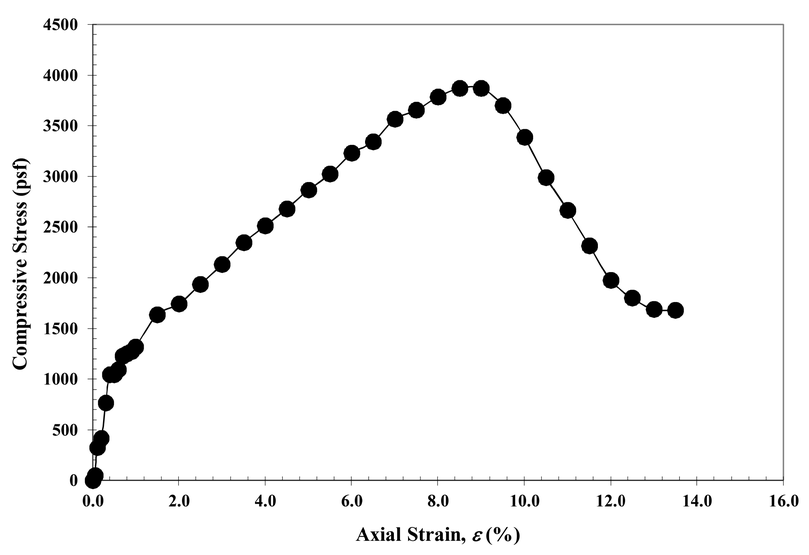

Notes: Stiff, gray, SILT and CLAY, trace sand.

Preliminary Plans - Not For Reference Only

CUY-90-16.28 (CCG3A)

MODEL: Sheet PAPERSIZE: 34x22 (in.) DATE: 3/28/2025 TIME: 8:33:09 AM USER: AsIddIqI
pw:\\mb-us-pw.bentley.com:mb-us-pw-03\Documents\Cleveland_OH\OL_Projects\ODOT\District12\82382\400-Engineering\Geotechnical\Sheets\82382_ZD004.dgn

GEOTECHNICAL PROFILE - ROADWAY
LABORATORY TEST DATA

DESIGN AGENCY
NEAS
National Engineering & Architectural Services Inc.
2800 CORPORATE EXCHANGE DR, SUITE 240
COLUMBUS, OH, 43231
TEL:614.714.0299
WWW.NEASINC.COM

DESIGNER: MWJ & DT
REVIEWER: BPA 08/23/24
PROJECT ID: 82382
SUBSET: 14 TOTAL: 310
SHEET: P.2400 TOTAL: 2696

BARR ENGINEERING, INC.

5710 Westbourne Avenue
Columbus, OH 43213
614-892-0162

Unconfined Compressive Strength of Cohesive Soil

(Project: CUY-CCG3, Boring Location: B-144-0-14, ST-21, Depth: 71.5 - 72.0 ft)

Tested Date: 11/3/2014

Specimen Properties

Average Dia., D_{avg} (in):	2.82
Average Height, H_{avg} (in):	6.00
Area, A (in^2):	6.26
Volume, V (in^3):	37.58
Wet Mass of Specimen (lb):	2.9
Moisture Content (%):	19.7
Dry Mass of Specimen (lb):	2.4
Wet Unit Weight, γ (lb/ft^3):	133.7
Dry Unit Weight, γ_d (lb/ft^3):	111.7

Final Specimen Figure



Results

Unconfined Compressive Strength (psf):	**6600**
Strain (%):	**10.0**

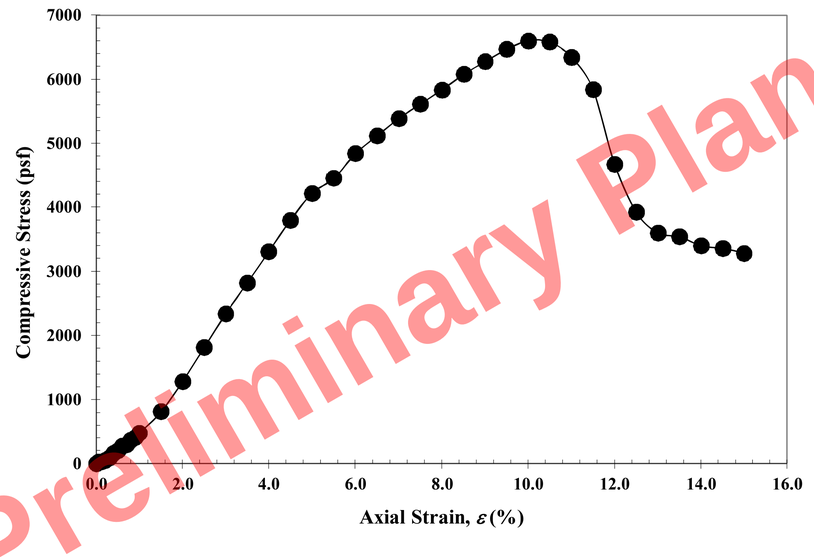

Notes: Very stiff, gray, SILT, some clay, trace sand.

NEAS
National Engineering & Architectural Services Inc.

5710 Westbourne Avenue
Columbus, OH 43213
614-892-0162

Unconfined Compressive Strength of Cohesive Soil (ASTM D2166)

(Project: CUY-90-16.28, Boring Location: B-134-2-20, ST-1, Depth: 59.3 - 59.8ft)

Tested Date: 4/12/2021

Specimen Properties

Average Dia., D_{avg} (in):	2.86
Average Height, H_{avg} (in):	5.74
Area, A (in^2):	6.43
Volume, V (in^3):	36.90
Wet Mass of Specimen (lb):	2.9
Moisture Content (%):	19.0
Dry Mass of Specimen (lb):	2.4
Wet Unit Weight, γ (lb/ft^3):	134.8
Dry Unit Weight, γ_d (lb/ft^3):	113.3

Final Specimen Figure



Results

Unconfined Compressive Strength (psf):	**6946**
Strain (%):	**8.0**

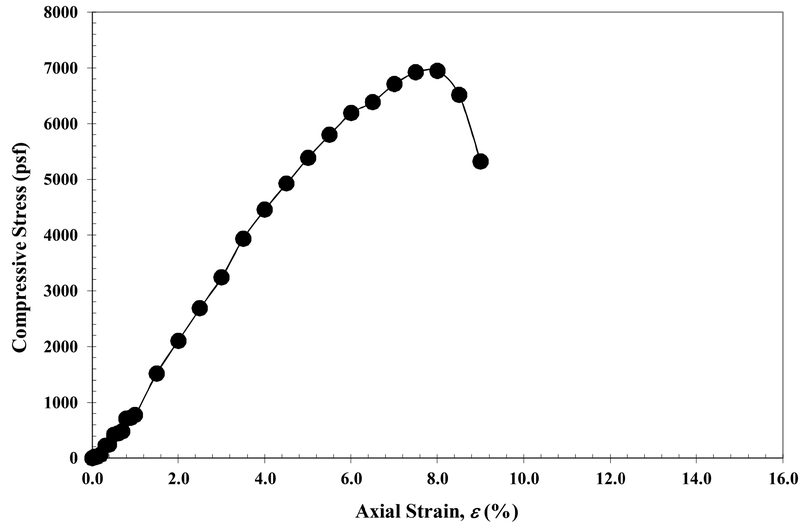

Notes: Very stiff, gray, SILT, some clay, trace sand, trace gravel, damp.

Preliminary Plans - Not For Reference Only

GEOTECHNICAL PROFILE - ROADWAY
LABORATORY TEST DATA

DESIGN AGENCY
NEAS
National Engineering & Architectural Services Inc.
2800 CORPORATE EXCHANGE DR, SUITE 240
COLUMBUS, OH, 43231
TEL:614.714.0299
WWW.NEASINC.COM

DESIGNER: MWJ & DT
REVIEWER: BPA 08/23/24
PROJECT ID: 82382
SUBSET: 15 TOTAL: 310
SHEET: P.2401 TOTAL: 2696

CUY-90-16.28 (CCG3A)

MODEL: Sheet PAPERSIZE: 34x22 (in.) DATE: 3/28/2025 TIME: 8:33:27 AM USER: AsIdIdI
pw:\\mb-us-pw.bentley.com:mb-us-pw-03\Documents\Cleveland_OH\OL_Projects\ODOT\District2\82382\400-Engineering\Geotechnical\Sheets\82382_ZD005.dgn

NEAS National Engineering & Architectural Services Inc.
5710 Westbourne Avenue
Columbus, OH 43213
614-892-0162

Unconfined Compressive Strength of Cohesive Soil (ASTM D2166)

(Project: CUY-90-16.28, Boring Location: B-134-3-20, ST-1, Depth: 64.0 - 64.5ft)

Tested Date: 4/9/2021

Specimen Properties

Average Dia., D_{avg} (in):	2.86
Average Height, H_{avg} (in):	5.73
Area, A (in^2):	6.44
Volume, V (in^3):	36.95
Wet Mass of Specimen (lb):	2.9
Moisture Content (%):	18.3
Dry Mass of Specimen (lb):	2.4
Wet Unit Weight, γ (lb/ft^3):	133.5
Dry Unit Weight, γ_d (lb/ft^3):	112.9

Final Specimen Figure



Results

Unconfined Compressive Strength (psf):	**6377**
Strain (%):	**5.5**

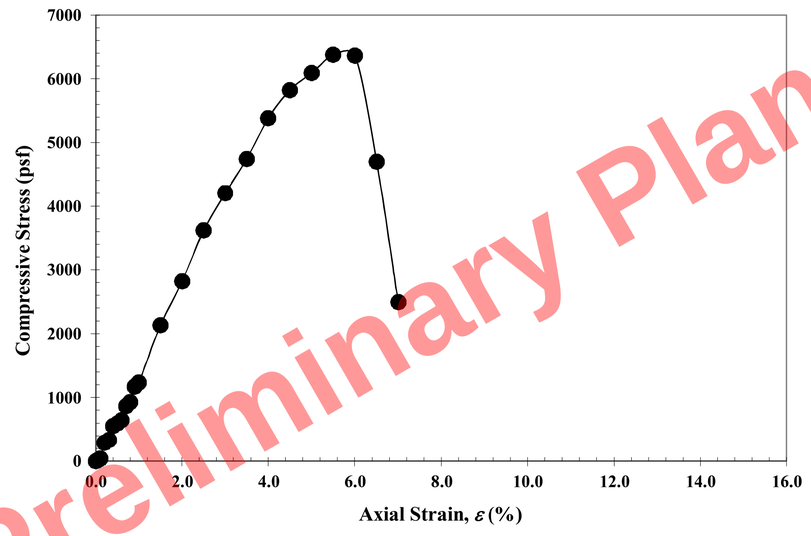

Notes: Very stiff, gray, SILT, little clay, trace sand, trace gravel, damp.

NEAS National Engineering & Architectural Services Inc.
5710 Westbourne Avenue
Columbus, OH 43213
614-892-0162

Unconfined Compressive Strength of Cohesive Soil (ASTM D2166)

(Project: CUY-90-16.28, Boring Location: B-141-1-20, ST-1, Depth: 49.1 - 49.6ft)

Tested Date: 6/7/2021

Specimen Properties

Average Dia., D_{avg} (in):	2.86
Average Height, H_{avg} (in):	5.74
Area, A (in^2):	6.42
Volume, V (in^3):	36.83
Wet Mass of Specimen (lb):	2.7
Moisture Content (%):	22.9
Dry Mass of Specimen (lb):	2.2
Wet Unit Weight, γ (lb/ft^3):	125.7
Dry Unit Weight, γ_d (lb/ft^3):	102.3

Final Specimen Figure



Results

Unconfined Compressive Strength (psf):	**1445**
Strain (%):	**8.0**

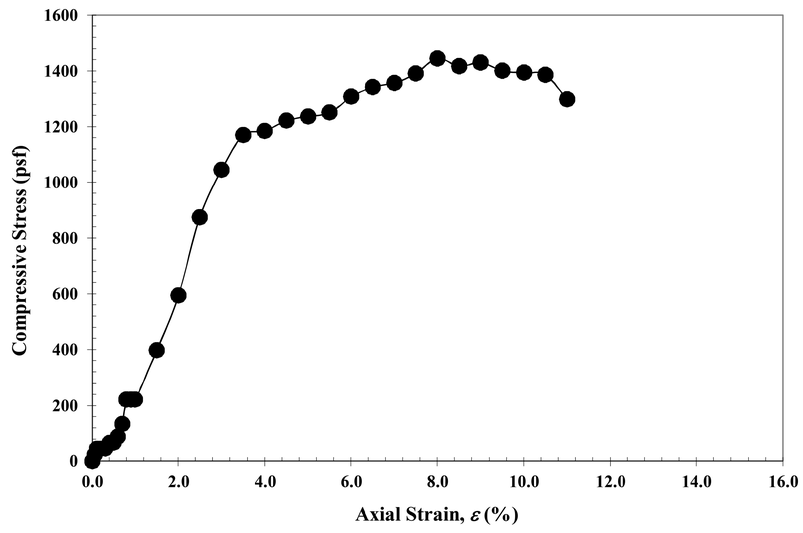

Notes: Medium stiff, gray, SILT, some clay, trace sand, trace gravel, moist.

Preliminary Plans - Not For Reference Only

GEOTECHNICAL PROFILE - ROADWAY
LABORATORY TEST DATA

DESIGN AGENCY
NEAS National Engineering & Architectural Services Inc.
2800 CORPORATE EXCHANGE DR, SUITE 240
COLUMBUS, OH, 43231
TEL:614.714.0299
WWW.NEASINC.COM

DESIGNER: MWJ & DT
REVIEWER: BPA 08/23/24
PROJECT ID: 82382
SUBSET: 16 | TOTAL: 310
SHEET: P.2402 | TOTAL: 2696

CUY-90-16.28 (CCG3A)

MODEL: Sheet PAPERSIZE: 34x22 (in.) DATE: 3/28/2025 TIME: 8:33:42 AM USER: AsIdIdI
pw:\\mb-us-pw.bentley.com:mb-us-pw-03\Documents\Cleveland_OH\OI_Projects\ODOT\District2\82382\400-Engineering\Geotechnical\Sheets\82382_ZD006.dgn

5710 Westbourne Avenue
Columbus, OH 43213
614-892-0162

Unconfined Compressive Strength of Cohesive Soil (ASTM D2166)

(Project: CUY-90-16.28, Boring Location: B-141-1-20, ST-2, Depth: 64.3 - 64.8ft)

Tested Date: 6/7/2021

Specimen Properties

Average Dia., D_{avg} (in):	2.86
Average Height, H_{avg} (in):	5.72
Area, A (in^2):	6.44
Volume, V (in^3):	36.83
Wet Mass of Specimen (lb):	2.8
Moisture Content (%):	19.9
Dry Mass of Specimen (lb):	2.4
Wet Unit Weight, γ (lb/ft^3):	132.9
Dry Unit Weight, γ_d (lb/ft^3):	110.8

Final Specimen Figure



Results

Unconfined Compressive Strength (psf):	**2082**
Strain (%):	**14.5**

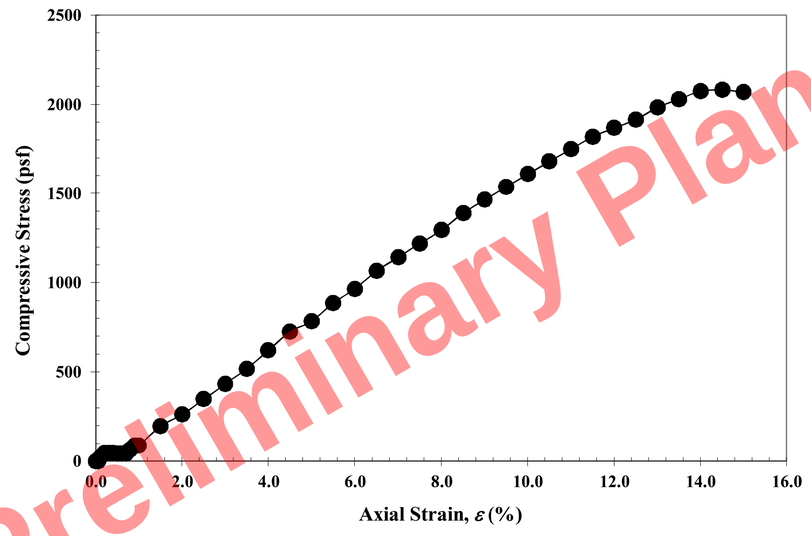

Notes: Stiff, gray, SILT, some clay, trace sand, trace gravel, damp.

5710 Westbourne Avenue
Columbus, OH 43213
614-892-0162

Unconfined Compressive Strength of Cohesive Soil (ASTM D2166)

(Project: CUY-90-16.28, Boring Location: B-142-1-20, ST-1, Depth: 69.4 - 69.9ft)

Tested Date: 4/12/2021

Specimen Properties

Average Dia., D_{avg} (in):	2.87
Average Height, H_{avg} (in):	5.69
Area, A (in^2):	6.47
Volume, V (in^3):	36.83
Wet Mass of Specimen (lb):	2.8
Moisture Content (%):	23.3
Dry Mass of Specimen (lb):	2.2
Wet Unit Weight, γ (lb/ft^3):	130.1
Dry Unit Weight, γ_d (lb/ft^3):	105.5

Final Specimen Figure



Results

Unconfined Compressive Strength (psf):	**1916**
Strain (%):	**13.0**

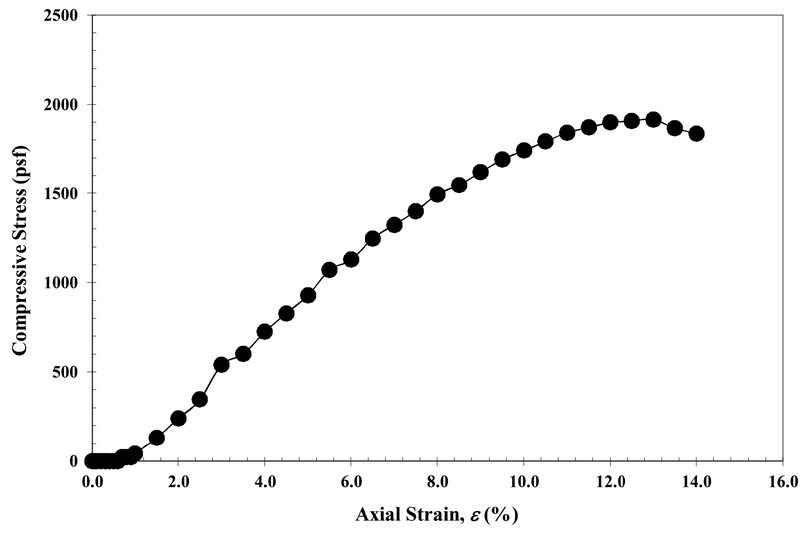

Notes: Medium stiff, gray, SILT, some clay, trace sand, trace gravel, moist.

Preliminary Plans - Not For Reference Only

GEOTECHNICAL PROFILE - ROADWAY
LABORATORY TEST DATA

DESIGN AGENCY
NEAS
National Engineering & Architectural Services Inc.
2800 CORPORATE EXCHANGE DR, SUITE 240
COLUMBUS, OH, 43231
TEL:614.714.0299
WWW.NEASINC.COM

DESIGNER: MWJ & DT
REVIEWER: BPA 08/23/24
PROJECT ID: 82382
SUBSET: 17 TOTAL: 310
SHEET: P.2403 TOTAL: 2696

CUY-90-16.28 (CCG3A)

MODEL: Sheet PAPERSIZE: 34x22 (in.) DATE: 3/28/2025 TIME: 8:33:59 AM USER: AsIdIdI
pw:\\mb-us-pw.bentley.com:mb-us-pw-03\Documents\Cleveland_OH\DL_Projects\ODOT\District2\82382\400-Engineering\Geotechnical\Sheets\82382_ZD007.dgn

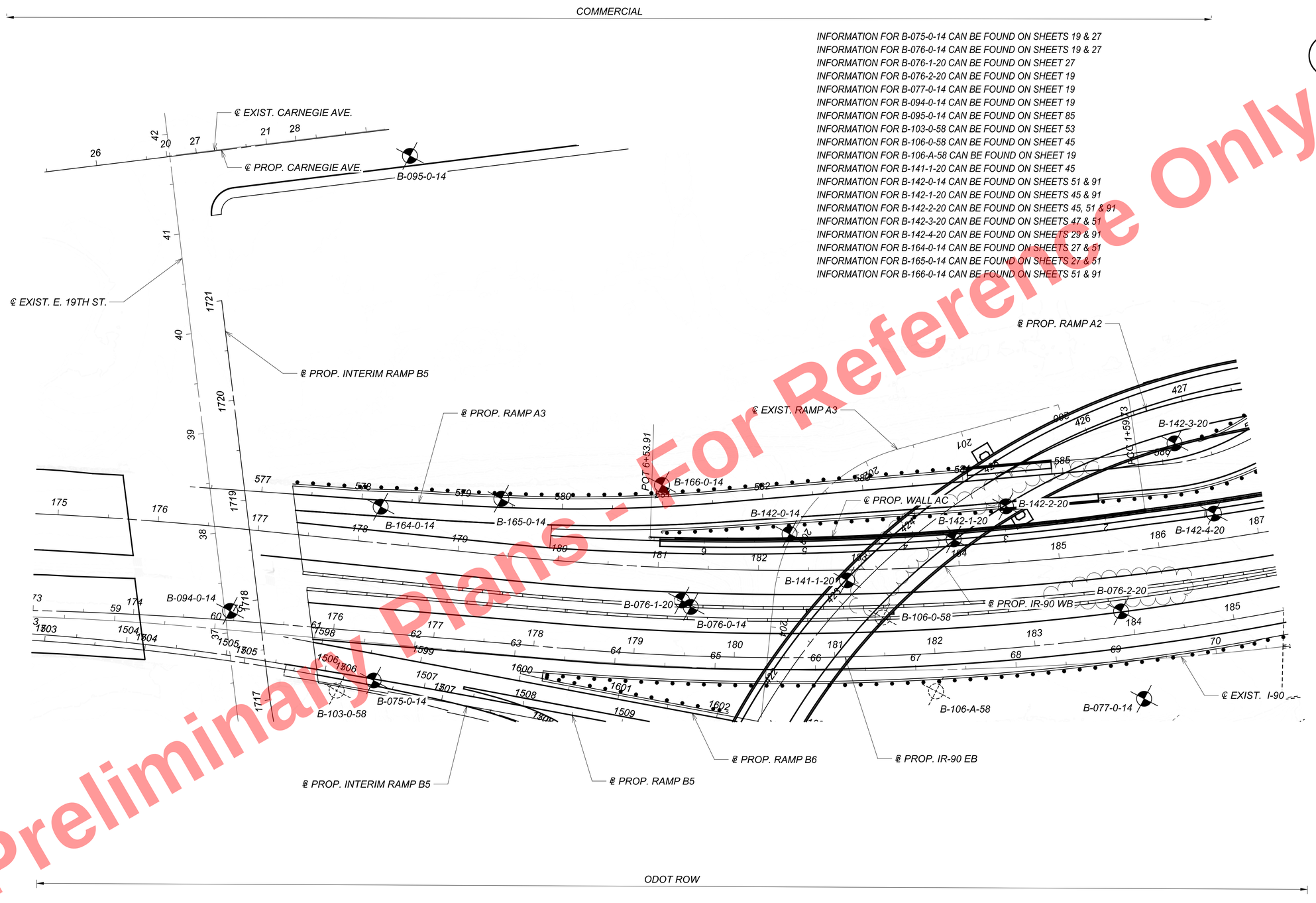

Preliminary Plans - For Reference Only

HORIZONTAL SCALE IN FEET
0 25 50 100

GEOTECHNICAL PROFILE - ROADWAY
STA. 173+00 TO STA. 185+50 IR-90 EB

CUY-90-16.28 (CCG3A)

MODEL: IP_940NEW PAPERSIZE: 34x22 (In.) DATE: 3/28/2025 TIME: 8:35:59 AM USER: Asidqi
pw:\\mb-us-pw.bentley.com:mb-us-pw-03\Documents\Cleveland_OH\OL_Projects\ODOT\District12\82382\400-Engineering\Geotechnical\Sheets\IP_940NEW.dgn

DESIGN AGENCY
NEAS
National Engineering & Architectural Services Inc.
2800 CORPORATE EXCHANGE DR, SUITE 240
COLUMBUS, OH, 43231
TEL:614.714.0299
WWW.NEASINC.COM

DESIGNER	MWJ & DT
REVIEWER	BPA 08/23/24
PROJECT ID	82382
SUBSET / TOTAL	18 / 310
SHEET / TOTAL	P.2404 / 2696

MODEL: 82382_IF940l_test PAPERSIZE: 34x22 (In.) DATE: 3/28/2025 TIME: 8:36:15 AM USER: Asiddiqi
pw:\\mb-us-pw.bentley.com:mb-us-pw-03\Documents\Cleveland_OH\01_Projects\ODOT\District2\82382\400-Engineering\Geotechnical\Sheets\82382_IF940l.dgn

Preliminary Plans - For Reference Only

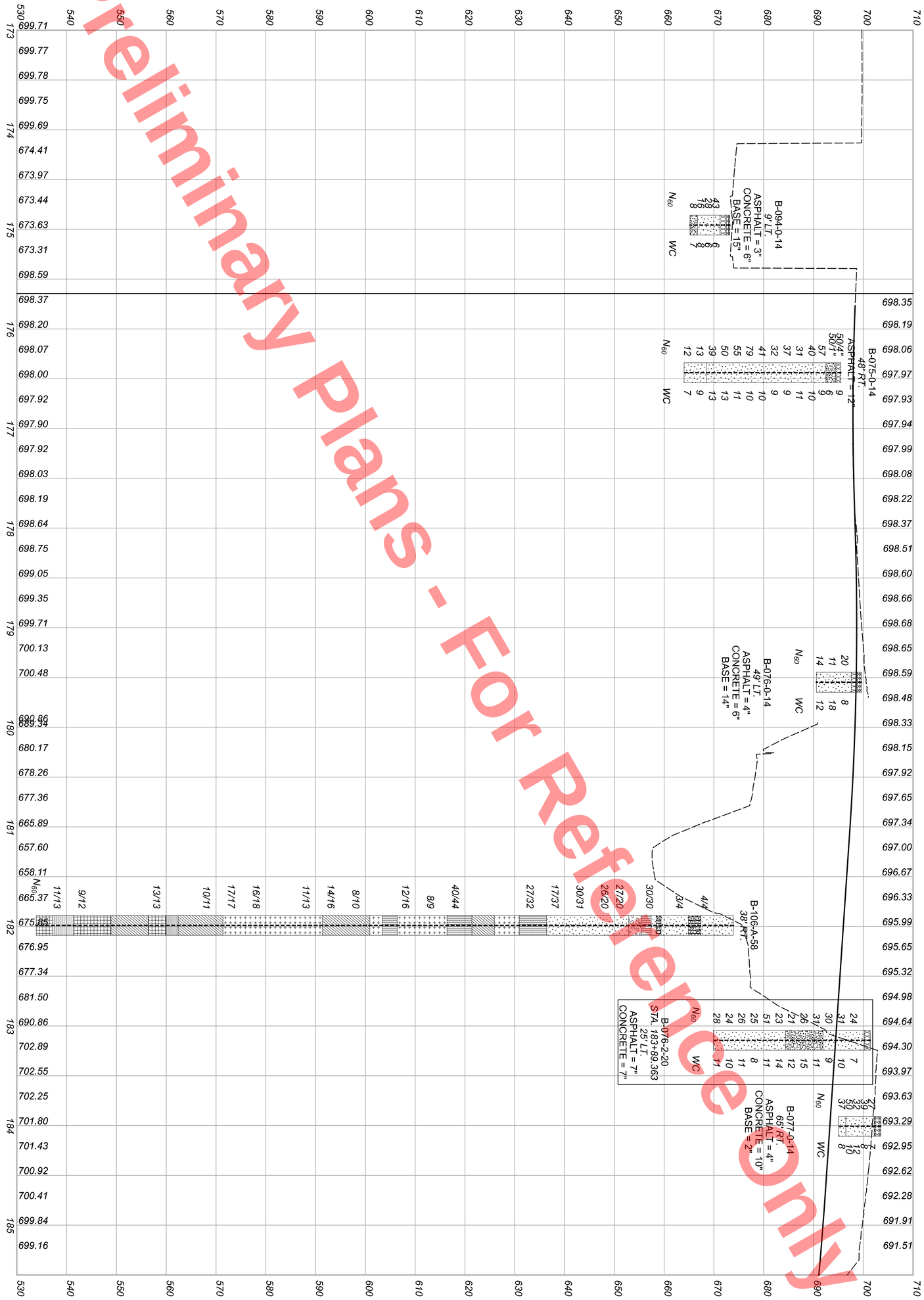

GEOTECHNICAL PROFILE - ROADWAY
STA. 173+00 TO STA. 185+50 IR-90 EB

HORIZONTAL SCALE IN FEET
0 20
10 40

DESIGN AGENCY
EAS
2800 CORPORATE EXCHANGE DR. SUITE 240
COLUMBUS, OH. 43231
TEL: 614.714.0299
WWW.NEASINC.COM
DESIGNER
MWJ & DT
REVIEWER
BPA 08/23/24

PROJECT ID
82382

SUBSET 19 TOTAL 310

SHEET P 2405 TOTAL 2696

INFORMATION FOR B-078-0-14 CAN BE FOUND ON SHEETS 21, 29, 70, 72 & 74
INFORMATION FOR B-078-1-20 CAN BE FOUND ON SHEETS 21, 29, 70, 72, 74 & 80
INFORMATION FOR B-080-0-14 CAN BE FOUND ON SHEETS 29, 51, 70, 72, 74 & 91
INFORMATION FOR B-081-0-14 CAN BE FOUND ON SHEETS 21, 29 & 114
INFORMATION FOR B-144-0-14 CAN BE FOUND ON SHEETS 21, 29, 49, 70 & 80
INFORMATION FOR B-146-0-14 CAN BE FOUND ON SHEETS 93 & 114
INFORMATION FOR C-079-0-14 CAN BE FOUND ON SHEETS 21, 29 & 31
INFORMATION FOR C-121-0-14 CAN BE FOUND ON SHEET 93

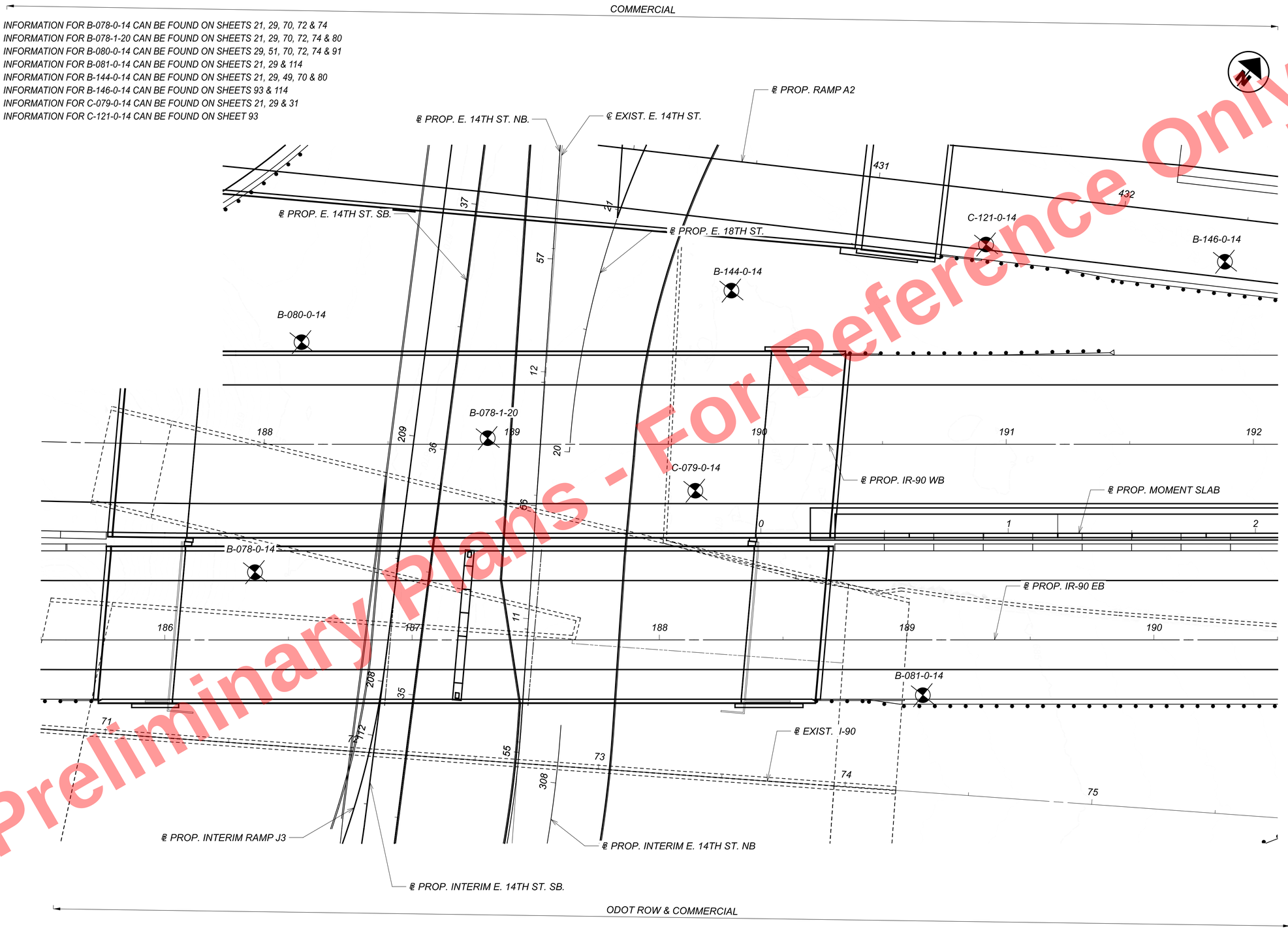

Preliminary Plans - For Reference Only

HORIZONTAL SCALE IN FEET
0 25 50 100

GEOTECHNICAL PROFILE - ROADWAY
STA. 185+50 TO STA. 195+50 IR-90 EB

DESIGN AGENCY
NEAS
National Engineering & Architectural Services Inc.
2800 CORPORATE EXCHANGE DR, SUITE 240
COLUMBUS, OH, 43231
TEL:614.714.0299
WWW.NEASINC.COM

DESIGNER: MWJ & DT
REVIEWER: BPA 08/23/24
PROJECT ID: 82382
SUBSET: 20 TOTAL: 310
SHEET: P.2406 TOTAL: 2696

CUY-90-16.28 (CCG3A)

MODEL: 82382_IP9402 PAPERSIZE: 34x22 (in) DATE: 3/28/2025 TIME: 8:36:29 AM USER: Asiddiq
pw:\\mb-us-pw.bentley.com:mb-us-pw-03\Documents\Cleveland_OHNO_Projects\ODOT\District2\82382\400-Engineering\Geotechnical\Sheets\82382_IP9402.dgn

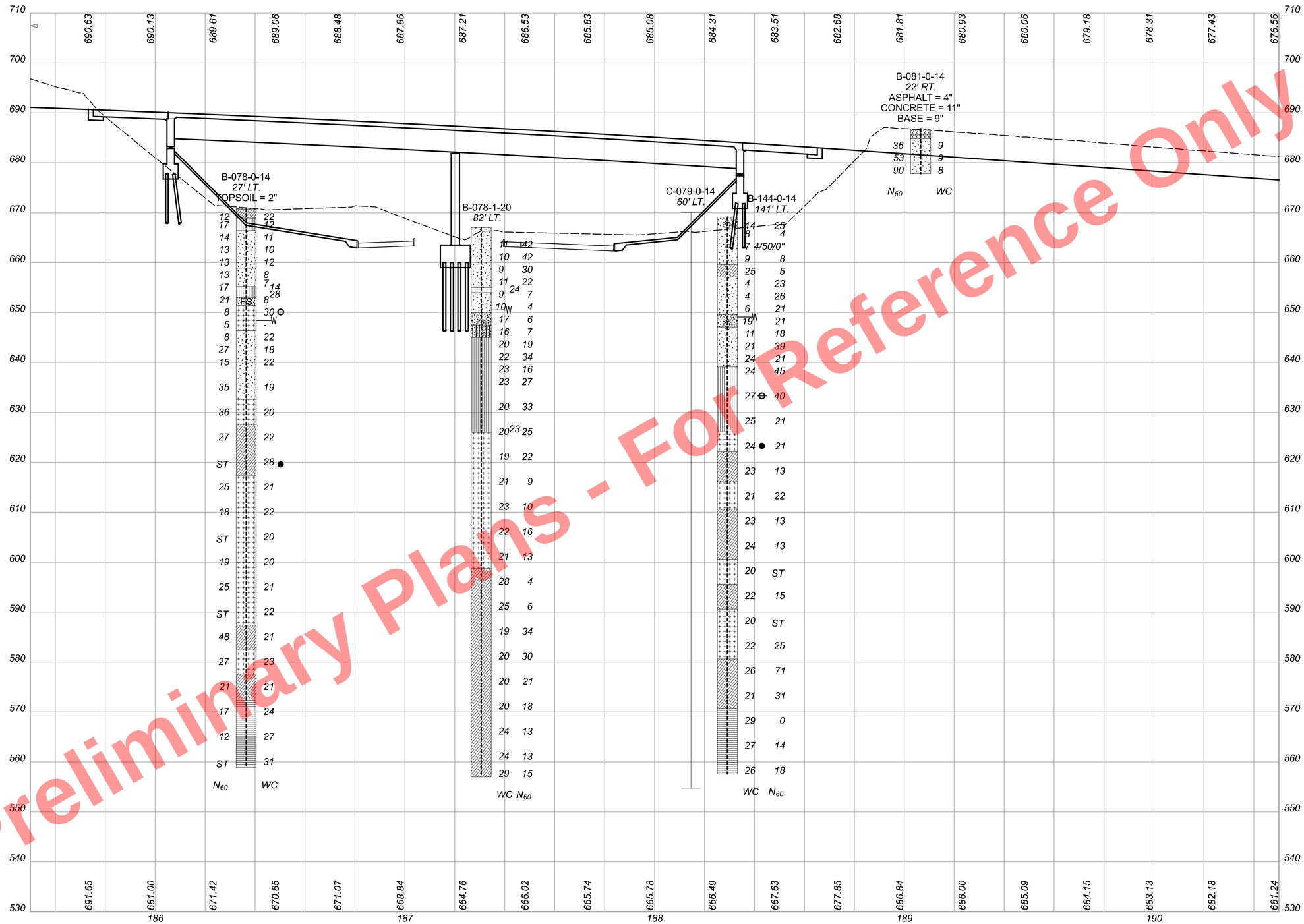

Preliminary Plans - For Reference Only

HORIZONTAL SCALE IN FEET
0 25 50 100

GEOTECHNICAL PROFILE - ROADWAY
STA. 185+50 TO STA. 190+50 IR-90 EB

DESIGN AGENCY
NEAS
National Engineering & Architectural Services Inc.
2800 CORPORATE EXCHANGE DR, SUITE 240
COLUMBUS, OH, 43231
TEL:614.714.0299
WWW.NEASINC.COM

DESIGNER: MWJ & DT
REVIEWER: BPA 08/23/24
PROJECT ID: 82382
SUBSET: 21 TOTAL: 310
SHEET: P.2407 TOTAL: 2696

CUY-90-16.28 (CCG3A)

MODEL: 82382_ZF9402_test PAPERSIZE: 34x22 (in.) DATE: 3/28/2025 TIME: 8:37:19 AM USER: Asiddiqi
pw:\\mb-us-pw.bentley.com:mb-us-pw-03\Documents\Cleveland_OH\OI_Projects\ODOT\District12\82382\400-Engineering\Geotechnical\Sheets\82382_IF9402.dgn

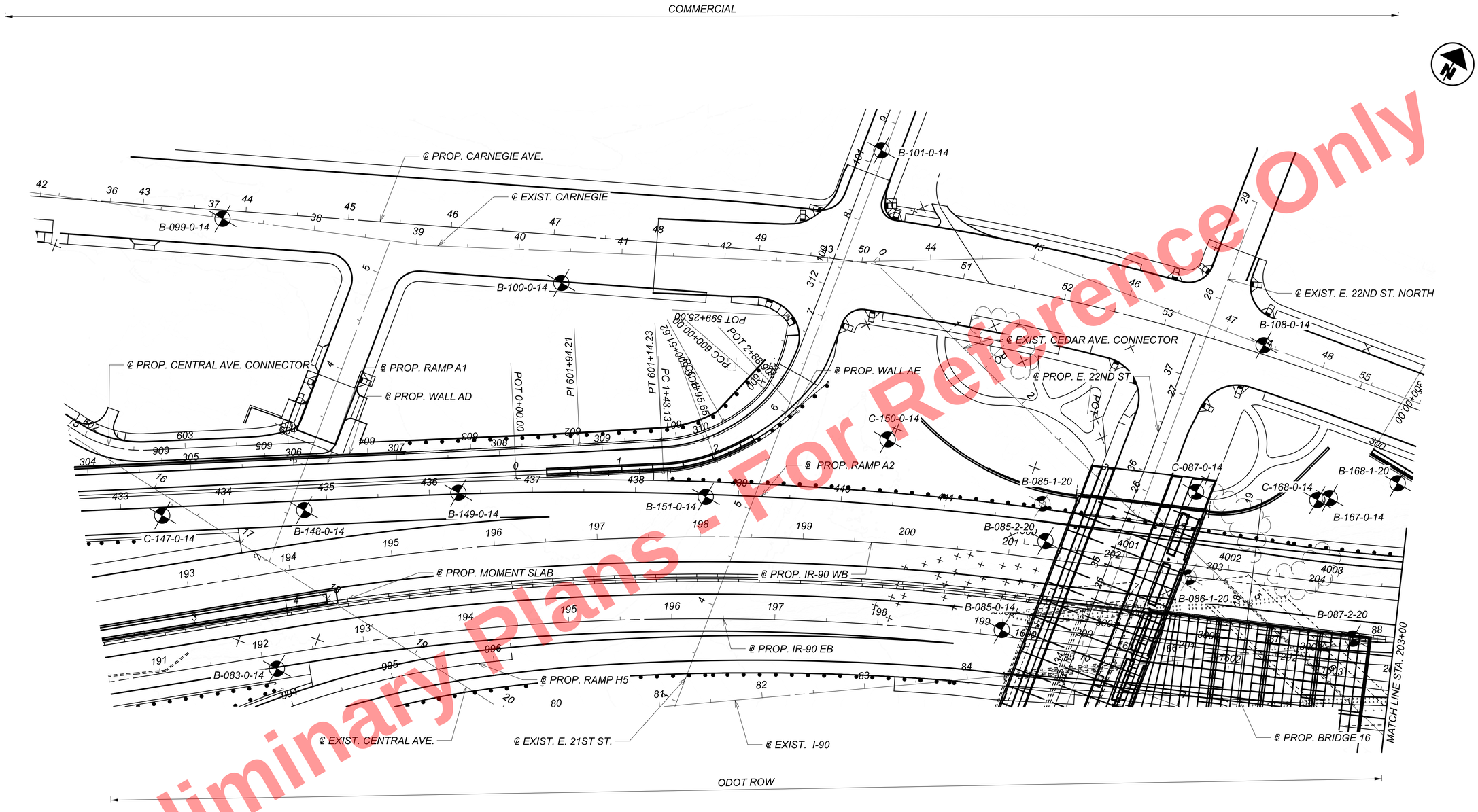

INFORMATION FOR B-083-0-14 CAN BE FOUND ON SHEETS 23, 31, 65 & 114
INFORMATION FOR B-085-0-14 CAN BE FOUND ON SHEETS 23, 31 & 84
INFORMATION FOR B-085-1-20 CAN BE FOUND ON SHEETS 31 & 84
INFORMATION FOR B-085-2-20 CAN BE FOUND ON SHEETS 31 & 84
INFORMATION FOR B-086-1-20 CAN BE FOUND ON SHEETS 23, 31 & 84
INFORMATION FOR B-087-2-20 CAN BE FOUND ON SHEET 33
INFORMATION FOR B-099-0-14 CAN BE FOUND ON SHEET 86
INFORMATION FOR B-100-0-14 CAN BE FOUND ON SHEET 87
INFORMATION FOR B-101-0-14 CAN BE FOUND ON SHEET 87
INFORMATION FOR B-108-0-14 CAN BE FOUND ON SHEETS 84 & 87
INFORMATION FOR B-148-0-14 CAN BE FOUND ON SHEETS 23, 31, 35, 93 & 114
INFORMATION FOR B-149-0-14 CAN BE FOUND ON SHEETS 23, 31, 35, 93 & 94
INFORMATION FOR B-151-0-14 CAN BE FOUND ON SHEETS 23, 31, 35, 93 & 94

Preliminary Plans - For Reference Only

HORIZONTAL SCALE IN FEET
0 25 50 100

GEOTECHNICAL PROFILE - ROADWAY
STA. 190+50 TO STA. 203+00 IR-90 EB

DESIGN AGENCY
NEAS
National Engineering & Architectural Services Inc.
2800 CORPORATE EXCHANGE DR, SUITE 240
COLUMBUS, OH, 43231
TEL:614.714.0299
WWW.NEASINC.COM

DESIGNER	MWJ & DT
REVIEWER	BPA 08/23/24
PROJECT ID	82382
SUBSET	22
TOTAL	310
SHEET	P.2408
TOTAL	2696

CUY-90-16.28 (CCG3A)

MODEL: 82382_IP9403 PAPERSIZE: 34x22 (in.) DATE: 3/28/2025 TIME: 8:37:42 AM USER: Asiddiqi
pw:\\mb-us-pw.bentley.com:mb-us-pw-03\Documents\Cleveland_OH\OI_Projects\ODOT\District12\82382\400-Engineering\Geotechnical\Sheets\82382_IP9403.dgn

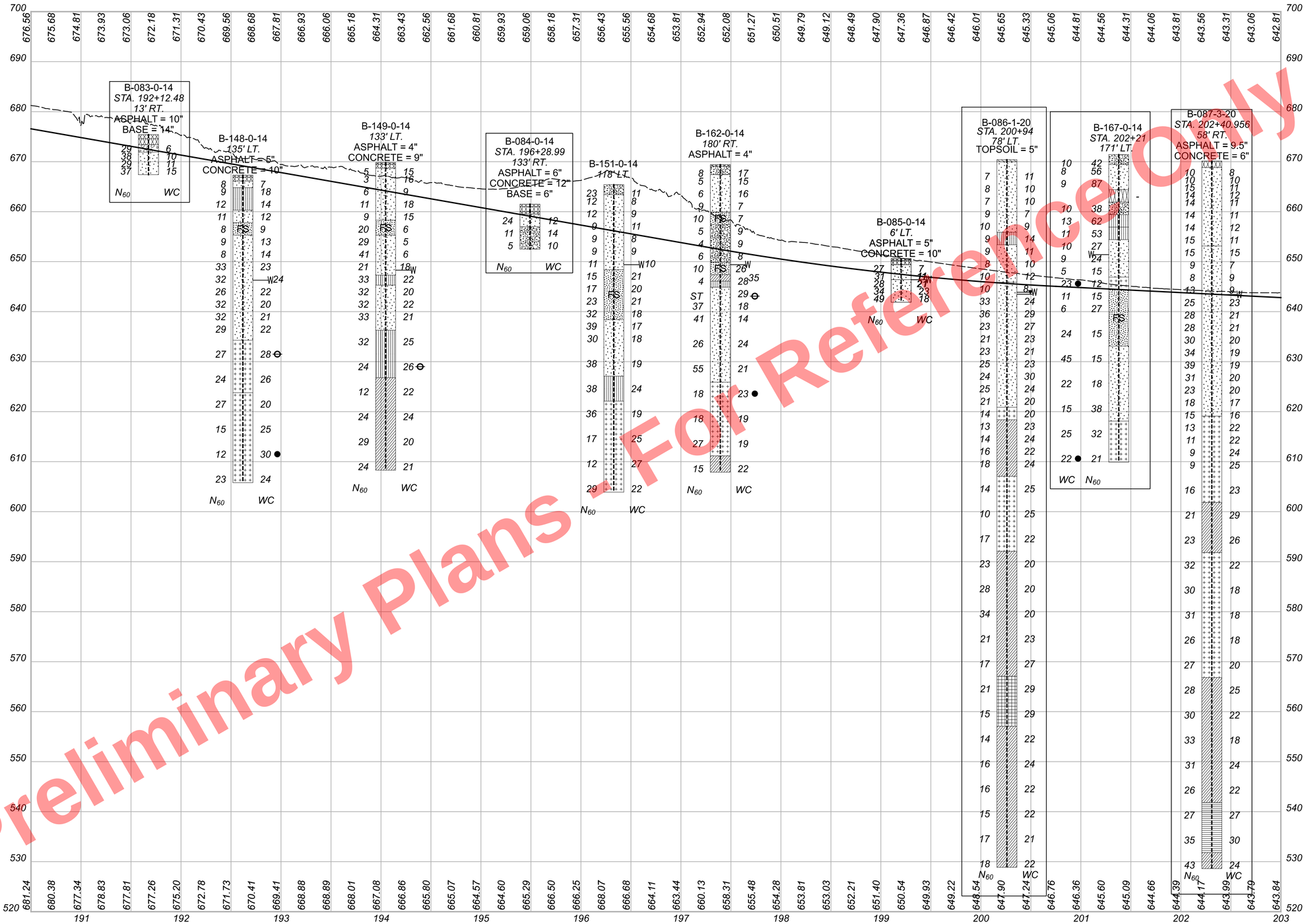

Preliminary Plans - For Reference Only

HORIZONTAL SCALE IN FEET
0 10 20 40

GEOTECHNICAL PROFILE - ROADWAY
STA. 190+50 TO STA. 203+00 IR-90 EB

CUY-90-16.28 (CCG3A)

MODEL: 82382_IF9403_test_3 PAPERSIZE: 34x22 (in.) DATE: 3/28/2025 TIME: 8:37:57 AM USER: Asladlal
pw:\\mb-us-pw.bentley.commb-us-pw-03\Documents\Cleveland_OHIO_Projects\ODOT\District2\82382\400-Engineering\Geotechnical\Sheets\82382_IF9403.dgn

DESIGN AGENCY
NEAS
National Engineering & Architectural Services Inc.
2800 CORPORATE EXCHANGE DR, SUITE 240
COLUMBUS, OH, 43231
TEL:614.714.0299
WWW.NEASINC.COM

DESIGNER MWJ & DT
REVIEWER BPA 08/23/24
PROJECT ID 82382
SUBSET 23 TOTAL 310
SHEET P.2409 TOTAL 2696

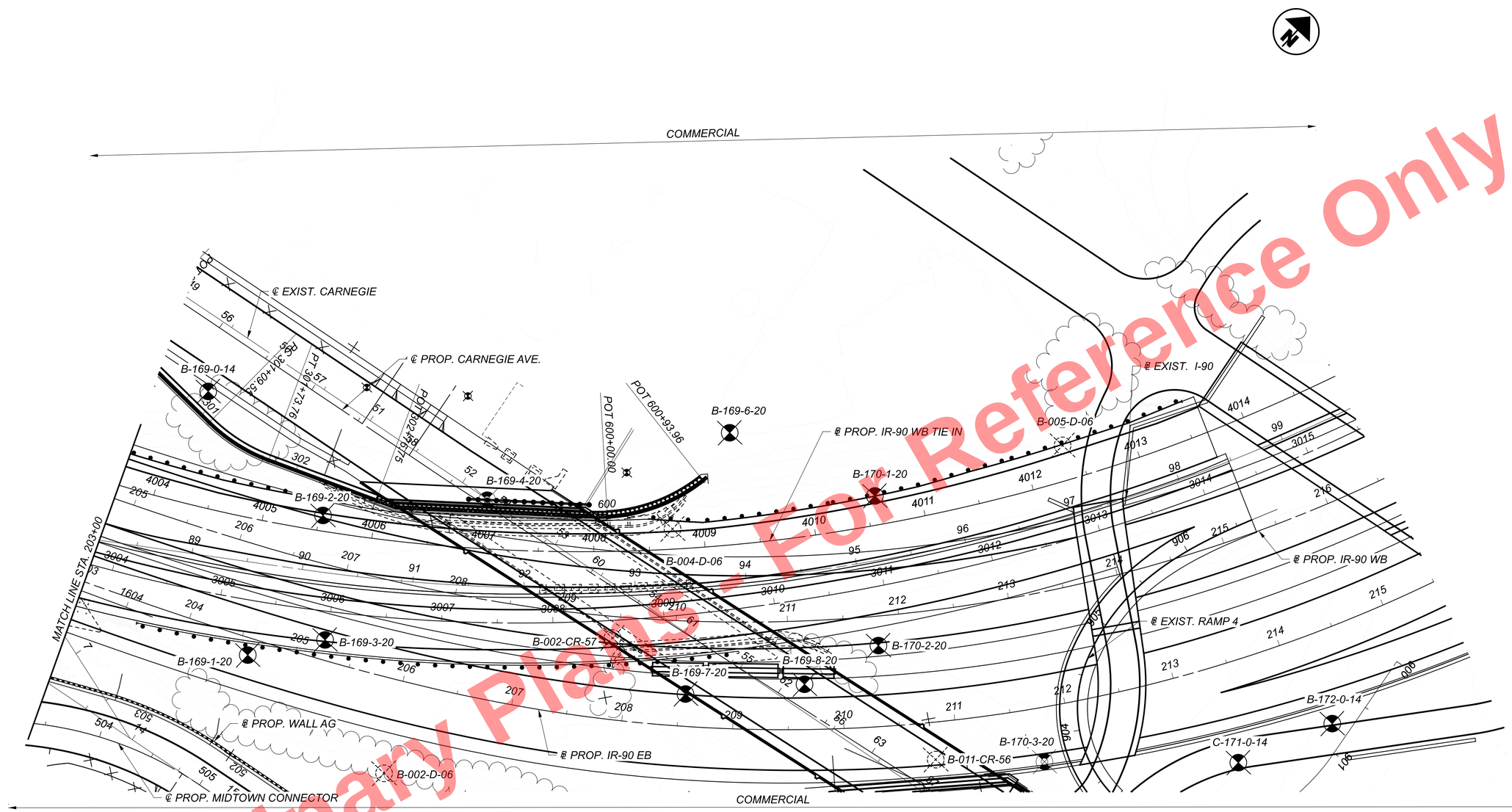

INFORMATION FOR B-002-CR-57 CAN BE FOUND ON SHEET 89
INFORMATION FOR B-002-D-06 CAN BE FOUND ON SHEET 98
INFORMATION FOR B-004-D-06 CAN BE FOUND ON SHEETS 33 & 100
INFORMATION FOR B-005-D-06 CAN BE FOUND ON SHEETS 33 & 78
INFORMATION FOR B-011-CR-56 CAN BE FOUND ON SHEET 89
INFORMATION FOR B-169-0-14 CAN BE FOUND ON SHEETS 25, 33, 87, 89 & 96
INFORMATION FOR B-169-1-20 CAN BE FOUND ON SHEETS 25 & 98
INFORMATION FOR B-169-2-20 CAN BE FOUND ON SHEETS 33 & 96
INFORMATION FOR B-169-3-20 CAN BE FOUND ON SHEET 25
INFORMATION FOR B-169-4-20 CAN BE FOUND ON SHEETS 89 & 100
INFORMATION FOR B-169-6-20 CAN BE FOUND ON SHEET 100
INFORMATION FOR B-169-7-20 CAN BE FOUND ON SHEETS 25 & 89
INFORMATION FOR B-169-8-20 CAN BE FOUND ON SHEETS 25 & 89
INFORMATION FOR B-170-1-20 CAN BE FOUND ON SHEET 33
INFORMATION FOR B-170-2-20 CAN BE FOUND ON SHEETS 33 & 78
INFORMATION FOR B-170-3-20 CAN BE FOUND ON SHEETS 25, 78, 89 & 102
INFORMATION FOR B-172-0-14 CAN BE FOUND ON SHEETS 25 & 78
INFORMATION FOR C-171-0-14 CAN BE FOUND ON SHEET 25

Preliminary Plans - For Reference Only

HORIZONTAL SCALE IN FEET
0 25 50 100

GEOTECHNICAL PROFILE - ROADWAY
STA. 203+00 TO STA. 215+50 IR-90 EB

CUY-90-16.28 (CCG3A)

MODEL: 82382_IP9404 PAPERSIZE: 34x22 (in) DATE: 3/28/2025 TIME: 8:38:11 AM USER: Asiddiqi
pw:\\mb-us-pw.bentley.com:mb-us-pw-03\Documents\Cleveland.OH\OI_Projects\ODOT\District2\82382\400-Engineering\Geotechnical\Sheets\82382_IP9404.dgn

DESIGN AGENCY
NEAS
National Engineering & Architectural Services Inc.
2800 CORPORATE EXCHANGE DR, SUITE 240
COLUMBUS, OH, 43231
TEL:614.714.0299
WWW.NEASINC.COM

DESIGNER	MWJ & DT
REVIEWER	BPA 08/23/24
PROJECT ID	82382
SUBSET / TOTAL	24 / 310
SHEET / TOTAL	P.2410 / 2696

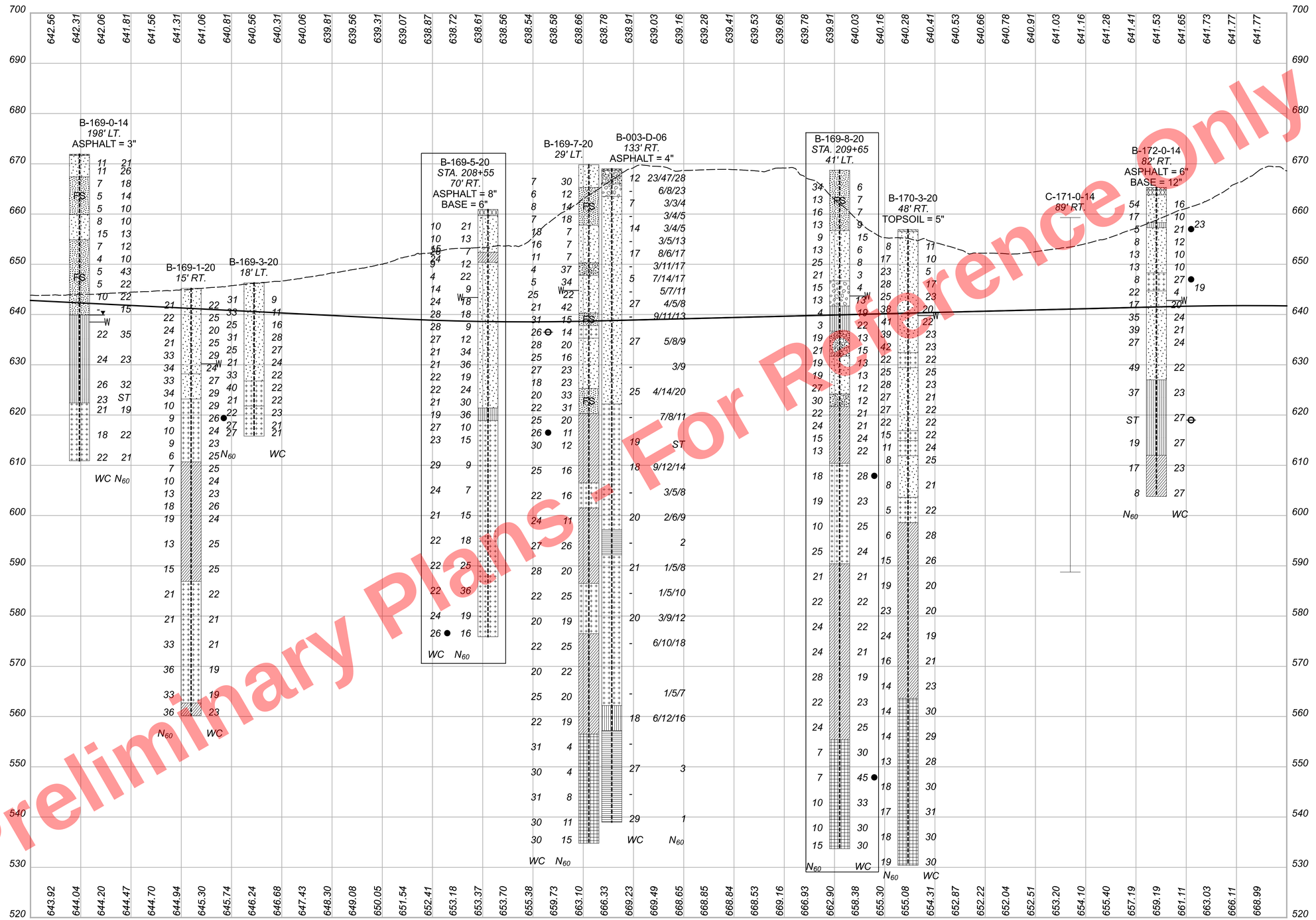

Preliminary Plans - For Reference Only

HORIZONTAL SCALE IN FEET
0 25 50 100

GEOTECHNICAL PROFILE - ROADWAY
STA. 203+00 TO STA. 215+50 IR-90 EB

CUY-90-16.28 (CCG3A)

MODEL: 82382_IF9403_test_4 PAPERSIZE: 34x22 (in.) DATE: 3/28/2025 TIME: 8:39:01 AM USER: Asldldl
pw:\\mb-us-pw.bentley.com:mb-us-pw-03\Documents\Cleveland_OHIO_Projects\ODOT\District2\82382\400-Engineering\Geotechnical\Sheets\82382_IF9404.dgn

DESIGN AGENCY
NEAS
National Engineering & Architectural Services Inc.
2800 CORPORATE EXCHANGE DR, SUITE 240
COLUMBUS, OH, 43231
TEL:614.714.0299
WWW.NEASINC.COM

DESIGNER: MWJ & DT
REVIEWER: BPA 08/23/24
PROJECT ID: 82382
SUBSET: 25 TOTAL: 310
SHEET: P.2411 TOTAL: 2696

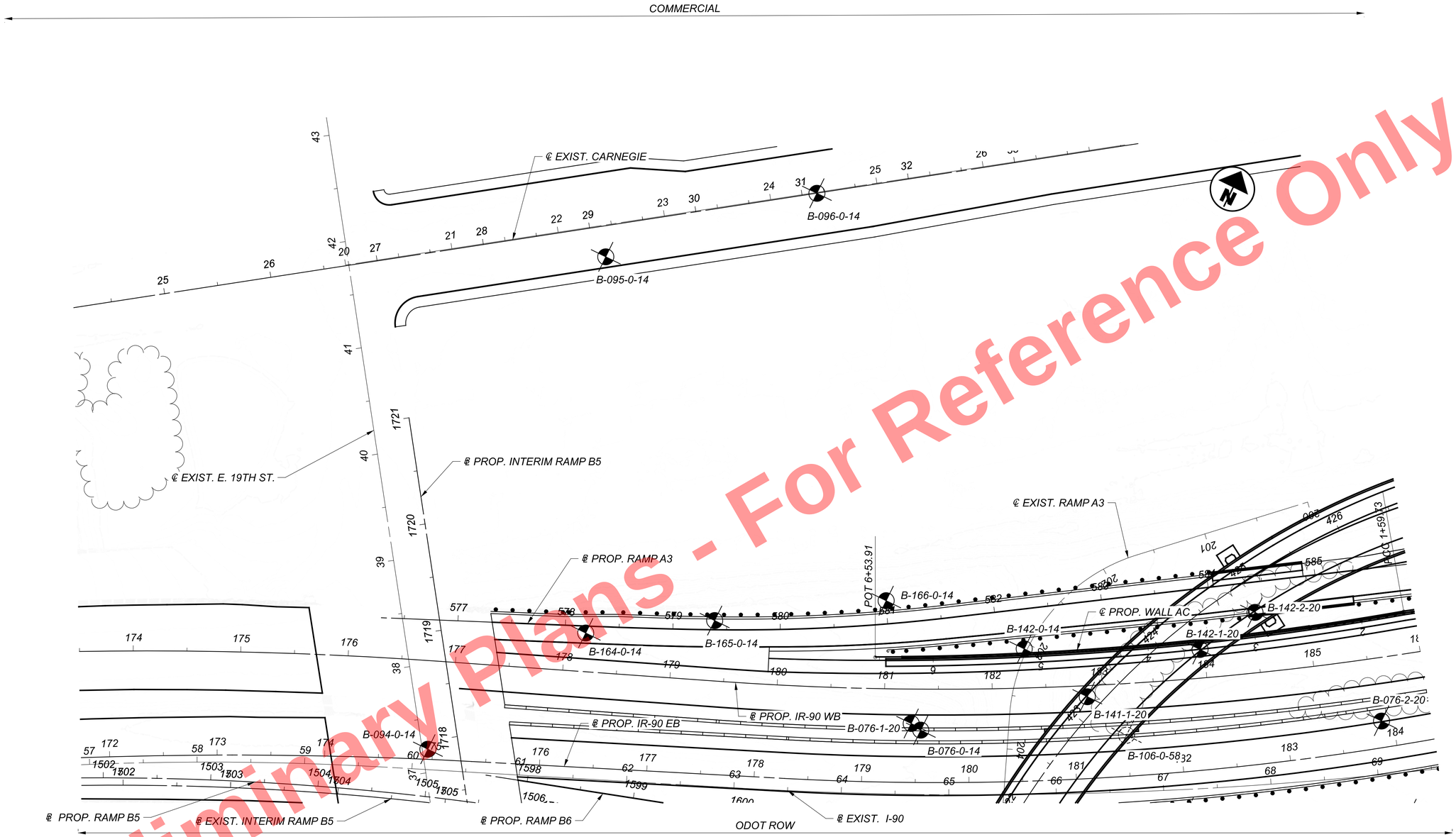

Preliminary Plans - For Reference Only

INFORMATION FOR B-076-0-14 CAN BE FOUND ON SHEETS 19 & 27
INFORMATION FOR B-076-1-20 CAN BE FOUND ON SHEET 27
INFORMATION FOR B-076-2-20 CAN BE FOUND ON SHEET 19
INFORMATION FOR B-094-0-14 CAN BE FOUND ON SHEET 19
INFORMATION FOR B-095-0-14 CAN BE FOUND ON SHEET 85
INFORMATION FOR B-096-0-14 CAN BE FOUND ON SHEET 85
INFORMATION FOR B-106-0-58 CAN BE FOUND ON SHEET 45
INFORMATION FOR B-141-1-20 CAN BE FOUND ON SHEET 45
INFORMATION FOR B-142-0-14 CAN BE FOUND ON SHEETS 51 & 91
INFORMATION FOR B-142-1-20 CAN BE FOUND ON SHEETS 45 & 91
INFORMATION FOR B-142-2-20 CAN BE FOUND ON SHEETS 45, 51 & 91
INFORMATION FOR B-164-0-14 CAN BE FOUND ON SHEETS 27 & 51
INFORMATION FOR B-165-0-14 CAN BE FOUND ON SHEETS 27 & 51
INFORMATION FOR B-166-0-14 CAN BE FOUND ON SHEETS 51 & 91

HORIZONTAL SCALE IN FEET
0 25 50 100

GEOTECHNICAL PROFILE - ROADWAY
STA. 173+50 TO STA. 186+00 IR-90 WB

CUY-90-16.28 (CCG3A)

MODEL: 82382_IP950I PAPERSIZE: 34x22 (in.) DATE: 3/28/2025 TIME: 8:39:25 AM USER: AsIddIqI
pw:\\mb-us-pw.bentley.com:mb-us-pw-03\Documents\Cleveland_OH\DL_Projects\ODOT\District2\82382\400-Engineering\Geotechnical\Sheets\82382_IP950I.dgn

DESIGN AGENCY
NEAS
National Engineering & Architectural Services Inc.
2800 CORPORATE EXCHANGE DR, SUITE 240
COLUMBUS, OH, 43231
TEL:614.714.0299
WWW.NEASINC.COM

DESIGNER MWJ & DT
REVIEWER BPA 08/23/24
PROJECT ID 82382
SUBSET 26 TOTAL 310
SHEET P.2412 TOTAL 2696

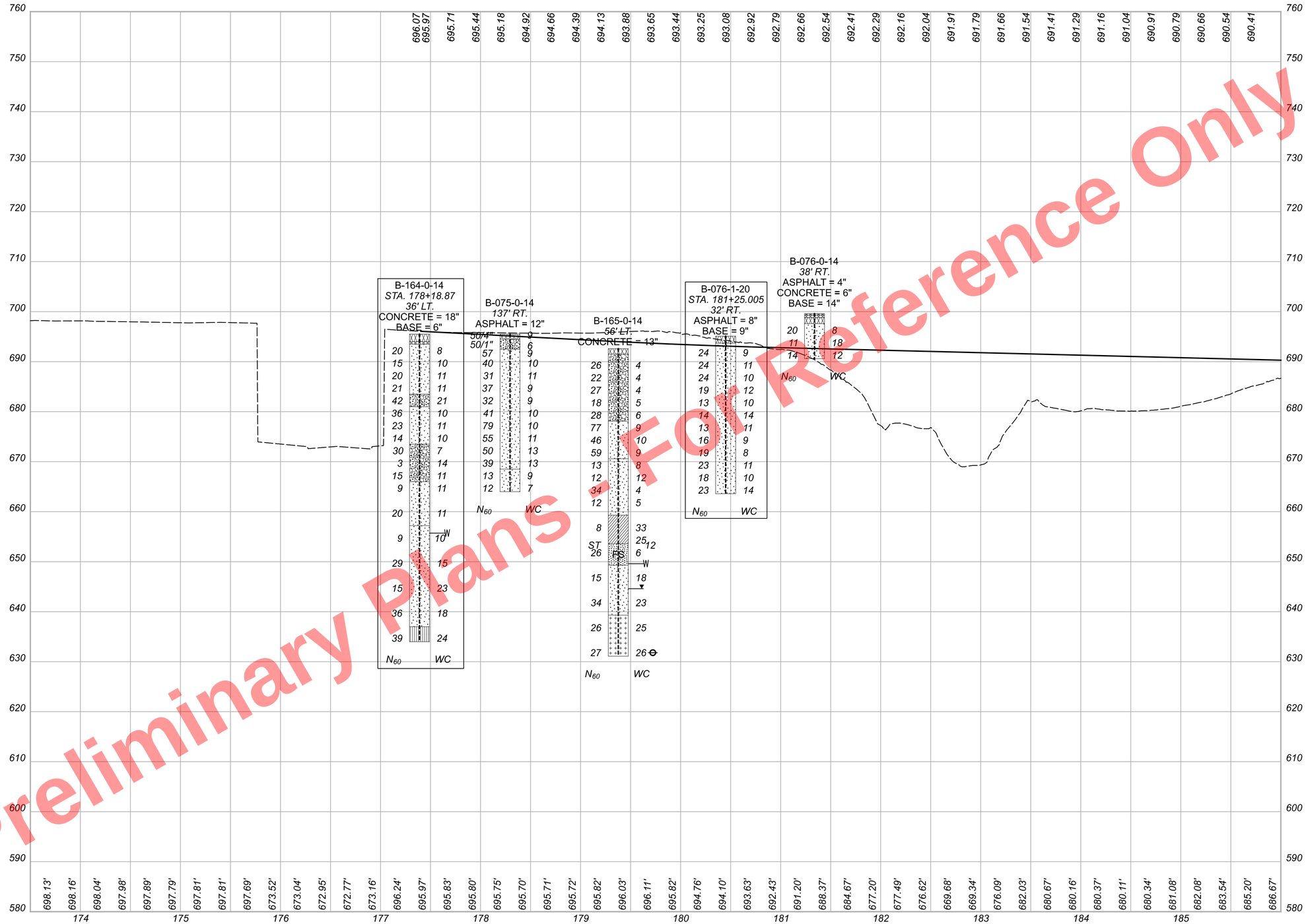

HORIZONTAL SCALE IN FEET
0 10 20 40

GEOTECHNICAL PROFILE - ROADWAY
STA. 173+50 TO STA. 186+00 IR-90 WB

CUY-90-16.28 (CCG3A)

MODEL: 82382_IF950I PAPERSIZE: 34x22 (in.) DATE: 3/28/2025 TIME: 8:40:22 AM USER: Asiddiq
pw:\\mb-us-pw.bentley.com:mb-us-pw-03\Documents\Cleveland_OH\01_Projects\0007\District2\82382\400-Engineering\Geotechnical\Sheets\82382_IF950I.dgn

DESIGN AGENCY
NEAS
National Engineering & Architectural Services Inc.
2800 CORPORATE EXCHANGE DR, SUITE 240
COLUMBUS, OH, 43231
TEL:614.714.0299
WWW.NEASINC.COM

DESIGNER: MWJ & DT
REVIEWER: BPA 08/23/24
PROJECT ID: 82382
SUBSET: 27 TOTAL: 310
SHEET: P.2413 TOTAL: 2696

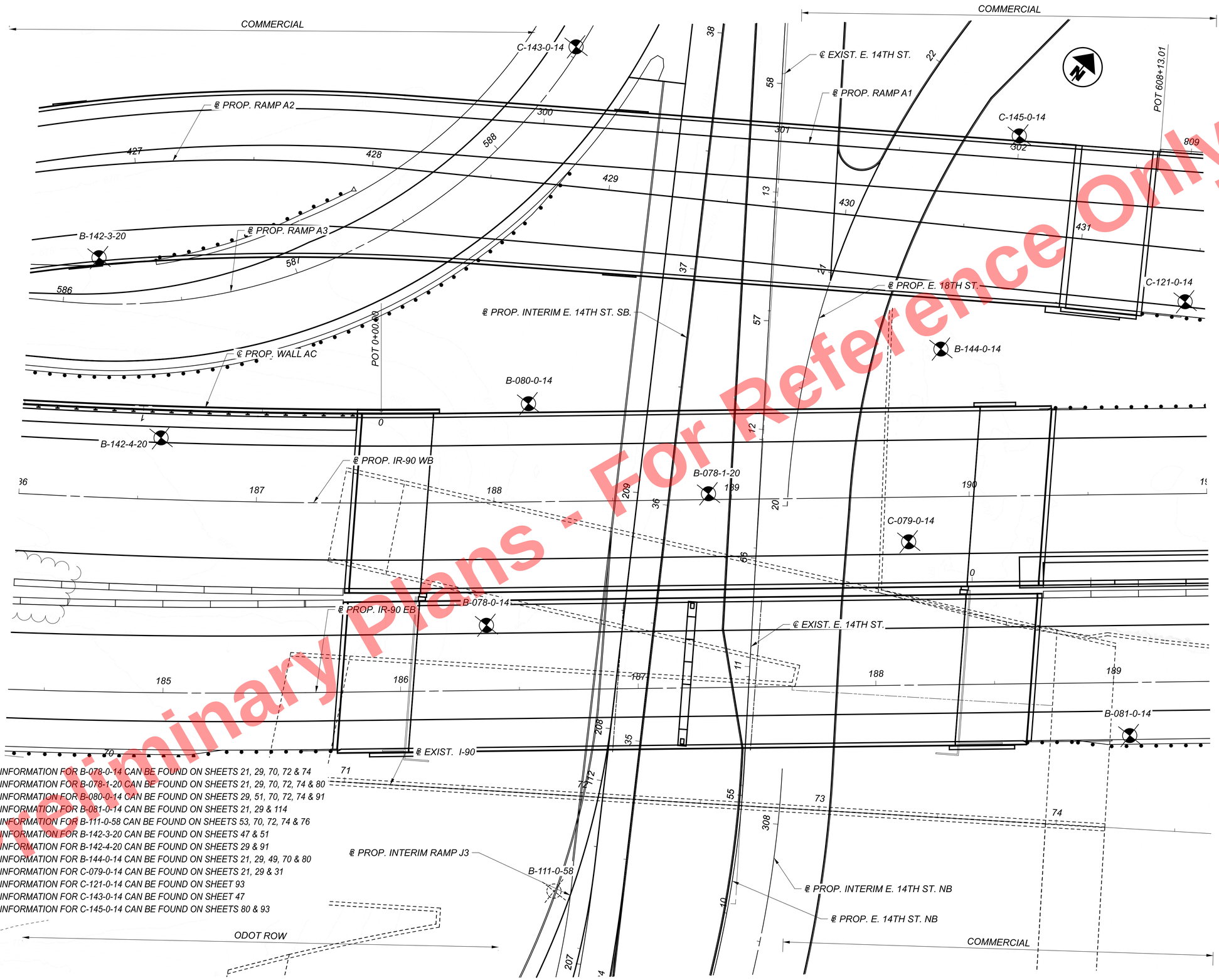

INFORMATION FOR B-078-0-14 CAN BE FOUND ON SHEETS 21, 29, 70, 72 & 74
INFORMATION FOR B-078-1-20 CAN BE FOUND ON SHEETS 21, 29, 70, 72, 74 & 80
INFORMATION FOR B-080-0-14 CAN BE FOUND ON SHEETS 29, 51, 70, 72, 74 & 91
INFORMATION FOR B-081-0-14 CAN BE FOUND ON SHEETS 21, 29 & 114
INFORMATION FOR B-111-0-58 CAN BE FOUND ON SHEETS 53, 70, 72, 74 & 76
INFORMATION FOR B-142-3-20 CAN BE FOUND ON SHEETS 47 & 51
INFORMATION FOR B-142-4-20 CAN BE FOUND ON SHEETS 29 & 91
INFORMATION FOR B-144-0-14 CAN BE FOUND ON SHEETS 21, 29, 49, 70 & 80
INFORMATION FOR C-079-0-14 CAN BE FOUND ON SHEETS 21, 29 & 31
INFORMATION FOR C-121-0-14 CAN BE FOUND ON SHEET 93
INFORMATION FOR C-143-0-14 CAN BE FOUND ON SHEET 47
INFORMATION FOR C-145-0-14 CAN BE FOUND ON SHEETS 80 & 93

Preliminary Plans - For Reference Only

HORIZONTAL SCALE IN FEET
0 25 50 100

GEOTECHNICAL PROFILE - ROADWAY
STA. 186+00 TO STA. 191+00 IR-90 WB

DESIGN AGENCY
NEAS
National Engineering & Architectural Services Inc.
2800 CORPORATE EXCHANGE DR, SUITE 240
COLUMBUS, OH, 43231
TEL:614.714.0299
WWW.NEASINC.COM

DESIGNER: MWJ & DT
REVIEWER: BPA 08/23/24
PROJECT ID: 82382
SUBSET: 28 TOTAL: 310
SHEET: P.2414 TOTAL: 2696

CUY-90-16.28 (CCG3A)

MODEL: 82382_ZP9502 PAPERSIZE: 34x22 (in.) DATE: 3/28/2025 TIME: 8:40:39 AM USER: Asiddiq1
pw:\\mb-us-pw.bentley.com:mb-us-pw-03\Documents\Cleveland_OH\01_Projects\ODOT\District2\82382\400-Engineering\Geotechnical\Sheets\82382_IP9502.dgn

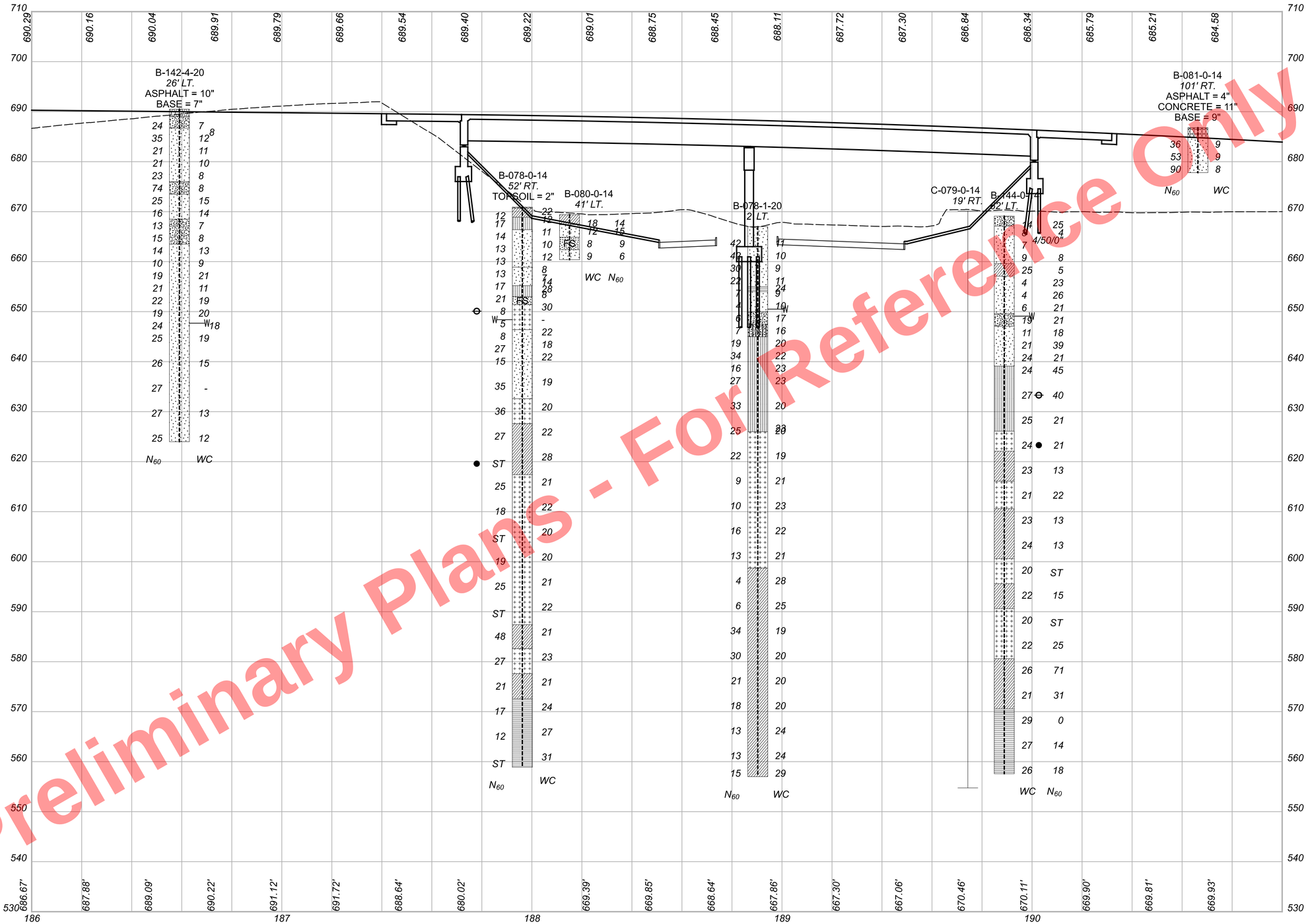

Preliminary Plans - For Reference Only

HORIZONTAL SCALE IN FEET
0 25 50 100

GEOTECHNICAL PROFILE - ROADWAY
STA. 186+00 TO STA. 191+00 IR-90 WB

CUY-90-16.28 (CCG3A)

MODEL: 82382_ZF9502 PAPERSIZE: 34x22 (in.) DATE: 3/28/2025 TIME: 8:40:54 AM USER: Asiddiqi
pw:\\mb-us-pw.bentley.com:mb-us-pw-03\Documents\Cleveland_OH\01_Projects\0007\District2\82382\400-Engineering\Geotechnical\Sheets\82382_IF9502.dgn

DESIGN AGENCY
NEAS
National Engineering & Architectural Services Inc.
2800 CORPORATE EXCHANGE DR, SUITE 240
COLUMBUS, OH, 43231
TEL:614.714.0299
WWW.NEASINC.COM

DESIGNER	MWJ & DT
REVIEWER	BPA 08/23/24
PROJECT ID	82382
SUBSET	29
TOTAL	310
SHEET	P.2415
TOTAL	2696

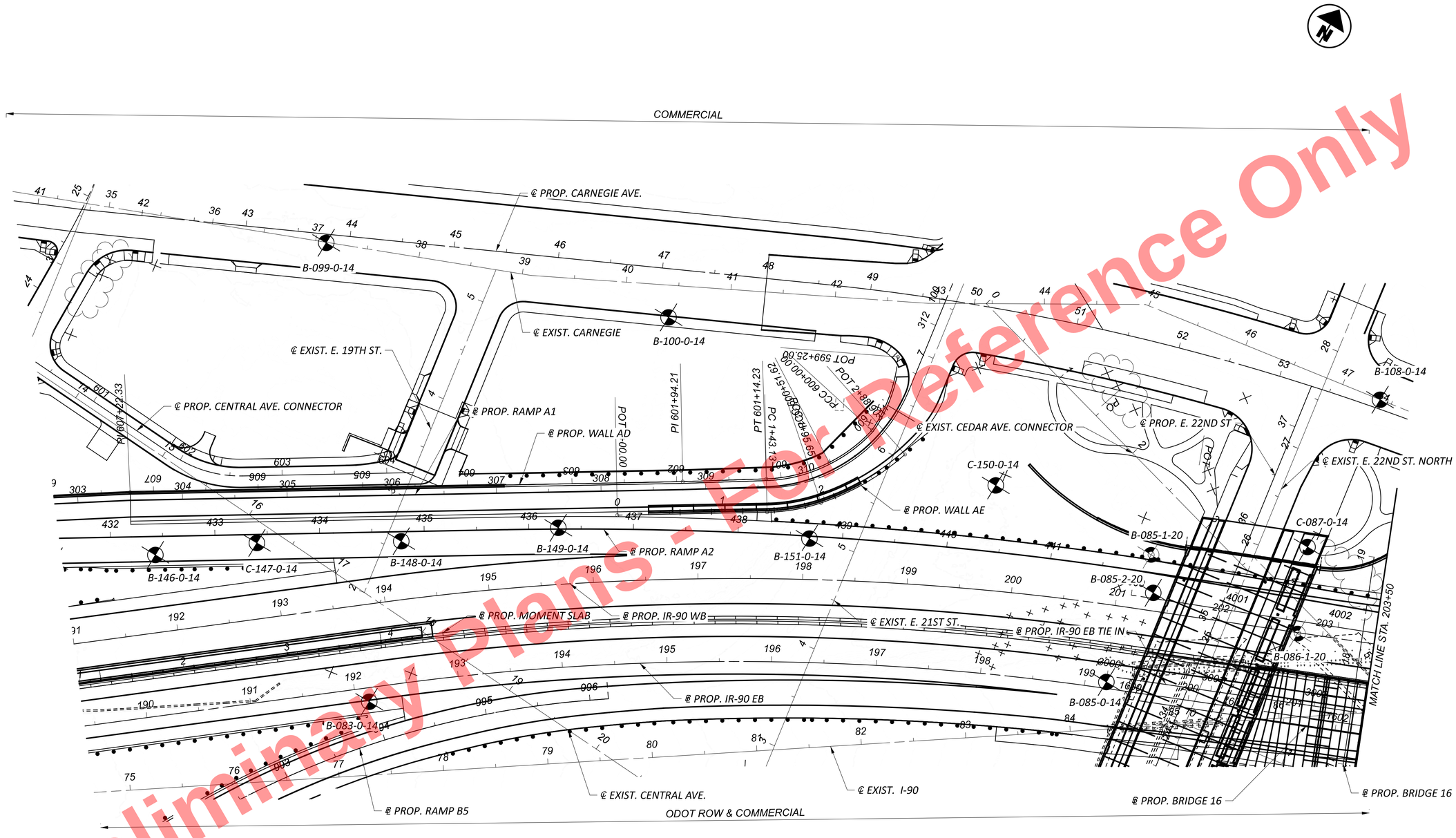

Preliminary Plans - For Reference Only

INFORMATION FOR B-083-0-14 CAN BE FOUND ON SHEETS 23, 31, 65 & 114
INFORMATION FOR B-085-0-14 CAN BE FOUND ON SHEETS 23, 31 & 84
INFORMATION FOR B-085-1-20 CAN BE FOUND ON SHEETS 31 & 84
INFORMATION FOR B-085-2-20 CAN BE FOUND ON SHEETS 31 & 84
INFORMATION FOR B-086-1-20 CAN BE FOUND ON SHEETS 23, 31 & 84
INFORMATION FOR B-099-0-14 CAN BE FOUND ON SHEET 86
INFORMATION FOR B-100-0-14 CAN BE FOUND ON SHEETS 87, 93 & 94
INFORMATION FOR B-108-0-14 CAN BE FOUND ON SHEETS 84 & 87
INFORMATION FOR B-146-0-14 CAN BE FOUND ON SHEETS 93 & 114
INFORMATION FOR B-148-0-14 CAN BE FOUND ON SHEETS 23, 31, 35, 93 & 114
INFORMATION FOR B-149-0-14 CAN BE FOUND ON SHEETS 23, 31, 35, 93 & 94
INFORMATION FOR B-151-0-14 CAN BE FOUND ON SHEETS 23, 31, 35, 93 & 94
INFORMATION FOR C-087-0-14 CAN BE FOUND ON SHEET 84
INFORMATION FOR C-147-0-14 CAN BE FOUND ON SHEET 93
INFORMATION FOR C-150-0-14 CAN BE FOUND ON SHEETS 93 & 94

HORIZONTAL SCALE IN FEET
0 25 50 100

GEOTECHNICAL PROFILE - ROADWAY
STA. 191+00 TO STA. 203+50 IR-90 WB

CUY-90-16.28 (CCG3A)

MODEL: 82382_IP9503 PAPERSIZE: 34x22 (in.) DATE: 3/28/2025 TIME: 8:41:08 AM USER: Asiddiqi
pw:\\mb-us-pw.bentley.com:mb-us-pw-03\Documents\Cleveland_OH\01_Projects\ODOT\District2\82382\400-Engineering\Geotechnical\Sheets\82382_IP9503.dgn

DESIGN AGENCY
NEAS
National Engineering & Architectural Services Inc.
2800 CORPORATE EXCHANGE DR, SUITE 240
COLUMBUS, OH, 43231
TEL:614.714.0299
WWW.NEASINC.COM

DESIGNER	MWJ & DT
REVIEWER	BPA 08/23/24
PROJECT ID	82382
SUBSET	30
TOTAL	310
SHEET	P.2416
TOTAL	2696

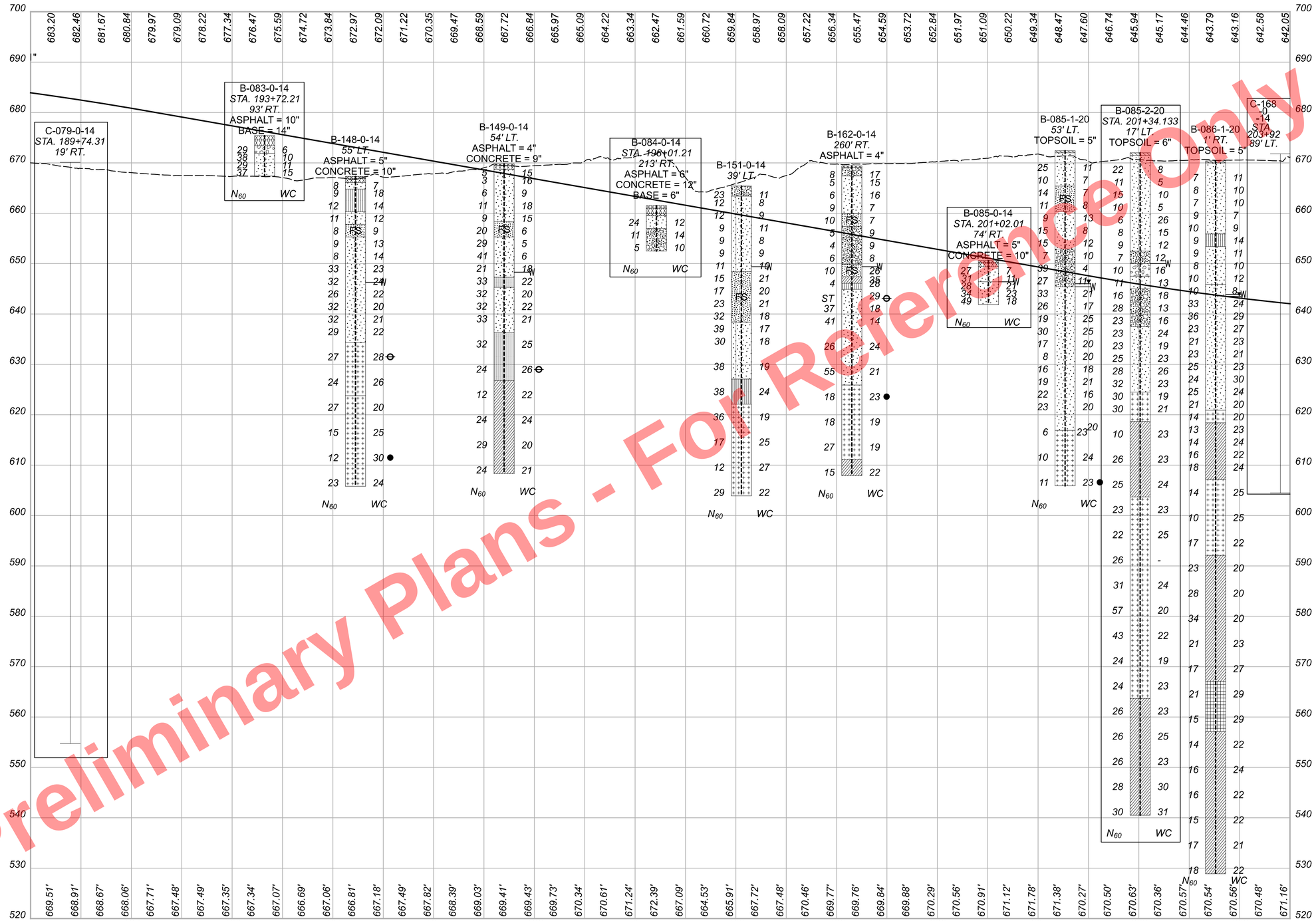

HORIZONTAL SCALE IN FEET
0 10 20 40

GEOTECHNICAL PROFILE - ROADWAY
STA. 191+00 TO STA. 203+50 IR-90 WB

CUY-90-16.28 (CCG3A)

MODEL: 82382_IF9503_2 PAPERSIZE: 34x22 (in.) DATE: 3/28/2025 TIME: 8:41:23 AM USER: Asldldl
pw:\\mb-us-pw.bentley.commb-us-pw-03\Documents\Cleveland_OH\01_Projects\ODOT\District2\82382\400-Engineering\Geotechnical\Sheets\82382_IF9503.dgn

DESIGN AGENCY
NEAS
National Engineering & Architectural Services Inc.
2800 CORPORATE EXCHANGE DR, SUITE 240
COLUMBUS, OH, 43231
TEL:614.714.0299
WWW.NEASINC.COM

DESIGNER MWJ & DT
REVIEWER BPA 08/23/24
PROJECT ID 82382
SUBSET 31 TOTAL 310
SHEET P.2417 TOTAL 2696

COMMERCIAL

INFORMATION FOR B-002-CR-57 CAN BE FOUND ON SHEET 89
INFORMATION FOR B-004-D-06 CAN BE FOUND ON SHEETS 33 & 100
INFORMATION FOR B-005-D-06 CAN BE FOUND ON SHEETS 33 & 78
INFORMATION FOR B-087-2-20 CAN BE FOUND ON SHEET 33
INFORMATION FOR B-167-0-14 CAN BE FOUND ON SHEETS 23 & 33
INFORMATION FOR B-168-1-20 CAN BE FOUND ON SHEET 96
INFORMATION FOR B-169-0-14 CAN BE FOUND ON SHEETS 25, 33, 87, 89 & 96
INFORMATION FOR B-169-1-20 CAN BE FOUND ON SHEETS 25 & 98
INFORMATION FOR B-169-2-20 CAN BE FOUND ON SHEETS 33 & 96
INFORMATION FOR B-169-3-20 CAN BE FOUND ON SHEET 25
INFORMATION FOR B-169-4-20 CAN BE FOUND ON SHEETS 89 & 100
INFORMATION FOR B-169-6-20 CAN BE FOUND ON SHEET 100
INFORMATION FOR B-169-7-20 CAN BE FOUND ON SHEETS 25 & 89
INFORMATION FOR B-169-8-20 CAN BE FOUND ON SHEETS 25 & 89
INFORMATION FOR B-170-1-20 CAN BE FOUND ON SHEET 33
INFORMATION FOR B-170-2-20 CAN BE FOUND ON SHEETS 33 & 78
INFORMATION FOR C-168-0-14 CAN BE FOUND ON SHEET 31

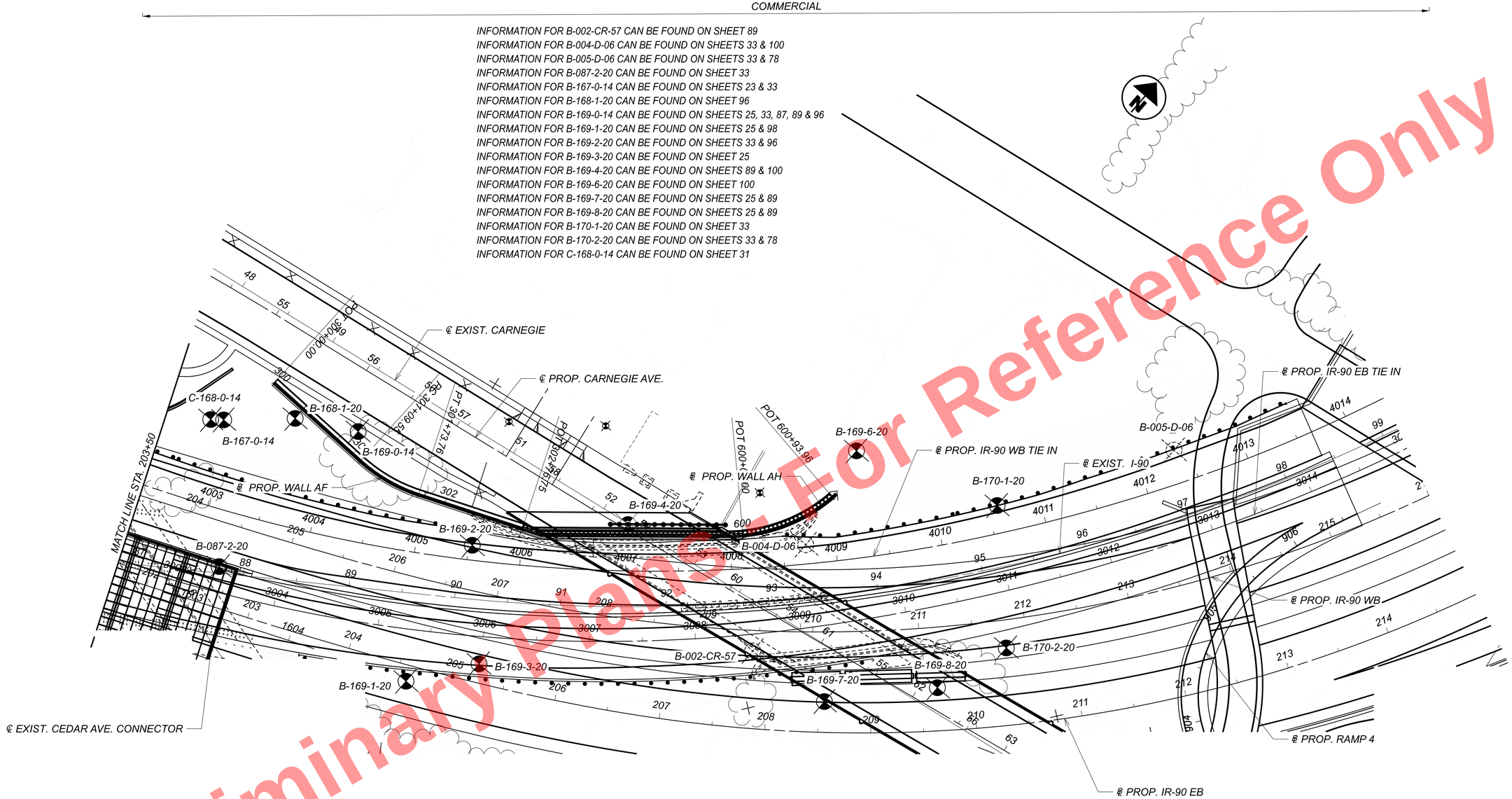

Preliminary Plans - For Reference Only

HORIZONTAL SCALE IN FEET
0 25 50 100

GEOTECHNICAL PROFILE - ROADWAY
STA. 203+50 TO STA. 216+00 IR-90 WB

DESIGN AGENCY
NEAS
National Engineering & Architectural Services Inc.
2800 CORPORATE EXCHANGE DR, SUITE 240
COLUMBUS, OH, 43231
TEL:614.714.0299
WWW.NEASINC.COM

DESIGNER MWJ & DT
REVIEWER BPA 08/23/24
PROJECT ID 82382
SUBSET 32 TOTAL 310
SHEET P.2418 TOTAL 2696

CUY-90-16.28 (CCG3A)

MODEL: 82382_IP9504 PAPERSIZE: 34x22 (in.) DATE: 3/28/2025 TIME: 8:41:37 AM USER: Asiddiqi
pw:\\mb-us-pw.bentley.com:mb-us-pw-03\Documents\Cleveland_OH\01_Projects\ODOT\District2\82382\400-Engineering\Geotechnical\Sheets\82382_IP9504.dgn

MODEL: 82382_IF9504 PAPERSIZE: 34x22 (in.) DATE: 3/28/2025 TIME: 8:42:35 AM USER: Asldd1q1
pw:\\mb-us-pw.bentley.com:mb-us-pw-03\Documents\Cleveland_OH\01_Projects\ODOT\District2\82382\400-Engineering\Geotechnical\Sheets\82382_IF9504.dgn

Preliminary Plans - For Reference Only

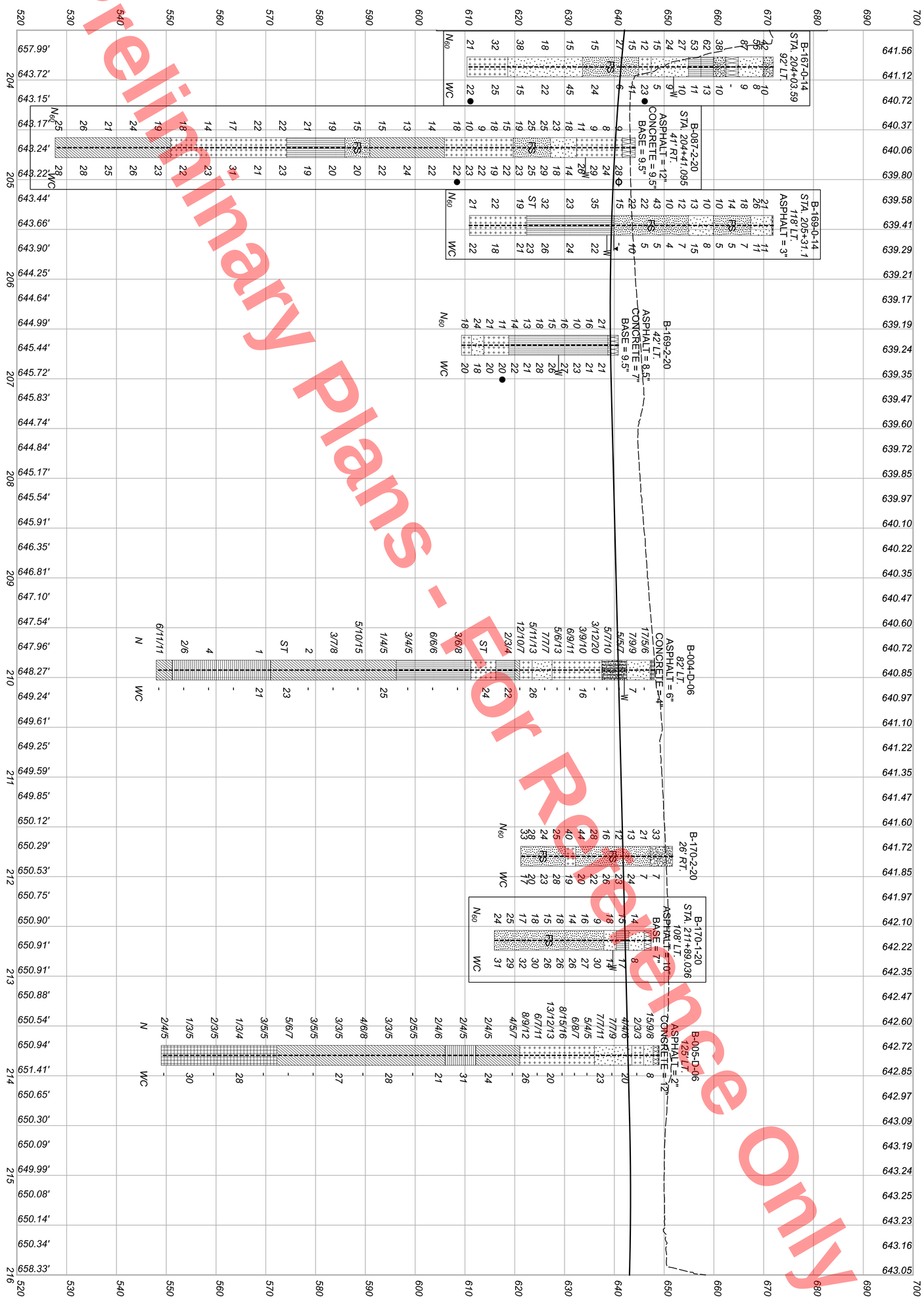

DESIGN AGENCY
EAS
2800 CORPORATE EXCHANGE DR. SUITE 240
COLUMBUS, OH. 43231
TEL: 614.714.0299
WWW.NEASINC.COM

DESIGNER MWJ & DT
REVIEWER BPA 08/23/24
PROJECT ID 82382
SUBSET 33 TOTAL 310
SHEET P 2419 TOTAL 2696

GEOTECHNICAL PROFILE - ROADWAY
STA. 203+50 TO STA. 216+00 IR-90 WB

HORIZONTAL SCALE IN FEET
0 50
25 100

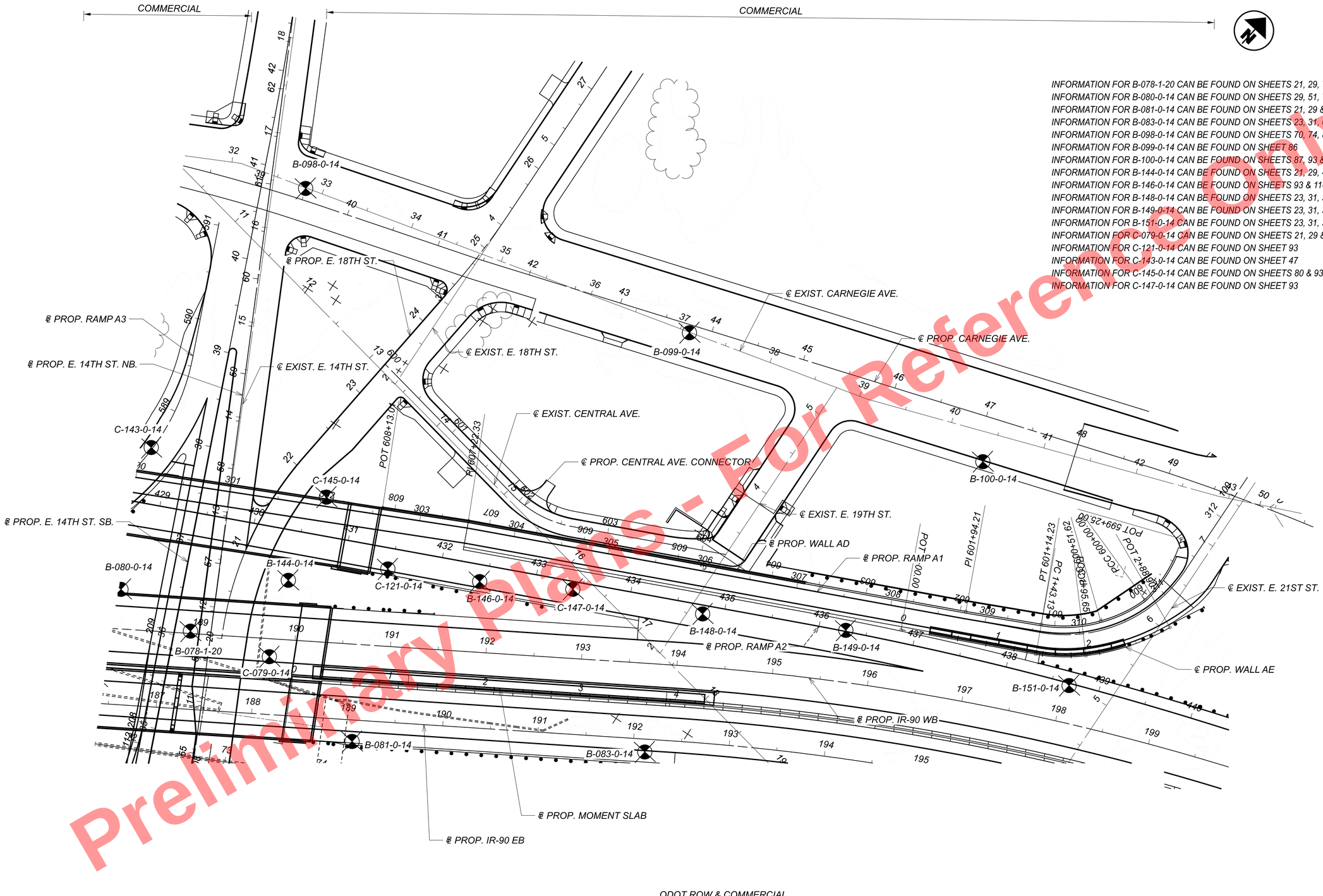

INFORMATION FOR B-078-1-20 CAN BE FOUND ON SHEETS 21, 29, 70, 72, 74 & 80
INFORMATION FOR B-080-0-14 CAN BE FOUND ON SHEETS 29, 51, 70, 72, 74 & 91
INFORMATION FOR B-081-0-14 CAN BE FOUND ON SHEETS 21, 29 & 114
INFORMATION FOR B-083-0-14 CAN BE FOUND ON SHEETS 23, 31, 65 & 114
INFORMATION FOR B-098-0-14 CAN BE FOUND ON SHEETS 70, 74, 80 & 86
INFORMATION FOR B-099-0-14 CAN BE FOUND ON SHEET 86
INFORMATION FOR B-100-0-14 CAN BE FOUND ON SHEETS 87, 93 & 94
INFORMATION FOR B-144-0-14 CAN BE FOUND ON SHEETS 21, 29, 49, 70 & 80
INFORMATION FOR B-146-0-14 CAN BE FOUND ON SHEETS 93 & 114
INFORMATION FOR B-148-0-14 CAN BE FOUND ON SHEETS 23, 31, 35, 93 & 114
INFORMATION FOR B-149-0-14 CAN BE FOUND ON SHEETS 23, 31, 35, 93 & 94
INFORMATION FOR B-151-0-14 CAN BE FOUND ON SHEETS 23, 31, 35, 93 & 94
INFORMATION FOR C-079-0-14 CAN BE FOUND ON SHEETS 21, 29 & 31
INFORMATION FOR C-121-0-14 CAN BE FOUND ON SHEET 93
INFORMATION FOR C-143-0-14 CAN BE FOUND ON SHEET 47
INFORMATION FOR C-145-0-14 CAN BE FOUND ON SHEETS 80 & 93
INFORMATION FOR C-147-0-14 CAN BE FOUND ON SHEET 93

For Reference Only
Preliminary Plans - Not for Construction

HORIZONTAL SCALE IN FEET
0 25 50 100

GEOTECHNICAL PROFILE - ROADWAY
RAMP A1

CUY-90-16.28 (CCG3A)

DESIGN AGENCY
NEAS
National Engineering & Architectural Services Inc.
2800 CORPORATE EXCHANGE DR, SUITE 240
COLUMBUS, OH, 43231
TEL:614.714.0299
WWW.NEASINC.COM

DESIGNER	MWJ & DT
REVIEWER	BPA 08/23/24
PROJECT ID	82382
SUBSET	34
TOTAL	310
SHEET	P.2420
TOTAL	2696

MODEL: 82382_IP990L2 PAPERSIZE: 34x22 (in) DATE: 3/28/2025 TIME: 8:42:52 AM USER: Asldldl
pw:\\mb-us-pw.bentley.com:mb-us-pw-03\Documents\Cleveland.OH\OiL_Projects\ODOT\District2\82382\400-Engineering\Geotechnical\Sheets\82382_IP990L.dgn

HORIZONTAL SCALE IN FEET
0 25 50 100

GEOTECHNICAL PROFILE - ROADWAY
RAMP A1

DESIGN AGENCY
NEAS
National Engineering & Architectural Services Inc.
2800 CORPORATE EXCHANGE DR, SUITE 240
COLUMBUS, OH, 43231
TEL:614.714.0299
WWW.NEASINC.COM

DESIGNER: MWJ & DT
REVIEWER: BPA 08/23/24
PROJECT ID: 82382
SUBSET: 35 TOTAL: 310
SHEET: P.2421 TOTAL: 2696

CUY-90-16.28 (CCG3A)

MODEL: PGL_RALInterim - RampAL_Profile_50scale_ISheet] PAPERSIZE: 34x22 (in.) DATE: 3/28/2025 TIME: 8:44:00 AM USER: Asiddiqi
pw:\\mb-us-pw.bentley.com:mb-us-pw-03\Documents\Cleveland_OH\DL_Projects\ODOT\District2\82382\400-Engineering\Geotechnical\Sheets\82382_IF990I.dgn

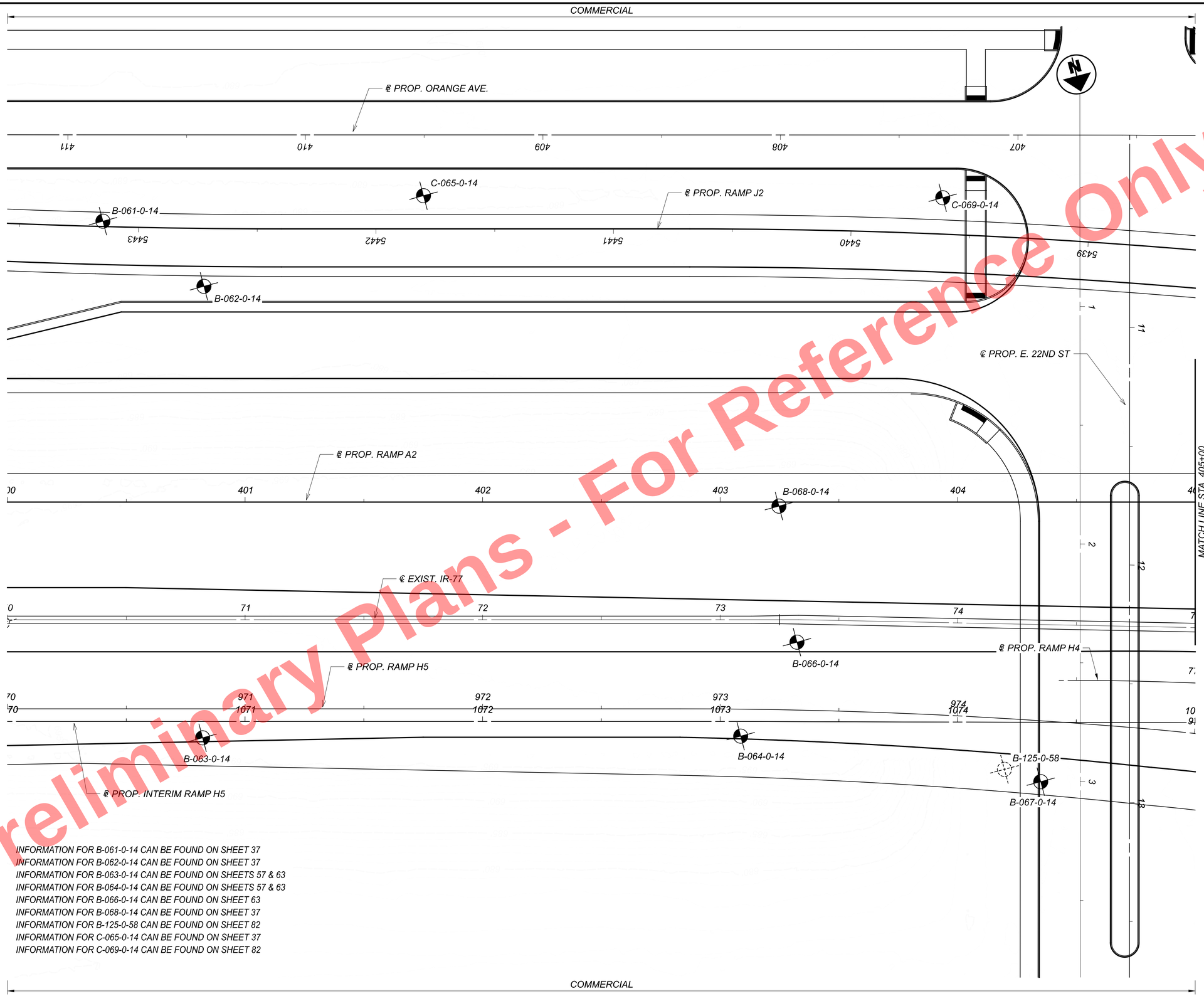

Preliminary Plans - For Reference Only

INFORMATION FOR B-061-0-14 CAN BE FOUND ON SHEET 37
INFORMATION FOR B-062-0-14 CAN BE FOUND ON SHEET 37
INFORMATION FOR B-063-0-14 CAN BE FOUND ON SHEETS 57 & 63
INFORMATION FOR B-064-0-14 CAN BE FOUND ON SHEETS 57 & 63
INFORMATION FOR B-066-0-14 CAN BE FOUND ON SHEET 63
INFORMATION FOR B-068-0-14 CAN BE FOUND ON SHEET 37
INFORMATION FOR B-125-0-58 CAN BE FOUND ON SHEET 82
INFORMATION FOR C-065-0-14 CAN BE FOUND ON SHEET 37
INFORMATION FOR C-069-0-14 CAN BE FOUND ON SHEET 82

HORIZONTAL SCALE IN FEET
0 10 20 40

GEOTECHNICAL PROFILE - ROADWAY
STA. 400+00 TO STA. 405+00 RAMP A2

CUY-90-16.28 (CCG3A)

MODEL: 82382_IP9100 PAPERSIZE: 34x22 (in.) DATE: 3/28/2025 TIME: 8:44:17 AM USER: Asiddiqi
pw:\\mb-us-pw.bentley.com:mb-us-pw-03\Documents\Cleveland_OHIO\Projects\ODOT\District2\82382\400-Engineering\Geotechnical\Sheets\82382_IP9100.dgn

DESIGN AGENCY
NEAS
National Engineering & Architectural Services Inc.
2800 CORPORATE EXCHANGE DR, SUITE 240
COLUMBUS, OH, 43231
TEL:614.714.0299
WWW.NEASINC.COM

DESIGNER
MWJ & DT

REVIEWER
BPA 08/23/24

PROJECT ID
82382

SUBSET 36 | TOTAL 310

SHEET P.2422 | TOTAL 2696

MODEL: 82382_IF9100I PAPERSIZE: 34x22 (In.) DATE: 3/28/2025 TIME: 8:44:42 AM USER: Asiddiqi
pw:\\mb-us-pw.bentley.com:mb-us-pw-03\Documents\Cleveland_OH\01_Projects\ODOT\District12\82382\400-Engineering\Geotechnical\Sheets\82382_IF9100I.dgn

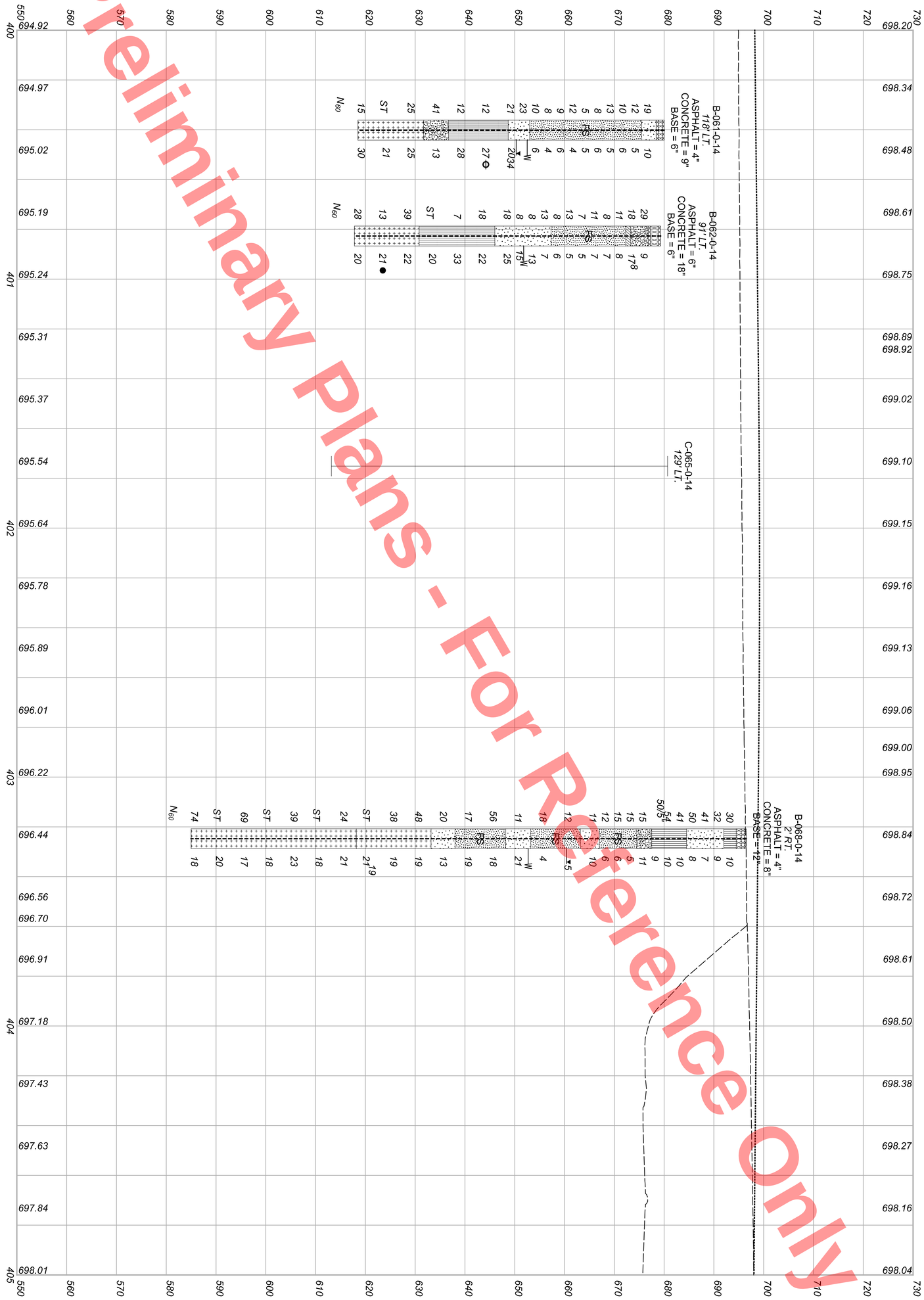

GEOTECHNICAL PROFILE - ROADWAY
STA. 400+00 TO STA. 405+00 RAMP A2

HORIZONTAL SCALE IN FEET
0 20
10 40

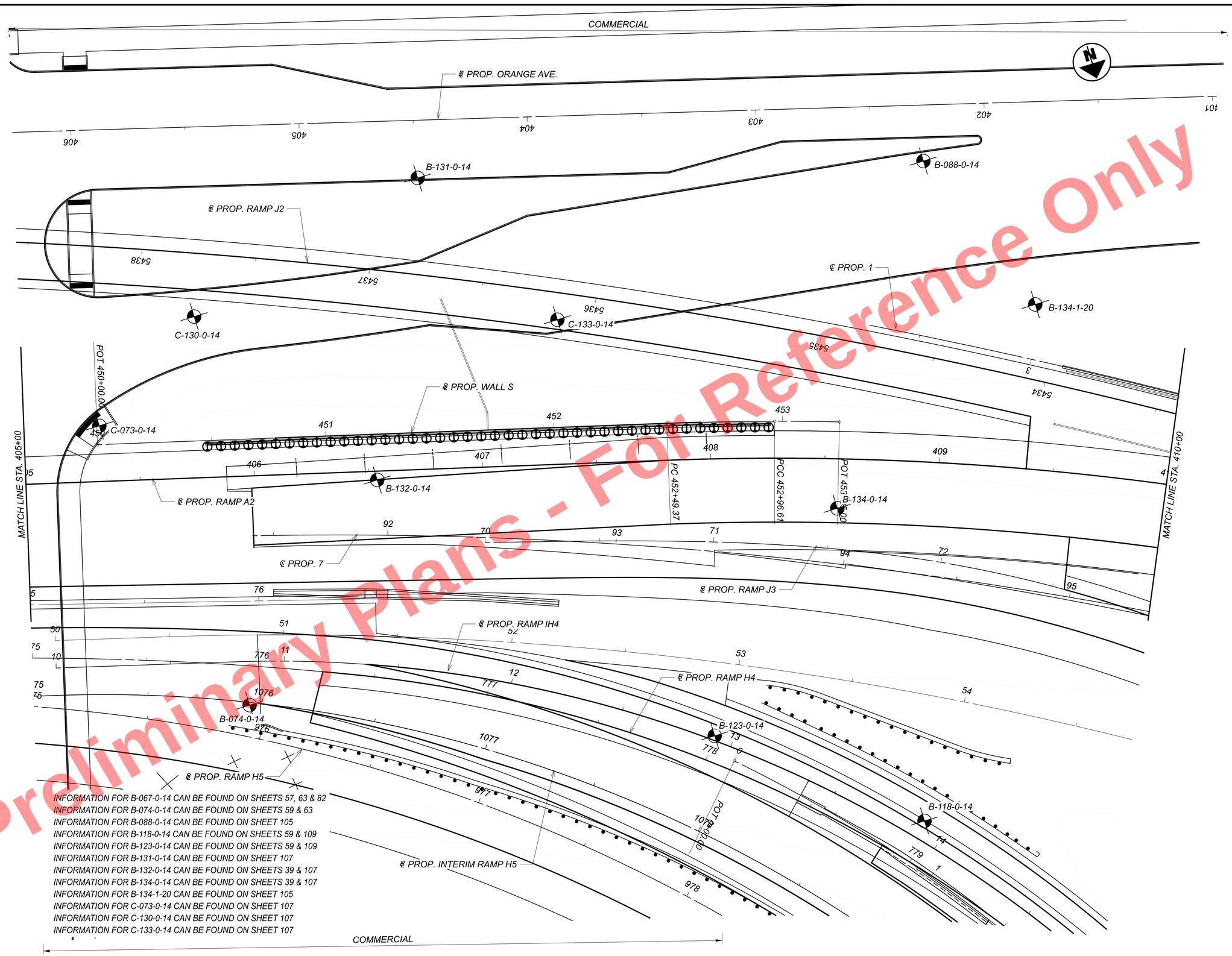

Preliminary Plans - For Reference Only

HORIZONTAL SCALE IN FEET
0 10 20 40

GEOTECHNICAL PROFILE - ROADWAY
STA. 405+00 TO STA. 410+00 RAMP A2

CUY-90-16.28 (CCG3A)

MODEL: 82382_IP9l002 PAPERSIZE: 34x22 (In) DATE: 3/28/2025 TIME: 8:44:56 AM USER: Asiddiqi
pw:\\vmb-us-pw.bentley.com:vmb-us-pw-03\Documents\Cleveland_OH\01_Projects\000T\District2\82382\400-Engineering\Geotechnical\Sheets\82382_IP9l002.dgn

DESIGN AGENCY
NEAS
National Engineering & Architectural Services Inc.
2800 CORPORATE EXCHANGE DR, SUITE 240
COLUMBUS, OH, 43231
TEL:614.714.0299
WWW.NEASINC.COM

DESIGNER	MWJ & DT
REVIEWER	BPA 08/23/24
PROJECT ID	82382
SUBSET	38
TOTAL	310
SHEET	P.2424
TOTAL	2696

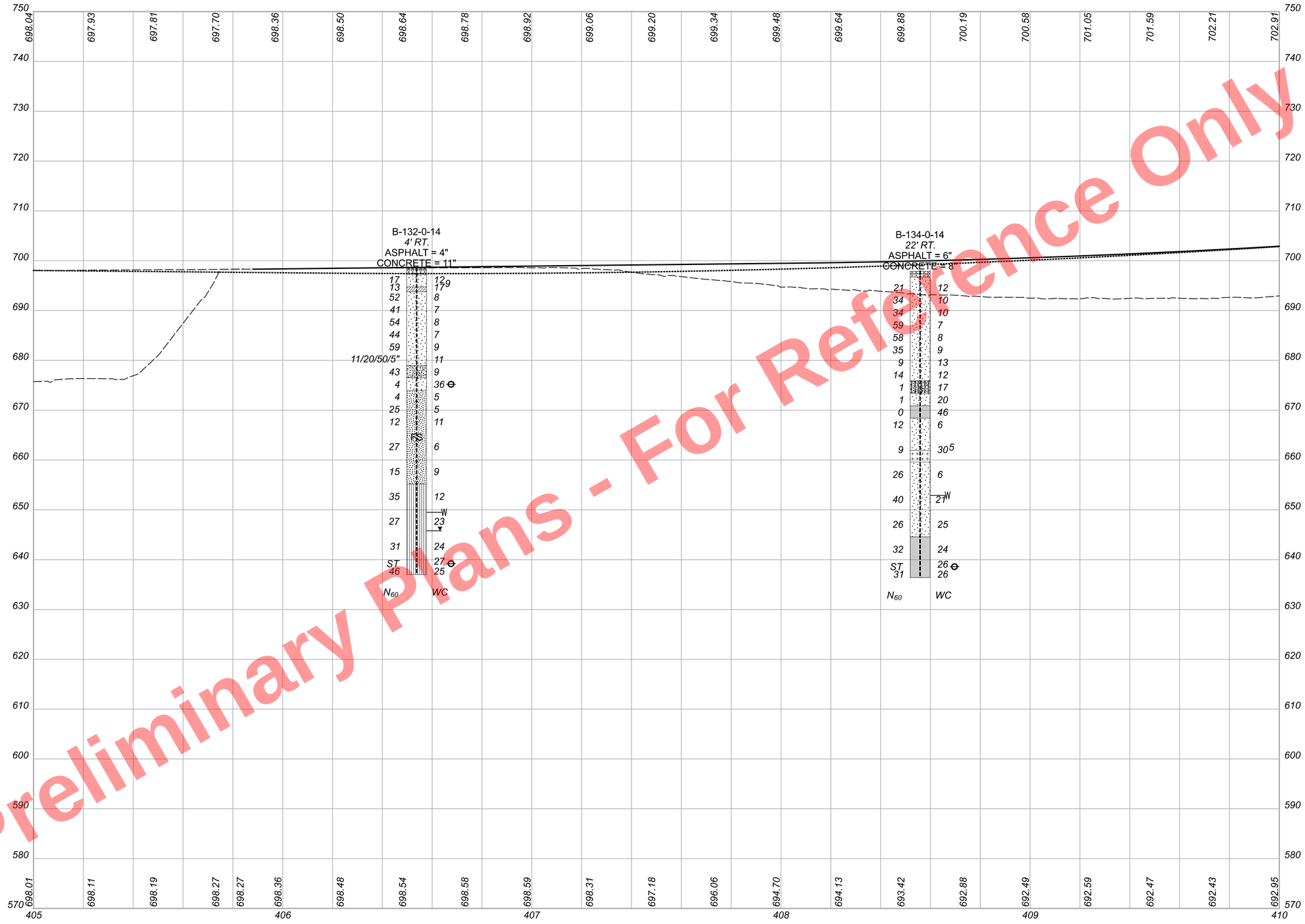

Preliminary Plans - For Reference Only

HORIZONTAL SCALE IN FEET
0 10 20 40

GEOTECHNICAL PROFILE - ROADWAY
STA. 405+00 TO STA. 410+00 RAMP A2

DESIGN AGENCY
NEAS
National Engineering & Architectural Services Inc.
2800 CORPORATE EXCHANGE DR, SUITE 240
COLUMBUS, OH, 43231
TEL:614.714.0299
WWW.NEASINC.COM

DESIGNER	MWJ & DT
REVIEWER	BPA 08/23/24
PROJECT ID	82382
SUBSET	39
TOTAL	310
SHEET	P.2425
TOTAL	2696

CUY-90-16.28 (CCG3A)

MODEL: 82382_IF9I002 PAPERSIZE: 34x22 (in.) DATE: 3/28/2025 TIME: 8:45:20 AM USER: Asiddiqi
pw:\\mb-us-pw.bentley.com:mb-us-pw-03\Documents\Cleveland_OH\OI_Projects\ODOT\District12\82382\400-Engineering\Geotechnical\Sheets\82382_IF9I002.dgn

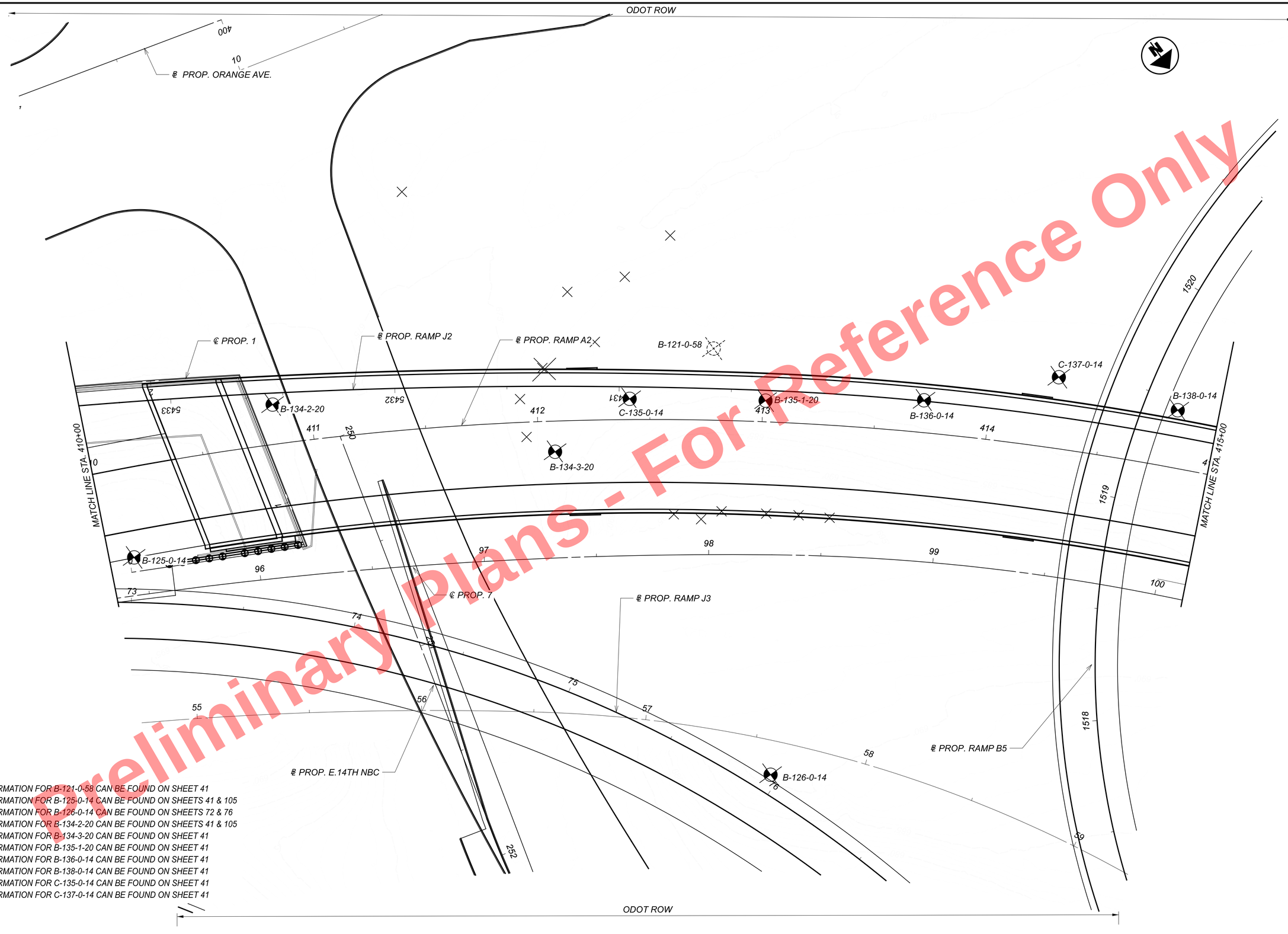

INFORMATION FOR B-121-0-58 CAN BE FOUND ON SHEET 41
INFORMATION FOR B-125-0-14 CAN BE FOUND ON SHEETS 41 & 105
INFORMATION FOR B-126-0-14 CAN BE FOUND ON SHEETS 72 & 76
INFORMATION FOR B-134-2-20 CAN BE FOUND ON SHEETS 41 & 105
INFORMATION FOR B-134-3-20 CAN BE FOUND ON SHEET 41
INFORMATION FOR B-135-1-20 CAN BE FOUND ON SHEET 41
INFORMATION FOR B-136-0-14 CAN BE FOUND ON SHEET 41
INFORMATION FOR B-138-0-14 CAN BE FOUND ON SHEET 41
INFORMATION FOR C-135-0-14 CAN BE FOUND ON SHEET 41
INFORMATION FOR C-137-0-14 CAN BE FOUND ON SHEET 41

Preliminary Plans - For Reference Only

HORIZONTAL SCALE IN FEET
0 10 20 40

GEOTECHNICAL PROFILE - ROADWAY
STA. 410+00 TO STA. 415+00 RAMP A2

CUY-90-16.28 (CCG3A)

MODEL: 82382_IP91003 PAPERSIZE: 34x22 (in.) DATE: 3/28/2025 TIME: 8:45:35 AM USER: AsIdIdI
pw:\\mb-us-pw.bentley.com:mb-us-pw-03\Documents\Cleveland_OH\01_Projects\ODOT\District2\82382\400-Engineering\Geotechnical\Sheets\82382_IP91003.dgn

DESIGN AGENCY
NEAS
National Engineering & Architectural Services Inc.
2800 CORPORATE EXCHANGE DR, SUITE 240
COLUMBUS, OH, 43231
TEL:614.714.0299
WWW.NEASINC.COM

DESIGNER MWJ & DT
REVIEWER BPA 08/23/24
PROJECT ID 82382
SUBSET 40 TOTAL 310
SHEET P.2426 TOTAL 2696



Preliminary Plans - Not For Reference Only

HORIZONTAL SCALE IN FEET
0 10 20 40

GEOTECHNICAL PROFILE - ROADWAY
STA. 410+00 TO STA. 415+00 RAMP A2

CUY-90-16.28 (CCG3A)

MODEL: 82382_IF9I003 PAPERSIZE: 34x22 (In.) DATE: 3/28/2025 TIME: 8:46:00 AM USER: Asldldfl
pw:\\mb-us-pw.bentley.com:mb-us-pw-03\Documents\Cleveland_OH\01_Projects\ODOT\District2\82382\400-Engineering\Geotechnical\Sheets\82382_IF9I003.dgn

DESIGN AGENCY
NEAS
National Engineering & Architectural Services Inc.

2800 CORPORATE EXCHANGE DR, SUITE 240
COLUMBUS, OH, 43231
TEL:614.714.0299
WWW.NEASINC.COM

DESIGNER: MWJ & DT
REVIEWER: BPA 08/23/24
PROJECT ID: 82382
SUBSET: 41 TOTAL: 310
SHEET: P.2427 TOTAL: 2696

Preliminary Plans - For Reference Only

ODOT ROW

℄ PROP. RAMP B5

℄ EXIST. INTERIM RAMP B5

℄ PROP. RAMP A2

℄ PROP. INTERIM RAMP J3

℄ EXIST. RAMP A3

B-138-1-20

B-139-0-14

B-139-1-20

MATCH LINE STA. 415+00

MATCH LINE STA. 420+00

1521 1513 1712 1711 1710 1571 1510

5 416 417 418 419

101 210 211 102 209 208 207 103 104

INFORMATION FOR B-138-1-20 CAN BE FOUND ON SHEET 43
INFORMATION FOR B-139-0-14 CAN BE FOUND ON SHEET 43
INFORMATION FOR B-139-1-20 CAN BE FOUND ON SHEET 43

ODOT ROW

HORIZONTAL SCALE IN FEET
0 10 20 40

GEOTECHNICAL PROFILE - ROADWAY
STA. 415+00 TO STA. 420+00 RAMP A2

CUY-90-16.28 (CCG3A)

MODEL: 82382_IP9I004 PAPERSIZE: 34x22 (in.) DATE: 3/28/2025 TIME: 8:46:14 AM USER: Asiddiqi
pw:\\mb-us-pw.bentley.com:mb-us-pw-03\Documents\Cleveland_OH\01_Projects\ODOT\District2\82382\400-Engineering\Geotechnical\Sheets\82382_IP9I004.dgn

DESIGN AGENCY
NEAS
National Engineering & Architectural Services Inc.
2800 CORPORATE EXCHANGE DR, SUITE 240
COLUMBUS, OH, 43231
TEL:614.714.0299
WWW.NEASINC.COM

DESIGNER MWJ & DT

REVIEWER BPA 08/23/24

PROJECT ID 82382

SUBSET 42 | TOTAL 310

SHEET P.2428 | TOTAL 2696

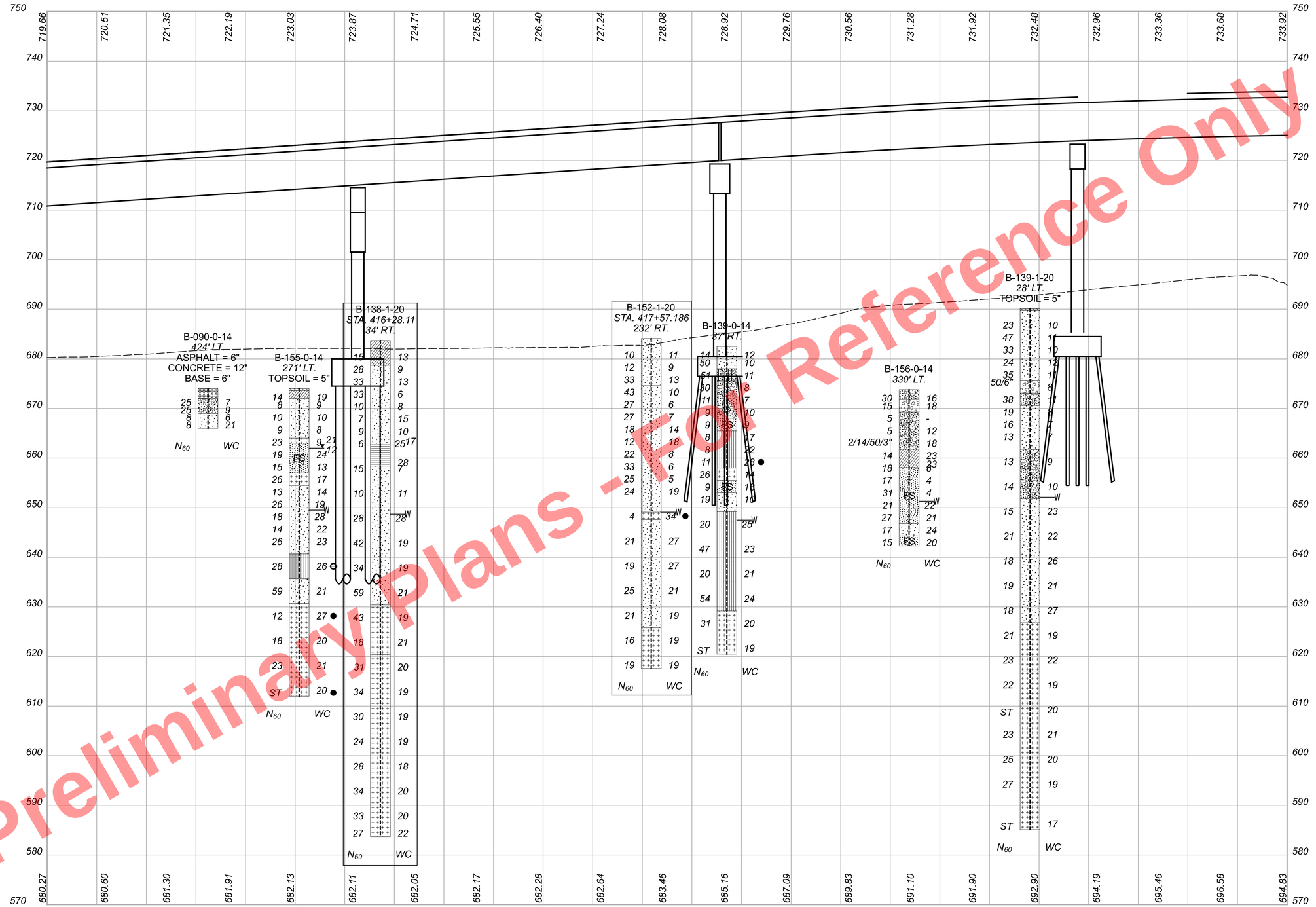

Preliminary Plans - Not For Construction
Reference Only

HORIZONTAL SCALE IN FEET
0 10 20 40

GEOTECHNICAL PROFILE - ROADWAY
STA. 415+00 TO STA. 420+00 RAMP A2

CUY-90-16.28 (CCG3A)

MODEL: 82382_IF9I004 PAPERSIZE: 34x22 (In.) DATE: 3/28/2025 TIME: 8:46:39 AM USER: Asiddiqi
pw:\\mb-us-pw.bentley.com:mb-us-pw-03\Documents\Cleveland_OH\OiL_Projects\ODOT\District2\82382\400-Engineering\Geotechnical\Sheets\82382_IF9I004.dgn

DESIGN AGENCY
NEAS
National Engineering & Architectural Services Inc.
2800 CORPORATE EXCHANGE DR, SUITE 240
COLUMBUS, OH, 43231
TEL:614.714.0299
WWW.NEASINC.COM

DESIGNER MWJ & DT
REVIEWER BPA 08/23/24
PROJECT ID 82382
SUBSET 43 TOTAL 310
SHEET P.2429 TOTAL 2696

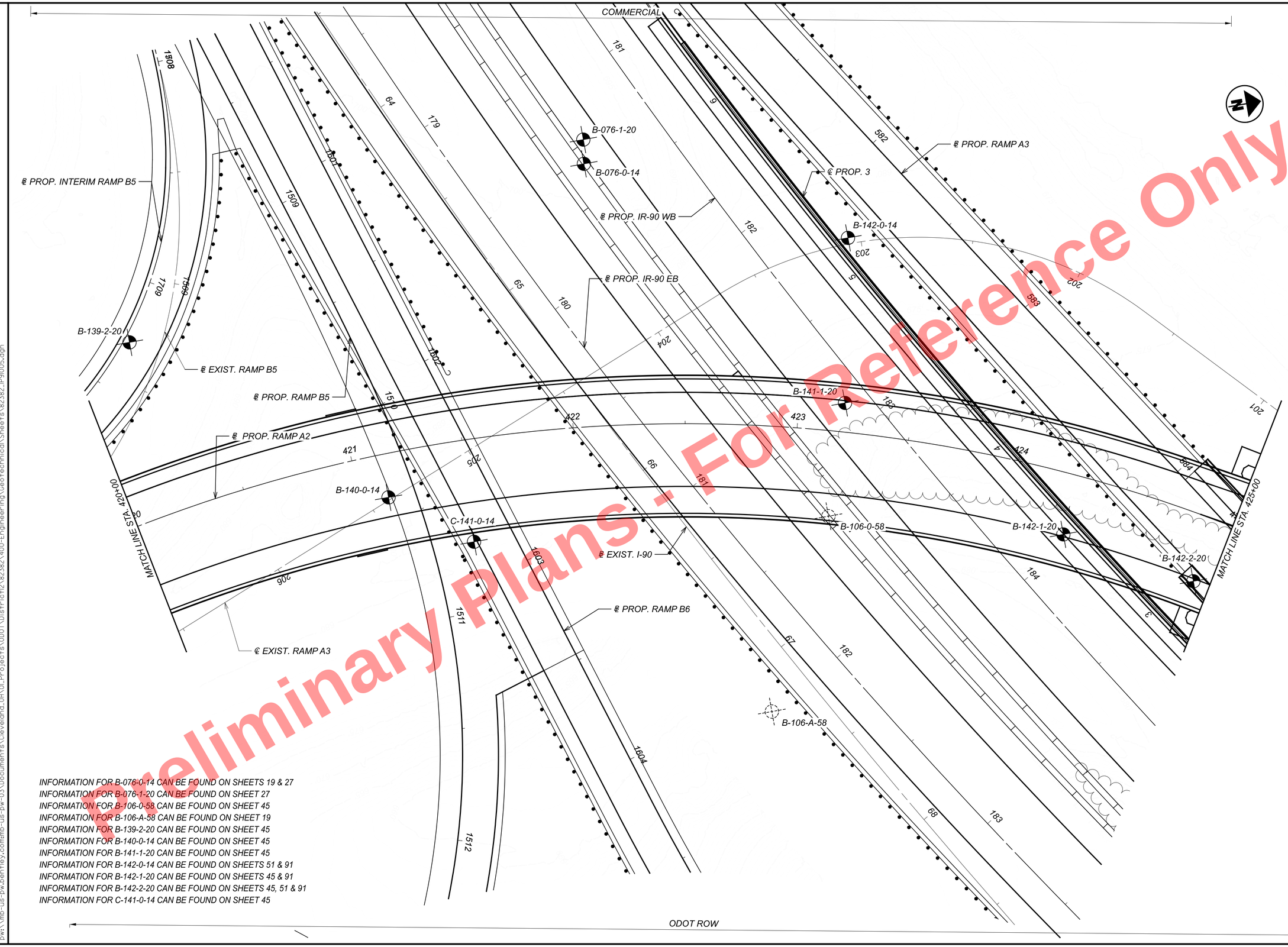

Preliminary Plans - Not For Reference Only

INFORMATION FOR B-076-0-14 CAN BE FOUND ON SHEETS 19 & 27
INFORMATION FOR B-076-1-20 CAN BE FOUND ON SHEET 27
INFORMATION FOR B-106-0-58 CAN BE FOUND ON SHEET 45
INFORMATION FOR B-106-A-58 CAN BE FOUND ON SHEET 19
INFORMATION FOR B-139-2-20 CAN BE FOUND ON SHEET 45
INFORMATION FOR B-140-0-14 CAN BE FOUND ON SHEET 45
INFORMATION FOR B-141-1-20 CAN BE FOUND ON SHEET 45
INFORMATION FOR B-142-0-14 CAN BE FOUND ON SHEETS 51 & 91
INFORMATION FOR B-142-1-20 CAN BE FOUND ON SHEETS 45 & 91
INFORMATION FOR B-142-2-20 CAN BE FOUND ON SHEETS 45, 51 & 91
INFORMATION FOR C-141-0-14 CAN BE FOUND ON SHEET 45

HORIZONTAL SCALE IN FEET
0 10 20 40

GEOTECHNICAL PROFILE - ROADWAY
STA. 420+00 TO STA. 425+00 RAMP A2

CUY-90-16.28 (CCG3A)

MODEL: 82382_IP91005 PAPERSIZE: 34x22 (In) DATE: 3/28/2025 TIME: 8:46:54 AM USER: Asldlql
pw:\\mb-us-pw.bentley.com:mb-us-pw-03\Documents\Cleveland_OH\01_Projects\0DOT\District2\82382\400-Engineering\Geotechnical\Sheets\82382_IP91005.dgn

DESIGN AGENCY
NEAS
National Engineering & Architectural Services Inc.
2800 CORPORATE EXCHANGE DR, SUITE 240
COLUMBUS, OH, 43231
TEL:614.714.0299
WWW.NEASINC.COM

DESIGNER MWJ & DT
REVIEWER BPA 08/23/24
PROJECT ID 82382
SUBSET 44 TOTAL 310
SHEET P.2430 TOTAL 2696

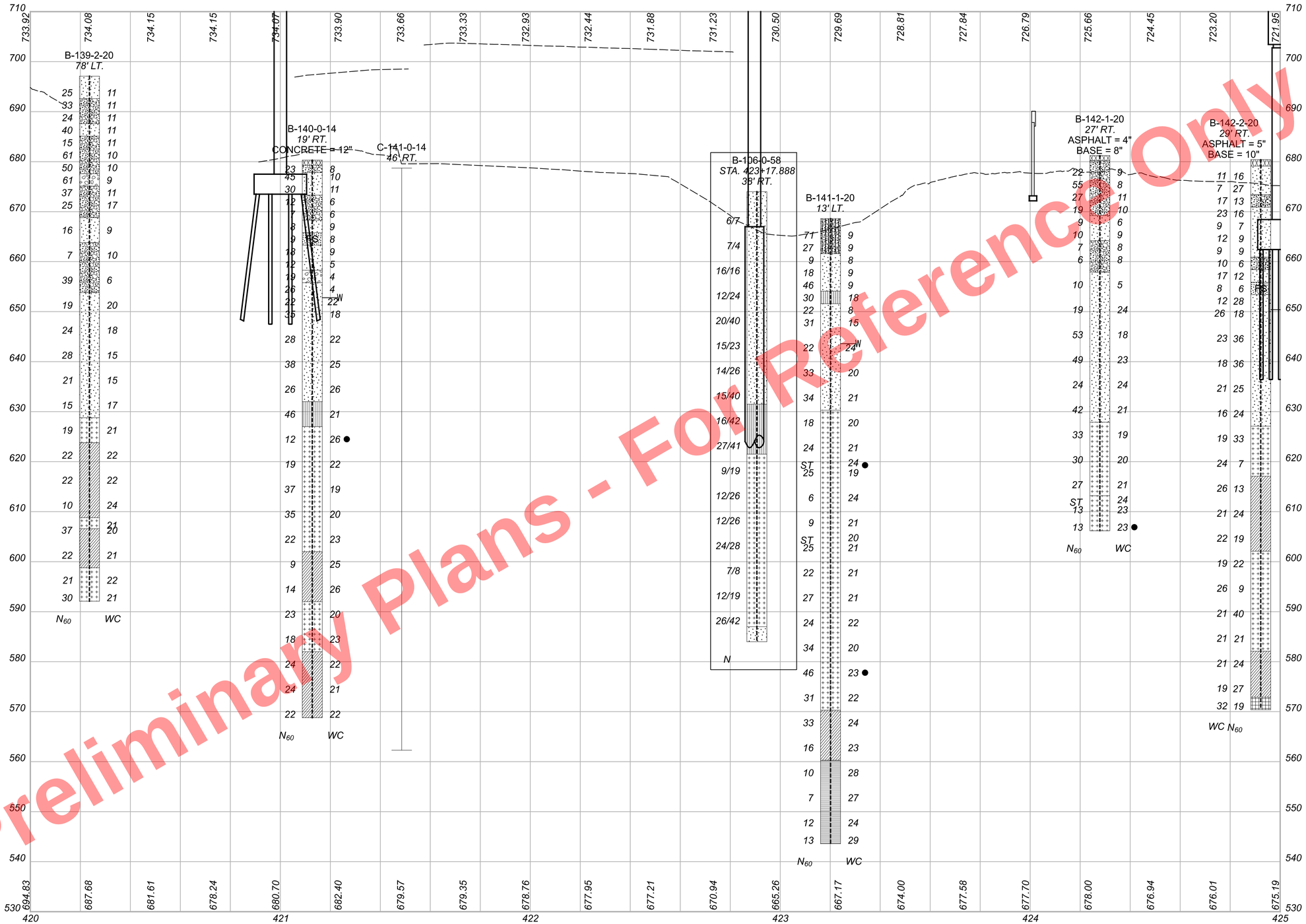

Preliminary Plans - For Reference Only

HORIZONTAL SCALE IN FEET
0 10 20 40

GEOTECHNICAL PROFILE - ROADWAY
STA. 420+00 TO STA. 425+00 RAMP A2

CUY-90-16.28 (CCG3A)

DESIGN AGENCY
NEAS
National Engineering & Architectural Services Inc.
2800 CORPORATE EXCHANGE DR, SUITE 240
COLUMBUS, OH, 43231
TEL:614.714.0299
WWW.NEASINC.COM

DESIGNER MWJ & DT
REVIEWER BPA 08/23/24
PROJECT ID 82382
SUBSET 45 TOTAL 310
SHEET P.2431 TOTAL 2696

MODEL: 82382_IF9005 PAPERSIZE: 34x22 (in.) DATE: 3/28/2025 TIME: 8:47:21 AM USER: Asladlql
pw:\\mb-us-pw.bentley.com:mb-us-pw-03\Documents\Cleveland_OH\01_Projects\ODOT\District2\82382\400-Engineering\Geotechnical\Sheets\82382_IF9005.dgn

INFORMATION FOR B-076-2-20 CAN BE FOUND ON SHEET 19
INFORMATION FOR B-078-0-14 CAN BE FOUND ON SHEETS 21, 29, 70, 72 & 74
INFORMATION FOR B-078-1-20 CAN BE FOUND ON SHEETS 21, 29, 70, 72, 74 & 80
INFORMATION FOR B-080-0-14 CAN BE FOUND ON SHEETS 29, 51, 70, 72, 74 & 91
INFORMATION FOR B-142-3-20 CAN BE FOUND ON SHEETS 47 & 51
INFORMATION FOR B-142-4-20 CAN BE FOUND ON SHEETS 29 & 91
INFORMATION FOR C-143-0-14 CAN BE FOUND ON SHEET 47

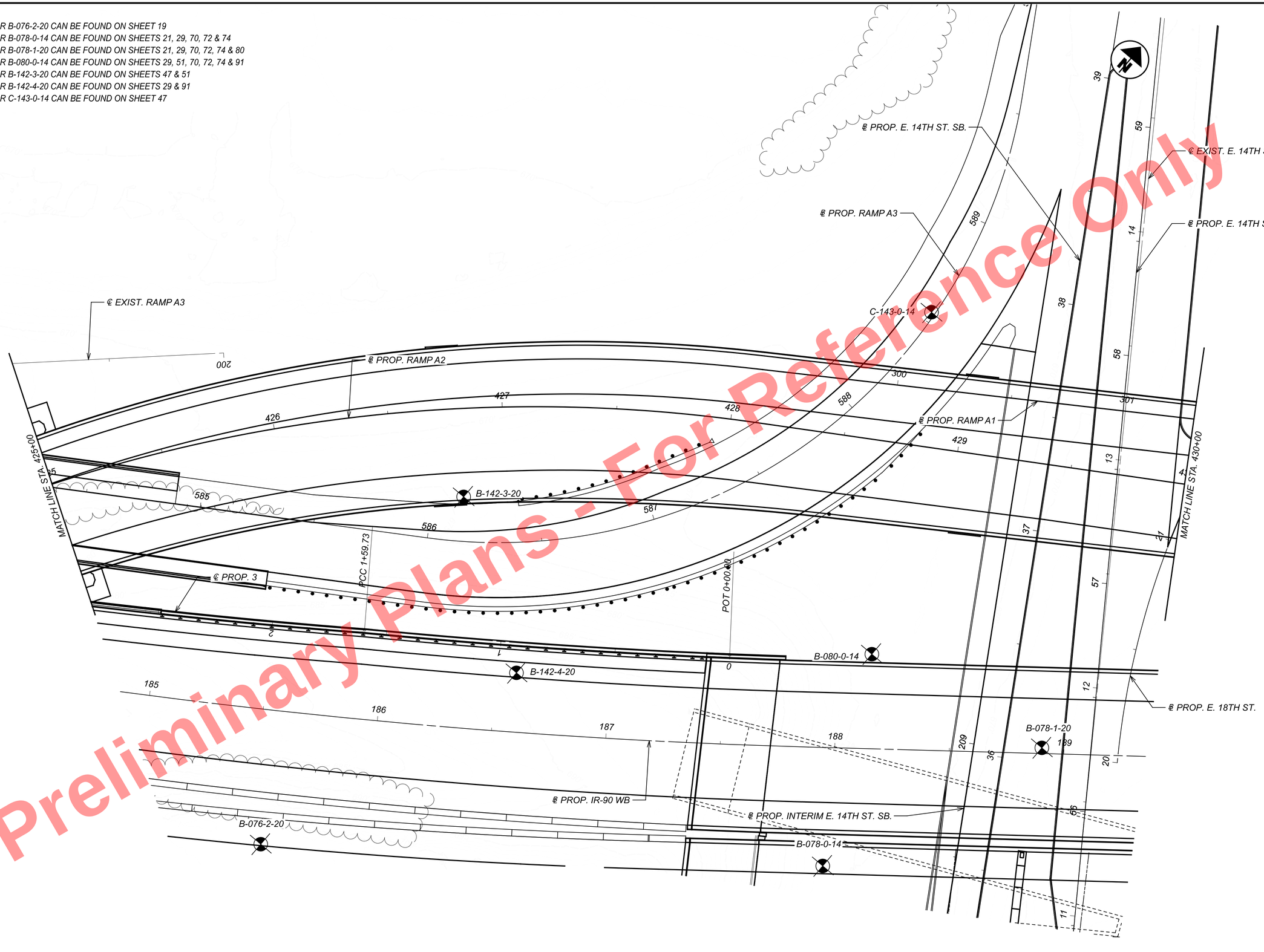

For Reference Only
Preliminary Plans - Not

HORIZONTAL SCALE IN FEET
0 10 20 40

GEOTECHNICAL PROFILE - ROADWAY
STA. 425+00 TO STA. 430+00 RAMP A2

CUY-90-16.28 (CCG3A)

MODEL: 82382_IP91006 PAPERSIZE: 34x22 (In.) DATE: 3/28/2025 TIME: 8:47:39 AM USER: AsIadIqI
pw:\\mb-us-pw.bentley.com:mb-us-pw-03\Documents\Cleveland_OH\01_Projects\ODOT\District2\82382\400-Engineering\Geotechnical\Sheets\82382_IP91006.dgn

DESIGN AGENCY
NEAS
National Engineering & Architectural Services Inc.
2800 CORPORATE EXCHANGE DR, SUITE 240
COLUMBUS, OH, 43231
TEL:614.714.0299
WWW.NEASINC.COM

DESIGNER	MWJ & DT
REVIEWER	BPA 08/23/24
PROJECT ID	82382
SUBSET	46
TOTAL	310
SHEET	P.2432
TOTAL	2696

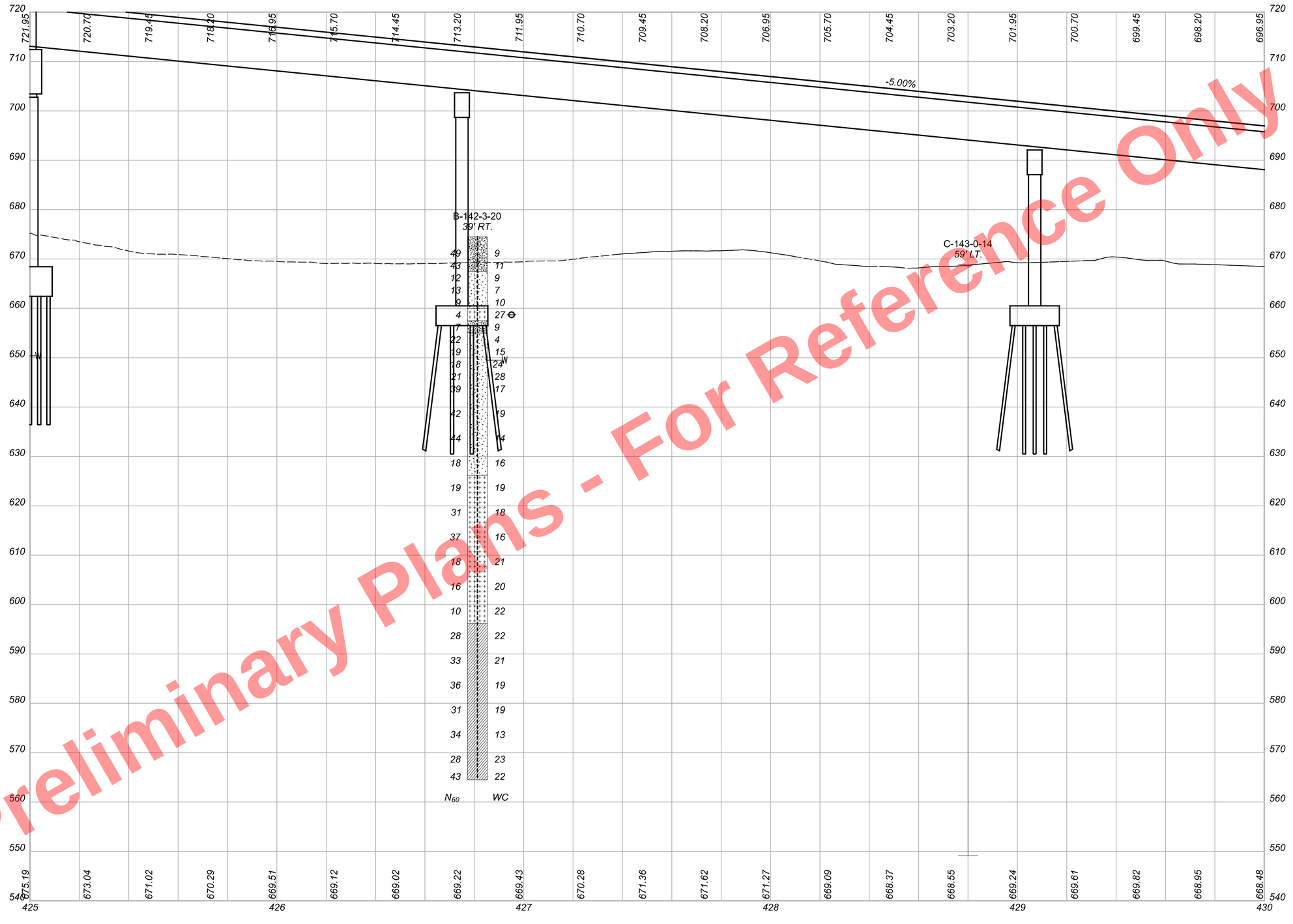

Preliminary Plans - For Reference Only

HORIZONTAL SCALE IN FEET
0 10 20 40

GEOTECHNICAL PROFILE - ROADWAY
STA. 425+00 TO STA. 430+00 RAMP A2

CUY-90-16.28 (CCG3A)

MODEL: 82382_IF9I006 PAPERSIZE: 34x22 (in.) DATE: 3/28/2025 TIME: 8:48:45 AM USER: AsIdIdI
pw:\\mb-us-pw.bentley.com:mb-us-pw-03\Documents\Cleveland_OH\DL_Projects\ODOT\District2\82382\400-Engineering\Geotechnical\Sheets\82382_IF9I006.dgn

DESIGN AGENCY
NEAS
National Engineering & Architectural Services Inc.
2800 CORPORATE EXCHANGE DR, SUITE 240
COLUMBUS, OH, 43231
TEL:614.714.0299
WWW.NEASINC.COM

DESIGNER MWJ & DT
REVIEWER BPA 08/23/24
PROJECT ID 82382
SUBSET 47 TOTAL 310
SHEET P.2433 TOTAL 2696

COMMERCIAL

℄ EXIST. E. 18TH ST.

℄ PROP. CWNTRAL AVE. CONNECTOR

℄ EXIST. CENTRAL AVE.

℄ PROP. E. 18TH ST.

℄ PROP. WALL AD

POT 608+13.01

PI 607+22.33

℄ PROP. RAMP A1

℄ EXIST. 1

℄ PROP. RAMP A2

℄ PROP. IR-90 WB

℄ PROP. MOMENT SLAB

℄ PROP. IR-90 EB

ODOT ROW

MATCH LINE STA. 430+00

C-145-0-14

B-144-0-14

B-146-0-14

C-121-0-14

C-147-0-14

B-148-0-14

C-079-0-14

B-083-0-14

INFORMATION FOR B-083-0-14 CAN BE FOUND ON SHEETS 23, 31, 65 & 114
INFORMATION FOR B-144-0-14 CAN BE FOUND ON SHEETS 21, 29, 49, 70 & 80
INFORMATION FOR B-146-0-14 CAN BE FOUND ON SHEETS 93 & 114
INFORMATION FOR B-148-0-14 CAN BE FOUND ON SHEETS 23, 31, 35, 93 & 114
INFORMATION FOR C-079-0-14 CAN BE FOUND ON SHEETS 21, 29 & 31
INFORMATION FOR C-121-0-14 CAN BE FOUND ON SHEET 93
INFORMATION FOR C-145-0-14 CAN BE FOUND ON SHEETS 80 & 93
INFORMATION FOR C-147-0-14 CAN BE FOUND ON SHEET 93

For Reference Only
Preliminary Plans - Not

HORIZONTAL SCALE IN FEET
0 10 20 40

GEOTECHNICAL PROFILE - ROADWAY
STA. 430+00 TO STA. 435+00 RAMP A2

DESIGN AGENCY
NEAS
National Engineering & Architectural Services Inc.
2600 CORPORATE EXCHANGE DR, SUITE 240
COLUMBUS, OH, 43231
TEL:614.714.0299
WWW.NEASINC.COM

DESIGNER: MWJ & DT
REVIEWER: BPA 08/23/24
PROJECT ID: 82382
SUBSET: 48 TOTAL: 310
SHEET: P.2434 TOTAL: 2696

CUY-90-16.28 (CCG3A)

MODEL: 82382_IP9I007 PAPERSIZE: 34x22 (In.) DATE: 3/28/2025 TIME: 8:49:06 AM USER: Asldal
pw:\\mb-us-pw.bentley.com\mb-us-pw-03\Documents\Cleveland.OH\OI_Projects\ODOT\District2\82382\400-Engineering\Geotechnical\Sheets\82382_IP9I007.dgn

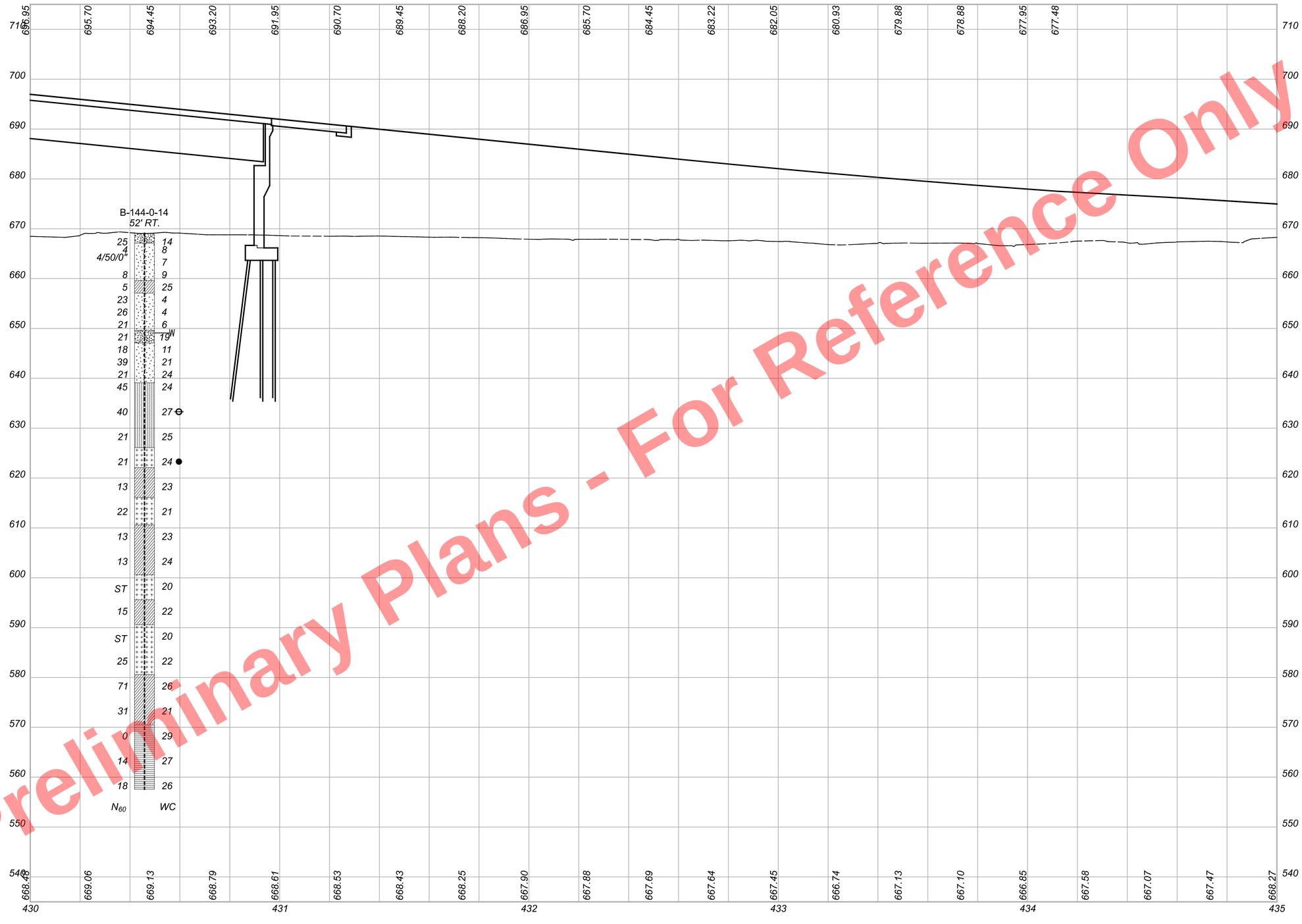

Preliminary Plans - For Reference Only

HORIZONTAL SCALE IN FEET
0 10 20 40

GEOTECHNICAL PROFILE - ROADWAY
STA. 430+00 TO STA. 435+00 RAMP A2

CUY-90-16.28 (CCG3A)

MODEL: 82382_IF9007 PAPERSIZE: 34x22 (In) DATE: 3/28/2025 TIME: 8:50:07 AM USER: Asiddiqi
pw:\\mb-us-pw.bentley.com:mb-us-pw-03\Documents\Cleveland_OH\01_Projects\ODOT\District2\82382\400-Engineering\Geotechnical\Sheets\82382_IF9007.dgn

DESIGN AGENCY
NEAS
Northeast Engineering & Architectural Services Inc.
2800 CORPORATE EXCHANGE DR, SUITE 240
COLUMBUS, OH, 43231
TEL:614.714.0299
WWW.NEASINC.COM

DESIGNER	MWJ & DT
REVIEWER	BPA 08/23/24
PROJECT ID	82382
SUBSET	49
TOTAL	310
SHEET	P.2435
TOTAL	2696

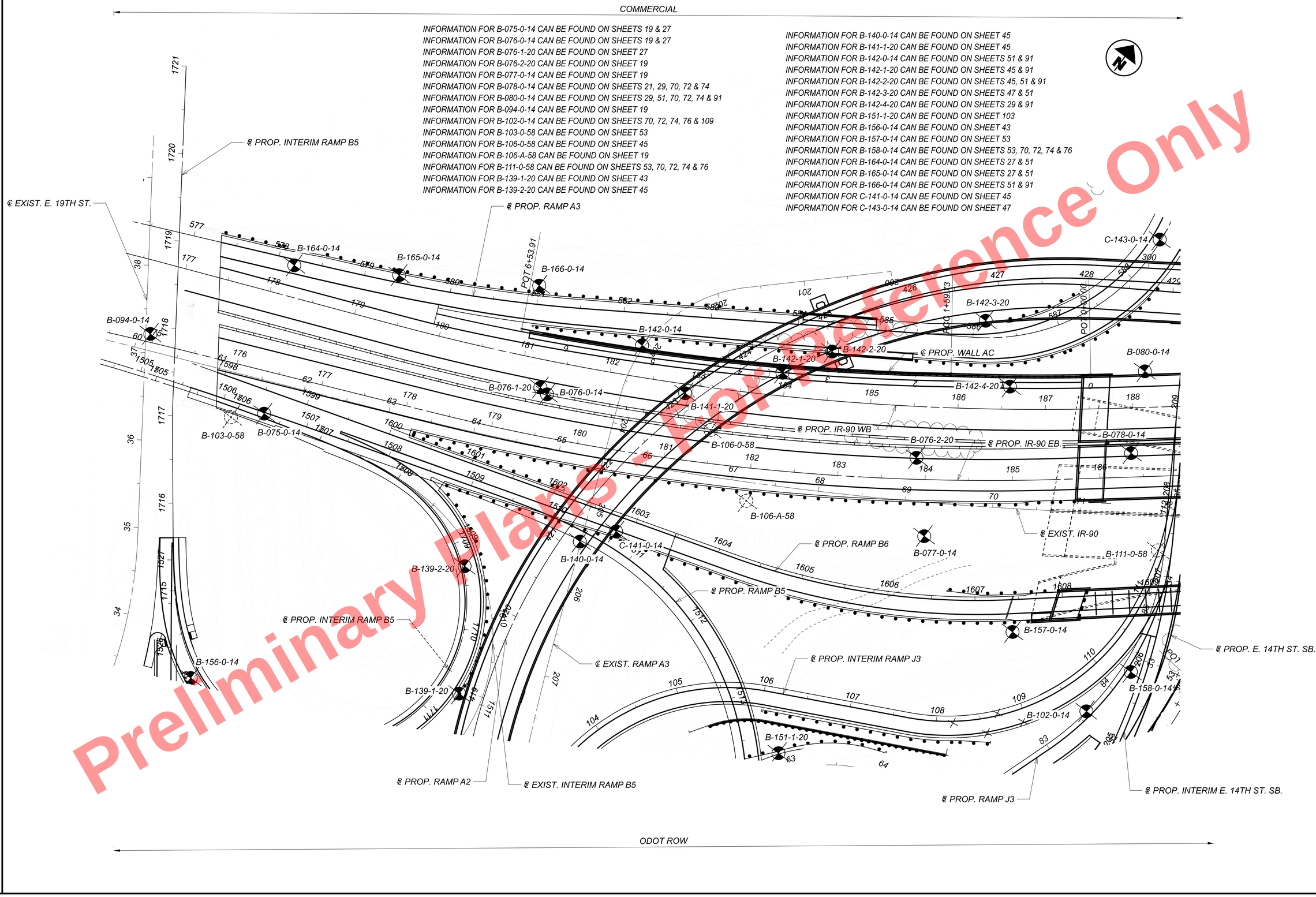

HORIZONTAL SCALE IN FEET
0 25 50 100

GEOTECHNICAL PROFILE - ROADWAY
RAMP A3

DESIGN AGENCY
NEAS
National Engineering & Architectural Services Inc.
2800 CORPORATE EXCHANGE DR, SUITE 240
COLUMBUS, OH, 43231
TEL:614.714.0299
WWW.NEASINC.COM

DESIGNER: MWJ & DT
REVIEWER: BPA 08/23/24
PROJECT ID: 82382
SUBSET: 50 TOTAL: 310
SHEET: P.2436 TOTAL: 2696

CUY-90-16.28 (CCG3A)

MODEL: 82382_IP9101 PAPERSIZE: 34x22 (in.) DATE: 3/28/2025 TIME: 8:50:29 AM USER: Asladql
pw:\\vmb-us-pw.bentley.com:vmb-us-pw-03\Documents\Cleveland_OH\01_Projects\ODOT\District2\82382\400-Engineering\Geotechnical\Sheets\82382_IP9101.dgn

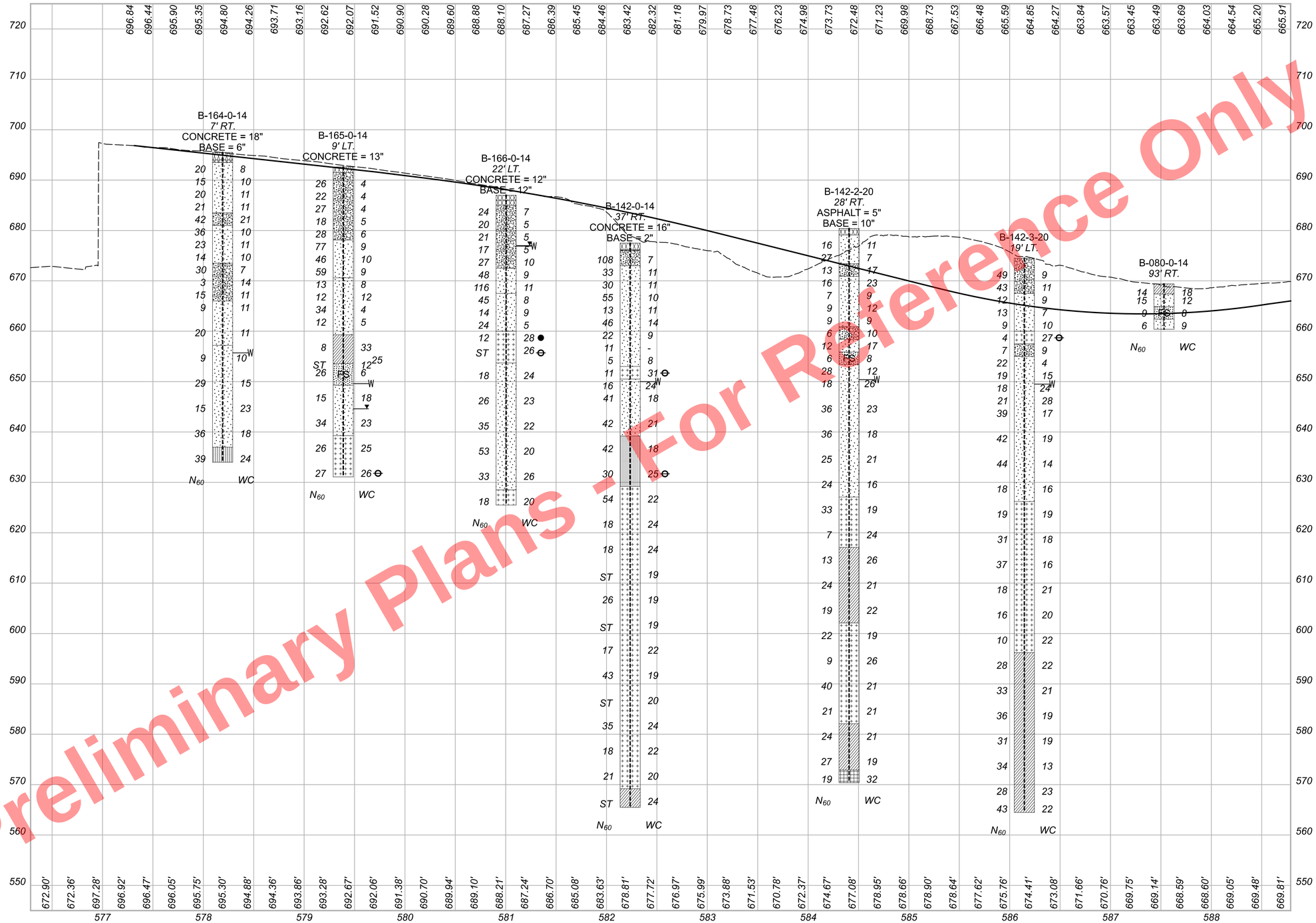

Preliminary Plans - Not For Reference Only

HORIZONTAL SCALE IN FEET
0 25 50 100

GEOTECHNICAL PROFILE - ROADWAY
RAMP A3

CUY-90-16.28 (CCG3A)

MODEL: 82382_IF9101 PAPERSIZE: 34x22 (in.) DATE: 3/28/2025 TIME: 8:51:31 AM USER: Asldd1q1
pw:\\mb-us-pw.bentley.com:mb-us-pw-03\Documents\Cleveland_OH\DL_Projects\ODOT\District2\82382\400-Engineering\Geotechnical\Sheets\82382_IF9101.dgn

DESIGN AGENCY
NEAS
National Engineering & Architectural Services Inc.
2800 CORPORATE EXCHANGE DR, SUITE 240
COLUMBUS, OH, 43231
TEL:614.714.0299
WWW.NEASINC.COM

DESIGNER
MWJ & DT

REVIEWER
BPA 08/23/24

PROJECT ID
82382

SUBSET	TOTAL
51	310

SHEET	TOTAL
P.2437	2696

INFORMATION FOR B-075-0-14 CAN BE FOUND ON SHEETS 19 & 27
INFORMATION FOR B-076-0-14 CAN BE FOUND ON SHEETS 19 & 27
INFORMATION FOR B-076-1-20 CAN BE FOUND ON SHEET 27
INFORMATION FOR B-076-2-20 CAN BE FOUND ON SHEET 19
INFORMATION FOR B-077-0-14 CAN BE FOUND ON SHEET 19
INFORMATION FOR B-078-0-14 CAN BE FOUND ON SHEETS 21, 29, 70, 72 & 74
INFORMATION FOR B-078-1-20 CAN BE FOUND ON SHEETS 21, 29, 70, 72, 74 & 80
INFORMATION FOR B-080-0-14 CAN BE FOUND ON SHEETS 29, 51, 70, 72, 74 & 91
INFORMATION FOR B-103-0-58 CAN BE FOUND ON SHEET 53
INFORMATION FOR B-106-A-58 CAN BE FOUND ON SHEET 19
INFORMATION FOR B-111-0-58 CAN BE FOUND ON SHEETS 53, 70, 72, 74 & 76
INFORMATION FOR B-140-0-14 CAN BE FOUND ON SHEET 45
INFORMATION FOR B-141-1-20 CAN BE FOUND ON SHEET 45
INFORMATION FOR B-142-0-14 CAN BE FOUND ON SHEETS 51 & 91
INFORMATION FOR B-142-1-20 CAN BE FOUND ON SHEETS 45 & 91
INFORMATION FOR B-142-2-20 CAN BE FOUND ON SHEETS 45, 51 & 91
INFORMATION FOR B-142-3-20 CAN BE FOUND ON SHEETS 47 & 51
INFORMATION FOR B-142-4-20 CAN BE FOUND ON SHEETS 29 & 91
INFORMATION FOR B-157-0-14 CAN BE FOUND ON SHEET 53
INFORMATION FOR B-164-0-14 CAN BE FOUND ON SHEETS 27 & 51
INFORMATION FOR B-165-0-14 CAN BE FOUND ON SHEETS 27 & 51
INFORMATION FOR B-166-0-14 CAN BE FOUND ON SHEETS 51 & 91
INFORMATION FOR C-141-0-14 CAN BE FOUND ON SHEET 45
INFORMATION FOR C-143-0-14 CAN BE FOUND ON SHEET 47

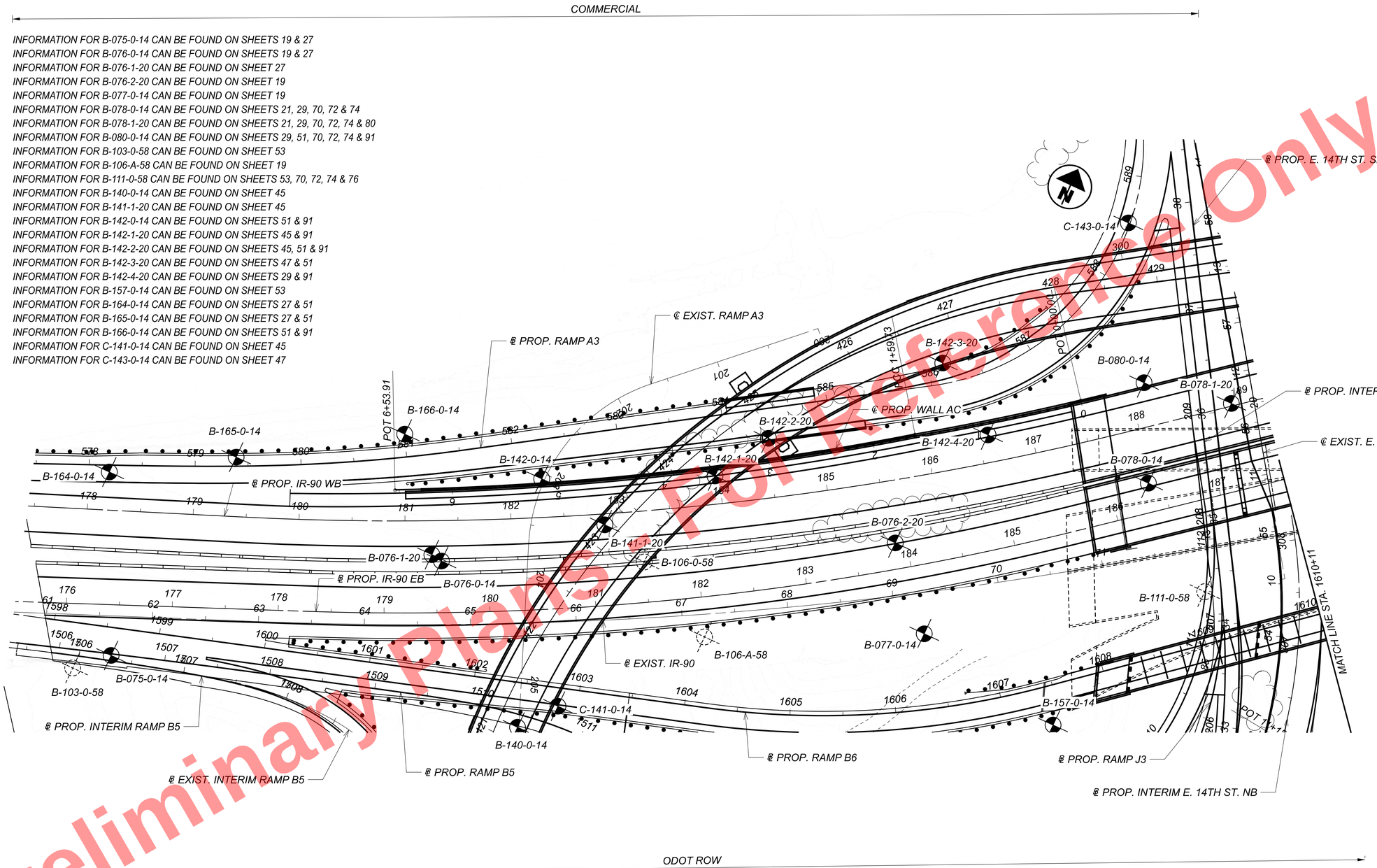

Preliminary Plans Not For Reference Only

HORIZONTAL SCALE IN FEET
0 25 50 100

GEOTECHNICAL PROFILE - ROADWAY
STA. 1597+61 TO STA. 1610+11 RAMP B6

CUY-90-16.28 (CCG3A)

MODEL: 82382_IP9120l PAPERSIZE: 34x22 (in) DATE: 3/28/2025 TIME: 8:51:49 AM USER: Asldldl
pw:\\vmb-us-pw.bentley.com:vmb-us-pw-03\Documents\Cleveland_OH\01_Projects\ODOT\District2\82382\400-Engineering\Geotechnical\Sheets\82382_IP9120l.dgn

DESIGN AGENCY
NEAS
National Engineering & Architectural Services Inc.
2800 CORPORATE EXCHANGE DR, SUITE 240
COLUMBUS, OH, 43231
TEL:614.714.0299
WWW.NEASINC.COM

DESIGNER MWJ & DT
REVIEWER BPA 08/23/24
PROJECT ID 82382
SUBSET 52 | TOTAL 310
SHEET P.2438 | TOTAL 2696

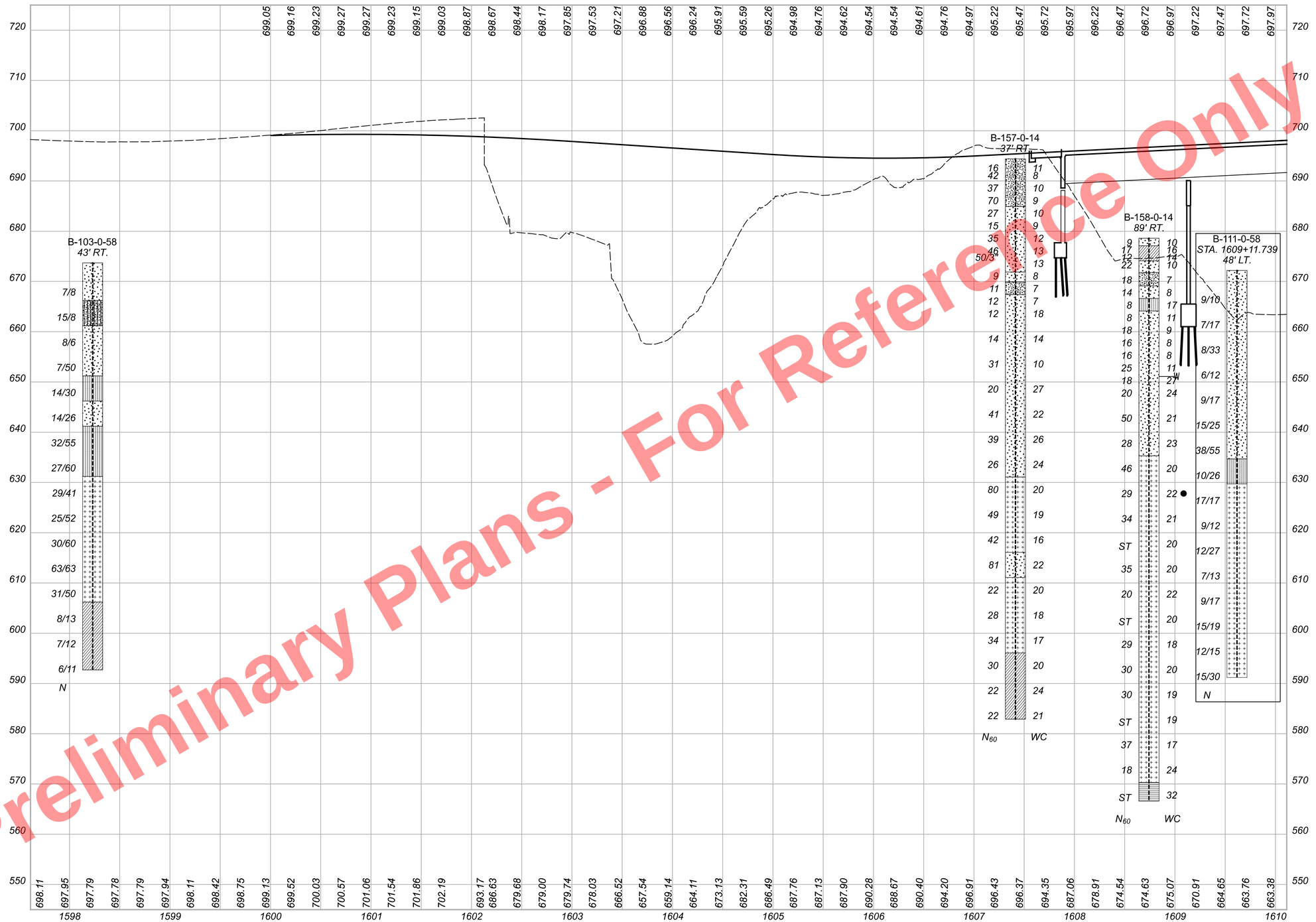

Preliminary Plans - For Reference Only

HORIZONTAL SCALE IN FEET
0 25 50 100

GEOTECHNICAL PROFILE - ROADWAY
STA. 1597+61 TO STA. 1610+11 RAMP B6

DESIGN AGENCY
NEAS
National Engineering & Architectural Services Inc.
2800 CORPORATE EXCHANGE DR, SUITE 240
COLUMBUS, OH, 43231
TEL:614.714.0299
WWW.NEASINC.COM

DESIGNER
MWJ & DT

REVIEWER
BPA 08/23/24

PROJECT ID
82382

SUBSET	TOTAL
53	310

SHEET	TOTAL
P.2439	2696

CUY-90-16.28 (CCG3A)

MODEL: Sheet PAPERSIZE: 34x22 (in.) DATE: 3/28/2025 TIME: 8:52:43 AM USER: Asiddiqi
pw:\\mb-us-pw.bentley.com:mb-us-pw-03\Documents\Cleveland_OH\OI_Projects\ODOT\District12\82382\400-Engineering\Geotechnical\Sheets\82382_IF9120I_print.dgn

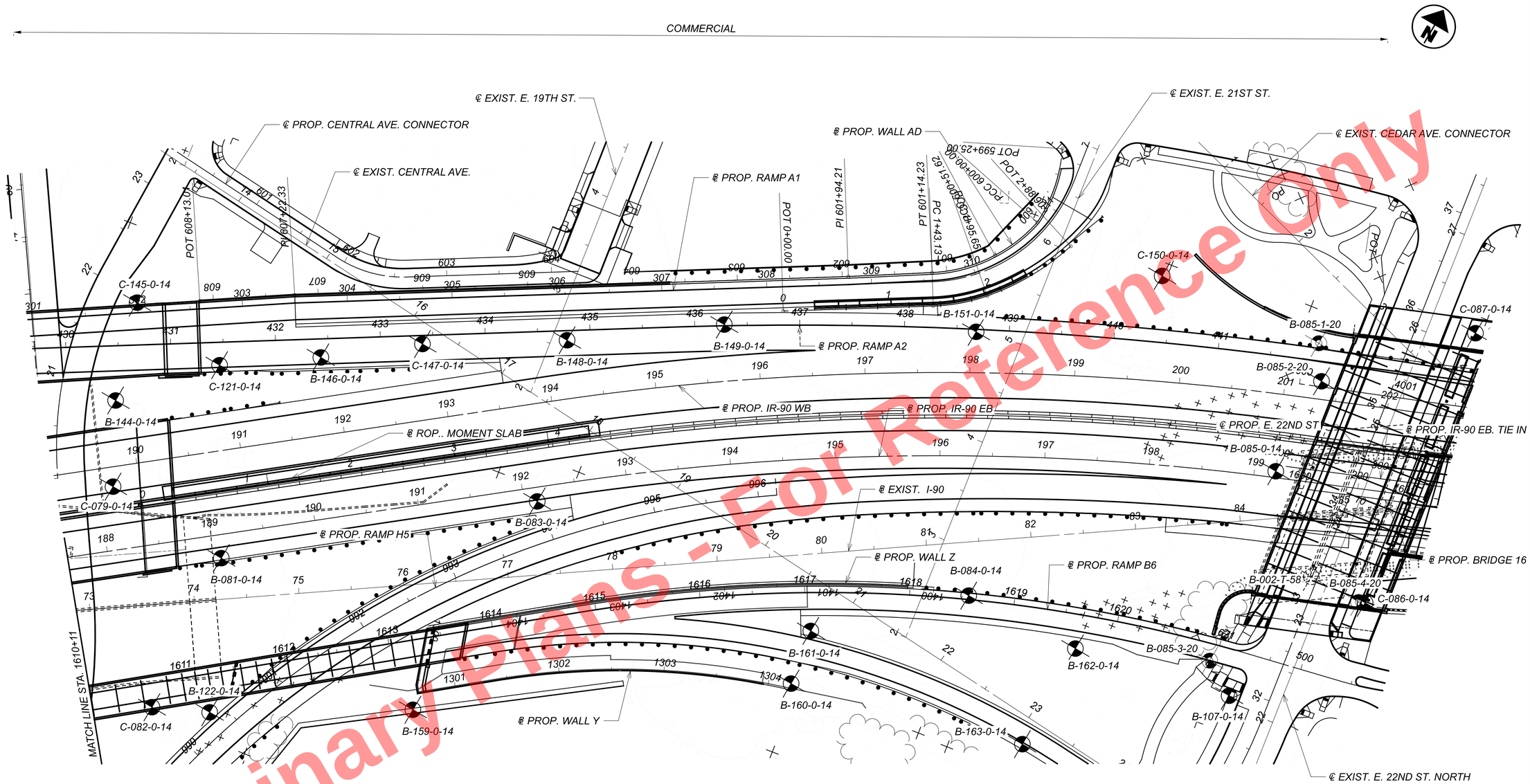

INFORMATION FOR B-002-T-58 CAN BE FOUND ON SHEET 84
INFORMATION FOR B-081-0-14 CAN BE FOUND ON SHEETS 21 & 29
INFORMATION FOR B-083-0-14 CAN BE FOUND ON SHEETS 23, 31, 65 & 114
INFORMATION FOR B-084-0-14 CAN BE FOUND ON SHEETS 23 & 31
INFORMATION FOR B-085-0-14 CAN BE FOUND ON SHEETS 23, 31 & 84
INFORMATION FOR B-085-1-20 CAN BE FOUND ON SHEETS 31 & 84
INFORMATION FOR B-085-2-20 CAN BE FOUND ON SHEETS 31 & 84
INFORMATION FOR B-085-3-20 CAN BE FOUND ON SHEET 55
INFORMATION FOR B-085-4-20 CAN BE FOUND ON SHEETS 84 & 98
INFORMATION FOR B-107-0-14 CAN BE FOUND ON SHEET 84
INFORMATION FOR B-122-0-14 CAN BE FOUND ON SHEETS 55 & 65
INFORMATION FOR B-144-0-14 CAN BE FOUND ON SHEETS 21, 29, 49, 70 & 80
INFORMATION FOR B-146-0-14 CAN BE FOUND ON SHEETS 93 & 114
INFORMATION FOR B-148-0-14 CAN BE FOUND ON SHEETS 23, 31, 35, 93 & 114
INFORMATION FOR B-149-0-14 CAN BE FOUND ON SHEETS 23, 31, 35, 93 & 94
INFORMATION FOR B-151-0-14 CAN BE FOUND ON SHEETS 23, 31, 35, 93 & 94
INFORMATION FOR B-159-0-14 CAN BE FOUND ON SHEETS 55, 65, 113 & 111
INFORMATION FOR B-160-0-14 CAN BE FOUND ON SHEET 111
INFORMATION FOR B-161-0-14 CAN BE FOUND ON SHEET 113
INFORMATION FOR B-162-0-14 CAN BE FOUND ON SHEETS 23 & 31
INFORMATION FOR B-163-0-14 CAN BE FOUND ON SHEET 84
INFORMATION FOR C-079-0-14 CAN BE FOUND ON SHEETS 21, 29 & 31
INFORMATION FOR C-082-0-14 CAN BE FOUND ON SHEET 55
INFORMATION FOR C-086-0-14 CAN BE FOUND ON SHEETS 84 & 98
INFORMATION FOR C-087-0-14 CAN BE FOUND ON SHEET 84
INFORMATION FOR C-121-0-14 CAN BE FOUND ON SHEET 93
INFORMATION FOR C-145-0-14 CAN BE FOUND ON SHEET 80
INFORMATION FOR C-147-0-14 CAN BE FOUND ON SHEET 93
INFORMATION FOR C-150-0-14 CAN BE FOUND ON SHEETS 93 & 94

Preliminary Plans - For Reference Only

HORIZONTAL SCALE IN FEET
0 25 50 100

GEOTECHNICAL PROFILE - ROADWAY
STA. 1610+11 TO END RAMP B6

CUY-90-16.28 (CCG3A)

MODEL: 82382_IP9I202 PAPERSIZE: 34x22 (in.) DATE: 3/28/2025 TIME: 8:53:05 AM USER: Asiddiqi
pw:\\mb-us-pw.bentley.com:mb-us-pw-03\Documents\Cleveland_OH\01_Projects\ODOT\District2\82382\400-Engineering\Geotechnical\Sheets\82382_IP9I202.dgn

DESIGN AGENCY
NEAS
National Engineering & Architectural Services Inc.
2800 CORPORATE EXCHANGE DR, SUITE 240
COLUMBUS, OH, 43231
TEL:614.714.0299
WWW.NEASINC.COM

DESIGNER	MWJ & DT
REVIEWER	BPA 08/23/24
PROJECT ID	82382
SUBSET	54
TOTAL	310
SHEET	P.2440
TOTAL	2696

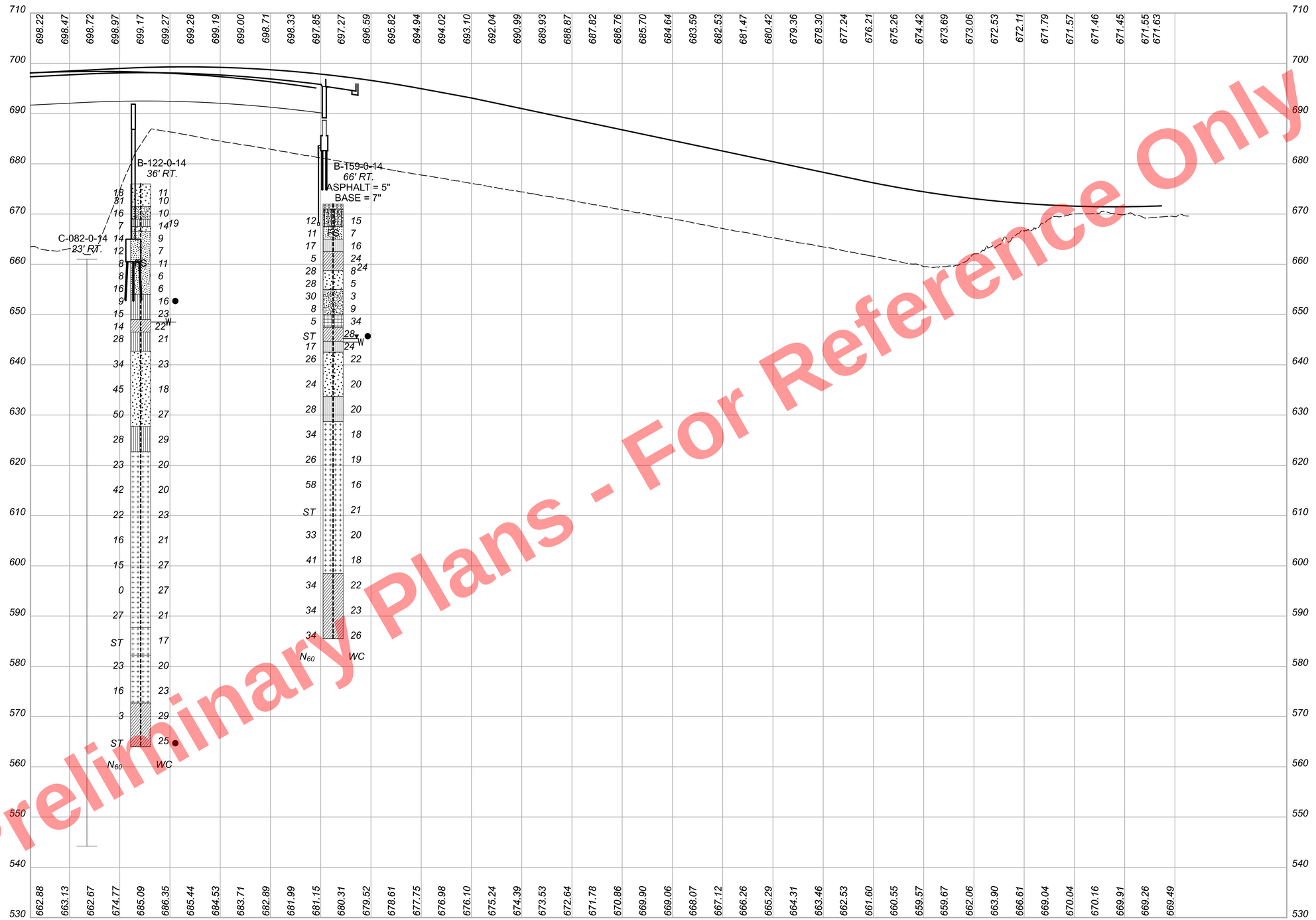

Preliminary Plans - For Reference Only

HORIZONTAL SCALE IN FEET
0 25 50 100

GEOTECHNICAL PROFILE - ROADWAY
STA. 1610+11 TO END RAMP B6

CUY-90-16.28 (CCG3A)

MODEL: Sheet PAPERSIZE: 34x22 (in.) DATE: 3/28/2025 TIME: 8:54:00 AM USER: Asiddiqi
pw:\\mb-us-pw.bentley.com:mb-us-pw-03\Documents\Cleveland_OH\Oi_Projects\000T\District2\82382\400-Engineering\Geotechnical\Sheets\82382_IF91202_print.dgn

DESIGN AGENCY
NEAS
National Engineering & Architectural Services Inc.
2800 CORPORATE EXCHANGE DR, SUITE 240
COLUMBUS, OH, 43231
TEL:614.714.0299
WWW.NEASINC.COM

DESIGNER MWJ & DT
REVIEWER BPA 08/23/24
PROJECT ID 82382
SUBSET 55 TOTAL 310
SHEET P.2441 TOTAL 2696

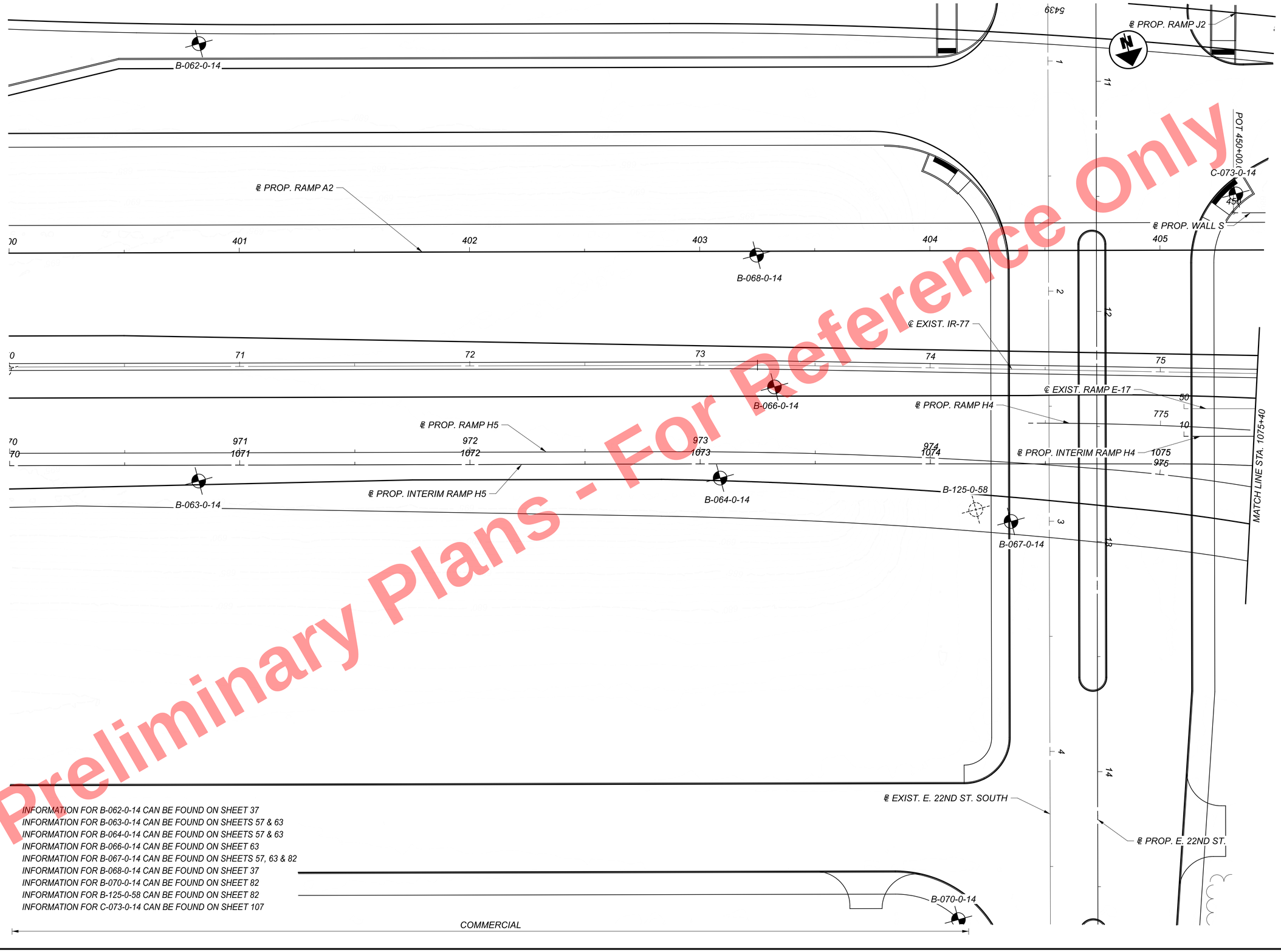

INFORMATION FOR B-062-0-14 CAN BE FOUND ON SHEET 37
INFORMATION FOR B-063-0-14 CAN BE FOUND ON SHEETS 57 & 63
INFORMATION FOR B-064-0-14 CAN BE FOUND ON SHEETS 57 & 63
INFORMATION FOR B-066-0-14 CAN BE FOUND ON SHEET 63
INFORMATION FOR B-067-0-14 CAN BE FOUND ON SHEETS 57, 63 & 82
INFORMATION FOR B-068-0-14 CAN BE FOUND ON SHEET 37
INFORMATION FOR B-070-0-14 CAN BE FOUND ON SHEET 82
INFORMATION FOR B-125-0-58 CAN BE FOUND ON SHEET 82
INFORMATION FOR C-073-0-14 CAN BE FOUND ON SHEET 107

Preliminary Plans - For Reference Only

HORIZONTAL SCALE IN FEET
0 10 20 40

GEOTECHNICAL PROFILE - ROADWAY
STA. 1070+00 TO STA. 1075+40 RAMP H5 INTERIM

DESIGN AGENCY
NEAS
National Engineering & Architectural Services Inc.
2800 CORPORATE EXCHANGE DR, SUITE 240
COLUMBUS, OH, 43231
TEL:614.714.0299
WWW.NEASINC.COM

DESIGNER	MWJ & DT
REVIEWER	BPA 08/23/24
PROJECT ID	82382
SUBSET	56
TOTAL	310
SHEET	P.2442
TOTAL	2696

CUY-90-16.28 (CCG3A)

MODEL: 82382_IP9I40I PAPERSIZE: 34x22 (in.) DATE: 3/28/2025 TIME: 8:54:22 AM USER: Asiddiqi
pw:\\mb-us-pw.bentley.com:mb-us-pw-03\Documents\Cleveland_OH\OI_Projects\ODOT\District2\82382\400-Engineering\Geotechnical\Sheets\82382_IP9I40I.dgn

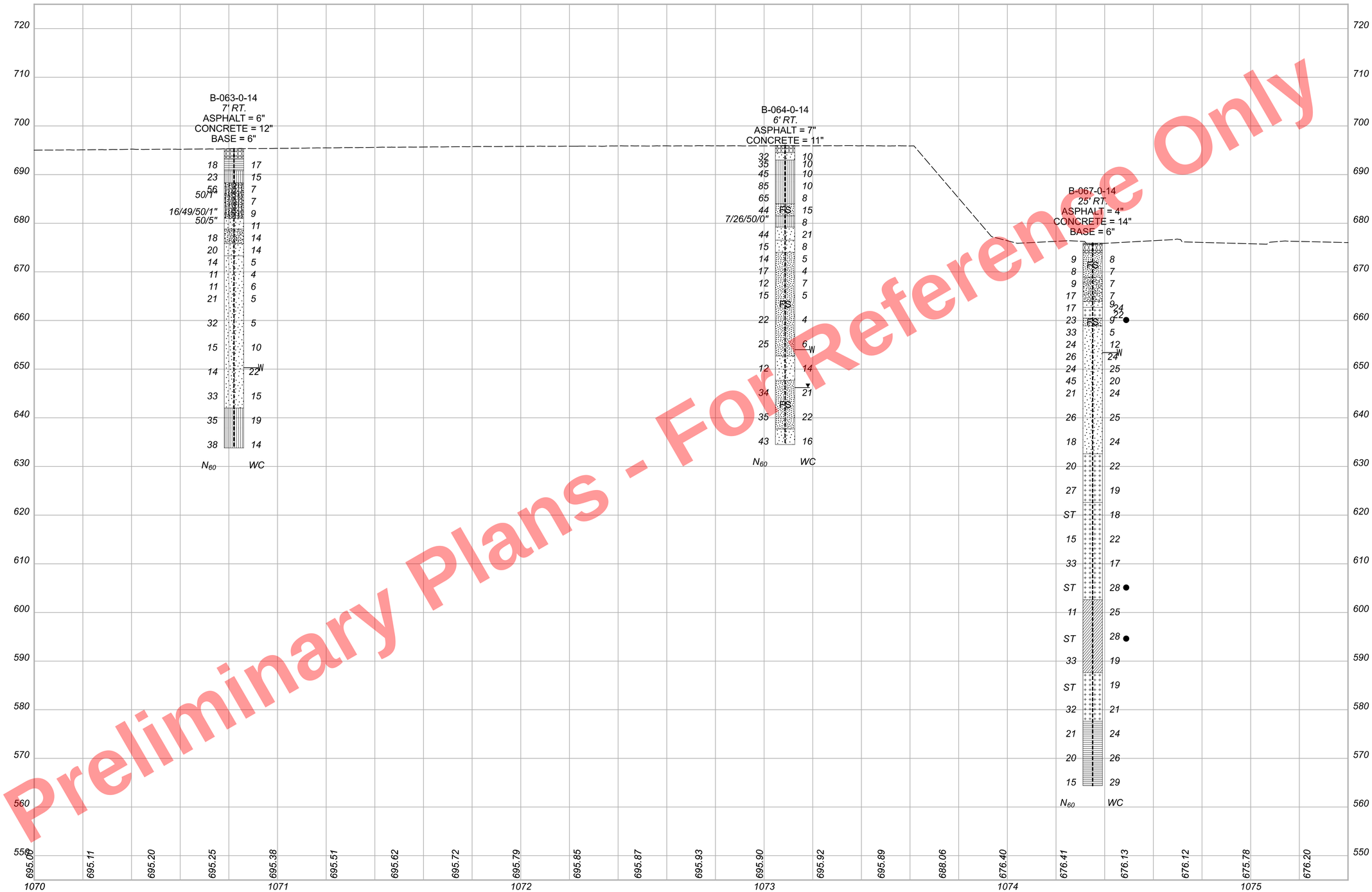

Preliminary Plans - For Reference Only

HORIZONTAL SCALE IN FEET
0 10 20 40

GEOTECHNICAL PROFILE - ROADWAY
STA. 1070+00 TO STA. 1075+40 RAMP H5 INTERIM

CUY-90-16.28 (CCG3A)

MODEL: 82382_IF9140 PAPERSIZE: 34x22 (in) DATE: 3/28/2025 TIME: 8:55:14 AM USER: Asldldl
pw:\\mb-us-pw.bentley.com:mb-us-pw-03\Documents\Cleveland_OHYOL_Projects\ODOT\District2\82382\400-Engineering\Geotechnical\Sheets\82382_IF9140l.dgn

DESIGN AGENCY
NEAS
National Engineering & Architectural Services Inc.
2800 CORPORATE EXCHANGE DR, SUITE 240
COLUMBUS, OH, 43231
TEL:614.714.0299
WWW.NEASINC.COM

DESIGNER MWJ & DT
REVIEWER BPA 08/23/24
PROJECT ID 82382
SUBSET 57 TOTAL 310
SHEET P.2443 TOTAL 2696

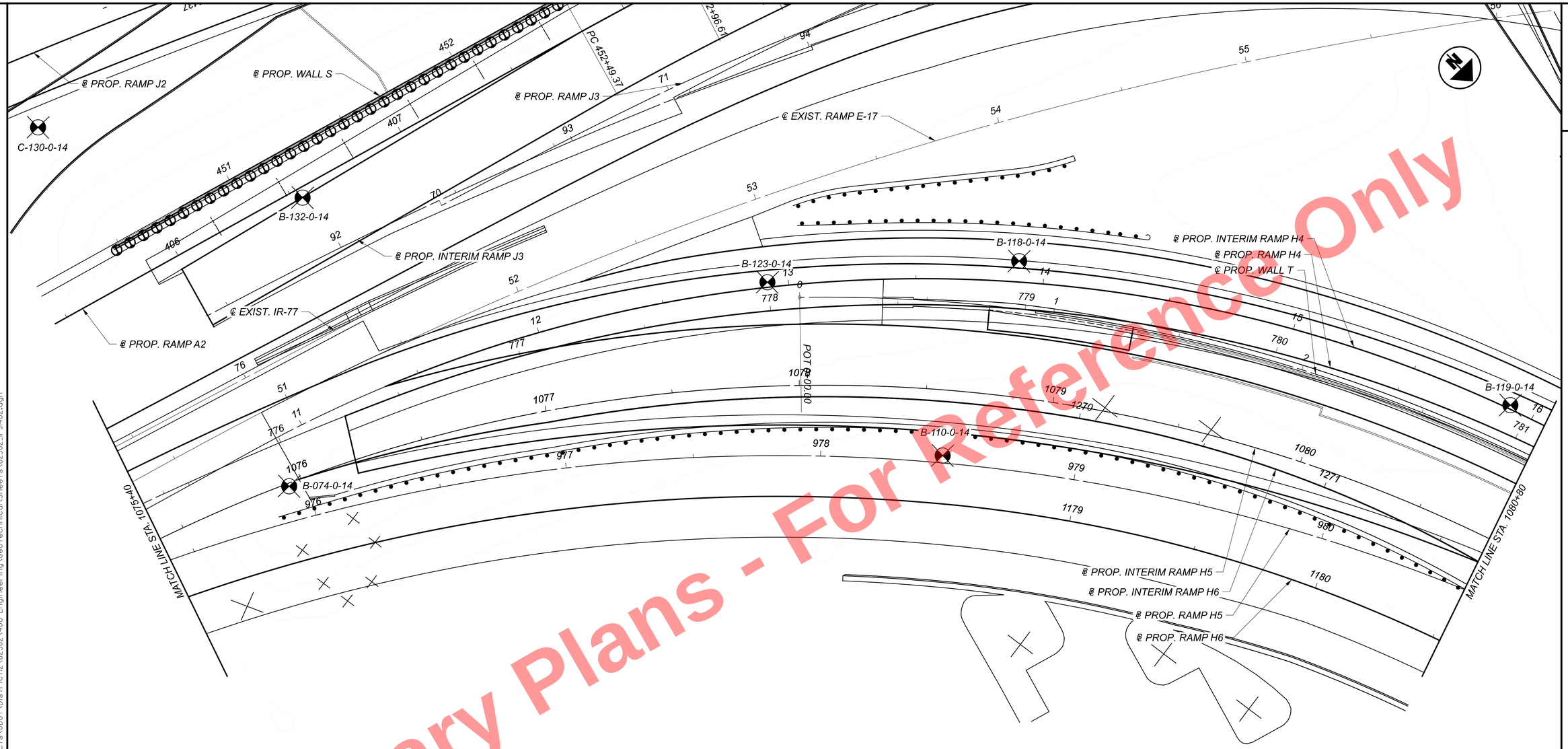

Preliminary Plans - For Reference Only

INFORMATION FOR B-074-0-14 CAN BE FOUND ON SHEETS 59 & 63
INFORMATION FOR B-110-0-14 CAN BE FOUND ON SHEETS 59 & 63
INFORMATION FOR B-118-0-14 CAN BE FOUND ON SHEETS 59 & 109
INFORMATION FOR B-119-0-14 CAN BE FOUND ON SHEETS 59 & 109
INFORMATION FOR B-123-0-14 CAN BE FOUND ON SHEETS 59 & 109
INFORMATION FOR B-132-0-14 CAN BE FOUND ON SHEETS 39 & 107
INFORMATION FOR C-130-0-14 CAN BE FOUND ON SHEET 107

COMMERCIAL

GEOTECHNICAL PROFILE - ROADWAY
STA. 1075+40 TO STA. 1080+80 RAMP H5 INTERIM

DESIGN AGENCY
NEAS
National Engineering & Architectural Services Inc.
2800 CORPORATE EXCHANGE DR, SUITE 240
COLUMBUS, OH, 43231
TEL:614.714.0299
WWW.NEASINC.COM

DESIGNER	MWJ & DT
REVIEWER	BPA 08/23/24
PROJECT ID	82382
SUBSET / TOTAL	58 / 310
SHEET / TOTAL	P.2444 / 2696

CUY-90-16.28 (CCG3A)

MODEL: 82382_IP9402 PAPERSIZE: 34x22 (in.) DATE: 3/28/2025 TIME: 8:55:36 AM USER: Asiddiq
pw:\\mb-us-pw.bentley.com:mb-us-pw-03\Documents\Cleveland_OH\01_Projects\ODOT\District2\82382\400-Engineering\Geotechnical\Sheets\82382_IP9402.dgn

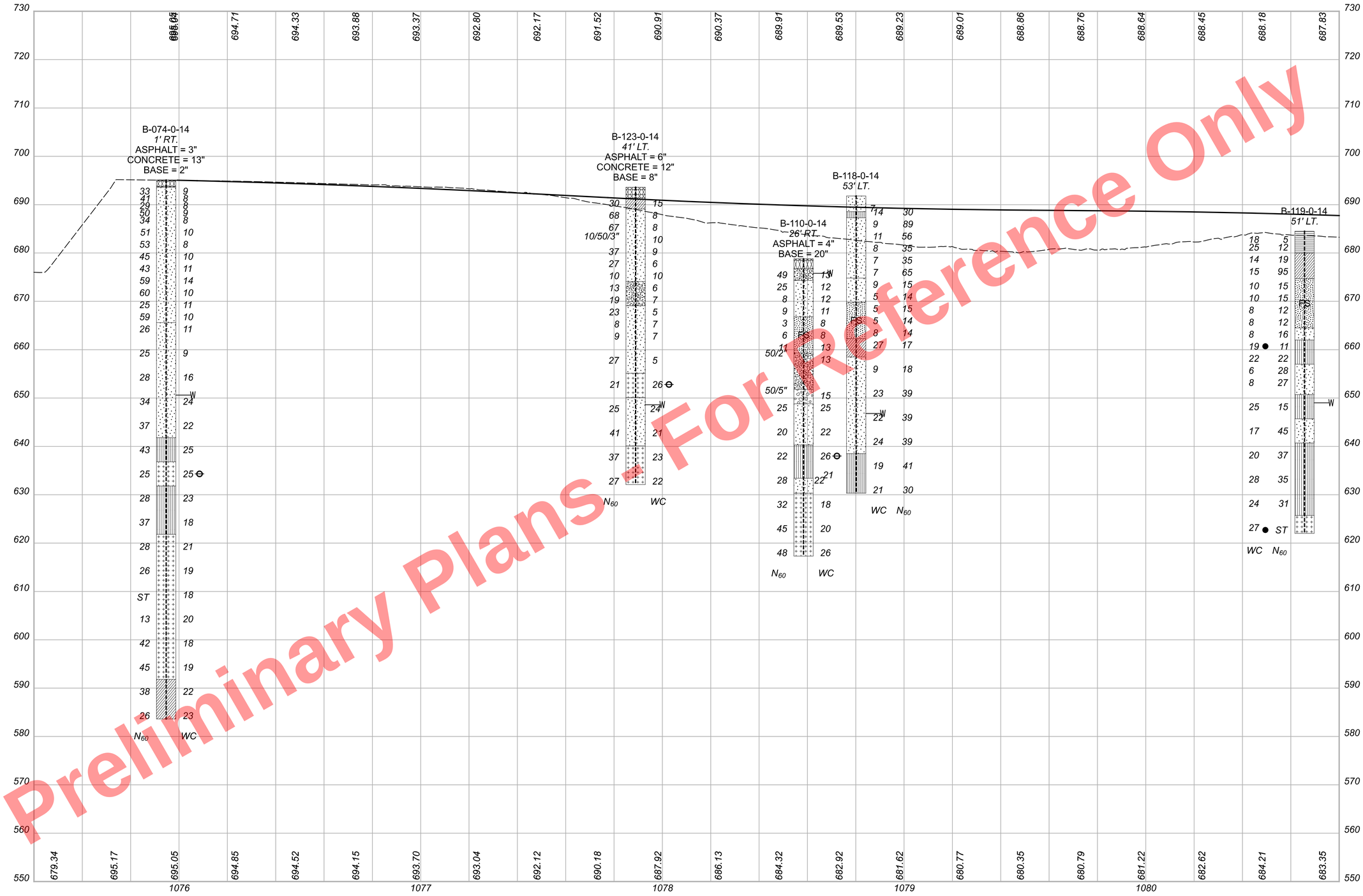

Preliminary Plans - For Reference Only

HORIZONTAL SCALE IN FEET
0 10 20 40

GEOTECHNICAL PROFILE - ROADWAY
STA. 1075+40 TO STA. 1080+80 RAMP H5 INTERIM

DESIGN AGENCY
NEAS
National Engineering & Architectural Services Inc.
2800 CORPORATE EXCHANGE DR, SUITE 240
COLUMBUS, OH, 43231
TEL:614.714.0299
WWW.NEASINC.COM

DESIGNER	MWJ & DT
REVIEWER	BPA 08/23/24
PROJECT ID	82382
SUBSET	59
TOTAL	310
SHEET	P.2445
TOTAL	2696

CUY-90-16.28 (CCG3A)

MODEL: 82382_IF9402 PAPERSIZE: 34x22 (in.) DATE: 3/28/2025 TIME: 8:56:27 AM USER: Asiddiqi
pw:\\mb-us-pw.bentley.com:mb-us-pw-03\Documents\Cleveland.OH\DgnLibrary\Projects\ODOT\District2\82382\400-Engineering\Geotechnical\Sheets\82382_IF9402.dgn

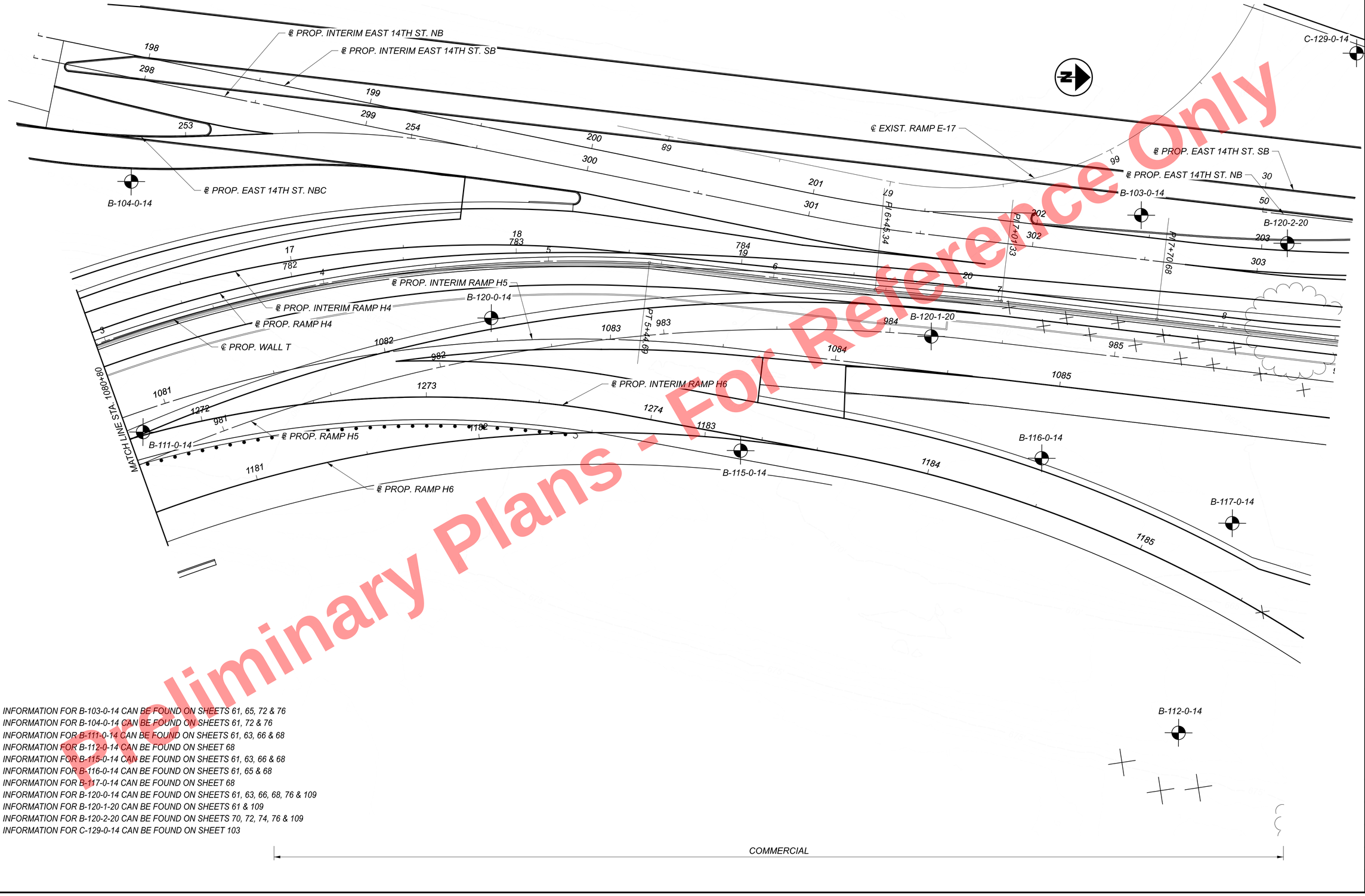

INFORMATION FOR B-103-0-14 CAN BE FOUND ON SHEETS 61, 65, 72 & 76
INFORMATION FOR B-104-0-14 CAN BE FOUND ON SHEETS 61, 72 & 76
INFORMATION FOR B-111-0-14 CAN BE FOUND ON SHEETS 61, 63, 66 & 68
INFORMATION FOR B-112-0-14 CAN BE FOUND ON SHEET 68
INFORMATION FOR B-115-0-14 CAN BE FOUND ON SHEETS 61, 63, 66 & 68
INFORMATION FOR B-116-0-14 CAN BE FOUND ON SHEETS 61, 65 & 68
INFORMATION FOR B-117-0-14 CAN BE FOUND ON SHEET 68
INFORMATION FOR B-120-0-14 CAN BE FOUND ON SHEETS 61, 63, 66, 68, 76 & 109
INFORMATION FOR B-120-1-20 CAN BE FOUND ON SHEETS 61 & 109
INFORMATION FOR B-120-2-20 CAN BE FOUND ON SHEETS 70, 72, 74, 76 & 109
INFORMATION FOR C-129-0-14 CAN BE FOUND ON SHEET 103

COMMERCIAL

Preliminary Plans - For Reference Only

HORIZONTAL SCALE IN FEET
0 10 20 40

GEOTECHNICAL PROFILE - ROADWAY
STA. 1080+80 TO STA. 1086+20 RAMP H5 INTERIM

CUY-90-16.28 (CCG3A)

MODEL: 82382_IP9I403 PAPERSIZE: 34x22 (In.) DATE: 3/28/2025 TIME: 8:56:49 AM USER: AsIdIdI
pw:\\mb-us-pw.bentley.com:mb-us-pw-03\Documents\Cleveland_OH\01_Projects\ODOT\District2\82382\400-Engineering\Geotechnical\Sheets\82382_IP9I403.dgn

DESIGN AGENCY
NEAS
National Engineering & Architectural Services Inc.
2800 CORPORATE EXCHANGE DR, SUITE 240
COLUMBUS, OH, 43231
TEL:614.714.0299
WWW.NEASINC.COM

DESIGNER	MWJ & DT
REVIEWER	BPA 08/23/24
PROJECT ID	82382
SUBSET	TOTAL
60	310
SHEET	TOTAL
P.2446	2696

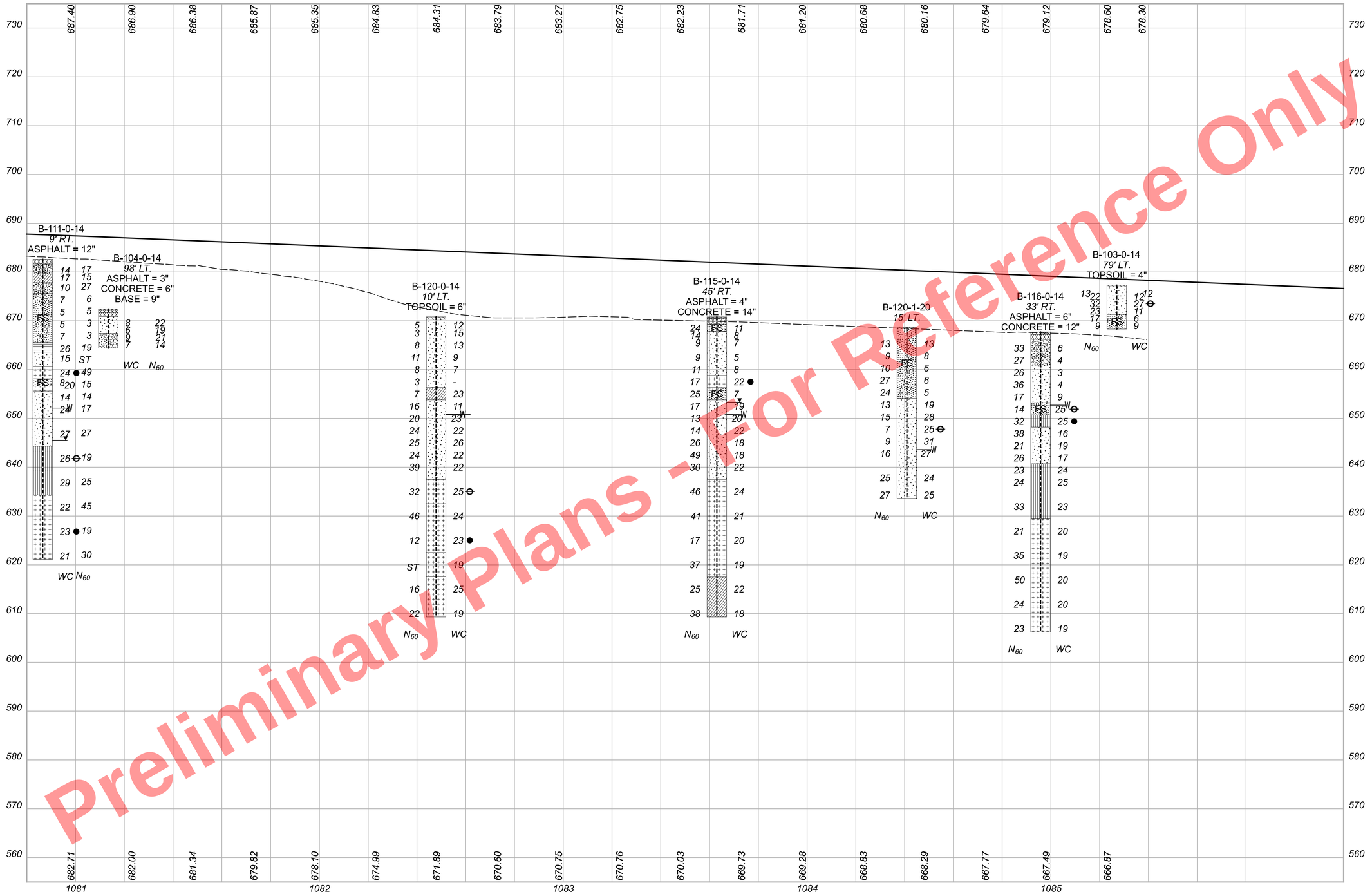

Preliminary Plans - For Reference Only

HORIZONTAL SCALE IN FEET
0 10 20 40

GEOTECHNICAL PROFILE - ROADWAY
STA. 1080+80 TO STA. 1086+20 RAMP H5 INTERIM

DESIGN AGENCY
NEAS
National Engineering & Architectural Services Inc.
2800 CORPORATE EXCHANGE DR, SUITE 240
COLUMBUS, OH, 43231
TEL:614.714.0299
WWW.NEASINC.COM

DESIGNER
MWJ & DT

REVIEWER
BPA 08/23/24

PROJECT ID
82382

SUBSET	TOTAL
61	310

SHEET	TOTAL
P.2447	2696

CUY-90-16.28 (CCG3A)

MODEL: 82382_IF9403 PAPERSIZE: 34x22 (in) DATE: 3/28/2025 TIME: 8:57:41 AM USER: Asidd1
pw:\\mb-us-pw.bentley.com:mb-us-pw-03\Documents\Cleveland_OH\01_Projects\ODOT\District2\82382\400-Engineering\Geotechnical\Sheets\82382_IF9403.dgn

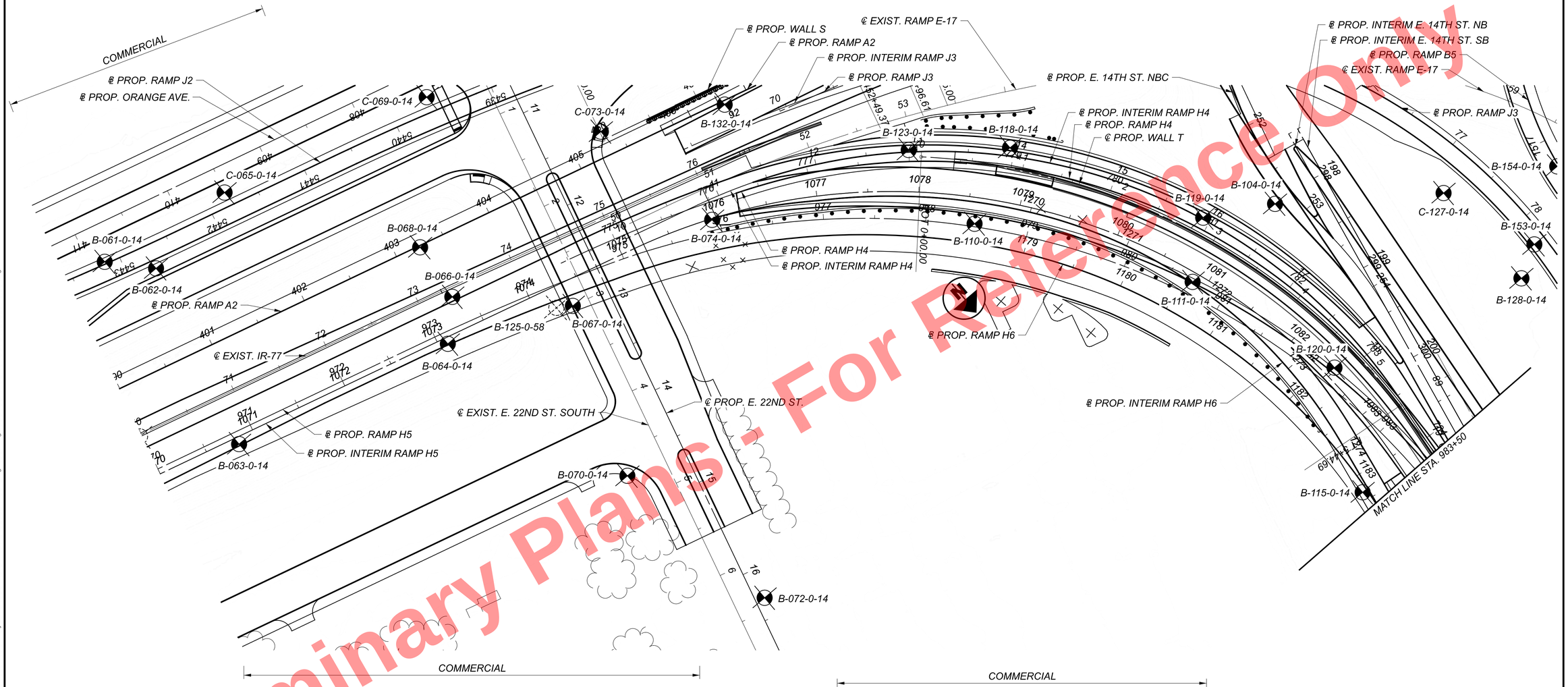

Preliminary Plans - For Reference Only

INFORMATION FOR B-061-0-14 CAN BE FOUND ON SHEET 37
INFORMATION FOR B-062-0-14 CAN BE FOUND ON SHEET 37
INFORMATION FOR B-063-0-14 CAN BE FOUND ON SHEETS 57 & 63
INFORMATION FOR B-064-0-14 CAN BE FOUND ON SHEETS 57 & 63
INFORMATION FOR B-066-0-14 CAN BE FOUND ON SHEET 63
INFORMATION FOR B-067-0-14 CAN BE FOUND ON SHEETS 57, 63 & 82
INFORMATION FOR B-068-0-14 CAN BE FOUND ON SHEET 37
INFORMATION FOR B-070-0-14 CAN BE FOUND ON SHEET 82
INFORMATION FOR B-072-0-14 CAN BE FOUND ON SHEET 82
INFORMATION FOR B-074-0-14 CAN BE FOUND ON SHEETS 59 & 63
INFORMATION FOR B-104-0-14 CAN BE FOUND ON SHEETS 61, 72 & 76
INFORMATION FOR B-110-0-14 CAN BE FOUND ON SHEETS 59 & 63
INFORMATION FOR B-111-0-14 CAN BE FOUND ON SHEETS 61, 63, 66 & 68
INFORMATION FOR B-115-0-14 CAN BE FOUND ON SHEETS 61, 63, 66 & 68

INFORMATION FOR B-118-0-14 CAN BE FOUND ON SHEET 59
INFORMATION FOR B-119-0-14 CAN BE FOUND ON SHEETS 59 & 109
INFORMATION FOR B-120-0-14 CAN BE FOUND ON SHEETS 61, 63, 66, 68, 76 & 109
INFORMATION FOR B-123-0-14 CAN BE FOUND ON SHEETS 59 & 109
INFORMATION FOR B-125-0-58 CAN BE FOUND ON SHEET 82
INFORMATION FOR B-128-0-14 CAN BE FOUND ON SHEETS 72 & 76
INFORMATION FOR B-132-0-14 CAN BE FOUND ON SHEETS 39 & 107
INFORMATION FOR B-153-0-14 CAN BE FOUND ON SHEETS 72 & 76
INFORMATION FOR B-154-0-14 CAN BE FOUND ON SHEETS 72 & 76
INFORMATION FOR C-065-0-14 CAN BE FOUND ON SHEET 37
INFORMATION FOR C-069-0-14 CAN BE FOUND ON SHEET 82
INFORMATION FOR C-073-0-14 CAN BE FOUND ON SHEET 107
INFORMATION FOR C-127-0-14 CAN BE FOUND ON SHEETS 72 & 76

HORIZONTAL SCALE IN FEET
0 25 50 100

GEOTECHNICAL PROFILE - ROADWAY
STA. 970+00 TO STA. 983+50 RAMP H5

CUY-90-16.28 (CCG3A)

MODEL: 82382_IP9130| PAPERSIZE: 34x22 (in.) DATE: 3/28/2025 TIME: 8:58:04 AM USER: Asiddiq|
pw:\\mb-us-pw.bentley.com:mb-us-pw-03\Documents\Cleveland_OH\OI_Projects\0007\District2\82382\400-Engineering\Geotechnical\Sheets\82382_IP9130l.dgn

DESIGN AGENCY
NEAS
National Engineering & Architectural Services Inc.
2800 CORPORATE EXCHANGE DR, SUITE 240
COLUMBUS, OH, 43231
TEL:614.714.0299
WWW.NEASINC.COM

DESIGNER MWJ & DT
REVIEWER BPA 08/23/24
PROJECT ID 82382
SUBSET 62 TOTAL 310
SHEET P.2448 TOTAL 2696

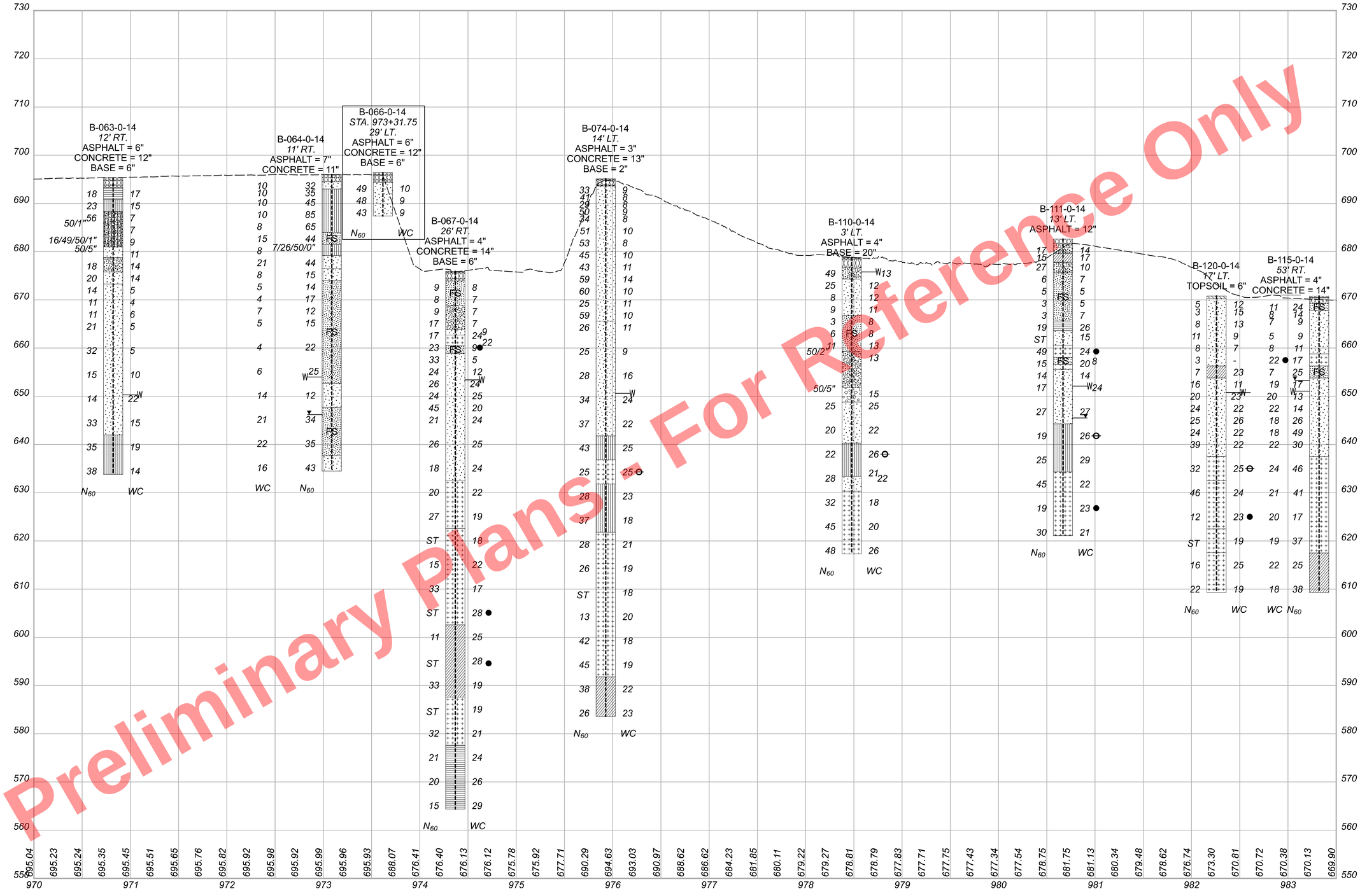

Preliminary Plans - For Reference Only

HORIZONTAL SCALE IN FEET
0 25 50 100

GEOTECHNICAL PROFILE - ROADWAY
STA. 970+00 TO STA. 983+50 RAMP H5

CUY-90-16.28 (CCG3A)

MODEL: 82382_IF9I30I PAPERSIZE: 34x22 (In.) DATE: 3/28/2025 TIME: 8:58:58 AM USER: AsIddIqI
pw:\\mb-us-pw.bentley.com\mb-us-pw-03\Documents\Cleveland_OH\OIL_Projects\ODOT\District12\82382\400-Engineering\Geotechnical\Sheets\82382_IF9I30I.dgn

DESIGN AGENCY
NEAS
National Engineering & Architectural Services Inc.
2800 CORPORATE EXCHANGE DR, SUITE 240
COLUMBUS, OH, 43231
TEL:614.714.0299
WWW.NEASINC.COM

DESIGNER: MWJ & DT
REVIEWER: BPA 08/23/24
PROJECT ID: 82382
SUBSET: 63 | TOTAL: 310
SHEET: P.2449 | TOTAL: 2696

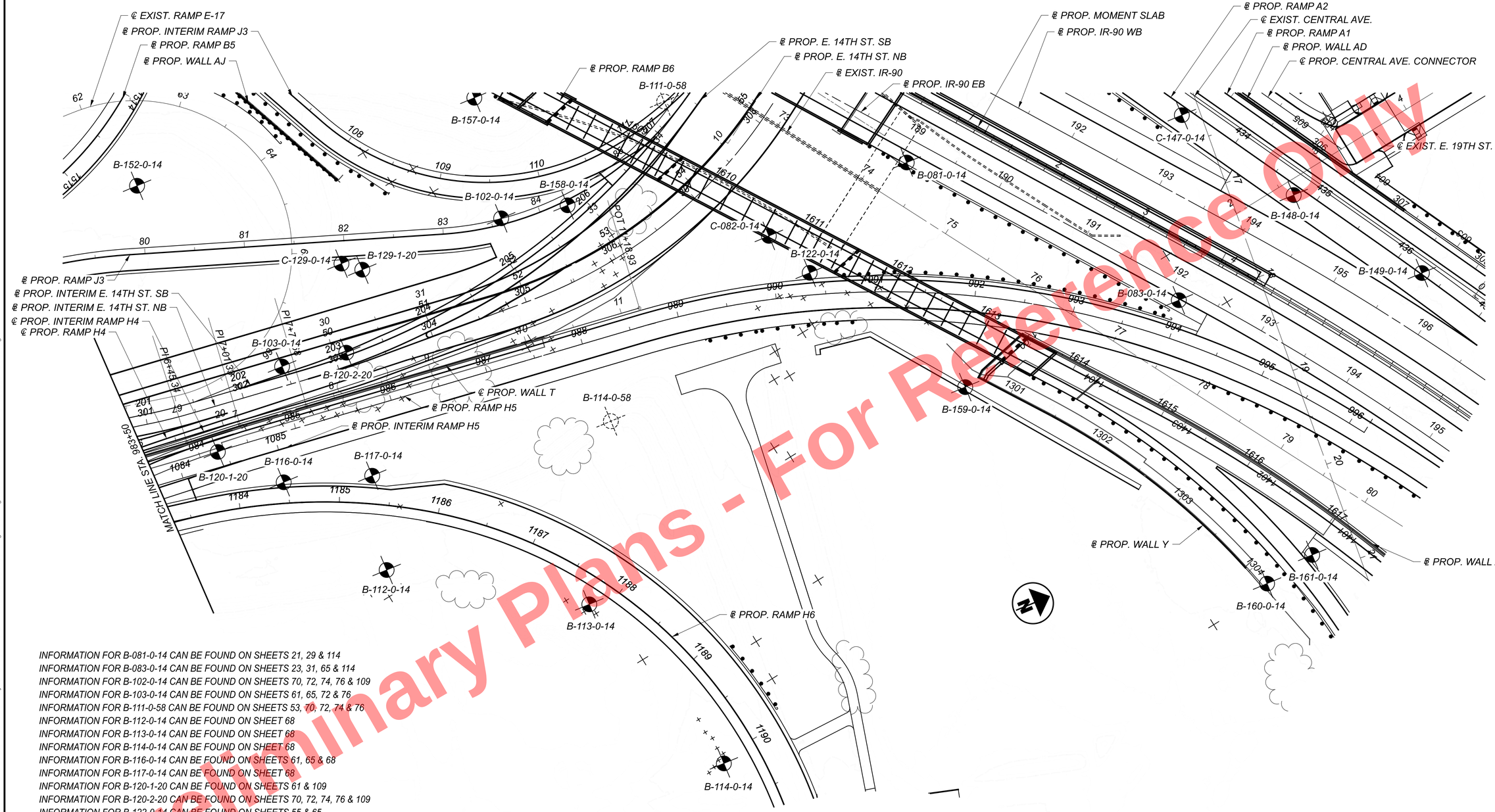

INFORMATION FOR B-081-0-14 CAN BE FOUND ON SHEETS 21, 29 & 114
INFORMATION FOR B-083-0-14 CAN BE FOUND ON SHEETS 23, 31, 65 & 114
INFORMATION FOR B-102-0-14 CAN BE FOUND ON SHEETS 70, 72, 74, 76 & 109
INFORMATION FOR B-103-0-14 CAN BE FOUND ON SHEETS 61, 65, 72 & 76
INFORMATION FOR B-111-0-58 CAN BE FOUND ON SHEETS 53, 70, 72, 74 & 76
INFORMATION FOR B-112-0-14 CAN BE FOUND ON SHEET 68
INFORMATION FOR B-113-0-14 CAN BE FOUND ON SHEET 68
INFORMATION FOR B-114-0-14 CAN BE FOUND ON SHEET 68
INFORMATION FOR B-116-0-14 CAN BE FOUND ON SHEETS 61, 65 & 68
INFORMATION FOR B-117-0-14 CAN BE FOUND ON SHEET 68
INFORMATION FOR B-120-1-20 CAN BE FOUND ON SHEETS 61 & 109
INFORMATION FOR B-120-2-20 CAN BE FOUND ON SHEETS 70, 72, 74, 76 & 109
INFORMATION FOR B-122-0-14 CAN BE FOUND ON SHEETS 55 & 65
INFORMATION FOR B-129-1-20 CAN BE FOUND ON SHEETS 70, 72, 74, 76 & 103
INFORMATION FOR B-148-0-14 CAN BE FOUND ON SHEETS 23, 31, 35, 93 & 114
INFORMATION FOR B-149-0-14 CAN BE FOUND ON SHEETS 23, 31, 35, 93 & 94
INFORMATION FOR B-152-0-14 CAN BE FOUND ON SHEET 103
INFORMATION FOR B-157-0-14 CAN BE FOUND ON SHEET 53
INFORMATION FOR B-158-0-14 CAN BE FOUND ON SHEETS 53, 70, 72, 74 & 76
INFORMATION FOR B-159-0-14 CAN BE FOUND ON SHEETS 55, 65, 113 & 111
INFORMATION FOR B-160-0-14 CAN BE FOUND ON SHEET 111
INFORMATION FOR B-161-0-14 CAN BE FOUND ON SHEET 113
INFORMATION FOR C-082-0-14 CAN BE FOUND ON SHEET 55
INFORMATION FOR C-129-0-14 CAN BE FOUND ON SHEET 103
INFORMATION FOR C-147-0-14 CAN BE FOUND ON SHEET 93

For Preliminary Plans - For Reference Only

HORIZONTAL SCALE IN FEET
0 25 50 100

GEOTECHNICAL PROFILE - ROADWAY
STA. 983+50 TO STA. 997+00 RAMP H5

DESIGN AGENCY
NEAS
National Engineering & Architectural Services Inc.
2800 CORPORATE EXCHANGE DR, SUITE 240
COLUMBUS, OH, 43231
TEL:614.714.0299
WWW.NEASINC.COM

DESIGNER: MWJ & DT
REVIEWER: BPA 08/23/24
PROJECT ID: 82382
SUBSET: 64 TOTAL: 310
SHEET: P.2450 TOTAL: 2696

CUY-90-16.28 (CCG3A)

MODEL: 82382_IP91302 PAPERSIZE: 34x22 (in.) DATE: 3/28/2025 TIME: 8:59:21 AM USER: Asldtql
pw:\\mb-us-pw.bentley.com:mb-us-pw-03\Documents\Cleveland_OH\OL_Projects\ODOT\Dist1\c#12.82382\400-Engineering\G

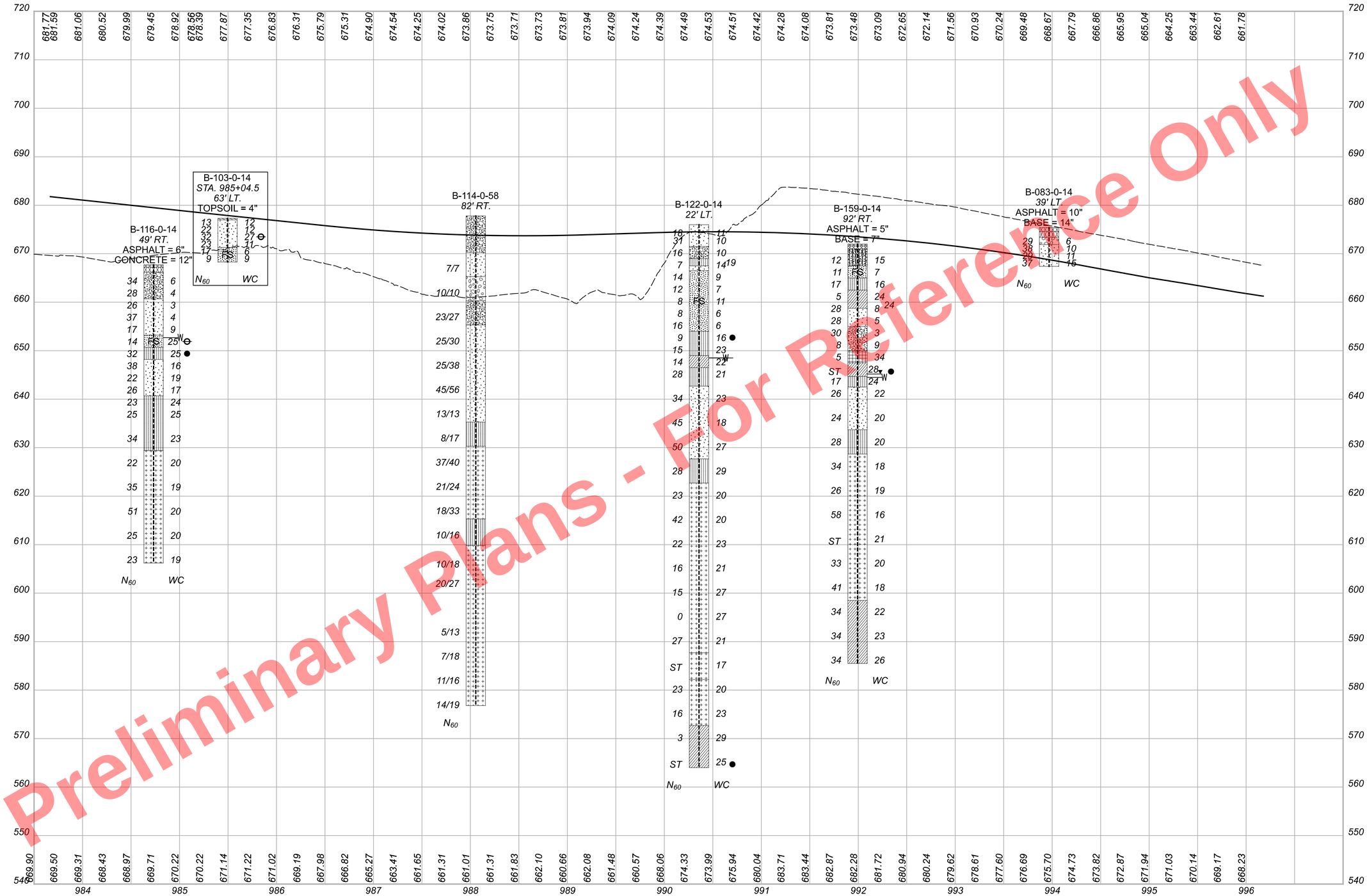

Preliminary Plans - Not For Reference Only

HORIZONTAL SCALE IN FEET
0 25 50 100

GEOTECHNICAL PROFILE - ROADWAY
STA. 983+50 TO STA. 997+00 RAMP H5

CUY-90-16.28 (CCG3A)

MODEL: 82382_IF9l302 PAPERSIZE: 34x22 (In.) DATE: 3/28/2025 TIME: 9:00:15 AM USER: Asiddiq
pw:\\mb-us-pw.bentley.com:mb-us-pw-03\Documents\Cleveland_OH\OI_Projects\ODOT\District#2\82382\400-Engineering\Geotechnical\Sheets\82382_IF9l302.dgn

DESIGN AGENCY
NEAS
National Engineering & Architectural Services Inc.
2800 CORPORATE EXCHANGE DR, SUITE 240
COLUMBUS, OH, 43231
TEL:614.714.0299
WWW.NEASINC.COM

DESIGNER	MWJ & DT
REVIEWER	BPA 08/23/24
PROJECT ID	82382
SUBSET	65
TOTAL	310
SHEET	P.2451
TOTAL	2696

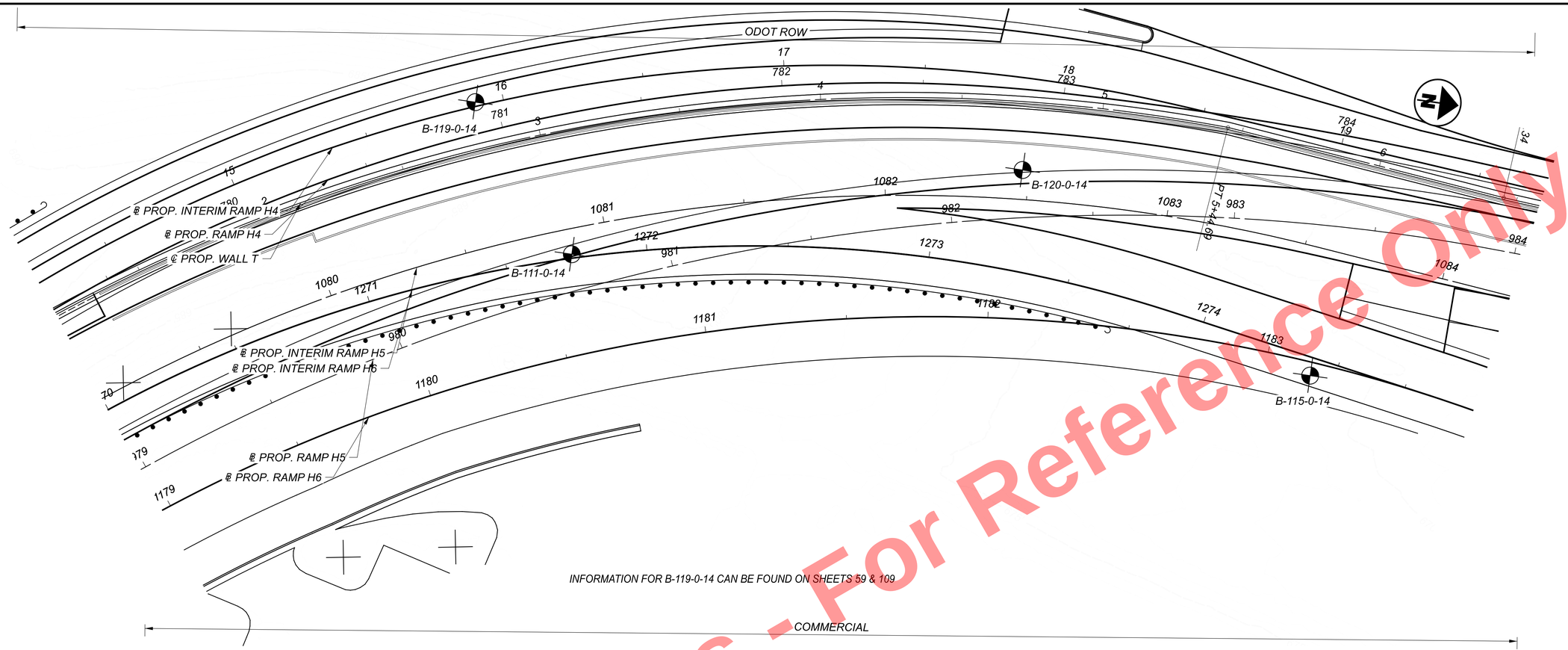

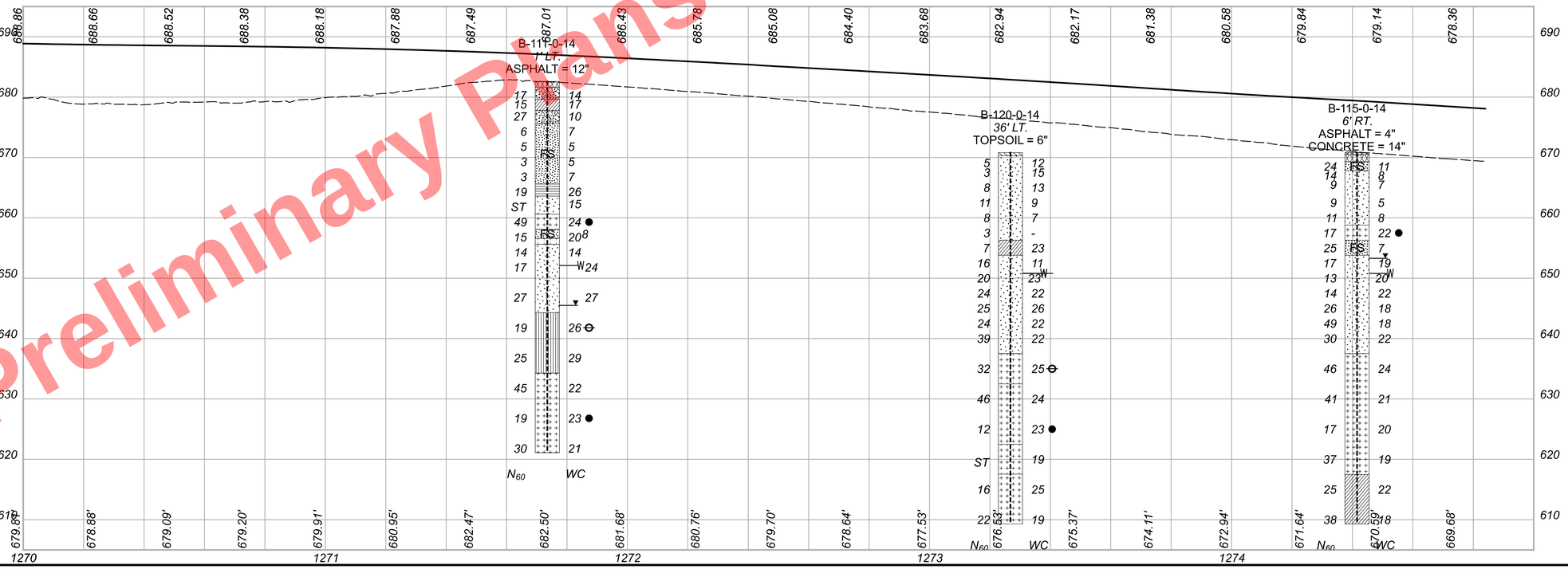

Preliminary Plans - For Reference Only

HORIZONTAL SCALE IN FEET
0 10 20 40

GEOTECHNICAL PROFILE - ROADWAY
RAMP H6 INTERIM

CUY-90-16.28 (CCG3A)

MODEL: 82382_IP9160I PAPERSIZE: 34x22 (in.) DATE: 3/28/2025 TIME: 9:00:38 AM USER: AsIdtl
pw:\\mb-us-pw.bentley.com:mb-us-pw-03\Documents\Cleveland_OH\OiL_Projects\ODOT\District#2\82382\400-Engineering\Geotechnical\Sheets\82382_IP9160Ldgn

DESIGN AGENCY
NEAS
National Engineering & Architectural Services Inc.
2800 CORPORATE EXCHANGE DR, SUITE 240
COLUMBUS, OH, 43231
TEL:614.714.0299
WWW.NEASINC.COM

DESIGNER	MWJ & DT
REVIEWER	BPA 08/23/24
PROJECT ID	82382
SUBSET	66
TOTAL	310
SHEET	P.2452
TOTAL	2696

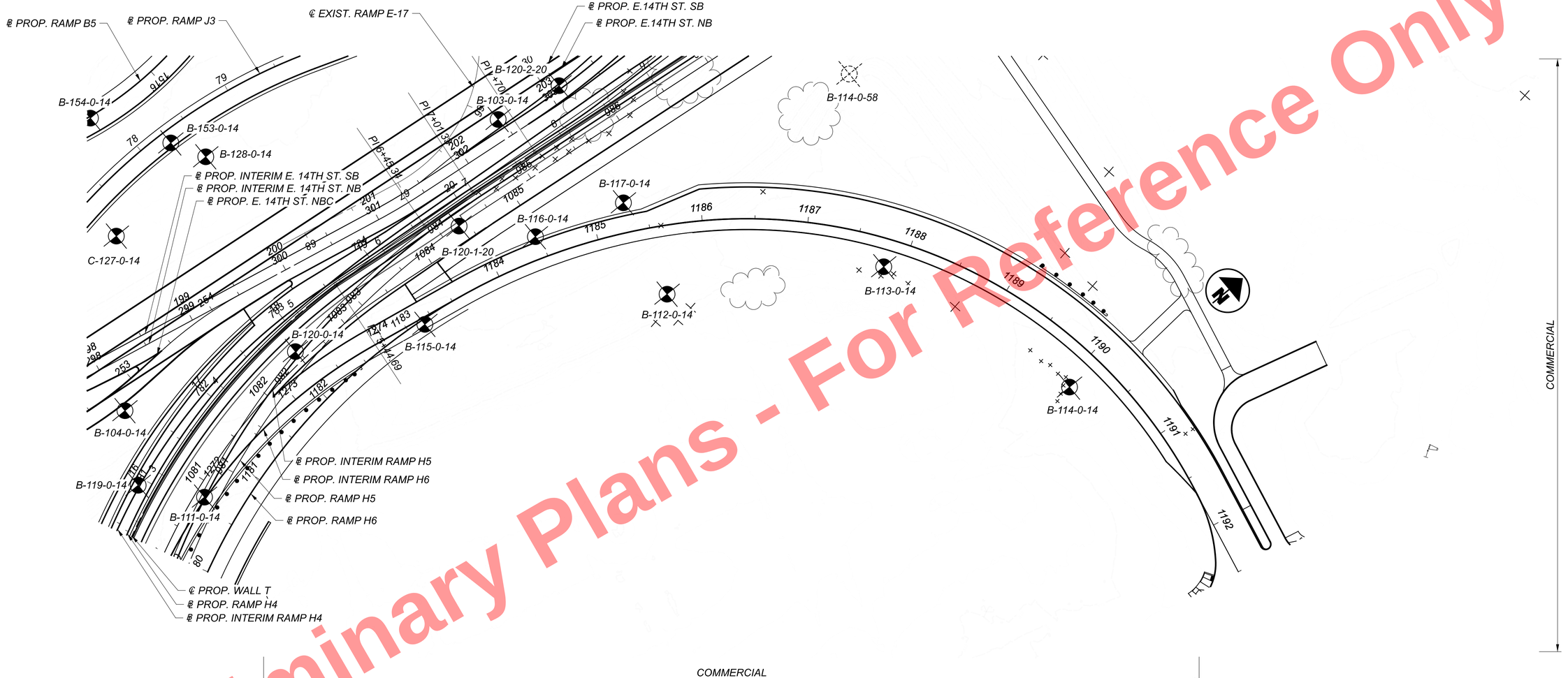

Preliminary Plans - For Reference Only

INFORMATION FOR B-103-0-14 CAN BE FOUND ON SHEETS 61, 65, 72 & 76
INFORMATION FOR B-104-0-14 CAN BE FOUND ON SHEETS 61, 72 & 76
INFORMATION FOR B-111-0-14 CAN BE FOUND ON SHEETS 61, 63, 66 & 68
INFORMATION FOR B-112-0-14 CAN BE FOUND ON SHEET 68
INFORMATION FOR B-113-0-14 CAN BE FOUND ON SHEET 68
INFORMATION FOR B-114-0-14 CAN BE FOUND ON SHEET 68
INFORMATION FOR B-115-0-14 CAN BE FOUND ON SHEETS 61, 63, 66 & 68
INFORMATION FOR B-116-0-14 CAN BE FOUND ON SHEETS 61, 65 & 68
INFORMATION FOR B-117-0-14 CAN BE FOUND ON SHEET 68
INFORMATION FOR B-119-0-14 CAN BE FOUND ON SHEETS 59 & 108
INFORMATION FOR B-120-0-14 CAN BE FOUND ON SHEETS 61, 63, 66, 68, 76 & 109
INFORMATION FOR B-120-1-20 CAN BE FOUND ON SHEETS 61 & 109
INFORMATION FOR B-120-2-20 CAN BE FOUND ON SHEETS 70, 72, 74, 76 & 109
INFORMATION FOR B-128-0-14 CAN BE FOUND ON SHEETS 72 & 76
INFORMATION FOR B-153-0-14 CAN BE FOUND ON SHEETS 72 & 76
INFORMATION FOR B-154-0-14 CAN BE FOUND ON SHEETS 72 & 76
INFORMATION FOR C-127-0-14 CAN BE FOUND ON SHEETS 72 & 76

HORIZONTAL SCALE IN FEET
0 25 50 100

GEOTECHNICAL PROFILE - ROADWAY
RAMP H6

CUY-90-16.28 (CCG3A)

MODEL: 82382_IP9150 PAPERSIZE: 34x22 (in.) DATE: 3/28/2025 TIME: 9:00:55 AM USER: Asiddiqi
pw:\\mb-us-pw.bentley.com:mb-us-pw-03\Documents\Cleveland_OH\01_Projects\ODOT\District2\82382\400-Engineering\Geotechnical\Sheets\82382_IP9150.dgn

DESIGN AGENCY
NEAS
National Engineering & Architectural Services Inc.
2800 CORPORATE EXCHANGE DR, SUITE 240
COLUMBUS, OH, 43231
TEL:614.714.0299
WWW.NEASINC.COM

DESIGNER
MWJ & DT

REVIEWER
BPA 08/23/24

PROJECT ID
82382

SUBSET	TOTAL
67	310

SHEET	TOTAL
P.2453	2696

MODEL: 82382_IF9150I_2 PAPERSIZE: 34x22 (In.) DATE: 3/28/2025 TIME: 9:01:49 AM USER: AsIddIq!
pw:\\mb-us-pw.bentley.com:mb-us-pw-03\Documents\Cleveland_OH\01_Projects\ODOT\District2\82382\400-Engineering\Geotechnical\Sheets\82382_IF9150I.dgn

Preliminary Plans - For Reference Only

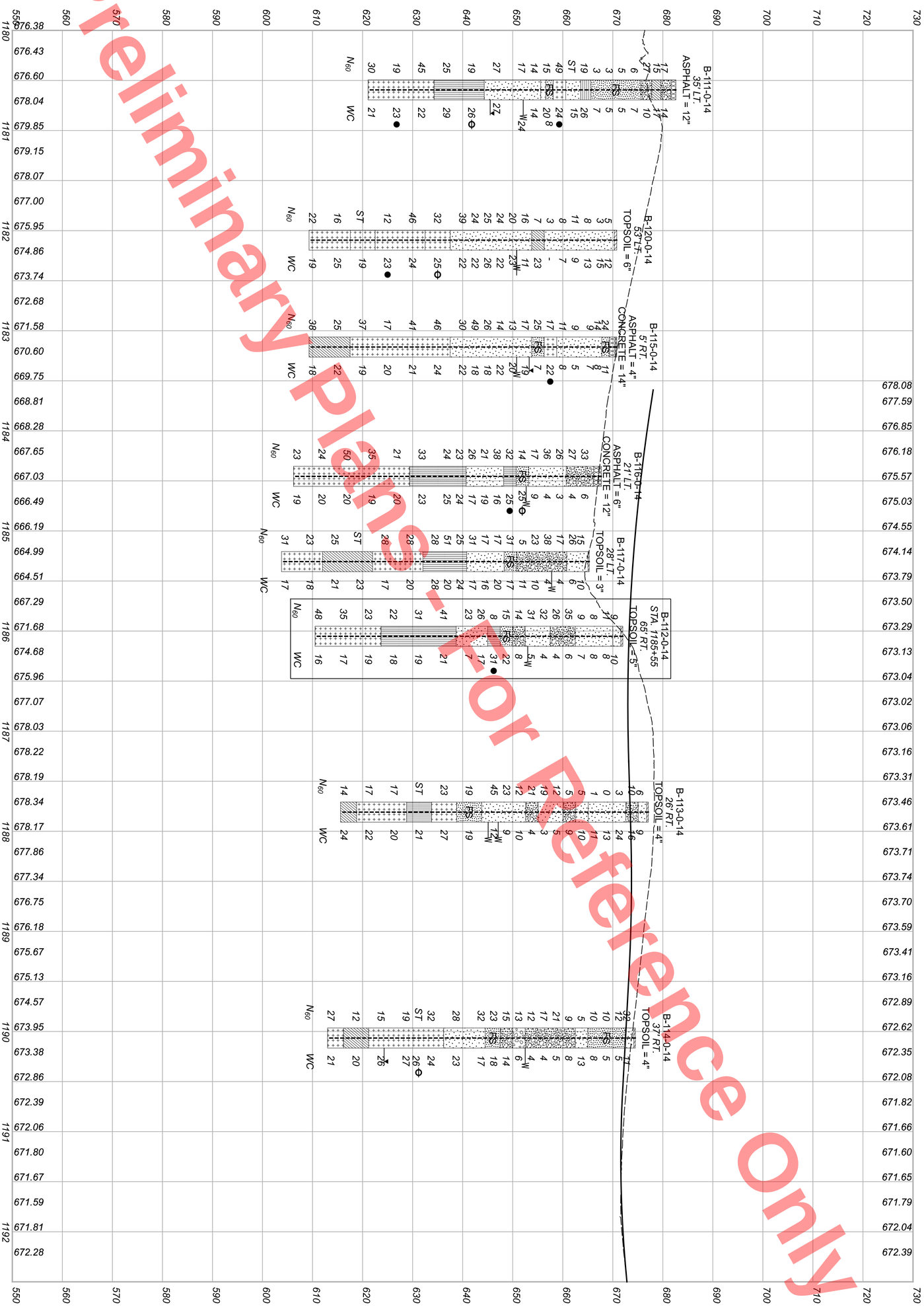

GEOTECHNICAL PROFILE - ROADWAY
RAMP H6

HORIZONTAL SCALE IN FEET
0 50
25 100

DESIGN AGENCY
2800 CORPORATE EXCHANGE DR. SUITE 240
COLUMBUS, OH. 43231
TEL: 614.714.0299
WWW.NEASINC.COM

DESIGNER MWJ & DT
REVIEWER BPA 08/23/24
PROJECT ID 82382
SUBSET 68 TOTAL 310
SHEET P 2454 TOTAL 2696

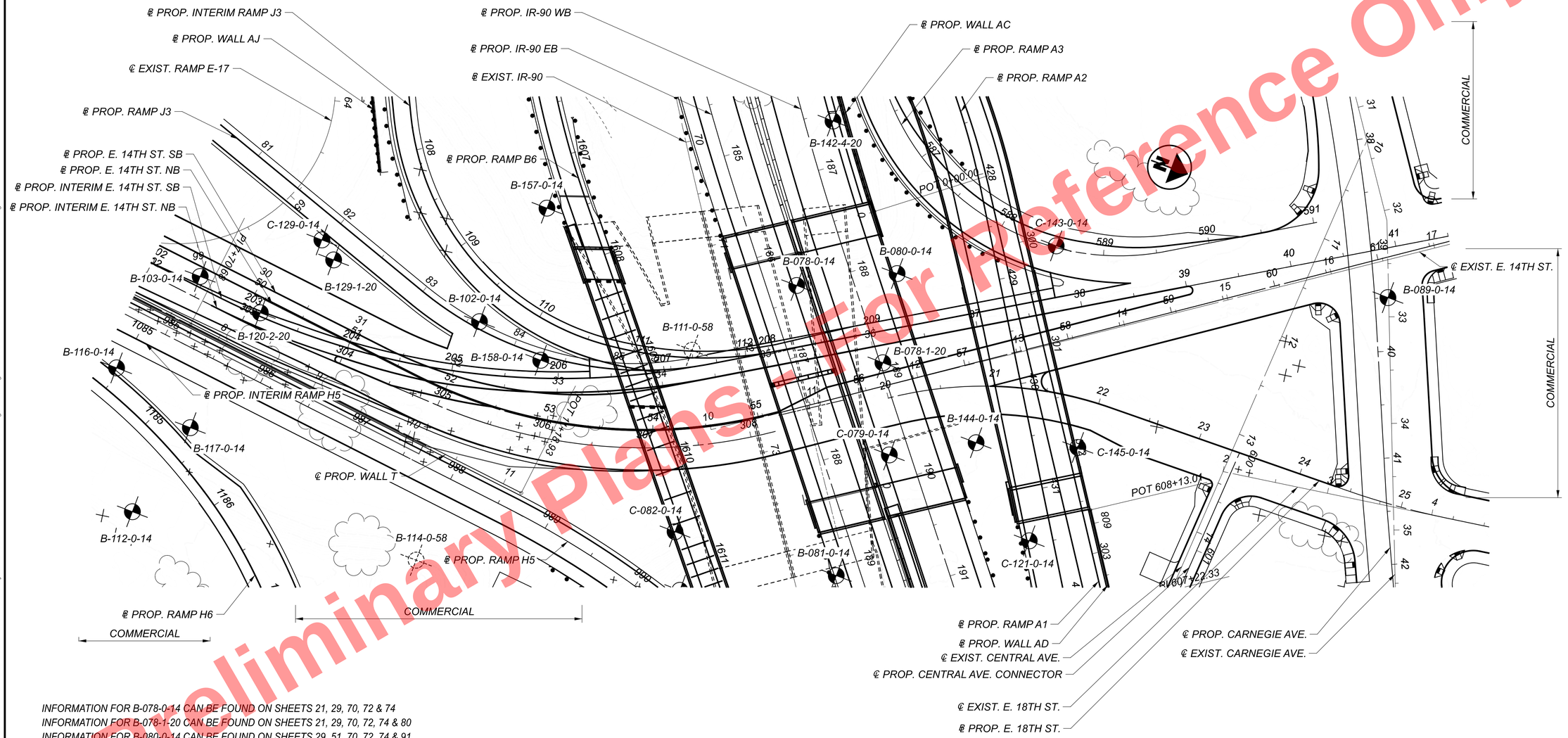

Preliminary Plans
Not For Reference Only

INFORMATION FOR B-078-0-14 CAN BE FOUND ON SHEETS 21, 29, 70, 72 & 74
INFORMATION FOR B-078-1-20 CAN BE FOUND ON SHEETS 21, 29, 70, 72, 74 & 80
INFORMATION FOR B-080-0-14 CAN BE FOUND ON SHEETS 29, 51, 70, 72, 74 & 91
INFORMATION FOR B-081-0-14 CAN BE FOUND ON SHEETS 21, 29 & 114
INFORMATION FOR B-089-0-14 CAN BE FOUND ON SHEET 41
INFORMATION FOR B-102-0-14 CAN BE FOUND ON SHEETS 70, 72, 76 & 109
INFORMATION FOR B-103-0-14 CAN BE FOUND ON SHEETS 61, 65, 72 & 76
INFORMATION FOR B-111-0-58 CAN BE FOUND ON SHEETS 53, 70, 72, 74 & 76
INFORMATION FOR B-112-0-14 CAN BE FOUND ON SHEET 68
INFORMATION FOR B-114-0-58 CAN BE FOUND ON SHEET 65
INFORMATION FOR B-116-0-14 CAN BE FOUND ON SHEETS 61, 65 & 68
INFORMATION FOR B-117-0-14 CAN BE FOUND ON SHEET 68
INFORMATION FOR B-120-2-20 CAN BE FOUND ON SHEETS 70, 72, 74, 76 & 109
INFORMATION FOR B-129-1-20 CAN BE FOUND ON SHEETS 70, 72, 74, 76 & 103

INFORMATION FOR B-142-4-20 CAN BE FOUND ON SHEETS 29 & 91
INFORMATION FOR B-144-0-14 CAN BE FOUND ON SHEETS 21, 29, 49, 70, 80, 93 & 114
INFORMATION FOR B-157-0-14 CAN BE FOUND ON SHEET 53
INFORMATION FOR B-158-0-14 CAN BE FOUND ON SHEETS 53, 70, 72, 74 & 76
INFORMATION FOR C-079-0-14 CAN BE FOUND ON SHEETS 21, 29 & 31
INFORMATION FOR C-082-0-14 CAN BE FOUND ON SHEET 55
INFORMATION FOR C-121-0-14 CAN BE FOUND ON SHEET 93
INFORMATION FOR C-129-0-14 CAN BE FOUND ON SHEET 103
INFORMATION FOR C-143-0-14 CAN BE FOUND ON SHEET 47
INFORMATION FOR C-145-0-14 CAN BE FOUND ON SHEETS 80 & 93

HORIZONTAL SCALE IN FEET
0 25 50 100

GEOTECHNICAL PROFILE - ROADWAY
STA. 290+00 TO STA. 302+50 EAST 14TH STREET SB

CUY-90-16.28 (CCG3A)

MODEL: 82382_IP9170I PAPERSIZE: 34x22 (in.) DATE: 3/28/2025 TIME: 9:02:12 AM USER: AsIddIqI
pw:\\mb-us-pw.bentley.com:mb-us-pw-03\Documents\Cleveland_OH\OI_Projects\ODOT\District#12\82382\400-Engineering\Geotechnical\Sheets\82382_IP9170I.dgn

DESIGN AGENCY
NEAS
National Engineering & Architectural Services Inc.
2800 CORPORATE EXCHANGE DR, SUITE 240
COLUMBUS, OH, 43231
TEL:614.714.0299
WWW.NEASINC.COM

DESIGNER	MWJ & DT
REVIEWER	BPA 08/23/24
PROJECT ID	82382
SUBSET	69
TOTAL	310
SHEET	P.2455
TOTAL	2696

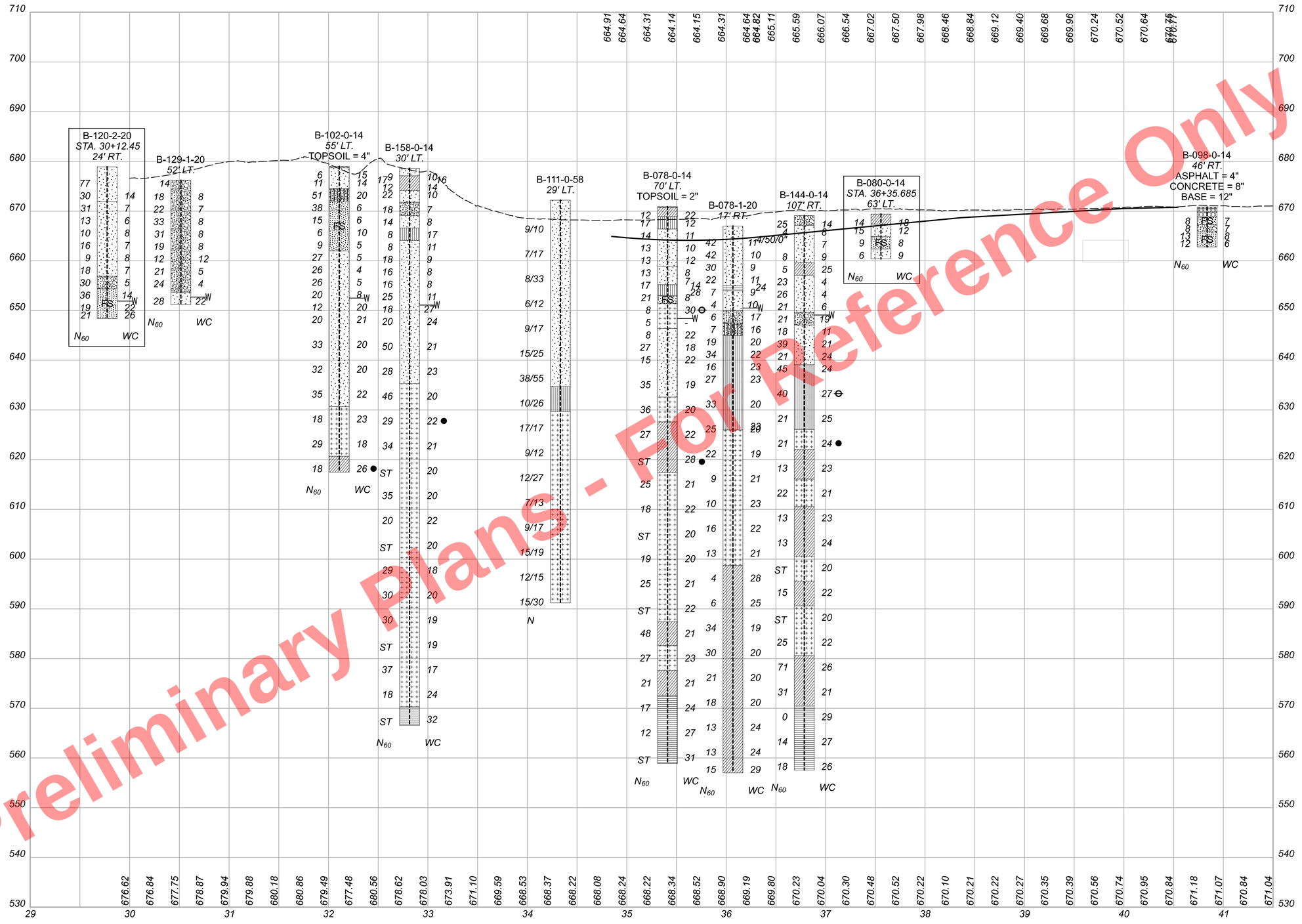

Preliminary Plans - For Reference Only

HORIZONTAL SCALE IN FEET
0 25 50 100

GEOTECHNICAL PROFILE - ROADWAY
STA. 290+00 TO STA. 302+50 EAST 14TH STREET SB

CUY-90-16.28 (CCG3A)

MODEL: 82382_IF9170I PAPERSIZE: 34x22 (In.) DATE: 3/28/2025 TIME: 9:03:04 AM USER: Asldldl
pw:\\mb-us-pw.bentley.com:mb-us-pw-03\Documents\Cleveland_OH\DL_Projects\ODOT\District2\82382\400-Engineering\Geotechnical\Sheets\82382_IF9170I.dgn

DESIGN AGENCY
NEAS
National Engineering & Architectural Services Inc.
2800 CORPORATE EXCHANGE DR, SUITE 240
COLUMBUS, OH, 43231
TEL:614.714.0299
WWW.NEASINC.COM

DESIGNER MWJ & DT
REVIEWER BPA 08/23/24
PROJECT ID 82382
SUBSET 70 TOTAL 310
SHEET P.2456 TOTAL 2696

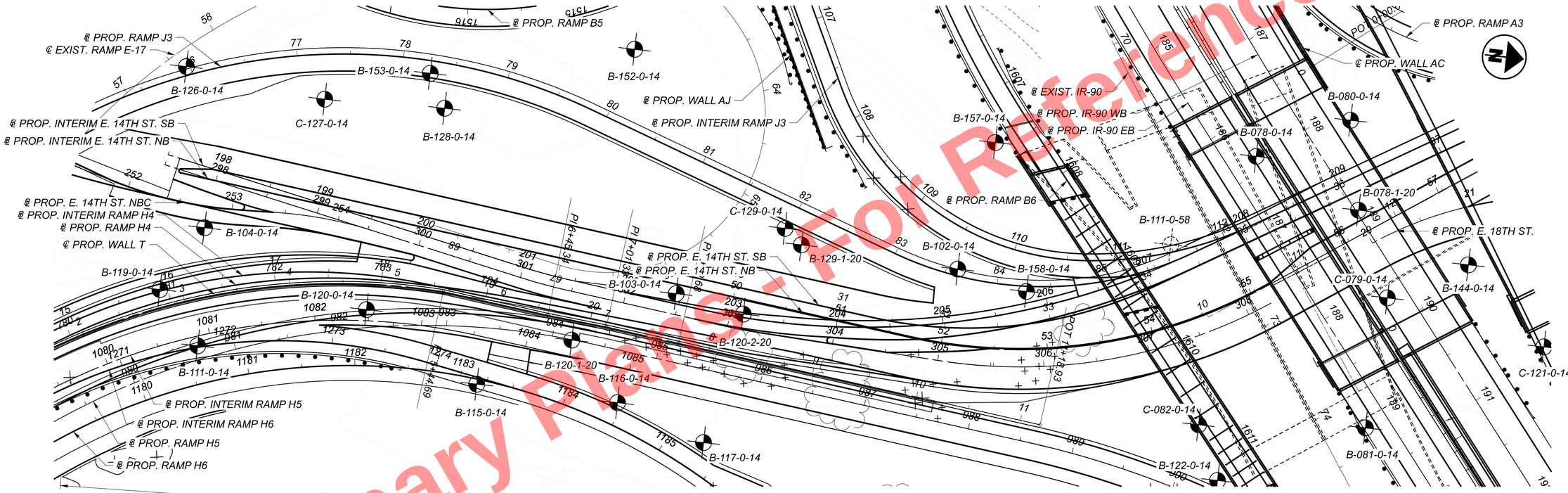

For Reference Only
Preliminary Plans - For

INFORMATION FOR B-078-0-14 CAN BE FOUND ON SHEETS 21, 29, 70, 72 & 74
INFORMATION FOR B-078-1-20 CAN BE FOUND ON SHEETS 21, 29, 70, 72 & 74
INFORMATION FOR B-080-0-14 CAN BE FOUND ON SHEETS 29, 51, 70, 72, 74 & 91
INFORMATION FOR B-081-0-14 CAN BE FOUND ON SHEETS 21, 29 & 114
INFORMATION FOR B-102-0-14 CAN BE FOUND ON SHEETS 70, 72, 74, 76 & 109
INFORMATION FOR B-103-0-14 CAN BE FOUND ON SHEETS 61, 65, 72 & 76
INFORMATION FOR B-104-0-14 CAN BE FOUND ON SHEETS 61, 72 & 76
INFORMATION FOR B-111-0-14 CAN BE FOUND ON SHEETS 61, 63, 66 & 68
INFORMATION FOR B-111-0-58 CAN BE FOUND ON SHEETS 53, 70, 72, 74 & 76
INFORMATION FOR B-115-0-14 CAN BE FOUND ON SHEETS 61, 63, 66 & 68
INFORMATION FOR B-116-0-14 CAN BE FOUND ON SHEETS 61, 65 & 68
INFORMATION FOR B-117-0-14 CAN BE FOUND ON SHEET 68
INFORMATION FOR B-119-0-14 CAN BE FOUND ON SHEETS 59 & 109
INFORMATION FOR B-120-0-14 CAN BE FOUND ON SHEETS 61, 63, 66, 68, 76 & 109
INFORMATION FOR B-120-1-20 CAN BE FOUND ON SHEETS 61 & 109
INFORMATION FOR B-120-2-20 CAN BE FOUND ON SHEETS 70, 72, 74, 76 & 109
INFORMATION FOR B-122-0-14 CAN BE FOUND ON SHEETS 55 & 65
INFORMATION FOR B-126-0-14 CAN BE FOUND ON SHEETS 72 & 76
INFORMATION FOR B-128-0-14 CAN BE FOUND ON SHEETS 72 & 76
INFORMATION FOR B-129-1-20 CAN BE FOUND ON SHEETS 70, 72, 74, 76 & 103
INFORMATION FOR B-144-0-14 CAN BE FOUND ON SHEETS 21, 29, 49, 70, 80, 93 & 114
INFORMATION FOR B-152-0-14 CAN BE FOUND ON SHEET 103
INFORMATION FOR B-153-0-14 CAN BE FOUND ON SHEETS 72 & 76
INFORMATION FOR B-157-0-14 CAN BE FOUND ON SHEET 53
INFORMATION FOR B-158-0-14 CAN BE FOUND ON SHEETS 53, 70, 72, 74 & 76
INFORMATION FOR C-079-0-14 CAN BE FOUND ON SHEETS 21, 29 & 31
INFORMATION FOR C-082-0-14 CAN BE FOUND ON SHEET 55
INFORMATION FOR C-121-0-14 CAN BE FOUND ON SHEET 93
INFORMATION FOR C-127-0-14 CAN BE FOUND ON SHEETS 72 & 76
INFORMATION FOR C-129-0-14 CAN BE FOUND ON SHEET 103

HORIZONTAL SCALE IN FEET
0 25 50 100

GEOTECHNICAL PROFILE - ROADWAY
STA. 196+70 TO STA. 210+20 EAST 14TH STREET INTERIM SB

CUY-90-16.28 (CCG3A)

MODEL: 82382_IF9180I PAPERSIZE: 34x22 (In) DATE: 3/28/2025 TIME: 9:03:28 AM USER: Asldfql
pw:\\mb-us-pw.bentley.com:mb-us-pw-03\Documents\Cleveland_OH\01_Projects\0007\01\Tech\82382\400-Engineering\Geotechnical\Sheets\82382_IF9180Ldgn

DESIGN AGENCY
NEAS
National Engineering & Architectural Services Inc.
2800 CORPORATE EXCHANGE DR, SUITE 240
COLUMBUS, OH, 43231
TEL:614.714.0299
WWW.NEASINC.COM

DESIGNER MWJ & DT
REVIEWER BPA 08/23/24
PROJECT ID 82382
SUBSET 71 TOTAL 310
SHEET P.2457 TOTAL 2696

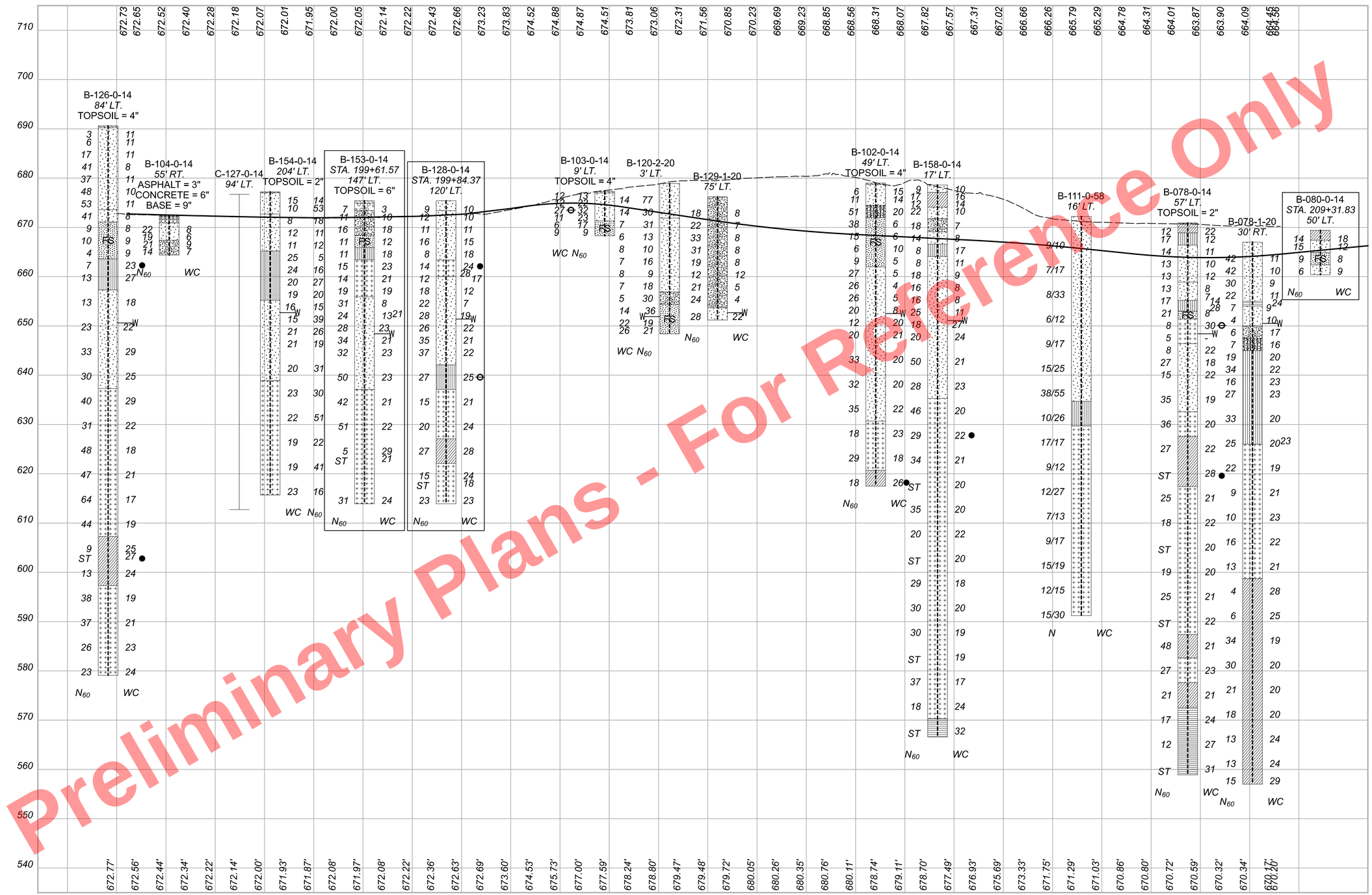

Preliminary Plans - For Reference Only

HORIZONTAL SCALE IN FEET
0 25 50 100

GEOTECHNICAL PROFILE - ROADWAY
STA. 196+70 TO STA. 210+20 EAST 14TH STREET INTERIM SB

CUY-90-16.28 (CCG3A)

MODEL: 82382_IF9180I PAPERSIZE: 34x22 (In.) DATE: 3/28/2025 TIME: 9:04:27 AM USER: AsIddIgI
pw:\\mb-us-pw.bentley.com:mb-us-pw-03\Documents\Cleveland_OH\OiL_Projects\ODOT\District#12\82382\400-Engineering\Geotechnical\Sheets\82382_IF9180I.dgn

DESIGN AGENCY
NEAS
National Engineering & Architectural Services Inc.
2800 CORPORATE EXCHANGE DR, SUITE 240
COLUMBUS, OH, 43231
TEL:614.714.0299
WWW.NEASINC.COM

DESIGNER MWJ & DT
REVIEWER BPA 08/23/24
PROJECT ID 82382
SUBSET 72 TOTAL 310
SHEET P.2458 TOTAL 2696

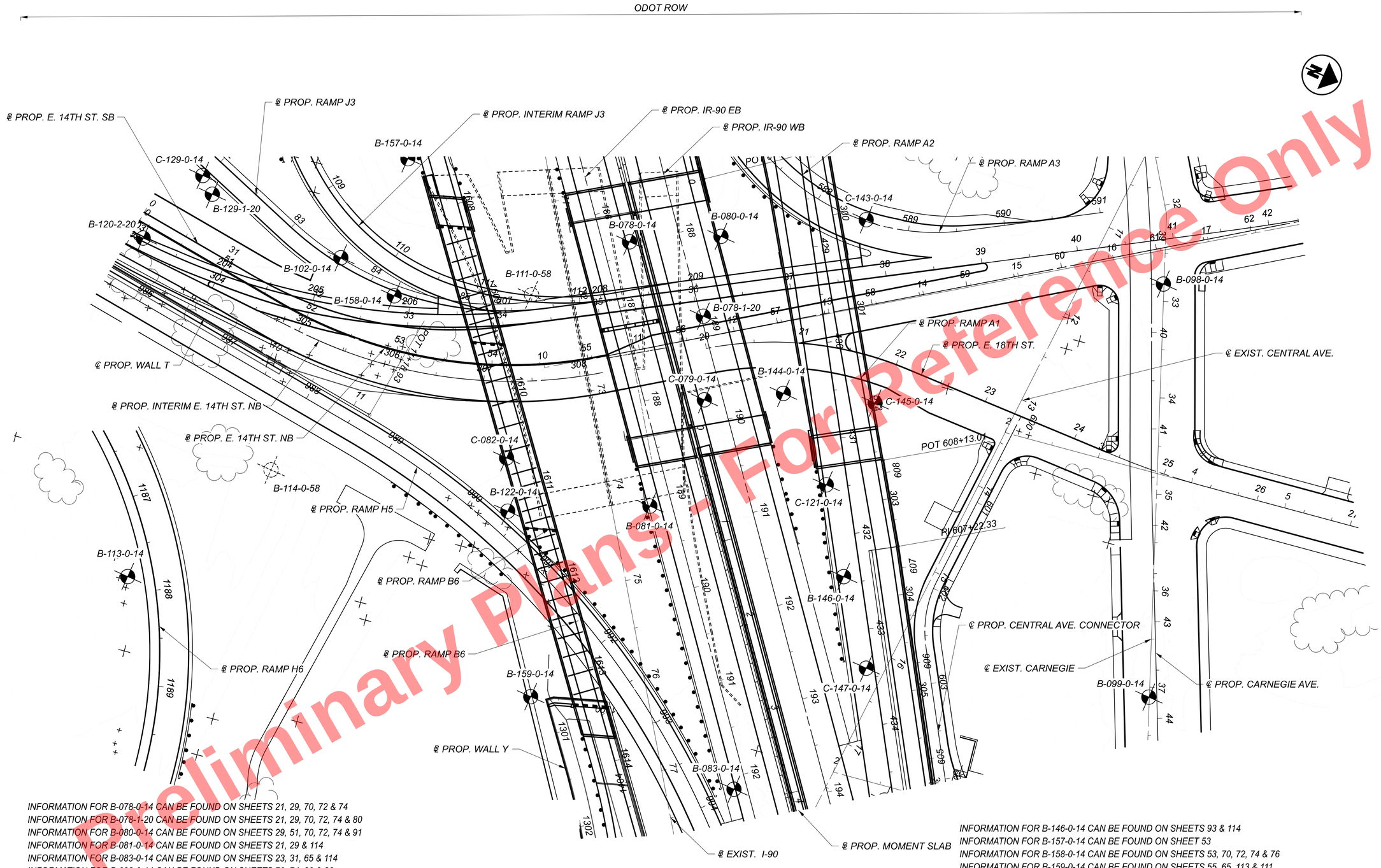

Preliminary Plans - For Reference Only

INFORMATION FOR B-078-0-14 CAN BE FOUND ON SHEETS 21, 29, 70, 72 & 74
INFORMATION FOR B-078-1-20 CAN BE FOUND ON SHEETS 21, 29, 70, 72, 74 & 80
INFORMATION FOR B-080-0-14 CAN BE FOUND ON SHEETS 29, 51, 70, 72, 74 & 91
INFORMATION FOR B-081-0-14 CAN BE FOUND ON SHEETS 21, 29 & 114
INFORMATION FOR B-083-0-14 CAN BE FOUND ON SHEETS 23, 31, 65 & 114
INFORMATION FOR B-098-0-14 CAN BE FOUND ON SHEETS 70, 74, 80 & 86
INFORMATION FOR B-099-0-14 CAN BE FOUND ON SHEET 86
INFORMATION FOR B-102-0-14 CAN BE FOUND ON SHEETS 70, 72, 74, 76 & 109
INFORMATION FOR B-111-0-58 CAN BE FOUND ON SHEETS 53, 70, 72, 74 & 76
INFORMATION FOR B-113-0-14 CAN BE FOUND ON SHEET 68
INFORMATION FOR B-120-2-20 CAN BE FOUND ON SHEETS 70, 72, 74, 76 & 109
INFORMATION FOR B-122-0-14 CAN BE FOUND ON SHEETS 55 & 65
INFORMATION FOR B-129-1-20 CAN BE FOUND ON SHEETS 70, 72, 74, 76 & 103
INFORMATION FOR B-144-0-14 CAN BE FOUND ON SHEETS 21, 29, 49, 70, 80, 93 & 114
INFORMATION FOR B-146-0-14 CAN BE FOUND ON SHEETS 93 & 114
INFORMATION FOR B-157-0-14 CAN BE FOUND ON SHEET 53
INFORMATION FOR B-158-0-14 CAN BE FOUND ON SHEETS 53, 70, 72, 74 & 76
INFORMATION FOR B-159-0-14 CAN BE FOUND ON SHEETS 55, 65, 113 & 111
INFORMATION FOR C-079-0-14 CAN BE FOUND ON SHEETS 21, 29 & 31
INFORMATION FOR C-082-0-14 CAN BE FOUND ON SHEET 55
INFORMATION FOR C-121-0-14 CAN BE FOUND ON SHEET 93
INFORMATION FOR C-129-0-14 CAN BE FOUND ON SHEET 103
INFORMATION FOR C-143-0-14 CAN BE FOUND ON SHEET 47
INFORMATION FOR C-145-0-14 CAN BE FOUND ON SHEETS 80 & 93
INFORMATION FOR C-147-0-14 CAN BE FOUND ON SHEET 93

HORIZONTAL SCALE IN FEET
0 25 50 100

GEOTECHNICAL PROFILE - ROADWAY
EAST 14TH STREET NB

CUY-90-16.28 (CCG3A)

MODEL: 82382_IP960I PAPERSIZE: 34x22 (In.) DATE: 3/28/2025 TIME: 9:04:45 AM USER: Asldalql
pw:\\mb-us-pw.bentley.com:mb-us-pw-03\Documents\Cleveland_OH\OiL_Projects\ODOT\Districts\12\82382\400-Engineering\Geotechnical\Sheets\82382_IP960I.dgn

DESIGN AGENCY
NEAS
National Engineering & Architectural Services Inc.
2800 CORPORATE EXCHANGE DR, SUITE 240
COLUMBUS, OH, 43231
TEL:614.714.0299
WWW.NEASINC.COM

DESIGNER MWJ & DT
REVIEWER BPA 08/23/24
PROJECT ID 82382
SUBSET 73 TOTAL 310
SHEET P.2459 TOTAL 2696

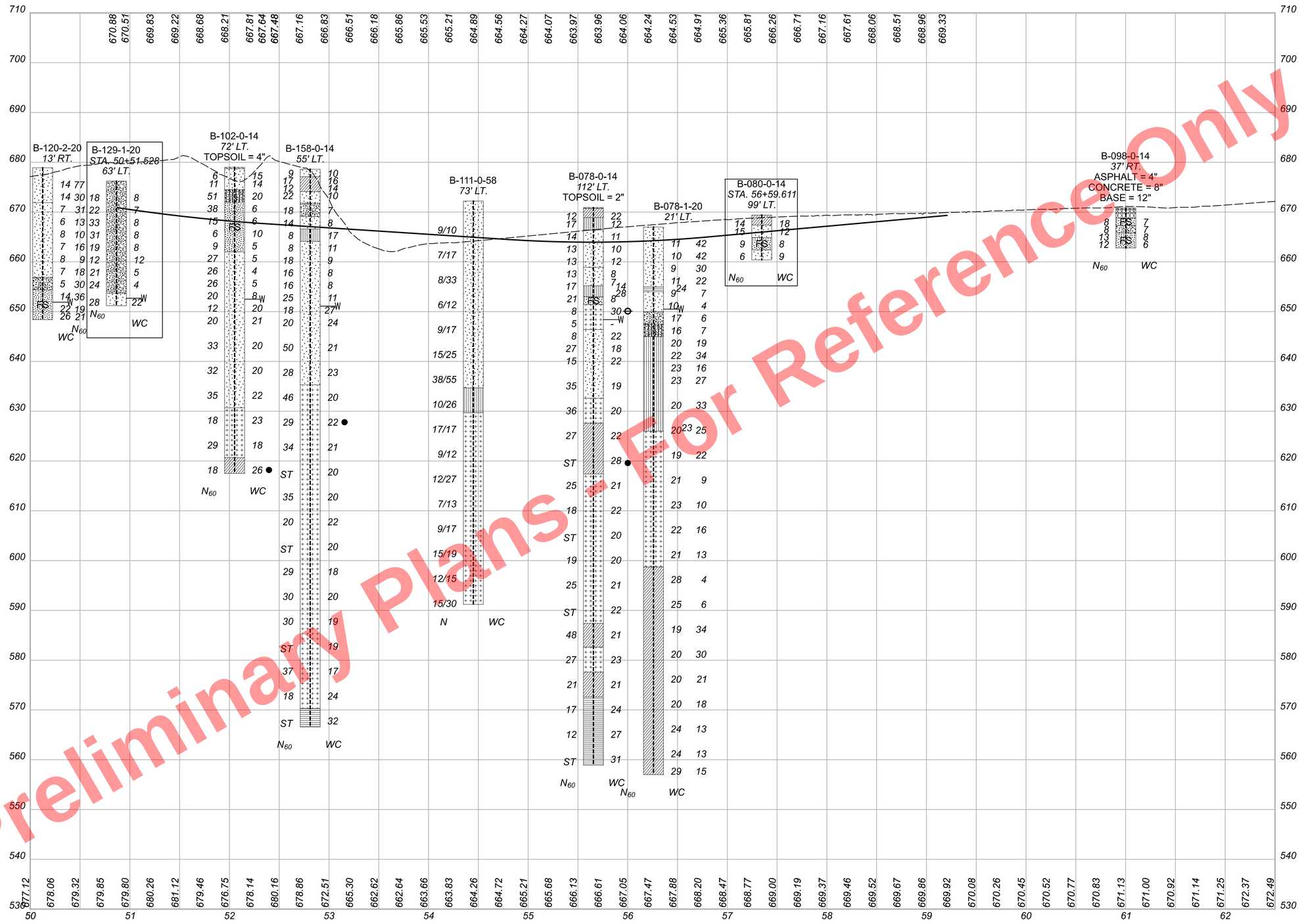

Preliminary Plans - For Reference Only

HORIZONTAL SCALE IN FEET
0 25 50 100

GEOTECHNICAL PROFILE - ROADWAY
EAST 14TH STREET NB

CUY-90-16.28 (CCG3A)

MODEL: 82382_IF960I PAPERSIZE: 34x22 (in.) DATE: 3/28/2025 TIME: 9:05:38 AM USER: Asiddiq
pw:\\mb-us-pw.bentley.commb-us-pw-03\Documents\Cleveland_OH\OI_Projects\0007\District2\82382\400-Engineering\Geotechnical\Sheets\82382_IF960I.dgn

DESIGN AGENCY
NEAS
National Engineering & Architectural Services Inc.
2800 CORPORATE EXCHANGE DR, SUITE 240
COLUMBUS, OH, 43231
TEL:614.714.0299
WWW.NEASINC.COM

DESIGNER	MWJ & DT
REVIEWER	BPA 08/23/24
PROJECT ID	82382
SUBSET	74
TOTAL	310
SHEET	P.2460
TOTAL	2696

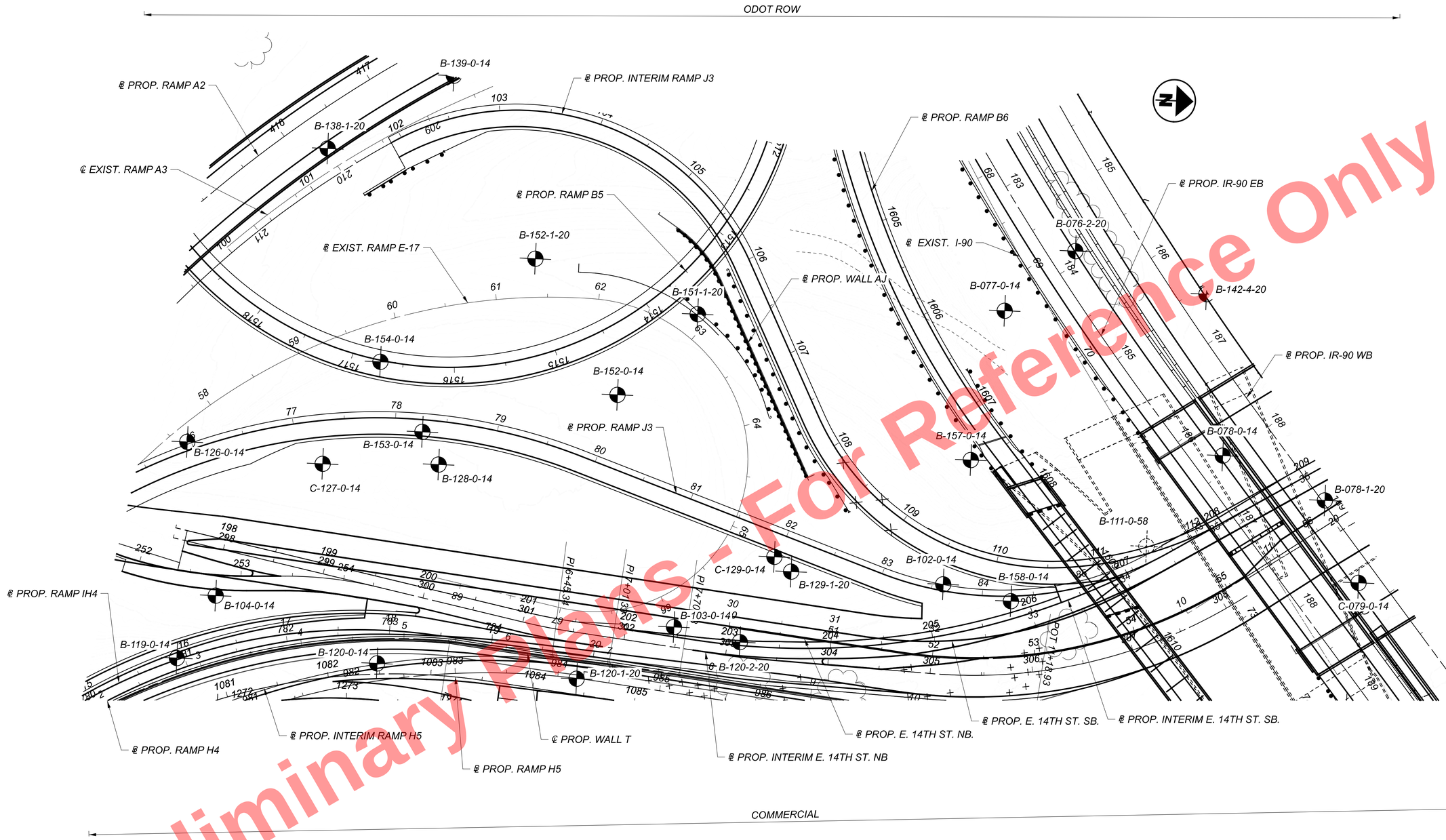

Preliminary Plans - Not For Reference Only

INFORMATION FOR B-076-2-20 CAN BE FOUND ON SHEET 19
INFORMATION FOR B-077-0-14 CAN BE FOUND ON SHEET 19
INFORMATION FOR B-078-0-14 CAN BE FOUND ON SHEETS 21, 29, 70, 72 & 74
INFORMATION FOR B-078-1-20 CAN BE FOUND ON SHEETS 21, 29, 70, 72, 74 & 80
INFORMATION FOR B-102-0-14 CAN BE FOUND ON SHEETS 70, 72, 74, 76 & 109
INFORMATION FOR B-103-0-14 CAN BE FOUND ON SHEETS 61, 65, 72 & 76
INFORMATION FOR B-104-0-14 CAN BE FOUND ON SHEETS 61, 72 & 76
INFORMATION FOR B-111-0-58 CAN BE FOUND ON SHEETS 53, 70, 72, 74 & 76
INFORMATION FOR B-119-0-14 CAN BE FOUND ON SHEETS 59 & 109
INFORMATION FOR B-120-0-14 CAN BE FOUND ON SHEETS 61, 63, 66, 68, 76 & 109
INFORMATION FOR B-120-1-20 CAN BE FOUND ON SHEETS 61 & 109
INFORMATION FOR B-120-2-20 CAN BE FOUND ON SHEETS 70, 72, 74, 76 & 109
INFORMATION FOR B-126-0-14 CAN BE FOUND ON SHEETS 72 & 76
INFORMATION FOR B-128-0-14 CAN BE FOUND ON SHEETS 72 & 76

INFORMATION FOR B-129-1-20 CAN BE FOUND ON SHEETS 70, 72, 74, 76 & 103
INFORMATION FOR B-138-1-20 CAN BE FOUND ON SHEET 41
INFORMATION FOR B-139-0-14 CAN BE FOUND ON SHEET 43
INFORMATION FOR B-142-4-20 CAN BE FOUND ON SHEETS 29 & 91
INFORMATION FOR B-151-1-20 CAN BE FOUND ON SHEET 103
INFORMATION FOR B-152-0-14 CAN BE FOUND ON SHEET 103
INFORMATION FOR B-152-1-20 CAN BE FOUND ON SHEET 43
INFORMATION FOR B-153-0-14 CAN BE FOUND ON SHEETS 72 & 76
INFORMATION FOR B-154-0-14 CAN BE FOUND ON SHEETS 72 & 76
INFORMATION FOR B-157-0-14 CAN BE FOUND ON SHEET 53
INFORMATION FOR B-158-0-14 CAN BE FOUND ON SHEETS 53, 70, 72, 74 & 76
INFORMATION FOR C-079-0-14 CAN BE FOUND ON SHEETS 21, 29 & 31
INFORMATION FOR C-127-0-14 CAN BE FOUND ON SHEETS 72 & 76
INFORMATION FOR C-129-0-14 CAN BE FOUND ON SHEET 103

HORIZONTAL SCALE IN FEET
0 25 50 100

GEOTECHNICAL PROFILE - ROADWAY
EAST 14TH STREET INTERIM NB

CUY-90-16.28 (CCG3A)

MODEL: 82382_IP970I PAPERSIZE: 34x22 (In.) DATE: 3/28/2025 TIME: 9:06:01 AM USER: Asldldl
pw:\\mb-us-pw.bentley.com:mb-us-pw-03\Documents\Cleveland_OH\OI_Projects\ODOT\District2\82382\400-Engineering\Geotechnical\Sheets\82382_IP970I.dgn

DESIGN AGENCY
NEAS
National Engineering & Architectural Services Inc.
2800 CORPORATE EXCHANGE DR, SUITE 240
COLUMBUS, OH, 43231
TEL:614.714.0299
WWW.NEASINC.COM

DESIGNER
MWJ & DT

REVIEWER
BPA 08/23/24

PROJECT ID
82382

SUBSET 75 | TOTAL 310

SHEET P.2461 | TOTAL 2696

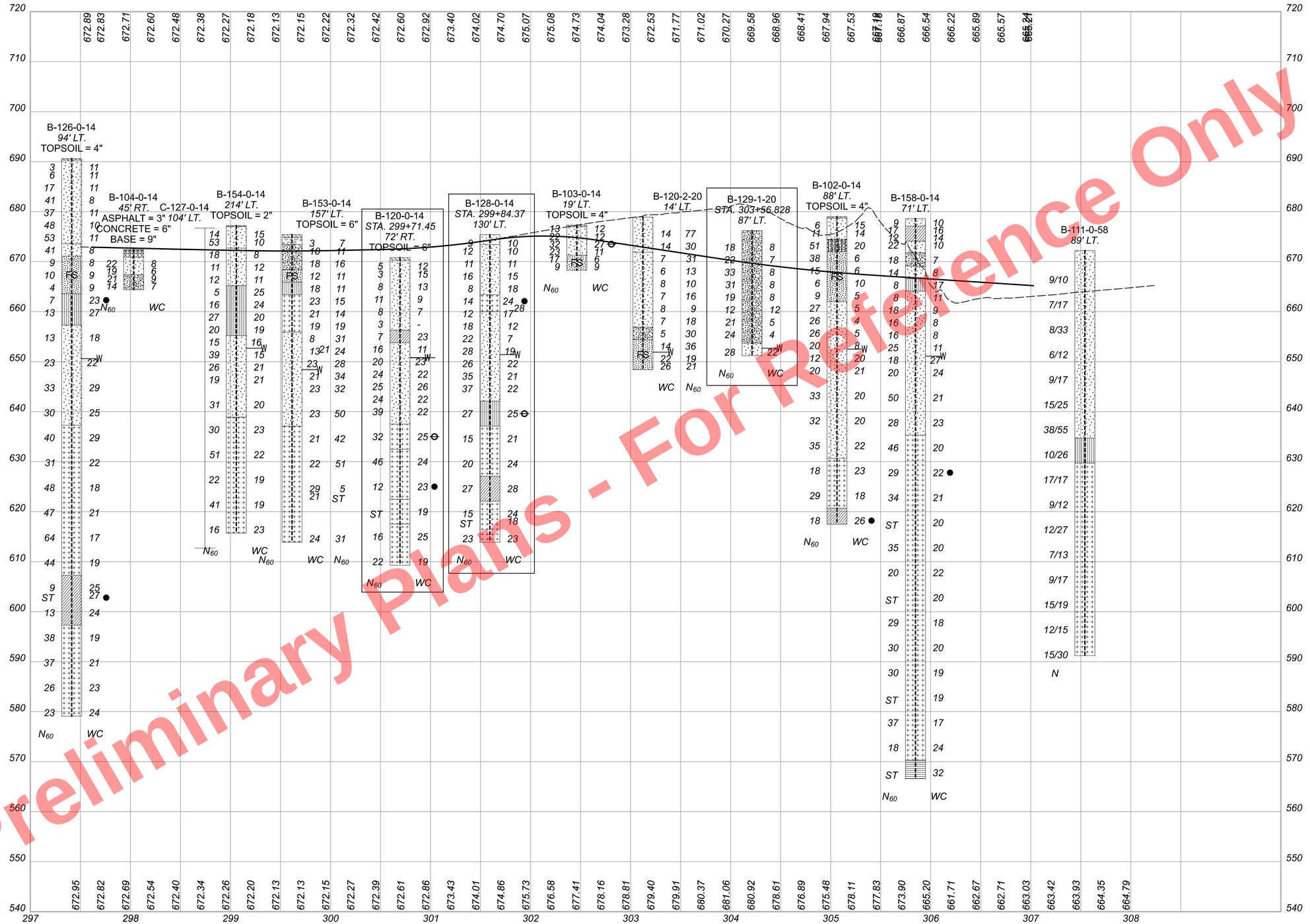

Preliminary Plans - Not For Reference Only

HORIZONTAL SCALE IN FEET
0 25 50 100

GEOTECHNICAL PROFILE - ROADWAY
EAST 14TH STREET INTERIM NB

CUY-90-16.28 (CCG3A)

MODEL: 82382_IF970I PAPERSIZE: 34x22 (in.) DATE: 3/28/2025 TIME: 9:06:54 AM USER: AsiddIqI
pw:\\mb-us-pw.bentley.com:mb-us-pw-03\Documents\Cleveland_OH\OI_Projects\ODOT\District#2\82382\400-Engineering\Geotechnical\Sheets\82382_IF970I.dgn

DESIGN AGENCY
NEAS
National Engineering & Architectural Services Inc.
2800 CORPORATE EXCHANGE DR, SUITE 240
COLUMBUS, OH, 43231
TEL:614.714.0299
WWW.NEASINC.COM

DESIGNER	MWJ & DT
REVIEWER	BPA 08/23/24
PROJECT ID	82382
SUBSET	76
TOTAL	310
SHEET	P.2462
TOTAL	2696

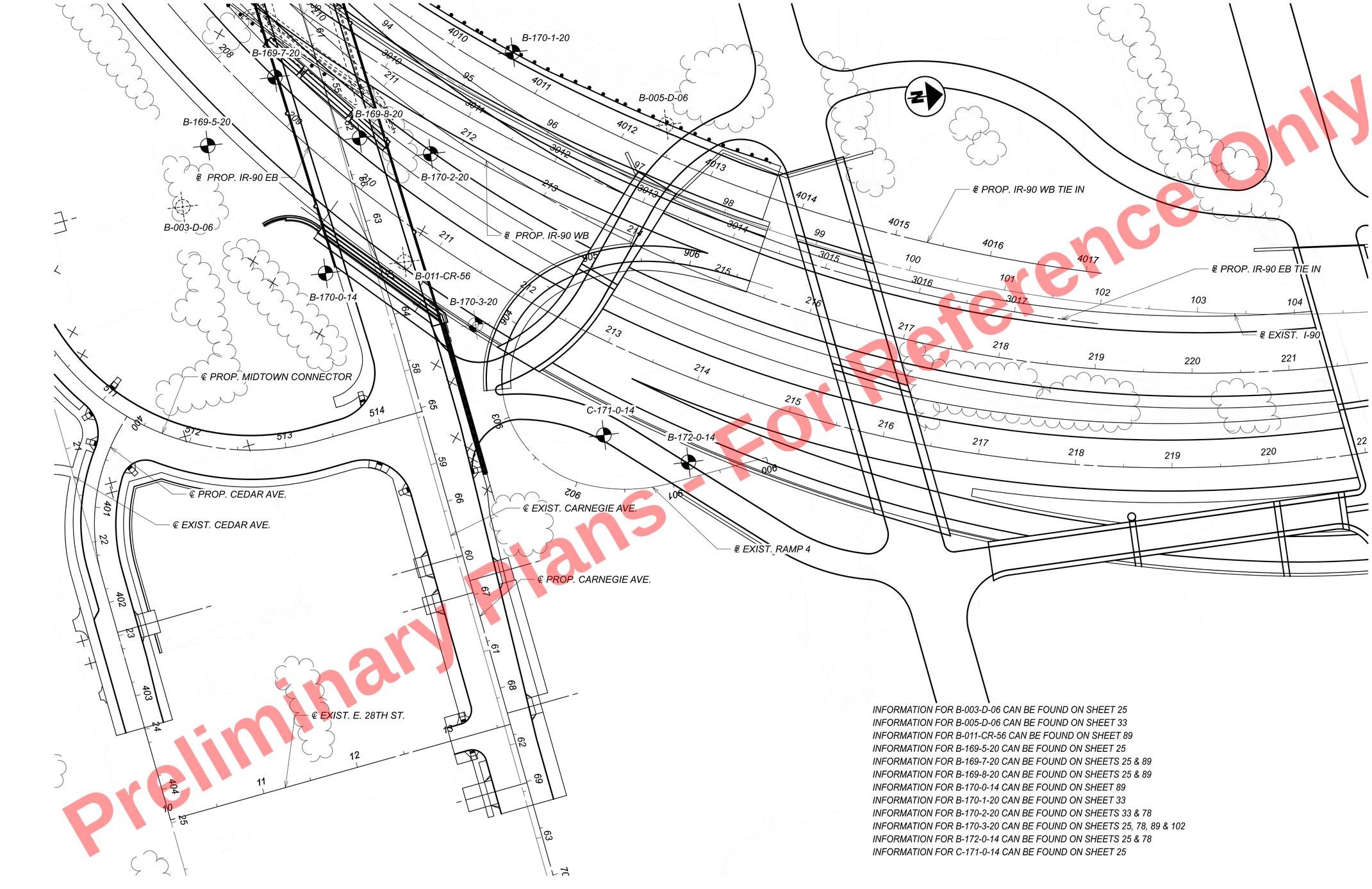

Preliminary Plans - For Reference Only

INFORMATION FOR B-003-D-06 CAN BE FOUND ON SHEET 25
INFORMATION FOR B-005-D-06 CAN BE FOUND ON SHEET 33
INFORMATION FOR B-011-CR-56 CAN BE FOUND ON SHEET 89
INFORMATION FOR B-169-5-20 CAN BE FOUND ON SHEET 25
INFORMATION FOR B-169-7-20 CAN BE FOUND ON SHEETS 25 & 89
INFORMATION FOR B-169-8-20 CAN BE FOUND ON SHEETS 25 & 89
INFORMATION FOR B-170-0-14 CAN BE FOUND ON SHEET 89
INFORMATION FOR B-170-1-20 CAN BE FOUND ON SHEET 33
INFORMATION FOR B-170-2-20 CAN BE FOUND ON SHEETS 33 & 78
INFORMATION FOR B-170-3-20 CAN BE FOUND ON SHEETS 25, 78, 89 & 102
INFORMATION FOR B-172-0-14 CAN BE FOUND ON SHEETS 25 & 78
INFORMATION FOR C-171-0-14 CAN BE FOUND ON SHEET 25

HORIZONTAL SCALE IN FEET
0 25 50 100

GEOTECHNICAL PROFILE - ROADWAY
RAMP 4

CUY-90-16.28 (CCG3A)

MODEL: 82382_IP980I PAPERSIZE: 34x22 (in.) DATE: 3/28/2025 TIME: 9:07:19 AM USER: AsIddIq
pw:\\mb-us-pw.bentley.com\mb-us-pw-03\Documents\Cleveland_OH\OL_Projects\ODOT\District12\82382\400-Engineering\Geotechnical\Sheets\82382_IP980I.dgn

DESIGN AGENCY
NEAS
National Engineering & Architectural Services Inc.
2800 CORPORATE EXCHANGE DR, SUITE 240
COLUMBUS, OH, 43231
TEL:614.714.0299
WWW.NEASINC.COM

DESIGNER: MWJ & DT
REVIEWER: BPA 08/23/24
PROJECT ID: 82382
SUBSET: 77 TOTAL: 310
SHEET: P.2463 TOTAL: 2696

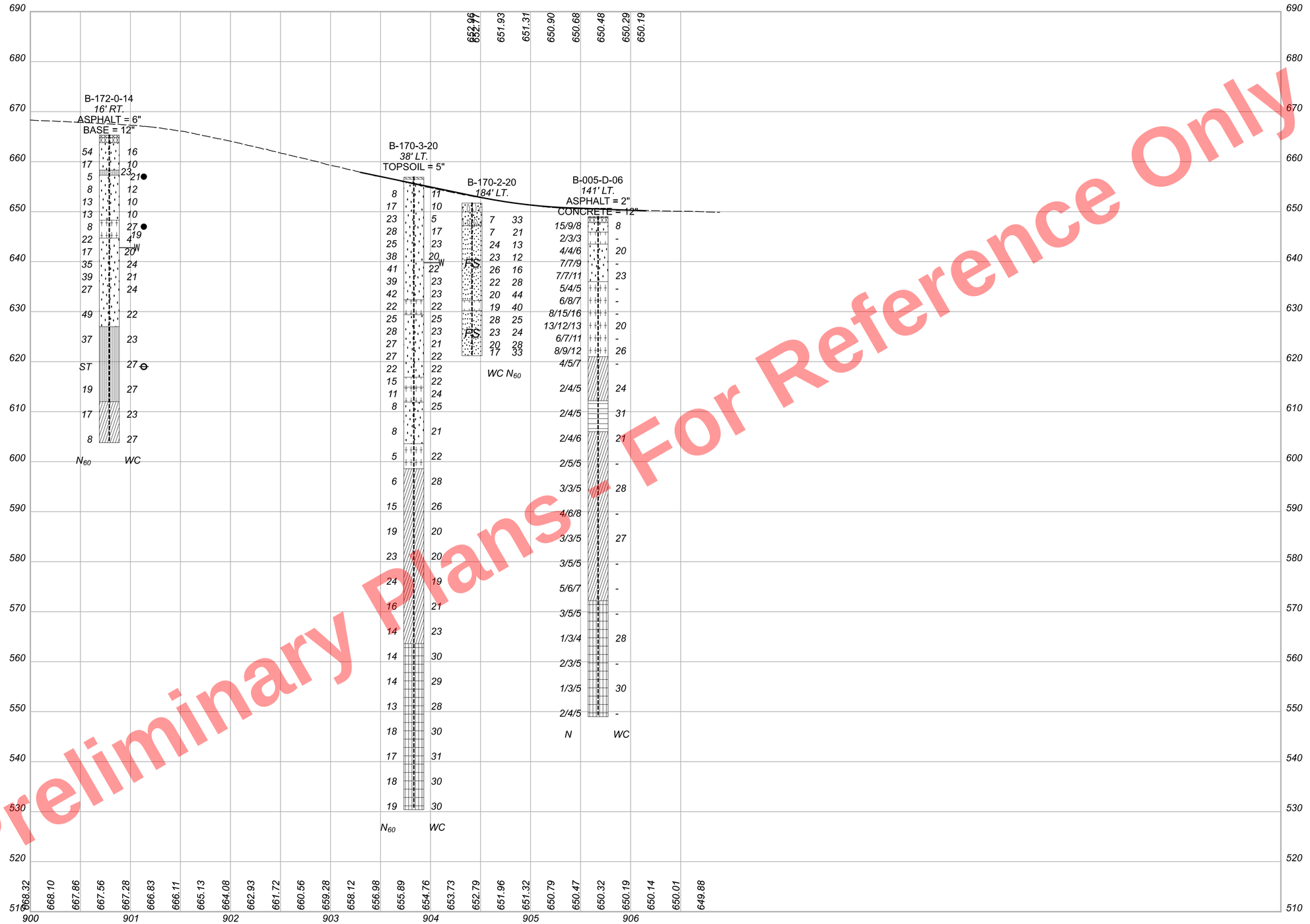

Preliminary Plans - For Reference Only

HORIZONTAL SCALE IN FEET
0 25 50 100

GEOTECHNICAL PROFILE - ROADWAY
RAMP 4

CUY-90-16.28 (CCG3A)

MODEL: 82382_IF980I PAPERSIZE: 34x22 (in.) DATE: 3/28/2025 TIME: 9:08:12 AM USER: AsldaIqI
pw:\\mb-us-pw.bentley.com:mb-us-pw-03\Documents\Cleveland.OH\OI_Projects\ODOT\District2\82382\400-Engineering\Geotechnical\Sheets\82382_IF980I.dgn

DESIGN AGENCY
NEAS
National Engineering & Architectural Services Inc.
2800 CORPORATE EXCHANGE DR, SUITE 240
COLUMBUS, OH, 43231
TEL:614.714.0299
WWW.NEASINC.COM

DESIGNER: MWJ & DT
REVIEWER: BPA 08/23/24
PROJECT ID: 82382
SUBSET: 78 TOTAL: 310
SHEET: P.2464 TOTAL: 2696

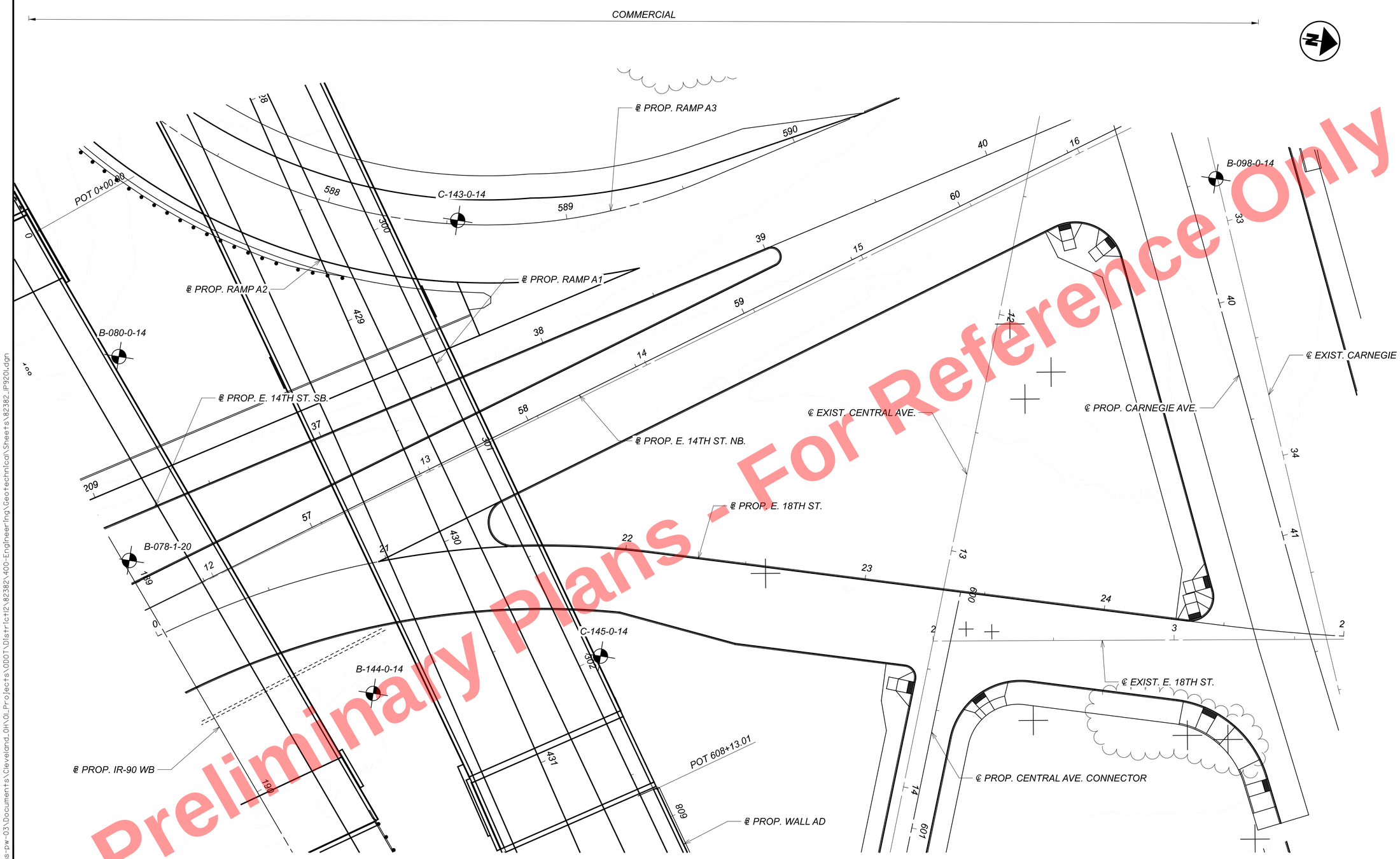

Preliminary Plans - For Reference Only

INFORMATION FOR B-078-1-20 CAN BE FOUND ON SHEETS 21, 29, 70, 72 & 74
INFORMATION FOR B-080-0-14 CAN BE FOUND ON SHEETS 29, 51, 70, 72 & 74
INFORMATION FOR B-098-0-14 CAN BE FOUND ON SHEETS 70, 74, 80 & 86
INFORMATION FOR B-144-0-14 CAN BE FOUND ON SHEETS 21, 29, 49, 70, 80, 93 & 114
INFORMATION FOR C-145-0-14 CAN BE FOUND ON SHEETS 80 & 93
INFORMATION FOR C-143-0-14 CAN BE FOUND ON SHEET 47

HORIZONTAL SCALE IN FEET
0 10 20 40

GEOTECHNICAL PROFILE - ROADWAY
STA. 20+00 TO STA. 25+00 EAST 18TH STREET

DESIGN AGENCY
NEAS
National Engineering & Architectural Services Inc.
2800 CORPORATE EXCHANGE DR, SUITE 240
COLUMBUS, OH, 43231
TEL:614.714.0299
WWW.NEASINC.COM

DESIGNER: MWJ & DT
REVIEWER: BPA 08/23/24
PROJECT ID: 82382
SUBSET: 79 TOTAL: 310
SHEET: P.2465 TOTAL: 2696

CUY-90-16.28 (CCG3A)

MODEL: 82382_IP920I PAPERSIZE: 34x22 (In.) DATE: 3/28/2025 TIME: 9:08:38 AM USER: Asiddiqi
pw:\\mb-us-pw.bentley.com:mb-us-pw-03\Documents\Cleveland_OH\OI_Projects\ODOT\District2\82382\400-Engineering\Geotechnical\Sheets\82382_IP920I.dgn

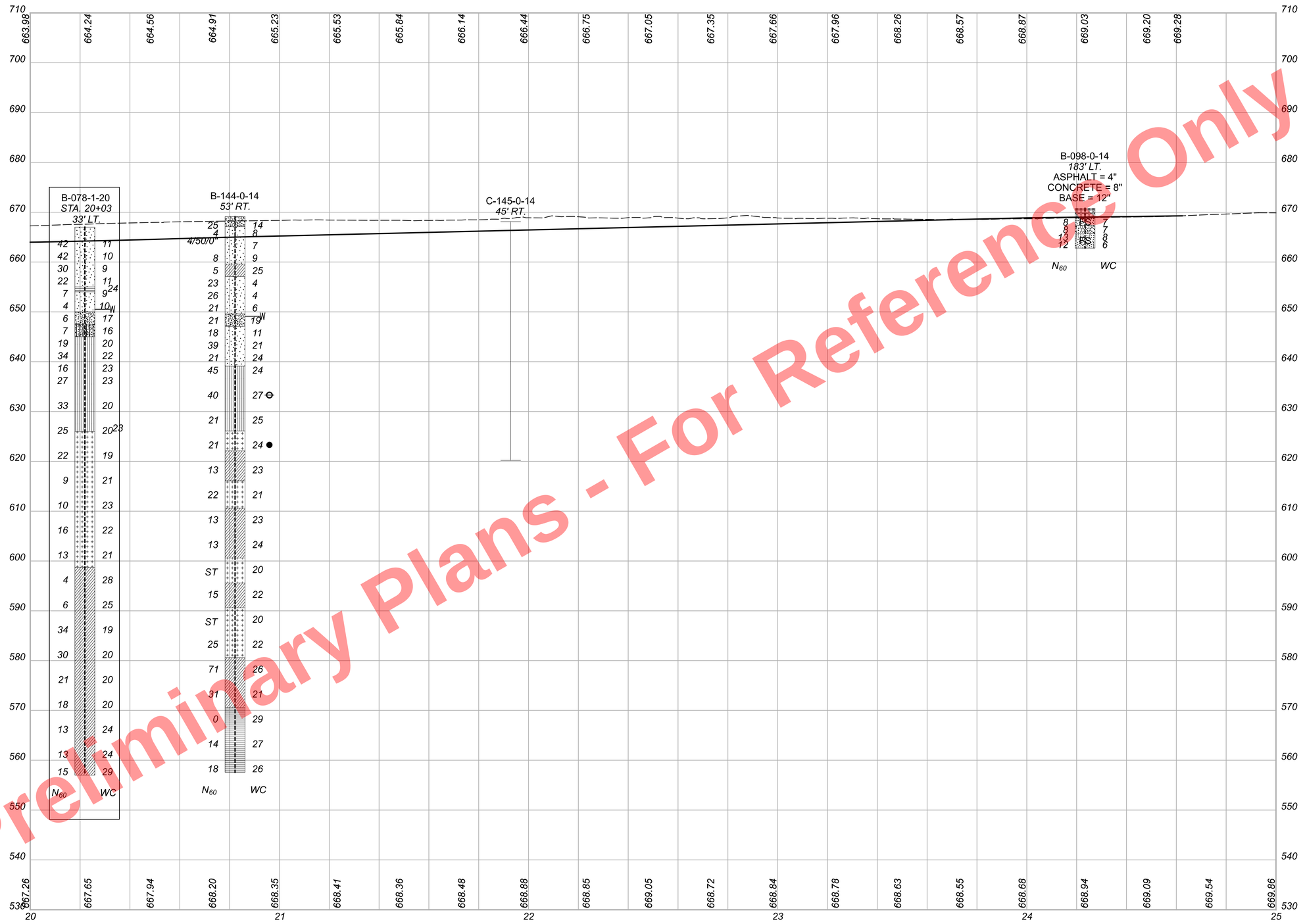

Preliminary Plans - For Reference Only

HORIZONTAL SCALE IN FEET
0 10 20 40

GEOTECHNICAL PROFILE - ROADWAY
STA. 20+00 TO STA. 25+00 EAST 18TH STREET

CUY-90-16.28 (CCG3A)

MODEL: 82382_IF920I PAPERSIZE: 34x22 (in) DATE: 3/28/2025 TIME: 9:09:28 AM USER: Asiddiq
pw:\\mb-us-pw.bentley.com:mb-us-pw-03\Documents\Cleveland_OH\01_Projects\D0OT\District2\82382\400-Engineering\Geotechnical\Sheets\82382_IF920I.dgn

DESIGN AGENCY
NEAS
National Engineering & Architectural Services Inc.
2800 CORPORATE EXCHANGE DR, SUITE 240
COLUMBUS, OH, 43231
TEL:614.714.0299
WWW.NEASINC.COM

DESIGNER	MWJ & DT
REVIEWER	BPA 08/23/24
PROJECT ID	82382
SUBSET	80
TOTAL	310
SHEET	P.2466
TOTAL	2696

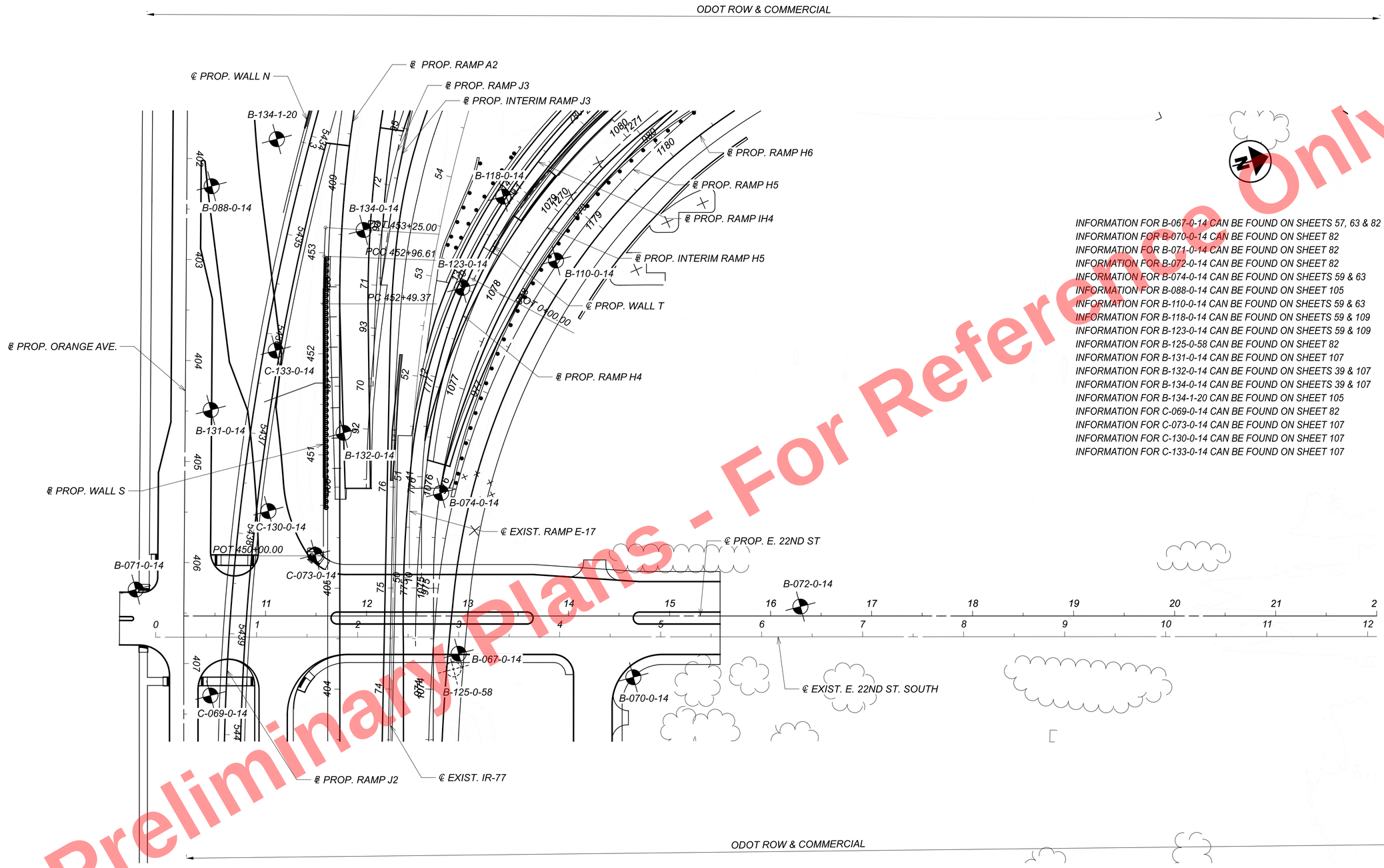

INFORMATION FOR B-067-0-14 CAN BE FOUND ON SHEETS 57, 63 & 82
INFORMATION FOR B-070-0-14 CAN BE FOUND ON SHEET 82
INFORMATION FOR B-071-0-14 CAN BE FOUND ON SHEET 82
INFORMATION FOR B-072-0-14 CAN BE FOUND ON SHEET 82
INFORMATION FOR B-074-0-14 CAN BE FOUND ON SHEETS 59 & 63
INFORMATION FOR B-088-0-14 CAN BE FOUND ON SHEET 105
INFORMATION FOR B-110-0-14 CAN BE FOUND ON SHEETS 59 & 63
INFORMATION FOR B-118-0-14 CAN BE FOUND ON SHEETS 59 & 109
INFORMATION FOR B-123-0-14 CAN BE FOUND ON SHEETS 59 & 109
INFORMATION FOR B-125-0-58 CAN BE FOUND ON SHEET 82
INFORMATION FOR B-131-0-14 CAN BE FOUND ON SHEET 107
INFORMATION FOR B-132-0-14 CAN BE FOUND ON SHEETS 39 & 107
INFORMATION FOR B-134-0-14 CAN BE FOUND ON SHEETS 39 & 107
INFORMATION FOR B-134-1-20 CAN BE FOUND ON SHEET 105
INFORMATION FOR C-069-0-14 CAN BE FOUND ON SHEET 82
INFORMATION FOR C-073-0-14 CAN BE FOUND ON SHEET 107
INFORMATION FOR C-130-0-14 CAN BE FOUND ON SHEET 107
INFORMATION FOR C-133-0-14 CAN BE FOUND ON SHEET 107

Preliminary Plans - For Reference Only

HORIZONTAL SCALE IN FEET
0 25 50 100

GEOTECHNICAL PROFILE - ROADWAY
STA. 9+50 TO STA. 22+00 EAST 22ND STREET

DESIGN AGENCY
NEAS
National Engineering & Architectural Services Inc.
2800 CORPORATE EXCHANGE DR, SUITE 240
COLUMBUS, OH, 43231
TEL:614.714.0299
WWW.NEASINC.COM

DESIGNER MWJ & DT
REVIEWER BPA 08/23/24
PROJECT ID 82382
SUBSET 81 TOTAL 310
SHEET P.2467 TOTAL 2696

CUY-90-16.28 (CCG3A)

MODEL: 82382_IP930I PAPERSIZE: 34x22 (in.) DATE: 3/28/2025 TIME: 9:09:50 AM USER: AsladdI
pw:\\mb-us-pw.bentley.com:mb-us-pw-03\Documents\Cleveland_OH\OiL_Projects\ODOT\District2\82382\400-Engineering\Geotechnical\Sheets\82382_IP930I.dgn

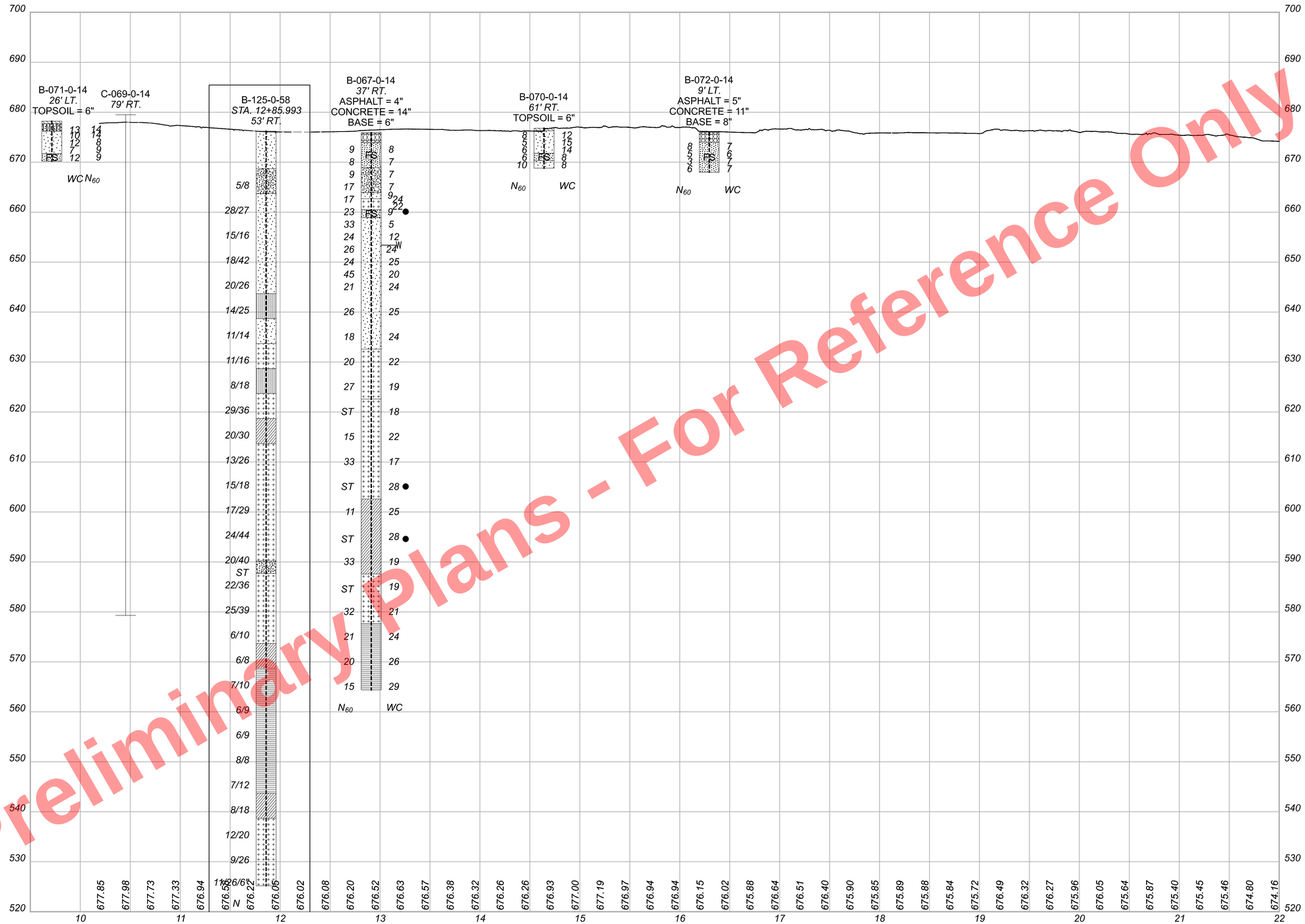

Preliminary Plans - Not For Reference Only

HORIZONTAL SCALE IN FEET
0 25 50 100

GEOTECHNICAL PROFILE - ROADWAY
STA. 9+50 TO STA. 22+00 EAST 22ND STREET

DESIGN AGENCY
NEAS
National Engineering & Architectural Services Inc.
2800 CORPORATE EXCHANGE DR, SUITE 240
COLUMBUS, OH, 43231
TEL:614.714.0299
WWW.NEASINC.COM

DESIGNER: MWJ & DT
REVIEWER: BPA 08/23/24
PROJECT ID: 82382
SUBSET: 82 TOTAL: 310
SHEET: P.2468 TOTAL: 2696

CUY-90-16.28 (CCG3A)

MODEL: 82382_IF930I PAPERSIZE: 34x22 (in.) DATE: 3/28/2025 TIME: 9:10:32 AM USER: AsiddIqI
pw:\\vmb-us-pw.bentley.com:vmb-us-pw-03\Documents\Cleveland_OHYOI_Projects\ODOT\District2\82382\400-Engineering\Geotechnical\Sheets\82382_IF930I.dgn

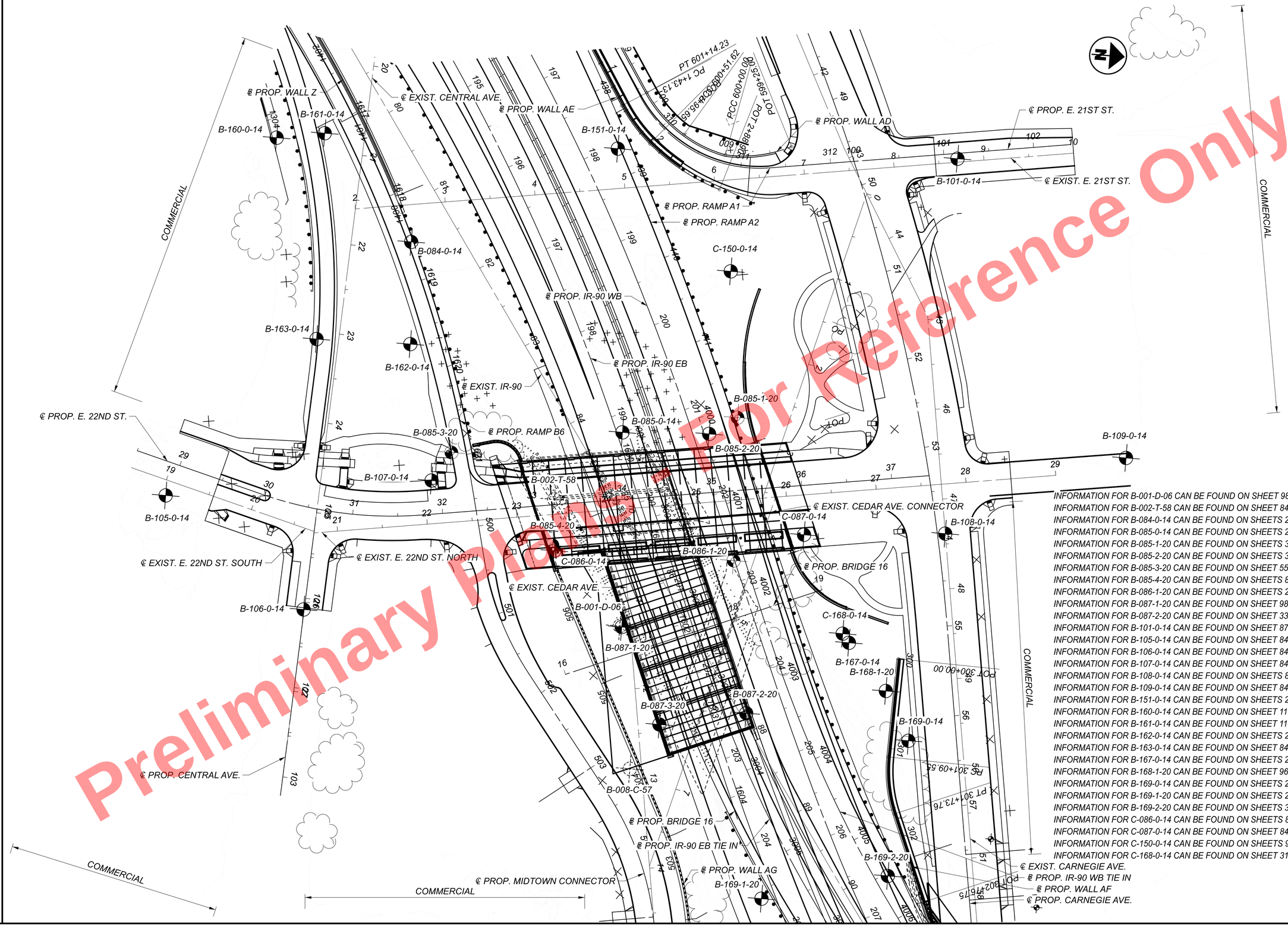

Preliminary Plans Not For Reference Only

INFORMATION FOR B-001-D-06 CAN BE FOUND ON SHEET 98
INFORMATION FOR B-002-T-58 CAN BE FOUND ON SHEET 84
INFORMATION FOR B-084-0-14 CAN BE FOUND ON SHEETS 23 & 31
INFORMATION FOR B-085-0-14 CAN BE FOUND ON SHEETS 23, 31 & 84
INFORMATION FOR B-085-1-20 CAN BE FOUND ON SHEETS 31 & 84
INFORMATION FOR B-085-2-20 CAN BE FOUND ON SHEETS 31 & 84
INFORMATION FOR B-085-3-20 CAN BE FOUND ON SHEET 55
INFORMATION FOR B-085-4-20 CAN BE FOUND ON SHEETS 84 & 98
INFORMATION FOR B-086-1-20 CAN BE FOUND ON SHEETS 23, 31 & 84
INFORMATION FOR B-087-1-20 CAN BE FOUND ON SHEET 98
INFORMATION FOR B-087-2-20 CAN BE FOUND ON SHEET 33
INFORMATION FOR B-101-0-14 CAN BE FOUND ON SHEET 87
INFORMATION FOR B-105-0-14 CAN BE FOUND ON SHEET 84
INFORMATION FOR B-106-0-14 CAN BE FOUND ON SHEET 84
INFORMATION FOR B-107-0-14 CAN BE FOUND ON SHEET 84
INFORMATION FOR B-108-0-14 CAN BE FOUND ON SHEETS 84 & 87
INFORMATION FOR B-109-0-14 CAN BE FOUND ON SHEET 84
INFORMATION FOR B-151-0-14 CAN BE FOUND ON SHEETS 23, 31, 35, 93 & 94
INFORMATION FOR B-160-0-14 CAN BE FOUND ON SHEET 111
INFORMATION FOR B-161-0-14 CAN BE FOUND ON SHEET 113
INFORMATION FOR B-162-0-14 CAN BE FOUND ON SHEETS 23 & 31
INFORMATION FOR B-163-0-14 CAN BE FOUND ON SHEET 84
INFORMATION FOR B-167-0-14 CAN BE FOUND ON SHEETS 23 & 33
INFORMATION FOR B-168-1-20 CAN BE FOUND ON SHEET 96
INFORMATION FOR B-169-0-14 CAN BE FOUND ON SHEETS 25, 33, 87, 89 & 96
INFORMATION FOR B-169-1-20 CAN BE FOUND ON SHEETS 25 & 98
INFORMATION FOR B-169-2-20 CAN BE FOUND ON SHEETS 33 & 96
INFORMATION FOR C-086-0-14 CAN BE FOUND ON SHEETS 84 & 98
INFORMATION FOR C-087-0-14 CAN BE FOUND ON SHEET 84
INFORMATION FOR C-150-0-14 CAN BE FOUND ON SHEETS 93 & 94
INFORMATION FOR C-168-0-14 CAN BE FOUND ON SHEET 31

HORIZONTAL SCALE IN FEET
0 25 50 100

GEOTECHNICAL PROFILE - ROADWAY
STA. 28+50 TO STA. 41+00 EAST 22ND STREET

CUY-90-16.28 (CCG3A)

DESIGN AGENCY
NEAS
National Engineering & Architectural Services Inc.
2800 CORPORATE EXCHANGE DR, SUITE 240
COLUMBUS, OH, 43231
TEL:614.714.0299
WWW.NEASINC.COM

DESIGNER	MWJ & DT
REVIEWER	BPA 08/23/24
PROJECT ID	82382
SUBSET	83
TOTAL	310
SHEET	P.2469
TOTAL	2696

MODEL: 82382_IP9302 PAPERSIZE: 34x22 (in.) DATE: 3/28/2025 TIME: 9:05:53 AM USER: Asldalal
pw:\\vmb-us-pw.bentley.com:mb-us-pw-03\Documents\Cleveland_OH\01_Projects\000T\District2\82382\400-Engineering\Geotechnical\Sheets\82382_IP9302.dgn

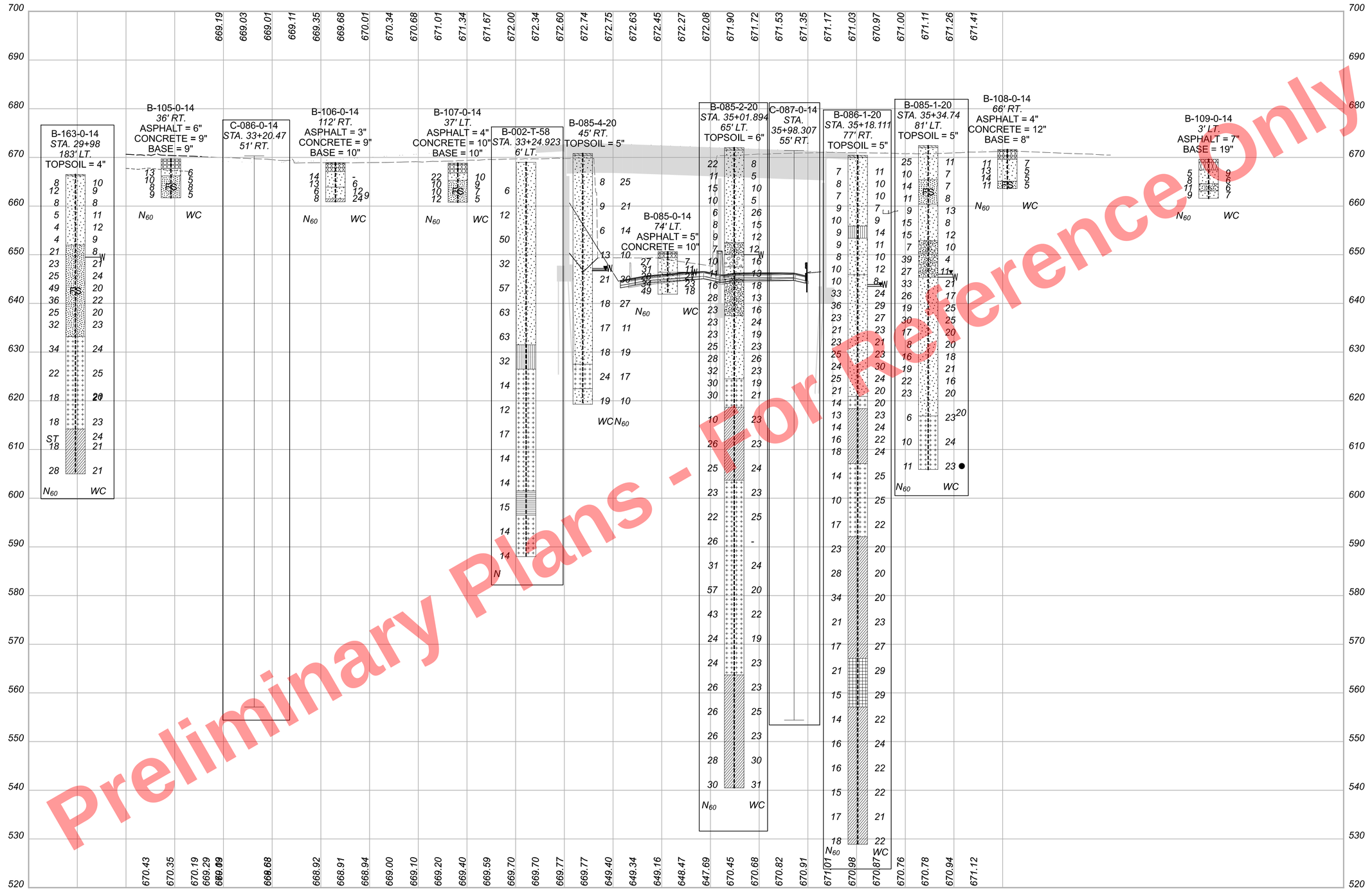

Preliminary Plans - For Reference Only

HORIZONTAL SCALE IN FEET
0 25 50 100

GEOTECHNICAL PROFILE - ROADWAY
STA. 28+50 TO STA. 41+00 EAST 22ND STREET

CUY-90-16.28 (CCG3A)

DESIGN AGENCY
NEAS
National Engineering & Architectural Services Inc.
2800 CORPORATE EXCHANGE DR, SUITE 240
COLUMBUS, OH, 43231
TEL:614.714.0299
WWW.NEASINC.COM

DESIGNER MWJ & DT
REVIEWER BPA 08/23/24
PROJECT ID 82382
SUBSET 84 TOTAL 310
SHEET P.2470 TOTAL 2696

MODEL: 82382_IF9302 PAPERSIZE: 34x22 (in.) DATE: 3/28/2025 TIME: 9:18:11 AM USER: Asiddiqi
pw:\\mb-us-pw.bentley.com:mb-us-pw-03\Documents\Cleveland_OHIO_Projects\ODOT\District2\82382\400-Engineering\Geotechnical\Sheets\82382_IF9302.dgn

Preliminary Plans - For Reference Only

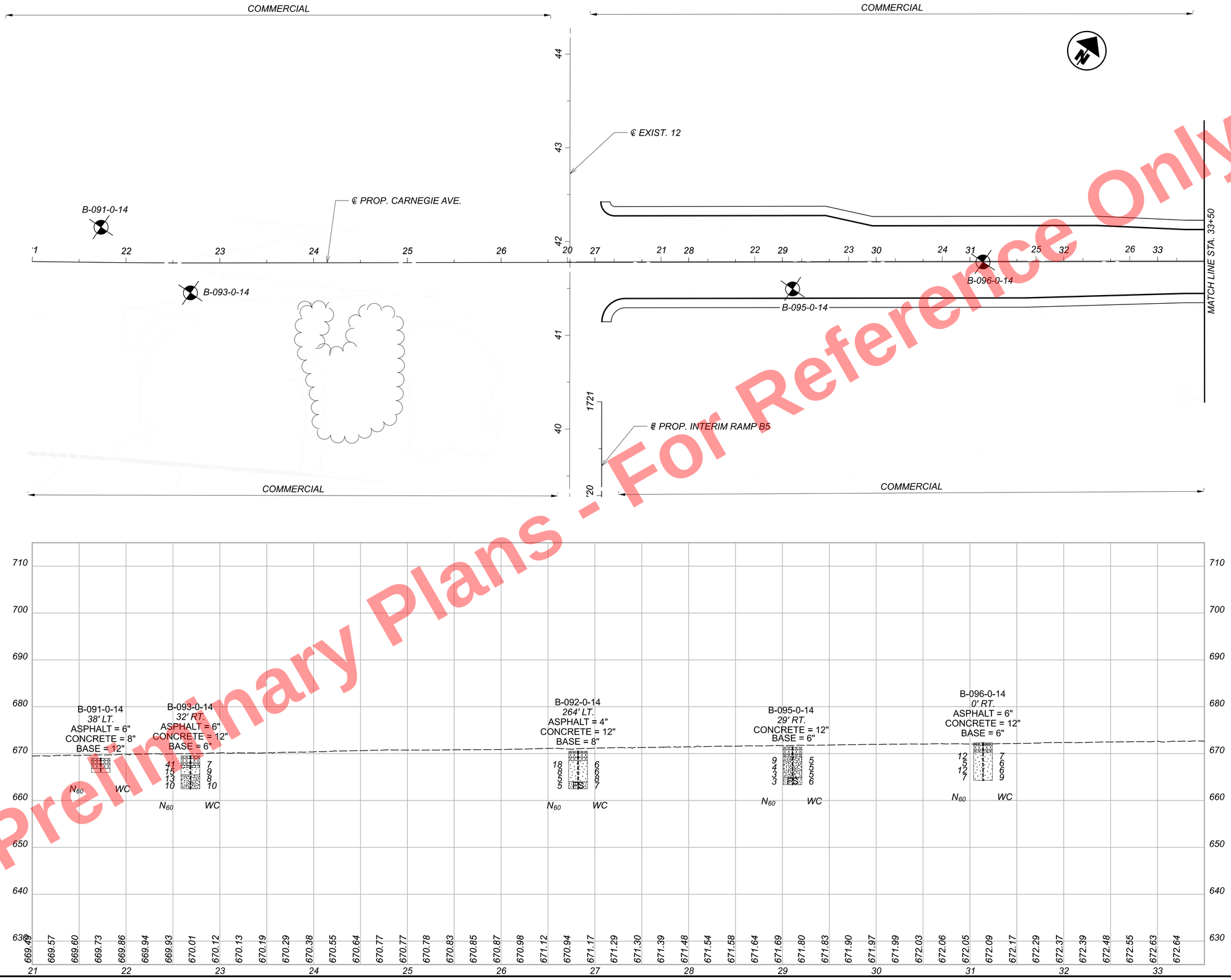

HORIZONTAL SCALE IN FEET
0 25 50 100

GEOTECHNICAL PROFILE - ROADWAY
STA. 21+00 TO STA. 33+50 CARNEGIE AVENUE

CUY-90-16.28 (CCG3A)

MODEL: 82382_IP910I PAPERSIZE: 34x22 (in.) DATE: 3/28/2025 TIME: 9:11:29 AM USER: Asiddiqi
pw:\\mb-us-pw.bentley.com:mb-us-pw-03\Documents\Cleveland_OH\01_Projects\ODOT\District12\82382\400-Engineering\Geotechnical\Sheets\82382_IP910I.dgn

DESIGN AGENCY
NEAS
National Engineering & Architectural Services Inc.
2800 CORPORATE EXCHANGE DR, SUITE 240
COLUMBUS, OH, 43231
TEL:614.714.0299
WWW.NEASINC.COM

DESIGNER: MWJ & DT
REVIEWER: BPA 08/23/24
PROJECT ID: 82382
SUBSET: 85 TOTAL: 310
SHEET: P.2471 TOTAL: 2696

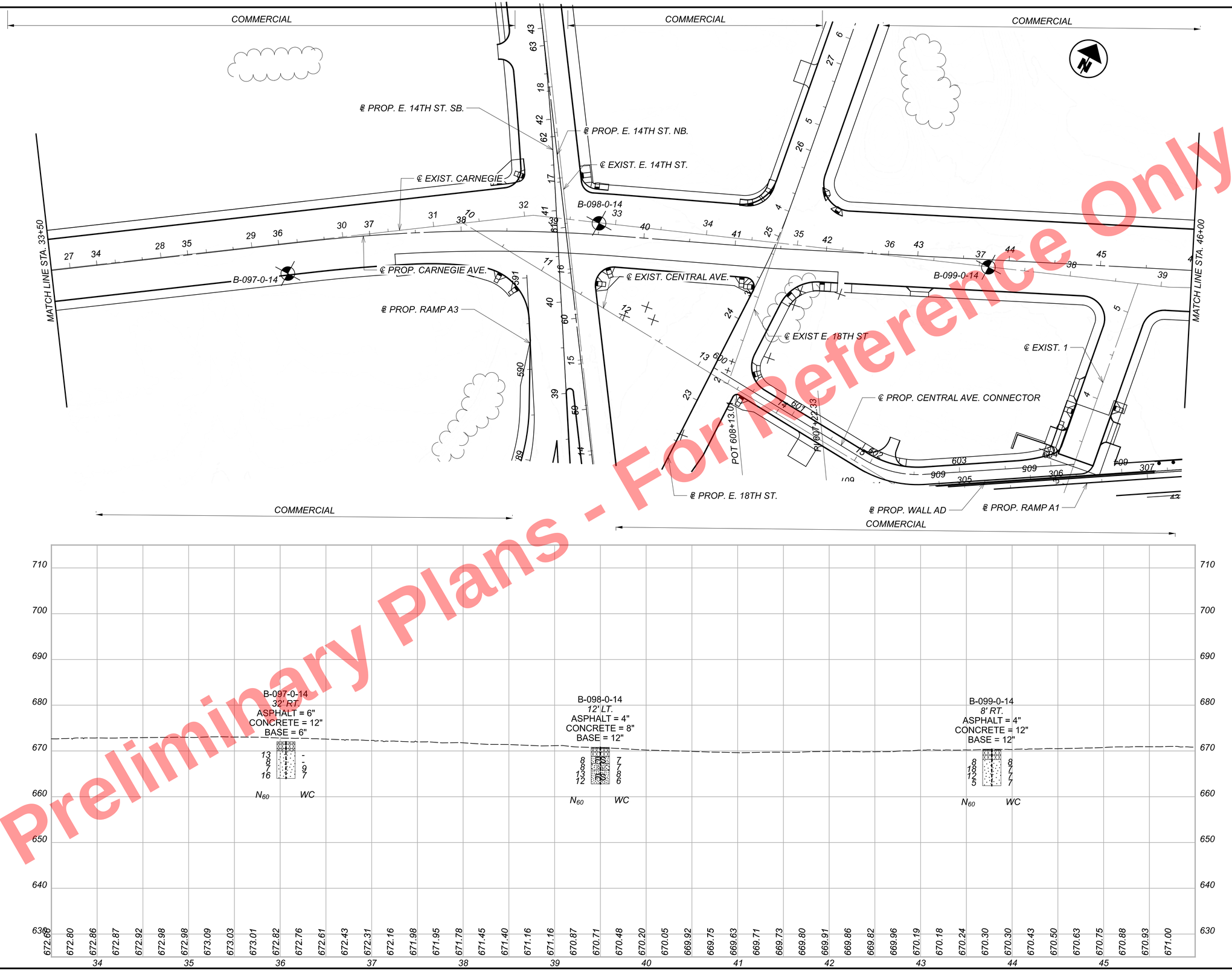

Preliminary Plans - For Reference Only

HORIZONTAL SCALE IN FEET
0 25 50 100

GEOTECHNICAL PROFILE - ROADWAY
STA. 33+50 TO STA. 46+00 CARNEGIE AVENUE

CUY-90-16.28 (CCG3A)

MODEL: 82382_IP9102 PAPERSIZE: 34x22 (in) DATE: 3/28/2025 TIME: 9:11:45 AM USER: AsIddIgI
pw:\\mb-us-pw.bentley.com:mb-us-pw-03\Documents\Cleveland_OH\OI_Projects\ODOT\District2\82382\400-Engineering\Geotechnical\Sheets\82382_IP9102.dgn

DESIGN AGENCY
NEAS
National Engineering & Architectural Services Inc.
2800 CORPORATE EXCHANGE DR, SUITE 240
COLUMBUS, OH, 43231
TEL:614.714.0299
WWW.NEASINC.COM

DESIGNER	MWJ & DT
REVIEWER	BPA 08/23/24
PROJECT ID	82382
SUBSET / TOTAL	86 / 310
SHEET / TOTAL	P.2472 / 2696

INFORMATION FOR B-085-1-20 CAN BE FOUND ON SHEETS 31 & 84
INFORMATION FOR B-085-2-20 CAN BE FOUND ON SHEETS 31 & 84
INFORMATION FOR B-086-1-20 CAN BE FOUND ON SHEETS 23, 31 & 84
INFORMATION FOR B-087-2-20 CAN BE FOUND ON SHEET 33
INFORMATION FOR B-151-0-14 CAN BE FOUND ON SHEETS 23, 31, 35, 93 & 94
INFORMATION FOR B-167-0-14 CAN BE FOUND ON SHEETS 23, 33 & 96
INFORMATION FOR B-168-1-20 CAN BE FOUND ON SHEET 96
INFORMATION FOR B-169-1-20 CAN BE FOUND ON SHEETS 25 & 98
INFORMATION FOR B-169-2-20 CAN BE FOUND ON SHEETS 33 & 96
INFORMATION FOR B-169-3-20 CAN BE FOUND ON SHEET 25
INFORMATION FOR C-087-0-14 CAN BE FOUND ON SHEET 84
INFORMATION FOR C-150-0-14 CAN BE FOUND ON SHEETS 93 & 94
INFORMATION FOR C-168-0-14 CAN BE FOUND ON SHEET 31

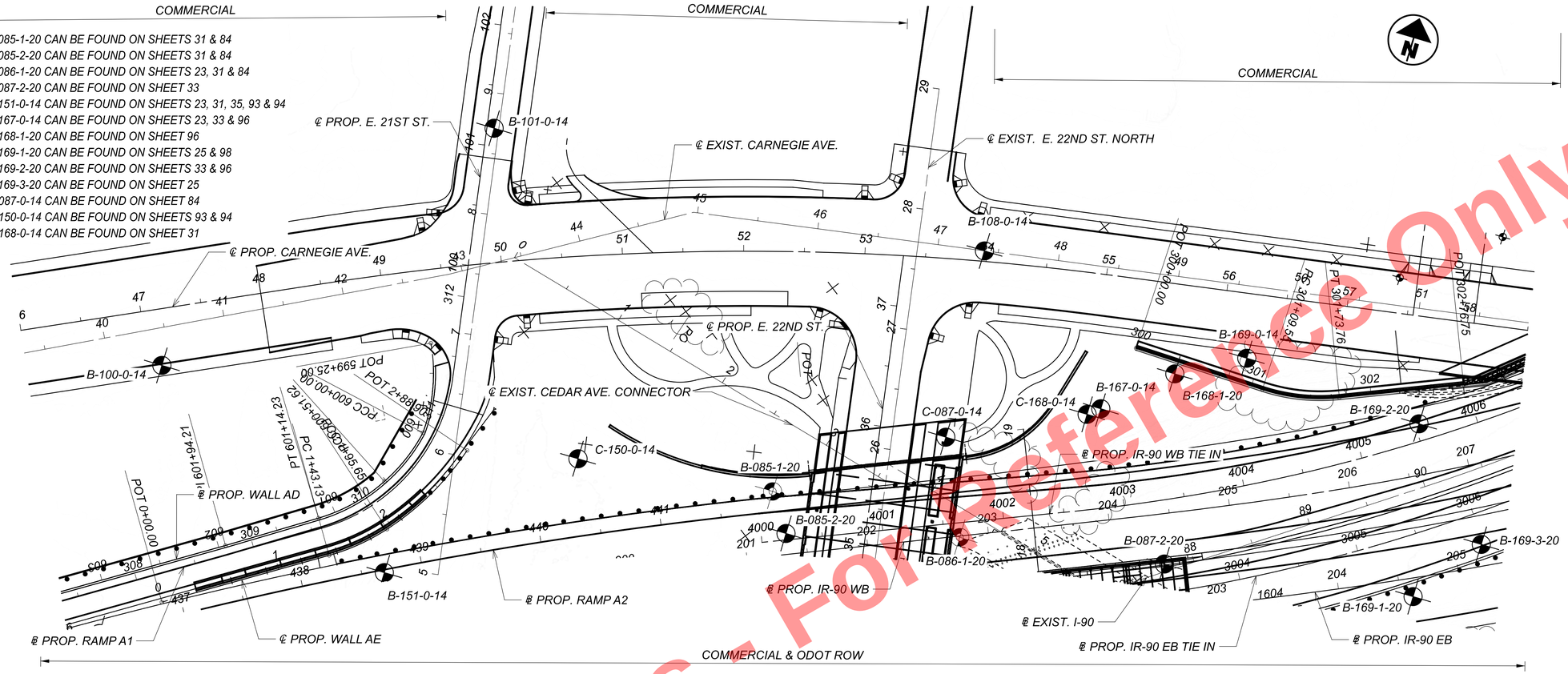

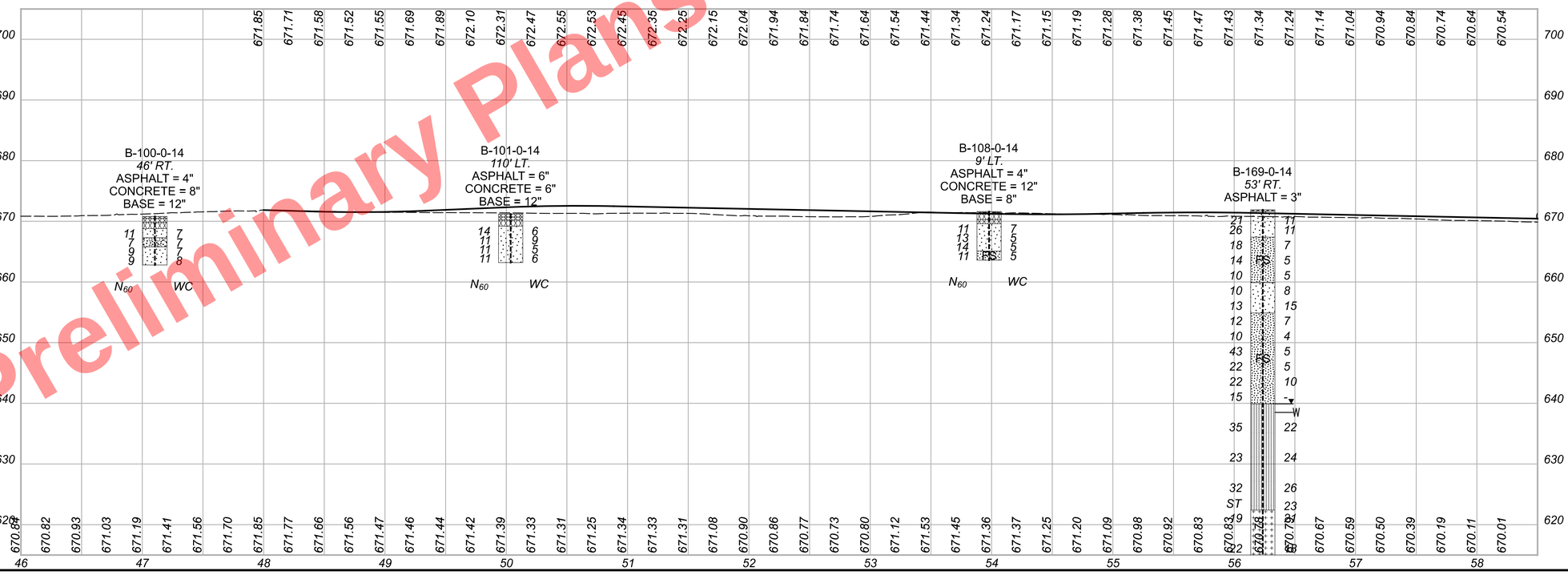

Preliminary Plans - For Reference Only

HORIZONTAL SCALE IN FEET
0 25 50 100

GEOTECHNICAL PROFILE - ROADWAY
STA. 46+00 TO STA. 55+00 CARNEGIE AVENUE

DESIGN AGENCY
NEAS
National Engineering & Architectural Services Inc.
2800 CORPORATE EXCHANGE DR, SUITE 240
COLUMBUS, OH, 43231
TEL:614.714.0299
WWW.NEASINC.COM

DESIGNER: MWJ & DT
REVIEWER: BPA 08/23/24
PROJECT ID: 82382
SUBSET: 87 TOTAL: 310
SHEET: P.2473 TOTAL: 2696

CUY-90-16.28 (CCG3A)

MODEL: 82382_IP9103 PAPERSIZE: 34x22 (in.) DATE: 3/28/2025 TIME: 9:20:06 AM USER: AsIdaIqI
pw:\\mb-us-pw.bentley.com:mb-us-pw-03\Documents\Cleveland_OH\OI_Projects\ODOT\District#2\82382\400-Engineering\Geotechnical\Sheets\82382_IP9103.dgn

INFORMATION FOR B-002-CR-57 CAN BE FOUND ON SHEET 89
INFORMATION FOR B-002-D-06 CAN BE FOUND ON SHEET 98
INFORMATION FOR B-003-D-06 CAN BE FOUND ON SHEET 25
INFORMATION FOR B-004-D-06 CAN BE FOUND ON SHEETS 33 & 100
INFORMATION FOR B-005-D-06 CAN BE FOUND ON SHEETS 33 & 78
INFORMATION FOR B-008-C-57 CAN BE FOUND ON SHEET 98
INFORMATION FOR B-011-CR-56 CAN BE FOUND ON SHEET 89
INFORMATION FOR B-087-2-20 CAN BE FOUND ON SHEET 33
INFORMATION FOR B-087-3-20 CAN BE FOUND ON SHEETS 23 & 98
INFORMATION FOR B-167-0-14 CAN BE FOUND ON SHEETS 23 & 33
INFORMATION FOR B-168-1-20 CAN BE FOUND ON SHEET 96
INFORMATION FOR B-169-0-14 CAN BE FOUND ON SHEETS 25, 33, 87, 89 & 96
INFORMATION FOR B-169-1-20 CAN BE FOUND ON SHEETS 25 & 98
INFORMATION FOR B-169-2-20 CAN BE FOUND ON SHEETS 33 & 96
INFORMATION FOR B-169-3-20 CAN BE FOUND ON SHEET 25
INFORMATION FOR B-169-4-20 CAN BE FOUND ON SHEETS 89 & 100
INFORMATION FOR B-169-5-20 CAN BE FOUND ON SHEET 25
INFORMATION FOR B-169-6-20 CAN BE FOUND ON SHEET 100
INFORMATION FOR B-169-7-20 CAN BE FOUND ON SHEETS 25 & 89
INFORMATION FOR B-169-8-20 CAN BE FOUND ON SHEETS 25 & 89
INFORMATION FOR B-170-0-14 CAN BE FOUND ON SHEET 89
INFORMATION FOR B-170-1-20 CAN BE FOUND ON SHEET 33
INFORMATION FOR B-170-2-20 CAN BE FOUND ON SHEETS 33 & 78
INFORMATION FOR B-170-3-20 CAN BE FOUND ON SHEETS 25, 78, 89 & 102
INFORMATION FOR B-172-0-14 CAN BE FOUND ON SHEETS 25 & 78
INFORMATION FOR C-171-0-14 CAN BE FOUND ON SHEET 25

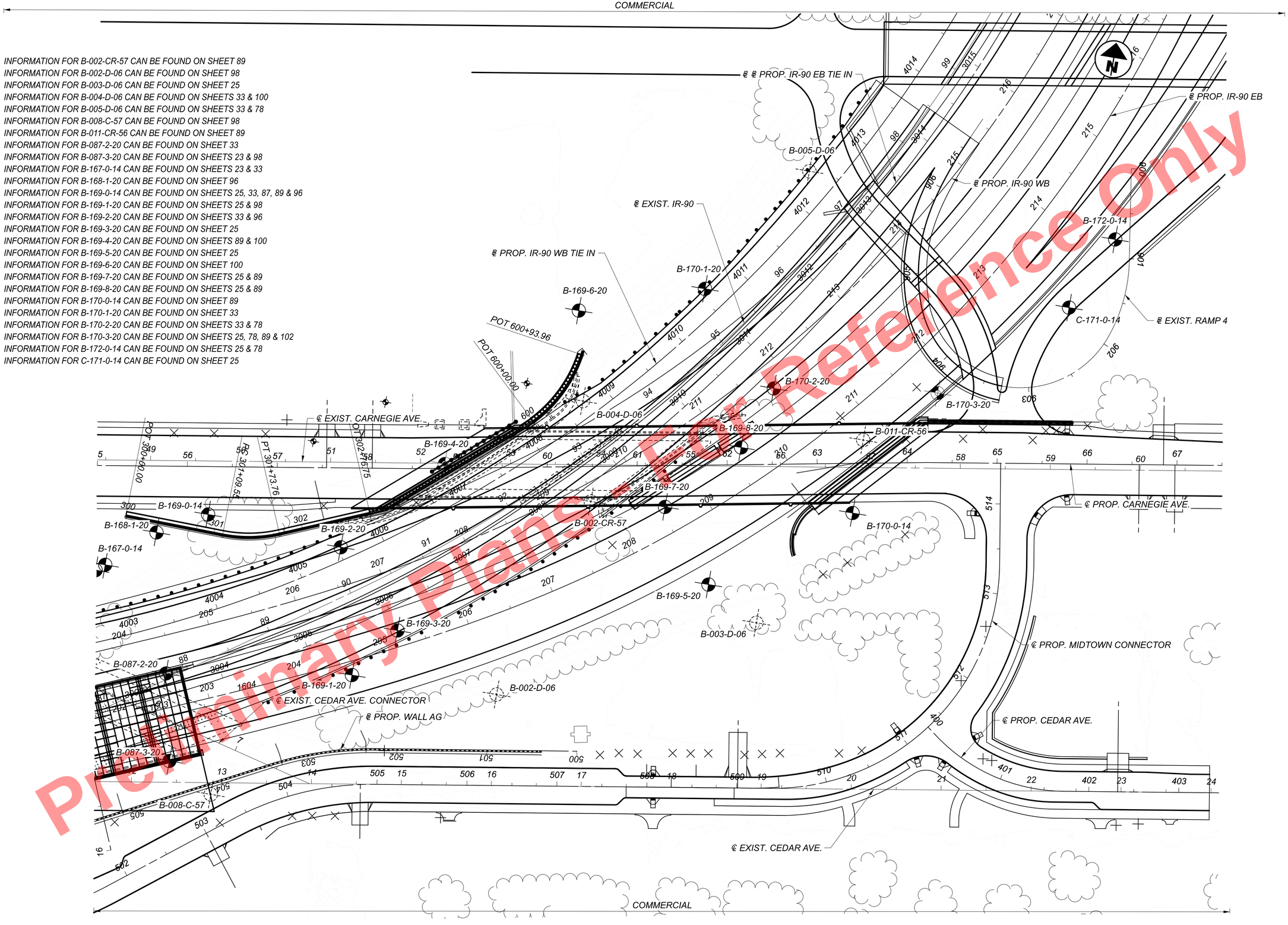

Preliminary Plans
For Reference Only

HORIZONTAL SCALE IN FEET
0 25 50 100

GEOTECHNICAL PROFILE - ROADWAY
STA. 55+00 TO STA. 67+50 CARNEGIE AVENUE

CUY-90-16.28 (CCG3A)

MODEL: 82382_IP9104 PAPERSIZE: 34x22 (in.) DATE: 3/28/2025 TIME: 9:22:25 AM USER: Asiddiqi
pw:\\mb-us-pw.bentley.com:mb-us-pw-03\Documents\Cleveland_OH\DOT_Projects\DOT\District2\82382\400-Engineering\Geotechnical\Sheets\82382_IP9104.dgn

DESIGN AGENCY
NEAS
National Engineering & Architectural Services Inc.
2800 CORPORATE EXCHANGE DR,
SUITE 240
COLUMBUS, OH,
43231
TEL:614.714.0299
WWW.NEASINC.COM

DESIGNER
MWJ & DT
REVIEWER
BPA 08/23/24
PROJECT ID
82382
SUBSET 88 TOTAL 310
SHEET P.2474 TOTAL 2696

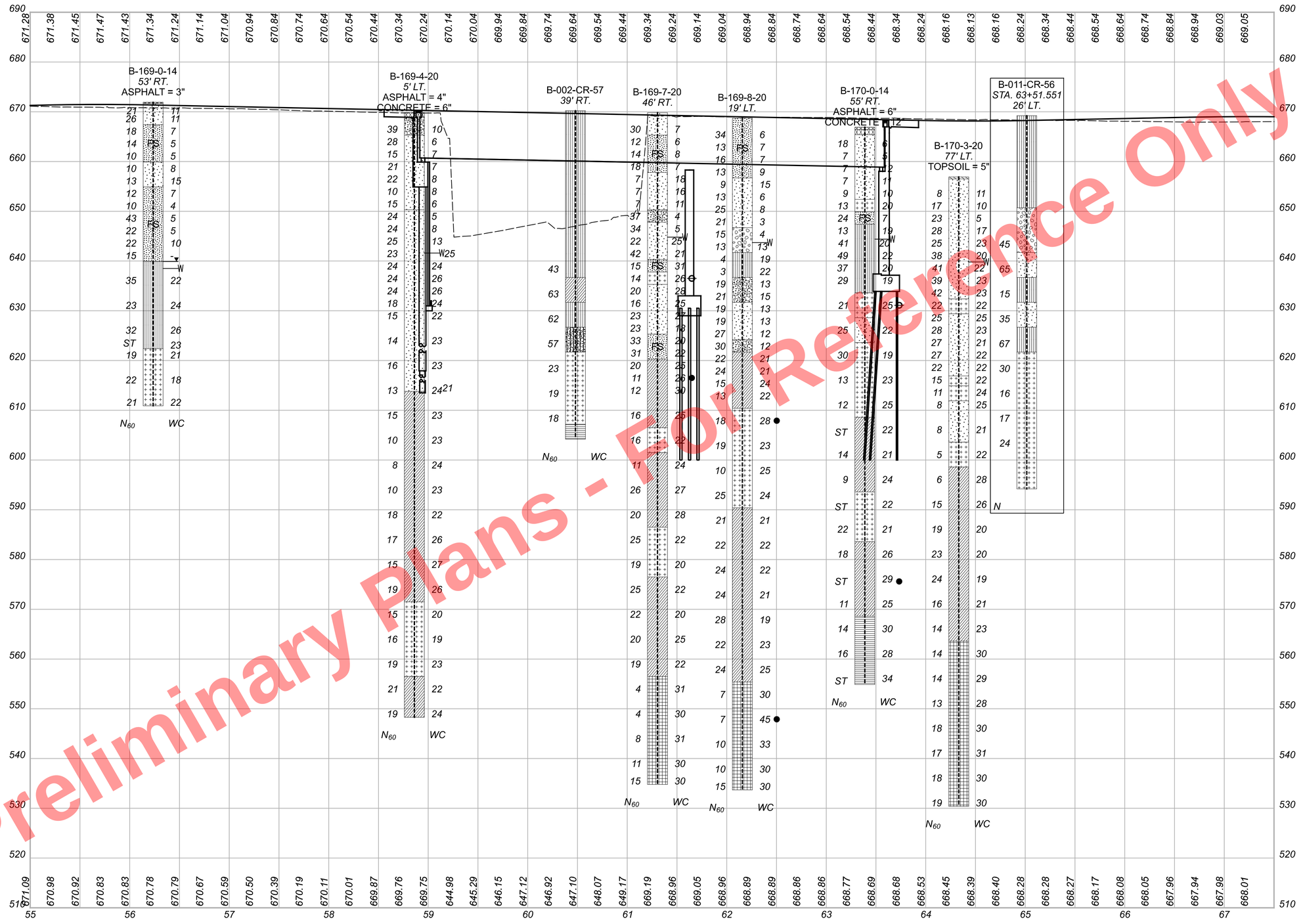

Preliminary Plans - For Reference Only

HORIZONTAL SCALE IN FEET
0 25 50 100

GEOTECHNICAL PROFILE - ROADWAY
STA. 55+00 TO STA. 67+50 CARNEGIE AVENUE

CUY-90-16.28 (CCG3A)

MODEL: 82382_IF9I04 PAPERSIZE: 34x22 (in) DATE: 3/28/2025 TIME: 9:39 AM USER: Asiddiqi
pw:\\mb-us-pw.bentley.com:mb-us-pw-03\Documents\Cleveland_OH\OiL_Projects\ODOT\District12\82382\400-Engineering\Geotechnical\Sheets\82382_IF9I04.dgn

DESIGN AGENCY
NEAS
National Engineering & Architectural Services Inc.
2800 CORPORATE EXCHANGE DR, SUITE 240
COLUMBUS, OH, 43231
TEL:614.714.0299
WWW.NEASINC.COM

DESIGNER MWJ & DT
REVIEWER BPA 08/23/24
PROJECT ID 82382
SUBSET 89 | TOTAL 310
SHEET P.2475 | TOTAL 2696

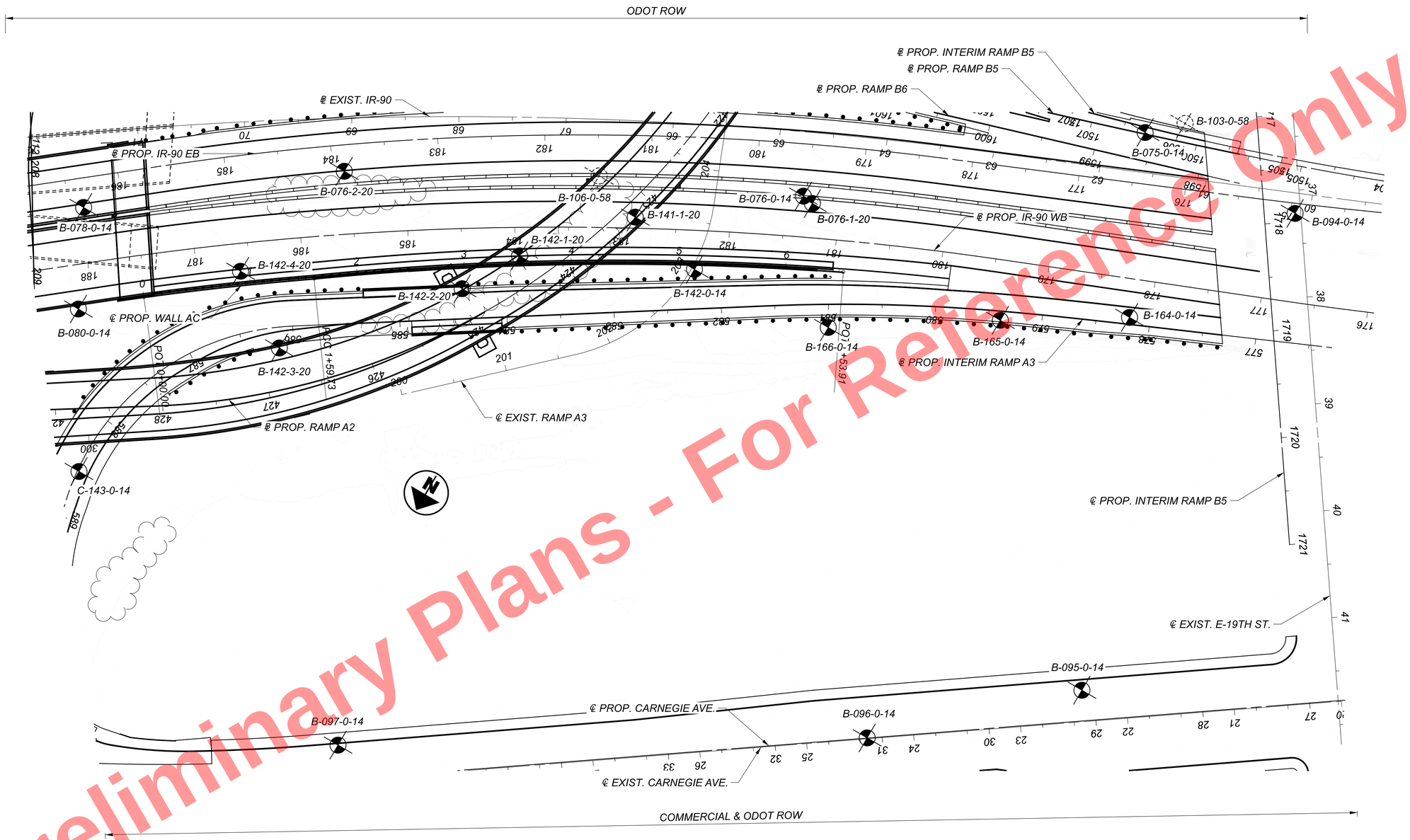

INFORMATION FOR B-075-0-14 CAN BE FOUND ON SHEETS 19 & 27
INFORMATION FOR B-076-0-14 CAN BE FOUND ON SHEETS 19 & 27
INFORMATION FOR B-076-1-20 CAN BE FOUND ON SHEET 27
INFORMATION FOR B-076-2-20 CAN BE FOUND ON SHEET 19
INFORMATION FOR B-078-0-14 CAN BE FOUND ON SHEETS 21, 29, 70, 72 & 74
INFORMATION FOR B-080-0-14 CAN BE FOUND ON SHEETS 29, 51, 70, 72, 74 & 91
INFORMATION FOR B-094-0-14 CAN BE FOUND ON SHEET 19
INFORMATION FOR B-095-0-14 CAN BE FOUND ON SHEET 85
INFORMATION FOR B-096-0-14 CAN BE FOUND ON SHEET 85
INFORMATION FOR B-097-0-14 CAN BE FOUND ON SHEET 86
INFORMATION FOR B-103-0-58 CAN BE FOUND ON SHEET 53
INFORMATION FOR B-106-0-58 CAN BE FOUND ON SHEET 45

INFORMATION FOR B-141-1-20 CAN BE FOUND ON SHEET 45
INFORMATION FOR B-142-0-14 CAN BE FOUND ON SHEETS 51 & 91
INFORMATION FOR B-142-1-20 CAN BE FOUND ON SHEETS 45 & 91
INFORMATION FOR B-142-2-20 CAN BE FOUND ON SHEETS 45, 51 & 91
INFORMATION FOR B-142-3-20 CAN BE FOUND ON SHEETS 47 & 51
INFORMATION FOR B-142-4-20 CAN BE FOUND ON SHEETS 29 & 91
INFORMATION FOR B-164-0-14 CAN BE FOUND ON SHEETS 27 & 51
INFORMATION FOR B-165-0-14 CAN BE FOUND ON SHEETS 27 & 51
INFORMATION FOR B-166-0-14 CAN BE FOUND ON SHEETS 51 & 91
INFORMATION FOR C-143-0-14 CAN BE FOUND ON SHEET 47

Preliminary Plans - For Reference Only

HORIZONTAL SCALE IN FEET
0 25 50 100

GEOTECHNICAL PROFILE - ROADWAY
BEGIN TO END WALL AC

CUY-90-16.28 (CCG3A)

MODEL: 82382_ZP920i PAPERSIZE: 34x22 (in.) DATE: 3/28/2025 TIME: 9:53:41 AM USER: Asiddiqi
pw:\\vmb-us-pw.bentley.com\vmb-us-pw-03\Documents\Cleveland_OH\01_Projects\ODOT\District2\82382\400-Engineering\Geotechnical\Sheets\82382_ZP920i.dgn

DESIGN AGENCY
NEAS
National Engineering & Architectural Services Inc.
2800 CORPORATE EXCHANGE DR, SUITE 240
COLUMBUS, OH, 43231
TEL:614.714.0299
WWW.NEASINC.COM

DESIGNER	MWJ & DT
REVIEWER	BPA 08/23/24
PROJECT ID	82382
SUBSET / TOTAL	90 / 310
SHEET / TOTAL	P.2476 / 2696

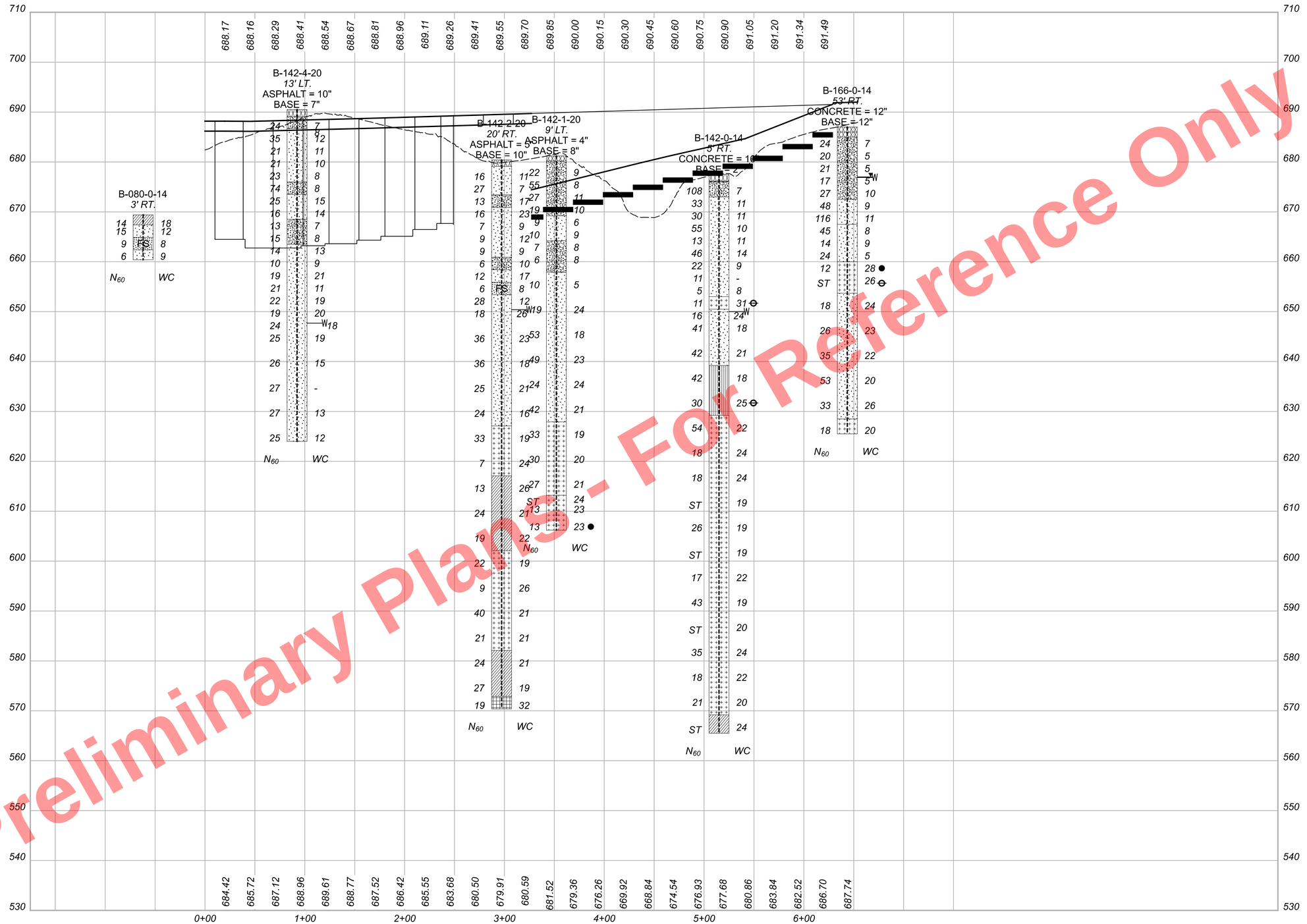

Preliminary Plans - Not For Reference Only

HORIZONTAL SCALE IN FEET
0 25 50 100

GEOTECHNICAL PROFILE - ROADWAY
BEGIN TO END WALL AC

DESIGN AGENCY
NEAS
National Engineering & Architectural Services Inc.
2800 CORPORATE EXCHANGE DR, SUITE 240
COLUMBUS, OH, 43231
TEL:614.714.0299
WWW.NEASINC.COM

DESIGNER
MWJ & DT

REVIEWER
BPA 08/23/24

PROJECT ID
82382

SUBSET	TOTAL
91	310

SHEET	TOTAL
P.2477	2696

CUY-90-16.28 (CCG3A)

MODEL: 82382_ZF930l PAPERSIZE: 34x22 (in.) DATE: 3/28/2025 TIME: 9:14:27 AM USER: AsldAql
pw:\\mb-us-pw.bentley.com:mb-us-pw-03\Documents\Cleveland_OH\01_Projects\ODOT\District2\82382\400-Engineering\Geotechnical\Sheets\82382_ZF920l.dgn

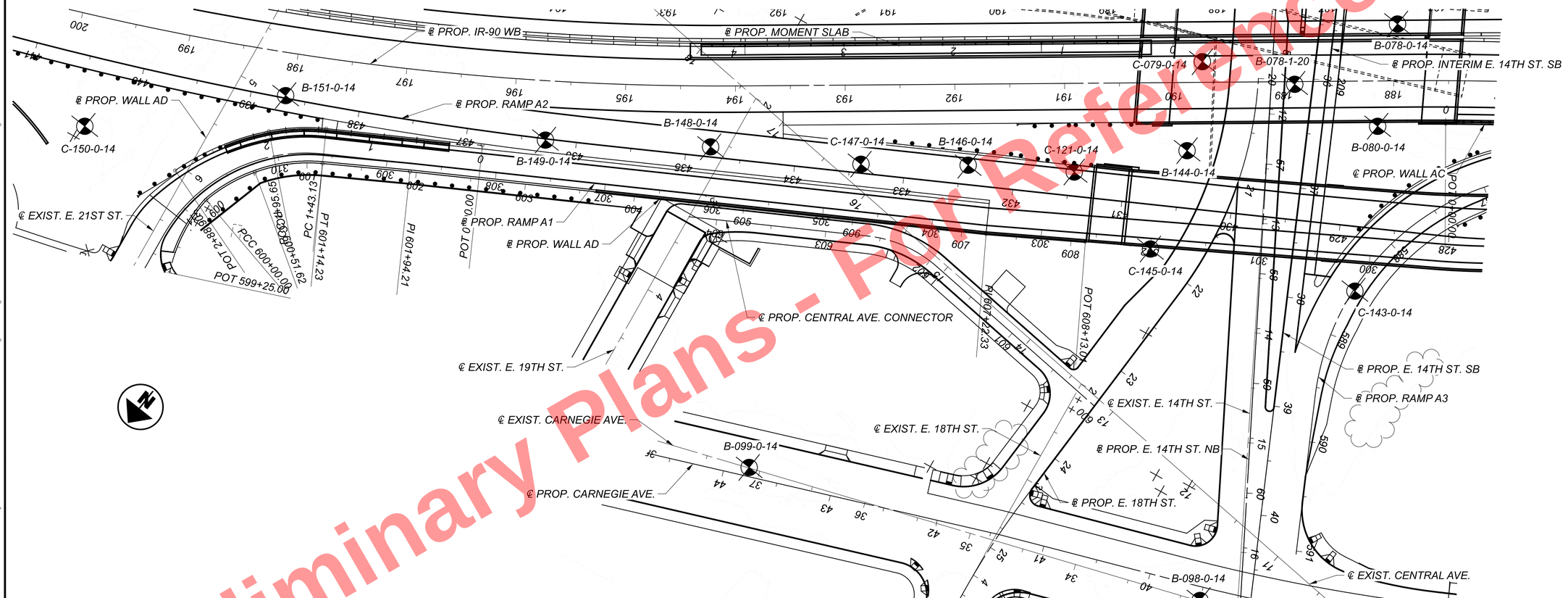

INFORMATION FOR B-078-0-14 CAN BE FOUND ON SHEETS 21, 29, 70, 72 & 74
INFORMATION FOR B-078-1-20 CAN BE FOUND ON SHEETS 21, 29, 70, 72, 74 & 80
INFORMATION FOR B-080-0-14 CAN BE FOUND ON SHEETS 29, 51, 70, 72, 74 & 80
INFORMATION FOR B-098-0-14 CAN BE FOUND ON SHEETS 70, 74, 80 & 86
INFORMATION FOR B-099-0-14 CAN BE FOUND ON SHEET 86
INFORMATION FOR B-144-0-14 CAN BE FOUND ON SHEETS 21, 29, 49, 70 & 80
INFORMATION FOR B-146-0-14 CAN BE FOUND ON SHEETS 93 & 114
INFORMATION FOR B-148-0-14 CAN BE FOUND ON SHEETS 23, 31, 35, 93 & 114
INFORMATION FOR B-149-0-14 CAN BE FOUND ON SHEETS 23, 31, 35, 93 & 94
INFORMATION FOR B-151-0-14 CAN BE FOUND ON SHEETS 23, 31, 35, 93 & 94
INFORMATION FOR C-079-0-14 CAN BE FOUND ON SHEETS 21, 29 & 31
INFORMATION FOR C-121-0-14 CAN BE FOUND ON SHEET 93
INFORMATION FOR C-143-0-14 CAN BE FOUND ON SHEET 47
INFORMATION FOR C-145-0-14 CAN BE FOUND ON SHEETS 80 & 93
INFORMATION FOR C-147-0-14 CAN BE FOUND ON SHEET 93
INFORMATION FOR C-150-0-14 CAN BE FOUND ON SHEETS 93 & 94

Preliminary Plans - For Reference Only

HORIZONTAL SCALE IN FEET
0 25 50 100

GEOTECHNICAL PROFILE - ROADWAY
BEGIN TO END WALL AD

CUY-90-16.28 (CCG3A)

MODEL: 82382_ZP930I PAPERSIZE: 34x22 (in.) DATE: 3/28/2025 TIME: 9:45:51 AM USER: AsiddiqI
pw:\\vmb-us-pw.bentley.com:vmb-us-pw-03\Documents\Cleveland_OHIO\Projects\ODOT\District12\82382\400-Engineering\Geotechnical\Sheets\82382_ZP930I.dgn

DESIGN AGENCY
NEAS
National Engineering & Architectural Services Inc.
2800 CORPORATE EXCHANGE DR, SUITE 240
COLUMBUS, OH, 43231
TEL:614.714.0299
WWW.NEASINC.COM

DESIGNER	MWJ & DT
REVIEWER	BPA 08/23/24
PROJECT ID	82382
SUBSET / TOTAL	92 / 310
SHEET / TOTAL	P.2478 / 2696

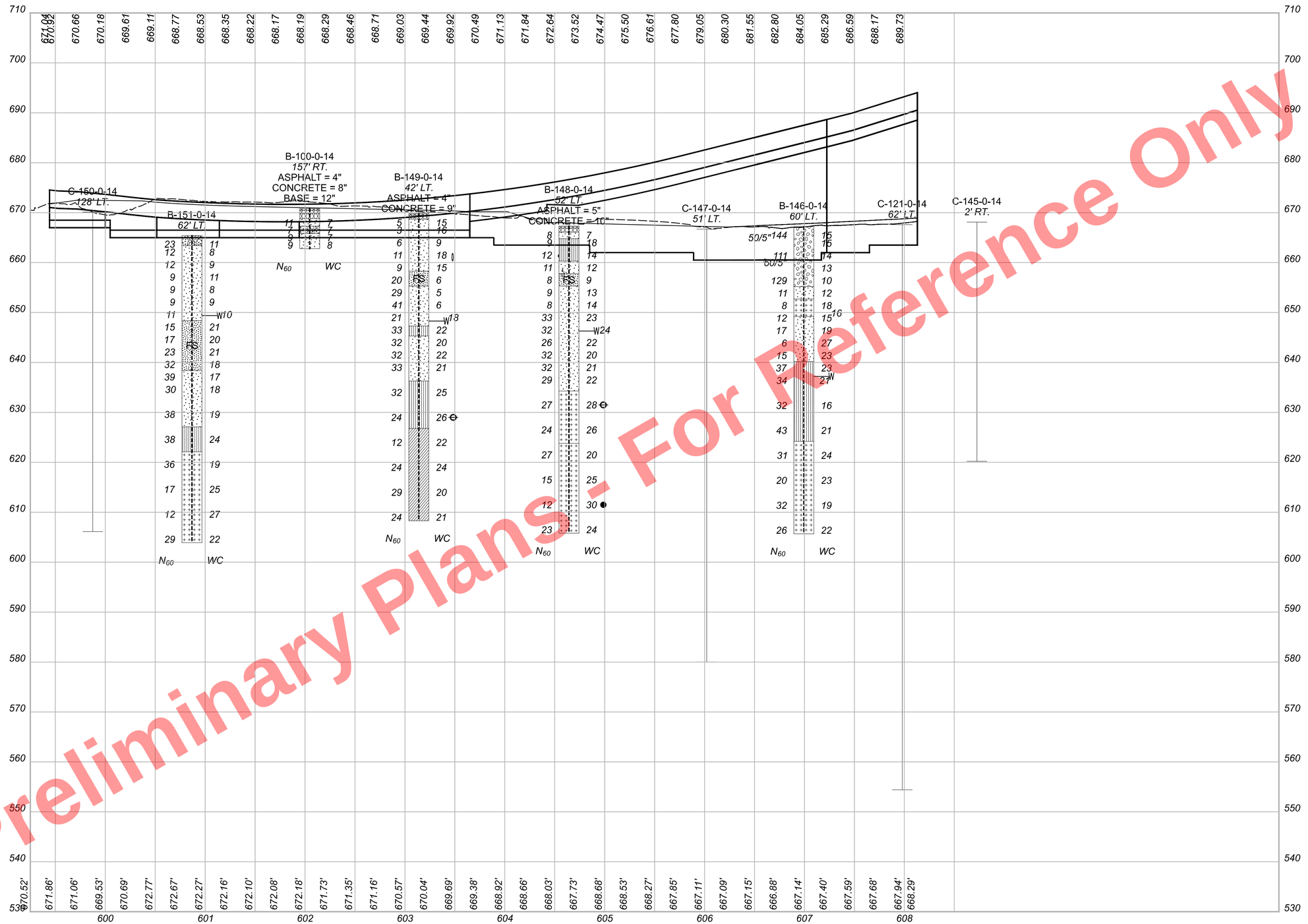

Preliminary Plans - Not For Reference Only

HORIZONTAL SCALE IN FEET
0 25 50 100

GEOTECHNICAL PROFILE - ROADWAY
BEGIN TO END WALL AD

DESIGN AGENCY
NEAS
National Engineering & Architectural Services Inc.
2800 CORPORATE EXCHANGE DR, SUITE 240
COLUMBUS, OH, 43231
TEL:614.714.0299
WWW.NEASINC.COM

DESIGNER
MWJ & DT

REVIEWER
BPA 08/23/24

PROJECT ID
82382

SUBSET	TOTAL
93	310

SHEET	TOTAL
P.2479	2696

CUY-90-16.28 (CCG3A)

MODEL: 82382_ZF930I PAPERSIZE: 34x22 (in.) DATE: 3/28/2025 TIME: 9:15:33 AM USER: AsIddIqI
pw:\\mb-us-pw.bentley.com:mb-us-pw-03\Documents\Cleveland_OH\DL_Projects\ODOT\District2\82382\400-Engineering\Geotechnical\Sheets\82382_ZF930I.dgn

Preliminary Plans - For Reference Only

GEOTECHNICAL PROFILE - ROADWAY
BEGIN TO END WALL AE

HORIZONTAL SCALE IN FEET
0 10 20 40

CUY-90-16.28 (CCG3A)

MODEL: 82382_ZP940I PAPERSIZE: 34x22 (in.) DATE: 3/28/2025 TIME: 9:15:57 AM USER: Asiddiq
pw:\\mb-us-pw.bentley.com:mb-us-pw-03\Documents\Cleveland_OH\01_Projects\0DOT\District2\82382\400-Engineering\Geotechnical\Sheets\82382_ZP940I.dgn

COMMERCIAL

℄ EXIST. CARNEGIE AVE.

℄ PROP. WALL AD

℄ EXIST. E. 21ST ST.

℄ PROP. WALL AE

℄ PROP. RAMP A2

℄ PROP. IR-90 WB

POT 599+25

POT 0+00.00

PI 601+94.21

PT 601+14.23

PCC 600+51.62

PCC 600+00.00

PCC 1+98.65

POT 2+88.90

B-149-0-14

B-100-0-14

B-151-0-14

C-150-0-14

B-149-0-14
11' RT.
ASPHALT = 4"
CONCRETE = 9"

B-100-0-14
188' LT.
ASPHALT = 4"
CONCRETE = 8"
BASE = 12"

B-151-0-14
30' RT.

C-150-0-14
80' RT.

N_{60} WC

DESIGN AGENCY
NEAS
National Engineering & Architectural Services Inc.
2800 CORPORATE EXCHANGE DR, SUITE 240
COLUMBUS, OH, 43231
TEL:614.714.0299
WWW.NEASINC.COM

DESIGNER MWJ & DT

REVIEWER BPA 08/23/24

PROJECT ID 82382

SUBSET 94 TOTAL 310

SHEET P.2480 TOTAL 2696

INFORMATION FOR B-087-2-20 CAN BE FOUND ON SHEET 33
INFORMATION FOR B-168-1-20 CAN BE FOUND ON SHEET 96
INFORMATION FOR B-169-0-14 CAN BE FOUND ON SHEETS 25, 33, 87, 89 & 96
INFORMATION FOR B-169-1-20 CAN BE FOUND ON SHEETS 25 & 98
INFORMATION FOR B-169-2-20 CAN BE FOUND ON SHEETS 33 & 96
INFORMATION FOR B-169-3-20 CAN BE FOUND ON SHEET 25
INFORMATION FOR B-169-4-20 CAN BE FOUND ON SHEETS 89 & 100

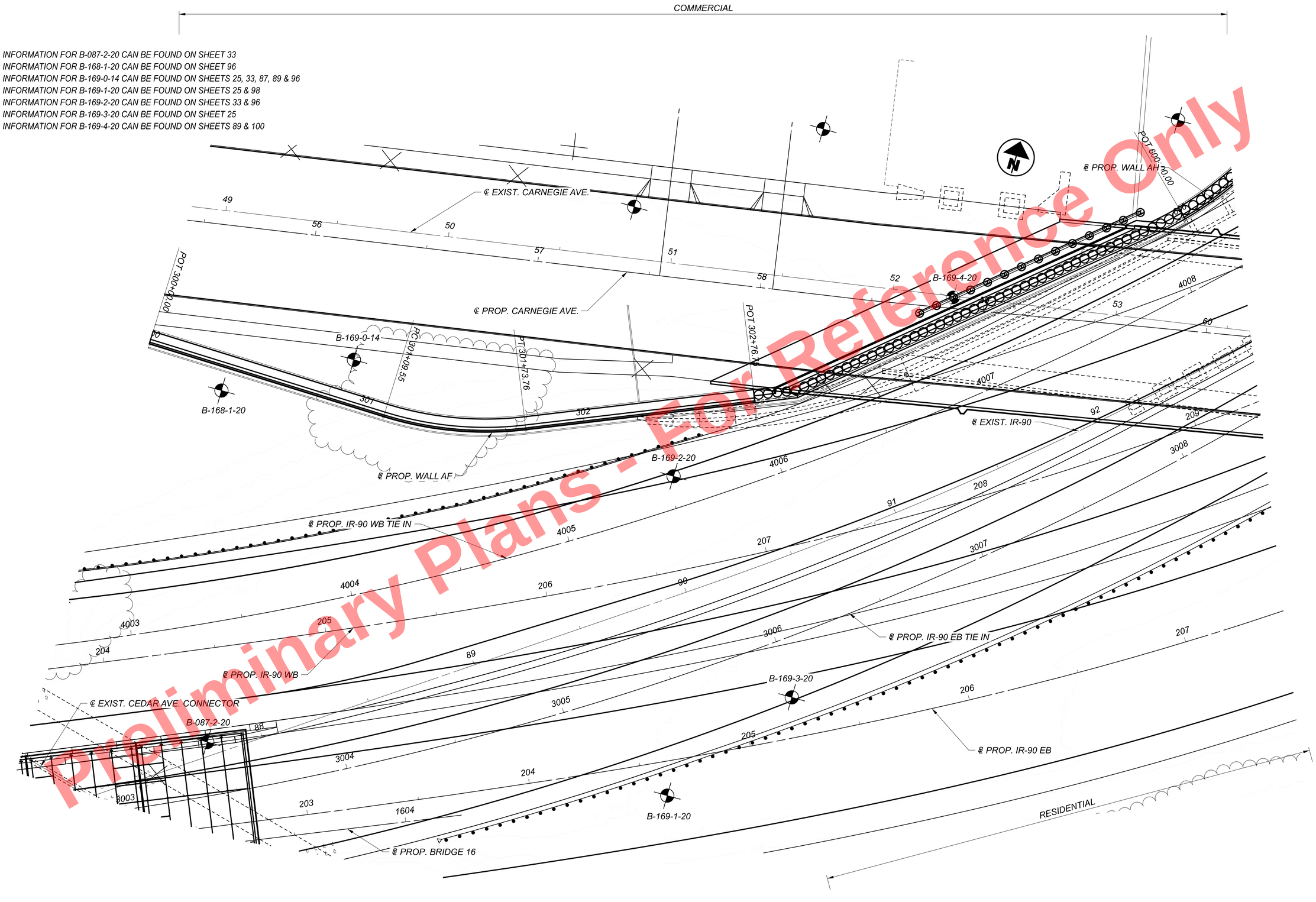

For Reference Only
Preliminary Plans - Not

HORIZONTAL SCALE IN FEET
0 10 20 40

GEOTECHNICAL PROFILE - ROADWAY
BEGIN TO END WALL AF

CUY-90-16.28 (CCG3A)

MODEL: 82382_ZP950I PAPERSIZE: 34x22 (in.) DATE: 3/28/2025 TIME: 9:16:14 AM USER: Asiddiqi
pw:\\mb-us-pw.bentley.com:mb-us-pw-03\Documents\Cleveland_OH\01_Projects\ODOT\District2\82382\400-Engineering\Geotechnical\Sheets\82382_ZP950I.dgn

DESIGN AGENCY
NEAS
National Engineering & Architectural Services Inc.
2800 CORPORATE EXCHANGE DR, SUITE 240
COLUMBUS, OH, 43231
TEL:614.714.0299
WWW.NEASINC.COM

DESIGNER	MWJ & DT
REVIEWER	BPA 08/23/24
PROJECT ID	82382
SUBSET / TOTAL	95 / 310
SHEET / TOTAL	P.2481 / 2696

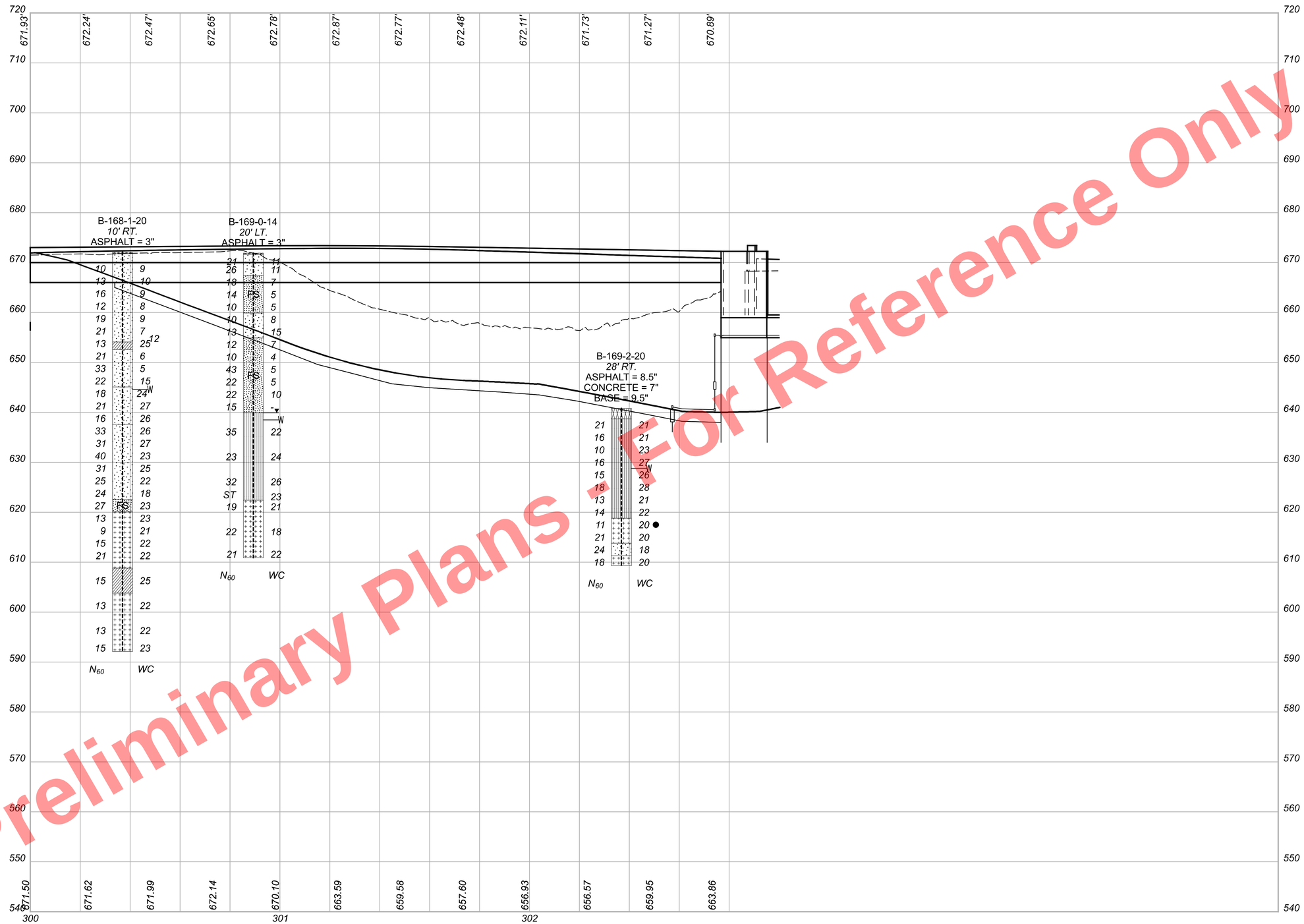

Preliminary Plans - Not For Reference Only

HORIZONTAL SCALE IN FEET
0 10 20 40

GEOTECHNICAL PROFILE - ROADWAY
BEGIN TO END WALL AF

CUY-90-16.28 (CCG3A)

MODEL: 82382_ZF950I PAPERSIZE: 34x22 (In.) DATE: 3/28/2025 TIME: 9:17:07 AM USER: AsIddIqI
pw:\\mb-us-pw.bentley.com:mb-us-pw-03\Documents\Cleveland_OH\DL_Projects\ODOT\District2\82382\400-Engineering\Geotechnical\Sheets\82382_ZF950I.dgn

DESIGN AGENCY
NEAS
National Engineering & Architectural Services Inc.
2800 CORPORATE EXCHANGE DR, SUITE 240
COLUMBUS, OH, 43231
TEL:614.714.0299
WWW.NEASINC.COM

DESIGNER
MWJ & DT

REVIEWER
BPA 08/23/24

PROJECT ID
82382

SUBSET	TOTAL
96	310

SHEET	TOTAL
P.2482	2696

INFORMATION FOR B-001-D-60 CAN BE FOUND ON SHEET 98
INFORMATION FOR B-002-D-06 CAN BE FOUND ON SHEET 98
INFORMATION FOR B-002-T-58 CAN BE FOUND ON SHEET 84
INFORMATION FOR B-008-C-57 CAN BE FOUND ON SHEET 98
INFORMATION FOR B-085-0-14 CAN BE FOUND ON SHEETS 23, 31 & 84
INFORMATION FOR B-085-1-20 CAN BE FOUND ON SHEETS 31 & 84
INFORMATION FOR B-085-2-20 CAN BE FOUND ON SHEETS 31 & 84
INFORMATION FOR B-085-3-20 CAN BE FOUND ON SHEET 55
INFORMATION FOR B-085-4-20 CAN BE FOUND ON SHEETS 84 & 98
INFORMATION FOR B-086-1-20 CAN BE FOUND ON SHEETS 23, 31 & 84
INFORMATION FOR B-087-1-20 CAN BE FOUND ON SHEET 98
INFORMATION FOR B-087-2-20 CAN BE FOUND ON SHEET 33
INFORMATION FOR B-107-0-14 CAN BE FOUND ON SHEET 84
INFORMATION FOR B-167-0-14 CAN BE FOUND ON SHEETS 23 & 33
INFORMATION FOR B-169-1-20 CAN BE FOUND ON SHEETS 25 & 98
INFORMATION FOR B-169-2-20 CAN BE FOUND ON SHEETS 33 & 96
INFORMATION FOR B-169-3-20 CAN BE FOUND ON SHEET 25
INFORMATION FOR C-086-0-14 CAN BE FOUND ON SHEETS 84 & 98
INFORMATION FOR C-087-0-14 CAN BE FOUND ON SHEET 84
INFORMATION FOR C-168-0-14 CAN BE FOUND ON SHEET 31

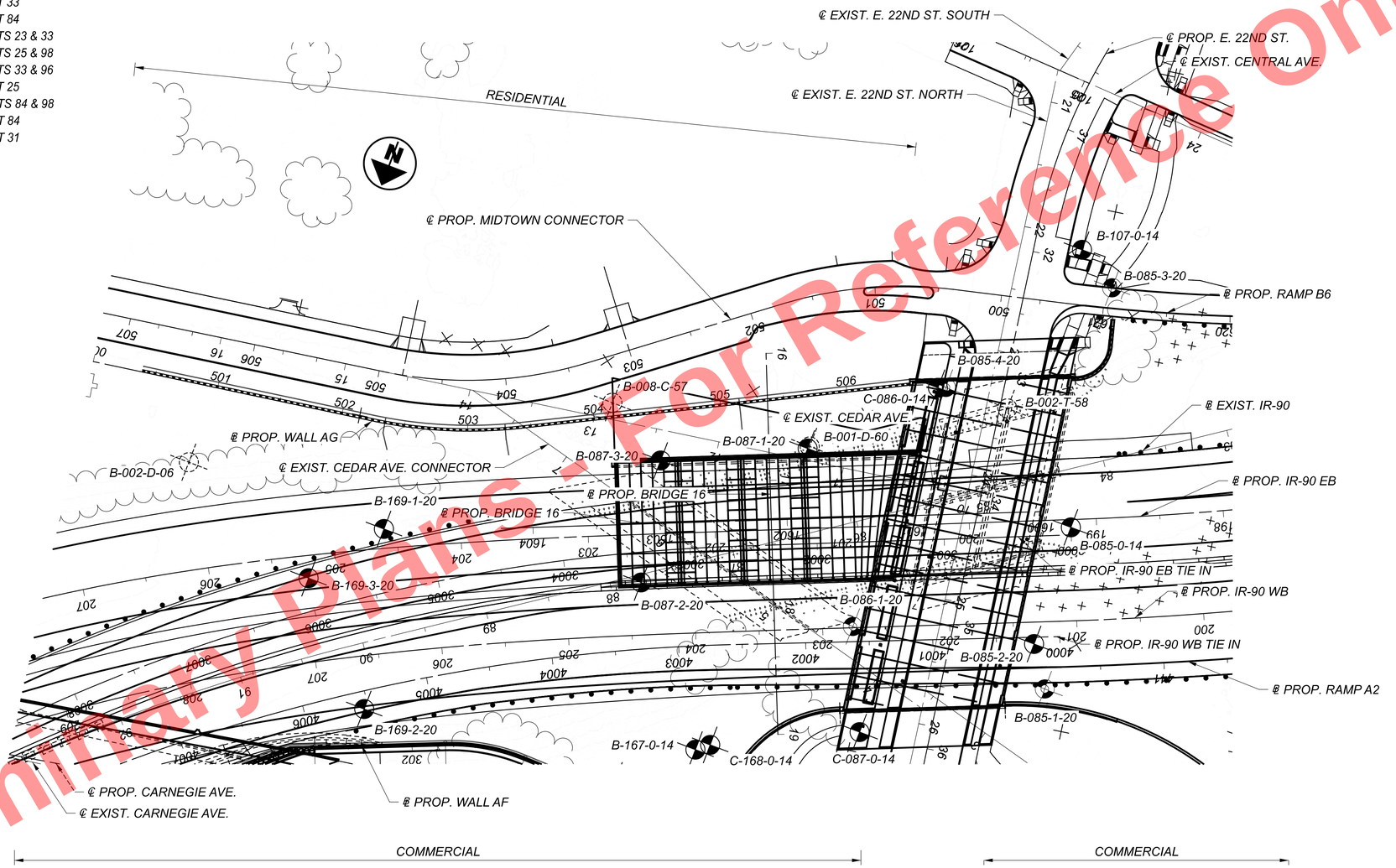

Preliminary Plans - Not For Reference Only

HORIZONTAL SCALE IN FEET
0 25 50 100

GEOTECHNICAL PROFILE - ROADWAY
BEGIN TO END WALL AG

DESIGN AGENCY
NEAS
National Engineering & Architectural Services Inc.
2800 CORPORATE EXCHANGE DR, SUITE 240
COLUMBUS, OH, 43231
TEL:614.714.0299
WWW.NEASINC.COM

DESIGNER MWJ & DT
REVIEWER BPA 08/23/24
PROJECT ID 82382
SUBSET 97 TOTAL 310
SHEET P.2483 TOTAL 2696

CUY-90-16.28 (CCG3A)

MODEL: 82382_ZP960I PAPERSIZE: 34x22 (in.) DATE: 3/28/2025 TIME: 9:11:28 AM USER: Asiddiqi
pw:\\mb-us-pw.bentley.com:mb-us-pw-03\Documents\Cleveland.OH\OiL_Projects\ODOT\District2\82382\400-Engineering\Geotechnical\Sheets\82382_ZP960i.dgn

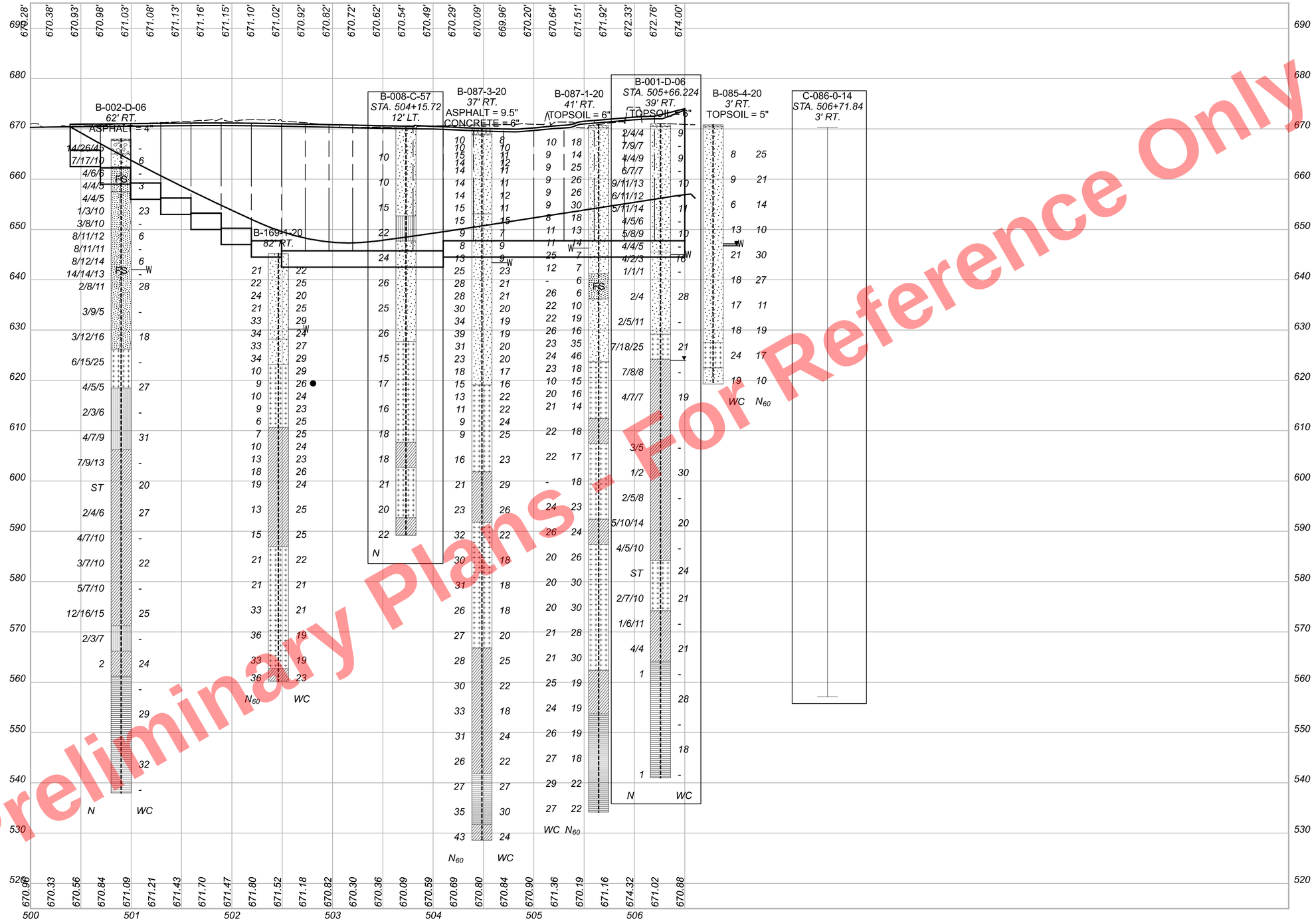

Preliminary Plans - For Reference Only

HORIZONTAL SCALE IN FEET
0 25 50 100

GEOTECHNICAL PROFILE - ROADWAY
BEGIN TO END WALL AG

CUY-90-16.28 (CCG3A)

MODEL: 82382_ZF960l PAPERSIZE: 34x22 (in) DATE: 3/28/2025 TIME: 9:18:30 AM USER: Asldldl
pw:\\mb-us-pw.bentley.com:mb-us-pw-03\Documents\Cleveland_OH\01_Projects\ODOT\District2\82382\400-Engineering\Geotechnical\Sheets\82382_ZF960l.dgn

DESIGN AGENCY
NEAS
National Engineering & Architectural Services Inc.
2800 CORPORATE EXCHANGE DR, SUITE 240
COLUMBUS, OH, 43231
TEL:614.714.0299
WWW.NEASINC.COM

DESIGNER
MWJ & DT

REVIEWER
BPA 08/23/24

PROJECT ID
82382

SUBSET	TOTAL
98	310

SHEET	TOTAL
P.2484	2696

INFORMATION FOR B-002-CR-57 CAN BE FOUND ON SHEET 89
INFORMATION FOR B-004-D-06 CAN BE FOUND ON SHEETS 33 & 100
INFORMATION FOR B-169-4-20 CAN BE FOUND ON SHEETS 89 & 100
INFORMATION FOR B-169-6-20 CAN BE FOUND ON SHEET 100
INFORMATION FOR B-169-7-20 CAN BE FOUND ON SHEETS 25 & 89
INFORMATION FOR B-170-1-20 CAN BE FOUND ON SHEET 33

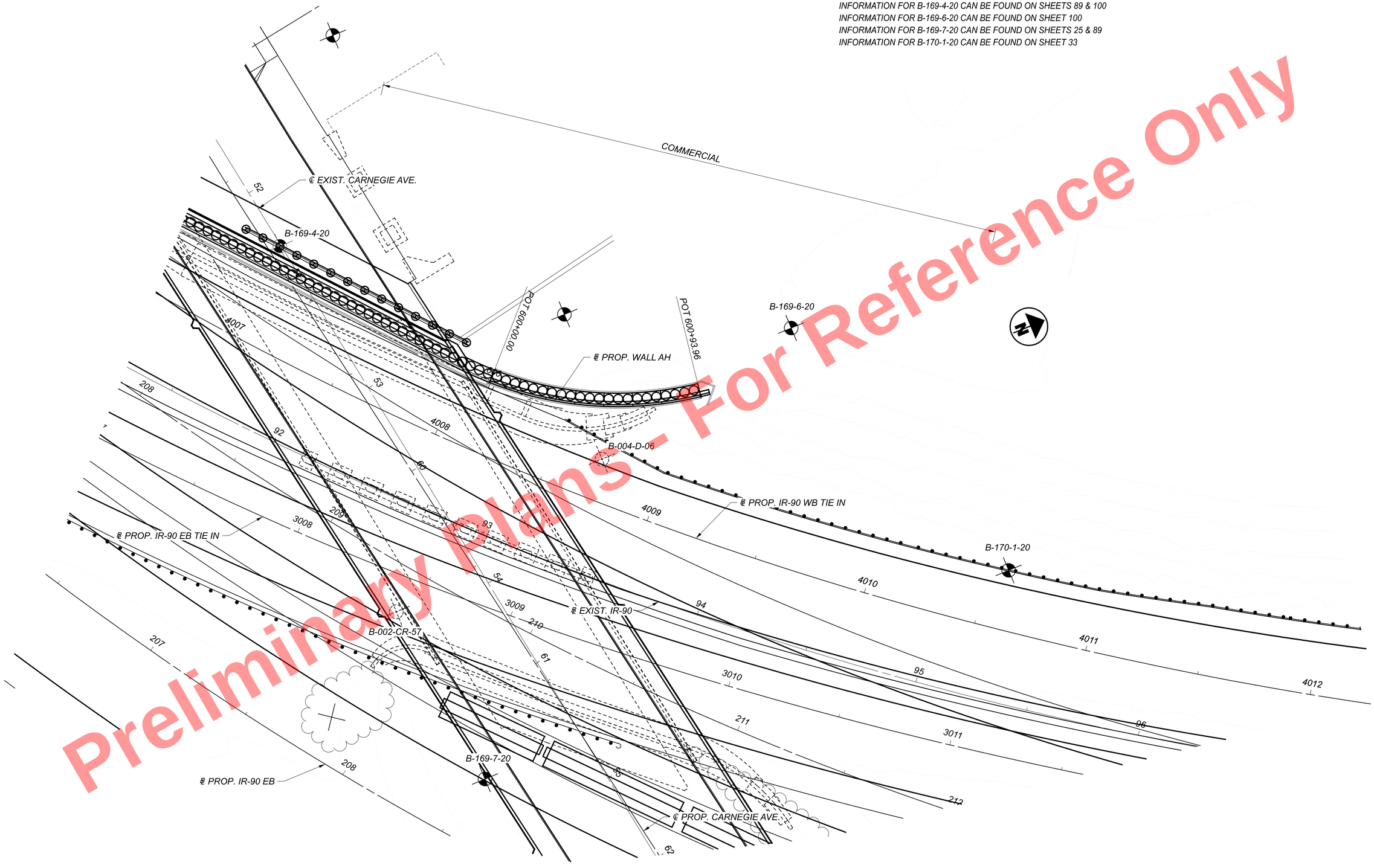

Preliminary Plans - For Reference Only

HORIZONTAL SCALE IN FEET
0 10 20 40

GEOTECHNICAL PROFILE - ROADWAY
BEGIN TO END WALL AH

CUY-90-16.28 (CCG3A)

MODEL: 82382_ZP970I PAPERSIZE: 34x22 (In) DATE: 3/28/2025 TIME: 9:08:48 AM USER: Asldal
pw:\\mb-us-pw.bentley.com\mb-us-pw-03\Documents\Cleveland_OH\OL_Projects\ODOT\District12\82382\400-Engineering\Geotechnical\Sheets\82382_ZP970I.dgn

DESIGN AGENCY
NEAS
National Engineering & Architectural Services Inc.
2800 CORPORATE EXCHANGE DR, SUITE 240
COLUMBUS, OH, 43231
TEL:614.714.0299
WWW.NEASINC.COM

DESIGNER	MWJ & DT
REVIEWER	BPA 08/23/24
PROJECT ID	82382
SUBSET / TOTAL	99 / 310
SHEET / TOTAL	P.2485 / 2696

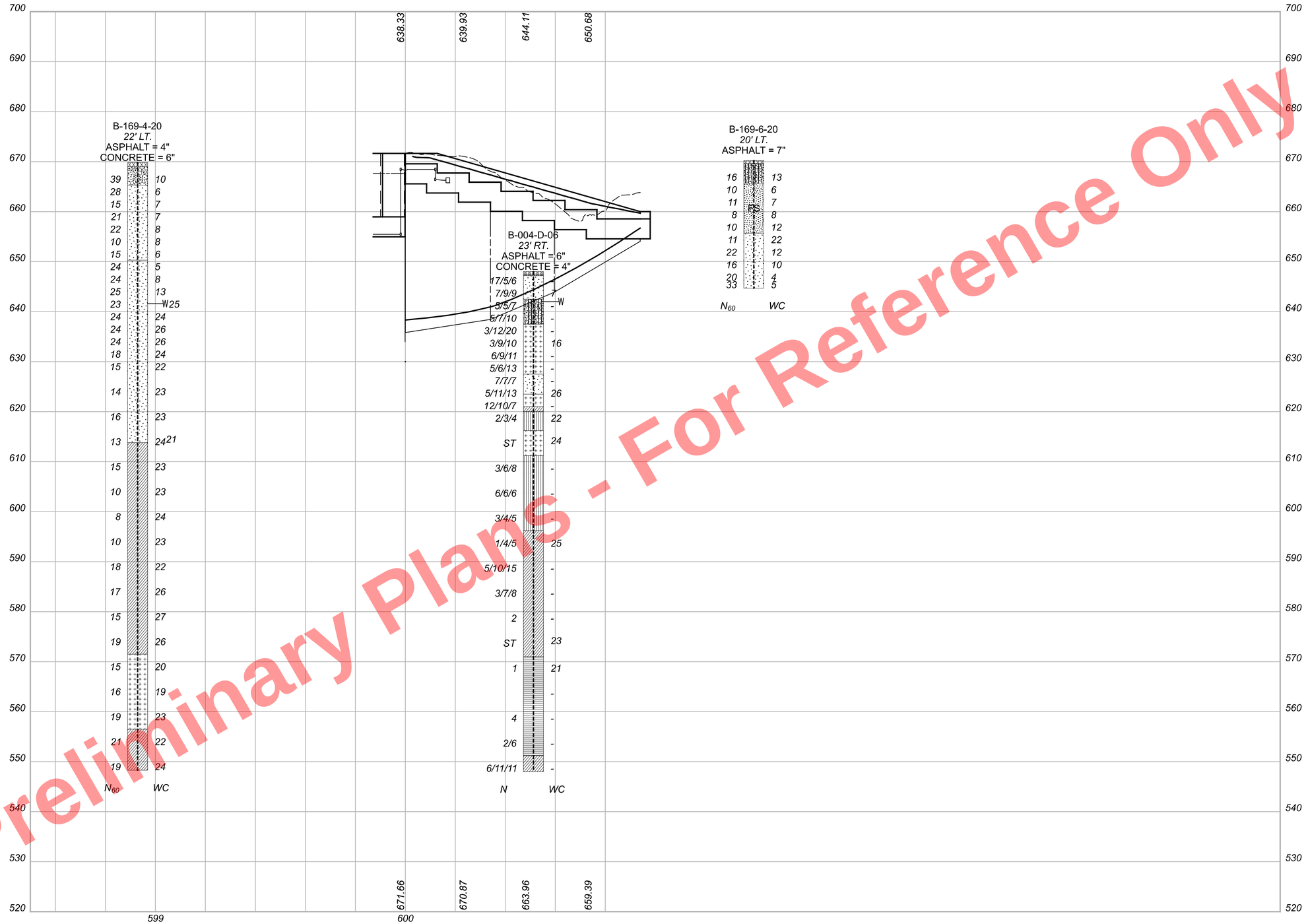

Preliminary Plans - For Reference Only

HORIZONTAL SCALE IN FEET
0 10 20 40

GEOTECHNICAL PROFILE - ROADWAY
BEGIN TO END WALL AH

CUY-90-16.28 (CCG3A)

MODEL: Back Face WallAH Proposed Profile - WallAH_20scale_profile.i PAPERSIZE: 34x22 (in.) DATE: 3/28/2025 TIME: 12:24:49 PM USER: Asladlal
pw:\\mb-us-pw.bentley.com:mb-us-pw-03\Documents\Cleveland.OH\OiL_Projects\ODOT\District2\82382\400-Engineering\Geotechnical\Sheets\82382_ZF970i.dgn

DESIGN AGENCY
NEAS
National Engineering & Architectural Services Inc.
2800 CORPORATE EXCHANGE DR, SUITE 240
COLUMBUS, OH, 43231
TEL:614.714.0299
WWW.NEASINC.COM

DESIGNER
MWJ & DT

REVIEWER
BPA 08/23/24

PROJECT ID
82382

SUBSET	TOTAL
100	310

SHEET	TOTAL
P.2486	2696

Preliminary Plans - For Reference Only

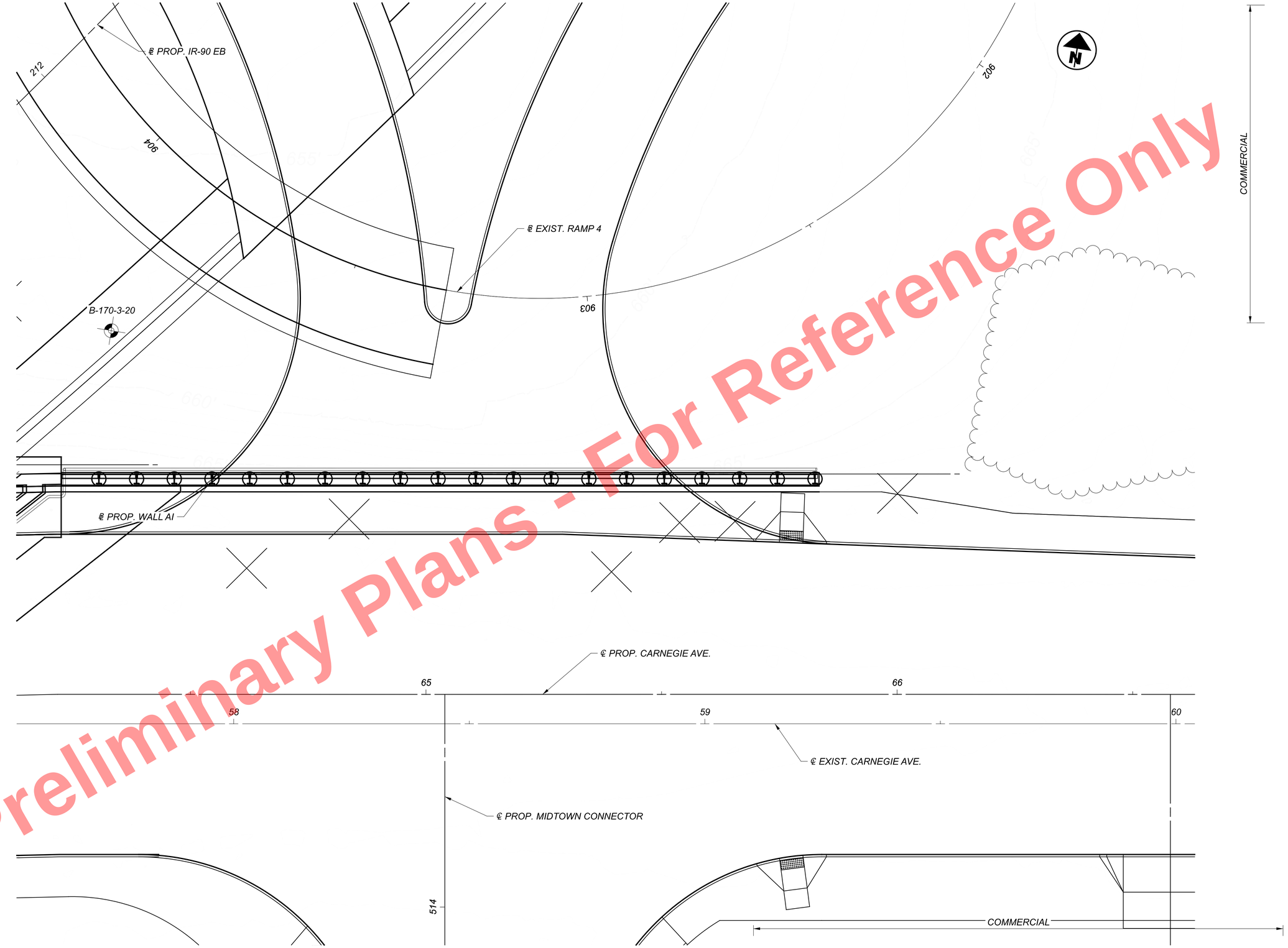

HORIZONTAL SCALE IN FEET
0 5 10 20

GEOTECHNICAL PROFILE - ROADWAY
BEGIN TO END WALL AI

CUY-90-16.28 (CCG3A)

MODEL: 82382_ZP980I PAPERSIZE: 34x22 (in.) DATE: 3/28/2025 TIME: 9:20:04 AM USER: Asldtql
pw:\\mb-us-pw.bentley.com:mb-us-pw-03\Documents\Cleveland_OH\OI_Projects\0007\District2\82382\400-Engineering\Geotechnical\Sheets\82382_ZP980I.dgn

DESIGN AGENCY
NEAS
National Engineering & Architectural Services Inc.
2800 CORPORATE EXCHANGE DR, SUITE 240
COLUMBUS, OH, 43231
TEL:614.714.0299
WWW.NEASINC.COM

DESIGNER	MWJ & DT
REVIEWER	BPA 08/23/24
PROJECT ID	82382
SUBSET	101
TOTAL	310
SHEET	P.2487
TOTAL	2696

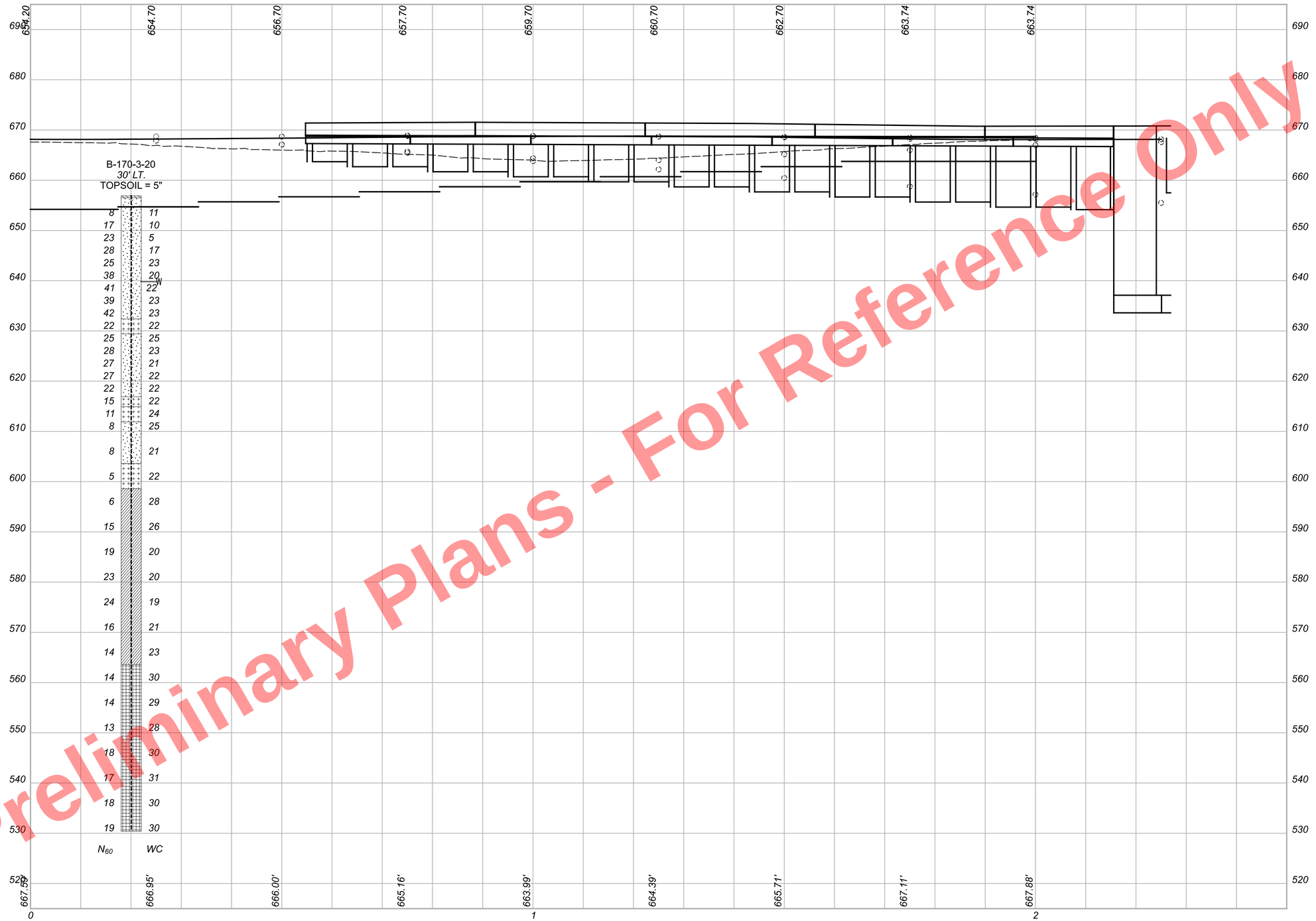

Preliminary Plans - Not For Reference Only

HORIZONTAL SCALE IN FEET
0 5 10 20

GEOTECHNICAL PROFILE - ROADWAY
BEGIN TO END WALL AI

DESIGN AGENCY
NEAS
National Engineering & Architectural Services Inc.

2800 CORPORATE EXCHANGE DR, SUITE 240
COLUMBUS, OH, 43231
TEL:614.714.0299
WWW.NEASINC.COM

DESIGNER: MWJ & DT
REVIEWER: BPA 08/23/24
PROJECT ID: 82382
SUBSET: 102 TOTAL: 310
SHEET: P.2488 TOTAL: 2696

CUY-90-16.28 (CCG3A)

MODEL: 82382_ZF980I PAPERSIZE: 34x22 (in.) DATE: 3/28/2025 TIME: 9:26:04 AM USER: AsIddIqI
pw:\\mb-us-pw.bentley.com:mb-us-pw-03\Documents\Cleveland_OH\01_Projects\ODOT\District2\82382\400-Engineering\Geotechnical\Sheets\82382_ZF980I.dgn

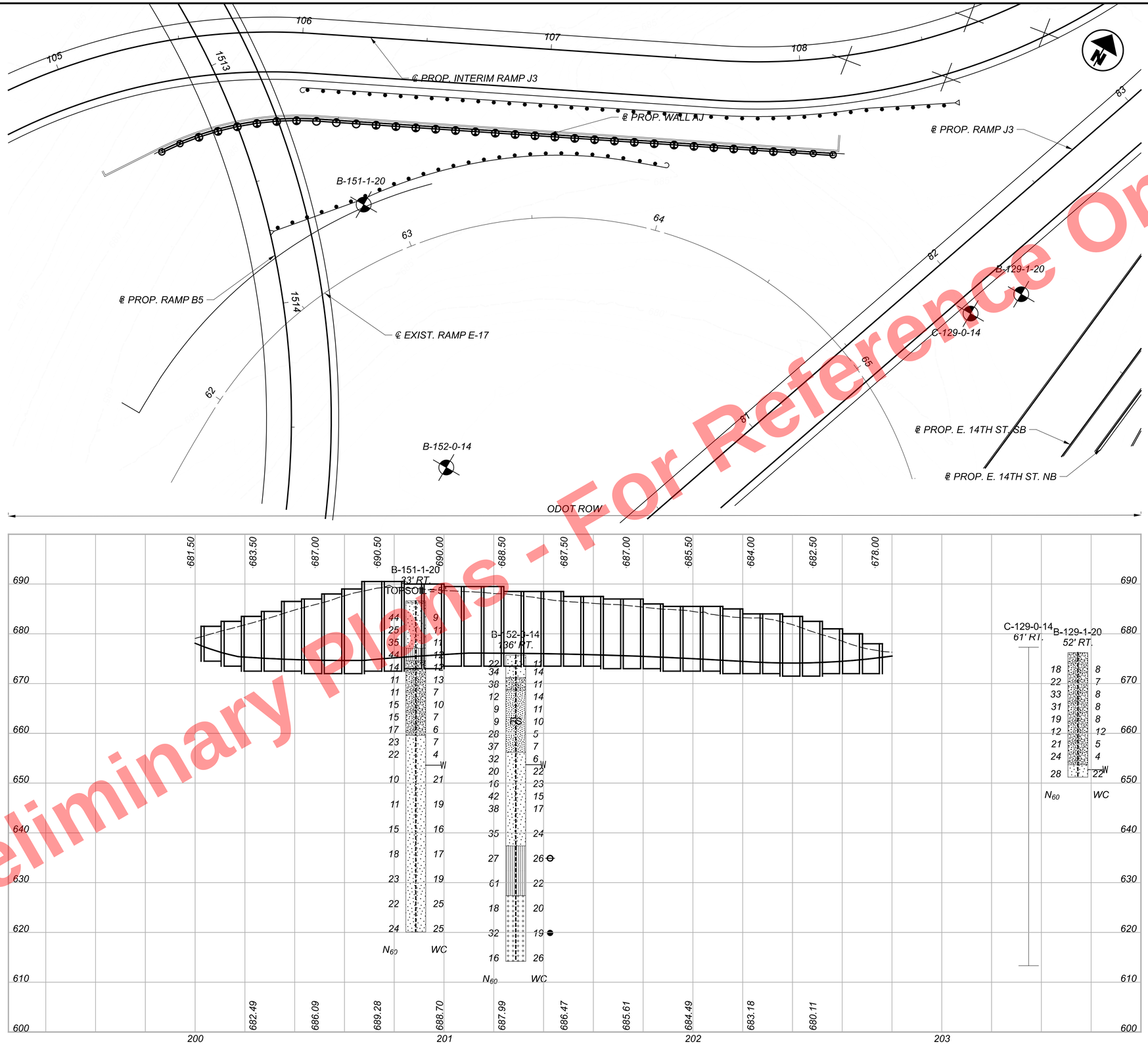

Preliminary Plans - Not For Reference Only

HORIZONTAL SCALE IN FEET
0 10 20 40

SOIL PROFILE - ROADWAY
BEGIN TO END WALL AJ

CUY-90-16.28 (CCG3A)

MODEL: Sheet PAPERSIZE: 34x22 (in.) DATE: 3/28/2025 TIME: 12:04:58 PM USER: AsIddIql
pw:\\mb-us-pw.bentley.com:mb-us-pw-03\Documents\Cleveland.OH\OI_Projects\ODOT\District2\82382\400-Engineering\Geotechnical\Sheets\82382_ZP990i.dgn

DESIGN AGENCY
NEAS
National Engineering & Architectural Services Inc.
2800 CORPORATE EXCHANGE DR, SUITE 240
COLUMBUS, OH, 43231
TEL:614.714.0299
WWW.NEASINC.COM

DESIGNER	MWJ & DT
REVIEWER	BPA 08/23/24
PROJECT ID	82382
SUBSET	103
TOTAL	310
SHEET	P.2489
TOTAL	2696

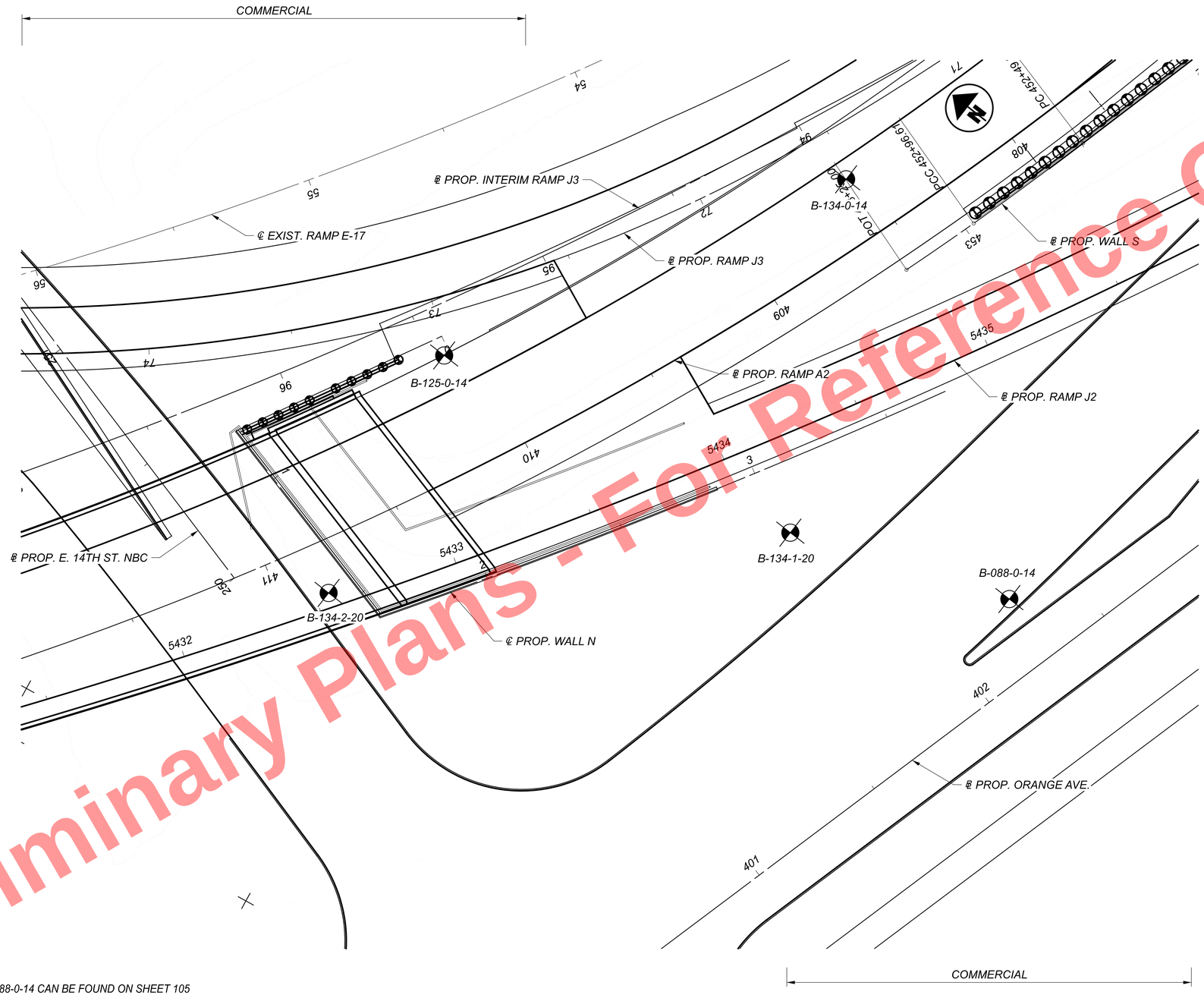

INFORMATION FOR B-088-0-14 CAN BE FOUND ON SHEET 105
INFORMATION FOR B-125-0-14 CAN BE FOUND ON SHEETS 41 & 105
INFORMATION FOR B-134-0-14 CAN BE FOUND ON SHEETS 39 & 107
INFORMATION FOR B-134-1-20 CAN BE FOUND ON SHEET 105
INFORMATION FOR B-134-2-20 CAN BE FOUND ON SHEETS 41 & 105

Preliminary Plans - For Reference Only

HORIZONTAL SCALE IN FEET
0 10 20 40

GEOTECHNICAL PROFILE - ROADWAY
BEGIN TO END WALL N

CUY-90-16.28 (CCG3A)

MODEL: 82382_ZP9I01 PAPERSIZE: 34x22 (in.) DATE: 3/28/2025 TIME: 9:2l:44 AM USER: Asiddiq
pw:\\mb-us-pw.bentley.com:mb-us-pw-03\Documents\Cleveland.OH\OiL_Projects\ODOT\District2\82382\400-Engineering\Geotechnical\Sheets\82382_ZP9I0l.dgn

DESIGN AGENCY
NEAS
National Engineering & Architectural Services Inc.
2800 CORPORATE EXCHANGE DR, SUITE 240
COLUMBUS, OH, 43231
TEL:614.714.0299
WWW.NEASINC.COM

DESIGNER MWJ & DT
REVIEWER BPA 08/23/24
PROJECT ID 82382
SUBSET 104 TOTAL 310
SHEET P.2490 TOTAL 2696

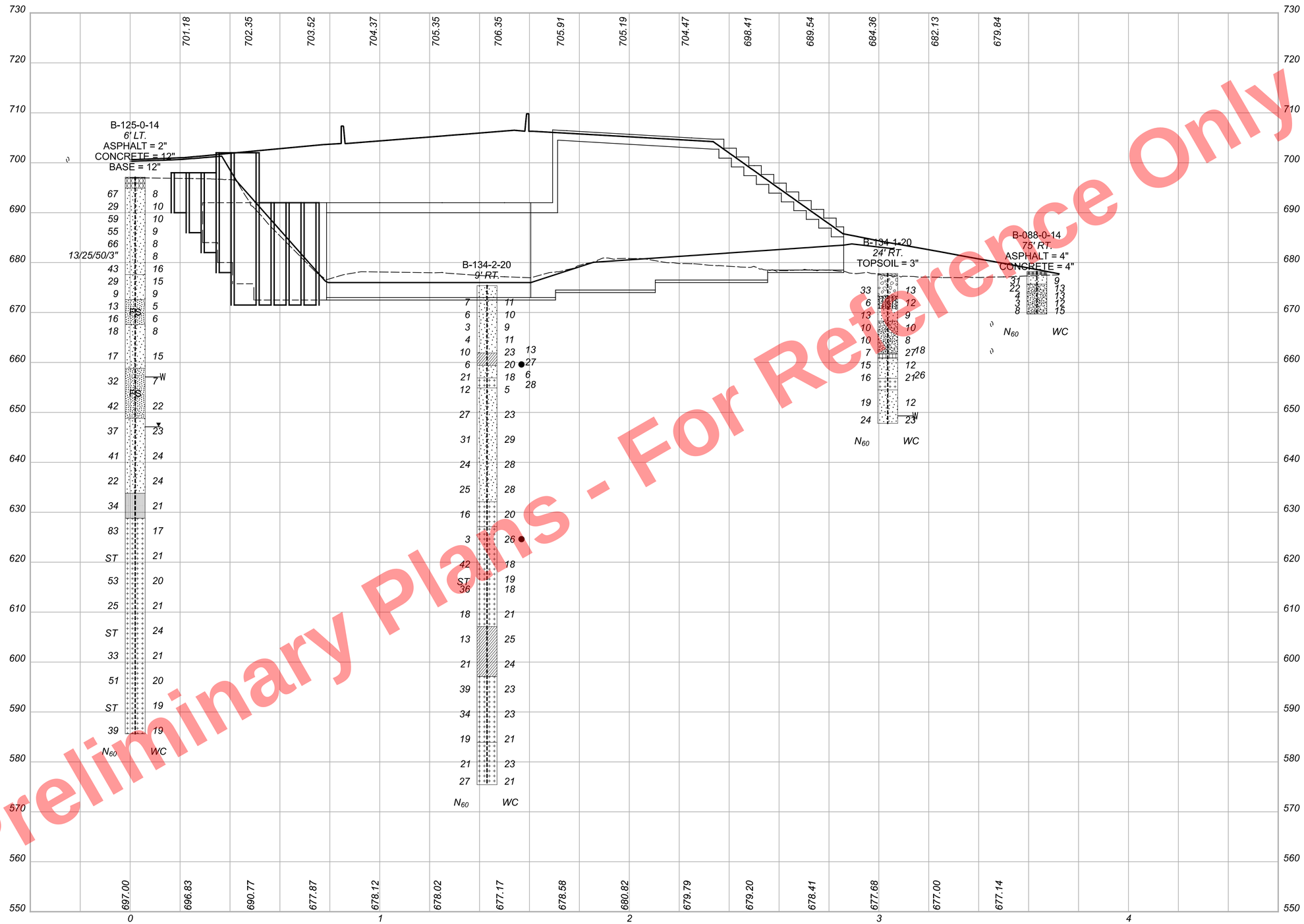

Preliminary Plans - For Reference Only

HORIZONTAL SCALE IN FEET
0 10 20 40

GEOTECHNICAL PROFILE - ROADWAY
BEGIN TO END WALL N

CUY-90-16.28 (CCG3A)

MODEL: 82382_ZF9101 PAPERSIZE: 34x22 (in.) DATE: 3/28/2025 TIME: 9:22:45 AM USER: Asldalql
pw:\\mb-us-pw.bentley.com:mb-us-pw-03\Documents\Cleveland_OH\DL_Projects\ODOT\District2\82382\400-Engineering\Geotechnical\Sheets\82382_ZF9101.dgn

DESIGN AGENCY
NEAS
National Engineering & Architectural Services Inc.
2800 CORPORATE EXCHANGE DR, SUITE 240
COLUMBUS, OH, 43231
TEL:614.714.0299
WWW.NEASINC.COM

DESIGNER MWJ & DT
REVIEWER BPA 08/23/24
PROJECT ID 82382
SUBSET 105 TOTAL 310
SHEET P.2491 TOTAL 2696

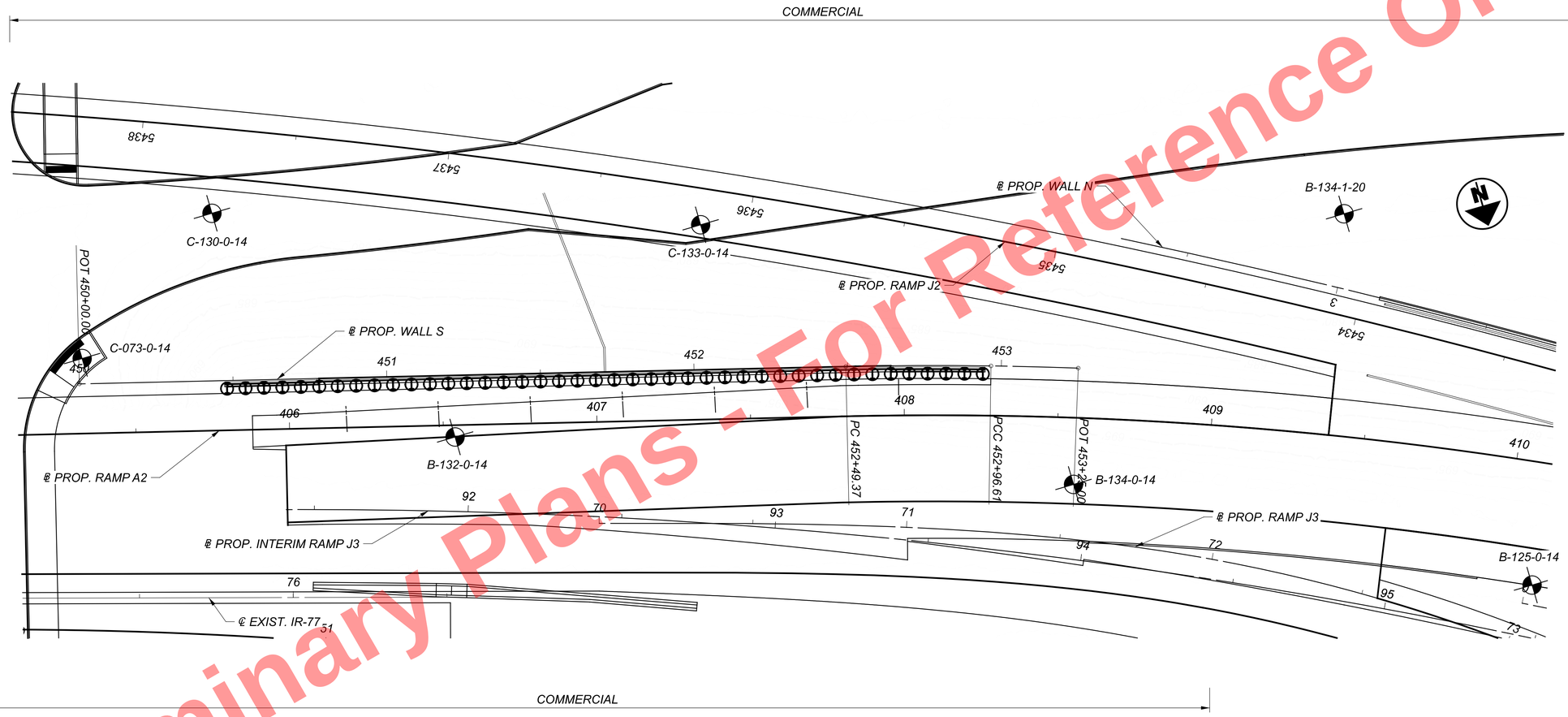

INFORMATION FOR B-125-0-14 CAN BE FOUND ON SHEETS 41 & 105
INFORMATION FOR B-132-0-14 CAN BE FOUND ON SHEETS 39 & 107
INFORMATION FOR B-134-0-14 CAN BE FOUND ON SHEETS 39 & 107
INFORMATION FOR B-134-1-20 CAN BE FOUND ON SHEET 105
INFORMATION FOR C-073-0-14 CAN BE FOUND ON SHEET 107
INFORMATION FOR C-130-0-14 CAN BE FOUND ON SHEET 107
INFORMATION FOR C-133-0-14 CAN BE FOUND ON SHEET 107

Preliminary Plans - For Reference Only

HORIZONTAL SCALE IN FEET
0 10 20 40

GEOTECHNICAL PROFILE - ROADWAY
BEGIN TO END WALL S

CUY-90-16.28 (CCG3A)

MODEL: 82382_ZP9I20I PAPERSIZE: 34x22 (in.) DATE: 3/28/2025 TIME: 9:23:03 AM USER: AsIddIqI
pw:\\mb-us-pw.bentley.com:mb-us-pw-03\Documents\Cleveland_OHIOI_Projects\ODOT\District2\82382\400-Engineering\Geotechnical\Sheets\82382_ZP9I20I.dgn

DESIGN AGENCY
NEAS
National Engineering & Architectural Services Inc.
2800 CORPORATE EXCHANGE DR, SUITE 240
COLUMBUS, OH, 43231
TEL:614.714.0299
WWW.NEASINC.COM

DESIGNER	MWJ & DT
REVIEWER	BPA 08/23/24
PROJECT ID	82382
SUBSET	106
TOTAL	310
SHEET	P.2492
TOTAL	2696

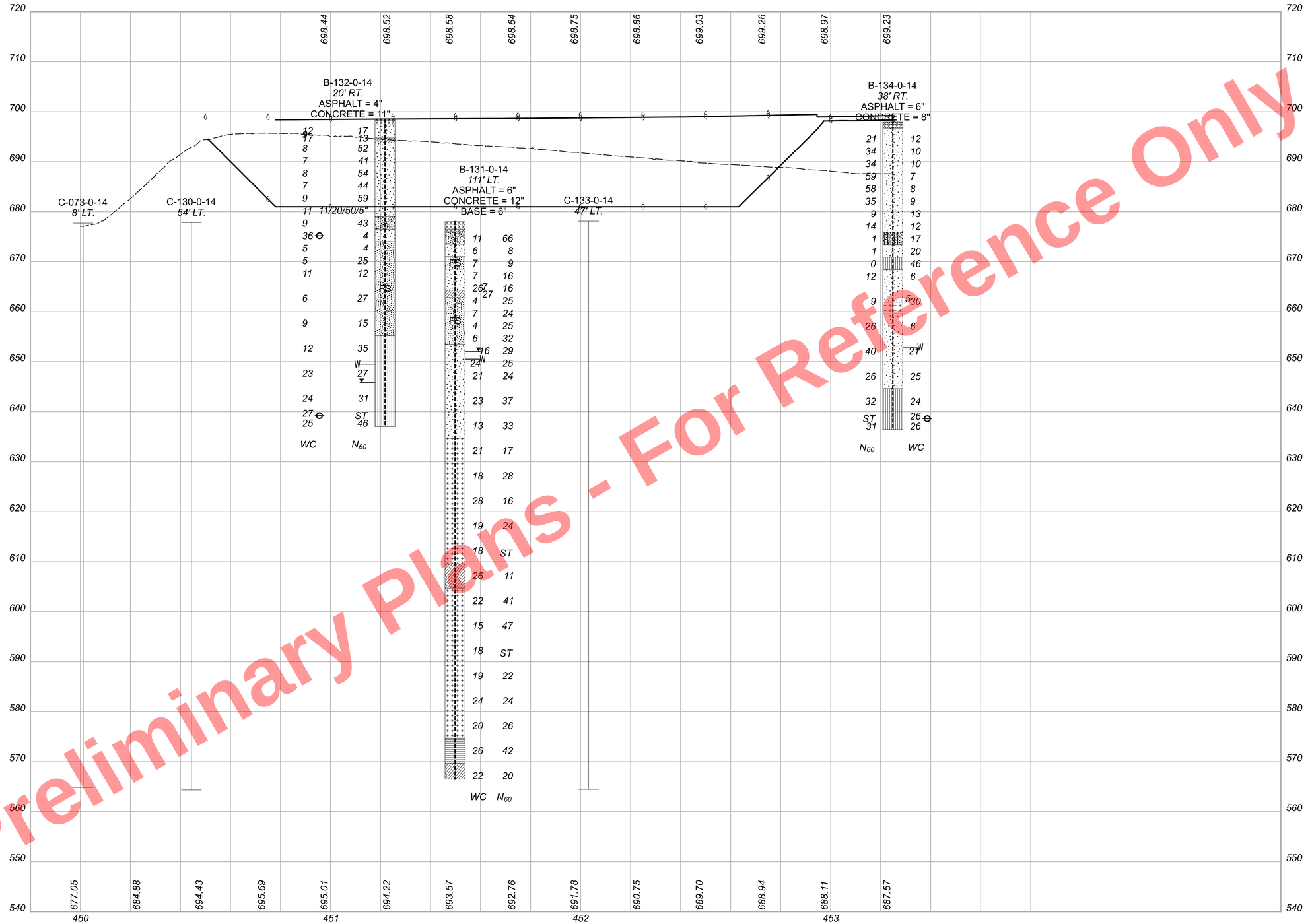

Preliminary Plans - For Reference Only

HORIZONTAL SCALE IN FEET
0 10 20 40

GEOTECHNICAL PROFILE - ROADWAY
BEGIN TO END WALL S

CUY-90-16.28 (CCG3A)

MODEL: 82382_ZF9I20I PAPERSIZE: 34x22 (In.) DATE: 3/28/2025 TIME: 9:24:04 AM USER: AsIddIqI
pw:\\mb-us-pw.bentley.com\mb-us-pw-03\Documents\Cleveland_OHX0i_Projects\000T\DistrIct2\82382\400-EngIneerIng\GeotechnIcal\Sheets\82382_ZF9I20I.dgn

DESIGN AGENCY
NEAS
National Engineering & Architectural Services Inc.
2800 CORPORATE EXCHANGE DR, SUITE 240
COLUMBUS, OH, 43231
TEL:614.714.0299
WWW.NEASINC.COM

DESIGNER
MWJ & DT

REVIEWER
BPA 08/23/24

PROJECT ID
82382

SUBSET 107 | TOTAL 310

SHEET P.2493 | TOTAL 2696

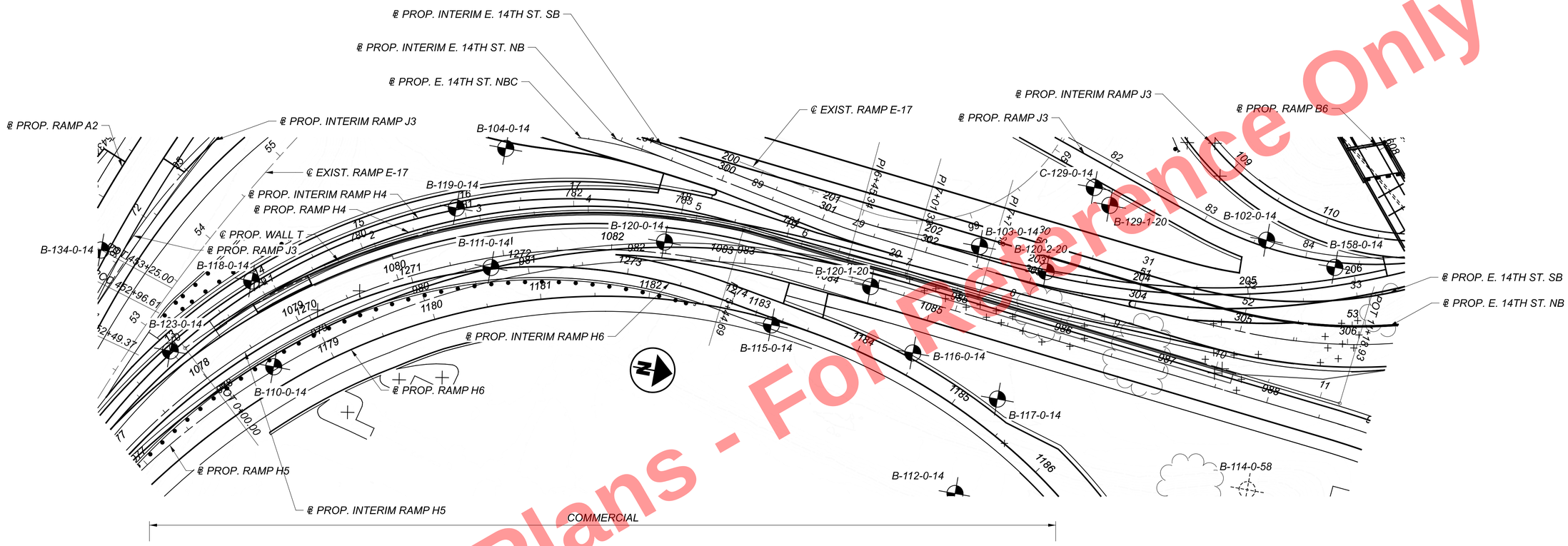

INFORMATION FOR B-102-0-14 CAN BE FOUND ON SHEETS 70, 72, 74, 76 & 109
INFORMATION FOR B-103-0-14 CAN BE FOUND ON SHEETS 61, 65, 72 & 76
INFORMATION FOR B-104-0-14 CAN BE FOUND ON SHEETS 61, 72 & 76
INFORMATION FOR B-110-0-14 CAN BE FOUND ON SHEETS 59 & 63
INFORMATION FOR B-111-0-14 CAN BE FOUND ON SHEETS 61, 63, 66 & 68
INFORMATION FOR B-112-0-14 CAN BE FOUND ON SHEET 68
INFORMATION FOR B-114-0-58 CAN BE FOUND ON SHEET 65
INFORMATION FOR B-115-0-14 CAN BE FOUND ON SHEETS 61, 63, 66 & 68
INFORMATION FOR B-116-0-14 CAN BE FOUND ON SHEETS 61, 65 & 68
INFORMATION FOR B-117-0-14 CAN BE FOUND ON SHEET 68
INFORMATION FOR B-118-0-14 CAN BE FOUND ON SHEETS 59 & 109
INFORMATION FOR B-119-0-14 CAN BE FOUND ON SHEETS 59 & 109
INFORMATION FOR B-120-0-14 CAN BE FOUND ON SHEETS 61, 63, 66, 68, 76 & 109
INFORMATION FOR B-120-1-20 CAN BE FOUND ON SHEETS 61 & 109
INFORMATION FOR B-120-2-20 CAN BE FOUND ON SHEETS 70, 72, 74 & 76
INFORMATION FOR B-123-0-14 CAN BE FOUND ON SHEETS 59 & 109
INFORMATION FOR B-129-1-20 CAN BE FOUND ON SHEETS 70, 72, 74, 76 & 103
INFORMATION FOR B-134-0-14 CAN BE FOUND ON SHEETS 39 & 107
INFORMATION FOR B-158-0-14 CAN BE FOUND ON SHEETS 53, 70, 72, 74 & 76
INFORMATION FOR C-129-0-14 CAN BE FOUND ON SHEET 103

Preliminary Plans - For Reference Only

HORIZONTAL SCALE IN FEET
0 25 50 100

GEOTECHNICAL PROFILE - ROADWAY
BEGIN TO END WALL T

DESIGN AGENCY
NEAS
National Engineering & Architectural Services Inc.
2800 CORPORATE EXCHANGE DR, SUITE 240
COLUMBUS, OH, 43231
TEL:614.714.0299
WWW.NEASINC.COM

DESIGNER MWJ & DT
REVIEWER BPA 08/23/24
PROJECT ID 82382
SUBSET 108 TOTAL 310
SHEET P.2494 TOTAL 2696

CUY-90-16.28 (CCG3A)

MODEL: 82382_ZP9|30| PAPERSIZE: 34x22 (in.) DATE: 3/28/2025 TIME: 9:24:29 AM USER: Asldldql
pw:\\mb-us-pw.bentley.com:mb-us-pw-03\Documents\Cleveland_OH\OI_Projects\ODOT\District2\82382\400-Engineering\Geotechnical\Sheets\82382_ZP9|30|.dgn

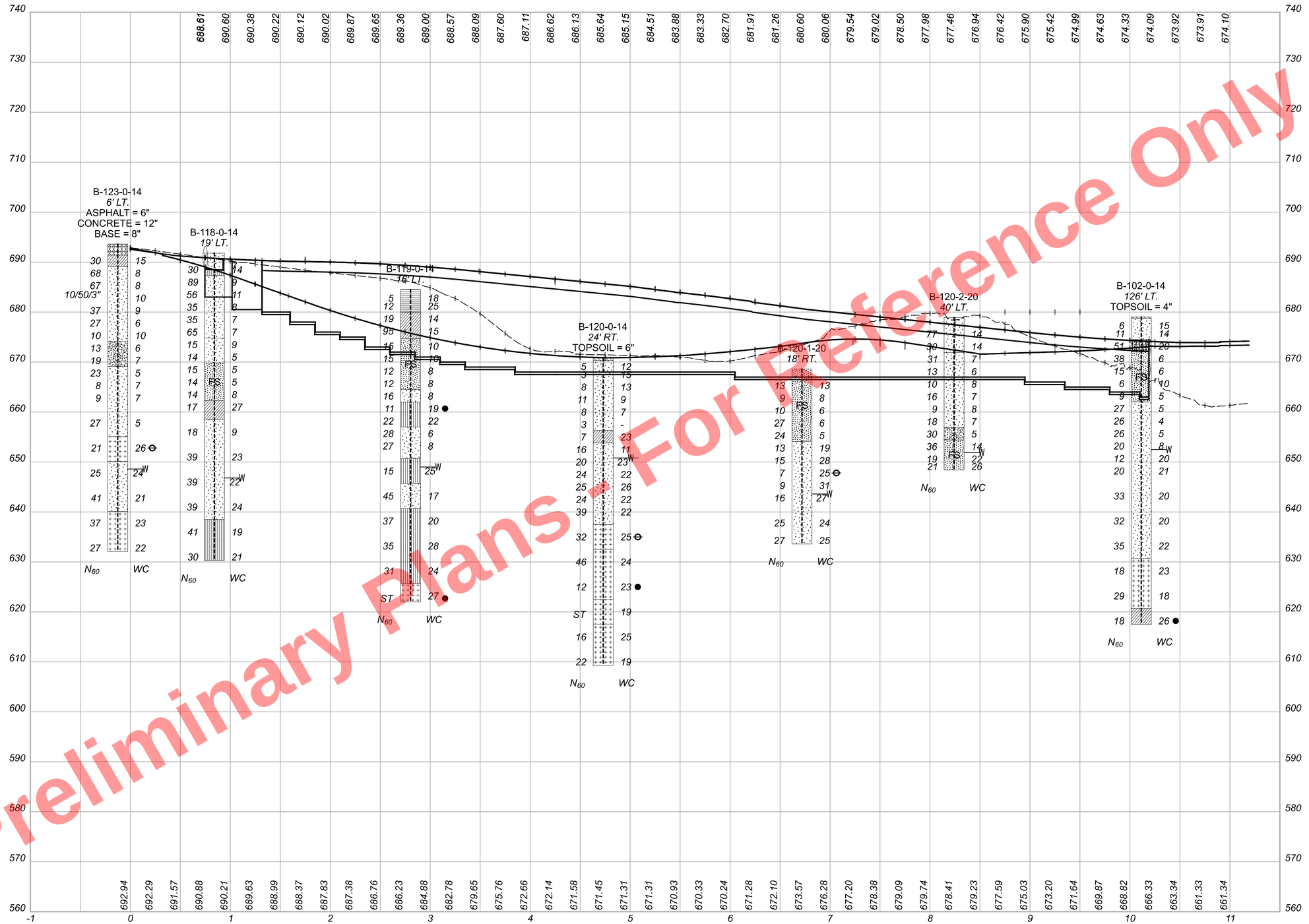

Preliminary Plans - Not For Reference Only

HORIZONTAL SCALE IN FEET
0 25 50 100

GEOTECHNICAL PROFILE - ROADWAY
BEGIN TO END WALL T

CUY-90-16.28 (CCG3A)

MODEL: 82382_ZF9130 PAPERSIZE: 34x22 (in.) DATE: 3/28/2025 TIME: 9:25:32 AM USER: Asiddiqi
pw:\\vmb-us-pw.bentley.com:vmb-us-pw-03\Documents\Cleveland_OH\01_Projects\000T\District2\82382\400-Engineering\Geotechnical\Sheets\82382_ZF9130i.dgn

DESIGN AGENCY
NEAS
National Engineering & Architectural Services Inc.
2800 CORPORATE EXCHANGE DR, SUITE 240
COLUMBUS, OH, 43231
TEL:614.714.0299
WWW.NEASINC.COM

DESIGNER
MWJ & DT

REVIEWER
BPA 08/23/24

PROJECT ID
82382

SUBSET	TOTAL
109	310

SHEET	TOTAL
P.2495	2696

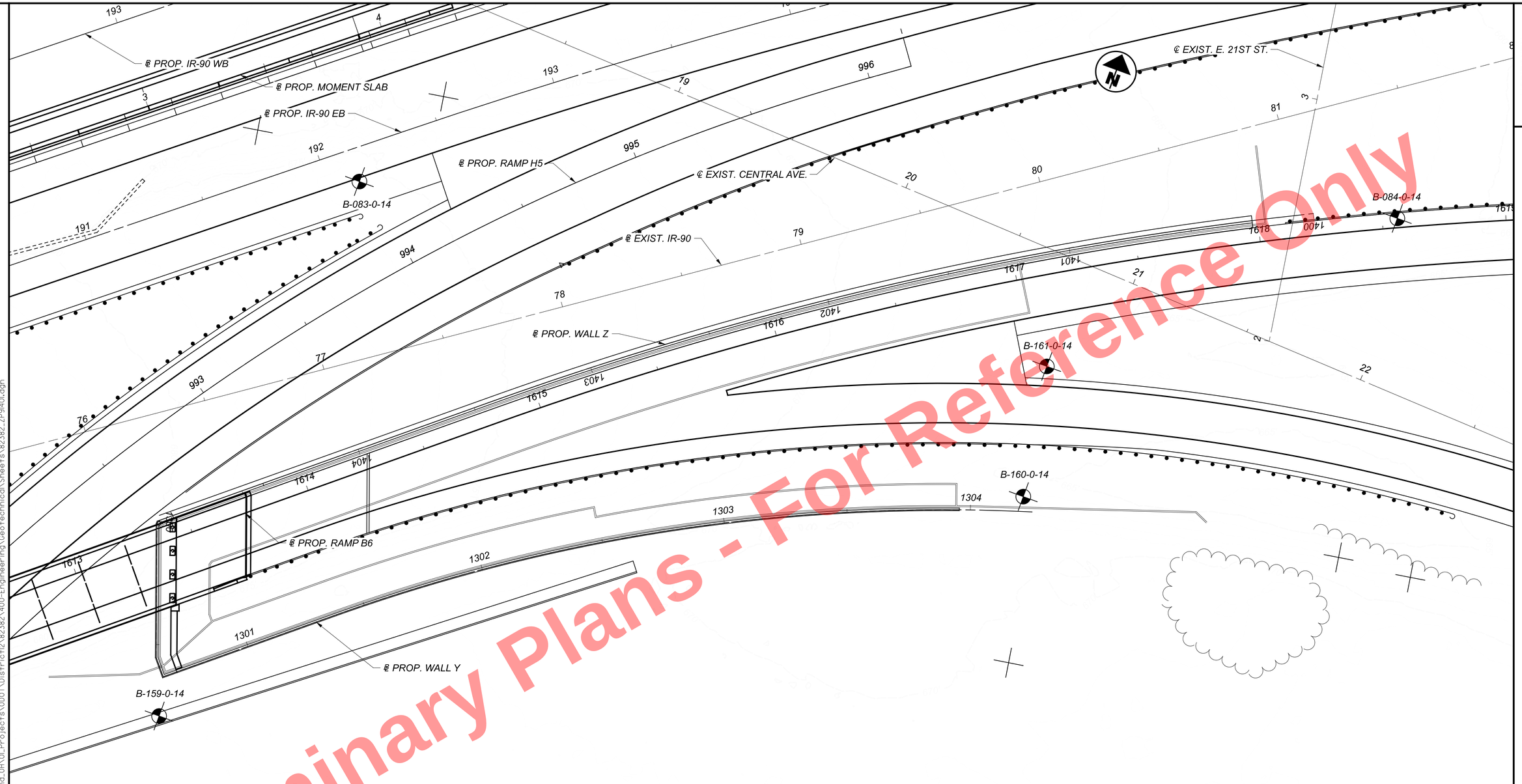

Preliminary Plans - For Reference Only

INFORMATION FOR B-083-0-14 CAN BE FOUND ON SHEETS 23, 31, 65 & 114
INFORMATION FOR B-084-0-14 CAN BE FOUND ON SHEETS 23 & 31
INFORMATION FOR B-159-0-14 CAN BE FOUND ON SHEETS 55, 65, 113 & 111
INFORMATION FOR B-160-0-14 CAN BE FOUND ON SHEET 111
INFORMATION FOR B-161-0-14 CAN BE FOUND ON SHEET 113

COMMERCIAL

HORIZONTAL SCALE IN FEET
0 10 20 40

GEOTECHNICAL PROFILE - ROADWAY
BEGIN TO END WALL Y

DESIGN AGENCY
NEAS
National Engineering & Architectural Services Inc.
2800 CORPORATE EXCHANGE DR, SUITE 240
COLUMBUS, OH, 43231
TEL:614.714.0299
WWW.NEASINC.COM

DESIGNER: MWJ & DT
REVIEWER: BPA 08/23/24
PROJECT ID: 82382
SUBSET 110 | TOTAL 310
SHEET P.2496 | TOTAL 2696

CUY-90-16.28 (CCG3A)

MODEL: 82382_ZP9401 PAPERSIZE: 34x22 (In.) DATE: 3/28/2025 TIME: 9:25:52 AM USER: Asladql
pw:\\mb-us-pw.bentley.com:mb-us-pw-03\Documents\Cleveland_OH\OL_Projects\ODOT\District2\82382\400-Engineering\Geotechnical\Sheets\82382_ZP9401.dgn

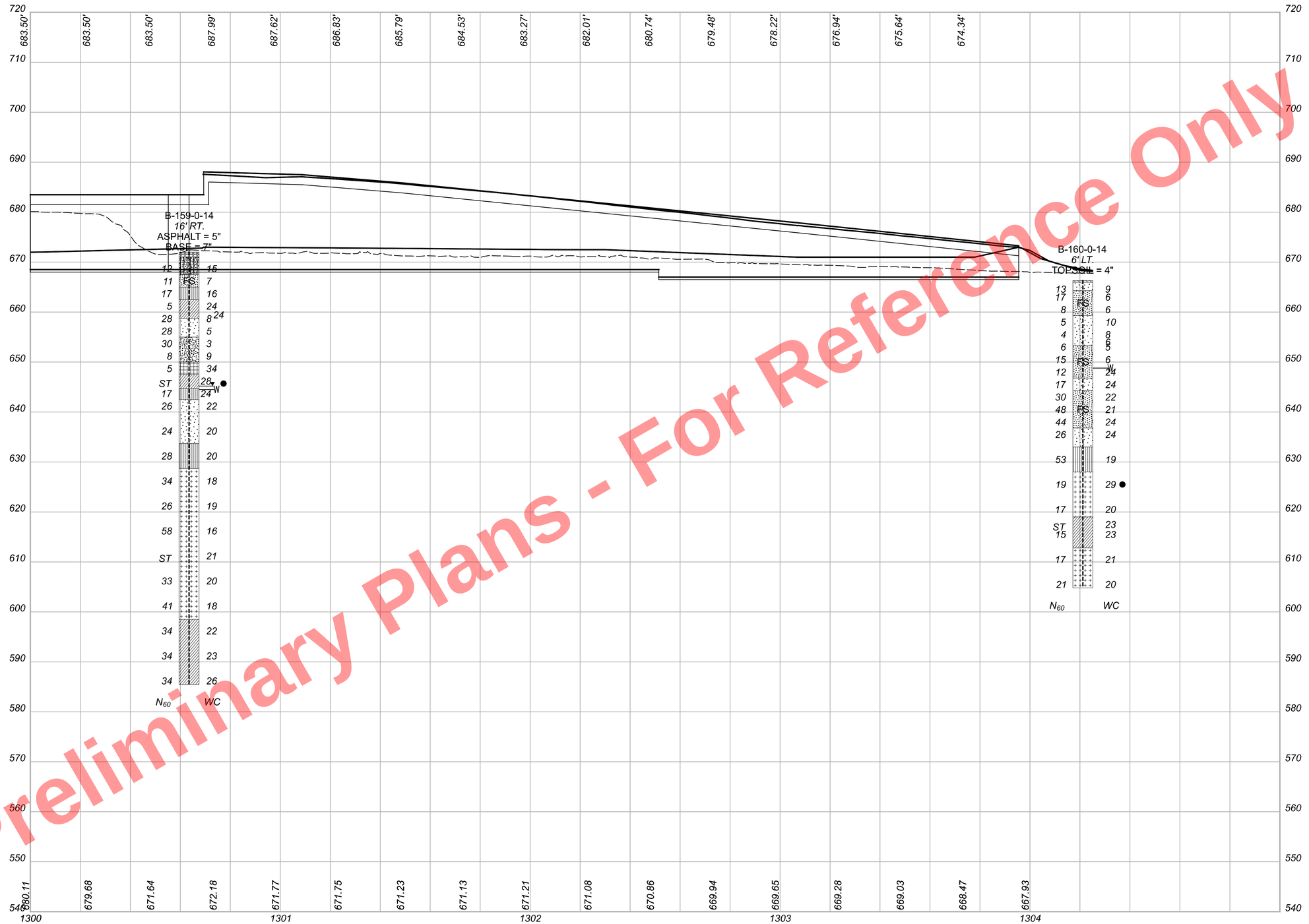

Preliminary Plans - For Reference Only

HORIZONTAL SCALE IN FEET
0 10 20 40

GEOTECHNICAL PROFILE - ROADWAY
BEGIN TO END WALL Y

CUY-90-16.28 (CCG3A)

MODEL: 82382_ZF9140l PAPERSIZE: 34x22 (in.) DATE: 3/28/2025 TIME: 9:26:53 AM USER: Asiddiqi
pw:\\mb-us-pw.bentley.com:mb-us-pw-03\Documents\Cleveland_OH\01_Projects\ODOT\District2\82382\400-Engineering\Geotechnical\Sheets\82382_ZF9140l.dgn

DESIGN AGENCY
NEAS
National Engineering & Architectural Services Inc.
2800 CORPORATE EXCHANGE DR, SUITE 240
COLUMBUS, OH, 43231
TEL:614.714.0299
WWW.NEASINC.COM

DESIGNER
MWJ & DT

REVIEWER
BPA 08/23/24

PROJECT ID
82382

SUBSET	TOTAL
111	310

SHEET	TOTAL
P.2497	2696

COMMERCIAL

INFORMATION FOR B-083-0-14 CAN BE FOUND ON SHEETS 23, 31, 65 & 114
INFORMATION FOR B-084-0-14 CAN BE FOUND ON SHEETS 23 & 31
INFORMATION FOR B-159-0-14 CAN BE FOUND ON SHEETS 55, 65, 113 & 111
INFORMATION FOR B-160-0-14 CAN BE FOUND ON SHEET 111
INFORMATION FOR B-161-0-14 CAN BE FOUND ON SHEET 113

HORIZONTAL SCALE IN FEET
0 10 20 40

℄ PROP. WALL Y
B-160-0-14
B-159-0-14
B-161-0-14
B-084-0-14
℄ PROP. RAMP B6
℄ PROP. WALL Z
℄ EXIST. IR-90
℄ EXIST. CENTRAL AVE.
℄ PROP. RAMP H5
℄ EXIST. E. 21ST ST.
B-083-0-14
℄ PROP. IR-90 EB
℄ PROP. MOMENT SLAB
℄ PROP. IR-90 WB

Preliminary Plans - For Reference Only

GEOTECHNICAL PROFILE - ROADWAY
BEGIN TO END WALL Z

CUY-90-16.28 (CCG3A)

MODEL: 82382_ZP9150I PAPERSIZE: 34x22 (in.) DATE: 3/28/2025 TIME: 9:27:09 AM USER: AsIddIqI
pw:\\mb-us-pw.bentley.com:mb-us-pw-03\Documents\Cleveland_OH\OI_Projects\ODOT\District#12\82382\400-Engineering\Geotechnical\Sheets\82382_ZP9150I.dgn

DESIGN AGENCY
NEAS
National Engineering & Architectural Services Inc.
2800 CORPORATE EXCHANGE DR, SUITE 240
COLUMBUS, OH, 43231
TEL:614.714.0299
WWW.NEASINC.COM

DESIGNER	MWJ & DT
REVIEWER	BPA 08/23/24
PROJECT ID	82382
SUBSET / TOTAL	112 / 310
SHEET / TOTAL	P.2498 / 2696

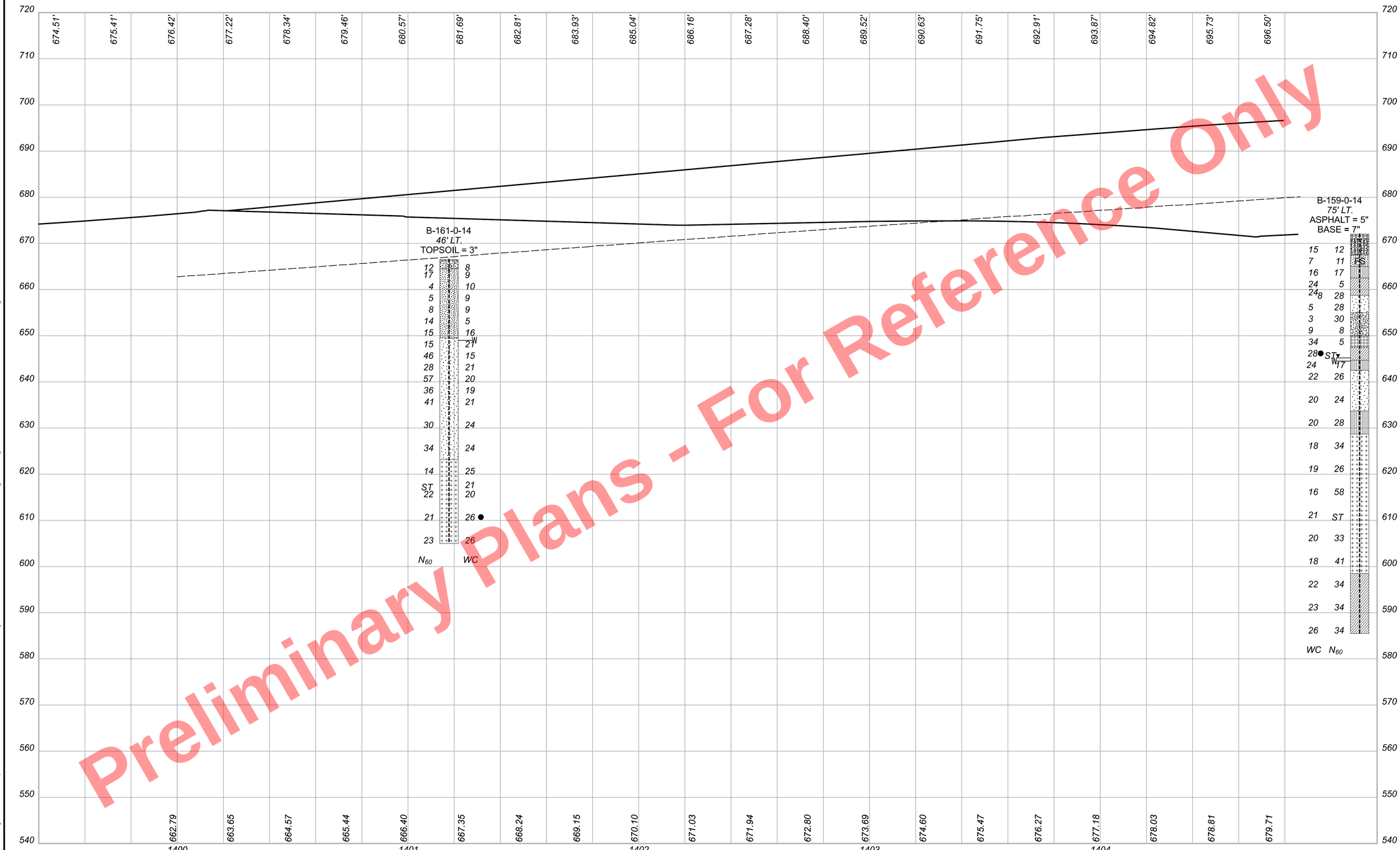

Preliminary Plans - For Reference Only

HORIZONTAL SCALE IN FEET
0 10 20 40

GEOTECHNICAL PROFILE - ROADWAY
BEGIN TO END WALL Z

CUY-90-16.28 (CCG3A)

MODEL: 82382_ZF9150I PAPERSIZE: 34x22 (in.) DATE: 3/28/2025 TIME: 9:28:10 AM USER: Asiddiqi
pw:\\mb-us-pw.bentley.com:mb-us-pw-03\Documents\Cleveland_OH\OI_Projects\ODOT\District12\82382\400-Engineering\Geotechnical\Sheets\82382_ZF9150I.dgn

DESIGN AGENCY
NEAS
National Engineering & Architectural Services Inc.
2800 CORPORATE EXCHANGE DR, SUITE 240
COLUMBUS, OH, 43231
TEL:614.714.0299
WWW.NEASINC.COM

DESIGNER	MWJ & DT
REVIEWER	BPA 08/23/24
PROJECT ID	82382
SUBSET	113
TOTAL	310
SHEET	P.2499
TOTAL	2696

GEOTECHNICAL PROFILE - ROADWAY
BEGIN TO END MOMENT SLAB

HORIZONTAL SCALE IN FEET
0 10 20 40

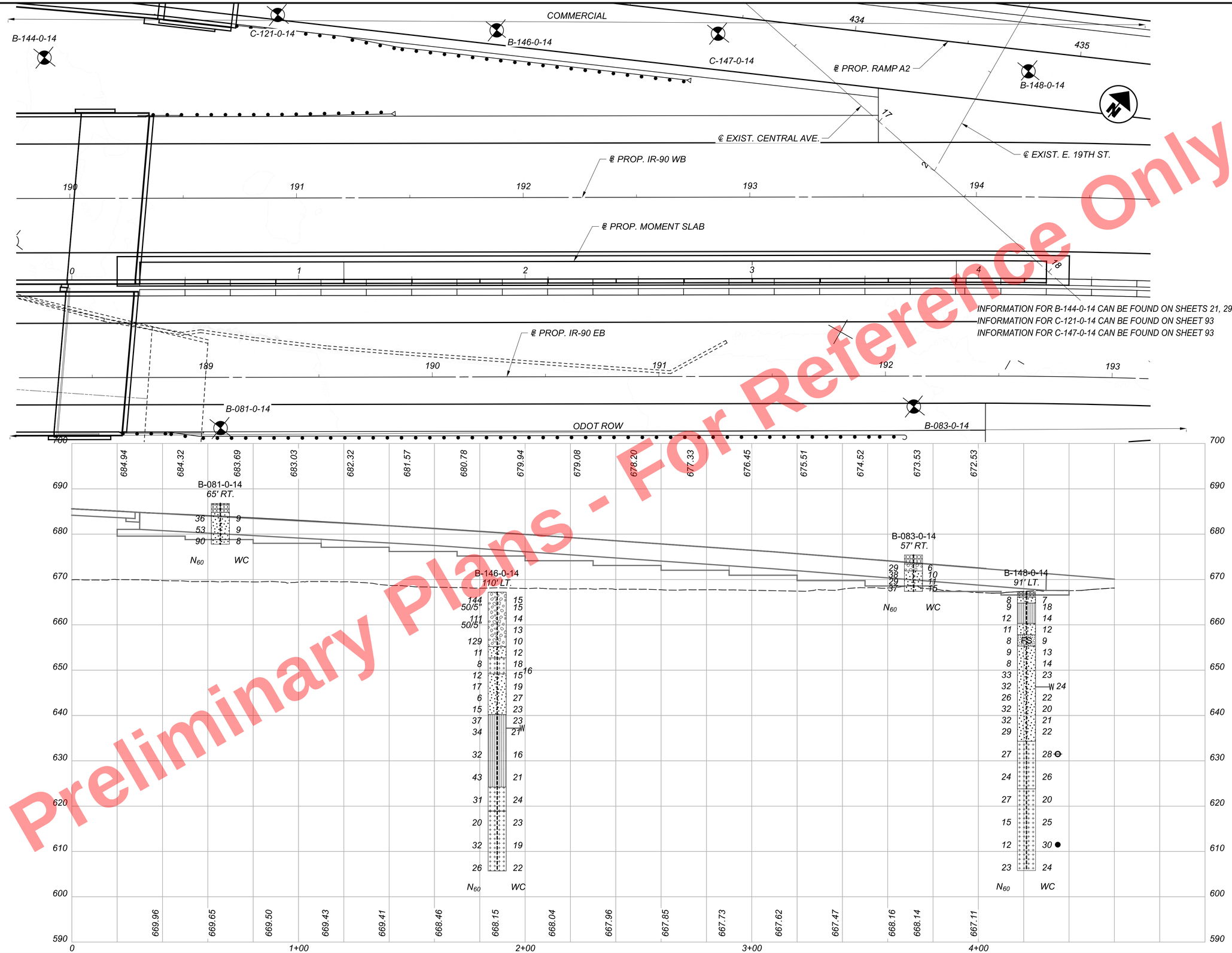

Preliminary Plans - For Reference Only

CUY-90-16.28 (CCG3A)

MODEL: 082382_IP001 PAPERSIZE: 34x22 (In.) DATE: 3/28/2025 TIME: 9:28:43 AM USER: Asldldl
pw:\\mb-us-pw.bentley.com:mb-us-pw-03\Documents\Cleveland_OH\01_Projects\000T\District2\82382\400-Engineering\Geotechnical\Sheets\82382_ZP9601.dgn

DESIGN AGENCY
NEAS
National Engineering & Architectural Services Inc.
2800 CORPORATE EXCHANGE DR, SUITE 240
COLUMBUS, OH, 43231
TEL:614.714.0299
WWW.NEASINC.COM

DESIGNER MWJ & DT
REVIEWER BPA 08/23/24
PROJECT ID 82382
SUBSET 114 TOTAL 310
SHEET P.2500 TOTAL 2696

MODEL: Sheet PAPERSIZE: 34x22 (in.) DATE: 3/28/2025 TIME: 11:24:46 AM USER: Asiddiqi
pw:\\mb-us-pw.bentley.com:mb-us-pw-03\Documents\Cleveland_OH\01_Projects\ODOT\District12\82382\400-Engineering\Geotechnical\Sheets\82382_ZL001.dgn

PROJECT: CUY-CCG3
TYPE: RETAINING WALL
PID: 82380 SFN:
START: 11/5/14 END: 11/6/14

DRILLING FIRM / OPERATOR: BARR / T.GILBERT
SAMPLING FIRM / LOGGER: BARR / D.LYON
DRILLING METHOD: 3.25" HSA
SAMPLING METHOD: SPT / ST

DRILL RIG: CME 45B
HAMMER: CME AUTOMATIC
CALIBRATION DATE: 1/26/14
ENERGY RATIO (%): 77.4

STATION / OFFSET: 69+83, 48' RT.
ALIGNMENT: IR-77
ELEVATION: 694.8 (MSL) EOB: 61.5 ft.
LAT / LONG: 41.492141, -81.673807

EXPLORATION ID B-060-0-14

MATERIAL DESCRIPTION AND NOTES	ELEV.	DEPTHS	SPT/ RQD	N_{60}	REC (%)	SAMPLE ID	HP (tsf)	GRADATION (%) GR	CS	FS	SI	CL	ATTERBERG LL	PL	PI	WC	ODOT CLASS (GI)	BACK FILL
6.5, **ASPHALT**	694.3																	
11.5, **CONCRETE**	693.3																	
STIFF TO HARD, BROWN AND GRAY, **SILTY CLAY**, SOME SAND, TRACE GRAVEL, LITTLE IRON STAINING, MOIST **(FILL)**			2 1 4	6	50	SS-1	1.75	-	-	-	-	-	-	-	-	22	A-6b (V)	
			3 4 5	12	67	SS-2	3.25	3	5	16	36	40	37	18	19	19	A-6b (12)	
@5.0'; SS-5 CONTAINS BRICK FRAGMENTS	689.3		4 7 50/5"	-	100	SS-3A	4.25	-	-	-	-	-	-	-	-	19	A-6b (V)	
HARD, LIGHT BROWN AND DARK GRAY, **SANDY SILT**, LITTLE CLAY, TRACE GRAVEL, DAMP **(FILL)**	688.4					SS-3B	4.25	7	8	38	30	17	25	18	7	14	A-4a (2)	
VERY DENSE, BROWN WITH GRAY TO DARK BROWN, **GRAVEL WITH SAND** LITTLE SILT, TRACE CLAY, CONTAINS ASPHALT, CONCRETE, BRICK, DAMP TO MOIST **(FILL)**			17 50/5"	-	100	SS-4	-	-	-	-	-	-	-	-	-	12	A-1-b (V)	
			9 38 28	85	89	SS-5	-	-	-	-	-	-	-	-	-	7	A-1-b (V)	
	682.6																	
VERY DENSE, GRAYISH BROWN, **COARSE AND FINE SAND**, LITTLE SILT, TRACE GRAVEL, TRACE CLAY, SS-6 CONTAINS SILT LENSES, DAMP TO MOIST			21 20 37	74	94	SS-6	-	-	-	-	-	-	-	-	-	11	A-3a (V)	
			18 23 24	61	100	SS-7	-	8	6	62	20	4	NP	NP	NP	7	A-3a (0)	
	677.8																	
LOOSE TO MEDIUM DENSE, ORANGISH BROWN AND DARK GRAY, **GRAVEL WITH SAND** TRACE SILT, TRACE CLAY, SS-8 CONTAINS IRON STAINING, DAMP **(FILL)**			5 4 6	13	100	SS-8	-	-	-	-	-	-	-	-	-	8	A-1-b (V)	
			4 4 4	10	100	SS-9	-	57	10	22	7	4	NP	NP	NP	6	A-1-b (0)	
	672.8																	
LOOSE, LIGHT BROWN AND BROWN, **FINE SAND**, TRACE COARSE SAND, TRACE GRAVEL, TRACE SILT, TRACE CLAY, DAMP	670.3		3 3 5	10	94	SS-10	-	-	-	-	-	-	-	-	-	5	A-3 (V)	
MEDIUM DENSE, LIGHT BROWN AND BROWN, **COARSE AND FINE SAND** LITTLE GRAVEL, TRACE SILT, TRACE CLAY, DAMP			3 3 6	12	94	SS-11	-	-	-	-	-	-	-	-	-	4	A-3a (V)	
	667.8																	
LOOSE, BROWN AND LIGHT BROWN, **GRAVEL WITH SAND**, TRACE SILT, TRACE CLAY, DAMP			3 3 3	8	94	SS-12	-	-	-	-	-	-	-	-	-	6	A-1-b (V)	
	664.8																	
LOOSE TO MEDIUM DENSE, LIGHT BROWN, **FINE SAND**, TRACE COARSE SAND, TRACE GRAVEL, TRACE SILT, TRACE CLAY, DAMP			4 5 5	13	100	SS-13	-	2	0	93	4	1	NP	NP	NP	4	A-3 (0)	
			2 2 2	5	94	SS-14	-	-	-	-	-	-	-	-	-	5	A-3 (V)	
@40.0'; SS-15 BECOMES GRAYISH BROWN, WET		W 654.5	4 3 3	8	100	SS-15	-	1	4	91	-	4	-	NP	NP	NP	24	A-3 (0)
@45.0'; SS-16 BECOMES BROWN WITH ORANGISH BROWN, CONTAINS IRON STAINING			4 5 9	18	100	SS-16	-	-	-	-	-	-	-	-	-	25	A-3 (V)	
	646.3																	
MEDIUM DENSE, GRAY, **COARSE AND FINE SAND** LITTLE SILT, TRACE CLAY, TRACE GRAVEL, SS-17 CONTAINS IRON STAINING, WET			2 4 7	14	100	SS-17	-	-	-	-	-	-	-	-	-	23	A-3a (V)	
@53.0'; UNIT WEIGHT: 127.8 PCF @ 22.5% MC					117	ST-18	-	0	0	77	20	3	NP	NP	NP	23	A-3a (0)	
			3 5 7	15	100	SS-19	-	-	-	-	-	-	-	-	-	23	A-3a (V)	

Preliminary plans - For Reference Only

STANDARD ODOT SOIL BORING LOG (11 X 17) - OH DOT.GDT - 6/22/22 17:57 - X:\ACTIVE PROJECTS\ACTIVE SOIL PROJECTS\1ARCHIVE BY YEAR\2017 ARCHIVE\CUY-CCG3 82380\GINT FILES\CUY-CCG3 MASTER - LR UPDATED.GPJ

DESIGN AGENCY
2800 CORPORATE EXCHANGE DR. SUITE 240
COLUMBUS, OH. 43231
TEL:614.714.0299
WWW.NEASINC.COM

DESIGNER MWJ & DT
REVIEWER BPA 08/23/24
PROJECT ID 82382
SHEET 115 TOTAL 310
SHEET P 2501 TOTAL 2696

GEOTECHNICAL PROFILE - ROADWAY
EXISTING IR-77
BORING LOG B-060-0-14

MODEL: Sheet PAPERSIZE: 34x22 (in.) DATE: 3/28/2025 TIME: 9:52:16 AM USER: Asiddiqi
pw:\\mb-us-pw.bentley.com:mb-us-pw-03\Documents\Cleveland_OH\01_Projects\ODOT\District12\82382\400-Engineering\Geotechnical\Sheets\82382_ZL002.dgn

PID: 82380 | SFN: | PROJECT: CUY-CCG3 | STATION / OFFSET: 69+83, 48' RT. | START: 11/5/14 | END: 11/6/14 | PG 2 OF 2 | B-060-0-14

MATERIAL DESCRIPTION AND NOTES	ELEV.	DEPTHS	SPT/ RQD	N_{60}	REC (%)	SAMPLE ID	HP (tsf)	GRADATION (%) GR	CS	FS	SI	CL	ATTERBERG LL	PL	PI	WC	ODOT CLASS (GI)	BACK FILL
@60.0'; SS-20 BECOMES DENSE, GRAYISH BROWN, DAMP	634.8	61	9 16 16	41	100	SS-20	-	-	-	-	-	-	-	-	-	9	A-3a (V)	
	633.3	EOB																

Preliminary Plans - For Reference Only

STANDARD ODOT SOIL BORING LOG (11 X 17) - OH DOT.GDT - 6/22/22 17:57 - X:\ACTIVE PROJECTS\ACTIVE SOIL PROJECTS\1ARCHIVE BY YEAR\2017 ARCHIVE\CUY-CCG3 82380\GINT FILES\CUY-CCG3 MASTER - LR UPDATED.GPJ

NOTES: GROUNDWATER ENCOUNTERED AT 40.3' DURING DRILLING, 47.3' UPON COMPLETION. CAVE DEPTH 38.7'.
ABANDONMENT METHODS, MATERIALS, QUANTITIES: PLACED .5 BAG ASPHALT PATCH; SHOVELED SOIL CUTTINGS

DESIGN AGENCY
2800 CORPORATE EXCHANGE DR. SUITE 240
COLUMBUS, OH. 43231
TEL:614.714.0299
WWW.JNEASINC.COM
DESIGNER MW,J & DT
REVIEWER BPA 08/23/24

PROJECT ID 82382
SHEET 116 TOTAL 310
SHEET P 2502 TOTAL 2696

GEOTECHNICAL PROFILE - ROADWAY
EXISTING IR-77
BORING LOG B-060-0-14 (CONTINUED)

MODEL: Sheet PAPERSIZE: 34x22 (in.) DATE: 3/28/2025 TIME: 9:52:32 AM USER: Asiddiqi
pw:\\mb-us-pw.bentley.com:mb-us-pw-03\Documents\Cleveland_OH\01_Projects\ODOT\District12\82382\400-Engineering\Geotechnical\Sheets\82382_ZL003.dgn

PROJECT: CUY-CCG3
TYPE: RETAINING WALL
PID: 82380 SFN:
START: 12/31/14 END: 12/31/14

DRILLING FIRM / OPERATOR: BARR / T.GILBERT
SAMPLING FIRM / LOGGER: BARR / D.KLIMKOWICZ
DRILLING METHOD: 3.25" HSA
SAMPLING METHOD: SPT / ST

DRILL RIG: CME 45B
HAMMER: CME AUTOMATIC
CALIBRATION DATE: 1/26/14
ENERGY RATIO (%): 77.4

STATION / OFFSET: 400+40, 118' LT.
ALIGNMENT: RAMP A2
ELEVATION: 680.1 (MSL) EOB: 61.5 ft.
LAT / LONG: 41.491612, -81.674219

EXPLORATION ID B-061-0-14

MATERIAL DESCRIPTION AND NOTES	ELEV.	DEPTHS	SPT/ RQD	N_{60}	REC (%)	SAMPLE ID	HP (tsf)	GRADATION (%) GR	CS	FS	SI	CL	ATTERBERG LL	PL	PI	WC	ODOT CLASS (GI)	BACK FILL
4.0", **ASPHALT**	679.7																	
9.0", **CONCRETE**	679.0																	
6.0", **GRANULAR BASE**	678.5																	
MEDIUM DENSE, BROWN, **COARSE AND FINE SAND**, SOME SILT, TRACE CLAY, TRACE GRAVEL, DAMP	675.6		8 8 7	19	100	SS-1	-	0	22	46	22	10	NP	NP	NP	10	A-3a (0)	
LOOSE TO MEDIUM DENSE, BROWN, **FINE SAND**, LITTLE COARSE SAND, TRACE SILT, TRACE GRAVEL, TRACE CLAY, DRY TO DAMP			3 4 5	12	100	SS-2	-	-	-	-	-	-	-	-	-	5	A-3 (V)	
			3 4 4	10	100	SS-3	-	3	14	77	4	2	NP	NP	NP	6	A-3 (0)	
			3 4 6	13	100	SS-4	-	-	-	-	-	-	-	-	-	5	A-3 (V)	
@12.5'; SS-5 TO SS-8 BECOME "AND" COARSE SAND			3 3 3	8	100	SS-5	-	-	-	-	-	-	-	-	-	6	A-3 (V)	
			2 2 2	5	100	SS-6	-	-	-	-	-	-	-	-	-	5	A-3 (V)	
			3 4 5	12	100	SS-7	-	1	47	44	6	2	NP	NP	NP	4	A-3 (0)	
			2 2 5	9	100	SS-8	-	-	-	-	-	-	-	-	-	6	A-3 (V)	
@22.5'; SS-9 AND SS-10 BECOME TRACE COARSE SAND			2 3 3	8	100	SS-9	-	-	-	-	-	-	-	-	-	4	A-3 (V)	
	653.1		3 4 4	10	100	SS-10	-	-	-	-	-	-	-	-	-	6	A-3 (V)	
MEDIUM DENSE, BROWN, **COARSE AND FINE SAND**, TRACE GRAVEL, TRACE SILT, TRACE CLAY, WET		W 652.6	3 10 8	23	100	SS-11	-	-	-	-	-	-	-	-	-	18	A-3a (V)	
	648.8		3 8 8	21	100	SS-12A	-	-	-	-	-	-	-	-	-	20	A-3a (V)	
						SS-12B	-	-	-	-	-	-	-	-	-	34	A-4a (V)	
MEDIUM DENSE, BROWN BECOMING GRAYISH BROWN, **SANDY SILT**, LITTLE GRAVEL, LITTLE CLAY, WET			2 5 4	12	100	SS-13	-	14	1	25	48	12	NP	NP	NP	27	A-4a (5)	
			3 3 6	12	100	SS-14	-	-	-	-	-	-	-	-	-	28	A-4a (V)	
	636.8		4 12 20	41	100	SS-15	-	-	-	-	-	-	-	-	-	13	A-1-b (V)	
DENSE, GRAYISH BROWN, **GRAVEL WITH SAND**, TRACE SILT, TRACE CLAY, MOIST	631.8																	
MEDIUM DENSE, GRAYISH BROWN, **SILT**, TRACE CLAY, TRACE SAND, TRACE GRAVEL, WET			3 7 12	25	100	SS-16	-	-	-	-	-	-	-	-	-	25	A-4b (V)	
@56.6'; UNIT WEIGHT: 135.6 PCF @ 21.4% MC					100	ST-17	-	0	0	5	87	8	NP	NP	NP	21	A-4b (8)	

Preliminary Plans - For Reference Only

STANDARD ODOT SOIL BORING LOG (11 X 17) - OH DOT.GDT - 1/3/24 15:27 - X:\ACTIVE PROJECTS\ACTIVE SOIL PROJECTS\1ARCHIVE BY YEAR\2017 ARCHIVE\CUY-CCG3 82380\GINT FILES\CUY-CCG3 MASTER - LR UPDATED.GPJ

DESIGN AGENCY
2800 CORPORATE EXCHANGE DR. SUITE 240
COLUMBUS, OH. 43231
TEL:614.714.0299
WWW.NEASINC.COM

DESIGNER MWJ & DT
REVIEWER BPA 08/23/24
PROJECT ID 82382
SHEET 117 SUBSET TOTAL 310
SHEET P 2503 TOTAL 2696

GEOTECHNICAL PROFILE - ROADWAY
BRIDGE NO. CUY-77-1587 RAMP A2 FLYOVER
BORING LOG B-061-0-14

MODEL: Sheet PAPERSIZE: 34x22 (in.) DATE: 3/28/2025 TIME: 9:52:56 AM USER: Asiddiqi
pw:\\mb-us-pw.bentley.com:mb-us-pw-03\Documents\Cleveland_OH\01_Projects\ODOT\District12\82382\400-Engineering\Geotechnical\Sheets\82382_ZL004.dgn

PID: 82380 | SFN: | PROJECT: CUY-CCG3 | STATION / OFFSET: 400+40, 118' LT. | START: 12/31/14 | END: 12/31/14 | PG 2 OF 2 | B-061-0-14

MATERIAL DESCRIPTION AND NOTES	ELEV.	DEPTHS	SPT/ RQD	N_{60}	REC (%)	SAMPLE ID	HP (tsf)	GRADATION (%) GR	CS	FS	SI	CL	ATTERBERG LL	PL	PI	WC	ODOT CLASS (GI)	BACK FILL
MEDIUM DENSE, GRAYISH BROWN, **SILT**, TRACE CLAY, TRACE SAND, TRACE GRAVEL, WET *(continued)* @60.0'; SS-18 CONTAINS DECAYED VEGETATION	620.1	61	4 5 7	15	100	SS-18	-	-	-	-	-	-	-	-	-	30	A-4b (V)	
	618.6	EOB																

Preliminary Plans - For Reference Only

STANDARD ODOT SOIL BORING LOG (11 X 17) - OH DOT.GDT - 1/3/24 15:27 - X:\ACTIVE PROJECTS\ACTIVE SOIL PROJECTS\1ARCHIVE BY YEAR\2017 ARCHIVE\CUY-CCG3 82380\GINT FILES\CUY-CCG3 MASTER - LR UPDATED.GPJ

NOTES: GROUNDWATER ENCOUNTERED AT 27.5' DURING DRILLING, 29.7' UPON COMPLETION. CAVE DEPTH 11.3'.
ABANDONMENT METHODS, MATERIALS, QUANTITIES: PLACED .5 BAG ASPHALT PATCH; SHOVELED SOIL CUTTINGS

DESIGN AGENCY
EAS
2800 CORPORATE EXCHANGE DR. SUITE 240
COLUMBUS, OH. 43231
TEL:614.714.0299
WWW.NEASINC.COM
DESIGNER MW,J & DT
REVIEWER BPA 08/23/24

PROJECT ID 82382
SUBSET 118 TOTAL 310
SHEET P 2504 TOTAL 2696

GEOTECHNICAL PROFILE - ROADWAY
BRIDGE NO. CUY-77-1587 RAMP A2 FLYOVER
BORING LOG B-061-0-14 (CONTINUED)

MODEL: Sheet PAPERSIZE: 34x22 (in.) DATE: 3/28/2025 TIME: 9:53:12 AM USER: Asiddiqi
pw:\\mb-us-pw.bentley.com:mb-us-pw-03\Documents\Cleveland_OH\01_Projects\ODOT\District12\82382\400-Engineering\Geotechnical\Sheets\82382_ZL005.dgn

STANDARD ODOT SOIL BORING LOG (8.5 X 11) - OH DOT.GDT - 1/3/24 15:16 - X:\ACTIVE PROJECTS\ACTIVE SOIL PROJECTS\1\ARCHIVE BY YEAR\2017 ARCHIVE\CUY-CCG3 82380\GINT FILES\CU

PROJECT: CUY-CCG3 | DRILLING FIRM / OPERATOR: BARR / T.GILBERT | DRILL RIG: CME 55 | STATION / OFFSET: 400+83, 91' LT. | EXPLORATION ID B-062-0-14
TYPE: RETAINING WALL | SAMPLING FIRM / LOGGER: BARR / D.KLIMKOWICZ | HAMMER: CME AUTOMATIC | ALIGNMENT: RAMP A2
PID: 82380 SFN: | DRILLING METHOD: 3.25" HSA | CALIBRATION DATE: 1/26/14 | ELEVATION: 679.3 (MSL) EOB: 61.5 ft. | PAGE 1 OF 2
START: 1/14/15 END: 1/14/15 | SAMPLING METHOD: SPT / ST | ENERGY RATIO (%): 78.8 | LAT / LONG: 41.491715, -81.674342

MATERIAL DESCRIPTION AND NOTES	ELEV. 679.3	DEPTHS	SPT/ RQD	N_{60}	REC (%)	SAMPLE ID	HP (tsf)	GRADATION (%) GR	CS	FS	SI	CL	ATTERBERG LL	PL	PI	WC	ODOT CLASS (GI)	BACK FILL
6.0", **ASPHALT**	678.8																	
18.0", **CONCRETE**	677.3																	
6.0", **GRANULAR BASE**	676.8																	
MEDIUM DENSE, BROWN, **GRAVEL WITH SAND**, TRACE SILT, TRACE CLAY, DAMP **(FILL)**	673.3		6 10 12	29	100	SS-1	-	19	38	26	10	7	NP	NP	NP	9	A-1-b (0)	
			5 7 7	18	100	SS-2A	-	-	-	-	-	-	-	-	-	8	A-1-b (V)	
						SS-2B	1.25	-	-	-	-	-	-	-	-	17	A-6a (V)	
STIFF, GRAY, **SILT AND CLAY**, TRACE SAND, TRACE GRAVEL, MOIST **(POSSIBLE FILL)**	672.3																	
LOOSE TO MEDIUM DENSE, BROWN, **FINE SAND**, LITTLE COARSE SAND, TRACE GRAVEL, TRACE SILT, TRACE CLAY, DAMP			4 4 4	11	100	SS-3	-	-	-	-	-	-	-	-	-	8	A-3 (V)	
			4 3 3	8	100	SS-4	-	-	-	-	-	-	-	-	-	7	A-3 (V)	
@12.5'; SS-5 TO SS-8 BECOME LIGHT BROWN			3 4 4	11	100	SS-5	-	4	13	79	2	2	NP	NP	NP	7	A-3 (0)	
			2 2 3	7	100	SS-6	-	-	-	-	-	-	-	-	-	5	A-3 (V)	
			4 5 5	13	100	SS-7	-	-	-	-	-	-	-	-	-	5	A-3 (V)	
			2 3 3	8	100	SS-8	-	-	-	-	-	-	-	-	-	6	A-3 (V)	
	657.3																	
LOOSE TO MEDIUM DENSE, LIGHT BROWN, GRAYISH BROWN AND BLACK, **COARSE AND FINE SAND**, LITTLE SILT, LITTLE CLAY, TRACE GRAVEL, DAMP TO WET @22.5'; SS-9 CONTAINS IRON STAINING			3 5 5	13	100	SS-9	-	-	-	-	-	-	-	-	-	7	A-3a (V)	
			3 3 3	8	100	SS-10	-	-	-	-	-	-	-	-	-	13	A-3a (V)	
		W 651.8																
			3 3 3	8	11	SS-11	-	1	14	55	19	11	NP	NP	NP	15	A-3a (0)	

STANDARD ODOT SOIL BORING LOG (8.5 X 11) - OH DOT.GDT - 1/3/24 15:16 - X:\ACTIVE PROJECTS\ACTIVE SOIL PROJECTS\1\ARCHIVE BY YEAR\2017 ARCHIVE\CUY-CCG3 82380\GINT FILES\CU

PID: 82380 | SFN: | PROJECT: CUY-CCG3 | STATION / OFFSET: 400+83, 91' LT. | START: 1/14/15 | END: 1/14/15 | PG 2 OF 2 | B-062-0-14

MATERIAL DESCRIPTION AND NOTES	ELEV. 649.3	DEPTHS	SPT/ RQD	N_{60}	REC (%)	SAMPLE ID	HP (tsf)	GRADATION (%) GR	CS	FS	SI	CL	ATTERBERG LL	PL	PI	WC	ODOT CLASS (GI)	BACK FILL
LOOSE TO MEDIUM DENSE, LIGHT BROWN, GRAYISH BROWN AND BLACK, **COARSE AND FINE SAND**, LITTLE SILT, LITTLE CLAY, TRACE GRAVEL, DAMP TO WET *(continued)* @30.0'; SS-12 CONTAINS "SILT AND CLAY" LENSES	646.0		3 6 8	18	100	SS-12	-	-	-	-	-	-	-	-	-	25	A-3a (V)	
LOOSE TO MEDIUM DENSE, GRAYISH BROWN, **SANDY SILT**, TRACE TO LITTLE CLAY, TRACE GRAVEL, WET			8 6 8	18	100	SS-13	-	1	4	49	35	11	NP	NP	NP	22	A-4a (2)	
			3 2 3	7	100	SS-14	-	-	-	-	-	-	-	-	-	33	A-4a (V)	
@46.3'; UNIT WEIGHT: 132.1 PCF @ 19.9% MC	630.8				88	ST-15	-	0	1	47	42	10	NP	NP	NP	20	A-4a (3)	
STIFF TO HARD, GRAYISH BROWN, **SILT**, SOME CLAY, LITTLE SAND, CONTAINS NO INTACT SOIL FOR HP READINGS, WET TO MOIST			10 12 18	39	100	SS-16	-	-	-	-	-	-	-	-	-	22	A-4b (V)	
			4 6 4	13	100	SS-17	-	0	1	14	64	21	24	18	6	21	A-4b (8)	
	617.8	EOB	4 10 11	28	100	SS-18	-	-	-	-	-	-	-	-	-	20	A-4b (V)	

NOTES: GROUNDWATER ENCOUNTERED AT 27.5' DURING DRILLING. CAVE DEPTH 25.0'.
ABANDONMENT METHODS, MATERIALS, QUANTITIES: PLACED .5 BAG ASPHALT PATCH; SHOVELED SOIL CUTTINGS

Preliminary Plans - For Reference Only

SHEET	TOTAL
P 2505	2696

SUBSET 119 TOTAL 310
PROJECT ID 82382
REVIEWER BPA 08/23/24
DESIGNER MWJ & DT

DESIGN AGENCY
EAS
2800 CORPORATE EXCHANGE DR. SUITE 240
COLUMBUS, OH. 43231
TEL:614.714.0299
WWW.NEASINC.COM

GEOTECHNICAL PROFILE - ROADWAY
BRIDGE NO. CUY-77-1587 RAMP A2 FLYOVER
BORING LOG B-062-0-14

MODEL: Sheet PAPERSIZE: 34x22 (in.) DATE: 3/28/2025 TIME: 9:53:31 AM USER: Asiddiqi
pw:\\mb-us-pw.bentley.com:mb-us-pw-03\Documents\Cleveland_OH\01_Projects\ODOT\District12\82382\400-Engineering\Geotechnical\Sheets\82382_ZL006.dgn

PROJECT: CUY-CCG3
TYPE: RETAINING WALL
PID: 82380 SFN:
START: 11/11/14 END: 11/13/14

DRILLING FIRM / OPERATOR: BARR / P.STROUD
SAMPLING FIRM / LOGGER: BARR / Z.JEWELL
DRILLING METHOD: 3.25" HSA
SAMPLING METHOD: SPT

DRILL RIG: MOBILE B-58
HAMMER: MOBILE AUTOMATIC
CALIBRATION DATE: 1/26/14
ENERGY RATIO (%): 90*

STATION / OFFSET: 1070+82, 7' RT.
ALIGNMENT: RAMP H5 INTERIM
ELEVATION: 695.3 (MSL) EOB: 61.5 ft.
LAT / LONG: 41.492217, -81.674156

EXPLORATION ID B-063-0-14

MATERIAL DESCRIPTION AND NOTES	ELEV. 695.3	DEPTHS	SPT/ RQD	N_{60}	REC (%)	SAMPLE ID	HP (tsf)	GRADATION (%) GR	CS	FS	SI	CL	ATTERBERG LL	PL	PI	WC	ODOT CLASS (GI)	BACK FILL
6.0", **ASPHALT**	694.8																	
12.0", **CONCRETE**	693.8																	
6.0", **GRANULAR BASE**	693.3																	
VERY STIFF, BROWN AND GRAY, **SILTY CLAY**, LITTLE SAND, TRACE GRAVEL, CONTAINS FEW BRICK FRAGMENTS, DAMP **(FILL)**	690.8		3 5 7	18	100	SS-1	3.50	9	6	14	38	33	39	19	20	17	A-6b (11)	
HARD, DARK GRAY AND BROWN, **SANDY SILT**, LITTLE CLAY, TRACE GRAVEL, DAMP **(FILL)**	688.3		5 7 8	23	100	SS-2	4.50	9	9	35	31	16	26	18	8	15	A-4a (2)	
VERY DENSE, BROWN, **GRAVEL WITH SAND AND SILT** TRACE CLAY, CONTAINS BRICK AND CONCRETE FRAGMENTS, DAMP **(FILL)**	681.0		36 20 17	56	100	SS-3	-	-	-	-	-	-	-	-	-	7	A-2-4 (V)	
			50/1"	-	100	SS-4	-	-	-	-	-	-	-	-	-	7	A-2-4 (V)	
			16 49 50/1"	-	100	SS-5	-	32	14	26	19	9	22	18	4	9	A-2-4 (0)	
VERY DENSE, DARK BROWN, **COARSE AND FINE SAND** LITTLE GRAVEL, SOME SILT, TRACE CLAY, MOIST **(FILL)**	678.8		50/5"	-	100	SS-6	-	-	-	-	-	-	-	-	-	11	A-3a (V)	
MEDIUM DENSE, DARK BROWN AND REDDISH BROWN, **GRAVEL WITH SAND** LITTLE SILT, TRACE CLAY, CONTAINS BRICK AND GLASS FRAGMENTS, WET **(FILL)**	675.8		5 6 6	18	94	SS-7	-	29	24	28	14	5	NP	NP	NP	14	A-1-b (0)	
MEDIUM DENSE, BROWN AND BLACK, **COARSE AND FINE SAND**, SOME GRAVEL, LITTLE SILT, TRACE CLAY, WET **(FILL)**	673.3		5 7 6	20	89	SS-8	-	22	19	36	15	8	NP	NP	NP	14	A-3a (0)	
MEDIUM DENSE TO DENSE, BROWN, **COARSE AND FINE SAND**, TRACE TO LITTLE SILT, TRACE GRAVEL, TRACE CLAY, DRY			3 4 5	14	94	SS-9	-	-	-	-	-	-	-	-	-	5	A-3a (V)	
			3 3 4	11	100	SS-10	-	-	-	-	-	-	-	-	-	4	A-3a (V)	
			2 4 3	11	78	SS-11	-	-	-	-	-	-	-	-	-	6	A-3a (V)	
			3 7 7	21	100	SS-12	-	-	-	-	-	-	-	-	-	5	A-3a (V)	
			4 9 12	32	100	SS-13	-	7	35	47	8	3	NP	NP	NP	5	A-3a (0)	
@40.0'; SS-14 TO SS-16 BECOME MOIST TO WET			4 5 5	15	100	SS-14	-	-	-	-	-	-	-	-	-	10	A-3a (V)	
		W 650.3																
			3 4 5	14	100	SS-15	-	-	-	-	-	-	-	-	-	22	A-3a (V)	
@50.0'; SS-16 BECOMES GRAYISH BROWN			6 11 11	33	100	SS-16	-	-	-	-	-	-	-	-	-	15	A-3a (V)	
	642.0																	
DENSE, GRAYISH BROWN, **SANDY SILT**, TRACE CLAY, TRACE GRAVEL, WET TO MOIST			8 11 12	35	100	SS-17	-	3	11	46	31	9	NP	NP	NP	19	A-4a (1)	

Preliminary Plans - For Reference Only

STANDARD ODOT SOIL BORING LOG (11 X 17) - OH DOT.GDT - 6/22/22 17:58 - X:\ACTIVE PROJECTS\ACTIVE SOIL PROJECTS\1ARCHIVE BY YEAR\2017 ARCHIVE\CUY-CCG3 82380\GINT FILES\CUY-CCG3 MASTER - LR UPDATED.GPJ

DESIGN AGENCY
2800 CORPORATE EXCHANGE DR. SUITE 240
COLUMBUS, OH. 43231
TEL:614.714.0299
WWW.NEASINC.COM

DESIGNER MW.J & DT
REVIEWER BPA 08/23/24
PROJECT ID 82382
SUBSET 120 TOTAL 310
SHEET P 2506 TOTAL 2696

GEOTECHNICAL PROFILE - ROADWAY
RAMP H5 INTERIM
BORING LOG B-063-0-14

MODEL: Sheet PAPERSIZE: 34x22 (in.) DATE: 3/28/2025 TIME: 9:53:59 AM USER: Asiddiqi
pw:\\mb-us-pw.bentley.com:mb-us-pw-03\Documents\Cleveland_OH\01_Projects\ODOT\District12\82382\400-Engineering\Geotechnical\Sheets\82382_ZL007.dgn

PID: 82380 | SFN: | PROJECT: CUY-CCG3 | STATION / OFFSET: 1070+82, 7' RT. | START: 11/11/14 | END: 11/13/14 | PG 2 OF 2 | B-063-0-14

MATERIAL DESCRIPTION AND NOTES	ELEV.	DEPTHS	SPT/ RQD	N_{60}	REC (%)	SAMPLE ID	HP (tsf)	GRADATION (%) GR	CS	FS	SI	CL	ATTERBERG LL	PL	PI	WC	ODOT CLASS (GI)	BACK FILL
DENSE, GRAYISH BROWN, **SANDY SILT**, TRACE CLAY, TRACE GRAVEL, WET TO MOIST *(continued)*	635.3	61	8 11 14	38	100	SS-18	-	-	-	-	-	-	-	-	-	14	A-4a (V)	
	633.8	EOB																

Preliminary Plans - For Reference Only

NOTES: GROUNDWATER ENCOUNTERED AT 38.0' DURING DRILLING. CAVE DEPTH 45.0'.
ABANDONMENT METHODS, MATERIALS, QUANTITIES: PLACED .5 BAG ASPHALT PATCH; SHOVELED SOIL CUTTINGS

STANDARD ODOT SOIL BORING LOG (11 X 17) - OH DOT.GDT - 6/22/22 17:58 - X:\ACTIVE PROJECTS\ACTIVE SOIL PROJECTS\1ARCHIVE BY YEAR\2017 ARCHIVE\CUY-CCG3 82380\GINT FILES\CUY-CCG3 MASTER - LR UPDATED.GPJ

SHEET P 2507 | TOTAL 2696
SUBSET 121 | TOTAL 310
PROJECT ID 82382
REVIEWER BPA 08/23/24
DESIGNER MWJ & DT
DESIGN AGENCY
2800 CORPORATE EXCHANGE DR. SUITE 240 COLUMBUS, OH. 43231
TEL:614.714.0299
WWW.NEASINC.COM

GEOTECHNICAL PROFILE - ROADWAY
RAMP H5 INTERIM
BORING LOG B-063-0-14 (CONTINUED)

MODEL: Sheet PAPERSIZE: 34x22 (in.) DATE: 3/28/2025 TIME: 9:54:15 AM USER: Asiddiqi
pw:\\mb-us-pw.bentley.com:mb-us-pw-03\Documents\Cleveland_OH\01_Projects\ODOT\District12\82382\400-Engineering\Geotechnical\Sheets\82382_ZL008.dgn

PROJECT: CUY-CCG3
TYPE: RETAINING WALL
PID: 82380 SFN:
START: 11/6/14 END: 11/6/14

DRILLING FIRM / OPERATOR: BARR / T.GILBERT
SAMPLING FIRM / LOGGER: BARR / D.LYON
DRILLING METHOD: 3.25" HSA
SAMPLING METHOD: SPT

DRILL RIG: CME 45B
HAMMER: CME AUTOMATIC
CALIBRATION DATE: 1/26/14
ENERGY RATIO (%): 77.4

STATION / OFFSET: 1073+09, 6' RT.
ALIGNMENT: RAMP H5 INTERIM
ELEVATION: 696.0 (MSL) EOB: 61.5 ft.
LAT / LONG: 41.492380, -81.674954

EXPLORATION ID B-064-0-14

MATERIAL DESCRIPTION AND NOTES	ELEV.	DEPTHS	SPT/ RQD	N_{60}	REC (%)	SAMPLE ID	HP (tsf)	GRADATION (%) GR	CS	FS	SI	CL	ATTERBERG LL	PL	PI	WC	ODOT CLASS (GI)	BACK FILL
7.0", **ASPHALT**	696.0																	
11.0", **CONCRETE**	695.4																	
DENSE, BROWN, **COARSE AND FINE SAND** TRACE GRAVEL, LITTLE SILT, TRACE CLAY, DAMP **(FILL)**	694.5		5 10 15	32	89	SS-1	-	-	-	-	-	-	-	-	-	10	A-3a (V)	
DENSE TO VERY DENSE, BROWN AND GRAYISH BROWN, **SANDY SILT**, LITTLE CLAY, TRACE GRAVEL, CONTAINS BRICK FRAGMENTS, DAMP **(FILL)**	693.0		7 13 14	35	94	SS-2	-	4	13	45	27	11	NP	NP	NP	10	A-4a (1)	
			14 18 17	45	83	SS-3	-	-	-	-	-	-	-	-	-	10	A-4a (V)	
			23 29 37	85	100	SS-4	-	-	-	-	-	-	-	-	-	10	A-4a (V)	
@10.0'; SS-5 CHANGES TO BROWN, CONTAINS SLAG AND BRICK FRAGMENTS	684.0		11 22 28	65	100	SS-5	-	-	-	-	-	-	-	-	-	8	A-4a (V)	
DENSE, GRAYISH BROWN, **FINE SAND**, TRACE COARSE SAND, TRACE SILT, TRACE GRAVEL, TRACE CLAY, CONTAINS LUMPS OF SANDY SILT, WET **(FILL)**	681.5		11 9 25	44	100	SS-6	-	-	-	-	-	-	-	-	-	15	A-3 (V)	
VERY DENSE, GRAYISH BROWN, **SANDY SILT**, TRACE CLAY, TRACE GRAVEL, CONTAINS BRICK, DAMP **(FILL)**	679.2		7 26 50/0"	-	90	SS-7	-	2	9	51	30	8	NP	NP	NP	8	A-4a (1)	
DENSE, **COARSE AND FINE SAND** LITTLE SILT, LITTLE GRAVEL, TRACE CLAY, COMPOSED OF CINDERS, WET **(FILL)**	676.5		33 22 12	44	100	SS-8	-	15	28	30	20	7	NP	NP	NP	21	A-3a (0)	
MEDIUM DENSE, ORANGISH BROWN, **COARSE AND FINE SAND**, LITTLE GRAVEL, TRACE SILT, TRACE CLAY, MOIST	674.0		6 5 7	15	100	SS-9	-	-	-	-	-	-	-	-	-	8	A-3a (V)	
MEDIUM DENSE, LIGHT BROWN AND DARK GRAYISH BROWN, **FINE SAND**, LITTLE TO SOME COARSE SAND, TRACE GRAVEL, TRACE SILT, TRACE CLAY, DAMP TO DRY			10 5 6	14	100	SS-10	-	-	-	-	-	-	-	-	-	5	A-3 (V)	
			3 5 8	17	100	SS-11	-	-	-	-	-	-	-	-	-	4	A-3 (V)	
			6 4 5	12	100	SS-12	-	-	-	-	-	-	-	-	-	7	A-3 (V)	
			4 6 6	15	100	SS-13	-	9	28	57	4	2	NP	NP	NP	5	A-3 (0)	
		W 654.0	4 8 9	22	100	SS-14	-	-	-	-	-	-	-	-	-	4	A-3 (V)	
			6 7 12	25	100	SS-15	-	-	-	-	-	-	-	-	-	6	A-3 (V)	
MEDIUM DENSE, BROWN, **COARSE AND FINE SAND** LITTLE SILT, TRACE CLAY, TRACE GRAVEL, WET	652.7		2 4 5	12	100	SS-16	-	-	-	-	-	-	-	-	-	14	A-3a (V)	
DENSE, BROWN, **FINE SAND**, TRACE COARSE SAND, TRACE GRAVEL, TRACE SILT, TRACE CLAY, WET	647.7	▼	5 8 18	34	100	SS-17	-	4	8	83	4	1	NP	NP	NP	21	A-3 (0)	
			5 10 17	35	100	SS-18	-	-	-	-	-	-	-	-	-	22	A-3 (V)	
DENSE, BROWN, **COARSE AND FINE SAND** LITTLE SILT, TRACE GRAVEL, TRACE CLAY, WET	637.7																	

Preliminary Plans - For Reference Only

STANDARD ODOT SOIL BORING LOG (11 X 17) - OH DOT.GDT - 6/22/22 17:58 - X:\ACTIVE PROJECTS\ACTIVE SOIL PROJECTS\1ARCHIVE BY YEAR\2017 ARCHIVE\CUY-CCG3 82380\GINT FILES\CUY-CCG3 MASTER - LR UPDATED.GPJ

DESIGN AGENCY
EAS
2800 CORPORATE EXCHANGE DR. SUITE 240 COLUMBUS, OH. 43231
TEL: 614.714.0299
WWW.NEASINC.COM

DESIGNER MWJ & DT
REVIEWER BPA 08/23/24
PROJECT ID 82382
SUBSET 122 TOTAL 310
SHEET P 2508 TOTAL 2696

GEOTECHNICAL PROFILE - ROADWAY
RAMP H5 INTERIM
BORING LOG B-064-0-14

MODEL: Sheet PAPERSIZE: 34x22 (in.) DATE: 3/28/2025 TIME: 9:54:41 AM USER: Asiddiqi
pw:\\mb-us-pw.bentley.com:mb-us-pw-03\Documents\Cleveland_OH\01_Projects\ODOT\District12\82382\400-Engineering\Geotechnical\Sheets\82382_ZL009.dgn

PID: 82380 | SFN: | PROJECT: CUY-CCG3 | STATION / OFFSET: 1073+09, 6' RT. | START: 11/6/14 | END: 11/6/14 | PG 2 OF 2 | B-064-0-14

MATERIAL DESCRIPTION AND NOTES	ELEV.	DEPTHS	SPT/ RQD	N_{60}	REC (%)	SAMPLE ID	HP (tsf)	GRADATION (%) GR	CS	FS	SI	CL	ATTERBERG LL	PL	PI	WC	ODOT CLASS (GI)	BACK FILL
DENSE, BROWN, **COARSE AND FINE SAND**LITTLE SILT, TRACE GRAVEL, TRACE CLAY, WET *(continued)*	636.0																	
	634.5	EOB 61	9 15 18	43	100	SS-19	-	-	-	-	-	-	-	-	-	16	A-3a (V)	

Preliminary Plans - For Reference Only

STANDARD ODOT SOIL BORING LOG (11 X 17) - OH DOT.GDT - 6/22/22 17:58 - X:\ACTIVE PROJECTS\ACTIVE SOIL PROJECTS\1ARCHIVE BY YEAR\2017 ARCHIVE\CUY-CCG3 82380\GINT FILES\CUY-CCG3 MASTER - LR UPDATED.GPJ

NOTES: GROUNDWATER ENCOUNTERED AT 42.0' DURING DRILLING, 49.8' UPON COMPLETION. CAVE DEPTH 37.1'.
ABANDONMENT METHODS, MATERIALS, QUANTITIES: PLACED .5 BAG ASPHALT PATCH; SHOVELED SOIL CUTTINGS

DESIGN AGENCY
EAS
2800 CORPORATE EXCHANGE DR. SUITE 240
COLUMBUS, OH. 43231
TEL:614.714.0299
WWW.NEASINC.COM

DESIGNER MW,J & DT
REVIEWER BPA 08/23/24
PROJECT ID 82382
SHEET 123 TOTAL 310
P 2509 TOTAL 2696

GEOTECHNICAL PROFILE - ROADWAY
RAMP H5 INTERIM
BORING LOG B-064-0-14 (CONTINUED)

MODEL: Sheet PAPERSIZE: 34x22 (in.) DATE: 3/28/2025 TIME: 9:54:56 AM USER: Asiddiqi
pw:\\mb-us-pw.bentley.com:mb-us-pw-03\Documents\Cleveland_OH\01_Projects\ODOT\District12\82382\400-Engineering\Geotechnical\Sheets\82382_ZL010.dgn

PROJECT: CUY-CCG3
TYPE: BRIDGE
PID: 82380 SFN:
START: 12/23/14 END: 12/23/14

DRILLING FIRM / OPERATOR: BARR / P.STROUD
SAMPLING FIRM / LOGGER: BARR / D.KLIMKOWICZ
DRILLING METHOD: 3.25" HSA
SAMPLING METHOD: SPT / ST

DRILL RIG: MOBILE B-58
HAMMER: MOBILE AUTOMATIC
CALIBRATION DATE: 1/26/14
ENERGY RATIO (%): 90*

STATION / OFFSET: 12+91, 37' RT.
ALIGNMENT: E 22ND ST
ELEVATION: 675.9 (MSL) EOB: 111.5 ft.
LAT / LONG: 41.492523, -81.675380

EXPLORATION ID B-067-0-14

MATERIAL DESCRIPTION AND NOTES	ELEV. 675.9	DEPTHS	SPT/ RQD	N_{60}	REC (%)	SAMPLE ID	HP (tsf)	GRADATION (%) GR	CS	FS	SI	CL	ATTERBERG LL	PL	PI	WC	ODOT CLASS (GI)	BACK FILL
4.0", **ASPHALT**	675.5																	
14.0", **CONCRETE**	674.4																	
6.0", **GRANULAR BASE**	673.9																	
LOOSE, BROWN, **FINE SAND**, SOME COARSE SAND, LITTLE GRAVEL, TRACE SILT, TRACE CLAY, DAMP			4 3 3	9	100	SS-1	-	14	22	54	7	3	NP	NP	NP	8	A-3 (0)	
			7 3 2	8	100	SS-2	-	-	-	-	-	-	-	-	-	7	A-3 (V)	
	668.9																	
LOOSE TO MEDIUM DENSE, BROWN, **GRAVEL WITH SAND**, TRACE SILT, TRACE CLAY, DAMP			4 4 2	9	100	SS-3	-	-	-	-	-	-	-	-	-	7	A-1-b (V)	
			6 6 5	17	100	SS-4	-	18	33	39	7	3	NP	NP	NP	7	A-1-b (0)	
	663.9																	
LOOSE, BROWN, **COARSE AND FINE SAND** TRACE GRAVEL, TRACE SILT, TRACE CLAY, DAMP	662.7		3 5 6	17	100	SS-5A	-	-	-	-	-	-	-	-	-	9	A-3a (V)	
MEDIUM STIFF TO STIFF, BROWN, **SILT**, SOME CLAY, TRACE TO LITTLE SAND, TRACE GRAVEL, WET						SS-5B	1.50	0	0	10	57	33	26	16	10	24	A-4b (8)	
	660.5					SS-6A	0.75	1	2	15	56	26	22	15	7	22	A-4b (8)	
MEDIUM DENSE, BROWN, **FINE SAND**, TRACE COARSE SAND, TRACE GRAVEL, TRACE SILT, TRACE CLAY, DAMP	658.9		5 7 8	23	100	SS-6B	-	-	-	-	-	-	-	-	-	9	A-3 (V)	
MEDIUM DENSE TO DENSE, BROWN, **COARSE AND FINE SAND**, LITTLE TO SOME SILT, TRACE CLAY, TRACE GRAVEL, DAMP TO MOIST			5 9 13	33	100	SS-7	-	-	-	-	-	-	-	-	-	5	A-3a (V)	
			8 6 10	24	100	SS-8	-	-	-	-	-	-	-	-	-	12	A-3a (V)	
		W 653.4																
@22.5'; SS-9 TO SS-14 BECOME WET			5 6 11	26	100	SS-9	-	-	-	-	-	-	-	-	-	24	A-3a (V)	
@25.0'; SS-10 TO SS-14 BECOME GRAYISH BROWN			7 6 10	24	100	SS-10	-	0	1	73	23	3	NP	NP	NP	25	A-3a (0)	
			8 12 18	45	100	SS-11	-	-	-	-	-	-	-	-	-	20	A-3a (V)	
			4 6 8	21	100	SS-12	-	-	-	-	-	-	-	-	-	24	A-3a (V)	
			4 7 10	26	100	SS-13	-	-	-	-	-	-	-	-	-	25	A-3a (V)	
			3 5 7	18	100	SS-14	-	-	-	-	-	-	-	-	-	24	A-3a (V)	
	632.6																	
MEDIUM DENSE, GRAYISH BROWN, **SILT**, LITTLE SAND, LITTLE CLAY, TRACE GRAVEL, ST-17 AND SS-18 CONTAINS NO INTACT SOIL FOR HP READINGS, WET TO MOIST			7 6 7	20	100	SS-15	-	0	0	16	73	11	NP	NP	NP	22	A-4b (8)	
			5 9 9	27	100	SS-16	-	-	-	-	-	-	-	-	-	19	A-4b (V)	
	622.6																	
STIFF TO HARD, GRAYISH BROWN, **SILT**, SOME TO "AND" CLAY, TRACE SAND, TRACE GRAVEL, DAMP TO WET																		
					111	ST-17	-	0	0	2	78	20	26	20	6	18	A-4b (8)	
@56.6'; UNIT WEIGHT: 134.4 PCF @ 18.4% MC																		

Preliminary Plans - For Reference Only

STANDARD ODOT SOIL BORING LOG (11 X 17) - OH DOT.GDT - 1/3/24 15:28 - X:\ACTIVE PROJECTS\ACTIVE SOIL PROJECTS\1ARCHIVE BY YEAR\2017 ARCHIVE\CUY-CCG3 82380\GINT FILES\CUY-CCG3 MASTER - LR UPDATED.GPJ

DESIGN AGENCY
2800 CORPORATE EXCHANGE DR. SUITE 240
COLUMBUS, OH. 43231
TEL:614.714.0299
WWW.NEASINC.COM

DESIGNER MWJ & DT
REVIEWER BPA 08/23/24
PROJECT ID 82382
SHEET P.2510 TOTAL 2696
SUBSET 124 TOTAL 310

GEOTECHNICAL PROFILE - ROADWAY
BRIDGE NO. CUY-90-1678 OVER IR-90
BORING LOG B-067-0-14

MODEL: Sheet PAPERSIZE: 34x22 (in.) DATE: 3/28/2025 TIME: 9:55:23 AM USER: Asiddiqi
pw:\\mb-us-pw.bentley.com:mb-us-pw-03\Documents\Cleveland_OH\01_Projects\ODOT\District12\82382\400-Engineering\Geotechnical\Sheets\82382_ZL011.dgn

PID: 82380 | SFN: | PROJECT: CUY-CCG3 | STATION / OFFSET: 12+91, 37' RT. | START: 12/23/14 | END: 12/23/14 | PG 2 OF 2 | B-067-0-14

MATERIAL DESCRIPTION AND NOTES	ELEV.	DEPTHS	SPT/ RQD	N_{60}	REC (%)	SAMPLE ID	HP (tsf)	GRADATION (%) GR	CS	FS	SI	CL	ATTERBERG LL	PL	PI	WC	ODOT CLASS (GI)	BACK FILL
STIFF TO HARD, GRAYISH BROWN, **SILT**, SOME TO "AND" CLAY, TRACE SAND, TRACE GRAVEL, DAMP TO WET *(continued)*	615.9	61	4 4 6	15	100	SS-18	-	-	-	-	-	-	-	-	-	22	A-4b (V)	
		66	5 11 11	33	100	SS-19	4.50	-	-	-	-	-	-	-	-	17	A-4b (V)	
@71.2'; UNIT WEIGHT: 126.3 PCF @ 27.7% MC		71			133	ST-20	2.25	0	0	1	63	36	30	20	10	28	A-4b (8)	
MEDIUM STIFF TO VERY STIFF, GRAYISH BROWN, **SILT AND CLAY**, TRACE SAND, TRACE GRAVEL, MOIST TO WET	602.6	76	4 3 4	11	100	SS-21	0.60	-	-	-	-	-	-	-	-	25	A-6a (V)	
@80.0'; UNIT WEIGHT: 122.5 PCF @ 27.7% MC		81			100	ST-22	2.60	0	0	2	53	45	30	19	11	28	A-6a (8)	
		86	7 10 12	33	100	SS-23	3.50	-	-	-	-	-	-	-	-	19	A-6a (V)	
VERY STIFF, GRAYISH BROWN, **SILT**, SOME CLAY, TRACE SAND, TRACE GRAVEL, DAMP TO MOIST	587.6																	
@91.2'; UNIT WEIGHT: 136.7 PCF @ 18.9% MC		91			100	ST-24	2.50	0	0	0	72	28	26	19	7	19	A-4b (8)	
@95.0'; SS-25 CONTAINS MANY SILTY CLAY LENSES		96	7 9 12	32	100	SS-25	3.50	-	-	-	-	-	-	-	-	21	A-4b (V)	
SOFT TO VERY STIFF, GRAYISH BROWN, **SILTY CLAY**, TRACE SAND, TRACE GRAVEL, MOIST	577.6																	
@100.0'; SS-26 CONTAINS MANY SILT LENSES		101	6 7 7	21	100	SS-26	2.00	-	-	-	-	-	-	-	-	24	A-6b (V)	
		106	5 6 7	20	100	SS-27	1.00	0	2	4	45	49	34	17	17	26	A-6b (11)	
	564.4	EOB 111	6 5 5	15	100	SS-28	0.50	-	-	-	-	-	-	-	-	29	A-6b (V)	

NOTES: GROUNDWATER ENCOUNTERED AT 22.5' DURING DRILLING. HOLE DID NOT CAVE.
ABANDONMENT METHODS, MATERIALS, QUANTITIES: PLACED .5 BAG ASPHALT PATCH; SHOVELED SOIL CUTTINGS

Preliminary Plans - For Reference Only

STANDARD ODOT SOIL BORING LOG (11 X 17) - OH DOT.GDT - 1/3/24 15:28 - X:\ACTIVE PROJECTS\ACTIVE SOIL PROJECTS\1ARCHIVE BY YEAR\2017 ARCHIVE\CUY-CCG3 82380\GINT FILES\CUY-CCG3 MASTER - LR UPDATED.GPJ

DESIGN AGENCY
EAS
2800 CORPORATE EXCHANGE DR. SUITE 240
COLUMBUS, OH. 43231
TEL:614.714.0299
WWW.JKEASINC.COM

DESIGNER MWJ & DT
REVIEWER BPA 08/23/24
PROJECT ID 82382
SHEET P 2511 | SUBSET 125 | TOTAL 310 | TOTAL 2696

GEOTECHNICAL PROFILE - ROADWAY
BRIDGE NO. CUY-90-1678 OVER IR-90
BORING LOG B-067-0-14 (CONTINUED)

MODEL: Sheet PAPERSIZE: 34x22 (in.) DATE: 3/28/2025 TIME: 9:55:42 AM USER: Asiddiqi
pw:\\mb-us-pw.bentley.com:mb-us-pw-03\Documents\Cleveland_OH\01_Projects\ODOT\District12\82382\400-Engineering\Geotechnical\Sheets\82382_ZL012.dgn

PROJECT: CUY-CCG3
TYPE: BRIDGE
PID: 82380 SFN:
START: 12/17/14 END: 12/22/14

DRILLING FIRM / OPERATOR: BARR / P.STROUD
SAMPLING FIRM / LOGGER: BARR / C. PIERCE
DRILLING METHOD: 3.25" HSA
SAMPLING METHOD: SPT / ST

DRILL RIG: MOBILE B-58
HAMMER: MOBILE AUTOMATIC
CALIBRATION DATE: 1/26/14
ENERGY RATIO (%): 90"

STATION / OFFSET: 403+25, 2' RT.
ALIGNMENT: RAMP A2
ELEVATION: 696.5 (MSL) EOB: 111.5 ft.
LAT / LONG: 41.492136, -81.675104

EXPLORATION ID B-068-0-14
PAGE 1 OF 2

MATERIAL DESCRIPTION AND NOTES	ELEV. 696.5	DEPTHS	SPT/ RQD	N_{60}	REC (%)	SAMPLE ID	HP (tsf)	GRADATION (%) GR	CS	FS	SI	CL	ATTERBERG LL	PL	PI	WC	ODOT CLASS (GI)	BACK FILL
4.0", **ASPHALT**	696.2																	
8.0", **CONCRETE**	695.5																	
12.0", **GRANULAR BASE**	694.5																	
DENSE, BROWN, **SANDY SILT**, LITTLE CLAY, TRACE GRAVEL, DAMP **(FILL)**	692.0		9 9 11	30	100	SS-1	-	5	12	44	26	13	NP	NP	NP	10	A-4a (1)	
DENSE TO VERY DENSE, BROWN, **COARSE AND FINE SAND**, LITTLE SILT, TRACE CLAY, TRACE GRAVEL, DAMP **(FILL)**			10 10 11	32	100	SS-2	-	-	-	-	-	-	-	-	-	9	A-3a (V)	
			4 13 14	41	100	SS-3	-	-	-	-	-	-	-	-	-	7	A-3a (V)	
@10.0'; SS-4 CHANGES TO GRAYISH BROWN, SOME SILT	684.5		12 15 18	50	100	SS-4	-	5	8	58	24	5	NP	NP	NP	8	A-3a (0)	
DENSE TO VERY DENSE, GRAYISH BROWN, **SANDY SILT**, LITTLE CLAY, TRACE GRAVEL, SS-5 CONTAINS BRICK FRAGMENTS, DAMP **(FILL)**			7 12 15	41	100	SS-5	-	-	-	-	-	-	-	-	-	10	A-4a (V)	
			14 16 20	54	100	SS-6	-	1	10	49	29	11	NP	NP	NP	10	A-4a (1)	
@17.5'; SS-7 CHANGES TO SOME GRAVEL, CONTAINS CONCRETE FRAGMENTS	677.5		50/5"	-	100	SS-7	-	-	-	-	-	-	-	-	-	9	A-4a (V)	
MEDIUM DENSE, ORANGISH BROWN, **GRAVEL WITH SAND**, LITTLE SILT, TRACE CLAY, MOIST	674.5		4 6 4	15	100	SS-8	-	22	30	25	17	6	NP	NP	NP	11	A-1-b (0)	
MEDIUM DENSE, BROWN, **FINE SAND**, TRACE SILT, TRACE COARSE SAND, TRACE CLAY, DAMP			4 6 4	15	100	SS-9	-	-	-	-	-	-	-	-	-	5	A-3 (V)	
			4 4 6	15	100	SS-10	-	-	-	-	-	-	-	-	-	6	A-3 (V)	
			6 4 4	12	100	SS-11	-	1	2	91	4	2	NP	NP	NP	6	A-3 (0)	
MEDIUM DENSE, BROWN, **COARSE AND FINE SAND** SOME SILT, TRACE GRAVEL, TRACE CLAY, CONTAINS SILT SEAMS, MOIST	667.0		4 3 4	11	100	SS-12	-	-	-	-	-	-	-	-	-	10	A-3a (V)	
MEDIUM DENSE, BROWN, **FINE SAND**, SOME COARSE SAND, TRACE SILT, TRACE GRAVEL, TRACE CLAY, DAMP TO DRY	663.2	▼	5 4 4	12	100	SS-13	-	-	-	-	-	-	-	-	-	5	A-3 (V)	
			5 5 7	18	100	SS-14	-	6	24	61	7	2	NP	NP	NP	4	A-3 (0)	
MEDIUM DENSE, BROWN, **COARSE AND FINE SAND** LITTLE GRAVEL, TRACE SILT, TRACE CLAY, WET	653.2	W 652.7	4 3 4	11	100	SS-15	-	-	-	-	-	-	-	-	-	21	A-3a (V)	
VERY DENSE, BROWN, **FINE SAND**, LITTLE COARSE SAND, TRACE SILT, TRACE GRAVEL, TRACE CLAY, WET	648.2		8 14 23	56	100	SS-16	-	-	-	-	-	-	-	-	-	18	A-3 (V)	
@55.0'; SS-17 BECOMES MEDIUM DENSE	638.0		3 5 6	17	100	SS-17	-	5	19	68	6	2	NP	NP	NP	19	A-3 (0)	
MEDIUM DENSE, BROWN, **COARSE AND FINE SAND** LITTLE SILT, TRACE GRAVEL, TRACE CLAY, MOIST																		

Preliminary Plans - For Reference Only

STANDARD ODOT SOIL BORING LOG (11 X 17) - OH DOT.GDT - 1/3/24 15:28 - X:\ACTIVE PROJECTS\ACTIVE SOIL PROJECTS\1ARCHIVE BY YEAR\2017 ARCHIVE\CUY-CCG3 82380\GINT FILES\CUY-CCG3 MASTER - LR UPDATED.GPJ

DESIGN AGENCY
2800 CORPORATE EXCHANGE DR. SUITE 240 COLUMBUS, OH. 43231
TEL:614.714.0299
WWW.NEASINC.COM

DESIGNER MWJ & DT
REVIEWER BPA 08/23/24
PROJECT ID 82382
SHEET P 2512 TOTAL 2696
SUBSET 126 TOTAL 310

GEOTECHNICAL PROFILE - ROADWAY
BRIDGE NO. CUY-77-1587 RAMP A2 FLYOVER
BORING LOG B-068-0-14

MODEL: Sheet PAPERSIZE: 34x22 (in.) DATE: 3/28/2025 TIME: 9:56:09 AM USER: Asiddiqi
pw:\\mb-us-pw.bentley.com:mb-us-pw-03\Documents\Cleveland_OH\01_Projects\ODOT\District12\82382\400-Engineering\Geotechnical\Sheets\82382_ZL013.dgn

PID: 82380 | SFN: | PROJECT: CUY-CCG3 | STATION / OFFSET: 403+25, 2' RT. | START: 12/17/14 | END: 12/22/14 | PG 2 OF 2 | B-068-0-14

MATERIAL DESCRIPTION AND NOTES	ELEV.	DEPTHS	SPT/ RQD	N_{60}	REC (%)	SAMPLE ID	HP (tsf)	GRADATION (%) GR	CS	FS	SI	CL	ATTERBERG LL	PL	PI	WC	ODOT CLASS (GI)	BACK FILL
MEDIUM DENSE, BROWN, **COARSE AND FINE SAND** LITTLE SILT, TRACE GRAVEL, TRACE CLAY, MOIST *(continued)*	636.5	61	3 5 8	20	100	SS-18	-	-	-	-	-	-	-	-	-	13	A-3a (V)	
	633.2	62–65																
DENSE, GRAYISH BROWN, **SILT**, TRACE TO LITTLE CLAY, TRACE TO LITTLE SAND, TRACE GRAVEL, WET		66	11 18 14	48	100	SS-19	-	-	-	-	-	-	-	-	-	19	A-4b (V)	
		67–70																
		71	4 10 15	38	100	SS-20	-	-	-	-	-	-	-	-	-	19	A-4b (V)	
		72–75																
@75.2'; UNIT WEIGHT: 133.8 PCF @ 19.0% MC		76			100	ST-21A	-	0	1	18	65	16	NP	NP	NP	19	A-4b (8)	
@76.5'; UNIT WEIGHT: 130.6 PCF @ 21.4% MC		77				ST-21B	-	0	0	1	91	8	NP	NP	NP	21	A-4b (8)	
	618.2	78–80																
STIFF TO HARD, GRAYISH BROWN, **SILT**, SOME CLAY, TRACE SAND, TRACE GRAVEL, DAMP TO MOIST		81	4 6 10	24	100	SS-22	1.60	-	-	-	-	-	-	-	-	21	A-4b (V)	
		82–85																
@86.6'; UNIT WEIGHT: 136.3 PCF @ 17.5% MC		86			94	ST-23	4.50	0	0	2	74	24	25	18	7	18	A-4b (8)	
@86.7'; UNIT WEIGHT: 134.5 PCF @ 17.6% MC		87–90																
		91	8 9 17	39	100	SS-24	3.50	-	-	-	-	-	-	-	-	23	A-4b (V)	
		92–95																
		96			84	ST-25	-	0	0	0	77	23	26	20	6	18	A-4b (8)	
		97–100																
		101	12 17 29	69	100	SS-26	4.50	-	-	-	-	-	-	-	-	17	A-4b (V)	
		102–105																
@106.6'; UNIT WEIGHT: 134.0 PCF @ 19.8% MC		106			67	ST-27	1.20	0	0	0	70	30	27	19	8	20	A-4b (8)	
		107–110																
	585.0	111 EOB	15 17 32	74	100	SS-28	3.75	-	-	-	-	-	-	-	-	18	A-4b (V)	

NOTES: GROUNDWATER ENCOUNTERED AT 43.8' DURING DRILLING, 36.1' UPON COMPLETION. CAVE DEPTH 42.0'.
ABANDONMENT METHODS, MATERIALS, QUANTITIES: PLACED .5 BAG ASPHALT PATCH; SHOVELED SOIL CUTTINGS

Preliminary Plans - For Reference Only

STANDARD ODOT SOIL BORING LOG (11 X 17) - OH DOT.GDT - 1/3/24 15:28 - X:\ACTIVE PROJECTS\ACTIVE SOIL PROJECTS\1ARCHIVE BY YEAR\2017 ARCHIVE\CUY-CCG3 82380\GINT FILES\CUY-CCG3 MASTER - LR UPDATED.GPJ

SHEET	TOTAL
P 2513	2696

SUBSET	TOTAL
127	310

PROJECT ID: 82382

REVIEWER: BPA 08/23/24

DESIGNER: MWJ & DT

DESIGN AGENCY
2800 CORPORATE EXCHANGE DR. SUITE 240
COLUMBUS, OH. 43231
TEL:614.714.0299
WWW.JNEASINC.COM

GEOTECHNICAL PROFILE - ROADWAY
BRIDGE NO. CUY-77-1587 RAMP A2 FLYOVER
BORING LOG B-068-0-14 (CONTINUED)

MODEL: Sheet PAPERSIZE: 34x22 (in.) DATE: 3/28/2025 TIME: 9:56:29 AM USER: Asiddiqi
pw:\\mb-us-pw.bentley.com:mb-us-pw-03\Documents\Cleveland_OH\01_Projects\ODOT\District12\82382\400-Engineering\Geotechnical\Sheets\82382_ZL014.dgn

PROJECT: CUY-CCG3
TYPE: BRIDGE
PID: 82380 SFN:
START: 11/10/14 END: 11/11/14

DRILLING FIRM / OPERATOR: BARR / D.SHOPE
SAMPLING FIRM / LOGGER: BARR / C.PIERCE III
DRILLING METHOD: 4.25" HSA
SAMPLING METHOD: SPT / ST

DRILL RIG: CME 55
HAMMER: CME AUTOMATIC
CALIBRATION DATE: 1/26/14
ENERGY RATIO (%): 78.8

STATION / OFFSET: 1075+95, 1' RT.
ALIGNMENT: INTERIM RAMP H5
ELEVATION: 695.1 (MSL) EOB: 111.5 ft.
LAT / LONG: 41.492593, -81.675957

EXPLORATION ID B-074-0-14

MATERIAL DESCRIPTION AND NOTES	ELEV. 695.1	DEPTHS	SPT/ RQD	N_{60}	REC (%)	SAMPLE ID	HP (tsf)	GRADATION (%) GR	CS	FS	SI	CL	ATTERBERG LL	PL	PI	WC	ODOT CLASS (GI)	BACK FILL
3.0", **ASPHALT**	694.8																	
13.0", **CONCRETE**	693.8																	
2.0", **GRANULAR BASE**	693.6																	
MEDIUM DENSE TO VERY DENSE, BROWN, **COARSE AND FINE SAND** TRACE TO SOME GRAVEL, LITTLE TO SOME SILT, TRACE CLAY, CONTAINS TRACE BRICK FRAGMENTS, DAMP TO MOIST **(FILL)**			8 13 12	33	100	SS-1	-	24	16	39	13	8	NP	NP	NP	9	A-3a (0)	
			10 15 16	41	100	SS-2	-	-	-	-	-	-	-	-	-	8	A-3a (V)	
			4 8 14	29	100	SS-3	-	-	-	-	-	-	-	-	-	8	A-3a (V)	
			19 20 18	50	100	SS-4	-	-	-	-	-	-	-	-	-	9	A-3a (V)	
			5 11 15	34	100	SS-5	-	2	13	68	12	5	NP	NP	NP	8	A-3a (0)	
			8 18 21	51	100	SS-6	-	-	-	-	-	-	-	-	-	10	A-3a (V)	
			12 19 21	53	100	SS-7	-	-	-	-	-	-	-	-	-	8	A-3a (V)	
			9 15 19	45	100	SS-8	-	3	4	62	23	8	NP	NP	NP	10	A-3a (0)	
			8 14 19	43	100	SS-9	-	-	-	-	-	-	-	-	-	11	A-3a (V)	
			10 19 26	59	100	SS-10	-	-	-	-	-	-	-	-	-	14	A-3a (V)	
			13 22 24	60	100	SS-11	-	-	-	-	-	-	-	-	-	10	A-3a (V)	
			10 10 9	25	100	SS-12	-	-	-	-	-	-	-	-	-	11	A-3a (V)	
@27.5'; SS-13 CHANGES TO BROWN AND DARK BROWN			15 27 18	59	100	SS-13	-	-	-	-	-	-	-	-	-	10	A-3a (V)	
	665.6																	
MEDIUM DENSE, BROWN, **COARSE AND FINE SAND** LITTLE SILT, LITTLE CLAY, TRACE GRAVEL, DAMP TO MOIST			6 8 12	26	100	SS-14	-	5	18	45	20	12	NP	NP	NP	11	A-3a (0)	
			6 9 10	25	100	SS-15	-	-	-	-	-	-	-	-	-	9	A-3a (V)	
			8 10 11	28	100	SS-16	-	-	-	-	-	-	-	-	-	16	A-3a (V)	
		W 650.6																
@45.0'; SS-17 AND SS-18 BECOME DENSE, WET			10 10 16	34	100	SS-17	-	-	-	-	-	-	-	-	-	24	A-3a (V)	
			8 12 16	37	100	SS-18	-	-	-	-	-	-	-	-	-	22	A-3a (V)	
	641.8																	
DENSE, BROWN, **SANDY SILT**, TRACE CLAY, TRACE GRAVEL, WET			6 12 21	43	100	SS-19	-	1	0	51	42	6	NP	NP	NP	25	A-4a (3)	
	636.8																	
MEDIUM DENSE, GRAYISH BROWN, **SILT**, LITTLE SAND, LITTLE CLAY, TRACE GRAVEL, WET																		

Preliminary Plans - For Reference Only

STANDARD ODOT SOIL BORING LOG (11 X 17) - OH DOT.GDT - 6/22/22 17:59 - X:\ACTIVE PROJECTS\ACTIVE SOIL PROJECTS\1ARCHIVE BY YEAR\2017 ARCHIVE\CUY-CCG3 82380\GINT FILES\CUY-CCG3 MASTER - LR UPDATED.GPJ

DESIGN AGENCY
EAS
2800 CORPORATE EXCHANGE DR. SUITE 240
COLUMBUS, OH. 43231
TEL:614.714.0299
WWW.NEASINC.COM

DESIGNER MWJ & DT
REVIEWER BPA 08/23/24
PROJECT ID 82382
SUBSET 128 TOTAL 310
SHEET P 2514 TOTAL 2696

GEOTECHNICAL PROFILE - ROADWAY
WALL M
BORING LOG B-074-0-14

MODEL: Sheet PAPERSIZE: 34x22 (in.) DATE: 3/28/2025 TIME: 9:57:00 AM USER: Asiddiqi
pw:\\mb-us-pw.bentley.com:mb-us-pw-03\Documents\Cleveland_OH\01_Projects\ODOT\District12\82382\400-Engineering\Geotechnical\Sheets\82382_ZL015.dgn

PID: 82380 | SFN: | PROJECT: CUY-CCG3 | STATION / OFFSET: 1075+95, 1' RT. | START: 11/10/14 | END: 11/11/14 | PG 2 OF 2 | B-074-0-14

MATERIAL DESCRIPTION AND NOTES	ELEV.	DEPTHS	SPT/ RQD	N_{60}	REC (%)	SAMPLE ID	HP (tsf)	GRADATION (%) GR	CS	FS	SI	CL	ATTERBERG LL	PL	PI	WC	ODOT CLASS (GI)	BACK FILL
MEDIUM DENSE, GRAYISH BROWN, **SILT**, LITTLE SAND, LITTLE CLAY, TRACE GRAVEL, WET *(continued)*	635.1	61	6 8 11	25	100	SS-20	-	0	1	18	69	12	NP	NP	NP	25	A-4b (8)	
	631.8	63																
STIFF, GRAYISH BROWN, **SANDY SILT**, LITTLE CLAY, TRACE GRAVEL, MOIST		65	8 10 11	28	100	SS-21	1.75	-	-	-	-	-	-	-	-	23	A-4a (V)	
		70	8 12 16	37	100	SS-22	1.75	-	-	-	-	-	-	-	-	18	A-4a (V)	
	621.8	72																
STIFF TO HARD, GRAYISH BROWN, **SILT**, LITTLE TO SOME CLAY, TRACE SAND, TRACE GRAVEL, DAMP TO MOIST		75	6 10 11	28	100	SS-23	2.25	1	0	6	69	24	28	19	9	21	A-4b (8)	
		80	6 9 11	26	100	SS-24	4.30	-	-	-	-	-	-	-	-	19	A-4b (V)	
@86.7'; UNIT WEIGHT: 135.0 PCF @ 17.9% MC		85			52	ST-25	-	0	0	2	79	19	25	19	6	18	A-4b (8)	
		90	5 5 5	13	100	SS-26	1.80	-	-	-	-	-	-	-	-	20	A-4b (V)	
@95.0'; SS-27 AND SS-28 BECOME, SOME SAND, LITTLE CLAY, TRACE GRAVEL, MOIST		95	8 12 20	42	100	SS-27	4.50	-	-	-	-	-	-	-	-	18	A-4b (V)	
		100	12 15 19	45	100	SS-28	3.25	-	-	-	-	-	-	-	-	19	A-4b (V)	
	591.8	102																
STIFF TO HARD, GRAYISH BROWN, **SILT AND CLAY**, TRACE SAND, TRACE GRAVEL, MOIST		105	12 12 17	38	100	SS-29	4.50	-	-	-	-	-	-	-	-	22	A-6a (V)	
	583.6	110	5 8 12	26	100	SS-30	1.60	-	-	-	-	-	-	-	-	23	A-6a (V)	
		EOB																

NOTES: GROUNDWATER ENCOUNTERED AT 44.5' DURING DRILLING. CAVE DEPTH 44.0'.
ABANDONMENT METHODS, MATERIALS, QUANTITIES: PLACED .5 BAG ASPHALT PATCH; SHOVELED SOIL CUTTINGS

Preliminary Plans - For Reference Only

STANDARD ODOT SOIL BORING LOG (11 X 17) - OH DOT.GDT - 6/22/22 17:59 - X:\ACTIVE PROJECTS\ACTIVE SOIL PROJECTS\1ARCHIVE BY YEAR\2017 ARCHIVE\CUY-CCG3 82380\GINT FILES\CUY-CCG3 MASTER - LR UPDATED.GPJ

DESIGN AGENCY
2800 CORPORATE EXCHANGE DR. SUITE 240
COLUMBUS, OH. 43231
TEL:614.714.0299
WWW.JNEASINC.COM

DESIGNER MW,J & DT
REVIEWER BPA 08/23/24
PROJECT ID 82382
SHEET 129 TOTAL 310
SHEET P 2515 TOTAL 2696

GEOTECHNICAL PROFILE - ROADWAY
WALL M
BORING LOG B-074-0-14 (CONTINUED)

MODEL: Sheet PAPERSIZE: 34x22 (in.) DATE: 3/28/2025 TIME: 9:57:19 AM USER: Asiddiqi
pw:\\mb-us-pw.bentley.com:mb-us-pw-03\Documents\Cleveland_OH\01_Projects\ODOT\District12\82382\400-Engineering\Geotechnical\Sheets\82382_ZL016.dgn

PROJECT: CUY-CCG3
TYPE: EMBANKMENT
PID: 82380 SFN:
START: 12/8/14 END: 12/8/14

DRILLING FIRM / OPERATOR: BARR / T.GILBERT
SAMPLING FIRM / LOGGER: BARR / D.KLIMKOWICZ
DRILLING METHOD: 3.25" HSA
SAMPLING METHOD: SPT

DRILL RIG: CME 45B
HAMMER: CME AUTOMATIC
CALIBRATION DATE: 1/26/14
ENERGY RATIO (%): 77.4

STATION / OFFSET: 176+44, 48' RT.
ALIGNMENT: IR-90 EB
ELEVATION: 695.5 (MSL) EOB: 31.5 ft.
LAT / LONG: 41.494711, -81.681139

EXPLORATION ID B-075-0-14

PAGE 1 OF 1

MATERIAL DESCRIPTION AND NOTES	ELEV.	DEPTHS	SPT/ RQD	N_{60}	REC (%)	SAMPLE ID	HP (tsf)	GRADATION (%) GR	CS	FS	SI	CL	ATTERBERG LL	PL	PI	WC	ODOT CLASS (GI)	BACK FILL
12.0", **ASPHALT**	694.5																	
VERY DENSE, GRAY AND REDDISH BROWN, **GRAVEL WITH SAND**, TRACE SILT, TRACE CLAY, SS-1 CONTAINS CONCRETE AND BRICK FRAGMENTS, DAMP **(FILL)**	692.5	1	50/4"	-	100	SS-1	-	45	24	19	9	3	NP	NP	NP	9	A-1-b (0)	
		2	50/1"	-	100	SS-2	-	-	-	-	-	-	-	-	-	6	A-1-b (V)	
DENSE TO VERY DENSE, DARK BROWN TO BROWN, **COARSE AND FINE SAND** SOME SILT, LITTLE GRAVEL, TRACE CLAY, SS-3 AND SS-4 CONTAIN CONCRETE FRAGMENTS, DAMP TO MOIST **(FILL)**		3																
		4	19 23 21	57	78	SS-3	-	17	19	31	24	9	NP	NP	NP	9	A-3a (0)	
@5.0'; SS-4 CHANGES TO BROWN AND GRAY, CONTAINS BRICK FRAGMENTS		5																
		6	35 16 15	40	100	SS-4	-	-	-	-	-	-	-	-	-	10	A-3a (V)	
@7.5'; SS-5 CONTAINS ASPHALT FRAGMENTS		7																
		8	8 12 12	31	100	SS-5	-	-	-	-	-	-	-	-	-	11	A-3a (V)	
@10.0'; SS-6 TO SS-10 CONTAINS CONCRETE AND BRICK FRAGMENTS		9																
		10																
		11	7 14 15	37	100	SS-6	-	-	-	-	-	-	-	-	-	9	A-3a (V)	
@12.5'; SS-7 CHANGES TO SOME GRAVEL, LITTLE SILT		12																
		13	8 13 12	32	100	SS-7	-	25	21	34	14	6	NP	NP	NP	9	A-3a (0)	
		14																
		15																
		16	13 13 19	41	100	SS-8	-	-	-	-	-	-	-	-	-	10	A-3a (V)	
@17.5'; SS-9 CHANGES TO DARK BROWN AND BROWN		17																
		18	18 23 38	79	100	SS-9	-	-	-	-	-	-	-	-	-	10	A-3a (V)	
@20.0'; SS-10 CHANGES TO BROWN		19																
		20																
		21	10 25 18	55	100	SS-10	-	25	23	31	14	7	NP	NP	NP	11	A-3a (0)	
@22.5'; SS-11 CHANGES TO BLACK AND BROWN, CONTAINS BRICK FRAGMENTS		22																
		23	10 13 26	50	100	SS-11	-	-	-	-	-	-	-	-	-	13	A-3a (V)	
@25.0'; SS-12 CONTAINS CONCRETE AND GLASS FRAGMENTS		24																
		25																
		26	8 12 18	39	61	SS-12	-	-	-	-	-	-	-	-	-	13	A-3a (V)	
	668.5	27																
MEDIUM DENSE, BROWN, **COARSE AND FINE SAND** TRACE SILT, TRACE GRAVEL, TRACE CLAY, DAMP		28	7 5 5	13	100	SS-13	-	-	-	-	-	-	-	-	-	9	A-3a (V)	
		29																
		30																
	664.0	31	3 4 5	12	100	SS-14	-	7	16	63	10	4	NP	NP	NP	7	A-3a (0)	
		EOB																

NOTES: GROUNDWATER NOT ENCOUNTERED DURING DRILLING. CAVE DEPTH 24.0'.
ABANDONMENT METHODS, MATERIALS, QUANTITIES: PLACED .5 BAG ASPHALT PATCH; SHOVELED SOIL CUTTINGS

Preliminary Plans - For Reference Only

STANDARD ODOT SOIL BORING LOG (11 X 17) - OH DOT.GDT - 6/22/22 17:59 - X:\ACTIVE PROJECTS\ACTIVE SOIL PROJECTS\1ARCHIVE BY YEAR\2017 ARCHIVE\CUY-CCG3 82380\GINT FILES\CUY-CCG3 MASTER - LR UPDATED.GPJ

DESIGN AGENCY: EAS
2800 CORPORATE EXCHANGE DR. SUITE 240 COLUMBUS, OH. 43231 TEL:614.714.0299 WWW.NEASINC.COM

DESIGNER: MWJ & DT
REVIEWER: BPA 08/23/24
PROJECT ID: 82382
SUBSET: 130 TOTAL: 310
SHEET: P 2516 TOTAL: 2696

GEOTECHNICAL PROFILE - ROADWAY
BRIDGE NO. CUY-90-1653R OVER EAST 14TH STREET
BORING LOG B-075-0-14

MODEL: Sheet PAPERSIZE: 34x22 (in.) DATE: 3/28/2025 TIME: 9:57:43 AM USER: Asiddiqi
pw:\\mb-us-pw.bentley.com:mb-us-pw-03\Documents\Cleveland_OH\01_Projects\ODOT\District12\82382\400-Engineering\Geotechnical\Sheets\82382_ZL017.dgn

Preliminary Plans - For Reference Only

PROJECT: CUY-90-16.28 (CCG3A)
TYPE: RETAINING WALL
PID: 82382 SFN:
START: 6/28/21 END: 6/29/21

DRILLING FIRM / OPERATOR: NEAS / ASHBAUGH
SAMPLING FIRM / LOGGER: NEAS / ASHBAUGH
DRILLING METHOD: 3.25" HSA
SAMPLING METHOD: SPT

DRILL RIG: CME 55T
HAMMER: CME AUTOMATIC
CALIBRATION DATE: 12/5/19
ENERGY RATIO (%): 68.4

STATION / OFFSET: 181+25, 32' RT.
ALIGNMENT: IR-90 WB
ELEVATION: 695.1 (MSL) EOB: 31.5 ft.
LAT / LONG: 41.495260, -81.680498

EXPLORATION ID B-076-1-20
PAGE 1 OF 1

MATERIAL DESCRIPTION AND NOTES	ELEV. 695.1	DEPTHS	SPT/ RQD	N_{60}	REC (%)	SAMPLE ID	HP (tsf)	GRADATION (%) GR	CS	FS	SI	CL	ATTERBERG LL	PL	PI	WC	ODOT CLASS (GI)	BACK FILL
8.0" ASPHALT AND 9.0" BASE (DRILLERS DESCRIPTION)	693.7																	
MEDIUM DENSE, BROWN, **COARSE AND FINE SAND** SOME SILT, TRACE TO LITTLE GRAVEL; TRACE CLAY, CONTAINS BRICK AND GLASS FRAGMENTS, DAMP TO MOIST **(FILL)**		1																
		2																
		3	9 11 10	24	44	SS-1	-	-	-	-	-	-	-	-	-	9	A-3a (V)	
		4																
		5	7 9 12	24	67	SS-2	-	-	-	-	-	-	-	-	-	11	A-3a (V)	
		6																
		7																
		8	7 10 11	24	50	SS-3	-	-	-	-	-	-	-	-	-	10	A-3a (V)	
		9																
		10																
		11	5 8 9	19	50	SS-4	-	13	17	38	23	9	NP	NP	NP	12	A-3a (0)	
		12																
		13	4 5 6	13	72	SS-5	-	-	-	-	-	-	-	-	-	10	A-3a (V)	
		14																
		15																
		16	5 6 6	14	67	SS-6	-	-	-	-	-	-	-	-	-	14	A-3a (V)	
		17																
		18	6 5 6	13	61	SS-7	-	6	17	47	24	6	NP	NP	NP	11	A-3a (0)	
		19																
		20																
		21	7 6 8	16	67	SS-8	-	-	-	-	-	-	-	-	-	9	A-3a (V)	
		22																
		23	7 7 10	19	56	SS-9	-	-	-	-	-	-	-	-	-	8	A-3a (V)	
		24																
		25																
		26	6 9 11	23	56	SS-10	-	4	15	54	21	6	NP	NP	NP	11	A-3a (0)	
		27																
		28	7 7 9	18	61	SS-11	-	-	-	-	-	-	-	-	-	10	A-3a (V)	
		29																
		30																
	663.6	31	7 9 11	23	44	SS-12	-	-	-	-	-	-	-	-	-	14	A-3a (V)	
		EOB																

NOTES: GROUNDWATER NOT ENCOUNTERED DURING DRILLING. HOLE DID NOT CAVE.
ABANDONMENT METHODS, MATERIALS, QUANTITIES: PLACED 0.5 BAG ASPHALT PATCH; SHOVELED SOIL CUTTINGS

STANDARD ODOT SOIL BORING LOG (11 X 17) - OH DOT.GDT - 6/22/22 18:15 - X:\ACTIVE PROJECTS\ACTIVE SOIL PROJECTS\CUY-90-16.28 (CCG3A - MOD#7)\IGINT FILES\CUY-90-16.28 (CCG3A).GPJ

DESIGN AGENCY
NEAS
2800 CORPORATE EXCHANGE DR. SUITE 240
COLUMBUS, OH. 43231
TEL:614.714.0299
WWW.NEASINC.COM

DESIGNER MWJ & DT
REVIEWER BPA 08/23/24
PROJECT ID 82382
SUBSET 131 TOTAL 310
SHEET P 2517 TOTAL 2696

GEOTECHNICAL PROFILE - ROADWAY
BRIDGE NO. CUY-90-1653L OVER EAST 14TH STREET
BORING LOG B-076-1-20

MODEL: Sheet PAPERSIZE: 34x22 (in.) DATE: 3/28/2025 TIME: 9:58:07 AM USER: Asiddiqi
pw:\\mb-us-pw.bentley.com:mb-us-pw-03\Documents\Cleveland_OH\01_Projects\ODOT\District12\82382\400-Engineering\Geotechnical\Sheets\82382_ZL018.dgn

PROJECT: CUY-90-16.28 (CCG3A)
TYPE: RETAINING WALL
PID: 82382 SFN:
START: 6/28/21 END: 6/29/21

DRILLING FIRM / OPERATOR: NEAS / ASHBAUGH
SAMPLING FIRM / LOGGER: NEAS / ASHBAUGH
DRILLING METHOD: 3.25" HSA
SAMPLING METHOD: SPT

DRILL RIG: CME 55T
HAMMER: CME AUTOMATIC
CALIBRATION DATE: 12/5/19
ENERGY RATIO (%): 68.4

STATION / OFFSET: 183+89, 25' LT.
ALIGNMENT: IR-90 EB
ELEVATION: 701.4 (MSL) EOB: 31.5 ft.
LAT / LONG: 41.495815, -81.678838

EXPLORATION ID B-076-2-20

PAGE 1 OF 1

MATERIAL DESCRIPTION AND NOTES	ELEV.	DEPTHS	SPT/ RQD	N_{60}	REC (%)	SAMPLE ID	HP (tsf)	GRADATION (%) GR	CS	FS	SI	CL	ATTERBERG LL	PL	PI	WC	ODOT CLASS (GI)	BACK FILL
7.0" ASPHALT AND 7.0" CONCRETE (DRILLERS DESCRIPTION)	700.2																	
MEDIUM DENSE TO DENSE, BROWN, **COARSE AND FINE SAND**, LITTLE SILT, TRACE GRAVEL, TRACE CLAY, CONTAINS TRACE BRICK FRAGMENTS, DAMP **(FILL)**			4 8 13	24	56	SS-1	-	-	-	-	-	-	-	-	-	7	A-3a (V)	
			8 13 14	31	67	SS-2	-	-	-	-	-	-	-	-	-	10	A-3a (V)	
	691.9		7 11 15	30	61	SS-3	-	8	18	56	14	4	NP	NP	NP	9	A-3a (0)	
MEDIUM DENSE TO DENSE, BROWN, **GRAVEL WITH SAND**, LITTLE SILT, TRACE CLAY, CONTAINS TRACE BRICK FRAGMENTS, MOIST **(FILL)**			7 12 15	31	56	SS-4	-	-	-	-	-	-	-	-	-	11	A-1-b (V)	
			7 11 12	26	61	SS-5	-	-	-	-	-	-	-	-	-	15	A-1-b (V)	
	684.4		7 10 8	21	56	SS-6	-	21	35	24	15	5	NP	NP	NP	12	A-1-b (0)	
MEDIUM DENSE TO VERY DENSE, BROWN, **COARSE AND FINE SAND** LITTLE TO SOME GRAVEL, LITTLE SILT, TRACE CLAY, CONTAINS BRICK AND GLASS FRAGMENTS, DAMP TO MOIST **(FILL)**			7 9 11	23	50	SS-7	-	-	-	-	-	-	-	-	-	14	A-3a (V)	
			10 22 23	51	61	SS-8	-	-	-	-	-	-	-	-	-	11	A-3a (V)	
			10 10 12	25	56	SS-9	-	31	18	35	13	3	NP	NP	NP	8	A-3a (0)	
			9 12 11	26	44	SS-10	-	-	-	-	-	-	-	-	-	11	A-3a (V)	
			10 9 12	24	56	SS-11	-	-	-	-	-	-	-	-	-	10	A-3a (V)	
	669.9	EOB	11 12 13	29	72	SS-12	-	-	-	-	-	-	-	-	-	11	A-3a (V)	

NOTES: GROUNDWATER NOT ENCOUNTERED DURING DRILLING. HOLE DID NOT CAVE.
ABANDONMENT METHODS, MATERIALS, QUANTITIES: PLACED 0.5 BAG ASPHALT PATCH; SHOVELED SOIL CUTTINGS

Preliminary Plans - For Reference Only

STANDARD ODOT SOIL BORING LOG (11 X 17) - OH DOT.GDT - 6/22/22 18:15 - X:\ACTIVE PROJECTS\ACTIVE SOIL PROJECTS\CUY-90-16.28 (CCG3A - MOD#7)\IGINT FILES\CUY-90-16.28 (CCG3A).GPJ

DESIGN AGENCY: NEAS
2800 CORPORATE EXCHANGE DR. SUITE 240 COLUMBUS, OH. 43231 TEL:614.714.0299 WWW.NEASINC.COM

DESIGNER: MWJ & DT
REVIEWER: BPA 08/23/24
PROJECT ID: 82382
SHEET: P 2518 TOTAL: 2696
SUBSET: 132 TOTAL: 310

GEOTECHNICAL PROFILE - ROADWAY
BRIDGE NO. CUY-90-1653R OVER EAST 14TH STREET
BORING LOG B-076-2-20

MODEL: Sheet PAPERSIZE: 34x22 (in.) DATE: 3/28/2025 TIME: 9:58:30 AM USER: Asiddiqi
pw:\\mb-us-pw.bentley.com:mb-us-pw-03\Documents\Cleveland_OH\01_Projects\ODOT\District12\82382\400-Engineering\Geotechnical\Sheets\82382_ZL019.dgn

PROJECT: CUY-CCG3
TYPE: BRIDGE
PID: 82380 SFN:
START: 1/21/15 END: 1/22/15

DRILLING FIRM / OPERATOR: BARR / T.GILBERT
SAMPLING FIRM / LOGGER: BARR / D.KLIMKOWICZ
DRILLING METHOD: 3.25" HSA
SAMPLING METHOD: SPT / ST

DRILL RIG: CME 45B
HAMMER: CME AUTOMATIC
CALIBRATION DATE: 1/26/14
ENERGY RATIO (%): 77.4

STATION / OFFSET: 186+36, 27' LT.
ALIGNMENT: IR-90 EB
ELEVATION: 670.9 (MSL) EOB: 112.0 ft.
LAT / LONG: 41.496226, -81.678129

EXPLORATION ID B-078-0-14

MATERIAL DESCRIPTION AND NOTES	ELEV. 670.9	DEPTHS	SPT/ RQD	N_{60}	REC (%)	SAMPLE ID	HP (tsf)	GRADATION (%) GR	CS	FS	SI	CL	ATTERBERG LL	PL	PI	WC	ODOT CLASS (GI)	BACK FILL
2.4", **TOPSOIL**	670.7		2 4 5	12	67	SS-1	2.25	6	12	26	34	22	33	20	13	22	A-6a (5)	
VERY STIFF, DARK BROWN, GRAY AND DARK GRAY, **SILT AND CLAY**, "AND" SAND, TRACE GRAVEL, CONTAINS FEW ROOTS, MOIST	668.9																	
(FILL)			6 6 7	17	100	SS-2	-	-	-	-	-	-	-	-	-	12	A-4a (V)	
MEDIUM DENSE, BROWN AND DARK GRAY, **SANDY SILT**, LITTLE GRAVEL, LITTLE CLAY, CONTAINS BRICK FRAGMENTS AND FEW ROOTS, DAMP	666.4																	
(FILL)			7 6 5	14	100	SS-3	-	-	-	-	-	-	-	-	-	11	A-3a (V)	
MEDIUM DENSE, BROWN AND DARK GRAY, **COARSE AND FINE SAND** LITTLE TO SOME SILT, TRACE TO LITTLE GRAVEL, TRACE CLAY, DAMP TO MOIST																		
(FILL)																		
@7.5'; SS-4 CONTAINS BRICK FRAGMENTS			5 5 5	13	100	SS-4	-	-	-	-	-	-	-	-	-	10	A-3a (V)	
			3 3 7	13	100	SS-5	-	13	19	46	15	7	NP	NP	NP	12	A-3a (0)	
	658.9																	
MEDIUM DENSE, BROWN, **COARSE AND FINE SAND** TRACE TO LITTLE GRAVEL, TRACE SILT, TRACE CLAY, DAMP			3 5 5	13	100	SS-6	-	-	-	-	-	-	-	-	-	8	A-3a (V)	
	655.2		4 6 7	17	100	SS-7A	-	-	-	-	-	-	-	-	-	7	A-3a (V)	
MEDIUM DENSE, BROWN MOTTLED WITH GRAY, **SANDY SILT**, LITTLE CLAY, TRACE GRAVEL, DAMP TO WET						SS-7B	-	0	1	54	28	17	18	14	4	14	A-4a (2)	
	653.0					SS-8A	-	-	-	-	-	-	-	-	-	28	A-4a (V)	
MEDIUM DENSE, BROWN, **FINE SAND**, TRACE COARSE SAND, TRACE SILT, TRACE CLAY, TRACE GRAVEL, DAMP	FS		4 8 8	21	100	SS-8B	-	-	-	-	-	-	-	-	-	8	A-3 (V)	
	651.4																	
LOOSE, BROWN AND GRAY, **SILT**, LITTLE SAND, TRACE CLAY, TRACE GRAVEL, WET			3 3 3	8	100	SS-9	-	0	1	19	73	7	NP	NP	NP	30	A-4b (8)	
		W 648.4																
@22.5'; SS-10 NO RECOVERY			2 2 2	5	0	SS-10	-	-	-	-	-	-	-	-	-	-		
	646.4																	
LOOSE TO DENSE, BROWN, **COARSE AND FINE SAND** TRACE SILT, TRACE CLAY, MOIST TO WET			3 1 5	8	100	SS-11	-	-	-	-	-	-	-	-	-	22	A-3a (V)	
@27.5'; SS-12 BECOMES BROWN AND GRAY			4 9 12	27	100	SS-12	-	-	-	-	-	-	-	-	-	18	A-3a (V)	
@30.0'; SS-13 BECOMES GRAYISH BROWN, SOME SILT			4 4 8	15	100	SS-13	-	0	2	69	24	5	NP	NP	NP	22	A-3a (0)	
	632.6																	
DENSE, GRAYISH BROWN, **SILT**, TRACE SAND, TRACE CLAY, TRACE GRAVEL, WET			9 10 17	35	100	SS-14	-	-	-	-	-	-	-	-	-	19	A-3a (V)	
	627.6																	
STIFF TO VERY STIFF, GRAYISH BROWN, **SILT AND CLAY**, TRACE SAND, TRACE GRAVEL, MOIST TO WET			9 10 18	36	100	SS-15	-	-	-	-	-	-	-	-	-	20	A-4b (V)	
@46.6'; UNIT WEIGHT: 127.7 PCF @ 22.0% MC			6 9 12	27	100	SS-16	3.50	-	-	-	-	-	-	-	-	22	A-6a (V)	
@51.7'; UNIT WEIGHT: 123.8 PCF @ 27.6% MC					100	ST-17	1.75	0	0	5	58	37	29	18	11	28	A-6a (8)	
	617.4																	
STIFF TO VERY STIFF, GRAYISH BROWN, **SILT**, SOME CLAY, TRACE SAND, TRACE GRAVEL, MOIST TO WET			8 11 8	25	100	SS-18	2.00	-	-	-	-	-	-	-	-	21	A-4b (V)	

STANDARD ODOT SOIL BORING LOG (11 X 17) - OH DOT.GDT - 6/22/22 18:00 - X:\ACTIVE PROJECTS\ACTIVE SOIL PROJECTS\1ARCHIVE BY YEAR\2017 ARCHIVE\CUY-CCG3 82380\GINT FILES\CUY-CCG3 MASTER - LR UPDATED.GPJ

Preliminary Plans - For Reference Only

DESIGN AGENCY
2800 CORPORATE EXCHANGE DR. SUITE 240
COLUMBUS, OH. 43231
TEL: 614.714.0299
WWW.MESINC.COM

DESIGNER MWJ & DT
REVIEWER BPA 08/23/24
PROJECT ID 82382
SHEET 133 TOTAL 310
SHEET P 2519 TOTAL 2696

GEOTECHNICAL PROFILE - ROADWAY
BRIDGE NO. CUY-90-1653R OVER EAST 14TH STREET
BORING LOG B-078-0-14

MODEL: Sheet PAPERSIZE: 34x22 (in.) DATE: 3/28/2025 TIME: 9:58:55 AM USER: Asiddiqi
pw:\\mb-us-pw.bentley.com:mb-us-pw-03\Documents\Cleveland_OH\01_Projects\ODOT\District12\82382\400-Engineering\Geotechnical\Sheets\82382_ZL020.dgn

PID: 82380 | SFN: | PROJECT: CUY-CCG3 | STATION / OFFSET: 186+36, 27' LT. | START: 1/21/15 | END: 1/22/15 | PG 2 OF 2 | B-078-0-14

MATERIAL DESCRIPTION AND NOTES	ELEV.	DEPTHS	SPT/ RQD	N_{60}	REC (%)	SAMPLE ID	HP (tsf)	GRADATION (%) GR	CS	FS	SI	CL	ATTERBERG LL	PL	PI	WC	ODOT CLASS (GI)	BACK FILL
STIFF TO VERY STIFF, GRAYISH BROWN, **SILT**, SOME CLAY, TRACE SAND, TRACE GRAVEL, MOIST TO WET *(continued)*	610.9	61	4 6 8	18	100	SS-19	1.75	-	-	-	-	-	-	-	-	22	A-4b (V)	
@60.0'; SS-19 TO SS-21 BECOMES GRAY		62–65																
		66			100	ST-20	2.50	0	0	2	65	33	27	18	9	20	A-4b (8)	
@66.7'; UNIT WEIGHT: 131.0 PCF @ 19.9% MC		67–70																
@70.0'; SS-21 AND SS-22 CONTAIN SILTY CLAY LENSES		71	5 6 9	19	100	SS-21	0.75	-	-	-	-	-	-	-	-	20	A-4b (V)	
		72–75																
@75.0'; SS-22 TO ST-23 BECOME GRAYISH BROWN		76	5 7 12	25	100	SS-22	1.75	-	-	-	-	-	-	-	-	21	A-4b (V)	
		77–80																
@80.0'; ST-23 BECOMES "AND" CLAY		81			100	ST-23	3.25	0	0	0	63	37	27	20	7	22	A-4b (8)	
	587.4	82–85																
STIFF, GRAYISH BROWN, **SILT AND CLAY**, TRACE SAND, TRACE GRAVEL, CONTAINS FEW SILT LENSES, MOIST		86	12 17 20	48	100	SS-24	1.60	-	-	-	-	-	-	-	-	21	A-6a (V)	
	582.6	87–90																
STIFF, GRAYISH BROWN, **SILT**, SOME CLAY, TRACE SAND, TRACE GRAVEL, CONTAINS SILTY CLAY LENSES, WET		91	5 8 13	27	100	SS-25	1.25	-	-	-	-	-	-	-	-	23	A-4b (V)	
	577.6	92–95																
MEDIUM STIFF, GRAYISH BROWN, **SILT AND CLAY**, TRACE SAND, TRACE GRAVEL, CONTAINS SILT LENSES, MOIST		96	6 6 10	21	100	SS-26	0.90	-	-	-	-	-	-	-	-	21	A-6a (V)	
	572.6	97–100																
VERY SOFT TO SOFT, GRAYISH BROWN, **SILTY CLAY**, TRACE SAND, TRACE GRAVEL, MOIST		101	5 6 7	17	100	SS-27	0.25	-	-	-	-	-	-	-	-	24	A-6b (V)	
		102–105																
		106	2 3 6	12	100	SS-28	0.10	-	-	-	-	-	-	-	-	27	A-6b (V)	
		107–110																
@111.2'; UNIT WEIGHT: 123.1 PCF @ 30.5% MC	558.9	111 EOB			96	ST-29	0.40	0	1	1	23	75	40	20	20	31	A-6b (12)	
		112																

NOTES: GROUNDWATER ENCOUNTERED AT 22.5' DURING DRILLING. CAVE DEPTH 21.0'.
ABANDONMENT METHODS, MATERIALS, QUANTITIES: SHOVELED SOIL CUTTINGS

STANDARD ODOT SOIL BORING LOG (11 X 17) - OH DOT.GDT - 6/22/22 18:00 - X:\ACTIVE PROJECTS\ACTIVE SOIL PROJECTS\1ARCHIVE BY YEAR\2017 ARCHIVE\CUY-CCG3 82380\GINT FILES\CUY-CCG3 MASTER - LR UPDATED.GPJ

Preliminary Plans - For Reference Only

SHEET	TOTAL
P 2520	2696

SUBSET	TOTAL
134	310

PROJECT ID: 82382

REVIEWER: BPA 08/23/24

DESIGNER: MWJ & DT

DESIGN AGENCY
EAS
2800 CORPORATE EXCHANGE DR. SUITE 240
COLUMBUS, OH. 43231
TEL:614.714.0299
WWW.NEASINC.COM

GEOTECHNICAL PROFILE - ROADWAY
BRIDGE NO. CUY-90-1653R OVER EAST 14TH STREET
BORING LOG B-078-0-14 (CONTINUED)

MODEL: Sheet PAPERSIZE: 34x22 (in.) DATE: 3/28/2025 TIME: 9:59:15 AM USER: Asiddiqi
pw:\\mb-us-pw.bentley.com:mb-us-pw-03\Documents\Cleveland_OH\01_Projects\ODOT\District12\82382\400-Engineering\Geotechnical\Sheets\82382_ZL021.dgn

PROJECT: CUY-90-16.28 (CCG3A)
TYPE: BRIDGE
PID: 82382 SFN: 1807901
START: 3/12/21 END: 3/15/21

DRILLING FIRM / OPERATOR: NEAS / J. HODGES
SAMPLING FIRM / LOGGER: NEAS / J. HODGES
DRILLING METHOD: 3.25" HSA
SAMPLING METHOD: SPT

DRILL RIG: CME 75T
HAMMER: CME AUTOMATIC
CALIBRATION DATE: 5/1/19
ENERGY RATIO (%): 89

STATION / OFFSET: 188+90, 2' LT.
ALIGNMENT: IR-90 WB
ELEVATION: 667.0 (MSL) EOB: 110.0 ft.
LAT / LONG: 41.496503, -81.677982

EXPLORATION ID B-078-1-20
PAGE 1 OF 2

MATERIAL DESCRIPTION AND NOTES	ELEV.	DEPTHS	SPT/ RQD	N_{60}	REC (%)	SAMPLE ID	HP (tsf)	GRADATION (%) GR	CS	FS	SI	CL	ATTERBERG LL	PL	PI	WC	ODOT CLASS (GI)	HOLE SEALED
MEDIUM DENSE TO DENSE, BROWN, **COARSE AND FINE SAND**, LITTLE SILT, TRACE TO LITTLE GRAVEL, TRACE TO LITTLE CLAY, DAMP	667.0		13 11 17	42	78	SS-1	-	-	-	-	-	-	-	-	-	11	A-3a (V)	
			5 12 16	42	100	SS-2	-	-	-	-	-	-	-	-	-	10	A-3a (V)	
			3 8 12	30	89	SS-3	-	-	-	-	-	-	-	-	-	9	A-3a (V)	
			3 7 8	22	100	SS-4	-	8	22	39	20	11	NP	NP	NP	11	A-3a (0)	
STIFF, BROWN, **SILTY CLAY**, LITTLE SAND, TRACE GRAVEL, MOIST	655.0					SS-5A	1.25	-	-	-	-	-	-	-	-	24	A-6b (V)	
	654.0		1 3 2	7	100	SS-5B	-	-	-	-	-	-	-	-	-	9	A-3a (V)	
VERY LOOSE TO LOOSE, BROWN, **COARSE AND FINE SAND**, LITTLE TO SOME GRAVEL, TRACE SILT, TRACE CLAY, DAMP		W 650.5	1 1 2	4	100	SS-6	-	-	-	-	-	-	-	-	-	10	A-3a (V)	
LOOSE, BROWN AND GRAY, **GRAVEL WITH SAND** LITTLE SILT, TRACE CLAY, WET	650.0		1 2 2	6	89	SS-7	-	-	-	-	-	-	-	-	-	17	A-1-b (V)	
LOOSE, BROWN, **GRAVEL WITH SAND AND SILT**LITTLE CLAY, WET	647.5		6 3 2	7	100	SS-8	-	-	-	-	-	-	-	-	-	16	A-2-4 (V)	
MEDIUM DENSE TO DENSE, GRAY, **SANDY SILT**, TRACE TO LITTLE GRAVEL, TRACE CLAY, WET	645.0		4 5 8	19	100	SS-9	-	14	19	18	45	4	NP	NP	NP	20	A-4a (3)	
			6 9 14	34	100	SS-10	-	-	-	-	-	-	-	-	-	22	A-4a (V)	
			3 5 6	16	100	SS-11	-	-	-	-	-	-	-	-	-	23	A-4a (V)	
			3 7 11	27	100	SS-12	-	-	-	-	-	-	-	-	-	23	A-4a (V)	
			7 10 12	33	100	SS-13	-	0	1	59	35	5	NP	NP	NP	20	A-4a (1)	
	626.0		4 8 9	25	100	SS-14A	-	-	-	-	-	-	-	-	-	23	A-4a (V)	
VERY STIFF, GRAY, **SILT**, LITTLE TO SOME CLAY, TRACE SAND, TRACE GRAVEL, DAMP TO MOIST						SS-14B	3.00	-	-	-	-	-	-	-	-	20	A-4b (V)	
			4 7 8	22	100	SS-15	3.25	1	0	3	74	22	26	20	6	19	A-4b (8)	
			2 3 3	9	100	SS-16	2.25	-	-	-	-	-	-	-	-	21	A-4b (V)	
@55.0'; SS-17 BECOMES LOOSE, WET			3 3 4	10	100	SS-17	-	0	0	3	79	18	NP	NP	NP	23	A-4b (8)	

Preliminary Plans - For Reference Only

STANDARD ODOT SOIL BORING LOG (11 X 17) - OH DOT.GDT - 6/22/22 18:16 - X:\ACTIVE PROJECTS\ACTIVE SOIL PROJECTS\CUY-90-16.28 (CCG3A - MOD#7)\GINT FILES\CUY-90-16.28 (CCG3A).GPJ

DESIGN AGENCY
NEAS
2800 CORPORATE EXCHANGE DR. SUITE 240
COLUMBUS, OH. 43231
TEL:614.714.0299
WWW.NEASINC.COM

DESIGNER MWJ & DT
REVIEWER BPA 08/23/24
PROJECT ID 82382
SUBSET 135 TOTAL 310
SHEET P 2521 TOTAL 2696

GEOTECHNICAL PROFILE - ROADWAY
BRIDGE NO. CUY-90-1653R OVER EAST 14TH STREET
BORING LOG B-078-1-20

MODEL: Sheet PAPERSIZE: 34x22 (in.) DATE: 3/28/2025 TIME: 9:59:37 AM USER: Asiddiqi
pw:\\mb-us-pw.bentley.com:mb-us-pw-03\Documents\Cleveland_OH\01_Projects\ODOT\District12\82382\400-Engineering\Geotechnical\Sheets\82382_ZL022.dgn

PID: 82382 | SFN: | PROJECT: CUY-90-16.28 (CCG3A) | STATION / OFFSET: 188+90, 2' LT. | START: 3/12/21 | END: 3/15/21 | PG 2 OF 2 | B-078-1-20

MATERIAL DESCRIPTION AND NOTES	ELEV.	DEPTHS	SPT/ RQD	N_{60}	REC (%)	SAMPLE ID	HP (tsf)	GRADATION (%) GR	CS	FS	SI	CL	ATTERBERG LL	PL	PI	WC	ODOT CLASS (GI)	HOLE SEALED
VERY STIFF, GRAY, **SILT**, LITTLE TO SOME CLAY, TRACE SAND, TRACE GRAVEL, DAMP TO MOIST *(continued)*		61	3 5 6	16	100	SS-18	2.75	-	-	-	-	-	-	-	-	22	A-4b (V)	
		62–64																
		65	3 4 5	13	100	SS-19	2.50	0	0	1	65	34	28	20	8	21	A-4b (8)	
		66–68																
	598.7																	
STIFF TO HARD, GRAY, **SILT AND CLAY**, TRACE SAND, TRACE GRAVEL, DAMP TO MOIST		69																
		70	1 1 2	4	100	SS-20	2.25	-	-	-	-	-	-	-	-	28	A-6a (V)	
		71–74																
		75	2 2 2	6	100	SS-21	2.25	0	0	1	61	38	31	19	12	25	A-6a (9)	
		76–79																
		80	5 8 15	34	100	SS-22	3.75	-	-	-	-	-	-	-	-	19	A-6a (V)	
		81–84																
		85	6 7 13	30	100	SS-23	4.25	-	-	-	-	-	-	-	-	20	A-6a (V)	
		86–89																
		90	6 6 8	21	100	SS-24	3.75	0	0	1	63	36	30	19	11	20	A-6a (8)	
		91–94																
		95	5 6 6	18	100	SS-25	4.50	-	-	-	-	-	-	-	-	20	A-6a (V)	
		96–99																
		100	5 5 4	13	100	SS-26	1.50	-	-	-	-	-	-	-	-	24	A-6a (V)	
		101–104																
		105	3 4 5	13	100	SS-27	1.75	0	1	2	55	42	32	19	13	24	A-6a (9)	
		106–108																
		109	2 4 6	15	100	SS-28	1.50	-	-	-	-	-	-	-	-	29	A-6a (V)	
	557.0	EOB 110																

NOTES: GROUNDWATER ENCOUNTERED AT 16.5' DURING DRILLING. HOLE DID NOT CAVE.
ABANDONMENT METHODS, MATERIALS, QUANTITIES: PUMPED 100 GAL. BENTONITE GROUT; SHOVELED SOIL CUTTINGS

Preliminary Plans - For Reference Only

STANDARD ODOT SOIL BORING LOG (11 X 17) - OH DOT.GDT - 6/22/22 18:16 - X:\ACTIVE PROJECTS\ACTIVE SOIL PROJECTS\CUY-90-16.28 (CCG3A - MOD#7)\GINT FILES\CUY-90-16.28 (CCG3A).GPJ

DESIGN AGENCY
EAS
2800 CORPORATE EXCHANGE DR. SUITE 240
COLUMBUS, OH. 43231
TEL:614.714.0299
WWW.NEASINC.COM

DESIGNER MW,J & DT
REVIEWER BPA 08/23/24
PROJECT ID 82382
SHEET 136 TOTAL 310
SHEET P 2522 TOTAL 2696

GEOTECHNICAL PROFILE - ROADWAY
BRIDGE NO. CUY-90-1653R OVER EAST 14TH STREET
BORING LOG B-078-1-20 (CONTINUED)

MODEL: Sheet PAPERSIZE: 34x22 (in.) DATE: 3/28/2025 TIME: 9:59:55 AM USER: Asiddiqi
pw:\\mb-us-pw.bentley.com:mb-us-pw-03\Documents\Cleveland_OH\01_Projects\ODOT\District12\82382\400-Engineering\Geotechnical\Sheets\82382_ZL023.dgn

PROJECT: CUY-90-16.28 (CCG3A)
TYPE: BRIDGE
PID: 82382 SFN: 1807839
START: 3/16/21 END: 3/16/21

DRILLING FIRM / OPERATOR: NEAS / ASHBAUGH
SAMPLING FIRM / LOGGER: NEAS / ASHBAUGH
DRILLING METHOD: 3.25" HSA
SAMPLING METHOD: SPT

DRILL RIG: CME 55T
HAMMER: CME AUTOMATIC
CALIBRATION DATE: 12/5/19
ENERGY RATIO (%): 68.4

STATION / OFFSET: 35+35, 81' LT.
ALIGNMENT: E 22ND ST
ELEVATION: 672.4 (MSL) EOB: 66.5 ft.
LAT / LONG: 41.498493, -81.674299

EXPLORATION ID B-085-1-20

MATERIAL DESCRIPTION AND NOTES	ELEV. 672.4	DEPTHS	SPT/ RQD	N_{60}	REC (%)	SAMPLE ID	HP (tsf)	GRADATION (%) GR	CS	FS	SI	CL	ATTERBERG LL	PL	PI	WC	ODOT CLASS (GI)	PIEZ.
5.0" TOPSOIL (DRILLERS DESCRIPTION)	672.0																	
LOOSE TO MEDIUM DENSE, BROWN, **COARSE AND FINE SAND**, LITTLE GRAVEL, TRACE SILT, TRACE CLAY, DAMP			8 12 10	25	61	SS-1	-	-	-	-	-	-	-	-	-	11	A-3a (V)	
			4 4 5	10	56	SS-2	-	-	-	-	-	-	-	-	-	7	A-3a (V)	
	665.4																	
MEDIUM DENSE, BROWN, **FINE SAND**, SOME COARSE SAND, TRACE SILT, TRACE CLAY, TRACE GRAVEL, DAMP	F S		4 3 9	14	67	SS-3	-	2	29	61	6	2	NP	NP	NP	7	A-3 (0)	
			4 5 5	11	67	SS-4	-	-	-	-	-	-	-	-	-	8	A-3 (V)	
	660.4																	
LOOSE TO MEDIUM DENSE, BROWN, **COARSE AND FINE SAND**, SOME SILT, TRACE GRAVEL, TRACE CLAY, DAMP TO MOIST			4 4 4	9	67	SS-5	-	6	19	47	24	4	NP	NP	NP	13	A-3a (0)	
			4 5 8	15	89	SS-6	-	-	-	-	-	-	-	-	-	8	A-3a (V)	
			5 5 8	15	78	SS-7	-	10	20	44	22	4	NP	NP	NP	12	A-3a (0)	
	652.9																	
LOOSE, BROWN BECOMING BROWNISH GRAY, **GRAVEL WITH SAND**, TRACE SILT, TRACE CLAY, DAMP TO MOIST			4 3 3	7	78	SS-8	-	-	-	-	-	-	-	-	-	10	A-1-b (V)	
@22.5' TO 26.5'; SS-9 AND SS-10 BECOME MEDIUM DENSE TO DENSE			7 15 19	39	78	SS-9	-	35	36	17	10	2	NP	NP	NP	4	A-1-b (0)	
			9 12 12	27	83	SS-10	-	-	-	-	-	-	-	-	-	11	A-1-b (V)	
	645.4	▼ W 645.4																
LOOSE TO DENSE, GRAY, **COARSE AND FINE SAND** TRACE TO LITTLE SILT, TRACE TO LITTLE GRAVEL, TRACE CLAY, MOIST TO WET @27.5' TO 29.0'; SS-11 CONTAINS A 2.0" A-4b SEAM			10 14 15	33	100	SS-11	-	-	-	-	-	-	-	-	-	21	A-3a (V)	
			8 12 11	26	100	SS-12	-	-	-	-	-	-	-	-	-	17	A-3a (V)	
			7 7 10	19	89	SS-13	-	-	-	-	-	-	-	-	-	25	A-3a (V)	
			6 10 16	30	100	SS-14	-	-	-	-	-	-	-	-	-	25	A-3a (V)	
			5 8 7	17	94	SS-15	-	-	-	-	-	-	-	-	-	20	A-3a (V)	
			3 4 3	8	89	SS-16	-	-	-	-	-	-	-	-	-	20	A-3a (V)	
			6 6 8	16	100	SS-17	-	-	-	-	-	-	-	-	-	18	A-3a (V)	
			7 9 8	19	100	SS-18	-	-	-	-	-	-	-	-	-	21	A-3a (V)	
			8 8 11	22	89	SS-19	-	-	-	-	-	-	-	-	-	16	A-3a (V)	
			8 10 10	23	94	SS-20	-	-	-	-	-	-	-	-	-	20	A-3a (V)	
	616.9																	
STIFF TO HARD, GRAY, **SILT**, SOME CLAY, TRACE TO LITTLE SAND, TRACE GRAVEL, MOIST TO WET			3 2 3	6	78	SS-21A	-	-	-	-	-	-	-	-	-	20	A-3a (V)	
						SS-21B	4.25	0	0	6	61	33	29	19	10	23	A-4b (8)	

Preliminary Plans - For Reference Only

STANDARD ODOT SOIL BORING LOG (11 X 17) - OH DOT.GDT - 1/3/24 14:15 - X:\ACTIVE PROJECTS\ACTIVE SOIL PROJECTS\1ARCHIVE BY YEAR\2022 ARCHIVE\CUY-90-16.28 (CCG3A - MOD#7)\GINT FILES\CUY-90-16.28 (CCG3A).GPJ

DESIGN AGENCY
NEAS
2800 CORPORATE EXCHANGE DR. SUITE 240
COLUMBUS, OH. 43231
TEL:614.714.0299
WWW.NEASINC.COM

DESIGNER MWJ & DT
REVIEWER BPA 08/23/24
PROJECT ID 82382
SUBSET 137 TOTAL 310
SHEET P 2523 TOTAL 2696

GEOTECHNICAL PROFILE - ROADWAY
BRIDGE NO. CUY-90-1678 OVER IR-90
BORING LOG B-085-1-20

MODEL: Sheet PAPERSIZE: 34x22 (in.) DATE: 3/28/2025 TIME: 10:00:26 AM USER: Asiddiqi
pw:\\mb-us-pw.bentley.com:mb-us-pw-03\Documents\Cleveland_OH\01_Projects\ODOT\District12\82382\400-Engineering\Geotechnical\Sheets\82382_ZL024.dgn

PID: 82382 | SFN: | PROJECT: CUY-90-16.28 (CCG3A) | STATION / OFFSET: 35+35, 81' LT. | START: 3/16/21 | END: 3/16/21 | PG 2 OF 2 | B-085-1-20

MATERIAL DESCRIPTION AND NOTES	ELEV.	DEPTHS	SPT/ RQD	N_{60}	REC (%)	SAMPLE ID	HP (tsf)	GRADATION (%) GR	CS	FS	SI	CL	ATTERBERG LL	PL	PI	WC	ODOT CLASS (GI)	PIEZ.
STIFF TO HARD, GRAY, **SILT**, SOME CLAY, TRACE TO LITTLE SAND, TRACE GRAVEL, MOIST TO WET *(continued)*	612.4	61	3 4 5	10	89	SS-22	1.25	-	-	-	-	-	-	-	-	24	A-4b (V)	
		62																
		63																
		64																
		65																
	605.9	66 EOB	3 5 5	11	100	SS-23	1.50	0	1	13	60	26	25	18	7	23	A-4b (8)	

Preliminary Plans - For Reference Only

NOTES: GROUNDWATER ENCOUNTERED AT 27.0' DURING DRILLING, 26.4' AFTER PIEZOMETER INSTALLATION. HOLE DID NOT CAVE.
ABANDONMENT METHODS, MATERIALS, QUANTITIES: POURED 35 GAL. BENTONITE GROUT; POURED 2 BAGS CEMENT; POURED 7 BAGS SAND

STANDARD ODOT SOIL BORING LOG (11 X 17) - OH DOT.GDT - 1/3/24 14:15 - X:\ACTIVE PROJECTS\ACTIVE SOIL PROJECTS\1ARCHIVE BY YEAR\2022 ARCHIVE\CUY-90-16.28 (CCG3A - MOD#7)\GINT FILES\CUY-90-16.28 (CCG3A).GPJ

DESIGN AGENCY
2800 CORPORATE EXCHANGE DR. SUITE 240
COLUMBUS, OH. 43231
TEL:614.714.0299
WWW.NEASINC.COM

DESIGNER MW,J & DT
REVIEWER BPA 08/23/24
PROJECT ID 82382
SHEET 138 SUBSET TOTAL 310
SHEET P 2524 TOTAL 2696

GEOTECHNICAL PROFILE - ROADWAY
BRIDGE NO. CUY-90-1678 OVER IR-90
BORING LOG B-085-1-20 (CONTINUED)

MODEL: Sheet PAPERSIZE: 34x22 (in.) DATE: 3/28/2025 TIME: 10:00:43 AM USER: Asiddiqi
pw:\\mb-us-pw.bentley.com:mb-us-pw-03\Documents\Cleveland_OH\01_Projects\ODOT\District12\82382\400-Engineering\Geotechnical\Sheets\82382_ZL025.dgn

PROJECT: CUY-90-16.28 (CCG3A)
TYPE: BRIDGE
PID: 82382 SFN: 1807839
START: 3/25/21 END: 3/25/21

DRILLING FIRM / OPERATOR: NEAS / ASHBAUGH
SAMPLING FIRM / LOGGER: NEAS / ASHBAUGH
DRILLING METHOD: 3.25" HSA
SAMPLING METHOD: SPT

DRILL RIG: CME 55T
HAMMER: CME AUTOMATIC
CALIBRATION DATE: 12/5/19
ENERGY RATIO (%): 68.4

STATION / OFFSET: 35+02, 65' LT.
ALIGNMENT: E 22ND ST
ELEVATION: 672.0 (MSL) EOB: 131.5 ft.
LAT / LONG: 41.498410, -81.674225

EXPLORATION ID B-085-2-20
PAGE 1 OF 3

MATERIAL DESCRIPTION AND NOTES	ELEV.	DEPTHS	SPT/ RQD	N_{60}	REC (%)	SAMPLE ID	HP (tsf)	GRADATION (%) GR	CS	FS	SI	CL	ATTERBERG LL	PL	PI	WC	ODOT CLASS (GI)	HOLE SEALED
6.0" TOPSOIL (DRILLERS DESCRIPTION)	671.5																	
LOOSE TO MEDIUM DENSE, BROWN, **COARSE AND FINE SAND**, TRACE TO LITTLE SILT, TRACE CLAY, TRACE GRAVEL, DAMP			6 9 10	22	67	SS-1	-	-	-	-	-	-	-	-	-	8	A-3a (V)	
			6 5 5	11	78	SS-2	-	7	40	41	10	2	NP	NP	NP	5	A-3a (0)	
			6 7 6	15	78	SS-3	-	-	-	-	-	-	-	-	-	10	A-3a (V)	
			4 4 5	10	83	SS-4	-	-	-	-	-	-	-	-	-	5	A-3a (V)	
@12.5' TO 19.0'; SS-5 THROUGH SS-7 CONTAIN INTERBEDDED SILT SEAMS, BECOMES WET TO MOIST			3 2 3	6	100	SS-5	-	-	-	-	-	-	-	-	-	26	A-3a (V)	
			3 4 3	8	89	SS-6	-	1	12	58	19	10	NP	NP	NP	15	A-3a (0)	
			4 4 4	9	94	SS-7	-	-	-	-	-	-	-	-	-	12	A-3a (V)	
	652.5																	
LOOSE, BROWN, **GRAVEL AND STONE FRAGMENTS WITH SAND**, TRACE SILT, TRACE CLAY, MOIST			3 3 3	7	89	SS-8	-	30	31	25	10	4	NP	NP	NP	12	A-1-b (0)	
	650.0	W 650.0																
LOOSE, BROWN, **GRAVEL**, LITTLE SAND, TRACE SILT, TRACE CLAY, WET			3 4 5	10	56	SS-9	-	-	-	-	-	-	-	-	-	16	A-1-a (V)	
	647.5																	
MEDIUM DENSE, BROWN, **COARSE AND FINE SAND** LITTLE SILT, LITTLE GRAVEL, TRACE CLAY, MOIST			4 5 5	11	50	SS-10	-	15	21	36	18	10	NP	NP	NP	13	A-3a (0)	
	645.0																	
MEDIUM DENSE, GRAY, **GRAVEL WITH SAND**, TRACE SILT, TRACE CLAY, MOIST TO WET			4 6 8	16	67	SS-11	-	-	-	-	-	-	-	-	-	18	A-1-b (V)	
			8 11 14	29	83	SS-12	-	46	33	13	7	1	NP	NP	NP	13	A-1-b (0)	
			7 9 11	23	72	SS-13	-	-	-	-	-	-	-	-	-	16	A-1-b (V)	
	637.5																	
MEDIUM DENSE TO DENSE, GRAY, **COARSE AND FINE SAND**, TRACE SILT, TRACE CLAY, TRACE GRAVEL, WET			7 10 10	23	83	SS-14	-	-	-	-	-	-	-	-	-	24	A-3a (V)	
			6 9 11	23	89	SS-15	-	1	22	66	9	2	NP	NP	NP	19	A-3a (0)	
			6 10 12	25	78	SS-16	-	-	-	-	-	-	-	-	-	23	A-3a (V)	
			7 12 13	29	89	SS-17	-	-	-	-	-	-	-	-	-	26	A-3a (V)	
			8 14 14	32	89	SS-18	-	-	-	-	-	-	-	-	-	23	A-3a (V)	
	624.5																	
VERY STIFF TO HARD, GRAY, **SILT**, SOME CLAY, TRACE SAND, TRACE GRAVEL, DAMP TO MOIST			8 12 14	30	78	SS-19	4.25	1	0	4	71	24	28	20	8	19	A-4b (8)	
			7 12 14	30	89	SS-20	2.50	-	-	-	-	-	-	-	-	21	A-4b (V)	
	618.7																	
MEDIUM STIFF TO STIFF, GRAY, **SILT AND CLAY**, TRACE SAND, TRACE GRAVEL, MOIST			4 4 5	10	100	SS-21	0.75	0	0	5	63	32	30	19	11	23	A-6a (8)	

Preliminary Plans - For Reference Only

STANDARD ODOT SOIL BORING LOG (11 X 17) - OH DOT.GDT - 1/3/24 14:16 - X:\ACTIVE PROJECTS\ACTIVE SOIL PROJECTS\1ARCHIVE BY YEAR\2022 ARCHIVE\CUY-90-16.28 (CCG3A - MOD#7)\GINT FILES\CUY-90-16.28 (CCG3A).GPJ

DESIGN AGENCY
NEAS
2800 CORPORATE EXCHANGE DR. SUITE 240 COLUMBUS, OH. 43231 TEL:614.714.0299 WWW.NEASINC.COM

DESIGNER MWJ & DT
REVIEWER BPA 08/23/24
PROJECT ID 82382
SHEET 139 TOTAL 310
SHEET P 2525 TOTAL 2696

GEOTECHNICAL PROFILE - ROADWAY
BRIDGE NO. CUY-90-1678 OVER IR-90
BORING LOG B-085-2-20

MODEL: Sheet PAPERSIZE: 34x22 (in.) DATE: 3/28/2025 TIME: 10:01:10 AM USER: Asiddiqi
pw:\\mb-us-pw.bentley.com:mb-us-pw-03\Documents\Cleveland_OH\01_Projects\ODOT\District12\82382\400-Engineering\Geotechnical\Sheets\82382_ZL026.dgn

PID: 82382 | SFN: | PROJECT: CUY-90-16.28 (CCG3A) | STATION / OFFSET: 35+02, 65' LT. | START: 3/25/21 | END: 3/25/21 | PG 2 OF 3 | B-085-2-20

MATERIAL DESCRIPTION AND NOTES	ELEV.	DEPTHS	SPT/ RQD	N_{60}	REC (%)	SAMPLE ID	HP (tsf)	GRADATION (%) GR	CS	FS	SI	CL	ATTERBERG LL	PL	PI	WC	ODOT CLASS (GI)	HOLE SEALED
MEDIUM STIFF TO STIFF, GRAY, **SILT AND CLAY**, TRACE SAND, TRACE GRAVEL, MOIST *(continued)*	612.0	61	8 11 12	26	100	SS-22	1.50	-	-	-	-	-	-	-	-	23	A-6a (V)	
		66	8 11 11	25	100	SS-23	1.75	-	-	-	-	-	-	-	-	24	A-6a (V)	
STIFF TO HARD, GRAY, **SILT**, SOME TO "AND" CLAY, TRACE SAND, TRACE GRAVEL, MOIST TO DAMP	603.7	71	8 9 11	23	100	SS-24	3.50	0	0	1	74	25	28	21	7	23	A-4b (8)	
		76	6 8 11	22	100	SS-25	1.75	0	0	1	57	42	32	22	10	25	A-4b (8)	
@80.0'; SS-26 CONTAINS NO RECOVERY		81	7 9 14	26	0	SS-26	-	-	-	-	-	-	-	-	-	-		
		86	10 11 16	31	100	SS-27	2.25	-	-	-	-	-	-	-	-	24	A-4b (V)	
		91	12 24 26	57	100	SS-28	4.25	0	0	1	67	32	26	19	7	20	A-4b (8)	
		96	12 18 20	43	89	SS-29	3.75	-	-	-	-	-	-	-	-	22	A-4b (V)	
		101	12 11 10	24	78	SS-30	4.25	-	-	-	-	-	-	-	-	19	A-4b (V)	
		106	10 11 10	24	100	SS-31	4.50	-	-	-	-	-	-	-	-	23	A-4b (V)	
MEDIUM STIFF TO STIFF, GRAY, **SILT AND CLAY**, TRACE SAND, TRACE GRAVEL, MOIST TO WET	563.7	111	9 12 11	26	89	SS-32	1.25	1	2	5	49	43	29	18	11	23	A-6a (8)	
		116	10 12 11	26	100	SS-33	1.50	-	-	-	-	-	-	-	-	25	A-6a (V)	
		121	11 13 10	26	89	SS-34	1.50	-	-	-	-	-	-	-	-	23	A-6a (V)	

Preliminary Plans - For Reference Only

STANDARD ODOT SOIL BORING LOG (11 X 17) - OH DOT.GDT - 1/3/24 14:16 - X:\ACTIVE PROJECTS\ACTIVE SOIL PROJECTS\1ARCHIVE BY YEAR\2022 ARCHIVE\CUY-90-16.28 (CCG3A - MOD#7)\GINT FILES\CUY-90-16.28 (CCG3A).GPJ

DESIGN AGENCY
2800 CORPORATE EXCHANGE DR. SUITE 240 COLUMBUS, OH. 43231
TEL:614.714.0299
WWW.NEASINC.COM

GEOTECHNICAL PROFILE - ROADWAY
BRIDGE NO. CUY-90-1678 OVER IR-90
BORING LOG B-085-2-20 (CONTINUED)

MODEL: Sheet PAPERSIZE: 34x22 (in.) DATE: 3/28/2025 TIME: 10:01:29 AM USER: Asiddiqi
pw:\\mb-us-pw.bentley.com:mb-us-pw-03\Documents\Cleveland_OH\01_Projects\ODOT\District12\82382\400-Engineering\Geotechnical\Sheets\82382_ZL027.dgn

PID: 82382 | SFN: | PROJECT: CUY-90-16.28 (CCG3A) | STATION / OFFSET: 35+00, 55' LT. | START: 3/25/21 | END: 3/25/21 | PG 3 OF 3 | B-085-2-20

MATERIAL DESCRIPTION AND NOTES	ELEV.	DEPTHS	SPT/ RQD	N_{60}	REC (%)	SAMPLE ID	HP (tsf)	GRADATION (%) GR	CS	FS	SI	CL	ATTERBERG LL	PL	PI	WC	ODOT CLASS (GI)	HOLE SEALED
MEDIUM STIFF TO STIFF, GRAY, **SILT AND CLAY**, TRACE SAND, TRACE GRAVEL, MOIST TO WET *(continued)*		123																
		124																
		125																
		126	10 11 14	29	100	SS-35	1.00	-	-	-	-	-	-	-	-	30	A-6a (V)	
		127																
		128																
		129																
		130																
	540.5	131 EOB	11 11 15	30	100	SS-36	0.75	-	-	-	-	-	-	-	-	31	A-6a (V)	

Preliminary Plans - For Reference Only

NOTES: GROUNDWATER ENCOUNTERED AT 22.0' DURING DRILLING. HOLE DID NOT CAVE.
ABANDONMENT METHODS, MATERIALS, QUANTITIES: PUMPED 250 GAL. BENTONITE GROUT; POURED 2 BAGS HOLE PLUG

STANDARD ODOT SOIL BORING LOG (11 X 17) - OH DOT.GDT - 6/22/22 18:16 - X:\ACTIVE PROJECTS\ACTIVE SOIL PROJECTS\CUY-90-16.28 (CCG3A - MOD#7)\GINT FILES\CUY-90-16.28 (CCG3A).GPJ

DESIGN AGENCY
2800 CORPORATE EXCHANGE DR. SUITE 240
COLUMBUS, OH. 43231
TEL:614.714.0299
WWW.NEASINC.COM

DESIGNER MW,J & DT
REVIEWER BPA 08/23/24
PROJECT ID 82382
SUBSET 141 TOTAL 310
SHEET P 2527 TOTAL 2696

GEOTECHNICAL PROFILE - ROADWAY
BRIDGE NO. CUY-90-1678 OVER IR-90
BORING LOG B-085-2-20 (CONTINUED)

MODEL: Sheet PAPERSIZE: 34x22 (in.) DATE: 3/28/2025 TIME: 10:01:45 AM USER: Asiddiqi
pw:\\mb-us-pw.bentley.com:mb-us-pw-03\Documents\Cleveland_OH\01_Projects\ODOT\District12\82382\400-Engineering\Geotechnical\Sheets\82382_ZL028.dgn

PROJECT: CUY-90-16.28 (CCG3A)
TYPE: PIEZO
PID: 82382 SFN:
START: 3/17/21 END: 3/17/21

DRILLING FIRM / OPERATOR: NEAS / ASHBAUGH
SAMPLING FIRM / LOGGER: NEAS / ASHBAUGH
DRILLING METHOD: 3.25" HSA
SAMPLING METHOD: SPT

DRILL RIG: CME 55T
HAMMER: CME AUTOMATIC
CALIBRATION DATE: 12/5/19
ENERGY RATIO (%): 68.4

STATION / OFFSET: 1620+93, 108' RT.
ALIGNMENT: RAMP B6
ELEVATION: 669.8 (MSL) EOB: 51.5 ft.
LAT / LONG: 41.497630, -81.674080

EXPLORATION ID B-085-3-20
PAGE 1 OF 1

MATERIAL DESCRIPTION AND NOTES	ELEV. 669.8	DEPTHS	SPT/ RQD	N_{60}	REC (%)	SAMPLE ID	HP (tsf)	GRADATION (%) GR	CS	FS	SI	CL	ATTERBERG LL	PL	PI	WC	ODOT CLASS (GI)	PIEZ.
5.0" TOPSOIL (DRILLERS DESCRIPTION)	669.4																	
LOOSE TO MEDIUM DENSE, BROWN BECOMING BROWNISH GRAY, **FINE SAND**, SOME COARSE SAND, TRACE SILT, TRACE GRAVEL, TRACE CLAY, SS-1 CONTAINS IRON STAINING, DAMP TO MOIST			4 5 7	14	67	SS-1	-	-	-	-	-	-	-	-	-	8	A-3 (V)	
			3 4 5	10	67	SS-2	-	-	-	-	-	-	-	-	-	13	A-3 (V)	
			4 3 4	8	78	SS-3	-	6	30	55	6	3	NP	NP	NP	12	A-3 (0)	
		W 646.0	4 5 9	16	72	SS-4	-	-	-	-	-	-	-	-	-	10	A-3 (V)	
F.S. @25.0'; BECOMES WET			4 4 8	14	89	SS-5	-	-	-	-	-	-	-	-	-	22	A-3 (V)	
			4 5 11	18	78	SS-6	-	-	-	-	-	-	-	-	-	23	A-3 (V)	
			6 6 7	15	100	SS-7	-	-	-	-	-	-	-	-	-	20	A-3 (V)	
			6 7 8	17	100	SS-8	-	-	-	-	-	-	-	-	-	25	A-3 (V)	
			5 8 8	18	89	SS-9	-	-	-	-	-	-	-	-	-	24	A-3 (V)	
MEDIUM DENSE, GRAY, **SILT**, SOME SAND, LITTLE CLAY, TRACE GRAVEL, WET	621.5																	
	618.3	EOB	8 9 13	25	89	SS-10	-	0	0	21	59	20	NP	NP	NP	19	A-4b (8)	

Preliminary Plans - For Reference Only

NOTES: GROUNDWATER ENCOUNTERED AT 23.8' DURING DRILLING, 21.7' AFTER PIEZOMETER INSTALLATION. HOLE DID NOT CAVE. BORING OFFSET 22.0' SOUTH.
ABANDONMENT METHODS, MATERIALS, QUANTITIES: POURED 30 GAL. BENTONITE GROUT; POURED 2 BAGS CEMENT; POURED 7 BAGS SAND

STANDARD ODOT SOIL BORING LOG (11 X 17) - OH DOT.GDT - 6/22/22 18:16 - X:\ACTIVE PROJECTS\ACTIVE SOIL PROJECTS\CUY-90-16.28 (CCG3A - MOD#7)\IGINT FILES\CUY-90-16.28 (CCG3A).GPJ

DESIGN AGENCY
NEAS
2800 CORPORATE EXCHANGE DR.
SUITE 240
COLUMBUS, OH. 43231
TEL:614.714.0299
WWW.NEASINC.COM

DESIGNER MWJ & DT
REVIEWER BPA 08/23/24
PROJECT ID 82382
SUBSET 142 TOTAL 310
SHEET P 2528 TOTAL 2696

GEOTECHNICAL PROFILE - ROADWAY
WALL Z
BORING LOG B-085-3-20

MODEL: Sheet PAPERSIZE: 34x22 (in.) DATE: 3/28/2025 TIME: 10:02:09 AM USER: Asiddiqi
pw:\\mb-us-pw.bentley.com:mb-us-pw-03\Documents\Cleveland_OH\01_Projects\ODOT\District12\82382\400-Engineering\Geotechnical\Sheets\82382_ZL029.dgn

PROJECT: CUY-90-16.28 (CCG3A)
TYPE: PIEZO
PID: 82382 SFN: 1807839
START: 3/10/21 END: 3/10/21

DRILLING FIRM / OPERATOR: NEAS / ASHBAUGH
SAMPLING FIRM / LOGGER: NEAS / ASHBAUGH
DRILLING METHOD: 3.25" HSA
SAMPLING METHOD: SPT

DRILL RIG: CME 55T
HAMMER: CME AUTOMATIC
CALIBRATION DATE: 12/5/19
ENERGY RATIO (%): 68.4

STATION / OFFSET: 33+19, 45' RT.
ALIGNMENT: E 22ND ST
ELEVATION: 670.8 (MSL) EOB: 51.5 ft.
LAT / LONG: 41.497956, -81.673732

EXPLORATION ID B-085-4-20

PAGE 1 OF 1

MATERIAL DESCRIPTION AND NOTES	ELEV.	DEPTHS	SPT/ RQD	N_{60}	REC (%)	SAMPLE ID	HP (tsf)	GRADATION (%) GR	CS	FS	SI	CL	ATTERBERG LL	PL	PI	WC	ODOT CLASS (GI)	PIEZ.
5.0" TOPSOIL (DRILLERS DESCRIPTION)	670.4																	
LOOSE TO MEDIUM DENSE, BROWN BECOMING GRAY, **COARSE AND FINE SAND**LITTLE SILT, TRACE TO LITTLE GRAVEL, TRACE CLAY, SS-5 CONTAINS IRON STAINING, DAMP TO MOIST			4 10 12	25	89	SS-1	-	-	-	-	-	-	-	-	-	8	A-3a (V)	
			4 8 10	21	100	SS-2	-	-	-	-	-	-	-	-	-	9	A-3a (V)	
			4 6 6	14	89	SS-3	-	4	19	54	17	6	NP	NP	NP	6	A-3a (0)	
			4 4 5	10	89	SS-4	-	-	-	-	-	-	-	-	-	13	A-3a (V)	
		▼ 647.2																
@25.0'; BECOMES WET			8 13 13	30	100	SS-5	-	-	-	-	-	-	-	-	-	21	A-3a (V)	
@30.0'; 3.2' OF SAND HEAVE			7 10 14	27	100	SS-6	-	-	-	-	-	-	-	-	-	18	A-3a (V)	
@35.0'; SAND HEAVE			4 4 6	11	78	SS-7	-	-	-	-	-	-	-	-	-	17	A-3a (V)	
@40.0'; SAND HEAVE			5 7 10	19	89	SS-8	-	-	-	-	-	-	-	-	-	18	A-3a (V)	
	627.5																	
MEDIUM DENSE, GRAY, **SILT**, SOME SAND, LITTLE CLAY, TRACE GRAVEL, WET			6 7 8	17	100	SS-9	-	0	1	23	61	15	NP	NP	NP	24	A-4b (8)	
	622.5																	
LOOSE, GRAY, **COARSE AND FINE SAND**LITTLE SILT, TRACE GRAVEL, TRACE CLAY, WET			4 4 5	10	100	SS-10	-	-	-	-	-	-	-	-	-	19	A-3a (V)	
	619.3	EOB																

NOTES: GROUNDWATER ENCOUNTERED AT 23.6' DURING DRILLING. ENCOUNTERED SAND HEAVE IN SS-6 TO SS-8. HOLE DID NOT CAVE.
ABANDONMENT METHODS, MATERIALS, QUANTITIES: POURED 30 GAL. BENTONITE GROUT; POURED 2 BAGS CEMENT; POURED 7 BAGS SAND

Preliminary Plans - For Reference Only

STANDARD ODOT SOIL BORING LOG (11 X 17) - OH DOT.GDT - 1/3/24 14:16 - X:\ACTIVE PROJECTS\ACTIVE SOIL PROJECTS\1ARCHIVE BY YEAR\2022 ARCHIVE\CUY-90-16.28 (CCG3A - MOD#7)\GINT FILES\CUY-90-16.28 (CCG3A).GPJ

DESIGN AGENCY
NEAS
2800 CORPORATE EXCHANGE DR. SUITE 240
COLUMBUS, OH. 43231
TEL:614.714.0299
WWW.NEASINC.COM

DESIGNER MWJ & DT
REVIEWER BPA 08/23/24
PROJECT ID 82382
SHEET P 2529 TOTAL 2696
SUBSET 143 TOTAL 310

GEOTECHNICAL PROFILE - ROADWAY
BRIDGE NO. CUY-90-1678 OVER IR-90
BORING LOG B-085-4-20

CUY-90-16.28 (CCG3A)

MODEL: Sheet PAPERSIZE: 34x22 (in.) DATE: 3/28/2025 TIME: 10:02:38 AM USER: Asiddiqi
pw:\\mb-us-pw.bentley.com:mb-us-pw-03\Documents\Cleveland_OH\01_Projects\ODOT\District12\82382\400-Engineering\Geotechnical\Sheets\82382_ZL030.dgn

PROJECT: CUY-90-16.28 (CCG3A)
TYPE: BRIDGE
PID: 82382 SFN: 1807841
START: 4/7/21 END: 4/7/21

DRILLING FIRM / OPERATOR: NEAS / ASHBAUGH
SAMPLING FIRM / LOGGER: NEAS / ASHBAUGH
DRILLING METHOD: 3.25" HSA
SAMPLING METHOD: SPT

DRILL RIG: CME 55T
HAMMER: CME AUTOMATIC
CALIBRATION DATE: 12/5/19
ENERGY RATIO (%): 68.4

STATION / OFFSET: 35+18, 77' RT.
ALIGNMENT: E 22ND ST
ELEVATION: 670.4 (MSL) EOB: 141.5 ft.
LAT / LONG: 41.498510, -81.673720

EXPLORATION ID B-086-1-20

MATERIAL DESCRIPTION AND NOTES	ELEV. 670.4	DEPTHS	SPT/ RQD	N_{60}	REC (%)	SAMPLE ID	HP (tsf)	GRADATION (%) GR	CS	FS	SI	CL	ATTERBERG LL	PL	PI	WC	ODOT CLASS (GI)	PIEZ.
5.0" TOPSOIL (DRILLERS DESCRIPTION)	670.0																	
LOOSE, BROWN, **COARSE AND FINE SAND**LITTLE TO SOME SILT, TRACE CLAY, TRACE GRAVEL, CONTAINS INTERBEDDED 0.25" TO 1.25" STIFF GRAY SILT AND CLAY (A-6A) SEAMS, CONTAINS TRACE COAL AND RED BRICK FRAGMENTS, DAMP **(FILL)**			2 3 3	7	89	SS-1	-	-	-	-	-	-	-	-	-	11	A-3a (V)	
			2 3 4	8	78	SS-2	-	-	-	-	-	-	-	-	-	10	A-3a (V)	
			3 3 3	7	89	SS-3	-	3	17	46	24	10	NP	NP	NP	10	A-3a (0)	
			3 4 4	9	94	SS-4	-	-	-	-	-	-	-	-	-	7	A-3a (V)	
			3 4 5	10	89	SS-5	-	-	-	-	-	-	-	-	-	9	A-3a (V)	
	655.9																	
MEDIUM STIFF, BROWN, **SANDY SILT**, LITTLE CLAY, TRACE GRAVEL, CONTAINS NO INTACT SOIL FOR HP READINGS, DAMP **(FILL)**			3 4 4	9	89	SS-6	-	4	9	30	39	18	20	14	6	14	A-4a (4)	
	653.4																	
LOOSE, BROWN, **COARSE AND FINE SAND**LITTLE TO SOME SILT, TRACE CLAY, TRACE GRAVEL, CONTAINS RED BRICK FRAGMENTS, DAMP TO MOIST **(FILL)**			3 3 5	9	94	SS-7	-	-	-	-	-	-	-	-	-	11	A-3a (V)	
			3 3 4	8	89	SS-8	-	-	-	-	-	-	-	-	-	10	A-3a (V)	
			3 4 5	10	78	SS-9	-	10	19	38	23	10	NP	NP	NP	12	A-3a (0)	
	645.9																	
LOOSE TO DENSE, BROWNISH GRAY BECOMING GRAY, **COARSE AND FINE SAND**TRACE TO LITTLE SILT, TRACE CLAY, TRACE GRAVEL, DAMP			4 4 5	10	100	SS-10	-	-	-	-	-	-	-	-	-	8	A-3a (V)	
		643.9 ▼																
@27.5' TO 49.0'; BECOMES WET			6 10 19	33	56	SS-11	-	-	-	-	-	-	-	-	-	24	A-3a (V)	
@27.5' TO 49.0'; BECOMES WET			7 14 18	36	78	SS-12	-	-	-	-	-	-	-	-	-	29	A-3a (V)	
			6 10 10	23	56	SS-13	-	-	-	-	-	-	-	-	-	27	A-3a (V)	
			5 7 11	21	61	SS-14	-	-	-	-	-	-	-	-	-	23	A-3a (V)	
			5 7 13	23	89	SS-15	-	-	-	-	-	-	-	-	-	21	A-3a (V)	
			4 8 14	25	100	SS-16	-	-	-	-	-	-	-	-	-	23	A-3a (V)	
			5 10 11	24	72	SS-17	-	-	-	-	-	-	-	-	-	30	A-3a (V)	
			7 11 11	25	94	SS-18	-	-	-	-	-	-	-	-	-	24	A-3a (V)	
			6 8 10	21	100	SS-19	-	-	-	-	-	-	-	-	-	20	A-3a (V)	
	620.9																	
MEDIUM DENSE, GRAY, **SILT**, SOME SAND, LITTLE CLAY, TRACE GRAVEL, WET			5 6 6	14	100	SS-20	-	1	0	24	57	18	NP	NP	NP	20	A-4b (8)	
	618.4																	
STIFF TO VERY STIFF, GRAY, **SILT AND CLAY**, TRACE SAND, TRACE GRAVEL, MOIST			4 5 6	13	100	SS-21	1.25	-	-	-	-	-	-	-	-	23	A-6a (V)	
			5 5 7	14	100	SS-22	2.50	0	0	3	60	37	32	19	13	24	A-6a (9)	
			6 6 8	16	100	SS-23	3.50	-	-	-	-	-	-	-	-	22	A-6a (V)	

Preliminary Plans - For Reference Only

STANDARD ODOT SOIL BORING LOG (11 X 17) - OH DOT.GDT - 1/3/24 14:16 - X:\ACTIVE PROJECTS\ACTIVE SOIL PROJECTS\1ARCHIVE BY YEAR\2022 ARCHIVE\CUY-90-16.28 (CCG3A - MOD#7\IGINT FILES\CUY-90-16.28 (CCG3A).GPJ

DESIGN AGENCY
NEAS
2800 CORPORATE EXCHANGE DR. SUITE 240
COLUMBUS, OH. 43231
TEL:614.714.0299
WWW.NEASINC.COM

DESIGNER MWJ & DT
REVIEWER BPA 08/23/24
PROJECT ID 82382
SUBSET 144 TOTAL 310
SHEET P 2530 TOTAL 2696

GEOTECHNICAL PROFILE - ROADWAY
BRIDGE NO. CUY-90-1678 OVER IR-90
BORING LOG B-086-1-20

MODEL: Sheet PAPERSIZE: 34x22 (in.) DATE: 3/28/2025 TIME: 10:03:09 AM USER: Asiddiqi
pw:\\mb-us-pw.bentley.com:mb-us-pw-03\Documents\Cleveland_OH\01_Projects\ODOT\District12\82382\400-Engineering\Geotechnical\Sheets\82382_ZL031.dgn

PID: 82382 | SFN: | PROJECT: CUY-90-16.28 (CCG3A) | STATION / OFFSET: 35+18, 77' RT. | START: 4/7/21 | END: 4/7/21 | PG 2 OF 3 | B-086-1-20

MATERIAL DESCRIPTION AND NOTES	ELEV.	DEPTHS	SPT/ RQD	N_{60}	REC (%)	SAMPLE ID	HP (tsf)	GRADATION (%) GR	CS	FS	SI	CL	ATTERBERG LL	PL	PI	WC	ODOT CLASS (GI)	PIEZ.
STIFF TO VERY STIFF, GRAY, **SILT AND CLAY**, TRACE SAND, TRACE GRAVEL, MOIST *(continued)*	610.4	61	5 6 10	18	100	SS-24	1.50	-	-	-	-	-	-	-	-	24	A-6a (V)	
	607.1	62–65																
MEDIUM STIFF TO VERY STIFF, GRAY, **SILT**, SOME TO "AND" CLAY, TRACE SAND, TRACE GRAVEL, MOIST		66	5 5 7	14	100	SS-25	1.75	0	0	1	59	40	29	19	10	25	A-4b (8)	
		67–70																
		71	4 5 4	10	100	SS-26	2.25	-	-	-	-	-	-	-	-	25	A-4b (V)	
		72–75																
		76	5 5 10	17	100	SS-27	0.75	0	0	1	64	35	29	20	9	22	A-4b (8)	
	592.1	77–80																
VERY STIFF TO HARD, GRAY, **SILT AND CLAY**, TRACE SAND, TRACE GRAVEL, DAMP TO MOIST		81	5 8 12	23	100	SS-28	4.25	-	-	-	-	-	-	-	-	20	A-6a (V)	
		82–85																
		86	7 10 15	29	100	SS-29	4.25	0	0	3	64	33	31	20	11	20	A-6a (8)	
		87–90																
		91	7 12 18	34	100	SS-30	4.50	-	-	-	-	-	-	-	-	20	A-6a (V)	
		92–95																
		96	8 9 9	21	100	SS-31	2.25	-	-	-	-	-	-	-	-	23	A-6a (V)	
		97–100																
		101	10 8 7	17	100	SS-32	2.25	1	1	3	42	53	33	20	13	27	A-6a (9)	
	567.1	102–105																
SOFT TO MEDIUM STIFF, GRAY, **CLAY**, SOME SILT, TRACE SAND, TRACE GRAVEL, MOIST		106	7 10 8	21	100	SS-33	0.75	-	-	-	-	-	-	-	-	29	A-7-6 (V)	
		107–110																
		111	5 7 6	15	100	SS-34	0.50	0	1	1	33	65	43	22	21	29	A-7-6 (13)	
	557.1	112–115																
SOFT TO VERY STIFF, GRAY, **SILT AND CLAY**, TRACE SAND, TRACE GRAVEL, MOIST		116	5 5 7	14	100	SS-35	0.50	-	-	-	-	-	-	-	-	22	A-6a (V)	
		117–120																
		121	5 6 8	16	100	SS-36	1.75	-	-	-	-	-	-	-	-	24	A-6a (V)	

Preliminary Plans - For Reference Only

STANDARD ODOT SOIL BORING LOG (11" X 17") - OH DOT.GDT - 1/3/24 14:16 - X:\ACTIVE PROJECTS\ACTIVE SOIL PROJECTS\1ARCHIVE BY YEAR\2022 ARCHIVE\CUY-90-16.28 (CCG3A - MOD#7)\GINT FILES\CUY-90-16.28 (CCG3A).GPJ

DESIGN AGENCY
EAS
2800 CORPORATE EXCHANGE DR. SUITE 240
COLUMBUS, OH. 43231
TEL:614.714.0299
WWW.NEASINC.COM
DESIGNER MW,J & DT
REVIEWER BPA 08/23/24

PROJECT ID 82382
SUBSET 145 TOTAL 310
SHEET P 2531 TOTAL 2696

GEOTECHNICAL PROFILE - ROADWAY
BRIDGE NO. CUY-90-1678 OVER IR-90
BORING LOG B-086-1-20 (CONTINUED)

MODEL: Sheet PAPERSIZE: 34x22 (in.) DATE: 3/28/2025 TIME: 10:03:35 AM USER: Asiddiqi
pw:\\mb-us-pw.bentley.com:mb-us-pw-03\Documents\Cleveland_OH\01_Projects\ODOT\District12\82382\400-Engineering\Geotechnical\Sheets\82382_ZL032.dgn

PID: 82382 | SFN: | PROJECT: CUY-90-16.28 (CCG3A) | STATION / OFFSET: 35+18, 77' RT. | START: 4/7/21 | END: 4/7/21 | PG 3 OF 3 | B-086-1-20

MATERIAL DESCRIPTION AND NOTES	ELEV.	DEPTHS	SPT/ RQD	N_{60}	REC (%)	SAMPLE ID	HP (tsf)	GRADATION (%) GR	CS	FS	SI	CL	ATTERBERG LL	PL	PI	WC	ODOT CLASS (GI)	PIEZ.
SOFT TO VERY STIFF, GRAY, **SILT AND CLAY**, TRACE SAND, TRACE GRAVEL, MOIST *(continued)*	548.5	123																
		124																
		125	6 7 7	16	100	SS-37	3.00	0	0	1	50	49	32	19	13	22	A-6a (9)	
		126																
		127																
		128																
		129																
		130	5 6 7	15	100	SS-38	2.75	-	-	-	-	-	-	-	-	22	A-6a (V)	
		131																
		132																
		133																
		134																
		135	7 8 7	17	100	SS-39	3.50	-	-	-	-	-	-	-	-	21	A-6a (V)	
		136																
		137																
		138																
		139																
		140																
	528.9	141 EOB	8 7 9	18	100	SS-40	3.00	0	0	1	50	49	33	18	15	22	A-6a (10)	

NOTES: GROUNDWATER ENCOUNTERED AT 26.5' DURING DRILLING, 26.9' AFTER PIEZOMETER INSTALLATION. HOLE DID NOT CAVE. BORING OFFSET 16.0' SOUTHWEST.
ABANDONMENT METHODS, MATERIALS, QUANTITIES: POURED 90 GAL. BENTONITE GROUT; POURED 2 BAGS CEMENT; POURED 10 BAGS SAND

Preliminary Plans - For Reference Only

STANDARD ODOT SOIL BORING LOG (11 X 17) - OH DOT.GDT - 1/3/24 14:16 - X:\ACTIVE PROJECTS\ACTIVE SOIL PROJECTS\1ARCHIVE BY YEAR\2022 ARCHIVE\CUY-90-16.28 (CCG3A - MOD#7)\GINT FILES\CUY-90-16.28 (CCG3A).GPJ

DESIGN AGENCY
2800 CORPORATE EXCHANGE DR. SUITE 240
COLUMBUS, OH. 43231
TEL:614.714.0299
WWW.NEASINC.COM
DESIGNER MW,J & DT
REVIEWER BPA 08/23/24
PROJECT ID 82382
SUBSET 146 TOTAL 310
SHEET P 2532 TOTAL 2696

GEOTECHNICAL PROFILE - ROADWAY
BRIDGE NO. CUY-90-1678 OVER IR-90
BORING LOG B-086-1-20 (CONTINUED)

MODEL: Sheet PAPERSIZE: 34x22 (in.) DATE: 3/28/2025 TIME: 10:03:54 AM USER: Asiddiqi
pw:\\mb-us-pw.bentley.com:mb-us-pw-03\Documents\Cleveland_OH\01_Projects\ODOT\District12\82382\400-Engineering\Geotechnical\Sheets\82382_ZL033.dgn

PROJECT: CUY-90-16.28 (CCG3A)
TYPE: BRIDGE
PID: 82382 SFN: 1807841
START: 3/11/21 END: 3/11/21

DRILLING FIRM / OPERATOR: NEAS / ASHBAUGH
SAMPLING FIRM / LOGGER: NEAS / ASHBAUGH
DRILLING METHOD: 3.25" HSA
SAMPLING METHOD: SPT

DRILL RIG: CME 55T
HAMMER: CME AUTOMATIC
CALIBRATION DATE: 12/5/19
ENERGY RATIO (%): 68.4

STATION / OFFSET: 201+25, 63' RT.
ALIGNMENT: IR-90 EB
ELEVATION: 670.7 (MSL) EOB: 136.5 ft.
LAT / LONG: 41.498184, -81.673420

EXPLORATION ID B-087-1-20

MATERIAL DESCRIPTION AND NOTES	ELEV. 670.7	DEPTHS	SPT/ RQD	N_{60}	REC (%)	SAMPLE ID	HP (tsf)	GRADATION (%) GR	CS	FS	SI	CL	ATTERBERG LL	PL	PI	WC	ODOT CLASS (GI)	HOLE SEALED
6.0" TOPSOIL (DRILLERS DESCRIPTION)	670.2																	
LOOSE TO MEDIUM DENSE, BROWN, **COARSE AND FINE SAND**, LITTLE SILT, TRACE CLAY, TRACE GRAVEL, DAMP TO MOIST		1																
		2																
		3	6 7 9	18	100	SS-1	-	-	-	-	-	-	-	-	-	10	A-3a (V)	
		4																
		5	5 5 7	14	89	SS-2	-	-	-	-	-	-	-	-	-	9	A-3a (V)	
		6																
		7																
		8	7 10 12	25	100	SS-3	-	3	17	54	19	7	NP	NP	NP	9	A-3a (0)	
		9																
		10																
		11	7 11 12	26	100	SS-4	-	-	-	-	-	-	-	-	-	9	A-3a (V)	
		12																
		13	7 10 13	26	89	SS-5	-	-	-	-	-	-	-	-	-	9	A-3a (V)	
		14																
		15																
		16	6 12 14	30	89	SS-6	-	5	20	51	17	7	NP	NP	NP	9	A-3a (0)	
		17																
		18	6 8 8	18	89	SS-7	-	-	-	-	-	-	-	-	-	8	A-3a (V)	
		19																
		20																
		21	6 6 5	13	94	SS-8	-	-	-	-	-	-	-	-	-	11	A-3a (V)	
		22																
		23	4 7 5	14	78	SS-9	-	4	23	49	17	7	NP	NP	NP	11	A-3a (0)	
		24																
		W 646.3																
@25.0'; SS-10 BECOMES WET		25																
		26	2 3 3	7	89	SS-10	-	-	-	-	-	-	-	-	-	25	A-3a (V)	
		27																
		28	3 3 3	7	83	SS-11	-	-	-	-	-	-	-	-	-	12	A-3a (V)	
	641.2	29																
LOOSE, GRAY, **FINE SAND**, SOME COARSE SAND, LITTLE SILT, TRACE GRAVEL, TRACE CLAY, WET		30																
@30.0'; SS-12 CONTAINS NO RECOVERY		31	2 2 3	6	0	SS-12	-	-	-	-	-	-	-	-	-	-		
F S		32																
		33	2 2 3	6	100	SS-13	-	-	-	-	-	-	-	-	-	26	A-3 (V)	
	636.2	34																
LOOSE TO MEDIUM DENSE, BROWNISH GRAY AND GRAY, **COARSE AND FINE SAND**, LITTLE SILT, TRACE CLAY, TRACE GRAVEL, WET		35																
		36	3 4 5	10	67	SS-14	-	-	-	-	-	-	-	-	-	22	A-3a (V)	
		37																
		38	3 7 10	19	78	SS-15	-	-	-	-	-	-	-	-	-	22	A-3a (V)	
		39																
		40																
		41	5 7 7	16	100	SS-16	-	-	-	-	-	-	-	-	-	26	A-3a (V)	
		42																
@42.5'; SS-17 AND SS-18 BECOME DENSE		43	9 13 18	35	100	SS-17	-	-	-	-	-	-	-	-	-	23	A-3a (V)	
		44																
		45																
		46	15 22 18	46	89	SS-18	-	-	-	-	-	-	-	-	-	24	A-3a (V)	
	623.7	47																
STIFF TO VERY STIFF, GRAY, **SILT**, SOME CLAY, TRACE SAND, TRACE GRAVEL, DAMP TO MOIST		48																
		49	5 6 10	18	100	SS-19	2.50	-	-	-	-	-	-	-	-	23	A-4b (V)	
		50																
		51	5 6 7	15	78	SS-20	1.75	0	1	7	64	28	28	19	9	10	A-4b (8)	
		52																
		53	5 7 7	16	78	SS-21	3.50	-	-	-	-	-	-	-	-	20	A-4b (V)	
		54																
		55																
		56	6 5 7	14	83	SS-22	2.50	-	-	-	-	-	-	-	-	21	A-4b (V)	
	612.4	57																
MEDIUM STIFF TO STIFF, GRAY, **SILT AND CLAY**, TRACE SAND, TRACE GRAVEL, MOIST		58																
		59																

Preliminary Plans For Reference Only

STANDARD ODOT SOIL BORING LOG (11 X 17) - OH DOT.GDT - 6/22/22 18:17 - X:\ACTIVE PROJECTS\ACTIVE SOIL PROJECTS\CUY-90-16.28 (CCG3A - MOD#7)\IGINT FILES\CUY-90-16.28 (CCG3A).GPJ

DESIGN AGENCY
NEAS
2800 CORPORATE EXCHANGE DR. SUITE 240
COLUMBUS, OH. 43231
TEL:614.714.0299
WWW.NEASINC.COM

DESIGNER MWJ & DT
REVIEWER BPA 08/23/24
PROJECT ID 82382
SUBSET 147 TOTAL 310
SHEET P 2533 TOTAL 2696

GEOTECHNICAL PROFILE - ROADWAY
BRIDGE NO. CUY-90-1680 OVER IR-90 EB
BORING LOG B-087-1-20

MODEL: Sheet PAPERSIZE: 34x22 (in.) DATE: 3/28/2025 TIME: 10:04:21 AM USER: Asiddiqi
pw:\\mb-us-pw.bentley.com:mb-us-pw-03\Documents\Cleveland_OH\01_Projects\ODOT\District12\82382\400-Engineering\Geotechnical\Sheets\82382_ZL034.dgn

PID: 82382 | SFN: | PROJECT: CUY-90-16.28 (CCG3A) | STATION / OFFSET: 201+25, 63' RT. | START: 3/11/21 | END: 3/11/21 | PG 2 OF 3 | B-087-1-20

MATERIAL DESCRIPTION AND NOTES	ELEV.	DEPTHS	SPT/ RQD	N_{60}	REC (%)	SAMPLE ID	HP (tsf)	GRADATION (%) GR	CS	FS	SI	CL	ATTERBERG LL	PL	PI	WC	ODOT CLASS (GI)	HOLE SEALED
MEDIUM STIFF TO STIFF, GRAY, **SILT AND CLAY**, TRACE SAND, TRACE GRAVEL, MOIST *(continued)*	610.7	61	6 8 8	18	78	SS-23	1.00	0	0	7	59	34	30	19	11	22	A-6a (8)	
		62																
	607.4	63																
MEDIUM DENSE, GRAY, **SILT**, SOME CLAY, TRACE SAND, TRACE GRAVEL, WET		64																
		65																
		66	7 7 8	17	89	SS-24	-	0	0	2	73	25	NP	NP	NP	22	A-4b (8)	
		67																
		68																
		69																
@70.0'; SS-25 CONTAINS NO RECOVERY		70																
		71	6 8 8	18	0	SS-25	-	-	-	-	-	-	-	-	-	-		
		72																
		73																
		74																
		75																
		76	7 9 11	23	100	SS-26	-	-	-	-	-	-	-	-	-	24	A-4b (V)	
		77																
	592.4	78																
STIFF, GRAY, **SILT AND CLAY**, TRACE SAND, TRACE GRAVEL, MOIST		79																
		80																
		81	6 11 10	24	100	SS-27	1.25	0	0	1	57	42	30	19	11	26	A-6a (8)	
		82																
	587.4	83																
VERY STIFF TO HARD, GRAY, **SILT**, SOME TO "AND" CLAY, TRACE SAND, TRACE GRAVEL, DAMP TO MOIST		84																
		85																
		86	7 10 13	26	100	SS-28	4.25	-	-	-	-	-	-	-	-	20	A-4b (V)	
		87																
		88																
		89																
		90																
		91	8 12 14	30	100	SS-29	3.75	0	1	0	63	36	30	20	10	20	A-4b (8)	
		92																
		93																
		94																
		95																
		96	10 13 13	30	100	SS-30	4.00	-	-	-	-	-	-	-	-	20	A-4b (V)	
		97																
		98																
		99																
		100																
		101	11 11 14	29	83	SS-31	2.75	0	0	1	62	37	30	20	10	21	A-4b (8)	
		102																
		103																
		104																
		105																
		106	10 12 14	30	89	SS-32	4.50	-	-	-	-	-	-	-	-	21	A-4b (V)	
		107																
	562.4	108																
STIFF TO VERY STIFF, GRAY, **SILT AND CLAY**, TRACE SAND, TRACE GRAVEL, MOIST		109																
		110																
		111	9 8 9	19	100	SS-33	2.00	0	1	1	51	47	32	20	12	25	A-6a (9)	
		112																
		113																
		114																
		115																
		116	7 8 9	19	100	SS-34	3.25	-	-	-	-	-	-	-	-	24	A-6a (V)	
	553.7	117																
MEDIUM STIFF TO VERY STIFF, GRAY, **SILTY CLAY**, TRACE SAND, TRACE GRAVEL, MOIST		118																
		119																
		120																
		121	7 9 8	19	94	SS-35	2.00	-	-	-	-	-	-	-	-	26	A-6b (V)	

Preliminary Plans - For Reference Only

STANDARD ODOT SOIL BORING LOG (11 X 17) - OH DOT.GDT - 6/22/22 18:17 - X:\ACTIVE PROJECTS\ACTIVE SOIL PROJECTS\CUY-90-16.28 (CCG3A - MOD#7)\GINT FILES\CUY-90-16.28 (CCG3A).GPJ

DESIGN AGENCY
EAS
2800 CORPORATE EXCHANGE DR. SUITE 240
COLUMBUS, OH. 43231
TEL:614.714.0299
WWW.NEASINC.COM

DESIGNER MWJ & DT
REVIEWER BPA 08/23/24
PROJECT ID 82382
SUBSET 148 TOTAL 310
SHEET P 2534 TOTAL 2696

GEOTECHNICAL PROFILE - ROADWAY
BRIDGE NO. CUY-90-1680 OVER IR-90 EB
BORING LOG B-087-1-20 (CONTINUED)

MODEL: Sheet PAPERSIZE: 34x22 (in.) DATE: 3/28/2025 TIME: 10:04:40 AM USER: Asiddiqi
pw:\\mb-us-pw.bentley.com:mb-us-pw-03\Documents\Cleveland_OH\01_Projects\ODOT\District12\82382\400-Engineering\Geotechnical\Sheets\82382_ZL035.dgn

PID: 82382 | SFN: | PROJECT: CUY-90-16.28 (CCG3A) | STATION / OFFSET: 201+25, 63' RT. | START: 3/11/21 | END: 3/11/21 | PG 3 OF 3 | B-087-1-20

MATERIAL DESCRIPTION AND NOTES	ELEV.	DEPTHS	SPT/ RQD	N_{60}	REC (%)	SAMPLE ID	HP (tsf)	GRADATION (%) GR	CS	FS	SI	CL	ATTERBERG LL	PL	PI	WC	ODOT CLASS (GI)	HOLE SEALED
MEDIUM STIFF TO VERY STIFF, GRAY, **SILTY CLAY**, TRACE SAND, TRACE GRAVEL, MOIST *(continued)*	548.8	123																
		124																
		125																
		126	7 7 9	18	100	SS-36	1.00	0	1	2	31	66	40	22	18	27	A-6b (11)	
		127																
		128																
		129																
		130																
		131	8 10 9	22	100	SS-37	1.50	-	-	-	-	-	-	-	-	29	A-6b (V)	
		132																
		133																
		134																
		135																
	534.2	136 EOB	7 9 10	22	94	SS-38	1.50	-	-	-	-	-	-	-	-	27	A-6b (V)	

NOTES: GROUNDWATER ENCOUNTERED AT 24.4' DURING DRILLING. HOLE DID NOT CAVE. BORING OFFSET 22.0' WEST.
ABANDONMENT METHODS, MATERIALS, QUANTITIES: PUMPED 300 GAL. BENTONITE GROUT

Preliminary Plans - For Reference Only

STANDARD ODOT SOIL BORING LOG (11 X 17) - OH DOT.GDT - 6/22/22 18:17 - X:\ACTIVE PROJECTS\ACTIVE SOIL PROJECTS\CUY-90-16.28 (CCG3A - MOD#7)\IGINT FILES\CUY-90-16.28 (CCG3A).GPJ

DESIGN AGENCY
EAS
2800 CORPORATE EXCHANGE DR. SUITE 240
COLUMBUS, OH. 43231
TEL:614.714.0299
WWW.NEASINC.COM

DESIGNER MW,J & DT
REVIEWER BPA 08/23/24
PROJECT ID 82382
SUBSET 149 TOTAL 310
SHEET P 2535 TOTAL 2696

GEOTECHNICAL PROFILE - ROADWAY
BRIDGE NO. CUY-90-1680 OVER IR-90 EB
BORING LOG B-087-1-20 (CONTINUED)

MODEL: Sheet PAPERSIZE: 34x22 (in.) DATE: 3/28/2025 TIME: 10:04:56 AM USER: Asiddiqi
pw:\\mb-us-pw.bentley.com:mb-us-pw-03\Documents\Cleveland_OH\01_Projects\ODOT\District12\82382\400-Engineering\Geotechnical\Sheets\82382_ZL036.dgn

PROJECT: CUY-90-16.28 (CCG3A)
TYPE: BRIDGE
PID: 82382 SFN: 1807841
START: 6/21/21 END: 6/21/21

DRILLING FIRM / OPERATOR: NEAS / ASHBAUGH
SAMPLING FIRM / LOGGER: NEAS / ASHBAUGH
DRILLING METHOD: 3.25" HSA
SAMPLING METHOD: SPT

DRILL RIG: CME 55T
HAMMER: CME AUTOMATIC
CALIBRATION DATE: 12/5/19
ENERGY RATIO (%): 68.4

STATION / OFFSET: 204+41, 41' RT.
ALIGNMENT: IR-90 WB
ELEVATION: 644.2 (MSL) EOB: 116.5 ft.
LAT / LONG: 41.498580, -81.673106

EXPLORATION ID B-087-2-20
PAGE 1 OF 2

MATERIAL DESCRIPTION AND NOTES	ELEV.	DEPTHS	SPT/ RQD	N_{60}	REC (%)	SAMPLE ID	HP (tsf)	GRADATION (%) GR	CS	FS	SI	CL	ATTERBERG LL	PL	PI	WC	ODOT CLASS (GI)	HOLE SEALED
12.0" ASPHALT AND 9.5" CONCRETE AND 9.5" BASE (DRILLERS DESCRIPTION)	644.2																	
	641.6																	
LOOSE TO MEDIUM DENSE, GRAY, **SILT**, LITTLE TO SOME SAND, TRACE CLAY, TRACE GRAVEL, WET			4 3 5	9	72	SS-1	-	0	0	11	83	6	NP	NP	NP	28	A-4b (8)	
			4 3 4	8	100	SS-2	-	1	0	29	63	7	NP	NP	NP	24	A-4b (7)	
			4 4 4	9	89	SS-3	-	-	-	-	-	-	-	-	-	29	A-4b (V)	
		W 634.2																
			3 4 6	11	94	SS-4	-	-	-	-	-	-	-	-	-	26	A-4b (V)	
	632.4																	
MEDIUM DENSE, BROWNISH GRAY, **COARSE AND FINE SAND**, LITTLE TO SOME SILT, TRACE CLAY, TRACE GRAVEL, MOIST			6 7 9	18	100	SS-5	-	-	-	-	-	-	-	-	-	14	A-3a (V)	
			9 10 10	23	100	SS-6	-	-	-	-	-	-	-	-	-	18	A-3a (V)	
	627.2																	
MEDIUM DENSE, BROWNISH GRAY, **FINE SAND**, LITTLE SILT, TRACE COARSE SAND, TRACE CLAY, TRACE GRAVEL, WET			8 9 13	25	100	SS-7	-	-	-	-	-	-	-	-	-	29	A-3 (V)	
@20.0'; SS-8 CONTAINS A 1.25" SILT AND CLAY SEAM			7 10 12	25	100	SS-8	-	-	-	-	-	-	-	-	-	25	A-3 (V)	
			8 7 10	19	100	SS-9	-	-	-	-	-	-	-	-	-	23	A-3 (V)	
	619.7																	
MEDIUM STIFF TO STIFF, GRAY, **SILT**, SOME CLAY, TRACE TO LITTLE SAND, TRACE GRAVEL, SS-13 CONTAINS NO INTACT SOIL PLUGS FOR HP READINGS, MOIST TO WET			4 6 7	15	89	SS-10	1.00	0	1	9	65	25	26	18	8	22	A-4b (8)	
			5 8 8	18	100	SS-11	1.25	-	-	-	-	-	-	-	-	19	A-4b (V)	
			3 3 5	9	100	SS-12	1.25	0	1	3	66	30	28	20	8	22	A-4b (8)	
			5 4 5	10	100	SS-13	-	-	-	-	-	-	-	-	-	23	A-4b (V)	
			5 6 10	18	100	SS-14	1.50	0	1	14	56	29	24	16	8	22	A-4b (8)	
	605.9																	
STIFF TO VERY STIFF, GRAY, **SILT AND CLAY**, TRACE SAND, TRACE GRAVEL, MOIST			4 5 7	14	100	SS-15	1.50	-	-	-	-	-	-	-	-	22	A-6a (V)	
			6 5 6	13	100	SS-16	1.25	-	-	-	-	-	-	-	-	24	A-6a (V)	
			5 6 7	15	78	SS-17	2.25	0	1	5	57	37	29	18	11	22	A-6a (8)	
	590.9																	
MEDIUM DENSE, GRAY, **FINE SAND**, LITTLE SILT, TRACE COARSE SAND, TRACE CLAY, TRACE GRAVEL, WET			7 6 7	15	56	SS-18	-	-	-	-	-	-	-	-	-	20	A-3 (V)	
	585.9																	
MEDIUM DENSE, GRAY, **SANDY SILT**, TRACE CLAY, TRACE GRAVEL, WET																		

Preliminary Plans - For Reference Only

STANDARD ODOT SOIL BORING LOG (11 X 17) - OH DOT.GDT - 6/22/22 18:17 - X:\ACTIVE PROJECTS\ACTIVE SOIL PROJECTS\CUY-90-16.28 (CCG3A - MOD#7)\IGINT FILES\CUY-90-16.28 (CCG3A).GPJ

DESIGN AGENCY
NEAS
2800 CORPORATE EXCHANGE DR. SUITE 240
COLUMBUS, OH. 43231
TEL:614.714.0299
WWW.NEASINC.COM

DESIGNER MWJ & DT
REVIEWER BPA 08/23/24
PROJECT ID 82382
SHEET 150 TOTAL 310
P 2536 TOTAL 2696

GEOTECHNICAL PROFILE - ROADWAY
BRIDGE NO. CUY-90-1680 OVER IR-90 EB
BORING LOG B-087-2-20

MODEL: Sheet PAPERSIZE: 34x22 (in.) DATE: 3/28/2025 TIME: 10:05:17 AM USER: Asiddiqi
pw:\\mb-us-pw.bentley.com:mb-us-pw-03\Documents\Cleveland_OH\01_Projects\ODOT\District12\82382\400-Engineering\Geotechnical\Sheets\82382_ZL037.dgn

PID: 82382 | SFN: | PROJECT: CUY-90-16.28 (CCG3A) | STATION / OFFSET: 204+41, 41' RT. | START: 6/21/21 | END: 6/21/21 | PG 2 OF 2 | B-087-2-20

MATERIAL DESCRIPTION AND NOTES	ELEV.	DEPTHS	SPT/ RQD	N_{60}	REC (%)	SAMPLE ID	HP (tsf)	GRADATION (%) GR	CS	FS	SI	CL	ATTERBERG LL	PL	PI	WC	ODOT CLASS (GI)	HOLE SEALED
MEDIUM DENSE, GRAY, **SANDY SILT**, TRACE CLAY, TRACE GRAVEL, WET *(continued)*	584.2	61	4 7 10	19	83	SS-19	-	4	5	42	39	10	NP	NP	NP	20	A-4a (3)	
		66	5 8 10	21	67	SS-20	-	-	-	-	-	-	-	-	-	19	A-4a (V)	
STIFF TO VERY STIFF, GRAY, **SILT**, SOME CLAY, TRACE TO LITTLE SAND, TRACE GRAVEL, MOIST TO WET	574.2	71	6 7 12	22	78	SS-21	2.50	-	-	-	-	-	-	-	-	23	A-4b (V)	
		76	9 9 10	22	61	SS-22	2.25	4	2	14	54	26	25	17	8	21	A-4b (8)	
		81	8 7 8	17	72	SS-23	1.50	-	-	-	-	-	-	-	-	31	A-4b (V)	
		86	5 5 7	14	67	SS-24	1.75	0	0	1	65	34	28	19	9	23	A-4b (8)	
		91	7 7 9	18	89	SS-25	2.50	-	-	-	-	-	-	-	-	22	A-4b (V)	
SOFT TO STIFF, GRAY, **SILT AND CLAY**, TRACE SAND, TRACE GRAVEL, MOIST	550.9	96	7 9 8	19	78	SS-26	1.50	0	0	3	59	38	29	18	11	23	A-6a (8)	
		101	10 12 9	24	89	SS-27	1.00	-	-	-	-	-	-	-	-	26	A-6a (V)	
		106	10 8 10	21	78	SS-28	0.75	-	-	-	-	-	-	-	-	25	A-6a (V)	
		111	8 11 12	26	100	SS-29	0.50	1	1	4	37	57	35	22	13	28	A-6a (9)	
	527.7	EOB 116	9 10 12	25	100	SS-30	1.25	-	-	-	-	-	-	-	-	28	A-6a (V)	

NOTES: GROUNDWATER ENCOUNTERED AT 10.0' DURING DRILLING. HOLE DID NOT CAVE. BORING OFFSET TO THE EAST.
ABANDONMENT METHODS, MATERIALS, QUANTITIES: PLACED 0.5 BAG ASPHALT PATCH; PUMPED 250 GAL. BENTONITE GROUT

Preliminary Plans - For Reference Only

STANDARD ODOT SOIL BORING LOG (11 X 17) - OH DOT.GDT - 6/22/22 18:17 - X:\ACTIVE PROJECTS\ACTIVE SOIL PROJECTS\CUY-90-16.28 (CCG3A - MOD#7)\IGINT FILES\CUY-90-16.28 (CCG3A).GPJ

DESIGN AGENCY
EAS
2800 CORPORATE EXCHANGE DR. SUITE 240
COLUMBUS, OH. 43231
TEL:614.714.0299
WWW.NEASINC.COM

DESIGNER MW,J & DT
REVIEWER BPA 08/23/24
PROJECT ID 82382
SUBSET 151 TOTAL 310
SHEET P 2537 TOTAL 2696

GEOTECHNICAL PROFILE - ROADWAY
BRIDGE NO. CUY-90-1680 OVER IR-90 EB
BORING LOG B-087-2-20 (CONTINUED)

MODEL: Sheet PAPERSIZE: 34x22 (in.) DATE: 3/28/2025 TIME: 10:05:35 AM USER: Asiddiqi
pw:\\mb-us-pw.bentley.com:mb-us-pw-03\Documents\Cleveland_OH\01_Projects\ODOT\District12\82382\400-Engineering\Geotechnical\Sheets\82382_ZL038.dgn

PROJECT: CUY-90-16.28 (CCG3A)
TYPE: BRIDGE
PID: 82382 SFN: 1807841
START: 3/31/21 END: 3/31/21

DRILLING FIRM / OPERATOR: NEAS / ASHBAUGH
SAMPLING FIRM / LOGGER: NEAS / ASHBAUGH
DRILLING METHOD: 3.25" HSA
SAMPLING METHOD: SPT

DRILL RIG: CME 55T
HAMMER: CME AUTOMATIC
CALIBRATION DATE: 12/5/19
ENERGY RATIO (%): 68.4

STATION / OFFSET: 202+41, 58' RT.
ALIGNMENT: IR-90 EB
ELEVATION: 670.1 (MSL) EOB: 141.5 ft.
LAT / LONG: 41.498318, -81.673037

EXPLORATION ID B-087-3-20

MATERIAL DESCRIPTION AND NOTES	ELEV.	DEPTHS	SPT/ RQD	N_{60}	REC (%)	SAMPLE ID	HP (tsf)	GRADATION (%) GR	CS	FS	SI	CL	ATTERBERG LL	PL	PI	WC	ODOT CLASS (GI)	HOLE SEALED
9.5" ASPHALT AND 6.0" CONCRETE (DRILLERS DESCRIPTION)	668.8																	
LOOSE TO MEDIUM DENSE, BROWN, **COARSE AND FINE SAND**, LITTLE SILT, TRACE TO LITTLE GRAVEL AND STONE FRAGMENTS, TRACE CLAY, CONTAINS INTERBEDDED 0.25" TO 1.0" SOFT GRAY SILT AND CLAY (A-6A) LAYERS, CONTAINS RED BRICK FRAGMENTS AND CONCRETE FRAGMENTS, DAMP TO MOIST **(FILL)**			11 5 4	10	61	SS-1	-	18	18	42	16	6	NP	NP	NP	8	A-3a (0)	
			5 4 5	10	78	SS-2	-	6	20	54	15	5	NP	NP	NP	10	A-3a (0)	
			6 6 7	15	72	SS-3	-	-	-	-	-	-	-	-	-	11	A-3a (V)	
			10 7 5	14	72	SS-4	-	-	-	-	-	-	-	-	-	12	A-3a (V)	
			5 6 6	14	78	SS-5	-	5	20	55	15	5	NP	NP	NP	11	A-3a (0)	
			5 7 5	14	78	SS-6	-	-	-	-	-	-	-	-	-	11	A-3a (V)	
			6 5 7	14	83	SS-7	-	-	-	-	-	-	-	-	-	12	A-3a (V)	
			7 6 7	15	100	SS-8	-	4	18	52	17	9	NP	NP	NP	11	A-3a (0)	
	653.1																	
LOOSE TO MEDIUM DENSE, BROWN, **COARSE AND FINE SAND**, SOME SILT, TRACE CLAY, TRACE GRAVEL, SS-9 CONTAINS A 3.0" GRAY SILT (A-4B) SEAM, MOIST TO DAMP			9 6 7	15	94	SS-9	-	-	-	-	-	-	-	-	-	15	A-3a (V)	
@20.0'; BECOMES TRACE TO LITTLE SILT			3 4 4	9	67	SS-10	-	-	-	-	-	-	-	-	-	7	A-3a (V)	
			4 3 4	8	56	SS-11	-	1	7	64	20	8	NP	NP	NP	9	A-3a (0)	
			4 5 6	13	78	SS-12	-	-	-	-	-	-	-	-	-	9	A-3a (V)	
		W 643.4																
@27.5'; BECOMES BROWNISH GRAY AND GRAY, WET			6 9 13	25	44	SS-13	-	-	-	-	-	-	-	-	-	23	A-3a (V)	
			7 10 15	29	72	SS-14	-	-	-	-	-	-	-	-	-	21	A-3a (V)	
			6 12 13	29	89	SS-15	-	-	-	-	-	-	-	-	-	21	A-3a (V)	
			7 14 12	30	83	SS-16	-	-	-	-	-	-	-	-	-	20	A-3a (V)	
			7 13 17	34	83	SS-17	-	-	-	-	-	-	-	-	-	19	A-3a (V)	
			7 15 19	39	89	SS-18	-	-	-	-	-	-	-	-	-	19	A-3a (V)	
			7 12 15	31	78	SS-19	-	-	-	-	-	-	-	-	-	20	A-3a (V)	
			5 8 12	23	78	SS-20	-	-	-	-	-	-	-	-	-	20	A-3a (V)	
			4 7 9	18	78	SS-21	-	-	-	-	-	-	-	-	-	17	A-3a (V)	
	619.1																	
STIFF TO VERY STIFF, GRAY, **SILT**, SOME TO "AND" CLAY, TRACE SAND, TRACE GRAVEL, MOIST			4 6 7	15	100	SS-22	-	-	-	-	-	-	-	-	-	16	A-3a (V)	
			4 5 6	13	94	SS-23	1.75	0	1	8	61	30	28	18	10	22	A-4b (8)	
			3 5 5	11	100	SS-24	2.00	-	-	-	-	-	-	-	-	22	A-4b (V)	
			4 4 4	9	100	SS-25	1.50	-	-	-	-	-	-	-	-	24	A-4b (V)	

Preliminary Plans - For Reference Only

STANDARD ODOT SOIL BORING LOG (11 X 17) - OH DOT.GDT - 6/22/22 18:17 - X:\ACTIVE PROJECTS\ACTIVE SOIL PROJECTS\CUY-90-16.28 (CCG3A - MOD#7)\IGINT FILES\CUY-90-16.28 (CCG3A).GPJ

DESIGN AGENCY
NEAS
2800 CORPORATE EXCHANGE DR. SUITE 240
COLUMBUS, OH. 43231
TEL:614.714.0299
WWW.NEASINC.COM

DESIGNER MWJ & DT
REVIEWER BPA 08/23/24
PROJECT ID 82382
SUBSET 152 TOTAL 310
SHEET P 2538 TOTAL 2696

GEOTECHNICAL PROFILE - ROADWAY
WALL AG
BORING LOG B-087-3-20

MODEL: Sheet PAPERSIZE: 34x22 (in.) DATE: 3/28/2025 TIME: 10:06:04 AM USER: Asiddiqi
pw:\\mb-us-pw.bentley.com:mb-us-pw-03\Documents\Cleveland_OH\01_Projects\ODOT\District12\82382\400-Engineering\Geotechnical\Sheets\82382_ZL039.dgn

PID: 82382 | SFN: | PROJECT: CUY-90-16.28 (CCG3A) | STATION / OFFSET: 202+41, 58' RT. | START: 3/31/21 | END: 3/31/21 | PG 2 OF 3 | B-087-3-20

MATERIAL DESCRIPTION AND NOTES	ELEV.	DEPTHS	SPT/ RQD	N_{60}	REC (%)	SAMPLE ID	HP (tsf)	GRADATION (%) GR	CS	FS	SI	CL	ATTERBERG LL	PL	PI	WC	ODOT CLASS (GI)	HOLE SEALED
STIFF TO VERY STIFF, GRAY, **SILT**, SOME TO "AND" CLAY, TRACE SAND, TRACE GRAVEL, MOIST *(continued)*		61	3 3 5	9	100	SS-26	1.25	0	0	1	62	37	31	21	10	25	A-4b (8)	
		62																
		63																
		64																
		65																
		66	5 6 8	16	100	SS-27	1.50	-	-	-	-	-	-	-	-	23	A-4b (V)	
		67																
	601.8	68																
STIFF, GRAY, **SILT AND CLAY**, TRACE SAND, TRACE GRAVEL, DAMP TO MOIST		69																
		70																
		71	7 7 11	21	100	SS-28	1.25	0	0	2	49	49	33	22	11	29	A-6a (8)	
		72																
		73																
		74																
		75																
		76	8 8 12	23	100	SS-29	1.50	-	-	-	-	-	-	-	-	26	A-6a (V)	
		77																
	591.8	78																
HARD, GRAY, **SILT**, SOME TO "AND" CLAY, TRACE SAND, TRACE GRAVEL, MOIST TO DAMP		79																
		80																
		81	10 12 16	32	100	SS-30	4.50	1	0	1	59	39	30	20	10	22	A-4b (8)	
		82																
		83																
		84																
		85																
		86	9 10 16	30	100	SS-31	4.50	-	-	-	-	-	-	-	-	18	A-4b (V)	
		87																
		88																
		89																
		90																
		91	8 10 17	31	100	SS-32	4.50	0	0	0	65	35	30	20	10	18	A-4b (8)	
		92																
		93																
		94																
		95																
		96	9 11 12	26	100	SS-33	4.50	-	-	-	-	-	-	-	-	18	A-4b (V)	
		97																
		98																
		99																
		100																
		101	8 9 15	27	100	SS-34	4.50	0	0	0	66	34	28	20	8	20	A-4b (8)	
		102																
	566.8	103																
STIFF TO HARD, GRAY, **SILT AND CLAY**, TRACE SAND, TRACE GRAVEL, DAMP TO MOIST		104																
		105																
		106	10 10 15	29	100	SS-35	2.00	-	-	-	-	-	-	-	-	25	A-6a (V)	
		107																
		108																
		109																
		110																
		111	11 12 14	30	100	SS-36	4.50	0	0	0	56	44	33	19	14	22	A-6a (10)	
		112																
		113																
		114																
		115																
		116	8 13 16	33	100	SS-37	4.50	-	-	-	-	-	-	-	-	18	A-6a (V)	
		117																
		118																
		119																
		120																
		121	9 12 15	31	100	SS-38	3.75	-	-	-	-	-	-	-	-	24	A-6a (V)	

Preliminary Plans - For Reference Only

STANDARD ODOT SOIL BORING LOG (11 X 17) - OH DOT.GDT - 6/22/22 18:17 - X:\ACTIVE PROJECTS\ACTIVE SOIL PROJECTS\CUY-90-16.28 (CCG3A - MOD#7)\GINT FILES\CUY-90-16.28 (CCG3A).GPJ

DESIGN AGENCY
EAS
2800 CORPORATE EXCHANGE DR. SUITE 240
COLUMBUS, OH. 43231
TEL:614.714.0299
WWW.NEASINC.COM

DESIGNER MWJ & DT
REVIEWER BPA 08/23/24
PROJECT ID 82382
SHEET 153 TOTAL 310
P 2539 TOTAL 2696

GEOTECHNICAL PROFILE - ROADWAY
WALL AG
BORING LOG B-087-3-20 (CONTINUED)

MODEL: Sheet PAPERSIZE: 34x22 (in.) DATE: 3/28/2025 TIME: 10:06:23 AM USER: Asiddiqi
pw:\\mb-us-pw.bentley.com:mb-us-pw-03\Documents\Cleveland_OH\01_Projects\ODOT\District12\82382\400-Engineering\Geotechnical\Sheets\82382_ZL040.dgn

PID: 82382 | SFN: | PROJECT: CUY-90-16.28 (CCG3A) | STATION / OFFSET: 202+41, 58' RT. | START: 3/31/21 | END: 3/31/21 | PG 3 OF 3 | B-087-3-20

MATERIAL DESCRIPTION AND NOTES	ELEV.	DEPTHS	SPT/ RQD	N_{60}	REC (%)	SAMPLE ID	HP (tsf)	GRADATION (%) GR	CS	FS	SI	CL	ATTERBERG LL	PL	PI	WC	ODOT CLASS (GI)	HOLE SEALED
STIFF TO HARD, GRAY, **SILT AND CLAY**, TRACE SAND, TRACE GRAVEL, DAMP TO MOIST *(continued)*	548.2	123																
		124																
		125																
		126	10 10 13	26	100	SS-39	3.50	1	1	5	49	44	30	18	12	22	A-6a (9)	
	541.8	127																
STIFF, GRAY, **SILTY CLAY**, TRACE SAND, TRACE GRAVEL, MOIST		128																
		129																
		130																
		131	12 11 13	27	100	SS-40	1.25	0	1	1	31	67	40	22	18	27	A-6b (11)	
		132																
		133																
		134																
		135																
		136	11 15 16	35	100	SS-41	1.25	-	-	-	-	-	-	-	-	30	A-6b (V)	
	531.8	137																
STIFF, GRAY, **SILT AND CLAY**, TRACE SAND, TRACE GRAVEL, MOIST		138																
		139																
		140																
		141	8 18 20	43	100	SS-42	1.50	1	1	2	45	51	35	20	15	24	A-6a (10)	
	528.6	EOB																

NOTES: GROUNDWATER ENCOUNTERED AT 26.7' DURING DRILLING. HOLE DID NOT CAVE. BORING OFFSET 11.0' WEST AND 5.0' SOUTH.
ABANDONMENT METHODS, MATERIALS, QUANTITIES: PLACED 0.5 BAG ASPHALT PATCH; PUMPED 250 GAL. BENTONITE GROUT

Preliminary Plans - For Reference Only

STANDARD ODOT SOIL BORING LOG (11 X 17) - OH DOT.GDT - 6/22/22 18:17 - X:\ACTIVE PROJECTS\ACTIVE SOIL PROJECTS\CUY-90-16.28 (CCG3A - MOD#7)\IGINT FILES\CUY-90-16.28 (CCG3A).GPJ

DESIGN AGENCY
2800 CORPORATE EXCHANGE DR. SUITE 400 COLUMBUS, OH. 43231
TEL:614.714.0299
WWW.NEASINC.COM

GEOTECHNICAL PROFILE - ROADWAY
WALL AG
BORING LOG B-087-3-20 (CONTINUED)

MODEL: Sheet PAPERSIZE: 34x22 (in.) DATE: 3/28/2025 TIME: 10:06:39 AM USER: Asiddiqi
pw:\\mb-us-pw.bentley.com:mb-us-pw-03\Documents\Cleveland_OH\01_Projects\ODOT\District12\82382\400-Engineering\Geotechnical\Sheets\82382_ZL041.dgn

STANDARD ODOT SOIL BORING LOG (8.5 X 11) - OH DOT.GDT - 6/22/22 14:13 - X:\ACTIVE PROJECTS\ACTIVE SOIL PROJECTS\1ARCHIVE BY YEAR\2017 ARCHIVE\CUY-CCG3 82380\GINT FILES

PROJECT: CUY-CCG3
TYPE: SUBGRADE
PID: 82380 SFN:
START: 2/3/15 END: 2/3/15

DRILLING FIRM / OPERATOR: BARR / T.GILBERT
SAMPLING FIRM / LOGGER: BARR / S.PENCE
DRILLING METHOD: 3.25" HSA
SAMPLING METHOD: SPT

DRILL RIG: CME 45B
HAMMER: CME AUTOMATIC
CALIBRATION DATE: 1/26/14
ENERGY RATIO (%): 77.4

STATION / OFFSET: 408+87, 132' LT.
ALIGNMENT: RAMP A2
ELEVATION: 678.2 (MSL) EOB: 8.5 ft.
LAT / LONG: 41.492213, -81.677246

EXPLORATION ID B-088-0-14

PAGE 1 OF 1

MATERIAL DESCRIPTION AND NOTES	ELEV. 678.2	DEPTHS	SPT/ RQD	N_{60}	REC (%)	SAMPLE ID	HP (tsf)	GRADATION (%) GR	CS	FS	SI	CL	ATTERBERG LL	PL	PI	WC	ODOT CLASS (GI)	BACK FILL
4.0", **ASPHALT**	677.9																	
8.0", **CONCRETE**	677.6																	
DENSE, BROWN, **COARSE AND FINE SAND**, SOME GRAVEL, TRACE SILT, TRACE CLAY, CONTAINS BRICK FRAGMENTS, DAMP **(FILL)**	675.7	1	9 11 13	31	100	SS-1	-	22	17	44	10	7	NP	NP	NP	9	A-3a (0)	
MEDIUM DENSE, BROWN, **GRAVEL WITH SAND**, TRACE SILT, TRACE CLAY, WET **(FILL)** @4.0'; SS-3 TO SS-5 BECOME VERY LOOSE TO LOOSE		2	9 11 6	22	100	SS-2	-	-	-	-	-	-	-	-	-	13	A-1-b (V)	
		3	5 2 1	4	78	SS-3	-	-	-	-	-	-	-	-	-	13	A-1-b (V)	
		4	3 1 1	3	44	SS-4	-	-	-	-	-	-	-	-	-	12	A-1-b (V)	
	669.7	5	1 2 4	8	56	SS-5	-	44	17	27	6	6	NP	NP	NP	15	A-1-b (0)	
	EOB	6																
		7																
		8																

NOTES: GROUNDWATER NOT ENCOUNTERED DURING DRILLING. HOLE DID NOT CAVE.
ABANDONMENT METHODS, MATERIALS, QUANTITIES: PLACED 0.5 BAG ASPHALT PATCH; SHOVELED SOIL CUTTINGS

Preliminary Plans - For Reference Only

DESIGN AGENCY
2800 CORPORATE EXCHANGE DR. SUITE 240
COLUMBUS, OH. 43231
TEL:614.714.0299
WWW.NEASINC.COM

DESIGNER MWJ & DT
REVIEWER BPA 08/23/24
PROJECT ID 82382
SUBSET 155 TOTAL 310
SHEET P 2541 TOTAL 2696

GEOTECHNICAL PROFILE - ROADWAY
WALL N
BORING LOG B-088-0-14

MODEL: Sheet PAPERSIZE: 34x22 (in.) DATE: 3/28/2025 TIME: 10:06:50 AM USER: Asiddiqi
pw:\\mb-us-pw.bentley.com:mb-us-pw-03\Documents\Cleveland_OH\01_Projects\ODOT\District12\82382\400-Engineering\Geotechnical\Sheets\82382_ZL042.dgn

STANDARD ODOT SOIL BORING LOG (8.5 X 11) - OH DOT GDT - 6/22/22 14:14 - X:\ACTIVE PROJECTS\ACTIVE SOIL PROJECTS\1ARCHIVE BY YEAR\2017 ARCHIVE\CUY-CCG3 82380\GINT FILES

PROJECT: CUY-CCG3	DRILLING FIRM / OPERATOR: BARR / P.STROUD	DRILL RIG: MOBILE B-58	STATION / OFFSET: 32+11, 55' LT.	EXPLORATION ID B-102-0-14
TYPE: RETAINING WALL	SAMPLING FIRM / LOGGER: BARR / C. PIERCE	HAMMER: MOBILE AUTOMATIC	ALIGNMENT: SB E 14TH ST	
PID: 82380 SFN:	DRILLING METHOD: 3.25" HSA	CALIBRATION DATE: 1/26/14	ELEVATION: 679.0 (MSL) EOB: 61.5 ft.	PAGE 1 OF 2
START: 12/3/14 END: 12/3/14	SAMPLING METHOD: SPT	ENERGY RATIO (%): 90*	LAT / LONG: 41.495491, -81.677640	

MATERIAL DESCRIPTION AND NOTES	ELEV. 679.0	DEPTHS	SPT/ RQD	N_{60}	REC (%)	SAMPLE ID	HP (tsf)	GRADATION (%) GR	CS	FS	SI	CL	ATTERBERG LL	PL	PI	WC	ODOT CLASS (GI)	BACK FILL
4.0", **TOPSOIL**	678.7																	
LOOSE TO MEDIUM DENSE, DARK BROWN AND BROWN, **COARSE AND FINE SAND**, SOME GRAVEL, LITTLE SILT, TRACE CLAY, SS-1 AND SS-2 CONTAIN FEW ROOTS, WET **(FILL)** @3.0'; SS-2 CONTAINS CONCRETE FRAGMENTS	674.5	1–4	3 2 2	6	100	SS-1	-	-	-	-	-	-	-	-	-	15	A-3a (V)	
			3 2 5	11	33	SS-2	-	23	14	37	17	9	NP	NP	NP	14	A-3a (0)	
VERY DENSE, BROWN AND DARK GRAY, **GRAVEL WITH SAND AND SILT**, LITTLE CLAY, CONTAINS GRANITE AND CONCRETE FRAGMENTS, WET **(FILL)**	672.0	5–6	3 18 16	51	100	SS-3	-	-	-	-	-	-	-	-	-	20	A-2-4 (V)	
DENSE, BROWN, **FINE SAND**, SOME COARSE SAND, TRACE SILT, TRACE GRAVEL, TRACE CLAY, DAMP		7–8	16 13 12	38	100	SS-4	-	-	-	-	-	-	-	-	-	6	A-3 (V)	
@10.0'; SS-5 TO SS-7 BECOME LOOSE TO MEDIUM DENSE		10–11	4 5 5	15	100	SS-5	-	-	-	-	-	-	-	-	-	6	A-3 (V)	
		13–14	3 2 2	6	100	SS-6	-	-	-	-	-	-	-	-	-	10	A-3 (V)	
	662.0	15–16	3 3 3	9	100	SS-7	-	3	27	65	4	1	NP	NP	NP	5	A-3 (0)	
MEDIUM DENSE, BROWN, **COARSE AND FINE SAND**, LITTLE GRAVEL, TRACE SILT, TRACE CLAY, DAMP		18–19	9 8 10	27	100	SS-8	-	-	-	-	-	-	-	-	-	5	A-3a (V)	
		20–21	7 7 10	26	100	SS-9	-	-	-	-	-	-	-	-	-	4	A-3a (V)	
@22.5'; SS-10 TO SS-16 BECOME LITTLE SILT, TRACE GRAVEL, CONTAINS SILT LAYERS		23–24	6 8 9	26	100	SS-10	-	-	-	-	-	-	-	-	-	5	A-3a (V)	
	W 652.5	25–26	7 7 6	20	67	SS-11	-	-	-	-	-	-	-	-	-	8	A-3a (V)	
@27.5'; SS-12 TO SS-16 BECOME WET		28–29	3 3 5	12	78	SS-12	-	-	-	-	-	-	-	-	-	20	A-3a (V)	

Preliminary Plans - For Reference Only

STANDARD ODOT SOIL BORING LOG (8.5 X 11) - OH DOT GDT - 1/3/24 15:17 - X:\ACTIVE PROJECTS\ACTIVE SOIL PROJECTS\1ARCHIVE BY YEAR\2017 ARCHIVE\CUY-CCG3 82380\GINT FILES\CU

PROJECT: CUY-CCG3 | DRILLING FIRM / OPERATOR: BARR / P.STROUD | DRILL RIG: MOBILE B-58 | STATION / OFFSET: 32+11, 55' LT. | EXPLORATION ID B-102-0-14
TYPE: RETAINING WALL | SAMPLING FIRM / LOGGER: BARR / C. PIERCE | HAMMER: MOBILE AUTOMATIC | ALIGNMENT: SB E 14TH ST
PID: 82380 SFN: | DRILLING METHOD: 3.25" HSA | CALIBRATION DATE: 1/26/14 | ELEVATION: 679.0 (MSL) EOB: 61.5 ft. | PAGE 1 OF 2
START: 12/3/14 END: 12/3/14 | SAMPLING METHOD: SPT | ENERGY RATIO (%): 90* | LAT / LONG: 41.495491, -81.677640

MATERIAL DESCRIPTION AND NOTES | ELEV. 679.0 | DEPTHS | SPT/ RQD | N_{60} | REC (%) | SAMPLE ID | HP (tsf) | GRADATION (%) GR | CS | FS | SI | CL | ATTERBERG LL | PL | PI | WC | ODOT CLASS (GI) | BACK FILL

4.0", **TOPSOIL** 678.7
LOOSE TO MEDIUM DENSE, DARK BROWN AND BROWN, **COARSE AND FINE SAND**, SOME GRAVEL, LITTLE SILT, TRACE CLAY, SS-1 AND SS-2 CONTAIN FEW ROOTS, WET **(FILL)** @3.0'; SS-2 CONTAINS CONCRETE FRAGMENTS 674.5
VERY DENSE, BROWN AND DARK GRAY, **GRAVEL WITH SAND AND SILT**, LITTLE CLAY, CONTAINS GRANITE AND CONCRETE FRAGMENTS, WET **(FILL)** 672.0
DENSE, BROWN, **FINE SAND**, SOME COARSE SAND, TRACE SILT, TRACE GRAVEL, TRACE CLAY, DAMP
@10.0'; SS-5 TO SS-7 BECOME LOOSE TO MEDIUM DENSE
662.0
MEDIUM DENSE, BROWN, **COARSE AND FINE SAND**, LITTLE GRAVEL, TRACE SILT, TRACE CLAY, DAMP
@22.5'; SS-10 TO SS-16 BECOME LITTLE SILT, TRACE GRAVEL, CONTAINS SILT LAYERS
W 652.5
@27.5'; SS-12 TO SS-16 BECOME WET

1–4	3 2 2	6	100	SS-1	-	-	-	-	-	-	-	-	-	-	15	A-3a (V)	
	3 2 5	11	33	SS-2	-	23	14	37	17	9	NP	NP	NP	14	A-3a (0)	
5–6	3 18 16	51	100	SS-3	-	-	-	-	-	-	-	-	-	20	A-2-4 (V)	
7–8	16 13 12	38	100	SS-4	-	-	-	-	-	-	-	-	-	6	A-3 (V)	
10–11	4 5 5	15	100	SS-5	-	-	-	-	-	-	-	-	-	6	A-3 (V)	
13–14	3 2 2	6	100	SS-6	-	-	-	-	-	-	-	-	-	10	A-3 (V)	
15–16	3 3 3	9	100	SS-7	-	3	27	65	4	1	NP	NP	NP	5	A-3 (0)	
18–19	9 8 10	27	100	SS-8	-	-	-	-	-	-	-	-	-	5	A-3a (V)	
20–21	7 7 10	26	100	SS-9	-	-	-	-	-	-	-	-	-	4	A-3a (V)	
23–24	6 8 9	26	100	SS-10	-	-	-	-	-	-	-	-	-	5	A-3a (V)	
25–26	7 7 6	20	67	SS-11	-	-	-	-	-	-	-	-	-	8	A-3a (V)	
28–29	3 3 5	12	78	SS-12	-	-	-	-	-	-	-	-	-	20	A-3a (V)	

SHEET P 2542	SUBSET 156	PROJECT ID 82382	REVIEWER BPA 08/23/24	DESIGNER MWJ & DT
TOTAL 2696	TOTAL 310			

DESIGN AGENCY
2800 CORPORATE EXCHANGE DR. SUITE 400 COLUMBUS, OH. 43231
TEL:614.714.0299
WWW.NEASINC.COM

GEOTECHNICAL PROFILE - ROADWAY
WALL T
BORING LOG B-102-0-14

MODEL: Sheet PAPERSIZE: 34x22 (in.) DATE: 3/28/2025 TIME: 10:07:11 AM USER: Asiddiqi
pw:\\mb-us-pw.bentley.com:mb-us-pw-03\Documents\Cleveland_OH\01_Projects\ODOT\District12\82382\400-Engineering\Geotechnical\Sheets\82382_ZL043.dgn

STANDARD ODOT SOIL BORING LOG (8.5 X 11) - OH DOT.GDT - 6/22/22 14:14 - X:\ACTIVE PROJECTS\ACTIVE SOIL PROJECTS\1ARCHIVE BY YEAR\2017 ARCHIVE\CUY-CCG3 82380\GINT FILES

PROJECT: CUY-CCG3 | DRILLING FIRM / OPERATOR: BARR / P.STROUD | DRILL RIG: MOBILE B-58 | STATION / OFFSET: 978+48, 3' LT. | EXPLORATION ID B-110-0-14
TYPE: RETAINING WALL | SAMPLING FIRM / LOGGER: BARR / C.PIERCE III | HAMMER: MOBILE AUTOMATIC | ALIGNMENT: RAMP H5 | PAGE 1 OF 2
PID: 82380 SFN: | DRILLING METHOD: 3.25" HSA | CALIBRATION DATE: 1/26/14 | ELEVATION: 678.8 (MSL) EOB: 61.5 ft.
START: 11/17/14 END: 1/18/14 | SAMPLING METHOD: SPT | ENERGY RATIO (%): 90* | LAT / LONG: 41.493062, -81.676657

MATERIAL DESCRIPTION AND NOTES	ELEV. 678.8	DEPTHS	SPT/ RQD	N_{60}	REC (%)	SAMPLE ID	HP (tsf)	GRADATION (%) GR	CS	FS	SI	CL	ATTERBERG LL	PL	PI	WC	ODOT CLASS (GI)	BACK FILL
4.0", **ASPHALT** 20.0", **GRANULAR BASE**	678.4 676.8																	
DENSE, BROWN AND GRAY, **GRAVEL WITH SAND**, (CONCRETE FRAGMENTS), TRACE SILT, TRACE CLAY, MOIST **(FILL)**	674.3	W 675.8	5 24 8	48	44	SS-1	-	46	17	25	8	4	NP	NP	NP	13	A-1-b (0)	
MEDIUM DENSE, BROWN AND DARK GRAY, **COARSE AND FINE SAND**, SOME SILT, LITTLE GRAVEL, TRACE CLAY, MOIST **(FILL)** @7.5'; SS-3 AND SS-4 CHANGE TO LOOSE, BROWN	666.8		9 9 7	24	100	SS-2	-	14	16	40	21	9	NP	NP	NP	12	A-3a (0)	
			2 3 2	8	100	SS-3	-	-	-	-	-	-	-	-	-	12	A-3a (V)	
			2 3 3	9	100	SS-4	-	-	-	-	-	-	-	-	-	11	A-3a (V)	
VERY LOOSE TO MEDIUM DENSE, BROWN, **FINE SAND**, LITTLE COARSE SAND, LITTLE GRAVEL, TRACE SILT, TRACE CLAY, DAMP TO MOIST **(FILL)**	659.3		1 1 1	3	100	SS-5	-	-	-	-	-	-	-	-	-	8	A-3 (V)	
			1 2 2	6	100	SS-6	-	11	19	62	5	3	NP	NP	NP	8	A-3 (0)	
			3 3 4	11	100	SS-7	-	-	-	-	-	-	-	-	-	13	A-3 (V)	
VERY DENSE, REDDISH BROWN TO BROWN, **GRAVEL WITH SAND**, TRACE SILT, TRACE CLAY, GRAVEL IS CLAY TILE FRAGMENTS, MOIST **(FILL)** @21.5'; 5.0' VOID (POSSIBLE CLAY TILE PIPE)	651.8		60/2"	-	100	SS-8	-	-	-	-	-	-	-	-	-	13	A-1-b (V)	
VERY DENSE, REDDISH BROWN AND GRAY, **GRAVEL**, TRACE SAND, TRACE SILT, TRACE CLAY, GRAVEL IS CLAY TILE FRAGMENTS, MOIST **(FILL)**	648.8		50/5"	-	100	SS-9	-	-	-	-	-	-	-	-	-	15	A-1-a (V)	

STANDARD ODOT SOIL BORING LOG (8.5 X 11) - OH DOT.GDT - 6/22/22 14:14 - X:\ACTIVE PROJECTS\ACTIVE SOIL PROJECTS\1ARCHIVE BY YEAR\2017 ARCHIVE\CUY-CCG3 82380\GINT FILES

PID: 82380 | SFN: | PROJECT: CUY-CCG3 | STATION / OFFSET: 978+48, 3' LT. | START: 11/17/14 | END: 1/18/14 | PG 2 OF 2 | B-110-0-14

MATERIAL DESCRIPTION AND NOTES	ELEV. 648.8	DEPTHS	SPT/ RQD	N_{60}	REC (%)	SAMPLE ID	HP (tsf)	GRADATION (%) GR	CS	FS	SI	CL	ATTERBERG LL	PL	PI	WC	ODOT CLASS (GI)	BACK FILL
MEDIUM DENSE, BROWN, **COARSE AND FINE SAND**, SOME SILT, TRACE CLAY, TRACE GRAVEL, SS-12 CONTAINS WOOD FRAGMENTS, WET @35.0'; SS-13 BECOMES GRAY	640.3		7 8 8	24	100	SS-10	-	-	-	-	-	-	-	-	-	25	A-3a (V)	
			4 4 9	20	100	SS-11	-	0	0	68	29	3	NP	NP	NP	22	A-3a (0)	
MEDIUM DENSE, GRAY, **SANDY SILT**, TRACE CLAY, TRACE GRAVEL, WET	633.4		4 5 9	21	100	SS-12	-	0	0	46	48	6	NP	NP	NP	26	A-4a (4)	
MEDIUM DENSE, GRAYISH BROWN, **COARSE AND FINE SAND**, TRACE GRAVEL, TRACE SILT, TRACE CLAY, WET	630.3		3 8 10	27	100	SS-13A SS-13B	- -	- -	- -	- -	- -	- -	- -	- -	- -	21 22	A-4a (V) A-3a (V)	
DENSE, GRAYISH BROWN, **SILT**, LITTLE CLAY, TRACE SAND, TRACE GRAVEL, CONTAINS NO INTACT SOIL FOR HP READINGS, DAMP TO WET	617.3		7 10 11	32	100	SS-15	-	0	0	7	76	17	25	19	6	18	A-4b (8)	
			11 13 16	44	100	SS-16	-	-	-	-	-	-	-	-	-	20	A-4b (V)	
		EOB	12 15 16	47	100	SS-17	-	-	-	-	-	-	-	-	-	26	A-4b (V)	

NOTES: GROUNDWATER ENCOUNTERED AT 3.0' DURING DRILLING. CAVE DEPTH 5.0'.
ABANDONMENT METHODS, MATERIALS, QUANTITIES: PLACED .5 BAG ASPHALT PATCH; SHOVELED SOIL CUTTINGS

Preliminary Plans - For Reference Only

SHEET	TOTAL
P 2543	2696

SUBSET	TOTAL
157	310

PROJECT ID 82382
REVIEWER BPA 08/23/24
DESIGNER MWJ & DT

DESIGN AGENCY
EAS
2800 CORPORATE EXCHANGE DR. SUITE 240
COLUMBUS, OH. 43231
TEL:614.714.0299
WWW.NEASINC.COM

GEOTECHNICAL PROFILE - ROADWAY
WALL M
BORING LOG B-110-0-14

MODEL: Sheet PAPERSIZE: 34x22 (in.) DATE: 3/28/2025 TIME: 10:07:31 AM USER: Asiddiqi
pw:\\mb-us-pw.bentley.com:mb-us-pw-03\Documents\Cleveland_OH\01_Projects\ODOT\District12\82382\400-Engineering\Geotechnical\Sheets\82382_ZL044.dgn

STANDARD ODOT SOIL BORING LOG (8.5 X 11) - OH DOT.GDT - 6/22/22 14:15 - X:\ACTIVE PROJECTS\ACTIVE SOIL PROJECTS\1ARCHIVE BY YEAR\2017 ARCHIVE\CUY-CCG3 82380\GINT FILES

PROJECT: CUY-CCG3 | DRILLING FIRM / OPERATOR: BARR / T.GILBERT | DRILL RIG: CME 45B | STATION / OFFSET: 980+67, 13' LT. | EXPLORATION ID B-111-0-14
TYPE: RETAINING WALL | SAMPLING FIRM / LOGGER: BARR / D.LYON | HAMMER: CME AUTOMATIC | ALIGNMENT: RAMP H5 | PAGE 1 OF 2
PID: 82380 SFN: | DRILLING METHOD: 3.25" HSA | CALIBRATION DATE: 1/26/14 | ELEVATION: 682.6 (MSL) EOB: 61.5 ft.
START: 11/6/14 END: 11/7/14 | SAMPLING METHOD: SPT / ST | ENERGY RATIO (%): 77.4 | LAT / LONG: 41.493563, -81.677110

MATERIAL DESCRIPTION AND NOTES	ELEV.	DEPTHS	SPT/ RQD	N_{60}	REC (%)	SAMPLE ID	HP (tsf)	GRADATION (%) GR	CS	FS	SI	CL	ATTERBERG LL	PL	PI	WC	ODOT CLASS (GI)	BACK FILL
11.5", **ASPHALT**	682.6 / 681.7	1																
MEDIUM DENSE, BROWN AND DARK GRAYISH BROWN, **GRAVEL WITH SAND**, LITTLE SILT, TRACE CLAY, CONTAINS MANY BRICK FRAGMENTS, MOIST **(FILL)**	679.6	2	3 8 5	17	94	SS-1	-	-	-	-	-	-	-	-	-	14	A-1-b (V)	
VERY STIFF, BROWN MOTTLED WITH GRAY, **SILT AND CLAY**, LITTLE SAND, TRACE GRAVEL, DAMP **(FILL)**	677.8	3 4	4 6 6	15	100	SS-2	3.75	5	6	12	42	35	33	18	15	17	A-6a (10)	
MEDIUM DENSE, GRAYISH BROWN, **GRAVEL WITH SAND**, LITTLE SILT, TRACE CLAY, CONTAINS CINDERS, CONCRETE, AND GLASS FRAGMENTS, DAMP **(FILL)**	675.6	5 6 7	25 14 7	27	83	SS-3	-	38	14	23	15	10	21	16	5	10	A-1-b (0)	
VERY LOOSE TO LOOSE, BROWN, **FINE SAND**, LITTLE COARSE SAND, LITTLE GRAVEL, TRACE SILT, TRACE CLAY, DAMP	665.6	8 9 10	2 2 3	6	83	SS-4	-	-	-	-	-	-	-	-	-	7	A-3 (V)	
		11 12	3 2 2	5	83	SS-5	-	14	17	61	5	3	NP	NP	NP	5	A-3 (0)	
		13 14	1 1 1	3	100	SS-6	-	-	-	-	-	-	-	-	-	5	A-3 (V)	
		15 16	1 1 1	3	100	SS-7	-	-	-	-	-	-	-	-	-	7	A-3 (V)	
VERY STIFF, BROWN MOTTLED WITH GRAY, **SILTY CLAY**, TRACE SAND, TRACE GRAVEL, MOIST	663.6	18 19	6 7 8	19	100	SS-8	3.25	0	0	4	38	58	38	20	18	26	A-6b (11)	
GRAYISH BROWN, **COARSE AND FINE SAND**, SOME SILT, TRACE CLAY, TRACE GRAVEL, WET	660.6	20 21			88	ST-9	-	0	0	72	22	6	NP	NP	NP	15	A-3a (0)	
DENSE, BROWN MOTTLED WITH GRAYISH BROWN, **SILT**, SOME CLAY, LITTLE SAND, TRACE GRAVEL, CONTAINS SILTY CLAY LENSES AND FINE SAND LENSES, WET	658.1	23 24	7 15 23	49	100	SS-10	-	0	0	12	65	23	24	19	5	24	A-4b (8)	
MEDIUM DENSE, LIGHT BROWN AND DARK GRAY, **FINE SAND**, TRACE COARSE SAND, TRACE SILT, TRACE CLAY, DAMP	656.6	25 26	6 5 7	15	78	SS-11A	-	-	-	-	-	-	-	-	-	8	A-3 (V)	
						SS-1B	2.50	-	-	-	-	-	-	-	-	20	A-4b (V)	
VERY STIFF, GRAYISH BROWN MOTTLED WITH GRAY AND ORANGISH BROWN, **SILT**, LITTLE CLAY, TRACE SAND, TRACE GRAVEL, CONTAINS IRON STAINING, MOIST	655.6	27 28	6 6 5	14	100	SS-12	-	-	-	-	-	-	-	-	-	14	A-3a (V)	
MEDIUM DENSE, GRAYISH BROWN AND BROWN, **COARSE AND FINE SAND**, LITTLE SILT, TRACE CLAY, TRACE GRAVEL, MOIST TO WET		29																

STANDARD ODOT SOIL BORING LOG (8.5 X 11) - OH DOT.GDT - 6/22/22 14:15 - X:\ACTIVE PROJECTS\ACTIVE SOIL PROJECTS\1ARCHIVE BY YEAR\2017 ARCHIVE\CUY-CCG3 82380\GINT FILES

PID: 82380 | SFN: | PROJECT: CUY-CCG3 | STATION / OFFSET: 980+67, 13' LT. | START: 11/6/14 | END: 11/7/14 | PG 2 OF 2 | B-111-0-14

MATERIAL DESCRIPTION AND NOTES	ELEV.	DEPTHS	SPT/ RQD	N_{60}	REC (%)	SAMPLE ID	HP (tsf)	GRADATION (%) GR	CS	FS	SI	CL	ATTERBERG LL	PL	PI	WC	ODOT CLASS (GI)	BACK FILL
MEDIUM DENSE, GRAYISH BROWN AND BROWN, **COARSE AND FINE SAND**, LITTLE SILT, TRACE CLAY, TRACE GRAVEL, MOIST TO WET *(continued)*	652.6	W 652.1 31	6 7 6	17	78	SS-13	-	0	8	73	14	5	NP	NP	NP	24	A-3a (0)	
		32 33 34																
		35 36	5 10 11	27	100	SS-14	-	-	-	-	-	-	-	-	-	27	A-3a (V)	
	644.3	37 38 39																
MEDIUM DENSE, GRAY, **SANDY SILT**, TRACE CLAY, TRACE GRAVEL, WET		40 41 42 43 44	4 7 8	19	100	SS-15	-	1	0	61	34	4	NP	NP	NP	26	A-4a (1)	
		45 46 47 48 49	4 7 12	25	100	SS-16	-	-	-	-	-	-	-	-	-	29	A-4a (V)	
	634.3	50 51 52 53 54	11 16 19	45	100	SS-17	0.50	-	-	-	-	-	-	-	-	22	A-4b (V)	
SOFT TO VERY STIFF, GRAY, **SILT**, SOME CLAY, TRACE SAND, TRACE GRAVEL, MOIST TO WET		55 56 57 58 59	18 7 8	19	100	SS-18	1.75	1	0	7	67	25	25	18	7	23	A-4b (8)	
@55.0'; SS-18 AND SS-19 CONTAIN FEW SILTY CLAY LENSES	621.1	60 61 EOB	10 11 12	30	100	SS-19	3.10	-	-	-	-	-	-	-	-	21	A-4b (V)	

NOTES: GROUNDWATER ENCOUNTERED AT 30.5' DURING DRILLING, 37.1' UPON COMPLETION. CAVE DEPTH 28.6'.
ABANDONMENT METHODS, MATERIALS, QUANTITIES: PLACED .5 BAG ASPHALT PATCH; SHOVELED SOIL CUTTINGS

Preliminary Plans - For Reference Only

SHEET	TOTAL	SUBSET	TOTAL	PROJECT ID	REVIEWER	DESIGNER
P 2544	2696	158	310	82382	BPA 08/23/24	MWJ & DT

DESIGN AGENCY
2800 CORPORATE EXCHANGE DR. SUITE 400 COLUMBUS, OH. 43231
TEL:614.714.0299
WWW.NEASINC.COM

GEOTECHNICAL PROFILE - ROADWAY
WALL M
BORING LOG B-111-0-14

MODEL: Sheet PAPERSIZE: 34x22 (in.) DATE: 3/28/2025 TIME: 10:07:51 AM USER: Asiddiqi
pw:\\mb-us-pw.bentley.com:mb-us-pw-03\Documents\Cleveland_OH\01_Projects\ODOT\District12\82382\400-Engineering\Geotechnical\Sheets\82382_ZL045.dgn

STANDARD ODOT SOIL BORING LOG (8.5 X 11) - OH DOT GDT - 6/22/22 14:15 - X:\ACTIVE PROJECTS\ACTIVE SOIL PROJECTS\1ARCHIVE BY YEAR\2017 ARCHIVE\CUY-CCG3 82380\GINT FILES

PROJECT: CUY-CCG3 | DRILLING FIRM / OPERATOR: BARR / P.STROUD | DRILL RIG: MOBILE B-58 | STATION / OFFSET: 1185+55, 65' RT. | EXPLORATION ID B-112-0-14
TYPE: RETAINING WALL | SAMPLING FIRM / LOGGER: BARR / C.PIERCE III | HAMMER: MOBILE AUTOMATIC | ALIGNMENT: RAMP H6
PID: 82380 SFN: | DRILLING METHOD: 3.25" HSA | CALIBRATION DATE: 1/26/14 | ELEVATION: 672.0 (MSL) EOB: 61.5 ft. | PAGE 1 OF 2
START: 11/19/14 END: 11/19/14 | SAMPLING METHOD: SPT | ENERGY RATIO (%): 90* | LAT / LONG: 41.494820, -81.676621

MATERIAL DESCRIPTION AND NOTES	ELEV.	DEPTHS	SPT/RQD	N_{60}	REC (%)	SAMPLE ID	HP (tsf)	GRADATION (%) GR	CS	FS	SI	CL	ATTERBERG LL	PL	PI	WC	ODOT CLASS (GI)	BACK FILL
5.0", **TOPSOIL**	671.6		2 2 4	9	44	SS-1	-	-	-	-	-	-	-	-	-	10	A-3a (V)	
LOOSE, BROWN, **COARSE AND FINE SAND**, LITTLE GRAVEL, TRACE SILT, TRACE CLAY, CONTAINS TILE FRAGMENTS AND FEW ROOTS, MOIST (FILL)	670.0																	
LOOSE TO MEDIUM DENSE, BROWN, **COARSE AND FINE SAND**, TRACE SILT, TRACE CLAY, TRACE GRAVEL, SS-2 CONTAINS FEW ROOTS, DAMP			3 3 4	11	44	SS-2	-	4	11	72	8	5	NP	NP	NP	8	A-3a (0)	
			2 3 2	8	100	SS-3	-	-	-	-	-	-	-	-	-	8	A-3a (V)	
	662.5		3 3 3	9	100	SS-4	-	-	-	-	-	-	-	-	-	7	A-3a (V)	
MEDIUM DENSE TO DENSE, BROWN, **GRAVEL WITH SAND**, TRACE SILT, TRACE CLAY, DAMP			4 9 14	35	100	SS-5	-	-	-	-	-	-	-	-	-	6	A-1-b (V)	
	657.5		8 8 9	26	100	SS-6	-	26	47	18	7	2	NP	NP	NP	4	A-1-b (0)	
DENSE, BROWN, **COARSE AND FINE SAND**, TRACE GRAVEL, TRACE SILT, TRACE CLAY, DAMP			8 10 11	32	100	SS-7	-	-	-	-	-	-	-	-	-	4	A-3a (V)	
	652.5	W 653.0	8 11 9	30	100	SS-8	-	-	-	-	-	-	-	-	-	5	A-3a (V)	
MEDIUM DENSE, BROWN, **GRAVEL WITH SAND**, TRACE SILT, TRACE CLAY, WET	650.0		11 7 2	14	100	SS-9	-	-	-	-	-	-	-	-	-	8	A-1-b (V)	
MEDIUM DENSE, BROWN, **FINE SAND**, TRACE COARSE SAND, TRACE SILT, TRACE CLAY, TRACE GRAVEL, WET	647.5		3 3 7	15	100	SS-10	-	-	-	-	-	-	-	-	-	22	A-3 (V)	
MEDIUM STIFF, GRAYISH BROWN, **SANDY SILT**, SOME CLAY, TRACE GRAVEL, (SILT AND CLAY INTERBEDDED WITH FINE SAND AND SILT) CONTAINS NO INTACT SOIL FOR HP READINGS, WET	645.0		3 2 3	8	100	SS-11	-	0	1	36	42	21	23	16	7	31	A-4a (6)	
MEDIUM DENSE, BROWN AND GRAY, **COARSE AND FINE SAND**, TRACE GRAVEL, TRACE SILT, TRACE CLAY, WET			5 7 10	26	100	SS-12	-	-	-	-	-	-	-	-	-	17	A-3a (V)	

STANDARD ODOT SOIL BORING LOG (8.5 X 11) - OH DOT GDT - 6/22/22 14:15 - X:\ACTIVE PROJECTS\ACTIVE SOIL PROJECTS\1ARCHIVE BY YEAR\2017 ARCHIVE\CUY-CCG3 82380\GINT FILES

PID: 82380 | SFN: | PROJECT: CUY-CCG3 | STATION / OFFSET: 1185+55, 65' RT. | START: 11/19/14 | END: 11/19/14 | PG 2 OF 2 | B-112-0-14

MATERIAL DESCRIPTION AND NOTES	ELEV.	DEPTHS	SPT/RQD	N_{60}	REC (%)	SAMPLE ID	HP (tsf)	GRADATION (%) GR	CS	FS	SI	CL	ATTERBERG LL	PL	PI	WC	ODOT CLASS (GI)	BACK FILL
MEDIUM DENSE, BROWN AND GRAY, **COARSE AND FINE SAND**, TRACE GRAVEL, TRACE SILT, TRACE CLAY, WET *(continued)* @30.0'; SS-13 BECOMES BROWN	642.0		5 7 8	23	100	SS-13	-	-	-	-	-	-	-	-	-	7	A-3a (V)	
MEDIUM DENSE TO DENSE, GRAYISH BROWN, **SANDY SILT**, TRACE CLAY, TRACE GRAVEL, WET	638.7		6 11 16	41	100	SS-14	-	1	8	46	39	6	NP	NP	NP	21	A-4a (2)	
			7 10 10	30	100	SS-15	-	2	4	56	33	5	NP	NP	NP	19	A-4a (1)	
@45.0'; SS-16 (SILT AND CLAY INTERBEDDED WITH FINE SAND AND SILT)	623.7		4 6 8	21	100	SS-16	-	-	-	-	-	-	-	-	-	18	A-4a (V)	
VERY STIFF TO HARD, GRAY, **SILT**, SOME CLAY, TRACE SAND, TRACE GRAVEL, MOIST TO DAMP			4 6 9	23	100	SS-17	2.10	0	0	6	73	21	26	17	9	19	A-4b (8)	
@55.0'; SS-18 TO SS-19 BECOME GRAYISH BROWN			8 10 13	35	100	SS-18	4.50	-	-	-	-	-	-	-	-	17	A-4b (V)	
	610.5	EOB	9 14 17	47	100	SS-19	4.50	-	-	-	-	-	-	-	-	16	A-4b (V)	

NOTES: GROUNDWATER ENCOUNTERED AT 19.0' DURING DRILLING. CAVE DEPTH 22.1'.
ABANDONMENT METHODS, MATERIALS, QUANTITIES: SHOVELED SOIL CUTTINGS

Preliminary Plans - For Reference Only

SHEET	TOTAL	SUBSET	TOTAL	PROJECT ID	REVIEWER	DESIGNER
P 2545	2696	159	310	82382	BPA 08/23/24	MWJ & DT

DESIGN AGENCY
2800 CORPORATE EXCHANGE DR. SUITE 240
COLUMBUS, OH. 43231
TEL:614.714.0299
WWW.NEASINC.COM

GEOTECHNICAL PROFILE - ROADWAY
WALL M
BORING LOG B-112-0-14

MODEL: Sheet PAPERSIZE: 34x22 (in.) DATE: 3/28/2025 TIME: 10:08:11 AM USER: Asiddiqi
pw:\\mb-us-pw.bentley.com:mb-us-pw-03\Documents\Cleveland_OH\01_Projects\ODOT\District12\82382\400-Engineering\Geotechnical\Sheets\82382_ZL046.dgn

Preliminary Plans - For Reference Only

PROJECT: CUY-CCG3
TYPE: RETAINING WALL
PID: 82380 SFN:
START: 11/19/14 END: 11/19/14

DRILLING FIRM / OPERATOR: BARR / T.GILBERT
SAMPLING FIRM / LOGGER: BARR / D.LYON
DRILLING METHOD: 3.25" HSA
SAMPLING METHOD: SPT / ST

DRILL RIG: CME 45B
HAMMER: CME AUTOMATIC
CALIBRATION DATE: 1/26/14
ENERGY RATIO (%): 77.4

STATION / OFFSET: 1187+81, 26' RT.
ALIGNMENT: RAMP H6
ELEVATION: 677.1 (MSL) EOB: 61.5 ft.
LAT / LONG: 41.495295, -81.676213

EXPLORATION ID B-113-0-14

MATERIAL DESCRIPTION AND NOTES	ELEV. 677.1	DEPTHS	SPT/ RQD	N_{60}	REC (%)	SAMPLE ID	HP (tsf)	GRADATION (%) GR	CS	FS	SI	CL	ATTERBERG LL	PL	PI	WC	ODOT CLASS (GI)	BACK FILL
4.0", **TOPSOIL**	676.8		2 2 3	6	56	SS-1	-	-	-	-	-	-	-	-	-	9	A-3a (V)	
LOOSE, BROWN, **COARSE AND FINE SAND** LITTLE GRAVEL, LITTLE SILT, TRACE CLAY, CONTAINS FEW ROOTS, DAMP	675.1																	
(FILL)			5 5 3	10	94	SS-2	-	38	25	23	9	5	NP	NP	NP	16	A-1-b (0)	
LOOSE, DARK GRAYISH BROWN, **GRAVEL WITH SAND** TRACE SILT, TRACE CLAY, CONTAINS TILE FRAGMENTS AND CINDERS, WET	672.6																	
(FILL)			0 1 1	3	89	SS-3	-	-	-	-	-	-	-	-	-	24	A-3a (V)	
VERY LOOSE, DARK GRAYISH BROWN AND BROWN, **COARSE AND FINE SAND** LITTLE GRAVEL, LITTLE SILT, TRACE CLAY, SS-3 CONTAINS TILE AND GLASS FRAGMENTS AND CINDERS, WET TO MOIST																		
(FILL)																		
@7.5'; SS-4 CONTAINS CINDERS			0 0 0	0	78	SS-4	-	-	-	-	-	-	-	-	-	13	A-3a (V)	
@10.0'; SS-5 CHANGES TO BROWN, CONTAINS GLASS FRAGMENTS, CHANGES TO BROWN			0 1 0	1	67	SS-5	-	-	-	-	-	-	-	-	-	11	A-3a (V)	
	665.1																	
LOOSE, BROWN, **COARSE AND FINE SAND** TRACE SILT, TRACE CLAY, TRACE GRAVEL, DAMP			1 2 2	5	89	SS-6	-	0	1	87	8	4	NP	NP	NP	10	A-3a (0)	
	662.6																	
LOOSE, BROWN, **GRAVEL WITH SAND** TRACE SILT, TRACE CLAY, DAMP			2 2 2	5	89	SS-7	-	-	-	-	-	-	-	-	-	9	A-1-b (V)	
	660.1																	
MEDIUM DENSE, BROWN, **COARSE AND FINE SAND** TRACE GRAVEL, TRACE SILT, TRACE CLAY, DAMP			2 4 5	12	89	SS-8	-	-	-	-	-	-	-	-	-	5	A-3a (V)	
			5 7 8	19	89	SS-9	-	-	-	-	-	-	-	-	-	3	A-3a (V)	
	655.1																	
MEDIUM DENSE, BROWN, **GRAVEL WITH SAND** TRACE SILT, TRACE CLAY, DAMP			4 7 9	21	78	SS-10	-	1	72	21	4	2	NP	NP	NP	4	A-1-b (0)	
	652.6																	
MEDIUM DENSE TO DENSE, BROWN, **COARSE AND FINE SAND**, TRACE GRAVEL, TRACE SILT, TRACE CLAY, DAMP TO MOIST			4 4 5	12	39	SS-11	-	-	-	-	-	-	-	-	-	10	A-3a (V)	
			7 10 8	23	100	SS-12	-	-	-	-	-	-	-	-	-	9	A-3a (V)	
		W 647.1																
			10 18 17	45	100	SS-13	-	-	-	-	-	-	-	-	-	12	A-3a (V)	
		W 645.1																
	643.8																	
MEDIUM DENSE, GRAYISH BROWN, **FINE SAND**, TRACE COARSE SAND, TRACE SILT, TRACE CLAY, TRACE GRAVEL, WET			3 6 9	19	39	SS-14	-	-	-	-	-	-	-	-	-	19	A-3 (V)	
	638.8																	
MEDIUM DENSE, GRAY, **SILT**, LITTLE CLAY, LITTLE SAND, TRACE GRAVEL, WET			8 8 10	23	100	SS-15	-	-	-	-	-	-	-	-	-	27	A-4b (V)	
	633.8																	
GRAY, **SANDY SILT**, TRACE CLAY, TRACE GRAVEL, WET					100	ST-16	-	0	1	63	31	5	NP	NP	NP	21	A-4a (0)	
@46.2'; UNIT WEIGHT: 133.8 PCF @ 21.0% MC	628.8																	
VERY STIFF, GRAY, **SILT**, SOME CLAY, TRACE SAND, TRACE GRAVEL, DAMP TO MOIST			3 5 8	17	100	SS-17	2.60	0	0	7	66	27	29	20	9	20	A-4b (8)	
			6 5 8	17	100	SS-18	2.25	-	-	-	-	-	-	-	-	22	A-4b (V)	
	618.8																	
MEDIUM STIFF TO STIFF, GRAY, **SILT AND CLAY**, TRACE SAND, TRACE GRAVEL, MOIST																		

STANDARD ODOT SOIL BORING LOG (11 X 17) - OH DOT.GDT - 1/3/24 15:31 - X:\ACTIVE PROJECTS\ACTIVE SOIL PROJECTS\1ARCHIVE BY YEAR\2017 ARCHIVE\CUY-CCG3 82380\GINT FILES\CUY-CCG3 MASTER - LR UPDATED.GPJ

DESIGN AGENCY
EAS
2800 CORPORATE EXCHANGE DR. SUITE 240
COLUMBUS, OH. 43231
TEL:614.714.0299
WWW.NEASINC.COM

DESIGNER MWJ & DT
REVIEWER BPA 08/23/24
PROJECT ID 82382
SHEET 160 TOTAL 310
P 2546 TOTAL 2696

GEOTECHNICAL PROFILE - ROADWAY
RAMP H6
BORING LOG B-113-0-14

MODEL: Sheet PAPERSIZE: 34x22 (in.) DATE: 3/28/2025 TIME: 10:08:38 AM USER: Asiddiqi
pw:\\mb-us-pw.bentley.com:mb-us-pw-03\Documents\Cleveland_OH\01_Projects\ODOT\District12\82382\400-Engineering\Geotechnical\Sheets\82382_ZL047.dgn

PID: 82380 | SFN: | PROJECT: CUY-CCG3 | STATION / OFFSET: 1187+81, 26' RT. | START: 11/19/14 | END: 11/19/14 | PG 2 OF 2 | B-113-0-14

MATERIAL DESCRIPTION AND NOTES	ELEV.	DEPTHS	SPT/ RQD	N_{60}	REC (%)	SAMPLE ID	HP (tsf)	GRADATION (%) GR	CS	FS	SI	CL	ATTERBERG LL	PL	PI	WC	ODOT CLASS (GI)	BACK FILL
MEDIUM STIFF TO STIFF, GRAY, **SILT AND CLAY**, TRACE SAND, TRACE GRAVEL, MOIST *(continued)*	617.1																	
	615.6	61 EOB	4 4 7	14	100	SS-19	1.00	0	0	1	60	39	33	20	13	24	A-6a (9)	

Preliminary Plans - For Reference Only

STANDARD ODOT SOIL BORING LOG (11 X 17) - OH DOT.GDT - 1/3/24 15:31 - X:\ACTIVE PROJECTS\ACTIVE SOIL PROJECTS\1ARCHIVE BY YEAR\2017 ARCHIVE\CUY-CCG3 82380\GINT FILES\CUY-CCG3 MASTER - LR UPDATED.GPJ

NOTES: GROUNDWATER ENCOUNTERED AT 30.0' DURING DRILLING, 32.0' 1 HOUR 45 MINUTES LATER. CAVE DEPTH 28.6'.
ABANDONMENT METHODS, MATERIALS, QUANTITIES: SHOVELED SOIL CUTTINGS

DESIGN AGENCY
2800 CORPORATE EXCHANGE DR. SUITE 240
COLUMBUS, OH. 43231
TEL:614.714.0299
WWW.NEASINC.COM

DESIGNER MW,J & DT
REVIEWER BPA 08/23/24
PROJECT ID 82382
SHEET 161 TOTAL 310
P 2547 TOTAL 2696

GEOTECHNICAL PROFILE - ROADWAY
RAMP H6
BORING LOG B-113-0-14 (CONTINUED)

MODEL: Sheet PAPERSIZE: 34x22 (in.) DATE: 3/28/2025 TIME: 10:08:54 AM USER: Asiddiqi
pw:\\mb-us-pw.bentley.com:mb-us-pw-03\Documents\Cleveland_OH\01_Projects\ODOT\District12\82382\400-Engineering\Geotechnical\Sheets\82382_ZL048.dgn

PROJECT: CUY-CCG3
TYPE: RETAINING WALL
PID: 82380 SFN:
START: 11/19/14 END: 11/20/14

DRILLING FIRM / OPERATOR: BARR / T.GILBERT
SAMPLING FIRM / LOGGER: BARR / D.LYON
DRILLING METHOD: 3.25" HSA
SAMPLING METHOD: SPT / ST

DRILL RIG: CME 45B
HAMMER: CME AUTOMATIC
CALIBRATION DATE: 1/26/14
ENERGY RATIO (%): 77.4

STATION / OFFSET: 1190+07, 37' RT.
ALIGNMENT: RAMP H6
ELEVATION: 674.5 (MSL) EOB: 61.5 ft.
LAT / LONG: 41.495464, -81.675483

EXPLORATION ID B-114-0-14

MATERIAL DESCRIPTION AND NOTES	ELEV. 674.5	DEPTHS	SPT/ RQD	N_{60}	REC (%)	SAMPLE ID	HP (tsf)	GRADATION (%) GR	CS	FS	SI	CL	ATTERBERG LL	PL	PI	WC	ODOT CLASS (GI)	BACK FILL
4.0", **TOPSOIL**	674.2																	
DENSE, BROWN, **COARSE AND FINE SAND** SOME SILT, LITTLE GRAVEL, TRACE CLAY, DAMP	672.5		2 2 23	32	83	SS-1	-	-	-	-	-	-	-	-	-	11	A-3a (V)	
LOOSE TO MEDIUM DENSE, BROWN, **FINE SAND**, SOME COARSE SAND, LITTLE GRAVEL, TRACE SILT, TRACE CLAY, DAMP			6 5 4	12	94	SS-2	-	11	32	50	4	3	NP	NP	NP	5	A-3 (0)	
			4 4 4	10	94	SS-3	-	-	-	-	-	-	-	-	-	5	A-3 (V)	
			3 4 4	10	100	SS-4	-	-	-	-	-	-	-	-	-	8	A-3 (V)	
LOOSE, BROWN, **COARSE AND FINE SAND** TRACE GRAVEL, TRACE SILT, TRACE CLAY, MOIST	665.0		3 2 2	5	94	SS-5	-	-	-	-	-	-	-	-	-	13	A-3a (V)	
LOOSE TO MEDIUM DENSE, BROWN, **GRAVEL WITH SAND**, TRACE SILT, TRACE CLAY, DAMP	662.5		2 2 5	9	94	SS-6	-	36	55	5	2	2	NP	NP	NP	8	A-1-b (0)	
			6 7 9	21	100	SS-7	-	-	-	-	-	-	-	-	-	5	A-1-b (V)	
			5 6 7	17	100	SS-8	-	-	-	-	-	-	-	-	-	4	A-1-b (V)	
			6 5 4	12	28	SS-9	-	-	-	-	-	-	-	-	-	4	A-1-b (V)	
MEDIUM DENSE, BROWN, **GRAVEL**, TRACE SAND, TRACE SILT, TRACE CLAY, MOIST	652.5	W 652.5	4 5 5	13	44	SS-10	-	-	-	-	-	-	-	-	-	6	A-1-a (V)	
MEDIUM DENSE, BROWN, **GRAVEL WITH SAND**, TRACE SILT, TRACE CLAY, WET	650.0		6 6 6	15	33	SS-11	-	-	-	-	-	-	-	-	-	14	A-1-b (V)	
MEDIUM DENSE, BROWN, **FINE SAND**, SOME COARSE SAND, TRACE SILT, TRACE GRAVEL, TRACE CLAY, WET	647.5		6 7 11	23	72	SS-12	-	2	33	57	6	2	NP	NP	NP	18	A-3 (0)	
MEDIUM DENSE TO DENSE, GRAYISH BROWN, **COARSE AND FINE SAND** LITTLE SILT, TRACE CLAY, TRACE GRAVEL, WET	644.5		10 13 12	32	100	SS-13	-	-	-	-	-	-	-	-	-	17	A-3a (V)	
	636.2		6 8 14	28	100	SS-14	-	0	1	83	14	2	NP	NP	NP	23	A-3a (0)	
MEDIUM DENSE TO DENSE, GRAY, **SILT**, SOME SAND, TRACE CLAY, TRACE GRAVEL, WET			7 10 15	32	100	SS-15	-	-	-	-	-	-	-	-	-	24	A-4b (V)	
@44.0'; UNIT WEIGHT: 128.4 PCF @ 26.3% MC					100	ST-16	-	1	0	34	56	9	NP	NP	NP	26	A-4b (6)	
			5 6 9	19	100	SS-17	-	-	-	-	-	-	-	-	-	27	A-4b (V)	
			3 6 6	15	100	SS-18	-	-	-	-	-	-	-	-	-	26	A-4b (V)	
VERY STIFF, GRAY, **SILT AND CLAY**, TRACE SAND, TRACE GRAVEL, MOIST	621.2		2 3 6	12	100	SS-19	3.00	0	0	2	67	31	30	19	11	20	A-6a (8)	
MEDIUM DENSE, GRAY, **SILT**, SOME CLAY, TRACE SAND, TRACE GRAVEL, WET	616.2																	

Preliminary Plans - For Reference Only

STANDARD ODOT SOIL BORING LOG (11 X 17) - OH DOT.GDT - 1/3/24 15:31 - X:\ACTIVE PROJECTS\ACTIVE SOIL PROJECTS\1ARCHIVE BY YEAR\2017 ARCHIVE\CUY-CCG3 82380\GINT FILES\CUY-CCG3 MASTER - LR UPDATED.GPJ

SHEET	TOTAL
P 2548	2696

SUBSET 162 TOTAL 310

PROJECT ID 82382

REVIEWER BPA 08/23/24

DESIGNER MWJ & DT

DESIGN AGENCY
EAS
2800 CORPORATE EXCHANGE DR. SUITE 240
COLUMBUS, OH. 43231
TEL:614.714.0299
WWW.NEASINC.COM

GEOTECHNICAL PROFILE - ROADWAY
RAMP H6
BORING LOG B-114-0-14

MODEL: Sheet PAPERSIZE: 34x22 (in.) DATE: 3/28/2025 TIME: 10:09:19 AM USER: Asiddiqi
pw:\\mb-us-pw.bentley.com:mb-us-pw-03\Documents\Cleveland_OH\01_Projects\ODOT\District12\82382\400-Engineering\Geotechnical\Sheets\82382_ZL049.dgn

PID: 82380 | SFN: | PROJECT: CUY-CCG3 | STATION / OFFSET: 1190+07, 37' RT. | START: 11/19/14 | END: 11/20/14 | PG 2 OF 2 | B-114-0-14

MATERIAL DESCRIPTION AND NOTES	ELEV.	DEPTHS	SPT/ RQD	N_{60}	REC (%)	SAMPLE ID	HP (tsf)	GRADATION (%) GR	CS	FS	SI	CL	ATTERBERG LL	PL	PI	WC	ODOT CLASS (GI)	BACK FILL
MEDIUM DENSE, GRAY, **SILT**, SOME CLAY, TRACE SAND, TRACE GRAVEL, WET *(continued)*	614.5																	
	613.0	61 EOB	5 9 12	27	100	SS-20	-	-	-	-	-	-	-	-	-	21	A-4b (V)	

Preliminary Plans - For Reference Only

STANDARD ODOT SOIL BORING LOG (11 X 17) - OH DOT.GDT - 1/3/24 15:31 - X:\ACTIVE PROJECTS\ACTIVE SOIL PROJECTS\1ARCHIVE BY YEAR\2017 ARCHIVE\CUY-CCG3 82380\GINT FILES\CUY-CCG3 MASTER - LR UPDATED.GPJ

NOTES: GROUNDWATER ENCOUNTERED AT 22.0' DURING DRILLING, 50.2' UPON COMPLETION. CAVE DEPTH 10.0'.
ABANDONMENT METHODS, MATERIALS, QUANTITIES: SHOVELED SOIL CUTTINGS

DESIGN AGENCY
2800 CORPORATE EXCHANGE DR. SUITE 240
COLUMBUS, OH. 43231
TEL:614.714.0299
WWW.NEASINC.COM

DESIGNER MW,J & DT
REVIEWER BPA 08/23/24
PROJECT ID 82382
SHEET 163 TOTAL 310
P 2549 TOTAL 2696

GEOTECHNICAL PROFILE - ROADWAY
RAMP H6
BORING LOG B-114-0-14 (CONTINUED)

MODEL: Sheet PAPERSIZE: 34x22 (in.) DATE: 3/28/2025 TIME: 10:09:33 AM USER: Asiddiqi
pw:\\mb-us-pw.bentley.com:mb-us-pw-03\Documents\Cleveland_OH\01_Projects\ODOT\District12\82382\400-Engineering\Geotechnical\Sheets\82382_ZL050.dgn

STANDARD ODOT SOIL BORING LOG (8.5 X 11) - OH DOT.GDT - 6/22/22 14:15 - X:\ACTIVE PROJECTS\ACTIVE SOIL PROJECTS\1ARCHIVE BY YEAR\2017 ARCHIVE\CUY-CCG3 82380\GINT FILES

PROJECT: CUY-CCG3 | DRILLING FIRM / OPERATOR: BARR / D.SHOPE | DRILL RIG: CME 55 | STATION / OFFSET: 1274+42, 6' RT. | EXPLORATION ID B-115-0-14
TYPE: RETAINING WALL | SAMPLING FIRM / LOGGER: BARR / C.PIERCE III | HAMMER: CME AUTOMATIC | ALIGNMENT: RAMP H6 INTERIM
PID: 82380 SFN: | DRILLING METHOD: 4.25" HSA | CALIBRATION DATE: 1/26/14 | ELEVATION: 670.8 (MSL) EOB: 61.5 ft. | PAGE 1 OF 2
START: 11/6/14 END: 11/6/14 | SAMPLING METHOD: SPT | ENERGY RATIO (%): 78.8 | LAT / LONG: 41.494289, -81.677078

MATERIAL DESCRIPTION AND NOTES	ELEV. 670.8	DEPTHS	SPT/ RQD	N_{60}	REC (%)	SAMPLE ID	HP (tsf)	GRADATION (%) GR	CS	FS	SI	CL	ATTERBERG LL	PL	PI	WC	ODOT CLASS (GI)	BACK FILL
4.0", **ASPHALT**	670.5																	
14.0", **CONCRETE**	669.3																	
MEDIUM DENSE, BROWN, **FINE SAND**, TRACE COARSE SAND, TRACE SILT, TRACE CLAY, TRACE GRAVEL, CONTAINS A 4.0" SILT AND CLAY SEAM, MOIST	667.8		9 9 9	24	100	SS-1	-	-	-	-	-	-	-	-	-	11	A-3 (V)	
LOOSE TO MEDIUM DENSE, BROWN, **COARSE AND FINE SAND**, TRACE GRAVEL, TRACE SILT, TRACE CLAY, DAMP			7 7 4	14	100	SS-2	-	-	-	-	-	-	-	-	-	8	A-3a (V)	
			4 3 4	9	100	SS-3	-	9	8	72	7	4	NP	NP	NP	7	A-3a (0)	
			2 3 4	9	100	SS-4	-	-	-	-	-	-	-	-	-	5	A-3a (V)	
@10.0'; SS-5 CONTAINS A 4.0" SILT AND CLAY SEAM			2 4 4	11	100	SS-5	-	-	-	-	-	-	-	-	-	8	A-3a (V)	
	658.8																	
MEDIUM DENSE, GRAYISH BROWN, **SILT**, LITTLE SAND, TRACE CLAY, TRACE GRAVEL, WET	656.3		3 5 8	17	100	SS-6	-	0	0	12	78	10	24	18	6	22	A-4b (8)	
MEDIUM DENSE, BROWN, **FINE SAND**, TRACE COARSE SAND, TRACE GRAVEL, TRACE SILT, TRACE CLAY, DAMP	653.8		7 9 10	25	100	SS-7	-	-	-	-	-	-	-	-	-	7	A-3 (V)	
MEDIUM DENSE TO DENSE, BROWN, **COARSE AND FINE SAND**, LITTLE SILT, TRACE CLAY, WET		▼ W 650.8	4 5 8	17	100	SS-8	-	-	-	-	-	-	-	-	-	19	A-3a (V)	
			3 3 7	13	100	SS-9	-	-	-	-	-	-	-	-	-	20	A-3a (V)	
			4 5 6	14	100	SS-10	-	0	2	78	15	5	NP	NP	NP	22	A-3a (0)	
			4 9 11	26	100	SS-11	-	-	-	-	-	-	-	-	-	18	A-3a (V)	
			12 15 22	49	100	SS-12	-	-	-	-	-	-	-	-	-	18	A-3a (V)	

STANDARD ODOT SOIL BORING LOG (8.5 X 11) - OH DOT.GDT - 6/22/22 14:15 - X:\ACTIVE PROJECTS\ACTIVE SOIL PROJECTS\1ARCHIVE BY YEAR\2017 ARCHIVE\CUY-CCG3 82380\GINT FILES

PID: 82380 | SFN: | PROJECT: CUY-CCG3 | STATION / OFFSET: 1274+42, 6' RT. | START: 11/6/14 | END: 11/6/14 | PG 2 OF 2 | B-115-0-14

MATERIAL DESCRIPTION AND NOTES	ELEV. 640.8	DEPTHS	SPT/ RQD	N_{60}	REC (%)	SAMPLE ID	HP (tsf)	GRADATION (%) GR	CS	FS	SI	CL	ATTERBERG LL	PL	PI	WC	ODOT CLASS (GI)	BACK FILL
MEDIUM DENSE TO DENSE, BROWN, **COARSE AND FINE SAND**, LITTLE SILT, TRACE CLAY, WET *(continued)*			4 8 15	30	100	SS-13	-	-	-	-	-	-	-	-	-	22	A-3a (V)	
	637.5																	
MEDIUM DENSE TO DENSE, GRAYISH BROWN, **SILT**, TRACE TO LITTLE SAND, TRACE TO LITTLE CLAY, TRACE GRAVEL, WET			8 17 18	46	100	SS-14	-	-	-	-	-	-	-	-	-	24	A-4b (V)	
			13 15 16	41	100	SS-15	-	0	1	18	73	8	NP	NP	NP	21	A-4b (8)	
			7 6 7	17	100	SS-16	-	-	-	-	-	-	-	-	-	20	A-4b (V)	
			8 12 16	37	100	SS-17	-	1	0	7	77	15	NP	NP	NP	19	A-4b (8)	
	617.5																	
STIFF TO HARD, GRAYISH BROWN, **SILT AND CLAY**, TRACE SAND, TRACE GRAVEL, MOIST TO DAMP			8 9 10	25	100	SS-18	1.80	0	0	2	65	33	29	18	11	22	A-6a (8)	
			11 17 12	38	100	SS-19	4.50	-	-	-	-	-	-	-	-	18	A-6a (V)	
	609.3	EOB																

NOTES: GROUNDWATER ENCOUNTERED AT 20.0' DURING DRILLING, 17.5' UPON COMPLETION. CAVE DEPTH 18.1'.
ABANDONMENT METHODS, MATERIALS, QUANTITIES: PLACED .5 BAG ASPHALT PATCH; SHOVELED SOIL CUTTINGS

Preliminary Plans - For Reference Only

SHEET	TOTAL
P 2550	2696

SUBSET 164 TOTAL 310
PROJECT ID 82382
REVIEWER BPA 08/23/24
DESIGNER MWJ & DT

DESIGN AGENCY
EAS
2800 CORPORATE EXCHANGE DR. SUITE 240
COLUMBUS, OH. 43231
TEL:614.714.0299
WWW.NEASINC.COM

GEOTECHNICAL PROFILE - ROADWAY
RAMP H6 INTERIM
BORING LOG B-115-0-14

CUY-90-16.28 (CCG3A)

MODEL: Sheet PAPERSIZE: 34x22 (in.) DATE: 3/28/2025 TIME: 10:09:54 AM USER: Asiddiqi
pw:\\mb-us-pw.bentley.com:mb-us-pw-03\Documents\Cleveland_OH\01_Projects\ODOT\District12\82382\400-Engineering\Geotechnical\Sheets\82382_ZL051.dgn

PROJECT: CUY-CCG3
TYPE: RETAINING WALL
PID: 82380 SFN:
START: 11/4/14 END: 11/6/14

DRILLING FIRM / OPERATOR: BARR / P.STROUD
SAMPLING FIRM / LOGGER: BARR / D.LYON
DRILLING METHOD: 3.25" HSA
SAMPLING METHOD: SPT

DRILL RIG: MOBILE B-58
HAMMER: MOBILE AUTOMATIC
CALIBRATION DATE: 1/26/14
ENERGY RATIO (%): 90*

STATION / OFFSET: 1184+46, 21' LT.
ALIGNMENT: RAMP H6
ELEVATION: 667.7 (MSL) EOB: 61.5 ft.
LAT / LONG: 41.494654, -81.677064

EXPLORATION ID B-116-0-14
PAGE 1 OF 2

MATERIAL DESCRIPTION AND NOTES	ELEV. 667.7	DEPTHS	SPT/ RQD	N_{60}	REC (%)	SAMPLE ID	HP (tsf)	GRADATION (%) GR	CS	FS	SI	CL	ATTERBERG LL	PL	PI	WC	ODOT CLASS (GI)	BACK FILL
6.0", **ASPHALT**	667.2																	
12.0", **CONCRETE**	666.2																	
MEDIUM DENSE TO DENSE, LIGHT BROWN, **GRAVEL WITH SAND**, TRACE SILT, TRACE CLAY, DAMP			9 10 12	33	100	SS-1	-	-	-	-	-	-	-	-	-	6	A-1-b (V)	
@5.0'; SS-2 BECOMES GRAYISH BROWN	660.7		8 9 9	27	100	SS-2	-	33	41	17	7	2	NP	NP	NP	4	A-1-b (0)	
MEDIUM DENSE TO DENSE, BROWN, **COARSE AND FINE SAND**, LITTLE GRAVEL, TRACE SILT, TRACE CLAY, DAMP			3 5 12	26	67	SS-3	-	-	-	-	-	-	-	-	-	3	A-3a (V)	
			4 7 17	36	100	SS-4	-	-	-	-	-	-	-	-	-	4	A-3a (V)	
	653.2		12 7 4	17	78	SS-5	-	-	-	-	-	-	-	-	-	9	A-3a (V)	
MEDIUM DENSE, GRAYISH BROWN, **FINE SAND**, TRACE SILT, TRACE CLAY, TRACE GRAVEL, TRACE COARSE SAND, WET	650.7	W 652.7	3 4 5	14	100	SS-6	-	1	1	89	5	4	NP	NP	NP	25	A-3 (0)	
DENSE, GRAYISH BROWN, **SANDY SILT**, LITTLE CLAY, TRACE GRAVEL, WET	648.2		2 6 15	32	100	SS-7	-	2	12	44	25	17	18	13	5	25	A-4a (1)	
MEDIUM DENSE TO DENSE, GRAYISH BROWN, **COARSE AND FINE SAND** LITTLE SILT, TRACE CLAY, TRACE GRAVEL, MOIST TO WET			8 12 13	38	100	SS-8	-	-	-	-	-	-	-	-	-	16	A-3a (V)	
			3 6 8	21	100	SS-9	-	-	-	-	-	-	-	-	-	19	A-3a (V)	
			5 6 11	26	100	SS-10	-	-	-	-	-	-	-	-	-	17	A-3a (V)	
	640.7																	
MEDIUM DENSE TO DENSE, GRAYISH BROWN, **SANDY SILT**, LITTLE CLAY, TRACE GRAVEL, WET			3 6 9	23	100	SS-11	-	-	-	-	-	-	-	-	-	24	A-4a (V)	
			5 6 10	24	100	SS-12	-	0	0	61	33	6	NP	NP	NP	25	A-4a (1)	
	629.4		7 8 14	33	100	SS-13	-	-	-	-	-	-	-	-	-	23	A-4a (V)	
VERY STIFF TO HARD, GRAY, **SILT**, SOME CLAY, TRACE SAND, TRACE GRAVEL, SS-14 CONTAINS FEW DECAYED ORGANICS, DAMP TO MOIST			6 6 8	21	100	SS-14	3.10	-	-	-	-	-	-	-	-	20	A-4b (V)	
			6 9 14	35	100	SS-15	4.50	0	0	6	71	23	27	19	8	19	A-4b (8)	
			9 15 18	50	100	SS-16	2.60	-	-	-	-	-	-	-	-	20	A-4b (V)	
			5 7 9	24	100	SS-17	3.50	0	0	1	66	33	28	19	9	20	A-4b (8)	

Preliminary Plans - For Reference Only

STANDARD ODOT SOIL BORING LOG (11 X 17) - OH DOT.GDT - 1/3/24 15:31 - X:\ACTIVE PROJECTS\ACTIVE SOIL PROJECTS\1ARCHIVE BY YEAR\2017 ARCHIVE\CUY-CCG3 82380\GINT FILES\CUY-CCG3 MASTER - LR UPDATED.GPJ

DESIGN AGENCY
2800 CORPORATE EXCHANGE DR. SUITE 240
COLUMBUS, OH. 43231
TEL:614.714.0299
WWW.NEASINC.COM

DESIGNER MWJ & DT
REVIEWER BPA 08/23/24
PROJECT ID 82382
SUBSET 165 TOTAL 310
SHEET P 2551 TOTAL 2696

GEOTECHNICAL PROFILE - ROADWAY
RAMP H6
BORING LOG B-116-0-14

MODEL: Sheet PAPERSIZE: 34x22 (in.) DATE: 3/28/2025 TIME: 10:10:17 AM USER: Asiddiqi
pw:\\mb-us-pw.bentley.com:mb-us-pw-03\Documents\Cleveland_OH\01_Projects\ODOT\District12\82382\400-Engineering\Geotechnical\Sheets\82382_ZL052.dgn

PID: 82380 | SFN: | PROJECT: CUY-CCG3 | STATION / OFFSET: 1184+46, 21' LT. | START: 11/4/14 | END: 11/6/14 | PG 2 OF 2 | B-116-0-14

MATERIAL DESCRIPTION AND NOTES	ELEV. 607.7	DEPTHS	SPT/ RQD	N_{60}	REC (%)	SAMPLE ID	HP (tsf)	GRADATION (%) GR	CS	FS	SI	CL	ATTERBERG LL	PL	PI	WC	ODOT CLASS (GI)	BACK FILL
	606.2	61 EOB	6 7 8	23	100	SS-18	4.50	-	-	-	-	-	-	-	-	19	A-4b (V)	

Preliminary Plans - For Reference Only

NOTES: GROUNDWATER ENCOUNTERED AT 15.0' DURING DRILLING. CAVE DEPTH 14.0'.
ABANDONMENT METHODS, MATERIALS, QUANTITIES: PLACED .5 BAG ASPHALT PATCH; SHOVELED SOIL CUTTINGS

STANDARD ODOT SOIL BORING LOG (11 X 17) - OH DOT.GDT - 1/3/24 15:31 - X:\ACTIVE PROJECTS\ACTIVE SOIL PROJECTS\1ARCHIVE BY YEAR\2017 ARCHIVE\CUY-CCG3 82380\GINT FILES\CUY-CCG3 MASTER - LR UPDATED.GPJ

DESIGN AGENCY
2800 CORPORATE EXCHANGE DR. SUITE 240
COLUMBUS, OH. 43231
TEL:614.714.0299
WWW.NEASINC.COM
DESIGNER MW,J & DT
REVIEWER BPA 08/23/24

PROJECT ID 82382
SUBSET 166 TOTAL 310
SHEET P 2552 TOTAL 2696

GEOTECHNICAL PROFILE - ROADWAY
RAMP H6
BORING LOG B-116-0-14 (CONTINUED)

MODEL: Sheet PAPERSIZE: 34x22 (in.) DATE: 3/28/2025 TIME: 10:10:33 AM USER: Asiddiqi
pw:\\mb-us-pw.bentley.com:mb-us-pw-03\Documents\Cleveland_OH\01_Projects\ODOT\District12\82382\400-Engineering\Geotechnical\Sheets\82382_ZL053.dgn

STANDARD ODOT SOIL BORING LOG (8.5 X 11) - OH DOT.GDT - 1/3/24 15:17 - X:\ACTIVE PROJECTS\ACTIVE SOIL PROJECTS\1ARCHIVE BY YEAR\2017 ARCHIVE\CUY-CCG3 82380\GINT FILES\CU

PROJECT: CUY-CCG3 | DRILLING FIRM / OPERATOR: BARR / P.STROUD | DRILL RIG: MOBILE B-58 | STATION / OFFSET: 1185+31, 28' LT. | EXPLORATION ID B-117-0-14
TYPE: RETAINING WALL | SAMPLING FIRM / LOGGER: BARR / C.PIERCE III | HAMMER: MOBILE AUTOMATIC | ALIGNMENT: RAMP H6
PID: 82380 SFN: | DRILLING METHOD: 3.25" HSA | CALIBRATION DATE: 1/26/14 | ELEVATION: 665.3 (MSL) EOB: 61.5 ft. | PAGE 1 OF 2
START: 11/19/14 END: 11/20/14 | SAMPLING METHOD: SPT / ST | ENERGY RATIO (%): 90* | LAT / LONG: 41.494885, -81.676959

MATERIAL DESCRIPTION AND NOTES	ELEV. 665.3	DEPTHS	SPT/RQD	N_{60}	REC (%)	SAMPLE ID	HP (tsf)	GRADATION (%) GR	CS	FS	SI	CL	ATTERBERG LL	PL	PI	WC	ODOT CLASS (GI)	BACK FILL
3.0", **TOPSOIL**	665.1																	
MEDIUM DENSE, BROWN, **COARSE AND FINE SAND**, LITTLE GRAVEL, TRACE SILT, TRACE CLAY, DAMP **(FILL)** @2.5'; SS-2 CHANGES TO BROWN AND DARK GRAY	660.8		2 4 6	15	56	SS-1	-	17	22	47	9	5	NP	NP	NP	10	A-3a (0)	
			4 6 11	26	100	SS-2	-	-	-	-	-	-	-	-	-	6	A-3a (V)	
MEDIUM DENSE TO DENSE, BROWN, **GRAVEL WITH SAND**, TRACE SILT, TRACE CLAY, DAMP TO MOIST		W 657.8	4 5 6	17	100	SS-3	-	37	50	7	4	2	NP	NP	NP	4	A-1-b (0)	
			8 12 13	38	100	SS-4	-	-	-	-	-	-	-	-	-	4	A-1-b (V)	
@10.0'; SS-5 BECOMES BROWN AND GRAY			6 6 9	23	100	SS-5	-	-	-	-	-	-	-	-	-	10	A-1-b (V)	
@12.5'; SS-6 BECOMES LOOSE	650.8		4 2 1	5	100	SS-6	-	-	-	-	-	-	-	-	-	11	A-1-b (V)	
DENSE, BROWN AND GRAY, **FINE SAND**, LITTLE COARSE SAND, LITTLE GRAVEL, TRACE SILT, TRACE CLAY, WET	648.3		5 8 12	30	100	SS-7	-	13	13	68	5	1	NP	NP	NP	17	A-3 (0)	
MEDIUM DENSE TO DENSE, GRAYISH BROWN, **COARSE AND FINE SAND**, LITTLE TO SOME SILT, TRACE TO LITTLE GRAVEL, TRACE CLAY, WET			4 5 6	17	100	SS-8	-	-	-	-	-	-	-	-	-	20	A-3a (V)	
			5 5 6	17	100	SS-9	-	-	-	-	-	-	-	-	-	16	A-3a (V)	
			6 7 13	30	100	SS-10	-	-	-	-	-	-	-	-	-	17	A-3a (V)	
	640.8																	
MEDIUM DENSE TO VERY DENSE, GRAYISH BROWN, **SANDY SILT**, TRACE CLAY, TRACE GRAVEL, WET			4 5 11	24	100	SS-11	-	-	-	-	-	-	-	-	-	24	A-4a (V)	
			12 15 18	50	100	SS-12	-	0	1	59	34	6	NP	NP	NP	20	A-4a (1)	

STANDARD ODOT SOIL BORING LOG (8.5 X 11) - OH DOT.GDT - 1/3/24 15:17 - X:\ACTIVE PROJECTS\ACTIVE SOIL PROJECTS\1ARCHIVE BY YEAR\2017 ARCHIVE\CUY-CCG3 82380\GINT FILES\CU

PID: 82380 | SFN: | PROJECT: CUY-CCG3 | STATION / OFFSET: 1185+31, 28' LT. | START: 11/19/14 | END: 11/20/14 | PG 2 OF 2 | B-117-0-14

MATERIAL DESCRIPTION AND NOTES	ELEV. 635.3	DEPTHS	SPT/RQD	N_{60}	REC (%)	SAMPLE ID	HP (tsf)	GRADATION (%) GR	CS	FS	SI	CL	ATTERBERG LL	PL	PI	WC	ODOT CLASS (GI)	BACK FILL
MEDIUM DENSE TO VERY DENSE, GRAYISH BROWN, **SANDY SILT**, TRACE CLAY, TRACE GRAVEL, WET *(continued)*	632.1		6 8 10	27	100	SS-13	-	-	-	-	-	-	-	-	-	28	A-4a (V)	
VERY STIFF TO HARD, GRAYISH BROWN, **SILT**, LITTLE CLAY, TRACE SAND, TRACE GRAVEL, MOIST			6 8 10	27	100	SS-14	2.20	-	-	-	-	-	-	-	-	20	A-4b (V)	
			7 8 10	27	100	SS-15	4.50	-	-	-	-	-	-	-	-	17	A-4b (V)	
	622.0																	
VERY STIFF TO HARD, GRAY, **SILT AND CLAY**, TRACE SAND, TRACE GRAVEL, MOIST					100	ST-16	2.50	0	0	0	59	41	31	19	12	23	A-6a (9)	
@46.7'; UNIT WEIGHT 130.1 PCF @ 23.1% MC			7 7 9	24	100	SS-17	4.50	-	-	-	-	-	-	-	-	21	A-6a (V)	
	612.0																	
VERY STIFF TO HARD, GRAY, **SILT**, SOME CLAY, TRACE SAND, TRACE GRAVEL, CONTAINS NO INTACT SOIL FOR HP READINGS, DAMP			4 6 9	23	100	SS-18	-	0	0	1	71	28	28	18	10	18	A-4b (8)	
	603.8	EOB	5 9 11	30	100	SS-19	-	-	-	-	-	-	-	-	-	17	A-4b (V)	

NOTES: GROUNDWATER ENCOUNTERED AT 7.5' DURING DRILLING. CAVE DEPTH 9.8'.
ABANDONMENT METHODS, MATERIALS, QUANTITIES: SHOVELED SOIL CUTTINGS

Preliminary Plans - For Reference Only

SHEET	TOTAL
P 2553	2696

SUBSET	TOTAL
167	310

PROJECT ID 82382

REVIEWER	
BPA	08/23/24

DESIGNER	
MW,J & DT	

DESIGN AGENCY
EAS
2800 CORPORATE EXCHANGE DR. SUITE 240 COLUMBUS, OH. 43231
TEL:614.714.0299
WWW.NEASINC.COM

GEOTECHNICAL PROFILE - ROADWAY
RAMP H6
BORING LOG B-117-0-14

MODEL: Sheet PAPERSIZE: 34x22 (in.) DATE: 3/28/2025 TIME: 10:10:52 AM USER: Asiddiqi
pw:\\mb-us-pw.bentley.com:mb-us-pw-03\Documents\Cleveland_OH\01_Projects\ODOT\District12\82382\400-Engineering\Geotechnical\Sheets\82382_ZL054.dgn

STANDARD ODOT SOIL BORING LOG (8.5 X 11) - OH DOT GDT - 6/22/22 14:15 - X:\ACTIVE PROJECTS\ACTIVE SOIL PROJECTS\1ARCHIVE BY YEAR\2017 ARCHIVE\CUY-CCG3 82380\GINT FILES

PROJECT: CUY-CCG3 | DRILLING FIRM / OPERATOR: BARR / P.STROUD | DRILL RIG: MOBILE B-58 | STATION / OFFSET: 1078+80, 53' LT. | EXPLORATION ID B-118-0-14
TYPE: RETAINING WALL | SAMPLING FIRM / LOGGER: BARR / D.KLIMKOWICZ | HAMMER: MOBILE AUTOMATIC | ALIGNMENT: INTERIM RAMP H5
PID: 82380 SFN: | DRILLING METHOD: 3.25" HSA | CALIBRATION DATE: 1/26/14 | ELEVATION: 691.8 (MSL) EOB: 61.5 ft. | PAGE 1 OF 2
START: 11/17/14 END: 11/17/14 | SAMPLING METHOD: SPT | ENERGY RATIO (%): 90* | LAT / LONG: 41.492970, -81.676930

MATERIAL DESCRIPTION AND NOTES	ELEV. 691.8	DEPTHS	SPT/ RQD	N_{60}	REC (%)	SAMPLE ID	HP (tsf)	GRADATION (%) GR	CS	FS	SI	CL	ATTERBERG LL	PL	PI	WC	ODOT CLASS (GI)	BACK FILL
MEDIUM DENSE, BROWN, **COARSE AND FINE SAND**, LITTLE SILT, TRACE GRAVEL, TRACE CLAY, DAMP **(FILL)**		1–2																
	688.6	3	6 8 12	30	94	SS-1A	-	-	-	-	-	-	-	-	-	7	A-3a (V)	
DENSE, BROWN, **SANDY SILT**, LITTLE CLAY, TRACE GRAVEL, DAMP **(FILL)**	687.3	4				SS-1B	-	-	-	-	-	-	-	-	-	14	A-4a (V)	
DENSE TO VERY DENSE, BROWN AND DARK GRAY, **COARSE AND FINE SAND**, LITTLE SILT, TRACE TO LITTLE GRAVEL, TRACE CLAY, SS-2 CONTAINS BRICK AND ASPHALT FRAGMENTS, DAMP TO MOIST **(FILL)**		5–6	12 28 31	89	100	SS-2	-	19	13	40	19	9	NP	NP	NP	9	A-3a (0)	
@7.5'; SS-3 TO SS-6 CHANGES TO BROWN, CONTAINS BRICK FRAGMENTS		7–8	9 15 22	56	100	SS-3	-	-	-	-	-	-	-	-	-	11	A-3a (V)	
		9–10	9 11 12	35	100	SS-4	-	-	-	-	-	-	-	-	-	8	A-3a (V)	
		12–13	18 11 12	35	100	SS-5	-	10	25	50	11	4	NP	NP	NP	7	A-3a (0)	
@15.0'; SS-6 CHANGES TO SOME GRAVEL		14–15	30 17 26	65	94	SS-6	-	-	-	-	-	-	-	-	-	7	A-3a (V)	
	674.8	16–17																
MEDIUM DENSE, ORANGISH BROWN, **COARSE AND FINE SAND**, LITTLE GRAVEL, LITTLE SILT, TRACE CLAY, DAMP		18	3 4 6	15	100	SS-7	-	-	-	-	-	-	-	-	-	9	A-3a (V)	
		20–21	4 3 6	14	89	SS-8	-	-	-	-	-	-	-	-	-	5	A-3a (V)	
	669.8	22																
MEDIUM DENSE, BROWN, **FINE SAND**, TRACE COARSE SAND, TRACE SILT, TRACE CLAY, TRACE GRAVEL, DRY TO DAMP		23–24	4 4 6	15	100	SS-9	-	-	-	-	-	-	-	-	-	5	A-3 (V)	
		25–26	5 4 5	14	100	SS-10	-	1	7	87	3	2	NP	NP	NP	5	A-3 (0)	
		28	4 4 5	14	94	SS-11	-	-	-	-	-	-	-	-	-	8	A-3 (V)	
	662.3	29																

Preliminary Plans - For Reference Only

STANDARD ODOT SOIL BORING LOG (8.5 X 11) - OH DOT GDT - 6/22/22 14:15 - X:\ACTIVE PROJECTS\ACTIVE SOIL PROJECTS\1ARCHIVE BY YEAR\2017 ARCHIVE\CUY-CCG3 82380\GINT FILES

PID: 82380 | SFN: | PROJECT: CUY-CCG3 | STATION / OFFSET: 1078+80, 53' LT. | START: 11/17/14 | END: 11/17/14 | PG 2 OF 2 | B-118-0-14

MATERIAL DESCRIPTION AND NOTES	ELEV. 661.8	DEPTHS	SPT/ RQD	N_{60}	REC (%)	SAMPLE ID	HP (tsf)	GRADATION (%) GR	CS	FS	SI	CL	ATTERBERG LL	PL	PI	WC	ODOT CLASS (GI)	BACK FILL
STIFF, BROWN, **SILT AND CLAY**, TRACE SAND, TRACE GRAVEL, MOIST *(continued)*		31	7 5 6	17	94	SS-12	1.25	0	0	2	67	31	33	20	13	27	A-6a (9)	
	658.5	32–33																
MEDIUM DENSE, BROWN, **COARSE AND FINE SAND**, SOME SILT, TRACE CLAY, TRACE GRAVEL, DAMP		35	5 5 7	18	100	SS-13	-	-	-	-	-	-	-	-	-	9	A-3a (V)	
		37–38																
@40.0'; SS-14 TO SS-16 BECOME DENSE, WET		40	8 14 12	39	100	SS-14	-	-	-	-	-	-	-	-	-	23	A-3a (V)	
		42–43																
W	646.8	45																
@45.0'; SS-15 AND SS-16 BECOME GRAY		46	7 12 14	39	94	SS-15	-	0	0	68	29	3	NP	NP	NP	22	A-3a (0)	
		48–49																
		50–51	7 12 14	39	100	SS-16	-	-	-	-	-	-	-	-	-	24	A-3a (V)	
	638.5	52–53																
DENSE, GRAY, **SANDY SILT**, TRACE CLAY, TRACE GRAVEL, WET		55–56	8 11 16	41	94	SS-17	-	0	1	56	35	8	NP	NP	NP	19	A-4a (2)	
		58–59																
		60–61	10 10 10	30	100	SS-18	-	-	-	-	-	-	-	-	-	21	A-4a (V)	
	630.3	EOB																

NOTES: GROUNDWATER ENCOUNTERED AT 45.0' DURING DRILLING. CAVE DEPTH 37.5'.
ABANDONMENT METHODS, MATERIALS, QUANTITIES: SHOVELED SOIL CUTTINGS

DESIGN AGENCY
EAS
2800 CORPORATE EXCHANGE DR. SUITE 240
COLUMBUS, OH. 43231
TEL:614.714.0299
WWW.NEASINC.COM

DESIGNER MWJ & DT | REVIEWER BPA 08/23/24 | PROJECT ID 82382 | SHEET 168 TOTAL 310 | P 2554 TOTAL 2696

GEOTECHNICAL PROFILE - ROADWAY
WALL T
BORING LOG B-118-0-14

MODEL: Sheet PAPERSIZE: 34x22 (in.) DATE: 3/28/2025 TIME: 10:11:13 AM USER: Asiddiqi
pw:\\mb-us-pw.bentley.com:mb-us-pw-03\Documents\Cleveland_OH\01_Projects\ODOT\District12\82382\400-Engineering\Geotechnical\Sheets\82382_ZL055.dgn

PROJECT: CUY-CCG3
TYPE: RETAINING WALL
PID: 82380 SFN:
START: 4/8/15 END: 4/8/15

DRILLING FIRM / OPERATOR: BARR / J.GILBERT
SAMPLING FIRM / LOGGER: BARR / S.PENCE
DRILLING METHOD: 3.25" HSA
SAMPLING METHOD: SPT

DRILL RIG: CME 55X
HAMMER: CME AUTOMATIC
CALIBRATION DATE: 1/26/14
ENERGY RATIO (%): 81.2

STATION / OFFSET: 1080+66, 51' LT.
ALIGNMENT: INTERIM RAMP H5
ELEVATION: 684.5 (MSL) EOB: 62.5 ft.
LAT / LONG: 41.493451, -81.677288

EXPLORATION ID B-119-0-14

MATERIAL DESCRIPTION AND NOTES	ELEV.	DEPTHS	SPT/ RQD	N_{60}	REC (%)	SAMPLE ID	HP (tsf)	GRADATION (%) GR	CS	FS	SI	CL	ATTERBERG LL	PL	PI	WC	ODOT CLASS (GI)	BACK FILL
STIFF TO VERY STIFF, BROWN, GRAY, AND GRAYISH BROWN, **SILTY CLAY**, SOME SAND, TRACE GRAVEL, CONTAINS MANY ROOTS, DAMP TO MOIST **(FILL)**	684.5		2 2 2	5	83	SS-1	2.00	-	-	-	-	-	-	-	-	18	A-6b (V)	
	680.0		2 5 4	12	100	SS-2	1.25	7	9	18	35	31	38	22	16	25	A-6b (9)	
VERY STIFF, GRAYISH BROWN, **SILT AND CLAY**, SOME SAND, TRACE GRAVEL, SS-3 CONTAINS BRICK FRAGMENTS, DAMP **(FILL)** @7.5'; SS-4 CONTAINS GLASS	674.7		3 6 8	19	100	SS-3	2.10	-	-	-	-	-	-	-	-	14	A-6a (V)	
			3 39 31	95	83	SS-4	2.20	-	-	-	-	-	-	-	-	15	A-6a (V)	
MEDIUM DENSE, BROWN, **FINE SAND**, TRACE COARSE SAND, TRACE SILT, TRACE CLAY, TRACE GRAVEL, DAMP			3 5 6	15	100	SS-5	-	-	-	-	-	-	-	-	-	10	A-3 (V)	
			4 5 6	15	100	SS-6	-	4	2	84	5	5	NP	NP	NP	10	A-3 (0)	
			3 4 5	12	100	SS-7	-	-	-	-	-	-	-	-	-	8	A-3 (V)	
			4 4 5	12	100	SS-8	-	-	-	-	-	-	-	-	-	8	A-3 (V)	
MEDIUM DENSE, GRAYISH BROWN, **COARSE AND FINE SAND**, LITTLE SILT, TRACE CLAY, DAMP	664.5		4 8 4	16	100	SS-9	-	-	-	-	-	-	-	-	-	8	A-3a (V)	
MEDIUM DENSE, BROWN, **SANDY SILT**, LITTLE CLAY, TRACE GRAVEL, WET	662.0		3 3 5	11	100	SS-10	-	0	6	31	43	20	20	15	5	19	A-4a (6)	
			3 4 12	22	100	SS-11	-	-	-	-	-	-	-	-	-	22	A-4a (V)	
MEDIUM DENSE, BROWN AND GRAY, **COARSE AND FINE SAND**, TRACE SILT, TRACE CLAY, TRACE GRAVEL, DAMP	657.0		4 8 13	28	100	SS-12	-	-	-	-	-	-	-	-	-	6	A-3a (V)	
			6 11 9	27	100	SS-13	-	1	6	82	8	3	NP	NP	NP	8	A-3a (0)	
MEDIUM DENSE, GRAY, **SANDY SILT**, LITTLE CLAY, TRACE GRAVEL, WET	650.7	W 649.0																
			4 5 6	15	100	SS-14	-	-	-	-	-	-	-	-	-	25	A-4a (V)	
DENSE, GRAY, **COARSE AND FINE SAND**, LITTLE SILT, TRACE CLAY, TRACE GRAVEL, WET	645.7		5 13 20	45	100	SS-15	-	-	-	-	-	-	-	-	-	17	A-3a (V)	
DENSE, GRAY, **SANDY SILT**, TRACE CLAY, TRACE GRAVEL, WET	640.7		8 12 15	37	100	SS-16	-	0	1	48	46	5	NP	NP	NP	20	A-4a (3)	
			7 10 16	35	100	SS-17	-	-	-	-	-	-	-	-	-	28	A-4a (V)	
			11 9 14	31	100	SS-18	-	-	-	-	-	-	-	-	-	24	A-4a (V)	
GRAY, **SILT**, SOME CLAY, TRACE SAND, TRACE GRAVEL, WET	625.7																	

Preliminary Plans - For Reference Only

STANDARD ODOT SOIL BORING LOG (11 X 17) - OH DOT.GDT - 6/22/22 18:06 - X:\ACTIVE PROJECTS\ACTIVE SOIL PROJECTS\1\ARCHIVE BY YEAR\2017 ARCHIVE\CUY-CCG3 82380\GINT FILES\CUY-CCG3 MASTER - LR UPDATED.GPJ

DESIGN AGENCY
2800 CORPORATE EXCHANGE DR. SUITE 240
COLUMBUS, OH. 43231
TEL:614.714.0299
WWW.NEASINC.COM

DESIGNER MWJ & DT
REVIEWER BPA 08/23/24
PROJECT ID 82382
SUBSET 169 TOTAL 310
SHEET P 2555 TOTAL 2696

GEOTECHNICAL PROFILE - ROADWAY
WALL T
BORING LOG B-119-0-14

MODEL: Sheet PAPERSIZE: 34x22 (in.) DATE: 3/28/2025 TIME: 10:11:36 AM USER: Asiddiqi
pw:\\mb-us-pw.bentley.com:mb-us-pw-03\Documents\Cleveland_OH\01_Projects\ODOT\District12\82382\400-Engineering\Geotechnical\Sheets\82382_ZL056.dgn

PID: 82380 | SFN: | PROJECT: CUY-CCG3 | STATION / OFFSET: 1080+66, 51' LT. | START: 4/8/15 | END: 4/8/15 | PG 2 OF 2 | B-119-0-14

MATERIAL DESCRIPTION AND NOTES	ELEV.	DEPTHS	SPT/ RQD	N_{60}	REC (%)	SAMPLE ID	HP (tsf)	GRADATION (%) GR	CS	FS	SI	CL	ATTERBERG LL	PL	PI	WC	ODOT CLASS (GI)	BACK FILL
GRAY, **SILT**, SOME CLAY, TRACE SAND, TRACE GRAVEL, WET *(continued)*	624.5	61																
@62.0'; UNIT WEIGHT: 125.3 PCF @ 27.3% MC	622.0	62 EOB			83	SS-19	1.50	0	1	9	59	31	27	18	9	27	A-4b (8)	

Preliminary Plans - For Reference Only

STANDARD ODOT SOIL BORING LOG (11 X 17) - OH DOT.GDT - 6/22/22 18:06 - X:\ACTIVE PROJECTS\ACTIVE SOIL PROJECTS\1ARCHIVE BY YEAR\2017 ARCHIVE\CUY-CCG3 82380\GINT FILES\CUY-CCG3 MASTER - LR UPDATED.GPJ

NOTES: GROUNDWATER ENCOUNTERED AT 35.5' DURING DRILLING. CAVE IN DEPTH 32.0'.
ABANDONMENT METHODS, MATERIALS, QUANTITIES: SHOVELED SOIL CUTTINGS

DESIGN AGENCY
EAS
2800 CORPORATE EXCHANGE DR. SUITE 240 COLUMBUS, OH. 43231
TEL:614.714.0299
WWW.AEASINC.COM
DESIGNER MW,J & DT
REVIEWER BPA 08/23/24

PROJECT ID 82382
SUBSET 170 TOTAL 310
SHEET P 2556 TOTAL 2696

GEOTECHNICAL PROFILE - ROADWAY
WALL T
BORING LOG B-119-0-14 (CONTINUED)

MODEL: Sheet PAPERSIZE: 34x22 (in.) DATE: 3/28/2025 TIME: 10:11:51 AM USER: Asiddiqi
pw:\\mb-us-pw.bentley.com:mb-us-pw-03\Documents\Cleveland_OH\01_Projects\ODOT\District12\82382\400-Engineering\Geotechnical\Sheets\82382_ZL057.dgn

PROJECT: CUY-CCG3	DRILLING FIRM / OPERATOR: BARR / T.GILBERT	DRILL RIG: CME 55	STATION / OFFSET: 49+47, 54' RT.	EXPLORATION ID B-120-0-14
TYPE: RETAINING WALL	SAMPLING FIRM / LOGGER: BARR / D.KLIMKOWICZ	HAMMER: CME AUTOMATIC	ALIGNMENT: NB E 14TH ST	
PID: 82380 SFN:	DRILLING METHOD: 3.25" HSA	CALIBRATION DATE: 1/26/14	ELEVATION: 670.8 (MSL) EOB: 61.5 ft.	PAGE 1 OF 2
START: 2/11/15 END: 2/11/15	SAMPLING METHOD: SPT / ST	ENERGY RATIO (%): 78.8	LAT / LONG: 41.493986, -81.677293	

MATERIAL DESCRIPTION AND NOTES	ELEV. 670.8	DEPTHS	SPT/ RQD	N_{60}	REC (%)	SAMPLE ID	HP (tsf)	GRADATION (%) GR	CS	FS	SI	CL	ATTERBERG LL	PL	PI	WC	ODOT CLASS (GI)	BACK FILL
6.0", **TOPSOIL**	670.3																	
VERY LOOSE TO MEDIUM DENSE, BROWN, **COARSE AND FINE SAND** TRACE TO SOME GRAVEL, LITTLE SILT, TRACE CLAY, SS-1 CONTAINS ROOTS, MOIST TO WET **(FILL)**			2 2 2	5	100	SS-1	-	21	18	41	11	9	NP	NP	NP	12	A-3a (0)	
			1 1 1	3	100	SS-2	-	10	13	58	11	8	NP	NP	NP	15	A-3a (0)	
			2 3 3	8	100	SS-3	-	-	-	-	-	-	-	-	-	13	A-3a (V)	
@7.5'; SS-4 AND SS-5 CHANGE TO DAMP			3 4 4	11	100	SS-4	-	-	-	-	-	-	-	-	-	9	A-3a (V)	
			2 3 3	8	100	SS-5	-	-	-	-	-	-	-	-	-	7	A-3a (V)	
@12.5'; SS-6 NO RECOVERY			2 1 1	3	0	SS-6	-	-	-	-	-	-	-	-	-	-		
	656.3																	
VERY STIFF, BROWN, **SILT AND CLAY**, TRACE SAND, TRACE GRAVEL, MOIST			1 2 3	7	100	SS-7	2.75	0	0	6	55	39	29	18	11	23	A-6a (8)	
	653.8																	
MEDIUM DENSE TO DENSE, BROWN, **COARSE AND FINE SAND**, SOME SILT, LITTLE CLAY, TRACE GRAVEL, MOIST TO WET			5 6 6	16	100	SS-8	-	-	-	-	-	-	-	-	-	11	A-3a (V)	
		W 650.8	5 6 9	20	100	SS-9	-	1	5	59	21	14	NP	NP	NP	23	A-3a (0)	
			6 8 10	24	100	SS-10	-	-	-	-	-	-	-	-	-	22	A-3a (V)	
			4 8 11	25	100	SS-11	-	-	-	-	-	-	-	-	-	26	A-3a (V)	
			6 8 10	24	100	SS-12	-	-	-	-	-	-	-	-	-	22	A-3a (V)	
			10 13 17	39	100	SS-13	-	-	-	-	-	-	-	-	-	22	A-3a (V)	
	637.5																	
DENSE, GRAY, **SILT**, "AND" SAND, TRACE CLAY, TRACE GRAVEL, WET			8 10 14	32	100	SS-14	-	0	0	40	52	8	NP	NP	NP	25	A-4b (5)	
	632.5																	
STIFF TO VERY STIFF, GRAY, **SILT**, SOME CLAY, LITTLE SAND, TRACE GRAVEL, WET			11 17 18	46	100	SS-15	2.10	-	-	-	-	-	-	-	-	24	A-4b (V)	
			3 4 5	12	100	SS-16	1.25	0	2	16	52	30	23	15	8	23	A-4b (8)	
	622.5																	
GRAY, **SILT**, LITTLE CLAY, TRACE SAND, TRACE GRAVEL, WET					100	ST-17	-	0	0	8	79	13	NP	NP	NP	19	A-4b (8)	
@51.2'; UNIT WEIGHT: 138.8 PCF @ 18.7% MC																		
	617.5																	
VERY STIFF TO HARD, GRAY, **SILT**, SOME CLAY, TRACE SAND, TRACE GRAVEL, MOIST TO WET			3 5 7	16	100	SS-18	2.75	-	-	-	-	-	-	-	-	25	A-4b (V)	

Preliminary Plans - For Reference Only

STANDARD ODOT SOIL BORING LOG (11 X 17) - OH DOT.GDT - 6/22/22 18:06 - X:\ACTIVE PROJECTS\ACTIVE SOIL PROJECTS\1ARCHIVE BY YEAR\2017 ARCHIVE\CUY-CCG3 82380\GINT FILES\CUY-CCG3 MASTER - LR UPDATED.GPJ

SHEET	TOTAL
P 2557	2696

SUBSET	TOTAL
171	310

PROJECT ID 82382

REVIEWER BPA 08/23/24

DESIGNER MWJ & DT

DESIGN AGENCY
2800 CORPORATE EXCHANGE DR. SUITE 240
COLUMBUS, OH. 43231
TEL:614.714.0299
WWW.NEASINC.COM

GEOTECHNICAL PROFILE - ROADWAY
WALL T
BORING LOG B-120-0-14

MODEL: Sheet PAPERSIZE: 34x22 (in.) DATE: 3/28/2025 TIME: 10:12:18 AM USER: Asiddiqi
pw:\\mb-us-pw.bentley.com:mb-us-pw-03\Documents\Cleveland_OH\01_Projects\ODOT\District12\82382\400-Engineering\Geotechnical\Sheets\82382_ZL058.dgn

PID: 82380 | SFN: | PROJECT: CUY-CCG3 | STATION / OFFSET: 49+47, 54' RT. | START: 2/11/15 | END: 2/11/15 | PG 2 OF 2 | B-120-0-14

MATERIAL DESCRIPTION AND NOTES	ELEV.	DEPTHS	SPT/ RQD	N_{60}	REC (%)	SAMPLE ID	HP (tsf)	GRADATION (%) GR	CS	FS	SI	CL	ATTERBERG LL	PL	PI	WC	ODOT CLASS (GI)	BACK FILL
VERY STIFF TO HARD, GRAY, **SILT**, SOME CLAY, TRACE SAND, TRACE GRAVEL, MOIST TO WET *(continued)*	609.3	EOB 61	5 7 10	22	100	SS-19	4.50	0	1	2	68	29	26	18	8	19	A-4b (8)	

Preliminary Plans - For Reference Only

NOTES: GROUNDWATER ENCOUNTERED AT 20' DURING DRILLING. CAVE DEPTH 18.6'.
ABANDONMENT METHODS, MATERIALS, QUANTITIES: PLACED 0.5 BAG ASPHALT PATCH; SHOVELED SOIL CUTTINGS

STANDARD ODOT SOIL BORING LOG (11 X 17) - OH DOT.GDT - 6/22/22 18:06 - X:\ACTIVE PROJECTS\ACTIVE SOIL PROJECTS\1ARCHIVE BY YEAR\2017 ARCHIVE\CUY-CCG3 82380\GINT FILES\CUY-CCG3 MASTER - LR UPDATED.GPJ

DESIGN AGENCY
EAS
2800 CORPORATE EXCHANGE DR. SUITE 240 COLUMBUS, OH. 43231
TEL:614.714.0299
WWW.NEASINC.COM

DESIGNER MW,J & DT
REVIEWER BPA 08/23/24
PROJECT ID 82382
SHEET 172 TOTAL 310
SHEET P 2558 TOTAL 2696

GEOTECHNICAL PROFILE - ROADWAY
WALL T
BORING LOG B-120-0-14 (CONTINUED)

MODEL: Sheet PAPERSIZE: 34x22 (in.) DATE: 3/28/2025 TIME: 10:12:33 AM USER: Asiddiqi
pw:\\mb-us-pw.bentley.com:mb-us-pw-03\Documents\Cleveland_OH\01_Projects\ODOT\District12\82382\400-Engineering\Geotechnical\Sheets\82382_ZL059.dgn

PROJECT: CUY-90-16.28 (CCG3A)
TYPE: RETAINING WALL
PID: 82382 SFN:
START: 5/18/21 END: 5/18/21

DRILLING FIRM / OPERATOR: NEAS / J. HODGES
SAMPLING FIRM / LOGGER: NEAS / J. HODGES
DRILLING METHOD: 3.25" HSA
SAMPLING METHOD: SPT

DRILL RIG: CME 75T
HAMMER: CME AUTOMATIC
CALIBRATION DATE: 5/1/19
ENERGY RATIO (%): 89

STATION / OFFSET: 984+18, 0' RT.
ALIGNMENT: RAMP H5
ELEVATION: 668.6 (MSL) EOB: 35.0 ft.
LAT / LONG: 41.494520, -81.677262

EXPLORATION ID B-120-1-20
PAGE 1 OF 1

MATERIAL DESCRIPTION AND NOTES	ELEV.	DEPTHS	SPT/ RQD	N_{60}	REC (%)	SAMPLE ID	HP (tsf)	GRADATION (%) GR	CS	FS	SI	CL	ATTERBERG LL	PL	PI	WC	ODOT CLASS (GI)	BACK FILL
LOOSE TO MEDIUM DENSE, BROWN, **FINE SAND**, TRACE TO LITTLE COARSE SAND, TRACE GRAVEL, TRACE SILT, TRACE CLAY, MOIST TO DAMP	668.6																	
@2.5'; SS-1 CONTAINS INTERBEDDED SILT SEAMS			6 4 5	13	100	SS-1	-	-	-	-	-	-	-	-	-	13	A-3 (V)	
			2 3 3	9	100	SS-2	-	10	14	66	8	2	NP	NP	NP	8	A-3 (0)	
			3 3 4	10	100	SS-3	-	-	-	-	-	-	-	-	-	6	A-3 (V)	
			6 8 10	27	100	SS-4	-	-	-	-	-	-	-	-	-	6	A-3 (V)	
			6 7 9	24	100	SS-5	-	0	2	92	5	1	NP	NP	NP	5	A-3 (0)	
	654.1																	
LOOSE TO MEDIUM DENSE, BROWN, **COARSE AND FINE SAND**, LITTLE TO SOME SILT, TRACE CLAY, TRACE GRAVEL, MOIST TO WET			3 4 5	13	100	SS-6	-	-	-	-	-	-	-	-	-	19	A-3a (V)	
			4 5 5	15	100	SS-7	-	-	-	-	-	-	-	-	-	28	A-3a (V)	
			2 2 3	7	100	SS-8	-	0	0	72	24	4	NP	NP	NP	25	A-3a (0)	
@22.5'; SS-9 CONTAINS INTERBEDDED SILT SEAMS			2 2 4	9	100	SS-9	-	-	-	-	-	-	-	-	-	31	A-3a (V)	
		W 643.6																
@25.0'; BECOMES GRAY			4 4 7	16	100	SS-10	-	-	-	-	-	-	-	-	-	27	A-3a (V)	
			4 7 10	25	100	SS-11	-	0	0	74	23	3	NP	NP	NP	24	A-3a (0)	
	633.6	EOB	5 7 11	27	100	SS-12	-	-	-	-	-	-	-	-	-	25	A-3a (V)	

NOTES: GROUNDWATER ENCOUNTERED AT 17.5' DURING DRILLING. HOLE DID NOT CAVE.
ABANDONMENT METHODS, MATERIALS, QUANTITIES: POURED 1 BAG HOLE PLUG; SHOVELED SOIL CUTTINGS

Preliminary Plans - For Reference Only

STANDARD ODOT SOIL BORING LOG (11 X 17) - OH DOT.GDT - 6/22/22 18:18 - X:\ACTIVE PROJECTS\ACTIVE SOIL PROJECTS\CUY-90-16.28 (CCG3A - MOD#7)\IGINT FILES\CUY-90-16.28 (CCG3A).GPJ

DESIGN AGENCY
NEAS
2800 CORPORATE EXCHANGE DR. SUITE 240
COLUMBUS, OH. 43231
TEL:614.714.0299
WWW.NEASINC.COM

DESIGNER MWJ & DT
REVIEWER BPA 08/23/24
PROJECT ID 82382
SUBSET 173 TOTAL 310
SHEET P 2559 TOTAL 2696

GEOTECHNICAL PROFILE - ROADWAY
WALL T
BORING LOG B-120-1-20

MODEL: Sheet PAPERSIZE: 34x22 (in.) DATE: 3/28/2025 TIME: 10:12:59 AM USER: Asiddiqi
pw:\\mb-us-pw.bentley.com:mb-us-pw-03\Documents\Cleveland_OH\01_Projects\ODOT\District12\82382\400-Engineering\Geotechnical\Sheets\82382_ZL060.dgn

PROJECT: CUY-90-16.28 (CCG3A)
TYPE: RETAINING WALL
PID: 82382 SFN:
START: 5/19/21 END: 5/19/21

DRILLING FIRM / OPERATOR: NEAS / J. HODGES
SAMPLING FIRM / LOGGER: NEAS / J. HODGES
DRILLING METHOD: 3.25" HSA
SAMPLING METHOD: SPT

DRILL RIG: CME 75T
HAMMER: CME AUTOMATIC
CALIBRATION DATE: 5/1/19
ENERGY RATIO (%): 89

STATION / OFFSET: 203+11, 3' LT.
ALIGNMENT: SB E 14TH ST INTERIM
ELEVATION: 678.9 (MSL) EOB: 30.5 ft.
LAT / LONG: 41.494953, -81.677411

EXPLORATION ID B-120-2-20

PAGE 1 OF 1

MATERIAL DESCRIPTION AND NOTES	ELEV.	DEPTHS	SPT/ RQD	N_{60}	REC (%)	SAMPLE ID	HP (tsf)	GRADATION (%) GR	CS	FS	SI	CL	ATTERBERG LL	PL	PI	WC	ODOT CLASS (GI)	BACK FILL
VERY DENSE TO MEDIUM DENSE, BROWN AND YELLOWISH BROWN, **COARSE AND FINE SAND** LITTLE TO SOME GRAVEL AND STONE FRAGMENTS, LITTLE SILT, TRACE TO LITTLE CLAY, CONTAINS RED BRICK FRAGMENTS, WET **(FILL)**	678.9		8 23 29	77	100	SS-1	-	16	12	55	12	5	NP	NP	NP	14	A-3a (0)	
			2 8 12	30	100	SS-2	-	22	13	37	17	11	NP	NP	NP	14	A-3a (0)	
LOOSE TO DENSE, BROWN, **COARSE AND FINE SAND** TRACE SILT, TRACE CLAY, TRACE GRAVEL, DAMP	671.9		4 10 11	31	100	SS-3	-	-	-	-	-	-	-	-	-	7	A-3a (V)	
			2 4 5	13	100	SS-4	-	-	-	-	-	-	-	-	-	6	A-3a (V)	
			4 3 4	10	100	SS-5	-	0	13	74	10	3	NP	NP	NP	8	A-3a (0)	
			4 5 6	16	100	SS-6	-	-	-	-	-	-	-	-	-	7	A-3a (V)	
			2 3 3	9	100	SS-7	-	-	-	-	-	-	-	-	-	8	A-3a (V)	
			2 4 8	18	100	SS-8	-	-	-	-	-	-	-	-	-	7	A-3a (V)	
MEDIUM DENSE, BROWNISH GRAY, **GRAVEL WITH SAND**, LITTLE SILT, TRACE CLAY, DAMP	656.9		3 10 10	30	100	SS-9	-	25	44	18	11	2	NP	NP	NP	5	A-1-b (0)	
MEDIUM DENSE TO DENSE, BROWNISH GRAY, **FINE SAND**, TRACE SILT, TRACE COARSE SAND, TRACE CLAY, TRACE GRAVEL, MOIST TO WET	654.4		8 12 12	36	100	SS-10	-	-	-	-	-	-	-	-	-	14	A-3 (V)	
		W 651.9	5 6 7	19	100	SS-11	-	0	4	86	8	2	NP	NP	NP	22	A-3 (0)	
	648.4	EOB	6 7 7	21	100	SS-12	-	-	-	-	-	-	-	-	-	26	A-3 (V)	

NOTES: GROUNDWATER ENCOUNTERED AT 27.0' DURING DRILLING. HOLE DID NOT CAVE.
ABANDONMENT METHODS, MATERIALS, QUANTITIES: POURED 1 BAG HOLE PLUG; SHOVELED SOIL CUTTINGS

Preliminary Plans - For Reference Only

STANDARD ODOT SOIL BORING LOG (11 X 17) - OH DOT.GDT - 1/3/24 14:16 - X:\ACTIVE PROJECTS\ACTIVE SOIL PROJECTS\1ARCHIVE BY YEAR\2022 ARCHIVE\CUY-90-16.28 (CCG3A - MOD#7)\GINT FILES\CUY-90-16.28 (CCG3A).GPJ

DESIGN AGENCY
NEAS
2800 CORPORATE EXCHANGE DR. SUITE 240
COLUMBUS, OH. 43231
TEL:614.714.0299
WWW.NEASINC.COM

DESIGNER MWJ & DT
REVIEWER BPA 08/23/24
PROJECT ID 82382
SHEET 174 TOTAL 310
P 2560 TOTAL 2696

GEOTECHNICAL PROFILE - ROADWAY
WALL T
BORING LOG B-120-2-20

MODEL: Sheet PAPERSIZE: 34x22 (in.) DATE: 3/28/2025 TIME: 10:13:25 AM USER: Asiddiqi
pw:\\mb-us-pw.bentley.com:mb-us-pw-03\Documents\Cleveland_OH\01_Projects\ODOT\District12\82382\400-Engineering\Geotechnical\Sheets\82382_ZL061.dgn

PROJECT: CUY-CCG3
TYPE: BRIDGE
PID: 82380 SFN:
START: 4/9/15 END: 4/10/15

DRILLING FIRM / OPERATOR: BARR / J.GILBERT
SAMPLING FIRM / LOGGER: BARR / S.PENCE
DRILLING METHOD: 3.25" HSA
SAMPLING METHOD: SPT / ST

DRILL RIG: CME 55X
HAMMER: CME AUTOMATIC
CALIBRATION DATE: 1/26/14
ENERGY RATIO (%): 81.2

STATION / OFFSET: 990+36, 22' LT.
ALIGNMENT: RAMP H5
ELEVATION: 676.0 (MSL) EOB: 112.0 ft.
LAT / LONG: 41.496213, -81.677011

EXPLORATION ID B-122-0-14

PAGE 1 OF 2

MATERIAL DESCRIPTION AND NOTES	ELEV. 676.0	DEPTHS	SPT/ RQD	N_{60}	REC (%)	SAMPLE ID	HP (tsf)	GRADATION (%) GR	CS	FS	SI	CL	ATTERBERG LL	PL	PI	WC	ODOT CLASS (GI)	BACK FILL
MEDIUM DENSE TO DENSE, DARK BROWN, **COARSE AND FINE SAND** LITTLE SILT, LITTLE GRAVEL, TRACE CLAY, DAMP **(FILL)**		1	1 5 8	18	100	SS-1	-	-	-	-	-	-	-	-	-	11	A-3a (V)	
		2																
		3	9 13 10	31	100	SS-2	-	14	15	43	20	8	NP	NP	NP	10	A-3a (0)	
	671.5	4																
MEDIUM DENSE, BROWN AND REDDISH BROWN, **GRAVEL WITH SAND** LITTLE SILT, TRACE CLAY, CONTAINS BRICK FRAGMENTS, DAMP **(FILL)**		5																
		6	8 7 5	16	100	SS-3	-	27	23	31	13	6	NP	NP	NP	10	A-1-b (0)	
	669.0	7																
LOOSE, GRAY, **SANDY SILT**, LITTLE CLAY, TRACE GRAVEL, WET		8	3 2 3	7	100	SS-4A	-	-	-	-	-	-	-	-	-	19	A-4a (V)	
	667.5					SS-4B	-	-	-	-	-	-	-	-	-	14	A-3a (V)	
LOOSE, BROWN, **COARSE AND FINE SAND** TRACE SILT, TRACE CLAY, TRACE GRAVEL, WET	666.5	9																
LOOSE TO MEDIUM DENSE, BROWN, **FINE SAND**, LITTLE COARSE SAND, TRACE SILT, TRACE GRAVEL, TRACE CLAY, DAMP		10																
		11	3 4 6	14	100	SS-5	-	-	-	-	-	-	-	-	-	9	A-3 (V)	
		12																
		13	4 3 6	12	100	SS-6	-	4	19	68	6	3	NP	NP	NP	7	A-3 (0)	
		14																
		15																
F.S.		16	3 4 2	8	100	SS-7	-	-	-	-	-	-	-	-	-	11	A-3 (V)	
		17																
		18	2 2 4	8	100	SS-8	-	-	-	-	-	-	-	-	-	6	A-3 (V)	
		19																
		20																
		21	4 5 7	16	100	SS-9	-	-	-	-	-	-	-	-	-	6	A-3 (V)	
	654.0	22																
SOFT TO MEDIUM STIFF, BROWN, **SANDY SILT**, SOME CLAY, TRACE GRAVEL, MOIST TO WET		23	2 3 4	9	83	SS-10	0.50	3	18	39	14	26	19	12	7	16	A-4a (1)	
		24																
		25																
		26	2 4 7	15	100	SS-11	0.90	-	-	-	-	-	-	-	-	23	A-4a (V)	
	649.0	27																
STIFF, BROWN, **SILT AND CLAY**, SOME SAND, LITTLE GRAVEL, MOIST		W 648.5																
		28	5 4 6	14	100	SS-12	1.50	19	22	9	22	28	32	18	14	22	A-6a (4)	
	646.5	29																
STIFF, GRAY, **SANDY SILT**, LITTLE CLAY, TRACE GRAVEL, WET		30																
		31	5 9 12	28	100	SS-13	1.30	-	-	-	-	-	-	-	-	21	A-4a (V)	
	642.7	32																
DENSE, GRAY, **COARSE AND FINE SAND** SOME SILT, TRACE CLAY, TRACE GRAVEL, MOIST TO WET		33																
		34																
		35																
		36	7 11 14	34	100	SS-14	-	0	1	73	23	3	NP	NP	NP	23	A-3a (0)	
		37																
		38																
		39																
		40																
		41	8 13 20	45	100	SS-15	-	-	-	-	-	-	-	-	-	18	A-3a (V)	
		42																
		43																
		44																
		45																
		46	7 15 22	50	100	SS-16	-	-	-	-	-	-	-	-	-	27	A-3a (V)	
	627.7	47																
MEDIUM DENSE, GRAY, **SANDY SILT**, LITTLE CLAY, TRACE GRAVEL, WET		48																
		49																
		50																
		51	8 7 14	28	100	SS-17	-	-	-	-	-	-	-	-	-	29	A-4a (V)	
	622.7	52																
MEDIUM STIFF TO HARD, GRAY, **SILT**, SOME CLAY, TRACE SAND, TRACE GRAVEL, (INTERBEDDED SILT AND CLAY), MOIST TO WET		53																
		54																
		55																
		56	4 7 10	23	100	SS-18	3.25	-	-	-	-	-	-	-	-	20	A-4b (V)	
		57																
		58																
		59																

Preliminary Plans - For Reference Only

STANDARD ODOT SOIL BORING LOG (11 X 17) - OH DOT.GDT - 6/22/22 18:06 - X:\ACTIVE PROJECTS\ACTIVE SOIL PROJECTS\1ARCHIVE BY YEAR\2017 ARCHIVE\CUY-CCG3 82380\GINT FILES\CUY-CCG3 MASTER - LR UPDATED.GPJ

DESIGN AGENCY
EAS
2800 CORPORATE EXCHANGE DR. SUITE 240
COLUMBUS, OH. 43231
TEL:614.714.0299
WWW.NEASINC.COM

DESIGNER MWJ & DT
REVIEWER BPA 08/23/24
PROJECT ID 82382
SHEET 175 SUBSET TOTAL 310
P 2561 TOTAL 2696

GEOTECHNICAL PROFILE - ROADWAY
BRIDGE NO. CUY-90-1652S OVER EAST 14TH STREET AND RAMP H5
BORING LOG B-122-0-14

MODEL: Sheet PAPERSIZE: 34x22 (in.) DATE: 3/28/2025 TIME: 10:13:50 AM USER: Asiddiqi
pw:\\mb-us-pw.bentley.com:mb-us-pw-03\Documents\Cleveland_OH\01_Projects\ODOT\District12\82382\400-Engineering\Geotechnical\Sheets\82382_ZL062.dgn

PID: 82380 | SFN: | PROJECT: CUY-CCG3 | STATION / OFFSET: 990+36, 22' LT. | START: 4/9/15 | END: 4/10/15 | PG 2 OF 2 | B-122-0-14

MATERIAL DESCRIPTION AND NOTES	ELEV.	DEPTHS	SPT/ RQD	N_{60}	REC (%)	SAMPLE ID	HP (tsf)	GRADATION (%) GR	CS	FS	SI	CL	ATTERBERG LL	PL	PI	WC	ODOT CLASS (GI)	BACK FILL
MEDIUM STIFF TO HARD, GRAY, **SILT**, SOME CLAY, TRACE SAND, TRACE GRAVEL, (INTERBEDDED SILT AND CLAY), MOIST TO WET *(continued)*	616.0	61	5 11 20	42	100	SS-19	4.25	-	-	-	-	-	-	-	-	20	A-4b (V)	
		66	4 6 10	22	100	SS-20	1.80	0	0	1	66	33	28	20	8	23	A-4b (8)	
		71	3 5 7	16	100	SS-21	2.20	-	-	-	-	-	-	-	-	21	A-4b (V)	
		76	3 5 6	15	100	SS-22	0.75	-	-	-	-	-	-	-	-	27	A-4b (V)	
		81	WOH WOH WOH	0	100	SS-23	1.25	-	-	-	-	-	-	-	-	27	A-4b (V)	
		86	4 8 12	27	100	SS-24	4.00	-	-	-	-	-	-	-	-	21	A-4b (V)	
	587.7																	
GRAY, **SILT**, LITTLE SAND, TRACE CLAY, TRACE GRAVEL, MOIST @91.5'; UNIT WEIGHT: 123.2 PCF @ 17.9% MC		91			81	SS-25	-	0	0	15	78	7	NP	NP	NP	17	A-4b (8)	
	582.2																	
STIFF TO VERY STIFF, GRAY, **SILT**, "AND" CLAY, TRACE SAND, TRACE GRAVEL, MOIST		96	6 7 10	23	100	SS-26	3.25	-	-	-	-	-	-	-	-	20	A-4b (V)	
		101	2 5 7	16	100	SS-27	1.50	0	0	0	59	41	27	19	8	23	A-4b (8)	
	572.7																	
MEDIUM STIFF TO STIFF, GRAY, **SILT AND CLAY**, TRACE SAND, TRACE GRAVEL, MOIST TO WET		106	WOH WOH 2	3	100	SS-28	2.00	-	-	-	-	-	-	-	-	29	A-6a (V)	
@111.5'; UNIT WEIGHT: 129.7 PCF @ 26.6% MC	564.0	111			94	SS-29	0.60	1	1	5	45	48	28	16	12	25	A-6a (9)	
		EOB																

NOTES: GROUNDWATER ENCOUNTERED AT 27.5' DURING DRILLING. CAVE DEPTH 27.5'.
ABANDONMENT METHODS, MATERIALS, QUANTITIES: SHOVELED SOIL CUTTINGS

Preliminary Plans - For Reference Only

STANDARD ODOT SOIL BORING LOG (11 X 17) - OH DOT.GDT - 6/22/22 18:06 - X:\ACTIVE PROJECTS\ACTIVE SOIL PROJECTS\1ARCHIVE BY YEAR\2017 ARCHIVE\CUY-CCG3 82380\GINT FILES\CUY-CCG3 MASTER - LR UPDATED.GPJ

DESIGN AGENCY
EAS
2800 CORPORATE EXCHANGE DR. SUITE 240
COLUMBUS, OH. 43231
TEL:614.714.0299
WWW.NEASINC.COM

DESIGNER MWJ & DT
REVIEWER BPA 08/23/24
PROJECT ID 82382
SUBSET 176 TOTAL 310
SHEET P 2562 TOTAL 2696

GEOTECHNICAL PROFILE - ROADWAY
BRIDGE NO. CUY-90-1652S OVER EAST 14TH STREET AND RAMP H5
BORING LOG B-122-0-14 (CONTINUED)

MODEL: Sheet PAPERSIZE: 34x22 (in.) DATE: 3/28/2025 TIME: 10:14:10 AM USER: Asiddiqi
pw:\\mb-us-pw.bentley.com:mb-us-pw-03\Documents\Cleveland_OH\01_Projects\ODOT\District12\82382\400-Engineering\Geotechnical\Sheets\82382_ZL063.dgn

STANDARD ODOT SOIL BORING LOG (8.5 X 11) - OH DOT.GDT - 6/22/22 14:16 - X:\ACTIVE PROJECTS\ACTIVE SOIL PROJECTS\1ARCHIVE BY YEAR\2017 ARCHIVE\CUY-CCG3 82380\GINT FILES

PROJECT: CUY-CCG3 | DRILLING FIRM / OPERATOR: BARR / T.GILBERT | DRILL RIG: CME 45B | STATION / OFFSET: 1077+89, 41' LT. | EXPLORATION ID B-123-0-14
TYPE: RETAINING WALL | SAMPLING FIRM / LOGGER: BARR / Z.JEWELL | HAMMER: CME AUTOMATIC | ALIGNMENT: INTERIM RAMP H5
PID: 82380 SFN: | DRILLING METHOD: 3.25" HSA | CALIBRATION DATE: 1/26/14 | ELEVATION: 693.6 (MSL) EOB: 61.5 ft. | PAGE 1 OF 2
START: 11/12/14 END: 11/12/14 | SAMPLING METHOD: SPT | ENERGY RATIO (%): 77.4 | LAT / LONG: 41.492796, -81.676651

MATERIAL DESCRIPTION AND NOTES	ELEV. 693.6	DEPTHS	SPT/ RQD	N_{60}	REC (%)	SAMPLE ID	HP (tsf)	GRADATION (%) GR	CS	FS	SI	CL	ATTERBERG LL	PL	PI	WC	ODOT CLASS (GI)	BACK FILL
6.0", **ASPHALT**	693.1																	
12.0", **CONCRETE**	692.1																	
8.0", **GRANULAR BASE**	691.4																	
VERY STIFF, BROWN AND DARK GRAY, **SILT AND CLAY**, SOME SAND, LITTLE GRAVEL, DAMP **(FILL)**	689.1		7 9 14	30	100	SS-1	3.10	17	7	16	32	28	32	18	14	15	A-6a (7)	
VERY DENSE, BROWN, **COARSE AND FINE SAND**, LITTLE TO SOME SILT, TRACE TO LITTLE GRAVEL, TRACE CLAY, CONTAINS FEW BRICK AND CONCRETE FRAGMENTS, DAMP **(FILL)**			19 32 21	68	100	SS-2	-	-	-	-	-	-	-	-	-	8	A-3a (V)	
			16 24 28	67	100	SS-3	-	9	8	54	21	8	NP	NP	NP	8	A-3a (0)	
			10 50/3"	-	100	SS-4	-	-	-	-	-	-	-	-	-	10	A-3a (V)	
@12.5'; SS-5 CHANGES TO DENSE, BROWN AND BLACK			5 13 16	37	94	SS-5	-	-	-	-	-	-	-	-	-	9	A-3a (V)	
@15.0'; SS-6 CHANGES TO MEDIUM DENSE, BROWN			9 11 10	27	100	SS-6	-	-	-	-	-	-	-	-	-	6	A-3a (V)	
@17.5'; SS-7 CHANGES TO LOOSE	674.1		4 5 3	10	67	SS-7	-	19	26	37	12	6	NP	NP	NP	10	A-3a (0)	
MEDIUM DENSE, BROWN, **GRAVEL WITH SAND**, TRACE TO LITTLE SILT, TRACE CLAY, CONTAINS FEW BRICK FRAGMENTS, DAMP **(FILL)**			5 5 5	13	78	SS-8	-	-	-	-	-	-	-	-	-	6	A-1-b (V)	
	669.1		7 5 10	19	28	SS-9	-	-	-	-	-	-	-	-	-	7	A-1-b (V)	
LOOSE TO MEDIUM DENSE, BROWN, **COARSE AND FINE SAND**, TRACE SILT, TRACE GRAVEL, TRACE CLAY, DAMP			5 8 10	23	100	SS-10	-	-	-	-	-	-	-	-	-	5	A-3a (V)	
			3 3 3	8	100	SS-11	-	-	-	-	-	-	-	-	-	7	A-3a (V)	

STANDARD ODOT SOIL BORING LOG (8.5 X 11) - OH DOT.GDT - 6/22/22 14:16 - X:\ACTIVE PROJECTS\ACTIVE SOIL PROJECTS\1ARCHIVE BY YEAR\2017 ARCHIVE\CUY-CCG3 82380\GINT FILES

PID: 82380 | SFN: | PROJECT: CUY-CCG3 | STATION / OFFSET: 1077+89, 41' LT. | START: 11/12/14 | END: 11/12/14 | PG 2 OF 2 | B-123-0-14

MATERIAL DESCRIPTION AND NOTES	ELEV. 663.6	DEPTHS	SPT/ RQD	N_{60}	REC (%)	SAMPLE ID	HP (tsf)	GRADATION (%) GR	CS	FS	SI	CL	ATTERBERG LL	PL	PI	WC	ODOT CLASS (GI)	BACK FILL
LOOSE TO MEDIUM DENSE, BROWN, **COARSE AND FINE SAND**, TRACE SILT, TRACE GRAVEL, TRACE CLAY, DAMP *(continued)* @30.0'; SS-12 CONTAINS 4.0" SILT AND CLAY SEAM			3 3 4	9	100	SS-12	-	-	-	-	-	-	-	-	-	7	A-3a (V)	
	655.1		8 9 12	27	89	SS-13	-	6	30	52	8	4	NP	NP	NP	5	A-3a (0)	
MEDIUM DENSE, BROWN MOTTLED WITH GRAY, **SILT**, "AND" SAND, TRACE CLAY, TRACE GRAVEL, WET			4 7 9	21	100	SS-14	-	0	3	37	50	10	NP	NP	NP	26	A-4b (5)	
	650.1																	
MEDIUM DENSE TO DENSE, GRAYISH BROWN, **COARSE AND FINE SAND**, SOME SILT, TRACE CLAY, TRACE GRAVEL, WET		W 648.6	6 8 11	25	100	SS-15	-	-	-	-	-	-	-	-	-	24	A-3a (V)	
			9 15 17	41	100	SS-16	-	-	-	-	-	-	-	-	-	21	A-3a (V)	
	640.1																	
MEDIUM DENSE TO DENSE, GRAYISH BROWN, **SILT**, LITTLE TO SOME SAND, TRACE CLAY, TRACE GRAVEL, WET			11 13 16	37	100	SS-17	-	0	0	40	54	6	NP	NP	NP	23	A-4b (5)	
			7 10 11	27	100	SS-18	-	-	-	-	-	-	-	-	-	22	A-4b (V)	
	632.1	EOB																

NOTES: GROUNDWATER ENCOUNTERED AT 45.0' DURING DRILLING. CAVE DEPTH 17.0'.
ABANDONMENT METHODS, MATERIALS, QUANTITIES: PLACED .5 BAG ASPHALT PATCH; SHOVELED SOIL CUTTINGS

Preliminary Plans - For Reference Only

SHEET	TOTAL
P 2563	2696

SUBSET	TOTAL
177	310

PROJECT ID: 82382
REVIEWER: BPA 08/23/24
DESIGNER: MW.J & DT

DESIGN AGENCY
EAS
2800 CORPORATE EXCHANGE DR. SUITE 240
COLUMBUS, OH. 43231
TEL:614.714.0299
WWW.NEASINC.COM

GEOTECHNICAL PROFILE - ROADWAY
WALL T
BORING LOG B-123-0-14

MODEL: Sheet PAPERSIZE: 34x22 (in.) DATE: 3/28/2025 TIME: 10:14:31 AM USER: Asiddiqi
pw:\\mb-us-pw.bentley.com:mb-us-pw-03\Documents\Cleveland_OH\01_Projects\ODOT\District12\82382\400-Engineering\Geotechnical\Sheets\82382_ZL064.dgn

PROJECT: CUY-CCG3
TYPE: BRIDGE
PID: 82380 SFN:
START: 12/4/14 END: 12/5/14

DRILLING FIRM / OPERATOR: BARR / D.SHOPE
SAMPLING FIRM / LOGGER: BARR / D.KLIMKOWICZ
DRILLING METHOD: 4.25" HSA
SAMPLING METHOD: SPT / ST

DRILL RIG: CME 55
HAMMER: CME AUTOMATIC
CALIBRATION DATE: 1/26/14
ENERGY RATIO (%): 78.8

STATION / OFFSET: 410+11, 40' RT.
ALIGNMENT: RAMP A2
ELEVATION: 697.1 (MSL) EOB: 111.5 ft.
LAT / LONG: 41.492784, -81.677435

EXPLORATION ID B-125-0-14

MATERIAL DESCRIPTION AND NOTES	ELEV. 697.1	DEPTHS	SPT/ RQD	N_{60}	REC (%)	SAMPLE ID	HP (tsf)	GRADATION (%) GR	CS	FS	SI	CL	ATTERBERG LL	PL	PI	WC	ODOT CLASS (GI)	BACK FILL
2.5", **ASPHALT**	696.9																	
12.0", **CONCRETE**	695.9																	
12.0", **GRANULAR BASE**	694.9																	
MEDIUM DENSE TO VERY DENSE, BROWN AND DARK GRAY, **COARSE AND FINE SAND** TRACE TO LITTLE SILT, TRACE CLAY, TRACE GRAVEL, DAMP TO MOIST **(FILL)**			12 25 26	67	100	SS-1	-	9	16	48	20	7	NP	NP	NP	8	A-3a (0)	
@5.0'; SS-2 CONTAINS CONCRETE AND BRICK FRAGMENTS			10 10 12	29	100	SS-2	-	-	-	-	-	-	-	-	-	10	A-3a (V)	
@7.0'; SS-3 CONTAINS CONCRETE, BRICK AND GLASS FRAGMENTS			15 16 29	59	100	SS-3	-	-	-	-	-	-	-	-	-	10	A-3a (V)	
@10.0'; SS-4 CONTAINS CONCRETE FRAGMENTS			16 18 24	55	100	SS-4	-	-	-	-	-	-	-	-	-	9	A-3a (V)	
@12.5'; SS-5 CONTAINS GLASS FRAGMENTS			14 24 26	66	100	SS-5	-	-	-	-	-	-	-	-	-	8	A-3a (V)	
@15.0'; SS-6 CONTAINS BRICK FRAGMENTS			13 25 50/3"	-	100	SS-6	-	-	-	-	-	-	-	-	-	8	A-3a (V)	
@17.5'; SS-7 CHANGES TO SOME GRAVEL, WET			15 15 18	43	100	SS-7	-	33	16	36	10	5	NP	NP	NP	16	A-3a (0)	
LOOSE TO MEDIUM DENSE, BROWN, **COARSE AND FINE SAND**, SOME SILT, LITTLE CLAY, TRACE GRAVEL, CONTAINS NO INTACT SOIL FOR HP READINGS, WET TO MOIST	677.6		8 9 13	29	100	SS-8	-	7	21	37	21	14	21	15	6	15	A-3a (0)	
			6 4 3	9	100	SS-9	-	-	-	-	-	-	-	-	-	9	A-3a (V)	
MEDIUM DENSE, BROWN, **FINE SAND**, TRACE COARSE SAND, TRACE SILT, TRACE CLAY, TRACE GRAVEL, DAMP	672.6		3 4 6	13	100	SS-10	-	1	7	87	3	2	NP	NP	NP	5	A-3 (0)	
F.S.			5 5 7	16	100	SS-11	-	-	-	-	-	-	-	-	-	6	A-3 (V)	
MEDIUM DENSE, BROWN, **COARSE AND FINE SAND** LITTLE SILT, TRACE TO LITTLE GRAVEL, TRACE CLAY, DAMP TO MOIST	667.6		4 5 9	18	100	SS-12	-	-	-	-	-	-	-	-	-	8	A-3a (V)	
			5 5 8	17	100	SS-13	-	-	-	-	-	-	-	-	-	15	A-3a (V)	
DENSE, BROWN, **FINE SAND**, TRACE COARSE SAND, TRACE SILT, TRACE CLAY, TRACE GRAVEL, DAMP TO WET	658.8	W 657.1																
@40.0'; SS-14 CONTAINS A 3.0" SEAM OF "SILT AND CLAY"			11 11 13	32	100	SS-14	-	-	-	-	-	-	-	-	-	7	A-3 (V)	
F.S.			10 15 17	42	100	SS-15	-	0	2	88	8	2	NP	NP	NP	22	A-3 (0)	
MEDIUM DENSE TO DENSE, GRAYISH BROWN, **COARSE AND FINE SAND** SOME SILT, TRACE CLAY, TRACE GRAVEL, WET	648.8	▼	5 11 17	37	100	SS-16	-	0	0	74	23	3	NP	NP	NP	23	A-3a (0)	
			7 14 17	41	100	SS-17	-	-	-	-	-	-	-	-	-	24	A-3a (V)	

Preliminary Plans - For Reference Only

STANDARD ODOT SOIL BORING LOG (11 X 17) - OH DOT.GDT - 1/3/24 15:32 - X:\ACTIVE PROJECTS\ACTIVE SOIL PROJECTS\1ARCHIVE BY YEAR\2017 ARCHIVE\CUY-CCG3 82380\GINT FILES\CUY-CCG3 MASTER - LR UPDATED.GPJ

DESIGN AGENCY
EAS
2800 CORPORATE EXCHANGE DR. SUITE 240
COLUMBUS, OH. 43231
TEL: 614.714.0299
WWW.NEASINC.COM

DESIGNER MWJ & DT
REVIEWER BPA 08/23/24
PROJECT ID 82382
SHEET 178 TOTAL 310
P 2564 TOTAL 2696

GEOTECHNICAL PROFILE - ROADWAY
WALL N
BORING LOG B-125-0-14

MODEL: Sheet PAPERSIZE: 34x22 (in.) DATE: 3/28/2025 TIME: 10:15:00 AM USER: Asiddiqi
pw:\\mb-us-pw.bentley.com:mb-us-pw-03\Documents\Cleveland_OH\01_Projects\ODOT\District12\82382\400-Engineering\Geotechnical\Sheets\82382_ZL065.dgn

PID: 82380 | SFN: | PROJECT: CUY-CCG3 | STATION / OFFSET: 410+11, 40' RT. | START: 12/4/14 | END: 12/5/14 | PG 2 OF 2 | B-125-0-14

MATERIAL DESCRIPTION AND NOTES	ELEV.	DEPTHS	SPT/ RQD	N_{60}	REC (%)	SAMPLE ID	HP (tsf)	GRADATION (%) GR	CS	FS	SI	CL	ATTERBERG LL	PL	PI	WC	ODOT CLASS (GI)	BACK FILL
MEDIUM DENSE TO DENSE, GRAYISH BROWN, **COARSE AND FINE SAND** SOME SILT, TRACE CLAY, TRACE GRAVEL, WET *(continued)*	637.1	61	5 7 10	22	100	SS-18	-	-	-	-	-	-	-	-	-	24		
	633.8	62–64																
DENSE, GRAYISH BROWN, **SANDY SILT**, LITTLE CLAY, TRACE GRAVEL, WET		65	8 10 16	34	100	SS-19	-	-	-	-	-	-	-	-	-	21	A-4a (V)	
	628.8	66–69																
STIFF TO HARD, GRAYISH BROWN, **SILT**, SOME TO "AND" CLAY, TRACE SAND, TRACE GRAVEL, DAMP TO MOIST		70	16 28 35	83	100	SS-20	4.00	-	-	-	-	-	-	-	-	17	A-4b (V)	
		71–74																
@76.7'; UNIT WEIGHT: 128.8 PCF @ 21.4% MC		75–77			100	ST-21	4.30	0	0	1	72	27	26	19	7	21	A-4b (8)	
		78–80																
		81	9 15 25	53	100	SS-22	4.00	-	-	-	-	-	-	-	-	20	A-4b (V)	
		82–85																
		86	6 7 12	25	100	SS-23	1.50	-	-	-	-	-	-	-	-	21	A-4b (V)	
		87–90																
@90.1'; UNIT WEIGHT: 130.4 PCF @ 24.1% MC		91			100	ST-24	2.00	0	0	1	61	38	29	19	10	24	A-4b (8)	
		92–95																
		96	5 11 14	33	100	SS-25	2.70	-	-	-	-	-	-	-	-	21	A-4b (V)	
		97–100																
		101	11 17 22	51	100	SS-26	4.00	-	-	-	-	-	-	-	-	20	A-4b (V)	
		102–105																
@106.6'; UNIT WEIGHT: 133.9 PCF @ 18.7% MC		106			100	ST-27	3.25	0	0	0	74	26	26	19	7	19	A-4b (8)	
		107–110																
	585.6	111 EOB	8 13 17	39	100	SS-28	4.20	-	-	-	-	-	-	-	-	19	A-4b (V)	

NOTES: GROUNDWATER ENCOUNTERED AT 40.0' DURING DRILLING, 50.0' UPON COMPLETION. CAVE DEPTH 45.5'.
ABANDONMENT METHODS, MATERIALS, QUANTITIES: PLACED .5 BAG ASPHALT PATCH; SHOVELED SOIL CUTTINGS

Preliminary Plans - For Reference Only

STANDARD ODOT SOIL BORING LOG (11 X 17) - OH DOT.GDT - 1/3/24 15:32 - X:\ACTIVE PROJECTS\ACTIVE SOIL PROJECTS\1ARCHIVE BY YEAR\2017 ARCHIVE\CUY-CCG3 82380\GINT FILES\CUY-CCG3 MASTER - LR UPDATED.GPJ

GEOTECHNICAL PROFILE - ROADWAY
WALL N
BORING LOG B-125-0-14 (CONTINUED)

MODEL: Sheet PAPERSIZE: 34x22 (in.) DATE: 3/28/2025 TIME: 10:15:21 AM USER: Asiddiqi
pw:\\mb-us-pw.bentley.com:mb-us-pw-03\Documents\Cleveland_OH\01_Projects\ODOT\District12\82382\400-Engineering\Geotechnical\Sheets\82382_ZL066.dgn

PROJECT: CUY-CCG3
TYPE: BRIDGE
PID: 82380 SFN:
START: 11/12/14 END: 11/14/14

DRILLING FIRM / OPERATOR: BARR / JO.GILBERT
SAMPLING FIRM / LOGGER: BARR / Z.JEWELL
DRILLING METHOD: 3.25" HSA
SAMPLING METHOD: SPT / ST

DRILL RIG: CME 550X
HAMMER: CME AUTOMATIC
CALIBRATION DATE: 1/26/14
ENERGY RATIO (%): 85.3

STATION / OFFSET: 197+41, 84' LT.
ALIGNMENT: SB E 14TH ST INTERIM
ELEVATION: 690.7 (MSL) EOB: 111.5 ft.
LAT / LONG: 41.493460, -81.678057

EXPLORATION ID B-126-0-14

MATERIAL DESCRIPTION AND NOTES	ELEV.	DEPTHS	SPT/RQD	N_{60}	REC (%)	SAMPLE ID	HP (tsf)	GRADATION (%) GR	CS	FS	SI	CL	ATTERBERG LL	PL	PI	WC	ODOT CLASS (GI)	BACK FILL
4.0", **TOPSOIL**	690.4																	
VERY LOOSE, BROWN, **COARSE AND FINE SAND** LITTLE SILT, TRACE GRAVEL, TRACE CLAY, SS-1 CONTAINS FEW ROOTS, MOIST **(FILL)**			2 1 1	3	83	SS-1	-	8	12	54	19	7	NP	NP	NP	11	A-3a (0)	
@2.5'; SS-2 CHANGES TO LOOSE			2 2 2	6	89	SS-2	-	-	-	-	-	-	-	-	-	11	A-3a (V)	
@5.0'; SS-3 CHANGES TO MEDIUM DENSE, BROWN AND DARK GRAY			4 6 6	17	67	SS-3	-	-	-	-	-	-	-	-	-	11	A-3a (V)	
@7.5'; SS-4 TO SS-7 CHANGES TO DENSE TO VERY DENSE, BROWN			11 11 18	41	100	SS-4	-	-	-	-	-	-	-	-	-	8	A-3a (V)	
			8 12 14	37	100	SS-5	-	6	12	66	11	5	NP	NP	NP	11	A-3a (0)	
@12.5'; SS-6 CONTAINS BRICK FRAGMENTS			10 17 17	48	100	SS-6	-	-	-	-	-	-	-	-	-	10	A-3a (V)	
@15.0'; SS-7 CHANGES TO BROWN AND BLACK			12 17 20	53	100	SS-7	-	-	-	-	-	-	-	-	-	11	A-3a (V)	
	673.7																	
DENSE, BROWN, **COARSE AND FINE SAND** LITTLE GRAVEL, LITTLE SILT, TRACE CLAY, DAMP			10 11 18	41	61	SS-8	-	-	-	-	-	-	-	-	-	8	A-3a (V)	
	671.2																	
VERY LOOSE TO LOOSE, BROWN, **FINE SAND**, TRACE COARSE SAND, TRACE SILT, TRACE GRAVEL, TRACE CLAY, MOIST			3 3 3	9	78	SS-9	-	7	8	74	7	4	NP	NP	NP	8	A-3 (V)	
F.S.			2 3 4	10	61	SS-10	-	-	-	-	-	-	-	-	-	9	A-3 (V)	
			2 2 1	4	67	SS-11	-	-	-	-	-	-	-	-	-	9	A-3 (V)	
	663.7																	
STIFF TO VERY STIFF, BROWN, **SANDY SILT**, LITTLE CLAY, TRACE GRAVEL, WET			2 3 2	7	67	SS-12	2.00	2	4	26	48	20	25	17	8	23	A-4a (7)	
			2 4 5	13	89	SS-13	2.00	-	-	-	-	-	-	-	-	27	A-4a (V)	
	657.4																	
MEDIUM DENSE TO DENSE, BROWN TO GRAYISH BROWN, **COARSE AND FINE SAND** TRACE SILT, TRACE CLAY, TRACE GRAVEL, WET			4 4 5	13	67	SS-14	-	-	-	-	-	-	-	-	-	18	A-3a (V)	
		W 650.7																
			4 7 9	23	100	SS-15	-	0	15	79	4	2	NP	NP	NP	22	A-3a (V)	
			9 11 12	33	100	SS-16	-	-	-	-	-	-	-	-	-	29	A-3a (V)	
			7 10 11	30	100	SS-17	-	-	-	-	-	-	-	-	-	25	A-3a (V)	
	637.4																	
DENSE, GRAYISH BROWN, **SILT**, LITTLE TO SOME CLAY, TRACE SAND, TRACE GRAVEL, WET			7 13 15	40	100	SS-18	-	-	-	-	-	-	-	-	-	29	A-4b (V)	

Preliminary Plans - For Reference Only

STANDARD ODOT SOIL BORING LOG (11 X 17) - OH DOT.GDT - 1/3/24 15:32 - X:\ACTIVE PROJECTS\ACTIVE SOIL PROJECTS\1ARCHIVE BY YEAR\2017 ARCHIVE\CUY-CCG3 82380\GINT FILES\CUY-CCG3 MASTER - LR UPDATED.GPJ

DESIGN AGENCY
EAS
2800 CORPORATE EXCHANGE DR. SUITE 240
COLUMBUS, OH. 43231
TEL:614.714.0299
WWW.NEASINC.COM

DESIGNER MWJ & DT
REVIEWER BPA 08/23/24
PROJECT ID 82382
SUBSET 180 TOTAL 310
SHEET P 2566 TOTAL 2696

GEOTECHNICAL PROFILE - ROADWAY
EAST 14TH STREET INTERIM SB
BORING LOG B-126-0-14

PID: 82380 | SFN: | PROJECT: CUY-CCG3 | STATION / OFFSET: 197+41, 84' LT. | START: 11/12/14 | END: 11/14/14 | PG 2 OF 2 | B-126-0-14

MATERIAL DESCRIPTION AND NOTES	ELEV. 630.7	DEPTHS	SPT/ RQD	N_{60}	REC (%)	SAMPLE ID	HP (tsf)	GRADATION (%) GR	CS	FS	SI	CL	ATTERBERG LL	PL	PI	WC	ODOT CLASS (GI)	BACK FILL
DENSE, GRAYISH BROWN, **SILT**, LITTLE TO SOME CLAY, TRACE SAND, TRACE GRAVEL, WET *(continued)*	626.9	61	6 12 10	31	100	SS-19	-	0	0	8	81	11	NP	NP	NP	22	A-4b (8)	
VERY STIFF TO HARD, GRAYISH BROWN, **SILT**, SOME CLAY, TRACE SAND, TRACE GRAVEL, DAMP TO MOIST	607.4	66	8 15 19	48	100	SS-20	4.50	-	-	-	-	-	-	-	-	18	A-4b (V)	
		71	15 16 17	47	100	SS-21	4.00	-	-	-	-	-	-	-	-	21	A-4b (V)	
		76	11 19 26	64	100	SS-22	4.50	-	-	-	-	-	-	-	-	17	A-4b (V)	
		81	6 13 18	44	100	SS-23	4.50	0	0	4	72	24	28	20	8	19	A-4b (8)	
MEDIUM STIFF TO VERY STIFF, GRAYISH BROWN, **SILT AND CLAY**, TRACE SAND, TRACE GRAVEL, MOIST TO WET @86.5'; UNIT WEIGHT: 132.0 PCF @ 26.8% MC	597.4	86	2 3 3	9	100	SS-24	1.00	-	-	-	-	-	-	-	-	25	A-6a (V)	
		88			100	ST-25	2.00	0	0	3	61	36	28	17	11	27	A-6a (8)	
		91	5 4 5	13	100	SS-26	3.00	-	-	-	-	-	-	-	-	24	A-6a (V)	
STIFF TO HARD, GRAYISH BROWN, **SILT**, TRACE CLAY, TRACE SAND, TRACE GRAVEL, DAMP TO MOIST	579.2	96	6 9 18	38	100	SS-27	4.50	-	-	-	-	-	-	-	-	19	A-4b (V)	
		101	8 10 16	37	100	SS-28	4.00	-	-	-	-	-	-	-	-	21	A-4b (V)	
		106	6 8 10	26	100	SS-29	1.25	0	0	0	62	38	29	19	10	23	A-4b (8)	
		111	5 10 6	23	100	SS-30	3.75	-	-	-	-	-	-	-	-	24	A-4b (V)	

EOB

NOTES: GROUNDWATER ENCOUNTERED AT 40.0' DURING DRILLING. CAVE DEPTH 26.0'.
ABANDONMENT METHODS, MATERIALS, QUANTITIES: SHOVELED SOIL CUTTINGS

Preliminary Plans - For Reference Only

STANDARD ODOT SOIL BORING LOG (11 X 17) - OH DOT.GDT - 1/3/24 15:32 - X:\ACTIVE PROJECTS\ACTIVE SOIL PROJECTS\1ARCHIVE BY YEAR\2017 ARCHIVE\CUY-CCG3 82380\GINT FILES\CUY-CCG3 MASTER - LR UPDATED.GPJ

DESIGN AGENCY
REAS
2800 CORPORATE EXCHANGE DR. SUITE 240 COLUMBUS, OH. 43231 TEL:614.714.0299 WWW.NEASINC.COM

DESIGNER MWJ & DT
REVIEWER BPA 08/23/24
PROJECT ID 82382
SUBSET 181 TOTAL 310
SHEET P.2567 TOTAL 2696

GEOTECHNICAL PROFILE - ROADWAY
EAST 14TH STREET INTERIM SB
BORING LOG B-126-0-14 (CONTINUED)

MODEL: Sheet PAPERSIZE: 34x22 (in.) DATE: 3/28/2025 TIME: 10:16:08 AM USER: Asiddiqi
pw:\\mb-us-pw.bentley.com:mb-us-pw-03\Documents\Cleveland_OH\01_Projects\ODOT\District12\82382\400-Engineering\Geotechnical\Sheets\82382_ZL068.dgn

STANDARD ODOT SOIL BORING LOG (8.5 X 11) - OH DOT.GDT - 1/3/24 15:18 - X:\ACTIVE PROJECTS\ACTIVE SOIL PROJECTS\1ARCHIVE BY YEAR\2017 ARCHIVE\CUY-CCG3 82380\GINT FILES\CU

PROJECT: CUY-CCG3 | DRILLING FIRM / OPERATOR: BARR / JO.GILBERT | DRILL RIG: CME 55X | STATION / OFFSET: 199+84, 120' LT. | EXPLORATION ID B-128-0-14
TYPE: RETAINING WALL | SAMPLING FIRM / LOGGER: BARR / S.PENCE | HAMMER: CME AUTOMATIC | ALIGNMENT: SB E 14TH ST INTERIM
PID: 82380 SFN: | DRILLING METHOD: 3.25" HSA | CALIBRATION DATE: 1/26/14 | ELEVATION: 675.4 (MSL) EOB: 61.5 ft. | PAGE 1 OF 2
START: 11/19/14 END: 11/19/14 | SAMPLING METHOD: SPT / ST | ENERGY RATIO (%): 81.2 | LAT / LONG: 41.494133, -81.678006

MATERIAL DESCRIPTION AND NOTES	ELEV.	DEPTHS	SPT/ RQD	N_{60}	REC (%)	SAMPLE ID	HP (tsf)	GRADATION (%) GR	CS	FS	SI	CL	ATTERBERG LL	PL	PI	WC	ODOT CLASS (GI)	BACK FILL
LOOSE, BROWN AND DARK GRAY, **COARSE AND FINE SAND**, LITTLE GRAVEL, LITTLE SILT, TRACE CLAY, MOIST **(FILL)**	675.4	1	3 3 4	9	67	SS-1	-	-	-	-	-	-	-	-	-	10	A-3a (V)	
	673.4	2																
LOOSE TO MEDIUM DENSE, BROWN, **COARSE AND FINE SAND**, TRACE GRAVEL, TRACE SILT, TRACE CLAY, MOIST		3	2 5 4	12	67	SS-2	-	-	-	-	-	-	-	-	-	10	A-3a (V)	
		4																
		5	4 4 4	11	100	SS-3	-	10	21	54	10	5	NP	NP	NP	11	A-3a (0)	
@7.5'; SS-4 TO SS-5 (INTERBEDDED WITH SILT)		6																
		7	5 5 7	16	100	SS-4	-	-	-	-	-	-	-	-	-	15	A-3a (V)	
		8																
		9																
		10	3 3 3	8	100	SS-5	-	-	-	-	-	-	-	-	-	18	A-3a (V)	
	663.4	11																
STIFF, BROWN, **SILT**, SOME CLAY, TRACE SAND, TRACE GRAVEL, CONTAINS NO INTACT SOIL FOR HP READINGS, MOIST TO WET		12																
		13	3 4 6	14	100	SS-6	-	1	0	6	60	33	27	17	10	24	A-4b (8)	
	660.0	14																
MEDIUM DENSE TO DENSE, BROWN, **COARSE AND FINE SAND**, TRACE SILT, TRACE GRAVEL, TRACE CLAY, DAMP TO WET		15				SS-7A	-	-	-	-	-	-	-	-	-	28	A-4b (V)	
		16	5 5 4	12	100	SS-7B	-	-	-	-	-	-	-	-	-	17	A-3a (V)	
		17																
		18	6 5 8	18	100	SS-8	-	-	-	-	-	-	-	-	-	12	A-3a (V)	
		19																
		20	4 7 9	22	100	SS-9	-	-	-	-	-	-	-	-	-	7	A-3a (V)	
		21																
		22																
	W 651.4	23	8 9 12	28	100	SS-10	-	4	35	49	9	3	NP	NP	NP	19	A-3a (0)	
@25.0'; SS-11 TO SS-12 BECOME GRAYISH BROWN		24																
		25																
		26	6 4 15	26	100	SS-11	-	-	-	-	-	-	-	-	-	22	A-3a (V)	
@27.5'; SS-12 CONTAINS 1" SEAM OF SANDY SILT		27																
		28	7 11 15	35	100	SS-12	-	-	-	-	-	-	-	-	-	21	A-3a (V)	
		29																

STANDARD ODOT SOIL BORING LOG (8.5 X 11) - OH DOT.GDT - 6/22/22 14:17 - X:\ACTIVE PROJECTS\ACTIVE SOIL PROJECTS\1ARCHIVE BY YEAR\2017 ARCHIVE\CUY-CCG3 82380\GINT FILES

PID: 82380 | SFN: | PROJECT: CUY-CCG3 | STATION / OFFSET: 199+84, 120' LT. | START: 11/19/14 | END: 11/19/14 | PG 2 OF 2 | B-128-0-14

MATERIAL DESCRIPTION AND NOTES	ELEV.	DEPTHS	SPT/ RQD	N_{60}	REC (%)	SAMPLE ID	HP (tsf)	GRADATION (%) GR	CS	FS	SI	CL	ATTERBERG LL	PL	PI	WC	ODOT CLASS (GI)	BACK FILL
MEDIUM DENSE TO DENSE, BROWN, **COARSE AND FINE SAND**, TRACE SILT, TRACE GRAVEL, TRACE CLAY, DAMP TO WET *(continued)*	645.4	31	7 12 15	37	100	SS-13	-	-	-	-	-	-	-	-	-	22	A-3a (V)	
	642.1	32																
MEDIUM DENSE, GRAY, **SANDY SILT**, TRACE CLAY, TRACE GRAVEL, WET		33																
		34																
		35																
		36	6 10 10	27	100	SS-14	-	1	0	47	46	6	NP	NP	NP	25	A-4a (3)	
	637.1	37																
MEDIUM DENSE, GRAY, **SILT**, LITTLE CLAY, TRACE SAND, TRACE GRAVEL, INTERBEDDED, WET		38																
		39																
		40																
		41	3 4 7	15	100	SS-15	-	0	0	8	74	18	NP	NP	NP	21	A-4b (8)	
		42																
		43																
		44																
@45.0'; SS-16 BECOMES GRAYISH BROWN		45																
		46	12 9 6	20	100	SS-16	-	-	-	-	-	-	-	-	-	24	A-4b (V)	
	627.1	47																
VERY STIFF, GRAYISH BROWN, **SILT AND CLAY**, TRACE SAND, TRACE GRAVEL, CONTAINS NO INTACT SOIL FOR HP READINGS, WET		48																
		49																
		50																
		51	6 9 11	27	100	SS-17	-	-	-	-	-	-	-	-	-	28	A-6a (V)	
	622.1	52																
MEDIUM DENSE, GRAYISH BROWN, **SILT**, LITTLE CLAY, LITTLE SAND, TRACE GRAVEL, WET		53																
		54																
		55																
		56	4 5 6	15	100	SS-18	-	-	-	-	-	-	-	-	-	24	A-4b (V)	
		57			79	ST-19	-	0	0	12	75	13	NP	NP	NP	18	A-4b (8)	
@58.0'; UNIT WEIGHT: 136.5 PCF @ 18.1% MC		58																
		59																
		60																
	613.9	61	6 7 10	23	100	SS-20	1.30	-	-	-	-	-	-	-	-	23	A-4b (V)	
		EOB																

NOTES: GROUNDWATER ENCOUNTERED AT 24.0' DURING DRILLING. CAVE DEPTH 22.5'.
ABANDONMENT METHODS, MATERIALS, QUANTITIES: SHOVELED SOIL CUTTINGS

Preliminary Plans - For Reference Only

SHEET	TOTAL
P 2568	2696

SUBSET	TOTAL
182	310

PROJECT ID 82382

REVIEWER BPA 08/23/24

DESIGNER MW.J & DT

DESIGN AGENCY
EAS
2800 CORPORATE EXCHANGE DR. SUITE 240
COLUMBUS, OH. 43231
TEL:614.714.0299
WWW.NEASINC.COM

GEOTECHNICAL PROFILE - ROADWAY
EAST 14TH STREET SB
BORING LOG B-128-0-14

MODEL: Sheet PAPERSIZE: 34x22 (in.) DATE: 3/28/2025 TIME: 10:16:28 AM USER: Asiddiqi
pw:\\mb-us-pw.bentley.com:mb-us-pw-03\Documents\Cleveland_OH\01_Projects\ODOT\District12\82382\400-Engineering\Geotechnical\Sheets\82382_ZL069.dgn

STANDARD ODOT SOIL BORING LOG (8.5 X 11) - OH DOT.GDT - 1/3/24 14:08 - X:\ACTIVE PROJECTS\ACTIVE SOIL PROJECTS\1ARCHIVE BY YEAR\2022 ARCHIVE\CUY-90-16.28 (CCG3A - MOD#;

PROJECT: CUY-90-16.28 (CCG3A)	DRILLING FIRM / OPERATOR: NEAS / J. HODGES	DRILL RIG: CME 75T	STATION / OFFSET: 30+52, 52' LT.	EXPLORATION ID B-129-1-20
TYPE: RETAINING WALL	SAMPLING FIRM / LOGGER: NEAS / J. HODGES	HAMMER: CME AUTOMATIC	ALIGNMENT: SB E 14TH ST	
PID: 82382 SFN:	DRILLING METHOD: 3.25" HSA	CALIBRATION DATE: 5/1/19	ELEVATION: 676.2 (MSL) EOB: 25.0 ft.	PAGE 1 OF 1
START: 5/19/21 END: 5/19/21	SAMPLING METHOD: SPT	ENERGY RATIO (%): 89	LAT / LONG: 41.495084, -81.677667	

MATERIAL DESCRIPTION AND NOTES	ELEV.	DEPTHS	SPT/ RQD	N_{60}	REC (%)	SAMPLE ID	HP (tsf)	GRADATION (%) GR	CS	FS	SI	CL	ATTERBERG LL	PL	PI	WC	ODOT CLASS (GI)	BACK FILL
MEDIUM DENSE TO DENSE, BROWN, **GRAVEL WITH SAND**, TRACE TO LITTLE SILT, TRACE CLAY, DAMP TO MOIST	676.2	0																
		1																
		2																
		3	5 6 6	18	100	SS-1	-	5	47	27	14	7	NP	NP	NP	8	A-1-b (0)	
		4																
		5	5 7 8	22	39	SS-2	-	-	-	-	-	-	-	-	-	7	A-1-b (V)	
		6																
		7																
		8	7 9 13	33	44	SS-3	-	-	-	-	-	-	-	-	-	8	A-1-b (V)	
		9																
		10																
		11	8 10 11	31	28	SS-4	-	-	-	-	-	-	-	-	-	8	A-1-b (V)	
		12																
		13																
		14	7 6 7	19	78	SS-5	-	-	-	-	-	-	-	-	-	8	A-1-b (V)	
		15																
		16	6 3 5	12	56	SS-6	-	-	-	-	-	-	-	-	-	12	A-1-b (V)	
		17																
		18																
		19	5 6 8	21	89	SS-7	-	24	56	13	6	1	NP	NP	NP	5	A-1-b (0)	
		20																
		21	6 7 9	24	33	SS-8	-	-	-	-	-	-	-	-	-	4	A-1-b (V)	
		22																
	653.7	23																
MEDIUM DENSE, BROWNISH GRAY, **COARSE AND FINE SAND**, TRACE SILT, TRACE CLAY, TRACE GRAVEL, WET	W 652.7	24	8 9 10	28	100	SS-9	-	2	11	75	8	4	NP	NP	NP	22	A-3a (0)	
	651.2 EOB	25																

NOTES: GROUNDWATER ENCOUNTERED AT 23.5' DURING DRILLING. HOLE DID NOT CAVE.

ABANDONMENT METHODS, MATERIALS, QUANTITIES: SHOVELED SOIL CUTTINGS

Preliminary Plans - For Reference Only

SHEET P 2569	TOTAL 2696	SUBSET 183	TOTAL 310	PROJECT ID 82382	REVIEWER BPA 08/23/24	DESIGNER MW,J & DT

DESIGN AGENCY NEAS
2800 CORPORATE EXCHANGE DR. SUITE 240 COLUMBUS, OH. 43231
TEL:614.714.0299
WWW.NEASINC.COM

GEOTECHNICAL PROFILE - ROADWAY
WALL AJ
BORING LOG B-129-1-20

MODEL: Sheet PAPERSIZE: 34x22 (in.) DATE: 3/28/2025 TIME: 10:16:40 AM USER: Asiddiqi
pw:\\mb-us-pw.bentley.com:mb-us-pw-03\Documents\Cleveland_OH\01_Projects\ODOT\District12\82382\400-Engineering\Geotechnical\Sheets\82382_ZL070.dgn

PROJECT: CUY-CCG3
TYPE: BRIDGE
PID: 82380 SFN:
START: 1/15/15 END: 1/15/15

DRILLING FIRM / OPERATOR: BARR / T.GILBERT
SAMPLING FIRM / LOGGER: BARR / D.KLIMKOWICZ
DRILLING METHOD: 3.25" HSA
SAMPLING METHOD: SPT / ST

DRILL RIG: CME 55
HAMMER: CME AUTOMATIC
CALIBRATION DATE: 1/26/14
ENERGY RATIO (%): 78.8

STATION / OFFSET: 406+76, 128' LT.
ALIGNMENT: RAMP A2
ELEVATION: 678.0 (MSL) EOB: 111.5 ft.
LAT / LONG: 41.492050, -81.676467

EXPLORATION ID: B-131-0-14
PAGE: 1 OF 2

MATERIAL DESCRIPTION AND NOTES	ELEV. 678.0	DEPTHS	SPT/ RQD	N_{60}	REC (%)	SAMPLE ID	HP (tsf)	GRADATION (%) GR	CS	FS	SI	CL	ATTERBERG LL	PL	PI	WC	ODOT CLASS (GI)	BACK FILL
6.0", **ASPHALT**	677.5																	
12.0", **CONCRETE**	676.5																	
6.0", **GRANULAR BASE**	676.0																	
VERY DENSE, BROWN, BLACK AND GRAY, **GRAVEL WITH SAND**, TRACE SILT, TRACE CLAY, CONTAINS ASPHALT AND BRICK FRAGMENTS, DAMP **(FILL)**	673.5		30 33 17	66	11	SS-1	-	-	-	-	-	-	-	-	-	11	A-1-b (V)	
LOOSE, BROWN AND BLACK, **COARSE AND FINE SAND** LITTLE GRAVEL, TRACE SILT, TRACE CLAY, CONTAINS ASPHALT FRAGMENTS, DAMP **(FILL)**	671.0		1 3 3	8	100	SS-2	-	-	-	-	-	-	-	-	-	6	A-3a (V)	
LOOSE, BROWN, **FINE SAND**, TRACE SILT, TRACE COARSE SAND, TRACE CLAY, TRACE GRAVEL, DAMP	F.S. 668.5		4 4 3	9	100	SS-3	-	0	2	93	3	2	NP	NP	NP	7	A-3 (0)	
MEDIUM DENSE, DARK BROWN, **COARSE AND FINE SAND**, LITTLE GRAVEL, TRACE SILT, TRACE CLAY, DAMP	664.3		2 4 8	16	100	SS-4	-	-	-	-	-	-	-	-	-	7	A-3a (V)	
			4 6 6	16	100	SS-5A	-	-	-	-	-	-	-	-	-	7	A-3a (V)	
MEDIUM STIFF TO VERY STIFF, BROWN, **SILT AND CLAY**, TRACE SAND, TRACE GRAVEL, MOIST	662.8					SS-5B	1.00	-	-	-	-	-	-	-	-	26	A-6a (V)	
						SS-6A	2.40	-	-	-	-	-	-	-	-	27	A-6a (V)	
MEDIUM DENSE, BROWN, **FINE SAND**, SOME COARSE SAND, TRACE TO LITTLE GRAVEL, TRACE CLAY, DRY TO DAMP	F.S.		5 9 10	25	100	SS-6B	-	-	-	-	-	-	-	-	-	4	A-3 (V)	
			7 9 9	24	100	SS-7	-	3	23	64	7	3	NP	NP	NP	7	A-3 (0)	
			6 9 10	25	100	SS-8	-	-	-	-	-	-	-	-	-	4	A-3 (V)	
@22.5'; SS-9 BECOMES DENSE	653.5		5 9 15	32	100	SS-9	-	-	-	-	-	-	-	-	-	6	A-3 (V)	
MEDIUM DENSE, BROWN, **COARSE AND FINE SAND** LITTLE SILT, TRACE CLAY, TRACE GRAVEL, MOIST TO WET		▼	9 10 12	29	100	SS-10	-	0	1	76	20	3	NP	NP	NP	16	A-3a (0)	
		W 650.5																
			6 9 10	25	100	SS-11	-	-	-	-	-	-	-	-	-	24	A-3a (V)	
@30.0'; SS-12 TO SS-14 BECOME GRAY			5 8 10	24	100	SS-12	-	-	-	-	-	-	-	-	-	21	A-3a (V)	
@35.0'; SS-13 AND SS-14 BECOME DENSE			5 10 18	37	100	SS-13	-	-	-	-	-	-	-	-	-	23	A-3a (V)	
			5 10 15	33	100	SS-14	-	-	-	-	-	-	-	-	-	13	A-3a (V)	
VERY STIFF, GRAY, **SILT**, LITTLE CLAY, TRACE SAND, TRACE GRAVEL, MOIST	634.7		4 5 8	17	100	SS-15	2.50	0	1	6	75	18	25	18	7	21	A-4b (8)	
MEDIUM DENSE, GRAY, **SILT**, TRACE TO LITTLE CLAY, TRACE TO LITTLE SAND, TRACE GRAVEL, DAMP	629.7		9 10 11	28	100	SS-16	-	0	0	16	70	14	24	20	4	18	A-4b (8)	
@55.0'; BECOMES WET			4 5 7	16	100	SS-17	-	-	-	-	-	-	-	-	-	28	A-4b (V)	

Preliminary Plans - For Reference Only

STANDARD ODOT SOIL BORING LOG (11 X 17) - OH DOT.GDT - 6/22/22 18:07 - X:\ACTIVE PROJECTS\ACTIVE SOIL PROJECTS\1ARCHIVE BY YEAR\2017 ARCHIVE\CUY-CCG3 82380\GINT FILES\CUY-CCG3 MASTER - LR UPDATED.GPJ

SHEET	TOTAL
P 2570	2696

SUBSET 184 TOTAL 310

PROJECT ID 82382

REVIEWER BPA 08/23/24

DESIGNER MWJ & DT

DESIGN AGENCY
2800 CORPORATE EXCHANGE DR. SUITE 240
COLUMBUS, OH. 43231
TEL:614.714.0299
WWW.NEASINC.COM

GEOTECHNICAL PROFILE - ROADWAY
WALL S
BORING LOG B-131-0-14

MODEL: Sheet PAPERSIZE: 34x22 (in.) DATE: 3/28/2025 TIME: 10:17:08 AM USER: Asiddiqi
pw:\\mb-us-pw.bentley.com:mb-us-pw-03\Documents\Cleveland_OH\01_Projects\ODOT\District12\82382\400-Engineering\Geotechnical\Sheets\82382_ZL071.dgn

PID: 82380 | SFN: | PROJECT: CUY-CCG3 | STATION / OFFSET: 406+76, 128' LT. | START: 1/15/15 | END: 1/15/15 | PG 2 OF 2 | B-131-0-14

MATERIAL DESCRIPTION AND NOTES	ELEV.	DEPTHS	SPT/ RQD	N_{60}	REC (%)	SAMPLE ID	HP (tsf)	GRADATION (%) GR	CS	FS	SI	CL	ATTERBERG LL	PL	PI	WC	ODOT CLASS (GI)	BACK FILL
MEDIUM DENSE, GRAY, **SILT**, TRACE TO LITTLE CLAY, TRACE TO LITTLE SAND, TRACE GRAVEL, DAMP *(continued)*	618.0	61	5 8 10	24	100	SS-18	-	-	-	-	-	-	-	-	-	19	A-4b (V)	
		62–65																
@66.5'; UNIT WEIGHT: 133.7 PCF @ 17.6% MC		66			92	ST-19	-	0	0	3	87	10	NP	NP	NP	18	A-4b (8)	
		67–69																
MEDIUM STIFF TO STIFF, GRAY, **SILT AND CLAY**, TRACE SAND, TRACE GRAVEL, CONTAINS MANY SILT LENSES, WET	609.5	70	3 4 4	11	100	SS-20	1.00	-	-	-	-	-	-	-	-	26	A-6a (V)	
		71–74																
VERY STIFF TO HARD, GRAY, **SILT**, SOME CLAY, TRACE SAND, TRACE GRAVEL, DAMP TO MOIST	604.7	75	4 12 19	41	100	SS-21	2.75	-	-	-	-	-	-	-	-	22	A-4b (V)	
		76–79																
		80	11 16 20	47	100	SS-22	4.25	-	-	-	-	-	-	-	-	15	A-4b (V)	
		81–84																
@86.3'; UNIT WEIGHT: 136.2 PCF @ 18.2% MC		85																
		86			79	ST-23	4.50	0	0	1	71	28	27	19	8	18	A-4b (8)	
		87–89																
		90	2 5 12	22	100	SS-24	3.25	-	-	-	-	-	-	-	-	19	A-4b (V)	
		91–94																
		95	7 9 9	24	100	SS-25	2.20	-	-	-	-	-	-	-	-	24	A-4b (V)	
		96–99																
		100	5 8 12	26	100	SS-26	2.20	2	1	4	57	36	27	17	10	20	A-4b (8)	
	574.7	101–104																
STIFF, GRAY, **SILTY CLAY**, TRACE SAND, TRACE GRAVEL, CONTAINS FEW SILT LENSES, MOIST		105	10 13 19	42	100	SS-27	1.50	-	-	-	-	-	-	-	-	26	A-6b (V)	
		106–109																
STIFF, GRAY, **SILT AND CLAY**, TRACE SAND, TRACE GRAVEL, INTERBEDDED, MOIST	569.7	110	5 6 9	20	100	SS-28	1.50	-	-	-	-	-	-	-	-	22	A-6a (V)	
	566.5	EOB																

NOTES: GROUNDWATER ENCOUNTERED AT 27.5' DURING DRILLING, 26.0' UPON COMPLETION. HOLE DID NOT CAVE.
ABANDONMENT METHODS, MATERIALS, QUANTITIES: PLACED .5 BAG ASPHALT PATCH; SHOVELED SOIL CUTTINGS

Preliminary Plans - For Reference Only

STANDARD ODOT SOIL BORING LOG (11 X 17) - OH DOT.GDT - 6/22/22 18:07 - X:\ACTIVE PROJECTS\ACTIVE SOIL PROJECTS\1ARCHIVE BY YEAR\2017 ARCHIVE\CUY-CCG3 82380\GINT FILES\CUY-CCG3 MASTER - LR UPDATED.GPJ

DESIGN AGENCY
2800 CORPORATE EXCHANGE DR. SUITE 240
COLUMBUS, OH. 43231
TEL:614.714.0299
WWW.JNEASINC.COM

DESIGNER MW,J & DT
REVIEWER BPA 08/23/24
PROJECT ID 82382
SUBSET 185 TOTAL 310
SHEET P 2571 TOTAL 2696

GEOTECHNICAL PROFILE - ROADWAY
WALL S
BORING LOG B-131-0-14 (CONTINUED)

MODEL: Sheet PAPERSIZE: 34x22 (in.) DATE: 3/28/2025 TIME: 10:17:28 AM USER: Asiddiqi
pw:\\mb-us-pw.bentley.com:mb-us-pw-03\Documents\Cleveland_OH\01_Projects\ODOT\District12\82382\400-Engineering\Geotechnical\Sheets\82382_ZL072.dgn

STANDARD ODOT SOIL BORING LOG (8.5 X 11) - OH DOT.GDT - 1/3/24 15:18 - X:\ACTIVE PROJECTS\ACTIVE SOIL PROJECTS\1\ARCHIVE BY YEAR\2017 ARCHIVE\CUY-CCG3 82380\GINT FILES\CU

PROJECT: CUY-CCG3 | DRILLING FIRM / OPERATOR: BARR / T.GILBERT | DRILL RIG: CME 45B | STATION / OFFSET: 406+54, 4' RT. | EXPLORATION ID B-132-0-14
TYPE: RETAINING WALL | SAMPLING FIRM / LOGGER: BARR / D.LYON | HAMMER: CME AUTOMATIC | ALIGNMENT: RAMP A2
PID: 82380 SFN: | DRILLING METHOD: 3.25" HSA | CALIBRATION DATE: 1/26/14 | ELEVATION: 698.5 (MSL) EOB: 61.5 ft. | PAGE 1 OF 2
START: 12/3/14 END: 12/3/14 | SAMPLING METHOD: SPT / ST | ENERGY RATIO (%): 77.4 | LAT / LONG: 41.492381, -81.676260

MATERIAL DESCRIPTION AND NOTES	ELEV. 698.5	DEPTHS	SPT/ RQD	N_{60}	REC (%)	SAMPLE ID	HP (tsf)	GRADATION (%) GR	CS	FS	SI	CL	ATTERBERG LL	PL	PI	WC	ODOT CLASS (GI)	BACK FILL
4.0", **ASPHALT**	698.2																	
10.0", **CONCRETE**	697.3																	
MEDIUM DENSE, BROWN AND GRAY, **COARSE AND FINE SAND**, SOME GRAVEL, LITTLE SILT, TRACE CLAY, SS-1 CONTAINS BRICK FRAGMENTS, DAMP TO MOIST **(FILL)**	694.7		6 7 6	17	100	SS-1	-	21	14	37	19	9	NP	NP	NP	12	A-3a (0)	
			6 5 5	13	100	SS-2A	-	-	-	-	-	-	-	-	-	9	A-3a (V)	
						SS-2B	3.75	-	-	-	-	-	-	-	-	17	A-6a (V)	
VERY STIFF, BROWN AND DARK GRAY, **SILT AND CLAY**, LITTLE SAND, TRACE GRAVEL, CONTAINS FEW ASPHALT FRAGMENTS, DAMP **(FILL)**	693.7		5 13 27	52	100	SS-3	-	10	14	48	21	7	NP	NP	NP	8	A-3a (0)	
DENSE TO VERY DENSE, BROWN AND DARK GRAY, **COARSE AND FINE SAND**, SOME SILT, TRACE GRAVEL, TRACE CLAY, DAMP **(FILL)**																		
@7.5'; SS-4 TO SS-6 CHANGE TO BROWN			13 16 16	41	100	SS-4	-	-	-	-	-	-	-	-	-	7	A-3a (V)	
			12 19 23	54	100	SS-5	-	0	2	67	27	4	NP	NP	NP	8	A-3a (0)	
			13 17 17	44	100	SS-6	-	-	-	-	-	-	-	-	-	7	A-3a (V)	
@15.0'; SS-7 TO SS-8 CHANGE TO GRAYISH BROWN			14 23 23	59	100	SS-7	-	-	-	-	-	-	-	-	-	9	A-3a (V)	
			11 20 50/5"	-	100	SS-8	-	-	-	-	-	-	-	-	-	11	A-3a (V)	
	679.0																	
DENSE, BROWN, REDDISH BROWN, AND GRAY, **GRAVEL WITH SAND**, TRACE SILT, TRACE CLAY, CONTAINS BRICK AND CONCRETE FRAGMENTS, MOIST **(FILL)**	676.5		48 19 14	43	100	SS-9	-	-	-	-	-	-	-	-	-	9	A-1-b (V)	
VERY LOOSE, DARK GRAY AND BROWN, **COARSE AND FINE SAND**, LITTLE SILT, LITTLE GRAVEL, TRACE CLAY, CONTAINS PLASTIC, WET **(FILL)**	674.0		3 1 2	4	100	SS-10	-	13	25	34	19	9	NP	NP	NP	36	A-3a (0)	
VERY LOOSE, BROWN, **FINE SAND**, TRACE COARSE SAND, TRACE SILT, TRACE CLAY, TRACE GRAVEL, DAMP TO MOIST		F.S.	2 1 2	4	94	SS-11	-	-	-	-	-	-	-	-	-	5	A-3 (V)	
@27.5'; SS-12 TO SS-15 BECOME MEDIUM DENSE			4 6 13	25	100	SS-12	-	-	-	-	-	-	-	-	-	5	A-3 (V)	

STANDARD ODOT SOIL BORING LOG (8.5 X 11) - OH DOT.GDT - 1/3/24 15:18 - X:\ACTIVE PROJECTS\ACTIVE SOIL PROJECTS\1\ARCHIVE BY YEAR\2017 ARCHIVE\CUY-CCG3 82380\GINT FILES\CU

PID: 82380 | SFN: | PROJECT: CUY-CCG3 | STATION / OFFSET: 406+54, 4' RT. | START: 12/3/14 | END: 12/3/14 | PG 2 OF 2 | B-132-0-14

MATERIAL DESCRIPTION AND NOTES	ELEV. 668.5	DEPTHS	SPT/ RQD	N_{60}	REC (%)	SAMPLE ID	HP (tsf)	GRADATION (%) GR	CS	FS	SI	CL	ATTERBERG LL	PL	PI	WC	ODOT CLASS (GI)	BACK FILL
VERY LOOSE, BROWN, **FINE SAND**, TRACE COARSE SAND, TRACE SILT, TRACE CLAY, TRACE GRAVEL, DAMP TO MOIST *(continued)*			6 4 5	12	100	SS-13	-	-	-	-	-	-	-	-	-	11	A-3 (V)	
@35.0'; BECOMES SOME COARSE SAND		F.S.	9 10 11	27	100	SS-14	-	8	34	50	6	2	NP	NP	NP	6	A-3 (0)	
			9 5 7	15	100	SS-15	-	-	-	-	-	-	-	-	-	9	A-3 (V)	
	655.2																	
MEDIUM DENSE TO DENSE, GRAY AND BROWN, **COARSE AND FINE SAND**, LITTLE SILT, TRACE CLAY, TRACE GRAVEL, MOIST TO WET			6 11 16	35	100	SS-16	-	-	-	-	-	-	-	-	-	12	A-3a (V)	
		W 649.5																
@50.0'; SS-17 TO SS-20 BECOMES GRAY			6 10 11	27	100	SS-17	-	-	-	-	-	-	-	-	-	23	A-3a (V)	
			5 11 13	31	100	SS-18	-	-	-	-	-	-	-	-	-	24	A-3a (V)	
@58.9'; UNIT WEIGHT: 121.8 PCF @ 26.8% MC					100	ST-19	-	0	1	86	12	1	NP	NP	NP	27	A-3a (0)	
	637.0	EOB	8 15 21	46	100	SS-20	-	-	-	-	-	-	-	-	-	25	A-3a (V)	

NOTES: GROUNDWATER ENCOUNTERED AT 49.0' DURING DRILLING, 52.7' UPON COMPLETION. CAVE DEPTH 42.3'.
ABANDONMENT METHODS, MATERIALS, QUANTITIES: PLACED .5 BAG ASPHALT PATCH; SHOVELED SOIL CUTTINGS

Preliminary Plans - For Reference Only

SHEET	TOTAL	SUBSET	TOTAL	PROJECT ID	REVIEWER	DESIGNER
P 2572	2696	186	310	82382	BPA 08/23/24	MWJ & DT

DESIGN AGENCY
2800 CORPORATE EXCHANGE DR. SUITE 400 COLUMBUS, OH. 43231
TEL:614.714.0299
WWW.NEASINC.COM

GEOTECHNICAL PROFILE - ROADWAY
WALL S
BORING LOG B-132-0-14

MODEL: Sheet PAPERSIZE: 34x22 (in.) DATE: 3/28/2025 TIME: 10:17:48 AM USER: Asiddiqi
pw:\\mb-us-pw.bentley.com:mb-us-pw-03\Documents\Cleveland_OH\01_Projects\ODOT\District12\82382\400-Engineering\Geotechnical\Sheets\82382_ZL073.dgn

STANDARD ODOT SOIL BORING LOG (8.5 X 11) - OH DOT.GDT - 1/3/24 15:18 - X:\ACTIVE PROJECTS\ACTIVE SOIL PROJECTS\1\ARCHIVE BY YEAR\2017 ARCHIVE\CUY-CCG3 82380\GINT FILES\CU

PROJECT: CUY-CCG3 | DRILLING FIRM / OPERATOR: BARR / T.GILBERT | DRILL RIG: CME 45B | STATION / OFFSET: 408+56, 22' RT. | EXPLORATION ID B-134-0-14
TYPE: RETAINING WALL | SAMPLING FIRM / LOGGER: BARR / D.LYON | HAMMER: CME AUTOMATIC | ALIGNMENT: RAMP A2
PID: 82380 SFN: | DRILLING METHOD: 3.25" HSA | CALIBRATION DATE: 1/26/14 | ELEVATION: 697.9 (MSL) EOB: 61.5 ft. | PAGE 1 OF 2
START: 12/2/14 END: 12/2/14 | SAMPLING METHOD: SPT / ST | ENERGY RATIO (%): 77.4 | LAT / LONG: 41.492580, -81.676947

MATERIAL DESCRIPTION AND NOTES	ELEV.	DEPTHS	SPT/ RQD	N_{60}	REC (%)	SAMPLE ID	HP (tsf)	GRADATION (%) GR	CS	FS	SI	CL	ATTERBERG LL	PL	PI	WC	ODOT CLASS (GI)	BACK FILL
6.0", **ASPHALT**	697.4																	
9.0", **CONCRETE**	696.7																	
MEDIUM DENSE TO DENSE, DARK GRAY AND BROWN, **COARSE AND FINE SAND**, LITTLE SILT, TRACE TO LITTLE CLAY, TRACE TO LITTLE GRAVEL, DAMP TO MOIST **(FILL)**		1–4	5 6 10	21	100	SS-1	-	8	10	51	20	11	NP	NP	NP	12	A-3a (0)	
@5.0'; SS-2 CHANGES TO BROWN AND GRAY, CONTAINS CONCRETE FRAGMENTS		5–6	9 15 11	34	67	SS-2	-	-	-	-	-	-	-	-	-	10	A-3a (V)	
@7.5'; SS-3 CHANGES TO DARK GRAY AND BROWN, CONTAINS CONCRETE FRAGMENTS		7–8	9 12 14	34	100	SS-3	-	-	-	-	-	-	-	-	-	10	A-3a (V)	
@10.0'; SS-4 AND SS-5 CHANGE TO VERY DENSE GRAY BROWN, SS-4 CONTAINS CONCRETE FRAGMENTS		9–11	14 23 23	59	100	SS-4	-	-	-	-	-	-	-	-	-	7	A-3a (V)	
		12–13	11 22 23	58	100	SS-5	-	3	12	58	20	7	NP	NP	NP	8	A-3a (0)	
@15.0'; SS-6 CHANGES TO DENSE, DARK BROWN, CONTAINS PROCELAIN		14–16	14 15 12	35	100	SS-6	-	-	-	-	-	-	-	-	-	9	A-3a (V)	
@17.5'; SS-7 CHANGES TO LOOSE, BROWN AND DARK GRAY, CONTAINS CONCRETE FRAGMENTS		17–18	4 3 4	9	94	SS-7	-	-	-	-	-	-	-	-	-	13	A-3a (V)	
@20.0'; SS-8 CHANGES TO MEDIUM DENSE, CONTAINS BRICK FRAGMENTS	675.9	20–21	5 5 6	14	100	SS-8	-	-	-	-	-	-	-	-	-	12	A-3a (V)	
VERY LOOSE, DARK GRAY, BROWN, AND REDDISH BROWN, **GRAVEL WITH SAND AND SILT**, TRACE CLAY, CONTAINS MANY BRICK FRAGMENTS, MOIST **(FILL)**	673.4	23–24	3 0 1	1	44	SS-9	-	28	18	32	16	6	NP	NP	NP	17	A-2-4 (0)	
VERY LOOSE, DARK GRAY, **COARSE AND FINE SAND**, SOME GRAVEL, LITTLE SILT, TRACE CLAY, CONTAINS BRICK FRAGMENTS, WET **(FILL)**	670.9	25–26	1 1 0	1	72	SS-10	-	26	15	42	11	6	NP	NP	NP	20	A-3a (0)	
VERY LOOSE, DARK GRAY AND BROWN, **SANDY SILT**, LITTLE CLAY, TRACE GRAVEL, CONTAINS CINDERS, GLASS, AND PORCELAIN FRAGMENTS, WET **(FILL)**	668.4	28–29	0 0 0	0	39	SS-11	-	-	-	-	-	-	-	-	-	46	A-4a (V)	

Preliminary Plans - For Reference Only

STANDARD ODOT SOIL BORING LOG (8.5 X 11) - OH DOT.GDT - 1/3/24 15:18 - X:\ACTIVE PROJECTS\ACTIVE SOIL PROJECTS\1\ARCHIVE BY YEAR\2017 ARCHIVE\CUY-CCG3 82380\GINT FILES\CU

PID: 82380 | SFN: | PROJECT: CUY-CCG3 | STATION / OFFSET: 408+56, 22' RT. | START: 12/2/14 | END: 12/2/14 | PG 2 OF 2 | B-134-0-14

MATERIAL DESCRIPTION AND NOTES	ELEV.	DEPTHS	SPT/ RQD	N_{60}	REC (%)	SAMPLE ID	HP (tsf)	GRADATION (%) GR	CS	FS	SI	CL	ATTERBERG LL	PL	PI	WC	ODOT CLASS (GI)	BACK FILL
MEDIUM DENSE, BROWN, **COARSE AND FINE SAND**, TRACE TO LITTLE GRAVEL, TRACE SILT, TRACE CLAY, DAMP *(continued)*	667.9	30–31	5 4 5	12	94	SS-12	-	-	-	-	-	-	-	-	-	6	A-3a (V)	
	661.9	35–36	4 4 3	9	100	SS-13A	-	-	-	-	-	-	-	-	-	5	A-3a (V)	
LOOSE, BROWN, **SILT**, TRACE SAND, TRACE CLAY, TRACE GRAVEL, CONTAINS 2.5" SEAM OF "SILT AND CLAY", WET	659.6					SS-13B	-	-	-	-	-	-	-	-	-	30	A-4b (V)	
MEDIUM DENSE TO DENSE, BROWN, **COARSE AND FINE SAND**, SOME SILT, TRACE CLAY, TRACE GRAVEL, DAMP TO WET		40–41	4 7 13	26	100	SS-14	-	-	-	-	-	-	-	-	-	6	A-3a (V)	
W 652.9		45–46	11 13 18	40	100	SS-15	-	0	2	75	21	2	NP	NP	NP	21	A-3a (0)	
@45.0'; SS-15 BECOMES GRAYISH BROWN		50–51	4 9 11	26	100	SS-16	-	-	-	-	-	-	-	-	-	25	A-3a (V)	
@50.0'; SS-16 TO SS-19 BECOME GRAY	644.6	55–56	6 11 14	32	100	SS-17	-	-	-	-	-	-	-	-	-	24	A-4a (V)	
DENSE, GRAY, **SANDY SILT**, TRACE CLAY, TRACE GRAVEL, WET																		
@58.6'; UNIT WEIGHT: 123.6 PCF @ 25.9% MC					100	ST-18	-	0	0	54	43	3	NP	NP	NP	26	A-4a (2)	
	636.4	60–61	4 10 14	31	100	SS-19	-	-	-	-	-	-	-	-	-	26	A-4a (V)	
EOB																		

NOTES: GROUNDWATER ENCOUNTERED AT 45.0' DURING DRILLING. CAVE DEPTH 38.2'.
ABANDONMENT METHODS, MATERIALS, QUANTITIES: PLACED .5 BAG ASPHALT PATCH; SHOVELED SOIL CUTTINGS

DESIGN AGENCY
EAS Engineering & Architectural Services
2800 CORPORATE EXCHANGE DR. SUITE 400 COLUMBUS, OH. 43231 TEL:614.714.0299 WWW.AESINC.COM

DESIGNER MW.J & DT | REVIEWER BPA 08/23/24 | PROJECT ID 82382 | SHEET SUBSET 187 TOTAL 310 | SHEET P.2573 TOTAL 2696

GEOTECHNICAL PROFILE - ROADWAY
WALL S
BORING LOG B-134-0-14

MODEL: Sheet PAPERSIZE: 34x22 (in.) DATE: 3/28/2025 TIME: 10:18:08 AM USER: Asiddiqi
pw:\\mb-us-pw.bentley.com:mb-us-pw-03\Documents\Cleveland_OH\01_Projects\ODOT\District12\82382\400-Engineering\Geotechnical\Sheets\82382_ZL074.dgn

STANDARD ODOT SOIL BORING LOG (8.5 X 11) - OH DOT GDT - 6/22/22 13:25 - K:\ACTIVE PROJECTS\ACTIVE SOIL PROJECTS\CUY-90-16.28 (CCG3A - MOD#7)\GINT FILES\CUY-90-16.28 (CCG3A

PROJECT: CUY-90-16.28 (CCG3A)
TYPE: RETAINING WALL
PID: 82382 SFN:
START: 3/4/21 END: 3/4/21

DRILLING FIRM / OPERATOR: NEAS / J. HODGES
SAMPLING FIRM / LOGGER: NEAS / J. HODGES
DRILLING METHOD: 3.25" HSA
SAMPLING METHOD: SPT

DRILL RIG: CME 75T
HAMMER: CME AUTOMATIC
CALIBRATION DATE: 5/1/19
ENERGY RATIO (%): 89

STATION / OFFSET: 409+36, 72' LT.
ALIGNMENT: RAMP A2
ELEVATION: 677.8 (MSL) EOB: 30.0 ft.
LAT / LONG: 41.492418, -81.677347

EXPLORATION ID B-134-1-20

PAGE 1 OF 1

MATERIAL DESCRIPTION AND NOTES	ELEV. 677.8	DEPTHS	SPT/ RQD	N_{60}	REC (%)	SAMPLE ID	HP (tsf)	GRADATION (%) GR	CS	FS	SI	CL	ATTERBERG LL	PL	PI	WC	ODOT CLASS (GI)	BACK FILL
3.0" TOPSOIL (DRILLERS DESCRIPTION)	677.5																	
DENSE, BROWN, **STONE FRAGMENTS**, SOME SAND, LITTLE SILT, TRACE CLAY, CONTAINS RED BRICK FRAGMENTS, DAMP **(FILL)**	673.3		5 10 12	33	78	SS-1	-	-	-	-	-	-	-	-	-	13	A-1-a (V)	
LOOSE, BROWN, **STONE FRAGMENTS WITH SAND AND SILT**, TRACE CLAY, CONTAINS RED BRICK FRAGMENTS, DAMP **(FILL)**	670.8		2 2 2	6	33	SS-2	-	32	14	27	18	9	NP	NP	NP	12	A-2-4 (0)	
MEDIUM DENSE, BROWN, **COARSE AND FINE SAND**, TRACE GRAVEL, TRACE SILT, TRACE CLAY, DAMP	668.3		5 4 5	13	100	SS-3	-	-	-	-	-	-	-	-	-	9	A-3a (V)	
LOOSE, BROWN, **GRAVEL WITH SAND**, TRACE SILT, TRACE CLAY, DAMP TO MOIST	661.8		3 3 4	10	100	SS-4	-	-	-	-	-	-	-	-	-	10	A-1-b (V)	
			1 3 4	10	100	SS-5	-	-	-	-	-	-	-	-	-	8	A-1-b (V)	
			2 2 3	7	100	SS-6A	-	-	-	-	-	-	-	-	-	18	A-1-b (V)	
STIFF, BROWN, **CLAY**, "AND" SILT, LITTLE SAND, TRACE GRAVEL, MOIST	660.8					SS-6B	1.25	-	-	-	-	-	-	-	-	27	A-7-6 (V)	
MEDIUM DENSE, BROWN, **COARSE AND FINE SAND**, LITTLE GRAVEL, TRACE SILT, TRACE CLAY, MOIST TO WET	656.8		2 4 6	15	100	SS-7	-	-	-	-	-	-	-	-	-	12	A-3a (V)	
			2 3 8	16	100	SS-8A	-	-	-	-	-	-	-	-	-	26	A-3a (V)	
HARD, BROWN, **SILT**, LITTLE CLAY, TRACE SAND, TRACE GRAVEL, DAMP	654.5					SS-8B	4.50	1	1	7	71	20	28	22	6	21	A-4b (8)	
MEDIUM DENSE, BROWN BECOMING GRAY, **COARSE AND FINE SAND**, LITTLE GRAVEL, TRACE SILT, TRACE CLAY, CONTAINS IRON STAINING, MOIST TO WET			2 5 8	19	100	SS-9	-	-	-	-	-	-	-	-	-	12	A-3a (V)	
		W 649.3	3 6 10	24	100	SS-10	-	-	-	-	-	-	-	-	-	23	A-3a (V)	
	647.8	EOB																

NOTES: GROUNDWATER ENCOUNTERED AT 28.5' DURING DRILLING. HOLE DID NOT CAVE. BORING OFFSET 17.0' SOUTHWEST DUE TO OVERHEAD OBSTRUCTION.

ABANDONMENT METHODS, MATERIALS, QUANTITIES: SHOVELED SOIL CUTTINGS

Preliminary Plans - For Reference Only

SHEET	TOTAL
P 2574	2696

SUBSET	TOTAL
188	310

PROJECT ID: 82382

REVIEWER	
BPA	08/23/24

DESIGNER: MW,J & DT

DESIGN AGENCY
NEAS
2800 CORPORATE EXCHANGE DR. SUITE 400
COLUMBUS, OH. 43231
TEL:614.714.0299
WWW.NEASINC.COM

GEOTECHNICAL PROFILE - ROADWAY
WALL N
BORING LOG B-134-1-20

MODEL: Sheet PAPERSIZE: 34x22 (in.) DATE: 3/28/2025 TIME: 10:18:22 AM USER: Asiddiqi
pw:\\mb-us-pw.bentley.com:mb-us-pw-03\Documents\Cleveland_OH\01_Projects\ODOT\District12\82382\400-Engineering\Geotechnical\Sheets\82382_ZL075.dgn

PROJECT: CUY-90-16.28 (CCG3A)
TYPE: BRIDGE
PID: 82382 SFN: 1806910
START: 3/10/21 END: 3/10/21

DRILLING FIRM / OPERATOR: NEAS / J. HODGES
SAMPLING FIRM / LOGGER: NEAS / J. HODGES
DRILLING METHOD: 3.25" HSA
SAMPLING METHOD: SPT / ST

DRILL RIG: CME 75T
HAMMER: CME AUTOMATIC
CALIBRATION DATE: 5/1/19
ENERGY RATIO (%): 89

STATION / OFFSET: 410+84, 18' LT.
ALIGNMENT: RAMP A2
ELEVATION: 675.4 (MSL) EOB: 100.0 ft.
LAT / LONG: 41.492734, -81.677764

EXPLORATION ID B-134-2-20
PAGE 1 OF 2

MATERIAL DESCRIPTION AND NOTES	ELEV. 675.4	DEPTHS	SPT/ RQD	N_{60}	REC (%)	SAMPLE ID	HP (tsf)	GRADATION (%) GR	CS	FS	SI	CL	ATTERBERG LL	PL	PI	WC	ODOT CLASS (GI)	HOLE SEALED
VERY LOOSE TO LOOSE, BROWN, **COARSE AND FINE SAND**, LITTLE SILT, LITTLE GRAVEL, TRACE CLAY, CONTAINS RED BRICK FRAGMENTS, SS-5A CONTAINS IRON STAINING, DAMP TO MOIST **(FILL)**			2 3 2	7	67	SS-1	-	-	-	-	-	-	-	-	-	11	A-3a (V)	
			1 2 2	6	56	SS-2	-	-	-	-	-	-	-	-	-	10	A-3a (V)	
			1 1 1	3	100	SS-3	-	-	-	-	-	-	-	-	-	9	A-3a (V)	
			2 2 1	4	100	SS-4	-	-	-	-	-	-	-	-	-	11	A-3a (V)	
	661.9		3 3 4	10	89	SS-5A	-	-	-	-	-	-	-	-	-	13	A-3a (V)	
						SS-5B	1.50	-	-	-	-	-	-	-	-	23	A-6a (V)	
STIFF, BROWN, **SILT AND CLAY**, TRACE SAND, TRACE GRAVEL, MOIST	659.4		2 1 3	6	100	SS-6A	1.75	0	1	4	43	52	30	19	11	27	A-6a (8)	
						SS-6B	-	-	-	-	-	-	-	-	-	20	A-3a (V)	
LOOSE TO MEDIUM DENSE, BROWN, **COARSE AND FINE SAND**, LITTLE SILT, TRACE CLAY, TRACE GRAVEL, WET TO DAMP	656.9		1 4 10	21	100	SS-7A	-	-	-	-	-	-	-	-	-	6	A-3a (V)	
						SS-7B	-	0	9	13	57	21	NP	NP	NP	18	A-4b (8)	
MEDIUM DENSE, BROWN, **SILT**, SOME SAND, SOME CLAY, TRACE GRAVEL, WET	654.9					SS-8A	-	-	-	-	-	-	-	-	-	28	A-4b (V)	
			0 4 4	12	100	SS-8B	-	-	-	-	-	-	-	-	-	5	A-3a (V)	
MEDIUM DENSE TO DENSE, BROWN AND BROWNISH GRAY, **COARSE AND FINE SAND**LITTLE TO SOME SILT, LITTLE CLAY, TRACE GRAVEL, CONTAINS INTERBEDDED SILT LENSES, DAMP TO WET			5 8 10	27	100	SS-9	-	-	-	-	-	-	-	-	-	23	A-3a (V)	
			4 8 13	31	100	SS-10	-	-	-	-	-	-	-	-	-	29	A-3a (V)	
			3 4 12	24	100	SS-11	-	-	-	-	-	-	-	-	-	28	A-3a (V)	
			2 7 10	25	100	SS-12	-	-	-	-	-	-	-	-	-	28	A-3a (V)	
	632.1																	
MEDIUM DENSE, GRAY, **SILT**, LITTLE CLAY, TRACE SAND, TRACE GRAVEL, WET			3 4 7	16	100	SS-13	-	0	0	8	75	17	NP	NP	NP	20	A-4b (8)	
	627.1																	
MEDIUM STIFF TO HARD, GRAY, **SILT**, SOME TO "AND" CLAY, TRACE TO LITTLE SAND, TRACE GRAVEL, DAMP TO WET			2 1 1	3	100	SS-14	1.00	0	0	11	56	33	24	17	7	26	A-4b (8)	
			5 12 16	42	100	SS-15	4.50	-	-	-	-	-	-	-	-	18	A-4b (V)	
@59.3' TO 59.8'; Qu = 6946 PSF @ 8.0%					100	ST-1	4.50	0	0	1	75	24	27	21	6	19	A-4b (8)	

Preliminary Plans - For Reference Only

STANDARD ODOT SOIL BORING LOG (11 X 17) - OH DOT.GDT - 1/3/24 14:17 - X:\ACTIVE PROJECTS\ACTIVE SOIL PROJECTS\1ARCHIVE BY YEAR\2022 ARCHIVE\CUY-90-16.28 (CCG3A - MOD#7)\GINT FILES\CUY-90-16.28 (CCG3A).GPJ

DESIGN AGENCY
NEAS
2800 CORPORATE EXCHANGE DR. SUITE 240
COLUMBUS, OH. 43231
TEL:614.714.0299
WWW.NEASINC.COM

DESIGNER MWJ & DT
REVIEWER BPA 08/23/24
PROJECT ID 82382
SUBSET 189 TOTAL 310
SHEET P 2575 TOTAL 2696

GEOTECHNICAL PROFILE - ROADWAY
WALL N
BORING LOG B-134-2-20

MODEL: Sheet PAPERSIZE: 34x22 (in.) DATE: 3/28/2025 TIME: 10:18:49 AM USER: Asiddiqi
pw:\\mb-us-pw.bentley.com:mb-us-pw-03\Documents\Cleveland_OH\01_Projects\ODOT\District12\82382\400-Engineering\Geotechnical\Sheets\82382_ZL076.dgn

PID: 82382 | SFN: | PROJECT: CUY-90-16.28 (CCG3A) | STATION / OFFSET: 410+84, 18' LT. | START: 3/10/21 | END: 3/10/21 | PG 2 OF 2 | B-134-2-20

MATERIAL DESCRIPTION AND NOTES	ELEV.	DEPTHS	SPT/ RQD	N_{60}	REC (%)	SAMPLE ID	HP (tsf)	GRADATION (%) GR	CS	FS	SI	CL	ATTERBERG LL	PL	PI	WC	ODOT CLASS (GI)	HOLE SEALED
MEDIUM STIFF TO HARD, GRAY, **SILT**, SOME TO "AND" CLAY, TRACE TO LITTLE SAND, TRACE GRAVEL, DAMP TO WET *(continued)*	615.4	61	5 10 14	36	100	SS-16	4.50	-	-	-	-	-	-	-	-	18	A-4b (V)	
		62																
		63																
		64																
		65																
		66	2 5 7	18	100	SS-17	3.50	0	0	2	58	40	27	19	8	21	A-4b (8)	
		67																
	607.1	68																
VERY STIFF, GRAY, **SILT AND CLAY**, LITTLE SAND, TRACE GRAVEL, MOIST		69																
		70																
		71	4 3 6	13	100	SS-18	3.25	-	-	-	-	-	-	-	-	25	A-6a (V)	
		72																
		73																
		74																
		75																
		76	5 6 8	21	100	SS-19	3.00	-	-	-	-	-	-	-	-	24	A-6a (V)	
		77																
	597.1	78																
MEDIUM DENSE TO DENSE, GRAY, **SILT**, LITTLE CLAY, TRACE SAND, TRACE GRAVEL, WET		79																
		80																
		81	7 12 14	39	100	SS-20	-	-	-	-	-	-	-	-	-	23	A-4b (V)	
		82																
		83																
		84																
		85																
		86	6 10 13	34	100	SS-21	-	0	0	1	81	18	NP	NP	NP	23	A-4b (8)	
		87																
		88																
		89																
		90																
		91	2 5 8	19	100	SS-22	-	-	-	-	-	-	-	-	-	21	A-4b (V)	
	583.9	92																
VERY STIFF, GRAY, **SILT**, "AND" CLAY, TRACE SAND, TRACE GRAVEL, MOIST		93																
		94																
		95																
		96	3 5 9	21	100	SS-23	2.75	0	0	1	50	49	29	19	10	23	A-4b (8)	
		97																
		98																
		99	5 7 11	27	100	SS-24	3.00	-	-	-	-	-	-	-	-	21	A-4b (V)	
	575.4	EOB 100																

NOTES: GROUNDWATER NOT ENCOUNTERED DURING DRILLING. HOLE DID NOT CAVE.
ABANDONMENT METHODS, MATERIALS, QUANTITIES: PUMPED 220 GAL. BENTONITE GROUT

Preliminary Plans - For Reference Only

STANDARD ODOT SOIL BORING LOG (11 X 17) - OH DOT.GDT - 1/3/24 14:17 - X:\ACTIVE PROJECTS\ACTIVE SOIL PROJECTS\1ARCHIVE BY YEAR\2022 ARCHIVE\CUY-90-16.28 (CCG3A - MOD#7)\GINT FILES\CUY-90-16.28 (CCG3A).GPJ

DESIGN AGENCY
EAS
2800 CORPORATE EXCHANGE DR. SUITE 240
COLUMBUS, OH. 43231
TEL:614.714.0299
WWW.NEASINC.COM

DESIGNER MWJ & DT
REVIEWER BPA 08/23/24
PROJECT ID 82382
SUBSET 190 TOTAL 310
SHEET P.2576 TOTAL 2696

GEOTECHNICAL PROFILE - ROADWAY
WALL N
BORING LOG B-134-2-20 (CONTINUED)

MODEL: Sheet PAPERSIZE: 34x22 (in.) DATE: 3/28/2025 TIME: 10:19:06 AM USER: Asiddiqi
pw:\\mb-us-pw.bentley.com:mb-us-pw-03\Documents\Cleveland_OH\01_Projects\ODOT\District12\82382\400-Engineering\Geotechnical\Sheets\82382_ZL077.dgn

PROJECT: CUY-90-16.28 (CCG3A)
TYPE: BRIDGE
PID: 82382 SFN: 1806910
START: 3/25/21 END: 3/26/21

DRILLING FIRM / OPERATOR: NEAS / J. HODGES
SAMPLING FIRM / LOGGER: NEAS / J. HODGES
DRILLING METHOD: 3.25" HSA
SAMPLING METHOD: SPT / ST

DRILL RIG: CME 75T
HAMMER: CME AUTOMATIC
CALIBRATION DATE: 5/1/19
ENERGY RATIO (%): 89

STATION / OFFSET: 412+07, 14' RT.
ALIGNMENT: RAMP A2
ELEVATION: 678.0 (MSL) EOB: 110.0 ft.
LAT / LONG: 41.492986, -81.678087

EXPLORATION ID: B-134-3-20
PAGE: 1 OF 2

MATERIAL DESCRIPTION AND NOTES	ELEV.	DEPTHS	SPT/ RQD	N_{60}	REC (%)	SAMPLE ID	HP (tsf)	GR	CS	FS	SI	CL	LL	PL	PI	WC	ODOT CLASS (GI)	HOLE SEALED
MEDIUM DENSE, BROWN, **COARSE AND FINE SAND** LITTLE TO SOME GRAVEL, TRACE SILT, TRACE CLAY, DAMP TO MOIST	678.0		7 4 7	16	100	SS-1	-	-	-	-	-	-	-	-	-	7	A-3a (V)	
			3 7 8	22	100	SS-2	-	-	-	-	-	-	-	-	-	10	A-3a (V)	
			3 5 8	19	56	SS-3	-	-	-	-	-	-	-	-	-	8	A-3a (V)	
			6 6 5	16	89	SS-4	-	-	-	-	-	-	-	-	-	10	A-3a (V)	
@12.5'; SS-5 TO SS-7A BECOME BROWNISH GRAY			3 4 5	13	100	SS-5	-	-	-	-	-	-	-	-	-	13	A-3a (V)	
			4 4 8	18	100	SS-6	-	-	-	-	-	-	-	-	-	16	A-3a (V)	
	659.5		3 8 9	25	100	SS-7A	-	-	-	-	-	-	-	-	-	10	A-3a (V)	
VERY STIFF TO HARD, BROWN, **SILT**, SOME CLAY, TRACE SAND, TRACE GRAVEL, DAMP TO MOIST						SS-7B	2.25	-	-	-	-	-	-	-	-	19	A-4b (V)	
	656.8		4 6 9	22	100	SS-8A	4.25	0	1	3	64	32	27	20	7	24	A-4b (8)	
MEDIUM DENSE TO DENSE, BROWN, **COARSE AND FINE SAND**, TRACE GRAVEL, TRACE SILT, TRACE CLAY, SS-9 CONTAINS IRON STAINING, MOIST TO WET						SS-8B	-	-	-	-	-	-	-	-	-	12	A-3a (V)	
			3 6 11	25	100	SS-9	-	-	-	-	-	-	-	-	-	13	A-3a (V)	
@30.0'; SS-10 TO SS-12 BECOME GRAY			4 5 8	19	100	SS-10	-	-	-	-	-	-	-	-	-	28	A-3a (V)	
			2 8 12	30	100	SS-11	-	-	-	-	-	-	-	-	-	28	A-3a (V)	
			6 11 15	39	100	SS-12	-	-	-	-	-	-	-	-	-	23	A-3a (V)	
	634.7																	
MEDIUM DENSE TO DENSE, GRAY, **SILT**, TRACE TO SOME SAND, LITTLE CLAY, TRACE GRAVEL, DAMP TO WET			2 4 6	15	100	SS-13	-	0	0	22	61	17	NP	NP	NP	22	A-4b (8)	
			7 10 14	36	100	SS-14	-	-	-	-	-	-	-	-	-	17	A-4b (V)	
			3 7 7	21	100	SS-15	-	0	0	6	81	13	NP	NP	NP	23	A-4b (8)	

Preliminary Plans - For Reference Only

STANDARD ODOT SOIL BORING LOG (11 X 17) - OH DOT.GDT - 1/3/24 14:17 - X:\ACTIVE PROJECTS\ACTIVE SOIL PROJECTS\1ARCHIVE BY YEAR\2022 ARCHIVE\CUY-90-16.28 (CCG3A - MOD#7)\GINT FILES\CUY-90-16.28 (CCG3A).GPJ

DESIGN AGENCY
NEAS
2800 CORPORATE EXCHANGE DR. SUITE 240
COLUMBUS, OH. 43231
TEL:614.714.0299
WWW.NEASINC.COM

DESIGNER MWJ & DT
REVIEWER BPA 08/23/24
PROJECT ID 82382
SHEET 191 TOTAL 310
SHEET P 2577 TOTAL 2696

GEOTECHNICAL PROFILE - ROADWAY
BRIDGE NO. CUY-77-1587 RAMP A2 FLYOVER
BORING LOG B-134-3-20

MODEL: Sheet PAPERSIZE: 34x22 (in.) DATE: 3/28/2025 TIME: 10:19:33 AM USER: Asiddiqi
pw:\\mb-us-pw.bentley.com:mb-us-pw-03\Documents\Cleveland_OH\01_Projects\ODOT\District12\82382\400-Engineering\Geotechnical\Sheets\82382_ZL078.dgn

PID: 82382 | SFN: | PROJECT: CUY-90-16.28 (CCG3A) | STATION / OFFSET: 412+07, 14' RT. | START: 3/25/21 | END: 3/26/21 | PG 2 OF 2 | B-134-3-20

MATERIAL DESCRIPTION AND NOTES	ELEV.	DEPTHS	SPT/ RQD	N_{60}	REC (%)	SAMPLE ID	HP (tsf)	GRADATION (%) GR	CS	FS	SI	CL	ATTERBERG LL	PL	PI	WC	ODOT CLASS (GI)	HOLE SEALED
MEDIUM DENSE TO DENSE, GRAY, **SILT**, TRACE TO SOME SAND, LITTLE CLAY, TRACE GRAVEL, DAMP TO WET *(continued)*	618.0	61	2 3 8	16	100	SS-16	-	-	-	-	-	-	-	-	-	23	A-4b (V)	
		62																
		63																
@64.0' TO 64.5'; Qu = 6377 PSF @ 5.5%		64		-		ST-1	-	0	0	3	78	19	25	21	4	19	A-4b (8)	
		65																
		66	6 10 16	39	100	SS-17	-	-	-	-	-	-	-	-	-	19	A-4b (V)	
	609.7	67																
STIFF TO HARD, GRAY, **SILT**, SOME TO "AND" CLAY, TRACE SAND, TRACE GRAVEL, MOIST		68																
		69																
		70																
		71	2 4 7	16	100	SS-18	3.25	0	0	1	69	30	28	20	8	22	A-4b (8)	
		72																
		73																
		74																
		75																
		76	3 4 8	18	100	SS-19	2.75	-	-	-	-	-	-	-	-	21	A-4b (V)	
		77																
		78																
		79																
		80																
		81	1 2 3	7	100	SS-20	3.00	0	0	2	61	37	29	19	10	25	A-4b (8)	
		82																
		83																
		84																
		85																
		86	2 2 4	9	100	SS-21	1.75	-	-	-	-	-	-	-	-	26	A-4b (V)	
		87																
		88																
		89																
		90																
		91	7 10 15	37	100	SS-22	4.25	0	0	1	72	27	26	19	7	20	A-4b (8)	
		92																
		93																
		94																
		95																
		96	7 9 14	34	100	SS-23	4.50	-	-	-	-	-	-	-	-	20	A-4b (V)	
	579.7	97																
STIFF, GRAY, **SILT AND CLAY**, TRACE SAND, TRACE GRAVEL, MOIST		98																
		99																
		100																
		101	5 6 6	18	100	SS-24	1.25	-	-	-	-	-	-	-	-	25	A-6a (V)	
		102																
		103																
		104																
		105																
		106	2 4 6	15	100	SS-25	1.50	0	1	3	46	50	32	20	12	24	A-6a (9)	
		107																
		108																
		109	5 6 6	18	100	SS-26	1.25	-	-	-	-	-	-	-	-	27	A-6a (V)	
	568.0 EOB	110																

NOTES: GROUNDWATER NOT ENCOUNTERED DURING DRILLING. HOLE DID NOT CAVE.
ABANDONMENT METHODS, MATERIALS, QUANTITIES: PUMPED 75 GAL. BENTONITE GROUT; SHOVELED SOIL CUTTINGS

Preliminary Plans - For Reference Only

STANDARD ODOT SOIL BORING LOG (11 X 17) - OH DOT.GDT - 1/3/24 14:17 - X:\ACTIVE PROJECTS\ACTIVE SOIL PROJECTS\1ARCHIVE BY YEAR\2022 ARCHIVE\CUY-90-16.28 (CCG3A - MOD#7)\GINT FILES\CUY-90-16.28 (CCG3A).GPJ

DESIGN AGENCY
EAS
2800 CORPORATE EXCHANGE DR. SUITE 240
COLUMBUS, OH. 43231
TEL:614.714.0299
WWW.AEASINC.COM

DESIGNER MW,J & DT
REVIEWER BPA 08/23/24
PROJECT ID 82382
SUBSET 192 TOTAL 310
SHEET P 2578 TOTAL 2696

GEOTECHNICAL PROFILE - ROADWAY
BRIDGE NO. CUY-77-1587 RAMP A2 FLYOVER
BORING LOG B-134-3-20 (CONTINUED)

MODEL: Sheet PAPERSIZE: 34x22 (in.) DATE: 3/28/2025 TIME: 10:19:52 AM USER: Asiddiqi
pw:\\mb-us-pw.bentley.com:mb-us-pw-03\Documents\Cleveland_OH\01_Projects\ODOT\District12\82382\400-Engineering\Geotechnical\Sheets\82382_ZL079.dgn

PROJECT: CUY-90-16.28 (CCG3A)
TYPE: BRIDGE
PID: 82382 SFN: 1806910
START: 5/3/21 END: 5/5/21

DRILLING FIRM / OPERATOR: NEAS / J. HODGES
SAMPLING FIRM / LOGGER: NEAS / J. HODGES
DRILLING METHOD: 3.25" HSA
SAMPLING METHOD: SPT

DRILL RIG: CME 75T
HAMMER: CME AUTOMATIC
CALIBRATION DATE: 5/1/19
ENERGY RATIO (%): 89

STATION / OFFSET: 413+01, 9' LT.
ALIGNMENT: RAMP A2
ELEVATION: 679.8 (MSL) EOB: 120.0 ft.
LAT / LONG: 41.493088, -81.678412

EXPLORATION ID B-135-1-20

MATERIAL DESCRIPTION AND NOTES	ELEV.	DEPTHS	SPT/ RQD	N_{60}	REC (%)	SAMPLE ID	HP (tsf)	GR	CS	FS	SI	CL	LL	PL	PI	WC	ODOT CLASS (GI)	HOLE SEALED
DENSE, BROWN AND BLACK, **GRAVEL AND STONE FRAGMENTS WITH SAND** TRACE SILT, TRACE CLAY, CONTAINS SLAG AND RED BRICK FRAGMENTS, DAMP **(FILL)**	679.8		8 16 17	49	100	SS-1	-	-	-	-	-	-	-	-	-	10	A-1-a (V)	
LOOSE TO MEDIUM DENSE, BROWN, **COARSE AND FINE SAND**, TRACE TO LITTLE GRAVEL, TRACE SILT, TRACE CLAY, DAMP	675.3		8 5 6	16	100	SS-2	-	-	-	-	-	-	-	-	-	7	A-3a (V)	
			4 2 2	6	100	SS-3	-	-	-	-	-	-	-	-	-	8	A-3a (V)	
			2 4 3	10	100	SS-4	-	-	-	-	-	-	-	-	-	7	A-3a (V)	
			3 3 3	9	100	SS-5	-	-	-	-	-	-	-	-	-	7	A-3a (V)	
	663.8		1 3 3	9	100	SS-6A	-	-	-	-	-	-	-	-	-	13	A-3a (V)	
LOOSE, BROWN, **SILT**, LITTLE CLAY, TRACE SAND, TRACE GRAVEL, WET						SS-6B	-	-	-	-	-	-	-	-	-	23	A-4b (V)	
	661.3		3 1 4	7	100	SS-7A	-	0	1	5	77	17	NP	NP	NP	29	A-4b (8)	
LOOSE TO MEDIUM DENSE, BROWN, **COARSE AND FINE SAND**, TRACE GRAVEL, TRACE SILT, TRACE CLAY, MOIST TO DAMP						SS-7B	-	-	-	-	-	-	-	-	-	17	A-3a (V)	
	657.8		2 4 5	13	100	SS-8	-	-	-	-	-	-	-	-	-	9	A-3a (V)	
MEDIUM DENSE, BROWN, **SILT**, LITTLE CLAY, TRACE SAND, TRACE GRAVEL, WET	655.3		2 6 8	21	100	SS-9	-	0	1	2	80	17	NP	NP	NP	21	A-4b (8)	
LOOSE TO DENSE, BROWN, **COARSE AND FINE SAND** TRACE TO LITTLE SILT, TRACE CLAY, TRACE GRAVEL, DAMP			2 7 8	22	100	SS-10	-	-	-	-	-	-	-	-	-	6	A-3a (V)	
@30.0'; BECOMES WET			5 7 9	24	100	SS-11	-	-	-	-	-	-	-	-	-	26	A-3a (V)	
		W 644.8	3 7 10	25	100	SS-12	-	-	-	-	-	-	-	-	-	26	A-3a (V)	
@40.0'; BECOMES GRAY			7 11 14	37	100	SS-13	-	-	-	-	-	-	-	-	-	24	A-3a (V)	
			3 3 4	10	100	SS-14	-	-	-	-	-	-	-	-	-	26	A-3a (V)	
MEDIUM DENSE TO DENSE, GRAY, **SILT**, TRACE TO LITTLE CLAY, TRACE TO LITTLE SAND, TRACE GRAVEL, WET	631.5		2 5 10	22	100	SS-15	-	-	-	-	-	-	-	-	-	19	A-4b (V)	
			7 12 18	45	100	SS-16	-	0	0	14	79	7	NP	NP	NP	21	A-4b (8)	

Preliminary Plans - For Reference Only

STANDARD ODOT SOIL BORING LOG (11 X 17) - OH DOT.GDT - 1/3/24 14:17 - X:\ACTIVE PROJECTS\ACTIVE SOIL PROJECTS\1ARCHIVE BY YEAR\2022 ARCHIVE\CUY-90-16.28 (CCG3A - MOD#7)\GINT FILES\CUY-90-16.28 (CCG3A).GPJ

DESIGN AGENCY
NEAS
2800 CORPORATE EXCHANGE DR. SUITE 240
COLUMBUS, OH. 43231
TEL:614.714.0299
WWW.NEASINC.COM

DESIGNER MWJ & DT
REVIEWER BPA 08/23/24
PROJECT ID 82382
SHEET P 2579 TOTAL 2696
SUBSET 193 TOTAL 310

GEOTECHNICAL PROFILE - ROADWAY
BRIDGE NO. CUY-77-1587 RAMP A2 FLYOVER
BORING LOG B-135-1-20

MODEL: Sheet PAPERSIZE: 34x22 (in.) DATE: 3/28/2025 TIME: 10:20:19 AM USER: Asiddiqi
pw:\\mb-us-pw.bentley.com:mb-us-pw-03\Documents\Cleveland_OH\01_Projects\ODOT\District12\82382\400-Engineering\Geotechnical\Sheets\82382_ZL080.dgn

PID: 82382 | SFN: | PROJECT: CUY-90-16.28 (CCG3A) | STATION / OFFSET: 413+01, 9' LT. | START: 5/3/21 | END: 5/5/21 | PG 2 OF 2 | B-135-1-20

MATERIAL DESCRIPTION AND NOTES	ELEV.	DEPTHS	SPT/ RQD	N_{60}	REC (%)	SAMPLE ID	HP (tsf)	GRADATION (%) GR	CS	FS	SI	CL	ATTERBERG LL	PL	PI	WC	ODOT CLASS (GI)	HOLE SEALED
MEDIUM DENSE TO DENSE, GRAY, **SILT**, TRACE TO LITTLE CLAY, TRACE TO LITTLE SAND, TRACE GRAVEL, WET *(continued)*	619.8	61	4 6 8	21	100	SS-17	-	-	-	-	-	-	-	-	-	21	A-4b (V)	
		66	7 9 13	33	100	SS-18	-	0	0	3	81	16	NP	NP	NP	19	A-4b (8)	
	611.5	71	3 5 9	21	100	SS-19	2.50	-	-	-	-	-	-	-	-	21	A-4b (V)	
VERY STIFF, GRAY, **SILT**, SOME CLAY, TRACE SAND, TRACE GRAVEL, MOIST TO DAMP		76	3 7 9	24	100	SS-20	3.25	0	0	2	64	34	28	20	8	21	A-4b (8)	
		81	4 5 8	19	100	SS-21	3.00	-	-	-	-	-	-	-	-	23	A-4b (V)	
		86	5 7 14	31	100	SS-22	3.25	0	0	1	69	30	27	20	7	19	A-4b (8)	
		91	8 10 18	42	100	SS-23	3.00	-	-	-	-	-	-	-	-	23	A-4b (V)	
		96	5 8 12	30	100	SS-24	3.50	0	1	1	67	31	26	19	7	21	A-4b (8)	
@100.0'; SS-25 BECOMES "AND" CLAY		101	8 9 11	30	100	SS-25	2.50	0	1	2	55	42	29	19	10	24	A-4b (8)	
	576.5																	
MEDIUM STIFF TO STIFF, GRAY, **SILTY CLAY**, TRACE SAND, TRACE GRAVEL, DAMP TO MOIST		106	4 4 6	15	100	SS-26	1.25	-	-	-	-	-	-	-	-	21	A-6b (V)	
		111	0 2 4	9	100	SS-27	1.00	1	1	2	29	67	39	23	16	29	A-6b (10)	
		116	0 3 4	10	100	SS-28	1.25	-	-	-	-	-	-	-	-	27	A-6b (V)	
	559.8	119	0 3 6	13	100	SS-29	1.00	-	-	-	-	-	-	-	-	24	A-6b (V)	
		EOB 120																

NOTES: GROUNDWATER ENCOUNTERED AT 35.0' DURING DRILLING. HOLE DID NOT CAVE.
ABANDONMENT METHODS, MATERIALS, QUANTITIES: PUMPED 150 GAL. BENTONITE GROUT

Preliminary Plans - For Reference Only

STANDARD ODOT SOIL BORING LOG (11 X 17) - OH DOT.GDT - 1/3/24 14:17 - X:\ACTIVE PROJECTS\ACTIVE SOIL PROJECTS\1ARCHIVE BY YEAR\2022 ARCHIVE\CUY-90-16.28 (CCG3A - MOD#7)\GINT FILES\CUY-90-16.28 (CCG3A).GPJ

DESIGN AGENCY
2800 CORPORATE EXCHANGE DR. SUITE 240
COLUMBUS, OH. 43231
TEL:614.714.0299
WWW.JNEASINC.COM

DESIGNER MWJ & DT
REVIEWER BPA 08/23/24
PROJECT ID 82382
SHEET 194 TOTAL 310
P 2580 TOTAL 2696

GEOTECHNICAL PROFILE - ROADWAY
BRIDGE NO. CUY-77-1587 RAMP A2 FLYOVER
BORING LOG B-135-1-20 (CONTINUED)

MODEL: Sheet PAPERSIZE: 34x22 (in.) DATE: 3/28/2025 TIME: 10:20:39 AM USER: Asiddiqi
pw:\\mb-us-pw.bentley.com:mb-us-pw-03\Documents\Cleveland_OH\01_Projects\ODOT\District12\82382\400-Engineering\Geotechnical\Sheets\82382_ZL081.dgn

STANDARD ODOT SOIL BORING LOG (8.5 X 11) - OH DOT.GDT - 1/3/24 15:18 - X:\ACTIVE PROJECTS\ACTIVE SOIL PROJECTS\1ARCHIVE BY YEAR\2017 ARCHIVE\CUY-CCG3 82380\GINT FILES\CU

PROJECT: CUY-CCG3 | DRILLING FIRM / OPERATOR: BARR / P.STROUD | DRILL RIG: MOBILE B-58 | STATION / OFFSET: 413+71, 14' LT. | EXPLORATION ID B-136-0-14
TYPE: RETAINING WALL | SAMPLING FIRM / LOGGER: BARR / C. PIERCE | HAMMER: MOBILE AUTOMATIC | ALIGNMENT: RAMP A2
PID: 82380 SFN: | DRILLING METHOD: 3.25" HSA | CALIBRATION DATE: 1/26/14 | ELEVATION: 687.3 (MSL) EOB: 61.5 ft. | PAGE 1 OF 2
START: 12/2/14 END: 12/2/14 | SAMPLING METHOD: SPT | ENERGY RATIO (%): 90* | LAT / LONG: 41.493203, -81.678620

MATERIAL DESCRIPTION AND NOTES	ELEV.	DEPTHS	SPT/RQD	N_{60}	REC (%)	SAMPLE ID	HP (tsf)	GRADATION (%) GR	CS	FS	SI	CL	ATTERBERG LL	PL	PI	WC	ODOT CLASS (GI)	BACK FILL
MEDIUM DENSE, BLACK AND BROWN, **GRAVEL WITH SAND**, TRACE SILT, TRACE CLAY, CONTAINS ASPHALT, DAMP **(FILL)**	687.3 / 685.3	1	10 12 6	27	78	SS-1	-	-	-	-	-	-	-	-	-	10	A-1-b (V)	
MEDIUM DENSE TO DENSE, BROWN, **COARSE AND FINE SAND**, TRACE SILT, TRACE GRAVEL, TRACE CLAY, CONTAINS BRICK FRAGMENTS, DAMP TO MOIST **(FILL)**		3	7 11 13	36	100	SS-2	-	8	23	57	8	4	NP	NP	NP	12	A-3a (0)	
@5.0'; SS-3 AND SS-4 CONTAIN BRICK FRAGMENTS		6	9 10 11	32	100	SS-3	-	-	-	-	-	-	-	-	-	8	A-3a (V)	
@7.5'; SS-4 CHANGES TO BROWN AND DARK GRAY	677.8	8	6 9 9	27	100	SS-4	-	-	-	-	-	-	-	-	-	10	A-3a (V)	
DENSE, DARK GRAY AND BROWN, **GRAVEL WITH SAND**, LITTLE SILT, TRACE CLAY, CONTAINS BRICK AND CONCRETE FRAGMENTS, MOIST **(FILL)**	675.3	11	18 17 11	42	100	SS-5	-	33	18	32	12	5	NP	NP	NP	11	A-1-b (0)	
MEDIUM DENSE TO DENSE, BROWN, **GRAVEL WITH SAND**, TRACE SILT, TRACE CLAY, DAMP	670.3	13	11 10 10	30	100	SS-6	-	23	52	11	9	5	NP	NP	NP	7	A-1-b (0)	
		16	6 7 7	21	100	SS-7	-	-	-	-	-	-	-	-	-	8	A-1-b (V)	
MEDIUM DENSE, BROWN, **FINE SAND**, TRACE COARSE SAND, TRACE GRAVEL, TRACE SILT, TRACE CLAY, DAMP		18	4 4 4	12	100	SS-8	-	3	9	84	2	2	NP	NP	NP	6	A-3 (0)	
		21	4 4 5	14	100	SS-9	-	-	-	-	-	-	-	-	-	6	A-3 (V)	
@22.5'; SS-10 BECOMES DENSE	662.8	23	7 11 11	33	100	SS-10	-	-	-	-	-	-	-	-	-	5	A-3 (V)	
MEDIUM DENSE, BROWN, **SANDY SILT**, LITTLE CLAY, TRACE GRAVEL, CONTAINS A 2.0" SILT AND CLAY SEAM, WET	660.3	26	4 2 5	11	100	SS-11	-	0	1	41	47	11	NP	NP	NP	24	A-4a (5)	
VERY STIFF, BROWN, **SANDY SILT**, LITTLE CLAY, TRACE GRAVEL, INTERBEDDED SILT AND CLAY WITH SAND, MOIST		28	4 5 10	23	100	SS-12	2.25	0	5	36	41	18	19	13	6	17	A-4a (5)	

STANDARD ODOT SOIL BORING LOG (8.5 X 11) - OH DOT.GDT - 1/3/24 15:18 - X:\ACTIVE PROJECTS\ACTIVE SOIL PROJECTS\1ARCHIVE BY YEAR\2017 ARCHIVE\CUY-CCG3 82380\GINT FILES\CU

PID: 82380 | SFN: | PROJECT: CUY-CCG3 | STATION / OFFSET: 413+71, 14' LT. | START: 12/2/14 | END: 12/2/14 | PG 2 OF 2 | B-136-0-14

MATERIAL DESCRIPTION AND NOTES	ELEV.	DEPTHS	SPT/RQD	N_{60}	REC (%)	SAMPLE ID	HP (tsf)	GRADATION (%) GR	CS	FS	SI	CL	ATTERBERG LL	PL	PI	WC	ODOT CLASS (GI)	BACK FILL
	657.3 / 656.8	31	6 7 7	21	100	SS-13A SS-13B	2.50 -	- -	- -	- -	- -	- -	- -	- -	- -	23 16	A-4a (V) A-3 (V)	
MEDIUM DENSE, BROWN, **FINE SAND**, TRACE COARSE SAND, TRACE SILT, TRACE CLAY, WET	654.0																	
MEDIUM DENSE, BROWN, **COARSE AND FINE SAND**, SOME SILT, TRACE CLAY, MOIST TO WET		36	7 8 6	21	100	SS-14	-	0	30	37	31	2	NP	NP	NP	13	A-3a (0)	
W 649.8		41	4 4 7	17	100	SS-15	-	-	-	-	-	-	-	-	-	21	A-3a (V)	
@40.0'; SS-15 TO SS-17 BECOME LITTLE SILT, TRACE CLAY, TRACE GRAVEL		46	2 2 7	14	100	SS-16	-	1	1	82	14	2	NP	NP	NP	24	A-3a (0)	
@50.0'; SS-17 BECOMES GRAY	634.0	51	4 7 9	24	100	SS-17	-	-	-	-	-	-	-	-	-	24	A-3a (V)	
MEDIUM DENSE, GRAY, **SILT**, "AND" SAND, TRACE CLAY, WET	629.0	56	6 9 10	29	100	SS-18	-	0	4	34	55	7	NP	NP	NP	21	A-4b (5)	
DENSE, GRAY, **SILT**, LITTLE CLAY, TRACE SAND, TRACE GRAVEL, DAMP	625.8	61	11 11 13	36	100	SS-19	-	0	1	2	81	16	25	20	5	17	A-4b (8)	
	EOB																	

NOTES: GROUNDWATER ENCOUNTERED AT 37.5' DURING DRILLING. CAVE DEPTH 25.1'.
ABANDONMENT METHODS, MATERIALS, QUANTITIES: SHOVELED SOIL CUTTINGS

Preliminary Plans - For Reference Only

SHEET	TOTAL
P 2581	2696

SUBSET	TOTAL
195	310

PROJECT ID: 82382
REVIEWER: BPA 08/23/24
DESIGNER: MWJ & DT

DESIGN AGENCY
2800 CORPORATE EXCHANGE DR. SUITE 400
COLUMBUS, OH. 43231
TEL:614.714.0299
WWW.NEASINC.COM

GEOTECHNICAL PROFILE - ROADWAY
BRIDGE NO. CUY-77-1587 RAMP A2 FLYOVER
BORING LOG B-136-0-14

MODEL: Sheet PAPERSIZE: 34x22 (in.) DATE: 3/28/2025 TIME: 10:20:59 AM USER: Asiddiqi
pw:\\mb-us-pw.bentley.com:mb-us-pw-03\Documents\Cleveland_OH\01_Projects\ODOT\District12\82382\400-Engineering\Geotechnical\Sheets\82382_ZL082.dgn

STANDARD ODOT SOIL BORING LOG (8.5 X 11) - OH DOT.GDT - 1/3/24 15:18 - X:\ACTIVE PROJECTS\ACTIVE SOIL PROJECTS\1\ARCHIVE BY YEAR\2017 ARCHIVE\CUY-CCG3 82380\GINT FILES\CU

PROJECT: CUY-CCG3 | DRILLING FIRM / OPERATOR: BARR / D.SHOPE | DRILL RIG: CME 55 | STATION / OFFSET: 414+82, 26' LT. | EXPLORATION ID B-138-0-14
TYPE: RETAINING WALL | SAMPLING FIRM / LOGGER: BARR / D.KLIMKOWICZ | HAMMER: CME AUTOMATIC | ALIGNMENT: RAMP A2
PID: 82380 SFN: | DRILLING METHOD: 3.25" HSA | CALIBRATION DATE: 1/26/14 | ELEVATION: 685.5 (MSL) EOB: 62.0 ft. | PAGE 1 OF 2
START: 12/2/14 END: 12/3/14 | SAMPLING METHOD: SPT / ST | ENERGY RATIO (%): 78.8 | LAT / LONG: 41.493397, -81.678942

MATERIAL DESCRIPTION AND NOTES	ELEV. 685.5	DEPTHS	SPT/ RQD	N_{60}	REC (%)	SAMPLE ID	HP (tsf)	GRADATION (%) GR	CS	FS	SI	CL	ATTERBERG LL	PL	PI	WC	ODOT CLASS (GI)	BACK FILL
4.0", **TOPSOIL**	685.2																	
MEDIUM DENSE TO VERY DENSE, BROWN, **COARSE AND FINE SAND**, LITTLE SILT, LITTLE GRAVEL, TRACE CLAY, DAMP TO MOIST **(FILL)**		1	3 6 9	20	100	SS-1	-	-	-	-	-	-	-	-	-	9	A-3a (V)	
		2																
		3	10 18 12	39	100	SS-2	-	11	11	59	13	6	NP	NP	NP	10	A-3a (0)	
		4																
@5.0'; SS-3 TO SS-5 CONTAIN BRICK AND/OR CONCRETE FRAGMENTS		5	7 24 27	67	100	SS-3	-	-	-	-	-	-	-	-	-	10	A-3a (V)	
		6																
		7																
		8	8 9 18	35	100	SS-4	-	-	-	-	-	-	-	-	-	12	A-3a (V)	
		9																
		10																
		11	7 6 6	16	100	SS-5	-	-	-	-	-	-	-	-	-	14	A-3a (V)	
	673.5	12																
MEDIUM DENSE, BROWN AND GRAY, **GRAVEL WITH SAND**, TRACE SILT, TRACE CLAY, CONTAINS CONCRETE FRAGMENTS, DAMP TO MOIST **(FILL)**		13	3 3 6	12	100	SS-6	-	47	27	16	8	2	NP	NP	NP	11	A-1-b (0)	
		14																
		15																
		16	3 4 5	12	100	SS-7	-	33	18	37	9	3	NP	NP	NP	10	A-1-b (0)	
	668.5	17																
MEDIUM DENSE, BROWN, **FINE SAND**, TRACE COARSE SAND, TRACE SILT, TRACE CLAY, TRACE GRAVEL, DAMP		18	4 5 6	14	100	SS-8	-	1	9	83	4	3	NP	NP	NP	8	A-3 (0)	
	666.0	19																
MEDIUM DENSE, BROWN, **COARSE AND FINE SAND**, LITTLE SILT, TRACE GRAVEL, TRACE CLAY, DAMP TO WET		20																
		21	3 4 8	16	100	SS-9	-	10	17	54	13	6	NP	NP	NP	15	A-3a (0)	
		22																
		23	6 6 5	14	100	SS-10A	-	-	-	-	-	-	-	-	-	8	A-3a (V)	
	661.9					SS-10B	-	-	-	-	-	-	-	-	-	27	A-4b (V)	
MEDIUM DENSE, BROWN, **SILT**, SOME CLAY, TRACE SAND, TRACE GRAVEL, WET	661.0	24																
DENSE, BROWN, **COARSE AND FINE SAND**, LITTLE SILT, TRACE GRAVEL, TRACE CLAY, DAMP		25	9 15 14	38	100	SS-11	-	-	-	-	-	-	-	-	-	4	A-3a (V)	
	658.5	26																
DENSE, BROWN, **SILT**, LITTLE SAND, LITTLE CLAY, TRACE GRAVEL, DAMP	657.5	27																
MEDIUM DENSE TO DENSE, BROWN, **COARSE AND FINE SAND**, TRACE SILT, TRACE CLAY, TRACE GRAVEL, DAMP TO MOIST		28	12 12 10	29	100	SS-12A	-	-	-	-	-	-	-	-	-	15	A-4b (V)	
						SS-12B	-	3	28	56	9	4	NP	NP	NP	13	A-3a (0)	
		29																

STANDARD ODOT SOIL BORING LOG (8.5 X 11) - OH DOT.GDT - 1/3/24 15:18 - X:\ACTIVE PROJECTS\ACTIVE SOIL PROJECTS\1\ARCHIVE BY YEAR\2017 ARCHIVE\CUY-CCG3 82380\GINT FILES\CU

PID: 82380 | SFN: | PROJECT: CUY-CCG3 | STATION / OFFSET: 414+82, 26' LT. | START: 12/2/14 | END: 12/3/14 | PG 2 OF 2 | B-138-0-14

MATERIAL DESCRIPTION AND NOTES	ELEV. 655.5	DEPTHS	SPT/ RQD	N_{60}	REC (%)	SAMPLE ID	HP (tsf)	GRADATION (%) GR	CS	FS	SI	CL	ATTERBERG LL	PL	PI	WC	ODOT CLASS (GI)	BACK FILL
	654.3																	
MEDIUM STIFF TO STIFF, BROWN MOTTLED WITH GRAY, **SILT AND CLAY**, TRACE SAND, TRACE GRAVEL, MOIST	652.2	31	12 13 19	42	100	SS-13A	-	-	-	-	-	-	-	-	-	10	A-3a (V)	
						SS-13B	1.00	-	-	-	-	-	-	-	-	23	A-6a (V)	
		32																
		33																
VERY DENSE, GRAYISH BROWN, **COARSE AND FINE SAND**, LITTLE SILT, TRACE CLAY, TRACE GRAVEL, WET		34																
W	650.5	35	13 16 23	51	100	SS-14	-	-	-	-	-	-	-	-	-	20	A-3a (V)	
	647.2	36																
DENSE, GRAYISH BROWN, **SANDY SILT**, TRACE CLAY, TRACE GRAVEL, WET		37																
		38																
		39																
		40																
		41	11 12 14	34	100	SS-15	-	1	0	48	46	5	NP	NP	NP	23	A-4a (3)	
	642.2	42																
DENSE TO VERY DENSE, GRAYISH BROWN, **SILT**, LITTLE CLAY, TRACE SAND, TRACE GRAVEL, DAMP TO MOIST		43																
		44																
		45																
		46	9 14 25	51	100	SS-16	-	-	-	-	-	-	-	-	-	22	A-4b (V)	
		47																
		48																
		49																
		50																
		51	14 24 41	85	100	SS-17	-	-	-	-	-	-	-	-	-	18	A-4b (V)	
		52																
		53																
		54																
		55																
@55.0'; SS-18 BECOMES GRAY		56	11 14 15	38	100	SS-18	-	0	0	7	78	15	24	21	3	19	A-4b (8)	
		57																
		58																
		59																
		60																
@60.0'; ST-19 BECOMES LITTLE SAND		61																
@60.8'; UNIT WEIGHT: 137.4 PCF @ 29.1% MC	623.5	EOB			100	ST-19	-	0	1	19	69	11	22	19	3	29	A-4b (8)	
		62																

NOTES: GROUNDWATER ENCOUNTERED AT 35.0' DURING DRILLING. CAVE DEPTH 30.0'.
ABANDONMENT METHODS, MATERIALS, QUANTITIES: SHOVELED SOIL CUTTINGS

Preliminary Plans - For Reference Only

SHEET	TOTAL
P 2582	2696

SUBSET	TOTAL
196	310

PROJECT ID 82382

REVIEWER	
BPA	08/23/24

DESIGNER MWJ & DT

DESIGN AGENCY
2800 CORPORATE EXCHANGE DR. SUITE 240
COLUMBUS, OH. 43231
TEL: 614.714.0299
WWW.NEASINC.COM

GEOTECHNICAL PROFILE - ROADWAY
BRIDGE NO. CUY-77-1587 RAMP A2 FLYOVER
BORING LOG B-138-0-14

MODEL: Sheet PAPERSIZE: 34x22 (in.) DATE: 3/28/2025 TIME: 10:21:20 AM USER: Asiddiqi
pw:\\mb-us-pw.bentley.com:mb-us-pw-03\Documents\Cleveland_OH\01_Projects\ODOT\District12\82382\400-Engineering\Geotechnical\Sheets\82382_ZL083.dgn

PROJECT: CUY-90-16.28 (CCG3A)
TYPE: BRIDGE
PID: 82382 SFN: 1806910
START: 3/23/21 END: 3/24/21

DRILLING FIRM / OPERATOR: NEAS / J. HODGES
SAMPLING FIRM / LOGGER: NEAS / J. HODGES
DRILLING METHOD: 3.25" HSA
SAMPLING METHOD: SPT

DRILL RIG: CME 75T
HAMMER: CME AUTOMATIC
CALIBRATION DATE: 5/1/19
ENERGY RATIO (%): 89

STATION / OFFSET: 416+28, 34' RT.
ALIGNMENT: RAMP A2
ELEVATION: 683.7 (MSL) EOB: 100.0 ft.
LAT / LONG: 41.493809, -81.679116

EXPLORATION ID: B-138-1-20
PAGE: 1 OF 2

MATERIAL DESCRIPTION AND NOTES	ELEV.	DEPTHS	SPT/ RQD	N_{60}	REC (%)	SAMPLE ID	HP (tsf)	GRADATION (%) GR	CS	FS	SI	CL	ATTERBERG LL	PL	PI	WC	ODOT CLASS (GI)	HOLE SEALED
HARD, BROWN, **SILT AND CLAY**, SOME SAND, SOME GRAVEL AND STONE FRAGMENTS, CONTAINS IRON STAINING, DAMP	683.7		2 5 5	15	44	SS-1	4.50	23	14	21	23	19	31	18	13	13	A-6a (2)	
MEDIUM DENSE TO DENSE, BROWN AND BROWNISH GRAY, **COARSE AND FINE SAND** TRACE TO LITTLE GRAVEL, TRACE TO LITTLE SILT, TRACE CLAY, DAMP TO MOIST	678.7		4 9 10	28	100	SS-2	-	-	-	-	-	-	-	-	-	9	A-3a (V)	
			3 7 15	33	100	SS-3	-	-	-	-	-	-	-	-	-	13	A-3a (V)	
			7 10 12	33	100	SS-4	-	-	-	-	-	-	-	-	-	6	A-3a (V)	
@12.5' TO 21.0'; BECOMES LOOSE			2 3 4	10	100	SS-5	-	-	-	-	-	-	-	-	-	8	A-3a (V)	
			1 2 3	7	100	SS-6	-	-	-	-	-	-	-	-	-	15	A-3a (V)	
			1 2 4	9	100	SS-7	-	-	-	-	-	-	-	-	-	10	A-3a (V)	
			1 1 3	6	100	SS-8A	-	-	-	-	-	-	-	-	-	17	A-3a (V)	
STIFF TO VERY STIFF, BROWN, **SILTY CLAY**, TRACE SAND, TRACE GRAVEL, MOIST	662.7					SS-8B	1.50	0	0	9	41	50	38	21	17	25	A-6b (11)	
	658.4		4 4 6	15	100	SS-9A	2.75	-	-	-	-	-	-	-	-	28	A-6b (V)	
LOOSE TO MEDIUM DENSE, BROWN BECOMING GRAY, **COARSE AND FINE SAND** TRACE TO LITTLE SILT, TRACE GRAVEL, TRACE CLAY, MOIST TO WET						SS-9B	-	-	-	-	-	-	-	-	-	7	A-3a (V)	
			3 3 4	10	100	SS-10	-	-	-	-	-	-	-	-	-	11	A-3a (V)	
		W 648.7	2 8 11	28	100	SS-11	-	-	-	-	-	-	-	-	-	28	A-3a (V)	
@40.0' TO 51.5'; BECOMES DENSE TO VERY DENSE			7 13 15	42	100	SS-12	-	-	-	-	-	-	-	-	-	19	A-3a (V)	
			9 10 13	34	100	SS-13	-	-	-	-	-	-	-	-	-	19	A-3a (V)	
			6 14 26	59	100	SS-14	-	-	-	-	-	-	-	-	-	21	A-3a (V)	
MEDIUM DENSE TO DENSE, GRAY, **SILT**, LITTLE CLAY, TRACE SAND, TRACE GRAVEL, WET	630.4		7 14 15	43	100	SS-15	-	0	0	6	80	14	NP	NP	NP	19	A-4b (8)	

Preliminary Plans - For Reference Only

STANDARD ODOT SOIL BORING LOG (11 X 17) - OH DOT.GDT - 1/3/24 14:17 - X:\ACTIVE PROJECTS\ACTIVE SOIL PROJECTS\1ARCHIVE BY YEAR\2022 ARCHIVE\CUY-90-16.28 (CCG3A - MOD#7)\GINT FILES\CUY-90-16.28 (CCG3A).GPJ

DESIGN AGENCY: NEAS
2800 CORPORATE EXCHANGE DR. SUITE 240 COLUMBUS, OH. 43231 TEL:614.714.0299 WWW.NEASINC.COM

DESIGNER: MWJ & DT
REVIEWER: BPA 08/23/24
PROJECT ID: 82382
SHEET: P 2583 TOTAL 2696
SUBSET: 197 TOTAL 310

GEOTECHNICAL PROFILE - ROADWAY
BRIDGE NO. CUY-77-1587 RAMP A2 FLYOVER
BORING LOG B-138-1-20

MODEL: Sheet PAPERSIZE: 34x22 (in.) DATE: 3/28/2025 TIME: 10:21:47 AM USER: Asiddiqi
pw:\\mb-us-pw.bentley.com:mb-us-pw-03\Documents\Cleveland_OH\01_Projects\ODOT\District12\82382\400-Engineering\Geotechnical\Sheets\82382_ZL084.dgn

PID: 82382 | SFN: | PROJECT: CUY-90-16.28 (CCG3A) | STATION / OFFSET: 416+28, 34' RT. | START: 3/23/21 | END: 3/24/21 | PG 2 OF 2 | B-138-1-20

MATERIAL DESCRIPTION AND NOTES	ELEV.	DEPTHS	SPT/ RQD	N_{60}	REC (%)	SAMPLE ID	HP (tsf)	GRADATION (%) GR	CS	FS	SI	CL	ATTERBERG LL	PL	PI	WC	ODOT CLASS (GI)	HOLE SEALED
MEDIUM DENSE TO DENSE, GRAY, **SILT**, LITTLE CLAY, TRACE SAND, TRACE GRAVEL, WET *(continued)*	623.7	61	4 5 7	18	100	SS-16	-	-	-	-	-	-	-	-	-	21	A-4b (V)	
	620.4	63																
HARD, GRAY, **SILT**, SOME CLAY, TRACE SAND, TRACE GRAVEL, DAMP TO MOIST		65	5 9 12	31	100	SS-17	4.50	0	0	2	76	22	26	20	6	20	A-4b (8)	
		70	7 11 12	34	100	SS-18	4.50	-	-	-	-	-	-	-	-	19	A-4b (V)	
		75	6 9 11	30	100	SS-19	4.50	0	0	2	75	23	27	19	8	19	A-4b (8)	
		80	3 6 10	24	100	SS-20	4.25	-	-	-	-	-	-	-	-	19	A-4b (V)	
		85	4 8 11	28	100	SS-21	4.50	0	0	3	71	26	27	20	7	18	A-4b (8)	
		90	6 8 15	34	100	SS-22	4.50	-	-	-	-	-	-	-	-	20	A-4b (V)	
		95	5 8 14	33	100	SS-23	4.50	0	0	1	67	32	29	21	8	20	A-4b (8)	
	583.7	EOB 100	4 8 10	27	100	SS-24	4.50	-	-	-	-	-	-	-	-	22	A-4b (V)	

NOTES: GROUNDWATER ENCOUNTERED AT 35.0' DURING DRILLING. HOLE DID NOT CAVE.
ABANDONMENT METHODS, MATERIALS, QUANTITIES: PUMPED 100 GAL. BENTONITE GROUT; SHOVELED SOIL CUTTINGS

Preliminary Plans - For Reference Only

STANDARD ODOT SOIL BORING LOG (11 X 17) - OH DOT.GDT - 1/3/24 14:17 - X:\ACTIVE PROJECTS\ACTIVE SOIL PROJECTS\1ARCHIVE BY YEAR\2022 ARCHIVE\CUY-90-16.28 (CCG3A - MOD#7)\GINT FILES\CUY-90-16.28 (CCG3A).GPJ

DESIGN AGENCY
EAS
2800 CORPORATE EXCHANGE DR. SUITE 240
COLUMBUS, OH. 43231
TEL:614.714.0299
WWW.AEASINC.COM

DESIGNER MW,J & DT
REVIEWER BPA 08/23/24
PROJECT ID 82382
SUBSET 198 TOTAL 310
SHEET P 2584 TOTAL 2696

GEOTECHNICAL PROFILE - ROADWAY
BRIDGE NO. CUY-77-1587 RAMP A2 FLYOVER
BORING LOG B-138-1-20 (CONTINUED)

MODEL: Sheet PAPERSIZE: 34x22 (in.) DATE: 3/28/2025 TIME: 10:22:05 AM USER: Asiddiqi
pw:\\mb-us-pw.bentley.com:mb-us-pw-03\Documents\Cleveland_OH\01_Projects\ODOT\District12\82382\400-Engineering\Geotechnical\Sheets\82382_ZL085.dgn

STANDARD ODOT SOIL BORING LOG (8.5 X 11) - OH DOT.GDT - 1/3/24 15:18 - X:\ACTIVE PROJECTS\ACTIVE SOIL PROJECTS\1ARCHIVE BY YEAR\2017 ARCHIVE\CUY-CCG3 82380\GINT FILES\CU

PROJECT: CUY-CCG3 | DRILLING FIRM / OPERATOR: BARR / T.GILBERT | DRILL RIG: CME 55X | STATION / OFFSET: 417+74, 37' RT. | EXPLORATION ID B-139-0-14
TYPE: RETAINING WALL | SAMPLING FIRM / LOGGER: BARR / D.KLIMKOWICZ | HAMMER: CME AUTOMATIC | ALIGNMENT: RAMP A2
PID: 82380 SFN: | DRILLING METHOD: 3.25" HSA | CALIBRATION DATE: 1/26/14 | ELEVATION: 682.5 (MSL) EOB: 62.0 ft. | PAGE 1 OF 2
START: 4/1/15 END: 4/1/15 | SAMPLING METHOD: SPT / ST | ENERGY RATIO (%): 81.2 | LAT / LONG: 41.494139, -81.679389

MATERIAL DESCRIPTION AND NOTES	ELEV.	DEPTHS	SPT/ RQD	N_{60}	REC (%)	SAMPLE ID	HP (tsf)	GRADATION (%) GR	CS	FS	SI	CL	ATTERBERG LL	PL	PI	WC	ODOT CLASS (GI)	BACK FILL
MEDIUM DENSE TO DENSE, BROWN, **COARSE AND FINE SAND**, SOME SILT, LITTLE GRAVEL, TRACE CLAY, DAMP **(FILL)**	682.5	1	3 5 5	14	100	SS-1	-	-	-	-	-	-	-	-	-	12	A-3a (V)	
		2																
		3	15 17 20	50	100	SS-2	-	12	16	41	23	8	NP	NP	NP	10	A-3a (0)	
	678.0	4																
VERY DENSE, BROWN, **GRAVEL WITH SAND AND SILT**, LITTLE CLAY, DAMP **(FILL)**		5	18 21 17	51	100	SS-3	-	18	11	38	21	12	NP	NP	NP	11	A-2-4 (0)	
	675.5	6																
LOOSE TO MEDIUM DENSE, BROWN, **GRAVEL WITH SAND**, TRACE SILT, TRACE CLAY, DAMP @7.5'; SS-4 CONTAINS BRICK FRAGMENTS		7																
		8	11 11 11	30	100	SS-4	-	-	-	-	-	-	-	-	-	8	A-1-b (V)	
		9																
		10																
		11	5 4 4	11	100	SS-5	-	27	26	39	5	3	NP	NP	NP	7	A-1-b (0)	
		12																
		13	3 3 4	9	100	SS-6	-	-	-	-	-	-	-	-	-	10	A-1-b (V)	
	668.0	14																
LOOSE, BROWN, **FINE SAND**, TRACE COARSE SAND, TRACE SILT, TRACE CLAY, TRACE GRAVEL, DAMP		15																
		16	2 3 4	9	100	SS-7	-	-	-	-	-	-	-	-	-	9	A-3 (V)	
	665.5	17																
LOOSE, BROWN, **SANDY SILT**, TRACE CLAY, TRACE GRAVEL, MOIST		18	2 3 3	8	100	SS-8	-	1	2	48	40	9	NP	NP	NP	17	A-4a (3)	
	663.0	19																
MEDIUM STIFF TO STIFF, BROWN, **SANDY SILT**, SOME CLAY, TRACE GRAVEL, MOIST TO WET @20.0'; SS-9 TO SS-10 BECOME SOME CLAY		20																
		21	3 3 3	8	100	SS-9	2.00	-	-	-	-	-	-	-	-	22	A-4a (V)	
		22																
		23	3 3 5	11	100	SS-10	1.25	0	0	25	42	33	25	16	9	28	A-4a (8)	
	658.0	24																
MEDIUM DENSE, GRAY, **SILT**, LITTLE CLAY, LITTLE SAND, TRACE GRAVEL, DAMP		25																
		26	5 10 9	26	100	SS-11	-	-	-	-	-	-	-	-	-	14	A-4b (V)	
	655.5	27																
LOOSE, BROWN, **FINE SAND**, TRACE COARSE SAND, TRACE SILT, TRACE CLAY, TRACE GRAVEL, MOIST		28	3 4 3	9	67	SS-12	-	-	-	-	-	-	-	-	-	18	A-3 (V)	
	653.0	29																

STANDARD ODOT SOIL BORING LOG (8.5 X 11) - OH DOT.GDT - 1/3/24 15:18 - X:\ACTIVE PROJECTS\ACTIVE SOIL PROJECTS\1ARCHIVE BY YEAR\2017 ARCHIVE\CUY-CCG3 82380\GINT FILES\CU

PID: 82380 | SFN: | PROJECT: CUY-CCG3 | STATION / OFFSET: 417+74, 37' RT. | START: 4/1/15 | END: 4/1/15 | PG 2 OF 2 | B-139-0-14

MATERIAL DESCRIPTION AND NOTES	ELEV.	DEPTHS	SPT/ RQD	N_{60}	REC (%)	SAMPLE ID	HP (tsf)	GRADATION (%) GR	CS	FS	SI	CL	ATTERBERG LL	PL	PI	WC	ODOT CLASS (GI)	BACK FILL
MEDIUM DENSE, BROWN, **COARSE AND FINE SAND**, TRACE SILT, TRACE CLAY, TRACE GRAVEL, DAMP *(continued)*	652.5	31	3 6 8	19	100	SS-13	-	-	-	-	-	-	-	-	-	10	A-3a (V)	
	649.2	32																
MEDIUM DENSE TO DENSE, DARK BROWN, **SANDY SILT**, TRACE CLAY, TRACE GRAVEL, WET		33																
		34																
	W 647.5	35																
		36	5 7 8	20	100	SS-14	-	0	2	59	36	3	NP	NP	NP	25	A-4a (1)	
		37																
		38																
		39																
		40																
		41	8 15 20	47	100	SS-15	-	-	-	-	-	-	-	-	-	23	A-4a (V)	
		42																
		43																
		44																
		45																
		46	2 5 10	20	100	SS-16	-	-	-	-	-	-	-	-	-	21	A-4a (V)	
		47																
		48																
		49																
@50.0'; SS-17 BECOMES VERY DENSE		50																
		51	13 19 21	54	100	SS-17	-	-	-	-	-	-	-	-	-	24	A-4a (V)	
	629.2	52																
HARD, GRAY, **SILT**, SOME CLAY, TRACE SAND, TRACE GRAVEL, DAMP TO MOIST		53																
		54																
		55																
		56	5 10 13	31	100	SS-18	4.25	-	-	-	-	-	-	-	-	20	A-4b (V)	
		57																
		58																
		59																
		60																
@61.1'; UNIT WEIGHT: 135.5 PCF @ 15.7% MC	620.5	61			100	SS-19	4.50	0	0	0	66	34	26	19	7	19	A-4b (8)	
	EOB	62																

NOTES: GROUNDWATER ENCOUNTERED AT 35.0' DURING DRILLING. CAVE DEPTH 16.5'.
ABANDONMENT METHODS, MATERIALS, QUANTITIES: SHOVELED SOIL CUTTINGS

Preliminary Plans - For Reference Only

SHEET	TOTAL
P 2585	2696

SUBSET 199 TOTAL 310

PROJECT ID 82382

REVIEWER BPA 08/23/24

DESIGNER MWJ & DT

DESIGN AGENCY
EAS
2800 CORPORATE EXCHANGE DR. SUITE 240
COLUMBUS, OH. 43231
TEL:614.714.0299
WWW.NEASINC.COM

GEOTECHNICAL PROFILE - ROADWAY
BRIDGE NO. CUY-77-1587 RAMP A2 FLYOVER
BORING LOG B-139-0-14

MODEL: Sheet PAPERSIZE: 34x22 (in.) DATE: 3/28/2025 TIME: 10:22:25 AM USER: Asiddiqi
pw:\\mb-us-pw.bentley.com:mb-us-pw-03\Documents\Cleveland_OH\01_Projects\ODOT\District12\82382\400-Engineering\Geotechnical\Sheets\82382_ZL086.dgn

PROJECT: CUY-90-16.28 (CCG3A)
TYPE: BRIDGE
PID: 82382 SFN: 1806910
START: 6/30/21 END: 6/30/21

DRILLING FIRM / OPERATOR: NEAS / ASHBAUGH
SAMPLING FIRM / LOGGER: NEAS / ASHBAUGH
DRILLING METHOD: 3.25" HSA
SAMPLING METHOD: SPT / ST

DRILL RIG: CME 55T
HAMMER: CME AUTOMATIC
CALIBRATION DATE: 12/5/19
ENERGY RATIO (%): 68.4

STATION / OFFSET: 418+96, 28' LT.
ALIGNMENT: RAMP A2
ELEVATION: 690.1 (MSL) EOB: 105.0 ft.
LAT / LONG: 41.494367, -81.679790

EXPLORATION ID B-139-1-20
PAGE 1 OF 2

MATERIAL DESCRIPTION AND NOTES	ELEV.	DEPTHS	SPT/ RQD	N_{60}	REC (%)	SAMPLE ID	HP (tsf)	GRADATION (%) GR	CS	FS	SI	CL	ATTERBERG LL	PL	PI	WC	ODOT CLASS (GI)	HOLE SEALED
5.0" TOPSOIL (DRILLERS DESCRIPTION)	689.7																	
MEDIUM DENSE TO DENSE, BROWN, **COARSE AND FINE SAND**, LITTLE SILT, LITTLE GRAVEL, TRACE CLAY, CONTAINS CONCRETE AND BRICK FRAGMENTS, DAMP TO MOIST **(FILL)**			11 10 10	23	72	SS-1	-	-	-	-	-	-	-	-	-	10	A-3a (V)	
			10 21 20	47	61	SS-2	-	-	-	-	-	-	-	-	-	11	A-3a (V)	
			12 14 15	33	44	SS-3	-	-	-	-	-	-	-	-	-	10	A-3a (V)	
			16 14 7	24	56	SS-4	-	11	22	41	18	8	NP	NP	NP	12	A-3a (0)	
			15 13 18	35	50	SS-5	-	-	-	-	-	-	-	-	-	11	A-3a (V)	
	675.6																	
VERY DENSE, BROWN, **STONE FRAGMENTS** LITTLE SAND, TRACE SILT, TRACE CLAY, CONTAINS CONCRETE AND BRICK FRAGMENTS, DAMP **(FILL)**			50	-	50	SS-6	-	-	-	-	-	-	-	-	-	8	A-1-a (V)	
	673.1																	
DENSE, BROWN, **GRAVEL AND STONE FRAGMENTS WITH SAND**, LITTLE SILT, TRACE CLAY, CONTAINS CONCRETE AND BRICK FRAGMENTS, DAMP **(FILL)**			20 19 14	38	39	SS-7	-	-	-	-	-	-	-	-	-	11	A-1-b (V)	
	670.6																	
MEDIUM DENSE, BROWN, **COARSE AND FINE SAND** TRACE SILT, TRACE GRAVEL, TRACE CLAY, DAMP			8 7 10	19	67	SS-8	-	-	-	-	-	-	-	-	-	8	A-3a (V)	
			8 8 6	16	50	SS-9	-	-	-	-	-	-	-	-	-	7	A-3a (V)	
			8 5 6	13	67	SS-10	-	8	10	70	8	4	NP	NP	NP	7	A-3a (0)	
	661.8																	
MEDIUM DENSE, BROWN, **GRAVEL AND STONE FRAGMENTS WITH SAND** LITTLE SILT, TRACE CLAY, DAMP			6 5 6	13	56	SS-11	-	-	-	-	-	-	-	-	-	9	A-1-b (V)	
			4 5 7	14	61	SS-12	-	-	-	-	-	-	-	-	-	10	A-1-b (V)	
	651.8	W 652.1																
MEDIUM DENSE, BROWN, **COARSE AND FINE SAND** LITTLE TO SOME SILT, TRACE CLAY, TRACE GRAVEL, WET			7 6 7	15	100	SS-13	-	-	-	-	-	-	-	-	-	23	A-3a (V)	
			8 9 9	21	100	SS-14	-	-	-	-	-	-	-	-	-	22	A-3a (V)	
			6 6 10	18	100	SS-15	-	-	-	-	-	-	-	-	-	26	A-3a (V)	
			7 8 9	19	100	SS-16	-	0	3	72	22	3	NP	NP	NP	21	A-3a (0)	

Preliminary Plans - For Reference Only

STANDARD ODOT SOIL BORING LOG (11 X 17) - OH DOT.GDT - 1/3/24 14:17 - X:\ACTIVE PROJECTS\ACTIVE SOIL PROJECTS\1ARCHIVE BY YEAR\2022 ARCHIVE\CUY-90-16.28 (CCG3A - MOD#7)\GINT FILES\CUY-90-16.28 (CCG3A).GPJ

DESIGN AGENCY
NEAS
2800 CORPORATE EXCHANGE DR. SUITE 240
COLUMBUS, OH. 43231
TEL:614.714.0299
WWW.NEASINC.COM

DESIGNER MWJ & DT
REVIEWER BPA 08/23/24
PROJECT ID 82382
SUBSET 200 TOTAL 310
SHEET P 2586 TOTAL 2696

GEOTECHNICAL PROFILE - ROADWAY
BRIDGE NO. CUY-77-1587 RAMP A2 FLYOVER
BORING LOG B-139-1-20

MODEL: Sheet PAPERSIZE: 34x22 (in.) DATE: 3/28/2025 TIME: 10:22:54 AM USER: Asiddiqi
pw:\\mb-us-pw.bentley.com:mb-us-pw-03\Documents\Cleveland_OH\01_Projects\ODOT\District12\82382\400-Engineering\Geotechnical\Sheets\82382_ZL087.dgn

PID: 82382 | SFN: | PROJECT: CUY-90-16.28 (CCG3A) | STATION / OFFSET: 418+96, 28' LT. | START: 6/30/21 | END: 6/30/21 | PG 2 OF 2 | B-139-1-20

MATERIAL DESCRIPTION AND NOTES	ELEV.	DEPTHS	SPT/ RQD	N_{60}	REC (%)	SAMPLE ID	HP (tsf)	GRADATION (%) GR	CS	FS	SI	CL	ATTERBERG LL	PL	PI	WC	ODOT CLASS (GI)	HOLE SEALED
MEDIUM DENSE, BROWN, **COARSE AND FINE SAND** LITTLE TO SOME SILT, TRACE CLAY, TRACE GRAVEL, WET *(continued)*	630.1	61	7 6 10	18	100	SS-17	-	-	-	-	-	-	-	-	-	27	A-3a (V)	
	626.8	63																
MEDIUM DENSE, GRAY, **SILT**, LITTLE CLAY, LITTLE SAND, TRACE GRAVEL, MOIST TO WET		66	7 7 11	21	100	SS-18	-	-	-	-	-	-	-	-	-	19	A-4b (V)	
		71	8 8 12	23	100	SS-19	-	0	0	11	77	12	NP	NP	NP	22	A-4b (8)	
	617.1																	
VERY STIFF TO HARD, GRAY, **SILT**, SOME CLAY, TRACE SAND, TRACE GRAVEL, MOIST TO DAMP		76	9 10 9	22	100	SS-20	3.25	-	-	-	-	-	-	-	-	19	A-4b (V)	
		81			115	ST-1	3.00	0	0	1	68	31	28	19	9	20	A-4b (8)	
		86	10 8 12	23	100	SS-21	3.50	-	-	-	-	-	-	-	-	21	A-4b (V)	
		91	8 10 12	25	100	SS-22	3.75	0	0	2	67	31	29	19	10	20	A-4b (8)	
		96	10 11 13	27	100	SS-23	4.50	-	-	-	-	-	-	-	-	19	A-4b (V)	
	585.1	EOB 105			106	ST-2	4.25	0	0	2	68	30	27	18	9	17	A-4b (8)	

NOTES: GROUNDWATER ENCOUNTERED AT 38.0' DURING DRILLING. HOLE DID NOT CAVE.
ABANDONMENT METHODS, MATERIALS, QUANTITIES: PUMPED 200 GAL. BENTONITE GROUT; POURED 1 BAG HOLE PLUG

Preliminary Plans - For Reference Only

STANDARD ODOT SOIL BORING LOG (11 X 17) - OH DOT.GDT - 1/3/24 14:17 - X:\ACTIVE PROJECTS\ACTIVE SOIL PROJECTS\1ARCHIVE BY YEAR\2022 ARCHIVE\CUY-90-16.28 (CCG3A - MOD#7)\GINT FILES\CUY-90-16.28 (CCG3A).GPJ

DESIGN AGENCY
EAS
2800 CORPORATE EXCHANGE DR. SUITE 240
COLUMBUS, OH. 43231
TEL:614.714.0299
WWW.AEASINC.COM

DESIGNER MW,J & DT
REVIEWER BPA 08/23/24
PROJECT ID 82382
SUBSET 201 TOTAL 310
SHEET P 2587 TOTAL 2696

GEOTECHNICAL PROFILE - ROADWAY
BRIDGE NO. CUY-77-1587 RAMP A2 FLYOVER
BORING LOG B-139-1-20 (CONTINUED)

MODEL: Sheet PAPERSIZE: 34x22 (in.) DATE: 3/28/2025 TIME: 10:23:13 AM USER: Asiddiqi
pw:\\mb-us-pw.bentley.com:mb-us-pw-03\Documents\Cleveland_OH\01_Projects\ODOT\District12\82382\400-Engineering\Geotechnical\Sheets\82382_ZL088.dgn

PROJECT: CUY-90-16.28 (CCG3A)
TYPE: BRIDGE
PID: 82382 SFN: 1806910
START: 3/19/21 END: 3/22/21

DRILLING FIRM / OPERATOR: NEAS / J. HODGES
SAMPLING FIRM / LOGGER: NEAS / J. HODGES
DRILLING METHOD: 3.25" HSA
SAMPLING METHOD: SPT

DRILL RIG: CME 75T
HAMMER: CME AUTOMATIC
CALIBRATION DATE: 5/1/19
ENERGY RATIO (%): 89

STATION / OFFSET: 420+24, 78' LT.
ALIGNMENT: RAMP A2
ELEVATION: 697.1 (MSL) EOB: 105.0 ft.
LAT / LONG: 41.494699, -81.680088

EXPLORATION ID B-139-2-20

MATERIAL DESCRIPTION AND NOTES	ELEV. 697.1	DEPTHS	SPT/ RQD	N_{60}	REC (%)	SAMPLE ID	HP (tsf)	GRADATION (%) GR	CS	FS	SI	CL	ATTERBERG LL	PL	PI	WC	ODOT CLASS (GI)	HOLE SEALED
MEDIUM DENSE, BROWN, **COARSE AND FINE SAND** LITTLE SILT, LITTLE GRAVEL, TRACE CLAY, DAMP **(FILL)**		1–4	7 8 9	25	33	SS-1	-	-	-	-	-	-	-	-	-	11	A-3a (V)	
	692.6																	
MEDIUM DENSE TO DENSE, BROWN, **STONE FRAGMENTS WITH SAND** LITTLE SILT, TRACE CLAY, CONTAINS RED BRICK FRAGMENTS, DAMP **(FILL)**		5–6	3 8 14	33	100	SS-2	-	-	-	-	-	-	-	-	-	11	A-1-b (V)	
		7–9	3 6 10	24	67	SS-3	-	-	-	-	-	-	-	-	-	11	A-1-b (V)	
	687.6																	
DENSE, BROWN, **COARSE AND FINE SAND** LITTLE GRAVEL, TRACE SILT, TRACE CLAY, DAMP **(FILL)**		10–11	6 13 14	40	100	SS-4	-	-	-	-	-	-	-	-	-	11	A-3a (V)	
	685.1																	
MEDIUM DENSE TO VERY DENSE, BROWNISH GRAY, **GRAVEL AND STONE FRAGMENTS WITH SAND** LITTLE SILT, TRACE CLAY, CONTAINS SLAG, CONCRETE, AND ASPHALT FRAGMENTS, DAMP **(FILL)**		12–13	2 3 7	15	89	SS-5	-	-	-	-	-	-	-	-	-	11	A-1-b (V)	
		15–16	16 19 22	61	100	SS-6	-	-	-	-	-	-	-	-	-	10	A-1-b (V)	
		18–19	2 14 20	50	100	SS-7	-	-	-	-	-	-	-	-	-	10	A-1-b (V)	
	677.6																	
VERY DENSE, GRAY, **STONE FRAGMENTS** SOME SAND, TRACE SILT, TRACE CLAY, DAMP **(FILL)**		20–21	4 13 28	61	78	SS-8	-	-	-	-	-	-	-	-	-	9	A-1-a (V)	
	675.1																	
MEDIUM DENSE TO DENSE, BROWNISH GRAY BECOMING DARK BROWN, **GRAVEL AND STONE FRAGMENTS WITH SAND** LITTLE SILT, TRACE CLAY, CONTAINS RED BRICK FRAGMENTS, DAMP **(FILL)**		23–24	2 6 19	37	100	SS-9	-	-	-	-	-	-	-	-	-	11	A-1-b (V)	
		25–26	5 8 9	25	100	SS-10	-	-	-	-	-	-	-	-	-	17	A-1-b (V)	
	668.8																	
MEDIUM DENSE, BROWN, **COARSE AND FINE SAND** TRACE GRAVEL, TRACE SILT, TRACE CLAY, DAMP		30–31	4 5 6	16	100	SS-11	-	-	-	-	-	-	-	-	-	9	A-3a (V)	
	663.8																	
LOOSE TO DENSE, BROWN, **GRAVEL WITH SAND** TRACE SILT, TRACE CLAY, DAMP		35–36	2 3 2	7	100	SS-12	-	-	-	-	-	-	-	-	-	10	A-1-b (V)	
		40–41	3 12 14	39	100	SS-13	-	-	-	-	-	-	-	-	-	6	A-1-b (V)	
	653.8																	
MEDIUM DENSE, BROWN, **COARSE AND FINE SAND** LITTLE SILT, TRACE CLAY, TRACE GRAVEL, WET		45–46	3 5 8	19	100	SS-14	-	-	-	-	-	-	-	-	-	20	A-3a (V)	
		50–51	2 5 11	24	100	SS-15	-	-	-	-	-	-	-	-	-	18	A-3a (V)	
		55–56	4 7 12	28	67	SS-16	-	-	-	-	-	-	-	-	-	15	A-3a (V)	

Preliminary Plans - For Reference Only

STANDARD ODOT SOIL BORING LOG (11 X 17) - OH DOT.GDT - 1/3/24 14:18 - X:\ACTIVE PROJECTS\ACTIVE SOIL PROJECTS\1ARCHIVE BY YEAR\2022 ARCHIVE\CUY-90-16.28 (CCG3A - MOD#7\IGINT FILES\CUY-90-16.28 (CCG3A).GPJ

DESIGN AGENCY
NEAS
2800 CORPORATE EXCHANGE DR. SUITE 240
COLUMBUS, OH. 43231
TEL:614.714.0299
WWW.NEASINC.COM

DESIGNER MWJ & DT
REVIEWER BPA 08/23/24
PROJECT ID 82382
SUBSET 202 TOTAL 310
SHEET P 2588 TOTAL 2696

GEOTECHNICAL PROFILE - ROADWAY
BRIDGE NO. CUY-77-1587 RAMP A2 FLYOVER
BORING LOG B-139-2-20

MODEL: Sheet PAPERSIZE: 34x22 (in.) DATE: 3/28/2025 TIME: 10:23:40 AM USER: Asiddiqi
pw:\\mb-us-pw.bentley.com:mb-us-pw-03\Documents\Cleveland_OH\01_Projects\ODOT\District12\82382\400-Engineering\Geotechnical\Sheets\82382_ZL089.dgn

PID: 82382 | SFN: | PROJECT: CUY-90-16.28 (CCG3A) | STATION / OFFSET: 420+24, 78' LT. | START: 3/19/21 | END: 3/22/21 | PG 2 OF 2 | B-139-2-20

MATERIAL DESCRIPTION AND NOTES	ELEV.	DEPTHS	SPT/ RQD	N_{60}	REC (%)	SAMPLE ID	HP (tsf)	GRADATION (%) GR	CS	FS	SI	CL	ATTERBERG LL	PL	PI	WC	ODOT CLASS (GI)	HOLE SEALED
MEDIUM DENSE, BROWN, **COARSE AND FINE SAND**, LITTLE SILT, TRACE CLAY, TRACE GRAVEL, WET *(continued)*	637.1	61	5 6 8	21	44	SS-17	-	0	15	65	16	4	NP	NP	NP	15	A-3a (0)	
		62																
		63																
		64																
		65																
		66	3 4 6	15	11	SS-18	-	-	-	-	-	-	-	-	-	17	A-3a (V)	
		67																
	628.8	68																
HARD, GRAY, **SILT**, SOME CLAY, TRACE SAND, TRACE GRAVEL, DAMP		69																
		70																
		71	3 5 8	19	100	SS-19	4.50	0	0	2	70	28	28	21	7	21	A-4b (8)	
		72																
	623.8	73																
VERY STIFF, GRAY, **SILT AND CLAY**, TRACE SAND, TRACE GRAVEL, MOIST		74																
		75																
		76	5 7 8	22	100	SS-20	2.50	-	-	-	-	-	-	-	-	22	A-6a (V)	
		77																
		78																
		79																
		80																
		81	2 6 9	22	100	SS-21	2.75	0	0	2	61	37	30	19	11	22	A-6a (8)	
		82																
		83																
		84																
		85																
		86	3 3 4	10	100	SS-22	2.50	-	-	-	-	-	-	-	-	24	A-6a (V)	
		87																
	608.8	88																
DENSE, GRAY, **SILT**, LITTLE CLAY, LITTLE SAND, TRACE GRAVEL, MOIST		89																
	606.6	90				SS-23A	-	-	-	-	-	-	-	-	-	21	A-4b (V)	
VERY STIFF TO HARD, GRAY, **SILT AND CLAY**, TRACE SAND, TRACE GRAVEL, DAMP TO MOIST		91	5 13 12	37	100	SS-23B	4.25	0	1	0	61	38	31	20	11	20	A-6a (8)	
		92																
		93																
		94																
		95																
		96	3 6 9	22	100	SS-24	2.75	-	-	-	-	-	-	-	-	21	A-6a (V)	
		97																
	598.8	98																
VERY STIFF, GRAY, **SILT**, "AND" CLAY, TRACE SAND, TRACE GRAVEL, MOIST TO DAMP		99																
		100																
		101	5 6 8	21	100	SS-25	2.50	0	0	0	59	41	31	21	10	22	A-4b (8)	
		102																
		103																
		104	3 8 12	30	100	SS-26	3.00	-	-	-	-	-	-	-	-	21	A-4b (V)	
	592.1	105	EOB															

NOTES: GROUNDWATER NOT ENCOUNTERED DURING DRILLING. HOLE DID NOT CAVE.
ABANDONMENT METHODS, MATERIALS, QUANTITIES: PUMPED 100 GAL. BENTONITE GROUT; SHOVELED SOIL CUTTINGS

Preliminary Plans - For Reference Only

STANDARD ODOT SOIL BORING LOG (11 X 17) - OH DOT.GDT - 1/3/24 14:18 - X:\ACTIVE PROJECTS\ACTIVE SOIL PROJECTS\1ARCHIVE BY YEAR\2022 ARCHIVE\CUY-90-16.28 (CCG3A - MOD#7\IGINT FILES\CUY-90-16.28 (CCG3A).GPJ

DESIGN AGENCY
EAS
2800 CORPORATE EXCHANGE DR. SUITE 240
COLUMBUS, OH. 43231
TEL:614.714.0299
WWW.NEASINC.COM

DESIGNER MWJ & DT
REVIEWER BPA 08/23/24
PROJECT ID 82382
SHEET 203 TOTAL 310
SHEET P 2589 TOTAL 2696

GEOTECHNICAL PROFILE - ROADWAY
BRIDGE NO. CUY-77-1587 RAMP A2 FLYOVER
BORING LOG B-139-2-20 (CONTINUED)

MODEL: Sheet PAPERSIZE: 34x22 (in.) DATE: 3/28/2025 TIME: 10:24:00 AM USER: Asiddiqi
pw:\\mb-us-pw.bentley.com:mb-us-pw-03\Documents\Cleveland_OH\01_Projects\ODOT\District12\82382\400-Engineering\Geotechnical\Sheets\82382_ZL090.dgn

PROJECT: CUY-CCG3
TYPE: BRIDGE
PID: 82380 SFN:
START: 4/14/15 END: 4/15/15

DRILLING FIRM / OPERATOR: BARR / J.GILBERT
SAMPLING FIRM / LOGGER: BARR / J.GILBERT
DRILLING METHOD: 3.25" HSA
SAMPLING METHOD: SPT

DRILL RIG: CME 55X
HAMMER: CME AUTOMATIC
CALIBRATION DATE: 1/26/14
ENERGY RATIO (%): 81.2

STATION / OFFSET: 421+13, 19' RT.
ALIGNMENT: RAMP A2
ELEVATION: 680.3 (MSL) EOB: 111.5 ft.
LAT / LONG: 41.494976, -81.679762

EXPLORATION ID B-140-0-14

MATERIAL DESCRIPTION AND NOTES	ELEV.	DEPTHS	SPT/ RQD	N_{60}	REC (%)	SAMPLE ID	HP (tsf)	GRADATION (%) GR	CS	FS	SI	CL	ATTERBERG LL	PL	PI	WC	ODOT CLASS (GI)	BACK FILL
12.0", **CONCRETE**	679.3																	
MEDIUM DENSE, LIGHT GRAY AND BROWN, **GRAVEL WITH SAND**, LITTLE SILT, TRACE CLAY, CONTAINS BRICK FRAGMENTS, DAMP **(FILL)**	677.8		2 7 10	23	33	SS-1	-	-	-	-	-	-	-	-	-	8	A-1-b (V)	
MEDIUM DENSE TO DENSE, BROWN, **COARSE AND FINE SAND**, SOME GRAVEL, LITTLE SILT, TRACE CLAY, CONTAINS SLAG, BRICK AND LIMESTONE FRAGMENTS, DAMP **(FILL)** @5.0'; SS-3 CHANGES TO DARK GRAYISH BROWN, CONTAINS CINDERS AND BRICK FRAGMENTS, FEW ROOT HAIRS, DAMP	673.3		19 19 14	45	100	SS-2	-	26	23	33	13	5	NP	NP	NP	10	A-3a (0)	
			4 9 13	30	100	SS-3	-	-	-	-	-	-	-	-	-	11	A-3a (V)	
LOOSE TO MEDIUM DENSE, BROWN, **GRAVEL WITH SAND**, TRACE SILT, TRACE CLAY, DAMP **(POSSIBLE FILL)**	668.3		5 5 4	12	100	SS-4	-	-	-	-	-	-	-	-	-	6	A-1-b (V)	
			3 2 3	7	83	SS-5	-	21	47	23	6	3	NP	NP	NP	6	A-1-b (0)	
LOOSE, BROWN, **COARSE AND FINE SAND** LITTLE SILT, TRACE CLAY, TRACE GRAVEL, CONTAINS FEW ROOTS, DAMP	665.8		2 3 3	8	83	SS-6	-	-	-	-	-	-	-	-	-	9	A-3a (V)	
LOOSE, BROWN, **FINE SAND**, SOME COARSE SAND, TRACE SILT, TRACE GRAVEL, TRACE CLAY, DAMP	663.3		2 3 4	9	83	SS-7	-	7	23	60	8	2	NP	NP	NP	8	A-3 (0)	
MEDIUM DENSE, BROWN, **COARSE AND FINE SAND** SOME GRAVEL, LITTLE SILT, TRACE CLAY, DAMP	658.3		2 5 8	18	44	SS-8	-	-	-	-	-	-	-	-	-	9	A-3a (V)	
			5 4 5	12	83	SS-9	-	-	-	-	-	-	-	-	-	5	A-3a (V)	
MEDIUM DENSE, BROWN, **GRAVEL**, SOME SAND, TRACE SILT, TRACE CLAY, DAMP	655.8		4 6 8	19	56	SS-10	-	61	24	9	5	1	NP	NP	NP	4	A-1-a (0)	
MEDIUM DENSE TO DENSE, LIGHT GRAYISH BROWN, **COARSE AND FINE SAND** LITTLE GRAVEL, TRACE SILT, TRACE CLAY, DAMP			3 7 12	26	67	SS-11	-	-	-	-	-	-	-	-	-	4	A-3a (V)	
@27.5'; SS-12 TO SS-16 BECOME WET, SS-12 CONTAINS 2.0" SILTY CLAY SEAM		W 652.8	4 4 12	22	100	SS-12	-	-	-	-	-	-	-	-	-	22	A-3a (V)	
@30.0'; SS-13 AND SS-15 BECOME BROWN, TRACE GRAVEL			7 12 14	35	100	SS-13	-	-	-	-	-	-	-	-	-	18	A-3a (V)	
			7 10 11	28	100	SS-14	-	-	-	-	-	-	-	-	-	22	A-3a (V)	
@40.0'; SS-15 TO SS-16 BECOME SOME SILT			5 11 17	38	100	SS-15	-	0	1	64	31	4	NP	NP	NP	25	A-3a (0)	
@45.0'; SS-16 BECOMES GRAYISH BROWN	632.0		4 8 11	26	100	SS-16	-	-	-	-	-	-	-	-	-	26	A-3a (V)	
DENSE, GRAYISH BROWN, **SANDY SILT**, TRACE CLAY, TRACE GRAVEL, MOIST	627.0		9 14 20	46	100	SS-17	-	-	-	-	-	-	-	-	-	21	A-4a (V)	
MEDIUM DENSE TO DENSE, GRAYISH BROWN, **SILT**, SOME CLAY, LITTLE SAND, TRACE GRAVEL, WET TO DAMP			4 4 5	12	100	SS-18	-	0	1	13	63	23	25	19	6	26	A-4b (8)	

Preliminary plans - For Reference Only

STANDARD ODOT SOIL BORING LOG (11 X 17) - OH DOT.GDT - 1/3/24 15:33 - X:\ACTIVE PROJECTS\ACTIVE SOIL PROJECTS\1ARCHIVE BY YEAR\2017 ARCHIVE\CUY-CCG3 82380\GINT FILES\CUY-CCG3 MASTER - LR UPDATED.GPJ

DESIGN AGENCY
EAS
2800 CORPORATE EXCHANGE DR. SUITE 240
COLUMBUS, OH. 43231
TEL:614.714.0299
WWW.NEASINC.COM

DESIGNER MWJ & DT
REVIEWER BPA 08/23/24
PROJECT ID 82382
SUBSET 204 TOTAL 310
SHEET P 2590 TOTAL 2696

GEOTECHNICAL PROFILE - ROADWAY
BRIDGE NO. CUY-77-1587 RAMP A2 FLYOVER
BORING LOG B-140-0-14

MODEL: Sheet PAPERSIZE: 34x22 (in.) DATE: 3/28/2025 TIME: 10:24:29 AM USER: Asiddiqi
pw:\\mb-us-pw.bentley.com:mb-us-pw-03\Documents\Cleveland_OH\01_Projects\ODOT\District12\82382\400-Engineering\Geotechnical\Sheets\82382_ZL091.dgn

PID: 82380 | SFN: | PROJECT: CUY-CCG3 | STATION / OFFSET: 421+13, 19' RT. | START: 4/14/15 | END: 4/15/15 | PG 2 OF 2 | B-140-0-14

MATERIAL DESCRIPTION AND NOTES	ELEV.	DEPTHS	SPT/ RQD	N_{60}	REC (%)	SAMPLE ID	HP (tsf)	GRADATION (%) GR	CS	FS	SI	CL	ATTERBERG LL	PL	PI	WC	ODOT CLASS (GI)	BACK FILL
MEDIUM DENSE TO DENSE, GRAYISH BROWN, **SILT**, SOME CLAY, LITTLE SAND, TRACE GRAVEL, WET TO DAMP *(continued)*		61	3 7 7	19	100	SS-19	-	-	-	-	-	-	-	-	-	22	A-4b (V)	
		62																
		63																
		64																
@65.0'; SS-20 BECOMES GRAY		65																
		66	11 12 15	37	100	SS-20	-	-	-	-	-	-	-	-	-	19	A-4b (V)	
		67																
		68																
		69																
		70																
		71	6 11 15	35	100	SS-21	-	-	-	-	-	-	-	-	-	20	A-4b (V)	
		72																
		73																
		74																
		75																
		76	4 7 9	22	100	SS-22	-	-	-	-	-	-	-	-	-	23	A-4b (V)	
		77																
	602.0	78																
STIFF TO VERY STIFF, GRAYISH BROWN, **SILT AND CLAY**, TRACE SAND, TRACE GRAVEL, MOIST		79																
		80																
		81	0 3 4	9	100	SS-23	1.75	0	0	2	60	38	30	19	11	25	A-6a (8)	
		82																
		83																
		84																
		85																
		86	0 4 6	14	100	SS-24	2.60	-	-	-	-	-	-	-	-	26	A-6a (V)	
		87																
	592.0	88																
STIFF TO VERY STIFF, GRAYISH BROWN, **SILT**, SOME CLAY, TRACE SAND, TRACE GRAVEL, INTERBEDDED, MOIST		89																
		90																
		91	5 7 10	23	100	SS-25	2.10	0	0	1	70	29	26	19	7	20	A-4b (8)	
		92																
		93																
		94																
		95																
		96	2 4 9	18	100	SS-26	1.75	-	-	-	-	-	-	-	-	23	A-4b (V)	
		97																
	582.0	98																
STIFF TO VERY STIFF, GRAYISH BROWN, **SILT AND CLAY**, TRACE SAND, TRACE GRAVEL, INTERBEDDED, MOIST		99																
		100																
		101	4 8 10	24	100	SS-27	1.90	-	-	-	-	-	-	-	-	22	A-6a (V)	
		102																
		103																
		104																
		105																
		106	4 8 10	24	100	SS-28	4.00	-	-	-	-	-	-	-	-	21	A-6a (V)	
		107																
		108																
		109																
		110																
	568.8	111	5 7 9	22	100	SS-29	2.30	2	1	5	44	48	30	19	11	22	A-6a (8)	
		EOB																

NOTES: GROUNDWATER ENCOUNTERED AT 27.5' DURING DRILLING.
ABANDONMENT METHODS, MATERIALS, QUANTITIES: SHOVELED SOIL CUTTINGS

STANDARD ODOT SOIL BORING LOG (11 X 17) - OH DOT.GDT - 1/3/24 15:33 - X:\ACTIVE PROJECTS\ACTIVE SOIL PROJECTS\1ARCHIVE BY YEAR\2017 ARCHIVE\CUY-CCG3 82380\GINT FILES\CUY-CCG3 MASTER - LR UPDATED.GPJ

Preliminary Plans - For Reference Only

DESIGN AGENCY
2800 CORPORATE EXCHANGE DR. SUITE 240
COLUMBUS, OH. 43231
TEL:614.714.0299
WWW.JNEASINC.COM

DESIGNER MWJ & DT
REVIEWER BPA 08/23/24
PROJECT ID 82382
SHEET 205 TOTAL 310
P 2591 TOTAL 2696

GEOTECHNICAL PROFILE - ROADWAY
BRIDGE NO. CUY-77-1587 RAMP A2 FLYOVER
BORING LOG B-140-0-14 (CONTINUED)

MODEL: Sheet PAPERSIZE: 34x22 (in.) DATE: 3/28/2025 TIME: 10:24:48 AM USER: Asiddiqi
pw:\\mb-us-pw.bentley.com:mb-us-pw-03\Documents\Cleveland_OH\01_Projects\ODOT\District12\82382\400-Engineering\Geotechnical\Sheets\82382_ZL092.dgn

PROJECT: CUY-90-16.28 (CCG3A)
TYPE: BRIDGE
PID: 82382 SFN: 1806910
START: 5/6/21 END: 5/7/21

DRILLING FIRM / OPERATOR: NEAS / J. HODGES
SAMPLING FIRM / LOGGER: NEAS / J. HODGES
DRILLING METHOD: 3.25" HSA
SAMPLING METHOD: SPT / ST

DRILL RIG: CME 75T
HAMMER: CME AUTOMATIC
CALIBRATION DATE: 5/1/19
ENERGY RATIO (%): 89

STATION / OFFSET: 423+20, 13' LT.
ALIGNMENT: RAMP A2
ELEVATION: 668.6 (MSL) EOB: 125.0 ft.
LAT / LONG: 41.495547, -81.679775

EXPLORATION ID: B-141-1-20
PAGE: 1 OF 3

MATERIAL DESCRIPTION AND NOTES	ELEV.	DEPTHS	SPT/ RQD	N_{60}	REC (%)	SAMPLE ID	HP (tsf)	GRADATION (%) GR	CS	FS	SI	CL	ATTERBERG LL	PL	PI	WC	ODOT CLASS (GI)	HOLE SEALED
MEDIUM DENSE TO VERY DENSE, BROWNISH GRAY, **GRAVEL AND STONE FRAGMENTS WITH SAND AND SILT**, TRACE CLAY, CONTAINS ASPHALT FRAGMENTS, DAMP **(FILL)**	668.6		20 22 26	71	100	SS-1	-	-	-	-	-	-	-	-	-	9	A-2-4 (V)	
			16 10 8	27	100	SS-2	-	-	-	-	-	-	-	-	-	9	A-2-4 (V)	
LOOSE TO MEDIUM DENSE, BROWN, **COARSE AND FINE SAND**, LITTLE TO SOME SILT, TRACE TO LITTLE CLAY, TRACE TO LITTLE GRAVEL, CONTAINS SLAG, DAMP **(FILL)**	661.6		3 3 3	9	100	SS-3	-	-	-	-	-	-	-	-	-	8	A-3a (V)	
			4 7 5	18	100	SS-4	-	-	-	-	-	-	-	-	-	9	A-3a (V)	
@12.5'; SS-5 CHANGES TO DENSE			8 19 12	46	67	SS-5	-	10	18	39	21	12	NP	NP	NP	9	A-3a (0)	
SOFT, BROWNISH GRAY, **SANDY SILT**, LITTLE CLAY, TRACE GRAVEL, MOIST	654.1		3 10 10	30	39	SS-6	0.25	-	-	-	-	-	-	-	-	18	A-4a (V)	
MEDIUM DENSE TO DENSE, BROWN, **COARSE AND FINE SAND**, LITTLE TO SOME SILT, TRACE TO LITTLE CLAY, TRACE GRAVEL, DAMP	651.6		4 5 10	22	17	SS-7	-	-	-	-	-	-	-	-	-	8	A-3a (V)	
@20.0' TO 36.5'; BECOMES WET			5 9 12	31	67	SS-8	-	3	17	47	22	11	NP	NP	NP	15	A-3a (0)	
		W 643.6	7 7 8	22	100	SS-9	-	-	-	-	-	-	-	-	-	24	A-3a (V)	
			7 10 12	33	100	SS-10	-	-	-	-	-	-	-	-	-	20	A-3a (V)	
			7 8 15	34	100	SS-11	-	-	-	-	-	-	-	-	-	21	A-3a (V)	
MEDIUM DENSE, GRAY, **SILT**, LITTLE TO "AND" CLAY, TRACE TO LITTLE SAND, TRACE GRAVEL, MOIST TO WET	630.3		9 6 6	18	100	SS-12	-	0	0	16	68	16	NP	NP	NP	20	A-4b (8)	
@45.0' TO 51.5'; BECOMES VERY STIFF TO HARD			7 8 8	24	100	SS-13	4.25	0	0	4	73	23	26	20	6	21	A-4b (8)	
@49.1' TO 49.6'; Qu = 1445 PSF @ 8.0%					100	ST-1	4.50	0	0	5	80	15	24	20	4	24	A-4b (8)	
@50.0' TO 51.5'; SS-14 BECOMES DAMP			8 8 9	25	100	SS-14	3.25	-	-	-	-	-	-	-	-	19	A-4b (V)	
@55.0' TO 61.5'; BECOMES SOFT TO MEDIUM STIFF			2 2 2	6	100	SS-15	0.50	0	0	4	64	32	28	20	8	24	A-4b (8)	

Preliminary Plans - For Reference Only

STANDARD ODOT SOIL BORING LOG (11 X 17) - OH DOT.GDT - 1/3/24 14:18 - X:\ACTIVE PROJECTS\ACTIVE SOIL PROJECTS\1ARCHIVE BY YEAR\2022 ARCHIVE\CUY-90-16.28 (CCG3A - MOD#7)\GINT FILES\CUY-90-16.28 (CCG3A).GPJ

DESIGN AGENCY: NEAS — 2800 CORPORATE EXCHANGE DR. SUITE 240 COLUMBUS, OH. 43231 TEL:614.714.0299 WWW.NEASINC.COM
DESIGNER: MWJ & DT
REVIEWER: BPA 08/23/24
PROJECT ID: 82382
SHEET: P 2592 TOTAL: 2696
SUBSET: 206 TOTAL: 310

GEOTECHNICAL PROFILE - ROADWAY
BRIDGE NO. CUY-77-1587 RAMP A2 FLYOVER
BORING LOG B-141-1-20

MODEL: Sheet PAPERSIZE: 34x22 (in.) DATE: 3/28/2025 TIME: 10:25:14 AM USER: Asiddiqi
pw:\\mb-us-pw.bentley.com:mb-us-pw-03\Documents\Cleveland_OH\01_Projects\ODOT\District12\82382\400-Engineering\Geotechnical\Sheets\82382_ZL093.dgn

PID: 82382 | SFN: | PROJECT: CUY-90-16.28 (CCG3A) | STATION / OFFSET: 423+20, 13' LT. | START: 5/6/21 | END: 5/7/21 | PG 2 OF 3 | B-141-1-20

MATERIAL DESCRIPTION AND NOTES	ELEV.	DEPTHS	SPT/ RQD	N_{60}	REC (%)	SAMPLE ID	HP (tsf)	GRADATION (%) GR	CS	FS	SI	CL	ATTERBERG LL	PL	PI	WC	ODOT CLASS (GI)	HOLE SEALED
MEDIUM DENSE, GRAY, **SILT**, LITTLE TO "AND" CLAY, TRACE TO LITTLE SAND, TRACE GRAVEL, MOIST TO WET *(continued)*	608.6	61	2 3 3	9	100	SS-16	0.50	-	-	-	-	-	-	-	-	21	A-4b (V)	
		62																
@63.0' TO 96.5'; BECOMES VERY STIFF TO HARD		63																
		64			100	ST-2	3.50	0	0	2	70	28	26	20	6	20	A-4b (8)	
@64.3' TO 64.8'; Qu = 2082 PSF @ 14.5%, DAMP		65	5 8 9	25	100	SS-17	4.25	1	0	1	69	29	27	20	7	21	A-4b (8)	
		66																
		67																
		68																
		69																
		70																
		71	3 6 9	22	100	SS-18	2.75	0	0	3	66	31	26	18	8	21	A-4b (8)	
		72																
		73																
		74																
		75																
		76	4 8 10	27	100	SS-19	2.50	-	-	-	-	-	-	-	-	21	A-4b (V)	
		77																
		78																
		79																
		80																
		81	5 6 10	24	100	SS-20	2.50	0	0	1	60	39	29	19	10	22	A-4b (8)	
		82																
		83																
		84																
		85																
		86	6 9 14	34	100	SS-21	3.00	-	-	-	-	-	-	-	-	20	A-4b (V)	
		87																
		88																
		89																
		90																
		91	8 11 20	46	100	SS-22	3.75	0	0	1	71	28	26	21	5	23	A-4b (8)	
		92																
		93																
		94																
		95																
		96	6 9 12	31	100	SS-23	3.25	-	-	-	-	-	-	-	-	22	A-4b (V)	
		97																
	570.3	98																
MEDIUM STIFF TO VERY STIFF, GRAY, **SILT AND CLAY**, TRACE SAND, TRACE GRAVEL, MOIST		99																
		100																
		101	8 10 12	33	100	SS-24	0.75	2	1	2	53	42	30	18	12	24	A-6a (9)	
		102																
		103																
		104																
		105																
		106	4 5 6	16	100	SS-25	2.25	-	-	-	-	-	-	-	-	23	A-6a (V)	
		107																
	560.3	108																
SOFT TO MEDIUM STIFF, GRAY, **SILTY CLAY**, TRACE SAND, TRACE GRAVEL, MOIST		109																
		110																
		111	1 3 4	10	100	SS-26	0.50	-	-	-	-	-	-	-	-	28	A-6b (V)	
		112																
		113																
		114																
		115																
		116	0 2 3	7	100	SS-27	0.75	0	1	2	38	59	36	20	16	27	A-6b (10)	
		117																
		118																
		119																
		120																
		121	1 3 5	12	100	SS-28	0.50	-	-	-	-	-	-	-	-	24	A-6b (V)	

Preliminary Plans - For Reference Only

STANDARD ODOT SOIL BORING LOG (11" X 17") - OH DOT.GDT - 1/3/24 14:18 - X:\ACTIVE PROJECTS\ACTIVE SOIL PROJECTS\1ARCHIVE BY YEAR\2022 ARCHIVE\CUY-90-16.28 (CCG3A - MOD#7)\GINT FILES\CUY-90-16.28 (CCG3A).GPJ

DESIGN AGENCY
EAS
2800 CORPORATE EXCHANGE DR. SUITE 240
COLUMBUS, OH. 43231
TEL:614.714.0299
WWW.NEASINC.COM

DESIGNER MW,J & DT
REVIEWER BPA 08/23/24
PROJECT ID 82382
SUBSET 207 TOTAL 310
SHEET P 2593 TOTAL 2696

GEOTECHNICAL PROFILE - ROADWAY
BRIDGE NO. CUY-77-1587 RAMP A2 FLYOVER
BORING LOG B-141-1-20 (CONTINUED)

MODEL: Sheet PAPERSIZE: 34x22 (in.) DATE: 3/28/2025 TIME: 10:25:33 AM USER: Asiddiqi
pw:\\mb-us-pw.bentley.com:mb-us-pw-03\Documents\Cleveland_OH\01_Projects\ODOT\District12\82382\400-Engineering\Geotechnical\Sheets\82382_ZL094.dgn

PID: 82382 | SFN: | PROJECT: CUY-90-16.28 (CCG3A) | STATION / OFFSET: 423+20, 13' LT. | START: 5/6/21 | END: 5/7/21 | PG 3 OF 3 | B-141-1-20

MATERIAL DESCRIPTION AND NOTES	ELEV.	DEPTHS	SPT/ RQD	N_{60}	REC (%)	SAMPLE ID	HP (tsf)	GRADATION (%) GR	CS	FS	SI	CL	ATTERBERG LL	PL	PI	WC	ODOT CLASS (GI)	HOLE SEALED
SOFT TO MEDIUM STIFF, GRAY, **SILTY CLAY**, TRACE SAND, TRACE GRAVEL, MOIST *(continued)*	546.7	123																
	543.6	EOB 125	1 3 6	13	100	SS-29	0.50	-	-	-	-	-	-	-	-	29	A-6b (V)	

Preliminary Plans - For Reference Only

STANDARD ODOT SOIL BORING LOG (11 X 17) - OH DOT.GDT - 1/3/24 14:18 - X:\ACTIVE PROJECTS\ACTIVE SOIL PROJECTS\1ARCHIVE BY YEAR\2022 ARCHIVE\CUY-90-16.28 (CCG3A - MOD#7)\GINT FILES\CUY-90-16.28 (CCG3A).GPJ

NOTES: GROUNDWATER ENCOUNTERED AT 25.0' DURING DRILLING. HOLE DID NOT CAVE.
ABANDONMENT METHODS, MATERIALS, QUANTITIES: PUMPED 250 GAL. BENTONITE GROUT

DESIGN AGENCY
EAS
2800 CORPORATE EXCHANGE DR. SUITE 240
COLUMBUS, OH. 43231
TEL:614.714.0299
WWW.NEASINC.COM

DESIGNER MW,J & DT
REVIEWER BPA 08/23/24
PROJECT ID 82382
SUBSET 208 TOTAL 310
SHEET P 2594 TOTAL 2696

GEOTECHNICAL PROFILE - ROADWAY
BRIDGE NO. CUY-77-1587 RAMP A2 FLYOVER
BORING LOG B-141-1-20 (CONTINUED)

MODEL: Sheet PAPERSIZE: 34x22 (in.) DATE: 3/28/2025 TIME: 10:25:48 AM USER: Asiddiqi
pw:\\mb-us-pw.bentley.com:mb-us-pw-03\Documents\Cleveland_OH\01_Projects\ODOT\District12\82382\400-Engineering\Geotechnical\Sheets\82382_ZL095.dgn

PROJECT: CUY-CCG3	DRILLING FIRM / OPERATOR: BARR / T.GILBERT	DRILL RIG: CME 55	STATION / OFFSET: 182+31, 36' LT.	EXPLORATION ID B-142-0-14
TYPE: BRIDGE	SAMPLING FIRM / LOGGER: BARR / D.KLIMKOWICZ	HAMMER: CME AUTOMATIC	ALIGNMENT: IR-90 WB	
PID: 82380 SFN:	DRILLING METHOD: 3.25" HSA	CALIBRATION DATE: 1/26/14	ELEVATION: 677.5 (MSL) EOB: 112.0 ft.	PAGE 1 OF 2
START: 2/26/15 END: 3/9/15	SAMPLING METHOD: SPT / ST	ENERGY RATIO (%): 78.8	LAT / LONG: 41.495588, -81.680039	

MATERIAL DESCRIPTION AND NOTES	ELEV. 677.5	DEPTHS	SPT/ RQD	N_{60}	REC (%)	SAMPLE ID	HP (tsf)	GRADATION (%) GR	CS	FS	SI	CL	ATTERBERG LL	PL	PI	WC	ODOT CLASS (GI)	BACK FILL
16.0", **CONCRETE**																		
	676.2																	
2.0", **GRANULAR BASE**	676.0																	
VERY DENSE, BROWN, **GRAVEL WITH SAND**, TRACE SILT, TRACE CLAY, DAMP **(FILL)**			17 45 37	108	100	SS-1	-	-	-	-	-	-	-	-	-	7	A-1-b (V)	
	673.0																	
MEDIUM DENSE TO VERY DENSE, BLACK, **COARSE AND FINE SAND**, SOME SILT, LITTLE GRAVEL, TRACE CLAY, CONTAINS ASPHALT AND BRICK FRAGMENTS, DAMP TO MOIST **(FILL)** @7.0'; SS-3 TO SS-5 CHANGE TO BROWN			11 15 10	33	100	SS-2	-	19	18	32	22	9	NP	NP	NP	11	A-3a (0)	
			9 9 14	30	100	SS-3	-	-	-	-	-	-	-	-	-	11	A-3a (V)	
			9 16 26	55	100	SS-4	-	12	15	41	23	9	NP	NP	NP	10	A-3a (0)	
			3 5 5	13	100	SS-5	-	-	-	-	-	-	-	-	-	11	A-3a (V)	
			13 20 15	46	100	SS-6	-	-	-	-	-	-	-	-	-	14	A-3a (V)	
	660.5																	
LOOSE TO MEDIUM DENSE, BROWN, **GRAVEL WITH SAND**, LITTLE SILT, TRACE CLAY, DAMP			4 10 7	22	100	SS-7	-	17	32	28	16	7	NP	NP	NP	9	A-1-b (0)	
@20.0'; SS-8 NO RECOVERY			5 5 3	11	0	SS-8	-	-	-	-	-	-	-	-	-	-		
			3 2 2	5	100	SS-9	-	-	-	-	-	-	-	-	-	8	A-1-b (V)	
	653.0																	
MEDIUM DENSE, BROWN, **SILT**, SOME SAND, LITTLE CLAY, TRACE GRAVEL, WET			2 3 5	11	100	SS-10	-	0	0	26	56	18	NP	NP	NP	31	A-4b (8)	
	650.5																	
MEDIUM DENSE TO DENSE, BROWN, **COARSE AND FINE SAND**, TRACE SILT, TRACE CLAY, TRACE GRAVEL, WET		W 650.0	4 4 8	16	100	SS-11	-	-	-	-	-	-	-	-	-	24	A-3a (V)	
			5 10 21	41	100	SS-12	-	-	-	-	-	-	-	-	-	18	A-3a (V)	
			10 16 16	42	100	SS-13	-	2	15	71	9	3	NP	NP	NP	21	A-3a (0)	
	639.2																	
MEDIUM DENSE TO DENSE, BROWN, **SANDY SILT**, TRACE CLAY, TRACE GRAVEL, WET			6 12 20	42	100	SS-14	-	-	-	-	-	-	-	-	-	18	A-4a (V)	
			6 8 15	30	100	SS-15	-	0	0	52	40	8	NP	NP	NP	25	A-4a (3)	
	629.2																	
MEDIUM STIFF TO HARD, BROWN, **SILT**, LITTLE TO SOME CLAY, TRACE SAND, TRACE GRAVEL, MOIST TO WET			10 16 25	54	100	SS-16	2.50	-	-	-	-	-	-	-	-	22	A-4b (V)	
			6 7 7	18	100	SS-17	0.75	-	-	-	-	-	-	-	-	24	A-4b (V)	

Preliminary Plans - For Reference Only

STANDARD ODOT SOIL BORING LOG (11 X 17) - OH DOT.GDT - 6/22/22 18:09 - X:\ACTIVE PROJECTS\ACTIVE SOIL PROJECTS\1\ARCHIVE BY YEAR\2017 ARCHIVE\CUY-CCG3 82380\GINT FILES\CUY-CCG3 MASTER - LR UPDATED.GPJ

DESIGN AGENCY
2800 CORPORATE EXCHANGE DR. SUITE 240
COLUMBUS, OH. 43231
TEL: 614.714.0299
WWW.NEASINC.COM

DESIGNER MWJ & DT
REVIEWER BPA 08/23/24
PROJECT ID 82382
SUBSET 209 TOTAL 310
SHEET P 2595 TOTAL 2696

GEOTECHNICAL PROFILE - ROADWAY
WALL AC
BORING LOG B-142-0-14

MODEL: Sheet PAPERSIZE: 34x22 (in.) DATE: 3/28/2025 TIME: 10:26:15 AM USER: Asiddiqi
pw:\\mb-us-pw.bentley.com:mb-us-pw-03\Documents\Cleveland_OH\01_Projects\ODOT\District12\82382\400-Engineering\Geotechnical\Sheets\82382_ZL096.dgn

PID: 82380 | SFN: | PROJECT: CUY-CCG3 | STATION / OFFSET: 182+31, 36' LT. | START: 2/26/15 | END: 3/9/15 | PG 2 OF 2 | B-142-0-14

MATERIAL DESCRIPTION AND NOTES	ELEV.	DEPTHS	SPT/ RQD	N_{60}	REC (%)	SAMPLE ID	HP (tsf)	GRADATION (%) GR	CS	FS	SI	CL	ATTERBERG LL	PL	PI	WC	ODOT CLASS (GI)	BACK FILL
MEDIUM STIFF TO HARD, BROWN, **SILT**, LITTLE TO SOME CLAY, TRACE SAND, TRACE GRAVEL, MOIST TO WET *(continued)*	617.5	61	6 7 7	18	56	SS-18	1.30	-	-	-	-	-	-	-	-	24	A-4b (V)	
		62–64																
@65.0'; UNIT WEIGHT: 132.4 PCF @ 19.4% MC		65																
		66			100	SS-19	2.10	0	0	3	75	22	25	19	6	19	A-4b (8)	
		67–69																
		70																
		71	5 8 12	26	100	SS-20	2.80	-	-	-	-	-	-	-	-	19	A-4b (V)	
		72–74																
@75.8'; UNIT WEIGHT: 134.5 PCF @ 25.2% MC		75																
		76			100	SS-21	1.50	0	0	1	72	27	25	19	6	19	A-4b (8)	
		77–79																
		80																
		81	0 6 7	17	100	SS-22	2.75	-	-	-	-	-	-	-	-	22	A-4b (V)	
		82–84																
		85																
		86	8 15 18	43	100	SS-23	4.10	-	-	-	-	-	-	-	-	19	A-4b (V)	
		87–89																
@90.0'; ST-24 TO ST-27 BECOME "AND" CLAY		90																
@91.1'; UNIT WEIGHT: 132.9 PCF @ 20.3% MC		91			100	SS-24	1.60	0	0	0	59	41	28	20	8	20	A-4b (8)	
		92–94																
		95																
		96	6 12 15	35	100	SS-25	2.90	-	-	-	-	-	-	-	-	24	A-4b (V)	
		97–99																
		100																
		101	4 5 9	18	100	SS-26	1.25	0	0	0	61	39	26	17	9	22	A-4b (8)	
		102–104																
		105																
		106	0 6 10	21	100	SS-27	1.50	-	-	-	-	-	-	-	-	20	A-4b (V)	
		107–109																
	569.2	110																
VERY STIFF, GRAY, **SILT AND CLAY**, TRACE SAND, TRACE GRAVEL, MOIST		111			100	SS-28	2.50	1	2	4	38	55	31	19	12	24	A-6a (9)	
@111.5'; UNIT WEIGHT: 129.5 PCF @ 24.3% MC	565.5	EOB 112																

NOTES: GROUNDWATER ENCOUNTERED AT 27.5 DURING DRILLING. CAVE DEPTH 27.0'.
ABANDONMENT METHODS, MATERIALS, QUANTITIES: PLACED 0.5 BAG ASPHALT PATCH; SHOVELED SOIL CUTTINGS

STANDARD ODOT SOIL BORING LOG (11 X 17) - OH DOT.GDT - 6/22/22 18:09 - X:\ACTIVE PROJECTS\ACTIVE SOIL PROJECTS\1ARCHIVE BY YEAR\2017 ARCHIVE\CUY-CCG3 82380\GINT FILES\CUY-CCG3 MASTER - LR UPDATED.GPJ

Preliminary Plans - For Reference Only

DESIGN AGENCY
EAS
2800 CORPORATE EXCHANGE DR. SUITE 240
COLUMBUS, OH. 43231
TEL: 614.714.0299
WWW.AEASINC.COM

DESIGNER MWJ & DT
REVIEWER BPA 08/23/24
PROJECT ID 82382
SUBSET 210 TOTAL 310
SHEET P 2596 TOTAL 2696

GEOTECHNICAL PROFILE - ROADWAY
WALL AC
BORING LOG B-142-0-14 (CONTINUED)

MODEL: Sheet PAPERSIZE: 34x22 (in.) DATE: 3/28/2025 TIME: 10:26:35 AM USER: Asiddiqi
pw:\\mb-us-pw.bentley.com:mb-us-pw-03\Documents\Cleveland_OH\01_Projects\ODOT\District12\82382\400-Engineering\Geotechnical\Sheets\82382_ZL097.dgn

PROJECT: CUY-90-16.28 (CCG3A)
TYPE: RETAINING WALL
PID: 82382 SFN:
START: 3/15/21 END: 3/15/21

DRILLING FIRM / OPERATOR: NEAS / J. HODGES
SAMPLING FIRM / LOGGER: NEAS / J. HODGES
DRILLING METHOD: 3.25" HSA
SAMPLING METHOD: SPT / ST

DRILL RIG: CME 75T
HAMMER: CME AUTOMATIC
CALIBRATION DATE: 5/1/19
ENERGY RATIO (%): 89

STATION / OFFSET: 424+28, 27' RT.
ALIGNMENT: RAMP A2
ELEVATION: 681.2 (MSL) EOB: 75.0 ft.
LAT / LONG: 41.495780, -81.679499

EXPLORATION ID B-142-1-20

MATERIAL DESCRIPTION AND NOTES	ELEV.	DEPTHS	SPT/ RQD	N_{60}	REC (%)	SAMPLE ID	HP (tsf)	GRADATION (%) GR	CS	FS	SI	CL	ATTERBERG LL	PL	PI	WC	ODOT CLASS (GI)	HOLE SEALED
4.0" ASPHALT AND 8.0" BASE (DRILLERS DESCRIPTION)	681.2 / 680.2																	
MEDIUM DENSE TO VERY DENSE, BROWN AND DARK GRAY, **GRAVEL AND STONE FRAGMENTS WITH SAND** TRACE SILT, TRACE CLAY, CONTAINS RED BRICK FRAGMENTS, GLASS, AND CONCRETE FRAGMENTS, DAMP **(FILL)**			5 6 9	22	44	SS-1	-	-	-	-	-	-	-	-	-	9	A-1-b (V)	
			3 10 27	55	100	SS-2	-	-	-	-	-	-	-	-	-	8	A-1-b (V)	
			3 7 11	27	100	SS-3	-	-	-	-	-	-	-	-	-	11	A-1-b (V)	
			6 6 7	19	100	SS-4	-	-	-	-	-	-	-	-	-	10	A-1-b (V)	
	669.2																	
LOOSE, BROWN, **COARSE AND FINE SAND** TRACE TO LITTLE GRAVEL, TRACE SILT, TRACE CLAY, DAMP			2 2 4	9	100	SS-5	-	-	-	-	-	-	-	-	-	6	A-3a (V)	
			2 3 4	10	100	SS-6	-	-	-	-	-	-	-	-	-	9	A-3a (V)	
	664.2																	
LOOSE, BROWN, **GRAVEL WITH SAND** TRACE SILT, TRACE CLAY, DAMP			1 2 3	7	100	SS-7	-	20	32	36	6	6	NP	NP	NP	8	A-1-b (0)	
			1 2 2	6	78	SS-8	-	-	-	-	-	-	-	-	-	8	A-1-b (V)	
	657.9																	
LOOSE, LIGHT BROWN, **COARSE AND FINE SAND** TRACE TO LITTLE SILT, TRACE CLAY, TRACE GRAVEL, DAMP			2 3 4	10	100	SS-9	-	-	-	-	-	-	-	-	-	5	A-3a (V)	
@30.0'; SS-10 TO SS-14 BECOME MEDIUM DENSE TO VERY DENSE, BROWNISH GRAY, WET			3 5 8	19	100	SS-10	-	-	-	-	-	-	-	-	-	24	A-3a (V)	
			6 15 21	53	100	SS-11	-	-	-	-	-	-	-	-	-	18	A-3a (V)	
			10 14 19	49	100	SS-12	-	-	-	-	-	-	-	-	-	23	A-3a (V)	
			5 8 8	24	100	SS-13	-	-	-	-	-	-	-	-	-	24	A-3a (V)	
			7 11 17	42	100	SS-14	-	-	-	-	-	-	-	-	-	21	A-3a (V)	
	627.9																	
MEDIUM DENSE TO DENSE, GRAY, **SILT**, LITTLE CLAY, TRACE TO LITTLE SAND, TRACE GRAVEL, WET			6 13 9	33	100	SS-15	-	0	0	14	67	19	NP	NP	NP	19	A-4b (8)	

Preliminary Plans - For Reference Only

STANDARD ODOT SOIL BORING LOG (11 X 17) - OH DOT.GDT - 1/3/24 14:18 - X:\ACTIVE PROJECTS\ACTIVE SOIL PROJECTS\1ARCHIVE BY YEAR\2022 ARCHIVE\CUY-90-16.28 (CCG3A - MOD#7)\GINT FILES\CUY-90-16.28 (CCG3A).GPJ

DESIGN AGENCY
NEAS
2800 CORPORATE EXCHANGE DR. SUITE 240
COLUMBUS, OH. 43231
TEL:614.714.0299
WWW.NEASINC.COM

DESIGNER MW,J & DT
REVIEWER BPA 08/23/24
PROJECT ID 82382
SUBSET 211 TOTAL 310
SHEET P 2597 TOTAL 2696

GEOTECHNICAL PROFILE - ROADWAY
WALL AC
BORING LOG B-142-1-20

MODEL: Sheet PAPERSIZE: 34x22 (in.) DATE: 3/28/2025 TIME: 10:27:03 AM USER: Asiddiqi
pw:\\mb-us-pw.bentley.com:mb-us-pw-03\Documents\Cleveland_OH\01_Projects\ODOT\District12\82382\400-Engineering\Geotechnical\Sheets\82382_ZL098.dgn

PID: 82382 | SFN: | PROJECT: CUY-90-16.28 (CCG3A) | STATION / OFFSET: 424+28, 27' RT. | START: 3/15/21 | END: 3/15/21 | PG 2 OF 2 | B-142-1-20

MATERIAL DESCRIPTION AND NOTES	ELEV.	DEPTHS	SPT/ RQD	N_{60}	REC (%)	SAMPLE ID	HP (tsf)	GRADATION (%) GR	CS	FS	SI	CL	ATTERBERG LL	PL	PI	WC	ODOT CLASS (GI)	HOLE SEALED
MEDIUM DENSE TO DENSE, GRAY, **SILT**, LITTLE CLAY, TRACE TO LITTLE SAND, TRACE GRAVEL, WET *(continued)*		61	5 6 14	30	100	SS-16	-	-	-	-	-	-	-	-	-	20	A-4b (V)	
		62																
		63																
		64																
		65																
		66	4 6 12	27	100	SS-17	-	0	0	8	72	20	NP	NP	NP	21	A-4b (8)	
		67																
	613.2	68																
MEDIUM STIFF TO VERY STIFF, GRAY, **SILT**, SOME TO "AND" CLAY, TRACE SAND, TRACE GRAVEL, MOIST		69			100	ST-1	4.00	0	0	0	67	33	29	21	8	24	A-4b (8)	
@69.4' TO 69.9'; Qu = 1916 PSF @ 13.0%		70																
		71	3 4 5	13	100	SS-18	1.25	-	-	-	-	-	-	-	-	23	A-4b (V)	
		72																
		73																
		74	2 6 3	13	100	SS-19	2.75	0	0	6	56	38	26	18	8	23	A-4b (8)	
	606.2	75 EOB																

NOTES: GROUNDWATER NOT ENCOUNTERED DURING DRILLING. HOLE DID NOT CAVE.

ABANDONMENT METHODS, MATERIALS, QUANTITIES: PLACED 0.5 BAG ASPHALT PATCH; PUMPED 50 GAL. BENTONITE GROUT; SHOVELED SOIL CUTTINGS

Preliminary Plans - For Reference Only

STANDARD ODOT SOIL BORING LOG (11 X 17) - OH DOT.GDT - 1/3/24 14:18 - X:\ACTIVE PROJECTS\ACTIVE SOIL PROJECTS\1ARCHIVE BY YEAR\2022 ARCHIVE\CUY-90-16.28 (CCG3A - MOD#7)\GINT FILES\CUY-90-16.28 (CCG3A).GPJ

DESIGN AGENCY
2800 CORPORATE EXCHANGE DR. SUITE 240 COLUMBUS, OH. 43231
TEL:614.714.0299
WWW.JNEASINC.COM

DESIGNER MW,J & DT
REVIEWER BPA 08/23/24
PROJECT ID 82382
SUBSET 212 TOTAL 310
SHEET P 2598 TOTAL 2696

GEOTECHNICAL PROFILE - ROADWAY
WALL AC
BORING LOG B-142-1-20 (CONTINUED)

MODEL: Sheet PAPERSIZE: 34x22 (in.) DATE: 3/28/2025 TIME: 10:27:19 AM USER: Asiddiqi
pw:\\mb-us-pw.bentley.com:mb-us-pw-03\Documents\Cleveland_OH\01_Projects\ODOT\District12\82382\400-Engineering\Geotechnical\Sheets\82382_ZL099.dgn

PROJECT: CUY-90-16.28 (CCG3A)
TYPE: BRIDGE
PID: 82382 SFN: 1806910
START: 3/17/21 END: 3/17/21

DRILLING FIRM / OPERATOR: NEAS / J. HODGES
SAMPLING FIRM / LOGGER: NEAS / J. HODGES
DRILLING METHOD: 3.25" HSA
SAMPLING METHOD: SPT

DRILL RIG: CME 75T
HAMMER: CME AUTOMATIC
CALIBRATION DATE: 5/1/19
ENERGY RATIO (%): 89

STATION / OFFSET: 424+92, 29' RT.
ALIGNMENT: RAMP A2
ELEVATION: 680.4 (MSL) EOB: 110.0 ft.
LAT / LONG: 41.495926, -81.679385

EXPLORATION ID B-142-2-20
PAGE 1 OF 2

MATERIAL DESCRIPTION AND NOTES	ELEV. 680.4	DEPTHS	SPT/ RQD	N_{60}	REC (%)	SAMPLE ID	HP (tsf)	GRADATION (%) GR	CS	FS	SI	CL	ATTERBERG LL	PL	PI	WC	ODOT CLASS (GI)	HOLE SEALED
5.0" ASPHALT AND 10.0" BASE (DRILLERS DESCRIPTION)	679.1																	
MEDIUM DENSE, BROWN, **COARSE AND FINE SAND** TRACE SILT, TRACE GRAVEL, TRACE CLAY, MOIST TO DAMP **(FILL)**	673.4		3 5 6	16	100	SS-1	-	-	-	-	-	-	-	-	-	11	A-3a (V)	
			2 6 12	27	100	SS-2	-	-	-	-	-	-	-	-	-	7	A-3a (V)	
MEDIUM DENSE, BLACK AND BROWN, **STONE FRAGMENTS WITH SAND** LITTLE SILT, TRACE CLAY, CONTAINS RED BRICK FRAGMENTS, MOIST **(FILL)**	670.9		4 5 4	13	100	SS-3	-	-	-	-	-	-	-	-	-	17	A-1-b (V)	
LOOSE TO MEDIUM DENSE, BROWN, **COARSE AND FINE SAND**, TRACE TO LITTLE GRAVEL, TRACE SILT, TRACE CLAY, WET TO MOIST			6 7 4	16	100	SS-4	-	-	-	-	-	-	-	-	-	23	A-3a (V)	
			2 2 3	7	100	SS-5	-	-	-	-	-	-	-	-	-	9	A-3a (V)	
			2 2 4	9	100	SS-6	-	-	-	-	-	-	-	-	-	12	A-3a (V)	
	660.9		1 3 3	9	56	SS-7	-	-	-	-	-	-	-	-	-	9	A-3a (V)	
LOOSE, BROWN, **GRAVEL WITH SAND** LITTLE SILT, TRACE CLAY, CONTAINS A 1.0" A-6B SEAM, DAMP	658.4		4 2 2	6	100	SS-8	-	-	-	-	-	-	-	-	-	10	A-1-b (V)	
MEDIUM DENSE, BROWN, **COARSE AND FINE SAND** LITTLE SILT, TRACE GRAVEL, TRACE CLAY, WET	655.9		2 2 6	12	100	SS-9	-	-	-	-	-	-	-	-	-	17	A-3a (V)	
LOOSE, BROWN, **FINE SAND**, LITTLE COARSE SAND, TRACE SILT, TRACE GRAVEL, TRACE CLAY, DAMP	FS 653.4		1 2 2	6	100	SS-10	-	-	-	-	-	-	-	-	-	8	A-3 (V)	
MEDIUM DENSE TO DENSE, GRAY, **COARSE AND FINE SAND**, LITTLE SILT, TRACE CLAY, TRACE GRAVEL, MOIST TO WET		W 650.4	7 9 10	28	100	SS-11	-	-	-	-	-	-	-	-	-	12	A-3a (V)	
			4 5 7	18	100	SS-12	-	-	-	-	-	-	-	-	-	26	A-3a (V)	
			3 8 16	36	100	SS-13	-	-	-	-	-	-	-	-	-	23	A-3a (V)	
			9 10 14	36	100	SS-14	-	-	-	-	-	-	-	-	-	18	A-3a (V)	
			5 8 9	25	100	SS-15	-	-	-	-	-	-	-	-	-	21	A-3a (V)	
			3 6 10	24	100	SS-16	-	0	4	72	20	4	NP	NP	NP	16	A-3a (0)	
	627.1																	
DENSE, GRAY, **SILT**, TRACE TO LITTLE SAND, LITTLE CLAY, TRACE GRAVEL, WET			9 7 15	33	100	SS-17	-	0	0	18	70	12	NP	NP	NP	19	A-4b (8)	

Preliminary Plans - For Reference Only

STANDARD ODOT SOIL BORING LOG (11 X 17) - OH DOT.GDT - 1/3/24 14:18 - X:\ACTIVE PROJECTS\ACTIVE SOIL PROJECTS\1ARCHIVE BY YEAR\2022 ARCHIVE\CUY-90-16.28 (CCG3A - MOD#7)\GINT FILES\CUY-90-16.28 (CCG3A).GPJ

DESIGN AGENCY
NEAS
2800 CORPORATE EXCHANGE DR. SUITE 240 COLUMBUS, OH. 43231 TEL:614.714.0299 WWW.NEASINC.COM

DESIGNER MWJ & DT
REVIEWER BPA 08/23/24
PROJECT ID 82382
SUBSET 213 TOTAL 310
SHEET P 2599 TOTAL 2696

GEOTECHNICAL PROFILE - ROADWAY
WALL AC
BORING LOG B-142-2-20

MODEL: Sheet PAPERSIZE: 34x22 (in.) DATE: 3/28/2025 TIME: 10:27:48 AM USER: Asiddiqi
pw:\\mb-us-pw.bentley.com:mb-us-pw-03\Documents\Cleveland_OH\01_Projects\ODOT\District12\82382\400-Engineering\Geotechnical\Sheets\82382_ZL100.dgn

PID: 82382 | SFN: | PROJECT: CUY-90-16.28 (CCG3A) | STATION / OFFSET: 424+92, 29' RT. | START: 3/17/21 | END: 3/17/21 | PG 2 OF 2 | B-142-2-20

MATERIAL DESCRIPTION AND NOTES	ELEV.	DEPTHS	SPT/ RQD	N_{60}	REC (%)	SAMPLE ID	HP (tsf)	GRADATION (%) GR	CS	FS	SI	CL	ATTERBERG LL	PL	PI	WC	ODOT CLASS (GI)	HOLE SEALED
DENSE, GRAY, **SILT**, TRACE TO LITTLE SAND, LITTLE CLAY, TRACE GRAVEL, WET *(continued)* @60.0'; SS-18 BECOMES VERY STIFF		61	1 2 3	7	100	SS-18	3.25	-	-	-	-	-	-	-	-	24	A-4b (V)	
	617.1	62																
STIFF TO HARD, GRAY, **SILT AND CLAY**, TRACE SAND, TRACE GRAVEL, MOIST		63																
		64																
		65																
		66	4 4 5	13	100	SS-19	1.75	0	0	1	62	37	31	20	11	26	A-6a (8)	
		67																
		68																
		69																
		70																
		71	3 6 10	24	100	SS-20	4.25	-	-	-	-	-	-	-	-	21	A-6a (V)	
		72																
		73																
		74																
		75																
		76	5 6 7	19	100	SS-21	2.00	0	0	1	58	41	31	20	11	22	A-6a (8)	
		77																
	602.1	78																
STIFF TO HARD, GRAY, **SILT**, "AND" CLAY, TRACE SAND, TRACE GRAVEL, DAMP TO MOIST		79																
		80																
		81	2 5 10	22	100	SS-22	4.25	-	-	-	-	-	-	-	-	19	A-4b (V)	
		82																
		83																
		84																
		85																
		86	2 2 4	9	100	SS-23	2.00	-	-	-	-	-	-	-	-	26	A-4b (V)	
		87																
		88																
		89																
		90																
		91	4 16 11	40	100	SS-24	4.25	0	0	0	60	40	30	20	10	21	A-4b (8)	
		92																
		93																
		94																
		95																
		96	2 6 8	21	100	SS-25	3.25	-	-	-	-	-	-	-	-	21	A-4b (V)	
	582.1	97																
VERY STIFF, GRAY, **SILT AND CLAY**, TRACE SAND, TRACE GRAVEL, MOIST TO DAMP		98																
		99																
		100																
		101	4 7 9	24	100	SS-26	3.00	0	0	0	60	40	30	19	11	21	A-6a (8)	
		102																
		103																
		104																
		105																
		106	4 8 10	27	100	SS-27	4.00	-	-	-	-	-	-	-	-	19	A-6a (V)	
	572.9	107																
SOFT TO MEDIUM STIFF, GRAY, **CLAY**, SOME SILT, TRACE SAND, TRACE GRAVEL, MOIST		108																
		109	4 6 7	19	100	SS-28	0.50	0	1	3	22	74	44	23	21	32	A-7-6 (13)	
	570.4	110	EOB															

NOTES: GROUNDWATER ENCOUNTERED AT 30.0' DURING DRILLING. HOLE DID NOT CAVE.
ABANDONMENT METHODS, MATERIALS, QUANTITIES: PLACED 0.5 BAG ASPHALT PATCH; PUMPED 240 GAL. BENTONITE GROUT

Preliminary Plans - For Reference Only

STANDARD ODOT SOIL BORING LOG (11 X 17) - OH DOT.GDT - 1/3/24 14:18 - X:\ACTIVE PROJECTS\ACTIVE SOIL PROJECTS\1ARCHIVE BY YEAR\2022 ARCHIVE\CUY-90-16.28 (CCG3A - MOD#7)\GINT FILES\CUY-90-16.28 (CCG3A).GPJ

DESIGN AGENCY
EAS
2800 CORPORATE EXCHANGE DR. SUITE 240 COLUMBUS, OH. 43231
TEL:614.714.0299
WWW.AEASINC.COM

DESIGNER MW,J & DT
REVIEWER BPA 08/23/24
PROJECT ID 82382
SUBSET 214 TOTAL 310
SHEET P 2600 TOTAL 2696

GEOTECHNICAL PROFILE - ROADWAY
WALL AC
BORING LOG B-142-2-20 (CONTINUED)

MODEL: Sheet PAPERSIZE: 34x22 (in.) DATE: 3/28/2025 TIME: 10:28:07 AM USER: Asiddiqi
pw:\\mb-us-pw.bentley.com:mb-us-pw-03\Documents\Cleveland_OH\01_Projects\ODOT\District12\82382\400-Engineering\Geotechnical\Sheets\82382_ZL101.dgn

PROJECT: CUY-90-16.28 (CCG3A)
TYPE: BRIDGE
PID: 82382 SFN: 1806910
START: 3/16/21 END: 3/16/21

DRILLING FIRM / OPERATOR: NEAS / J. HODGES
SAMPLING FIRM / LOGGER: NEAS / J. HODGES
DRILLING METHOD: 3.25" HSA
SAMPLING METHOD: SPT

DRILL RIG: CME 75T
HAMMER: CME AUTOMATIC
CALIBRATION DATE: 5/1/19
ENERGY RATIO (%): 89

STATION / OFFSET: 426+81, 39' RT.
ALIGNMENT: RAMP A2
ELEVATION: 674.5 (MSL) EOB: 110.0 ft.
LAT / LONG: 41.496290, -81.678945

EXPLORATION ID B-142-3-20
PAGE 1 OF 2

MATERIAL DESCRIPTION AND NOTES	ELEV.	DEPTHS	SPT/ RQD	N_{60}	REC (%)	SAMPLE ID	HP (tsf)	GRADATION (%) GR	CS	FS	SI	CL	ATTERBERG LL	PL	PI	WC	ODOT CLASS (GI)	HOLE SEALED
DENSE, BROWN, **GRAVEL AND STONE FRAGMENTS WITH SAND**, TRACE SILT, TRACE CLAY, CONTAINS RED BRICK FRAGMENTS, DAMP **(FILL)**	674.5																	
		3	6 12 21	49	100	SS-1	-	-	-	-	-	-	-	-	-	9	A-1-b (V)	
		6	7 11 18	43	100	SS-2	-	-	-	-	-	-	-	-	-	11	A-1-b (V)	
	667.5	7																
LOOSE TO MEDIUM DENSE, ORANGISH BROWN BECOMING BROWN, **COARSE AND FINE SAND** TRACE TO LITTLE GRAVEL, TRACE SILT, TRACE CLAY, SS-1 CONTAINS IRON STAINING, DAMP		8	3 4 4	12	100	SS-3	-	-	-	-	-	-	-	-	-	9	A-3a (V)	
		11	4 5 4	13	100	SS-4	-	-	-	-	-	-	-	-	-	7	A-3a (V)	
		13	2 3 3	9	89	SS-5	-	-	-	-	-	-	-	-	-	10	A-3a (V)	
	660.0	14																
VERY LOOSE, BROWN AND ORANGISH BROWN, **SILT**, SOME CLAY, LITTLE SAND, TRACE GRAVEL, CONTAINS IRON STAINING, WET		15	1 1 2	4	100	SS-6	-	0	1	11	63	25	NP	NP	NP	27	A-4b (8)	
	657.5	16																
LOOSE, BROWN, **GRAVEL WITH SAND** TRACE SILT, TRACE CLAY, DAMP		18	2 2 3	7	100	SS-7	-	-	-	-	-	-	-	-	-	9	A-1-b (V)	
	655.0	19																
MEDIUM DENSE TO DENSE, BROWN, **COARSE AND FINE SAND**, LITTLE SILT, TRACE CLAY, TRACE GRAVEL, DAMP		20																
		21	2 7 8	22	56	SS-8	-	-	-	-	-	-	-	-	-	4	A-3a (V)	
@22.5' TO 46.5'; BECOMES MOIST TO WET		23	3 6 7	19	100	SS-9	-	-	-	-	-	-	-	-	-	15	A-3a (V)	
	W 649.5	24																
		25	3 6 6	18	100	SS-10	-	-	-	-	-	-	-	-	-	24	A-3a (V)	
		26																
		28	3 5 9	21	100	SS-11	-	-	-	-	-	-	-	-	-	28	A-3a (V)	
		29																
		30	4 10 16	39	100	SS-12	-	-	-	-	-	-	-	-	-	17	A-3a (V)	
		31																
		33																
		34																
		35	12 12 16	42	28	SS-13	-	-	-	-	-	-	-	-	-	19	A-3a (V)	
		36																
		37																
		38																
		39																
		40	10 13 17	45	44	SS-14	-	-	-	-	-	-	-	-	-	14	A-3a (V)	
		41																
		42																
		43																
		44																
		45	4 5 7	18	67	SS-15	-	0	22	53	19	6	NP	NP	NP	16	A-3a (0)	
	626.2	46																
VERY STIFF TO HARD, GRAY, **SILT**, SOME TO "AND" CLAY, TRACE SAND, TRACE GRAVEL, DAMP TO MOIST		48																
		49																
		50	3 5 8	19	100	SS-16	4.50	-	-	-	-	-	-	-	-	19	A-4b (V)	
		51																
		52																
		53																
		54																
		55	5 9 12	31	100	SS-17	4.50	0	0	4	69	27	26	20	6	18	A-4b (8)	
		56																
		57																
		58																
		59																

Preliminary Plans - For Reference Only

STANDARD ODOT SOIL BORING LOG (11 X 17) - OH DOT.GDT - 1/3/24 14:18 - X:\ACTIVE PROJECTS\ACTIVE SOIL PROJECTS\1ARCHIVE BY YEAR\2022 ARCHIVE\CUY-90-16.28 (CCG3A - MOD#7)\GINT FILES\CUY-90-16.28 (CCG3A).GPJ

DESIGN AGENCY
NEAS
2800 CORPORATE EXCHANGE DR. SUITE 240
COLUMBUS, OH. 43231
TEL:614.714.0299
WWW.NEASINC.COM

DESIGNER MWJ & DT
REVIEWER BPA 08/23/24
PROJECT ID 82382
SHEET P.2601 TOTAL 2696
SUBSET 215 TOTAL 310

GEOTECHNICAL PROFILE - ROADWAY
BRIDGE NO. CUY-77-1587 RAMP A2 FLYOVER
BORING LOG B-142-3-20

MODEL: Sheet PAPERSIZE: 34x22 (in.) DATE: 3/28/2025 TIME: 10:28:34 AM USER: Asiddiqi
pw:\\mb-us-pw.bentley.com:mb-us-pw-03\Documents\Cleveland_OH\01_Projects\ODOT\District12\82382\400-Engineering\Geotechnical\Sheets\82382_ZL102.dgn

PID: 82382 | SFN: | PROJECT: CUY-90-16.28 (CCG3A) | STATION / OFFSET: 426+81, 39' RT. | START: 3/16/21 | END: 3/16/21 | PG 2 OF 2 | B-142-3-20

MATERIAL DESCRIPTION AND NOTES	ELEV.	DEPTHS	SPT/ RQD	N_{60}	REC (%)	SAMPLE ID	HP (tsf)	GRADATION (%) GR	CS	FS	SI	CL	ATTERBERG LL	PL	PI	WC	ODOT CLASS (GI)	HOLE SEALED
VERY STIFF TO HARD, GRAY, **SILT**, SOME TO "AND" CLAY, TRACE SAND, TRACE GRAVEL, DAMP TO MOIST *(continued)*	614.5	61	7 11 14	37	100	SS-18	4.50	-	-	-	-	-	-	-	-	16	A-4b (V)	
		62–65																
		66	2 3 9	18	100	SS-19	4.50	0	0	1	63	36	26	20	6	21	A-4b (8)	
		67–70																
		71	2 4 7	16	100	SS-20	3.00	-	-	-	-	-	-	-	-	20	A-4b (V)	
		72–75																
		76	1 3 4	10	100	SS-21	2.25	0	0	2	55	43	28	19	9	22	A-4b (8)	
		77–80																
VERY STIFF TO HARD, GRAY, **SILT AND CLAY**, TRACE SAND, TRACE GRAVEL, DAMP TO MOIST	596.2	81	3 8 11	28	100	SS-22	4.25	-	-	-	-	-	-	-	-	22	A-6a (V)	
		82–85																
		86	4 9 13	33	100	SS-23	4.50	0	0	1	46	53	30	19	11	21	A-6a (8)	
		87–90																
		91	4 10 14	36	100	SS-24	4.25	-	-	-	-	-	-	-	-	19	A-6a (V)	
		92–95																
		96	5 9 12	31	100	SS-25	4.50	0	1	3	45	51	29	18	11	19	A-6a (8)	
		97–100																
		101	4 10 13	34	100	SS-26	4.50	-	-	-	-	-	-	-	-	13	A-6a (V)	
		102–105																
		106	3 9 10	28	100	SS-27	2.50	-	-	-	-	-	-	-	-	23	A-6a (V)	
		107–109																
	564.5	EOB 110	6 12 17	43	100	SS-28	3.50	0	2	2	40	56	31	19	12	22	A-6a (9)	

NOTES: GROUNDWATER ENCOUNTERED AT 25.0' DURING DRILLING. HOLE DID NOT CAVE.
ABANDONMENT METHODS, MATERIALS, QUANTITIES: PUMPED 240 GAL. BENTONITE GROUT

Preliminary Plans - For Reference Only

STANDARD ODOT SOIL BORING LOG (11 X 17) - OH DOT.GDT - 1/3/24 14:18 - X:\ACTIVE PROJECTS\ACTIVE SOIL PROJECTS\1ARCHIVE BY YEAR\2022 ARCHIVE\CUY-90-16.28 (CCG3A - MOD#7)\GINT FILES\CUY-90-16.28 (CCG3A).GPJ

DESIGN AGENCY
2800 CORPORATE EXCHANGE DR. SUITE 240
COLUMBUS, OH. 43231
TEL:614.714.0299
WWW.JNEASINC.COM

DESIGNER MW,J & DT
REVIEWER BPA 08/23/24
PROJECT ID 82382
SUBSET 216 TOTAL 310
SHEET P.2602 TOTAL 2696

GEOTECHNICAL PROFILE - ROADWAY
BRIDGE NO. CUY-77-1587 RAMP A2 FLYOVER
BORING LOG B-142-3-20 (CONTINUED)

MODEL: Sheet PAPERSIZE: 34x22 (in.) DATE: 3/28/2025 TIME: 10:28:53 AM USER: Asiddiqi
pw:\\mb-us-pw.bentley.com:mb-us-pw-03\Documents\Cleveland_OH\01_Projects\ODOT\District12\82382\400-Engineering\Geotechnical\Sheets\82382_ZL103.dgn

PROJECT: CUY-90-16.28 (CCG3A)
TYPE: RETAINING WALL
PID: 82382 SFN:
START: 6/24/21 END: 6/24/21

DRILLING FIRM / OPERATOR: NEAS / ASHBAUGH
SAMPLING FIRM / LOGGER: NEAS / ASHBAUGH
DRILLING METHOD: 3.25" HSA
SAMPLING METHOD: SPT

DRILL RIG: CME 55T
HAMMER: CME AUTOMATIC
CALIBRATION DATE: 12/5/19
ENERGY RATIO (%): 68.4

STATION / OFFSET: 186+59, 26' LT.
ALIGNMENT: IR-90 WB
ELEVATION: 690.5 (MSL) EOB: 66.5 ft.
LAT / LONG: 41.496169, -81.678701

EXPLORATION ID B-142-4-20

MATERIAL DESCRIPTION AND NOTES	ELEV.	DEPTHS	SPT/ RQD	N_{60}	REC (%)	SAMPLE ID	HP (tsf)	GRADATION (%) GR	CS	FS	SI	CL	ATTERBERG LL	PL	PI	WC	ODOT CLASS (GI)	HOLE SEALED
10.0" ASPHALT AND 7.0" BASE (DRILLERS DESCRIPTION)	690.5																	
	689.1																	
MEDIUM DENSE, BROWN, **GRAVEL WITH SAND** LITTLE SILT, TRACE CLAY, CONTAINS BRICK FRAGMENTS AND IRON STAINING, DAMP **(FILL)**	686.7	3	6 10 11	24	67	SS-1A	-	18	33	25	19	5	NP	NP	NP	7	A-1-b (0)	
						SS-1B	-	-	-	-	-	-	-	-	-	8	A-3a (V)	
MEDIUM DENSE TO DENSE, BROWN BECOMING BROWN AND BLACK, **COARSE AND FINE SAND** LITTLE GRAVEL, LITTLE SILT, TRACE CLAY, CONTAINS IRON STAINING, MOIST TO DAMP **(FILL)**		6	8 13 18	35	56	SS-2	-	11	25	41	17	6	NP	NP	NP	12	A-3a (0)	
		8	10 8 10	21	72	SS-3	-	18	23	36	16	7	NP	NP	NP	11	A-3a (0)	
		11	8 8 10	21	67	SS-4	-	-	-	-	-	-	-	-	-	10	A-3a (V)	
		13	5 9 11	23	78	SS-5	-	-	-	-	-	-	-	-	-	8	A-3a (V)	
	676.0																	
VERY DENSE, GRAY AND BLACK, **GRAVEL AND STONE FRAGMENTS WITH SAND** LITTLE SILT, TRACE CLAY, CONTAINS IRON STAINING, DAMP **(FILL)**	673.5	16	21 24 41	74	61	SS-6	-	-	-	-	-	-	-	-	-	8	A-1-b (V)	
MEDIUM DENSE, DARK BROWN, **COARSE AND FINE SAND**, LITTLE SILT, TRACE GRAVEL, TRACE CLAY, CONTAINS BRICK AND TILE FRAGMENTS, CONTAINS IRON STAINING, WET **(FILL)**		18	7 10 12	25	67	SS-7	-	9	19	50	16	6	NP	NP	NP	15	A-3a (0)	
		21	5 6 8	16	56	SS-8	-	-	-	-	-	-	-	-	-	14	A-3a (V)	
	668.5																	
MEDIUM DENSE, BROWN, **GRAVEL WITH SAND** TRACE SILT, TRACE CLAY, DAMP		23	7 5 6	13	50	SS-9	-	-	-	-	-	-	-	-	-	7	A-1-b (V)	
		26	5 5 8	15	56	SS-10	-	16	47	26	8	3	NP	NP	NP	8	A-1-b (0)	
	663.5																	
LOOSE TO MEDIUM DENSE, BROWN, **COARSE AND FINE SAND**, TRACE TO LITTLE SILT, TRACE GRAVEL, TRACE CLAY, MOIST TO WET		28	5 6 6	14	44	SS-11	-	-	-	-	-	-	-	-	-	13	A-3a (V)	
		31	5 4 5	10	44	SS-12	-	-	-	-	-	-	-	-	-	9	A-3a (V)	
@32.5'; SS-13 CONTAINS A 3.0" A-6A SEAM		33	6 9 8	19	61	SS-13	-	-	-	-	-	-	-	-	-	21	A-3a (V)	
		36	7 9 9	21	67	SS-14	-	-	-	-	-	-	-	-	-	11	A-3a (V)	
		38	7 8 11	22	83	SS-15	-	7	31	48	10	4	NP	NP	NP	19	A-3a (0)	
		41	6 7 10	19	67	SS-16	-	-	-	-	-	-	-	-	-	20	A-3a (V)	
	W 647.7																	
		43	6 8 13	24	61	SS-17	-	-	-	-	-	-	-	-	-	18	A-3a (V)	
		46	5 8 14	25	67	SS-18	-	-	-	-	-	-	-	-	-	19	A-3a (V)	
		51	6 10 13	26	56	SS-19	-	-	-	-	-	-	-	-	-	15	A-3a (V)	
@55.0'; SS-20 CONTAINS NO RECOVERY		56	8 11 13	27	0	SS-20	-	-	-	-	-	-	-	-	-	-		

Preliminary Plans - For Reference Only

STANDARD ODOT SOIL BORING LOG (11 X 17) - OH DOT.GDT - 6/22/22 18:20 - X:\ACTIVE PROJECTS\ACTIVE SOIL PROJECTS\CUY-90-16.28 (CCG3A - MOD#7)\IGINT FILES\CUY-90-16.28 (CCG3A).GPJ

DESIGN AGENCY
NEAS
2800 CORPORATE EXCHANGE DR. SUITE 240
COLUMBUS, OH. 43231
TEL:614.714.0299
WWW.NEASINC.COM

DESIGNER MWJ & DT
REVIEWER BPA 08/23/24
PROJECT ID 82382
SUBSET 217 TOTAL 310
SHEET P 2603 TOTAL 2696

GEOTECHNICAL PROFILE - ROADWAY
WALL AC
BORING LOG B-142-4-20

MODEL: Sheet PAPERSIZE: 34x22 (in.) DATE: 3/28/2025 TIME: 10:29:22 AM USER: Asiddiqi
pw:\\mb-us-pw.bentley.com:mb-us-pw-03\Documents\Cleveland_OH\01_Projects\ODOT\District12\82382\400-Engineering\Geotechnical\Sheets\82382_ZL104.dgn

PID: 82382 | SFN: | PROJECT: CUY-90-16.28 (CCG3A) | STATION / OFFSET: 186+59, 26' LT. | START: 6/24/21 | END: 6/24/21 | PG 2 OF 2 | B-142-4-20

MATERIAL DESCRIPTION AND NOTES	ELEV.	DEPTHS	SPT/ RQD	N_{60}	REC (%)	SAMPLE ID	HP (tsf)	GRADATION (%) GR	CS	FS	SI	CL	ATTERBERG LL	PL	PI	WC	ODOT CLASS (GI)	HOLE SEALED
LOOSE TO MEDIUM DENSE, BROWN, **COARSE AND FINE SAND**, TRACE TO LITTLE SILT, TRACE GRAVEL, TRACE CLAY, MOIST TO WET *(continued)*	630.5	61	9 10 14	27	89	SS-21	-	-	-	-	-	-	-	-	-	13	A-3a (V)	
		62																
		63																
		64																
		65																
		66	10 9 13	25	56	SS-22	-	-	-	-	-	-	-	-	-	12	A-3a (V)	
	624.0	EOB																

Preliminary Plans - For Reference Only

STANDARD ODOT SOIL BORING LOG (11 X 17) - OH DOT.GDT - 6/22/22 18:20 - X:\ACTIVE PROJECTS\ACTIVE SOIL PROJECTS\CUY-90-16.28 (CCG3A - MOD#7)\IGINT FILES\CUY-90-16.28 (CCG3A).GPJ

NOTES: GROUNDWATER ENCOUNTERED AT 42.8' DURING DRILLING. HOLE DID NOT CAVE.
ABANDONMENT METHODS, MATERIALS, QUANTITIES: PLACED 0.5 BAG ASPHALT PATCH; PUMPED 150 GAL. BENTONITE GROUT

DESIGN AGENCY
EAS
2800 CORPORATE EXCHANGE DR. SUITE 240
COLUMBUS, OH. 43231
TEL:614.714.0299
WWW.NEASINC.COM
DESIGNER MW,J & DT
REVIEWER BPA 08/23/24

PROJECT ID 82382
SUBSET 218 TOTAL 310
SHEET P 2604 TOTAL 2696

GEOTECHNICAL PROFILE - ROADWAY
WALL AC
BORING LOG B-142-4-20 (CONTINUED)

MODEL: Sheet PAPERSIZE: 34x22 (in.) DATE: 3/28/2025 TIME: 10:29:39 AM USER: Asiddiqi
pw:\\mb-us-pw.bentley.com:mb-us-pw-03\Documents\Cleveland_OH\01_Projects\ODOT\District12\82382\400-Engineering\Geotechnical\Sheets\82382_ZL105.dgn

PROJECT: CUY-CCG3
TYPE: BRIDGE
PID: 82380 SFN:
START: 10/21/14 END: 10/22/14

DRILLING FIRM / OPERATOR: BARR / T.GILBERT
SAMPLING FIRM / LOGGER: BARR / Z.JEWELL
DRILLING METHOD: 3.25" HSA
SAMPLING METHOD: SPT / ST

DRILL RIG: CME 45B
HAMMER: CME AUTOMATIC
CALIBRATION DATE: 1/26/14
ENERGY RATIO (%): 77.4

STATION / OFFSET: 430+46, 52' RT.
ALIGNMENT: RAMP A2
ELEVATION: 669.1 (MSL) EOB: 111.5 ft.
LAT / LONG: 41.496799, -81.677835

EXPLORATION ID B-144-0-14

MATERIAL DESCRIPTION AND NOTES	ELEV.	DEPTHS	SPT/ RQD	N_{60}	REC (%)	SAMPLE ID	HP (tsf)	GRADATION (%) GR	CS	FS	SI	CL	ATTERBERG LL	PL	PI	WC	ODOT CLASS (GI)	BACK FILL
MEDIUM DENSE, BROWN, **GRAVEL WITH SAND** LITTLE SILT, TRACE CLAY, CONTAINS CONCRETE FRAGMENTS, MOIST **(FILL)**	669.1		5 11 8	25	44	SS-1	-	-	-	-	-	-	-	-	-	14	A-1-b (V)	
	667.1																	
VERY LOOSE, BROWN, **COARSE AND FINE SAND** LITTLE GRAVEL, TRACE SILT, TRACE CLAY, DAMP			2 2 1	4	100	SS-2	-	15	23	46	10	6	NP	NP	NP	8	A-3a (0)	
@5.0'; SS-3 BECOMES VERY DENSE			4 50/0"	-	100	SS-3	-	-	-	-	-	-	-	-	-	7	A-3a (V)	
@7.5'; SS-4 BECOMES LOOSE			3 3 3	8	94	SS-4	-	-	-	-	-	-	-	-	-	9	A-3a (V)	
	659.6																	
STIFF, BROWN MOTTLED WITH GRAY, **SILT AND CLAY**, TRACE SAND, TRACE GRAVEL, MOIST			2 2 2	5	100	SS-5	1.50	0	0	1	56	43	32	18	14	25	A-6a (10)	
	657.1																	
MEDIUM DENSE, BROWN, **COARSE AND FINE SAND** LITTLE TO SOME GRAVEL, TRACE SILT, TRACE CLAY, DAMP			8 9 9	23	89	SS-6	-	-	-	-	-	-	-	-	-	4	A-3a (V)	
			6 8 12	26	83	SS-7	-	-	-	-	-	-	-	-	-	4	A-3a (V)	
			6 7 9	21	94	SS-8	-	-	-	-	-	-	-	-	-	6	A-3a (V)	
	649.6																	
MEDIUM DENSE, BROWN, **GRAVEL WITH SAND**, TRACE SILT, TRACE CLAY, WET		W 649.1	6 6 10	21	100	SS-9	-	6	58	31	3	2	NP	NP	NP	19	A-1-b (0)	
	647.1																	
MEDIUM DENSE TO DENSE, BROWN, **COARSE AND FINE SAND**, LITTLE GRAVEL, TRACE SILT, TRACE CLAY, MOIST TO WET			5 6 8	18	100	SS-10	-	-	-	-	-	-	-	-	-	11	A-3a (V)	
@25.0'; SS-11 TO SS-12 BECOME LITTLE SILT, TRACE GRAVEL			6 12 18	39	100	SS-11	-	-	-	-	-	-	-	-	-	21	A-3a (V)	
@27.5'; SS-12 BECOMES GRAY			5 7 9	21	89	SS-12	-	0	2	80	15	3	NP	NP	NP	24	A-3a (0)	
	639.1																	
MEDIUM DENSE TO DENSE, GRAYISH BROWN, **SANDY SILT**, TRACE CLAY, TRACE GRAVEL, WET			10 12 23	45	94	SS-13	-	-	-	-	-	-	-	-	-	24	A-4a (V)	
			6 12 19	40	89	SS-14	-	0	0	53	43	4	NP	NP	NP	27	A-4a (2)	
			4 7 9	21	100	SS-15	-	-	-	-	-	-	-	-	-	25	A-4a (V)	
	626.1																	
MEDIUM DENSE, GRAY, **SILT**, LITTLE CLAY, TRACE SAND, TRACE GRAVEL, WET			7 7 9	21	100	SS-16	-	0	0	3	80	17	25	19	6	24	A-4b (8)	
	622.1																	
STIFF, GRAY, **SILT AND CLAY**, TRACE SAND, TRACE GRAVEL, MOIST			4 5 5	13	100	SS-17	1.10	0	0	3	62	35	29	18	11	23	A-6a (8)	
	616.1																	
MEDIUM DENSE, GRAY, **SILT**, LITTLE CLAY, TRACE SAND, TRACE GRAVEL, MOIST TO WET			9 8 9	22	100	SS-18	-	-	-	-	-	-	-	-	-	21	A-4b (V)	
	610.6																	
STIFF, GRAY, **SILT AND CLAY**, TRACE SAND, TRACE GRAVEL, MOIST																		

Preliminary Plans - For Reference Only

STANDARD ODOT SOIL BORING LOG (11 X 17) - OH DOT.GDT - 1/3/24 15:34 - X:\ACTIVE PROJECTS\ACTIVE SOIL PROJECTS\1ARCHIVE BY YEAR\2017 ARCHIVE\CUY-CCG3 82380\GINT FILES\CUY-CCG3 MASTER - LR UPDATED.GPJ

DESIGN AGENCY
2800 CORPORATE EXCHANGE DR. SUITE 240
COLUMBUS, OH. 43231
TEL:614.714.0299
WWW.MEASINC.COM

DESIGNER MWJ & DT
REVIEWER BPA 08/23/24
PROJECT ID 82382
SUBSET 219 TOTAL 310
SHEET P 2605 TOTAL 2696

GEOTECHNICAL PROFILE - ROADWAY
BRIDGE NO. CUY-77-1587 RAMP A2 FLYOVER
BORING LOG B-144-0-14

MODEL: Sheet PAPERSIZE: 34x22 (in.) DATE: 3/28/2025 TIME: 10:30:05 AM USER: Asiddiqi
pw:\\mb-us-pw.bentley.com:mb-us-pw-03\Documents\Cleveland_OH\01_Projects\ODOT\District12\82382\400-Engineering\Geotechnical\Sheets\82382_ZL106.dgn

PID: 82380 | SFN: | PROJECT: CUY-CCG3 | STATION / OFFSET: 430+46, 52' RT. | START: 10/21/14 | END: 10/22/14 | PG 2 OF 2 | B-144-0-14

MATERIAL DESCRIPTION AND NOTES	ELEV.	DEPTHS	SPT/ RQD	N_{60}	REC (%)	SAMPLE ID	HP (tsf)	GRADATION (%) GR	CS	FS	SI	CL	ATTERBERG LL	PL	PI	WC	ODOT CLASS (GI)	BACK FILL
STIFF, GRAY, **SILT AND CLAY**, TRACE SAND, TRACE GRAVEL, MOIST *(continued)*	609.1	61	3 4 6	13	100	SS-19	1.10	-	-	-	-	-	-	-	-	23	A-6a (V)	
		62–64																
		65	3 4 6	13	100	SS-20	1.40	-	-	-	-	-	-	-	-	24	A-6a (V)	
	600.6	66–70																
VERY STIFF, GRAY, **SILT**, SOME CLAY, TRACE SAND, TRACE GRAVEL, MOIST @71.5'; UNCONFINED: 6600 PSF @ 10.0% STRAIN @71.8'; UNIT WEIGHT: 133.3 PCF @ 19.9% MC		71			100	ST-21	2.50	0	0	1	66	33	27	18	9	20	A-4b (8)	
	595.6	72–74																
STIFF, GRAY, **SILT AND CLAY**, TRACE SAND, TRACE GRAVEL, MOIST		75	5 5 7	15	100	SS-22	1.50	-	-	-	-	-	-	-	-	22	A-6a (V)	
	590.6	76–80																
STIFF TO HARD, GRAY, **SILT**, "AND" CLAY, TRACE SAND, TRACE GRAVEL, MOIST @81.8'; UNIT WEIGHT: 133.6 PCF @ 19.8% MC		81			100	ST-23	4.50	0	0	0	65	35	28	18	10	20	A-4b (8)	
@85.0'; SS-24 BECOMES GRAYISH BROWN		86	5 7 12	25	100	SS-24	1.50	-	-	-	-	-	-	-	-	22	A-4b (V)	
	580.6	87–90																
MEDIUM STIFF TO STIFF, GRAY, **SILT AND CLAY**, TRACE SAND, TRACE GRAVEL, CONTAINS SILT LENSES, MOIST		91	11 25 30	71	100	SS-25	1.00	-	-	-	-	-	-	-	-	26	A-6a (V)	
		96	7 10 14	31	100	SS-26	1.20	-	-	-	-	-	-	-	-	21	A-6a (V)	
	570.6	97–100																
VERY SOFT TO SOFT, GRAY, **SILTY CLAY**, TRACE SAND, TRACE GRAVEL, MOIST		101	0 0 0	0	100	SS-27	0.20	0	1	3	34	62	37	18	19	29	A-6b (12)	
		106	4 5 6	14	100	SS-28	0.30	-	-	-	-	-	-	-	-	27	A-6b (V)	
		111	6 6 8	18	100	SS-29	0.40	-	-	-	-	-	-	-	-	26	A-6b (V)	
	557.6	EOB																

NOTES: GROUNDWATER ENCOUNTERED AT 20.0' DURING DRILLING. CAVE DEPTH 21.0'.
ABANDONMENT METHODS, MATERIALS, QUANTITIES: SHOVELED SOIL CUTTINGS

Preliminary Plans - For Reference Only

STANDARD ODOT SOIL BORING LOG (11 X 17) - OH DOT.GDT - 1/3/24 15:34 - X:\ACTIVE PROJECTS\ACTIVE SOIL PROJECTS\1ARCHIVE BY YEAR\2017 ARCHIVE\CUY-CCG3 82380\GINT FILES\CUY-CCG3 MASTER - LR UPDATED.GPJ

DESIGN AGENCY
EAS
2800 CORPORATE EXCHANGE DR. SUITE 240
COLUMBUS, OH. 43231
TEL:614.714.0299
WWW.NEASINC.COM
DESIGNER MWJ & DT
REVIEWER BPA 08/23/24
PROJECT ID 82382
SHEET 220 TOTAL 310
P 2606 TOTAL 2696

GEOTECHNICAL PROFILE - ROADWAY
BRIDGE NO. CUY-77-1587 RAMP A2 FLYOVER
BORING LOG B-144-0-14 (CONTINUED)

MODEL: Sheet PAPERSIZE: 34x22 (in.) DATE: 3/28/2025 TIME: 10:30:25 AM USER: Asiddiqi
pw:\\mb-us-pw.bentley.com:mb-us-pw-03\Documents\Cleveland_OH\01_Projects\ODOT\District12\82382\400-Engineering\Geotechnical\Sheets\82382_ZL107.dgn

STANDARD ODOT SOIL BORING LOG (8.5 X 11) - OH DOT GDT - 6/22/22 14:18 - X:\ACTIVE PROJECTS\ACTIVE SOIL PROJECTS\1ARCHIVE BY YEAR\2017 ARCHIVE\CUY-CCG3 82380\GINT FILES

PROJECT: CUY-CCG3 | DRILLING FIRM / OPERATOR: BARR / P.STROUD | DRILL RIG: MOBILE B-58 | STATION / OFFSET: 432+43, 18' RT. | EXPLORATION ID B-146-0-14
TYPE: RETAINING WALL | SAMPLING FIRM / LOGGER: BARR / D.KLIMKOWICZ | HAMMER: MOBILE AUTOMATIC | ALIGNMENT: RAMP A2
PID: 82380 SFN: | DRILLING METHOD: 3.25" HSA | CALIBRATION DATE: 1/26/14 | ELEVATION: 667.2 (MSL) EOB: 61.5 ft. | PAGE 1 OF 2
START: 10/21/14 END: 10/22/14 | SAMPLING METHOD: SPT | ENERGY RATIO (%): 90* | LAT / LONG: 41.497164, -81.677289

MATERIAL DESCRIPTION AND NOTES	ELEV. 667.2	DEPTHS	SPT/ RQD	N_{60}	REC (%)	SAMPLE ID	HP (tsf)	GRADATION (%) GR	CS	FS	SI	CL	ATTERBERG LL	PL	PI	WC	ODOT CLASS (GI)	HOLE SEALED
VERY DENSE, BROWN, **GRAVEL**, "AND" SAND, TRACE SILT, TRACE CLAY, CONTAINS BRICK, CONCRETE AND ASPHALT FRAGMENTS, WET **(FILL)**		1	22 47 47	141	100	SS-1	-	-	-	-	-	-	-	-	-	15	A-1-a (V)	
		3	50/5"	-	80	SS-2	-	-	-	-	-	-	-	-	-	15	A-1-a (V)	
		6	15 40 32	108	83	SS-3	-	50	22	17	8	3	NP	NP	NP	14	A-1-a (0)	
		8	50/5"	-	60	SS-4	-	-	-	-	-	-	-	-	-	13	A-1-a (V)	
		11	18 46 38	126	100	SS-5	-	-	-	-	-	-	-	-	-	10	A-1-a (V)	
	655.2																	
MEDIUM DENSE, BROWN, **COARSE AND FINE SAND**, LITTLE GRAVEL, LITTLE SILT, TRACE CLAY, CONTAINS GLASS, MOIST **(FILL)**		13	4 3 4	11	89	SS-6	-	17	25	36	14	8	NP	NP	NP	12	A-3a (0)	
	652.7																	
MEDIUM STIFF TO STIFF, GRAY, **SILT**, SOME CLAY, LITTLE SAND, TRACE GRAVEL, MOIST		16	4 2 3	8	100	SS-7	1.90	0	1	14	58	27	24	17	7	18	A-4b (8)	
	649.2																	
LOOSE TO MEDIUM DENSE, BROWN, **COARSE AND FINE SAND**, TRACE TO LITTLE SILT, TRACE TO LITTLE GRAVEL, TRACE CLAY, WET		18	3 3 5	12	100	SS-8A SS-8B	0.70 -	- -	- -	- -	- -	- -	- -	- -	- -	16 15	A-4b (V) A-3a (V)	
		21	4 5 6	17	100	SS-9	-	12	32	41	11	4	NP	NP	NP	19	A-3a (0)	
		23	1 1 3	6	100	SS-10	-	-	-	-	-	-	-	-	-	27	A-3a (V)	
		26	4 2 8	15	100	SS-11	-	1	14	74	8	3	NP	NP	NP	23	A-3a (0)	
	640.2																	
DENSE, BROWN, **SANDY SILT**, TRACE CLAY, TRACE GRAVEL, MOIST TO WET		28	7 11 13	36	100	SS-12	-	-	-	-	-	-	-	-	-	23	A-4a (V)	
			W 637.2															

Preliminary Plans - For Reference Only

STANDARD ODOT SOIL BORING LOG (8.5 X 11) - OH DOT GDT - 6/22/22 14:18 - X:\ACTIVE PROJECTS\ACTIVE SOIL PROJECTS\1ARCHIVE BY YEAR\2017 ARCHIVE\CUY-CCG3 82380\GINT FILES

PID: 82380 | SFN: | PROJECT: CUY-CCG3 | STATION / OFFSET: 432+43, 18' RT. | START: 10/21/14 | END: 10/22/14 | PG 2 OF 2 | B-146-0-14

MATERIAL DESCRIPTION AND NOTES	ELEV. 637.2	DEPTHS	SPT/ RQD	N_{60}	REC (%)	SAMPLE ID	HP (tsf)	GRADATION (%) GR	CS	FS	SI	CL	ATTERBERG LL	PL	PI	WC	ODOT CLASS (GI)	HOLE SEALED
DENSE, BROWN, **SANDY SILT**, TRACE CLAY, TRACE GRAVEL, MOIST TO WET *(continued)*		31	7 10 12	33	100	SS-13	-	0	2	59	33	6	NP	NP	NP	21	A-4a (1)	
		36	8 8 13	32	100	SS-14	-	-	-	-	-	-	-	-	-	16	A-4a (V)	
@40.0'; SS-15 BECOMES GRAYISH BROWN		41	10 12 16	42	100	SS-15	-	-	-	-	-	-	-	-	-	21	A-4a (V)	
	624.2																	
DENSE, GRAY, **SILT**, LITTLE SAND, LITTLE CLAY, TRACE GRAVEL, WET		46	8 8 12	30	100	SS-16	-	0	1	14	70	15	NP	NP	NP	24	A-4b (8)	
	618.9																	
MEDIUM STIFF TO STIFF, GRAY, **SILT**, SOME CLAY, TRACE SAND, TRACE GRAVEL, SS-18 CONTAINS NO INTACT SOIL FOR HP READINGS, DAMP TO MOIST		51	5 6 7	20	100	SS-17	0.75	1	0	3	64	32	28	19	9	23	A-4b (8)	
		56	5 10 11	32	100	SS-18	-	-	-	-	-	-	-	-	-	19	A-4b (V)	
		61	5 7 10	26	100	SS-19	1.60	-	-	-	-	-	-	-	-	22	A-4b (V)	
	605.7	EOB																

NOTES: GROUNDWATER ENCOUNTERED AT 30.0' DURING DRILLING. CAVE DEPTH 22.0'.
ABANDONMENT METHODS, MATERIALS, QUANTITIES: POURED 2 BAGS BENTONITE CHIPS; SOIL MIXED WITH 2 BAGS CEMENT

DESIGN AGENCY
EAS
2800 CORPORATE EXCHANGE DR. SUITE 240
COLUMBUS, OH. 43231
TEL:614.714.0299
WWW.NEASINC.COM

DESIGNER MWJ & DT | REVIEWER BPA 08/23/24 | PROJECT ID 82382 | SUBSET 221 TOTAL 310 | SHEET P 2607 TOTAL 2696

GEOTECHNICAL PROFILE - ROADWAY
WALL AD
BORING LOG B-146-0-14

MODEL: Sheet PAPERSIZE: 34x22 (in.) DATE: 3/28/2025 TIME: 10:30:46 AM USER: Asiddiqi
pw:\\mb-us-pw.bentley.com:mb-us-pw-03\Documents\Cleveland_OH\01_Projects\ODOT\District12\82382\400-Engineering\Geotechnical\Sheets\82382_ZL108.dgn

PROJECT: CUY-CCG3
TYPE: RETAINING WALL
PID: 82380 SFN:
START: 10/23/14 END: 10/24/14

DRILLING FIRM / OPERATOR: BARR / P.STROUD
SAMPLING FIRM / LOGGER: BARR / D.KLIMKOWICZ
DRILLING METHOD: 3.25" HSA
SAMPLING METHOD: SPT

DRILL RIG: MOBILE B-58
HAMMER: MOBILE AUTOMATIC
CALIBRATION DATE: 1/26/14
ENERGY RATIO (%): 90*

STATION / OFFSET: 306+08, 44' RT.
ALIGNMENT: RAMP A1
ELEVATION: 667.3 (MSL) EOB: 61.5 ft.
LAT / LONG: 41.497523, -81.676575

EXPLORATION ID B-148-0-14

MATERIAL DESCRIPTION AND NOTES	ELEV. 667.3	DEPTHS	SPT/ RQD	N_{60}	REC (%)	SAMPLE ID	HP (tsf)	GRADATION (%) GR	CS	FS	SI	CL	ATTERBERG LL	PL	PI	WC	ODOT CLASS (GI)	HOLE SEALED
5.0", **ASPHALT**	666.9																	
9.0", **CONCRETE**	666.1																	
LOOSE, BROWN, **COARSE AND FINE SAND** LITTLE SILT, TRACE GRAVEL, TRACE CLAY, DAMP **(FILL)**	664.8	1–2	3 3 2	8	83	SS-1	-	-	-	-	-	-	-	-	-	7	A-3a (V)	
STIFF, BROWN, ORANGISH BROWN AND GRAY, **SANDY SILT**, SOME CLAY, TRACE GRAVEL, CONTAINS FEW ROOTS, DAMP TO MOIST **(FILL)**	660.3	2–4	3 3 3	9	89	SS-2	1.40	1	10	37	29	23	24	14	10	18	A-4a (3)	
		5–6	6 4 4	12	89	SS-3	1.50	-	-	-	-	-	-	-	-	14	A-4a (V)	
MEDIUM DENSE, BROWN, **COARSE AND FINE SAND** LITTLE GRAVEL, LITTLE SILT, TRACE CLAY, MOIST **(FILL)**	657.8	7–8	2 3 4	11	78	SS-4	-	-	-	-	-	-	-	-	-	12	A-3a (V)	
LOOSE, BROWN, **FINE SAND**, LITTLE SILT, TRACE COARSE SAND, TRACE GRAVEL, TRACE CLAY, DAMP	655.3	10–11	3 2 3	8	100	SS-5	-	-	-	-	-	-	-	-	-	9	A-3 (V)	
LOOSE, BROWN, **COARSE AND FINE SAND** LITTLE GRAVEL, TRACE SILT, TRACE CLAY, WET		12–13	2 3 3	9	100	SS-6	-	-	-	-	-	-	-	-	-	13	A-3a (V)	
		15–16	2 2 3	8	94	SS-7	-	20	27	40	9	4	NP	NP	NP	14	A-3a (0)	
@17.5'; SS-8 TO SS-13 BECOME MEDIUM DENSE TO DENSE, GRAYISH BROWN, TRACE GRAVEL		18–19	8 11 11	33	100	SS-8	-	-	-	-	-	-	-	-	-	23	A-3a (V)	
	W 646.3	20–21	6 10 11	32	100	SS-9	-	0	1	87	10	2	NP	NP	NP	24	A-3a (0)	
		23–24	5 7 10	26	100	SS-10	-	-	-	-	-	-	-	-	-	22	A-3a (V)	
		25–26	7 10 11	32	100	SS-11	-	-	-	-	-	-	-	-	-	20	A-3a (V)	
@27.5'; SS-12 AND SS-13 BECOME LITTLE TO SOME SILT		28–29	6 8 13	32	100	SS-12	-	-	-	-	-	-	-	-	-	21	A-3a (V)	
		30–31	7 9 10	29	100	SS-13	-	-	-	-	-	-	-	-	-	22	A-3a (V)	
MEDIUM DENSE, GRAY, **SILT**, SOME SAND, TRACE CLAY, TRACE GRAVEL, WET	634.3	35–36	5 8 10	27	100	SS-14	-	0	0	34	57	9	NP	NP	NP	28	A-4b (6)	
		40–41	7 8 8	24	100	SS-15	-	-	-	-	-	-	-	-	-	26	A-4b (V)	
MEDIUM STIFF TO HARD, GRAY, **SILT**, SOME CLAY, TRACE SAND, TRACE GRAVEL, SS-18 CONTAINS NO INTACT SOIL FOR HP READINGS, MOIST TO WET	623.8	45–46	5 7 11	27	100	SS-16	4.50	0	0	2	75	23	27	17	10	20	A-4b (8)	
		50–51	3 5 5	15	100	SS-17	1.00	-	-	-	-	-	-	-	-	25	A-4b (V)	
		55–56	0 3 5	12	100	SS-18	-	0	0	1	73	26	26	17	9	30	A-4b (8)	

Preliminary Plans - For Reference Only

STANDARD ODOT SOIL BORING LOG (11 X 17) - OH DOT.GDT - 6/22/22 18:09 - X:\ACTIVE PROJECTS\ACTIVE SOIL PROJECTS\1ARCHIVE BY YEAR\2017 ARCHIVE\CUY-CCG3 82380\GINT FILES\CUY-CCG3 MASTER - LR UPDATED.GPJ

DESIGN AGENCY
EAS
2800 CORPORATE EXCHANGE DR. SUITE 240
COLUMBUS, OH. 43231
TEL:614.714.0299
WWW.NEASINC.COM

DESIGNER MWJ & DT
REVIEWER BPA 08/23/24
PROJECT ID 82382
SHEET 222 TOTAL 310
P 2608 TOTAL 2696

GEOTECHNICAL PROFILE - ROADWAY
WALL AE WEST
BORING LOG B-148-0-14

MODEL: Sheet PAPERSIZE: 34x22 (in.) DATE: 3/28/2025 TIME: 10:31:12 AM USER: Asiddiqi
pw:\\mb-us-pw.bentley.com:mb-us-pw-03\Documents\Cleveland_OH\01_Projects\ODOT\District12\82382\400-Engineering\Geotechnical\Sheets\82382_ZL109.dgn

PID: 82380	SFN:	PROJECT: CUY-CCG3	STATION / OFFSET: 306+08, 44' RT.	START: 10/23/14	END: 10/24/14	PG 2 OF 2	B-148-0-14

MATERIAL DESCRIPTION AND NOTES	ELEV.	DEPTHS	SPT/ RQD	N_{60}	REC (%)	SAMPLE ID	HP (tsf)	GRADATION (%) GR	CS	FS	SI	CL	ATTERBERG LL	PL	PI	WC	ODOT CLASS (GI)	HOLE SEALED
	607.3																	
	605.8	61 EOB	5 6 9	23	100	SS-19	1.60	-	-	-	-	-	-	-	-	24	A-4b (V)	

Preliminary Plans - For Reference Only

NOTES: GROUNDWATER ENCOUNTERED AT 21.0' DURING DRILLING. HOLE DID NOT CAVE.
ABANDONMENT METHODS, MATERIALS, QUANTITIES: PLACED 1 BAG ASPHALT PATCH; SOIL MIXED WITH 3 BAGS CEMENT

STANDARD ODOT SOIL BORING LOG (11 X 17) - OH DOT.GDT - 6/22/22 18:09 - X:\ACTIVE PROJECTS\ACTIVE SOIL PROJECTS\1ARCHIVE BY YEAR\2017 ARCHIVE\CUY-CCG3 82380\GINT FILES\CUY-CCG3 MASTER - LR UPDATED.GPJ

DESIGN AGENCY
EAS
2800 CORPORATE EXCHANGE DR. SUITE 240 COLUMBUS, OH. 43231
TEL:614.714.0299
WWW.NEASINC.COM

GEOTECHNICAL PROFILE - ROADWAY
WALL AE WEST
BORING LOG B-148-0-14 (CONTINUED)

MODEL: Sheet PAPERSIZE: 34x22 (in.) DATE: 3/28/2025 TIME: 10:31:28 AM USER: Asiddiqi
pw:\\mb-us-pw.bentley.com:mb-us-pw-03\Documents\Cleveland_OH\01_Projects\ODOT\District12\82382\400-Engineering\Geotechnical\Sheets\82382_ZL110.dgn

PROJECT: CUY-CCG3
TYPE: RETAINING WALL
PID: 82380 SFN:
START: 10/22/14 END: 10/23/14

DRILLING FIRM / OPERATOR: BARR / P.STROUD
SAMPLING FIRM / LOGGER: BARR / D.KLIMKOWICZ
DRILLING METHOD: 3.25" HSA
SAMPLING METHOD: SPT

DRILL RIG: MOBILE B-58
HAMMER: MOBILE AUTOMATIC
CALIBRATION DATE: 1/26/14
ENERGY RATIO (%): 90*

STATION / OFFSET: 307+58, 34' RT.
ALIGNMENT: RAMP A1
ELEVATION: 669.8 (MSL) EOB: 61.5 ft.
LAT / LONG: 41.497763, -81.676127

EXPLORATION ID B-149-0-14
PAGE 1 OF 2

MATERIAL DESCRIPTION AND NOTES	ELEV. 669.8	DEPTHS	SPT/ RQD	N_{60}	REC (%)	SAMPLE ID	HP (tsf)	GRADATION (%) GR	CS	FS	SI	CL	ATTERBERG LL	PL	PI	WC	ODOT CLASS (GI)	HOLE SEALED
4.0", **ASPHALT**	669.4																	
9.0", **GRANULAR BASE**	668.7																	
VERY LOOSE TO LOOSE, BROWN AND BLACK, **COARSE AND FINE SAND** SOME SILT, TRACE CLAY, TRACE GRAVEL, MOIST TO WET **(FILL)**			3 2 1	5	78	SS-1	-	-	-	-	-	-	-	-	-	15	A-3a (V)	
			2 1 1	3	89	SS-2	-	8	23	40	21	8	NP	NP	NP	16	A-3a (0)	
			2 1 3	6	100	SS-3	-	-	-	-	-	-	-	-	-	9	A-3a (V)	
@7.5'; SS-4 TO SS-5 BECOME LOOSE TO MEDIUM DENSE			3 4 3	11	100	SS-4	-	-	-	-	-	-	-	-	-	18	A-3a (V)	
	658.3		3 2 4	9	100	SS-5	-	-	-	-	-	-	-	-	-	15	A-3a (V)	
MEDIUM DENSE, BROWN, **FINE SAND**, SOME COARSE SAND, TRACE SILT, TRACE CLAY, TRACE GRAVEL, DAMP	655.3		6 5 8	20	100	SS-6	-	3	29	59	6	3	NP	NP	NP	6	A-3 (0)	
MEDIUM DENSE TO DENSE, BROWN, **COARSE AND FINE SAND**, TRACE GRAVEL, TRACE SILT, TRACE CLAY, DAMP TO WET			9 9 10	29	100	SS-7	-	-	-	-	-	-	-	-	-	5	A-3a (V)	
@17.5'; SS-8 BECOMES BROWN AND GRAY			9 13 14	41	100	SS-8	-	-	-	-	-	-	-	-	-	6	A-3a (V)	
@20.0'; SS-9 BECOMES GRAY			5 6 8	21	100	SS-9	-	-	-	-	-	-	-	-	-	18	A-3a (V)	
	647.3	W 648.3																
DENSE, GRAY, **SANDY SILT**, TRACE CLAY, TRACE GRAVEL, WET	645.3		8 11 11	33	100	SS-10	-	0	0	60	35	5	NP	NP	NP	22	A-4a (1)	
DENSE, GRAY, **COARSE AND FINE SAND**, TRACE SILT, TRACE CLAY, TRACE GRAVEL, WET			8 10 11	32	100	SS-11	-	-	-	-	-	-	-	-	-	20	A-3a (V)	
@27.5'; SS-12 AND SS-13 BECOME GRAYISH BROWN			8 10 11	32	100	SS-12	-	0	8	81	9	2	NP	NP	NP	22	A-3a (0)	
			8 9 13	33	100	SS-13	-	-	-	-	-	-	-	-	-	21	A-3a (V)	
	636.3																	
MEDIUM DENSE TO DENSE, GRAYISH BROWN, **SANDY SILT**, TRACE CLAY, TRACE GRAVEL, WET			8 9 12	32	100	SS-14	-	-	-	-	-	-	-	-	-	25	A-4a (V)	
			4 7 9	24	100	SS-15	-	0	0	46	47	7	NP	NP	NP	26	A-4a (4)	
	626.8																	
MEDIUM STIFF TO VERY STIFF, GRAY, **SILT AND CLAY**, TRACE SAND, TRACE GRAVEL, MOIST			2 3 5	12	100	SS-16	1.40	-	-	-	-	-	-	-	-	22	A-6a (V)	
			8 8 8	24	100	SS-17	0.80	1	0	3	61	35	29	18	11	24	A-6a (8)	
			8 9 10	29	100	SS-18	3.30	-	-	-	-	-	-	-	-	20	A-6a (V)	

Preliminary Plans - For Reference Only

STANDARD ODOT SOIL BORING LOG (11 X 17) - OH DOT.GDT - 6/22/22 18:10 - X:\ACTIVE PROJECTS\ACTIVE SOIL PROJECTS\1ARCHIVE BY YEAR\2017 ARCHIVE\CUY-CCG3 82380\GINT FILES\CUY-CCG3 MASTER - LR UPDATED.GPJ

DESIGN AGENCY
2800 CORPORATE EXCHANGE DR. SUITE 240
COLUMBUS, OH. 43231
TEL: 614.714.0299
WWW.NEASINC.COM

DESIGNER MWJ & DT
REVIEWER BPA 08/23/24
PROJECT ID 82382
SUBSET 224 TOTAL 310
SHEET P 2610 TOTAL 2696

GEOTECHNICAL PROFILE - ROADWAY
WALL AE WEST
BORING LOG B-149-0-14

MODEL: Sheet PAPERSIZE: 34x22 (in.) DATE: 3/28/2025 TIME: 10:31:54 AM USER: Asiddiqi
pw:\\mb-us-pw.bentley.com:mb-us-pw-03\Documents\Cleveland_OH\01_Projects\ODOT\District12\82382\400-Engineering\Geotechnical\Sheets\82382_ZL111.dgn

PID: 82380 | SFN: | PROJECT: CUY-CCG3 | STATION / OFFSET: 307+58, 34' RT. | START: 10/22/14 | END: 10/23/14 | PG 2 OF 2 | B-149-0-14

MATERIAL DESCRIPTION AND NOTES	ELEV.	DEPTHS	SPT/ RQD	N_{60}	REC (%)	SAMPLE ID	HP (tsf)	GRADATION (%) GR	CS	FS	SI	CL	ATTERBERG LL	PL	PI	WC	ODOT CLASS (GI)	HOLE SEALED
MEDIUM STIFF TO VERY STIFF, GRAY, **SILT AND CLAY**, TRACE SAND, TRACE GRAVEL, MOIST *(continued)*	609.8																	
	608.3	EOB 61	6 8 8	24	100	SS-19	1.00	-	-	-	-	-	-	-	-	21	A-6a (V)	

Preliminary Plans - For Reference Only

STANDARD ODOT SOIL BORING LOG (11 X 17) - OH DOT.GDT - 6/22/22 18:10 - X:\ACTIVE PROJECTS\ACTIVE SOIL PROJECTS\1ARCHIVE BY YEAR\2017 ARCHIVE\CUY-CCG3 82380\GINT FILES\CUY-CCG3 MASTER - LR UPDATED.GPJ

NOTES: GROUNDWATER ENCOUNTERED AT 21.5' DURING DRILLING. CAVE DEPTH 21.5'.

ABANDONMENT METHODS, MATERIALS, QUANTITIES: PLACED .5 BAG ASPHALT PATCH; POURED 3 BAGS CEMENT; SHOVELED SOIL CUTTINGS

DESIGN AGENCY
EAS
2800 CORPORATE EXCHANGE DR. SUITE 240 COLUMBUS, OH. 43231
TEL:614.714.0299
WWW.AEASINC.COM

DESIGNER MW,J & DT
REVIEWER BPA 08/23/24
PROJECT ID 82382
SUBSET 225 TOTAL 310
SHEET P.2611 TOTAL 2696

GEOTECHNICAL PROFILE - ROADWAY
WALL AE WEST
BORING LOG B-149-0-14 (CONTINUED)

MODEL: Sheet PAPERSIZE: 34x22 (in.) DATE: 3/28/2025 TIME: 10:32:09 AM USER: Asiddiqi
pw:\\mb-us-pw.bentley.com:mb-us-pw-03\Documents\Cleveland_OH\01_Projects\ODOT\District12\82382\400-Engineering\Geotechnical\Sheets\82382_ZL112.dgn

STANDARD ODOT SOIL BORING LOG (8.5 X 11) - OH DOT.GDT - 6/22/22 14:18 - X:\ACTIVE PROJECTS\ACTIVE SOIL PROJECTS\1ARCHIVE BY YEAR\2017 ARCHIVE\CUY-CCG3 82380\GINT FILES

PROJECT: CUY-CCG3 | DRILLING FIRM / OPERATOR: BARR / P.STROUD | DRILL RIG: MOBILE B-58 | STATION / OFFSET: 198+05, 39' LT. | EXPLORATION ID B-151-0-14
TYPE: RETAINING WALL | SAMPLING FIRM / LOGGER: BARR / C. PIERCE | HAMMER: MOBILE AUTOMATIC | ALIGNMENT: IR-90 WB
PID: 82380 SFN: | DRILLING METHOD: 3.25" HSA | CALIBRATION DATE: 1/26/14 | ELEVATION: 665.4 (MSL) EOB: 61.5 ft. | PAGE 1 OF 2
START: 12/2/14 END: 12/3/14 | SAMPLING METHOD: SPT | ENERGY RATIO (%): 90* | LAT / LONG: 41.498073, -81.675354

MATERIAL DESCRIPTION AND NOTES	ELEV.	DEPTHS	SPT/ RQD	N_{60}	REC (%)	SAMPLE ID	HP (tsf)	GRADATION (%) GR	CS	FS	SI	CL	ATTERBERG LL	PL	PI	WC	ODOT CLASS (GI)	BACK FILL
MEDIUM DENSE, BROWN AND DARK GRAY, **GRAVEL WITH SAND**, TRACE SILT, TRACE CLAY, CONTAINS FEW ROOTS, MOIST **(FILL)**	665.4	1	3 9 6	23	100	SS-1	-	38	22	29	8	3	NP	NP	NP	11	A-1-b (0)	
	663.4																	
LOOSE TO MEDIUM DENSE, BROWN, **COARSE AND FINE SAND**, TRACE SILT, TRACE CLAY, TRACE GRAVEL, DAMP TO MOIST		2																
		3	3 4 4	12	100	SS-2	-	-	-	-	-	-	-	-	-	8	A-3a (V)	
		4																
		5	4 4 4	12	100	SS-3	-	-	-	-	-	-	-	-	-	9	A-3a (V)	
		6																
		7																
		8	2 3 3	9	100	SS-4	-	0	3	83	10	4	NP	NP	NP	11	A-3a (0)	
		9																
		10																
		11	3 3 3	9	100	SS-5	-	-	-	-	-	-	-	-	-	8	A-3a (V)	
		12																
		13	3 3 3	9	100	SS-6	-	-	-	-	-	-	-	-	-	9	A-3a (V)	
		14																
		15																
		16	3 3 4	11	100	SS-7	-	-	-	-	-	-	-	-	-	10	A-3a (V)	
	648.4	17	W 649.4															
MEDIUM DENSE TO DENSE, BROWN, **FINE SAND**, SOME COARSE SAND, TRACE GRAVEL, TRACE SILT, TRACE CLAY, WET		18	0 3 7	15	100	SS-8	-	6	30	59	3	2	NP	NP	NP	21	A-3 (0)	
		19																
		20																
		21	3 4 7	17	100	SS-9	-	-	-	-	-	-	-	-	-	20	A-3 (V)	
		22																
		23																
		24	5 7 8	23	100	SS-10	-	-	-	-	-	-	-	-	-	21	A-3 (V)	
		25																
		26																
		27	5 10 11	32	100	SS-11	-	-	-	-	-	-	-	-	-	18	A-3 (V)	
	638.4	28																
DENSE, GRAYISH BROWN, **COARSE AND FINE SAND**, TRACE SILT, TRACE CLAY, TRACE GRAVEL, WET		29	6 12 14	39	100	SS-12	-	2	28	57	9	4	NP	NP	NP	17	A-3a (0)	

STANDARD ODOT SOIL BORING LOG (8.5 X 11) - OH DOT.GDT - 6/22/22 14:18 - X:\ACTIVE PROJECTS\ACTIVE SOIL PROJECTS\1ARCHIVE BY YEAR\2017 ARCHIVE\CUY-CCG3 82380\GINT FILES

PID: 82380 | SFN: | PROJECT: CUY-CCG3 | STATION / OFFSET: 198+05, 39' LT. | START: 12/2/14 | END: 12/3/14 | PG 2 OF 2 | B-151-0-14

MATERIAL DESCRIPTION AND NOTES	ELEV.	DEPTHS	SPT/ RQD	N_{60}	REC (%)	SAMPLE ID	HP (tsf)	GRADATION (%) GR	CS	FS	SI	CL	ATTERBERG LL	PL	PI	WC	ODOT CLASS (GI)	BACK FILL
DENSE, GRAYISH BROWN, **COARSE AND FINE SAND**, TRACE SILT, TRACE CLAY, TRACE GRAVEL, WET *(continued)*	635.4	31	3 8 12	30	100	SS-13	-	-	-	-	-	-	-	-	-	18	A-3a (V)	
		32																
		33																
		34																
		35																
		36	11 11 14	38	100	SS-14	-	-	-	-	-	-	-	-	-	19	A-3a (V)	
	627.1	37																
DENSE, GRAYISH BROWN, **SANDY SILT**, TRACE CLAY, TRACE GRAVEL, WET		38																
		39																
	622.1	40																
MEDIUM STIFF TO VERY STIFF, GRAY, **SILT**, SOME TO "AND" CLAY, TRACE SAND, TRACE GRAVEL, MOIST TO WET		41	10 13 12	38	100	SS-15	-	0	1	51	42	6	NP	NP	NP	24	A-4a (3)	
		42																
		43																
		44																
		45																
		46	7 10 14	36	100	SS-16	4.00	-	-	-	-	-	-	-	-	19	A-4b (V)	
		47																
		48																
		49																
		50																
		51	6 6 5	17	100	SS-17	0.60	0	1	2	61	36	29	19	10	25	A-4b (8)	
		52																
		53																
		54																
		55																
		56	4 3 5	12	100	SS-18	0.75	-	-	-	-	-	-	-	-	27	A-4b (V)	
		57																
		58																
		59																
		60																
	603.9	61	5 7 12	29	100	SS-19	1.00	0	1	1	69	29	26	18	8	22	A-4b (8)	
		EOB																

NOTES: GROUNDWATER ENCOUNTERED AT 16.0' DURING DRILLING. CAVE DEPTH 19.7'.
ABANDONMENT METHODS, MATERIALS, QUANTITIES: SHOVELED SOIL CUTTINGS

Preliminary Plans - For Reference Only

SHEET	TOTAL
P 2612	2696

SUBSET	TOTAL
226	310

PROJECT ID: 82382

REVIEWER: BPA 08/23/24

DESIGNER: MW.J & DT

DESIGN AGENCY
EAS
2800 CORPORATE EXCHANGE DR. SUITE 240
COLUMBUS, OH. 43231
TEL:614.714.0299
WWW.AEASINC.COM

GEOTECHNICAL PROFILE - ROADWAY
WALL AE WEST
BORING LOG B-151-0-14

MODEL: Sheet PAPERSIZE: 34x22 (in.) DATE: 3/28/2025 TIME: 10:32:30 AM USER: Asiddiqi
pw:\\mb-us-pw.bentley.com:mb-us-pw-03\Documents\Cleveland_OH\01_Projects\ODOT\District12\82382\400-Engineering\Geotechnical\Sheets\82382_ZL113.dgn

Preliminary Plans - For Reference Only

PROJECT: CUY-90-16.28 (CCG3A)
TYPE: RETAINING WALL
PID: 82382 SFN:
START: 7/2/21 END: 7/2/21

DRILLING FIRM / OPERATOR: NEAS / ASHBAUGH
SAMPLING FIRM / LOGGER: NEAS / ASHBAUGH
DRILLING METHOD: 3.25" HSA
SAMPLING METHOD: SPT

DRILL RIG: CME 55T
HAMMER: CME AUTOMATIC
CALIBRATION DATE: 12/5/19
ENERGY RATIO (%): 68.4

STATION / OFFSET: 1605+19, 200' RT.
ALIGNMENT: RAMP B6
ELEVATION: 686.6 (MSL) EOB: 66.5 ft.
LAT / LONG: 41.494812, -81.678570

EXPLORATION ID: B-151-1-20
PAGE: 1 OF 2

MATERIAL DESCRIPTION AND NOTES	ELEV.	DEPTHS	SPT/ RQD	N_{60}	REC (%)	SAMPLE ID	HP (tsf)	GRADATION (%) GR	CS	FS	SI	CL	ATTERBERG LL	PL	PI	WC	ODOT CLASS (GI)	HOLE SEALED
5.0" TOPSOIL (DRILLERS DESCRIPTION)	686.2																	
MEDIUM DENSE TO DENSE, BROWN, **COARSE AND FINE SAND**, LITTLE SILT, TRACE TO LITTLE GRAVEL, TRACE CLAY, CONTAINS TRACE IRON STAINING, DAMP **(FILL)**			8 18 21	44	67	SS-1	-	-	-	-	-	-	-	-	-	9	A-3a (V)	
			7 10 12	25	56	SS-2	-	-	-	-	-	-	-	-	-	11	A-3a (V)	
			7 15 16	35	61	SS-3	-	-	-	-	-	-	-	-	-	11	A-3a (V)	
	677.1																	
DENSE, BROWN, **SANDY SILT**, SOME GRAVEL, TRACE CLAY, CONTAINS CONCRETE AND BRICK FRAGMENTS, DAMP **(FILL)**			10 21 18	44	33	SS-4	-	25	11	27	27	10	NP	NP	NP	12	A-4a (0)	
	674.6																	
MEDIUM DENSE, BROWN, **GRAVEL WITH SAND** TRACE TO LITTLE SILT, TRACE CLAY, DAMP TO MOIST			11 8 4	14	56	SS-5	-	-	-	-	-	-	-	-	-	12	A-1-b (V)	
			7 6 4	11	78	SS-6	-	-	-	-	-	-	-	-	-	13	A-1-b (V)	
			4 5 5	11	56	SS-7	-	11	46	33	7	3	NP	NP	NP	7	A-1-b (0)	
			6 6 7	15	83	SS-8	-	-	-	-	-	-	-	-	-	10	A-1-b (V)	
			7 6 7	15	56	SS-9	-	-	-	-	-	-	-	-	-	7	A-1-b (V)	
			7 7 8	17	56	SS-10	-	22	34	26	13	5	NP	NP	NP	6	A-1-b (0)	
	659.6																	
LOOSE TO MEDIUM DENSE, BROWN BECOMING GRAYISH BROWN, **COARSE AND FINE SAND** TRACE TO LITTLE SILT, TRACE GRAVEL, TRACE CLAY, DAMP			6 8 12	23	56	SS-11	-	-	-	-	-	-	-	-	-	7	A-3a (V)	
			7 10 9	22	78	SS-12	-	-	-	-	-	-	-	-	-	4	A-3a (V)	
		W 653.6																
@35.0'; BECOMES WET			4 4 5	10	67	SS-13	-	-	-	-	-	-	-	-	-	21	A-3a (V)	
			5 4 6	11	67	SS-14	-	-	-	-	-	-	-	-	-	19	A-3a (V)	
			6 7 6	15	72	SS-15	-	-	-	-	-	-	-	-	-	16	A-3a (V)	
			7 8 8	18	67	SS-16	-	-	-	-	-	-	-	-	-	17	A-3a (V)	
			8 9 11	23	89	SS-17	-	-	-	-	-	-	-	-	-	19	A-3a (V)	

STANDARD ODOT SOIL BORING LOG (11 X 17) - OH DOT.GDT - 6/22/22 18:20 - X:\ACTIVE PROJECTS\ACTIVE SOIL PROJECTS\CUY-90-16.28 (CCG3A - MOD#7)\IGINT FILES\CUY-90-16.28 (CCG3A).GPJ

DESIGN AGENCY
NEAS
2800 CORPORATE EXCHANGE DR. SUITE 240 COLUMBUS, OH. 43231
TEL:614.714.0299
WWW.NEASINC.COM

DESIGNER MW,J & DT
REVIEWER BPA 08/23/24
PROJECT ID 82382
SUBSET 227 TOTAL 310
SHEET P 2613 TOTAL 2696

GEOTECHNICAL PROFILE - ROADWAY
WALL AJ
BORING LOG B-151-1-20

MODEL: Sheet PAPERSIZE: 34x22 (in.) DATE: 3/28/2025 TIME: 10:32:58 AM USER: Asiddiqi
pw:\\mb-us-pw.bentley.com:mb-us-pw-03\Documents\Cleveland_OH\01_Projects\ODOT\District12\82382\400-Engineering\Geotechnical\Sheets\82382_ZL114.dgn

PID: 82382 | SFN: | PROJECT: CUY-90-16.28 (CCG3A) | STATION / OFFSET: 1605+19, 200' RT. | START: 7/2/21 | END: 7/2/21 | PG 2 OF 2 | B-151-1-20

MATERIAL DESCRIPTION AND NOTES	ELEV.	DEPTHS	SPT/ RQD	N_{60}	REC (%)	SAMPLE ID	HP (tsf)	GRADATION (%) GR	CS	FS	SI	CL	ATTERBERG LL	PL	PI	WC	ODOT CLASS (GI)	HOLE SEALED
LOOSE TO MEDIUM DENSE, BROWN BECOMING GRAYISH BROWN, **COARSE AND FINE SAND** TRACE TO LITTLE SILT, TRACE GRAVEL, TRACE CLAY, DAMP *(continued)*	626.6	61	8 10 9	22	78	SS-18	-	-	-	-	-	-	-	-	-	25	A-3a (V)	
		62																
		63																
		64																
		65																
		66	9 10 11	24	89	SS-19	-	-	-	-	-	-	-	-	-	25	A-3a (V)	
	620.1	EOB																

Preliminary Plans - For Reference Only

NOTES: GROUNDWATER ENCOUNTERED AT 33.0' DURING DRILLING. HOLE DID NOT CAVE.
ABANDONMENT METHODS, MATERIALS, QUANTITIES: PUMPED 140 GAL. BENTONITE GROUT; POURED 1 BAG HOLE PLUG

STANDARD ODOT SOIL BORING LOG (11 X 17) - OH DOT.GDT - 6/22/22 18:20 - X:\ACTIVE PROJECTS\ACTIVE SOIL PROJECTS\CUY-90-16.28 (CCG3A - MOD#7)\IGINT FILES\CUY-90-16.28 (CCG3A).GPJ

DESIGN AGENCY
2800 CORPORATE EXCHANGE DR. SUITE 240
COLUMBUS, OH. 43231
TEL:614.714.0299
WWW.NEASINC.COM

DESIGNER MW,J & DT
REVIEWER BPA 08/23/24
PROJECT ID 82382
SHEET 228 TOTAL 310
SHEET P.2614 TOTAL 2696

GEOTECHNICAL PROFILE - ROADWAY
WALL AJ
BORING LOG B-151-1-20 (CONTINUED)

MODEL: Sheet PAPERSIZE: 34x22 (in.) DATE: 3/28/2025 TIME: 10:33:16 AM USER: Asiddiqi
pw:\\mb-us-pw.bentley.com:mb-us-pw-03\Documents\Cleveland_OH\01_Projects\ODOT\District12\82382\400-Engineering\Geotechnical\Sheets\82382_ZL115.dgn

STANDARD ODOT SOIL BORING LOG (8.5 X 11) - OH DOT.GDT - 6/22/22 14:19 - X:\ACTIVE PROJECTS\ACTIVE SOIL PROJECTS\1ARCHIVE BY YEAR\2017 ARCHIVE\CUY-CCG3 82380\GINT FILES

PROJECT: CUY-CCG3 | DRILLING FIRM / OPERATOR: BARR / JO.GILBERT | DRILL RIG: CME 55X | STATION / OFFSET: 201+57, 225' LT. | EXPLORATION ID B-152-0-14
TYPE: RETAINING WALL | SAMPLING FIRM / LOGGER: BARR / Z.JEWELL | HAMMER: CME AUTOMATIC | ALIGNMENT: SB E 14TH ST INTERIM | PAGE 1 OF 2
PID: 82380 SFN: | DRILLING METHOD: 3.25" HSA | CALIBRATION DATE: 1/26/14 | ELEVATION: 675.7 (MSL) EOB: 61.5 ft.
START: 11/20/14 END: 11/20/14 | SAMPLING METHOD: SPT | ENERGY RATIO (%): 81.2 | LAT / LONG: 41.494605, -81.678275

MATERIAL DESCRIPTION AND NOTES	ELEV. 675.7	DEPTHS	SPT/ RQD	N_{60}	REC (%)	SAMPLE ID	HP (tsf)	GRADATION (%) GR	CS	FS	SI	CL	ATTERBERG LL	PL	PI	WC	ODOT CLASS (GI)	BACK FILL
MEDIUM DENSE TO DENSE, DARK BROWN AND BROWN, **COARSE AND FINE SAND**, LITTLE SILT, LITTLE GRAVEL, TRACE CLAY, SS-1 CONTAINS TILE FRAGMENTS, MOIST TO WET **(FILL)**		1	3 5 11	22	67	SS-1	-	-	-	-	-	-	-	-	-	11	A-3a (V)	
		2																
		3	10 13 12	34	100	SS-2	-	15	18	39	20	8	NP	NP	NP	14	A-3a (0)	
	671.2	4																
DENSE, BROWN, **GRAVEL WITH SAND**, TRACE SILT, TRACE CLAY, CONTAINS BRICK FRAGMENTS, DAMP **(FILL)**		5	8 18 10	38	83	SS-3	-	46	19	22	9	4	NP	NP	NP	11	A-1-b (0)	
	668.7	6																
LOOSE TO MEDIUM DENSE, BROWN, **FINE SAND**, TRACE TO LITTLE GRAVEL, TRACE TO LITTLE COARSE SAND, TRACE SILT, TRACE CLAY, DAMP TO MOIST		7	4 4 5	12	78	SS-4	-	-	-	-	-	-	-	-	-	14	A-3 (V)	
		8																
		9	3 4 3	9	89	SS-5	-	-	-	-	-	-	-	-	-	11	A-3 (V)	
		10																
		11																
		12	3 2 5	9	56	SS-6	-	-	-	-	-	-	-	-	-	10	A-3 (V)	
		13																
@15.0'; SS-7 AND SS-8 BECOME MEDIUM DENSE TO DENSE		14																
		15	6 11 10	28	100	SS-7	-	20	18	54	6	2	NP	NP	NP	5	A-3 (0)	
		16																
		17																
		18	7 13 14	37	89	SS-8	-	-	-	-	-	-	-	-	-	7	A-3 (V)	
	656.2	19																
MEDIUM DENSE TO DENSE, BROWN, **COARSE AND FINE SAND**, LITTLE SILT, TRACE CLAY, TRACE GRAVEL, DAMP TO WET		20	6 11 13	32	100	SS-9	-	-	-	-	-	-	-	-	-	6	A-3a (V)	
	W 653.7	21																
		22																
		23	6 7 8	20	89	SS-10	-	-	-	-	-	-	-	-	-	22	A-3a (V)	
		24																
		25																
		26	3 5 7	16	100	SS-11	-	0	1	83	12	4	NP	NP	NP	23	A-3a (0)	
		27																
		28	7 12 19	42	100	SS-12	-	-	-	-	-	-	-	-	-	15	A-3a (V)	
		29																

STANDARD ODOT SOIL BORING LOG (8.5 X 11) - OH DOT.GDT - 6/22/22 14:19 - X:\ACTIVE PROJECTS\ACTIVE SOIL PROJECTS\1ARCHIVE BY YEAR\2017 ARCHIVE\CUY-CCG3 82380\GINT FILES

PID: 82380 | SFN: | PROJECT: CUY-CCG3 | STATION / OFFSET: 201+57, 225' LT. | START: 11/20/14 | END: 11/20/14 | PG 2 OF 2 | B-152-0-14

MATERIAL DESCRIPTION AND NOTES	ELEV. 645.7	DEPTHS	SPT/ RQD	N_{60}	REC (%)	SAMPLE ID	HP (tsf)	GRADATION (%) GR	CS	FS	SI	CL	ATTERBERG LL	PL	PI	WC	ODOT CLASS (GI)	BACK FILL
MEDIUM DENSE TO DENSE, BROWN, **COARSE AND FINE SAND**, LITTLE SILT, TRACE CLAY, TRACE GRAVEL, DAMP TO WET *(continued)*		31	11 12 16	38	100	SS-13	-	-	-	-	-	-	-	-	-	17	A-3a (V)	
		32																
		33																
		34																
@35.0'; SS-14 BECOMES GRAY		35	8 13 13	35	67	SS-14	-	0	1	77	19	3	NP	NP	NP	24	A-3a (V)	
	637.4	36																
MEDIUM DENSE, GRAY, **SANDY SILT**, TRACE CLAY, TRACE GRAVEL, WET		37																
		38																
		39																
		40																
		41	4 9 11	27	100	SS-15	-	0	0	62	33	5	NP	NP	NP	26	A-4a (1)	
		42																
		43																
		44																
@45.0'; SS-16 BECOMES VERY DENSE		45																
		46	11 21 24	61	100	SS-16	-	-	-	-	-	-	-	-	-	22	A-4a (V)	
	627.4	47																
MEDIUM DENSE TO DENSE, GRAY, **SILT**, LITTLE SAND, TRACE TO LITTLE CLAY, TRACE GRAVEL, INTERBEDDED, WET		48																
		49																
		50																
		51	3 5 8	18	100	SS-17	-	-	-	-	-	-	-	-	-	20	A-4a (V)	
		52																
		53																
		54																
		55																
		56	12 12 12	32	100	SS-18	-	0	0	17	73	10	NP	NP	NP	19	A-4b (8)	
		57																
		58																
		59																
		60																
	614.2	61	4 6 6	16	100	SS-19	-	-	-	-	-	-	-	-	-	26	A-4b (V)	
		EOB																

NOTES: GROUNDWATER ENCOUNTERED AT 22.0' DURING DRILLING. CAVE DEPTH 21.5'.
ABANDONMENT METHODS, MATERIALS, QUANTITIES: SHOVELED SOIL CUTTINGS

Preliminary Plans - For Reference Only

SHEET	TOTAL	SUBSET	TOTAL	PROJECT ID	REVIEWER	DESIGNER
P 2615	2696	229	310	82382	BPA 08/23/24	MWJ & DT

DESIGN AGENCY
EAS
2800 CORPORATE EXCHANGE DR. SUITE 240
COLUMBUS, OH. 43231
TEL:614.714.0299
WWW.NEASINC.COM

GEOTECHNICAL PROFILE - ROADWAY
WALL AJ
BORING LOG B-152-0-14

MODEL: Sheet PAPERSIZE: 34x22 (in.) DATE: 3/28/2025 TIME: 10:33:36 AM USER: Asiddiqi
pw:\\mb-us-pw.bentley.com:mb-us-pw-03\Documents\Cleveland_OH\01_Projects\ODOT\District12\82382\400-Engineering\Geotechnical\Sheets\82382_ZL116.dgn

PROJECT: CUY-90-16.28 (CCG3A)	DRILLING FIRM / OPERATOR: NEAS / J. HODGES	DRILL RIG: CME 75T	STATION / OFFSET: 417+57, 232' RT.	EXPLORATION ID B-152-1-20
TYPE: RETAINING WALL	SAMPLING FIRM / LOGGER: NEAS / J. HODGES	HAMMER: CME AUTOMATIC	ALIGNMENT: RAMP A2	
PID: 82382 SFN:	DRILLING METHOD: 3.25" HSA	CALIBRATION DATE: 5/1/19	ELEVATION: 684.1 (MSL) EOB: 66.5 ft.	PAGE 1 OF 2
START: 5/20/21 END: 5/20/21	SAMPLING METHOD: SPT	ENERGY RATIO (%): 89	LAT / LONG: 41.494373, -81.678748	

MATERIAL DESCRIPTION AND NOTES	ELEV.	DEPTHS	SPT/ RQD	N_{60}	REC (%)	SAMPLE ID	HP (tsf)	GRADATION (%) GR	CS	FS	SI	CL	ATTERBERG LL	PL	PI	WC	ODOT CLASS (GI)	BACK FILL
LOOSE TO DENSE, BROWN, **COARSE AND FINE SAND** TRACE TO LITTLE SILT, TRACE GRAVEL, TRACE CLAY, CONTAINS TRACE RED BRICK FRAGMENTS, DAMP TO MOIST **(FILL)**	684.1		3 3 4	10	100	SS-1	-	-	-	-	-	-	-	-	-	11	A-3a (V)	
			3 4 4	12	100	SS-2	-	-	-	-	-	-	-	-	-	9	A-3a (V)	
			2 10 12	33	100	SS-3	-	-	-	-	-	-	-	-	-	13	A-3a (V)	
	674.6																	
MEDIUM DENSE TO DENSE, BROWN AND BLACK BECOMING BROWN, **COARSE AND FINE SAND** TRACE TO LITTLE SILT, TRACE TO LITTLE GRAVEL, TRACE CLAY, DAMP TO MOIST			13 17 12	43	100	SS-4	-	-	-	-	-	-	-	-	-	10	A-3a (V)	
			7 10 8	27	100	SS-5	-	-	-	-	-	-	-	-	-	6	A-3a (V)	
			9 11 7	27	100	SS-6	-	-	-	-	-	-	-	-	-	7	A-3a (V)	
			17 7 5	18	100	SS-7	-	-	-	-	-	-	-	-	-	14	A-3a (V)	
@20.0'; SS-8 BECOMES WET			9 4 4	12	100	SS-8	-	-	-	-	-	-	-	-	-	18	A-3a (V)	
			6 7 8	22	100	SS-9	-	-	-	-	-	-	-	-	-	8	A-3a (V)	
			9 10 12	33	100	SS-10	-	-	-	-	-	-	-	-	-	6	A-3a (V)	
			10 9 8	25	100	SS-11	-	-	-	-	-	-	-	-	-	5	A-3a (V)	
@30.0'; SS-12 BECOMES WET			10 8 8	24	100	SS-12	-	-	-	-	-	-	-	-	-	19	A-3a (V)	
	649.1	W 649.1																
MEDIUM STIFF, BROWNISH GRAY, **SILT**, SOME CLAY, LITTLE SAND, TRACE GRAVEL, WET	647.6		1 1 2	4	100	SS-13	0.75	0	1	12	58	29	30	21	9	34	A-4b (8)	
MEDIUM DENSE, BROWNISH GRAY, **COARSE AND FINE SAND**, TRACE TO LITTLE SILT, TRACE GRAVEL, TRACE CLAY, WET			2 6 8	21	100	SS-14	-	-	-	-	-	-	-	-	-	27	A-3a (V)	
			3 6 7	19	100	SS-15	-	-	-	-	-	-	-	-	-	27	A-3a (V)	
			5 7 10	25	100	SS-16	-	-	-	-	-	-	-	-	-	21	A-3a (V)	
			4 6 8	21	100	SS-17	-	-	-	-	-	-	-	-	-	19	A-3a (V)	
	625.8																	
HARD, GRAY, **SILT**, LITTLE CLAY, TRACE SAND, TRACE GRAVEL, DAMP																		

Preliminary Plans - For Reference Only

STANDARD ODOT SOIL BORING LOG (11 X 17) - OH DOT.GDT - 1/3/24 14:19 - X:\ACTIVE PROJECTS\ACTIVE SOIL PROJECTS\1ARCHIVE BY YEAR\2022 ARCHIVE\CUY-90-16.28 (CCG3A - MOD#7)\GINT FILES\CUY-90-16.28 (CCG3A).GPJ

DESIGN AGENCY
NEAS
2800 CORPORATE EXCHANGE DR. SUITE 240
COLUMBUS, OH. 43231
TEL:614.714.0299
WWW.NEASINC.COM

DESIGNER MWJ & DT
REVIEWER BPA 08/23/24
PROJECT ID 82382
SHEET P.2616 TOTAL 2696
SUBSET 230 TOTAL 310

GEOTECHNICAL PROFILE - ROADWAY
BRIDGE NO. CUY-77-1587 RAMP A2 FLYOVER
BORING LOG B-152-1-20

MODEL: Sheet PAPERSIZE: 34x22 (in.) DATE: 3/28/2025 TIME: 10:34:11 AM USER: Asiddiqi
pw:\\mb-us-pw.bentley.com:mb-us-pw-03\Documents\Cleveland_OH\01_Projects\ODOT\District12\82382\400-Engineering\Geotechnical\Sheets\82382_ZL117.dgn

PID: 82382 | SFN: | PROJECT: CUY-90-16.28 (CCG3A) | STATION / OFFSET: 417+57, 232' RT. | START: 5/20/21 | END: 5/20/21 | PG 2 OF 2 | B-152-1-20

MATERIAL DESCRIPTION AND NOTES	ELEV.	DEPTHS	SPT/ RQD	N_{60}	REC (%)	SAMPLE ID	HP (tsf)	GRADATION (%) GR	CS	FS	SI	CL	ATTERBERG LL	PL	PI	WC	ODOT CLASS (GI)	BACK FILL
HARD, GRAY, **SILT**, LITTLE CLAY, TRACE SAND, TRACE GRAVEL, DAMP *(continued)*	624.1	61	3 5 6	16	100	SS-18	4.50	-	-	-	-	-	-	-	-	19	A-4b (V)	
		62																
		63																
		64																
		65																
	617.6	66 EOB	3 6 7	19	100	SS-19	4.50	0	0	6	74	20	25	19	6	19	A-4b (8)	

Preliminary Plans - For Reference Only

STANDARD ODOT SOIL BORING LOG (11 X 17) - OH DOT.GDT - 1/3/24 14:19 - X:\ACTIVE PROJECTS\ACTIVE SOIL PROJECTS\1ARCHIVE BY YEAR\2022 ARCHIVE\CUY-90-16.28 (CCG3A - MOD#7)\GINT FILES\CUY-90-16.28 (CCG3A).GPJ

NOTES: GROUNDWATER ENCOUNTERED AT 35.0' DURING DRILLING. HOLE DID NOT CAVE.
ABANDONMENT METHODS, MATERIALS, QUANTITIES: PUMPED 50 GAL. BENTONITE GROUT; SHOVELED SOIL CUTTINGS

SHEET P 2617 | TOTAL 2696
SUBSET 231 | TOTAL 310
PROJECT ID 82382
REVIEWER BPA 08/23/24
DESIGNER MWJ & DT

DESIGN AGENCY
EAS
2800 CORPORATE EXCHANGE DR. SUITE 240
COLUMBUS, OH. 43231
TEL:614.714.0299
WWW.NEASINC.COM

GEOTECHNICAL PROFILE - ROADWAY
BRIDGE NO. CUY-77-1587 RAMP A2 FLYOVER
BORING LOG B-152-1-20 (CONTINUED)

MODEL: Sheet PAPERSIZE: 34x22 (in.) DATE: 3/28/2025 TIME: 10:34:28 AM USER: Asiddiqi
pw:\\mb-us-pw.bentley.com:mb-us-pw-03\Documents\Cleveland_OH\01_Projects\ODOT\District12\82382\400-Engineering\Geotechnical\Sheets\82382_ZL118.dgn

STANDARD ODOT SOIL BORING LOG (8.5 X 11) - OH DOT.GDT - 1/3/24 15:19 - X:\ACTIVE PROJECTS\ACTIVE SOIL PROJECTS\ARCHIVE BY YEAR\2017 ARCHIVE\CUY-CCG3 82380\GINT FILES\CU

PROJECT: CUY-CCG3 | DRILLING FIRM / OPERATOR: BARR / JO.GILBERT | DRILL RIG: CME 55X | STATION / OFFSET: 199+62, 147' LT. | EXPLORATION ID B-153-0-14
TYPE: RETAINING WALL | SAMPLING FIRM / LOGGER: BARR / Z.JEWELL | HAMMER: CME AUTOMATIC | ALIGNMENT: SB E 14TH ST INTERIM | PAGE 1 OF 2
PID: 82380 SFN: | DRILLING METHOD: 3.25" HSA | CALIBRATION DATE: 1/26/14 | ELEVATION: 675.4 (MSL) EOB: 61.5 ft.
START: 11/19/14 END: 11/19/14 | SAMPLING METHOD: SPT / ST | ENERGY RATIO (%): 81.2 | LAT / LONG: 41.494087, -81.678120

MATERIAL DESCRIPTION AND NOTES	ELEV.	DEPTHS	SPT/ RQD	N_{60}	REC (%)	SAMPLE ID	HP (tsf)	GRADATION (%) GR	CS	FS	SI	CL	ATTERBERG LL	PL	PI	WC	ODOT CLASS (GI)	BACK FILL
6.0", **TOPSOIL**	674.9																	
LOOSE, BROWN, **GRAVEL**, TRACE SAND, TRACE SILT, TRACE CLAY, DRY **(FILL)**	673.4		2 2 3	7	6	SS-1	-	-	-	-	-	-	-	-	-	3	A-1-a (V)	
MEDIUM DENSE, DARK BROWN, **GRAVEL WITH SAND**, TRACE SILT, TRACE CLAY, CONTAINS BRICK FRAGMENTS AND CONCRETE, DAMP TO WET **(FILL)** @5.0'; SS-3 CHANGES TO BROWN	668.4		2 3 5	11	33	SS-2	-	40	25	22	8	5	NP	NP	NP	10	A-1-b (0)	
			3 8 4	16	33	SS-3	-	-	-	-	-	-	-	-	-	18	A-1-b (V)	
MEDIUM DENSE, BROWN, **FINE SAND**, TRACE COARSE SAND, TRACE SILT, TRACE CLAY, TRACE GRAVEL, CONTAINS A 3" SILT AND CLAY SEAM, MOIST	665.9		3 4 4	11	100	SS-4	-	-	-	-	-	-	-	-	-	12	A-3 (V)	
STIFF, BROWN, **SANDY SILT**, LITTLE CLAY, TRACE GRAVEL, MOIST	663.4		3 4 4	11	100	SS-5	1.30	-	-	-	-	-	-	-	-	18	A-4a (V)	
STIFF, BROWN, **SILT**, SOME CLAY, TRACE SAND, TRACE GRAVEL, MOIST TO DAMP @15.0'; SS-7 AND SS-8 INTERBEDDED WITH CLAY @17.0'; SS-8 BECOMES GRAYISH BROWN, CONTAINS NO INTACT SOIL FOR HP READINGS	655.9		3 3 8	15	100	SS-6	1.90	0	0	1	71	28	28	21	7	23	A-4b (8)	
			3 4 6	14	100	SS-7	1.80	-	-	-	-	-	-	-	-	21	A-4b (V)	
			7 7 7	19	100	SS-8	-	0	0	5	73	22	25	19	6	19	A-4b (8)	
MEDIUM DENSE TO DENSE, BROWN, **COARSE AND FINE SAND**, SOME SILT, TRACE CLAY, TRACE GRAVEL, DAMP TO WET	651.9		6 10 13	31	100	SS-9	-	-	-	-	-	-	-	-	-	8	A-3a (V)	
VERY STIFF, GRAYISH BROWN, **SANDY SILT**, TRACE CLAY, TRACE GRAVEL, DAMP	650.9		4 8 10	24	100	SS-10A	-	-	-	-	-	-	-	-	-	21	A-3a (V)	
						SS-10B	3.00	-	-	-	-	-	-	-	-	13	A-4a (V)	
MEDIUM DENSE TO DENSE, BROWN, **COARSE AND FINE SAND**, SOME SILT, TRACE CLAY, TRACE GRAVEL, WET		W 648.4	6 9 12	28	100	SS-11	-	0	15	56	26	3	NP	NP	NP	23	A-3a (0)	
			7 11 14	34	100	SS-12	-	-	-	-	-	-	-	-	-	21	A-3a (V)	

STANDARD ODOT SOIL BORING LOG (8.5 X 11) - OH DOT.GDT - 1/3/24 15:19 - X:\ACTIVE PROJECTS\ACTIVE SOIL PROJECTS\ARCHIVE BY YEAR\2017 ARCHIVE\CUY-CCG3 82380\GINT FILES\CU

PID: 82380 | SFN: | PROJECT: CUY-CCG3 | STATION / OFFSET: 199+62, 147' LT. | START: 11/19/14 | END: 11/19/14 | PG 2 OF 2 | B-153-0-14

MATERIAL DESCRIPTION AND NOTES	ELEV.	DEPTHS	SPT/ RQD	N_{60}	REC (%)	SAMPLE ID	HP (tsf)	GRADATION (%) GR	CS	FS	SI	CL	ATTERBERG LL	PL	PI	WC	ODOT CLASS (GI)	BACK FILL
MEDIUM DENSE TO DENSE, BROWN, **COARSE AND FINE SAND**, SOME SILT, TRACE CLAY, TRACE GRAVEL, WET *(continued)* @30.0'; SS-13 AND SS-14 BECOME GRAYISH BROWN	637.1		8 9 15	32	100	SS-13	-	-	-	-	-	-	-	-	-	23	A-3a (V)	
			7 13 24	50	100	SS-14	-	-	-	-	-	-	-	-	-	23	A-3a (V)	
DENSE TO VERY DENSE, GRAYISH BROWN, **SILT**, SOME TO "AND" SAND, TRACE CLAY, TRACE GRAVEL, WET			11 15 16	42	100	SS-15	-	0	1	20	70	9	NP	NP	NP	21	A-4b (8)	
			12 18 20	51	100	SS-16	-	-	-	-	-	-	-	-	-	22	A-4b (V)	
@50.0'; SS-17 BECOMES LOOSE			2 2 2	5	100	SS-17	-	-	-	-	-	-	-	-	-	29	A-4b (V)	
					67	ST-18	-	0	0	34	60	6	NP	NP	NP	21	A-4b (6)	
	613.9	EOB	4 8 15	31	100	SS-19	-	-	-	-	-	-	-	-	-	24	A-4b (V)	

NOTES: GROUNDWATER ENCOUNTERED AT 27.0' DURING DRILLING. HOLE DID NOT CAVE.
ABANDONMENT METHODS, MATERIALS, QUANTITIES: SHOVELED SOIL CUTTINGS

Preliminary Plans - For Reference Only

SHEET	TOTAL
P 2618	2696

SUBSET	TOTAL
232	310

PROJECT ID: 82382
REVIEWER: BPA 08/23/24
DESIGNER: MW.J & DT

DESIGN AGENCY
EAS
2800 CORPORATE EXCHANGE DR. SUITE 240
COLUMBUS, OH. 43231
TEL:614.714.0299
WWW.NEASINC.COM

GEOTECHNICAL PROFILE - ROADWAY
EAST 14TH STREET INTERIM SB
BORING LOG B-153-0-14

MODEL: Sheet PAPERSIZE: 34x22 (in.) DATE: 3/28/2025 TIME: 10:34:48 AM USER: Asiddiqi
pw:\\mb-us-pw.bentley.com:mb-us-pw-03\Documents\Cleveland_OH\01_Projects\ODOT\District12\82382\400-Engineering\Geotechnical\Sheets\82382_ZL119.dgn

STANDARD ODOT SOIL BORING LOG (8.5 X 11) - OH DOT.GDT - 1/3/24 15:19 - X:\ACTIVE PROJECTS\ACTIVE SOIL PROJECTS\ARCHIVE BY YEAR\2017 ARCHIVE\CUY-CCG3 82380\GINT FILES\CU

PROJECT: CUY-CCG3 | DRILLING FIRM / OPERATOR: BARR / JO.GILBERT | DRILL RIG: CME 55X | STATION / OFFSET: 199+06, 204' LT. | EXPLORATION ID B-154-0-14
TYPE: RETAINING WALL | SAMPLING FIRM / LOGGER: BARR / Z.JEWELL | HAMMER: CME AUTOMATIC | ALIGNMENT: SB E 14TH ST INTERIM
PID: 82380 SFN: | DRILLING METHOD: 3.25" HSA | CALIBRATION DATE: 1/26/14 | ELEVATION: 677.2 (MSL) EOB: 61.5 ft. | PAGE 1 OF 2
START: 11/18/14 END: 11/19/14 | SAMPLING METHOD: SPT | ENERGY RATIO (%): 81.2 | LAT / LONG: 41.493969, -81.678364

MATERIAL DESCRIPTION AND NOTES	ELEV. 677.2	DEPTHS	SPT/RQD	N_{60}	REC (%)	SAMPLE ID	HP (tsf)	GRADATION (%) GR	CS	FS	SI	CL	ATTERBERG LL	PL	PI	WC	ODOT CLASS (GI)	BACK FILL
2.5", **TOPSOIL**	677.0	1	1 3 7	14	67	SS-1	-	-	-	-	-	-	-	-	-	15	A-3a (V)	
MEDIUM DENSE, BROWN AND DARK GRAY, **COARSE AND FINE SAND**, LITTLE SILT, TRACE GRAVEL, TRACE CLAY, SS-1 CONTAINS FEW ROOTS, DAMP TO MOIST **(FILL)** @2.5'; SS-2 BECOMES VERY DENSE		2 3 4	11 17 22	53	56	SS-2	-	10	30	35	17	8	NP	NP	NP	10	A-3a (0)	
	672.7	5	5 6 7	18	100	SS-3	-	-	-	-	-	-	-	-	-	8	A-3a (V)	
MEDIUM DENSE, BROWN, **COARSE AND FINE SAND**, LITTLE GRAVEL, TRACE SILT, TRACE CLAY, DAMP TO MOIST		8 9	5 4 4	11	100	SS-4	-	11	6	69	10	4	NP	NP	NP	12	A-3a (0)	
		10 11	4 5 4	12	100	SS-5	-	-	-	-	-	-	-	-	-	11	A-3a (V)	
	665.2	12																
LOOSE TO MEDIUM DENSE, BROWN, **SANDY SILT**, TRACE TO LITTLE CLAY, TRACE GRAVEL, WET		13 14	5 2 2	5	100	SS-6	-	-	-	-	-	-	-	-	-	25	A-4a (V)	
		15 16	3 5 7	16	100	SS-7	-	-	-	-	-	-	-	-	-	24	A-4a (V)	
@17.5'; SS-8 BECOMES BROWN AND ORANGISH BROWN		17 18 19	6 9 11	27	100	SS-8	-	1	1	52	39	7	NP	NP	NP	20	A-4a (2)	
@20.0'; SS-9 BECOMES GRAYISH BROWN		20 21	2 5 10	20	100	SS-9	-	-	-	-	-	-	-	-	-	19	A-4a (V)	
	655.2	22																
MEDIUM DENSE TO DENSE, BROWN, **COARSE AND FINE SAND**, LITTLE SILT, TRACE CLAY, TRACE GRAVEL, MOIST TO WET		23 24	4 5 6	15	100	SS-10	-	-	-	-	-	-	-	-	-	16	A-3a (V)	
	W 652.7	25 26	6 14 15	39	100	SS-11	-	-	-	-	-	-	-	-	-	15	A-3a (V)	
		27 28 29	6 8 11	26	67	SS-12	-	-	-	-	-	-	-	-	-	21	A-3a (V)	

STANDARD ODOT SOIL BORING LOG (8.5 X 11) - OH DOT.GDT - 1/3/24 15:19 - X:\ACTIVE PROJECTS\ACTIVE SOIL PROJECTS\ARCHIVE BY YEAR\2017 ARCHIVE\CUY-CCG3 82380\GINT FILES\CU

PID: 82380 | SFN: | PROJECT: CUY-CCG3 | STATION / OFFSET: 199+06, 204' LT. | START: 11/18/14 | END: 11/19/14 | PG 2 OF 2 | B-154-0-14

MATERIAL DESCRIPTION AND NOTES	ELEV. 647.2	DEPTHS	SPT/RQD	N_{60}	REC (%)	SAMPLE ID	HP (tsf)	GRADATION (%) GR	CS	FS	SI	CL	ATTERBERG LL	PL	PI	WC	ODOT CLASS (GI)	BACK FILL
MEDIUM DENSE TO DENSE, BROWN, **COARSE AND FINE SAND**, LITTLE SILT, TRACE CLAY, TRACE GRAVEL, MOIST TO WET *(continued)*		31 32 33 34	5 6 8	19	100	SS-13	-	0	4	77	16	3	NP	NP	NP	21	A-3a (0)	
@35.0'; SS-14 BECOMES GRAYISH BROWN		35 36 37 38	9 11 12	31	100	SS-14	-	-	-	-	-	-	-	-	-	20	A-3a (V)	
	638.9	39																
MEDIUM DENSE TO VERY DENSE, GRAYISH BROWN, **SILT**, SOME CLAY TRACE SAND, TRACE GRAVEL, CONTAINS NO INTACT SOIL FOR HP READINGS, DAMP TO MOIST		40 41 42 43 44	9 11 11	30	100	SS-15	-	-	-	-	-	-	-	-	-	23	A-4b (V)	
		45 46 47 48 49	13 15 23	51	100	SS-16	-	-	-	-	-	-	-	-	-	22	A-4b (V)	
		50 51 52 53 54	4 7 9	22	67	SS-17	-	0	0	5	72	23	25	19	6	19	A-4b (8)	
		55 56 57 58 59	10 13 17	41	100	SS-18	-	-	-	-	-	-	-	-	-	19	A-4b (V)	
	618.9	60																
STIFF TO VERY STIFF, GRAYISH BROWN, **SILT**, SOME CLAY TRACE SAND, TRACE GRAVEL, MOIST	615.7	61 EOB	3 5 7	16	100	SS-19	2.00	0	0	1	70	29	29	19	10	23	A-4b (8)	

NOTES: GROUNDWATER ENCOUNTERED AT 24.5' DURING DRILLING. CAVE DEPTH 23.0'.
ABANDONMENT METHODS, MATERIALS, QUANTITIES: SHOVELED SOIL CUTTINGS

Preliminary Plans - For Reference Only

SHEET	TOTAL
P 2619	2696

SUBSET	TOTAL
233	310

PROJECT ID: 82382

REVIEWER	
BPA	08/23/24

DESIGNER	
MW,J & DT	

DESIGN AGENCY
EAS
2800 CORPORATE EXCHANGE DR. SUITE 240
COLUMBUS, OH. 43231
TEL:614.714.0299
WWW.NEASINC.COM

GEOTECHNICAL PROFILE - ROADWAY
EAST 14TH STREET INTERIM SB
BORING LOG B-154-0-14

MODEL: Sheet PAPERSIZE: 34x22 (in.) DATE: 3/28/2025 TIME: 10:35:08 AM USER: Asiddiqi
pw:\\mb-us-pw.bentley.com:mb-us-pw-03\Documents\Cleveland_OH\01_Projects\ODOT\District12\82382\400-Engineering\Geotechnical\Sheets\82382_ZL120.dgn

PROJECT: CUY-CCG3
TYPE: RETAINING WALL
PID: 82380 SFN:
START: 1/6/15 END: 1/12/15

DRILLING FIRM / OPERATOR: BARR / T.GILBERT
SAMPLING FIRM / LOGGER: BARR / Z.JEWELL
DRILLING METHOD: 3.25" HSA
SAMPLING METHOD: SPT / ST

DRILL RIG: CME 45B
HAMMER: CME AUTOMATIC
CALIBRATION DATE: 1/26/14
ENERGY RATIO (%): 77.4

STATION / OFFSET: 416+02, 271' LT.
ALIGNMENT: RAMP A2
ELEVATION: 674.0 (MSL) EOB: 62.0 ft.
LAT / LONG: 41.493240, -81.679940

EXPLORATION ID B-155-0-14

MATERIAL DESCRIPTION AND NOTES	ELEV. 674.0	DEPTHS	SPT/ RQD	N_{60}	REC (%)	SAMPLE ID	HP (tsf)	GRADATION (%) GR	CS	FS	SI	CL	ATTERBERG LL	PL	PI	WC	ODOT CLASS (GI)	BACK FILL
5.0", **TOPSOIL**	673.6																	
HARD, BROWN AND DARK BROWN, **SILT AND CLAY**, SOME SAND, LITTLE GRAVEL, CONTAINS FEW ROOTS, DAMP	672.0		3 5 6	14	100	SS-1	4.25	12	7	16	36	29	38	23	15	19	A-6a (8)	
(FILL)																		
LOOSE, BROWN, **COARSE AND FINE SAND** LITTLE GRAVEL, TRACE SILT, TRACE CLAY, DAMP @2.5'; SS-2 CONTAIN FEW ROOTS			3 2 4	8	100	SS-2	-	-	-	-	-	-	-	-	-	9	A-3a (V)	
			3 3 5	10	100	SS-3	-	12	26	51	8	3	NP	NP	NP	10	A-3a (0)	
			3 2 5	9	100	SS-4	-	-	-	-	-	-	-	-	-	8	A-3a (V)	
	664.0																	
STIFF, BROWN, **SILT**, "AND" CLAY, TRACE SAND, TRACE GRAVEL, MOIST	663.0		2 7 11	23	100	SS-5A	1.25	0	1	5	57	37	29	19	10	21	A-4b (8)	
MEDIUM DENSE, BROWN, **FINE SAND**, TRACE COARSE SAND, TRACE SILT, TRACE CLAY, DAMP	F.S. 662.0	▼				SS-5B	-	-	-	-	-	-	-	-	-	9	A-3 (V)	
STIFF, BROWN, **SILT**, "AND" CLAY, TRACE SAND, TRACE GRAVEL, MOIST	661.0		4 6 9	19	100	SS-6A	1.50	-	-	-	-	-	-	-	-	12	A-4b (V)	
MEDIUM DENSE, BROWN, **FINE SAND**, TRACE COARSE SAND, TRACE SILT, TRACE CLAY, TRACE GRAVEL, WET TO MOIST	F.S.					SS-6B	-	-	-	-	-	-	-	-	-	24	A-3 (V)	
			4 5 7	15	100	SS-7	-	-	-	-	-	-	-	-	-	13	A-3 (V)	
	657.0																	
MEDIUM DENSE, BROWN MOTTLED WITH GRAY, **SILT**, SOME SAND, LITTLE CLAY, TRACE GRAVEL, DAMP			7 9 11	26	100	SS-8	-	0	1	20	60	19	23	18	5	17	A-4b (8)	
	654.5																	
MEDIUM DENSE, BROWN, **COARSE AND FINE SAND** LITTLE TO SOME SILT, TRACE CLAY, TRACE GRAVEL, MOIST TO WET			4 4 6	13	100	SS-9	-	-	-	-	-	-	-	-	-	14	A-3a (V)	
			7 9 11	26	100	SS-10	-	-	-	-	-	-	-	-	-	19	A-3a (V)	
		W 649.5																
			7 7 7	18	100	SS-11	-	-	-	-	-	-	-	-	-	28	A-3a (V)	
@27.5'; SS-12 TO SS-13 BECOME GRAYISH BROWN			2 4 7	14	100	SS-12	-	0	1	85	11	3	NP	NP	NP	22	A-3a (0)	
			3 9 11	26	100	SS-13	-	-	-	-	-	-	-	-	-	23	A-3a (V)	
	640.7																	
MEDIUM DENSE, GRAYISH BROWN, **SANDY SILT**, TRACE CLAY, TRACE GRAVEL, WET			4 10 12	28	100	SS-14	-	0	0	53	42	5	NP	NP	NP	26	A-4a (2)	
	635.7																	
VERY DENSE, GRAYISH BROWN, **COARSE AND FINE SAND**, LITTLE SILT, TRACE CLAY, TRACE GRAVEL, WET			12 20 26	59	100	SS-15	-	-	-	-	-	-	-	-	-	21	A-3a (V)	
	630.7																	
MEDIUM STIFF TO VERY STIFF, GRAY, **SILT**, SOME CLAY, TRACE SAND, TRACE GRAVEL, MOIST TO WET			3 5 4	12	100	SS-16	0.50	0	0	5	63	32	29	20	9	27	A-4b (8)	
			5 6 8	18	100	SS-17	2.30	-	-	-	-	-	-	-	-	20	A-4b (V)	
			6 8 10	23	100	SS-18	1.80	-	-	-	-	-	-	-	-	21	A-4b (V)	
	615.7																	
GRAY, **SILT**, LITTLE SAND, TRACE CLAY, TRACE GRAVEL, DAMP																		

Preliminary Plans - For Reference Only

STANDARD ODOT SOIL BORING LOG (11 X 17) - OH DOT.GDT - 1/3/24 15:34 - X:\ACTIVE PROJECTS\ACTIVE SOIL PROJECTS\1ARCHIVE BY YEAR\2017 ARCHIVE\CUY-CCG3 82380\GINT FILES\CUY-CCG3 MASTER - LR UPDATED.GPJ

DESIGN AGENCY
EAS
2800 CORPORATE EXCHANGE DR. SUITE 240
COLUMBUS, OH. 43231
TEL:614.714.0299
WWW.NEASINC.COM

DESIGNER MWJ & DT
REVIEWER BPA 08/23/24
PROJECT ID 82382
SHEET P.2620 TOTAL 2696
SUBSET 234 TOTAL 310

GEOTECHNICAL PROFILE - ROADWAY
BRIDGE NO. CUY-77-1587 RAMP A2 FLYOVER
BORING LOG B-155-0-14

MODEL: Sheet PAPERSIZE: 34x22 (in.) DATE: 3/28/2025 TIME: 10:35:34 AM USER: Asiddiqi
pw:\\mb-us-pw.bentley.com:mb-us-pw-03\Documents\Cleveland_OH\01_Projects\ODOT\District12\82382\400-Engineering\Geotechnical\Sheets\82382_ZL121.dgn

PID: 82380 | SFN: | PROJECT: CUY-CCG3 | STATION / OFFSET: 416+02, 271' LT. | START: 1/6/15 | END: 1/12/15 | PG 2 OF 2 | B-155-0-14

MATERIAL DESCRIPTION AND NOTES	ELEV.	DEPTHS	SPT/ RQD	N_{60}	REC (%)	SAMPLE ID	HP (tsf)	GRADATION (%) GR	CS	FS	SI	CL	ATTERBERG LL	PL	PI	WC	ODOT CLASS (GI)	BACK FILL
GRAY, **SILT**, LITTLE SAND, TRACE CLAY, TRACE GRAVEL, DAMP *(continued)*	614.0	61																
	612.0	EOB 62			76	ST-19	-	0	0	14	77	9	NP	NP	NP	20	A-4b (8)	

Preliminary Plans - For Reference Only

STANDARD ODOT SOIL BORING LOG (11 X 17) - OH DOT.GDT - 1/3/24 15:34 - X:\ACTIVE PROJECTS\ACTIVE SOIL PROJECTS\1ARCHIVE BY YEAR\2017 ARCHIVE\CUY-CCG3 82380\GINT FILES\CUY-CCG3 MASTER - LR UPDATED.GPJ

NOTES: GROUNDWATER ENCOUNTERED AT 24.5' DURING DRILLING, 12.0' UPON COMPLETION. CAVE DEPTH 19.0'.
ABANDONMENT METHODS, MATERIALS, QUANTITIES: SHOVELED SOIL CUTTINGS

DESIGN AGENCY
EAS
2800 CORPORATE EXCHANGE DR. SUITE 240
COLUMBUS, OH. 43231
TEL:614.714.0299
WWW.NEASINC.COM

DESIGNER MW,J & DT
REVIEWER BPA 08/23/24
PROJECT ID 82382
SUBSET 235 TOTAL 310
SHEET P 2621 TOTAL 2696

GEOTECHNICAL PROFILE - ROADWAY
BRIDGE NO. CUY-77-1587 RAMP A2 FLYOVER
BORING LOG B-155-0-14 (CONTINUED)

MODEL: Sheet PAPERSIZE: 34x22 (in.) DATE: 3/28/2025 TIME: 10:35:50 AM USER: Asiddiqi
pw:\\mb-us-pw.bentley.com:mb-us-pw-03\Documents\Cleveland_OH\01_Projects\ODOT\District12\82382\400-Engineering\Geotechnical\Sheets\82382_ZL122.dgn

PROJECT: CUY-CCG3
TYPE: EMBANKMENT
PID: 82380 SFN:
START: 1/13/15 END: 1/13/15

DRILLING FIRM / OPERATOR: BARR / T.GILBERT
SAMPLING FIRM / LOGGER: BARR / D.KLIMKOWICZ
DRILLING METHOD: 3.25" HSA
SAMPLING METHOD: SPT

DRILL RIG: CME 45B
HAMMER: CME AUTOMATIC
CALIBRATION DATE: 1/26/14
ENERGY RATIO (%): 77.4

STATION / OFFSET: 418+48, 330' LT.
ALIGNMENT: RAMP A2
ELEVATION: 673.8 (MSL) EOB: 31.5 ft.
LAT / LONG: 41.493907, -81.680731

EXPLORATION ID: B-156-0-14
PAGE: 1 OF 1

MATERIAL DESCRIPTION AND NOTES	ELEV.	DEPTHS	SPT/ RQD	N_{60}	REC (%)	SAMPLE ID	HP (tsf)	GR	CS	FS	SI	CL	LL	PL	PI	WC	ODOT CLASS (GI)	BACK FILL
MEDIUM DENSE, BROWN , REDDISH BROWN AND GRAY, **GRAVEL WITH SAND** LITTLE SILT, TRACE CLAY, CONTAINS FEW ROOTS, CONCRETE AND BRICK FRAGMENTS, WET **(FILL)**	671.8	1	4 11 12	30	33	SS-1	-	40	17	27	11	5	NP	NP	NP	16	A-1-b (0)	
MEDIUM DENSE, REDDISH BROWN, **GRAVEL**, TRACE SAND, TRACE SILT, TRACE CLAY, COMPOSED OF BRICK FRAGMENTS, WET **(FILL)**	669.3	3	6 7 5	15	22	SS-2	-	-	-	-	-	-	-	-	-	18	A-1-a (V)	
LOOSE, BROWN AND GRAY, **GRAVEL WITH SAND** TRACE SILT, TRACE CLAY, MOIST TO WET **(FILL)** @5.0'; SS-3 NO RECOVERY		5	5 2 2	5	0	SS-3	-	-	-	-	-	-	-	-	-	-		
		8	5 2 2	5	11	SS-4	-	-	-	-	-	-	-	-	-	12	A-1-b (V)	
@10.0'; SS-5 CHANGES TO VERY DENSE, CONTAINS FEW ROOTS	661.8	11	2 14 50/3"	-	80	SS-5	-	33	20	35	9	3	NP	NP	NP	18	A-1-b (0)	
STIFF TO VERY STIFF, GRAY MOTTLED WITH BROWN, **SILT AND CLAY**, TRACE SAND, TRACE GRAVEL, CONTAINS SILT SEAMS, MOIST	658.1	13	2 5 6	14	100	SS-6	1.40	0	0	5	59	36	31	17	14	23	A-6a (10)	
		15	3 5 9	18	100	SS-7A	2.25	-	-	-	-	-	-	-	-	23	A-6a (V)	
						SS-7B	-	-	-	-	-	-	-	-	-	8	A-3 (V)	
MEDIUM DENSE TO DENSE, BROWN, **FINE SAND**, LITTLE COARSE SAND, TRACE SILT, TRACE CLAY, TRACE GRAVEL, DRY TO DAMP		18	6 6 7	17	100	SS-8	-	-	-	-	-	-	-	-	-	4	A-3 (V)	
		21	5 10 14	31	100	SS-9	-	0	16	77	5	2	NP	NP	NP	4	A-3 (0)	
F.S. W 651.3 @22.5'; SS-10 TO SS-11 BECOME WET		23	5 8 8	21	100	SS-10	-	-	-	-	-	-	-	-	-	22	A-3 (V)	
	646.8	26	6 10 11	27	100	SS-11	-	-	-	-	-	-	-	-	-	21	A-3 (V)	
MEDIUM DENSE, BROWN BECOMING GRAY, **COARSE AND FINE SAND** SOME SILT, TRACE CLAY, TRACE GRAVEL, WET	642.3	28	5 6 7	17	100	SS-12	-	0	1	64	32	3	NP	NP	NP	24	A-3a (0)	
	EOB	31	4 5 7	15	100	SS-13	-	-	-	-	-	-	-	-	-	20	A-3a (V)	

NOTES: GROUNDWATER ENCOUNTERED AT 22.5' DURING DRILLING. CAVE DEPTH 10.0'.
ABANDONMENT METHODS, MATERIALS, QUANTITIES: SHOVELED SOIL CUTTINGS

Preliminary Plans - For Reference Only

STANDARD ODOT SOIL BORING LOG (11 X 17) - OH DOT.GDT - 1/3/24 15:34 - X:\ACTIVE PROJECTS\ACTIVE SOIL PROJECTS\1ARCHIVE BY YEAR\2017 ARCHIVE\CUY-CCG3 82380\GINT FILES\CUY-CCG3 MASTER - LR UPDATED.GPJ

DESIGN AGENCY: DEAS
2800 CORPORATE EXCHANGE DR. SUITE 240 COLUMBUS, OH. 43231
TEL:614.714.0299
WWW.NEASINC.COM

DESIGNER: MWJ & DT
REVIEWER: BPA 08/23/24
PROJECT ID: 82382
SUBSET: 236 TOTAL: 310
SHEET: P 2622 TOTAL: 2696

GEOTECHNICAL PROFILE - ROADWAY
BRIDGE NO. CUY-77-1587 RAMP A2 FLYOVER
BORING LOG B-156-0-14

MODEL: Sheet PAPERSIZE: 34x22 (in.) DATE: 3/28/2025 TIME: 10:36:12 AM USER: Asiddiqi
pw:\\mb-us-pw.bentley.com:mb-us-pw-03\Documents\Cleveland_OH\01_Projects\ODOT\District12\82382\400-Engineering\Geotechnical\Sheets\82382_ZL123.dgn

PROJECT: CUY-CCG3
TYPE: BRIDGE
PID: 82380 SFN:
START: 11/20/14 END: 11/21/14

DRILLING FIRM / OPERATOR: BARR / T.GILBERT
SAMPLING FIRM / LOGGER: BARR / Z.JEWELL
DRILLING METHOD: 3.25" HSA
SAMPLING METHOD: SPT

DRILL RIG: CME 55X
HAMMER: CME AUTOMATIC
CALIBRATION DATE: 1/26/14
ENERGY RATIO (%): 81.2

STATION / OFFSET: 1607+41, 37' RT.
ALIGNMENT: RAMP B6
ELEVATION: 694.5 (MSL) EOB: 111.5 ft.
LAT / LONG: 41.495554, -81.678084

EXPLORATION ID B-157-0-14

MATERIAL DESCRIPTION AND NOTES	ELEV.	DEPTHS	SPT/ RQD	N_{60}	REC (%)	SAMPLE ID	HP (tsf)	GRADATION (%) GR	CS	FS	SI	CL	ATTERBERG LL	PL	PI	WC	ODOT CLASS (GI)	BACK FILL
MEDIUM DENSE TO VERY DENSE, DARK GRAYISH BROWN, **GRAVEL WITH SAND** LITTLE SILT, TRACE CLAY, CONTAINS ASPHALT, SLAG, AND BRICK FRAGMENTS, DAMP **(FILL)**	694.5	1	3 5 7	16	100	SS-1	-	-	-	-	-	-	-	-	-	11	A-1-b (V)	
		2																
		3	15 16 15	42	100	SS-2	-	34	27	20	13	6	NP	NP	NP	8	A-1-b (0)	
		4																
@5.0'; SS-3 BECOMES BROWN AND DARD GRAYISH BROWN		5	9 13 14	37	100	SS-3	-	-	-	-	-	-	-	-	-	10	A-1-b (V)	
		6																
@7.5'; SS-4 BECOMES DARK GRAYISH BROWN		7																
		8	8 24 28	70	100	SS-4	-	-	-	-	-	-	-	-	-	9	A-1-b (V)	
	685.0	9																
MEDIUM DENSE TO DENSE, ORANGISH BROWN, **COARSE AND FINE SAND** TRACE TO LITTLE SILT, TRACE TO LITTLE GRAVEL, TRACE CLAY, SS-5 CONTAINS IRON STAINS, DAMP TO MOIST **(FILL)**		10																
		11	5 9 11	27	100	SS-5	-	10	18	55	10	7	NP	NP	NP	10	A-3a (0)	
@12.5'; SS-6 TO SS-7 BECOME BROWN AND GRAYISH BROWN, CONTAINS ASPHALT FRAGMENTS		12																
		13	10 7 4	15	100	SS-6	-	-	-	-	-	-	-	-	-	9	A-3a (V)	
		14																
@15.0'; SS-7 CONTAINS BRICK FRAGMENTS		15																
		16	5 10 16	35	100	SS-7	-	-	-	-	-	-	-	-	-	12	A-3a (V)	
		17																
@17.5'; SS-8 TO SS-9 BECOME BROWN AND DARK GRAYISH BROWN, CONTAINS ROOT, BRICK AND SLAG FRAGMENTS		18	18 14 20	46	100	SS-8	-	12	33	32	15	8	NP	NP	NP	13	A-3a (0)	
		19																
@20.0'; SS-9 BECOMES VERY DENSE		20	50/3"	-	67	SS-9	-	-	-	-	-	-	-	-	-	13	A-3a (V)	
	672.0	21																
LOOSE, ORANGISH BROWN, **COARSE AND FINE SAND** TRACE SILT, TRACE GRAVEL, CONTAINS IRON STAINS, DAMP		22																
	670.0	23	2 3 4	9	100	SS-10	-	-	-	-	-	-	-	-	-	8	A-3a (V)	
MEDIUM DENSE, BROWN, **GRAVEL WITH SAND** TRACE SILT, TRACE CLAY, DAMP		24																
		25	3 4 4	11	100	SS-11	-	25	47	22	4	2	NP	NP	NP	7	A-1-b (0)	
	667.5	26																
MEDIUM DENSE TO DENSE, LIGHT BROWN, **COARSE AND FINE SAND** LITTLE SILT, TRACE CLAY, TRACE GRAVEL, DAMP TO MOIST		27																
		28	3 3 6	12	100	SS-12	-	-	-	-	-	-	-	-	-	7	A-3a (V)	
		29																
		30	4 4 5	12	100	SS-13	-	-	-	-	-	-	-	-	-	18	A-3a (V)	
		31																
		32																
		33																
		34																
@35.0'; SS-14 BECOMES BROWN		35	3 5 5	14	83	SS-14	-	-	-	-	-	-	-	-	-	14	A-3a (V)	
		36																
		37																
		38																
		39																
@40.0'; SS-15 BECOMES LIGHT BROWN, (FINE SAND INTERBEDDED WITH SILT)		40	8 11 12	31	100	SS-15	-	-	-	-	-	-	-	-	-	10	A-3a (V)	
		41																
		42																
		43																
		44																
@45.0'; SS-16 TO SS-19 BECOME BROWN, WET		45	3 7 8	20	100	SS-16	-	-	-	-	-	-	-	-	-	27	A-3a (V)	
		46																
		47																
		48																
		49																
		50	7 12 18	41	100	SS-17	-	0	1	86	11	2	NP	NP	NP	22	A-3a (0)	
		51																
		52																
		53																
		54																
		55	8 14 15	39	100	SS-18	-	-	-	-	-	-	-	-	-	26	A-3a (V)	
		56																
		57																
		58																
		59																

Preliminary Plans - For Reference Only

STANDARD ODOT SOIL BORING LOG (11 X 17) - OH DOT.GDT - 1/3/24 15:35 - X:\ACTIVE PROJECTS\ACTIVE SOIL PROJECTS\1ARCHIVE BY YEAR\2017 ARCHIVE\CUY-CCG3 82380\GINT FILES\CUY-CCG3 MASTER - LR UPDATED.GPJ

DESIGN AGENCY
2800 CORPORATE EXCHANGE DR. SUITE 400
COLUMBUS, OH. 43231
TEL:614.714.0299
WWW.NEASINC.COM

DESIGNER MWJ & DT
REVIEWER BPA 08/23/24
PROJECT ID 82382
SUBSET 237 TOTAL 310
SHEET P 2623 TOTAL 2696

GEOTECHNICAL PROFILE - ROADWAY
BRIDGE NO. CUY-90-1652S OVER EAST 14TH STREET AND RAMP H5
BORING LOG B-157-0-14

MODEL: Sheet PAPERSIZE: 34x22 (in.) DATE: 3/28/2025 TIME: 10:36:44 AM USER: Asiddiqi
pw:\\mb-us-pw.bentley.com:mb-us-pw-03\Documents\Cleveland_OH\01_Projects\ODOT\District12\82382\400-Engineering\Geotechnical\Sheets\82382_ZL124.dgn

PID: 82380 | SFN: | PROJECT: CUY-CCG3 | STATION / OFFSET: 1607+41, 37' RT. | START: 11/20/14 | END: 11/21/14 | PG 2 OF 2 | B-157-0-14

MATERIAL DESCRIPTION AND NOTES	ELEV.	DEPTHS	SPT/ RQD	N_{60}	REC (%)	SAMPLE ID	HP (tsf)	GRADATION (%) GR	CS	FS	SI	CL	ATTERBERG LL	PL	PI	WC	ODOT CLASS (GI)	BACK FILL
MEDIUM DENSE TO DENSE, LIGHT BROWN, **COARSE AND FINE SAND** LITTLE SILT, TRACE CLAY, TRACE GRAVEL, DAMP TO MOIST *(continued)*	634.5	61	6 6 13	26	100	SS-19	-	-	-	-	-	-	-	-	-	24	A-3a (V)	
	631.2	62–65																
DENSE TO VERY DENSE, GRAY, **SILT**, "AND" SAND, TRACE CLAY, TRACE GRAVEL, MOIST TO WET		66	10 22 37	80	100	SS-20	-	0	1	40	51	8	NP	NP	NP	20	A-4b (5)	
		67–70																
@70.0'; SS-21 TO SS-22 BECOME LITTLE CLAY, TRACE SAND		71	11 17 19	49	72	SS-21	-	-	-	-	-	-	-	-	-	19	A-4b (V)	
		72–75																
		76	9 12 19	42	100	SS-22	-	-	-	-	-	-	-	-	-	16	A-4b (V)	
	616.2	77–80																
VERY DENSE, GRAY, **COARSE AND FINE SAND** SOME SILT, TRACE CLAY, TRACE GRAVEL, WET		81	17 28 32	81	100	SS-23	-	0	0	65	30	5	NP	NP	NP	22	A-3a (0)	
	611.2	82–85																
STIFF TO HARD, GRAY, **SILT**, SOME CLAY, TRACE SAND, TRACE GRAVEL, MOIST TO DAMP		86	4 7 9	22	100	SS-24	2.00	0	0	3	66	31	28	18	10	20	A-4b (8)	
		87–90																
		91	6 8 13	28	100	SS-25	4.25	-	-	-	-	-	-	-	-	18	A-4b (V)	
		92–95																
		96	7 10 15	34	100	SS-26	4.50	-	-	-	-	-	-	-	-	17	A-4b (V)	
	596.2	97–100																
STIFF TO VERY STIFF, GRAY, **SILT AND CLAY**, TRACE SAND, TRACE GRAVEL, INTERBEDDED, MOIST		101	6 8 14	30	100	SS-27	2.00	0	0	1	55	44	30	18	12	20	A-6a (9)	
		102–105																
		106	4 7 9	22	100	SS-28	2.90	-	-	-	-	-	-	-	-	24	A-6a (V)	
		107–110																
	583.0	111	4 6 10	22	100	SS-29	2.00	-	-	-	-	-	-	-	-	21	A-6a (V)	
		EOB																

NOTES: GROUNDWATER NOT ENCOUNTERED DURING DRILLING. CAVE DEPTH 53.0'.
ABANDONMENT METHODS, MATERIALS, QUANTITIES: SHOVELED SOIL CUTTINGS

Preliminary Plans - For Reference Only

STANDARD ODOT SOIL BORING LOG (11 X 17) - OH DOT.GDT - 1/3/24 15:35 - X:\ACTIVE PROJECTS\ACTIVE SOIL PROJECTS\1ARCHIVE BY YEAR\2017 ARCHIVE\CUY-CCG3 82380\GINT FILES\CUY-CCG3 MASTER - LR UPDATED.GPJ

DESIGN AGENCY
EAS
2800 CORPORATE EXCHANGE DR. SUITE 240
COLUMBUS, OH. 43231
TEL:614.714.0299
WWW.JNEASINC.COM

DESIGNER MWJ & DT
REVIEWER BPA 08/23/24
PROJECT ID 82382
SUBSET 238 TOTAL 310
SHEET P 2624 TOTAL 2696

GEOTECHNICAL PROFILE - ROADWAY
BRIDGE NO. CUY-90-1652S OVER EAST 14TH STREET AND RAMP H5
BORING LOG B-157-0-14 (CONTINUED)

MODEL: Sheet PAPERSIZE: 34x22 (in.) DATE: 3/28/2025 TIME: 10:37:05 AM USER: Asiddiqi
pw:\\mb-us-pw.bentley.com:mb-us-pw-03\Documents\Cleveland_OH\01_Projects\ODOT\District12\82382\400-Engineering\Geotechnical\Sheets\82382_ZL125.dgn

PROJECT: CUY-CCG3
TYPE: BRIDGE
PID: 82380 SFN:
START: 3/10/15 END: 3/10/15

DRILLING FIRM / OPERATOR: BARR / J.GILBERT
SAMPLING FIRM / LOGGER: BARR / D.KLIMKOWICZ
DRILLING METHOD: 3.25" HSA
SAMPLING METHOD: SPT / ST

DRILL RIG: CME 55
HAMMER: CME AUTOMATIC
CALIBRATION DATE: 1/26/14
ENERGY RATIO (%): 78.8

STATION / OFFSET: 32+82, 30' LT.
ALIGNMENT: SB E 14TH ST
ELEVATION: 678.6 (MSL) EOB: 112.0 ft.
LAT / LONG: 41.495673, -81.677588

EXPLORATION ID B-158-0-14

MATERIAL DESCRIPTION AND NOTES	ELEV.	DEPTHS	SPT/ RQD	N_{60}	REC (%)	SAMPLE ID	HP (tsf)	GRADATION (%) GR	CS	FS	SI	CL	ATTERBERG LL	PL	PI	WC	ODOT CLASS (GI)	BACK FILL
LOOSE, BROWN, **COARSE AND FINE SAND** LITTLE SILT, TRACE CLAY, TRACE GRAVEL, DAMP **(FILL)**	678.6	1	3 3 4	9	100	SS-1	-	-	-	-	-	-	-	-	-	10	A-3a (V)	
	677.1																	
STIFF TO VERY STIFF, BROWN AND GRAY, **SILT AND CLAY**, SOME SAND, TRACE GRAVEL, MOIST TO DAMP **(FILL)**		2	5 6 7	17	100	SS-2	4.00	2	6	21	40	31	29	15	14	16	A-6a (9)	
		3																
		4	1 4 5	12	100	SS-3	1.25	-	-	-	-	-	-	-	-	14	A-6a (V)	
	674.1																	
MEDIUM DENSE, BROWN, **COARSE AND FINE SAND** TRACE SILT, TRACE CLAY, TRACE GRAVEL, DAMP **(FILL)**		5	8 9 8	22	100	SS-4	-	-	-	-	-	-	-	-	-	10	A-3a (V)	
	671.8	6																
MEDIUM DENSE, BROWN, **GRAVEL WITH SAND** TRACE SILT, TRACE CLAY, DAMP **(FILL)**		7	5 7 7	18	100	SS-5	-	22	41	28	6	3	NP	NP	NP	7	A-1-b (0)	
	669.1	8																
MEDIUM DENSE, BROWN, **COARSE AND FINE SAND** TRACE SILT, TRACE CLAY, TRACE GRAVEL, DAMP **(FILL)**		9																
		10	4 5 6	14	100	SS-6	-	-	-	-	-	-	-	-	-	8	A-3a (V)	
	666.6	11																
LOOSE, BROWN, **SANDY SILT**, LITTLE CLAY, TRACE GRAVEL, MOIST **(FILL)**		12																
		13	3 3 3	8	100	SS-7	-	5	4	35	42	14	NP	NP	NP	17	A-4a (4)	
	664.1	14																
LOOSE TO DENSE, BROWN, **COARSE AND FINE SAND** TRACE TO LITTLE SILT, TRACE CLAY, TRACE GRAVEL, DAMP TO WET		15																
		16	3 3 3	8	100	SS-8	-	-	-	-	-	-	-	-	-	11	A-3a (V)	
		17																
@17.5'; SS-9 TO SS-11 BECOMES LIGHT BROWN		18	3 6 8	18	100	SS-9	-	-	-	-	-	-	-	-	-	9	A-3a (V)	
		19																
		20																
		21	4 5 7	16	100	SS-10	-	6	12	66	8	8	NP	NP	NP	8	A-3a (0)	
		22																
		23	3 5 7	16	100	SS-11	-	-	-	-	-	-	-	-	-	8	A-3a (V)	
		24																
@25.0'; SS-12 TO SS-16 BECOMES DARK BROWN		25	3 8 11	25	100	SS-12	-	-	-	-	-	-	-	-	-	11	A-3a (V)	
		26																
	W 651.1	27																
		28	4 5 9	18	100	SS-13	-	-	-	-	-	-	-	-	-	27	A-3a (V)	
		29																
		30																
		31	4 6 9	20	100	SS-14	-	0	5	71	19	5	NP	NP	NP	24	A-3a (0)	
		32																
		33																
		34																
		35																
		36	7 13 25	50	100	SS-15	-	-	-	-	-	-	-	-	-	21	A-3a (V)	
		37																
		38																
		39																
		40																
		41	7 10 11	28	100	SS-16	-	-	-	-	-	-	-	-	-	23	A-3a (V)	
		42																
	635.3	43																
MEDIUM DENSE TO DENSE, GRAY, **SILT**, LITTLE CLAY, LITTLE SAND, TRACE GRAVEL, MOIST TO WET		44																
		45																
		46	10 15 20	46	100	SS-17	-	-	-	-	-	-	-	-	-	20	A-4b (V)	
		47																
		48																
		49																
		50																
		51	7 9 13	29	100	SS-18	-	0	0	18	64	18	NP	NP	NP	22	A-4b (8)	
		52																
		53																
		54																
		55																
		56	10 13 13	34	100	SS-19	-	-	-	-	-	-	-	-	-	21	A-4b (V)	
		57																
		58																
		59																

Preliminary Plans - For Reference Only

STANDARD ODOT SOIL BORING LOG (11 X 17) - OH DOT.GDT - 1/3/24 15:35 - X:\ACTIVE PROJECTS\ACTIVE SOIL PROJECTS\1ARCHIVE BY YEAR\2017 ARCHIVE\CUY-CCG3 82380\GINT FILES\CUY-CCG3 MASTER - LR UPDATED.GPJ

DESIGN AGENCY
EAS
2800 CORPORATE EXCHANGE DR. SUITE 240
COLUMBUS, OH. 43231
TEL:614.714.0299
WWW.NEASINC.COM

DESIGNER MWJ & DT
REVIEWER BPA 08/23/24
PROJECT ID 82382
SUBSET 239 TOTAL 310
SHEET P 2625 TOTAL 2696

GEOTECHNICAL PROFILE - ROADWAY
BRIDGE NO. CUY-90-1652S OVER EAST 14TH STREET AND RAMP H5
BORING LOG B-158-0-14

MODEL: Sheet PAPERSIZE: 34x22 (in.) DATE: 3/28/2025 TIME: 10:37:33 AM USER: Asiddiqi
pw:\\mb-us-pw.bentley.com:mb-us-pw-03\Documents\Cleveland_OH\01_Projects\ODOT\District12\82382\400-Engineering\Geotechnical\Sheets\82382_ZL126.dgn

PID: 82380 | SFN: | PROJECT: CUY-CCG3 | STATION / OFFSET: 32+82, 30' LT. | START: 3/10/15 | END: 3/10/15 | PG 2 OF 2 | B-158-0-14

MATERIAL DESCRIPTION AND NOTES	ELEV.	DEPTHS	SPT/ RQD	N_{60}	REC (%)	SAMPLE ID	HP (tsf)	GRADATION (%) GR	CS	FS	SI	CL	ATTERBERG LL	PL	PI	WC	ODOT CLASS (GI)	BACK FILL
MEDIUM DENSE TO DENSE, GRAY, **SILT**, LITTLE CLAY, LITTLE SAND, TRACE GRAVEL, MOIST TO WET *(continued)* @60.0'; ST-20 BECOMES SOME CLAY, TRACE SAND @61.6'; UNIT WEIGHT: 135.8 PCF @ 20.4% MC	618.6	61			100	SS-20	-	0	0	6	73	21	NP	NP	NP	20	A-4b (8)	
	615.3	62–64																
MEDIUM STIFF TO HARD, GRAY, **SILT**, SOME CLAY, TRACE SAND, TRACE GRAVEL, DAMP TO MOIST		65	8 12 15	35	100	SS-21	4.00	-	-	-	-	-	-	-	-	20	A-4b (V)	
		66–69																
		70	6 6 9	20	100	SS-22	1.60	-	-	-	-	-	-	-	-	22	A-4b (V)	
		71–74																
@75.0'; UNIT WEIGHT: 131.4 PCF @ 19.6% MC		75			100	SS-23	3.50	0	0	0	66	34	27	20	7	20	A-4b (8)	
		76–79																
		80	8 9 13	29	100	SS-24	4.00	-	-	-	-	-	-	-	-	18	A-4b (V)	
		81–84																
		85	8 10 13	30	100	SS-25	4.25	-	-	-	-	-	-	-	-	20	A-4b (V)	
		86–89																
		90	7 9 14	30	100	SS-26	4.25	-	-	-	-	-	-	-	-	19	A-4b (V)	
		91–94																
@96.5'; UNIT WEIGHT: 134.1 PCF @ 19.1% MC		95			100	SS-27	3.00	0	0	0	67	33	26	19	7	19	A-4b (8)	
		96–99																
		100	8 12 16	37	100	SS-28	4.50	-	-	-	-	-	-	-	-	17	A-4b (V)	
		101–104																
		105	4 6 8	18	100	SS-29	0.60	-	-	-	-	-	-	-	-	24	A-4b (V)	
	570.3	106–109																
MEDIUM STIFF TO STIFF, GRAY, **SILTY CLAY**, TRACE SAND, TRACE GRAVEL, MOIST		110																
@111.6'; UNIT WEIGHT: 120.9 PCF @ 31.8% MC	566.6	111			100	SS-30	1.00	1	1	2	26	70	38	21	17	32	A-6b (11)	
	EOB	112																

NOTES: GROUNDWATER ENCOUNTERED AT 27.5' DURING DRILLING. CAVE DEPTH 26.0'.
ABANDONMENT METHODS, MATERIALS, QUANTITIES: PLACED 0.5 BAG ASPHALT PATCH; SHOVELED SOIL CUTTINGS

Preliminary Plans - For Reference Only

STANDARD ODOT SOIL BORING LOG (11 X 17) - OH DOT.GDT - 1/3/24 15:35 - X:\ACTIVE PROJECTS\ACTIVE SOIL PROJECTS\1ARCHIVE BY YEAR\2017 ARCHIVE\CUY-CCG3 82380\GINT FILES\CUY-CCG3 MASTER - LR UPDATED.GPJ

DESIGN AGENCY
EAS
2800 CORPORATE EXCHANGE DR. SUITE 240
COLUMBUS, OH. 43231
TEL:614.714.0299
WWW.NEASINC.COM

DESIGNER MW,J & DT | REVIEWER BPA 08/23/24 | PROJECT ID 82382 | SUBSET 240 TOTAL 310 | SHEET P.2626 TOTAL 2696

GEOTECHNICAL PROFILE - ROADWAY
BRIDGE NO. CUY-90-1652S OVER EAST 14TH STREET AND RAMP H5
BORING LOG B-158-0-14 (CONTINUED)

MODEL: Sheet PAPERSIZE: 34x22 (in.) DATE: 3/28/2025 TIME: 10:37:52 AM USER: Asiddiqi
pw:\\mb-us-pw.bentley.com:mb-us-pw-03\Documents\Cleveland_OH\01_Projects\ODOT\District12\82382\400-Engineering\Geotechnical\Sheets\82382_ZL127.dgn

PROJECT: CUY-CCG3
TYPE: BRIDGE
PID: 82380 SFN:
START: 12/2/14 END: 12/3/14

DRILLING FIRM / OPERATOR: BARR / D.SHOPE
SAMPLING FIRM / LOGGER: BARR / D.KLIMKOWICZ
DRILLING METHOD: 3.25" HSA
SAMPLING METHOD: SPT / ST

DRILL RIG: CME 55
HAMMER: CME AUTOMATIC
CALIBRATION DATE: 1/26/14
ENERGY RATIO (%): 78.8

STATION / OFFSET: 1613+12, 66' RT.
ALIGNMENT: RAMP B6
ELEVATION: 672.0 (MSL) EOB: 86.5 ft.
LAT / LONG: 41.496483, -81.676402

EXPLORATION ID B-159-0-14

Preliminary plans - For Reference Only

MATERIAL DESCRIPTION AND NOTES	ELEV.	DEPTHS	SPT/ RQD	N_{60}	REC (%)	SAMPLE ID	HP (tsf)	GRADATION (%) GR	CS	FS	SI	CL	ATTERBERG LL	PL	PI	WC	ODOT CLASS (GI)	BACK FILL
4.5", **ASPHALT**	671.6																	
7.5", **GRANULAR BASE**	671.0																	
MEDIUM DENSE, DARK GRAY AND BROWN, **GRAVEL WITH SAND AND SILT** TRACE CLAY, CONTAINS BRICK FRAGMENTS AND CINDERS, MOIST **(FILL)**	667.5		4 5 4	12	100	SS-1	-	-	-	-	-	-	-	-	-	15	A-2-4 (V)	
MEDIUM DENSE, BROWN, **FINE SAND**, TRACE COARSE SAND, TRACE SILT, TRACE GRAVEL, TRACE CLAY, CONTAINS BRICK FRAGMENTS, DAMP **(FILL)**	665.0		3 3 5	11	100	SS-2	-	-	-	-	-	-	-	-	-	7	A-3 (V)	
MEDIUM DENSE, BROWN AND LIGHT BROWN AND LIGHT GRAY, **SANDY SILT**, TRACE CLAY, TRACE GRAVEL, CONTAINS SILT SEAMS, MOIST **(FILL)**	662.5		5 6 7	17	100	SS-3	-	2	4	54	31	9	NP	NP	NP	16	A-4a (1)	
STIFF, BROWN MOTTLED WITH GRAYISH BROWN, **SILT AND CLAY**, TRACE SAND, TRACE GRAVEL, MOIST	658.8		2 2 2	5	100	SS-4	1.50	1	0	4	56	39	34	19	15	24	A-6a (10)	
			5 8 13	28	100	SS-5A	1.90	1	1	5	56	37	32	20	12	24	A-6a (9)	
						SS-5B	-	-	-	-	-	-	-	-	-	8	A-3a (V)	
MEDIUM DENSE, BROWN, **COARSE AND FINE SAND** LITTLE SILT, TRACE GRAVEL, TRACE CLAY, DAMP	655.0		7 10 11	28	100	SS-6	-	-	-	-	-	-	-	-	-	5	A-3a (V)	
MEDIUM DENSE, BROWN, **GRAVEL WITH SAND** TRACE SILT, TRACE CLAY, DRY TO DAMP @20.0'; SS-8 BECOMES LOOSE @21.1'; UNIT WEIGHT: 125.1 PCF @ 28.1% MC	650.0		7 11 12	30	100	SS-7	-	23	54	12	8	3	NP	NP	NP	3	A-1-b (0)	
			6 4 2	8	100	SS-8	-	-	-	-	-	-	-	-	-	9	A-1-b (V)	
VERY SOFT, BROWN, **CLAY**, "AND" SILT, TRACE SAND, TRACE GRAVEL, MOIST	647.5		0 2 2	5	100	SS-9	0.15	1	0	1	36	62	43	21	22	34	A-7-6 (13)	
VERY STIFF, GRAY, **SILT AND CLAY**, TRACE SAND, TRACE GRAVEL, WET	644.7	▼ W 644.5			100	ST-10	2.10	0	1	5	57	37	30	19	11	28	A-6a (8)	
MEDIUM DENSE, GRAY, **SANDY SILT**, TRACE CLAY, TRACE GRAVEL, CONTAINS SILT SEAMS, WET	642.5		2 5 8	17	100	SS-11	-	-	-	-	-	-	-	-	-	24	A-4a (V)	
MEDIUM DENSE, GRAY, **COARSE AND FINE SAND** LITTLE SILT, TRACE CLAY, TRACE GRAVEL, WET	633.7		4 8 12	26	100	SS-12	-	-	-	-	-	-	-	-	-	22	A-3a (V)	
			4 7 11	24	100	SS-13	-	-	-	-	-	-	-	-	-	20	A-3a (V)	
MEDIUM DENSE, GRAY, **SANDY SILT**, TRACE CLAY, TRACE GRAVEL, MOIST	628.7		7 8 13	28	100	SS-14	-	-	-	-	-	-	-	-	-	20	A-4a (V)	
VERY STIFF TO HARD, GRAY, **SILT**, TRACE TO SOME SAND, LITTLE TO SOME CLAY, TRACE GRAVEL, MOIST			8 10 16	34	100	SS-15	3.70	0	3	22	59	16	22	16	6	18	A-4b (8)	
			6 8 12	26	100	SS-16	4.00	-	-	-	-	-	-	-	-	19	A-4b (V)	
			9 22 22	58	100	SS-17	3.00	-	-	-	-	-	-	-	-	16	A-4b (V)	

STANDARD ODOT SOIL BORING LOG (11 X 17) - OH DOT.GDT - 1/3/24 15:35 - X:\ACTIVE PROJECTS\ACTIVE SOIL PROJECTS\1ARCHIVE BY YEAR\2017 ARCHIVE\CUY-CCG3 82380\GINT FILES\CUY-CCG3 MASTER - LR UPDATED.GPJ

DESIGN AGENCY
2800 CORPORATE EXCHANGE DR. SUITE 240
COLUMBUS, OH. 43231
TEL: 614.714.0299
WWW.NEASINC.COM

DESIGNER MWJ & DT
REVIEWER BPA 08/23/24
PROJECT ID 82382
SUBSET 241 TOTAL 310
SHEET P 2627 TOTAL 2696

GEOTECHNICAL PROFILE - ROADWAY
WALL Y
BORING LOG B-159-0-14

MODEL: Sheet PAPERSIZE: 34x22 (in.) DATE: 3/28/2025 TIME: 10:38:17 AM USER: Asiddiqi
pw:\\mb-us-pw.bentley.com:mb-us-pw-03\Documents\Cleveland_OH\01_Projects\ODOT\District12\82382\400-Engineering\Geotechnical\Sheets\82382_ZL128.dgn

PID: 82380 | SFN: | PROJECT: CUY-CCG3 | STATION / OFFSET: 1613+12, 66' RT. | START: 12/2/14 | END: 12/3/14 | PG 2 OF 2 | B-159-0-14

MATERIAL DESCRIPTION AND NOTES	ELEV.	DEPTHS	SPT/ RQD	N_{60}	REC (%)	SAMPLE ID	HP (tsf)	GRADATION (%) GR	CS	FS	SI	CL	ATTERBERG LL	PL	PI	WC	ODOT CLASS (GI)	BACK FILL
VERY STIFF TO HARD, GRAY, **SILT**, TRACE TO SOME SAND, LITTLE TO SOME CLAY, TRACE GRAVEL, MOIST *(continued)* @60.0'; UNIT WEIGHT: 131.3 PCF @ 20.8% MC	612.0	61			100	ST-18	2.20	0	1	0	73	26	27	18	9	21	A-4b (8)	
		62																
		63																
		64																
		65	7															
		66	10 15	33	100	SS-19	2.25	-	-	-	-	-	-	-	-	20	A-4b (V)	
		67																
		68																
		69																
		70																
		71	10 13 18	41	100	SS-20	4.25	-	-	-	-	-	-	-	-	18	A-4b (V)	
		72																
		73																
	598.5	74																
STIFF TO VERY STIFF, GRAY, **SILT AND CLAY** TRACE SAND, TRACE GRAVEL, MOIST		75																
		76	8 11 15	34	100	SS-21	3.00	0	0	1	53	46	31	19	12	22	A-6a (9)	
		77																
		78																
		79																
		80																
		81	8 11 15	34	100	SS-22	2.10	-	-	-	-	-	-	-	-	23	A-6a (V)	
		82																
		83																
		84																
		85																
	585.5	86 EOB	9 11 15	34	100	SS-23	1.50	-	-	-	-	-	-	-	-	26	A-6a (V)	

NOTES: GROUNDWATER ENCOUNTERED AT 27.5' DURING DRILLING, 26.8' UPON COMPLETION. CAVE DEPTH 29.0'.
ABANDONMENT METHODS, MATERIALS, QUANTITIES: PLACED .5 BAG ASPHALT PATCH; SHOVELED SOIL CUTTINGS

Preliminary Plans - For Reference Only

STANDARD ODOT SOIL BORING LOG (11 X 17) - OH DOT.GDT - 1/3/24 15:35 - X:\ACTIVE PROJECTS\ACTIVE SOIL PROJECTS\1ARCHIVE BY YEAR\2017 ARCHIVE\CUY-CCG3 82380\GINT FILES\CUY-CCG3 MASTER - LR UPDATED.GPJ

DESIGN AGENCY
2800 CORPORATE EXCHANGE DR. SUITE 240
COLUMBUS, OH. 43231
TEL:614.714.0299
WWW.MEINC.COM

DESIGNER MW,J & DT
REVIEWER BPA 08/23/24
PROJECT ID 82382
SUBSET 242 TOTAL 310
SHEET P 2628 TOTAL 2696

GEOTECHNICAL PROFILE - ROADWAY
WALL Y
BORING LOG B-159-0-14 (CONTINUED)

MODEL: Sheet PAPERSIZE: 34x22 (in.) DATE: 3/28/2025 TIME: 10:38:35 AM USER: Asiddiqi
pw:\\mb-us-pw.bentley.com:mb-us-pw-03\Documents\Cleveland_OH\01_Projects\ODOT\District12\82382\400-Engineering\Geotechnical\Sheets\82382_ZL129.dgn

PROJECT: CUY-CCG3
TYPE: RETAINING WALL
PID: 82380 SFN:
START: 12/4/14 END: 12/5/14

DRILLING FIRM / OPERATOR: BARR / T.GILBERT
SAMPLING FIRM / LOGGER: BARR / D.LYON
DRILLING METHOD: 3.25" HSA
SAMPLING METHOD: SPT / ST

DRILL RIG: CME 45B
HAMMER: CME AUTOMATIC
CALIBRATION DATE: 1/26/14
ENERGY RATIO (%): 77.4

STATION / OFFSET: 1616+72, 100' RT.
ALIGNMENT: RAMP B6
ELEVATION: 666.3 (MSL) EOB: 61.5 ft.
LAT / LONG: 41.497034, -81.675305

EXPLORATION ID B-160-0-14

MATERIAL DESCRIPTION AND NOTES	ELEV. 666.3	DEPTHS	SPT/ RQD	N_{60}	REC (%)	SAMPLE ID	HP (tsf)	GRADATION (%) GR	CS	FS	SI	CL	ATTERBERG LL	PL	PI	WC	ODOT CLASS (GI)	BACK FILL
4.0", **TOPSOIL**	665.9																	
MEDIUM DENSE, BROWN, BLACK AND LIGHT BROWN, **COARSE AND FINE SAND** SOME GRAVEL, TRACE SILT, TRACE CLAY, CONTAINS SLAG AND BRICK FRAGMENTS **(FILL)**	664.3		2 5 5	13	100	SS-1	-	-	-	-	-	-	-	-	-	9	A-3a (V)	
LOOSE TO MEDIUM DENSE, BROWN AND LIGHT BROWN, **FINE SAND**, TRACE SILT, TRACE COARSE SAND, TRACE GRAVEL, TRACE CLAY, DAMP	F.S.		6 6 7	17	78	SS-2	-	4	5	83	7	1	NP	NP	NP	6	A-3 (0)	
			3 3 3	8	78	SS-3	-	-	-	-	-	-	-	-	-	6	A-3 (V)	
	659.3																	
VERY LOOSE TO LOOSE, BROWN, **COARSE AND FINE SAND**, TRACE GRAVEL, TRACE SILT, TRACE CLAY, DAMP TO MOIST			2 2 2	5	89	SS-4	-	-	-	-	-	-	-	-	-	10	A-3a (V)	
			2 1 2	4	100	SS-5	-	-	-	-	-	-	-	-	-	8	A-3a (V)	
	653.3		6 2 3	6	94	SS-6A	-	-	-	-	-	-	-	-	-	6	A-3a (V)	
LOOSE TO MEDIUM DENSE, BROWN, **FINE SAND**, TRACE TO LITTLE COARSE SAND, TRACE SILT, TRACE CLAY, DAMP	F.S.					SS-6B	-	0	1	90	7	2	NP	NP	NP	5	A-3 (0)	
			4 5 7	15	78	SS-7	-	-	-	-	-	-	-	-	-	6	A-3 (V)	
@17.5'; SS-8 BECOMES WET		W 648.8	4 4 5	12	72	SS-8	-	-	-	-	-	-	-	-	-	24	A-3 (V)	
	646.8																	
MEDIUM DENSE, BROWN, **COARSE AND FINE SAND** LITTLE SILT, TRACE CLAY, TRACE GRAVEL, WET			4 6 7	17	100	SS-9	-	-	-	-	-	-	-	-	-	24	A-3a (V)	
	644.3																	
MEDIUM DENSE TO DENSE, BROWN, **FINE SAND**, LITTLE COARSE SAND, TRACE SILT, TRACE CLAY, TRACE GRAVEL, WET	F.S.		2 9 14	30	100	SS-10	-	0	11	83	5	1	NP	NP	NP	22	A-3 (0)	
			8 16 21	48	100	SS-11	-	-	-	-	-	-	-	-	-	21	A-3 (V)	
			7 14 20	44	100	SS-12	-	-	-	-	-	-	-	-	-	24	A-3 (V)	
	636.8																	
MEDIUM DENSE, BROWN, **COARSE AND FINE SAND** SOME SILT, TRACE CLAY, TRACE GRAVEL, WET			5 8 12	26	100	SS-13	-	0	0	65	32	3	NP	NP	NP	24	A-3a (0)	
	633.0																	
VERY DENSE, GRAYISH BROWN, **SANDY SILT**, LITTLE CLAY, TRACE GRAVEL, MOIST			13 18 23	53	100	SS-14	-	-	-	-	-	-	-	-	-	19	A-4a (V)	
	628.0																	
MEDIUM DENSE, GRAYISH BROWN, **SILT**, SOME SAND, SOME CLAY, TRACE GRAVEL, WET			6 6 9	19	100	SS-15	-	0	0	28	51	21	21	16	5	29	A-4b (7)	
			4 6 7	17	100	SS-16	-	-	-	-	-	-	-	-	-	20	A-4b (V)	
	619.0																	
VERY STIFF, GRAY TO GRAYISH BROWN, **SILT AND CLAY**, TRACE SAND, TRACE GRAVEL, MOIST @48.0'; UNIT WEIGHT: 128.5 PCF @ 23.2% MC					96	ST-17	2.50	0	0	4	61	35	29	17	12	23	A-6a (9)	
			3 5 7	15	100	SS-18	3.25	-	-	-	-	-	-	-	-	23	A-6a (V)	
	612.8																	
MEDIUM DENSE, GRAYISH BROWN, **SILT**, SOME CLAY, TRACE SAND, TRACE GRAVEL, MOIST			3 6 7	17	100	SS-19	-	-	-	-	-	-	-	-	-	21	A-4b (V)	

Preliminary Plans - For Reference Only

STANDARD ODOT SOIL BORING LOG (11 X 17) - OH DOT.GDT - 6/22/22 18:12 - X:\ACTIVE PROJECTS\ACTIVE SOIL PROJECTS\1\ARCHIVE BY YEAR\2017 ARCHIVE\CUY-CCG3 82380\GINT FILES\CUY-CCG3 MASTER - LR UPDATED.GPJ

DESIGN AGENCY
2800 CORPORATE EXCHANGE DR. SUITE 240
COLUMBUS, OH. 43231
TEL:614.714.0299
WWW.MESINC.COM

DESIGNER MWJ & DT
REVIEWER BPA 08/23/24
PROJECT ID 82382
SUBSET 243 TOTAL 310
SHEET P 2629 TOTAL 2696

GEOTECHNICAL PROFILE - ROADWAY
WALL Y
BORING LOG B-160-0-14

MODEL: Sheet PAPERSIZE: 34x22 (in.) DATE: 3/28/2025 TIME: 10:39:00 AM USER: Asiddiqi
pw:\\mb-us-pw.bentley.com:mb-us-pw-03\Documents\Cleveland_OH\01_Projects\ODOT\District12\82382\400-Engineering\Geotechnical\Sheets\82382_ZL130.dgn

PID: 82380 | SFN: | PROJECT: CUY-CCG3 | STATION / OFFSET: 1616+72, 100' RT. | START: 12/4/14 | END: 12/5/14 | PG 2 OF 2 | B-160-0-14

MATERIAL DESCRIPTION AND NOTES	ELEV.	DEPTHS	SPT/ RQD	N_{60}	REC (%)	SAMPLE ID	HP (tsf)	GRADATION (%) GR	CS	FS	SI	CL	ATTERBERG LL	PL	PI	WC	ODOT CLASS (GI)	BACK FILL
MEDIUM DENSE, GRAYISH BROWN, **SILT**, SOME CLAY, TRACE SAND, TRACE GRAVEL, MOIST *(continued)*	606.3																	
	604.8	EOB 61	6 8 8	21	100	SS-20	-	0	0	1	70	29	25	19	6	20	A-4b (8)	

Preliminary Plans - For Reference Only

STANDARD ODOT SOIL BORING LOG (11 X 17) - OH DOT.GDT - 6/22/22 18:12 - X:\ACTIVE PROJECTS\ACTIVE SOIL PROJECTS\1ARCHIVE BY YEAR\2017 ARCHIVE\CUY-CCG3 82380\GINT FILES\CUY-CCG3 MASTER - LR UPDATED.GPJ

NOTES: GROUNDWATER ENCOUNTERED AT 17.5' DURING DRILLING. CAVE DEPTH 16.2'.
ABANDONMENT METHODS, MATERIALS, QUANTITIES: SHOVELED SOIL CUTTINGS

DESIGN AGENCY
2800 CORPORATE EXCHANGE DR. SUITE 240 COLUMBUS, OH. 43231
TEL:614.714.0299
WWW.NEASINC.COM

DESIGNER MW,J & DT
REVIEWER BPA 08/23/24
PROJECT ID 82382
SHEET 244 SUBSET TOTAL 310
SHEET P 2630 TOTAL 2696

GEOTECHNICAL PROFILE - ROADWAY
WALL Y
BORING LOG B-160-0-14 (CONTINUED)

MODEL: Sheet PAPERSIZE: 34x22 (in.) DATE: 3/28/2025 TIME: 10:39:16 AM USER: Asiddiqi
pw:\\mb-us-pw.bentley.com:mb-us-pw-03\Documents\Cleveland_OH\01_Projects\ODOT\District12\82382\400-Engineering\Geotechnical\Sheets\82382_ZL131.dgn

STANDARD ODOT SOIL BORING LOG (8.5 X 11) - OH DOT.GDT - 6/22/22 14:20 - X:\ACTIVE PROJECTS\ACTIVE SOIL PROJECTS\1ARCHIVE BY YEAR\2017 ARCHIVE\CUY-CCG3 82380\GINT FILES

PROJECT: CUY-CCG3 | DRILLING FIRM / OPERATOR: BARR / T.GILBERT | DRILL RIG: CME 45B | STATION / OFFSET: 1616+99, 53' RT. | EXPLORATION ID B-161-0-14
TYPE: RETAINING WALL | SAMPLING FIRM / LOGGER: BARR / D.LYON | HAMMER: CME AUTOMATIC | ALIGNMENT: RAMP B6
PID: 82380 SFN: | DRILLING METHOD: 3.25" HSA | CALIBRATION DATE: 1/26/14 | ELEVATION: 666.5 (MSL) EOB: 61.5 ft. | PAGE 1 OF 2
START: 12/3/14 END: 12/3/14 | SAMPLING METHOD: SPT / ST | ENERGY RATIO (%): 77.4 | LAT / LONG: 41.497179, -81.675336

MATERIAL DESCRIPTION AND NOTES	ELEV.	DEPTHS	SPT/ RQD	N_{60}	REC (%)	SAMPLE ID	HP (tsf)	GRADATION (%) GR	CS	FS	SI	CL	ATTERBERG LL	PL	PI	WC	ODOT CLASS (GI)	BACK FILL
3.0", **TOPSOIL**	666.3																	
MEDIUM DENSE, BROWN, **GRAVEL WITH SAND**, LITTLE SILT, TRACE CLAY, CONTAINS FEW ROOTS, DAMP **(FILL)**	664.5		3 4 5	12	44	SS-1	-	35	16	35	11	3	NP	NP	NP	8	A-1-b (0)	
VERY LOOSE TO MEDIUM DENSE, BROWN AND GRAYISH BROWN, **FINE SAND**, SOME COARSE SAND, LITTLE GRAVEL, TRACE SILT, TRACE CLAY, DAMP			7 6 7	17	89	SS-2	-	-	-	-	-	-	-	-	-	9	A-3 (V)	
@5.0'; SS-3 BECOMES DARK BROWN			2 1 2	4	94	SS-3	-	19	21	53	5	2	NP	NP	NP	10	A-3 (0)	
			2 2 2	5	100	SS-4	-	-	-	-	-	-	-	-	-	9	A-3 (V)	
			3 2 4	8	50	SS-5	-	-	-	-	-	-	-	-	-	9	A-3 (V)	
@12.5'; SS-6 BECOMES GRAYISH BROWN, TRACE GRAVEL			3 4 7	14	100	SS-6	-	5	26	62	6	1	NP	NP	NP	5	A-3 (0)	
@15.0'; SS-7 BECOMES MOIST	649.5		5 5 7	15	100	SS-7	-	-	-	-	-	-	-	-	-	16	A-3 (V)	
MEDIUM DENSE TO VERY DENSE, GRAY, **COARSE AND FINE SAND**, TRACE TO LITTLE SILT, TRACE CLAY, TRACE GRAVEL, MOIST TO WET		W 649.0	4 5 7	15	61	SS-8	-	-	-	-	-	-	-	-	-	21	A-3a (V)	
			10 15 21	46	100	SS-9	-	-	-	-	-	-	-	-	-	15	A-3a (V)	
			4 8 14	28	100	SS-10	-	-	-	-	-	-	-	-	-	21	A-3a (V)	
@25.0'; SS-11 TO SS-15 BECOME GRAYISH BROWN			8 18 26	57	100	SS-11	-	-	-	-	-	-	-	-	-	20	A-3a (V)	
			6 10 18	36	100	SS-12	-	0	7	81	10	2	NP	NP	NP	19	A-3a (0)	

PID: 82380 | SFN: | PROJECT: CUY-CCG3 | STATION / OFFSET: 1616+99, 53' RT. | START: 12/3/14 | END: 12/3/14 | PG 2 OF 2 | B-161-0-14

MATERIAL DESCRIPTION AND NOTES	ELEV.	DEPTHS	SPT/ RQD	N_{60}	REC (%)	SAMPLE ID	HP (tsf)	GRADATION (%) GR	CS	FS	SI	CL	ATTERBERG LL	PL	PI	WC	ODOT CLASS (GI)	BACK FILL
MEDIUM DENSE TO VERY DENSE, GRAY, **COARSE AND FINE SAND**, TRACE TO LITTLE SILT, TRACE CLAY, TRACE GRAVEL, MOIST TO WET *(continued)*	636.5		5 12 20	41	100	SS-13	-	-	-	-	-	-	-	-	-	21	A-3a (V)	
			4 10 13	30	100	SS-14	-	-	-	-	-	-	-	-	-	24	A-3a (V)	
			9 13 13	34	100	SS-15	-	-	-	-	-	-	-	-	-	24	A-3a (V)	
	623.2																	
MEDIUM DENSE, GRAY, **SILT**, LITTLE TO SOME CLAY, TRACE SAND, TRACE GRAVEL, DAMP TO WET			3 4 7	14	100	SS-16	-	-	-	-	-	-	-	-	-	25	A-4b (V)	
@48.0'; UNIT WEIGHT: 130.1 PCF @ 21.2% MC					117	ST-17	-	0	0	2	78	20	26	21	5	21	A-4b (8)	
			5 7 10	22	100	SS-18	-	-	-	-	-	-	-	-	-	20	A-4b (V)	
	613.2																	
STIFF TO VERY STIFF, GRAY, **SILT**, SOME CLAY, TRACE SAND, TRACE GRAVEL, WET			5 6 10	21	100	SS-19	1.40	0	0	1	74	25	28	20	8	26	A-4b (8)	
	605.0	EOB	6 8 10	23	100	SS-20	2.75	-	-	-	-	-	-	-	-	26	A-4b (V)	

NOTES: GROUNDWATER ENCOUNTERED AT 17.5' DURING DRILLING. CAVE DEPTH 15.0'.
ABANDONMENT METHODS, MATERIALS, QUANTITIES: SHOVELED SOIL CUTTINGS

Preliminary Plans - For Reference Only

SHEET	TOTAL	SUBSET	TOTAL	PROJECT ID	REVIEWER	DESIGNER
P 2631	2696	245	310	82382	BPA 08/23/24	MWJ & DT

DESIGN AGENCY
2800 CORPORATE EXCHANGE DR. SUITE 240
COLUMBUS, OH. 43231
TEL:614.714.0299
WWW.NEASINC.COM

GEOTECHNICAL PROFILE - ROADWAY
WALL Z
BORING LOG B-161-0-14

MODEL: Sheet PAPERSIZE: 34x22 (in.) DATE: 3/28/2025 TIME: 10:39:37 AM USER: Asiddiqi
pw:\\mb-us-pw.bentley.com:mb-us-pw-03\Documents\Cleveland_OH\01_Projects\ODOT\District12\82382\400-Engineering\Geotechnical\Sheets\82382_ZL132.dgn

STANDARD ODOT SOIL BORING LOG (8.5 X 11) - OH DOT.GDT - 6/22/22 14:20 - X:\ACTIVE PROJECTS\ACTIVE SOIL PROJECTS\1ARCHIVE BY YEAR\2017 ARCHIVE\CUY-CCG3 82380\GINT FILES

PROJECT: CUY-CCG3 | DRILLING FIRM / OPERATOR: BARR / T.GILBERT | DRILL RIG: CME 45B | STATION / OFFSET: 197+39, 180' RT. | EXPLORATION ID B-162-0-14
TYPE: RETAINING WALL | SAMPLING FIRM / LOGGER: BARR / D.LYON | HAMMER: CME AUTOMATIC | ALIGNMENT: IR-90 EB
PID: 82380 SFN: | DRILLING METHOD: 3.25" HSA | CALIBRATION DATE: 1/26/14 | ELEVATION: 669.4 (MSL) EOB: 61.5 ft. | PAGE 1 OF 2
START: 12/3/14 END: 12/4/14 | SAMPLING METHOD: SPT / ST | ENERGY RATIO (%): 77.4 | LAT / LONG: 41.497483, -81.674507

MATERIAL DESCRIPTION AND NOTES	ELEV.	DEPTHS	SPT/RQD	N_{60}	REC (%)	SAMPLE ID	HP (tsf)	GRADATION (%) GR	CS	FS	SI	CL	ATTERBERG LL	PL	PI	WC	ODOT CLASS (GI)	BACK FILL
4.0", **TOPSOIL**	669.4																	
LOOSE, DARK GRAY AND GRAY, **GRAVEL WITH SAND**, TRACE SILT, TRACE CLAY, CONTAINS CONCRETE FRAGMENTS, WET **(FILL)**	669.1		4 3 3	8	28	SS-1	-	-	-	-	-	-	-	-	-	17	A-1-b (V)	
LOOSE, DARK BROWN TO BROWN, **COARSE AND FINE SAND**, LITTLE TO SOME GRAVEL, LITTLE SILT, TRACE CLAY, SS-2 CONTAINS CONCRETE AND BRICK FRAGMENTS, WET **(FILL)**	667.4		4 2 2	5	94	SS-2	-	-	-	-	-	-	-	-	-	15	A-3a (V)	
@7.5'; SS-4 CHANGES TO DAMP			3 3 2	6	72	SS-3	-	17	18	45	13	7	NP	NP	NP	16	A-3a (0)	
	659.9		4 3 4	9	89	SS-4	-	-	-	-	-	-	-	-	-	7	A-3a (V)	
LOOSE, BROWN, **FINE SAND**, TRACE COARSE SAND, TRACE CLAY, TRACE SILT, TRACE GRAVEL, DAMP	F S		4 4 4	10	100	SS-5	-	1	3	89	3	4	NP	NP	NP	7	A-3 (0)	
	657.4																	
VERY LOOSE TO LOOSE, BROWN, **GRAVEL WITH SAND**, TRACE SILT, TRACE CLAY, DAMP			2 2 2	5	83	SS-6	-	-	-	-	-	-	-	-	-	9	A-1-b (V)	
			2 1 2	4	89	SS-7	-	-	-	-	-	-	-	-	-	9	A-1-b (V)	
	649.9		3 2 3	6	83	SS-8	-	33	40	23	3	1	NP	NP	NP	8	A-1-b (0)	
LOOSE, BROWN, **FINE SAND**, TRACE COARSE SAND, TRACE SILT, TRACE CLAY, TRACE GRAVEL, WET	F S	W 649.4	5 4 4	10	72	SS-9	-	-	-	-	-	-	-	-	-	26	A-3 (V)	
	647.4																	
VERY SOFT, GRAY, **SILT AND CLAY**, TRACE SAND, TRACE GRAVEL, CONTAINS NO INTACT SOIL FOR HP READINGS, WET	646.1		0 0 3	4	100	SS-10A	-	-	-	-	-	-	-	-	-	35	A-6a (V)	
						SS-10B	-	-	-	-	-	-	-	-	-	28	A-4a (V)	
VERY LOOSE, GRAY, **SANDY SILT**, LITTLE CLAY, TRACE GRAVEL, WET	644.9																	
MEDIUM DENSE TO VERY DENSE, DARK GRAY AND BROWN TO BROWN, **COARSE AND FINE SAND**, LITTLE SILT, TRACE CLAY, TRACE GRAVEL, WET @25.8'; UNIT WEIGHT: 126.6 PCF @ 28.8% MC					100	SS-11	-	0	1	75	20	4	NP	NP	NP	29	A-3a (0)	
			8 13 16	37	100	SS-12	-	-	-	-	-	-	-	-	-	18	A-3a (V)	

STANDARD ODOT SOIL BORING LOG (8.5 X 11) - OH DOT.GDT - 6/22/22 14:20 - X:\ACTIVE PROJECTS\ACTIVE SOIL PROJECTS\1ARCHIVE BY YEAR\2017 ARCHIVE\CUY-CCG3 82380\GINT FILES

PID: 82380 | SFN: | PROJECT: CUY-CCG3 | STATION / OFFSET: 197+39, 180' RT. | START: 12/3/14 | END: 12/4/14 | PG 2 OF 2 | B-162-0-14

MATERIAL DESCRIPTION AND NOTES	ELEV.	DEPTHS	SPT/RQD	N_{60}	REC (%)	SAMPLE ID	HP (tsf)	GRADATION (%) GR	CS	FS	SI	CL	ATTERBERG LL	PL	PI	WC	ODOT CLASS (GI)	BACK FILL
MEDIUM DENSE TO VERY DENSE, DARK GRAY AND BROWN TO BROWN, **COARSE AND FINE SAND**, LITTLE SILT, TRACE CLAY, TRACE GRAVEL, WET *(continued)*	639.4		16 20 12	41	100	SS-13	-	-	-	-	-	-	-	-	-	14	A-3a (V)	
@35.0'; SS-14 BECOMES GRAY			9 9 11	26	56	SS-14	-	-	-	-	-	-	-	-	-	24	A-3a (V)	
	625.9		10 20 23	55	100	SS-15	-	-	-	-	-	-	-	-	-	21	A-3a (V)	
STIFF TO HARD, GRAYISH BROWN, **SILT**, SOME CLAY, TRACE SAND, TRACE GRAVEL, DAMP TO MOIST			6 7 7	18	72	SS-16	1.90	0	1	3	70	26	26	19	7	23	A-4b (8)	
			2 6 8	18	100	SS-17	3.50	-	-	-	-	-	-	-	-	19	A-4b (V)	
	611.2		6 9 12	27	100	SS-18	4.25	1	0	5	69	25	27	19	8	19	A-4b (8)	
STIFF, GRAYISH BROWN, **SILT AND CLAY**, TRACE SAND, TRACE GRAVEL, DAMP	607.9	EOB	4 5 7	15	100	SS-19	1.70	-	-	-	-	-	-	-	-	22	A-6a (V)	

NOTES: GROUNDWATER ENCOUNTERED AT 20.0' DURING DRILLING. CAVE DEPTH 20.0'.
ABANDONMENT METHODS, MATERIALS, QUANTITIES: SHOVELED SOIL CUTTINGS

Preliminary Plans - For Reference Only

SHEET	TOTAL
P 2632	2696

SUBSET	TOTAL
246	310

PROJECT ID: 82382

REVIEWER	
BPA	08/23/24

DESIGNER: MW.J & DT

DESIGN AGENCY
2800 CORPORATE EXCHANGE DR. SUITE 240
COLUMBUS, OH. 43231
TEL:614.714.0299
WWW.NEASINC.COM

GEOTECHNICAL PROFILE - ROADWAY
WALL Z
BORING LOG B-162-0-14

MODEL: Sheet PAPERSIZE: 34x22 (in.) DATE: 3/28/2025 TIME: 10:39:57 AM USER: Asiddiqi
pw:\\mb-us-pw.bentley.com:mb-us-pw-03\Documents\Cleveland_OH\01_Projects\ODOT\District12\82382\400-Engineering\Geotechnical\Sheets\82382_ZL133.dgn

STANDARD ODOT SOIL BORING LOG (8.5 X 11) - OH DOT.GDT - 6/22/22 14:20 - X:\ACTIVE PROJECTS\ACTIVE SOIL PROJECTS\1ARCHIVE BY YEAR\2017 ARCHIVE\CUY-CCG3 82380\GINT FILES

PROJECT: CUY-CCG3 | DRILLING FIRM / OPERATOR: BARR / T.GILBERT | DRILL RIG: CME 45B | STATION / OFFSET: 1618+99, 187' RT. | EXPLORATION ID B-163-0-14
TYPE: RETAINING WALL | SAMPLING FIRM / LOGGER: BARR / D.LYON | HAMMER: CME AUTOMATIC | ALIGNMENT: RAMP B6
PID: 82380 SFN: | DRILLING METHOD: 3.25" HSA | CALIBRATION DATE: 1/26/14 | ELEVATION: 666.5 (MSL) EOB: 61.5 ft. | PAGE 1 OF 2
START: 12/4/14 END: 12/4/14 | SAMPLING METHOD: SPT / ST | ENERGY RATIO (%): 77.4 | LAT / LONG: 41.497197, -81.674502

MATERIAL DESCRIPTION AND NOTES	ELEV. 666.5	DEPTHS	SPT/ RQD	N_{60}	REC (%)	SAMPLE ID	HP (tsf)	GRADATION (%) GR	CS	FS	SI	CL	ATTERBERG LL	PL	PI	WC	ODOT CLASS (GI)	BACK FILL
4.0", **TOPSOIL**	666.2																	
VERY LOOSE TO MEDIUM DENSE, BROWN, **COARSE AND FINE SAND**, TRACE SILT, TRACE GRAVEL, TRACE CLAY, DAMP TO MOIST **(FILL)**		1	2 2 4	8	94	SS-1	-	-	-	-	-	-	-	-	-	10	A-3a (V)	
		2																
		3	5 5 4	12	94	SS-2	-	3	11	75	8	3	NP	NP	NP	9	A-3a (0)	
		4																
		5	3 3 3	8	89	SS-3	-	-	-	-	-	-	-	-	-	8	A-3a (V)	
@7.5'; SS-4 TO SS-6 BECOME SOME GRAVEL		6																
		7																
		8	3 2 2	5	94	SS-4	-	-	-	-	-	-	-	-	-	11	A-3a (V)	
		9																
		10	1 2 1	4	100	SS-5	-	-	-	-	-	-	-	-	-	12	A-3a (V)	
		11																
		12																
	652.0	13	2 1 2	4	89	SS-6	-	-	-	-	-	-	-	-	-	9	A-3a (V)	
MEDIUM DENSE TO DENSE, BROWN, **FINE SAND**, SOME COARSE SAND, LITTLE GRAVEL, TRACE SILT, TRACE CLAY, DAMP		14																
		15	5 8 8	21	89	SS-7	-	14	35	43	6	2	NP	NP	NP	8	A-3 (0)	
W 649.5		16																
@17.5'; SS-8 TO SS-13 BECOME WET		17																
		18	7 11	23	94	SS-8	-	-	-	-	-	-	-	-	-	21	A-3 (V)	
		19																
		20	5 8 11	25	100	SS-9	-	-	-	-	-	-	-	-	-	24	A-3 (V)	
		21																
		22																
@22.5'; SS-10 TO SS-13 BECOME GRAYISH BROWN, TRACE COARSE SAND, TRACE GRAVEL		23	7 15 23	49	100	SS-10	-	-	-	-	-	-	-	-	-	20	A-3 (V)	
		24																
		25	6 12 16	36	100	SS-11	-	0	3	87	8	2	NP	NP	NP	22	A-3 (0)	
		26																
		27																
		28	4 7 12	25	100	SS-12	-	-	-	-	-	-	-	-	-	20	A-3 (V)	
		29																

STANDARD ODOT SOIL BORING LOG (8.5 X 11) - OH DOT.GDT - 6/22/22 14:20 - X:\ACTIVE PROJECTS\ACTIVE SOIL PROJECTS\1ARCHIVE BY YEAR\2017 ARCHIVE\CUY-CCG3 82380\GINT FILES

PID: 82380 | SFN: | PROJECT: CUY-CCG3 | STATION / OFFSET: 1618+99, 187' RT. | START: 12/4/14 | END: 12/4/14 | PG 2 OF 2 | B-163-0-14

MATERIAL DESCRIPTION AND NOTES	ELEV. 636.5	DEPTHS	SPT/ RQD	N_{60}	REC (%)	SAMPLE ID	HP (tsf)	GRADATION (%) GR	CS	FS	SI	CL	ATTERBERG LL	PL	PI	WC	ODOT CLASS (GI)	BACK FILL
MEDIUM DENSE TO DENSE, BROWN, **FINE SAND**, SOME COARSE SAND, LITTLE GRAVEL, TRACE SILT, TRACE CLAY, DAMP *(continued)*		31	7 10 15	32	100	SS-13	-	-	-	-	-	-	-	-	-	23	A-3 (V)	
	633.2	32																
MEDIUM DENSE TO DENSE, GRAYISH BROWN, **SILT**, SOME SAND, LITTLE CLAY, TRACE GRAVEL, WET		33																
		34																
		35	9 12 14	34	100	SS-14	-	-	-	-	-	-	-	-	-	24	A-4b (V)	
		36																
		37																
		38																
		39																
		40																
		41	4 9 8	22	100	SS-15	-	0	0	34	53	13	NP	NP	NP	25	A-4b (6)	
		42																
		43																
		44																
		45																
	620.2	46	5 6 8	18	100	SS-16A	-	-	-	-	-	-	-	-	-	20	A-4b (V)	
MEDIUM STIFF TO STIFF, GRAYISH BROWN, **SILT**, SOME CLAY, TRACE SAND, TRACE GRAVEL, WET						SS-16B	1.25	-	-	-	-	-	-	-	-	21	A-4b (V)	
		47																
		48																
		49																
		50																
	614.2	51	3 6 8	18	100	SS-17	1.00	-	-	-	-	-	-	-	-	23	A-4b (V)	
STIFF TO VERY STIFF, GRAYISH BROWN, **SILT AND CLAY**, TRACE SAND, TRACE GRAVEL, MOIST		52																
@53.0'; UNIT WEIGHT: 127.2 PCF @ 23.5% MC		53																
		54			100	ST-18	1.25	0	1	0	59	40	31	18	13	24	A-6a (9)	
		55																
		56	4 6 8	18	100	SS-19	2.10	-	-	-	-	-	-	-	-	21	A-6a (V)	
		57																
		58																
		59																
		60																
	605.0	61	5 9 13	28	100	SS-20	2.80	-	-	-	-	-	-	-	-	21	A-6a (V)	
		EOB																

NOTES: GROUNDWATER ENCOUNTERED AT 17.0' DURING DRILLING. CAVE DEPTH 17.0'.
ABANDONMENT METHODS, MATERIALS, QUANTITIES: SHOVELED SOIL CUTTINGS

Preliminary Plans - For Reference Only

SHEET	TOTAL	SUBSET	TOTAL	PROJECT ID	REVIEWER	DESIGNER
P 2633	2696	247	310	82382	BPA 08/23/24	MWJ & DT

DESIGN AGENCY
2800 CORPORATE EXCHANGE DR. SUITE 400 COLUMBUS, OH. 43231
TEL:614.714.0299
WWW.NEASINC.COM

GEOTECHNICAL PROFILE - ROADWAY
WALL Y
BORING LOG B-163-0-14

MODEL: Sheet PAPERSIZE: 34x22 (in.) DATE: 3/28/2025 TIME: 10:40:18 AM USER: Asiddiqi
pw:\\mb-us-pw.bentley.com:mb-us-pw-03\Documents\Cleveland_OH\01_Projects\ODOT\District12\82382\400-Engineering\Geotechnical\Sheets\82382_ZL134.dgn

PROJECT: CUY-CCG3
TYPE: RETAINING WALL
PID: 82380 SFN:
START: 12/9/14 END: 12/9/14

DRILLING FIRM / OPERATOR: BARR / P.STROUD
SAMPLING FIRM / LOGGER: BARR / C. PIERCE
DRILLING METHOD: 3.25" HSA
SAMPLING METHOD: SPT

DRILL RIG: MOBILE B-58
HAMMER: MOBILE AUTOMATIC
CALIBRATION DATE: 1/26/14
ENERGY RATIO (%): 90*

STATION / OFFSET: 578+19, 7' RT.
ALIGNMENT: RAMP A3
ELEVATION: 695.5 (MSL) EOB: 61.5 ft.
LAT / LONG: 41.495142, -81.681405

EXPLORATION ID B-164-0-14

MATERIAL DESCRIPTION AND NOTES	ELEV. 695.5	DEPTHS	SPT/ RQD	N_{60}	REC (%)	SAMPLE ID	HP (tsf)	GRADATION (%) GR	CS	FS	SI	CL	ATTERBERG LL	PL	PI	WC	ODOT CLASS (GI)	BACK FILL
18.0", **CONCRETE**	694.0																	
6.0", **GRANULAR BASE**	693.5																	
MEDIUM DENSE, BROWN, **COARSE AND FINE SAND** LITTLE GRAVEL, LITTLE SILT, TRACE CLAY, SS-1 CONTAINS CONCRETE FRAGMENTS, DAMP TO MOIST **(FILL)**			7 6 7	20	100	SS-1	-	19	27	33	14	7	NP	NP	NP	8	A-3a (0)	
@5.0'; SS-2 CHANGES TO DARK GRAY AND BROWN, CONTAINS ASPHALT AND CONCRETE FRAGMENTS			5 5 5	15	100	SS-2	-	-	-	-	-	-	-	-	-	10	A-3a (V)	
@7.5'; SS-3 CONTAINS ASPHALT FRAGMENTS			7 6 7	20	100	SS-3	-	-	-	-	-	-	-	-	-	11	A-3a (V)	
@10.0'; SS-4 CONTAINS CONCRETE FRAGMENTS	683.5		7 7 7	21	100	SS-4	-	19	17	41	16	7	NP	NP	NP	11	A-3a (0)	
DENSE, BROWN AND GRAY, **GRAVEL WITH SAND** TRACE SILT, TRACE CLAY, CONTAINS CONCRETE AND SLAG, WET **(FILL)**	681.0		7 14 14	42	100	SS-5	-	47	13	26	8	6	NP	NP	NP	21	A-1-b (0)	
MEDIUM DENSE TO DENSE, BROWN, **COARSE AND FINE SAND**, LITTLE TO SOME SILT, TRACE CLAY, TRACE TO LITTLE GRAVEL, SS-6 AND SS-7 CONTAIN BRICK FRAGMENTS, MOIST **(FILL)**			7 11 13	36	100	SS-6	-	-	-	-	-	-	-	-	-	10	A-3a (V)	
			5 7 8	23	100	SS-7	-	-	-	-	-	-	-	-	-	11	A-3a (V)	
			4 4 5	14	100	SS-8	-	-	-	-	-	-	-	-	-	10	A-3a (V)	
DENSE, BROWN, **GRAVEL WITH SAND** LITTLE SILT, TRACE CLAY, CONTAINS CONCRETE AND BRICK FRAGMENTS, DAMP TO WET **(FILL)**	673.5		8 11 9	30	22	SS-9	-	-	-	-	-	-	-	-	-	7	A-1-b (V)	
@25.0'; SS-10 CHANGES TO VERY LOOSE, DARK GRAY AND BROWN			5 1 1	3	100	SS-10	-	31	21	31	11	6	NP	NP	NP	14	A-1-b (0)	
@27.5'; SS-11 CHANGES TO MEDIUM DENSE, BROWN	666.0		4 6 4	15	100	SS-11	-	-	-	-	-	-	-	-	-	11	A-1-b (V)	
LOOSE TO MEDIUM DENSE, BROWN, **COARSE AND FINE SAND**, TRACE GRAVEL, TRACE SILT, TRACE CLAY, CONTAINS BRICK FRAGMENTS, MOIST **(FILL)**			4 3 3	9	100	SS-12	-	-	-	-	-	-	-	-	-	11	A-3a (V)	
@35.0'; SS-13 CONTAINS 2 RED BRICK FRAGMENTS	657.2		6 6 7	20	11	SS-13	-	-	-	-	-	-	-	-	-	11		
LOOSE, BROWN, **COARSE AND FINE SAND** TRACE SILT, TRACE CLAY, TRACE GRAVEL, MOIST TO WET		W 655.7	2 3 3	9	100	SS-14	-	-	-	-	-	-	-	-	-	10	A-3a (V)	
@45.0'; SS-15 TO SS-17 BECOME MEDIUM DENSE TO DENSE			6 7 12	29	100	SS-15	-	3	21	63	9	4	NP	NP	NP	15	A-3a (0)	
@50.0'; SS-16 TO SS-17 BECOME BROWN AND GRAY			3 2 8	15	100	SS-16	-	-	-	-	-	-	-	-	-	23	A-3a (V)	
			9 12 12	36	100	SS-17	-	-	-	-	-	-	-	-	-	18	A-3a (V)	
	637.0																	
DENSE, GRAYISH BROWN, **SANDY SILT**, TRACE CLAY, TRACE GRAVEL, WET																		

Preliminary Plans - For Reference Only

STANDARD ODOT SOIL BORING LOG (11 X 17) - OH DOT.GDT - 1/3/24 15:35 - X:\ACTIVE PROJECTS\ACTIVE SOIL PROJECTS\1ARCHIVE BY YEAR\2017 ARCHIVE\CUY-CCG3 82380\GINT FILES\CUY-CCG3 MASTER - LR UPDATED.GPJ

DESIGN AGENCY
EAS
2800 CORPORATE EXCHANGE DR. SUITE 400
COLUMBUS, OH. 43231
TEL:614.714.0299
WWW.NEASINC.COM

DESIGNER MWJ & DT
REVIEWER BPA 08/23/24
PROJECT ID 82382
SUBSET 248 TOTAL 310
SHEET P 2634 TOTAL 2696

GEOTECHNICAL PROFILE - ROADWAY
RAMP A3
BORING LOG B-164-0-14

MODEL: Sheet PAPERSIZE: 34x22 (in.) DATE: 3/28/2025 TIME: 10:40:48 AM USER: Asiddiqi
pw:\\mb-us-pw.bentley.com:mb-us-pw-03\Documents\Cleveland_OH\01_Projects\ODOT\District12\82382\400-Engineering\Geotechnical\Sheets\82382_ZL135.dgn

PID: 82380 | SFN: | PROJECT: CUY-CCG3 | STATION / OFFSET: 578+19, 7' RT. | START: 12/9/14 | END: 12/9/14 | PG 2 OF 2 | B-164-0-14

MATERIAL DESCRIPTION AND NOTES	ELEV.	DEPTHS	SPT/ RQD	N_{60}	REC (%)	SAMPLE ID	HP (tsf)	GRADATION (%) GR	CS	FS	SI	CL	ATTERBERG LL	PL	PI	WC	ODOT CLASS (GI)	BACK FILL
DENSE, GRAYISH BROWN, **SANDY SILT**, TRACE CLAY, TRACE GRAVEL, WET *(continued)*	635.5																	
	634.0	EOB 61	6 10 16	39	100	SS-18	-	0	0	49	44	7	NP	NP	NP	24	A-4a (3)	

Preliminary Plans - For Reference Only

NOTES: GROUNDWATER ENCOUNTERED AT 39.8' DURING DRILLING. CAVE DEPTH 32.3'.
ABANDONMENT METHODS, MATERIALS, QUANTITIES: POURED .5 BAG CEMENT; SHOVELED SOIL CUTTINGS

STANDARD ODOT SOIL BORING LOG (11 X 17) - OH DOT.GDT - 1/3/24 15:35 - X:\ACTIVE PROJECTS\ACTIVE SOIL PROJECTS\1ARCHIVE BY YEAR\2017 ARCHIVE\CUY-CCG3 82380\GINT FILES\CUY-CCG3 MASTER - LR UPDATED.GPJ

DESIGN AGENCY
EAS
2800 CORPORATE EXCHANGE DR. SUITE 240 COLUMBUS, OH. 43231
TEL:614.714.0299
WWW.NEASINC.COM

DESIGNER MW,J & DT
REVIEWER BPA 08/23/24
PROJECT ID 82382
SUBSET 249 TOTAL 310
SHEET P 2635 TOTAL 2696

GEOTECHNICAL PROFILE - ROADWAY
RAMP A3
BORING LOG B-164-0-14 (CONTINUED)

MODEL: Sheet PAPERSIZE: 34x22 (in.) DATE: 3/28/2025 TIME: 10:41:04 AM USER: Asiddiqi
pw:\\mb-us-pw.bentley.com:mb-us-pw-03\Documents\Cleveland_OH\01_Projects\ODOT\District12\82382\400-Engineering\Geotechnical\Sheets\82382_ZL136.dgn

STANDARD ODOT SOIL BORING LOG (8.5 X 11) - OH DOT.GDT - 1/3/24 15:20 - X:\ACTIVE PROJECTS\ACTIVE SOIL PROJECTS\1ARCHIVE BY YEAR\2017 ARCHIVE\CUY-CCG3 82380\GINT FILES\CU

PROJECT: CUY-CCG3 | DRILLING FIRM / OPERATOR: BARR / T.GILBERT | DRILL RIG: CME 45B | STATION / OFFSET: 579+39, 9' LT. | EXPLORATION ID B-165-0-14
TYPE: RETAINING WALL | SAMPLING FIRM / LOGGER: BARR / D.LYON | HAMMER: CME AUTOMATIC | ALIGNMENT: RAMP A3
PID: 82380 SFN: | DRILLING METHOD: 3.25" HSA | CALIBRATION DATE: 1/26/14 | ELEVATION: 692.6 (MSL) EOB: 61.5 ft. | PAGE 1 OF 2
START: 11/24/14 END: 11/24/14 | SAMPLING METHOD: SPT / ST | ENERGY RATIO (%): 77.4 | LAT / LONG: 41.495312, -81.681029

MATERIAL DESCRIPTION AND NOTES	ELEV.	DEPTHS	SPT/ RQD	N_{60}	REC (%)	SAMPLE ID	HP (tsf)	GRADATION (%) GR	CS	FS	SI	CL	ATTERBERG LL	PL	PI	WC	ODOT CLASS (GI)	BACK FILL
13.0", **CONCRETE**	692.6																	
MEDIUM DENSE, BROWN, **GRAVEL WITH SAND**, TRACE SILT, TRACE CLAY, DAMP **(FILL)**	691.5		6 10 10	26	94	SS-1	-	-	-	-	-	-	-	-	-	4	A-1-b (V)	
			7 8 9	22	89	SS-2	-	22	45	28	4	1	NP	NP	NP	4	A-1-b (0)	
			7 10 11	27	100	SS-3	-	-	-	-	-	-	-	-	-	4	A-1-b (V)	
			7 4 10	18	100	SS-4	-	-	-	-	-	-	-	-	-	5	A-1-b (V)	
	678.1		9 11 11	28	100	SS-5	-	-	-	-	-	-	-	-	-	6	A-1-b (V)	
DENSE TO VERY DENSE, BROWN, **COARSE AND FINE SAND**, SOME GRAVEL, LITTLE SILT, TRACE CLAY, DAMP **(FILL)**			21 30 30	77	100	SS-6	-	23	13	41	19	4	NP	NP	NP	9	A-3a (0)	
@17.5'; SS-7 CONTAINS CONCRETE FRAGMENTS			11 16 20	46	94	SS-7	-	-	-	-	-	-	-	-	-	10	A-3a (V)	
@20.0'; SS-8 CHANGES TO BROWN AND BLACK			17 24 22	59	89	SS-8	-	-	-	-	-	-	-	-	-	9	A-3a (V)	
	670.6																	
MEDIUM DENSE TO DENSE, BROWN, **COARSE AND FINE SAND**, LITTLE SILT, TRACE CLAY, TRACE GRAVEL, DAMP TO MOIST			5 5 5	13	100	SS-9	-	-	-	-	-	-	-	-	-	8	A-3a (V)	
			4 4 5	12	100	SS-10	-	4	8	60	19	9	NP	NP	NP	12	A-3a (0)	
			8 12 14	34	100	SS-11	-	-	-	-	-	-	-	-	-	4	A-3a (V)	

STANDARD ODOT SOIL BORING LOG (8.5 X 11) - OH DOT.GDT - 1/3/24 15:20 - X:\ACTIVE PROJECTS\ACTIVE SOIL PROJECTS\1ARCHIVE BY YEAR\2017 ARCHIVE\CUY-CCG3 82380\GINT FILES\CU

PID: 82380 | SFN: | PROJECT: CUY-CCG3 | STATION / OFFSET: 579+39, 9' LT. | START: 11/24/14 | END: 11/24/14 | PG 2 OF 2 | B-165-0-14

MATERIAL DESCRIPTION AND NOTES	ELEV.	DEPTHS	SPT/ RQD	N_{60}	REC (%)	SAMPLE ID	HP (tsf)	GRADATION (%) GR	CS	FS	SI	CL	ATTERBERG LL	PL	PI	WC	ODOT CLASS (GI)	BACK FILL
MEDIUM DENSE TO DENSE, BROWN, **COARSE AND FINE SAND**, LITTLE SILT, TRACE CLAY, TRACE GRAVEL, DAMP TO MOIST *(continued)*	662.6		6 5 4	12	89	SS-12	-	-	-	-	-	-	-	-	-	5	A-3a (V)	
	659.3																	
STIFF TO VERY STIFF, BROWN, **SILT AND CLAY**, TRACE SAND, TRACE GRAVEL, WET TO MOIST			2 2 4	8	94	SS-13	2.10	-	-	-	-	-	-	-	-	33	A-6a (V)	
@38.4'; UNIT WEIGHT: 124.3 PCF @ 24.7% MC	653.6				100	SS-14A	1.25	0	0	3	64	33	34	22	12	25	A-6a (9)	
MEDIUM DENSE, BROWN, **FINE SAND**, TRACE SILT, TRACE COARSE SAND, TRACE CLAY, TRACE GRAVEL, DAMP						SS-14B	-	0	3	87	8	2	NP	NP	NP	12	A-3 (0)	
			7 10 10	26	100	SS-15	-	-	-	-	-	-	-	-	-	6	A-3 (V)	
	649.3	W 649.6																
MEDIUM DENSE TO DENSE, BROWN, **COARSE AND FINE SAND**, LITTLE SILT, TRACE CLAY, TRACE GRAVEL, WET			7 7 5	15	50	SS-16	-	-	-	-	-	-	-	-	-	18	A-3a (V)	
@50.0'; SS-17 BECOMES GRAYISH BROWN			6 9 17	34	100	SS-17	-	0	1	79	18	2	NP	NP	NP	23	A-3a (0)	
	639.3																	
MEDIUM DENSE, GRAY, **SILT**, SOME SAND, TRACE CLAY, TRACE GRAVEL, WET			4 8 12	26	100	SS-18	-	-	-	-	-	-	-	-	-	25	A-4b (V)	
	631.1	EOB	5 9 12	27	100	SS-19	-	0	0	29	65	6	NP	NP	NP	26	A-4b (7)	

NOTES: GROUNDWATER ENCOUNTERED AT 43.0' DURING DRILLING, 48.0' UPON COMPLETION. CAVE DEPTH 49.0'.
ABANDONMENT METHODS, MATERIALS, QUANTITIES: PLACED .5 BAG ASPHALT PATCH; SHOVELED SOIL CUTTINGS

Preliminary Plans - For Reference Only

DESIGN AGENCY
EAS
2800 CORPORATE EXCHANGE DR. SUITE 240
COLUMBUS, OH. 43231
TEL:614.714.0299
WWW.NEASINC.COM

DESIGNER MWJ & DT
REVIEWER BPA 08/23/24
PROJECT ID 82382
SHEET 250 TOTAL 310
SHEET P.2636 TOTAL 2696

GEOTECHNICAL PROFILE - ROADWAY
RAMP A3
BORING LOG B-165-0-14

MODEL: Sheet PAPERSIZE: 34x22 (in.) DATE: 3/28/2025 TIME: 10:41:24 AM USER: Asiddiqi
pw:\\mb-us-pw.bentley.com:mb-us-pw-03\Documents\Cleveland_OH\01_Projects\ODOT\District12\82382\400-Engineering\Geotechnical\Sheets\82382_ZL137.dgn

Preliminary Plans - For Reference Only

PROJECT: CUY-CCG3
TYPE: RETAINING WALL
PID: 82380 SFN:
START: 11/24/14 END: 11/25/14

DRILLING FIRM / OPERATOR: BARR / P.STROUD
SAMPLING FIRM / LOGGER: BARR / C. PIERCE
DRILLING METHOD: 3.25" HSA
SAMPLING METHOD: SPT / ST

DRILL RIG: MOBILE B-58
HAMMER: MOBILE AUTOMATIC
CALIBRATION DATE: 1/26/14
ENERGY RATIO (%): 90*

STATION / OFFSET: 581+00, 22' LT.
ALIGNMENT: RAMP A3
ELEVATION: 687.0 (MSL) EOB: 61.5 ft.
LAT / LONG: 41.495547, -81.680532

EXPLORATION ID B-166-0-14

MATERIAL DESCRIPTION AND NOTES	ELEV.	DEPTHS	SPT/ RQD	N_{60}	REC (%)	SAMPLE ID	HP (tsf)	GRADATION (%) GR	CS	FS	SI	CL	ATTERBERG LL	PL	PI	WC	ODOT CLASS (GI)	BACK FILL
12.0", **CONCRETE**	687.0																	
12.0", **GRANULAR BASE**	686.0																	
MEDIUM DENSE, BROWN, **GRAVEL WITH SAND**, TRACE SILT, TRACE CLAY, DAMP **(FILL)**	685.0		12 8 8	24	78	SS-1	-	-	-	-	-	-	-	-	-	7	A-1-b (V)	
			21 6 7	20	56	SS-2	-	-	-	-	-	-	-	-	-	5	A-1-b (V)	
			6 7 7	21	100	SS-3	-	19	45	31	4	1	NP	NP	NP	5	A-1-b (0)	
		676.9																
			5 4 7	17	67	SS-4	-	-	-	-	-	-	-	-	-	5	A-1-b (V)	
@12.5'; SS-5 CHANGES TO GRAYISH BROWN	672.5		2 4 14	27	100	SS-5	-	38	34	21	5	2	NP	NP	NP	10	A-1-b (0)	
DENSE TO VERY DENSE, BROWN, **COARSE AND FINE SAND**, SOME SILT, LITTLE GRAVEL, LITTLE CLAY, DAMP TO MOIST **(POSSIBLE FILL)**			7 14 18	48	100	SS-6	-	-	-	-	-	-	-	-	-	9	A-3a (V)	
@17.5'; SS-7 CHANGES TO BROWN AND GRAY			18 35 42	116	100	SS-7	-	-	-	-	-	-	-	-	-	11	A-3a (V)	
MEDIUM DENSE TO DENSE, BROWN, **COARSE AND FINE SAND**, LITTLE SILT, TRACE CLAY, TRACE GRAVEL, DAMP	667.5		13 16 14	45	100	SS-8	-	5	10	68	12	5	NP	NP	NP	8	A-3a (0)	
			4 5 4	14	100	SS-9	-	-	-	-	-	-	-	-	-	9	A-3a (V)	
			5 8 8	24	100	SS-10	-	-	-	-	-	-	-	-	-	5	A-3a (V)	
MEDIUM DENSE, BROWN AND GRAY, **SILT**, LITTLE CLAY, TRACE SAND, TRACE GRAVEL, WET	660.0		2 4 4	12	100	SS-11	-	1	0	6	74	19	27	22	5	28	A-4b (8)	
BROWN AND GRAY, **SILT**, LITTLE CLAY, TRACE SAND, TRACE GRAVEL, WET	657.5				100	ST-12	-	0	0	2	87	11	NP	NP	NP	26	A-4b (8)	
@31.6'; UNIT WEIGHT: 126.6 PCF @ 25.6% MC	653.7																	
MEDIUM DENSE TO VERY DENSE, BROWN, **COARSE AND FINE SAND** LITTLE SILT, TRACE CLAY, TRACE GRAVEL, WET			4 4 8	18	100	SS-13	-	-	-	-	-	-	-	-	-	24	A-3a (V)	
@40.0'; SS-14 TO SS-17 BECOMES GRAYISH BROWN			4 5 12	26	100	SS-14	-	-	-	-	-	-	-	-	-	23	A-3a (V)	
			7 10 13	35	100	SS-15	-	0	2	80	15	3	NP	NP	NP	22	A-3a (0)	
			11 17 18	53	100	SS-16	-	-	-	-	-	-	-	-	-	20	A-3a (V)	
			4 8 14	33	100	SS-17	-	-	-	-	-	-	-	-	-	26	A-3a (V)	
	628.5																	
STIFF, GRAY, **SILT**, SOME CLAY, TRACE SAND, TRACE GRAVEL, MOIST																		

STANDARD ODOT SOIL BORING LOG (11 X 17) - OH DOT.GDT - 1/3/24 15:36 - X:\ACTIVE PROJECTS\ACTIVE SOIL PROJECTS\1ARCHIVE BY YEAR\2017 ARCHIVE\CUY-CCG3 82380\GINT FILES\CUY-CCG3 MASTER - LR UPDATED.GPJ

DESIGN AGENCY
2800 CORPORATE EXCHANGE DR. SUITE 240
COLUMBUS, OH. 43231
TEL:614.714.0299
WWW.NEASINC.COM

DESIGNER MWJ & DT
REVIEWER BPA 08/23/24
PROJECT ID 82382
SUBSET 251 TOTAL 310
SHEET P 2637 TOTAL 2696

GEOTECHNICAL PROFILE - ROADWAY
WALL AC
BORING LOG B-166-0-14

MODEL: Sheet PAPERSIZE: 34x22 (in.) DATE: 3/28/2025 TIME: 10:41:54 AM USER: Asiddiqi
pw:\\mb-us-pw.bentley.com:mb-us-pw-03\Documents\Cleveland_OH\01_Projects\ODOT\District12\82382\400-Engineering\Geotechnical\Sheets\82382_ZL138.dgn

PID: 82380 | SFN: | PROJECT: CUY-CCG3 | STATION / OFFSET: 581+00, 22' LT. | START: 11/24/14 | END: 11/25/14 | PG 2 OF 2 | B-166-0-14

MATERIAL DESCRIPTION AND NOTES	ELEV.	DEPTHS	SPT/ RQD	N_{60}	REC (%)	SAMPLE ID	HP (tsf)	GRADATION (%) GR	CS	FS	SI	CL	ATTERBERG LL	PL	PI	WC	ODOT CLASS (GI)	BACK FILL
STIFF, GRAY, **SILT**, SOME CLAY, TRACE SAND, TRACE GRAVEL, MOIST *(continued)*	625.5	EOB 61	5 6 6	18	100	SS-18	1.30	0	0	6	71	23	26	18	8	20	A-4b (8)	

Preliminary Plans - For Reference Only

NOTES: GROUNDWATER ENCOUNTERED AT 10.1' DURING DRILLING, 10.0' UPON COMPLETION. CAVE DEPTH 19.9'.
ABANDONMENT METHODS, MATERIALS, QUANTITIES: SOIL MIXED WITH 1 BAG CEMENT

STANDARD ODOT SOIL BORING LOG (11 X 17) - OH DOT.GDT - 1/3/24 15:36 - X:\ACTIVE PROJECTS\ACTIVE SOIL PROJECTS\1ARCHIVE BY YEAR\2017 ARCHIVE\CUY-CCG3 82380\GINT FILES\CUY-CCG3 MASTER - LR UPDATED.GPJ

DESIGN AGENCY
EAS
2800 CORPORATE EXCHANGE DR. SUITE 240 COLUMBUS, OH. 43231
TEL:614.714.0299
WWW.NEASINC.COM

DESIGNER MW,J & DT
REVIEWER BPA 08/23/24
PROJECT ID 82382
SUBSET 252 TOTAL 310
SHEET P 2638 TOTAL 2696

GEOTECHNICAL PROFILE - ROADWAY
WALL AC
BORING LOG B-166-0-14 (CONTINUED)

MODEL: Sheet PAPERSIZE: 34x22 (in.) DATE: 3/28/2025 TIME: 10:42:09 AM USER: Asiddiqi
pw:\\mb-us-pw.bentley.com:mb-us-pw-03\Documents\Cleveland_OH\01_Projects\ODOT\District12\82382\400-Engineering\Geotechnical\Sheets\82382_ZL139.dgn

STANDARD ODOT SOIL BORING LOG (8.5 X 11) - OH DOT.GDT - 6/22/22 14:21 - X:\ACTIVE PROJECTS\ACTIVE SOIL PROJECTS\1ARCHIVE BY YEAR\2017 ARCHIVE\CUY-CCG3 82380\GINT FILES

PROJECT: CUY-CCG3 | DRILLING FIRM / OPERATOR: BARR / P.STROUD | DRILL RIG: MOBILE B-58 | STATION / OFFSET: 204+04, 92' LT. | EXPLORATION ID B-167-0-14
TYPE: RETAINING WALL | SAMPLING FIRM / LOGGER: BARR / C. PIERCE | HAMMER: MOBILE AUTOMATIC | ALIGNMENT: IR-90 WB
PID: 82380 SFN: | DRILLING METHOD: 3.25" HSA | CALIBRATION DATE: 1/26/14 | ELEVATION: 671.9 (MSL) EOB: 61.5 ft. | PAGE 1 OF 2
START: 11/20/14 END: 11/21/14 | SAMPLING METHOD: SPT | ENERGY RATIO (%): 90* | LAT / LONG: 41.498878, -81.673419

MATERIAL DESCRIPTION AND NOTES	ELEV.	DEPTHS	SPT/RQD	N_{60}	REC (%)	SAMPLE ID	HP (tsf)	GRADATION (%) GR	CS	FS	SI	CL	ATTERBERG LL	PL	PI	WC	ODOT CLASS (GI)	BACK FILL
DENSE, GRAY, **GRAVEL WITH SAND**, TRACE SILT, TRACE CLAY, DAMP **(FILL)**	669.9	1	8 9 19	42	89	SS-1	-	46	22	21	8	3	NP	NP	NP	10	A-1-b (0)	
VERY DENSE, BROWN AND GRAY, **COARSE AND FINE SAND**, SOME SILT, LITTLE GRAVEL, TRACE CLAY, DAMP **(FILL)**	664.9	3	18 18 19	56	44	SS-2	-	-	-	-	-	-	-	-	-	8	A-3a (V)	
NO RECOVERY, **CONCRETE RUBBLE**, (DRILLERS DESCRIPTION OF CUTTINGS) **(FILL)**	662.4	5	5 25 33	87	50	SS-3	-	13	18	39	21	9	NP	NP	NP	9	A-3a (0)	
DENSE, BROWN, DARK GRAY, AND BLACK, **GRAVEL WITH SAND**, LITTLE SILT, TRACE CLAY, DAMP **(FILL)**	659.9	8			0	SS-4	-	-	-	-	-	-	-	-	-	-		
VERY DENSE, BROWN AND DARK GRAY, **SANDY SILT**, LITTLE GRAVEL, LITTLE CLAY, CONTAINS FEW BRICK FRAGMENTS, DAMP **(FILL)**	657.4	10	16 14 11	38	100	SS-5	-	-	-	-	-	-	-	-	-	10	A-1-b (V)	
VERY DENSE, BROWN, **SANDY SILT**, LITTLE GRAVEL, LITTLE CLAY, CONTAINS PETROLEUM ODOR, DAMP **(POSSIBLE FILL)**	654.9	13	15 19 22	62	100	SS-6	-	-	-	-	-	-	-	-	-	13	A-4a (V)	
MEDIUM DENSE, BROWN, **COARSE AND FINE SAND**, LITTLE SILT, LITTLE GRAVEL, TRACE CLAY, DAMP	647.4	15	16 16 19	53	100	SS-7	-	-	-	-	-	-	-	-	-	11	A-4a (V)	
		18	6 8 10	27	100	SS-8	-	11	14	55	15	5	NP	NP	NP	10	A-3a (0)	
		W 651.9 20	5 7 9	24	100	SS-9	-	-	-	-	-	-	-	-	-	9	A-3a (V)	
		23	4 5 5	15	100	SS-10	-	-	-	-	-	-	-	-	-	5	A-3a (V)	
MEDIUM DENSE, BROWN, **SILT**, LITTLE CLAY, TRACE SAND, TRACE GRAVEL, WET	644.9	25	3 3 5	12	100	SS-11	-	5	4	6	70	15	NP	NP	NP	23	A-4b (8)	
MEDIUM DENSE, BROWN, **FINE SAND**, TRACE SILT, TRACE COARSE SAND, TRACE CLAY, TRACE GRAVEL, DAMP		28	3 4 6	15	100	SS-12	-	-	-	-	-	-	-	-	-	11	A-3 (V)	

PID: 82380 | SFN: | PROJECT: CUY-CCG3 | STATION / OFFSET: 204+04, 92' LT. | START: 11/20/14 | END: 11/21/14 | PG 2 OF 2 | B-167-0-14

MATERIAL DESCRIPTION AND NOTES	ELEV.	DEPTHS	SPT/RQD	N_{60}	REC (%)	SAMPLE ID	HP (tsf)	GRADATION (%) GR	CS	FS	SI	CL	ATTERBERG LL	PL	PI	WC	ODOT CLASS (GI)	BACK FILL
MEDIUM DENSE, BROWN, **FINE SAND**, TRACE SILT, TRACE COARSE SAND, TRACE CLAY, TRACE GRAVEL, DAMP *(continued)*	641.9	31	5 8 10	27	100	SS-13	-	-	-	-	-	-	-	-	-	6	A-3 (V)	
@35.0'; SS-14 BECOMES GRAYISH BROWN, WET	633.6	35	4 4 6	15	100	SS-14	-	0	3	91	4	2	NP	NP	NP	24	A-3 (0)	
MEDIUM DENSE, GRAYISH BROWN, **COARSE AND FINE SAND**, TRACE GRAVEL, TRACE SILT, TRACE CLAY, WET TO MOIST		40	3 3 7	15	100	SS-15	-	-	-	-	-	-	-	-	-	45	A-3a (V)	
		45	3 5 7	18	100	SS-16	-	-	-	-	-	-	-	-	-	22	A-3a (V)	
@50.0'; SS-17 BECOMES DENSE, SOME SILT	618.6	50	8 11 14	38	100	SS-17	-	-	-	-	-	-	-	-	-	15	A-3a (V)	
MEDIUM DENSE TO DENSE, GRAYISH BROWN, **SILT**, LITTLE CLAY, TRACE SAND, TRACE GRAVEL, MOIST		55	9 11 10	32	100	SS-18	-	-	-	-	-	-	-	-	-	25	A-4b (V)	
	610.4 EOB	60	4 7 7	21	100	SS-19	-	0	0	5	78	17	25	20	5	22	A-4b (8)	

NOTES: GROUNDWATER ENCOUNTERED AT 17.5' DURING DRILLING, DRY AFTER DRILLING. CAVE DEPTH 19.6'.
ABANDONMENT METHODS, MATERIALS, QUANTITIES: SHOVELED SOIL CUTTINGS

Preliminary Plans - For Reference Only

SHEET	TOTAL
P 2639	2696

SUBSET	TOTAL
253	310

PROJECT ID: 82382
REVIEWER: BPA 08/23/24
DESIGNER: MWJ & DT

DESIGN AGENCY
EAS
2800 CORPORATE EXCHANGE DR. SUITE 240
COLUMBUS, OH. 43231
TEL:614.714.0299
WWW.NEASINC.COM

GEOTECHNICAL PROFILE - ROADWAY
WALL AF EAST
BORING LOG B-167-0-14

MODEL: Sheet PAPERSIZE: 34x22 (in.) DATE: 3/28/2025 TIME: 10:42:30 AM USER: Asiddiqi
pw:\\mb-us-pw.bentley.com:mb-us-pw-03\Documents\Cleveland_OH\01_Projects\ODOT\District12\82382\400-Engineering\Geotechnical\Sheets\82382_ZL140.dgn

PROJECT: CUY-90-16.28 (CCG3A)
TYPE: RETAINING WALL
PID: 82382 SFN:
START: 3/9/21 END: 3/9/21

DRILLING FIRM / OPERATOR: NEAS / J. HODGES
SAMPLING FIRM / LOGGER: NEAS / J. HODGES
DRILLING METHOD: 3.25" HSA
SAMPLING METHOD: SPT

DRILL RIG: CME 75T
HAMMER: CME AUTOMATIC
CALIBRATION DATE: 5/1/19
ENERGY RATIO (%): 89

STATION / OFFSET: 55+66, 74' RT.
ALIGNMENT: CARNEGIE AVE
ELEVATION: 672.1 (MSL) EOB: 80.0 ft.
LAT / LONG: 41.499000, -81.673234

EXPLORATION ID B-168-1-20

MATERIAL DESCRIPTION AND NOTES	ELEV. 672.1	DEPTHS	SPT/ RQD	N_{60}	REC (%)	SAMPLE ID	HP (tsf)	GRADATION (%) GR	CS	FS	SI	CL	ATTERBERG LL	PL	PI	WC	ODOT CLASS (GI)	HOLE SEALED
3.0" ASPHALT (DRILLERS DESCRIPTION)	671.8																	
LOOSE TO MEDIUM DENSE, BROWN, **COARSE AND FINE SAND**, LITTLE SILT, TRACE CLAY, TRACE GRAVEL, SS-1 CONTAINS IRON STAINING, DAMP TO MOIST			6 4 3	10	56	SS-1	-	-	-	-	-	-	-	-	-	9	A-3a (V)	
			3 4 5	13	67	SS-2	-	-	-	-	-	-	-	-	-	10	A-3a (V)	
			4 6 5	16	44	SS-3	-	3	16	64	13	4	NP	NP	NP	9	A-3a (0)	
			2 3 5	12	100	SS-4	-	-	-	-	-	-	-	-	-	8	A-3a (V)	
			6 6 7	19	67	SS-5	-	2	11	69	14	4	NP	NP	NP	9	A-3a (0)	
			5 6 8	21	44	SS-6	-	-	-	-	-	-	-	-	-	7	A-3a (V)	
	654.1					SS-7A	-	-	-	-	-	-	-	-	-	12	A-3a (V)	
VERY STIFF, GRAY, **SILT AND CLAY**, TRACE SAND, TRACE GRAVEL, MOIST			1 4 5	13	100	SS-7B	2.25	-	-	-	-	-	-	-	-	25	A-6a (V)	
	652.6																	
MEDIUM DENSE TO DENSE, BROWN, **COARSE AND FINE SAND**, TRACE SILT, TRACE GRAVEL, TRACE CLAY, DAMP TO MOIST			5 7 7	21	39	SS-8	-	-	-	-	-	-	-	-	-	6	A-3a (V)	
			5 10 12	33	100	SS-9	-	0	4	82	12	2	NP	NP	NP	5	A-3a (0)	
			5 7 8	22	100	SS-10	-	-	-	-	-	-	-	-	-	15	A-3a (V)	
	645.1	W 644.6																
MEDIUM DENSE, GRAY, **COARSE AND FINE SAND** LITTLE TO SOME SILT, TRACE GRAVEL, TRACE CLAY, WET			2 5 7	18	100	SS-11	-	-	-	-	-	-	-	-	-	24	A-3a (V)	
			3 5 9	21	56	SS-12	-	-	-	-	-	-	-	-	-	27	A-3a (V)	
			4 4 7	16	89	SS-13	-	-	-	-	-	-	-	-	-	26	A-3a (V)	
	637.6																	
MEDIUM DENSE TO DENSE, GRAY, **COARSE AND FINE SAND**, TRACE SILT, TRACE GRAVEL, TRACE CLAY, WET			5 10 12	33	100	SS-14	-	-	-	-	-	-	-	-	-	26	A-3a (V)	
			4 7 14	31	100	SS-15	-	-	-	-	-	-	-	-	-	27	A-3a (V)	
			5 11 16	40	100	SS-16	-	-	-	-	-	-	-	-	-	23	A-3a (V)	
			3 9 12	31	100	SS-17	-	-	-	-	-	-	-	-	-	25	A-3a (V)	
			2 6 11	25	100	SS-18	-	-	-	-	-	-	-	-	-	22	A-3a (V)	
			5 7 9	24	100	SS-19	-	-	-	-	-	-	-	-	-	18	A-3a (V)	
	622.6																	
MEDIUM DENSE, GRAY, **FINE SAND**, SOME COARSE SAND, LITTLE SILT, TRACE CLAY, TRACE GRAVEL, WET	F.S.		8 8 10	27	100	SS-20	-	-	-	-	-	-	-	-	-	23	A-3 (V)	
	620.1																	
STIFF TO VERY STIFF, GRAY, **SILT**, SOME CLAY, TRACE SAND, TRACE GRAVEL, MOIST			6 4 5	13	100	SS-21	1.75	-	-	-	-	-	-	-	-	23	A-4b (V)	
			3 3 3	9	100	SS-22	2.00	1	0	7	60	32	29	19	10	21	A-4b (8)	
			3 4 6	15	100	SS-23	1.50	-	-	-	-	-	-	-	-	22	A-4b (V)	

Preliminary Plans - For Reference Only

STANDARD ODOT SOIL BORING LOG (11 X 17) - OH DOT.GDT - 6/22/22 18:21 - X:\ACTIVE PROJECTS\ACTIVE SOIL PROJECTS\CUY-90-16.28 (CCG3A - MOD#7)\IGINT FILES\CUY-90-16.28 (CCG3A).GPJ

DESIGN AGENCY
NEAS
2800 CORPORATE EXCHANGE DR. SUITE 240
COLUMBUS, OH. 43231
TEL:614.714.0299
WWW.NEASINC.COM

DESIGNER MW,J & DT
REVIEWER BPA 08/23/24
PROJECT ID 82382
SUBSET 254 TOTAL 310
SHEET P 2640 TOTAL 2696

GEOTECHNICAL PROFILE - ROADWAY
WALL AF EAST
BORING LOG B-168-1-20

MODEL: Sheet PAPERSIZE: 34x22 (in.) DATE: 3/28/2025 TIME: 10:43:00 AM USER: Asiddiqi
pw:\\mb-us-pw.bentley.com:mb-us-pw-03\Documents\Cleveland_OH\01_Projects\ODOT\District12\82382\400-Engineering\Geotechnical\Sheets\82382_ZL141.dgn

PID: 82382 | SFN: | PROJECT: CUY-90-16.28 (CCG3A) | STATION / OFFSET: 55+66, 74' RT. | START: 3/9/21 | END: 3/9/21 | PG 2 OF 2 | B-168-1-20

MATERIAL DESCRIPTION AND NOTES	ELEV.	DEPTHS	SPT/ RQD	N_{60}	REC (%)	SAMPLE ID	HP (tsf)	GRADATION (%) GR	CS	FS	SI	CL	ATTERBERG LL	PL	PI	WC	ODOT CLASS (GI)	HOLE SEALED
STIFF TO VERY STIFF, GRAY, **SILT**, SOME CLAY, TRACE SAND, TRACE GRAVEL, MOIST *(continued)*	612.1	61	3 6 8	21	100	SS-24	2.50	-	-	-	-	-	-	-	-	22	A-4b (V)	
	608.8	62–64																
MEDIUM STIFF, GRAY, **SILT AND CLAY**, TRACE SAND, TRACE GRAVEL, MOIST		65	0 4 6	15	100	SS-25	0.75	0	0	8	56	36	30	19	11	25	A-6a (8)	
	603.8	66–68																
VERY STIFF, GRAY, **SILT**, SOME CLAY, TRACE SAND, TRACE GRAVEL, MOIST		69																
		70	6 4 5	13	100	SS-26	3.75	-	-	-	-	-	-	-	-	22	A-4b (V)	
		71–74																
		75	5 4 5	13	100	SS-27	3.00	0	0	2	65	33	29	20	9	22	A-4b (8)	
		76–78																
	592.1	79	6 6 4	15	100	SS-28	2.25	-	-	-	-	-	-	-	-	23	A-4b (V)	
		EOB 80																

NOTES: GROUNDWATER ENCOUNTERED AT 27.5' DURING DRILLING. HOLE DID NOT CAVE.
ABANDONMENT METHODS, MATERIALS, QUANTITIES: PUMPED 180 GAL. BENTONITE GROUT

Preliminary Plans - For Reference Only

STANDARD ODOT SOIL BORING LOG (11 X 17) - OH DOT.GDT - 6/22/22 18:21 - X:\ACTIVE PROJECTS\ACTIVE SOIL PROJECTS\CUY-90-16.28 (CCG3A - MOD#7)\GINT FILES\CUY-90-16.28 (CCG3A).GPJ

DESIGN AGENCY
EAS
2800 CORPORATE EXCHANGE DR. SUITE 240
COLUMBUS, OH. 43231
TEL:614.714.0299
WWW.AEASINC.COM

DESIGNER MWJ & DT
REVIEWER BPA 08/23/24
PROJECT ID 82382
SUBSET 255 TOTAL 310
SHEET P 2641 TOTAL 2696

GEOTECHNICAL PROFILE - ROADWAY
WALL AF EAST
BORING LOG B-168-1-20 (CONTINUED)

MODEL: Sheet PAPERSIZE: 34x22 (in.) DATE: 3/28/2025 TIME: 10:43:17 AM USER: Asiddiqi
pw:\\mb-us-pw.bentley.com:mb-us-pw-03\Documents\Cleveland_OH\01_Projects\ODOT\District12\82382\400-Engineering\Geotechnical\Sheets\82382_ZL142.dgn

PROJECT: CUY-CCG3
TYPE: RETAINING WALL
PID: 82380 SFN:
START: 11/18/14 END: 11/18/14

DRILLING FIRM / OPERATOR: BARR / T.GILBERT
SAMPLING FIRM / LOGGER: BARR / D.LYON
DRILLING METHOD: 3.25" HSA
SAMPLING METHOD: SPT / ST

DRILL RIG: CME 45B
HAMMER: CME AUTOMATIC
CALIBRATION DATE: 1/26/14
ENERGY RATIO (%): 77.4

STATION / OFFSET: 56+24, 53' RT.
ALIGNMENT: CARNEGIE AVE
ELEVATION: 671.9 (MSL) EOB: 61.0 ft.
LAT / LONG: 41.499079, -81.673039

EXPLORATION ID B-169-0-14

MATERIAL DESCRIPTION AND NOTES	ELEV. 671.9	DEPTHS	SPT/ RQD	N_{60}	REC (%)	SAMPLE ID	HP (tsf)	GRADATION (%) GR	CS	FS	SI	CL	ATTERBERG LL	PL	PI	WC	ODOT CLASS (GI)	BACK FILL
3.0", **ASPHALT**	671.7																	
MEDIUM DENSE, DARK BROWN, **COARSE AND FINE SAND**, LITTLE GRAVEL, LITTLE SILT, TRACE CLAY, CONTAINS BRICK FRAGMENTS, MOIST **(FILL)** @2.5'; SS-2 CHANGES TO BROWN	667.4		6 8 8	21	56	SS-1	-	14	23	43	13	7	NP	NP	NP	11	A-3a (0)	
			7 8 12	26	83	SS-2	-	-	-	-	-	-	-	-	-	11	A-3a (V)	
LOOSE TO MEDIUM DENSE, BROWN, **FINE SAND**, SOME COARSE SAND, TRACE GRAVEL, TRACE SILT, TRACE CLAY, DAMP			4 7 7	18	83	SS-3	-	-	-	-	-	-	-	-	-	7	A-3 (V)	
F,S			4 5 6	14	83	SS-4	-	-	-	-	-	-	-	-	-	5	A-3 (V)	
	659.9		3 4 4	10	72	SS-5	-	9	35	50	4	2	NP	NP	NP	5	A-3 (0)	
LOOSE TO MEDIUM DENSE, BROWN, **COARSE AND FINE SAND**, TRACE GRAVEL, TRACE SILT, TRACE CLAY, DAMP TO MOIST			3 4 4	10	89	SS-6	-	-	-	-	-	-	-	-	-	8	A-3a (V)	
			7 4 6	13	100	SS-7	-	-	-	-	-	-	-	-	-	15	A-3a (V)	
	654.9		3 5 4	12	78	SS-8	-	-	-	-	-	-	-	-	-	7	A-3 (V)	
LOOSE TO MEDIUM DENSE, BROWN, **FINE SAND**, TRACE SILT, TRACE CLAY, TRACE GRAVEL, TRACE COARSE SAND, DAMP			8 4 4	10	89	SS-9	-	-	-	-	-	-	-	-	-	4	A-3 (V)	
@22.5'; SS-10 BECOMES DENSE			9 15 18	43	94	SS-10	-	1	1	89	6	3	NP	NP	NP	5	A-3 (0)	
F,S																		
@25.0'; SS-11 TO SS-13 BECOME MEDIUM DENSE			8 9 8	22	94	SS-11	-	-	-	-	-	-	-	-	-	5	A-3 (V)	
			7 6 11	22	100	SS-12	-	-	-	-	-	-	-	-	-	10	A-3 (V)	
@30.0'; SS-13 CONTAINS NO RECOVERY			5 4 8	15	0	SS-13	-	-	-	-	-	-	-	-	-	-		
	639.9	▼																
MEDIUM DENSE TO DENSE, GRAY, **SANDY SILT**, TRACE CLAY, TRACE GRAVEL, MOIST TO WET		W 638.5																
			8 11 16	35	100	SS-14	-	-	-	-	-	-	-	-	-	22	A-4a (V)	
			4 7 11	23	100	SS-15	-	-	-	-	-	-	-	-	-	24	A-4a (V)	
			7 11 14	32	100	SS-16	-	-	-	-	-	-	-	-	-	26	A-4a (V)	
					100	ST-17	-	0	1	61	32	6	NP	NP	NP	23	A-4a (1)	
	622.4																	
VERY STIFF, GRAY, **SILT**, SOME CLAY, TRACE SAND, TRACE GRAVEL, DAMP TO MOIST			10 7 8	19	100	SS-18	-	-	-	-	-	-	-	-	-	21	A-4b (V)	
			5 6 11	22	100	SS-19	3.75	0	0	2	69	29	29	19	10	18	A-4b (8)	
			6															

Preliminary Plans - For Reference Only

STANDARD ODOT SOIL BORING LOG (11 X 17) - OH DOT.GDT - 1/3/24 15:36 - X:\ACTIVE PROJECTS\ACTIVE SOIL PROJECTS\1ARCHIVE BY YEAR\2017 ARCHIVE\CUY-CCG3 82380\GINT FILES\CUY-CCG3 MASTER - LR UPDATED.GPJ

SHEET	TOTAL
P 2642	2696

SUBSET	TOTAL
256	310

PROJECT ID: 82382

REVIEWER: BPA 08/23/24

DESIGNER: MWJ & DT

DESIGN AGENCY
2800 CORPORATE EXCHANGE DR. SUITE 240
COLUMBUS, OH. 43231
TEL: 614.714.0299
WWW.NEASINC.COM

GEOTECHNICAL PROFILE - ROADWAY
WALL AF EAST
BORING LOG B-169-0-14

MODEL: Sheet PAPERSIZE: 34x22 (in.) DATE: 3/28/2025 TIME: 10:43:42 AM USER: Asiddiqi
pw:\\mb-us-pw.bentley.com:mb-us-pw-03\Documents\Cleveland_OH\01_Projects\ODOT\District12\82382\400-Engineering\Geotechnical\Sheets\82382_ZL143.dgn

Preliminary Plans - For Reference Only

PID: 82380 | SFN: | PROJECT: CUY-CCG3 | STATION / OFFSET: 56+24, 53' RT. | START: 11/18/14 | END: 11/18/14 | PG 2 OF 2 | B-169-0-14

MATERIAL DESCRIPTION AND NOTES	ELEV.	DEPTHS	SPT/ RQD	N_{60}	REC (%)	SAMPLE ID	HP (tsf)	GRADATION (%) GR	CS	FS	SI	CL	ATTERBERG LL	PL	PI	WC	ODOT CLASS (GI)	BACK FILL
	611.9																	
	610.9	EOB 61	8 8	21	100	SS-20	2.10	-	-	-	-	-	-	-	-	22	A-4b (V)	

NOTES: GROUNDWATER ENCOUNTERED AT 33.4' DURING DRILLING, 32.0' UPON COMPLETION. CAVE DEPTH 28.9'.
ABANDONMENT METHODS, MATERIALS, QUANTITIES: PLACED .25 BAG ASPHALT PATCH; SHOVELED SOIL CUTTINGS

STANDARD ODOT SOIL BORING LOG (11 X 17) - OH DOT.GDT - 1/3/24 15:36 - X:\ACTIVE PROJECTS\ACTIVE SOIL PROJECTS\1ARCHIVE BY YEAR\2017 ARCHIVE\CUY-CCG3 82380\GINT FILES\CUY-CCG3 MASTER - LR UPDATED.GPJ

DESIGN AGENCY
EAS
2800 CORPORATE EXCHANGE DR. SUITE 240
COLUMBUS, OH. 43231
TEL:614.714.0299
WWW.NEASINC.COM

DESIGNER MW,J & DT
REVIEWER BPA 08/23/24
PROJECT ID 82382
SUBSET 257 TOTAL 310
SHEET P 2643 TOTAL 2696

GEOTECHNICAL PROFILE - ROADWAY
WALL AF EAST
BORING LOG B-169-0-14 (CONTINUED)

MODEL: Sheet PAPERSIZE: 34x22 (in.) DATE: 3/28/2025 TIME: 10:43:57 AM USER: Asiddiqi
pw:\\mb-us-pw.bentley.com:mb-us-pw-03\Documents\Cleveland_OH\01_Projects\ODOT\District12\82382\400-Engineering\Geotechnical\Sheets\82382_ZL144.dgn

PROJECT: CUY-90-16.28 (CCG3A)
TYPE: RETAINING WALL
PID: 82382 SFN:
START: 3/8/21 END: 3/8/21

DRILLING FIRM / OPERATOR: NEAS / J. HODGES
SAMPLING FIRM / LOGGER: NEAS / J. HODGES
DRILLING METHOD: 3.25" HSA
SAMPLING METHOD: SPT

DRILL RIG: CME 75T
HAMMER: CME AUTOMATIC
CALIBRATION DATE: 5/1/19
ENERGY RATIO (%): 89

STATION / OFFSET: 204+60, 15' RT.
ALIGNMENT: IR-90 EB
ELEVATION: 645.2 (MSL) EOB: 85.0 ft.
LAT / LONG: 41.498665, -81.672360

EXPLORATION ID B-169-1-20
PAGE 1 OF 2

MATERIAL DESCRIPTION AND NOTES	ELEV.	DEPTHS	SPT/ RQD	N_{60}	REC (%)	SAMPLE ID	HP (tsf)	GRADATION (%) GR	CS	FS	SI	CL	ATTERBERG LL	PL	PI	WC	ODOT CLASS (GI)	HOLE SEALED
MEDIUM DENSE TO DENSE, BROWN AND BROWNISH GRAY, **COARSE AND FINE SAND**LITTLE SILT, TRACE CLAY, TRACE GRAVEL, CONTAINS TRACE IRON STAINING, MOIST TO WET	645.2		6 7 7	21	83	SS-1	-	-	-	-	-	-	-	-	-	22	A-3a (V)	
			5 7 8	22	100	SS-2	-	0	0	75	20	5	NP	NP	NP	25	A-3a (0)	
			5 6 10	24	100	SS-3	-	-	-	-	-	-	-	-	-	20	A-3a (V)	
			6 5 9	21	100	SS-4	-	-	-	-	-	-	-	-	-	25	A-3a (V)	
			4 10 12	33	100	SS-5	-	-	-	-	-	-	-	-	-	29	A-3a (V)	
		W 630.2	6 10 13	34	100	SS-6	-	-	-	-	-	-	-	-	-	24	A-3a (V)	
	628.2																	
DENSE, BROWNISH GRAY, **COARSE AND FINE SAND** LITTLE TO SOME SILT, TRACE CLAY, TRACE GRAVEL, WET			7 10 12	33	100	SS-7	-	-	-	-	-	-	-	-	-	27	A-3a (V)	
			6 10 13	34	100	SS-8	-	-	-	-	-	-	-	-	-	29	A-3a (V)	
	623.2																	
STIFF TO HARD, GRAY AND BROWNISH GRAY, **SILT**, SOME CLAY, TRACE SAND, TRACE GRAVEL, MOIST TO WET			1 3 4	10	100	SS-9	1.75	-	-	-	-	-	-	-	-	29	A-4b (V)	
			2 2 4	9	100	SS-10	1.50	0	0	3	62	35	27	20	7	26	A-4b (8)	
			2 3 4	10	100	SS-11	1.50	-	-	-	-	-	-	-	-	24	A-4b (V)	
			1 2 4	9	100	SS-12	4.25	-	-	-	-	-	-	-	-	23	A-4b (V)	
			1 1 3	6	100	SS-13	2.75	-	-	-	-	-	-	-	-	25	A-4b (V)	
	610.7																	
STIFF TO VERY STIFF, GRAY, **SILT AND CLAY**, TRACE SAND, TRACE GRAVEL, MOIST			1 2 3	7	100	SS-14	1.25	0	1	1	53	45	32	21	11	25	A-6a (8)	
			2 2 5	10	100	SS-15	1.75	-	-	-	-	-	-	-	-	24	A-6a (V)	
			3 4 5	13	100	SS-16	1.50	-	-	-	-	-	-	-	-	23	A-6a (V)	
			4 5 7	18	100	SS-17	2.00	0	0	2	49	49	30	19	11	26	A-6a (8)	
			3 5 8	19	100	SS-18	2.00	-	-	-	-	-	-	-	-	24	A-6a (V)	
			2 4 5	13	100	SS-19	2.75	-	-	-	-	-	-	-	-	25	A-6a (V)	
			3 4 6	15	100	SS-20	2.75	0	0	1	45	54	32	21	11	25	A-6a (8)	
	586.9																	
VERY STIFF TO HARD, GRAY, **SILT**, "AND" CLAY, TRACE SAND, TRACE GRAVEL, MOIST TO DAMP																		

Preliminary Plans - For Reference Only

STANDARD ODOT SOIL BORING LOG (11 X 17) - OH DOT.GDT - 6/22/22 18:21 - X:\ACTIVE PROJECTS\ACTIVE SOIL PROJECTS\CUY-90-16.28 (CCG3A - MOD#7)\IGINT FILES\CUY-90-16.28 (CCG3A).GPJ

DESIGN AGENCY
NEAS
2800 CORPORATE EXCHANGE DR. SUITE 240
COLUMBUS, OH. 43231
TEL:614.714.0299
WWW.NEASINC.COM

DESIGNER MWJ & DT
REVIEWER BPA 08/23/24
PROJECT ID 82382
SHEET 258 TOTAL 310
SHEET P 2644 TOTAL 2696

GEOTECHNICAL PROFILE - ROADWAY
WALL AG
BORING LOG B-169-1-20

MODEL: Sheet PAPERSIZE: 34x22 (in.) DATE: 3/28/2025 TIME: 10:44:21 AM USER: Asiddiqi
pw:\\mb-us-pw.bentley.com:mb-us-pw-03\Documents\Cleveland_OH\01_Projects\ODOT\District12\82382\400-Engineering\Geotechnical\Sheets\82382_ZL145.dgn

PID: 82382 | SFN: | PROJECT: CUY-90-16.28 (CCG3A) | STATION / OFFSET: 204+60, 15' RT. | START: 3/8/21 | END: 3/8/21 | PG 2 OF 2 | B-169-1-20

MATERIAL DESCRIPTION AND NOTES	ELEV.	DEPTHS	SPT/ RQD	N_{60}	REC (%)	SAMPLE ID	HP (tsf)	GRADATION (%) GR	CS	FS	SI	CL	ATTERBERG LL	PL	PI	WC	ODOT CLASS (GI)	HOLE SEALED
VERY STIFF TO HARD, GRAY, **SILT**, "AND" CLAY, TRACE SAND, TRACE GRAVEL, MOIST TO DAMP *(continued)*	585.2	61	4 6 8	21	100	SS-21	4.00	-	-	-	-	-	-	-	-	22	A-4b (V)	
		65	5 6 8	21	100	SS-22	2.75	0	0	1	55	44	30	20	10	21	A-4b (8)	
		70	6 8 14	33	100	SS-23	2.25	-	-	-	-	-	-	-	-	21	A-4b (V)	
		75	7 8 16	36	100	SS-24	3.25	-	-	-	-	-	-	-	-	19	A-4b (V)	
		80	6 9 13	33	100	SS-25	4.50	-	-	-	-	-	-	-	-	19	A-4b (V)	
STIFF TO VERY STIFF, GRAY, **SILT AND CLAY**, TRACE SAND, TRACE GRAVEL, MOIST	562.7	84	7 10 14	36	100	SS-26	2.00	0	0	1	45	54	32	21	11	23	A-6a (8)	
	560.2	EOB																

NOTES: GROUNDWATER ENCOUNTERED AT 15.0' DURING DRILLING. HOLE DID NOT CAVE.
ABANDONMENT METHODS, MATERIALS, QUANTITIES: PUMPED 180 GAL. BENTONITE GROUT

Preliminary Plans - For Reference Only

STANDARD ODOT SOIL BORING LOG (11 X 17) - OH DOT.GDT - 6/22/22 18:21 - X:\ACTIVE PROJECTS\ACTIVE SOIL PROJECTS\CUY-90-16.28 (CCG3A - MOD#7)\IGINT FILES\CUY-90-16.28 (CCG3A).GPJ

DESIGN AGENCY
2800 CORPORATE EXCHANGE DR. SUITE 240
COLUMBUS, OH. 43231
TEL:614.714.0299
WWW.NEASINC.COM

DESIGNER MWJ & DT
REVIEWER BPA 08/23/24
PROJECT ID 82382
SUBSET 259 TOTAL 310
SHEET P 2645 TOTAL 2696

GEOTECHNICAL PROFILE - ROADWAY
WALL AG
BORING LOG B-169-1-20 (CONTINUED)

MODEL: Sheet PAPERSIZE: 34x22 (in.) DATE: 3/28/2025 TIME: 10:44:38 AM USER: Asiddiqi
pw:\\mb-us-pw.bentley.com:mb-us-pw-03\Documents\Cleveland_OH\01_Projects\ODOT\District12\82382\400-Engineering\Geotechnical\Sheets\82382_ZL146.dgn

PROJECT: CUY-90-16.28 (CCG3A)
TYPE: RETAINING WALL
PID: 82382 SFN:
START: 6/23/21 END: 6/23/21

DRILLING FIRM / OPERATOR: NEAS / ASHBAUGH
SAMPLING FIRM / LOGGER: NEAS / ASHBAUGH
DRILLING METHOD: 3.25" HSA
SAMPLING METHOD: SPT

DRILL RIG: CME 55T
HAMMER: CME AUTOMATIC
CALIBRATION DATE: 12/5/19
ENERGY RATIO (%): 68.4

STATION / OFFSET: 206+66, 42' LT.
ALIGNMENT: IR-90 WB
ELEVATION: 640.8 (MSL) EOB: 31.5 ft.
LAT / LONG: 41.499044, -81.672487

EXPLORATION ID B-169-2-20
PAGE 1 OF 1

MATERIAL DESCRIPTION AND NOTES	ELEV.	DEPTHS	SPT/ RQD	N_{60}	REC (%)	SAMPLE ID	HP (tsf)	GRADATION (%) GR	CS	FS	SI	CL	ATTERBERG LL	PL	PI	WC	ODOT CLASS (GI)	BACK FILL
8.5" ASPHALT AND 7.0" CONCRETE AND 9.5" BASE (DRILLERS DESCRIPTION)	640.8 / 638.7																	
LOOSE TO MEDIUM DENSE, BROWNISH GRAY, **SANDY SILT**, TRACE CLAY, TRACE GRAVEL, WET			5 8 10	21	67	SS-1	-	-	-	-	-	-	-	-	-	21	A-4a (V)	
			4 7 7	16	56	SS-2	-	-	-	-	-	-	-	-	-	21	A-4a (V)	
			5 5 4	10	56	SS-3	-	3	3	57	32	5	NP	NP	NP	23	A-4a (0)	
			4 6 8	16	67	SS-4	-	-	-	-	-	-	-	-	-	27	A-4a (V)	
		W 628.8																
			7 6 7	15	61	SS-5	-	-	-	-	-	-	-	-	-	26	A-4a (V)	
			6 7 9	18	89	SS-6	-	-	-	-	-	-	-	-	-	28	A-4a (V)	
			5 6 5	13	50	SS-7	-	-	-	-	-	-	-	-	-	21	A-4a (V)	
			4 5 7	14	56	SS-8	-	-	-	-	-	-	-	-	-	22	A-4a (V)	
	618.8																	
VERY STIFF, GRAY, **SILT**, SOME SAND, LITTLE CLAY, TRACE GRAVEL, MOIST			6 5 5	11	61	SS-9	4.00	0	6	18	57	19	23	18	5	20	A-4b (8)	
			7 9 9	21	67	SS-10	4.00	-	-	-	-	-	-	-	-	20	A-4b (V)	
	613.8																	
MEDIUM DENSE, GRAY, **COARSE AND FINE SAND** SOME SILT, TRACE CLAY, TRACE GRAVEL, MOIST			8 10 11	24	72	SS-11	-	-	-	-	-	-	-	-	-	18	A-3a (V)	
	611.3																	
VERY STIFF, GRAY, **SILT**, SOME CLAY, LITTLE SAND, TRACE GRAVEL, MOIST			7 6 10	18	78	SS-12	3.00	0	5	13	58	24	25	17	8	20	A-4b (8)	
	609.3	EOB																

NOTES: GROUNDWATER ENCOUNTERED AT 12.0' DURING DRILLING. HOLE DID NOT CAVE.
ABANDONMENT METHODS, MATERIALS, QUANTITIES: PLACED 0.5 BAG ASPHALT PATCH; POURED 1 BAG HOLE PLUG; SHOVELED SOIL CUTTINGS

Preliminary Plans - For Reference Only

STANDARD ODOT SOIL BORING LOG (11 X 17) - OH DOT.GDT - 6/22/22 18:21 - X:\ACTIVE PROJECTS\ACTIVE SOIL PROJECTS\CUY-90-16.28 (CCG3A - MOD#7)\IGINT FILES\CUY-90-16.28 (CCG3A).GPJ

DESIGN AGENCY
NEAS
2800 CORPORATE EXCHANGE DR. SUITE 240
COLUMBUS, OH. 43231
TEL:614.714.0299
WWW.NEASINC.COM

DESIGNER MWJ & DT
REVIEWER BPA 08/23/24
PROJECT ID 82382
SUBSET 260 TOTAL 310
SHEET P 2646 TOTAL 2696

GEOTECHNICAL PROFILE - ROADWAY
WALL AF EAST
BORING LOG B-169-2-20

MODEL: Sheet PAPERSIZE: 34x22 (in.) DATE: 3/28/2025 TIME: 10:44:59 AM USER: Asiddiqi
pw:\\mb-us-pw.bentley.com:mb-us-pw-03\Documents\Cleveland_OH\01_Projects\ODOT\District12\82382\400-Engineering\Geotechnical\Sheets\82382_ZL147.dgn

PROJECT: CUY-90-16.28 (CCG3A)
TYPE: RETAINING WALL
PID: 82382 SFN:
START: 5/21/21 END: 5/21/21

DRILLING FIRM / OPERATOR: NEAS / J. HODGES
SAMPLING FIRM / LOGGER: NEAS / J. HODGES
DRILLING METHOD: 3.25" HSA
SAMPLING METHOD: SPT

DRILL RIG: CME 75T
HAMMER: CME AUTOMATIC
CALIBRATION DATE: 5/1/19
ENERGY RATIO (%): 89

STATION / OFFSET: 205+22, 18' LT.
ALIGNMENT: IR-90 EB
ELEVATION: 646.3 (MSL) EOB: 30.5 ft.
LAT / LONG: 41.498821, -81.672206

EXPLORATION ID B-169-3-20
PAGE 1 OF 1

MATERIAL DESCRIPTION AND NOTES	ELEV. 646.3	DEPTHS	SPT/ RQD	N_{60}	REC (%)	SAMPLE ID	HP (tsf)	GRADATION (%) GR	CS	FS	SI	CL	ATTERBERG LL	PL	PI	WC	ODOT CLASS (GI)	BACK FILL
MEDIUM DENSE TO DENSE, BROWN BECOMING BROWNISH GRAY, **COARSE AND FINE SAND**LITTLE TO SOME SILT, TRACE GRAVEL, TRACE CLAY, DAMP TO MOIST			8 10 11	31	100	SS-1	-	-	-	-	-	-	-	-	-	9	A-3a (V)	
			7 10 12	33	100	SS-2	-	-	-	-	-	-	-	-	-	11	A-3a (V)	
@7.5'; BECOMES WET			5 7 10	25	44	SS-3	-	-	-	-	-	-	-	-	-	16	A-3a (V)	
			7 10 11	31	56	SS-4	-	-	-	-	-	-	-	-	-	28	A-3a (V)	
			3 8 9	25	100	SS-5	-	-	-	-	-	-	-	-	-	27	A-3a (V)	
			4 6 8	21	100	SS-6	-	-	-	-	-	-	-	-	-	24	A-3a (V)	
	626.8		8 9 13	33	89	SS-7	-	-	-	-	-	-	-	-	-	22	A-3a (V)	
MEDIUM DENSE TO DENSE, GRAY, **SILT**, SOME SAND, TRACE TO LITTLE CLAY, TRACE GRAVEL, CONTAINS TRACE IRON STAINING, WET			10 11 16	40	56	SS-8	-	1	0	30	65	4	NP	NP	NP	22	A-4b (7)	
	621.8		4 8 6	21	100	SS-9	-	1	1	21	62	15	NP	NP	NP	22	A-4b (8)	
VERY STIFF, GRAY, **SILT**, SOME CLAY, TRACE SAND, TRACE GRAVEL, CONTAINS TRACE IRON STAINING, MOIST			9 9 6	22	100	SS-10	3.00	-	-	-	-	-	-	-	-	23	A-4b (V)	
			9 8 10	27	100	SS-11	3.00	-	-	-	-	-	-	-	-	21	A-4b (V)	
	615.8	EOB	8 9 9	27	100	SS-12	2.75	0	1	7	65	27	29	20	9	21	A-4b (8)	

NOTES: GROUNDWATER NOT ENCOUNTERED DURING DRILLING. HOLE DID NOT CAVE.
ABANDONMENT METHODS, MATERIALS, QUANTITIES: POURED 1 BAG HOLE PLUG; SHOVELED SOIL CUTTINGS

Preliminary Plans - For Reference Only

STANDARD ODOT SOIL BORING LOG (11 X 17) - OH DOT.GDT - 6/22/22 18:21 - X:\ACTIVE PROJECTS\ACTIVE SOIL PROJECTS\CUY-90-16.28 (CCG3A - MOD#7)\IGINT FILES\CUY-90-16.28 (CCG3A).GPJ

DESIGN AGENCY
NEAS
2800 CORPORATE EXCHANGE DR. SUITE 240
COLUMBUS, OH. 43231
TEL:614.714.0299
WWW.NEASINC.COM

DESIGNER MWJ & DT
REVIEWER BPA 08/23/24
PROJECT ID 82382
SUBSET 261 TOTAL 310
SHEET P 2647 TOTAL 2696

GEOTECHNICAL PROFILE - ROADWAY
BRIDGE NO. CUY-90-1653R OVER EAST 14TH STREET
BORING LOG B-169-3-20

MODEL: Sheet PAPERSIZE: 34x22 (in.) DATE: 3/28/2025 TIME: 10:45:24 AM USER: Asiddiqi
pw:\\mb-us-pw.bentley.com:mb-us-pw-03\Documents\Cleveland_OH\01_Projects\ODOT\District12\82382\400-Engineering\Geotechnical\Sheets\82382_ZL148.dgn

PROJECT: CUY-90-16.28 (CCG3A)
TYPE: BRIDGE
PID: 82382 SFN: 1807898
START: 4/19/21 END: 4/19/21

DRILLING FIRM / OPERATOR: NEAS / ASHBAUGH
SAMPLING FIRM / LOGGER: NEAS / ASHBAUGH
DRILLING METHOD: 3.25" HSA
SAMPLING METHOD: SPT

DRILL RIG: CME 55T
HAMMER: CME AUTOMATIC
CALIBRATION DATE: 12/5/19
ENERGY RATIO (%): 68.4

STATION / OFFSET: 58+86, 5' LT.
ALIGNMENT: CARNEGIE AVE
ELEVATION: 669.8 (MSL) EOB: 121.5 ft.
LAT / LONG: 41.499345, -81.672124

EXPLORATION ID B-169-4-20

MATERIAL DESCRIPTION AND NOTES	ELEV. 669.8	DEPTHS	SPT/ RQD	N_{60}	REC (%)	SAMPLE ID	HP (tsf)	GRADATION (%) GR	CS	FS	SI	CL	ATTERBERG LL	PL	PI	WC	ODOT CLASS (GI)	HOLE SEALED
4.0" ASPHALT AND 6.0" CONCRETE (DRILLERS DESCRIPTION)	669.0																	
DENSE, BROWN AND BLACK, **GRAVEL AND STONE FRAGMENTS WITH SAND** LITTLE SILT, TRACE CLAY, CONTAINS CONCRETE AND ASPHALT FRAGMENTS, DAMP **(FILL)**	665.3		11 15 19	39	72	SS-1	-	-	-	-	-	-	-	-	-	10	A-1b (V)	
LOOSE TO MEDIUM DENSE, BROWN, **COARSE AND FINE SAND**, LITTLE SILT, TRACE GRAVEL, TRACE CLAY, CONTAINS RED BRICK FRAGMENTS, DAMP **(FILL)**			6 13 12	29	78	SS-2	-	-	-	-	-	-	-	-	-	6	A-3a (V)	
			7 7 6	15	83	SS-3	-	7	25	50	13	5	NP	NP	NP	7	A-3a (0)	
			5 9 9	21	67	SS-4	-	-	-	-	-	-	-	-	-	7	A-3a (V)	
			6 9 10	22	67	SS-5	-	10	21	49	14	6	NP	NP	NP	8	A-3a (0)	
			6 4 5	10	56	SS-6	-	-	-	-	-	-	-	-	-	8	A-3a (V)	
			7 6 7	15	78	SS-7	-	5	20	59	11	5	NP	NP	NP	6	A-3a (0)	
MEDIUM DENSE, LIGHT BROWN, **COARSE AND FINE SAND**, LITTLE SILT, TRACE CLAY, TRACE GRAVEL, DAMP TO MOIST	650.3		4 10 11	24	72	SS-8	-	-	-	-	-	-	-	-	-	5	A-3a (V)	
			6 11 10	24	61	SS-9	-	1	9	65	20	5	NP	NP	NP	8	A-3a (0)	
			7 11 11	25	83	SS-10	-	-	-	-	-	-	-	-	-	13	A-3a (V)	
@27.5'; BECOMES GRAY, WET		W 641.6	8 9 11	23	56	SS-11	-	-	-	-	-	-	-	-	-	25	A-3a (V)	
			8 10 11	24	67	SS-12	-	-	-	-	-	-	-	-	-	24	A-3a (V)	
			7 10 11	24	78	SS-13	-	-	-	-	-	-	-	-	-	26	A-3a (V)	
			7 9 12	24	72	SS-14	-	-	-	-	-	-	-	-	-	26	A-3a (V)	
			7 7 9	18	78	SS-15	-	-	-	-	-	-	-	-	-	24	A-3a (V)	
			4 5 8	15	72	SS-16	-	-	-	-	-	-	-	-	-	22	A-3a (V)	
			5 5 7	14	100	SS-17	-	-	-	-	-	-	-	-	-	23	A-3a (V)	
			6 7 7	16	100	SS-18	-	-	-	-	-	-	-	-	-	23	A-3a (V)	
	613.8		5 5 6	13	100	SS-19A	-	-	-	-	-	-	-	-	-	21	A-3a (V)	
STIFF TO VERY STIFF, GRAY, **SILT AND CLAY**, TRACE SAND, TRACE GRAVEL, MOIST						SS-19B	2.25	-	-	-	-	-	-	-	-	24	A-6a (V)	

Preliminary Plans - For Reference Only

STANDARD ODOT SOIL BORING LOG (11 X 17) - OH DOT.GDT - 1/3/24 14:19 - X:\ACTIVE PROJECTS\ACTIVE SOIL PROJECTS\1ARCHIVE BY YEAR\2022 ARCHIVE\CUY-90-16.28 (CCG3A - MOD#7\IGINT FILES\CUY-90-16.28 (CCG3A).GPJ

DESIGN AGENCY
NEAS
2800 CORPORATE EXCHANGE DR. SUITE 240
COLUMBUS, OH. 43231
TEL:614.714.0299
WWW.NEASINC.COM

DESIGNER MWJ & DT
REVIEWER BPA 08/23/24
PROJECT ID 82382
SHEET P 2648 TOTAL 2696
SUBSET 262 TOTAL 310

GEOTECHNICAL PROFILE - ROADWAY
WALL AH
BORING LOG B-169-4-20

MODEL: Sheet PAPERSIZE: 34x22 (in.) DATE: 3/28/2025 TIME: 10:45:53 AM USER: Asiddiqi
pw:\\mb-us-pw.bentley.com:mb-us-pw-03\Documents\Cleveland_OH\01_Projects\ODOT\District12\82382\400-Engineering\Geotechnical\Sheets\82382_ZL149.dgn

PID: 82382 | SFN: | PROJECT: CUY-90-16.28 (CCG3A) | STATION / OFFSET: 58+86, 5' LT. | START: 4/19/21 | END: 4/19/21 | PG 2 OF 2 | B-169-4-20

MATERIAL DESCRIPTION AND NOTES	ELEV.	DEPTHS	SPT/ RQD	N_{60}	REC (%)	SAMPLE ID	HP (tsf)	GRADATION (%) GR	CS	FS	SI	CL	ATTERBERG LL	PL	PI	WC	ODOT CLASS (GI)	HOLE SEALED
STIFF TO VERY STIFF, GRAY, **SILT AND CLAY**, TRACE SAND, TRACE GRAVEL, MOIST *(continued)*	609.8	61	6 7 6	15	94	SS-20	1.50	0	0	6	58	36	31	19	12	23	A-6a (9)	
		62–64																
		65–66	5 4 5	10	100	SS-21	1.25	-	-	-	-	-	-	-	-	23	A-6a (V)	
		67–69																
		70–71	3 3 4	8	100	SS-22	1.50	0	0	2	53	45	32	21	11	24	A-6a (8)	
		72–74																
		75–76	4 4 5	10	100	SS-23	1.75	-	-	-	-	-	-	-	-	23	A-6a (V)	
		77–79																
		80–81	6 7 9	18	100	SS-24	2.00	-	-	-	-	-	-	-	-	22	A-6a (V)	
		82–84																
		85–86	5 7 8	17	100	SS-25	1.75	0	0	2	59	39	32	20	12	26	A-6a (9)	
		87–89																
		90–91	7 6 7	15	100	SS-26	2.00	-	-	-	-	-	-	-	-	27	A-6a (V)	
		92–94																
		95–96	7 8 9	19	100	SS-27	2.25	-	-	-	-	-	-	-	-	26	A-6a (V)	
	571.5	97–99																
VERY STIFF TO HARD, GRAY, **SILT**, SOME TO "AND" CLAY, TRACE SAND, TRACE GRAVEL, DAMP TO MOIST		100–101	7 6 7	15	100	SS-28	4.50	0	0	0	64	36	29	20	9	20	A-4b (8)	
		102–104																
		105–106	6 8 6	16	100	SS-29	4.50	-	-	-	-	-	-	-	-	19	A-4b (V)	
		107–109																
		110–111	8 8 9	19	100	SS-30	2.25	0	1	3	52	44	29	19	10	23	A-4b (8)	
	556.5	112–114																
STIFF TO VERY STIFF, GRAY, **SILT AND CLAY**, TRACE SAND, TRACE GRAVEL, MOIST		115–116	7 9 9	21	100	SS-31	1.50	0	3	6	45	46	32	17	15	22	A-6a (10)	
		117–119																
	548.3	120–121	6 8 9	19	100	SS-32	3.00	-	-	-	-	-	-	-	-	24	A-6a (V)	
		EOB																

NOTES: GROUNDWATER ENCOUNTERED AT 28.2' DURING DRILLING. HOLE DID NOT CAVE.
ABANDONMENT METHODS, MATERIALS, QUANTITIES: PLACED 0.5 BAG ASPHALT PATCH; PUMPED 250 GAL. BENTONITE GROUT

Preliminary Plans - For Reference Only

STANDARD ODOT SOIL BORING LOG (11" X 17") - OH DOT.GDT - 1/3/24 14:19 - X:\ACTIVE PROJECTS\ACTIVE SOIL PROJECTS\1ARCHIVE BY YEAR\2022 ARCHIVE\CUY-90-16.28 (CCG3A - MOD#7)\GINT FILES\CUY-90-16.28 (CCG3A).GPJ

DESIGN AGENCY
2800 CORPORATE EXCHANGE DR. SUITE 240
COLUMBUS, OH. 43231
TEL: 614.714.0299
WWW.JNEASINC.COM

DESIGNER MWJ & DT
REVIEWER BPA 08/23/24
PROJECT ID 82382
SUBSET 263 TOTAL 310
SHEET P 2649 TOTAL 2696

GEOTECHNICAL PROFILE - ROADWAY
WALL AH
BORING LOG B-169-4-20 (CONTINUED)

MODEL: Sheet PAPERSIZE: 34x22 (in.) DATE: 3/28/2025 TIME: 10:46:12 AM USER: Asiddiqi
pw:\\mb-us-pw.bentley.com:mb-us-pw-03\Documents\Cleveland_OH\01_Projects\ODOT\District12\82382\400-Engineering\Geotechnical\Sheets\82382_ZL150.dgn

PROJECT: CUY-90-16.28 (CCG3A)
TYPE: RETAINING WALL
PID: 82382 SFN:
START: 3/5/21 END: 3/5/21

DRILLING FIRM / OPERATOR: NEAS / J. HODGES
SAMPLING FIRM / LOGGER: NEAS / J. HODGES
DRILLING METHOD: 3.25" HSA
SAMPLING METHOD: SPT

DRILL RIG: CME 75T
HAMMER: CME AUTOMATIC
CALIBRATION DATE: 5/1/19
ENERGY RATIO (%): 89

STATION / OFFSET: 208+55, 70' RT.
ALIGNMENT: IR-90 EB
ELEVATION: 660.9 (MSL) EOB: 85.0 ft.
LAT / LONG: 41.499109, -81.670990

EXPLORATION ID B-169-5-20
PAGE 1 OF 2

MATERIAL DESCRIPTION AND NOTES	ELEV.	DEPTHS	SPT/ RQD	N_{60}	REC (%)	SAMPLE ID	HP (tsf)	GRADATION (%) GR	CS	FS	SI	CL	ATTERBERG LL	PL	PI	WC	ODOT CLASS (GI)	HOLE SEALED
8.0" ASPHALT AND 6.0" BASE (DRILLERS DESCRIPTION)	659.7																	
LOOSE TO MEDIUM DENSE, BROWN, **COARSE AND FINE SAND**, LITTLE SILT, TRACE GRAVEL, TRACE CLAY, CONTAINS TRACE IRON STAINING, DAMP TO MOIST			12 6 8	21	100	SS-1	-	-	-	-	-	-	-	-	-	10	A-3a (V)	
			14 5 4	13	100	SS-2	-	9	24	45	14	8	NP	NP	NP	10	A-3a (0)	
	652.4		3 2 3	7	100	SS-3A	-	-	-	-	-	-	-	-	-	15	A-3a (V)	
STIFF TO VERY STIFF, BROWNISH GRAY, **SILT AND CLAY**, TRACE SAND, TRACE GRAVEL, MOIST TO WET						SS-3B	1.75	-	-	-	-	-	-	-	-	28	A-6a (V)	
	650.4					SS-4A	2.00	-	-	-	-	-	-	-	-	24	A-6a (V)	
LOOSE TO DENSE, BROWNISH GRAY BECOMING GRAY, **COARSE AND FINE SAND** TRACE TO LITTLE GRAVEL, LITTLE SILT, TRACE CLAY, DAMP TO MOIST			2 2 6	12	100	SS-4B	-	-	-	-	-	-	-	-	-	9	A-3a (V)	
			3 5 10	22	89	SS-5	-	-	-	-	-	-	-	-	-	4	A-3a (V)	
			2 2 4	9	67	SS-6	-	-	-	-	-	-	-	-	-	14	A-3a (V)	
@17.5'; BECOMES WET		W 643.4	2 5 7	18	78	SS-7	-	-	-	-	-	-	-	-	-	24	A-3a (V)	
			2 4 8	18	100	SS-8	-	-	-	-	-	-	-	-	-	28	A-3a (V)	
			2 2 4	9	100	SS-9	-	-	-	-	-	-	-	-	-	28	A-3a (V)	
			2 3 5	12	100	SS-10	-	-	-	-	-	-	-	-	-	27	A-3a (V)	
			9 10 13	34	100	SS-11	-	-	-	-	-	-	-	-	-	21	A-3a (V)	
			10 10 14	36	100	SS-12	-	-	-	-	-	-	-	-	-	21	A-3a (V)	
			5 6 7	19	100	SS-13	-	-	-	-	-	-	-	-	-	22	A-3a (V)	
			5 7 9	24	100	SS-14	-	-	-	-	-	-	-	-	-	22	A-3a (V)	
	621.4		5 8 12	30	100	SS-15	-	-	-	-	-	-	-	-	-	21	A-3a (V)	
DENSE, GRAY, **SANDY SILT**, TRACE CLAY, TRACE GRAVEL, WET			7 10 14	36	100	SS-16	-	0	0	45	45	10	NP	NP	NP	19	A-4a (4)	
	618.9																	
MEDIUM STIFF TO HARD, GRAY, **SILT**, "AND" CLAY, TRACE SAND, TRACE GRAVEL, MOIST TO WET			3 3 4	10	100	SS-17	2.50	-	-	-	-	-	-	-	-	27	A-4b (V)	
			3 4 6	15	100	SS-18	1.25	0	0	4	54	42	28	18	10	23	A-4b (8)	
			2 3 3	9	100	SS-19	0.75	-	-	-	-	-	-	-	-	29	A-4b (V)	
			1 2 3	7	100	SS-20	1.00	0	0	1	57	42	29	19	10	24	A-4b (8)	

Preliminary Plans - For Reference Only

STANDARD ODOT SOIL BORING LOG (11 X 17) - OH DOT.GDT - 6/22/22 18:22 - X:\ACTIVE PROJECTS\ACTIVE SOIL PROJECTS\CUY-90-16.28 (CCG3A - MOD#7)\IGINT FILES\CUY-90-16.28 (CCG3A).GPJ

DESIGN AGENCY
NEAS
2800 CORPORATE EXCHANGE DR. SUITE 240
COLUMBUS, OH. 43231
TEL:614.714.0299
WWW.NEASINC.COM

DESIGNER MWJ & DT
REVIEWER BPA 08/23/24
PROJECT ID 82382
SUBSET 264 TOTAL 310
SHEET P 2650 TOTAL 2696

GEOTECHNICAL PROFILE - ROADWAY
WALL AG
BORING LOG B-169-5-20

MODEL: Sheet PAPERSIZE: 34x22 (in.) DATE: 3/28/2025 TIME: 10:46:39 AM USER: Asiddiqi
pw:\\mb-us-pw.bentley.com:mb-us-pw-03\Documents\Cleveland_OH\01_Projects\ODOT\District12\82382\400-Engineering\Geotechnical\Sheets\82382_ZL151.dgn

PID: 82382 | SFN: | PROJECT: CUY-90-16.28 (CCG3A) | STATION / OFFSET: 208+55, 70' RT. | START: 3/5/21 | END: 3/5/21 | PG 2 OF 2 | B-169-5-20

MATERIAL DESCRIPTION AND NOTES	ELEV.	DEPTHS	SPT/ RQD	N_{60}	REC (%)	SAMPLE ID	HP (tsf)	GRADATION (%) GR	CS	FS	SI	CL	ATTERBERG LL	PL	PI	WC	ODOT CLASS (GI)	HOLE SEALED
MEDIUM STIFF TO HARD, GRAY, **SILT**, "AND" CLAY, TRACE SAND, TRACE GRAVEL, MOIST TO WET *(continued)*	600.9	61	2 5 5	15	100	SS-21	2.00	-	-	-	-	-	-	-	-	21	A-4b (V)	
		65	3 6 6	18	100	SS-22	2.75	0	0	1	56	43	28	18	10	22	A-4b (8)	
		70	4 7 10	25	100	SS-23	4.25	-	-	-	-	-	-	-	-	22	A-4b (V)	
		75	5 11 13	36	100	SS-24	3.25	0	0	1	63	36	27	20	7	22	A-4b (8)	
		80	4 6 7	19	100	SS-25	3.25	-	-	-	-	-	-	-	-	24	A-4b (V)	
		84	5 5 6	16	100	SS-26	3.00	0	0	1	53	46	28	20	8	26	A-4b (8)	
	575.9	EOB 85																

NOTES: GROUNDWATER ENCOUNTERED AT 17.5' DURING DRILLING. HOLE DID NOT CAVE.
ABANDONMENT METHODS, MATERIALS, QUANTITIES: PUMPED 180 GAL. BENTONITE GROUT

Preliminary Plans - For Reference Only

STANDARD ODOT SOIL BORING LOG (11 X 17) - OH DOT.GDT - 6/22/22 18:22 - X:\ACTIVE PROJECTS\ACTIVE SOIL PROJECTS\CUY-90-16.28 (CCG3A - MOD#7)\IGINT FILES\CUY-90-16.28 (CCG3A).GPJ

DESIGN AGENCY
2800 CORPORATE EXCHANGE DR. SUITE 240
COLUMBUS, OH. 43231
TEL:614.714.0299
WWW.NEASINC.COM

DESIGNER MW,J & DT
REVIEWER BPA 08/23/24
PROJECT ID 82382
SHEET 265 TOTAL 310
SHEET P 2651 TOTAL 2696

GEOTECHNICAL PROFILE - ROADWAY
WALL AG
BORING LOG B-169-5-20 (CONTINUED)

MODEL: Sheet PAPERSIZE: 34x22 (in.) DATE: 3/28/2025 TIME: 10:46:56 AM USER: Asiddiqi
pw:\\mb-us-pw.bentley.com:mb-us-pw-03\Documents\Cleveland_OH\01_Projects\ODOT\District12\82382\400-Engineering\Geotechnical\Sheets\82382_ZL152.dgn

STANDARD ODOT SOIL BORING LOG (8.5 X 11) - OH DOT.GDT - 6/22/22 13:28 - X:\ACTIVE PROJECTS\ACTIVE SOIL PROJECTS\CUY-90-16.28 (CCG3A - MOD#7)\GINT FILES\CUY-90-16.28 (CCG3A

PROJECT: CUY-90-16.28 (CCG3A)
TYPE: RETAINING WALL
PID: 82382 SFN:
START: 6/1/21 END: 6/1/21

DRILLING FIRM / OPERATOR: NEAS / J. HODGES
SAMPLING FIRM / LOGGER: NEAS / J. HODGES
DRILLING METHOD: 3.25" HSA
SAMPLING METHOD: SPT

DRILL RIG: CME 55X
HAMMER: CME AUTOMATIC
CALIBRATION DATE: 12/5/19
ENERGY RATIO (%): 81.9

STATION / OFFSET: 210+46, 170' LT.
ALIGNMENT: IR-90 WB
ELEVATION: 670.2 (MSL) EOB: 25.5 ft.
LAT / LONG: 41.499871, -81.671684

EXPLORATION ID B-169-6-20

PAGE 1 OF 1

MATERIAL DESCRIPTION AND NOTES	ELEV. 670.2	DEPTHS	SPT/ RQD	N_{60}	REC (%)	SAMPLE ID	HP (tsf)	GRADATION (%) GR	CS	FS	SI	CL	ATTERBERG LL	PL	PI	WC	ODOT CLASS (GI)	BACK FILL
7.0" ASPHALT (DRILLERS DESCRIPTION)	669.6																	
MEDIUM DENSE, BROWN, **GRAVEL AND STONE FRAGMENTS WITH SAND AND SILT**, TRACE CLAY, CONTAINS TRACE BRICK, SLAG, AND GLASS FRAGMENTS, DAMP **(FILL)**		1																
		2																
		3	9 7 5	16	100	SS-1	-	-	-	-	-	-	-	-	-	13	A-2-4 (V)	
	665.7	4																
LOOSE TO MEDIUM DENSE, BROWN, **FINE SAND**, TRACE SILT, TRACE COARSE SAND, TRACE CLAY, TRACE GRAVEL, DAMP TO MOIST		5	5 4 3	10	100	SS-2	-	-	-	-	-	-	-	-	-	6	A-3 (V)	
		6																
		7																
		8	3 4 4	11	100	SS-3	-	-	-	-	-	-	-	-	-	7	A-3 (V)	
		9																
		10																
		11	4 3 3	8	100	SS-4	-	0	2	91	6	1	NP	NP	NP	8	A-3 (0)	
		12																
	655.7	13	3 3 4	10	100	SS-5	-	-	-	-	-	-	-	-	-	12	A-3 (V)	
MEDIUM DENSE TO DENSE, GRAY, **COARSE AND FINE SAND**, TRACE TO LITTLE SILT, TRACE TO LITTLE GRAVEL, TRACE CLAY, MOIST TO DAMP		14																
		15																
		16	2 3 5	11	100	SS-6	-	-	-	-	-	-	-	-	-	22	A-3a (V)	
		17																
		18	4 7 9	22	100	SS-7	-	-	-	-	-	-	-	-	-	12	A-3a (V)	
		19																
		20																
		21	3 4 8	16	100	SS-8	-	11	9	65	12	3	NP	NP	NP	10	A-3a (0)	
		22																
		23	6 6 9	20	100	SS-9	-	-	-	-	-	-	-	-	-	4	A-3a (V)	
		24																
	644.7 EOB	25	5 10 14	33	100	SS-10	-	-	-	-	-	-	-	-	-	5	A-3a (V)	

NOTES: GROUNDWATER NOT ENCOUNTERED DURING DRILLING. HOLE DID NOT CAVE.
ABANDONMENT METHODS, MATERIALS, QUANTITIES: PLACED 0.5 BAG ASPHALT PATCH; SHOVELED SOIL CUTTINGS

Preliminary Plans - For Reference Only

SHEET	TOTAL
P 2652	2696

SUBSET	TOTAL
266	310

PROJECT ID: 82382

REVIEWER: BPA 08/23/24

DESIGNER: MWJ & DT

DESIGN AGENCY
NEAS
2800 CORPORATE EXCHANGE DR. SUITE 240
COLUMBUS, OH. 43231
TEL:614.714.0299
WWW.NEASINC.COM

GEOTECHNICAL PROFILE - ROADWAY
WALL AH
BORING LOG B-169-6-20

MODEL: Sheet PAPERSIZE: 34x22 (in.) DATE: 3/28/2025 TIME: 10:47:10 AM USER: Asiddiqi
pw:\\mb-us-pw.bentley.com:mb-us-pw-03\Documents\Cleveland_OH\01_Projects\ODOT\District12\82382\400-Engineering\Geotechnical\Sheets\82382_ZL153.dgn

PROJECT: CUY-90-16.28 (CCG3A)
TYPE: BRIDGE
PID: 82382 SFN: 1807898
START: 6/2/21 END: 6/3/21

DRILLING FIRM / OPERATOR: NEAS / J. HODGES
SAMPLING FIRM / LOGGER: NEAS / J. HODGES
DRILLING METHOD: 3.25" HSA
SAMPLING METHOD: SPT

DRILL RIG: CME 55X
HAMMER: CME AUTOMATIC
CALIBRATION DATE: 12/5/19
ENERGY RATIO (%): 81.9

STATION / OFFSET: 61+30, 46' RT.
ALIGNMENT: CARNEGIE AVE
ELEVATION: 669.8 (MSL) EOB: 135.0 ft.
LAT / LONG: 41.499322, -81.671213

EXPLORATION ID B-169-7-20
PAGE 1 OF 3

MATERIAL DESCRIPTION AND NOTES	ELEV.	DEPTHS	SPT/ RQD	N_{60}	REC (%)	SAMPLE ID	HP (tsf)	GRADATION (%) GR	CS	FS	SI	CL	ATTERBERG LL	PL	PI	WC	ODOT CLASS (GI)	HOLE SEALED
MEDIUM DENSE, ORANGISH BROWN, **COARSE AND FINE SAND**, LITTLE GRAVEL, TRACE SILT, TRACE CLAY, CONTAINS IRON STAINING, DAMP	669.8		5 5 17	30	100	SS-1	-	-	-	-	-	-	-	-	-	7	A-3a (V)	
	665.3																	
MEDIUM DENSE, ORANGISH BROWN, **FINE SAND**, TRACE SILT, TRACE COARSE SAND, TRACE CLAY, TRACE GRAVEL, CONTAINS IRON STAINING, DAMP			10 5 4	12	100	SS-2	-	-	-	-	-	-	-	-	-	6	A-3 (V)	
F.S.			8 5 5	14	100	SS-3	-	0	4	89	6	1	NP	NP	NP	8	A-3 (0)	
			8 7 6	18	100	SS-4	-	-	-	-	-	-	-	-	-	7	A-3 (V)	
	657.8																	
LOOSE, BROWN, **COARSE AND FINE SAND**, LITTLE SILT, TRACE CLAY, TRACE GRAVEL, WET TO MOIST			4 3 2	7	100	SS-5	-	-	-	-	-	-	-	-	-	18	A-3a (V)	
			3 3 2	7	100	SS-6	-	0	9	66	20	5	NP	NP	NP	16	A-3a (0)	
			2 2 3	7	100	SS-7	-	-	-	-	-	-	-	-	-	11	A-3a (V)	
	650.3																	
DENSE, BROWNISH GRAY, **GRAVEL WITH SAND**, TRACE SILT, TRACE CLAY, DAMP			7 11 16	37	100	SS-8	-	-	-	-	-	-	-	-	-	4	A-1-b (V)	
	647.8																	
MEDIUM DENSE TO DENSE, BROWNISH GRAY BECOMING GRAY, **COARSE AND FINE SAND**, TRACE SILT, TRACE GRAVEL, TRACE CLAY, DAMP TO WET			5 12 13	34	100	SS-9	-	-	-	-	-	-	-	-	-	5	A-3a (V)	
		W 644.8	7 8 8	22	100	SS-10	-	-	-	-	-	-	-	-	-	25	A-3a (V)	
			5 14 17	42	100	SS-11	-	-	-	-	-	-	-	-	-	21	A-3a (V)	
	640.3																	
MEDIUM DENSE, GRAY, **FINE SAND**, TRACE COARSE SAND, TRACE SILT, TRACE GRAVEL, TRACE CLAY, WET			6 5 6	15	100	SS-12	-	-	-	-	-	-	-	-	-	31	A-3 (V)	
F.S.	637.8																	
MEDIUM DENSE, GRAY, **SILT**, "AND" SAND, TRACE CLAY, TRACE GRAVEL, WET			3 3 7	14	100	SS-13	-	0	0	37	57	6	NP	NP	NP	26	A-4b (6)	
	635.3																	
MEDIUM DENSE, GRAY, **COARSE AND FINE SAND**, TRACE TO LITTLE SILT, TRACE GRAVEL, TRACE CLAY, WET			3 7 8	20	100	SS-14	-	-	-	-	-	-	-	-	-	28	A-3a (V)	
			4 5 7	16	100	SS-15	-	-	-	-	-	-	-	-	-	25	A-3a (V)	
			3 6 11	23	100	SS-16	-	-	-	-	-	-	-	-	-	27	A-3a (V)	
			10 9 8	23	100	SS-17	-	-	-	-	-	-	-	-	-	18	A-3a (V)	
	625.3																	
DENSE, GRAY, **FINE SAND**, TRACE COARSE SAND, TRACE SILT, TRACE GRAVEL, TRACE CLAY, WET			4 11 13	33	100	SS-18	-	-	-	-	-	-	-	-	-	20	A-3 (V)	
F.S.			10 14 9	31	100	SS-19	-	-	-	-	-	-	-	-	-	22	A-3 (V)	
	620.3																	
MEDIUM STIFF TO STIFF, GRAY, **SILT AND CLAY**, TRACE SAND, TRACE GRAVEL, MOIST TO WET			3 7 8	20	100	SS-20	1.25	-	-	-	-	-	-	-	-	25	A-6a (V)	
			3 3 5	11	100	SS-21	1.50	0	1	5	58	36	29	18	11	26	A-6a (8)	
			3 4 5	12	100	SS-22	1.00	-	-	-	-	-	-	-	-	30	A-6a (V)	

Preliminary Plans - For Reference Only

STANDARD ODOT SOIL BORING LOG (11 X 17) - OH DOT.GDT - 1/3/24 14:19 - X:\ACTIVE PROJECTS\ACTIVE SOIL PROJECTS\1ARCHIVE BY YEAR\2022 ARCHIVE\CUY-90-16.28 (CCG3A - MOD#7)\GINT FILES\CUY-90-16.28 (CCG3A).GPJ

DESIGN AGENCY
NEAS
2800 CORPORATE EXCHANGE DR. SUITE 240
COLUMBUS, OH. 43231
TEL:614.714.0299
WWW.NEASINC.COM

DESIGNER MWJ & DT
REVIEWER BPA 08/23/24
PROJECT ID 82382
SUBSET 267 TOTAL 310
SHEET P 2653 TOTAL 2696

GEOTECHNICAL PROFILE - ROADWAY
BRIDGE NO. CUY-90-1696 OVER IR-90
BORING LOG B-169-7-20

MODEL: Sheet PAPERSIZE: 34x22 (in.) DATE: 3/28/2025 TIME: 10:47:36 AM USER: Asiddiqi
pw:\\mb-us-pw.bentley.com:mb-us-pw-03\Documents\Cleveland_OH\01_Projects\ODOT\District12\82382\400-Engineering\Geotechnical\Sheets\82382_ZL154.dgn

PID: 82382 | SFN: | PROJECT: CUY-90-16.28 (CCG3A) | STATION / OFFSET: 61+30, 46' RT. | START: 6/2/21 | END: 6/3/21 | PG 2 OF 3 | B-169-7-20

MATERIAL DESCRIPTION AND NOTES	ELEV. 609.8	DEPTHS	SPT/ RQD	N_{60}	REC (%)	SAMPLE ID	HP (tsf)	GRADATION (%) GR	CS	FS	SI	CL	ATTERBERG LL	PL	PI	WC	ODOT CLASS (GI)	HOLE SEALED
MEDIUM STIFF TO STIFF, GRAY, **SILT AND CLAY**, TRACE SAND, TRACE GRAVEL, MOIST TO WET *(continued)*		61	2 5 7	16	100	SS-23	0.75	-	-	-	-	-	-	-	-	25	A-6a (V)	
	606.5	62																
SOFT TO MEDIUM STIFF, GRAY, **SILT**, SOME CLAY, TRACE SAND, TRACE GRAVEL, MOIST		63																
		64																
		65																
		66	3 5 7	16	100	SS-24	0.50	0	0	1	69	30	28	20	8	22	A-4b (8)	
	601.5	67																
STIFF, GRAY, **SILT AND CLAY**, TRACE SAND, TRACE GRAVEL, MOIST		68																
		69																
		70																
		71	0 4 4	11	100	SS-25	1.50	-	-	-	-	-	-	-	-	24	A-6a (V)	
		72																
		73																
		74																
		75																
		76	3 9 10	26	100	SS-26	1.25	0	0	1	55	44	31	20	11	27	A-6a (8)	
		77																
		78																
		79																
		80																
		81	4 7 8	20	100	SS-27	1.25	-	-	-	-	-	-	-	-	28	A-6a (V)	
	586.5	82																
HARD, GRAY, **SILT**, SOME CLAY, TRACE SAND, TRACE GRAVEL, MOIST TO DAMP		83																
		84																
		85																
		86	4 8 10	25	100	SS-28	4.25	0	1	0	70	29	28	21	7	22	A-4b (8)	
		87																
		88																
		89																
		90																
		91	5 6 8	19	100	SS-29	4.50	-	-	-	-	-	-	-	-	20	A-4b (V)	
	576.5	92																
STIFF TO HARD, GRAY, **SILT AND CLAY**, TRACE SAND, TRACE GRAVEL, MOIST		93																
		94																
		95																
		96	5 7 11	25	100	SS-30	4.50	0	0	0	60	40	30	19	11	22	A-6a (8)	
		97																
		98																
		99																
		100																
		101	5 6 10	22	100	SS-31	4.25	-	-	-	-	-	-	-	-	20	A-6a (V)	
		102																
		103																
		104																
		105																
		106	5 6 9	20	100	SS-32	1.50	0	0	1	50	49	33	19	14	25	A-6a (10)	
		107																
		108																
		109																
		110																
		111	6 6 8	19	100	SS-33	1.50	-	-	-	-	-	-	-	-	22	A-6a (V)	
	556.5	112																
VERY SOFT TO MEDIUM STIFF, GRAY, **CLAY**, SOME SILT, TRACE SAND, TRACE GRAVEL, MOIST		113																
		114																
		115																
		116	0 0 3	4	100	SS-34	0.20	-	-	-	-	-	-	-	-	31	A-7-6 (V)	
		117																
		118																
		119																
		120																
		121	0 1 2	4	100	SS-35	0.25	1	2	3	28	66	41	21	20	30	A-7-6 (12)	

Preliminary Plans - For Reference Only

STANDARD ODOT SOIL BORING LOG (11 X 17) - OH DOT.GDT - 1/3/24 14:19 - X:\ACTIVE PROJECTS\ACTIVE SOIL PROJECTS\1ARCHIVE BY YEAR\2022 ARCHIVE\CUY-90-16.28 (CCG3A - MOD#7)\GINT FILES\CUY-90-16.28 (CCG3A).GPJ

DESIGN AGENCY
2800 CORPORATE EXCHANGE DR. SUITE 240
COLUMBUS, OH. 43231
TEL:614.714.0299
WWW.JNEASINC.COM

DESIGNER MWJ & DT
REVIEWER BPA 08/23/24
PROJECT ID 82382
SHEET 268 SUBSET TOTAL 310
P 2654 SHEET TOTAL 2696

GEOTECHNICAL PROFILE - ROADWAY
BRIDGE NO. CUY-90-1696 OVER IR-90
BORING LOG B-169-7-20 (CONTINUED)

MODEL: Sheet PAPERSIZE: 34x22 (in.) DATE: 3/28/2025 TIME: 10:47:55 AM USER: Asiddiqi
pw:\\mb-us-pw.bentley.com:mb-us-pw-03\Documents\Cleveland_OH\01_Projects\ODOT\District12\82382\400-Engineering\Geotechnical\Sheets\82382_ZL155.dgn

PID: 82382 | SFN: | PROJECT: CUY-90-16.28 (CCG3A) | STATION / OFFSET: 61+30, 46' RT. | START: 6/2/21 | END: 6/3/21 | PG 3 OF 3 | B-169-7-20

MATERIAL DESCRIPTION AND NOTES	ELEV.	DEPTHS	SPT/ RQD	N_{60}	REC (%)	SAMPLE ID	HP (tsf)	GRADATION (%) GR	CS	FS	SI	CL	ATTERBERG LL	PL	PI	WC	ODOT CLASS (GI)	HOLE SEALED
VERY SOFT TO MEDIUM STIFF, GRAY, **CLAY**, SOME SILT, TRACE SAND, TRACE GRAVEL, MOIST *(continued)*	547.9	123																
		124																
		125																
		126	0 2 4	8	100	SS-36	0.50	-	-	-	-	-	-	-	-	31	A-7-6 (V)	
		127																
		128																
		129																
		130																
		131	1 2 6	11	100	SS-37	0.25	1	1	1	26	71	45	22	23	30	A-7-6 (14)	
		132																
		133																
		134	0 4 7	15	100	SS-38	0.50	-	-	-	-	-	-	-	-	30	A-7-6 (V)	
	534.8	EOB 135																

Preliminary Plans - For Reference Only

STANDARD ODOT SOIL BORING LOG (11 X 17) - OH DOT.GDT - 1/3/24 14:19 - X:\ACTIVE PROJECTS\ACTIVE SOIL PROJECTS\1ARCHIVE BY YEAR\2022 ARCHIVE\CUY-90-16.28 (CCG3A - MOD#7)\GINT FILES\CUY-90-16.28 (CCG3A).GPJ

NOTES: GROUNDWATER ENCOUNTERED AT 25.0' DURING DRILLING. HOLE DID NOT CAVE.
ABANDONMENT METHODS, MATERIALS, QUANTITIES: PUMPED 300 GAL. BENTONITE GROUT

DESIGN AGENCY
2800 CORPORATE EXCHANGE DR. SUITE 240
COLUMBUS, OH. 43231
TEL:614.714.0299
WWW.NEASINC.COM

DESIGNER MW,J & DT
REVIEWER BPA 08/23/24
PROJECT ID 82382
SHEET 269 TOTAL 310
SHEET P 2655 TOTAL 2696

GEOTECHNICAL PROFILE - ROADWAY
BRIDGE NO. CUY-90-1696 OVER IR-90
BORING LOG B-169-7-20 (CONTINUED)

MODEL: Sheet PAPERSIZE: 34x22 (in.) DATE: 3/28/2025 TIME: 10:48:11 AM USER: Asiddiqi
pw:\\mb-us-pw.bentley.com:mb-us-pw-03\Documents\Cleveland_OH\01_Projects\ODOT\District12\82382\400-Engineering\Geotechnical\Sheets\82382_ZL156.dgn

PROJECT: CUY-90-16.28 (CCG3A)
TYPE: BRIDGE
PID: 82382 SFN: 1807898
START: 5/18/21 END: 5/19/21

DRILLING FIRM / OPERATOR: NEAS / J. HODGES
SAMPLING FIRM / LOGGER: NEAS / J. HODGES
DRILLING METHOD: 3.25" HSA
SAMPLING METHOD: SPT

DRILL RIG: CME 75T
HAMMER: CME AUTOMATIC
CALIBRATION DATE: 5/1/19
ENERGY RATIO (%): 89

STATION / OFFSET: 62+16, 19' LT.
ALIGNMENT: CARNEGIE AVE
ELEVATION: 668.7 (MSL) EOB: 135.0 ft.
LAT / LONG: 41.499538, -81.670947

EXPLORATION ID B-169-8-20

MATERIAL DESCRIPTION AND NOTES	ELEV.	DEPTHS	SPT/ RQD	N_{60}	REC (%)	SAMPLE ID	HP (tsf)	GRADATION (%) GR	CS	FS	SI	CL	ATTERBERG LL	PL	PI	WC	ODOT CLASS (GI)	HOLE SEALED
MEDIUM DENSE TO DENSE, ORANGISH BROWN AND BROWN, **FINE SAND**, TRACE COARSE SAND, TRACE SILT, TRACE CLAY, TRACE GRAVEL, CONTAINS IRON STAINING, DAMP	668.7		23 11 12	34	100	SS-1	-	-	-	-	-	-	-	-	-	6	A-3 (V)	
			4 4 5	13	100	SS-2	-	-	-	-	-	-	-	-	-	7	A-3 (V)	
			7 5 6	16	100	SS-3	-	0	5	90	4	1	NP	NP	NP	7	A-3 (0)	
			9 5 4	13	100	SS-4	-	-	-	-	-	-	-	-	-	9	A-3 (V)	
LOOSE TO MEDIUM DENSE, BROWN, **COARSE AND FINE SAND**, TRACE SILT, TRACE CLAY, TRACE GRAVEL, MOIST TO DAMP	656.7		10 3 3	9	100	SS-5	-	-	-	-	-	-	-	-	-	15	A-3a (V)	
			8 5 4	13	100	SS-6	-	2	15	72	9	2	NP	NP	NP	6	A-3a (0)	
@17.5' TO 21.5'; BECOMES LITTLE TO SOME GRAVEL			9 6 11	25	100	SS-7	-	-	-	-	-	-	-	-	-	8	A-3a (V)	
			6 7 7	21	100	SS-8	-	-	-	-	-	-	-	-	-	3	A-3a (V)	
MEDIUM DENSE, BROWN, **GRAVEL**, "AND" SAND, TRACE SILT, TRACE CLAY, DAMP TO MOIST	646.7	W 643.7	4 5 5	15	100	SS-9	-	56	29	7	6	2	NP	NP	NP	4	A-1-a (0)	
			3 4 5	13	100	SS-10	-	-	-	-	-	-	-	-	-	13	A-1-a (V)	
VERY LOOSE, GRAY, **SANDY SILT**, TRACE GRAVEL, TRACE CLAY, WET	641.7		1 2 1	4	100	SS-11	-	8	19	27	40	6	NP	NP	NP	19	A-4a (2)	
			1 0 2	3	100	SS-12	-	-	-	-	-	-	-	-	-	22	A-4a (V)	
MEDIUM DENSE, GRAY, **GRAVEL WITH SAND**, TRACE SILT, TRACE CLAY, MOIST	636.7		4 6 7	19	100	SS-13	-	-	-	-	-	-	-	-	-	13	A-1-b (V)	
			5 6 8	21	100	SS-14	-	-	-	-	-	-	-	-	-	15	A-1-b (V)	
MEDIUM DENSE, GRAY, **COARSE AND FINE SAND**, LITTLE GRAVEL, TRACE SILT, TRACE CLAY, MOIST	631.7		5 6 7	19	100	SS-15	-	-	-	-	-	-	-	-	-	13	A-3a (V)	
			6 6 7	19	100	SS-16	-	-	-	-	-	-	-	-	-	13	A-3a (V)	
			8 8 10	27	100	SS-17	-	-	-	-	-	-	-	-	-	12	A-3a (V)	
MEDIUM DENSE, GRAY, **GRAVEL WITH SAND**, TRACE SILT, TRACE CLAY, MOIST	624.2		8 9 11	30	100	SS-18	-	-	-	-	-	-	-	-	-	12	A-1-b (V)	
STIFF TO VERY STIFF, GRAY, **SILT AND CLAY**, TRACE SAND, TRACE GRAVEL, MOIST	621.7		4 7 8	22	100	SS-19	2.25	-	-	-	-	-	-	-	-	21	A-6a (V)	
			5 7 9	24	100	SS-20	2.00	0	0	4	63	33	30	19	11	21	A-6a (8)	
			4 5 5	15	100	SS-21	2.25	-	-	-	-	-	-	-	-	24	A-6a (V)	
			4 4 5	13	100	SS-22	1.50	-	-	-	-	-	-	-	-	22	A-6a (V)	
	610.4																	
STIFF TO VERY STIFF, GRAY, **SILT**, SOME TO "AND" CLAY, TRACE SAND, TRACE GRAVEL, WET TO MOIST																		

Preliminary Plans - For Reference Only

STANDARD ODOT SOIL BORING LOG (11 X 17) - OH DOT.GDT - 1/3/24 14:19 - X:\ACTIVE PROJECTS\ACTIVE SOIL PROJECTS\1ARCHIVE BY YEAR\2022 ARCHIVE\CUY-90-16.28 (CCG3A - MOD#7)\IGINT FILES\CUY-90-16.28 (CCG3A).GPJ

DESIGN AGENCY
NEAS
2800 CORPORATE EXCHANGE DR. SUITE 240
COLUMBUS, OH. 43231
TEL:614.714.0299
WWW.NEASINC.COM

DESIGNER MWJ & DT
REVIEWER BPA 08/23/24
PROJECT ID 82382
SUBSET 270 TOTAL 310
SHEET P 2656 TOTAL 2696

GEOTECHNICAL PROFILE - ROADWAY
BRIDGE NO. CUY-90-1696 OVER IR-90
BORING LOG B-169-8-20

MODEL: Sheet PAPERSIZE: 34x22 (in.) DATE: 3/28/2025 TIME: 10:48:35 AM USER: Asiddiqi
pw:\\mb-us-pw.bentley.com:mb-us-pw-03\Documents\Cleveland_OH\01_Projects\ODOT\District12\82382\400-Engineering\Geotechnical\Sheets\82382_ZL157.dgn

PID: 82382 | SFN: | PROJECT: CUY-90-16.28 (CCG3A) | STATION / OFFSET: 62+16, 19' LT. | START: 5/18/21 | END: 5/19/21 | PG 2 OF 3 | B-169-8-20

MATERIAL DESCRIPTION AND NOTES	ELEV.	DEPTHS	SPT/ RQD	N_{60}	REC (%)	SAMPLE ID	HP (tsf)	GRADATION (%) GR	CS	FS	SI	CL	ATTERBERG LL	PL	PI	WC	ODOT CLASS (GI)	HOLE SEALED
STIFF TO VERY STIFF, GRAY, **SILT**, SOME TO "AND" CLAY, TRACE SAND, TRACE GRAVEL, WET TO MOIST *(continued)*	608.7	61	3 6 6	18	100	SS-23	1.50	0	0	2	66	32	28	19	9	28	A-4b (8)	
		62																
		63																
		64																
		65																
		66	4 5 8	19	100	SS-24	1.25	-	-	-	-	-	-	-	-	23	A-4b (V)	
		67																
		68																
		69																
		70																
		71	1 3 4	10	100	SS-25	2.50	-	-	-	-	-	-	-	-	25	A-4b (V)	
		72																
		73																
		74																
		75																
		76	4 8 9	25	100	SS-26	2.75	0	0	1	57	42	30	20	10	24	A-4b (8)	
		77																
		78																
	590.4	79																
STIFF TO VERY STIFF, GRAY, **SILT AND CLAY**, TRACE SAND, TRACE GRAVEL, DAMP TO MOIST		80																
		81	3 6 8	21	100	SS-27	2.00	-	-	-	-	-	-	-	-	21	A-6a (V)	
		82																
		83																
		84																
		85																
		86	5 6 9	22	100	SS-28	3.00	-	-	-	-	-	-	-	-	22	A-6a (V)	
		87																
		88																
		89																
		90																
		91	4 7 9	24	100	SS-29	4.00	0	0	1	52	47	33	19	14	22	A-6a (10)	
		92																
		93																
		94																
		95																
		96	4 6 10	24	100	SS-30	3.75	-	-	-	-	-	-	-	-	21	A-6a (V)	
		97																
		98																
		99																
		100																
		101	6 8 11	28	100	SS-31	4.00	-	-	-	-	-	-	-	-	19	A-6a (V)	
		102																
		103																
		104																
		105																
		106	6 7 8	22	100	SS-32	1.50	0	0	1	57	42	33	19	14	23	A-6a (10)	
		107																
		108																
		109																
		110																
		111	5 7 9	24	100	SS-33	2.00	-	-	-	-	-	-	-	-	25	A-6a (V)	
		112																
		113																
		114																
		115																
		116	1 2 3	7	100	SS-34	0.50	-	-	-	-	-	-	-	-	30	A-7-6 (V)	
		117																
		118																
		119																
		120																
		121	0 2 3	7	100	SS-35	0.50	2	2	3	26	67	46	21	25	45	A-7-6 (15)	
SOFT TO MEDIUM STIFF, GRAY, **CLAY**, SOME SILT, TRACE SAND, TRACE GRAVEL, MOIST TO WET	555.4																	

Preliminary Plans - For Reference Only

STANDARD ODOT SOIL BORING LOG (11 X 17) - OH DOT.GDT - 1/3/24 14:19 - X:\ACTIVE PROJECTS\ACTIVE SOIL PROJECTS\1ARCHIVE BY YEAR\2022 ARCHIVE\CUY-90-16.28 (CCG3A - MOD#7)\GINT FILES\CUY-90-16.28 (CCG3A).GPJ

DESIGN AGENCY
EAS
2800 CORPORATE EXCHANGE DR. SUITE 240
COLUMBUS, OH. 43231
TEL:614.714.0299
WWW.NEASINC.COM
DESIGNER MWJ & DT
REVIEWER BPA 08/23/24

PROJECT ID 82382
SUBSET 271 TOTAL 310
SHEET P 2657 TOTAL 2696

GEOTECHNICAL PROFILE - ROADWAY
BRIDGE NO. CUY-90-1696 OVER IR-90
BORING LOG B-169-8-20 (CONTINUED)

MODEL: Sheet PAPERSIZE: 34x22 (in.) DATE: 3/28/2025 TIME: 10:48:56 AM USER: Asiddiqi
pw:\\mb-us-pw.bentley.com:mb-us-pw-03\Documents\Cleveland_OH\01_Projects\ODOT\District12\82382\400-Engineering\Geotechnical\Sheets\82382_ZL158.dgn

PID: 82382 | SFN: | PROJECT: CUY-90-16.28 (CCG3A) | STATION / OFFSET: 62+16, 19' LT. | START: 5/18/21 | END: 5/19/21 | PG 3 OF 3 | B-169-8-20

MATERIAL DESCRIPTION AND NOTES	ELEV.	DEPTHS	SPT/ RQD	N_{60}	REC (%)	SAMPLE ID	HP (tsf)	GRADATION (%) GR	CS	FS	SI	CL	ATTERBERG LL	PL	PI	WC	ODOT CLASS (GI)	HOLE SEALED
SOFT TO MEDIUM STIFF, GRAY, **CLAY**, SOME SILT, TRACE SAND, TRACE GRAVEL, MOIST TO WET *(continued)*	546.9	123																
		124																
		125																
		126	1 3 4	10	100	SS-36	0.25	-	-	-	-	-	-	-	-	33	A-7-6 (V)	
		127																
		128																
		129																
		130																
		131	0 2 5	10	100	SS-37	0.25	0	1	2	26	71	44	22	22	30	A-7-6 (14)	
		132																
		133																
		134	0 3 7	15	100	SS-38	0.25	-	-	-	-	-	-	-	-	30	A-7-6 (V)	
	533.7	135 EOB																

Preliminary Plans - For Reference Only

NOTES: GROUNDWATER ENCOUNTERED AT 25.0' DURING DRILLING. HOLE DID NOT CAVE.
ABANDONMENT METHODS, MATERIALS, QUANTITIES: PLACED 0.5 BAG ASPHALT PATCH; PUMPED 300 GAL. BENTONITE GROUT

STANDARD ODOT SOIL BORING LOG (11 X 17) - OH DOT.GDT - 1/3/24 14:19 - X:\ACTIVE PROJECTS\ACTIVE SOIL PROJECTS\1ARCHIVE BY YEAR\2022 ARCHIVE\CUY-90-16.28 (CCG3A - MOD#7)\GINT FILES\CUY-90-16.28 (CCG3A).GPJ

DESIGN AGENCY
2800 CORPORATE EXCHANGE DR. SUITE 240
COLUMBUS, OH. 43231
TEL:614.714.0299
WWW.JNEASINC.COM

DESIGNER MW,J & DT
REVIEWER BPA 08/23/24
PROJECT ID 82382
SHEET 272 TOTAL 310
P 2658 TOTAL 2696

GEOTECHNICAL PROFILE - ROADWAY
BRIDGE NO. CUY-90-1696 OVER IR-90
BORING LOG B-169-8-20 (CONTINUED)

MODEL: Sheet PAPERSIZE: 34x22 (in.) DATE: 3/28/2025 TIME: 10:49:12 AM USER: Asiddiqi
pw:\\mb-us-pw.bentley.com:mb-us-pw-03\Documents\Cleveland_OH\01_Projects\ODOT\District12\82382\400-Engineering\Geotechnical\Sheets\82382_ZL159.dgn

PROJECT: CUY-CCG3
TYPE: BRIDGE
PID: 82380 SFN:
START: 2/25/15 END: 2/25/15

DRILLING FIRM / OPERATOR: BARR / T.GILBERT
SAMPLING FIRM / LOGGER: BARR / D.KLIMKOWICZ
DRILLING METHOD: 3.25" HSA
SAMPLING METHOD: SPT / ST

DRILL RIG: CME 55
HAMMER: CME AUTOMATIC
CALIBRATION DATE: 1/26/14
ENERGY RATIO (%): 78.8

STATION / OFFSET: 63+39, 55' RT.
ALIGNMENT: CARNEGIE AVE
ELEVATION: 666.9 (MSL) EOB: 112.0 ft.
LAT / LONG: 41.499394, -81.670458

EXPLORATION ID B-170-0-14

MATERIAL DESCRIPTION AND NOTES	ELEV.	DEPTHS	SPT/ RQD	N_{60}	REC (%)	SAMPLE ID	HP (tsf)	GRADATION (%) GR	CS	FS	SI	CL	ATTERBERG LL	PL	PI	WC	ODOT CLASS (GI)	BACK FILL
6.0", **ASPHALT**	666.4																	
12.0", **CONCRETE**	665.4																	
LOOSE TO MEDIUM DENSE, LIGHT BROWN, **COARSE AND FINE SAND** SOME SILT, TRACE GRAVEL, TRACE CLAY, DAMP TO MOIST **(FILL)**			6 7 7	18	100	SS-1	-	-	-	-	-	-	-	-	-	6	A-3a (V)	
			3 2 3	7	100	SS-2	-	6	8	61	21	4	NP	NP	NP	5	A-3a (0)	
			2 2 3	7	100	SS-3	-	-	-	-	-	-	-	-	-	12	A-3a (V)	
@10.0'; SS-4 AND SS-5 CHANGE TO TRACE SILT			2 2 3	7	100	SS-4	-	0	5	83	8	4	NP	NP	NP	11	A-3a (0)	
			3 3 4	9	100	SS-5	-	-	-	-	-	-	-	-	-	10	A-3a (V)	
	652.4																	
HARD, GRAYISH BROWN, **SILT**, SOME CLAY, TRACE SAND, TRACE GRAVEL, MOIST			2 4 6	13	100	SS-6	4.50	0	1	6	70	23	27	19	8	20	A-4b (8)	
	649.9																	
MEDIUM DENSE, GRAYISH BROWN, **FINE SAND**, TRACE COARSE SAND, TRACE GRAVEL, TRACE SILT, TRACE CLAY, DAMP			6 9 9	24	100	SS-7	-	-	-	-	-	-	-	-	-	7	A-3 (V)	
	647.4																	
MEDIUM DENSE TO DENSE, GRAYISH BROWN, **SANDY SILT**, TRACE CLAY, TRACE GRAVEL, WET		W 644.4	4 6 4	13	67	SS-8	-	-	-	-	-	-	-	-	-	19	A-4a (V)	
			8 15 16	41	100	SS-9	-	0	0	49	45	6	NP	NP	NP	20	A-4a (3)	
			13 18 19	49	100	SS-10	-	-	-	-	-	-	-	-	-	22	A-4a (V)	
			7 13 15	37	100	SS-11	-	0	1	56	37	6	NP	NP	NP	20	A-4a (2)	
			7 9 13	29	100	SS-12	-	-	-	-	-	-	-	-	-	19	A-4a (V)	
	633.6																	
MEDIUM DENSE, GRAYISH BROWN MOTTLED WITH DARK GRAY, **SILT**, LITTLE SAND, TRACE CLAY, TRACE GRAVEL, SLIGHTLY ORGANIC, WET			4 6 10	21	100	SS-13	-	0	0	11	83	6	NP	NP	NP	25	A-4b (8)	
	628.6																	
MEDIUM DENSE, GRAY, **COARSE AND FINE SAND** LITTLE SILT, TRACE GRAVEL, TRACE CLAY, CONTAINS 1.0" SILT SEAM, WET			3 9 10	25	100	SS-14	-	-	-	-	-	-	-	-	-	22	A-3a (V)	
	623.6																	
SOFT TO VERY STIFF, GRAYISH BROWN, **SILT**, "AND" CLAY, TRACE SAND, TRACE GRAVEL, MOIST TO WET			6 7 16	30	100	SS-15	2.25	-	-	-	-	-	-	-	-	19	A-4b (V)	
			4 4 6	13	100	SS-16	0.30	0	1	6	57	36	28	18	10	23	A-4b (8)	
			3 4 5	12	450	SS-17	0.60	-	-	-	-	-	-	-	-	25	A-4b (V)	
	608.6																	
MEDIUM STIFF TO STIFF, GRAYISH BROWN, **SILT AND CLAY**, TRACE SAND, TRACE GRAVEL, MOIST TO WET																		

Preliminary Plans - For Reference Only

STANDARD ODOT SOIL BORING LOG (11 X 17) - OH DOT.GDT - 1/3/24 15:36 - X:\ACTIVE PROJECTS\ACTIVE SOIL PROJECTS\1ARCHIVE BY YEAR\2017 ARCHIVE\CUY-CCG3 82380\GINT FILES\CUY-CCG3 MASTER - LR UPDATED.GPJ

DESIGN AGENCY
EAS
2800 CORPORATE EXCHANGE DR. SUITE 240
COLUMBUS, OH. 43231
TEL: 614.714.0299
WWW.NEASINC.COM

DESIGNER MWJ & DT
REVIEWER BPA 08/23/24
PROJECT ID 82382
SUBSET 273 TOTAL 310
SHEET P 2659 TOTAL 2696

GEOTECHNICAL PROFILE - ROADWAY
BRIDGE NO. CUY-90-1696 OVER IR-90
BORING LOG B-170-0-14

MODEL: Sheet PAPERSIZE: 34x22 (in.) DATE: 3/28/2025 TIME: 10:49:36 AM USER: Asiddiqi
pw:\\mb-us-pw.bentley.com:mb-us-pw-03\Documents\Cleveland_OH\01_Projects\ODOT\District12\82382\400-Engineering\Geotechnical\Sheets\82382_ZL160.dgn

PID: 82380 | SFN: | PROJECT: CUY-CCG3 | STATION / OFFSET: 63+39, 55' RT. | START: 2/25/15 | END: 2/25/15 | PG 2 OF 2 | B-170-0-14

MATERIAL DESCRIPTION AND NOTES	ELEV.	DEPTHS	SPT/ RQD	N_{60}	REC (%)	SAMPLE ID	HP (tsf)	GRADATION (%) GR	CS	FS	SI	CL	ATTERBERG LL	PL	PI	WC	ODOT CLASS (GI)	BACK FILL
MEDIUM STIFF TO STIFF, GRAYISH BROWN, **SILT AND CLAY**, TRACE SAND, TRACE GRAVEL, MOIST TO WET *(continued)* @61.3'; UNIT WEIGHT: 133.1 PCF @ 22.2% MC		61			93	ST-18	1.30	0	0	1	62	37	29	18	11	22	A-6a (8)	
		62–65																
		66	3 5 6	14	100	SS-19	0.90	-	-	-	-	-	-	-	-	21	A-6a (V)	
		67–70																
		71	0 3 4	9	100	SS-20	1.40	-	-	-	-	-	-	-	-	24	A-6a (V)	
	593.6	72–75																
STIFF TO VERY STIFF, GRAYISH BROWN, **SILT**, SOME CLAY, TRACE SAND, TRACE GRAVEL, MOIST @75.1'; UNIT WEIGHT: 128.6 PCF @ 22.1% MC		76			77	ST-21	2.00	0	0	1	69	30	27	19	8	22	A-4b (8)	
		77–80																
		81	5 7 10	22	100	SS-22	1.80	-	-	-	-	-	-	-	-	21	A-4b (V)	
	583.6	82–85																
MEDIUM STIFF TO STIFF, GRAYISH BROWN, **SILT AND CLAY**, TRACE SAND, TRACE GRAVEL, CONTAINS 1.0" SILT SEAM, MOIST TO WET		86	0 6 8	18	100	SS-23	1.10	-	-	-	-	-	-	-	-	26	A-6a (V)	
		87–90																
@90.1'; UNIT WEIGHT: 127.9 PCF @ 28.7% MC		91			89	ST-24	1.00	0	0	0	51	49	29	18	11	29	A-6a (8)	
		92–95																
		96	3 3 5	11	100	SS-25	1.40	-	-	-	-	-	-	-	-	25	A-6a (V)	
	568.6	97–100																
SOFT TO STIFF, GRAYISH BROWN, **SILTY CLAY**, TRACE SAND, TRACE GRAVEL, MOIST		101	4 5 6	14	100	SS-26	0.60	-	-	-	-	-	-	-	-	30	A-6b (V)	
		102–105																
		106	5 6 6	16	100	SS-27	0.40	-	-	-	-	-	-	-	-	28	A-6b (V)	
		107–110																
@110.1'; UNIT WEIGHT: 122.6 PCF @ 33.7% MC		111			94	ST-28	1.10	0	1	1	19	79	40	22	18	34	A-6b (11)	
	554.9	112 EOB																

NOTES: GROUNDWATER ENCOUNTERED AT 22.5' DURING DRILLING. CAVE DEPTH 22.8'.
ABANDONMENT METHODS, MATERIALS, QUANTITIES: PLACED .5 BAG ASPHALT PATCH; SHOVELED SOIL CUTTINGS

Preliminary Plans - For Reference Only

STANDARD ODOT SOIL BORING LOG (11 X 17) - OH DOT.GDT - 1/3/24 15:36 - X:\ACTIVE PROJECTS\ACTIVE SOIL PROJECTS\1ARCHIVE BY YEAR\2017 ARCHIVE\CUY-CCG3 82380\GINT FILES\CUY-CCG3 MASTER - LR UPDATED.GPJ

DESIGN AGENCY
EAS
2800 CORPORATE EXCHANGE DR. SUITE 240
COLUMBUS, OH. 43231
TEL: 614.714.0299
WWW.NEASINC.COM

DESIGNER MWJ & DT
REVIEWER BPA 08/23/24
PROJECT ID 82382
SUBSET 274 TOTAL 310
SHEET P 2660 TOTAL 2696

GEOTECHNICAL PROFILE - ROADWAY
BRIDGE NO. CUY-90-1696 OVER IR-90
BORING LOG B-170-0-14 (CONTINUED)

MODEL: Sheet PAPERSIZE: 34x22 (in.) DATE: 3/28/2025 TIME: 10:49:55 AM USER: Asiddiqi
pw:\\mb-us-pw.bentley.com:mb-us-pw-03\Documents\Cleveland_OH\01_Projects\ODOT\District12\82382\400-Engineering\Geotechnical\Sheets\82382_ZL161.dgn

PROJECT: CUY-90-16.28 (CCG3A)
TYPE: RETAINING WALL
PID: 82382 SFN:
START: 6/24/21 END: 6/24/21

DRILLING FIRM / OPERATOR: NEAS / ASHBAUGH
SAMPLING FIRM / LOGGER: NEAS / ASHBAUGH
DRILLING METHOD: 3.25" HSA
SAMPLING METHOD: SPT

DRILL RIG: CME 55T
HAMMER: CME AUTOMATIC
CALIBRATION DATE: 12/5/19
ENERGY RATIO (%): 68.4

STATION / OFFSET: 211+89, 108' LT.
ALIGNMENT: IR-90 WB
ELEVATION: 647.4 (MSL) EOB: 31.5 ft.
LAT / LONG: 41.499998, -81.671193

EXPLORATION ID B-170-1-20
PAGE 1 OF 1

MATERIAL DESCRIPTION AND NOTES	ELEV. 647.4	DEPTHS	SPT/ RQD	N_{60}	REC (%)	SAMPLE ID	HP (tsf)	GRADATION (%) GR	CS	FS	SI	CL	ATTERBERG LL	PL	PI	WC	ODOT CLASS (GI)	BACK FILL
10.0" ASPHALT AND 7.0" BASE (DRILLERS DESCRIPTION)	646.0																	
MEDIUM DENSE, BROWN, **COARSE AND FINE SAND**, SOME GRAVEL, LITTLE SILT, TRACE CLAY, DAMP	642.9		9 6 6	14	44	SS-1	-	-	-	-	-	-	-	-	-	8	A-3a (V)	
MEDIUM DENSE, BROWN, **SANDY SILT**, TRACE CLAY, TRACE GRAVEL, MOIST	640.4		7 6 7	15	61	SS-2	-	1	1	48	44	6	NP	NP	NP	17	A-4a (3)	
MEDIUM DENSE, BROWN, **COARSE AND FINE SAND**, TRACE GRAVEL, TRACE CLAY, MOIST	637.9	W 639.7	6 7 9	18	67	SS-3	-	-	-	-	-	-	-	-	-	14	A-3a (V)	
LOOSE TO MEDIUM DENSE, BROWNISH GRAY, **FINE SAND**, SOME SILT, TRACE COARSE SAND, TRACE CLAY, TRACE GRAVEL, WET			4 4 4	9	78	SS-4	-	-	-	-	-	-	-	-	-	30	A-3 (V)	
			5 6 8	16	83	SS-5	-	-	-	-	-	-	-	-	-	27	A-3 (V)	
			6 5 7	14	56	SS-6	-	-	-	-	-	-	-	-	-	26	A-3 (V)	
			5 7 9	18	67	SS-7	-	-	-	-	-	-	-	-	-	26	A-3 (V)	
		F.S.	7 6 7	15	78	SS-8	-	-	-	-	-	-	-	-	-	26	A-3 (V)	
			6 8 8	18	83	SS-9	-	-	-	-	-	-	-	-	-	30	A-3 (V)	
			9 7 8	17	89	SS-10	-	-	-	-	-	-	-	-	-	32	A-3 (V)	
			10 10 12	25	78	SS-11	-	-	-	-	-	-	-	-	-	29	A-3 (V)	
	615.9	EOB	10 11 10	24	89	SS-12	-	-	-	-	-	-	-	-	-	31	A-3 (V)	

NOTES: GROUNDWATER ENCOUNTERED AT 7.7' DURING DRILLING. HOLE DID NOT CAVE.
ABANDONMENT METHODS, MATERIALS, QUANTITIES: PLACED 0.5 BAG ASPHALT PATCH; SHOVELED SOIL CUTTINGS

Preliminary Plans - For Reference Only

STANDARD ODOT SOIL BORING LOG (11 X 17) - OH DOT.GDT - 6/22/22 18:22 - X:\ACTIVE PROJECTS\ACTIVE SOIL PROJECTS\CUY-90-16.28 (CCG3A - MOD#7)\IGINT FILES\CUY-90-16.28 (CCG3A).GPJ

DESIGN AGENCY: NEAS, 2800 CORPORATE EXCHANGE DR. SUITE 240, COLUMBUS, OH. 43231, TEL: 614.714.0299, WWW.NEASINC.COM
DESIGNER: MWJ & DT
REVIEWER: BPA 08/23/24
PROJECT ID: 82382
SHEET: 275 TOTAL: 310
SHEET: P 2661 TOTAL: 2696

GEOTECHNICAL PROFILE - ROADWAY
BRIDGE NO. CUY-90-1653L OVER EAST 14TH STREET
BORING LOG B-170-1-20

CUY-90-16.28 (CCG3A)

MODEL: Sheet PAPERSIZE: 34x22 (in.) DATE: 3/28/2025 TIME: 10:50:17 AM USER: Asiddiqi
pw:\\mb-us-pw.bentley.com:mb-us-pw-03\Documents\Cleveland_OH\01_Projects\ODOT\District12\82382\400-Engineering\Geotechnical\Sheets\82382_ZL162.dgn

PROJECT: CUY-90-16.28 (CCG3A)	DRILLING FIRM / OPERATOR: NEAS / J. HODGES	DRILL RIG: CME 75T	STATION / OFFSET: 211+80, 26' RT.
TYPE: RETAINING WALL	SAMPLING FIRM / LOGGER: NEAS / J. HODGES	HAMMER: CME AUTOMATIC	ALIGNMENT: IR-90 WB
PID: 82382 SFN:	DRILLING METHOD: 3.25" HSA	CALIBRATION DATE: 5/1/19	ELEVATION: 651.7 (MSL) EOB: 30.5 ft.
START: 5/21/21 END: 5/21/21	SAMPLING METHOD: SPT	ENERGY RATIO (%): 89	LAT / LONG: 41.499731, -81.670853

EXPLORATION ID B-170-2-20

PAGE 1 OF 1

MATERIAL DESCRIPTION AND NOTES	ELEV. 651.7	DEPTHS	SPT/ RQD	N_{60}	REC (%)	SAMPLE ID	HP (tsf)	GRADATION (%) GR	CS	FS	SI	CL	ATTERBERG LL	PL	PI	WC	ODOT CLASS (GI)	BACK FILL
DENSE, BROWN, **GRAVEL AND STONE FRAGMENTS WITH SAND**, LITTLE SILT, TRACE CLAY, DAMP **(FILL)**	647.2	3–4	12 12 10	33	100	SS-1	-	27	24	30	13	6	NP	NP	NP	7	A-1-b (0)	
MEDIUM DENSE TO DENSE, BROWN BECOMING BROWNISH GRAY, **FINE SAND** LITTLE COARSE SAND, TRACE SILT, TRACE CLAY, TRACE GRAVEL, DAMP		5–6	5 6 8	21	100	SS-2	-	-	-	-	-	-	-	-	-	7	A-3 (V)	
@7.5' TO 19.0'; BECOMES WET		8–9	4 4 5	13	100	SS-3	-	0	19	73	6	2	NP	NP	NP	24	A-3 (0)	
		10–11	3 4 4	12	100	SS-4	-	-	-	-	-	-	-	-	-	23	A-3 (V)	
		13–14	3 5 6	16	100	SS-5	-	-	-	-	-	-	-	-	-	26	A-3 (V)	
		15–16	6 8 11	28	100	SS-6	-	-	-	-	-	-	-	-	-	22	A-3 (V)	
		18–19	11 13 17	45	100	SS-7	-	-	-	-	-	-	-	-	-	20	A-3 (V)	
DENSE, GRAY, **SILT**, SOME SAND, TRACE CLAY, TRACE GRAVEL, WET	632.2	20–21	7 13 14	40	100	SS-8	-	0	0	22	69	9	NP	NP	NP	19	A-4b (8)	
MEDIUM DENSE TO DENSE, GRAY, **FINE SAND**, LITTLE SILT, TRACE COARSE SAND, TRACE CLAY, TRACE GRAVEL, WET TO MOIST	630.2	23–24	4 6 11	25	100	SS-9	-	-	-	-	-	-	-	-	-	28	A-3 (V)	
		25–26	9 8 8	24	100	SS-10	-	-	-	-	-	-	-	-	-	23	A-3 (V)	
		28–29	10 9 10	28	100	SS-11	-	-	-	-	-	-	-	-	-	20	A-3 (V)	
	621.2	30 EOB	10 10 12	33	100	SS-12	-	-	-	-	-	-	-	-	-	17	A-3 (V)	

NOTES: GROUNDWATER NOT ENCOUNTERED DURING DRILLING. HOLE DID NOT CAVE.
ABANDONMENT METHODS, MATERIALS, QUANTITIES: SHOVELED SOIL CUTTINGS

Preliminary Plans - For Reference Only

STANDARD ODOT SOIL BORING LOG (11 X 17) - OH DOT.GDT - 6/22/22 18:22 - X:\ACTIVE PROJECTS\ACTIVE SOIL PROJECTS\CUY-90-16.28 (CCG3A - MOD#7)\GINT FILES\CUY-90-16.28 (CCG3A).GPJ

DESIGN AGENCY
NEAS
2800 CORPORATE EXCHANGE DR. SUITE 240 COLUMBUS, OH. 43231
TEL:614.714.0299
WWW.NEASINC.COM

DESIGNER MWJ & DT
REVIEWER BPA 08/23/24
PROJECT ID 82382
SUBSET 276 TOTAL 310
SHEET P.2662 TOTAL 2696

GEOTECHNICAL PROFILE - ROADWAY
BRIDGE NO. CUY-90-1653L OVER EAST 14TH STREET
BORING LOG B-170-2-20

MODEL: Sheet PAPERSIZE: 34x22 (in.) DATE: 3/28/2025 TIME: 10:50:40 AM USER: Asiddiqi
pw:\\mb-us-pw.bentley.com:mb-us-pw-03\Documents\Cleveland_OH\01_Projects\ODOT\District12\82382\400-Engineering\Geotechnical\Sheets\82382_ZL163.dgn

PROJECT: CUY-90-16.28 (CCG3A)
TYPE: BRIDGE
PID: 82382 SFN: 1807898
START: 4/14/21 END: 4/14/21

DRILLING FIRM / OPERATOR: NEAS / ASHBAUGH
SAMPLING FIRM / LOGGER: NEAS / ASHBAUGH
DRILLING METHOD: 3.25" HSA
SAMPLING METHOD: SPT

DRILL RIG: CME 55T
HAMMER: CME AUTOMATIC
CALIBRATION DATE: 12/5/19
ENERGY RATIO (%): 68.4

STATION / OFFSET: 64+33, 77' LT.
ALIGNMENT: CARNEGIE AVE
ELEVATION: 656.9 (MSL) EOB: 126.5 ft.
LAT / LONG: 41.499796, -81.670194

EXPLORATION ID B-170-3-20

MATERIAL DESCRIPTION AND NOTES	ELEV. 656.9	DEPTHS	SPT/ RQD	N_{60}	REC (%)	SAMPLE ID	HP (tsf)	GRADATION (%) GR	CS	FS	SI	CL	ATTERBERG LL	PL	PI	WC	ODOT CLASS (GI)	PIEZ.
5.0" TOPSOIL (DRILLERS DESCRIPTION)	656.5																	
LOOSE TO MEDIUM DENSE, BROWN BECOMING GRAYISH BROWN, **COARSE AND FINE SAND** LITTLE SILT, TRACE GRAVEL, TRACE CLAY, MOIST TO DAMP			3 3 4	8	50	SS-1	-	-	-	-	-	-	-	-	-	11	A-3a (V)	
			4 5 10	17	78	SS-2	-	-	-	-	-	-	-	-	-	10	A-3a (V)	
			7 10 10	23	83	SS-3	-	-	-	-	-	-	-	-	-	5	A-3a (V)	
@10.0' TO 24.0'; BECOMES WET			8 12 13	29	78	SS-4	-	-	-	-	-	-	-	-	-	17	A-3a (V)	
			5 10 12	25	83	SS-5	-	-	-	-	-	-	-	-	-	23	A-3a (V)	
@15.0' TO 24.0'; BECOMES DENSE			9 14 19	38	89	SS-6	-	-	-	-	-	-	-	-	-	20	A-3a (V)	
		W 639.8																
			12 15 21	41	78	SS-7	-	-	-	-	-	-	-	-	-	22	A-3a (V)	
			10 14 20	39	72	SS-8	-	-	-	-	-	-	-	-	-	23	A-3a (V)	
			10 15 22	42	94	SS-9	-	-	-	-	-	-	-	-	-	23	A-3a (V)	
MEDIUM DENSE, GRAY, **SILT**, SOME SAND, TRACE CLAY, TRACE GRAVEL, WET	632.4		7 10 9	22	100	SS-10	-	0	0	24	70	6	NP	NP	NP	22	A-4b (8)	
MEDIUM DENSE, BROWNISH GRAY, **COARSE AND FINE SAND**, TRACE TO LITTLE SILT, TRACE GRAVEL, TRACE CLAY, WET	629.4		7 10 12	25	83	SS-11	-	-	-	-	-	-	-	-	-	25	A-3a (V)	
			7 12 13	29	94	SS-12	-	-	-	-	-	-	-	-	-	23	A-3a (V)	
			7 11 13	27	89	SS-13	-	-	-	-	-	-	-	-	-	21	A-3a (V)	
			8 10 14	27	83	SS-14	-	-	-	-	-	-	-	-	-	22	A-3a (V)	
			7 7 12	22	83	SS-15	-	-	-	-	-	-	-	-	-	22	A-3a (V)	
MEDIUM DENSE, GRAY, **SILT**, SOME SAND, LITTLE CLAY, TRACE GRAVEL, WET	616.9		4 6 7	15	89	SS-16	-	0	0	30	50	20	NP	NP	NP	22	A-4b (7)	
STIFF, GRAY, **SILT**, "AND" CLAY, TRACE SAND, TRACE GRAVEL, MOIST	614.9		4 5 5	11	89	SS-17	1.25	0	0	4	59	37	30	20	10	24	A-4b (8)	
LOOSE, GRAY, **COARSE AND FINE SAND** SOME SILT, TRACE TO LITTLE CLAY, TRACE GRAVEL, WET	611.9		3 4 3	8	100	SS-18	-	-	-	-	-	-	-	-	-	25	A-3a (V)	
			2 3 4	8	100	SS-19	-	-	-	-	-	-	-	-	-	21	A-3a (V)	
STIFF TO VERY STIFF, GRAY, **SILT**, "AND" CLAY, TRACE SAND, TRACE GRAVEL, MOIST	603.6		2 2 2	5	100	SS-20	2.00	0	0	2	62	36	30	20	10	22	A-4b (8)	
VERY STIFF TO HARD, GRAY, **SILT AND CLAY**, TRACE SAND, TRACE GRAVEL, MOIST	598.6																	

Preliminary Plans - For Reference Only

STANDARD ODOT SOIL BORING LOG (11 X 17) - OH DOT.GDT - 1/3/24 14:20 - X:\ACTIVE PROJECTS\ACTIVE SOIL PROJECTS\1ARCHIVE BY YEAR\2022 ARCHIVE\CUY-90-16.28 (CCG3A - MOD#7\IGINT FILES\CUY-90-16.28 (CCG3A).GPJ

DESIGN AGENCY
NEAS
2800 CORPORATE EXCHANGE DR. SUITE 240
COLUMBUS, OH. 43231
TEL:614.714.0299
WWW.NEASINC.COM

DESIGNER MWJ & DT
REVIEWER BPA 08/23/24
PROJECT ID 82382
SUBSET 277 TOTAL 310
SHEET P 2663 TOTAL 2696

GEOTECHNICAL PROFILE - ROADWAY
WALL AI
BORING LOG B-170-3-20

MODEL: Sheet PAPERSIZE: 34x22 (in.) DATE: 3/28/2025 TIME: 10:51:11 AM USER: Asiddiqi
pw:\\mb-us-pw.bentley.com:mb-us-pw-03\Documents\Cleveland_OH\01_Projects\ODOT\District12\82382\400-Engineering\Geotechnical\Sheets\82382_ZL164.dgn

PID: 82382 | SFN: | PROJECT: CUY-90-16.28 (CCG3A) | STATION / OFFSET: 64+33, 77' LT. | START: 4/14/21 | END: 4/14/21 | PG 2 OF 3 | B-170-3-20

MATERIAL DESCRIPTION AND NOTES	ELEV.	DEPTHS	SPT/ RQD	N_{60}	REC (%)	SAMPLE ID	HP (tsf)	GRADATION (%) GR	CS	FS	SI	CL	ATTERBERG LL	PL	PI	WC	ODOT CLASS (GI)	PIEZ.
VERY STIFF TO HARD, GRAY, **SILT AND CLAY**, TRACE SAND, TRACE GRAVEL, MOIST *(continued)*	596.9	61	2 2 3	6	100	SS-21	2.50	-	-	-	-	-	-	-	-	28	A-6a (V)	
		62–64																
		65	4 5 8	15	100	SS-22	2.50	0	0	2	56	42	34	19	15	26	A-6a (10)	
		66–69																
		70	5 8 9	19	100	SS-23	3.50	-	-	-	-	-	-	-	-	20	A-6a (V)	
		71–74																
		75	5 10 10	23	100	SS-24	3.75	0	1	1	58	40	33	19	14	20	A-6a (10)	
		76–79																
		80	7 10 11	24	100	SS-25	4.25	-	-	-	-	-	-	-	-	19	A-6a (V)	
		81–84																
		85	7 7 7	16	100	SS-26	2.50	-	-	-	-	-	-	-	-	21	A-6a (V)	
		86–89																
		90	5 6 6	14	100	SS-27	2.25	0	0	5	51	44	33	18	15	23	A-6a (10)	
	563.6	91–94																
SOFT TO STIFF, GRAY, **CLAY**, SOME SILT, TRACE SAND, TRACE GRAVEL, MOIST		95	5 6 6	14	100	SS-28	0.75	-	-	-	-	-	-	-	-	30	A-7-6 (V)	
		96–99																
		100	4 5 7	14	100	SS-29	0.50	1	1	2	32	64	42	20	22	29	A-7-6 (13)	
		101–104																
		105	6 5 6	13	100	SS-30	0.75	-	-	-	-	-	-	-	-	28	A-7-6 (V)	
		106–109																
		110	7 8 8	18	100	SS-31	1.00	-	-	-	-	-	-	-	-	30	A-7-6 (V)	
		111–114																
		115	6 8 7	17	100	SS-32	1.00	0	1	2	30	67	47	22	25	31	A-7-6 (15)	
		116–119																
		120	7 7 9	18	100	SS-33	1.00	-	-	-	-	-	-	-	-	30	A-7-6 (V)	
		121																

Preliminary Plans - For Reference Only

STANDARD ODOT SOIL BORING LOG (11 X 17) - OH DOT.GDT - 1/3/24 14:20 - X:\ACTIVE PROJECTS\ACTIVE SOIL PROJECTS\1ARCHIVE BY YEAR\2022 ARCHIVE\CUY-90-16.28 (CCG3A - MOD#7)\GINT FILES\CUY-90-16.28 (CCG3A).GPJ

GEOTECHNICAL PROFILE - ROADWAY
WALL AI
BORING LOG B-170-3-20 (CONTINUED)

MODEL: Sheet PAPERSIZE: 34x22 (in.) DATE: 3/28/2025 TIME: 10:51:37 AM USER: Asiddiqi
pw:\\mb-us-pw.bentley.com:mb-us-pw-03\Documents\Cleveland_OH\01_Projects\ODOT\District12\82382\400-Engineering\Geotechnical\Sheets\82382_ZL165.dgn

PID: 82382 | SFN: | PROJECT: CUY-90-16.28 (CCG3A) | STATION / OFFSET: 64+33, 77' LT. | START: 4/14/21 | END: 4/14/21 | PG 3 OF 3 | B-170-3-20

MATERIAL DESCRIPTION AND NOTES	ELEV.	DEPTHS	SPT/ RQD	N_{60}	REC (%)	SAMPLE ID	HP (tsf)	GRADATION (%) GR	CS	FS	SI	CL	ATTERBERG LL	PL	PI	WC	ODOT CLASS (GI)	PIEZ.
SOFT TO STIFF, GRAY, **CLAY**, SOME SILT, TRACE SAND, TRACE GRAVEL, MOIST *(continued)*	535.0	123																
		124																
		125	8															
	530.4	126 EOB	9 8	19	100	SS-34	1.00	-	-	-	-	-	-	-	-	30	A-7-6 (V)	

Preliminary Plans - For Reference Only

NOTES: GROUNDWATER ENCOUNTERED AT 17.1' DURING DRILLING, 11.6' AFTER PIEZOMETER INSTALLATION. HOLE DID NOT CAVE. BORING OFFSET 16.0' EAST.
ABANDONMENT METHODS, MATERIALS, QUANTITIES: POURED 80 GAL. BENTONITE GROUT; POURED 2 BAGS CEMENT; POURED 12 BAGS SAND

STANDARD ODOT SOIL BORING LOG (11 X 17) - OH DOT.GDT - 1/3/24 14:20 - X:\ACTIVE PROJECTS\ACTIVE SOIL PROJECTS\1ARCHIVE BY YEAR\2022 ARCHIVE\CUY-90-16.28 (CCG3A - MOD#7)\GINT FILES\CUY-90-16.28 (CCG3A).GPJ

DESIGN AGENCY
EAS
2800 CORPORATE EXCHANGE DR. SUITE 240
COLUMBUS, OH. 43231
TEL:614.714.0299
WWW.AEASINC.COM

DESIGNER MW,J & DT
REVIEWER BPA 08/23/24
PROJECT ID 82382
SUBSET 279 TOTAL 310
SHEET P 2665 TOTAL 2696

GEOTECHNICAL PROFILE - ROADWAY
WALL AI
BORING LOG B-170-3-20 (CONTINUED)

MODEL: Sheet PAPERSIZE: 34x22 (in.) DATE: 3/28/2025 TIME: 10:51:53 AM USER: Asiddiqi
pw:\\mb-us-pw.bentley.com:mb-us-pw-03\Documents\Cleveland_OH\01_Projects\ODOT\District12\82382\400-Engineering\Geotechnical\Sheets\82382_ZL166.dgn

PROJECT: CUY-CCG3
TYPE: RETAINING WALL
PID: 82380 SFN:
START: 1/13/15 END: 1/13/15

DRILLING FIRM / OPERATOR: BARR / T.GILBERT
SAMPLING FIRM / LOGGER: BARR / D.KLIMKOWICZ
DRILLING METHOD: 3.25" HSA
SAMPLING METHOD: SPT / ST

DRILL RIG: CME 45B
HAMMER: CME AUTOMATIC
CALIBRATION DATE: 1/26/14
ENERGY RATIO (%): 77.4

STATION / OFFSET: 214+20, 82' RT.
ALIGNMENT: IR-90 EB
ELEVATION: 665.3 (MSL) EOB: 61.5 ft.
LAT / LONG: 41.500344, -81.669581

EXPLORATION ID B-172-0-14

MATERIAL DESCRIPTION AND NOTES	ELEV. 665.3	DEPTHS	SPT/ RQD	N_{60}	REC (%)	SAMPLE ID	HP (tsf)	GRADATION (%) GR	CS	FS	SI	CL	ATTERBERG LL	PL	PI	WC	ODOT CLASS (GI)	BACK FILL
6.0", **ASPHALT**	664.8																	
12.0", **GRANULAR BASE**	663.8																	
MEDIUM DENSE TO VERY DENSE, BROWN AND REDDISH BROWN, **COARSE AND FINE SAND** LITTLE SILT, TRACE GRAVEL, TRACE CLAY, CONTAINS BRICK FRAGMENTS, WET TO MOIST **(FILL)**			6 6 36	54	89	SS-1	-	9	18	49	18	6	NP	NP	NP	16	A-3a (0)	
@5.0'; SS-2 CONTAINS ASPHALT	658.3		8 7 6	17	11	SS-2	-	-	-	-	-	-	-	-	-	10	A-3a (V)	
MEDIUM STIFF, BROWN, **SANDY SILT**, LITTLE CLAY, TRACE GRAVEL, WET	657.3		2 2 2	5	100	SS-3A	0.60	0	15	29	38	18	23	15	8	23	A-4a (4)	
LOOSE TO MEDIUM DENSE, BROWN, **COARSE AND FINE SAND**, LITTLE SILT, TRACE CLAY, TRACE GRAVEL, WET TO MOIST						SS-3B	-	-	-	-	-	-	-	-	-	21	A-3a (V)	
			4 3 3	8	100	SS-4	-	0	5	78	14	3	NP	NP	NP	12	A-3a (0)	
			2 3 7	13	100	SS-5	-	-	-	-	-	-	-	-	-	10	A-3a (V)	
			5 5 5	13	100	SS-6	-	-	-	-	-	-	-	-	-	10	A-3a (V)	
	648.3																	
LOOSE TO MEDIUM DENSE, GRAYISH BROWN, **SILT**, LITTLE SAND, LITTLE CLAY, TRACE GRAVEL, SLIGHTLY ORGANIC, WET TO MOIST			3 2 4	8	100	SS-7	-	5	9	6	66	14	24	19	5	27	A-4b (8)	
	644.7		3 9 8	22	100	SS-8A	-	-	-	-	-	-	-	-	-	19	A-4b (V)	
MEDIUM DENSE TO DENSE, GRAYISH BROWN, **COARSE AND FINE SAND** LITTLE SILT, TRACE CLAY, TRACE GRAVEL, WET						SS-8B	-	-	-	-	-	-	-	-	-	4	A-3a (V)	
		W 642.8	3 5 8	17	100	SS-9	-	-	-	-	-	-	-	-	-	20	A-3a (V)	
			9 12 15	35	100	SS-10	-	1	2	76	18	3	NP	NP	NP	24	A-3a (0)	
			9 15 15	39	100	SS-11	-	-	-	-	-	-	-	-	-	21	A-3a (V)	
@30.0'; SS-12 CONTAINS FEW THIN SEAMS OF "SILTY AND CLAY"			5 8 13	27	100	SS-12	-	-	-	-	-	-	-	-	-	24	A-3a (V)	
			7 14 24	49	100	SS-13	-	-	-	-	-	-	-	-	-	22	A-3a (V)	
	627.0																	
MEDIUM DENSE TO DENSE, GRAYISH BROWN, **SANDY SILT**, LITTLE CLAY, TRACE GRAVEL, WET			9 14 15	37	100	SS-14	-	-	-	-	-	-	-	-	-	23	A-4a (V)	
@45.0'; UNIT WEIGHT: 125.1 PCF @ 26.9% MC					100	ST-15	-	0	1	48	38	13	NP	NP	NP	27	A-4a (3)	
	614.0		5 8 7	19	100	SS-16	-	-	-	-	-	-	-	-	-	27	A-4a (V)	
MEDIUM STIFF TO VERY STIFF, GRAYISH BROWN, **SILT AND CLAY**, LITTLE SAND, TRACE GRAVEL, MOIST TO WET																		
			4 5 8	17	100	SS-17	2.10	0	0	11	55	34	29	18	11	23	A-6a (8)	

STANDARD ODOT SOIL BORING LOG (11 X 17) - OH DOT.GDT - 6/22/22 18:14 - X:\ACTIVE PROJECTS\ACTIVE SOIL PROJECTS\1ARCHIVE BY YEAR\2017 ARCHIVE\CUY-CCG3 82380\GINT FILES\CUY-CCG3 MASTER - LR UPDATED.GPJ

Preliminary Plans - For Reference Only

DESIGN AGENCY: EAS
2800 CORPORATE EXCHANGE DR. SUITE 240 COLUMBUS, OH. 43231 TEL: 614.714.0299 WWW.NEISINC.COM

DESIGNER: MWJ & DT
REVIEWER: BPA 08/23/24
PROJECT ID: 82382
SHEET: 280 TOTAL: 310
SHEET: P 2666 TOTAL: 2696

GEOTECHNICAL PROFILE - ROADWAY
BRIDGE NO. CUY-90-1653R OVER EAST 14TH STREET
BORING LOG B-172-0-14

MODEL: Sheet PAPERSIZE: 34x22 (in.) DATE: 3/28/2025 TIME: 10:52:21 AM USER: Asiddiqi
pw:\\mb-us-pw.bentley.com:mb-us-pw-03\Documents\Cleveland_OH\01_Projects\ODOT\District12\82382\400-Engineering\Geotechnical\Sheets\82382_ZL167.dgn

PID: 82380 | SFN: | PROJECT: CUY-CCG3 | STATION / OFFSET: 214+20, 82' RT. | START: 1/13/15 | END: 1/13/15 | PG 2 OF 2 | B-172-0-14

MATERIAL DESCRIPTION AND NOTES	ELEV.	DEPTHS	SPT/ RQD	N_{60}	REC (%)	SAMPLE ID	HP (tsf)	GRADATION (%) GR	CS	FS	SI	CL	ATTERBERG LL	PL	PI	WC	ODOT CLASS (GI)	BACK FILL
@60.0'; SS-18 BECOMES GRAY	603.8	EOB 61	3 3 3	8	100	SS-18	0.60	-	-	-	-	-	-	-	-	27	A-6a (V)	

Preliminary Plans - For Reference Only

NOTES: GROUNDWATER ENCOUNTERED AT 22.5' DURING DRILLING. CAVE DEPTH 18.0'.
ABANDONMENT METHODS, MATERIALS, QUANTITIES: PLACED .5 BAG ASPHALT PATCH; SHOVELED SOIL CUTTINGS

STANDARD ODOT SOIL BORING LOG (11 X 17) - OH DOT.GDT - 6/22/22 18:14 - X:\ACTIVE PROJECTS\ACTIVE SOIL PROJECTS\1ARCHIVE BY YEAR\2017 ARCHIVE\CUY-CCG3 82380\GINT FILES\CUY-CCG3 MASTER - LR UPDATED.GPJ

DESIGN AGENCY
2800 CORPORATE EXCHANGE DR. SUITE 240 COLUMBUS, OH. 43231
TEL:614.714.0299
WWW.JNEASINC.COM
DESIGNER MW,J & DT
REVIEWER BPA 08/23/24
PROJECT ID 82382
SUBSET 281 TOTAL 310
SHEET P 2667 TOTAL 2696

GEOTECHNICAL PROFILE - ROADWAY
BRIDGE NO. CUY-90-1653R OVER EAST 14TH STREET
BORING LOG B-172-0-14 (CONTINUED)

MODEL: Sheet PAPERSIZE: 34x22 (in.) DATE: 3/28/2025 TIME: 10:52:37 AM USER: Asiddiqi
pw:\\mb-us-pw.bentley.com:mb-us-pw-03\Documents\Cleveland_OH\01_Projects\ODOT\District12\82382\400-Engineering\Geotechnical\Sheets\82382_ZL168.dgn

B-001-D-06

DLZ OHIO INC. * 6121 HUNTLEY ROAD, COLUMBUS, OHIO 43229 * (614)888-0040

Client: Ohio Department of Transportation - District 12 | *Project:* ODOT Innerbelt - Retaining Walls | *Job No.* 0422-1007.00

LOG OF: Boring W-DLZ-1 | *Location:* As per plan | *Date Drilled:* 9/26/06

WATER OBSERVATIONS: Water seepage at: 26.0'
Water level at completion: 47.0' (with augers removed)

Depth (ft)	Elev. (ft)	Blows per 6"	Recovery (in)	Sample No. Drive	Sample No. Press / Core	Hand Penetrometer (tsf)	DESCRIPTION	% Aggregate	% C. Sand	% M. Sand	% F. Sand	% Silt	% Clay	STANDARD PENETRATION (N) Natural Moisture Content, % - ● PL ⊢ LL Blows per foot - ○ 10 20 30 40
0	671.0						Topsoil - 6"							
0.5	670.5	2 4 4	18	1			FILL: Loose to medium dense brown GRAVEL WITH SAND AND SILT (A-2-4); damp.							
5		7 9 7	18	2										
		4 4 9	16	3			S-3 contains 1" silty clay seam.							
		6 7 7	15	4										
10		9 11 13	18	5				6	17	--	53	24		Non-Plastic
		6 11 12	18	6										
15		5 11 14	17	7										
		4 5 6	12	8			S-8 contains piece of wood.							
20		5 8 9	16	9										
		4 4 5	18	10			@ 23.5'; small brick fragments, piece of slag.							
25														
25.5	645.5	4 2 3	18	11			Very loose to loose gray GRAVEL WITH SAND AND SILT (A-2-4); wet.							
		1 1 1	12	12			S-12 contains wood fragments, 1" silty clay seam.							
30														

FILE: Innerbelt RW's Newest [11/25/2006 11:09 AM]

Preliminary Plans - For Reference Only

B-001-D-06

DLZ OHIO INC. * 6121 HUNTLEY ROAD, COLUMBUS, OHIO 43229 * (614)888-0040

Client: Ohio Department of Transportation - District 12 | *Project:* ODOT Innerbelt - Retaining Walls | *Job No.* 0422-1007.00

LOG OF: Boring W-DLZ-1 | *Location:* As per plan | *Date Drilled:* 9/26/06

WATER OBSERVATIONS: Water seepage at: 26.0'
Water level at completion: 47.0' (with augers removed)

Depth (ft)	Elev. (ft)	Blows per 6"	Recovery (in)	Sample No. Drive	Sample No. Press / Core	Hand Penetrometer (tsf)	DESCRIPTION	% Aggregate	% C. Sand	% M. Sand	% F. Sand	% Silt	% Clay	STANDARD PENETRATION (N) Natural Moisture Content, % - ● PL ⊢ LL Blows per foot - ○ 10 20 30 40
30	641.0						Very loose to loose gray GRAVEL WITH SAND AND SILT (A-2-4); wet.							
		WOH 2 4	18	13				0	0	--	88	9	3	Non-Plastic
35														
		2 5 11	16	14			S-14 contains wood fragment.							
40														
41.8	629.3						Dense gray SILT (A-4b), little fine sand; wet.							
		7 18 25	18	15										
45														
46.8	624.3						Stiff to very stiff gray SILT AND CLAY (A-6a), trace fine to coarse sand; moist.							
		7 8 8	18	16										
50														
		4 7 7	14	17		2.75								
55														
					P-1		@ 58.0'; 24" Press Tube - 0" Recovery.							
60														

FILE: Innerbelt RW's Newest [11/25/2006 11:09 AM]

DESIGN AGENCY
EAS
2800 CORPORATE EXCHANGE DR. SUITE 240
COLUMBUS, OH. 43231
TEL:614.714.0299
WWW.AESINC.COM

DESIGNER MWJ & DT
REVIEWER BPA 08/23/24
PROJECT ID 82382
SUBSET 282 TOTAL 310
SHEET P 2668 TOTAL 2696

GEOTECHNICAL PROFILE - ROADWAY
BRIDGE NO. CUY-90-1680 OVER IR-90 EB
BORING LOG B-001-D-06

MODEL: Sheet PAPERSIZE: 34x22 (in.) DATE: 3/28/2025 TIME: 10:52:54 AM USER: Asiddiqi
pw:\\mb-us-pw.bentley.com:mb-us-pw-03\Documents\Cleveland_OH\01_Projects\ODOT\District12\82382\400-Engineering\Geotechnical\Sheets\82382_ZL169.dgn

B-001-D-06

DLZ OHIO INC. * 6121 HUNTLEY ROAD, COLUMBUS, OHIO 43229 * (614)888-0040

Client: Ohio Department of Transportation - District 12 | *Project:* ODOT Innerbelt - Retaining Walls | *Job No.* 0422-1007.00

LOG OF: Boring W-DLZ-1 | *Location:* As per plan | *Date Drilled:* 9/26/06

WATER OBSERVATIONS: Water seepage at: 26.0'
Water level at completion: 47.0' (with augers removed)

Depth (ft)	Elev. (ft)	Blows per 6"	Recovery (in)	Sample No. Drive	Sample No. Press / Core	Hand Penetrometer (tsf)	DESCRIPTION	% Aggregate	% C. Sand	% M. Sand	% F. Sand	% Silt	% Clay
60	611.0						Stiff to very stiff gray SILT AND CLAY (A-6a), trace fine to coarse sand; moist.						
65		WOH 3 5	17	18		1.0							
70		WOH 1 2	18	19		0.5		0	0	--	1	51	48
75		2 5 8	16	20									
80		5 10 14	18	21		3.25							
85		4 5 10	18	22		2.75							
86.8	584.3						Stiff to very stiff gray SANDY SILT (A-4a); moist. @ 88.0'; 24" Press Tube - 24" recovery.						
90					P-2			0	0	--	2	62	36

STANDARD PENETRATION (N)
Natural Moisture Content, % - ●
PL ⊢⊣ LL
Blows per foot - ○
10 20 30 40

File: Innerbelt RW's Newest [11/25/2006 11:09 AM]

Preliminary Plans - For Reference Only

B-001-D-06

DLZ OHIO INC. * 6121 HUNTLEY ROAD, COLUMBUS, OHIO 43229 * (614)888-0040

Client: Ohio Department of Transportation - District 12 | *Project:* ODOT Innerbelt - Retaining Walls | *Job No.* 0422-1007.00

LOG OF: Boring W-DLZ-1 | *Location:* As per plan | *Date Drilled:* 9/26/06

WATER OBSERVATIONS: Water seepage at: 26.0'
Water level at completion: 47.0' (with augers removed)

Depth (ft)	Elev. (ft)	Blows per 6"	Recovery (in)	Sample No. Drive	Sample No. Press / Core	Hand Penetrometer (tsf)	DESCRIPTION	% Aggregate	% C. Sand	% M. Sand	% F. Sand	% Silt	% Clay
90	581.0						Stiff to very stiff gray SANDY SILT (A-4a); moist.						
95		2 7 10	18	23		1.75							
96.8	574.3						Stiff gray SILT AND CLAY (A-6a), trace fine sand; moist.						
100		1 6 11	18	24		1.75							
105		WOH 4 4	18	25		0.25	@ 103.5'; very soft to soft, trace fine to coarse sand, trace gravel.						
106.8	564.2						Very soft gray SILTY CLAY (A-6b), trace fine to coarse sand, trace gravel; moist.						
110		WOH WOH 1	18	26		0.0							
115		WOH WOH WOH	18	27		0.0		1	1	--	2	32	65
120		WOH WOH WOH	18	28		0.0							

STANDARD PENETRATION (N)
Natural Moisture Content, % - ●
PL ⊢⊣ LL
Blows per foot - ○
10 20 30 40

File: Innerbelt RW's Newest [11/25/2006 11:09 AM]

DESIGN AGENCY
EAS
2800 CORPORATE EXCHANGE DR. SUITE 240
COLUMBUS, OH. 43231
TEL:614.714.0299
WWW.NEASINC.COM

DESIGNER MWJ & DT
REVIEWER BPA 08/23/24
PROJECT ID 82382
SUBSET 283 TOTAL 310
SHEET P 2669 TOTAL 2696

GEOTECHNICAL PROFILE - ROADWAY
BRIDGE NO. CUY-90-1680 OVER IR-90 EB
BORING LOG B-001-D-06 (CONTINUED)

MODEL: Sheet PAPERSIZE: 34x22 (in.) DATE: 3/28/2025 TIME: 10:53:11 AM USER: Asiddiqi
pw:\\mb-us-pw.bentley.com:mb-us-pw-03\Documents\Cleveland_OH\01_Projects\ODOT\District12\82382\400-Engineering\Geotechnical\Sheets\82382_ZL170.dgn

B-001-D-06

DLZ OHIO INC. * 6121 HUNTLEY ROAD, COLUMBUS, OHIO 43229 * (614)888-0040

Client: Ohio Department of Transportation - District 12 | *Project:* ODOT Innerbelt - Retaining Walls | *Job No.* 0422-1007.00

LOG OF: Boring W-DLZ-1 | *Location:* As per plan | *Date Drilled:* 9/26/06

WATER OBSERVATIONS: Water seepage at: 26.0'
Water level at completion: 47.0' (with augers removed)

Depth (ft)	Elev. (ft)	Blows per 6"	Recovery (in)	Sample No. Drive	Sample No. Press / Core	Hand Penetrometer (tsf)	DESCRIPTION	% Aggregate	% C. Sand	% M. Sand	% F. Sand	% Silt	% Clay	STANDARD PENETRATION (N)
120	551.0						Very soft gray SILTY CLAY (A-6b), trace fine to coarse sand, trace gravel; moist.							Natural Moisture Content, % - ● PL ⊢—⊣ LL; Blows per foot - ○ (10 20 30 40)
		WOH WOH WOH	18	29		0.0								
125														
		WOH WOH 1	18	30		0.0								
130.0	541.0						Bottom of Boring - 130.0'							
135														
140														
145														
150														

File: Innerbelt RM's Newest [11/25/2006 11:09 AM]

Preliminary Plans - For Reference Only

SHEET P 2670 / TOTAL 2696	SUBSET 284 / TOTAL 310	PROJECT ID 82382	REVIEWER BPA 08/23/24	DESIGNER MWJ & DT	DESIGN AGENCY EAS 2800 CORPORATE EXCHANGE DR. SUITE 240 COLUMBUS, OH. 43231 TEL:614.714.0299 WWW.NEASINC.COM

GEOTECHNICAL PROFILE - ROADWAY
BRIDGE NO. CUY-90-1680 OVER IR-90 EB
BORING LOG B-001-D-06 (CONTINUED)

Preliminary Plans - For Reference Only

SHEET 3 C

STATE OF OHIO
DEPARTMENT OF HIGHWAYS
TESTING LABORATORY

LOG OF BORING

CO., RT. NO., SEC. CUY-42-18.81 BRIDGE NO. CUY-42-1896
REAR ABUTMENT UNDER CARNEGIE AVE.
LOCATION: T.H. 2 STA. 5+19 OFFSET 45' RT. FED. NO.

ELEV.	DEPTH	NO. BLOWS	SAMPLE NO.	DESCRIPTION
671.0	0			
	2			
	4			
	6			
	8			
	10			GRAY SANDY SILT A-4a
	12			
	14			
	16			
	18			
	20			
	22			
	24			
	26			
	28			
	30			
640.0	32	63	55584	GRAY SANDY SILT A-4a
	34			
635.0	36			

RC
12-31-56

SHEET 4 C

LOG OF BORING (CONTINUED)
BRIDGE NO. CUY-42-1896 T.H. 2

ELEV.	DEPTH	NO. BLOWS	SAMPLE NO.	DESCRIPTION
	38	63		GRAY SANDY SILT AND CLAY A-6a
	40			
630.0	42	62	55585	GRAY SANDY SILT A-4a
	44			
625.0	46			
	48	57		GRAY SANDY SILT AND GRAVEL A-2-4
	50			
620.0	52	23	55586	GRAY SILT A-4b
	54			
615.0	56			
	58	19	55587	GRAY SILT A-4b
	60			
610.0	62	18	55588	GRAY SILT A-4b
	64			
606.0	66			GRAY SILT CLAY A-6b
				BOTTOM OF HOLE
	68			
	70			
	72			
	74			
	76			
	78			
	80			
	82			

RC
12-31-56

DESIGN AGENCY
EAS
2800 CORPORATE EXCHANGE DR. SUITE 240
COLUMBUS, OH. 43231
TEL:614.714.0299
WWW.JNEASINC.COM

DESIGNER MW,J & DT
REVIEWER BPA 08/23/24
PROJECT ID 82382
SUBSET 285 TOTAL 310
SHEET P.2671 TOTAL 2696

GEOTECHNICAL PROFILE - ROADWAY
BRIDGE NO. CUY-90-1696 OVER IR-90
BORING LOG B-002-CR-57

DLZ OHIO INC. * 6121 HUNTLEY ROAD, COLUMBUS, OHIO 43229 * (614)888-0040

Client: Ohio Department of Transportation - District 12 | *Project:* ODOT Innerbelt - Retaining Walls | *Job No.* 0422-1007.00

LOG OF: Boring W-DLZ-2 | *Location:* As per plan | *Date Drilled:* 9/18/06 to 9/19/06

WATER OBSERVATIONS: Water seepage at: 26.0'
Water level at completion: ?

Depth (ft)	Elev. (ft)	Blows per 6"	Recovery (in)	Sample No. Drive	Sample No. Press / Core	Hand Penetrometer (tsf)	DESCRIPTION	% Aggregate	% C. Sand	% M. Sand	% F. Sand	% Silt	% Clay
0	668.0												
0.3	667.7						Asphalt Concrete - 4"						
		14 26 45	13	1			FILL: Very dense gray GRAVEL (A-1-a); contains brick; damp.						
3.0	665.0												
		7 17 10	8	2			FILL: Medium dense brown COARSE AND FINE SAND (A-3a), little gravel; contains brick, slag, roots; damp.						
5.5	662.5												
		4 6 6	15	3			POSSIBLE FILL: Loose to medium dense light brown FINE SAND (A-3); damp.						
		4 4 5	18	4			@ 8.0'; brown.						
10.5	657.5												
		4 4 5	18	5			Loose to medium dense brown GRAVEL WITH SAND AND SILT (A-2-4); damp.						
		1 3 10	18	6			@ 14.0'; 10" silty clay seam.						
		3 8 10	16	7			@ 16.0'; peppered.						
		8 11 12	17	8			@ 18.5'; gray.						
		8 11 11	17	9									
		8 12 14	14	10				0	1	--	94	5	
		14 14 13	18	11			@ 26.0'; wet.						
		2 8 11	15	12									

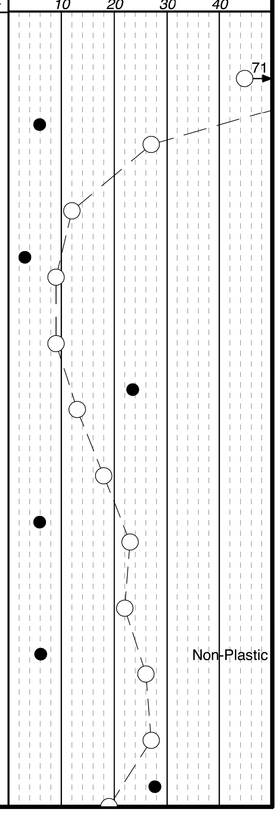

FILE: Innerbelt RW's Newest [11/25/2006 11:09 AM]

DLZ OHIO INC. * 6121 HUNTLEY ROAD, COLUMBUS, OHIO 43229 * (614)888-0040

Client: Ohio Department of Transportation - District 12 | *Project:* ODOT Innerbelt - Retaining Walls | *Job No.* 0422-1007.00

LOG OF: Boring W-DLZ-2 | *Location:* As per plan | *Date Drilled:* 9/18/06 to 9/19/06

WATER OBSERVATIONS: Water seepage at: 26.0'
Water level at completion: ?

Depth (ft)	Elev. (ft)	Blows per 6"	Recovery (in)	Sample No. Drive	Sample No. Press / Core	Hand Penetrometer (tsf)	DESCRIPTION	% Aggregate	% C. Sand	% M. Sand	% F. Sand	% Silt	% Clay
30	638.0						Medium dense gray COARSE AND FINE SAND (A-3a); wet.						
		3 9 15	18	13									
		3 12 16	17	14									
41.8	626.3						Dense gray SILT (A-4b), little fine sand, trace clay; wet.						
		6 15 25		15									
49.5	618.5	4 5 5	18	16		0.75	Medium stiff to stiff gray SANDY SILT (A-4a); moist.						
		2 3 6	14	17		1.0							
		4 7 9	18	18		---	@ 58.5'; contains organic material.						

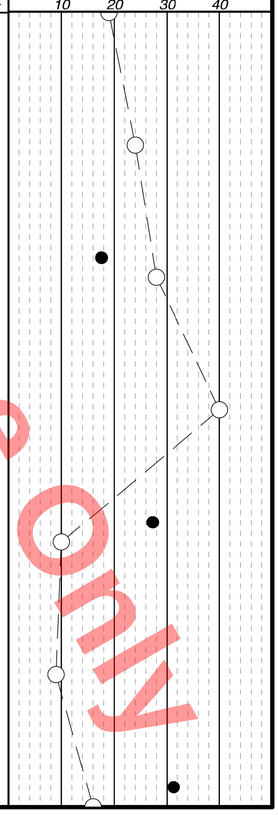

FILE: Innerbelt RW's Newest [11/25/2006 11:09 AM]

Preliminary Plans - For Reference Only

DESIGN AGENCY: REAS
2800 CORPORATE EXCHANGE DR. SUITE 240 COLUMBUS, OH. 43231 TEL:614.714.0299 WWW.NEASINC.COM

DESIGNER: MWJ & DT
REVIEWER: BPA 08/23/24
PROJECT ID: 82382
SUBSET: 286 TOTAL: 310
SHEET: P.2672 TOTAL: 2696

GEOTECHNICAL PROFILE - ROADWAY
WALL AG
BORING LOG B-002-D-06

MODEL: Sheet PAPERSIZE: 34x22 (in.) DATE: 3/28/2025 TIME: 10:54:04 AM USER: Asiddiqi
pw:\\mb-us-pw.bentley.com:mb-us-pw-03\Documents\Cleveland_OH\01_Projects\ODOT\District12\82382\400-Engineering\Geotechnical\Sheets\82382_ZL173.dgn

Preliminary Plans - For Reference Only

DLZ OHIO INC. * 6121 HUNTLEY ROAD, COLUMBUS, OHIO 43229 * (614)888-0040

Client: Ohio Department of Transportation - District 12 | *Project:* ODOT Innerbelt - Retaining Walls | *Job No.* 0422-1007.00

LOG OF: Boring W-DLZ-2 | *Location:* As per plan | *Date Drilled:* 9/18/06 to 9/19/06

WATER OBSERVATIONS: Water seepage at: 26.0'
Water level at completion: ?

Depth (ft)	Elev. (ft)	Blows per 6"	Recovery (in)	Sample No. Drive	Sample No. Press / Core	Hand Penetrometer (tsf)	DESCRIPTION	% Aggregate	% C. Sand	% M. Sand	% F. Sand	% Silt	% Clay
60	608.0						Medium stiff to stiff gray SANDY SILT (A-4a); moist.						
61.8	606.3						Very stiff gray SILT AND CLAY (A-6a), trace fine sand; moist.						
65		7 9 13	18	19		2.25							
70					P-1	2.5 TSF	@ 68.0'; 24" Press Tube - 24" Recovery.	0	0	--	1	62	37
75		2 4 6	18	20		2.25	@ 73.5'; trace fine and coarse sand, trace gravel.		0	--	1	45	54
80		4 7 10	14	21		1.75							
85		3 7 10	18	22		2.0							
90		5 7 10	18	23		1.25							

STANDARD PENETRATION (N)
Natural Moisture Content, % - ●
PL ⊢⊣ LL
Blows per foot - ○
10 20 30 40

FILE: Innerbelt RW's Newest [11/25/2006 11:09 AM]

DLZ OHIO INC. * 6121 HUNTLEY ROAD, COLUMBUS, OHIO 43229 * (614)888-0040

Client: Ohio Department of Transportation - District 12 | *Project:* ODOT Innerbelt - Retaining Walls | *Job No.* 0422-1007.00

LOG OF: Boring W-DLZ-2 | *Location:* As per plan | *Date Drilled:* 9/18/06 to 9/19/06

WATER OBSERVATIONS: Water seepage at: 26.0'
Water level at completion: ?

Depth (ft)	Elev. (ft)	Blows per 6"	Recovery (in)	Sample No. Drive	Sample No. Press / Core	Hand Penetrometer (tsf)	DESCRIPTION	% Aggregate	% C. Sand	% M. Sand	% F. Sand	% Silt	% Clay
90.1	578.0 577.9						Very stiff gray SILT AND CLAY (A-6a), trace fine to coarse sand, trace gravel; moist.						
95		12 16 15	17	24		2.5							
96.8	571.3						Soft to medium stiff gray SANDY SILT (A-4a), trace gravel; moist.						
100		2 3 7	16	25		0.5							
101.8	566.2						Very soft to soft SILT AND CLAY (A-6a), trace fine to coarse sand, trace gravel; moist.						
105		WOH WOH 2	18	26		0.0		1	3	--	8	48	40
106.8	561.2						Very soft gray SILTY CLAY (A-6b), trace fine to coarse sand, trace gravel; moist.						
110		WOH WOH WOH	18	27		0.0							
115		WOH WOH WOH	18	28		0.0							
120					29	0.0	@ 118.0'; 24" Press Tube - 0" recovery.						

STANDARD PENETRATION (N)
Natural Moisture Content, % - ●
PL ⊢⊣ LL
Blows per foot - ○
10 20 30 40

FILE: Innerbelt RW's Newest [11/25/2006 11:09 AM]

DESIGN AGENCY
EAS
2800 CORPORATE EXCHANGE DR. SUITE 400 COLUMBUS, OH. 43231
TEL:614.714.0299
WWW.AESINC.COM

DESIGNER MWJ & DT
REVIEWER BPA 08/23/24
PROJECT ID 82382
SUBSET 287 TOTAL 310
SHEET P 2673 TOTAL 2696

GEOTECHNICAL PROFILE - ROADWAY
WALL AG
BORING LOG B-002-D-06 (CONTINUED)

MODEL: Sheet PAPERSIZE: 34x22 (in.) DATE: 3/28/2025 TIME: 10:54:21 AM USER: Asiddiqi
pw:\\mb-us-pw.bentley.com:mb-us-pw-03\Documents\Cleveland_OH\01_Projects\ODOT\District12\82382\400-Engineering\Geotechnical\Sheets\82382_ZL174.dgn

DLZ OHIO INC. * 6121 HUNTLEY ROAD, COLUMBUS, OHIO 43229 * (614)888-0040

Client: Ohio Department of Transportation - District 12 | *Project:* ODOT Innerbelt - Retaining Walls | *Job No.* 0422-1007.00

LOG OF: Boring W-DLZ-2 | *Location:* As per plan | *Date Drilled:* 9/18/06 to 9/19/06

WATER OBSERVATIONS: Water seepage at: 26.0'
Water level at completion: ?

Depth (ft)	Elev. (ft)	Blows per 6"	Recovery (in)	Sample No. Drive	Sample No. Press / Core	Hand Penetrometer (tsf)	DESCRIPTION	% Aggregate	% C. Sand	% M. Sand	% F. Sand	% Silt	% Clay	STANDARD PENETRATION (N) / Natural Moisture Content, % - ● / PL — LL / Blows per foot - ○ (10 20 30 40)
120	548.0						Very soft gray SILTY CLAY (A-6b), trace fine to coarse sand, trace gravel; moist.							
125		WOH WOH WOH	18	30		0.0								
130.0	538.0	WOH WOH WOH	14	31		0.0								
							Bottom of Boring - 130.0'							
135														
140														
145														
150														

Plot: Innerbelt RW's Newest | 11/25/2006 11:09 AM |

Preliminary Plans - For Reference Only

DESIGN AGENCY
EAS
2800 CORPORATE EXCHANGE DR. SUITE 240
COLUMBUS, OH. 43231
TEL:614.714.0299
WWW.AEASINC.COM

DESIGNER MW,J & DT
REVIEWER BPA 08/23/24
PROJECT ID 82382
SUBSET 288 TOTAL 310
SHEET P 2674 TOTAL 2696

GEOTECHNICAL PROFILE - ROADWAY
WALL AG
BORING LOG B-002-D-06 (CONTINUED)

SHEET 3 B

B-002-T-58

STATE OF OHIO
DEPARTMENT OF HIGHWAYS
TESTING LABORATORY

LOG OF BORING

CO., RT. NO., SEC. CUY-42-18.81 BRIDGE NO. CUY-42-1881
REAR ABUTMENT UNDER E. 22nd ST.

LOCATION: T.H. 2 STA. 2+73 OFFSET 18' LT. FED. NO.

ELEV.	DEPTH	NO. BLOWS	SAMPLE NO.	DESCRIPTION
669.8	0			
	2			
	4			
664.8	6	6	58585	BR. SILTY GRAVELLY SAND A-3a
	8			
659.8	10	12	58586	BR. SILTY GRAVELLY SAND A-3a
	12			
	14			
654.8	16	50	58587	BROWN SILTY SAND A-3a
	18			
649.8	20	32	58588	GRAY SILTY GRAVELLY SAND A-3a
	22			
	24			
644.8	26	57	58589	DK. GRAY SILTY SAND A-3a
	28			
639.8	30	63	58590	DK. GRAY SILTY SAND A-3a
	32			
	34			
634.8	36	63	58591	DK. GRAY SILTY SAND A-3a

RC
2-26-57

SHEET 4 F

LOG OF BORING (CONTINUED) B-002-T-58

BRIDGE NO. CUY-42-1881 T.H. 2

ELEV.	DEPTH	NO. BLOWS	SAMPLE NO.	DESCRIPTION
	38			
629.8	40	32	58592	DK. GRAY SANDY SILT A-4a
	42			
	44			
624.8	46	14	58593	DK. GRAY SILT A-4b
	48			
619.8	50	12	58594	DK. GRAY SILT A-4b
	52			
	54			
614.8	56	17	58595	DK. GRAY SILT A-4b
	58			
609.8	60	14	58596	DK. GRAY SILT A-4b
	62			
	64			
604.8	66	14	58597	DK. GRAY SILT A-4b
	68			
599.8	70	15	58598	DK. GRAY SILTY CLAY A-6b
	72			
	74			
594.8	76	14	58599	DK. GRAY SILT A-4b
	78			
589.8	80	14	58600	DK. GRAY SILT A-4b
588.8	82			BOTTOM OF HOLE

RC
2-28-57

Preliminary Plans - For Reference Only

DESIGN AGENCY
REAS
2800 CORPORATE EXCHANGE DR. SUITE 240 COLUMBUS, OH. 43231 TEL:614.714.0299 WWW.NEASINC.COM

DESIGNER MWJ & DT
REVIEWER BPA 08/23/24
PROJECT ID 82382
SUBSET 289 TOTAL 310
SHEET P.2675 TOTAL 2696

GEOTECHNICAL PROFILE - ROADWAY
BRIDGE NO. CUY-90-1678 OVER IR-90
BORING LOG B-002-T-58

MODEL: Sheet PAPERSIZE: 34x22 (in.) DATE: 3/28/2025 TIME: 10:54:55 AM USER: Asiddiqi
pw:\\mb-us-pw.bentley.com:mb-us-pw-03\Documents\Cleveland_OH\01_Projects\ODOT\District12\82382\400-Engineering\Geotechnical\Sheets\82382_ZL176.dgn

DLZ OHIO INC. * 6121 HUNTLEY ROAD, COLUMBUS, OHIO 43229 * (614)888-0040

Client: Ohio Department of Transportation - District 12 | *Project:* ODOT Innerbelt - Retaining Walls | *Job No.* 0422-1007.00

LOG OF: Boring W-DLZ-3 | *Location:* As per plan | *Date Drilled:* 9/21/06

WATER OBSERVATIONS: Water seepage at: 23.9' - 49.0'
Water level at completion: 25.0' (inside hollowstem augers)

Depth (ft)	Elev. (ft)	Blows per 6"	Recovery (in)	Sample No. Drive	Sample No. Press / Core	Hand Penetrometer (tsf)	DESCRIPTION	GRADATION % Aggregate	% C. Sand	% M. Sand	% F. Sand	% Silt	% Clay	STANDARD PENETRATION (N) / Natural Moisture Content, % / PL — LL / Blows per foot
0	669.0													10 20 30 40
0.3	668.7	23 47 28	18	1			Asphalt Concrete - 3.5" FILL: Very dense gray GRAVEL WITH SAND (A-1-b); damp.							
3.0	666.0	6 8 23	12	2			FILL: Dense gray GRAVEL (A-1-a); damp.							
5.5	663.5	3 3 4	14	3			Loose brown GRAVEL WITH SAND AND SILT (A-2-4); damp.	10	22	--	53	15		Non-Plastic
		3 4 5	16	4										
10		3 4 5	18	5			@ 11.0'; little gravel.							
		3 5 13	18	6			@ 13.5'; medium dense. @ 14.0'; 6" clump of clayey silt.							
15		8 6 17	18	7			@ 16.7'; 6" clump of clayey silt.							
		3 11 17	18	8			@ 18.5'; trace gravel.							
20		7 14 17	16	9			@ 20.5'; dense, peppered.							
		5 7 11	18	10			@ 23.0' - 25.5'; medium dense, brown and gray, contains clumps of clayey silt.							
25		4 5 8	18	11			@ 25.5'; gray.							
28.0	641.0	9 11 13	18	12			Medium dense gray GRAVEL WITH SAND AND SILT (A-2-4); wet.							
30														

DLZ OHIO INC. * 6121 HUNTLEY ROAD, COLUMBUS, OHIO 43229 * (614)888-0040

Client: Ohio Department of Transportation - District 12 | *Project:* ODOT Innerbelt - Retaining Walls | *Job No.* 0422-1007.00

LOG OF: Boring W-DLZ-3 | *Location:* As per plan | *Date Drilled:* 9/21/06

WATER OBSERVATIONS: Water seepage at: 23.9' - 49.0'
Water level at completion: 25.0' (inside hollowstem augers)

Depth (ft)	Elev. (ft)	Blows per 6"	Recovery (in)	Sample No. Drive	Sample No. Press / Core	Hand Penetrometer (tsf)	DESCRIPTION	GRADATION % Aggregate	% C. Sand	% M. Sand	% F. Sand	% Silt	% Clay	STANDARD PENETRATION (N) / Natural Moisture Content, % / PL — LL / Blows per foot
30	639.0						Medium dense gray GRAVEL WITH SAND AND SILT (A-2-4); wet.							10 20 30 40
		5 8 9	18	13				0	0	--	67	33		Non-Plastic
35														
		WOH 3 9	18	14										
40														
		4 14 20	18	15										
45														
46.8	622.3						Stiff gray SILT (A-4b), trace fine to coarse sand; moist.							
		7 8 11	18	16		1.75								
50														
						3.5 TSF	Lean clay							
55						3.5 TSF	Lean clay @ 53.5'; 24" Press Tube - 24" Recovery.	0 0	0 0	-- --	1 1	69 69	30 30	
		9 12 14	18	17		4.0	@ 58.5' - 60.0'; very stiff to hard.	0	0	--	4	66	30	
60														

Preliminary Plans - For Reference Only

FILE: Innerbelt RW's Newest [11/25/2006 11:09 AM]

DESIGN AGENCY
EAS
2800 CORPORATE EXCHANGE DR. SUITE 400
COLUMBUS, OH. 43231
TEL:614.714.0299
WWW.NEASINC.COM
DESIGNER MWJ & DT
REVIEWER BPA 08/23/24

PROJECT ID 82382
SUBSET 290 TOTAL 310
SHEET P.2676 TOTAL 2696

GEOTECHNICAL PROFILE - ROADWAY
WALL AG
BORING LOG B-003-D-06

MODEL: Sheet PAPERSIZE: 34x22 (in.) DATE: 3/28/2025 TIME: 10:55:12 AM USER: Asiddiqi
pw:\\mb-us-pw.bentley.com:mb-us-pw-03\Documents\Cleveland_OH\01_Projects\ODOT\District12\82382\400-Engineering\Geotechnical\Sheets\82382_ZL177.dgn

DLZ OHIO INC. * 6121 HUNTLEY ROAD, COLUMBUS, OHIO 43229 * (614)888-0040

Client: Ohio Department of Transportation - District 12 | *Project:* ODOT Innerbelt - Retaining Walls | *Job No.* 0422-1007.00

LOG OF: Boring W-DLZ-3 | *Location:* As per plan | *Date Drilled:* 9/21/06

WATER OBSERVATIONS: Water seepage at: 23.9' - 49.0'
Water level at completion: 25.0' (inside hollowstem augers)

Depth (ft)	Elev. (ft)	Blows per 6"	Recovery (in)	Sample No. Drive	Sample No. Press / Core	Hand Penetrometer (tsf)	DESCRIPTION	GRADATION % Aggregate	% C. Sand	% M. Sand	% F. Sand	% Silt	% Clay
60	609.0						Medium stiff gray SILT (A-4b), trace fine to coarse sand; moist.						
		3 5 8	18	18		.75							
65													
		2 6 9	18	19		2.5	@ 68.5'; very stiff.						
70													
71.8	597.3						Very soft gray SILTY CLAY (A-6b), trace fine to coarse sand, trace gravel; moist.						
		WOH WOH 2	18	20		0.0							
75													
76.8	592.3						Stiff to very stiff gray SILT (A-4b), trace fine sand; moist.						
		1 5 8	18	21		2.5		0	0	--	0	65	35
80													
		1 5 10	18	22		1.5							
85													
		3 9 12	18	23		2.25							
90													

STANDARD PENETRATION (N)
Natural Moisture Content, % - ●
PL ⊢⊣ LL
Blows per foot - ○
10 20 30 40

FILE: Innerbelt RW's Newest [11/25/2006 11:09 AM]

DLZ OHIO INC. * 6121 HUNTLEY ROAD, COLUMBUS, OHIO 43229 * (614)888-0040

Client: Ohio Department of Transportation - District 12 | *Project:* ODOT Innerbelt - Retaining Walls | *Job No.* 0422-1007.00

LOG OF: Boring W-DLZ-3 | *Location:* As per plan | *Date Drilled:* 9/21/06

WATER OBSERVATIONS: Water seepage at: 23.9' - 49.0'
Water level at completion: 25.0' (inside hollowstem augers)

Depth (ft)	Elev. (ft)	Blows per 6"	Recovery (in)	Sample No. Drive	Sample No. Press / Core	Hand Penetrometer (tsf)	DESCRIPTION	GRADATION % Aggregate	% C. Sand	% M. Sand	% F. Sand	% Silt	% Clay
90	579.0						Stiff to very stiff gray SILT (A-4b), trace fine sand; moist.						
		6 10 18	18	24		3.25							
95													
					P-2	1.5	@ 98.0'; 24" Press Tube - 0" recovery.						
100													
		1 5 7	18	26		1.0	@ 103.5' - 105.0'; medium stiff to stiff.						
105													
106.8	562.2						Very stiff gray SANDY SILT (A-4a), trace gravel; moist.						
		6 12 16	18	27		2.75							
110													
111.8	557.2						Very soft gray SILTY CLAY (A-6b), trace fine to coarse sand, trace gravel; moist.						
		WOH WOH WOH	18	28		0.0							
115													
		WOH WOH 3	18	29		0.0		4	1	--	2	30	63
120													

STANDARD PENETRATION (N)
Natural Moisture Content, % - ●
PL ⊢⊣ LL
Blows per foot - ○
10 20 30 40

FILE: Innerbelt RW's Newest [11/25/2006 11:09 AM]

Preliminary Plans - For Reference Only

GEOTECHNICAL PROFILE - ROADWAY
WALL AG
BORING LOG B-003-D-06 (CONTINUED)

MODEL: Sheet PAPERSIZE: 34x22 (in.) DATE: 3/28/2025 TIME: 10:55:29 AM USER: Asiddiqi
pw:\\mb-us-pw.bentley.com:mb-us-pw-03\Documents\Cleveland_OH\01_Projects\ODOT\District12\82382\400-Engineering\Geotechnical\Sheets\82382_ZL178.dgn

DLZ OHIO INC. * 6121 HUNTLEY ROAD, COLUMBUS, OHIO 43229 * (614)888-0040

Client: Ohio Department of Transportation - District 12 | *Project:* ODOT Innerbelt - Retaining Walls | *Job No.* 0422-1007.00

LOG OF: Boring W-DLZ-3 | *Location:* As per plan | *Date Drilled:* 9/21/06

WATER OBSERVATIONS: Water seepage at: 23.9' - 49.0'
Water level at completion: 25.0' (inside hollowstem augers)

Depth (ft)	Elev. (ft)	Blows per 6"	Recovery (in)	Sample No. Drive	Sample No. Press / Core	Hand Penetrometer (tsf)	DESCRIPTION	GRADATION % Aggregate	% C. Sand	% M. Sand	% F. Sand	% Silt	% Clay	STANDARD PENETRATION (N)
120	549.0						Very soft gray SILTY CLAY (A-6b), trace fine to coarse sand, trace gravel; moist.							Natural Moisture Content, % - ● PL — LL; Blows per foot - ○ (10 20 30 40)
125		WOH WOH WOH	18	30		0.0								
		WOH WOH 1	18	31		0.0								
130.0	539.0						Bottom of Boring - 130.0'							
135														
140														
145														
150														

File: Innerbelt RW's Newest [11/25/2006 11:09 AM]

Preliminary Plans - For Reference Only

DESIGN AGENCY
2800 CORPORATE EXCHANGE DR. SUITE 240
COLUMBUS, OH. 43231
TEL:614.714.0299
WWW.MEASINC.COM

DESIGNER MWJ & DT
REVIEWER BPA 08/23/24
PROJECT ID 82382
SUBSET 292 TOTAL 310
SHEET P 2678 TOTAL 2696

GEOTECHNICAL PROFILE - ROADWAY
WALL AG
BORING LOG B-003-D-06 (CONTINUED)

MODEL: Sheet PAPERSIZE: 34x22 (in.) DATE: 3/28/2025 TIME: 10:55:39 AM USER: Asiddiqi
pw:\\mb-us-pw.bentley.com:mb-us-pw-03\Documents\Cleveland_OH\01_Projects\ODOT\District12\82382\400-Engineering\Geotechnical\Sheets\82382_ZL179.dgn

DLZ OHIO INC. * 6121 HUNTLEY ROAD, COLUMBUS, OHIO 43229 * (614)888-0040

Client: Ohio Department of Transportation - District 12 | *Project:* ODOT Innerbelt - Retaining Walls | *Job No.* 0422-1007.00

LOG OF: Boring W-DLZ-4 | *Location:* As per plan | *Date Drilled:* 10/2/06

WATER OBSERVATIONS: Water seepage at: 6.0' - 27.0'
Water level at completion: None (inside hollowstem augers)

Depth (ft)	Elev. (ft)	Blows per 6"	Recovery (in)	Sample No. Drive	Sample No. Press / Core	Hand Penetrometer (tsf)	DESCRIPTION	% Aggregate	% C. Sand	% M. Sand	% F. Sand	% Silt	% Clay
0	648.0						Asphalt Concrete - 6"						
1.3	646.7	17 5 6	16	1			Portland Cement Concrete - 9"						
							POSSIBLE FILL: Medium dense brown COARSE AND FINE SAND (A-3a), trace to little gravel; damp.						
		7 9 9	10	2									
5													
5.5	642.5	5 5 7	9	3			Medium dense brown GRAVEL WITH SAND AND SILT (A-2-4); wet.						
		5 7 10	16	4			S-4: gray, contains a petroleum-like odor.						
10													
10.5	637.5	3 12 20	18	5			Medium dense to dense gray SILT (A-4b), some to "and" fine sand; wet.						
		3 9 10	16	6									
15													
		6 9 11	17	7									
		5 6 13	18	8									
20													
20.5	627.5	7 7 7	16	9			Medium dense gray COARSE AND FINE SAND (A-3a), trace gravel; wet.						
		5 11 13	18	10A 10B			S-10A contains a petroleum-like odor.						
24.5	623.5						Medium dense gray SILT (A-4b), some fine sand; wet.						
25													
		12 10 7	18	11A 11B		1.5							
27.0	621.0						Stiff gray SILT AND CLAY (A-6a), trace fine to coarse sand; moist.						
28.0	620.0												
		2 3 4	12	12		1.0	Medium stiff to stiff gray SANDY SILT (A-4a); moist.						
30													

GRADATION

STANDARD PENETRATION (N)
Natural Moisture Content, % - ●
PL ⊢ LL
Blows per foot - ○
10 20 30 40

FILE: Innerbelt RW's Newest [11/25/2006 11:09 AM]

Preliminary Plans - For Reference Only

DLZ OHIO INC. * 6121 HUNTLEY ROAD, COLUMBUS, OHIO 43229 * (614)888-0040

Client: Ohio Department of Transportation - District 12 | *Project:* ODOT Innerbelt - Retaining Walls | *Job No.* 0422-1007.00

LOG OF: Boring W-DLZ-4 | *Location:* As per plan | *Date Drilled:* 10/2/06

WATER OBSERVATIONS: Water seepage at: 6.0' - 27.0'
Water level at completion: None (inside hollowstem augers)

Depth (ft)	Elev. (ft)	Blows per 6"	Recovery (in)	Sample No. Drive	Sample No. Press / Core	Hand Penetrometer (tsf)	DESCRIPTION	% Aggregate	% C. Sand	% M. Sand	% F. Sand	% Silt	% Clay
30	618.0						Stiff to very stiff gray SANDY SILT (A-4a); moist.						
31.8	616.2						Stiff gray SILT (A-4b), little clay, trace fine sand; moist to wet.						
					P-1	1.5		0	0	--	2	86	12
35													
36.8	611.2						Stiff to very stiff gray SANDY SILT (A-4a); moist.						
		3 6 8	18	13		1.5							
40													
		6 6 6	18	14		2.25							
45													
		3 4 5	18	15		2.0							
50													
51.8	596.3						Stiff to very stiff gray SILT AND CLAY (A-6a), trace fine to coarse sand; moist.						
		1 4 5	18	16		1.5							
55													
		5 10 15	16	17		3.0							
60													

GRADATION

STANDARD PENETRATION (N)
Natural Moisture Content, % - ●
PL ⊢ LL
Blows per foot - ○
10 20 30 40

FILE: Innerbelt RW's Newest [11/25/2006 11:09 AM]

GEOTECHNICAL PROFILE - ROADWAY
WALL AH
BORING LOG B-004-D-06

DESIGN AGENCY	DLZ
	2800 CORPORATE EXCHANGE DR. SUITE 400 COLUMBUS, OH. 43231 TEL:614.714.0299 WWW.DLZINC.COM
DESIGNER	MWJ & DT
REVIEWER	BPA 08/23/24
PROJECT ID	82382
SUBSET	293 TOTAL 310
SHEET	P 2679 TOTAL 2696

MODEL: Sheet PAPERSIZE: 34x22 (in.) DATE: 3/28/2025 TIME: 10:55:57 AM USER: Asiddiqi
pw:\\mb-us-pw.bentley.com:mb-us-pw-03\Documents\Cleveland_OH\01_Projects\ODOT\District12\82382\400-Engineering\Geotechnical\Sheets\82382_ZL180.dgn

DLZ OHIO INC. * 6121 HUNTLEY ROAD, COLUMBUS, OHIO 43229 * (614)888-0040

Client: Ohio Department of Transportation - District 12 | *Project:* ODOT Innerbelt - Retaining Walls | *Job No.* 0422-1007.00

LOG OF: Boring W-DLZ-4 | *Location:* As per plan | *Date Drilled:* 10/2/06

WATER OBSERVATIONS: Water seepage at: 6.0' - 27.0'
Water level at completion: None (inside hollowstem augers)

Depth (ft)	Elev. (ft)	Blows per 6"	Recovery (in)	Sample No. Drive	Sample No. Press / Core	Hand Penetrometer (tsf)	DESCRIPTION	% Aggregate	% C. Sand	% M. Sand	% F. Sand	% Silt	% Clay
60	588.0						Stiff to very stiff gray SILT AND CLAY (A-6a), trace fine to coarse sand; moist.						
		3 7 8	18	18		2.5							
65													
		WOH WOH 2	18	19		0.5	@ 68.5' - 70.0'; soft to medium stiff.						
70													
					P-2	1.5 TSF		0	0	--	1	61	38
75					P-2	1.5 TSF		0	0	--	1	61	38
77.0	571.0						Soft to medium stiff gray SILTY CLAY (A-6b), trace fine to coarse sand, trace gravel; moist.						
		WOH WOH 1	18	20		0.0	@ 78.5'; very soft.						
80													
		WOH WOH WOH	18	21		0.0							
85													
		WOH WOH 4	18	22		0.5	@ 88.5'; soft to medium stiff.						
90													

STANDARD PENETRATION (N)
Natural Moisture Content, % - ●
PL ⊢ LL
Blows per foot - ○
10 20 30 40

FILE: Innerbelt RW's Newest [11/25/2006 11:09 AM]

Preliminary Plans - For Reference Only

DLZ OHIO INC. * 6121 HUNTLEY ROAD, COLUMBUS, OHIO 43229 * (614)888-0040

Client: Ohio Department of Transportation - District 12 | *Project:* ODOT Innerbelt - Retaining Walls | *Job No.* 0422-1007.00

LOG OF: Boring W-DLZ-4 | *Location:* As per plan | *Date Drilled:* 10/2/06

WATER OBSERVATIONS: Water seepage at: 6.0' - 27.0'
Water level at completion: None (inside hollowstem augers)

Depth (ft)	Elev. (ft)	Blows per 6"	Recovery (in)	Sample No. Drive	Sample No. Press / Core	Hand Penetrometer (tsf)	DESCRIPTION	% Aggregate	% C. Sand	% M. Sand	% F. Sand	% Silt	% Clay
90	558.0						Soft to medium stiff gray SILTY CLAY (A-6b), trace fine to coarse sand, trace gravel; moist.						
		WOH 2 6	18	23		0.5							
95													
96.8	551.3						Soft to medium stiff gray SILT AND CLAY (A-6a), trace fine to coarse sand, trace gravel; damp to moist.						
		6 11 11	18	24		0.5							
100.0	548.0						Bottom of Boring - 100.0'						
105													
110													
115													
120													

STANDARD PENETRATION (N)
Natural Moisture Content, % - ●
PL ⊢ LL
Blows per foot - ○
10 20 30 40

FILE: Innerbelt RW's Newest [11/25/2006 11:09 AM]

DESIGN AGENCY
EAS
2800 CORPORATE EXCHANGE DR. SUITE 240
COLUMBUS, OH. 43231
TEL:614.714.0299
WWW.AEASINC.COM

DESIGNER MWJ & DT
REVIEWER BPA 08/23/24

PROJECT ID 82382
SUBSET 294 TOTAL 310
SHEET P 2680 TOTAL 2696

GEOTECHNICAL PROFILE - ROADWAY
WALL AH
BORING LOG B-004-D-06 (CONTINUED)

MODEL: Sheet PAPERSIZE: 34x22 (in.) DATE: 3/28/2025 TIME: 10:56:13 AM USER: Asiddiqi
pw:\\mb-us-pw.bentley.com:mb-us-pw-03\Documents\Cleveland_OH\01_Projects\ODOT\District12\82382\400-Engineering\Geotechnical\Sheets\82382_ZL181.dgn

DLZ OHIO INC. * 6121 HUNTLEY ROAD, COLUMBUS, OHIO 43229 * (614)888-0040

Client: Ohio Department of Transportation - District 12 | *Project:* ODOT Innerbelt - Retaining Walls | *Job No.* 0422-1007.00

LOG OF: Boring W-DLZ-5 | *Location:* As per plan | *Date Drilled:* 10/2/06

WATER OBSERVATIONS: Water seepage at: - Water level at completion: -

Depth (ft)	Elev. (ft)	Blows per 6"	Recovery (in)	Sample No. Drive	Sample No. Press / Core	Hand Penetrometer (tsf)	DESCRIPTION	% Aggregate	% C. Sand	% M. Sand	% F. Sand	% Silt	% Clay	STANDARD PENETRATION (N) / Natural Moisture Content, % / PL — LL / Blows per foot
0	649.0						Asphalt Concrete - 2"							
1.2	647.8	15 9 8	18	1			Portland Cement Concrete - 12"							
3.1	645.9						FILL: Medium dense brown GRAVEL WITH SAND AND SILT (A-2-4); damp.	2	12	--	54	32		Non-Plastic
5		2 3 3	14	2			FILL: Loose gray SILT (A-4b), some fine sand, little clay; contains wood fibers; moist.							
5.5	643.5	4 4 6	18	3			Loose to medium dense brown COARSE AND FINE SAND (A-3a); moist.							
8.0	641.0	7 7 9	14	4			Loose to medium dense gray COARSE AND FINE SAND (A-3a), trace to little clayey silt; wet.							
10		7 7 11	-	5										
13.0	636.0	5 4 5	-	6			Loose to medium dense gray SILT (A-4b), little to some fine sand, trace clay; wet.							
15		6 8 7	0	7										
20		8 15 16	6	8										
		13 12 13	18	9					0	--	20	70	10	Non-Plastic
25		6 7 11	18	10			S-10 contains a seam of coarse and fine sand.							
		8 9 12	15	11			S-11 contains a clayey silt seam.							
28.0	621.0	4 5 7	18	12		0.5	Soft to medium stiff gray SILT AND CLAY (A-6a), trace fine sand; moist.							
30														

FILE: Innerbelt RW's Newest [11/25/2006 11:09 AM]

Preliminary Plans - For Reference Only

DLZ OHIO INC. * 6121 HUNTLEY ROAD, COLUMBUS, OHIO 43229 * (614)888-0040

Client: Ohio Department of Transportation - District 12 | *Project:* ODOT Innerbelt - Retaining Walls | *Job No.* 0422-1007.00

LOG OF: Boring W-DLZ-5 | *Location:* As per plan | *Date Drilled:* 10/2/06

WATER OBSERVATIONS: Water seepage at: - Water level at completion: -

Depth (ft)	Elev. (ft)	Blows per 6"	Recovery (in)	Sample No. Drive	Sample No. Press / Core	Hand Penetrometer (tsf)	DESCRIPTION	% Aggregate	% C. Sand	% M. Sand	% F. Sand	% Silt	% Clay	STANDARD PENETRATION (N) / Natural Moisture Content, % / PL — LL / Blows per foot
30	619.0						Soft to medium stiff gray SILT AND CLAY (A-6a), trace fine sand; moist.							
35		2 4 5	18	13		0.75		0	0	--	2	66	32	
40		2 4 5	18	14	P-1	0.75		0	0	--	0	45	55	
45		2 4 6	14	15		0.75								
50		2 5 5	18	16		1.0	@ 48.5' - 50.0'; medium stiff to stiff.							
55		3 3 5	18	17		0.5								
60		4 6 8	17	18		1.5	@ 58.5' - 60.0'; stiff.							

FILE: Innerbelt RW's Newest [11/25/2006 11:09 AM]

SHEET P 2681	SUBSET 295	PROJECT ID 82382	REVIEWER BPA 08/23/24	DESIGNER MWJ & DT	DESIGN AGENCY DLZ 2800 CORPORATE EXCHANGE DR. SUITE 400 COLUMBUS, OH. 43231 TEL:614.714.0299 WWW.DLZNSINC.COM
TOTAL 2696	TOTAL 310				

GEOTECHNICAL PROFILE - ROADWAY
BRIDGE NO. CUY-90-1653L OVER EAST 14TH STREET
BORING LOG B-005-D-06

MODEL: Sheet PAPERSIZE: 34x22 (in.) DATE: 3/28/2025 TIME: 10:56:30 AM USER: Asiddiqi
pw:\\mb-us-pw.bentley.com:mb-us-pw-03\Documents\Cleveland_OH\01_Projects\ODOT\District12\82382\400-Engineering\Geotechnical\Sheets\82382_ZL182.dgn

DLZ OHIO INC. * 6121 HUNTLEY ROAD, COLUMBUS, OHIO 43229 * (614)888-0040

Client: Ohio Department of Transportation - District 12 | *Project:* ODOT Innerbelt - Retaining Walls | *Job No.* 0422-1007.00

LOG OF: Boring W-DLZ-5 | *Location:* As per plan | *Date Drilled:* 10/2/06

WATER OBSERVATIONS: Water seepage at: - Water level at completion: -

Depth (ft)	Elev. (ft)	Blows per 6"	Recovery (in)	Sample No. Drive	Sample No. Press / Core	Hand Penetrometer (tsf)	DESCRIPTION	GRADATION % Aggregate	% C. Sand	% M. Sand	% F. Sand	% Silt	% Clay
60	589.0						Soft to medium stiff gray SILT AND CLAY (A-6a), trace fine sand; moist.						
		3 3 5	18	19		0.5		0	0	--	0	58	42
65													
		3 5 5	18	20		1.5	@ 68.5'; stiff.						
70													
		5 6 7	1	21									
75													
76.8	572.3						Soft to medium stiff gray CLAY (A-7-6), trace fine to coarse sand, trace gravel; moist.						
		3 5 5	18	22		0.5							
80					P-2								
		1 3 4	18	23		0.25	@ 83.5'; very soft to soft.						
85													
		2 3 5	18	24		0.0							
90													

STANDARD PENETRATION (N) — Natural Moisture Content, % - ● — PL ⊢⊣ LL — Blows per foot - ○ — 10 20 30 40

FILE: Innerbelt RW's Newest [11/25/2006 11:09 AM]

Preliminary Plans - For Reference Only

DLZ OHIO INC. * 6121 HUNTLEY ROAD, COLUMBUS, OHIO 43229 * (614)888-0040

Client: Ohio Department of Transportation - District 12 | *Project:* ODOT Innerbelt - Retaining Walls | *Job No.* 0422-1007.00

LOG OF: Boring W-DLZ-5 | *Location:* As per plan | *Date Drilled:* 10/2/06

WATER OBSERVATIONS: Water seepage at: - Water level at completion: -

Depth (ft)	Elev. (ft)	Blows per 6"	Recovery (in)	Sample No. Drive	Sample No. Press / Core	Hand Penetrometer (tsf)	DESCRIPTION	GRADATION % Aggregate	% C. Sand	% M. Sand	% F. Sand	% Silt	% Clay
90	559.0						Very soft gray CLAY (A-7-6), trace fine to coarse sand, trace gravel; moist.						
		1 3 5	18	25		0.0		0	1	--	2	24	73
95													
		2 4 5	18	26		0.0							
100.0	549.0						Bottom of Boring - 100.0'						
105													
110													
115													
120													

STANDARD PENETRATION (N) — Natural Moisture Content, % - ● — PL ⊢⊣ LL — Blows per foot - ○ — 10 20 30 40

FILE: Innerbelt RW's Newest [11/25/2006 11:09 AM]

DESIGN AGENCY
EAS
2800 CORPORATE EXCHANGE DR. SUITE 240
COLUMBUS, OH. 43231
TEL:614.714.0299
WWW.NEASINC.COM

DESIGNER MWJ & DT
REVIEWER BPA 08/23/24
PROJECT ID 82382
SUBSET 296 TOTAL 310
SHEET P 2682 TOTAL 2696

GEOTECHNICAL PROFILE - ROADWAY
BRIDGE NO. CUY-90-1653L OVER EAST 14TH STREET
BORING LOG B-005-D-06 (CONTINUED)

MODEL: Sheet PAPERSIZE: 34x22 (in.) DATE: 3/28/2025 TIME: 10:56:47 AM USER: Asiddiqi
pw:\\mb-us-pw.bentley.com:mb-us-pw-03\Documents\Cleveland_OH\01_Projects\ODOT\District12\82382\400-Engineering\Geotechnical\Sheets\82382_ZL183.dgn

SHEET 3

B-008-C-57

STATE OF OHIO
DEPARTMENT OF HIGHWAYS
TESTING LABORATORY

LOG OF BORING

CO., RT. NO. SEC. CUY-42-18.81 BRIDGE NO. CUY-42-1885
FORWARD ABUTMENT UNDER CEDAR AVE.
LOCATION: T.H. 8 STA. 2+82 OFFSET CL FED. NO.

ELEV.	DEPTH	NO. BLOWS	SAMPLE NO.	DESCRIPTION
671.0	0			
	2			
	4			
666.0	6	10	58601	BROWN GRAVELLY SAND A-3a
	8			
661.0	10	10	58602	BROWN GRAVELLY SAND A-3a
	12			
	14			
656.0	16	15	58603	BROWN SILTY SAND A-3a
	18			
651.0	20	22	58604	BROWN SANDY SILT A-4a
	22			
	24			
646.0	26	24	58605	BROWN SILTY SAND A-3a
	28			
641.0	30	26	58606	BROWN SILTY SAND A-3a
	32			
	34			
636.0	36	25	58607	BROWN SILTY SAND A-3a

RC
2·26·57

SHEET 4

LOG OF BORING (CONTINUED)
BRIDGE NO. CUY-42-1885 T.H. 8

ELEV.	DEPTH	NO. BLOWS	SAMPLE NO.	DESCRIPTION
	38			
631.0	40	26	58608	BROWN SILTY SAND A-3a
	42			
	44			
626.0	46	15	58609	GRAY SILT A-4b
	48			
621.0	50	17	58610	GRAY SILT A-4b
	52			
	54			
616.0	56	16	58611	GRAY SILT A-4b
	58			
611.0	60	18	58612	GRAY SILT A-4b
	62			
	64			
606.0	66	18	58613	GRAY SILT & CLAY A-6a
	68			
601.0	70	21	58614	GRAY SILT A-4b
	72			
	74			
596.0	76	20	58615	GRAY SILT A-4b
	78			
591.0	80	22	58616	GRAY SILT & CLAY A-6a
	82			BOTTOM OF HOLE

RC
2·26·57

Preliminary Plans - For Reference Only

SHEET P 2683 TOTAL 2696
SUBSET 297 TOTAL 310
PROJECT ID 82382
REVIEWER BPA 08/23/24
DESIGNER MWJ & DT
DESIGN AGENCY
2800 CORPORATE EXCHANGE DR. SUITE 240 COLUMBUS, OH. 43231 TEL:614.714.0299 WWW.JNEASINC.COM

GEOTECHNICAL PROFILE - ROADWAY
BRIDGE NO. CUY-90-1680 OVER IR-90 EB
BORING LOG B-008-C-57

B-011-CR-56

SHEET 5 C

STATE OF OHIO
DEPARTMENT OF HIGHWAYS
TESTING LABORATORY

LOG OF BORING

CO., RT. NO., SEC. CUY-42-18.81 FORWARD ABUTMENT
BRIDGE NO. CUY-42-1896 UNDER CARNEGIE AVE.
LOCATION: T.H. 11 STA. 8+23 OFFSET 36' LT. FED. NO.

ELEV.	DEPTH	NO. BLOWS	SAMPLE NO.	DESCRIPTION
670.0	0			
	2			
	4			
	6			
	8			
	10			
	12			GRAY SANDY SILT A-4a
	14			
	16			
	18			
	20			
	22			
	24			
645.0	26	45	55575	BROWN GRAVEL A-1-a
	28			
640.0	30	65	55576	GRAY SILTY SAND A-3a
	32			
	34			
635.0	36	15	55577	GRAY SANDY SILT A-4a

RC
12-31-56

B-011-CR-56

SHEET 6 C

LOG OF BORING (CONTINUED)
BRIDGE NO. CUY-42-1896 T.H. 11

ELEV.	DEPTH	NO. BLOWS	SAMPLE NO.	DESCRIPTION
	38			
630.0	40	35	55578	GRAY SILTY SAND A-3a
	42			
	44			
625.0	46	67	55579	GRAY SANDY SILT A-4a
	48			
620.0	50	30	55580	GRAY SILT A-4b
	52			
	54			
615.0	56	16	55581	GRAY SILT A-4b
	58			
610.0	60	17	55582	GRAY SILT A-4b
	62			
	64			
605.0	66	24	55583	GRAY SILT A-4b
	68			
	70			
	72			
	74			
595.0	76			BOTTOM OF HOLE
	78			
	80			
	82			

RC
12-31-56

Preliminary Plans - For Reference Only

DESIGN AGENCY
REAS
2800 CORPORATE EXCHANGE DR. SUITE 240 COLUMBUS, OH. 43231 TEL:614.714.0299 WWW.NEASINC.COM

DESIGNER MWJ & DT
REVIEWER BPA 08/23/24
PROJECT ID 82382
SUBSET 298 TOTAL 310
SHEET P.2684 TOTAL 2696

GEOTECHNICAL PROFILE - ROADWAY
BRIDGE NO. CUY-90-1696 OVER IR-90
BORING LOG B-011-CR-56

Preliminary Plans - For Reference Only

SHEET 9

B-103-0-58

STATE OF OHIO
DEPARTMENT OF HIGHWAYS
TESTING LABORATORY

LOG OF BORING

CO., RT. NO., SEC. CUYAHOGA-CLEVELAND — BRIDGE NO. —
WILLOW INNERBELT INTERCHANGE

LOCATION: T.H. B-103 STA. — OFFSET — FED. NO. —

ELEV.	DEPTH	NO. BLOWS	SAMPLE NO.	DESCRIPTION
674.5	0			
	2			
	4			
669.5	6	7/8	85005	Brown Silty Gravelly Sand A-3a
	8			
664.5	10	15/8	85006	Brown Silty Sandy Gravel A-2-4
	12			
	14			
659.5	16	8/6	85007	Brown Silty Sand A-3a
	18			
654.5	20	7/50	85008	Brown Silty Gravelly Sand A-3a
	22			
	24			
649.5	26	14/30	85009	Brown & Gray Sandy Silt A-4a
	28			
644.5	30	14/26	85010	Gray Silty Sand A-3a
	32			
	34			
639.5	36	32/55	85011	Gray Sandy Silt A-4a

4-17-58
RC

SHEET 10

LOG OF BORING (CONTINUED) B-103-0-58

BRIDGE NO. — T.H. B-103

ELEV.	DEPTH	NO. BLOWS	SAMPLE NO.	DESCRIPTION
	38			
634.5	40	27/60	85012	Gray Sandy Silt A-4a
	42			
	44			
629.5	46	29/41	85013	Gray Silt A-4b
	48			
624.5	50	25/52	85014	Gray Silt A-4b
	52			
	54			
619.5	56	30/60	85015	Gray Silt A-4b
	58			
614.5	60	63/63	85016	Gray Silt A-4b
	62			
	64			
609.5	66	31/50	85017	Gray Silt A-4b
	68			
604.5	70	8/13	85018	Gray Silt & Clay A-6a
	72			
	74			
599.5	76	7/12	85019	Gray Silt & Clay A-6a
	78			
594.5	80	6/11	85020	Gray Silt & Clay A-6a
593.5	82			BOTTOM OF BORING

4-17-58
RC

GEOTECHNICAL PROFILE - ROADWAY
BRIDGE NO. CUY-90-1652S OVER EAST 14TH STREET AND RAMP H5
BORING LOG B-103-0-58

Preliminary Plans - For Reference Only

SHEET 11

B-106-0-58

STATE OF OHIO
DEPARTMENT OF HIGHWAYS
TESTING LABORATORY

LOG OF BORING

CO., RT. NO., SEC. CUYAHOGA-CLEVELAND _____ BRIDGE NO. _____
WILLOW INNERBELT INTERCHANGE _____

LOCATION: T.H. B-106 STA. _____ OFFSET 20' N. _____ FED. NO. _____

ELEV.	DEPTH	NO. BLOWS	SAMPLE NO.	DESCRIPTION
674.8	0			
	2			
	4			
669.8	6	6/7	85298	Brown Silty Gravelly Sand A-3a
	8			
664.8	10			
	12	7/4	85299	Brown Silty Gravelly Sand A-3a
	14			
659.8	16	16/16	85300	Brown Silty Gravelly Sand A-3a
	18			
654.8	20			
	22	12/24	85301	Brown Silty Sand A-3a
	24			
649.8	26	20/40	85302	Brown Sand A-3a
	28			
644.8	30			
	32	15/23	85303	Brown Silty Sand A-3a
	34			
639.8	36	14/26	-----	Br. Silty Sand A-3a

4-17-58
RC

SHEET 12

LOG OF BORING (CONTINUED) B-106-0-58

BRIDGE NO. _____ T.H. B-106

ELEV.	DEPTH	NO. BLOWS	SAMPLE NO.	DESCRIPTION
	38			
634.8	40			
	42	15/40	85304	Gray Silty Sand A-3a
	44			
629.8	46	16/42	85305	Gray Sandy Silt A-4a
	48			
624.8	50			
	52	27/41	85306	Gray Sandy Silt A-4a
	54			
619.8	56	9/19	85307	Gray Silt A-4b
	58			
614.8	60			
	62	12/26	85308	Gray Silt A-4b
	64			
609.8	66	12/26	85309	Gray Silt A-4b
	68			
604.8	70			
	72	24/28	85310	Gray Silt A-4b
	74			
599.8	76	7/8	85311	Gray Silt A-4b
	78			
594.8	80			
	82	12/19	85312	Gray Silt A-4b

4-17-58
RC

GEOTECHNICAL PROFILE - ROADWAY
BRIDGE NO. CUY-77-1587 RAMP A2 FLYOVER
BORING LOG B-106-0-58

DESIGN AGENCY
2800 CORPORATE EXCHANGE DR. SUITE 240
COLUMBUS, OH. 43231
TEL:614.714.0299
WWW.NEASINC.COM
DESIGNER MW.J & DT
REVIEWER BPA 08/23/24

PROJECT ID 82382
SUBSET 300 TOTAL 310
SHEET P.2686 TOTAL 2696

MODEL: Sheet PAPERSIZE: 34x22 (in.) DATE: 3/28/2025 TIME: 10:58:20 AM USER: Asiddiqi
pw:\\mb-us-pw.bentley.com:mb-us-pw-03\Documents\Cleveland_OH\01_Projects\ODOT\District12\82382\400-Engineering\Geotechnical\Sheets\82382_ZL187.dgn

LOG OF BORING (CONTINUED) B-106-0-58

BRIDGE NO. _____ T.H. B-106

ELEV.	DEPTH	NO. BLOWS	SAMPLE NO.	DESCRIPTION
	84			
589.8	86	26/42	85313	Gray Silt A-4b
	88			
585.8 584.8	90	-----	85314	Gray Sand A-3a
				BOTTOM OF BORING

4-17-58
RC

Preliminary Plans - For Reference Only

GEOTECHNICAL PROFILE - ROADWAY
BRIDGE NO. CUY-77-1587 RAMP A2 FLYOVER
BORING LOG B-106-0-58 (CONTINUED)

B-106-A-58

STATE OF OHIO
DEPARTMENT OF HIGHWAYS
TESTING LABORATORY

SHEET 3

LOG OF BORING

CO., RT. NO., SEC. CUYAHOGA-CLEVELAND BRIDGE NO. ____
WILLOW INNERBELT INTERCHANGE

LOCATION: T.H. B-106A STA. 67+13 OFFSET 20'RT FED. NO. ____

ELEV.	DEPTH	NO. BLOWS	SAMPLE NO.	DESCRIPTION
674.7	0			Brown Silty Sand A-3a
	2			
	4			
669.7	6	4/4	92887	Brown Silty Gravelly Sand A-3a
666.7	8		92939	Brown Silty Sandy Gravel A-2-4
664.7	10	3/4	-----	
	12			Brown Gravelly Sand A-3a
660.7	14			
659.7	16	30/30	92940 92888	Brown Silty Sand A-3a Brown Silty Sandy Gravel A-2-4
657.7	18		92943	Brown Gravelly Sand A-3a Brown Sandy Silt A-4a
654.7	20			
652.7	22	27/20	92889	Brown Gravel A-1-a
	24		92941	Brown Silty Gravelly Sand A-1-a
649.7	26	26/20	92890	Brown Silty Sand A-3a
646.7	28			
644.7	30		92942	Brown Silty Sand A-3a
	32	30/31	92891	Brown Silty Sand A-3a
	34			
639.7	36	17/37	92892	Brown Silty Sand A-3a

Direct Shear*
Quick-Undrained
$C=0.12\ T/ft^2$
$\phi=23°12'$
$\delta_w=108.0\ \#/ft^3$
WC=8%

Direct Shear*
Quick-Undrained
$C=0.0\ T/ft^2$
$\phi=48°03'$
$\delta_w=127.0\ \#/ft^3$
WC=21%

Direct Shear*
Quick-Undrained
$C=0.08\ T/ft^2$
$\phi=38°40'$
$\delta_w=140.0\ \#/ft^3$
WC=13%

Direct Shear*
Quick-Undrained
$C=0.08\ T/ft^2$
$\phi=31°26'$
$\delta_w=125.0\ \#/ft^3$
WC=17%

*Remolded

KMM 8/14/98

LOG OF BORING (CONTINUED) B-106-A-58 SHEET 4

BRIDGE NO. ____ T.H. B-106-A

ELEV.	DEPTH	NO. BLOWS	SAMPLE NO.	DESCRIPTION
	38			
634.7	40			
	42	27/32	92893	Brown Sandy Silt A-4a
	44			
628.7	46			
	48		93268	Gray Silt A-4b
624.7	50			
	52		93269	Gray Silt & Clay A-6a
	54			
619.7	56	40/44	92894	Gray Sandy Silt A-4a
	58			
614.7	60			
	62	8/9	92895	Gray Silt A-4b
	64			
609.7	66	12/16	92896	Gray Silt A-4b
	68			
604.7	70		93270	Gray Sandy Silt A-4a
	72		93271	Gray Silt A-4b
	74			
599.7	76	8/10	92897	Gray Silt and Clay A-6a
	78			
594.7	80			
	82	14/16	92898	Gray Silt and Clay A-6a

Direct Shear*
Quick-Undrained
$q_u=1.48\ T/ft^2$
$\delta_w=127.0\ \#/ft^3$
WC=21%

$q_u=0.59\ T/ft^2$
$\delta_w=117.3\ \#/ft^3$
WC=29%

Direct Shear*
Quick-Undrained
$C=0.02\ T/ft^2$
$\phi=5°43'$
$\delta_w=126.9\ \#/ft^3$
WC=23%

$q_u=1.86\ T/ft^2$
$\delta_w=144.1\ \#/ft^3$
WC=22%

*Remolded

Preliminary Plans - For Reference Only

Preliminary Plans - For Reference Only

SHEET 5

LOG OF BORING (CONTINUED) B-106-A-58

BRIDGE NO. _____ T.H. B-106-A

ELEV.	DEPTH	NO. BLOWS	SAMPLE NO.	DESCRIPTION
	84			
589.7	86	11/13	92899	Gray Silt A-4b
	88			
584.7	90		93272	Gray Silt A-4b — q_u=1.87 T/ft^2, γ_ω=128.5#/ft^3, WC=17%
	92			
	94			
579.7	96	16/18	92900	Gray Silt A-4b
	98			
574.7	100			
	102	17/17	92901	Gray Silt A-4b
	104			
569.7	106	10/11	92902	Gray Silt and Clay A-6a
	108			
564.7	110			
	112		93273	Gray Silt and Clay A-6a
	114			
	116			
561.7	118	13/13	92903	Gray Silty Clay A-6b
559.7	120		93274	Gray Clay A-7-6 — Direct Shear*, Quick Consolidated Undrained C=0.02 T/ft^2, ϕ=11°19', γ_ω=118.7 #/ft^3, WC=35%
	122			
	124			
554.7	126		93275	Gray Silt and Clay A-6a
	128			

*Remolded

SHEET 6

LOG OF BORING (CONTINUED) B-106-A-58

BRIDGE NO. _____ T.H. B-106-A

ELEV.	DEPTH	NO. BLOWS	SAMPLE NO.	DESCRIPTION
544.7	130			
	132	9/12	92904	Gray Clay A-7-6
	134			
539.7	136	11/13	92905	Gray Silty Clay A-6b
	138			
536.2	140		93276	Gray Clay A-7-6
534.7				Bottom of Boring

Direct shear tests are quick unconsolidated undrained unless otherwise noted.

DESIGN AGENCY	2800 CORPORATE EXCHANGE DR. SUITE 240 COLUMBUS, OH. 43231 TEL:614.714.0299 WWW.MEASINC.COM
DESIGNER	MWJ & DT
REVIEWER	BPA 08/23/24
PROJECT ID	82382
SUBSET	303
TOTAL SHEET	310
SHEET	P 2689
TOTAL	2696

GEOTECHNICAL PROFILE - ROADWAY
BRIDGE NO. CUY-90-1653R OVER EAST 14TH STREET
BORING LOG B-106-A-58 (CONTINUED)

Preliminary Plans - For Reference Only

SHEET 14

STATE OF OHIO
DEPARTMENT OF HIGHWAYS
TESTING LABORATORY

LOG OF BORING

CO., RT. NO., SEC. CUYAHOGA-CLEVELAND BRIDGE NO. _____
WILLOW INNERBELT INTERCHANGE

LOCATION: T.H. B-111 STA. _____ OFFSET _____ FED. NO. _____

ELEV.	DEPTH	NO. BLOWS	SAMPLE NO.	DESCRIPTION
673.0	0			
	2			Brick & Cinders
	4			
688.0	6	9/10	84989	Brown Silty Sand A-3a
	8			
663.0	10	7/17	84990	Brown Silty Gravelly Sand A-3a
	12			
	14			
658.0	16	8/33	84991	Brown Silty Sand A-3a
	18			
653.0	20	6/12	84992	Brown Silty Sand A-3a
	22			
	24			
648.0	26	9/17	84993	Brown Silty Sand A-3a
	28			
643.0	30	15/25	84994	Brown Silty Sand A-3a
	32			
	34			
638.0	36	38/55	84995	Brown Silty Sand A-3a

4-17-58
RC

SHEET 15

LOG OF BORING (CONTINUED)

BRIDGE NO. _____ T.H. B-111

ELEV.	DEPTH	NO. BLOWS	SAMPLE NO.	DESCRIPTION
	38			
633.0	40	10/26	84996	Gray Sandy Silt A-4a
	42			
	44			
628.0	46	17/17	84997	Gray Silt A-4b
	48			
623.0	50	9/12	84998	Gray Silt A-4b
	52			
	54			
618.0	56	12/27	84999	Gray Silt A-4b
	58			
613.0	60	7/13	85000	Gray Silt A-4b
	62			
	64			
608.0	66	9/17	85001	Gray Silt A-4b
	68			
603.0	70	15/19	85002	Gray Silt A-4b
	72			
	74			
598.0	76	12/15	85003	Gray Silt A-4b
	78			
593.0	80			
592.0		15/30	85004	Gray Silt A-4b
	82			BOTTOM OF BORING

4-17-58
RC

MODEL: Sheet PAPERSIZE: 34x22 (in.) DATE: 3/28/2025 TIME: 10:59:41 AM USER: Asiddiqi
pw:\\mb-us-pw.bentley.com:mb-us-pw-03\Documents\Cleveland_OH\01_Projects\ODOT\District12\82382\400-Engineering\Geotechnical\Sheets\82382_ZL191.dgn

STATE OF OHIO
DEPARTMENT OF HIGHWAYS
TESTING LABORATORY

B-114-0-58

LOG OF BORING

CO., RT. NO., SEC. CUYAHOGA-CLEVELAND BRIDGE NO. ———
WILLOW INNERBELT INTERCHANGE ———

LOCATION: T.H. B-114 STA. ——— OFFSET ——— FED. NO. ———

ELEV.	DEPTH	NO. BLOWS	SAMPLE NO.	DESCRIPTION
678.6	0			
	2			
	4			
673.6	6	-----	------	Brown Sandy Gravel-Fill A-1-b
	8			
668.6	10	7/7	85279	Brown Sand A-3a
	12			
	14			
663.6	16	10/10	85280	Brown Gravel & Sandstone Fragments A-1-a
	18			
658.6	20	23/27	85281	Gray Sand & Stone Fragments A-1-b
	22			
	24			
653.6	26	25/30	85282	Gray Gravelly Sand A-3a
	28			
648.6	30	25/38	85283	Gray Silty Gravelly Sand A-3a
	32			
	34			
643.6	36	45/56	85284	Gray Silty Sand A-3a

4-17-58
RC

LOG OF BORING (CONTINUED) B-114-0-14

BRIDGE NO. ——— T.H. B-114

ELEV.	DEPTH	NO. BLOWS	SAMPLE NO.	DESCRIPTION
	38			
638.6	40	13/13	85285	Gray Silty Sand A-3a
	42			
	44			
633.6	46	8/17	85286	Gray Sandy Silt A-4a
	48			
628.6	50	37/40	85287	Gray Silt A-4b
	52			
	54			
623.6	56	21/24	85288	Gray Silt A-4b
	58			
618.6	60	18/33	85289	Gray Silt A-4b (Layer of Fine Sand & Gravel)
	62			
	64			
613.6	66	10/16	85290	Gray Sandy Silt A-4a
	68			
	70			
607.6	72	10/18	85291	Gray Silt A-4b
	74			
603.6	76	20/27	85292	Gray Silt A-4b
	78			
598.6	80	-----	85293	Gray Silt A-4b
	82			

4-17-58
RC

Preliminary Plans - For Reference Only

GEOTECHNICAL PROFILE - ROADWAY
RAMP H5
BORING LOG B-114-0-58

MODEL: Sheet PAPERSIZE: 34x22 (in.) DATE: 3/28/2025 TIME: 11:00:21 AM USER: Asiddiqi
pw:\\mb-us-pw.bentley.com:mb-us-pw-03\Documents\Cleveland_OH\01_Projects\ODOT\District12\82382\400-Engineering\Geotechnical\Sheets\82382_ZL192.dgn

LOG OF BORING (CONTINUED) B-114-0-58 SHEET 18

BRIDGE NO. _____ T.H. B-114

ELEV.	DEPTH	NO. BLOWS	SAMPLE NO.	DESCRIPTION
593.6	84	5/13	85294	Gray Silt A-4b
	86			
	88			
588.6	90	7/18	85295	Gray Silt A-4b
	92			
	94			
583.6	96	11/16	85296	Gray Silt A-4b
	98			
578.6	100			
577.6		14/19	85297	Gray Silt A-4b
				BOTTOM OF BORING

4-17-58 AC

BK.

Preliminary Plans - For Reference Only

GEOTECHNICAL PROFILE - ROADWAY
RAMP H5
BORING LOG B-114-0-58 (CONTINUED)

SHEET 21

B-121-0-58

STATE OF OHIO
DEPARTMENT OF HIGHWAYS
TESTING LABORATORY

LOG OF BORING

CO., RT. NO., SEC. CUYAHOGA-CLEVELAND _____ BRIDGE NO. CUY _____
WILLOW INNERBELT INTERCHANGE _____

LOCATION: T.H. B-121 STA. _____ OFFSET _____ FED. NO. _____

ELEV.	DEPTH	NO. BLOWS	SAMPLE NO.	DESCRIPTION
678.1	0			
	2			
	4			
673.1	6	7/10	86061	Brown Sand A-3a
	8			
668.1	10	7/13	86062	Brown Silty Sand A-3a
	12			
	14			
663.1	16	12/16	86063	Brown Silty Sand A-3a
	18			
658.1	20	17/26	86064	Brown Silt A-4b
	22			
	24			
653.1	26	23/25	86065	Brown Silty Gravelly Sand A-3a
	28			
648.1	30	26/58	86066	Grayish-Brown Silty Sand A-3a
	32			
	34			
643.1	36	16/18	86067	Grayish-Brown Sandy Silt A-4a

4-17-58
EC

OK

SHEET 22

LOG OF BORING (CONTINUED) B-121-0-58
BRIDGE NO. CUYAHOGA-CLEVELAND WILLOW INNERBELT INTERCH T.H. B-121

ELEV.	DEPTH	NO. BLOWS	SAMPLE NO.	DESCRIPTION
	38			
638.1	40	29/44	86068	Gray Silty Sand A-3a
	42			
	44			
633.1	46	21/36	86069	Gray Silt A-4b
	48			
628.1	50	20/42	86070	Gray Silt A-4b
	52			
	54			
623.1	56	15/20	86071	Gray Silt A-4b
	58			
618.1	60	32/43	86072	Gray Silt A-4b
	62			
	64			
613.1	66	32/24	86073	Gray Silt A-4b
	68			
608.1	70	10/16	86074	Gray Silt A-4b
	72			
	74			
603.1	76	6/9	86075	Gray Silt A-4b
	78			
598.1	80	14/21	86076	Gray Silt A-4b
	82			

4-17-58
EC

AK

Preliminary Plans - For Reference Only

GEOTECHNICAL PROFILE - ROADWAY
BRIDGE NO. CUY-77-1587 RAMP A2 FLYOVER
BORING LOG B-121-0-58

MODEL: Sheet PAPERSIZE: 34x22 (in.) DATE: 3/28/2025 TIME: 11:01:05 AM USER: Asiddiqi
pw:\\mb-us-pw.bentley.com:mb-us-pw-03\Documents\Cleveland_OH\01_Projects\ODOT\District12\82382\400-Engineering\Geotechnical\Sheets\82382_ZL194.dgn

SHEET 23

LOG OF BORING (CONTINUED) B-121-0-58

BRIDGE NO. CUYAHOGA-CLEVELAND WILLOW INNERBELT INTERCH. T.H. B-121

ELEV.	DEPTH	NO. BLOWS	SAMPLE NO.	DESCRIPTION
593.1 592.1	84 86	12/23	86077	Gray Silt A-4b BOTTOM OF BORING
	42			
	44			
	46			
	48			
	50			
	52			
	54			
	56			
	58			
	60			
	62			
	64			
	66			
	68			
	70			
	72			
	74			
	76			
	78			
	80			
	82			

4-17-58
RC

Preliminary Plans - For Reference Only

GEOTECHNICAL PROFILE - ROADWAY
BRIDGE NO. CUY-77-1587 RAMP A2 FLYOVER
BORING LOG B-121-0-58 (CONTINUED)

MODEL: Sheet PAPERSIZE: 34x22 (in.) DATE: 3/28/2025 TIME: 11:01:18 AM USER: Asiddiqi
pw:\\mb-us-pw.bentley.com:mb-us-pw-03\Documents\Cleveland_OH\01_Projects\ODOT\District12\82382\400-Engineering\Geotechnical\Sheets\82382_ZL195.dgn

Preliminary Plans - For Reference Only

SHEET 24

B-125-0-58

STATE OF OHIO
DEPARTMENT OF HIGHWAYS
TESTING LABORATORY

LOG OF BORING

CO., RT. NO., SEC. CUYAHOGA-CLEVELAND WILLOW INNERBELT INTERCHANGE BRIDGE NO. _____

LOCATION: T.H. B-125 STA. _____ OFFSET 12' E. FED. NO. _____

ELEV.	DEPTH	NO. BLOWS	SAMPLE NO.	DESCRIPTION
677.0	0			
	2			
	4			
672.0	6	----	86592	Sand (Fill Material) A-3a
	8			
	10			
667.0	12	5/8	86593	Gravel, Sand & Cinder Fill A-1-b
	14			
662.0	16	28/27	86594	Brown Silty Sand A-3a
	18			
	20			
657.0	22	15/16	86595	Brown Sand A-3a
	24			
652.0	26	18/42	86596	Brown Sand A-3a
	28			
647.0	30	20/26	86597	Gray Silty Sand A-3a
	32			
	34			
642.0	36	14/25	86598	Gray Sandy Silt A-4a

4-17-58
RC

ck

SHEET 25

LOG OF BORING (CONTINUED) B-125-0-58

BRIDGE NO. _____ T.H. B-125

ELEV.	DEPTH	NO. BLOWS	SAMPLE NO.	DESCRIPTION
	38			
637.0	40	11/14	86599	Gray Silty Sand A-3a
	42			
	44			
632.0	46	11/16	86600	Gray Silt A-4b
	48			
627.0	50	8/18	86601	Gray Sandy Silt A-4a
	52			
	54			
622.0	56	29/36	86602	Gray Silt A-4b
	58			
617.0	60	20/30	86603	Gray Silt & Clay A-6a
	62			
	64			
612.0	66	13/26	86604	Gray Silt A-4b
	68			
607.0	70	15/18	86605	Gray Silt A-4b
	72			
	74			
602.0	76	17/29	86606	Gray Silt A-4b
	78			
597.0	80	24/44	86607	Gray Silt A-4b
	82			

4-17-58
RC

ck

SHEET P 2695 | TOTAL 2696
SUBSET 309 | TOTAL 310
PROJECT ID 82382
REVIEWER BPA 08/23/24
DESIGNER MWJ & DT

DESIGN AGENCY
2800 CORPORATE EXCHANGE DR. SUITE 240
COLUMBUS, OH. 43231
TEL: 614.714.0299
WWW.NEASINC.COM

GEOTECHNICAL PROFILE - ROADWAY
BRIDGE NO. CUY-90-1678 OVER IR-90
BORING LOG B-125-0-58

MODEL: Sheet PAPERSIZE: 34x22 (in.) DATE: 3/28/2025 TIME: 11:01:41 AM USER: Asiddiqi
pw:\\mb-us-pw.bentley.com:mb-us-pw-03\Documents\Cleveland_OH\01_Projects\ODOT\District12\82382\400-Engineering\Geotechnical\Sheets\82382_ZL196.dgn

SHEET 26

LOG OF BORING (CONTINUED) B-125-0-58

BRIDGE NO. _____ T.H. B-125

ELEV.	DEPTH	NO. BLOWS	SAMPLE NO.	DESCRIPTION
	84			
592.0	86	20/40	86608	Gray Silt A-4b
	88			Coarse Brown Sand & Large Gravel A-1-b
587.0	90	22/36	86609	Gray Silt A-4b
	92			
	94			
582.0	96	25/39	86610	Gray Silt A-4b
	98			
577.0	100	6/10	86611	Gray Silt A-4b
	102			
	104			
572.0	106	6/8	86612	Gray Silt & Clay A-6a
	108			
567.0	110	7/10	86613	Gray Silty Clay A-6b
	112			
	114			
562.0	116	6/9	86614	Gray Silty Clay A-6b
	118			
557.0	120	6/9	86615	Gray Silty Clay A-6b
	122			
	124			
552.0	126	8/8	86616	Gray Silty Clay A-6b
	128			

4-17-58
RC

OK

SHEET 27

LOG OF BORING (CONTINUED) B-125-0-58

BRIDGE NO. _____ T.H. B-125

ELEV.	DEPTH	NO. BLOWS	SAMPLE NO.	DESCRIPTION
547.0	130	7/12	86617	Gray Silty Clay A-6b
	132			
	134			
542.0	136	8/18	86618	Gray Silt & Clay A-6a
	138			
537.0	140	12/20	86619	Gray Silt A-4b
	142			
	144			
532.0	146	9/26	86620	Gray Silt A-4b
	148			
527.0	150			
526.0		11/26	86621	Gray Silt A-4b
				BOTTOM OF BORING

4-17-58
RC

OK

Preliminary Plans - For Reference Only

DESIGN AGENCY
EAS
2800 CORPORATE EXCHANGE DR. SUITE 240
COLUMBUS, OH. 43231
TEL:614.714.0299
WWW.AEASINC.COM

DESIGNER MWJ & DT
REVIEWER BPA 08/23/24
PROJECT ID 82382
SUBSET 310 TOTAL 310
SHEET P.2696 TOTAL 2696

GEOTECHNICAL PROFILE - ROADWAY
BRIDGE NO. CUY-90-1678 OVER IR-90
BORING LOG B-125-0-58 (CONTINUED)