STATE OF OHIO

DEPARTMENT OF TRANSPORTATION

HAM-75-7.85

CITY OF CINCINNATI

HAMILTON COUNTY

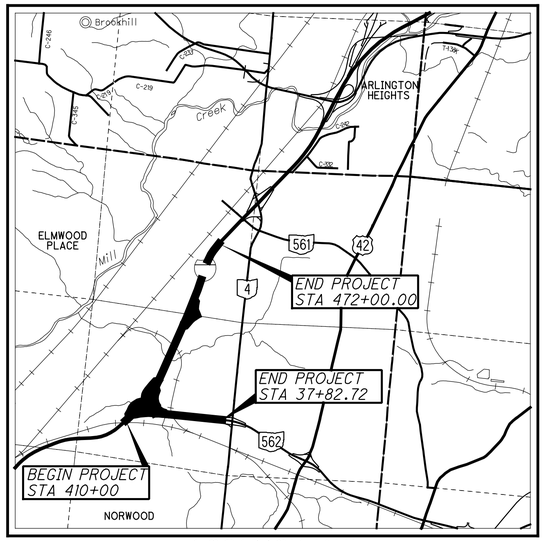

LOCATION MAP

LATITUDE: N39°11'20" LONGITUDE: W84°28'50"

SCALE IN MILES

0 1/2 1

N

PORTION TO BE IMPROVED

INTERSTATE HIGHWAY

FEDERAL ROUTES

STATE ROUTES

COUNTY & TOWNSHIP ROADS

OTHER ROADS

DESIGN DESIGNATION - I.R. 75, S.R. 562 & TOWNE ST

	I.R. 75	S.R. 562	TOWNE ST
CURRENT ADT (2010)	173,800	70,700	8,340
DESIGN YEAR ADT (2030)	203,000	78,000	8,340
DESIGN HOURLY VOLUME (2030)	17,050	7,410	900
DIRECTION DISTRIBUTION	53%	53%	76%
TRUCKS (24 HOUR B&C)	14%	11%	7%
DESIGN SPEED	60	60	40
LEGAL SPEED	55	55	35
DESIGN FUNCTIONAL CLASSIFICATION	01 URBAN INTERSTATE	02 URBAN FREEWAY AND EXPRESSWAY	05 URBAN COLLECTOR
NHS PROJECT	YES	YES	NO

DESIGN EXCEPTIONS

DESIGN FEATURE	APPROVAL DATE	SHEET NUMBERS
SHOULDER WIDTH	3/2/2015	267,270,
STOPPING SIGHT DISTANCE	2/20/2013	270,276,277,283, 279,280

ADA DESIGN WAIVERS

NONE REQUIRED

ENGINEERS SEAL:

FOR ROADWAY:

HEATH R. BRENDLINGER E-77786 — STATE OF OHIO — REGISTERED PROFESSIONAL ENGINEER

ENGINEERS SEAL:

NOISE WALLS: 1A, 1B-1, 1B-2, 1C, 2A, 2B

SIAMAK S. KHORSHIDI E-61030 — STATE OF OHIO — REGISTERED PROFESSIONAL ENGINEER

ENGINEERS SEAL:

BRIDGES: HAM-562-0004, HAM-75-0791, RET WALL B, RET WALL C, RET WALL D, RET WALL M

RYAN J. ELY E-69142 — STATE OF OHIO — REGISTERED PROFESSIONAL ENGINEER

ENGINEERS SEAL:

BRIDGES: HAM-75-0823, RET WALL F, RET WALL G

PAUL PASQUALE ANTONELLI E-76901 — STATE OF OHIO — REGISTERED PROFESSIONAL ENGINEER

ENGINEERS SEAL:

FOR ITS/LIGHTING, TRAFFIC SIGNALS

JASON D. SMALLWOOD E-66540 — STATE OF OHIO — REGISTERED PROFESSIONAL ENGINEER

ENGINEERS SEAL:

BRIDGE: HAM-75-0857 RETAINING WALLS: S, U, T, H, I

SIAMAK S. KHORSHIDI E-61030 — STATE OF OHIO — REGISTERED PROFESSIONAL ENGINEER

PROJECT DESCRIPTION

THE PROJECT CONSISTS OF COMPLETE ASPHALT PAVEMENT RECONSTRUCTION AND WIDENING OF 1.17 MILES OF I.R. 75 WITH AN ADDITIONAL NORTHBOUND AND SOUTHBOUND LANE AND 0.25 MILES OF RECONSTRUCTION AND WIDENING OF S.R. 562 IN HAMILTON COUNTY. ADDITIONAL WORK INCLUDES RECONSTRUCTION OF 6 RAMPS, 4 ROADWAY BRIDGES, 3 RAIL ROAD BRIDGES AND 0.75 MILES OF RAIL ROAD RECONSTRUCTION. THIS WORK INCLUDES NOISE WALLS, RETAINING WALLS, ITS, LIGHTING, WATER WORK, STORM SEWER SYSTEMS AND BMP STRUCTURES. THIS IS PHASE 8 OF THE MILL CREEK EXPRESSWAY PROJECT.

PROJECT EARTH DISTURBED AREA:	58.3 ACRES
ESTIMATED CONTRACTOR EARTH DISTURBED AREA:	1.0 ACRES
NOTICE OF INTENT EARTH DISTURBED AREA:	59.3 ACRES

LIMITED ACCESS

THIS IMPROVEMENT IS ESPECIALLY DESIGNED FOR THROUGH TRAFFIC AND HAS BEEN DECLARED A LIMITED ACCESS HIGHWAY OR FREEWAY BY ACTION OF THE DIRECTOR IN ACCORDANCE WITH THE PROVISIONS OF SECTION 5511.02 OF THE OHIO REVISED CODE.

2023 SPECIFICATIONS

THE STANDARD SPECIFICATIONS OF THE STATE OF OHIO, DEPARTMENT OF TRANSPORTATION, INCLUDING CHANGES AND SUPPLEMENTAL SPECIFICATIONS LISTED IN THE PROPOSAL SHALL GOVERN THIS IMPROVEMENT.

I HEREBY APPROVE THESE PLANS AND DECLARE THAT THE MAKING OF THIS IMPROVEMENT WILL NOT REQUIRE THE CLOSING TO TRAFFIC OF THE HIGHWAY AND SIDE ROADS EXCEPT AS NOTED ON SHEETS 71 & 72 , AND THAT PROVISIONS FOR THE MAINTENANCE AND SAFETY OF TRAFFIC WILL BE AS SET FORTH ON THE PLANS AND ESTIMATES.

Douglas A. Gruver, P.E.
District 08

Pamela Boratyn
Director, Department of Transportation

FEDERAL PROJECT NO. E240(935)

PID NO. 121447

CONSTRUCTION PROJECT NO.

RAILROAD INVOLVEMENT NONE

HAM-75-7.85

1 / 1047

UNDERGROUND UTILITIES
Contact Two Working Days Before You Dig
OHIO811.org Before You Dig
OHIO811, 8-1-1, or 1-800-362-2764
(Non-members must be called directly)

PLAN PREPARED BY:

EMH&T
Evans, Mechwart, Hambleton & Tilton, Inc.
Engineers • Surveyors • Planners • Scientists
5500 New Albany Road, Columbus, OH 43054
Phone: 614.775.4500 Toll Free: 888.775.3648
emht.com

STANDARD CONSTRUCTION DRAWINGS

BP-2.1	1/21/22	CB-6	7/19/24	F-3.1	7/19/13	RM-4.5	1/16/26	HL-10.31	7/15/22	MT-95.30	7/18/25	MT-98.29	1/17/20	MT-110.10	7/19/13	TC-52.20	1/15/21	ITS-18.10	7/16/21
BP-2.2	1/16/26	CB-8	7/19/24	F-3.3	7/19/13	RM-4.6	7/18/25	HL-20.11	7/21/23	MT-95.31	7/18/25	MT-98.30	7/18/25			TC-61.10	4/21/23	ITS-30.11	1/16/26
BP-2.3	1/16/26			F-3.4	7/19/13			HL-20.13	1/17/25	MT-95.32	7/18/25	MT-99.20	4/19/19	TC-12.31	1/16/26	TC-61.30	7/19/24	ITS-30.12	1/16/26
BP-2.4	7/19/13	DM-1.1	1/17/25					HL-20.21	1/17/25	MT-95.40	7/18/25	MT-99.30	1/17/20	TC-15.116	1/16/26	TC-65.10	1/17/14	ITS-30.13	1/16/26
BP-3.1	1/19/24	DM-1.2	1/17/25			AS-1-15	1/20/23	HL-20.24	1/17/25	MT-95.41	7/18/25	MT-99.50	7/18/25	TC-21.11	1/16/26	TC-65.11	1/17/25	ITS-35.11	1/16/26
BP-4.1	7/19/13	DM-2.1	1/18/13	MGS-2.1	1/16/26	AS-2-15	7/21/23	HL-30.11	7/21/23	MT-95.45	7/21/23	MT-99.60	7/19/24	TC-21.21	7/18/25	TC-71.10	1/16/26	ITS-35.12	1/16/26
BP-5.1	1/16/26	DM-4.1	7/17/20	MGS-3.1	1/16/26			HL-30.21	4/17/20	MT-95.50	7/21/17	MT-100.00	1/19/24	TC-21.50	1/16/26	TC-72.20	1/16/26	ITS-35.13	1/16/26
BP-6.1	7/19/13	DM-4.3	1/15/16	MGS-3.2	7/18/25	GSD-1-19	7/19/24	HL-30.22	1/17/25	MT-95.70	7/21/23	MT-101.60	1/17/25	TC-22.20	7/18/25	TC-73.20	1/16/26	ITS-36.12	7/18/25
BP-7.1	1/16/26	DM-4.4	1/15/16	MGS-4.2	7/18/25	NBS-1-09	1/17/25	HL-30.31	1/17/25	MT-95.71	7/21/23	MT-101.70	7/19/24	TC-41.10	1/16/26	TC-74.10	1/16/26	ITS-50.10	1/16/26
BP-9.1	1/18/19			MGS-4.3	7/18/25	PCB-91	7/17/20	HL-30.32	4/17/20	MT-95.73	7/19/24	MT-101.75	7/21/23	TC-41.20	10/18/13			ITS-50.12	7/19/24
		I-3B, 3B1	1/17/25	MGS-5.2	7/15/16			HL-30.33	1/21/22	MT-95.82	7/19/13	MT-101.80	1/17/20	TC-41.30	4/21/23	ITS-10.10	1/17/25		
CB-2-2A,2B,2C	7/19/24	I-3C, 3C1	1/17/25	MGS-5.3	7/15/16			HL-30.41	1/17/25	MT-97.10	7/18/25	MT-101.90	7/17/20	TC-41.40	1/16/26	ITS-10.11	7/18/25		
CB-2-3,2-4	7/19/24	I-3D	7/19/24	MGS-6.1	1/19/18	SICD-1-96	7/18/14	HL-40.20	1/17/25	MT-98.10	1/17/20	MT-102.10	7/21/23	TC-41.50	10/18/13	ITS-12.10	1/16/26	CITY OF CINCINNATI STANDARD DRAWINGS	
CB-3	1/16/26					SICD-2-14	1/15/21	HL-50.11	1/16/15	MT-98.11	1/17/20	MT-102.20	4/19/19	TC-42.10	10/18/13	ITS-14.10	1/17/25		
CB-3A	1/16/26	MH-1	7/15/22	RM-4.1	1/17/20			HL-50.21	7/15/22	MT-98.20	4/19/19	MT-102.30	10/16/15	TC-42.20	10/18/13	ITS-14.11	1/16/26	ES-6-1	9/2/04
CB-4	7/19/24	MH-3	7/19/24	RM-4.2	1/16/26	HL-10.11	7/21/23	HL-60.11	7/21/17	MT-98.21	7/21/23	MT-103.10	7/18/25	TC-51.11	7/18/25	ITS-14.50	7/18/25	ES-6-2	3/29/05
CB-4A,5A,8A	7/19/24			RM-4.3	7/18/25	HL-10.12	7/21/23	HL-60.21	7/20/18	MT-98.22	1/17/20	MT-104.10	1/16/26	TC-51.12	7/18/25	ITS-15.11	1/16/26	ES-6-3	9/7/04
CB-5	7/19/24	F-1.1	7/18/25	RM-4.4	1/17/25	HL-10.13	1/20/23	HL-60.31	7/19/24	MT-98.28	1/17/20	MT-105.10	1/17/20	TC-52.10	10/18/13	ITS-18.00	7/16/21	ES-7	4/27/05

MSD STANDARD DRAWINGS			
49003			
49005			
49031			
49032			
49037			
49040			
49048			
49058-A			
SUPPLEMENTAL SPECIFICATIONS			
800-2023	1/16/26		
804	1/16/26		
807	1/17/25		
809	1/16/26		

813	7/21/23		
821	4/20/12		
825	7/19/24		
832	7/18/25		
837	1/16/26		
840	1/16/26		
850	7/21/23		
866	4/21/17		
867	4/15/22		
878	1/16/26		
902	1/16/26		
904	7/15/22		
905	1/17/25		
909	1/16/26		
913	4/16/21		
921	7/19/24		
1136	4/21/23		

SPECIAL PROVISIONS

WATERWAY PERMIT (08/14/23)

OHIO EPA 513 PERMIT (7/7/21)

CROSSHOLE SONIC LOGGING (CSL) (6/11/19)

Preliminary Plans - For Reference Only

J:\A\20110903\ODOT\HAM\7.7889\roadway\sheets\77889GT001.dgn 5/21/2026 9:37:58 AM hbrendlinger

INDEX OF SHEETS:

TITLE SHEET	1 - 2
SCHEMATIC PLAN	3 - 4
GEOMETRIC PLAN	5 - 9
HORIZONTAL AND VERTICAL CONTROL	10
TYPICAL SECTIONS	11 - 30
GENERAL NOTES	31 - 49
MAINTENANCE OF TRAFFIC	50 - 214
GENERAL SUMMARY	215 - 230
SUBSUMMARIES AND ESTIMATED QTYS	231 - 262
PROJECT SITE PLAN	263 - 265
PLAN AND PROFILE - I.R. 75	266 - 273
PLAN AND PROFILE - RAMP M	274 - 277
PLAN AND PROFILE - RAMP N	278 - 279
PLAN AND PROFILE - RAMP J	280 - 282
PLAN AND PROFILE - RAMP K	283 - 284
PLAN AND PROFILE - S.R. 562	285 - 287
PLAN AND PROFILE - RAMP P	288 - 289
PLAN AND PROFILE - RAMP Q	290
PLAN AND PROFILE - TOWNE ST	291 - 292
CROSS SECTION LAYOUT INDEX	293 - 296
CROSS SECTIONS - I.R. 75	297 - 426
CROSS SECTIONS - RAMP M	427 - 435
CROSS SECTIONS - RAMP N	436 - 450
CROSS SECTIONS - RAMP J	451 - 471
CROSS SECTIONS - RAMP K	472 - 489
CROSS SECTIONS - S.R. 562	490 - 502
CROSS SECTIONS - RAMP P	503 - 506
CROSS SECTIONS - RAMP Q	507 - 509
CROSS SECTIONS - TOWNE ST	510 - 516
CROSS SECTIONS - CEDAR ST	517 - 518
SUPERELEVATION TABLES	519 - 529
PAVEMENT DETAILS	530 - 538
INTERSECTION DETAILS	539
DRIVE DETAILS	540
CURB RAMP DETAILS	541 - 543
DRAINAGE PLANS	544 - 551
STORM SEWER PROFILES	552 - 570
CULVERT DETAILS	571
STORMWATER DETENTION SYSTEM DETAILS	572 - 580
GRADING PLANS	581 - 583
RETAINING WALLS	
SCHEMATIC PLAN	584 - 585
WALLS D, S AND U	586 - 610
WALLS M AND T	611 - 621
WALLS B, C, F, G, H AND I	622 - 664
NOISE WALLS	
SCHEMATIC PLAN	665
NOISE WALLS 1A, 1B-1, 1B-2 AND 1C	666 - 677
NOISE WALLS 2A AND 2B	678 - 682
SANITARY SEWER PROFILES	683 - 684
GREATER CINCINNATI WATER WORKS	685 - 687
ROADSIDE BARRIER PLAN	688 - 698
TRAFFIC CONTROL	699 - 746
SIGNAL PLANS	747 - 749
ITS PLANS	750 - 776
LIGHTING PLANS	777 - 808
STRUCTURES (20' AND OVER)	
HAM-562-0004	809 - 864
HAM-75-0791	865 - 929
HAM-75-0823	930 - 993
HAM-75-0857	994 - 1039
FENCING PLAN	1040 - 1047
RIGHT OF WAY PLANS	
SOIL PROFILE PLANS AND STRUCTURE FOUNDATION EXPLORATIONS	

Preliminary Plans - For Reference Only

CALCULATED | CHECKED

INDEX OF SHEETS

HAM-75-7.85

J:\20110903\ODOT\HAM\77889\roadway\sheets\77889GT002.dgn 5/22/2026 10:04:27 AM hbrendlinger

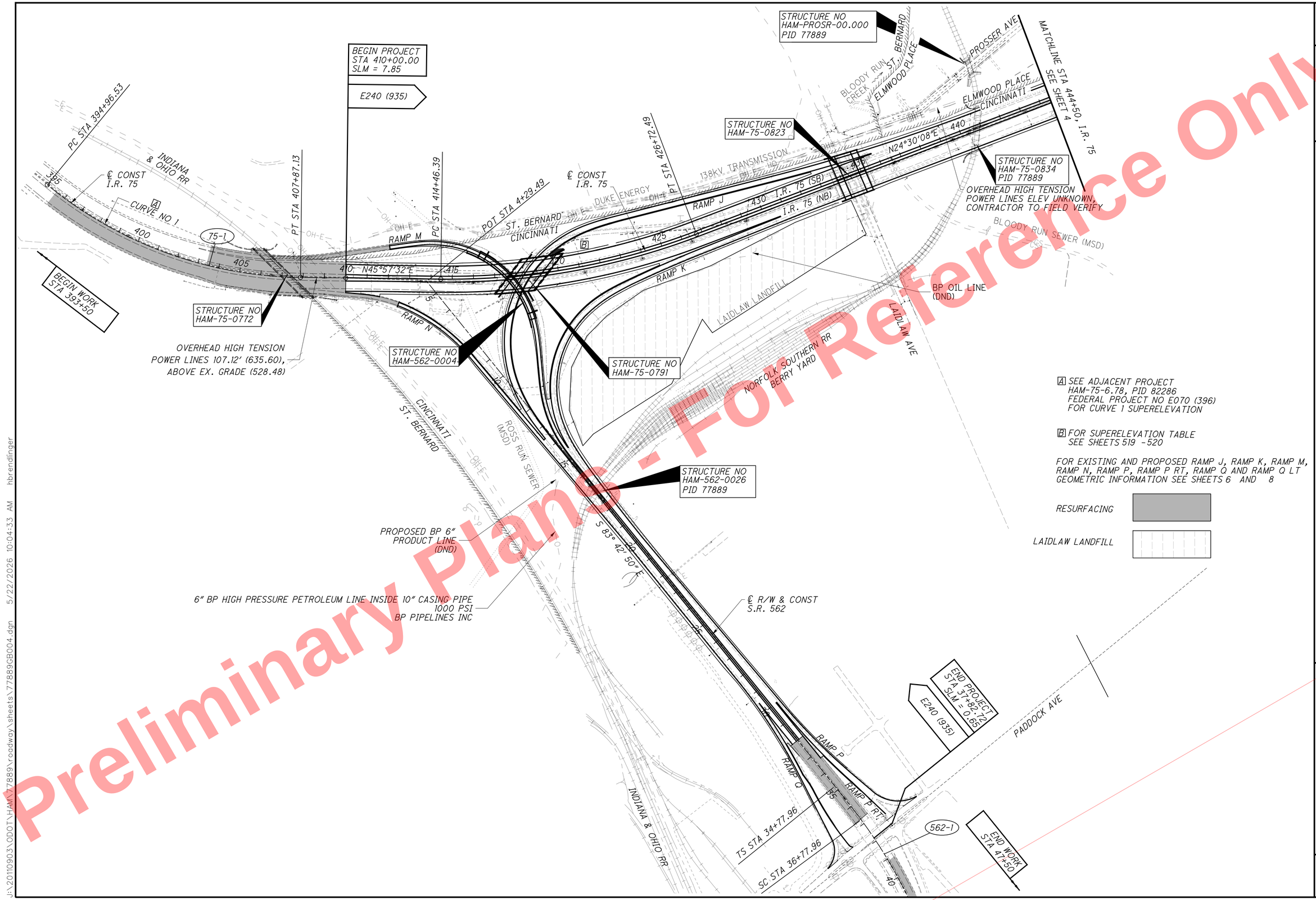

Preliminary Plans - For Reference Only

SCHEMATIC PLAN
I.R. 75 & S.R. 562 NORWOOD LATERAL PKWY

HAM-75-7.85

3
1047

J:\20110903\ODOT\HAM\77889\roadway\sheets\77889GB004.dgn 5/22/2026 10:04:33 AM hbrendlinger

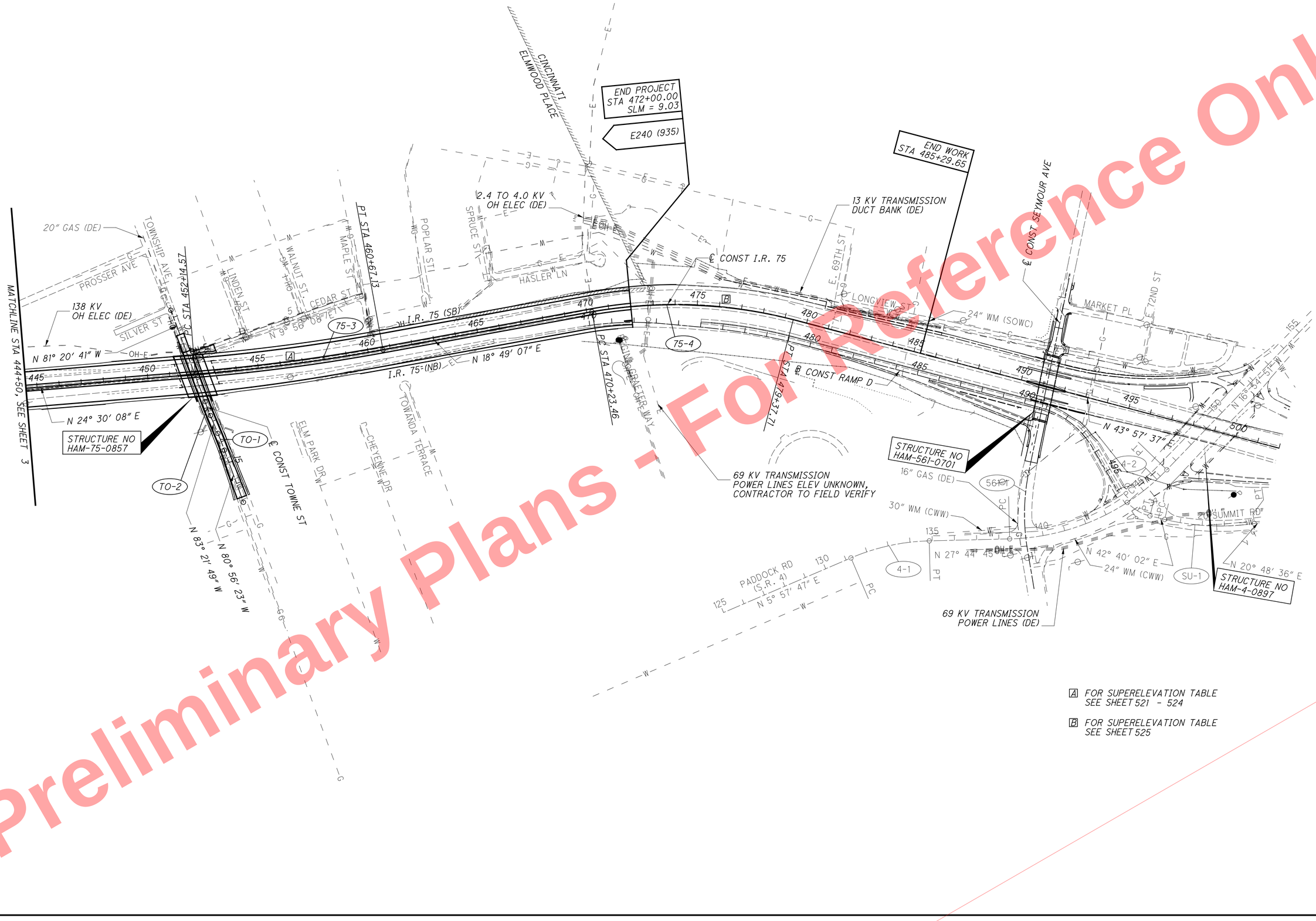

Preliminary Plans - For Reference Only

J:\20110903\ODOT\HAM\77889\roadway\sheets\77889GB401.dgn 5/22/2026 10:04:36 AM hbrendlinger

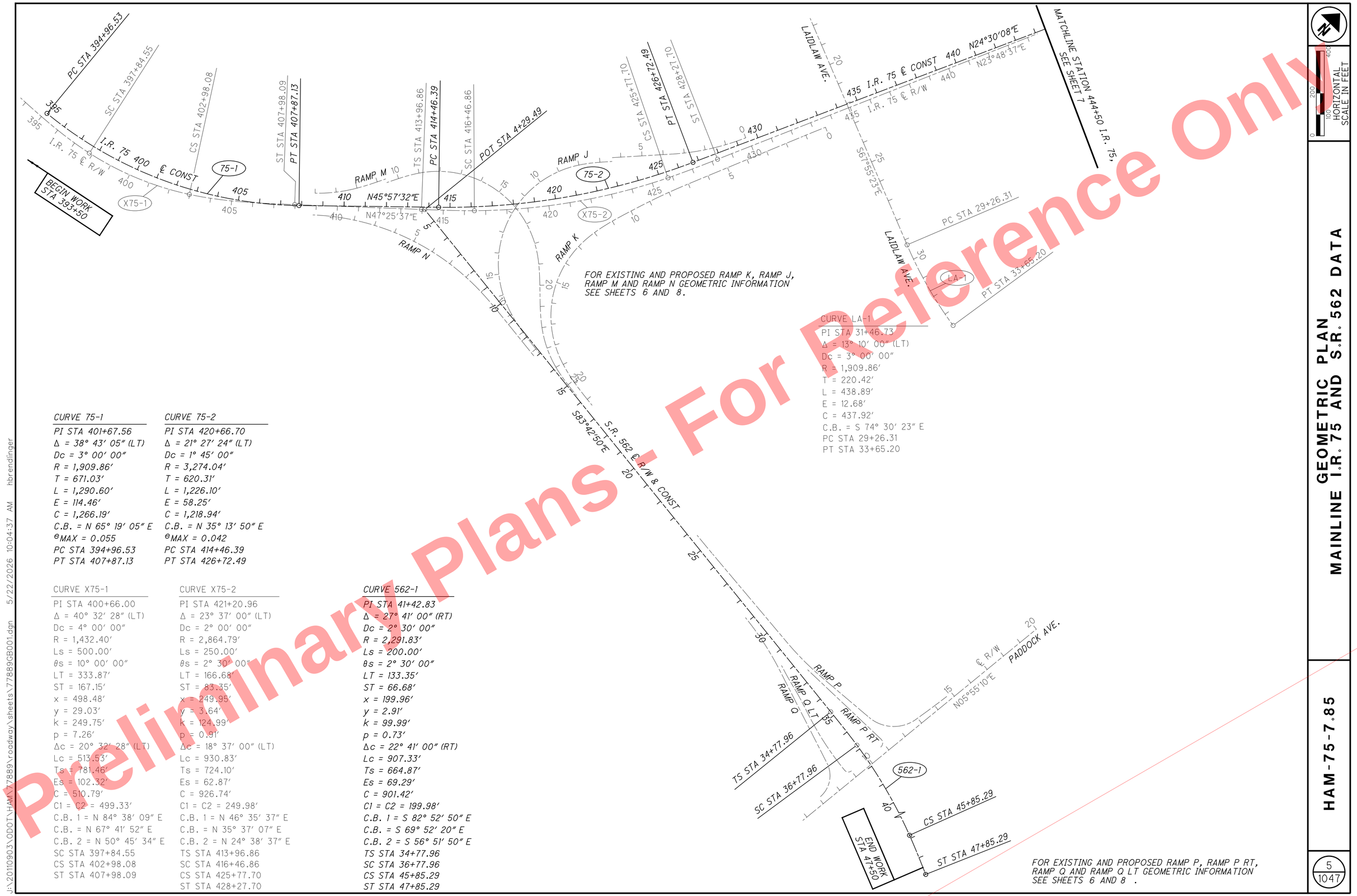

CURVE 75-1

PI STA 401+67.56
Δ = 38° 43′ 05″ (LT)
Dc = 3° 00′ 00″
R = 1,909.86′
T = 671.03′
L = 1,290.60′
E = 114.46′
C = 1,266.19′
C.B. = N 65° 19′ 05″ E
e^{MAX} = 0.055
PC STA 394+96.53
PT STA 407+87.13

CURVE 75-2

PI STA 420+66.70
Δ = 21° 27′ 24″ (LT)
Dc = 1° 45′ 00″
R = 3,274.04′
T = 620.31′
L = 1,226.10′
E = 58.25′
C = 1,218.94′
C.B. = N 35° 13′ 50″ E
e^{MAX} = 0.042
PC STA 414+46.39
PT STA 426+72.49

CURVE LA-1

PI STA 31+46.73
Δ = 13° 10′ 00″ (LT)
Dc = 3° 00′ 00″
R = 1,909.86′
T = 220.42′
L = 438.89′
E = 12.68′
C = 437.92′
C.B. = S 74° 30′ 23″ E
PC STA 29+26.31
PT STA 33+65.20

CURVE X75-1

PI STA 400+66.00
Δ = 40° 32′ 28″ (LT)
Dc = 4° 00′ 00″
R = 1,432.40′
Ls = 500.00′
θs = 10° 00′ 00″
LT = 333.87′
ST = 167.15′
x = 498.48′
y = 29.03′
k = 249.75′
p = 7.26′
Δc = 20° 32′ 28″ (LT)
Lc = 513.53′
Ts = 781.46′
Es = 102.32′
C = 510.79′
C1 = C2 = 499.33′
C.B. 1 = N 84° 38′ 09″ E
C.B. = N 67° 41′ 52″ E
C.B. 2 = N 50° 45′ 34″ E
SC STA 397+84.55
CS STA 402+98.08
ST STA 407+98.09

CURVE X75-2

PI STA 421+20.96
Δ = 23° 37′ 00″ (LT)
Dc = 2° 00′ 00″
R = 2,864.79′
Ls = 250.00′
θs = 2° 30′ 00″
LT = 166.68′
ST = 83.35′
x = 249.95′
y = 3.64′
k = 124.99′
p = 0.91′
Δc = 18° 37′ 00″ (LT)
Lc = 930.83′
Ts = 724.10′
Es = 62.87′
C = 926.74′
C1 = C2 = 249.98′
C.B. 1 = N 46° 35′ 37″ E
C.B. = N 35° 37′ 07″ E
C.B. 2 = N 24° 38′ 37″ E
TS STA 413+96.86
SC STA 416+46.86
CS STA 425+77.70
ST STA 428+27.70

CURVE 562-1

PI STA 41+42.83
Δ = 27° 41′ 00″ (RT)
Dc = 2° 30′ 00″
R = 2,291.83′
Ls = 200.00′
θs = 2° 30′ 00″
LT = 133.35′
ST = 66.68′
x = 199.96′
y = 2.91′
k = 99.99′
p = 0.73′
Δc = 22° 41′ 00″ (RT)
Lc = 907.33′
Ts = 664.87′
Es = 69.29′
C = 901.42′
C1 = C2 = 199.98′
C.B. 1 = S 82° 52′ 50″ E
C.B. = S 69° 52′ 20″ E
C.B. 2 = S 56° 51′ 50″ E
TS STA 34+77.96
SC STA 36+77.96
CS STA 45+85.29
ST STA 47+85.29

Preliminary Plans - Not For Reference Only

HORIZONTAL SCALE IN FEET
0 100 200 400

GEOMETRIC PLAN
MAINLINE I.R. 75 AND S.R. 562 DATA

HAM-75-7.85

5
1047

J:\20110903\ODOT\HAM\77889\roadway\sheets\77889GB001.dgn 5/22/2026 10:04:37 AM hbrendlinger

Preliminary Plans - For Reference Only

BEGIN WORK STA 393+50

BEGIN PROJECT STA 410+00.00 SLM = 7.85

E240 (935)

MATCHLINE STATION 444+50 I.R. 75, SEE SHEET 7

FOR PROPOSED MAINLINE I.R. 75 AND S.R. 562 GEOMETRIC INFORMATION SEE SHEET 5

FOR PROPOSED RAMP K, RAMP J, RAMP M AND RAMP N GEOMETRIC INFORMATION SEE SHEET 8

FOR PROPOSED RAMP P, RAMP P RT, RAMP Q AND RAMP Q LT GEOMETRIC INFORMATION SEE SHEET 8

END PROJECT STA 37+82.12 SLM = 0.65

E240 (935)

END WORK STA 47+50

LAIDLAW AVE

PADDOCK AVE

℄ R/W

℄ CONST

℄ R/W & CONST

RAMP M

RAMP J

RAMP K

RAMP N

RAMP P

RAMP P RT

RAMP Q

RAMP Q LT

X562-M1 X562-M2 X562-M3 X562-J1 X562-J2 X562-K1 X562-K2 X562-K3 X562-N1 X562-P1 X562-P2 X562-P3 X562-P4 X562-P5 X562-Q1 X562-Q2 X562-Q3 X562-Q4 X562-Q5 X562-Q6

CURVE X562-N1
PI STA 4+64.38
Δ = 43° 49′ 00″ (RT)
Dc = 5° 00′ 00″
R = 1,145.92′
T = 460.85′
L = 876.33′
E = 89.20′
C = 855.13′
C.B. = N 69° 22′ 40″ E
PC STA 0+03.53
CS STA 8+79.86
ST STA 10+79.86
POT STA 12+97.91

CURVE X562-J1
PI STA 1+81.50
Δ = 18° 00′ 00″ (RT)
Dc = 5° 00′ 00″
R = 1,145.92′
T = 181.50′
L = 360.00′
E = 14.28′
C = 358.52′
C.B. = S 32° 51′ 10″ W
PC STA 0+00.00
PT STA 3+60.00

CURVE X562-J2
PI STA 16+69.96
Δ = 125° 34′ 00″ (LT)
Dc = 12° 00′ 00″
R = 477.46′
Δc = 97° 04′ 00″ (LT)
Lc = 808.89′
Es = 577.98′
C = 715.57′
C.B. 1 = S 38° 21′ 14″ W
C.B. = S 17° 10′ 50″ E
C.B. 2 = N 77° 43′ 08″ W
POT STA 6+42.65
ST STA 6+42.65
SC STA 8+17.65
CS STA 16+26.54
ST STA 19+26.54

CURVE X562-K1
PI STA 0+57.29
Δ = 1° 08′ 45″ (LT)
Dc = 1° 00′ 00″
R = 5,729.58′
T = 57.29′
L = 114.58′
E = 0.29′
C = 114.58′
C.B. = S 23° 16′ 47″ W
PC STA 0+00.00
PT STA 1+14.58

CURVE X562-K2
PI STA 8+33.75
Δ = 5° 00′ 00″ (LT)
Dc = 2° 00′ 00″
R = 2,864.79′
T = 125.08′
L = 250.00′
E = 2.73′
C = 249.92′
C.B. = S 20° 12′ 25″ W
PC STA 7+08.67
PT STA 9+58.67

CURVE X562-K3
PI STA 17+33.64
Δ = 101° 25′ 15″ (LT)
Dc = 12° 00′ 00″
R = 477.46′
Ls = 300.00′
θs = 18° 00′ 00″
LT = 201.04′
ST = 100.95′
x = 297.05′
y = 31.20′
k = 149.51′
p = 7.83′
Δc = 65° 25′ 15″ (LT)
Lc = 545.17′
Ts = 742.64′
Es = 288.90′
C = 516.04′
C1 = C2 = 298.69′
C.B. 1 = S 11° 42′ 43″ W
C.B. = S 33° 00′ 13″ E
C.B. 2 = N 77° 43′ 08″ W
TS STA 9+91.00
SC STA 12+91.00
CS STA 18+36.17
ST STA 21+36.17

CURVE X562-M1
PI STA 6+83.71
Δ = 13° 20′ 00″ (LT)
Dc = 8° 00′ 00″
R = 716.20′
T = 83.71′
L = 166.67′
E = 4.88′
C = 166.29′
C.B. = N 39° 39′ 27″ E
PC STA 6+00.00
CS STA 7+66.67
ST STA 9+41.67

CURVE X562-M2
PI STA 16+93.51
Δ = 108° 17′ 43″ (RT)
Dc = 12° 00′ 00″
R = 477.46′
Ls = 175.00′
θs = 10° 30′ 00″
LT = 116.87′
ST = 58.52′
x = 174.41′
y = 10.66′
k = 87.40′
p = 2.67′
Δc = 87° 17′ 43″ (RT)
Lc = 727.46′
Ts = 751.84′
Es = 342.30′
C = 659.11′
C1 = C2 = 174.74′
C.B. 1 = N 29° 29′ 24″ E
C.B. = N 80° 08′ 19″ E
C.B. 2 = N 49° 12′ 46″ W
TS STA 9+41.67
SC STA 11+16.67
CS STA 18+44.13
ST STA 20+19.13

CURVE X562-M3
PI STA 23+12.55
Δ = 38° 00′ 00″ (LT)
Dc = 11° 00′ 00″
R = 520.87′
Ls = 175.00′
θs = 9° 37′ 30″
LT = 116.84′
ST = 58.49′
x = 174.51′
y = 9.78′
k = 87.42′
p = 2.45′
Δc = 18° 45′ 00″ (LT)
Lc = 170.45′
Ts = 267.61′
Es = 32.60′
C = 169.69′
C1 = C2 = 174.78′
C.B. 1 = S 48° 55′ 17″ E
C.B. = S 64° 42′ 50″ E
C.B. 2 = N 80° 30′ 23″ W
TS STA 20+44.94
SC STA 22+19.94
CS STA 23+90.39
ST STA 25+65.39

CURVE X562-P1
PI STA 13+24.38
Δ = 97° 17′ 15″ (RT)
Dc = 229° 10′ 59″
R = 25.00′
T = 28.40′
L = 42.45′
E = 12.84′
C = 37.53′
C.B. = S 42° 43′ 28″ E
PC STA 12+95.98
PT STA 13+38.43

CURVE X562-P2
PI STA 0+57.29
Δ = 1° 08′ 45″ (LT)
Dc = 1° 00′ 00″
R = 5,729.58′
T = 57.29′
L = 114.58′
E = 0.29′
C = 114.58′
C.B. = S 84° 17′ 13″ E
PC STA 0+00.00
PT STA 1+14.58

CURVE X562-P3
PI STA 7+77.94
Δ = 9° 37′ 44″ (LT)
Dc = 4° 00′ 00″
R = 1,432.39′
T = 120.65′
L = 240.72′
E = 5.07′
C = 240.44′
C.B. = S 89° 40′ 27″ E
PC STA 6+57.29
PT STA 8+98.01

CURVE X562-P4
PI STA 13+27.15
Δ = 76° 23′ 31″ (LT)
Dc = 31° 49′ 52″
R = 180.00′
T = 141.62′
L = 239.99′
E = 49.04′
C = 222.61′
C.B. = N 47° 18′ 55″ E
PC STA 11+85.52
PT STA 14+25.51

CURVE X562-P5
PI STA 15+24.80
Δ = 1° 03′ 35″ (LT)
Dc = 2° 00′ 00″
R = 2,864.79′
T = 26.49′
L = 52.99′
E = 0.12′
C = 52.99′
C.B. = N 8° 35′ 22″ E
PC STA 14+98.30
PT STA 15+51.29

CURVE X562-Q1
PI STA 1+50.13
Δ = 11° 58′ 00″ (RT)
Dc = 4° 00′ 00″
R = 1,432.39′
T = 150.13′
L = 299.17′
E = 7.85′
C = 298.62′
C.B. = S 77° 43′ 50″ E
PC STA 0+00.00
PT STA 2+99.17

CURVE X562-Q2
PI STA 8+90.83
Δ = 76° 15′ 54″ (RT)
Dc = 44° 04′ 25″
R = 130.00′
T = 102.05′
L = 173.04′
E = 35.27′
C = 160.55′
C.B. = S 33° 36′ 53″ E
PC STA 7+88.78
PT STA 9+61.82

CURVE X562-Q3
PI STA 3+34.63
Δ = 4° 17′ 00″ (LT)
Dc = 4° 00′ 00″
R = 1,432.39′
T = 53.57′
L = 107.08′
E = 1.00′
C = 107.06′
C.B. = S 73° 53′ 20″ E
PC STA 2+81.06
PRC STA 3+88.14
PT STA 4+95.22

CURVE X562-Q4
PI STA 4+41.71
Δ = 4° 17′ 00″ (RT)
Dc = 4° 00′ 00″
R = 1,432.39′
T = 53.57′
L = 107.08′
E = 1.00′
C = 107.06′
C.B. = S 73° 53′ 20″ E
PC STA 2+81.06
PCC STA 8+58.84
PT STA 8+94.66

CURVE X562-Q5
PI STA 7+05.27
Δ = 12° 20′ 00″ (LT)
Dc = 4° 00′ 00″
R = 1,432.39′
T = 154.76′
L = 308.33′
E = 8.34′
C = 307.74′
C.B. = S 77° 54′ 50″ E

CURVE X562-Q6
PI STA 8+81.64
Δ = 90° 00′ 00″ (LT)
Dc = 251° 17′ 50″
R = 22.80′
T = 22.80′
L = 35.81′
E = 9.44′
C = 32.24′
C.B. = N 50° 55′ 10″ E

EXISTING RAMP M DATA
1	PC	6+00.00
2	CS	7+66.67
3	ST	9+41.67 (LEFT)
4	ST	9+41.67 (RIGHT)
5	SC	11+16.67
6	CS	18+44.13
7	ST	20+19.13
	S 45° 42′ 50″ E	
8	TS	20+44.94
9	SC	22+19.94
10	CS	23+90.39
11	ST	25+65.39

EXISTING RAMP N DATA
12	PC	0+03.53
13	CS	8+79.86
14	ST	10+79.86
	S 83° 42′ 50″ E	
15	POT	12+97.91

EXISTING RAMP J DATA
16	PC	0+00.00
17	PT	3+60.00
	S 41° 51′ 10″ W	
18	POT	6+42.65
19	ST	6+42.65
20	SC	8+17.65
21	CS	16+26.54
22	ST	19+26.54

EXISTING RAMP K DATA
23	PC	0+00.00
24	PT	1+14.58
	S 22° 42′ 25″ W	
25	PC	7+08.67
26	PT	9+58.67
	S 17° 42′ 25″ W	
27	TS	9+91.00
28	SC	12+91.00
29	CS	18+36.17
30	ST	21+36.17

EXISTING RAMP P DATA
50	PC	0+00.00
51	PT	1+14.58
	S 84° 51′ 35″ E	
52	PC	6+57.29
53	PT	8+98.01
	N 85° 30′ 41″ E	
54	PC	11+85.52
55	PT	14+25.51
	N 9° 07′ 10″ E	
56	PC	14+98.30
57	PT	15+51.29
	N 8° 03′ 35″ E	
58	POT	16+04.86

EXISTING RAMP P RT DATA
59	POT	8+20.00
	N 88° 37′ 55″ E	
60	PC	12+95.98
61	PT	13+38.43

EXISTING RAMP Q DATA
40	PC	0+00.00
41	PT	2+99.17
	S 71° 44′ 50″ E	
42	PC	7+88.78
43	PT	9+61.82

EXISTING RAMP Q LT DATA
44	PC	2+81.06
45	PRC	3+88.14
46	PT	4+95.22
	S 71° 44′ 50″ E	
47	PC	5+50.51
48	PCC	8+58.84
49	PT	8+94.66

HORIZONTAL SCALE IN FEET
0 100 200 400

GEOMETRIC PLAN
EXISTING RAMP BASELINE DATA

HAM-75-7.85

6
1047

J:\20110903\ODOT\HAM\77889\roadway\sheets\77889GB002.dgn 5/22/2026 10:04:37 AM hbrendlinger

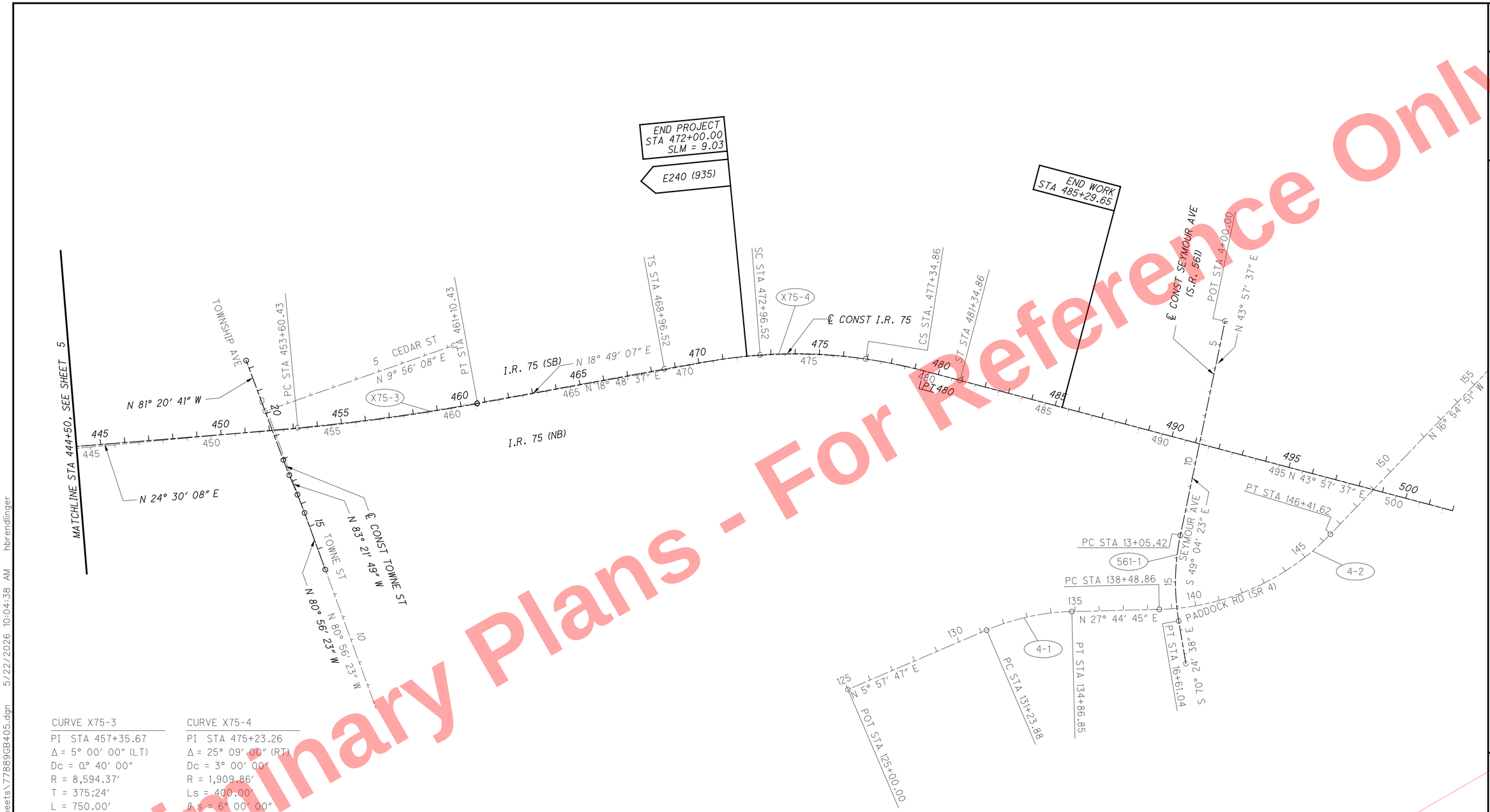

Preliminary Plans - For Reference Only

HORIZONTAL SCALE IN FEET
0 100 200 400

GEOMETRIC I.R. 75 PLAN
EXISTING MAINLINE I.R. 75 AND RAMP DATA

HAM-75-7.85

7
1047

CURVE X75-3
PI STA 457+35.67
Δ = 5° 00′ 00″ (LT)
Dc = 0° 40′ 00″
R = 8,594.37′
T = 375.24′
L = 750.00′
E = 8.19′
e_{max} = 0.019
PC STA. 453+60.43
PT STA. 461+10.43

CURVE X75-4
PI STA 475+23.26
Δ = 25° 09′ 00″ (RT)
Dc = 3° 00′ 00″
R = 1,909.86′
Ls = 400.00′
θs = 6° 00′ 00″
LT = 266.82′
ST = 133.47′
x = 399.56′
y = 13.95′
k = 199.93′
p = 3.49′
D c = 13° 09′ 00″ (RT)
Lc = 438.34′
Ts = 626.73′
Es = 50.52′
e_{max} = 0.055
TS STA. 468+96.52
SC STA. 472+96.52
CS STA. 477+34.86
ST STA. 481+34.86

CURVE 4-1
PI STA 133+07.58
Δ = 21° 46′ 58″ (RT)
Dc = 6° 00′ 05″
R = 954.72′
T = 183.70′
L = 362.97′
E = 17.51′
C = 360.79′
C.B. = N 16° 51′ 16″ E
e_{max} = NC
PC STA. 131+23.88
PT STA. 134+86.85

CURVE 4-2
PI STA 142+66.61
Δ = 44° 39′ 36″ (LT)
Dc = 5° 38′ 01″
R = 1,017.06′
T = 417.75′
L = 792.76′
E = 82.45′
C = 772.84′
C.B. = N 5° 24′ 57″ E
e_{max} = NC
PC STA. 138+48.86
PT STA. 146+41.62

CURVE 561-1
PI STA 14+85.32
Δ = 21° 20′ 15″ (LT)
Dc = 6° 00′ 00″
R = 954.93′
T = 179.90′
L = 355.62′
E = 16.80′
C = 353.57′
C.B. = S 59° 44′ 30″ E
e_{max} = NC
PC STA. 13+05.42
PT STA. 16+61.04

CURVE 75-H1

PI STA 3+97.24	*PI STA 8+26.34*
D = 31° 00′ 00″ (RT)	*D = 43° 06′ 15″ (RT)*
Dc = 4° 00′ 00″	*Dc = 44° 04′ 25″*
R = 1,432.39′	*R = 130.00′*
T = 397.24′	*T = 51.34′*
L = 775.00′	*L = 97.80′*
E = 54.06′	*E = 9.77′*
C = 765.58′	*C = 95.51′*
C.B. = N 39° 18′ 37″ E	*C.B. = N 76° 21′ 45″ E*
e_{max} =	e_{max} =
PC Sta. 0+00.00	*PCC Sta. 7+75.00*
PT Sta. 7+75.00	*PT Sta. 8+72.80*

J:\20110903\ODOT\HAM\77889\roadway\sheets\77889GB405.dgn 5/22/2026 10:04:38 AM hbrendlinger

FOR EXISTING RAMP K, RAMP J, RAMP M AND RAMP N GEOMETRIC INFORMATION SEE SHEET 6

FOR EXISTING RAMP P, RAMP P RT, RAMP Q AND RAMP Q LT GEOMETRIC INFORMATION SEE SHEET 6

CURVE 562-N1
PI STA 414+98.04
Δ = 25° 49′ 54″ (RT)
Dc = 6° 45′ 24″
R = 848.00′
T = 194.46′
L = 382.32′
E = 22.01′
C = 379.09′
C.B. = N 82° 13′ 28″ E
e MAX = 0.060
PC STA 413+03.58
PT STA 416+85.90

PROPOSED RAMP N DATA		
97	PC	413+03.58
98	PT	416+85.90
	S 84° 51′ 35″ E	
99	POT	428+52.11

BEGIN WORK STA 393+50

BEGIN PROJECT STA 410+00.00 SLM = 7.85

E240 (935)

FOR EXISTING AND PROPOSED MAINLINE I.R. 75 AND S.R. 562 GEOMETRIC INFORMATION SEE SHEET 5

℄ R/W I.R. 75

I.R. 75 ℄ CONST

I.R. 75 ℄ R/W

N45°57′32″E

N47°25′37″E

N23°48′37″E

N24°30′08″E

S67°55′23″E

LAIDLAW AVE

MATCHLINE STATION 444+50 I.R. 75, SEE SHEET 9

RAMP J

RAMP K

RAMP M

RAMP N

RAMP P

RAMP Q

562-J1 562-J2 562-K1 562-K2 562-K3 562-M1 562-M2 562-N1 562-P1 562-P2 562-P3 562-Q1 562-Q2

℄ R/W & CONST S.R. 562

℄ R/W PADDOCK AVE (SR 4)

N05°55′10″E

END PROJECT STA 37+82.72 SLM = 0.65

END WORK STA 47+50

CURVE 562-J1
PI STA 420+13.05
Δ = 114° 40′ 09″ (RT)
Dc = 10° 15′ 00″
R = 558.98′
Ls_1 = 300.00′
θs_1 = 15° 22′ 30″
LT_1 = 200.76′
ST_1 = 100.69′
x_1 = 297.85′
y_1 = 26.70′
K_1 = 149.64′
P_1 = 6.69′
T_1 = 1028.72′
Ls_2 = 224.99′
θs_2 = 11° 31′ 51″
LT_2 = 150.31′
ST_2 = 75.29′
x_2 = 224.08′
y_2 = 15.05′
K_2 = 112.34′
P_2 = 3.77′
T_2 = 933.30′
Lc = 856.23′
Es = 486.38′
C_1 = 299.04′
C = 774.94′
C_2 = 224.59′
C.B.$_1$ = N 78° 35′ 31″ W
C.B. = N 24° 27′ 26″ W
C.B.$_2$ = N 27° 06′ 47″ E
e MAX = 0.059
TS STA 409+84.33
SC STA 412+84.33
CS STA 421+40.56
ST STA 423+65.55

PROPOSED RAMP J DATA		
70	POT	403+79.32
	N 83° 42′ 50″ W	
71	TS	409+84.33
72	SC	412+84.33
73	CS	421+40.56
74	ST	423+65.55
	N 30° 57′ 19″ E	
75	POT	426+57.83 (RT)
76	POT	426+57.83 (LT)
	N 30° 57′ 19″ E	
77	PC	430+95.95
78	PT	440+63.91

CURVE 562-J2
PI STA 435+80.44
Δ = 6° 27′ 11″ (LT)
Dc = 0° 40′ 00″
R = 8,594.37′
T = 484.49′
L = 967.96′
E = 13.65′
C = 967.45′
C.B. = N 27° 43′ 44″ E
e MAX = NC
PC STA 430+95.95
PT STA 440+63.91

PROPOSED RAMP K DATA		
79	PC	408+34.32
80	PT	412+13.84
	N 81° 04′ 33″ W	
81	TS	412+42.98
82	SC	414+67.98
83	CS	421+05.87
84	SC	423+05.87
85	PT	427+20.98
	N 23° 21′ 23″ E	
86	POT	431+71.07

CURVE 562-K1
PI STA 410+24.11
Δ = 2° 28′ 59″ (RT)
Dc = 0° 39′ 15″
R = 8,757.22′
T = 189.79′
L = 379.52′
E = 2.06′
C = 379.49′
C.B. = N 82° 28′ 20″ W
e MAX = NC
PC STA 408+34.32
PT STA 412+13.84

CURVE 562-K3
PI STA 425+13.52
Δ = 4° 09′ 04″ (RT)
Dc = 1° 00′ 00″
R = 5,729.58′
T = 207.65′
L = 415.11′
E = 3.76′
C = 415.02′
C.B. = N 21° 55′ 15″ E
e MAX = NC
SC STA 423+05.87
PT STA 427+20.98

CURVE 562-K2
PI STA 419+50.81
Δ = 74° 57′ 08″ (RT)
Dc = 11° 45′ 00″
R = 487.62′
Ls_1 = 225.00′
θs_1 = 13° 13′ 08″
LT_1 = 150.42′
ST_1 = 75.38′
x_1 = 223.81′
y_1 = 17.24′
k_1 = 112.30′
p_1 = 4.32′
T_1 = 707.83′
Ls_2 = 200.00′
θs_2 = 12° 45′ 00″
LT_2 = 128.48′
ST_2 = 72.24′
x_2 = 198.93′
y_2 = 15.94′
k_2 = 99.84′
p_2 = 3.12′
T_2 = 687.17′
Lc = 637.89′
Es = 126.82′
C_1 = 224.47′
C = 593.37′
C_2 = 199.57′
C.B.$_1$ = N 76° 40′ 17″ W
C.B. = N 30° 22′ 51″ W
C.B.$_2$ = N 15° 15′ 48″ E
e MAX = 0.057
TS STA 412+42.98
SC STA 414+67.98
CS STA 421+05.87
SC STA 423+05.87

PROPOSED RAMP M DATA		
87	POT	412+00.00
	N 36° 59′ 00″ E	
88	TS	412+39.90
89	SC	414+14.90
90	CS	420+32.40
91	ST	422+07.38
	S 49° 56′ 13″ E	
92	TS	422+54.25
93	SC	424+29.25
94	CS	425+92.03
95	ST	427+67.01
	S 83° 42′ 50″ E	
96	POT	432+13.01

CURVE 562-M1
PI STA 418+44.84
Δ = 93° 04′ 47″ (RT)
Dc = 11° 44′ 43″
R = 487.82′
Ls_1 = 175.00′
θs_1 = 10° 16′ 37″
LT_1 = 116.86′
ST_1 = 58.51′
x_1 = 174.44′
y_1 = 10.44′
k_1 = 87.41′
p_1 = 2.61′
T_1 = 604.94′
Ls_2 = 174.98′
θs_2 = 10° 16′ 33″
LT_2 = 116.85′
ST_2 = 58.51′
x_2 = 174.42′
y_2 = 10.44′
k_2 = 87.40′
p_2 = 2.61′
T_2 = 604.93′
Lc = 617.50′
Es = 225.18′
C_1 = 174.75′
C = 577.09′
C_2 = 174.73′
C.B.$_1$ = N 40° 24′ 29″ E
C.B. = N 83° 31′ 25″ E
C.B.$_2$ = S 53° 21′ 41″ E
e MAX = 0.056
TS STA 412+39.90
SC STA 414+14.90
CS STA 420+32.40
ST STA 422+07.38

CURVE 562-M2
PI STA 425+16.31
Δ = 33°46′37″ (LT)
Dc = 10°00′00″
R = 572.96′
Ls_1 = 175.00′
θs_1 = 8°45′00″
LT_1 = 116.81′
ST_1 = 58.46′
x_1 = 174.59′
y_1 = 8.89′
K_1 = 87.43′
p_1 = 2.23′
T_1 = 262.06′
Ls_2 = 174.98′
θs_2 = 8°44′56″
LT_2 = 116.80′
ST_2 = 58.46′
x_2 = 174.57′
y_2 = 8.89′
K_2 = 87.42′
p_2 = 2.22′
T_2 = 262.05′
Lc = 162.78′
Es = 28.15′
C_1 = 174.82′
C = 162.23′
C_2 = 174.80′
C.B.$_1$ = S 52° 51′ 11″ E
C.B. = S 66° 49′ 33″ E
C.B.$_2$ = S 80° 47′ 53″ E
e MAX = 0.059
TS STA 422+54.25
SC STA 424+29.25
CS STA 425+92.03
ST STA 427+67.01

PROPOSED RAMP Q DATA		
103	PC	28+09.58
104	PT	33+42.17
	S 71° 44′ 50″ E	
105	PC	36+66.42
106	PT	38+39.46

CURVE 562-Q1
PI STA 30+76.85
Δ = 11° 58′ 00″ (RT)
Dc = 2° 14′ 49″
R = 2,550.00′
T = 267.27′
L = 532.59′
E = 13.97′
C = 531.62′
C.B. = S 77° 43′ 50″ E
e MAX = 0.035
PC STA 28+09.58
PT STA 33+42.17

CURVE 562-Q2
PI STA 37+68.47
Δ = 76° 15′ 54″ (RT)
Dc = 44° 04′ 25″
R = 130.00′
T = 102.05′
L = 173.04′
E = 35.27′
C = 160.55′
C.B. = S 33° 36′ 53″ E
PC STA 36+66.42
PT STA 38+39.46

PROPOSED RAMP P DATA		
100	POT	20+00.00
	S 84° 51′ 35″ E	
101	PC	30+13.47
102	PT	35+00.83
	N 85° 30′ 41″ E	
103	PC	36+17.99
104	PT	38+57.98
	N 9° 07′ 10″ E	
105	PC	39+30.77
106	PT	39+83.76
	N 8° 03′ 35″ E	
107	POT	40+37.33

CURVE 562-P1
PI STA 32+57.73
Δ = 9° 37′ 44″ (LT)
Dc = 1° 58′ 33″
R = 2,900.00′
T = 244.26′
L = 487.36′
E = 10.27′
C = 486.79′
C.B. = S 89° 40′ 27″ E
e MAX = 0.035
PC STA 30+13.47
PT STA 35+00.83

CURVE 562-P2
PI STA 37+59.61
Δ = 76° 23′ 31″ (LT)
Dc = 31° 49′ 52″
R = 180.00′
T = 141.62′
L = 239.99′
E = 49.04′
C = 222.61′
C.B. = N 47° 18′ 55″ E
PC STA 36+19.77
PT STA 38+57.98

CURVE 562-P3
PI STA 39+57.26
Δ = 1° 03′ 35″ (LT)
Dc = 2° 00′ 00″
R = 2,864.79′
T = 26.49′
L = 52.99′
E = 0.12′
C = 52.99′
C.B. = N 8° 35′ 22″ E
PC STA 39+30.77
PT STA 39+83.76

Preliminary Plans - For Reference Only

HORIZONTAL SCALE IN FEET
0 100 200 400

GEOMETRIC PLAN
PROPOSED RAMP BASELINE DATA

HAM-75-7.85

8
1047

J:\20110903\ODOT\HAM\7.7889\roadway\sheets\77889GB003.dgn 5/22/2026 10:04:38 AM hbrendlinger

CL CONST TOWNE ST DATA	
1	PC 15+59.60
2	PT 16+40.40
	N 83°21'49" W 87.30'
3	PC 17+27.70
4	PC 17+95.00
	N 81°20'41" W 483.74'
5	POT 22+33.74

CURVE TO-1
PI STA 16+00.01
Δ = 2° 25′ 26″ (LT)
Dc = 2° 59′ 59″
R = 1,910.00′
T = 40.41′
L = 80.80′
E = 0.43′
C = 80.80′
C.B. = N 82° 09′ 06″ W
e_{max} = NC
PC STA 15+59.60
PT STA 16+40.40

CURVE TO-2
PI STA 17+61.35
Δ = 2° 01′ 08″ (RT)
Dc = 2° 59′ 59″
R = 1,910.00′
T = 33.65′
L = 67.30′
E = 0.30′
C = 67.30′
C.B. = N 82° 21′ 15″ W
e_{max} = NC
PC STA 17+27.70
PT STA 17+95.00

CURVE 75-3
PI STA 456+41.20
Δ = 5° 41′ 01″ (LT)
Dc = 0° 40′ 00″
R = 8,594.37′
T = 426.63′
L = 852.56′
E = 10.58′
C = 852.21′
C.B. = N 21° 39′ 37″ E
e_{max} = 0.019
PC STA 452+14.57
PT STA 460+67.13

CURVE 75-4
PI STA 474+88.06
Δ = 25° 08′ 30″ (RT)
Dc = 2° 45′ 00″
R = 2,083.48′
T = 464.60′
L = 914.25′
E = 51.17′
C = 906.93′
C.B. = N 31° 23′ 22″ E
e_{max} = 0.053
PC STA 470+23.46
PT STA 479+37.71

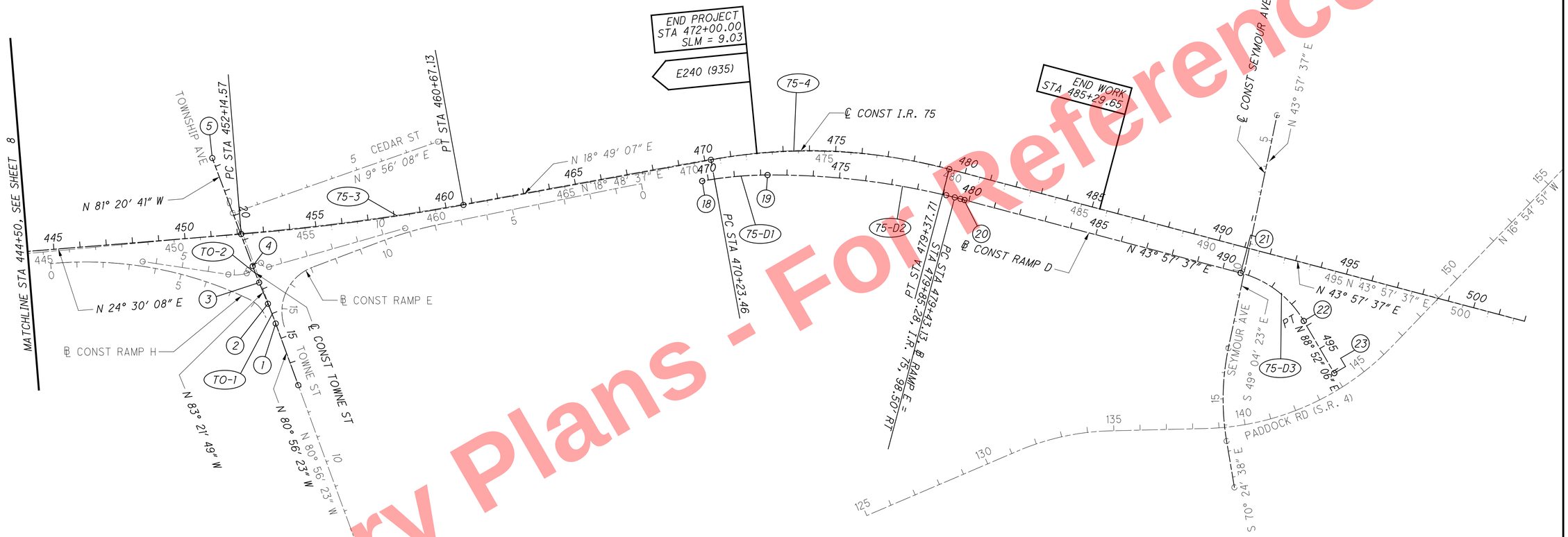

REMAINING PORTION OF RAMP D
TO BE CONSTRUCTED WITH PID 117525

PROPOSED RAMP D DATA	
18	PC 469+76.37
19	PCC 472+26.37
20	PT 479+83.46
	N 43°57′37″ E 1085.57′
21	PC 490+69.03
22	PT 493+78.68
	N 88°52′06″ E 230.01′
23	POT 496+08.69

CURVE 75-D1
PI STA 472+01.69
D = 10° 00′ 00″ (RT)
Dc = 4° 00′ 00″
R = 1,432.40′
T = 125.32′
L = 250.00′
E = 5.47′
C = 249.68′
C.B. = N 23° 49′ 07″ E
e_{max} = 0.053
PC STA 469+76.37
PT STA 472+26.37

CURVE 75-D2
PI STA 476+07.13
D = 15° 08′ 30″ (RT)
Dc = 2° 00′ 00″
R = 2,864.79′
T = 380.76′
L = 757.09′
E = 25.19′
C = 754.89′
C.B. = N 36° 23′ 22″ E
e_{max} = 0.030
PCC STA 472+26.37
PT STA 479+83.46

CURVE 75-D3
PI STA 492+32.30
D = 44° 54′ 29″ (RT)
Dc = 14° 30′ 09″
R = 395.07′
T = 163.27′
L = 309.65′
E = 32.41′
C = 301.79′
C.B. = N 66° 24′ 52″ E
e_{max} = 0.053
PC STA 490+69.03
PT STA 493+78.68

Preliminary Plans - For Reference Only

HORIZONTAL SCALE IN FEET
0 100 200 400

GEOMETRIC I.R. 75 PLAN
PROPOSED MAINLINE I.R. 75 AND RAMP DATA

HAM-75-7.85

9
1047

J:\20110903\ODOT\HAM\7889\roadway\sheets\77889GB403.dgn 5/22/2026 10:04:39 AM hbrendlinger

VERTICAL CONTROL

BENCHMARK	ELEVATION	DESCRIPTION
SOURCE BENCHMARK NGS MONUMENT X 144	529.74	IN IVORYDALE, AT THE INTERSECTION OF MURRAY ROAD AND THE CONRAIL RAILROAD, SET VERTICALLY IN THE SOUTH FACE OF THE WEST CONCRETE PIER OF AN ABANDONED OVERPASS, 290.0 M (951.4 FT) NORTH OF THE ROAD CENTER, 12.2 M (40.0 FT) NORTH-WEST OF THE NEAR RAIL, 3.6 M (11.8 FT) WEST OF A SWITCH STAND, 0.8 M (2.6 FT) ABOVE THE GROUND SURFACE, 0.6 M (2.0 FT) WEST OF THE SOUTHEAST CORNER OF THE PIER, AND 0.4 M (1.3 FT) ABOVE THE LEVEL OF THE TRACK.
NGS MONUMENT Y 144	549.88	IN ELMWOOD PLACE, AT THE INTERSECTION OF 69TH STREET AND THE CONRAIL RAIL-ROAD, IN TOP OF AND 1.1 M (3.6 FT) NORTHWEST OF THE SOUTHEAST END OF THE SOUTHWEST CONCRETE ABUTMENT OF THE RAILROAD OVERPASS OF THE STREET, 10.4M (34.1 FT) SOUTHWEST OF THE STREET CENTER, 2.2 M (7.2 FT) SOUTHEAST OF THE NEAR RAIL, AND 0.4 M (1.3 FT) ABOVE THE LEVEL OF THE TRACK.
NGS MONUMENT Z 144	556.75	IN CARTHAGE, AT THE INTERSECTION OF THE CONRAIL RAILROAD AND PADDOCK ROAD, IN TOP OF AND 0.4 M (1.3 FT) NORTHEAST OF THE SOUTHWEST END OF A CONCRETE RETAINING WALL, 19.7 M (64.6 FT) EAST OF THE ROAD CENTER, 9.1 M (29.9 FT) NORTH-EAST OF THE EAST CORNER OF A RAILROAD OVERPASS, 2.1 M (6.9 FT) SOUTHEAST OF THE NEAR RAIL, AND 0.2 M (0.7 FT) ABOVE THE LEVEL OF THE TRACK.
BM #401	519.64	CHISELED BOX ON THE SOUTHEAST CORNER OF A CONCRETE PAD FOR A SIGNAL CONTROL BOX, LOCATED ON THE SOUTHWEST CORNER OF VINE STREET AND RAILROAD AVENUE.
BM #402	534.36	CHISELED BOX ON THE SOUTHEAST CORNER OF A RETAINING WALL, ON TOP, LOCATED ON THE NORTHWEST CORNER OF PADDOCK ROAD AND EAST ROSS AVENUE.
BM #403	585.33	CHISELED "X" ON THE SOUTHEAST BOLT OF A SIGNAL POLE BASE LOCATED ON THE NORTHWEST CORNER OF LAIDLAW AVENUE AND PADDOCK ROAD.
BM #404	523.26	CHISELED "X" ON THE NORTHWEST CORNER OF A CATCH BASIN 250 FEET +/- EAST OF THE INTERSTATE-75 OVERPASS ON THE NORTH CURB LINE OF LAIDLAW AVENUE ACROSS FROM THE INTERSECTION OF NORFOLK SOUTHERN YARD.
BM #405	521.92	CHISELED BOX ON THE NORTHWEST CORNER ON THE TOP OF A CURB ON A CURB AND GUTTER INLET, ON THE SOUTH SIDE OF MURRAY ROAD, 350 FEET +/- WEST OF THE INTERSECTION OF MURRAY ROAD AND PROSSER AVENUE NEXT TO THE ENTRANCE OF EXEL YARD.
BM #406	529.61	CHISELED BOX ON THE SOUTHWEST CORNER OF A CONCRETE PAD FOR A SIGNAL CONTROL BOX, LOCATED ON THE NORTHEAST CORNER OF VINE STREET AND MURRAY ROAD.
BM #407	529.74	CHISELED BOX ON THE SOUTHWEST CORNER OF THE TOP OF CURB TO A CURB AND GUTTER INLET ON THE SOUTH SIDE OF TOWNSHIP AVENUE, 140 FEET +/- EAST OF INTERSECTION TOWNSHIP AVENUE AND VINE STREET 2 FEET +/- EAST OF THE NORTH ENTRANCE TO UNITED DAIRY FARMERS.
BM #408	530.70	CHISELED BOX ON THE SOUTHWEST CORNER OF THE BACK OF CURB ON A CURB AND GUTTER INLET ON THE SOUTH SIDE OF TOWNSHIP AVENUE ON THE SOUTHEAST CORNER OF TOWNSHIP AVENUE AND SILVER STREET.
BM #409	564.07	CHISELED BOX ON THE SOUTHWEST CORNER OF A CONCRETE PAD FOR A WATER METER PIT ON THE SOUTH SIDE OF TOWN STREET 200 FEET +/- EAST OF THE NORTH BOUND EXIT RAMP TO TOWNE STREET ACROSS FROM 1028 TOWN STREET 12 FEET +/- SOUTH OF SIDEWALK.
BM #410	541.01	NORTH RIM OF A MANHOLE LOCATED IN THE SIDEWALK AT THE SOUTHWEST INTER-SECTION OF PADDOCK ROAD AND TOWNE STREET.
BM #411	568.65	CHISELED "X" ON THE NORTH RIM OF A STORM MANHOLE LOCATED IN THE CENTERLINE OF REGINA GRAETER WAY 150 FEET +/- WEST FROM THE CENTERLINE INTERSECTION OF PADDOCK DRIVE AND REGINA GRAETER WAY BETWEEN 2 CURB AND GUTTER INLETS.
BM #412	585.83	CHISELED BOX ON THE BACK OF CURB AT THE SOUTHWEST CORNER OF GIVAUDAN PARKING LOT, 25 FEET +/- NORTH OF CENTERLINE FROM REGINA GRAETER WAY AND 75 FEET +/- EAST OF CENTERLINE CUL-DE-SAC OF REGINA GRAETER WAY.
BM #413	569.62	CHISELED "X" ON THE SOUTHWEST BOLT OF A SIGN POLE WITH A MAST ARM 75 FEET +/- NORTH FROM THE CENTERLINE OF EAST SEYMOUR AVENUE 200 FEET +/- EAST FROM THE INTERSECTION OF EAST SEYMOUR AVENUE AND PADDOCK ROAD.
BM #414	564.64	SOUTHWEST CORNER OF A CURB AND GUTTER INLET 60 FEET +/- SOUTH FROM THE CENTERLINE OF WEST SEYMOUR AVENUE 250 FEET +/- WEST FROM THE INTER-SECTION OF PADDOCK ROAD AND WEST SEYMOUR AVENUE.
BM #415	549.37	CHISELED "X" ON THE NORTH RIM OF A WATER MANHOLE, ON THE NORTHWEST CORNER OF WEST SEYMOUR AVENUE AND LONGVIEW, 40 FEET +/- NORTH FROM THE CENTERLINE OF WEST SEYMOUR AVENUE AND 20 FEET +/- WEST FROM THE CENTER-LINE OF LONGVIEW STREET.
BM #416	533.94	CONCRETE MONUMENT WITH A BRASS DISC FOUND ON THE NORTHEAST CORNER OF VINE STREET AND WEST SEYMOUR AVENUE IN A BRICK SIDEWALK, MARKED CITY OF CINCINNATI TOPOGRAPHIC SURVEY 1912, BENCHMARK NO.15.
BM #417	529.06	CHISELED "X" ON THE NORTH RIM OF A WATER MANHOLE AT THE INTERSECTION OF VINE STREET AND 69TH STREET 45 FEET +/- EAST FROM THE CENTERLINE OF VINE STREET, IN THE WEST BOUND LANE OF 69TH STREET 7 FEET +/- SOUTH OF NORTH CURB LINE.
BM #418	524.02	CHISELED "X" ON THE NORTH RIM OF A UNION GAS AND ELECTRIC CO. MANHOLE IN THE ROADWAY ON THE NORTHEAST CORNER OF VINE STREET AND 66TH STREET 30 FEET +/- EAST FROM THE CENTERLINE OF VINE STREET AND 5 FEET +/- SOUTH OF THE NORTH CURB LINE OF 66TH STREET.
BM #419	553.98	CHISELED "X" ON THE NORTH RIM OF A SANITARY MANHOLE AND THE INTERSECTION OF 66TH STREET AND HASLER AVENUE, THE WEST MOST OF 2 SANITARY MANHOLES IN THE INTERSECTION.
BM #420	557.46	CHISELED "X" ON THE NORTH RIM OF A TELEPHONE MANHOLE AT THE NORTHEAST CORNER OF THE INTERSECTION OF SUMMIT ROAD AND THE ENTRANCE TO SUMMIT BEHAVIORAL, 60 FEET +/- EAST OF THE CENTERLINE OF SUMMIT ROAD AND 30 FEET +/- NORTH OF THE CENTERLINE OF THE ENTRANCE ROAD.
BM #421	565.44	CHISELED BOX ON THE WEST SIDE OF A CONCRETE BASE TO A SIGNAL SUPPORT POST, LOCATED IN THE ISLAND AT THE INTERSECTION OF SUMMIT ROAD AND SECTION ROAD.
BM #422	554.98	CHISELED "X" ON THE NORTH RIM OF A TELEPHONE MANHOLE IN THE SIDEWALK AT THE EAST END OF CITY CENTER DRIVE ON THE NORTH SIDE OF THE ROAD, 120 FEET +/- WEST OF THE ENTRANCE TO THE FOOTBRIDGE OVER INTERSTATE-75.
BM #423	546.71	CONCRETE MONUMENT WITH A BRASS DISK FOUND AND STAMPED "CITY OF CINCINNATI TRAVERSE STATION 2069 BENCHMARK SET 1948" ON THE WEST SIDE OF ANTHONY WAYNE AVENUE IN A CONCRETE SIDEWALK OPPOSITE CITY CENTER DRIVE, 25 FEET +/- SOUTH OF ENTRANCE TO HAMILTON COUNTY FAIR.

BENCH MARKS

POINT	TYPE	ELEVATION	NORTHING *	EASTING *
SOURCE BENCHMARK	(NGS MONUMENT X 144	529.74	436899.45	1404236.13
NGS MONUMENT Y 144		549.88	440216.54	1407194.85
NGS MONUMENT Z 144		556.75	441899.76	1408647.98
BM #401		519.64	433397.74	1402542.37
BM #402		534.36	431756.17	1407619.45
BM #403		585.33	435184.27	1408015.62
BM #404		523.26	435638.38	1405916.72
BM #405		521.92	435852.17	1405243.99
BM #406		529.61	436262.48	1403444.45
BM #407		529.74	437598.66	1404495.44
BM #408		530.70	437354.95	1406061.26
BM #409		564.07	437227.21	1406856.18
BM #410		541.01	437010.17	1408206.76
BM #411		568.65	438837.41	1408284.17
BM #412		585.83	439053.13	1407330.44
BM #413		569.62	440239.91	1409025.80
BM #414		564.64	440364.65	1408538.43
BM #415		549.37	440823.27	1408141.26
BM #416		533.94	441274.60	1407592.02
BM #417		529.06	440487.90	1406933.68
BM #418		524.02	439547.32	1406114.74
BM #419		553.98	439117.64	1406753.95
BM #420		557.46	441207.86	1409333.96
BM #421		565.44	442791.64	1410499.46
BM #422		554.98	443097.85	1410219.47
BM #423		546.71	443326.70	1409556.64

HORIZONTAL CONTROL - PRIMARY

POINT	ELEVATION	NORTHING*	EASTING*	REMARK
502	543.04	432931.60	1403155.57	5/8 IPS IN CONC W/ALUM CAP IRSW/CAP
503	559.20	432611.55	1403612.64	5/8 IPS IN CONC W/ALUM CAP IRSW/CAP
507	522.25	435915.06	1405239.17	5/8 IPS IN CONC W/ALUM CAP IRSW/CAP
530	535.56	440928.89	1408675.89	5/8 IPS IN CONC W/ALUM CAP IRSW/CAP
537	534.35	444337.58	1411412.82	5/8 IPS IN CONC W/ALUM CAP IRSW/CAP
538	544.85	444809.07	1412047.99	5/8 IPS IN CONC W/ALUM CAP IRSW/CAP

HORIZONTAL CONTROL - SECONDARY

POINT	ELEVATION	NORTHING*	EASTING*	REMARK
501	534.52	431790.14	1407660.51	IRS W/CAP
504	523.52	433489.85	1402439.33	IRS W/CAP
505	528.48	436241.70	1403290.67	IRS W/CAP
506	521.40	436085.30	1404454.95	IRS W/CAP
508	521.60	435693.66	1405777.03	IRS W/CAP
509	552.81	435319.16	1406580.83	IRS W/CAP
510	551.25	434024.21	1406396.65	MAGS W/SHINER MAGS
511	583.63	435115.23	1408003.01	MAGS W/SHINER MAGS
512	540.61	437035.44	1408277.55	IRS W/CAP
513	565.45	437201.89	1407088.23	IRS W/CAP
514	561.58	437245.60	1406808.10	IRS W/CAP
515	529.65	437421.91	1405951.11	IRS W/CAP
516	527.74	437561.56	1405042.59	IRS W/CAP
517	529.92	437602.09	1404458.49	IRS W/CAP
518	524.89	439509.16	1406086.54	IRS W/CAP
519	537.56	439306.93	1406403.06	IRS W/CAP
520	554.30	439165.95	1406736.13	IRS W/CAP
521	585.96	439000.84	1407311.34	IRS W/CAP
522	574.35	438889.87	1407894.11	IRS W/CAP
523	569.68	438798.67	1408374.64	IRS W/CAP
524	566.68	440283.45	1408951.52	IRS W/CAP
525	567.56	440318.68	1408756.84	IRS W/CAP
526	563.95	440496.42	1408502.65	IRS W/CAP
527	551.46	440775.36	1408167.30	IRS W/CAP
528	534.73	441143.50	1407664.41	IRS W/CAP
529	534.87	441388.53	1407473.46	IRS W/CAP
531	559.39	441341.71	1409403.81	IRS W/CAP
532	557.96	441986.06	1409736.65	IRS W/CAP
533	564.68	442772.93	1410471.90	IRS W/CAP
534	555.99	443065.00	1410247.20	IRS W/CAP
535	544.31	443272.35	1409768.33	IRS W/CAP
536	547.52	443314.45	1409594.27	IRS W/CAP

* ALL NORTHING AND EASTING COORDINATES ARE GROUND COORDINATES.

BASIS OF BEARINGS:

THE BEARINGS SHOWN ON THIS PLAT ARE BASED ON THE OHIO STATE PLANE COORDINATE SYSTEM, SOUTH ZONE, NAD83 (1995). SAID BEARINGS ORIGINATED FROM A FIELD TRAVERSE WHICH WAS TIED (REFERENCED) TO SAID COORDINATE SYSTEM BY GPS OBSERVATIONS AND OBSERVATIONS OF SELECTED NATIONAL GEODETIC SURVEY MONUMENTS 7008, 7016, 6954, AND 6937. THE PORTION OF THE CENTERLINE OF I.R. 75, HAVING A BEARING OF NORTH 43° 57' 37" EAST, IS DESIGNATED THE "BASIS OF BEARING" FOR THIS SURVEY.

BASIS OF STATIONING:

I.R. 75: THE CENTERLINE STATIONING ESTABLISHED BY WOOLPERT WAS HELD.
SEYMOUR:THE CENTERLINE STATIONING ESTABLISHED BY WOOLPERT WAS HELD.

PADDOCK: THE CENTERLINE STATIONING WAS ESTABLISHED BASED ON OHIO DEPARTMENT TRANSPORTATION RIGHT-OF-WAY PLANS "HAM-S.R. 4 - 4.000" (2000), (METRIC UNITS). HOLDING STATION 4+221.140 AND APPLYING A CONVERSION FACTOR OF 1 U.S. FOOT = (1200/3937) METERS.

SUMMIT: THE CENTERLINE STATIONING WAS ESTABLISHED BASED ON OHIO DEPARTMENT TRANSPORTATION RIGHT-OF-WAY PLANS "S.H. 987 SEC. CINCINNATI (PT) B, ARLINGTON HEIGHTS & LOCKLAND (PT)" (1947). HOLDING STATION 0+04.59 AND ADDING 1000 FEET.

VERTICAL DATUM CONVERSION TO NGVD 1929:

THE ELEVATION ESTABLISHED BY THE NATIONAL GEODETIC SURVEY, AT MONUMENT X144 IS AS FOLLOWS:
NORTH AMERICAN VERTICAL DATUM OF 1988 IS 529.74 FEET IN ELEVATION.
NATIONAL GEODETIC VERTICAL DATUM OF 1929 IS 530.32 FEET IN ELEVATION.
529.74 FEET (NAVD88) + 0.58 FEET = 530.32 FEET (NGVD 29)

PRIMARY CONTROL MONUMENTS:

PRIMARY CONTROL MONUMENTS ARE CONCRETE MONUMENTS WITH ALUMINUM DISKS CONFORMING TO THE SPECIFICATIONS OF A "TYPE A" MONUMENT AS SHOWN IN THE OHIO DEPARTMENT OF TRANSPORTATION SURVEY AND MAPPING SPECIFICATIONS OF THE OFFICE OF AERIAL ENGINEERING, DATED JULY 15, 2011.

Preliminary Plans - For Reference Only

CALCULATED JM CHECKED EDK

HORIZONTAL AND VERTICAL CONTROL

HAM-75-7.85

J:\2011093\ODOT\HAM\77889\roadway\sheets\77889GB005.dgn 5/22/2026 10:04:40 AM hbrendlinger

EXISTING LEGEND

- (A) 1 ¼" ASPHALT CONCRETE SURFACE COURSE
- (B) 1 ½" ASPHALT CONCRETE SURFACE COURSE
- (C) ASPHALT CONCRETE INTERMEDIATE COURSE, VARIABLE DEPTH
- (D) 1 ¾" ASPHALT CONCRETE, INTERMEDIATE COURSE
- (E) 2" MIN. DEPTH ASPHALT CONCRETE SURFACE COURSE
- (F) 3" BITUMINOUS AGGREGATE BASE
- (G) 4 ½" BITUMINOUS AGGREGATE BASE
- (I) 9" CONCRETE PAVEMENT
- (J) 9" REINFORCED PORTLAND CEMENT CONCRETE PAVEMENT (HAM-4W-7.81 (1956) FILE #08C1412)
- (K) 6" AGGREGATE BASE
- (L) AGGREGATE BASE, VARIABLE DEPTH
- (M) STABILIZED CRUSHED AGGREGATE
- (N) SUBBASE
- (O) AGGREGATE BASE, VARIES 3" MIN
- (P) SHALLOW UNDERDRAIN
- (Q) CONDUIT, 713.04, (2) 4" CONDUITS
- (R) 6" PIPE UNDERDRAIN
- (S) CONCRETE BARRIER, TYPE A
- (T) 50" CONCRETE BARRIER TYPE B
- (V) 3" BITUMINOUS AGGREGATE BASE
- (W) 4" CONCRETE WALK
- (X) EXISTING CURB
- (Y) EXISTING BARRIER
- (Z) 13" ASPHALT CONCRETE BASE
- (AA) CEMENT STABILIZED SUBGRADE
- (BB) EXISTING LOAD TRANSFER PLATFORM

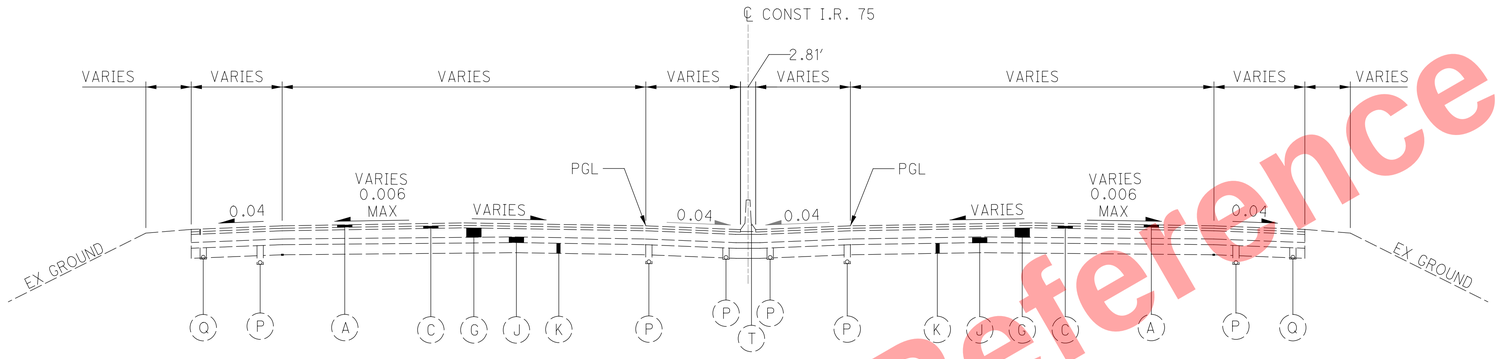

EXISTING SECTIONS - I.R. 75
STA 410+00.00 TO STA 416+52.71
(PER PID 82286)

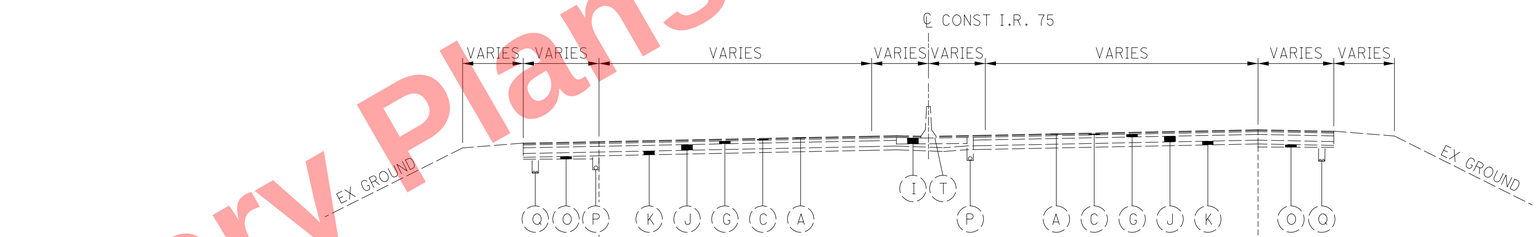

EXISTING SUPERELEVATED SECTIONS - I.R. 75
STA 468+96.52 TO STA 481+34.86

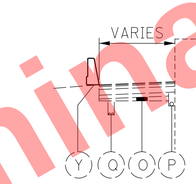

I.R. 75 SB LANE
STA 426+57.83 TO 428+27.70

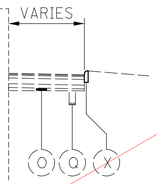

I.R. 75 NB LANE
STA 471+59.61 TO STA 479+87.30

Preliminary Plans - For Reference Only

TYPICAL SECTIONS - EXISTING I.R. 75

HAM-75-7.85

11
1047

J:\20110903\ODOT\HAM\77889\roadway\sheets\77889GY006.dgn 5/22/2026 10:04:40 AM hbrendlinger

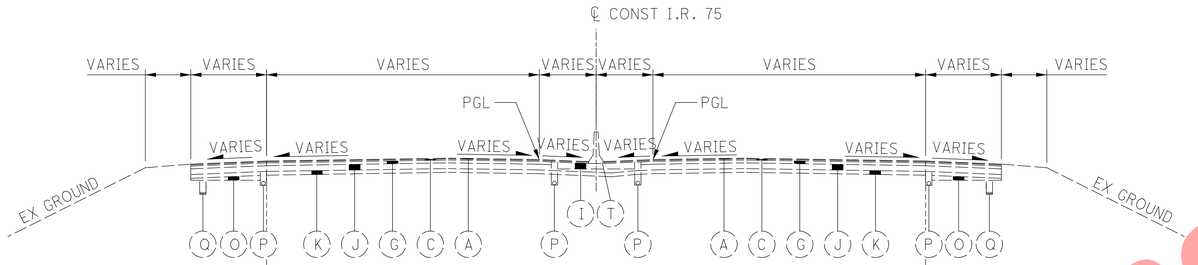

EXISTING SECTIONS - I.R. 75
STA 481+34.86 TO STA 514+01.64

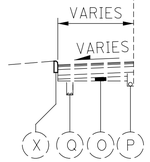

I.R. 75 SB LANE
STA 433+34.29 TO STA 433+60.24
STA 453+57.93 TO STA 463+42.62

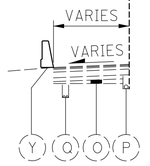

I.R. 75 SB LANE
STA 490+84.13 TO STA 491+57.99
STA 498+15.23 TO STA 500+49.41
STA 506+96.23 TO STA 507+33.85

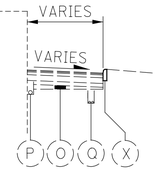

I.R. 75 NB LANE
STA 505+92.57 TO STA 514+01.64

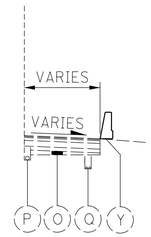

I.R. 75 NB LANE
STA 490+90.39 TO STA 492+25.78
STA 497+36.60 TO STA 499+30.90

Preliminary Plans - For Reference Only

FOR EXISTING LEGEND, SEE SHEET 11

TYPICAL SECTIONS - EXISTING I.R. 75

HAM-75-7.85

12
1047

J:\20110903\ODOT\HAM\77889\roadway\sheets\77889GY007.dgn 5/22/2026 10:04:41 AM hbrendlinger

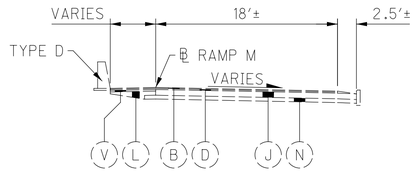

EXISTING SECTION - RAMP M

STA 7+20.00 TO STA 14+72.44
STA 17+51.44 TO STA 20+45.00

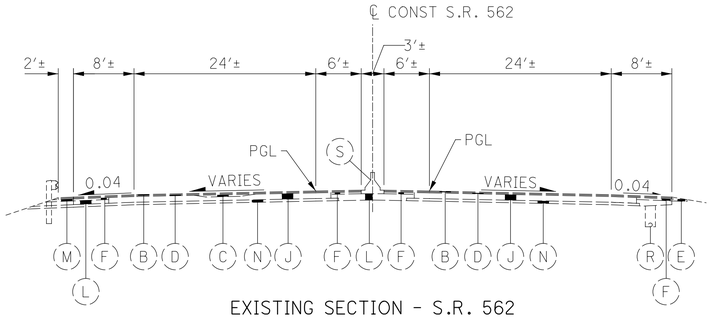

EXISTING SECTION - S.R. 562

STA 16+46.49 TO STA 35+44.45

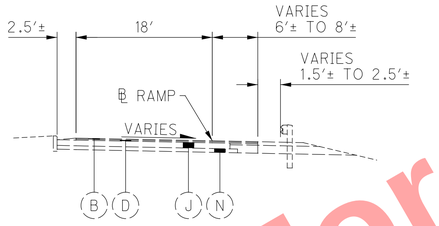

EXISTING SECTION - RAMPS K & N

RAMP K STA 8+82.84 TO STA 16+41.30
RAMP N STA 2+31.15 TO STA 15+70.62

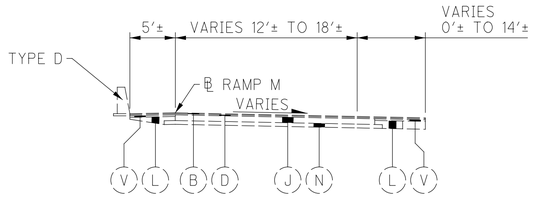

EXISTING SECTION - RAMP M

STA 21+26.37 TO STA 25+82.04

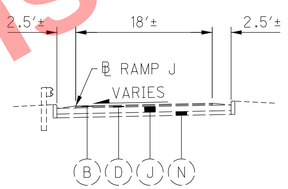

EXISTING SECTION - RAMP J

STA 2+70.00 TO STA 17+18.20

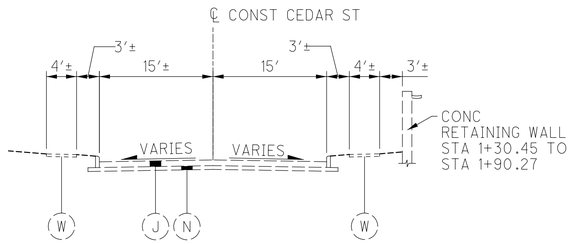

EXISTING SECTION - CEDAR ST

STA 0+00.00 TO STA 2+73.94

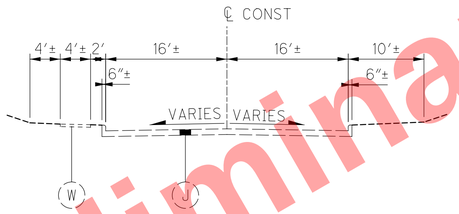

EXISTING SECTION - PROSSER AVE

PROSSER AVE STA 19+85.16 TO 22+00.00

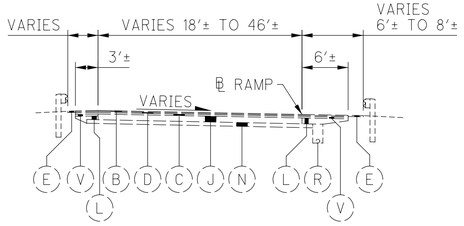

EXISTING SECTION - RAMPS P & Q

RAMP P STA 8+20.00 TO STA 11+85.52
RAMP Q STA 3+16.21 TO STA 7+88.78

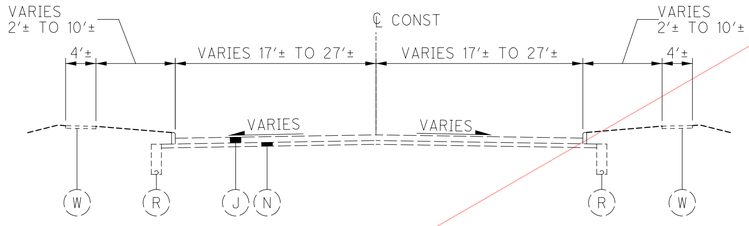

EXISTING SECTION - TOWNSHIP AVE & TOWNE ST

TOWNE ST STA 15+50.00 TO STA 19+85.16
TOWNSHIP AVE STA 19+85.16 TO 22+00.00

FOR EXISTING LEGEND SHEET 11

Preliminary Plans - Not for Construction
For Reference Only

TYPICAL SECTIONS - EXISTING S.R. 562, RAMPS, SIDE ROADS

HAM-75-7.85

13
1047

J:\2011090\3\ODOT\HAM\7889\roadway\sheets\77889GY010.dgn 5/22/2026 10:04:41 AM hbrendlinger

[1] 18.5′
STA 403+40.00 TO STA 406+00.00
VARIES 18.5′ TO 19.5′
STA 406+00.00 TO STA 406+60.61
19.5′
STA 406+60.61 TO STA 407+87.13
VARIES 19.5′ TO 16′
STA 407+87.13 TO STA 410+00.00

[2] 13.5′
STA 395+50.00 TO STA 407+87.13
VARIES 13.5′ TO 14.5′
STA 407+87.13 TO STA 408+47.13
14.5′
STA 408+47.13 TO STA 410+00.00

[3] 4′
STA 395+50.00 TO STA 407+87.13
VARIES 4′ TO 1.16′
STA 407+87.13 TO STA 410+00.00

[4] 0′
STA 395+50.00 TO STA 403+21.63
VARIES 0′ TO 12′
STA 403+21.63 TO STA 404+21.63

[5] 12′
STA 395+50.00 TO STA 403+21.63
VARIES 12′ TO 8′
STA 403+21.63 TO STA 404+21.63
8′
STA 404+21.63 TO STA 404+55.82

[6] 8′
STA 404+01.04 TO STA 405+39.61
VARIES 20.21′ TO 24.58′
STA 405+39.61 TO STA 406+16.11
8′
STA 406+16.11 TO STA 406+26.34
VARIES 8′ TO 6.5′
STA 406+26.34 TO STA 406+66.36

[7] VARIES 6.5′ TO 6′
STA 406+66.36 TO STA 406+78.90
6′
STA 406+78.90 TO STA 408+87.95

[8] 8′
STA 404+75.00 TO STA 405+99.99
VARIES 8′ TO 24′
STA 405+99.99 TO STA 410+00.00

FOR EXISTING LEGEND, SEE SHEET 11

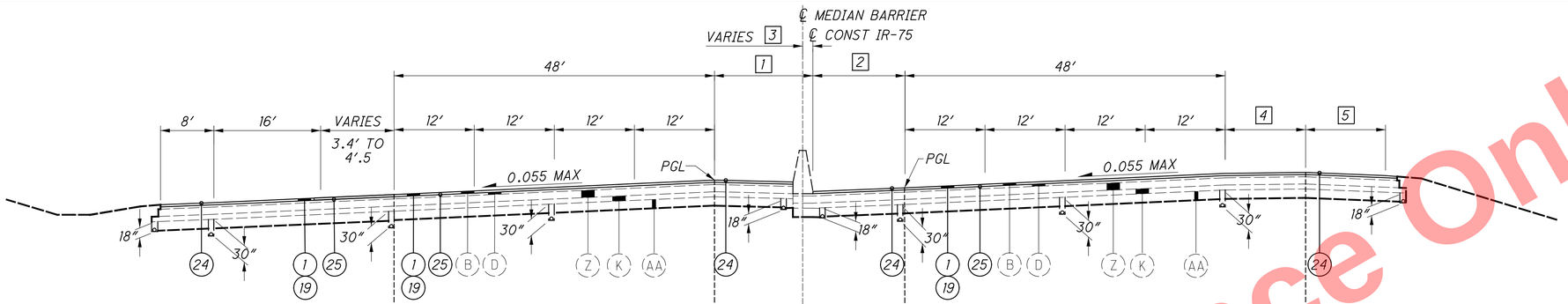

SECTION APPLIES IR-75:
STA 408+07.13 TO STA 410+00.00

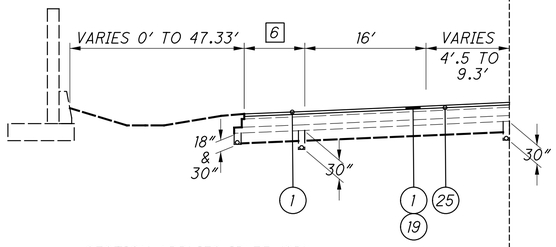

SECTION APPLIES IR-75 (SB):
STA 404+01.04 TO STA 406+66.36

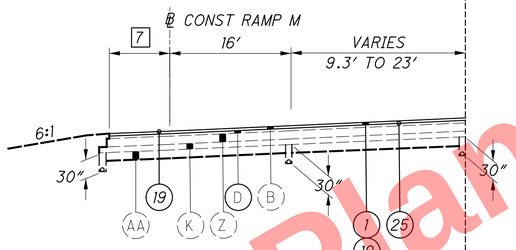

SECTION APPLIES IR-75 (SB):
STA 406+66.36 TO STA 408+87.95

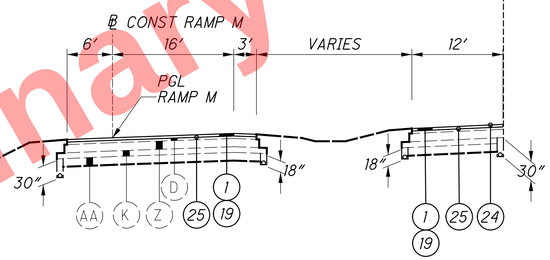

SECTION APPLIES IR-75 (SB):
STA 408+87.95 TO STA 410+00.00

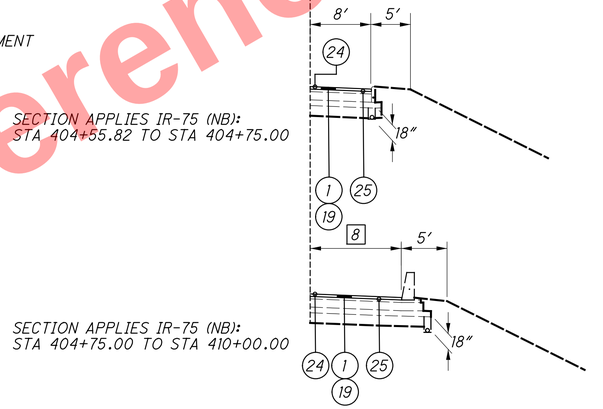

SECTION APPLIES IR-75 (NB):
STA 404+55.82 TO STA 404+75.00

SECTION APPLIES IR-75 (NB):
STA 404+75.00 TO STA 410+00.00

RESURFACING SECTION - I.R. 75

SECTION APPLIES:
STA 395+50.00 TO STA 410+00.00 (NB)
STA 403+40.00 TO STA 410+00.00 (SB)

LEGEND

(1) ITEM 442 - 1 ½″ ASPHALT CONCRETE SURFACE COURSE, 12.5MM, TYPE A (447), AS PER PLAN
(2) ITEM 407 - NON-TRACKING TACK COAT (@0.055 GAL/SY)
(3) ITEM 442 - 1 ¾″ ASPHALT CONCRETE INTERMEDIATE COURSE, 12.5MM, TYPE A (446)
(4) ITEM 302 - 13″ ASPHALT CONCRETE BASE (2-6.5″ LIFTS)
(5) ITEM 304 - 6″ AGREGGATE BASE
(6) ITEM 452 - 6″ NON-REINFORCED CONCRETE PAVEMENT
(7) ITEM 605 - 6″ BASE PIPE UNDERDRAINS
(8) ITEM 204 - PROOF ROLLING
(9) ITEM 659 - SEEDING AND MULCHING
(10) ITEM 606 - GUARDRAIL, TYPE MGS
(11) ITEM 452 - 13″ NON-REINFORCED CONCRETE PAVEMENT
(12) ITEM 206 - CEMENT STABILIZED SUBGRADE, 14″ DEEP
(13) ITEM 605 - 6″ SHALLOW PIPE UNDERDRAINS
(14) ITEM 605 - 6″ UNCLASSIFIED PIPE UNDERDRAINS
(15) ITEM 526 - REINFORCED CONCRETE APPROACH SLAB (T=17″)
(16) ITEM 302 - 9″ ASPHALT CONCRETE BASE (2-4.5″ LIFTS)
(17) ITEM 609 - CURB, TYPE 6
(18) ITEM 608 - 4″ CONCRETE WALK
(19) ITEM 254 - 1 ½″ PAVEMENT PLANING, ASPHALT CONCRETE
(20) ITEM 411 - 8″ STABILIZED CRUSHED AGGREGATE
(21) ITEM 622 - CONCRETE BARRIER, SINGLE SLOPE, TYPE B1
(22) ITEM 622 - CONCRETE BARRIER, SINGLE SLOPE, TYPE C1
(23) ITEM 622 - CONCRETE BARRIER, SINGLE SLOPE, TYPE D
(24) ITEM 618 - RUMBLE STRIPS (ASPHALT)
(25) ITEM 407 - NON-TRACKING TACK COAT (@0.085 GAL/SY)
(26) ITEM 609 - CURB, TYPE 4-C, AS PER PLAN
(27) ITEM 204 - SUBGRADE COMPACTION
(28) ITEM 302 - 4 3/4″ ASPHALT CONCRETE BASE
(29) ITEM 659 - TOPSOIL
(30) ITEM 441 - 1 1/2″ ASPHALT CONCRETE SURFACE COURSE, TYPE 1 (448), PG 64-22
(31) ITEM 408 - PRIME COAT
(32) ITEM 441 - 1.75″ ASPHALT CONCRETE INTERMEDIATE COURSE, TYPE 1 (448)
(33) ITEM 254 - PAVEMENT PLANING, ASPHALT CONCRETE, VARIABLE DEPTH

NOTE:
FOR RUMBLE STRIP DETAILS SEE SHEET 30

Preliminary Plans - For Reference Only

J:\20110903\ODOT\HAM\77889\roadway\sheets\77889GY011.dgn 5/22/2026 10:04:42 AM hbrendlinger

TYPICAL SECTIONS - RESURFACING I.R. 75

HAM-75-7.85

[1] VARIES 16′ TO 13.5′
STA 410+00.00 TO STA 411+50.00
13.5′
STA 411+50.00 TO STA 412+26.87
STA 428+92.01 TO STA 433+82.10

[2] VARIES 14.5′ TO 13.5′
STA 410+00.00 TO STA 411+50.00
13.5′
STA 411+50.00 TO STA 412+26.87
STA 428+92.01 TO STA 433+82.10

[3] VARIES 24′ TO 15.28′
STA 432+77.00 TO STA 433+82.10

[4] VARIES 5.58′ TO 0′
STA 428+92.01 TO STA 431+70.83
0′
STA 431+70.83 TO STA 433+48.82

[5] 10′
STA 428+92.01 TO STA 430+71.07
VARIES 10′ TO 12′
430+71.07 TO 431+71.07
12′
STA 431+71.07 TO STA 433+38.82
VARIES 12′ TO 14′
STA 433+38.82 TO 433+48.82

[6] 8′
STA 410+00.00 TO STA 410+69.34
VARIES 8′ TO 6′
STA 410+69.34 TO STA 411+18.85
6′
STA 411+18.85 TO STA 411+61.42

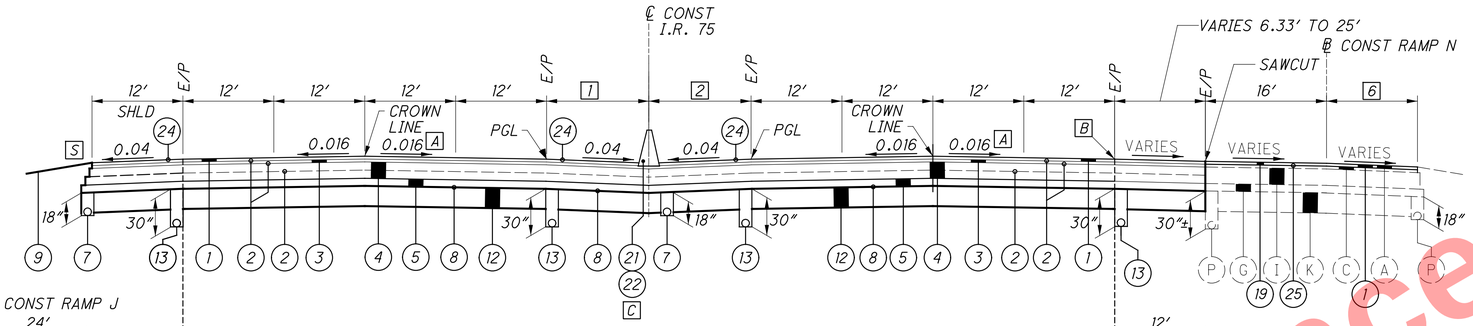

NORMAL FOUR LANE SECTION – I.R. 75
STA 410+00.00 TO STA 412+26.87
STA 428+92.01 TO STA 433+82.10

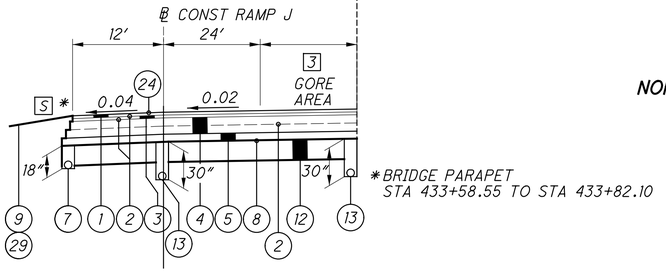

I.R. 75 SB AUXILLARY LANE (RAMP J)
STA 432+77.00 TO STA 433+82.10

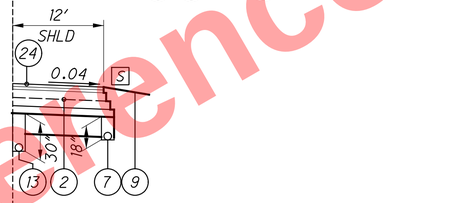

SECTION APPLIES:
STA 411+61.42 TO STA 412+26.87

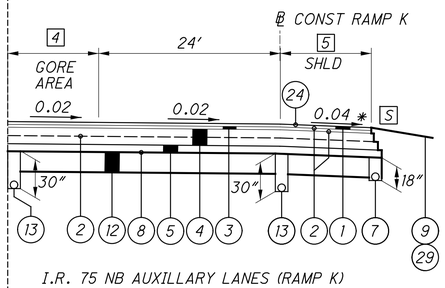

I.R. 75 NB AUXILLARY LANES (RAMP K)
STA 428+92.01 TO STA 433+48.82

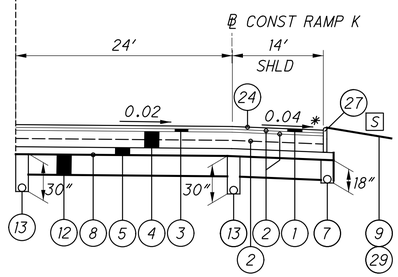

I.R. 75 NB AUXILLARY LANES (RAMP K)
STA 433+48.82 TO STA 433+82.10

[A] VARIES 0.00 TO 0.016
STA 410+00.00 TO STA 410+87.87

[B] 0.032 MAX GRADE BREAK
SEE INTERCHANGE DETAILS

[C] SINGLE SLOPE BARRIER
TYPE C1
STA 407+87.13 TO STA 411+49.93

TYPE B1
STA 411+49.93 TO STA 412+26.87
STA 428+92.01 TO STA 433+82.10

[S] SEE SHEET 26 FOR GRADING DETAILS.
SEE SHEETS 28 - 30 FOR ROADSIDE BARRIER DETAILS

FOR LEGEND, SEE SHEET 14

NOTES:
FOR PAVEMENT STEP DETAILS SEE SHEET 27
FOR RUMBLE STRIP DETAILS SEE SHEET 30

Preliminary Plans - For Reference Only

J:\20110903\ODOT\HAM\77889\roadway\sheets\77889GY001.dgn 5/22/2026 10:04:42 AM hbrendlinger

TYPICAL SECTIONS - I.R. 75

HAM-75-7.85

[1] 12′
STA 412+26.87 TO STA 415+00.00
VARIES 12′ TO 14′
STA 415+00.00 TO STA 415+50.00
VARIES 14′ TO 12′
STA 420+51.15 TO STA 420+61.15
12′
STA 420+61.15 TO STA 428+92.01

[2] 12′
STA 412+26.87 TO STA 416+02.82
VARIES 12′ TO 14′
STA 416+02.82 TO STA 416+46.29
12′
STA 419+52.73 TO STA 424+64.86

[3] 12′
STA 412+26.87 TO STA 417+12.66
VARIES 12′ TO 10.4′
STA 417+12.66 TO STA 417+52.66
10.4′
STA 417+52.66 TO STA 417+63.36

[4] 10.4′
STA 417+63.36 TO STA 417+93.36
12′
STA 419+22.73 TO STA 419+52.73

[5] VARIES 15.01′ TO 12.68′
STA 433+82.10 TO STA 434+12.10
VARIES 7.19′ TO 5.24′
STA 434+89.11 TO STA 435+19.11

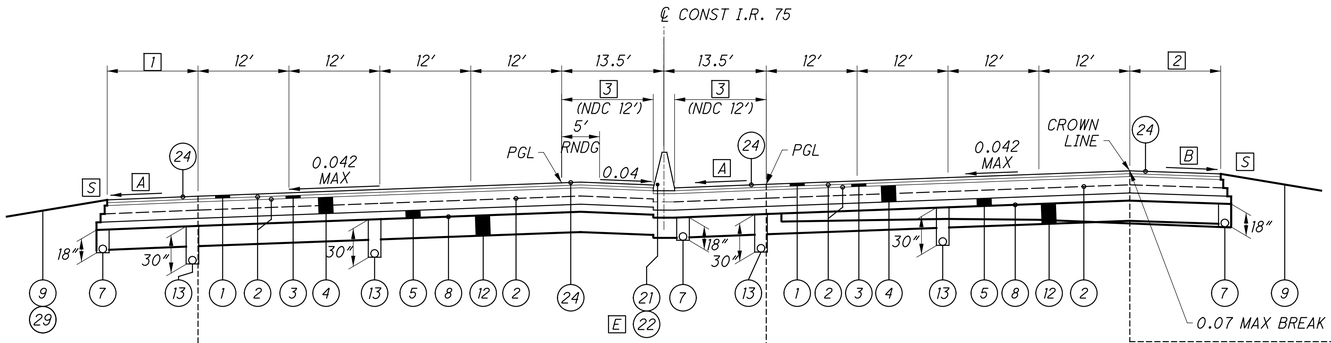

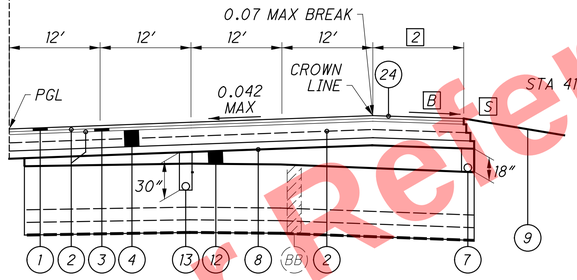

SECTION APPLIES:
STA 413+50.00 TO STA 414+50.00

SUPERELEVATED FOUR LANE SECTION - I.R. 75
STA 412+26.87 TO STA 417+63.36
STA 419+52.73 TO STA 428+92.01

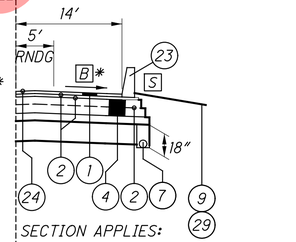

BRIDGE PARAPET *
STA 416+96.92 TO STA 417+63.36

SECTION APPLIES:
STA 416+46.29 TO STA 417+63.36

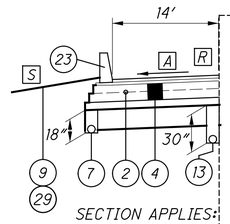

SECTION APPLIES:
STA 415+50.00 TO STA 417+63.36

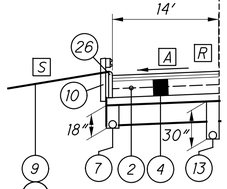

*BRIDGE PARAPET
STA 419+52.73 TO STA 420+32.57

SECTION APPLIES:
STA 419+52.73 TO STA 420+51.15

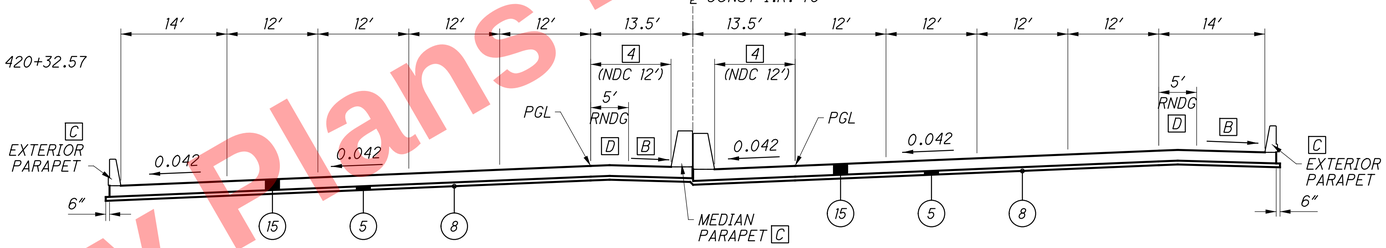

APPROACH SLAB SECTION - I.R. 75
HAM-75-0791 OVER RAMP J
STA 417+63.36 TO STA 417+93.36
STA 419+22.73 TO STA 419+52.73

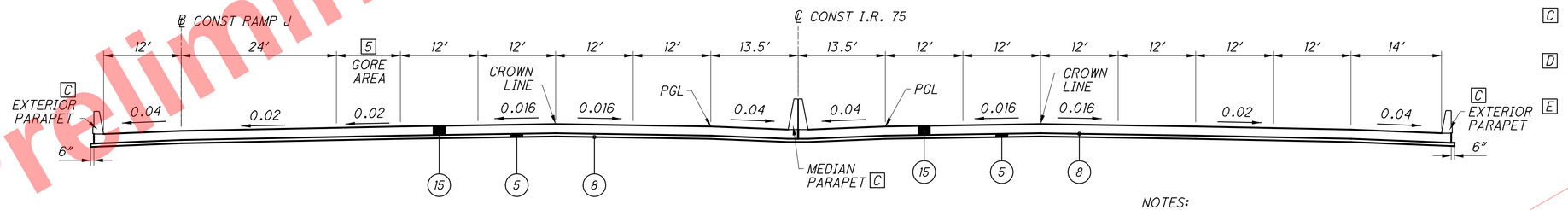

APPROACH SLAB SECTION - I.R. 75
HAM-75-0823 OVER LAIDLAW AVE.
STA 433+82.10 TO STA 434+12.10
STA 434+89.11 TO STA 435+19.11

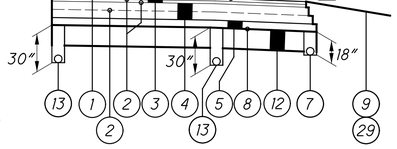

I.R. 75 NB AUXILLARY LANES (RAMP K)
STA 424+64.86 TO STA 428+92.01

NOTES:
1. FOR PAVEMENT STEP DETAILS SEE SHEET 27
2. SEE HAM-75-0791 APPROACH SLAB SECTIONS SHEET 56/65 FOR LIMITS OF SHOULDER CROSS SLOPE TRANSITIONS.
3. FOR RUMBLE STRIP DETAILS SEE SHEET 30

[A] 0.04 OR RATE OF SUPER IF GREATER

[B] VARIES 0.04 TO 0.028 (SEE NOTE 2)

[C] PAID FOR AS PART OF APPROACH SLAB
FOR BARRIER DETAILS SEE SHEET 865

[D] TRANSITION FROM 0.028 TO SHOULDER ROUNDING
SEE NOTE 2

[E] TYPE B1 SINGLE SLOPE BARRIER
STA 412+26.87 TO STA 414+72.74
STA 426+46.92 TO STA 428+92.01

TYPE C1 SINGLE SLOPE BARRIER
STA 414+72.74 TO STA 417+60.53
STA 419+54.31 TO STA 426+46.92

MEDIAN PARAPET
STA 417+60.53 TO STA 417+63.36
STA 419+52.73 TO STA 419+54.31

[S] SEE SHEET 26 FOR GRADING DETAILS.
SEE SHEETS 28 - 30 FOR ROADSIDE BARRIER DETAILS

FOR LEGEND, SEE SHEET 14

TYPICAL SECTIONS - I.R. 75

HAM-75-7.85

16
1047

Preliminary Plans - For Reference Only

J:\20110903\ODOT\HAM\77889\roadway\sheets\77889GY002.dgn 5/22/2026 10:04:42 AM hbrendlinger

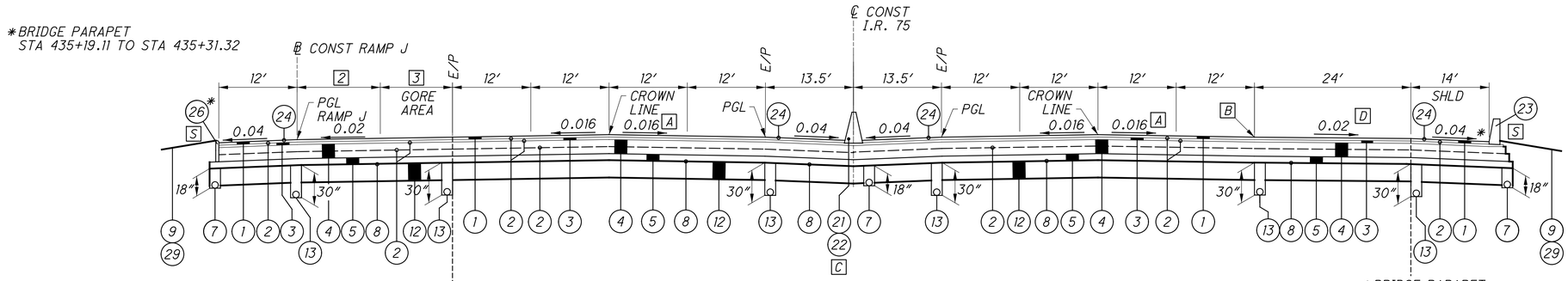

NORMAL FOUR LANE SECTION – I.R. 75

STA 435+19.11 TO STA 449+08.29

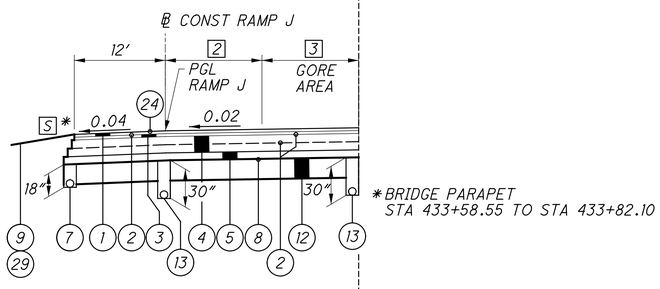

*BRIDGE PARAPET
STA 433+58.55 TO STA 433+82.10

I.R. 75 SB AUXILLARY LANE (RAMP J)
STA 435+55.67 TO STA 440+58.66

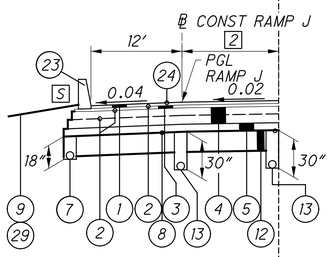

I.R. 75 SB AUXILLARY LANE (RAMP J)
STA 440+58.66 TO STA 442+03.31

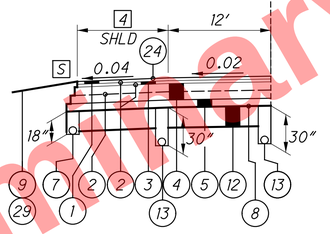

I.R. 75 SB AUXILLARY LANE
STA 442+03.31 TO STA 449+08.29

*BRIDGE PARAPET
STA 435+19.11 TO STA 435+23.53

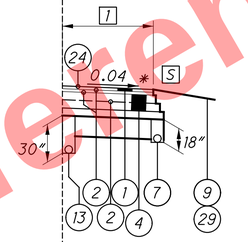

SECTION APPLIES:
STA 435+57.53 TO STA 439+00.00

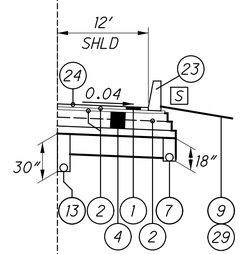

SECTION APPLIES:
STA 439+00.00 TO STA 441+23.52
STA 445+13.90 TO STA 448+00.00

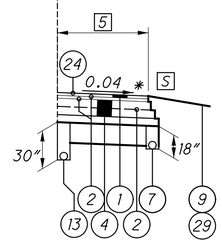

SECTION APPLIES:
STA 441+23.52 TO STA 449+08.29

1 14′
STA 435+57.53 TO STA 435+60.28
VARIES 14′ TO 12′
STA 435+60.28 TO STA 436+10.28
12′
STA 436+10.28 TO STA 439+00.00

2 24′
STA 435+19.11 TO STA 436+09.27
VARIES 24′ TO 12′
STA 436+09.27 TO STA 440+58.66
12′
STA 440+58.66 TO STA 442+03.31

3 VARIES 5.24′ TO 0′
STA 435+19.11 TO STA 436+09.27
0′
STA 436+09.27 TO STA 439+85.00

4 12′
STA 442+03.31 TO STA 447+94.67
VARIES 12′ TO 14′
STA 447+94.67 TO STA 448+44.67
14′
STA 448+44.67 TO STA 449+08.29

5 12′
STA 441+23.52 TO STA 445+03.91
VARIES 12′ TO 14′
STA 445+03.91 TO STA 445+13.91
14′
STA 445+13.91 TO STA 448+00.00
VARIES 14′ TO 12′
STA 448+00.00 TO STA 448+50.00
12′
STA 448+50.00 TO STA 449+08.29

A VARIES 0.00 TO 0.016
STA 410+00.00 TO STA 410+87.87

B 0.032 MAX GRADE BREAK
SEE INTERCHANGE DETAILS

C SINGLE SLOPE BARRIER
TYPE C1
STA 407+87.13 TO STA 411+49.93

TYPE B1
STA 411+49.93 TO STA 412+26.87
STA 428+92.01 TO STA 433+82.10
STA 435+19.11 TO STA 444+50.00

D PVMT CROSS SLOPE TRANSITIONS
0.02 TO 0.016
STA 448+65.55 TO STA 449+08.29

S SEE SHEET 26 FOR GRADING DETAILS.
SEE SHEETS 28 - 30 FOR ROADSIDE BARRIER DETAILS

NOTE:
FOR PAVEMENT STEP DETAILS SEE SHEET 27
FOR RUMBLE STRIP DETAILS SEE SHEET 30

FOR LEGEND, SEE SHEET 14

TYPICAL SECTIONS - I.R. 75

HAM-75-7.85

17
1047

Preliminary Plans - For Reference Only

J:\20110903\ODOT\HAM\7889\roadway\sheets\77889GY001a.dgn 5/22/2026 10:04:43 AM hbrendlinger

[1] 12′
STA 449+08.29 TO STA 451+35.90
VARIES 12′ TO 14′
STA 451+35.90 TO STA 451+45.90

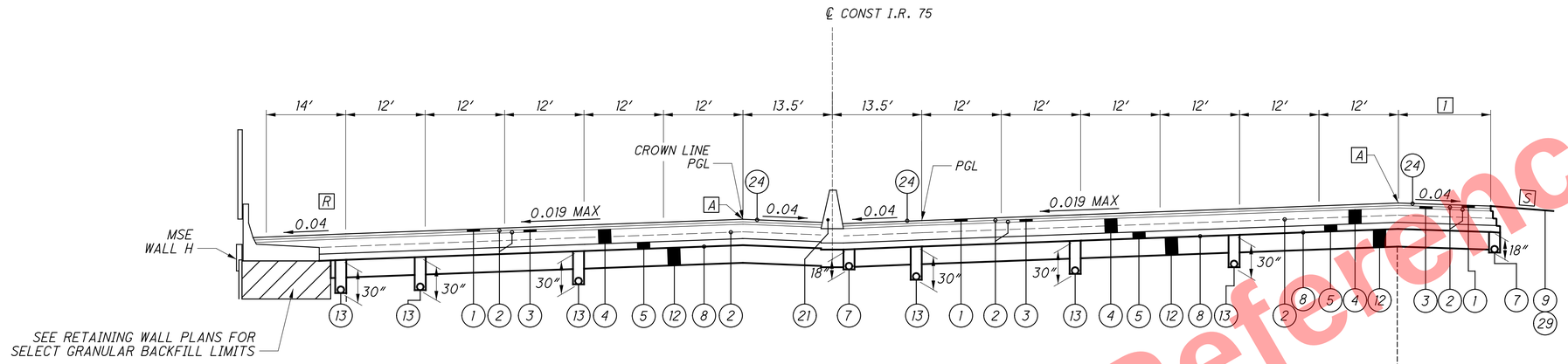

SUPERELEVATED SECTION - I.R. 75

STA 449+08.29 TO STA 451+48.21

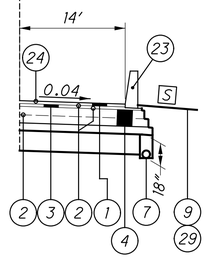

SECTION APPLIES
STA 451+45.90 TO STA 451+48.21

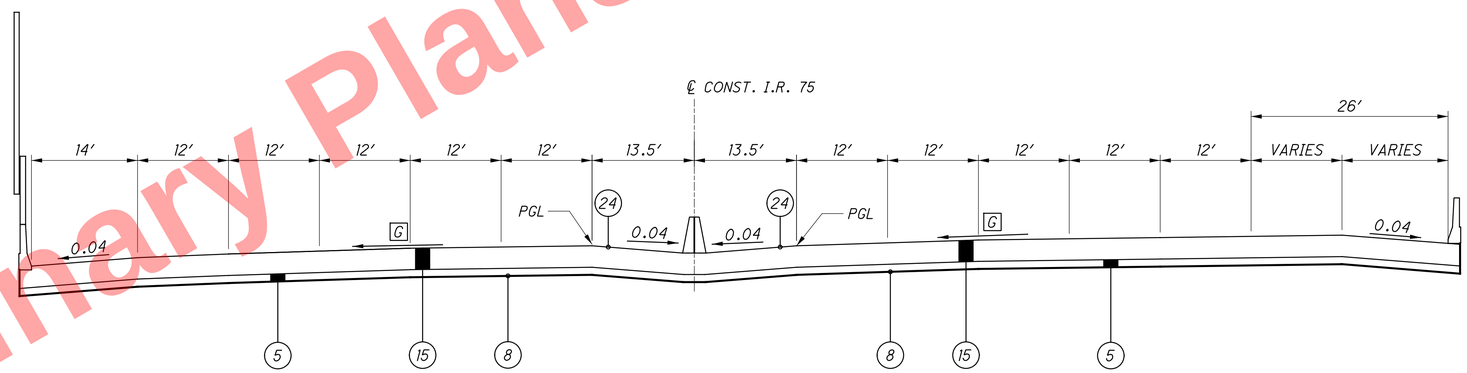

APPROACH SLAB SECTION - I.R. 75
HAM-75-0857 OVER TOWNE STREET

STA 451+48.21 TO STA 451+78.21
STA 452+47.26 TO STA 452+77.26

[A] 0.07 MAX BREAK

[S] SEE SHEET 26 FOR GRADING DETAILS.
SEE SHEETS 28 - 30 FOR ROADSIDE
BARRIER DETAILS

NOTES:
FOR RUMBLE STRIP DETAILS SEE SHEET 30

FOR LEGEND, SEE SHEET 14

TYPICAL SECTIONS - I.R. 75

HAM-75-7.85

18
1047

Preliminary Plans - For Reference Only

J:\20110903\ODOT\HAM\77889\roadway\sheets\77889GY401.dgn 5/22/2026 10:04:44 AM hbrendlinger

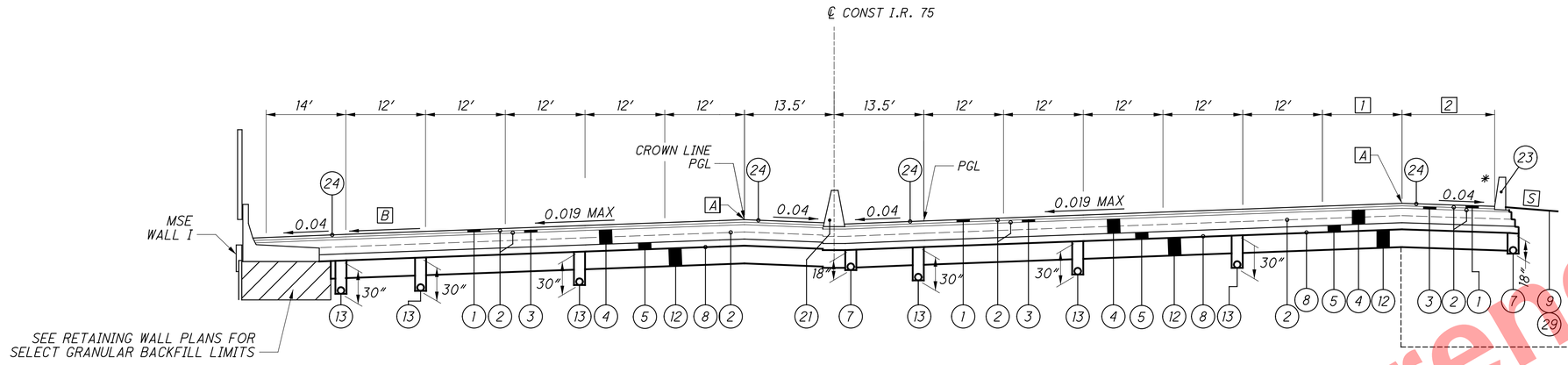

SUPERELEVATED SECTION - I.R. 75

STA 452+77.26 TO STA 463+73.42

* BRIDGE PARAPET
STA 452+77.26 TO STA 453+04.39

[1] VARIES 10.32′ TO 0′
STA 452+77.26 TO STA 458+91.07
0′
STA 458+91.07 TO STA 463+73.42

[2] VARIES 16.22′ TO 14.73′
STA 452+77.26 TO STA 453+37.95

[3] VARIES 14.73′ TO 12′
STA 453+37.95 TO STA 454+09.39
12′
STA 454+09.39 TO STA 459+40.00
VARIES 12′ TO 14′
STA 459+40.00 TO STA 459+50.00

[4] VARIES 14′ TO 12′
STA 462+90.91 TO STA 463+40.91
12′
STA 463+40.91 TO STA 463+73.42

[A] 0.07 MAX BREAK

[B] PVMT CROSS SLOPE TRANSITIONS
0.019 TO 0.02
STA 459+99.47 TO STA 460+10.15
PVMT CROSS SLOPE
0.02
STA 460+10.15 TO STA 463+73.42

[C] PVMT CROSS SLOPE TRANSITIONS
0.02 TO 0.016
STA 464+65.55 TO STA 464+76.22

[D] PVMT CROSS SLOPE TRANSITIONS
0.016 TO 0.02
STA 463+73.42 TO STA 463+84.09

[S] SEE SHEET 26 FOR GRADING DETAILS.
SEE SHEETS 28 - 30 FOR ROADSIDE BARRIER DETAILS

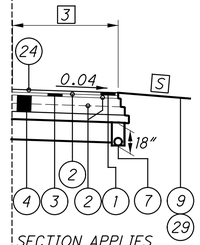

SECTION APPLIES
STA 453+37.95 TO STA 459+50.00

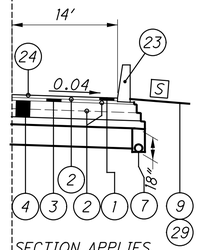

SECTION APPLIES
STA 459+50.00 TO STA 462+90.91

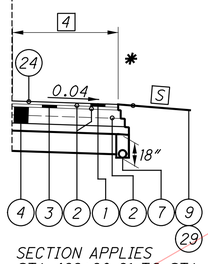

SECTION APPLIES
STA 462+90.91 TO STA 463+73.42

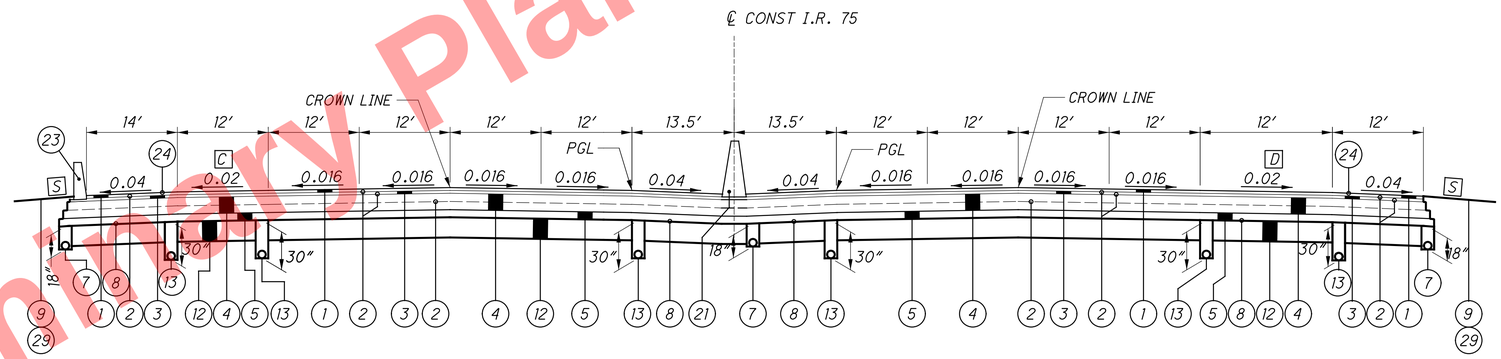

NORMAL SECTION - I.R. 75

STA 463+73.42 TO STA 464+76.22

NOTES:
FOR RUMBLE STRIP DETAILS SEE SHEET 30

FOR LEGEND, SEE SHEET 14

TYPICAL SECTIONS - I.R. 75

HAM-75-7.85

19
1047

Preliminary Plans - For Reference Only

J:\20110903\ODOT\HAM\77889\roadway\sheets\77889GY401.dgn 5/22/2026 10:04:44 AM hbrendlinger

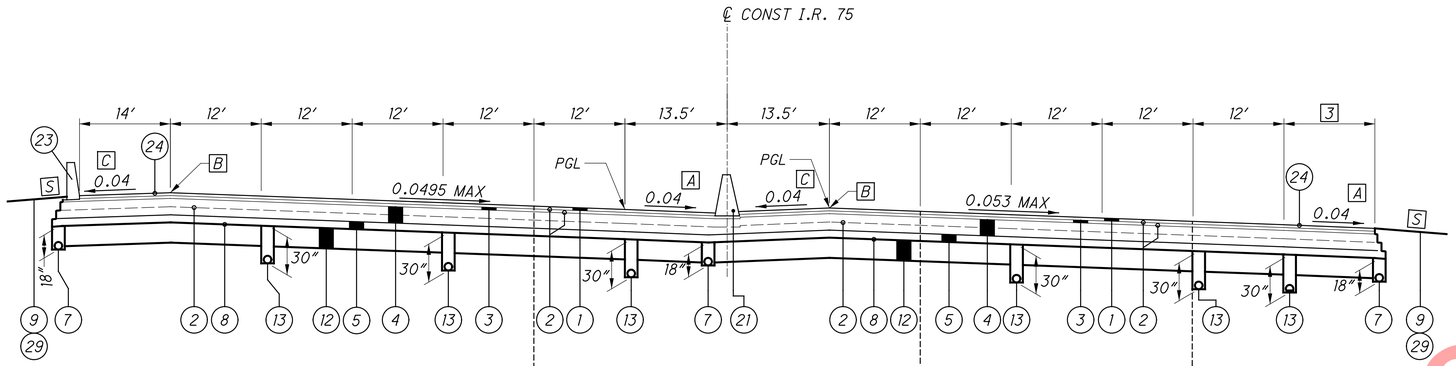

SUPERELEVATED SECTION - I.R. 75

STA 464+76.22 TO STA 472+00.00

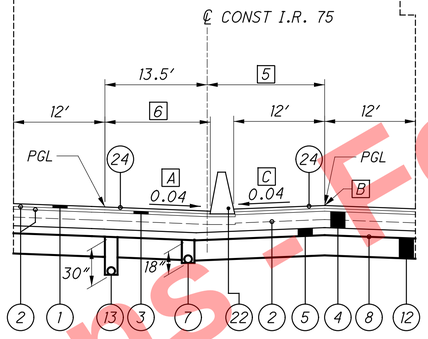

I.R. 75 SHOULDER WIDENING

STA 470+05.06 TO STA 472+00.00

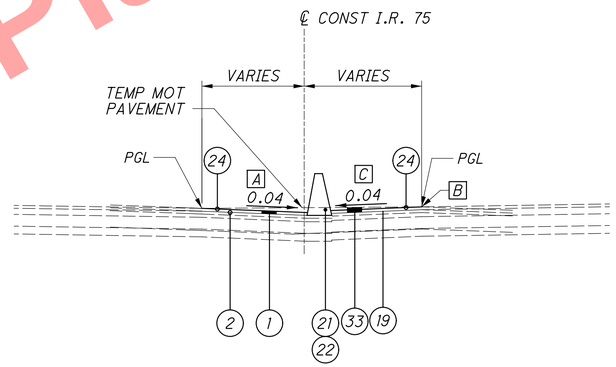

I.R. 75 BARRIER REPLACEMENT

STA 472+00.00 TO STA 482+25.00

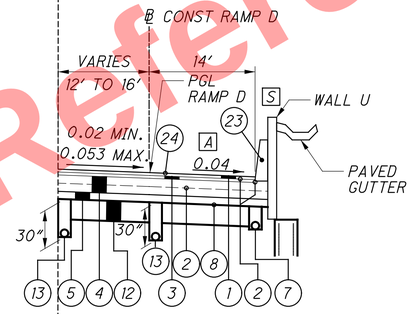

I.R. 75 NB AUXILIARY/ DECELERATION LANE

STA 469+76.37 TO STA 471+23.05

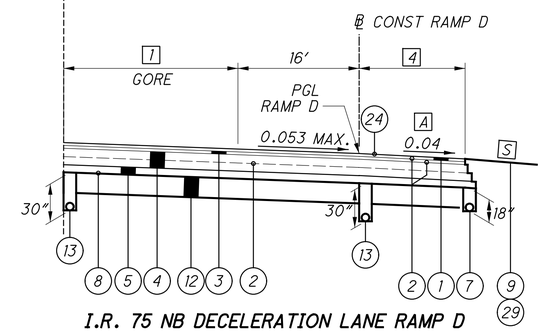

I.R. 75 NB DECELERATION LANE RAMP D

STA 471+23.05 TO STA 472+00.00

1 VARIES 0′ TO 20′
STA 471+23.05 TO STA 475+21.64

2 NOT USED

3 12′
STA 464+76.22 TO STA 465+81.60
VARIES 12′ TO 14′
STA 465+81.60 TO STA 465+91.60
14′
STA 465+91.60 TO STA 469+76.37

4 14′
STA 471+23.05 TO STA 471+29.52
14′ TO 12′
STA 471+29.52 TO STA 471+81.42
12′
STA 471+81.42 TO STA 472+00.00

5 VARIES 13.5′ TO 15.5′
STA 470+05.06 TO STA 472+00.00

6 VARIES 12′ TO 14′
STA 470+05.06 TO STA 472+00.00

A 0.04 OR RATE OF SUPER IF GREATER

B 0.07 MAX BREAK

C VARIES 0.04 TO 0.01

S SEE SHEET 26 FOR GRADING DETAILS.
SEE SHEETS 28 - 30 FOR ROADSIDE BARRIER DETAILS

FOR LEGEND, SEE SHEET 14

NOTES:
FOR RUMBLE STRIP DETAILS SEE SHEET 30

TYPICAL SECTIONS - I.R. 75

HAM-75-7.85

J:\20110903\ODOT\HAM\77889\roadway\sheets\77889GY401.dgn 5/22/2026 10:04:44 AM hbrendlinger

Preliminary Plans - For Reference Only

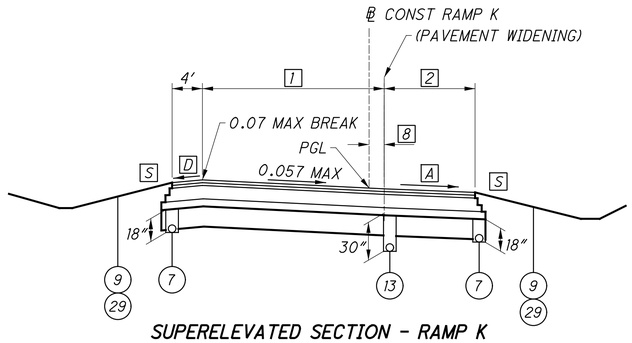

SUPERELEVATED SECTION - RAMP K

STA 416+12.76 TO STA 423+05.87

FOR PAVEMENT BUILD UP, SEE DETAIL A SHEET 22

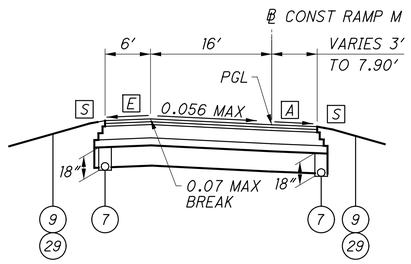

SUPERELEVATED SECTION - RAMP M

STA 412+39.90 TO STA 413+88.11

FOR PAVEMENT BUILD UP, SEE DETAIL A SHEET 22

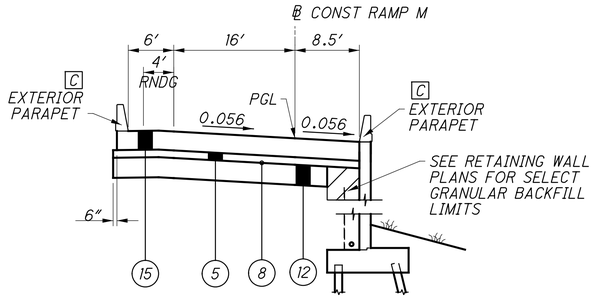

FORWARD APPROACH SLAB SECTION - RAMP M
HAM-562-0004 OVER I.R. 75

STA 419+94.75 TO STA 420+24.75

SEE RETAINING WALL PLANS FOR SELECT GRANULAR BACKFILL LIMITS

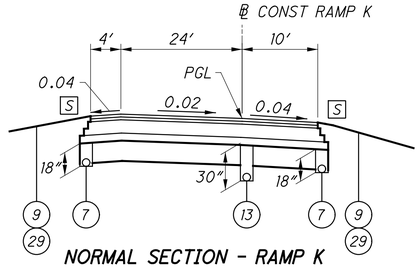

NORMAL SECTION - RAMP K

STA 423+05.87 TO STA 424+61.11

FOR PAVEMENT BUILD UP, SEE DETAIL A SHEET 22

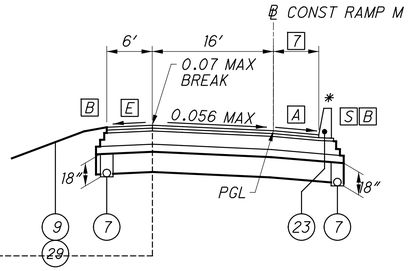

SUPERELEVATED SECTION - RAMP M

STA 413+88.11 TO STA 416+26.45

STA 420+24.75 TO STA 422+25.65

FOR PAVEMENT BUILD UP, SEE DETAIL A SHEET 22

*BRIDGE PARAPET

STA 415+68.84 TO STA 416+26.45

STA 420+24.75 TO STA 420+60.83

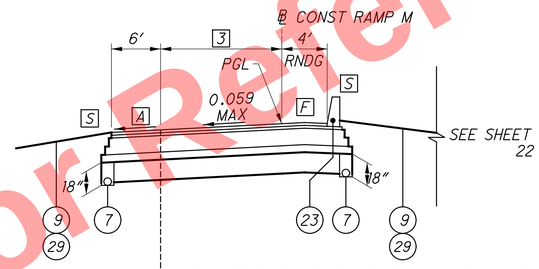

SUPERELEVATED SECTION - RAMP M

STA 422+25.65 TO STA 428+03.50

FOR PAVEMENT BUILD UP, SEE DETAIL A SHEET 22

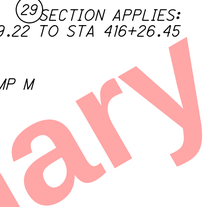

SECTION APPLIES:
STA 416+09.22 TO STA 416+26.45

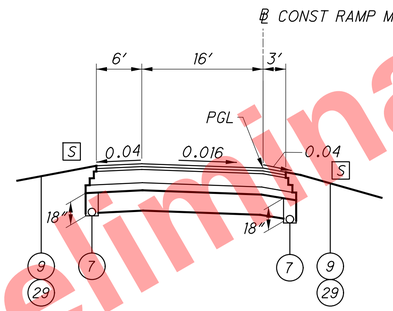

NORMAL SECTION - RAMP M

STA 412+00.00 TO STA 412+39.90

FOR PAVEMENT BUILD UP, SEE DETAIL A SHEET 22

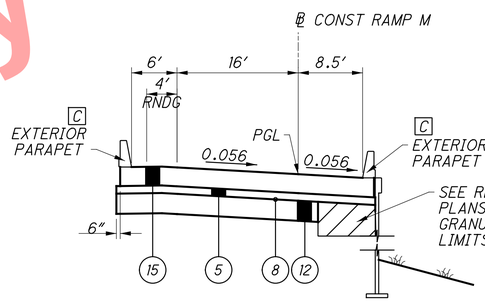

REAR APPROACH SLAB SECTION - RAMP M
HAM-562-0004 OVER I.R. 75

STA 416+26.45 TO STA 416+56.45

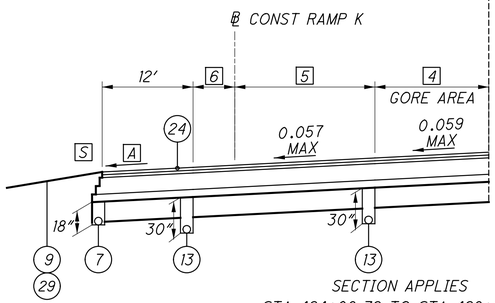

SECTION APPLIES
STA 424+08.79 TO STA 428+03.50
FOR PAVEMENT BUILD UP, SEE DETAIL A SHEET 22

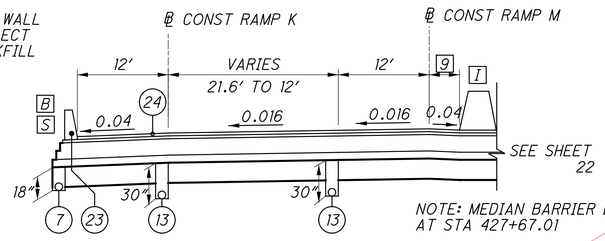

NOTE: MEDIAN BARRIER BEGINS AT STA 427+67.01

NORMAL SECTION - RAMP M

STA 428+03.50 TO STA 432+13.01

FOR PAVEMENT BUILD UP, SEE SHEET 22

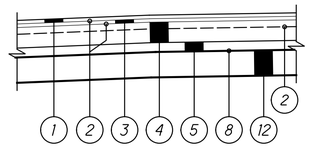

DETAIL A
ASPHALT RAMP PAVEMENT BUILD UP DETAIL

TYPICAL RAMPS J, K, M & N

[A] 0.04 OR RATE OF SUPER IF GREATER

[B] FOR SHOULDER TREATMENTS, SEE SHEET 30

[C] PAID FOR AS PART OF APPROACH SLAB

[D] VARIES 0.013 TO 0.04

[E] VARIES 0.014 TO 0.04

[F] VARIES 0.011 TO 0.04

[S] SEE SHEET 26 FOR GRADING DETAILS. SEE SHEETS 28 - 30 FOR ROADSIDE BARRIER DETAILS

NOTE:
FOR RUMBLE STRIP DETAILS SEE SHEET 30

[1] 29.5′
STA 416+12.76 TO STA 421+05.87
VARIES 29.5′ TO 24′
STA 421+05.87 TO STA 423+05.87

[2] VARIES 12′ TO 10′
STA 416+12.76 TO STA 416+64.40
10′
STA 416+64.40 TO STA 423+05.87

[3] 16′
STA 422+25.65 TO STA 426+92.80
VARIES 16′ TO 12′
STA 426+92.80 TO STA 428+03.50

[4] VARIES 24′ TO 0′
STA 424+08.79 TO STA 426+92.80
0′
STA 426+92.80 TO STA 428+03.50

[5] 24′
STA 424+08.79 TO STA 426+92.80
VARIES 24′ TO 21.6′
STA 426+92.80 TO STA 428+03.50

[6] 5.5′
STA 424+08.79 TO STA 425+72.28
VARIES 5.5′ TO 0′
STA 425+72.28 TO STA 428+03.50

[7] VARIES 7.90′ TO 8.5′
STA 413+88.11 TO STA 414+14.90
8.5′
STA 414+14.90 TO STA 416+26.45
VARIES 8.5′ TO 4′
STA 420+24.75 TO STA 422+07.38
4′
STA 422+07.38 TO STA 422+25.65

[8] 5.5′
STA 416+12.76 TO STA 421+05.87
VARIES 5.5′ TO 0′
STA 421+05.87 TO STA 423+05.87

[9] 4′
STA 428+03.50 TO STA 429+43.13
VARIES 4′ TO 6′
STA 429+43.13 TO STA 429+83.10
6′
STA 429+83.10 TO STA 432+13.01

FOR LEGEND, SEE SHEET 14

Preliminary Plans - For Reference Only

J:\20110903\ODOT\HAM\77889\roadway\sheets\77889GY009.dgn 5/22/2026 10:04:46 AM hbrendlinger

TYPICAL SECTIONS - I.R. 75 & S.R. 562 INTERCHANGE

HAM-75-7.85

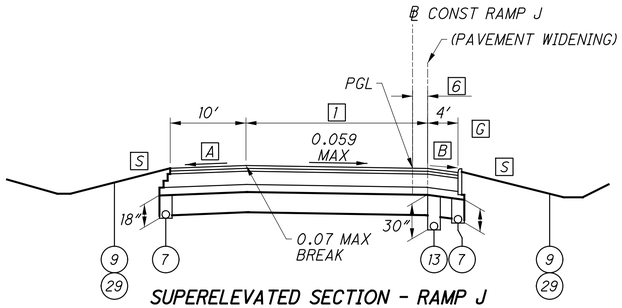

SUPERELEVATED SECTION - RAMP J
STA 412+01.35 TO STA 423+65.55
FOR PAVEMENT BUILDUP,
SEE DETAIL A THIS SHEET

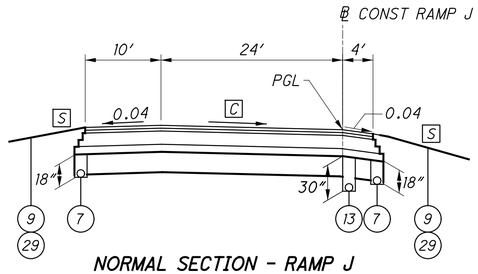

NORMAL SECTION - RAMP J
STA 423+65.55 TO STA 426+57.83
FOR PAVEMENT BUILDUP,
SEE DETAIL A THIS SHEET

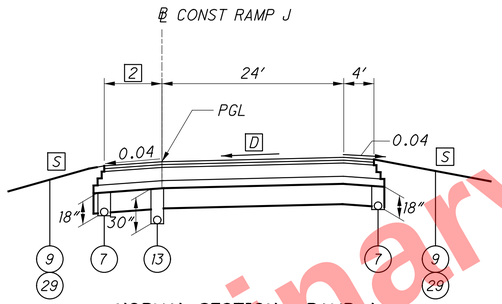

NORMAL SECTION - RAMP J
STA 426+57.83 TO STA 432+78.47
FOR PAVEMENT BUILDUP,
SEE DETAIL A THIS SHEET

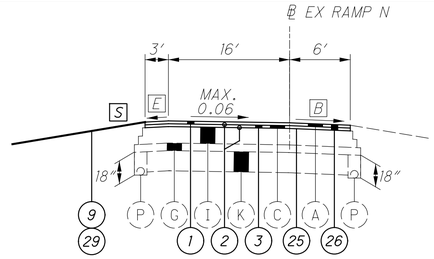

RESURFACING SECTION - RAMP N
STA 411+72.13 TO STA 412+64.37

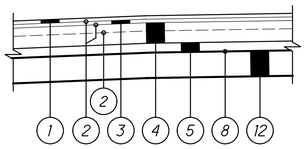

DETAIL A
ASPHALT RAMP PAVEMENT BUILD UP DETAIL
TYPICAL RAMPS J, K, M & N

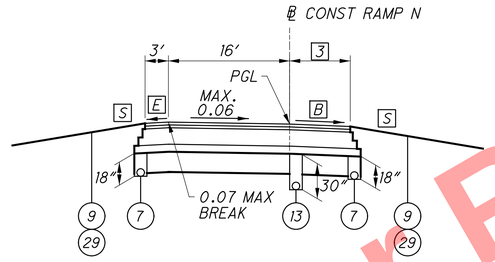

SUPERELEVATED SECTION - RAMP N
STA 412+64.37 TO STA 417+45.10
FOR PAVEMENT BUILDUP,
SEE DETAIL A THIS SHEET

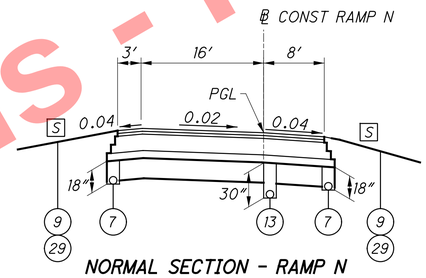

NORMAL SECTION - RAMP N
STA 417+45.10 TO STA 420+25.37
FOR PAVEMENT BUILDUP,
SEE DETAIL A THIS SHEET

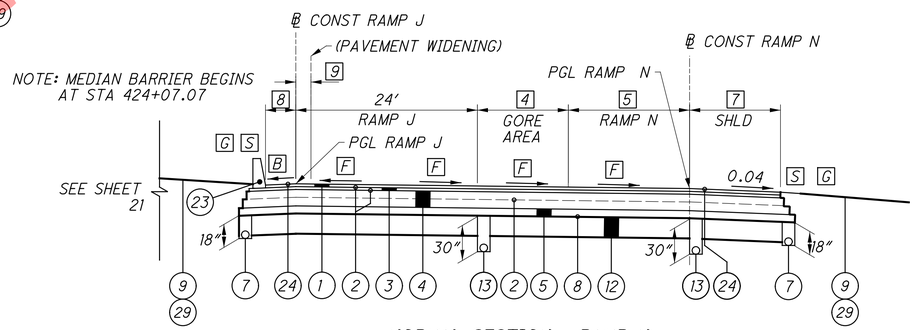

NORMAL SECTION - RAMP N
STA 420+25.37 TO STA 428+52.11

FOR LEGEND, SEE SHEET 14

1. VARIES 27.26′ TO 28.5′
   STA 412+01.35 TO STA 412+84.33
   28.5′
   STA 412+84.33 TO STA 421+40.56
   VARIES 28.5′ TO 24′
   STA 421+40.56 TO STA 423+65.55
2. 10′
   STA 426+57.83 TO STA 432+28.40
   VARIES 10′ TO 12′
   STA 432+28.40 TO STA 432+78.47
3. 6′
   STA 412+64.37 TO STA 416+85.90
   VARIES 6′ TO 8′
   STA 416+85.90 TO STA 417+35.90
   8′
   STA 417+35.90 TO STA 417+45.10
4. VARIES 23′ TO 0′
   STA 420+25.37 TO STA 426+52.23
   0′
   STA 426+52.23 TO STA 428+52.11
5. 16′
   STA 420+25.37 TO STA 426+52.23
   VARIES 16′ TO 12′
   STA 426+52.23 TO STA 428+52.11
6. VARIES 3.26′ TO 4.5′
   STA 412+01.35 TO STA 412+84.33
   4.5′
   STA 412+84.33 TO STA 421+40.56
   VARIES 4.5′ TO 0′
   STA 421+40.56 TO STA 423+65.55
7. 8′
   STA 420+25.37 TO STA 424+67.51
   VARIES 8′ TO 12′
   STA 426+48.29 TO STA 428+51.87
8. 4′
   STA 420+25.37 TO STA 425+83.02
   VARIES 4′ TO 6′
   STA 425+83.02 TO STA 426+23.09
   6′
   STA 426+23.09 TO STA 428+52.11
9. VARIES 3.26′ TO 0′
   STA 420+25.37 TO STA 422+47.94
   0′
   STA 422+47.94 TO STA 428+52.11

A VARIES 0.04 TO 0.011

B 0.04 OR RATE OF SUPER IF GREATER

C VARIES 0.016 TO -0.016

D VARIES 0.016 TO 0.02

E VARIES 0.010 TO 0.04

F FOR SLOPE DETAILS SEE SUPERELEVATION TABLE SHEETS 526-529

G FOR SHOULDER TREATMENTS, SEE SHEET 30

S SEE SHEET 26 FOR GRADING DETAILS. SEE SHEETS 28 - 30 FOR ROADSIDE BARRIER DETAILS

NOTE:
FOR RUMBLE STRIP DETAILS SEE SHEET 30

TYPICAL SECTIONS - I.R. 75 & S.R. 562 INTERCHANGE

HAM-75-7.85

22
1047

Preliminary Plans - For Reference Only

J:\20110903\ODOT\HAM\77889\roadway\sheets\77889GY004.dgn 5/22/2026 10:04:46 AM hbrendlinger

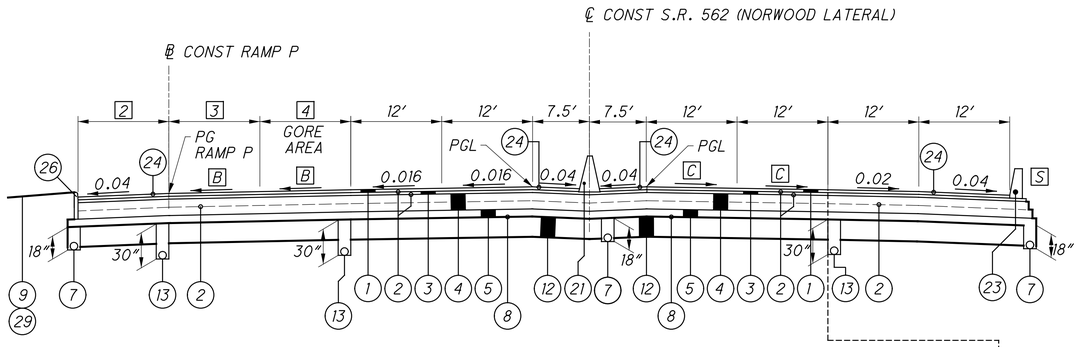

NORMAL SECTION - S.R. 562

STA 20+00.00 TO STA 32+00.56

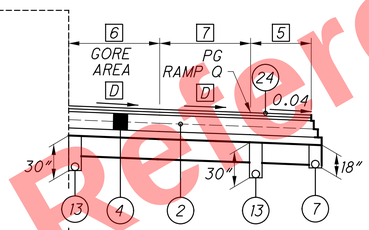

S.R. 562 EB AUXILLARY LANES (RAMP Q)
STA 24+00.00 TO STA 31+81.64
FOR PAVEMENT BUILDUP,
SEE DETAIL A SHEET 22

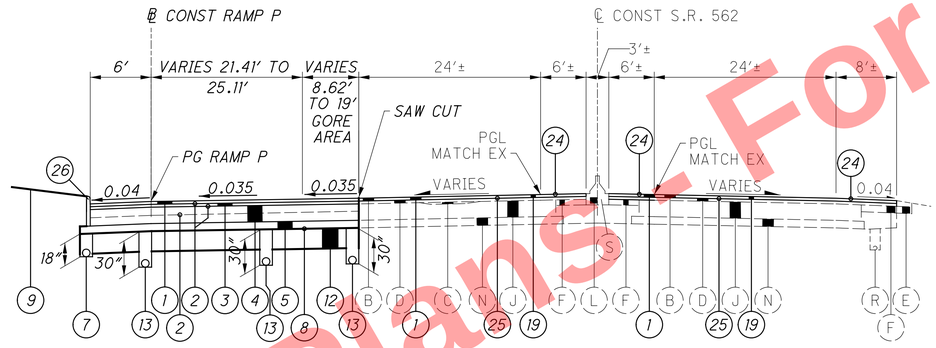

NORMAL SECTION - S.R. 562

STA 32+00.00 TO STA 33+32.56

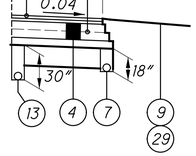

SECTION APPLIES:
STA 31+81.64 TO STA 32+00.00
FOR PAVEMENT BUILDUP,
SEE DETAIL A SHEET 22

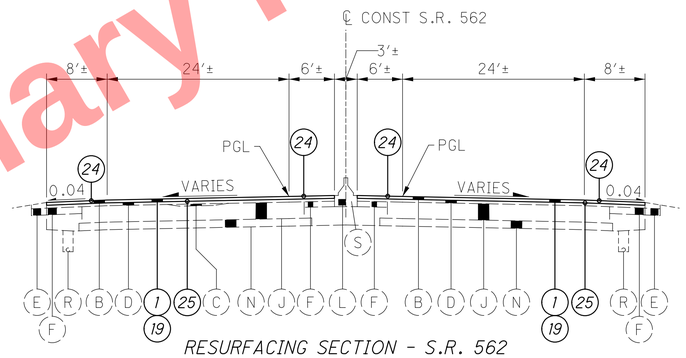

RESURFACING SECTION - S.R. 562
STA 33+32.56 TO STA 36+71.54 (WB)
STA 35+03.63 TO STA 36+76.44 (EB)
STA 39+09.48 TO STA 47+50.00 (WB)
SEE PLAN AND PROFILE FOR RESURFACING AREAS

FOR LEGEND, SEE SHEET 14
FOR EXISTING LEGEND, SEE SHEET 11

[1] 6′
STA 33+30.18 TO STA 34+50.73
VARIES 6′ TO 4′
STA 34+50.73 TO STA 35+09.21

[2] VARIES 12′ TO 8′
STA 20+00.00 TO STA 21+99.92
8′
STA 21+99.92 TO STA 30+13.10
VARIES 8′ TO 6′
STA 30+13.10 TO STA 30+62.78
6′
STA 30+62.78 TO STA 32+00.00

[3] VARIES 0′ TO 16′
STA 20+00.00 TO STA 28+00.16
16′
STA 28+00.16 TO STA 30+13.01
VARIES 16′ TO 21.41′
STA 30+13.01 TO STA 32+00.00

[4] 0′
STA 20+00.00 TO STA 28+00.16
VARIES 0′ TO 8.62′
STA 28+00.16 TO STA 32+00.00

[5] 12′
STA 24+00.00 TO STA 27+09.58
VARIES 12′ TO 8′
STA 27+09.58 TO STA 28+09.58
8′
STA 28+09.58 TO STA 31+81.64

[6] 0′
STA 24+00.00 TO STA 29+52.80
VARIES 0′ TO 23.12′
STA 29+52.80 TO STA 31+81.64

[7] 12′
STA 24+00.00 TO STA 28+09.58
VARIES 12′ TO 16′
STA 28+09.58 TO 29+52.80
16′
STA 29+52.80 TO STA 31+81.64

[8] 16′
STA 31+79.61 TO STA 33+42.17
VARIES 16′ TO 24′
STA 33+42.17 TO STA 33+92.17
VARIES 24′ TO 27.36′
STA 33+92.17 TO STA 34+50.00

[9] VARIES 8′ TO 6′
STA 31+79.61 TO STA 32+29.61
6′
STA 32+29.61 TO STA 34+50.00

[10] VARIES 12′ TO 11.31′
STA 31+81.64 TO STA 32+00.00

[A] VARIES 0.035 TO 0.04

[B] VARIES 0.016 TO 0.035

[C] 0.016
STA 20+00.00 TO STA 31+56.30
VARIES 0.016 TO 0.0175
STA 31+56.30 TO STA 32+00.00

[D] VARIES 0.02 TO 0.035

[L] LONGITUDINAL JOINT PER SCD-BP-2.1

[S] SEE SHEET 26 FOR GRADING DETAILS.
SEE SHEETS 28 - 30 FOR ROADSIDE BARRIER DETAILS

TYPICAL SECTIONS - S.R. 562

HAM-75-7.85

23
1047

Preliminary Plans
For Reference Only

J:\20110903\ODOT\HAM\77889\roadway\sheets\77889GY008.dgn 5/22/2026 10:04:48 AM hbrendlinger

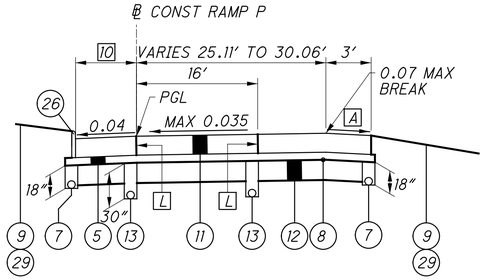

SUPERELEVATED SECTION - RAMP P

STA 33+30.18 TO STA 35+09.21

10 6′
STA 33+30.18 TO STA 34+50.73
VARIES 6′ TO 4′
STA 34+50.73 TO STA 35+09.21

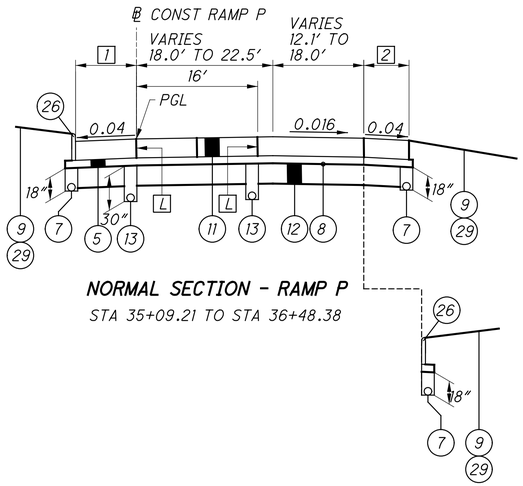

NORMAL SECTION - RAMP P

STA 35+09.21 TO STA 36+48.38

SECTION APPLIES:
STA 35+81.73 TO STA 36+48.38

1 STA 35+09.21 TO STA 35+97.99
4.0′

STA 35+97.99 TO STA 36+17.99
4.0′ TO 0′

STA 36+17.99 TO STA 38+21.83
0′

2 STA 35+09.21 TO STA 35+64.09
3.0′

STA 35+64.09 TO STA 35+81.73
3.0′ TO 0′

STA 35+81.73 TO STA 36+48.38
0′

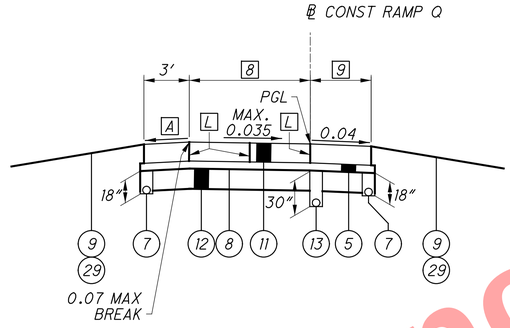

SUPERELEVATED SECTION - RAMP Q

STA 31+79.61 TO STA 34+50.00

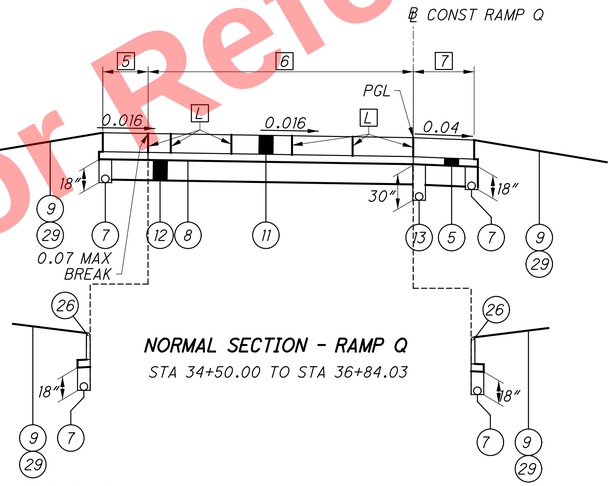

NORMAL SECTION - RAMP Q

STA 34+50.00 TO STA 36+84.03

SECTION APPLIES:
STA 36+46.01 TO STA 36+84.03

SECTION APPLIES:
STA 35+12.50 TO STA 36+84.03

5 STA 34+50.00 TO STA 35+96.17
3.0′

STA 35+96.17 TO STA 36+46.01
3.0′ TO 1.0′

STA 36+46.01 TO STA 37+19.27
1.0′

6 STA 34+50.00 TO STA 36+84.03
26.1′ TO 49.6′

7 STA 34+50.00 TO STA 35+12.50
6.0′

STA 35+12.50 TO STA 36+37.50
6.0′ TO 1.0′

STA 36+37.50 TO STA 38+19.08
1.0′

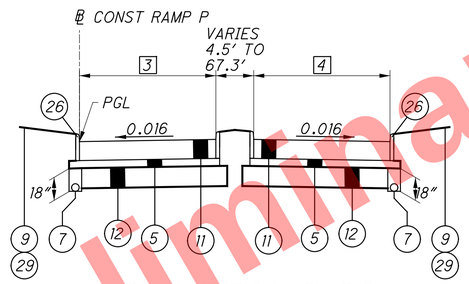

NORMAL SECTION - RAMP P

STA 36+48.38 TO STA 38+31.83

3 STA 36+48.38 TO STA 36+97.76
18.5′

STA 36+97.76 TO STA 37+66.41
18.5′ TO 25.3′

STA 37+66.41 TO STA 38+32.09
25.3′ TO 2.0′

4 STA 36+48.38 TO STA 37+00.10
18.0′

STA 37+00.10 TO STA 37+26.14
18.0′ TO 36.9′

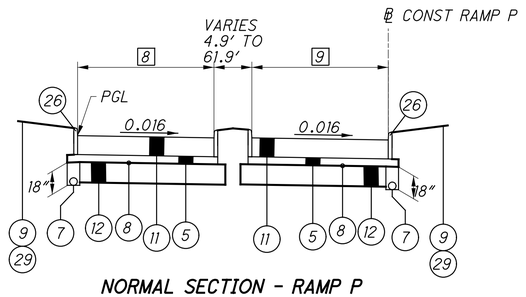

NORMAL SECTION - RAMP P

STA 36+84.03 TO STA 38+19.37

8 STA 36+84.03 TO STA 37+20.24
30.1′ TO 3.0′

9 STA 36+48.03 TO STA 38+19.37
21.6′ TO 3.0′

A VARIES 0.035 TO 0.04

L LONGITUDINAL JOINT PER SCD-BP-2.1

FOR LEGEND, SEE SHEET 14
FOR EXISTING LEGEND, SEE SHEET 11

TYPICAL SECTIONS - RAMP P AND RAMP Q

HAM-75-7.85

24
1047

Preliminary Plans - For Reference Only

J:\20110903\ODOT\HAM\77889\roadway\sheets\77889GY008.dgn 5/22/2026 10:04:48 AM htrendlinger

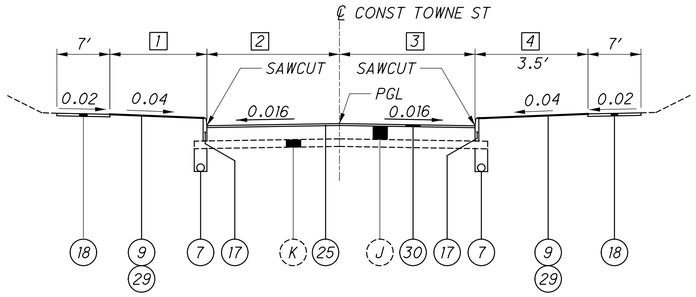

NORMAL SECTION - TOWNE ST

STA 13+34.00 TO STA 15+59.60

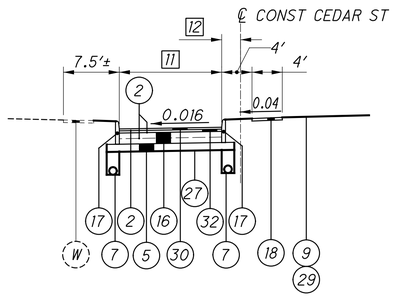

NORMAL SECTION - CEDAR ST

STA 0+26.75 TO STA 0+59.26

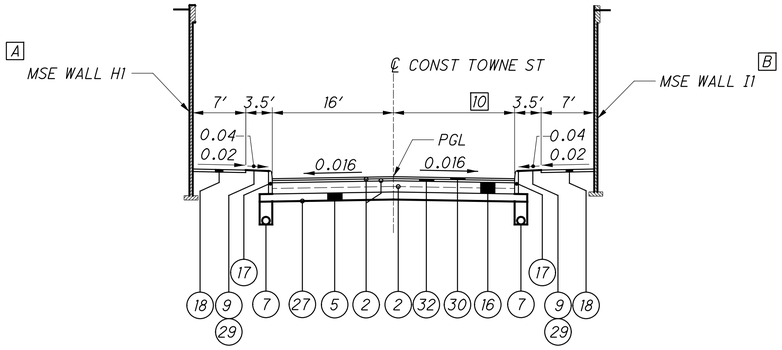

NORMAL SECTION - TOWNE ST

STA 15+59.60 TO STA 20+34.41

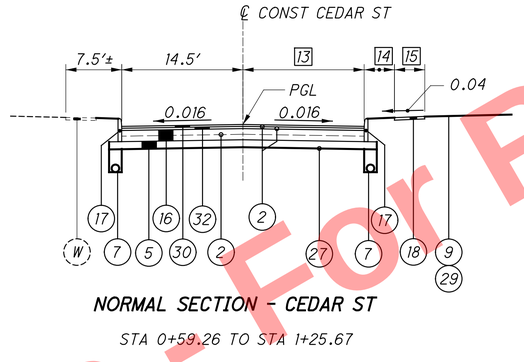

NORMAL SECTION - CEDAR ST

STA 0+59.26 TO STA 1+25.67

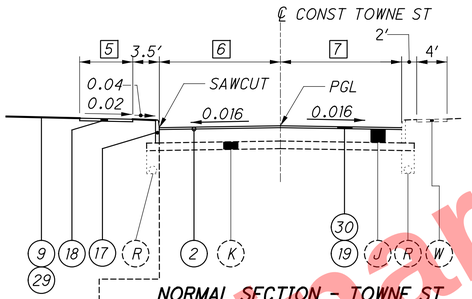

NORMAL SECTION - TOWNE ST

STA 20+34.41 TO STA 21+16.51

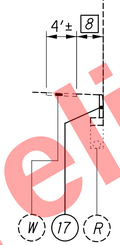

SECTION APPLIES
STA 20+88.51 TO STA 21+16.51

FOR EXISTING LEGEND, SEE SHEET 11
FOR LEGEND, SEE SHEET 14

1 VARIES 6.85′ TO 3.5′
STA 13+34.00 TO STA 13+99.65
3.5′
STA 13+99.65 TO STA 15+59.60

2 VARIES 21.6± TO 16′

3 VARIES 23′± TO 16′

4 8′
STA. 13+34.00 TO STA. 15+00.00
VARIES 8′ TO 3.5′
STA 15+00.00 TO STA 15+59.60

5 7′
STA 20+34.41 TO STA 20+38.51
VARIES 7′ TO 4′±
STA 20+38.51 TO STA 20+88.51

6 16′
STA 20+34.41 TO STA 20+66.51
VARIES 16′ TO 16.4′±
STA 20+66.51 TO STA 21+16.51

7 VARIES 17.3′ TO 18′±
STA 20+34.41 TO STA 21+16.51

8 VARIES 3.5′± TO 2.7′±
STA 20+88.51 TO STA 21+16.51

9 VARIES 0′ TO 12′
STA 4+98.41 TO STA 5+04.04
12′ STA 5+04.04 TO 6+33.72

10 16′
STA.15+59.60 TO STA. 19+92.12
VARIES 16′ TO 17.3′±
STA 19+92.12 TO STA 20+34.41

11 VARIES 14.5′ TO 12′
STA 0+26.75 TO STA 0+36.40
12′
STA 0+36.40 TO STA 0+49.36
VARIES 12′ TO 14.5′
STA 0+49.36 TO STA 0+59.26

12 VARIES 0′ TO 2.5′
STA 0+26.75 TO STA 0+36.40
2.5′
STA 0+36.40 TO STA 0+49.36
VARIES 2.5′ TO 0′
STA 0+49.36 TO STA 0+59.26

13 VARIES 0′ TO 14′
STA 0+59.26 TO STA 1+14.71
14′
STA 1+14.71 TO STA 1+25.67

14 3.5′
STA. 0+59.26 TO STA. 1+14.71
VARIES 3.5′ TO 4.2±
STA. 1+14.71 TO STA. 1+25.67

15 4′
STA. 0+59.26 TO STA. 1+14.71
VARIES 3.5′ TO 4.2±
STA. 1+14.71 TO STA. 1+25.67

A MSE WALL H1
STA 17+89.70 TO STA 20+24.79

B MSE WALL I1
STA 17+72.56 TO STA 20+07.83

TYPICAL SECTIONS - TOWNE ST. & CEDAR ST.

HAM-75-7.85

25
1047

Preliminary Plans - For Reference Only

J:\20110903\ODOT\HAM\77889\roadway\sheets\77889GY401.dgn 5/22/2026 10:04:48 AM hbrendlinger

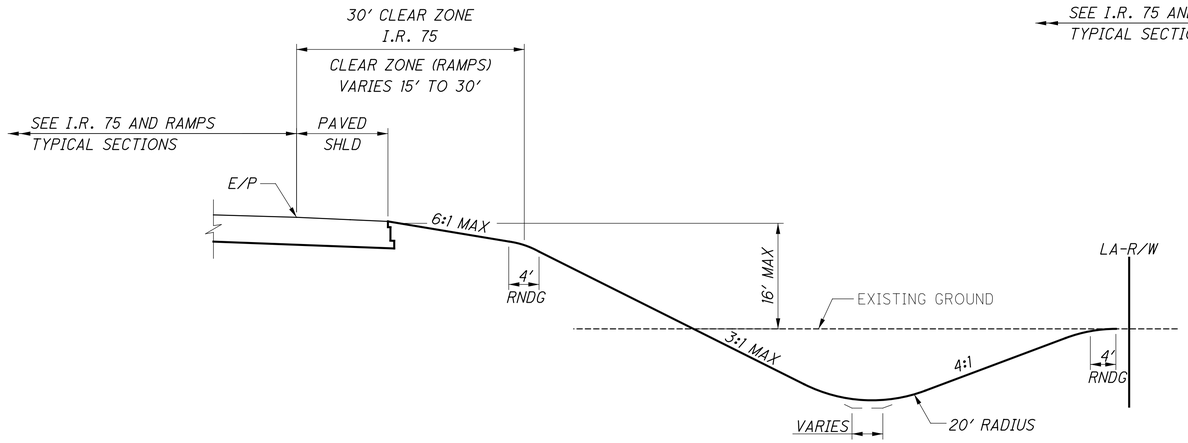

SAFETY GRADING: MEDIUM FILL SECTION

OPPOSITE HAND ALSO, SEE CROSS SECTIONS

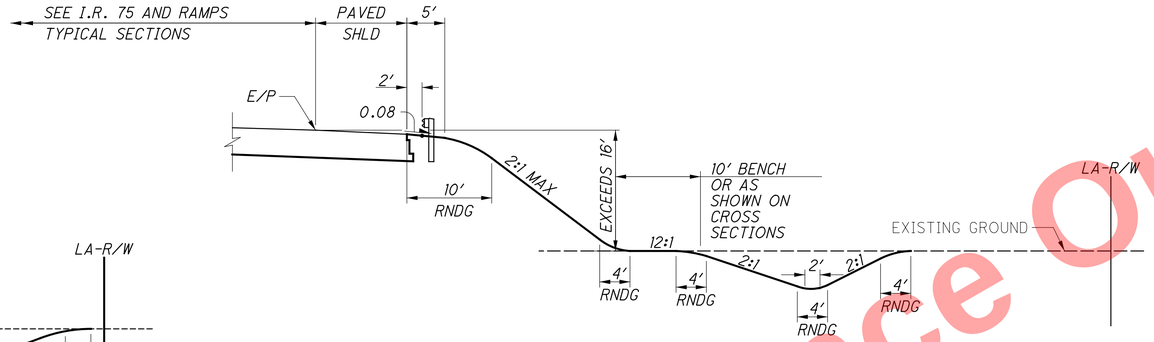

BARRIER GRADING SECTION

OPPOSITE HAND ALSO, SEE CROSS SECTIONS

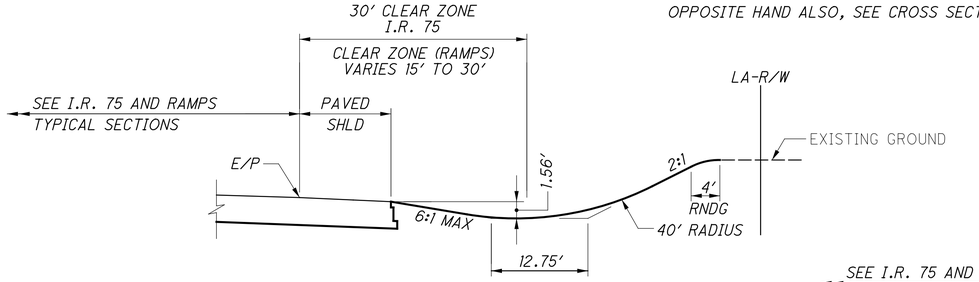

SAFETY GRADING: CUT SECTION

OPPOSITE HAND ALSO, SEE CROSS SECTIONS

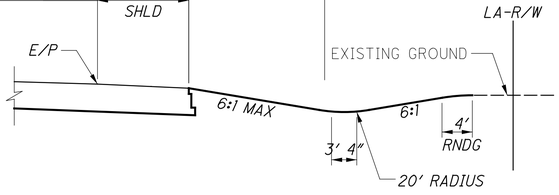

SAFETY GRADING: SHALLOW CUT OR FILL SECTION

OPPOSITE HAND ALSO, SEE CROSS SECTIONS

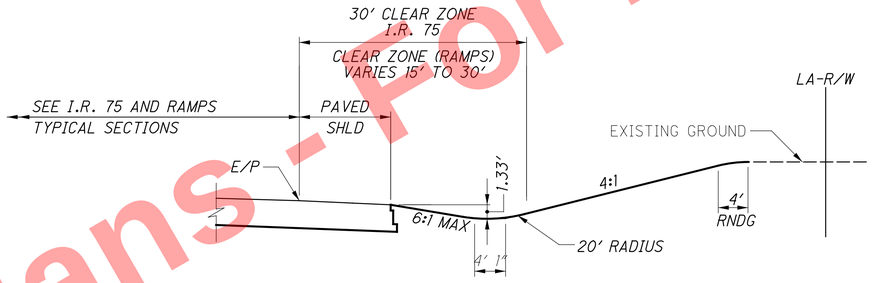

SAFETY GRADING: CUT SECTION

OPPOSITE HAND ALSO, SEE CROSS SECTIONS

PAVED SHOULDER CROSS SLOPES

CURBED-HIGH SIDE OF SUPERELEVATED SECTIONS

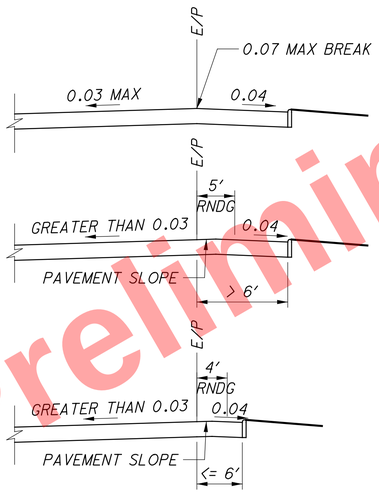

UNCURBED-HIGH SIDE OF SUPERELEVATED SECTIONS

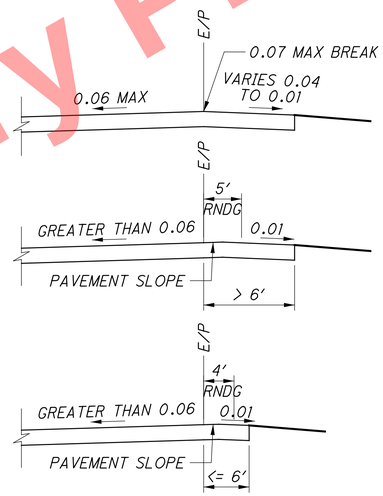

Preliminary Plans - For Reference Only

J:\20110903\ODOT\HAM\77889\roadway\sheets\77889GY005.dgn 5/22/2026 10:04:49 AM hbrendlinger

TYPICAL SECTIONS - ROADSIDE GRADING

HAM-75-7.85

ASPHALT EDGE COURSE DETAIL

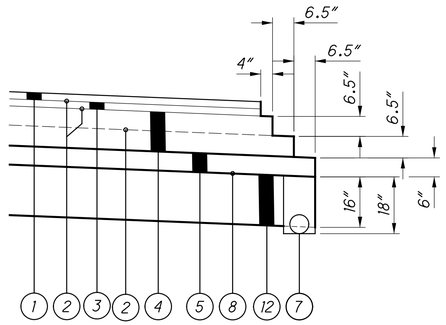

CONCRETE EDGE COURSE DETAIL

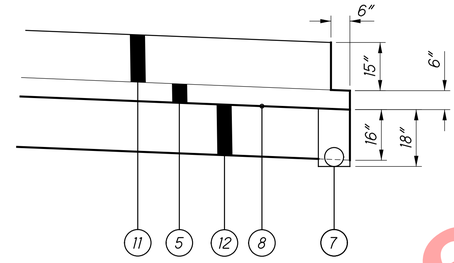

ASPHALT EDGE COURSE DETAIL
(WITH TYPE D BARRIER)

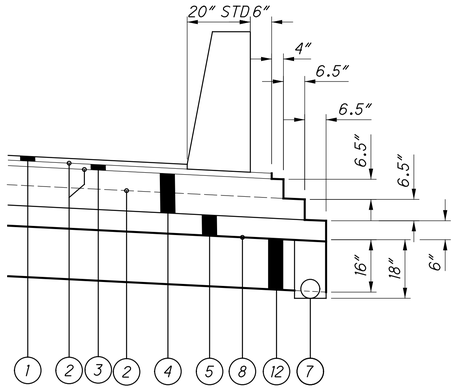

CONCRETE EDGE COURSE DETAIL
(WITH TYPE D BARRIER)

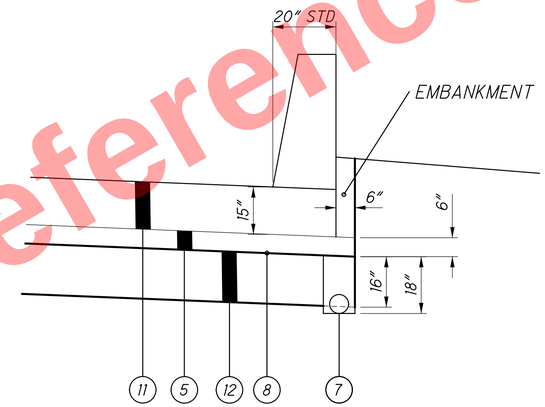

ASPHALT EDGE COURSE DETAIL
(WITH TYPE 4-C CURB, AS PER PLAN)

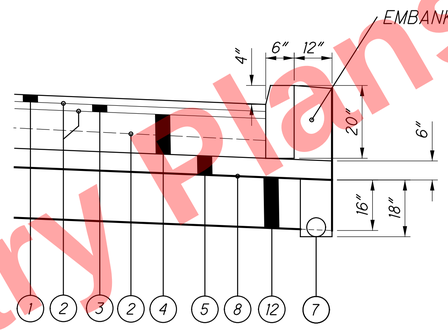

CONCRETE EDGE COURSE DETAIL
(WITH TYPE 4-C CURB, AS PER PLAN)

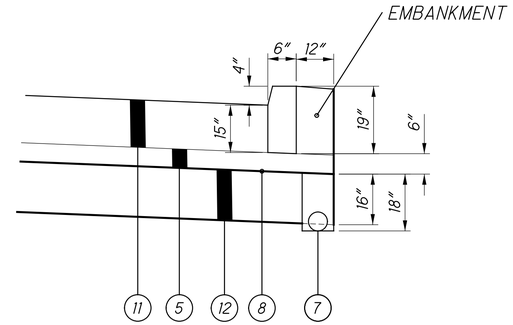

ASPHALT EDGE COURSE DETAIL
(WITH TYPE 6 CURB)

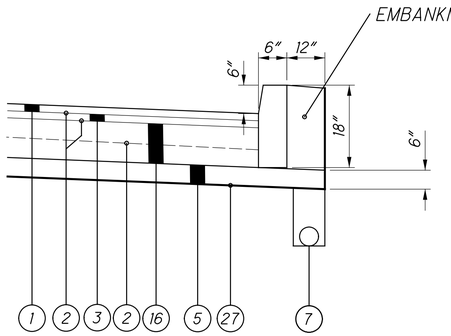

FOR LEGEND, SEE SHEET 14

Preliminary Plans - For Reference Only

J:\20110903\ODOT\HAM\77889\roadway\sheets\77889GY013.dgn 5/22/2026 10:04:49 AM hbrendlinger

TYPICAL SECTIONS - PAVEMENT STEP DETAILS

HAM-75-7.85

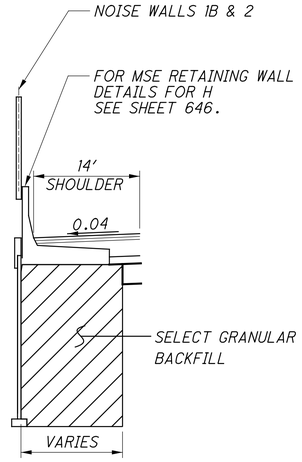

MSE WALL H & I SECTION - I.R. 75 SB

STA 448+44.67 TO STA 451+59.91
STA 452+15.54 TO STA 463+81.56

SEE RETAINING WALL PLANS FOR
SELECT GRANULAR BACKFILL LIMITS

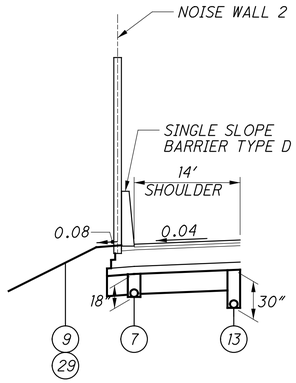

SINGLE SLOPE BARRIER TYPE D
W/ NOISE WALL SECTION - I.R. 75 SB

STA 463+81.56 TO STA 472+00.00

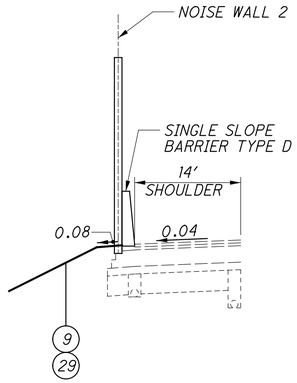

SINGLE SLOPE BARRIER TYPE D
W/ NOISE WALL SECTION - I.R. 75 SB

STA 472+00.00 TO STA 474+04.00

Preliminary Plans - For Reference Only

TYPICAL SECTIONS - DETAILS

HAM-75-7.85

28
1047

J:\20110903\ODOT\HAM\77889\roadway\sheets\77889GY408.dgn 5/22/2026 10:04:52 AM hbrendlinger

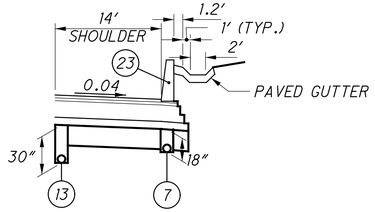

SINGLE SLOPE BARRIER
TYPE D W/ PAVED GUTTER, WALLS S & U
SECTION - I.R. 75 NB

STA 445+13.91 TO STA 445+38.00 - WALL S
STA 447+42.00 TO STA 448+00.00 - WALL S
STA 465+91.60 TO STA 466+27.00 - WALL U
STA 470+83.00 TO STA 471+00.00 - WALL U

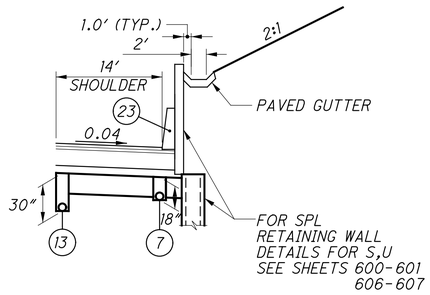

SPL RETAINING WALL
W/ PAVED GUTTER, WALLS S & U
SECTION - I.R. 75 NB

STA 445+38.00 TO STA 447+42.00 - WALL S
STA 466+27.00 TO STA 470+83.00 - WALL U

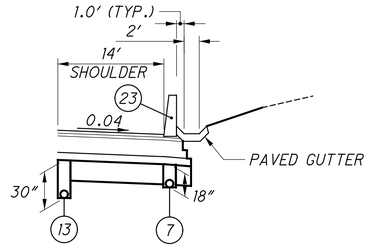

SINGLE SLOPE BARRIER
TYPE D W/ PAVED GUTTER,
WALL T SECTION - I.R. 75 NB

STA 459+50.00 TO STA 460+00.00
STA 461+90.00 TO STA 462+00.00

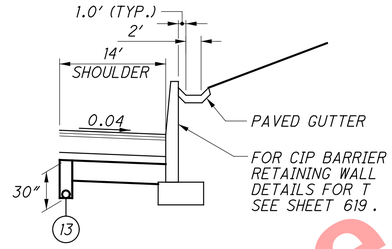

CIP BARRIER RETAINING WALL T
SECTION - I.R. 75 NB

STA 460+00.00 TO STA 461+90.00

Preliminary Plans - For Reference Only

J:\20110903\ODOT\HAM\77889\roadway\sheets\77889GY1409.dgn 5/22/2026 10:04:53 AM hbrendlinger

TYPICAL SECTIONS - DETAILS

HAM-75-7.85

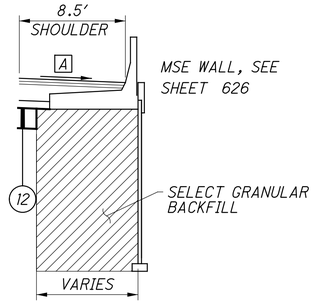

MSE WALL SECTION - RAMP M

STA 415+68.84 TO STA 416+26.45

SEE RETAINING WALL PLANS FOR SELECT GRANULAR BACKFILL LIMITS

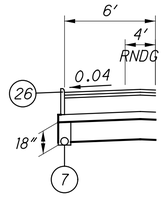

CURB SECTION - RAMP M

STA 416+07.33 TO STA 416+26.45
STA 420+24.75 TO STA 420+42.11

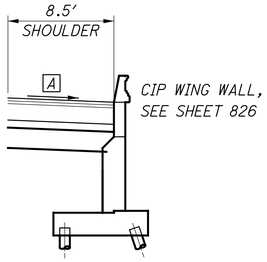

CIP WING WALL SECTION - RAMP M

STA 420+24.75 TO STA 420+60.83

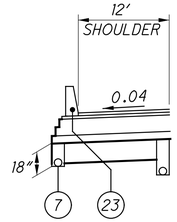

BARRIER SECTION - RAMP M

STA 427+79.14 TO STA 429+61.94

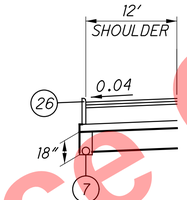

CURB SECTION - RAMP M

STA 429+61.94 TO STA 432+13.01

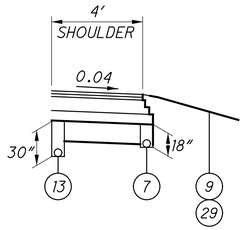

NORMAL SECTION - RAMP J

STA 421+30.00 TO STA 423+65.55

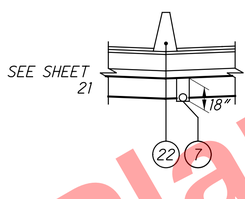

MEDIAN BARRIER DETAIL - RAMP N

STA 425+83.12 TO STA 428+52.11

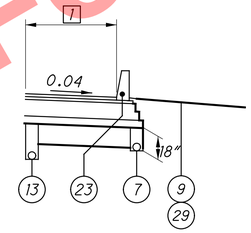

BARRIER SECTION - RAMP N

STA 424+17.89 TO STA 428+52.11

SEE CONSTRUCTION JOINTS NOTE BELOW FOR DOWELING REQUIREMENTS

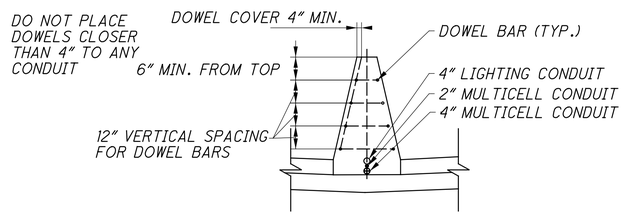

MEDIAN BARRIER CONDUIT DETAIL

CONSTRUCTION JOINTS: BARRIER RUNS WITH ABUTTING VERTICAL SURFACED AT EITHER REQUIRED OR PERMISIBLE CONSTRUCTION JOINTS ARE TO BE DOWERLED TO EACH OTHER BY USE OF 3/4' DIA. BY 18" LONG EPOXY COATED DEFORMED DOWEL BARS AS PER CMS 622.02. BARS ARE TO BE PLACED AS SHOWN. PROVIDE A 4" CLEARNACE TO BARIER SURFACES AND TO ANY RACEWAYS.

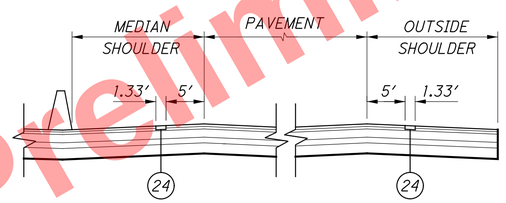

RUMBLE STRIP DETAIL

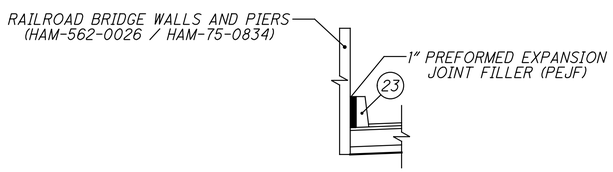

BARRIER EXPANSION JOINT DETAIL BETWEEN RAILROAD BRIDGE WALLS AND PIERS

1 SEE SHEET 22

A 0.04 OR RATE OF SUPER IF GREATER

B ITEM 622 - CONCRETE BARRIER, SINGLE SLOPE, TYPE C1, AS PER PLAN

FOR LEGEND, SEE SHEET 14

TYPICAL SECTIONS - DETAILS

HAM-75-7.85

30
1047

Preliminary Plans - For Reference Only

J:\20110903\ODOT\HAM\77889\roadway\sheets\77889GY012.dgn 5/22/2026 10:04:54 AM hbrendlinger

UTILITIES

LISTED BELOW ARE ALL UTILITIES LOCATED WITHIN THE PROJECT CONSTRUCTION LIMITS TOGETHER WITH THEIR RESPECTIVE OWNERS:

GAS
DUKE ENERGY (GAS)
139 EAST 4TH ST., ROOM 460A
CINCINNATI, OH 45202
OH/KYHOUSEBILL@DUKE-ENERGY.COM

OIL
BP PIPELINES (NORTH AMERICA) INC.
BLAKE PATRICK
30 SOUTH WACKER DRIVE
SUITE 900
CHICAGO, IL 60606
312-809-3155
BLAKE.PATRICK@BP.COM
BPPIPELINESROW@BP.COM

BP PIPELINES NORTH AMERICA, INC.
KIM MILLER
930 TENNESSEE AVENUE
CINCINNATI, OH 45229
513-649-6187

ELECTRIC:
DUKE ENERGY - ELECTRIC (DISTRIBUTION)
AARON WRIGHT
2010 DANA AVE
CINCINNATI, OH 45207
513-514-8211
AARON.WRIGHT@DUKE-ENERGY.COM

DUKE ELECTRIC - TRANSMISSION
TIM MEYER
139 EAST 4TH STREET, 552A
CINCINNATI, OH 45202
513-287-1266

CABLE
CHARTER COMMUNICATIONS
KENT RIEGER
10920 KENWOOD ROAD
BLUE ASH, OHIO 45242
DL-SOUTHERN-OHIO-OUTSIDE-PLANT@CHARTER.COM
513-386-5499
KENT.REIGER@CHARTER.COM

TELEPHONE
CINCINNATI BELL - AERIAL & PLACING
ROB STROCHINSKY
221 E. 4TH STREET
BLDG. 121-900
CINCINNATI, OH 45201
513-565-6014
ROBERT.STROCHINSKY@CINBELL.COM
ROADPROJECTS@CINBELL.COM

CINCINNATI BELL - UNDERGROUND STRUCTURES
BRECK COWAN
221 E. 4TH STREET
BLDG. 121-900
CINCINNATI, OH 45201
513-565-7187 - OFFICE
BRECK.COWAN@CINBELL.COM

VERIZON
ALLEN GUEST
120 RAVINE STREET
AKRON, OH 44303
330-253-8267

UTILITIES (CONT)

TELEPHONE (CONT)
SPRINT NEXTEL
STEVE HUGHES
11370 ENTERPRISE PARK DRIVE
SHARONVILLE, OH 45251
513-459-5796
STEVEN.HUGHES@SPRINT.COM

QWEST/CENTURYLINK/LUMEN
JORDAN LANGSTON
20 N MECHANIC STREET
LEBANON, OH 45036
513-933-3502
RELOCATIONS@LUMEN.COM

SANITARY SEWER
CINCINNATI METROPOLITAN SEWER DISTRICT
ROBERT FRANKLIN
1600 GEST STREET
CINCINNATI, OH 45204
513-577-7188
MSDUTILITYREVIEW@CINCINNATI-OH.GOV
ROB.FRANKLIN@CINCINNATI-OH.GOV

WATER
GREATER CINCINNATI WATER WORKS
KYLE BUCKLEY
3845 EASTERN AVENUE
CINCINNATI, OH 45226
513-591-7874
KYLE.BUCKLEY@GCWW.CINCINNATI-OH.GOV

SOUTHWESTERN OHIO WATER COMPANY
MIKE FLAVIN
600 W. LOVELAND AVENUE, SUITE 3
LOVELAND, OH 45140
513-489-4844

STORM
CINCINNATI STORMWATER MANAGEMENT UTILITY
ROBERT GOODPASTER
4747 SPRING GROVE AVENUE
CINCINNATI, OHIO 45232
513-591-7746
ROBERT.GOODPASTER@CINCINNATI-OH.GOV
SMUPLANREVIEW@CINCINNATI-OH.GOV

MISC
GIVAUDAN FLAVORS CORPORATION
FRED WILSON
1199 EDISON DRIVE
CINCINNATI, OH 45216
PHONE: 513.948.4284
MOBILE: 847.226.3863
FAX: 513.482.8535

ODOT ITS
CENTRAL OFFICE ODOT ITS
1606 WEST BROAD STREET
COLUMBUS, OH 43223
614.387.4113
CEN.ITS.LAB@DOT.OHIO.GOV

THE LOCATION OF THE UNDERGROUND UTILITIES SHOWN ON THE PLANS ARE AS OBTAINED FROM THE OWNERS AS REQUIRED BY SECTION 153.64 O.R.C.

UTILITY NOTIFICATION

THE OHIO DEPARTMENT OF TRANSPORTATION HAS UTILITY FACILITIES (HIGHWAY LIGHTING, TRAFFIC SIGNALS, ITS) WITHIN THE LIMITS OF THIS PROJECT.

IN ADDITION TO THE INFORMATION OUTLINED IN THE 4A NOTES OF THIS CONTRACT, AND EVEN THOUGH ODOT IS LISTED AS A MEMEBER OF THE OHIO UTILITIES PROTECTION

UTILITY NOTIFICATION (CONT)

SERVICES (OUPS), THE CONTRACTOR ON THIS PROJECT IS REQUIRED TO CONTACT ODOT, DISTRICT 8, TRAFFIC DEPARTMENT, AND ARTIMIS DIRECTLY SO THAT THE ODOT UTILITIES, LOCATED WITHIN THIS PROJECT, ARE MARKED. THE CONTRACTOR SHALL NOTIFY DISTRICT 8, TRAFFIC AT 513-933-6689, ARTIMIS AT 513-564-6118, AND THE PROJECT ENGINEER, FOURTEEN (14) CALENDAR DAYS IN ADVANCE OF ANY WORK, FOR THE NEED TO MARK ODOT'S OWNED UTILITIES.

THE ABOVE REQUIREMENTS ARE IN ADDITION TO SECTION 105.07 & 107.16 OF THE CONSTRUCTION AND MATERIAL SPECIFICATIONS AND THE 4A PROPOSAL NOTE.

THE CONTRACTOR SHALL NOTIFY OTHER UTILITIES THOUGH OUPS OR DIRECTLY A MINIMUM OF FORTY-EIGHT (48) HOURS IN ADVANCE OF ANY WORK.

THE COST FOR THE ABOVE DESCRIBED WORK IS IDENTICAL TO THE OVERALL BID PRICE OF THE PROJECT.

EXISTING OVERHEAD ELECTRIC FACILITIES

WITHIN THE CORRIDOR SEVERAL OVERHEAD ELECTRIC FACILITIES EXIST. CONTRACTOR TO EXERCISE CAUTION WHEN WORKING UNDER OR NEAR ANY ELECTRIC UTILITY.

BRITISH PETROLEUM COORDINATION

CONSTRUCTION NEAR STA. 433+35 UNDER I-75 AND NEAR STA. 413.50 UNDER SR 562 WEST OF THE NORWOOD LATERAL NORFOLK SOUTHERN RAIL ROAD BRIDGE REQUIRE COORDINATION WITH BRITISH PETROLEUM.

ALL CONSTRUCTION AND ANY WORK DONE NEAR THE NEW BP PIPELINE SHALL MAINTAIN A MINIMUM OF THREE (3) FEET OF COVER. AND A MINIMUM OF THREE (3) FEET OF HORIZONTAL CLEARANCES BETWEEN THE PIPELINE AND WORK PROPOSED FOR THE PROJECT. A BP OIL REPRESENTATIVE SHALL BE CONTACTED AND PRESENT DURING WORK NEAR THE PIPELINE. CONTACT INFORMATION FOR THE LOCAL BP DAMAGE PREVENTION SPECIALIST IS INCLUDED IN THE UTILITY INFORMATION WITH THE GENERAL NOTES AND THIS SECTION.

THE PIPELINES BP OPERATES TRANSPORT VARIOUS LIQUIDS AND GASSES AT HIGH PRESSURE. THERE ARE POTENTIAL HAZARDS ASSOCIATED WITH CONSTRUCTION OR EXCAVATION WORK AROUND PIPELINES. AS A RESULT OF THESE POTENTIAL HAZARDS, AND IN COMPLIANCE WITH THE REQUIREMENTS IMPOSED UPON BP AS AN INDUSTRY REGULATED BY THE U.S. DEPARTMENT OF TRANSPORTATION AND OFFICE OF PIPELINE SAFETY, THE FOLLOWING LIST OF GENERAL REQUIREMENTS FOR WORKING ON PIPELINE RIGHTS-OF-WAY HAS BEEN COMPILED.

GENERAL SAFETY REQUIREMENTS:
811 THE NATIONAL ONE-CALL NUMBER, MUST BE CONTACTED AT LEAST 48 HOURS (2 WORKING DAYS) BEFORE ANY CONSTRUCTION AND/OR EXCAVATION ACTIVITIES ARE INITIATED WITHIN THE PIPELINE RIGHT-OF-WAY SO THAT BP MAY HAVE A REPRESENTATIVE PREVENT TO ENSURE THAT THERE ARE NO CONFLICTS WITH THE PIPELINE.

THE CONTRACTOR IS RESPONSIBLE FOR CONDUCTING AN ONSITE PRECONSTRUCTION MEETING PRIOR TO THE START OF ANY WORK NEAR THE BP PIPELINE FOR EACH NEW LOCATION AS APPLICABLE. THE PURPOSE OF THE MEETING IS TO IDENTIFY AND DISCUSS THE LOCATION OF THE PIPELINE RELATIVE TO THE

BRITISH PETROLEUM COORDINATION (CONT)

WORK, SAFETY AND CONTRACT REQUIREMENTS, AND OTHER PERTINENT SITE SPECIFIC CONDITIONS. THE REQUIRED ATTENDEES ARE THE BP REPRESENTATIVE, ODOT PROJECT REPRESENTATIVE, CONTRACTOR AND SUB-CONTRACTOR REPRESENTATIVE(S), AND PERSONNEL DIRECTLY INVOLVED IN THE WORK ACTIVITIES NEAR THE PIPELINE.

TO HAVE THE PIPELINE PHYSICALLY LOCATED AND DEPTH VERIFIED, CONTACT BP5#32S LOCAL FIELD REPRESENTATIVE, MR. KIM MILLER AT 513-646-6187, TWO (2) WEEKS PRIOR.
THE CONTRACTOR IS RESPONSIBLE FOR TAKING ALL NECESSARY SAFETY PRECAUTIONS AND WILL BE HELD RESPONSIBLE FOR ANY DAMAGES CAUSED TO THE PIPELINE OR PROPERTY AS A RESULT OF THEIR WORK.

EXCAVATION SPECIFIC REQUIREMENTS:
NO EXCAVATION OR CONSTRUCTION ACTIVITY WILL BE PERMITTED IN THE VICINITY OF A PIPELINE UNTIL ALL APPROPRIATE COMMUNICATIONS HAVE BEEN MADE WITH BP'S FIELD OPERATIONS AND THE BP RIGHT-OF-WAY DEPARTMENT. IN SOME INSTANCES, EXCAVATION AND OTHER CONSTRUCTION ACTIVITIES AROUND CERTAIN PIPELINES CAN BE CONDUCTED SAFELY ONLY WHEN THE PIPELINE OPERATING PRESSURE HAS BEEN REDUCED. CONTRACTORS ARE THEREFORE CAUTIONED THAT EXCAVATION WHICH EXPOSES OR SIGNIFICANTLY REDUCES THE COVER OVER A PIPELINE MAY HAVE TO BE DELAYED UNTIL THE REDUCED OPERATING PRESSURES ARE ACHIEVED.

GENERAL CONSTRUCTION ACTIVITIES:
THE CONTRACTOR SHALL EXERCISE EXTREME CAUTION WHEN EXCAVATING IN AREAS OF THE ABANDONED PIPELINE. THE CONTRACTOR SHALL NOT BE PERMITTED TO TRANSPORT CONSTRUCTION MATERIALS OR EQUIPMENT LONGITUDINALLY OVER THE ABANDONED PIPELINE. WHERE IT IS NECESSARY FOR CONSTRUCTION EQUIPMENT (I.E., TRACTORS, BACKHOES, DUMP TRUCKS, ETC.) OR EQUIPMENT TRANSPORTING CONSTRUCTION MATERIALS TO CROSS THE PIPELINE, THE CROSSING OF THE PIPELINE RIGHT-OF-WAY SHALL BE AT, OR AS NEAR TO, A 90 ANGLE AS IS FEASIBLE.

NO TRACK TYPE CONSTRUCTION EQUIPMENT SHALL BE PERMITTED TO PIVOT OR TURN DIRECTLY OVER THE TOP OF THE ABANDONED PIPELINE.

A SCRAPER OR PAN TYPE TRACTOR SHALL NOT BE USED FOR REMOVAL OF SOIL WITHIN TEN FEET (10') OF THE CENTERLINE OF THE ABANDONED PIPELINE. RUBBER TIRE OR SMALL TRACK TYPE EQUIPMENT IS AN ACCEPTABLE ALTERNATIVE.

A SHEEPSFOOT ROLLER SHALL NOT BE USED FOR COMPACTION PURPOSES WITHIN FIVE FEET (5') OR DIRECTLY ABOVE THE CENTERLINE OF THE ABANDONED PIPELINE.

CONSTRUCTION NOTIFICATION

THE CONTRACTOR SHALL NOTIFY THE PROPERTY OWNER OF PARCEL 201-T, SOLVAY RARE EARTH SYSTEMS, 48 HOURS PRIOR TO ENTERING UPON OR BEGINNING WORK ON THE TEMPORARY EASEMENT. NOTIFICATION SHALL BE IN WRITING AND INDICATE THE ANTICIPATED START DATE OF THE USE OF THE TEMPORARY EASEMENT FOR ACCESS OR CONSTRUCTION. THE CONTRACTOR SHALL BE REQUIRED TO PROVIDE A COPY OF THIS WRITTEN NOTIFICATION TO THE PROJECT ENGINEER FOR PROJECT RECORDING PURPOSES AND TRACKING THE DURATION OF USE FOR THE PARCEL.

Preliminary Plans - For Reference Only

CALCULATED SEA
CHECKED DLR

GENERAL NOTES

HAM-75-7.85

J:\20110903\ODOT\HAM\77889\roadway\sheets\77889GN001.dgn 5/22/2026 10:04:55 AM hbrendlinger

METROPOLITAN SEWER DISTRICT COORDINATION

ALL PROPOSED COMBINED SEWER AND SANITARY PIPING AND RELATED APPURTENANCES TO BE PROVIDED TO THE METROPOLITAN SEWER DISTRICT MUST BE INSTALLED AND TESTED IN ACCORDANCE WITH MSD RULES AND REGULATIONS AND STANDARD DRAWINGS. ALL MATERIALS MUST CONFORM TO MSD RULES AND REGULATIONS AND STANDARD DRAWINGS. MSD MUST BE CONTACTED FOR INSPECTION 48 HOURS PRIOR TO THE BEGINNING OF ANY MSD WORK. ALL STORMWATER CONNECTIONS TO THE COMBINED SEWER REQUIRE A STORMWATER CONNECTION PERMIT FROM MSD'S DEVELOPMENT SERVICES OFFICE. THE PERMIT IS AVAILABLE FROM THE FOLLOWING WEBSITE: http://www.msdgc.org/downloads /customer_care/permits_and_records/sewer_tap_application.pdf

ALL EXISTING SEWERS TO REMAIN IN SERVICE MUST BE VIDEO RECORDED PRE AND POST CONSTRUCTION PER THE REQUIREMENTS OF ODOT SUPPLEMENTAL SPECIFICATON 902, SECTION 902.01. ANY DAMAGE CAUSED TO THE SEWERS DURING CONSTRUCTION MUST BE REPAIRED TO THE SATISFACTION OF MSD. MSD RULES AND REGULATIONS AND STANDARD CONSTRUCTION DRAWINGS MAY BE FOUND AT THE FOLLOWING WEBSITE: http://www.msdgc.org/ABOUT_MSD/LEGAL_AND_ ORGANIZATIONAL_DOCUMENTS/INDEX.HTML

ROSS RUN SEWER CONNECTION

THE ASSOCIATED PLAN NOTE APPLIES TO THE ROSS RUN CONNECTION AT THE FOLLOWING LOCATIONS:

LOCATION 1:

STA. 414+94.93, 95.05' LT:
PLAN AND PROFILE SHEET 267
DRAINAGE PLAN SHEET 544
STORM SEWER PROFILE SHEET 553

LOCATION 2:

STA. 415+76.20, 109.98' RT:
PLAN AND PROFILE SHEET 267
DRAINAGE PLAN SHEET 544
STORM SEWER PROFILE SHEET 559

CONNECTIONS TO EXISTING MSD INFRASTRUCTURE SHALL BE MADE BY MAKING NEAT SAWCUTS OR CORES AT THE LOCATIONS SHOWN IN THE PLANS. WASTE FROM THE SAWCUT OR CORE SHALL BE REMOVED AND SHALL NOT ENTER THE SEWER. WHERE THE EDGE OF THE OPENING IS MORE THAN 6 INCHES FROM THE OUTSIDE WALL OF THE PROPOSED CONDUIT, PLACE DOWELS CONSISTING OF NO. 4 BARS A MINIMUM OF 6 INCHES DEEP INTO THE EXISTING SIDE WALL AT 6 INCHES ON CENTER AROUND THE EDGES OR CIRCUMFERENCE OF THE OPENING.

EXTEND THE DOWELS INTO THE VOID SPACE TO A POINT NO GREATER THAN 2 INCHES FROM THE OUTSIDE EDGE OF THE PROPOSED CONDUIT. AFTER PLACING THE PROPOSED CONDUIT AND DOWELS INTO THE EXISTING STRUCTURE, FILL THE VOID WITH CLASS QC1 CONCRETE.ALL COSTS ASSOCIATED WITH THE PROPOSED SEWER CONNECTION TO THE ROSS RUN SEWER ARE INCLUDED PER ITEM 611 IN THE ODOT CMS.

SEE PLAN SHEETS 44 - 46 FOR THE ROSS RUN RECORD PLAN DETAILS.

RECONNECT SEWER LATERAL

THE CONTRACTOR SHALL RECONNECT ANY SEWER LATERAL DISTURBED DURING CONSTRUCTION PER MSD RULES AND REGULATIONS. THIS WORK SHALL BE INCLUDED IN THE UNIT PRICE FOR ITEM 611 - 8" CONDUIT, TYPE B, 706.02, JOINTS PER 706.11.

SURVEYING PARAMETERS

PRIMARY PROJECT CONTROL MONUMENTS GOVERN ALL POSITIONING ON ODOT PROJECTS. SEE SHEET 10 OF THE PLANS FOR A TABLE CONTAINING PROJECT CONTROL INFORMATION.

USE THE FOLLOWING PROJECT CONTROL, VERTICAL POSITIONING, AND HORIZONTAL POSITIONING PARAMETERS FOR ALL SURVEYING:

PROJECT CONTROL

POSITIONING METHOD: STATIC GPS OBSERVATIONS FOR HORIZONTAL CONTROL AND DIFFERENTIAL LEVELING FOR VERTICAL CONTROL

MONUMENT TYPE: TYPE A

VERTICAL POSITIONING

ORTHOMETRIC HEIGHT DATUM: NAVD 88
GEOID: 03

HORIZONTAL POSITIONING

REFERENCE FRAME: NAD 83 (1995)
ELLIPSOID: GRS 80
MAP PROJECTION: LAMBERT CONFORMAL CONIC
COORDINATE SYSTEM: OHIO STATE PLANE (SOUTH ZONE)
COMBINED SCALE FACTOR: 0.999916593
ORIGIN OF COORDINATE
SYSTEM: NORTHING: 0.0, EASTING 0.0

USE THE POSITIONING METHODS AND MONUMENT TYPE USED IN THE ORIGINAL SURVEY TO RESTORE ALL MONUMENTS RELATED TO PRIMARY PROJECT CONTROL THAT ARE DAMAGED OR DESTROYED BY CONSTRUCTION ACTIVITIES. RESTORE THE DAMAGED OR DESTROYED MONUMENTS IN ACCORDANCE WITH SUPPLEMENTAL SPECIFICATION 823.

UNITS ARE IN U.S. SURVEY FEET. USE THE FOLLOWING CONVERSION FACTOR: 1 METER = 3.280833333 U.S. SURVEY FEET.

WORK LIMITS

THE WORK LIMITS SHOWN ON THESE PLANS ARE FOR PHYSICAL CONSTRUCTION ONLY. PROVIDE THE INSTALLATION AND OPERATION OF ALL WORK ZONE TRAFFIC CONTROL AND WORK ZONE TRAFFIC CONTROL DEVICES REQUIRED BY THESE PLANS WHETHER INSIDE OR OUTSIDE THESE WORK LIMITS.

CLEARING AND GRUBBING, AS PER PLAN

TREE REMOVAL HAS BEEN PERFORMED ON THE SOUTHBOUND SIDE OF I-75 BETWEEN STATIONS 410+00 TO 475+00 AND ON NORFOLK SOUTHERN RAILROAD. REFER TO PID 117762 FOR FURTHER INFORMATION.

THE DEPARTMENT HAS NOT MARKED INDIVIDUAL TREES AND STUMPS FOR REMOVAL. UNLESS SPECIFICALLY DESIGNATED AS "DO NOT DISTURB" IN THE PLANS, REMOVE ALL TREES AND STUMPS WITHIN THE CONSTRUCTION LIMITS UNDER THE LUMP SUM BID FOR ITEM 201 CLEARING AND GRUBBING.

PROTECTION OF RIGHT-OF-WAY LANDSCAPING

PRIOR TO BEGINNING WORK, THE CONTRACTOR, THE PROJECT ENGINEER, AND A REPRESENTATIVE OF THE MAINTAINING AGENCY WILL REVIEW AND RECORD ALL LANDSCAPING ITEMS WITHIN THE RIGHT OF WAY (BOTH WITHIN AND OUTSIDE THE CONSTRUCTION LIMITS) A RECORD OF THIS REVIEW WILL BE KEPT IN THE PROJECT ENGINEER'S FILES. PRIOR TO FINAL ACCEPTANCE, A FINAL REVIEW OF LANDSCAPING ITEMS WILL BE MADE.

PROTECTION OF RIGHT-OF-WAY LANDSCAPING (CONT)

CONSTRICT ALL ACTIVITIES, EQUIPMENT STORAGE, AND STAGING TO WITHIN THE CONSTRUCTION LIMITS. UNLESS OTHERWISE IDENTIFIED IN THE PLANS OR PROPOSAL, THE CONSTRUCTION LIMITS ARE IDENTIFIED AS 30 FEET FROM THE EDGE OF PAVEMENT.

SUBMIT A WRITTEN REQUEST TO THE PROJECT ENGINEER TO USE ANY AREA OUTSIDE THESE LIMITS. THE DOCUMENT SUBMITTED MUST CLEARLY IDENTIFY THE AREA AND EXPLAIN THE PROPOSED USE AND RESTORATION OF THE AREA. THE REQUEST MUST BE APPROVED, IN WRITING, BEFORE THE CONTRACTOR HAS PERMISSION TO USE THE AREA.

ANY ITEMS DAMAGED BEYOND THE CONSTRUCTION LIMITS AS DEFINED ABOVE WILL BE REPLACED IN KIND OR AS APPROVED BY THE PROJECT ENGINEER.

FENCE LENGTHS

THE LENGTHS OF FENCE SHOWN IN THE PLANS ARE HORIZONTAL DIMENSIONS. MEASUREMENTS OF THE FINAL QUANTITIES WILL BE IN ACCORDANCE WITH ITEM 607.

ROUNDING

THE ROUNDING AT SLOPE BREAKPOINTS SHOWN ON THE TYPICAL SECTIONS APPLIES TO ALL CROSS-SECTIONS EVEN THOUGH OTHERWISE SHOWN.

PART-WIDTH CONSTRUCTION

BECAUSE OF THE NECESSITY TO BUILD THIS PROJECT UNDER TRAFFIC AND TO CONSTRUCT THE FULL PAVEMENT WIDTH IN STAGES, EXERCISE CARE TO PREVENT THE CONSTRUCTION OF A BUTT JOINT IN THE BASE COURSES. LAP LONGITUDINAL JOINTS AS SHOWN ON STANDARD CONSTRUCTION DRAWING BP-3.1.

ITEM 202 - REMOVAL MISC.: ABANDONED WATER LINE

THE CONTRACTOR SHALL FURNISH ALL LABOR AND EQUIPMENT NECESSARY TO REMOVE THE ABANDONED 6" WATER LINE PER ITEM 202 UNDER TOWNE STREET AS SHOWN IN THE PLAN.

CONTRACTION AND/OR EXPANSION JOINTS

ALTHOUGH SPECIFIC LOCATIONS OF CERTAIN CONTRACTION AND EXPANSION JOINTS HAVE BEEN DETAILED ON THIS PLAN, NO WAIVER OF THE SPECIFICATIONS IS INTENDED. IN ALL CASES, THE PROVISION OF EXPANSION JOINTS AT ALL MAJOR STRUCTURES INCLUDING THE MAXIMUM SPACING BETWEEN CONTRACTION JOINTS IS IN ACCORDANCE WITH STANDARD CONSTRUCTION DRAWING BP-2.2 AND THE SPECIFICATIONS.

EXISTING PLANS

THE FOLLOWING PREVIOUS CONSTRUCTION PLANS, WHICH SHOW THE ORIGINAL ALIGNMENT AND PROFILE, ARE AVAILABLE FOR INSPECTION AT THE ODOT DISTRICT 8 OFFICE IN LEBANON, OHIO:

HAM-4W-7.81 ORIGINAL CONSTRUCTION PLANS, 1956
HAM-75-4.21 ORIGINAL CONSTRUCTION PLANS, 1992
HAM-4-4.00 REDEVELOPMENT PLANS, 2000
HAM-561-7.00 REDECKING PLANS, 2004

MEDIAN AND/OR CURBING ON APPROACH SLABS

WITHIN THE LIMITS OF THE APPROACH SLAB, TRANSITION THE SHAPE OF THE MEDIAN AND/OR CURBING ON APPROACH SLABS FROM THE STANDARD SECTION ON THE APPROACHES TO THE SECTION USED ON THE BRIDGE.

PAVEMENT RESTORATION FOR PIPE INSTALLATIONS AND/OR REMOVALS

THE FOLLOWING ESTIMATED QUANTITIES ARE PROVIDED FOR PAVEMENT RESTORATION FOLLOWING INSTALLATION AND/OR REMOVAL OF PIPES IN AREAS WHERE FULL-WIDTH PAVEMENT RECONSTRUCTION IS NOT BEING PERFORMED AS A PART OF THE PROJECT IMPROVEMENTS. THE ESTIMATED QUANTITIES ARE BASED ON A PAVEMENT RESTORATION WIDTH THAT INCLUDES THE TRENCH PLUS TWO FEET ON EACH SIDE OF THE TRENCH. DEEPER EXCAVATIONS MAY REQUIRE MORE RESTORATION AND ADDITIONAL MATERIALS WILL BE PROVIDED BY THE CONTRACTOR AT THE BID UNIT PRICE, AS DIRECTED BY THE ENGINEER.

LAIDLAW AVE:

ITEM 255 - FULL DEPTH PAVEMENT REMOVAL AND RIGID REPLACEMENT, TYPE 1, CLASS QC MS - 270 SQ YD

PROSSER AVE:

ITEM 255 - FULL DEPTH PAVEMENT REMOVAL AND RIGID REPLACEMENT, TYPE 1, CLASS QC MS - 216 SQ YD

ITEM 609, CURB, TYPE 2-A 37 FT

PAVEMENT RESTORATION FOR DRAINAGE STRUCTURE INSTALLATIONS

THE FOLLOWING ESTIMATED QUANTITY IS PROVIDED FOR PAVEMENT RESTORATION FOLLOWING INSTALLATION OF ITEM 611, DRAINAGE STRUCTURES IN AREAS WHERE FULL-WIDTH PAVEMENT RECONSTRUCTION IS NOT BEING PERFORMED AS A PART OF THE PROJECT IMPROVEMENTS. THE ESTIMATED QUANTITIES ARE BASED ON A PAVEMENT RESTORATION WIDTH THAT INCLUDES AN ADDITIONAL TWO FEET AROUND THE PERIMETER OF THE DRAINAGE STRUCTURE.

ITEM 255 - FULL DEPTH PAVEMENT REMOVAL AND RIGID REPLACEMENT, TYPE 1, CLASS QC MS - 8 SQ YD

THE FOLLOWING QUANTITY IS BASED ON A 304 THICKNESS OF 8 INCHES USED TO REPAIR THE DRIVEWAY ADJACENT TO THE STRUCTURE ON LAIDLAW IMPACTED BY THE RELOCATION OF THE 60" COMBINED SEWER PIPE IDENTIFIED IN THE PLANS.

ITEM 304, AGGREGATE BASE - 12 CU YD

ADDITIONAL MATERIALS, IF NEEDED, WILL BE PROVIDED BY THE CONTRACTOR AT THE BID UNIT PRICE, AS DIRECTED BY THE ENGINEER.

Preliminary plans - For Reference Only

CALCULATED SEA
CHECKED DLR

GENERAL NOTES

HAM-75-7.85

32
1047

SS NO. 7168

J:\20110903\ODOT\HAM\77889\roadway\sheets\77889GN001.dgn 5/22/2026 10:04:55 AM hbrendlinger

ITEM SPECIAL - FILL AND PLUG EXISTING CONDUIT, VARIES

THIS ITEM CONSISTS OF THE CONSTRUCTION OF BULKHEADS IN EXISTING CONDUITS AND FILLING THE AREA SEALED OFF WITH GROUT OR OTHER MATERIAL APPROVED BY THE ENGINEER.

IF USING CELLULAR GROUT, UTILIZE A MIX PROPORTIONAL TO THE TABLE SHOWN BELOW.

MATERIALS	AMOUNT
CEMENT TYPE 1L (LB/CY)	MINIMUM 700
WATER (GALLONS)	39-42
W/C	0.46-0.50
FOAM (LB/CY) - ASTM C869*	0.6

* ADDED AT THE SITE; ABOVE AMOUNT IS SUGGESTED BUT MAY BE MODIFIED TO MEET THE PRE-PUMPING REQUIREMENTS.

IF USING CELLULAR GROUT, THE FOLLOWING GROUT PROPERTIES MUST BE MET BEFORE PUMPING IS PERMITTED.

TEST	ASTM PREFERENCE	LIMITS
FRESH DENSITY (LB/CY)	ASTM C138	BEFORE PUMPING: 40 ±3
FLUIDITY	ASTM C939	35-60 SECONDS
FLOWABILITY/SPREAD	ASTM D6103	MINIMUM 10"
AIR CONTENT	ASTM C138	50-70%
TEMPERATURE	ASTM C1064	50-75 °F
STABILITY TEST	ASTM C940	NO COLLAPSE (0")

LOCATE THE BULKHEADS AT THE LIMITS OF THE AREA TO BE FILLED, AS INDICATED ON THE PLANS. THE BULKHEADS SHALL BE WATERTIGHT AND INCLUDE VISUAL GROUT RETURN PIPES AT BOTH ENDS. AN INSTALLATION PLAN SHALL BE SUBMITTED 15 DAYS PRIOR DETAILING GROUT INSTALLATION.

PUMP THE FILL MATERIAL INTO PLACE OR BY OTHER MEANS APPROVED BY THE ENGINEER, SO THAT AFTER SETTLEMENT, AT LEAST 95 PERCENT OF THE CROSS-SECTIONAL AREA OF THE CONDUIT, FOR ITS ENTIRE LENGTH IS FILLED. THE LENGTH OF FILLED AND PLUGGED CONDUIT TO BE PAID FOR IN THE ACTUAL NUMBER OF FEET (MEASURED ALONG THE CENTERLINE OF EACH CONDUIT FROM OUTER FACE TO OUTER FACE OF BULKHEADS) FILLED AND PLUGGED AS DESCRIBED ABOVE.

IN LIEU OF FILLING AND PLUGGING THE EXISTING CONDUIT, THE PIPE MAY BE REMOVED AND BACKFILLED PER 203. THE LENGTH , MEASURED AS PROVIDED ABOVE, WILL BE PAID FOR AT THE CONTRACT PRICE PER FOOT FOR, ITEM SPECIAL, FILL AND PLUG EXISTING CONDUIT.

UNRECORDED STORM WATER DRAINAGE

FURNISH A CONTINUANCE FOR ALL UNRECORDED STORM WATER DRAINAGE, SUCH AS ROOF DRAINS, FOOTER DRAINS, OR YARD DRAINS, DISTURBED BY THE WORK. FURNISH EITHER AN OPEN CONTINUANCE OR AN UNOBSTRUCTED CONTINUANCE BY CONNECTING A CONDUIT THROUGH THE CURB OR INTO A DRAINAGE STRUCTURE. THE LOCATION, TYPE, SIZE AND GRADE OF THE NEEDED CONDUIT TO REPLACE OR EXTEND AN EXISTING DRAIN WILL BE DETERMINED BY THE ENGINEER. ALL SUCH CONTINUANCE REQUIRES A RIGHT OF WAY USE PERMIT.

THE FOLLOWING CONDUIT TYPES MAY BE USED: 707.33, 707.41 NON-PERFORATED, 707.42, 707.43, 707.45, 707.46, 707.47, 707.51, 707.52 SDR35.

UNRECORDED STORM WATER DRAINAGE (CONT)

THE FOLLOWING ESTIMATED QUANTITIES HAVE BEEN INCLUDED IN THE GENERAL SUMMARY FOR USE AS DIRECTED BY THE ENGINEER FOR THE WORK NOTED ABOVE:

611, 6" CONDUIT, TYPE B	100 FT.
611, 6" CONDUIT, TYPE C	100 FT.
611, 6" CONDUIT, TYPE E	100 FT.
611, 6" CONDUIT, TYPE F	100 FT.

UNRECORDED ACTIVE SANITARY SEWER CONNECTIONS

FURNISH A CONTINUANCE FOR ALL UNRECORDED ACTIVE SANITARY SEWER CONNECTIONS SUCH AS SANITARY, WASTEWATER, CURTAIN/GRADIENT DRAINS, AND FOUNDATION FLOOR DRAINS DISTURBED BY THE WORK. FURNISH AN UNOBSTRUCTED CONTINUANCE OF THE UNRECORDED ACTIVE SANITARY SEWER CONNECTIONS TO THE SATISFACTION OF THE ENGINEER. ALL SUCH CONTINUANCE REQUIRES A RIGHT OF WAY USE PERMIT. ALL SANITARY AND SANITARY WASTEWATER CONTINUANCE MAY ALSO REQUIRE A NPDES PERMIT FROM THE OHIO ENVIRONMENTAL PROTECTION AGENCY. REPORT ALL CONTINUANCE TO THE LOCAL HEALTH DEPARTMENT.

THE FOLLOWING CONDUIT TYPES MAY BE USED: 707.42, 707.43, 707.44, 707.45, 707.46, 707.47, 707.51, 707.52 SDR35, 706.01, 706.02, OR 706.08 WITH JOINTS AS PER 706.11 OR 706.12.

THE FOLLOWING ESTIMATED QUANTITIES HAVE BEEN INCLUDED IN THE GENERAL SUMMARY FOR USE AS DIRECTED BY THE ENGINEER FOR THE WORK NOTED ABOVE:

611, 8" CONDUIT, TYPE B WITH CLASS II BEDDING	100 FT.
611, 8" CONDUIT, TYPE C WITH CLASS II BEDDING	100 FT.

ITEM SPECIAL - MISCELLANEOUS METAL

EXISTING CASTINGS MAY PROVE TO BE UNSUITABLE FOR REUSE, AS DETERMINED BY THE ENGINEER. IT SHALL BE THE CONTRACTOR'S RESPONSIBILITY TO PROVIDE THE CASTINGS OF THE REQUIRED TYPE, SIZE AND STRENGTH (HEAVY OR LIGHT DUTY) FOR THE PARTICULAR STRUCTURE IN QUESTION. ALL MATERIAL SHALL MEET ITEM 611 OF THE SPECIFICATIONS AND SHALL HAVE THE PRIOR APPROVAL OF THE ENGINEER.

THE FOLLOWING ESTIMATED QUANTITY HAS BEEN CARRIED TO THE GENERAL SUMMARY FOR USE AS DIRECTED BY THE ENGINEER.

SPECIAL, MISCELLANEOUS METAL 1000 POUNDS

THE CONTRACTOR IS CAUTIONED TO USE EXTREME CARE IN THE REMOVAL, STORAGE AND REPLACEMENT OF ALL EXISTING CASTINGS. CASTINGS DAMAGED BY THE NEGLIGENCE OF THE CONTRACTOR, AS DETERMINED BY THE ENGINEER, SHALL BE REPLACED WITH THE PROPER NEW CASTINGS AT THE EXPENSE OF THE CONTRACTOR.

EXISTING UNDERDRAINS

ALL EXISTING UNDERDRAINS NOT REMOVED DURING PROPOSED CONSTRUCTION SHALL BE PROVIDED WITH A POSITIVE OUTLET. ALL MATERIALS, LABOR, AND INCIDENTALS NECESSARY TO PROVIDE AN OUTLET FOR THE EXISTING UNDERDRAIN SHALL BE INCLUDED IN THE FOLLOWING BID ITEMS. CONTINGENCY QUANTITIES HAVE BEEN ESTIMATED BELOW TO BE USED AS DIRECTED BY THE ENGINEER:

611, PRECAST REINFORCED OUTLET	5 EACH
611, 6" CONDUIT, TYPE F FOR UNDERDRAIN OUTLET	200 FT
601, TIED CONCRETE BLOCK MAT WITH TYPE 1 UNDERLAYMENT	10 SY

PROPOSED UNDERDRAINS

UNDERDRAIN OULET CONNECTIONS AND TRANSVERSE UNDERDRAINS MAY EXTEND ACROSS ADJOINING CONSTRUCTION PHASES. IN THESE SITUATIONS THE CONTRACTOR SHALL PROVIDE AND INSTALL TEMPORARY PLUGS OR CAPS AT THE LIMITS OF THE UNDERDRAIN CONSTRUCTION OF THE SUBSEQUENT PHASE. THE TEMPORARY CAP SHALL BE REMOVED, THE EXISTING OUTLET SHALL BE INSPECTED FOR CLEANLINESS, CLEANED IF NECESSARY, AND THE UNDERDRAIN OR OUTLET CONSTRUCTION COMPLETED OR CONTINUED TO THE NEXT STAGE LIMIT. ALL MATERIAL, LABOR ANO INCIDENTALS NECESSARY TO PROVIDE, TO THE SATISFACTION OF THE ENGINEER, THE TEMPORARY CAPPING AND PIPE CLEANOUT BETWEEN EACH PHASE SHALL BE INCLUDED IN ITEM 611 - CONDUIT, TYPE F FOR UNDERDRAIN OUTLETS OR ITEM 605 - SHALLOW PIPE UNDERDRAIN, BY SIZE AND TYPE.

ALL MATERIAL, LABOR AND INCIDENTALS, INCLUDING BENDS AND BRANCHES NECESSARY TO PROVIDE THE CONSTRUCTION OF THE PROPOSED UNDERDRAIN SHALL BE INCLUDED IN ITEM 611 6" CONDUIT, TYPE F FOR UNDERDRAIN OUTLETS.

UNDERDRAIN CONNECTIONS

ALL EXISTING UNDERDRAINS SHALL BE CONNECTED INTO THE PROPOSED UNDERDRAINS AS SHOWN IN UNDERDRAIN PLAN AND DETAILS. SECTIONS OF EXISTING UNDERDRAIN DESIGNATED TO BE REMOVED SHALL BE CONSIDERED TO BE INCIDENTAL TO THE EXCAVATION. ALL MATERIAL, LABOR AND INCIDENTALS, INCLUDING BENDS AND BRANCHES NECESSARY TO PROVIDE THE CONNECTION OF THE EXISTING UNDERDRAINS SHALL BE INCLUDED IN ITEM 611 - 6" CONDUIT, TYPE F.

ITEM SPECIAL - PIPE CLEANOUT

REMOVE SEDIMENTS, DEBRIS OR OTHER BLOCKAGES FROM THE EXISTING DRAINAGE SYSTEMS AS DIRECTED BY THE ENGINEER. ALL MATERIAL REMOVED SHALL BE DISPOSED OF PER 105.16 AND 105.17. CLEAN OUT ALL CONDUITS, CATCH BASINS AND MANHOLES TO THE SATISFACTION OF THE ENGINEER.

ALL LABOR, EQUIPMENT, MATERIAL, MAINTENANCE OF TRAFFIC (INCLUDING LEO, IF NEEDED) AND ALL INCIDENTALS REQUIRED TO COMPLETE THE WORK. THIS WORK SHALL BE PAID FOR UNDER:

ITEM 690E98600 SPECIAL - MISC.: DRAINAGE SYSTEM CLEANING, 36" AND UNDER, 200 HOUR

ITEM 690E98600 SPECIAL - MISC.: DRAINAGE SYSTEM CLEANING, OVER 36", 100 HOUR

POST CONSTRUCTION STORM WATER TREATMENT

THIS PLAN UTILIZES STRUCTURAL BEST MANAGEMENT PRACTICES (BMPS) FOR POST CONSTRUCTION STORM WATER TREATMENT.

VEGETATED FILTER STRIP

THIS PLAN UTILIZES VEGETATED FILTER STRIP(S) FOR POST CONSTRUCTION STORM WATER TREATMENT. PLACE EITHER ITEM 660 SODDING OR ITEM 659 SEEDING AND MULCHING WITH A 4-INCH LIFT OF TOPSOIL AND ITEM 670, SLOPE EROSION PROTECTION TO ALL DISTURBED AREAS DESIGNATED AS VEGETATED FILTER STRIPS, THE EDGE OF SHOULDER, AND THE FORESLOPE AS SPECIFIED IN THE PLANS.

VEGETATED BIOFILTER

THIS PLAN UTILIZES VEGETATED BIOFILTER(S) FOR POST CONSTRUCTION STORM WATER TREATMENT. PLACE EITHER ITEM 660 SODDING OR ITEM 659 SEEDING AND MULCHING WITH A 4-INCH LIFT OF TOPSOIL AS SHOWN IN THE PLANS TO ANY DISTURBED AREA ON THE SHOULDER AND FORESLOPE DRAINING TO A VEGETATED BIOFILTER. THE DITCH FOR EACH VEGETATED BIOFILTER SHALL BE TRAPEZOIDAL, AS SHOWN IN THE PLAN CROSS SECTIONS. PROVIDE ITEM 670 AS SPECIFIED IN THE PLANS.

MASONRY COLLAR, AS PER PLAN:

WHENEVER A PROPOSED CONDUIT IS TO BE CONNECTED TO AN EXISTING CONDUIT, THE EXISTING CONDUIT SHOULD BE REMOVED TO A MANUFACTURED JOINT. THE PROPOSED CONDUIT SHOULD MATCH THE EXISTING CONDUIT MATERIAL. CONNECT THE TWO CONDUITS AT BELL AND SPIGOT JOINTS. IF THE MASONRY COLLAR IS LOCATED UNDER THE INTERSTATE, THE MASONRY COLLAR WILL BE REQUIRED TO BE REINFORCED WITH 2 X 2 W0.9 X W0.9 GALVANIZED WELDED WIRE FABRIC. CHAIRS WILL BE REQUIRED SO THAT THE FABRIC IS 3" FROM THE PIPE. THE MASONRY COLLAR WILL BE 1' THICK. THE LENGTH OF THE MASONRY COLLAR WILL BE 3' TOTAL, CENTERED ON THE JOINT BETWEEN EXISTING AND PROPOSED.

THE COST IS INCLUDED IN THE UNIT PRICE BID FOR THE NEW CONDUIT.

CROSSINGS AND CONNECTIONS TO EXISTING PIPES AND UTILITIES

WHERE PLANS PROVIDE FOR A PROPOSED CONDUIT TO BE CONNECTED TO, OR CROSS OVER OR UNDER AN EXISTING SEWER OR UNDERGROUND UTILITY, THE CONTRACTOR SHALL LOCATE THE EXISTING PIPES OR UTILITIES BOTH AS TO LINE AND GRADE BEFORE STARTING TO LAY THE PROPOSED CONDUIT.

IF IT IS DETERMINED THAT THE ELEVATION OF THE EXISTING CONDUIT, OR EXISTING APPURTENANCE TO BE CONNECTED, DIFFERS FROM THE PLAN ELEVATION OR RESULTS IN A CHANGE IN THE PLAN CONDUIT SLOPE, THE ENGINEER SHALL BE NOTIFIED BEFORE STARTING CONSTRUCTION OF ANY PORTION OF THE PROPOSED CONDUIT WHICH WILL BE AFFECTED BY THE VARIANCE IN THE EXISTING ELEVATIONS.

IF IT IS DETERMINED THAT THE PROPOSED CONDUIT WILL INTERSECT AN EXISTING SEWER OR UNDERGROUND UTILITY IF CONSTRUCTED AS SHOWN ON THE PLAN, THE ENGINEER SHALL BE NOTIFIED BEFORE STARTING CONSTRUCTION OF ANY PORTION OF THE PROPOSED CONDUIT WHICH WOULD BE AFFECTED BY THE INTERFERENCE WITH AN EXISTING FACILITY.

PAYMENT FOR ALL THE OPERATIONS DESCRIBED ABOVE SHALL BE INCLUDED IN THE CONTRACT PRICE FOR THE PERTINENT 611 CONDUIT ITEM.

BENCHING OF FOUNDATION SLOPES

ALTHOUGH CROSS-SECTIONS INDICATE SPECIFIC DIMENSIONS FOR PROPOSED BENCHING OF THE EMBANKMENT FOUNDATIONS IN CERTAIN AREAS AS SHOWN BELOW, NO WAIVER OF THE SPECIFICATIONS IS INTENDED. BENCH ALL OTHER SLOPED EMBANKMENT AREAS AS SET FORTH IN SECTION 203.05 OF THE CONSTRUCTION AND MATERIAL SPECIFICATIONS (C&MS). NO ADDITIONAL PAYMENT WILL BE MADE FOR BENCHING REQUIRED UNDER THE PROVISIONS OF SECTION 203.05 NOT INDICATED IN THE PLANS.

SHEET	BENCHING
330	243 CY
332	241 CY
377	28 CY
425	172 CY

THE FOLLOWING ESTIMATED QUANTITIES HAVE BEEN CARRIED TO THE GENERAL SUMMARY FOR THIS WORK.

ITEM 203 - EXCAVATION	684 CY
ITEM 203 - EMBANKMENT	684 CY

CALCULATED SEA CHECKED DLR

GENERAL NOTES

HAM-75-7.85

Preliminary Process - For Reference Only

J:\20110903\ODOT\HAM\77889\roadway\sheets\77889GN001.dgn 5/22/2026 10:04:55 AM hbrendlinger

ITEM 611 - TYPE A OR B CONDUIT, AS PER PLAN

USE 703.11 STRUCTURAL BACKFILL TYPE 1 OR 613 LOW STRENGTH MORTAR, TYPE 2 AS STRUCTURAL BACKFILL FOR ALL TYPE A AND B FLEXIBLE CONDUITS 12-INCH DIAMETER AND LARGER. DETAIL THE SELECTED CONDUIT MATERIAL AND STRUCTURAL BACKFILL IN THE 611 INSTALLATION PLAN PER 611.04 B. NOTIFY THE ENGINEER IMMEDIATELY WHEN GROUNDWATER IS ENCOUNTERED DURING EXCAVATION. USE 703.11 STRUCTURAL BACKFILL TYPE 3 FOR BEDDING AND BACKFILL IN AREAS WHERE GROUNDWATER IS PRESENT. INSTALL 703.11 STRUCTURAL BACKFILL TYPE 3 AND GEOTEXTILE FABRIC ACCORDING TO 611.06. VERIFY THE CONDUIT MATERIAL AND REVISED BACKFILL MEET THE STRUCTURAL DESIGN REQUIREMENTS WITH THE CONDUIT MANUFACTURER PRIOR TO INSTALLATION.

ITEM 611 - INLET NO. 3 FOR SINGLE SLOPE BARRIER, TYPE B1, AS PER PLAN

THIS WORK IS THE CONSTRUCTION OF THE SINGLE SLOPE BARRIER OVER THE EXISTING INLET STRUCTURE PER THE STANDARD CONSTRUCTION DRAWING.

ALL MATERIAL, EQUIPMENT, LABOR AND INCIDENTALS NECESSARY TO CONSTRUCT THE SINGLE SLOPE BARRIER SHALL BE INCLUDED IN THE ITEM 611 - INLET NO. 3 FOR SINGLE SLOPE BARRIER, TYPE B, AS PER PLAN.

ITEM 611 - INLET NO. 3 FOR SINGLE SLOPE BARRIER, TYPE C1, AS PER PLAN

THIS WORK IS THE CONSTRUCTION OF THE SINGLE SLOPE BARRIER OVER THE EXISTING INLET SRUCTURE PER THE STANDARD CONSTRUCTION DRAWING.

ALL MATERIAL, EQUIPMENT, LABOR AND INCIDENTALS NECESSARY TO CONSTRUCT THE SINGLE SLOPE BARRIER SHALL BE INCLUDED IN THE ITEM 611 - INLET NO. 3 FOR SINGLE SLOPE BARRIER, TYPE C, AS PER PLAN.

ITEM 611 DRAINAGE STRUCTURE, MISC.: CHECK VALVE FOR 24" CONDUIT

PROVIDE AND INSTALL AN INLINE CHECK VALVE SUCH AS THE TIDEFLEX CHECKMATE OR APPROVED EQUAL AT THE LOCATIONS SHOWN IN THE PLANS. THE INTERNAL DIAMETER OF THE CHECK VALVE PROVIDED SHALL BE THE MAXIMUM SIZE AVAILABLE FROM INDUSTRY FOR THE SPECIFIC CONDUIT IN WHICH IT IS BEING INSTALLED. THE CHECK VALVE SHALL PREVENT ALL COMBINED SEWER BACKFLOW FROM PASSING THROUGH IT AND BE AN ALL RUBBER OR NEOPRENE LOW-HEADLOSS CHECK SLEEVE WITH NO MECHANICAL PARTS AND SHALL OPERATE ON DIFFERENTIAL PRESSURE AS A PASSIVE DEVICE. THE VALVE SHALL OPEN WITH AS LITTLE AS ONE INCH OF HEAD PRESSURE AND BE SELF DRAINING. THE VALVE SHALL HAVE A MINIMUM 25 YEAR SERVICE LIFE. INSTALL THE CHECK VALVE PER THE MANUFACTURE'S RECOMMENDATIONS PRIOR TO BACKFILLING THE CONDUIT.

INCLUDE ALL LABOR, EQUIPMENT AND MATERIALS REQUIRED FOR INSTALLATION IN THE UNIT PRICE BID FOR 611, DRAINAGE STRUCTURE, MISC.: CHECK VALVE FOR 24" CONDUIT.

CONNECTION BETWEEN EXISTING AND PROPOSED GUARDRAIL

WHEN IT IS NECESSARY TO SPLICE PROPOSED GUARDRAIL TO EXISTING GUARDRAIL, ONLY THE EXISTING GUARDRAIL SHALL BE CUT, DRILLED, OR PUNCHED. THE CONNECTION SHALL BE MADE USING A W-BEAM, BEAM SPLICE AS SHOWN IN AASHTO M 180-12, EXCEPT THE BEAM WASHERS ARE NOT TO BE USED. PAYMENT SHALL BE INCLUDED IN THE CONTRACT PRICE FOR THE RESPECTIVE GUARDRAIL ITEMS.

ITEM 611 DRAINAGE STRUCTURE, MISC.: CHECK VALVE FOR 36" CONDUIT

PROVIDE AND INSTALL AN INLINE CHECK VALVE SUCH AS THE TIDEFLEX CHECKMATE OR APPROVED EQUAL AT THE LOCATIONS SHOWN IN THE PLANS. THE INTERNAL DIAMETER OF THE CHECK VALVE PROVIDED SHALL BE THE MAXIMUM SIZE AVAILABLE FROM INDUSTRY FOR THE SPECIFIC CONDUIT IN WHICH IT IS BEING INSTALLED. THE CHECK VALVE SHALL PREVENT ALL COMBINED SEWER BACKFLOW FROM PASSING THROUGH IT AND BE AN ALL RUBBER OR NEOPRENE LOW-HEADLOSS CHECK SLEEVE WITH NO MECHANICAL PARTS AND SHALL OPERATE ON DIFFERENTIAL PRESSURE AS A PASSIVE DEVICE. THE VALVE SHALL OPEN WITH AS LITTLE AS ONE INCH OF HEAD PRESSURE AND BE SELF DRAINING. THE VALVE SHALL HAVE A MINIMUM 25 YEAR SERVICE LIFE. INSTALL THE CHECK VALVE PER THE MANUFACTURE'S RECOMMENDATIONS PRIOR TO BACKFILLING THE CONDUIT.

INCLUDE ALL LABOR, EQUIPMENT AND MATERIALS REQUIRED FOR INSTALLATION IN THE UNIT PRICE BID FOR 611, DRAINAGE STRUCTURE, MISC.: CHECK VALVE FOR 36" CONDUIT.

REVIEW OF DRAINAGE FACILITIES

BEFORE ANY WORK IS STARTED ON THE PROJECT AND AGAIN BEFORE FINAL ACCEPTANCE BY THE STATE, REPRESENTATIVES OF THE STATE AND THE CONTRACTOR, ALONG WITH LOCAL REPRESENTATIVES, SHALL MAKE AN INSPECTION OF ALL EXISTING SEWERS WHICH ARE TO REMAIN IN SERVICE AND WHICH MAY BE AFFECTED BY THE WORK. THE CONDITION OF THE EXISTING CONDUITS AND THEIR APPURTENANCE SHALL BE DETERMINED FROM FIELD OBSERVATIONS. RECORDS OF THE INSPECTION SHALL BE KEPT IN WRITING BY THE STATE.

ALL NEW CONDUITS, INLETS, CATCH BASINS, AND MANHOLES CONSTRUCTED AS A PART OF THE PROJECT SHALL BE FREE OF ALL FOREIGN MATTER AND IN A CLEAN CONDITION BEFORE THE PROJECT WILL BE ACCEPTED BY THE STATE.

ALL EXISTING SEWERS INSPECTED INITIALLY BY THE ABOVE MENTIONED PARTIES SHALL BE MAINTAINED AND LEFT IN A CONDITION REASONABLY COMPARABLE TO THAT DETERMINED BY THE ORIGINAL INSPECTION. ANY CHANGE IN THE CONDITION RESULTING FROM THE CONTRACTOR'S OPERATIONS SHALL BE CORRECTED BY THE CONTRACTOR TO THE SATISFACTION OF THE ENGINEER.

PAYMENT FOR ALL OPERATIONS DESCRIBED ABOVE SHALL BE INCLUDED IN THE CONTRACT PRICE FOR THE PERTINENT 611 CONDUIT ITEMS.

ITEM 690E98400 SPECIAL-MISC.: STORMWATER DETENTION SYSTEM

PROVIDE UNDERGROUND DETENTION SYSTEMS MEETING THE REQUIREMENTS AS OUTLINED IN THIS NOTE AND LOCATED WITHIN THE FOOTPRINT PROVIDED ON SHEETS 572-574.

MATERIAL REQUIREMENTS: PROVIDE A SYSTEM CONSISTING OF A COMBINATION OF DRAINAGE CONDUITS AND STRUCTURES. CONDUIT MATERIALS SHALL BE LIMITED TO 706.02, 706.05, 707.04, 707.42 AND STRUCTURES PER 611.10. DRAINAGE STRUCTURES SHALL MEET CMS 611. ONLY A CLOSED SYSTEM WITH THE ENTIRE REQUIRED STORAGE VOLUME BEING HELD WITHIN THE CONDUITS AND STRUCTURES WILL BE ALLOWED. ALL JOINTS AND STRUCTURE CONNECTIONS SHALL BE ADEQUATELY SEALED TO PREVENT INFILTRATION OR EXFILTRATION OF WATER.

ITEM 690E98400 SPECIAL-MISC.: STORMWATER DETENTION SYSTEM (CONT)

SYSTEM ACCESS: PROVIDE A MINIMUM OF TWO MANHOLE ACCESS POINTS ON EACH RUN OF CONDUIT THAT IS USED TO PROVIDE THE STORAGE VOLUME. ACCESS POINTS ARE NOT REQUIRED ON SHORT RUNS OF SMALL CONDUITS USED TO CONNECT THE LARGER SYSTEM. LOCATE AT LEAST ONE ACCESS POINT INTO THE SYSTEM AT THE POINT FURTHEST AWAY FROM THE OUTLET STRUCTURE. PROVIDE MANHOLE RISERS AT THE ACCESS POINTS MEETING THE REQUIREMENTS OF STANDARD CONSTRUCTION DRAWING MH-1.2 AND PROVIDE A MINIMUM OPENING DIAMETER OF 30 INCHES FOR FRAMES AND COVERS.

OUTLET CONTROL STRUCTURE: CONTROL THE RELEASE RATE USING A PASSIVE SYSTEM CONSISTING OF WEIR WALLS OR THE OUTLET CONDUIT SIZE OR A COMBINATION OF THE TWO. PROVIDE A MINIMUM ORIFICE OR CONDUIT SIZE OF 15 INCHES. A MANHOLE ACCESS POINT SHALL BE LOCATED IMMEDIATELY ABOVE THE OUTLET CONTROL DEVICE(S) TO ALLOW FOR MAINTENANCE AND CLEANING.

HYDRAULIC REQUIREMENTS (STORMWATER DETENTION SYSTEM 1):
REQUIRED STORAGE VOLUME: 28,480 CUBIC FEET
MAXIMUM RELEASE RATE: 27.23 CUBIC FEET PER SECOND
PROVIDE A MINIMUM SLOPE OF 0.25 PERCENT ALONG THE SYSTEM INVERT TO ENSURE POSITIVE DRAINAGE FROM ALL POINTS IN THE SYSTEM TO THE OUTLET STRUCTURE.

HYDRAULIC REQUIREMENTS (STORMWATER DETENTION SYSTEM 2):
REQUIRED STORAGE VOLUME: 10,230 CUBIC FEET
MAXIMUM RELEASE RATE: 12.9 CUBIC FEET PER SECOND
PROVIDE A MINIMUM SLOPE OF 0.25 PERCENT ALONG THE SYSTEM INVERT TO ENSURE POSITIVE DRAINAGE FROM ALL POINTS IN THE SYSTEM TO THE OUTLET STRUCTURE.

HYDRAULIC REQUIREMENTS (STORMWATER DETENTION SYSTEM 3):
REQUIRED STORAGE VOLUME: 35,070 CUBIC FEET
MAXIMUM RELEASE RATE: 16.6 CUBIC FEET PER SECOND
PROVIDE A MINIMUM SLOPE OF 0.25 PERCENT ALONG THE SYSTEM INVERT TO ENSURE POSITIVE DRAINAGE FROM ALL POINTS IN THE SYSTEM TO THE OUTLET STRUCTURE.

SUBMITTAL REQUIREMENTS: PROVIDE ALL OF THE FOLLOWING DOCUMENTATION PRIOR TO SHIPPING ANY MATERIALS TO THE PROJECT. ALLOW A MINIMUM OF FOUR WEEKS FOR APPROVAL.

A.
HYDRAULIC CALCULATIONS: PROVIDE TWO SETS OF HYDRAULIC CALCULATIONS STAMPED AND SIGNED BY AN OHIO REGISTERED PROFESSIONAL ENGINEER. SHOW THAT THE MINIMUM STORAGE VOLUME IS BEING PROVIDED AND THAT THE ALLOWABLE RELEASE RATE IS NOT BEING EXCEEDED.
B.
MAINTENANCE PROCEDURES: PROVIDE RECOMMENDED ROUTINE CLEANING/MAINTENANCE PROCEDURES FROM THE SYSTEM MANUFACTURER ADDRESSING HOW THE SYSTEM IS ACCESSED, ESTIMATED NUMBER OF LABORERS, EQUIPMENT NEEDED, AND HOW DEBRIS AND SEDIMENTS ARE TO BE REMOVED.

ITEM 690E98400 SPECIAL-MISC.: STORMWATER DETENTION SYSTEM (CONT)

C.
SHOP DRAWINGS: ENSURE THE SHOP DRAWINGS INCLUDE THE FOLLOWING:

1. ALL MATERIAL SPECIFICATIONS.
2. THE MANUFACTURER'S RECOMMENDED INSTALLATION PROCEDURES.
3. PLAN VIEW OF DETENTION SYSTEM, ADDITIONAL MANHOLES, AND THE CONDUIT CONNECTIONS TO THE MANHOLES. INCLUDE THE DELINEATED FOOTPRINT AS SHOWN IN THE PLANS ALONG WITH THE STORM SEWER AND THE PROVIDED MANHOLE WITH DIVERSION LABELED BY OTHERS. LABEL THE STATION AND OFFSET AT ALL ENDS OF CONDUIT RUNS, ACCESS POINTS AND STRUCTURES UTILIZING THE PROJECT ALIGNMENT STATIONING.
4. ELEVATION VIEWS SHOWING ELEVATION LABELS (CORRELATED TO THE PROJECT PLAN DATUM) OF THE DETENTION SYSTEM, ADDITIONAL MANHOLES, AND THE CONDUIT CONNECTIONS TO THE MANHOLES.
5. ALL DIMENSIONS. MANHOLE DIMENSIONS SHOWN IN THE SHOP DRAWINGS THAT DIFFER FROM THE MANHOLE DIMENSIONS IN THE PLANS REQUIRE APPROVAL FROM THE DISTRICT ENGINEERING OFFICE.

D.
STRUCTURAL CALCULATIONS: PROVIDE TWO SETS OF HYDRAULIC CALCULATIONS STAMPED AND SIGNED BY AN OHIO REGISTERED PROFESSIONAL ENGINEER. SHOW THAT THE SYSTEM IS DESIGNED TO HANDLE HS-20 VEHICLE LOADING AND ALL APPLICABLE CONSTRUCTION LOADS. SHOW THAT THE SYSTEM IS DESIGNED TO RESIST BUOYANCY UNDER POTENTIAL GROUNDWATER CONDITIONS.

METHOD OF MEASUREMENT: THE DEPARTMENT WILL MEASURE STORMWATER DETENTION SYSTEM BY THE NUMBER OF EACH IN PLACE (INCLUDING ALL MANHOLES, ACCESS POINTS, OUTLET CONTROL STRUCTURE, CONDUITS), COMPLETED AND ACCEPTED.

A SINGLE MANHOLE IS PROVIDED IN THE PLANS ALONG THE TRUNK STORM SEWER FROM WHICH WATER WILL BE DIRECTED INTO THE DETENTION SYSTEM. AN ADDITIONAL MANHOLE IS PROVIDED ALONG THE TRUNK SEWER TO RECEIVE THE WATER DISCHARGING FROM THE DETENTION SYSTEM. MINOR ADJUSTMENTS TO THE CONDUIT INVERT ELEVATIONS OF THESE MANHOLES WILL BE ALLOWED IF SUPPORTED BY THE SUBMITTED HYDRAULIC CALCULATIONS

THE FOLLOWING ITEMS HAVE BEEN CARRIED TO THE GENERAL SUMMARY AND IS CONSIDERED COMPENSATION IN FULL FOR ALL ITEMS LISTED ABOVE.

ITEM 690 - STORM WATER DETENTION SYSTEM 1, LUMP SUM
ITEM 690 - STORM WATER DETENTION SYSTEM 2, LUMP SUM
ITEM 690 - STORM WATER DETENTION SYSTEM 3, LUMP SUM

CALCULATED SEA CHECKED DLR

GENERAL NOTES

HAM-75-7.85

34
1047

Preliminary Plans - For Reference Only

J:\20110903\ODOT\HAM\77889\roadway\sheets\77889GN001.dgn 5/22/2026 10:04:55 AM hbrendlinger

ITEM 204 - PROOF ROLLING

THE FOLLOWING QUANTITY IS PROVIDED IN THE GENERAL SUMMARY TO ADDRESS LOCATIONS REQUIRING PROOF ROLLING.

ITEM 204 - PROOF ROLLING 92 HOUR.

CHEMICALLY STABILIZED SUBGRADE

THE ROADWAY SUBGRADE SHALL BE CEMENT STABILIZED AT THE LOCATIONS DESIGNATED IN THE TYPICAL SECTIONS. ALL CEMENT STABILIZATION SHALL BE 14" DEEP AND SHALL BE CONSTRUCTED PER THE REQUIREMENTS STATED IN CMS SPECIFICATION ITEM 206.

THE FOLLOWING ESTIMATED QUANTITIES HAVE BEEN INCLUDED IN THE GENERAL SUMMARY FOR THE USE TO COMPLETE THE WORK NOTED ABOVE (FOR ESTIMATING CEMENT, A SPREAD RATE OF 5 PERCENT PER A SOIL DRY UNIT WEIGHT OF 115 POUNDS PER CUBIC FOOT WAS USED):

206, CEMENT 4,902 TONS

206, CEMENT STABILIZED SUBGRADE, 14" DEEP 162,367 SQ YD

206, CURING COAT 162,367 SQ YD

206, MIXTURE DESIGN FOR CHEMICALLY STABILIZED SOILS LUMP

SEEDING AND MULCHING

THE FOLLOWING QUANTITIES ARE PROVIDED TO PROMOTE GROWTH AND CARE OF PERMANENT SEEDED AREAS:

659, SOIL ANALYSIS TEST	2 EACH
659, TOPSOIL	10,306 CU. YD.
659, SEEDING AND MULCHING	92,843 SQ. YD.
659, REPAIR SEEDING AND MULCHING	4,643 SQ. YD
659, INTER-SEEDING	4,643 SQ. YD.
659, COMMERCIAL FERTILIZER	12.90 TON
659, LIME	19.19 ACRES
659, WATER	527 M. GAL.
659, MOWING	209 M. SQ. FT.

ITEM 606 - IMPACT ATTENUATOR, TYPE 2 (UNIDIRECTIONAL OR BIDIRECTIONAL)

THIS ITEM SHALL CONSIST OF FURNISHING AND INSTALLING ANY OF THE TYPE 2 IMPACT ATTENUATORS AS LISTED ON THE OFFICE OF ROADWAY ENGINEERING'S WEB PAGE (REFER TO THE POSTED SHOP DRAWINGS FOR THE MOST CURRENT APPROVED PRODUCT MODELS). WHEN BI-DIRECTIONAL DESIGNS ARE SPECIFIED, THE CONTRACTOR SHALL SUPPLY APPROPRIATE TRANSITIONS.

PAYMENT FOR THE ABOVE WORK SHALL BE MADE AT THE UNIT PRICE BID FOR ITEM 606, IMPACT ATTENUATOR, TYPE 2 [(SPEED (IN MPH), HAZARD WIDTH (IN INCHES)), (UNIDIRECTIONAL OR BIDIRECTIONAL)], EACH, AND SHALL INCLUDE ALL LABOR, TOOLS, EQUIPMENT AND MATERIALS NECESSARY TO CONSTRUCT A COMPLETE AND FUNCTIONAL IMPACT ATTENUATOR SYSTEM, INCLUDING ALL RELATED BACKUPS/BACKSTOPS, TRANSITIONS, HARDWARE AND GRADING, NOT SEPARATELY SPECIFIED, AS REQUIRED BY THE MANUFACTURER. INSTALLATION SHALL BE AT THE LOCATIONS SPECIFIED IN THE PLANS, IN ACCORDANCE WITH THE MANUFACTURER'S SPECIFICATIONS.

ITEM 606 - ANCHOR ASSEMBLY, MGS TYPE E

THIS ITEM SHALL CONSIST OF FURNISHING AND INSTALLING ANY OF THE MASH 2016 TYPE E TANGENTIAL END TREATMENTS FOR TYPE MGS GUARDRAIL AS LISTED UNDER "PRODUCTS ACCEPTED FOR NEW INSTALLATIONS" ON THE ROADWAY APPROVED PRODUCTS LIST POSTED ON ROADWAY ENGINEERING'S WEB PAGE. INSTALLATION SHALL BE AT THE LOCATIONS SPECIFIED IN THE PLANS, IN ACCORDANCE WITH THE MANUFACTURER'S SPECIFICATIONS. REFER TO THE POSTED SHOP DRAWINGS FOR THE MOST CURRENT APPROVED PRODUCT MODELS.

REFER TO THE MANUFACTURER'S INSTRUCTIONS REGARDING THE INSTALLATION OF, AND THE GRADING AROUND THE FOUNDATION TUBES AND GROUND STRUT. THE TOP OF ANY FOUNDATION TUBE SHOULD BE LESS THAN 4 INCHES ABOVE THE GROUND. ON-SITE GRADING IS REQUIRED IF THE TOP OF THE FOUNDATION TUBES OR TOP OF THE GROUND STRUT DOES PROJECT MORE THAN 4 INCHES ABOVE THE GROUND LINE. THE PLACEMENT OF THE FOUNDATION TUBES SHOULD BE AN APPROPRIATE DEPTH BELOW THE LEVEL LINE IN ORDER TO MAINTAIN THE FINISHED GUARDRAIL HEIGHT OF 31 INCHES FROM THE EDGE OF THE SHOULDER.

THE FACE OF THE TYPE E IMPACT HEAD SHALL BE COVERED WITH SOLID FLUORESCENT YELLOW REBOUNDABLE RETROREFLECTIVE SHEETING, PER CMS 730.191.

WHEN THE FACE OF THE ADJACENT (ATTACHED) GUARDRAIL IS LESS THAN 4' OFFSET FROM THE PROPOSED EDGE LINE, AND PERMITTING SITE CONDITIONS EXIST: THE PROPOSED TYPE E ANCHOR ASSEMBLY SHALL BE INSTALLED AT A CONSISTENT FLARE RATE THROUGH THE FULL LENGTH OF THE SYSTEM. THE FLARE RATE SHALL BE A MAXIMUM OF 25:1 (RESULTING IN A 2' OFFSET). THE INSTALLATION SHALL BE IN ACCORDANCE WITH THE SHOP DRAWINGS, PRODUCT INSTALLATION MANUAL/GUIDANCE, AND AS DIRECTED BY THE ENGINEER.

PAYMENT FOR THE ABOVE WORK SHALL BE MADE AT THE UNIT PRICE BID FOR ITEM 606, ANCHOR ASSEMBLY, MGS TYPE E, EACH, AND SHALL INCLUDE ALL LABOR, TOOLS, EQUIPMENT AND MATERIALS NECESSARY TO CONSTRUCT A COMPLETE AND FUNCTIONAL ANCHOR ASSEMBLY SYSTEM, INCLUDING ALL RELATED TRANSITIONS, REFLECTIVE SHEETING, HARDWARE, GRADING, EMBANKMENT AND EXCAVATION NOT SEPARATELY SPECIFIED, AS REQUIRED BY THE MANUFACTURER.

ITEM 611 - 8" CONDUIT, TYPE B WITH CLASS II BEDDING
ITEM 611 - 8" CONDUIT, TYPE C WITH CLASS II BEDDING
ITEM 611 - 42" CONDUIT, TYPE B WITH CLASS II BEDDING
ITEM 611 - 42" CONDUIT, TYPE C WITH CLASS II BEDDING
ITEM 611 - 60" CONDUIT, TYPE B WITH CLASS II BEDDING

BACKFILL SHALL BE IN ACCORDANCE WITH MSD STANDARD CONSTRUCTION DRAWING ACC. NO. 49032.

PIPE MATERIAL SHALL BE IN ACCORDANCE WITH MSDGC APPROVED PIPE MATERIALS LIST UPDATED DECEMBER 30, 2025

https://msdgc.org/sites/default/assets/downloads/doing_business/capital_project_resource_library/Design/MSDGC_approved_pipe_materials.pdf

CONNECTION TO MSD ASSESTS WITHOUT MANHOLES

THE CONTRACTOR SHALL PROVIDE A PLAN SHOWING THE CONNECTION MEETS THE REQUIREMENTS OF OEPA PIPE JOINT REQUIREMENTS. THIS PLAN SHALL BE SIGNED AND SEALED BY A STRUCTURAL ENGINEER AND SUBMITTED FOR APPROVAL BY ODOT, MSDGC AND OEPA PRIOR TO THE WORK BEING PERFORMED.

MSD SANITARY SEWER FILLED, PLUGED AND ABANDONED

PER CITY SUPPLEMENT SECTION 202.041: SEAL ALL SEWERS TO BE ABANDONED ONE FOOT OR LESS IN DIAMETER. SEAL AND FILL ALL SEWERS LARGER THAN ONE FOOT IN DIAMTERE, AS INDICATED IN THE CONTRACT PLANS AND/OR CONTRACT SPECIFICATIONS. FILLING MAY BE DONE HYDRAULICALLY (USING SAND OR GRAVEL) OR BY MUD JACKING (USING SUITABLE CLAY). FILL MATERIAL MUST BE APPROVED BY THE ENGINEER BEFORE IT IS PLACED. PLACE ENOUGH APPROVED FILL MATERIAL TO OCCUPY AT LEAST 90% OF THE SEWER CROSS SECTIONAL AREA WITH SOLIDS.

MSD SANITARY SEWER NOTES

1. ALL PLANS AND CONSTRUCTION WITHIN HAMILTON COUNTY SHALL COMPLY WITH THE LATEST EDITION OF THE "RULES AND REGULATIONS" MANUAL GOVERNING THE DESIGN, CONSTRUCTION, MAINTENANCE, OPERATION , AND USE OF SANITARY AND COMBINED SEWERS IN THE METROPOLITAN SEWER DISTRICT OF GREATER CINCINNATI, HAMILTON COUNTY, OHIO, EFFECTIVE MARCH 1, 2001. COPIES MAY BE OBTAINED FROM THE DIVISION OF WASTEWATER ENGINEERING MSD, 1600 GEST STREET, CINCINNATI, OHIO 45204.

2. ALL SANITARY SEWERS SHALL BE CONSTRUCTED UNDER THE INSPECTION OF THE CHIEF ENGINEER, MSD.

3. THE OWNERS OF ALL PROPERTIES SHOWN ON THIS IMPROVEMENT PLAN SHALL BE SUBJECT TO ALL APPLICABLE SEWER SERVICE CHARGES, ASSESSMENTS, TAP-IN CHARGES OR FEES WHICH HAVE BEEN OR MAY BE ESTABLISHED BY THE BOARD OF COUNTY COMMISSIONERS.

4. APPROPRIATE UTILITY COMPANIES SHALL BE NOTIFIED AT LEAST 48 HOURS PRIOR TO BREAKING GROUND FOR THE PURPOSE OF VERIFYING BY FIELD INSPECTION THE EXACT LOCATION OF UNDERGROUND UTILITIES.

5. ALL SANITARY SEWER PIPE SHALL BE PVC, SDR35, ASTM D-3034 IN ACCORDANCE WITH MSD RULES AND REGULATIONS, EXCEPT WHERE NOTED.

6. ALL MANHOLES ON SANITARY SEWERS SHALL BE TYPE "S" MSD ACCESSION NO. 49037.

7. SANITARY MANHOLES SHALL BE TEMPORARILY CONSTRUCTED TO AN ELEVATION OF TWO FEET ABOVE THE SURROUNDING GRADE BY MEANS OF AN ADDITIONAL MANHOLE SECTION OR BRICK MASONRY ON TOP OF THE CONE.

8. SANITARY BUILDING SEWERS FOR PUBLIC AND PRIVATE SEWERS SHALL NOT BE EXTENDED MORE THAN TEN (10) FEET BEYOND THE PROPOSED RIGHT-OF-WAY LINE, EASEMENT LINE OR, IN CASES OF PRIVATE SEWERS, NO MORE THAN TEN (10) FEET BEYOND THE MAIN LINE SEWER PRIOR TO ISSUANCE OF TAP PERMITS.

9. TWO-WAY CLEANOUTS SHALL BE INSTALLED AT THE RIGHT-OF-WAY LINE OR SANITARY SEWER EASEMENT, WHERE APPLICABLE, IN ACCORDANCE TO MSD ACCESSION NO. 61979.

10. ALL LOWEST FINISHED FLOOR ELEVATIONS SHALL BE AT LEAST 36 INCHES ABOVE THE CROWN OF THE SEWER AT THE POINT OF TAP CONNECTION TO SAID SEWER, WHETHER PUBLIC OR PRIVATE, AND/OR IN ACCORDANCE WITH CITY OF CINCINNATI SUPPLEMENT CC-51-49. ANY BUILDING TO BE SERVED BY MEANS OTHER THAN GRAVITY MUST BE SO NOTED ON THE PLANS.

MSD SANITARY SEWER NOTES CON'T

11. ALL MANHOLES ON PUBLIC SANITARY SEWERS SHALL HAVE STANDARD LIDS AND FRAMES, MSD ACCESSION. NO 49005, EXCEPT WHERE NOTED. THE FRAME SHALL BE SECURELY FASTENED TO THE TOP MANHOLE SECTION BY FOUR 3/4-INCH STAINLESS STEEL CINCH ANCHORS.

12. CONTRACTOR'S LICENSE - ALL WORK DONE ON SANITARY AND/OR COMBINED SEWERS WITHIN THE JURISDICTION OF THE METROPOLITAN SEWER DISTRICT MUST BE DONE BY A CONTRACTOR WHO IS AN APPROVED SEWER TAPPER PROPERLY LICENSED BY THE DEPARTMENT AND BONDED.

13. SANITARY BUILDING SEWERS SHALL BE CONNECTED TO THE MAIN LINE WITH WYES. TEE FITTINGS ARE TO BE USED ONLY WHERE SHOWN ON THE APPROVED PLAN.

14. A TAP PERMIT IS REQUIRED FOR EACH BUILDING. BOND OR FINAL APPROVAL OF THE MAIN LINE IS REQUIRED PRIOR TO ISSUANCE OF A TAP PERMIT.

15. SANITARY SEWER CONSTRUCTION MUST COMMENCE WITHIN 12 MONTHS AND BE COMPLETED WITHIN 36 MONTHS OF THE DATE OF APPROVAL SHOWN HEREON OR THESE PLANS BECOME VOID.

16. FOR SANITARY SEWER MANHOLES 15. SANITARY SEWER CONSTRUCTION MUST COMMENCE WITHIN 12 MONTHS AND BE COMPLETED WITHIN 36 MONTHS OF THE DATE OF APPROVAL SHOWN HEREON OR THESE PLANS BECOME VOID. CONSTRUCTED IN PARKING LOTS, THE RIM ELEVATION SHALL BE 1" HIGHER THAN THE SURROUNDING GRADE AND THE PAVEMENT SHALL BE FEATHERED AWAY FROM THE MANHOLE RIM AT A GRADUAL SLOPE.

17. FOR SANITARY MANHOLES CONSTRUCTED IN GRASS AREAS, THE RIM ELEVATION SHALL BE 3" HIGHER THAN THE SURROUNDING GRADE, AND THE FILL SHALL BE FEATHERED AWAY FROM THE MANHOLE RIM AT A GRADUAL SLOPE.

18. ROOF DRAINS, FOUNDATION DRAINS, COOLING WATER, SWIMMING POOL WATER OR OTHER CLEAN WATER CONNECTIONS TO THE SANITARY SEWER SYSTEM ARE PROHIBITED.

19. TO ASSURE THAT STORMWATER DOES NOT ENTER THE SANITARY SEWER SYSTEM, A SCHEMATIC PLAN OF THE FOOTING AND FOUNDATION DRAINAGE SYSTEM, INCLUDING THE POINT OF DISCHARGE, IS NECESSARY.

20. THE CONTRACTOR SHALL TEST ALL MANHOLES LEAKAGE BY MEANS OF VACUUM TESTING. THE VACUUM TESTING CANNOT BE DONE UNTIL AFTER THE
MANHOLES ARE SET TO FINAL GRADE AND THE MANHOLE CASTINGS ARE BOLTED DOWN. ALL LIFT HOLES SHALL BE PLUGGED. ANY OTHER OPENINGS, SUCH AS FOR PRESSURE RELIEF VALVES, SHALL BE TEMPORARILY PLUGGED TO ALLOW THE VACUUM TEST. ALL PIPES ENTERING THE MANHOLE SHALL BE PLUGGED AND CARE SHALL BE TAKEN TO SECURELY BRACE THE PLUGS FROM BEING DRAWN INTO THE MANHOLE. THE VACUUM EQUIPMENT TEST HEAD SHALL BE PLACED IN THE OPENING OF THE CASTING ONLY, AND THE SEAL INFLATED IN ACCORDANCE WITH THE MANUFACTURER'S RECOMMENDATIONS.
VACUUM TESTING SHALL BE IN ACCORDANCE WITH ASTM C1244. A VACUUM OF 10 INCHES MERCURY (10" HG) SHALL BE DRAWN AND THE VACUUM PUMP SHUT OFF. WITH THE VALVES CLOSED, THE TIME SHALL BE MEASURED FOR THE VACUUM TO DROP TO NINE INCHES MERCURY (9" HG). THE MANHOLE SHALL PASS IF THE TIME MEETS OR EXCEEDS THE ALLOWABLE TIMES AS CALCULATED FROM ASTIM C1244, OR AS APPROVED BY THE ENGINEER. ALL MANHOLE REPAIR AND RETESTING REQUIRED BECAUSE OF THE FAILURE TO MEET THE TESTING REQUIREMENTS SHALL BE BORNE BY THE CONTRACTOR AT HIS COST.

SS NO. 7168

Preliminary Plans - For Reference Only

CALCULATED SEA
CHECKED DLR

GENERAL NOTES

HAM-75-7.85

J:\20110903\ODOT\HAM\77889\roadway\sheets\77889GN001.dgn 5/22/2026 10:04:56 AM hbrendlinger

MSD SANITARY SEWER BY-PASS PUMPING

SANITARY AND COMBINED SEWER FLOWS MUST BE MAINTAINED AT ALL TIMES. CONTRACTOR SHALL SUBMIT A BYPASS PUMPING PLAN TWO (2) WEEKS PRIOR TO WORK. CONTRACTOR WILL BE RESPONSIBLE FOR ANY SEWER BACKUPS THAT OCCUR DURING CONSTRUCTION IF THE CONSTRUCTION WORK IS PROVEN TO BE THE CAUSE. THE FOLLOWING FLOW DATA IS PROVIDED FOR INFORMATION ONLY.

PIPE NAME		36502003-36502002	36610021-36610020
		60-inch relocation	42-inch relocation
PIPE HEIGHT ft		5	3.5
DWF PEAK FLOW RATE cfs		1	1
6MO PEAK FLOW RATE cfs		72	54
2YR PEAK FLOW RATE cfs		150	90
5YR PEAK FLOW RATE cfs		170	110
10YR PEAK FLOW RATE cfs		180	120
MODEL VERSION		2023Q3	2023Q3
Note	Flow meter MC-RR-016 just downstream at MH 36502001 from 7/2015 to 7/2023		

ENVIRONMENTAL, CONTAMINATED SOILS

ON RULE 513 SITE #16 - LAIDLAW LANDFILL (PARCEL ID 118-0003 0004-00 WITH THE HAMILTON COUNTY AUDITOR; CURRENT STREET ADDRESS 925 LAIDLAW AVENUE, CINCINNATI, OHIO 45237) THE SOIL EXCAVATION FOR THE ROADWAY AND STRUCTURES SHALL BE DISPOSED OF AND CONSIDERED CONTAMINATED.

THE CONTRACTOR SHALL PROPERLY TRANSPORT AND DISPOSE OF THE EXCAVATED MATERIAL IN A LICENSED (BY THE LOCAL HEALTH DEPARTMENT) AND PERMITTED (BY THE OHIO ENVIRONMENTAL PROTECTION AGENCY) SOLID WASTE FACILITY. IF REQUIRED BY THE DISPOSAL FACILITY, THE CONTRACTOR SHALL BE RESPONSIBLE FOR CONDUCTING ANY ADDITIONAL SAMPLING AND ANALYSIS OF THE EXCAVATED MATERIAL.

IF EXCAVATIONS WITHIN THE AFOREMENTIONED LIMITS REQUIRE DEWATERING FOR CONSTRUCTION PURPOSES, THE CONTRACTOR SHALL DEWATER, CONTAINERIZE, AND SUBSEQUENTLY DISPOSE OF WATERS BY METHODS APPROVED BY THE ENGINEER. ALL WATER CONTAINERIZED BY THE CONTRACTOR BETWEEN THESE LIMITS SHALL BE SUBJECT TO TESTING BY AN INSPECTOR PROVIDED BY THE CONTRACTOR AND APPROVED BY THE ENGINEER. THE INSPECTOR SELECTED BY THE CONTRACTOR, MUST BE EMPLOYED BY AN ODOT PREQUALIFIED CONSULTANT IN ENVIRONMENTAL SITE ASSESSMENT (ESA) REMEDIATION DESIGN. A LIST OF THESE ODOT PREQUALIFIED CONSULTANTS AVAILABLE FOR USE BUY THE CONTRACTOR CAN BE FOUND AT THE FOLLOWING WEB ADDRESS:

HTTP://WWW.DOT.STATE.OH.US/DIVISIONS/ENGINEERING/CONSULTANT/CONSULTANT/PREQUAL-ENVIRON.PDF

THE INSPECTOR WILL CLASSIFY THE WATER AS EITHER NON REGULATED OR REGULATED. THE METHOD FOR DISPOSING OF THE NON-REGULATED WATER SHALL BE APPROVED BY THE ENGINEER. THE CONTRACTOR SHALL BE RESPONSIBLE FOR DISPOSAL OF THE REGULATED WATER IN ACCORDANCE WITH RECOMMENDATIONS MADE BY THE ODOT PREQUALIFIED INSPECTOR AND APPROVED BY THE ENGINEER. THE CONTRACTOR SHALL OBTAIN ALL NECESSARY PERMITS AND/OR AUTHORIZATIONS NEEDED TO PROPERLY HANDLE, STORE, TEST, TRANSPORT, AND DISPOSE OF WATER IN ACCORDANCE WITH APPLICABLE FEDERAL, STATE, AND LOCAL REGULATIONS.

THE CONTRACTOR SHALL FURNISH ALL LABOR, EQUIPMENT, AND MATERIALS NECESSARY TO PROPERLY DEVELOP A SSHP, EXCAVATE, STORE, TEST (FOR DISPOSAL TRANSPORT) AND DISPOSE OF CONTAMINATED MATERIALS, INCLUDING ANY REQUIRED APPROVALS OR FEES WITHIN THE LIMITS DEFINED ABOVE. PAYMENT FOR THIS WORK SHALL BE MADE AT THE CONTRACT PRICES BID PER CUBIC YARD. APPLICABLE PERMITS FOR DISPOSAL OF CONTAMINATED SOIL AND WATER SHALL BE SUBMITTED TO THE DISTRICT REGULATED WASTE PROJECT ENGINEER (RWPE) FOR SIGNATURE.

ENVIRONMENTAL, CONTAMINATED SOILS (CONT)

AN ESTIMATED EXCAVATION QUANTITY OF 73 CY HS BEEN ESTIMATED FOR STRUCTURE HAM-75-0823. SEE CROSS SECTIONS FOR ADDITIONAL CONTAMINATED SOIL EXCAVATION QUANTITIES (SUMMARY PROVIDED ON SHEET 24A RULE 13 USES A CONVERSION FACTOR OF 1 CY = 1.55 TONS. LAND FILL WEIGHT TICKETS CAN BE CONVERTED TO CUBIC YARDS FOR PAYMENT.

THE FOLLOWING QUANTITIES HAVE BEEN INCLUDED IN THE GENERAL SUMMARY FOR THE WORK NOTED ABOVE:

ITEM 203 - EXCAVATION, AS PER PLAN - 73 CY

690E65020 ITEM SPECIAL - WORK INVOLVING WATER - 10,000 GALLONS

690E65022 ITEM SPECIAL - WORK INVOLVING NON-REGULATED WATER 15,000 GALLONS

690E98400 ITEM SPECIAL - CONTAMINATED MATERIAL INSPECTION AND TESTING - LUMP SUM

ENVIRONMENTAL COMMITMENTS

NOTIFICATION OF TRAFFIC RESTRICTIONS

THROUGHOUT THE DURATION OF THE PROJECT, THE CONTRACTOR SHALL NOTIFY THE PROJECT ENGINEER IN WRITING OF ALL TRAFFIC RESTRICTIONS AND UPCOMING MAINTENANCE OF TRAFFIC CHANGES. THE CONTRACTOR SHALL ENSURE THE WRITTEN NOTIFICATION IS SUBMITTED IN A TIMELY MANNER TO ALLOW THE PROJECT ENGINEER TO MEET THE REQUIRED TIME FRAMES SET FORTH IN THE TABLE BELOW TO INFORM THE SPCIAL HUALING PERMIST SECTION (HAULING.PERMITS@DOT.OHIO.GOV) AND THE DISTRICT PUBLIC INFORMATION OFFICE (PIO). THIS NOTIFICATION SHALL BE RECEIVED BY THE PROJECT ENGINEER PRIOR TO THE PHYSICAL SETUP OF ANY APPLICABLE SIGNS OR MESSAGE BOARDS.

INFORMATION SHOULD INCLUDE, BUT IS NO LIMITED TO, ALL CONSTRUCTION ACTIVITIES THAT IMPACT OR INTERFERE WITH TRAFFIC AND SHALL LIST THE SPECIFIC LOCATION, TYPE OF WORK, ROAD STATUS, DATE AND TIME OF RESTRICTION, DURATION OF RESTRICTION, NUMBER OF LANES MAINTAINED, NUMBER OF LANES CLOSED, MINIMUM VERTICAL CLEARNACE, MINIMUM WIDTH OF DRIVABLE PAVEMENT, DETOUR ROUTES, IF APPLICABLE, AND ANY OTHER INFORMATION REQUESTED BY THE PROJECT ENGINEER.

NOTIFICATION OF TRAFFIC RESTRICTIONS TIME TABLE

ITEM	DURATION OF CLOSURE	NOTICE DUE TO PERMITS & IPO
RAMP & ROAD CLOSURES	* 2 WEEKS	21 CALENDAR DAYS PRIOR TO CLOSURE
	> 12 HOURS & < 2 WEEKS	14 CALENDAR DAYS PRIOR TO CLOSURE
	* 12 HOURS	4 BUSINESS DAYS PRIOR TO CLOSURE
LANE CLOSURES & RESTRICTIONS	* 2 WEEKS	14 CALENDAR DAYS PRIOR TO CLOSURE
	< 2 WEEKS	5 BUSINESS DAYS PRIOR TO CLOSURE
START OF CONSTRUCTION & TRAFFIC PATTERN CHANGES	N/A	14 CALENDAR DAYS PRIOR TO IMPLEMENTATION

ANY UNFORSEEN CONDITIONS NOT SPECIFIED IN THE PLANS REQUIRINGTRAFFIC RESTRICTIONS SHALL ALSO BE REPORTED TO THE PROJECTENGINEER USING THE NOTIFICATION TIME TABLE.

EARTH DISTURBANCE

NO VEGETATION SHALL BE REMOVED/DAMAGED OUTSIDE OF THE PHYSICAL WORK LIMITS. THE CONTRACTOR WILL BE REQUIRED TO NOTIFY THE ENGINEER IF THE VEGETATION OUTSIDE OF THE WORK LIMITS WILL BE IMPACTED PRIOR TO COMMENCING WORK.

ENVIRONMENTAL COMMITMENTS (CONT)

THREATENED & ENDANGERED SPECIES

PRIOR TO BRIDGE DEMOLITION ACTIVITIES, THE UNDERSIDE OF THE BRIDGES SHALL BE CAREFULLY EXAMINED FOR THE PRESENCE OF BATS, ESPECIALLY FROM APRIL 1 TO SEPTEMBER 30. IF ANY BATS ARE FOUND ROOSTING ON THE UNDERSIDE OF THE BRIDGE, THE USFWS, ODOT OFFICE OF ENVIRONMENTAL SERVICES AND ODOT DISTRICT 8 ENVIRONMENTAL SECTION SHALL BE CONTACTED TO PROVIDE THIS INFORMATION.

PERMITS

THE CONTRACTOR MUST ENSURE THAT A NOTICE OF INTENT (NOI) IS SUBMITTED TO THE OHIO ENVIRONMENTAL PROTECTION AGENCY (OEPA) A MINIMUM OF TWENTY-ONE (21) DAYS PRIOR TO CONSTRUCTION FOR COVERAGE UNDER THE NPDES CONSTRUCTION STORMWATER GENERAL PERMIT. AS REQUIRED BY THE PERMIT, A STORMWATER POLLUTION PREVENTION PLAN MUST BE DEVELOPED AND IMPLEMENTED PRIOR TO PROJECT CONSTRUCTION IN ACCORDANCE WITH ODOT CONSTRUCTION AND MATERIAL SPECIFICATIONS.

ENDANGERED BAT HABITAT REMOVAL

THE PROJECT IS LOCATED WITHIN THE KNOWN HABITAT RANGES OF THE FEDERALLY LISTED AND PROTECTED INDIANA BAT AND NORTHERN LONG-EARED BAT. NO TREES SHALL BE REMOVED UNDER THIS PROJECT FROM APRIL 1 THROUGH SEPTEMBER 30. ALL NECESSARY TREE REMOVAL SHALL OCCUR FROM OCTOBER 1 THROUGH MARCH 31. THIS REQUIREMENT IS NECESSARY TO AVOID AND MINIMIZE IMPACTS TO THESE SPECIES AS REQUIRED BY THE ENDANGERED SPECIES ACT. FOR THE PURPOSES OF THIS NOTE, A TREE IS DEFINED AS A LIVE, DYING, OR DEAD WOODY PLANT, WITH A TRUNK THREE INCHES OR GREATER IN DIAMETER AT A HEIGHT OF 4.5 FEET ABOVE THE GROUND SURFACE, AND WITH A MINIMUM HEIGHT OF 13 FEET.

PARKS AND RECREATIONAL AREAS

ELMWOOD PLACE MEMORIAL PARK - THE EXISTING BALLFIELD FENCE WILL BE EXTENDED AND CONNECTED TO THE PROPOSED IR75 RETAINING WALL TO BE CONSTRUCTED IMMEDIATELY ADJACENT TO THE PARK. AS SUCH, COORDINATION WITH THE VILLAGE OF ELMWOOD PLACE WILL BE REQUIRED A MINIMUM OF FOURTEEN (14) DAYS PRIOR TO BEGINNING WORK IN THIS AREA.

HAZARDOUS MATERIALS

FORMER LAIDLAW AVENUE LANDFILL - AS PER THE OCTOBER 1, 2013 RULE 3745-27-13 (RULE 513) AUTHORIZATION GRANTED BY THE OHIO ENVIRONMENTAL PROTECTION AGENCY (OEPA), ALL WORK TO BE CONDUCTED IN THE VICINITY OF THE FORMER LAIDLAW AVENUE LANDFILL MUST BE CONDUCTED IN COMPLIANCE WITH CONDITIONS OUTLINED IN THE RULE 513 AUTHORIZATION.

ASBESTOS CONTAINING MATERIALS

HIRE A LICENSED ASBESTOS HAZARD EVALUATION SPECIALIST TO DETERMINE IF REGULATED ASBESTOS IS PRESENT ON THE FOLLOWING STRUCTURES: SFN 3113779, SFN 3110036, SFN 3110087, AND SFN 3110176. THE SPECIALIST WILL DETERMINE IF REGULATED ASBESTOS IS PRESENT IN EXCESS OF THE ALLOWABLE REGULATORY LIMITS AND REQUIRES ABATEMENT. THE HAZARD EVALUATION SPECIALIST SHALL PREPARE AN ASBESTOS INSPECTION REPORT CONTAINING THE QUANTITIES AND LOCATIONS OF ASBESTOS CONTAINING MATERIALS. SUBMIT A COMPLETED NOTIFICATION OF DEMOLITION AND RENOVATION FORM (NDRF), APPLICABLE FEES, AND THE ASBESTOS INSPECTION REPORT TO THE OEPA AT LEAST 10 DAYS PRIOR TO ANY DEMOLITION ACTIVITY, RENOVATION ACTIVITY, OR BOTH.

ENVIRONMENTAL COMMITMENTS (CONT)

ALL MATERIALS, LABOR, EQUIPMENT AND INCIDENTALS NECESSARY TO COMPLETE THIS WORK WILL BE PAID FOR UNDER ITEM SPECIAL 690E71050 - ASBESTOS INSPECTION, VARIOUS STRUCTURES - 4 EACH

ITEM SPECIAL 690E70100 - NON-FRIABLE MATERIAL, SFN 3113779 - 160 SF
ITEM SPECIAL 690E70100 - FRIABLE MATERIAL, SFN 3113779 - 50 SF
ITEM SPECIAL 690E70120 - PIPE, SFN 3113779 - 260 SF
ITEM SPECIAL 690E70100 - NON-FRIABLE MATERIAL, SFN 3110036 - 160 SF
ITEM SPECIAL 690E70100 - FRIABLE MATERIAL, SFN 3110036 - 50 SF
ITEM SPECIAL 690E70120 - PIPE, SFN 3110036 - 260 SF
ITEM SPECIAL 690E70100 - NON-FRIABLE MATERIAL, SFN 3110087 - 160 SF
ITEM SPECIAL 690E70100 - FRIABLE MATERIAL, SFN 3110087 - 50 SF
ITEM SPECIAL 690E70120 - PIPE, SFN 3110087 - 260 SF
ITEM SPECIAL 690E70100 - NON-FRIABLE MATERIAL, SFN 3110176 - 160 SF
ITEM SPECIAL 690E70100 - FRIABLE MATERIAL, SFN 3110176 - 50 SF
ITEM SPECIAL 690E70120 - PIPE, SFN 3110176 - 260 SF

FIELD OFFICE, TYPE C AS PER PLAN

IN ADDITION, TO THE REQUIREMENTS OF ITEM 619, THE CONTRACTOR SHALL PROVIDE/LEASE A SUITABLE FIELD OFFICE WITH A MINIMUM OF 1500 SF OF USABLE OFFICE SPACE. OFFICE TO INCLUDE A SEPARATE MINIMUM 12 X36 CONFERENCE ROOM, AND SIX (6) SEPARATE OFFICES WITH SHELVING UNITS. FURTHER ITEMS ARE AS FOLLOWED:

1) FURNITURE:
   - -ELEVEN (11) SETS OF DESKS, OFFICE CHAIRS, AND FOUR DRAWER FILE CABINETS
   - -TWO (2) LOCKABLE FILE CABINETS
   - -TEN (10) 2'X8' COLLAPSIBLE TABLES
   - -TWENTY (20) FOLDING CHAIRS
2) COPY MACHINE WITH SCAN/PRINT/FAX/INTERNET HOOKUP CAPABILITIES. THE COPIER WILL PRINT 25PPM AND CAPABLE OF PRINTING SHEETS 8.5"X11", 8.5"X14", AND 11"X17". COPIER PAPER SUPPLIES AND MAINTENANCE TO BE INCLUDED.
3) CONTRACTOR TO PROVIDE INTERNET SERVICES WITH A MINIMUM SPEED OF 100 MBPS. THE CONTRACTOR SHALL SUPPLY THE PROJECT WITH THE IP ADDRESS SO THAT ODOT CAN ATTACH AN ODOT OWNED HUB. ODOT'S OWNED HUB WILL PROVIDE THE STAFF WITH A WIRELESS ROUTER AND ODOT FIREWALL.
4) ONE (1) SEPARATE WATER COOLER AND SERVICE.
5) FIELD OFFICE SHALL INCLUDE A SECURE PARKING AREA NOT LESS THAN 4000 SF CAPABLE OF SUPPLYING 10 EA ALL WEATHER PARKING SPOTS. "ALL WEATHER" SHALL BE DEFINED AS A HARD SMOOTH SURFACE THAT WILL ALLOW FOR SNOW REMOVAL. GRAVEL SURFACE IS NOT ACCEPTABLE. PARKING AREA TO BE SURROUNDED BY A 6' HIGH SECURITY FENCE WITH A LOCKABLE GATE INCLUDING KEYS AND ILLUMINATED BY SECURITY LIGHTING.
6) SNOW REMOVAL SHALL BE REQUIRED FOR PARKING AREA.
7) BI-WEEKLY CLEANING SERVICE.
8) DUMPSTER WITH NECESSARY SERVICE.
9) FIVE (5) EACH TELEPHONES.

THE CONTRACTOR SHALL OBTAIN APPROVAL OF THE PROPOSED FACILITY FROM THE ENGINEER PRIOR TO USE. THE FACILITY SHALL BE AVAILABLE FOR ODOT USE NOT MORE THAN 30 DAYS FROM THE AWARD OF CONTRACT.

Preliminary Plans - For Reference Only

CALCULATED SEA CHECKED DLR

GENERAL NOTES

HAM-75-7.85

J:\20110903\ODOT\HAM\77889\roadway\sheets\77889GN001.dgn 5/22/2026 10:04:56 AM hbrendlinger

ITEM 203 - EXCAVATION AS PER PLAN, ADDITIONAL EXCAVATION (CIN. 1119)

ADDITIONAL EXCAVATION SHALL BE IN ACCORDANCE WITH GREATER CINCINNATI WATER WORKS SPECIFICATION 1119.

ALL MATERIALS, LABOR AND INCIDENTALS NECESSARY TO COMPLETE THIS ITEM SHALL BE INCLUDED IN CONTRACT PRICE FOR THIS WORK.

ITEM 203 - EXCAVATION AS PER PLAN, EXPLORATORY EXCAVATION (CIN. 1120)

EXPLORATORY EXCAVATION SHALL BE IN ACCORDANCE WITH GREATER CINCINNATI WATER WORKS SPECIFICATION 1120.

ALL MATERIALS, LABOR AND INCIDENTALS NECESSARY TO COMPLETE THIS ITEM SHALL BE INCLUDED IN CONTRACT PRICE FOR THIS WORK.

ITEM 602 - CONCRETE MASONRY AS PER PLAN, CONCRETE, CLASS C (CIN. 1110)

CONCRETE MASONRY SHALL BE IN ACCORDANCE WITH GREATER CINCINNATI WATER WORKS SPECIFICATION 1110.

ALL MATERIALS, LABOR AND INCIDENTALS NECESSARY TO COMPLETE THIS ITEM SHALL BE INCLUDED IN CONTRACT PRICE FOR THIS WORK.

ITEM 202 - REMOVAL MISC.: DRAINAGE STRUCTURE ABANDONED, AS PER PLAN

THIS ITEM INCLUDES THE REMOVAL OF PREVIOUSLY ABANDONED DRAINAGE STRUCTURES AS IDENTIFIED ON THE RECORD PLANS WITHIN THE CORRIDOR THAT MAY BE ENCOUNTERED DURING CONSTRUCTION. THE FOLLOWING ESTIMATED QUANTITIES HAVE BEEN INCLUDED IN THE GENERAL SUMMARY TO BE USED AS DIRECTED BY THE ENGINEER FOR THE WORK NOTED ABOVE:

ITEM 202 - REMOVAL MISC.: DRAINAGE STRUCTURE ABANDONED, AS PER PLAN 56 EACH

ALL MATERIALS, LABOR, AND INCIDENTALS NECESSARY TO COMPLETE THIS ITEM SHALL BE INCLUDED IN CONTRACT PRICE FOR THIS WORK.

ITEM 202 - REMOVAL MISC.: DRAINAGE PIPE ABANDONED, 24" AND UNDER, AS PER PLAN

THIS ITEM INCLUDES THE REMOVAL OF PREVIOUSLY ABANDONED DRAINAGE CONDUIT AS IDENTIFIED ON THE RECORD PLANS WITHIN THE CORRIDOR THAT MAY BE ENCOUNTERED DURING CONSTRUCTION. THE FOLLOWING ESTIMATED QUANTITIES HAVE BEEN INCLUDED IN THE GENERAL SUMMARY TO BE USED AS DIRECTED BY THE ENGINEER FOR THE WORK NOTED ABOVE:

ITEM 202 - REMOVAL MISC.: DRAINAGE PIPE ABANDONED, 24" AND UNDER, AS PER PLAN 1,824 FT

ALL MATERIALS, LABOR, AND INCIDENTALS NECESSARY TO COMPLETE THIS ITEM SHALL BE INCLUDED IN CONTRACT PRICE FOR THIS WORK.

ITEM 442 - ASPHALT CONCRETE SURFACE COURSE, TYPE A (447), AS PER PLAN

THIS NOTE ONLY PERTAINS TO JOINTS ON I-75. GREAT CARE SHALL BE TAKEN TO MAINTAIN THE EXISTING PAVEMENT CROSS-SLOPE (CROWN), INTERSECTION CROSS-SLOPES (CROWN), AS WELL AS ALL LONGITUDINAL SLOPES DURING THE PAVING OPERATIONS.

LOCATE LONGITUDINAL JOINTS IN THE SURFACE COURSE SUBJECT TO THE FOLLOWING REQUIREMENTS:

PLACE THE MAINLINE PAVEMENT SURFACE COURSE WITH A SINGLE COLD LONGITUDINAL JOINT LOCATED BETWEEN LANES 2 AND 3 (LANE 1 IS THE EXISTING LEFT LANE WITH NUMBERING INCREASING FROM LEFT TO RIGHT IN THE DIRECTION OF TRAVEL). A COLD LONGITUDINAL JOINT IS PERMITTED BETWEEN THE SHOULDER AND MAINLINE PAVEMENT AND BETWEEN LANES 3 AND 4. NO OTHER COLD JOINTS ARE PERMITTED IN THE SURFACE COURSE OF MAINLINE PAVEMENT.

ITEM 202 - PAVEMENT REMOVED, AS PER PLAN

THIS WORK SHALL BE THE REMOVAL OF THE EXISTING CONCRETE BASE. THE ASPHALT REMOVAL IS PAID FOR UNDER A SEPERATE ITEM.

ITEM 611 - CONDUIT MISC.: CONDUIT INSTALLED WITH TRENCHLESS METHOD

THE CONTRACTOR SHALL DETERMINE THE APPROPRIATE METHOD OF TRENCHLESS INSTALLATION FOR EACH PIPE SEGMENT. THE CONTRACTOR SHALL MAINTAIN THE SAME METHOD OF INSTALLATION WITHIN EACH PIPE SEGMENT. THE CONTRACTOR SHALL CHOOSE THE APPROPRIATE METHOD OF INSTALLATION INCLUDING PIPE JACKING, MICRO-TUNNELING, BORED OR JACKED, TUNNEL PLATE LINER OR OTHER APPROVED METHOD. THE CONTRACTOR SHALL PROVIDE AN INSTALLATION PLAN, MANUFACTURERS SPECIFICATIONS AND DESIGN CALCULATIONS SIGNED AND SEALED BY AN ENGINEER 30 DAYS PRIOR TO INSTALLATION.

THE QUANTITY SHALL BE PAID FOR AT THE CONTRACT UNIT PRICE BID PER LINEAR FOOT AND SHALL INCLUDE ALL MATERIALS, LABOR AND ALL TOOLS, EQUIPMENT SUPPLIES AND INCIDENTALS NECESSARY TO COMPLETE THE WORK. SHOULD GROUT TO FILL VOIDS BETWEEN THE CONDUIT AND THE EXISTING GROUND BE REQUIRED, IT SHALL BE INCIDENTAL TO THE INSTALLATION AND IN ACCORDANCE WITH SS 837. SHOULD FIELD PAVING OF THE INVERT BE REQUIRED, IT SHALL BE INCIDENTAL TO THE INSTALLATION AND IN ACCORDANCE WITH ODOT CMS SECTION 611.11.

Preliminary Proof - For Reference Only

J:\20110903\ODOT\HAM\77889\roadway\sheets\77889GN001.dgn 5/22/2026 10:04:56 AM hbrendlinger

CALCULATED SEA | CHECKED DLR

GENERAL NOTES

HAM-75-7.85

ITEM 609 - CURB, TYPE 4-C, AS PER PLAN

CONSTRUCT AS PER STANDARD CONSTRUCTION DRAWING BP-5.1, EXCEPT THAT THE 16" HEIGHT OF CURB SHALL BE ADJUSTED. SO THAT THE BOTTOM OF CURB RESTS ON TOP OF THE AGGREGATE BASE COURSE AS SHOWN IN THE TYPICAL SECTIONS.

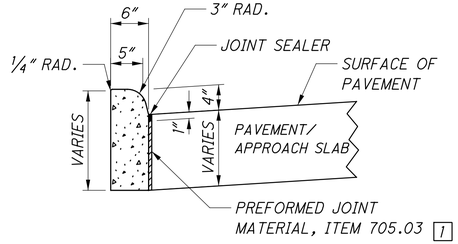

LEGEND

[1] EXPANSION JOINT MATERIAL AND JOINT SEALER ARE NOT REQUIRED FOR THE PORTION OF THE CURB THAT IS ADJACENT TO A FLEXIBLE PAVEMENT TYPE. BOTH MATERIALS ARE REQUIRED, AS DETAILED, FOR THE FULL HEIGHT OF RIGID PAVEMENT AND CONCRETE BASES.

FOR VARIABLE DIMENSIONS, SEE SHEET 27

ITEM 622 - CONCRETE BARRIER, SINGLE SLOPE, TYPE B1, AS PER PLAN

ITEM 622 - CONCRETE BARRIER, SINGLE SLOPE, TYPE C1, AS PER PLAN

THE ITEMS LISTED ABOVE SHALL BE CONSTRUCTED PER ITEM 622 AND RM-4.3 AND RM-4.5 EXCEPT WITH THE DIMENSIONS AND ADDITIONAL DETAILS SHOWN BELOW. ALL LABOR, EQUIPMENT, AND MATERIALS NECESSARY TO PERFORM THE WORK DETAILED BELOW SHALL BE INCLUDED IN THE THIS PAY ITEM PER THE GENERAL SUMMARY.

CONCRETE BARRIER, SINGLE SLOPE, TYPE B1, AS PER PLAN

ALIGNMENT	STATION FROM	STATION TO	SIDE	DIMENSION "W" (FT) BEGIN/END
IR-75	465+30.00	465+70.00	CL	2.8 / 5.0
IR-75	465+70.00	466+05.00	CL	5.0 / 5.0
IR-75	466+05.00	466+45.00	CL	5.0 / 2.8

CONCRETE BARRIER, SINGLE SLOPE, TYPE C1, AS PER PLAN

ALIGNMENT	STATION FROM	STATION TO	SIDE	DIMENSION "W" (FT) BEGIN/END
SR 562	15+54.00	17+30.12	CL	7.0 /
SR 562	17+30.12	17+70.09	CL	7.0 / 2.8

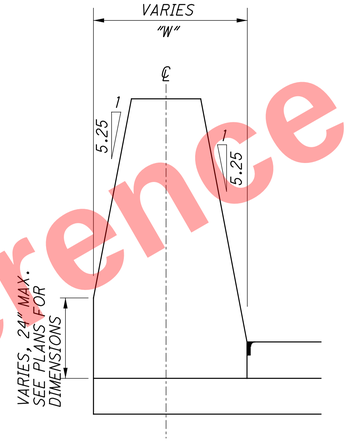

ITEM 622 - CONCRETE BARRIER, END ANCHORAGE, REINFORCED, TYPE B1, AS PER PLAN

ITEM 622 - CONCRETE BARRIER, END ANCHORAGE, REINFORCED, TYPE C1, AS PER PLAN

ITEM 622 - CONCRETE BARRIER, END ANCHORAGE, REINFORCED, TYPE D, AS PER PLAN

THE ITEMS LISTED ABOVE SHALL BE CONSTRUCTED PER ITEM 622 AND RM-4.3 AND RM-4.5 EXCEPT WITH THE DIMENSIONS AND ADDITIONAL DETAILS SHOWN BELOW. ALL LABOR, EQUIPMENT, AND MATERIALS NECESSARY TO PERFORM THE WORK DETAILED BELOW SHALL BE INCLUDED IN THE THIS PAY ITEM PER THE GENERAL SUMMARY.

CONCRETE BARRIER, END ANCHORAGE, REINFORCED, TYPE B1, C1, D, AS PER PLAN

ALIGNMENT	TYPE	STATION FROM	STATION TO	SIDE	DIMENSION "L" (FT)	DIMENSION "W" (FT) BEGIN/END	SEE DETAIL
IR-75	C1	419+54.31	419+69.3	CL	15.0	3.58 / 2.81	A
IR-75	D	416+79.53	416+96.92	RT	17.8	1.67 / 1.67	B
IR-75	B1	427+85.00	427+91.72	CL	6.7	2.81 / 2.81	A
IR-75	B1	433+75.00	433+82.10	CL	7.1	2.81 / 3.50	B
IR-75	B1	435+19.11	435+34.11	CL	15.0	3.50 / 2.81	A
IR-75	B1	439+15.00	439+25.00	CL	10.0	2.81 / 2.81	A
IR-75	B1	440+13.79	440+17.78	CL	4.0	2.81 / 2.81	B
IR-75	B1	441+42.28	441+55.00	CL	12.7 *	2.81 / 2.81	B
IR-75	B1	461+60.00	461+80.00	CL	20.0 *	2.81 / 2.81	B
IR-75	D	463+81.60	463+90.00	CL	8.4	1.67 / 1.67	B
IR-75	C1	474+28.35	474+36.35	CL	15.0**	2.81 / 2.81	A
IR-75	C1	478+68.44	478+76.44	CL	15.0*	2.81 / 2.81	A
SR 562	C1	17+70.09	17+80.00	CL	9.9	2.81 / 2.81	A
RAMP N	D	424+51.96	424+61.18	RT	9.4	1.67 / 1.67	A

* HAS LIGHT POLE IN END ANCHORAGE

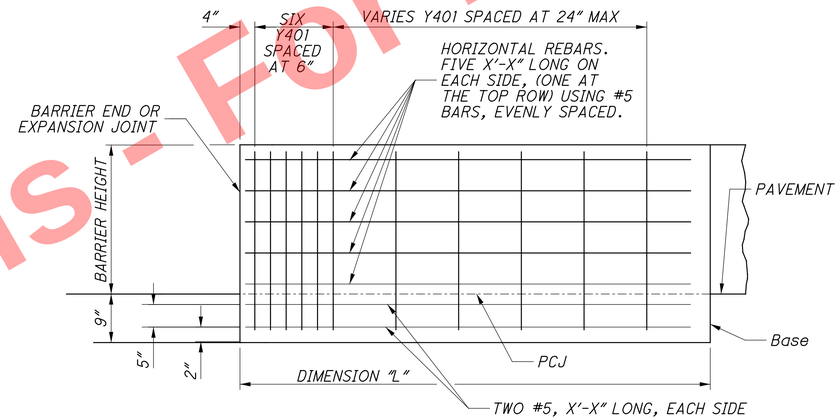

DETAIL "A"

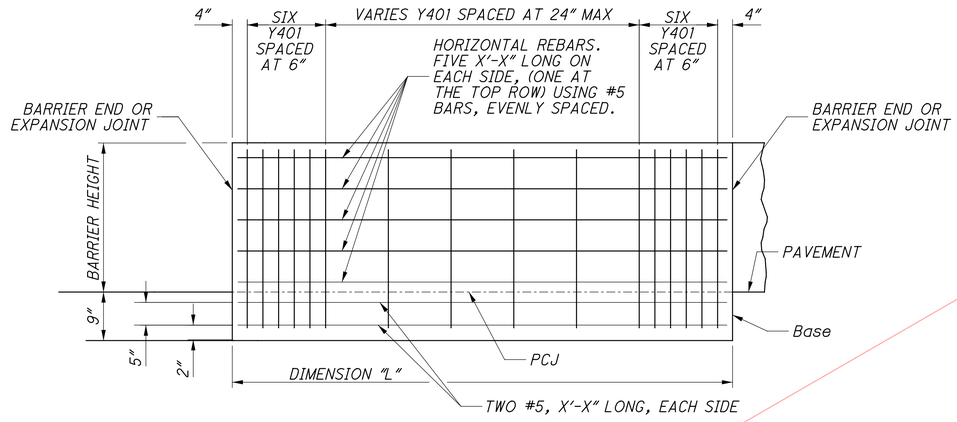

DETAIL "B"

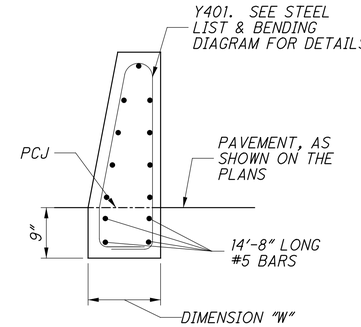

SECTION
(APPLIES TO ALL TYPE D END ANCHORAGES)

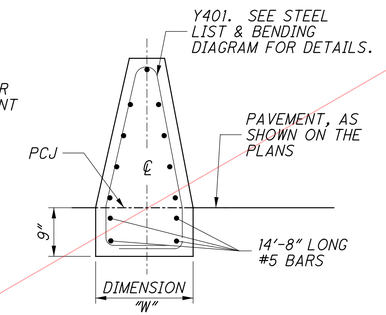

SECTION
(APPLIES TO ALL TYPE B1 AND C1 END ANCHORAGES)

Preliminary Plans - For Reference Only

CALCULATED SEA
CHECKED DLR

GENERAL NOTES

HAM-75-7.85

J:\20110903\ODOT\HAM\77889\roadway\sheets\77889GN001.dgn 5/22/2026 10:04:56 AM hbrendlinger

ITEM 622 - CONCRETE BARRIER, END ANCHORAGE, REINFORCED, TYPE C1, AS PER PLAN, A

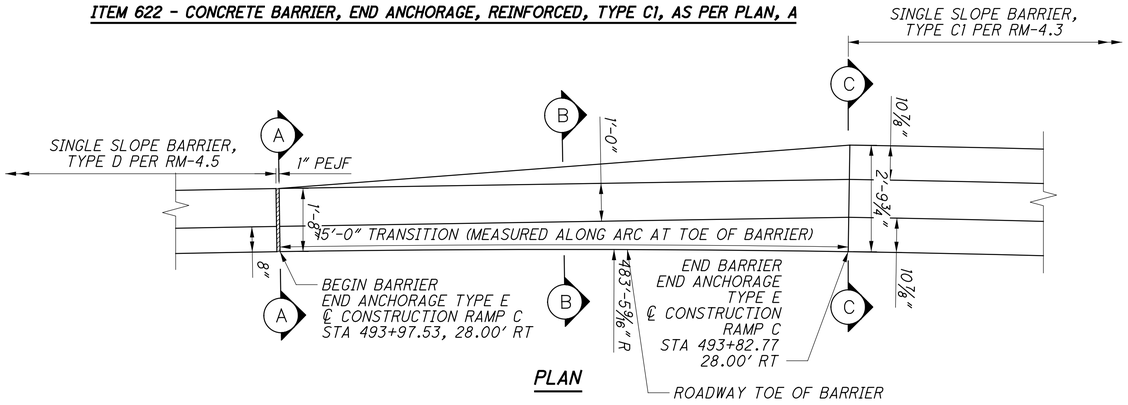

PLAN

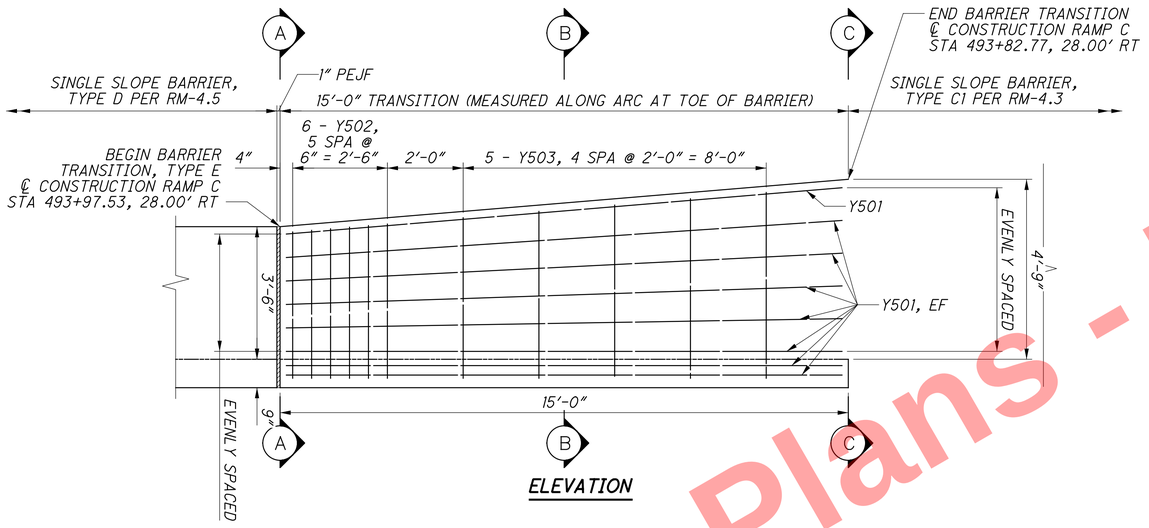

ELEVATION

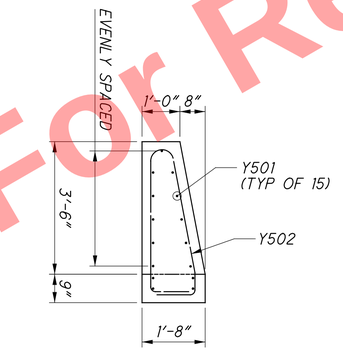

SECTION A-A

(SECTION AT ℄ CONSTRUCTION RAMP J STA 275+39.32)

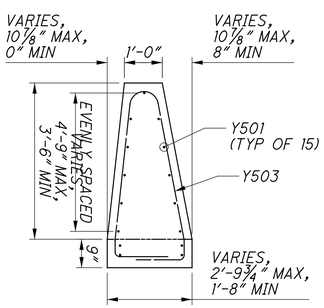

SECTION B-B

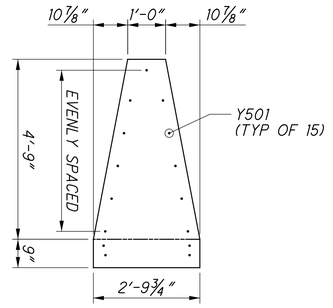

SECTION C-C

(SECTION AT ℄ CONSTRUCTION RAMP J STA 275+24.51)

MARK	NUMBER TOTAL	LENGTH	WEIGHT	TYPE	DIMENSIONS A	B	C	D	E	R	INC (A)	INC (B)
BARRIER END ANCHORAGE, TYPE D TO TYPE C1 BARRIER												
Y501	15	14'-8"	229	STR	1'-3" TO 1'-5"	3'-3½" TO 3'-5½"					0'-0⅜" (+)	0'-0⅜" (+)
Y502	6	10'-0" TO 10'-7"	64	1	1'-6¾" TO 2'-2¼"	3'-7½" TO 4'-4"					0'-1⅞" (+)	0'-2⅛" (+)
Y503	5	11'-1" TO 13'-1"	63	1								

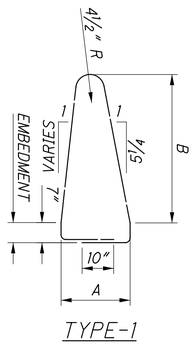

TYPE-1

NOTES

1. MATERIALS ARE SAME FOR THOSE SHOWN ON RM-4.3 AND RM-4.5, EXCEPT THAT CAST-IN-PLACE IS THE ONLY ACCEPTABLE METHOD. EDGES MAY BE CHAMFERED OR RADIUSED AS SHOWN ON THOSE DRAWINGS.
2. ALL LABOR, MATERIALS, AND INCIDENTALS NECESSARY TO CONSTRUCT THE BARRIER END ANCHORAGE PER THE DETAILS ON THIS SHEET SHALL BE INCLUDED FOR PAYMENT WITH ITEM 622 - CONCRETE BARRIER END ANCHORAGE, REINFORCED, TYPE C1, AS PER PLAN C.
3. PROVIDE 2" CLEAR COVER UNLESS NOTED OTHERWISE.

Preliminary Plans - For Reference Only

CALCULATED SEA CHECKED DLR

GENERAL NOTES

HAM-75-7.85

39 1047

J:\20110903\ODOT\HAM\77889\roadway\sheets\77889GN001.dgn 5/22/2026 10:04:56 AM hbrendlinger

ITEM 622 - CONCRETE BARRIER, END ANCHORAGE, REINFORCED, TYPE B1, AS PER PLAN, A

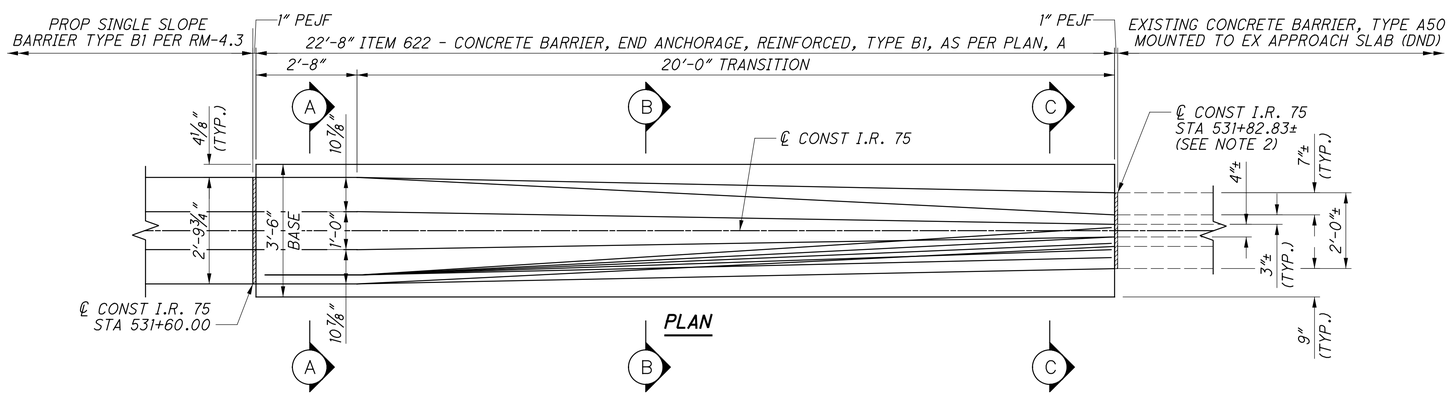

PLAN

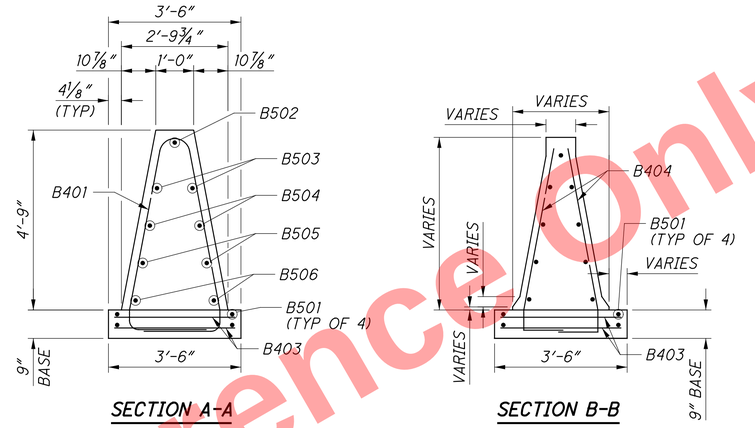

SECTION A-A

SECTION B-B

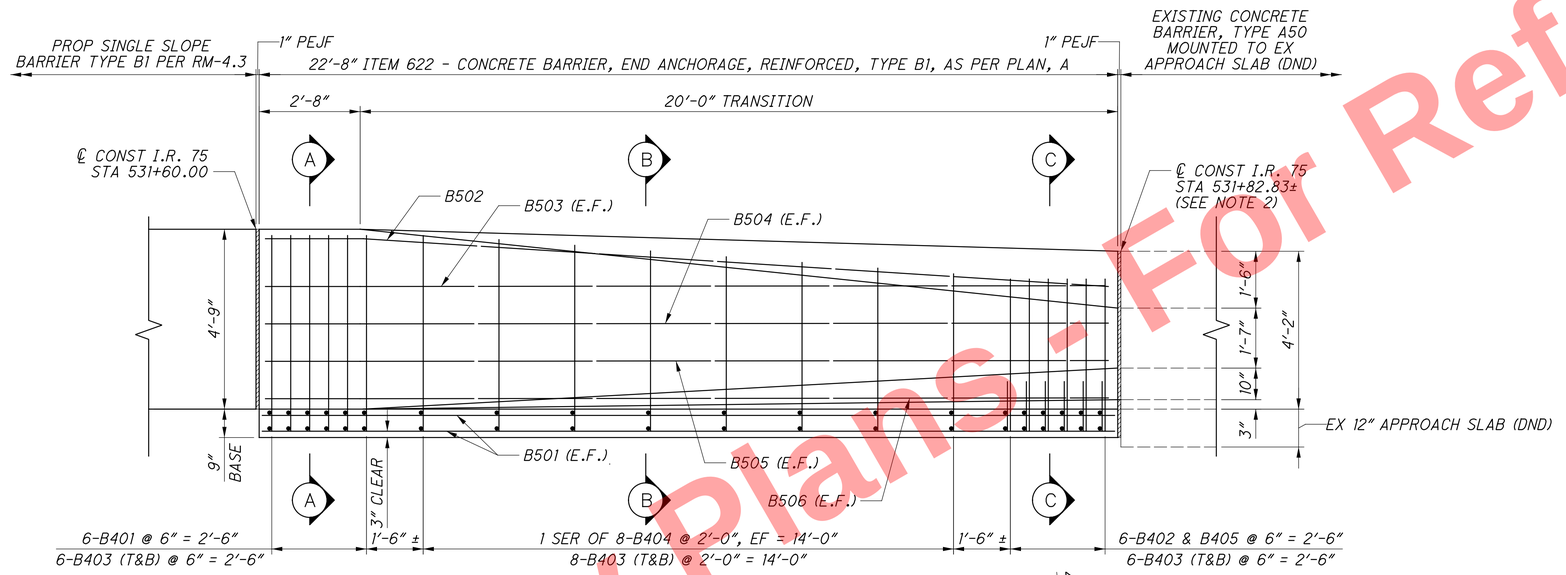

ELEVATION

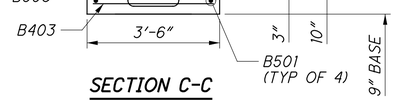

SECTION C-C

MARK	NUMBER TOTAL	LENGTH	WEIGHT	TYPE	DIMENSIONS A	B	C	D	E	R	INC
BARRIER TRANSITION - FOR INFORMATION ONLY											
B401	6	14'-2"	57	34	0'-7"	2'-5"	1'-0"	4'-7"		0'-5"	
B402	6	3'-11"	16	1	3'-4"	0'-8"					
B403	40	3'-2"	85	STR							
	2 SR	5'-0"			3'-6"	0'-4"					A = 1¾"
B404	OF	TO	60	10	TO	TO	0'-7"	1'-0 ½"			B = 1"
	8	6'-1"			4'-6"	11"					
B405	6	4'-7"	18	99	1'-4"	0'-11 ½"	0'-3"	0'-2 ¼"			
B501	4	22'-4"	93	STR							
B502	1	22'-4"	23	19	2'-6"	19'-10"	1'-3"				
B503	2	22'-4"	47	19	2'-6"	19'-10"	0'-5 ½"				
B504	2	22'-4"	47	19	2'-6"	19'-10"	0'-8"				
B505	2	22'-4"	47	19	2'-6"	19'-10"	0'-10"				
B506	2	22'-4"	47	19	2'-6"	19'-10"	1'-0"				
SUB-TOTAL			540								

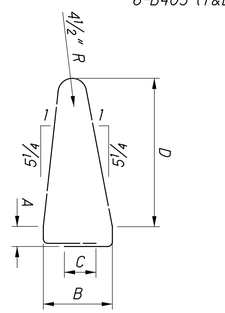

TYPE-34

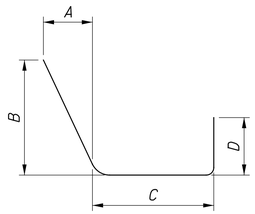

TYPE-10

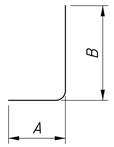

TYPE-1

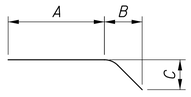

TYPE-19

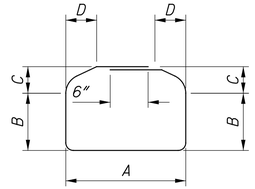

TYPE-99

LEGEND

T&B = TOP AND BOTTOM
EF = EACH FACE
TYP = TYPICAL
DND = DO NOT DISTURB

NOTES

1. BARRIER TRANSITION TO BE PAID WITH ITEM 622 - CONCRETE BARRIER, END ANCHORAGE, REINFORCED, TYPE B1, AS PER PLAN, A.
2. THE NORTH END OF THE BARRIER TRANSITION SHALL REPLACE THE EXISTING I-3A BARRIER MEDIAN INLET AND WILL ABUT THE EXISTING BARRIER JOINT ON THE REAR (SOUTH) APPROACH SLAB.
3. PROVIDE 2" CLEAR COVER UNLESS NOTED OTHERWISE.

CALCULATED BDE CHECKED RJE

GENERAL NOTES

HAM-75-7.85

40 / 1047

Preliminary Plans - For Reference Only

J:\20110903\ODOT\HAM\77889\roadway\sheets\77889GN014.dgn 5/22/2026 10:04:57 AM hbrendlinger

ITEM 202 - MANHOLE ABANDONED, AS PER PLAN

THE FOLLOWING DETAILS ARE PROVIDED FOR THE STRUCTURES LISTED BELOW. ALL LABOR, EQUIPMENT, AND MATERIALS NECESSARY TO PERFORM THE WORK DETAILED BELOW SHALL BE INCLUDED IN THE THIS PAY ITEM PER THE GENERAL SUMMARY.

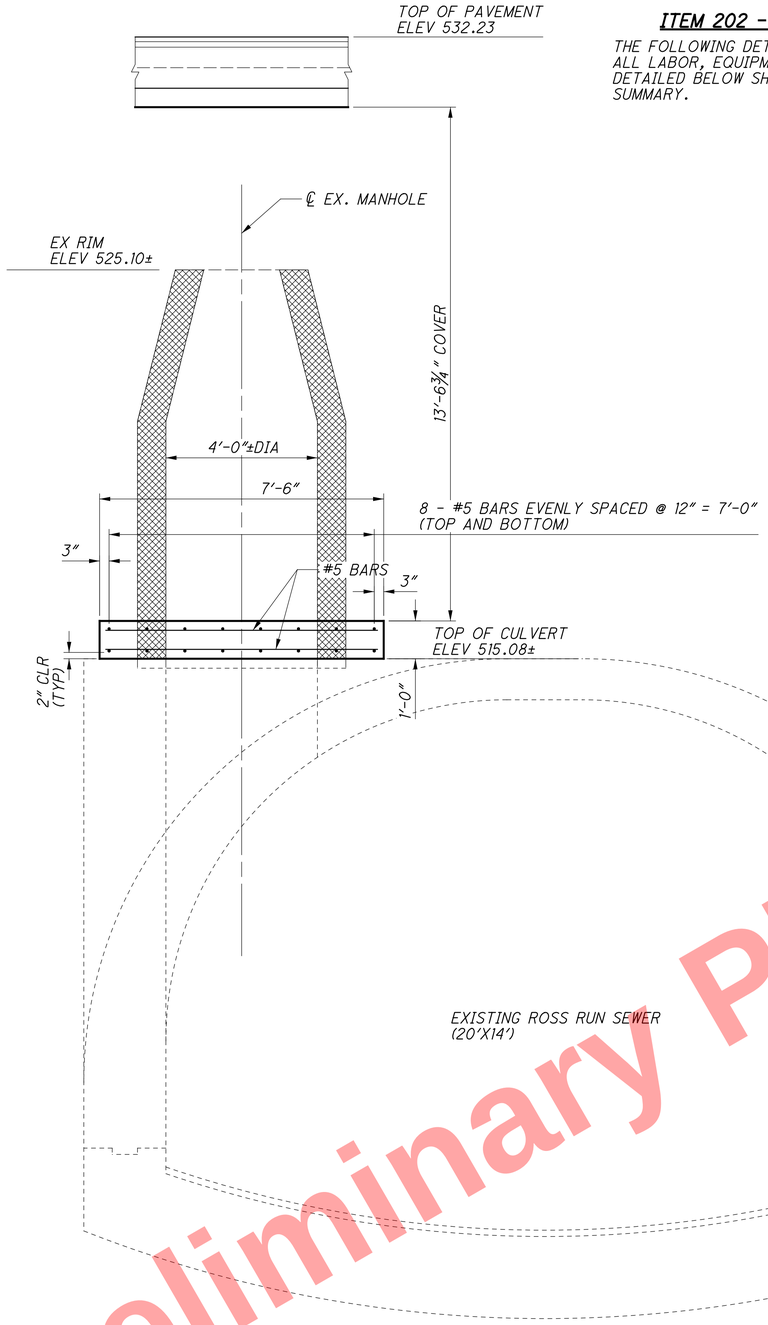

SECTION A-A

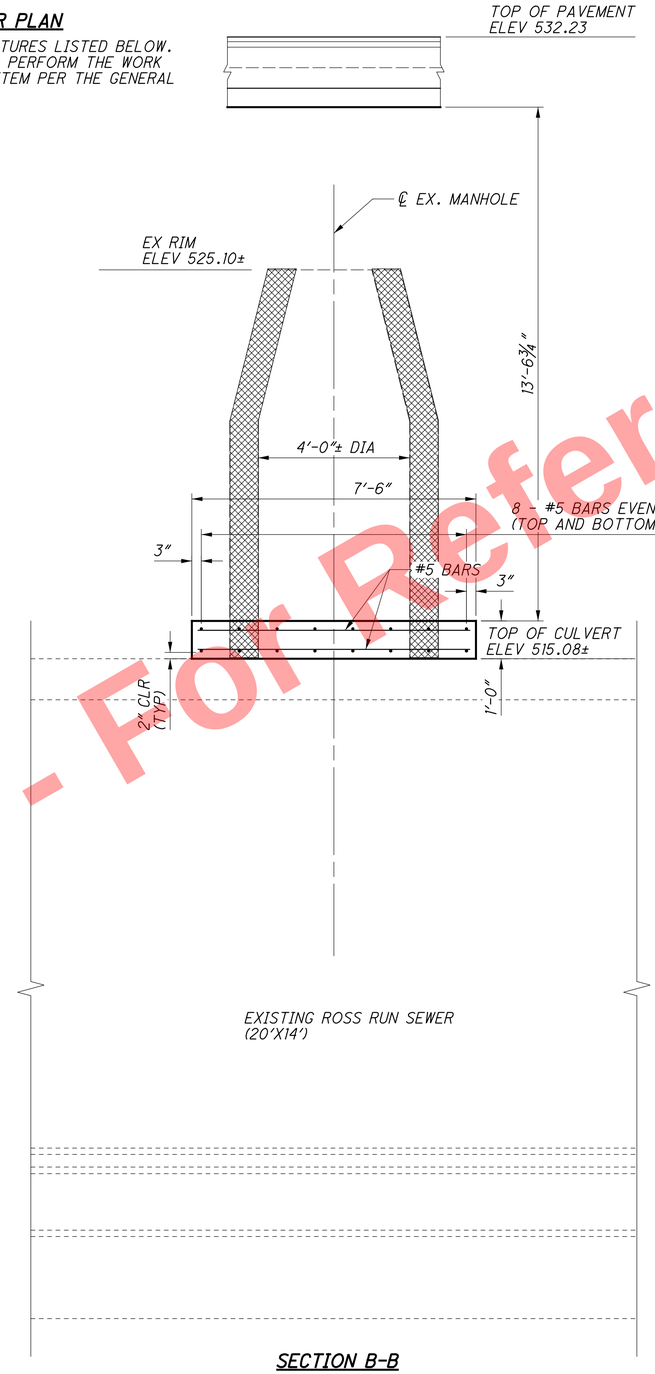

SECTION B-B

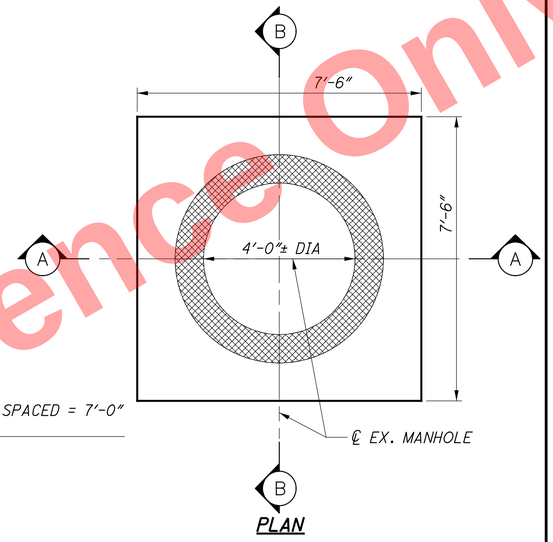

PLAN

CAP FOR EXISTING MANHOLE @ STA 419+02.25, 20.23' LT (℄ CONST RAMP N)

LEGEND

- PORTIONS OF EXISTING DRAINAGE STRUCTURES TO BE REMOVED

DESIGN DATA

CONCRETE CLASS QC1 - COMPRESSIVE STRENGTH 4.0 KSI

REINFORCING STEEL - ASTM A615 OR A996 GRADE 60, MINIMUM YIELD STRENGTH 60,000 PSI.

CALCULATED RJE CHECKED RSH

GENERAL NOTES

HAM-75-7.85

41
1047

Preliminary Plans - For Reference Only

J:\20110903\ODOT\HAM\77889\roadway\sheets\77889GN004.dgn 5/22/2026 10:04:58 AM hbrendlinger

ITEM 202 - INLET ABANDONED, AS PER PLAN

THE FOLLOWING DETAILS ARE PROVIDED FOR THE STRUCTURES LISTED BELOW. ALL LABOR, EQUIPMENT, AND MATERIALS NECESSARY TO PERFORM THE WORK DETAILED BELOW SHALL BE INCLUDED IN THE THIS PAY ITEM PER THE GENERAL SUMMARY.

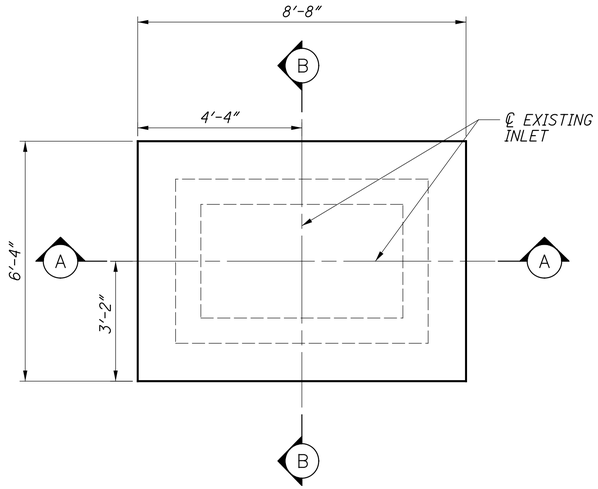

PLAN

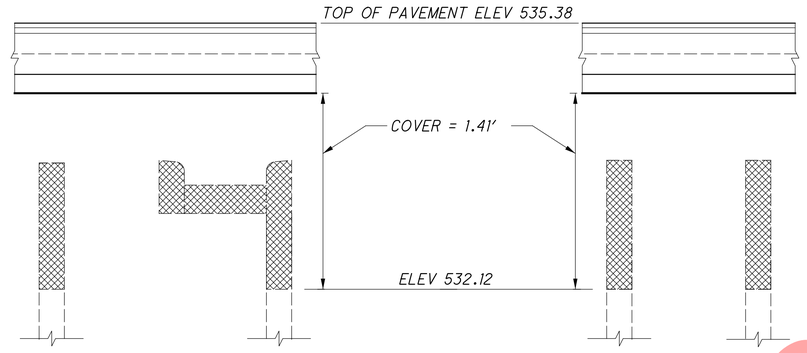

SECTION C-C (REMOVAL DETAILS)

SECTION D-D (REMOVAL DETAILS)

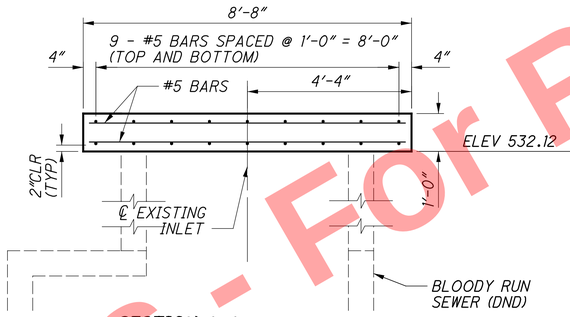

SECTION A-A

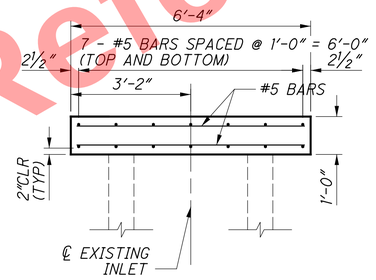

SECTION B-B

CAP FOR EXISTING INLET @ STA 436+57.07, 18.54 RT (℄ CONST I-75)

LEGEND

- PORTIONS OF EXISTING DRAINAGE STRUCTURES TO BE REMOVED

DESIGN DATA

CONCRETE CLASS QC1 - COMPRESSIVE STRENGTH 4.0 KSI

REINFORCING STEEL - ASTM A615 OR A996 GRADE 60, MINIMUM YIELD STRENGTH 60,000 PSI.

CALCULATED RJE
CHECKED RSH

GENERAL NOTES

HAM-75-7.85

42
1047

Preliminary Plans - For Reference Only

J:\20110903\ODOT\HAM\77889\roadway\sheets\77889GN013.dgn 5/22/2026 10:04:59 AM hbrendlinger

ITEM 611 - INLET NO.3 FOR SINGLE SLOPE BARRIER, TYPE B1, AS PER PLAN, A

THE FOLLOWING DETAILS ARE PROVIDED FOR THE STRUCTURES LISTED BELOW. ALL LABOR, EQUIPMENT, AND MATERIALS NECESSARY TO PERFORM THE WORK DETAILED BELOW SHALL BE INCLUDED IN THE THIS PAY ITEM PER THE GENERAL SUMMARY.

STR. NO.	STATION	SIDE	STR. NO.	STATION	SIDE
47	22+45	RT			
48	26+30	RT			
34	440+04	RT			
116	416+00	RT			
118	444+50	RT			
113	464+00	RT			
114	465+80	RT			
132	459+50	LT			
131	460+48	LT			
133	461+50	RT			

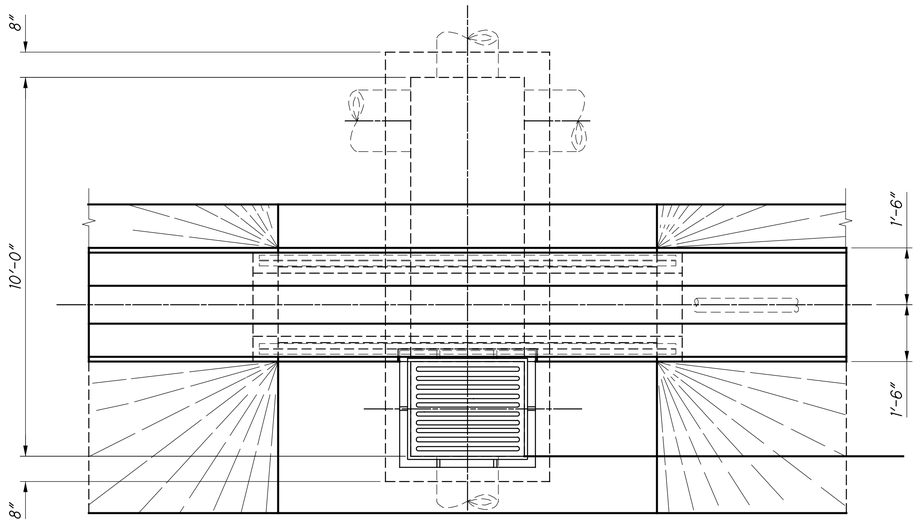

PLAN

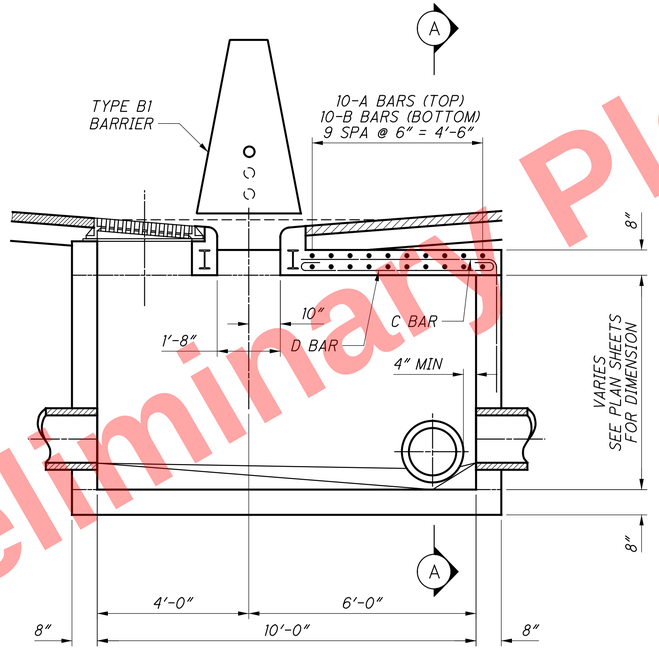

SECTION D-D

THIS DETAIL APPLIES TO INLETS AT THE FOLLOWING LOCATIONS: SEE TABLE ABOVE

INLET REINFORCING LIST

BAR A			BAR B			BAR C			BAR D		
NUMBER	SIZE	LENGTH	NUMBER	SIZE	LENGTH	NUMBER	SIZE	LENGTH	NUMBER	SIZE	LENGTH
10	#6	10'-10"	10	#6	5'-4"	8	#6	8'-1"	8	#6	6'-0"

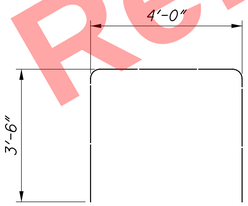

A BAR

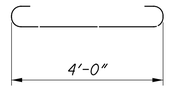

B BAR

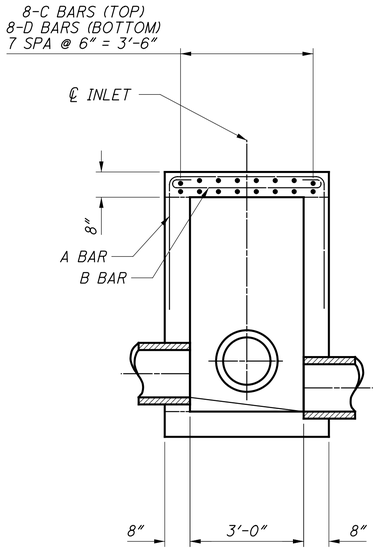

SECTION A-A

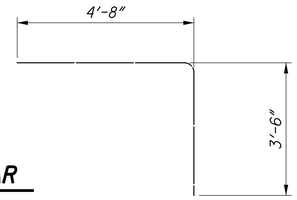

C BAR

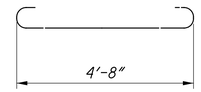

D BAR

NOTES

1. FOR ADDITIONAL DETAILS, DIMENSIONS AND REINFORCING, SEE STANDARD CONSTRUCTION DRAWING I-2.1.
2. ROTATE BARS AS NECESSARY TO MAINTAIN REQUIRED MINIMUM CONCRETE COVER.

CALCULATED RJE CHECKED RSH

GENERAL NOTES

HAM-75-7.85

Preliminary Plans - For Reference Only

J:\20110903\ODOT\HAM\77889\roadway\sheets\77889GN002.dgn 5/22/2026 10:04:59 AM hbrendlinger

ROSS RUN SEWER PLANS PROVIDED TO FACILITATE PROPOSED DRAINAGE CONNECTION

FED. RD. DIV.	STATE	PROJECT	FISCAL YEAR
2	OHIO		

227
361

HAM-5W-7.16, HAM-502-0.28

CALCULATED RJE
CHECKED RSH

GENERAL NOTES

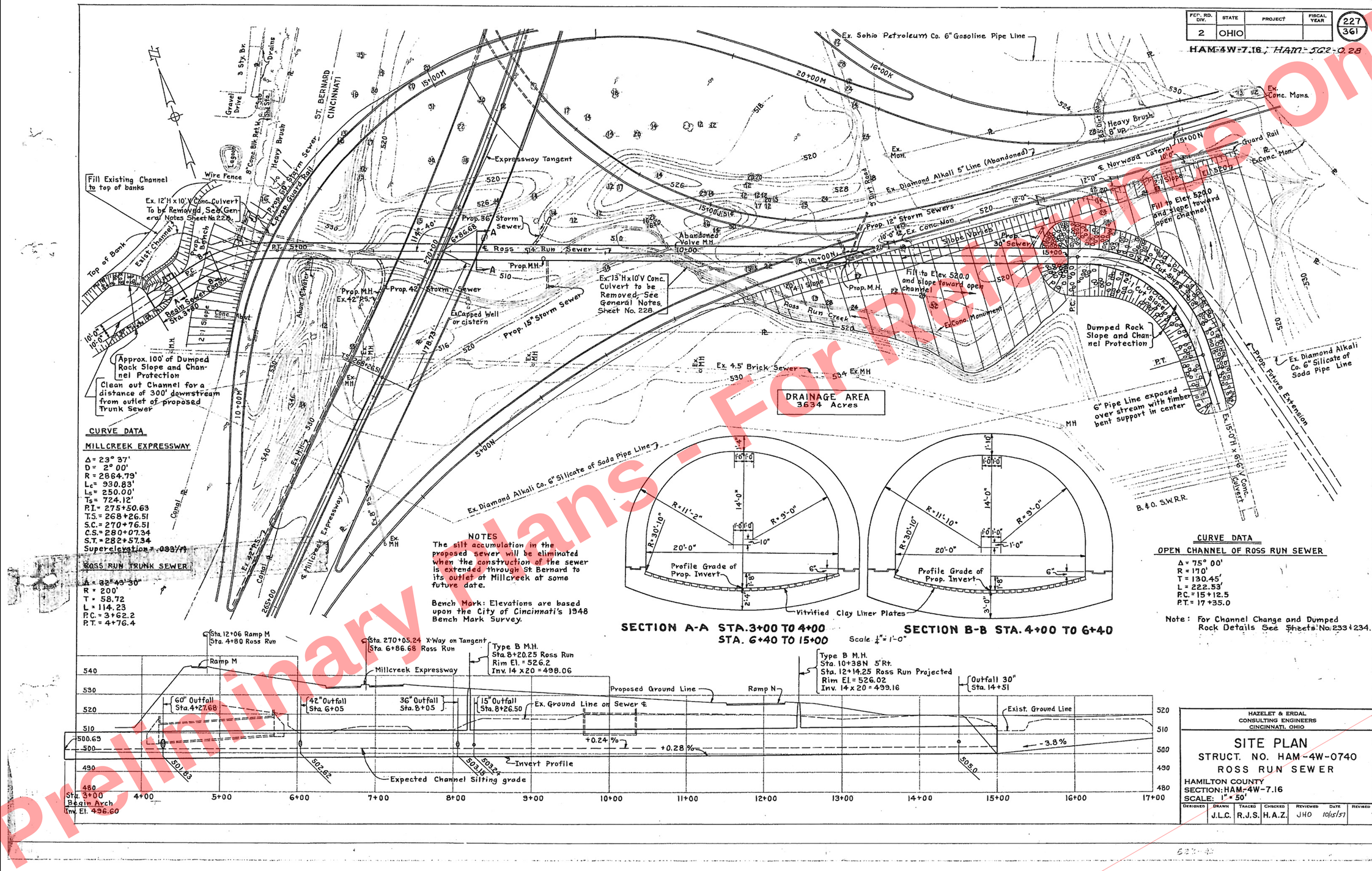

CURVE DATA

MILLCREEK EXPRESSWAY

Δ = 23° 37'
D = 2° 00'
R = 2864.79'
L_c = 930.83'
L_s = 250.00'
T_s = 724.12'
P.I. = 275+50.63
T.S. = 268+26.51
S.C. = 270+76.51
C.S. = 280+07.34
S.T. = 282+57.34
Superelevation = .033'/'

ROSS RUN TRUNK SEWER

Δ = 32°49'30"
R = 200'
T = 58.72
L = 114.23
P.C. = 3+62.2
P.T. = 4+76.4

NOTES

The silt accumulation in the proposed sewer will be eliminated when the construction of the sewer is extended through St Bernard to its outlet at Millcreek at some future date.

Bench Mark: Elevations are based upon the City of Cincinnati's 1948 Bench Mark Survey.

SECTION A-A STA. 3+00 TO 4+00
STA. 6+40 TO 15+00

SECTION B-B STA. 4+00 TO 6+40

Scale $\frac{1}{4}$" = 1'-0"

CURVE DATA

OPEN CHANNEL OF ROSS RUN SEWER

Δ = 75° 00'
R = 170'
T = 130.45'
L = 222.53'
P.C. = 15+12.5
P.T. = 17+35.0

Note: For Channel Change and Dumped Rock Details See Sheets No. 233 & 234.

HAZELET & ERDAL
CONSULTING ENGINEERS
CINCINNATI, OHIO

SITE PLAN

STRUCT. NO. HAM-4W-0740
ROSS RUN SEWER
HAMILTON COUNTY
SECTION: HAM-4W-7.16
SCALE: 1" = 50'

DESIGNED	DRAWN	TRACED	CHECKED	REVIEWED	DATE	REVISED
	J.L.C.	R.J.S.	H.A.Z.	JHO	10/15/57	

HAM-75-7.85

44
1047

Preliminary Plans - For Reference Only

FOR INFORMATION ONLY

J:\20110903\ODOT\HAM\7.7889\roadway\sheets\77889GN003.dgn 5/22/2026 10:05:01 AM hbrendlinger

ROSS RUN SEWER PLANS PROVIDED TO FACILITATE PROPOSED DRAINAGE CONNECTION

FED. RD. DIV.	STATE	PROJECT	FISCAL YEAR	228 / 361
2	OHIO			

HAM-4W-7.16 ; HAM-562-0.28

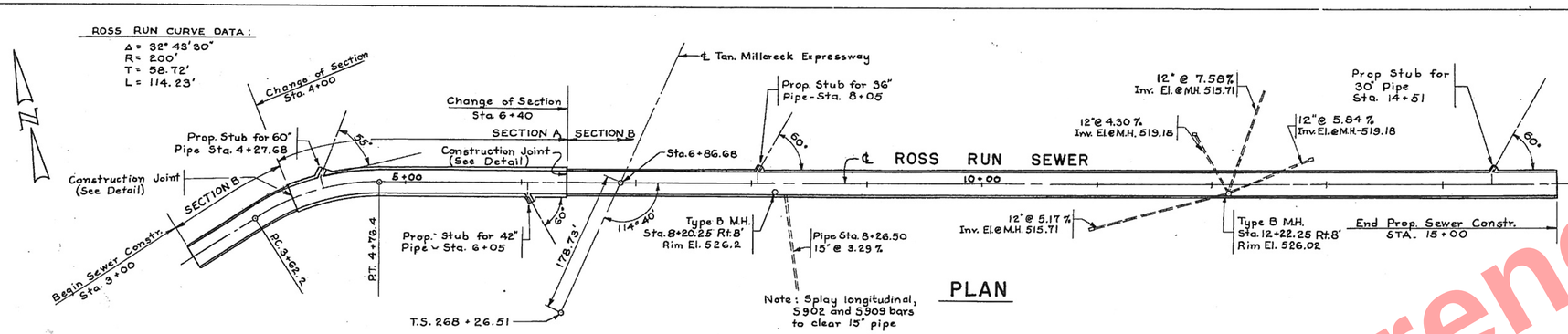

PLAN

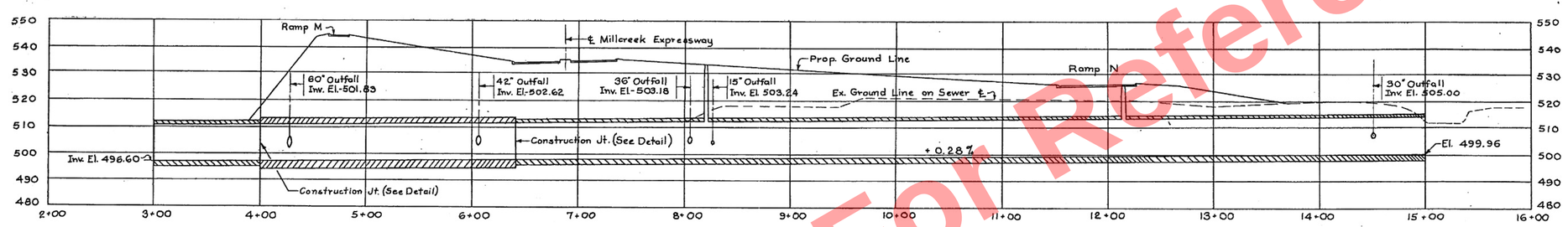

PROFILE

GENERAL NOTES

DESIGN SPECIFICATIONS: This structure conforms to the requirements of "Design Specifications for Highway Structures" of the State of Ohio, Department of Highways, dated 10-1-51, together with revisions thereof dated 7-15-52, 4-1-54, and 2-1-55.

REMOVAL OF EXISTING STRUCTURE: The existing 12'x 10' and 13'x10' concrete culverts shall be removed in accordance with the provisions of Item S-24.

CONCRETE: Shall be Class "C"

SURFACE FINISH OF CONCRETE: The inside of the sewer shall be finished in accordance with the provisions of Item S-1.

BACKFILL: Shall be placed symmetrically on both sides of the structure and preferably simultaneously along the entire length, in addition to observing the provisions of Item E-2.

VITRIFIED CLAY LINER PLATES: Vitrified clay liner plates shall conform to Supplemental Specification Number 30 dated May 28, 1948.

Liner plates shall be flat, and shall have a wearing surface not less than ¾ inch thick. The back of the plates shall be provided with "approximately five longitudinal dovetail shaped ribs to act as keys in the mortar. The plates shall be uniform in size, approximately 9 inches wide and 18 to 20 inches long. However, the widths shall be such that the surface is divided into an exact number of whole plates, due allowance being made for the joints. Shorter lengths shall be provided for breaking joints.

The joints in the liner plates shall be filled with an acid and caustic resistant joint material such as Furan resin cement similar and equal to "Permanite", "Alkor 5E", or "Muken All-Purposes," placed in accordance with the manufacturer's specifications. All excess filler shall be removed from the surface of the liner plates.

MANHOLE STEPS: Shall be identical to those furnished in Type B Manhole.

ESTIMATED QUANTITIES

ITEM	TOTAL	UNIT	DESCRIPTION
E-2	24,920	Cu.Yds.	Unclassified Excavation
S-1	5762	Cu.Yds.	Class "C" Concrete
S-4	321,963	Lbs.	Reinforcing Steel
S-24	Lump Sum	Lump Sum	Removal of Existing Structures
SS-30	24,442	Sq.Ft.	Vitrified Clay Liner Plates
I-8	2	Each	Manholes, Type B Complete, Including Manhole Steps.
I-10	3000	Cu. Yds.	Dumped Rock Channel Protection
E-2	Lump Sum	Lump Sum	Cofferdams, Cribs and Sheeting
E-3	6813	Cu. Yds	Channel Excavation

COFFERDAMS, CRIBS AND SHEETING: Adequate facilities for handling the flow of Ross Run Creek shall be provided and shall be considered as included in the Lump Sum price bid for Item E-2, Cofferdams, Cribs and Sheeting

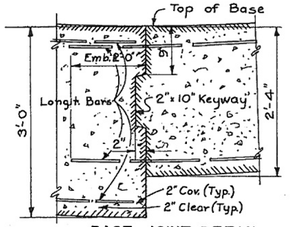

BASE JOINT DETAIL

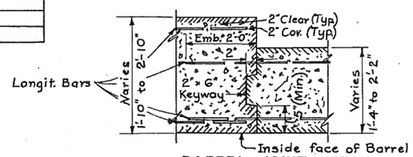

BARREL JOINT DETAIL

CONSTRUCTION JOINT DETAILS

HAZELET & ERDAL
CONSULTING ENGINEERS
CINCINNATI, OHIO

GENERAL PLAN
STRUCT. NO. HAM-4W-0740
ROSS RUN SEWER
HAMILTON COUNTY
SECTION: HAM-4W-7.16
SCALE:

DESIGNED	DRAWN	TRACED	CHECKED	REVIEWED	DATE	REVISED
E.R.B.	H.L.L.	N.H.	H.A.Z.	J.H.O	10/15/57	

CALCULATED RJE CHECKED RSH

GENERAL NOTES

HAM-75-7.85

45 / 1047

Preliminary Plans - For Reference Only

FOR INFORMATION ONLY

J:\20110903\ODOT\HAM\7889\roadway\sheets\77889GN003.dgn 5/22/2026 10:05:13 AM hbrendlinger

Preliminary Plans - For Reference Only

FED. RD. DIV.	STATE	PROJECT	FISCAL YEAR	229 361
2	OHIO			

HAM-4W-7.16 / HAM-562-0.28

CALCULATED RJE CHECKED RSH

GENERAL NOTES

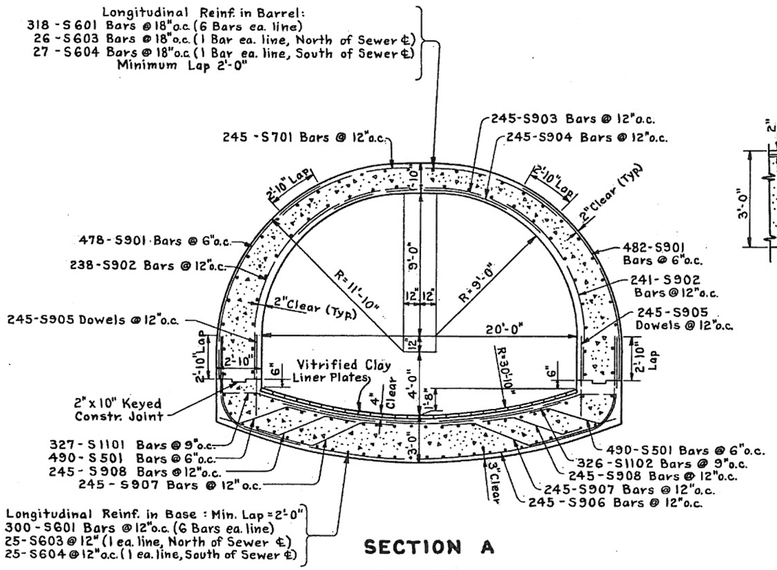

SECTION A

STA. 4+00 to STA. 6+40

Note: Reinforcement for the curved portion of the sewer (Sta. 4+00 to Sta. 4+76.4) to be set radially. For typical spacing dimensions, see "Detail of Reinforcement at Curve".

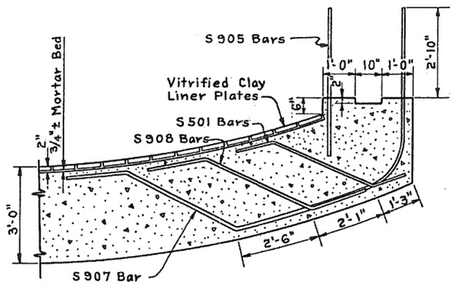

CORNER & CONSTR. JOINT DETAIL

STA. 4+00 to 6+40

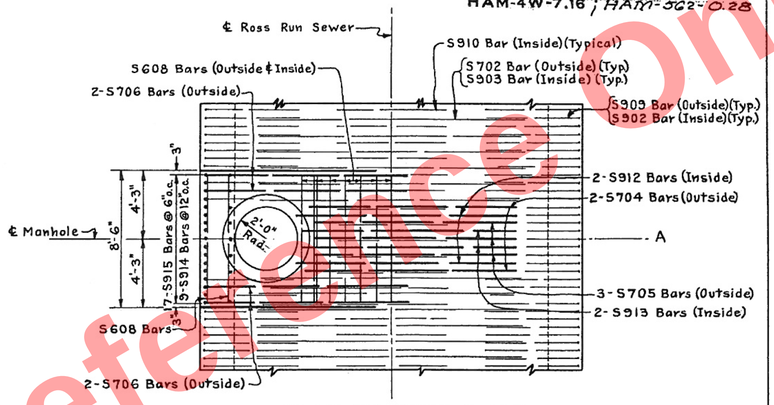

PLAN AT TYPE B M.H.

Note: Type B Manhole is similar to Type A or Type P Manhole, except base is omitted.

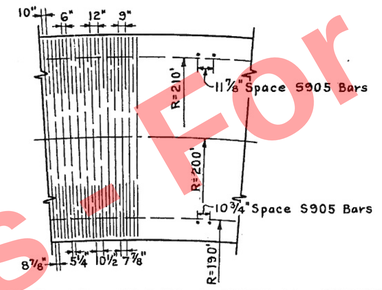

DETAIL OF REINFORCEMENT AT CURVE

STA. 3+62.2 to STA. 4+76.4

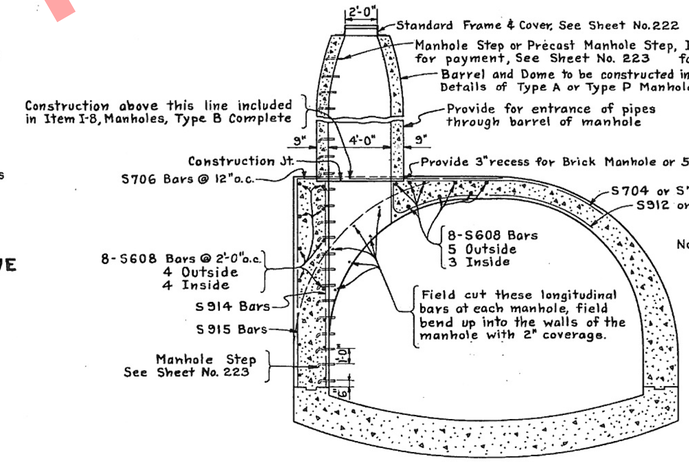

SECTION A-A AT TYPE B M.H.

1 Req'd. Sta. 8+20.25
1 Req'd. Sta. 12+14.25

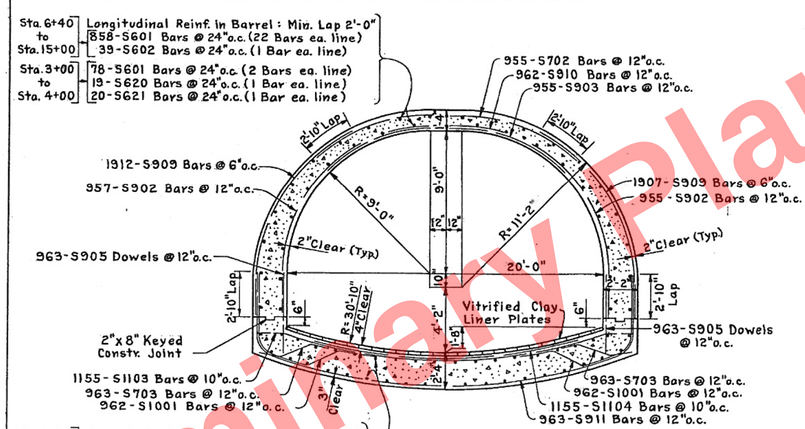

SECTION B

STA. 3+00 to STA. 4+00
STA. 6+40 to STA. 15+00

Note: Section A & Section B are taken looking in the direction of stationing.

Note: Reinforcement for the curved portion of the Sewer (Sta. 3+62.2 to Sta. 4+00) to be set radially. For typical spacing dimensions, see "Detail of Reinforcement at Curve"

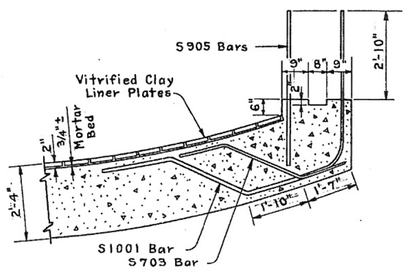

CORNER & CONSTR. JOINT DETAIL

STA. 3+00 to STA. 4+00
STA. 6+40 to STA. 15+00

HAZELET & ERDAL
CONSULTING ENGINEERS
CINCINNATI, OHIO

DETAILS

STRUCT. NO. HAM-4W-0740
ROSS RUN SEWER
HAMILTON COUNTY
SECTION: HAM.-4W-7.16
SCALE:

DESIGNED	DRAWN	TRACED	CHECKED	REVIEWED	DATE	REVISED
E.R.B.	H.L.L.	R.J.S.	H.A.Z.	J.H.O.	10/15/57	

HAM-75-7.85

46
1047

J:\20110903\ODOT\HAM\77889\roadway\sheets\77889GN003.dgn 5/22/2026 10:05:25 AM hbrendlinger

ELECTRONIC TICKETING

PURPOSE:
PROVIDE ELECTRONIC MATERIAL TICKETS IN AN ELECTRONIC FORMAT DIRECTLY RECORDED FROM THE MATERIAL LOADING SOURCE.

PROVIDE ELECTRONIC MATERIAL TICKETS FOR THE FOLLOWING MATERIALS:

- AGGREGATE
- ASPHALT CONCRETE
- PORTLAND CONCRETE

THIS NOTE IN NO WAY SUPERSEDES ANY OTHER COMMERCIAL REGULATIONS OR ANY OTHER LEGAL REQUIREMENTS REGULATING THE TRANSPORTATION OF COMMERCIAL MATERIALS.

REQUIREMENTS:
AT THE PRE-CONSTRUCTION MEETING, SUBMIT AN ELECTRONIC TICKETING PLAN TO THE ENGINEER DESCRIBING THE PROPOSED ELECTRONIC TICKET DELIVERY METHOD. THE ELECTRONIC MATERIAL TICKET SHALL CONTAIN INFORMATION AS REQUIRED PER THE APPLICABLE MATERIAL SPECIFICATION FOR WEIGHT MEASUREMENT AND OTHER MATERIAL CHARACTERISTICS; PROVIDE AN EXAMPLE(S) OR A MOCK-UP OF THE PROPOSED ELECTRONIC TICKET TO SHOW THE DETAILS ON WHAT IS TO BE TRANSMITTED TO THE DEPARTMENT. NAMING OF THE ELECTRONIC MATERIAL TICKET FILES SHALL BE DISTINCT SUCH THAT THE TICKET S REPRESENTED MATERIAL IS EASILY DETERMINED; INCLUDE THE PROPOSED NAMING CONVENTION. DELIVERY MAY BE THROUGH A PRODUCER WEBSITE UPLOAD ACCESSIBLE TO THE ENGINEER, ODOT PROJECT SPECIFIC SHAREPOINT DOCUMENTATION SITE UPLOAD, OR ANOTHER SECURE ELECTRONIC TRANSMITTAL MEANS. EMAILING OF A TICKET TO AN ODOT CONTACT IS ACCEPTABLE BUT IS NOT PREFERRED. THE ELECTRONIC TICKETING PLAN SHALL IDENTIFY A CONTINGENCY METHOD FOR MANUALLY CAPTURING AND DELIVERING TICKET INFORMATION IF ELECTRONIC TRANSMISSION IS TEMPORARILY UNAVAILABLE. AN ELECTRONIC TICKETING PLAN WHICH INCLUDES SOLELY THE USE OF DIGITAL PHOTOS OF PAPER TICKETS IS NOT ACCEPTABLE.

THE DEPARTMENT RECOGNIZES THAT VARIOUS DIGITAL TICKETING SYSTEMS MAY BE COMMERCIALLY AVAILABLE AND USED TO ACCOMMODATE INDIVIDUAL CONTRACTORS AND MATERIAL SUPPLIER CAPABILITIES. THE CONTRACTOR MAY PROVIDE A DIGITAL TICKETING SYSTEM GIVING SECURE ACCESS TO ORGANIZED DIGITAL DATA. IF UTILIZED, THE DIGITAL TICKETING SYSTEM MAY ALSO BE ACCESSIBLE BY REAL-TIME MONITORING WITH A MOBILE COMMUNICATION DEVICE SUCH AS A TABLET, SMARTPHONE, ETC. THROUGH MOBILE DEVICE APPLICATIONS (MOBILE APP) IF ACCEPTABLE TO THE DEPARTMENT. IF A DIGITAL TICKETING SYSTEM REQUIRES A MOBILE APP, THE MOBILE APP SHALL BE AT NO COST TO THE DEPARTMENT. THE DIGITAL DATA MUST BE ABLE TO BE EXPORTED IN A FORMAT USABLE BY THE ENGINEER UPON REQUEST (I.E. MICROSOFT WORD, MICROSOFT EXCEL, PDF FORMATS).

DELIVER EACH ELECTRONIC MATERIAL TICKET TO THE ENGINEER PRIOR TO THE PLACEMENT OF MATERIAL, BUT NOT PRIOR TO THE LOADING OF MATERIAL AT THE SOURCE.

PROVIDE THE ENGINEER A DAILY MATERIAL SUMMARY REPORT BY THE END OF THE DAY S HAULING ACTIVITIES, OR AT A TIME AS APPROVED BY THE ENGINEER. THE DAILY MATERIAL SUMMARY REPORT INCLUDES SUMMARY INFORMATION LISTED FOR EACH MATERIAL AS OUTLINED IN THE RESPECTIVE MATERIAL SPECIFICATION.

PAYMENT:
COSTS FOR THE ELECTRONIC TICKETING SHALL BE INCIDENTAL TO THE PROJECT.

NON-WORK PERIODS FOR MULTI-YEAR CONTRACTS

INDENTIFY THE ENTIRE MONTH OF EACH NOVEMBER OF THE ORIGINAL CONTRACT PERIOD AS A NON-WORK PERIOD IN THE CPM CALENDARS. THIS NON-WORK PERIOD WILL BE MADE AVAILABLE FOR USE AS AN OPPORTUNITY TO MITIGATE CRITICAL DELAYS. THE CONTRACTOR WILL BE PERMITTED TO CONTINUE WORK DURING THIS NON-WORK PERIOD BUT MUST GIVE PRECEDENCE TO PERFORMING WORK THAT MITIGATES ANY EXISTING PROJECT DELAY. MITIGATE CRITICAL DELAYS IN THE FOLLOWING ORDER:

1) EXCUSABLE, COMPENSABLE DELAYS
2) NON-EXCUSABLE DELAYS
3) EXCUSABLE, NON-COMPENSABLE DELAYS

THE DEPARTMENT WILL COMPENSATE THE CONTRACTOR FOR ADDITIONAL COSTS INCURRED DUE TO COLD WEATHER WORK RESULTING FROM THE MITIGATION OF AN EXCUSABLE, COMPENSABLE DELAY OR DEPARTMENT DIRECTED MITIGATION OF AN EXCUSABLE, NON-COMPENSABLE DELAY.

COMPENSATION FOR THESE ADDITIONAL COLD WEATHER WORK COSTS WILL BE COMPUTED PER C&MS 109.05A, B, C &E. PROVIDE NOTICE PER C&MS 108.02.F FOR ADDITIONAL COSTS, OTHER THAN COLD WEATHER WORK IMPACTS THAT ARE A DIRECT RESULT OF MITIGATING EXCUSABLE, COMPENSABLE OR DEPARTMENT DIRECTED EXCUSABLE, NON-COMPENSABLE DELAYS DURING THIS TIME PERIOD. MITIGATION OF ANY DELAY, WHETHER CAUSED BY THE DEPARTMENT, CONTRACTOR, THIRD-PARTY OR AN INTERVENING EVENT, IS A SHARED CONTRACT AND LEGAL REQUIREMENT. EXECUTE REASONABLE MITIGATION EFFORTS IN A TIMELY MANNER.

BY THE FOLLOWING DECEMBER 10TH, DETERMINE THE EFFECT OF MITIGATION OF ANY DELAY DURING THE MONTH OF NOVEMBER BY PERFORMING A TIME IMPACT ANALYSIS PER PN 107. A CHANGE ORDER WILL THEN BE WRITTEN TO MODIFY THE FINAL COMPLETION DATE AND ANY INTERIM COMPLETION DATES, IF WARRANTED.

ITEM 624 - MOBILIZATION, AS PER PLAN

ODOT 2019 CONSTRUCTION AND MATERIAL SPECIFICATION SECTION 624.02 LIMITATION, SHALL BE DELETED AND REPLACED WITH THE FOLLOWING.

624.02 LIMITATION.
THE DEPARTMENT WILL LIMIT THE SUM OF THE PARTIAL PAYMENTS SPECIFIED IN 624.04.A AND 624.04.B TO 5% OF THE ORIGINAL CONTRACT AMOUNT. THE DEPARTMENT WILL PAY THE BALANCE OF THE LUMP SUM AMOUNT BID, AS SPECIFIED IN 624.04.C. IF THE LUMP SUM AMOUNT BID FOR MOBILIZATION EXCEEDS 5% OF THE ORIGINAL CONTRACT AMOUNT, THE DEPARTMENT WILL PAY THE EXCESS UPON COMPLETION OF THE PROJECT.

SECTION 624.04 BASIS OF PAYMENT, SHALL BE DELETED AND REPLACED WITH THE FOLLOWING.

624.04 BASIS OF PAYMENT.
THE DEPARTMENT WILL MAKE PARTIAL PAYMENTS ACCORDING TO 109.09 AND AS MODIFIED BY THE FOLLOWING SCHEDULE:

A. THE DEPARTMENT WILL RELEASE 50 PERCENT OF THE LUMP SUM AMOUNT BID FOR MOBILIZATION OR 50 PERCENT OF 5% OF THE ORIGINAL CONTRACT AMOUNT, WHICHEVER IS LESS, TO THE CONTRACTOR WITH THE FIRST ESTIMATE PAYABLE, BUT NOT SOONER THAN 15 DAYS AFTER THE START OF WORK AT THE PROJECT SITE.

B. THE DEPARTMENT WILL RELEASE AN ADDITIONAL 40 PERCENT OF THE LUMP SUM AMOUNT BID FOR MOBILIZATION OR 40 PERCENT OF 5% OF THE ORIGINAL CONTRACT AMOUNT, WHICHEVER IS LESS, WITH THE FIRST REGULAR ESTIMATE AFTER 10 PERCENT OF THE ORIGINAL TOTAL CONTRACT AMOUNT, INCLUDING PAYMENTS FOR DELIVERED MATERIALS BUT EXCLUDING MOBILIZATION, IS EARNED.

C. UPON COMPLETION OF ALL WORK ON THE PROJECT, INCLUDING FINAL CLEANUP, THE DEPARTMENT WILL RELEASE PAYMENT OF THE REMAINING 10 PERCENT OF THE LUMP SUM AMOUNT BID FOR MOBILIZATION AND ANY AMOUNT OF THE LUMP SUM PRICE BID FOR MOBILIZATION, IN EXCESS OF 5% OF THE ORIGINAL CONTRACT AMOUNT FOR PARTIAL PAYMENT. FINAL CLEANUP INCLUDES BUT IS NOT LIMITED TO THE REMOVAL OF CONSTRUCTION LAYOUT STAKES AND SEDIMENT AND EROSION CONTROL ITEMS.

Preliminary Plans - Not For Reference Only

CALCULATED SEA
CHECKED DLR

GENERAL NOTES

HAM-75-7.85

J:\20110903\ODOT\HAM\77889\roadway\sheets\77889GN015.dgn 5/22/2026 10:05:38 AM hbrendlinger

Preliminary Plans - For Reference Only

DEDUCT 20'-0" FROM CONCRETE BARRIER;
ALL COSTS FOR CONCRETE BARRIER AND INLET ARE INCLUDED IN ITEM 611 - NO. 3 INLET (TYPE D), AS PER PLAN

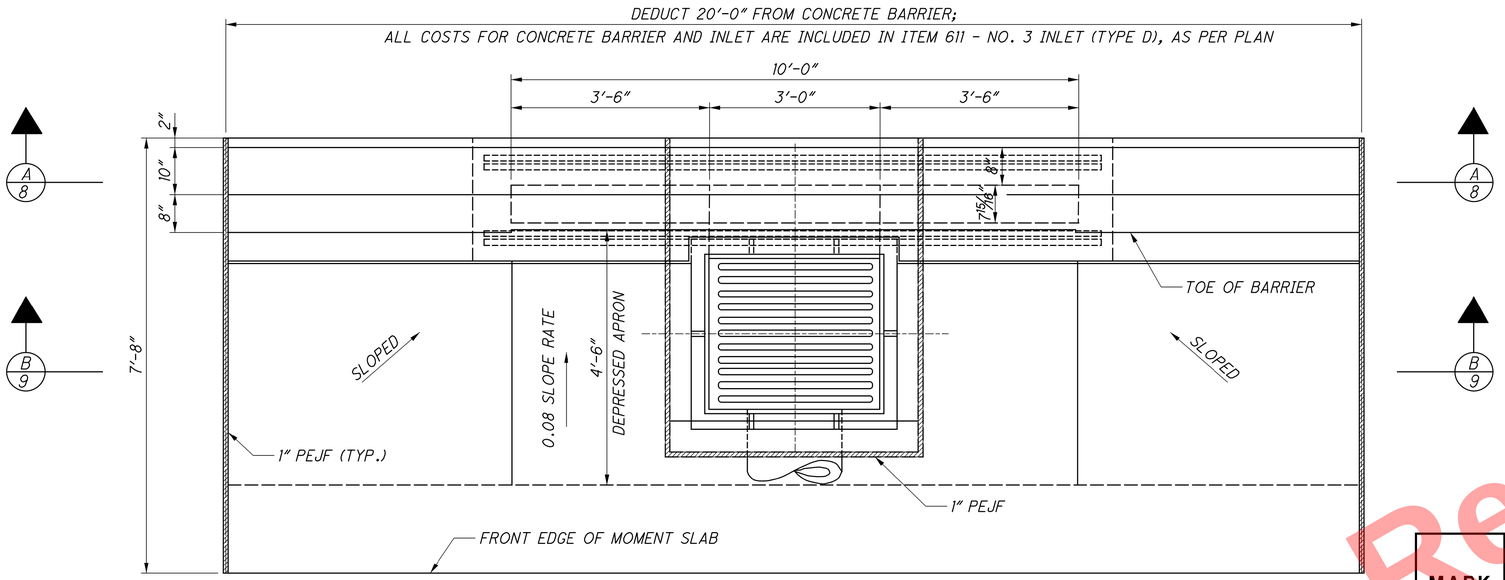

PLAN VIEW

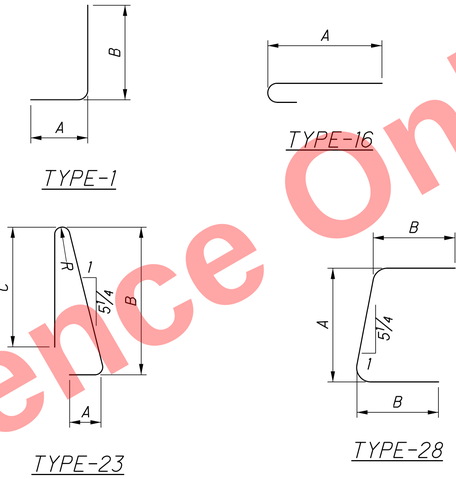

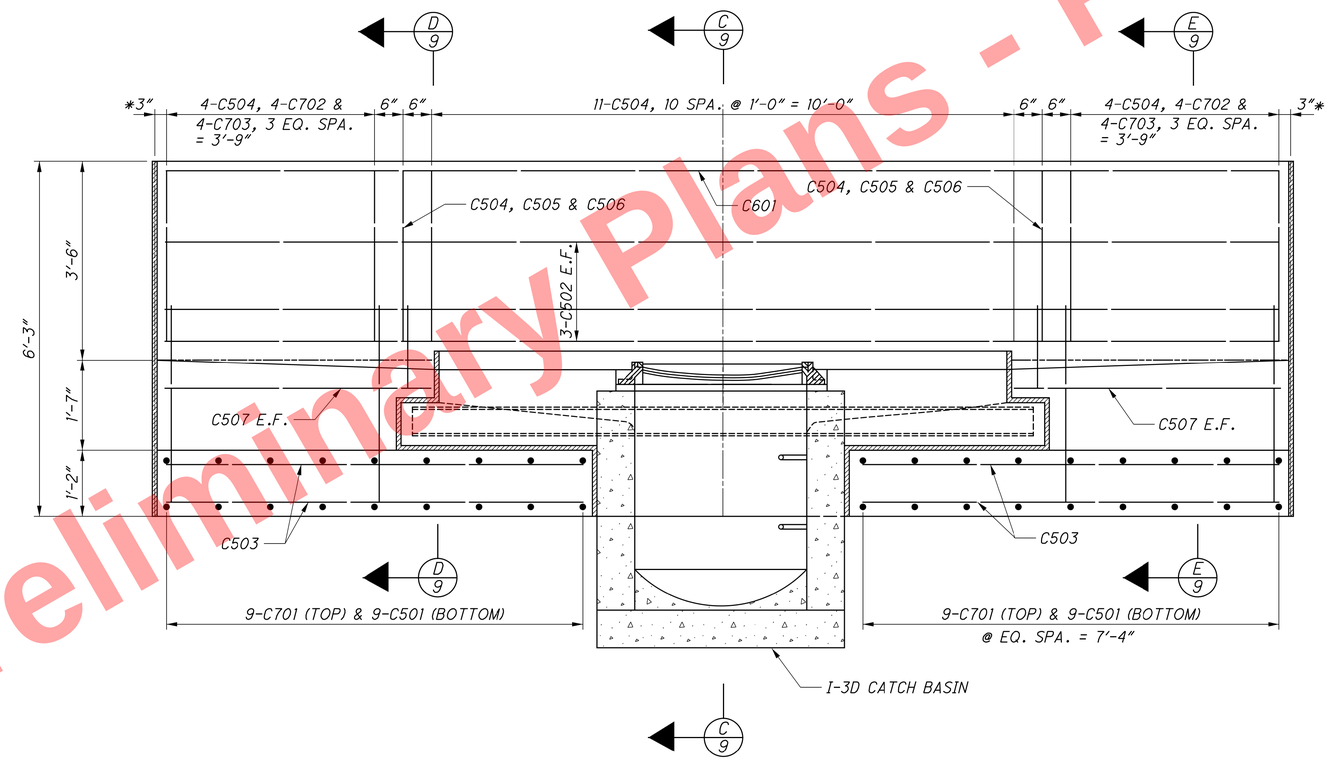

SECTION A-A

MARK	NUMBER TOTAL	LENGTH	WEIGHT	TYPE	DIMENSIONS A	B	C	R
INLET REINFORCING								
C401	8	10'-0"	54	ST				
C501	18	7'-4"	138	ST				
C502	12	19'-8"	246	ST				
C503	20	7'-5"	155	ST				
C504	21	7'-4"	160	23	0'-11"	3'-3"	3'-0"	2 3/4"
C505	2	3'-0"	6	28	1'-5"	0'-11"		
C506	2	2'-11"	6	1	1'-8"	1'-5"		
C507	4	4'-7"	19	ST				
C601	1	19'-8"	30	ST				
C701	18	8'-1"	297	16	7'-4"			
C702	8	5'-11"	97	28	3'-3"	1'-6"		
C703	8	4'-2"	68	1	1'-2"	3'-2"		
C704	10	2'-1"	43	ST				
INLET TOTAL = 1319 LBS (PER INLET)								

LEGEND:

* - DIMENSIONED TO CENTER OF PEJF.

NOTES:

1. SEE ROADWAY STD. DWG. I-3D FOR ADDITIONAL NOTES AND DETAILS.
2. SEE ROADWAY GENERAL NOTES FOR PAYMENT.
3. BAR DIMENSIONS ARE OUT TO OUT UNLESS NOTED OTHERWISE.
4. ALL BARS ARE EPOXY COATED.
5. WHEN NO BAR LEG DIMENSIONS ARE SHOWN, IT INDICATES STANDARD BEND.
6. 9.55 C.Y. OF CONCRETE/INLET INCLUDED FOR PAYMENT WITH ITEM 611 - NO. 3 INLET (TYPE D), AS PER PLAN.

CALCULATED SEA CHECKED DLR

GENERAL NOTES

HAM-75-7.85

48
1047

J:\20110903\ODOT\HAM\77889\roadway\sheets\77889GN016.dgn 5/22/2026 10:05:38 AM hbrendlinger

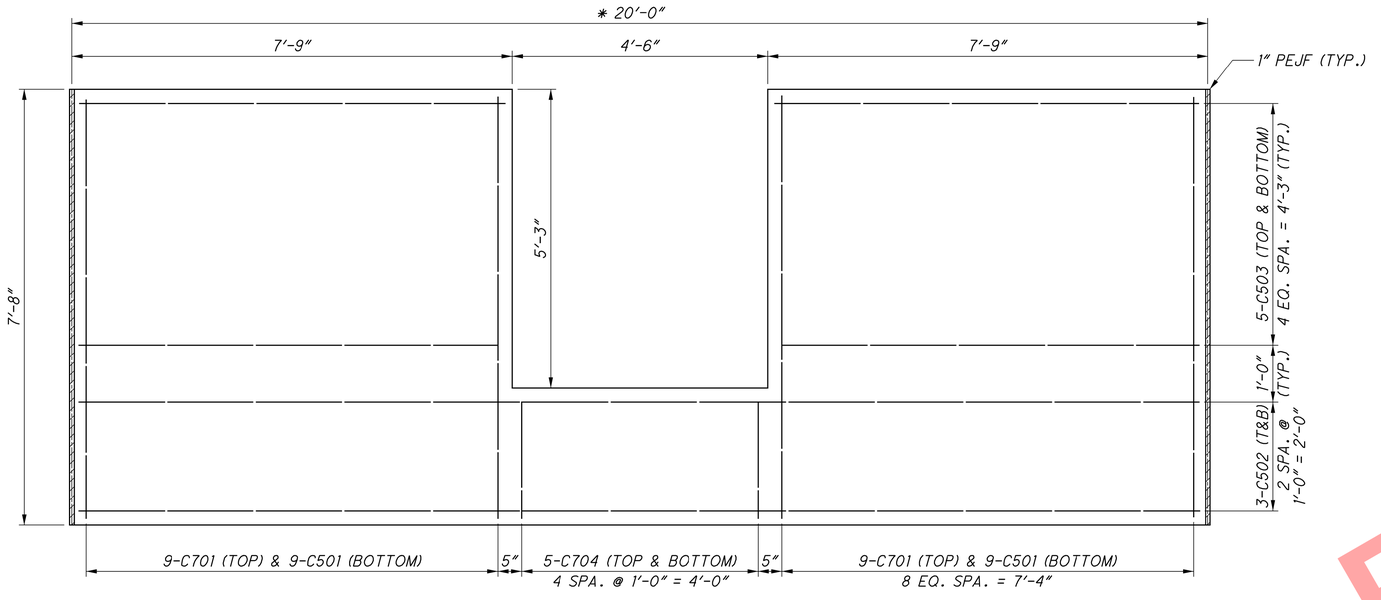

MOMENT SLAB PLAN VIEW

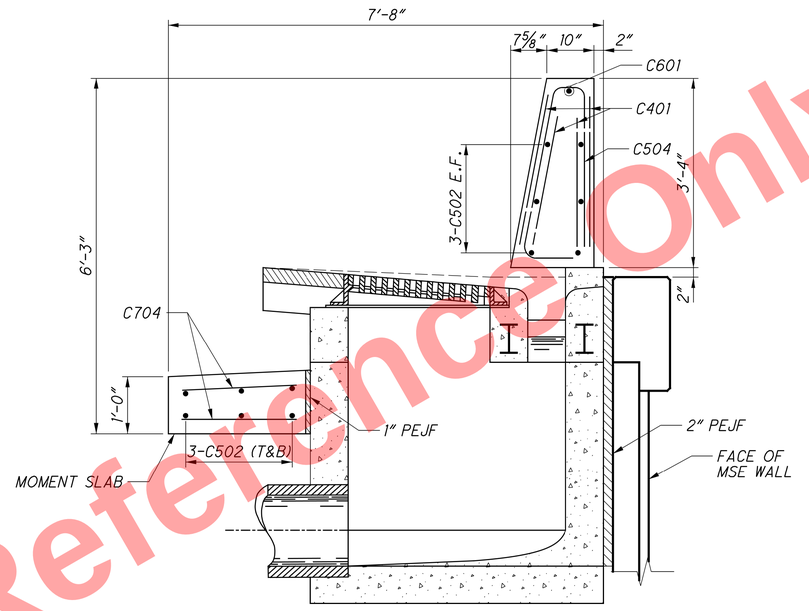

SECTION C-C

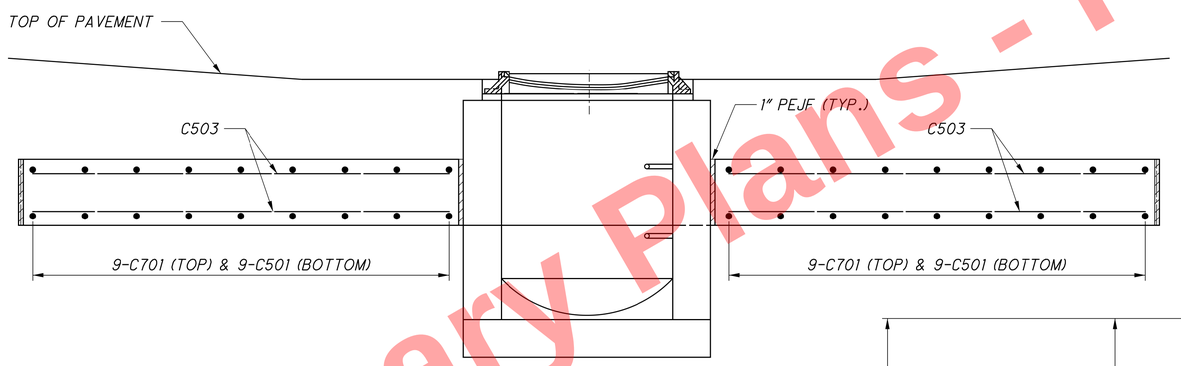

SECTION B-B

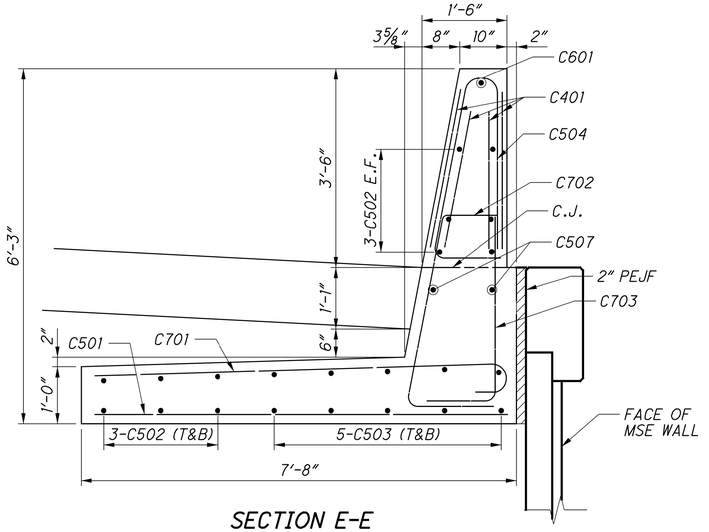

SECTION E-E

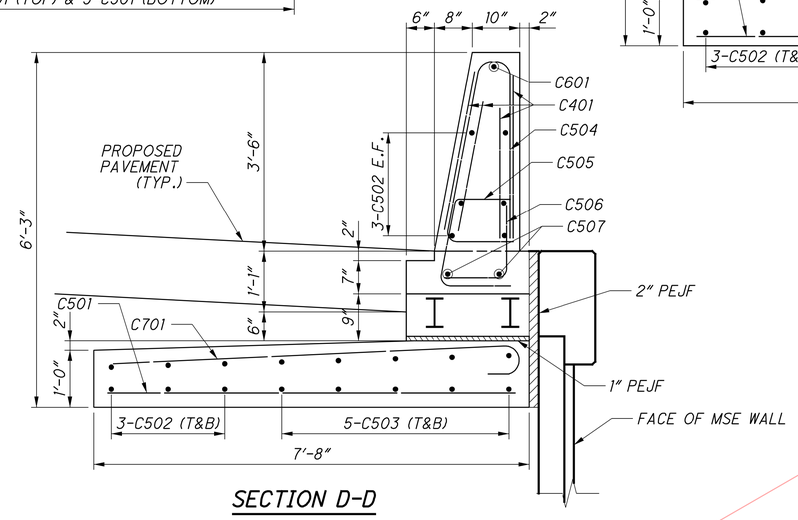

SECTION D-D

LEGEND:

* - DIMENSIONED TO CENTER OF PEJF.

NOTES:

1. SEE ROADWAY STD. DWG. I-3D FOR ADDITIONAL NOTES AND DETAILS.
2. SEE ROADWAY GENERAL NOTES FOR PAYMENT.

Preliminary Plans - For Reference Only

CALCULATED SEA
CHECKED DLR

GENERAL NOTES

HAM-75-7.85

J:\20110903\ODOT\HAM\77889\roadway\sheets\77889GN016.dgn 5/22/2026 10:06:57 AM hbrendlinger

SEQUENCE OF CONSTRUCTION

CONSTRUCTION SEQUENCE - IR 75

PRE-PHASE 1
PRIOR TO IMPLEMENTATION OF THE PHASE 1 SET-UP, TEMPORARY PAVEMENT SHALL BE CONSTRUCTED FOR USE IN FUTURE PHASES. THIS WILL BE COMPLETED BY UTILIZING SHOULDER CLOSURES (PER ODOT SCD MT-95.45), AND NIGHT-TIME LANE CLOSURES (PER ODOT SCD MT-95.30) AS PERMITTED BY THE PLCM.

PHASE 1
PHASE 1 SHALL CONSTRUCT THE OUTSIDE PORTIONS OF SB IR 75 WITH TRAFFIC MAINTAINED ON EXISTING PAVEMENT. ONE SB LANE WILL BE CROSSED OVER INTO CONTRA FLOW DURING PHASE 1, WHILE THE OTHER TWO SB LANES ARE MAINTAINED ON THE EXISTING INSIDE PAVEMENT. PID 117525 (HAM-75-8.91) WILL BE UNDER CONSTRUCTION AT THE SAME TIME AS PID 77889, AND THE MOT SET-UPS FOR BOTH PROJECTS WILL OVERLAP WITH EACH OTHER. ADDITIONAL PLAN SHEETS HAVE BEEN INCLUDED IN PHASE 1 TO ACCOUNT FOR THE DIFFERENT PID 117525 MOT PHASES.

PHASE 1 PART 2
PHASE 1 PART 2 IS AN OPTIONAL SET-UP THAT CAN BE UTILIZIED IF ALL PHASE 1 WORK IS COMPLETED SOUTH OF STATION 430+25. THIS SET-UP ALLOWS FOR AN EARLY START ON PHASE 2 STRUCTURE WORK INCLUDING DECK REMOVAL AND RAMP M PIER CONSTRUCTION. PART 2 WORK SHALL BE COMPLETED WITH THE TWO SB NON-CONTRAFLOW LANES SHIFTED ONTO THE NEWLY CONSTRUCTED BRIDGE OVER RAMP J. ALL OTHER LANES SHALL REMAIN IN THEIR PHASE 1 ALIGNMENT. PHASE 1 PART 2 ON IR 75 DOES NOT NEED TO COINCIDE WITH PHASE 1 PART 2 ON SR 562.

PHASE 2
PHASE 2 SHALL CONSTRUCT INSIDE PORTIONS OF SB IR 75 WITH NB TRAFFIC MAINTAINED ON EXISTING PAVEMENT AND SB SHIFTED ONTO NEWLY CONSTRUCTED OUTSIDE PAVEMENT.

PHASE 3A
PHASE 3A SHALL REMOVE THE REMAINING MAINLINE STRUCTURE OVER RAMP J AND CONSTRUCT THE REMAINDER OF THE PROPOSED RAMP J PAVEMENT. IR 75 THRU LANES SHALL BE MAINTAINED PER THE PHASE 3 DESCRIPTION BELOW (NB IN FULL CROSSOVER). RAMP D (NB EXIT TO PADDOCK RD) WILL REMAIN OPEN DURING THIS PHASE, HOWEVER ACCESS FROM IR 75 WILL BE REROUTED VIA SR-562 AS DETAILED WITHIN. PHASE 3A SHALL BE LIMITED TO 30 DAYS MAX DURATION.

PHASE 3
PHASE 3 SHALL CONSTRUCT ALL OF THE NB IR 75 PAVEMENT, WITH NB TRAFFIC CROSSED OVER TO THE SB SIDE OF THE HIGHWAY. THREE LANES PER DIRECTION SHALL BE MAINTAINED ON THE NEWLY CONSTRUCTED PAVEMENT. A SUB-PHASE (PART 2) SHALL BE UTILIZIED AT THE NORTH END OF THE PROJECT SO THAT RAMP D (NB EXIT TO PADDOCK RD) CAN BE MAINTAINED FOR THE DURATION OF PHASE 3.

PHASE 4
PHASE 4 SHALL CONSTRUCT SECTIONS OF MEDIAN BARRIER THAT WERE NON-PERFORMED IN PREVIOUS PHASES. SB IR 75 TRAFFIC SHALL REMAIN IN THE PHASE 3 ALIGNMENT, AND NB IR 75 TRAFFIC SHALL BE SHIFTED TO THE OUTSIDE OF NEWLY CONSTRUCTED NB PAVEMENT, ALL RAMP TRAFFIC SHALL BE MAINTAINED IN PHASE 4. THE FINAL PAVEMENT SURFACE COURSE AND PAVEMENT MARKINGS SHALL BE INSTALLED AFTER COMPLETION OF PHASE 4.

CONSTRUCTION SEQUENCE - SR 562 AND RAMP CONNECTIONS

RAMP J (IR 75 SB TO SR 562 EB)
RAMP J WILL BE CONSTRUCTED IN PIECES UNDER CLOSURE DURING PHASES 1, 2 AND 3A. ONCE DEMOLITION OF THE MAINLINE STRUCTURE OVERHEAD IS COMPLETE (EARLY PHASE 3A) THE REMAINING RAMP J PAVEMENT SHALL BE CONSTRUCTED. RAMP J SHALL BE OPEN TO TRAFFIC IN PHASES 3 AND 4.

RAMP M (SR 562 WB TO IR 75 SB)
RAMP M WILL BE CONSTRUCTED IN PIECES UNDER CLOSURE DURING PHASES 1 AND 2. THE EXISTING STRUCTURE WILL BE REMOVED IN PHASE 1 SO THAT THE PROPOSED REAR ABUTMENT CAN BE CONSTRUCTED. THE CENTER PIER, FORWARD ABUTMENT AND PROPOSED DECK WILL BE COMPLETED IN PHASE 2. RAMP M SHALL BE OPEN TO TRAFFIC IN PHASES 3A, 3 AND 4.

RAMP K (SR 562 WB TO IR 75 NB)
RAMP K SHALL BE MAINTAINED ON EXISTING PAVEMENT IN PHASES 1, 2 AND 3A. RAMP K WILL BE CONSTRUCTED UNDER CLOSURE IN PHASE 3, THEN REOPENED IN PHASE 4.

RAMP N (IR 75 NB TO SR 562 EB)
RAMP N SHALL BE MAINTAINED FOR THE DURATION OF THE PROJECT. RAMP N CONSTRUCTION SHALL BE COMPLETED PART WIDTH IN PHASES 1 AND 2.

SR 562
IN PHASE 1, SR 562 EB OUTSIDE PAVEMENT WILL BE CONSTRUCTED, WITH ONE LANE MAINTAINED IN EACH DIRECTION ON EXISTING PAVEMENT. A 30 DAY CLOSURE OF RAMP Q (EB EXIT TO PADDOCK RD) IS PERMITTED IN PHASE 1. IN PHASE 2, INSIDE PAVEMENT WILL BE CONSTRUCTED FOR EB AND WB SR 562 WITH ONE LANE MAINTAINED IN EACH DIRECTION ON EXISTING AND NEWLY CONSTRUCTED PAVEMENT. IN PHASE 3 SR 562 WB OUTSIDE PAVEMENT WILL BE CONSTRUCTED WITH ONE LANE MAINTAINED WB, AND TWO LANES MAINTAINED EB ON NEWLY CONSTRUCTED PAVEMENT. A 45 DAY CLOSURE OF RAMP P (WB ENTRANCE FROM PADDOCK RD) IS PERMITTED IN PHASE 3.

CONSTRUCTION SEQUENCE - LOCAL STREETS

TOWNE ST
OVERHEAD WORK FOR PHASES 1, 2 AND 3 SHALL BE COMPLETED WITH TOWNE STREET MAINTAINED AS DETAILED WITHIN. TOWNE STREET PAVEMENT WORK WILL BE COMPLETED IN PHASES 2 AND 3. PEDESTRIAN TRAFFIC SHALL BE DETOURED FOR PHASES 2 AND 3 WORK, HOWEVER BOTH EB AND WB VEHICULAR TRAFFIC SHALL BE MAINTAINED.

CEDAR ST
CEDAR STREET SHALL BE RECONSTRUCTED INTO THE PERMANENT ONE-WAY CONDITION DURING PHASE 1. THIS WORK SHALL BE COMPLETED WITH CEDAR STREET CLOSED AS DETAILED IN THE TOWNE ST MOT PLANS. ONE-WAY CEDAR ST SHALL THEN BE MAINTAINED FOR THE REMAINING PHASES.

LAIDLAW AVE
PRIOR TO PHASE 1, UTILITY WORK SHALL BE COMPLETED WITHIN LAIDLAW AVE. LEFT LANE CLOSURES SHALL BE UTILIZED FOR BOTH DIRECTIONS DURING NON-PEAK HOURS AS DETAILED WITHIN. RIGHT LANE CLOSURES SHALL BE UTILIZED ANYTIME ADJACENT STRUCTURE WORK IMPACTS THE ROADWAY. THIS SAME SETUP SHALL BE IMPLEMENTED THROUGHOUT PHASES 1-3.

PROSSER AVE
UTILITY WORK ON PROSSER AVE SHALL OCCUR DURING PHASE 1 UNDER CLOSURE. PROSSER AVE PEDESTRIAN AND VEHICULAR TRAFFIC SHALL BE DETOURED DURING PHASE 1 AS DETAILED WITHIN.

ITEM 614, MAINTAINING TRAFFIC

NO WORK SHALL BE PERFORMED AND ALL EXISTING LANES SHALL BE OPEN TO TRAFFIC DURING THE FOLLOWING DESIGNATED HOLIDAYS OR SPECIAL EVENTS:

NEW YEAR'S (OBSERVED)
GENERAL/REGULAR ELECTION DAY(NOV)
TOTAL SOLAR ECLIPSE (4/8/24) THANKSGIVING
MEMORIAL DAY
CHRISTMAS (OBSERVED)
FOURTH OF JULY (OBSERVED)
LABOR DAY

THE PERIOD OF TIME THAT THE LANES ARE TO BE OPEN DEPENDS ON THE DAY OF THE WEEK ON WHICH THE HOLIDAY OR SPECIAL EVENT FALLS. THE FOLLOWING SCHEDULE SHALL BE USED TO DETERMINE THIS PERIOD:

DAY OF HOLIDAY OR SPECIAL EVENT TIME ALL LANES MUST BE OPEN TO TRAFFIC

SUNDAY 12:00N FRIDAY THROUGH 6:00 AM MONDAY
MONDAY 12:00N FRIDAY THROUGH 6:00 AM TUESDAY
MONDAY (TOTAL SOLAR ECLIPSE) 12:00N FRIDAY THROUGH 6:00 AM WEDNESDAY
TUESDAY 12:00N MONDAY THROUGH 6:00 AM WEDNESDAY
TUESDAY (GEN./REG. ELECTION) 5:00 AM TUESDAY THROUGH 12:00 AM WEDNESDAY
WEDNESDAY 12:00N TUESDAY THROUGH 6:00 AM THURSDAY
THURSDAY 12:00N WEDNESDAY THROUGH 6:00 AM FRIDAY
THURSDAY (THANKSGIVING ONLY) 6:00 AM WEDNESDAY THROUGH 6:00 AM MONDAY
FRIDAY 12:00N THURSDAY THROUGH 6:00 AM MONDAY
SATURDAY 12:00N FRIDAY THROUGH 6:00 AM MONDAY

DURING THE SAME PERIODS, MAINTAIN PEDESTRIAN ACCESS IF PEDESTRIAN ACCESS WAS PRESENT PRIOR TO CONSTRUCTION.

NEWLY CONSTRUCTED LANE ADDITIONS, ONCE COMPLETED AND INITIALLY OPENED TO TRAFFIC, SHALL BE OPEN TO TRAFFIC DURING ALL SUBSEQUENT DESIGNATED HOLIDAYS AND SPECIAL EVENTS, AND RELATED PERIODS OF TIME, SPECIFIED ABOVE.

SHOULD THE CONTRACTOR FAIL TO MEET ANY OF THESE REQUIREMENTS, THE CONTRACTOR SHALL BE ASSESSED A DISINCENTIVE PER THE LANE VALUE CONTRACT (PN 127).

ACCESS TO ALL ADJOINING PROPERTIES SHALL BE MAINTAINED AT ALL TIMES. ACCESS FOR MAIL DELIVERY, EMERGENCY AND SERVICE VEHICLES SHALL NOT BE DISRUPTED. THE CONTRACTOR SHALL COORDINATE CONSTRUCTION ACTIVITIES WITH THE ENGINEER AND THE OWNERS OF THE ABUTTING PROPERTIES IN ADVANCE (10 DAYS) OF ANY OPERATIONS WHICH AFFECT ACCESS.

ANY WORK (FALSEWORK, TRAFFIC PROTECTION, CONTAINMENT, ETC.) OVER LIVE TRAFFIC BY THE CONTRACTOR THAT REDUCES THE EXISTING VERTICAL CLEARANCE IS PROHIBITED UNLESS 30 DAYS ADVANCED NOTICE IS PROVIDED TO THE ENGINEER WITH NEW PROPOSED VERTICAL CLEARANCES. THE CONTRACTOR SHALL PROVIDE FIELD MEASUREMENTS BEFORE ALLOWING TRAFFIC UNDERNEATH. IF ANY WORK IS TO OCCUR BELOW 14'-6", THEN SIGNS ON THE STRUCTURE AND ADVANCE WARNING SIGNS SHALL BE INSTALLED A MINIMUM OF 2 WEEKS PRIOR TO PERFORMING SUCH WORK. SIGNING SHALL BE IN ACCORDANCE WITH THE "OHIO MANUAL OF UNIFORM TRAFFIC CONTROL DEVICES" (OMUTCD) AND THE OHIO "TRAFFIC ENGINEERING MANUAL" (TEM). NO WORK OVER TRAFFIC SHALL OCCUR WITH A VERTICAL CLEARANCE LESS THAN 14'-0". LOWERING THE VERTICAL CLEARANCE DURING CONSTRUCTION IS CONSIDERED THE CONTRACTOR'S MEANS AND METHODS OF ACCOMPLISHING THE WORK, AND THEREFORE THE STATE IS NOT RESPONSIBLE FOR ANY DAMAGE FROM VEHICULAR IMPACTS THAT MAY RESULT AS PER 107.10.

Preliminary Plans - For Reference Only

J:\20110903\ODOT\HAM\77889\mot\sheets\77889MN001.dgn 5/22/2026 10:08:09 AM hbrendlinger

CALCULATED BDM CHECKED SMM

MAINTENANCE OF TRAFFIC NOTES

HAM-75-7.85

NOTICE OF CLOSURE SIGNS (W20-H13) SHALL BE ERECTED BY THE CONTRACTOR PRIOR TO THE SCHEDULED ROAD OR RAMP CLOSURE IN ACCORDANCE WITH THE NOTICE OF CLOSURE TIME TABLE BELOW. [AT THE APPROVAL OF THE ENGINEER, PORTABLE CHANGEABLE MESSAGE SIGNS MAY BE USED IN LIEU OF THE STANDARD FLATSHEET SIGN FOR CLOSURE DURATIONS OF LESS THAN 1 WEEK.]

THE SIGNS SHALL BE ERECTED ON THE RIGHT-HAND SIDE OF THE ROAD/RAMP FACING TRAFFIC. THEY SHALL BE PLACED SO AS NOT TO INTERFERE WITH THE VISIBILITY OF ANY OTHER TRAFFIC CONTROL SIGNS. ON ROADWAYS, THEY SHOULD BE ERECTED AT OR NEAR THE POINT OF CLOSURE. THE SIGNS MAY BE ERECTED ANYWHERE ON RAMPS AS LONG AS THEY ARE VISIBLE TO THE MOTORISTS USING THE RAMP. ON ENTRANCE RAMPS, THE SIGN SHALL BE ERECTED WELL IN ADVANCE OF THE MERGE AREA TO AVOID DISTRACTING MOTORISTS.

NOTIFICATION TIME FRAME TABLE

ITEM	DURATION OF CLOSURE	SIGN DISPLAY TO PUBLIC	NOTIFICATION DUE TO DISTRICT 6 COMMUNICATIONS OFFICE
RAMP & ROAD CLOSURES	>=2 WEEKS	14 CALENDAR DAYS PRIOR TO CLOSURE	21 CALENDAR DAYS PRIOR TO CLOSURE
	>12 HOURS & <2 WEEKS	7 CALENDAR DAYS PRIOR TO CLOSURE	14 CALENDAR DAYS PRIOR TO CLOSURE
	<12 HOURS	2 BUSINESS DAYS PRIOR TO CLOSURE	4 BUSINESS DAYS PRIOR TO CLOSURE

THE SIGN SHALL DISPLAY THE DATE OF THE CLOSURE IN MMM-DD FORMAT AND THE NUMBER OF DAYS OF THE CLOSURE. THE LAST LINE OF THE W20-H13 SIGN LISTS A PHONE NUMBER WHICH A MOTORIST MAY CALL FOR ADDITIONAL INFORMATION. THIS IS TO BE A SPECIFIC OFFICE WITHIN THE DISTRICT RATHER THAN THE GENERAL SWITCHBOARD NUMBER.

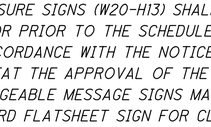

ALL WORK AND TRAFFIC CONTROL DEVICES SHALL BE IN ACCORDANCE WITH C&MS 614 AND OTHER APPLICABLE PORTIONS OF THE SPECIFICATIONS, AS WELL AS THE OHIO MANUAL OF UNIFORM TRAFFIC CONTROL DEVICES. PAYMENT FOR ALL LABOR, EQUIPMENT AND MATERIALS SHALL BE INCLUDED IN THE LUMP SUM CONTRACT PRICE FOR ITEM 614, MAINTAINING TRAFFIC, UNLESS SEPARATELY ITEMIZED IN THE PLAN.

POTHOLE PATCHING

THE FOLLOWING ESTIMATED QUANTITIES HAVE BEEN INCLUDED FOR USE AS DETERMINTED BY THE ENGINEER FOR POTHOLE PATCHING:

ITEM 614, ASPHALT CONCRETE FOR MAINTAINING TRAFFIC
90 CU YD

DRUM REQUIREMENTS

IN ADDITION TO THE REQUIREMENTS OF THE PLANS, SPECIFICATION AND PROPOSAL, DRUMS FURNISHED BY THE CONTRACTOR SHALL BE NEW AND UNUSED AT THE TIME OF ARRIVAL ON THE PROJECT. ANY DRUMS BROUGHT ON THE PROJECT, WHICH HAVE PREVIOUSLY BEEN USED ELSEWHERE, WILL NOT BE ACCEPTED. PAYMENT FOR DRUMS SHALL BE INCLUDED IN THE LUMP SUM PRICE BID FOR MAINTAINING TRAFFIC UNLESS SEPARATELY ITEMIZED.

FLOODLIGHTING

FLOODLIGHTING OF THE WORK SITE FOR OPERATIONS CONDUCTED DURING NIGHTTIME PERIODS SHALL BE ACCOMPLISHED SO THAT THE LIGHTS DO NOT CAUSE GLARE TO THE DRIVERS ON THE ROADWAY. TO ENSURE THE ADEQUACY OF THE FLOODLIGHT PLACEMENT, THE CONTRACTOR AND THE ENGINEER SHALL DRIVE THROUGH THE WORK SITE EACH NIGHT WHEN THE LIGHTING IS IN PLACE AND OPERATIVE PRIOR TO COMMENCING ANY WORK. IF GLARE IS DETECTED, THE LIGHT PLACEMENT AND SHIELDING SHALL BE ADJUSTED TO THE SATISFACTION OF THE ENGINEER BEFORE WORK PROCEEDS.

PAYMENT FOR ALL LABOR, EQUIPMENT AND MATERIALS SHALL BE INCLUDED IN THE LUMP SUM CONTRACT PRICE FOR ITEM 614, MAINTAINING TRAFFIC.

DUST CONTROL

THE CONTRACTOR SHALL FURNISH AND APPLY WATER FOR DUST CONTROL AS DIRECTED BY THE ENGINEER. THE FOLLOWING ESTIMATED QUANTITIES HAVE BEEN INCLUDED FOR DUST CONTROL PURPOSES:

ITEM 616, WATER 1230 M. GAL.

PORTABLE BARRIER

32" PORTABLE BARRIER SHALL BE ANCHORED ANYTIME THERE IS LESS THAN 2' BETWEEN THE BACK OF BARRIER AND THE WORK ZONE. PORTABLE BARRIER QUANTITIES HAVE BEEN SPLIT INTO ANCHORED AND UNANCHORED LENGTHS ACCORDINGLY.

WORK ZONE MARKINGS

THE FOLLOWING ESTIMATED QUANTITIES HAVE BEEN CARRIED TO THE GENERAL SUMMARY FOR USE AT LOCATIONS IDENTIFIED BY THE ENGINEER FOR WORK ZONE PAVEMENT MARKINGS PER THE REQUIREMENTS OF C&MS 614.04 AND 614.11. THESE QUANTITIES HAVE BEEN PROVIDED AS A CONTINGENCY FOR PLACEMENT ON THE ASPHALT SURFACE COURSE PRIOR TO APPLICATION OF PERMANENT PAVEMENT MARKINGS.

ITEM 614, WORK ZONE LANE LINE, CLASS III, 642 PAINT
11.33 MILE
ITEM 614, WORK ZONE EDGE LINE, CLASS III, 642 PAINT
11.34 MILE
ITEM 614, WORK ZONE CHANNELIZING LINE, CLASS III, 642 PAINT
10,758 FEET
ITEM 614, WORK ZONE DOTTED LINE, CLASS III, 642 PAINT
17,387 FEET

ITEM 614, REPLACEMENT SIGN

FLATSHEET SIGNS FURNISHED BY THE CONTRACTOR IN ACCORDANCE WITH THE REQUIREMENTS OF THE PLANS, SPECIFICATIONS AND PROPOSAL WHICH BECOME DAMAGED BY TRAFFIC FOR REASONS BEYOND THE CONTROL OF THE CONTRACTOR SHALL BE REPLACED IN KIND WHEN ORDERED BY THE ENGINEER. REPLACEMENT SIGNS SHALL BE NEW. OTHER MATERIALS MAY BE IN USED, BUT GOOD, CONDITION SUBJECT TO APPROVAL BY THE ENGINEER.

PAYMENT FOR THE NEW SIGNS SHALL BE MADE AT THE CONTRACT PRICE PER EACH FOR ITEM 614, REPLACEMENT SIGN, AND SHALL INCLUDE THE COST OF REMOVING AND DISPOSING OF DAMAGED SIGNS, HARDWARE AND SUPPORTS, AND PROVIDING THE NECESSARY REPLACEMENT HARDWARE, SUPPORTS, ETC.

AN ESTIMATED QUANTITY OF 15 EACH HAS BEEN PROVIDED IN THE GENERAL SUMMARY.

ITEM 614, REPLACEMENT DRUM

DRUMS FURNISHED BY THE CONTRACTOR IN ACCORDANCE WITH THE REQUIREMENTS OF THE PLANS, SPECIFICATIONS AND PROPOSAL WHICH BECOME DAMAGED BY TRAFFIC FOR REASONS BEYOND THE CONTROL OF THE CONTRACTOR SHALL BE REPLACED IN KIND WHEN ORDERED BY THE ENGINEER. REPLACEMENT DRUMS SHALL BE NEW.

PAYMENT FOR THE NEW DRUMS SHALL BE MADE AT THE CONTRACT PRICE PER EACH FOR ITEM 614, REPLACEMENT DRUM, AND SHALL INCLUDE THE COST OF REMOVING AND DISPOSING OF THE DAMAGED DRUM, AND PROVIDING AND MAINTAINING THE REPLACEMENT DRUM IN ACCORDANCE WITH THE CONTRACT REQUIREMENTS FOR THE ORIGINAL DRUM.

AN ESTIMATED QUANTITY OF 150 EACH HAS BEEN PROVIDED IN THE GENERAL SUMMARY.

PERMITTED LANE CLOSURE TIMES

SHORT TERM LANE CLOSURES ARE THOSE WHICH ARE PERMITTED BY THE PERMITTED LANE CLOSURE NOTE. THESE TIMES SHALL NOT BE REVISED WITHOUT PRIOR APPROVAL FROM THE DISTRICT 8 WORK ZONE TRAFFIC CONTROL MANAGER. SHORT TERM LANE CLOSURES SHALL ONLY BE IMPLEMENTED WHEN WORK IS BEING CONTINUOUSLY PERFORMED IN THE LANE. THE CLOSURE SHALL BE REMOVED AS SOON AS POSSIBLE AFTER WORK HAS STOPPED. PERMITTED LANE CLOSURES SHALL ONLY BE ALLOWED DURING THE TIMES SPECIFIED IN THE PERMITTED LANE CLOSURE TIMES AND UNAUTHORIZED LANE USE TABLE INCLUDED IN THESE PLANS. NO LANE OR SHOULDER CLOSURE SHALL BE IN PLACE WHEN NO WORK IS BEING PERFORMED.

PERMITTED LANE CLOSURE TIMES AND UNAUTHORIZED LANE USE TABLE

LOCATION	DIRECTION	EX. NO. OF THRU	1 LANE CLOSED		2 LANES CLOSED		15 MINUTE SHORT DURATION	COMPLETE CLOSURE	TIME UNIT	DISINCENTIVE PER LANE PER TIME UNIT	NOTES
			WEEKDAY	WEEKEND	WEEKDAY	WEEKEND					
IR-75	BOTH	3	8 PM - 6 AM	7 PM - 6 AM	11 PM - 5 AM	10 PM - 6 AM	12 AM - 4 AM	11 PM - 5 AM	1 MINUTE	$540	NOTE 1 (SOUTHBOUND), NOTE 2 (NORTHBOUND), NOTE 3, NOTE 4
SR-562	BOTH	2	8 PM - 6 AM	7 PM - 7 AM	NONE	NONE	11 PM - 5 AM	11 PM - 5 AM	1 MINUTE	$305	NOTE 1, NOTE 3, NOTE 4
RAMPS	BOTH		NONE	NONE	NONE	NONE	NONE	10 PM - 5 AM	1 MINUTE	$540	NOTE 5, NOTE 6
LAIDLAW AVE.	BOTH	1	9AM-4PM 6PM-7AM	9AM-4PM 6PM-7AM	NONE	NONE	NONE	NONE	1 MINUTE	$50	
TOWNE ST.	BOTH	1	ANYTIME	ANYTIME	NONE	NONE	11 PM - 5 AM	NONE	1 MINUTE	$50	
PADDOCK	BOTH	2	8 PM - 6 AM	7 PM - 7 AM	NONE	NONE	NONE	NONE	1 MINUTE	$130	
SEYMOUR AVE.	BOTH	2	ANYTIME	ANYTIME	NONE	NONE	NONE	NONE	1 MINUTE	$40	
PROSSER AVE	BOTH	1	ANYTIME	ANYTIME	NONE	NONE	NONE	9 AM - 3 PM	1 MINUTE	$50	NOTE 7

NOTES

1 NO CLOSURES 2 HOURS BEFORE TO 1 HOUR AFTER THE START TIME OF EVENTS AT GREAT AMERICAN BALL PARK, PAUL BROWN STADIUM, OR HERITAGE BANK ARENA.
THIS RESTRICTION ALSO APPLIES TO ANY OTHER LOCAL VENUE REACHING AN ATTEDANCE OF 20,000+
2 NO CLOSURES FROM 30 MINUTES BEFORE THE SCHEDULED FINISH TIME TO 2 HOURS AFTER EVENTS AT GREAT AMERICAN BALL PARK, PAUL BROWN STADIUM, OR HERITAGE BANK ARENA.
THIS RESTRICTION ALSO APPLIES TO ANY OTHER LOCAL VENUE REACHING AN ATTEDANCE OF 20,000+
3 COMPLETE CLOSURES OF IR-75 AND SR-562 ARE PERMITTED ACCORDING TO THE APPROVED MAINTENANCE OF TRAFFIC POLICY EXCEPTION NOTE ONLY.
4 NO SHORT TERM SHOULDER CLOSURES BETWEEN THE HOURS OF 6 AM TO 9 AM AND 3 PM TO 7 PM MONDAY THROUGH FRIDAY.
5 APPROVED MAINTENANCE OF TRAFFIC POLICY EXCEPTION RAMP CLOSURES: DISINCENTIVES SHALL BE ASSESSED FOR FAILURE TO REOPEN THE RAMP IN THE SPECIFIED TIME PERIOD.
6 RAMPS ARE PERMITTED TO BE CLOSED OVERNIGHT FOR MOT TRAFFIC SWITCHES AND FINAL SURFACING ONLY. ONLY ONE RAMP IS PERMITTED TO BE CLOSED AT A TIME.
7 PROSSER AVE IS PERMITTED TO BE CLOSED BETWEEN THE HOURS OF 9 AM AND 3 PM FOR DEMO/ERECTION OF THE STRUCTURE AS WELL AS FOR SEWER/WATERLINE WORK WITHIN THE ROADWAY.

THE CONTRACTOR WILL BE PERMITED TO REDUCE SB IR-75 TO ONE LANE FOR A PERIOD OF ONE WEEKEND TO CONSTRUCT THE TRANSITION AREA OF THE TEMPORARY ROAD DURING PHASE 1 PART 2.

ITEM 441, ASPHALT CONCRETE SURFACE COURSE, TYPE 1 (449), AS PER PLAN

THIS ITEM IS USED FOR TEMPORARY MOT PAVING WITHIN THE CROSS OVER AREAS INDICATED IN THE PLANS. THE ITEM IS VARIABLE DEPTH AND TO BE PLACED FROM EDGE OF LANE TO EDGE OF LANE TO CREATE A SMOOTH TRANSITION WITHIN THE CROSSOVER AREA.

ALL MATERIAL, LABOR AND EQUIPMENT NECESSARY TO PERFORM THE WORK IS INCLUDED IN THIS ITEM.

Preliminary Plans - Not For Construction Reference Only

CALCULATED BDM CHECKED SMM

MAINTENANCE OF TRAFFIC NOTES

HAM-75-7.85

J:\2011090\3\ODOT\HAM\77889\mot\sheets\77889MN002.dgn 5/22/2026 10:08:09 AM hbrendlinger

WORK ZONE SPEED ZONES (WZSZS)

THE FOLLOWING WORK ZONE SPEED ZONE (WZSZ) SPEED LIMIT REVISION(S) HAVE BEEN APPROVED FOR USE ON THIS PROJECT WHEN WORK ZONE CONDITIONS AND FACTORS ARE MET AS DESCRIBED BELOW:

WZSZ REVISION NUMBER	COUNTY-ROUTE-SECTION	DIRECTION
45099	HAM-75-7.85	NB & SB

POTENTIAL WZSZ LOCATIONS SHALL HAVE AN ORIGINAL (PRE-CONSTRUCTION) POSTED SPEED LIMIT OF 55 MPH OR GREATER, A QUALIFYING WORK ZONE CONDITION OF AT LEAST 0.5 MILE IN LENGTH, AN EXPECTED WORK DURATION OF AT LEAST THREE HOURS, AND A WORK ZONE CONDITION IN PLACE THAT REDUCES THE EXISTING FUNCTIONALITY OF THE TRAVEL LANES OR SHOULDERS (I.E., LANE CLOSURE, LANE SHIFT, CROSSOVER, CONTRAFLOW AND/OR SHOULDER CLOSURE). THE LENGTH OF THE WORK ZONE CONDITION IS MEASURED FROM THE BEGINNING OF THE TAPER FOR THE SUBJECT WORK ZONE CONDITION IMPACTING THE TRAVEL LANES AND/OR SHOULDER TO THE END OF THE DOWNSTREAM TAPER, WHERE DRIVERS ARE RETURNED TO TYPICAL ALIGNMENT. AN EXPECTED WORK DURATION OF AT LEAST THREE HOURS IS REQUIRED TO BALANCE THE ADDITIONAL EXPOSURE CREATED BY INSTALLING AND REMOVING WZSZ SIGNING WITH THE TIME NEEDED TO COMPLETE THE WORK.

IF THE WORK ZONE MEETS THESE MINIMUM CRITERIA, IT SHALL BE ANALYZED FURTHER USING TABLE 1 BELOW TO DETERMINE IF AND WHEN IT QUALIFIES FOR A SPEED LIMIT REDUCTION. DEPENDING ON THE ORIGINAL POSTED SPEED LIMIT, THE TYPE OF TEMPORARY TRAFFIC CONTROL USED, AND WHETHER OR NOT WORKERS ARE PRESENT, A WARRANTED WZSZ WILL VARY IN THE APPROVED SPEED LIMIT TO BE POSTED OVER TIME.

C&MS ITEM 614, PARAGRAPH 614.02(B), INDICATES THAT TWO DIRECTIONS OF A DIVIDED HIGHWAY ARE CONSIDERED SEPARATE HIGHWAY SECTIONS. THEREFORE, IF THE WORK ON A MULTI-LANE DIVIDED HIGHWAY IS LIMITED TO ONLY ONE DIRECTION, A SPEED LIMIT REDUCTION IN THE DIRECTION OF THE WORK DOES NOT AUTOMATICALLY CONSTITUTE A SPEED LIMIT REDUCTION IN THE OPPOSITE DIRECTION. EACH DIRECTION SHALL BE ANALYZED INDEPENDENTLY FROM EACH OTHER.

ALL WZSZS FLUCTUATE BETWEEN TWO APPROVED REDUCED SPEED LIMITS OR BETWEEN AN APPROVED REDUCED SPEED LIMIT AND THE ORIGINAL POSTED SPEED LIMIT. ONLY ONE OF TWO SIGNING STRATEGIES SHALL BE USED TO IMPLEMENT A WZSZ.

WZSZS USING DSL SIGN ASSEMBLIES SHALL BE IN ACCORDANCE WITH THIS NOTE, APPROVED LIST, SUPPLEMENTAL SPECIFICATIONS (SS) 808 AND 908, AND TRAFFIC SCD MT-104.10.

WZSZS USING DSL SIGN ASSEMBLIES SHALL BE IN ACCORDANCE WITH THIS NOTE, APPROVED LIST, SUPPLEMENTAL SPECIFICATIONS (SS) 808 AND 908, AND TRAFFIC SCD MT-104.10.

ONLY ONE WARRANTED SPEED LIMIT APPLIES AT ANY ONE TIME; SPEED LIMIT REDUCTIONS ARE NOT CUMULATIVE. WZSZS SHALL NOT BE USED FOR MOVING/MOBILE ACTIVITIES, AS DEFINED IN OMUTCD PART 6.

WHEN LOOKING UP THE WARRANTED WORK ZONE SPEED LIMITS, ALWAYS USE THE ORIGINAL, PRE-CONSTRUCTION, POSTED SPEED LIMIT. DO NOT USE A PRIOR OR CURRENT WORK ZONE SPEED LIMIT AS A LOOK UP VALUE IN THE TABLE. POSITIVE PROTECTION IS GENERALLY REGARDED AS PORTABLE BARRIER OR OTHER RIGID BARRIER IN USE ALONG THE WORK AREA WITHIN THE SUBJECT WARRANTED WORK ZONE CONDITION. WITHOUT POSITIVE PROTECTION IS GENERALLY REGARDED AS USING DRUMS, CONES, SHADOW VEHICLE, ETC., ALONG THE WORK AREA WITHIN THE SUBJECT WARRANTED WORK ZONE CONDITION. WORKERS ARE CONSIDERED AS BEING PRESENT WHEN ON-SITE, WORKING WITHIN THE SUBJECT WARRANTED WORK ZONE CONDITION. WHEN THE WORK ZONE CONDITION REDUCING THE EXISTING FUNCTIONALITY OF THE TRAVEL LANES OR SHOULDERS IS REMOVED, THE SPEED LIMIT DISPLAYED SHALL RETURN TO THE ORIGINAL POSTED SPEED LIMIT.

ITEM 808 DIGITAL SPEED LIMIT SIGN ASSEMBLY HAS BEEN SEPERATELY ITEMIZED IN THE PLANS. QUANTITIES FOR EACH SIGN HAVE BEEN SHOWN IN THE SUB-SUMMARY WITH THEIR ASSOCIATED PLAN SHEET. A SUMMARY OF DSL SIGN ASSEMBLIES IS AS FOLLOWS:
2 SIGNS FOR 26 MONTHS
2 SIGNS FOR 23 MONTHS
1 SIGN FOR 20 MONTHS
1 SIGN FOR 13 MONTHS
5 SIGNS FOR 10 MONTHS
4 SIGNS FOR 3 MONTHS

	WITH POSITIVE PROTECTION		WITHOUT POSITIVE PROTECTION	
ORIGINAL POSTED SPEED LIMIT	WORKERS PRESENT	WORKERS NOT PRESENT	WORKERS PRESENT	WORKERS NOT PRESENT
55	50	55	45	55

ITEM 614, WORK ZONE INCREASED PENALTIES SIGN (R11-H5A)

R11-H5A-48 SIGNS SHALL BE FURNISHED, ERECTED, AND MAINTAINED IN GOOD CONDITION AND/OR REPLACED AS NECESSARY AND SUBSEQUENTLY REMOVED BY THE CONTRACTOR. SIGNS SHALL BE MOUNTED AT THE APPROPRIATE OFFSETS AND ELEVATIONS AS PRESCRIBED BY THE OHIO MANUAL OF UNIFORM TRAFFIC CONTROL DEVICES. THEY SHALL BE MAINTAINED ON SUPPORTS MEETING CURRENT SAFETY CRITERIA.

THE SIGNS MAY BE ERECTED OR UNCOVERED NO MORE THAN FOUR HOURS BEFORE THE ACTUAL START OF WORK. THE SIGNS SHALL BE REMOVED OR COVERED NO LATER THAN FOUR HOURS FOLLOWING RESTORATION OF ALL LANES TO TRAFFIC WITH NO RESTRICTIONS, OR SOONER AS DIRECTED BY THE ENGINEER. TEMPORARY SIGN COVERING AND UNCOVERING DUE TO TEMPORARY LANE RESTORATIONS SHALL BE GUIDED BY THE FOUR-HOUR LIMITATIONS STATED ABOVE. SUCH LANE RESTORATIONS SHOULD BE EXPECTED TO REMAIN IN EFFECT FOR 30 OR MORE CONSECUTIVE CALENDAR DAYS, SUCH AS DURING WINTER SHUT-DOWNS.

THE SIGNS ON THE MAINLINE SHALL BE DUAL MOUNTED UNLESS NOT PHYSICALLY POSSIBLE. THE FIRST SIGN SHALL BE PLACED BETWEEN THE ROAD WORK AHEAD (W20-1) SIGN AND THE NEXT SIGN IN THE SEQUENCE. SIGNS SHALL BE ERECTED ON EACH ENTRANCE RAMP AND EVERY 2 MILES THROUGH THE CONSTRUCTION WORK LIMITS. SIGNS ON THE MAINLINE SHALL BE R11-H5A-48. SIGNS USED ON THE RAMPS SHALL BE R11-H5A-24. R11-H5A-24 SIGNS MAY BE USED IN THE MEDIAN IN LIEU OF R11-H5A-48 SIGNS IF IT IS NOT PHYSICALLY POSSIBLE TO PROVIDE R11-H5A-48 SIGNS IN THE MEDIAN.

THE R11-H5A-48 SIGNS SHALL BE MOUNTED ON 2 NO. 3 POSTS WHEN LOCATED WITHIN CLEAR ZONES.

THE CONTRACTOR MAY USE SIGNS AND SUPPORTS IN USED, BUT GOOD, CONDITION PROVIDED THE SIGNS MEET CURRENT ODOT SPECIFICATIONS. SIGN FACES SHALL BE RETROREFLECTORIZED WITH TYPE G SHEETING COMPLYING WITH THE REQUIREMENTS OF C&MS 730.19.

WORK ZONE INCREASED PENALTIES SIGNS AND SUPPORTS WILL BE MEASURED AS THE NUMBER OF SIGN INSTALLATIONS, INCLUDING THE SIGN AND NECESSARY SUPPORTS. IF A SIGN AND SUPPORT COMBINATION IS REMOVED AND REERECTED AT ANOTHER LOCATION AS DIRECTED BY THE ENGINEER, IT SHALL BE CONSIDERED ANOTHER UNIT.

PAYMENT FOR ACCEPTED QUANTITIES, COMPLETE, IN PLACE WILL BE MADE AT THE CONTRACT UNIT PRICE. PAYMENT SHALL BE FULL COMPENSATION FOR ALL MATERIALS, LABOR, INCIDENTALS AND EQUIPMENT FOR FURNISHING, ERECTING, MAINTAINING, COVERING DURING SUSPENSION OF WORK, AND REMOVAL OF THE SIGN AND SUPPORT.

ITEM 614, WORK ZONE INCREASED PENALTIES SIGN 11 EACH

WORK ZONE INCREASED PENALTIES SIGNS WILL BE PLACED AS DETAILED IN THE PLANS.

APPROVED MAINTENANCE OF TRAFFIC (MOT) POLICY EXCEPTIONS

PORTIONS OF THE MOT PLANS AS DESCRIBED BELOW HAVE APPROVED MOT EXCEPTION(S) PER TRAFFIC MANAGEMENT IN WORK ZONES POLICY (21-008(P)) AND STANDARD PROCEDURE (123-001(SP)).

APPROVED MOT EXCEPTION(S) INCLUDE:

- MOTPE #1, #2 AND #4 ARE NO LONGER APPLICABLE AND HAVE BEEN REPLACED WITH MOTPE #7A AND #7B.
- MOTPE #3: CLOSE RAMP P, PADDOCK ROAD TO WESTBOUND SR 562, AS SHOWN IN PHASE 3, PART 1. SEE WINDOW CONTRACT TABLE FOR DURATION.
- MOTPE #5: CLOSE IR 75 OVERNIGHT FROM 11 PM TO 5 AM TO OCCUR 3 TIMES PER DIRECTION (2-INSTALL, 1-DEMO) AT HAM-75-0834, AND TO OCCUR AN ADDITIONAL 4 TIMES PER YEAR (PER DIRECTION) AT LOCATIONS DEEMED NECESSARY BY THE CONTRACTOR.
- MOTPE #6: NO LONGER APPLICABLE.
- MOTPE #7A: CLOSE RAMP J, SOUTHBOUND I-75 TO EASTBOUND SR-562, DURING PHASES 1, 2 AND 3A. SEE WINDOW CONTRACT TABLE FOR DURATION.
- MOTPE #7B: CLOSE RAMP M, WESTBOUND SR-562 TO SOUTHBOUND I-75, DURING PHASES 1 AND 2. SEE WINDOW CONTRACT TABLE FOR DURATION.
- MOTPE #8: CLOSE RAMP K, WESTBOUND SR-562 TO NORTHBOUND I-75, DURING PHASE 3. SEE WINDOW CONTRACT TABLE FOR DURATION.
- MOTPE #9: NO LONGER APPLICABLE.
- MOTPE #10: NO LONGER APPLICABLE

A MAINTENANCE OF TRAFFIC MEETING SHALL BE HELD A MINIMUM OF 30 CALENDAR DAYS PRIOR TO IMPLEMENTATION OF EACH APPROVED MOT EXCEPTION. THIS MEETING SHALL INCLUDE THE DISTRICT WORK ZONE TRAFFIC MANAGER AND CITY OF CINCINNATI AS WELL AS THE CONTRACTOR, WORKSITE TRAFFIC SUPERVISOR (WTS) AND ANY SUBCONTRACTORS INVOLVED WITH TEMPORARY TRAFFIC CONTROL.

IN ADDITION TO ANY NOTIFICATIONS REQUIRED IN OTHER NOTES, THE CONTRACTOR SHALL NOTIFY THE PROJECT ENGINEER AT LEAST 3 BUSINESS DAYS IN ADVANCE OF IMPLEMENTATION OF THE APPROVED MOT EXCEPTION(S) REFERENCED ABOVE SO THAT THE PROJECT ENGINEER CAN SEND EMAIL NOTIFICATION TO THE OFFICE OF ROADWAY ENGINEERING, STATEWIDE TMC, DWZTM AND SPECIAL HAULING PERMITS AT LEAST 2 BUSINESS DAYS IN ADVANCE OF THE IMPLEMENTATION OF THE APPROVED MOT EXCEPTION(S) REFERENCED ABOVE. REFERENCE "EXCEPTION REQUEST APPROVAL DATED [___/___/___] FOR PID 77889" IN THE NOTIFICATION AND OTHER CORRESPONDENCE.

ANY CHANGES TO THE MOT THAT IMPACT THE PREVIOUSLY APPROVED MOT EXCEPTION(S) LISTED ABOVE SHALL BE APPROVED IN WRITING BY THE MOT EXCEPTION COMMITTEE (MOTEC). IN THE EVENT THAT SUCH CHANGES ARE PROPOSED, THE REQUEST SHALL BE COORDINATED THROUGH THE DISTRICT WORK ZONE TRAFFIC MANAGER (DWZTM) A MINIMUM OF 30 CALENDAR DAYS PRIOR TO THE DESIRED

IMPLEMENTATION DATE. IF THE DISTRICT AGREES WITH THE PROPOSED CHANGES THE DWZTM SHALL SEEK APPROVAL FROM THE MOTEC. IN THE EVENT THE PROPOSED CHANGES ARE APPROVED IN WRITING, THE CLOSURES ARE STILL SUBJECT TO NOTIFICATION REQUIREMENTS WITHIN THIS NOTE PRIOR TO IMPLEMENTATION.

CALCULATED BDM CHECKED SMM

MAINTENANCE OF TRAFFIC NOTES

HAM-75-7.85

52
1047

Preliminary Plans - For Reference Only

J:\2011093\ODOT\HAM\77889\mot\sheets\77889MN003.dgn 5/22/2026 10:08:11 AM hbrendlinger

EXTRA ADVANCE WARNING SIGNS

AN EXTRA ADVANCE WARNING SIGN GROUP CONSISTS OF TWO W20-1 (ROAD WORK AHEAD) SIGNS, TWO W20-5 (RIGHT /LEFT LANE CLOSED AHEAD) SIGNS WITH W16-3A DISTANCE PLATES, AND TWO W3-H7 (WATCH FOR STOPPED TRAFFIC) SIGNS AND REQUIRED WARNING LIGHTS. THE CONTRACTOR SHALL PROVIDE, ERECT, MAINTAIN AND REMOVE EXTRA ADVANCE WARNING SIGN GROUPS DURING MOTPE LANE CLOSURES ON IR 75 AND SR 562. SIGNS SHALL BE INSTALLED AS SHOWN ON TRAFFIC SCD MT-95.50, WITH THE EXTRA W20-5 LANE CLOSURE SIGNS PLACED 2 MILES FROM THE BEGINNING OF THE TAPER WITH THE APPROPRIATE W16-3A DISTANCE PLATES.

PAYMENT FOR PROVIDING, ERECTING, MAINTAINING AND REMOVING EXTRA ADVANCE WARNING SIGN GROUPS SHALL BE INCLUDED IN THE LUMP SUM BID FOR ITEM 614, MAINTAINING TRAFFIC.

ITEM 614, WORK ZONE CROSSOVER LIGHTING SYSTEM

THIS WORK SHALL CONSIST OF FURNISHING, ERECTING, OPERATING, MAINTAINING AND REMOVING A WORK ZONE LIGHTING SYSTEM FOR A SINGLE CROSSOVER, OR OVERLAPPING A PAIR OF CROSSOVERS. THE SYSTEM SHALL BE AS SHOWN ON TRAFFIC SCD MT-100.00. THE CONTRACTOR SHALL ARRANGE FOR AND PAY FOR POWER. ALL MATERIALS AND CONSTRUCTION SHALL COMPLY WITH APPLICABLE PORTIONS OF 625 AND 725 EXCEPT: THE PERFORMANCE TEST OF 625.19F, AND CERTIFIED DRAWING REQUIREMENT OF 625.04, ARE WAIVED AND USED MATERIALS IN GOOD CONDITION ARE ACCEPTABLE.

POLES WHICH ARE NOT PROTECTED BY GUARDRAIL OR PORTABLE BARRIER SHALL BE LOCATED OUTSIDE THE CLEAR ZONE, AND SHOULD BE LOCATED AT LEAST 30 FEET (PREFERABLY 40 FEET) FROM THE EDGE OF PAVEMENT WHEN POSSIBLE. ADDITIONAL POLE LINES, CABLES AND APPURTENANCES NECESSARY TO FURNISH POWER TO THE LIGHTING SYSTEM SHALL BE INCLUDED IN THIS ITEM. SERVICE POLES SHALL BE POSITIONED WITH THE SAME CONSTRAINTS AS THE LIGHTING POLES AS A MINIMUM.

PAYMENT WILL BE MADE AT THE UNIT PRICE PER EACH FOR ITEM 614, WORK ZONE CROSSOVER LIGHTING SYSTEM THROUGHOUT ALL PHASES OF WORK WHEN THE CROSSOVER ROADWAYS ARE USED.

ITEM 614, PORTABLE CHANGEABLE MESSAGE SIGN

THE CONTRACTOR SHALL FURNISH, INSTALL, MAINTAIN AND REMOVE, WHEN NO LONGER NEEDED, PORTABLE CHANGEABLE MESSAGE SIGNS (PCMS) AS DETAILED WITHIN. IN ADDITION TO THE SPECIFIC LOCATIONS AND APPLICATIONS DETAILED IN THE PLAN SHEETS, THE CONTRACTOR SHALL PROVIDE PCMS PRIOR TO EACH MAJOR PHASE CHANGE. SIGNS SHALL BE IN PLACE 7 DAYS PRIOR TO AND 7 DAYS AFTER EACH PHASE CHANGE AND SHALL BE LOCATED A MINIMUM OF 1500' IN ADVANCE OF THE TEMPORARY TRAFFIC CONTROL SETUP FOR SB I-75, NB I-75 AND WB SR-562. THE PCMS LOCATIONS SHALL NOT BE IN CONFLICT WITH ANY OTHER EXISTING OR TEMPORARY SIGNAGE. PRIOR TO THE PHASE CHANGE, THE MESSAGE SHOULD READ "NEW TRAFFIC PATTERN/*DATE*". AFTER THE PHASE CHANGE, THE MESSAGE SHOULD READ "NEW TRAFFIC PATTERN". AN ADDITIONAL 14 SIGN MONTHS OF ITEM 614, PORTABLE CHANGEABLE MESSAGE SIGNS, AS PER PLAN HAS BEEN CARRIED TO THE GENERAL SUMMARY FOR PCMS UTILIZED FOR PHASE CHANGES.

ALL SIGNS SHALL BE OF A TYPE SHOWN ON A LIST OF APPROVED PCMS UNITS AVAILABLE ON THE OFFICE OF MATERIALS MANAGEMENT WEB PAGE. THE LIST CONTAINS CLASS A AND B UNITS WITH MINIMUM LEGIBILITY DISTANCES OF 800 FEET AND 650 FEET, RESPECTIVELY.

EACH SIGN SHALL BE TRAILER-MOUNTED AND EQUIPPED WITH A FUNCTIONAL DIMMING MECHANISM, TO DIM THE SIGN DURING DARKNESS, AND A TAMPER AND VANDAL PROOF ENCLOSURE. EACH SIGN SHALL BE PROVIDED WITH APPROPRIATE TRAINING AND OPERATION INSTRUCTIONS TO ENABLE ON-SITE PERSONNEL TO OPERATE AND TROUBLESHOOT THE UNIT. THE SIGN SHALL ALSO BE CAPABLE OF BEING POWERED BY AN ELECTRICAL SERVICE DROP FROM A LOCAL UTILITY COMPANY. THE PCMS SHALL BE DELINEATED IN ACCORDANCE WITH C&MS 614.03.

THE PROBABLE PCMS LOCATIONS AND WORK LIMITS FOR THOSE LOCATIONS ARE SHOWN IN THE PLANS. PLACEMENT, OPERATION, MAINTENANCE AND ALL ACTIVATION OF THE SIGNS BY THE CONTRACTOR SHALL BE AS DIRECTED BY THE ENGINEER. THE PCMS SHALL BE LOCATED IN A HIGHLY VISIBLE POSITION YET PROTECTED FROM TRAFFIC. THE CONTRACTOR SHALL, AT THE DIRECTION OF THE ENGINEER, RELOCATE THE PCMS TO IMPROVE VISIBILITY OR ACCOMMODATE CHANGED CONDITIONS. WHEN NOT IN USE, THE PCMS SHALL BE TURNED OFF. ADDITIONALLY, WHEN NOT IN USE FOR EXTENDED PERIODS OF TIME, THE PCMS SHALL BE TURNED AWAY FROM ALL TRAFFIC.

THE ENGINEER SHALL BE PROVIDED ACCESS TO EACH SIGN UNIT AND SHALL BE PROVIDED WITH APPROPRIATE TRAINING AND OPERATION INSTRUCTIONS TO ENABLE ODOT PERSONNEL TO OPERATE AND TROUBLESHOOT THE UNIT, AND TO REVISE SIGN MESSAGES, IF NECESSARY.

ALL MESSAGES TO BE DISPLAYED ON THE SIGN WILL BE PROVIDED BY THE ENGINEER. A LIST OF ALL REQUIRED PRE-PROGRAMMED MESSAGES WILL BE GIVEN TO THE CONTRACTOR AT THE PROJECT PRECONSTRUCTION CONFERENCE. THE SIGN SHALL HAVE THE CAPABILITY TO STORE UP TO 99 MESSAGES. MESSAGE MEMORY OR PRE-PROGRAMMED DISPLAYS SHALL NOT BE LOST AS A RESULT OF POWER FAILURES TO THE ON-BOARD COMPUTER. THE SIGN LEGEND SHALL BE CAPABLE OF BEING CHANGED IN THE FIELD. THREE-LINE PRESENTATION FORMATS WITH UP TO SIX MESSAGE PHASES SHALL BE SUPPORTED. PCMS FORMAT SHALL PERMIT THE COMPLETE MESSAGE FOR EACH PHASE TO BE READ AT LEAST TWICE.

THE PCMS SHALL CONTAIN AN ACCURATE CLOCK AND PROGRAMMING LOGIC WHICH WILL ALLOW THE SIGN TO BE ACTIVATED, DEACTIVATED OR MESSAGES CHANGED AUTOMATICALLY AT DIFFERENT TIMES OF THE DAY FOR DIFFERENT DAYS OF THE WEEK.

THE PCMS SHALL CONTAIN AN ACCURATE CLOCK AND PROGRAMMING LOGIC WHICH WILL ALLOW THE SIGN TO BE ACTIVATED, DEACTIVATED OR MESSAGES CHANGED AUTOMATICALLY AT DIFFERENT TIMES OF THE DAY FOR DIFFERENT DAYS OF THE WEEK.

THE PCMS UNIT SHALL BE MAINTAINED IN GOOD WORKING ORDER BY THE CONTRACTOR IN ACCORDANCE WITH THE PROVISIONS OF C&MS 614.07. THE CONTRACTOR SHALL, PRIOR TO ACTIVATING THE UNIT, MAKE ARRANGEMENTS, WITH AN AUTHORIZED SERVICE AGENT FOR THE PCMS, TO ASSURE PROMPT SERVICE IN THE EVENT OF FAILURE. ANY FAILURE SHALL NOT RESULT IN THE SIGN BEING OUT OF SERVICE FOR MORE THAN 12 HOURS, INCLUDING WEEKENDS. FAILURE TO COMPLY MAY RESULT IN AN ORDER TO STOP WORK AND OPEN ALL TRAFFIC LANES AND/OR IN THE DEPARTMENT TAKING APPROPRIATE ACTION TO SAFELY CONTROL TRAFFIC. THE ENTIRE COST TO CONTROL TRAFFIC, ACCRUED BY THE DEPARTMENT DUE TO THE CONTRACTOR'S NONCOMPLIANCE, WILL BE DEDUCTED FROM MONEYS DUE, OR TO BECOME DUE THE CONTRACTOR ON HIS CONTRACT.

THE CONTRACTOR SHALL BE RESPONSIBLE FOR 24-HOUR-PER-DAY OPERATION AND MAINTENANCE OF THESE SIGNS ON THE PROJECT FOR THE DURATION OF THE PHASES WHEN THE PLAN REQUIRES THEIR USE.

PAYMENT FOR THE ABOVE DESCRIBED ITEM SHALL BE AT THE CONTRACT UNIT PRICE. PAYMENT SHALL INCLUDE ALL LABOR, MATERIALS, EQUIPMENT, FUELS, LUBRICATING OILS, SOFTWARE, HARDWARE AND INCIDENTALS TO PERFORM THE ABOVE DESCRIBED WORK.

ITEM 614, WORKSITE TRAFFIC SUPERVISOR

SUBJECT TO APPROVAL OF THE ENGINEER, THE CONTRACTOR SHALL EMPLOY AND IDENTIFY (SOMEONE OTHER THAN THE SUPERINTENDENT) A PREQUALIFIED WORKSITE TRAFFIC SUPERVISOR (WTS) BEFORE STARTING WORK IN THE FIELD. THE WTS SHALL BE TRAINED IN ACCORDANCE WITH CMS 614.03, SHALL HAVE SUCCESSFULLY COMPLETED ODOT ADMINISTERED WTS TESTING (AND RE-TESTING WHEN APPLICABLE) AND BE LISTED ON THE ODOT PREQUALIFIED WTS ROSTER. PREQUALIFICATION EXPIRES EVERY 5 YEARS. RE-TESTING SHALL BE SUCCESSFULLY REPEATED EVERY 5 YEARS TO REMAIN PREQUALIFIED.

THE NAME OF THE PREQUALIFIED WTS AND RELATED 24-HOUR CONTACT INFORMATION SHALL BE PROVIDED TO THE ENGINEER AT THE PRECONSTRUCTION CONFERENCE. IF THE DESIGNATED WTS WILL NOT BE AVAILABLE FULL TIME (24/7), THE CONTRACTOR MAY DESIGNATE AN ALTERNATE (SECONDARY) WTS TO BE AVAILABLE WHEN THE PRIMARY IS OFF DUTY; HOWEVER THE PRIMARY WTS SHALL REMAIN THE POINT OF CONTACT AT ALL TIMES. ANY ALTERNATE (SECONDARY) WTS IS SUBJECT TO THE SAME TRAINING, PREQUALIFICATION AND OTHER REQUIREMENTS OUTLINED WITHIN THIS PLAN NOTE. AT ALL TIMES THE ENGINEER, OR ENGINEER'S REPRESENTATIVES, MUST BE INFORMED OF WHO THE PRIMARY WTS (AND SECONDARY WTS, IF APPLICABLE) IS AT THE CURRENT TIME.

THE WTS POSITION HAS THE PRIMARY RESPONSIBILITY OF IMPLEMENTING THE TRAFFIC MANAGEMENT PLAN (TMP), MONITORING THE SAFETY AND MOBILITY OF THE ENTIRE WORK ZONE, AND CORRECTING TEMPORARY TRAFFIC CONTROL (TTC) DEFICIENCIES FOR THE ENTIRE WORK ZONE. THE WTS, AND ALTERNATE WTS WHEN ON DUTY, SHALL HAVE SUFFICIENT AUTHORITY TO EFFECTIVELY CARRY OUT THE IDENTIFIED WTS RESPONSIBILITIES AND DUTIES. THE DUTIES OF THE WTS ARE AS FOLLOWS:

1. BE AVAILABLE ON A 24-HOUR PER DAY BASIS.
2. BE ON SITE FOR ALL EMERGENCY TTC NEEDS WITHIN ONE HOUR OF NOTIFICATION BY POLICE OR PROJECT STAFF, AND EFFECT CORRECTIVE MEASURES IMMEDIATELY ON EXISTING WORK ZONE TTC DEVICES.
3. ATTEND PRECONSTRUCTION MEETING AND ALL PROJECT MEETINGS WHERE TTC MANAGEMENT IS DISCUSSED.
4. BE AVAILABLE ON SITE FOR OTHER MEETINGS OR DISCUSSIONS WITH THE ENGINEER UPON REQUEST.
5. BE AWARE OF ALL EXISTING AND PROPOSED TTC OPERATIONS OF THE CONTRACTOR, SUBCONTRACTORS AND SUPPLIERS, AND ENSURE COORDINATION OCCURS BETWEEN THEM TO ELIMINATE CONFLICTING TEMPORARY AND/OR PERMANENT TRAFFIC CONTROL.
6. COORDINATE PROJECT ACTIVITIES WITH ALL LAW ENFORCEMENT OFFICERS (LEOS). THE WTS SHALL ALSO BE THE MAIN CONTACT PERSON WITH THE LEOS WHILE LEOS ARE ON THE PROJECT.
7. COORDINATE AND FACILITATE MEETINGS WITH ODOT PERSONNEL, LEOS AND OTHER APPLICABLE ENTITIES BEFORE EACH PLAN PHASE SWITCH TO DISCUSS THE WORK ZONE TTC FOR IMPLEMENTING THE PHASE SWITCH. SUBMIT A WRITTEN DETAIL OF MOT OPERATIONS AND SCHEDULE OF EVENTS TO IMPLEMENT THE SWITCH BETWEEN PHASE PLANS TO THE ENGINEER 5 CALENDAR DAYS PRIOR TO THIS MEETING.
8. BE PRESENT, ON SITE FOR, AND INVOLVED WITH, EACH TTC SET UP/TAKE DOWN AND EACH PHASE CHANGE IN ACCORDANCE WITH CMS 614.03.
9. ON A CONTINUAL BASIS ENSURE THAT THE TTC ZONE AND ALL RELATED DEVICES ARE INSTALLED, MAINTAINED AND REMOVED IN COMPLIANCE WITH THE CONTRACT DOCUMENTS.
10. ON A CONTINUAL BASIS FACILITATE CORRECTIVE ACTION(S) NECESSARY TO BRING DEFICIENT TTC ZONES AND ALL RELATED DEVICES INTO COMPLIANCE WITH CONTRACT DOCUMENTS IN THE TIMEFRAME DETERMINED BY THE ENGINEER.
11. INSPECT, EVALUATE, PROPOSE NECESSARY MODIFICATIONS TO, AND DOCUMENT THE EFFECTIVENESS OF, THE TTC DEVICES AND TRAFFIC OPERATIONS ON A DAILY BASIS (7 DAYS A WEEK). IN ADDITION, PERFORM ONE WEEKLY NIGHT INSPECTION OF THE WORK ZONE SETUP FOR DAYTIME WORK OPERATIONS; AND ONE DAYTIME INSPECTION PER WEEK FOR NIGHTTIME PROJECTS. THIS SHALL INCLUDE (BUT NOT BE LIMITED TO) DOCUMENTATION ON THE FOLLOWING PROJECT EVENTS:
    A. INITIAL TTC SETUP (DAY AND NIGHT REVIEW).
    B. DAILY TTC SETUP AND REMOVAL.
    C. WHEN CONSTRUCTION STAGING CAUSES A CHANGE IN THE TTC SETUP.
    D. CRASH OCCURRENCES WITHIN THE CONSTRUCTION AREA AND WITHIN THE INFLUENCE AREA(S) APPROACHING THE WORK ZONE.
    E. REMOVAL OF TTC DEVICES AT THE END OF A PHASE OR PROJECT.
    F. ALL OTHER EMERGENCY TTC NEEDS.
12. COMPLETE THE DEPARTMENT APPROVED LONG TERM INSPECTION FORM (CA-D-8) AFTER EACH INSPECTION AS REQUIRED IN # 11 AND SUBMIT IT TO THE ENGINEER THE FOLLOWING WORKDAY. THESE REPORTS SHALL INCLUDE A CHECKLIST OF ALL TTC MAINTENANCE ITEMS TO BE REVIEWED. A COPY OF THE FORM WILL BE PROVIDED AT THE PRE-CONSTRUCTION MEETING.
    ANY DEFICIENCIES OBSERVED SHALL BE NOTED, ALONG WITH RECOMMENDED OR COMPLETED CORRECTIVE ACTIONS AND THE DATES BY WHICH SUCH CORRECTIONS WERE, OR WILL BE, COMPLETED. A COPY OF THE CURRENT CA-D-8 DOCUMENT CAN BE FOUND ON THE OFFICE OF CONSTRUCTION ADMINISTRATION'S INSPECTION FORMS WEBSITE.
13. HAVE COPIES OF THE ODOT TEMPORARY TRAFFIC CONTROL MANUAL AND CONTRACT DOCUMENTS AVAILABLE AT ALL TIMES ON THE PROJECT.

THE DEPARTMENT WILL DEDUCT:

A. THE PRORATED DAILY AMOUNT OF ITEM 614 MAINTAINING TRAFFIC FOR ANY DAY IN WHICH THE WTS FAILS TO PERFORM THE DUTIES SET FORTH ABOVE. THE PRORATED DAILY AMOUNT WILL BE EQUAL TO THE ORIGINAL BID AMOUNT FOR ITEM 614 MAINTAINING TRAFFIC DIVIDED BY THE DIFFERENCE BETWEEN THE ORIGINAL COMPLETION DATE AND THE FIRST DAY OF WORK, IN CALENDAR DAYS.
B. 1% OF THE ORIGINAL BID AMOUNT FOR ITEM 614 MAINTAINING TRAFFIC FOR ANY DAY THAT A TTC ISSUE IS IDENTIFIED IN THE FIELD AND IS NOT CORRECTED IN THE GIVEN TIMEFRAME PER THE ENGINEER. DEDUCTION B SHALL NOT APPLY TO SITUATIONS COVERED BY DEDUCTION C.

Preliminary plans - Reference only

J:\20110903\ODOT\HAM\77889\mot\sheets\77889MN004.dgn 5/22/2026 10:08:11 AM hbrendlinger

CALCULATED BDM CHECKED SMM

MAINTENANCE OF TRAFFIC NOTES

HAM-75-7.85

C. 1% OF THE ORIGINAL BID AMOUNT FOR ITEM 614 MAINTAINING TRAFFIC FOR ANY DAY THAT A LANE OR RAMP IS BLOCKED (FULLY OR PARTIALLY) WITHOUT TTC, AS DETERMINED BY THE ENGINEER. THIS DEDUCTION SHALL BE IN addition TO ANY OTHER DISINCENTIVES ESTABLISHED FOR UNAUTHORIZED LANE USE.

FOR DAYS IN WHICH MORE THAN ONE DEDUCTION LISTED ABOVE OCCUR, THE HIGHEST DEDUCTION AMOUNT WILL APPLY.

IF THREE OR MORE TOTAL DAYS RESULT IN TTC ISSUES DESCRIBED IN DEDUCTION B OR C ABOVE, THE PRIMARY WTS SHALL BE IMMEDIATELY REMOVED FROM THE WORK IN ACCORDANCE WITH C&MS 108.05. UPON REMOVAL THE ENGINEER SHALL NOTIFY ODOT CENTRAL OFFICE (WTSPREQUALIFICATION@DOT.OHIO.GOV) TO REGISTER A REMOVAL AGAINST THE STATEWIDE PREQUALIFICATION FOR THE PRIMARY WTS. THREE REMOVALS SHALL CAUSE STATEWIDE DISQUALIFICATION FOR ANY PREVIOUSLY PREQUALIFIED WTS.

PAYMENT FOR THE ABOVE REQUIREMENTS, RESPONSIBILITIES AND DUTIES SHALL BE INCLUDED IN THE LUMP SUM PRICE BID FOR ITEM 614, MAINTAINING TRAFFIC.

TRAFFIC INCIDENT MANAGEMENT (TIM) DURING MOT

OHIO TIM IS OHIO'S TRAFFIC INCIDENT MANAGEMENT PROGRAM WHICH IS COMMITTED TO MAINTAINING THE SAFE AND EFFECTIVE FLOW OF TRAFFIC DURING EMERGENCIES AS TO PREVENT FURTHER DAMAGE, INJURY OR UNDUE DELAY OF THE MOTORING PUBLIC. IN ADDITION TO COMPLYING WITH THE PROVISION OF OMUTCD CHAPTER 6I, CONTROL OF TRAFFIC THROUGH TRAFFIC INCIDENT MANAGEMENT AREAS, THE CONTRACTOR SHALL ACTIVELY PARTICIPATE IN TIM PLANNING AND IMPLEMENTATION AS OUTLINED BELOW.

1. SUPERINTENDENT SHALL IDENTIFY THE INDIVIDUAL PERSONS ON THE PROJECT WHO WILL, OR MAY NEED TO, PERFORM THE DUTIES HEREIN. AT A MINIMUM, INCLUDE THE SUPERINTENDENT, FOREMEN AND SUPERVISORS (OR EQUIVALENT) AS WELL AS THE WORKSITE TRAFFIC SUPERVISOR (WTS; IF APPLICABLE TO THE PROJECT). THESE INDIVIDUALLY IDENTIFIED PERSONS SHALL COLLECTIVELY BE KNOWN AS CONTRACTOR TRAFFIC INCIDENT MANAGEMENT (TIM) CONTACTS. NOTIFY THE PROJECT ENGINEER OF THE CONTRACTOR TIM CONTACTS (ALONG WITH CONTACT INFORMATION FOR EACH) AT OR BEFORE THE PRECONSTRUCTION MEETING.
2. SUPERINTENDENT SHALL NOTIFY THE ENGINEER IMMEDIATELY IF ANY CONTRACTOR TIM CONTACT IS ADDED, REMOVED OR THE CONTACT INFORMATION CHANGES OVER THE COURSE OF THE PROJECT.
3. PRIOR THE FIRST DAY OF WORK IN THE FIELD, EACH CONTRACTOR TIM CONTACT ON THE PROJECT SHALL HAVE ATTENDED AND SUCCESSFULLY COMPLETED OHIO TIM TRAINING PROVIDED BY THE DEPARTMENT OR DESIGNEE. TRAINING INFORMATION CAN BE FOUND AT WWW.OHIOTIM.COM.
4. SUPERINTENDENT, AT A MINIMUM, SHALL ATTEND AND ACTIVELY PARTICIPATE IN A DEPARTMENT SCHEDULED TIM MEETING BEFORE CONSTRUCTION WORK BEGINS AND BEFORE EACH PHASE CHANGE. THESE MEETINGS WILL RESULT IN A DEPARTMENT ISSUED PROJECT SPECIFIC TRAFFIC INCIDENT MANAGEMENT PLAN (TIMP). AT THE TIM MEETINGS THE ATTENDING CONTRACTOR TIM CONTACTS SHALL:
   A. COLLABORATE WITH ODOT AND SAFETY FORCES;
   B. SHARE PROJECT SPECIFIC DETAILS THAT IMPACT TIM RESPONDERS; AND
   C. RECOMMEND WAYS TO INCORPORATE NECESSARY EMERGENCY ACCESS AND OTHER TIM ELEMENTS FOR TIM RESPONDERS GIVEN PROJECT SPECIFIC WORK BEING COMPLETED AND PROJECT SPECIFIC PHASING.
5. CONTRACTOR TIM CONTACTS SHALL IMPLEMENT COMPONENTS OF THE RESULTING TIMP (SUCH AS APPROVED EMERGENCY INGRESS/EGRESS POINTS, ETC), AS DIRECTED BY THE ENGINEER IN ACCORDANCE WITH 109.05.
6. CONTRACTOR TIM CONTACTS SHALL PERFORM, AT A MINIMUM, THE FOLLOWING FUNCTIONS WHEN AN INCIDENT/CRASH OCCURS:
   A. IF OBSERVED OR PRESENT WHEN OCCURS, CALL 911 AND THEN NOTIFY THE TRAFFIC MANAGEMENT CENTER (TMC) TO PROVIDE THE FOLLOWING:
      I. LOCATION, INCLUDING MILEPOST NUMBER AND DIRECTION OF TRAVEL
      II. NUMBER AND TYPE OF VEHICLES INVOLVED, IF KNOWN
      III. ESTIMATED EXTENT OF DAMAGE OR INJURY, IF KNOWN
      IV. ESTIMATED NUMBER OF PATIENTS INVOLVED, IF KNOWN
      V. ANY POTENTIAL HAZARDOUS CONDITIONS, IF KNOWN
      VI. THE PLACARD NUMBER ON ANY HAZARDOUS MATERIALS PLACARD FROM A SAFE DISTANCE, IF APPLICABLE AND VISIBLE
   B. FOLLOWING AN INCIDENT/CRASH:
      I. INITIATE TRAFFIC MANAGEMENT/PROVIDE TEMPORARY TRAFFIC CONTROL AS INDICATED IN THE TIMP, AS DIRECTED BY THE ENGINEER IN ACCORDANCE WITH 109.05.
      II. RECOMMEND ROADWAY REPAIR NEEDS.
      III. PROVIDE REPAIR RESOURCES AND INITIATE REPAIRS, AS DIRECTED BY THE ENGINEER IN ACCORDANCE WITH 109.05.
      IV. ATTEND AND PARTICIPATE IN AN AFTER ACTION REVIEW (AAR).

ALL COSTS, UNLESS OTHERWISE SPECIFIED, RESULTING FROM THE ABOVE REQUIREMENTS SHALL BE CONSIDERED TO BE INCLUDED IN THE LUMP SUM PRICE FOR ITEM 614, MAINTAINING TRAFFIC. FAILURE TO PERFORM THE REQUIREMENTS OF THIS PLAN NOTE WILL RESULT IN A DAILY FINE OF 2% OF ITEM 614, MAINTAINING TRAFFIC AND MAY RESULT IN ONE OR MORE CONTRACTOR TIM CONTACTS BEING REMOVED FROM THE LIST OF OHIO TIM TRAINED INDIVIDUALS (AT THE SOLE DISCRETION OF THE OHIO TIM EXECUTIVE COMMITTEE). IN THE EVENT AN INDIVIDUAL IS REMOVED FROM THE OHIO TIM TRAINED LIST, THE INDIVIDUAL WILL BE REMOVED FROM CONTRACTOR TIM CONTACT RESPONSIBILITIES ON ALL PROJECTS.

ACCESS MANAGEMENT FOR DAILY/NIGHTLY WORK OPERATIONS

ACCESS MANAGEMENT IS PART OF THE CONTRACTOR'S MEANS AND METHODS. IT IS ANTICIPATED THAT EQUIPMENT WILL BE TRAILERED IN/OUT OF THE WORK AREA OR DRIVEN ACROSS LANES OF TRAFFIC SINCE THE MEDIAN BARRIER RESTRICTS AVAILABLE STAGING AREAS.

IF THE CONTRACTOR ELECTS TO CROSS OPEN LANES OF TRAVEL, MT-99.60 IS THE GOVERNING STANDARD EXCEPT AS FOLLOWS: THE SHORT DURATION CLOSURE IS PERMITTED TO BE PERFORMED BETWEEN 11:00 PM AND 5:00 AM; THE DURATION OF THE CLOSURE SHALL NOT EXCEED 5 MINUTES; AND ALL EQUIPMENT SHALL CROSS PERPENDICULAR TO THE ROAD. REMOVE, TURN, OR COVER ALL SIGNS USED IN THE SHORT-DURATION CLOSURE IF THE NEXT SHORT-DURATION CLOSURE WILL OCCUR MORE THAN 2 HOURS LATER. THIS INCLUDES TURNING OFF OR REVISING THE MESSAGE ON THE PORTABLE CHANGEABLE MESSAGE SIGN.

ALL COSTS ASSOCIATED WITH ACCESS MANAGEMENT INCLUDING LAW ENFORCEMENT OFFICERS AND PORTABLE CHANGEABLE MESSAGE SIGNS SHALL BE INCLUDED IN THE LUMP SUM CONTRACT PRICE FOR ITEM 614, MAINTAINING TRAFFIC.

ITEM 614, WORK ZONE RAISED PAVEMENT MARKER

WORK ZONE RAISED PAVEMENT MARKERS, AS PER PLAN, AND THEIR INSTALLATION SHALL CONFORM TO C&MS 614 OR C&MS 621 AS SPECIFIED HEREIN.

- RAISED PAVEMENT MARKERS IN USE DURING THE SNOW-PLOWING SEASON SHALL CONFORM TO 621.
- RAISED PAVEMENT MARKERS IN USE DURING THE NON-SNOW-PLOW SEASON SHALL CONFORM TO EITHER 614 OR TO 621.

THE SNOW-PLOWING SEASON SHALL RUN FROM OCTOBER 15 THROUGH APRIL 1.

IF PROJECT DELAYS, NOT THE FAULT OF ODOT, CAUSE THE WORK TO EXTEND INTO THE SNOW-PLOWING SEASON, THE CONTRACTOR SHALL BE RESPONSIBLE FOR REPLACING WORK ZONE RAISED PAVEMENT MARKERS (WZRPMS) CONFORMING TO C&MS 614, WITH RAISED PAVEMENT MARKERS CONFORMING TO 621, AS DETERMINED BY THE ENGINEER, AT THE CONTRACTOR'S EXPENSE.

THIS ITEM SHALL INCLUDE PURCHASE, INSTALLATION AND REMOVAL OF ITEM 614 WORK ZONE RAISED PAVEMENT MARKER, AS PER PLAN, INCLUDING FILLING OF ANY DEPRESSIONS CREATED IN THE PAVEMENT AS PER C&MS 621.08.

RESURFACING OF THE TRANSITION AREAS SHALL BE PERFORMED AT THE TIME THAT THE SURFACE COURSE IS BEING APPLIED TO THE ENTIRE PROJECT. PRIOR TO APPLICATION OF THE SURFACE COURSE ON THE PROJECT, THE EXISTING PAVEMENT WITHIN THE TRANSITION AREA SHALL BE REMOVED TO A DEPTH NECESSARY TO REACH THE LEVEL OF THE INTERMEDIATE COURSE OF THE PAVEMENT, AS DETERMINED BY THE ENGINEER. FOR QUANTITIES PROVIDED BELOW, IT WAS ASSUMED THAT 1 1/2" OF SURFACE COURSE (ITEM 442) WILL BE NEEDED.

THE FOLLOWING BID ITEMS SHOULD BE INCLUDED IN THE PLANS:

ITEM 614 WORK ZONE RAISED PAVEMENT MARKER, AS PER PLAN 5035 EACH

PAYMENT FOR RESURFACING WITHIN THE TRANSITION AREA SHALL BE PAID FOR UNDER THE APPROPRIATE BID ITEMS FOR THE WORK REQUIRED, AS PROVIDED FOR IN THE PLANS.

ITEM 614, WORK ZONE RAISED PAVEMENT MARKERS ON PERMANENT CONCRETE SURFACES

RAISED PAVEMENT MARKERS IN WORK ZONES, INSTALLED ON PERMANENT CONCRETE SURFACES, SHALL BE ITEM 614 WORK ZONE RAISED PAVEMENT MARKERS.
WZRPMS ARE INTENDED FOR USE ONLY DURING THE NON-SNOW-PLOWING SEASON. WZRPMS SHALL NOT BE PROVIDED DURING THE SNOW-PLOWING SEASON.

THE SNOW-PLOWING SEASON SHALL RUN FROM OCTOBER 15 THROUGH APRIL 1.

WHERE A TEMPORARY ALIGNMENT WILL REMAIN IN USE THROUGH THE WINTER, THE WZRPMS SHALL BE REMOVED PRIOR TO THE BEGINNING OF THE SNOW-PLOWING SEASON AND REPLACED APPROXIMATELY APRIL 1, OR AS OTHERWISE DETERMINED BY THE ENGINEER.

THIS ITEM SHALL INCLUDE PURCHASE, INSTALLATION AND REMOVAL OF ITEM 614 WORK ZONE RAISED PAVEMENT MARKERS.

AN ESTIMATED QUANTITY OF 200 EACH OF ITEM 614 WORK ZONE RAISED PAVEMENT MARKER HAS BEEN PROVIDED AND CARRIED TO THE GENERAL SUMMARY.

DELINEATION OF PORTABLE AND PERMANENT BARRIER

BARRIER REFLECTORS AND OBJECT MARKERS SHALL BE INSTALLED ON ALL PORTABLE BARRIER (PB) USED FOR TRAFFIC CONTROL AND ON PERMANENT CONCRETE BARRIER (INCLUDING BRIDGE PARAPETS) LOCATED WITHIN 5 FEET OF THE EDGE OF THE ADJACENT TRAVEL LANE.

BARRIER REFLECTORS SHALL CONFORM TO C&MS 626, EXCEPT THAT THE SPACING SHALL BE AS PER TRAFFIC SCD MT-101.70. OBJECT MARKERS AND THEIR INSTALLATION SHALL CONFORM TO C&MS 614.03 AND TRAFFIC SCD MT-101.70. WHEN THE PB CONTAINS GLARE SCREEN, ONE SET OF THREE VERTICAL STRIPES OF SHEETING SHALL BE CONSIDERED EQUIVALENT TO AN OBJECT MARKER, ONE-WAY.

INCREASED BARRIER DELINEATION, AS SPECIFIED HEREIN, SHALL BE INSTALLED ON ALL PB AND CONCRETE PERMANENT BARRIER LOCATED WITHIN 5 FEET OF THE EDGE OF THE TRAVELED LANE ALONG TAPERS AND TRANSITION AREAS AND ALONG CURVES (OUTSIDE ONLY) WITH DEGREE OF CURVATURE GREATER THAN OR EQUAL TO 3 DEGREES.

THE INCREASED BARRIER DELINEATION SHALL CONSIST OF EITHER DELINEATION PANELS OR THE TRIPLE STACKING OF WORK ZONE BARRIER REFLECTORS.

DELINEATION PANELS SHALL CONSIST OF PANELS OF DELINEATION, APPROXIMATELY 34 INCHES LONG AND 6 INCHES WIDE AND SHALL BE "CRIMPED." PANELS SHALL BE INSTALLED AND SPACED PER TRAFFIC SCD MT-101.70.

TRIPLE-STACKED BARRIER REFLECTORS SHALL CONSIST OF ALIGNING THREE BARRIER REFLECTORS VERTICALLY, AT LOCATIONS WHERE A SINGLE BARRIER REFLECTOR WOULD BE OTHERWISE ATTACHED. THERE SHALL BE NO OPEN SPACE BETWEEN THE ADJACENT BARRIER REFLECTORS. THE TRIPLE-STACKED BARRIER REFLECTORS SHALL CONFORM TO C&MS 626, EXCEPT THAT THEY SHALL BE SPACED AND ALIGNED PER TRAFFIC SCD MT-101.70.

THE FOLLOWING ESTIMATED QUANTITIES HAVE BEEN INCLUDED IN THE PLANS AND CARRIED TO THE GENERAL SUMMARY:

ITEM 614, BARRIER REFLECTOR, TYPE 1 1235 EACH
ITEM 614, BARRIER REFLECTOR, TYPE 2 18 EACH
ITEM 614, OBJECT MARKER, ONE-WAY 1235 EACH
ITEM 614, OBJECT MARKER, TWO-WAY 230 EACH
ITEM 614, INCREASED BARRIER DELINEATION 8000 FEET

PAYMENT SHALL BE FULL COMPENSATION FOR ALL MATERIAL, LABOR, INCIDENTALS AND EQUIPMENT NECESSARY FOR FURNISHING, INSTALLING, MAINTAINING AND REMOVING EACH OF THE ABOVE ITEMS.

ALONG RUNS OF INCREASED BARRIER DELINEATION WHERE THIS ITEM IS PROVIDED, THE QUANTITY SHALL BE MEASURED AS THE ENTIRE LENGTH OF THE RUN OF INCREASED BARRIER DELINEATION, INCLUDING THE SPACES BETWEEN THE INDIVIDUAL DELINEATION PANELS OR STACKS OF BARRIER REFLECTORS.

CALCULATED BDM CHECKED SMM

MAINTENANCE OF TRAFFIC NOTES

HAM-75-7.85

54
1047

Preliminary plan - for reference only

J:\20110903\ODOT\HAM\77889\mot\sheets\77889MN005.dgn 5/22/2026 10:08:12 AM hbrendlinger

DELINEATION OF TEMPORARY AND PERMANENT GUARDRAIL
BARRIER REFLECTORS SHALL BE INSTALLED ON ALL TEMPORARY GUARDRAIL USED FOR TRAFFIC CONTROL AND ON ALL PERMANENT GUARDRAIL LOCATED WITHIN 5 FEET OF THE EDGE OF THE ADJACENT TRAVEL LANE. BARRIER REFLECTORS SHALL CONFORM TO C&MS 626.

OBJECT MARKERS SHALL BE INSTALLED ON ALL TEMPORARY AND PERMANENT GUARDRAIL LOCATED WITHIN 5 FEET OF THE EDGE OF THE ADJACENT TRAVEL LANE. GUARDRAIL-MOUNTING OF OBJECT MARKERS SHALL BE MADE BY INSTALLING THE OBJECT MARKERS ON THE EXTENSION BLOCKS RATHER THAN DIRECTLY ONTO THE GUARDRAIL ITSELF. OBJECT MARKERS SHALL CONFORM TO C&MS 614.03 AND THE SPACING SHALL BE APPROXIMATELY 50 FEET.

THE FOLLOWING ESTIMATED QUANTITIES HAVE BEEN INCLUDED IN THE PLANS AND CARRIED TO THE GENERAL SUMMARY:

ITEM 614, BARRIER REFLECTOR, TYPE 2 25 EACH
ITEM 614, OBJECT MARKER, ONE-WAY 25 EACH

PAYMENT SHALL BE FULL COMPENSATION FOR ALL MATERIAL, LABOR, INCIDENTALS AND EQUIPMENT NECESSARY FOR FURNISHING, INSTALLING, MAINTAINING AND REMOVING THE ABOVE ITEM(S).

ITEM 614 - LAW ENFORCEMENT OFFICER (WITH PATROL CAR) FOR ASSISTANCE DURING CONSTRUCTION OPERATIONS
USE OF LAW ENFORCEMENT OFFICERS (LEOS) BY CONTRACTORS OTHER THAN THE USES SPECIFIED BELOW WILL NOT BE PERMITTED AT PROJECT COST. LEOS SHOULD NOT BE USED WHERE THE OMUTCD INTENDS THAT FLAGGERS BE USED.

IN ADDITION TO THE REQUIREMENTS OF C&MS 614 AND THE OMUTCD, A UNIFORMED LEO WITH AN OFFICIAL PATROL CAR (CAR WITH TOP-MOUNTED EMERGENCY FLASHING LIGHTS AND COMPLETE MARKINGS OF THE APPROPRIATE LAW ENFORCEMENT AGENCY) SHALL BE PROVIDED FOR THE FOLLOWING TRAFFIC CONTROL TASKS:

- DURING THE ENTIRE ADVANCE PREPARATION AND CLOSURE SEQUENCE WHERE COMPLETE BLOCKAGE OF TRAFFIC IS REQUIRED.

- DURING A TRAFFIC SIGNAL INSTALLATION WHEN IMPACTING THE NORMAL FUNCTION OF THE SIGNAL OR THE FLOW OF TRAFFIC, OR WHEN TRAFFIC NEEDS TO BE DIRECTED THROUGH AN ENERGIZED TRAFFIC SIGNAL CONTRARY TO THE SIGNAL DISPLAY (E.G., DIRECTING MOTORISTS THROUGH A RED LIGHT).

IN ADDITION TO THE REQUIREMENT OF C&MS 614 AND THE OMUTCD, A UNIFORMED LEO WITH AN OFFICIAL PATROL CAR (CAR WITH TOP-MOUNTED EMERGENCY FLASHING LIGHTS AND COMPLETE MARKINGS OF THE APPROPRIATE LAW ENFORCEMENT AGENCY) SHOULD BE PROVIDED FOR THE FOLLOWING TRAFFIC CONTROL TASKS AS APPROVED BY THE ENGINEER:

- FOR LANE CLOSURES: DURING INITIAL SET-UP PERIODS, TEAR DOWN PERIODS, SUBSTANTIAL SHIFTS OF A CLOSURE POINT OR WHEN NEW LANE CLOSURE ARRANGEMENTS ARE INITIATED FOR LONG-TERM LANE CLOSURES/SHIFTS (FOR THE FIRST AND LAST DAY OF MAJOR CHANGES IN TRAFFIC CONTROL SETUP).

- FOR OPERATIONS WITHOUT POSITIVE PROTECTION OCCURRING WITHIN 10 FEET OF AN OPEN TRAVELED LANE THAT MEET ALL OF THE FOLLOWING CRITERIA:
  - ON A MULTI-LANE DIVIDED INTERSTATE, OTHER FREEWAY OR EXPRESSWAY; AND
  - AN AUTHORIZED SPEED LIMIT OF 45 MPH OR GREATER THAT IS IN EFFECT AT THE TIME OF THE OPERATION; AND,
  - AADT OF 50,000 (OR AADT OF 30,000 WITH 25% OR HIGHER PERCENT TRUCKS)

"WITHOUT POSITIVE PROTECTION" MEANS USE OF DRUMS, CONES, SHADOW VEHICLE, ETC, WITHOUT PROTECTION FROM PORTABLE BARRIER OR OTHER RIGID BARRIER ALONG THE WORK AREA. THIS PHRASE DOES NOT APPLY TO CASES WHERE POSITIVE PROTECTION IS REQUIRED. MOBILE OPERATIONS ARE REGARDED AS "WITHOUT POSITIVE PROTECTION". FOR WORK ZONES USING A COMBINATION OF BARRIER AND TEMPORARY TRAFFIC CONTROL DEVICES (CONES, DRUMS, ETC), THE DESIGNATION SHALL BE BASED UPON THE TYPE OF DEVICES USED IN THE AREA THAT WORKERS ARE LOCATED.

IF MULTIPLE ACTIVE LOCALIZED QUALIFYING WORK AREAS OCCUR WITHOUT POSITIVE PROTECTION, PER MAINLINE TRAFFIC DIRECTION, PROVIDE A UNIFORMED LEO AND OFFICIAL PATROL CAR IN ADVANCE OF:

- THE FIRST ACTIVE WORK AREA THAT DRIVERS WILL ENCOUNTER; OR
- THE ACTIVE WORK AREA LATERALLY CLOSEST TO THE OPEN TRAVELED LANE; OR
- OTHER LOCATION AS APPROVED BY THE ENGINEER.

THE UNIFORMED LEO AND OFFICIAL PATROL CAR MAY RELOCATE AMONG THE LISTED LOCATIONS AS APPROPRIATE AS THE OPERATIONS PROCEED IN THE LOCALIZED QUALIFYING WORK AREAS.

IN GENERAL, LEOS SHOULD BE POSITIONED IN ADVANCE OF AND ON THE SAME SIDE AS THE LANE RESTRICTION (OR AT THE POINT OF ROAD CLOSURE), AND TO MANUALLY CONTROL TRAFFIC MOVEMENTS THROUGH SIGNALIZED INTERSECTIONS IN WORK ZONES.

LEOS SHOULD NOT FORGO THEIR TRAFFIC CONTROL RESPONSIBILITIES TO APPREHEND MOTORISTS FOR ROUTINE TRAFFIC VIOLATIONS. HOWEVER, IF A MOTORIST'S ACTIONS ARE CONSIDERED TO BE RECKLESS, THEN PURSUIT OF THE MOTORIST IS APPROPRIATE.

THE LEOS WORK AT THE DIRECTION OF THE CONTRACTOR. THE CONTRACTOR IS RESPONSIBLE FOR SECURING THE SERVICES OF THE LEOS WITH THE APPROPRIATE AGENCIES AND COMMUNICATING THE INTENTIONS OF THE PLANS WITH RESPECT TO DUTIES OF THE LEOS. THE ENGINEER SHALL HAVE FINAL CONTROL OVER THE LEOS' DUTIES AND PLACEMENT, AND WILL RESOLVE ANY ISSUES THAT MAY ARISE BETWEEN THE TWO PARTIES.

ENSURE PROVIDED LEOS HAVE BEEN TRAINED APPROPRIATE TO THE JOB DECISIONS THEY ARE REQUIRED TO MAKE WHILE ON THE PROJECT, IN ACCORDANCE WITH C&MS 614.03.

THE LEO SHALL REPORT IN TO THE CONTRACTOR PRIOR TO THE START OF THE SHIFT, IN ORDER TO RECEIVE INSTRUCTIONS REGARDING SPECIFIC WORK ASSIGNMENTS DURING HIS/HER SHIFT. THE LEO IS EXPECTED TO STAY AT THE PROJECT SITE FOR THE ENTIRE DURATION OF HIS/HER SHIFT. THE LEO SHALL REPORT TO THE CONTRACTOR AT THE END OF HIS/HER SHIFT. SHOULD IT BE NECESSARY TO LEAVE THE PROJECT SITE, THE LEO SHALL NOTIFY THE ENGINEER. THE CONTRACTOR SHALL PROVIDE THE LEO WITH A TWO-WAY COMMUNICATION DEVICE THAT SHALL BE RETURNED TO THE CONTRACTOR AT THE END OF HIS/HER SHIFT.

LEOS (WITH PATROL CAR) REQUIRED BY THE TRAFFIC MAINTENANCE TASKS ABOVE SHALL BE PAID FOR ON A UNIT PRICE (HOURLY) BASIS UNDER ITEM 614, LAW ENFORCEMENT OFFICER (WITH PATROL CAR) FOR ASSISTANCE. THE FOLLOWING ESTIMATED QUANTITIES HAVE BEEN CARRIED TO THE GENERAL SUMMARY.

ITEM 614, LAW ENFORCEMENT OFFICER WITH PATROL CAR FOR ASSISTANCE 2100 HOURS

THE HOURS PAID SHALL INCLUDE ANY MINIMUM SHOW-UP TIME REQUIRED BY THE LAW ENFORCEMENT AGENCY INVOLVED.

ANY ADDITIONAL COSTS (ADMINISTRATIVE OR OTHERWISE) INCURRED BY THE CONTRACTOR TO OBTAIN THE SERVICES OF AN LEO ARE INCLUDED WITH THE BID UNIT PRICE FOR ITEM 614, LAW ENFORCEMENT OFFICER WITH PATROL CAR FOR ASSISTANCE.

ITEM 614, WORK ZONE PAVEMENT MARKINGS, 648
THE FOLLOWING ESTIMATED QUANTITIES HAVE BEEN CARRIED TO THE GENERAL SUMMARY FOR USE AT LOCATIONS AND AT TIMES AS DIRECTED BY THE ENGINEER FOR WORK ZONE PAVEMENT MARKINGS PER THE REQUIREMENTS OF C&MS 614.11.

ITEM 614 WORK ZONE LANE LINE, CLASS I, 6", 648, 2.10 MILES
ITEM 614 WORK ZONE EDGE LINE, CLASS I, 6", 648, 5.00 MILES
ITEM 614 WORK ZONE CHANNELIZING LINE, CLASS I, 8", 648, 2,825 FEET
ITEM 614 WORK ZONE DOTTED LINE, CLASS I, 6", 648, 1,290 FEET

NOTIFICATION OF TRAFFIC RESTRICTIONS
THROUGHOUT THE DURATION OF THE PROJECT, THE CONTRACTOR SHALL NOTIFY THE PROJECT ENGINEER IN WRITING OF ALL TRAFFIC RESTRICTIONS AND UPCOMING MAINTENANCE OF TRAFFIC CHANGES. THE CONTRACTOR SHALL ENSURE THE WRITTEN NOTIFICATION IS SUBMITTED IN A TIMELY MANNER TO ALLOW THE PROJECT ENGINEER TO MEET THE REQUIRED TIME FRAMES SET FORTH IN THE TABLE BELOW TO INFORM THE SPECIAL HAULING PERMITS SECTION (HAULING.PERMITS@DOT.OHIO.GOV) AND THE DISTRICT PUBLIC INFORMATION OFFICE (PIO). THIS NOTIFICATION SHALL BE RECEIVED BY THE PROJECT ENGINEER PRIOR TO THE PHYSICAL SETUP OF ANY APPLICABLE SIGNS OR MESSAGE BOARDS.

INFORMATION SHOULD INCLUDE, BUT IS NOT LIMITED TO, ALL CONSTRUCTION ACTIVITIES THAT IMPACT OR INTERFERE WITH TRAFFIC AND SHALL LIST THE SPECIFIC LOCATION, TYPE OF WORK, ROAD STATUS, DATE AND TIME OF RESTRICTION, DURATION OF RESTRICTION, NUMBER OF LANES MAINTAINED, NUMBER OF LANES CLOSED, MINIMUM VERTICAL CLEARANCE, MINIMUM WIDTH OF DRIVABLE PAVEMENT, DETOUR ROUTES, IF APPLICABLE, AND ANY OTHER INFORMATION REQUESTED BY THE PROJECT ENGINEER.

NOTIFICATION TIME FRAME TABLE

ITEM	DURATION OF CLOSURE	NOTIFICATION DUE TO DISTRICT 6 COMMUNICATIONS OFFICE	SIGN DISPLAYED TO PUBLIC
RAMP & ROAD CLOSURES	>=2 WEEKS	21 CALENDAR DAYS PRIOR TO CLOSURE	14 CALENDAR DAYS PRIOR TO CLOSURE
	>12 HOURS & <2 WEEKS	14 CALENDAR DAYS PRIOR TO CLOSURE	7 CALENDAR DAYS PRIOR TO CLOSURE
	<12 HOURS	4 BUSINESS DAYS PRIOR TO CLOSURE	2 BUSINESS DAYS PRIOR TO CLOSURE
LANE CLOSURE & RESTRICTIONS	>=2 WEEKS	14 CALENDAR DAYS PRIOR TO CLOSURE	
	<2 WEEKS	5 BUSINESS DAYS PRIOR TO CLOSURE	
START OF CONSTRUCTION & TRAFFIC PATTERN CHANGES	N/A	14 CALENDAR DAYS PRIOR TO IMPLEMENTATION	

ANY UNFORESEEN CONDITIONS NOT SPECIFIED IN THE PLANS REQUIRING TRAFFIC RESTRICTIONS SHALL ALSO BE REPORTED TO THE PROJECT ENGINEER USING THE NOTICE TO OFFICE OF COMMUNICATIONS TIME TABLE.

ITEM 614, MAINTAINING EXISTING RAMPS, AS PER PLAN
AS APPROVED BY THE ENGINEER, THE CONTRACTOR MAY MAINTAIN RAMP M THROUGH A PORTION OF PHASE 1 OR 2 AND RAMP J THROUGH A PORTION OF PHASE 1, 2, OR 3A.

THE FOLLOWING QUANTITIES HAVE BEEN INCLUDED IN THE MOT SUBSUMMARY:

ITEM 614, MAINTAINING TRAFFIC, MISC.: MAINTAIN EXISTING RAMP M, AS PER PLAN, 1 LUMP SUM
ITEM 614, MAINTAINING TRAFFIC, MISC.: MAINTAIN EXISTING RAMP J, AS PER PLAN, 1 LUMP SUM

PAYMENT FOR ALL LABOR, EQUIPMENT, AND MATERIALS TO MAINTAIN THE RAMPS SHALL BE INCLUDED IN THE LUMP SUM CONTRACT PRICE FOR THE ITEMS LISTED ABOVE. THESE ITEMS INCLUDE BUT ARE NOT LIMITED TO THE COST TO INSTALL PORTABLE CONCRETE BARRIER WALL, TEMPORARY STRIPING, AND RPMS. ALL COSTS ASSOCIATED WITH CLOSING AND OPENING THE RAMPS PER THE ESTABLISHED MOT PHASING WOULD BE INCLUDED WITH THOSE BID PRICES.

Preliminary Plans - For Reference Only

J:\2011093\ODOT\HAM\77889\mot\sheets\77889MN006.dgn 5/22/2026 10:08:12 AM hbrendlinger

NOTIFICATION CONTACT INFO:
DISTRICT PUBLIC INFORMATION OFFICER BY EMAIL AT DOT.D08.PIO@dot.ohio.gov
DISTRICT PERMIT SECTION BY EMAIL AT D08.Permits@dot.ohio.gov
CENTRAL OFFICE SPECIAL HAUL PERMITS SECTION BY EMAIL AT DOT.D08.Detours@dot.ohio.gov
DISTRICT TRAFFIC, DETOUR SECTION BY EMAIL AT DOT.D08.Detours@dot.ohio.gov

ITEM 615, ROADS FOR MAINTAINING TRAFFIC
PER THE REQUIREMENTS OF THE 2023 CONSTRUCTION AND MATERIALS SPECIFICATIONS (CMS), ALL COSTS ASSOCIATED WITH DRAINAGE RELATED TO TEMPORARY PAVEMENT CONSTRUCTION SHALL BE INCIDENTAL TO ITEM 615, ROADS FOR MAINTAINING TRAFFIC. THE MAINTENANCE OF TRAFFIC PLANS IDENTIFY SPECIFIC LOCATIONS WHERE TEMPORARY DRAINAGE CONDUITS AND TEMPORARY GUARDRAIL ARE EXPECTED TO BE NEEDED. IT SHALL BE THE CONTRACTORS RESPONSIBILITY TO DETERMINE ACTUAL DESIGN NEEDS. THESE SPECIFIC ITEMS, AS WELL AS ALL OTHER REQUIREMENTS OF THE CMS SHALL BE INCLUDED IN THE BASE BID OF ROADS FOR MAINTAINING TRAFFIC.

THE FOLLOWING ESTIMATED QUANTITIES HAVE BEEN PROVIDED FOR INFORMATION ONLY. THESE QUANTITIES DO NOT INCLUDE ALL ASPECTS OF ITEM 615, BUT HAVE BEEN PROVIDED FOR ASSISTANCE IN BIDDING:

12" CONDUIT, TYPE B = 300 FEET
12" CONDUIT, TYPE C = 100 FEET
DRAINAGE MISC.: CONVERT MEDIAN INLET TO CB-6 = 3 EACH

EXCAVATION FOR MAINTAINING TRAFFIC 590 CU. YD.
EMBANKMENT FOR MAINTAINING TRAFFIC 355 CU. YD.

PAYMENT FOR ALL COSTS SHALL BE INCLUDED IN THE CONTRACT PRICE PER LUMP SUM FOR ITEM 615, ROADS FOR MAINTAINING TRAFFIC.

ITEM 615, ROADS FOR MAINTAINING TRAFFIC, AS PER PLAN
THIS ITEM OF WORK SHALL INCLUDE EARTHWORK AND PAVEMENT FOR CONSTRUCTING THE PAVEMENT TRANSITION AREA IN THE OPTIONAL SUB-PHASE (PHASE 1 PART 2) ON IR-75.

THE FOLLOWING ESTIMATED QUANTITIES HAVE BEEN PROVIDED FOR INFORMATION ONLY. THESE QUANTITIES DO NOT INCLUDE ALL ASPECTS OF ITEM 615, BUT HAVE BEEN PROVIDED FOR ASSISTANCE IN BIDDING:

EMBANKMENT FOR MAINTAINING TRAFFIC 1760 CU. YD.
PAVEMENT FOR MAINTAINING TRAFFIC, CLASS A 995 CU. YD.

PAYMENT FOR ALL COSTS SHALL BE INCLUDED IN THE CONTRACT PRICE PER LUMP SUM FOR ITEM 615, ROADS FOR MAINTAINING TRAFFIC, AS PER PLAN.

ITEM 615, PAVEMENT FOR MAINTAINING TRAFFIC, CLASS A, AS PER PLAN
IN ORDER TO REMOVE EXISTING RUMBLE STRIPS PRIOR TO SHIFTING TRAFFIC ONTO SHOULDERS, PAVEMENT FOR MAINTAINING TRAFFIC, CLASS A, AS PER PLAN SHALL INCLUDE MILLING 2' WIDE BY 1.5" DEEP STRIP OF EXISTING INSIDE AND OUTSIDE SHOULDERS FOR THE STATION RANGES DETAILED BELOW. THE MILLED AREAS SHALL THEN BE RESURFACED WITH 1.5" OF ASPHALT CONCRETE SURFACE COURSE (ITEM 448, TYPE 1). THIS WORK SHALL BE COMPLETED PRIOR TO SHIFTING MAINLINE TRAFFIC ONTO THE SHOULDERS.

PAYMENT FOR ALL MATERIALS AND LABOR ASSOCIATED WITH MILLING AND RESURFACING EXISTING SHOULDERS SHALL BE INCIDENTAL TO ITEM 615 PAVEMENT FOR MAINTAINING TRAFFIC, CLASS A, AS PER PLAN.

A QUANTITY OF 5480 S.Y. FOR THIS ITEM HAS BEEN CARRIED TO THE GENERAL SUMMARY.

THE MILLING AND RESURFACING DESCRIBED ABOVE SHALL BE APPLIED TO THE FOLLOWING LENGTHS OF EXISTING SHOULDER:

IR 75 NB INSIDE SHOULDER STA. 401+00 - STA. 483+00
IR 75 NB OUTSIDE SHOULDER STA. 401+00 - STA. 471+00
IR 75 SB INSIDE SHOULDER STA. 408+00 - STA. 461+00
SR 562 WB OUTSIDE SHOULDER STA. 14+00 - STA. 36+00

ITEM 622, PORTABLE BARRIER, 50"
THIS WORK SHALL CONSIST OF FURNISHING, MAINTAINING, AND SUBSEQUENTLY REMOVING A 50-INCH PORTABLE BARRIER AT THE LOCATIONS SHOWN ON THE PLANS. FOR DETAILS, SEE SCD RM-4.1.

PORTABLE STEEL BARRIER IS AN APPROVED ALTERNATIVE TO PORTABLE CONCRETE BARRIER. FOR INFORMATION ON APPROVED VENDORS, SEE THE APPROVED PRODUCTS LIST MAINTAINED BY THE OFFICE OF ROADWAY ENGINEERING.

PORTABLE BARRIER, 32 INCHES HIGH WITH AN 18-INCH MINIMUM HEIGHT GLARE SCREEN MAY BE USED AT THE OPTION OF THE CONTRACTOR. THE GLARE SCREEN SHALL BE CONSTRUCTED USING ONE OF THE SCREENS PROVIDED ON THE APPROVED LIST, AVAILABLE ON THE OFFICE OF ROADWAY ENGINEERING WEBSITE.

PADDLE OR INTERMITTENT TYPE GLARE SCREENS SHALL BE DESIGNED USING A 20 DEGREE CUT-OFF ANGLE BASED ON TANGENT ALIGNMENT. THAT SPACING SHALL BE USED THROUGHOUT THE BARRIER LENGTH WITHOUT REGARD TO BARRIER CURVATURE.

THE GLARE SCREEN SYSTEM SHALL BE SECURELY FASTENED TO THE 32-INCH PORTABLE BARRIER USING THE HARDWARE AND PROCEDURES SPECIFIED BY THE MANUFACTURER.

FOR DIRECTIONS ON HOW TO INSTALL THE GLARE SCREEN AND THE BARRIER, SEE THE MANUFACTURER'S INSTRUCTIONS.

50" PORTABLE BARRIER SHALL BE ANCHORED ANYTIME THERE IS LESS THAN 2' BETWEEN THE BACK OF BARRIER AND WORK ZONE.

PAYMENT SHALL INCLUDE ALL LABOR, MATERIAL, AND EQUIPMENT NECESSARY TO PERFORM THE WORK AND SHALL BE PAID FOR AT THE CONTRACT PRICE PER FOOT FOR ITEM 622, PORTABLE BARRIER, 50", AS PER PLAN.

ITEM, 253 PARTIAL DEPTH PAVEMENT REPAIR
THE FOLLOWING ESTIMATED QUANTITIES OF ITEM 253 PARTIAL DEPTH PAVEMENT REPAIR HAVE BEEN CARRIED TO THE GENERAL SUMMARY TO BE USED IN EACH YEAR OF MOT AS DIRECTED BY THE ENGINEER FOR MAINTAINING TRAFFIC.

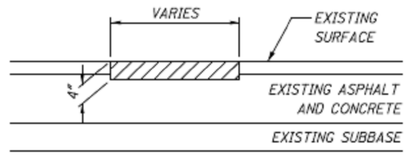

.
EXISTING DETERIORATED ASPHALT SHALL BE REMOVED TO A MINIMUM DEPTH OF 4 INCHES OR TOP OF CONCRETE OR AS DIRECTED BY THE ENGINEER AND REPLACED WITH ITEM 301, ASPHALT CONCRETE BASE. THE 301 SHALL BE COMPACTED AS PER 401.15 AND IN APPROXIMATELY EQUAL LAYERS IF REQUIRED DUE TO THE DEPTH OF REPAIR. THE LOCATIONS AND SIZE OF THE REPAIRS SHALL BE DETERMINED BY THE ENGINEER.

ITEM 253 PAVEMENT REPAIR, MISC.: PERFORMED IN 2027
400 CU YDS
ITEM 253 PAVEMENT REPAIR, MISC.: PERFORMED IN 2028
400 CU YDS
ITEM 253 PAVEMENT REPAIR, MISC.: PERFORMED IN 2029
400 CU YDS

ITEM 503, COFFERDAMS AND EXCAVATION BRACING
TEMPORARY SHORING WILL BE REQUIRED TO FACILITATE MAINTAINING TRAFFIC IN THE LOCATIONS DEPICTED IN THE MAINTENANCE OF TRAFFIC PLANS. APPROXIMATE LENGTHS OF THE TEMPORARY SHORING HAS BEEN PROVIDED IN PLAN TO AID IN THE BIDDING OF THESE WALLS. SEPERATE PAY ITEMS HAVE BEEN INCLUDED FOR EACH LOCATION. THE SHORING IS ANTICIPATED TO HAVE AN EXPOSED HEIGHT OF LESS THAN 8'-0". THE CONTRACTOR IS RESPONSIBLE FOR THEIR CHOSEN METHOD OF SHORING. PLANS, INCLUDING DESIGN AND GEOTECHNICAL EVALUATION, FOR THE TEMPORARY SHORING SHALL BE PREPARED AND PROVIDED PER CMS 501.05. NO ADDITIONAL PAYMENT WILL BE MADE FOR THIS ITEM. ALL COSTS ASSOCIATED WITH TEMPORARY SHORING SHALL BE INCIDENTAL TO THE LUMP SUM FOR ITEM 503, COFFERDAMS AND EXCAVATION BRACING, FOR EACH LOCATION IN THE GENERAL SUMMARY.

ID	PHASE	LOCATION	TYPE	STATION	TEMP. SHORING LENGTH (FT)	TEMP. SHORING AREA (SF)
TS1	1	IR-75	SHEET PILE	439+50- 442+00	250	1000
TS2	1	IR-75	TWFMSE WALL	453+50- 465+00	1150	6325
TS3	1	IR-75	SHEET PILE	465+00- 472+10	710	2840
TS4	1	RAMP N	SHEET PILE	412+35 - 415+50	315	1260
TS5	1	RAMP N	TWFMSE WALL	420+25- 422+00	175	525
TS6	1	RAMP N	SHEET PILE	422+00- 428+13	613	4904
TS7	1 PT 1	RAMP Q	SHEET PILE	28+00 - 34+50	650	2600
TS8	2	IR-75	SHEET PILE	453+00-470+27	1727	6908

THE FOLLOWING QUANTITIES HAVE BEEN CARRIED TO THE GENERAL SUMMARY:
ITEM 503 COFFERDAMS AND EXCAVATION BRACING, AS PER PLAN, TS1
ITEM 503 COFFERDAMS AND EXCAVATION BRACING, AS PER PLAN, TS2
ITEM 503 COFFERDAMS AND EXCAVATION BRACING, AS PER PLAN, TS3
ITEM 503 COFFERDAMS AND EXCAVATION BRACING, AS PER PLAN, TS4
ITEM 503 COFFERDAMS AND EXCAVATION BRACING, AS PER PLAN, TS5
ITEM 503 COFFERDAMS AND EXCAVATION BRACING, AS PER PLAN, TS6
ITEM 503 COFFERDAMS AND EXCAVATION BRACING, AS PER PLAN, TS7
ITEM 503 COFFERDAMS AND EXCAVATION BRACING, AS PER PLAN, TS8

ITEM 614, WORK ZONE IMPACT ATTENUATOR FOR 24" WIDE HAZARDS (UNIDIRECTIONAL OR BIDIRECTIONAL)
THIS ITEM SHALL CONSIST OF FURNISHING AND INSTALLING A NON-GATING IMPACT ATTENUATOR. FURNISH AN IMPACT ATTENUATOR FROM THE OFFICE OF ROADWAY ENGINEERING'S APPROVED LIST FOR WORK ZONE IMPACT ATTENUATORS, FROM THE ROADWAY STANDARDS APPROVED PRODUCTS WEB PAGE.

INSTALLATION SHALL BE AT THE LOCATIONS SPECIFIED IN THE PLANS IN ACCORDANCE WITH THE MANUFACTURER5#32S SPECIFICATIONS.

THE CONTRACTOR SHALL REPAIR OR REPLACE A DAMAGED UNIT WITHIN 24 HOURS OF A DAMAGING IMPACT.

WHEN BIDIRECTIONAL DESIGNS ARE SPECIFIED, THE CONTRACTOR SHALL SUPPLY APPROPRIATE TRANSITIONS. WHEN GATING IMPACT ATTENUATORS ARE DESIRED, THE CONTRACTOR SHALL SUBMIT DOCUMENTATION TO THE ENGINEER FOR ACCEPTANCE.

THE COST FOR THE ADDITIONAL BARRIER REQUIRED FOR A GATING IMPACT ATTENUATOR SHALL BE INCLUDED IN THE COST OF THE GATING IMPACT ATTENUATOR.

PAYMENT FOR THE ABOVE WORK SHALL BE MADE AT THE UNIT PRICE BID AND SHALL INCLUDE ALL LABOR, TOOLS, EQUIPMENT AND MATERIALS NECESSARY TO CONSTRUCT AND MAINTAIN A COMPLETE AND FUNCTIONAL IMPACT ATTENUATOR SYSTEM, INCLUDING ALL RELATED BACKUPS, TRANSITIONS, LEVELING PADS, HARDWARE AND GRADING, NOT SEPARATELY SPECIFIED, AS REQUIRED BY THE MANUFACTURER.

Preliminary Plans - For Reference Only

CALCULATED BDM CHECKED SMM

MAINTENANCE OF TRAFFIC NOTES

HAM-75-7.85

J:\20110903\ODOT\HAM\77889\mot\sheets\77889MN007.dgn 5/22/2026 10:08:13 AM hbrendlinger

MAINTAINING TRAFFIC, MISC.:OPTIMIZED TRAFFIC SIGNAL OPERATIONS FOR RAMP CLOSURES

GENERAL

THIS ITEM OF WORK SHALL INCLUDE THE DEVELOPMENT, IMPLEMENTATION, EVALUATION, AND MODIFICATION OF OPTIMIZED TRAFFIC SIGNAL TIMINGS ON THE LOCAL ROADWAY NETWORK DURING FREEWAY RAMP CLOSURES. DIVERTED TRAFFIC CAUSING SIGNIFICANT DELAYS AND QUEUES ROADWAYS SHALL BE MITIGATED THRU OPTIMIZED TRAFFIC SIGNAL TIMINGS. OTHER MITIGATION STRATEGIES, SUCH AS REVISED LANE ASSIGNMENTS OR ADDITIONAL SIGNAL PHASING ALONG PADDOCK RD, SHALL BE INCLUDED IN SEPARATION PAY ITEMS IN THIS CONTRACT.

THE CONTRACTOR SHALL PERFORM THIS WORK FOR THE EACH OF THE THREE FOLLOWING RAMP CLOSURE SCENARIOS:

1. CLOSURES OF RAMP M (WB 562 TO 75 SB) AND RAMP J (75 SB TO 562 EB) TOGETHER.
2. CLOSURE OF RAMP J BUT RAMP M IS OPEN.
3. CLOSURE OF RAMP K (562 WB TO 75 NB.)

IT'S ANTICIPATED THAT 75 TRAFFIC SIGNALS ACROSS MULTIPLE ENTITIES MAY BE IMPACTED BY DIVERTED TRAFFIC. THESE JURISDICTIONS ARE THE OHIO DEPARTMENT OF TRANSPORTATION, CITIES OF CINCINNATI AND NORWOOD, AND THE VILLAGES OF ELMWOOD PLACE AND ST. BERNARD. THE AREA CONTAINING THESE TRAFFIC SIGNALS IS GENERALLY BOUND BY PADDOCK RD/CARTHAGE AVE TO THE NORTH, VINE STREET/SPRING GROVE AVENUE TO THE WEST, MITCHELL AVENUE/DANA AVE TO THE SOUTH, AND MONTGOMERY ROAD TO THE EAST. THE TRAFFIC SIGNALS ANTICIPATED TO BE IMPACTED ARE ALONG THE FOLLOWING ROADWAYS: PADDOCK ROAD, READING RD, VINE STREET/SPRING GROVE AVENUE, SEYMOUR AVENUE, MITCHELL AVENUE, ROSS AVENUE, DANA AVENUE, AND TOWNE STREET/TOWNSHIP AVENUE, NORWOOD AVENUE, AND MONTGOMERY ROAD. HOWEVER, THE QUANTITY AND LOCATION OF TRAFFIC SIGNALS REQUIRING OPTIMIZATION MAY CHANGE BECAUSE OF, INCLUDING BUT NOT LIMITED TO THE CONSTRUCTION PHASING, TRAFFIC DATA AND MODELING, OBSERVATIONS/FEEDBACK, OR TO IMPROVE SIGNAL OPERATIONS AT AN ADJACENT SIGNAL.

GOAL OF OPTIMIZED TRAFFIC SIGNAL TIMINGS

WITH EACH OF THE THREE RAMP CLOSURE SCENARIOS THAT'S EXPECTED TO DIVERT TRAFFIC FROM THE FREEWAYS TO THE LOCAL ROADWAYS, THE CONTRACTOR SHALL OPTIMIZE THE TRAFFIC SIGNAL TIMING ALONG EACH IMPACTED SIGNALIZED CORRIDOR OR INTERSECTION TO ACHIEVE THE FOLLOWING PRIORITIZED GOALS:

1. PREVENT STOPPED OR SLOW TRAFFIC ON THE RAMPS AT THE FREEWAY INTERCHANGES FORM BACKING UP ONTO THE FREEWAY MAINLINE.
2. DEPENDENT ON THE TRAFFIC PATTERN AND TIME OF DAY, PROGRESSION SHALL FAVOR GETTING TO OR AWAY FROM THE INTERCHANGES.
3. MINIMIZING TRAVEL TIMES ALONG THE COORDINATED PHASES ON EACH CORRIDOR. IN ADDITION, PROGRESSION SHALL FAVOR THE HEAVIEST COORDINATED DIRECTION.
4. PROVIDING SUFFICIENT TIME PER ODOT OR LOCAL STANDARDS FOR PEDESTRIAINS TO CROSS EACH EXISTING SIGNALIZED CROSSWALK. THIS SHALL BE PERFORMED WITHOUT KNOCKING THE SIGNALS OUT OF COORDINATION
5. MINIMIZE DELAY AND QUEUE LENGTHS ON THE NON-COORDINATED PHASES OR CORRIDORS NOT DIRECTLY CONNECTED TO THE INTERSTATE.

FOR THIS WORK, THE CONTRACTOR SHALL FOLLOW SUPPLEMENTAL SPECIFICATION 824 DATED 1/20/2023 AND AS NOTED BELOW:

1. 824.03 EQUIPMENT INSPECTION
   - A. THE FULL REQUIREMENTS OF 824.03 SHALL NOT APPLY. THE FOLLOWING IS REQUIRED TO ENSURE PROPER GPS TIME CLOCK IS PROVIDED (SEE BELOW): INTERSECTION IDENTIFICATION, CABINET TYPE, CONTROLLER TYPE, CURRENT COMMUNICATIONS METHOD, AND PICTURE(S) OF THE INSIDE OF THE CABINET SHOWING THE FRONT/BACK OF THE CONTROLLER AND ALL PORTS.
2. 824.04 COUNTS:
   - A. 824.04 WILL BE FOLLOWED FOR EXISTING COUNT INFORMATION IN CREATING A BASE MODEL OF ALL INTERSECTIONS.
3. 824.05 MEASURE OF EFFECTIVENESS-EXISTING TIMING:
   - A. THE CONTRACTOR SHALL COLLECT TRAVEL TIMES ON EACH OF THE EXISTING CORRIDORS TO BE USED AS A COMPARISON FOR EACH RAMP CLOSURE AND THEIR OPTIMIZED SIGNAL TIMINGS.
4. 824.06 TIMING PARAMETERS:
   - A. THE PROPOSED SIGNAL TIMINGS SHALL FOLLOW THE STANDARDS AND PREFERENCES OF EACH AGENCY. IF ANY AGENCY HAS NO STANDARDS OR PREFERENCES, THEN THE CONTRACTOR SHALL FOLLOW ODOT STANDARDS FOR THOSE SIGNALS.
5. 824.07 MODELING:
   - A. THE CONTRACTOR SHALL CREATE A SYNCHRO MODEL OF THE EXISTING CONDITIONS BUT SHALL NOT OPTIMIZE THE EXISTING SIGNAL TIMING. THE EXISTING CONDITIONS MODEL SHALL BE USED AS A BASELINE COMPARISION AND STARTING POINT FOR THE OPTIMIZED MODELS AND SIGNAL TIMING FOR EACH OF THE THREE RAMP CLOSURES.
   - B. FOLLOW 824.07 FOR EACH OF THE THREE RAMP CLOSURES USING ASSUMED TRAFFIC VOLUMES FOR THE 7 PEAK PERIODS SPECIFIED IN 824.07.B. THE CONTRACTOR SHALL MAKE ASSUMPTIONS OF TRAFFIC VOLUMES WITHOUT CUSTOMARY TURNING MOVEMENT COUNT INFORMATION AVAILABLE FOR EACH. ODOT WILL PROVIDED AVERAGE DAILY TRAFFIC (ADT) MAPS FOR THREE SCENARIOS SHOWING THE DIFFERENCE OR 'DELTA' BETWEEN THE EXISTING AVERAGE DAILY TRAFFIC (ADT) VOLUME AND THE FORECASTED ADT VOLUMES FOR EACH CORRIDOR TO ASSIST WITH MODELING.
6. 824.08 FIELD TIMING PLAN IMPLEMENTATION:
   - A. THE CONTRACTOR SHALL SUBMIT HIS PROPOSED TIMINGS FOR EACH OF THE THREE RAMP CLOSURES FOR REVIEW AND APPROVAL BY THE ENGINEER AND THE MAINTAINING AGENCY AT LEAST 60 DAYS PRIOR TO IMPLEMENTATION. ONCE APPROVED, THE CONTRACTOR SHALL IMPLEMENT AT THE SAME TIME AS CLOSING THE RAMPS.
7. 824.09 FIELD OBSERVATION AND TIMING ADJUSTMENT RECOMMENDATIONS:
   - A. FOR EACH PROPOSED SCENARIO, THE CONTRACTOR SHALL ASSUME COLLECTING TURNING MOVEMENT COUNT INFORMATION AT A MAXIMUM OF 15 INTERSECTIONS POST-IMPLEMENTATION TO HELP VERIFY ASSUMPTIONS AND FOR TWEAKING THE MODELS AND SIGNAL TIMINGS.
   - B. OBSERVATIONS AND TRAFFIC COUNTS SHALL BEGIN IMMEDIATELY UPON IMPLEMENTING EACH RAMP CLOSURES.
   - C. TRAFFIC COUNT INFORMATION SHALL BE COLLECTED AND INCORPORATED INTO MODEL, SO THAT THE PROPOSED TRAFFIC SIGNAL TIMING CAN BE ANALYZED AND MODIFIED WITHIN 30 DAYS OF THE START OF EACH RAMP CLOSURE.
   - D. THE CONTRACTOR SHALL PROVIDE A SUMMARY OF ALL TIMING CHANGES AS WELL AS UPDATED TIMING CHARTS TO THE ENGINEER.
   - E. THE CONTRACTOR SHALL ALSO BE REQUIRED TO LOG, ANALYZE, AND RESPOND TO ALL SIGNAL TIMING REQUESTS/REPORTS RECEIVED FROM THE ENGINEER AND MAINTAINING AGENCIES.
8. 824.11 MEEETINGS:
   - A. AT THE PRE-CONSTRUCTION MEETING, ANY EXISTING TRAFFIC SIGNAL PLANS, TIMING CHARTS, AND MAPS FOR THREE RAMP CLOSURES SHOWING THE DIFFERENCE OR 'DELTA' BETWEEN THE EXISTING AVERAGE DAILY TRAFFIC (ADT) VOLUME AND THE FORECASTED ADT VOLUMES FOR EACH CORRIDOR WILL BE PROVIDED TO THE CONTRACTOR.
   - B. PRIOR TO STARTING ANY WORK FOR THIS PAY ITEM, THE CONTRACTOR SHALL HOLD A MEETING WITH THE ENGINEER AND EACH MAINTAINING AGENCY TO DISCUSS THIS WORK. THE PURPOSE OF THE MEETING IS TO DISCUSS UNDERSTANDING THE SCOPE OF WORK, SCHEDULE, METHODS OF COLLECTING DATA, MODELING, TIMING PREFERENCES, SIGNAL CONDITIONS, SIGNAL COMMUNCIATIONS, IDENTIFYING COORDINATED MOVEMENTS, AND IMPLEMENTING RECOMMENDED TRAFFIC SIGNAL TIMINGS. IN ADDITION, THE DISCUSSION SHALL INCLUDE EXPECTATIONS OF DELIVERABLES, REVIEW AND RESPONSE TIMES, METHODS TO RESOLVE ACTUAL VERSUS EXPECTED TRAFFIC FLOW, AND COMPLAINTS. THE DISCUSSION SHALL INCLUDE SETTING A COMMON GOAL OR EXPECTATION OF HOW WELL TRAFFIC WILL FLOW ON EACH CORRIDOR WITH DIVERTED TRAFFIC AND OPTIMIZED SIGNAL TIMINGS.
   - C. THE CONTRACTOR SHALL SUBMIT THEIR RECOMMENDED TRAFFIC SIGNAL TIMING PLAN FOR EACH DIFFERENT CLOSURE TO THE TRAFFIC SIGNAL OWNERS FOR REVIEW AND APPROVAL 60 DAYS PRIOR TO IMPLEMENTATION. THE CONTRACTOR SHALL ALSO CONDUCT A MEETING WITH EACH OWNER TO REVIEW THE MODELS AND TIMING PLANS TO DISCUSS TIMING CHANGES, ASSUMPTIONS, AND IMPLEMENTATION.
   - D. 60 DAYS AFTER IMPLEMENTING TIMING PLANS FOR EACH DIFFERENT CONSTRUCTION PHASE, THE CONTRACTOR SHALL CONDUCT A MEETING WITH EACH TRAFFIC SIGNAL OWNER TO REVIEW THE PERFORMANCE OF THOSE TIMING PLANS AND THEIR MEASURE OF EFFECTIVENESS. ONCE EACH AGENCY AND THE CONTRACTOR AGREES THAT NO FURTHER CHANGES THEN THE CONTRACTOR WILL SUBMIT AN INTIAL REPORT WITH MOE'S.
9. 824.12 DELIVERABLES
   - A. THE CONTRACTOR SHALL PROVIDE THE DELIVERABLES OF THIS SECTION FOR EACH OF THE RAMP CLOSURE SCENARIOS.

IN ADDITION TO THE ABOVE, THE FOLLOWING SHALL ALSO APPLY:

1. WHILE THE PURPOSE OF THIS NOTE IS FOR THE CONTRACTOR TO PROVIDE AND IMPLEMENT OPTIMIZED TRAFFIC SIGNAL TIMNGS, THE CONTRACTOR SHALL NOT BE RESPONSIBLE FOR THE PHYSICAL MAINTENANCE OF THE TRAFFIC SIGNAL INSTALLATIONS. ANY INSTANCES OF DETECTION ISSUES, CONDITION REPORTS, SIGNALS IN FLASH, ETC WILL BE HANDLED BY THE MAINTAINING AGENCY UNLESS THE CONTRACTOR HAS CAUSED THE ISSUE.
2. CONTRACTOR SHALL FURNISH AND INSTALL GPS TIME CLOCKS FOR EACH INTERSECTION IN ORDER TO MAINTAIN ACCURATE TIME OF DAY AMONGST INTERSECTIONS. THE GPS TIME CLOCKS SHALL BE ELTEC OR APPROVED EQUAL AND COMPATIBLE WITH EXISTING THE CONTROLLER AND CABINET. THESE GPS TIME CLOCKS SHALL BECOME THE PROPERTY OF THE MAINTAINING AGENCY UPON COMPLETION OF THE PROJECT.
3. UNLESS INDICATED IN THE PLANS, THE CONTRACTOR ISN'T PERMITTED TO INSTALL ADDITIONAL PHASES OR MODIFY PHASING MODES (I.E. ADD A LEFT TURN PHASE, CHANGE FROM PROTECTED TO PROTECTED/PERMISSIVE LEFT TURN PHASES OR CHANGING FROM LEADING TO LAGGING LEFTS) UNLESS THE CONTRACTOR'S STUDY PROVES AN OPERATIONAL IMPROVEMENT AND THE ENGINEER AND MAINTAINING AGENCY APPROVE OF THE CHANGE. ANY COST TO MAKE SUCH A RECOMMENDED CHANGE SHALL BE INCIDENTAL TO THIS PAY ITEM.

METHOD OF MEASUREMENT

THE DEPARTMENT WILL MEASURE MAINTAINING TRAFFIC, MISC.: OPTIMIZED TRAFFIC SIGNAL OPERATIONS FOR RAMP CLOSURES PER EACH INTERSECTION, AND WHICH INCLUDES PROVIDING ALL MATERIALS, EQUIPMENT, LABOR, SOFTWARE, FINAL DELIVERABLES, AND INCIDENTALS TO OPTIMIZE AND IMPLEMENT TRAFFIC SIGNAL TIMINGS FOR MITIGATING DIVERTED TRAFFIC FROM THE FREEWAY ONTO THE LOCAL ROADWAY NETWORK.

THE CONTRACTOR SHALL USE AN ODOT PREQUALIFIED DESIGN CONSULTANT, SPECIFICALLY PREQUALIFIED IN TRAFFIC SIGNALS SYSTEM DESIGN. PRIOR TO COMMENCING DESIGN WORK, THE CONTRACTOR SHALL SUBMIT TO THE ENGINEER THE DESIGN CONSULTANT'S FEE PROPOSAL. THE FEE PROPOSAL SHALL BE IN ACCORDANCE WITH ODOT FEE PROPOSAL SPREADSHEET AND ODOT FEE ESTIMATION GUIDANCE, AND ODOT CONSULTANT SERVICES MANUAL. ALL INVOICES SHALL BE SUBMITTED MONTHLY.

PAYMENT FOR OPTIMIZED TRAFFIC SIGNAL OPERATIONS FOR RAMP CLOSURES WILL BE MADE PER ITEM 614 EACH, MAINTAINING TRAFFIC, MISC.: OPTIMIZED TRAFFIC SIGNAL OPERATIONS FOR RAMP CLOSURES BASED UPON THE INVOICES RECEIVED FROM THE TRAFFIC SIGNAL OPTIMIZATION SERVICES FOR THE DOLLARS USED, INCLUDING A FIVE PERCENT MARKUP FOR CONTRACTOR OVERHEAD FOR ADMINISTERING THE CONTRACT WITH THE TRAFFIC SIGNAL OPTIMIZATION SERVICES. PAYMENT FOR ALL LABOR, EQUIPMENT, AND MATERIALS FOR THE SIGNAL TIMING ADJUSTMENTS WILL BE JUSTIFIED PER C&MS 109.05.C.

THE CONTRACTOR SHALL BID THIS PAY ITEM AT $1 EACH TO ALLOW FOR AN ALLOWANCE OF $750,000.

Preliminary - For Reference Only

CALCULATED BDM CHECKED SMM

MAINTENANCE OF TRAFFIC NOTES

HAM-75-7.85

J:\20110903\ODOT\HAM\77889\mot\sheets\77889MN008.dgn 5/22/2026 10:08:14 AM hbrendlinger

WORK ZONE QUEUE DETECTION WARNING SYSTEM

THE CONTRACTOR SHALL FURNISH, INSTALL, AND MAINTAIN AN APPROVED WORK ZONE QUEUE DETECTION WARNING SYSTEM (WZQDWS) AS PER SUPPLEMENTAL SPECIFICATION 896.

THE PROBABLE INITIAL LOCATIONS OF THE WZQDWS DEVICES ARE AS FOLLOWS:

- SB I-75 APPROACHING PADDOCK ROAD
- WB SR-562 APPROACHING PADDOCK ROAD

IT IS EXPECTED THAT THESE LOCATIONS WILL VARY BASED ON PLANNED OR UNPLANNED PHASE AND TRAFFIC PATTERN CHANGES. PLACEMENT, OPERATION, MAINTENANCE AND ALL ACTIVATION OF THE DEVICES BY THE CONTRACTOR SHALL BE DIRECTED BY THE ENGINEER.

THE FOLLOWING TRAFFIC SENSOR THRESHOLDS AND PORTABLE CHANGEABLE MESSAGE SIGNS (PCMS) MESSAGES SHALL BE USED:

- GREATER THAN OR EQUAL TO 50 MPH - USE FOUR CORNER FLASHING CAUTION MODE

- BETWEEN 50 MPH AND 25 MPH - TRAFFIC AHEAD XX MPH / SLOW DOWN

- BELOW OR EQUAL TO 25 MPH - TRAFFIC AHEAD XX MPH / PREPARE TO STOP

FOUR CORNER FLASHING CAUTION MODE SHALL CONSIST OF THE USE OF ONE ASTERISK IN EACH CORNER OF THE PCMS DISPLAY (4 TOTAL ASTERISKS).

XX SHALL BE ROUNDED UP TO THE NEAREST MULTIPLE OF 5 MPH MINUS 1. OCCUPANCY MAY BE DIRECTED TO BE USED BASED ON CERTAIN TRAFFIC CONDITIONS AND SCENARIOS. ODOT WILL DIRECT THE CONTRACTOR OF THE THRESHOLDS TO BE USED FOR THOSE AREAS WHERE OCCUPANCY IS DIRECTED TO BE USED.

THE FOLLOWING ESTIMATED QUANTITY HAS BEEN CARRIED TO THE GENERAL SUMMARY.

ITEM 896, PORTABLE NON-INTRUSIVE TRAFFIC SENSOR, CLASS I - 84 SIGN MONTHS
(ASSUMING 2 SENSORS FOR 42 MONTHS)

ITEM 896, PORTABLE CHANGEABLE MESSAGE SIGN, AS PER PLAN - 84 SIGN MONTHS
(ASSUMING 2 PCMS SIGNS) FOR 42 MONTH(S)

ITEM 614 SPECIAL - WORK ZONE TRAFFIC SIGNAL

UNDER THIS ITEM OF WORK, THE CONTRACTOR SHALL FURNISH, INSTALL, RELOCATE, MODIFY AND SUBSEQUENTLY REMOVE: TEMPORARY SIGNALS, DOWN GUYS, GROUND RODS, SIGNAL CABLE, POWER CABLE, SERVICE CABLE, CONDUIT RISERS, MESSENGER WIRE, SIGNAL HEADS, COVERING OF VEHICULAR SIGNAL HEADS, SIGNS, TEMPORARY DETECTION AND LOOP DETECTORS AS NEEDED TO RENDER A FULLY FUNCTIONAL TEMPORARY SIGNALIZED INTERSECTION.

AS DETAILED WITHIN, TEMPORARY TRAFFIC SIGNALS OR TRAFFIC SIGNAL MODIFICATIONS TO ACCOMMODATE INDIVIDUAL MAINTENANCE OF TRAFFIC PHASES SHALL BE INSTALLED AT THE INTERSECTIONS LISTED BELOW.

- PADDOCK ROAD AT SR 562 (NORWOOD LATERAL) EB RAMPS
- PADDOCK ROAD AT SR 562 (NORWOOD LATERAL) WB RAMPS

AS DETAILED WITHIN, TRAFFIC SIGNAL MODIFICATIONS SHALL BE IMPLEMENTED AT THE INTERSECTION LISTED BELOW. TRAFFIC SIGNAL MODIFICATIONS TO ACCOMMODATE MAINTENANCE OF TRAFFIC AT THIS LOCATION SHALL BE CONSIDERED PERMANENT AND SHALL BE LEFT IN PLACE AT THE END OF THE PROJECT.

- PADDOCK ROAD AT LAIDLAW AVENUE.

ALL METHODS OF TRAFFIC CONTROL SHALL BE APPROVED BY THE ENGINEER AND SHALL BE IN PLACE AND OPERATING PRIOR TO THE DEACTIVATION AND REMOVAL AND/OR RELOCATION OF ANY EXISTING SIGNAL EQUIPMENT. ALL MODIFICATIONS TO SIGNALIZATION SHALL BE DONE UNDER THE PROTECTION OF A LAW ENFORCEMENT OFFICER. REFERENCE IS MADE TO ITEM 614 MAINTAINING TRAFFIC. ANY VEHICULAR TRAFFIC SIGNAL HEAD THAT WILL BE OUT OF OPERATION SHALL BE COVERED IN ACCORDANCE WITH 632.25. ANY EXISTING VEHICULAR OR PEDESTRIAN HEAD THAT IS NOT FUNCTIONAL SHALL BE REMOVED IMMEDIATELY OR COVERED.

AN EXISTING TRAFFIC SIGNAL, OR ANY PART THEREOF, SHALL NOT BE TAKEN OUT OF SERVICE UNLESS ALTERNATE MEANS OF TRAFFIC CONTROL ARE IN PLACE AND OPERATIONAL. UNLESS DIRECTED BY THE CITY OF CINCINNATI.

THE CONTRACTOR SHALL SHIFT EXISTING SIGNAL HEADS TO ALIGN WITH LANES IN THE INDIVIDUAL MAINTENANCE OF TRAFFIC PHASES. DETAILED HEAD PLACEMENT HAS BEEN PROVIDED FOR EACH PHASE OF WORK IN THE MAINTENANCE OF TRAFFIC PLAN. THIS ITEM SHALL CONSIST OF ADJUSTING THE LOCATION OF TEMPORARY TRAFFIC SIGNAL HEADS FOR EACH PHASE OF CONSTRUCTION INCLUDING UNLASHING AND RELASHING ALL WIRING. ALL TEMPORARY AERIAL WIRING SHALL BE A MINIMUM OF 21 FT. ABOVE THE ROADWAY SURFACE. NO TWO VEHICULAR SIGNAL HEADS SHALL BE LOCATED WITHIN EIGHT FEET OF ONE ANOTHER, MEASURED PERPENDICULAR TO THE TRAVEL LANE. SIGNS SHALL BE ALIGNED PER THE PLANS.

VEHICULAR DETECTION SHALL BE MAINTAINED AT ALL TIMES AND DURING ALL PHASES OF CONSTRUCTION USING EITHER EXISTING LOOP DETECTORS OR TEMPORARY VIDEO OR RADAR DETECTION. UNLESS NOTED IN THE PLAN OR AS REQUIRED BY ITEM 614E18000-MAINTAINING TRAFFIC, MISC.: OPTIMIZED TRAFFIC SIGNAL OPERATIONS FOR RAMP CLOSURES, THE TRAFFIC SIGNAL SHALL UTILIZE THE EXISTING TIMING AND PHASING.

TEMPORARY TRAFFIC SIGNAL SPECIFICATIONS

ALL TEMPORARY TRAFFIC SIGNAL EQUIPMENT SHALL COMPLY WITH THE FOLLOWING SPECIFICATIONS. ALL 1300 SERIES REFERENCES CONTAINED HEREIN ARE PER THE SUPPLEMENT TO STATE OF OHIO DEPARTMENT OF TRANSPORTATION CONSTRUCTION AND MATERIAL SPECIFICATIONS, PUBLISHED BY THE CITY OF CINCINNATI, OHIO, AND DATED JANUARY 1, 2019.

THESE SPECIFICATIONS, TOGETHER WITH THE ACCOMPANYING PLANS ARE INTENDED TO DESCRIBE THE TYPE, SIZE AND LOCATION OF THE PRODUCTS AND MATERIALS TO BE PROVIDED AND INSTALLED UNDER THE VARIOUS BID ITEMS RELATED TO TRAFFIC CONTROL. THE CONTRACTOR SHALL FURNISH AND INSTALL TRAFFIC CONTROL DEVICES AND RELATED MATERIALS IN COMPLIANCE WITH THESE PLANS AND SPECIFICATIONS, AS WELL AS THE 2023 OHIO DEPARTMENT OF TRANSPORTATION CONSTRUCTION AND MATERIAL SPECIFICATIONS, THE 2019 CITY OF CINCINNATI SUPPLEMENT TO THE CONSTRUCTION AND MATERIAL SPECIFICATIONS, THE OHIO MANUAL OF UNIFORM TRAFFIC CONTROL DEVICES AND THE STANDARD CONSTRUCTION DRAWINGS ISSUED BY THE CITY OF CINCINNATI AND THE OHIO DEPARTMENT OF TRANSPORTATION. THESE SPECIFICATIONS SET FORTH THE MINIMUM PERFORMANCE AND OPERATING REQUIREMENTS OF THE TRAFFIC CONTROL ITEMS REFERRED TO HEREIN.

ALL INCIDENTAL WORK ITEMS CALLED FOR IN THESE PLANS FOR WHICH NO SPECIFIC METHOD OF PAYMENT IS PROVIDED SHALL BE PERFORMED BY THE CONTRACTOR AND THE TOTAL COST OF SAID ITEMS SHALL BE INCLUDED IN THE PRICE OF ITS ASSOCIATED BID ITEM.

COVERING OF VEHICULAR SIGNAL HEAD

COVER VEHICULAR SIGNAL HEADS IF ERECTED AT INTERSECTIONS WHERE TRAFFIC IS MAINTAINED BEFORE ENERGIZING THE SIGNALS. USE A STURDY OPAQUE COVERING MATERIAL SPECIFICALLY MADE FOR USE WITH TRAFFIC SIGNALS, AND ENSURE THAT THE COLOR OF THE COVER IS DIFFERENT THAN THE SIGNAL HEAD, TAN OR BEIGE, SO THAT IT IS CLEAR TO DRIVERS THE HEADS ARE COVERED, NOT DARK. USE A METHOD OF COVERING TO COVER ATTACHMENT AND MATERIALS, INCLUDING BACKPLATES, AS APPROVED BY THE ENGINEER. COVERS ARE TO BE FREE OF TEXT, PICTURES, OR ANY TYPE OF ADVERTISING. MAINTAIN COVERS, AND REMOVE THEM WHEN DIRECTED BY THE ENGINEER.

DETECTOR LOOP

IN ADDITION TO THE REQUIREMENTS OF ITEM 632, DETECTOR LOOPS SHALL BE PER ITEM 1328 AND CITY OF CINCINNATI STANDARD CONSTRUCTION DRAWING ES-4-1.

1303 EQUIPMENT QUALITY

ALL EQUIPMENT AND MATERIALS SHALL BE NEW AND OF FIRST QUALITY AS PER SPECIFICATION 1303.

1304 UTILITIES PERMITS AND REGULATIONS

THE CONTRACT DRAWINGS SHOW ALL UTILITIES, WATER, GAS, SEWER LINES AND UNDER GROUND TUNNELS KNOWN TO EXIST. HOWEVER, THIS DOES NOT GUARANTEE THAT ALL EXISTING LINES, FACILITIES AND APPURTENANCES HAVE BEEN SHOWN ON THE CONTRACT DRAWINGS, AND THE CITY AND ENGINEER ASSUME NO RESPONSIBILITY FOR THE ACCURACY THEREOF AND DOES NOT FREE THE CONTRACTOR FROM NECESSARY PRECAUTIONS FOR THE PROTECTION OF ANY UTILITY ENCOUNTERED ON THE PROJECT OR THE RESTORATION OF ANY UTILITY DAMAGED DURING THE WORK. THE CONTRACTOR IS RESPONSIBLE TO OBTAIN ALL NECESSARY PERMITS, AND COMPLY WITH ALL LOCAL AND NATIONAL SAFETY CODES.

THE CONTRACTOR SHALL NOTIFY AT LEAST 48 HOURS BEFORE BREAKING GROUND, ALL PUBLIC AND/OR PRIVATE SERVICE CORPORATIONS HAVING WIRE, POLES, PIPES, CONDUIT, MANHOLES, TUNNELS OR OTHER STRUCTURES THAT MAY BE AFFECTED BY THIS OPERATION, INCLUDING ALL STRUCTURES WHICH ARE AFFECTED AND NOT SHOWN ON THESE PLANS. OWNERS OF UNDERGROUND UTILITIES WHICH ARE MEMBERS OF THE OHIO UTILITIES PROTECTION SERVICE CAN BE NOTIFIED BY CALLING 800-362-2764 (TOLL FREE). NON-MEMBER UNDERGROUND UTILITY OWNERS MUST BE CALLED DIRECTLY.

SUPPORTING AND/OR PROTECTING EXISTING WATER LINES, GAS MAINS, TELEPHONE CONDUIT, STORM SEWERS, ETC. SHALL BE INCLUDED IN PAYMENT FOR THE VARIOUS CONTRACT ITEMS OF WORK.

ALL WORK REQUIRED FOR THE MAINTENANCE OF SERVICE OF EXISTING UTILITIES SHALL BE DONE BY, AND AT THE EXPENSE OF, THE CONTRACTOR.

ALL MAINTENANCE, REPAIR AND/OR REPLACEMENT OF EXISTING UTILITIES SHALL BE IN ACCORDANCE WITH THE RULES AND REGULATIONS OF THE VARIOUS UTILITY COMPANIES HAVING JURISDICTION.

ALL EXISTING STORM SEWERS, DRIVEWAY DRAINS, AND OTHER SURFACE DRAIN PIPES, WHETHER SHOWN ON THE CONTRACT DRAWINGS OR NOT, REMOVED OR DAMAGED DURING CONSTRUCTION SHALL BE REPAIRED AND RECONNECTED BY THE CONTRACTOR AS DIRECTED BY THE ENGINEER AT NO COST TO THE CITY OR PROJECT. REPLACED DRAIN PIPES SHALL BE LAID ON COMPACTED BEDDING EQUAL IN DENSITY TO SURROUNDING STRATUM. ALL UTILITIES OTHER THAN WATER AND SEWER LINES ARE TO BE RELOCATED. AS DIRECTED BY THE ENGINEER, AT NO COST TO THE CITY OR PROJECT.

IT IS ASSUMED THAT THERE ARE WATER AND GAS BRANCH LINES, ETC., SERVING EACH ADJACENT BUILDING. THE CONTRACTOR SHALL REPAIR AND REPLACE THESE UTILITIES, IF DAMAGED, AT NO COST TO THE CITY OR PROJECT.

IT IS THE CONTRACTORS RESPONSIBILITY TO VERIFY WITH THE INDIVIDUAL UTILITY OWNERS THAT ABANDONED SERVICE TAPS HAVE BEEN PROPERLY DISCONNECTED AND TERMINATED IF THE TAPS ARE ENCOUNTERED DURING CONSTRUCTION.

Preliminary Plans - For Reference Only

J:\20110903\ODOT\HAM\77889\mot\sheets\77889MN009.dgn 5/27/2026 12:14:36 PM hbrendlinger

1308 CONTRACTOR FURNISHED EQUIPMENT
THE CONTRACTOR SHALL SUBMIT TO THE CITY TRAFFIC ENGINEER FOR REVIEW AND APPROVAL SEVEN (7) SETS OF DRAWINGS, CATALOG CUTS, SPECIFICATIONS, DATA SHEETS, WIRING DIAGRAMS, ETC., FOR ALL APPARATUS AND EQUIPMENT THAT THE CONTRACTOR PROPOSES TO FURNISH. NO EQUIPMENT MAY BE PURCHASED OR INSTALLED WITHOUT WRITTEN APPROVAL.

1308 EQUIPMENT FURNISHED BY THE CITY
THE FOLLOWING EQUIPMENT WILL BE FURNISHED TO THE CONTRACTOR BY THE CITY:

1. CTCS SECTIONALIZERS (NOT STANDARD SECTIONALIZERS).
2. OVERHEAD AND PUSHBUTTON SIGNS, FLAT SHEET TYPE.

1309 INSTALLATION PRACTICES
MINOR REPOSITIONING OF SIGNS OR SIGNALS MAY BE NECESSARY AND THE CONTRACTOR SHALL MAKE THE ADJUSTMENTS AS DIRECTED BY THE ENGINEER. WORK SHALL BE INCIDENTAL TO THE COST OF THE ITEM BEING REPOSITIONED.

1311 INSPECTION
IN ADDITION TO THE PROVISIONS OF ITEM 105.10, THE CONTRACTOR SHALL OBSERVE THE FOLLOWING:

1. ALL CONDUIT IN TRENCH SHALL BE APPROVED BEFORE BACKFILL AND/ OR CONCRETE ENCASEMENT IS COMPLETED.
2. ALL FOUNDATIONS FOR ANCHOR BASE POLES, COMPLETE WITH ANCHOR BOLTS AND REBAR CAGES INTACT, SHALL BE APPROVED PRIOR TO PLACING CONCRETE.

1313 TESTING
THE CONTRACTOR SHALL OPERATE ALL NEW TRAFFIC SIGNALS FOR FIVE CONTINUOUS DAYS IN FLASHING OPERATION, UNLESS OTHERWISE INSTRUCTED BY THE ENGINEER. REBUILT OR REPLACED TRAFFIC SIGNALS ARE TO BE OPERATED IN COLOR MODE DIRECTLY. PRIOR TO ACCEPTANCE OF ANY NEW, REBUILT OR REPLACED TRAFFIC SIGNAL, THE TRAFFIC SIGNAL SHALL HAVE A FINAL TEST CONSISTING OF 30 MINUTES OF COLOR OPERATION WITHOUT FAILURE OR MALFUNCTIONS.

1314 MAINTENANCE OF TRAFFIC AND SYSTEMS
IN ADDITION TO THE REQUIREMENTS OF ITEM 614 "MAINTAINING TRAFFIC" IN THE ODOT CMS AND THE MODIFICATIONS THERETO IN THIS SUPPLEMENT, THE FOLLOWING APPLY:

- PROVIDE ADEQUATE AND SAFE TRAFFIC CONTROL AT LOCATIONS UNDER THIS CONTRACT UTILIZING ADVANCE WARNING DEVICES, POLICE, FLAGMEN, LABOR AND MATERIALS CONSISTENT WITH THE OHIO MANUAL OF UNIFORM TRAFFIC CONTROL DEVICES AND WHICH THE CITY APPROVES.
- SUBMIT A PLAN OR PLANS FOR THE MAINTENANCE OF TRAFFIC TO THE CITY. SUCH A PLAN OR PLANS MUST MEET WITH THE APPROVAL OF THE DIVISION OF TRAFFIC ENGINEERING. SUBMIT THE PLAN AT LEAST FIVE DAYS IN ADVANCE OF ANY CONTRACT WORK AT THE LOCATION(S) INVOLVED.
- PROVIDE POLICE IN ASSISTANCE OF TRAFFIC MAINTENANCE AND CONTROL DURING THE PERIODS WHERE THE TRAFFIC SIGNALS MAY HAVE TO BE TURNED OUT AND AT ALL LOCATIONS THE CITY TRAFFIC ENGINEER DEEMS NECESSARY.
- DISABLE NO MORE THAN ONE TRAFFIC SIGNAL LOCATION FOR THE PURPOSE OF CONTRACT WORK AT ANY TIME WHERE MORE THAN ONE OF THE SPECIFIED LOCATIONS ARE ON THE ADJOINING MAJOR STREET AND ARE ADJACENT TO ONE ANOTHER, UNLESS THE CITY TRAFFIC ENGINEER APPROVES IN WRITING. DO NOT WORK AT ANY LOCATION DURING THE HOURS OF 7:00 - 9:00 A.M. AND 4:00 - 6:00 P.M., MONDAY THROUGH FRIDAY, OR AS THE CONTRACT BID PROPOSAL PROVISION INDICATES.

IF FOR ANY REASON THE CONTRACTOR IS UNABLE TO COMPLY WITH THE PROVISIONS OF HIS CONTRACT, THE ENGINEER WILL IMPOSE SPECIAL REQUIREMENTS AS MAY BE NECESSARY FOR THE SAFETY AND CONVENIENCE OF THE PUBLIC. SPECIAL REQUIREMENTS MAY INCLUDE, BUT WILL NOT BE LIMITED TO: A) SERVICES OF AN OFF-DUTY CINCINNATI POLICE OFFICER(S), B) WORK ON A CONTINUING BASIS, OR C) TEMPORARY RESTORATION OR PLATING.

1314 MAINTENANCE OF EXISTING TRAFFIC SIGNAL
THE CONTRACTOR SHALL MAINTAIN AND KEEP OPERATIONAL THE EXISTING TRAFFIC SIGNAL UNTIL ALL NEW EQUIPMENT HAS BEEN INSTALLED AND IS FUNCTIONAL. WORK WILL INCLUDE ANY MODIFICATIONS TO EXISTING OR TEMPORARY TRAFFIC SIGNAL INSTALLATIONS AS REQUIRED BY CHANGES IN CONSTRUCTION OR OPERATIONAL CONDITIONS IN THE PROJECT AREA THROUGHOUT THE ENTIRE CONTRACT PERIOD. THIS WILL INCLUDE RELOCATIONS, REMOVALS, COVERING OR UNCOVERING OF TRAFFIC/PEDESTRIAN SIGNALS AND ILLUMINATED/REFLECTORIZED SIGNS AND OTHER TRAFFIC SIGNAL EQUIPMENT, AND THE INSTALLATION OF TEMPORARY POLES OR TEMPORARY POLE GUYS TO SATISFY SAFETY AND OPERATIONAL CONDITIONS THROUGHOUT THE PROJECT. THIS WORK WILL BE PERFORMED AS DIRECTED BY THE ENGINEER. THE CONTRACTOR IS RESPONSIBLE FOR ANY DAMAGE TO ANY OF THE TRAFFIC SIGNAL COMPONENTS REQUIRED TO BE HANDLED DURING RELOCATION OF POLES AND MODIFICATIONS TO THE SIGNAL SYSTEM. THE CONTRACTOR IS RESPONSIBLE FOR NORMAL MAINTENANCE OF THE TRAFFIC SIGNAL, INCLUDING LAMP REPLACEMENT AND REPAIRS REQUIRED DUE TO OUTAGES CAUSED BY CIRCUMSTANCES OTHER THAN THE CONTRACTOR'S OPERATIONS. THE CITY OF CINCINNATI WILL BE RESPONSIBLE THE MAINTENANCE OF THE CONTROLLER EQUIPMENT.

WHERE PROPOSED NEW EQUIPMENT BLOCKS OR OBSCURES THE LINE OF SIGHT OF EXISTING EQUIPMENT, OR WHERE NEW EQUIPMENT IS PROPOSED IN THE SAME LOCATION AS EXISTING EQUIPMENT, THE CONTRACTOR SHALL TEMPORARILY ADJUST EXISTING OR NEW SIGNALS AND SIGNS. NEW TRAFFIC SIGNALS AND SIGNS WHICH WERE TEMPORARY ADJUSTED. SHALL BE RE-POSITIONED IN THE PROPOSED LOCATIONS AS INDICATED IN THE PLANS AFTER EXISTING EQUIPMENT IS REMOVED.

ALL ADJUSTMENTS SHALL BE APPROVED BY THE CITY OF CINCINNATI TRAFFIC ENGINEER.

SCHEDULE CONSTRUCTION THROUGHOUT THE PROJECT TO MAINTAIN THE INTERCONNECT SYSTEM DURING THE CONTRACT PERIOD. USE EXISTING, TEMPORARY CABLE OR NEWLY INSTALLED INTERCONNECT CABLE TO MAINTAIN THE INTERCONNECT SYSTEM.

REMOVAL OF EXISTING TRAFFIC SIGNALS
PORTIONS OF THE EXISTING TRAFFIC SIGNALS AT THE FOLLOWING INTERSECTIONS SHALL BE REMOVED. ONLY ITEMS SPECIFIED FOR REMOVAL SHALL BE REMOVED. WHERE ITEMS ARE REMOVED FOR TEMPORARY MAINTENANCE OF TRAFFIC APPLICATIONS, THE CONTRACTOR SHALL RESTORE THE REMOVED MATERIAL AND REINSTALL WHEN THE MAINTENANCE OF TRAFFIC SETUPS ARE REMOVED.

- PADDOCK ROAD AT SR 562 (NORWOOD LATERAL) EB RAMPS (SHALL BE RESTORED TO ORIGINAL CONDUITS WHEN MAINTENANCE OF TRAFFIC SETUPS ARE REMOVED)
- PADDOCK ROAD AT SR 562 (NORWOOD LATERAL) WB RAMPS (SHALL BE RESTORED TO ORIGINAL CONDUITS WHEN MAINTENANCE OF TRAFFIC SETUPS ARE REMOVED)
- PADDOCK ROAD AT LAIDLAW AVENUE. (SIGNAL MODIFICATIONS AT THIS INTERSECTION ARE PERMANENT)

THE CONTRACTOR SHALL REMOVE ALL OLD EQUIPMENT AND MAKE THE NECESSARY RESTORATIONS. IT WILL BE THE CONTRACTORS RESPONSIBILITY TO RETURN TO THE CITY OF CINCINNATI ALL OLD EQUIPMENT EXCEPT CUT OFF STEEL EMBEDDED BASE POLES, OLD SIGNAL CABLE, AND OLD SPAN WIRE. THE CONTRACTOR SHALL CONTACT THE TRAFFIC SERVICES BUREAU SUPERVISOR AT 591-6097 TO ARRANGE RETURN OF THE OLD EQUIPMENT UNDAMAGED. THE CONTRACTOR SHALL BE RESPONSIBLE FOR DISPOSAL OF UNWANTED EQUIPMENT.

ITEM 1323 SIGNAL CABLE, 7 CONDUCTOR, NO. 14 AWG, AS PER PLAN
TRAFFIC SIGNAL CABLE SHALL BE STRANDED COPPER CONDUCTOR AND MEET THE REQUIREMENTS OF IMSA SPECIFICATION 19-1 OR 20-1. ANY OTHER CABLE AND WIRE SHALL BE THE TYPE AND SIZE SPECIFIED IN ACCORDANCE WITH THE PLANS AND STANDARD DRAWINGS. ALL ACCESSORIES, SPLICES AND HARDWARE WILL BE INCLUDED WITH THE CABLE AND WIRE. THE CITY SHALL APPROVE ALL CONNECTIONS AND SPLICES.

CONNECTION TO THE ENERGIZED TRAFFIC SIGNAL INTERCONNECT CABLE, OR DISCONNECTION, SHALL BE MADE BY THE CITY OF CINCINNATI FORCES. THE CONTRACTOR SHALL CONTACT THE CITY'S TRAFFIC SERVICES BUREAU FIVE (5) DAYS IN ADVANCE AT 352-3712 TO ARRANGE THIS WORK.

CITY FORCES SHALL MAKE ALL SECTIONALIZER CONNECTIONS. THE CONTRACTOR SHALL DO ALL OTHER WORK INVOLVED IN COMPLETING THE INSTALLATION OF THE CABLE SYSTEM.

CABLE TAGS SHALL BE PROVIDED AND INSTALLED BY THE CONTRACTOR.

1327 VEHICULAR SIGNAL HEAD ASSEMBLY, 3 SECTION, 12 INCH LENS, 1-WAY
1327 VEHICULAR SIGNAL HEAD ASSEMBLY, 5 SECTION, 12 INCH LENS, 1-WAY
ALL TRAFFIC SIGNAL INDICATIONS SHALL BE OF THE LED TYPE AND ALL TRAFFIC SIGNAL HEADS SHALL BE OF POLYCARBONATE CONSTRUCTION AND BE PROVIDED WITH A 3/8" DRAIN HOLE IN THE BOTTOM. ALL TRAFFIC SIGNALS SHALL BE CONNECTED TO THE DROP PIPE WITH LOCK NUTS ON THE TOP, AND UNDERNEATH THE TOP SECTION, PER ES-3-5. THE LED OPTICAL UNIT AND MOUNTING HARDWARE INCLUDING REFLECTORIZED SIGN ATTACHMENT (WHERE SPECIFIED) SHALL BE INCLUDED IN THE UNIT PRICE OF THE TRAFFIC SIGNAL, SEE STANDARD DRAWINGS ES-3-2, ES-3-4 AND ES-3-5 FOR MORE INFORMATION. ENTRANCE HEADS FOR TRAFFIC SIGNALS SHALL BE UNPAINTED CAST ALUMINUM, CONTINUOUS SLOT TYPE (TRAFFIC PARTS NO. 7092 OR APPROVED EQUAL). BALANCE ADJUSTERS SHALL BE UNPAINTED GALVANIZED, CAST IRON (TRAFFIC PARTS NO. 1010 OR APPROVED EQUAL). SPAN WIRE CLAMPS SHALL BE UNPAINTED CAST ALUMINUM, U-BOLT TYPE (TRAFFIC PARTS NO. 1504 OR APPROVED EQUAL).

WHERE LOUVERS ARE SPECIFIED FOR TRAFFIC SIGNALS, THE CIRCULAR GREEN AND ARROW LENSES SHALL BE FURNISHED WITH LOUVERS IN LIEU OF STANDARD VISORS. THE LOUVERS SHALL BE POLYCARBONATE, FLAT BLACK IN COLOR, 5 VANE, AND 12" LONG. THE COST OF THE LOUVERS SHALL BE INCIDENTAL TO THE TRAFFIC SIGNAL HEADS FURNISHED AND INSTALLED.

ALL TRAFFIC SIGNAL INDICATIONS SHALL BE OF THE LED TYPE (LEOTEK, GELCORE GE OR APPROVED EQUAL) AND BE ON THE CURRENT ODOT PREQUALIFIED LIST (QPL).

1329 SIGN FLAT SHEET, TYPE G
1329 SPAN MOUNTED SIGN ATTACHMENT (HANGER) ASSEMBLY
ALL OVERHEAD SIGNS WILL BE SUPPLIED BY THE CITY OF CINCINNATI SIGN SHOP. THE CONTRACTOR SHALL CONTACT THE CONSTRUCTION ENGINEER A MINIMUM OF TEN (10) WORKING DAYS TO ARRANGE TO PICK UP THE SIGNS TO BE INSTALLED. ENTRANCE HEADS FOR OVERHEAD REFLECTORIZED SIGNS SHALL BE UNPAINTED CAST ALUMINUM, CONTINUOUS SLOT TYPE (TRAFFIC PARTS NO. 7092 OR APPROVED EQUAL).

ANY SIGNS THAT ARE NOT INSTALLED SHALL BE RETURNED THE SIGN SHOP IN NEW CONDITION.

THE CONTRACTOR IS TO INCLUDE ALL FURNISHING OF ALUMINUM DROP PIPE, STAINLESS STEEL MOUNTING HARDWARE, SPAN WIRE ATTACHMENT AND ANY OTHER HARDWARE NEEDED TO MOUNT EACH SIGN PER CITY STANDARD DRAWING ES-3-10A. CONTRACTOR TO SUPPLY AND INSTALL NYLON WASHER BETWEEN STAINLESS STEEL BOLT HEADS AND SIGN FACES.

1335 CABLE AND POLE IDENTIFICATION
IN ADDITION TO ITEM 1335, ALL AERIAL INTERCONNECT CABLE INSTALLATIONS SHALL INCLUDE THE INSTALLATION OF WEATHERPROOF PLASTIC CABLE TAGS WITH INDELIBLE, IMPRINTED TEXT COC 591-6000, ZIP TIED TO THE CABLE AT EVERY POLE ATTACHMENT POINT.

PAYMENT
ALL ELEMENTS OF WORK OUTLINED ABOVE SHALL BE CONSIDERED INCIDENTAL TO THIS ITEM OF WORK AND SHALL INCLUDE ALL LABOR, EQUIPMENT AND MATERIALS NECESSARY TO FURNISH, INSTALL, MODIFY, REMOVE, STORE, ERECT, RELOCATE, ADJUST AND REPAIR TEMPORARY TRAFFIC SIGNAL ITEMS AS DESCRIBED HEREIN. ALL COSTS FOR THE ABOVE WORK SHALL BE INCLUDED IN THE PRICE BID FOR ITEM 614 SPECIAL - WORK ZONE TRAFFIC SIGNAL AND SHALL BE PER EACH INTERSECTION.

PROJECT COORDINATION
PID 77889 (HAM-75-7.85) AND PID 117525 (HAM-75-8.91) WILL BE UNDER CONSTRUCTION AT THE SAME TIME. PID 77889 WILL HAVE CONTRA FLOW AND OR LANE SHIFTS IN BOTH DIRECTIONS SOUTH OF TOWNE STREET WITH SHORT TERM LANE CLOSURES EXTENDING BEYOND TOWNE STREET. THE CONTRACTOR FOR PID 77889 SHALL COORDINATE THEIR WORK AND MOT WITH THE ADJACENT PROJECT. WORK AND MOT ON PID 77889 GOVERNS AND CONTROLS.

PID 105204 (HAM-126-11.30) AND PID 77889 (HAM-75-7.85) WILL BE UNDER CONSTUCTION AT THE SAME TIME. PID 105204 WILL HAVE WEEKEND RAMP CLOSURES AT THE I-75 AND SR 126 INTERCHANGE ALONG WITH OTHER LOCAL SERVICE RAMPS IN THIS AREA. THE CONTRACTOR FOR PID 77889 SHALL COORDINATE THEIR WORK AND MOT WITH THE ADJACENT PROJECT. WORK AND MOT ON PID 105204 GOVERNS AND CONTROLS.

CALCULATED BDM CHECKED SMM

MAINTENANCE OF TRAFFIC NOTES

HAM-75-7.85

Preliminary Plans - For Reference Only

J:\2011093\ODOT\HAM\77889\mot\sheets\77889MN010.dgn 5/22/2026 10:08:15 AM hbrendlinger

MAINTAINING INTERSTATE REFERENCE LOCATION SIGNS

THE CONTRACTOR SHALL MAINTAIN INTERSTATE REFERENCE LOCATION SIGNS (SIGN D10-5) BY USE OF THE EXISTING, TEMPORARY (BLACK ON ORANGE), OR PROPOSED REFERENCE LOCATION SIGNS. THESE SIGNS SHALL BE SPACED EVERY 2/10 OF A MILE MAINTAINED DURING THE FOLLOWING PHASES AS DESCRIBED BELOW OR AS DETAILED WITHIN. ADDITIONAL SIGNS MAY BE USED TO IDENTIFY CONTRACTOR ACCESS POINTS. THE SIGN DIMENSIONS BELOW INCLUDE THE LETTER A TO DESIGNATE AN ACCESS POINT. NON-ACCESS POINT SIGNS CAN BE REDUCED IN HEIGHT.

PHASE 1:
- EXISTING D10-5 SIGNS MOUNTED ON MEDIAN BARRIER

PHASE 2:
- TEMPORARY D10-5 SIGNS GROUND MOUNTED ALONG THE SB RIGHT SHOULDER
- EXISTING D10-5 SIGNS MOUNTED ON MEDIAN BARRIER

PHASE 3:
- TEMPORARY D10-5 SIGNS GROUND MOUNTED ALONG THE SB RIGHT SHOULDER (FROM PHASE 2)
- TEMPORARY D10-5 SIGNS GROUND MOUNTED ALONG THE NB RIGHT SHOULDER.
- TEMPORARY D10-5 SIGNS PB MOUNTED ALONG RIGHT SHOULDER OF NB CONTRA FLOW.

PHASE 4:
- TEMPORARY D10-5 SIGNS GROUND MOUNTED ALONG THE SB RIGHT SHOULDER (FROM PHASE 2)
- PROPOSED D10-5 SIGNS MOUNTED ON THE MEDIAN BARRER.

1.50" Radius, 0.50" Border, Black on Orange;
"A", E 2K specified length;
"NORTH", B 2K;
Interstate 71 M1-1;
"MILE", C 2K;
"199", C 2K; ".2", C 2K;

INTERIM COMPLETION REQUIREMENTS

PHASE 1 WORK SHALL NOT BEGIN UNTIL 5/15/2027. THE PROJECT HAS AN INTERIM COMPLETION DATE OF 11/1/2030. ON OR BEFORE THE INTERIM COMPLETION DATE, THE ROADWAY SHALL BE PLACED IN FINAL CONFIGURATION ON INTERMEDIATE COURSE ASPHALT, ALL WORK ZONE PAVEMENT MARKINGS AND WORK ZONE RAISED PAVEMENT MARKERS IN PLACE, AND ALL LANES OPEN TO TRAFFIC.

THE CONTRACT WILL BE SUBJECT TO DAILY DISINCENTIVES FOR FAILURE TO COMPLETE ALL THE REQUIRED WORK, AND ASSOCIATED INCIDENTALS RELATED TO THE WORK, AS OUTLINED IN THE TABLE INCLUDED IN THIS NOTE. APPLICATION OF THE DISINCENTIVES WILL BE BASED ON THE OVERALL CONTRACT AMOUNT. DAILY DISINCENTIVES ARE APPLICABLE TO THE WORK REQUIRED TO THE INTERIM COMPLETION DATE ONLY. THE CONTRACT IS STILL SUBJECT TO LIQUIDATED DAMAGES AS OUTLINED IN CMS 108.07 FOR THE REMAINDER OF THE CONTRACT. THE END CONSTRUCTION DATE SHALL BE 6/30/2031, BY WHICH THE FINAL SURFACE COURSE, PERMANENT PAVEMENT MARKINGS, RPM'S, ETC SHALL BE COMPLETED.

DESCRIPTION OR LOCATION OF CRITICAL WORK	COMPLETION DATE	TIME PERIOD	DISINCENTIVE $ PER TIME PERIOD
ROADWAY PLACED IN FINAL CONFIGURATION, ALL LANES OPEN	11/1/2030	DAY	$13,700

WINDOW CONTRACT TABLE

DESCRIPTION OF CRITICAL WORK	CALENDAR DAYS TO COMPLETE	DISINCENTIVE $ PER DAY	WORK WINDOW	
			START	END
CLOSURE OF RAMP M (SR-562 WB TO I-75 SB) - PHASES 1 & 2	900	$25,000	5/15/2027	10/31/2029
CLOSURE OF RAMP J (I-75 SB TO SR-562 EB) - PHASES 1, 2 & 3A	900	$17,000	5/15/2027	10/31/2029
CLOSURE OF RAMP K (SR-562 WB TO I-75 NB) - PHASE 3	365	$20,000	FOLLOWING THE REOPENING OF RAMPS M AND J	11/1/2030
CLOSURE OF RAMP P (PADDOCK RD TO SR-562 WB) - PHASE 3	45	$8,100	FOLLOWING THE REOPENING OF RAMPS M AND J	11/1/2030
CLOSURE OF RAMP Q (SR-562 EB TO PADDOCK RD) - PHASE 1	30	$8,100	5/15/2027	11/1/2030

For Reference Only
Preliminary Plans

CALCULATED BDM CHECKED SMM

MAINTENANCE OF TRAFFIC NOTES

HAM-75-7.85

J:\20110903\ODOT\HAM\77889\mot\sheets\77889MN011.dgn 5/22/2026 10:08:16 AM hbrendlinger

SHEET NUMBER									ITEM	ITEM EXT.	TOTALS CARRIED TO GENERAL SUMMARY	UNIT	DESCRIPTION	SEE SHEET NO.
63	64	65	66	67										
													MAINTENANCE OF TRAFFIC	
400									253	90000	400	CU YD	PAVEMENT REPAIR, MISC.: PERFORMED IN 2027	56
400									253	90000	400	CU YD	PAVEMENT REPAIR, MISC.: PERFORMED IN 2028	56
400									253	90000	400	CU YD	PAVEMENT REPAIR, MISC.: PERFORMED IN 2029	56
	408								441	70201	408	CU YD	ASPHALT CONCRETE INTERMEDIATE COURSE, TYPE 1, (449), AS PER PLAN	51
LUMP									503	11101	LUMP		COFFERDAMS AND EXCAVATION BRACING, AS PER PLAN, TS1	56
LUMP									503	11101	LUMP		COFFERDAMS AND EXCAVATION BRACING, AS PER PLAN, TS2	56
LUMP									503	11101	LUMP		COFFERDAMS AND EXCAVATION BRACING, AS PER PLAN, TS3	56
LUMP									503	11101	LUMP		COFFERDAMS AND EXCAVATION BRACING, AS PER PLAN, TS4	56
LUMP									503	11101	LUMP		COFFERDAMS AND EXCAVATION BRACING, AS PER PLAN, TS5	56
LUMP									503	11101	LUMP		COFFERDAMS AND EXCAVATION BRACING, AS PER PLAN, TS6	56
LUMP									503	11101	LUMP		COFFERDAMS AND EXCAVATION BRACING, AS PER PLAN, TS7	56
LUMP									503	11101	LUMP		COFFERDAMS AND EXCAVATION BRACING, AS PER PLAN, TS8	56
			1	1					606	60040	2	EACH	IMPACT ATTENUATOR, TYPE 3, UNIDIRECTIONAL, 60 MPH, 48" WIDE	
2100									614	11110	2100	HOUR	LAW ENFORCEMENT OFFICER WITH PATROL CAR FOR ASSISTANCE	55
	3								614	11300	3	EACH	SPECIAL - WORK ZONE TRAFFIC SIGNAL	58
8000									614	11630	8000	FT	INCREASED BARRIER DELINEATION	54
	9	2		5					614	12380	16	EACH	WORK ZONE IMPACT ATTENUATOR, 24" WIDE HAZARDS (UNIDIRECTIONAL)	56
	4	2							614	12384	6	EACH	WORK ZONE IMPACT ATTENUATOR, 24" WIDE HAZARDS (BIDIRECTIONAL)	56
	1	1	1						614	12400	3	EACH	WORK ZONE IMPACT ATTENUATOR, MISC.: 24" WIDE HAZARDS (UNIDIRECTIONAL), TYPE 3	56
	LUMP	LUMP	LUMP	LUMP					614	12420	LUMP		DETOUR SIGNING	
	5	4	2						614	12484	11	EACH	WORK ZONE INCREASED PENALTIES SIGN	52
15									614	12500	15	EACH	REPLACEMENT SIGN	51
150									614	12600	150	EACH	REPLACEMENT DRUM	51
2									614	12756	2	EACH	WORK ZONE CROSSOVER LIGHTING SYSTEM	53
200									614	12800	200	EACH	WORK ZONE RAISED PAVEMENT MARKER	54
5035									614	12801	5035	EACH	WORK ZONE RAISED PAVEMENT MARKER, AS PER PLAN	54
90									614	13000	90	CU YD	ASPHALT CONCRETE FOR MAINTAINING TRAFFIC	51
1235									614	13310	1235	EACH	BARRIER REFLECTOR, TYPE 1, BIDIRECTIONAL	54
43									614	13312	43	EACH	BARRIER REFLECTOR, TYPE 2, BIDIRECTIONAL	54
1260									614	13350	1260	EACH	OBJECT MARKER, ONE WAY	54
230									614	13360	230	EACH	OBJECT MARKER, TWO WAY	54
750000									614	18000	750000	EACH	MAINTAINING TRAFFIC, MISC.: OPTIMIZED TRAFFIC SIGNAL OPERATIONS FOR RAMP CLOSURE	57
LUMP									614	18002	LUMP		MAINTAINING TRAFFIC, MISC.: MAINTAIN EXISTING RAMP M, AS PER PLAN	55
LUMP									614	18002	LUMP		MAINTAINING TRAFFIC, MISC.: MAINTAIN EXISTING RAMP J, AS PER PLAN	55
14	290			16					614	18600	320	SNMT	PORTABLE CHANGEABLE MESSAGE SIGN	53

CALCULATED JMH
CHECKED SMM

MAINTENANCE OF TRAFFIC SUBSUMMARY

HAM-75-7.85

61
1047

Preliminary Plans - For Reference Only

J:\20110903\ODOT\HAM\7889\mot\sheets\77889MS006.dgn 5/22/2026 10:08:18 AM hbrendlinger

SHEET NUMBER									ITEM	ITEM EXT.	TOTALS CARRIED TO GENERAL SUMMARY	UNIT	DESCRIPTION	SEE SHEET NO.
63	64	65	66	67										
	3.1	1.5	3.0	3.6					614	20056	11.2	MILE	WORK ZONE LANE LINE, CLASS I, 6", 807 PAINT	
11.33									614	20560	11.33	MILE	WORK ZONE LANE LINE, CLASS III, 6", 642 PAINT	
	13.4	7.6	7.8	9.4					614	22056	38.2	MILE	WORK ZONE EDGE LINE, CLASS I, 6", 807 PAINT	
11.34									614	22360	11.34	MILE	WORK ZONE EDGE LINE, CLASS III, 6", 642 PAINT	
	21600	18762	8213	9573					614	23110	58148	FT	WORK ZONE CHANNELIZING LINE, CLASS I, 12", 807 PAINT	
10758									614	23690	10758	FT	WORK ZONE CHANNELIZING LINE, CLASS III, 12", 642 PAINT	
	6863	1655	420	11061					614	24102	19999	FT	WORK ZONE DOTTED LINE, CLASS I, 6", 807 PAINT	
17387									614	24612	17387	FT	WORK ZONE DOTTED LINE, CLASS III, 6", 642 PAINT	
2.1									614	20366	2.1	MILE	WORK ZONE LANE LINE, CLASS I, 6", 648	55
5									614	22336	5	MILE	WORK ZONE EDGE LINE, CLASS I, 6", 648	55
2825									614	23140	2825	FT	WORK ZONE CHANNELIZING LINE, CLASS I, 8", 648	55
1290									614	24142	1290	FT	WORK ZONE DOTTED LINE, CLASS I, 6", 648	55
	418								614	28200	418	FT	WORK ZONE GORE MARKING, CLASS II, 642 PAINT	
	11								614	30000	11	EACH	WORK ZONE ARROW, CLASS I	
LUMP									615	10000	LUMP		ROADS FOR MAINTAINING TRAFFIC	
LUMP									615	10001	LUMP		ROADS FOR MAINTAINING TRAFFIC, AS PER PLAN	56
	958								615	20000	958	SQ YD	PAVEMENT FOR MAINTAINING TRAFFIC, CLASS A	
5480									615	20001	5480	SQ YD	PAVEMENT FOR MAINTAINING TRAFFIC, CLASS A, AS PER PLAN	56
1230									616	10000	1230	MGAL	WATER	
	7810	14000	3070						622	41011	24880	FT	PORTABLE BARRIER, 50", AS PER PLAN	56
			1	1					622	41060	2	FT	DUAL PORTABLE BARRIER TRANSITION/TERMINATION	
	15110	1890	5130	10950					622	41100	33080	FT	PORTABLE BARRIER, UNANCHORED	
	2840	3500		180					622	41110	6520	FT	PORTABLE BARRIER, ANCHORED	
	72	130	19	2					808	18700	223	SNMT	DIGITAL SPEED LIMIT SIGN ASSEMBLY	
84									896	00010	84	SNMT	PORTABLE NON-INTRUSIVE TRAFFIC SENSOR, CLASS I	58
84									896	00021	84	SNMT	PORTABLE CHANGEABLE MESSAGE SIGN, AS PER PLAN	58
													INCIDENTALS	
LUMP									614	11000	LUMP		MAINTAINING TRAFFIC	

CALCULATED JMH
CHECKED SMM

MAINTENANCE OF TRAFFIC SUBSUMMARY

HAM-75-7.85

62
1047

Preliminary Plans - For Reference Only

J:\20110903\ODOT\HAM\77889\mot\sheets\77889MS007.dgn 5/27/2026 12:14:53 PM hbrendlinger

J:\20110903\ODOT\HAM\77889\mot\sheets\77889MS001.dgn 5/27/2026 12:15:04 PM hbrendlinger

Preliminary Plans - For Reference Only

SHEET NO.			50	51	52	53	54	55	56	57	58	TOTALS CARRIED TO SUB SUMMARY
614	PAVEMENT REPAIR, MISC.: (BY YEAR)	CU YD							1200			1200
503	COFFERDAMS AND EXCAVATION BRACING, AS PER PLAN (BY LOCATION)								LUMP			LUMP
614	MAINTAINING TRAFFIC		LUMP									LUMP
614	LAW ENFORCEMENT OFFICER WITH PATROL CAR FOR ASSISTANCE	HOUR						2100				2100
614	INCREASED BARRIER DELINEATION	FT					8000					8000
614	REPLACEMENT SIGN	EACH			15							15
614	REPLACEMENT DRUM	EACH			150							150
614	WORK ZONE CROSSOVER LIGHTING SYSTEM	EACH				2						2
614	WORK ZONE RAISED PAVEMENT MARKER	EACH					200					200
614	WORK ZONE RAISED PAVEMENT MARKER, AS PER PLAN	EACH					5035					5035
614	ASPHALT CONCRETE FOR MAINTAINING TRAFFIC	CU YD			90							90
614	BARRIER REFLECTOR, TYPE 1, BIDIRECTIONAL	EACH					1235					1235
614	BARRIER REFLECTOR, TYPE 2, BIDIRECTIONAL	EACH					18	25				43
614	OBJECT MARKER, ONE WAY	EACH					1235	25				1260
614	OBJECT MARKER, TWO WAY	EACH					230					230
614	MAINTAINING TRAFFIC, MISC.: MAINTAIN EXISTING RAMP M, AS PER PLAN							LUMP				LUMP
614	MAINTAINING TRAFFIC MISC.: MAINTAIN EXISTING RAMP J, AS PER PLAN							LUMP				LUMP
614	PORTABLE CHANGEABLE MESSAGE SIGN	SNMT				14						14
614	WORK ZONE LANE LINE, CLASS I, 6", 648	MILE						2.1				2.1
614	WORK ZONE LANE LINE, CLASS III, 6", 642 PAINT	MILE			11.33							11.33
614	WORK ZONE EDGE LINE, CLASS I, 6", 648	MILE						5				5
614	WORK ZONE EDGE LINE, CLASS III, 6", 642 PAINT	MILE			11.34							11.34
614	WORK ZONE CHANNELIZING LINE, CLASS I, 12", 648	FT						2825				2825
614	WORK ZONE CHANNELIZING LINE, CLASS III, 12", 642 PAINT	FT			10758							10758
614	WORK ZONE DOTTED LINE, CLASS I, 6", 648	FT						1280				1280
614	WORK ZONE DOTTED LINE, CLASS III, 6", 642 PAINT	FT			17387							17387
615	ROADS FOR MAINTAINING TRAFFIC								LUMP			LUMP
615	ROADS FOR MAINTAINING TRAFFIC, AS PER PLAN								LUMP			LUMP
615	PAVEMENT FOR MAINTAINING TRAFFIC, CLASS A, AS PER PLAN	SQ YD							5480			5480
616	WATER	MGAL			1230							1230
614	MAINTAINING TRAFFIC, MISC.: OPTIMIZED TRAFFIC SIGNAL OPERATIONS FOR RAMP CLOSURE	EACH								750000		750000
896	PORTABLE NON-INTRUSIVE TRAFFIC SENSOR, CLASS I	SNMT									84	84
896	PORTABLE CHANGEABLE MESSAGE SIGN, AS PER PLAN	SNMT									84	84

63
1047

HAM-75-7.85

MAINTENANCE OF TRAFFIC ESTIMATED QUANTITIES

CALCULATED BDM
CHECKED SMM

MAINTENANCE OF TRAFFIC ESTIMATED QUANTITIES

CALCULATED BDM | CHECKED SMM

SHEET NO.	PHASE	441 ASPHALT CONCRETE INTERMEDIATE COURSE, TYPE 1, (449), AS PER PLAN, PG-64-22		614 WORK ZONE IMPACT ATTENUATOR, 24" WIDE HAZARDS, (UNIDIRECTIONAL)	614 WORK ZONE IMPACT ATTENUATOR, 24" WIDE HAZARDS, (BIDIRECTIONAL)	614 WORK ZONE IMPACT ATTENUATOR, 24" WIDE HAZARDS, (UNIDIRECTIONAL), TYPE 3	614 DETOUR SIGNING	614 WORK ZONE INCREASED PENALTIES SIGN	614 PORTABLE CHANGEABLE MESSAGE SIGN	614 WORK ZONE LANE LINE, CLASS 1, 6", 807 PAINT	614 WORK ZONE EDGE LINE, CLASS 1, 6", 807 PAINT	614 WORK ZONE CHANNELIZING LINE, CLASS 1, 12", 807 PAINT	614 WORK ZONE DOTTED LINE, CLASS 1, 6", 807 PAINT	614 SPECIAL - WORK ZONE TRAFFIC SIGNAL	614 WORK ZONE GORE MARKING, CLASS II, 642 PAINT	614 WORK ZONE ARROW, CLASS I		615 PAVEMENT FOR MAINTAINING TRAFFIC, CLASS A		622 PORTABLE BARRIER, 50", AS PER PLAN	622 PORTABLE BARRIER, UNANCHORED	622 PORTABLE BARRIER, ANCHORED		808 DIGITAL SPEED LIMIT (DSL) SIGN ASSEMBLY
		CY		EACH	EACH	EACH		EACH	SNMT	FT	FT	FT	FT		FT	EACH		SQ YD		FT	FT	FT		SNMT
71	PRE-PHASE 1						LUMP																	
72	PRE-PHASE 1						LUMP																	
73	PRE-PHASE 1								240															
74	PRE-PHASE 1	271		1							890										1010			
75	PRE-PHASE 1																	558						
76	PRE-PHASE 1																	55						
77	PRE-PHASE 1	27		1							400										470			
78	PRE-PHASE 1	110		1							1600										1670			
80	PRE-PHASE 1														1									
81	PRE-PHASE 1														1									
82	PRE-PHASE 1														1									
84	1							2																
85	1																							12
86	1										1432	1932												
87	1			1						46	3534	3750						102		720	1081			
88	1									800	4800	1600						67		800	650	150		12
89	1									2150	4800	250	475					89		800	800			
90	1									1925	4800	475	402					31		800	620	180		24
91	1			1						1600	4800	800	598							800	1190			
92	1									2162	4788	238	125							800	540	260		
93	1			1						1083	4357	1039								1060	140	660		
94	1			1							772	792								250	112			
95	1										720	695	139											
96	1										1238	1258	236											
97	1									417	834									140		140		
98	1									2400	4800		370							800		800		
99	1					1				300	4784	2100	659		190					800	600	200		12
100	1			1							3290	2869	321		72					40	40			
101	1										548	1148												
102	1							3																12
104	1 PT. 2									404	1414	303									446			
105	1 PT. 2									446	1600	354									800			
106	1 PT. 2			1							1600	800									1176			
107	1 PT. 2										48	324									24			
110	1										445													
111	1										1962										681	300		
112	1										1640										620			
113	1										2400		544								800			
114	1										2933		533					56			670			
115	1									135	1267	491	148		137	11								
116	1									534		382	534		19									
117	1									800			800											
118	1									979			979											
119	1 PT. 2										440										220			
120	1 PT. 2										1020										460			
121	1 PT. 2										555													
122	1				4																290	150		
125	1						LUMP																	
126	1, 2 & 3A						LUMP		25															
127	1 & 2						LUMP		24															
128	1 PT. 2						LUMP		1															
SUBTOTAL										16181	70511													
TOTALS CARRIED TO SUBSUMMARY		408		9	4	1	LUMP	5	290	3.1 MI	13.4 MI	21600	6863	3	418	11		958		7810	15110	2840		72

HAM-75-7.85

64
1047

Preliminary Plans - For Reference Only

J:\20110903\ODOT\HAM\77889\mot\sheets\77889MS002.dgn 5/22/2026 10:08:20 AM hbrendlinger

SHEET NO.	PHASE	614 WORK ZONE IMPACT ATTENUATOR, 24" WIDE HAZARDS, (UNIDIRECTIONAL) EACH	614 WORK ZONE IMPACT ATTENUATOR, 24" WIDE HAZARDS, (BIDIRECTIONAL) EACH	614 WORK ZONE IMPACT ATTENUATOR, 24" WIDE HAZARDS, (UNIDIRECTIONAL), TYPE 3 EACH	614 DETOUR SIGNING	614 WORK ZONE INCREASED PENALTIES SIGN EACH	614 WORK ZONE LANE LINE, CLASS I, 6", 807 PAINT FT	614 WORK ZONE EDGE LINE, CLASS I, 6", 807 PAINT FT	614 WORK ZONE CHANNELIZING LINE, CLASS I, 12", 807 PAINT FT	614 WORK ZONE DOTTED LINE, CLASS I, 6", 807 PAINT FT		622 PORTABLE BARRIER, 50", AS PER PLAN FT	622 PORTABLE BARRIER, UNANCHORED FT	622 PORTABLE BARRIER, ANCHORED FT		808 DIGITAL SPEED LIMIT (DSL) SIGN ASSEMBLY SNMT							
129	2					2																	
130	2							142	1022							12							
131	2							2600	4000														
132	2	1		1			800	3779	2800			1275	150										
133	2						1974	2250	276			1600											
134	2						1600	1600				1600											
135	2						1600	1600				1600				29							
136	2						920	2198	680			1600											
137	2							1728	1600			1600											
138	2						800	1600	800			1600											
139	2							1600	1600			1600											
140	2							2000	2000			1100											
141	2							3252	3024	660		425											
142	2							2048	960							60							
143	2					2										29							
145	2							1200						134									
146	2							1962					560	420									
147	2							2572					620	666									
148	2							3200		225			220	1380									
149	2	1						4644		770			280	800									
150	2							133															
151	2		2		LUMP								60	100									
SUBTOTAL							7694	40108															
TOTALS CARRIED TO SUBSUMMARY		2	2	1	LUMP	4	1.5 MI	7.6 MI	18762	1655		14000	1890	3500		130							

Preliminary Plans - For Reference Only

CALCULATED BDM
CHECKED SMM

MAINTENANCE OF TRAFFIC ESTIMATED QUANTITIES

HAM-75-7.85

J:\20110903\ODOT\HAM\7889\mot\sheets\77889MS003.dgn 5/22/2026 10:08:20 AM hbrendlinger

SHEET NO.	PHASE	606 IMPACT ATTENUATOR, TYPE 3, UNIDIRECTIONAL, 60 MPH, 48" WIDE (EACH)		614 WORK ZONE IMPACT ATTENUATOR, 24" WIDE HAZARDS, (UNIDIRECTIONAL), TYPE 3 (EACH)	614 DETOUR SIGNING	614 WORK ZONE INCREASED PENALTIES SIGN (EACH)	614 WORK ZONE LANE LINE, CLASS I, 6", 807 PAINT (FT)	614 WORK ZONE EDGE LINE, CLASS I, 6", 807 PAINT (FT)	614 WORK ZONE CHANNELIZING LINE, CLASS I, 12", 807 PAINT (FT)	614 WORK ZONE DOTTED LINE, CLASS I, 6", 807 PAINT (FT)		622 PORTABLE BARRIER, 50", AS PER PLAN (FT)	622 PORTABLE BARRIER, UNANCHORED (FT)	622 DUAL PORTABLE BARRIER TRANSITION/TERMINATION (EACH)		808 DIGITAL SPEED LIMIT (DSL) SIGN ASSEMBLY (SNMT)							
152	3A					2																	
153	3A															1							
154	3A							1246	2319														
155	3A	1						3160	1740				1430	1									
156	3A						974	2800	626														
157	3A						1600	2427								1							
158	3A						1600	3200															
159	3A						2240	3432				116	116										
160	3A						3200	4800				800	1360			17							
161	3A						2800	4200				700	500										
162	3A						2960	4710				605	875										
163	3A						250	3300	1846			525	525										
164	3A							3200	1600														
165	3A							123	82														
168	3A							2264				144	144										
169	3A							28				14	14										
170	3A			1				1702				166	166										
171	3A							820		420													
173	3A				LUMP																		
SUBTOTAL							15624	41412															
TOTALS CARRIED TO SUBSUMMARY		1		1	LUMP	2	3.0 MI	7.8 MI	8213	420		3070	5130	1		19							

Preliminary Plans - For Reference Only

CALCULATED BDM
CHECKED SMM

MAINTENANCE OF TRAFFIC ESTIMATED QUANTITIES

HAM-75-7.85

J:\2011093\ODOT\HAM\77889\mot\sheets\77889MS004.dgn 5/22/2026 10:08:21 AM hbrendlinger

SHEET NO.	PHASE	606 IMPACT ATTENUATOR, TYPE 3, UNIDIRECTIONAL, 60 MPH, 48" WIDE (EACH)		614 WORK ZONE IMPACT ATTENUATOR, 24" WIDE HAZARDS, (UNIDIRECTIONAL) (EACH)			614 DETOUR SIGNING	614 PORTABLE CHANGEABLE MESSAGE SIGN (SNMT)	614 WORK ZONE LANE LINE, CLASS I, 6", 807 PAINT (FT)	614 WORK ZONE EDGE LINE, CLASS I, 6", 807 PAINT (FT)	614 WORK ZONE CHANNELIZING LINE, CLASS I, 12", 807 PAINT (FT)	614 WORK ZONE DOTTED LINE, CLASS I, 6", 807 PAINT (FT)		622 PORTABLE BARRIER, UNANCHORED (FT)	622 PORTABLE BARRIER, ANCHORED (FT)	622 DUAL PORTABLE BARRIER TRANSITION/TERMINATION (EACH)		808 DIGITAL SPEED LIMIT (DSL) SIGN ASSEMBLY (SNMT)					
176	3										26											
177	3									1012	140			400								
178	3								600	1200												
179	3								800	1600												
180	3									913		407										
181	3									13		13										
184	3 PT. 1								342	1153		469		640								
185	3 PT. 1								250	2740	1400			550								
186	3									1096	1096											
187	3 PT. 2									492		420										
188	3 PT. 2	1								2454				1510		1						
189	3 PT. 2									1094				490	180							
190	3									1064				400								
191	3								605	3169												
192	3 PT. 1								620	2600	240	500		680								
193	3 PT. 1								800	3200	100	700		800								
194	3 PT. 1			1					400	2704	627			622								
195	3									1418												
197	3 PT. 2			1						236		236		110								
198	3 PT. 2									1361		339										
200	3						LUMP	16														
201	3 PT. 1						LUMP															
202	4									560	1160	580							1			
203	4			1						1400	1400	700		305								
204	4								516	1878	1084	383		1020								
205	4								1600	1600				57								
206	4								1850	1947		97										
207	4								1650	1727		1528							1			
208	4								1600	1600		1600										
209	4			1					1600	1600		1200		50								
210	4								1600	1600		800		800								
211	4								1600	1600		800		800								
212	4								1600	2072		289		800								
213	4			1					858	1600	742			916								
214	4									958	1558											
SUBTOTAL									18891	49661												
TOTALS CARRIED TO SUBSUMMARY		1		5			LUMP	16	3.6 MI	9.4 MI	9573	11061		10950	180	1		2				

CALCULATED BDM
CHECKED SMM

MAINTENANCE OF TRAFFIC ESTIMATED QUANTITIES

HAM-75-7.85

67
1047

Preliminary Plans - For Reference Only

J:\2011093\ODOT\HAM\77889\mot\sheets\77889MS005.dgn 5/22/2026 10:08:21 AM hbrendlinger

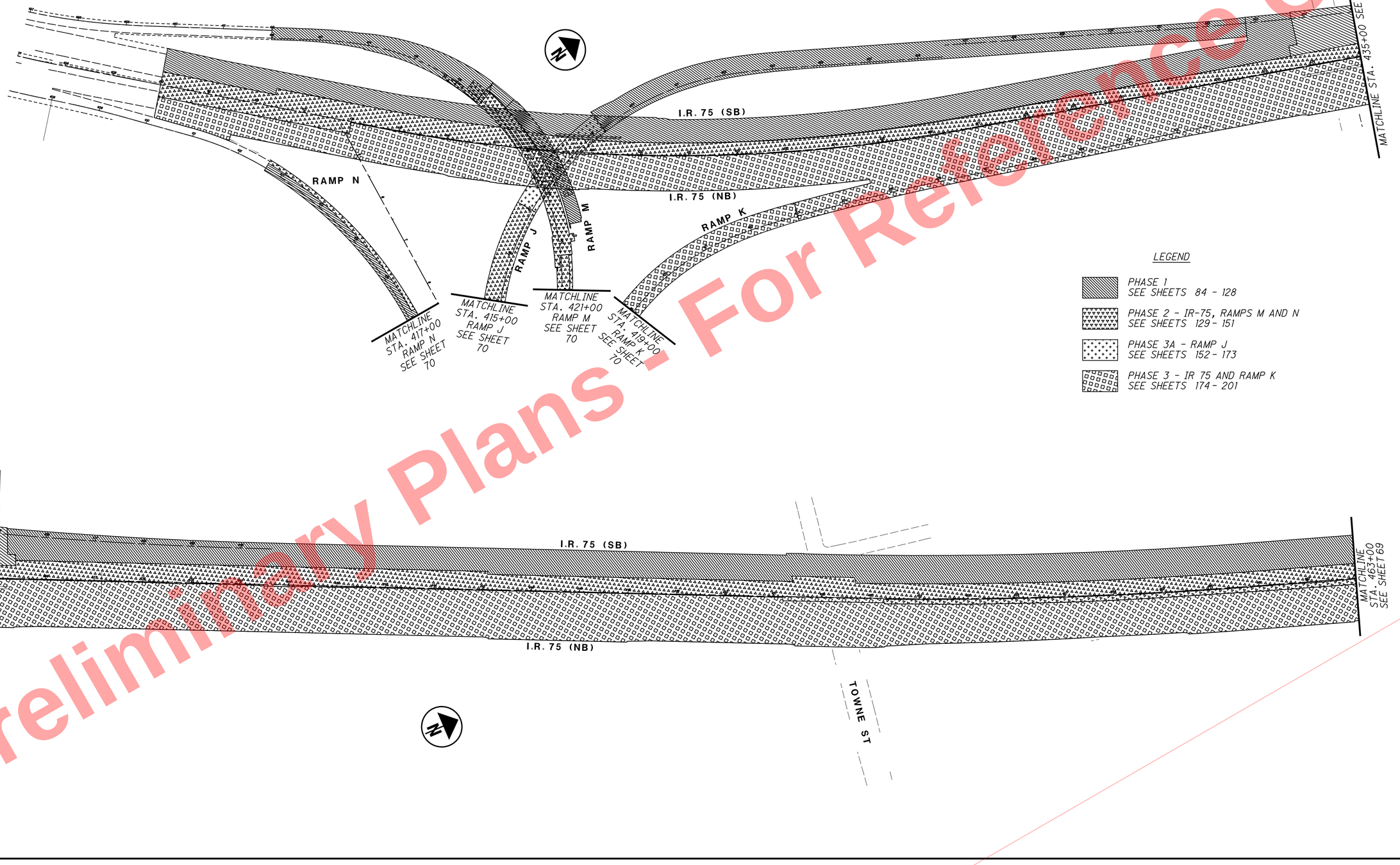

Preliminary Plans - Not For Reference Only

HORIZONTAL SCALE IN FEET
0 50 100 200

CALCULATED RLS
CHECKED SMM

MAINTENANCE OF TRAFFIC - PHASING OVERVIEW
IR 75 - STA. 407+00 TO STA. 463+00

HAM-75-7.85

68
1047

J:\20110903\ODOT\HAM\77889\mot\sheets\77889MB001.dgn 5/22/2026 10:08:25 AM hbrendlinger

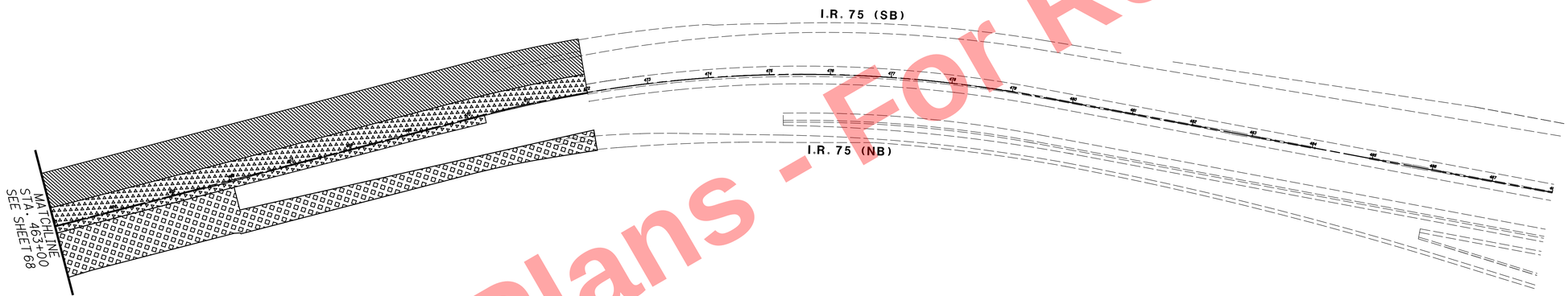

LEGEND

PHASE 1
SEE SHEETS 84 - 128

PHASE 2
SEE SHEETS 129 - 151

PHASE 3
SEE SHEETS 174 - 201

Preliminary Plans - For Reference Only

MAINTENANCE OF TRAFFIC - PHASING OVERVIEW
IR 75 - STA. 463+00 TO STA. 488+00

HAM-75-7.82

CALCULATED RLS
CHECKED SMM

HORIZONTAL SCALE IN FEET
0 50 100 200

69
1047

J:\20110903\ODOT\HAM\77889\mot\sheets\77889MB002.dgn 5/22/2026 10:08:28 AM hbrendlinger

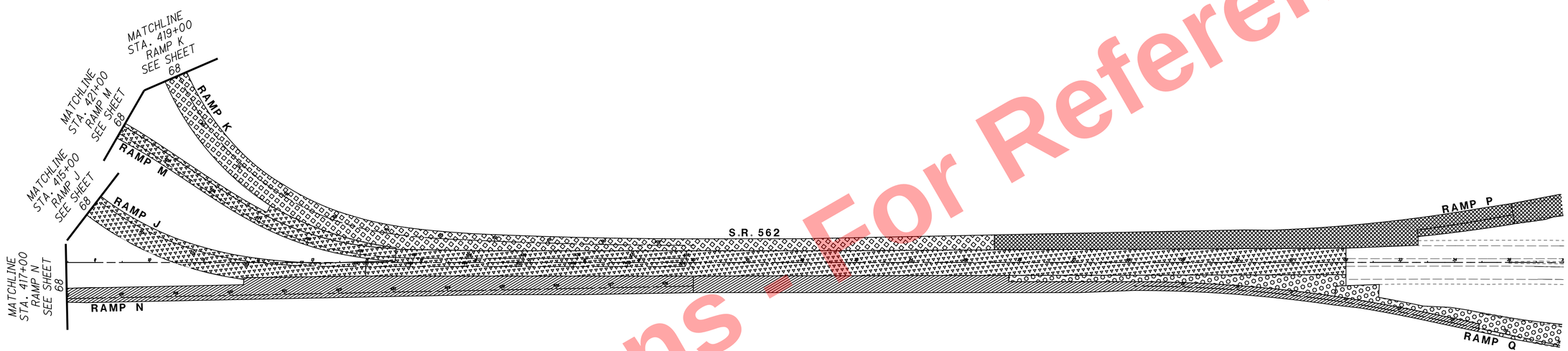

LEGEND

- PHASE 1
  SEE SHEETS 110 - 118
- PHASE 1 - PART 2
  SEE SHEETS 119 - 121
- PHASE 2
  SEE SHEETS 145 - 150
- PHASE 3A
  SEE SHEETS 168 - 172
- PHASE 3
  SEE SHEETS 190 - 195
- PHASE 3 - PART 2
  SEE SHEETS 197 - 199

Preliminary Plans - For Reference Only

HORIZONTAL SCALE IN FEET
0 50 100 200

CALCULATED RLS
CHECKED SMM

MAINTENANCE OF TRAFFIC - PHASING OVERVIEW
SR 562 - STA. 8+50 TO STA. 36+00

HAM-75-7.85

70
1047

J:\20110903\ODOT\HAM\77889\mot\sheets\77889MB003.dgn 5/22/2026 10:08:30 AM hbrendlinger

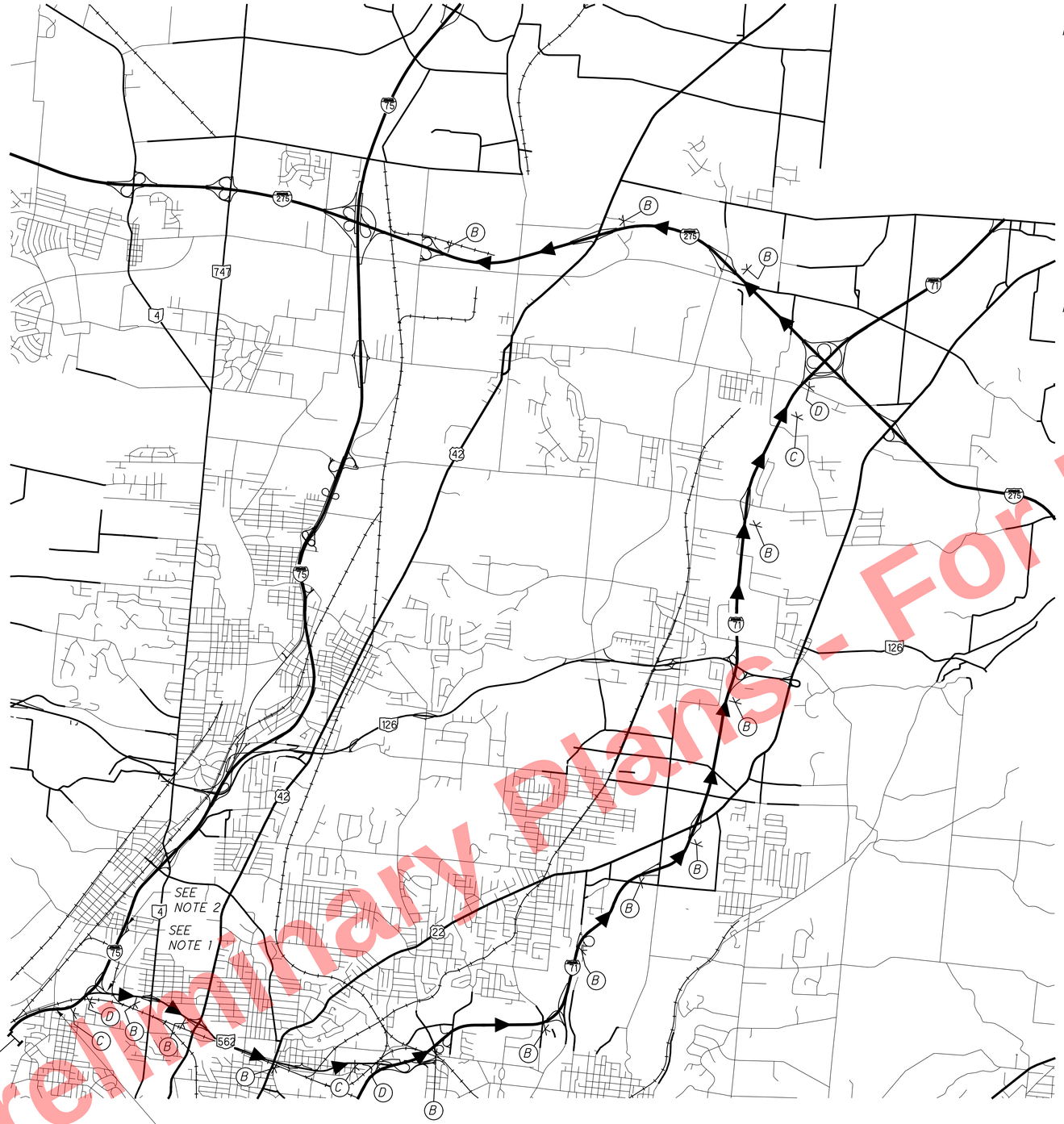

PORTABLE CHANGEABLE MESSAGE SIGNS PLACED 1 MILE AND 2 MILES IN ADVANCE OF DETOUR

I-75 NB CLOSED AHEAD

FOLLOW DETOUR

(A)

DETOUR	M4-8-30
NORTH	M3-1-30
INTERSTATE 75	M1-1-30-2
↑	M6-3-30

(B)

DETOUR	M4-8-30
NORTH	M3-1-30
INTERSTATE 75	M1-1-30-2
↰	M5-2R-30

(C)

DETOUR	M4-8-30
NORTH	M3-1-30
INTERSTATE 75	M1-1-30-2
↗	M6-2R-30

(D)

PORTABLE CHANGEABLE MESSAGE SIGNS PLACED 1 MILE AND 2 MILES IN ADVANCE OF DETOUR

SR-562 WB CLOSED AHEAD

FOLLOW DETOUR TO I-75

(E)

DETOUR	M4-8-30
TO	M4-5-30
INTERSTATE 75	M1-1-30-2
↑	M6-3-30

(F)

DETOUR	M4-8-30
TO	M4-5-30
INTERSTATE 75	M1-1-30-2
→	M6-1-30

(G)

DETOUR	M4-8-30
TO	M4-5-30
INTERSTATE 75	M1-1-30-2
↱	M5-1R-30

(H)

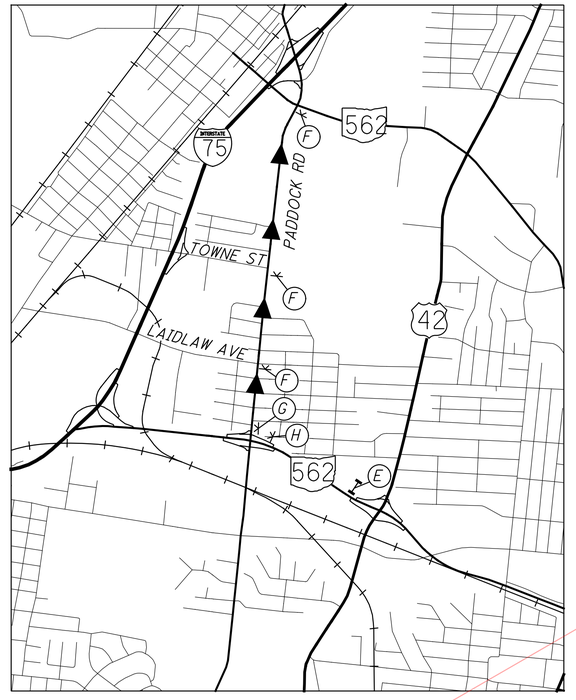

LEGEND

- DETOUR ROUTE
- TEMPORARY SIGN SUPPORT
- PORTABLE CHANGEABLE MESSAGE SIGN

3:1 NORTHBOUND LANE REDUCTION BEFORE SINGLE LANE EXIT PER ODOT SCD MT-95.32 AND MT-99.50

NOTES:
1. CLOSE SR 562 WESTBOUND RAMP TO I-75 NORTHBOUND PER ODOT SCD MT-95.31 AND MT-98.29

2. IF OPEN TO TRAFFIC, CLOSE NORTHBOUND I-75 ENTRANCE RAMP FROM TOWNE ST PER ODOT SCD MT-98.30.

Preliminary Plans - Not For Reference Only

NO SCALE

CALCULATED BDM CHECKED SMM

MOTPE DETOUR PLAN I-75 NORTHBOUND

HAM-75-7.85

71
1047

J:\2011\0903\ODOT\HAM\77889\mot\sheets\77889MD006.dgn 5/22/2026 10:08:32 AM hbrendlinger

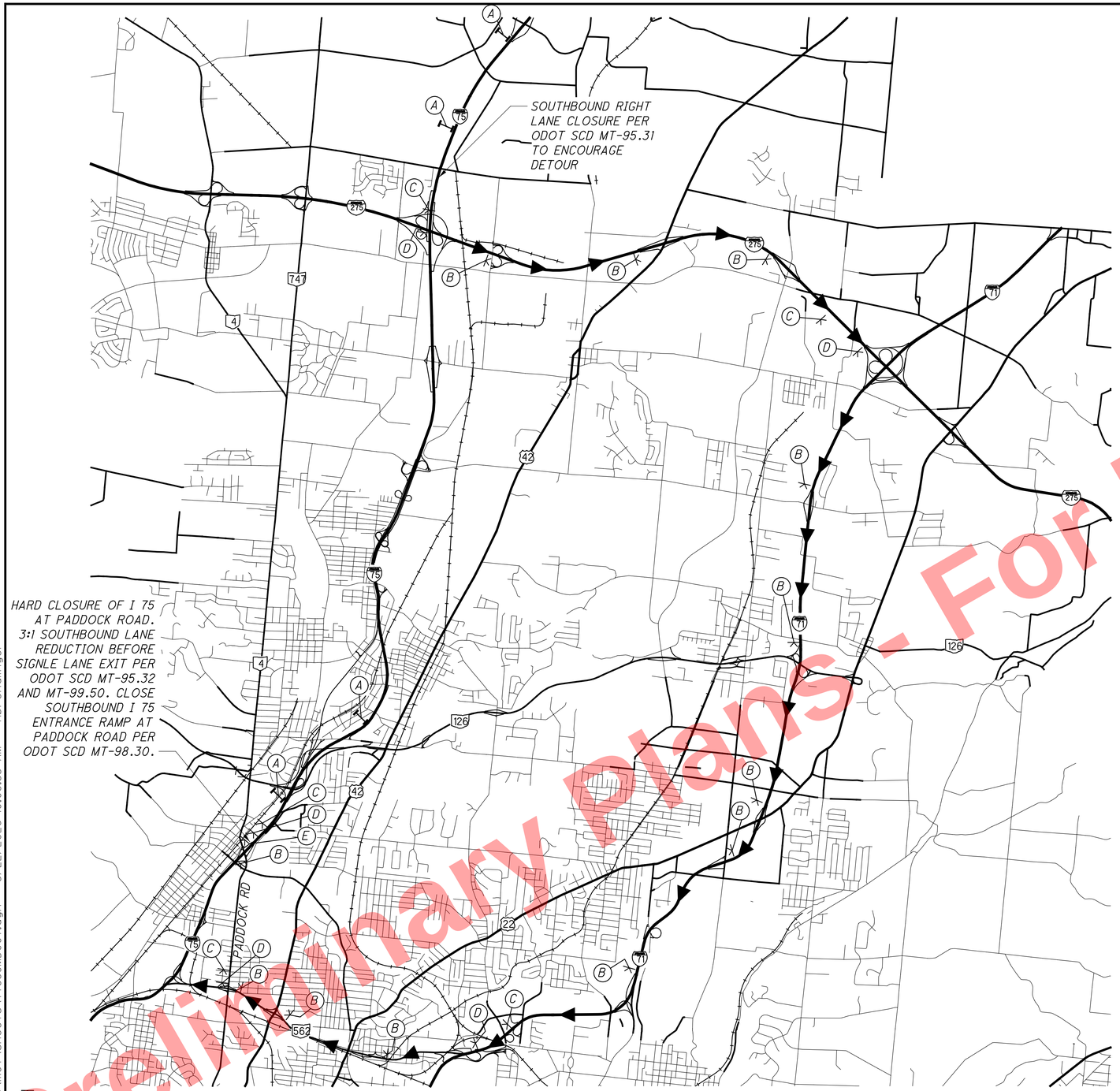

PORTABLE CHANGEABLE MESSAGE SIGNS PLACED 1 MILE AND 2 MILES IN ADVANCE OF DETOUR

PHASE 1 - PART 2 ONLY

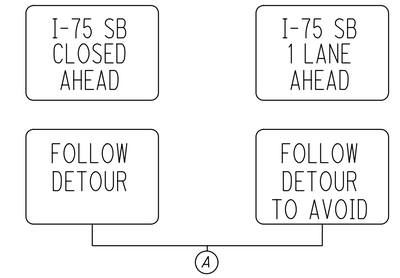

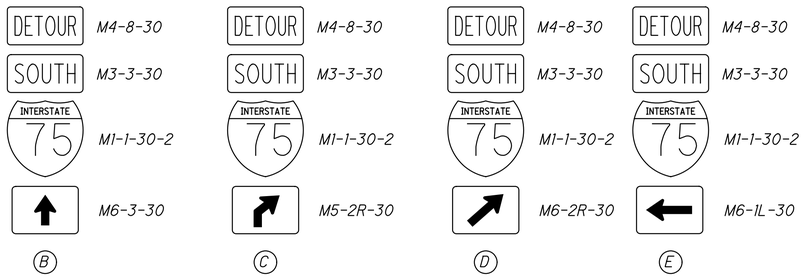

Preliminary Plans - Not For Reference Only

NO SCALE

CALCULATED BDM CHECKED SMM

MOTPE DETOUR PLAN

I-75 SOUTHBOUND - ALTERNATIVE 1

HAM-75-7.85

72 1047

J:\2011\0903\ODOT\HAM\77889\mot\sheets\77889MD007.dgn 5/22/2026 10:08:33 AM hbrendlinger

NOTES:

1. IN AN EFFORT TO HELP DIVERT TRAFFIC AWAY FROM THE MOT SET-UP, EXISTING DMS SIGNS THROUGHOUT THE AREA OF IMPACT SHALL BE UTILIZED TO SUPPLEMENT PORTABLE CHANGEABLE MESSAGE SIGNS (PCMS'S) DURING THE FIRST 30 DAYS OF THE RAMP J, RAMP M AND RAMP K CLOSURES.

2. DMS MESSAGES WILL BE COORDINATED WITH THE TMC BY THE DISTRICT.

3. AFTER 30 DAYS THE DMS SIGNS SHALL BE RESTORED TO STANDARD MESSAGING.

4. PCMS'S SHALL BE PLACED A MINIMUM OF 500' FROM EXISTING DMS SIGNS AND GUIDE SIGNS. THE MESSAGE SHALL BE LIMITED TO TWO PANELS PER SIGN, THREE LINES PER PANEL AND EIGHT CHARACTERS PER LINE.

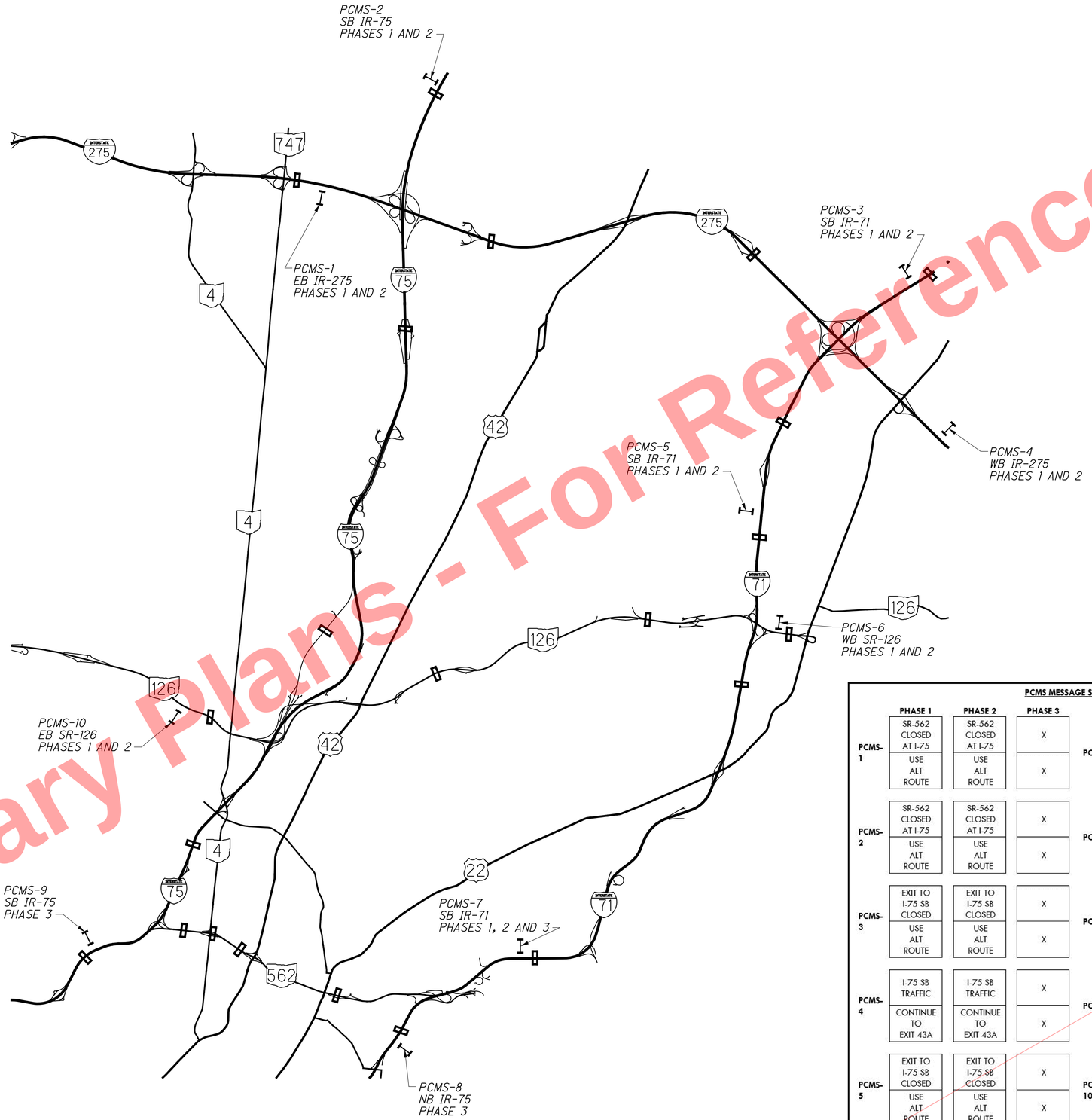

PCMS MESSAGE SUMMARY

	PHASE 1	PHASE 2	PHASE 3
PCMS-1	SR-562 CLOSED AT I-75	SR-562 CLOSED AT I-75	X
	USE ALT ROUTE	USE ALT ROUTE	X
PCMS-2	SR-562 CLOSED AT I-75	SR-562 CLOSED AT I-75	X
	USE ALT ROUTE	USE ALT ROUTE	X
PCMS-3	EXIT TO I-75 SB CLOSED	EXIT TO I-75 SB CLOSED	X
	USE ALT ROUTE	USE ALT ROUTE	X
PCMS-4	I-75 SB TRAFFIC	I-75 SB TRAFFIC	X
	CONTINUE TO EXIT 43A	CONTINUE TO EXIT 43A	X
PCMS-5	EXIT TO I-75 SB CLOSED	EXIT TO I-75 SB CLOSED	X
	USE ALT ROUTE	USE ALT ROUTE	X

	PHASE 1	PHASE 2	PHASE 3
PCMS-6	I-75 SB TRAFFIC	I-75 SB TRAFFIC	X
	CONTINUE TO EXIT 27	CONTINUE TO EXIT 27	X
PCMS-7	EXIT TO I-75 SB CLOSED	EXIT TO I-75 SB CLOSED	EXIT TO I-75 NB CLOSED
	USE ALT ROUTE	USE ALT ROUTE	USE ALT ROUTE
PCMS-8	X	X	I-75 NB RAMP CLOSED
	X	X	USE ALT ROUTE
PCMS-9	X	X	NB I-75 USE EXIT 6
	X	X	FOLLOW DETOUR
PCMS-10	SR-562 CLOSED AT I-75	SR-562 CLOSED AT I-75	X
	USE ALT ROUTE	USE ALT ROUTE	X

LEGEND

- EXISTING DMS
- PORTABLE CHANGEABLE MESSAGE SIGN

Preliminary Plans - For Reference Only

NO SCALE

CALCULATED BDM CHECKED SMM

AREA WIDE MESSAGING PLAN

HAM-75-7.85

J:\2011\0903\ODOT\HAM\77889\mot\sheets\77889MD01IA.dgn 5/22/2026 10:08:34 AM hbrendlinger

DR1 - EXISTING BASIN TO BE RECONSTRUCTED TO CATCH BASIN NO. 6 UNTIL RECONSTRUCTED TO ORIGINAL CONDITION IN PHASE 4.
DR2 - EXISTING BASIN TO BE RECONSTRUCTED TO CATCH BASIN NO. 6 UNTIL RECONSTRUCTED TO ORIGINAL CONDITION IN PHASE 4.
DR3 - EXISTING BASIN TO BE RECONSTRUCTED TO CATCH BASIN NO. 6 UNTIL RECONSTRUCTED TO ORIGINAL CONDITION IN PHASE 4.

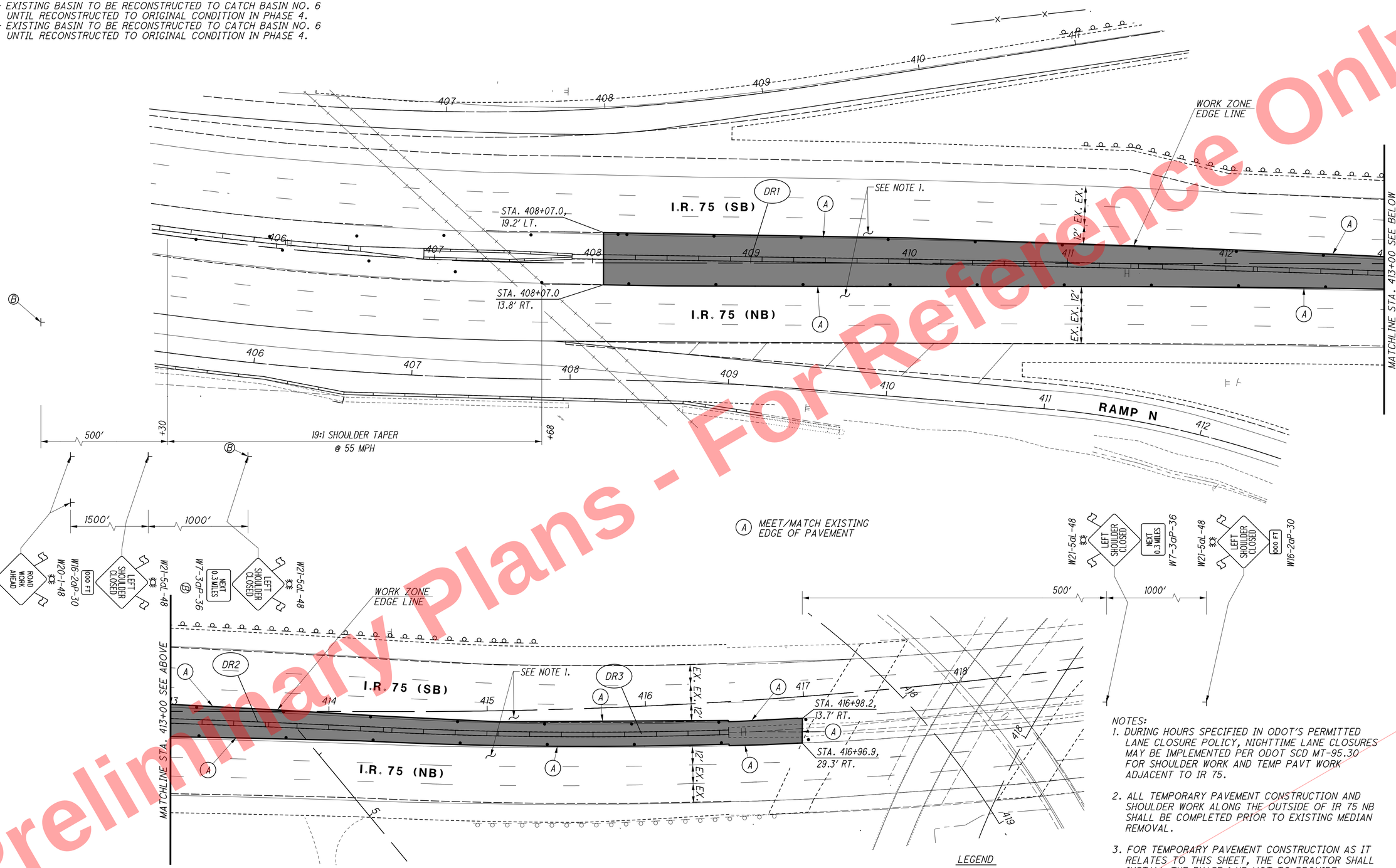

(A) MEET/MATCH EXISTING EDGE OF PAVEMENT

DRUM SPACING CHART	
TANGENT	80' c/c
TAPER	55' c/c
RADII	10' c/c

LEGEND
- TEMPORARY PAVEMENT
- DRUM
- PROPOSED SIGN SUPPORT

NOTES:
1. DURING HOURS SPECIFIED IN ODOT'S PERMITTED LANE CLOSURE POLICY, NIGHTTIME LANE CLOSURES MAY BE IMPLEMENTED PER ODOT SCD MT-95.30 FOR SHOULDER WORK AND TEMP PAVT WORK ADJACENT TO IR 75.
2. ALL TEMPORARY PAVEMENT CONSTRUCTION AND SHOULDER WORK ALONG THE OUTSIDE OF IR 75 NB SHALL BE COMPLETED PRIOR TO EXISTING MEDIAN REMOVAL.
3. FOR TEMPORARY PAVEMENT CONSTRUCTION AS IT RELATES TO THIS SHEET, THE CONTRACTOR SHALL INSTALL THE PHASE 1 NB MOT TO PROVIDE ADDITIONAL WORK SPACE AND PROTECT THE EXPOSED ENDS OF THE MEDIAN. ADDITIONALLY, THE SB SHOULDER SHALL BE CLOSED WITH PORTABLE BARRIER PER ODOT SCD MT- 95.45. QUANTITIES FOR THE SB SHOULDER CLOSURE HAVE BEEN PROVIDED. THIS SET-UP SHALL REMAIN IN PLACE UNTIL PHASE 1.

HORIZONTAL SCALE IN FEET
0 15 30 60
CALCULATED RLS
CHECKED SMM

MAINTENANCE OF TRAFFIC PLAN - PRE-PHASE 1
I.R. 75 TEMPORARY PAVEMENT PLAN

HAM-75-7.85

74
1047

Preliminary Plans - For Reference Only

J:\20110903\ODOT\HAM\77889\mot\sheets\77889MP193.dgn 5/22/2026 10:08:40 AM hbrendlinger

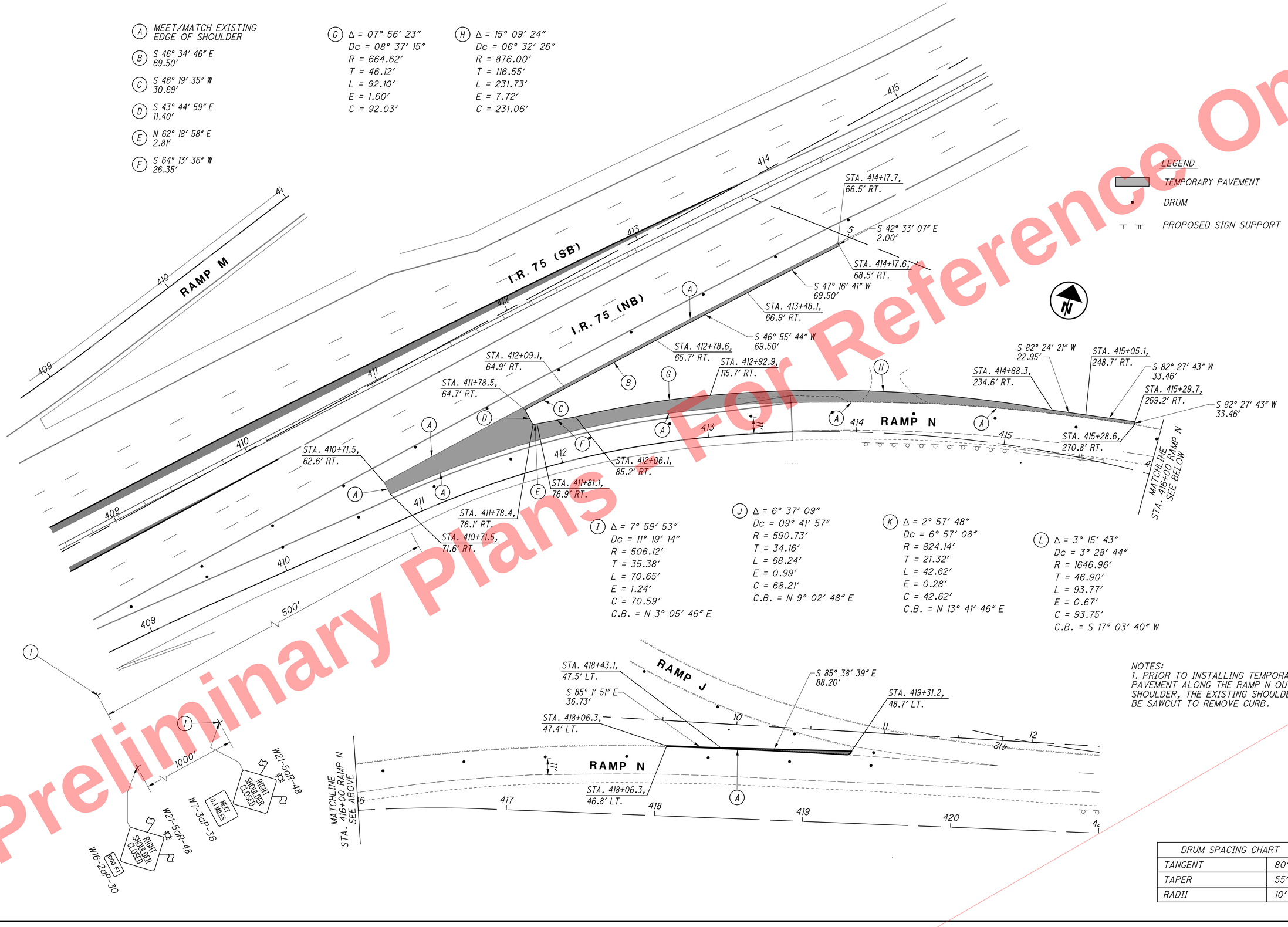

NOTES:
1. PRIOR TO INSTALLING TEMPORARY PAVEMENT ALONG THE RAMP N OUTSIDE SHOULDER, THE EXISTING SHOULDER SHALL BE SAWCUT TO REMOVE CURB.

DRUM SPACING CHART	
TANGENT	80′ c/c
TAPER	55′ c/c
RADII	10′ c/c

Preliminary Plans For Reference Only

HORIZONTAL SCALE IN FEET 0 15 30 60

CALCULATED RLS
CHECKED SMM

MAINTENANCE OF TRAFFIC PLAN - PRE-PHASE 1
RAMP N TEMPORARY PAVEMENT PLAN

HAM-75-7.85

J:\20110903\ODOT\HAM\77889\mot\sheets\77889MP147.dgn 5/22/2026 10:08:41 AM hbrendlinger

Preliminary Plans - For Reference Only

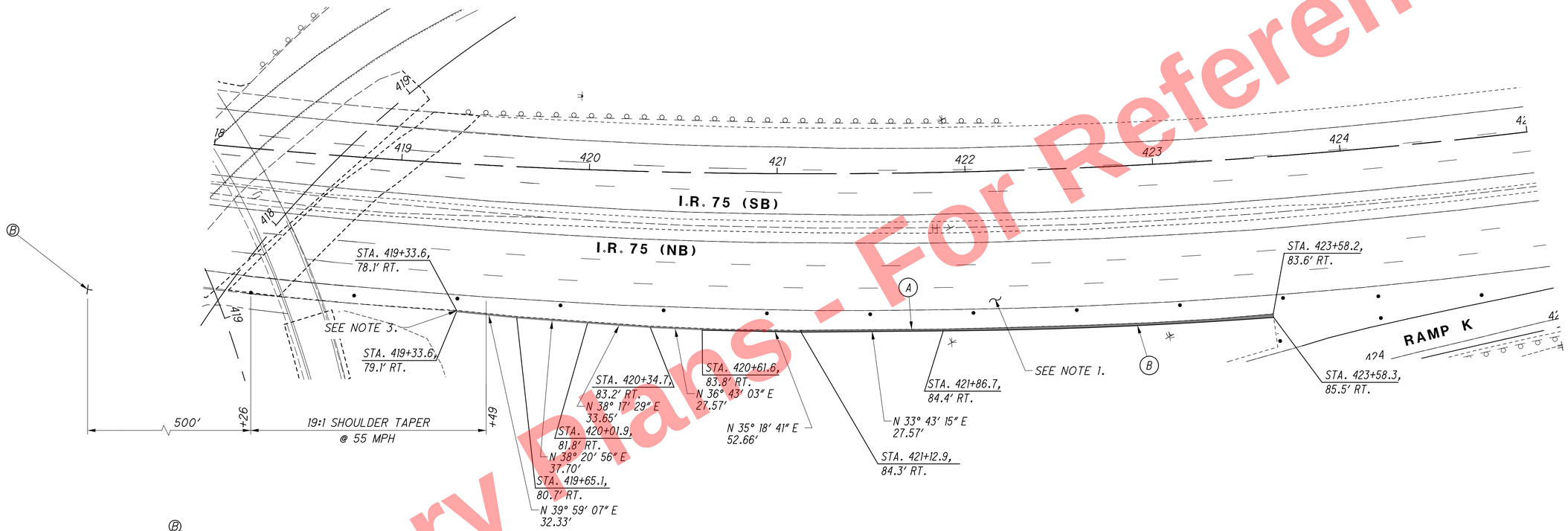

Ⓐ MEET/MATCH EXISTING EDGE OF SHOULDER

DRUM SPACING CHART	
TANGENT	80′ c/c
TAPER	55′ c/c
RADII	10′ c/c

LEGEND

- TEMPORARY PAVEMENT
- DRUM
- PROPOSED SIGN SUPPORT

NOTES:

1. DURING HOURS SPECIFIED IN ODOT'S PERMITTED LANE CLOSURE POLICY, NIGHTTIME LANE CLOSURES MAY BE IMPLEMENTED PER ODOT SCD MT-95.30 FOR SHOULDER WORK AND TEMP PAVT WORK ADJACENT TO IR 75.
2. ALL TEMPORARY PAVEMENT CONSTRUCTION AND SHOULDER WORK ALONG THE OUTSIDE OF IR 75 NB SHALL BE COMPLETED PRIOR TO EXISTING MEDIAN REMOVAL.
3. TEMPORARY PAVEMENT SHOULD MEET THE END OF THE CONCRETE BARRIER ON THE EAST SIDE OF NB IR 75 AT APPROXIMATE STA. 419+34

HORIZONTAL SCALE IN FEET
0 15 30 60

CALCULATED RLS
CHECKED SMM

MAINTENANCE OF TRAFFIC PLAN - PRE-PHASE 1
I.R. 75 TEMPORARY PAVEMENT PLAN

HAM-75-7.85

76
1047

J:\20110903\ODOT\HAM\77889\mot\sheets\77889MP267.dgn 5/22/2026 10:08:43 AM hbrendlinger

Preliminary Plans - For Reference Only

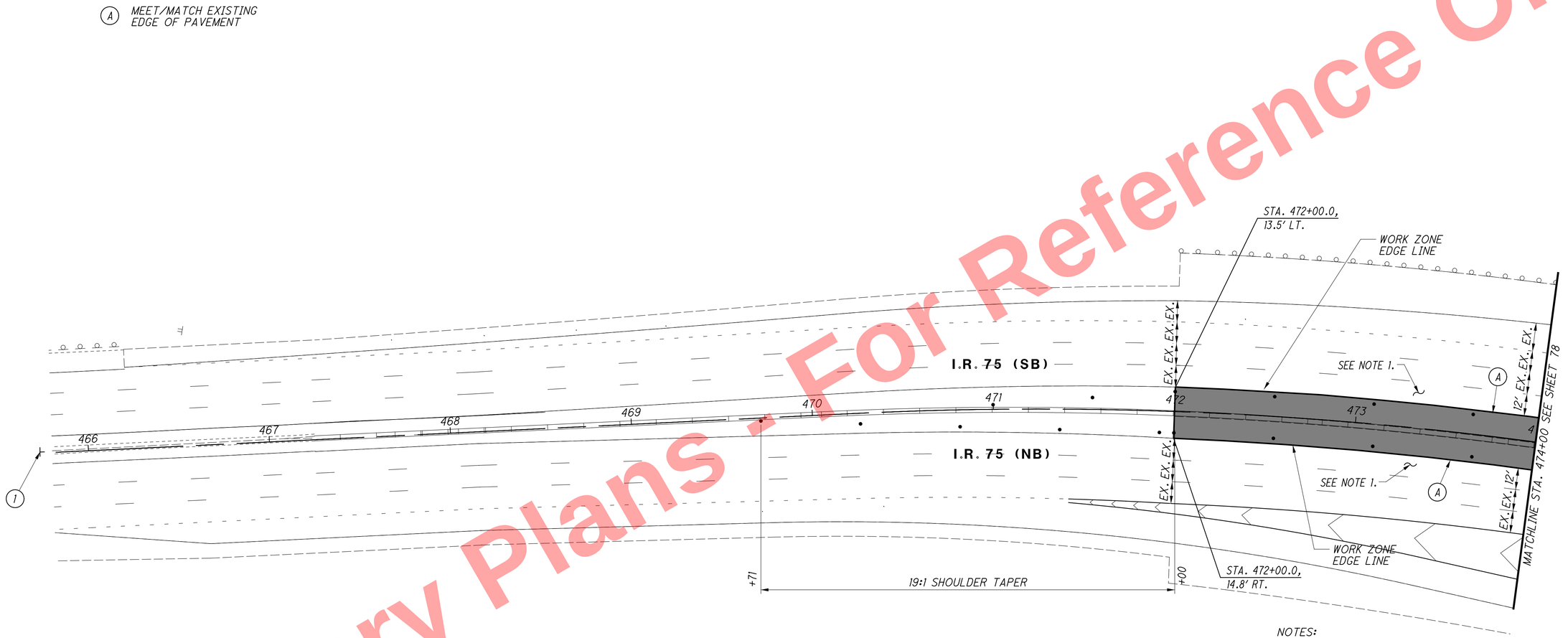

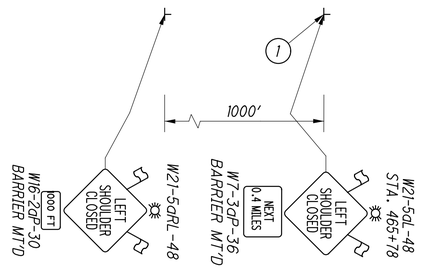

A MEET/MATCH EXISTING EDGE OF PAVEMENT

LEGEND

- TEMPORARY PAVEMENT
- DRUM
- PROPOSED SIGN SUPPORT

NOTES:

1. DURING HOURS SPECIFIED IN ODOT'S PERMITTED LANE CLOSURE POLICY, NIGHTTIME LANE CLOSURES MAY BE IMPLEMENTED PER ODOT SCD MT-95.30 FOR SHOULDER WORK AND TEMP PAVT WORK ADJACENT TO IR 75.
2. MEDIAN PAVEMENT WORK IN THIS AREA WILL LIKELY OVERLAP WITH AN ADJACENT PROJECT TO THE NORTH (PID 117525). THE CONTRACTOR SHALL COORDINATE ANY LANE OR SHOULDER CLOSURES NECESSARY FOR PRE-PHASE 1 WORK.
3. FOR TEMPORARY PAVEMENT CONSTRUCTION AS IT RELATES TO THIS SHEET, THE NB AND SB SHOULDERS SHALL BE CLOSED WITH PORTABLE BARRIER PER ODOT SCD-95.45. QUANTITIES FOR THE SHOULDER CLOSURES HAVE BEEN PROVIDED. THIS SET-UP SHALL REMAIN IN PLACE UNTIL PHASE 1.

DRUM SPACING CHART	
TANGENT	80' c/c
TAPER	55' c/c
RADII	10' c/c

HORIZONTAL SCALE IN FEET
0 15 30 60

CALCULATED RLS
CHECKED SMM

MAINTENANCE OF TRAFFIC PLAN - PRE-PHASE 1
I.R. 75 TEMPORARY PAVEMENT PLAN

HAM-75-7.85

77
1047

J:\20110903\ODOT\HAM\77889\mot\sheets\77889MP151.dgn 5/22/2026 10:08:44 AM hbrendlinger

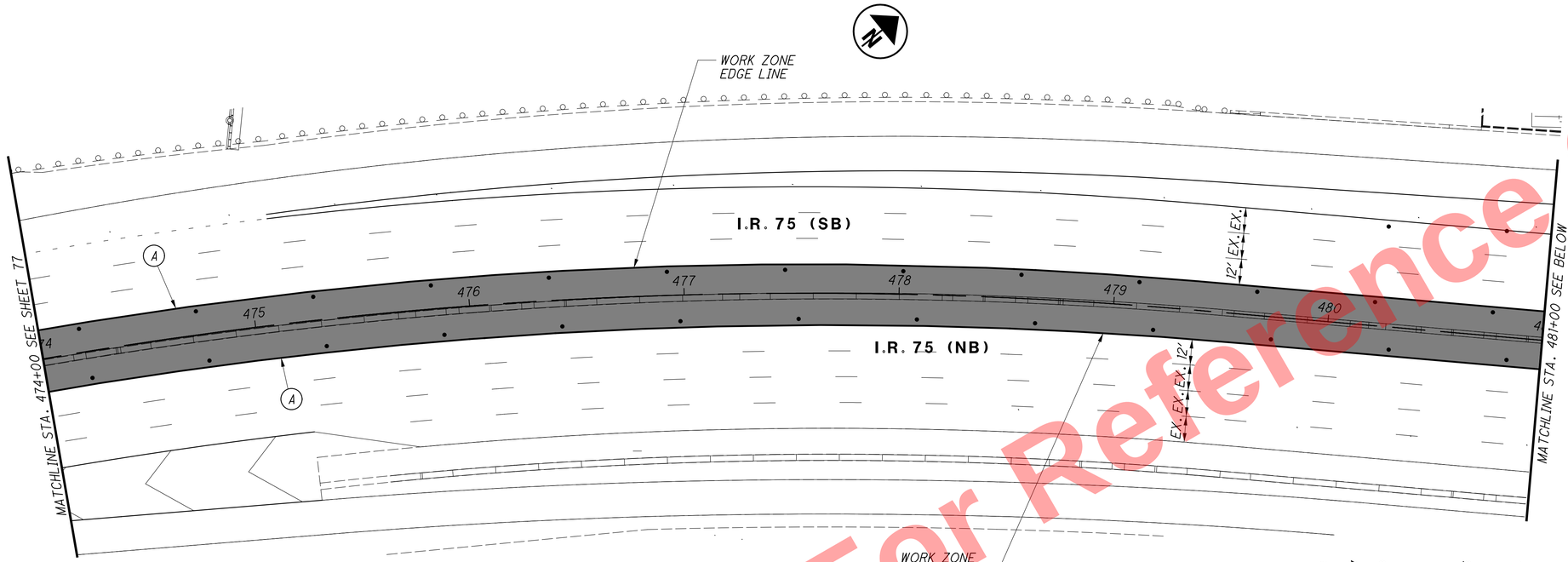

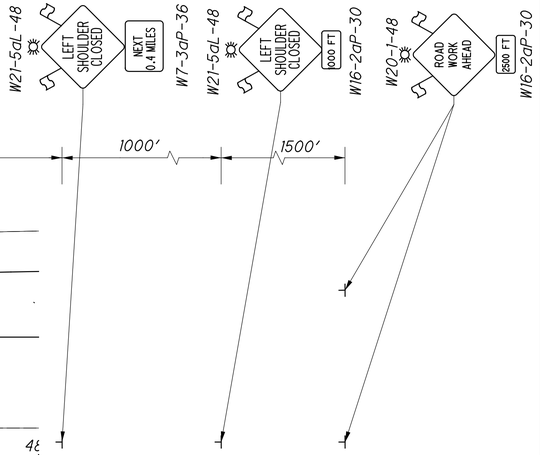

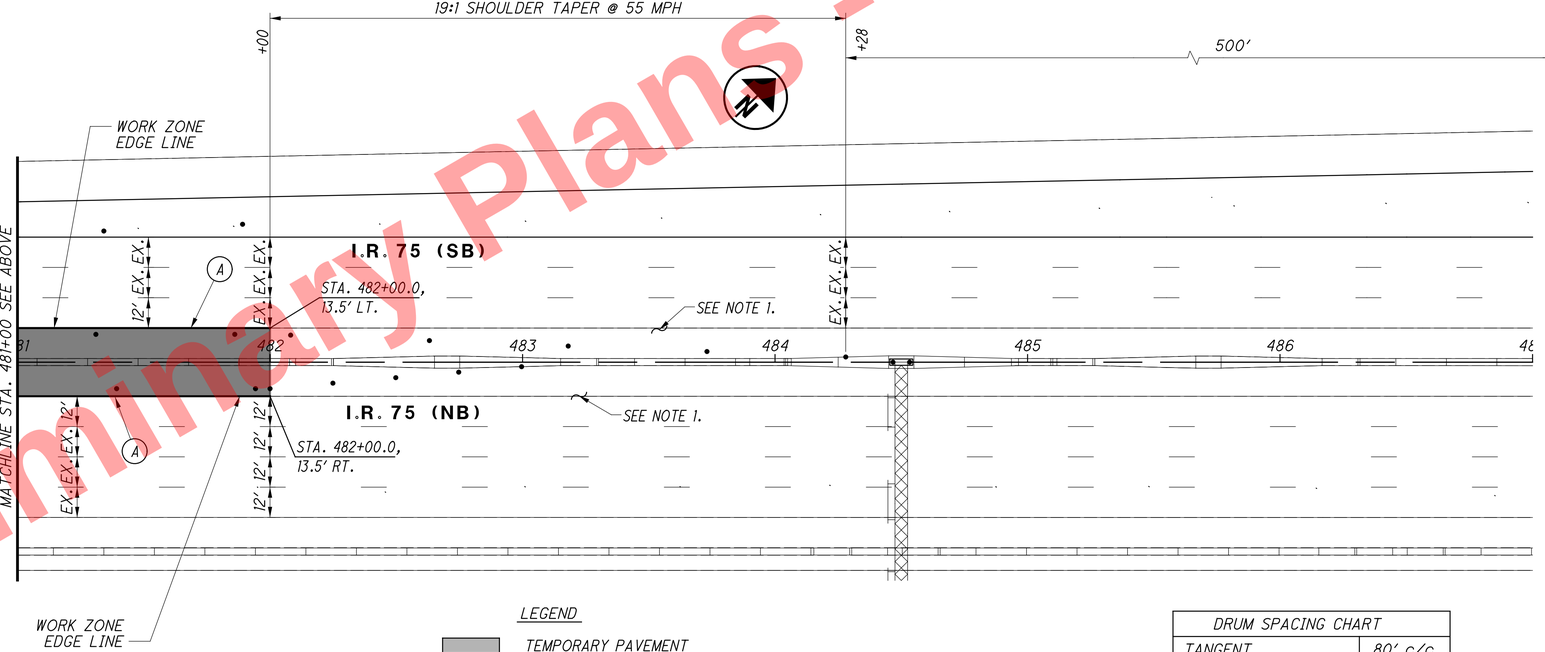

LEGEND

- TEMPORARY PAVEMENT
- DRUM
- PROPOSED SIGN SUPPORT
- (A) MEET/MATCH EXISTING EDGE OF PAVEMENT

DRUM SPACING CHART	
TANGENT	80' c/c
TAPER	55' c/c
RADII	10' c/c

NOTES:

1. DURING HOURS SPECIFIED IN ODOT'S PERMITTED LANE CLOSURE POLICY, NIGHTTIME LANE CLOSURES MAY BE IMPLEMENTED PER ODOT SCD MT-95.30 FOR SHOULDER WORK AND TEMP PAVT WORK ADJACENT TO IR 75.
2. MEDIAN PAVEMENT WORK IN THIS AREA WILL LIKELY OVERLAP WITH AN ADJACENT PROJECT TO THE NORTH (PID 117525). THE CONTRACTOR SHALL COORDINATE ANY LANE OR SHOULDER CLOSURES NECESSARY FOR PRE-PHASE 1 WORK.
3. FOR TEMPORARY PAVEMENT CONSTRUCTION AS IT RELATES TO THIS SHEET, THE NB AND SB SHOULDERS SHALL BE CLOSED WITH PORTABLE BARRIER PER ODOT SCD-95.45. QUANTITIES FOR THE SHOULDER CLOSURES HAVE BEEN PROVIDED. THIS SET-UP SHALL REMAIN IN PLACE UNTIL PHASE 1.

HORIZONTAL SCALE IN FEET
0 15 30 60

CALCULATED RLS
CHECKED SMM

MAINTENANCE OF TRAFFIC PLAN - PRE-PHASE 1
I.R. 75 TEMPORARY PAVEMENT PLAN

HAM-75-7.85

78
1047

Preliminary Plans - For Reference Only

J:\20110903\ODOT\HAM\77889\mot\sheets\77889MP152.dgn 5/22/2026 10:08:45 AM hbrendlinger

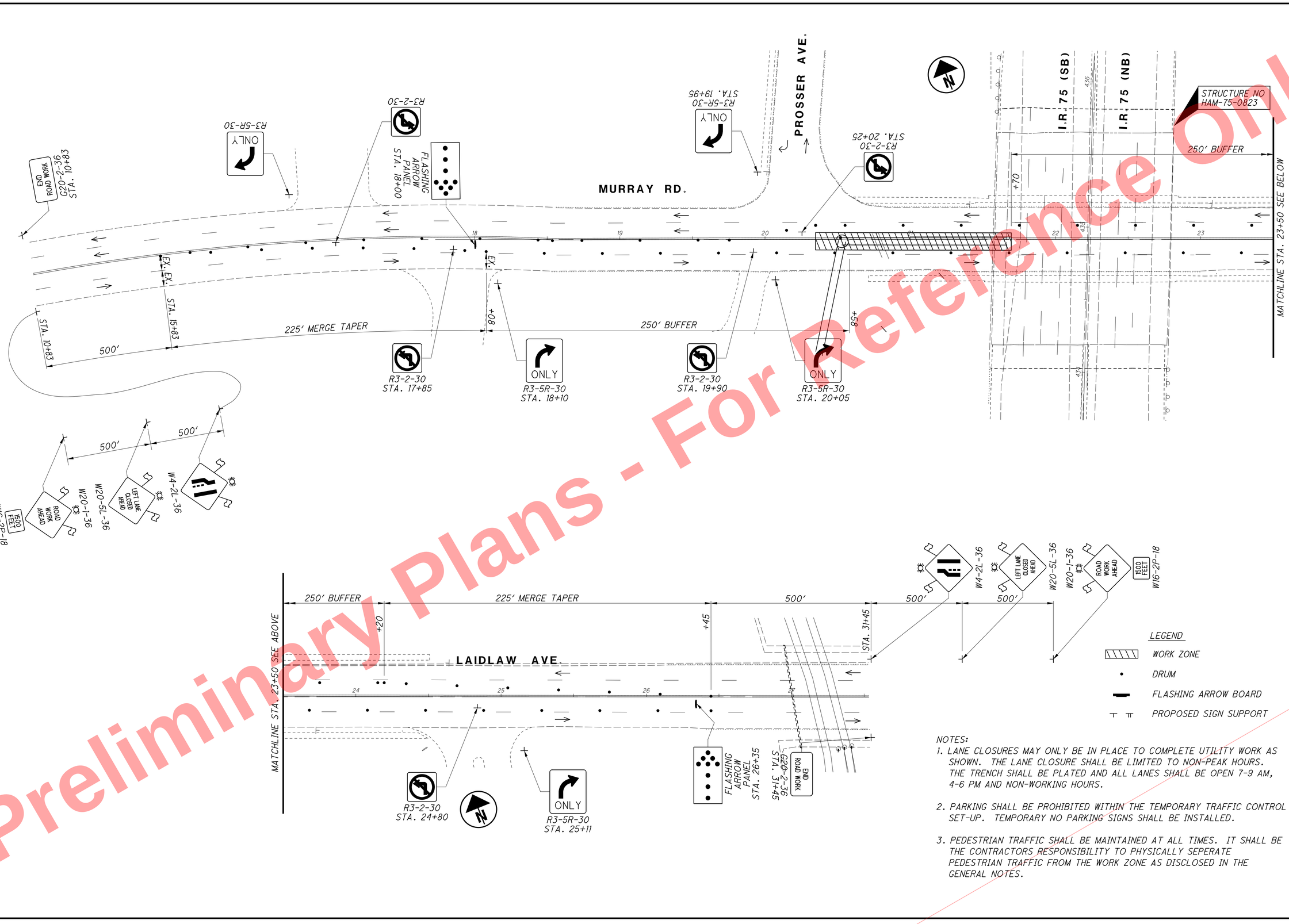

NOTES:

1. LANE CLOSURES MAY ONLY BE IN PLACE TO COMPLETE UTILITY WORK AS SHOWN. THE LANE CLOSURE SHALL BE LIMITED TO NON-PEAK HOURS. THE TRENCH SHALL BE PLATED AND ALL LANES SHALL BE OPEN 7-9 AM, 4-6 PM AND NON-WORKING HOURS.
2. PARKING SHALL BE PROHIBITED WITHIN THE TEMPORARY TRAFFIC CONTROL SET-UP. TEMPORARY NO PARKING SIGNS SHALL BE INSTALLED.
3. PEDESTRIAN TRAFFIC SHALL BE MAINTAINED AT ALL TIMES. IT SHALL BE THE CONTRACTORS RESPONSIBILITY TO PHYSICALLY SEPERATE PEDESTRIAN TRAFFIC FROM THE WORK ZONE AS DISCLOSED IN THE GENERAL NOTES.

HORIZONTAL SCALE IN FEET
0 15 30 60
CALCULATED RLS
CHECKED SMM

MAINTENANCE OF TRAFFIC PLAN - PRE-PHASE 1
LAIDLAW AVE. - STA. 11+00 TO STA. 27+55

HAM-75-7.85

79
1047

Preliminary Plans - For Reference Only

J:\20110903\ODOT\HAM\77889\mot\sheets\77889MP079.dgn 5/22/2026 10:08:46 AM hbrendlinger

LEGEND

- EX. TRAFFIC SIGNAL HEAD
- PR. TRAFFIC SIGNAL HEAD
- EX. PED. SIGNAL HEAD
- EX. CITY STEEL TRAFFIC POLE
- EX. CONTROLLER
- EX. PULLBOX
- REFLECTORIZED SIGN

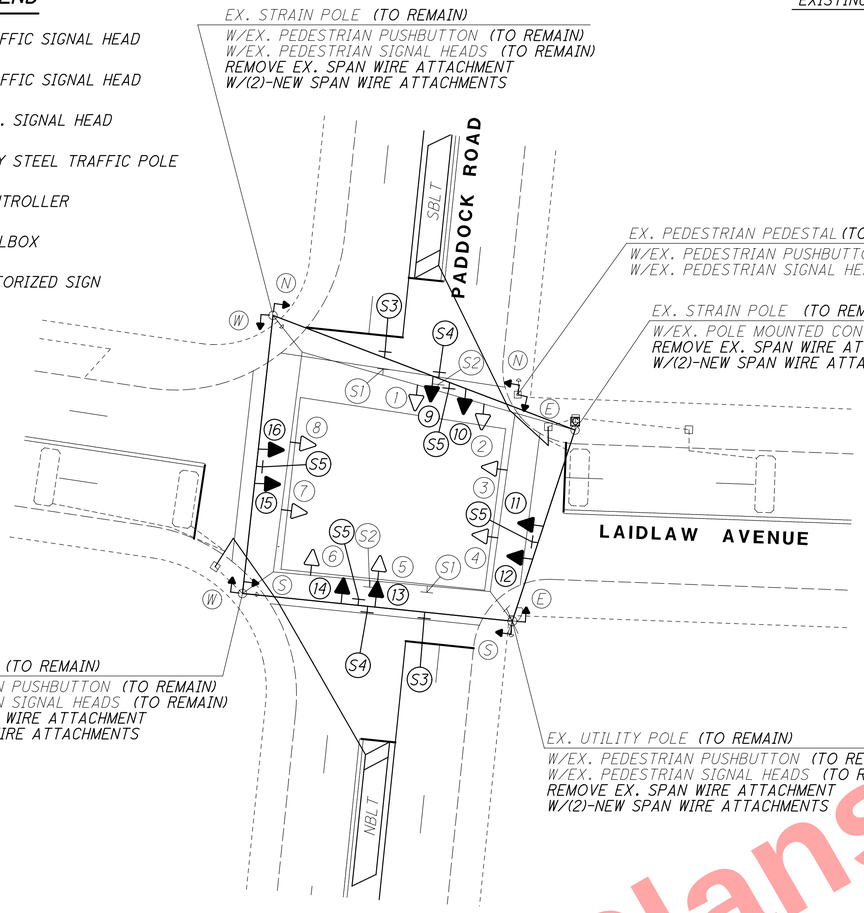

EXISTING SIGNAL HEADS (TO BE REMOVED)

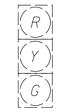

HEADS 1, 2, 3, 4, 5, 6, 7, & 8

PROPOSED SIGNAL HEADS

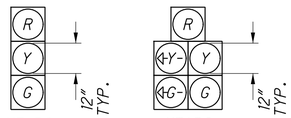

HEADS 10, 11, 12, 14, 15, & 16

HEADS 9 & 13

EXISTING PEDESTRIAN SIGNAL HEADS (REMAIN)



EXISTING SPAN MOUNTED SIGNS (REMOVE)

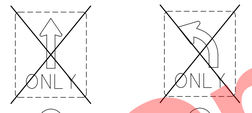

PROPOSED SPAN MOUNTED SIGNS



NOTE:
INSTALL THE SPAN TO PROVIDE FOR A 4 TO 5 PERCENT SAG. ATTACH THE SPAN NO CLOSER THAN 1 FT. FROM THE TOP OF THE POLE. THE LOWEST VEHICULAR HEAD IN EACH DIRECTION SHALL BE 17 FT. ABOVE PAVEMENT SURFACE WITH THE REMAINING VEHICULAR HEADS MEETING THE REQUIREMENTS OF THE OHIO MANUAL OF UNIFORM TRAFFIC CONTROL DEVICES.

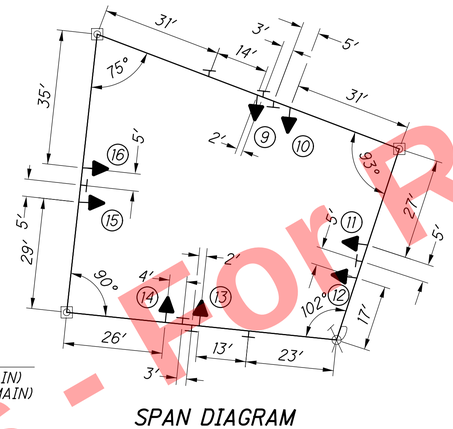

SPAN DIAGRAM

NOTES:
-17' MIN CLEARANCE PER ES-3-2
-WITHOUT BOTTOM TETHER

FIELD WIRING HOOK-UP CHART

SIGNAL HEAD	INDICATION	FIELD TERMINAL	FLASH	SIGNAL HEAD	INDICATION	FIELD TERMINAL	FLASH
9 (NBLT)	R	ϕNB R	EX.	13 (SBLT)	R	ϕSB R	EX.
	Y	ϕNB Y			Y	ϕSB Y	
	G	ϕNB G			G	ϕSB G	
	←Y–	ϕNBLT Y			–Y→	ϕSBLT Y	
	←G–	ϕNBLT G			–G→	ϕSBLT G	
10 (NB)	R	ϕNB R	EX.	14 (SB)	R	ϕSB R	EX.
	Y	ϕNB Y			Y	ϕSB Y	
	G	ϕNB G			G	ϕSB G	
11 & 12 (EB)	R	ϕEB R	EX.	15 & 16 (WB)	R	ϕWB R	EX.
	Y	ϕEB Y			Y	ϕWB Y	
	G	ϕEB G			G	ϕWB G	

PHASING DIAGRAM

LEGEND
VEHICLE ϕ
PEDESTRIAN ϕ

PHASE NUMBERS FOR FIELD WIRING HOOK-UP CHART AND PHASING DIAGRAM TO BE FURNISHED BY THE CITY OF CINCINNATI.

SIGNAL TIMING CHART

INTERSECTION: PADDOCK RD AT LAIDLAW AVE
MAINTAINING AGENCY: CITY OF CINCINNATI

INTERVAL OR FEATURE			CONTROLLER MOVEMENT NO.							
INTERSECTION MOVEMENT (PHASE)			NBLT	SB	–	WB	SBLT	NB	–	EB
DIRECTION			NBLT	SB	–	WB	SBLT	NB	–	EB
MINIMUM GREEN (INITIAL)		(SEC.)	7	EX.	–	EX.	7	EX.	–	EX.
ADDED INITIAL		(SEC./ACTUATION)	–	–	–	–	–	–	–	–
MAXIMUM INITIAL		(SEC.)	–	EX.	–	EX.	–	EX.	–	EX.
PASSAGE TIME (PRESET GAP)		(SEC.)	3.7	EX.	–	EX.	3.7	EX.	–	EX.
TIME BEFORE REDUCTION		(SEC.)	–	–	–	–	–	–	–	–
MINIMUM GAP		(SEC.)	–	–	–	–	–	–	–	–
TIME TO REDUCE		(SEC.)	–	–	–	–	–	–	–	–
MAXIMUM GREEN I		(SEC.)	20	EX.	–	EX.	EX.	20	–	EX.
MAXIMUM GREEN II		(SEC.)	20	EX.	–	EX.	EX.	20	–	EX.
YELLOW CHANGE		(SEC.)	3.2	EX.	–	EX.	3.2	EX.	–	EX.
ALL RED CLEARANCE		(SEC.)	1.7	EX.	–	EX.	1.3	EX.	–	EX.
WALK		(SEC.)	–	EX.	–	EX.	–	EX.	–	EX.
PEDESTRIAN CLEARANCE		(SEC.)	–	EX.	–	EX.	–	EX.	–	EX.
RECALL	MAXIMUM	(ON/OFF)	OFF	EX.	–	EX.	OFF	EX.	–	EX.
	MINIMUM	(ON/OFF)	OFF	EX.	–	EX.	OFF	EX.	–	EX.
	PEDESTRIAN	(ON/OFF)	OFF	EX.	–	EX.	OFF	EX.	–	EX.
MEMORY		(ON/OFF)	OFF	EX.	–	EX.	OFF	EX.	–	EX.

NOTES:
1. TRAFFIC SIGNAL TIMING VALUES LISTED ABOVE HAVE BEEN FURNISHED FOR INITIAL ACTIVATION. TRAFFIC SIGNAL TIMINGS SHALL BE UPDATED/ADJUSTED AS NEEDED FOR THE DURATION OF THE PROJECT AS DIRECTED BY THE CITY OF CINCINNATI OR BASED ON RESULTS OF THE TRAFFIC SIGNAL COORDINATION STUDY.
2. PHASE NUMBERS TO BE FURNISHED BY THE CITY OF CINCINNATI.

WIRING DIAGRAM

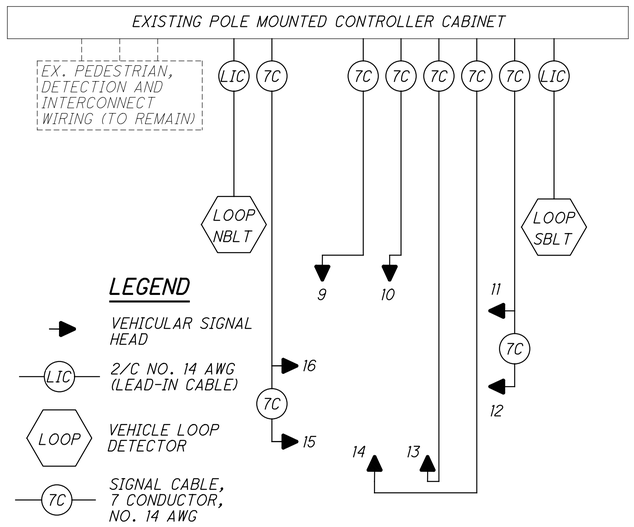

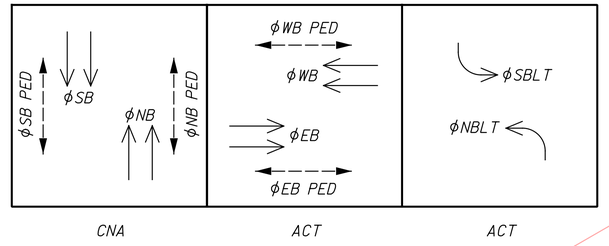

DETECTION CHART

LOOP DESIGNATION	LOOP CONFIGURATION**	SIZE (FT.)	PULSE OR PRESENCE	DELAY (SEC.)	EXTENSION (SEC.)	CONNECT TO DETECTOR UNIT (UNIT-CHANNEL)	ASSOCIATED CONTROLLER PHASE
NBLT	P	5'x30'	PRESENCE	3	–	NEW: 1/1	NBLT
SBLT	P	5'x30'	PRESENCE	3	–	NEW: 1/2	SBLT

** CONFIGURATIONS: POWERHEAD (P), QUADRUPOLE (Q), ANGULAR DESIGN DETECTOR (ADD), OR RECTANGULAR (R); PER TC-82.10

Preliminary Plans - For Reference Only

N

HORIZONTAL SCALE IN FEET
0 10 20 40

CALCULATED MSJ
CHECKED DRM/JDS

TRAFFIC SIGNAL MODIFICATION PLAN
PADDOCK RD AT LAIDLAW AVE

HAM-75-7.85

80
1047

J:\20110903\ODOT\HAM\77889\signals\sheets\77889CP001.dgn 5/22/2026 10:08:53 AM hbrendlinger

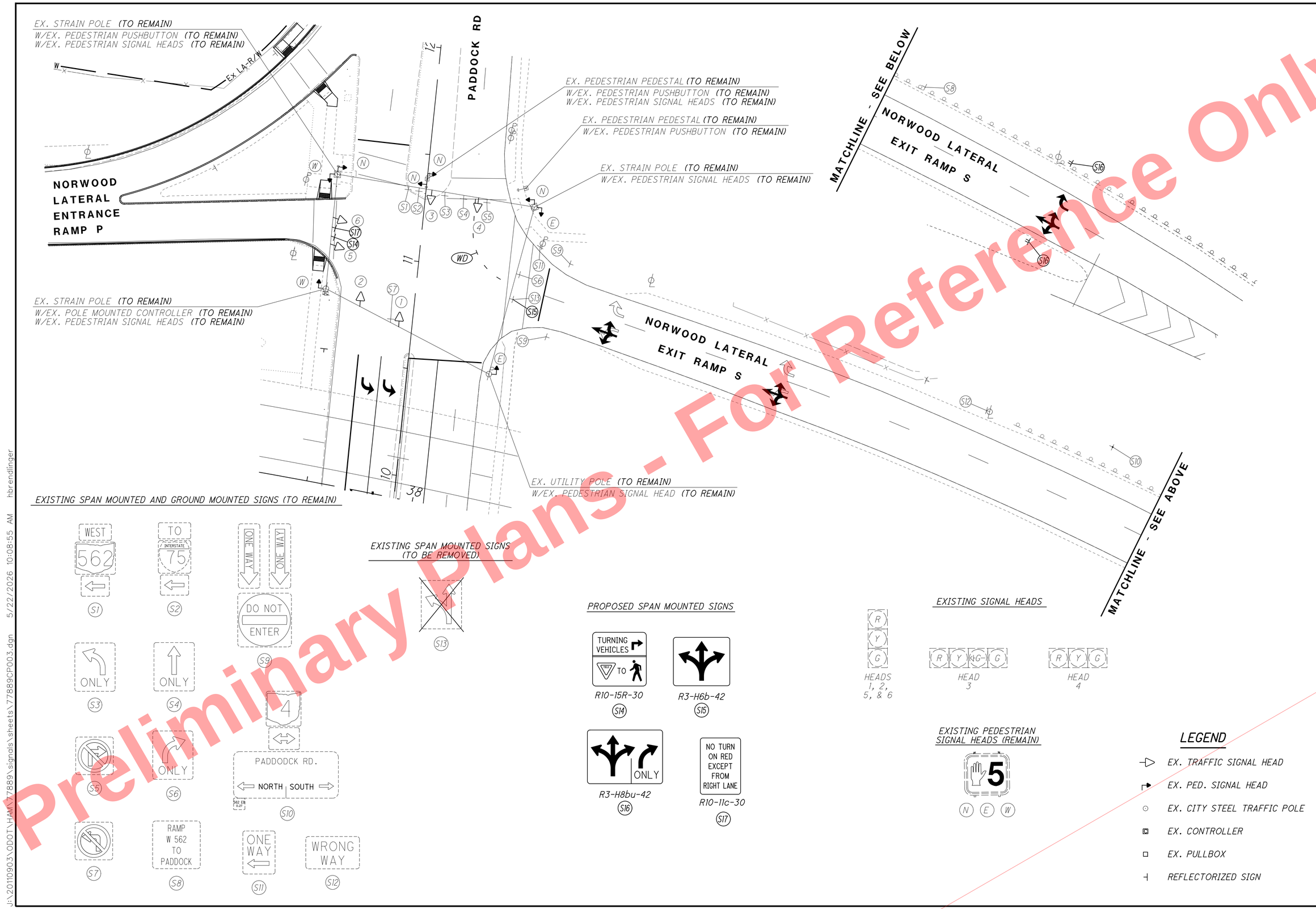

Preliminary Plans - For Reference Only

HORIZONTAL SCALE IN FEET 0 10 20 40

CALCULATED MSJ
CHECKED DRM/JDS

TEMPORARY TRAFFIC SIGNAL MODIFICATION PLAN
PADDOCK RD AT NORWOOD LATERAL WB RAMPS

HAM-75-7.85

J:\20110903\ODOT\HAM\77889\signals\sheets\77889CP003.dgn 5/22/2026 10:08:55 AM hbrendlinger

LEGEND

- EX. TRAFFIC SIGNAL HEAD
- PR. TRAFFIC SIGNAL HEAD
- EX. PED. SIGNAL HEAD
- EX. CITY STEEL TRAFFIC POLE
- EX. CONTROLLER
- EX. PULLBOX
- REFLECTORIZED SIGN

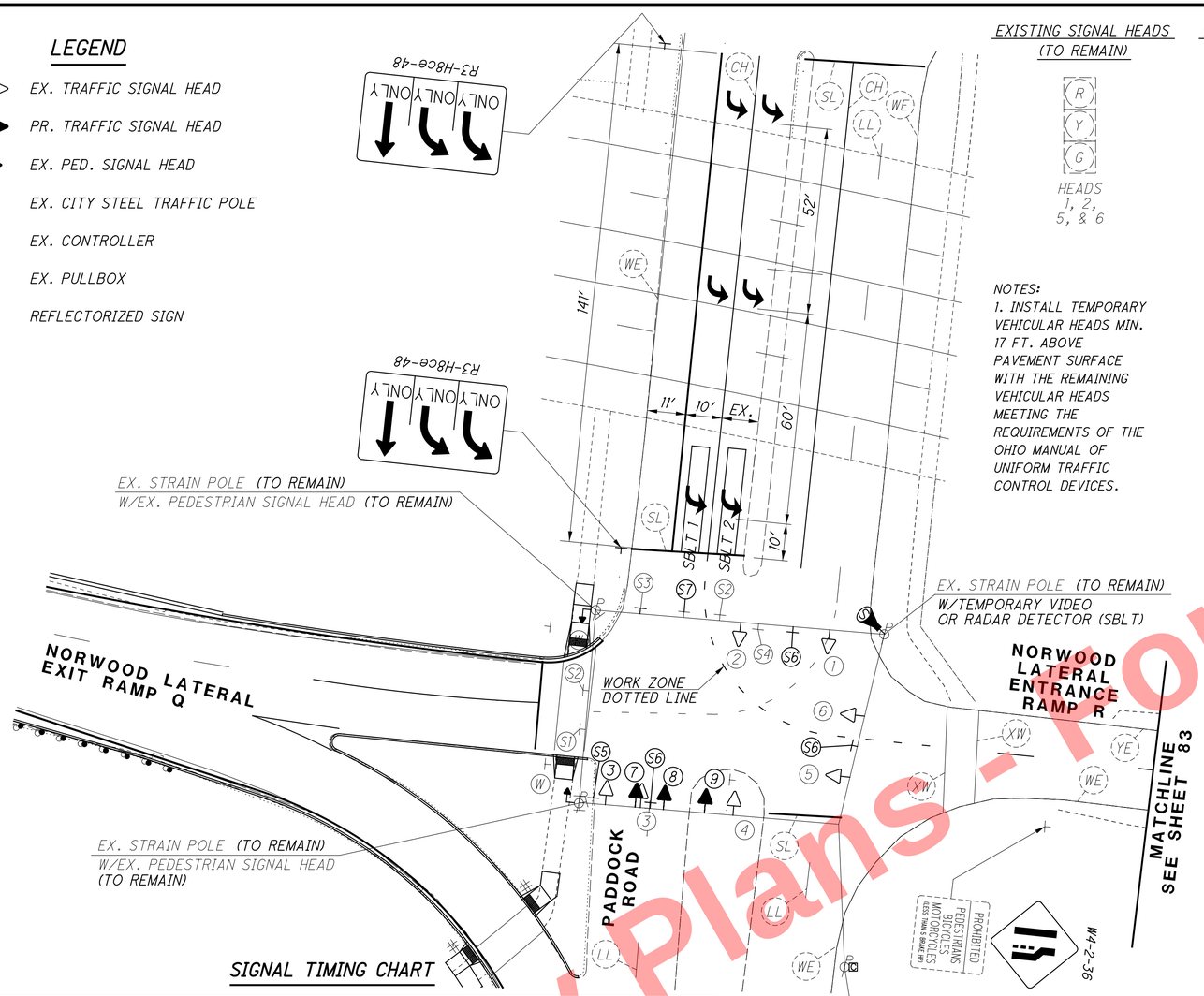

EXISTING SIGNAL HEADS (TO REMAIN)

HEADS 1, 2, 5, & 6

EXISTING SIGNAL HEADS (TO BE RELOCATED)

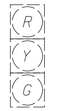

HEAD 3

EXISTING SIGNAL HEADS (TO BE REMOVED AND STORED)

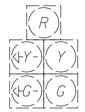

HEAD 4

TEMPORARY TRAFFIC SIGNAL HEADS

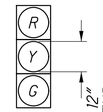

HEAD 7

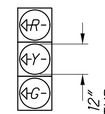

HEADS 8 & 9

EXISTING PEDESTRIAN SIGNAL HEADS (TO REMAIN)



NOTES:
1. INSTALL TEMPORARY VEHICULAR HEADS MIN. 17 FT. ABOVE PAVEMENT SURFACE WITH THE REMAINING VEHICULAR HEADS MEETING THE REQUIREMENTS OF THE OHIO MANUAL OF UNIFORM TRAFFIC CONTROL DEVICES.

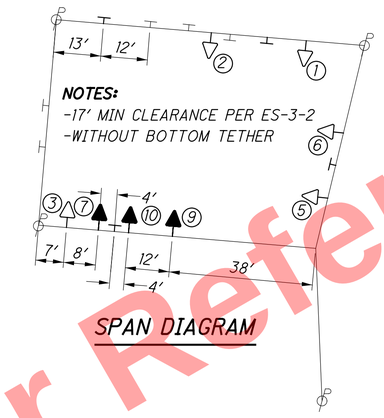

SPAN DIAGRAM

TEMPORARY SPAN MOUNTED SIGNS

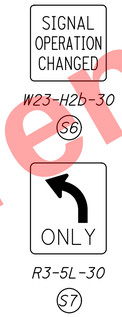

EXISTING SPAN MOUNTED SIGNS

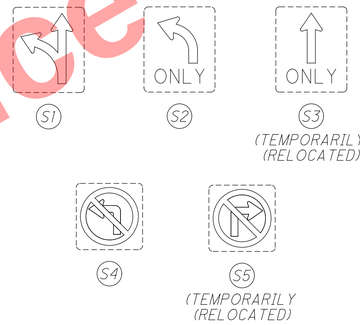

FIELD WIRING HOOK-UP CHART

SIGNAL HEAD	INDICATION	FIELD TERMINAL	FLASH	SIGNAL HEAD	INDICATION	FIELD TERMINAL	FLASH
3 & 7 (SB)	R	ϕSB R	EX.	8 & 9 (SBLT)	→R	ϕSBLT R	MATCH HEADS 3 & 7
	Y	ϕSB Y			→Y	ϕSBLT Y	
	G	ϕSB G			→G	ϕSBLT G	

NOTES:
1. PHASE NUMBERS FOR FIELD WIRING HOOK-UP CHART AND PHASING DIAGRAM TO BE FURNISHED BY THE CITY OF CINCINNATI.

SIGNAL TIMING CHART

INTERSECTION: PADDOCK RD AT NORWOOD LATERAL EASTBOUND RAMPS
MAINTAINING AGENCY: CITY OF CINCINNATI

INTERVAL OR FEATURE			CONTROLLER MOVEMENT NO.							
INTERSECTION MOVEMENT (PHASE)			-	SB	-	-	SBLT	NB	-	EB
DIRECTION			-	SB	-	-	SBLT	NB	-	EB
MINIMUM GREEN (INITIAL)		(SEC.)	-	EX.	-	-	EX.	EX.	-	EX.
ADDED INITIAL		(SEC./ACTUATION)	-	-	-	-	-	-	-	-
MAXIMUM INITIAL		(SEC.)	-	EX.	-	-	EX.	EX.	-	EX.
PASSAGE TIME (PRESET GAP)		(SEC.)	-	EX.	-	-	EX.	EX.	-	EX.
TIME BEFORE REDUCTION		(SEC.)	-	-	-	-	-	-	-	-
MINIMUM GAP		(SEC.)	-	-	-	-	-	-	-	-
TIME TO REDUCE		(SEC.)	-	-	-	-	-	-	-	-
MAXIMUM GREEN I		(SEC.)	-	EX.	-	-	EX.	EX.	-	EX.
MAXIMUM GREEN II		(SEC.)	-	EX.	-	-	EX.	EX.	-	EX.
YELLOW CHANGE		(SEC.)	-	EX.	-	-	3.2	EX.	-	EX.
ALL RED CLEARANCE		(SEC.)	-	EX.	-	-	1.9	EX.	-	EX.
WALK		(SEC.)	-	EX.	-	-	EX.	EX.	-	EX.
PEDESTRIAN CLEARANCE		(SEC.)	-	EX.	-	-	EX.	EX.	-	EX.
RECALL	MAXIMUM	(ON/OFF)	-	EX.	-	-	EX.	EX.	-	EX.
	MINIMUM	(ON/OFF)	-	EX.	-	-	EX.	EX.	-	EX.
	PEDESTRIAN	(ON/OFF)	-	EX.	-	-	EX.	EX.	-	EX.
MEMORY		(ON/OFF)	-	EX.	-	-	EX.	EX.	-	EX.

NOTES:
1. TRAFFIC SIGNAL TIMING VALUES LISTED ABOVE HAVE BEEN FURNISHED FOR INITIAL ACTIVATION. TRAFFIC SIGNAL TIMINGS SHALL BE UPDATED/ADJUSTED AS NEEDED FOR THE DURATION OF THE PROJECT AS DIRECTED BY THE CITY OF CINCINNATI OR BASED ON RESULTS OF THE TRAFFIC SIGNAL COORDINATION STUDY.
2. PHASE NUMBERS TO BE FURNISHED BY THE CITY OF CINCINNATI.

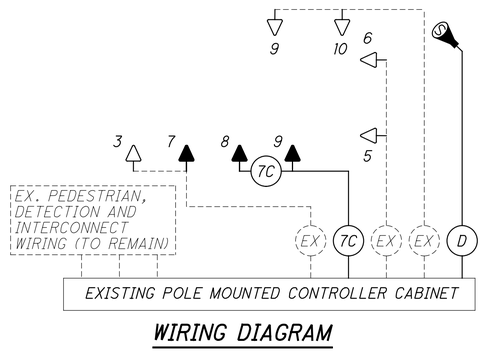

WIRING DIAGRAM

WIRING DIAGRAM LEGEND

- TEMPORARY VEHICULAR SIGNAL HEAD
- EXISTING VEHICULAR SIGNAL HEAD
- (D) RADAR/VIDEO DETECTOR CABLE
- (S) RADAR/VIDEO DETECTOR UNIT
- (7C) SIGNAL CABLE, 7 CONDUCTOR, NO. 14 AWG

DETECTION CHART

DETECTION DESIGNATION	SIZE (FT.)	PULSE OR PRESENCE	DELAY (SEC.)	EXTENSION (SEC.)	CONNECT TO DETECTOR UNIT (UNIT-CHANNEL)	ASSOCIATED CONTROLLER PHASE
SBLT 1	5'x30'	PRESENCE	3	-	NEW 1/1	SBLT
SBLT 2	5'x30'	PRESENCE	3	-	NEW 1/2	SBLT

PHASING DIAGRAM

LEGEND
VEHICLE ϕ
PEDESTRIAN ϕ

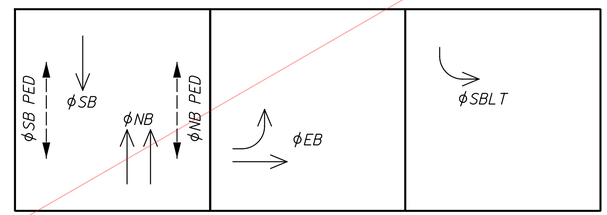

Preliminary Plans - For Reference Only

N

HORIZONTAL SCALE IN FEET
0 10 20 40

CALCULATED MSJ
CHECKED DRM/JDS

TEMPORARY TRAFFIC SIGNAL MODIFICATION PLAN
PADDOCK RD AT NORWOOD LATERAL EB RAMPS

HAM-75-7.85

82
1047

J:\20110903\ODOT\HAM\77889\signals\sheets\77889CP002.dgn 5/22/2026 10:08:58 AM hbrendlinger

J:\20110903\ODOT\HAM\77889\signals\sheets\77889CP005.dgn 5/22/2026 10:09:00 AM hbrendlinger

Preliminary Plans - For Reference Only

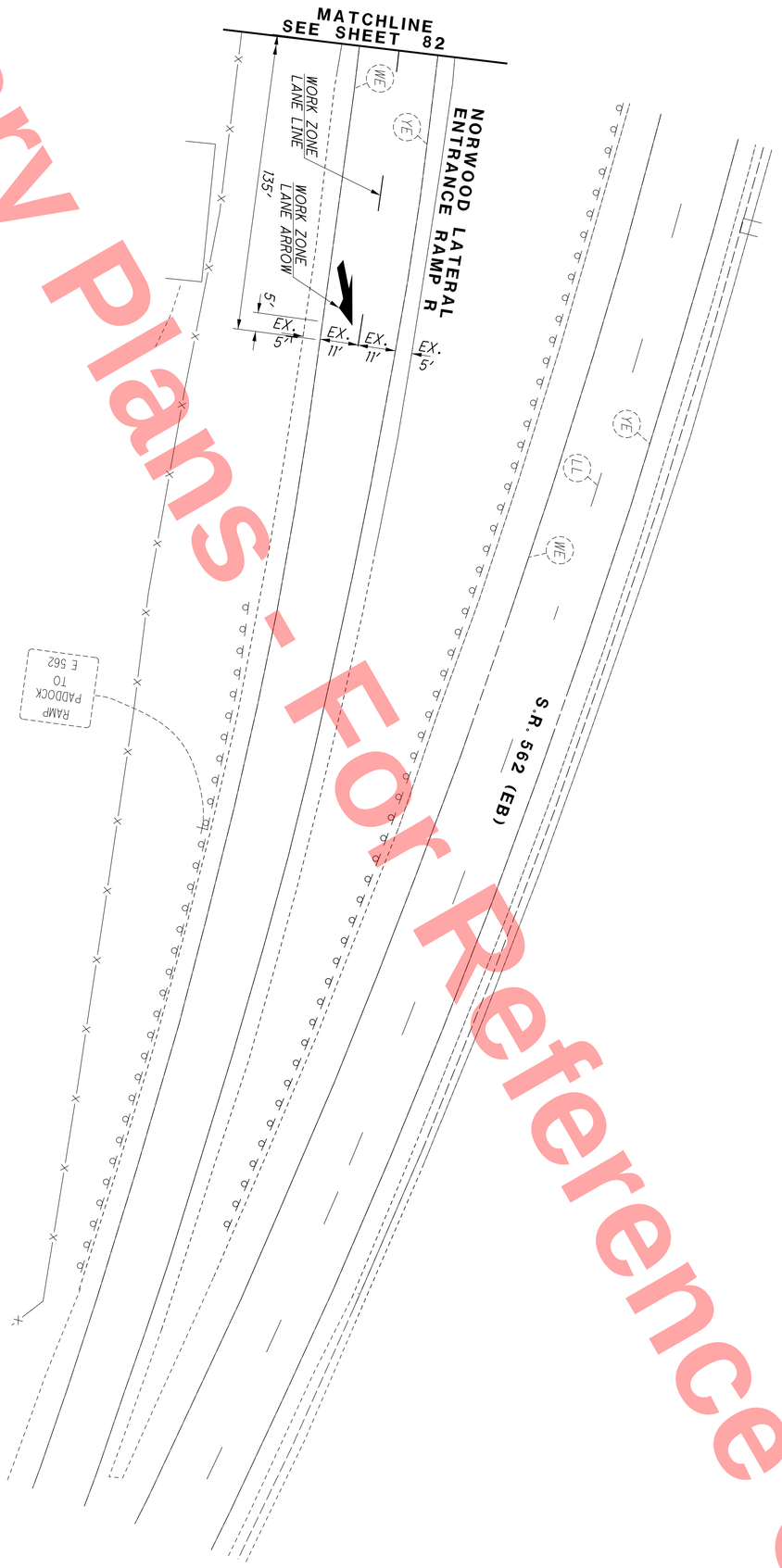

83 / 1047	HAM-75-7.85	TRAFFIC SIGNAL PLAN PADDOCK RD AT NORWOOD LATERAL EB RAMPS	CALCULATED MSJ CHECKED DRM/JDS	0 20 10 40 HORIZONTAL SCALE IN FEET

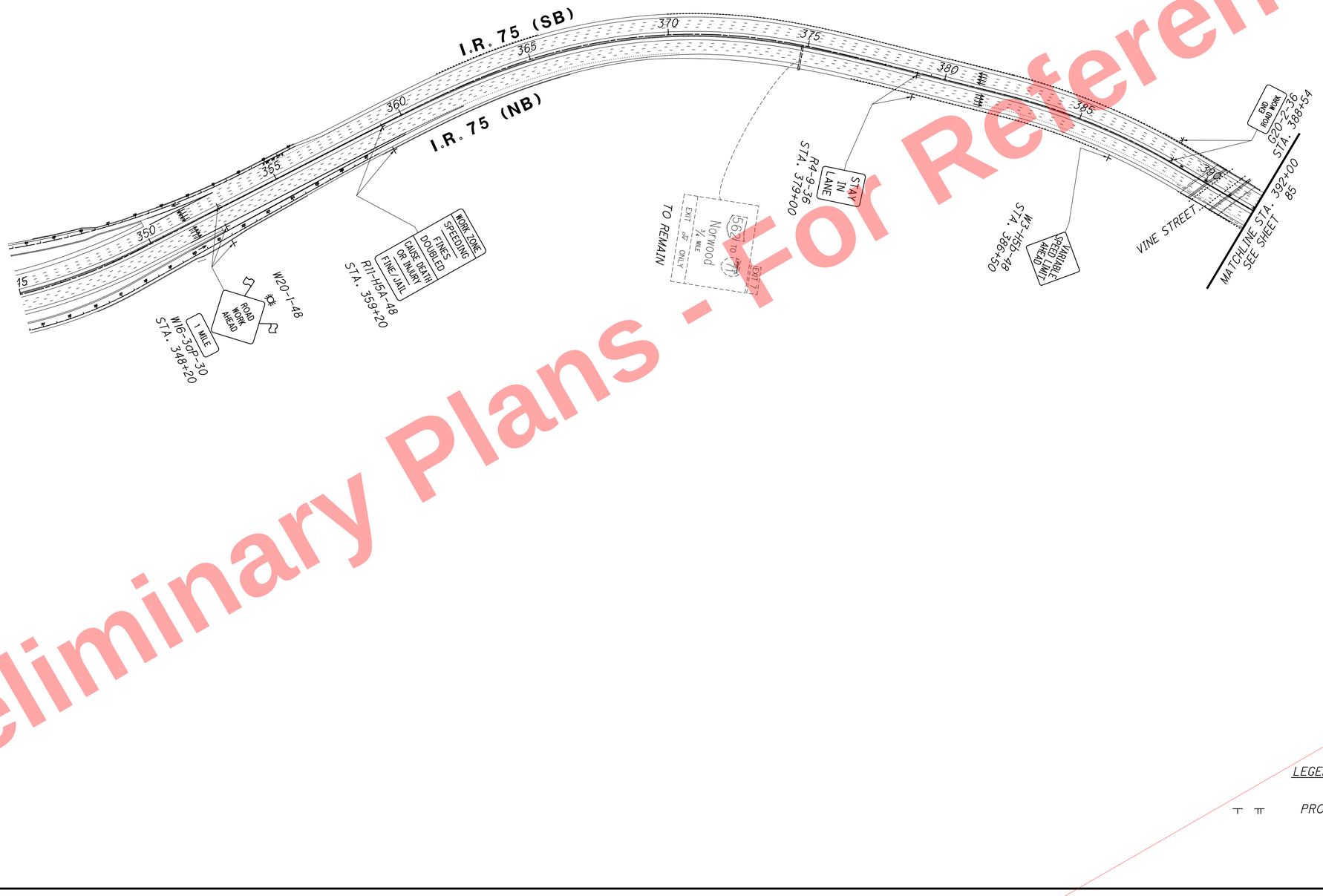

Preliminary Plans - For Reference Only

LEGEND

⊤ ⫪ PROPOSED SIGN SUPPORT

HORIZONTAL SCALE IN FEET
0 50 100 200

CALCULATED RLS
CHECKED SMM

MAINTENANCE OF TRAFFIC PLAN - PHASE 1
I.R. 75 - STA. 345+00 TO STA. 392+00

HAM-75-7.85

84
1047

J:\20110903\ODOT\HAM\77889\mot\sheets\77889MP162.dgn 5/22/2026 10:09:01 AM hbrendlinger

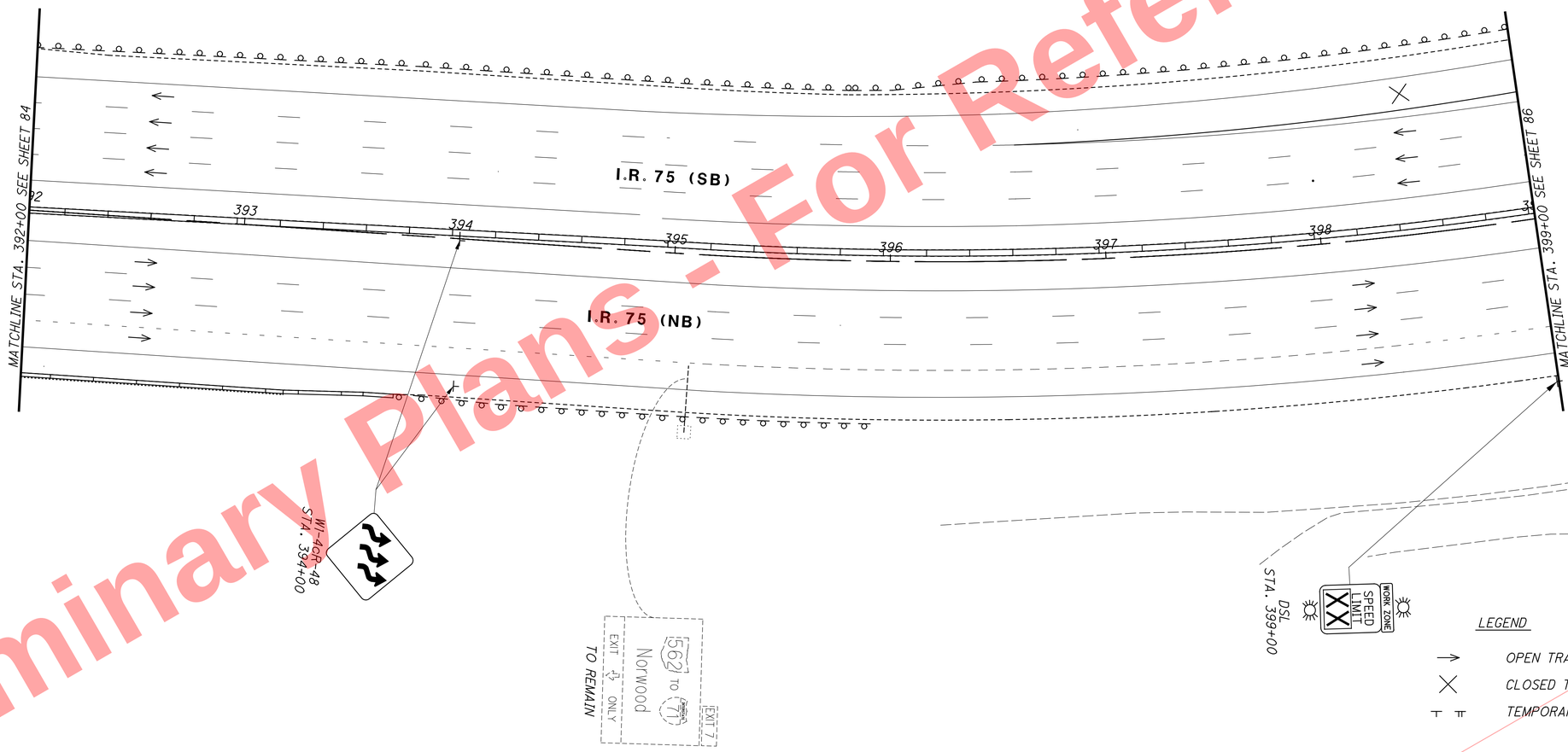

DRUM SPACING CHART	
TANGENT	80' c/c
TAPER	55' c/c
RADII	10' c/c

Preliminary Plans - For Reference Only

HORIZONTAL SCALE IN FEET
0 15 30 60

CALCULATED RLS
CHECKED SMM

MAINTENANCE OF TRAFFIC PLAN - PHASE 1
I.R. 75 - STA. 392+00 TO STA. 399+00

HAM-75-7.85

85
1047

J:\20110903\ODOT\HAM\7889\mot\sheets\77889MP240.dgn 5/22/2026 10:09:03 AM hbrendlinger

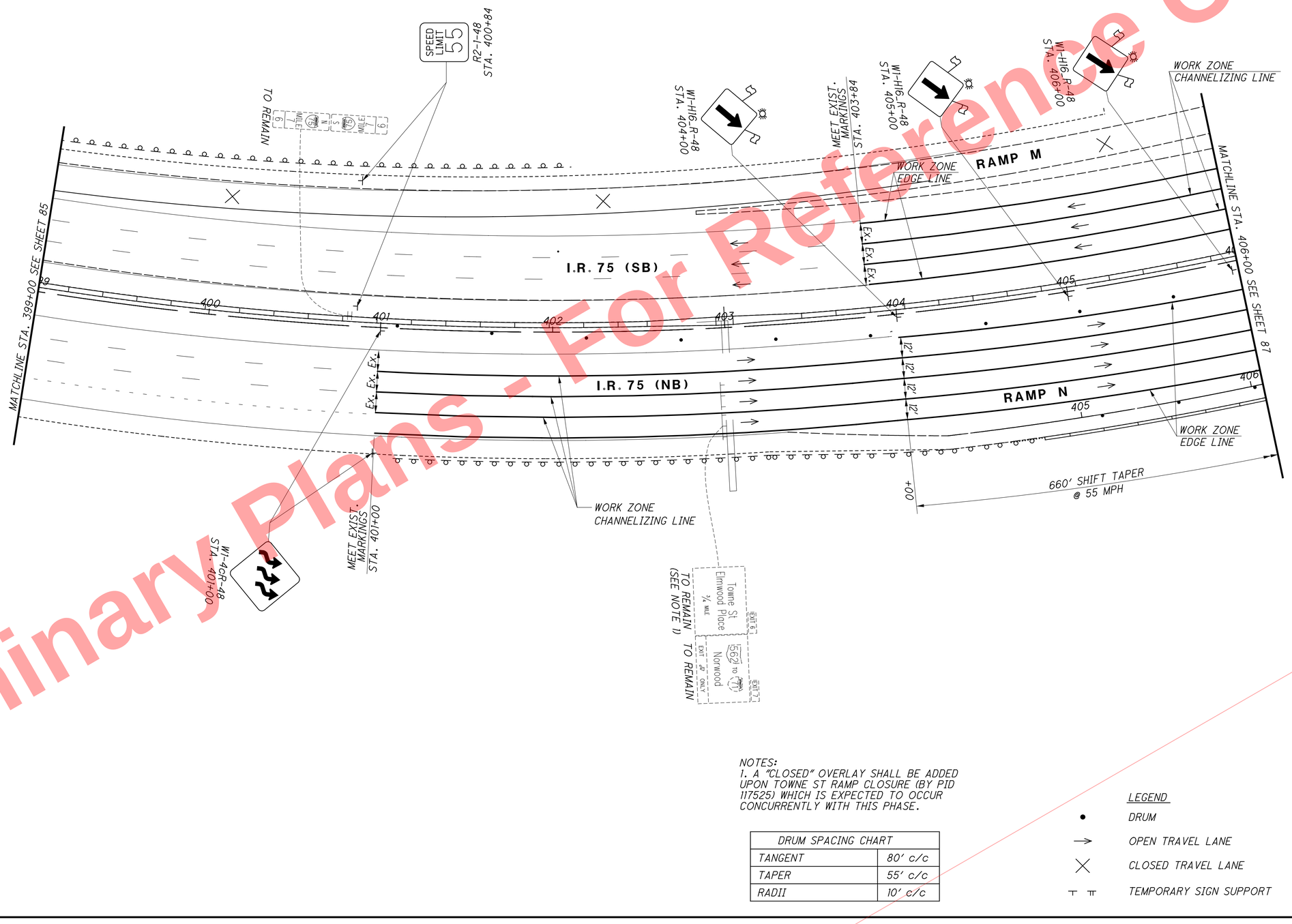

NOTES:
1. A "CLOSED" OVERLAY SHALL BE ADDED UPON TOWNE ST RAMP CLOSURE (BY PID 117525) WHICH IS EXPECTED TO OCCUR CONCURRENTLY WITH THIS PHASE.

DRUM SPACING CHART	
TANGENT	80' c/c
TAPER	55' c/c
RADII	10' c/c

LEGEND
- DRUM
- OPEN TRAVEL LANE
- CLOSED TRAVEL LANE
- TEMPORARY SIGN SUPPORT

HORIZONTAL SCALE IN FEET
0 15 30 60

CALCULATED RLS
CHECKED SMM

MAINTENANCE OF TRAFFIC PLAN - PHASE 1
I.R. 75 - STA. 399+00 TO STA. 406+00

HAM-75-7.85

86
1047

Preliminary Plans - For Reference Only

J:\20110903\ODOT\HAM\77889\mot\sheets\77889MP001.dgn 5/22/2026 10:09:05 AM hbrendlinger

① Δ = 4° 44′ 40″ (RT)
Dc = 2° 59′ 59″
R = 1910.00′
T = 79.13′
L = 158.16′
E = 1.64′
C = 158.11′
C.B. = N 52° 39′ 07″ E

② Δ = 6° 3′28″ (LT)
Dc = 2° 59′ 59″
R = 1910.00′
T = 101.62′
L = 203.05′
E = 2.70′
C = 202.96′
C.B. = N 51° 21′ 44″ E

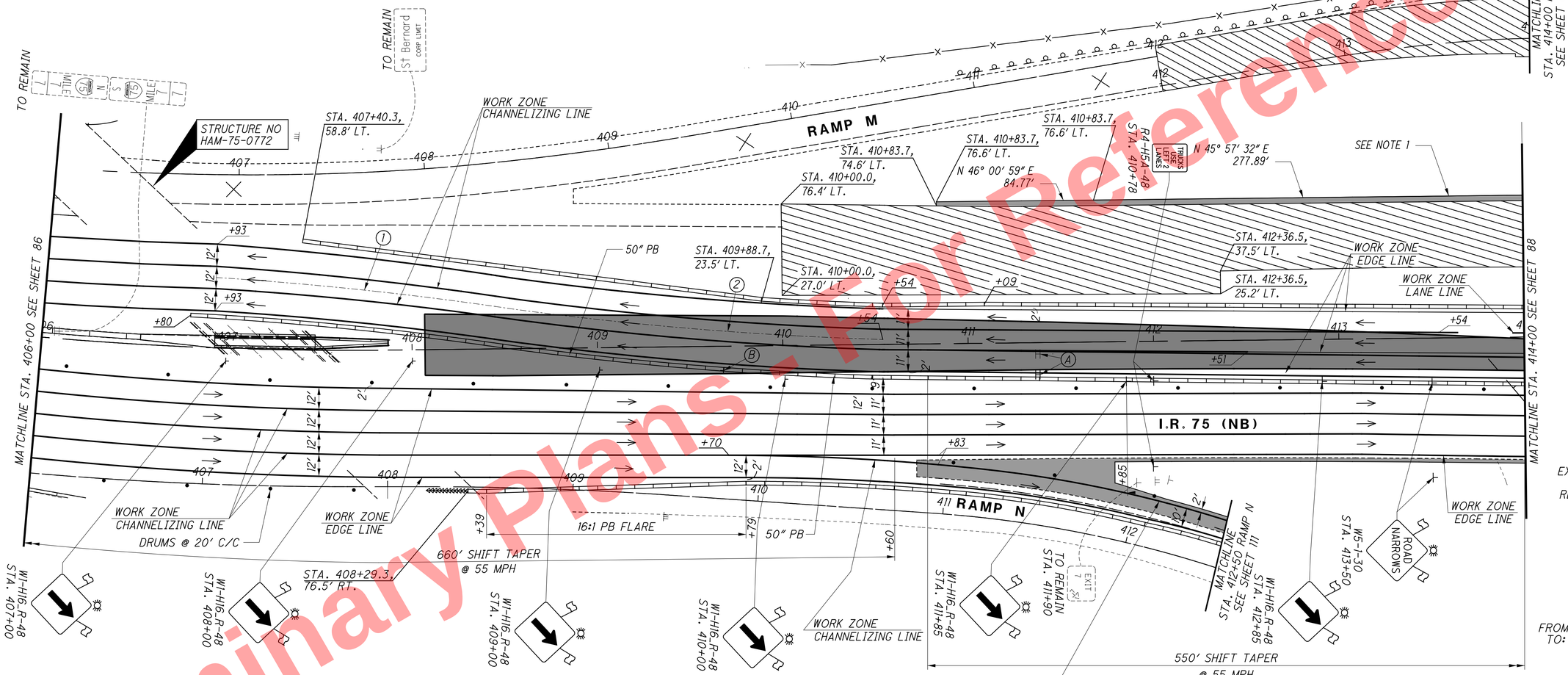

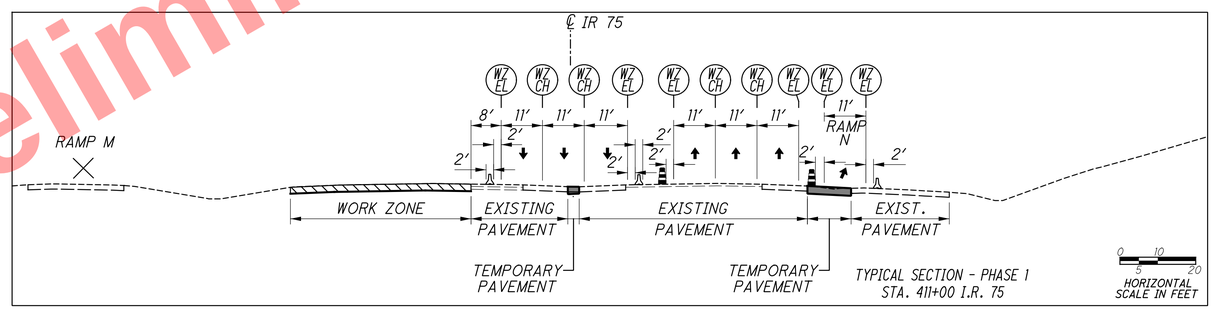

LEGEND
- PHASE 1 WORK ZONE
- TEMPORARY PAVEMENT
- DRUM
- PORTABLE BARRIER
- IMPACT ATTENUATOR
- TEMPORARY SIGN SUPPORT
- OPEN TRAVEL LANE
- CLOSED TRAVEL LANE

NOTES:
1. INSTALL TEMPORARY PAVEMENT IN PHASE 1

DRUM SPACING CHART	
TANGENT	80′ c/c
TAPER	55′ c/c
RADII	10′ c/c

HORIZONTAL SCALE IN FEET 0 15 30 60

CALCULATED RLS CHECKED SMM

MAINTENANCE OF TRAFFIC PLAN - PHASE 1
I.R. 75 - STA. 406+00 TO STA. 414+00

HAM-75-7.85

87
1047

Preliminary Plans - Not for Reference Only

J:\2011090\3\ODOT\HAM\77889\mot\sheets\77889MP002.dgn 5/22/2026 10:09:07 AM hbrendlinger

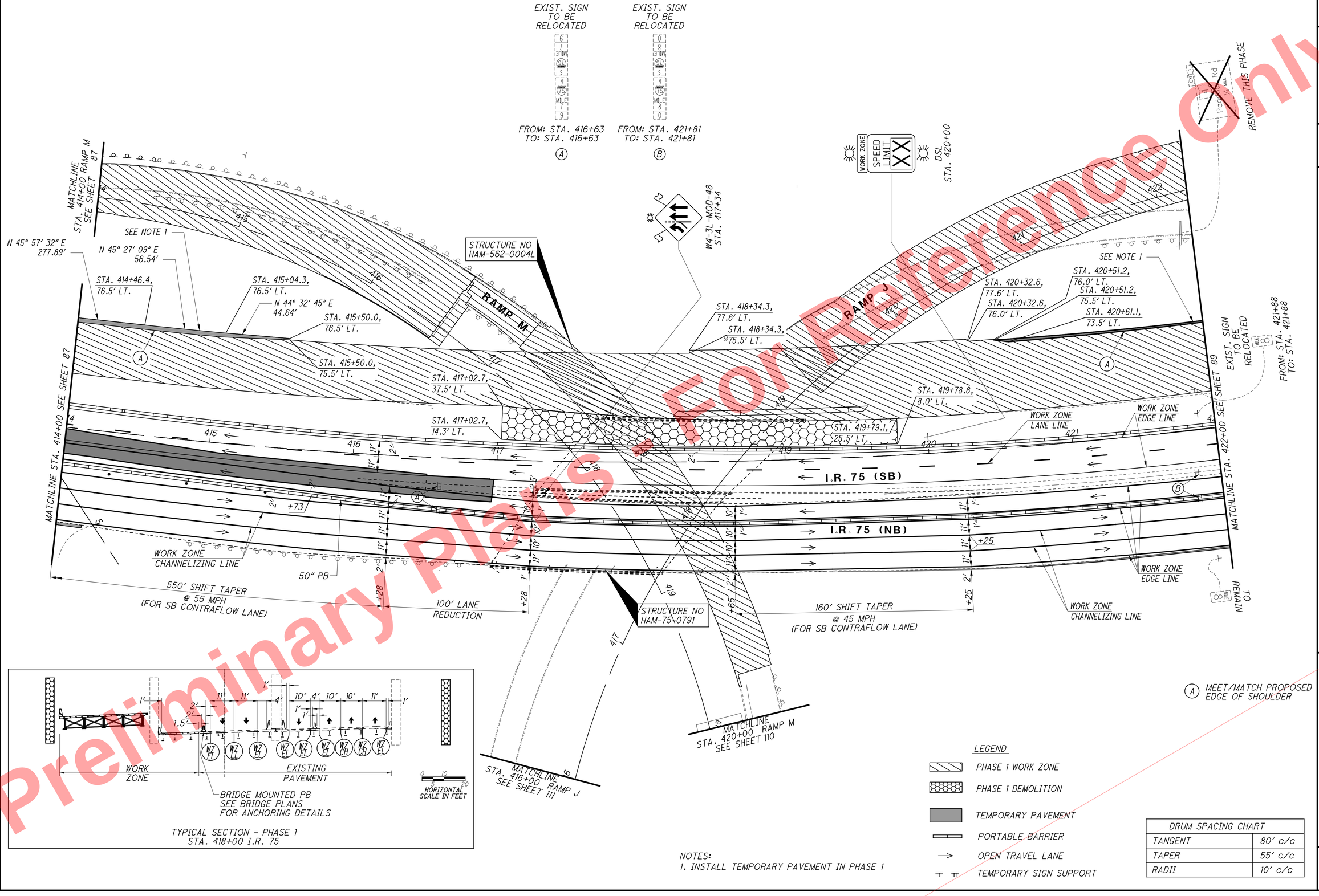

NOTES:
1. INSTALL TEMPORARY PAVEMENT IN PHASE 1

DRUM SPACING CHART	
TANGENT	80' c/c
TAPER	55' c/c
RADII	10' c/c

Preliminary Plans - For Reference Only

HORIZONTAL SCALE IN FEET 0 15 30 60

CALCULATED RLS
CHECKED SMM

MAINTENANCE OF TRAFFIC PLAN - PHASE 1
I.R. 75 - STA. 414+00 TO STA. 422+00

HAM-75-7.85

J:\20110903\ODOT\HAM\77889\mot\sheets\77889MP003.dgn 5/22/2026 10:09:09 AM hbrendlinger

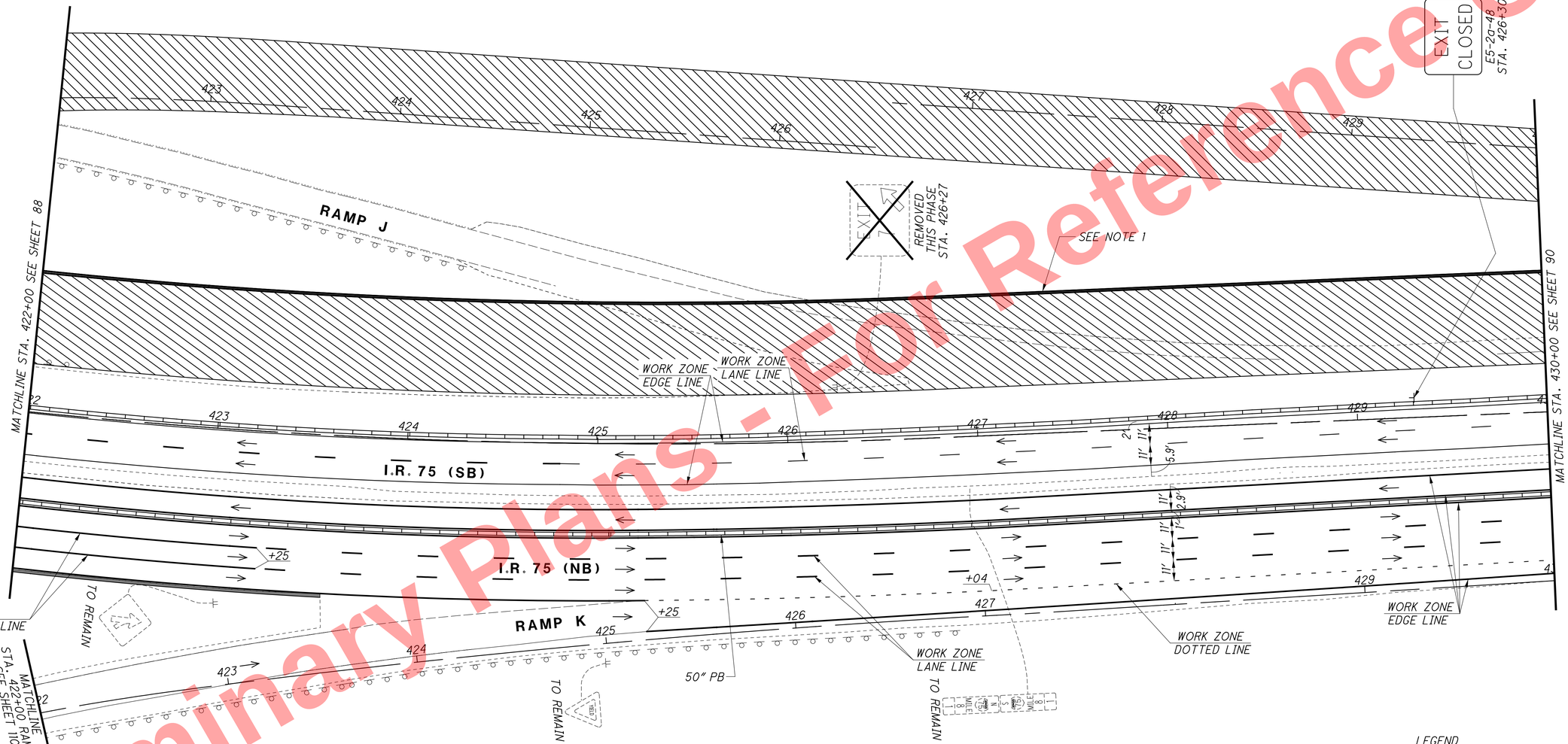

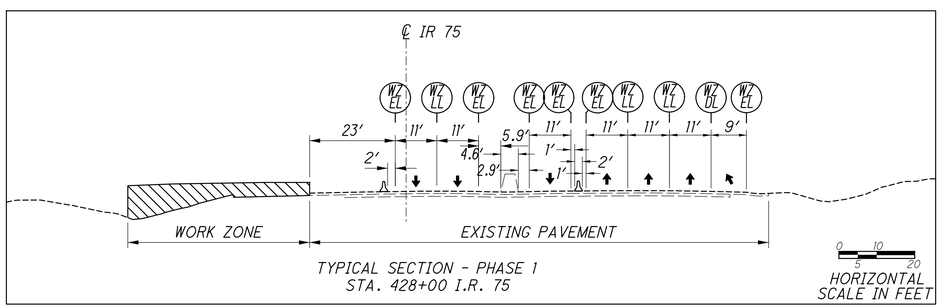

TYPICAL SECTION - PHASE 1
STA. 428+00 I.R. 75

NOTES:
1. INSTALL TEMPORARY PAVEMENT IN PHASE 1

LEGEND

- PHASE 1 WORK ZONE
- PORTABLE BARRIER
- TEMPORARY PAVEMENT
- OPEN TRAVEL LANE
- TEMPORARY SIGN SUPPORT
- EXISTING SIGN SUPPORT

DRUM SPACING CHART	
TANGENT	80' c/c
TAPER	55' c/c
RADII	10' c/c

HORIZONTAL SCALE IN FEET 0 15 30 60

CALCULATED RLS
CHECKED SMM

MAINTENANCE OF TRAFFIC PLAN - PHASE 1
I.R. 75 - STA. 422+00 TO STA. 430+00

HAM-75-7.85

Preliminary Plans - For Reference Only

J:\20110903\ODOT\HAM\77889\mot\sheets\77889MP004.dgn 5/22/2026 10:09:11 AM hbrendlinger

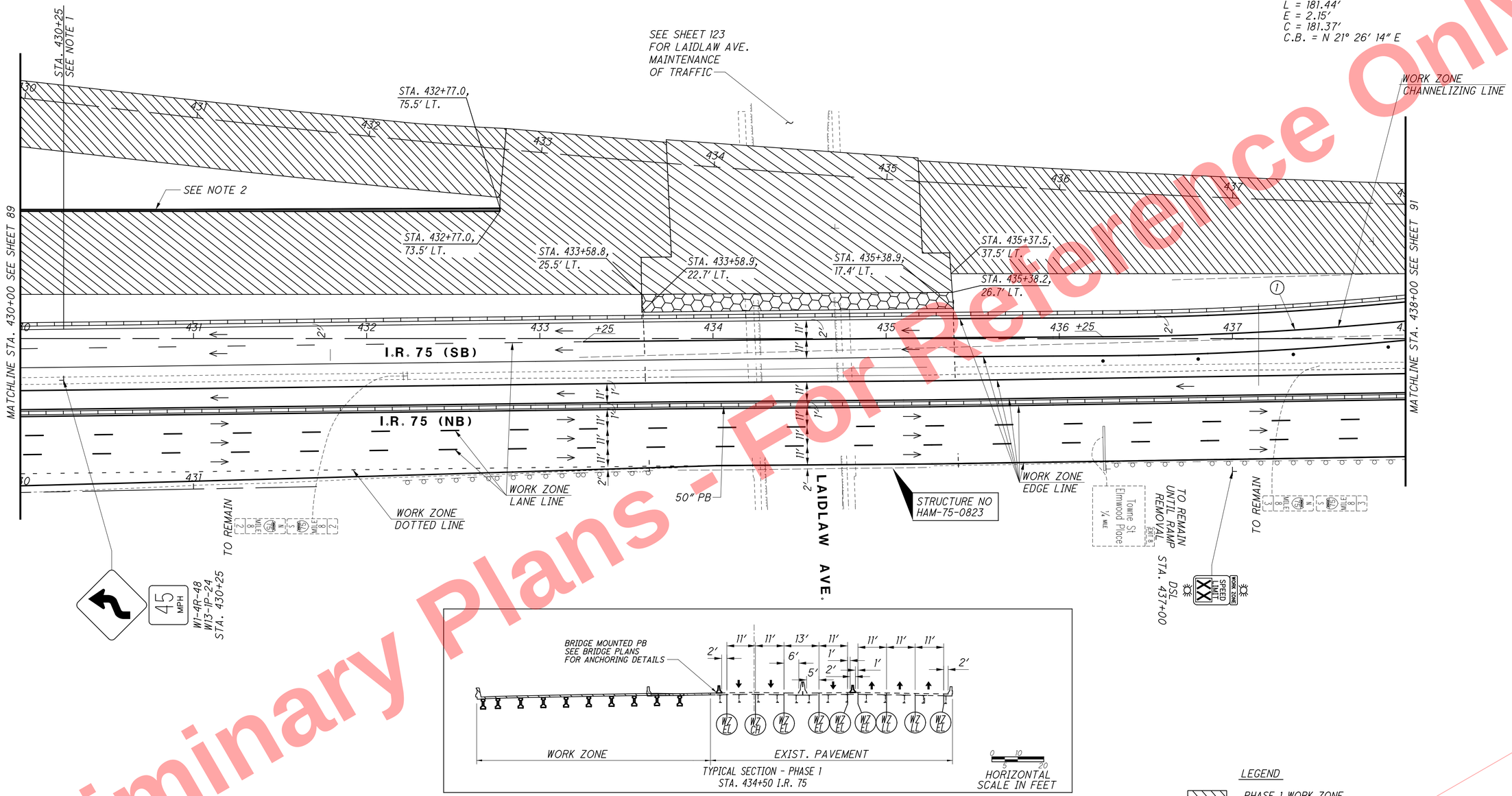

NOTES:
1. ONCE ALL IR-75 SB WORK IS COMPLETED SOUTH OF STATION 430+25, THE CONTRACTOR HAS THE OPTION TO MOVE INTO PHASE 1 - PART 2 TO BEGIN PHASE 2 STRUCTURE WORK OVER RAMP J EARLY. THE REMAINING PHASE 1 WORK TO THE NORTH WOULD CONTINUE DURING PART 2. SEE SHEETS 307 & 308.
2. INSTALL TEMPORARY PAVEMENT IN PHASE 1.

HORIZONTAL SCALE IN FEET
CALCULATED RLS
CHECKED SMM

MAINTENANCE OF TRAFFIC PLAN - PHASE 1
I.R. 75 - STA. 430+00 TO STA. 438+00

HAM-75-7.85

90
1047

Preliminary Plans - Not For Reference Only

J:\20110903\ODOT\HAM\77889\mot\sheets\77889MP005.dgn 5/22/2026 10:09:12 AM hbrendlinger

① Δ = 05° 25′ 38″ (LT)
Dc = 02° 59′ 28″
R = 1915.50′
T = 90.79′
L = 181.44′
E = 2.15′
C = 181.37′
C.B. = N 21° 26′ 14″ E

② Δ = 05° 25′ 38″ (RT)
Dc = 02° 59′ 23″
R = 1916.50′
T = 97.11′
L = 194.05′
E = 2.46′
C = 193.97′
C.B. = N 21° 37′ 27″ E

③ Δ = 04° 44′ 30″ (RT)
Dc = 02° 59′ 28″
R = 1915.50′
T = 79.31′
L = 158.53′
E = 1.64′
C = 158.48′
C.B. = N 26° 54′ 40″ E

④ Δ = 05° 23′ 14″ (LT)
Dc = 02° 59′ 28″
R = 1915.50′
T = 90.12′
L = 180.10′
E = 2.12′
C = 180.03′
C.B. = N 26° 35′ 18″ E

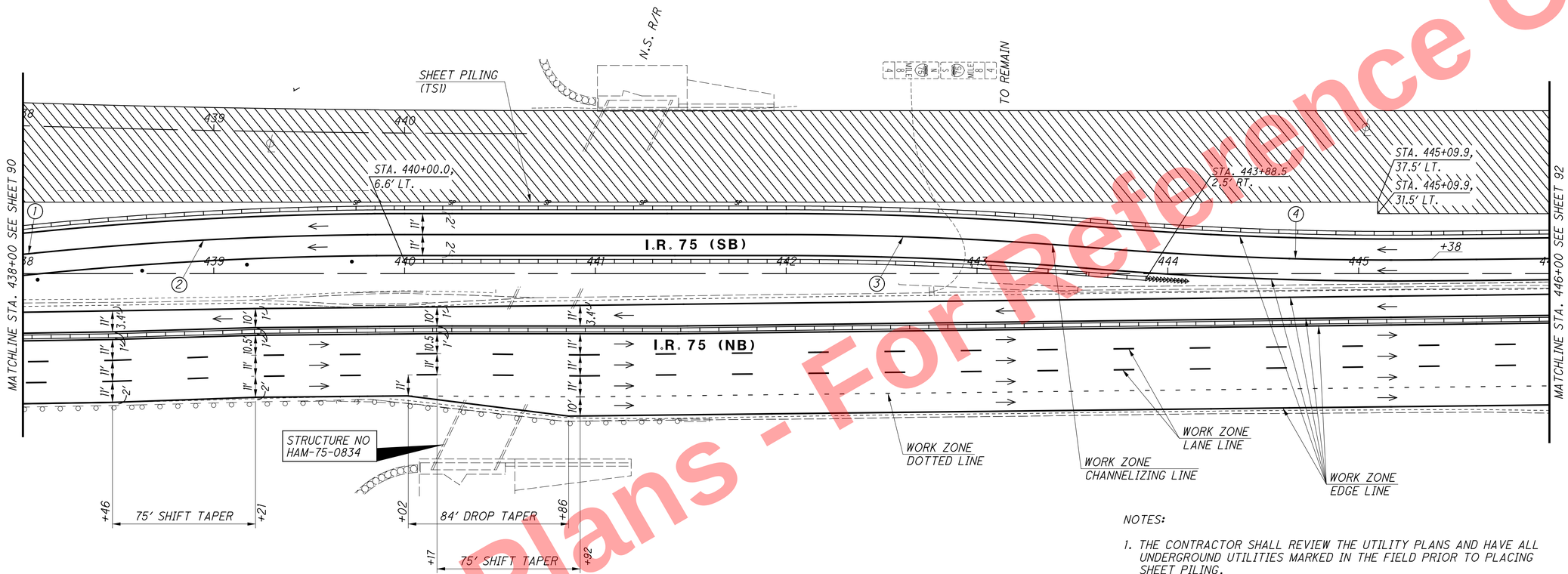

NOTES:

1. THE CONTRACTOR SHALL REVIEW THE UTILITY PLANS AND HAVE ALL UNDERGROUND UTILITIES MARKED IN THE FIELD PRIOR TO PLACING SHEET PILING.

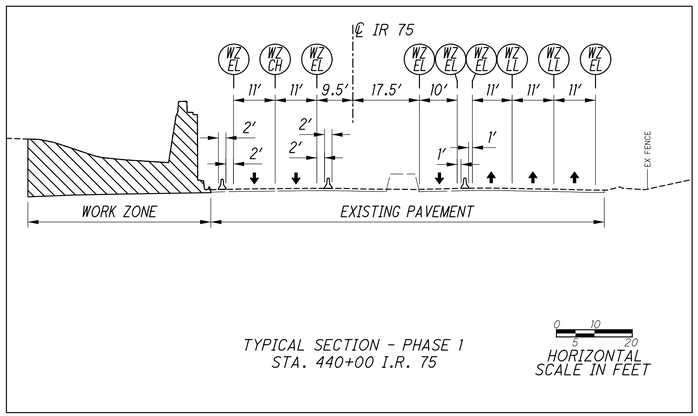

LEGEND
- PHASE 1 WORK ZONE
- DRUM
- PORTABLE BARRIER
- IMPACT ATTENUATOR
- EXISTING SIGN SUPPORT
- OPEN TRAVEL LANE
- PROPOSED SIGN SUPPORT

HORIZONTAL SCALE IN FEET
0 15 30 60

CALCULATED RLS
CHECKED SMM

MAINTENANCE OF TRAFFIC PLAN - PHASE 1
I.R. 75 - STA. 438+00 TO STA. 446+00

HAM-75-7.85

91
1047

Preliminary Plans - For Reference Only

J:\2011090\3\ODOT\HAM\77889\mot\sheets\77889MP163.dgn 5/22/2026 10:09:15 AM hbrendlinger

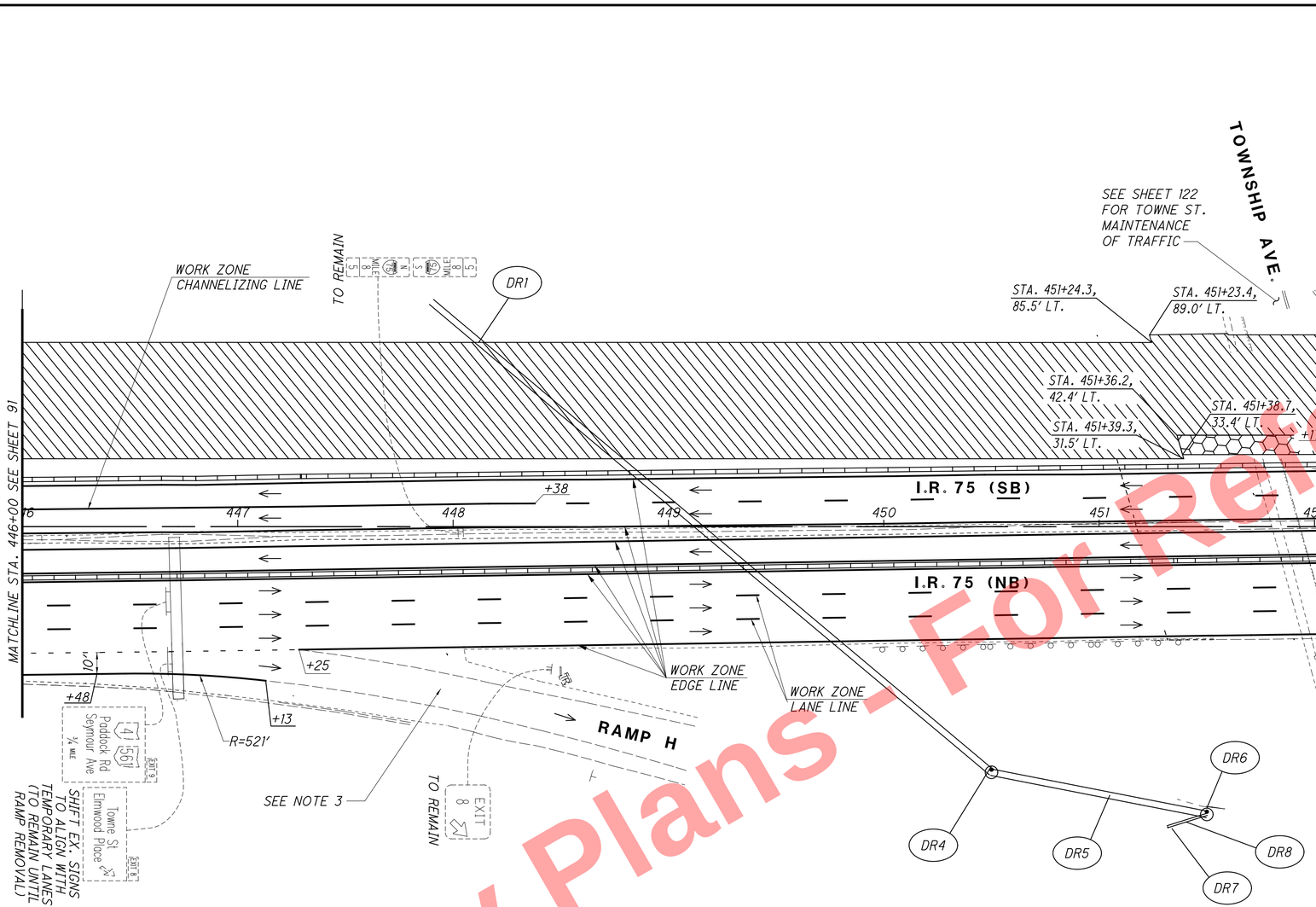

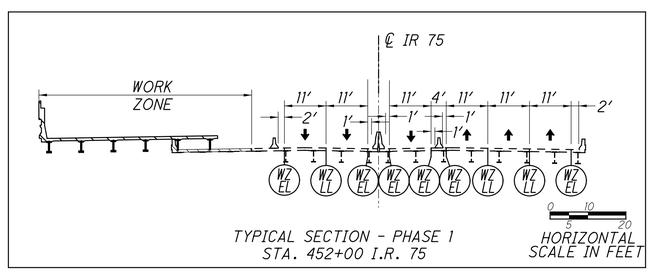

DR1 - INSTALL PROPOSED PIPE TO MAINTAIN EXISTING DRAINAGE.
DR4 - INSTALL PROPOSED MANHOLE STA. 450+50.00, 114.0' RT.
DR5 - INSTALL PROPOSED MANHOLE STA. 451+50.00, 113.5' RT.
DR6 - INSTALL PROPOSED PIPE TO MAINTAIN EXISTING DRAINAGE.
DR7 - EXISTING MANHOLE TO BE REMOVED DURING PHASE 3.
DR8 - 20' - 12" CONUIT, TYPE C TO BE REMOVED IN PHASE 3.

NOTES:
1. THE CONTRACTOR SHALL REVIEW THE UTILITY PLANS AND HAVE ALL UNDERGROUND UTILITIES MARKED IN THE FIELD PRIOR TO PLACING SHEET PILING.
2. PHASE 1 WORK ON THIS PROJECT (PID 121447) IS EXPECTED TO OVERLAP WITH PHASES 3, 4 AND 5 OF AN ADJACENT PROJECT TO THE NORTH (PID 117525). MOT LAYOUTS HAVE BEEN PROVIDED FOR EACH EXPECTED SCENARIO OF THE OVERLAP.
3. TOWNE STREET RAMPS WILL BE REMOVED BY PID 117525 - MOT PHASE 5. RAMP REMOVAL IS EXPECTED TO OCCUR CONCURRENTLY WITH THE PHASE 1 MOT SHOWN ON THIS SHEET.

LEGEND
- PHASE 1 WORK ZONE
- PHASE 1 DEMOLITION
- PORTABLE BARRIER
- EXISTING SIGN SUPPORT
- OPEN TRAVEL LANE

HORIZONTAL SCALE IN FEET
0 15 30 60

CALCULATED RLS
CHECKED SMM

MAINTENANCE OF TRAFFIC PLAN - PHASE 1
I.R. 75 - STA. 446+00 TO STA. 454+00

HAM-75-7.85

92
1047

Preliminary Plans - For Reference Only

J:\2011090\3_ODOT\HAM\77889\mot\sheets\77889MP006.dgn 5/22/2026 10:09:17 AM hbrendlinger

NOTES:
1. THE CONTRACTOR SHALL REVIEW THE UTILITY PLANS AND HAVE ALL UNDERGROUND UTILITIES MARKED IN THE FIELD PRIOR TO PLACING SHEET PILING.
2. ROADWAY WORK NORTH OF STA. 460+60.8 SHALL NOT BEGIN UNTIL PID 117525 PHASE 4 IS COMPLETE.
3. CONNECT PORTABLE BARRIER AND EXISTING MEDIAN UTILIZING MT-101.80.

LEGEND
- PHASE 1 WORK ZONE
- PORTABLE BARRIER
- TEMPORARY PAVEMENT
- DRUM
- TEMPORARY SIGN SUPPORT
- OPEN TRAVEL LANE

DR1 - 117'-12" CONDUIT, TYPE B W/4'x4' BOX CONNECTION TO BE FILLED WITH CONCRETE AND ABANDONED IN PLACE IN PHASE 3.
DR2 - EXISTING CONDUIT TO REMAIN IN SERVICE UNTIL FILLED WITH CONCRETE AND ABANDONED IN PLACE IN PHASE 3.
DR3 - 72'-12" CONDUIT, TYPE B W/4'x4' BOX CONNECTION TO BE FILLED WITH CONCRETE AND ABANDONED IN PLACE IN PHASE 3.
DR4 - EXISTING CONDUIT TO REMAIN IN SERVICE UNTIL FILLED WITH CONCRETE AND ABANDONED IN PLACE IN PHASE 3.
DR5 - 300'-12" CONDUIT, TYPE B W/4'x4' BOX CONNECTION TO BE FILLED WITH CONCRETE AND ABANDONED IN PLACE IN PHASE 3.

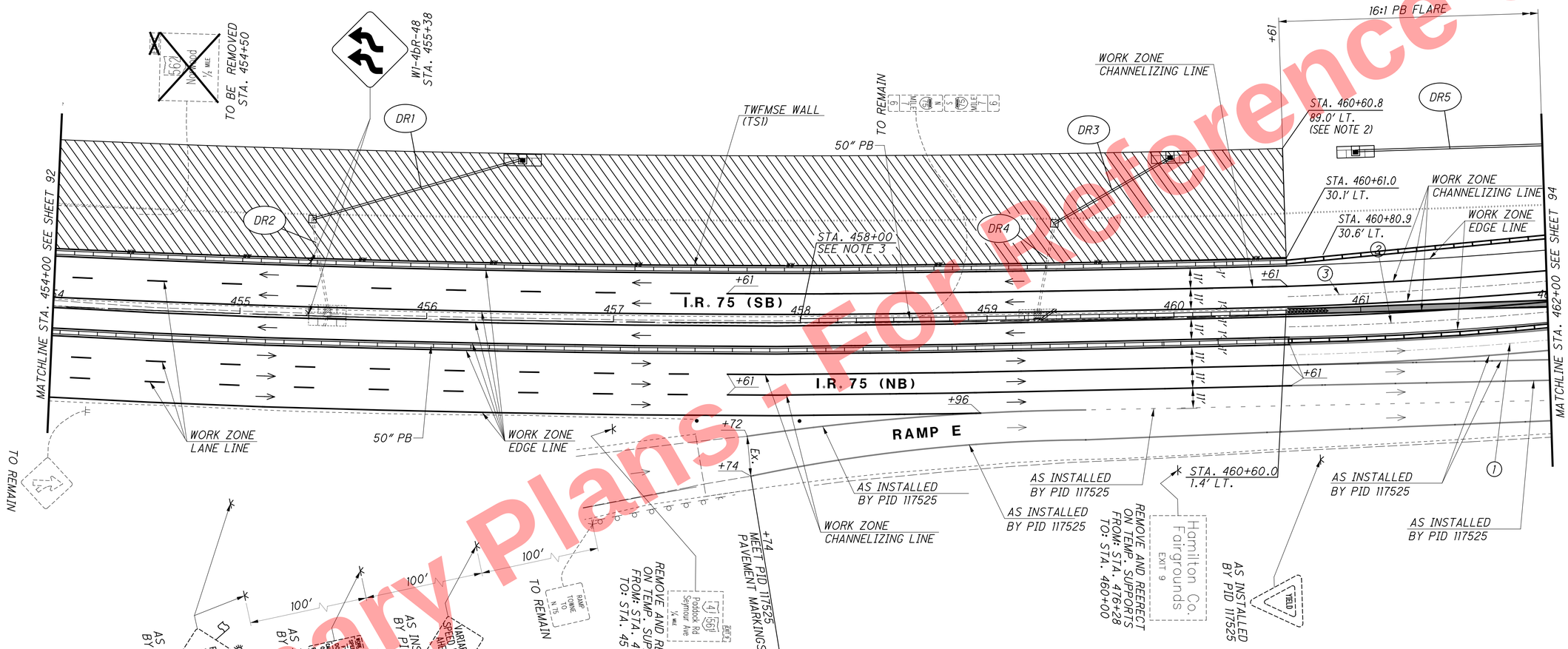

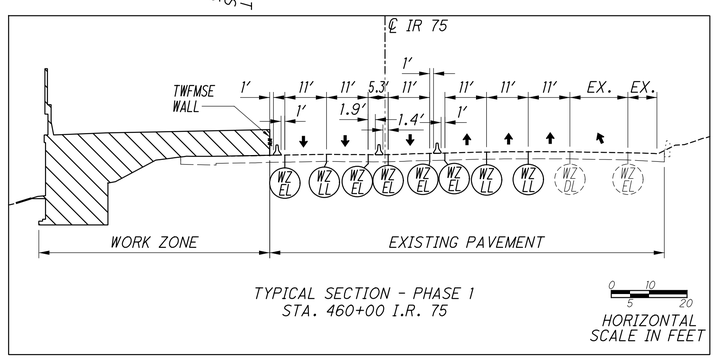

TYPICAL SECTION - PHASE 1
STA. 460+00 I.R. 75

HORIZONTAL SCALE IN FEET

① Δ = 10° 08' 56" (LT)
Dc = 3° 00' 02"
R = 1909.50'
T = 169.56'
L = 338.23'
E = 7.51'
C = 337.79'
C.B. = N 14° 24' 15" E

② Δ = 10° 05' 16" (LT)
Dc = 2° 59' 59"
R = 1910.00'
T = 168.58'
L = 336.28'
E = 7.43'
C = 335.85'
C.B. = N 14° 24' 15" E

③ Δ = 08° 15' 17" (LT)
Dc = 02° 06' 55"
R = 2708.78'
T = 195.46'
L = 390.25'
E = 7.043'
C = 389.92'
C.B. = N 14° 34' 13" E

HORIZONTAL SCALE IN FEET
0 15 30 60

CALCULATED RLS
CHECKED SMM

MAINTENANCE OF TRAFFIC PLAN - PHASE 1 DURING PID 117525 PHASE 3
I.R. 75 - STA. 454+00 TO STA. 462+00

HAM-75-7.85

93
1047

Preliminary Plans - For Reference Only

J:\20110903\ODOT\HAM\77889\mot\sheets\77889MP357.dgn 5/22/2026 10:09:20 AM hbrendlinger

DR1 - 300' - 12" CONDUIT, TYPE B W/4'X4' BOX CONNECTION TO BE FILLED WITH CONCRETE AND ABANDONED IN PLACE IN PHASE 2.

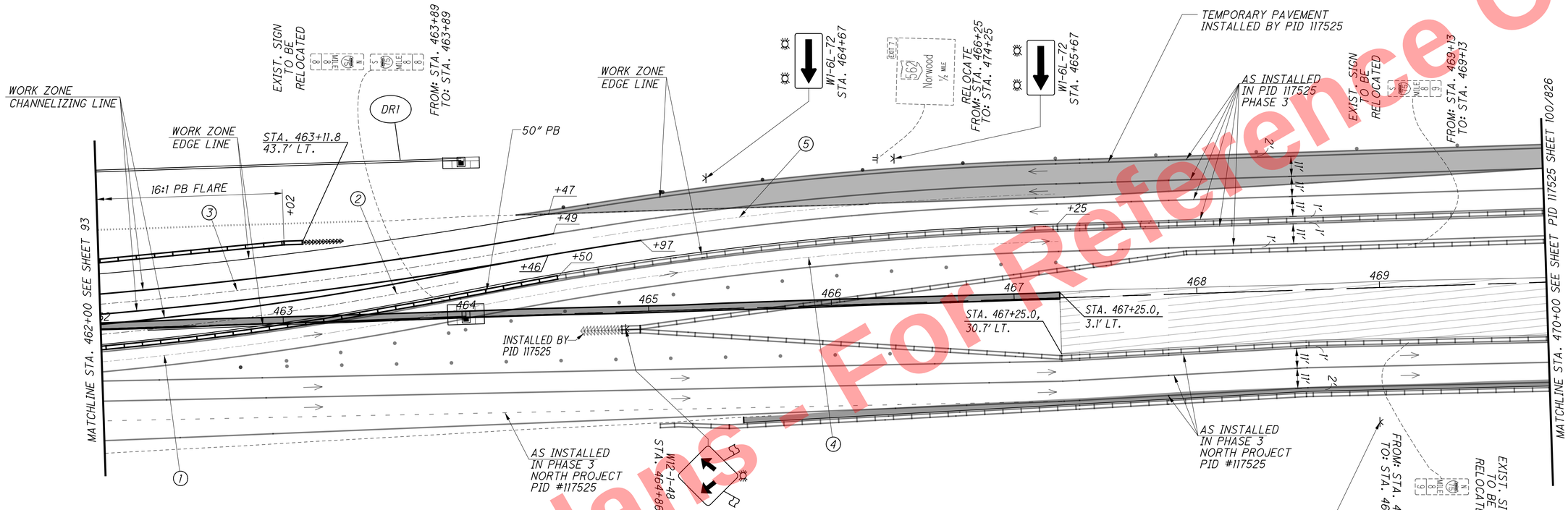

① Δ = 10° 08' 56" (LT)
Dc = 3° 00' 02"
R = 1909.50'
T = 169.56'
L = 338.23'
E = 7.51'
C = 337.79'
C.B. = N 14° 24' 15" E

② Δ = 10° 05' 16" (LT)
Dc = 2° 59' 59"
R = 1910.00'
T = 168.58'
L = 336.28'
E = 7.43'
C = 335.85'
C.B. = N 14° 24' 15" E

③ Δ = 08° 15' 17" (LT)
Dc = 02° 06' 55"
R = 2708.78'
T = 195.46'
L = 390.25'
E = 7.043'
C = 389.92'
C.B. = N 14° 34' 13" E

④ Δ = 09° 45' 23" (RT)
Dc = 2° 58' 56"
R = 1932.00'
T = 164.89'
L = 328.98'
E = 7.02'
C = 328.59'
C.B. = N 14° 11' 19" E

⑤ Δ = 07° 35' 55" (RT)
Dc = 2° 58' 52"
R = 1922.00'
T = 127.64'
L = 254.90'
E = 4.23'
C = 254.71'
C.B. = N 15° 16' 36" E

LEGEND

- PID 117525 PHASE 3 WORK ZONE
- PORTABLE BARRIER
- TEMPORARY PAVEMENT
- DRUM
- IMPACT ATTENUATOR (48" WIDE HAZARD) - ITEM 606, UNIDIRECTIONAL, TYPE 3
- TEMPORARY SIGN SUPPORT
- EXISTING SIGN SUPPORT
- PROPOSED SIGN SUPPORT
- OPEN TRAVEL LANE

Preliminary Plans - For Reference Only

HORIZONTAL SCALE IN FEET
0 15 30 60

CALCULATED RLS
CHECKED SMM

MAINTENANCE OF TRAFFIC PLAN - PHASE 1 DURING PID 117525 PHASE 3
I.R. 75 - STA. 462+00 TO STA. 470+00

HAM-75-7.85

94
1047

J:\20110903\ODOT\HAM\77889\mot\sheets\77889MP358.dgn 5/22/2026 10:09:22 AM hbrendlinger

NOTES:
1. THE CONTRACTOR SHALL REVIEW THE UTILITY PLANS AND HAVE ALL UNDERGROUND UTILITIES MARKED IN THE FIELD PRIOR TO PLACING SHEET PILING.
2. ROADWAY WORK NORTH OF STA. 460+60.8 SHALL NOT BEGIN UNTIL PID 117525 PHASE 4 IS COMPLETE.

DR1 - 117'-12" CONDUIT, TYPE B W/4'x4' BOX CONNECTION TO BE FILLED WITH CONCRETE AND ABANDONED IN PLACE IN PHASE 3.
DR2 - EXISTING CONDUIT TO REMAIN IN SERVICE UNTIL FILLED WITH CONCRETE AND ABANDONED IN PLACE IN PHASE 3.
DR3 - 72'-12" CONDUIT, TYPE B W/4'x4' BOX CONNECTION TO BE FILLED WITH CONCRETE AND ABANDONED IN PLACE IN PHASE 3.
DR4 - EXISTING CONDUIT TO REMAIN IN SERVICE UNTIL FILLED WITH CONCRETE AND ABANDONED IN PLACE IN PHASE 3.
DR5 - 300'-12" CONDUIT, TYPE B W/4'x4' BOX CONNECTION TO BE FILLED WITH CONCRETE AND ABANDONED IN PLACE IN PHASE 3.

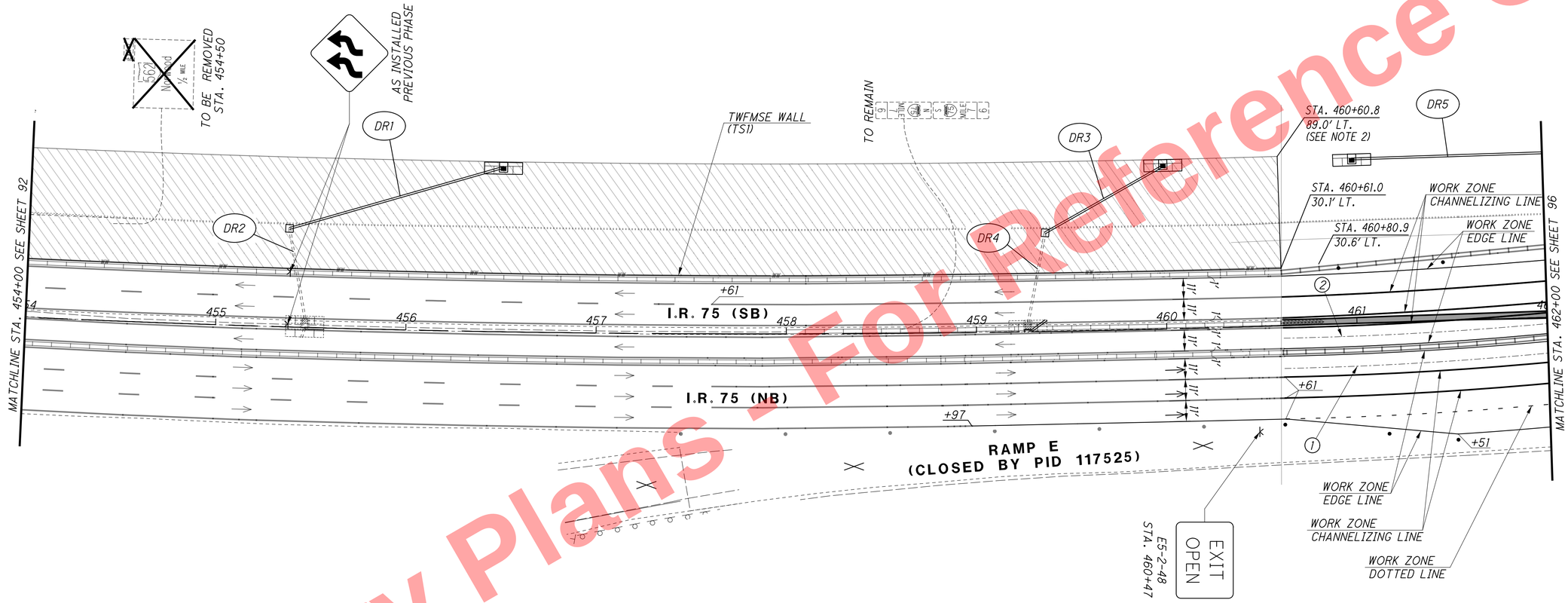

① Δ = 11° 02' 51" (LT)
Dc = 2° 59' 28"
R = 1915.50'
T = 185.24'
L = 369.34'
E = 8.94'
C = 368.77'
C.B. = N 13° 52' 13" E

② Δ = 11° 16' 22" (LT)
Dc = 2° 59' 59"
R = 1910.00'
T = 188.50'
L = 375.79'
E = 9.28'
C = 375.19'
C.B. = N 13° 56' 34" E

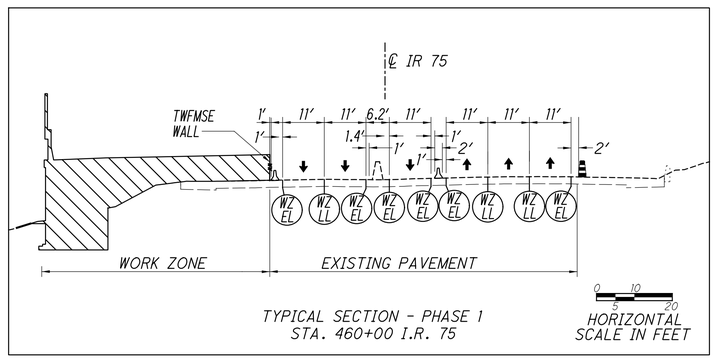

TYPICAL SECTION - PHASE 1
STA. 460+00 I.R. 75

LEGEND
- PHASE 1 WORK ZONE
- PORTABLE BARRIER
- TEMPORARY PAVEMENT
- DRUM
- IMPACT ATTENUATOR
- OPEN TRAVEL LANE
- PROPOSED SIGN SUPPORT
- CLOSED TRAVEL LANE

HORIZONTAL SCALE IN FEET
0 15 30 60

CALCULATED RLS
CHECKED SMM

MAINTENANCE OF TRAFFIC PLAN - PHASE 1 DURING PID 117525 PHASE 4
I.R. 75 - STA. 454+00 TO STA. 462+00

HAM-75-7.85

95
1047

Preliminary Plans - For Reference Only

J:\20110903\ODOT\HAM\77889\mot\sheets\77889MP360.dgn 5/22/2026 10:09:24 AM hbrendlinger

NOTES:

DR1 - 300' -12" CONDUIT, TYPE B W/4'X4' BOX CONNECTION TO BE FILLED WITH CONCRETE AND ABANDONED IN PLACE IN PHASE 2

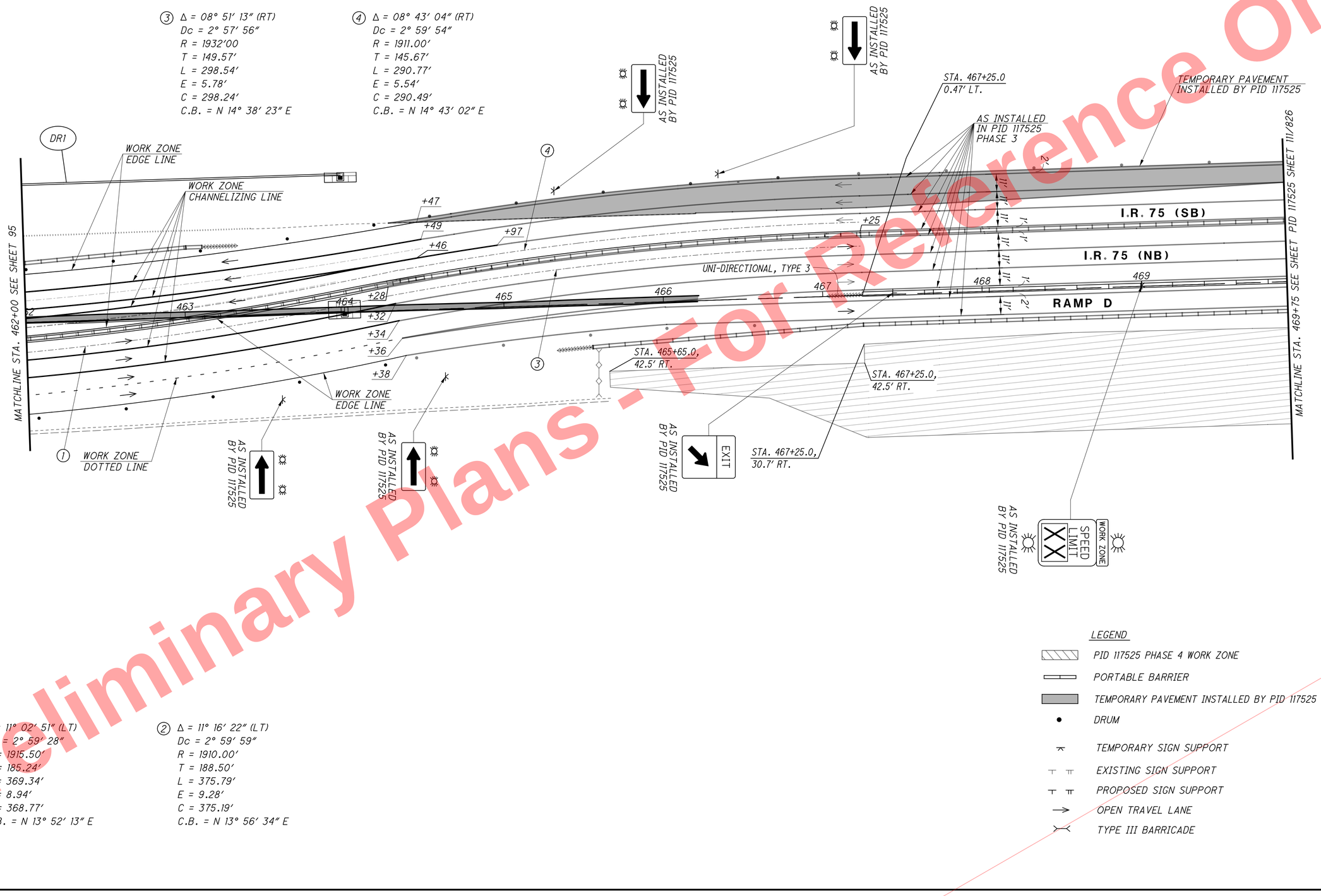

① Δ = 11° 02' 51" (LT)
Dc = 2° 59' 28"
R = 1915.50'
T = 185.24'
L = 369.34'
E = 8.94'
C = 368.77'
C.B. = N 13° 52' 13" E

② Δ = 11° 16' 22" (LT)
Dc = 2° 59' 59"
R = 1910.00'
T = 188.50'
L = 375.79'
E = 9.28'
C = 375.19'
C.B. = N 13° 56' 34" E

LEGEND

- PID 117525 PHASE 4 WORK ZONE
- PORTABLE BARRIER
- TEMPORARY PAVEMENT INSTALLED BY PID 117525
- DRUM
- TEMPORARY SIGN SUPPORT
- EXISTING SIGN SUPPORT
- PROPOSED SIGN SUPPORT
- OPEN TRAVEL LANE
- TYPE III BARRICADE

Preliminary Plans - For Reference Only

HORIZONTAL SCALE IN FEET
0 15 30 60
CALCULATED RLS
CHECKED SMM

MAINTENANCE OF TRAFFIC PLAN - PHASE 1 DURING PID 117525 PHASE 4
I.R. 75 - STA. 462+00 TO STA. 469+75

HAM-75-7.85

96
1047

J:\20110903\ODOT\HAM\77889\mot\sheets\77889MP361.dgn 5/22/2026 10:09:27 AM hbrendlinger

NOTES:
1. THE CONTRACTOR SHALL REVIEW THE UTILITY PLANS AND HAVE ALL UNDERGROUND UTILITIES MARKED IN THE FIELD PRIOR TO PLACING SHEET PILING.
2. ROADWAY WORK NORTH OF STA. 460+60.8 SHALL NOT BEGIN UNTIL PID 117525 PHASE 4 IS COMPLETE.

DR1 - 117'-12" CONDUIT, TYPE B W/4'x4' BOX CONNECTION TO BE FILLED WITH CONCRETE AND ABANDONED IN PLACE IN PHASE 3.
DR2 - EXISTING CONDUIT TO REMAIN IN SERVICE UNTIL FILLED WITH CONCRETE AND ABANDONED IN PLACE IN PHASE 3.
DR3 - 72'-12" CONDUIT, TYPE B W/4'x4' BOX CONNECTION TO BE FILLED WITH CONCRETE AND ABANDONED IN PLACE IN PHASE 3.
DR4 - EXISTING CONDUIT TO REMAIN IN SERVICE UNTIL FILLED WITH CONCRETE AND ABANDONED IN PLACE IN PHASE 3.
DR5 - 300'-12" CONDUIT, TYPE B W/4'x4' BOX CONNECTION TO BE FILLED WITH CONCRETE AND ABANDONED IN PLACE IN PHASE 3.

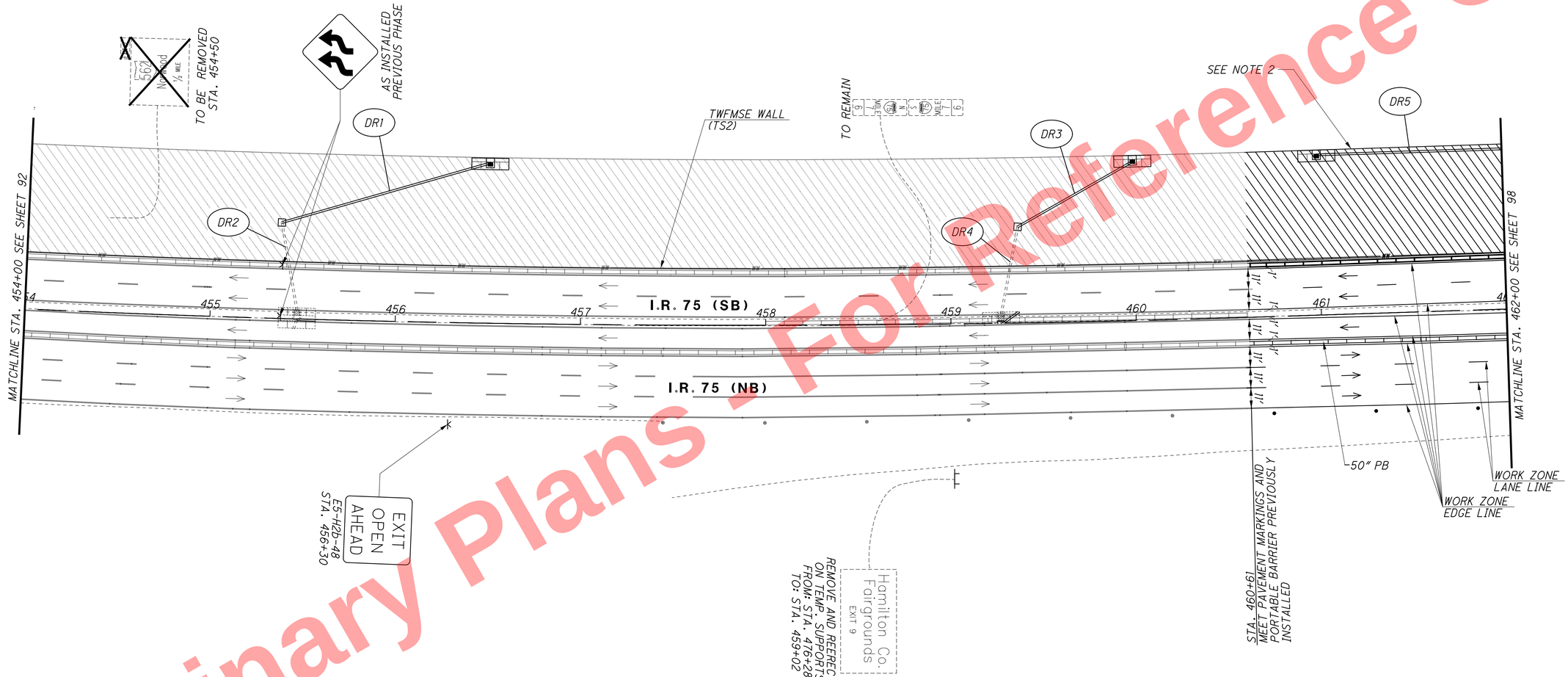

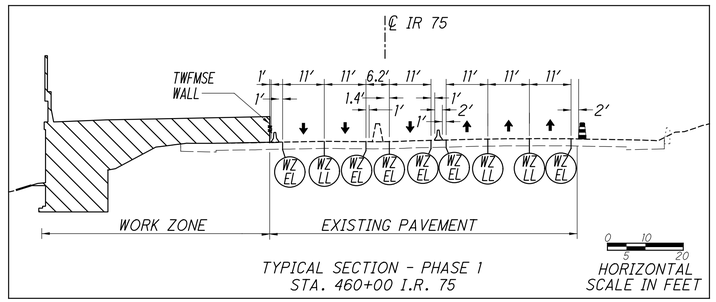

TYPICAL SECTION - PHASE 1
STA. 460+00 I.R. 75

LEGEND
- PHASE 1 WORK ZONE
- PORTABLE BARRIER
- TEMPORARY PAVEMENT
- DRUM
- TEMPORARY SIGN SUPPORT
- OPEN TRAVEL LANE

HORIZONTAL SCALE IN FEET
0 15 30 60

CALCULATED RLS
CHECKED SMM

MAINTENANCE OF TRAFFIC PLAN - PHASE 1 AFTER PID 117525 PHASE 4
I.R. 75 - STA. 454+00 TO STA. 462+00

HAM-75-7.85

97
1047

Preliminary Plans - For Reference Only

J:\20110903\ODOT\HAM\77889\mot\sheets\77889MP164.dgn 5/22/2026 10:09:28 AM hbrendlinger

DR1 - 300'-12" CONDUIT, TYPE B W/4'X4' BOX CONNECTION TO BE FILLED WITH CONCRETE AND ABANDONED IN PLACE IN PHASE 2.

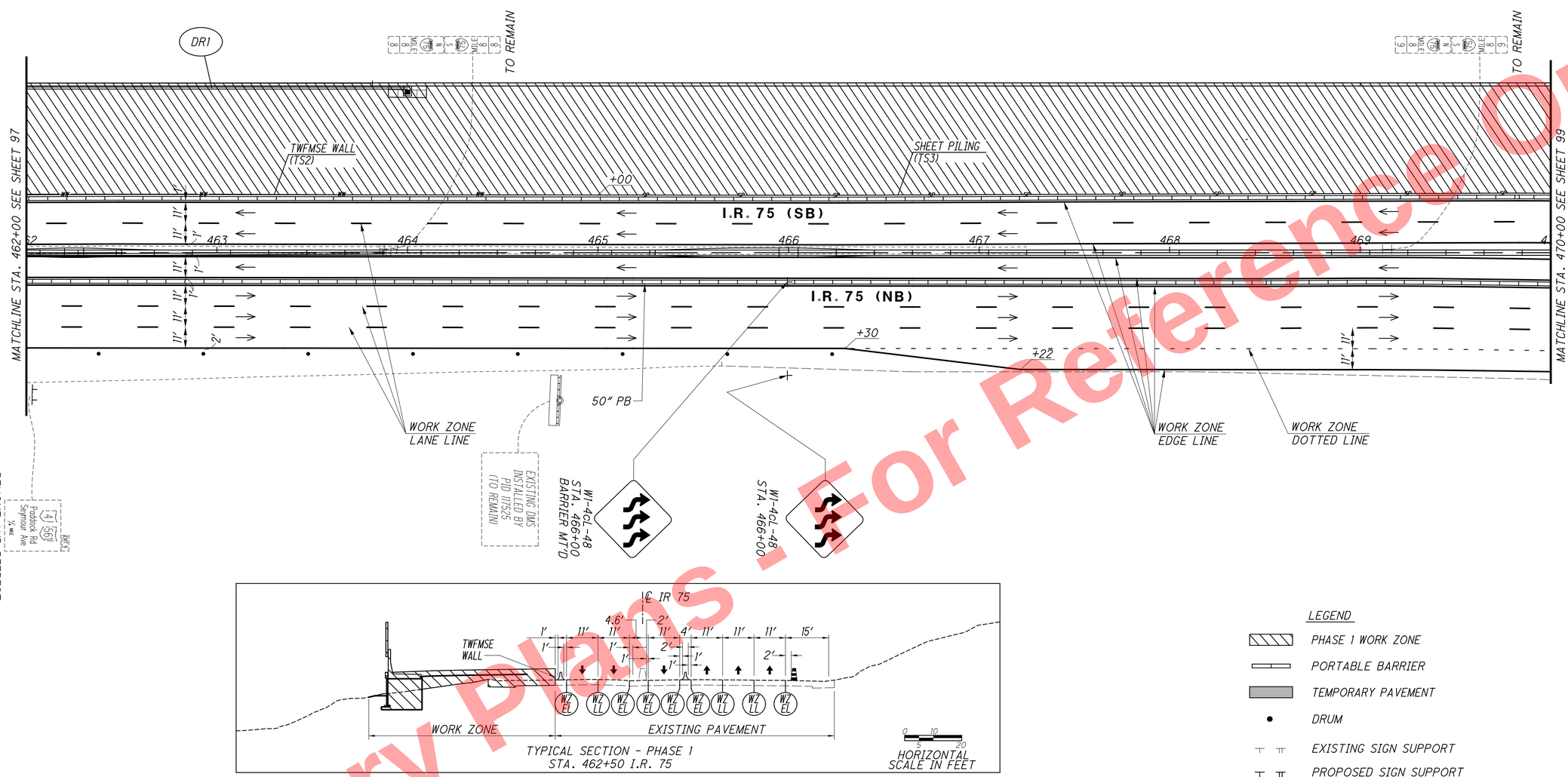

TYPICAL SECTION - PHASE 1
STA. 462+50 I.R. 75

LEGEND

- PHASE 1 WORK ZONE
- PORTABLE BARRIER
- TEMPORARY PAVEMENT
- DRUM
- EXISTING SIGN SUPPORT
- PROPOSED SIGN SUPPORT
- OPEN TRAVEL LANE

NOTES:
1. THE CONTRACTOR SHALL REVIEW THE UTILITY PLANS AND HAVE ALL UNDERGROUND UTILITIES MARKED IN THE FIELD PRIOR TO PLACING SHEET PILING.

HORIZONTAL SCALE IN FEET
0 15 30 60

CALCULATED RLS
CHECKED SMM

MAINTENANCE OF TRAFFIC PLAN - PHASE 1 AFTER PID 117525 PHASE 4
I.R. 75 - STA. 462+00 TO STA. 470+00

HAM-75-7.85

98
1047

Preliminary Plans - For Reference Only

J:\20110903\ODOT\HAM\77889\mot\sheets\77889MP007.dgn 5/22/2026 10:09:30 AM hbrendlinger

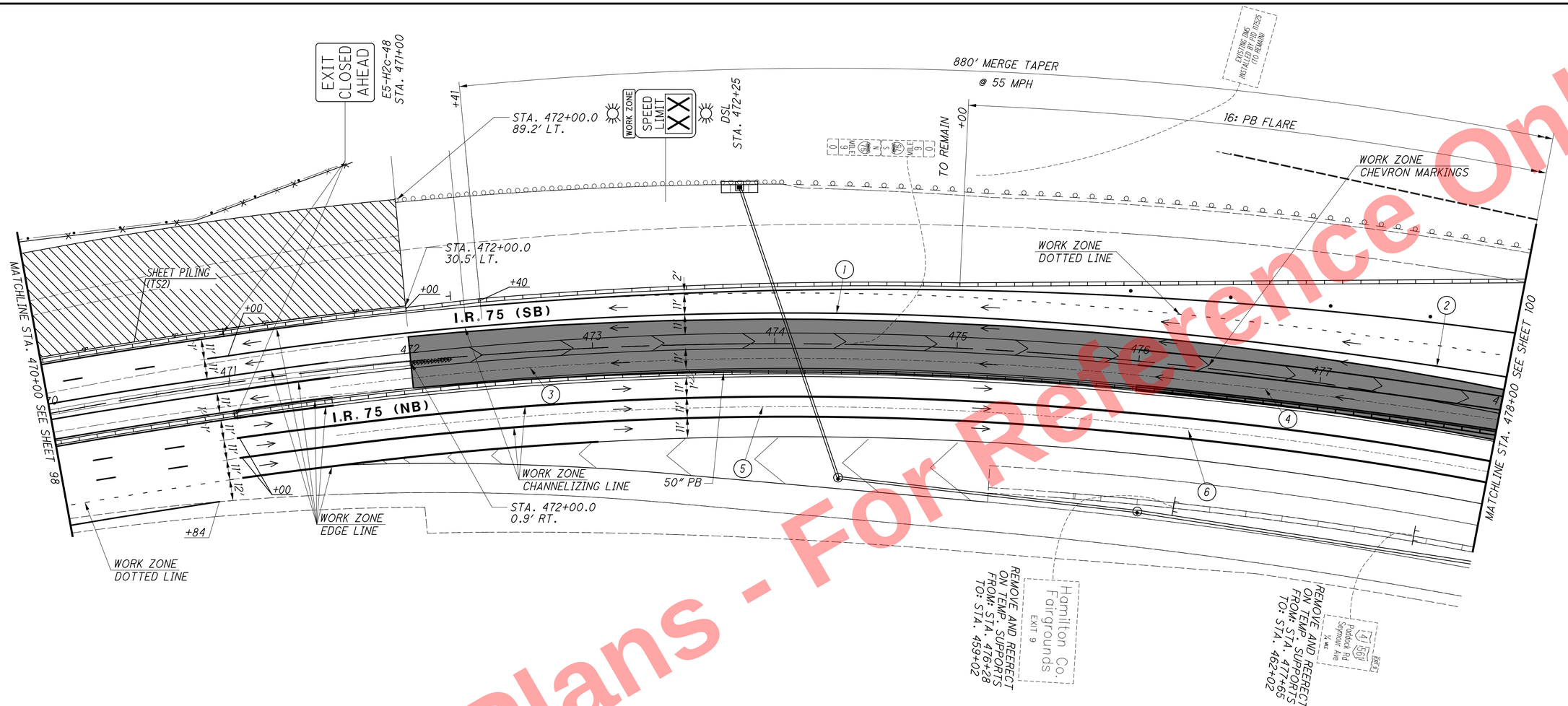

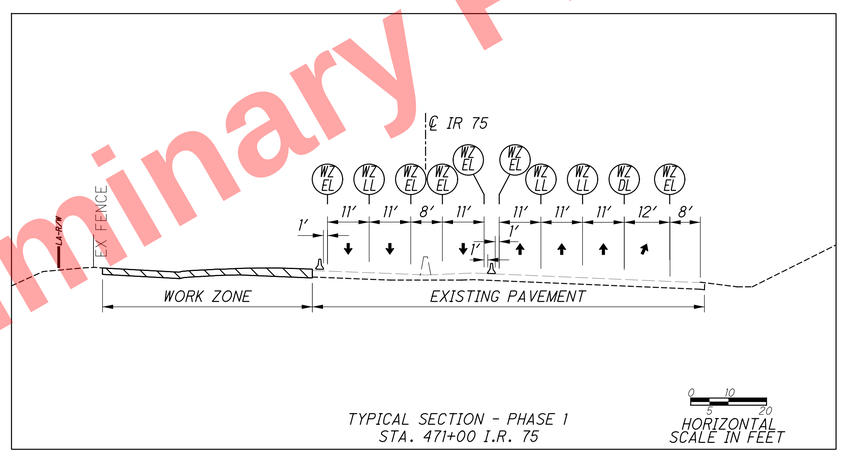

TYPICAL SECTION - PHASE 1
STA. 471+00 I.R. 75

① Δ = 12° 50' 42" (RT)
Dc = 02° 51' 32"
R = 2004.10'
T = 225.59'
L = 449.30'
E = 12.66'
C = 448.36'
C.B. = N 28° 17' 51" E

② Δ = 09° 19' 53" (RT)
Dc = 01° 46' 44"
R = 3220.87'
T = 262.86'
L = 524.56'
E = 10.71'
C = 523.98'
C.B. = N 39° 23' 08" E

③ Δ = 12° 50' 27" (RT)
Dc = 02° 53' 38"
R = 1979.90'
T = 222.79'
L = 443.72'
E = 12.50'
C = 442.79'
C.B. = N 28° 17' 54" E

④ Δ = 09° 11' 59" (RT)
Dc = 01° 31' 45"
R = 3746.43'
T = 301.42'
L = 601.55'
E = 12.11'
C = 600.90'
C.B. = N 39° 19' 11" E

⑤ Δ = 12° 50' 43" (RT)
Dc = 02° 56' 03"
R = 1952.73'
T = 219.81'
L = 437.78'
E = 12.33'
C = 436.87'
C.B. = N 28° 17' 51" E

⑥ Δ = 9° 51' 32" (RT)
Dc = 02° 48' 36"
R = 2038.79'
T = 175.84'
L = 350.81'
E = 7.57'
C = 350.38'
C.B. = N 39° 07' 06" E

LEGEND

- PHASE 1 WORK ZONE
- PORTABLE BARRIER
- IMPACT ATTENUATOR
- TEMPORARY PAVEMENT
- EXISTING SIGN SUPPORT
- PROPOSED SIGN SUPPORT
- OPEN TRAVEL LANE

NOTES:

1. PROPOSED DRAINAGE SHOWN ON THIS SHEET SHALL BE INSTALLED PER THE CONSTRUCTION SEQUENCE NOTES.
2. THE CONTRACTOR SHALL REVIEW THE UTILITY PLANS AND HAVE ALL UNDERGROUND UTILITIES MARKED IN THE FIELD PRIOR TO PLACING SHEET PILING.

HORIZONTAL SCALE IN FEET
0 15 30 60

CALCULATED RLS
CHECKED SMM

MAINTENANCE OF TRAFFIC PLAN - PHASE 1
I.R. 75 - STA. 470+00 TO STA. 478+00

HAM-75-7.85

99
1047

Preliminary Plans - For Reference Only

J:\20110903\ODOT\HAM\77889\mot\sheets\77889MP183.dgn 5/22/2026 10:09:33 AM hbrendlinger

(1) Δ = 09° 11′ 59″ (RT)
Dc = 01° 31′ 45″
R = 3746.43′
T = 301.42′
L = 601.55′
E = 12.11′
C = 600.90′
C.B. = N 39° 19′ 11″ E

(2) Δ = 9° 51′ 32″ (RT)
Dc = 02° 48′ 36″
R = 2038.79′
T = 175.84′
L = 350.81′
E = 7.57′
C = 350.38′
C.B. = N 39° 07′ 06″ E

(3) Δ = 09° 19′ 53″ (RT)
Dc = 01° 46′ 44″
R = 3220.87′
T = 262.86′
L = 524.56′
E = 10.71′
C = 523.98′
C.B. = N 39° 23′ 08″ E

(4) Δ = 03° 43′ 14″ (LT)
Dc = 02° 59′ 59″
R = 1910.00′
T = 62.04′
L = 124.03′
E = 1.01′
C = 124.01′
C.B. = N 41° 07′ 22″ E

(5) Δ = 03° 33′ 07″ (RT)
Dc = 02° 59′ 59″
R = 1910.00′
T = 59.22′
L = 118.41′
E = 0.92′
C = 118.39′
C.B. = N 41° 02′ 19″ E

11′x6′ LEVEL 2

SOUTH 75 ALL LANES

STA. 478+00 BLACK ON ORANGE

880′ MERGE TAPER @ 55 MPH

16:1 PB FLARE

+28

+21

WORK ZONE CHEVERON LINE

WORK ZONE DOTTED LINE

WORK ZONE EDGE LINE

STA. 478+37.7 80.3′ LT.

W4-3R-48 STA. 482+78

WORK ZONE CHANNELIZING LINE

W1-H16-48 STA. 485+76

360′ SHIFT TAPER @ 55 MPH

+14

+10

RAMP C

I.R. 75 (SB)

+57

+56

+00

SEE NOTE 1

I.R. 75 (NB)

RAMP D

RAMP E

MATCHLINE STA. 478+00 SEE SHEET 99

MATCHLINE STA. 486+00 SEE SHEET 101

478 479 480 481 482 483 484 485

12′ 12′ 12′ 12′ 12′ 12′ 11′

EX. EX. EX.

WORK ZONE EDGE LINE

WORK ZONE CHANNELIZING LINE

LEFT EXIT 10B Galbraith Rd 1¼ MILES

INSTALLED BY PID 117525 TO REMAIN

126 Ronald Reagan Highway 1 MILE EXIT ONLY

EXIT 10A

4 Paddock Rd

INSTALLED BY PID 117525 TO REMAIN

561 Seymour Ave

TO REMAIN

SPEED LIMIT 55

R2-1-48 STA. 485+56

LEGEND
- PORTABLE BARRIER
- TEMPORARY PAVEMENT
- IMPACT ATTENUATOR
- OPEN TRAVEL LANE
- PROPOSED SIGN SUPPORT
- TYPE III BARRICADE

NOTES:
1. CONNECT PORTABLE BARRIER AND EXISTING MEDIAN UTILIZING MT-101.80.

Preliminary Plans - Not For Construction
For Reference Only

HORIZONTAL SCALE IN FEET
0 15 30 60

CALCULATED RLS
CHECKED SMM

MAINTENANCE OF TRAFFIC PLAN - PHASE 1
I.R. 75 - STA. 478+00 TO STA. 486+00

HAM-75-7.85

100
1047

J:\20110903\ODOT\HAM\77889\mot\sheets\77889MP008.dgn 5/22/2026 10:09:35 AM hbrendlinger

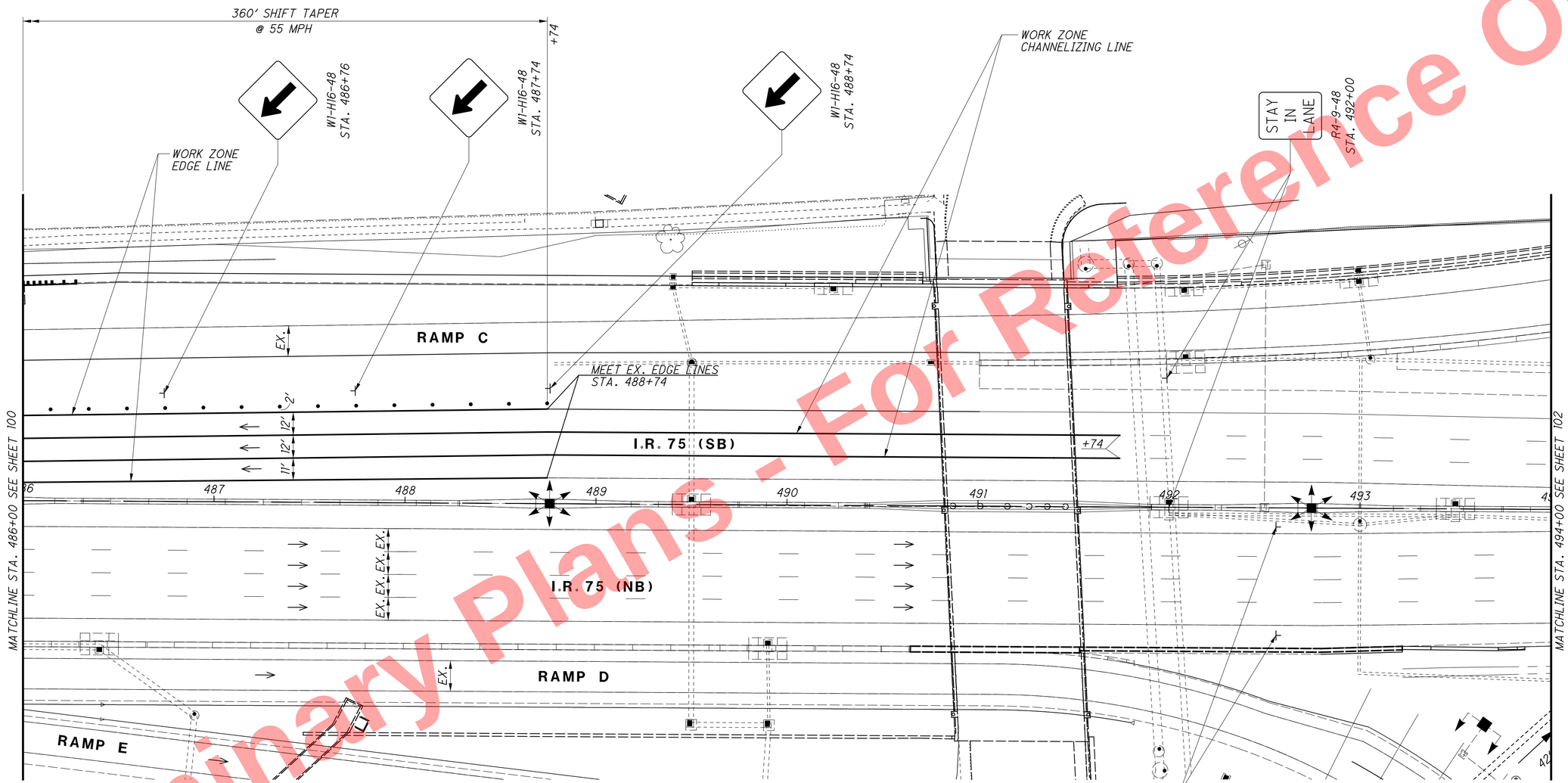

LEGEND

- PORTABLE BARRIER
- TEMPORARY PAVEMENT
- DRUM
- PROPOSED SIGN SUPPORT
- OPEN TRAVEL LANE

NOTES:

1. RAMP D AND E SIGNAGE SHALL BE PER PID 117525

HORIZONTAL SCALE IN FEET
0 15 30 60

CALCULATED RLS
CHECKED SMM

MAINTENANCE OF TRAFFIC PLAN - PHASE 1
I.R. 75 - STA. 486+00 TO STA. 494+00

HAM-75-7.85

101
1047

Preliminary Plans - For Reference Only

J:\20110903\ODOT\HAM\77889\mot\sheets\77889MP346.dgn 5/22/2026 10:09:45 AM hbrendlinger

Preliminary Plans - For Reference Only

J:\20110903\ODOT\HAM\77889\mot\sheets\77889MP111.dgn 5/22/2026 10:09:47 AM hbrendlinger

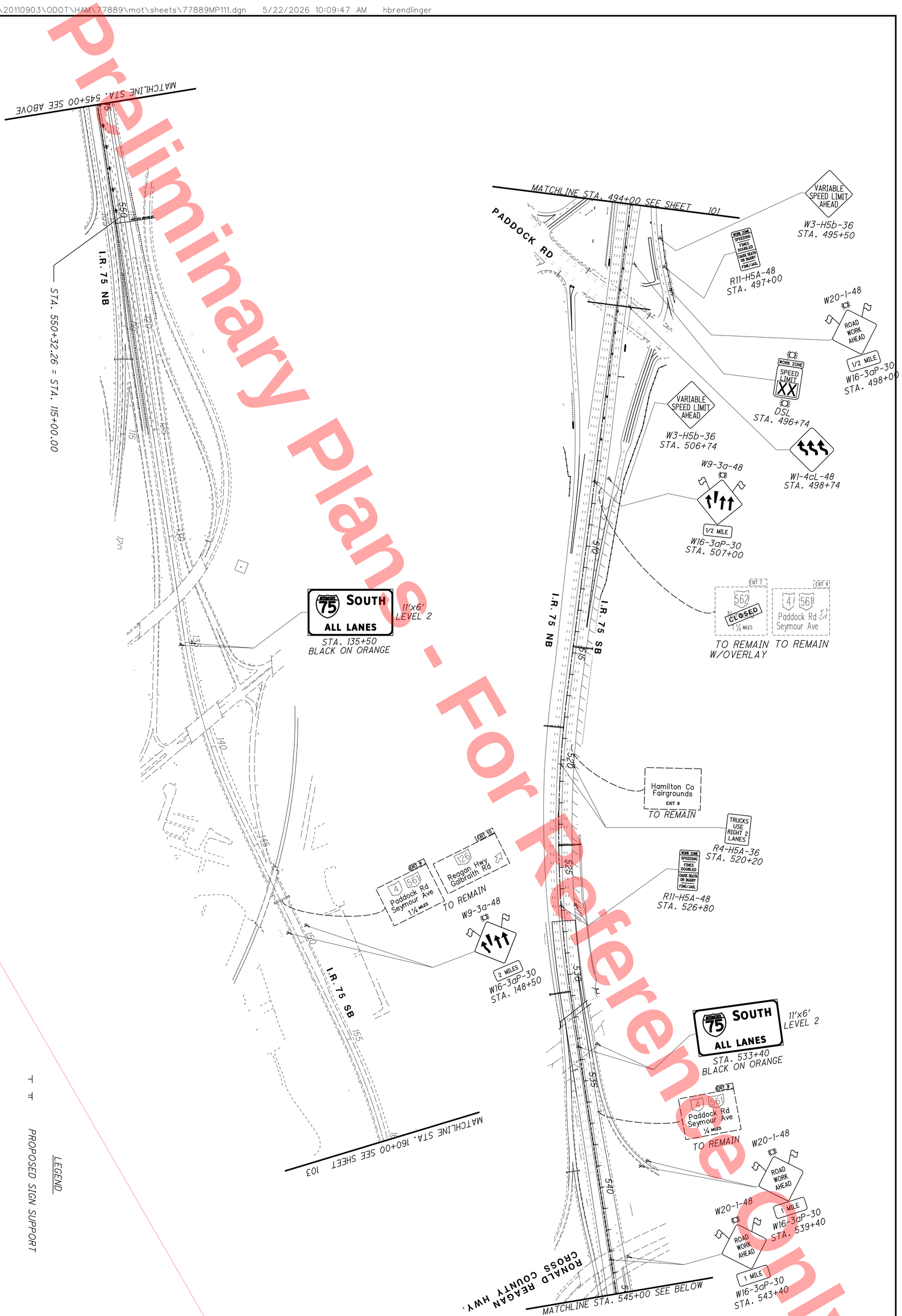

102 / 1047	HAM-75-7.85	MAINTENANCE OF TRAFFIC PLAN - PHASE 1 I.R. 75 - STA. 494+00 TO STA. 160+00	CALCULATED RLS CHECKED SMM	0 100 50 200 HORIZONTAL SCALE IN FEET

J:\2011090\3\ODOT\HAM\77889\mot\sheets\77889MP112.dgn 5/22/2026 10:09:49 AM hbrendlinger

Preliminary Plans - For Reference Only

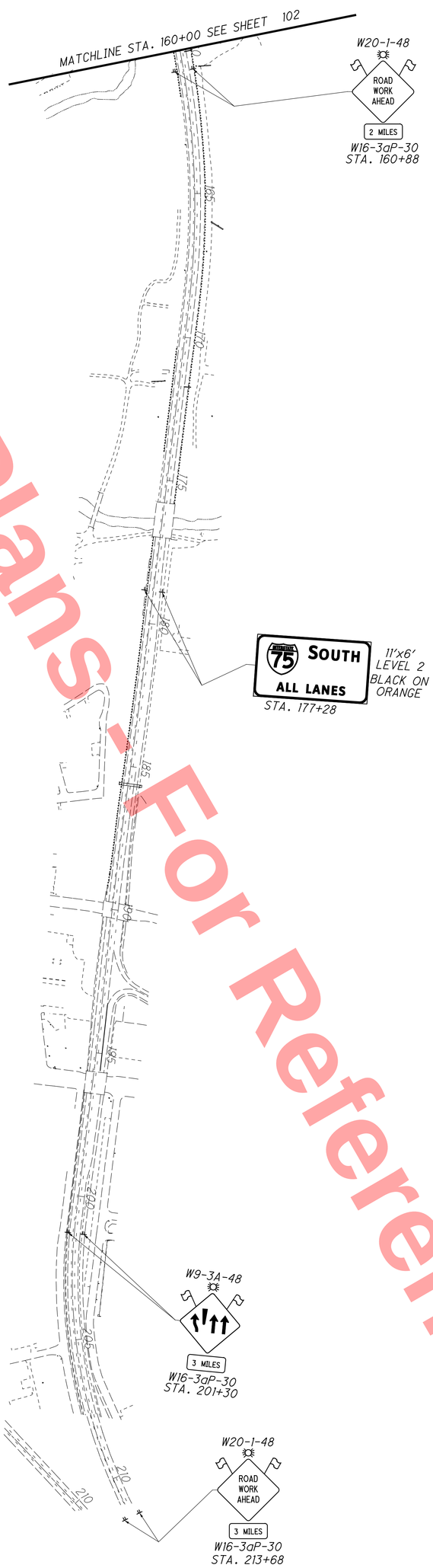

LEGEND

PROPOSED SIGN SUPPORT

103 / 1047	HAM-75-7.85	MAINTENANCE OF TRAFFIC PLAN - PHASE 1 I.R. 75 - STA. 160+00 TO STA. 210+00	CALCULATED RLS CHECKED SMM	0 100 50 200 HORIZONTAL SCALE IN FEET

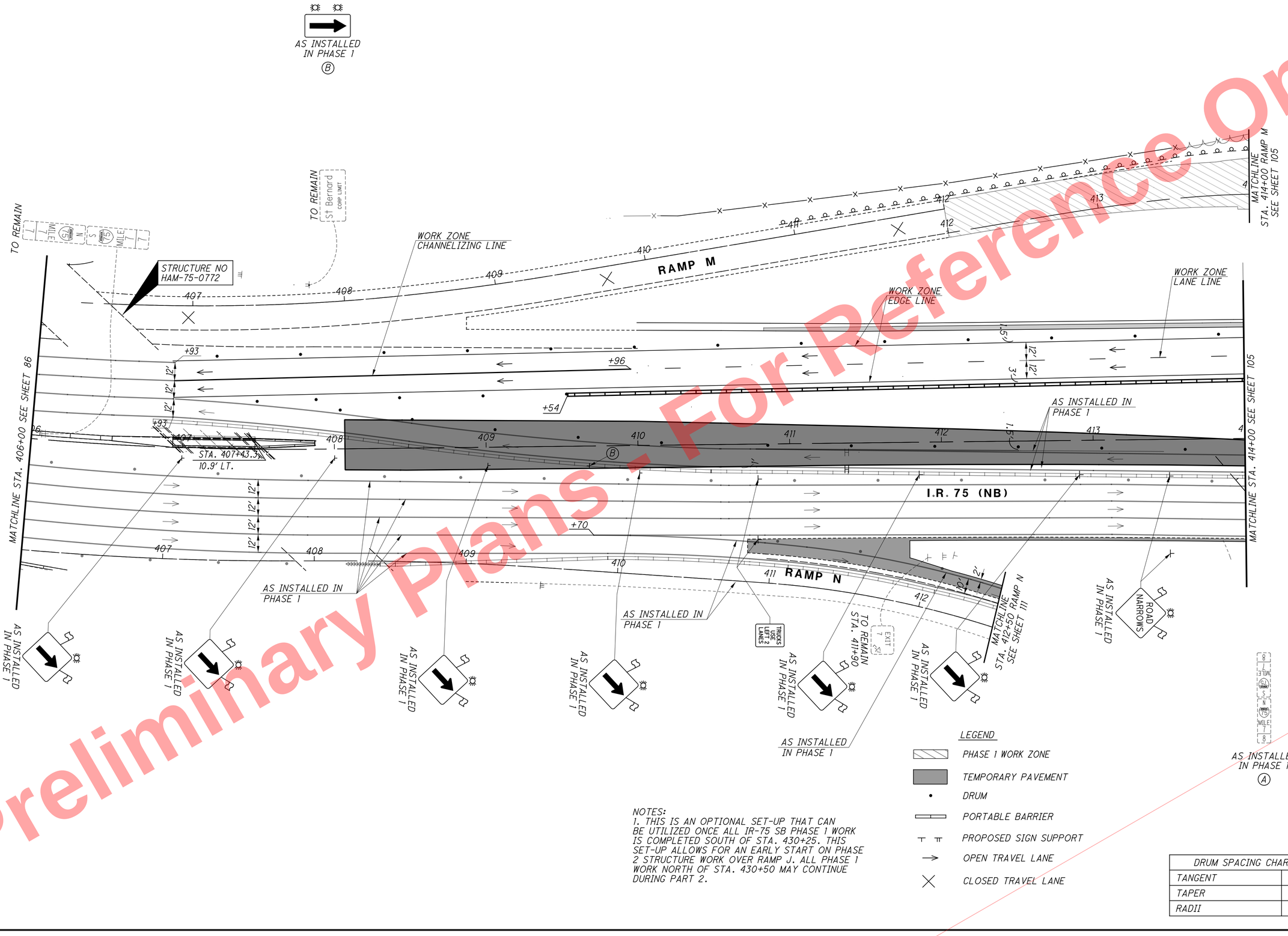

NOTES:
1. THIS IS AN OPTIONAL SET-UP THAT CAN BE UTILIZED ONCE ALL IR-75 SB PHASE 1 WORK IS COMPLETED SOUTH OF STA. 430+25. THIS SET-UP ALLOWS FOR AN EARLY START ON PHASE 2 STRUCTURE WORK OVER RAMP J. ALL PHASE 1 WORK NORTH OF STA. 430+50 MAY CONTINUE DURING PART 2.

DRUM SPACING CHART	
TANGENT	80' c/c
TAPER	55' c/c
RADII	10' c/c

HORIZONTAL SCALE IN FEET
0 15 30 60

CALCULATED RLS
CHECKED SMM

MAINTENANCE OF TRAFFIC PLAN - PHASE 1 - PT. 2
I.R. 75 - STA. 406+00 TO STA. 414+00

HAM-75-7.85

104
1047

Preliminary Plans - For Reference Only

J:\20110903\ODOT\HAM\77889\mot\sheets\77889MP362.dgn 5/22/2026 10:09:53 AM hbrendlinger

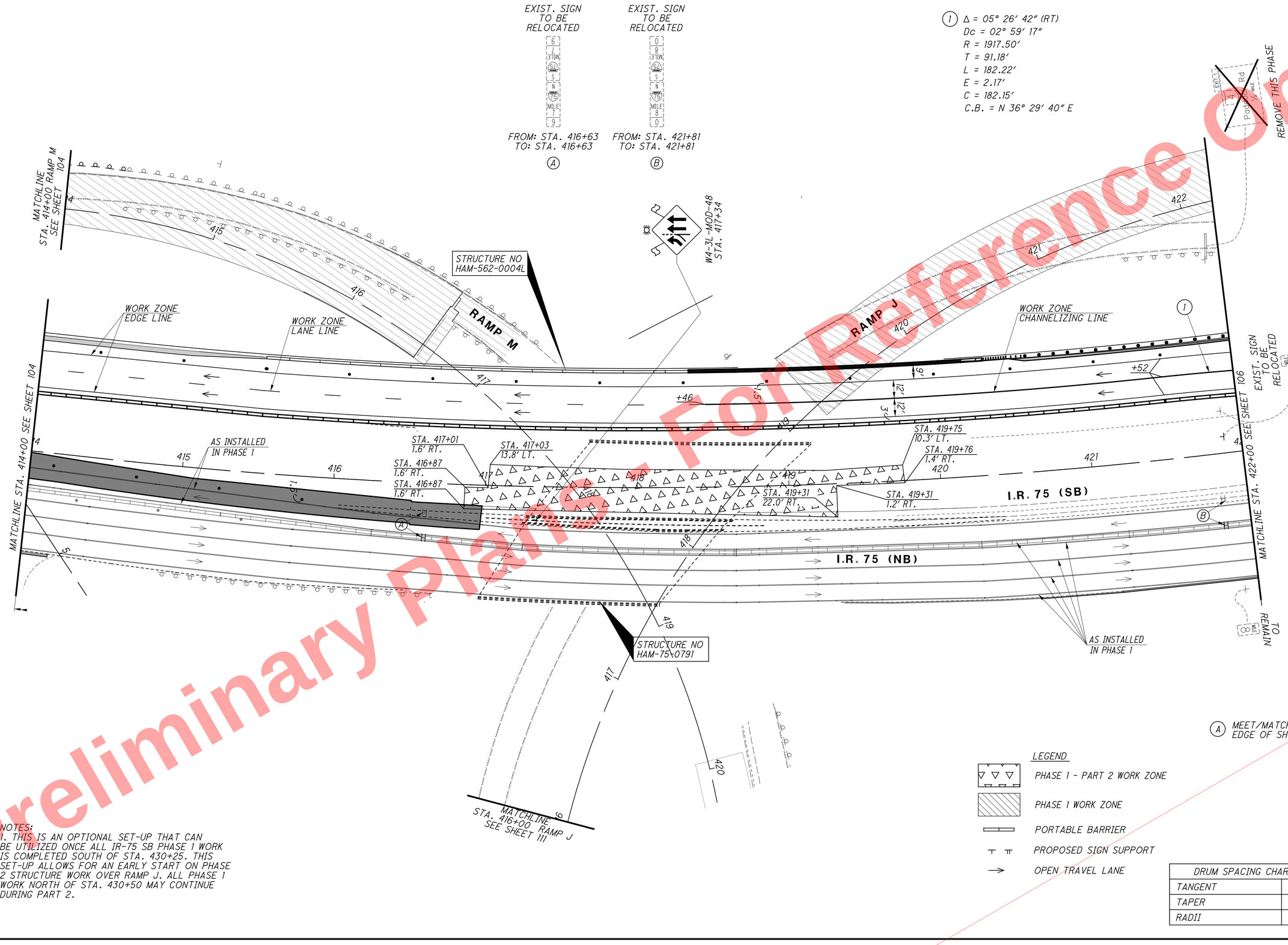

NOTES:
1. THIS IS AN OPTIONAL SET-UP THAT CAN BE UTILIZED ONCE ALL IR-75 SB PHASE 1 WORK IS COMPLETED SOUTH OF STA. 430+25. THIS SET-UP ALLOWS FOR AN EARLY START ON PHASE 2 STRUCTURE WORK OVER RAMP J. ALL PHASE 1 WORK NORTH OF STA. 430+50 MAY CONTINUE DURING PART 2.

DRUM SPACING CHART	
TANGENT	80′ c/c
TAPER	55′ c/c
RADII	10′ c/c

HORIZONTAL SCALE IN FEET
0 15 30 60

CALCULATED RLS
CHECKED SMM

MAINTENANCE OF TRAFFIC PLAN - PHASE 1 - PT. 2
I.R. 75 - STA. 414+00 TO STA. 422+00

HAM-75-7.85

105
1047

J:\2011090\3\ODOT\HAM\77889\mot\sheets\77889MP359.dgn 5/22/2026 10:09:55 AM hbrendlinger

For Reference Only
Preliminary Plans - Not for Construction

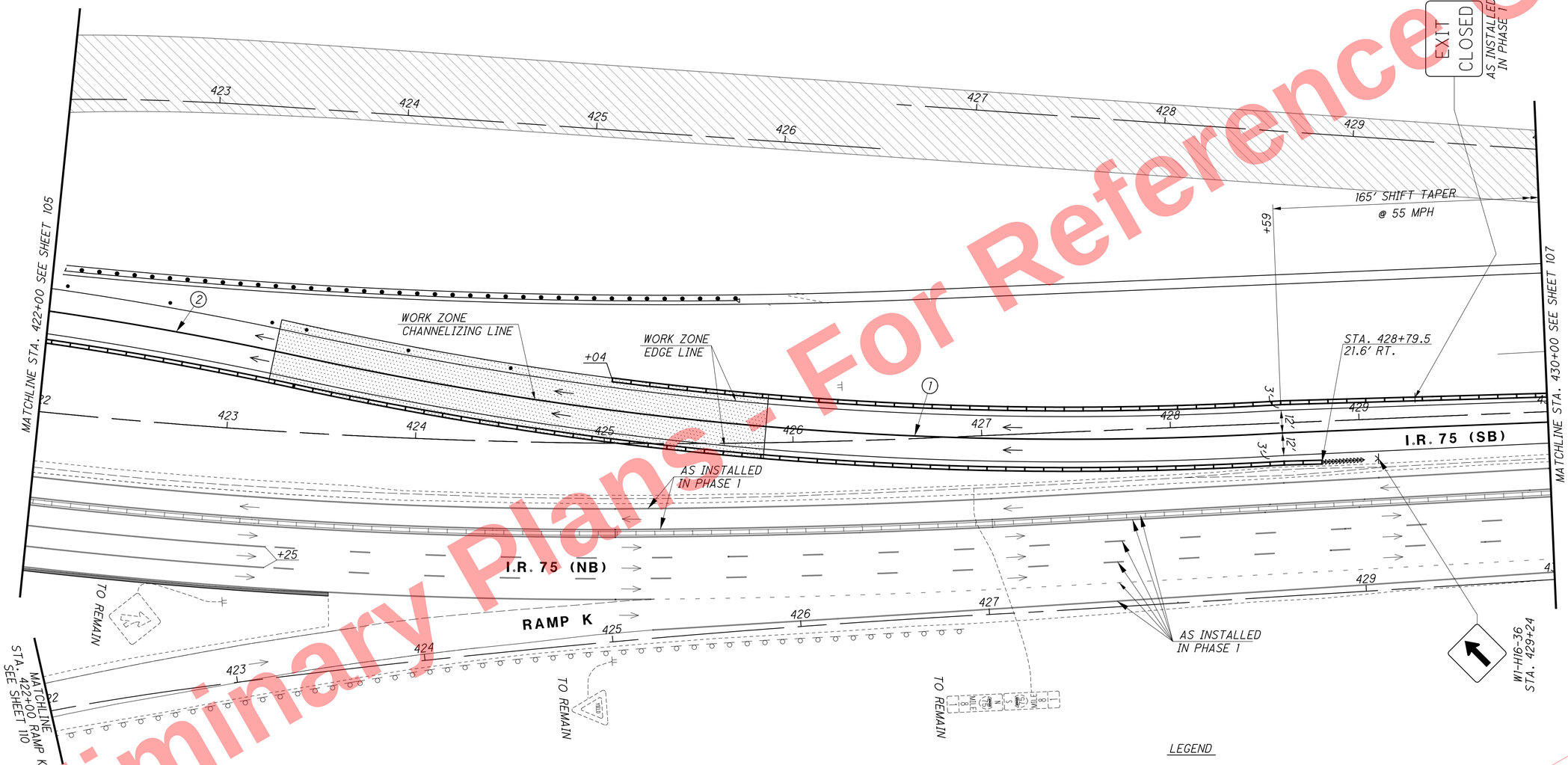

NOTES:
1. THIS IS AN OPTIONAL SET-UP THAT CAN BE UTILIZED ONCE ALL IR-75 SB PHASE 1 WORK IS COMPLETED SOUTH OF STA. 430+25. THIS SET-UP ALLOWS FOR AN EARLY START ON PHASE 2 STRUCTURE WORK OVER RAMP J. ALL PHASE 1 WORK NORTH OF STA. 430+50 MAY CONTINUE DURING PART 2.

2. THIS SET-UP WILL REQUIRE THE CONTRACTOR TO CONSTRUCT A TRANSITION FROM EXISTING PAVEMENT TO THE NEWLY CONSTRUCTED STRUCTURE OVER RAMP J, SEE SHEETS 108 - 109 FOR DETAILS. THE FILL AND PAVEMENT NEEDED FOR THIS TRANSITION SHALL BE CONSTRUCTED BY IMPLEMENTING A 3:1 SOUTHBOUND LANE REDUCTION VIA RIGHT LANE CLOSURES (PER ODOT SCD MT-95.40), JUST NORTH OF THE SB SINGLE LANE CROSSOVER, ODOT SCD MT-95.40, FOR A MAXIMUM OF ONE WEEKEND. THE IR-75 SB ENTRANCE RAMP FROM PADDOCK RD SHALL BE CLOSED PER ODOT SCD MT-98.30. THE SB CONTRAFLOW LANE SHALL REMAIN OPEN, HOWEVER THE DETOUR SIGNING SHOWN ON SHEET 72 SHALL BE IN PLACE DURING THIS SET-UP TO ENCOURAGE TRAFFIC TO USE AN ALTERNATE ROUTE.

(1) Δ = 15° 39' 46" (LT)
Dc = 02° 59' 39"
R = 1913.50'
T = 263.19'
L = 523.09'
E = 18.02'
C = 521.46'
C.B. = N 31° 23' 08" E

(2) Δ = 05° 26' 42" (RT)
Dc = 02° 59' 17"
R = 1917.50'
T = 91.18'
L = 182.22'
E = 2.17'
C = 182.15'
C.B. = N 36° 29' 40" E

LEGEND
- PORTABLE BARRIER
- DRUM
- IMPACT ATTENUATOR
- OPEN TRAVEL LANE
- TEMPORARY SIGN SUPPORT
- PHASE 1 WORK ZONE
- PAVEMENT TRANSITION (SEE NOTE 2)

DRUM SPACING CHART	
TANGENT	80' c/c
TAPER	55' c/c
RADII	10' c/c

HORIZONTAL SCALE IN FEET
0 15 30 60

CALCULATED RLS
CHECKED SMM

MAINTENANCE OF TRAFFIC PLAN - PHASE 1 - PT. 2
I.R. 75 - STA. 422+00 TO STA. 430+00

HAM-75-7.85

106
1047

Preliminary Plans - For Reference Only

J:\20110903\ODOT\HAM\77889\mot\sheets\77889MP363.dgn 5/22/2026 10:09:57 AM hbrendlinger

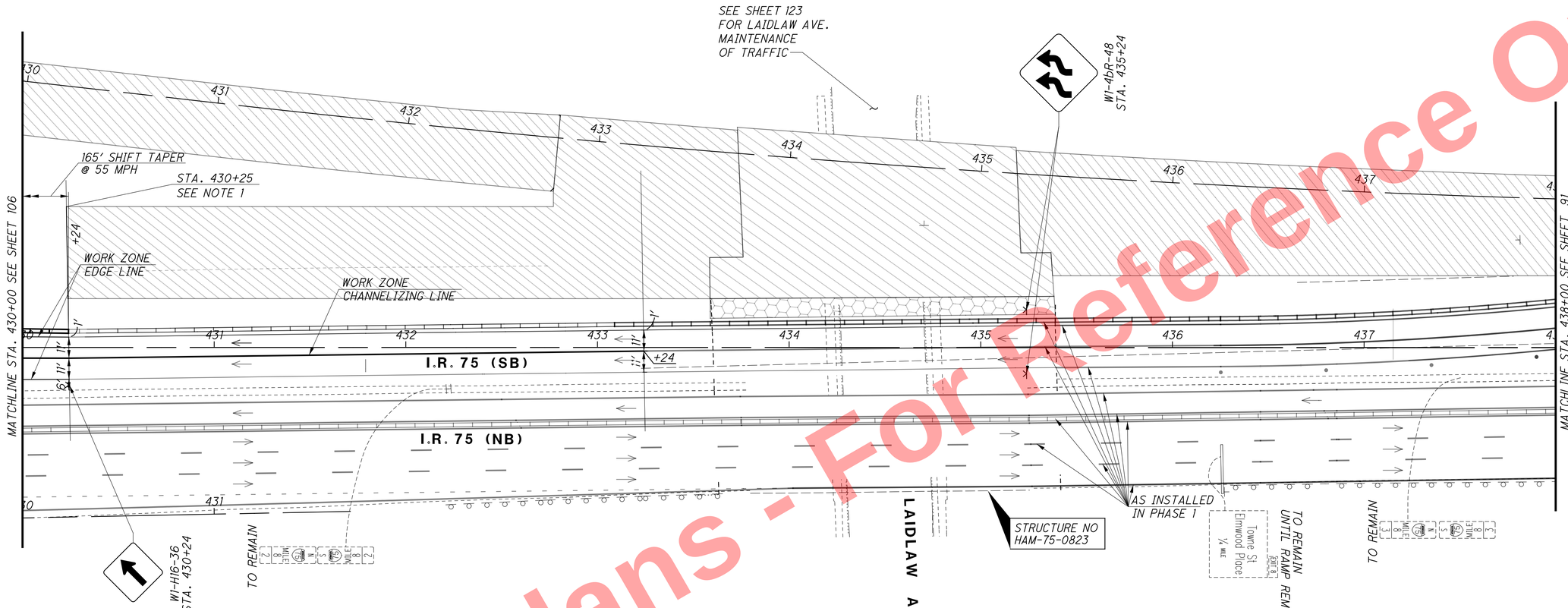

NOTES:
1. THIS IS AN OPTIONAL SET-UP THAT CAN BE UTILIZED ONCE ALL IR-75 SB PHASE 1 WORK IS COMPLETED SOUTH OF STA. 430+25. THIS SET-UP ALLOWS FOR AN EARLY START ON PHASE 2 STRUCTURE WORK OVER RAMP J. ALL PHASE 1 WORK NORTH OF STA. 430+50 MAY CONTINUE DURING PART 2.

LEGEND

- PORTABLE BARRIER
- EXISTING SIGN SUPPORT
- OPEN TRAVEL LANE
- TEMPORARY SIGN SUPPORT
- PHASE 1 WORK ZONE

HORIZONTAL SCALE IN FEET
0 15 30 60

CALCULATED RLS
CHECKED SMM

MAINTENANCE OF TRAFFIC PLAN - PHASE 1 - PT. 2
I.R. 75 - STA. 430+00 TO STA. 438+00

HAM-75-7.85

107
1047

Preliminary Plans - For Reference Only

J:\20110903\ODOT\HAM\77889\mot\sheets\77889MP364.dgn 5/22/2026 10:09:59 AM hbrendlinger

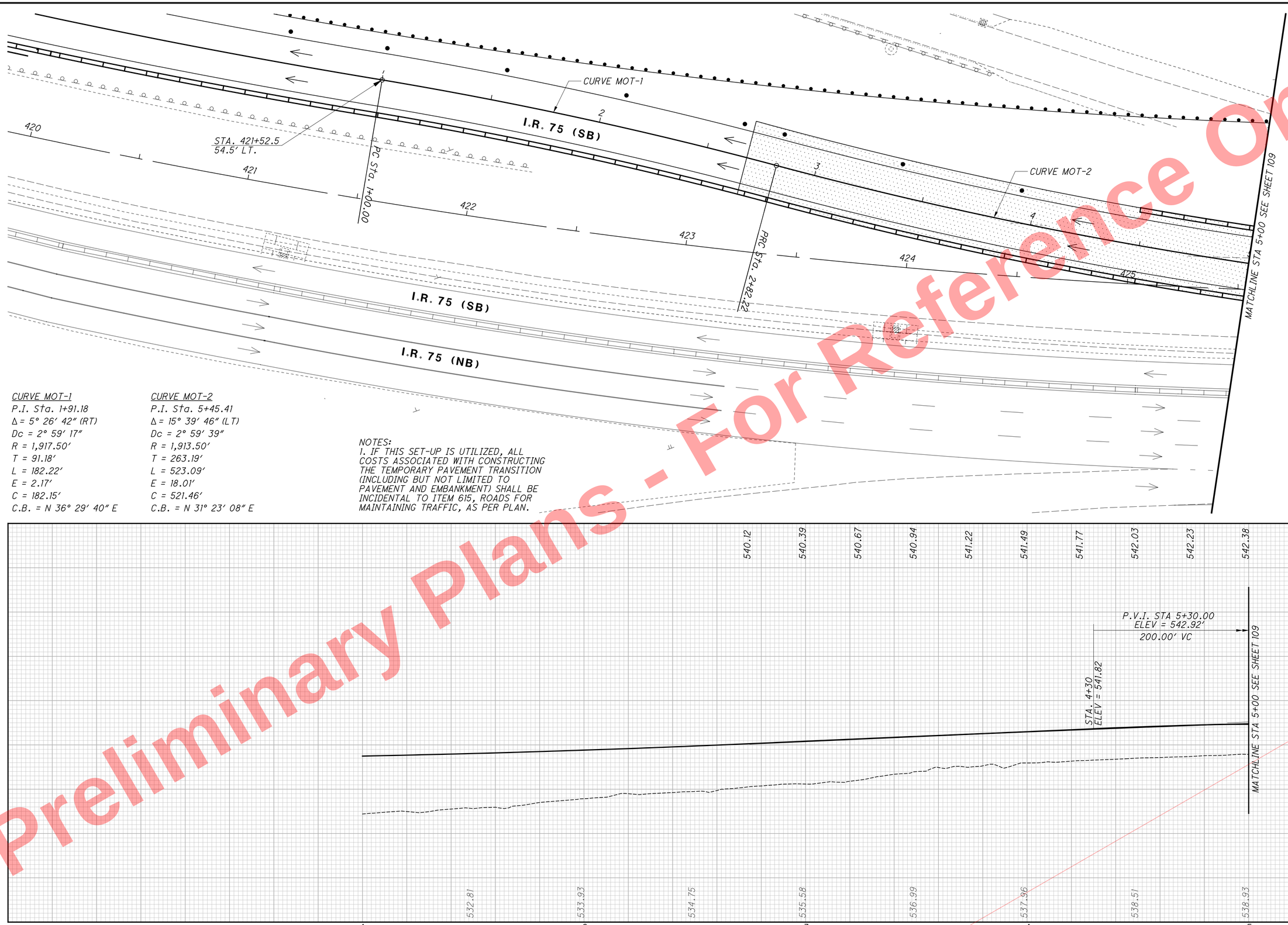

CURVE MOT-1
P.I. Sta. 1+91.18
Δ = 5° 26′ 42″ (RT)
Dc = 2° 59′ 17″
R = 1,917.50′
T = 91.18′
L = 182.22′
E = 2.17′
C = 182.15′
C.B. = N 36° 29′ 40″ E

CURVE MOT-2
P.I. Sta. 5+45.41
Δ = 15° 39′ 46″ (LT)
Dc = 2° 59′ 39″
R = 1,913.50′
T = 263.19′
L = 523.09′
E = 18.01′
C = 521.46′
C.B. = N 31° 23′ 08″ E

NOTES:
1. IF THIS SET-UP IS UTILIZED, ALL COSTS ASSOCIATED WITH CONSTRUCTING THE TEMPORARY PAVEMENT TRANSITION (INCLUDING BUT NOT LIMITED TO PAVEMENT AND EMBANKMENT) SHALL BE INCIDENTAL TO ITEM 615, ROADS FOR MAINTAINING TRAFFIC, AS PER PLAN.

Preliminary Plans - For Reference Only

HORIZONTAL SCALE IN FEET
0 10 20 40

CALCULATED BLM
CHECKED HDB

MOT PAVEMENT TRANSITION DETAILS - PHASE 1 - PART 2
STA. 1+00 TO STA. 5+00

HAM-75-7.85

108
1047

J:\2011\0903\00DOT\HAM\77889\mot\sheets\77889MP365.dgn 5/22/2026 10:10:03 AM hbrendlinger

CURVE MOT-2
P.I. Sta. 5+45.41
Δ = 15° 39′ 46″ (LT)
Dc = 2° 59′ 39″
R = 1,913.50′
T = 263.19′
L = 523.09′
E = 18.01′
C = 521.46′
C.B. = N 31° 23′ 08″ E

NOTES:
1. IF THIS SET-UP IS UTILIZED, ALL COSTS ASSOCIATED WITH CONSTRUCTING THE TEMPORARY PAVEMENT TRANSITION (INCLUDING BUT NOT LIMITED TO PAVEMENT AND EMBANKMENT) SHALL BE INCIDENTAL TO ITEM 615, ROADS FOR MAINTAINING TRAFFIC, AS PER PLAN.

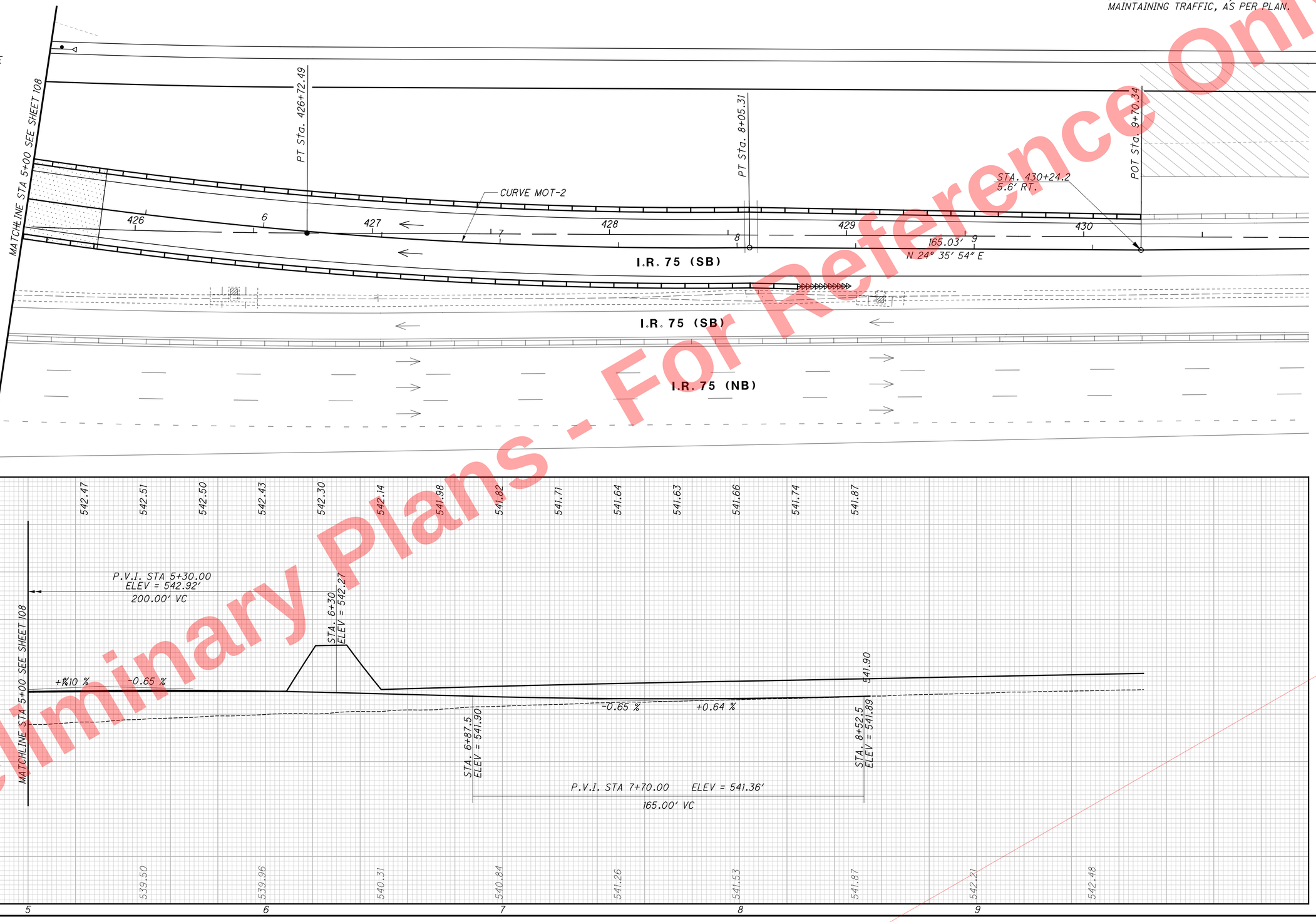

HORIZONTAL SCALE IN FEET
0 10 20 40

CALCULATED BLM
CHECKED HDB

MOT PAVEMENT TRANSITION DETAILS - PHASE 1 - PART 2
STA. 5+00 TO STA. 9+70.34

HAM-75-7.85

109
1047

Preliminary Plans - For Reference Only

J:\2011\0903\ODOT\HAM\77889\mot\sheets\77889MP365.dgn 5/22/2026 10:10:03 AM hbrendlinger

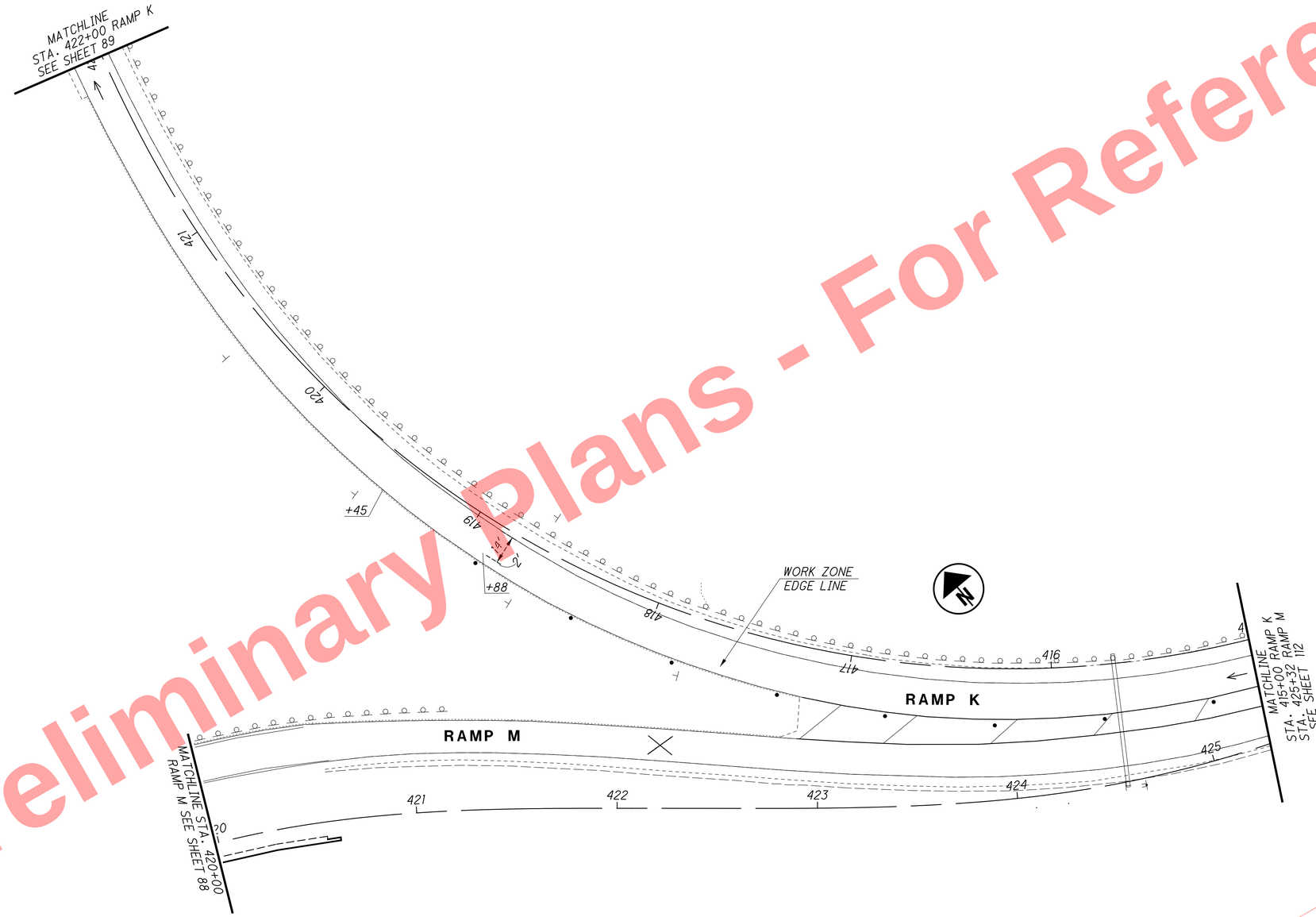

MAINTENANCE OF TRAFFIC PLAN - PHASE 1
RAMP K - STA. 415+00 TO STA. 422+00

HAM-75-7.85

110
1047

CALCULATED RLS
CHECKED SMM

0 15 30 60
HORIZONTAL SCALE IN FEET

Preliminary Plans - For Reference Only

J:\20110903\ODOT\HAM\7889\mot\sheets\77889MP073.dgn 5/22/2026 10:10:05 AM hbrendlinger

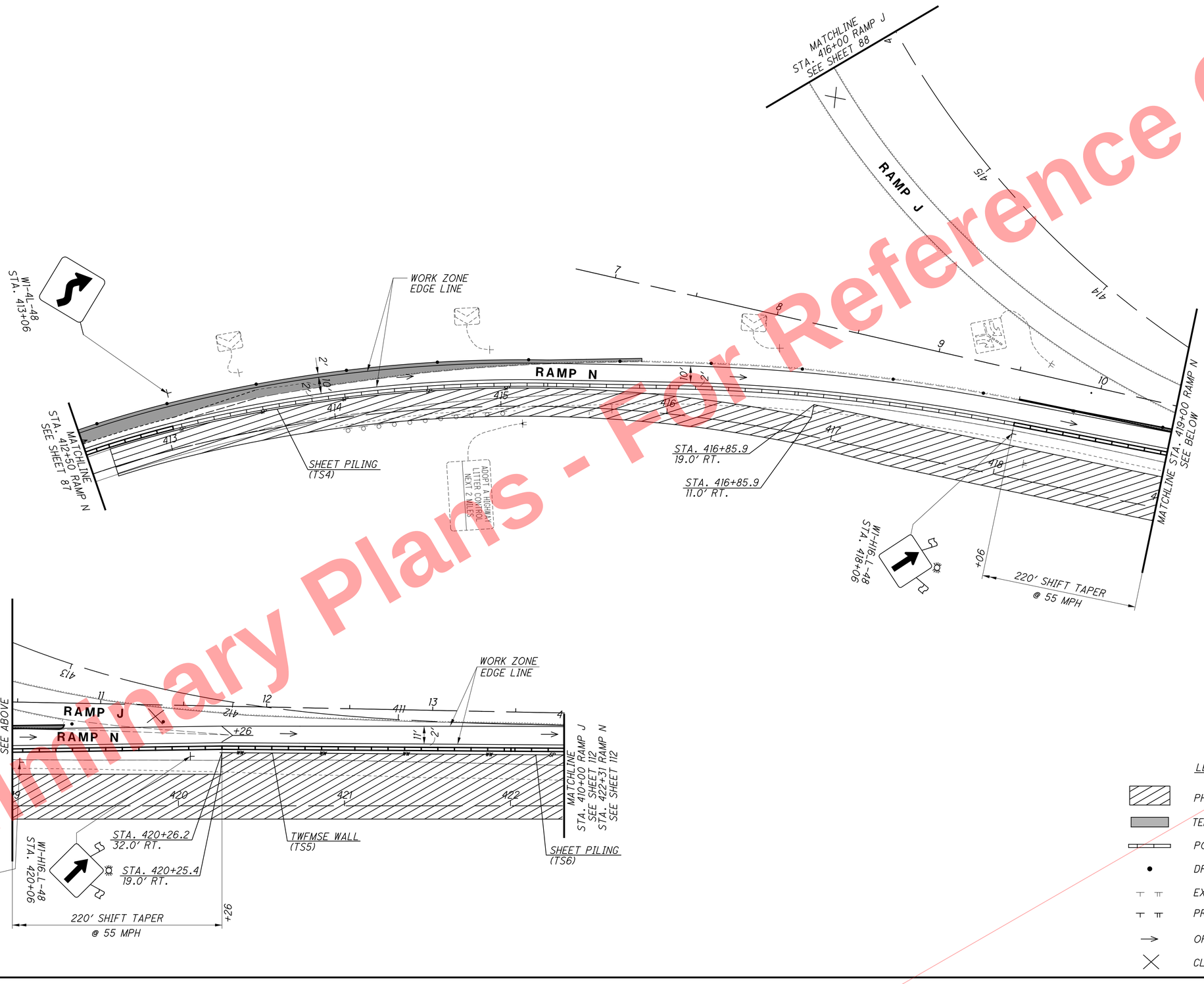

Preliminary Plans - For Reference Only

HORIZONTAL SCALE IN FEET
0 15 30 60

CALCULATED RLS
CHECKED SMM

MAINTENANCE OF TRAFFIC PLAN - PHASE 1
RAMP N - STA. 412+50 TO STA. 422+31

HAM-75-7.85

111
1047

J:\20110903\ODOT\HAM\77889\mot\sheets\77889MP306.dgn 5/22/2026 10:10:06 AM hbrendlinger

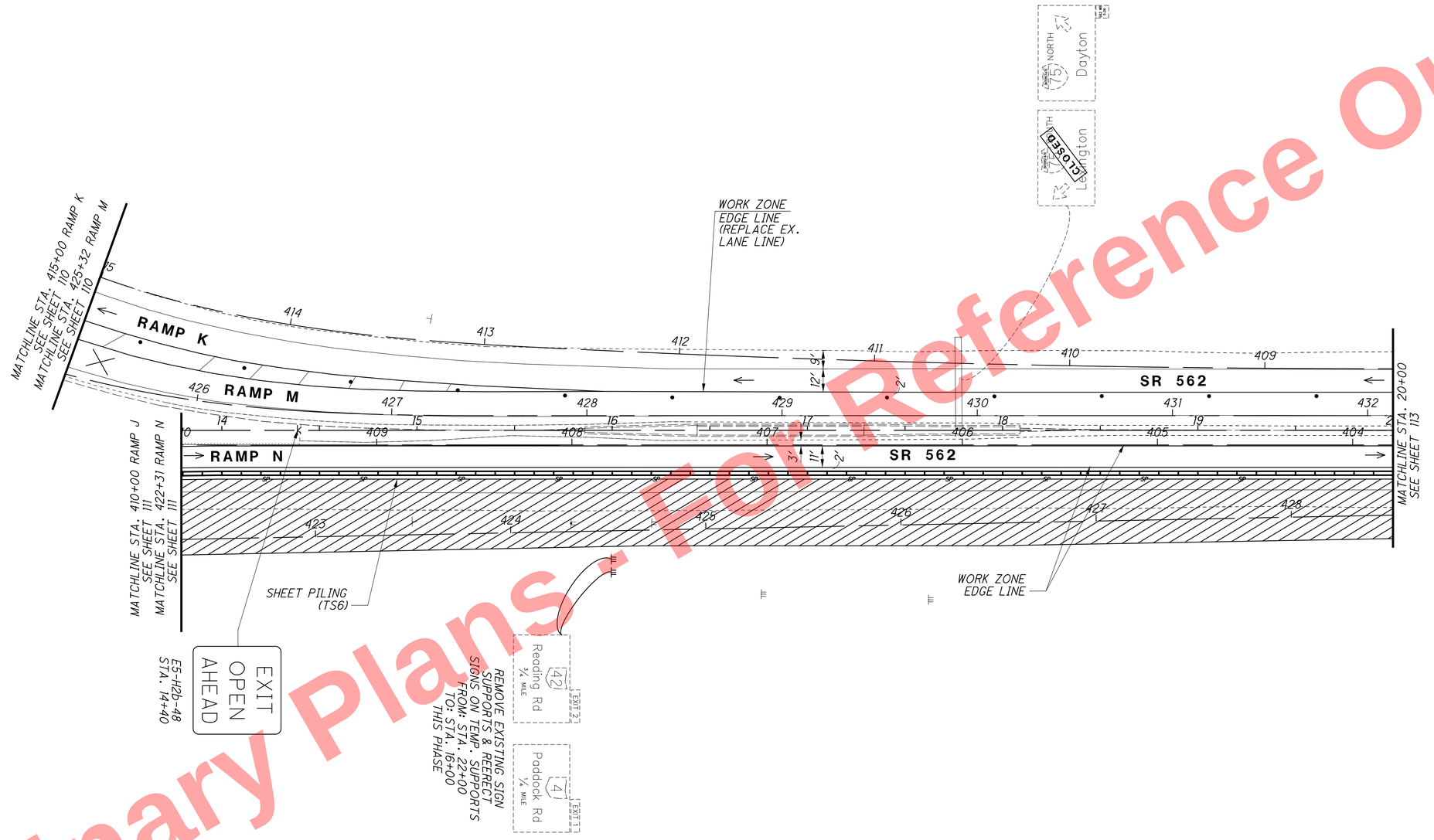

NOTES:
1. THE CONTRACTOR SHALL REVIEW THE UTILITY PLANS AND HAVE ALL UNDERGROUND UTILITIES MARKED IN THE FIELD PRIOR TO PLACING SHEET PILING.

LEGEND

- PHASE 1 WORK ZONE
- PORTABLE BARRIER
- IMPACT ATTENUATOR
- DRUM
- TYPE III BARRICADE
- PROPOSED SIGN SUPPORT
- OPEN TRAVEL LANE
- CLOSED TRAVEL LANE

HORIZONTAL SCALE IN FEET

CALCULATED RLS
CHECKED SMM

MAINTENANCE OF TRAFFIC PLAN - PHASE 1
S.R 562 - STA. 13+80 TO STA. 20+00

HAM-75-7.85

112
1047

Preliminary Plans - Not For Construction
Preliminary Plans - Not For Reference Only

J:\20110903\ODOT\HAM\7889\mot\sheets\77889MP196.dgn 5/22/2026 10:10:08 AM hbrendlinger

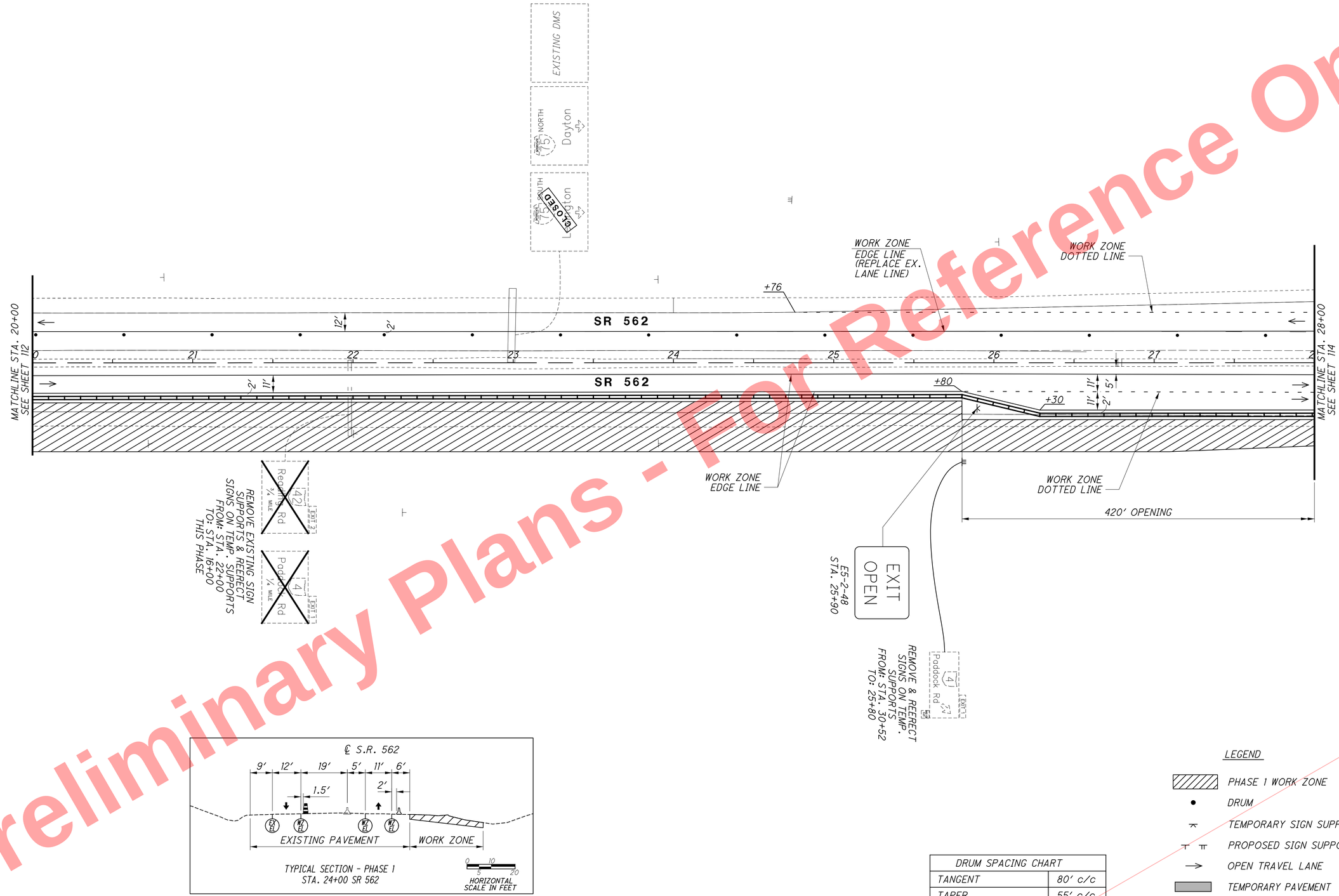

DRUM SPACING CHART	
TANGENT	80' c/c
TAPER	55' c/c
RADII	10' c/c

Preliminary Plans - Not For Reference Only

N

0 15 30 60
HORIZONTAL
SCALE IN FEET

CALCULATED RLS
CHECKED SMM

MAINTENANCE OF TRAFFIC PLAN - PHASE 1 - PT. 1
S.R. 562 - STA. 20+00 TO STA. 28+00

HAM-75-7.85

113
1047

J:\2011093\ODOT\HAM\77889\mot\sheets\77889MP197.dgn 5/22/2026 10:10:09 AM hbrendlinger

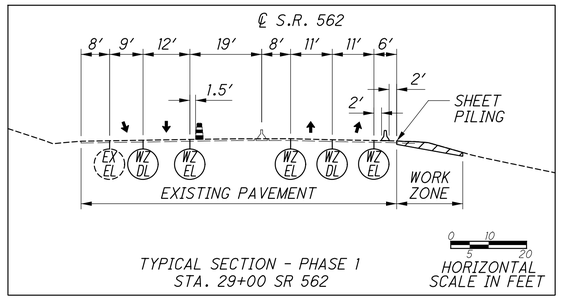

TYPICAL SECTION - PHASE 1
STA. 29+00 SR 562

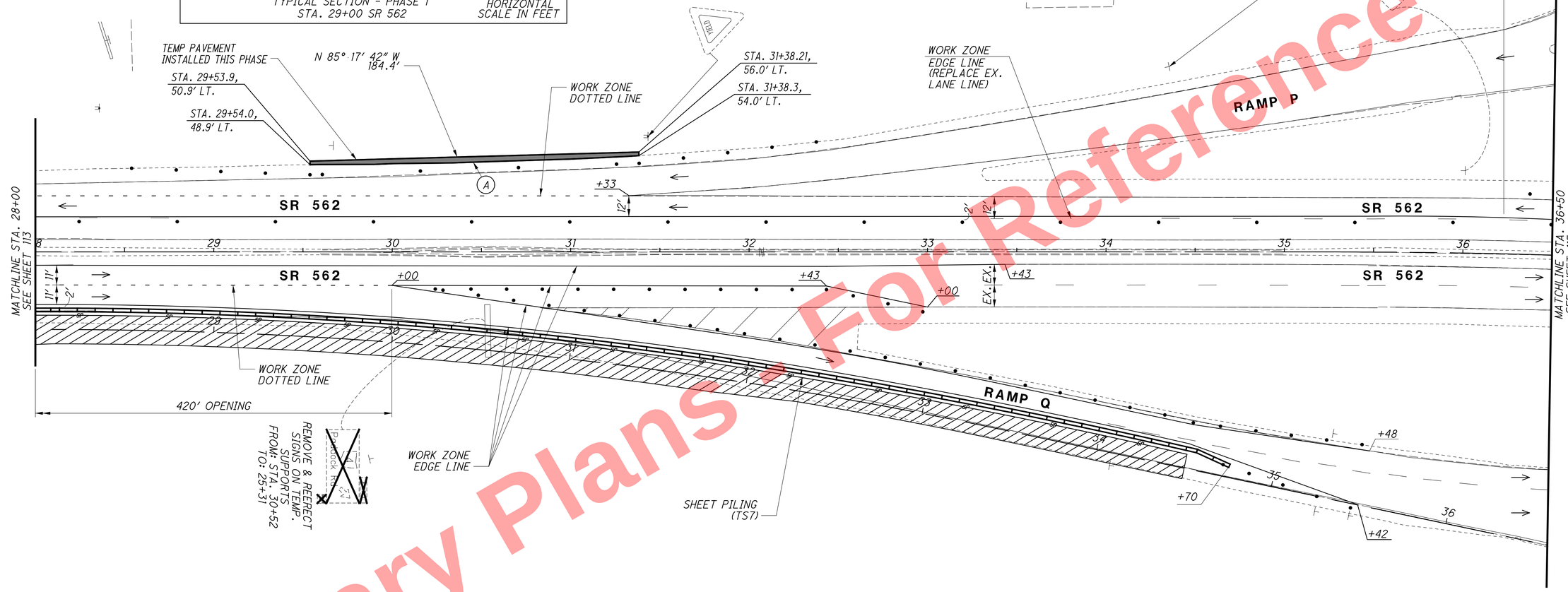

Ⓐ MEET/MATCH EDGE OF SHOULDER

DRUM SPACING CHART	
TANGENT	80′ c/c
TAPER	55′ c/c
RADII	10′ c/c

LEGEND

- PHASE 1 WORK ZONE
- DRUM
- TEMPORARY SIGN SUPPORT
- EXISTING SIGN SUPPORT
- OPEN TRAVEL LANE
- TEMPORARY PAVEMENT
- PORTABLE BARRIER

HORIZONTAL SCALE IN FEET
0 15 30 60

CALCULATED RLS
CHECKED SMM

MAINTENANCE OF TRAFFIC PLAN - PHASE 1 - PT. 1
S.R. 562 - STA. 28+00 TO STA. 36+50

HAM-75-7.85

114
1047

Preliminary Plans For Reference Only

J:\20110903\ODOT\HAM\77889\mot\sheets\77889MP251.dgn 5/22/2026 10:10:10 AM hbrendlinger

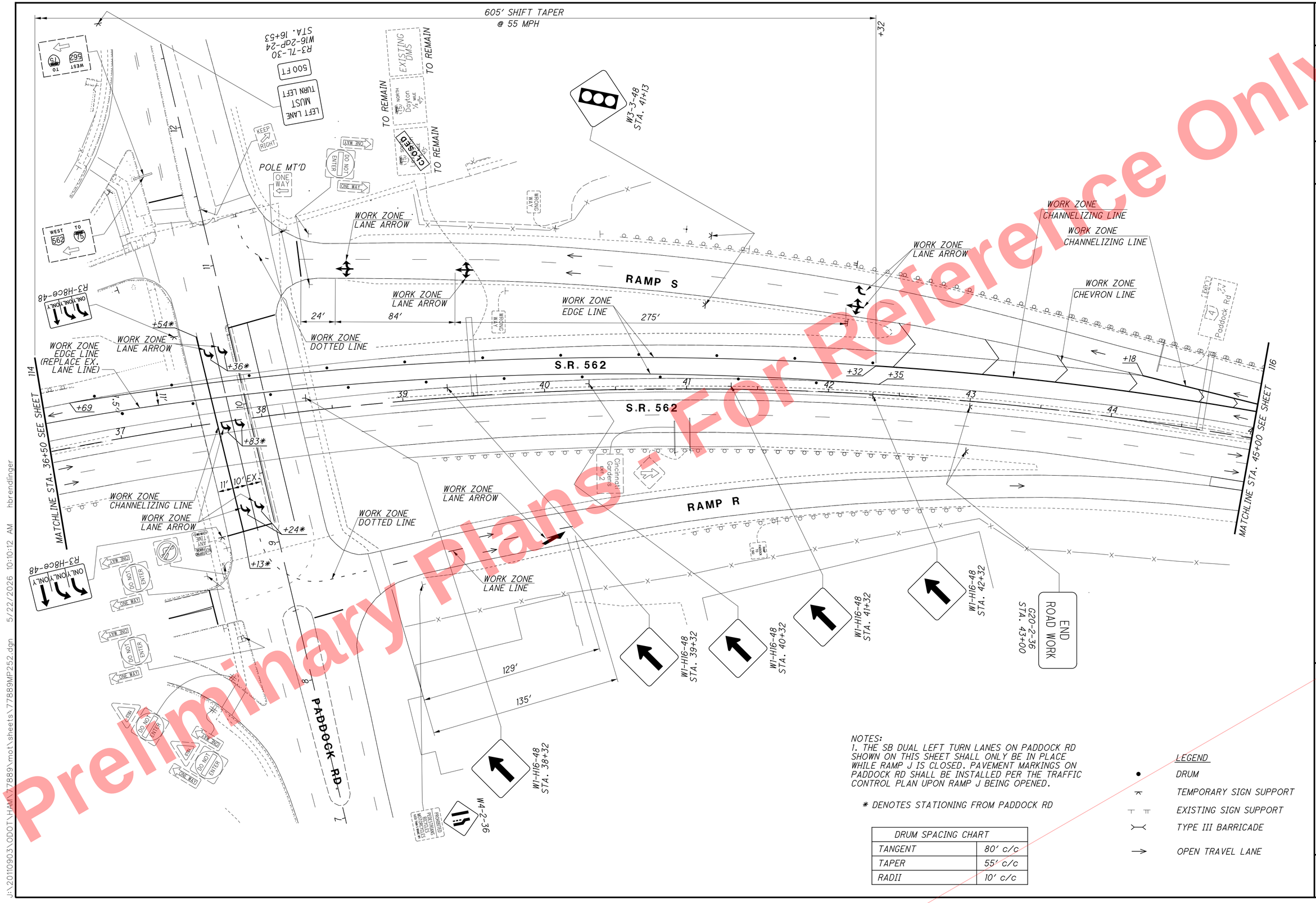

NOTES:
1. THE SB DUAL LEFT TURN LANES ON PADDOCK RD SHOWN ON THIS SHEET SHALL ONLY BE IN PLACE WHILE RAMP J IS CLOSED. PAVEMENT MARKINGS ON PADDOCK RD SHALL BE INSTALLED PER THE TRAFFIC CONTROL PLAN UPON RAMP J BEING OPENED.

* DENOTES STATIONING FROM PADDOCK RD

DRUM SPACING CHART	
TANGENT	80' c/c
TAPER	55' c/c
RADII	10' c/c

LEGEND
- DRUM
- TEMPORARY SIGN SUPPORT
- EXISTING SIGN SUPPORT
- TYPE III BARRICADE
- OPEN TRAVEL LANE

HORIZONTAL SCALE IN FEET
0 15 30 60

CALCULATED RLS
CHECKED SMM

MAINTENANCE OF TRAFFIC PLAN - PHASE 1 - PT. 1
S.R. 562 - STA. 36+50 TO STA. 45+00

HAM-75-7.85

115
1047

J:\20110903\ODOT\HAM\77889\mot\sheets\77889MP252.dgn 5/22/2026 10:10:12 AM hbrendlinger

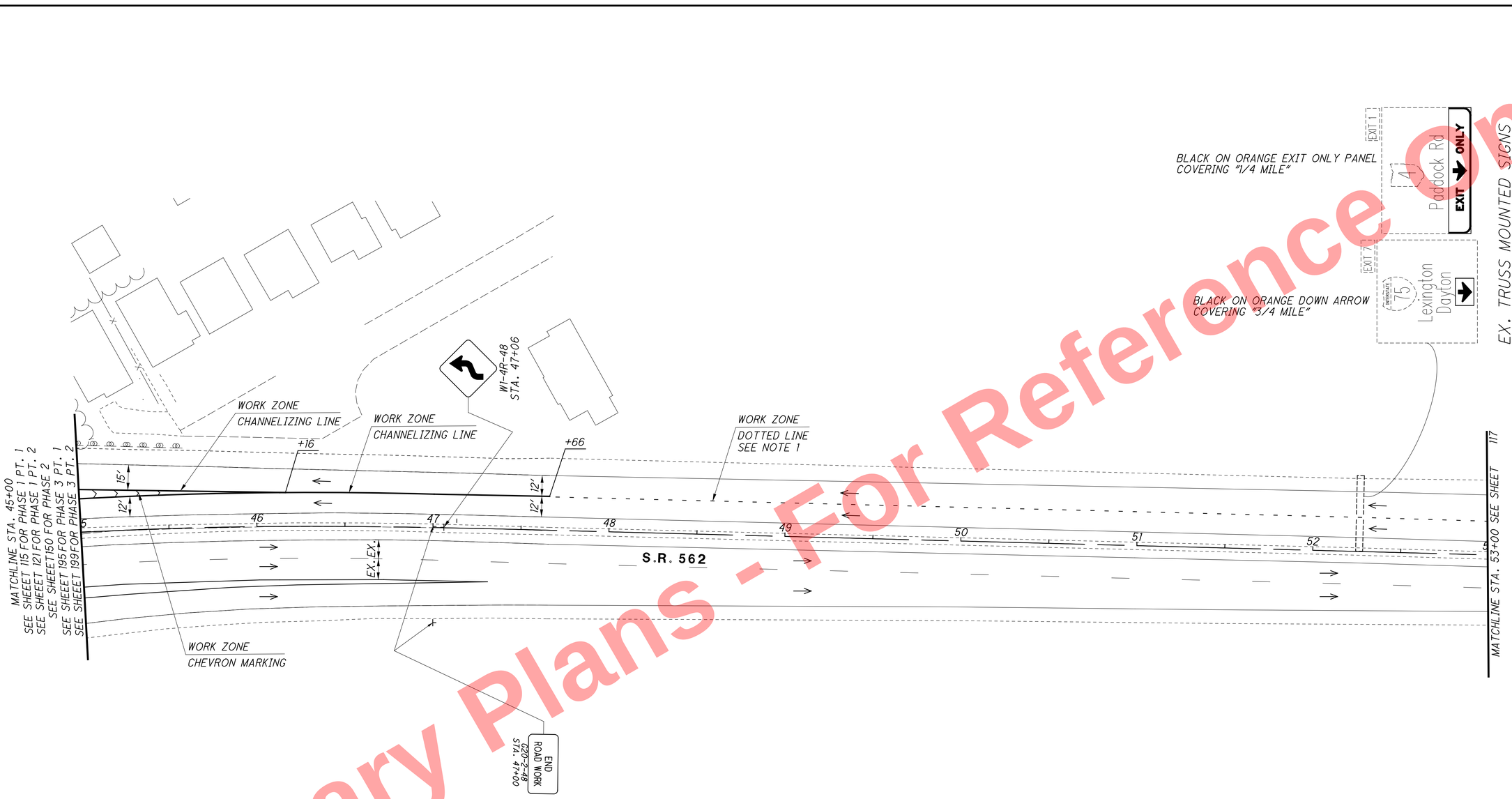

Preliminary Plans - For Reference Only

NOTES

1. AT THE CONCLUSION OF PHASE 3, THE WORK ZONE DOTTED LINE SHALL BE REMOVED AND REPLACED WITH A WORK ZONE LANE LINE.

LEGEND

- PROPOSED SIGN SUPPORT
- OPEN TRAVEL LANE

HORIZONTAL SCALE IN FEET
0 15 30 60

CALCULATED RLS
CHECKED SMM

MAINTENANCE OF TRAFFIC PLAN - PHASES 1, 2 & 3
S.R. 562 - STA. 45+00 TO STA. 53+00

HAM-75-7.85

116
1047

J:\20110903\ODOT\HAM\77889\mot\sheets\77889MP265.dgn 5/22/2026 10:10:15 AM hbrendlinger

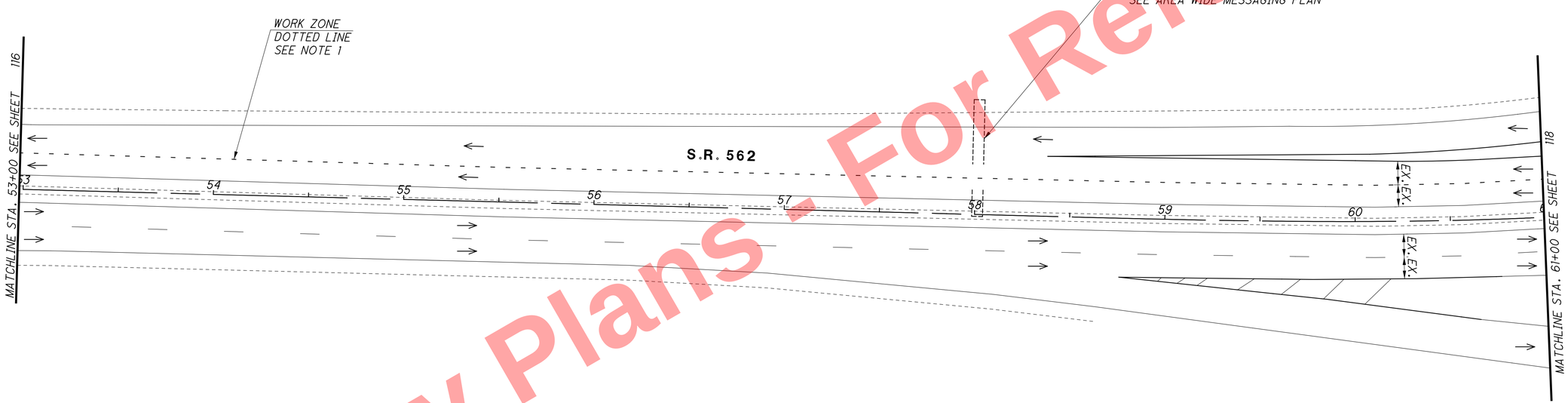

NOTES

1. AT THE CONCLUSION OF PHASE 3, THE WORK ZONE DOTTED LINE SHALL BE REMOVED AND REPLACED WITH A WORK ZONE LANE LINE.

DRUM SPACING CHART	
TANGENT	80' c/c
TAPER	55' c/c
RADII	10' c/c

LEGEND

→ OPEN TRAVEL LANE

Preliminary Plans - For Reference Only

J:\20110903\ODOT\HAM\77889\mot\sheets\77889MP335.dgn 5/22/2026 10:10:18 AM hbrendlinger

N

0 15 30 60
HORIZONTAL SCALE IN FEET

CALCULATED RLS
CHECKED SMM

TRAFFIC PLAN - PHASES 1, 2 & 3

MAINTENANCE OF TRAFFIC
S.R. 562 - STA. 53+00 TO STA. 61+00

HAM-75-7.85

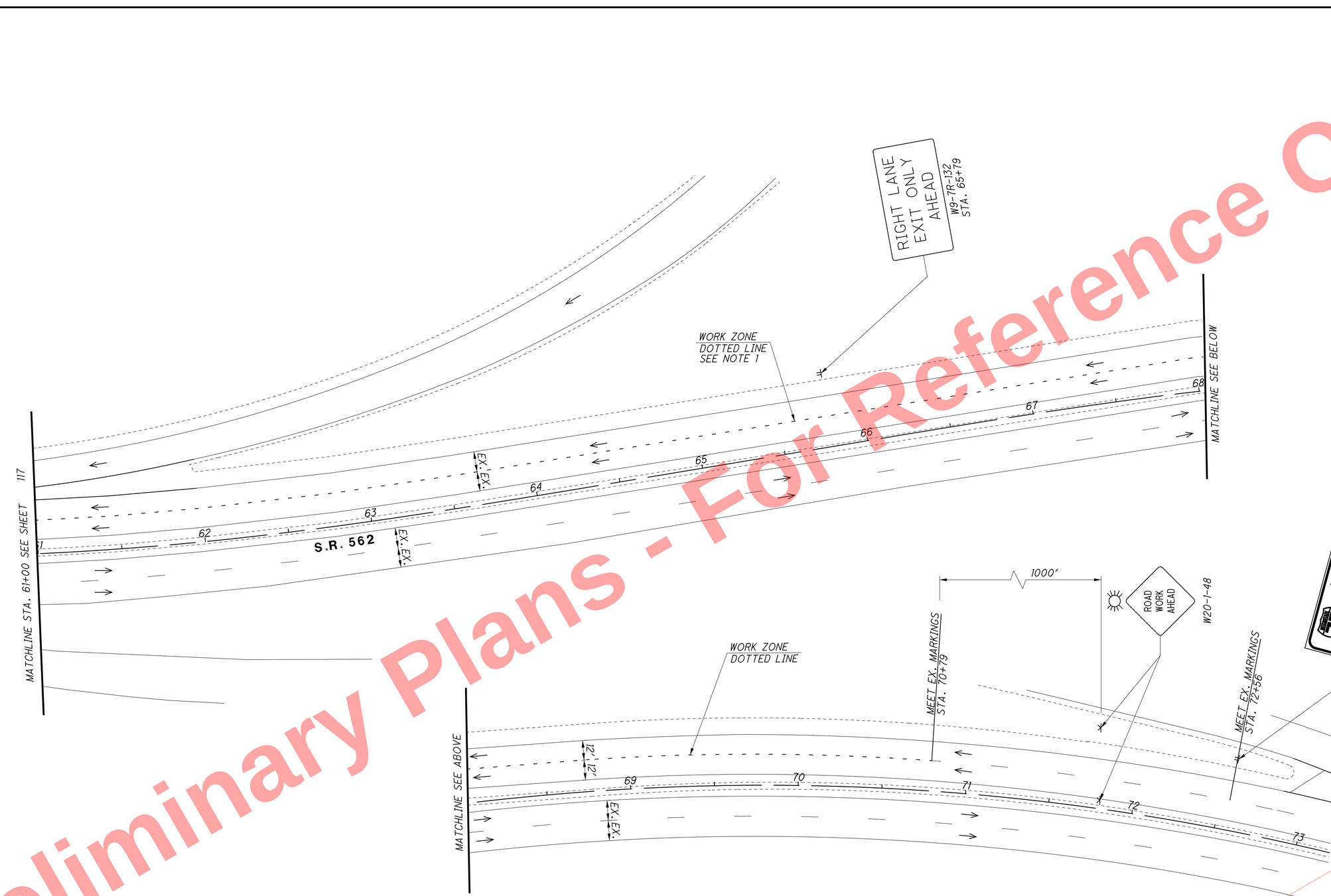

NOTES

1. AT THE CONCLUSION OF PHASE 3, THE WORK ZONE DOTTED LINE SHALL BE REMOVED AND REPLACED WITH A WORK ZONE LANE LINE.

LEGEND

- TEMPORARY SIGN SUPPORT
- PROPOSED SIGN SUPPORT
- OPEN TRAVEL LANE

HORIZONTAL SCALE IN FEET
0 15 30 60

CALCULATED RLS
CHECKED SMM

MAINTENANCE OF TRAFFIC PLAN - PHASES 1, 2 & 3
S.R. 562 - STA. 61+00 TO STA. 73+00

HAM-75-7.85

118
1047

Preliminary Plans - For Reference Only

J:\20110903\ODOT\HAM\77889\mot\sheets\77889MP336.dgn 5/22/2026 10:10:20 AM hbrendlinger

PART 2 ADVANCED SIGN UPDATES:

- FOR THE PART 2 RAMP CLOSURE, THE CONTRACTOR SHALL REMOVE OR COVER THE E5-H2b (STA. 14+40) AND E5-2 (STA. 25+90) SIGNS. ADDITIONALLY, THE RELOCATED GUIDE SIGN SHALL BE MODIFIED AS SHOWN BELOW:





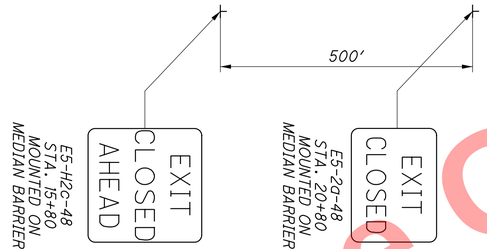

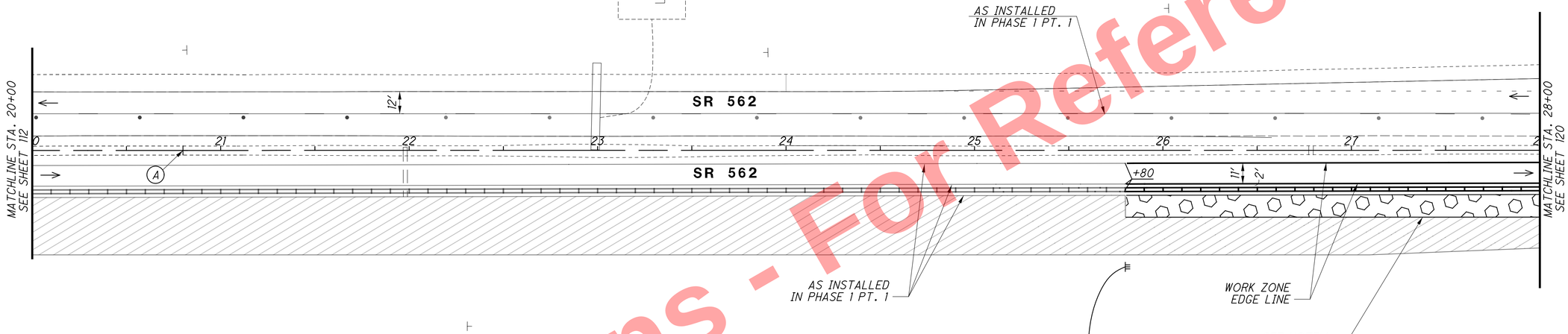



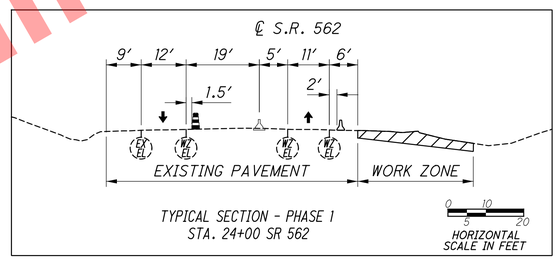

NOTES:
1. RAMP Q MAY BE CLOSED FOR UP TO 30 DAYS. SEE SHEET 128 FOR DETOUR PLAN.

DRUM SPACING CHART	
TANGENT	80' c/c
TAPER	55' c/c
RADII	10' c/c

LEGEND

- PHASE 1 WORK ZONE
- PHASE 1 PT. 2 WORK ZONE
- DRUM
- OPEN TRAVEL LANE
- PORTABLE BARRIER
- PROPOSED SIGN SUPPORT

Preliminary Plans - For Reference Only

J:\20110903\ODOT\HAM\77889\mot\sheets\77889MP343.dgn 5/22/2026 10:10:21 AM hbrendlinger

N

0 15 30 60
HORIZONTAL
SCALE IN FEET

CALCULATED RLS
CHECKED SMM

MAINTENANCE OF TRAFFIC PLAN - PHASE 1 - PT. 2
S.R. 562 - STA. 20+00 TO STA. 28+00

HAM-75-7.85

119
1047

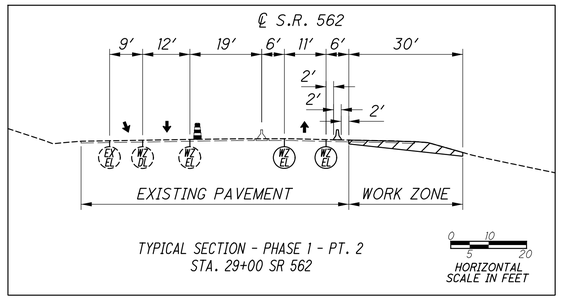

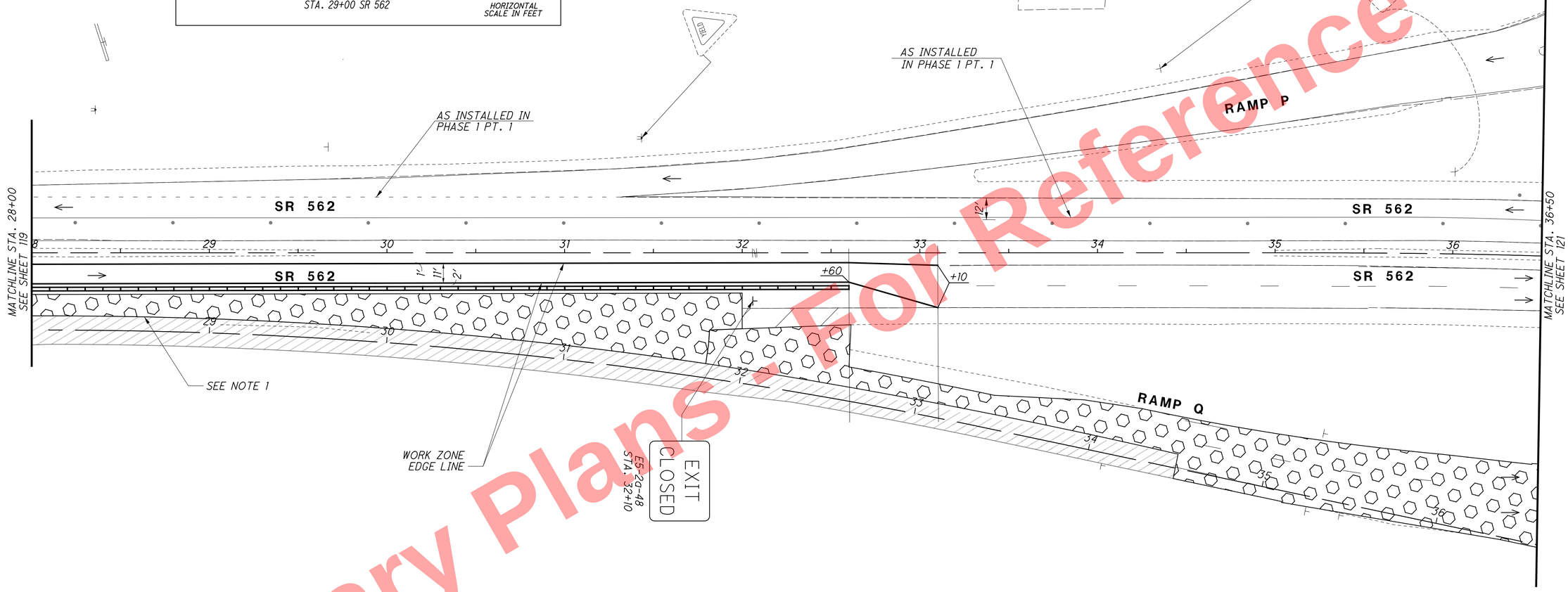

NOTES:
1. RAMP Q MAY BE CLOSED FOR UP TO 30 DAYS. SEE SHEET 128 FOR DETOUR PLAN.

DRUM SPACING CHART	
TANGENT	80′ c/c
TAPER	55′ c/c
RADII	10′ c/c

LEGEND

- PHASE 1 WORK ZONE
- PHASE 1 PT. 2 WORK ZONE
- DRUM
- PROPOSED SIGN SUPPORT
- EXISTING SIGN SUPPORT
- OPEN TRAVEL LANE
- TEMPORARY PAVEMENT
- PORTABLE BARRIER

HORIZONTAL SCALE IN FEET
0 15 30 60

CALCULATED RLS
CHECKED SMM

MAINTENANCE OF TRAFFIC PLAN - PHASE 1 - PT. 2
S.R. 562 - STA. 28+00 TO STA. 36+50

HAM-75-7.85

120
1047

Preliminary Plans - For Reference Only

J:\20110903\ODOT\HAM\77889\mot\sheets\77889MP344.dgn 5/22/2026 10:10:23 AM hbrendlinger

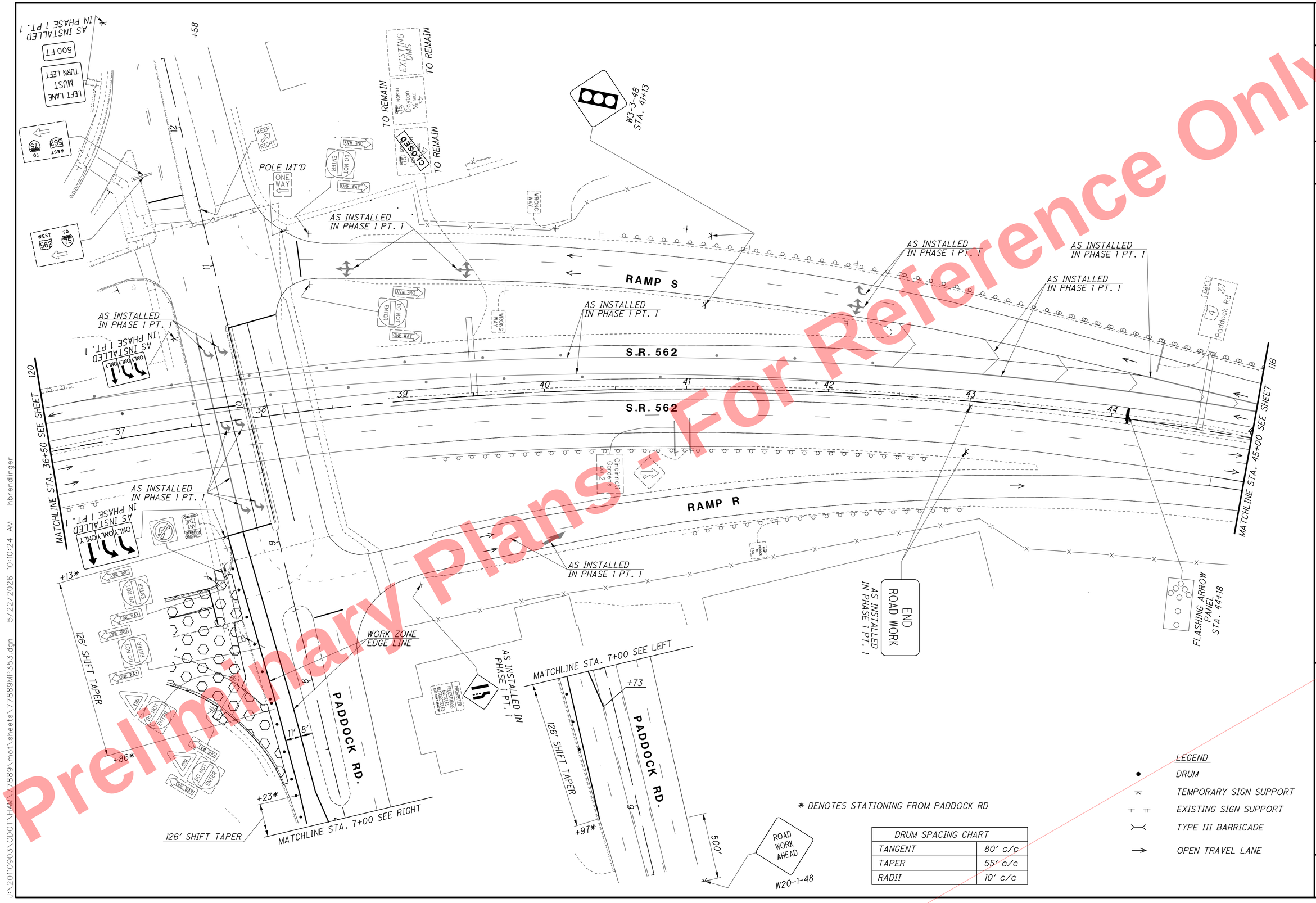

Preliminary Plans - For Reference Only

J:\20110903\ODOT\HAM\77889\mot\sheets\77889MP353.dgn 5/22/2026 10:10:24 AM hbrendlinger

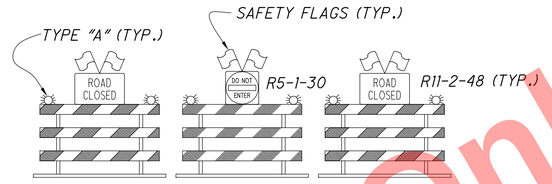

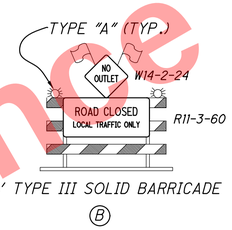

Preliminary Plans - For Reference Only

J:\20110903\ODOT\HAM\77889\mot\sheets\77889MP201.dgn 5/22/2026 10:10:26 AM hbrendlinger

HORIZONTAL SCALE IN FEET
0 15 30 60

CALCULATED RLS
CHECKED SMM

MAINTENACE OF TRAFFIC PLAN - PHASE 1
CEDAR STREET CLOSURE DETAIL

HAM-75-7.85

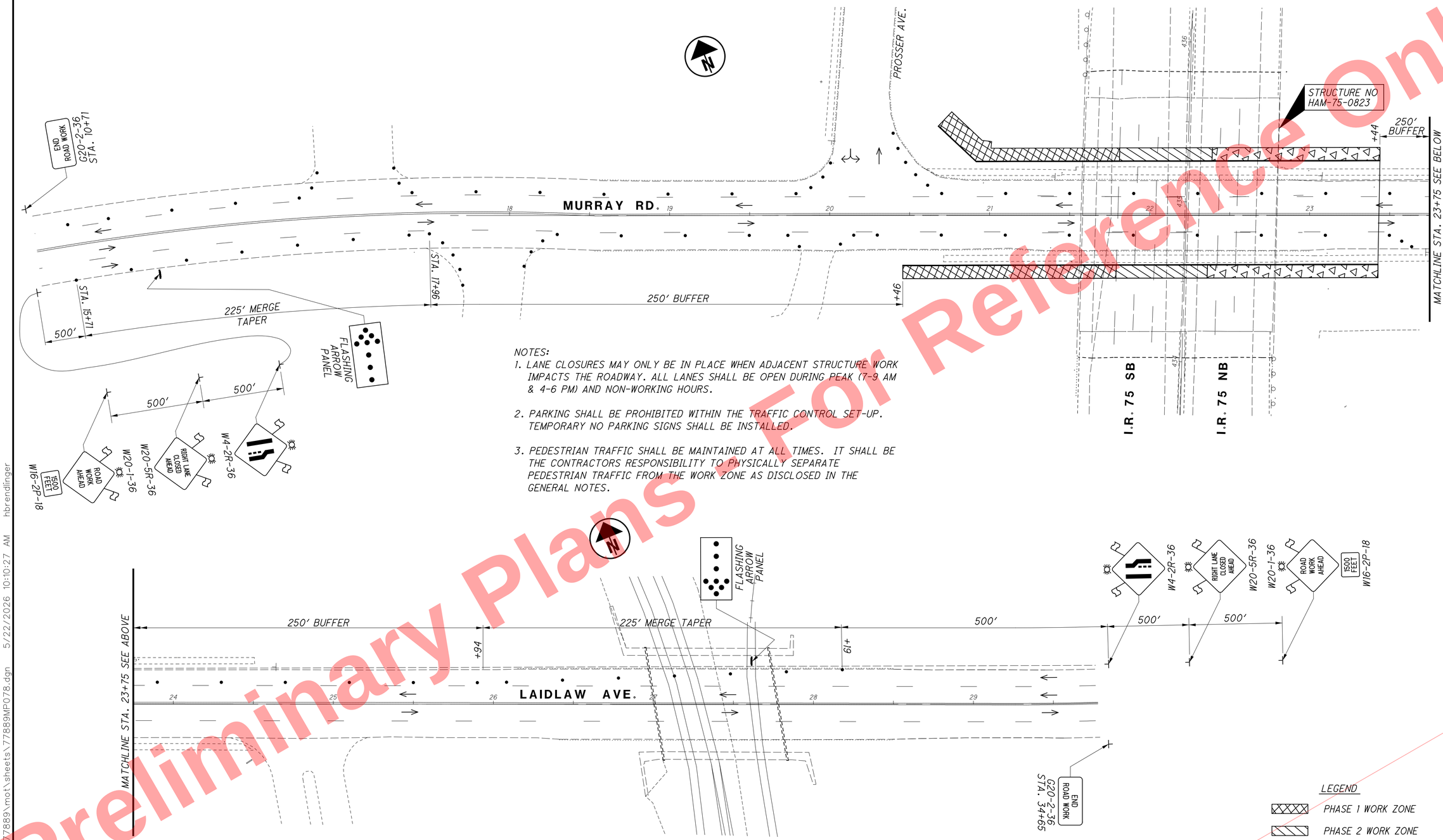

NOTES:

1. LANE CLOSURES MAY ONLY BE IN PLACE WHEN ADJACENT STRUCTURE WORK IMPACTS THE ROADWAY. ALL LANES SHALL BE OPEN DURING PEAK (7-9 AM & 4-6 PM) AND NON-WORKING HOURS.
2. PARKING SHALL BE PROHIBITED WITHIN THE TRAFFIC CONTROL SET-UP. TEMPORARY NO PARKING SIGNS SHALL BE INSTALLED.
3. PEDESTRIAN TRAFFIC SHALL BE MAINTAINED AT ALL TIMES. IT SHALL BE THE CONTRACTORS RESPONSIBILITY TO PHYSICALLY SEPARATE PEDESTRIAN TRAFFIC FROM THE WORK ZONE AS DISCLOSED IN THE GENERAL NOTES.

LEGEND

- PHASE 1 WORK ZONE
- PHASE 2 WORK ZONE
- PHASE 3 WORK ZONE
- DRUM
- FLASHING ARROW BOARD
- PROPOSED SIGN SUPPORT
- OPEN TRAVEL LANE

HORIZONTAL SCALE IN FEET
0 15 30 60

CALCULATED RLS
CHECKED SMM

MAINTENANCE OF TRAFFIC PLAN - PHASES 1-3
LAIDLAW AVE - STA. 15+50 TO STA. 29+75

HAM-75-7.85

123
1047

Preliminary Plans
For Reference Only

J:\20110903\ODOT\HAM\77889\mot\sheets\77889MP078.dgn 5/22/2026 10:10:27 AM hbrendlinger

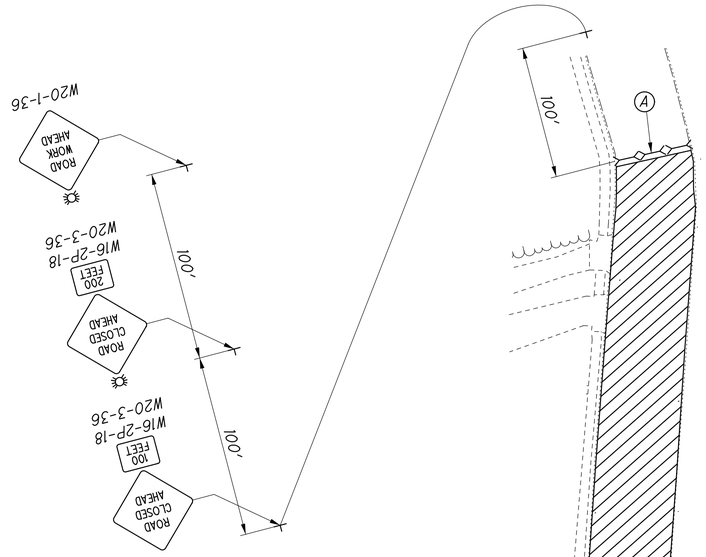

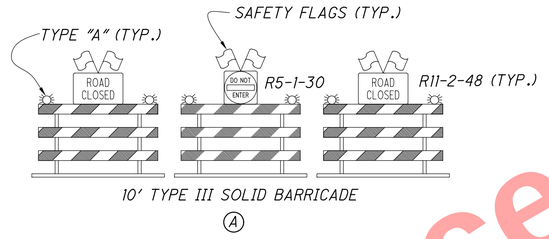

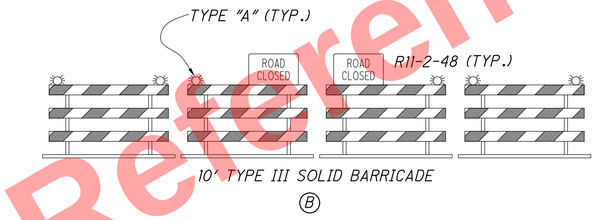

NOTES:
1. THE CONTRACTOR SHALL PHASE CONSTRUCTION TO MAINTAIN ACCESS TO DRIVEWAYS ON PROSSER AVE FROM AT LEASTONE DIRECTION AT ALL TIMES.
2. SEE SHEET125 FOR PEDESTRIAN AND VEHICULAR DETOURS.

Preliminary Plans - Not For Reference Only

J:\20110903\ODOT\HAM\77889\mot\sheets\77889MP366.dgn 5/22/2026 10:10:28 AM hbrendlinger

HORIZONTAL SCALE IN FEET
0 15 30 60

CALCULATED RLS
CHECKED SMM

MAINTENANCE OF TRAFFIC PLAN - PHASE 1
PROSSER AVE.

HAM-75-7.85

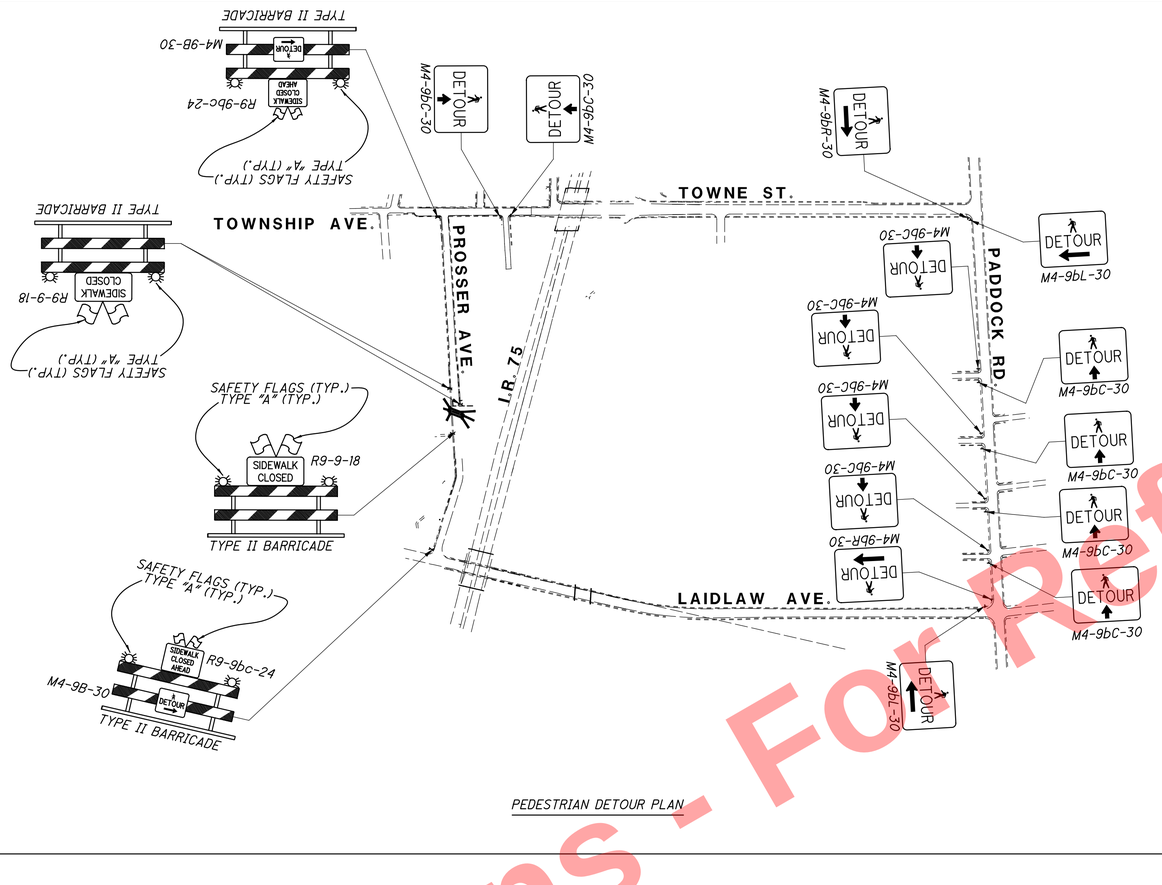

PEDESTRIAN DETOUR PLAN

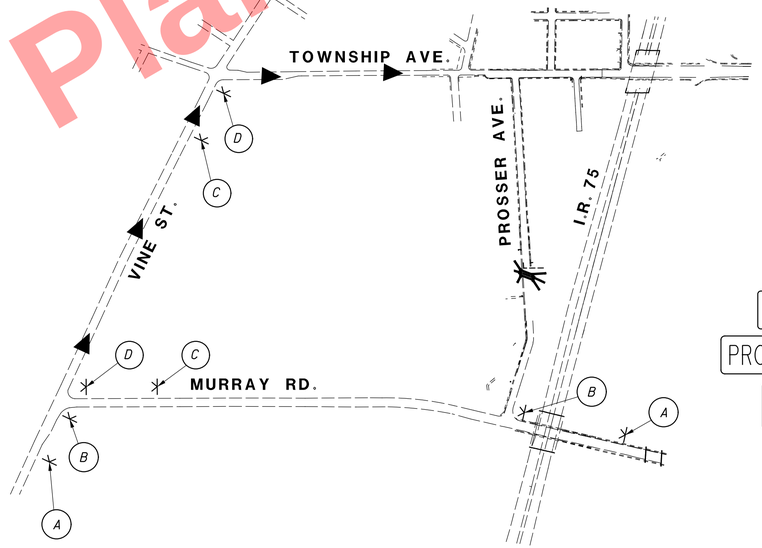

VEHICULAR DETOUR PLAN

LEGEND

- DETOUR ROUTE
- TEMPORARY SIGN SUPPORT
- TYPE III BARRICADE

SPECIAL
BLACK ON ORANGE
60"x48"

PROSSER AVE
CLOSED
FOLLOW DETOUR

A

DETOUR M4-8-30
PROSSER AVE SPECIAL BLACK ON ORANGE 48"x24"
M6-3-30

B

DETOUR M4-8-30
PROSSER AVE SPECIAL BLACK ON ORANGE 48"x24"
M5-1R-30

C

DETOUR M4-8-30
PROSSER AVE SPECIAL BLACK ON ORANGE 48"x24"
M6-1R-30

D

Preliminary Plans - For Reference Only

J:\20110903\ODOT\HAM\77889\mot\sheets\77889MP119.dgn 5/22/2026 10:10:30 AM hbrendlinger

N

0 300 600 1200
HORIZONTAL SCALE IN FEET

CALCULATED RLS
CHECKED SMM

MAINTENANCE OF TRAFFIC PLAN - PHASE 1
PROSSER AVE DETOUR PLANS

HAM-75-7.85



TRUSS MOUNTED SIGNS

(1)

CANTILEVER MOUNTED SIGN REMOVED

(2)



CANTILEVER MOUNTED SIGN

(3)



CANTILEVER MOUNTED SIGN

(4)



CANTILEVER MOUNTED SIGN

(5)

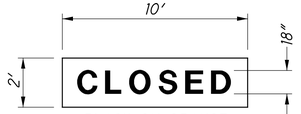

BLACK ON ORANGE OVERLAY "CLOSED" SIGN



GROUND MOUNTED SIGN

(6)

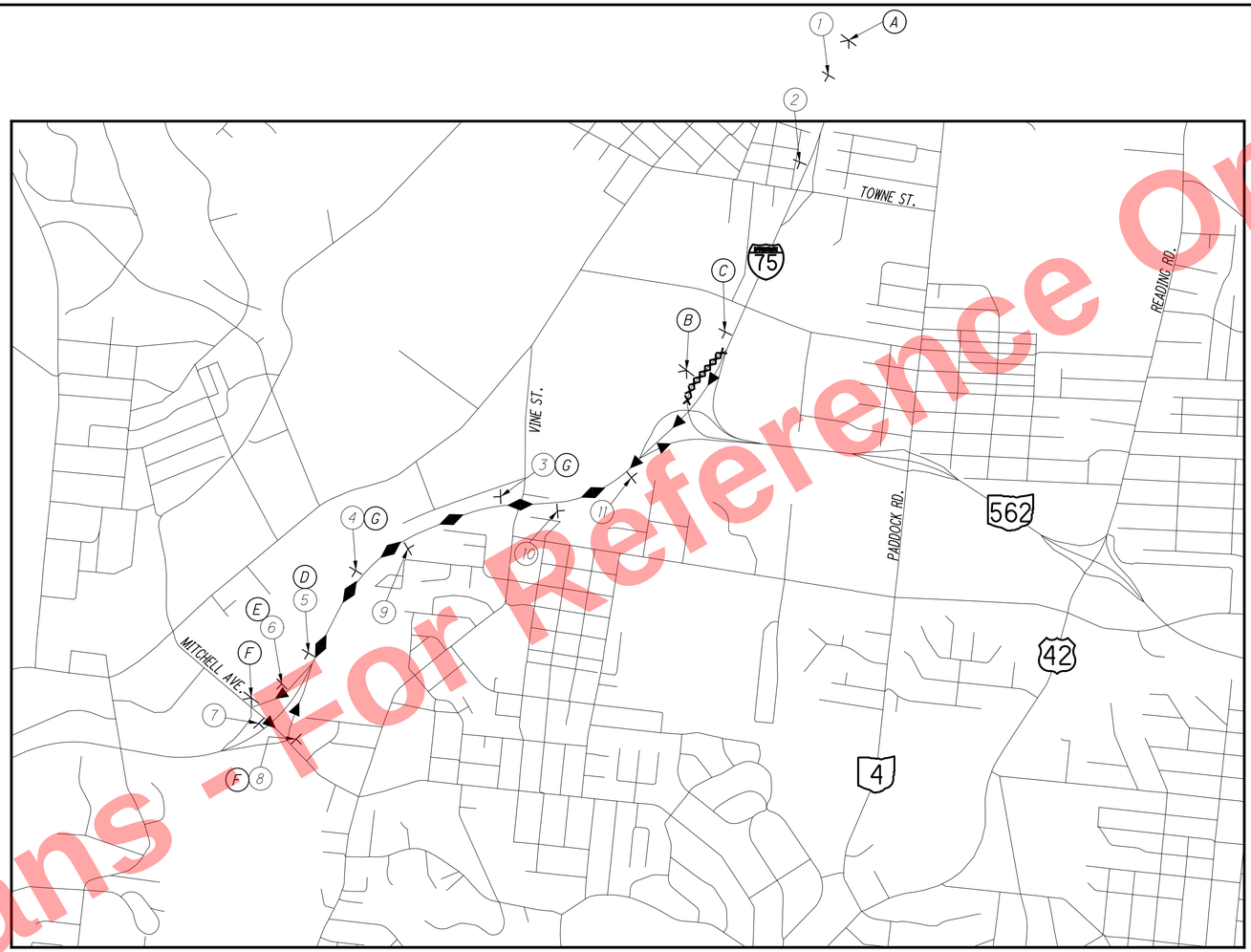



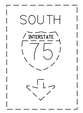

BRIDGE MOUNTED SIGNS

(7)



CANTILEVER MOUNTED SIGN

(8)

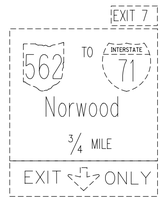

TRUSS MOUNTED SIGN

(9)

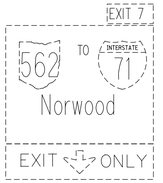

CANTILEVER MOUNTED SIGN

(10)



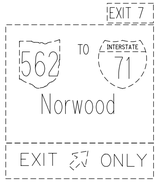

TRUSS MOUNTED SIGNS

(11)

PORTABLE CHANGEABLE MESSAGE SIGNS

DURING CLOSURE

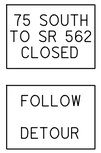

(A)

TWO WEEKS PRIOR TO CLOSURE



W20-H13-60

(B)

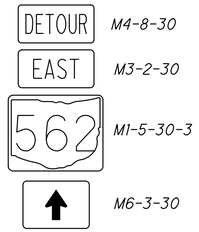

(C)

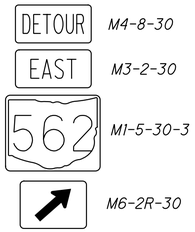

(D)

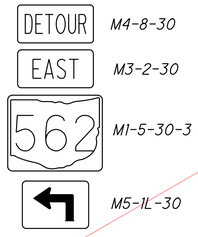

(E)

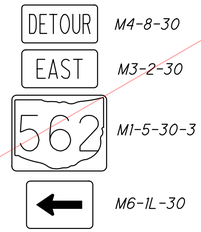

(F)

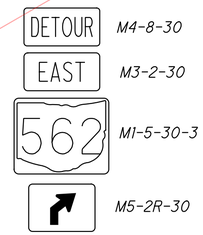

(G)

LEGEND

× RAMP CLOSURE

▶ DETOUR ROUTE

⊥ EXISTING SIGN SUPPORT

⊻ TEMPORARY SIGN SUPPORT

Preliminary Plans - For Reference Only

J:\20110903\ODOT\HAM\77889\mot\sheets\77889MD004.dgn 5/22/2026 10:10:31 AM hbrendlinger

HORIZONTAL SCALE IN FEET
0 500 1000 2000

CALCULATED RLS
CHECKED SMM

MAINTENANCE OF TRAFFIC DETOUR PLAN
RAMP J - PHASE 1, 2 AND 3A

HAM-75-7.85

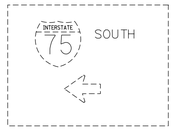

CANTILEVER MOUNTED SIGN

(1)

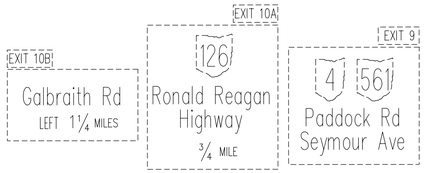

TRUSS MOUNTED SIGNS

(2)

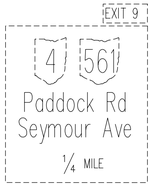

GROUND MOUNTED SIGN

(3)

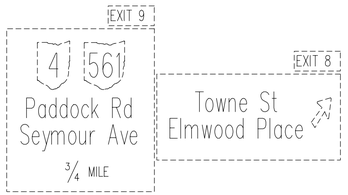

TRUSS MOUNTED SIGNS

(4)



CANTILEVER MOUNTED SIGN

(5)

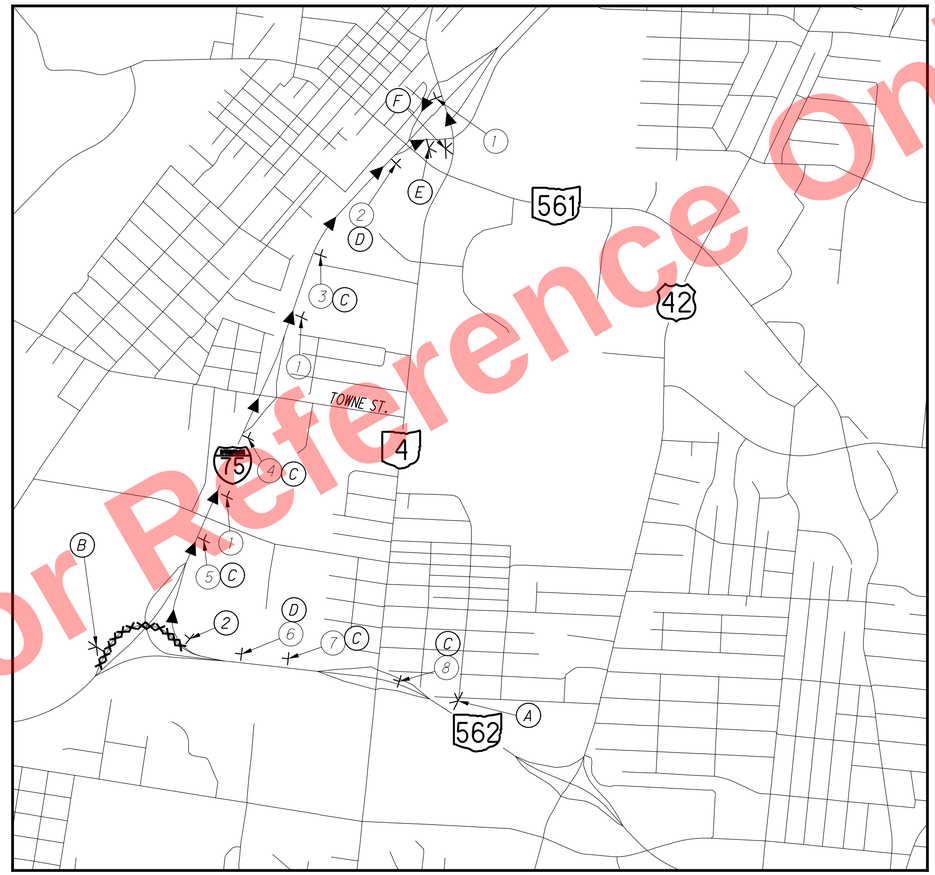

ALL OVERHEAD WORK (INCLUDING BEAM PLACEMENT) IMPACTING I.R. 75 TRAFFIC BELOW SHALL BE COMPLETED PER ODOT SCD MT-99.60

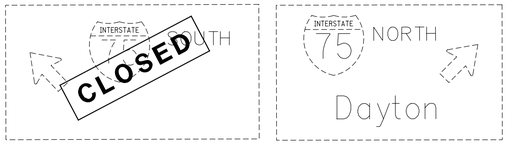

TRUSS MOUNTED SIGNS

(6)

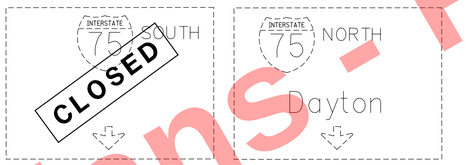

TRUSS MOUNTED SIGNS

(7)

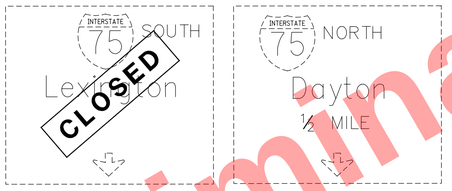

TRUSS MOUNTED SIGNS

(8)

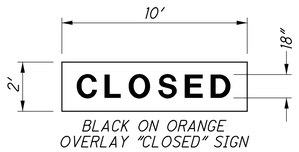

BLACK ON ORANGE OVERLAY "CLOSED" SIGN

PORTABLE CHANGEABLE MESSAGE SIGNS

DURING CLOSURE

(A)

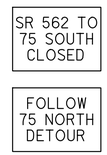

TWO WEEKS PRIOR TO CLOSURE



W20-H13-60

(B)

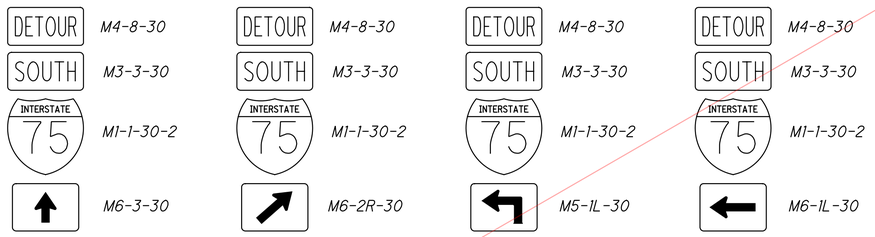

(C) (D) (E) (F)

LEGEND

- RAMP CLOSURE
- DETOUR ROUTE
- EXISTING SIGN SUPPORT
- TEMPORARY SIGN SUPPORT

Preliminary Plans - For Reference Only

J:\20110903\ODOT\HAM\77889\mot\sheets\77889MD001.dgn 5/22/2026 10:10:32 AM hbrendlinger

HORIZONTAL SCALE IN FEET
0 500 1000 2000

CALCULATED RLS
CHECKED SMM

TRAFFIC DETOUR PLAN
MAINTENANCE OF TRAFFIC PHASES 1 AND 2
RAMP M - PHASE 1

HAM-75-7.85

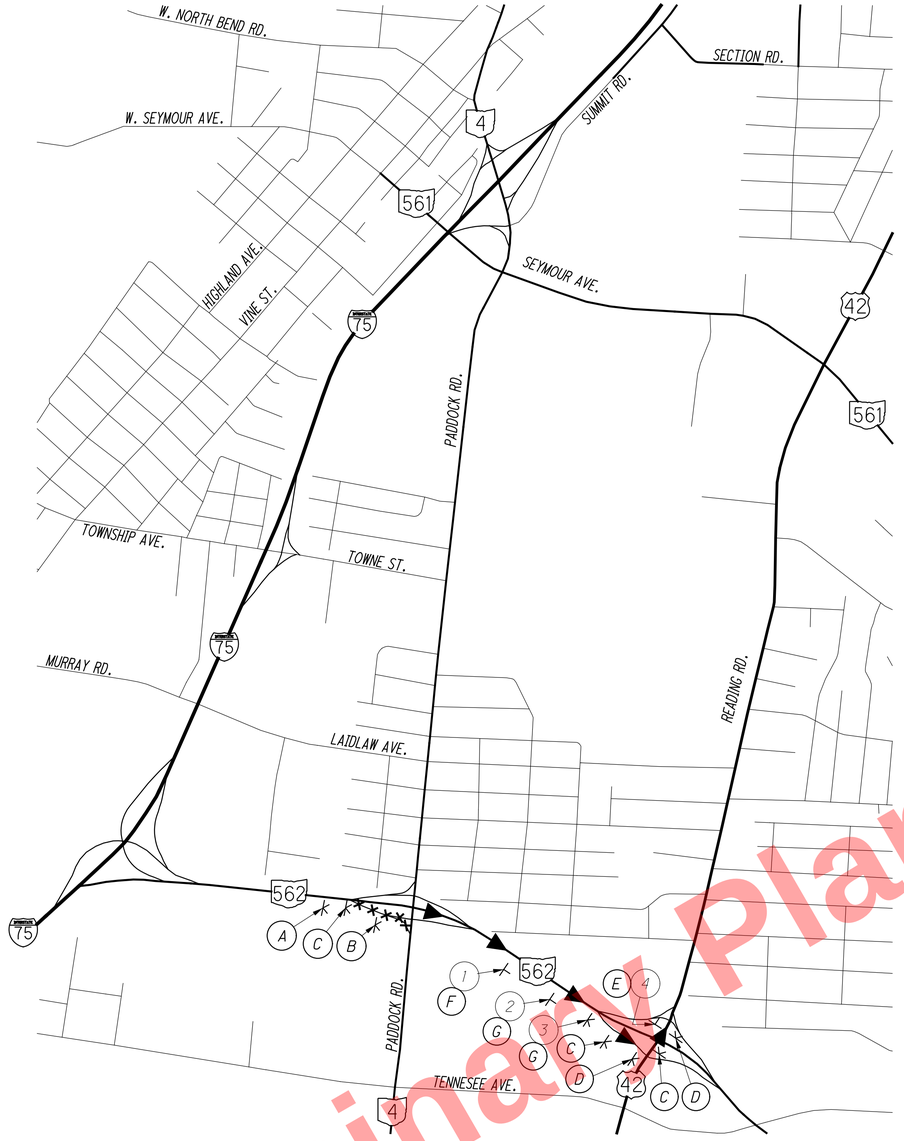

LEGEND

- × *RAMP CLOSURE*
- ▶ *DETOUR ROUTE*
- *TEMPORARY SIGN SUPPORT*
- *EXISTING SIGN SUPPORT*

PORTABLE CHANGEABLE MESSAGE SIGNS

DURING CLOSURE

(A)

EXIT TO PADDOCK CLOSED

FOLLOW DETOUR

TWO WEEKS PRIOR TO CLOSURE

RAMP WILL BE CLOSED [DATE] FOR [#] DAYS INFO:

W20-H13-60

(B)

DETOUR *M4-8-30*
Paddock Rd *54"x12" BLK/ORG*
M6-3-30
(C)

DETOUR *M4-8-30*
Paddock Rd *54"x12" BLK/ORG*
M5-1L-30
(D)

DETOUR *M4-8-30*
Paddock Rd *54"x12" BLK/ORG*
M6-1L-30
(E)

DETOUR *M4-8-30*
Paddock Rd *54"x12" BLK/ORG*
M5-2R-30
(F)

DETOUR *M4-8-30*
Paddock Rd *54"x12" BLK/ORG*
M6-2R-30
(G)

EXIT 2
42
Reading Rd
½ MILE

CANTILEVER MOUNTED SIGN
(1)

EXIT 2
42
Reading Rd

CANTILEVER MOUNTED SIGN
(2)

EXIT
2

GROUND MOUNTED SIGN
(3)

WEST TO
562
INTERSTATE
75

CENTER MOUNTED SIGN
(4)

TEMPORARY TRAFFIC SIGNAL MODIFICATIONS

1. AN EXISTING TRAFFIC SIGNAL, OR ANY PART THEREOF, SHALL NOT BE TAKEN OUT OF SERVICE UNLESS ALTERNATE MEANS OF TRAFFIC CONTROL ARE IN PLACE AND OPERATIONAL. UNLESS DIRECTED BY THE CITY OF CINCINNATI OR ENGINEER. EXISTING TRAFFIC SIGNALS SHALL NOT BE TAKEN OUT OF SERVICE BETWEEN THE HOURS OF:

-7:00 AM TO 9:00 AM AND 4:00 PM TO 6:00 PM, MONDAY THROUGH FRIDAY
-OR ONE HOUR BEFORE SUNSET THROUGH ONE-HALF HOUR AFTER SUN RISE, WHICHEVER IS THE LONGEST DURATION.

2. ANY UNUSED SIGNAL HEAD, OR SPAN/ARM MOUNTED SIGN SHALL BE COVERED AND DISCONNECTED.

3. WHEN THE EASTBOUND EXIT RAMP TO PADDOCK RD FROM SR 562 IS CLOSED THE FOLLOWING TRAFFIC SIGNAL MODIFICATIONS SHALL BE IMPLEMENTED AT THE PADDOCK ROAD/SR 562 EB RAMPS INTERSECTION:

A.COVER VEHICULAR SIGNAL INDICATIONS FOR THE EXIT RAMP.
B.DEACTIVATE THE EB PHASE.
C. INSTALL SIGNAL OPERATION CHANGED SIGNS (W23-H2B) FOR ALL DIRECTIONS. CENTER THE SIGN OVER THE APPROACH.

Preliminary Plans - For Reference Only

NO SCALE

CALCULATED RLS CHECKED SMM

MAINTENANCE OF TRAFFIC PLAN - DETOUR PLAN
RAMP Q - PHASE 1 PT. 2

HAM-75-7.85

J:\20110903\ODOT\HAM\77889\mot\sheets\77889MD012.dgn 5/22/2026 10:10:32 AM hbrendlinger

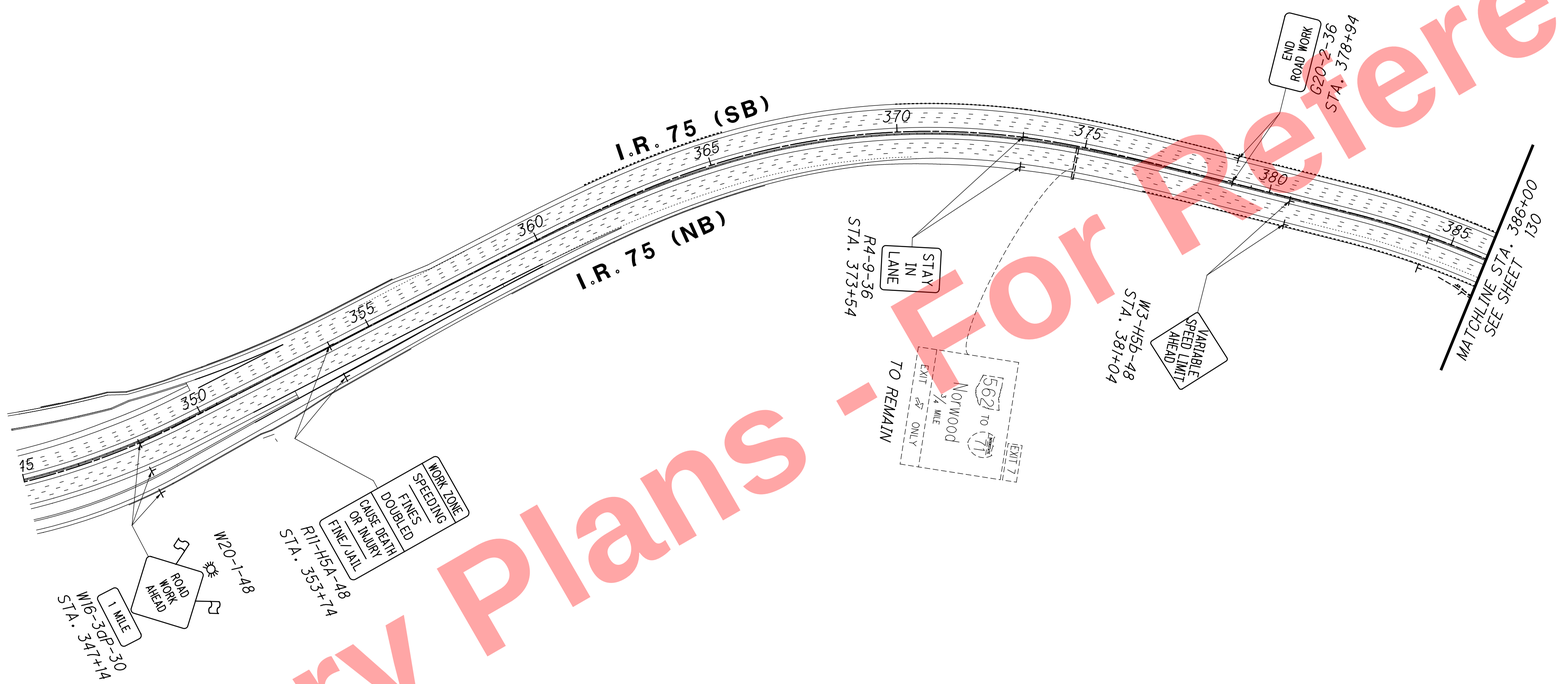

Preliminary Plans - For Reference Only

LEGEND

⊢ ⊢ PROPOSED SIGN SUPPORT

HORIZONTAL SCALE IN FEET
0 50 100 200

CALCULATED RLS
CHECKED SMM

MAINTENANCE OF TRAFFIC PLAN - PHASE 2
I.R. 75 - STA. 345+00 TO STA. 386+00

HAM-75-7.85

129
1047

J:\20110903\ODOT\HAM\77889\mot\sheets\77889MP244.dgn 5/22/2026 10:10:33 AM hbrendlinger

DRUM SPACING CHART	
TANGENT	80' c/c
TAPER	55' c/c
RADII	10' c/c

LEGEND

- DRUM
- TEMPORARY SIGN SUPPORT
- OPEN TRAVEL LANE

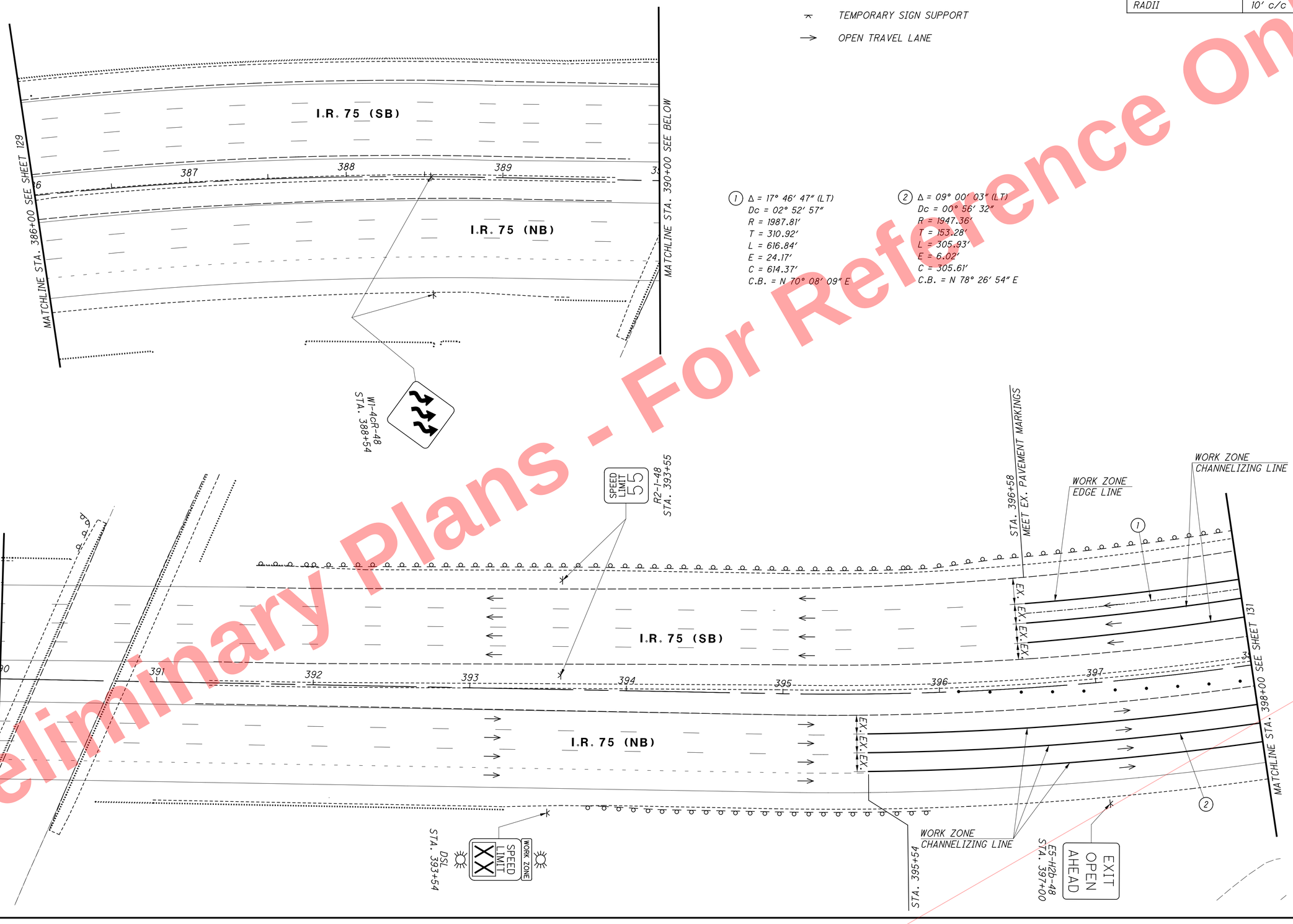

1. Δ = 17° 46' 47" (LT)
Dc = 02° 52' 57"
R = 1987.81'
T = 310.92'
L = 616.84'
E = 24.17'
C = 614.37'
C.B. = N 70° 08' 09" E

2. Δ = 09° 00' 03" (LT)
Dc = 00° 56' 32"
R = 1947.36'
T = 153.28'
L = 305.93'
E = 6.02'
C = 305.61'
C.B. = N 78° 26' 54" E

Preliminary Plans - For Reference Only

HORIZONTAL SCALE IN FEET 0 15 30 60

CALCULATED RLS
CHECKED SMM

MAINTENANCE OF TRAFFIC PLAN - PHASE 2
I.R. 75 - STA. 386+00 TO STA. 398+00

HAM-75-7.85

J:\20110903\ODOT\HAM\77889\mot\sheets\77889MP243.dgn 5/22/2026 10:10:36 AM hbrendlinger

(1) Δ = 17° 46′ 47″ (LT)
Dc = 02° 52′ 57″
R = 1987.81′
T = 310.92′
L = 616.84′
E = 24.17′
C = 614.37′
C.B. = N 70° 08′ 09″ E

(2) Δ = 09° 00′ 03″ (LT)
Dc = 00° 56′ 32″
R = 1947.36′
T = 153.28′
L = 305.93′
E = 6.02′
C = 305.61′
C.B. = N 78° 26′ 54″ E

(3) Δ = 15° 34′ 36″ (LT)
Dc = 03° 45′ 03″
R = 1527.00′
T = 208.93′
L = 415.28′
E = 14.22′
C = 414.00′
C.B. = N 52° 56′ 47″ E

(4) Δ = 19° 49′ 22″ (LT)
Dc = 02° 56′ 20″
R = 1949.62′
T = 340.66′
L = 674.52′
E = 29.54′
C = 671.16′
C.B. = N 65° 03′ 59″ E

(5) Δ = 08° 12′ 02″ (LT)
Dc = 02° 55′ 28″
R = 1959.33′
T = 140.46′
L = 280.43′
E = 5.03′
C = 280.19′
C.B. = N 50° 03′ 33″ E

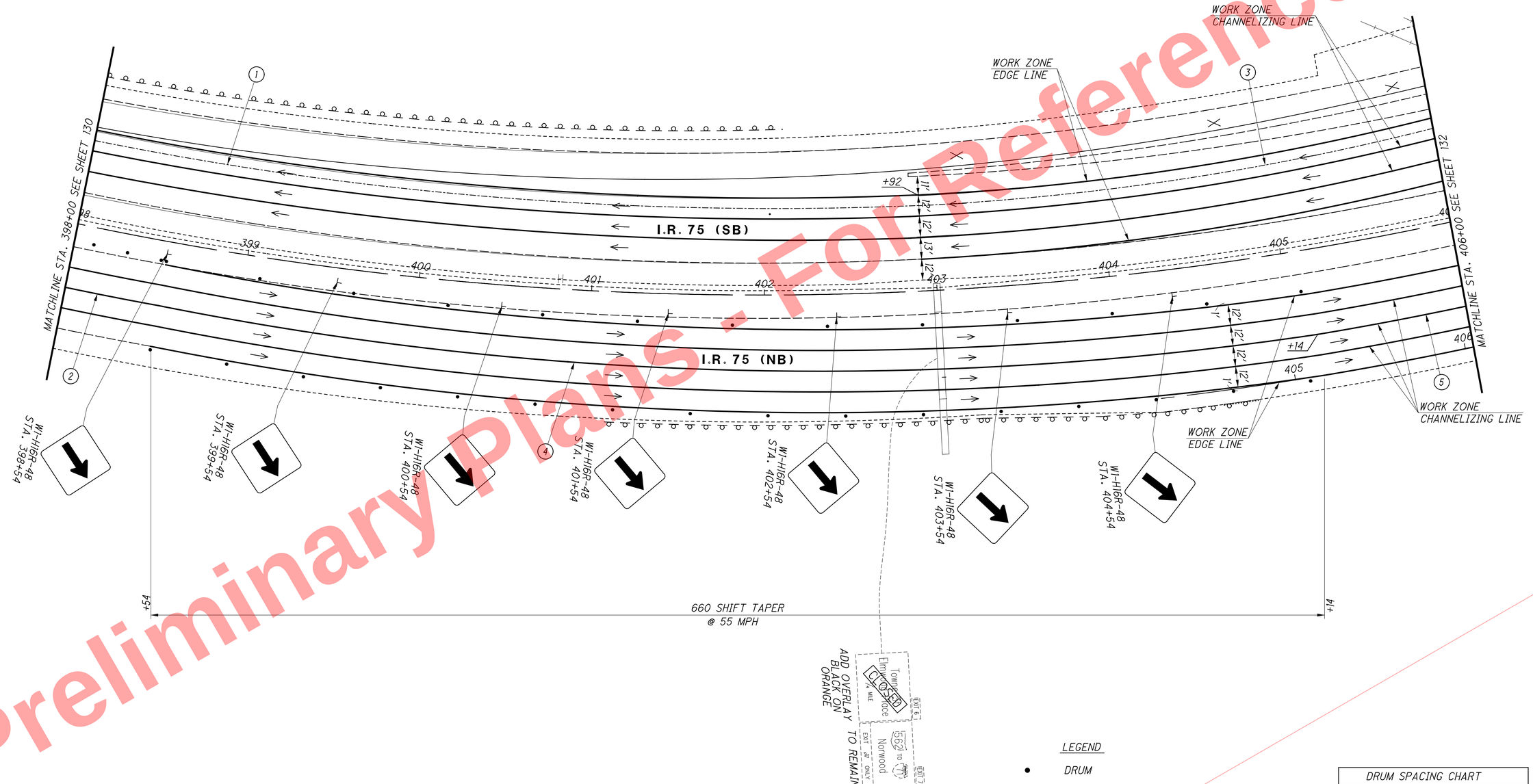

LEGEND
- DRUM
- PROPOSED SIGN SUPPORT
- OPEN TRAVEL LANE
- CLOSED TRAVEL LANE

DRUM SPACING CHART	
TANGENT	80′ c/c
TAPER	55′ c/c
RADII	10′ c/c

HORIZONTAL SCALE IN FEET
0 15 30 60

CALCULATED RLS
CHECKED SMM

MAINTENANCE OF TRAFFIC PLAN - PHASE 2
I.R. 75 - STA. 398+00 TO STA. 406+00

HAM-75-7.85

131
1047

Preliminary Plans - For Reference Only

J:\20110903\ODOT\HAM\77889\mot\sheets\77889MP242.dgn 5/22/2026 10:10:37 AM hbrendlinger

(1) Δ = 15° 34′ 36″ (LT)
Dc = 03° 45′ 03″
R = 1527.00′
T = 208.93′
L = 415.28′
E = 14.22′
C = 414.00′
C.B. = N 52° 56′ 47″ E

(2) Δ = 08° 12′ 02″ (LT)
Dc = 02° 55′ 28″
R = 1959.33′
T = 140.46′
L = 280.43′
E = 5.03′
C = 280.19′
C.B. = N 50° 03′ 33″ E

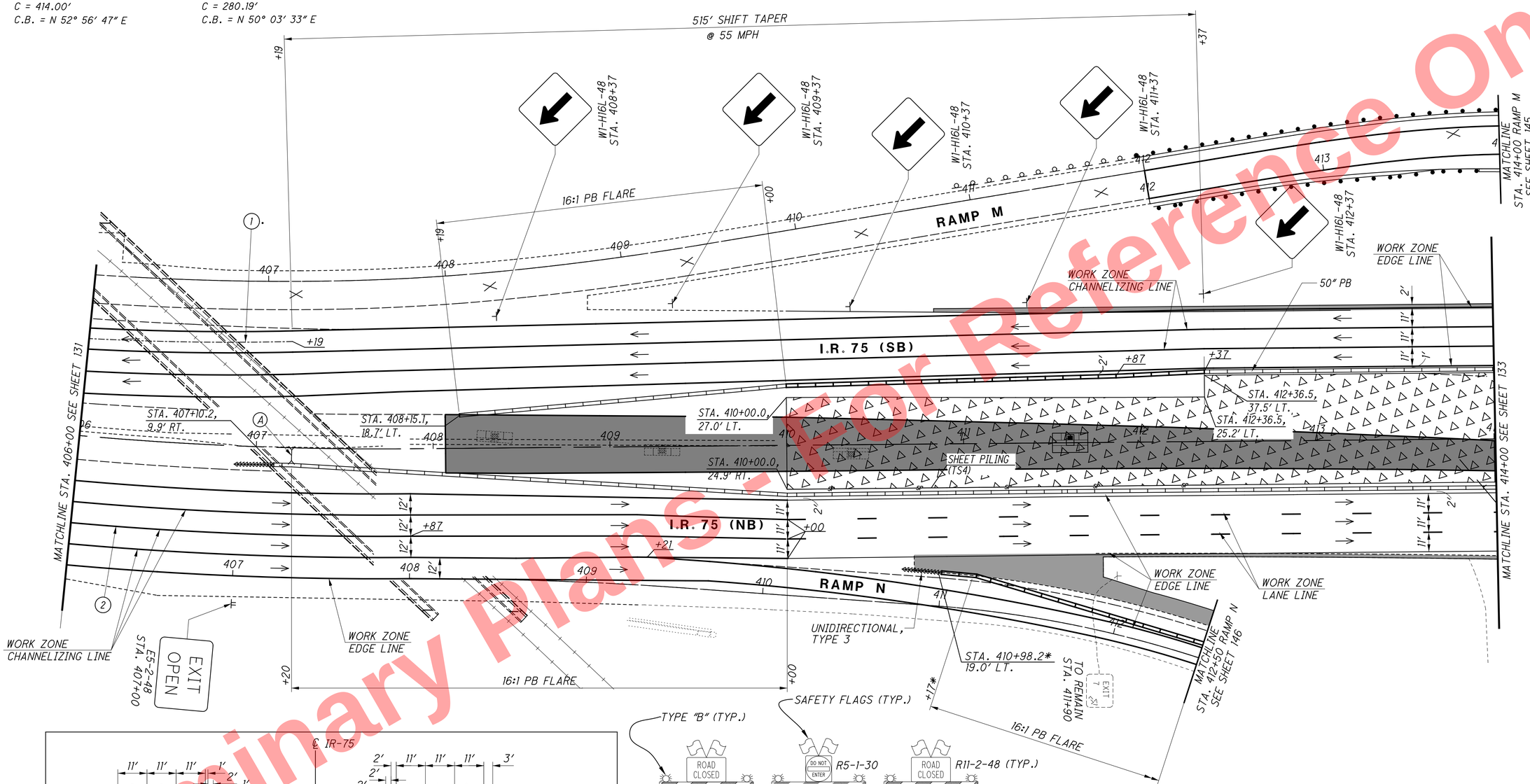

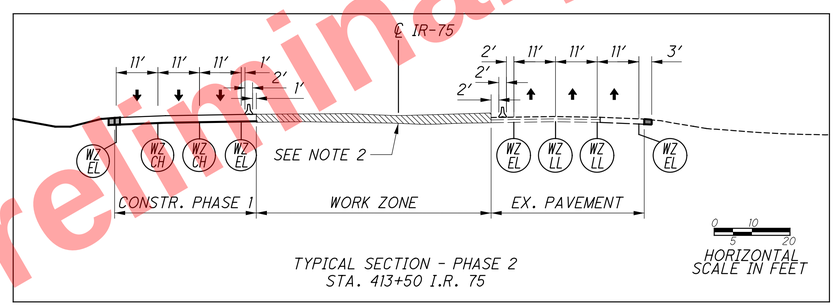

TYPICAL SECTION - PHASE 2
STA. 413+50 I.R. 75

10′ TYPE III SOLID BARRICADE
(A)

NOTES:
1. THE CONTRACTOR SHALL REVIEW THE UTILITY PLANS AND HAVE ALL UNDERGROUND UTILITIES MARKED IN THE FIELD PRIOR TO PLACING SHEET PILING.
2. TO ALLOW FOR THE PHASE 3 CROSSOVER, THE CONTRACTOR SHALL NON-PERFORM PROPOSED MEDIAN BARRIER SOUTH OF STA. 414+13 UNTIL PHASE 4.

* DENOTES STATIONING FROM RAMP N

LEGEND
- PHASE 2 WORK ZONE
- PORTABLE BARRIER
- TEMPORARY PAVEMENT
- IMPACT ATTENUATOR
- PROPOSED SIGN SUPPORT
- OPEN TRAVEL LANE
- CLOSED TRAVEL LANE
- TYPE III BARRICADE

DRUM SPACING CHART	
TANGENT	80′ c/c
TAPER	55′ c/c
RADII	10′ c/c

HORIZONTAL SCALE IN FEET
0 15 30 60

CALCULATED RLS
CHECKED SMM

MAINTENANCE OF TRAFFIC PLAN - PHASE 2
I.R. 75 - STA. 406+00 TO STA. 414+00

HAM-75-7.85

132
1047

Preliminary Plans - Not for Reference Only

J:\20110903\ODOT\HAM\77889\mot\sheets\77889MP241.dgn 5/22/2026 10:10:39 AM hbrendlinger

EXIST. SIGN TO BE RELOCATED



FROM: STA. 416+63
TO: STA. 416+63

Ⓐ

EXIST. SIGN TO BE RELOCATED



FROM: STA. 421+81
TO: STA. 421+81

Ⓑ

TYPICAL SECTION - PHASE 2
STA. 418+00 I.R. 75

LEGEND

- PHASE 2 WORK ZONE
- PHASE 2 DEMOLITION
- PORTABLE BARRIER
- TEMPORARY PAVEMENT
- EXISTING SIGN SUPPORT
- OPEN TRAVEL LANE

NOTES:
1. TO ALLOW FOR THE PHASE 3 CROSSOVER, THE CONTRACTOR SHALL NON-PERFORM PROPOSED MEDIAN BARRIER SOUTH OF STA. 414+13 UNTIL PHASE 4.

DRUM SPACING CHART	
TANGENT	80' c/c
TAPER	55' c/c
RADII	10' c/c

Preliminary Plans - Not For Construction
For Reference Only

HORIZONTAL SCALE IN FEET
0 15 30 60

CALCULATED RLS
CHECKED SMM

MAINTENANCE OF TRAFFIC PLAN - PHASE 2
I.R. 75 - STA. 414+00 TO STA. 422+00

HAM-75-7.85

133
1047

J:\20110903\ODOT\HAM\77889\mot\sheets\77889MP224.dgn 5/22/2026 10:10:41 AM hbrendlinger

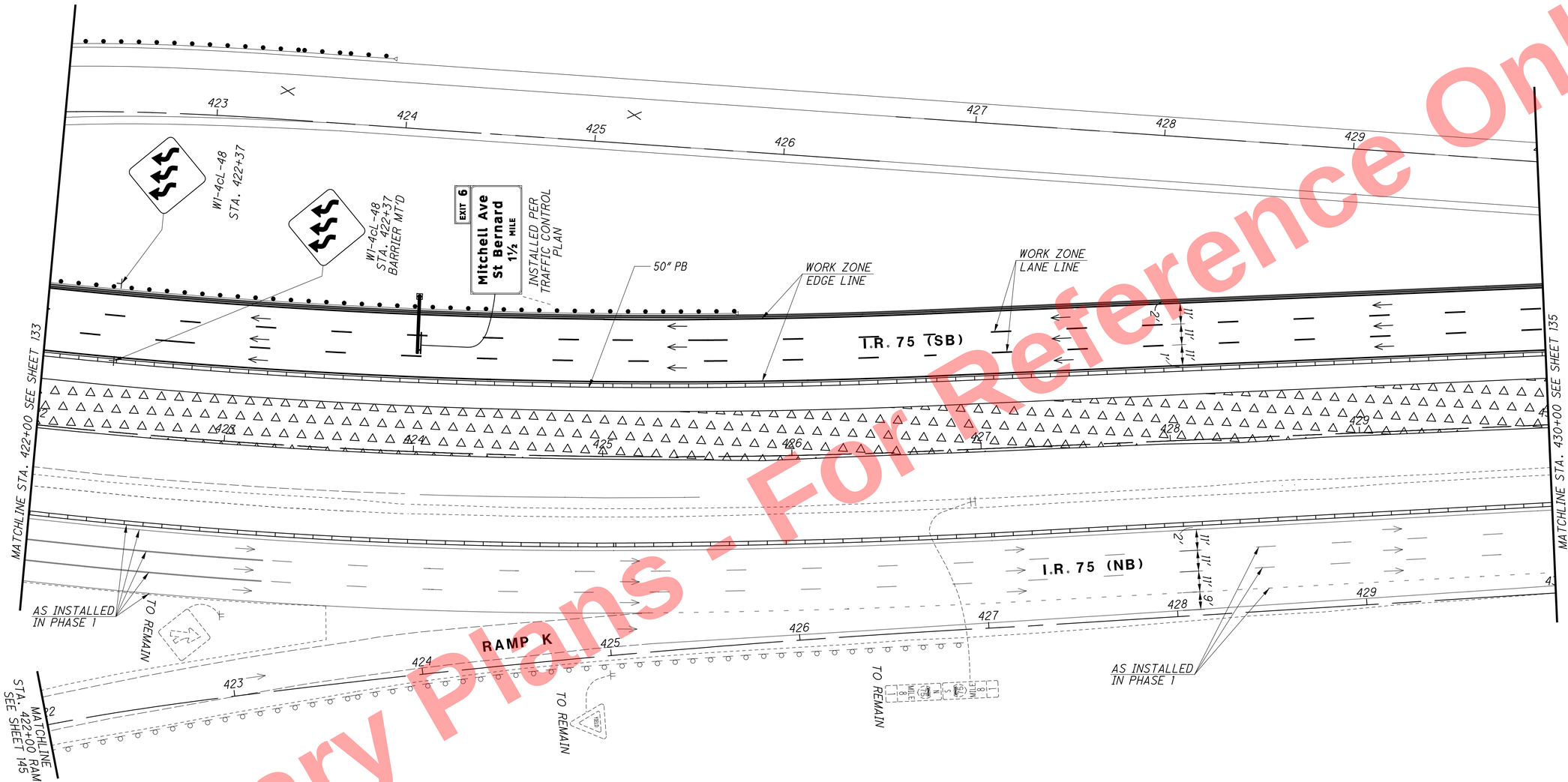

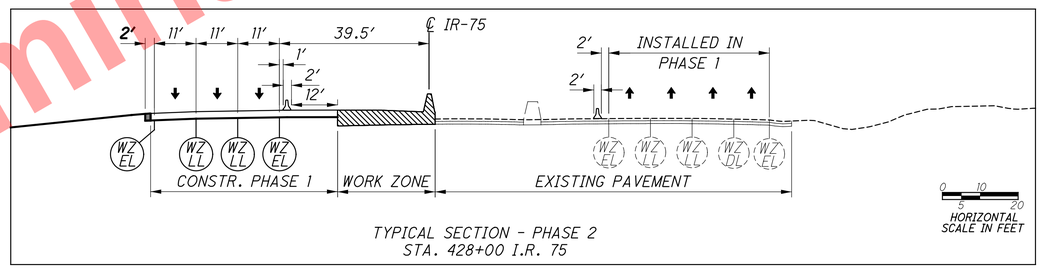

TYPICAL SECTION - PHASE 2
STA. 428+00 I.R. 75

LEGEND

- PHASE 2 WORK ZONE
- PORTABLE BARRIER
- OPEN TRAVEL LANE
- EXISTING SIGN SUPPORT
- PROPOSED SIGN SUPPORT
- CLOSED TRAVEL LANE

Preliminary Plans - For Reference Only

HORIZONTAL SCALE IN FEET
0 15 30 60

CALCULATED RLS
CHECKED SMM

MAINTENANCE OF TRAFFIC PLAN - PHASE 2
I.R. 75 - STA. 424+00 TO STA. 430+00

HAM-75-7.85

134
1047

J:\20110903\ODOT\HAM\77889\mot\sheets\77889MP016.dgn 5/22/2026 10:10:43 AM hbrendlinger

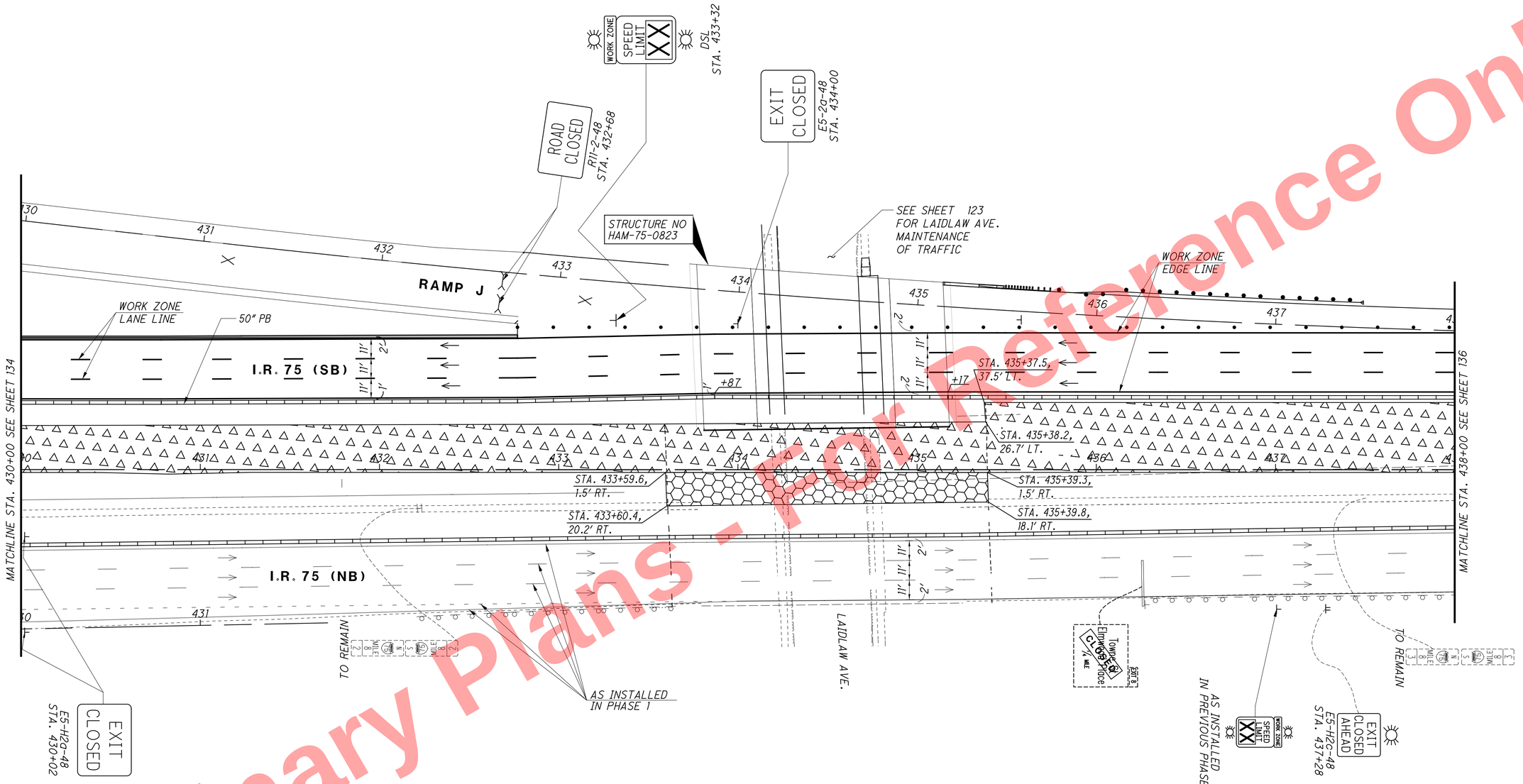

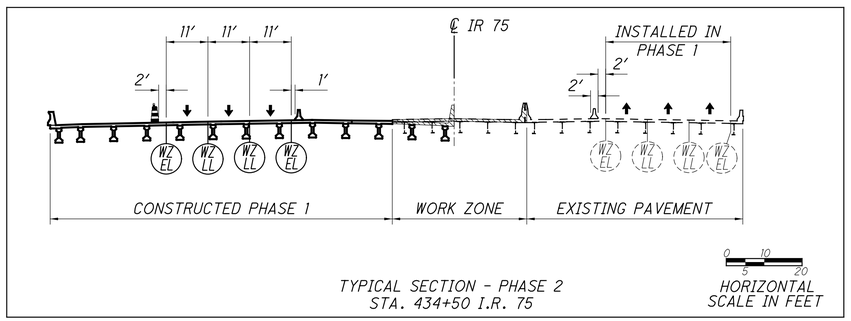

TYPICAL SECTION - PHASE 2
STA. 434+50 I.R. 75

LEGEND

- PHASE 2 WORK ZONE
- PHASE 2 DEMOLITION
- DRUM
- PORTABLE BARRIER
- OPEN TRAVEL LANE
- CLOSED TRAVEL LANE
- TYPE III BARRICADE
- PROPOSED SIGN SUPPORT
- EXISTING SIGN SUPPORT
- TEMPORARY PAVEMENT

HORIZONTAL SCALE IN FEET
0 15 30 60

CALCULATED RLS
CHECKED SMM

MAINTENANCE OF TRAFFIC PLAN - PHASE 2
I.R. 75 - STA. 430+00 TO STA. 438+00

HAM-75-7.85

135
1047

Preliminary Plans - Not for Construction
Preliminary Plans - Not for Construction
For Reference Only

I:\2019\03\ODOT\HAM\77889\mot\sheets\77889MP017.dgn 5/22/2026 10:10:46 AM bbrendlinger

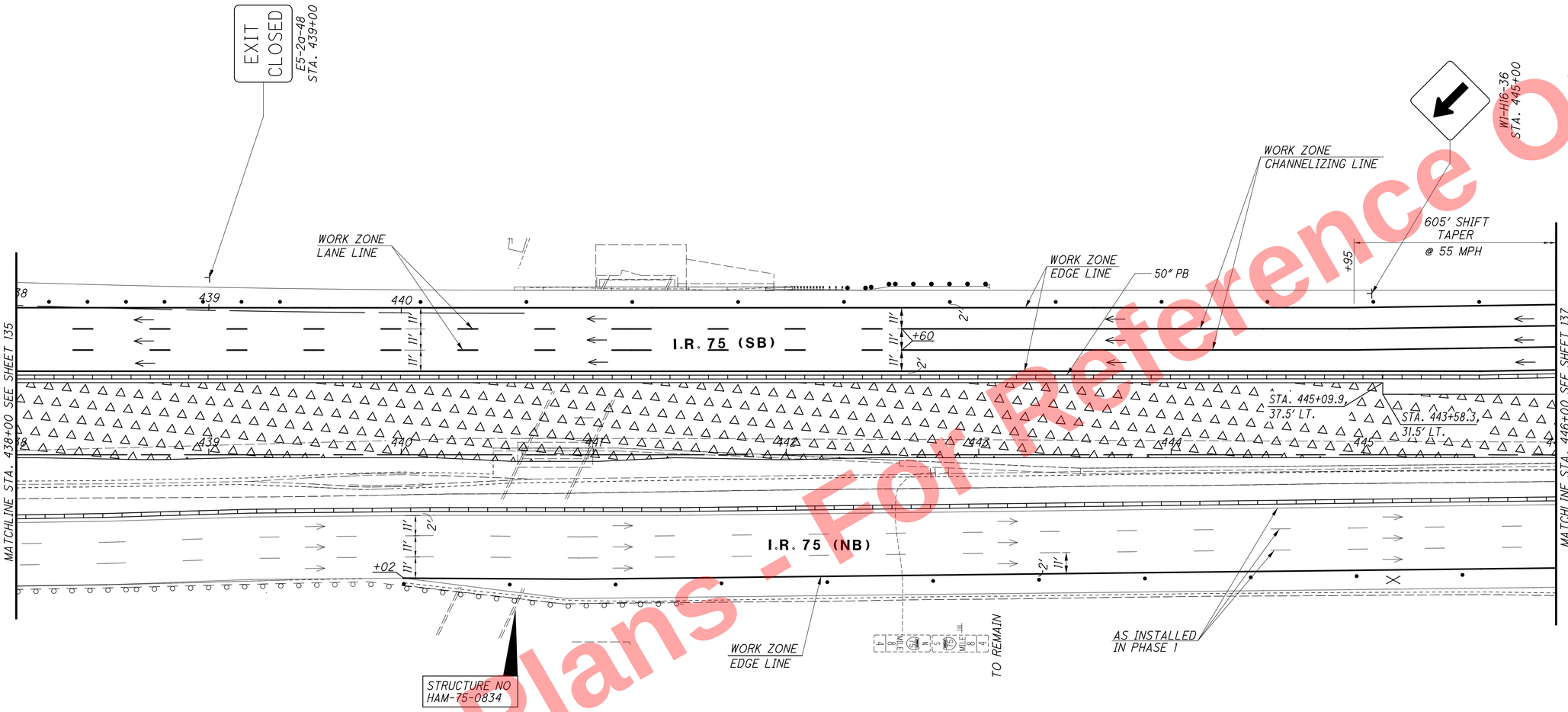

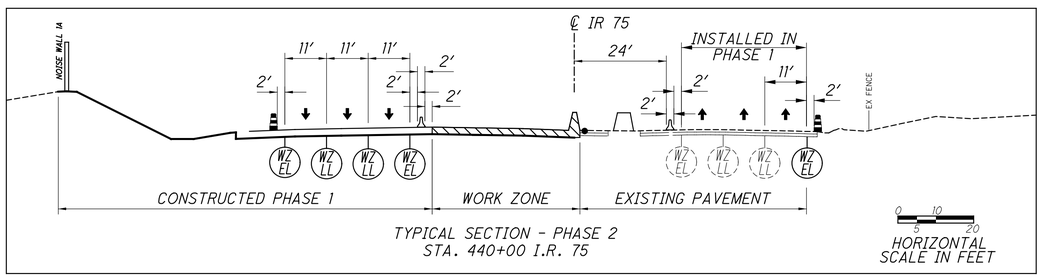

LEGEND

- PHASE 2 WORK ZONE
- DRUM
- PORTABLE BARRIER
- OPEN TRAVEL LANE
- CLOSED TRAVEL LANE
- PROPOSED SIGN SUPPORT
- EXISTING SIGN SUPPORT

DRUM SPACING CHART	
TANGENT	80' c/c
TAPER	55' c/c
RADII	10' c/c

HORIZONTAL SCALE IN FEET

CALCULATED RLS CHECKED SMM

MAINTENANCE OF TRAFFIC PLAN - PHASE 2
I.R. 75 - STA. 438+00 TO STA. 446+00

HAM-75-7.85

136
1047

Preliminary Plans - For Reference Only

I:\2011090.3\ODOT\HAM\7.889\mot\sheets\7889MP168.dgn 5/22/2026 10:10:48 AM bbrendlinger

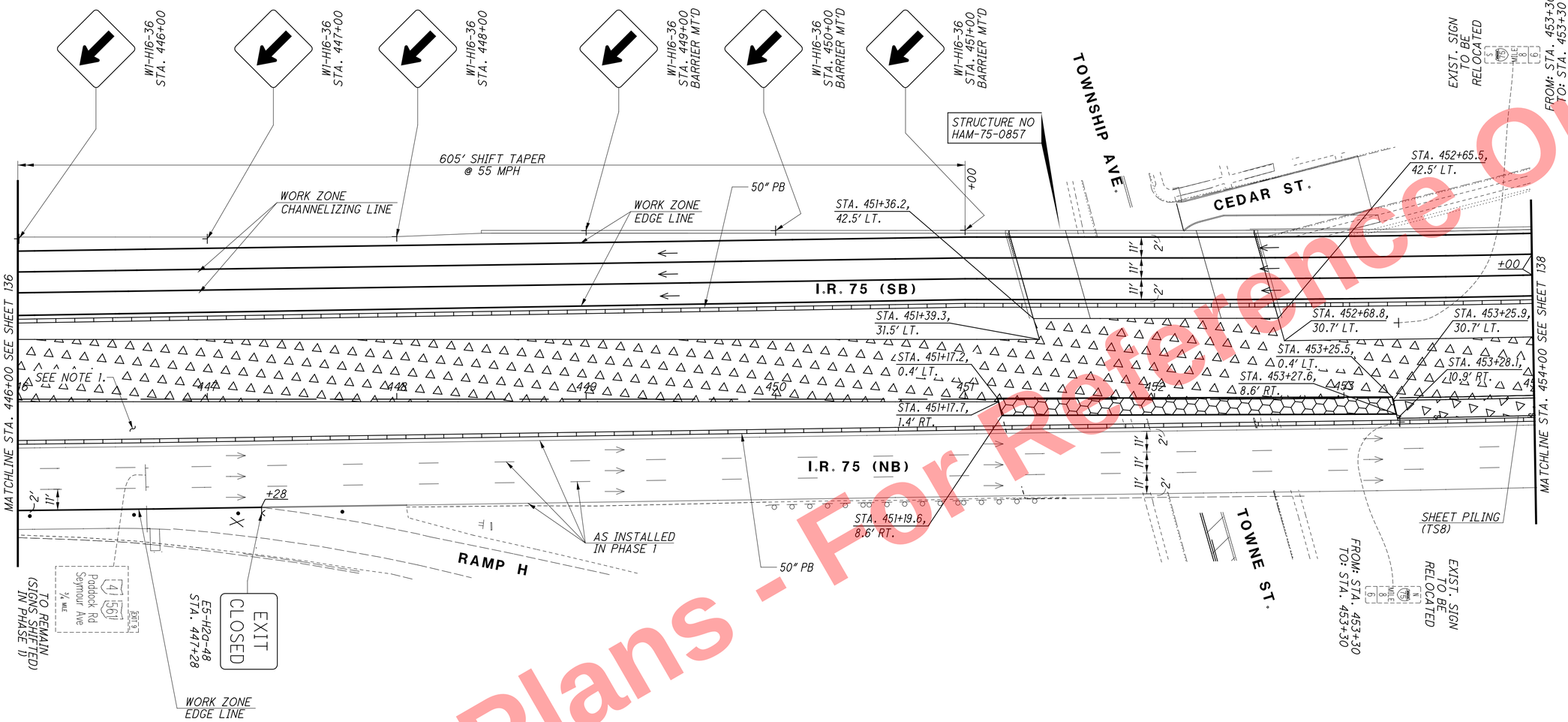

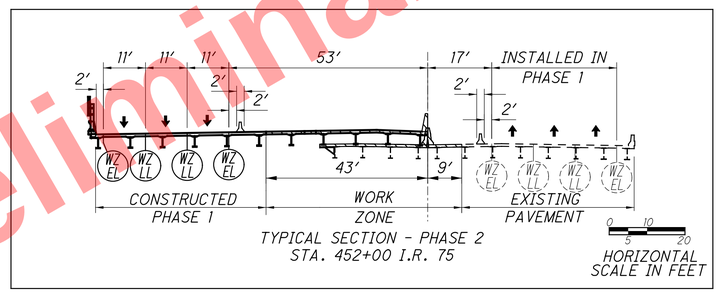

TYPICAL SECTION - PHASE 2
STA. 452+00 I.R. 75

LEGEND

- PHASE 2 WORK ZONE
- PHASE 2 DEMOLITION
- DRUM
- PORTABLE BARRIER
- TEMPORARY SIGN SUPPORT
- PROPOSED SIGN SUPPORT
- EXISTING SIGN SUPPORT
- OPEN TRAVEL LANE
- CLOSED TRAVEL LANE

DRUM SPACING CHART	
TANGENT	80' c/c
TAPER	55' c/c
RADII	10' c/c

HORIZONTAL SCALE IN FEET
0 15 30 60

CALCULATED RLS
CHECKED SMM

TRAFFIC PLAN - PHASE 2
MAINTENANCE OF TRAFFIC
I.R. 75 - STA. 446+00 TO STA. 454+00

HAM-75-7.85

137
1047

Preliminary Plans - For Reference Only

J:\20110903\ODOT\HAM\77889\mot\sheets\77889MP018.dgn 5/22/2026 10:10:50 AM hbrendlinger

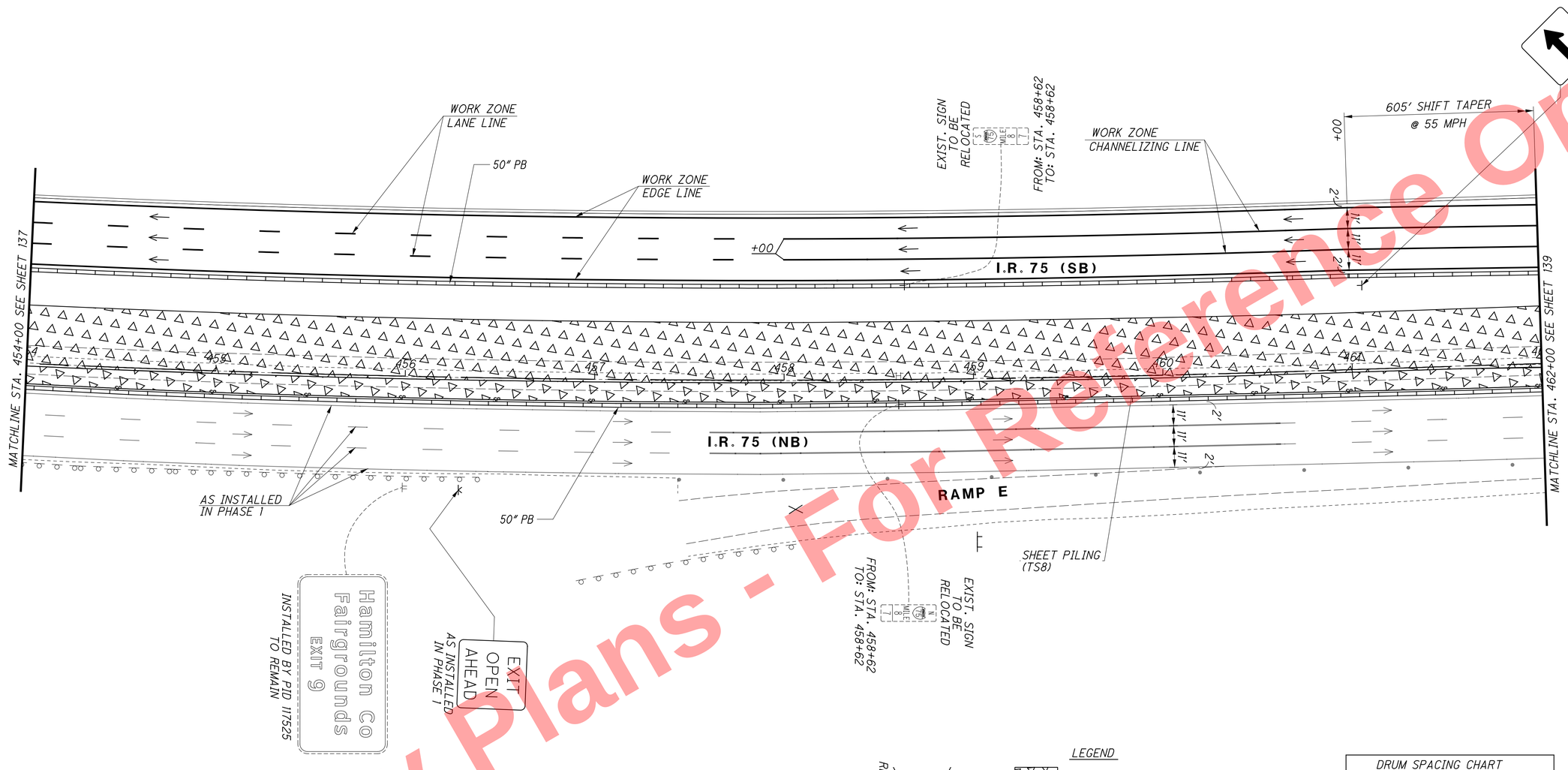

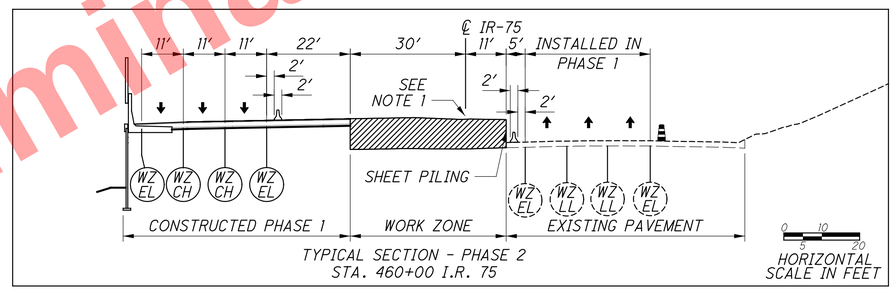

TYPICAL SECTION - PHASE 2
STA. 460+00 I.R. 75

DRUM SPACING CHART	
TANGENT	80' c/c
TAPER	55' c/c
RADII	10' c/c

NOTES:
1. THE CONTRACTOR SHALL NON-PERFORM MEDIAN BARRIER CONSTRUCTION FROM STA. 456+00 TO STA. 482+25 UNTIL PHASE 4 TO ALLOW FOR THE PHASE 3 RAMP CROSSOVERS.

MAINTENANCE OF TRAFFIC PLAN - PHASE 2
I.R. 75 - STA. 454+00 TO STA. 462+00

HAM-75-7.85

138
1047

Preliminary Plans - For Reference Only

J:\20110903\ODOT\HAM\77889\mot\sheets\77889MP169.dgn 5/22/2026 10:10:52 AM hbrendlinger

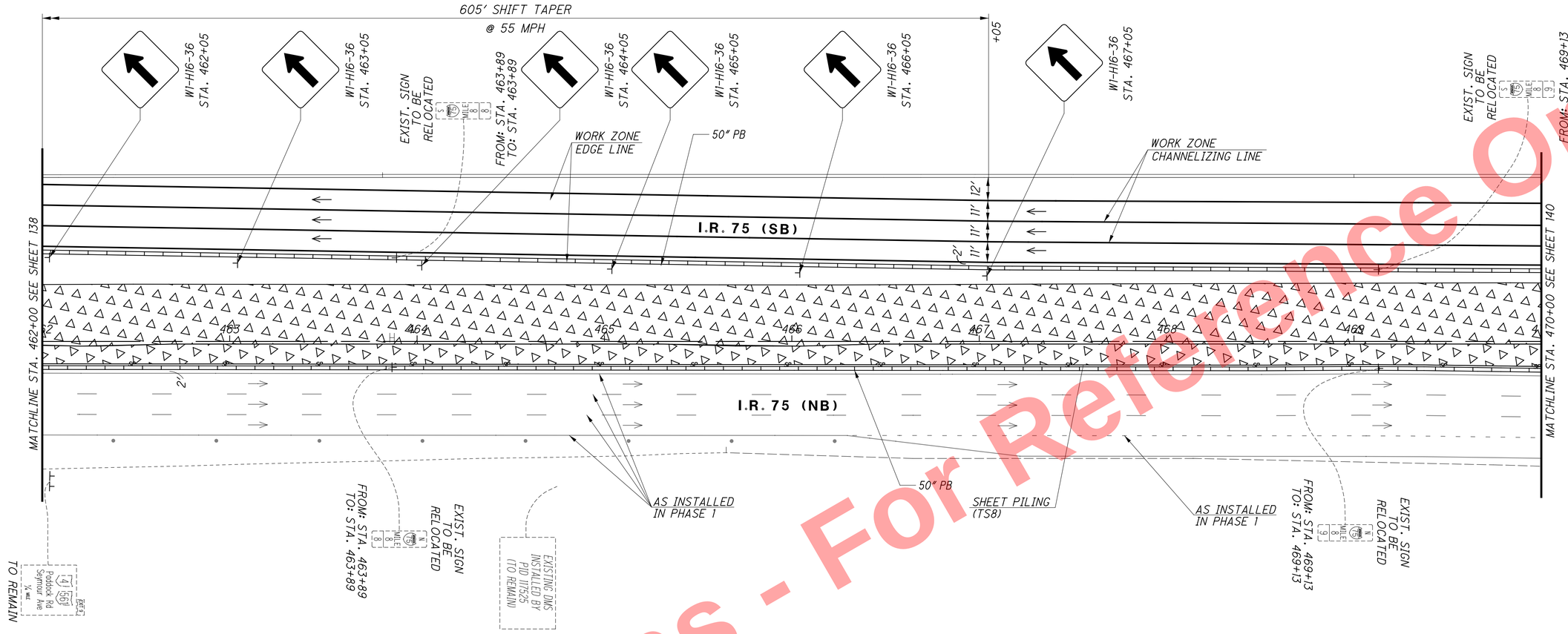

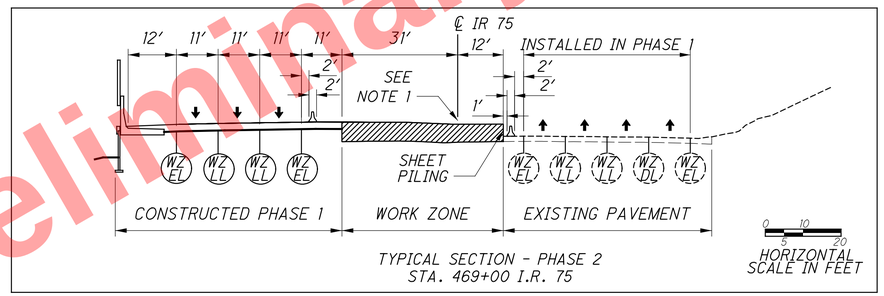

TYPICAL SECTION - PHASE 2
STA. 469+00 I.R. 75

LEGEND

- PHASE 2 WORK ZONE
- PORTABLE BARRIER
- TEMPORARY PAVEMENT
- DRUM
- PROPOSED SIGN SUPPORT
- EXISTING SIGN SUPPORT
- OPEN TRAVEL LANE

NOTES:
1. THE CONTRACTOR SHALL NON-PERFORM MEDIAN BARRIER CONSTRUCTION FROM STA. 456 +00 TO STA. 482+25 UNTIL PHASE 4 TO ALLOW FOR THE PHASE 3 RAMP CROSSOVERS.

CALCULATED RLS
CHECKED SMM

MAINTENANCE OF TRAFFIC PLAN - PHASE 2
I.R. 75 - STA. 462+00 TO STA. 470+00

HAM-75-7.85

139
1047

Preliminary Plans - For Reference Only

J:\20110903\ODOT\HAM\77889\mot\sheets\77889MP019.dgn 5/22/2026 10:10:54 AM hbrendlinger

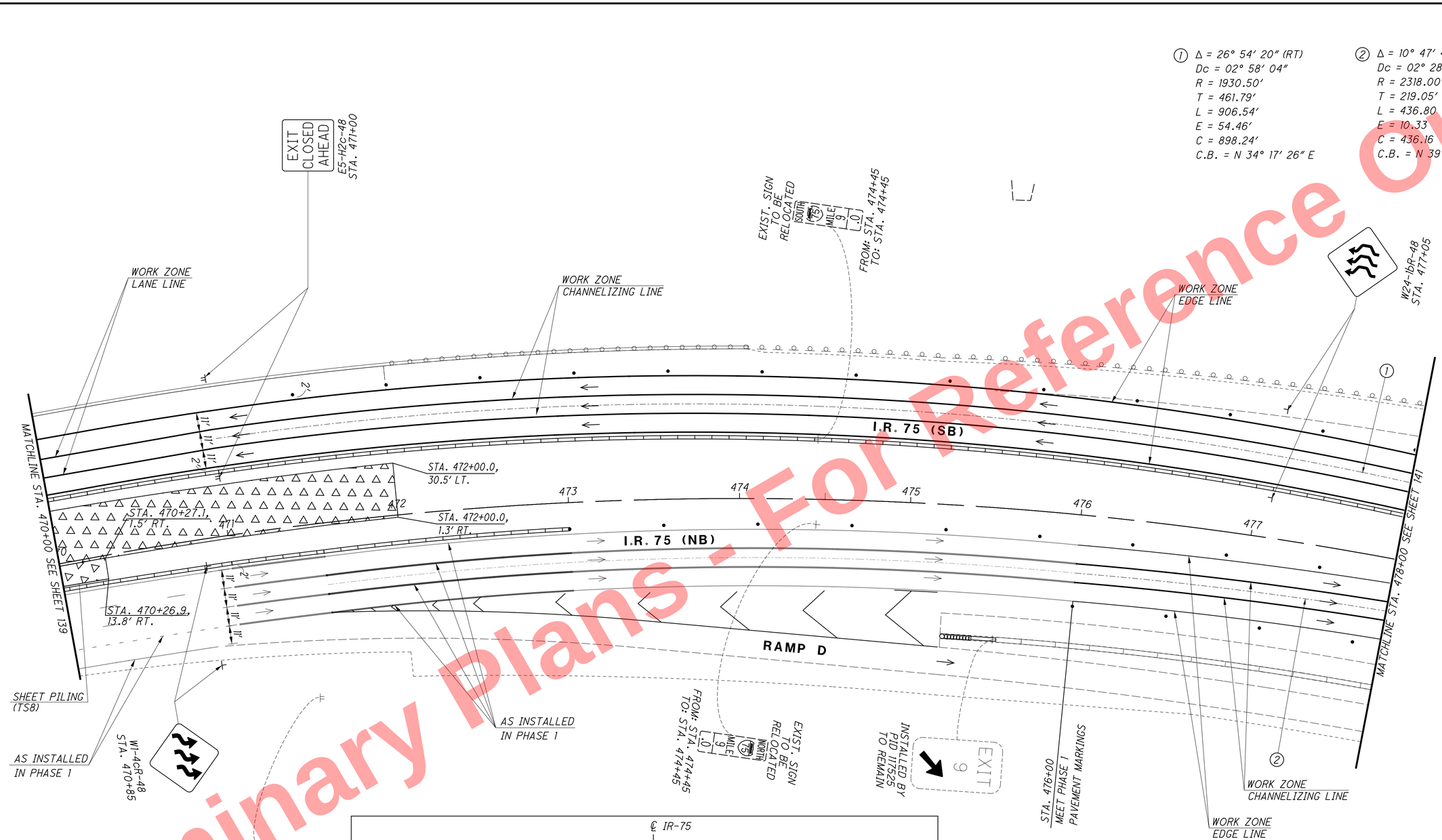

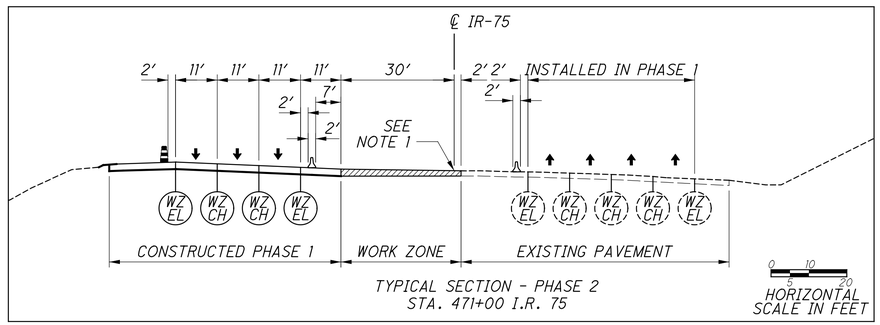

LEGEND

- PHASE 2 WORK ZONE
- PORTABLE BARRIER
- TEMPORARY PAVEMENT
- DRUM
- EXISTING SIGN SUPPORT
- PROPOSED SIGN SUPPORT
- OPEN TRAVEL LANE

DRUM SPACING CHART	
TANGENT	80′ c/c
TAPER	55′ c/c
RADII	10′ c/c

NOTES:
1. THE CONTRACTOR SHALL NON-PERFORM MEDIAN BARRIER CONSTRUCTION FROM STA. 456+00 TO STA. 482+25 UNTIL PHASE 4 TO ALLOW FOR THE PHASE 3 RAMP CROSSOVERS.

Preliminary Plans - For Reference Only

CALCULATED RLS
CHECKED SMM

MAINTENANCE OF TRAFFIC PLAN - PHASE 2
I.R. 75 - STA. 470+00 TO STA. 478+00

HAM-75-7.85

140
1047

J:\20110903\ODOT\HAM\77889\mot\sheets\77889MP185.dgn 5/22/2026 10:10:56 AM hbrendlinger

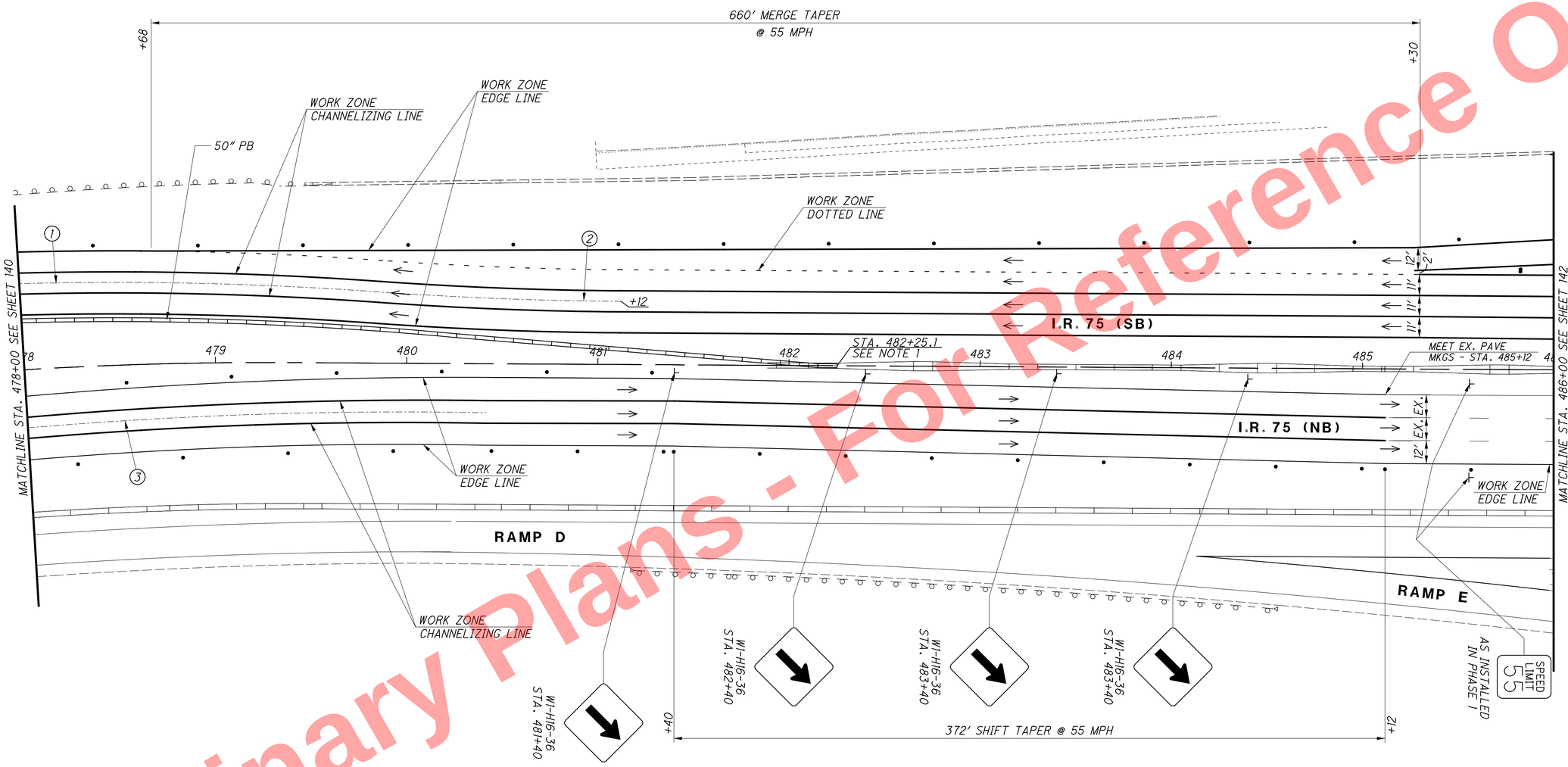

① Δ = 26° 54′ 20″ (RT)
Dc = 02° 58′ 04″
R = 1930.50′
T = 461.79′
L = 906.54′
E = 54.46′
C = 898.24′
C.B. = N 34° 17′ 26″ E

② Δ = 03° 46′ 28″ (LT)
Dc = 02° 58′ 57″
R = 1921.00′
T = 63.30′
L = 126.55′
E = 1.04′
C = 126.52′
C.B. = N 45° 51′ 22″ E

③ Δ = 10° 47′ 49″ (RT)
Dc = 02° 28′ 18″
R = 2318.00′
T = 219.05′
L = 436.80
E = 10.33
C = 436.16
C.B. = N 39° 17′ 38″ E

DRUM SPACING CHART	
TANGENT	80′ c/c
TAPER	55′ c/c
RADII	10′ c/c

LEGEND
- PORTABLE BARRIER
- TEMPORARY PAVEMENT
- DRUM
- PROPOSED SIGN SUPPORT
- OPEN TRAVEL LANE

NOTES:
1. CONNECT PORTABLE BARRIER AND EXISTING MEDIAN UTILIZING MT-101.80
2. THE CONTRACTOR SHALL NON-PERFORM MEDIAN BARRIER CONSTRUCTION FROM STA. 456+00 TO STA. 482+25 UNTIL PHASE 4 TO ALLOW FOR THE PHASE 3 RAMP CROSSOVERS.

Preliminary Plans - For Reference Only

HORIZONTAL SCALE IN FEET
0 15 30 60

CALCULATED RLS
CHECKED SMM

MAINTENANCE OF TRAFFIC PLAN - PHASE 2
I.R. 75 - STA. 478+00 TO STA. 486+00

HAM-75-7.85

141
1047

J:\20110903\ODOT\HAM\77889\mot\sheets\77889MP020.dgn 5/22/2026 10:10:58 AM hbrendlinger

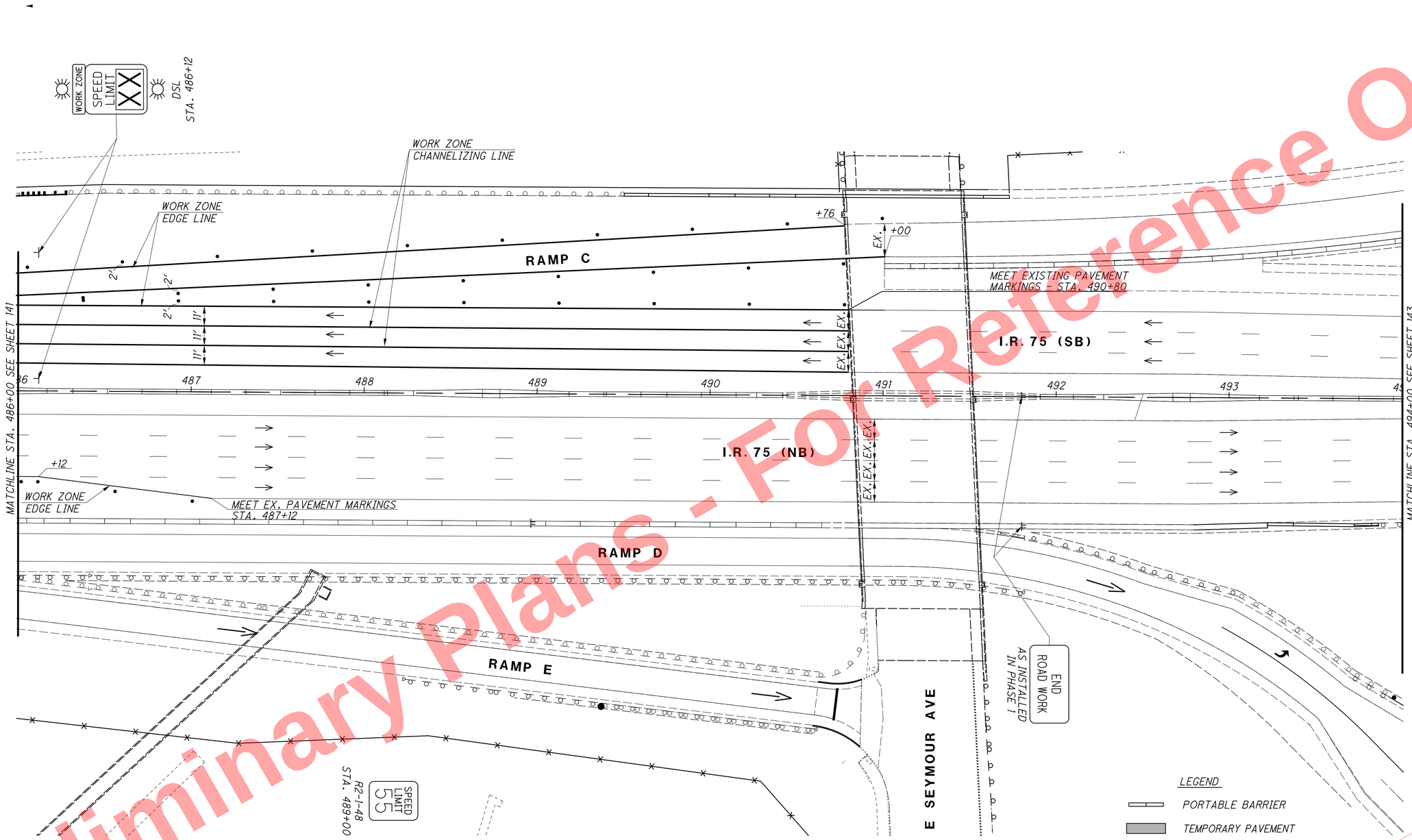

DRUM SPACING CHART	
TANGENT	80' c/c
TAPER	55' c/c
RADII	10' c/c

NOTE: THE CONTRACTOR SHALL REVIEW THE UTILITY PLANS AND HAVE ALL UNDERGROUND UTILITIES MARKED IN THE FIELD PRIOR TO PLACING SHEET PILING.

Preliminary Plans - For Reference Only

HORIZONTAL SCALE IN FEET
0 15 30 60

CALCULATED RLS
CHECKED SMM

MAINTENANCE OF TRAFFIC PLAN - PHASE 2
I.R. 75 - STA. 486+00 TO STA. 494+00

HAM-75-7.85

142
1047

J:\20110903\ODOT\HAM\77889\mot\sheets\77889MP345.dgn 5/22/2026 10:11:00 AM hbrendlinger

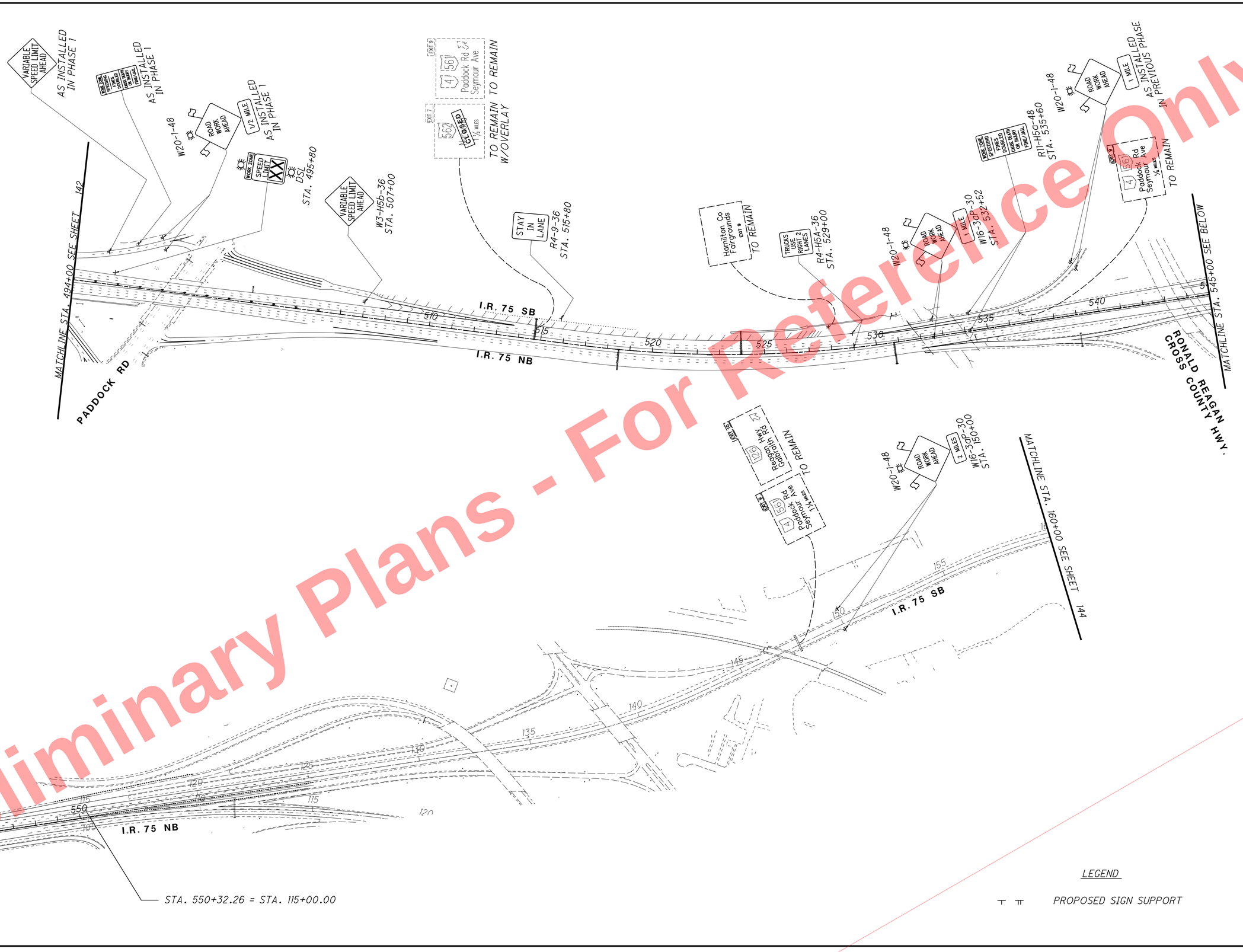

Preliminary Plans - For Reference Only

MAINTENANCE OF TRAFFIC PLAN - PHASE 2
I.R. 75 - STA. 486+00 TO STA. 160+00

CALCULATED RLS
CHECKED SMM

0 50 100 200
HORIZONTAL SCALE IN FEET

HAM-75-7.85

143
1047

J:\20110903\ODOT\HAM\77889\mot\sheets\77889MP246.dgn 5/22/2026 10:11:02 AM hbrendlinger

J:\20110903\ODOT\HAM\77889\mot\sheets\77889MP247.dgn 5/22/2026 10:11:03 AM hbrendlinger

Preliminary Plans - For Reference Only

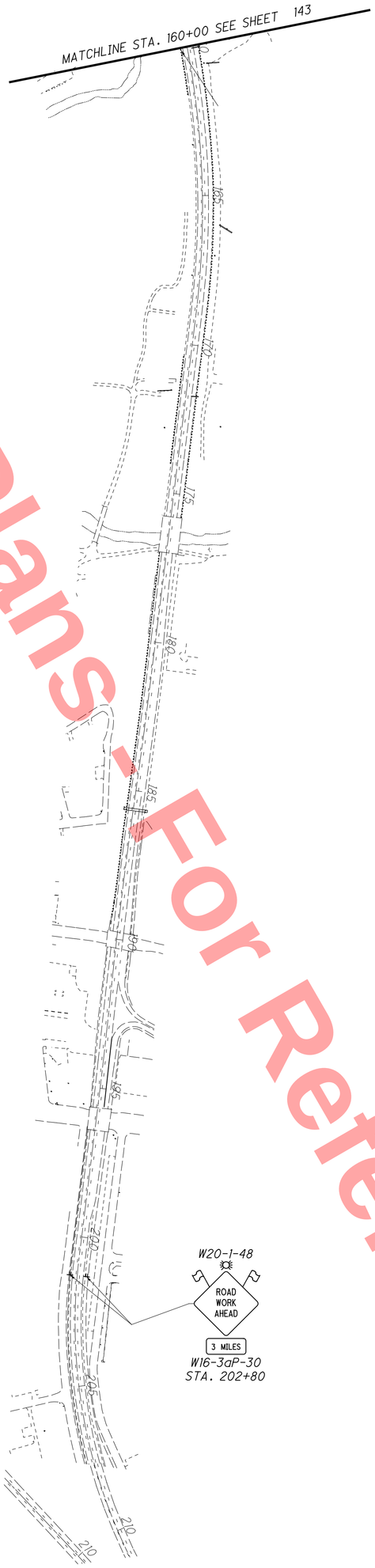

LEGEND

PROPOSED SIGN SUPPORT

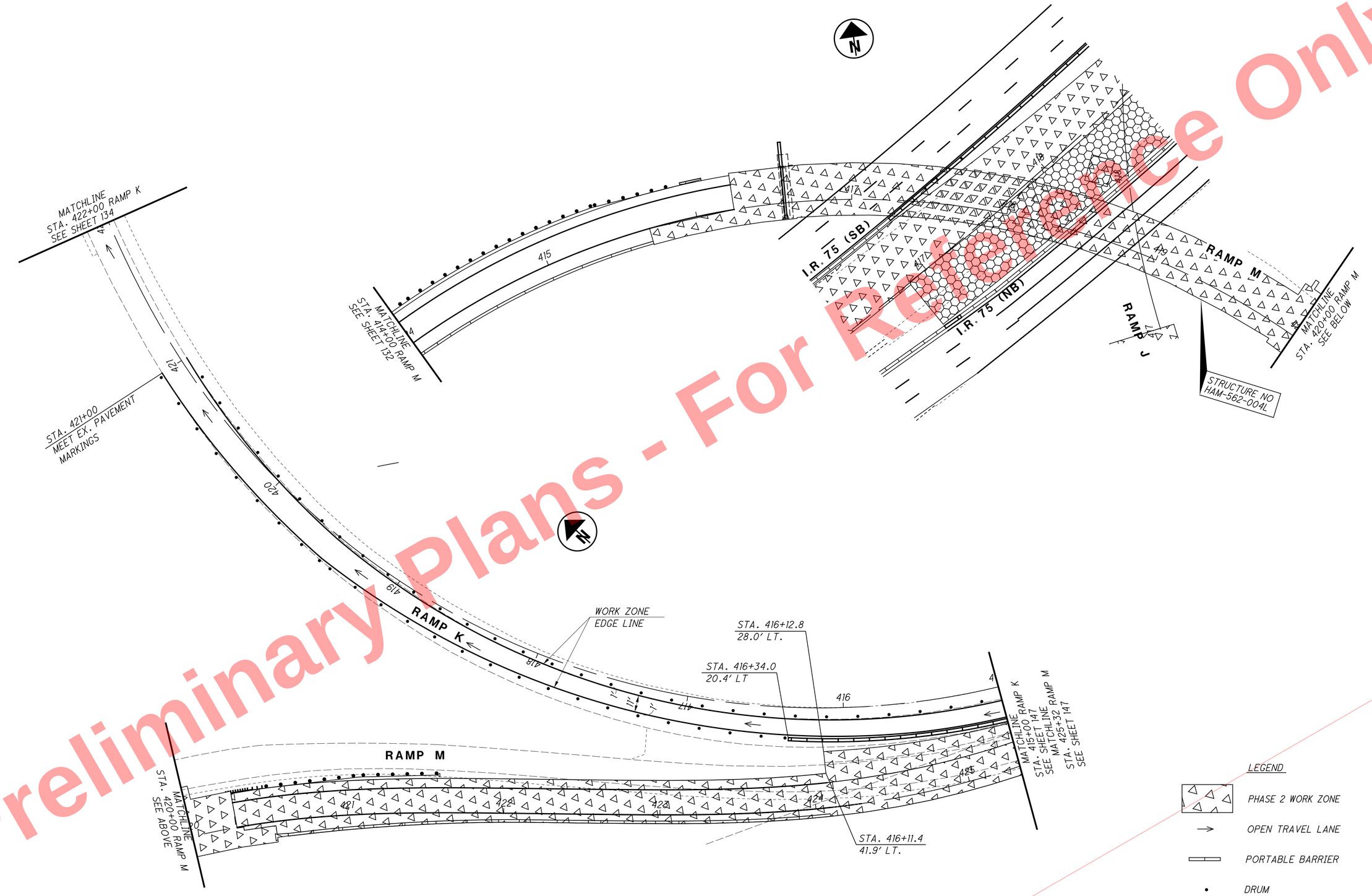

Preliminary Plans - For Reference Only

MAINTENANCE OF TRAFFIC PLAN - PHASE 2
RAMP M - STA. 414+00 TO STA. 425+32

HAM-75-7.85

CALCULATED RLS
CHECKED SMM

HORIZONTAL SCALE IN FEET
0 15 30 60

145
1047

J:\20110903\ODOT\HAM\77889\mot\sheets\77889MP309.dgn 5/22/2026 10:11:04 AM hbrendlinger

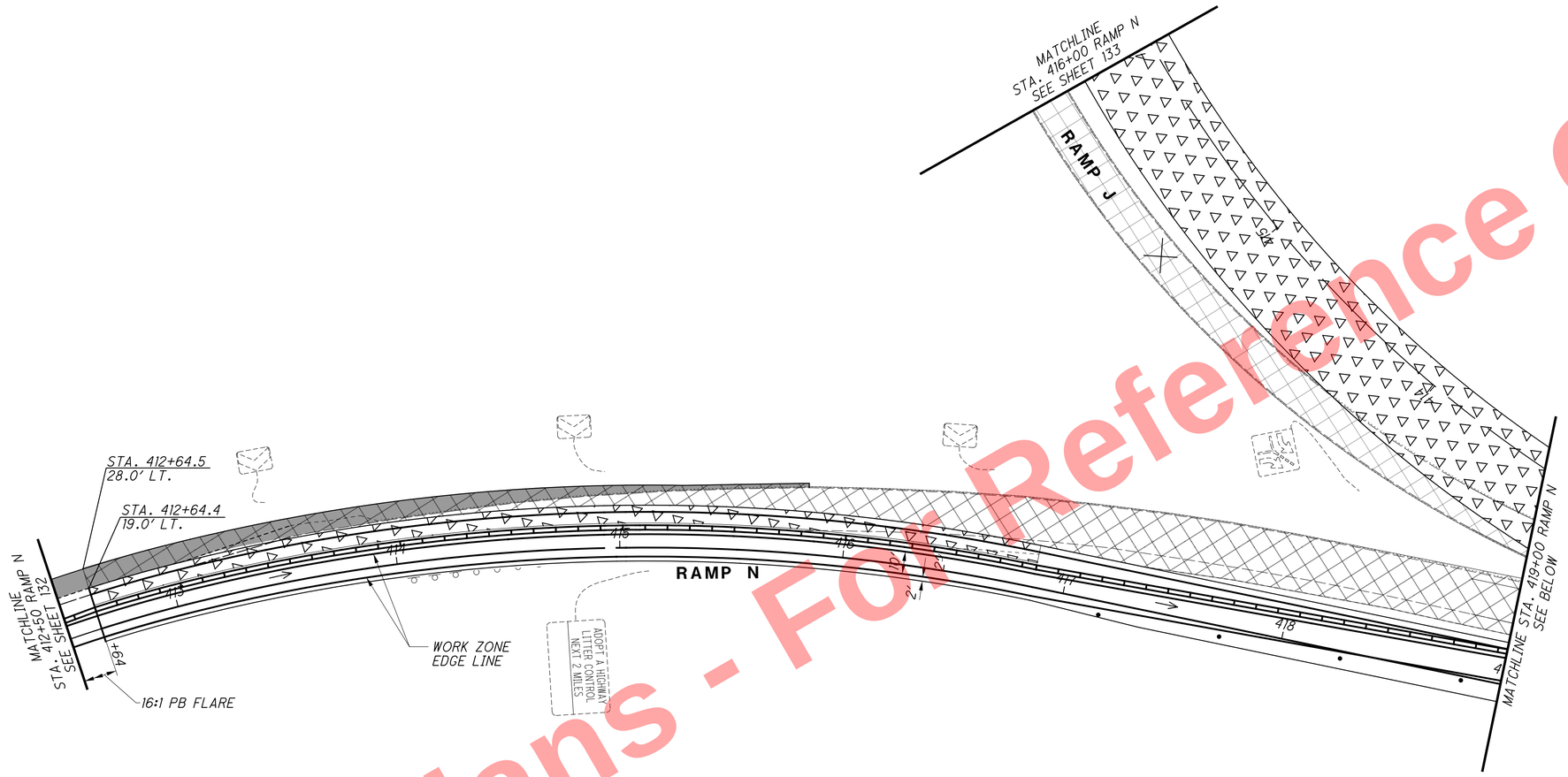

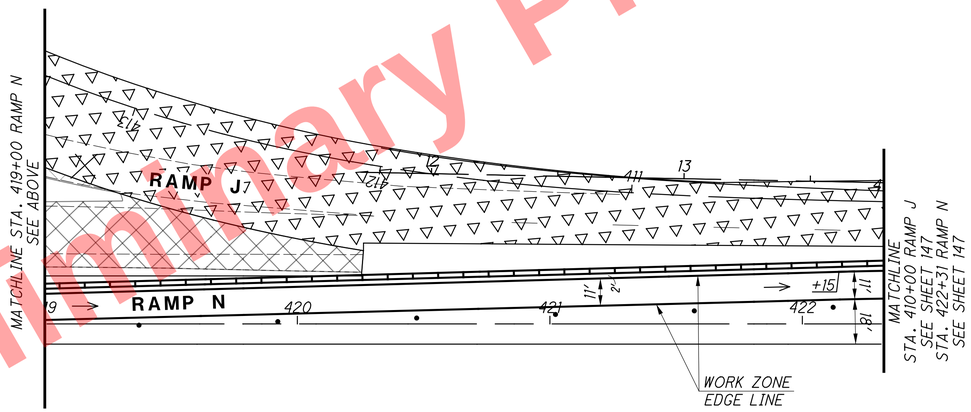

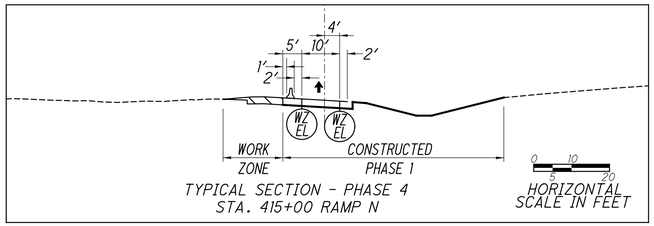

TYPICAL SECTION - PHASE 4
STA. 415+00 RAMP N

LEGEND

- PHASE 2 WORK ZONE
- RAMP J & N PAVEMENT REMOVAL
- PORTABLE BARRIER
- DRUM
- OPEN TRAVEL LANE
- TEMPORARY PAVEMENT

Preliminary Plans - For Reference Only

N

0 15 30 60
HORIZONTAL SCALE IN FEET

CALCULATED RLS
CHECKED SMM

MAINTENANCE OF TRAFFIC PLAN - PHASE 2
RAMP N - STA. 412+50 TO STA. 422+31

HAM-75-7.85

146
1047

J:\20110903\ODOT\HAM\77889\mot\sheets\77889MP313.dgn 5/22/2026 10:11:05 AM hbrendlinger

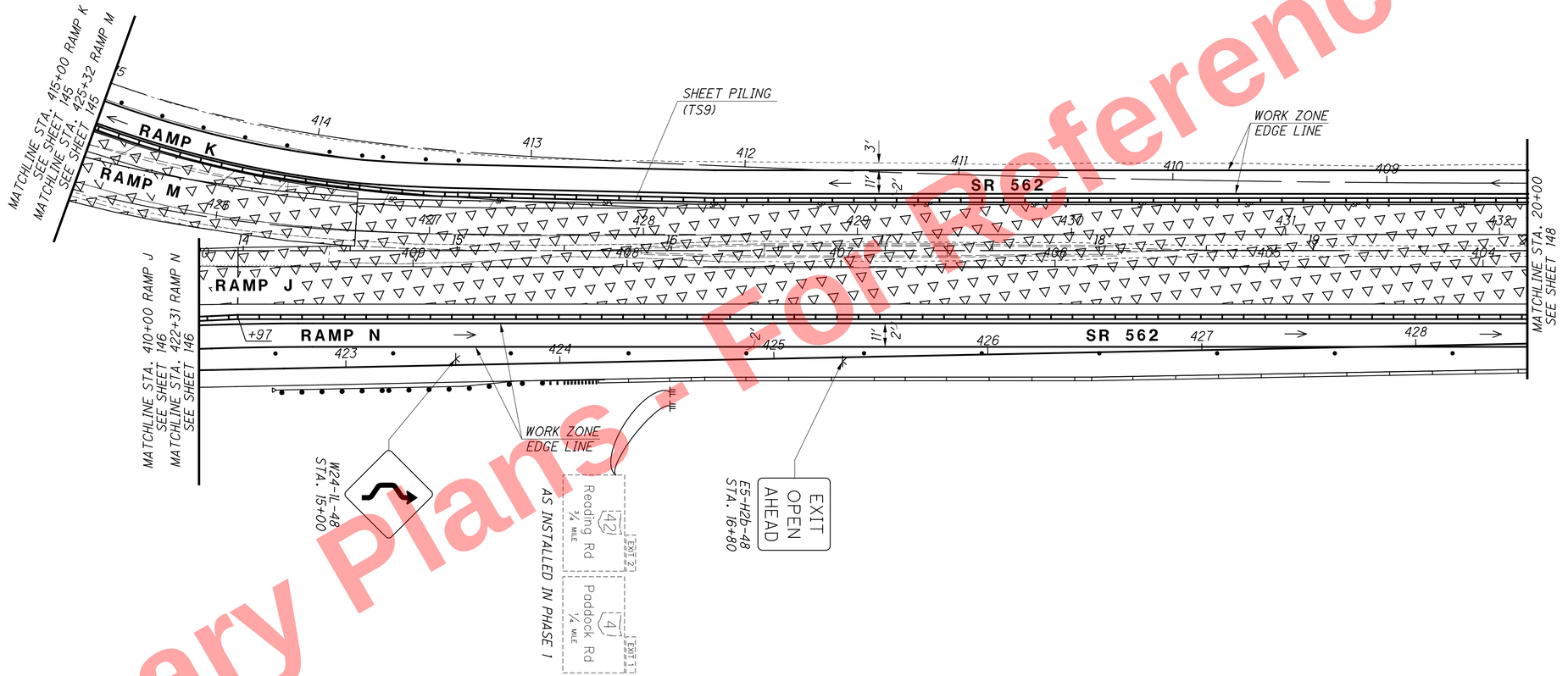

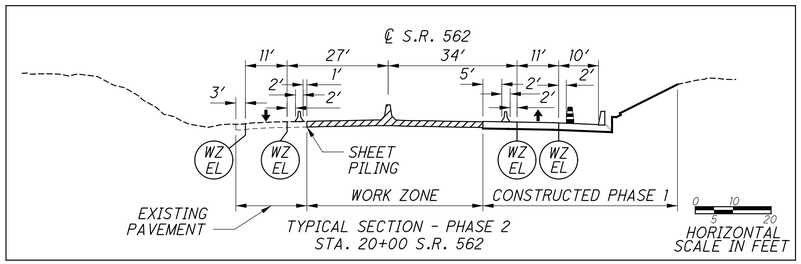

NOTES:
1. THE CONTRACTOR SHALL REVIEW THE UTILITY PLANS AND HAVE ALL UNDERGROUND UTILITIES MARKED IN THE FIELD PRIOR TO PLACING SHEET PILING.

DRUM SPACING CHART	
TANGENT	80′ c/c
TAPER	55′ c/c
RADII/CLOSURE	10′ c/c

LEGEND

- PHASE 2 WORK ZONE
- PORTABLE BARRIER
- DRUM
- OPEN TRAVEL LANE
- TEMPORARY SIGN SUPPORT
- PROPOSED SIGN SUPPORT

HORIZONTAL SCALE IN FEET
0 15 30 60

CALCULATED RLS
CHECKED SMM

MAINTENANCE OF TRAFFIC PLAN - PHASE 2
S.R 562 - STA. 10+90 TO STA. 20+00

HAM-75-7.85

147
1047

Preliminary Plans - For Reference Only

J:\2011093\ODOT\HAM\7889\mot\sheets\77889MP255.dgn 5/22/2026 10:11:07 AM hbrendlinger

Preliminary Plans - For Reference Only

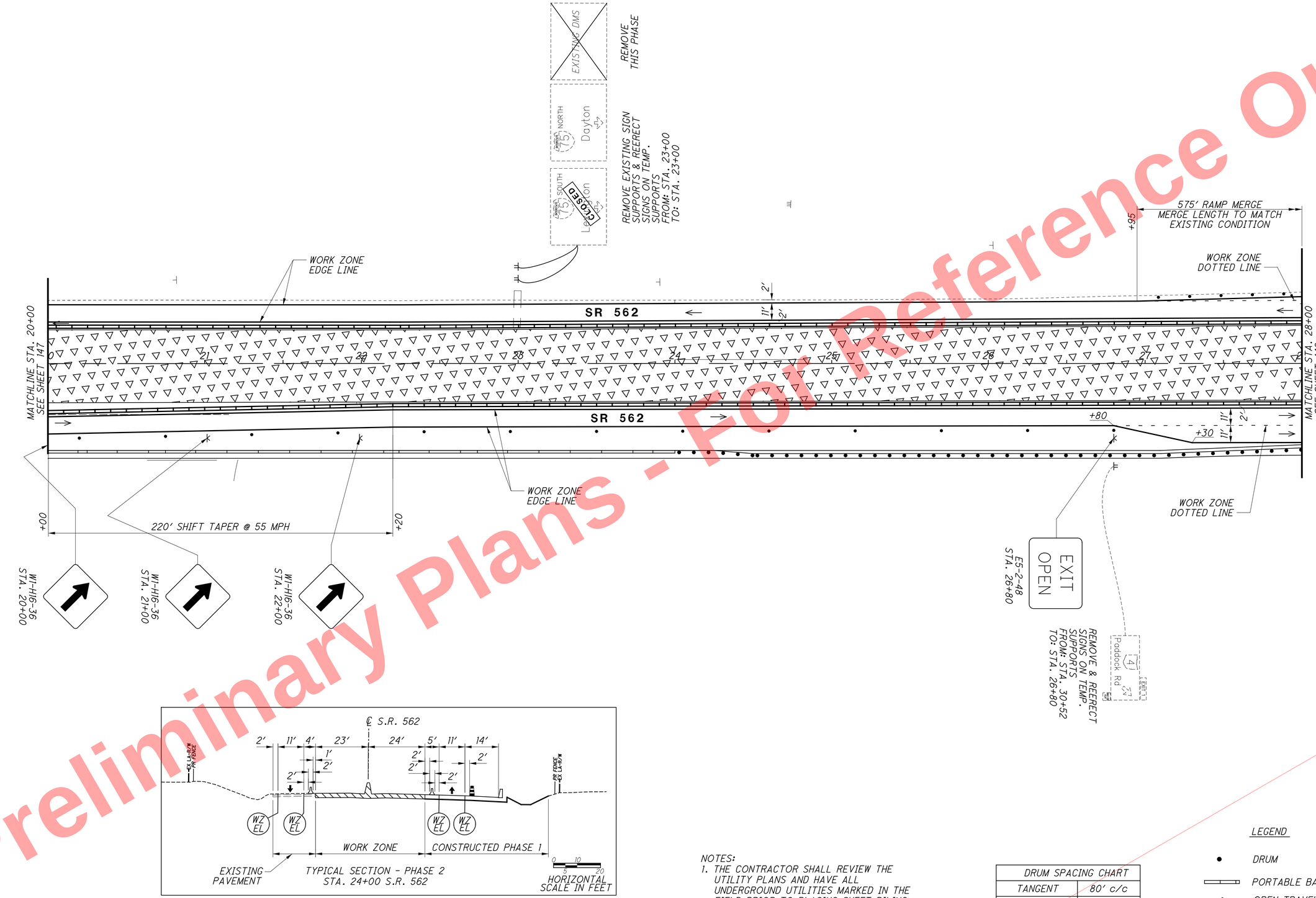

NOTES:
1. THE CONTRACTOR SHALL REVIEW THE UTILITY PLANS AND HAVE ALL UNDERGROUND UTILITIES MARKED IN THE FIELD PRIOR TO PLACING SHEET PILING.

DRUM SPACING CHART	
TANGENT	80' c/c
TAPER	55' c/c
RADII/CLOSURE	10' c/c

LEGEND
- DRUM
- PORTABLE BARRIER
- OPEN TRAVEL LANE
- TEMPORARY SIGN SUPPORT

HORIZONTAL SCALE IN FEET: 0, 15, 30, 60

CALCULATED RLS
CHECKED SMM

MAINTENANCE OF TRAFFIC PLAN - PHASE 2
S.R. 562 - STA. 20+00 TO STA. 28+00

HAM-75-7.85

148
1047

J:\20110903\ODOT\HAM\77889\mot\sheets\77889MP256.dgn 5/22/2026 10:11:08 AM hbrendlinger

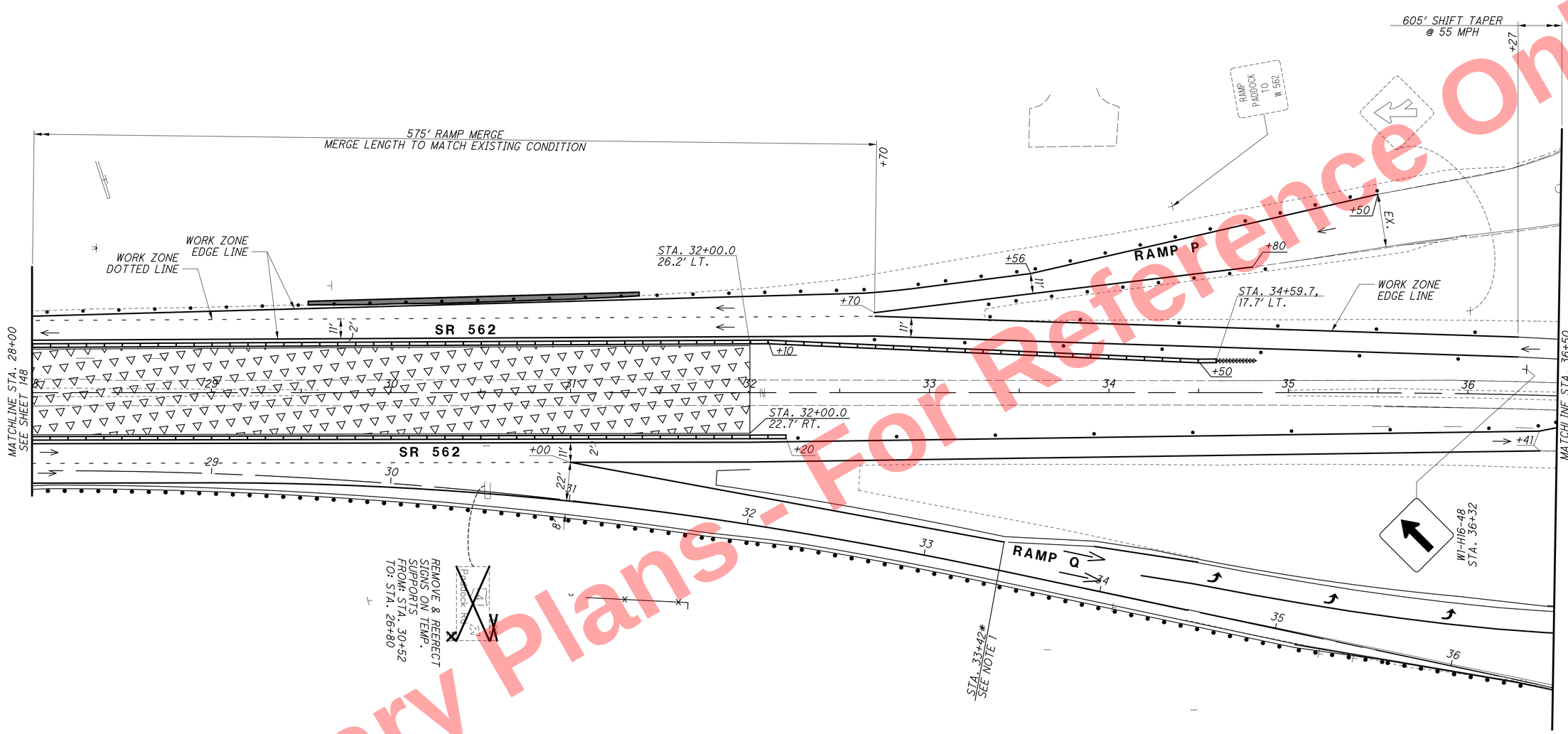

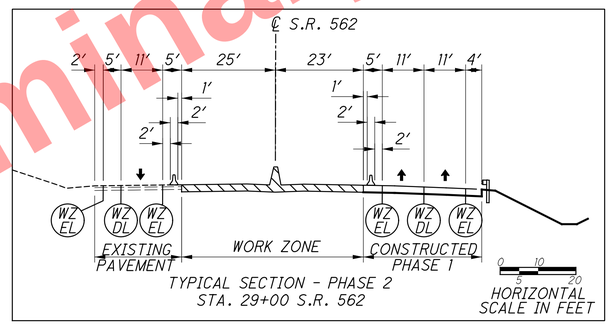

TYPICAL SECTION - PHASE 2
STA. 29+00 S.R. 562

NOTES:
1. RAMP Q PAVEMENT MARKINGS EAST OF STA. 33+42* SHALL BE INSTALLED PER THE TRAFFIC CONTROL PLAN
2. THE CONTRACTOR SHALL REVIEW THE UTILITY PLANS AND HAVE ALL UNDERGROUND UTILITIES MARKED IN THE FIELD PRIOR TO PLACING SHEET PILING.

* DENOTES STATIONING FROM RAMP Q

DRUM SPACING CHART	
TANGENT	80' c/c
TAPER	55' c/c
RADII/CLOSURE	10' c/c

LEGEND
- PHASE 2 WORK ZONE
- PORTABLE BARRIER
- IMPACT ATTENUATOR
- EXISTING SIGN SUPPORT
- PROPOSED SIGN SUPPORT
- OPEN TRAVEL LANE

HORIZONTAL SCALE IN FEET
0 15 30 60

CALCULATED RLS
CHECKED SMM

MAINTENANCE OF TRAFFIC PLAN - PHASE 2
S.R. 562 - STA. 28+00 TO STA. 36+50

HAM-75-7.85

149
1047

Preliminary Plans - For Reference Only

J:\20110903\ODOT\HAM\77889\mot\sheets\77889MP257.dgn 5/22/2026 10:11:09 AM hbrendlinger

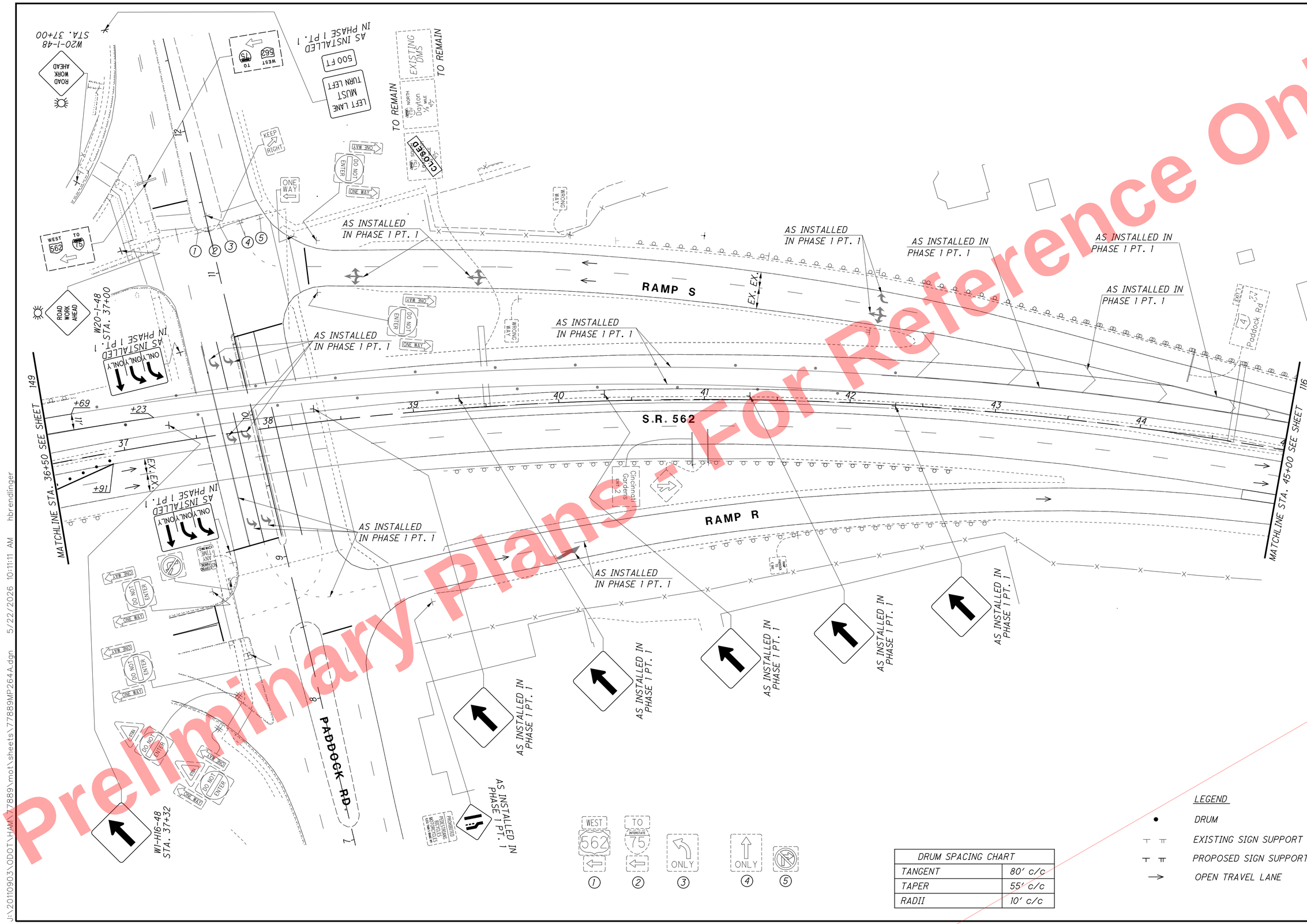

DRUM SPACING CHART	
TANGENT	80′ c/c
TAPER	55′ c/c
RADII	10′ c/c

LEGEND

- DRUM
- EXISTING SIGN SUPPORT
- PROPOSED SIGN SUPPORT
- OPEN TRAVEL LANE

Preliminary Plans - For Reference Only

HORIZONTAL SCALE IN FEET
0 15 30 60

CALCULATED RLS
CHECKED SMM

MAINTENANCE OF TRAFFIC PLAN - PHASE 2 & 3A
S.R. 562 - STA. 36+50 TO STA. 45+00

HAM-75-7.85

150
1047

J:\20110903\ODOT\HAM\7889\mot\sheets\77889MP264A.dgn 5/22/2026 10:11:11 AM hbrendlinger

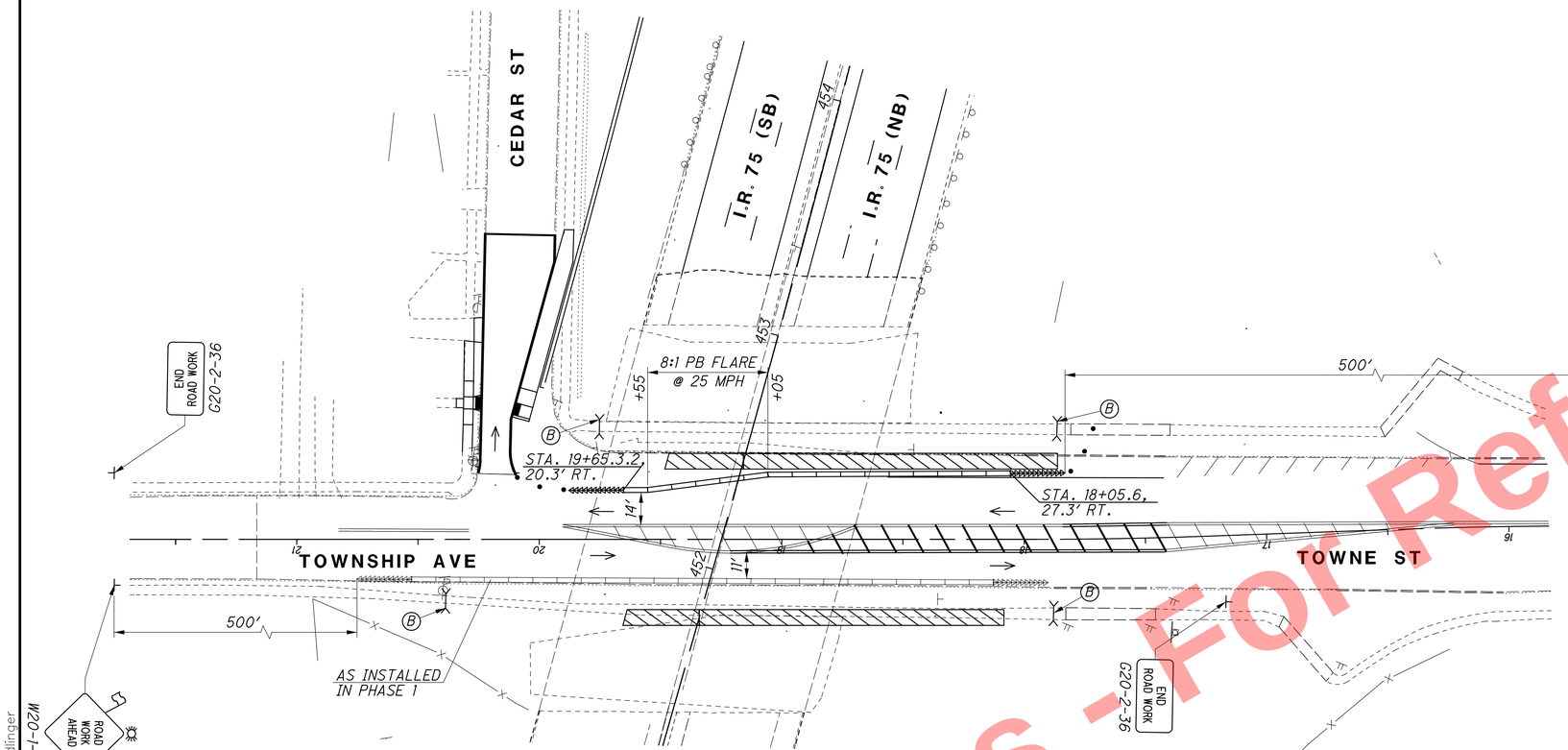

DRUM SPACING CHART	
TANGENT	40' c/c
TAPER	35' c/c
RADII	10' c/c

LEGEND

- PHASES 2 & 3 WORK ZONE
- PORTABLE BARRIER
- TYPE III BARRICADE
- IMPACT ATTENUATOR
- DRUM
- OPEN TRAVEL LANE

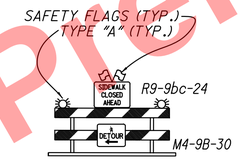

TYPE II BARRICADE (A)

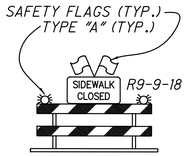

TYPE II BARRICADE (B)

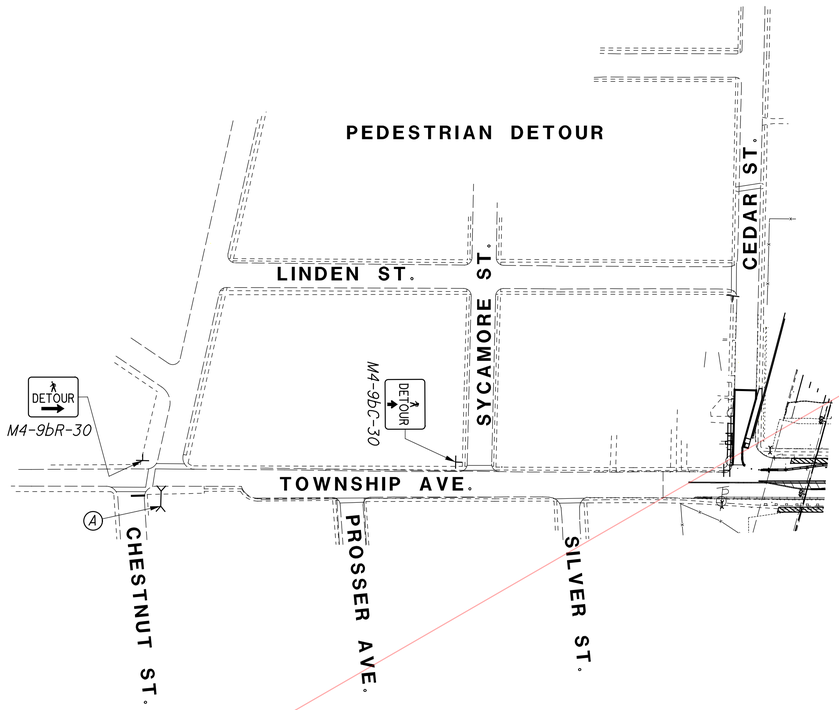

Preliminary Plans - For Reference Only

HORIZONTAL SCALE IN FEET

CALCULATED RLS
CHECKED SMM

MAINTENANCE OF TRAFFIC PLAN - PHASES 2 & 3
TOWNE STREET

J:\20110903\ODOT\HAM\77889\mot\sheets\77889MP206.dgn 5/22/2026 10:11:12 AM hbrendlinger

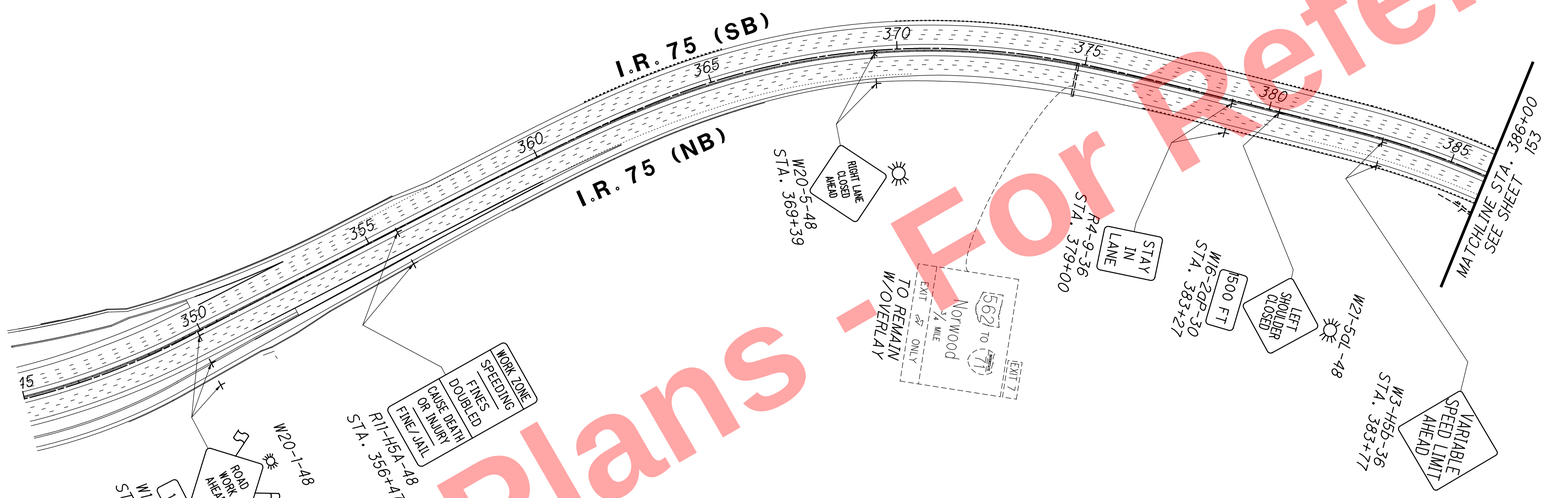

LEGEND

⊤ ⊤ PROPOSED SIGN SUPPORT

Preliminary Plans - For Reference Only

HORIZONTAL SCALE IN FEET
0 50 100 200

CALCULATED RLS
CHECKED SMM

MAINTENANCE OF TRAFFIC PLAN - PHASE 3A
I.R. 75 - STA. 345+00 TO STA. 386+00

HAM-75-7.85

152
1047

J:\20110903\ODOT\HAM\77889\mot\sheets\77889MP314.dgn 5/22/2026 10:11:14 AM hbrendlinger

Preliminary Plans - For Reference Only

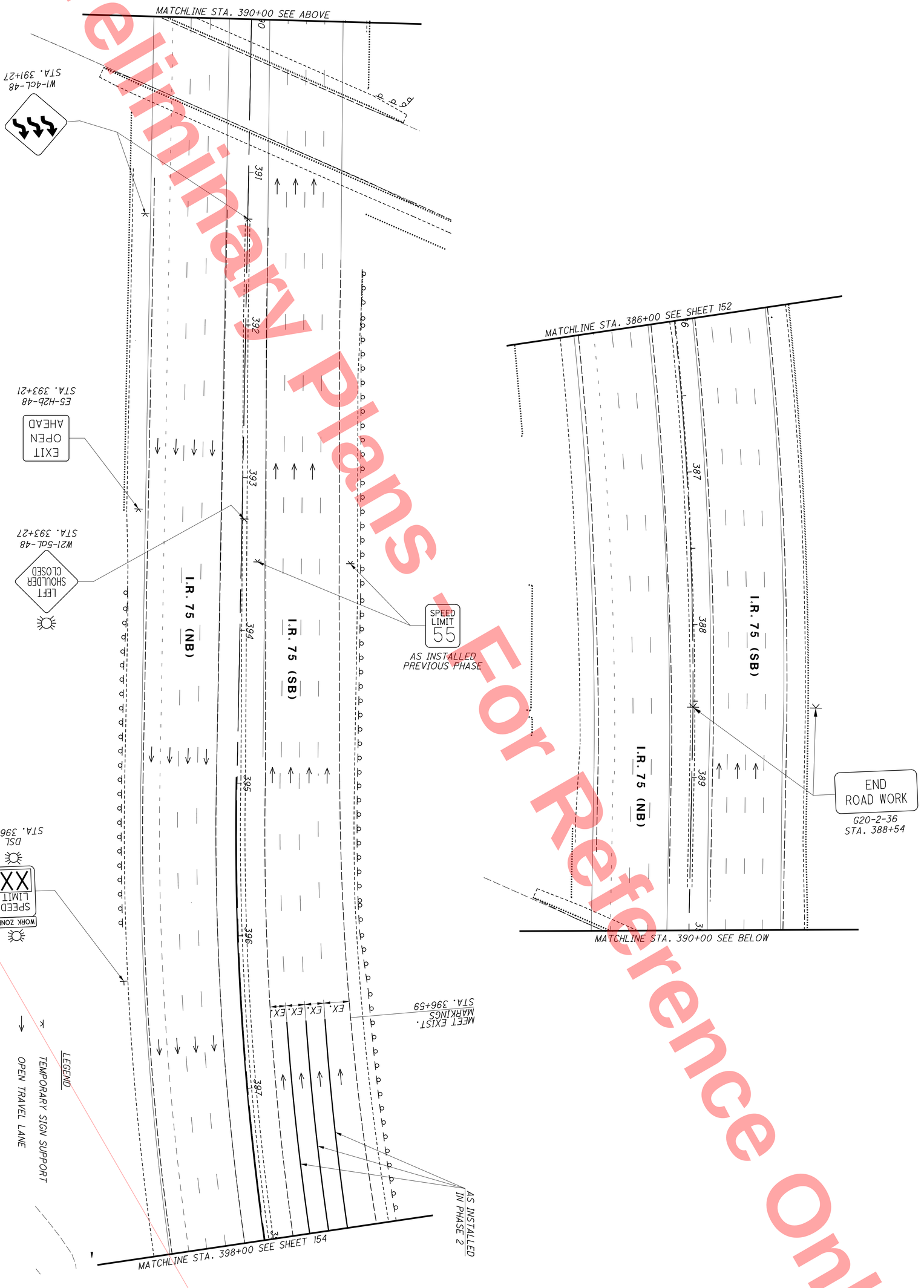

153 / 1047	HAM-75-7.85	MAINTENANCE OF TRAFFIC PLAN - PHASE 3A I.R. 75 - STA. 386+00 TO STA. 398+00	CALCULATED RLS CHECKED SMM	0 30 15 60 HORIZONTAL SCALE IN FEET

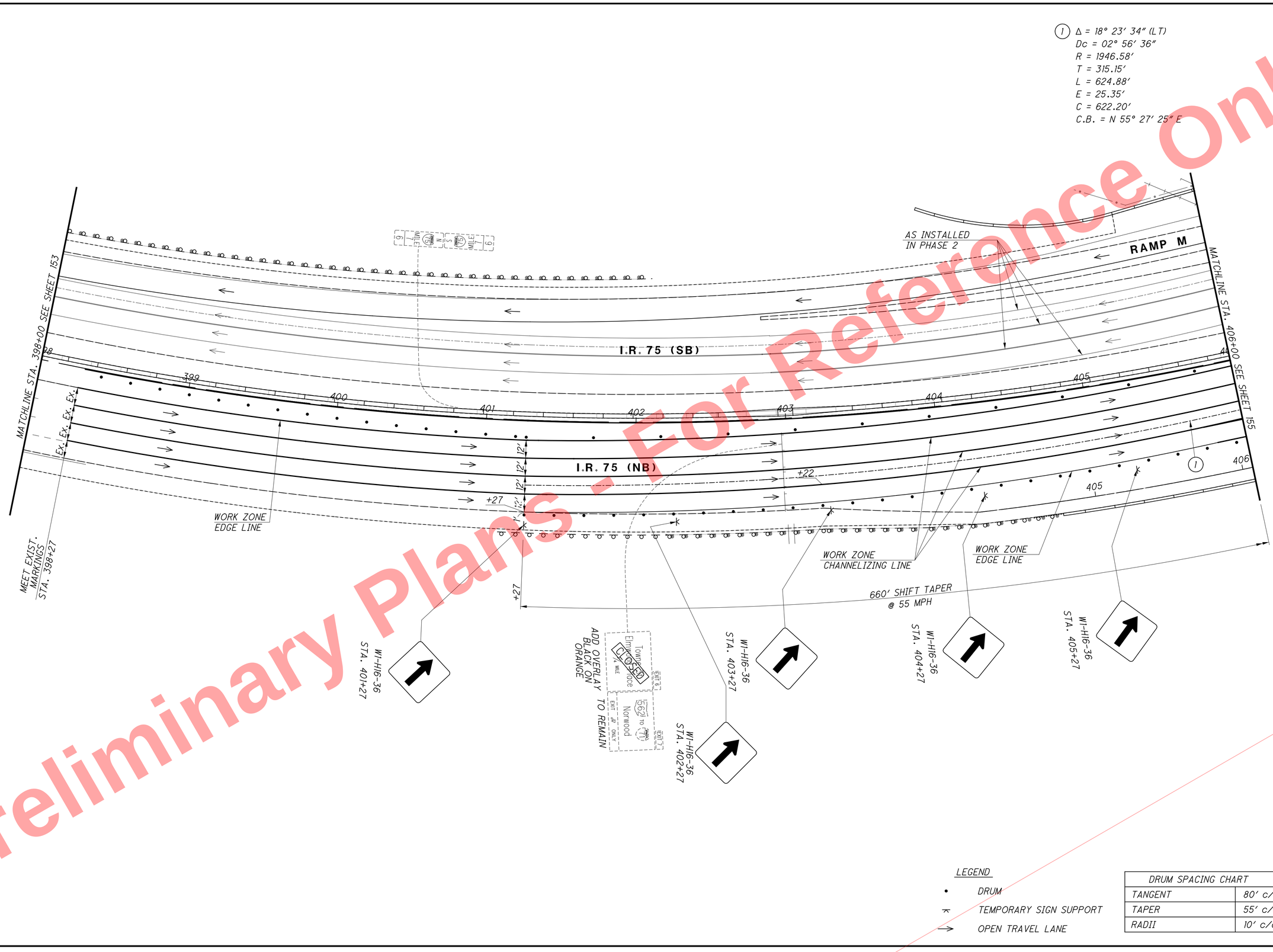

DRUM SPACING CHART	
TANGENT	80′ c/c
TAPER	55′ c/c
RADII	10′ c/c

Preliminary Plans - For Reference Only

HORIZONTAL SCALE IN FEET 0 15 30 60

CALCULATED RLS
CHECKED SMM

MAINTENANCE OF TRAFFIC PLAN - PHASE 3A
I.R. 75 - STA. 398+00 TO STA. 406+00

HAM-75-7.85

J:\20110903\ODOT\HAM\77889\mot\sheets\77889MP316.dgn 5/22/2026 10:11:18 AM bbrendlinger

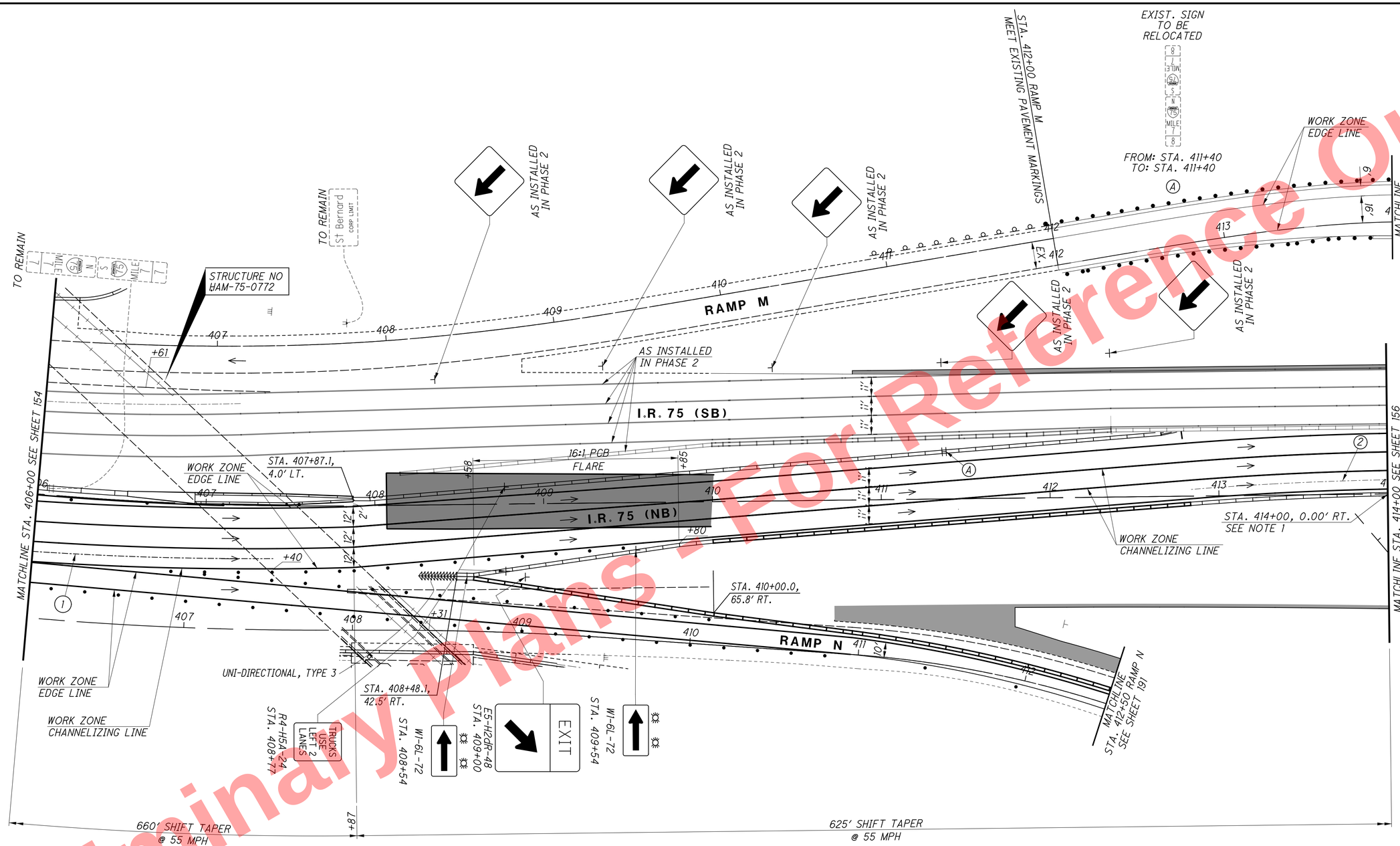

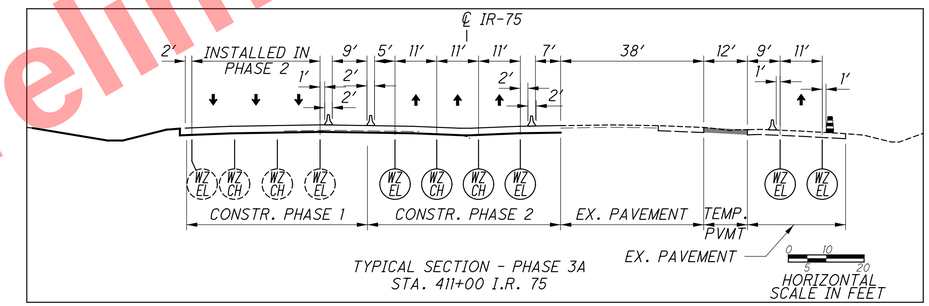

TYPICAL SECTION - PHASE 3A
STA. 411+00 I.R. 75

① Δ = 18° 23' 34" (LT)
Dc = 02° 56' 36"
R = 1946.58'
T = 315.15'
L = 624.88'
E = 25.35'
C = 622.20'
C.B. = N 55° 27' 25" E

② Δ = 03° 55' 31"
Dc = 3° 59' 59"
R = 1910.00'
T = 65.45'
L = 130.85'
E = 1.12'
C = 130.83'
C.B. = N 43° 59' 47" E

LEGEND

- DRUM
- PORTABLE BARRIER
- TEMPORARY PAVEMENT
- IMPACT ATTENUATOR (48" WIDE HAZARD) - ITEM 606, UNIDIRECTIONAL, TYPE 3
- EXISTING SIGN SUPPORT
- PROPOSED SIGN SUPPORT
- OPEN TRAVEL LANE

NOTES:
1. CONNECT PORTABLE BARRIER AND MEDIAN CONSTRUCTED IN PREVIOUS PHASE UTILIZING MT-101.80.

DRUM SPACING CHART	
TANGENT	80' c/c
TAPER	55' c/c
RADII	10' c/c

HORIZONTAL SCALE IN FEET
0 15 30 60

CALCULATED RLS
CHECKED SMM

MAINTENANCE OF TRAFFIC PLAN - PHASE 3A
I.R. 75 - STA. 406+00 TO STA. 414+00

HAM-75-7.85

155
1047

Preliminary Plans - For Reference Only

J:\20110903\ODOT\HAM\77889\mot\sheets\77889MP317.dgn 5/22/2026 10:11:20 AM hbrendlinger

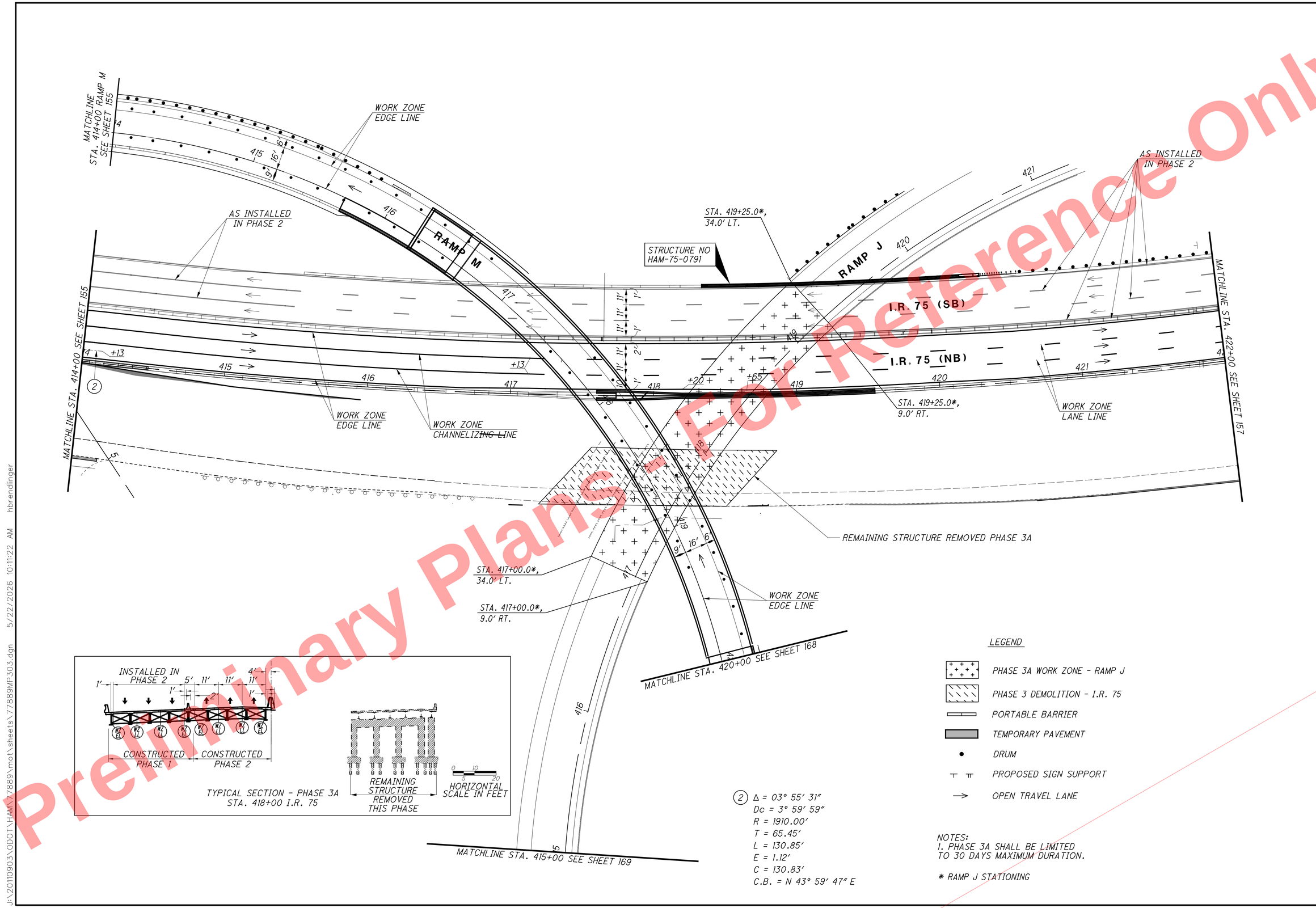

Preliminary Plans - For Reference Only

HORIZONTAL SCALE IN FEET 0 15 30 60

CALCULATED RLS
CHECKED SMM

MAINTENANCE OF TRAFFIC PLAN - PHASE 3A
I.R. 75 - STA. 414+00 TO STA. 422+00

HAM-75-7.85

J:\20110903\ODOT\HAM\77889\mot\sheets\77889MP303.dgn 5/22/2026 10:11:22 AM hbrendlinger

Preliminary Plans - For Reference Only

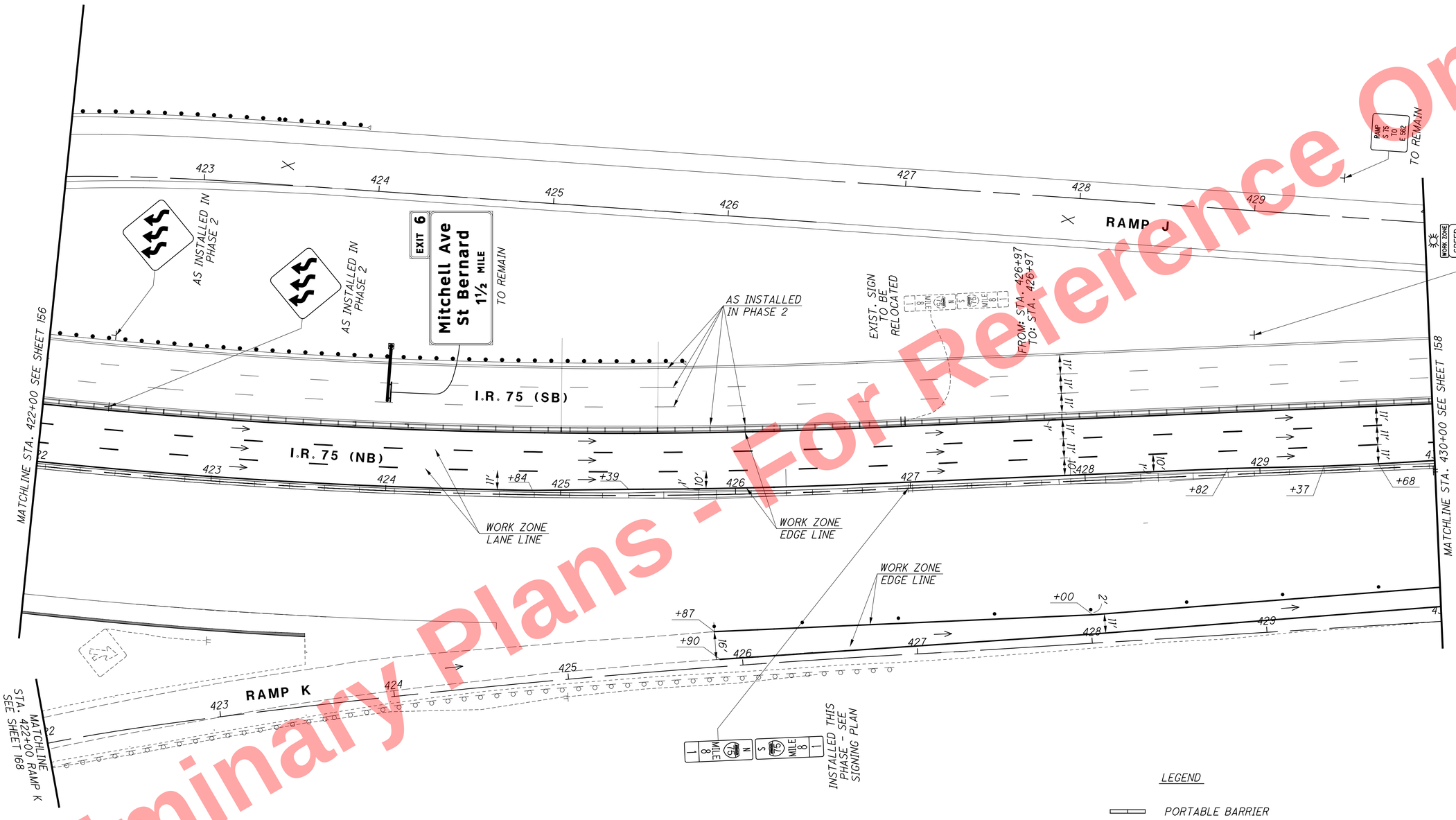

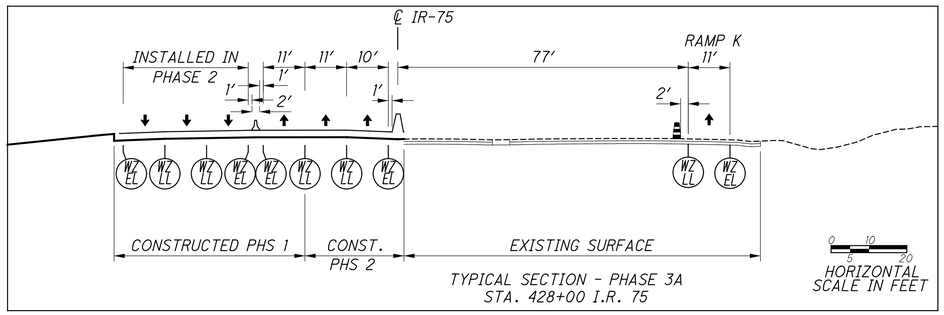

LEGEND

- PORTABLE BARRIER
- DRUM
- EXISTING SIGN SUPPORT
- PROPOSED SIGN SUPPORT
- OPEN TRAVEL LANE
- CLOSED ROADWAY

DRUM SPACING CHART	
TANGENT	80′ c/c
TAPER	55′ c/c
RADII	10′ c/c

HORIZONTAL SCALE IN FEET

CALCULATED RLS
CHECKED SMM

MAINTENANCE OF TRAFFIC PLAN - PHASE 3A
I.R. 75 - STA. 422+00 TO STA. 430+00

HAM-75-7.85

157
1047

J:\20110903\ODOT\HAM\77889\mot\sheets\77889MP318.dgn 5/22/2026 10:11:24 AM hbrendlinger

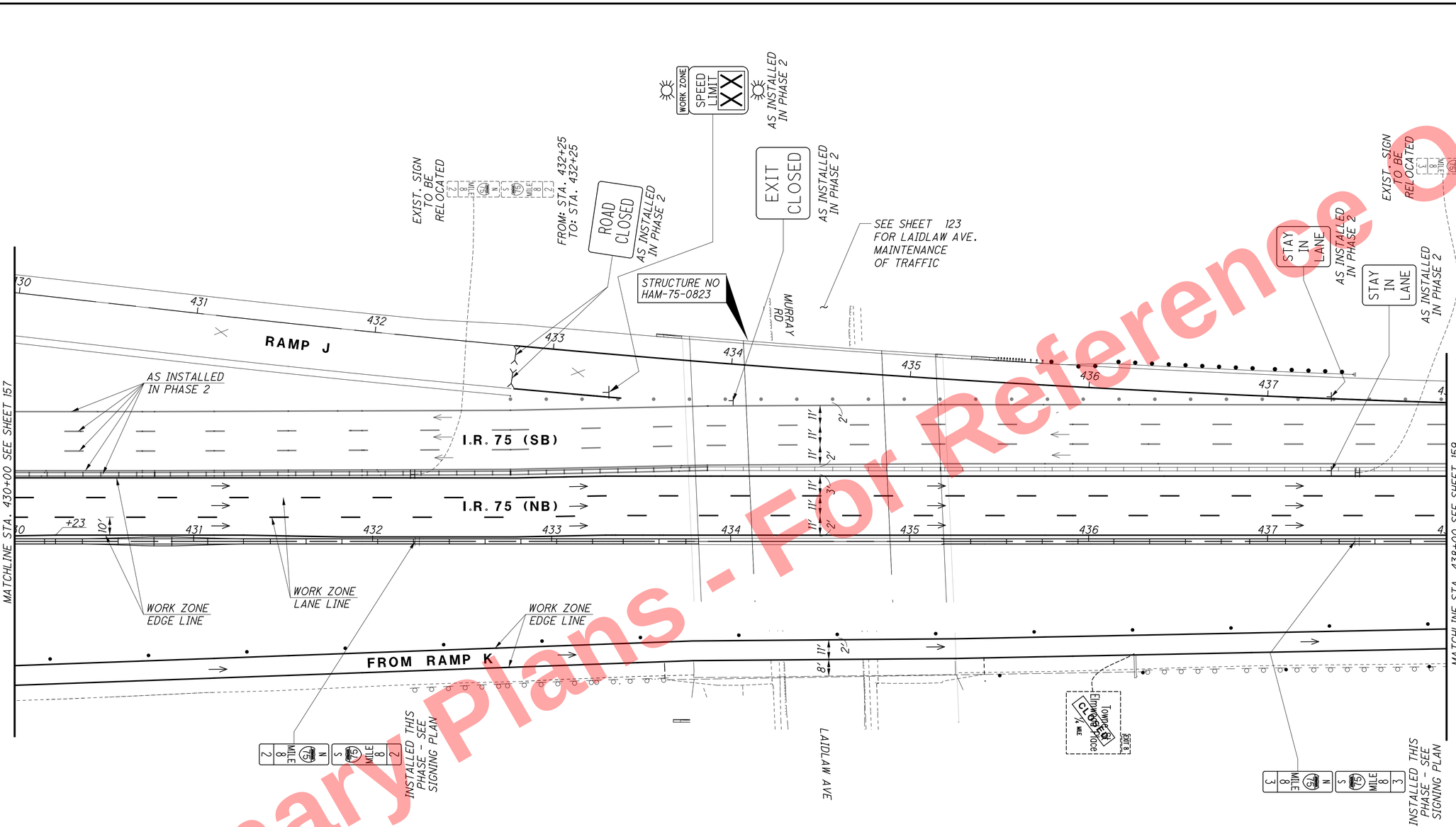

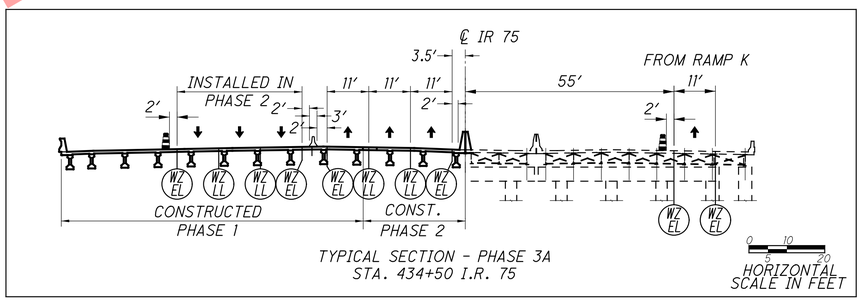

TYPICAL SECTION - PHASE 3A
STA. 434+50 I.R. 75

LEGEND

- DRUM
- PORTABLE BARRIER
- PROPOSED SIGN SUPPORT
- OPEN TRAVEL LANE
- CLOSED ROADWAY

DRUM SPACING CHART	
TANGENT	80' c/c
TAPER	55' c/c
RADII	10' c/c

HORIZONTAL SCALE IN FEET

CALCULATED RLS
CHECKED SMM

MAINTENANCE OF TRAFFIC PLAN - PHASE 3A
I.R. 75 - STA. 430+00 TO STA. 438+00

HAM-75-7.85

Preliminary Plans - For Reference Only

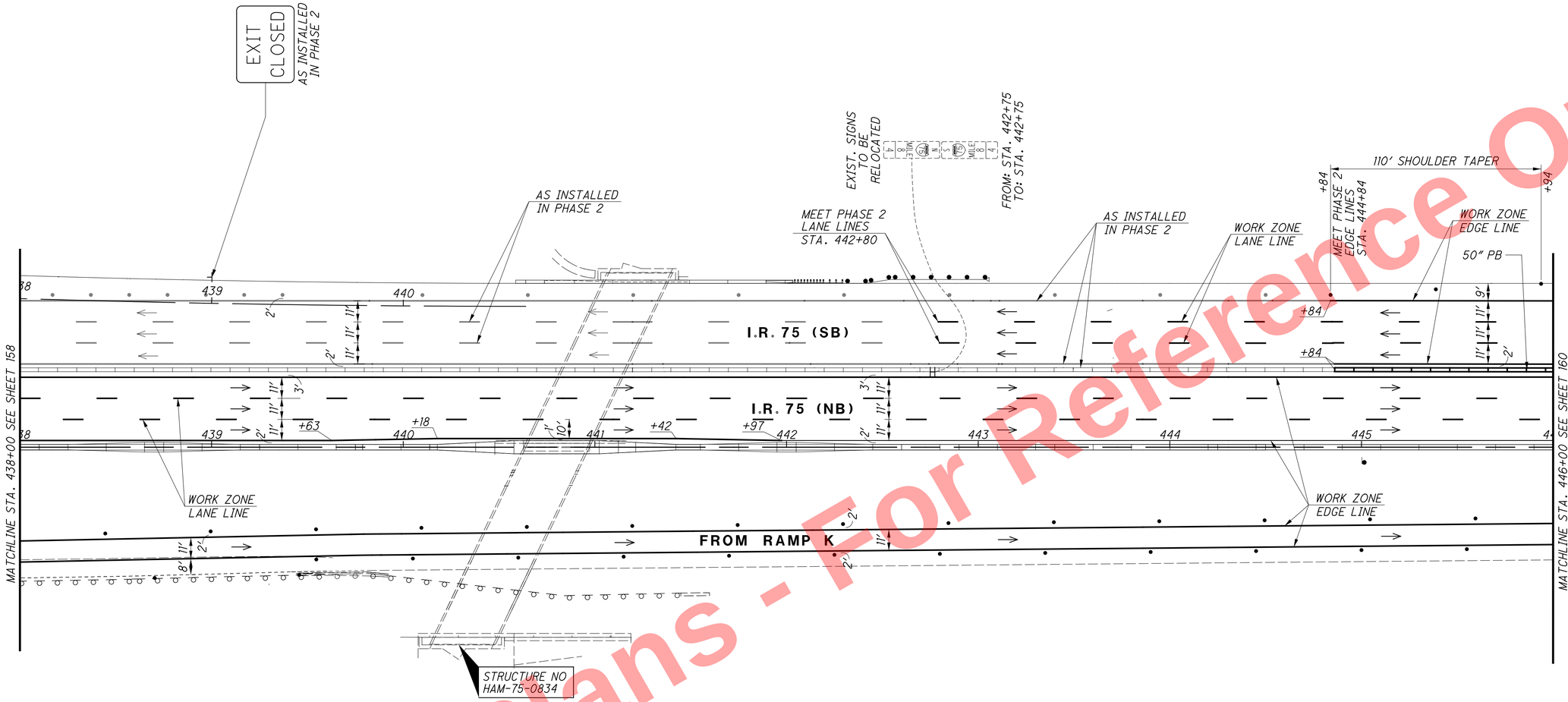

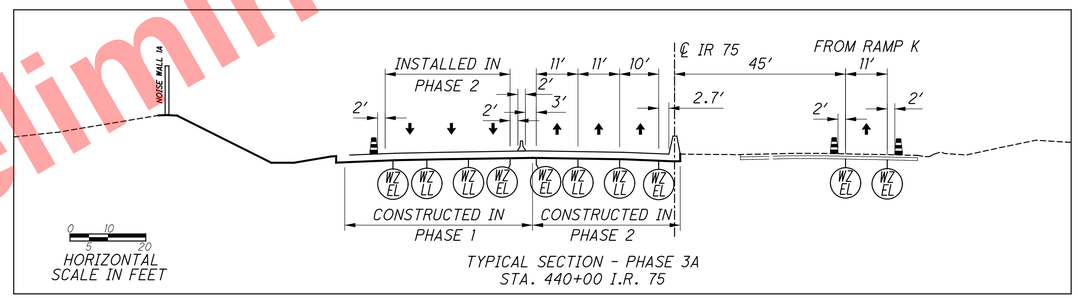

TYPICAL SECTION - PHASE 3A
STA. 440+00 I.R. 75

DRUM SPACING CHART	
TANGENT	80′ c/c
TAPER	55′ c/c
RADII	10′ c/c

LEGEND

- PORTABLE BARRIER
- DRUM
- OPEN TRAVEL LANE
- PROPOSED SIGN SUPPORT

HORIZONTAL SCALE IN FEET

CALCULATED RLS CHECKED SMM

MAINTENANCE OF TRAFFIC PLAN - PHASE 3A
I.R. 75 - STA. 438+00 TO STA. 446+00

HAM-75-7.85

159
1047

Preliminary Plans - For Reference Only

J:\20110903\ODOT\HAM\77889\mot\sheets\77889MP320.dgn 5/22/2026 10:11:29 AM hbrendlinger

Preliminary Plans - For Reference Only

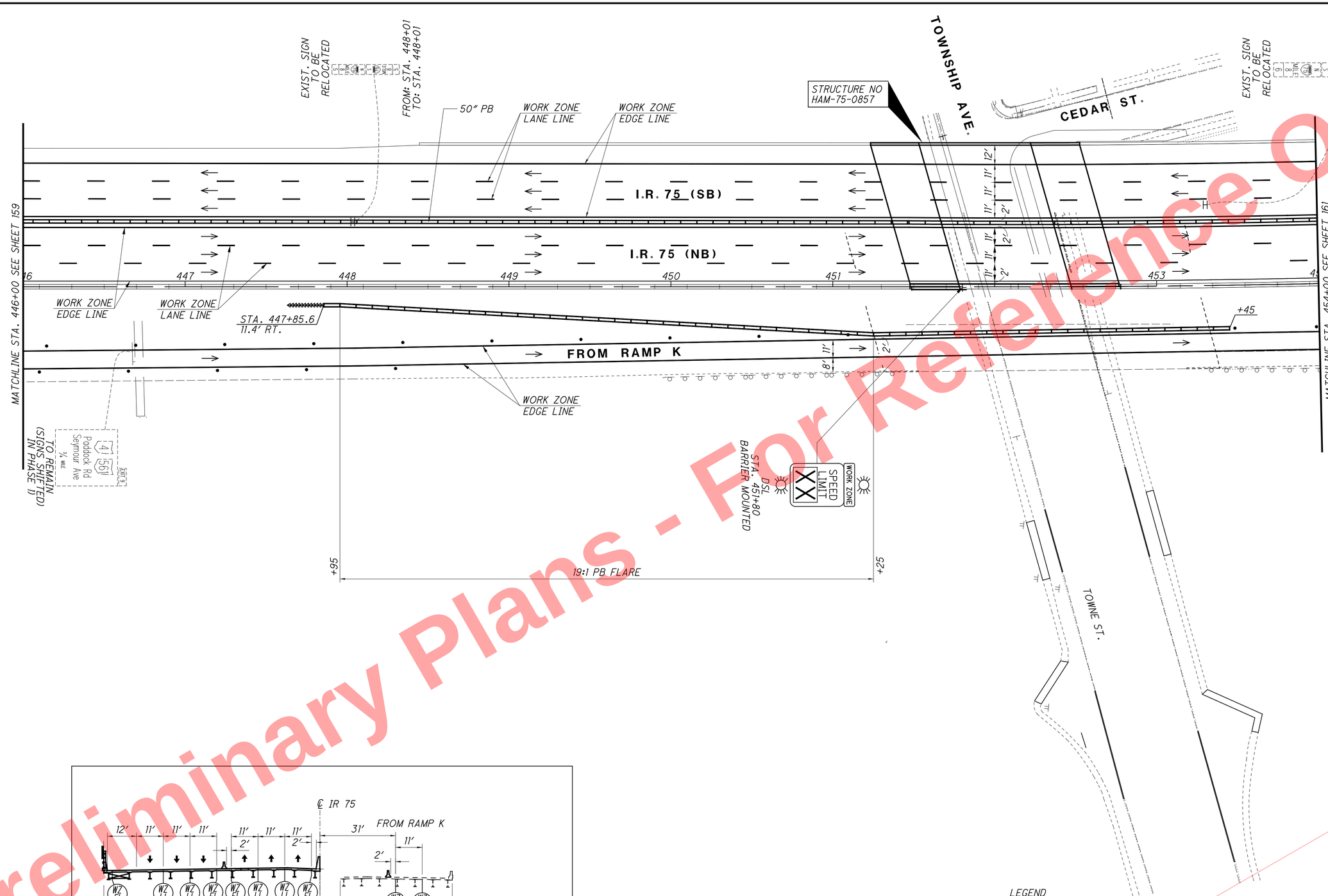

TYPICAL SECTION - PHASE 3A
STA. 452+00 I.R. 75

DRUM SPACING CHART	
TANGENT	80' c/c
TAPER	55' c/c
RADII	10' c/c

LEGEND

- PORTABLE BARRIER
- DRUM
- PROPOSED SIGN SUPPORT
- OPEN TRAVEL LANE

0 15 30 60
HORIZONTAL SCALE IN FEET

CALCULATED RLS
CHECKED SMM

MAINTENANCE OF TRAFFIC PLAN - PHASE 3A
I.R. 75 - STA. 446+00 TO STA. 454+00

HAM-75-7.85

160
1047

J:\20110903\ODOT\HAM\7889\mot\sheets\77889MP321.dgn 5/22/2026 10:11:32 AM hbrendlinger

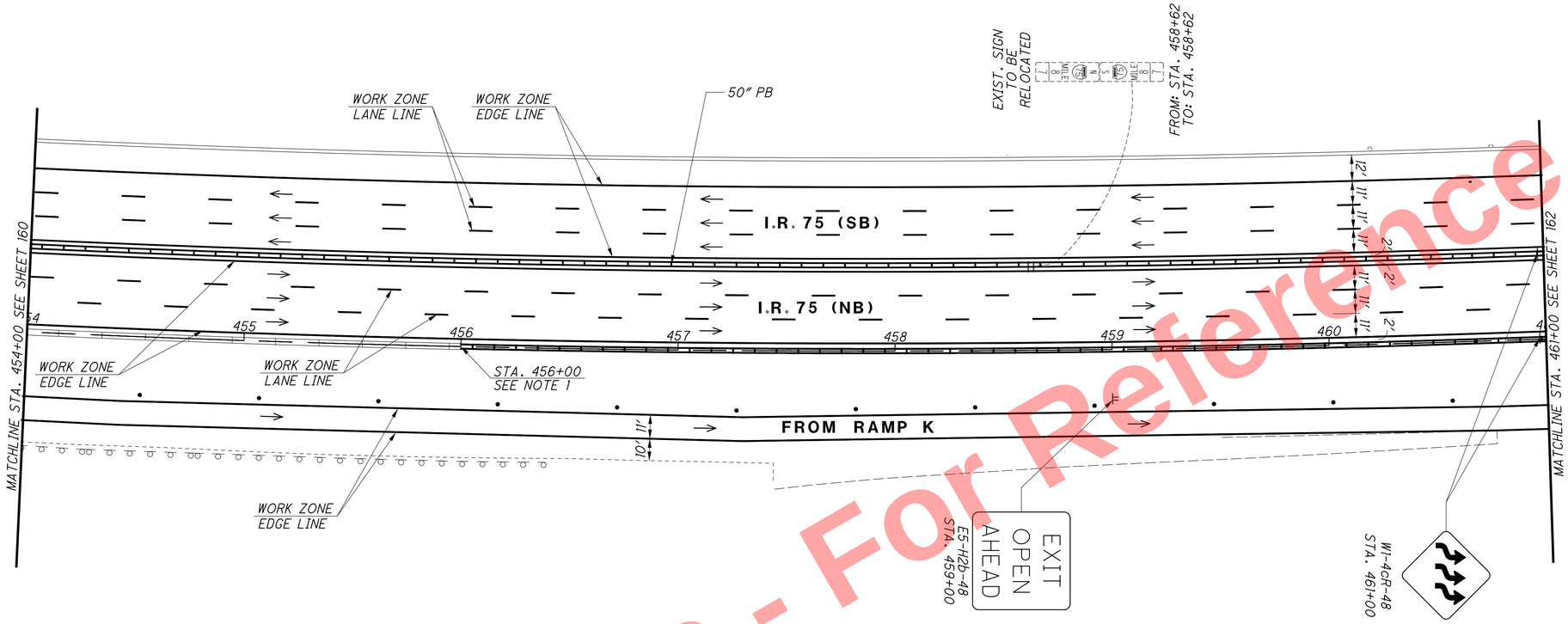

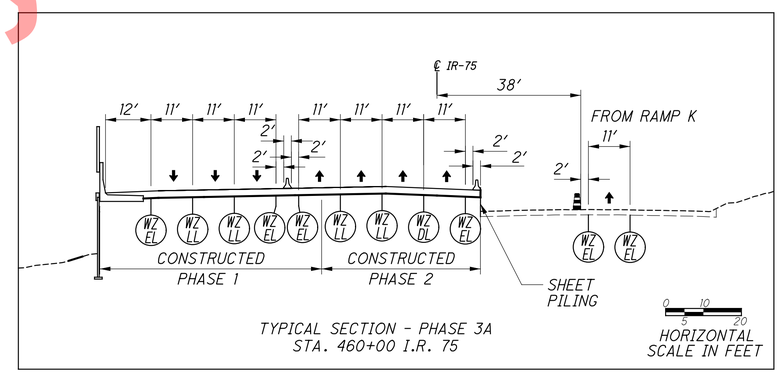

TYPICAL SECTION - PHASE 3A
STA. 460+00 I.R. 75

NOTES:
1. CONNECT PORTABLE BARRIER AND EXISTING MEDIAN UTILIZING ODOT SCD MT-101.80.

(1) Δ = 10° 14′ 50″ (LT)
Dc = 03° 00′ 30″
R = 1904.50′
T = 170.76′
L = 340.61′
E = 7.64′
C = 340.16′
C.B. = N 18° 19′ 08″ E

(2) Δ = 06° 35′ 11″ (RT)
Dc = 02° 59′ 28″
R = 1915.50′
T = 110.22′
L = 220.20′
E = 3.17′
C = 220.08′
C.B. = N 16° 29′ 19″ E

DRUM SPACING CHART	
TANGENT	80′ c/c
TAPER	55′ c/c
RADII	10′ c/c

LEGEND
- PORTABLE BARRIER
- DRUM
- PROPOSED SIGN SUPPORT
- OPEN TRAVEL LANE
- IMPACT ATTENUATOR

HORIZONTAL SCALE IN FEET
0 15 30 60

CALCULATED RLS
CHECKED SMM

MAINTENANCE OF TRAFFIC PLAN - PHASE 3A
I.R. 75 - STA. 454+00 TO STA. 461+00

HAM-75-7.85

161
1047

Preliminary Plans - For Reference Only

J:\20110903\ODOT\HAM\77889\mot\sheets\77889MP322.dgn 5/22/2026 10:11:33 AM hbrendlinger

Preliminary Plans - For Reference Only

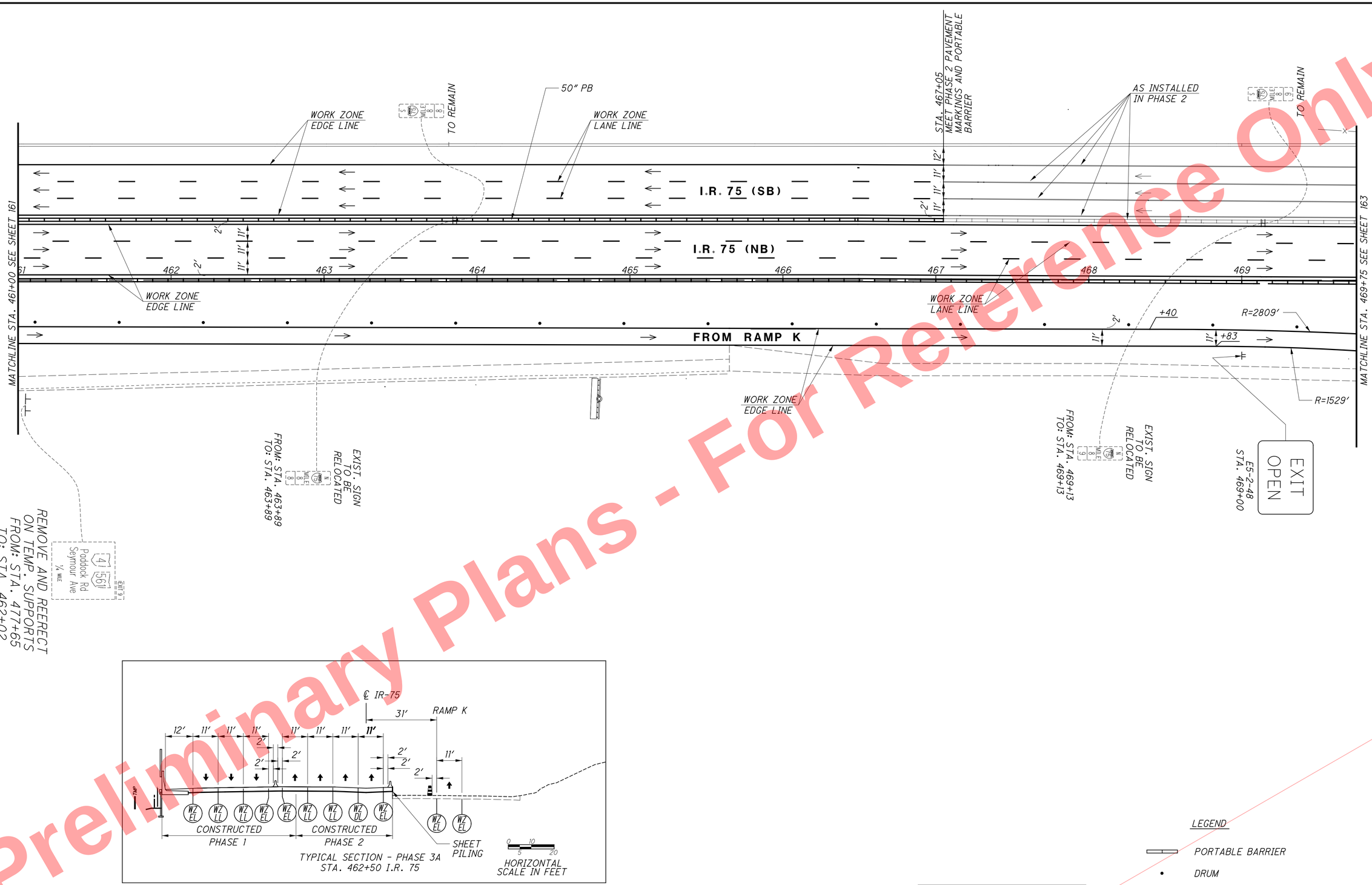

TYPICAL SECTION - PHASE 3A
STA. 462+50 I.R. 75

DRUM SPACING CHART	
TANGENT	80' c/c
TAPER	55' c/c
RADII	10' c/c

LEGEND

- PORTABLE BARRIER
- DRUM
- PROPOSED SIGN SUPPORT
- OPEN TRAVEL LANE

0 15 30 60
HORIZONTAL SCALE IN FEET

CALCULATED RLS
CHECKED SMM

MAINTENANCE OF TRAFFIC PLAN - PHASE 3A
I.R. 75 - STA. 461+00 TO STA. 469+75

HAM-75-7.85

162
1047

J:\20110903\ODOT\HAM\7889\mot\sheets\77889MP323.dgn 5/22/2026 10:11:35 AM hbrendlinger

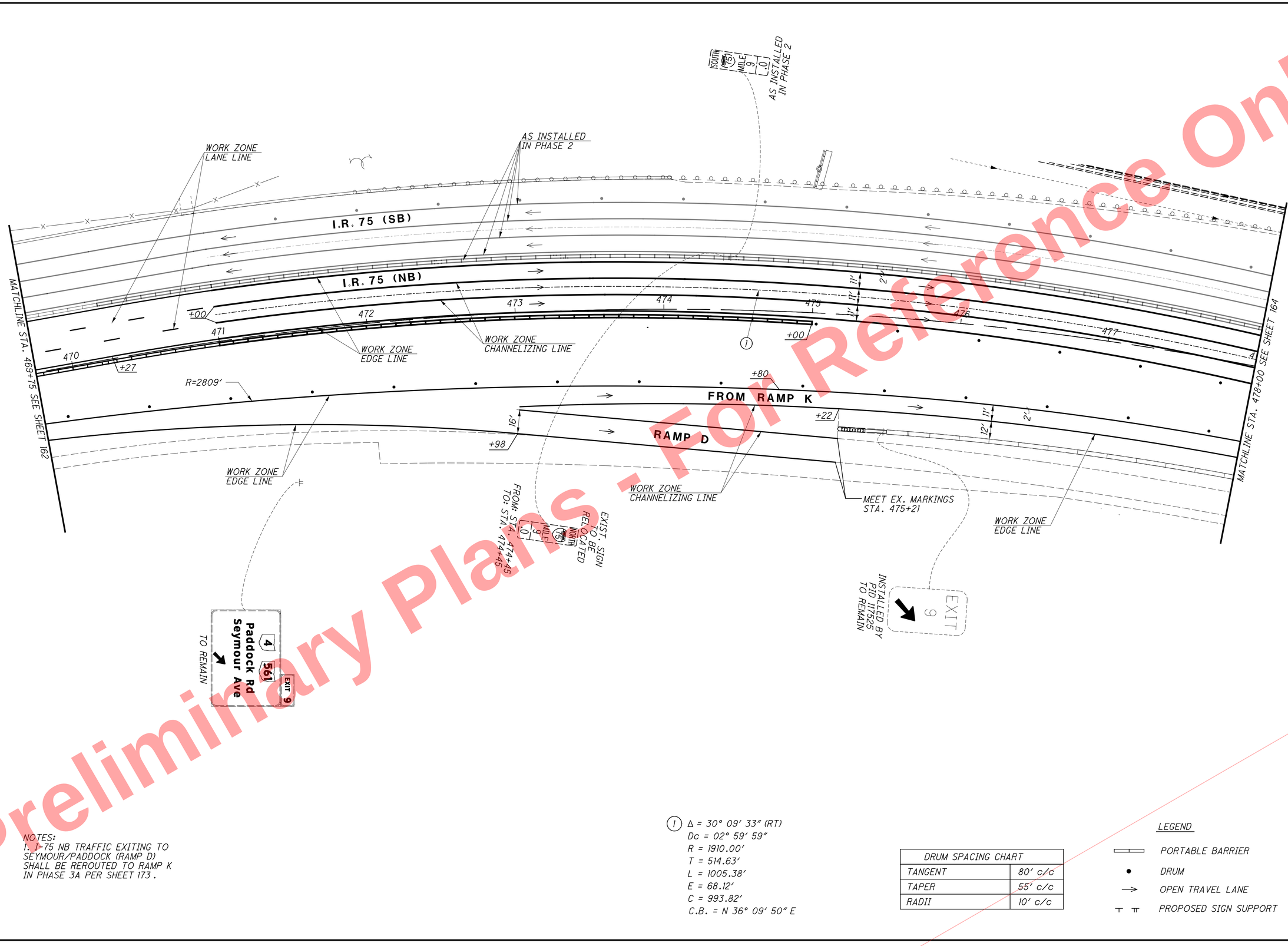

Preliminary Plans - For Reference Only

NOTES:
1. I-75 NB TRAFFIC EXITING TO SEYMOUR/PADDOCK (RAMP D) SHALL BE REROUTED TO RAMP K IN PHASE 3A PER SHEET 173.

(1) Δ = 30° 09' 33" (RT)
Dc = 02° 59' 59"
R = 1910.00'
T = 514.63'
L = 1005.38'
E = 68.12'
C = 993.82'
C.B. = N 36° 09' 50" E

DRUM SPACING CHART	
TANGENT	80' c/c
TAPER	55' c/c
RADII	10' c/c

LEGEND
- PORTABLE BARRIER
- DRUM
- OPEN TRAVEL LANE
- PROPOSED SIGN SUPPORT

HORIZONTAL SCALE IN FEET
0 15 30 60

CALCULATED RLS
CHECKED SMM

MAINTENANCE OF TRAFFIC PLAN - PHASE 3A
I.R. 75 - STA. 469+75 TO STA. 478+00

HAM-75-7.85

163
1047

J:\20110903\ODOT\HAM\77889\mot\sheets\77889MP324.dgn 5/22/2026 10:11:36 AM hbrendlinger

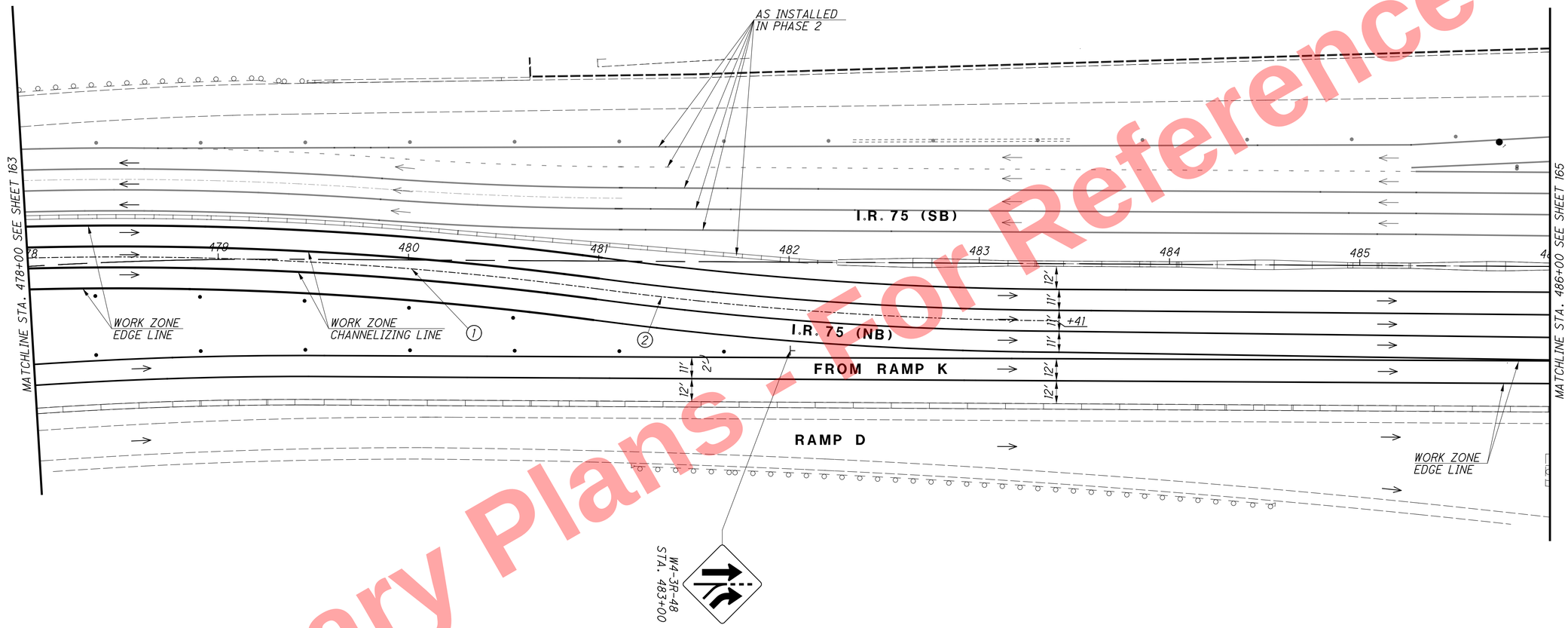

LEGEND

- DRUM
- PORTABLE BARRIER
- OPEN TRAVEL LANE
- PROPOSED SIGN SUPPORT

(1) Δ = 30° 09′ 33″ (RT)
Dc = 02° 59′ 59″
R = 1910.00′
T = 514.63′
L = 1005.38′
E = 68.12′
C = 993.82′
C.B. = N 36° 09′ 50″ E

(2) Δ = 07° 15′ 44″ (LT)
Dc = 02° 58′ 57″
R = 1921.00′
T = 121.91′
L = 243.49′
E = 3.86′
C = 243.33′
C.B. = N 47° 35′ 29″ E

DRUM SPACING CHART	
TANGENT	80′ c/c
TAPER	55′ c/c
RADII	10′ c/c

Preliminary Plans - For Reference Only

J:\20110903\ODOT\HAM\77889\mot\sheets\77889MP325.dgn 5/22/2026 10:11:38 AM hbrendlinger

HORIZONTAL SCALE IN FEET
0 15 30 60

CALCULATED RLS
CHECKED SMM

MAINTENANCE OF TRAFFIC PLAN - PHASE 3A
I.R. 75 - STA. 478+00 TO STA. 486+00

HAM-75-7.85

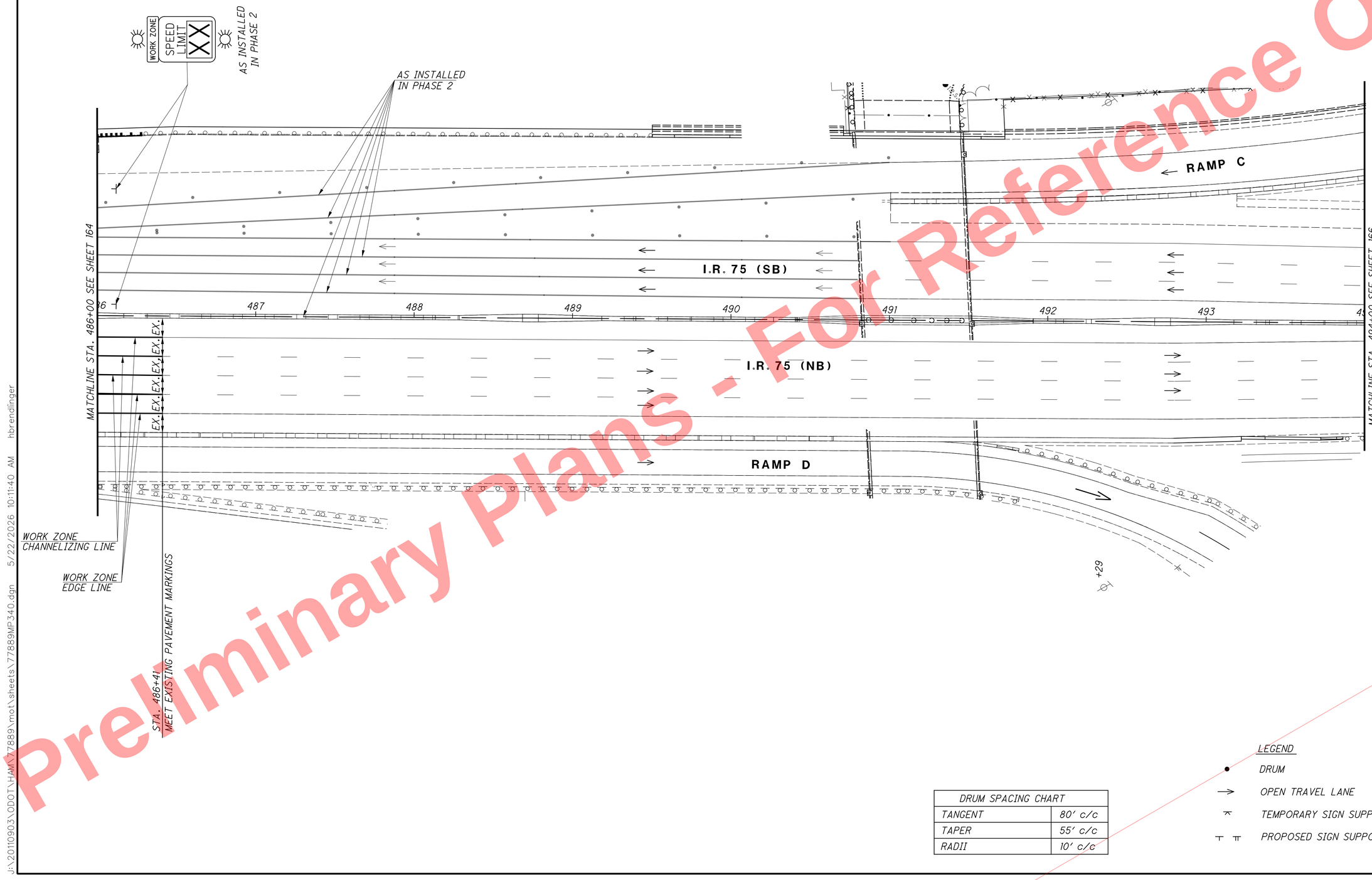

DRUM SPACING CHART	
TANGENT	80′ c/c
TAPER	55′ c/c
RADII	10′ c/c

LEGEND

- DRUM
- OPEN TRAVEL LANE
- TEMPORARY SIGN SUPPORT
- PROPOSED SIGN SUPPORT

HORIZONTAL SCALE IN FEET
0 15 30 60

CALCULATED RLS
CHECKED SMM

MAINTENANCE OF TRAFFIC PLAN - PHASE 3A
I.R. 75 - STA. 486+00 TO STA. 494+00

HAM-75-7.85

165
1047

Preliminary Plans - For Reference Only

J:\20110903\ODOT\HAM\77889\mot\sheets\77889MP340.dgn 5/22/2026 10:11:40 AM hbrendlinger

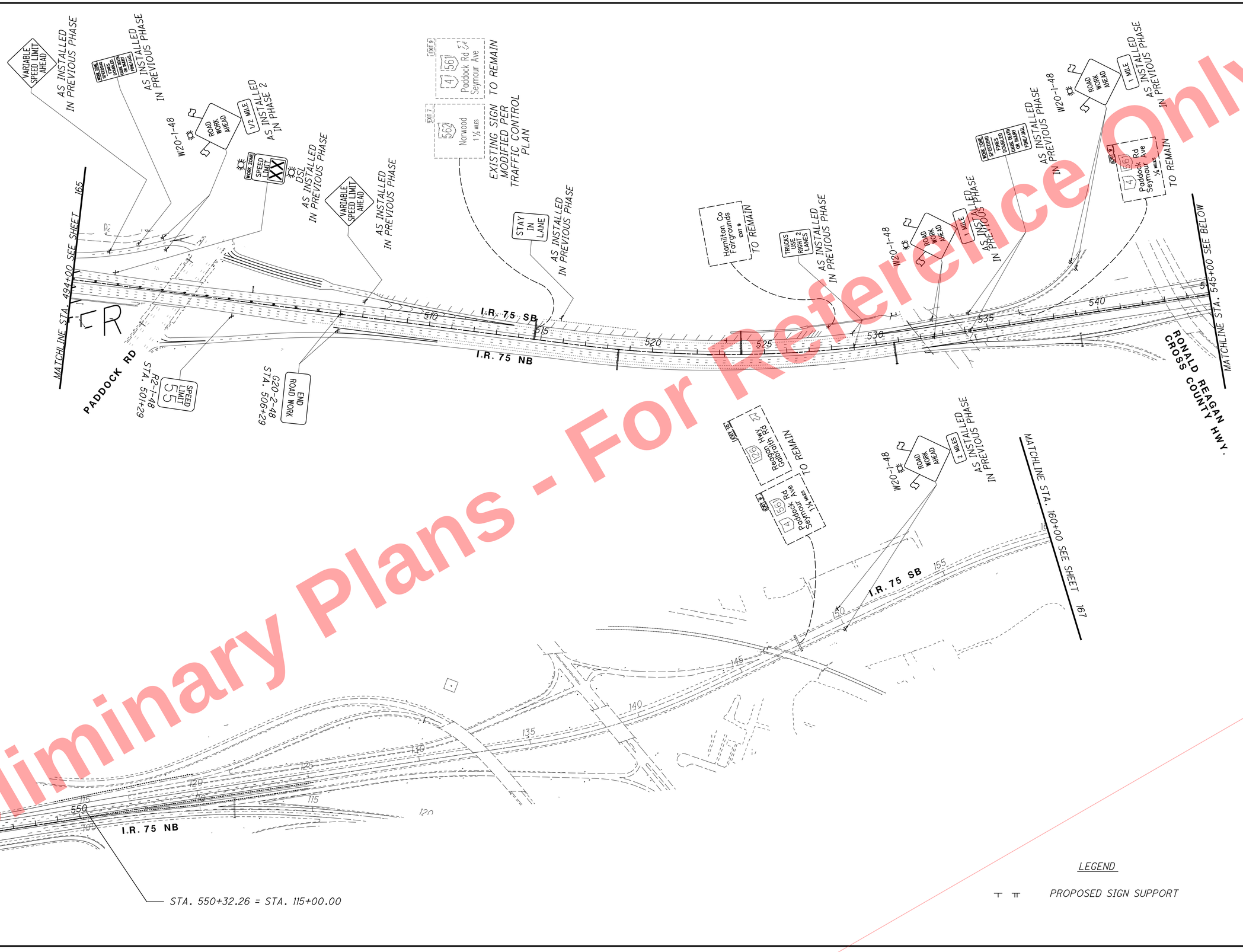

Preliminary Plans - For Reference Only

MAINTENANCE OF TRAFFIC PLAN - PHASES 3A & 3
I.R. 75 - STA. 494+00 TO STA. 160+00

CALCULATED RLS
CHECKED SMM

HORIZONTAL SCALE IN FEET
0 50 100 200

HAM-75-7.85

166
1047

J:\20110903\ODOT\HAM\77889\mot\sheets\77889MP326.dgn 5/22/2026 10:11:42 AM hbrendlinger

J:\20110903\ODOT\HAM\77889\mot\sheets\77889MP327.dgn 5/22/2026 10:11:43 AM hbrendlinger

Preliminary Plans - For Reference Only

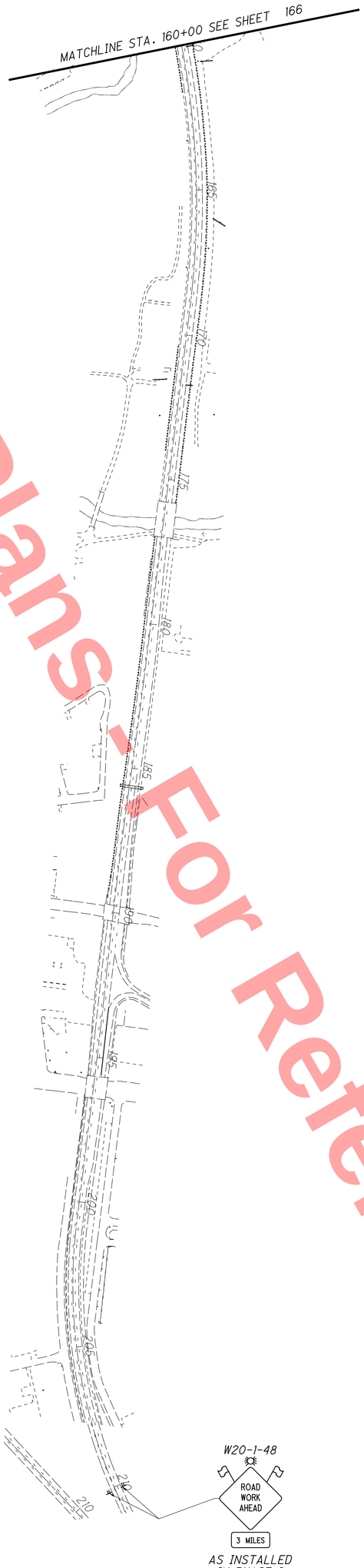

LEGEND

PROPOSED SIGN SUPPORT

167 / 1047	HAM-75-7.85	MAINTENANCE OF TRAFFIC PLAN - PHASES 3A & 3 I.R. 75 - STA. 160+00 TO STA. 210+00	CALCULATED RLS CHECKED SMM	0 30 15 60 HORIZONTAL SCALE IN FEET

(1) Δ = 15° 37′ 15″ (LT)
Dc = 08° 53′ 24″
R = 644.50′
T = 88.41′
L = 175.71′
E = 6.04′
C = 175.17′
C.B. = S 58° 56′ 17″ E

(2) Δ = 09° 17′ 50″ (RT)
Dc = 05° 00′ 22″
R = 1144.50′
T = 93.06′
L = 185.71′
E = 3.78′
C = 185.51′
C.B. = S 57° 14′ 52″ E

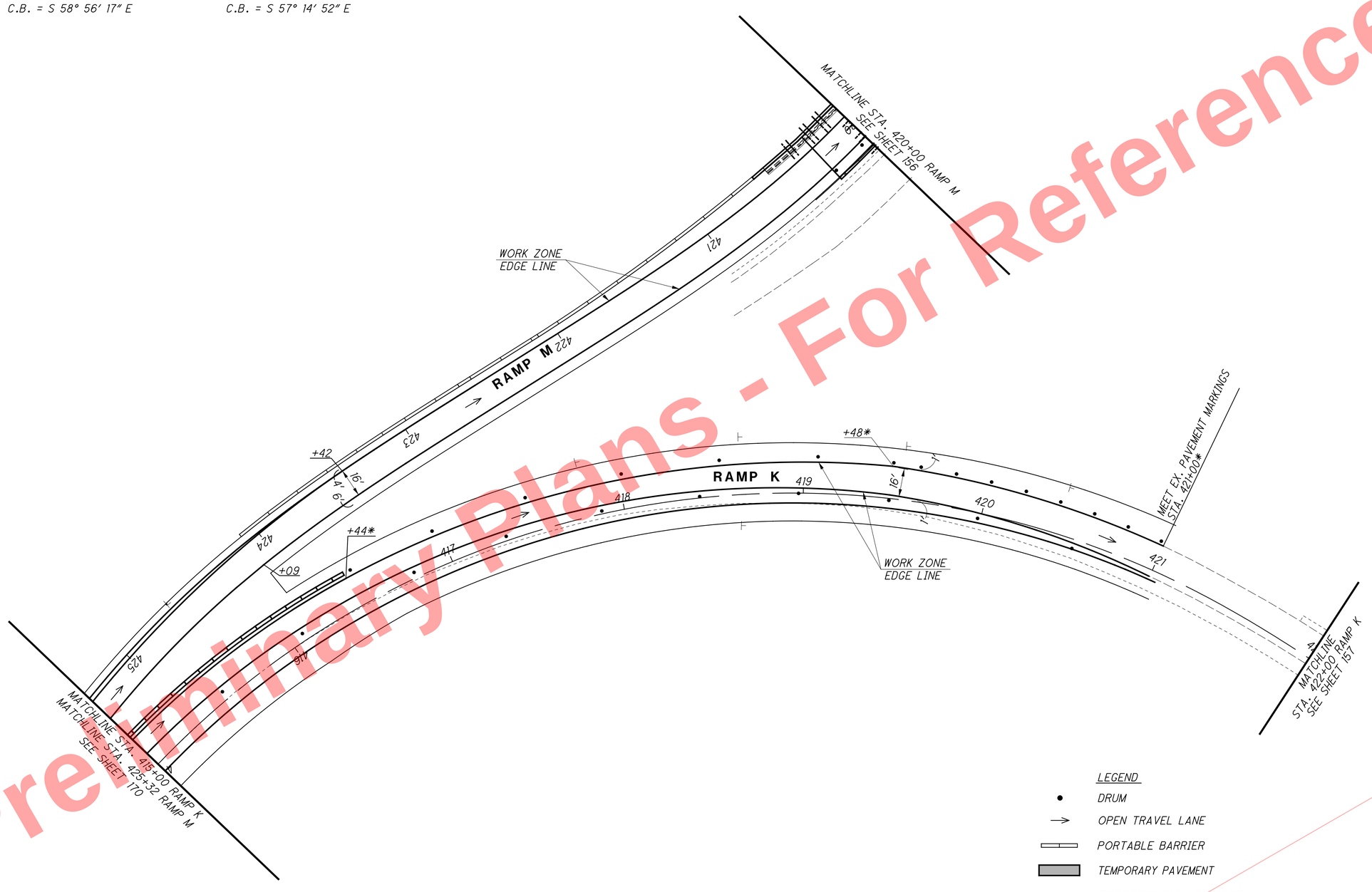

* DENOTES RAMP K STATIONING

Preliminary Plans - For Reference Only

HORIZONTAL SCALE IN FEET
0 15 30 60

CALCULATED RLS
CHECKED SMM

MAINTENANCE OF TRAFFIC PLAN - PHASE 3A
RAMP K - STA. 415+00 TO STA. 422+00

HAM-75-7.85

168
1047

J:\20110903\ODOT\HAM\77889\mot\sheets\77889MP125A.dgn 5/22/2026 10:11:45 AM hbrendlinger

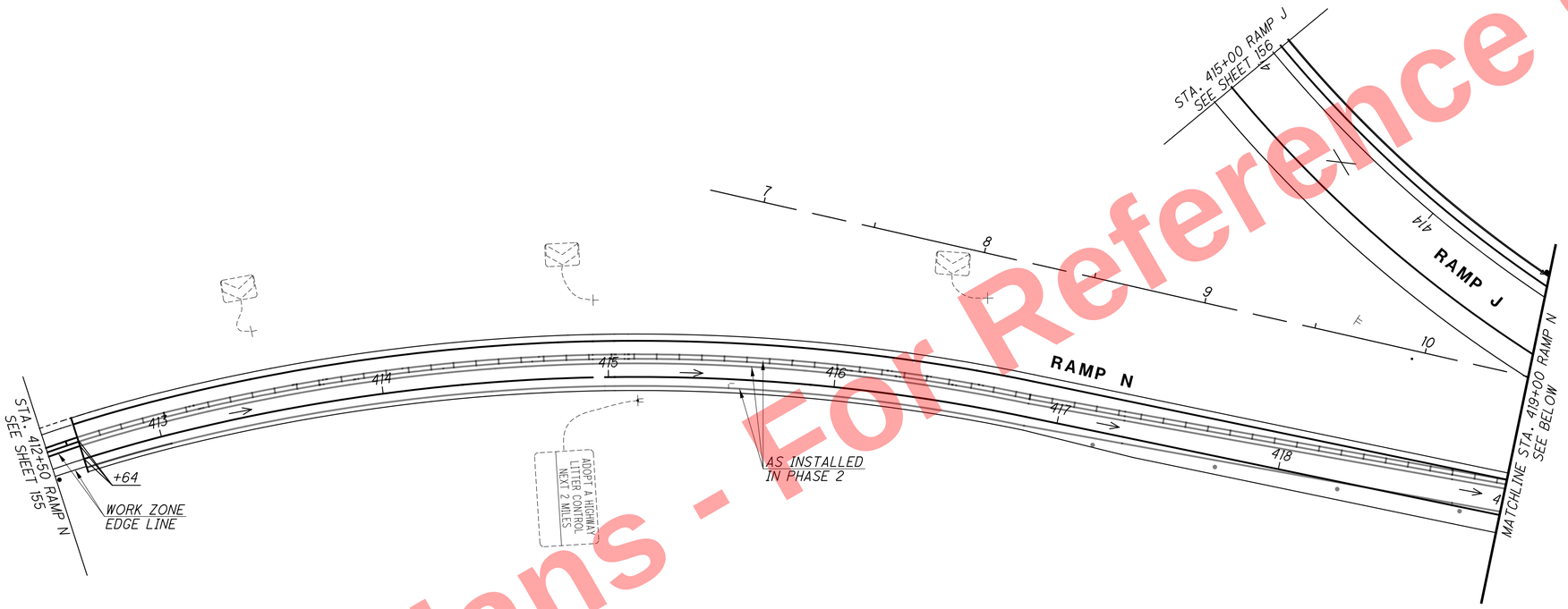

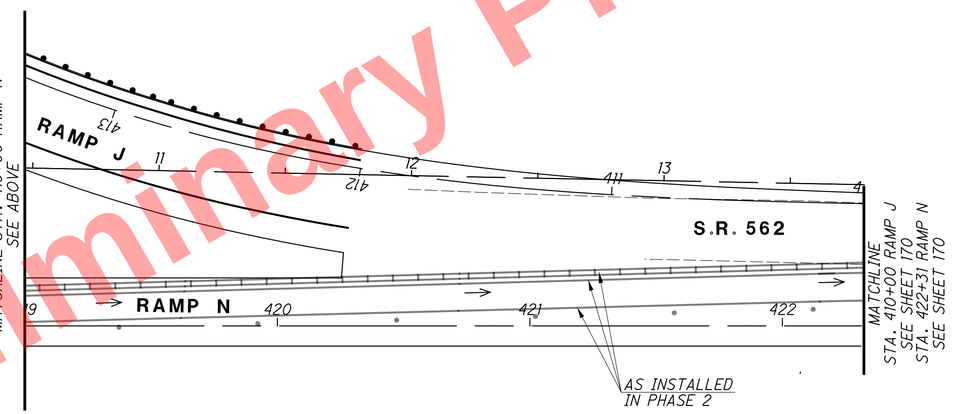

LEGEND

- PORTABLE BARRIER
- DRUM
- EXISTING SIGN SUPPORT
- OPEN TRAVEL LANE
- CLOSED TRAVEL LANE

HORIZONTAL SCALE IN FEET
0 15 30 60

CALCULATED RLS
CHECKED SMM

MAINTENANCE OF TRAFFIC PLAN - PHASE 3A
RAMP N - STA. 412+50 TO STA. 422+31

HAM-75-7.85

169
1047

Preliminary Plans - For Reference Only

J:\20110903\ODOT\HAM\77889\mot\sheets\77889MP122A.dgn 5/22/2026 10:11:47 AM hbrendlinger

(1) Δ = 12° 50′ 30″ (RT)
Dc = 11° 36′ 59″
R = 493.24′
T = 55.51′
L = 110.55′
E = 3.11′
C = 110.32′
C.B. = S 76° 21′ 16″ E

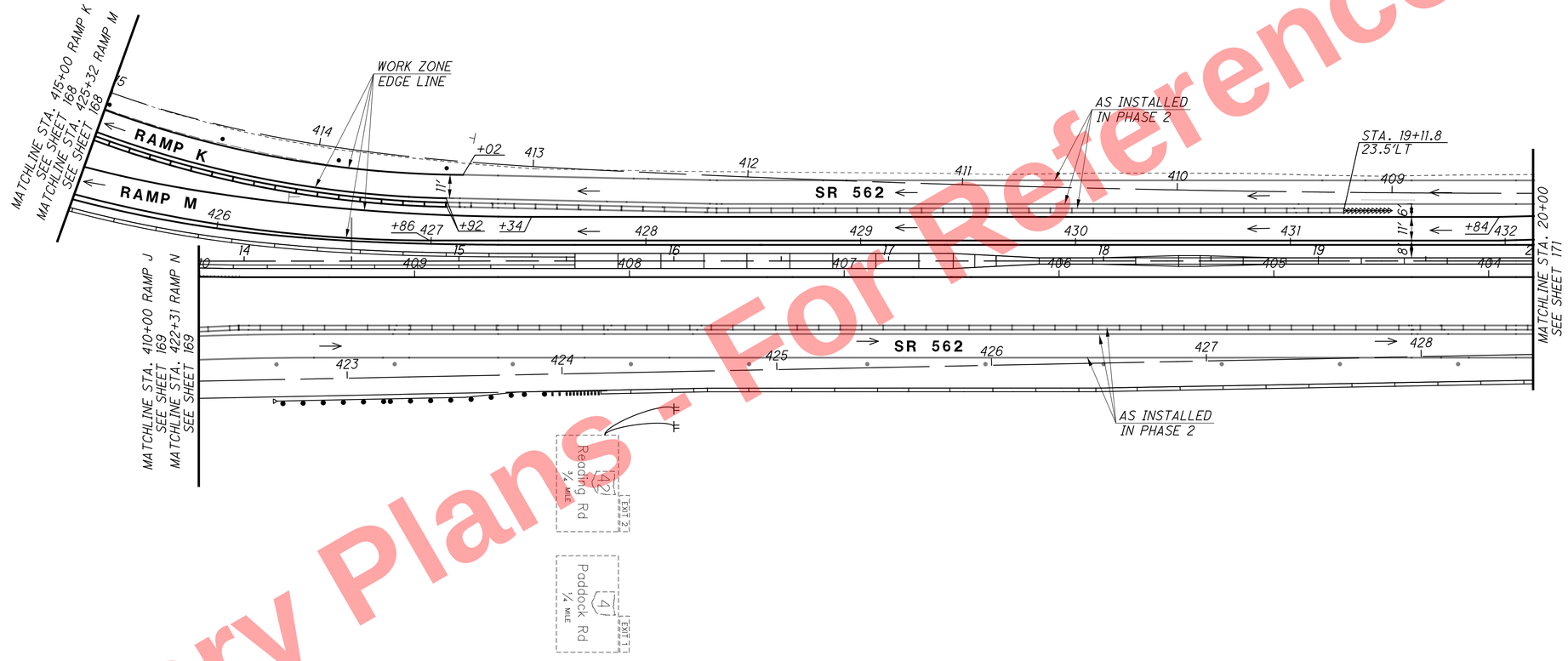

* DENOTES STATIONING
FROM RAMP K

DRUM SPACING CHART	
TANGENT	80′ c/c
TAPER	55′ c/c
RADII/CLOSURE	10′ c/c

LEGEND

- PORTABLE BARRIER
- DRUM
- PROPOSED SIGN SUPPORT
- OPEN TRAVEL LANE

HORIZONTAL SCALE IN FEET
0 15 30 60

CALCULATED RLS
CHECKED SMM

MAINTENANCE OF TRAFFIC PLAN - PHASE 3A
S.R 562 - STA. 13+79 TO STA. 20+00

HAM-75-7.85

170
1047

Preliminary Plans - For Reference Only

J:\20110903\ODOT\HAM\77889\mot\sheets\77889MP261A.dgn 5/22/2026 10:11:49 AM hbrendlinger

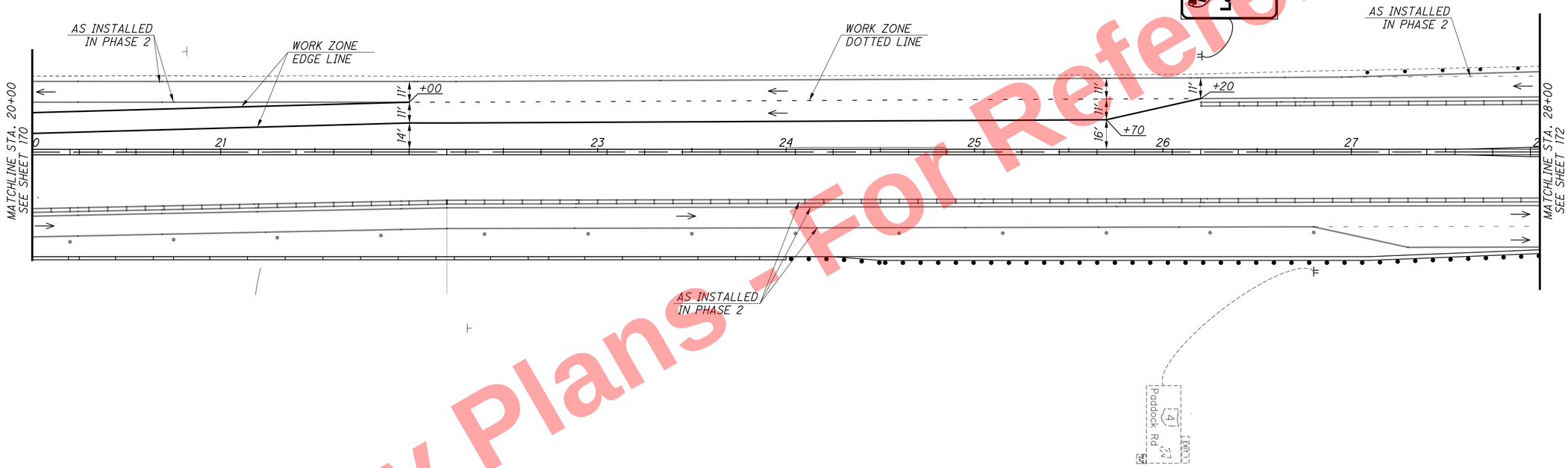

DRUM SPACING CHART	
TANGENT	80' c/c
TAPER	55' c/c
RADII/CLOSURE	10' c/c

LEGEND

- PORTABLE BARRIER
- DRUM
- PROPOSED SIGN SUPPORT
- OPEN TRAVEL LANE

HORIZONTAL SCALE IN FEET
0 15 30 60

CALCULATED RLS
CHECKED SMM

MAINTENANCE OF TRAFFIC PLAN - PHASE 3A
S.R. 562 - STA. 20+00 TO STA. 28+00

HAM-75-7.85

171
1047

Preliminary Plans - For Reference Only

J:\20110903\ODOT\HAM\77889\mot\sheets\77889MP262A.dgn 5/22/2026 10:11:50 AM hbrendlinger

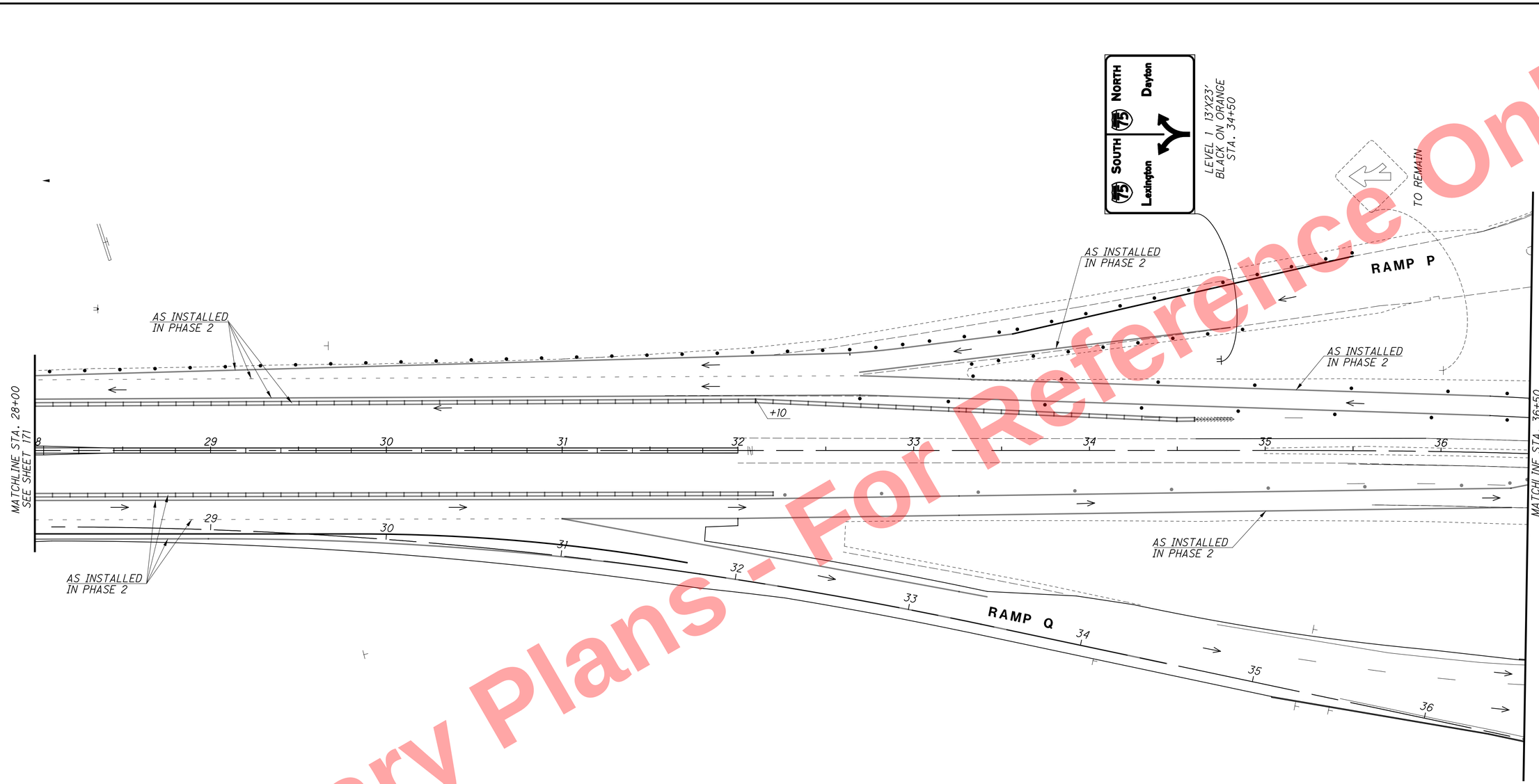

DRUM SPACING CHART	
TANGENT	80' c/c
TAPER	55' c/c
RADII/CLOSURE	10' c/c

LEGEND

- PHASE 3A WORK ZONE
- DRUM
- PROPOSED SIGN SUPPORT
- OPEN TRAVEL LANE
- TEMPORARY PAVEMENT
- PORTABLE BARRIER
- IMPACT ATTENUATOR

HORIZONTAL SCALE IN FEET
0 15 30 60

CALCULATED RLS
CHECKED SMM

MAINTENANCE OF TRAFFIC PLAN - PHASE 3A
S.R. 562 - STA. 28+00 TO STA. 36+50

HAM-75-7.85

172
1047

Preliminary Plans - For Reference Only

J:\20110903\ODOT\HAM\77889\mot\sheets\77889MP263A.dgn 5/22/2026 10:11:52 AM hbrendlinger

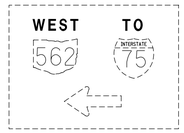

CENTER MOUNTED SIGN

(1)

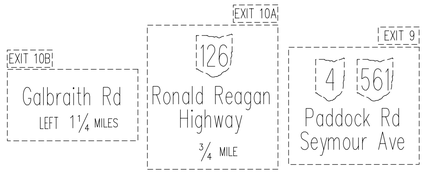

TRUSS MOUNTED SIGNS

(2)

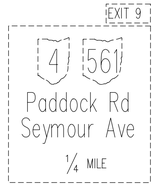

GROUND MOUNTED SIGN

(3)

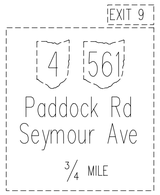

TRUSS MOUNTED SIGNS

(4)

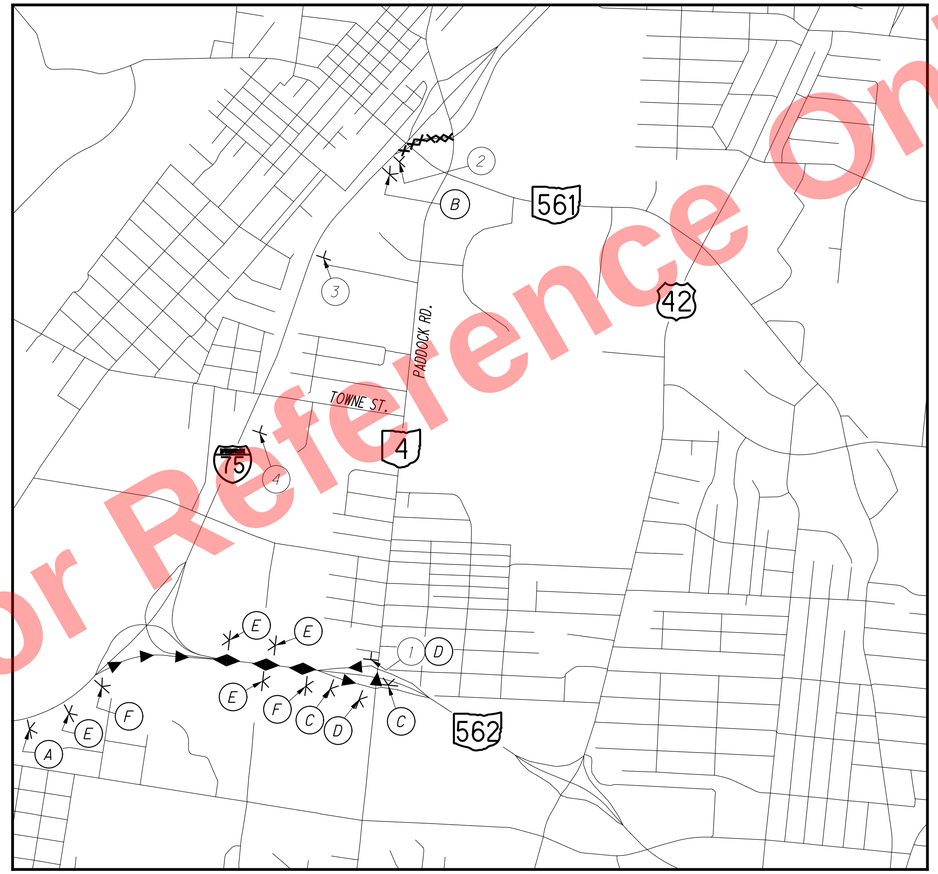

NOTES:
1. RAMP D TRAFFIC (I-75) NB TO SEYMOUR/PADDOCK) WILL BE REROUTED TO RAMP K IN PHASE 3A. THIS PHASE SHALL BE LIMITED TO 30 DAYS MAXIMUM DURATION.

LEGEND

- RAMP CLOSURE
- DETOUR ROUTE
- EXISTING SIGN SUPPORT
- TEMPORARY SIGN SUPPORT

PORTABLE CHANGEABLE MESSAGE SIGNS

DURING CLOSURE

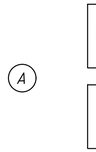

(A)

TWO WEEKS PRIOR TO CLOSURE



W20-H13-60

(B)

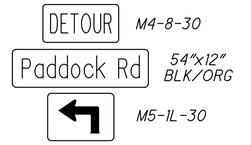

(C)

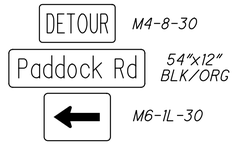

(D)

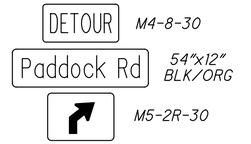

(E)

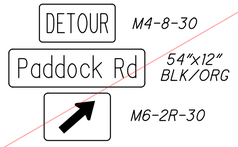

(F)

Preliminary Plans - For Reference Only

HORIZONTAL SCALE IN FEET
0 500 1000 2000

CALCULATED RLS
CHECKED SMM

MAINTENANCE OF TRAFFIC DETOUR PLAN
RAMP D FROM I-75 - PHASE 3A

HAM-75-7.85

173
1047

J:\20110903\ODOT\HAM\7889\mot\sheets\77889MD014.dgn 5/22/2026 10:11:53 AM htrendlinger

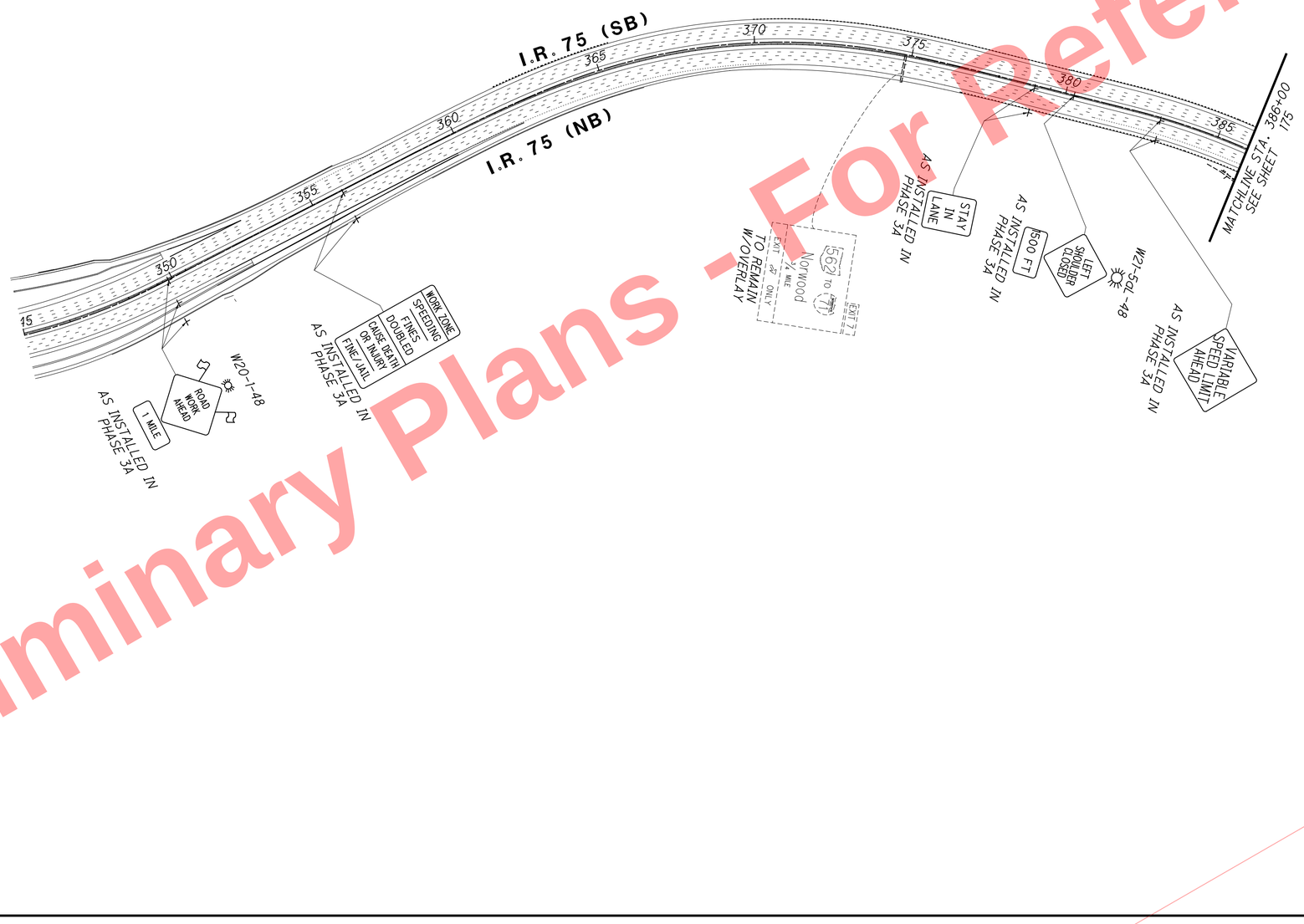

LEGEND

⊢ TEMPORARY SIGN SUPPORT

Preliminary Plans - For Reference Only

HORIZONTAL SCALE IN FEET
0 50 100 200

CALCULATED RLS
CHECKED SMM

MAINTENANCE OF TRAFFIC PLAN - PHASE 3
I.R. 75 - STA. 345+00 TO STA. 386+00

HAM-75-7.85

174
1047

J:\20110903\ODOT\HAM\77889\mot\sheets\77889MP250.dgn 5/22/2026 10:11:54 AM hbrendlinger

Preliminary Plans - For Reference Only

END ROAD WORK

AS INSTALLED IN PHASE 2

I.R. 75 (SB)

I.R. 75 (NB)

MATCHLINE STA. 386+00 SEE SHEET 174

MATCHLINE STA. 390+00 SEE BELOW

387 388 389

19:1 SHOULDER TAPER @ 55 MPH

SPEED LIMIT 55

AS INSTALLED IN PHASE 2

MEET EXIST. MARKINGS STA. 396+59

AS INSTALLED IN PHASE 2

EX. EX. EX. EX.

MATCHLINE STA. 390+00 SEE ABOVE

MATCHLINE STA. 398+00 SEE SHEET 176

391 392 393 394 395 396 397

AS INSTALLED IN PHASE 3A

EXIT OPEN AHEAD

AS INSTALLED IN PHASE 3A

LEFT SHOULDER CLOSED

AS INSTALLED IN PHASE 3A

DSL

AS INSTALLED IN PHASE 3A

SPEED LIMIT XX

WORK ZONE

LEGEND

- DRUM
- TEMPORARY SIGN SUPPORT
- OPEN TRAVEL LANE

HORIZONTAL SCALE IN FEET
0 15 30 60

CALCULATED RLS
CHECKED SMM

MAINTENANCE OF TRAFFIC PLAN - PHASE 3
I.R. 75 - STA. 386+00 TO STA. 398+00

HAM-75-7.85

175
1047

J:\20110903\ODOT\HAM\77889\mot\sheets\77889MP249.dgn 5/22/2026 10:11:56 AM hbrendlinger

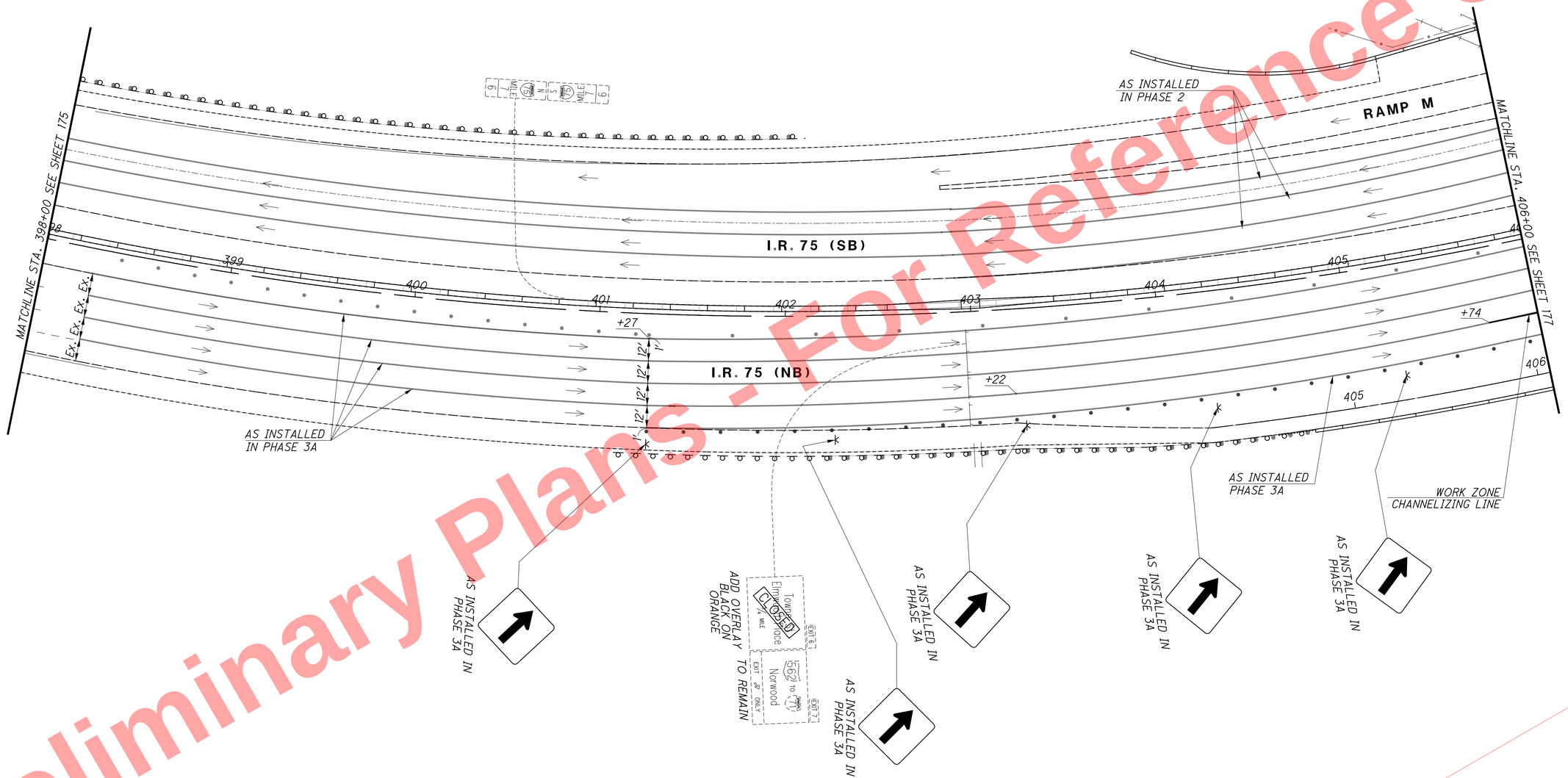

LEGEND

- DRUM
- PROPOSED SIGN SUPPORT
- OPEN TRAVEL LANE

DRUM SPACING CHART	
TANGENT	80' c/c
TAPER	55' c/c
RADII	10' c/c

HORIZONTAL SCALE IN FEET 0 15 30 60

CALCULATED RLS
CHECKED SMM

MAINTENANCE OF TRAFFIC PLAN - PHASE 3
I.R. 75 - STA. 398+00 TO STA. 406+00

HAM-75-7.85

Preliminary Plans - For Reference Only

J:\20110903\ODOT\HAM\77889\mot\sheets\77889MP038.dgn 5/22/2026 10:11:58 AM bbrendlinger

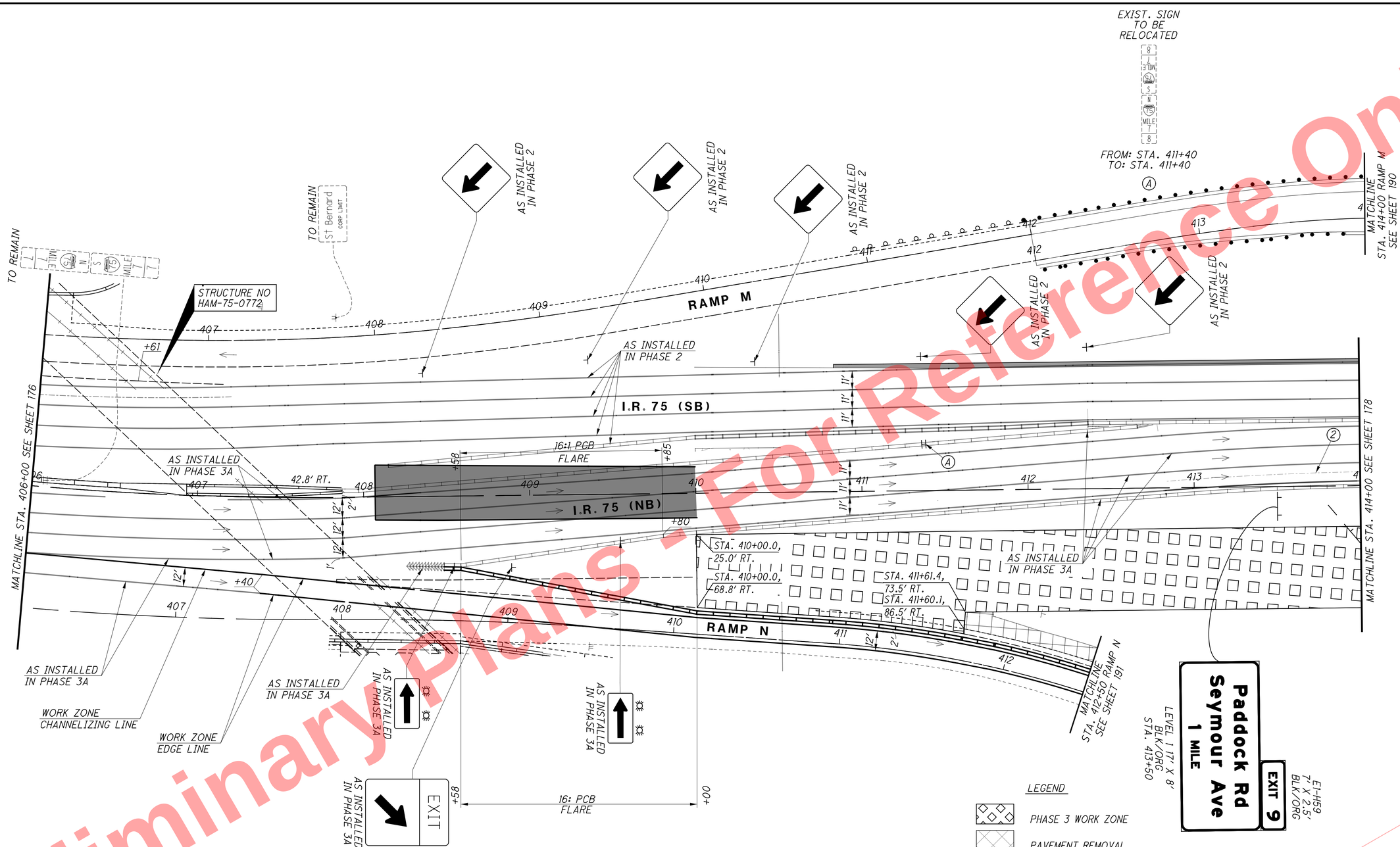

DRUM SPACING CHART	
TANGENT	80' c/c
TAPER	55' c/c
RADII	10' c/c

HORIZONTAL SCALE IN FEET

CALCULATED RLS
CHECKED SMM

TRAFFIC PLAN - PHASE 3
MAINTENANCE OF TRAFFIC
I.R. 75 - STA. 406+00 TO STA. 414+00

HAM-75-7.85

177
1047

Preliminary Plans - For Reference Only

J:\20110903\ODOT\HAM\77889\mot\sheets\77889MP039.dgn 5/22/2026 10:12:00 AM hbrendlinger

MAINTENANCE OF TRAFFIC PLAN - PHASE 3
I.R. 75 - STA. 414+00 TO STA. 422+00

HAM-75-7.85

178
1047

CALCULATED RLS
CHECKED SMM

HORIZONTAL SCALE IN FEET
0 15 30 60

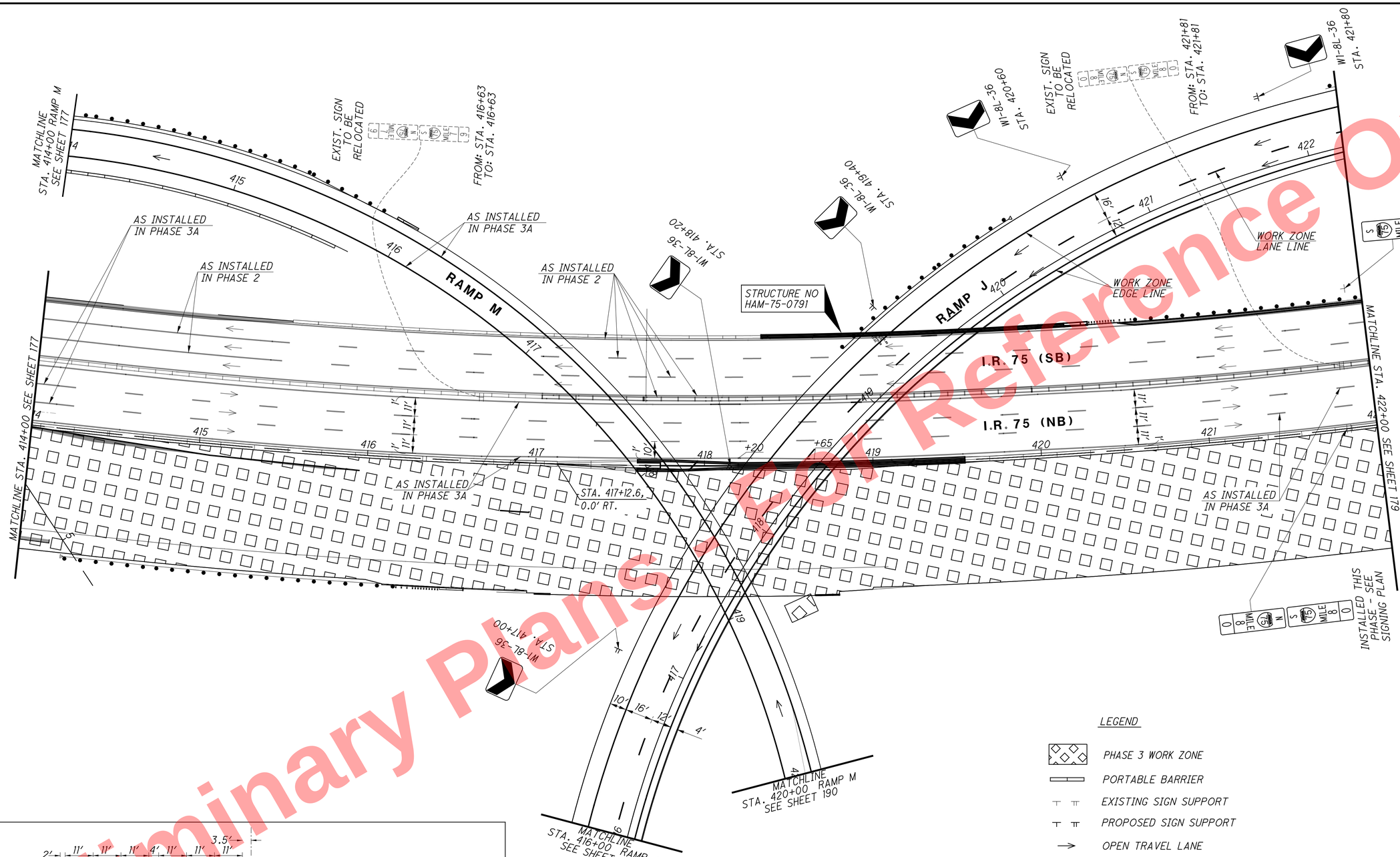

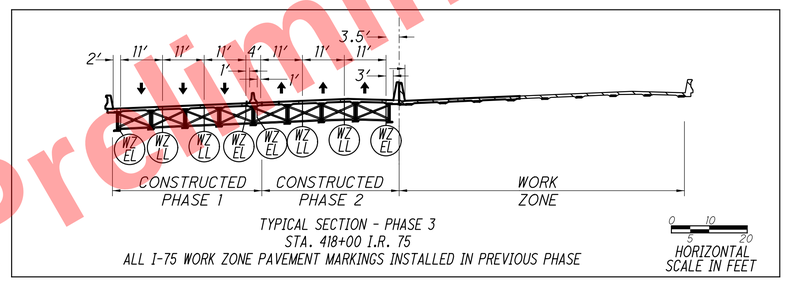

TYPICAL SECTION - PHASE 3
STA. 418+00 I.R. 75
ALL I-75 WORK ZONE PAVEMENT MARKINGS INSTALLED IN PREVIOUS PHASE

HORIZONTAL SCALE IN FEET
0 5 10 20

LEGEND

- PHASE 3 WORK ZONE
- PORTABLE BARRIER
- EXISTING SIGN SUPPORT
- PROPOSED SIGN SUPPORT
- OPEN TRAVEL LANE

NOTE:

1. RAMP J SIGNAGE TO BE INSTALLED PER THE TRAFFIC CONTROL PLANS PRIOR TO THE OPENING OF RAMP J.

DRUM SPACING CHART	
TANGENT	80′ c/c
TAPER	55′ c/c
RADII	10′ c/c

Preliminary Plans Not for Construction
Not Reference Only

J:\20110903\ODOT\HAM\77889\mot\sheets\77889MP040.dgn 5/22/2026 10:12:02 AM hbrendlinger

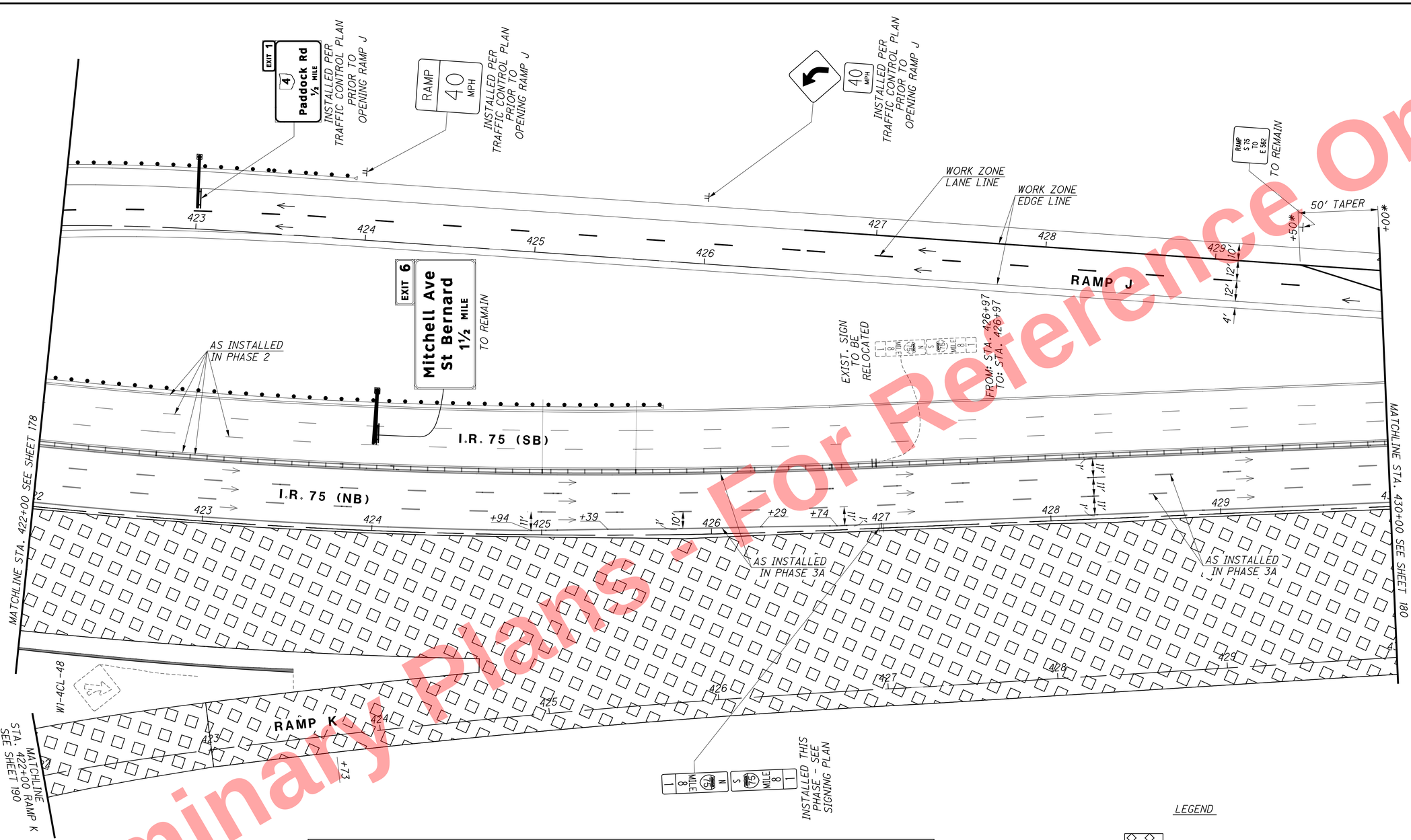

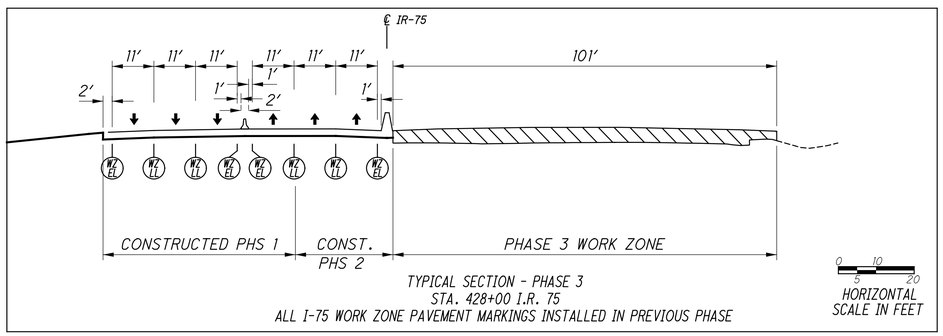

TYPICAL SECTION - PHASE 3
STA. 428+00 I.R. 75
ALL I-75 WORK ZONE PAVEMENT MARKINGS INSTALLED IN PREVIOUS PHASE

LEGEND

- PHASE 3 WORK ZONE
- PORTABLE BARRIER
- EXISTING SIGN SUPPORT
- PROPOSED SIGN SUPPORT
- OPEN TRAVEL LANE

* DENOTES STATIONING FROM RAMP J

DRUM SPACING CHART	
TANGENT	80' c/c
TAPER	55' c/c
RADII	10' c/c

HORIZONTAL SCALE IN FEET 0 15 30 60

CALCULATED RLS
CHECKED SMM

MAINTENANCE OF TRAFFIC PLAN - PHASE 3
I.R. 75 - STA. 422+00 TO STA. 430+00

HAM-75-7.85

Preliminary Plans - For Reference Only

J:\20110903\ODOT\HAM\77889\mot\sheets\77889MP041.dgn 5/22/2026 10:12:04 AM hbrendlinger

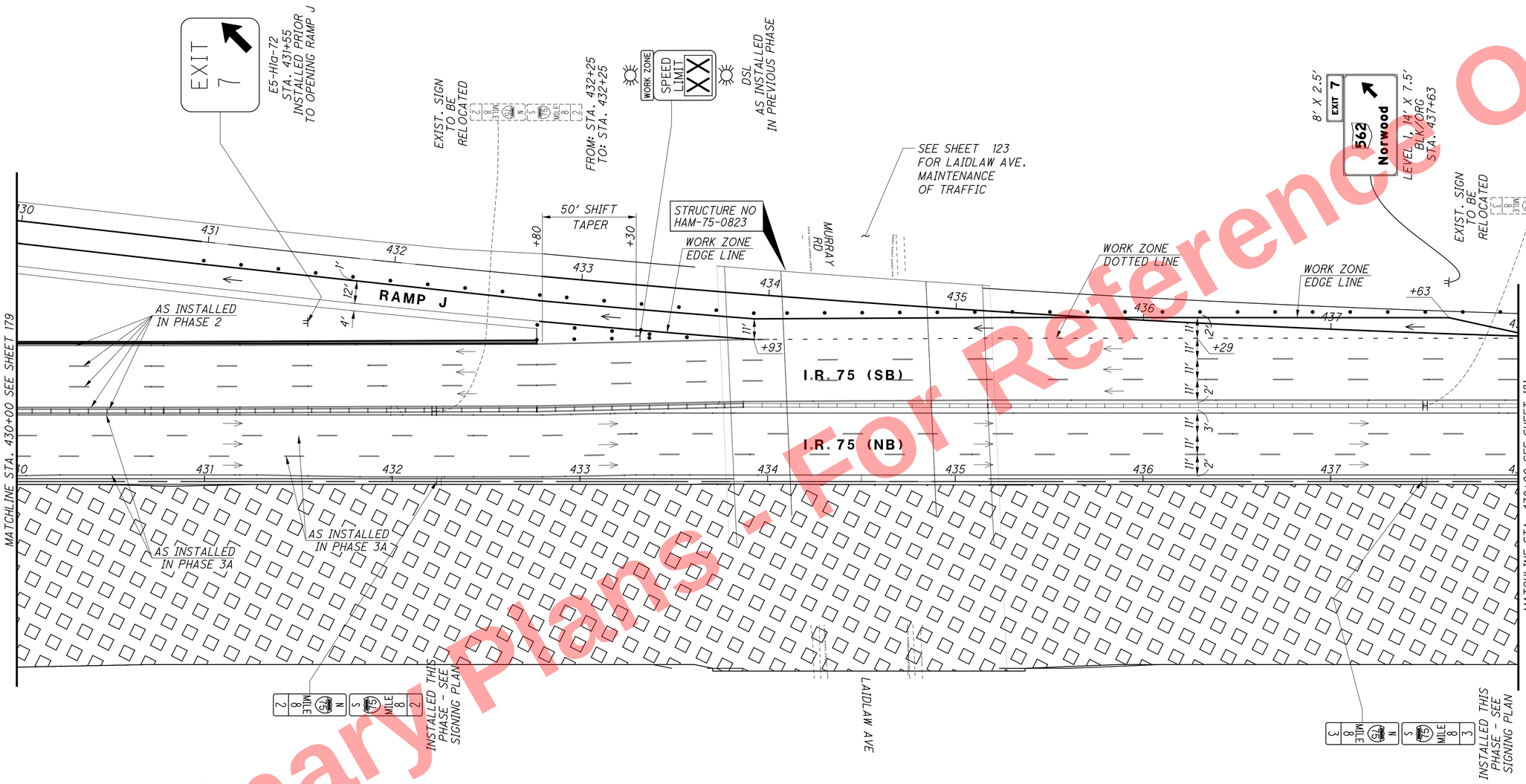

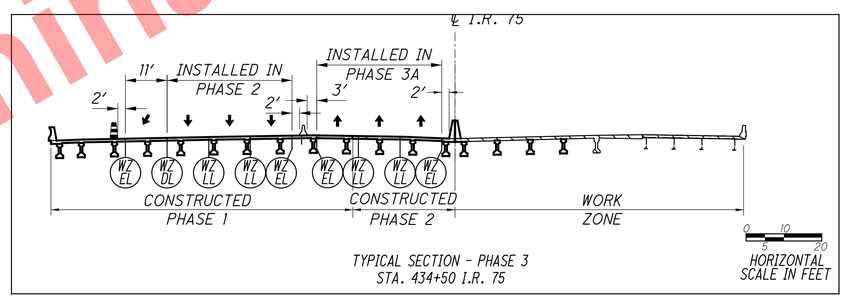

TYPICAL SECTION - PHASE 3
STA. 434+50 I.R. 75

LEGEND

- PHASE 3 WORK ZONE
- DRUM
- PORTABLE BARRIER
- EXISTING SIGN SUPPORT
- PROPOSED SIGN SUPPORT
- OPEN TRAVEL LANE

DRUM SPACING CHART	
TANGENT	80' c/c
TAPER	55' c/c
RADII	10' c/c

HORIZONTAL SCALE IN FEET
0 15 30 60

CALCULATED RLS
CHECKED SMM

MAINTENANCE OF TRAFFIC PLAN - PHASE 3
I.R. 75 - STA. 430+00 TO STA. 438+00

HAM-75-7.85

Preliminary Plans - For Reference Only

I:\20110903\ODOT\HAM\77889\mot\sheets\77889MP042.dgn 5/22/2026 10:12:07 AM bbrendlinger

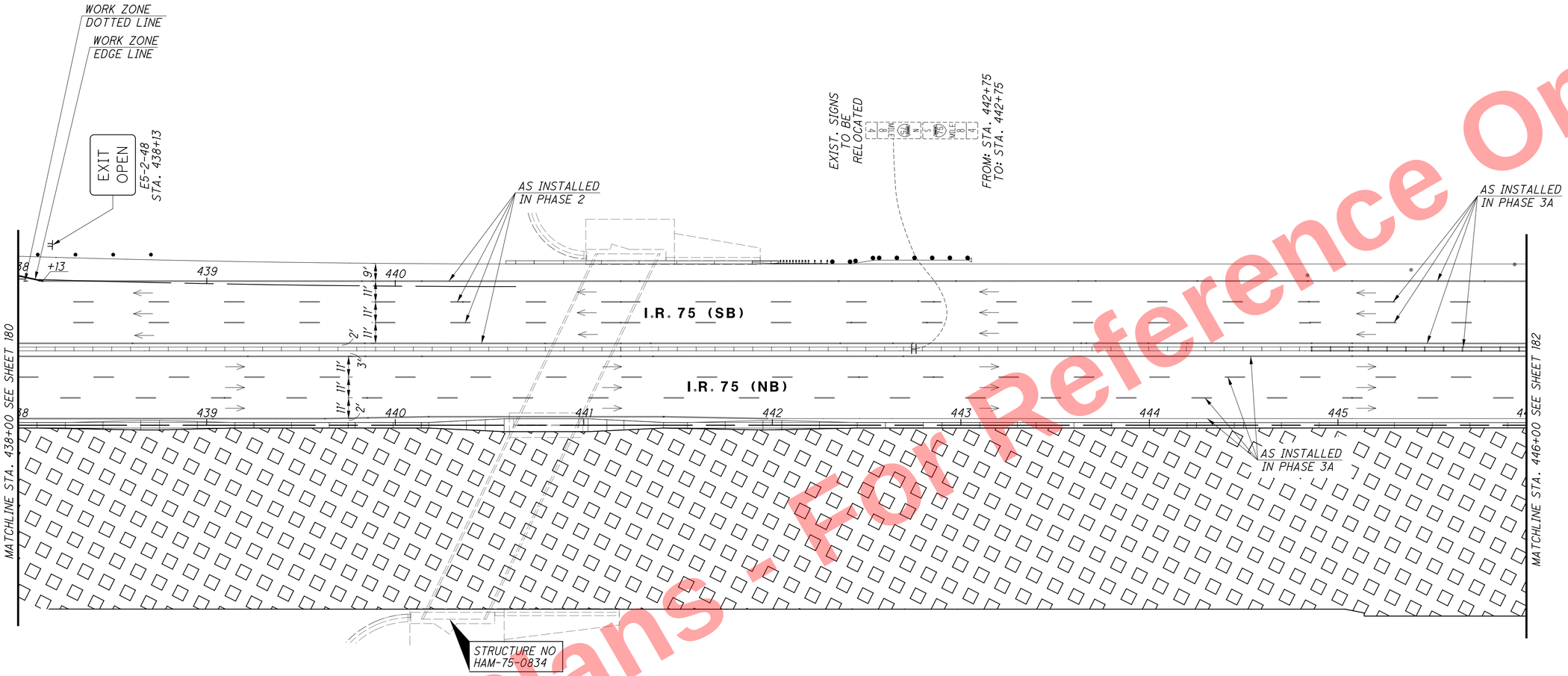

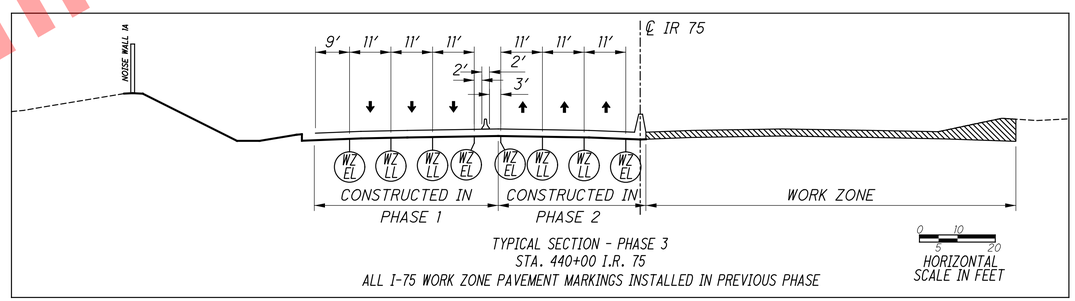

TYPICAL SECTION - PHASE 3
STA. 440+00 I.R. 75
ALL I-75 WORK ZONE PAVEMENT MARKINGS INSTALLED IN PREVIOUS PHASE

DRUM SPACING CHART	
TANGENT	80′ c/c
TAPER	55′ c/c
RADII	10′ c/c

LEGEND

- PHASE 3 WORK ZONE
- PORTABLE BARRIER
- DRUM
- PROPOSED SIGN SUPPORT
- OPEN TRAVEL LANE

HORIZONTAL SCALE IN FEET

CALCULATED RLS
CHECKED SMM

MAINTENANCE OF TRAFFIC PLAN - PHASE 3
I.R. 75 - STA. 438+00 TO STA. 446+00

HAM-75-7.85

181
1047

Preliminary Plans - For Reference Only

J:\20110903\ODOT\HAM\77889\mot\sheets\77889MP177.dgn 5/22/2026 10:12:09 AM hbrendlinger

Preliminary Plans - For Reference Only

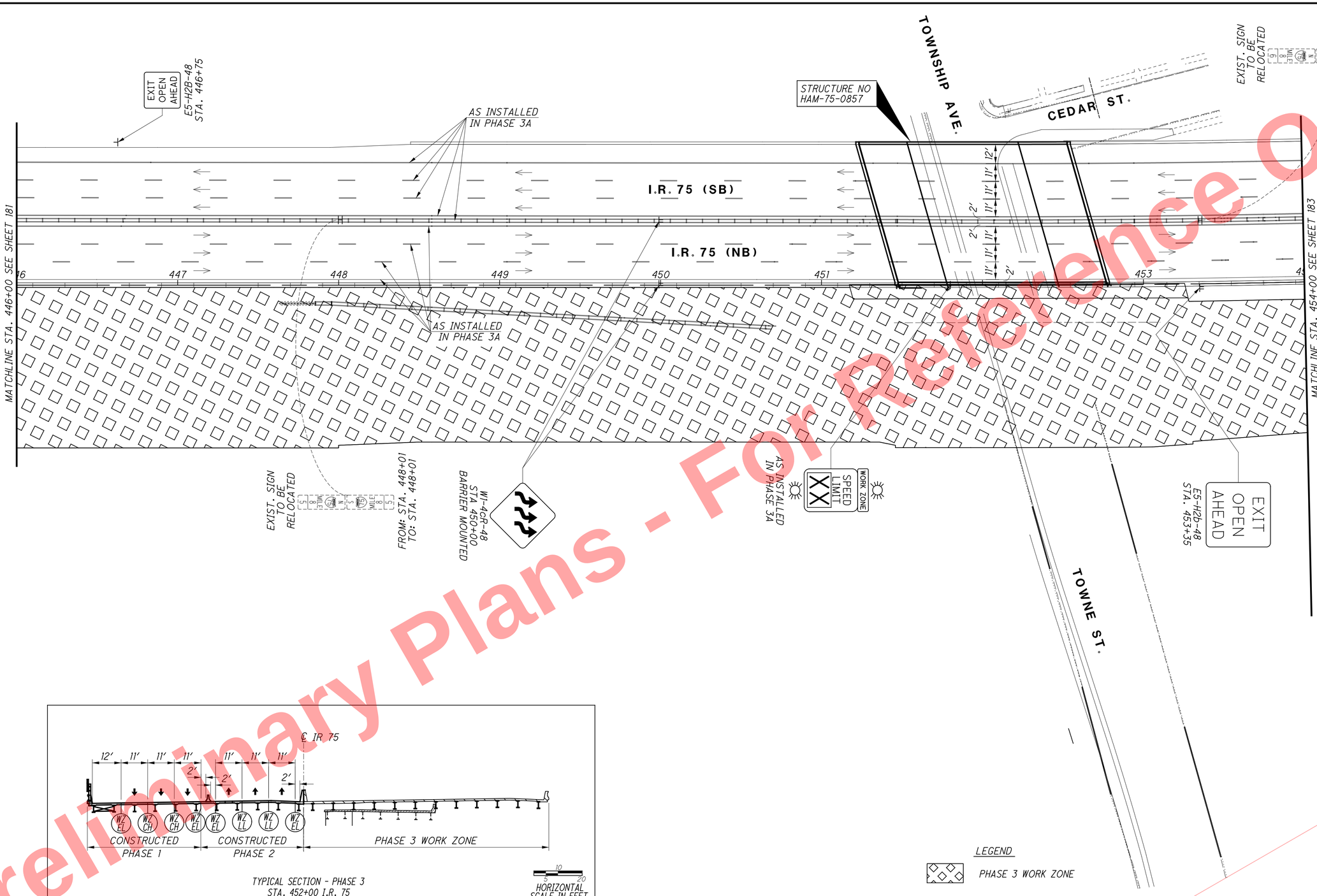

TYPICAL SECTION - PHASE 3
STA. 452+00 I.R. 75
ALL I-75 WORK ZONE PAVEMENT MARKINGS INSTALLED IN PREVIOUS PHASE

LEGEND

- PHASE 3 WORK ZONE
- PORTABLE BARRIER
- DRUM
- PROPOSED SIGN SUPPORT
- OPEN TRAVEL LANE

HORIZONTAL SCALE IN FEET: 0, 15, 30, 60

CALCULATED RLS
CHECKED SMM

MAINTENANCE OF TRAFFIC PLAN - PHASE 3
I.R. 75 - STA. 446+00 TO STA. 454+00

HAM-75-7.85

182
1047

J:\20110903\ODOT\HAM\77889\mot\sheets\77889MP043.dgn 5/22/2026 10:12:11 AM hbrendlinger

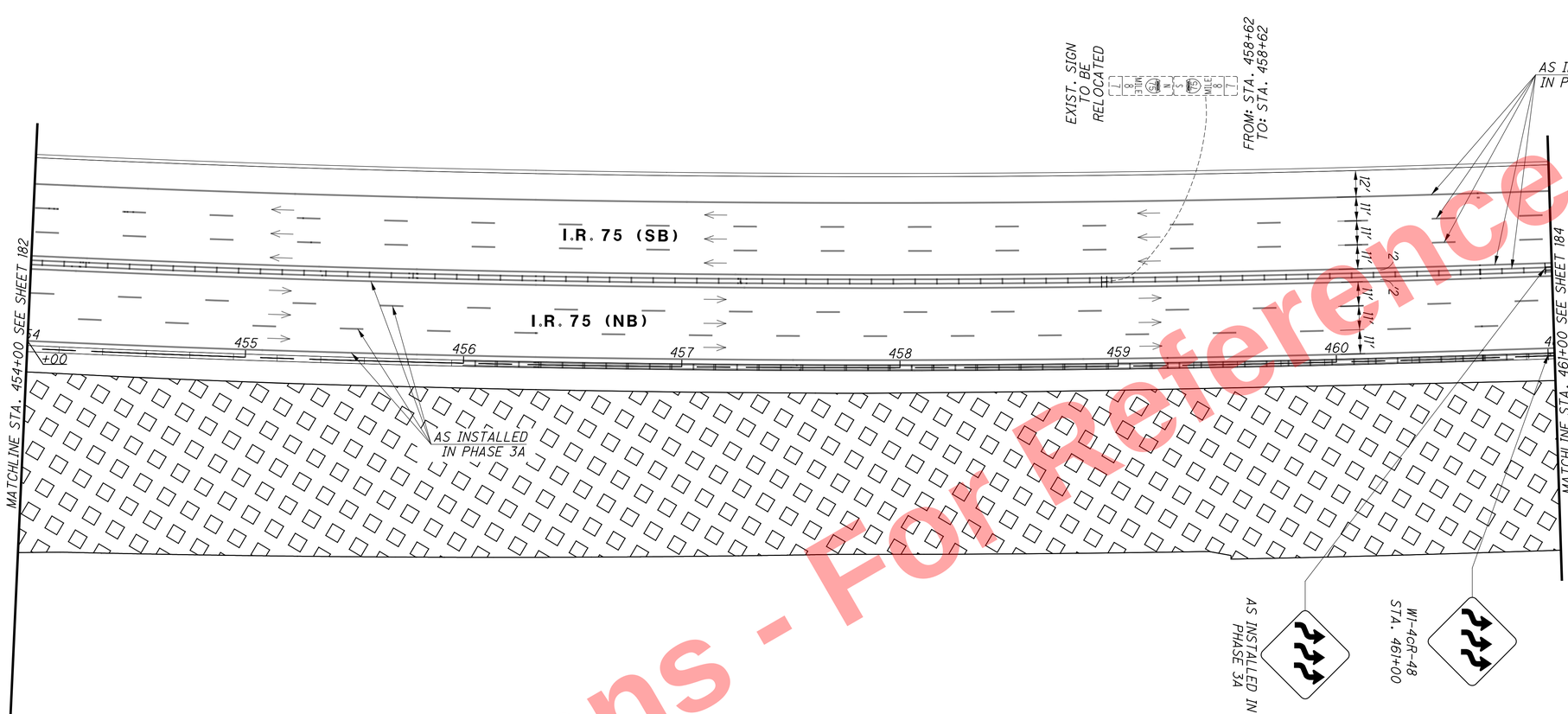

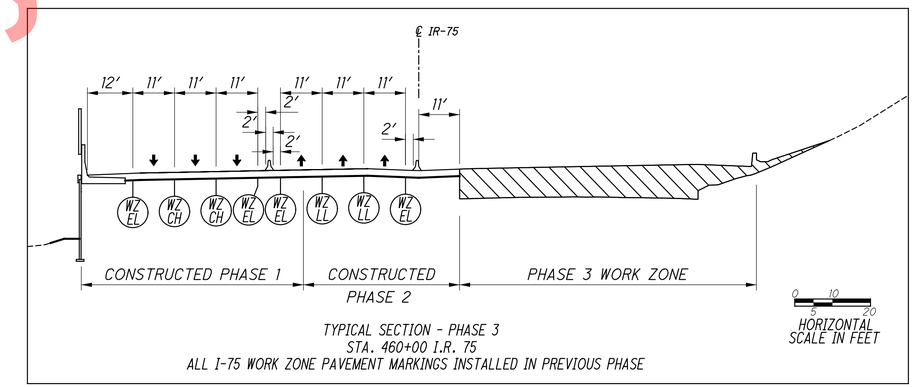

TYPICAL SECTION - PHASE 3
STA. 460+00 I.R. 75
ALL I-75 WORK ZONE PAVEMENT MARKINGS INSTALLED IN PREVIOUS PHASE

NOTE:
ONCE PHASE 3 WORK SHOWN ON SHEETS 183-185 IS COMPLETE, THE CONTRACTOR SHALL TRANSITION INTO THE PHASE 3, PART 2 SET-UP TO COMPLETE NB PAVEMENT.

LEGEND
- PHASE 3 WORK ZONE
- PORTABLE BARRIER
- DRUM
- PROPOSED SIGN SUPPORT
- OPEN TRAVEL LANE

HORIZONTAL SCALE IN FEET
0 15 30 60

CALCULATED RLS
CHECKED SMM

MAINTENANCE OF TRAFFIC PLAN - PHASE 3
I.R. 75 - STA. 454+00 TO STA. 461+00

HAM-75-7.85

183
1047

Preliminary Plans - For Reference Only

J:\20110903\ODOT\HAM\77889\mot\sheets\77889MP181.dgn 5/22/2026 10:12:13 AM hbrendlinger

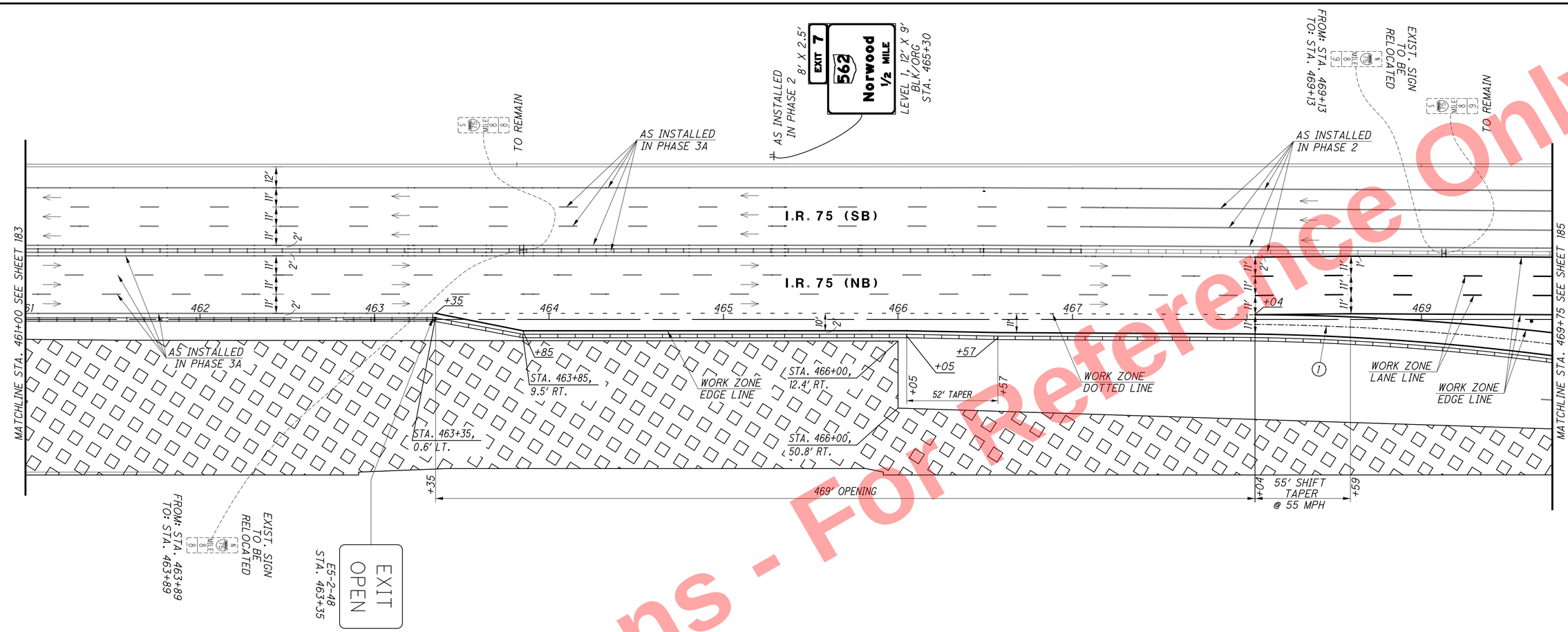

① Δ = 15° 53′ 33″ (RT)
Dc = 03° 45′ 03″
R = 1527.52′
T = 213.22′
L = 423.70′
E = 14.81′
C = 422.35′
C.B. = N 27° 22′ 25″ E

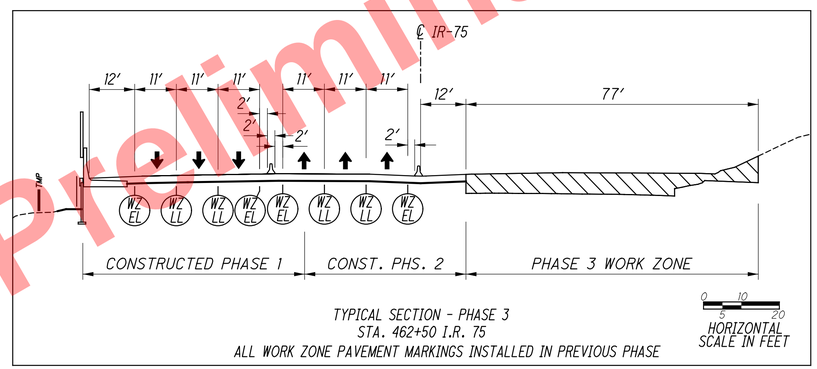

TYPICAL SECTION - PHASE 3
STA. 462+50 I.R. 75
ALL WORK ZONE PAVEMENT MARKINGS INSTALLED IN PREVIOUS PHASE

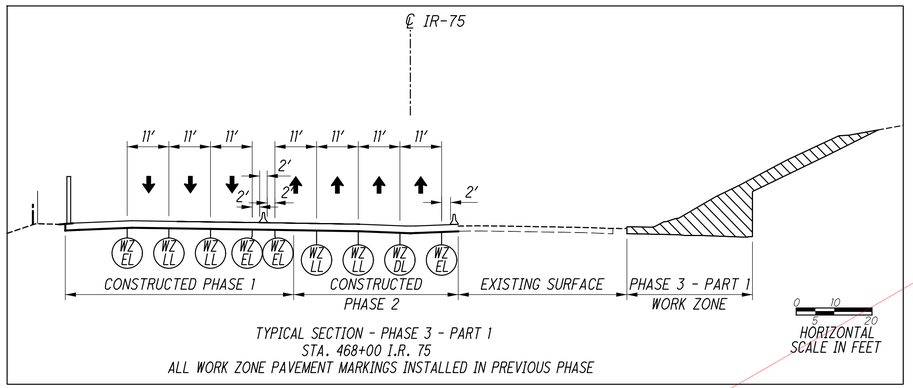

TYPICAL SECTION - PHASE 3 - PART 1
STA. 468+00 I.R. 75
ALL WORK ZONE PAVEMENT MARKINGS INSTALLED IN PREVIOUS PHASE

LEGEND
- PHASE 3 WORK ZONE
- DRUM
- PORTABLE BARRIER
- PROPOSED SIGN SUPPORT
- OPEN TRAVEL LANE

NOTE:
ONCE PHASE 3 WORK SHOWN ON SHEETS 183-185 IS COMPLETE, THE CONTRACTOR SHALL TRANSITION INTO THE PHASE 3, PART 2 SET-UP TO COMPLETE NB PAVEMENT.

HORIZONTAL SCALE IN FEET
0 15 30 60
CALCULATED RLS
CHECKED SMM

MAINTENANCE OF TRAFFIC PLAN - PHASE 3
I.R. 75 - STA. 461+00 TO STA. 469+75

HAM-75-7.85

184
1047

Preliminary Plans - For Reference Only

J:\20110903\ODOT\HAM\77889\mot\sheets\77889MP044.dgn 5/22/2026 10:12:15 AM hbrendlinger

Preliminary Plans - For Reference Only

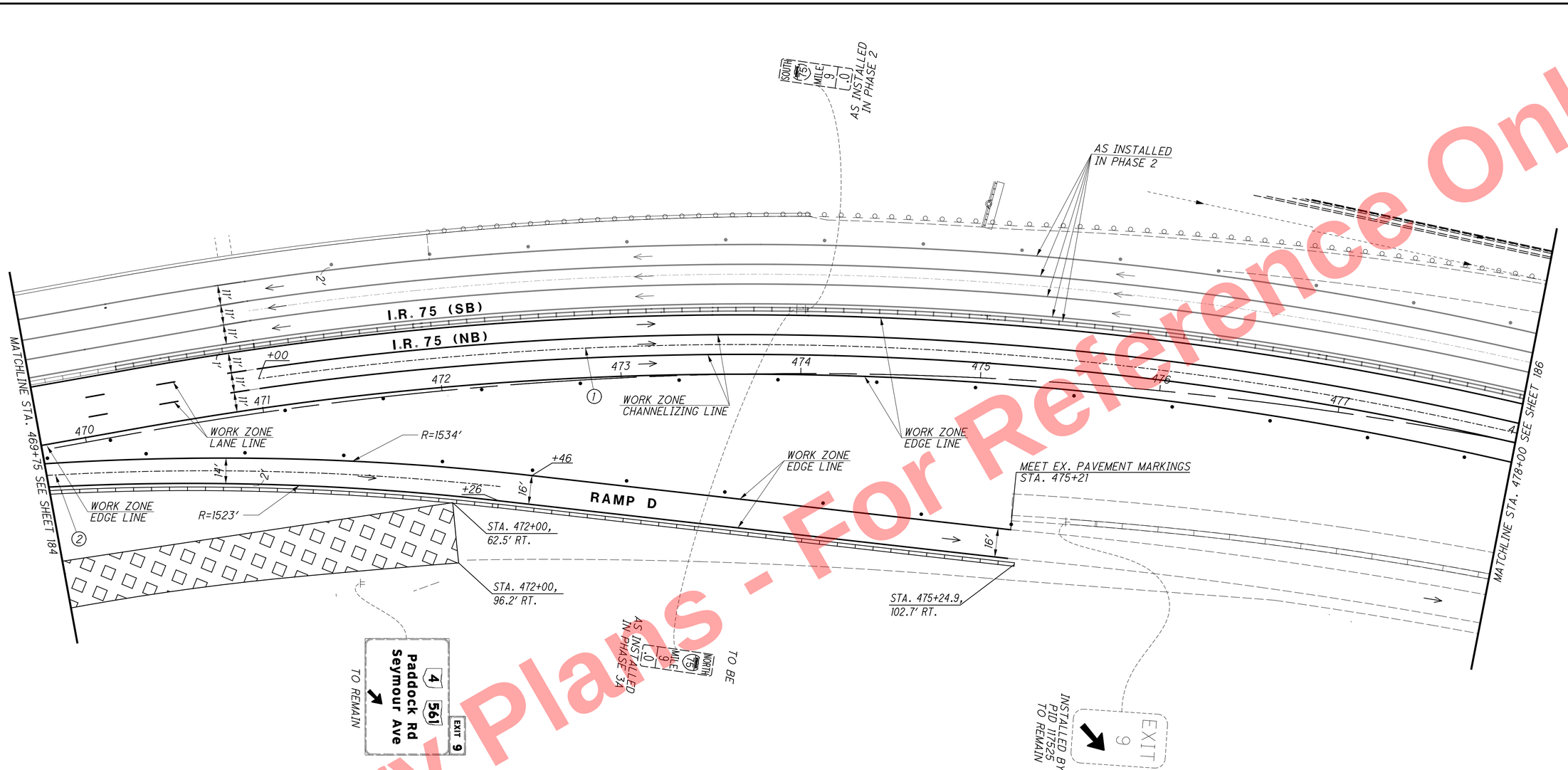

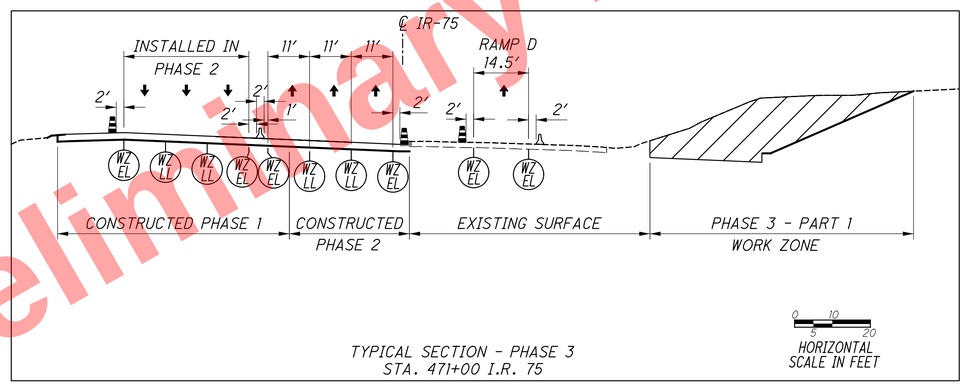

TYPICAL SECTION - PHASE 3
STA. 471+00 I.R. 75

HORIZONTAL SCALE IN FEET

① Δ = 30° 13' 46" (RT)
Dc = 02° 59' 59"
R = 1910.00'
T = 515.89'
L = 1007.72'
E = 68.44'
C = 996.08'
C.B. = N 36° 11' 58" E

② Δ = 15° 53' 33" (RT)
Dc = 03° 45' 03"
R = 1527.52'
T = 213.22'
L = 423.70'
E = 14.81'
C = 422.35'
C.B. = N 27° 22' 25" E

NOTE:
ONCE PHASE 3 WORK SHOWN ON SHEETS 183-185 IS COMPLETE, THE CONTRACTOR SHALL TRANSITION INTO THE PHASE 3, PART 2 SET-UP TO COMPLETE NB PAVEMENT.

LEGEND
- PHASE 3 WORK ZONE
- PORTABLE BARRIER
- DRUM
- PROPOSED SIGN SUPPORT
- OPEN TRAVEL LANE

HORIZONTAL SCALE IN FEET

CALCULATED RLS
CHECKED SMM

MAINTENANCE OF TRAFFIC PLAN - PHASE 3
I.R. 75 - STA. 469+75 TO STA. 478+00

HAM-75-7.85

185
1047

J:\20110903\ODOT\HAM\77889\mot\sheets\77889MP187.dgn 5/22/2026 10:12:16 AM hbrendlinger

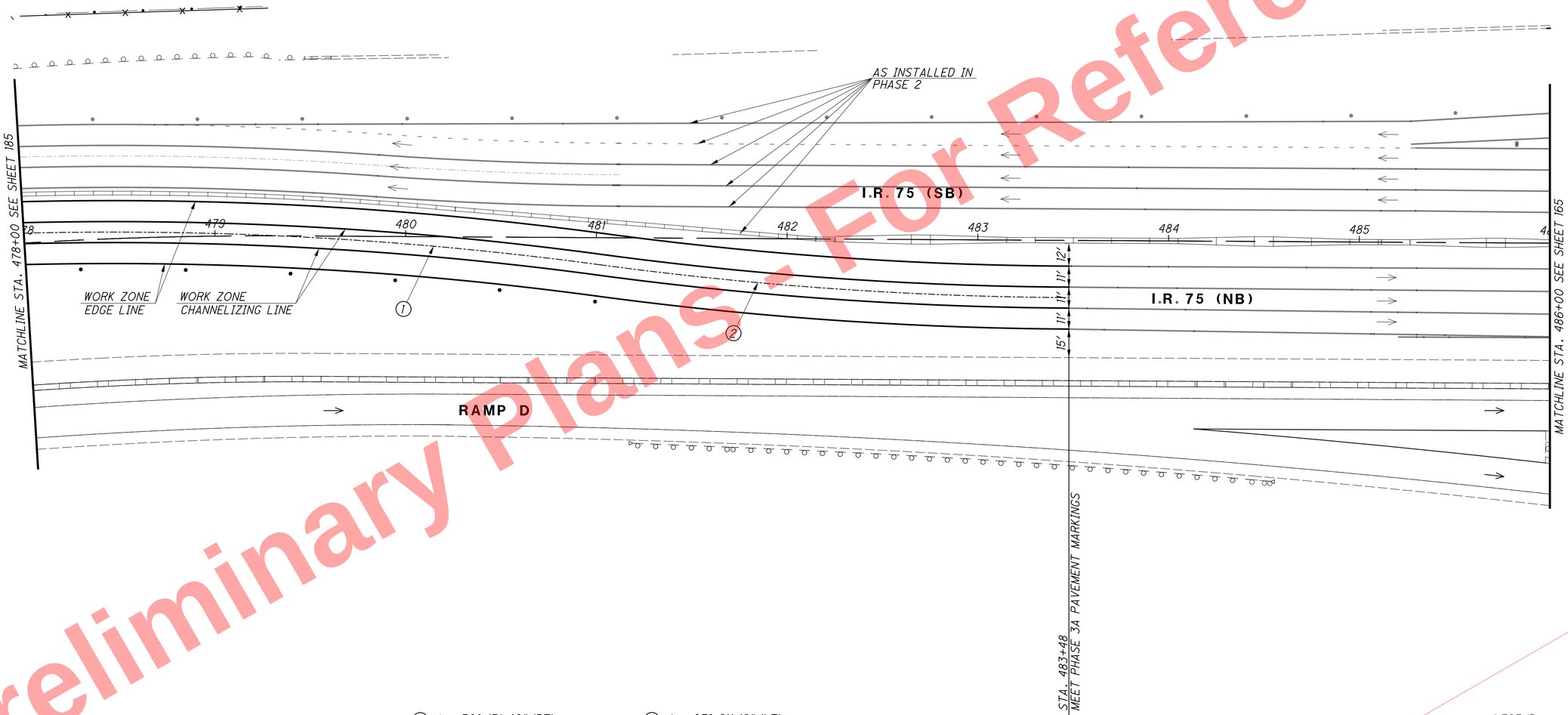

① Δ = 30° 13′ 46″ (RT)
Dc = 02° 59′ 59″
R = 1910.00′
T = 515.89′
L = 1007.72′
E = 68.44′
C = 996.08′
C.B. = N 36° 11′ 58″ E

② Δ = 07° 21′ 12″ (LT)
Dc = 02° 58′ 57″
R = 1921.00′
T = 123.44′
L = 246.54′
E = 3.96′
C = 246.38′
C.B. = N 47° 38′ 13″ E

LEGEND

- PORTABLE BARRIER
- DRUM
- OPEN TRAVEL LANE

Preliminary Plans - For Reference Only

HORIZONTAL SCALE IN FEET
0 15 30 60

CALCULATED RLS
CHECKED SMM

MAINTENANCE OF TRAFFIC PLAN - PHASE 3
I.R. 75 - STA. 478+00 TO STA. 486+00

HAM-75-7.85

186
1047

J:\20110903\ODOT\HAM\77889\mot\sheets\77889MP269.dgn 5/22/2026 10:12:18 AM hbrendlinger

Preliminary Plans - For Reference Only

LEGEND

- PORTABLE BARRIER
- DRUM
- PROPOSED SIGN SUPPORT
- OPEN TRAVEL LANE

HORIZONTAL SCALE IN FEET
0 15 30 60

CALCULATED RLS
CHECKED SMM

MAINTENANCE OF TRAFFIC PLAN - PHASE 3 - PT. 2
I.R. 75 - STA. 454+00 TO STA. 461+00

HAM-75-7.85

187
1047

J:\20110903\ODOT\HAM\77889\mot\sheets\77889MP347.dgn 5/22/2026 10:12:20 AM hbrendlinger

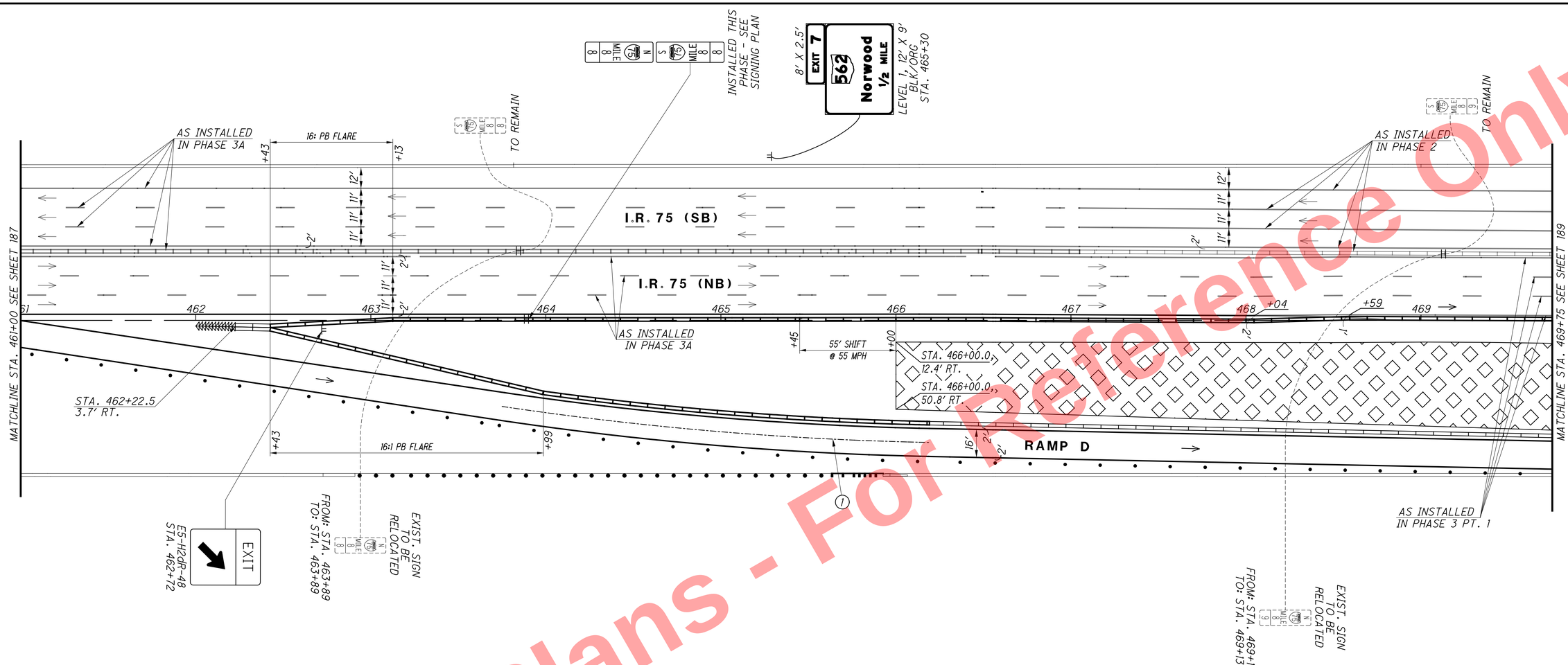

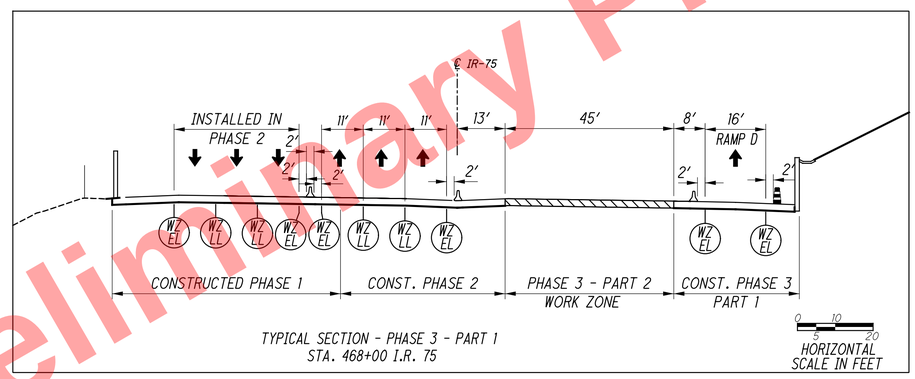

TYPICAL SECTION - PHASE 3 - PART 1
STA. 468+00 I.R. 75

① Δ = 07° 18′ 57″ (LT)
Dc = 02° 59′ 14″
R = 1918.00′
T = 122.62′
L = 244.90′
E = 3.92′
C = 244.74′
C.B. = N 23° 38′ 39″ E

LEGEND

- PHASE 3 - PART 2 WORK ZONE
- DRUM
- PORTABLE BARRIER
- PROPOSED SIGN SUPPORT
- IMPACT ATTENUATOR (48″ WIDE HAZARD) - ITEM 606, UNIDIRECTIONAL, TYPE 3
- OPEN TRAVEL LANE

HORIZONTAL SCALE IN FEET
0 15 30 60

CALCULATED RLS
CHECKED SMM

MAINTENANCE OF TRAFFIC PLAN - PHASE 3 - PT. 2
I.R. 75 - STA. 461+00 TO STA. 469+75

HAM-75-7.85

188
1047

Preliminary Plans - For Reference Only

J:\20110903\ODOT\HAM\77889\mot\sheets\77889MP348.dgn 5/22/2026 10:12:22 AM hbrendlinger

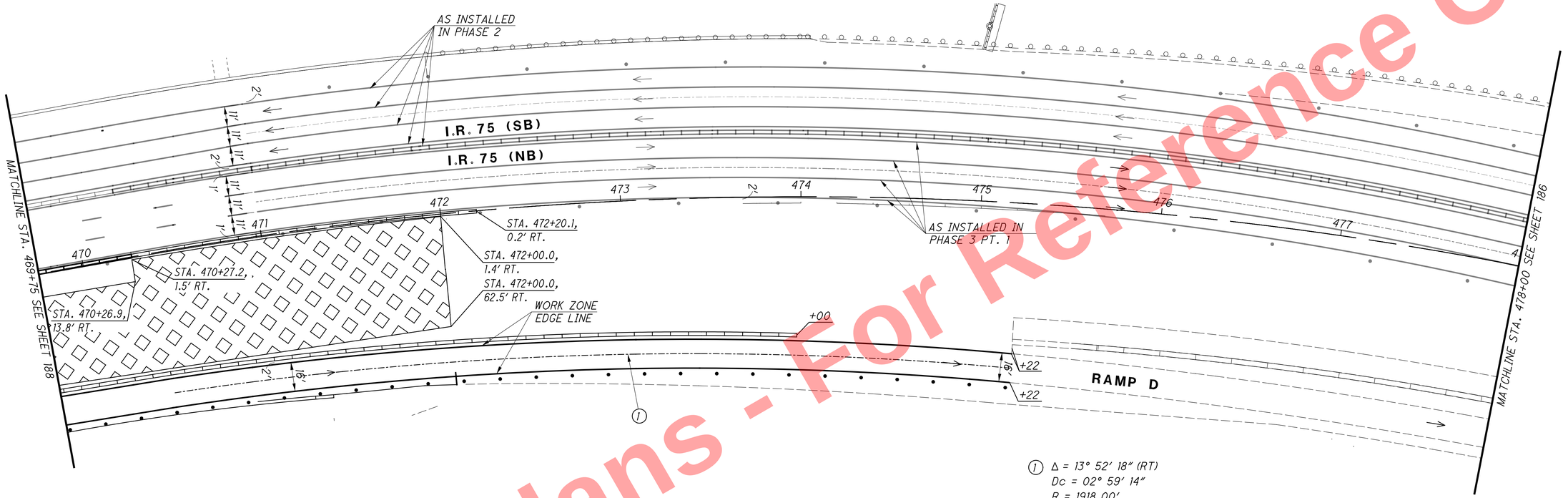

1 Δ = 13° 52′ 18″ (RT)
Dc = 02° 59′ 14″
R = 1918.00′
T = 233.32′
L = 464.36′
E = 14.14′
C = 463.23′
C.B. = N 27° 28′ 56″ E

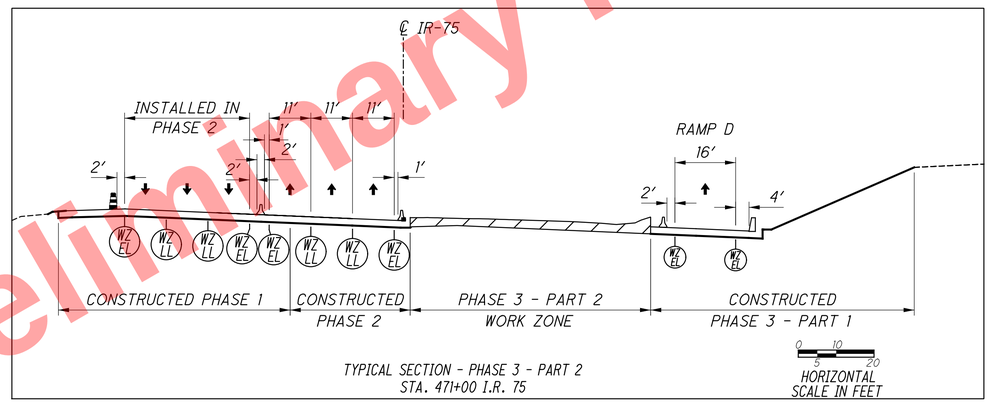

TYPICAL SECTION - PHASE 3 - PART 2
STA. 471+00 I.R. 75

LEGEND

- PHASE 3 - PT. 2 WORK ZONE
- PORTABLE BARRIER
- DRUM
- OPEN TRAVEL LANE

0 15 30 60
HORIZONTAL SCALE IN FEET

CALCULATED RLS
CHECKED SMM

MAINTENANCE OF TRAFFIC PLAN - PHASE 3 - PT. 2
I.R. 75 - STA. 469+75 TO STA. 478+00

HAM-75-7.85

189
1047

Preliminary Plans - For Reference Only

J:\20110903\ODOT\HAM\77889\mot\sheets\77889MP351.dgn 5/22/2026 10:12:24 AM hbrendlinger

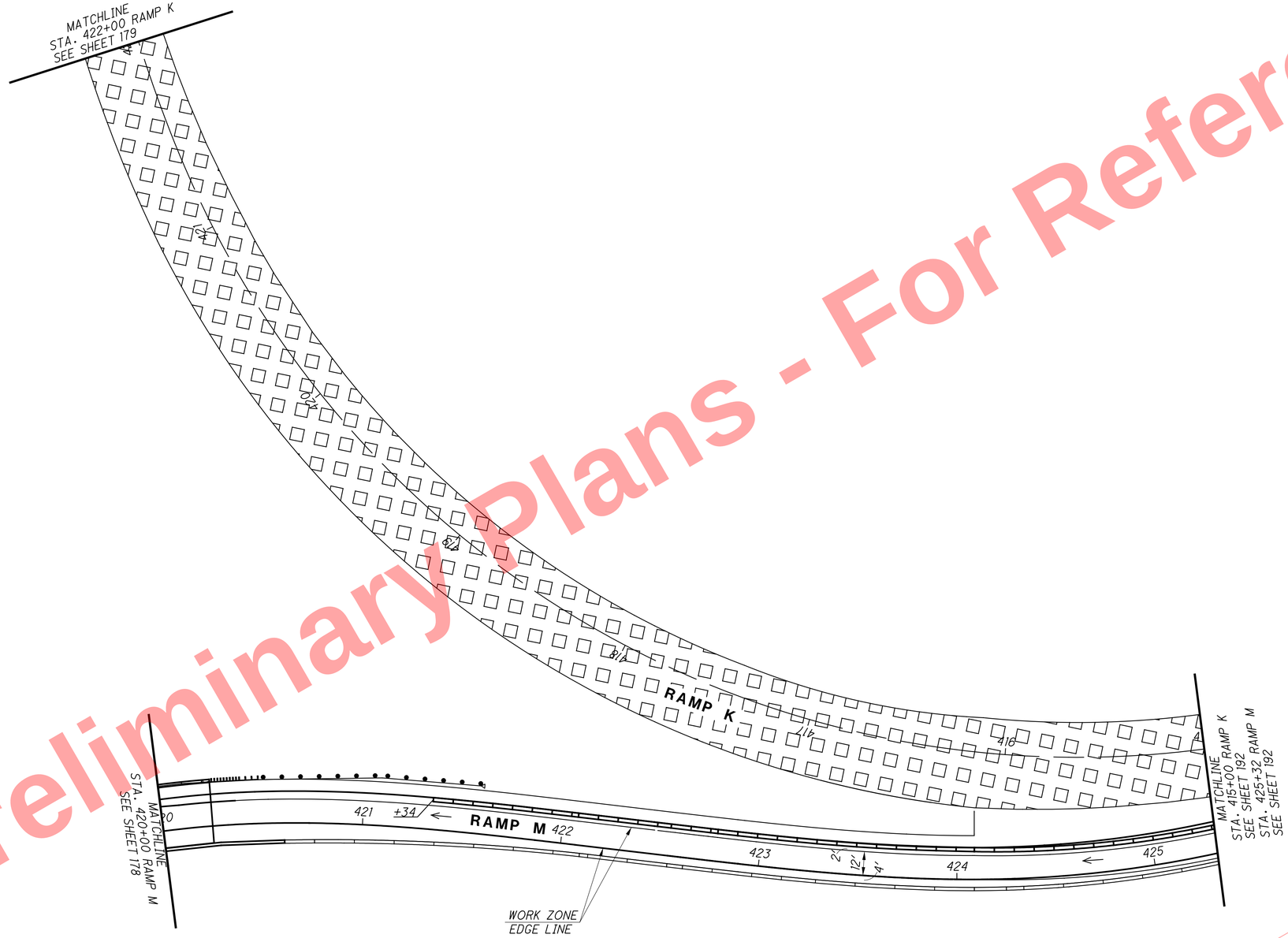

Preliminary Plans - For Reference Only

MAINTENANCE OF TRAFFIC PLAN - PHASE 3
RAMP M - STA. 420+00 TO STA. 425+32

HAM-75-7.85

CALCULATED RLS
CHECKED SMM

HORIZONTAL SCALE IN FEET
0 15 30 60

190
1047

J:\20110903\ODOT\HAM\77889\mot\sheets\77889MP074.dgn 5/22/2026 10:12:25 AM hbrendlinger

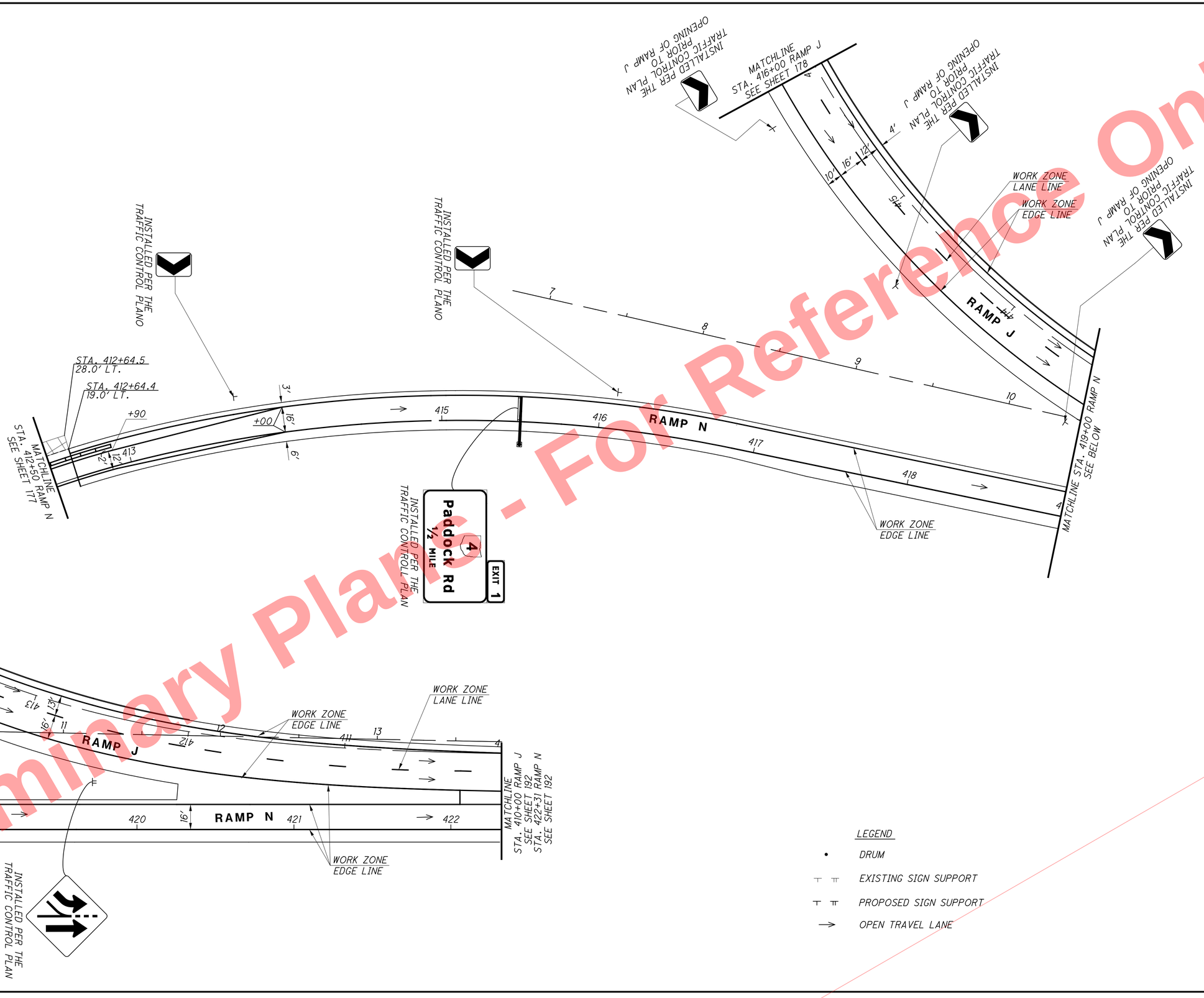

Preliminary Plans - For Reference Only

MAINTENANCE OF TRAFFIC PLAN - PHASE 3
RAMP N - STA. 412+50 TO STA. 422+31

HAM-75-7.85

CALCULATED RLS
CHECKED SMM

HORIZONTAL SCALE IN FEET

191
1047

J:\20110903\ODOT\HAM\77889\mot\sheets\77889MP122.dgn 5/22/2026 10:12:27 AM hbrendlinger

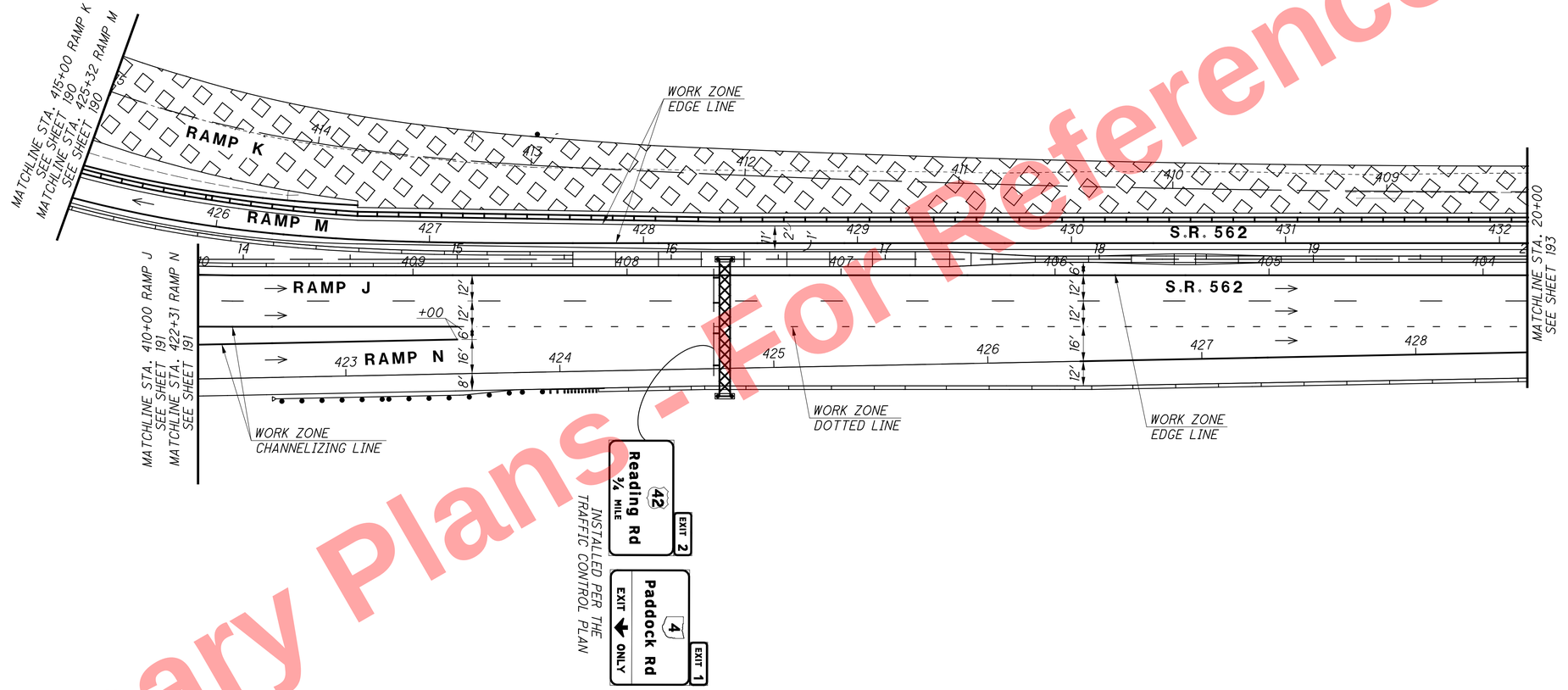

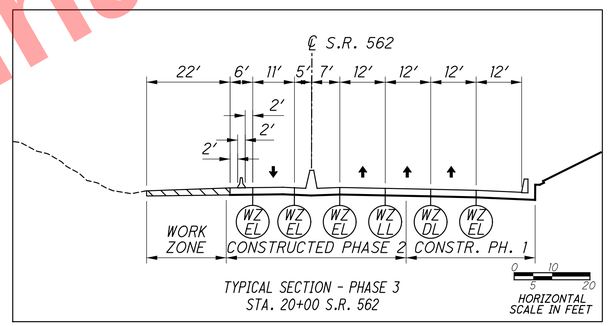

TYPICAL SECTION - PHASE 3
STA. 20+00 S.R. 562

DRUM SPACING CHART	
TANGENT	80′ c/c
TAPER	55′ c/c
RADII/CLOSURE	10′ c/c

LEGEND

- RAMP K PHASE 3 WORK ZONE
- PORTABLE BARRIER
- DRUM
- PROPOSED SIGN SUPPORT
- OPEN TRAVEL LANE

HORIZONTAL SCALE IN FEET
0 15 30 60

CALCULATED RLS
CHECKED SMM

MAINTENANCE OF TRAFFIC PLAN - PHASE 3
S.R 562 - STA. 13+79 TO STA. 20+00

HAM-75-7.85

192
1047

Preliminary Plans - For Reference Only

J:\20110903\ODOT\HAM\77889\mot\sheets\77889MP261.dgn 5/22/2026 10:12:28 AM hbrendlinger

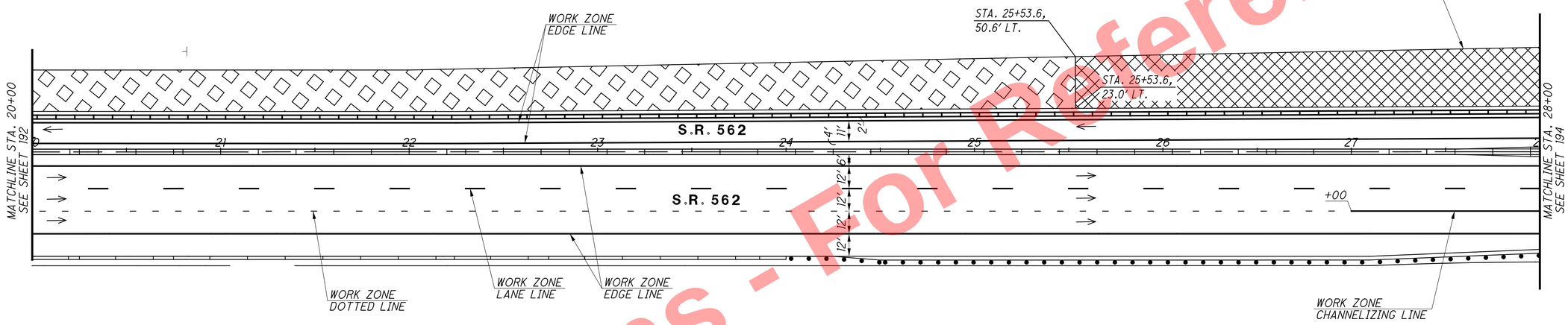

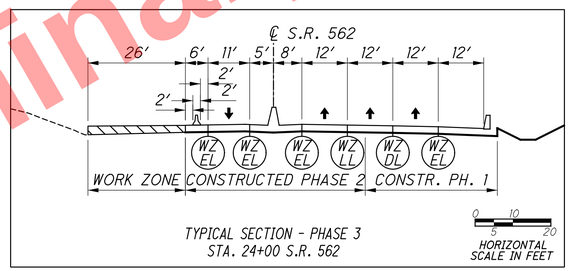

TYPICAL SECTION - PHASE 3
STA. 24+00 S.R. 562

NOTES:
1. ONCE WORK IS COMPLETED IN THE RAMP CLOSURE AREA (45 DAY MAX), THE CONTRACTOR SHALL TRANSITION INTO THE PHASE 3 - PART 2 SET-UP.

DRUM SPACING CHART	
TANGENT	80' c/c
TAPER	55' c/c
RADII/CLOSURE	10' c/c

LEGEND

- PHASE 3 WORK ZONE
- WORK ZONE - 45 DAY CLOSURE
- PORTABLE BARRIER
- PROPOSED SIGN SUPPORT
- OPEN TRAVEL LANE

HORIZONTAL SCALE IN FEET
0 15 30 60

CALCULATED RLS
CHECKED SMM

MAINTENANCE OF TRAFFIC PLAN - PHASE 3
S.R. 562 - STA. 20+00 TO STA. 28+00

HAM-75-7.85

193
1047

Preliminary Plans - For Reference Only

J:\20110903\ODOT\HAM\77889\mot\sheets\77889MP262.dgn 5/22/2026 10:12:29 AM hbrendlinger

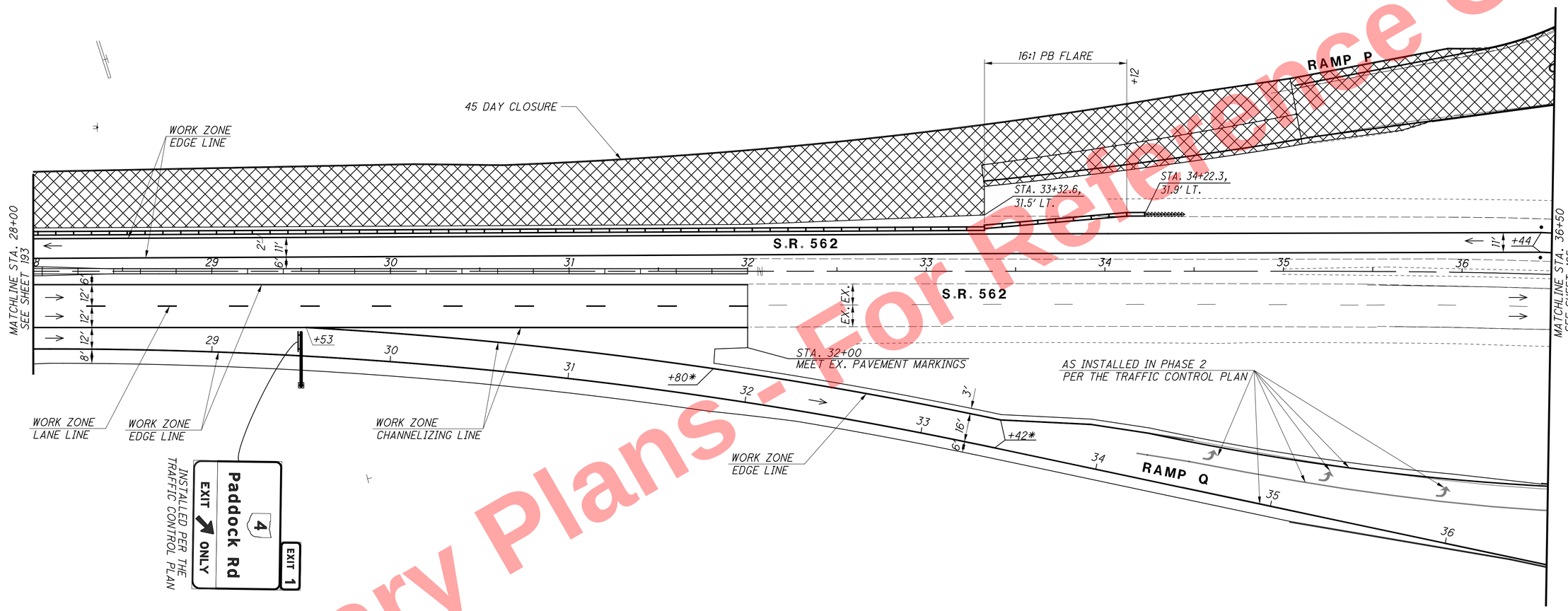

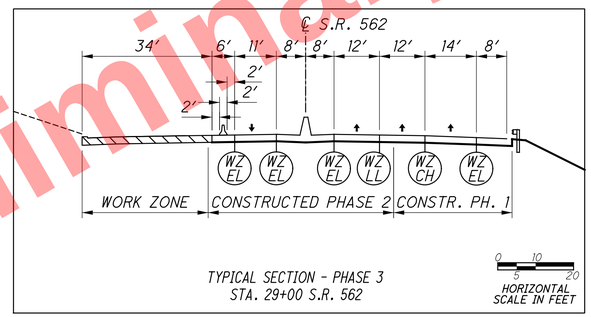

TYPICAL SECTION - PHASE 3
STA. 29+00 S.R. 562

* DENOTES STATIONING FROM RAMP Q

NOTES:
1. ONCE WORK IS COMPLETED IN THE RAMP CLOSURE AREA (45 DAY MAX), THE CONTRACTOR SHALL TRANSITION INTO THE PHASE 3 - PART 2 SET-UP.

2. THE RAMP Q PAVEMENT MARKINGS SHALL BE INSTALLED PER THE TRAFFIC CONTROL PLAN.

DRUM SPACING CHART	
TANGENT	80' c/c
TAPER	55' c/c
RADII/CLOSURE	10' c/c

LEGEND

- WORK ZONE - 45 DAY CLOSURE
- DRUM
- TEMPORARY SIGN SUPPORT
- OPEN TRAVEL LANE
- PORTABLE BARRIER
- IMPACT ATTENUATOR

Preliminary Plans - For Reference Only

N

0 15 30 60 HORIZONTAL SCALE IN FEET

CALCULATED RLS CHECKED SMM

MAINTENANCE OF TRAFFIC PLAN - PHASE 3
S.R. 562 - STA. 28+00 TO STA. 36+50

HAM-75-7.85

194
1047

J:\20110903\ODOT\HAM\77889\mot\sheets\77889MP263.dgn 5/22/2026 10:12:31 AM hbrendlinger

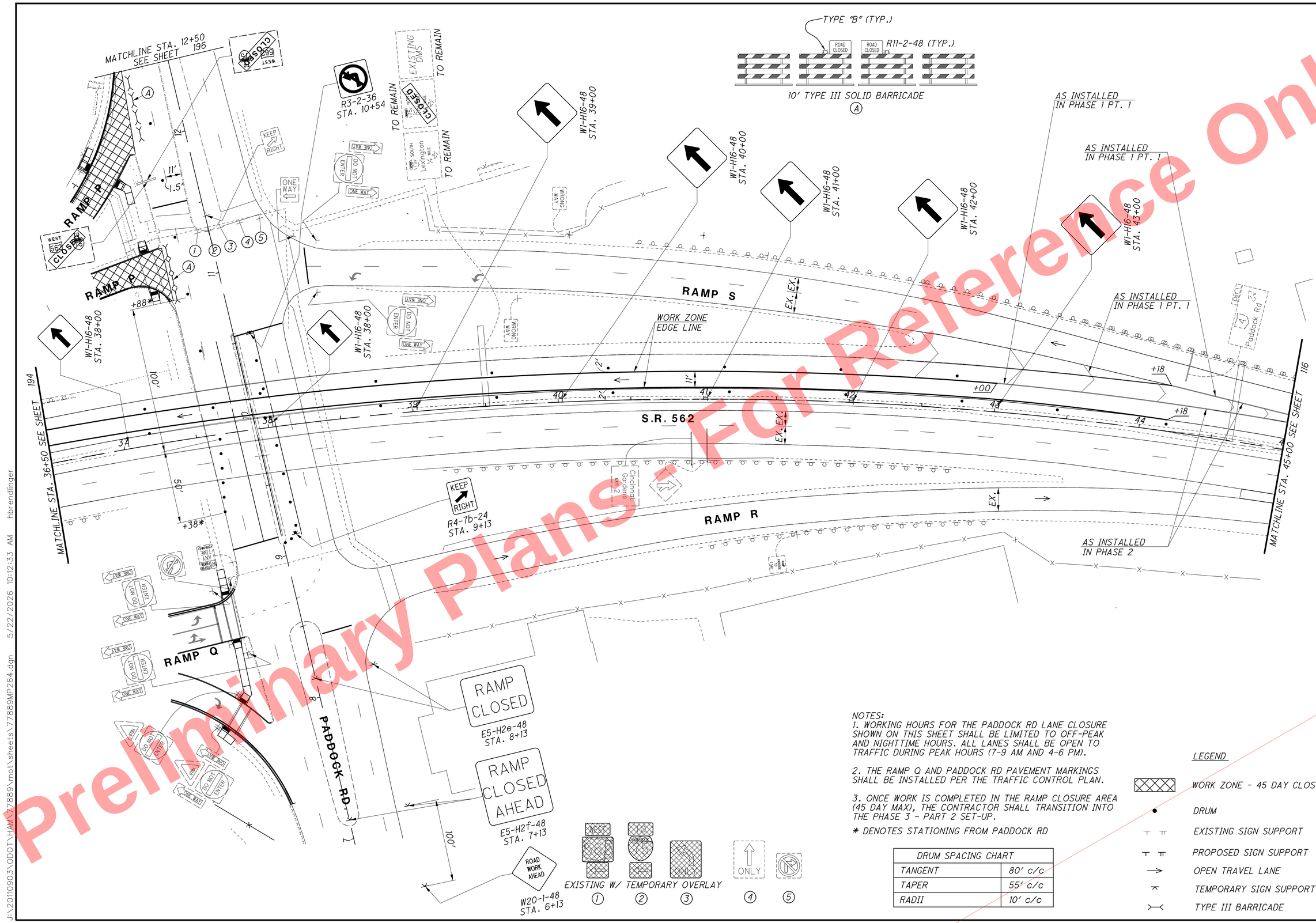

NOTES:
1. WORKING HOURS FOR THE PADDOCK RD LANE CLOSURE SHOWN ON THIS SHEET SHALL BE LIMITED TO OFF-PEAK AND NIGHTTIME HOURS. ALL LANES SHALL BE OPEN TO TRAFFIC DURING PEAK HOURS (7-9 AM AND 4-6 PM).

2. THE RAMP Q AND PADDOCK RD PAVEMENT MARKINGS SHALL BE INSTALLED PER THE TRAFFIC CONTROL PLAN.

3. ONCE WORK IS COMPLETED IN THE RAMP CLOSURE AREA (45 DAY MAX), THE CONTRACTOR SHALL TRANSITION INTO THE PHASE 3 - PART 2 SET-UP.

* DENOTES STATIONING FROM PADDOCK RD

DRUM SPACING CHART	
TANGENT	80' c/c
TAPER	55' c/c
RADII	10' c/c

LEGEND

- WORK ZONE - 45 DAY CLOSURE
- DRUM
- EXISTING SIGN SUPPORT
- PROPOSED SIGN SUPPORT
- OPEN TRAVEL LANE
- TEMPORARY SIGN SUPPORT
- TYPE III BARRICADE

HORIZONTAL SCALE IN FEET
0 15 30 60

CALCULATED RLS
CHECKED SMM

MAINTENANCE OF TRAFFIC PLAN - PHASE 3
S.R. 562 - STA. 36+50 TO STA. 45+00

HAM-75-7.85

195
1047

Preliminary Plans - For Reference Only

J:\20110903\ODOT\HAM\77889\mot\sheets\77889MP264.dgn 5/22/2026 10:12:33 AM hbrendlinger

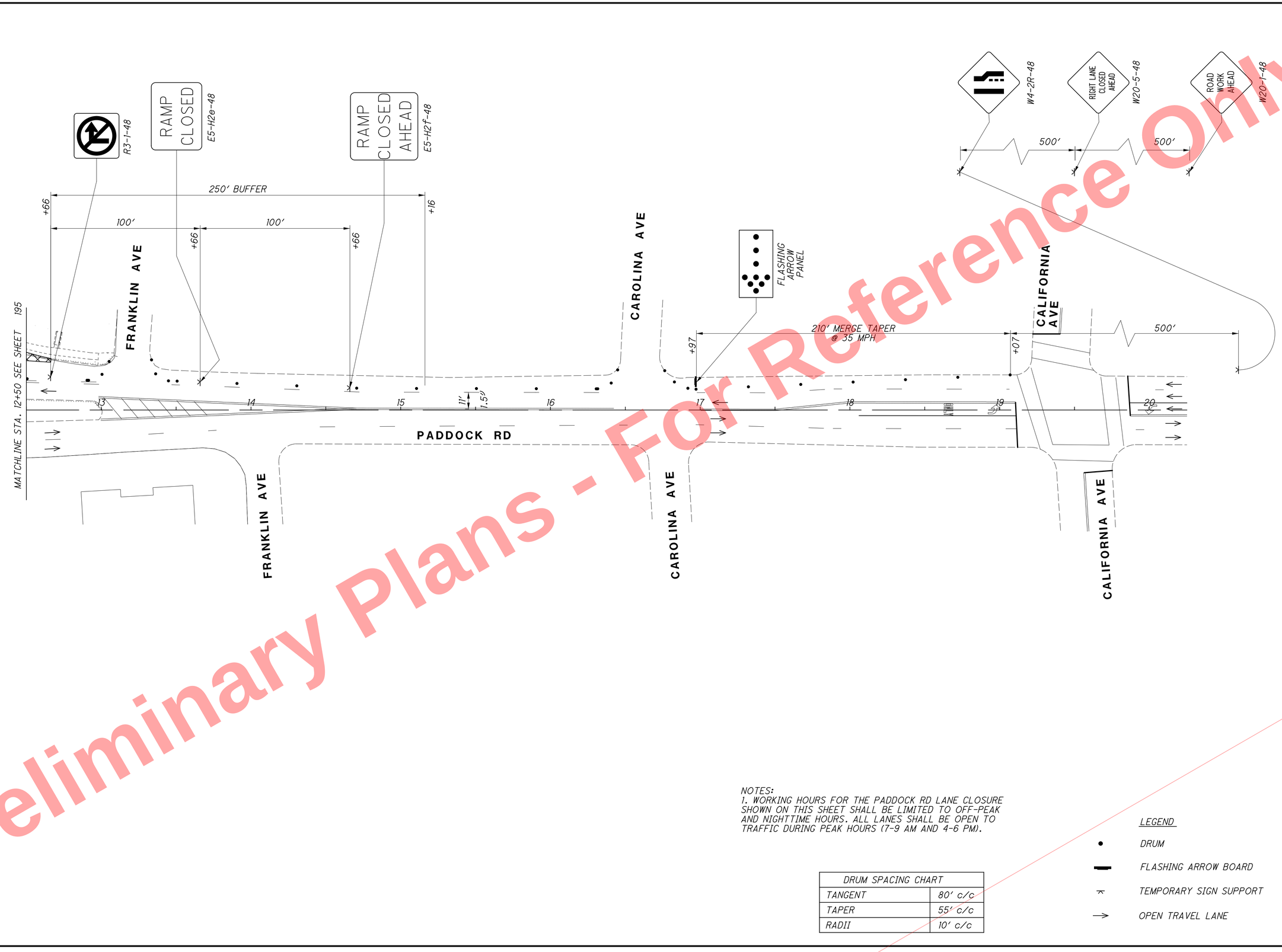

NOTES:
1. WORKING HOURS FOR THE PADDOCK RD LANE CLOSURE SHOWN ON THIS SHEET SHALL BE LIMITED TO OFF-PEAK AND NIGHTTIME HOURS. ALL LANES SHALL BE OPEN TO TRAFFIC DURING PEAK HOURS (7-9 AM AND 4-6 PM).

DRUM SPACING CHART	
TANGENT	80′ c/c
TAPER	55′ c/c
RADII	10′ c/c

LEGEND

- DRUM
- FLASHING ARROW BOARD
- TEMPORARY SIGN SUPPORT
- OPEN TRAVEL LANE

HORIZONTAL SCALE IN FEET
0 15 30 60

CALCULATED RLS
CHECKED SMM

MAINTENANCE OF TRAFFIC PLAN - PHASE 3 - PT. 1
PADDOCK RD - STA. 12+50 TO STA. 20+00

HAM-75-7.85

196
1047

Preliminary Plans - Not For Reference Only

J:\20110903\ODOT\HAM\77889\mot\sheets\77889MP356.dgn 5/22/2026 10:12:34 AM hbrendlinger

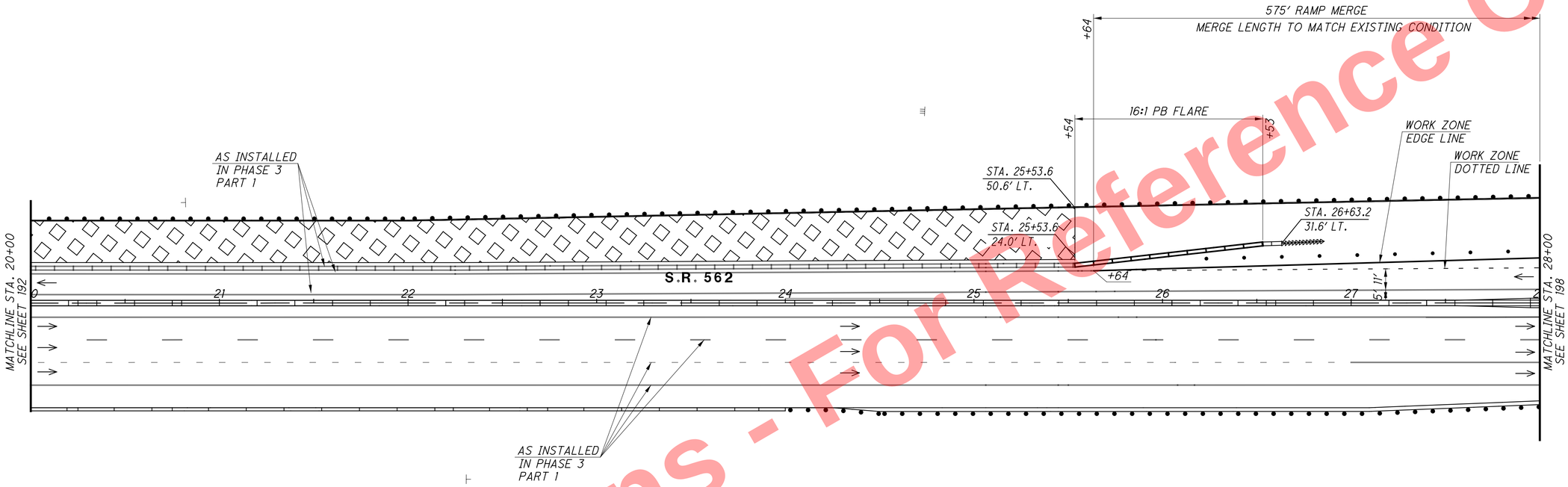

DRUM SPACING CHART	
TANGENT	80' c/c
TAPER	55' c/c
RADII/CLOSURE	10' c/c

LEGEND

- PHASE 3 WORK ZONE
- DRUM
- PROPOSED SIGN SUPPORT
- PORTABLE BARRIER
- IMPACT ATTENUATOR
- OPEN TRAVEL LANE

HORIZONTAL SCALE IN FEET
0 15 30 60

CALCULATED RLS
CHECKED SMM

MAINTENANCE OF TRAFFIC PLAN - PHASE 3 - PT. 2
S.R. 562 - STA. 20+00 TO STA. 28+00

HAM-75-7.85

197
1047

Preliminary Plans - For Reference Only

J:\20110903\ODOT\HAM\7889\mot\sheets\77889MP338.dgn 5/22/2026 10:12:35 AM hbrendlinger

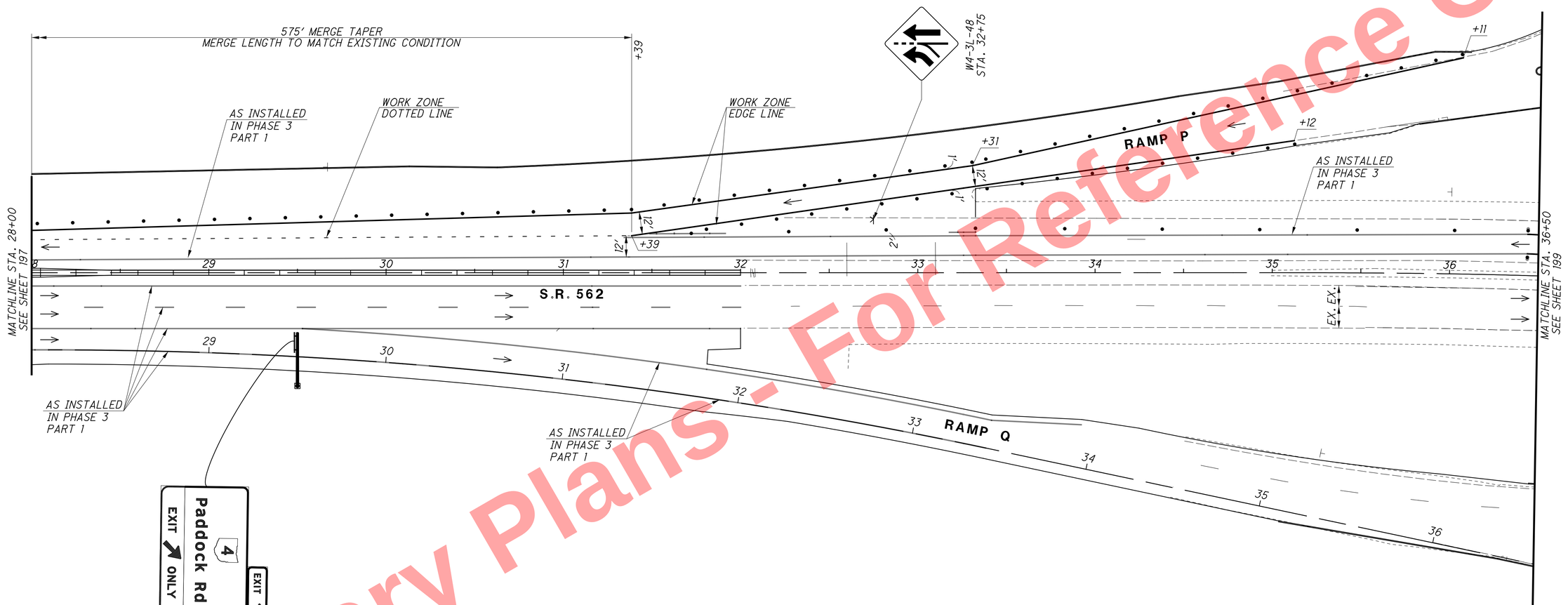

Preliminary Plans - For Reference Only

LEGEND

- DRUM
- OPEN TRAVEL LANE
- TEMPORARY SIGN SUPPORT

DRUM SPACING CHART	
TANGENT	80' c/c
TAPER	55' c/c
RADII/CLOSURE	10' c/c

HORIZONTAL SCALE IN FEET
0 15 30 60

CALCULATED RLS
CHECKED SMM

MAINTENANCE OF TRAFFIC PLAN - PHASE 3 - PT. 2
S.R. 562 - STA. 28+00 TO STA. 36+50

HAM-75-7.85

198
1047

J:\20110903\ODOT\HAM\77889\mot\sheets\77889MP339.dgn 5/22/2026 10:12:36 AM hbrendlinger

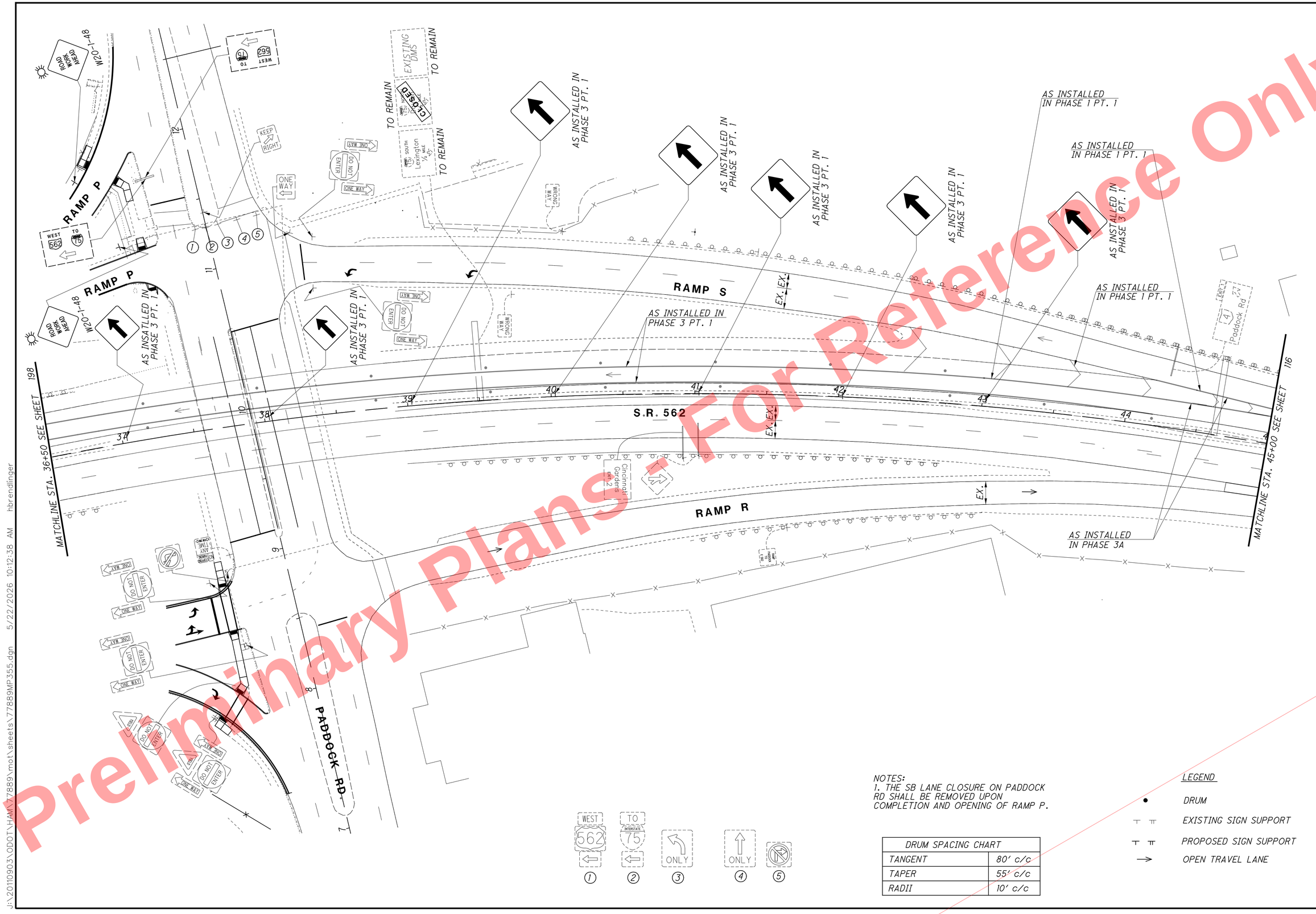

NOTES:
1. THE SB LANE CLOSURE ON PADDOCK RD SHALL BE REMOVED UPON COMPLETION AND OPENING OF RAMP P.

DRUM SPACING CHART	
TANGENT	80′ c/c
TAPER	55′ c/c
RADII	10′ c/c

LEGEND
- DRUM
- EXISTING SIGN SUPPORT
- PROPOSED SIGN SUPPORT
- OPEN TRAVEL LANE

HORIZONTAL SCALE IN FEET
0 15 30 60

CALCULATED RLS
CHECKED SMM

MAINTENANCE OF TRAFFIC PLAN - PHASE 3 - PT. 2
S.R. 562 - STA. 36+50 TO STA. 45+00

HAM-75-7.85

199
1047

Preliminary Plans - For Reference Only

J:\20110903\ODOT\HAM\77889\mot\sheets\77889MP355.dgn 5/22/2026 10:12:38 AM hbrendlinger

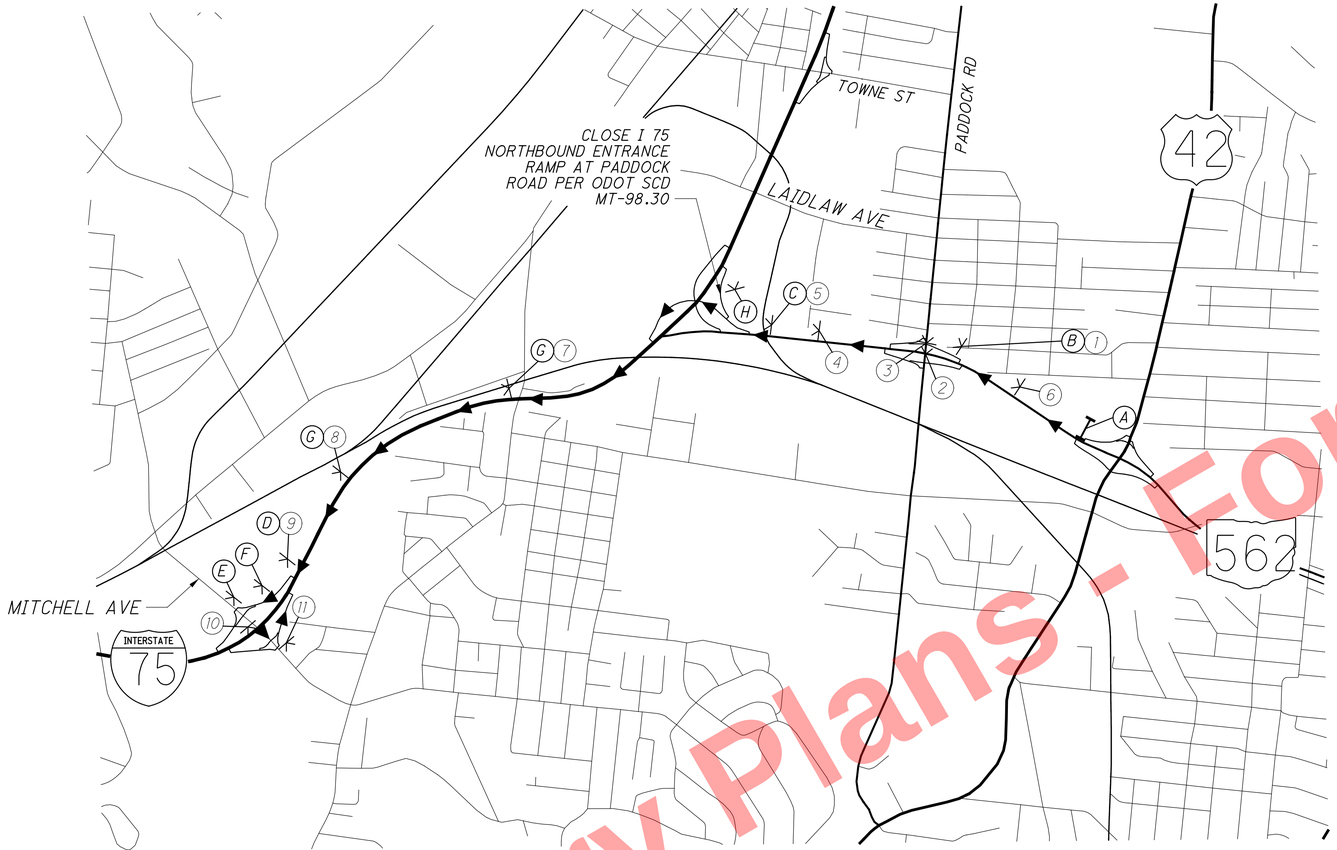

PORTABLE CHANGEABLEMESSAGE SIGN PLACED 1 MILE IN ADVANCE OF DETOUR

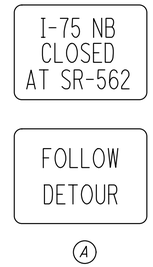

(A)

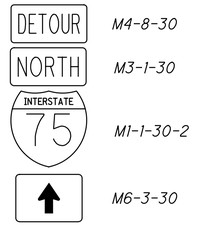

M4-8-30
M3-1-30
M1-1-30-2
M6-3-30

(B)

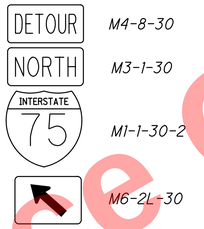

M4-8-30
M3-1-30
M1-1-30-2
M6-2L-30

(C)

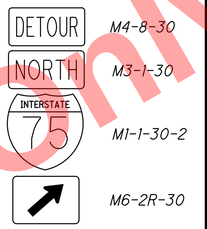

M4-8-30
M3-1-30
M1-1-30-2
M6-2R-30

(D)

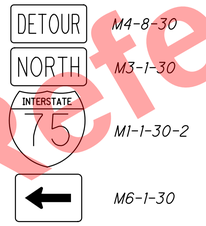

M4-8-30
M3-1-30
M1-1-30-2
M6-1-30

(E)

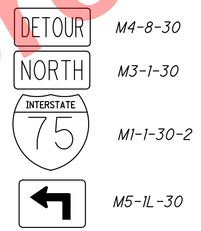

M4-8-30
M3-1-30
M1-1-30-2
M5-1L-30

(F)

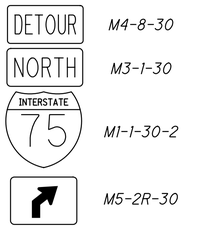

M4-8-30
M3-1-30
M1-1-30-2
M5-2R-30

(G)

TWO WEEKS PRIOR TO CLOSURE

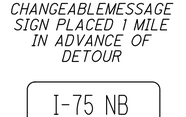

W20-H13-60

(H)

(1)

(2)



(3)



(4)





(5)





(6)



(7)



(8)



(9)

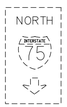

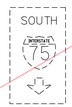

(10)

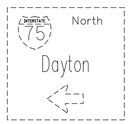

(11)

LEGEND

DETOUR ROUTE

TEMPORARY SIGN SUPPORT

PORTABLE CHANGEABLE MESSAGE SIGN

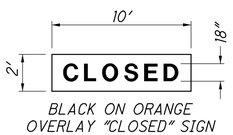

BLACK ON ORANGE OVERLAY "CLOSED" SIGN

Preliminary Plans - For Reference Only

NOT TO SCALE

CALCULATED BDM
CHECKED SMM

MAINTENANCE OF TRAFFIC DETOUR PLAN
RAMP K - PHASE 3

HAM-75-7.85

200
1047

J:\2011\0903\ODOT\HAM\77889\mot\sheets\77889MD009B.dgn 5/22/2026 10:12:39 AM hbrendlinger

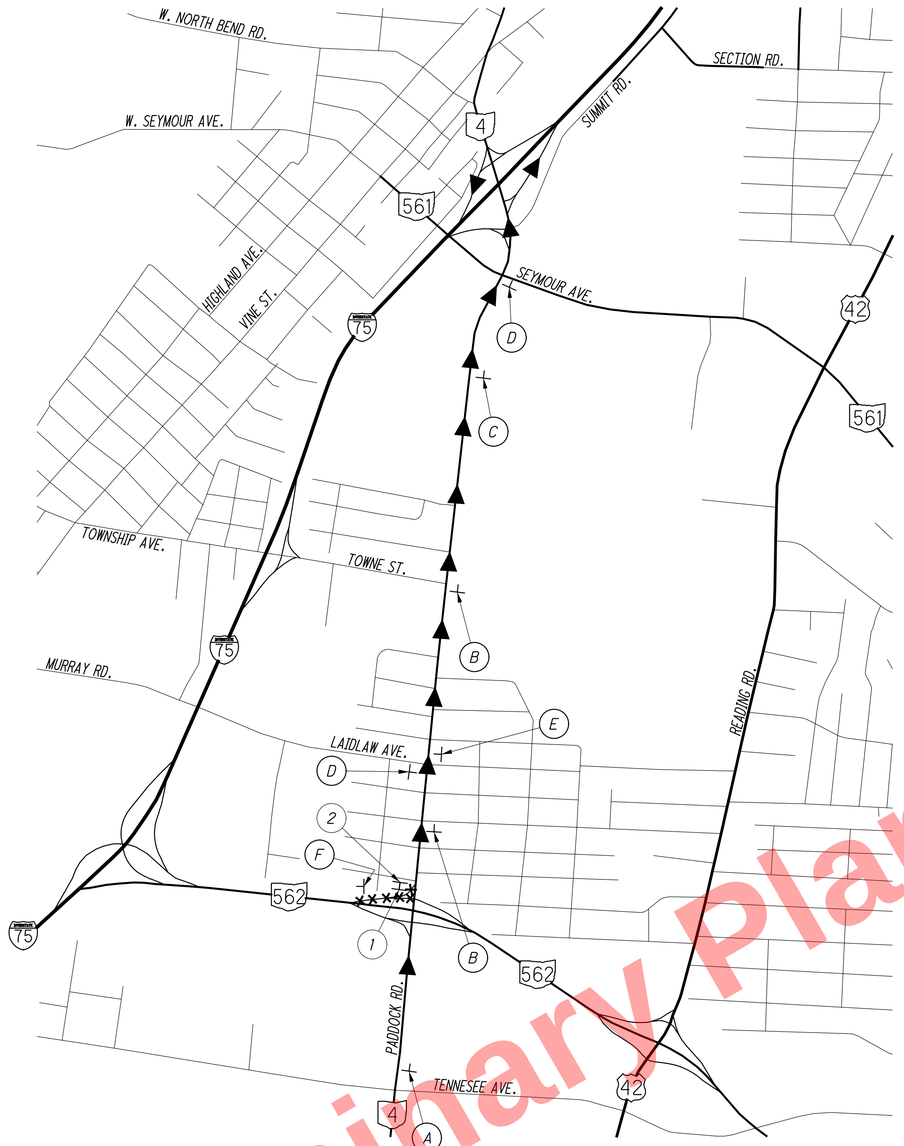

LEGEND

- × RAMP CLOSURE
- ▶ DETOUR ROUTE
- ⊥ EXISTING SIGN SUPPORT
- ⊻ TEMPORARY SIGN SUPPORT
- ⊥ TYPE III BARRICADE

SPECIAL
BLACK ON ORANGE
60"x48"

RAMP TO
SR 562 WEST
CLOSED
FOLLOW DETOUR

(A)

DETOUR	M4-8-30	DETOUR	M4-8-30	DETOUR M4-8-30	DETOUR M4-8-30
WEST	M3-4-30	WEST	M3-4-30	WEST M3-4-30	WEST M3-4-30
562	M1-1-30-2	562	M1-1-30-2	562 M1-1-30-2	562 M1-1-30-2
	M6-3-30		M5-1L-30	M6-1L-30	M6-1R-30
(B)		(C)		(D)	(E)

10'
2'
18"
CLOSED
BLACK ON ORANGE
OVERLAY "CLOSED" SIGN

TWO WEEKS PRIOR TO CLOSURE

RAMP WILL BE
CLOSED [DATE]
FOR [#] DAYS
INFO:

W20-H13-60

(F)



CANTILEVER MOUNTED SIGN

(1)

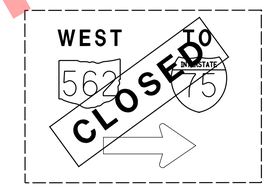

CANTILEVER MOUNTED SIGN

(2)

TEMPORARY TRAFFIC SIGNAL MODIFICATIONS

1. AN EXISTING TRAFFIC SIGNAL, OR ANY PART THEREOF, SHALL NOT BE TAKEN OUT OF SERVICE UNLESS ALTERNATE MEANS OF TRAFFIC CONTROL ARE IN PLACE AND OPERATIONAL. UNLESS DIRECTED BY THE CITY OF CINCINNATI OR ENGINEER. EXISTING TRAFFIC SIGNALS SHALL NOT BE TAKEN OUT OF SERVICE BETWEEN THE HOURS OF:

-7:00 AM TO 9:00 AM AND 4:00 PM TO 6:00 PM, MONDAY THROUGH FRIDAY
-OR ONE HOUR BEFORE SUNSET THROUGH ONE-HALF HOUR AFTER SUN RISE, WHICHEVER IS THE LONGEST DURATION.

2. ANY UNUSED SIGNAL HEAD, OR SPAN/ARM MOUNTED SIGN SHALL BE COVERED AND DISCONNECTED.

3. WHEN THE WESTBOUND ENTRANCE RAMP FROM PADDOCK TO SR 562 IS CLOSED THE FOLLOWING TRAFFIC SIGNAL MODIFICATIONS SHALL BE IMPLEMENTED AT THE PADDOCK ROAD/SR 562 WB RAMPS INTERSECTION:

A.COVER VEHICULAR SIGNAL INDICATIONS FOR THE NB LEFT TURN MOVEMENT.
B.DEACTIVATE THE NB LEFT TURN PHASE.
C. INSTALL SIGNAL OPERATION CHANGED SIGNS (W23-H2B) FOR ALL DIRECTIONS. CENTER THE SIGN OVER THE APPROACH.
D. MOUNTED A (NO LEFT TURN) SIGN ON THE TRAFFIC SIGNAL SPAN WIRE 3 FEET WEST OF THE NB LEFT TURN SIGNAL HEAD.
E. MOUNTED A (NO RIGHT TURN) SIGN ON THE TRAFFIC SIGNAL SPAN WIRE 3 FEET WEST OF THE SB SIGNAL HEADS.

Preliminary Plans - For Reference Only

J:\20110903\ODOT\HAM\77889\mot\sheets\77889MD002.dgn 5/22/2026 10:12:48 AM hbrendlinger

NO SCALE

CALCULATED RLS
CHECKED SMM

MAINTENANCE OF TRAFFIC PLAN - PHASE 3
RAMP P DETOUR ROUTE

HAM-75-7.85

201
1047

Preliminary Plans - For Reference Only

NOTE:
1. "END ROAD WORK" SIGN INSTALLED AT STA. 388+54 IN I.R. 75 SB IN PHASE 3 SHALL REMAIN.

2. R11-H5A-48 SIGN INSTALLED IN PHASE 3A AT 359+20 SHALL REMAIN.

LEGEND

- DRUM
- OPEN TRAVEL LANE
- PROPOSED SIGN SUPPORT
- TEMPORARY SIGN SUPPORT

DRUM SPACING CHART	
TANGENT	80' c/c
TAPER	55' c/c
RADII	10' c/c

HORIZONTAL SCALE IN FEET
0 15 30 60

CALCULATED RLS
CHECKED SMM

MAINTENANCE OF TRAFFIC PLAN - PHASE 4
I.R. 75 - STA. 391+00 TO STA. 399+00

HAM-75-7.85

202
1047

J:\20110903\ODOT\HAM\77889\mot\sheets\77889MP134.dgn 5/22/2026 10:12:51 AM hbrendlinger

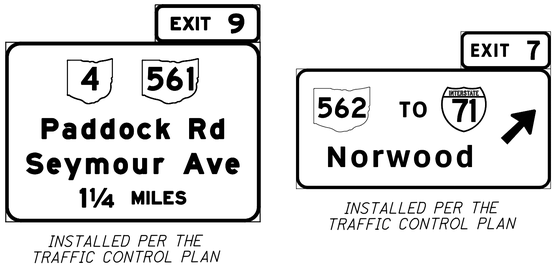

INSTALLED PER THE TRAFFIC CONTROL PLAN

INSTALLED PER THE TRAFFIC CONTROL PLAN

①

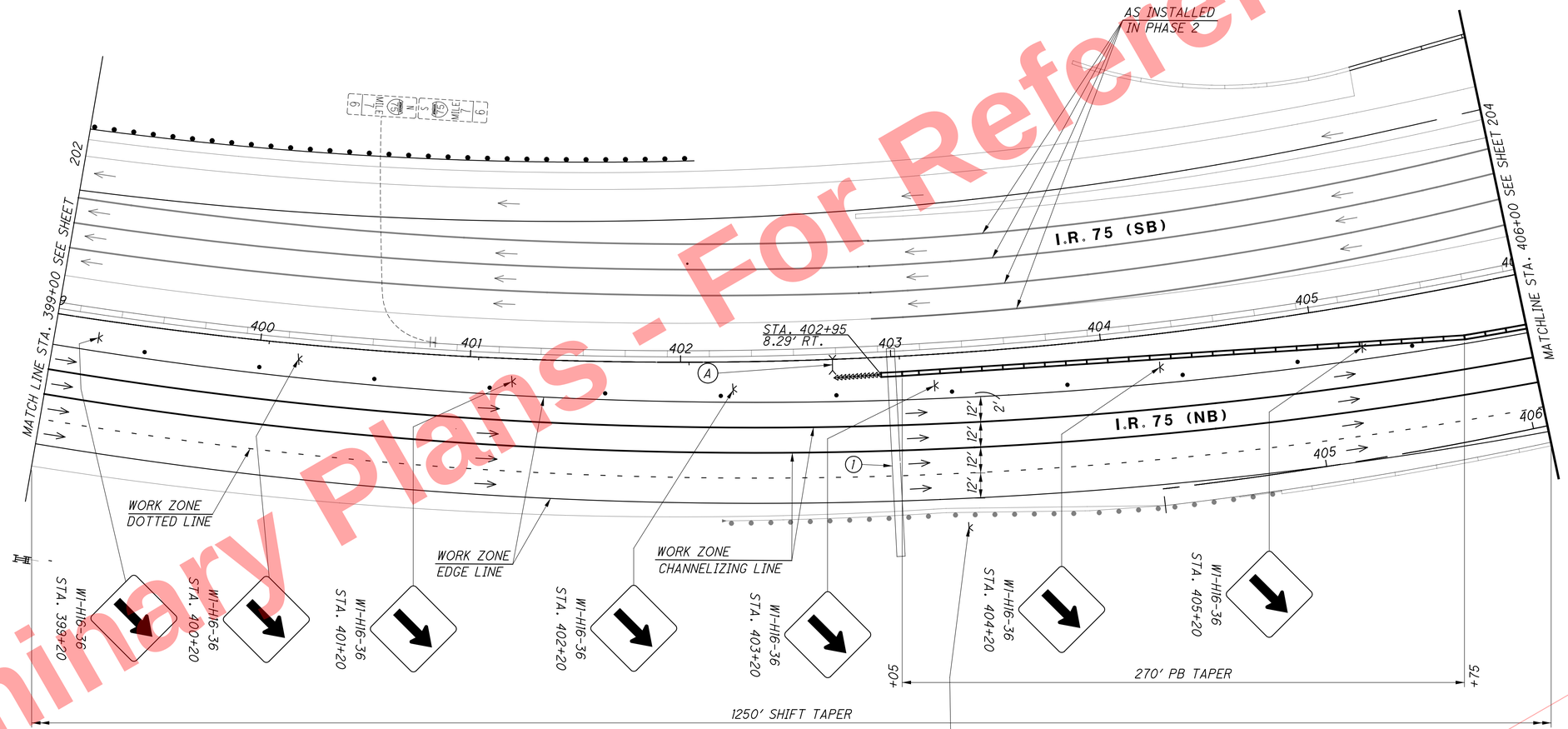

NOTES:
1. THE PAVEMENT SURFACE COURSE AND FINAL PAVEMENT MARKINGS SHALL BE INSTALLED AFTER PHASE 4 MEDIAN WORK HAS BEEN COMPLETED.

LEGEND

- DRUM
- TEMPORARY SIGN SUPPORT
- OPEN TRAVEL LANE
- IMPACT ATTENUATOR
- PORTABLE BARRIER
- TYPE III BARRICADE

DRUM SPACING CHART	
TANGENT	80' c/c
TAPER	55' c/c
RADII	10' c/c

HORIZONTAL SCALE IN FEET
0 15 30 60

CALCULATED RLS
CHECKED SMM

MAINTENANCE OF TRAFFIC PLAN - PHASE 4
I.R. 75 - STA. 399+00 TO STA. 406+00

HAM-75-7.85

203
1047

Preliminary Plans - Not For Reference Only

J:\20110903\ODOT\HAM\77889\mot\sheets\77889MP135.dgn 5/22/2026 10:12:52 AM hbrendlinger

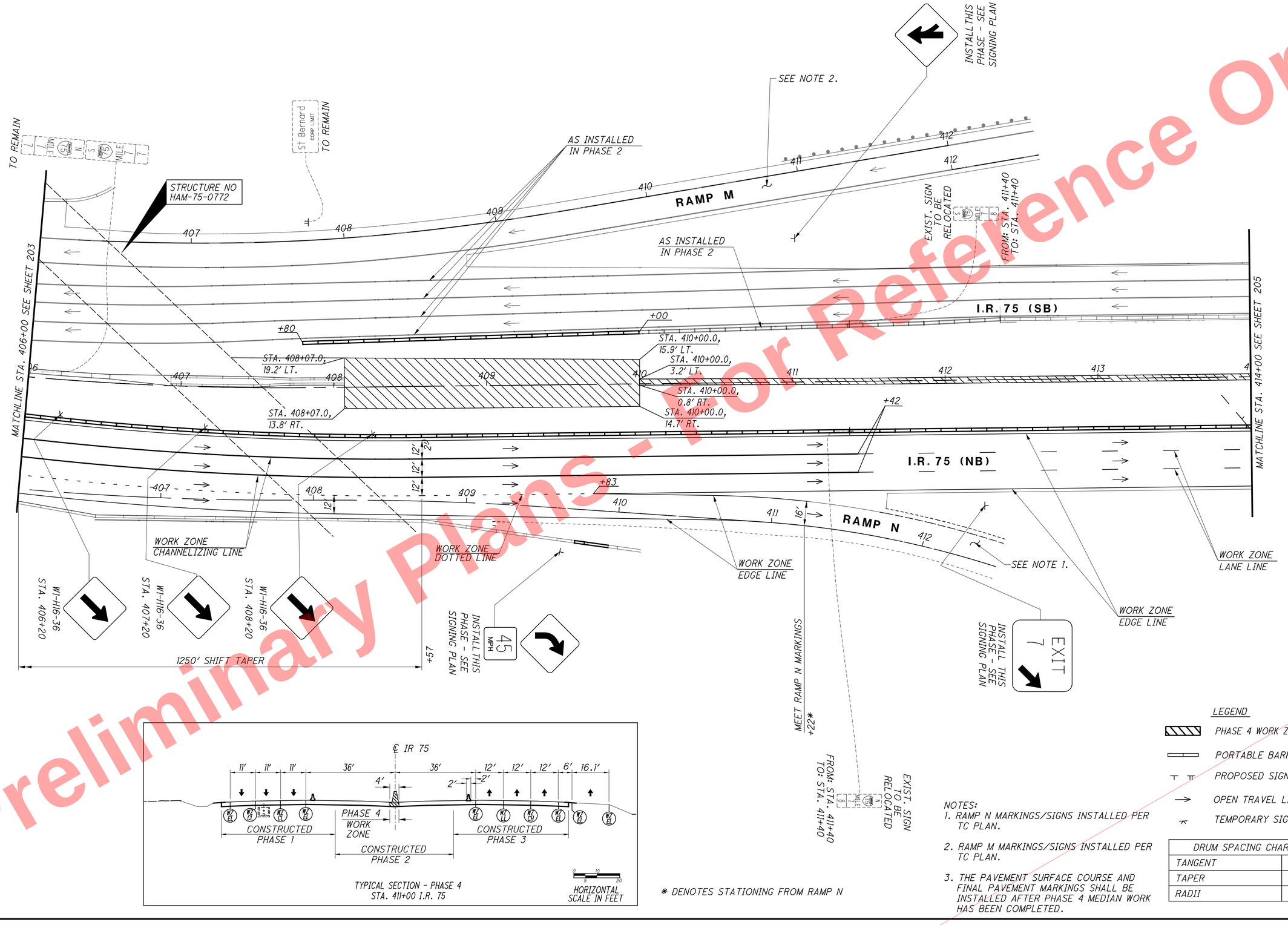

* DENOTES STATIONING FROM RAMP N

LEGEND

- PHASE 4 WORK ZONE
- PORTABLE BARRIER
- PROPOSED SIGN SUPPORT
- OPEN TRAVEL LANE
- TEMPORARY SIGN SUPPORT

NOTES:
1. RAMP N MARKINGS/SIGNS INSTALLED PER TC PLAN.
2. RAMP M MARKINGS/SIGNS INSTALLED PER TC PLAN.
3. THE PAVEMENT SURFACE COURSE AND FINAL PAVEMENT MARKINGS SHALL BE INSTALLED AFTER PHASE 4 MEDIAN WORK HAS BEEN COMPLETED.

DRUM SPACING CHART	
TANGENT	80' c/c
TAPER	55' c/c
RADII	10' c/c

HORIZONTAL SCALE IN FEET
0 15 30 60

CALCULATED RLS
CHECKED SMM

MAINTENANCE OF TRAFFIC PLAN - PHASE 4
I.R. 75 - STA. 406+00 TO STA. 414+00

HAM-75-7.85

204
1047

Preliminary Plans - For Reference Only

J:\20110903\ODOT\HAM\77889\mot\sheets\77889MP136.dgn 5/22/2026 10:12:56 AM hbrendlinger

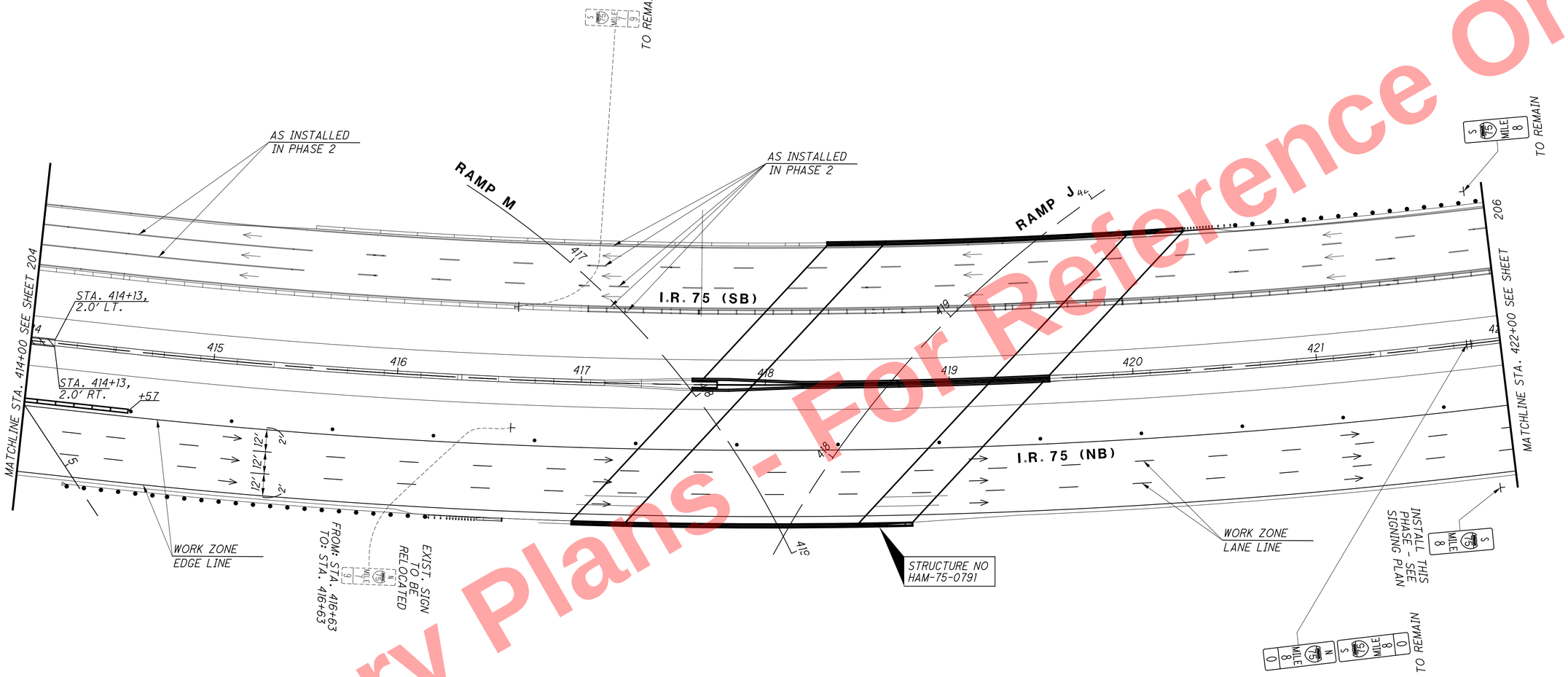

LEGEND

- DRUM
- PORTABLE BARRIER
- PROPOSED SIGN SUPPORT
- OPEN TRAVEL LANE

NOTES:
1. THE PAVEMENT SURFACE COURSE AND FINAL PAVEMENT MARKINGS SHALL BE INSTALLED AFTER PHASE 4 MEDIAN WORK HAS BEEN COMPLETED.

DRUM SPACING CHART	
TANGENT	80' c/c
TAPER	55' c/c
RADII	10' c/c

HORIZONTAL SCALE IN FEET
0 15 30 60

CALCULATED RLS
CHECKED SMM

MAINTENANCE OF TRAFFIC PLAN - PHASE 4
I.R. 75 - STA. 414+00 TO STA. 422+00

HAM-75-7.85

205
1047

Preliminary Plans - For Reference Only

J:\20110903\ODOT\HAM\77889\mot\sheets\77889MP137.dgn 5/22/2026 10:12:57 AM hbrendlinger

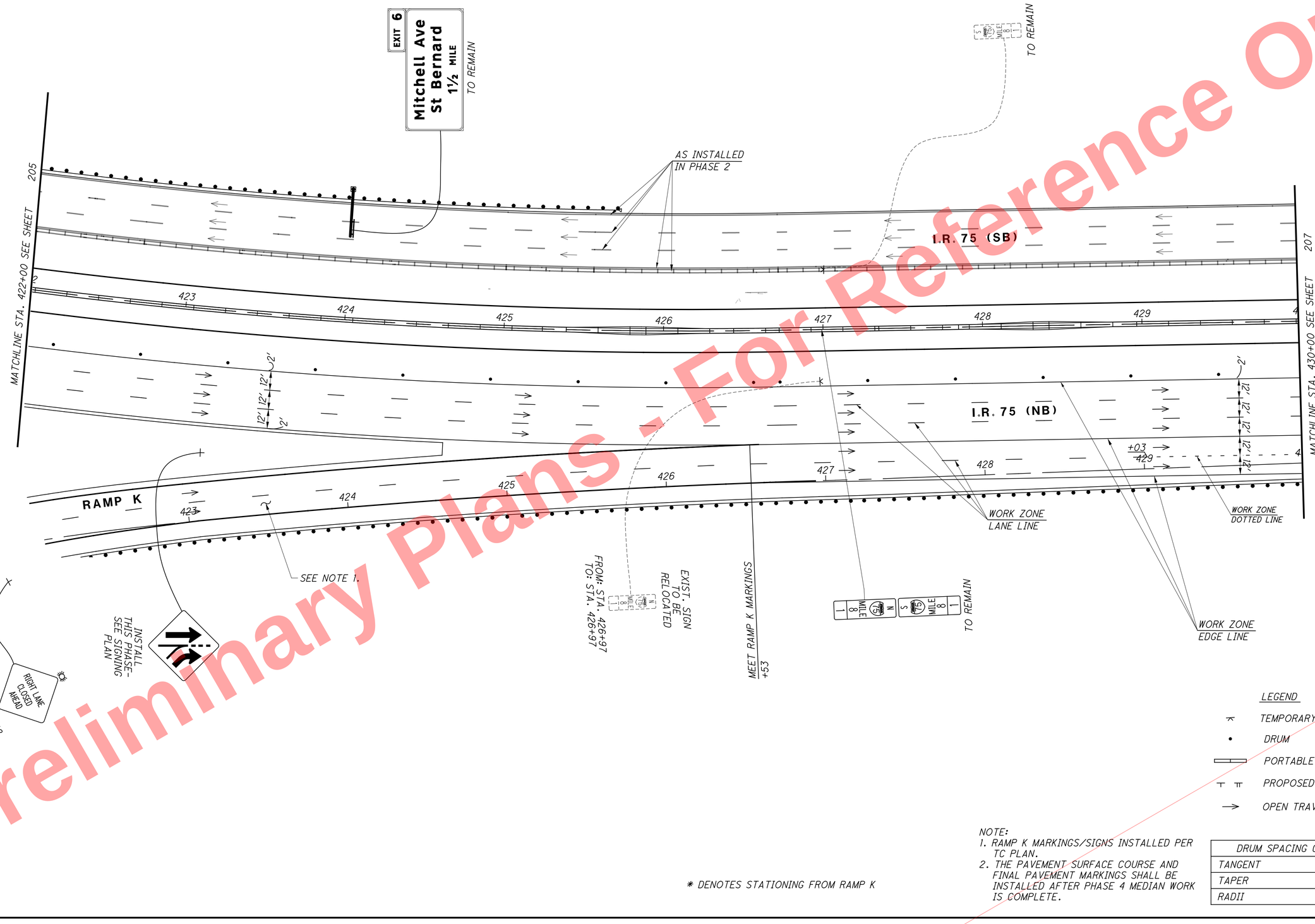

* DENOTES STATIONING FROM RAMP K

NOTE:
1. RAMP K MARKINGS/SIGNS INSTALLED PER TC PLAN.
2. THE PAVEMENT SURFACE COURSE AND FINAL PAVEMENT MARKINGS SHALL BE INSTALLED AFTER PHASE 4 MEDIAN WORK IS COMPLETE.

DRUM SPACING CHART	
TANGENT	80' c/c
TAPER	55' c/c
RADII	10' c/c

HORIZONTAL SCALE IN FEET
0 15 30 60

CALCULATED RLS
CHECKED SMM

MAINTENANCE OF TRAFFIC PLAN - PHASE 4
I.R. 75 - STA. 422+00 TO STA. 430+00

HAM-75-7.85

206
1047

Preliminary Plans - For Reference Only

J:\20110903\ODOT\HAM\77889\mot\sheets\77889MP138.dgn 5/22/2026 10:12:58 AM hbrendlinger

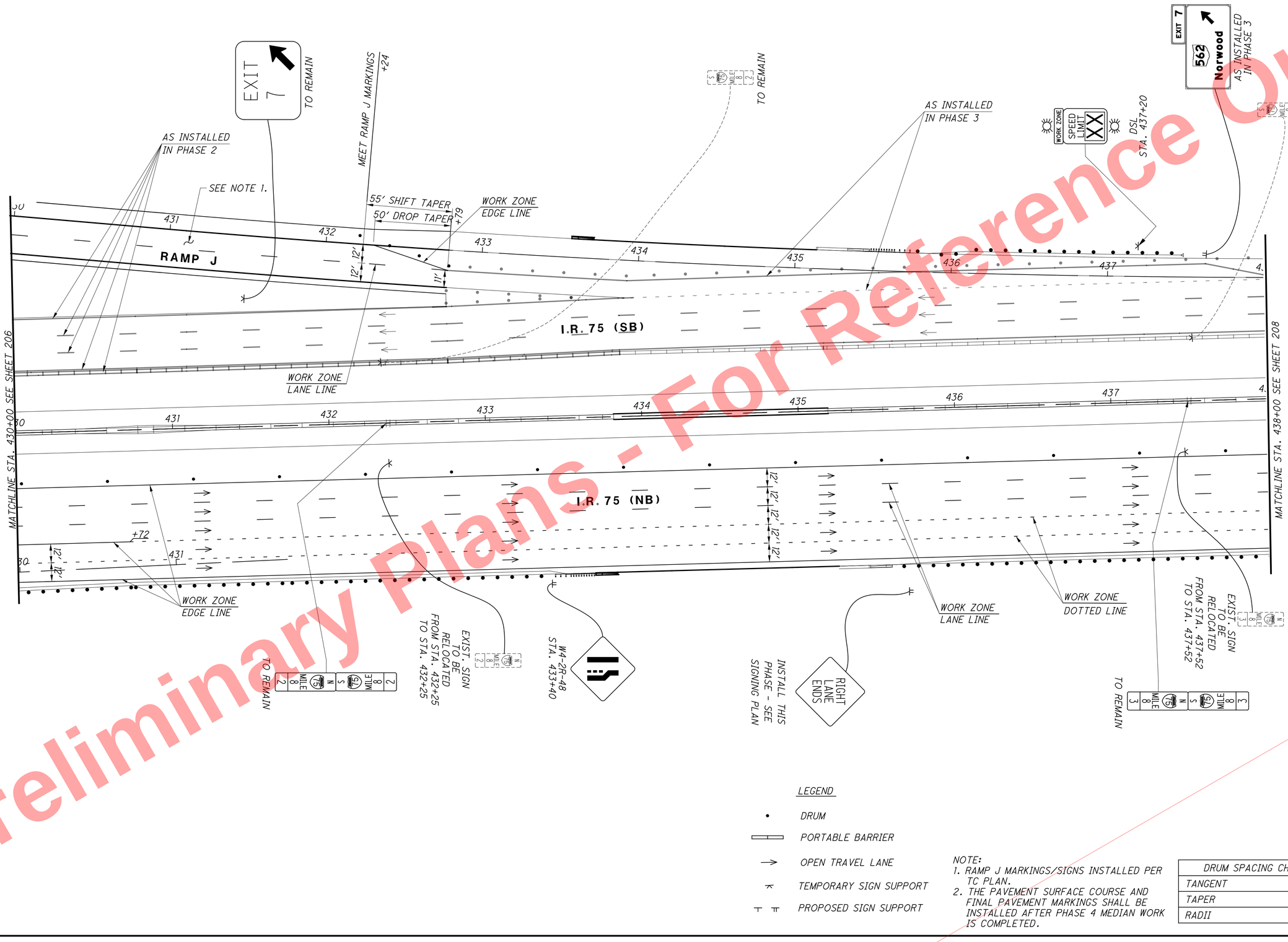

LEGEND

- DRUM
- PORTABLE BARRIER
- OPEN TRAVEL LANE
- TEMPORARY SIGN SUPPORT
- PROPOSED SIGN SUPPORT

NOTE:
1. RAMP J MARKINGS/SIGNS INSTALLED PER TC PLAN.
2. THE PAVEMENT SURFACE COURSE AND FINAL PAVEMENT MARKINGS SHALL BE INSTALLED AFTER PHASE 4 MEDIAN WORK IS COMPLETED.

DRUM SPACING CHART	
TANGENT	80' c/c
TAPER	55' c/c
RADII	10' c/c

Preliminary Plans - For Reference Only

HORIZONTAL SCALE IN FEET
0 15 30 60

CALCULATED RLS
CHECKED SMM

MAINTENANCE OF TRAFFIC PLAN - PHASE 4
I.R. 75 - STA. 430+00 TO STA. 438+00

HAM-75-7.85

207
1047

J:\20110903\ODOT\HAM\77889\mot\sheets\77889MP139.dgn 5/22/2026 10:13:01 AM hbrendlinger

Preliminary Plans - For Reference Only

EXIT OPEN

AS INSTALLED IN PHASE 3

AS INSTALLED IN PHASE 3

AS INSTALLED IN PHASE 2

AS INSTALLED IN PHASE 3A

EXIT 7 — 562 TO Norwood — EXIT ONLY

SOUTH 75

INSTALLED PER THE TRAFFIC CONTROL PLAN

TO REMAIN

I.R. 75 (SB)

I.R. 75 (NB)

MATCHLINE STA. 438+00 SEE SHEET 207

MATCHLINE STA. 446+00 SEE SHEET 209

438 439 440 441 442 443 444 445

12' 12' 12' 12' 2' 2'

WORK ZONE DOTTED LINE

WORK ZONE EDGE LINE

WORK ZONE LANE LINE

+40

660' MERGE TAPER @ 55 MPH

FROM: STA. 442+75
TO: STA. 442+75

EXIST. SIGN TO BE RELOCATED

NORTH 75 MILE 8.4

SOUTH 75 MILE 8.4

TO REMAIN

INSTALLED PER THE TRAFFIC CONTROL PLAN

EXIT 9

4 561 Paddock Rd Seymour Ave

1/2 MILE

RIGHT LANE ONLY

LEVEL 1 17'X15'
INSTALLED PER THE TRAFFIC CONTROL PLAN W/ TEMPORARY OVERLAY

LEGEND

- TEMPORARY SIGN SUPPORT
- DRUM
- PORTABLE BARRIER
- OPEN TRAVEL LANE

NOTES:
1. THE PAVEMENT SURFACE COURSE AND FINAL PAVEMENT MARKINGS SHALL BE INSTALLED AFTER PHASE 4 MEDIAN WORK HAS BEEN COMPLETED.

DRUM SPACING CHART	
TANGENT	80' c/c
TAPER	55' c/c
RADII	10' c/c

HORIZONTAL SCALE IN FEET
0 15 30 60

CALCULATED RLS
CHECKED SMM

MAINTENANCE OF TRAFFIC PLAN - PHASE 4
I.R. 75 - STA. 438+00 TO STA. 446+00

HAM-75-7.85

208
1047

J:\20110903\ODOT\HAM\77889\mot\sheets\77889MP140.dgn 5/22/2026 10:13:02 AM hbrendlinger

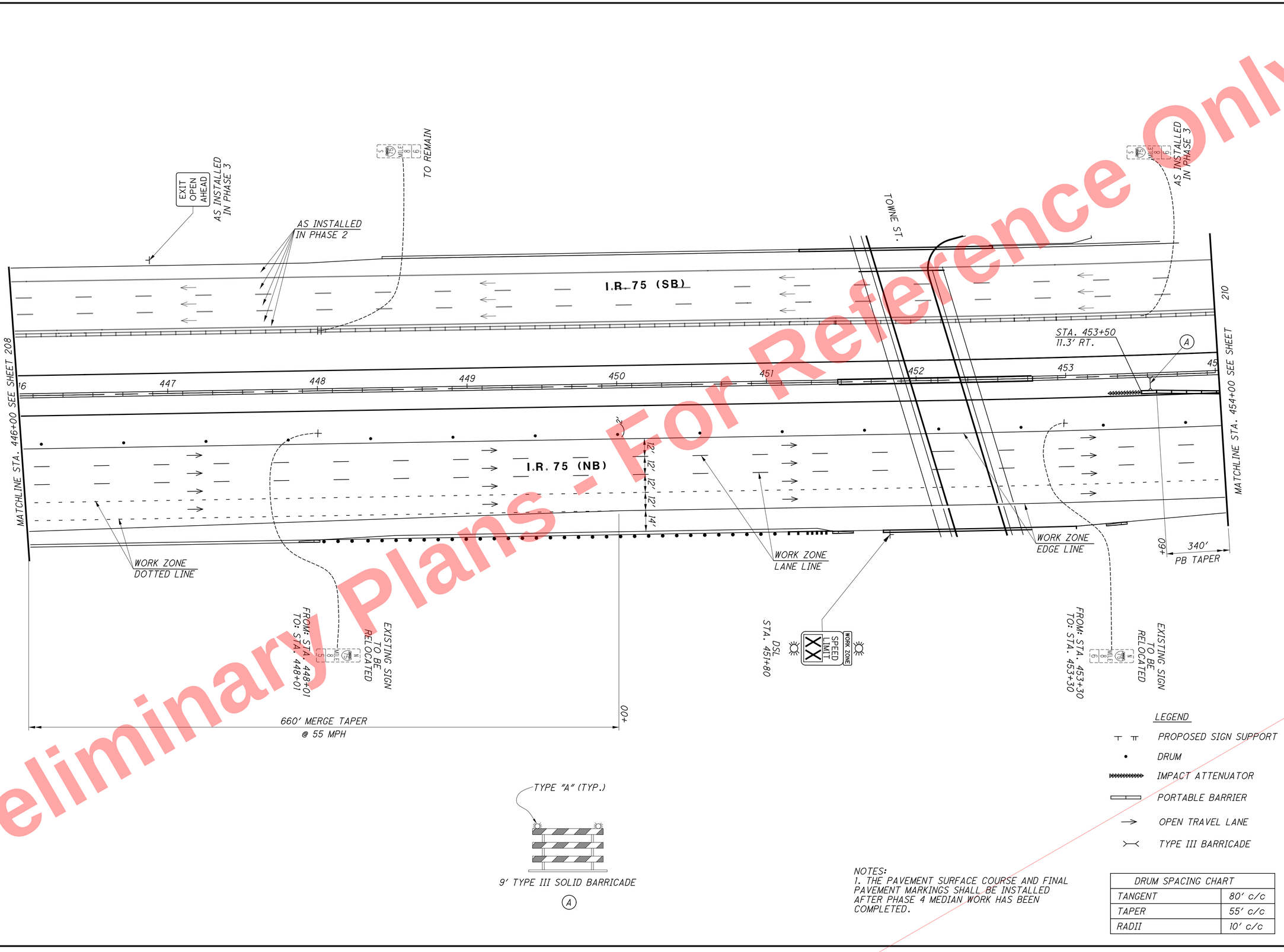

NOTES:
1. THE PAVEMENT SURFACE COURSE AND FINAL PAVEMENT MARKINGS SHALL BE INSTALLED AFTER PHASE 4 MEDIAN WORK HAS BEEN COMPLETED.

DRUM SPACING CHART	
TANGENT	80' c/c
TAPER	55' c/c
RADII	10' c/c

HORIZONTAL SCALE IN FEET
0 15 30 60

CALCULATED RLS
CHECKED SMM

MAINTENANCE OF TRAFFIC PLAN - PHASE 4
I.R. 75 - STA. 446+00 TO STA. 454+00

HAM-75-7.85

209
1047

Preliminary Plans - For Reference Only

J:\20110903\ODOT\HAM\77889\mot\sheets\77889MP141.dgn 5/22/2026 10:13:03 AM hbrendlinger

Preliminary Plans - For Reference Only

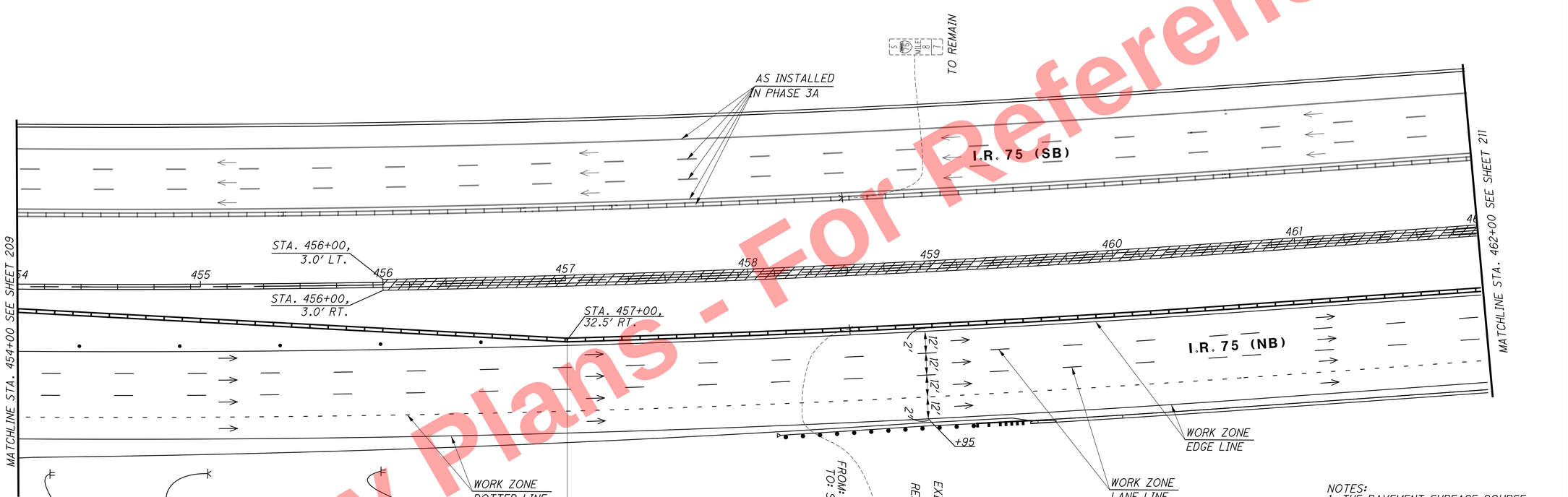

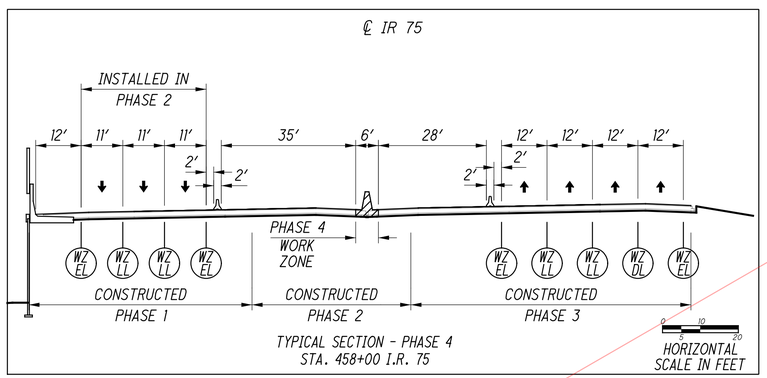

LEGEND

- PHASE 4 WORK ZONE
- DRUM
- PORTABLE BARRIER
- OPEN TRAVEL LANE
- TEMPORARY SIGN SUPPORT
- PROPOSED SIGN SUPPORT

DRUM SPACING CHART	
TANGENT	80' c/c
TAPER	55' c/c
RADII	10' c/c

NOTES:
1. THE PAVEMENT SURFACE COURSE AND FINAL PAVEMENT MARKINGS SHALL BE INSTALLED AFTER PHASE 4 MEDIAN WORK HAS BEEN COMPLETED.

HORIZONTAL SCALE IN FEET
0 15 30 60

CALCULATED RLS
CHECKED SMM

MAINTENANCE OF TRAFFIC PLAN - PHASE 4
I.R. 75 - STA. 454+00 TO STA. 462+00

HAM-75-7.85

210
1047

J:\20110903\ODOT\HAM\77889\mot\sheets\77889MP142.dgn 5/22/2026 10:13:04 AM hbrendlinger

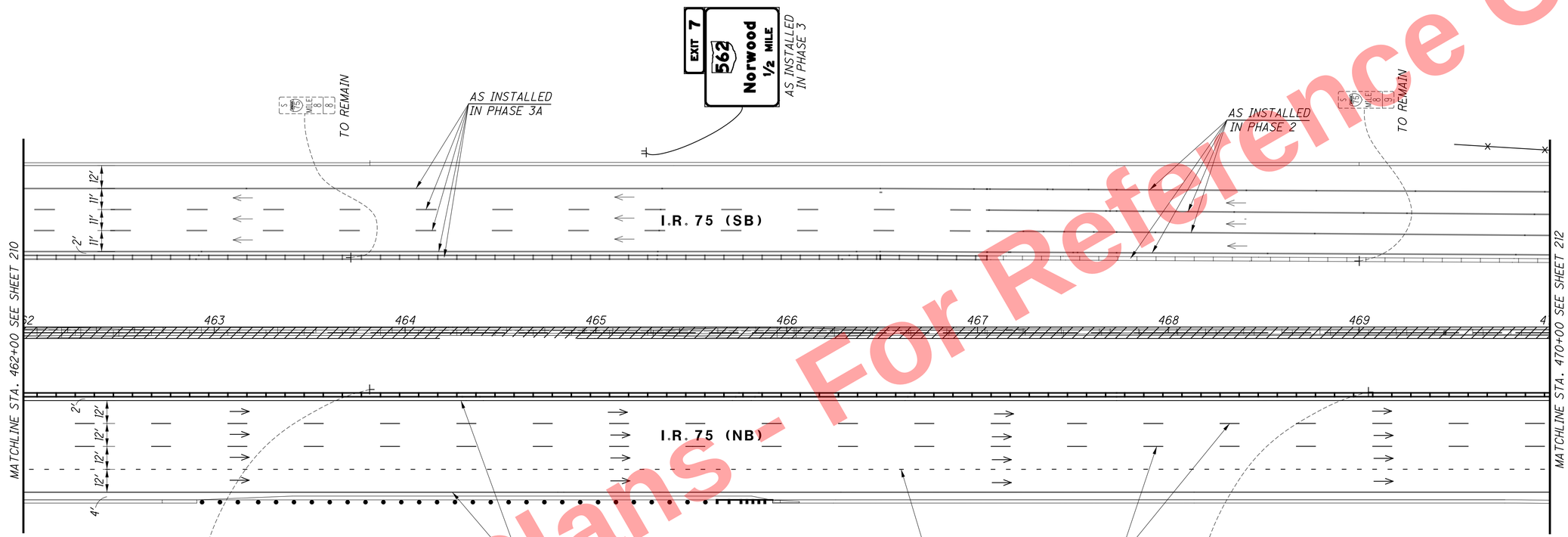

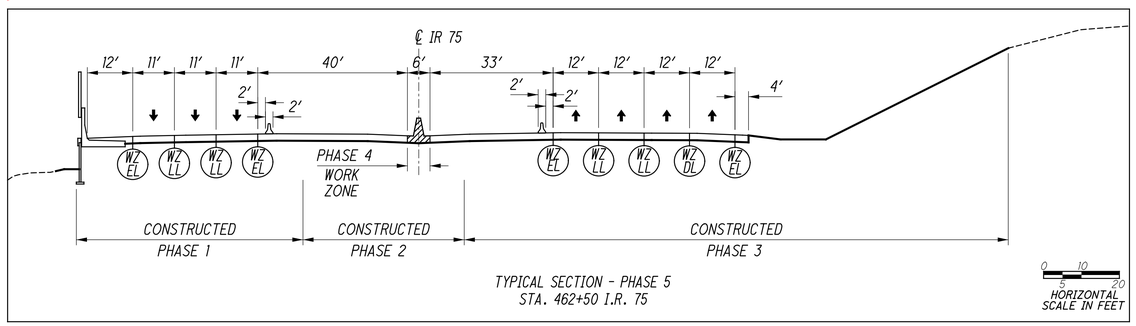

TYPICAL SECTION - PHASE 5
STA. 462+50 I.R. 75

NOTES:
1. THE PAVEMENT SURFACE COURSE AND FINAL PAVEMENT MARKINGS SHALL BE INSTALLED AFTER PHASE 4 MEDIAN WORK HAS BEEN COMPLETED.

LEGEND

- DRUM
- OPEN TRAVEL LANE
- PORTABLE BARRIER
- TEMPORARY SIGN SUPPORT

DRUM SPACING CHART	
TANGENT	80' c/c
TAPER	55' c/c
RADII	10' c/c

Preliminary Plans - For Reference Only

HORIZONTAL SCALE IN FEET
0 15 30 60

CALCULATED RLS
CHECKED SMM

MAINTENANCE OF TRAFFIC PLAN - PHASE 4
I.R. 75 - STA. 462+00 TO STA. 470+00

HAM-75-7.85

211
1047

J:\2011093\ODOT\HAM\77889\mot\sheets\77889MP057.dgn 5/22/2026 10:13:06 AM hbrendlinger

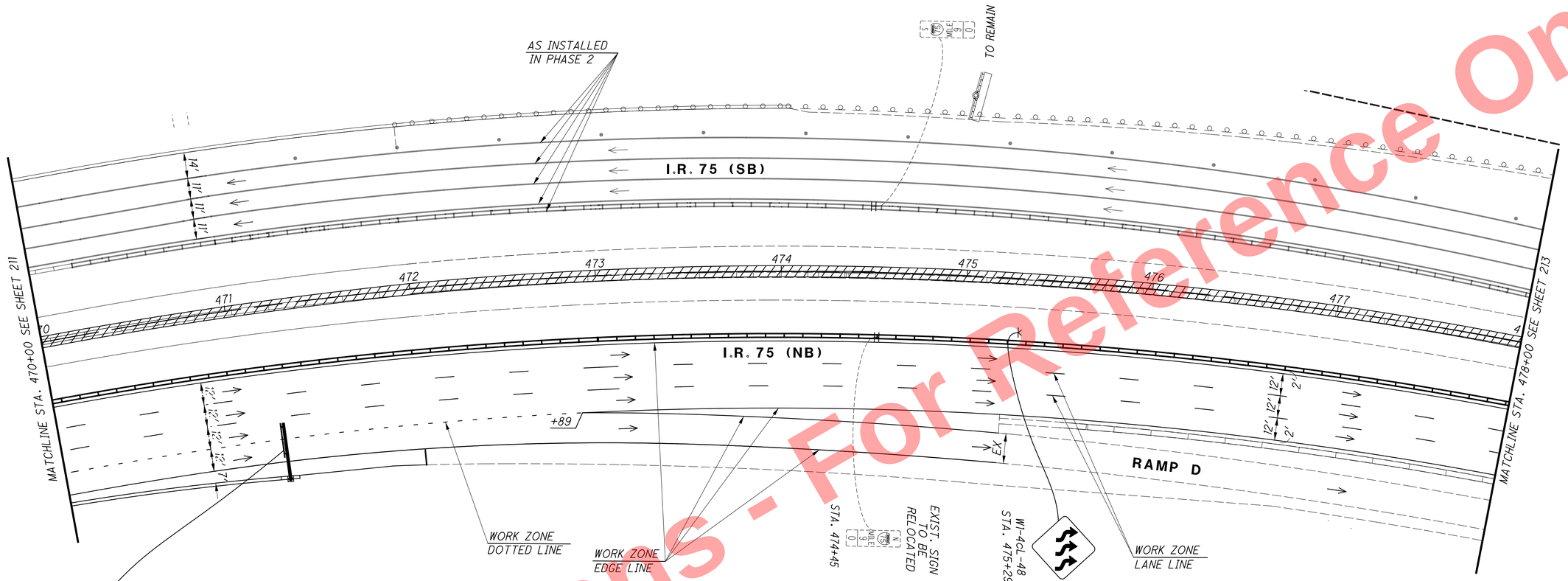

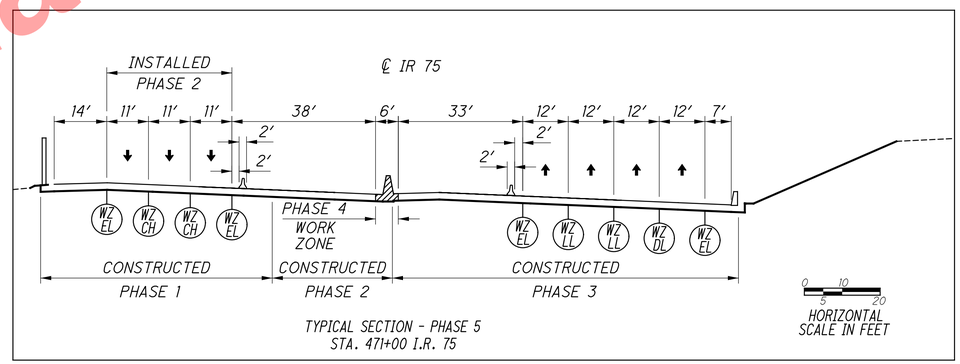

TYPICAL SECTION - PHASE 5
STA. 471+00 I.R. 75

NOTES:
1. THE PAVEMENT SURFACE COURSE AND FINAL PAVEMENT MARKINGS SHALL BE INSTALLED AFTER PHASE 4 MEDIAN WORK HAS BEEN COMPLETED.

LEGEND

- PHASE 4 WORK ZONE
- DRUM
- PORTABLE BARRIER
- TEMPORARY SIGN SUPPORT
- PROPOSED SIGN SUPPORT
- OPEN TRAVEL LANE

DRUM SPACING CHART	
TANGENT	80′ c/c
TAPER	55′ c/c
RADII	10′ c/c

HORIZONTAL SCALE IN FEET
0 15 30 60

CALCULATED RLS
CHECKED SMM

MAINTENANCE OF TRAFFIC PLAN - PHASE 4
I.R. 75 - STA. 470+00 TO STA. 478+00

HAM-75-7.85

212
1047

Preliminary Plans - For Reference Only

J:\20110903\ODOT\HAM\77889\mot\sheets\77889MP189.dgn 5/22/2026 10:13:08 AM hbrendlinger

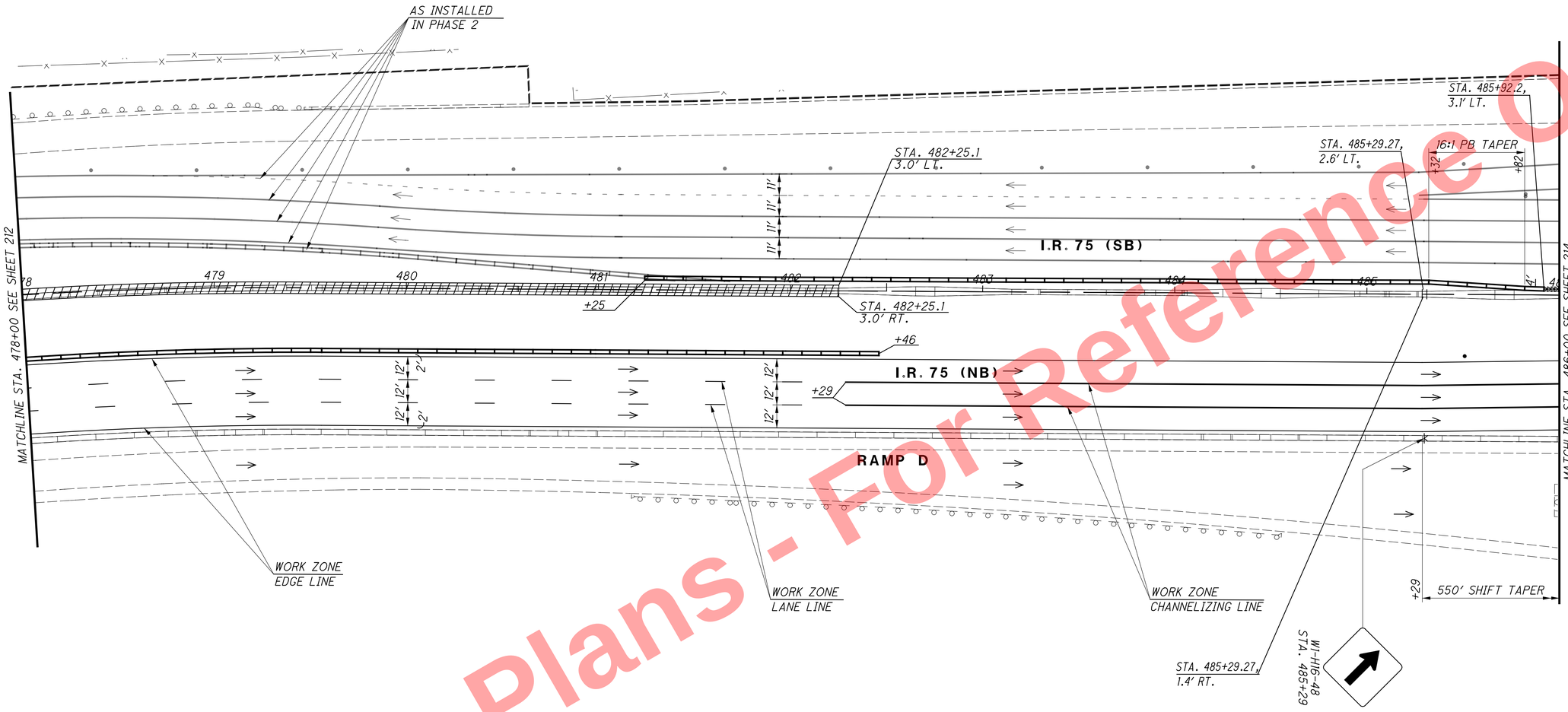

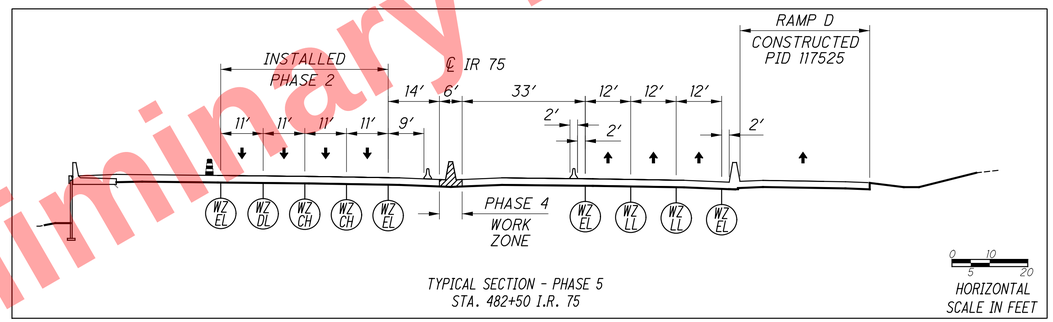

TYPICAL SECTION - PHASE 5
STA. 482+50 I.R. 75

LEGEND

- PHASE 4 WORK ZONE
- PORTABLE BARRIER
- DRUM
- IMPACT ATTENUATOR
- TEMPORARY SIGN SUPPORT
- OPEN TRAVEL LANE

DRUM SPACING CHART	
TANGENT	80' c/c
TAPER	55' c/c
RADII	10' c/c

NOTES:
1. THE PAVEMENT SURFACE COURSE AND FINAL PAVEMENT MARKINGS SHALL BE INSTALLED AFTER PHASE 4 MEDIAN WORK HAS BEEN COMPLETED.

HORIZONTAL SCALE IN FEET
0 15 30 60

CALCULATED RLS
CHECKED SMM

MAINTENANCE OF TRAFFIC PLAN - PHASE 4
I.R. 75 - STA. 478+00 TO STA. 486+00

HAM-75-7.85

213
1047

Preliminary Plans - For Reference Only

J:\20110903\ODOT\HAM\7889\mot\sheets\77889MP058.dgn 5/22/2026 10:13:10 AM hbrendlinger

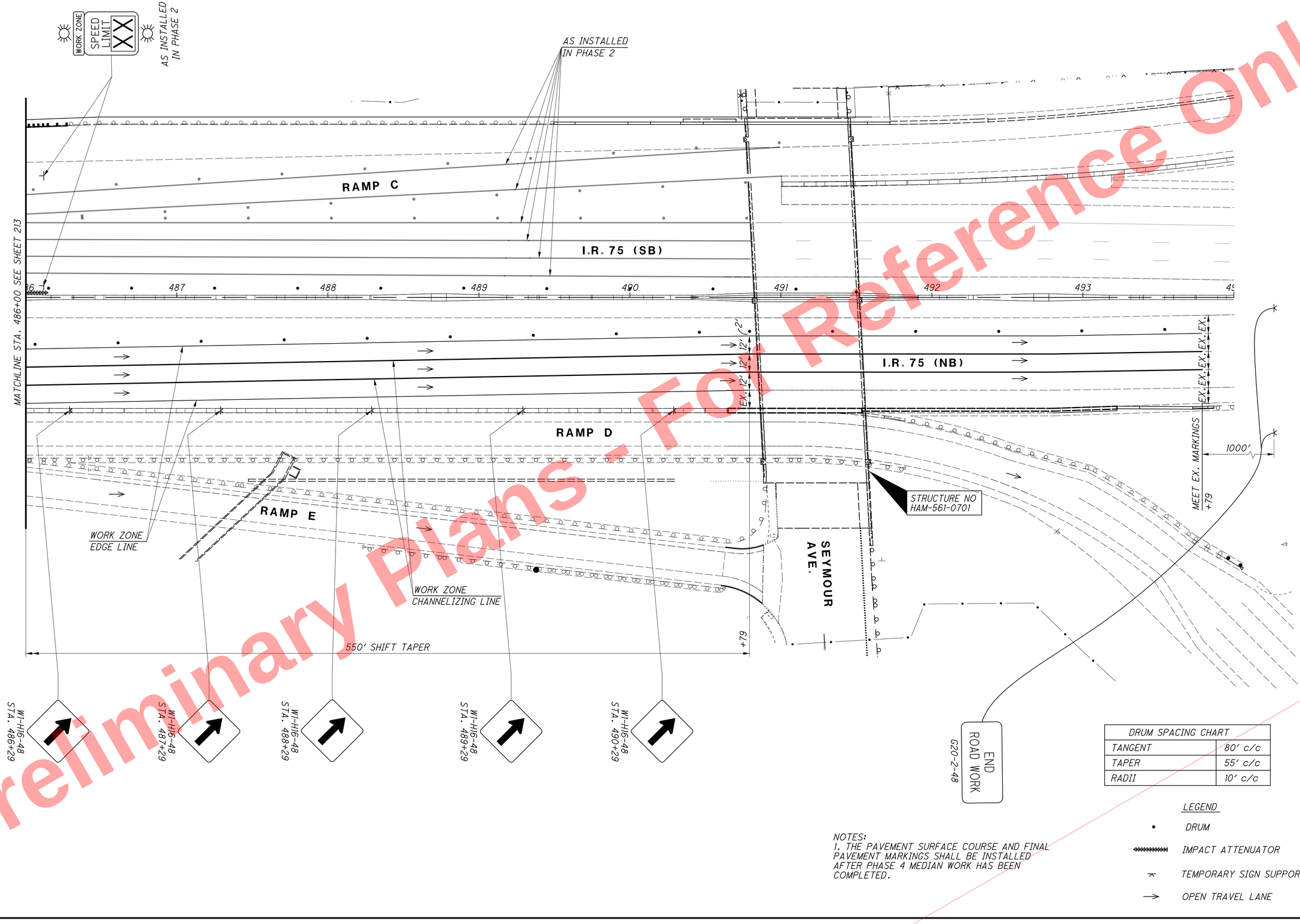

DRUM SPACING CHART	
TANGENT	80' c/c
TAPER	55' c/c
RADII	10' c/c

LEGEND

- DRUM
- IMPACT ATTENUATOR
- TEMPORARY SIGN SUPPORT
- OPEN TRAVEL LANE

NOTES:
1. THE PAVEMENT SURFACE COURSE AND FINAL PAVEMENT MARKINGS SHALL BE INSTALLED AFTER PHASE 4 MEDIAN WORK HAS BEEN COMPLETED.

HORIZONTAL SCALE IN FEET
0 15 30 60

CALCULATED RLS
CHECKED SMM

MAINTENANCE OF TRAFFIC PLAN - PHASE 4
I.R. 75 - STA. 486+00 TO STA. 494+00

HAM-75-7.85

214
1047

Preliminary Plans - For Reference Only

J:\20110903\ODOT\HAM\77889\mot\sheets\77889MP059.dgn 5/22/2026 10:13:11 AM hbrendlinger

SHEET NUMBER											PART.			ITEM	ITEM EXT	GRAND TOTAL	UNIT	DESCRIPTION	SEE SHEET NO.
	37	33	35	36	231	236	237	244	245	262	01/IMS/04	02/IMS/03	04/NHS/04						
																		ROADWAY	
											LUMP	LUMP	LUMP	201	11001	LS		CLEARING AND GRUBBING, AS PER PLAN	32
					2						1	1		202	20010	2	EACH	HEADWALL REMOVED	
					114,234						73,299	27,111	13,824	202	23001	114,234	SY	PAVEMENT REMOVED, AS PER PLAN	37
					114,234						73,299	27,111	13,824	202	23500	114,234	SY	WEARING COURSE REMOVED	
					3,070	6,288					6,831	2,527		202	30000	9,358	SF	WALK REMOVED	
							10,796				6,249	2,311	2,236	202	30700	10,796	FT	CONCRETE BARRIER REMOVED	
						1,718	6,015				5,645	2,088		202	32000	7,733	FT	CURB REMOVED	
					354						258	96		202	32600	354	FT	GUTTER REMOVED	
					4,704						3,412	1,262	30	202	35100	4,704	FT	PIPE REMOVED, 24" DIAMETER AND UNDER	
					1,450						1,059	391		202	35200	1,450	FT	PIPE REMOVED, OVER 24" DIAMETER	
							8,349				5,452	2,017	880	202	38000	8,349	FT	GUARDRAIL REMOVED	
					22						16	6		202	58000	22	EACH	MANHOLE REMOVED	
					40						27	10	3	202	58100	40	EACH	CATCH BASIN REMOVED	
					14						10	4		202	58200	14	EACH	INLET REMOVED	
					7						5	2		202	58400	7	EACH	INLET ABANDONED	
					1						1			202	58401	1	EACH	INLET ABANDONED, AS PER PLAN	42
					8						6	2		202	58500	8	EACH	CATCH BASIN ABANDONED	
					18						9	4	5	202	58700	18	EACH	MANHOLE ABANDONED	
					1						1			202	58701	1	EACH	MANHOLE ABANDONED, AS PER PLAN	41
					6,327						3,711	1,372	1,244	SPECIAL	20270000	6,327	FT	FILL AND PLUG EXISTING CONDUIT, VARIES	33
					10,719						7,799	2,884	36	202	75000	10,719	FT	FENCE REMOVED	
	56										41	15		202	98100	56	EACH	REMOVAL MISC.: DRAINAGE STRUCTURE ABANDONED, AS PER PLAN	37
	1,824										1,332	492		202	98200	1,824	FT	REMOVAL MISC.: DRAINAGE PIPE ABANDONED, AS PER PLAN	37
						230					168	62		202	98200	230	FT	REMOVAL MISC.: ABANDONED WATER LINE	32
		684						124,945			88,339	32,674	4,616	203	10000	125,629	CY	EXCAVATION	
				73							53	20		203	10001	73	CY	EXCAVATION, AS PER PLAN	36
		684						143,357			104,231	38,551	1,259	203	20000	144,041	CY	EMBANKMENT	
									1,843		1,345	498		204	10000	1,843	SY	SUBGRADE COMPACTION	
			92								67	25		204	45000	92	HOUR	PROOF ROLLING	
			4,902								3,199	1,183	520	206	10500	4,902	TON	CEMENT	
			162,367								105,945	39,185	17,237	206	11000	162,367	SY	CURING COAT	
			162,367								105,945	39,185	17,237	206	15020	162,367	SY	CEMENT STABILIZED SUBGRADE, 14 INCHES DEEP	35
			LUMP								LUMP	LUMP	LUMP	206	30000	LS		MIXTURE DESIGN FOR CHEMICALLY STABILIZED SOILS	
							1,257				519	192	546	516	13600	1,257	SF	1" PREFORMED EXPANSION JOINT FILLER	
							7,453				3,808	1,409	2,236	606	15050	7,453	FT	GUARDRAIL, TYPE MGS	
							75				55	20		606	15100	75	FT	GUARDRAIL, TYPE MGS WITH LONG POSTS	
							12				8	3	1	606	26150	12	EACH	ANCHOR ASSEMBLY, MGS TYPE E	35
							5				3	1	1	606	26550	5	EACH	ANCHOR ASSEMBLY, MGS TYPE T	
							15				10	4	1	606	35002	15	EACH	MGS BRIDGE TERMINAL ASSEMBLY, TYPE 1	
							9				6	2	1	606	35102	9	EACH	MGS BRIDGE TERMINAL ASSEMBLY, TYPE 2	
										13,863	7,372	2,726	3,765	607	23000	13,863	FT	FENCE, TYPE CLT	
										13,863	7,372	2,726	3,765	607	70000	13,863	FT	FENCELINE SEEDING AND MULCHING	

CALCULATED DLR
CHECKED EDK

GENERAL SUMMARY

HAM-75-7.85

215
1047

Preliminary Plans - For Reference Only

J:\20110903\ODOT\HAM\7889\roadway\sheets\77889GG001.dgn 5/22/2026 10:13:13 AM hbrendlinger

SHEET NUMBER											PART.			ITEM	ITEM EXT	GRAND TOTAL	UNIT	DESCRIPTION	SEE SHEET NO.
33	36	236	237								01/IMS/04	02/IMS/03	04/NHS/04						
																		ROADWAY	
		15,435									11,146	4,123	166	608	10000	15,435	SF	4" CONCRETE WALK	
		841									256	95	490	608	52000	841	SF	CURB RAMP	
			5,151								3,011	1,114	1,026	622	10100	5,151	FT	CONCRETE BARRIER, SINGLE SLOPE, TYPE B1	
			85								62	23		622	10101	85	FT	CONCRETE BARRIER, SINGLE SLOPE, TYPE B1, AS PER PLAN	38
			1,957								1,370	507	80	622	10140	1,957	FT	CONCRETE BARRIER, SINGLE SLOPE, TYPE C1	
			158										158	622	10141	158	FT	CONCRETE BARRIER, SINGLE SLOPE, TYPE C1, AS PER PLAN	38
			3,992								2,493	922	577	622	10160	3,992	FT	CONCRETE BARRIER, SINGLE SLOPE, TYPE D	
			2								1		1	622	10200	2	EACH	BARRIER TRANSITION	
			20								13	5	2	622	25000	20	EACH	CONCRETE BARRIER END SECTION, TYPE D	
			52								31	12	9	622	25006	52	EACH	CONCRETE BARRIER, END ANCHORAGE, REINFORCED, TYPE B1	
			7								5	2		622	25007	7	EACH	CONCRETE BARRIER, END ANCHORAGE, REINFORCED, TYPE B1, AS PER PLAN	38
			16								11	4	1	622	25014	16	EACH	CONCRETE BARRIER, END ANCHORAGE, REINFORCED, TYPE C1	
			4								2	1	1	622	25015	4	EACH	CONCRETE BARRIER, END ANCHORAGE, REINFORCED, TYPE C1, AS PER PLAN	38
			39								23	8	8	622	25050	39	EACH	CONCRETE BARRIER, END ANCHORAGE, REINFORCED, TYPE D	
			3								1	1	1	622	25051	3	EACH	CONCRETE BARRIER, END ANCHORAGE, REINFORCED, TYPE D, AS PER PLAN	38
			294								183	67	44	626	00102	294	EACH	BARRIER REFLECTOR, TYPE 1, 1 WAY	
			81								59	22		626	00110	81	EACH	BARRIER REFLECTOR, TYPE 2, 1 WAY	
	10,000										7,300	2,700		SPECIAL	69065020	10,000	GAL	WORK INVOLVING WATER	36
	15,000										10,950	4,050		SPECIAL	69065022	15,000	GAL	WORK INVOLVING NON-REGULATED WATER	36
	160										117	43		SPECIAL	69070100	160	SF	ASBESTOS ABATEMENT NON-FRIABLE MATERIAL, SFN 3113779	36
	50										37	13		SPECIAL	69070100	50	SF	ASBESTOS ABATEMENT FRIABLE MATERIAL, SFN 3113779	36
	260										190	70		SPECIAL	69070120	260	FT	ASBESTOS ABATEMENT PIPE, SFN 3113779	36
	160										117	43		SPECIAL	69070100	160	SF	ASBESTOS ABATEMENT NON-FRIABLE MATERIAL, SFN 3110036	36
	50										37	13		SPECIAL	69070100	50	SF	ASBESTOS ABATEMENT FRIABLE MATERIAL, SFN 3110036	36
	260										190	70		SPECIAL	69070120	260	FT	ASBESTOS ABATEMENT PIPE, SFN 3110036	36
	160										117	43		SPECIAL	69070100	160	SF	ASBESTOS ABATEMENT NON-FRIABLE MATERIAL, SFN 3110087	36
	50										37	13		SPECIAL	69070100	50	SF	ASBESTOS ABATEMENT FRIABLE MATERIAL, SFN 3110087	36
	260										190	70		SPECIAL	69070120	260	FT	ASBESTOS ABATEMENT PIPE, SFN 3110087	36
	160										117	43		SPECIAL	69070100	160	SF	ASBESTOS ABATEMENT NON-FRIABLE MATERIAL, SFN 3110176	36
	50										37	13		SPECIAL	69070100	50	SF	ASBESTOS ABATEMENT FRIABLE MATERIAL, SFN 3110176	36
	260										190	70		SPECIAL	69070120	260	FT	ASBESTOS ABATEMENT PIPE, SFN 3110176	36
	4										4			SPECIAL	69071050	4	EACH	ASBESTOS INSPECTION, VARIOUS STRUCTURES	36
	LUMP										LUMP	LUMP		SPECIAL	69098400	LS		CONTAMINATED MATERIAL INSPECTION AND TESTING	36
200											146	54		SPECIAL	69098600	200	HOUR	SPECIAL - MISC.: DRAINAGE SYSTEM CLEANING, 36" AND UNDER	33
100											73	27		SPECIAL	69098600	100	HOUR	SPECIAL - MISC.: DRAINAGE SYSTEM CLEANING, OVER 36"	33
											LUMP	LUMP	LUMP	878	25000	LS		INSPECTION AND COMPACTION TESTING OF UNBOUND MATERIALS	

CALCULATED DLR
CHECKED EDK

GENERAL SUMMARY

HAM-75-7.85

216
1047

Preliminary Plans
For Reference Only

J:\20110903\ODOT\HAM\7889\roadway\sheets\77889GG001.dgn 5/22/2026 10:13:13 AM hbrendlinger

SHEET NUMBER												PART.			ITEM	ITEM EXT	GRAND TOTAL	UNIT	DESCRIPTION	SEE SHEET NO.
33	35	247	253	261								01/IMS/04	02/IMS/03	04/NHS/04						
																			EROSION CONTROL	
10			12									13	5	4	601	21050	22	SY	TIED CONCRETE BLOCK MAT WITH TYPE 1 UNDERLAYMENT	
				47								34	13		601	21060	47	SY	TIED CONCRETE BLOCK MAT WITH TYPE 2 UNDERLAYMENT	
		11										8	3		601	32200	11	CY	ROCK CHANNEL PROTECTION, TYPE C WITH FILTER	
				110								80	30		601	37500	110	FT	PAVED GUTTER, TYPE 1-2	
	2											1	1		659	00100	2	EACH	SOIL ANALYSIS TEST	
	10,306											7,090	2,622	594	659	00300	10,306	CY	TOPSOIL	
	92,843											63,852	23,617	5,374	659	10000	92,843	SY	SEEDING AND MULCHING	
	4,643											3,193	1,181	269	659	14000	4,643	SY	REPAIR SEEDING AND MULCHING	
	4,643											3,193	1,181	269	659	15000	4,643	SY	INTER-SEEDING	
	12.9											8.09	2.99	1.82	659	20000	12.9	TON	COMMERCIAL FERTILIZER	
	19.19											13.19	4.88	1.12	659	31000	19.19	ACRE	LIME	
	527											363	134	30	659	35000	527	MGAL	WATER	
	209											144	53	12	659	40000	209	MSF	MOWING	
				6,334								4,624	1,710		670	00700	6,334	SY	DITCH EROSION PROTECTION	
												LUMP	LUMP	LUMP	832	15000	LS		STORM WATER POLLUTION PREVENTION PLAN	
												LUMP	LUMP	LUMP	832	15002	LS		STORM WATER POLLUTION PREVENTION INSPECTIONS	
												LUMP	LUMP	LUMP	832	15010	LS		STORM WATER POLLUTION PREVENTION INSPECTION SOFTWARE	
												382,312	141,403	174,571	832	30000	698,286	EACH	EROSION CONTROL	
																			DRAINAGE	
		11										8	3		602	20000	11	CY	CONCRETE MASONRY	
			39,512									24,405	9,026	6,081	605	11100	39,512	FT	6" SHALLOW PIPE UNDERDRAINS	
			2,666									1,790	662	214	605	13300	2,666	FT	6" UNCLASSIFIED PIPE UNDERDRAINS	
			32,697									20,204	7,473	5,020	605	14000	32,697	FT	6" BASE PIPE UNDERDRAINS	
200			4,300									2,866	1,060	574	611	00510	4,500	FT	6" CONDUIT, TYPE F FOR UNDERDRAIN OUTLETS	
100												73	27		611	00900	100	FT	6" CONDUIT, TYPE B	
100												73	27		611	01100	100	FT	6" CONDUIT, TYPE C	
100												73	27		611	01400	100	FT	6" CONDUIT, TYPE E	
100												73	27		611	01500	100	FT	6" CONDUIT, TYPE F	
		4,091										2,043	756	1,292	611	05901	4,091	FT	15" CONDUIT, TYPE B, AS PER PLAN	34
		198										145	53		611	05900	198	FT	15" CONDUIT, TYPE B, 706.02, JOINTS PER 706.11	
		613										444	164	5	611	06100	613	FT	15" CONDUIT, TYPE C	
		66										48	18		611	06100	66	FT	15" CONDUIT, TYPE C, 706.02, JOINTS PER 706.11	
		173										126	47		611	06700	173	FT	15" CONDUIT, TYPE F, 707.05 TYPE C, 707.21 OR 707.33	
		2,738										1,072	397	1,269	611	07401	2,738	FT	18" CONDUIT, TYPE B, AS PER PLAN	34
		247										180	67		611	07600	247	FT	18" CONDUIT, TYPE C	
		201										75	28	98	611	08901	201	FT	21" CONDUIT, TYPE B, AS PER PLAN	34
		55										9	3	43	611	09100	55	FT	21" CONDUIT, TYPE C	
		585										427	158		611	10401	585	FT	24" CONDUIT, TYPE B, AS PER PLAN	34
		773										557	206	10	611	10600	773	FT	24" CONDUIT, TYPE C	
		21												21	611	10600	21	FT	24" CONDUIT, TYPE C, 748.01, 748.02	34
		402										293	109		611	13401	402	FT	30" CONDUIT, TYPE B, AS PER PLAN	34
		576										420	156		611	13600	576	FT	30" CONDUIT, TYPE C	
		273										199	74		611	16401	273	FT	36" CONDUIT, TYPE B, AS PER PLAN	34
		1,148										838	310		611	16600	1,148	FT	36" CONDUIT, TYPE C	
		226										165	61		611	16600	226	FT	36" CONDUIT, TYPE C, 748.01, 748.02	
		929										678	251		611	19401	929	FT	42" CONDUIT, TYPE B, AS PER PLAN	34
		340										248	92		611	19600	340	FT	42" CONDUIT, TYPE C	

CALCULATED DLR
CHECKED EDK

GENERAL SUMMARY

HAM-75-7.85

217
1047

Preliminary Plans - For Reference Only

J:\20110903\ODOT\HAM\7889\roadway\sheets\77889GG001.dgn 5/22/2026 10:13:13 AM hbrendlinger

SHEET NUMBER											PART.			ITEM	ITEM EXT	GRAND TOTAL	UNIT	DESCRIPTION	SEE SHEET NO.
32	33	236	237	245	246	247	253				01/IMS/04	02/IMS/03	04/NHS/04						
																		DRAINAGE	
						380					277	103		611	97400	380	FT	CONDUIT, MISC.: CONDUIT INSTALLED WITH TRENCHLESS METHOD, 21" TYPE B	37
						192					140	52		611	97400	192	FT	CONDUIT, MISC.: CONDUIT INSTALLED WITH TRENCHLESS METHOD, 24", TYPE B	37
						167					122	45		611	97400	167	FT	CONDUIT, MISC.: CONDUIT INSTALLED WITH TRENCHLESS METHOD, 30", TYPE A	37
						531					388	143		611	97400	531	FT	CONDUIT, MISC.: CONDUIT INSTALLED WITH TRENCHLESS METHOD, 36", TYPE B	37
						1					1			611	98150	1	EACH	CATCH BASIN, NO. 3	
						12					4	1	7	611	98180	12	EACH	CATCH BASIN, NO. 3A	
						3					2	1		611	98230	3	EACH	CATCH BASIN, NO. 4	
						3					2	1		611	98300	3	EACH	CATCH BASIN, NO. 5	
						3					2	1		611	98344	3	EACH	CATCH BASIN, NO. 5A	
						1					1			611	98370	1	EACH	CATCH BASIN, NO. 6	
						16					11	4	1	611	98410	16	EACH	CATCH BASIN, NO. 8	
						2					1	1		611	98434	2	EACH	CATCH BASIN, NO. 8A	
						1					1			611	98470	1	EACH	CATCH BASIN, NO. 2-2B	
						1					1			611	98630	1	EACH	CATCH BASIN ADJUSTED TO GRADE	
						9					6	2	1	611	99100	9	EACH	INLET, NO. 3 FOR SINGLE SLOPE BARRIER, TYPE B1	
			1			1					1	1		611	99101	2	EACH	INLET, NO. 3 FOR SINGLE SLOPE BARRIER, TYPE B1, AS PER PLAN	34
						10					6	2	2	611	99101	10	EACH	INLET, NO. 3 FOR SINGLE SLOPE BARRIER, TYPE B1, AS PER PLAN, A	43
						2					1	1		611	99110	2	EACH	INLET, NO. 3 FOR SINGLE SLOPE BARRIER, TYPE C1	
			3			5					6	2		611	99111	8	EACH	INLET, NO. 3 FOR SINGLE SLOPE BARRIER, TYPE C1, AS PER PLAN	34
						30					20	8	2	611	99114	30	EACH	INLET, NO. 3 FOR SINGLE SLOPE BARRIER, TYPE D	
						5					4	1		611	99115	5	EACH	INLET, NO. 3 FOR SINGLE SLOPE BARRIER, TYPE D, AS PER PLAN	48
						1					1			611	99150	1	EACH	INLET ADJUSTED TO GRADE	
						32					20	8	4	611	99574	32	EACH	MANHOLE, NO. 3	
						7					3	1	3	611	99654	7	EACH	MANHOLE ADJUSTED TO GRADE	
						1					1			611	99660	1	EACH	MANHOLE RECONSTRUCTED TO GRADE	
	5						6				8	3		611	99710	11	EACH	PRECAST REINFORCED CONCRETE OUTLET	
	1,000										730	270		SPECIAL	61199820	1,000	LB	MISCELLANEOUS METAL	33
						1							1	611	99900	1	EACH	DRAINAGE STRUCTURE, MISC.: CHECK VALVE FOR 24" CONDUIT	34
						2					1	1		611	99900	2	EACH	DRAINAGE STRUCTURE, MISC.: CHECK VALVE FOR 36" CONDUIT	34
						72					53	19		638	06712	72	FT	30" STEEL PIPE ENCASEMENT, OPEN CUT	
						211					154	57		638	07320	211	FT	48" STEEL PIPE ENCASEMENT, BORED OR JACKED	
						LUMP					LUMP	LUMP		SPECIAL	69098400	LS		STORMWATER DETENTION SYSTEM 1	34
						LUMP							LUMP	SPECIAL	69098400	LS		STORMWATER DETENTION SYSTEM 2	34
						LUMP					LUMP	LUMP		SPECIAL	69098400	LS		STORMWATER DETENTION SYSTEM 3	34
																		PAVEMENT	
				30,877							14,574	5,391	10,912	254	01000	30,877	SY	PAVEMENT PLANING, ASPHALT CONCRETE, 1.5" DEPTH	
				3,216							2,348	868		254	01000	3,216	SY	PAVEMENT PLANING, ASPHALT CONCRETE, VARIABLE DEPTH	
494											360	134		255	15000	494	SY	FULL DEPTH PAVEMENT REMOVAL AND RIGID REPLACEMENT, TYPE 1, CLASS QC MS	
				56,347							37,108	13,725	5,514	302	56000	56,347	CY	ASPHALT CONCRETE BASE, PG64-22, (449)	
12				28,034							18,376	6,797	2,873	304	20000	28,046	CY	AGGREGATE BASE	
				26,622							18,154	6,714	1,754	407	20000	26,622	GAL	NON-TRACKING TACK COAT	
				134							98	36		441	50000	134	CY	ASPHALT CONCRETE SURFACE COURSE, TYPE 1, (448), PG64-22	
				94							69	25		441	50200	94	CY	ASPHALT CONCRETE INTERMEDIATE COURSE, TYPE 1, (448)	
				15,155							9,744	3,604	1,807	442	00100	15,155	CY	ANTI-SEGREGATION EQUIPMENT	
				7,451							4,900	1,812	739	442	10080	7,451	CY	ASPHALT CONCRETE INTERMEDIATE COURSE, 12.5 MM, TYPE A (446)	
				7,620							4,783	1,769	1,068	442	10301	7,620	CY	ASPHALT CONCRETE SURFACE COURSE, 12.5 MM, TYPE A (447), AS PER PLAN	37
		47									34	13		452	12010	47	SY	8" NON-REINFORCED CONCRETE PAVEMENT, CLASS QC 1P	
				4,293									4,293	452	16010	4,293	SY	13" NON-REINFORCED CONCRETE PAVEMENT, CLASS QC 1P	
37											27	10		609	14000	37	FT	CURB, TYPE 2-A	
			4,150								1,744	645	1,761	609	24511	4,150	FT	CURB, TYPE 4-C, AS PER PLAN	38
		1,775									1,284	475	16	609	26000	1,775	FT	CURB, TYPE 6	
					8.42						4.96	1.84	1.62	618	40600	8.42	MILE	RUMBLE STRIPS, SHOULDER (ASPHALT CONCRETE)	

CALCULATED DLR
CHECKED EDK

GENERAL SUMMARY

HAM-75-7.85

218
1047

Preliminary Plans - For Reference Only

J:\20110903\ODOT\HAM\7889\roadway\sheets\77889GG001.dgn 5/22/2026 10:13:13 AM hbrendlinger

SHEET NUMBER								PART.		ITEM	ITEM EXT	GRAND TOTAL	UNIT	DESCRIPTION	SEE SHEET NO.
33	247	686						01/IMS/04	02/IMS/03						
														WATER WORK	
		5							5	203	10001	5	CY	EXCAVATION, AS PER PLAN, ADDITIONAL EXCAVATION, (CIN. 1119)	37
		5							5	203	10001	5	CY	EXCAVATION, AS PER PLAN, EXPLORATORY EXCAVATION, (CIN. 1120)	37
		216							216	509	25000	216	LB	UNCOATED STEEL REINFORCEMENT, (CIN. 509)	37
		2							2	602	20001	2	CY	CONCRETE MASONRY, AS PER PLAN, CONCRETE, CLASS C, (CIN. 1110)	686
		1							1	602	98200	1	CY	MASONRY, MISC.: BRICK MASONRY, (CIN. 602)	686
		19							19	SPECIAL	63811602	19	FT	6" WATER MAIN DIP AND FITTINGS, FURNISHING AND LAYING 6" DUCTILE IRON PIPE AND FITTINGS, (CIN. 1101)	686
		145							145	SPECIAL	63811604	145	FT	8" WATER MAIN DIP AND FITTINGS, FURNISHING AND LAYING 8" DUCTILE IRON PIPE AND FITTINGS, (CIN. 1101)	686
		5							5	SPECIAL	63811608	5	FT	12" WATER MAIN DIP AND FITTINGS, FURNISHING AND LAYING 12" DUCTILE IRON PIPE FITTINGS, (CIN. 1101)	686
		20							20	SPECIAL	63811610	20	FT	16" WATER MAIN DIP AND FITTINGS, FURNISHING AND LAYING 16" DUCTILE IRON PIPE AND FITTINGS, (CIN. 1101)	686
		3							3	SPECIAL	63820498	3	EACH	VALVE BOX, FURNISHING AND INSTALLING VALVE BOX, COMPLETE (CIN. 1116)	686
		8							8	SPECIAL	63820500	8	EACH	VALVE BOX ADJUSTED TO GRADE, (CIN. 1125)	686
		2							2	SPECIAL	63820750	2	EACH	6" FIRE HYDRANT, FURNISHING AND INSTALLING FIRE HYDRANT, (CIN. 1112)	686
		2							2	SPECIAL	63820760	2	EACH	FIRE HYDRANT REMOVED AND DISPOSED OF, (CIN. 1114)	686
		2							2	SPECIAL	63820762	2	EACH	FIRE HYDRANT SERVICE LINE EXTENDED AND ADJUSTED TO GRADE FURNISHING AND INSTALLING FIRE HYDRANT EXTENSION, 6" LONG, (CIN. 1115)	686
		1							1	SPECIAL	63820806	1	FT	RETAP, RECONNECT AND EXTEND 3/4" POLYETHYLENE WATER SERVICE CONNECTION, (CIN. 1128)	686
		1							1	SPECIAL	63820904	1	EACH	SERVICE BOX, FURNISHING AND INSTALLING CURB AND ROADWAY BOX, (CIN. 1131)	686
		1							1	SPECIAL	63830002	1	MBF	SHEETING AND BRACING ORDERED LEFT IN PLACE, (CIN. 637)	686
		1							1	638	98000	1	EACH	WATER WORK, MISC.: FIRE HYDRANT FLOW TESTING (EXISTING), (CIN. 1112)	686
		2							2	638	98000	2	EACH	WATER WORK, MISC.: FIRE HYDRANT FLOW TESTING (NEW), (CIN. 1112)	686
		1							1	638	98000	1	EACH	WATER WORK, MISC.: FIRE HYDRANT PAINTING (EXISTING), (CIN. 1112)	686
		2							2	638	98000	2	EACH	WATER WORK, MISC.: FIRE HYDRANT PAINTING (NEW), (CIN. 1112)	686
		1							1	638	98000	1	EACH	WATER WORK, MISC.: REMOVING EXISTING MANHOLE CURB AND COVER, (CIN. 1122)	686
		2							2	638	98000	2	EACH	WATER WORK, MISC.: REMOVING EXISTING VALVE BOX, (CIN. 1122)	686
		2							2	638	98000	2	EACH	WATER WORK, MISC.: RESETTING EXISTING CURB AND ROADWAY BOX, (CIN. 1132)	686
														SANITARY SEWER	
100	192							213	79	611	01800	292	FT	8" CONDUIT, TYPE B WITH CLASS II BEDDING	35
100								73	27	611	02000	100	FT	8" CONDUIT, TYPE C WITH CLASS II BEDDING	35
	21							15	6	611	19400	21	FT	42" CONDUIT, TYPE B WITH CLASS II BEDDING	35
	60							44	16	611	19600	60	FT	42" CONDUIT, TYPE C WITH CLASS II BEDDING	35
	233							170	63	611	23800	233	FT	60" CONDUIT, TYPE B WITH CLASS II BEDDING	35
	1							1		611	99690	1	EACH	MANHOLE, MISC.: SANITARY MANHOLE PER MSD STD ACC. NO 49003	
	1							1		611	99690	1	EACH	MANHOLE, MISC.: SANITARY MANHOLE PER MSD STD ACC. NO 49037	
	3							2	1	611	99690	3	EACH	MANHOLE, MISC.: SANITARY MANHOLE PER MSD STD ACC. NO 49040	
	1							1		611	99690	1	EACH	MANHOLE, MISC.: SANITARY MANHOLE PER MSD STD ACC. NO 49049	
	2							1	1	611	99690	2	EACH	MANHOLE, MISC.: SANITARY MANHOLE ADJUST TO GRADE PER MSD STD ACC. NO 49058-A	

CALCULATED DLR
CHECKED EDK

GENERAL SUMMARY

HAM-75-7.85

219
1047

Preliminary Plans - For Reference Only

J:\20110903\ODOT\HAM\7889\roadway\sheets\77889GG001.dgn 5/22/2026 10:13:13 AM hbrendlinger

SHEET NUMBER												PART.			ITEM	ITEM EXT	GRAND TOTAL	UNIT	DESCRIPTION	SEE SHEET NO.
780												01/IMS/04	02/IMS/03	04/NHS/04						
																			LIGHTING	
1												1			202	62000	1	EACH	JUNCTION BOX REMOVED	
88												46	16	26	625	00450	88	EACH	CONNECTION, FUSED PULL APART	
14												2		12	625	00451	14	EACH	CONNECTION, FUSED PULL APART, AS PER PLAN	778
48												29	10	9	625	00480	48	EACH	CONNECTION, UNFUSED PERMANENT	
38												19	7	12	625	10494	38	EACH	LIGHT POLE, LOW MAST, ALM50	
9												5	1	3	625	10503	9	EACH	LIGHT POLE (INSTALLATION ONLY), AS PER PLAN	779
5												4	1		625	13200	5	EACH	LIGHT TOWER, BBBB100	
6												4	1	1	625	13400	6	EACH	LIGHT TOWER, BBBBBB100	
3														3	625	14001	3	EACH	LIGHT POLE FOUNDATION, 24" X 6' DEEP, AS PER PLAN	778
42												23	8	11	625	14306	42	EACH	MEDIAN LIGHT POLE FOUNDATION, 10' DEEP	
2												1		1	625	14307	2	EACH	MEDIAN LIGHT POLE FOUNDATION, 10' DEEP, AS PER PLAN	37
4												3	1		625	15100	4	EACH	LIGHT TOWER FOUNDATION, 36" X 20' DEEP	
4												3		1	625	15200	4	EACH	LIGHT TOWER FOUNDATION, 36" X 25' DEEP	
4												3	1		625	15700	4	EACH	LIGHT TOWER FOUNDATION, MISC.:, MEDIAN, 36" X 20' DEEP	778
31,763												19,324	7,147	5,292	625	23200	31,763	FT	NO. 4 AWG 2400 VOLT DISTRIBUTION CABLE	
2,496														2,496	625	23300	2,496	FT	NO. 2 AWG 2400 VOLT DISTRIBUTION CABLE	
6,600												3,504	1,296	1,800	625	23400	6,600	FT	NO. 10 AWG POLE AND BRACKET CABLE	
2,062												1,506	556		625	24320	2,062	FT	1-1/2" DUCT CABLE WITH THREE NO. 4 AWG 2400 VOLT CABLES	
1,227												343	126	758	625	25500	1,227	FT	CONDUIT, 3", 725.04	
386												282	104		625	25605	386	FT	CONDUIT, 4", 725.051, AS PER PLAN	777
1,320												616	227	477	625	25908	1,320	FT	CONDUIT, JACKED OR DRILLED, 725.052, 3"	
62												41	15	6	625	26263	62	EACH	LUMINAIRE, HIGH MAST, SOLID STATE (LED), AS PER PLAN, 480V	778
12												4	1	7	625	26273	12	EACH	LUMINAIRE, LOW MAST, SOLID STATE (LED), AS PER PLAN, 240V	778
26												18	6	2	625	26273	26	EACH	LUMINAIRE, LOW MAST, SOLID STATE (LED), AS PER PLAN, 480V	778
7												6	1		625	27503	7	EACH	LUMINAIRE, UNDERPASS, SOLID STATE (LED), AS PER PLAN, 240V	778
7												6	1		625	27503	7	EACH	LUMINAIRE, UNDERPASS, SOLID STATE (LED), AS PER PLAN, 480V	778
15												7	2	6	625	27561	15	EACH	LUMINAIRE, INSTALLATION ONLY, AS PER PLAN	777
3,077												1,693	626	758	625	29000	3,077	FT	TRENCH	
6												5	1		625	29910	6	EACH	TRANSITION JUNCTION BOX	
57												32	11	14	625	29930	57	EACH	MEDIAN JUNCTION BOX	
17												9	2	6	625	30700	17	EACH	PULL BOX, 725.08, 18"	
1												1			625	30706	1	EACH	PULL BOX, 725.08, 24"	
45												23	8	14	625	31510	45	EACH	PULL BOX REMOVED	
152												84	31	37	625	32000	152	EACH	GROUND ROD	
6												5	1		625	33000	6	EACH	STRUCTURE GROUNDING SYSTEM	
4												3		1	625	34001	4	EACH	POWER SERVICE, AS PER PLAN	777
1												1			625	35021	1	EACH	RE-ERECT EXISTING LIGHT TOWER, AS PER PLAN	779
3,077												1,693	626	758	625	36010	3,077	FT	UNDERGROUND WARNING MARKING TAPE	
3												3			625	37101	3	EACH	SERVICE TO UNDERPASS LIGHTING, AS PER PLAN	777
LUMP												LUMP	LUMP	LUMP	625	38000	LS		HIGH VOLTAGE TEST	
LUMP												LUMP	LUMP	LUMP	SPECIAL	62540000	LS		MAINTAIN EXISTING LIGHTING	777
2												1	1		SPECIAL	62540010	2	EACH	REPLACEMENT OF EXISTING LIGHTING UNIT	778
9												6	2	1	625	75350	9	EACH	LIGHT TOWER REMOVED	
37												19	6	12	625	75400	37	EACH	LIGHT POLE REMOVED	
3														3	625	75402	3	EACH	LIGHT POLE REMOVED FOR STORAGE	
40												16	5	19	625	75500	40	EACH	LIGHT POLE FOUNDATION REMOVED	
3														3	625	75504	3	EACH	LUMINAIRE REMOVED FOR STORAGE	
73												43	15	15	625	75506	73	EACH	LUMINAIRE REMOVED	
4												3	1		625	75510	4	EACH	POWER SERVICE REMOVED	
9												6	2	1	625	75540	9	EACH	LIGHT TOWER FOUNDATION REMOVED	

CALCULATED DLR
CHECKED EDK

GENERAL SUMMARY

HAM-75-7.85

220
1047

Preliminary Plans - For Reference Only

J:\20110903\ODOT\HAM\7889\roadway\sheets\77889GG001.dgn 5/22/2026 10:13:14 AM hbrendlinger

SHEET NUMBER											PART.			ITEM	ITEM EXT	GRAND TOTAL	UNIT	DESCRIPTION	SEE SHEET NO.
780	753										01/IMS/04	02/IMS/03	04/NHS/04						
																		LIGHTING	
42,580											31,084	11,496		625	75551	42,580	FT	DISTRIBUTION CABLE REMOVED, AS PER PLAN	777
6											2		4	625	75800	6	EACH	DISCONNECT CIRCUIT	
1											1			625	76000	1	EACH	ARC FLASH CALCULATIONS AND LABEL, PS-A	779
1											1			625	76000	1	EACH	ARC FLASH CALCULATIONS AND LABEL, PS-B	779
1											1			625	76000	1	EACH	ARC FLASH CALCULATIONS AND LABEL, PS-C	779
1											1			625	76000	1	EACH	ARC FLASH CALCULATIONS AND LABEL, PS-F	779
1											1			625	76000	1	EACH	ARC FLASH CALCULATIONS AND LABEL, PS-G	779
1											1			625	76000	1	EACH	ARC FLASH CALCULATIONS AND LABEL, PS-H	779
3											3			625	98000	3	EACH	LIGHTING, MISC.: REMOVAL OF UNDERPASS LIGHTING	779
LUMP											LUMP	LUMP		625	98200	LS		LIGHTING, MISC.: REMOVAL OF EXISTING TEMPORARY LIGHTING	779
																		TRAFFIC SURVEILLANCE	
	38										28	10		625	25400	38	FT	CONDUIT, 2", 725.04	
	56										41	15		625	25408	56	FT	CONDUIT, 2", 725.051	
	463										263	96	104	625	25500	463	FT	CONDUIT, 3", 725.04	
	174										36	13	125	625	25504	174	FT	CONDUIT, 3", 725.051	
	305										223	82		625	25902	305	FT	CONDUIT, JACKED OR DRILLED, 725.04, 3"	
	1,562										996	368	198	625	29000	1,562	FT	TRENCH	
	8										5	2	1	625	30700	8	EACH	PULL BOX, 725.08, 18"	
	47										32	11	4	625	31510	47	EACH	PULL BOX REMOVED	
	13										8	2	3	625	32000	13	EACH	GROUND ROD	
	1,562										996	368	198	625	36010	1,562	FT	UNDERGROUND WARNING MARKING TAPE	
	2										1	1		625	75510	2	EACH	POWER SERVICE REMOVED	
	1										1			625	76000	1	EACH	ARC FLASH CALCULATIONS AND LABEL, CCTV #12	
	1										1			625	76000	1	EACH	ARC FLASH CALCULATIONS AND LABEL, DMS #12	
	1										1			625	76000	1	EACH	ARC FLASH CALCULATIONS AND LABEL, VDS	
	1										1			625	76000	1	EACH	ARC FLASH CALCULATIONS AND LABEL, CCTV #113	
	1										1			630	70021	1	EACH	OVERHEAD SIGN SUPPORT, DMS TRUSS, 115', AS PER PLAN	751
	1										1			630	70051	1	EACH	CATWALK, DMS TRUSS, AS PER PLAN	751
	1										1			630	70070	1	EACH	CONCRETE BARRIER MEDIAN OVERHEAD SIGN SUPPORT FOUNDATION, DMS TRUSS	
	1										1			630	70080	1	EACH	OVERHEAD SIGN SUPPORT FOUNDATION, DMS TRUSS	
	2										1	1		630	89702	2	EACH	REMOVAL OF OVERHEAD SIGN SUPPORT AND DISPOSAL	
	5										2	1	2	630	89812	5	EACH	REMOVAL OF WOOD POLE AND DISPOSAL	
	1,048										766	282		632	69310	1,048	FT	POWER CABLE, 1 CONDUCTOR, NO. 2 AWG	
	3,498										1,470	543	1,485	632	69350	3,498	FT	POWER CABLE, MISC.: 1 CONDUCTOR, 1/0 AWG	751
	1										1			632	70400	1	EACH	CONDUIT RISER, 2" DIAMETER	
	LUMP										LUMP	LUMP		632	90300	LS		SIGNALIZATION, MISC.: REMOVAL OF FIBER OPTIC CABLE AND POWER CABLE	751
	4										2		2	633	67101	4	EACH	CABINET FOUNDATION, AS PER PLAN	751
	4										2		2	633	67201	4	EACH	CONTROLLER WORK PAD, AS PER PLAN	751
	17,288										11,091	4,102	2,095	804	21030	17,288	FT	FIBER OPTIC CABLE, AIRBLOWN/PUSHABLE, 72 FIBER	
	25										19	6		809	00530	25	EACH	ITS JUNCTION BOX, 17x24x6 INCHES	
	2										2			809	01900	2	EACH	ITS PULL BOX WITH PAD AND STANDARD LID ASSEMBLY, 32" WIDE, TYPE 1	
	7										6	1		809	01920	7	EACH	ITS PULL BOX WITH PAD AND HINGED LID ASSEMBLY, 32" WIDE, TYPE 1	
	9										7	2		809	11000	9	EACH	COMMUNICATION CABLE MARKER	
	951										685	252	14	809	25000	951	FT	CONDUIT, MULTICELL, MISC.: 2" HDPE WITH 4-14MM/10MM INNERDUCTS	750
	848										412	152	284	809	25000	848	FT	CONDUIT, MULTICELL, MISC.: 2" HDPE WITH 4-14MM/10MM INNERDUCTS, JACKED OR DRILLED	750
	491										359	132		809	25000	491	FT	CONDUIT, MULTICELL, MISC.: 2" HDPE WITH 4-14MM/10MM INNERDUCTS, ON STRUCTURE	750

CALCULATED DLR
CHECKED EDK

GENERAL SUMMARY

HAM-75-7.85

221
1047

Preliminary Plans - For Reference Only

J:\20110903\ODOT\HAM\7889\roadway\sheets\77889GG001.dgn 5/22/2026 10:13:14 AM hbrendlinger

SHEET NUMBER												PART.			ITEM	ITEM EXT	GRAND TOTAL	UNIT	DESCRIPTION	SEE SHEET NO.
753	700											01/IMS/04	02/IMS/03	04/NHS/04						
																			TRAFFIC SURVEILLANCE	
974												695	257	22	809	25000	974	FT	CONDUIT, MULTICELL, MISC.: 4" HDPE	750
848												412	152	284	809	25000	848	FT	CONDUIT, MULTICELL, MISC.: 4" HDPE, JACKED OR DRILLED	750
491												359	132		809	25000	491	FT	CONDUIT, MULTICELL, MISC.: 4" HDPE, ON STRUCTURE	750
2												1	1		809	55000	2	EACH	ITS POWER SERVICE, POLE MOUNTED, 120/240V, 60 AMP	
452												330	122		809	64550	452	FT	ETHERNET CABLE, OUTDOOR-RATED	
3												1		2	809	65000	3	EACH	ITS CABINET - GROUND MOUNTED	
1												1			809	65040	1	EACH	ITS CABINET - DMS	
1														1	809	65990	1	EACH	ITS DEVICE, MISC.: RELOCATE CCTV CAMERA AND WIRELESS RADIO EQUIPMENT	752
1												1			809	65990	1	EACH	ITS DEVICE, MISC.: RELOCATE EXISTING DMS	751
1												1			809	65990	1	EACH	ITS DEVICE, MISC.: REMOVAL OF CCTV POLE, CAMERA, FOUNDATION, AND CABINET ASSEMBLY	751
1												1			809	65990	1	EACH	ITS DEVICE, MISC.: REMOVAL OF DMS SIGN	751
9												5	2	2	809	65990	9	EACH	ITS DEVICE, MISC.: REMOVAL OF ITS CABINET ASSEMBLY	751
5												2	1	2	809	65990	5	EACH	ITS DEVICE, MISC.: REMOVAL OF SIDE-FIRED RADAR VEHICLE DETECTOR	751
9												2	1	6	809	65990	9	EACH	ITS DEVICE, MISC.: REMOVAL OF WIRELESS RADIO EQUIPMENT	751
LUMP												LUMP	LUMP		809	70000	LS		MAINTAINING ITS DURING CONSTRUCTION	752
LUMP												LUMP	LUMP		809	70050	LS		AS-BUILT CONSTRUCTION PLANS	752
																			TRAFFIC CONTROL	
	59											40	15	4	620	00500	59	EACH	DELINEATOR, POST GROUND MOUNTED	
	6													6	620	11000	6	EACH	DELINEATOR, BRACKET MOUNTED	
	16											4	1	11	620	31200	16	EACH	REMOVAL OF DELINEATOR	
	7													7	620	60000	7	EACH	DELINEATOR, POST SURFACE MOUNTED	
	1,209											765	283	161	621	00100	1,209	EACH	RPM	
	755											473	175	107	621	54000	755	EACH	RAISED PAVEMENT MARKER REMOVED	
	16											7	2	7	625	32000	16	EACH	GROUND ROD	
	1,163											782.6	289.4	91	630	03100	1,163	FT	GROUND MOUNTED SUPPORT, NO. 3 POST	
	48											35	13		630	04100	48	FT	GROUND MOUNTED SUPPORT, NO. 4 POST	
	97.2											47.2	17.5	32.5	630	06400	97.2	FT	GROUND MOUNTED STRUCTURAL BEAM SUPPORT, S4X7.7	
	32.9													32.9	630	06500	32.9	FT	GROUND MOUNTED STRUCTURAL BEAM SUPPORT, W6X9	
	47											34	13		630	07500	47	FT	GROUND MOUNTED STRUCTURAL BEAM SUPPORT, W10X22	
	53.6											39.1	14.5		630	08000	53.6	FT	GROUND MOUNTED STRUCTURAL BEAM SUPPORT, W12X30	
	12											9	3		630	08004	12	FT	ONE WAY SUPPORT, NO. 3 POST	
	61											45	16		630	08600	61	EACH	SIGN POST REFLECTOR	
	12											6	2	4	630	09000	12	EACH	BREAKAWAY STRUCTURAL BEAM CONNECTION	
	5											3	1	1	630	72340	5	EACH	OVERHEAD SIGN SUPPORT, TYPE TC-12.31, DESIGN 12	
	3													3	630	72410	3	EACH	OVERHEAD SIGN SUPPORT, TYPE TC-15.116, DESIGN 1	
	3											2	1		630	72430	3	EACH	OVERHEAD SIGN SUPPORT, TYPE TC-15.116, DESIGN 3	
	12											9	3		630	75000	12	EACH	SIGN ATTACHMENT ASSEMBLY	
	809.13											521.4	192.85	94.88	630	80100	809.13	SF	SIGN, FLAT SHEET	
	318											188	70	60	630	80200	318	SF	SIGN, GROUND MOUNTED EXTRUSHEET	
	4,699.5											2,487.1	919.9	1,292.5	630	80224	4,699.5	SF	SIGN, OVERHEAD EXTRUSHEET	
	14											8	3	3	630	81021	14	EACH	CONCRETE MEDIAN BARRIER SIGN BRACKET, AS PER PLAN	699
	5											2	1	2	630	84010	5	EACH	CONCRETE BARRIER MEDIAN OVERHEAD SIGN SUPPORT FOUNDATION, TYPE TC-21.50	
	12											6	2	4	630	84500	12	EACH	GROUND MOUNTED STRUCTURAL BEAM SUPPORT FOUNDATION	
	11											5	2	4	630	84510	11	EACH	RIGID OVERHEAD SIGN SUPPORT FOUNDATION	
	76											47	17	12	630	84900	76	EACH	REMOVAL OF GROUND MOUNTED SIGN AND DISPOSAL	
	3											2	1		630	85400	3	EACH	REMOVAL OF GROUND MOUNTED MAJOR SIGN AND DISPOSAL	
	1											1			630	85600	1	EACH	REMOVAL OF GROUND MOUNTED MAJOR SIGN AND REERECTION	
	58											37	14	7	630	86002	58	EACH	REMOVAL OF GROUND MOUNTED POST SUPPORT AND DISPOSAL	
	13											7	3	3	630	86102	13	EACH	REMOVAL OF GROUND MOUNTED STRUCTURAL BEAM SUPPORT AND DISPOSAL	
	2											1	1		630	87100	2	EACH	REMOVAL OF OVERHEAD MOUNTED SIGN AND REERECTION	
	29											14	5	10	630	87400	29	EACH	REMOVAL OF OVERHEAD MOUNTED SIGN AND DISPOSAL	
	13											5	2	6	630	87500	13	EACH	REMOVAL OF POLE MOUNTED SIGN AND DISPOSAL	

CALCULATED DLR
CHECKED EDK

GENERAL SUMMARY

HAM-75-7.85

222
1047

Preliminary Plans - For Reference Only

J:\20110903\ODOT\HAM\7889\roadway\sheets\77889GG001.dgn 5/22/2026 10:13:14 AM hbrendlinger

SHEET NUMBER										PART.			ITEM	ITEM EXT	GRAND TOTAL	UNIT	DESCRIPTION	SEE SHEET NO.
700	701	748								01/IMS/04	02/IMS/03	04/NHS/04						
																	TRAFFIC CONTROL	
5										3	1	1	630	89706	5	EACH	REMOVAL OF OVERHEAD SIGN SUPPORT AND DISPOSAL, TYPE TC-12.30	
5										1	1	3	630	89802	5	EACH	REMOVAL OF OVERHEAD SIGN SUPPORT AND DISPOSAL, TYPE TC-7.65	
10										7	3		630	89894	10	EACH	REMOVAL OF TEMPORARY OVERLAY SIGN AND DISPOSAL	
12										8	3	1	630	89902	12	EACH	REMOVAL OF MISCELLANEOUS TRAFFIC CONTROL ITEM, BARRIER MOUNTED SIGN SUPPORT AND DISPOSAL	
1										1			630	89902	1	EACH	REMOVAL OF MISCELLANEOUS TRAFFIC CONTROL ITEM, PARTIAL TRUSS REMOVAL	
	0.18									0.13	0.05		644	00300	0.18	MILE	CENTER LINE	
	25											25	644	00500	25	FT	STOP LINE	
	153									37	14	102	644	00620	153	FT	CROSSWALK LINE, 12"	
	17									12	5		644	00700	17	FT	TRANSVERSE/DIAGONAL LINE	
	574									363	134	77	644	00720	574	FT	CHEVRON MARKING	
	11											11	644	01300	11	EACH	LANE ARROW	
	2									1	1		644	01350	2	EACH	LANE REDUCTION ARROW	
	2											2	644	01360	2	EACH	WRONG WAY ARROW	
	1,652									1,206	446		644	30000	1,652	FT	REMOVAL OF PAVEMENT MARKING	
	0.58									0.36	0.13	0.09	645	00118	0.58	MILE	EDGE LINE, 6", TYPE A4	
	0.56									0.38	0.14	0.04	645	00220	0.56	MILE	LANE LINE, 6", TYPE A4	
	412									301	111		645	00418	412	FT	CHANNELIZING LINE, 12", TYPE A4	
	265									193	72		645	01522	265	FT	DOTTED LINE, 6", TYPE A4	
	394									288	106		645	01566	394	FT	DOTTED LINE, 12", TYPE A4	
	40									29	11		646	10620	40	FT	CHEVRON MARKING	
	10.78									6.12	2.27	2.39	807	14010	10.78	MILE	WET REFLECTIVE THERMOPLASTIC PAVEMENT MARKING, EDGE LINE, 6"	
	10.77									7.35	2.72	0.7	807	14110	10.77	MILE	WET REFLECTIVE THERMOPLASTIC PAVEMENT MARKING, LANE LINE, 6"	
	10,346									6,017	2,225	2,104	807	14310	10,346	FT	WET REFLECTIVE THERMOPLASTIC PAVEMENT MARKING, CHANNELIZING LINE, 12"	
	5,933									3,601	1,332	1,000	807	14410	5,933	FT	WET REFLECTIVE THERMOPLASTIC PAVEMENT MARKING, DOTTED LINE, 6"	
	10,795									5,982	2,213	2,600	807	14430	10,795	FT	WET REFLECTIVE THERMOPLASTIC PAVEMENT MARKING, DOTTED LINE, 12"	
	21.55									13.48	4.98	3.09	850	10010	21.55	MILE	GROOVING FOR 6" RECESSED PAVEMENT MARKING, (ASPHALT)	
	5,933									3,601	1,332	1,000	850	10110	5,933	FT	GROOVING FOR 6" RECESSED PAVEMENT MARKING, (ASPHALT)	
	21,141									11,999	4,438	4,704	850	10130	21,141	FT	GROOVING FOR 12" RECESSED PAVEMENT MARKING, (ASPHALT)	
	1.14									0.74	0.27	0.13	850	20010	1.14	MILE	GROOVING FOR 6" RECESSED PAVEMENT MARKING, (CONCRETE)	
	265									193	72		850	20110	265	FT	GROOVING FOR 6" RECESSED PAVEMENT MARKING, (CONCRETE)	
	806									588	218		850	20130	806	FT	GROOVING FOR 12" RECESSED PAVEMENT MARKING, (CONCRETE)	
																	TRAFFIC SIGNALS	
		1										1	809	69101	1	EACH	STOP LINE RADAR DETECTION, AS PER PLAN	747

CALCULATED DLR
CHECKED EDK

GENERAL SUMMARY

HAM-75-7.85

223
1047

Preliminary Plans - For Reference Only

J:\20110903\ODOT\HAM\7889\roadway\sheets\77889GG001.dgn 5/22/2026 10:13:14 AM hbrendlinger

SHEET NUMBER													PART.		ITEM	ITEM EXT	GRAND TOTAL	UNIT	DESCRIPTION	SEE SHEET NO.
588	612												02/IMS/03							
																			RETAINING WALLS (SOLDIER PILE)	
LUMP													LUMP		503	21301	LS		UNCLASSIFIED EXCAVATION, AS PER PLAN	586
2,329													2,329		507	00400	2,329	FT	STEEL PILES, MISC.: SOLDIER PILES HP12X53	586
1,779													1,779		507	00400	1,779	FT	STEEL PILES, MISC.: SOLDIER PILES W18X86	586
50,490													50,490		509	10000	50,490	LB	EPOXY COATED STEEL REINFORCEMENT	
490													490		511	46011	490	CY	CLASS QC1 CONCRETE, RETAINING/WINGWALL NOT INCLUDING FOOTING, AS PER PLAN	586
1,012													1,012		512	10101	1,012	SY	SEALING OF CONCRETE SURFACES (EPOXY-URETHANE), AS PER PLAN	586
136													136		512	33001	136	SY	TYPE 2 WATERPROOFING, AS PER PLAN	586
1,024													1,024		516	13600	1,024	SF	1" PREFORMED EXPANSION JOINT FILLER	
1,239													1,239		518	20000	1,239	SY	PREFABRICATED GEOCOMPOSITE DRAIN	
256													256		518	39900	256	FT	4" NON-PERFORATED CORRUGATED PLASTIC PIPE, INCLUDING SPECIALS	
2,478													2,478		524	94503	2,478	FT	DRILLED SHAFTS, 24" DIAMETER, ABOVE BEDROCK, AS PER PLAN	586
2,234													2,234		524	94603	2,234	FT	DRILLED SHAFTS, 30" DIAMETER, ABOVE BEDROCK, AS PER PLAN	586
11,499													11,499		SPECIAL	53051020	11,499	SF	RETAINING WALL, TIMBER LAGGING TIMBER LAGGING	587
77													77		601	21000	77	SY	CONCRETE SLOPE PROTECTION	
807													807		601	37500	807	FT	PAVED GUTTER, TYPE 1-2	
379													379		611	01100	379	FT	6" CONDUIT, TYPE C	
3													3		866	00100	3	EACH	GROUND ANCHOR, 30 KIP MAX TEST LOAD	
39													39		866	00100	39	EACH	GROUND ANCHOR, 63 KIP MAX TEST LOAD	
39													39		866	00100	39	EACH	GROUND ANCHOR, 89 KIP MAX TEST LOAD	
LUMP													LUMP		866	00300	LS		INVESTIGATIVE ANCHOR PULLOUT TESTS	
5													5		866	00400	5	EACH	PERFORMANCE TEST	
2													2		866	00500	2	EACH	EXTENDED CREEP TEST	
																			RETAINING WALLS (CAST-IN-PLACE)	
	42												42		203	22000	42	CY	EMBANKMENT, USING NATURAL SOILS, 703.16.A	
	LUMP												LUMP		503	11100	LS		COFFERDAMS AND EXCAVATION BRACING	
	LUMP												LUMP		503	11101	LS		COFFERDAMS AND EXCAVATION BRACING, AS PER PLAN	611
	LUMP												LUMP		503	21301	LS		UNCLASSIFIED EXCAVATION, AS PER PLAN	611
	17,651												17,651		509	10000	17,651	LB	EPOXY COATED STEEL REINFORCEMENT	
	176												176		511	50212	176	CY	CLASS QC1 CONCRETE WITH QC/QA, SUBSTRUCTURE	
	151												151		512	10100	151	SY	SEALING OF CONCRETE SURFACES (EPOXY-URETHANE)	611
	23												23		512	33000	23	SY	TYPE 2 WATERPROOFING	
	19												19		516	13400	19	SF	3/4" PREFORMED EXPANSION JOINT FILLER	
	42												42		516	13600	42	SF	1" PREFORMED EXPANSION JOINT FILLER	
	71												71		518	21200	71	CY	POROUS BACKFILL WITH GEOTEXTILE FABRIC	
	191												191		518	40000	191	FT	6" PERFORATED CORRUGATED PLASTIC PIPE	
	10												10		518	40010	10	FT	6" NON-PERFORATED CORRUGATED PLASTIC PIPE, INCLUDING SPECIALS	
	22												22		518	42200	22	FT	8" PERFORATED CORRUGATED STEEL PIPE, 707.01	
	2												2		518	42300	2	FT	8" NON-PERFORATED CORRUGATED STEEL PIPE, INCLUDING SPECIALS, 707.01	
	153												153		SPECIAL	53013000	153	SF	FORM LINER	611
	252												252		601	37500	252	FT	PAVED GUTTER, TYPE 1-2	
	28												28		601	37501	28	FT	PAVED GUTTER, TYPE 1-2, AS PER PLAN	611

CALCULATED DLR
CHECKED EDK

GENERAL SUMMARY

HAM-75-7.85

224
1047

J:\20110903\ODOT\HAM\7889\roadway\sheets\77889GG001.dgn 5/22/2026 10:13:14 AM hbrendlinger

Preliminary Plans - For Reference Only

SHEET NUMBER													PART.		ITEM	ITEM EXT	GRAND TOTAL	UNIT	DESCRIPTION	SEE SHEET NO.
624	670												02/IMS/03							
																			RETAINING WALLS (MSE)	
LUMP													LUMP		202	11200	LS		PORTIONS OF STRUCTURE REMOVED	
3,877													3,877		203	20000	3,877	CY	EMBANKMENT	
7,789													7,789		203	35110	7,789	CY	GRANULAR MATERIAL, TYPE B	
2,468													2,468		203	35111	2,468	CY	GRANULAR MATERIAL, TYPE B, AS PER PLAN	622
31													31		SPECIAL	20365000	31	EACH	SETTLEMENT PLATFORM	623
LUMP													LUMP		503	11101	LS		COFFERDAMS AND EXCAVATION BRACING, AS PER PLAN	622
7,519													7,519		512	10101	7,519	SY	SEALING OF CONCRETE SURFACES (EPOXY-URETHANE), AS PER PLAN	622
752													752		516	13200	752	SF	1/2" PREFORMED EXPANSION JOINT FILLER	
472													472		516	13600	472	SF	1" PREFORMED EXPANSION JOINT FILLER	
24													24		516	13900	24	SF	2" PREFORMED EXPANSION JOINT FILLER	
106													106		517	76300	106	FT	RAILING, MISC.: TRAFFIC BARRIER ON MSE WALL	622
1,355													1,355		517	80010	1,355	FT	RAILING (COMBINATION NOISE AND TRAFFIC BARRIER ON MSE WALL WITH FLEXIBLE PAVEMENT)	622
236													236		601	21000	236	SY	CONCRETE SLOPE PROTECTION	
23													23		601	37500	23	FT	PAVED GUTTER, TYPE 1-2	
LUMP													LUMP		SPECIAL	69098400	LS		TEMPORARY SURCHARGE WALL B	622
LUMP													LUMP		SPECIAL	69098400	LS		TEMPORARY SURCHARGE WALL C	622
LUMP													LUMP		SPECIAL	69098400	LS		TEMPORARY SURCHARGE WALL F	622
LUMP													LUMP		SPECIAL	69098400	LS		TEMPORARY SURCHARGE WALL G	622
LUMP													LUMP		SPECIAL	69098400	LS		TEMPORARY SURCHARGE WALL H1	622
LUMP													LUMP		SPECIAL	69098400	LS		TEMPORARY SURCHARGE WALL I1	622
55,426													55,426		840	20001	55,426	SF	MECHANICALLY STABILIZED EARTH WALL, AS PER PLAN	622
28,818													28,818		840	21000	28,818	CY	WALL EXCAVATION	
5,153													5,153		840	22000	5,153	SY	FOUNDATION PREPARATION	
2,583													2,583		840	22001	2,583	SY	FOUNDATION PREPARATION, AS PER PLAN	622
44,190													44,190		840	23000	44,190	CY	SELECT GRANULAR BACKFILL	
257													257		840	23050	257	CY	NATURAL SOIL	
6,692													6,692		840	25010	6,692	FT	6" DRAINAGE PIPE, PERFORATED	
369													369		840	25020	369	FT	6" DRAINAGE PIPE, NON-PERFORATED	
2,969													2,969		840	26000	2,969	FT	CONCRETE COPING	622
49,485													49,485		840	26050	49,485	SF	AESTHETIC SURFACE TREATMENT	622
12													12		840	27000	12	DAY	ON-SITE ASSISTANCE	
LUMP													LUMP		867	00100	LS		TEMPORARY WIRE FACED MECHANICALLY STABILIZED EARTH WALL (WALL C-1)	
LUMP													LUMP		867	00100	LS		TEMPORARY WIRE FACED MECHANICALLY STABILIZED EARTH WALL (WALL C-2)	
LUMP													LUMP		867	00100	LS		TEMPORARY WIRE FACED MECHANICALLY STABILIZED EARTH WALL (WALL F1)	
LUMP													LUMP		867	00100	LS		TEMPORARY WIRE FACED MECHANICALLY STABILIZED EARTH WALL (WALL F2)	
LUMP													LUMP		867	00100	LS		TEMPORARY WIRE FACED MECHANICALLY STABILIZED EARTH WALL (WALL G1)	
LUMP													LUMP		867	00100	LS		TEMPORARY WIRE FACED MECHANICALLY STABILIZED EARTH WALL (WALL G2)	
LUMP													LUMP		867	00100	LS		TEMPORARY WIRE FACED MECHANICALLY STABILIZED EARTH WALL (WALL H1-1)	
LUMP													LUMP		867	00100	LS		TEMPORARY WIRE FACED MECHANICALLY STABILIZED EARTH WALL (WALL H1-2)	
LUMP													LUMP		867	00100	LS		TEMPORARY WIRE FACED MECHANICALLY STABILIZED EARTH WALL (WALL I1-1)	
LUMP													LUMP		867	00100	LS		TEMPORARY WIRE FACED MECHANICALLY STABILIZED EARTH WALL (WALL I1-2)	
																			NOISE BARRIERS	
	36												36		513	95000	36	FT	STRUCTURAL STEEL, MISC.: C10X15.3	670
	5												5		513	95000	5	FT	STRUCTURAL STEEL, MISC.: L4X4X1/2	670
	11												11		513	95030	11	EACH	STRUCTURAL STEEL, MISC.: 5/8" DIA. A325 BOLTS	670
	19												19		513	95030	19	EACH	STRUCTURAL STEEL, MISC.: 5/8" DIA. THREADED ANCHOR BOLTS	670
	25,265												25,265		SPECIAL	60610210	25,265	SF	NOISE BARRIER (REFLECTIVE)	
	8,562												8,562		SPECIAL	60610920	8,562	SF	NOISE BARRIER (REFLECTIVE), PARAPET MOUNTED	
	36												36		SPECIAL	60610920	36	SF	NOISE BARRIER (METAL PANELS)	670

CALCULATED DLR
CHECKED EDK

GENERAL SUMMARY

HAM-75-7.85

225
1047

Preliminary Plans - For Reference Only

J:\20110903\ODOT\HAM\7889\roadway\sheets\77889GG001.dgn 5/22/2026 10:13:14 AM hbrendlinger

SHEET NUMBER						PART.		ITEM	ITEM EXT	GRAND TOTAL	UNIT	DESCRIPTION	SEE SHEET NO.
814	815	870				03/IMS/10							
												STRUCTURE OVER 20 FOOT SPAN (HAM-562-0004)	
LUMP						LUMP		202	11003	LS		STRUCTURE REMOVED, OVER 20 FOOT SPAN, AS PER PLAN	811
109						109		202	22900	109	SY	APPROACH SLAB REMOVED	
LUMP						LUMP		503	11101	LS		COFFERDAMS AND EXCAVATION BRACING, AS PER PLAN (WALL G)	811
LUMP						LUMP		503	21300	LS		UNCLASSIFIED EXCAVATION	
LUMP						LUMP		505	11100	LS		PILE DRIVING EQUIPMENT MOBILIZATION	
8,890						8,890		507	00700	8,890	FT	16" CAST-IN-PLACE REINFORCED CONCRETE PILES, DRIVEN	
9,485						9,485		507	00751	9,485	FT	16" CAST-IN-PLACE REINFORCED CONCRETE PILES, FURNISHED, AS PER PLAN	811
94,506						94,506		509	10000	94,506	LB	EPOXY COATED STEEL REINFORCEMENT	
112,426						112,426		509	28001	112,426	LB	STAINLESS STEEL REINFORCEMENT, AS PER PLAN	811
14,835						14,835		509	30020	14,835	FT	NO. 4 DEFORMED GFRP REINFORCEMENT	
1,772						1,772		509	30030	1,772	FT	NO. 5 DEFORMED GFRP REINFORCEMENT	
136						136		511	34463	136	CY	CLASS QC SCC CONCRETE WITH QC/QA, BRIDGE DECK (PARAPET), AS PER PLAN	812
338						338		511	46512	338	CY	CLASS QC1 CONCRETE WITH QC/QA, FOOTING	
346						346		511	53014	346	CY	CLASS QC3 CONCRETE, MISC.: CONCRETE WITH QC/QA, BRIDGE DECK, AS PER PLAN	812
170						170		511	53014	170	CY	CLASS QC3 CONCRETE, MISC.: CONCRETE WITH QC/QA, PIER ABOVE FOOTINGS, AS PER PLAN	812
271						271		511	53014	271	CY	CLASS QC3 CONCRETE, MISC.: CONCRETE WITH QC/QA, ABUTMENT NOT INCLUDING FOOTINGS, AS PER PLAN	812
1,530						1,530		512	10100	1,530	SY	SEALING OF CONCRETE SURFACES (EPOXY-URETHANE)	
757,074						757,074		513	10300	757,074	LB	STRUCTURAL STEEL MEMBERS, LEVEL 5	
5,436						5,436		513	20000	5,436	EACH	WELDED STUD SHEAR CONNECTORS	
9,152						9,152		514	00061	9,152	SF	FIELD PAINTING STRUCTURAL STEEL, INTERMEDIATE COAT, AS PER PLAN	813
9,152						9,152		514	00067	9,152	SF	FIELD PAINTING STRUCTURAL STEEL, FINISH COAT, AS PER PLAN	813
34						34		516	10010	34	FT	ARMORLESS PREFORMED JOINT SEAL	
66						66		516	11210	66	FT	STRUCTURAL EXPANSION JOINT INCLUDING ELASTOMERIC STRIP SEAL	
111						111		516	13600	111	SF	1" PREFORMED EXPANSION JOINT FILLER	
3						3		516	44201	3	EACH	ELASTOMERIC BEARING WITH INTERNAL LAMINATES AND LOAD PLATE, AS PER PLAN, 15"x11"x3.94" ELAST. PAD, 26"X12"X2.25" BEV.LOAD PL	830
2						2		516	44201	2	EACH	ELASTOMERIC BEARING WITH INTERNAL LAMINATES AND LOAD PLATE, AS PER PLAN, 15"x11"x3.67" ELAST. PAD, 26"X12"X2.25" BEV.LOAD PL, 1.5" MAS. PL	830
3						3		516	44201	3	EACH	ELASTOMERIC BEARING WITH INTERNAL LAMINATES AND LOAD PLATE, AS PER PLAN, 17"x15"x3.94" ELAST. PAD, 26"X16"X3.19" BEV. LOAD PL	830
2						2		516	44201	2	EACH	ELASTOMERIC BEARING WITH INTERNAL LAMINATES AND LOAD PLATE, AS PER PLAN, 17"x15"x3.67" ELAST. PAD, 26"X16"X3.19" BEV. LOAD PL, 1.5" MAS. PL	830
5						5		516	44201	5	EACH	ELASTOMERIC BEARING WITH INTERNAL LAMINATES AND LOAD PLATE, AS PER PLAN, 15"x11"x3.67" ELAST. PAD, 26"X12"X1.69" BEV. LOAD PL, 1.5" MAS. PL	831
5						5		516	44201	5	EACH	ELASTOMERIC BEARING WITH INTERNAL LAMINATES AND LOAD PLATE, AS PER PLAN, 15"x11"x3.94" ELAST. PAD, 32"X12"X2.38" BEV.LOAD PL	831
	136					136		518	21200	136	CY	POROUS BACKFILL WITH GEOTEXTILE FABRIC	
	94					94		518	40000	94	FT	6" PERFORATED CORRUGATED PLASTIC PIPE	
	21					21		518	40011	21	FT	6" NON-PERFORATED CORRUGATED PLASTIC PIPE, INCLUDING SPECIALS, AS PER PLAN	813
	8					8		523	20000	8	EACH	DYNAMIC LOAD TESTING	813
	8					8		523	20500	8	EACH	RESTRIKE	
	224					224		526	30001	224	SY	REINFORCED CONCRETE APPROACH SLABS (T=17"), AS PER PLAN	813
	33					33		526	90010	33	FT	TYPE A INSTALLATION	
	34					34		526	90030	34	FT	TYPE C INSTALLATION	
	469					469		601	20000	469	SY	CRUSHED AGGREGATE SLOPE PROTECTION	
												STRUCTURE OVER 20 FOOT SPAN (HAM-75-0791)	
		LUMP				LUMP		202	11003	LS		STRUCTURE REMOVED, OVER 20 FOOT SPAN, AS PER PLAN	867
		582				582		202	22900	582	SY	APPROACH SLAB REMOVED	
		44				44		203	20001	44	CY	EMBANKMENT, AS PER PLAN	867
		LUMP				LUMP		503	11101	LS		COFFERDAMS AND EXCAVATION BRACING, AS PER PLAN (WALL A)	867
		LUMP				LUMP		503	11101	LS		COFFERDAMS AND EXCAVATION BRACING, AS PER PLAN (WALL B)	867
		LUMP				LUMP		503	21300	LS		UNCLASSIFIED EXCAVATION	
		LUMP				LUMP		505	11100	LS		PILE DRIVING EQUIPMENT MOBILIZATION	
		9,520				9,520		507	00700	9,520	FT	16" CAST-IN-PLACE REINFORCED CONCRETE PILES, DRIVEN	
		10,140				10,140		507	00751	10,140	FT	16" CAST-IN-PLACE REINFORCED CONCRETE PILES, FURNISHED, AS PER PLAN	867
		226,540				226,540		509	10000	226,540	LB	EPOXY COATED STEEL REINFORCEMENT	
		6,635				6,635		509	30020	6,635	FT	NO. 4 DEFORMED GFRP REINFORCEMENT	
		800				800		509	30030	800	FT	NO. 5 DEFORMED GFRP REINFORCEMENT	
		6,259				6,259		509	30040	6,259	FT	NO. 6 DEFORMED GFRP REINFORCEMENT	
		4				4		511	33501	4	EACH	SEMI-INTEGRAL DIAPHRAGM GUIDE, AS PER PLAN	869
		51				51		511	34463	51	CY	CLASS QC SCC CONCRETE WITH QC/QA, BRIDGE DECK (PARAPET), AS PER PLAN	868
		415				415		511	46512	415	CY	CLASS QC1 CONCRETE WITH QC/QA, FOOTING	

CALCULATED DLR CHECKED EDK

GENERAL SUMMARY

HAM-75-7.85

226
1047

Preliminary Plans
For Reference Only

J:\20110903\ODOT\HAM\7889\roadway\sheets\77889GG001.dgn 5/22/2026 10:13:15 AM hbrendlinger

SHEET NUMBER							PART.		ITEM	ITEM EXT	GRAND TOTAL	UNIT	DESCRIPTION	SEE SHEET NO.
870	871	935					03/IMS/10							
													STRUCTURE OVER 20 FOOT SPAN (HAM-75-0791) CON'T	
845							845		511	53014	845	CY	CLASS QC3 CONCRETE, MISC.: CONCRETE WITH QC/QA, BRIDGE DECK, AS PER PLAN	868
66							66		511	53014	66	CY	CLASS QC3 CONCRETE, MISC.: CONCRETE WITH QC/QA, BRIDGE DECK (MEDIAN RAILING), AS PER PLAN	868
230							230		511	53014	230	CY	CLASS QC3 CONCRETE, MISC.: CONCRETE WITH QC/QA, ABUTMENT NOT INCLUDING FOOTINGS, AS PER PLAN	869
1,348							1,348		512	10100	1,348	SY	SEALING OF CONCRETE SURFACES (EPOXY-URETHANE)	
72							72		512	10300	72	SY	SEALING CONCRETE BRIDGE DECKS WITH HMWM RESIN	
61							61		512	33000	61	SY	TYPE 2 WATERPROOFING	
834,999							834,999		513	10280	834,999	LB	STRUCTURAL STEEL MEMBERS, LEVEL 4	
6,696							6,696		513	20000	6,696	EACH	WELDED STUD SHEAR CONNECTORS	
2,629							2,629		514	00061	2,629	SF	FIELD PAINTING STRUCTURAL STEEL, INTERMEDIATE COAT, AS PER PLAN	869
2,629							2,629		514	00067	2,629	SF	FIELD PAINTING STRUCTURAL STEEL, FINISH COAT, AS PER PLAN	869
524							524		516	13600	524	SF	1" PREFORMED EXPANSION JOINT FILLER	
142							142		516	13800	142	SF	1-1/2" PREFORMED EXPANSION JOINT FILLER	
198							198		516	13900	198	SF	2" PREFORMED EXPANSION JOINT FILLER	
491							491		516	14020	491	FT	SEMI-INTEGRAL ABUTMENT EXPANSION JOINT SEAL	
36							36		516	44401	36	EACH	ELASTOMERIC BEARING WITH INTERNAL LAMINATES AND LOAD PLATE, AS PER PLAN, 14"X13"X4.77" ELAST. PAD AND TOP/BOT. LOAD PLATES	889
	180						180		518	21200	180	CY	POROUS BACKFILL WITH GEOTEXTILE FABRIC	
	317						317		518	40000	317	FT	6" PERFORATED CORRUGATED PLASTIC PIPE	
	71						71		518	40010	71	FT	6" NON-PERFORATED CORRUGATED PLASTIC PIPE, INCLUDING SPECIALS	
	8						8		523	20000	8	EACH	DYNAMIC LOAD TESTING	867
	8						8		523	20500	8	EACH	RESTRIKE	
	1,028						1,028		526	30001	1,028	SY	REINFORCED CONCRETE APPROACH SLABS (T=17"), AS PER PLAN	869
	422						422		526	90010	422	FT	TYPE A INSTALLATION	
	948						948		601	20000	948	SY	CRUSHED AGGREGATE SLOPE PROTECTION	
	LUMP						LUMP		867	00100	LS		TEMPORARY WIRE FACED MECHANICALLY STABILIZED EARTH WALL (WALL D)	
	LUMP						LUMP		867	00100	LS		TEMPORARY WIRE FACED MECHANICALLY STABILIZED EARTH WALL (WALL E)	
	LUMP						LUMP		867	00100	LS		TEMPORARY WIRE FACED MECHANICALLY STABILIZED EARTH WALL (WALL F)	
													STRUCTURE OVER 20 FOOT SPAN (HAM-75-0823)	
		LUMP					LUMP		202	11003	LS		STRUCTURE REMOVED, OVER 20 FOOT SPAN, AS PER PLAN	932
		407					407		202	22900	407	SY	APPROACH SLAB REMOVED	
		LUMP					LUMP		503	11101	LS		COFFERDAMS AND EXCAVATION BRACING, AS PER PLAN (WALL F1)	932
		LUMP					LUMP		503	11101	LS		COFFERDAMS AND EXCAVATION BRACING, AS PER PLAN (WALL F2)	932
		LUMP					LUMP		503	11101	LS		COFFERDAMS AND EXCAVATION BRACING, AS PER PLAN (WALL G1)	932
		LUMP					LUMP		503	11101	LS		COFFERDAMS AND EXCAVATION BRACING, AS PER PLAN (WALL G2)	932
		LUMP					LUMP		503	21300	LS		UNCLASSIFIED EXCAVATION	
		LUMP					LUMP		505	11100	LS		PILE DRIVING EQUIPMENT MOBILIZATION	
		11,625					11,625		507	00700	11,625	FT	16" CAST-IN-PLACE REINFORCED CONCRETE PILES, DRIVEN	
		12,400					12,400		507	00750	12,400	FT	16" CAST-IN-PLACE REINFORCED CONCRETE PILES, FURNISHED	
		207,660					207,660		509	10000	207,660	LB	EPOXY COATED STEEL REINFORCEMENT	
		4,288					4,288		509	30020	4,288	FT	NO. 4 DEFORMED GFRP REINFORCEMENT	
		627					627		509	30030	627	FT	NO. 5 DEFORMED GFRP REINFORCEMENT	
		4,168					4,168		509	30040	4,168	FT	NO. 6 DEFORMED GFRP REINFORCEMENT	
		4					4		511	33501	4	EACH	SEMI-INTEGRAL DIAPHRAGM GUIDE, AS PER PLAN	933
		30					30		511	34463	30	CY	CLASS QC SCC CONCRETE WITH QC/QA, BRIDGE DECK (PARAPET), AS PER PLAN	933
		372					372		511	46512	372	CY	CLASS QC1 CONCRETE WITH QC/QA, FOOTING	
		689					689		511	53014	689	CY	CLASS QC3 CONCRETE, MISC.: CONCRETE WITH QC/QA, BRIDGE DECK, AS PER PLAN	933
		36					36		511	53014	36	CY	CLASS QC3 CONCRETE, MISC.: CONCRETE WITH QC/QA, BRIDGE DECK (MEDIAN PARAPET), AS PER PLAN	933
		148					148		511	53014	148	CY	CLASS QC3 CONCRETE, MISC.: CONCRETE WITH QC/QA, ABUTMENT NOT INCLUDING FOOTING, AS PER PLAN	933
		1,434					1,434		512	10100	1,434	SY	SEALING OF CONCRETE SURFACES (EPOXY-URETHANE)	
		9					9		512	33000	9	SY	TYPE 2 WATERPROOFING	
		24					24		515	15010	24	EACH	DRAPED STRAND PRESTRESSED CONCRETE BRIDGE I-BEAM MEMBERS, LEVEL 3, TYPE 3 (LENGTH = 76'-8")	
		1					1		515	15010	1	EACH	DRAPED STRAND PRESTRESSED CONCRETE BRIDGE I-BEAM MEMBERS, LEVEL 3, TYPE 3 (LENGTH = 77'-1 1/4")	
		23					23		515	20000	23	EACH	INTERMEDIATE DIAPHRAGMS	

CALCULATED DLR
CHECKED EDK

GENERAL SUMMARY

HAM-75-7.85

227
1047

Preliminary Plans - For Reference Only

J:\20110903\ODOT\HAM\7889\roadway\sheets\77889GG001.dgn 5/22/2026 10:13:15 AM hbrendlinger

SHEET NUMBER								PART.		ITEM	ITEM EXT	GRAND TOTAL	UNIT	DESCRIPTION	SEE SHEET NO.
935	998	34						03/IMS/10	04/NHS/04						
														STRUCTURE OVER 20 FOOT SPAN (HAM-75-0823) CON'T	
41								41		516	13600	41	SF	1" PREFORMED EXPANSION JOINT FILLER	
91								91		516	13900	91	SF	2" PREFORMED EXPANSION JOINT FILLER	
454								454		516	14020	454	FT	SEMI-INTEGRAL ABUTMENT EXPANSION JOINT SEAL	
50								50		516	44200	50	EACH	ELASTOMERIC BEARING WITH INTERNAL LAMINATES AND LOAD PLATE 1'-1" X 1'-8" X 3 13/16"	
4								4		523	20000	4	EACH	DYNAMIC LOAD TESTING	933
4								4		523	20500	4	EACH	RESTRIKE	
1,404								1,404		526	30001	1,404	SY	REINFORCED CONCRETE APPROACH SLABS (T=17"), AS PER PLAN	933
422								422		526	90010	422	FT	TYPE A INSTALLATION	
2								2		622	25001	2	EACH	CONCRETE BARRIER END SECTION, TYPE D, AS PER PLAN	933
176								176		846	00110	176	CF	POLYMER MODIFIED ASPHALT EXPANSION JOINT SYSTEM	
														STRUCTURE OVER 20 FOOT SPAN (HAM-75-0857)	
	LUMP							LUMP		202	11003	LS		STRUCTURE REMOVED, OVER 20 FOOT SPAN, AS PER PLAN	996
	473							473		202	22900	473	SY	APPROACH SLAB REMOVED	
	LUMP							LUMP		503	11101	LS		COFFERDAMS AND EXCAVATION BRACING, AS PER PLAN (WALL A)	996
	LUMP							LUMP		503	11101	LS		COFFERDAMS AND EXCAVATION BRACING, AS PER PLAN (WALL B)	996
	LUMP							LUMP		503	11101	LS		COFFERDAMS AND EXCAVATION BRACING, AS PER PLAN (WALL C)	996
	LUMP							LUMP		503	11101	LS		COFFERDAMS AND EXCAVATION BRACING, AS PER PLAN (WALL D)	996
	LUMP							LUMP		503	21300	LS		UNCLASSIFIED EXCAVATION	
	LUMP							LUMP		505	11100	LS		PILE DRIVING EQUIPMENT MOBILIZATION	
	7,940							7,940		507	00500	7,940	FT	12" CAST-IN-PLACE REINFORCED CONCRETE PILES, DRIVEN	
	8,550							8,550		507	00550	8,550	FT	12" CAST-IN-PLACE REINFORCED CONCRETE PILES, FURNISHED	
	146,644							146,644		509	10000	146,644	LB	EPOXY COATED STEEL REINFORCEMENT	
	3,318							3,318		509	30020	3,318	FT	NO. 4 DEFORMED GFRP REINFORCEMENT	
	1,251							1,251		509	30030	1,251	FT	NO. 5 DEFORMED GFRP REINFORCEMENT	
	2,170							2,170		509	30040	2,170	FT	NO. 6 DEFORMED GFRP REINFORCEMENT	
	8							8		511	33501	8	EACH	SEMI-INTEGRAL DIAPHRAGM GUIDE, AS PER PLAN	997
	26							26		511	34463	26	CY	CLASS QC SCC CONCRETE WITH QC/QA, BRIDGE DECK (PARAPET), AS PER PLAN	997
	316							316		511	46513	316	CY	CLASS QC1 CONCRETE WITH QC/QA, FOOTING, AS PER PLAN	997
	540							540		511	53014	540	CY	CLASS QC3 CONCRETE, MISC.: CONCRETE WITH QC/QA, BRIDGE DECK, AS PER PLAN	996
	32							32		511	53014	32	CY	CLASS QC3 CONCRETE, MISC.: CONCRETE WITH QC/QA, BRIDGE DECK (MEDIAN PARAPET), AS PER PLAN	996
	152							152		511	53014	152	CY	CLASS QC3 CONCRETE, MISC.: CONCRETE WITH QC/QA, ABUTMENT, AS PER PLAN	997
	1,010							1,010		512	10100	1,010	SY	SEALING OF CONCRETE SURFACES (EPOXY-URETHANE)	
	7							7		512	33000	7	SY	TYPE 2 WATERPROOFING	
	328,782							328,782		513	10220	328,782	LB	STRUCTURAL STEEL MEMBERS, LEVEL 1	
	7,383							7,383		513	20000	7,383	EACH	WELDED STUD SHEAR CONNECTORS	
	18,231							18,231		514	00061	18,231	SF	FIELD PAINTING STRUCTURAL STEEL, INTERMEDIATE COAT, AS PER PLAN	997
	18,231							18,231		514	00067	18,231	SF	FIELD PAINTING STRUCTURAL STEEL, FINISH COAT, AS PER PLAN	997
	10							10		514	10000	10	EACH	FINAL INSPECTION REPAIR	
	396							396		516	10010	396	FT	ARMORLESS PREFORMED JOINT SEAL	
	353							353		516	13600	353	SF	1" PREFORMED EXPANSION JOINT FILLER	
	44							44		516	13900	44	SF	2" PREFORMED EXPANSION JOINT FILLER	
	414							414		516	14020	414	FT	SEMI-INTEGRAL ABUTMENT EXPANSION JOINT SEAL	
	46							46		516	44101	46	EACH	ELASTOMERIC BEARING WITH INTERNAL LAMINATES AND LOAD PLATE, AS PER PLAN 12"X12"X3.12" WITH 13"X13"X1.5" LOAD PLATE	
	2							2		523	20000	2	EACH	DYNAMIC LOAD TESTING	
	2							2		523	20500	2	EACH	RESTRIKE	
	1,267							1,267		526	30001	1,267	SY	REINFORCED CONCRETE APPROACH SLABS (T=17"), AS PER PLAN	997
	396							396		526	90030	396	FT	TYPE C INSTALLATION	
														MISCELLANEOUS STRUCTURE	
									LUMP	503	11101	LS		COFFERDAMS AND EXCAVATION BRACING, AS PER PLAN, STORMWATER DETENTION SYSTEM 2	576
								LUMP		503	11100	LS		COFFERDAMS AND EXCAVATION BRACING, STORMWATER DETENTION SYSTEM 3	

CALCULATED DLR CHECKED EDK

GENERAL SUMMARY

HAM-75-7.85

228
1047

Preliminary Plans - For Reference Only

J:\20110903\ODOT\HAM\77889\roadway\sheets\77889GG001.dgn 5/22/2026 10:13:15 AM hbrendlinger

SHEET NUMBER	PART. 01/IMS/04	PART. 02/IMS/03	PART. 04/NHS/04	ITEM	ITEM EXT	GRAND TOTAL	UNIT	DESCRIPTION	SEE SHEET NO.
61									
								MAINTENANCE OF TRAFFIC	
400	208	92	100	253	90000	400	CY	PAVEMENT REPAIR, MISC.: PERFORMED IN 2027	56
400	208	92	100	253	90000	400	CY	PAVEMENT REPAIR, MISC.: PERFORMED IN 2028	56
400	208	92	100	253	90000	400	CY	PAVEMENT REPAIR, MISC.: PERFORMED IN 2029	56
408	408			441	70201	408	CY	ASPHALT CONCRETE INTERMEDIATE COURSE, TYPE 1, (449), AS PER PLANPG-64-22	51
LUMP	LUMP	LUMP		503	11101	LS		COFFERDAMS AND EXCAVATION BRACING, AS PER PLAN, TS1	56
LUMP	LUMP	LUMP		503	11101	LS		COFFERDAMS AND EXCAVATION BRACING, AS PER PLAN, TS2	56
LUMP	LUMP	LUMP		503	11101	LS		COFFERDAMS AND EXCAVATION BRACING, AS PER PLAN, TS3	56
LUMP	LUMP	LUMP		503	11101	LS		COFFERDAMS AND EXCAVATION BRACING, AS PER PLAN, TS4	56
LUMP	LUMP	LUMP		503	11101	LS		COFFERDAMS AND EXCAVATION BRACING, AS PER PLAN, TS5	56
LUMP	LUMP	LUMP		503	11101	LS		COFFERDAMS AND EXCAVATION BRACING, AS PER PLAN, TS6	56
LUMP	LUMP	LUMP		503	11101	LS		COFFERDAMS AND EXCAVATION BRACING, AS PER PLAN, TS7	56
LUMP	LUMP	LUMP		503	11101	LS		COFFERDAMS AND EXCAVATION BRACING, AS PER PLAN, TS8	56
2	2			606	60040	2	EACH	IMPACT ATTENUATOR, TYPE 3 UNIDIRECTIONAL, 60 MPH, 48" WIDE	
2,100	894	331	875	614	11110	2,100	HOUR	LAW ENFORCEMENT OFFICER WITH PATROL CAR FOR ASSISTANCE	
3		1	2	SPECIAL	61411300	3	EACH	WORK ZONE TRAFFIC SIGNAL	58
8,000	3,920	1,680	2,400	614	11630	8,000	FT	INCREASED BARRIER DELINEATION	
16	8	4	4	614	12380	16	EACH	WORK ZONE IMPACT ATTENUATOR, 24" WIDE HAZARDS, (UNIDIRECTIONAL)	
6	3	2	1	614	12384	6	EACH	WORK ZONE IMPACT ATTENUATOR, 24" WIDE HAZARDS, (BIDIRECTIONAL)	
3	2	1		614	12400	3	EACH	WORK ZONE IMPACT ATTENUATOR, MISC.: 24" WIDE HAZARDS (UNIDIRECTIONAL), TYPE 3	56
LUMP	LUMP	LUMP	LUMP	614	12420	LS		DETOUR SIGNING	
11	8	3		614	12484	11	EACH	WORK ZONE INCREASED PENALTIES SIGN	
15	7	2	6	614	12500	15	EACH	REPLACEMENT SIGN	
150	64	23	63	614	12600	150	EACH	REPLACEMENT DRUM	
2	1	1		614	12756	2	EACH	WORK ZONE CROSSOVER LIGHTING SYSTEM	
200	110	40	50	614	12800	200	EACH	WORK ZONE RAISED PAVEMENT MARKER	
5,035	2,615	1,160	1,260	614	12801	5,035	EACH	WORK ZONE RAISED PAVEMENT MARKER, AS PER PLAN	54
90	39	15	36	614	13000	90	CY	ASPHALT CONCRETE FOR MAINTAINING TRAFFIC	
1,235	641	284	310	614	13310	1,235	EACH	BARRIER REFLECTOR, TYPE 1, BIDIRECTIONAL	
43	21	9	13	614	13312	43	EACH	BARRIER REFLECTOR, TYPE 2, BIDIRECTIONAL	
1,260	656	290	314	614	13350	1,260	EACH	OBJECT MARKER, ONE WAY	
230	113	48	69	614	13360	230	EACH	OBJECT MARKER, TWO WAY	
750,000	365,000	135,000	250,000	614	18000	750,000	EACH	MAINTAINING TRAFFIC, MISC.: OPTIMIZED TRAFFIC SIGNAL OPERATIONS FOR RAMP CLOSURE	57
LUMP	LUMP	LUMP	LUMP	614	18002	LS		MAINTAINING TRAFFIC, MISC.: MAINTAIN EXISTING RAMP M, AS PER PLAN	55
LUMP	LUMP	LUMP	LUMP	614	18002	LS		MAINTAINING TRAFFIC, MISC.: MAINTAIN EXISTING RAMP J, AS PER PLAN	55
320	175	65	80	614	18600	320	SNMT	PORTABLE CHANGEABLE MESSAGE SIGN	53

CALCULATED DLR
CHECKED EDK

GENERAL SUMMARY

HAM-75-7.85

229
1047

Preliminary Plans - For Reference Only

J:\20110903\ODOT\HAM\7889\roadway\sheets\77889GG001.dgn 5/22/2026 10:13:15 AM hbrendlinger

SHEET NUMBER											PART.			ITEM	ITEM EXT	GRAND TOTAL	UNIT	DESCRIPTION	SEE SHEET NO.
61	62										01/IMS/04	02/IMS/03	04/NHS/04						
																		MAINTENANCE OF TRAFFIC CONT.	
	11.2										5.8	2.5	2.9	614	20056	11.2	MILE	WORK ZONE LANE LINE, CLASS I, 6", 807 PAINT	
	2.1										1.1	0.5	0.5	614	20366	2.1	MILE	WORK ZONE LANE LINE, CLASS I, 6", 648	55
	11.33										5.93	2.6	2.8	614	20560	11.33	MILE	WORK ZONE LANE LINE, CLASS III, 6", 642 PAINT	
	38.2										19.9	8.8	9.5	614	22056	38.2	MILE	WORK ZONE EDGE LINE, CLASS I, 6", 807 PAINT	
	5										2.6	1.1	1.3	614	22336	5	MILE	WORK ZONE EDGE LINE, CLASS I, 6", 648	55
	11.34										5.94	2.6	2.8	614	22360	11.34	MILE	WORK ZONE EDGE LINE, CLASS III, 6", 642 PAINT	
	58,148										29,658	13,651	14,839	614	23110	58,148	FT	WORK ZONE CHANNELIZING LINE, CLASS I, 12", 807 PAINT	
	2,825										1,469	650	706	614	23140	2,825	FT	WORK ZONE CHANNELIZING LINE, CLASS I, 8", 648	55
	10,758										5,594	2,474	2,690	614	23690	10,758	FT	WORK ZONE CHANNELIZING LINE, CLASS III, 12", 642 PAINT	
	19,999										10,441	4,580	4,978	614	24102	19,999	FT	WORK ZONE DOTTED LINE, CLASS I, 6", 807 PAINT	
	1,290										670	297	323	614	24142	1,290	FT	WORK ZONE DOTTED LINE, CLASS I, 6", 648	55
	17,387										9,040	4,000	4,347	614	24612	17,387	FT	WORK ZONE DOTTED LINE, CLASS III, 6", 642 PAINT	
	418										309	52	57	614	28200	418	FT	WORK ZONE GORE MARKING, CLASS II, 642 PAINT	
	11												11	614	30200	11	EACH	WORK ZONE ARROW, CLASS I, 642 PAINT	
	LUMP										LUMP	LUMP	LUMP	615	10000	LS		ROADS FOR MAINTAINING TRAFFIC	
	LUMP										LUMP	LUMP	LUMP	615	10001	LS		ROADS FOR MAINTAINING TRAFFIC, AS PER PLAN	56
	958										658	244	56	615	20000	958	SY	PAVEMENT FOR MAINTAINING TRAFFIC, CLASS A	
	5,480										2,681	991	1,808	615	20001	5,480	SY	PAVEMENT FOR MAINTAINING TRAFFIC, CLASS A, AS PER PLAN	56
	1,230										602	222	406	616	10000	1,230	MGAL	WATER	
	24,880										18,162	6,718		622	41011	24,880	FT	PORTABLE BARRIER, 50", AS PER PLAN	56
	2										1	1		622	41060	2	EACH	DUAL PORTABLE BARRIER TRANSITION/TERMINATION	
	33,080										18,741	6,712	7,627	622	41100	33,080	FT	PORTABLE BARRIER, UNANCHORED	
	6,520										3,580	1,306	1,634	622	41110	6,520	FT	PORTABLE BARRIER, ANCHORED	
	223										163	60		808	18700	223	SNMT	DIGITAL SPEED LIMIT (DSL) SIGN ASSEMBLY	
	84										31	11	42	896	00010	84	SNMT	PORTABLE NON-INTRUSIVE TRAFFIC SENSOR, CLASS I	58
	84										31	11	42	896	00021	84	SNMT	PORTABLE CHANGEABLE MESSAGE SIGN, AS PER PLAN	58
																		INCIDENTALS	
											LUMP	LUMP	LUMP	108	10000	LS		CPM PROGRESS SCHEDULE	
											4,125	4,125	2,750	SPECIAL	11110100	11,000	EACH	DEPARTMENTS SHARE FACILITATED PARTNERING COSTS	
LUMP											LUMP	LUMP	LUMP	614	11000	LS		MAINTAINING TRAFFIC	50
											16	16	16	619	16021	48	MNTH	FIELD OFFICE, TYPE C, AS PER PLAN	36
											LUMP	LUMP	LUMP	623	10000	LS		CONSTRUCTION LAYOUT STAKES AND SURVEYING	
											LUMP	LUMP	LUMP	624	10001	LS		MOBILIZATION, AS PER PLAN	47

CALCULATED DLR CHECKED EDK

GENERAL SUMMARY

HAM-75-7.85

230
1047

Preliminary Plans - For Reference Only

J:\20110903\ODOT\HAM\7889\roadway\sheets\77889GG001.dgn 5/27/2026 12:15:42 PM hbrendlinger

ESTIMATED QUANTITIES SHEET NO.			202 HEADWALL REMOVED EACH	202 PAVEMENT REMOVED, AS PER PLAN SQ YD	202 WEARING COURSE REMOVED SQ YD	202 WALK REMOVED SQ FT		202 GUTTER REMOVED FT	202 PIPE REMOVED, 24" AND UNDER FT	202 PIPE REMOVED, OVER 24" FT		202 MANHOLE REMOVED EACH	202 CATCH BASIN REMOVED EACH	202 INLET REMOVED EACH	202 INLET ABANDONED EACH	202 INLET ABANDONED, AS PER PLAN EACH	202 CATCH BASIN ABANDONED EACH	202 MANHOLE ABANDONED EACH	202 MANHOLE ABANDONED, AS PER PLAN EACH	202 SPECIAL - FILL & PLUG EX. CONDUIT FT	202 FENCE REMOVED FT			
232			2	46,472	46,472				665	756		1	9	7	4	1	1	3		1,915	4,994			
233				32,796	32,796			60	2,484	30		9	17	6	3		4	4		1,758	4,198			
234				18,426	18,426	3,070		294	1,525	664		12	11	1			3	6	1	1,410	1,491			
235				16,540	16,540				30				3					5		1,244	36			
TOTALS CARRIED TO GENERAL SUMMARY			2	114,234	114,234	3,070		354	4,704	1,450		22	40	14	7	1	8	18	1	6,327	10,719			

CALCULATED SEA
CHECKED DLR

REMOVAL SUBSUMMARY

HAM-75-7.85

231
1047

Preliminary Plans - For Reference Only

J:\20110903\ODOT\HAM\77889\roadway\sheets\77889GS001_Removals.dgn 5/22/2026 10:13:16 AM hbrendlinger

SHEET NO.	REF. NO.	STATION FROM	STATION TO	SIDE	CENTERLINE ROADWAY REFERENCE			202 HEADWALL REMOVED EACH	202 PAVEMENT REMOVED, AS PER PLAN SQ YD	202 WEARING COURSE REMOVED SQ YD			202 PIPE REMOVED, 24" AND UNDER FT	202 PIPE REMOVED, OVER 24" FT		202 MANHOLE REMOVED EACH	202 CATCH BASIN REMOVED EACH	202 INLET REMOVED EACH	202 INLET ABANDONED EACH	202 INLET ABANDONED, AS PER PLAN EACH	202 CATCH BASIN ABANDONED EACH	202 MANHOLE ABANDONED EACH		202 SPECIAL - FILL & PLUG EX. CONDUIT FT	202 FENCE REMOVED FT		
267	R1	414+61		LT	I.R. 75																		1		36		
267	R2	410+00	417+16	LT	I.R. 75				4522	4522																	
267	R3	413+51	415+99	RT	I.R. 75								248					1									
267	R4	418+86	419+26	LT/RT	I.R. 75								162			1		1									
267	R5	419+12	419+50	LT/RT	I.R. 75				736	736																	
267	R6	416+45	419+50	LT	I.R. 75																					335	
267	R7	416+52	419+50	LT	I.R. 75																					279	
267	R8	410+00	417+39	RT	I.R. 75				4855	4855																	
267	R9	409+58		RT	I.R. 75												1										
269	R1	419+50	421+53	LT	I.R. 75																					189	
269	R2	419+50	432+00	LT	I.R. 75																					1250	
269	R3	430+50	431+37	LT	I.R. 75																					87	
269	R4	420+98	421+22	LT/RT	I.R. 75								20						1				1		264		
269	R5	423+84	423+98	LT/RT	I.R. 75								5						1						119		
269	R6	426+25	426+28	LT/RT	I.R. 75			2																	207		
269	R7	428+93	429+60	LT/RT	I.R. 75												2	1							184		
269	R8	424+65	432+00	RT	I.R. 75																					749	
269	R9	431+07	431+07	RT	I.R. 75																					13	
269	R10	419+50	432+00	LT	I.R. 75				7835	7835																	
269	R11	419+50	432+00	RT	I.R. 75				9209	9209																	
269	R12	429+16	430+35	RT	I.R. 75																				419		
269	R13	422+79	426+66	LT	I.R. 75				322	322																	
269	R14	426+33	426+42		LT/RT														1						59		
270	R1	433+19	434+46	LT	I.R. 75									183									1		166		
270	R2	432+00	433+57	LT	I.R. 75																					157	
270	R3	435+39	444+50	RT	I.R. 75				5283	5283																	
270	R4	436+61	437+40	LT	I.R. 75								6												74		
270	R5	435+23	439+97	LT	I.R. 75																					523	
270	R6	440+32	444+50	LT	I.R. 75																					426	
	R7	NOT USED																									
270	R8	436+57	444+50	RT	I.R. 75									573				4		1					228		
270	R9	432+00	433+80	RT	I.R. 75																					210	
270	R10	436+78	436+91	RT	I.R. 75																	1			14		
270	R11	435+26	439+29	RT	I.R. 75																					433	
270	R12	440+36	440+43	RT	I.R. 75												1								57		
270	R13	443+20	443+26	RT	I.R. 75								66				1										
270	R14	443+18	444+50	RT	I.R. 75																					286	
270	R15	439+22	439+54	LT/RT	I.R. 75								88				1										
270	R16	440+36	440+68	LT	I.R. 75												1								88		
	R17	NOT USED																									
270	R18	439+82	440+38	RT	I.R. 75																					57	
	R19	NOT USED																									
270	R20	432+00	433+61	LT	I.R. 75				1135	1135																	
270	R21	432+00	433+61	RT	I.R. 75				1023	1023																	
270	R22	435+39	444+50	LT/RT	I.R. 75				11552	11552																	
270	R23	439+55	439+64	RT	I.R. 75								52				1										
270	R24	429+14	433+36	RT	I.R. 75														1								
270	R25	440+37		RT	I.R.75								18				1										
TOTALS CARRIED TO REMOVAL SUBSUMMARY								2	46472	46472			665	756		1	9	7	4	1	1	3		1915	4994		

CALCULATED SEA CHECKED DLR

REMOVAL ESTIMATED QUANTITIES

HAM-75-7.85

232
1047

Preliminary Plans - For Reference Only

J:\20110903\ODOT\HAM\77889\roadway\sheets\77889GS001_Removals.dgn 5/22/2026 10:13:16 AM hbrendlinger

SHEET NO.	REF. NO.	STATION FROM	STATION TO	SIDE	CENTERLINE ROADWAY REFERENCE				202 PAVEMENT REMOVED, AS PER PLAN SQ YD	202 WEARING COURSE REMOVED SQ YD		202 GUTTER REMOVED FT	202 PIPE REMOVED, 24" AND UNDER FT	202 PIPE REMOVED, OVER 24" FT		202 MANHOLE REMOVED EACH	202 CATCH BASIN REMOVED EACH	202 INLET REMOVED EACH	202 INLET ABANDONED EACH		202 CATCH BASIN ABANDONED EACH	202 MANHOLE ABANDONED EACH		202 SPECIAL - FILL & PLUG EX. CONDUIT FT	202 FENCE REMOVED FT	
271	R1	444+50	451+17	LT/RT	I.R. 75				7992	7992																
271	R2	453+25	457+00	LT/RT	I.R. 75				4376	4376																
	R3	NOT USED																								
	R4	NOT USED																								
271	R5	13+34	21+17		TOWNE/CEDAR				3413	3413																
271	R6	444+50	457+00	CENTER/RT	I.R. 75									30		1						2		1234		
271	R7	446+20	446+29	RT	I.R. 75								65				1		1							
271	R8	447+97	449+16	RT	I.R. 75								129				1					1				
271	R9	450+99	451+84	LT	I.R. 75								84			1										
271	R10	451+31	451+52	RT	I.R. 75								20				1					1				
271	R11	451+31	451+28	RT	I.R. 75								70			1	1									
271	R12	452+13	451+71	RT	I.R. 75								160			2										
271	R13	452+13	452+08	RT	I.R. 75								6				1									
271	R14	452+13	17+42	RT/LT	75/TOWNE								42				1									
271	R15	452+13	452+32	RT	I.R. 75								108				1									
271	R16	453+08	17+34	RT	75/TOWNE								44				1									
271	R17	453+08	453+16	RT	I.R. 75								6				1									
271	R18	452+79	452+82	LT	I.R. 75								26			1										
271	R19	NOT USED		LT	I.R. 75																					
271	R20	453+08	16+27	RT	I.R. 75								144			1										
271	R21	453+08	452+72	RT	I.R. 75								114			2										
271	R22	453+08	453+35	RT	I.R. 75								32				1									
271	R23	455+18	455+33	RT	I.R. 75																1			43		
271	R24	455+18	455+47	LT/RT	I.R. 75														1		1			143		
271	R25	444+50	451+43	LT	I.R. 75																				804	
271	R26	454+30	457+00	LT	I.R. 75																				471	
271	R27	444+50	449+05	RT	I.R. 75																				463	
271	R28	451+23	452+36	RT	I.R. 75																				155	
	R29	NOT USED																								
271	R30	447+21	447+80	RT	I.R. 75							60														
271	R31	452+09	452+82		I.R. 75								204													
272	R1	457+00	469+50	LT/RT	I.R. 75				17015	17015																
272	R3	457+00	467+95	RT/CENTER	I.R. 75								856					4	1					228		
272	R4	458+26	458+36	LT	I.R. 75																1			50		
272	R5	459+27	459+37	LT	I.R. 75								49				1									
272	R6	459+27	459+36	RT	I.R. 75								76				2									
272	R7	460+28	460+36	LT	I.R. 75								49				1									
272	R8	462+48	462+58	LT	I.R. 75								68				1									
272	R9	462+48	462+57	RT	I.R. 75								66				1									
272	R10	465+19	465+31	RT	I.R. 75								2				1				1			60		
272	R11	467+95	467+95	LT	I.R. 75								64				1	1								
272	R12	457+00	469+50	LT	I.R. 75																				1246	
272	R13	458+97	469+50	RT	I.R. 75																				1059	
273	R1	469+50	472+00		I.R. 75				3791	3791																
TOTALS CARRIED TO REMOVAL SUBSUMMARY									32796	32796		60	2484	30		9	17	6	3		4	4		1758	4198	

CALCULATED SEA
CHECKED DLR

REMOVAL ESTIMATED QUANTITIES

HAM-75-7.85

233
1047

Preliminary Plans - For Reference Only

J:\20110903\ODOT\HAM\77889\roadway\sheets\77889GS001_Removals.dgn 5/22/2026 10:13:16 AM hbrendlinger

SHEET NO.	REF. NO.	STATION FROM	STATION TO	SIDE	CENTERLINE ROADWAY REFERENCE				202 PAVEMENT REMOVED, AS PER PLAN SQ YD	202 WEARING COURSE REMOVED SQ YD	202 WALK REMOVED SQ FT		202 GUTTER REMOVED FT	202 PIPE REMOVED, 24" AND UNDER FT	202 PIPE REMOVED, OVER 24" FT		202 MANHOLE REMOVED EACH	202 CATCH BASIN REMOVED EACH	202 INLET REMOVED EACH		202 CATCH BASIN ABANDONED EACH	202 MANHOLE ABANDONED EACH	202 MANHOLE ABANDONED, AS PER PLAN EACH	202 SPECIAL - FILL & PLUG EX. CONDUIT FT	202 FENCE REMOVED FT		
274	R1	412+00	417+27	LT/RT	RAMP M				1191	1191																	
274	R2	419+49	420+55	LT/RT	RAMP M				323	323																	
278	R1	412+64	416+99	LT/RT	RAMP N				1259	1259																	
278	R2	414+25	414+91	LT/RT	RAMP N										63		1										
278	R3	414+91	415+06	LT/RT	RAMP N									23				1									
280	R1	404+67	406+32	LT/RT	RAMP J								237														
280	R2	405+95	411+21	LT/RT	RAMP J									159			1	1				4		412		
280	R3	406+22	406+40	LT/RT	RAMP J									63				1								
280	R4	410+05	410+15	RT	RAMP J																1			112		
280	R5	412+54	413+43	LT/RT	RAMP J									129				2			1		1	134		
280	R6	413+10	413+51	LT	RAMP J																	1		63		
280	R7	407+88	415+34	RT	RAMP J																				636	
280	R8	403+79	404+98	LT	RAMP J																				137	
280	R9	407+31	408+75	LT	RAMP J																				183	
280	R14	403+79	404+93	LT	RAMP J				149	149																
280	R15	403+79	416+00	LT/RT	RAMP J				5118	5118																
280	R16	403+79	416+29	LT/RT	RAMP J				6088	6088																
280	R17	413+20	413+57	RT	RAMP J								57													
280	R18	408+33	408+43	LT/RT	RAMP J									15					1							
281	R1	416+14	429+29	LT/RT	RAMP J									274	601		5					1		533		
281	R2	416+99	418+14	LT	RAMP J									264			3									
281	R3	416+99	417+90	LT	RAMP J									255			1	1						43		
281	R4	416+00	428+49	LT/RT	RAMP J				3043	3043																
281	R5	418+42	419+32	LT	RAMP J									97				1								
281	R6	423+97	424+18	RT	RAMP J									50				1								
281	R7	423+97	424+37	RT	RAMP J									41				1								
281	R8	415+97	416+99	LT	RAMP J																1			113		
281	R9	419+43	419+58	LT	RAMP J									19				1								
281	R10	421+17	421+86	RT	RAMP J									7				1								
282	R1	20+48	23+42	RT	LAIDLAW						1462															
282	R2	20+87	23+47	LT	LAIDLAW						1548															
282	R3	436+91	436+98	LT	PROSSER						60														72	
284	R1	419+50	423+51	LT/RT	RAMP K				1255	1255																
284	R2	419+50	424+51	RT	RAMP K																				463	
284	R3	421+50	421+60	LT	RAMP K									129			1									
TOTALS CARRIED TO REMOVAL SUBSUMMARY									18426	18426	3070		294	1525	664		12	11	1		3	6	1	1410	1491		

CALCULATED SEA CHECKED DLR

REMOVAL ESTIMATED QUANTITIES

HAM-75-7.85

234
1047

Preliminary Plans - For Reference Only

J:\20110903\ODOT\HAM\77889\roadway\sheets\77889GS001_Removals.dgn 5/22/2026 10:13:17 AM hbrendlinger

SHEET NO.	REF. NO.	STATION FROM	STATION TO	SIDE	CENTERLINE ROADWAY REFERENCE				202 PAVEMENT REMOVED, AS PER PLAN SQ YD	202 WEARING COURSE REMOVED SQ YD				202 PIPE REMOVED, 24" AND UNDER FT			202 CATCH BASIN REMOVED EACH					202 MANHOLE ABANDONED EACH		202 SPECIAL - FILL & PLUG EX. CONDUIT FT	202 FENCE REMOVED FT		
285	R1	20+76	22+22	LT	S.R. 562																	1		143		
285	R2	22+22	22+35	LT/RT	S.R. 562									15			1							41		
285	R3	20+00	27+50	RT	S.R. 562				3315	3315																
285	R4	20+00	27+50	LT	S.R. 562				3411	3411																
285	R5	20+00	20+36	RT	S.R. 562																				36	
285	R6	22+22	26+30	LT/RT	S.R. 562												1					2		475		
286	R1	26+30	31+59	LT/RT	S.R. 562																	2		524		
286	R2	29+19	29+19	RT	S.R. 562									15			1							61		
286	R3	27+50	32+00	RT	S.R. 562				2383	2383																
286	R4	27+50	33+33	LT	S.R. 562				2989	2989																
288	R1	33+30	34+00	LT/RT	RAMP P				238	238																
289	R1	34+00	38+32	LT/RT	RAMP P				1596	1596																
290	R1	31+80	38+19	LT/RT	RAMP Q				2608	2608																
TOTALS CARRIED TO REMOVAL SUBSUMMARY									16540	16540				30			3					5		1244	36		

CALCULATED SEA
CHECKED DLR

REMOVAL ESTIMATED QUANTITIES

HAM-75-7.85

235
1047

Preliminary Plans - For Reference Only

J:\20110903\ODOT\HAM\7889\roadway\sheets\77889GS001_Removals.dgn 5/22/2026 10:13:17 AM hbrendlinger

SHEET NO.	REF. NO.	STATION FROM	STATION TO	SIDE	CENTERLINE ROADWAY REFERENCE	202 WALK REMOVED	202 CURB REMOVED	202 REMOVAL MISC.: ABANDONED WATERLINE		452 8" NON-REINFORCED CONCRETE PAVEMENT, CLASS QC1		608 4" CONCRETE WALK	608 CURB RAMP	609 CURB, TYPE 6							
						SF	FT	FT		SY		SF	SF	FT							
282	W1	20+48	23+42	RT	LAIDLAW							2432									
282	W2	20+87	23+47	LT	LAIDLAW							2515									
282	W3	436+91	436+98	LT	PROSSER							60									
291	R1	13+34	17+00	LT	TOWNE	1486															
291	R2	13+34	17+00	RT	TOWNE	1510															
291	R3	13+34	17+00	LT	TOWNE		366														
291	R4	13+34	17+00	RT	TOWNE		366														
291	W1	13+34	17+00	LT	TOWNE							2565									
291	W2	13+34	17+00	RT	TOWNE							2410									
291	C1	13+34	17+00	LT	TOWNE									366							
291	C2	13+34	17+00	RT	TOWNE									366							
291	D1	14+48	14+74	RT	TOWNE					42											
292	R1	17+00	20+89	LT	TOWNE	1510															
292	R2	17+00	19+88	RT	TOWNE	1189															
292	R3	17+00	21+17	LT	TOWNE		416														
292	R4	17+00	19+88	RT	TOWNE		290														
292	R5	20+26	21+17	RT	TOWNE		96														
292	R6	20+26	20+45	RT	TOWNE	98															
292	R7	00+27	00+65	LT	CEDAR	171															
292	R8	00+44	01+28	RT	CEDAR	324															
292	R9	00+27	01+26	LT	CEDAR		99														
292	R10	00+44	01+26	RT	CEDAR		84														
292	R11	17+60	19+86	RT	TOWNE			230													
292	W1	17+00	21+08	LT	TOWNE							2659									
292	W2	17+00	19+96	RT	TOWNE							2073									
292	W3	20+40	20+45	RT	TOWNE							20									
292	W4	00+30	00+47	LT	CEDAR							68									
292	W5	00+54	00+58	LT	CEDAR							11									
292	W6	00+63	01+28	RT	CEDAR							458									
292	D1	00+81	00+91	RT	CEDAR					4											
292	C1	17+00	19+92	RT	TOWNE									292							
292	C2	17+00	21+17	LT	TOWNE									416							
292	C3	20+39	21+17	RT	TOWNE									77							
292	C4	00+17	01+26	LT	CEDAR									117							
292	C5	00+16	01+26	RT	CEDAR									123							
292	CR1		00+20	LT	CEDAR								94								
292	CR2		00+23	RT	CEDAR								79								
292	CR3		00+54	RT	CEDAR								88								
292	CR4		00+56	LT	CEDAR								90								
289	CR1		37+46	RT	RAMP P								83	16							
289	CR2		37+46	RT	RAMP P								39	Q							
289	CR3		37+19	RT	RAMP P								53								
289	CR4		37+08	RT	RAMP P								53								
290	CR1		37+15	LT	RAMP Q								105								
290	CR2		37+28	LT	RAMP Q								39								
290	CR3		37+47	LT	RAMP Q								40								
290	CR4		37+47	LT	RAMP Q								78								
290	W1	37+29	37+49	LT	RAMP Q							165									
TOTALS CARRIED TO GENERAL SUMMARY						6288	1718	230		47		15435	841	1775							

Preliminary Plans - Not For Reference Only

CALCULATED SEA
CHECKED DLR

ROADWAY ESTIMATED QUANTITIES

HAM-75-7.85

J:\2011093\ODOT\HAM\77889\roadway\sheets\77889GS002_Roadway.dgn 5/22/2026 10:13:17 AM hbrendlinger

ESTIMATED QUANTITIES SHEET NO.	202 CONCRETE BARRIER REMOVED FT	202 CURB REMOVED FT	202 GUARDRAIL REMOVED FT		516 1" PREFORMED EXPANSION JOINT FILLER SF	606 GUARDRAIL, TYPE MGS FT	606 GUARDRAIL, TYPE MGS WITH LONG POSTS FT	606 ANCHOR ASSEMBLY, MGS TYPE E EACH	606 ANCHOR ASSEMBLY, MGS TYPE T EACH	606 MGS BRIDGE TERMINAL ASSEMBLY, TYPE 1 EACH	606 MGS BRIDGE TERMINAL ASSEMBLY, TYPE 2 EACH		609 CURB, TYPE 4-C, AS PER PLAN FT	611 INLET, NO. 3 FOR SINGLE SLOPE PARRIER, TYPE B1, AS PER PLAN EACH	611 INLET, NO. 3 FOR SINGLE SLOPE PARRIER, TYPE C1, AS PER PLAN EACH	622 CONCRETE BARRIER, SINGLE SLOPE, TYPE B1 FT	622 CONCRETE BARRIER, SINGLE SLOPE, TYPE B1, AS PER PLAN FT	622 CONCRETE BARRIER, SINGLE SLOPE, TYPE C1 FT	622 CONCRETE BARRIER, SINGLE SLOPE, TYPE C1, AS PER PLAN FT	622 CONCRETE BARRIER, SINGLE SLOPE, TYPE D FT	622 BARRIER TRANSITION EACH		622 CONCRETE BARRIER END SECTION, TYPE D EACH	622 CONCRETE BARRIER, END ANCHORAGE, REINFORCED, TYPE B1 EACH	622 CONCRETE BARRIER, END ANCHORAGE, REINFORCED, TYPE B1, AS PER PLAN EACH		622 CONCRETE BARRIER, END ANCHORAGE, REINFORCED, TYPE C1 EACH	622 CONCRETE BARRIER, END ANCHORAGE, REINFORCED, TYPE C1, AS PER PLAN EACH		622 CONCRETE BARRIER, END ANCHORAGE, REINFORCED, TYPE D EACH	622 CONCRETE BARRIER, END ANCHORAGE, REINFORCED, TYPE D, AS PER PLAN EACH	626 BARRIER REFLECTOR, TYPE 1, 1 WAY EACH	626 BARRIER REFLECTOR, TYPE 2, 1 WAY EACH
238	3,040	3,675	3,463			868	75	4	3	3	2		755			287		610		465			3	1			7	1		5	1	36	32
239	3,276	867	1,617		711	2,956		4	1	6	4		29			1,145		460		226			5	16	6		4			5		58	42
240	2,244	641	1,173			343		1		3	1			1	3	1,951	85	807		1,932			6	22	1		4	2		10	1	120	7
241	2,236	832	2,096		546	3,286		3	1	3	2		3,366			1,768		80	158	1,369	2		6	13			1	1		19	1	80	
TOTALS CARRIED TO GENERAL SUMMARY	10,796	6,015	8,349		1,257	7,453	75	12	5	15	9		4,150	1	3	5,151	85	1,957	158	3,992	2		20	52	7		16	4		39	3	294	81

CALCULATED SEA
CHECKED DLR

ROADSIDE BARRIER SUBSUMMARY

HAM-75-7.85

237
1047

Preliminary Plans - For Reference Only

J:\20110903\ODOT\HAM\7889\roadway\sheets\77889GS003_Roadside Barrier.dgn 5/22/2026 10:13:18 AM hbrendlinger

SHEET NO.	REF. NO.	STATION FROM	STATION TO	SIDE	CENTERLINE ROADWAY REFERENCE	202 CONCRETE BARRIER REMOVED FT	202 CURB REMOVED FT	202 GUARDRAIL REMOVED FT	606 GUARDRAIL, TYPE MGS FT	606 GUARDRAIL, TYPE MGS WITH LONG POSTS FT	606 ANCHOR ASSEMBLY, MGS TYPE E EACH	606 ANCHOR ASSEMBLY, MGS TYPE T EACH	606 MGS BRIDGE TERMINAL ASSEMBLY, TYPE 1 EACH	606 MGS BRIDGE TERMINAL ASSEMBLY, TYPE 2 EACH	609 CURB, TYPE 4-C, AS PER PLAN FT	622 CONCRETE BARRIER, SINGLE SLOPE, TYPE B1 FT	622 CONCRETE BARRIER, SINGLE SLOPE, TYPE C1 FT	622 CONCRETE BARRIER, SINGLE SLOPE, TYPE D FT	622 CONCRETE BARRIER END SECTION, TYPE D EACH	622 CONCRETE BARRIER, END ANCHORAGE, REINFORCED, TYPE B1 EACH	622 CONCRETE BARRIER, END ANCHORAGE, REINFORCED, TYPE C1 EACH	622 CONCRETE BARRIER, END ANCHORAGE, REINFORCED, TYPE C1, AS PER PLAN EACH	622 CONCRETE BARRIER, END ANCHORAGE, REINFORCED, TYPE D EACH	622 CONCRETE BARRIER, END ANCHORAGE, REINFORCED, TYPE D, AS PER PLAN EACH	626 BARRIER REFLECTOR, TYPE 1, 1 WAY EACH	626 BARRIER REFLECTOR, TYPE 2, 1 WAY EACH
688	R1	412+00	417+12	LT	RAMP M			542																			
688	R2	414+00	417+00	LT	RAMP M		361																				
688	R3	414+00	417+12	LT	RAMP M			283																			
688	R4	414+00	417+05	LT	RAMP M		365																				
688	R5	412+00	415+61	LT	I.R. 75			425																			
688	R6	407+87	417+01	RT	I.R. 75	916																					
688	R7	414+90	416+79	LT	I.R. 75			194																			
688	R8	416+54	416+98	RT	I.R. 75		46																				
688	R9	418+51	419+07	LT	RAMP J			63																			
688	R10	413+69	421+25	LT	RAMP J		825																				
688	R11	413+76	421+20	LT	RAMP J		788																				
688	R12	418+84	421+00	RT	I.R. 75	218																					
688	R13	419+31	421+00	LT	I.R. 75			168																			
688	R14	419+61	421+18	LT	RAMP M			172																			
688	R15	419+63	421+79	LT	RAMP M	225																					
688	R16	418+54	420+51	RT	RAMP K			194																			
688	R17	414+04	415+09	RT	RAMP N			105																			
688	R18	413+94	418+53	LT	RAMP N		470																				
688	R19	419+74	421+78	LT	RAMP M		219																				
688	R20	415+09	415+68	RT	RAMP N	60																					
688	R21	418+38	420+69	LT	RAMP K		241																				
688	G1	412+00	416+26	LT	RAMP M				412.5					1													9
688	G2	412+02	413+88	RT	RAMP M				175.0		1			1													5
688	G3	420+33	420+97	LT	I.R. 75				37.5			1															3
688	G4	414+27	416+97	RT	I.R. 75				cc		1		1														3
688	G5	420+25	421+58	LT	RAMP M				62.5		1		1														3
688	G6	418+60	420+47	RT	RAMP K				180.3																		3
688	G7	414+74	415+63	RT	RAMP N					25	1	1															3
688	G8	419+17	420+30	LT	RAMP J					50	1	1															3
688	C1	420+33	420+51	LT	I.R. 75										19												
688	C2	413+93	421+21	RT	RAMP J										718												
688	C3	420+25	420+42	LT	RAMP M										18												
688	B1	407+87	417+61	RT/LT	I.R. 75											287	479			1	7				18		
688	B2	415+50	418+34	LT	I.R. 75													248					2		4		
688	B3	419+54	421+00	RT/LT	I.R. 75												131					1			6		
688	B4	413+88	415+69	RT	RAMP M													113	1				2		3		
688	B5	420+61	421+80	RT	RAMP M													104					1		3		
688	B6	416+46	416+97	RT	I.R. 75														1					1	1		
688	B7	415+94	416+07	LT	RAMP M														1						1		
689	R1	421+25	424+24	RT	RAMP J		321																				
689	R2	421+52	424+46	RT	RAMP J			294																			
689	R3	426+04	429+17	LT	I.R. 75	315																					
689	R4	429+18	430+36	LT	I.R. 75			118																			
689	R5	433+34	433+60	LT	I.R. 75		26																				
689	R6	421+00	422+25	LT	I.R. 75			125																			
689	R7	421+00	434+00	RT	I.R. 75	1306																					
689	R8	420+51	426+90	RT	RAMP K			634																			
689	R9	432+21	433+67	RT	I.R. 75			146																			
689	R10	433+51	433+64	RT	I.R. 75		13																				
TOTALS CARRIED TO ROADSIDE BARRIER SUBSUMMARY						3040	3675	3463	868	75	4	3	3	2	755	287	610	465	3	1	7	1	5	1	36	32

CALCULATED SEA
CHECKED DLR

ROADSIDE BARRIER ESTIMATED QUANTITIES

HAM-75-7.85

238
1047

Preliminary Plans - For Reference Only

J:\20110903\ODOT\HAM\77889\roadway\sheets\77889GS003_Roadside Barrier.dgn 5/22/2026 10:13:18 AM hbrendlinger

SHEET NO.	REF. NO.	STATION FROM	STATION TO	SIDE	CENTERLINE ROADWAY REFERENCE	202 CONCRETE BARRIER REMOVED	202 CURB REMOVED	202 GUARDRAIL REMOVED	516 1" PREFORMED EXPANSION JOINT FILLER	606 GUARDRAIL, TYPE MGS	606 ANCHOR ASSEMBLY, MGS TYPE E	606 ANCHOR ASSEMBLY, MGS TYPE T	606 MGS BRIDGE TERMINAL ASSEMBLY, TYPE 1	606 MGS BRIDGE TERMINAL ASSEMBLY, TYPE 2	609 CURB, TYPE 4-C, AS PER PLAN	622 CONCRETE BARRIER, SINGLE SLOPE, TYPE B1	622 CONCRETE BARRIER, SINGLE SLOPE, TYPE C1	622 CONCRETE BARRIER, SINGLE SLOPE, TYPE D	622 CONCRETE BARRIER END SECTION, TYPE D	622 CONCRETE BARRIER, END ANCHORAGE, REINFORCED, TYPE B1	622 CONCRETE BARRIER, END ANCHORAGE, REINFORCED, TYPE B1, AS PER PLAN	622 CONCRETE BARRIER, END ANCHORAGE, REINFORCED, TYPE C1	622 CONCRETE BARRIER, END ANCHORAGE, REINFORCED, TYPE D	626 BARRIER REFLECTOR, TYPE 1, 1 WAY	626 BARRIER REFLECTOR, TYPE 2, 1 WAY	
						FT	FT	FT	SF	FT	EACH	EACH	EACH	EACH	FT	FT	FT	FT	EACH	EACH	EACH	EACH	EACH	EACH	EACH	
689	R11	421+20	424+36	RT	RAMP J		316																			
689	R12	433+65	434+00	RT	I.R. 75	36																				
689	R13	420+69	421+85	LT	RAMP K		119																			
689	G1	420+97	425+71	LT	I.R. 75					412.5	1														5	
689	G2	421+00	433+68	RT	I.R. 75					1289.0			1												13	
689	G3	422+19	423+91	LT	RAMP J					112.5	1	1													3	
689	C1	421+21	421+30	RT	RAMP J										9											
689	C2	433+49	433+68	RT	I.R. 75										20											
689	B1	421+00	433+82	RT/LT	I.R. 75											560	460			6	2	4		26		
690	R1	435+34	435+60	LT	I.R. 75		27																			
690	R2	435+32	437+02	LT	I.R. 75			171																		
690	R3	439+93	440+37	LT	I.R. 75	44																				
690	R4	440+37	441+97	LT	I.R. 75			161																		
690	R5	434+00	444+50	RT	I.R. 75	1051																				
690	R6	434+00	436+33	RT	I.R. 75	233																				
690	R7	436+30	439+44	RT	I.R. 75			315																		
690	R8	439+44	444+50	RT	I.R. 75	507																				
690	R9	440+48	443+53	LT/RT	I.R. 75	305																				
690	G1	435+48	437+49	LT	I.R. 75					125.0	1		1												3	
690	G2	442+03	443+04	LT	I.R. 75					25.0	1		1												3	
690	G3	435+58	439+00	RT	I.R. 75					325.0			1	1											4	
690	G4	441+38	444+50	RT	I.R. 75					312.5				1											4	
690	B1	440+59	442+03	LT	I.R. 75				322									116	1					1	3	
690	B2	435+19	444+50	LT/RT	I.R. 75											585				10	4				20	
690	B3	439+00	441+38	RT	I.R. 75				389									110	2				4	3		
690	B4	435+34	435+48	LT	I.R. 75														1					3		
690	B5	435+44	435+58	RT	I.R. 75														1					3		
691	R1	449+49	451+11	LT	I.R. 75		26	162																		
691	R2	453+01	457+00	LT	I.R. 75	58	340	343																		
691	R3	449+95	451+41	RT	I.R. 75		19	146																		
691	R4	453+30	456+40	RT	I.R. 75		20	309																		
691	R5	456+91	457+00	RT	I.R. 75			9																		
691	R6	444+50	451+17	CL	I.R. 75	667																				
691	R7	453+26	457+00	CL	I.R. 75	374																				
691	G1	444+50	445+14	RT	I.R. 75					39			1	1											3	
691	G2	448+00	451+42	RT	I.R. 75					315			1	1											4	
TOTALS CARRIED TO ROADSIDE BARRIER SUBSUMMARY						3276	867	1617	711	2956	4	1	6	4	29	1145	460	226	5	16	6	4	5	58	42	

CALCULATED SEA
CHECKED DLR

ROADSIDE BARRIER ESTIMATED QUANTITIES

HAM-75-7.85

239
1047

Preliminary Plans - For Reference Only

J:\20110903\ODOT\HAM\77889\roadway\sheets\77889GS003_Roadside Barrier.dgn 5/22/2026 10:13:18 AM hbrendlinger

ROADSIDE BARRIER ESTIMATED QUANTITIES

CALCULATED SEA
CHECKED DLR

SHEET NO.	REF. NO.	STATION FROM	STATION TO	SIDE	CENTERLINE ROADWAY REFERENCE	202 CONCRETE BARRIER REMOVED	202 CURB REMOVED	202 GUARDRAIL REMOVED	606 GUARDRAIL, TYPE MGS	606 ANCHOR ASSEMBLY, MGS TYPE E	606 ANCHOR ASSEMBLY, MGS TYPE T	606 MGS BRIDGE TERMINAL ASSEMBLY, TYPE 1	606 MGS BRIDGE TERMINAL ASSEMBLY, TYPE 2	611 INLET, NO. 3 FOR SINGLE SLOPE PARRIER, TYPE B1, AS PER PLAN	611 INLET, NO. 3 FOR SINGLE SLOPE PARRIER, TYPE C1, AS PER PLAN	622 CONCRETE BARRIER, SINGLE SLOPE, TYPE B1	622 CONCRETE BARRIER, SINGLE SLOPE, TYPE B1, AS PER PLAN	622 CONCRETE BARRIER, SINGLE SLOPE, TYPE C1	622 CONCRETE BARRIER, SINGLE SLOPE, TYPE D	622 CONCRETE BARRIER END SECTION, TYPE D	622 CONCRETE BARRIER, END ANCHORAGE, REINFORCED, TYPE B1	622 CONCRETE BARRIER, END ANCHORAGE, REINFORCED, TYPE B1, AS PER PLAN	622 CONCRETE BARRIER, END ANCHORAGE, REINFORCED, TYPE C1	622 CONCRETE BARRIER, END ANCHORAGE, REINFORCED, TYPE C1, AS PER PLAN	622 CONCRETE BARRIER, END ANCHORAGE, REINFORCED, TYPE D	622 CONCRETE BARRIER, END ANCHORAGE, REINFORCED, TYPE D, AS PER PLAN	626 BARRIER REFLECTOR, TYPE 1, 1 WAY	626 BARRIER REFLECTOR, TYPE 2, 1 WAY
						FT	FT	FT	FT	EACH	EACH	EACH	EACH	EACH	EACH	FT	FT	FT	FT	EACH	EACH	EACH	EACH	EACH	EACH	EACH	EACH	EACH
691	B1	445+14	448+00	RT	I.R. 75														223	2						1		4	
691	B2	451+42	451+77	RT	I.R. 75															1								3	
691	B3	453+05	453+38	RT	I.R. 75																					1		3	
691	B4	448+45	451+23	LT	I.R. 75																							4	
691	B5	452+53	457+00	LT	I.R. 75																							6	
691	B6	444+50	451+48	CL	I.R. 75											518					6							16	
691	B7	452+77	457+00	CL	I.R. 75											334					3							12	
692	R1	457+00	463+55	LT	I.R. 75		641	653																					
692	R2	467+53	469+50	LT	I.R. 75			197																					
692	R3	457+00	467+98	RT	I.R. 75	994		109																					
692	R4	457+00	469+50	CL	I.R. 75	1250																							
692	G1	458+14	459+50	RT	I.R. 75				62.5	1		1																3	
692	G2	462+91	465+93	RT	I.R. 75				280			1	1															4	
692	B1	463+82	469+50	LT	I.R. 75														525							3	1	6	
692	B2	459+50	462+91	RT	I.R. 75														264	2						2		4	
692	B3	465+92	469+50	RT	I.R. 75														309	1						1		4	
692	B4	457+00	469+50	CL	I.R. 75											819	85				10	1						26	
693	R1	469+50	469+68	LT	I.R. 75			214																					
693	B1	469+50	471+30	RT	I.R. 75														160							1		4	
693	B2	469+50	474+05	LT	I.R. 75							1							450							1		4	
693	B3	469+50	482+25	CL	I.R. 75									1	3	280		807			3		4	2				24	
TOTALS CARRIED TO ROADSIDE BARRIER SUBSUMMARY						2244	641	1173	343	1		3	1	1	3	1951	85	807	1932	6	22	1	4	2	10	1	120	7	

Preliminary Plans - Not For Reference Only

HAM-75-7.85

J:\20110903\ODOT\HAM\77889\roadway\sheets\77889GS003_Roadside Barrier.dgn 5/22/2026 10:13:19 AM hbrendlinger

SHEET NO.	REF. NO.	STATION FROM	STATION TO	SIDE	CENTERLINE ROADWAY REFERENCE	202 CONCRETE BARRIER REMOVED	202 CURB REMOVED	202 GUARDRAIL REMOVED	516 1" PREFORMED EXPANSION JOINT FILLER	606 GUARDRAIL, TYPE MGS	606 ANCHOR ASSEMBLY, MGS TYPE E	606 ANCHOR ASSEMBLY, MGS TYPE T	606 MGS BRIDGE TERMINAL ASSEMBLY, TYPE 1	606 MGS BRIDGE TERMINAL ASSEMBLY, TYPE 2	609 CURB, TYPE 4-C, AS PER PLAN		622 CONCRETE BARRIER, SINGLE SLOPE, TYPE B1	622 CONCRETE BARRIER, SINGLE SLOPE, TYPE C1	622 CONCRETE BARRIER, SINGLE SLOPE, TYPE C1, AS PER PLAN	622 CONCRETE BARRIER, SINGLE SLOPE, TYPE D	622 BARRIER TRANSITION	622 CONCRETE BARRIER END SECTION, TYPE D	622 CONCRETE BARRIER, END ANCHORAGE, REINFORCED, TYPE B1			622 CONCRETE BARRIER, END ANCHORAGE, REINFORCED, TYPE C1	622 CONCRETE BARRIER, END ANCHORAGE, REINFORCED, TYPE C1, AS PER PLAN	622 CONCRETE BARRIER, END ANCHORAGE, REINFORCED, TYPE D	622 CONCRETE BARRIER, END ANCHORAGE, REINFORCED, TYPE D, AS PER PLAN	626 BARRIER REFLECTOR, TYPE 1, 1 WAY
						FT	FT	FT	SF	FT	EACH	EACH	EACH	EACH	FT		FT	FT	FT	FT	EACH	EACH	EACH			EACH	EACH	EACH	EACH	EACH
694	R1	412+26	418+54	RT	RAMP K			625																						
694	R2	409+28	411+13	RT	RAMP K			185																						
694	R3	22+48	23+00	LT	S.R. 562			52																						
694	R4	417+21	418+38	LT	RAMP K		123																							
694	R5	421+78	422+82	LT	RAMP M		104																							
694	R6	421+79	23+00	LT/RT	M & 562	1336																								
694	R7	422+64	426+54	LT/RT	RAMP M		443																							
694	R8	418+53	419+31	LT	RAMP N		162																							
694	R9	420+83	424+88	RT	RAMP N			406																						
694	R10	20+69	22+44	RT	S.R. 562			175																						
694	G1	412+69	418+60	RT	RAMP K					573.0				1																
694	G2	410+86	23+00	LT/RT	K & 562					525.0			1																	
694	G3	410+65	413+44	RT	RAMP J					200.0	1		1																	
694	G4	422+67	424+18	RT	RAMP N					75.0	1		1																	
694	C1	410+86	23+00	LT/RT	K & 562										552															
694	C2	410+65	413+93	RT	RAMP J										324															
694	B1	410+86	412+69	RT	RAMP K															20		2							5	3
694	B2	421+80	427+67	RT	RAMP M															525									3	7
694	B3	408+25	410+65	LT	RAMP J															161		1							3	5
694	B4	15+54	23+00	LT/RT	562												284	80	158				5			1	1			16
694	B5	424+18	23+00	RT	N & 562				546											491		1						8	1	7
695	R1	23+00	23+88	LT	S.R. 562			89																						
695	R2	23+00	32+00	LT/RT	S.R. 562	900																								
695	R3	23+27	23+68	RT	S.R. 562			37																						
695	R4	29+23	34+50	RT	562 & Q			527																						
695	G1	23+00	30+05	LT	S.R. 562					675.0	1																			
695	G2	24+00	68+48	RT	562 & Q					1237.5		1		1																
695	C1	23+00	38+32	LT	562 & P										1526															
695	C2	36+50	37+66	RT	RAMP P										226															
695	C3	35+82	37+09	RT	RAMP P										179		742				1		4							18
695	C4	36+46	37+20	LT	RAMP Q										101					86		1								3
695	C5	36+85	37+70	LT	RAMP Q										299															
695	C6	35+13	38+19	LT	RAMP Q										159															
695	B1	23+00	32+00	LT/RT	S.R. 562												742				1		4							18
695	B2	23+00	24+00	RT	S.R. 562															86		1								3
TOTALS CARRIED TO ROADSIDE BARRIER SUBSUMMARY						2236	832	2096	546	3286	3	1	3	2	3366		1768	80	158	1369	2	6	13			1	1	19	1	80

Preliminary Plans - For Reference Only

CALCULATED SEA
CHECKED DLR

ROADSIDE BARRIER ESTIMATED QUANTITIES

HAM-75-7.85

241
1047

J:\20110903\ODOT\HAM\77889\roadway\sheets\77889GS003_Roadside Barrier.dgn 5/22/2026 10:13:19 AM hbrendlinger

SHEET NO.	STATION FROM	STATION TO	SEED. SQ. YD.	EXC. CU. YD.		EMB. CU. YD.	SHEET NO.	STATION FROM	STATION TO	SEED. SQ. YD.	EXC. CU. YD.	EMB. CU. YD.	SHEET NO.	STATION FROM	STATION TO	SEED. SQ. YD.	EXC. CU. YD.		EMB. CU. YD.
	MAINLINE IR-75 (SB/NB)							MAINLINE IR-75 (SB/NB) (CONT.)						MAINLINE IR-75 (SB/NB) (CONT.)					
297	409+00	409+50	0				357	438+50	439+00	1,017			417	467+50	468+00	502			
298	409+00	409+50		0		0	358	438+50	439+00		2,457	397	418	467+50	468+00		1554		264
299	410+00	410+00	0				359	439+50	440+00	716			419	468+50	469+00	513			
300	410+00	410+00		0		0	360	439+50	440+00		3,806	145	420	468+50	469+00		1586		71
301	410+50	411+00	363				361	440+50	441+00	250			421	469+50	470+00	396			
302	410+50	411+00		284		10	362	440+50	441+00		2,693	23	422	469+50	470+00		1911		16
303	411+50	412+00	562				363	441+50	442+00	372			423	470+50	471+00	482			
304	411+50	412+00		352		34	364	441+50	442+00		2,147	1	424	470+50	471+00		2530		7
305	412+50	413+00	756				365	442+50	443+00	972			425	471+50	472+00	864			
306	412+50	413+00		366		143	366	442+50	443+00		4,899	0	426	471+50	472+00		4487		108
307	413+50	414+00	856				367	443+50	444+00	1,122									
308	413+50	414+00		300		466	368	443+50	444+00		5,384	0							
309	414+50	415+00	905				369	444+50	445+00	718									
310	414+50	415+00		381		913	370	444+50	445+00		3291	0							
311	415+50	416+00	750				371	445+50	446+00	1093									
312	415+50	416+00		523		1,212	372	445+50	446+00		5620	12							
313	416+50	417+00	650				373	446+50	447+00	755									
314	416+50	417+00		1,177		1,292	374	446+50	447+00		4002	98							
315	417+50	417+93.36	679				375	447+50	448+00	622									
316	417+50	417+93.36		1,224		803	376	447+50	448+00		2419	285							
317	419+22.73	419+52.73	896				377	448+50	449+00	477									
318	419+22.73	419+52.73		161		642	378	448+50	449+00		238	920							
319	420+00	420+50	427				379	449+50	450+00	531									
320	420+00	420+50		64		2,262	380	449+50	450+00		21	1529							
321	421+00	421+50	821				381	450+50	451+00	871									
322	421+00	421+50		43		2,605	382	450+50	451+00		73	2473							
323	422+00	422+50	973				383	451+48.21	451+78.21	485									
324	422+00	422+50		130		2,568	384	451+48.21	451+78.21		38	3885							
325	423+00	423+50	933				385	452+00	452+47.26	0									
326	423+00	423+50		153		2,466	386	452+00	452+47.26		0	0							
327	424+00	424+50	850				387	452+77.26	453+00	0									
328	424+00	424+50		114		2,365	388	452+77.26	453+00		0	0							
329	425+00	425+50	1,150				389	453+50	454+00	982									
330	425+00	425+50		19		3,017	390	453+50	454+00		159	5981							
331	426+00	426+50	1,262				391	454+50	455+00	898									
332	426+00	426+50		56		3,188	392	454+50	455+00		68	5714							
333	427+00	427+50	1,105				393	455+50	456+00	779									
334	427+00	427+50		448		2,655	394	455+50	456+00		28	5815							
335	428+00	428+50	834				395	456+50	457+00	650									
336	428+00	428+50		250		2,153	396	456+50	457+00		23	5503							
337	429+00	429+50	673				397	457+50	458+00	728									
338	429+00	429+50		128		1,822	398	457+50	458+00		229	4940							
339	430+00	430+50	572				399	458+50	459+00	614									
340	430+00	430+50		89		1,579	400	458+50	459+00		163	4368							
341	431+00	431+50	472				401	459+50	460+00	356									
342	431+00	431+50		34		1,449	402	459+50	460+00		67	3886							
343	432+00	432+50	373				403	460+50	461+00	236									
344	432+00	432+50		56		1,133	404	460+50	461+00		14	3210							
345	433+00	433+50	467				405	461+50	462+00	291									
346	433+00	433+50		751		826	406	461+50	462+00		616	2575							
347	433+82.10	434+12.10	307				407	462+50	463+00	782									
348	433+82.10	434+12.10		141		1,823	408	462+50	463+00		2096	1863							
349	434+89.11	435+19.11	140				409	463+50	464+00	604									
350	434+89.11	435+19.11		2		677	410	463+50	464+00		1080	1356							
351	435+50	436+00	605				411	464+50	465+00	766									
352	435+50	436+00		700		1,631	412	464+50	465+00		1402	1269							
353	436+50	437+00	833				413	465+50	466+00	731									
354	436+50	437+00		1,139		1,295	414	465+50	466+00		1634	1095							
355	437+50	438+00	860				415	466+50	467+00	640									
356	437+50	438+00		1,465		816	416	466+50	467+00		640	780							
											SUBTOTALS CARRIED TO SHEET					244	41,889	67,925	0	100,434

CALCULATED SEA CHECKED DLR

EARTHWORK AND SEEDING SUBSUMMARY

HAM-75-7.85

242 / 1047

For Reference Only
Preliminary Plans - Not

J:\2011093\ODOT\HAM\77889\roadway\sheets\77889GS004_Earthwork.dgn 5/22/2026 10:13:20 AM hbrendlinger

SHEET NO.	STATION FROM	STATION TO	SEED. SQ. YD.	EXC. CU. YD.	EMB. SQ. YD.
	RAMP M				
427	412+00	412+50	145	60	1
428	413+00	413+50	361	33	104
429	414+00	414+50	383	0	596
430	415+00	415+50	478	0	1,207
431	416+00	416+26.45	382	21	896
432	416+56.45	420+24.75	1,678	89	726
433	420+50	421+50	807	0	2,442
434	422+00	423+00	699	36	1,790
435	423+50	424+08.79	381	6	546
	RAMP M SUBTOTALS:		5,314	245	8,308
	RAMP N				
436	412+64.37	413+00	190	27	13
437	413+50	414+50	666	90	105
438	415+00	416+00	827	118	322
439	416+50	417+00	583	29	628
440	417+50	418+00	689	49	1,191
441	418+50	419+00	850	62	1,800
442	419+50	420+00	712	5	1,979
443	420+50	421+00	895	19	2,656
444	421+50	422+00	722	8	1,911
445	422+50	423+00	411	150	547
446	423+50	424+00	300	526	54
447	424+50	425+00	156	1,038	0
448	425+50	426+00	28	1,839	0
449	426+50	427+00	283	1,176	0
450	427+50	428+00	322	602	0
	RAMP N SUBTOTALS:		7,634	5,738	11,206
	RAMP J				
451	412+01.34	412+50	308	9	607
452	413+00	414+00	1,707	115	2,791
453	414+50	415+50	2,844	662	2,644
454	416+00	416+50	1,372	1,264	683
455	417+00	417+50	1,557	4,560	287
456	418+00	418+50	811	4,061	89
457	419+00	419+50	666	2,810	194
458	420+00	420+50	1,094	2,510	271
459	421+00	421+50	978	4,242	40
460	422+00	422+50	916	4,859	0
461	423+00	423+50	756	4,498	0
462	424+00	424+50	650	3,307	0
463	425+00	425+50	644	2,276	0
464	426+00	426+50	539	1,469	0
465	426+57.83	426+57.83	35	90	0
466	427+00	427+50	241	280	10
467	428+00	429+00	716	138	288
468	429+50	430+50	778	14	653
469	431+00	431+50	539	487	47
470	432+00	432+50	411	680	0
471	432+78.47	432+78.47	114	210	0
	RAMP J SUBTOTALS:		17,676	38,541	8,604

SHEET NO.	STATION FROM	STATION TO	SEED. SQ. YD.	EXC. CU. YD.	EMB. SQ. YD.
	RAMP K				
472	408+50	408+50	0	0	0
473	409+00	409+50	111	164	32
474	410+00	410+50	128	333	4
475	411+00	411+50	95	1000	7
476	412+00	412+50	72	1947	7
477	413+00	413+50	457	1280	0
478	414+00	414+50	450	828	12
479	415+00	415+50	650	534	276
480	416+00	416+50	766	193	747
481	417+00	417+50	873	115	843
482	418+00	418+50	984	171	959
483	419+00	419+50	1139	27	1253
484	420+00	420+50	1310	19	1388
485	421+00	421+50	1172	12	1174
486	422+00	422+50	989	11	978
487	423+00	423+50	778	7	927
488	424+00	424+50	627	5	963
489	424+61.11	424+61.11	69	1	94
	RAMP K SUBTOTALS:		10,670	6,647	9,664

SHEET NO.	STATION FROM	STATION TO	SEED. SQ. YD.	EXC. CU. YD.	EMB. SQ. YD.
	MAINLINE SR 562				
490	20+00.00	20+50.00	144	212	17
491	21+00.00	21+50.00	217	369	34
492	22+00.00	22+50.00	239	325	63
493	23+00.00	23+50.00	250	261	97
494	24+00.00	24+50.00	311	258	95
495	25+00.00	25+50.00	338	261	145
496	26+00.00	26+50.00	366	301	118
497	27+00.00	27+50.00	390	312	150
498	28+00.00	28+50.00	417	322	115
499	29+00.00	29+50.00	456	374	114
500	30+00.00	30+50.00	527	413	119
501	31+00.00	31+50.00	450	470	86
502	32+00.00	32+00.00	104	200	16
	MAINLINE SR 562 SUBTOTALS:		4,209	4,078	1,169
	RAMP P				
503	32+00.00	32+50.00	56	75	6
504	33+00.00	33+50.00	67	115	6
505	34+00.00	34+50.00	172	44	23
506	35+00.00	35+50.00	63	47	1
	35+50.00	37+75.00	325	266	2
	RAMP P SUBTOTALS:		683	547	38
	RAMP Q				
507	31+79.61	32+50.00	257	71	40
508	33+00.00	33+50.00	328	92	14
509	34+00.00	34+50.00	222	94	0
	34+50.00	37+39.00	374	57	2
	RAMP Q SUBTOTALS:		807	314	56
	SUBTOTALS CARRIED TO SHEET 244		46,993	56,111	39,045

CALCULATED SEA
CHECKED DLR

EARTHWORK AND SEEDING SUBSUMMARY

HAM-75-7.85

243
1047

Preliminary Plans - For Reference Only

J:\20110903\ODOT\HAM\77889\roadway\sheets\77889GS004_Earthwork.dgn 5/22/2026 10:13:20 AM hbrendlinger

SHEET NO.	STATION FROM	STATION TO	SEED. SQ. YD.	EXC. CU. YD.	EMB. SQ. YD.
	TOWNE STREET				
510	13+34.18	14+00	179	31	7
511	14+50	15+00	363	30	53
512	15+50	16+50	681	56	325
513	17+00	18+00	2076	467	1609
514	18+50	19+50	292	118	633
515	20+00	20+50	125	137	123
516	21+00	21+50	106	18	96
	TOWNE STREET SUBTOTALS:		3,822	857	2,846
	CEDAR STREET				
517	0+36.40	1+00	77	22	15
518	1+25.67	1+50	62	30	8
	CEDAR STREET SUBTOTALS:		139	52	23
	HAM-75-7.85 ADDITIONAL EARTHWORK				
	ADDITIONAL FILL AREA ABOVE PAVT STEPS (L*A/27)				
	CONCRETE PAVT STEP - LENGTH = 5858' AREA = 0.62 SQFT				135
	ASPHALT PAVT STEP - LENGTH = 19499' AREA = 1.21 SQFT				874
	ADDITIONAL EARTHWORK SUBTOTALS:		0	0	1,009

SHEET NO.	STATION FROM	STATION TO	SEED. SQ. YD.	EXC. CU. YD.	EMB. SQ. YD.

SHEET NO.	STATION FROM	STATION TO	SEED. SQ. YD.	EXC. CU. YD.	EMB. SQ. YD.

SUBTOTALS THIS SHEET		3,961	909	3,878
SUBTOTALS CARRIED FROM SHEET	242	41,889	67,925	100,434
SUBTOTALS CARRIED FROM SHEET	243	46,993	56,111	39,045
TOTALS CARRIED TO GENERAL SUMMARY			124,945	143,357
TOTALS CARRIED TO GENERAL NOTES		92,843		

CALCULATED SEA
CHECKED DLR

EARTHWORK AND SEEDING SUBSUMMARY

HAM-75-7.85

244
1047

For Reference Only
Preliminary Plans - Not for Construction

hbrendlinger
5/22/2026 10:13:20 AM
J:\20110903\ODOT\HAM\77889\roadway\sheets\77889GS004_Earthwork.dgn

ESTIMATED QUANTITIES SHEET NO.	204 SUBGRADE COMPACTION		206 CEMENT STABILIZED SUBGRADE, 14" DEEP	254 PAVEMENT PLANING ASPHALT CONCRETE	255 PAVEMENT PLANING ASPHALT CONCRETE, VARIABLE DEPTH	302 13" ASPHALT CONCRETE BASE, PG64-22, (449)	302 9" ASPHALT CONCRETE BASE, PG64-22, (449)	304 6" AGGREGATE BASE	407 NON-TRACKING TACK COAT (@0.085 GAL/SY)	407 NON-TRACKING TACK COAT (@0.055 GAL/SY)	411 STABILIZED CRUSHED AGGREGATE (T=8")	442 1.5" ASPHALT CONCRETE SURFACE COURSE, 12.5 MM, TYPE A (447), AS PER PLAN	442 1.75" ASPHALT CONCRETE INTERMEDIATE COURSE, 12.5 MM, TYPE A (446)	452 13" NON-REINFORCED CONCRETE PAVEMENT, CLASS QC1		442 ANTI-SEGREGATION EQUIPMENT	441 1.5" ASPHALT CONCRETE SURFACE COURSE, TYPE 1 (448), PG 64-22	441 1.75" ASPHALT CONCRETE INTERMEDIATE COURSE, TYPE 1, (448)			
	SQ YD		SQ YD	SQ YD	SQ YD	CU YD	CU YD	CU YD	GAL	GAL	CU YD	CU YD	CU YD	SQ YD		CU YD	CU YD	CU YD			
IR-75																					
SEE SUPPLEMENTAL PAVEMENT CALCULATIONS - SHEET 1			10,340	13,573	311	3,698		1,724	1,154	1,686		981	495			1,476					
SEE SUPPLEMENTAL PAVEMENT CALCULATIONS - SHEET 2			14,574			5,222		2,624		2,382		591	699			1,290					
SEE SUPPLEMENTAL PAVEMENT CALCULATIONS - SHEET 3			24,792			8,935		4,132		4,081		1,024	1,201			2,225					
SEE SUPPLEMENTAL PAVEMENT CALCULATIONS - SHEET 4			1,212			399		194		180		42	52			93					
SEE SUPPLEMENTAL PAVEMENT CALCULATIONS - SHEET 5			1,637			567		273		257		56	74			130					
SEE SUPPLEMENTAL PAVEMENT CALCULATIONS - SHEET 6			1,711			599		286		272		63	79			141					
SEE SUPPLEMENTAL PAVEMENT CALCULATIONS - SHEET 7			3,932		2,905	1,420		696	247	649		267	192			337					
SEE SUPPLEMENTAL PAVEMENT CALCULATIONS - SHEET 8			624			226		113		103		26	31			57					
SEE SUPPLEMENTAL PAVEMENT CALCULATIONS - SHEET 9			7,258	6,616		2,593		1,210	595	1,182		580	347			910					
SEE SUPPLEMENTAL PAVEMENT CALCULATIONS - SHEET 10			20,895			7,473		3,688		3,407		839	999			1,838					
SEE SUPPLEMENTAL PAVEMENT CALCULATIONS - SHEET 11			18,117			6,368		3,150		2,695		728	850			1,578					
SEE SUPPLEMENTAL PAVEMENT CALCULATIONS - SHEET 12			5,154			1,654		851		745		181	213			393					
SEE SUPPLEMENTAL PAVEMENT CALCULATIONS - SHEET 13			624			226		113		103		26	31			56					
SEE SUPPLEMENTAL PAVEMENT CALCULATIONS - SHEET 14			713			254		119		116		28	34			62					
RAMP M																					
SEE SUPPLEMENTAL PAVEMENT CALCULATIONS - SHEET 15			1,526	895		553		302	76	301		98	74			172					
SEE SUPPLEMENTAL PAVEMENT CALCULATIONS - SHEET 16			1,246			427		208		193		44	56			100					
RAMP N																					
SEE SUPPLEMENTAL PAVEMENT CALCULATIONS - SHEET 17			8,342	259		2,920		1,391	22	1,339		329	385			714					
RAMP J																					
SEE SUPPLEMENTAL PAVEMENT CALCULATIONS - SHEET 18			10,072			3,475		1,679		1,576		392	458			849					
RAMP K																					
SEE SUPPLEMENTAL PAVEMENT CALCULATIONS - SHEET 19			9,527			3,341		1,588		1,517		368	442			810					
SR 562																					
SEE SUPPLEMENTAL PAVEMENT CALCULATIONS - SHEET 20			15,599	1,021		5,514		2,600	77	836		655	739			1,394					
RAMP P & RAMP Q																					
SEE SUPPLEMENTAL PAVEMENT CALCULATIONS - SHEET 21			4,472	7,245				746	616			302		4,293		302					
TOWNE ST, CEDAR ST																					
SEE SUPPLEMENTAL PAVEMENT CALCULATIONS - SHEET 22	1,843			1,268			483	347	108	107						228	134	94			
						SUBTOTAL			SUBTOTAL												
						55,864	483		2,895	23,727											
TOTALS CARRIED TO GENERAL SUMMARY	1,843		162,367	30,877	3,216	56,347		28,034	26,622			7,620	7,451	4,293		15,155	134	94			

CALCULATED SEA
CHECKED DLR

PAVEMENT CALCULATIONS SUBSUMMARY

HAM-75-7.85

245
1047

Preliminary Plans - For Reference Only

J:\20110903\ODOT\HAM\77889\roadway\sheets\77889GS005_Pavement.dgn 5/22/2026 10:13:21 AM hbrendlinger

ALIGNEMENT	SIDE	STATION FROM	STATION TO		618 RUMBLE STRIPS, IASPHALT CONCRETE MILE
I.R. 75 NORTHBOUND	RT-IN	395+50.00	417+55.67		0.42
I.R. 75 NORTHBOUND	RT-OUT	395+00.00	410+60.12	*	0.30
I.R. 75 NORTHBOUND	RT-OUT	410+60.12	417+08.21	*	0.13
I.R. 75 NORTHBOUND	RT-IN	419+44.10	433+82.48		0.28
I.R. 75 NORTHBOUND	RT-OUT	418+90.92	425+73.25		0.13
I.R. 75 NORTHBOUND	RT-OUT	425+73.25	433+85.94		0.16
I.R. 75 NORTHBOUND	RT-IN	435+19.48	451+50.62		0.31
I.R. 75 NORTHBOUND	RT-OUT	435+22.95	451+72.72		0.32
I.R. 75 NORTHBOUND	RT-IN	452+79.60	472+00.00		0.37
I.R. 75 NORTHBOUND	RT-OUT	423+00.14	472+00.00		0.93
I.R. 75 NORTHBOUND	RT-IN	472+00.00	482+25.00		0.20
I.R. 75 SOUTHBOUND	LT-IN	403+40.00	417+71.11		0.28
I.R. 75 SOUTHBOUND	LT-OUT	403+40.00	407+88.14	*	0.09
I.R. 75 SOUTHBOUND	LT-OUT	407+88.14	418+21.57	*	0.20
I.R. 75 SOUTHBOUND	LT-IN	419+61.44	433+81.72		0.27
I.R. 75 SOUTHBOUND	LT-OUT	420+18.23	433+66.17	*	0.26
I.R. 75 SOUTHBOUND	LT-OUT	433+66.17	433+77.52	*	0.01
I.R. 75 SOUTHBOUND	LT-IN	435+18.73	451+45.80		0.31
I.R. 75 SOUTHBOUND	LT-OUT	435+15.02	451+27.11		0.31
I.R. 75 SOUTHBOUND	LT-IN	452+74.91	472+00.00		0.37
I.R. 75 SOUTHBOUND	LT-OUT	452+56.56	472+00.00	*	0.37
I.R. 75 SOUTHBOUND	LT-IN	472+00.00	482+25.00		0.20
RAMP J	RT	403+79.32	411+00.67		0.14
RAMP K	RT	408+34.32	415+20.89		0.14
RAMP M	RT	423+95.75	432+13.01		0.16
RAMP N	RT	421+28.49	428+52.11		0.14
S.R. 562 EASTBOUND	RT-IN	20+00.00	36+74.44		0.32
S.R. 562 EASTBOUND	RT-OUT	20+00.00	30+92.64	*	0.21
S.R. 562 EASTBOUND	RT-OUT	30+92.64	36+75.93	*	0.12
S.R. 562 WESTBOUND	LT-IN	20+00.00	36+73.58		0.32
S.R. 562 WESTBOUND	LT-OUT	20+00.00	32+63.19	*	0.24
S.R. 562 WESTBOUND	LT-OUT	32+63.19	36+72.10	*	0.08
S.R. 562 WESTBOUND	LT-IN	39+08.62	47+50.00		0.16
S.R. 562 WESTBOUND	LT-OUT	39+05.44	43+16.33	*	0.08
S.R. 562 WESTBOUND	LT-OUT	43+16.33	47+50.00	*	0.09
NOTE:					
* = MAINLINE SWITCH OVER AT RAMP GORE					
SUBTOTAL CARRIED TO GENERAL SUMMARY					8.42

Preliminary Plans - For Reference Only

J:\20110903\ODOT\HAM\77889\roadway\sheets\77889GS005_Pavement.dgn 5/22/2026 10:13:21 AM hbrendlinger

CALCULATED SEA
CHECKED DLR

RUMBLE STRIP ESTIMATED QUANTITIES

HAM-75-7.85

DRAINAGE SUBSUMMARY

CALCULATED RSH
CHECKED DLR

ESTIMATED QUANTITIES SHEET NO.	601 ROCK CHANNEL PROTECTION, TYPE C WITH FILTER CU YD	602 CONCRETE MASONRY CU YD		611 8" CONDUIT, TYPE B WITH CLASS II BEDDING FT	611 15" CONDUIT, TYPE B, AS PER PLAN FT	611 15" CONDUIT, TYPE B, 706.02, JOINTS PER 706.11 FT	611 15" CONDUIT, TYPE C FT	611 15" CONDUIT, TYPE C, 706.02, JOINTS PER 706.11 FT	611 15" CONDUIT, TYPE F, 707.05 TYPE C, 707.21 OR 707.33 FT		611 18" CONDUIT, TYPE B, AS PER PLAN FT	611 18" CONDUIT, TYPE C FT			611 21" CONDUIT, TYPE B, AS PER PLAN FT	611 21" CONDUIT, TYPE C FT	611 24" CONDUIT, TYPE B, AS PER PLAN FT	611 24" CONDUIT, TYPE C FT	611 24" CONDUIT, TYPE C, 748.01, 748.02 FT	611 30" CONDUIT, TYPE B, AS PER PLAN FT	611 30" CONDUIT, TYPE C FT			611 36" CONDUIT, TYPE B, AS PER PLAN FT		611 36" CONDUIT, TYPE C FT	611 36" CONDUIT, TYPE C, 748.01, 748.02 FT	611 42" CONDUIT, TYPE B, AS PER PLAN FT	611 42" CONDUIT, TYPE B WITH CLASS II BEDDING FT	611 42" CONDUIT, TYPE C FT	611 42" CONDUIT, TYPE C WITH CLASS II BEDDING FT					611 60" CONDUIT, TYPE B WITH CLASS II BEDDING FT
248	11	9			917		220		173		743	247			85	6	210	553			119					479	226	190								
249		1			1,163	198	296	66			337					6	318				256				125	488		739		340					
250					457						141							209			201														
251		1			1,554		97				1,517				116	43	57	11	21	402				148	181										
252				192																									21	60					233
TOTALS CARRIED TO GENERAL SUMMARY	11	11		192	4,091	198	613	66	173		2,738	247			201	55	585	773	21	402	576			273	1,148	226	929	21	340	60					233

ESTIMATED QUANTITIES SHEET NO.	611 CONDUIT MISC.: CONDUIT INSTALLED WITH TRENCHLESS METHOD, 21" TYPE B FT	611 CONDUIT MISC.: CONDUIT INSTALLED WITH TRENCHLESS METHOD, 24" TYPE B FT	611 CONDUIT MISC.: CONDUIT INSTALLED WITH TRENCHLESS METHOD, 30" TYPE A FT		611 CONDUIT MISC.: CONDUIT INSTALLED WITH TRENCHLESS METHOD, 36" TYPE B FT		611 CATCH BASIN, NO. 3 EACH	611 CATCH BASIN, NO. 3A EACH	611 CATCH BASIN, NO. 4 EACH	611 CATCH BASIN, NO. 5 EACH	611 CATCH BASIN, NO. 5A EACH	611 CATCH BASIN, NO. 6 EACH	611 CATCH BASIN, NO. 8 EACH	611 CATCH BASIN, NO. 8A EACH	611 CATCH BASIN, NO. 2-2B EACH		611 CATCH BASIN ADJUSTED TO GRADE EACH	611 INLET, NO. 3 FOR SINGLE SLOPE BARRIER, TYPE B1 EACH	611 INLET, NO. 3 FOR SINGLE SLOPE BARRIER, TYPE B1, AS PER PLAN EACH	611 INLET, NO. 3 FOR SINGLE SLOPE BARRIER, TYPE B1, AS PER PLAN, A EACH		611 INLET, NO. 3 FOR SINGLE SLOPE BARRIER, TYPE C1 EACH	611 INLET, NO. 3 FOR SINGLE SLOPE BARRIER, TYPE C1, AS PER PLAN EACH	611 INLET, NO. 3 FOR SINGLE SLOPE BARRIER, TYPE D EACH	611 INLET, NO. 3 FOR SINGLE SLOPE BARRIER, TYPE D, AS PER PLAN EACH	611 INLET ADJUSTED TO GRADE EACH	611 MANHOLE NO. 3 EACH	611 MANHOLE ADJUSTED TO GRADE EACH	611 MANHOLE RECONSTRUCTED TO GRADE EACH	611 DRAINAGE STRUCTURE, MISC.: CHECK VALVE FOR 24" CONDUIT EACH	611 DRAINAGE STRUCTURE, MISC.: CHECK VALVE FOR 36" CONDUIT EACH	638 30" STEEL PIPE ENCASEMENT, OPEN CUT FT	638 48" STEEL PIPE ENCASEMENT, BORED OR JACKED FT
248	380	192			191		1	3	3				11	1				1	4				2	2	3		1	14	4	1		2		211
249					340			2		1	3	1	2						4		5				9	5		11					72	
250										2										1	3			3	4			1						
251					167			7					3	1	1				1		2				14			6	3		1			
252																																		
TOTALS CARRIED TO GENERAL SUMMARY	380	192			531		1	12	3	3	3	1	16	2	1			1	9	1	10		2	5	30	5	1	32	7	1	1	2	72	211

ESTIMATED QUANTITIES SHEET NO.	690 SPECIAL - MISC.: STORMWATER DETENTION SYSTEM 1 LUMP	690 SPECIAL - MISC.: STORMWATER DETENTION SYSTEM 2 LUMP	690 SPECIAL - MISC.: STORMWATER DETENTION SYSTEM 3 LUMP			690 MANHOLE MISC.: SANITARY MANHOLE ADJUSTED TO GRADE PER MSD SCD ACC NO. 49058-A EACH	690 MANHOLE MISC.: SANITARY MANHOLE PER MSD ACC NO. 49037 EACH	690 MANHOLE MISC.: SANITARY MANHOLE PER MSD ACC NO. 49040 EACH	690 MANHOLE MISC.: SANITARY MANHOLE PER MSD ACC NO. 49049 EACH	690 MANHOLE MISC.: SANITARY MANHOLE PER MSD ACC NO. 49003 EACH
248	LUMP		LUMP							
249										
250										
251		LUMP						1		
252						2	1	2	1	1
TOTALS CARRIED TO GENERAL SUMMARY	LUMP	LUMP	LUMP			2	1	3	1	1

HAM-75-7.85

247
1047

Preliminary Plans - For Reference Only

J:\20110903\ODOT\HAM\77889\drainage\sheets\77889DS001_Drainage.dgn 5/22/2026 10:13:22 AM hbrendlinger

DRAINAGE ESTIMATED QUANTITIES

CALCULATED RSH
CHECKED DLR

HAM-75-7.85

248
1047

REF. NO.	SHEET NO.	STATION FROM	STATION TO	SIDE	CENTERLINE ROADWAY REFERENCE	601 ROCK CHANNEL PROTECTION, TYPE C WITH FILTER	602 CONCRETE MASONRY	611 15" CONDUIT, TYPE B, AS PER PLAN	611 15" CONDUIT, TYPE C	611 15" CONDUIT, TYPE F, 707.05 TYPE C, 707.21 OR 707.33	611 18" CONDUIT, TYPE B, AS PER PLAN	611 18" CONDUIT, TYPE C	611 21" CONDUIT, TYPE B, AS PER PLAN	611 21" CONDUIT, TYPE C	611 24" CONDUIT, TYPE B, AS PER PLAN	611 24" CONDUIT, TYPE C	611 30" CONDUIT, TYPE C	611 36" CONDUIT, TYPE C	611 36" CONDUIT, TYPE C, 748.01, 748.02	611 42" CONDUIT, TYPE B, AS PER PLAN	611 CONDUIT MISC.: CONDUIT INSTALLED WITH TRENCHLESS METHOD, 21" TYPE B	611 CONDUIT MISC.: CONDUIT INSTALLED WITH TRENCHLESS METHOD, 24" TYPE B	611 CONDUIT MISC.: CONDUIT INSTALLED WITH TRENCHLESS METHOD, 36" TYPE B	611 CATCH BASIN, NO. 3	611 CATCH BASIN, NO. 3A	611 CATCH BASIN, NO. 4	611 CATCH BASIN, NO. 8	611 CATCH BASIN, NO. 8A	611 CATCH BASIN ADJUSTED TO GRADE	611 INLET, NO. 3 FOR SINGLE SLOPE BARRIER, TYPE B1	611 INLET, NO. 3 FOR SINGLE SLOPE BARRIER, TYPE C1, AS PER PLAN	611 INLET, NO. 3 FOR SINGLE SLOPE BARRIER, TYPE C1	611 INLET, NO. 3 FOR SINGLE SLOPE BARRIER, TYPE D	611 INLET ADJUSTED TO GRADE	611 MANHOLE NO. 3	611 MANHOLE ADJUSTED TO GRADE	611 MANHOLE RECONSTRUCTED TO GRADE	611 DRAINAGE STRUCTURE, MISC.: CHECK VALVE FOR 36" CONDUIT	638 48" STEEL PIPE ENCASEMENT, BORED OR JACKED	690 SPECIAL - MISC.: STORMWATER DETENTION SYSTEM 1	690 SPECIAL - MISC.: STORMWATER DETENTION SYSTEM 3
						CU YD	CU YD	FT	FT	FT	FT	FT	FT	FT	FT	FT	FT	FT	FT	FT	FT	FT	FT	EACH	EACH	EACH	EACH	EACH	EACH	EACH	EACH	EACH	EACH	EACH	EACH	EACH	EACH	EACH	FT	LUMP	LUMP
D1	544	411+01		LT	I.R. 75																														1						
D2	544	411+01	411+60	LT	I.R. 75			88																						1											
D3	544	413+06		LT	RAMP N																								1												
D4	544	413+27		LT	I.R. 75																														1						
D5	544	413+47		RT	I.R. 75																															1					
D6	544	413+50		RT	I.R. 75									6																											
D7	544	414+17		RT	I.R. 75																														1						
D8	544	414+17	414+17	LT	I.R. 75		0.27		7	54																						1								
D9	544	415+42		RT	I.R. 75																														1						
D10	544	415+76	415+90	RT	I.R. 75														15																1			1			
D11	544	415+90	416+12	RT	I.R. 75													65																	1				LUMP	
D12	544	416+69		RT	I.R. 75		0.27			41																						1							
D13	544	413+50	416+60	RT	I.R. 75			311																								1							
D14	544	414+94	417+01	LT	I.R. 75														211																1			1	211		
D15	544	416+80	417+45	RT	I.R. 75								85																1											
D16	544	417+45	417+91	RT	I.R. 75						58																	1												
D17	544	417+91	417+96	RT	I.R. 75				19																				1											
D18	544	418+34	419+22	LT/RT	I.R. 75				148																				1											
D19	544	417+01	419+06	LT	I.R. 75													200																	1					
D20	544	419+06	419+06	LT	I.R. 75							24																	1											
D21	544	419+22	419+42	LT	I.R. 75			25																				1											
D22	544	419+06	419+42	LT	I.R. 75			56																			1												
D23	544	419+42	419+62	LT	I.R. 75			25																				1											
D24	544	419+50	421+50	RT	I.R. 75										210														1										
D25	544	416+12	8+95	LT/RT	IR75/SR562													214															1							
D26	544	419+50	421+50	RT	I.R. 75							207																1											
D27	544	416+31	417+01	LT	I.R. 75					78																										1				
D28	544	408+00		LT/RT	I.R. 75																													1						
D29	544	409+00		LT/RT	I.R. 75																													1						
D1	545	419+38	421+40	LT	I.R. 75																			191																	
D2	545	421+40	421+55	LT	I.R. 75												47																							
D3	545	421+40	421+57	LT	I.R. 75							16																	1											
D4	545	421+88	422+30	LT/RT	I.R. 75																		192					1											
D5	545	421+97	422+30	LT/RT	I.R. 75			98																										1					
D6	545	421+55	422+30	LT	I.R. 75												72																							
D7	545	421+88	423+17	RT	I.R. 75																	167						1											
D8	545	421+88	424+23	LT	I.R. 75											185																							LUMP
D9	545	424+23	425+26	LT	I.R. 75											98																							
D10	545	427+60	427+60	LT	I.R. 75				46																				1											
D11	545	425+26	427+60	LT	I.R. 75											270																							
D12	545	427+60	427+60	LT/RT	I.R. 75						81																							1					
D13	545	427+60	428+40	RT	I.R. 75						144																	1											
D14	545	427+60	429+30	LT	I.R. 75						170																													
D15	545	429+30	432+20	LT	I.R. 75						290																													
D16	545	432+20	433+38	LT	I.R. 75			127																				1											
D17	545	432+20	433+65	LT	I.R. 75			165																									1						
D1	546	437+00	437+08	LT	I.R. 75	11.3	8.7													104																				
D2	546	437+08	437+15	LT	I.R. 75															86																				
D3	546	437+15	437+15	LT	I.R. 75																	85											1							
D4	546	437+15	437+40	LT/RT	I.R. 75																	128						1											
D5	546	438+90	439+00	RT	I.R. 75			22																				1											
TOTALS CARRIED TO DRAINAGE SUBSUMMARY						11	9.2	917	220	173	743	247	85	6	210	553	119	479	226	190	380	192	191	1	3	3	11	1	1	4	2	2	3	1	14	4	1	2	211	LUMP	LUMP

Preliminary Plans - For Reference Only

J:\20110903\ODOT\HAM\77889\drainage\sheets\77889DS001_Drainage.dgn 5/22/2026 10:13:22 AM hbrendlinger

REF. NO.	SHEET NO.	STATION FROM	STATION TO	SIDE	CENTERLINE ROADWAY REFERENCE	602 CONCRETE MASONRY		611 15" CONDUIT, TYPE B, AS PER PLAN	611 15" CONDUIT, TYPE B, 706.02, JOINTS PER 706.11	611 15" CONDUIT, TYPE C	611 15" CONDUIT, TYPE C, 706.02, JOINTS PER 706.11	611 18" CONDUIT, TYPE B, AS PER PLAN	611 21" CONDUIT, TYPE C	611 24" CONDUIT, TYPE B, AS PER PLAN	611 30" CONDUIT, TYPE C	611 36" CONDUIT, TYPE B, AS PER PLAN	611 36" CONDUIT, TYPE C	611 42" CONDUIT, TYPE B, AS PER PLAN	611 42" CONDUIT, TYPE C	611 CATCH BASIN, NO. 3A	611 CATCH BASIN, NO. 5	611 CATCH BASIN, NO. 5A	611 CATCH BASIN, NO. 6	611 CATCH BASIN, NO. 8	611 INLET, NO. 3 FOR SINGLE SLOPE BARRIER, TYPE B1	611 INLET, NO. 3 FOR SINGLE SLOPE BARRIER, TYPE B1, AS PER PLAN, A	611 INLET, NO. 3 FOR SINGLE SLOPE BARRIER, TYPE D	611 INLET, NO. 3 FOR SINGLE SLOPE BARRIER, TYPE D, AS PER PLAN	611 MANHOLE NO. 3	611 CONDUIT MISC.: CONDUIT INSTALLED WITH TRENCHLESS METHOD, 36" TYPE B	638 30" STEEL PIPE ENCASEMENT, OPEN CUT
						CU YD		FT	FT	FT	FT	FT	FT	FT	FT	FT	FT	FT	FT	EACH	EACH	EACH	EACH	EACH	EACH	EACH	EACH	EACH	FT	FT
D6	546	439+00	439+50	RT	I.R. 75			50																				1		
D7	546	437+15	439+40	LT	I.R. 75													225										1		
D8	546	439+50	440+04	RT	I.R. 75			54																			1			
D9	546	439+40	439+50	LT	I.R. 75									79											1					
D10	546	439+40	439+70	LT	I.R. 75			39																						
D11	546	439+50	440+04	LT/RT	I.R. 75								6	54													1			
D12	546	440+04	440+04	RT	I.R. 75			7																			1			
D13	546	440+04	440+04	RT	I.R. 75									87														1		
D14	546	440+04	443+59	LT	I.R. 75			44																			1			
D15	546	443+59	443+59	LT/RT	I.R. 75			7																			1			
D16	546	440+04	441+25	RT	I.R. 75							121																1		
D17	546	441+25	441+25	RT	I.R. 75							21													1					
D18	546	439+50	442+10	LT	I.R. 75													270										1		
D19	546	442+10	442+10	LT	I.R. 75			21																	1					
D20	546	442+10	443+15	LT	I.R. 75													105										1		
D21	546	443+15	443+15	LT	I.R. 75			78																		1				
D22	546	443+15	444+50	LT	I.R. 75													139										1		
D23	NOT USED																													
D24	NOT USED																													
D25	NOT USED																													
D26	546	435+24	435+50	LT	I.R. 75	0.25					28																1			
D27	546	435+34	435+50	RT	I.R. 75	0.25					38																1			
D1	NOT USED																													
D2	547	444+50	445+38	RT	I.R. 75			131																			1			
D3	547	444+50	444+50	CL	I.R. 75																					1				
D4	547	444+50	447+00	CL	I.R. 75			250																		1				
D5	547	444+50	447+90	LT	I.R. 75															340								1		
D6	547	447+90	448+60	LT	I.R. 75			72																			1			72
D7	547	448+60	449+50	LT	I.R. 75			90																1						
D8	NOT USED																													
D9	547	448+50	450+50	RT	I.R. 75																							1	340	
D10	547	451+50	451+50	LT	I.R. 75					20											1									
D11	547	451+50	451+66	LT	I.R. 75					38																	1			
D12	547	450+50	451+50	LT	I.R. 75											101												1		
D13	547	451+50	452+13	LT	I.R. 75											64												1		
D14	547	452+13	452+32	LT	I.R. 75					29										1										
D15	547	452+32	452+61	LT	I.R. 75					31										1										
D16	547	453+14	453+34	LT	I.R. 75					178																	1			
D17	547	452+13	453+34	LT	I.R. 75										125							1								
D18	547	453+34	455+49	LT	I.R. 75											220						1								
D19	547	455+49	456+51	LT	I.R. 75											103						1								
D20	547	456+50	456+51	LT	I.R. 75			131																			1			
D21	547	456+50	456+50	LT	I.R. 75			88																					1	
D22	547	456+51	459+06	LT	I.R. 75										256															
D23	547	449+50	450+00	RT	I.R. 75			101																			1			
D1	548	459+00	460+00	LT	I.R. 75				99																			1		
D2	548	460+00	460+48	LT	I.R. 75							97																1		
D3	548	460+00	461+00	LT	I.R. 75				99																			1		
D4	548	460+48	460+99	LT	I.R. 75									98													1			
D5	548	459+50	460+48	CL	I.R. 75							98															1			
TOTALS CARRIED TO DRAINAGE SUBSUMMARY						0.5		1163	198	296	66	337	6	318	256	125	488	739	340	2	1	3	1	2	4	5	9	5	11	340	72

Preliminary Plans - For Reference Only

DRAINAGE ESTIMATED QUANTITIES

CALCULATED RSH
CHECKED DLR

HAM-75-7.85

249
1047

J:\20110903\ODOT\HAM\77889\drainage\sheets\77889DS001_Drainage.dgn 5/22/2026 10:13:22 AM hbrendlinger

REF. NO.	SHEET NO.	STATION FROM	STATION TO	SIDE	CENTERLINE ROADWAY REFERENCE		611 15" CONDUIT, TYPE B, AS PER PLAN FT			611 18" CONDUIT, TYPE B, AS PER PLAN FT					611 24" CONDUIT, TYPE C FT		611 30" CONDUIT, TYPE C FT								611 CATCH BASIN, NO. 5 EACH					611 INLET, NO. 3 FOR SINGLE SLOPE BARRIER, TYPE B1, AS PER PLAN, A EACH	611 INLET, NO. 3 FOR SINGLE SLOPE BARRIER, TYPE B1, AS PER PLAN EACH		611 INLET, NO. 3 FOR SINGLE SLOPE BARRIER, TYPE C1, AS PER PLAN EACH	611 INLET, NO. 3 FOR SINGLE SLOPE BARRIER, TYPE D EACH	611 MANHOLE NO. 3 EACH	
D6	548	460+48	461+50	LT	I.R. 75		102																							1						
D7	548	459+00	459+00	RT	I.R. 75																									1						
D8	548	460+99	460+99	RT	I.R. 75										8																			1		
D9	548	459+00	460+99	RT	I.R. 75												201																		1	
D10	548	460+99	463+00	RT	I.R. 75										201															1						
D11	548	463+00	464+00	RT	I.R. 75					141																						1					
D12	548	464+00	464+00	LT	I.R. 75		85																												1	
D13	548	464+00	465+80	LT	I.R. 75		180																									1				
D14	548	465+80	466+16	LT	I.R. 75		90																												1	
D1	549	473+82		LT/RT	I.R. 75																														1	
D2	549	474+10		LT/RT	I.R. 75																													1		
D3	549	476+08		LT/RT	I.R. 75																													1		
D4	549	478+50		LT/RT	I.R. 75																													1		
D5	549	480+68		LT/RT	I.R. 75																															
TOTALS CARRIED TO DRAINAGE SUBSUMMARY							457			141					209		201											2					3	1		3	4	1	

Preliminary Plans - For Reference Only

CALCULATED RSH
CHECKED DLR

DRAINAGE ESTIMATED QUANTITIES

HAM-75-7.85

250
1047

J:\20110903\ODOT\HAM\7889\drainage\sheets\77889DS001_Drainage.dgn 5/22/2026 10:13:22 AM hbrendlinger

REF. NO.	SHEET NO.	STATION FROM	STATION TO	SIDE	CENTERLINE ROADWAY REFERENCE	602 CONCRETE MASONRY	611 15" CONDUIT, TYPE B, AS PER PLAN	611 15" CONDUIT, TYPE C	611 18" CONDUIT, TYPE B, AS PER PLAN	611 21" CONDUIT, TYPE B, AS PER PLAN	611 21" CONDUIT, TYPE C	611 24" CONDUIT, TYPE B, AS PER PLAN	611 24" CONDUIT, TYPE C	611 24" CONDUIT, TYPE C, 748.01, 748.02	611 30" CONDUIT, TYPE B, AS PER PLAN	611 36" CONDUIT, TYPE B, AS PER PLAN	611 36" CONDUIT, TYPE C	611 CONDUIT MISC.: CONDUIT INSTALLED WITH TRENCHLESS METHOD, 30" TYPE A	611 CATCH BASIN, NO. 3A	611 CATCH BASIN, NO. 8	611 CATCH BASIN, NO. 8A	611 CATCH BASIN, NO. 2-2B	611 INLET, NO. 3 FOR SINGLE SLOPE BARRIER, TYPE B1	611 INLET, NO. 3 FOR SINGLE SLOPE BARRIER, TYPE B1, AS PER PLAN, A	611 INLET, NO. 3 FOR SINGLE SLOPE BARRIER, TYPE D	611 MANHOLE NO. 3	611 MANHOLE MISC.: SANITARY MANHOLE PER MSD ACC NO. 49040	611 MANHOLE ADJUSTED TO GRADE	690 DRAINAGE STRUCTURE, MISC.: CHECK VALVE FOR 24" CONDUIT DETENTION SYSTEM 1	690 SPECIAL - MISC.: STORMWATER DETENTION SYSTEM 2
						CU YD	FT	FT	FT	FT	FT	FT	FT	FT	FT	FT	FT	FT	EACH	EACH	EACH	EACH	EACH	EACH	EACH	EACH	EACH	EACH	LUMP	LUMP
D1	550	8+95	10+20	LT	S.R.562											148					1									
D2	550	10+20	11+00	LT	S.R.562			92																	1					
D3	550	11+00	11+90	LT	S.R.562		81																			1				
D4	550	11+90	12+15	LT	S.R.562												181			1										
D5	550	11+90	13+13	LT	S.R.562	0.6												167												
D6	550	13+13	14+75	LT/RT	S.R.562										287										1					
D7	550	14+75	15+90	RT	S.R.562										115										1					
D8	550	15+90	15+90	LT/RT	S.R.562							9													1					
D9	550	15+76	15+90	LT	S.R.562					18										1										
D10	550	15+90	15+90	LT	S.R.562							48													1					
D11	550	15+90	15+90	RT	S.R.562				54																1					
D12	550	15+90	16+34	RT	S.R.562				44																1					
D13	550	15+90	15+34	RT	S.R.562		44																		1					
D14	550	15+90	16+40	LT/RT	S.R.562				50																1					
D15	550	16+34	16+40	LT/RT	S.R.562		11																		1					
D16	550	16+34	16+84	RT	S.R.562				50																1					
D17	550	16+40	16+90	LT	S.R.562				50																1					
D18	550	16+84	17+98	RT	S.R.562		114																			1				
D19	550	17+98	18+08	RT	S.R.562		12																1							
D20	550	20+50	20+50	RT	S.R.562		52																		1					
D21	550	20+50	20+50	LT/RT	S.R.562		45																	1						
D22	550	20+50	22+22	LT	S.R.562		174													1										
D23	550	22+22		LT	S.R.562									21														1		1
D24		NOT USED																												
D25		NOT USED																												
D26	550	22+45	22+45	LT	S.R.562						43									1										
D27	550	22+45	22+45	LT/RT	S.R.562					40														1						
D28	550	22+45	22+49	RT	S.R.562					53															1					
D29	550	22+22		LT	S.R.562																							1		
D30	550	22+22		LT	S.R.562																							1		
D31	550	22+01	22+01	LT	S.R.562			5					11													1				
D32	550	22+01	22+01	LT/RT	S.R.562					5																1				
D33	550	20+47	22+08	RT	S.R.562																									LUMP
D1	551	22+49	23+80	RT	S.R.562		132														1									
D2	551	22+45	26+00	LT	S.R.562				355											1										
D3	551	22+45	26+30	LT/RT	S.R.562				385															1						
D4	551	26+00	27+50	LT	S.R.562		150													1										
D5	551	26+30	28+60	LT	S.R.562				230																	1				
D6	551	27+50	29+00	LT	S.R.562		150													1										
D7	551	28+60	31+59	LT	S.R.562				299																			1		
D8	551	29+00	31+98	LT	S.R.562		299																			1				
D9	551	31+98	34+44	LT	S.R.562		247													1										
D10	551	34+44	34+87	LT	S.R.562		43													1										
TOTALS CARRIED TO DRAINAGE SUBSUMMARY						0.6	1554	97	1517	116	43	57	11	21	402	148	181	167	7	3	1	1	1	2	14	6	1	3	1	LUMP

CALCULATED RSH
CHECKED DLR

DRAINAGE ESTIMATED QUANTITIES

HAM-75-7.85

251
1047

Preliminary Plans - For Reference Only

J:\20110903\ODOT\HAM\7889\drainage\sheets\7889DS001_Drainage.dgn 5/22/2026 10:13:22 AM hbrendlinger

REF. NO.	SHEET NO.	STATION FROM	STATION TO	SIDE	CENTERLINE ROADWAY REFERENCE	611 8" CONDUIT, TYPE B WITH CLASS II BEDDING FT											611 42" CONDUIT, TYPE B WITH CLASS II BEDDING FT	611 42" CONDUIT, TYPE C WITH CLASS II BEDDING FT	611 60" CONDUIT, TYPE B WITH CLASS II BEDDING FT							690 MANHOLE MISC.: SANITARY MANHOLE PER MSD ACC NO. 49003 EACH	690 MANHOLE MISC.: SANITARY MANHOLE PER MSD ACC NO. 49040 EACH	690 MANHOLE MISC.: SANITARY MANHOLE ADJUSTED TO GRADE PER MSD SCD ACC NO. 49058-A EACH	690 MANHOLE MISC.: SANITARY MANHOLE PER MSD ACC NO. 49037 EACH	690 MANHOLE MISC.: SANITARY MANHOLE PER MSD ACC NO. 49049 EACH
S1	544	413+84	414+33	RT	I.R. 75													60									1		
S2	544	414+33	414+49	RT	I.R. 75												21												1
S1	545	432+76	432+86	LT	I.R. 75														10							1			
S1	546	433+50	434+41	LT	I.R. 75														110							1			
S2	546	434+41	434+46	LT	I.R. 75														113									1	
S3	546	438+26	438+52	LT	I.R. 75	26																							
S4	546	437+18	438+26	LT	I.R. 75	109																						1	
S5	546	436+61	438+26	LT	I.R. 75	57																				1			
TOTALS CARRIED TO DRAINAGE SUBSUMMARY						192											21	60	233							1	2	2	1	1

CALCULATED RSH
CHECKED DLR

DRAINAGE ESTIMATED QUANTITIES

HAM-75-7.85

252
1047

Preliminary Plans - For Reference Only

J:\20110903\ODOT\HAM\7889\drainage\sheets\77889DS001_Drainage.dgn 5/22/2026 10:13:23 AM hbrendlinger

ESTIMATED QUANTITIES SHEET NO.	601 TIED CONCRETE BLOCK MAT WITH TYPE 1 UNDERLAYMENT	605 6" SHALLOW PIPE UNDERDRAINS	605 6" UNCLASSIFIED PIPE UNDERDRAINS	605 6" BASE PIPE UNDERDRAINS	611 6" CONDUIT, TYPE F FOR UNDERDRAIN OUTLETS	611 PRECAST REINFORCED CONCRETE OUTLET
	SQ YD	FT	FT	FT	FT	EACH
254		3,368	1,612	6,446	847	
255	6	7,164		6,659	840	3
256	2	6,465		2,964	596	1
257		9,650	456	5,204	591	
258		4,151		2,553	221	
259		5,757		4,834	511	
260	4	2,957	598	4,037	694	2
TOTALS CARRIED TO GENERAL SUMMARY	12	39,512	2,666	32,697	4,300	6

CALCULATED RSH
CHECKED DLR

UNDERDRAIN SUBSUMMARY

HAM-75-7.85

253
1047

Preliminary Plans - For Reference Only

J:\20110903\ODOT\HAM\77889\drainage\sheets\77889DS002_Underdrains.dgn 5/22/2026 10:13:23 AM hbrendlinger

REF. NO.	SHEET NO.	STATION FROM	STATION TO	SIDE	CENTERLINE ROADWAY REFERENCE	OUTLET ELEVATION	601 TIED CONCRETE BLOCK MAT WITH TYPE 1 UNDERLAYMENT	605 6" SHALLOW PIPE UNDERDRAINS	605 6" UNCLASSIFIED PIPE UNDERDRAINS	605 6" BASE PIPE UNDERDRAINS	611 6" CONDUIT, TYPE F FOR UNDERDRAIN OUTLETS	611 PRECAST REINFORCED CONCRETE OUTLET				FOR INFORMATION ONLY BENDS AND BRANCHES						
																PLUG		6" x 45° BEND	6" x 90° BEND	6" x 6" TEE	6" x 6" CROSS	6" x 6" WYE
							SQ YD	FT	FT	FT	FT	EACH				EACH		EACH	EACH	EACH	EACH	EACH
UD1	544	410+00	411+58	LT	I.R. 75	EX UD				158						1						
UD2	544	411+60	416+58	LT	I.R. 75	526.67				490	72					1		2	1	2		
UD3	544	416+60	418+34	LT	I.R. 75	531.05				114	74					1		2	1	2		
UD4	544 -545	419+50	421+18	LT/RT	I.R. 75	530.96				84	266					1		2	1	1		5
UD5	544	410+00	411+58	LT	I.R. 75	EX UD		99								1						
UD6	544	411+01	411+58	LT	I.R. 75	526.20		48			10					1						
UD7	544	411+60	416+58	LT	I.R. 75			493								1						
UD8	544	416+60	418+22	LT	I.R. 75			107								1						
UD9	544 - 545	420+17	421+00	LT	I.R. 75			97								1						
UD10	544	410+00	411+58	LT	I.R. 75	523.12			156		12					1			2			
UD11	544	411+60	414+59	LT	I.R. 75			495			26					1			2			
UD12	544	411+61	416+58	LT	I.R. 75			86								1						
UD13	544 - 545	419+93	421+18	LT	I.R. 75			123								1						
UD14	544	410+00	411+58	RT	I.R. 75	EX UD				158						1						
UD15	544	411+62	413+48	RT	I.R. 75	527.88				177	10					1						
UD16	544	413+50	416+58	RT	I.R. 75	529.80				305	10					1			1			
UD17	544	416+62	417+43	RT	I.R. 75	534.28				39	10					1						
UD18	544 - 545	419+49	421+58	RT	I.R. 75					203	8					1		2				
UD19	544	410+00	411+58	RT	I.R. 75	EX UD		158								1						
UD20	544	411+60	413+48	RT	I.R. 75			187								1				1		
UD21	544	413+52	416+58	RT	I.R. 75			297			10					1						
UD22	544	416+60	417+34	RT	I.R. 75	529.88		42			10					1			1			
UD23	544 - 545	419+40	421+58	RT	I.R. 75			219								1						
UD24	544	412+27	413+48	RT	I.R. 75			121			24					1			1			
UD25	544	413+50	417+13	RT	I.R. 75	529.80		335			23					1			1			
UD26	544 - 545	419+16	421+58	RT	I.R. 75			236			10					1		2				
UD27	544	410+00	411+58	RT	I.R. 75	EX UD		158								1						
UD28	544	411+60	412+27	RT	I.R. 75			67								1						
UD29	544	411+60	413+45	RT	I.R. 75	526.53				182	75					1		2	1	2		
UD30	544	413+47	416+23	RT	I.R. 75	530.00				308	10					1				1		
UD31		NOT USED																				
UD32	544	418+79	419+16	RT	I.R. 75				33		10					1		2	1			
UD33	544 - 545	419+16	424+65	RT	I.R. 75					555	10					1		2	1			
UD34	544	412+00	416+33	LT	RAMP M	EX UD				447						1						
UD35	544	412+00	414+09	RT	RAMP M	EX UD				208						1						
UD36	544	414+14	415+67	RT	RAMP M	541.96				140	10					1						
UD37	544 - 550	420+07	424+02	LT	RAMP M	537.35				393	10					1						
UD38	544 - 550	420+61	422+86	RT	RAMP M	545.18				214	10					1						
UD39	544	412+64	415+00	LT	RAMP N	521.10				241	45									1	1	2
UD40	544	415+00	420+25	LT	RAMP N					530						1						
UD41	544	412+64	415+00	RT	RAMP N				235													
UD42	544	412+64	415+00	RT	RAMP N					227	10							2				
UD43	544	415+00	419+99	RT	RAMP N				499							1						
UD44	544	415+00	419+99	RT	RAMP N					491	10					1		2				
UD45	544 - 550	418+83	417+00	LT	RAMP J	513.00				337	13					1			1			
UD46	544	417+02	419+58	LT	RAMP J	510.28				272	29					1				1		
UD47	544	419+58	421+21	LT	RAMP J					173						1						
UD48	544 - 550	413+85	416+89	RT	RAMP J	513.50			292		10					1						
UD49	544	416+92	419+37	RT	RAMP J	508.06			236		10					1		1	1			
UD50	544 - 550	419+52	421+21	RT	RAMP J	508.06			161		10					1		1	1			
IR-75 SUBTOTAL CARRIED TO UNDERDRAIN SUBSUMMARY								3368	1612	6446	847											

Preliminary Plans - For Reference Only

CALCULATED RSH
CHECKED DLR

UNDERDRAIN ESTIMATED QUANTITIES

HAM-75-7.85

J:\20110903\ODOT\HAM\77889\drainage\sheets\77889DS002_Underdrains.dgn 5/22/2026 10:13:23 AM hbrendlinger

REF. NO.	SHEET NO.	STATION FROM	STATION TO	SIDE	CENTERLINE ROADWAY REFERENCE	OUTLET ELEVATION	601 TIED CONCRETE BLOCK MAT WITH TYPE 1 UNDERLAYMENT	605 6" SHALLOW PIPE UNDERDRAINS	605 6" UNCLASSIFIED PIPE UNDERDRAINS	605 6" BASE PIPE UNDERDRAINS	611 6" CONDUIT, TYPE F FOR UNDERDRAIN OUTLETS	611 PRECAST REINFORCED CONCRETE OUTLET				FOR INFORMATION ONLY BENDS AND BRANCHES						
																PLUG		6" x 45° BEND	6" x 90° BEND	6" x 6" TEE	6" x 6" CROSS	6" x 6" WYE
							SQ YD	FT	FT	FT	FT	EACH				EACH		EACH	EACH	EACH	EACH	EACH
UD51	544 - 550	413+85	416+89	RT	RAMP J	514.50				289	10					1						
UD52	544	416+92	419+18	RT	RAMP J	509.11				212	10					1						
UD53	544	419+22	419+42	RT	RAMP J					10	10					1						1
UD54	544	419+47	419+67	RT	RAMP J					10	10					1						1
UD55	544	419+71	421+21	RT	RAMP J	509.10				138	10					1						
UD56	544 - 550	416+17	419+24	LT	RAMP K	536.82				318	10					1			1			
UD57	544 - 545	419+26	421+50	LT	RAMP K	527.80	2			237	80	1				1			1	1		1
UD58	544 - 550	415+45	419+24	RT	RAMP K	523.00	2			374	30	1				1			1			1
UD59	544 - 545	419+26	421+50	RT	RAMP K					221						1						
UD60	544 - 550	415+45	419+24	RT	RAMP K			360			10					1		1	1			
UD61	544 - 545	416+26	421+50	RT	RAMP K			211			10					1		1	1			
UD1	544 - 545	421+23	427+56	LT	RAMP J	510.56				641	50					1			1	1		1
UD2	545	426+58	431+25	LT	RAMP J					368	15					1		1	1			
UD3	545	431+27	433+35	LT	RAMP J					208						1						
UD4	545	433+37	433+60	LT	RAMP J					20	13					1		1	1			
UD5	545	421+23	426+58	LT	RAMP J			101			26					1			2			
UD6	545	426+58	427+59	LT	RAMP J	534.63		369			40					1			1	1		1
UD7	545	427+61	431+25	LT	RAMP J	537.88		208			20					1			1	1		
UD8	545	431+27	433+35	RT	RAMP J	538.41		27			99					1			1	2		1
UD9	545	433+37	433+64	RT	RAMP J			534														
UD10	545	421+23	427+59	RT	RAMP J					626	10					1		1	1			
UD11	545	427+61	431+25	RT	RAMP J					365						1						
UD12	545	431+27	432+21	RT	RAMP J	540.04				90	10					1			1			
UD13	545	421+20	424+83	LT	I.R. 75					349	10					1		1	1			
UD14	545	424+85	427+58	LT	I.R. 75					263	10					1		1	1			
UD15	545	427+60	431+24	LT	I.R. 75					355	10					1			1			
UD16	545	431+26	432+18	LT	I.R. 75	540.11				83	11					1		2				
UD17	545	421+20	424+83	LT	I.R. 75			356								1						
UD18	545	424+85	427+58	LT	I.R. 75			269								1						
UD19	545	427+60	431+24	LT	I.R. 75			364								1						
UD20	545	431+26	432+20	LT	I.R. 75	540.01		94			15					1			1			
UD21	545	432+22	433+65	LT	I.R. 75			143								1						
UD22	545	421+20	422+83	LT	I.R. 75	532.13		359			45					1			1	1		1
UD23	545	422+85	427+58	LT	I.R. 75	536.46		271			54					1			1	1		1
UD24	545	427+60	428+92	LT	I.R. 75	538.24		132			39					1			1	1		
UD25	545	427+60	431+24	LT	I.R. 75	538.86		364			12					1			1			
UD26	545	431+26	433+65	LT	I.R. 75			239								1						
UD27	545	421+62	427+58	RT	I.R. 75	536.77				587	10					1						
UD28	545	427+62	431+24	RT	I.R. 75	539.50				353	10					1						
UD29	545	431+26	433+64	RT	I.R. 75	539.13				228	10					1		1				
UD30	545	421+60	427+58	RT	I.R. 75			600								1						
UD31	545	427+60	431+24	RT	I.R. 75			364								1						
UD32	545	431+26	433+65	RT	I.R. 75			239								1						
UD33	545	421+60	427+58	RT	I.R. 75			604								1			1	1		
UD34	545	427+61	428+92	RT	I.R. 75			131								1						
UD35	545	427+61	431+24	RT	I.R. 75	538.86		363			58					1			1	2		
UD36	545	431+26	433+65	RT	I.R. 75			239								1						
UD37	545	421+52	423+06	LT	RAMP K					158	34					1		1	1	1		
UD38	545	423+06	424+61	LT	RAMP K					156						1						
UD39	545	421+52	423+75	RT	RAMP K	538.03	2	223			39	1				1				1		3
IR-75 SUBTOTAL CARRIED TO UNDERDRAIN SUBSUMMARY							6	7164		6659	840	3										

CALCULATED RSH
CHECKED DLR

UNDERDRAIN ESTIMATED QUANTITIES

HAM-75-7.85

255
1047

Preliminary Plans - For Reference Only

J:\20110903\ODOT\HAM\77889\drainage\sheets\77889DS002_Underdrains.dgn 5/22/2026 10:13:24 AM hbrendlinger

REF. NO.	SHEET NO.	STATION FROM	STATION TO	SIDE	CENTERLINE ROADWAY REFERENCE	OUTLET ELEVATION	601 TIED CONCRETE BLOCK MAT WITH TYPE 1 UNDERLAYMENT	605 6" SHALLOW PIPE UNDERDRAINS	605 6" UNCLASSIFIED PIPE UNDERDRAINS	605 6" BASE PIPE UNDERDRAINS	611 6" CONDUIT, TYPE F FOR UNDERDRAIN OUTLETS	611 PRECAST REINFORCED CONCRETE OUTLET				FOR INFORMATION ONLY BENDS AND BRANCHES						
																PLUG		6" x 45° BEND	6" x 90° BEND	6" x 6" TEE	6" x 6" CROSS	6" x 6" WYE
							SQ YD	FT	FT	FT	FT	EACH				EACH		EACH	EACH	EACH	EACH	EACH
UD40	545	423+75	425+74	RT	RAMP K			199								1						
UD41	545	425+76	428+39	RT	RAMP K	534.62	2	263			27	1				1				1		2
UD42	545	428+39	431+24	RT	RAMP K			285								1						
UD43	545	431+26	433+65	RT	I.R. 75			239								1						
UD44	545	421+52	423+75	RT	RAMP K					216	10					1		1	1			
UD45	545	423+75	425+74	RT	RAMP K					193	10					1		1	1			
UD46	545	425+76	428+39	RT	RAMP K					257	10					1		1	1			
UD47	545	428+39	431+24	RT	RAMP K					278	10					1		1	1			
UD48	545	431+26	433+65	RT	I.R. 75	537.84				239	97					1			1	3		
UD1	546	435+31	437+15	LT	I.R. 75	529.40				179	10					1			1			
UD2	546	437+17	439+40	LT	I.R. 75	525.25				217	10					1			1			
UD3	546	439+42	440+04	LT	I.R. 75					57	10					1		1	1			
UD4	546	440+04	442+07	LT	I.R. 75					200	10					1		3	1			
UD5	546	442+10	443+13	LT	I.R. 75	525.44				97	10					1			1			
UD6	546	443+15	444+50	LT	I.R. 75	530.27				129	10					1			1			
UD7	546	435+17	437+12	LT	I.R. 75	528.40		188			10					1		2				
UD8	546	437+17	439+37	LT	I.R. 75	524.25		213			10					1		2				
UD9	546	439+42	440+04	LT	I.R. 75			62														
UD10	546	440+04	442+08	LT	I.R. 75			204														
UD11	546	442+13	443+13	LT	I.R. 75	524.44		94			10					1		2				
UD12	546	443+18	444+50	LT	I.R. 75	529.27		125			10					1		2				
UD13	546	435+18	437+15	LT	I.R. 75	528.76		197			21					1			1			
UD14	546	437+17	439+40	LT	I.R. 75	524.25		223			15					1			1			
UD15	546	439+42	440+04	LT	I.R. 75	523.75		62			67					1		1		1	1	2
UD16	546	440+04	442+08	LT	I.R. 75			204								1						
UD17	546	442+10	443+13	LT	I.R. 75	526.63		103			14					1			1			
UD18	546	443+15	444+50	LT	I.R. 75	529.27		135			14					1			1			
UD19	546	435+23	437+15	LT	I.R. 75	528.92		191			10					1			1			
UD20	546	437+17	439+50	LT	I.R. 75	524.37		232			10					1			1			
UD21	546	439+52	440+04	LT	I.R. 75	523.92		49			10					1				1		
UD22	546	440+04	443+13	LT	I.R. 75			309								1						
UD23	546	443+15	444+50	LT	I.R. 75	529.15		134			10					1			1			
UD24	546	435+21	437+14	RT	I.R. 75	529.96				183	10					1						
UD25	546	437+17	439+49	RT	I.R. 75	525.37				222	10					1						
UD26	546	439+54	440+02	RT	I.R. 75	526.16				38	10					1						
UD27	546	440+05	440+46	RT	I.R. 75	526.16				30	10					1						
UD28	546	440+49	443+13	RT	I.R. 75	525.35				256	10					1		2				
UD28A	546	440+49	441+05	LT	I.R. 75	525.35				48	10					1		1				
UD29	546	443+17	444+50	RT	I.R. 75	530.52				125	10					1						
UD30	546	435+22	437+15	RT	I.R. 75	527.65		193			12					1			1			
UD31	546	437+17	439+50	RT	I.R. 75	523.15		233			12					1			1			
UD32	546	439+52	440+04	RT	I.R. 75	523.15		51			10					1				1		
UD33	546	440+04	443+13	RT	I.R. 75			309								1						
UD34	546	443+15	444+50	RT	I.R. 75	529.15		135			12					1			1			
UD35	546	435+24	440+04	RT	I.R. 75	524.15		480			25					1				1	1	
UD36	546	440+04	444+50	RT	I.R. 75			446								1						
UD37	546	435+25	439+00	RT	I.R. 75	524.69		368			10					1			1			
UD38	546	439+02	440+04	RT	I.R. 75			102								1						
UD39	546	440+04	441+23	RT	I.R. 75			119								1						
UD40	546	441+25	444+50	RT	I.R. 75	524.90		318			10					1			1			
IR-75 SUBTOTAL CARRIED TO UNDERDRAIN SUBSUMMARY							2	6465		2964	596	1										

CALCULATED RSH CHECKED DLR

UNDERDRAIN ESTIMATED QUANTITIES

HAM-75-7.85

256
1047

Preliminary Plans - For Reference Only

J:\20110903\ODOT\HAM\77889\drainage\sheets\77889DS002_Underdrains.dgn 5/22/2026 10:13:24 AM hbrendlinger

REF. NO.	SHEET NO.	STATION FROM	STATION TO	SIDE	CENTERLINE ROADWAY REFERENCE	OUTLET ELEVATION	601 TIED CONCRETE BLOCK MAT WITH TYPE 1 UNDERLAYMENT	605 6" SHALLOW PIPE UNDERDRAINS	605 6" UNCLASSIFIED PIPE UNDERDRAINS	605 6" BASE PIPE UNDERDRAINS	611 6" CONDUIT, TYPE F FOR UNDERDRAIN OUTLETS	611 PRECAST REINFORCED CONCRETE OUTLET				FOR INFORMATION ONLY BENDS AND BRANCHES					
																PLUG		6" x 45° BEND	6" x 90° BEND	6" x 6" TEE	6" x 6" CROSS	6" x 6" WYE
							SQ YD	FT	FT	FT	FT	EACH				EACH		EACH	EACH	EACH	EACH	EACH
UD41	546	435+40	438+90	RT	I.R. 75	524.75				350	11					1			1			
UD42	546	438+99	439+49	RT	I.R. 75	524.97				40	10					1						
UD43	546	439+53	440+02	RT	I.R. 75	524.92				40	10					1						
UD44	546	440+05	441+22	RT	I.R. 75	524.92				107	10					1						
UD45	546	441+26	444+50	RT	I.R. 75	525.10				317	10					1			1			
UD1	547	444+50	448+40	LT	I.R. 75					384	30					1		1	1			1
UD2	547	444+50	449+40	LT	I.R. 75			494			20					1		1	1			1
UD3	547	444+50	451+31	LT	I.R. 75	533.75		681			18					1			1			
UD4	547	444+50	449+98	LT	I.R. 75	534.40		545			10					1			1			
UD5	547	444+52	447+00	RT	I.R. 75	534.46				237	10					1						
UD6	547	444+50	451+52	RT	I.R. 75			699			10					1		1	1			1
UD7	547	444+50	451+66	RT	I.R. 75			709			60					1		1	1			1
UD8	547	444+50	450+79	RT	I.R. 75			629								1				1		
UD9	547	444+50	445+37	RT	I.R. 75	534.43				85	12					1			1			
UD10	547	445+40	451+76	RT	I.R. 75	537.50				622	10					1						
UD11	547	447+02	449+99	RT	I.R. 75	542.94				287	10					1						
UD12	547	450+00	450+79	LT	I.R. 75	551.92		79			13					1			1			
UD13	547	450+02	451+49	RT	I.R. 75	551.94				138	10					1						
UD14	547	450+79	451+38	LT	I.R. 75			58			24					1			1	1		
UD15	547	450+79	451+59	RT	I.R. 75			79			24					1			1	1		
UD16	547	452+60	457+00	LT	I.R. 75			371	66							1						
UD17	547	452+67	457+00	LT	I.R. 75			372	59							1						
UD18	547	452+78	456+49	RT	I.R. 75	553.09			48	314	10					1						
UD19	547	452+81	457+00	RT	I.R. 75			375	45							1						
UD20	547	452+88	457+00	RT	I.R. 75			376	39							1						
UD21	547	452+94	457+00	RT	I.R. 75			374	32							1						
UD22	547	453+04	457+00	RT	I.R. 75				22	378						1						
UD23	547	456+52	457+00	RT	I.R. 75					49						1						
UD24	547	20+25		LT	TOWNSHIP	526.10																
UD24	547		0+91	LT	CEDAR			73	36		18									1		
UD25	547	0+91	1+26	LT	CEDAR				35							1						
UD26	547	0+92	1+25	RT	CEDAR	526.30			24		10					1						
UD27	547	18+01	20+25	LT	TOWNSHIP					214	10					1			1			
UD28	547	18+01	20+03	RT	TOWNSHIP	527.90				265	10					1						
UD29	547	15+60	17+99	LT	TOWNSHIP	538.20				229	10					1						
UD30	547	15+60	17+99	RT	TOWNSHIP	538.20				229	10					1						
UD1	548	457+00	460+48	LT	I.R. 75	548.69		345			63							1		1		1
UD2	548	457+00	460+48	LT	I.R. 75			346			10							1		1		1
UD3	548	457+00	459+49	RT	I.R. 75	549.37				240	10					1						
UD4	548	457+00	460+48	RT	I.R. 75			350			10							1		1		1
UD5	548	457+00	460+48	RT	I.R. 75			349			10							1		1		1
UD6	548	457+00	460+48	RT	I.R. 75	548.69		350			59									1		
UD7	548	457+00	460+98	RT	I.R. 75	549.82			50	342	10											
UD8	548	459+52	460+47	RT	I.R. 75	549.06				95						1						
UD9	548	460+48	466+45	LT	I.R. 75			597								1						
UD10	548	460+48	462+03	LT	I.R. 75			155								1						
UD11	548	460+50	461+49	LT	I.R. 75	549.06				89	10					1						
UD12	548	460+48	465+78	RT	I.R. 75			527			10					1						
UD13	548	460+48	462+03	RT	I.R. 75			152			10					1						
UD14	548	460+48	466+16	RT	I.R. 75			568								1				1		
UD15	548	461+01	466+15	RT	I.R. 75	549.82				504	10					1						
IR-75 SUBTOTAL CARRIED TO UNDERDRAIN SUBSUMMARY								9650	456	5204	591											

CALCULATED RSH CHECKED DLR

UNDERDRAIN ESTIMATED QUANTITIES

HAM-75-7.85

257
1047

Preliminary Plans - For Reference Only

J:\20110903\ODOT\HAM\77889\drainage\sheets\77889DS002_Underdrains.dgn 5/22/2026 10:13:24 AM hbrendlinger

REF. NO.	SHEET NO.	STATION FROM	STATION TO	SIDE	CENTERLINE ROADWAY REFERENCE	OUTLET ELEVATION	601 TIED CONCRETE BLOCK MAT WITH TYPE 1 UNDERLAYMENT SQ YD	605 6" SHALLOW PIPE UNDERDRAINS FT	605 6" UNCLASSIFIED PIPE UNDERDRAINS FT	605 6" BASE PIPE UNDERDRAINS FT	611 6" CONDUIT, TYPE F FOR UNDERDRAIN OUTLETS FT	611 PRECAST REINFORCED CONCRETE OUTLET EACH				FOR INFORMATION ONLY BENDS AND BRANCHES PLUG EACH		6" x 45° BEND EACH	6" x 90° BEND EACH	6" x 6" TEE EACH	6" x 6" CROSS EACH	6" x 6" WYE EACH
UD16	548	461+50	465+78	LT	I.R. 75	548.73		427			10					1			1			
UD17	548	461+52	463+99	RT	I.R. 75	549.40				237	10					1						
UD18	548	462+03	466+16	RT	I.R. 75			413			13					1			1	1		
UD19	548	464+02	469+50	LT	I.R. 75	552.71				539	10											
UD20	548	464+02	466+45	LT	I.R. 75	552.71		243			11					1			1			
UD21	548	464+02	465+79	RT	I.R. 75	552.99				167	10					1						
UD22	548	465+80	469+50	LT	I.R. 75	557.21		370			11								1			
UD23	548	465+82	469+50	LT	I.R. 75	557.91				359	10											
UD24	548	465+80	466+47	RT	I.R. 75	557.23		64			10								1			
UD25	548	466+18	469+50	RT	I.R. 75	557.46		332			24								1			
UD26	548	466+18	469+50	RT	I.R. 75			330			10							1	1			1
UD27	548	466+18	469+50	RT	I.R. 75	558.44				322	10											
UD28	548	466+47	469+50	LT	I.R. 75			303			48								1	1		
UD29	548	466+47	469+50	LT	I.R. 75			300			10							1	1			1
UD30	548	466+47	469+50	RT	I.R. 75			303			23								1	1		
UD1	549	469+50	470+75	LT	I.R. 75					127						1						
UD2	549	469+50	470+75	LT	I.R. 75			127								1						
UD3	549	469+50	470+75	LT	I.R. 75			126								1						
UD4	549	469+50	470+75	LT	I.R. 75			125								1						
UD5	549	469+50	470+75	LT	I.R. 75					125						1						
UD6	549	469+50	470+75	RT	I.R. 75			124								1						
UD7	549	469+50	470+75	RT	I.R. 75			124								1						
UD8	549	469+50	470+75	RT	I.R. 75			123								1						
UD9	549	469+50	470+75	RT	I.R. 75					123						1						
UD10	549	470+77	472+00	LT	I.R. 75					128						1						
UD11	549	470+77	472+00	LT	I.R. 75			127								1						
UD12	549	470+77	472+00	LT	I.R. 75			125								1						
UD13	549	470+77	472+00	LT	I.R. 75			128			11					1		1				1
UD14	549	470+77	472+00	LT	I.R. 75	560.89				308						1						
UD15	549	470+77	472+00	RT	I.R. 75			121								1						
UD16	549	470+77	472+00	RT	I.R. 75			123								1			1			1
UD17	549	470+76	472+00	RT	RAMP D			119								1						
UD18	549	470+76	472+00	RT	RAMP D					118						1						
IR-75 SUBTOTAL CARRIED TO UNDERDRAIN SUBSUMMARY								4151		2553	221											

CALCULATED RSH CHECKED DLR

UNDERDRAIN ESTIMATED QUANTITIES

HAM-75-7.85

258
1047

Preliminary Plans - For Reference Only

J:\20110903\ODOT\HAM\77889\drainage\sheets\77889DS002_Underdrains.dgn 5/22/2026 10:13:24 AM hbrendlinger

REF. NO.	SHEET NO.	STATION FROM	STATION TO	SIDE	CENTERLINE ROADWAY REFERENCE	OUTLET ELEVATION	601 TIED CONCRETE BLOCK MAT WITH TYPE 1 UNDERLAYMENT	605 6" SHALLOW PIPE UNDERDRAINS	605 6" UNCLASSIFIED PIPE UNDERDRAINS	605 6" BASE PIPE UNDERDRAINS	611 6" CONDUIT, TYPE F FOR UNDERDRAIN OUTLETS	611 PRECAST REINFORCED CONCRETE OUTLET				FOR INFORMATION ONLY BENDS AND BRANCHES						
																PLUG		6" x 45° BEND	6" x 90° BEND	6" x 6" TEE	6" x 6" CROSS	6" x 6" WYE
		FROM	TO				SQ YD	FT	FT	FT	FT	EACH				EACH		EACH	EACH	EACH	EACH	EACH
UD1	550	412+60	415+43	RT	RAMP K	523.95				273	10					1			1			
UD2	550	15+92	16+40	LT	S.R. 562	523.35				40	10					1				1		
UD3	550	16+40	16+88	LT	S.R. 562					48						1						
UD4	550	16+90	20+48	LT	S.R. 562	523.58				351	10					1		2	1			
UD5	550 -551	20+51	22+43	LT	S.R. 562	534.61				182	10					1						
UD6	550 -551	22+46	25+96	LT	S.R. 562	542.14				340	10					1						
UD7	550	412+45	415+43	RT	RAMP K	522.45		293			10					1			1			
UD8	550	15+93	16+40	LT	S.R. 562	522.78		45			10					1				1		
UD9	550	16+40	16+88	LT	S.R. 562			48								1						
UD10	550	16+90	20+48	LT	S.R. 562	523.01		356			10					1			1			
UD11	550	20+50	22+43	LT	S.R. 562	533.61		189			10					1			1			
UD12	550 -551	22+45	27+47	LT	S.R. 562			503								1						
UD13	550 -551	22+45	27+48	LT	S.R. 562	541.42		503			11					1			1	1		
UD14	550	412+46	416+13	LT	RAMP K	523.86		379			17					1			2			1
UD15	550	15+93	16+41	LT	S.R. 562	523.22		48			14					1				1		
UD16	550	16+41	20+00	LT	S.R. 562			359								1						
UD17	550	424+09	426+08	LT	RAMP M			196								1		1				
UD18	550	422+89	424+18	RT	RAMP M	537.03				130	40					1			1			
UD19	550	424+20	426+88	RT	RAMP M	526.06				265	10					1			1			
UD20	550	14+77	15+89	RT	S.R. 562	524.35				103	10					1		1				
UD21	550	15+94	16+33	RT	S.R. 562	524.19				29	10					1						
UD22	550	16+36	20+39	RT	S.R. 562	524.19				397	10					1		1				
UD22A	550	16+40	17+70	LT	S.R. 562	524.22				127	10					1		1				
UD23	550	20+52	22+33	RT	S.R. 562	535.14				172	10					1						
UD24	550	22+47	26+26	RT	S.R. 562	542.81				370	10					1						
UD25	550	411+76	413+83	RT	RAMP J					197	10					1		1	1			
UD26	550	411+76	413+83	RT	RAMP J			205								1						
UD27	550	409+06	411+74	RT	RAMP J	526.06				262	10					1		2	2			
UD28	550	412+01	413+81	LT	RAMP J	523.90				190	69					1			1	1		1
UD29	550	407+92	411+74	LT	RAMP J	522.57		385			27					1			2			
UD30	550	15+93	16+34	RT	S.R. 562	522.42		41			23					1				1	1	
UD31	550	16+34	20+48	RT	S.R. 562			413								1						
UD32	550	20+51	22+47	RT	S.R. 562	534.00		196			20					1			1	1		
UD33	550	22+49	25+98	RT	S.R. 562	541.50		349			20					1			1	1		
UD34	550	420+01	424+39	RT	RAMP N			438								1						
UD35	550	15+93	16+34	RT	S.R. 562			42								1						
UD36	550	16+34	16+82	RT	S.R. 562			46								1						
UD37	550	16+84	17+96	RT	S.R. 562	522.16		108			10					1			1			
UD38	550	17+98	20+48	RT	S.R. 562	524.38		245			10					1			1			
UD39	550	20+51	22+47	RT	S.R. 562			21								1						
UD40	550	22+49	25+98	RT	S.R. 562			349								1						
UD41	550	420+01	424+40	RT	RAMP N	523.24				430	10					1						
UD42	550	15+94	16+33	RT	S.R. 562	523.10				29	10					1						
UD43	550	16+36	16+80	RT	S.R. 562	523.10				34	10					1						
UD44	550	16+86	18+01	RT	S.R. 562	523.32				105	10					1						
UD45	550	18+09	20+48	RT	S.R. 562	527.35				229	10					1						
UD46	550	20+50	22+47	RT	S.R. 562	534.39				189	10					1			1			
UD47	550	22+49	25+98	RT	S.R. 562	541.95				342	10					1			1			
IR-75 SUBTOTAL CARRIED TO UNDERDRAIN SUBSUMMARY								5757		4834	511											

CALCULATED RSH CHECKED DLR

UNDERDRAIN ESTIMATED QUANTITIES

HAM-75-7.85

259
1047

Preliminary Plans - For Reference Only

J:\20110903\ODOT\HAM\77889\drainage\sheets\77889DS002_Underdrains.dgn 5/22/2026 10:13:24 AM hbrendlinger

REF. NO.	SHEET NO.	STATION FROM	STATION TO	SIDE	CENTERLINE ROADWAY REFERENCE	OUTLET ELEVATION	601 TIED CONCRETE BLOCK MAT WITH TYPE 1 UNDERLAYMENT	605 6" SHALLOW PIPE UNDERDRAINS	605 6" UNCLASSIFIED PIPE UNDERDRAINS	605 6" BASE PIPE UNDERDRAINS	611 6" CONDUIT, TYPE F FOR UNDERDRAIN OUTLETS	611 PRECAST REINFORCED CONCRETE OUTLET				FOR INFORMATION ONLY BENDS AND BRANCHES						
																PLUG		6" x 45° BEND	6" x 90° BEND	6" x 6" TEE	6" x 6" CROSS	6" x 6" WYE
							SQ YD	FT	FT	FT	FT	EACH				EACH		EACH	EACH	EACH	EACH	EACH
UD1	551	26+01	27+48	LT	RAMP P	555.48				137	10					1						
UD2	551	27+51	28+98	LT	RAMP P	561.05				137	10					1						
UD3	551	29+01	31+98	LT	RAMP P	566.75				287	10					1						
UD4	551	32+03	32+62	LT	RAMP P					105	10					1		1	1			
UD5	551	33+64	34+47	LT	RAMP P	580.10				72	10					1						
UD6	551	34+49	34+89	LT	RAMP P	580.40			30		10					1						
UD7	551	27+50	28+97	LT	RAMP P			148								1						
UD8	551	29+00	31+98	LT	RAMP P	566.07		294			10					1			1			
UD9	551	32+03	33+62	LT	RAMP P			159								1						
UD10	551	33+64	33+48	LT	RAMP P			83								1						
UD11	551	34+49	35+09	LT	RAMP P	578.32			54		10					1		1	1			
UD12	551	27+50	33+33	LT	S.R. 562			583			21					1			1	1		
UD13	551	32+03	33+62	RT	RAMP P	577.14		160			31					1			1	1		1
UD14	551	33+64	34+48	RT	RAMP P			84								1						
UD15	551	34+48	35+09	RT	RAMP P				56		10					1		1	1			
UD16	551	33+30	33+62	RT	RAMP P					30	15					1		2	1	1		
UD17	551	33+64	34+48	RT	RAMP P	578.48				81	38					1		2	1	2		2
UD18	551	34+48	35+09	RT	RAMP P	578.32			56		10					1		1	1			
UD19	551	26+32	28+58	RT	S.R. 562	557.16				217	10					1						
UD20	551	28+60	31+57	RT	S.R. 562	566.15				291	10					1			1			
UD21	551	31+59	32+00	RT	S.R. 562	577.47				34	10					1			1			
UD22	551	26+00	32+00	RT	S.R. 562	554.00	2	600			35	1				1			1	1		1
UD23	551	31+82	32+00	LT	RAMP Q				18	18	14					1		1	3			
UD24	551	32+00	33+53	LT	RAMP Q	575.00				151	43					1		2	1	1		2
UD25	551	33+53	34+50	LT	S.R. 562	578.00	2			93	67	1				1		2	1	1		1
UD26	551	26+00	31+98	RT	S.R. 562			598								1						
UD27	551	26+00	31+98	RT	S.R. 562			152								1						
UD28	551	32+00	33+52	RT	S.R. 562			96								1						
UD29	551	33+54	34+50	RT	S.R. 562					592	10					1		1	1			
UD30	551	32+00	33+52	RT	S.R. 562					147	10					1		1	1			
UD31	551	33+54	34+50	RT	S.R. 562					90	10					1		1	1			
UD40	551	35+06	36+40	LT	RAMP P					106	10					1		2				
UD41	551	35+06	37+39	LT	RAMP P				52	229						2			1	1		
UD42	551	36+45	37+39	LT	RAMP P				68	99	165					2						
UD43	551	36+70	37+46	LT	RAMP P				4	101						1						
UD44	551	35+06	35+93	LT	RAMP P					79						1		2				
UD45	551	35+98	37+49	LT	RAMP P				6	158						2						
UD50	551	34+43	37+31	RT	RAMP Q					274	75					2		1		3		
UD51	551	34+43	37+31	RT	RAMP Q					281						1						
UD52	551	36+88	37+31	RT	RAMP Q					49						1						
UD53	551	34+43	37+20	RT	RAMP Q					179	10					1						
UD54	551	37+03	37+20	RT	RAMP Q				70		10					1						
UD55	551	37+27	37+59	RT	RAMP Q				84							1						
UD56	551	37+36	37+59	RT	RAMP Q				44							1						
UD57	551	37+34	37+85	RT	RAMP Q				27							1						
UD58	551	37+32	37+81	RT	RAMP Q				29													
IR-75 SUBTOTAL CARRIED TO UNDERDRAIN SUBSUMMARY							4	2957	598	4037	694	2										

CALCULATED RSH
CHECKED DLR

UNDERDRAIN ESTIMATED QUANTITIES

HAM-75-7.85

260
1047

Preliminary Plans - For Reference Only

J:\20110903\ODOT\HAM\77889\drainage\sheets\77889DS002_Underdrains.dgn 5/22/2026 10:13:24 AM hbrendlinger

REF. NO.	SHEET NO.	STATION FROM	STATION TO	SIDE	CENTERLINE ROADWAY REFERENCE	601 TIED CONCRETE BLOCK MAT WITH TYPE 2 UNDERLAYMENT SQ YD	601 PAVED GUTTER, TYPE 1-2 SQ YD	670 DITCH EROSION PROTECTION SQ YD			
EC1	544	410+52	412+00	LT	I.R. 75			124			
EC2	544	415+47		LT	I.R. 75	14					
EC3	544	416+00	416+54	LT	I.R. 75		23				
EC4	544	416+00	417+27	RT	I.R. 75			108			
EC5	544	416+10		RT	I.R. 75	33					
EC6	544	416+58	417+50	LT	I.R. 75		40				
EC7	544	412+07	413+07	LT	RAMP N			86			
EC8	544	413+04	416+50	RT	RAMP N			274			
EC9	544	413+18	414+50	LT	RAMP J			123			
EC10	544	415+34	417+68	RT	RAMP J			176			
EC11	544 - 545	415+50	417+00	LT	RAMP J			139			
EC12	544	419+07	420+95	LT	RAMP J			130			
EC13	544	418+87	419+45	LT	RAMP J			73			
EC14	544	419+24	419+35	LT	RAMP J		8				
EC15	544 - 550	420+51	421+40	RT	RAMP J		39				
EC1	545	421+40	427+58	RT	RAMP J			506			
EC2	545	421+57	423+00	RT	I.R. 75			123			
EC3	545	422+56	424+00	RT	RAMP K			103			
EC4	545	427+60	430+50	RT	RAMP J			224			
EC5	545	428+39	429+99	RT	RAMP K			128			
EC6	545	431+88	433+35	LT	RAMP J			117			
EC1	546	435+19	438+50	RT	I.R. 75			351			
EC2	546	438+50	440+83	LT	I.R. 75			499			
EC3	546	438+50	438+83	LT	I.R. 75			40			
EC4	546	440+19	441+18	RT	I.R. 75			136			
EC5	546	442+00	442+11	LT	I.R. 75			175			
EC6	546	442+17	444+50	LT	I.R. 75			375			
EC7	546	441+32	444+50	RT	I.R. 75			389			
EC1	547	448+00	452+15	RT	I.R. 75			376			
EC2	547	452+98	455+49	RT	I.R. 75			202			
EC3	547	455+50	457+00	RT	I.R. 75			229			
EC4	547	451+50	452+15	RT	I.R. 75			123			
EC5	547	444+50	445+50	LT	I.R. 75			63			
EC6	547	444+50	448+00	RT	I.R. 75			237			
EC1	548	457+00	458+92	RT	I.R. 75			270			
EC2	548	459+00	459+50	RT	I.R. 75			51			
EC3	548	462+00	463+00	RT	I.R. 75			139			
EC4	548	463+00	466+00	RT	I.R. 75			369			
SUBTOTAL						47	110	6334			
TOTALS CARRIED TO GENERAL SUMMARY						47	110	6334			

Preliminary Plans - For Reference Only

CALCULATED RSH
CHECKED DLR

EROSION CONTROL ESTIMATED QUANTITIES

HAM-75-7.85

J:\20110903\ODOT\HAM\77889\drainage\sheets\77889DS003_Erosion Control.dgn 5/22/2026 10:13:25 AM hbrendlinger

REF. NO.	SHEET	STATION FROM	STATION TO	SIDE	CENTERLINE ROADWAY REFERENCE	607 FENCE, TYPE CLT		607 FENCELINE SEEDING AND MULCHING	FOR INFORMATION ONLY LINE POST	LINE POST ENCASED IN CONCRETE	END/CORNER POST ASSEMBLY	ABUTMENT CONNECTION
		FROM	TO			FT		FT	EACH	EACH	EACH	EACH
F1	1040	415+64.00	421+00.00	LT	IR 75	518		518	48	1	3	
F2	1040	420+47.00	421+00.00	RT	IR 75	87		87	8		1	
F1	1041	421+00.00	434+11.00	LT	IR 75	1,281		1,281	124	1	4	1
F2	1041	421+00.00	434+24.00	RT	IR 75	1,400		1,400	134	1	5	1
F1	1042	434+94.00	440+69.00	LT	IR 75	581		581	56		3	2
F2	1042	434+89.00	439+63.00	RT	IR 75	518		518	47	1	4	2
F3	1042	441+19.00	444+50.00	RT	IR 75	389		389	36		3	1
F4	1042	441+94.00	444+50.00	LT	IR 75	315		315	31		1	1
F5	1042	436+85.00	437+40.00	LT	IR 75	72		72				
F1	1043	444+50.00	451+59.00	LT	IR 75	771		771	71	3	4	1
F2	1043	444+50.00	449+07.00	RT	IR 75	466		466	44		3	
F3	1043	453+29.00	457+00.00	LT	IR 75	378		378	35		3	1
F1	1044	457+00.00	469+50.00	LT	IR 75	1,256		1,256	119	3	4	
F2	1044	457+00.00	469+50.00	RT	IR 75	1,286		1,286	120	1	8	
F1	1046	412+17.00	419+01.00	RT	RAMP K	622		622	60		3	1
F2	1046	423+71.00	425+20.00	RT	RAMP N	158		158	14		2	1
F3	1046	17+07.00	23+00.00	LT	SR 562	598		598	58	1	1	1
F4	1046	17+53.00	23+00.00	RT	SR 562	567		567	52		5	1
F1	1047	23+00.00	33+89.00	LT	SR 562	1,108		1,108	104		7	
F2	1047	23+00.00	37+62.00	RT	SR 562	1,492		1,492	144	2	4	
									1,305	14	68	14
TOTALS CARRIED TO GENERAL SUMMARY						13,863		13,863				

FOR INFORMATION ONLY TOTALS

CALCULATED SEA
CHECKED DLR

FENCE ESTIMATED QUANTITIES

HAM-75-7.85

262
1047

Preliminary Plans - Not For Reference Only

J:\2011093\ODOT\HAM\7889\roadway\sheets\778895S006_Fence.dgn 5/22/2026 10:13:26 AM hbrendlinger

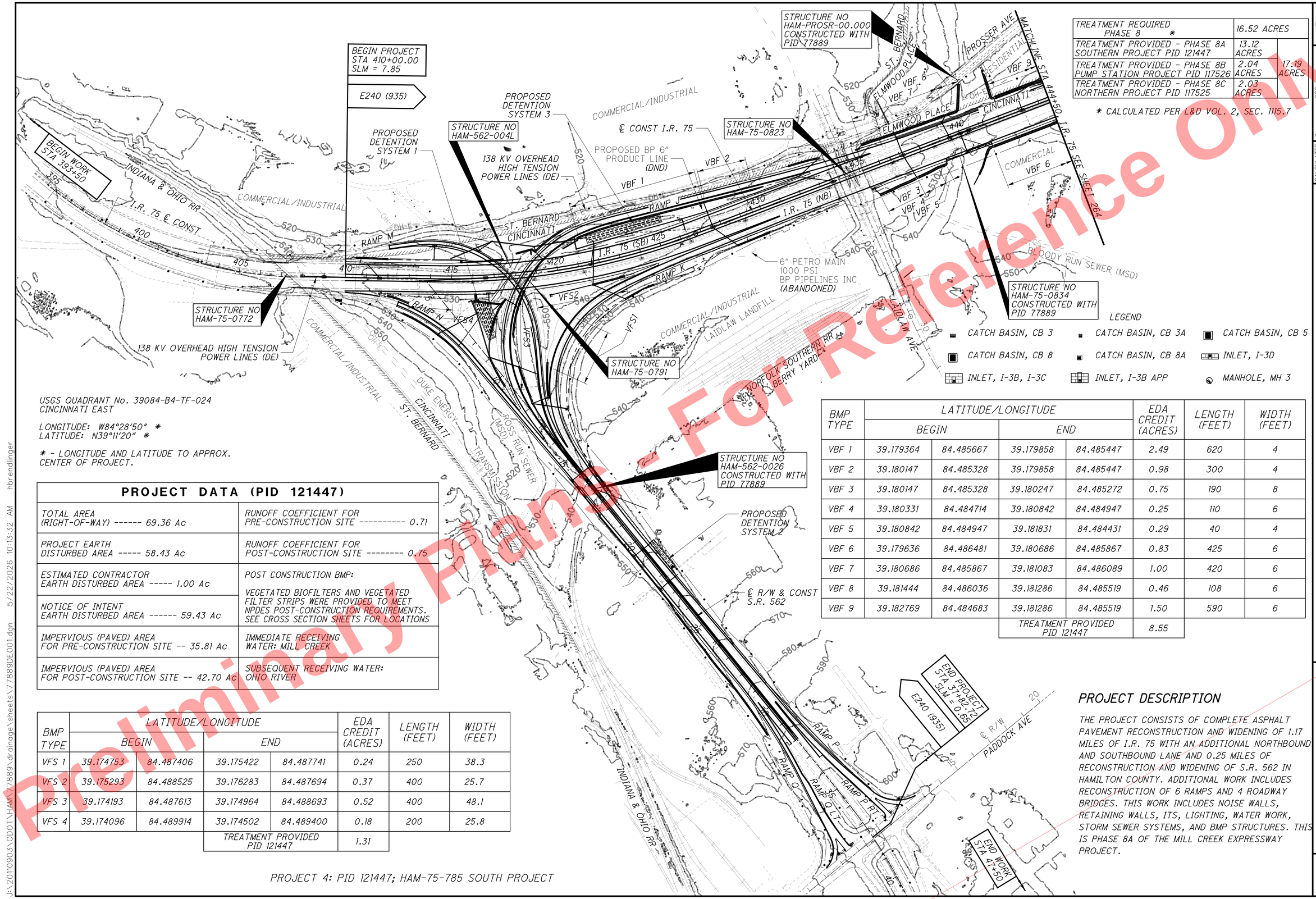

TREATMENT REQUIRED PHASE 8 *	16.52 ACRES	
TREATMENT PROVIDED - PHASE 8A SOUTHERN PROJECT PID 121447	13.12 ACRES	17.19 ACRES
TREATMENT PROVIDED - PHASE 8B PUMP STATION PROJECT PID 117526	2.04 ACRES	
TREATMENT PROVIDED - PHASE 8C NORTHERN PROJECT PID 117525	2.03 ACRES	

* CALCULATED PER L&D VOL. 2, SEC. 1115.7

BMP TYPE	LATITUDE/LONGITUDE BEGIN		LATITUDE/LONGITUDE END		EDA CREDIT (ACRES)	LENGTH (FEET)	WIDTH (FEET)
VBF 1	39.179364	84.485667	39.179858	84.485447	2.49	620	4
VBF 2	39.180147	84.485328	39.179858	84.485447	0.98	300	4
VBF 3	39.180147	84.485328	39.180247	84.485272	0.75	190	8
VBF 4	39.180331	84.484714	39.180842	84.484947	0.25	110	6
VBF 5	39.180842	84.484947	39.181831	84.484431	0.29	40	4
VBF 6	39.179636	84.486481	39.180686	84.485867	0.83	425	6
VBF 7	39.180686	84.485867	39.181083	84.486089	1.00	420	6
VBF 8	39.181444	84.486036	39.181286	84.485519	0.46	108	6
VBF 9	39.182769	84.484683	39.181286	84.485519	1.50	590	6
			TREATMENT PROVIDED PID 121447		8.55		

USGS QUADRANT No. 39084-B4-TF-024
CINCINNATI EAST

LONGITUDE: W84°28'50" *
LATITUDE: N39°11'20" *

* - LONGITUDE AND LATITUDE TO APPROX. CENTER OF PROJECT.

PROJECT DATA (PID 121447)

TOTAL AREA (RIGHT-OF-WAY) ------ 69.36 Ac	RUNOFF COEFFICIENT FOR PRE-CONSTRUCTION SITE ---------- 0.71
PROJECT EARTH DISTURBED AREA ----- 58.43 Ac	RUNOFF COEFFICIENT FOR POST-CONSTRUCTION SITE -------- 0.75
ESTIMATED CONTRACTOR EARTH DISTURBED AREA ----- 1.00 Ac	POST CONSTRUCTION BMP: VEGETATED BIOFILTERS AND VEGETATED FILTER STRIPS WERE PROVIDED TO MEET NPDES POST-CONSTRUCTION REQUIREMENTS. SEE CROSS SECTION SHEETS FOR LOCATIONS
NOTICE OF INTENT EARTH DISTURBED AREA ------ 59.43 Ac	
IMPERVIOUS (PAVED) AREA FOR PRE-CONSTRUCTION SITE -- 35.81 Ac	IMMEDIATE RECEIVING WATER: MILL CREEK
IMPERVIOUS (PAVED) AREA FOR POST-CONSTRUCTION SITE -- 42.70 Ac	SUBSEQUENT RECEIVING WATER: OHIO RIVER

BMP TYPE	LATITUDE/LONGITUDE BEGIN		LATITUDE/LONGITUDE END		EDA CREDIT (ACRES)	LENGTH (FEET)	WIDTH (FEET)
VFS 1	39.174753	84.487406	39.175422	84.487741	0.24	250	38.3
VFS 2	39.175293	84.488525	39.176283	84.487694	0.37	400	25.7
VFS 3	39.174193	84.487613	39.174964	84.488693	0.52	400	48.1
VFS 4	39.174096	84.489914	39.174502	84.489400	0.18	200	25.8
			TREATMENT PROVIDED PID 121447		1.31		

PROJECT DESCRIPTION

THE PROJECT CONSISTS OF COMPLETE ASPHALT PAVEMENT RECONSTRUCTION AND WIDENING OF 1.17 MILES OF I.R. 75 WITH AN ADDITIONAL NORTHBOUND AND SOUTHBOUND LANE AND 0.25 MILES OF RECONSTRUCTION AND WIDENING OF S.R. 562 IN HAMILTON COUNTY. ADDITIONAL WORK INCLUDES RECONSTRUCTION OF 6 RAMPS AND 4 ROADWAY BRIDGES. THIS WORK INCLUDES NOISE WALLS, RETAINING WALLS, ITS, LIGHTING, WATER WORK, STORM SEWER SYSTEMS, AND BMP STRUCTURES. THIS IS PHASE 8A OF THE MILL CREEK EXPRESSWAY PROJECT.

PROJECT 4: PID 121447; HAM-75-785 SOUTH PROJECT

HORIZONTAL SCALE IN FEET
0 100 200 400

CALCULATED RSH CHECKED DLR

PROJECT SITE PLAN
I.R. 75 & S.R. 562 NORWOOD LATERAL PKWY
HAM-75-7.85

263
1047

Preliminary Plans For Reference Only

J:\20110903\ODOT\HAM\77889\drainage\sheets\77889DE001.dgn 5/22/2026 10:13:32 AM hbrendlinger

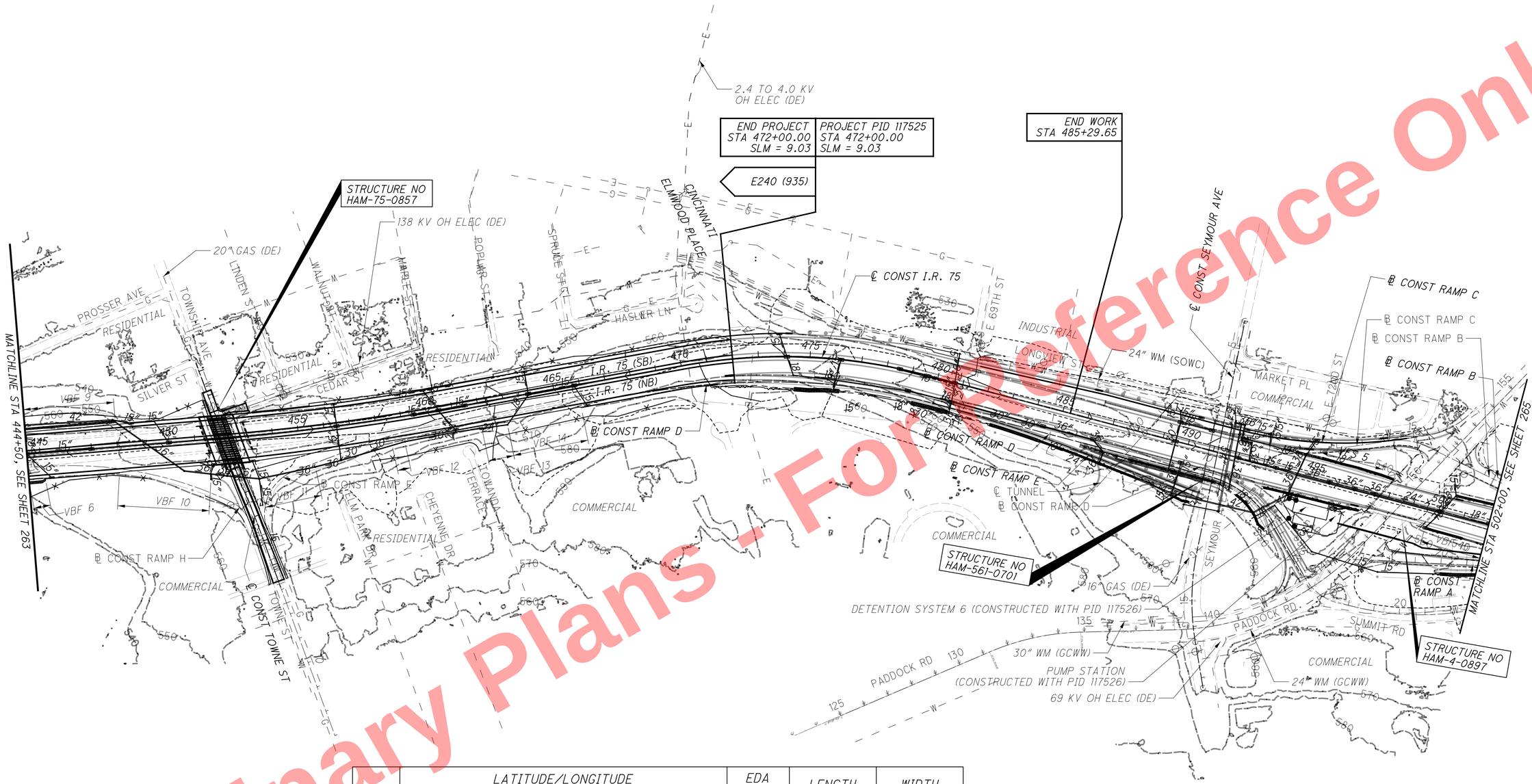

BMP TYPE	LATITUDE/LONGITUDE BEGIN		LATITUDE/LONGITUDE END		EDA CREDIT (ACRES)	LENGTH (FEET)	WIDTH (FEET)
** VFS 5	39.193920	84.476672	39.194552	84.476267	0.38 **	250	66.6
VBF 10	39.182553	84.484033	39.182669	84.483936	0.89	250	4
VBF 11	39.182669	84.483936	39.183381	84.483386	0.94	216	6
VBF 12	39.183878	84.483061	39.183839	84.483075	0.09	50	4
VBF 13	39.185247	84.482650	39.185383	84.482603	0.26	100	4
VBF 14	39.186175	84.482297	39.186428	84.482153	1.08	200	6
** VBF 15	39.186956	84.481953	39.186428	84.482153	1.11 **	320	4
			TREATMENT PROVIDED PID 121447		3.26		
			TREATMENT PROVIDED PID 117525		1.49		

** VFS 5 AND VBF 15 TO BE CONSTRUCTED WITH PID 117525

PROJECT 4: PID 121447; HAM-75-785 SOUTH PROJECT

HORIZONTAL SCALE IN FEET
0 100 200 400

CALCULATED RSH
CHECKED DLR

PROJECT SITE PLAN
I.R. 75

HAM-75-7.85

264
1047

Preliminary Plans - For Reference Only

J:\20110903\ODOT\HAM\7889\drainage\sheets\77889DE002.dgn 5/22/2026 10:13:39 AM hbrendlinger

	BMP TYPE	LATITUDE/LONGITUDE BEGIN		LATITUDE/LONGITUDE END		EDA CREDIT (ACRES)	LENGTH (FEET)	WIDTH (FEET)
**	VBF 16	39.195092	84.474367	39.195376	84.474018	0.54**	300	4
***	VBF 17	39.199688	84.469951	39.200478	84.469335	1.10***	350	9
***	VBF 18	39.200917	84.469327	39.200503	84.468830	0.94***	400	9
				TREATMENT PROVIDED PID 117525		0.54		
				TREATMENT PROVIDED PID 117526		2.04		

** VBF 16 TO BE CONSTRUCTED WITH PID 117525
*** VBF 17 AND VBF 18 TO BE CONSTRUCTED WITH PID 117526

30" WM (CWW)
PADDOCK RD
24" WM (CWW)
MATCHLINE STA 502+00, SEE SHEET 264
℄ CONST RAMP B
℄ CONST I.R. 75
INDUSTRIAL
CINCINNATI SPRINGFIELD TWP
COMMERCIAL
STRUCTURE NO HAM-75-0992 CONSTRUCTED WITH PID 117525
MSD CSO 490
VBF 15
VBF 16
VBF 17
VBF 18
℄ CONST RAMP A
I.R. 75 (SB)
I.R. 75 (NB)
SUMMIT AVE
MILL CREEK
RONALD REAGAN CROSS COUNTY HWY
ANTHONY WAYNE AVE
WOODBINE AVE
AVALON ST
OAKMONT ST
WORK DONE BY OTHERS HAM-75-10.10 (PID: 88124)
SPRINGFIELD TWP
CINCINNATI
℄ CONST I.R. 75
RESIDENTIAL
STRUCTURE NO HAM-75-1010 FOR FUTURE PROJECT PID: 88124
STRUCTURE NO HAM-75-1328 L & R FOR FUTURE PROJECT PID: 88124

PROJECT 4: PID 121447; HAM-75-785 SOUTH PROJECT

For Reference Only
Preliminary Plans

J:\20110903\ODOT\HAM\77889\drainage\sheets\77889DE003.dgn 5/22/2026 10:13:43 AM hbrendlinger

HORIZONTAL SCALE IN FEET
0 100 200 400
CALCULATED RSH CHECKED DLR

PROJECT SITE PLAN
I.R. 75

HAM-75-7.85

265
1047

CURVE 75-1
P.I. Sta. 401+67.56
Δ = 38° 43′ 05″ (LT)
Dc = 3° 00′ 00″
R = 1,909.86′
T = 671.03′
L = 1,290.60′
E = 114.46′
C = 1,266.19′
C.B. = N 65° 19′ 05″ E
e_{max} = 0.055

BEGIN WORK STA 393+50.00

PC Sta. 394+96.53

POLES SHOWN WITHIN ROADWAY TO BE RELOCATED AS A PART OF HAM-75-6.78. CONTRACTOR TO FIELD VERIFY.

N 84° 40′ 37″ E

395+50.00
2.50′ LT

395+50.00
73.50′ RT

CONST LIMITS

℄ CONST I.R. 75
(HAM-75-6.78)

403+40.00
93.69′ LT

403+40.00
5.66′ LT

403+21.63
73.50′ RT

405+39.61
110.28′ LT

405+39.61
98.07′ LT

406+16.11
116.30′ LT

406+16.11
99.72′ LT

406+49.55
86.82′ RT

405+99.99
81.50′ RT

404+21.63
81.50′ RT

PC Sta. 404+21.63

STRUCTURE NO
HAM-75-0772

ST. STA. 406+26.53

INDIANA & OHIO RAILWAY

CINCINNATI
ST. BERNARD

℄ RAMP M
(HAM-75-6.78)

℄ RAMP N
(HAM-75-6.78)

MATCHLINE STA 407+00 SEE SHEET 267

75-1

Ex R/W
Ex LA-R/W
Ex R/W
Ex LA-R/W
Ex R/W
Ex LA-R/W

CURVE 75-1
PI STA 401+67.56
Δ = 38° 43′ 05″ (LT)
Dc = 3° 00′ 00″
R = 1,909.86′
T = 671.03′
L = 1,290.60′
E = 114.46′
C = 1,266.19′
C.B. = N 65° 19′ 05″ E
e max = 0.055

RESURFACING
EROSION CONTROL
TIED CONCRETE BLOCK MAT

BEGIN PROJECT STA 410+00.00 SLM = 7.85

E240 (935)

CONST LIMITS

1 OVERHEAD HIGH TENSION POWER LINES 107.12′ (635.60), ABOVE EX. GRADE (528.48)

MATCHLINE STA 407+00 SEE SHEET 266

PT STA 407+87.13

BEGIN TAPER 410+00.00, 15.95′ LT

BEGIN TAPER 410+00.00, 14.50′ RT

410+00.00 68.83′ RT

STRUCTURE NO HAM-75-0772

BEGIN TAPER 410+69.34, 98.47′ RT

END TAPER 411+18.85, 101.66′ RT

I.R. 75 (SB)

I.R. 75 (NB)

N 45° 57′ 32″ E

SAWCUT 411+61.42 73.50′ RT

END TAPER 411+50.00, 13.50′ LT

END TAPER 411+50.00, 13.50′ RT

PROP MEDIAN BARRIER

℄ CONST I.R. 75

PC STA 414+46.39

RAMP M

RAMP N

BEGIN TAPER 415+00.00, 73.50′ LT

℄ CONST RAMP M

END TAPER 415+50.00, 75.50′ LT

SEE SHEET 274 FOR RAMP M

EX RAMP M

STRUCTURE NO HAM-562-0004

PROP BARRIER

417+63.36 BEGIN APP SLAB

10.4′ (NDC 12′)

END TAPER 416+12.82, 75.50′ RT

BEGIN TAPER 416+02.82, 73.50′ RT

SEE SHEET 280 FOR RAMP J

RAMP J

STRUCTURE NO HAM-75-0791

END TAPER 419+34.40, 73.50′ RT

BEGIN TAPER 418+78.31, 75.50′ RT

MATCHLINE STA 419+50 SEE SHEET 269

CURVE 75-2
PI STA 420+66.70
Δ = 21° 27′ 24″ (LT)
Dc = 1° 45′ 00″
R = 3,274.04′
T = 620.31′
L = 1,226.10′
E = 58.25′
C = 1,218.94′
C.B. = N 35° 13′ 50″ E
e MAX = 0.042

LIMITS OF EX GROUND IMPROVEMENT AREA (DND)

EX DRIVE (DND)

DETENTION AREA (HAM-75-6.78)

EX DRIVE (DND)

PROPOSED DETENTION SYSTEM 1

ROSS RUN SEWER (14′ x 20′) (MSD)

CINCINNATI ST. BERNARD INDIANA & OHIO RAILWAY

ST. BERNARD CITY OF CINCINNATI

CROSS REFERENCES	
SHEET NO	DESCRIPTION
552 - 570	STORM SEWER PROFILES
544 - 551	DRAINAGE PLANS
231 - 262	ESTIMATED QUANTITIES
519 - 529	SUPERELEVATION TABLES
688 - 695	ROADSIDE BARRIER PLAN
530 - 538	INTERCHANGE DETAILS
777 - 808	LIGHTING PLANS
865 - 929	BRIDGE PLANS HAM-75-0791
809 - 864	BRIDGE PLANS HAM-562-0004

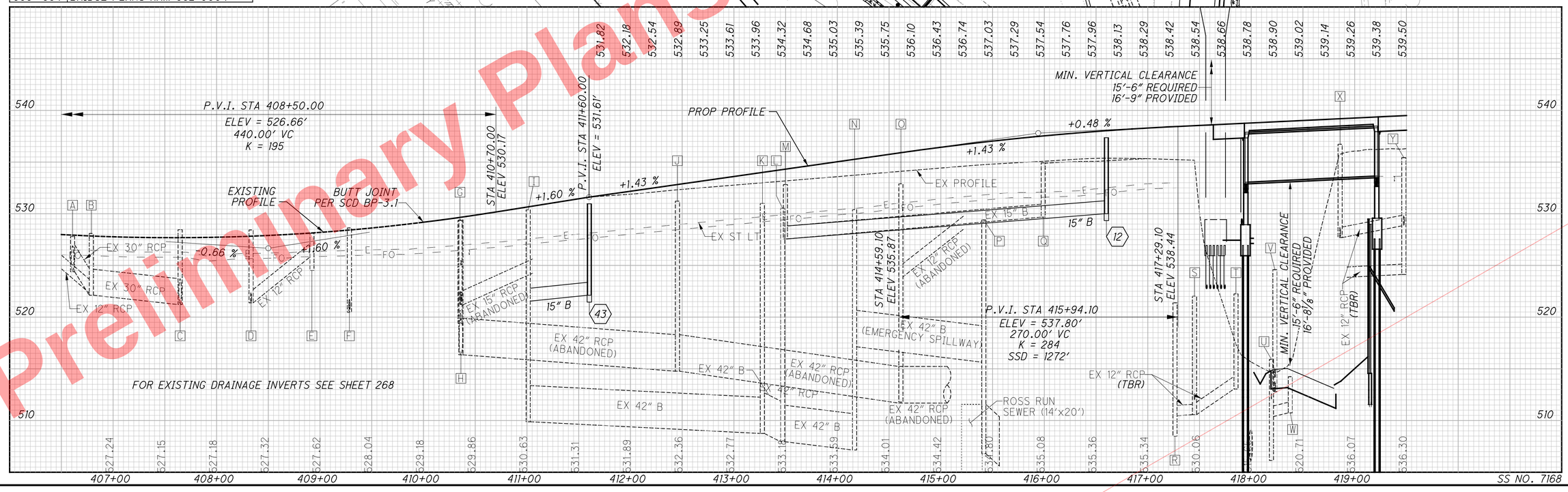

Preliminary Plans
For Reference Only

PLAN AND PROFILE - I.R. 75
STA 407+00 TO STA 419+50

HORIZONTAL SCALE IN FEET
0 25 50 100

CALCULATED SEA CHECKED DLR

HAM-75-7.85

267
1047

J:\20110903\ODOT\HAM\7889\roadway\sheets\77889GP002.dgn 5/22/2026 10:13:52 AM hbrendlinger

A STA 406+60.88, 59.20' RT
EX CB, GRATE ELEV 527.79
EX 30" RCP SE 524.39
EX 30" RCP NW 524.39

B STA 406+78.96, 27.56' LT
EX MH-1, RIM ELEV 528.09
EX 12" RCP S 522.35
EX 30" RCP SE 522.12
EX 30" RCP NE 522.12

C STA 407+64.79, 41.90' LT
EX MH, RIM ELEV 528.47
EX 30" RCP SW 521.22
EX 30" RCP NE 521.22

D STA 408+33.34, 1.94' RT
EX CB, GRATE ELEV 528.43
EX 12" RCP NW 521.38

E STA 408+92.15, 52.14' RT
EX CB, GRATE ELEV 528.11
EX 6" UD SW 524.51
EX 12" RCP W 525.81

F STA 409+28.38, 2.27' LT
EX CB, GRATE ELEV 528.63
EX 12" RCP SW 520.72
EX 15" RCP NE 520.47

G STA 410+35.28, 0.44' RT
EX CB, GRATE ELEV 529.35
EX 15" RCP SW 519.42
EX 15" RCP NE 519.42
EX 15" RCP NW 521.23

H STA 410+36.18, 47.35' LT
EX MH, RIM ELEV 529.41
ABANDONED W/PID 82286
EX 12" RCP SW 522.51
EX 15" RCP NE 521.21
EX 15" RCP S 518.56
EX 42" RCP S 516.46
EX 42" RCP N 516.36

I STA 411+01.18, 66.51' LT
EX MH, RIM ELEV 530.38
EX 24" B NORTHWESTERLY 521.26
EX 42" B NORTHEASTERLY 509.88
EX 42" B SO 509.88

J STA 412+45.42, 41.83' LT
EX MH, RIM ELEV 531.22
EX 12" RCP NW 522.92
EX 42" RCP NE 514.77
EX 42" RCP SW 514.72

K *EXISTING BY OTHERS, TO REMAIN*
STA 413+27.47, 66.61' LT
EX MH, RIM ELEV 531.00
ADJUST TO GRADE, 533.35
EX 42" B SE 508.75
EX 42" B SW 508.75

L *EXISTING BY OTHERS, TO REMAIN*
STA 413+47.13, 83.50' RT
EX MH, RIM ELEV 530.52
RECONSTRUCT TO GRADE, 532.75
EX 15" (NW) 527.30
EX 24" (SE) 519.00
EX 42" (NW) 507.95
EX 42" (NE) 507.95

M *EXISTING BY OTHERS, TO REMAIN*
ADJUST TO GRADE, 534.23
REPLACE FRAME AND GRATE WITH MH FRAME & LID
STA 413+49.78, 11.41' RT
EX CB, GRATE ELEV 532.82
EX 15" (NE) 527.57
EX 15" (SE) 527.57
15" (NE) 528.25

N *EXISTING BY OTHERS, TO REMAIN*
STA 414+16.63, 85.95' RT
EX MH, RIM ELEV 530.40
ADJUST TO GRADE, 532.85
EX 42" B NE 517.13
EX 42" B SW 507.15
EX 42" B SE 507.15

O STA 414+61.29, 36.20' LT
ABANDONED W/ PID 82286
EX MH, RIM ELEV 532.88
12" RCP E 523.89
12" RCP W 524.79
42" RCP S 512.81±
42" RCP N 512.81±

P *EXISTING BY OTHERS, TO REMAIN*
STA 415+41.54, 97.77' RT
EX MH, RIM ELEV 529.40
ADJUST TO GRADE, 531.71
EX 42" (SW) 515.65
(EMERGENCY SPILLWAY)
EX 42" (NE) 506.80
EX 18" (SE) 506.80

Q *(TO BE REMOVED)*
STA 415+98.92, 20.86' RT
EX CB, GRATE ELEV 534.92
EX 15" (SW) 529.67

R *(TO BE REMOVED)*
STA 417+26.26, 71.62' RT
EX MH, RIM ELEV 521.38
EX 12" RCP E 508.48
EX 6" DRN S 519.18
EX 12" RCP W 508.48

S *(TO BE REMOVED)*
STA 417+45.15, 40.51' RT
EX MH, RIM ELEV 522.02
EX 12" RCP SE 510.57
EX 12" RCP NW 510.57
EX 8" RCP SW 511.94
EX 8" RCP N 511.94

T *(TO BE REMOVED)*
STA 417+85.27, 15.74' LT
EX MH, RIM ELEV 522.25
EX 6" RCP S 515.55
EX 12" RCP E 513.05
EX 12" RCP W 513.05

U *(TO BE REMOVED)*
STA 418+19.52, 28.74' LT
EX MH, RIM ELEV 515.92
EX 12" RCP N 512.39
EX 6" UD N 512.09
EX 36" RCP SE 506.14
EX 36" RCP NE 506.14

V *(TO BE REMOVED)*
STA 418+22.89, 42.52' RT
EX MH, RIM ELEV 524.59
EX 12" RCP W 514.09
EX 12" RCP NW 512.79
EX 12" RCP S 512.79

W *(TO BE REMOVED)*
STA 418+37.78, 14.49' LT
EX CB, GRATE ELEV 514.24
EX 12" RCP W 510.74

X *(TO BE REMOVED)*
STA 418+85.87, 29.55' RT
EX CB, GRATE ELEV 536.72
EX 12" RCP N 531.70

Y *(TO BE REMOVED)*
STA 419+47.48, 23.86' LT
EX MH-1, RIM ELEV 535.43
EX 12" RCP SW 528.83
EX 12" RCP S 527.70
EX 12" RCP W 524.13

CROSS REFERENCES	
SHEET NO	DESCRIPTION
552 - 570	STORM SEWER PROFILES
544 - 551	DRAINAGE PLANS
231 - 262	ESTIMATED QUANTITIES
519 - 529	SUPERELEVATION TABLES
688 - 695	ROADSIDE BARRIER PLAN
530 - 538	INTERCHANGE DETAILS
777 - 808	LIGHTING PLANS
865 - 929	BRIDGE PLANS HAM-75-0791
809 - 864	BRIDGE PLANS HAM-562-0004

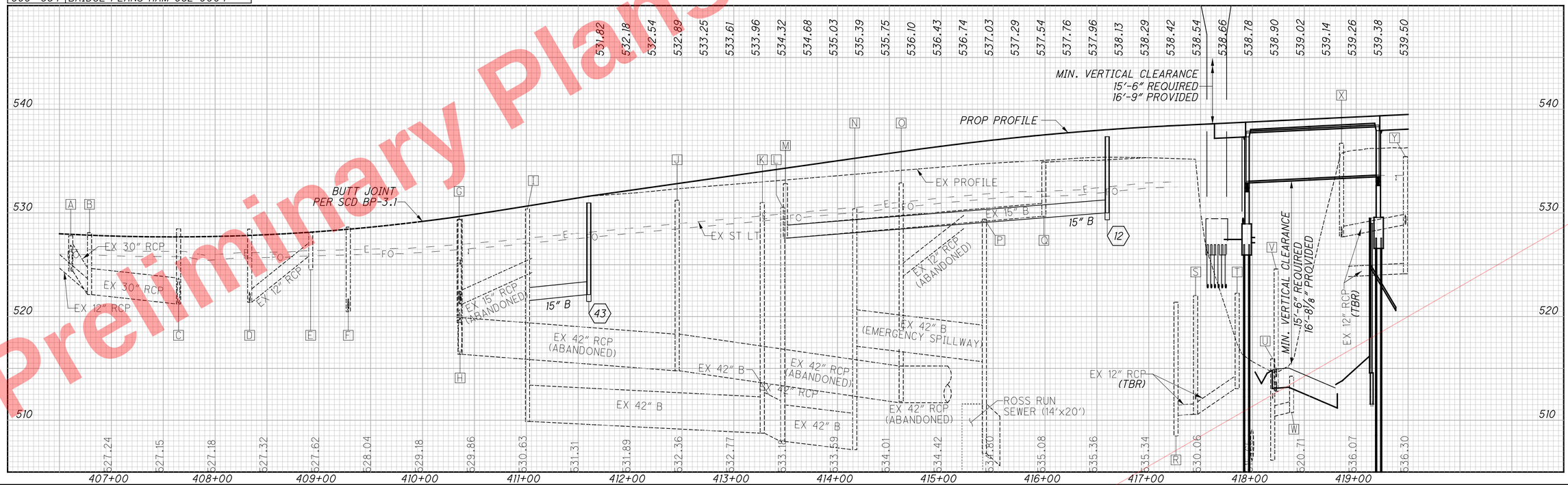

CALCULATED SEA
CHECKED DLR

HORIZONTAL SCALE IN FEET
0 25 50 100

EXISTING STORM PROFILE DATA - I.R. 75
STA 407+00 TO STA 419+50

HAM-75-7.85

268
1047

Preliminary Plans - For Reference Only

J:\2011093\ODOT\HAM\77889\roadway\sheets\77889GP002A.dgn 5/22/2026 10:13:56 AM hbrendlinger

CURVE 75-2
PI STA 420+66.70
Δ = 21° 27′ 24″ (LT)
Dc = 1° 45′ 00″
R = 3,274.04′
T = 620.31′
L = 1,226.10′
E = 58.25′
C = 1,218.94′
C.B. = N 35° 13′ 50″ E
e_{max} = 0.042

STRUCTURE NO HAM-75-0791

CROSS REFERENCES

SHEET NO	DESCRIPTION
552 - 570	STORM SEWER PROFILES
544 - 551	DRAINAGE PLANS
231 - 262	ESTIMATED QUANTITIES
519 - 529	SUPERELEVATION TABLES
688 - 695	ROADSIDE BARRIER PLAN
530 - 538	INTERCHANGE DETAILS
777 - 808	LIGHTING PLANS

EROSION CONTROL

60″ COMB (MSD) · SAWCUT · R13 · CONST LIMITS · VBF #2 · CONC TRUCK DOCK · 60″ COMB RCP (MSD) · LA-R/W · Ex LA-R/W · ST. BERNARD CINCINNATI · VBF #1 · R1 · R2 · STRUCTURE NO HAM-75-0791 · PROPOSED DETENTION SYSTEM 3 · END TAPER 420+61.15, 73.50′ LT · BEGIN TAPER 420+51.15, 75.50′ LT · 419+52.73 END APP SLAB · MATCHLINE STA 419+50 SEE SHEET 267 · RAMP J · RAMP K · EX RAMP J · PT STA 426+72.49 · I.R. 75 (SB) · I.R. 75 (NB) · 75-2 · R3 · R4 · R5 · R6 · R7 · R8 · R9 · R10 · R11 · R12 · R14 · PROP MEDIAN BARRIER · ℄ CONST I.R. 75 · 424+64.86 73.50′ RT · ℄ CONST RAMP J · ℄ CONST RAMP K · N 24° 30′ 08″ E · 430+70.83 61.50′ RT · END TAPER 431+71.07, 97.50′ RT · BEGIN TAPER 430+71.07, 97.50′ RT · DND BUILDING · TMP · EX 66″ CULVERT · CONST LIMITS · Ex SL · LAIDLAW LANDFILL · EX 6″ BP HIGH PRESSURE PETROLEUM LINE (DND) · MATCHLINE STA 432+00 SEE SHEET 270

[A] PIPE DEPTH CONFIRMED PER SUE IN MAY, 2013.

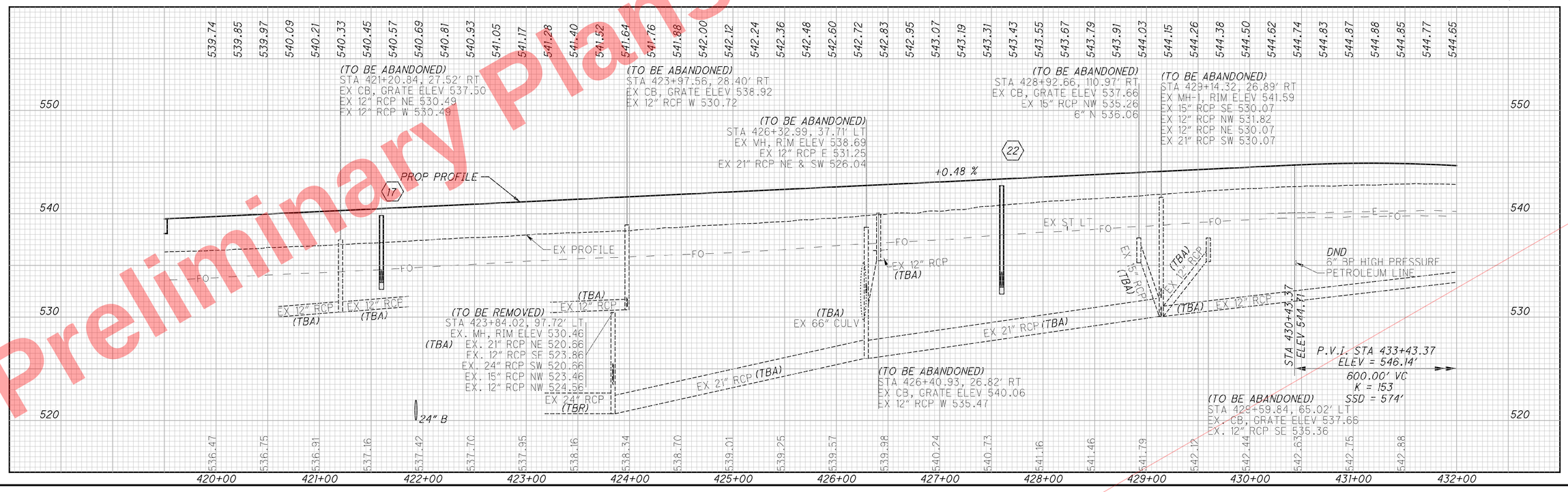

Preliminary Plans

For Reference Only

PLAN AND PROFILE - I.R. 75
STA 419+50 TO STA 432+00

HAM-75-7.85

269
1047

CALCULATED SEA · CHECKED DLR

HORIZONTAL SCALE IN FEET 0 25 50 100

J:\20110903\ODOT\HAM\77889\roadway\sheets\77889GP003.dgn 5/22/2026 10:14:01 AM hbrendlinger

CROSS REFERENCES

SHEET NO	DESCRIPTION
552 - 570	STORM SEWER PROFILES
544 - 551	DRAINAGE PLANS
683 - 684	SANITARY SEWER PROFILES
231 - 262	ESTIMATED QUANTITIES
519 - 529	SUPERELEVATION TABLES
688 - 695	ROADSIDE BARRIER PLAN
530 - 538	INTERCHANGE DETAILS
777 - 808	LIGHTING PLANS
930 - 993	BRIDGE PLANS HAM-75-0823

STRUCTURE NO HAM-75-0823

NOTE 1

STRUCTURE NO HAM-PROSR-00.000

PROSSER AVE

RAMP J

ST BERNARD

CINCINNATI

LAIDLAW AVE

LAIDLAW LANDFILL

WD GARGAGE

DND

TMP

60" COMB (MSD)

8" SAN (MSD)

24" COMB (MSD)

48" COMB (MSD)

CONST LIMITS

NOISE WALL 1A

NOISE WALL 1B-1

VBF #1

VBF #2

VBF #3

VBF #4

VBF #5

VBF #6

VBF #7

VBF #8

VBF #9

OVERHEAD HIGH TENSION POWER LINES ELEV UNKNOWN, CONTRACTOR TO FIELD VERIFY

435+72.88 61.50' LT

435+19.11 END APP SLAB

432+77.00 73.50' LT

433+82.10 BEGIN APP SLAB

PROP MEDIAN BARRIER

N 24° 30' 08" E

I.R. 75 (SB)

I.R. 75 (NB)

℄ CONST I.R. 75

10.1' (NDC 12')

BEGIN TAPER 433+38.82, 97.50' RT

END TAPER 433+48.82, 99.50' RT

BEGIN TAPER 435+60.28, 99.50' RT

END TAPER 436+10.28, 97.50' RT

BLOODY RUN SEWER (15'x10') (MSD)

NORFOLK & SOUTHERN RR

STRUCTURE NO HAM-75-0834

MATCHLINE STA 432+00 SEE SHEET 269

MATCHLINE STA 444+50 SEE SHEET 271

NOTE 1:
MSD PROJECT 11240020 CSO 181 REAL TIME CONTROL

EROSION CONTROL

HORIZONTAL SCALE IN FEET

CALCULATED SEA CHECKED DLR

PLAN AND PROFILE - I.R. 75
STA 432+00 TO STA 444+50

HAM-75-7.85

270
1047

J:\20110903\ODOT\HAM\7889\roadway\sheets\77889GP004.dgn 5/22/2026 10:14:08 AM hbrendlinger

Preliminary Plans - For Reference Only

STA 434+46.14, 37.05' LT
EX SAN MH, GRATE ELEV 520.02
EX 12" RCP N 515.07
EX 12" RCP NE 515.07
EX 12" RCP SW 515.07
EX 18" RCP SE 509.57
EX 24" RCP NW 509.42
TBR EX 60" SW 509.42
60" (NW) 509.42
(DO NOT DISTURB)

STA 434+86.45, 41.38' LT
EX SAN MH, GRATE ELEV 522.51
EX 12" RCP SE 517.31
EX 12" RCP SW 517.31
EX 6" RCP N 518.01

STA 434+89.62, 23.99' RT
EX SAN MH, GRATE ELEV 522.87
EX 6" RCP NW 517.97
EX 6" RCP NW 517.72
EX 12" RCP NW 516.92
EX 12" RCP W 516.67

STA 434+25.50, 39.67' LT
EX CB, GRATE ELEV 519.47
EX 18" RCP N 516.37
(DO NOT DISTURB)

STA 434+26.20, 24.14' LT
EX CB, GRATE ELEV 519.51
EX 12" RCP N 516.11 (IND)

STA 434+69.20, 41.52' LT
EX CB, GRATE ELEV 519.63
EX 12" RCP NE 516.11
EX 12" RCP S 516.11
(DO NOT DISTURB)

STA 434+69.84, 26.07' LT
EX CB, GRATE ELEV 519.46
EX 12" RCP SW 516.30
(DO NOT DISTURB)

STA 433+34.41, 22.32' RT
EX CB, GRATE ELEV 541.30
EX 12" RCP 534.90
(TO BE ABANDONED)

(TO BE ABANDONED)
STA 436+57.07, 18.54' RT
EX CB, GRATE ELEV 533.45
E ELEV 511.28

(TO BE REMOVED)
STA 438+70.00, 13.00' RT
EX CB, GRATE ELEV 528.80
EX 42" RCP NW 517.49
(TBA) EX 42" RCP SW 517.49

(TO BE REMOVED)
STA 439+53.49, 10.91' RT
EX CB, GRATE ELEV 528.35
EX 42" RCP N 518.04
EX 42" RCP S 518.33
EX 12" RCP SW 521.32

(TO BE ABANDONED)
STA 436+90.57, 103.62' RT
EX CB, GRATE EL 522.05
EX 12" RCP S 519.25

STA 439+21.89, 51.50' LT
EX CB, GRATE ELEV 525.69
EX 12" RCP E 522.99
(TO BE REMOVED)

(TO BE REMOVED)
STA 440+67.81, 53.21' LT
EX CB, GRATE ELEV 526.54
EX 6" CMP NE 523.70
EX 6" CMP SE 524.96
EX 6" CMP SE 523.62
EX 15" RCP E 522.54

(TO BE REMOVED)
STA 440+56.07, 9.98' RT
EX CB, GRATE ELEV 528.56
EX 36" RCP N 519.20
EX 42" RCP S 519.44
EX 12" RCP SE 521.82
EX 15" RCP NW 520.92

STA 443+18.93, 7.43' RT
EX CB, GRATE EL 535.05
EX 36" RCP N 521.82
EX 36" RCP S 522.10
EX 12" RCP SE 527.22
(TO BE REMOVED)

+0.48 %
-3.45 %
+3.55 %

P.V.I. STA 433+43.37
ELEV = 546.14'
600.00' VC
K = 153
SSD = 574'

P.V.I. STA 440+08.34
ELEV = 523.20'
650.00' VC
K = 93
SSD=415' (570' MIN)
ACTUAL DESIGN SPEED 49 MPH

P.V.I. STA 444+50.00
ELEV = 538.88'
NO CURVE

STA 436+43.34
ELEV 534.41

STA 436+43.37
ELEV 535.79

STA 443+33.34
ELEV 534.74

PROP PROFILE
EX PROFILE

MIN. VERTICAL CLEARANCE
14'-6" REQUIRED
14'-6⅞" PROVIDED

MIN. VERTICAL CLEARANCE
16'-6" REQUIRED
17'-10⅜" PROVIDED

EX 12" RCP (TBA)
EX 42" RCP (TBA)
EX 42" RCP (TBR)
EX 15" RCP
EX 36" RCP (TBR)
EX 16" WATER
BLOODY RUN SEWER
(TBR) EX 12" RCP

24" B
15" B

SS NO. 7168

CURVE 75-3
PI STA 456+41.20
Δ = 5°41'01" (LT)
Dc = 0°40'00"
R = 8,594.37'
T = 426.63'
L = 852.56'
E = 10.58'
emax = 0.019

1 BEGIN APP SLAB STA 451+48.21

2 END APP SLAB STA 452+77.26

3 ℄ CONST I.R. 75 452+12.74= ℄ CONST TOWNE ST 19+24.88

CROSS REFERENCES	
SHEET NO	DESCRIPTION
552 - 570	STORM SEWER PROFILES
544 - 551	DRAINAGE PLANS
231 - 262	ESTIMATED QUANTITES
519 - 529	SUPERELEVATION TABLES
688 - 695	ROADSIDE BARRIER PLANS
530 - 538	INTERCHANGE DETAILS
777 - 808	LIGHTING PLANS
865 - 929	BRIDGE PLANS HAM-75-0791
809 - 864	BRIDGE PLANS HAM-562-0004

EROSION CONTROL

HORIZONTAL SCALE IN FEET (0, 25, 50, 100)

CALCULATED CFR CHECKED JLM

PLAN AND PROFILE - I.R. 75
STA 444+50 TO STA 457+00

HAM-75-7.85

271
1047

J:\2011093\ODOT\HAM\77889\roadway\sheets\77889GP401.dgn 5/22/2026 10:14:12 AM hbrendlinger

Preliminary Plans - For Reference Only

CURVE 75-3
PI STA 456+41.20
Δ = 5°41'01" (LT)
Dc = 0°40'00"
R = 8,594.37'
T = 426.63'
L = 852.56'
E = 10.58'
emax = 0.019

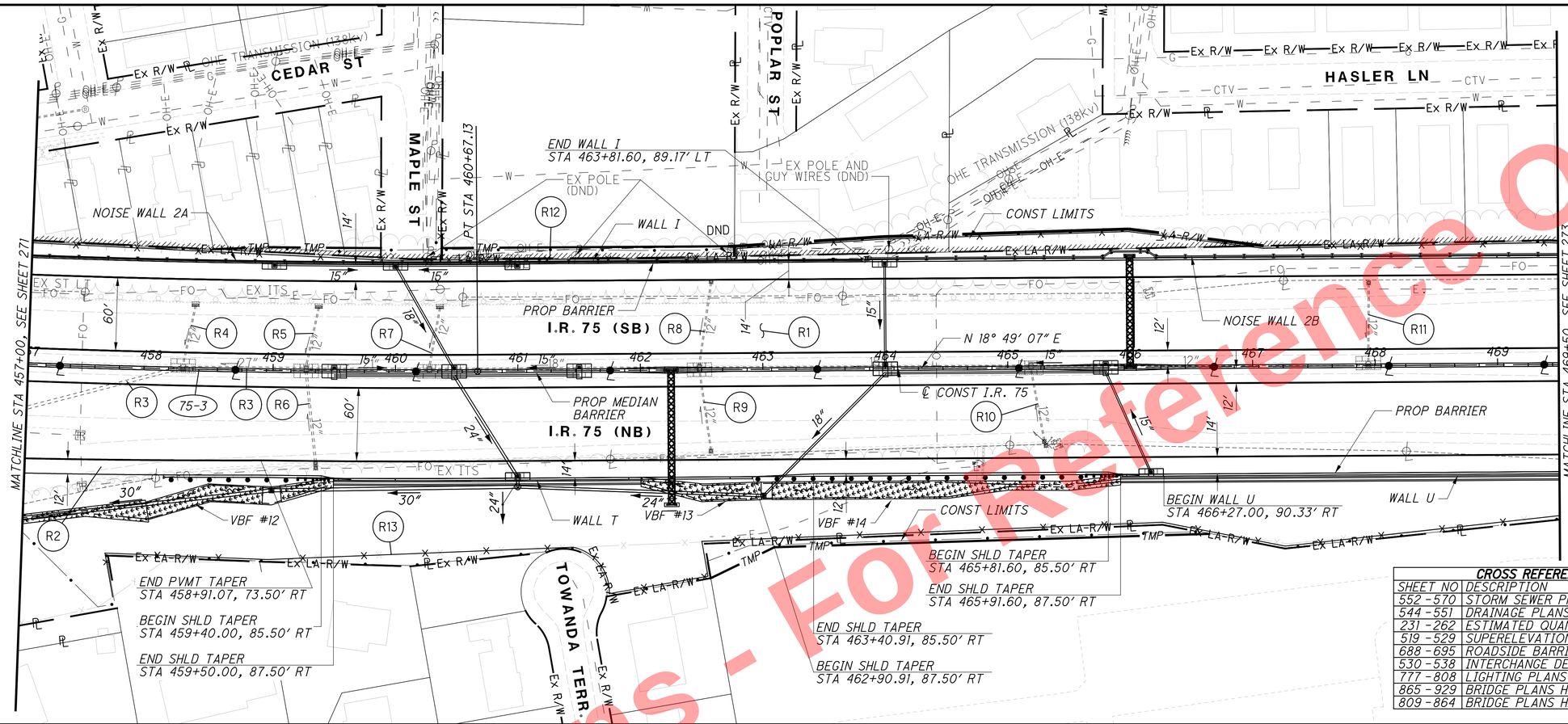

CROSS REFERENCES	
SHEET NO	DESCRIPTION
552-570	STORM SEWER PROFILES
544-551	DRAINAGE PLANS
231-262	ESTIMATED QUANTITIES
519-529	SUPERELEVATION TABLES
688-695	ROADSIDE BARRIER PLANS
530-538	INTERCHANGE DETAILS
777-808	LIGHTING PLANS
865-929	BRIDGE PLANS HAM-75-0791
809-864	BRIDGE PLANS HAM-562-0004

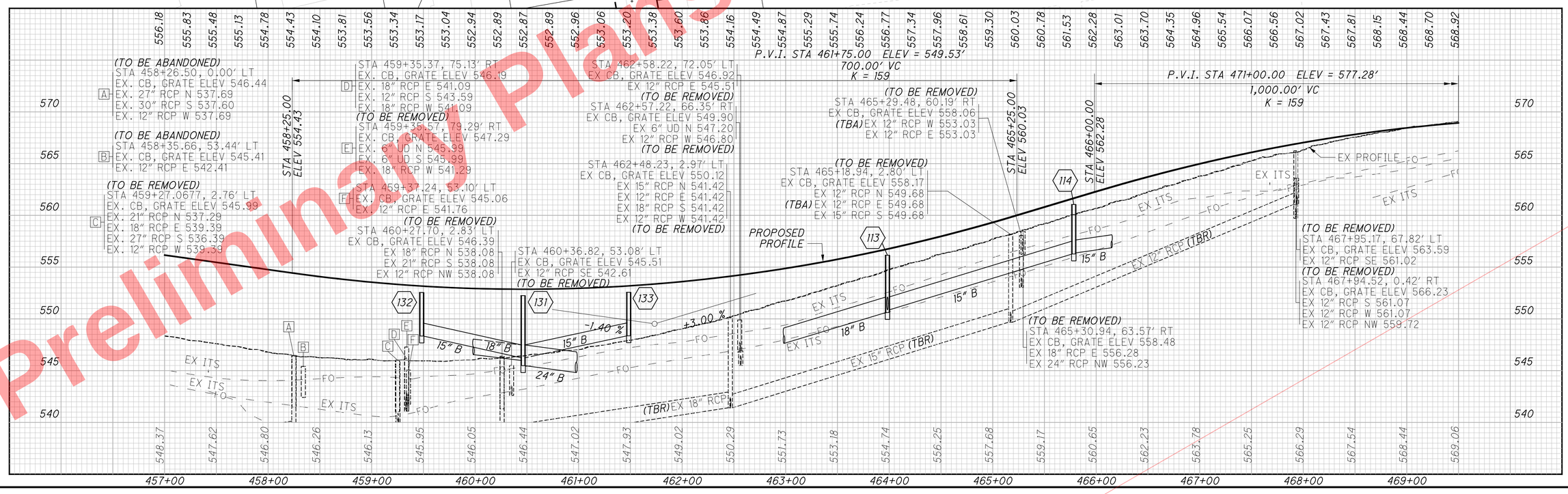

Preliminary Plans - For Reference Only

PLAN AND PROFILE - I.R. 75
STA 457+00 TO STA 469+50

HAM-75-7.85

272
1047

CALCULATED CFR CHECKED JLM

HORIZONTAL SCALE IN FEET

J:\2011090\3\ODOT\HAM\77889\roadway\sheets\77889GP402.dgn 5/22/2026 10:14:16 AM hbrendlinger

CROSS REFERENCES	
SHEET NO	DESCRIPTION
552 - 570	STORM SEWER PROFILES
544 - 551	DRAINAGE PLANS
231 - 262	ESTIMATED QUANTITIES
519 - 529	SUPERELEVATION TABLES
688 - 695	ROADSIDE BARRIER PLANS
530 - 538	INTERCHANGE DETAILS
777 - 808	LIGHTING PLANS
865 - 929	BRIDGE PLANS HAM-75-0791
809 - 864	BRIDGE PLANS HAM-562-0004

RESURFACING

CURVE 75-4
PI STA 474+88.06
Δ = 25°08'30" (RT)
Dc = 2°45'00"
R = 2,083.48'
T = 464.60'
L = 914.25'
E = 51.17'
emax = 0.053

END PROJECT STA 472+00.00 SLM = 9.03

E240 (935)

NOISE WALL 2B

UNDERGROUND ELECTRIC RELOCATION (BY OTHERS)

EX 24" WAT

EX 24" WAT (ABANDONED)

12" COMB

69TH STREET

SEE SHEET 272

MATCHLINE STA 469+50

I.R. 75 (SB)

I.R. 75 (NB)

N 18° 49' 07" E

PC STA 470+23.46

PC STA 469+76.37

BARRIER TYPE D

SAWCUT

75-4

CONST LIMITS

℄ CONST I.R. 75

PROP MEDIAN BARRIER

PT STA 479+37.71

END WORK STA 482+25.00

N 43° 59' 00" E

PCC STA 472+26.37

℄ CONST RAMP D

END TAPER
STA 471+81.42, 93.63' RT

BEGIN TAPER
STA 471+29.52, 92.70' RT

PT STA 479+83.46 -RAMP D

WALL U

END WALL U
STA 470+83.00, 93.34' RT

1 69 KV OHE TRANSMISSION POWER LINES ELEV UNKNOWN, CONTRACTOR TO FIELD VERIFY

P.V.I. STA 471+00.00 ELEV = 577.28'
1,000.00' VC
K=159
SSD=580

PROPOSED PROFILE

+3.00 %

-3.30 %

569.42

EX PROFILE

STA 473+81.39, 85.88' LT
EX CB-6, REMOVE AND REPLACE WITH I-3-D,
GRATE ELEV 569.17
15" (E) 563.17

STA 474+10.00, 0.44' LT
EX CB-6 CONVERT TO I-3-C1, APP,
GRATE ELEV 565.29
15" (W) 560.08
15" (E) 560.08

STA 474+18.74, 23.29' LT
MH-3, RIM ELEV 560.91
15" (W) 557.49
15" (NE) 557.49

STA 475+76.55, 22.21' RT (RAMP D)
CB-5, GRATE ELEV 554.62
18" (NW) 550.25

STA 475+82.68, 19.41' LT (RAMP D)
MH-3, RIM ELEV 556.42
15" (SW) 551.12
18" (SE) 549.90
15" (NW) 551.12
24" (NE) 549.90

STA 476+20.00, 0.58' LT (RAMP C)
EX CB-6 CONVERT TO I-3-C1, APP
GRATE ELEV 559.00
15" (SE) 553.70

STA 478+50.00, 1.92' LT
I-3-B1, GRATE ELEV 556.15
15" (NE) 546.65

STA 478+62.13, 22.22' LT
I-3-C1, GRATE ELEV 548.32
24" (SW) 543.02
24" (NE) 543.02

STA 479+00.00
ELEV 550.88

STA 480+58.23, 114.38' LT
EX CB-6 CONVERT TO I-3-D, APP,
GRATE ELEV 540.96
15" (SE) 538.96

STA 480+68.54, 2.75' LT
I-3-B1, GRATE ELEV 556.15
15" (SW) 540.25
15" (NW) 537.72
15" (SE) 537.60

STA 480+75.00, 74.72' RT
I-3-C1, GRATE ELEV 544.31
24" (SW) 538.75
15" (NW) 536.75
30" (NE) 536.25
15" (SE) 538.75

STA 480+34.82, 18.75' RT
CB-5, GRATE ELEV 543.00
15" (NW) 539.50

-0.86 %

P.V.I. STA 481+00.00 ELEV = 544.28'
400.00' VC K = 164

EX ELECTRIC
EX ITS
EX ST LT
EX 15" B
EX 18" B
EX 24" B
EX 30" B

568.92 569.10 569.24 569.34 569.40 569.42 569.39 569.31 569.19 569.01 568.78

569.06 569.46 569.69 569.67 569.53 568.94 568.47 567.84 567.06 566.12 565.02 563.76 562.35 560.78 559.13 557.48 555.83 554.18 552.53 550.88 549.30 547.88 546.61 545.50 544.53 543.72 543.06 542.56

575 570 565 560 555 550 545 540 535 530

470+00 471+00 472+00 473+00 474+00 475+00 476+00 477+00 478+00 479+00 480+00 481+00 482+00

Preliminary Plans - For Reference Only

J:\2011093\ODOT\HAM\77889\roadway\sheets\77889GP403.dgn 5/22/2026 10:14:19 AM hbrendlinger

HORIZONTAL SCALE IN FEET
0 25 50 100

CALCULATED JLM CHECKED CFR

PLAN AND PROFILE - I.R. 75
STA 469+50 TO STA 482+00

HAM-75-7.85

CROSS REFERENCES	
SHEET NO	DESCRIPTION
552 - 570	STORM SEWER PROFILES
544 - 551	DRAINAGE PLANS
231 - 262	ESTIMATED QUANTITIES
519 - 529	SUPERELEVATION TABLES
688 - 695	ROADSIDE BARRIER PLAN
530 - 538	INTERCHANGE DETAILS
777 - 808	LIGHTING PLANS
930 - 993	BRIDGE PLANS HAM-75-0823
865 - 929	BRIDGE PLANS HAM-75-0791

RESURFACING

EROSION CONTROL

TIED CONCRETE BLOCK MAT

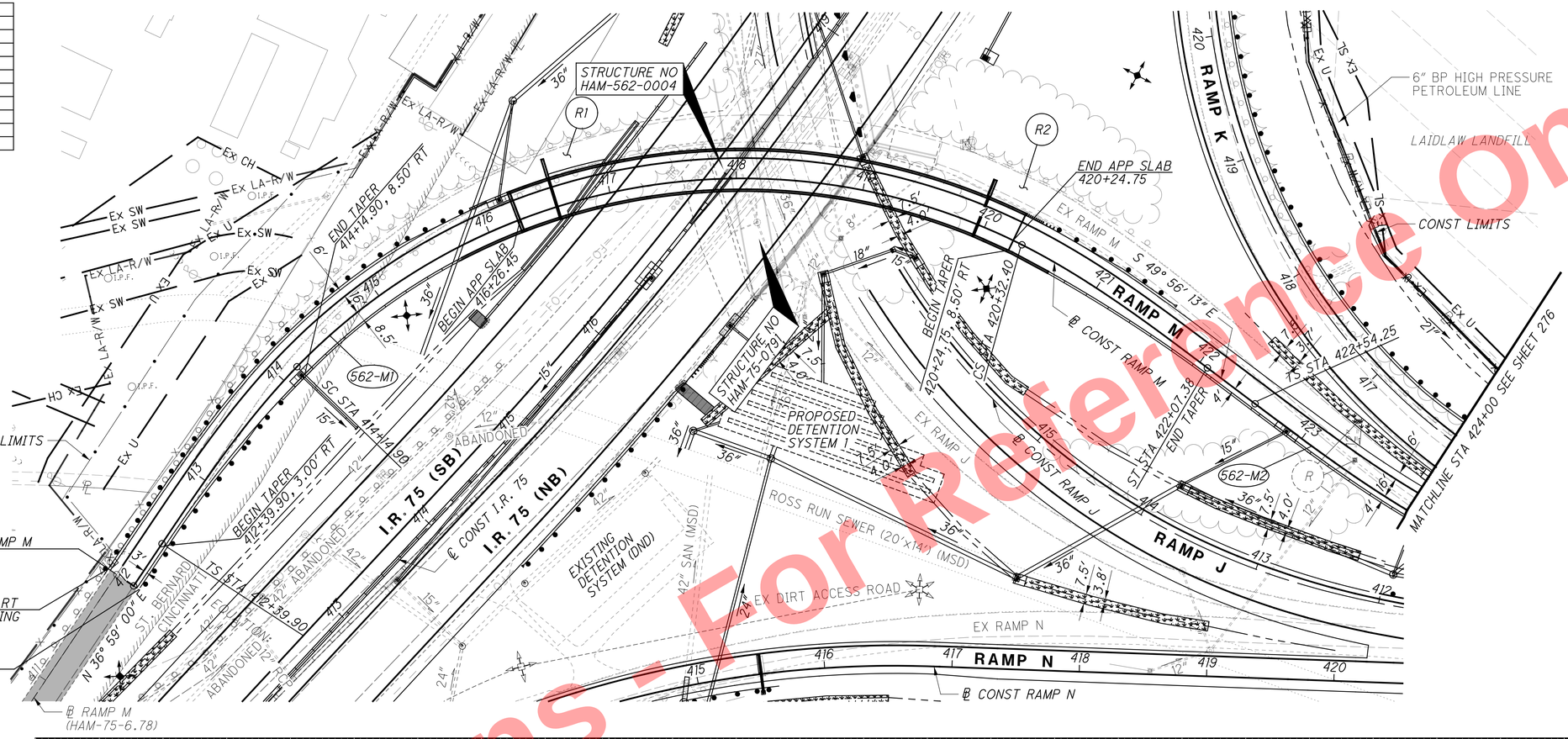

CURVE 562-M1	CURVE 562-M2
PI STA 418+44.84	PI STA 425+16.31
Δ = 93° 04' 47" (RT)	Δ = 33°46'37" (LT)
Dc = 11° 44' 43"	Dc = 10°00'00"
R = 487.82'	R = 572.96'
Ls_1 = 175.00'	Ls_1 = 175.00'
θs_1 = 10° 16' 37"	θs_1 = 8°45'00"
LT_1 = 116.86'	LT_1 = 116.81'
ST_1 = 58.51'	ST_1 = 58.46'
x_1 = 174.44'	x_1 = 174.59'
y_1 = 10.44'	y_1 = 8.89'
k_1 = 87.41'	k_1 = 87.43'
p_1 = 2.61'	p_1 = 2.23'
T_1 = 604.94'	T_1 = 262.06'
Ls_2 = 174.98'	Ls_2 = 174.98'
θs_2 = 10° 16' 33"	θs_2 = 8°44'56"
LT_2 = 116.85'	LT_2 = 116.80'
ST_2 = 58.51'	ST_2 = 58.46'
x_2 = 174.42'	x_2 = 174.57'
y_2 = 10.44'	y_2 = 8.89'
k_2 = 87.40'	k_2 = 87.42'
p_2 = 2.61'	p_2 = 2.22'
T_2 = 604.93'	T_2 = 262.05'
Lc = 617.50'	Lc = 162.78'
Es = 225.18'	Es = 28.15'
C_1 = 174.75'	C_1 = 174.82'
C = 577.09'	C = 162.23'
C_2 = 174.73'	C_2 = 174.80'
$C.B._1$ = N 40° 24' 29" E	$C.B._1$ = S 52° 51' 11" E
C.B. = N 83° 31' 25" E	C.B. = S 66° 49' 33" E
$C.B._2$ = S 53° 21' 41" E	$C.B._2$ = S 80° 47' 53" E
e_{MAX} = 0.056	e_{MAX} = 0.059

FOR RAMP M PROFILE SEE SHEET 275

Preliminary Plans - For Reference Only

N

HORIZONTAL SCALE IN FEET 0 25 50 100

CALCULATED SEA CHECKED DLR

PLAN AND PROFILE - S.R. 562 RAMP M

STA 412+00.00 TO STA 424+00.00

HAM-75-7.85

274 1047

J:\20110903\ODOT\HAM\77889\roadway\sheets\77889GP030.dgn 5/22/2026 10:14:22 AM hbrendlinger

Preliminary Plans
For Reference Only

P.V.I. STA 418+55.00
ELEV = 570.28'
468.00' VC
K = 44

STA 416+21.00
ELEV 557.23'

STA 420+89.00
ELEV 558.48'

+5.58 %
-5.04 %

PR PROFILE

(TO BE REMOVED)
STA 423+44.61, 8.83' LT
EX CB, GRATE ELEV 543.20
EX 12" RCP N 536.91
EX 12" RCP SW 529.53

(TO BE REMOVED)
STA 423+28.16, 36.90' LT
EX CB, GRATE ELEV 543.36
EX 12" RCP S 536.91

86B

65

(TO BE REMOVED)
STA 418+61.91, 30.73' LT
EX MH, RIM ELEV 524.59
EX 8" RCP N 512.79
EX 8" RCP W 514.09
EX 12" RCP S 512.79

MIN. VERTICAL CLEARANCE
15'-6" REQUIRED
16'-9" PROVIDED

EX PROFILE

EX ITS 12" CONDUIT

STA 412+00.00
ELEV 534.81

+4.52 %

+5.58 %

EX PROFILE

86

EX ST LT

STA 412+30.00
ELEV 536.17'

STA 513+70.00
ELEV 543.24'

EX ITS 12" CONDUIT

STA 418+17.27, 34.34' RT
EX MH, RIM ELEV 522.02
EX 12" RCP SE 510.57
EX 12" RCP NW 510.57
EX 8" RCP SW 511.94
EX 8" RCP N 511.94

P.V.I. STA 413+00.00
ELEV = 539.33'
140.00' VC
K = 133

(TO BE REMOVED)
STA 417+96.61, 31.71' LT
EX MH, RIM ELEV 522.25
EX 8" RCP W 513.05
EX 8" RCP NE 515.55
EX 12" RCP W 513.05

EX 12" RCP

EX 8" RCP

EX ST LT

36" C

EX 20' X 14'
BOX CULVERT

36" B

(TO BE REMOVED)
STA 418+90.15, 40.11' RT
EX CB, GRATE ELEV 515.16
EX 12" RCP NW 509.76
EX 12" RCP SW 509.76
8" NE

570 560 550 540 530 520 510 500

534.81 535.94 537.09 538.28 539.52 540.80 542.14 543.52 544.91 546.30 547.70 549.09 550.48 551.88 553.27 554.67 556.06 557.45 558.75 559.91 560.93 561.80 562.54 563.13 563.58 563.89 564.05 564.08 563.96 563.70 563.30 562.76 562.07 561.25 560.28 559.17 557.93 556.67 555.41 554.15 552.89 551.63 550.37 549.11 547.85 546.59 545.33 544.07 542.81

534.81 536.87 538.65 540.08 541.44 542.76 544.01 545.63 546.70 547.18 544.47 534.28 522.80 515.40 529.73 545.52 548.31 549.40 548.06 546.77 544.87 544.00 543.20 541.90 540.84

412+00 413+00 414+00 415+00 416+00 417+00 418+00 419+00 420+00 421+00 422+00 423+00 424+00

CALCULATED SEA
CHECKED DLR

PROFILE - SR 562 RAMP M
STA 412+00.00 TO STA 424+00.00

HAM-75-7.85

275
1047

J:\20110903\ODOT\HAM\7889\roadway\sheets\77889GP031.dgn 5/22/2026 10:14:25 AM hbrendlinger

CROSS REFERENCES	
SHEET NO	DESCRIPTION
552 - 570	STORM SEWER PROFILES
544 - 551	DRAINAGE PLANS
231 - 262	ESTIMATED QUANTITIES
519 - 529	SUPERELEVATION TABLES
688 - 695	ROADSIDE BARRIER PLAN
530 - 538	INTERCHANGE DETAILS
777 - 808	LIGHTING PLANS
930 - 993	BRIDGE PLANS HAM-75-0823
865 - 929	BRIDGE PLANS HAM-75-0791

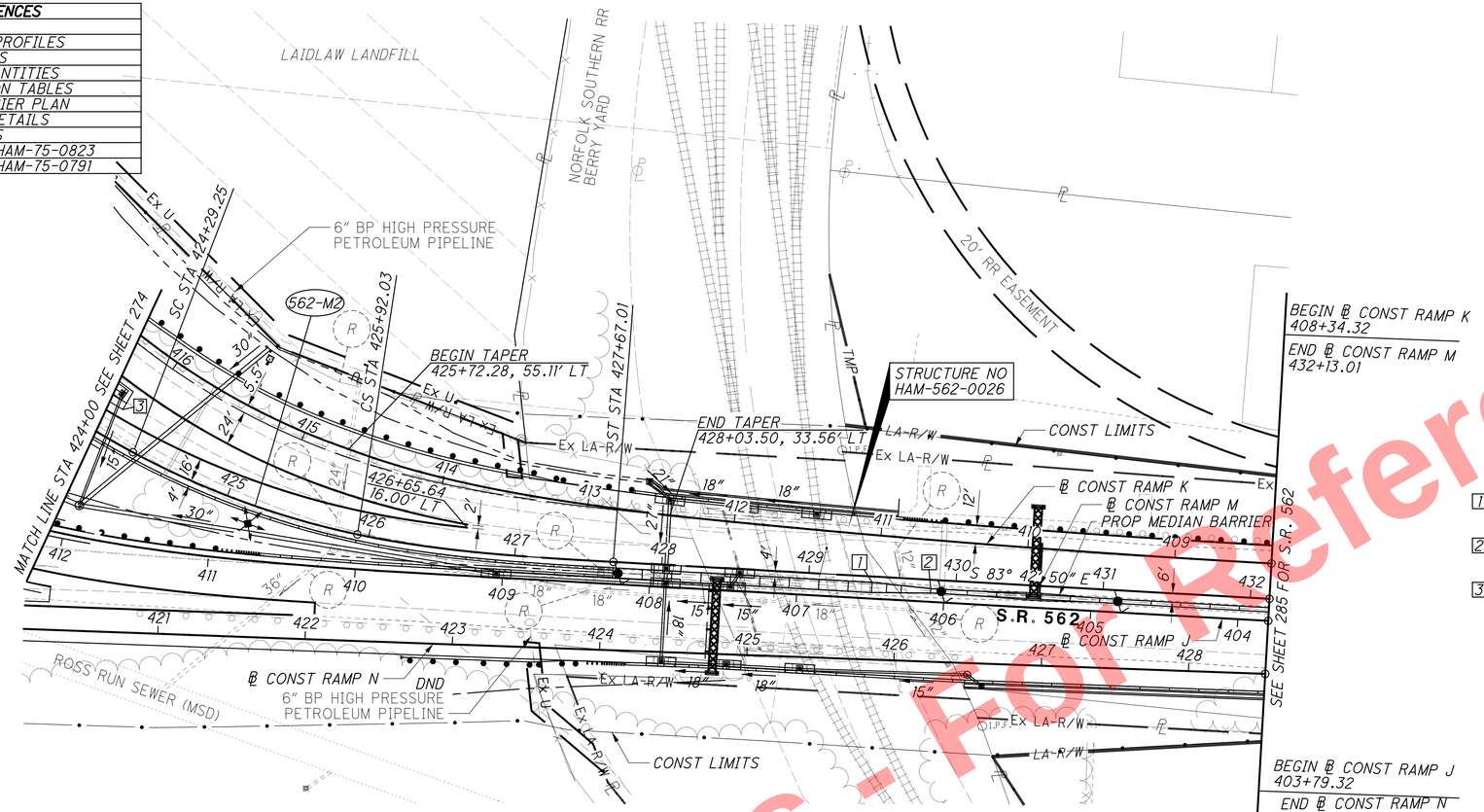

1 BEGIN TAPER
429+43.13, 4.00' RT

2 END TAPER
429+83.10, 6.00' RT

3 424+08.79
22.00' LT

CURVE 562-M2
PI STA 425+16.31
Δ = 33°46'37" (LT)
Dc = 10°00'00"
R = 572.96'
Ls_1 = 175.00'
θs_1 = 8°45'00"
LT_1 = 116.81'
ST_1 = 58.46'
x_1 = 174.59'
y_1 = 8.89'
k_1 = 87.43'
p_1 = 2.23'
T_1 = 262.06'
Ls_2 = 174.98'
θs_2 = 8°44'56"
LT_2 = 116.80'
ST_2 = 58.46'
x_2 = 174.57'
y_2 = 8.89'
k_2 = 87.42'
p_2 = 2.22'
T_2 = 262.05'
Lc = 162.78'
Es = 28.15'
C_1 = 174.82'
C = 162.23'
C_2 = 174.80'
$C.B._1$ = S 52° 51' 11" E
C.B. = S 66° 49' 33" E
$C.B._2$ = S 80° 47' 53" E
e_{MAX} = 0.059

(R) FOR REMOVALS SEE SHEET 280

FOR RAMP M PROFILE SEE SHEET 277

Preliminary Plans - For Reference Only

HORIZONTAL SCALE IN FEET
0 25 50 100

CALCULATED SEA CHECKED DLR

PLAN AND PROFILE - S.R. 562 RAMP M
STA 424+00.00 TO STA 432+13.01

HAM-75-7.85

276
1047

J:\20110903\ODOT\HAM\77889\roadway\sheets\77889GP032.dgn 5/22/2026 10:14:29 AM hbrendlinger

Preliminary Plans - For Reference Only

542.81 541.55 540.29 539.03 537.77 536.51 535.25 534.06 532.98 531.99 531.11 530.33 529.65 529.08 528.61 528.24 527.97 527.80 527.74 527.78 527.92 528.16 528.51 528.95 529.50 530.16 530.91 531.77 532.71 533.66 534.61 535.56 536.51

590 580 570 560 550 540 530 520

P.V.I. STA 428+15.08
ELEV = 521.89'
540.00' VC
K = 61
SSD = 295' (570' MIN)
ACTUAL DESIGN SPEED 40 MPH

(TO BE REMOVED)
STA 429+52.75, 41.63' LT
EX CB, GRATE ELEV 528.51
EX 12" RCP S 525.61

(TO BE ABANDONED)
STA 425+78.98, 13.18' RT
EX MH, RIM ELEV 531.72
EX 18" RCP E 514.36
EX 24" RCP N 513.78
EX 30" RCP SW 513.36

(TO BE ABANDONED)
STA 427+49.24, 21.01' RT
EX MH-1, RIM ELEV 530.46
EX 12" RCP NE 522.71
EX 18" RCP E 518.46
EX 18" RCP SW 518.36

(TO BE REMOVED)
STA 428+69.99, 20.68' RT
EX MH-1, RIM ELEV 529.93
EX 18" RCP E 521.33
EX 18" RCP W 521.23

STA 425+45.08
ELEV 535.50

STA 430+85.08
ELEV 532.14

STA 432+13.01
ELEV 537.00

MIN. VERTICAL CLEARANCE
14'-6" REQUIRED
16'-10¼" PROVIDED

EX PROFILE

PR PROFILE

66 72 67 70 69 68

13.9' 15.7'

-5.04 %

+.80 %

30" C 30" B 15" B 15" B

EX 18" RCP (TBA)

EX 18" RCP (TBR)

EX 18" RCP (TBA)

(TBA)
EX 18" RCP

EX 18" RCP (TBR)

(TO BE ABANDONED)
STA 429+70.03, 21.09' RT
EX MH, RIM ELEV 530.27
EX 12" RCP N 523.57
EX 15" RCP SE 523.92
EX 18" RCP W 517.77

DND
6" BP HIGH PRESSURE
PETROLEUM LINE

540.84 539.68 537.89 536.12 534.20 532.75 531.46 530.50 530.17 529.98 530.08 530.35 531.07 532.04 533.26 534.78 536.51

424+00 425+00 426+00 427+00 428+00 429+00 430+00 431+00 432+00 433+00

CALCULATED SEA
CHECKED DLR

PROFILE - SR 562 RAMP M

STA 424+00.00 TO STA 432+13.01

HAM-75-7.85

277
1047

J:\20110903\ODOT\HAM\7889\roadway\sheets\77889GP033.dgn 5/22/2026 10:14:33 AM hbrendlinger

Preliminary Plans - For Reference Only

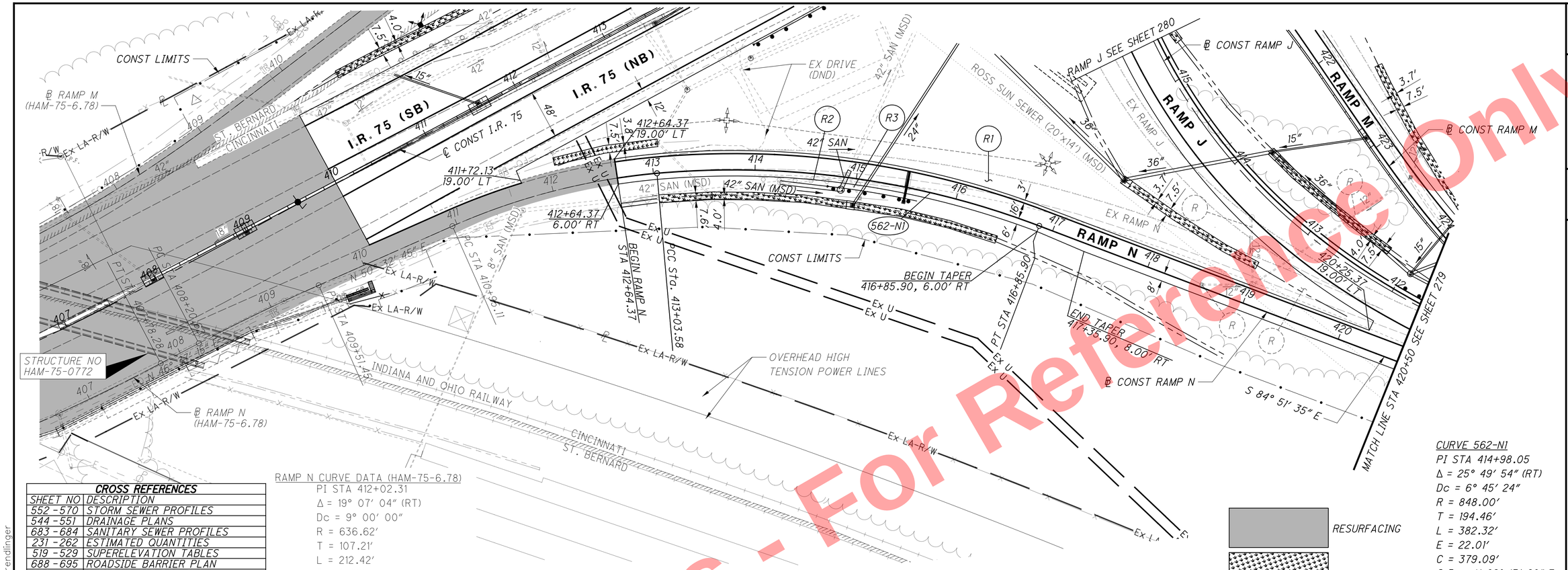

CROSS REFERENCES	
SHEET NO	DESCRIPTION
552 - 570	STORM SEWER PROFILES
544 - 551	DRAINAGE PLANS
683 - 684	SANITARY SEWER PROFILES
231 - 262	ESTIMATED QUANTITIES
519 - 529	SUPERELEVATION TABLES
688 - 695	ROADSIDE BARRIER PLAN
530 - 538	INTERCHANGE DETAILS
777 - 808	LIGHTING PLANS

RAMP N CURVE DATA (HAM-75-6.78)
PI STA 412+02.31
Δ = 19° 07' 04" (RT)
Dc = 9° 00' 00"
R = 636.62'
T = 107.21'
L = 212.42'
E = 8.96'
e_{max} = 0.060

CURVE 562-N1
PI STA 414+98.05
Δ = 25° 49' 54" (RT)
Dc = 6° 45' 24"
R = 848.00'
T = 194.46'
L = 382.32'
E = 22.01'
C = 379.09'
C.B. = N 82° 13' 28" E
e_{max} = 0.060

RESURFACING
EROSION CONTROL

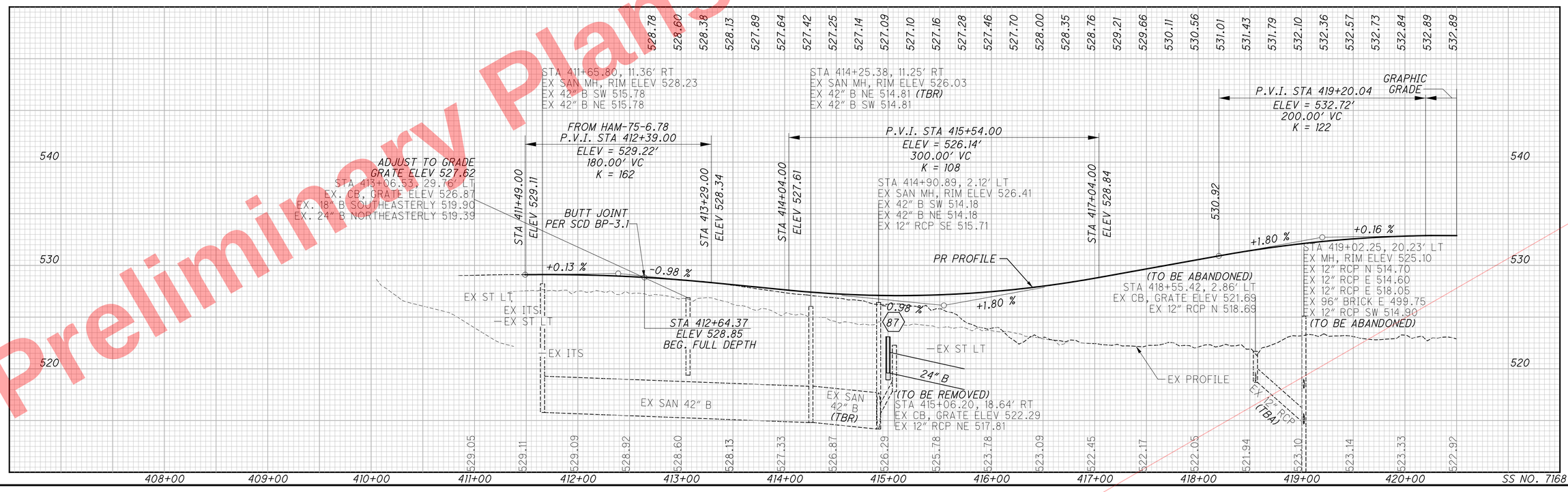

PLAN AND PROFILE - S.R. 562 RAMP N
STA 407+87.13 TO STA 420+50.00

HAM-75-7.85

CALCULATED SEA CHECKED DLR

HORIZONTAL SCALE IN FEET
0 25 50 100

278
1047

J:\2011090\3\ODOT\HAM\77889\roadway\sheets\77889GP040.dgn 5/22/2026 10:14:35 AM hbrendlinger

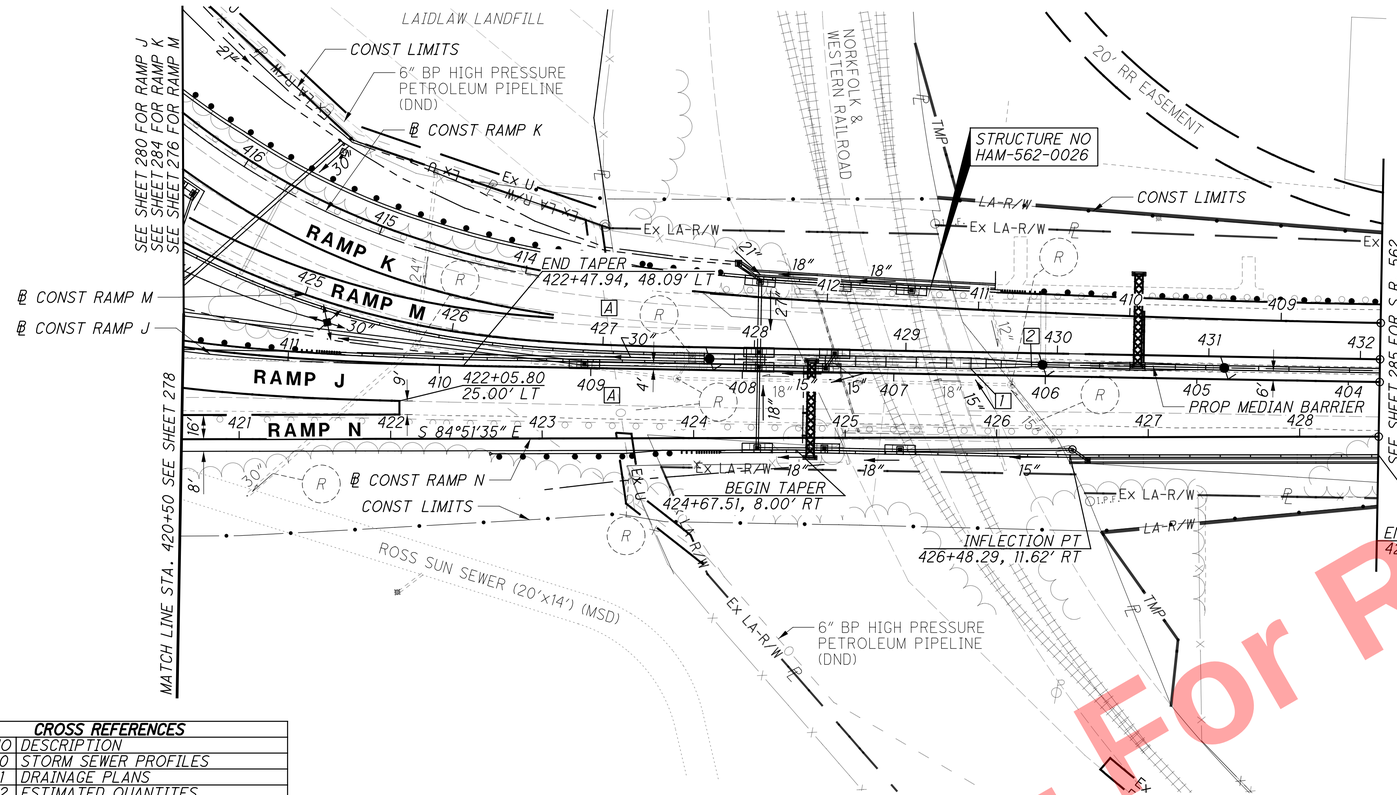

CROSS REFERENCES	
SHEET NO	DESCRIPTION
552 - 570	STORM SEWER PROFILES
544 - 551	DRAINAGE PLANS
231 - 262	ESTIMATED QUANTITES
519 - 529	SUPERELEVATION TABLES
688 - 695	ROADSIDE BARRIER PLAN
530 - 538	INTERCHANGE DETAILS
777 - 808	LIGHTING PLANS

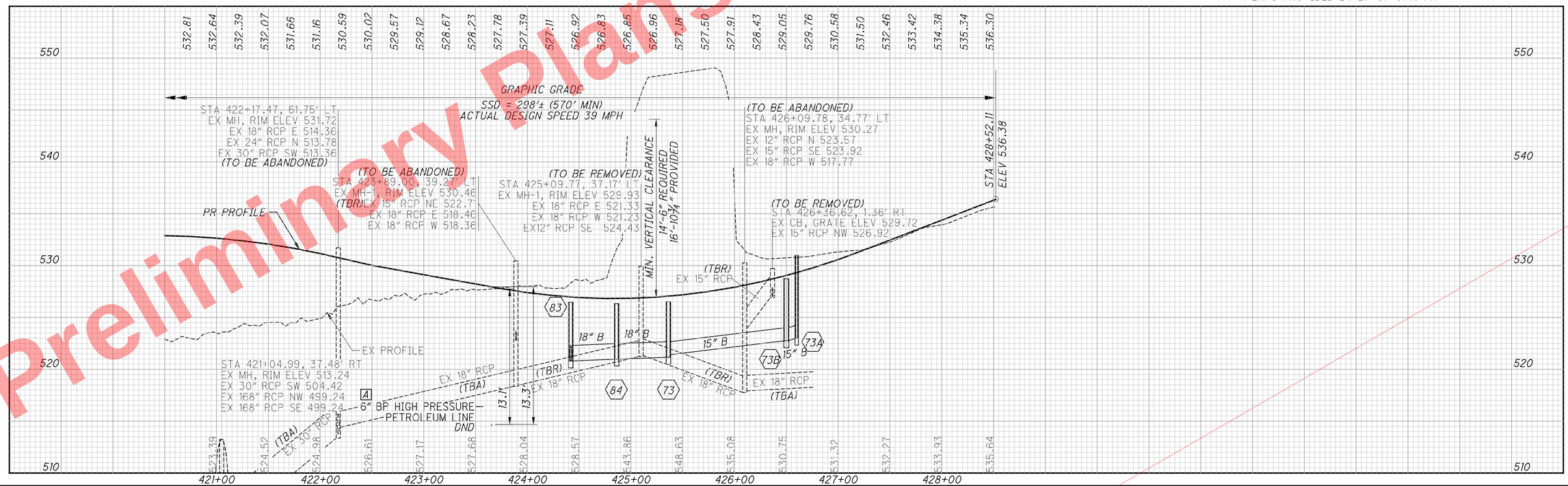

Preliminary Plans - Not For Reference Only

PLAN AND PROFILE - S.R. 562 RAMP N
STA 420+50 TO STA 428+40.82

HAM-75-7.85

CALCULATED SEA CHECKED DLR

HORIZONTAL SCALE IN FEET

279
1047

J:\20110903\ODOT\HAM\77889\roadway\sheets\77889GP041.dgn 5/22/2026 10:14:41 AM hbrendlinger

CROSS REFERENCES	
SHEET NO	DESCRIPTION
552 - 570	STORM SEWER PROFILES
544 - 551	DRAINAGE PLANS
231 - 262	ESTIMATED QUANTITIES
519 - 529	SUPERELEVATION TABLES
688 - 695	ROADSIDE BARRIER PLAN
530 - 538	INTERCHANGE DETAILS
777 - 808	LIGHTING PLANS

CURVE 562-J1
PI STA 420+13.05
Δ = 114° 40′ 09″ (RT)
Dc = 10° 15′ 00″
R = 558.98′
Ls_1 = 300.00′
θs_1 = 15° 22′ 30″
LT_1 = 200.76′
ST_1 = 100.69′
x_1 = 297.85′
y_1 = 26.70′
k_1 = 149.64′
p_1 = 6.69′
T_1 = 1028.72′
Ls_2 = 224.99′
θs_2 = 11° 31′ 51″
LT_2 = 150.31′
ST_2 = 75.29′
x_2 = 224.08′
y_2 = 15.05′
k_2 = 112.34′
p_2 = 3.77′
T_2 = 933.30′
Lc = 856.23′
Es = 486.38′
C_1 = 299.04′
C = 774.94′
C_2 = 224.59′
$C.B._1$ = N 78° 35′ 31″ W
C.B. = N 24° 27′ 26″ W
$C.B._2$ = N 27° 06′ 47″ E
^{e}MAX = 0.059

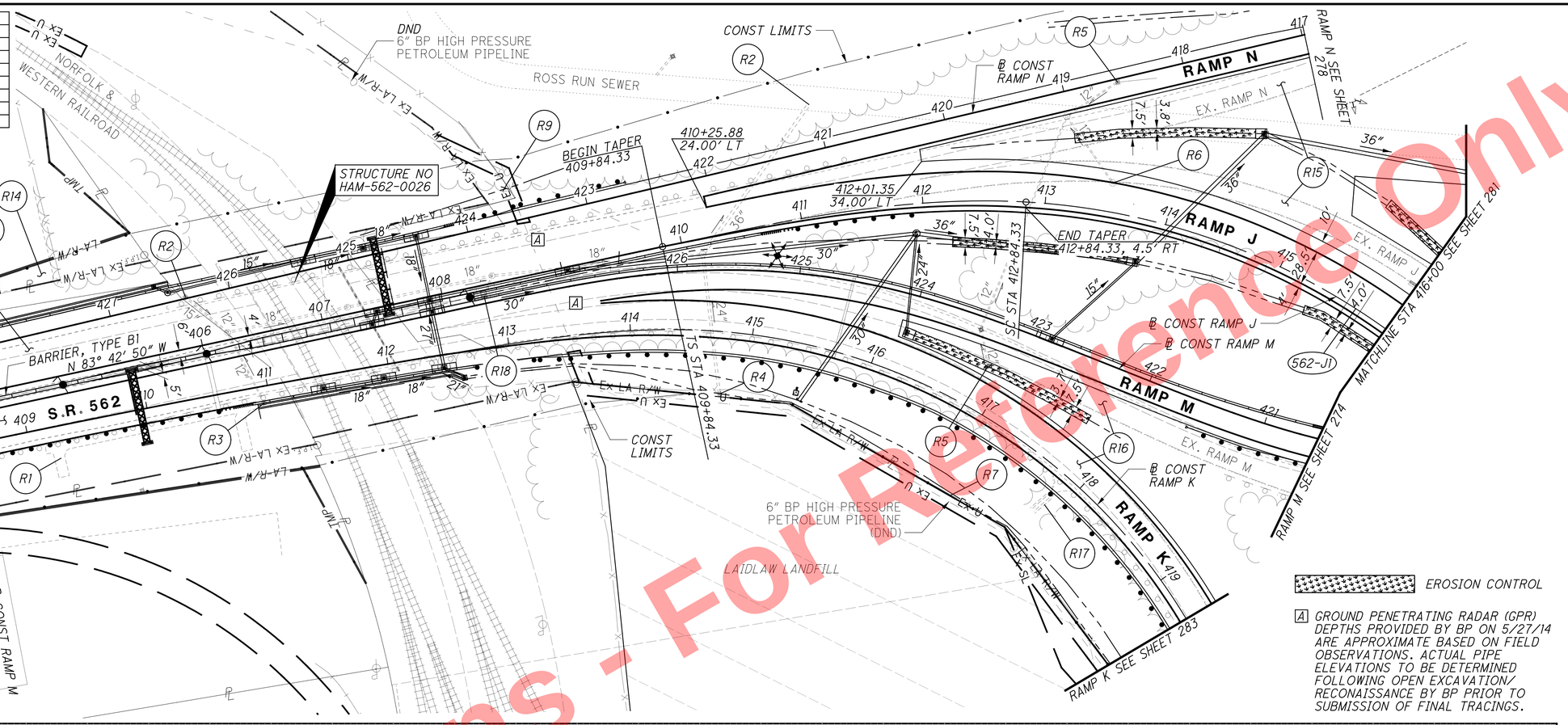

[A] GROUND PENETRATING RADAR (GPR) DEPTHS PROVIDED BY BP ON 5/27/14 ARE APPROXIMATE BASED ON FIELD OBSERVATIONS. ACTUAL PIPE ELEVATIONS TO BE DETERMINED FOLLOWING OPEN EXCAVATION/ RECONAISSANCE BY BP PRIOR TO SUBMISSION OF FINAL TRACINGS.

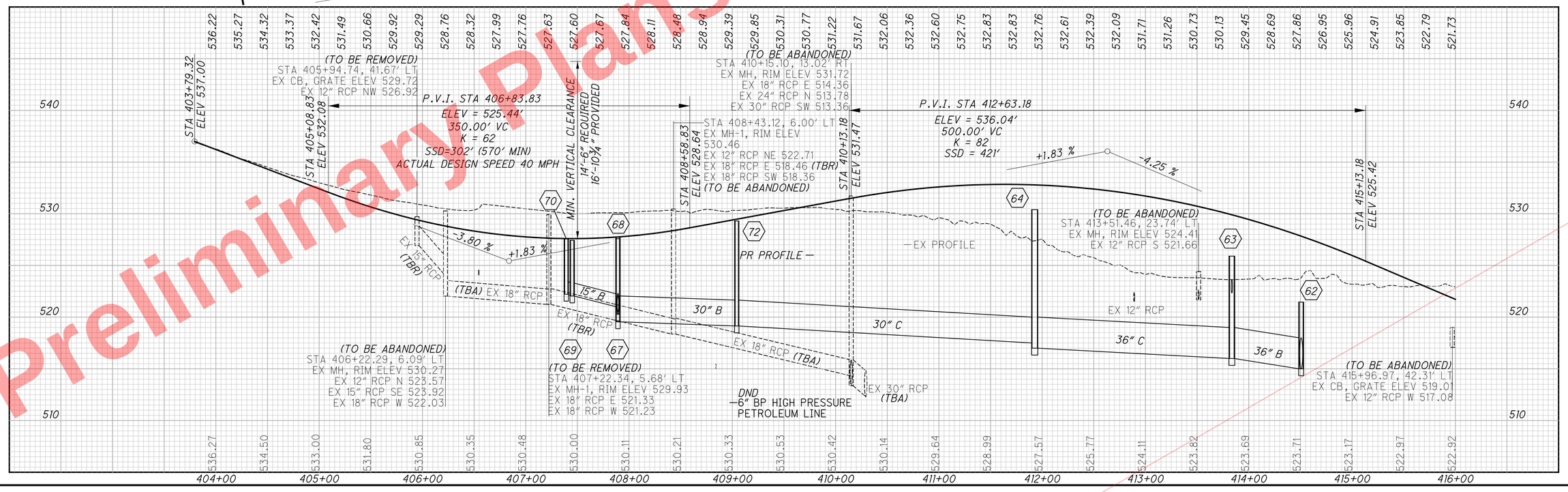

Preliminary Plans - Not For Reference Only

HORIZONTAL SCALE IN FEET
0 25 50 100

CALCULATED SEA CHECKED DLR

PLAN AND PROFILE - S.R. 562 RAMP J
STA 403+79.32 TO STA 416+00.00

HAM-75-7.85

280
1047

J:\2011093\ODOT\HAM\7889\roadway\sheets\77889GP010.dgn 5/22/2026 10:14:46 AM hbrendlinger

CROSS REFERENCES	
SHEET NO	DESCRIPTION
552 - 570	STORM SEWER PROFILES
544 - 551	DRAINAGE PLANS
231 - 262	ESTIMATED QUANTITIES
519 - 529	SUPERELEVATION TABLES
688 - 695	ROADSIDE BARRIER PLAN
530 - 538	INTERCHANGE DETAILS
777 - 808	LIGHTING PLANS
865 - 929	BRIDGE PLANS HAM-75-0791
809 - 864	BRIDGE PLANS HAM 562-0004

EROSION CONTROL

CURVE 562-J1
PI STA 420+13.05
Δ = 114° 40′ 09″ (RT)
Dc = 10° 15′ 00″
R = 558.98′
Ls_1 = 300.00′
θs_1 = 15° 22′ 30″
LT_1 = 200.76′
ST_1 = 100.69′
x_1 = 297.85′
y_1 = 26.70′
k_1 = 149.64′
p_1 = 6.69′
T_1 = 1028.72′
Ls_2 = 224.99′
θs_2 = 11° 31′ 51″
LT_2 = 150.31′
ST_2 = 75.29′
x_2 = 224.08′
y_2 = 15.05′
k_2 = 112.34′
p_2 = 3.77′
T_2 = 933.30′
Lc = 856.23′
Es = 486.38′
C_1 = 299.04′
C = 774.94′
C_2 = 224.59′
C.B.$_1$ = N 78° 35′ 31″ W
C.B. = N 24° 27′ 26″ W
C.B.$_2$ = N 27° 06′ 47″ E
e_{MAX} = 0.059

HORIZONTAL SCALE IN FEET
0 25 50 100

CALCULATED SEA CHECKED DLR

PLAN AND PROFILE - S.R. 562 RAMP J
STA 416+00.00 TO STA 429+00.00

HAM-75-7.85

281
1047

Preliminary Plans - For Reference Only

J:\2011093\ODOT\HAM\7889\roadway\sheets\77889GP011.dgn 5/22/2026 10:14:52 AM hbrendlinger

1 BEGIN APP SLAB STA 433+76.88
2 END APP SLAB STA 435+14.68

EROSION CONTROL

CROSS REFERENCES

SHEET NO	DESCRIPTION
552 - 570	STORM SEWER PROFILES
544 - 551	DRAINAGE PLANS
231 - 262	ESTIMATED QUANTITIES
519 - 529	SUPERELLEVATION TABLES
688 - 695	ROADSIDE BARRIER PLAN
530 - 538	INTERCHANGE DETAILS
777 - 808	LIGHTING PLANS
930 - 993	BRIDGE PLANS HAM-75-0823

MATCHLINE STA 429+00 SEE SHEET 281

RAMP J
RAMP K
I.R. 75 (SB)
I.R. 75 (NB)
PROSSER AVE
ELMWOOD PLACE
CINCINNATI
ST. BERNARD
LAIDLAW AVE
LAIDLAW LANDFILL
℄ CONST RAMP J
℄ CONST RAMP K
℄ CONST I.R. 75
END TAPER 432+78.47, 12.00' LT
BEGIN TAPER 432+28.40, 10.00' LT
PC STA 430+95.95
N 30° 57' 19" E
N 24° 30' 08" E
432+78.47 28.00' RT
435+73.98 24.00' RT
END ℄ CONST RAMP J 440+63.91
CONST LIMITS
DND 6" BP HIGH PRESSURE PETROLEUM PIPELINE
BARRIER, TYPE B1
STRUCTURE NO HAM-75-0823
STRUCTURE NO HAM-75-0834
60" COMB (MSD)
48" COMB (MSD)
WD GARAGE
NORFOLK SOUTHERN RR
BLOODY RUN SEWER

CURVE 562-J2
PI STA 435+80.44
Δ = 6° 27' 11" (LT)
Dc = 0° 40' 00"
R = 8,594.37'
T = 484.49'
L = 967.96'
E = 13.65'
C = 967.45'
C.B. = N 27° 43' 44" E
eMAX = NC

A PIPE DEPTH CONFIRMED PER SUE IN MAY, 2013.

GRAPHIC GRADE
PR PROFILE
EX PROFILE
EX ST LT
+3.60%
-0.60%
I-75 STRUCTURE
DND 6" BP HIGH PRESSURE PETROLEUM LINE
P.V.I. STA 429+50.00
ELEV = 545.09'
549.68' VC
K = 131
SSD = 532'
STA 432+24.84 ELEV 543.43
MIN. VERTICAL CLEARANCE 14'-6" REQUIRED 14'-6⅜" PROVIDED
(TO BE REMOVED) STA 439+22.27, 23.17' RT EX CB, GRATE ELEV 525.69 EX 12" RCP E 522.99
EX ITS
STA 440+63.91 ELEV 528.84

541.37 541.81 542.21 542.56 542.86 543.12 543.32 543.48 543.59 543.66 543.67 543.64 543.56 543.43 543.28 543.08 542.85 542.57 542.25 541.89 541.48 541.04 540.55 540.02 539.44 538.83 538.17 537.47 536.73 535.94 535.12 534.28 533.45 532.69 531.99 531.36 530.80 530.30 529.86 529.50 529.19 528.96 528.79 528.68 528.64 528.67 528.76

538.24 539.32 540.59 543.67 544.80 544.69 544.54 544.77 544.16 525.85 520.09 530.43 541.04 539.28 539.09 536.42 534.67 534.76 534.37 533.75 535.05 539.01 539.26

429+00 430+00 431+00 432+00 433+00 434+00 435+00 436+00 437+00 438+00 439+00 440+00 441+00

550 540 530 520

Preliminary Plans - For Reference Only

PLAN AND PROFILE - S.R. 562 RAMP J
STA 429+00.00 TO STA 440+63.91
HAM-75-7.85
282
1047

CALCULATED SEA CHECKED DLR

HORIZONTAL SCALE IN FEET 0 25 50 100

J:\2011093\ODOT\HAM\77889\roadway\sheets\77889GP012.dgn 5/22/2026 10:15:23 AM hbrendlinger

CROSS REFERENCES	
SHEET NO	DESCRIPTION
552 - 570	STORM SEWER PROFILES
544 - 551	DRAINAGE PLANS
231 - 262	ESTIMATED QUANTITIES
519 - 529	SUPERELEVATION TABLES
688 - 695	ROADSIDE BARRIER PLAN
530 - 538	INTERCHANGE DETAILS
777 - 808	LIGHTING PLANS

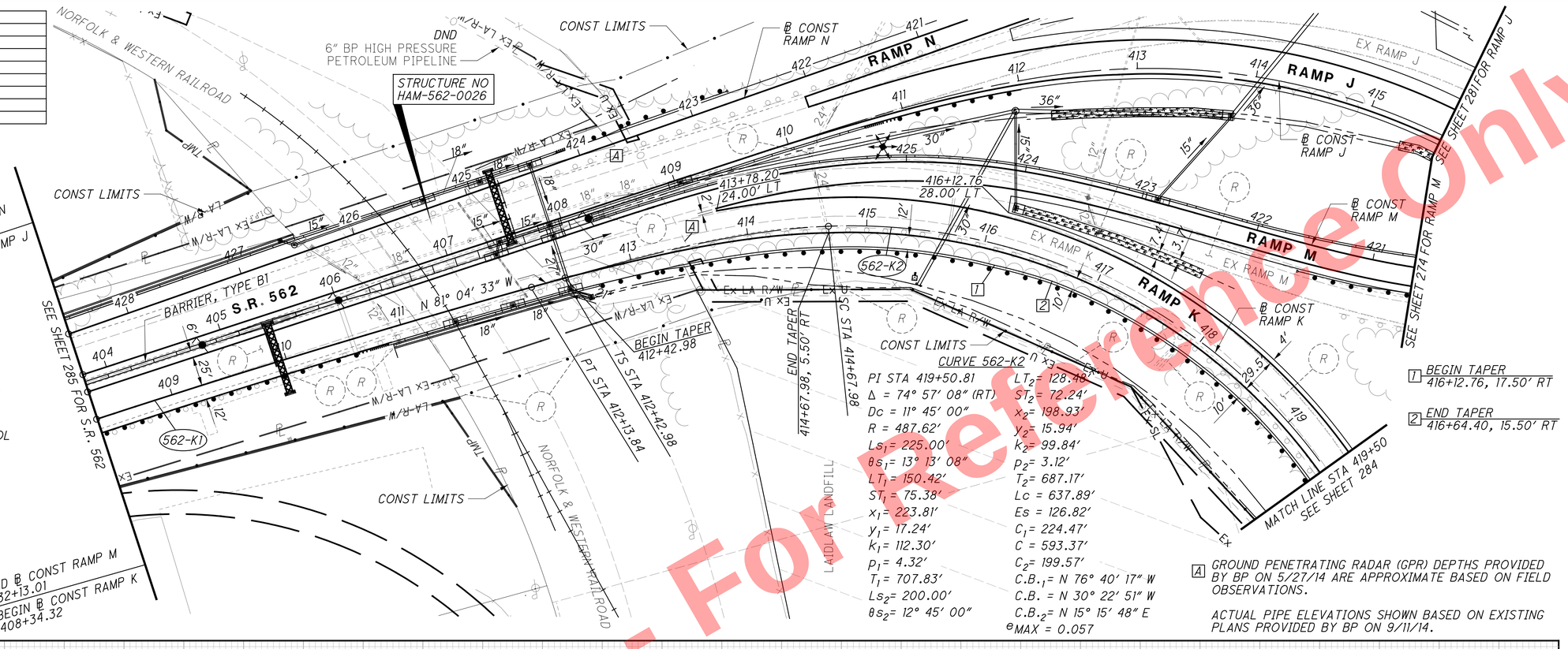

(R) FOR REMOVALS SEE SHEET 280

EROSION CONTROL

CURVE 562-K1
PI STA 410+24.11
Δ = 2° 28' 59" (RT)
Dc = 0° 39' 15"
R = 8,757.22'
T = 189.79'
L = 379.52'
E = 2.06'
C = 379.49'
C.B. = N 82° 28' 20" W

CURVE 562-K2
PI STA 419+50.81
Δ = 74° 57' 08" (RT)
Dc = 11° 45' 00"
R = 487.62'
Ls_1 = 225.00'
θs_1 = 13° 13' 08"
LT_1 = 150.42'
ST_1 = 75.38'
x_1 = 223.81'
y_1 = 17.24'
k_1 = 112.30'
p_1 = 4.32'
T_1 = 707.83'
Ls_2 = 200.00'
θs_2 = 12° 45' 00"
LT_2 = 128.48'
ST_2 = 72.24'
x_2 = 198.93'
y_2 = 15.94'
k_2 = 99.84'
p_2 = 3.12'
T_2 = 687.17'
Lc = 637.89'
Es = 126.82'
C_1 = 224.47'
C = 593.37'
C_2 = 199.57'
C.B.$_1$ = N 76° 40' 17" W
C.B. = N 30° 22' 51" W
C.B.$_2$ = N 15° 15' 48" E
e_{MAX} = 0.057

[4] GROUND PENETRATING RADAR (GPR) DEPTHS PROVIDED BY BP ON 5/27/14 ARE APPROXIMATE BASED ON FIELD OBSERVATIONS.

ACTUAL PIPE ELEVATIONS SHOWN BASED ON EXISTING PLANS PROVIDED BY BP ON 9/11/14.

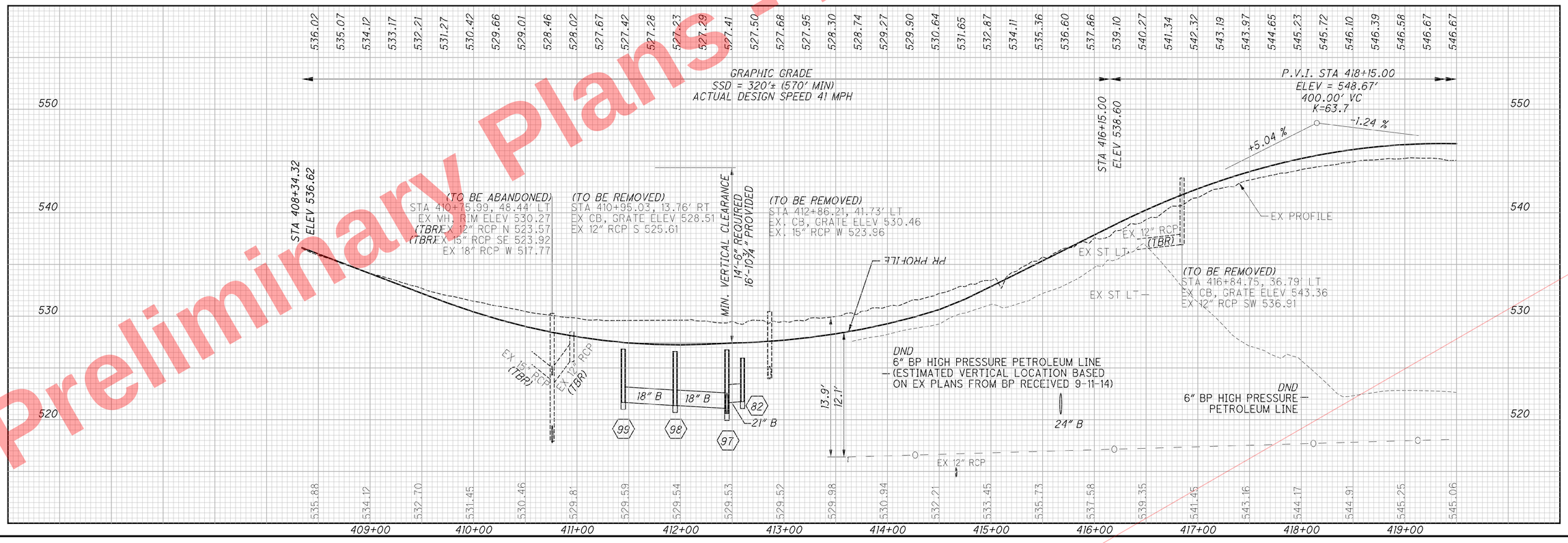

Preliminary Plans - For Reference Only

PLAN AND PROFILE - S.R. 562 RAMP K
STA 408+34.32 TO STA 419+50.00

HAM-75-7.85

283
1047

CALCULATED SEA
CHECKED DLR

HORIZONTAL SCALE IN FEET
0 25 50 100

J:\20110903\ODOT\HAM\77889\roadway\sheets\77889GP020.dgn 5/22/2026 10:15:39 AM hbrendlinger

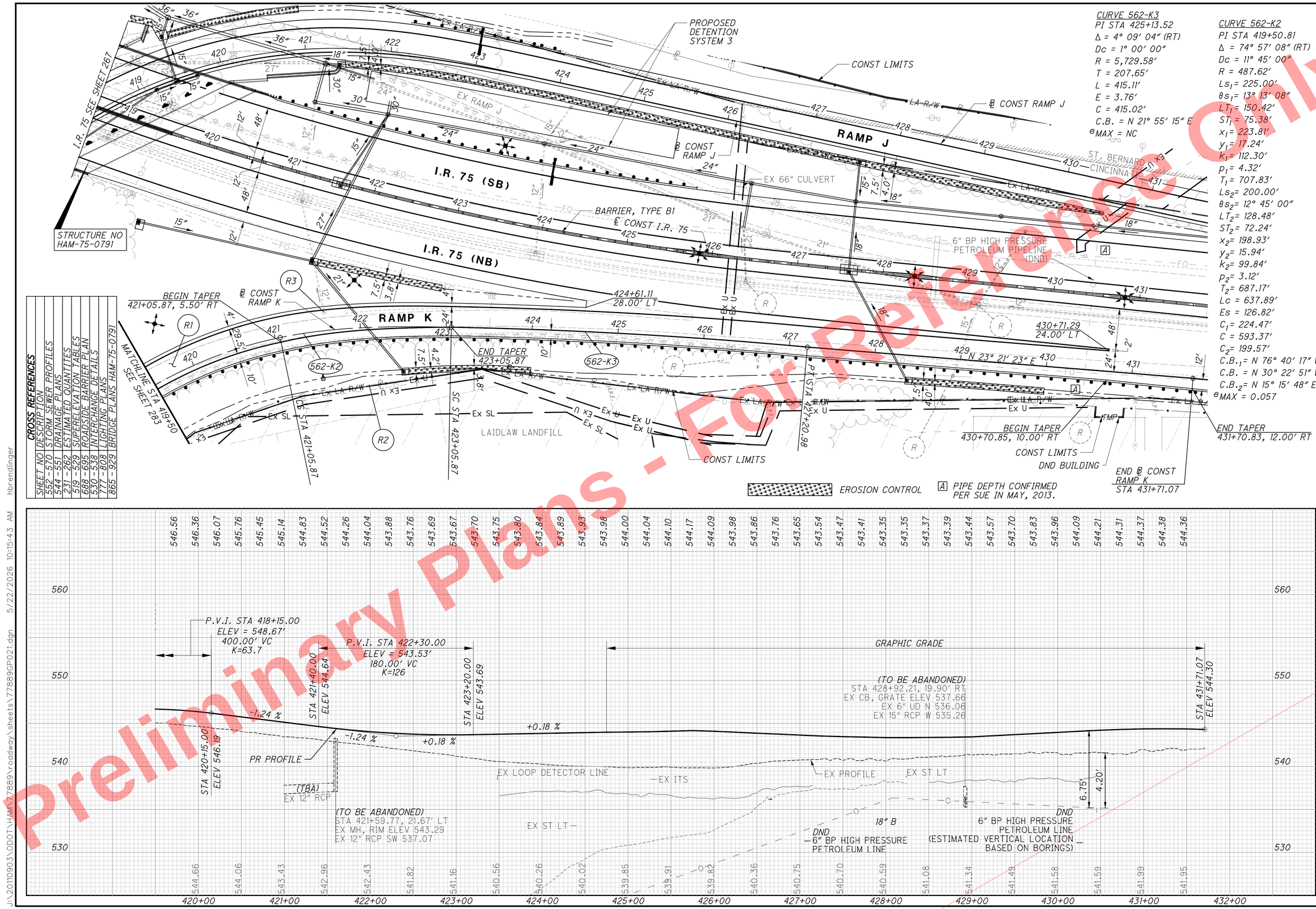

CURVE 562-K3
PI STA 425+13.52
Δ = 4° 09' 04" (RT)
Dc = 1° 00' 00"
R = 5,729.58'
T = 207.65'
L = 415.11'
E = 3.76'
C = 415.02'
C.B. = N 21° 55' 15" E
e_{MAX} = NC

CURVE 562-K2
PI STA 419+50.81
Δ = 74° 57' 08" (RT)
Dc = 11° 45' 00"
R = 487.62'
Ls_1 = 225.00'
θs_1 = 13° 13' 08"
LT_1 = 150.42'
ST_1 = 75.38'
x_1 = 223.81'
y_1 = 17.24'
k_1 = 112.30'
p_1 = 4.32'
T_1 = 707.83'
Ls_2 = 200.00'
θs_2 = 12° 45' 00"
LT_2 = 128.48'
ST_2 = 72.24'
x_2 = 198.93'
y_2 = 15.94'
k_2 = 99.84'
p_2 = 3.12'
T_2 = 687.17'
Lc = 637.89'
Es = 126.82'
C_1 = 224.47'
C = 593.37'
C_2 = 199.57'
$C.B._1$ = N 76° 40' 17" W
C.B. = N 30° 22' 51" W
$C.B._2$ = N 15° 15' 48" E
e_{MAX} = 0.057

CROSS REFERENCES

SHEET NO	DESCRIPTION
552 - 570	STORM SEWER PROFILES
544 - 551	DRAINAGE PLANS
231 - 262	ESTIMATED QUANTITIES
519 - 529	SUPERELEVATION TABLES
688 - 695	ROADSIDE BARRIER PLAN
530 - 538	INTERCHANGE DETAILS
777 - 808	LIGHTING PLANS
865 - 929	BRIDGE PLANS HAM-75-0791

HORIZONTAL SCALE IN FEET 0 25 50 100

CALCULATED SEA
CHECKED DLR

PLAN AND PROFILE - S.R. 562 RAMP K
STA 419+50 TO STA 431+71.07

HAM-75-7.85

Preliminary Plans - For Reference Only

J:\20110903\ODOT\HAM\77889\roadway\sheets\77889GP021.dgn 5/22/2026 10:15:43 AM hbrendlinger

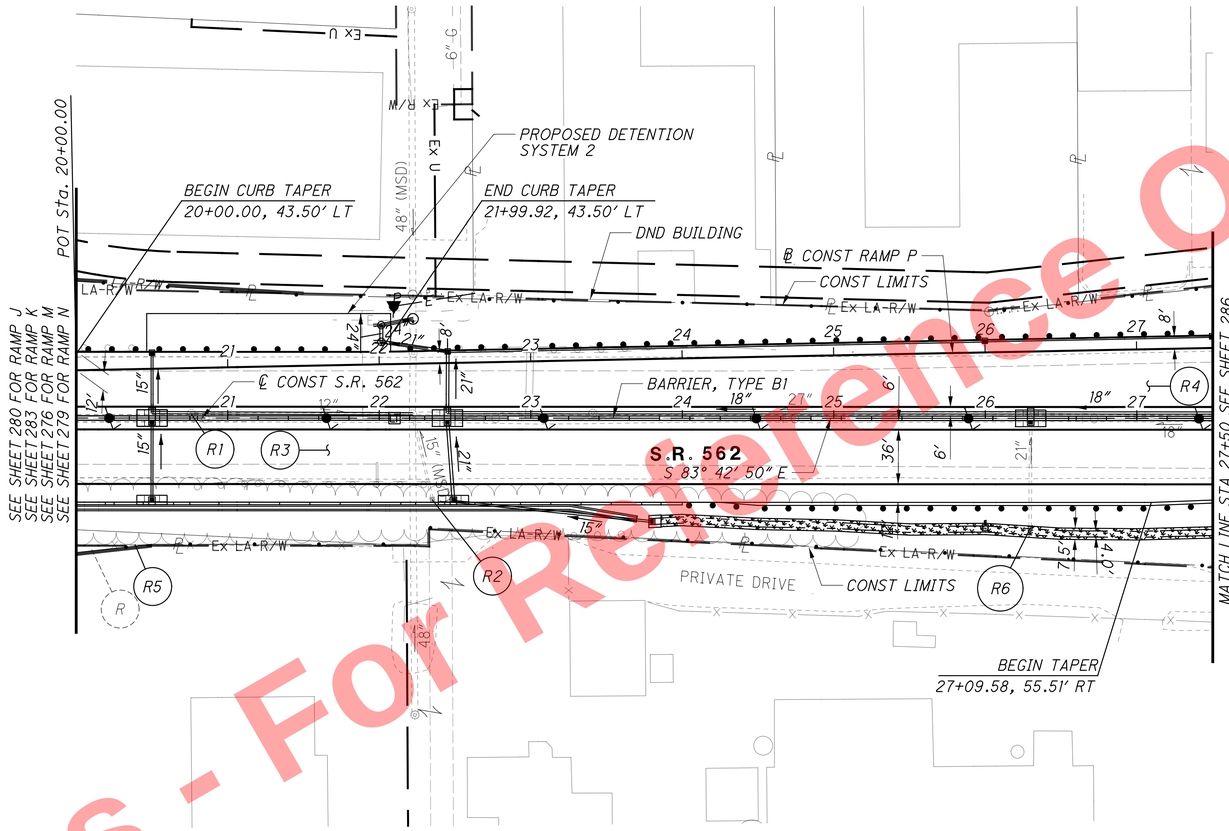

EROSION CONTROL

CROSS REFERENCES	
SHEET NO	DESCRIPTION
552 - 570	STORM SEWER PROFILES
544 - 551	DRAINAGE PLANS
231 - 262	ESTIMATED QUANTITIES
519 - 529	SUPERELEVATION TABLES
688 - 695	ROADSIDE BARRIER PLAN
530 - 538	INTERCHANGE DETAILS
777 - 808	LIGHTING PLANS

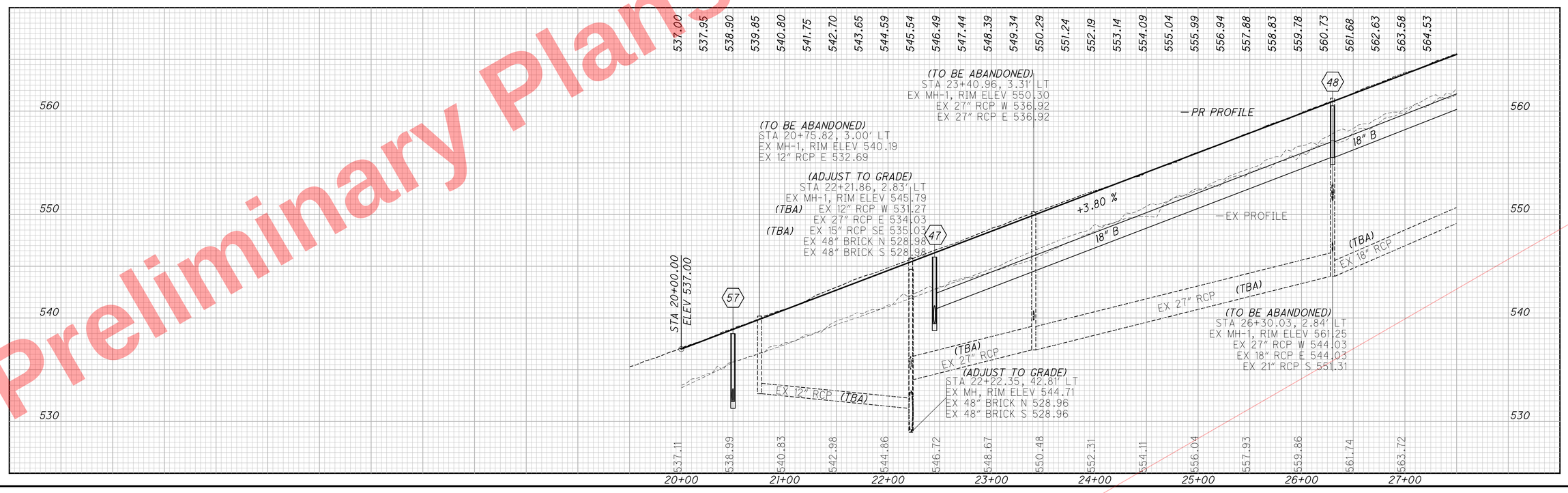

Preliminary Plans - For Reference Only

HORIZONTAL SCALE IN FEET
0 25 50 100

CALCULATED SEA
CHECKED DLR

PLAN AND PROFILE - S.R. 562
STA 20+00 TO STA 27+50

HAM-75-7.85

285
1047

J:\20110903\ODOT\HAM\77889\roadway\sheets\77889GP060.dgn 5/22/2026 10:15:51 AM hbrendlinger

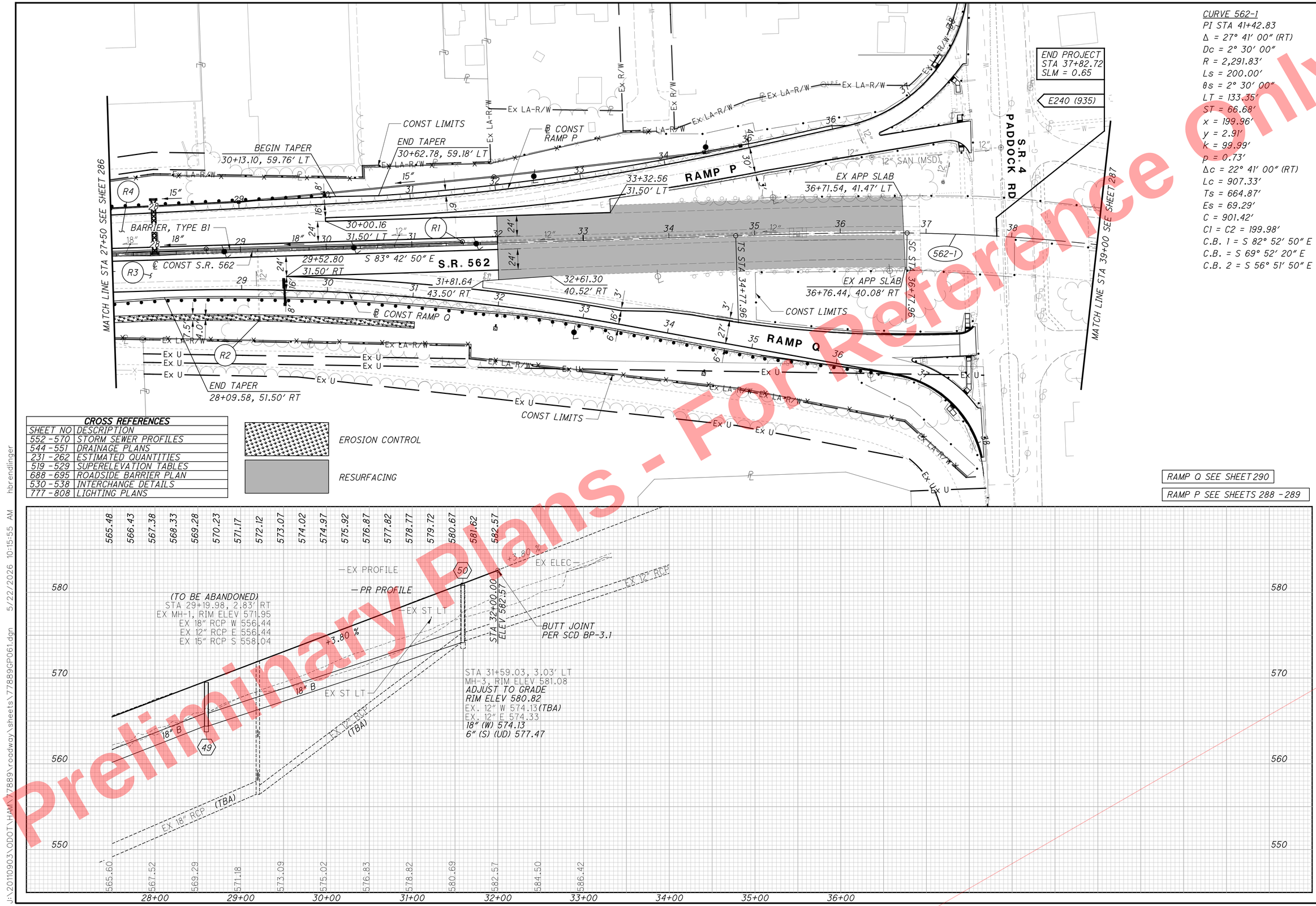

CURVE 562-1
PI STA 41+42.83
Δ = 27° 41' 00" (RT)
Dc = 2° 30' 00"
R = 2,291.83'
Ls = 200.00'
θs = 2° 30' 00"
LT = 133.35'
ST = 66.68'
x = 199.96'
y = 2.91'
k = 99.99'
p = 0.73'
Δc = 22° 41' 00" (RT)
Lc = 907.33'
Ts = 664.87'
Es = 69.29'
C = 901.42'
C1 = C2 = 199.98'
C.B. 1 = S 82° 52' 50" E
C.B. = S 69° 52' 20" E
C.B. 2 = S 56° 51' 50" E

CROSS REFERENCES	
SHEET NO	DESCRIPTION
552 - 570	STORM SEWER PROFILES
544 - 551	DRAINAGE PLANS
231 - 262	ESTIMATED QUANTITIES
519 - 529	SUPERELEVATION TABLES
688 - 695	ROADSIDE BARRIER PLAN
530 - 538	INTERCHANGE DETAILS
777 - 808	LIGHTING PLANS

HORIZONTAL SCALE IN FEET
0 25 50 100

CALCULATED SEA
CHECKED DLR

PLAN AND PROFILE - S.R. 562
STA 27+50 TO STA 39+00

HAM-75-7.85

Preliminary Plans - For Reference Only

J:\20110903\ODOT\HAM\77889\roadway\sheets\77889GP061.dgn 5/22/2026 10:15:55 AM hbrendlinger

CURVE 562-1
PI STA 41+42.83
Δ = 27° 41′ 00″ (RT)
Dc = 2° 30′ 00″
R = 2,291.83′
Ls = 200.00′
θs = 2° 30′ 00″
LT = 133.35′
ST = 66.68′
x = 199.96′
y = 2.91′
k = 99.99′
p = 0.73′
Δc = 22° 41′ 00″ (RT)
Lc = 907.33′
Ts = 664.87′
Es = 69.29′
C = 901.42′
C1 = C2 = 199.98′
C.B. 1 = S 82° 52′ 50″ E
C.B. = S 69° 52′ 20″ E
C.B. 2 = S 56° 51′ 50″ E

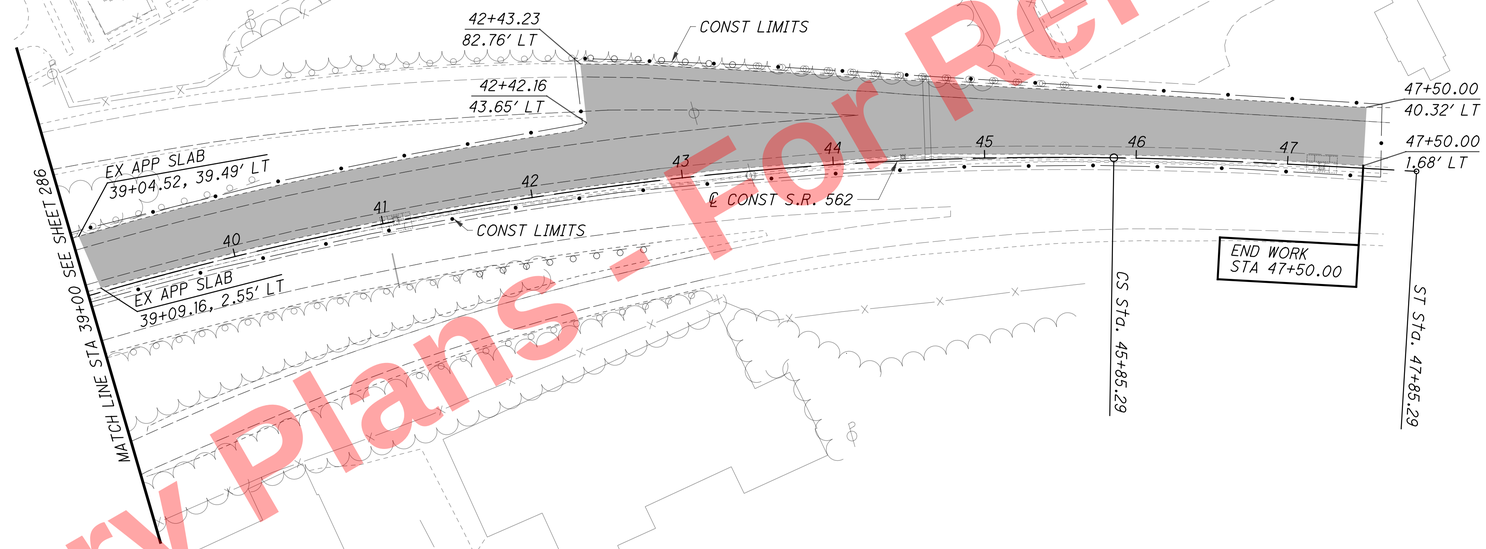

CROSS REFERENCES	
SHEET NO	DESCRIPTION
552 - 570	STORM SEWER PROFILES
544 - 551	DRAINAGE PLANS
231 - 262	ESTIMATED QUANTITIES
519 - 529	SUPERELEVATION TABLES
688 - 695	ROADSIDE BARRIER PLAN
530 - 538	INTERCHANGE DETAILS
777 - 808	LIGHTING PLANS

RESURFACING

Preliminary Plans - For Reference Only

HORIZONTAL SCALE IN FEET
0 25 50 100

CALCULATED SEA
CHECKED DLR

PLAN AND PROFILE - S.R. 562
STA 39+00 TO STA 47+85.29

HAM-75-7.85

287
1047

J:\20110903\ODOT\HAM\7889\roadway\sheets\77889GP062.dgn 5/22/2026 10:15:58 AM hbrendlinger

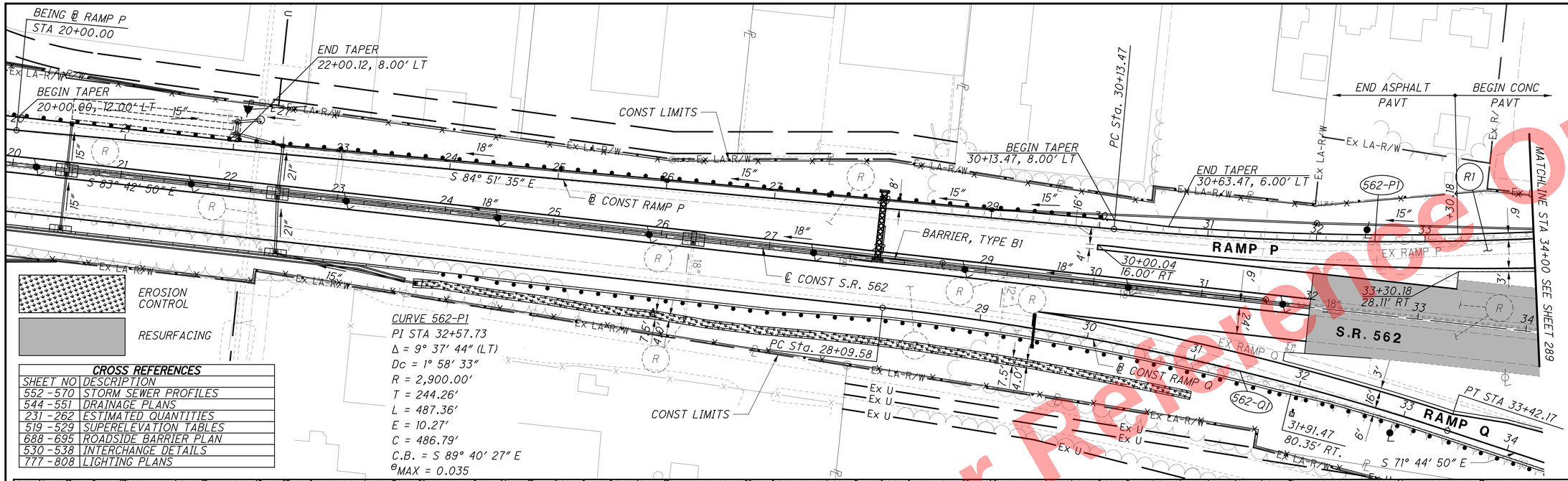

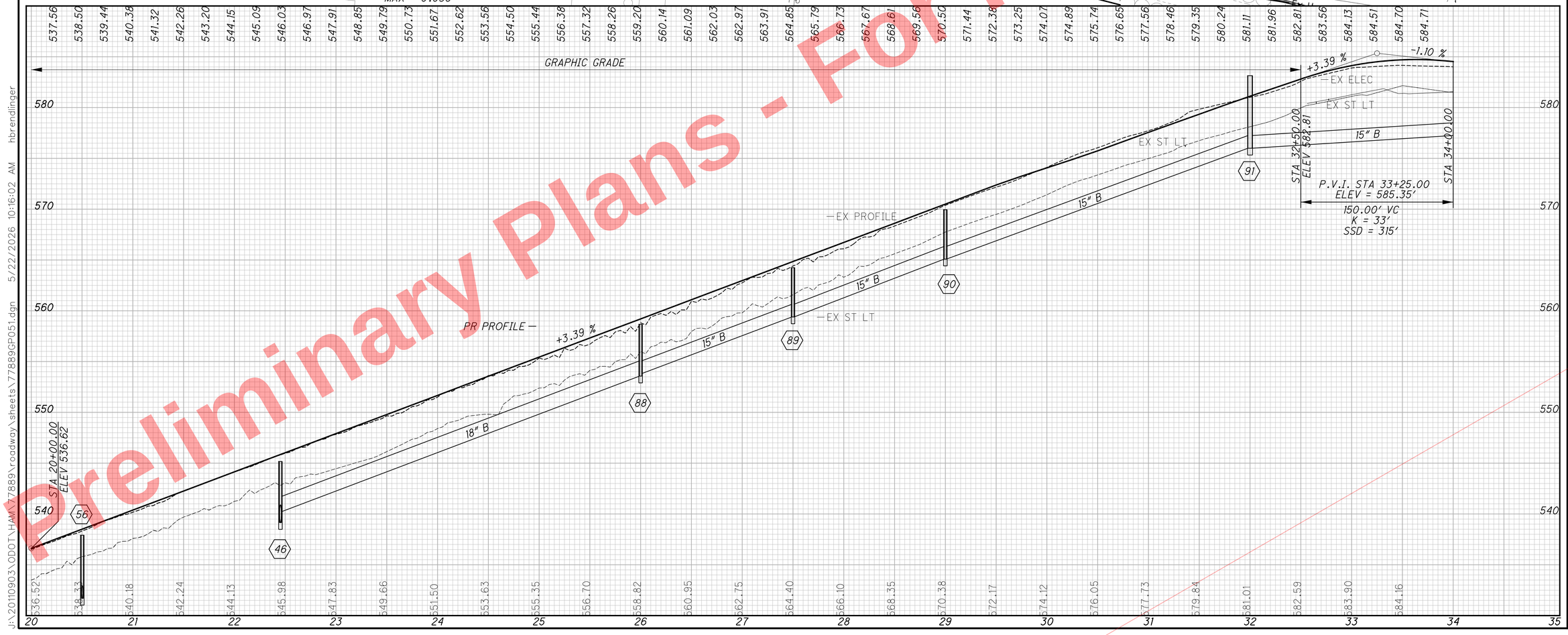

Preliminary Plans - For Reference Only

HORIZONTAL SCALE IN FEET
0 25 50 100
CALCULATED SEA
CHECKED DLR

PLAN AND PROFILE - S.R. 562 RAMP P
STA. 20+00 TO STA. 34+00.00

HAM-75-7.85

288
1047

J:\20110903\ODOT\HAM\77889\roadway\sheets\77889GP051.dgn 5/22/2026 10:16:02 AM hbrendlinger

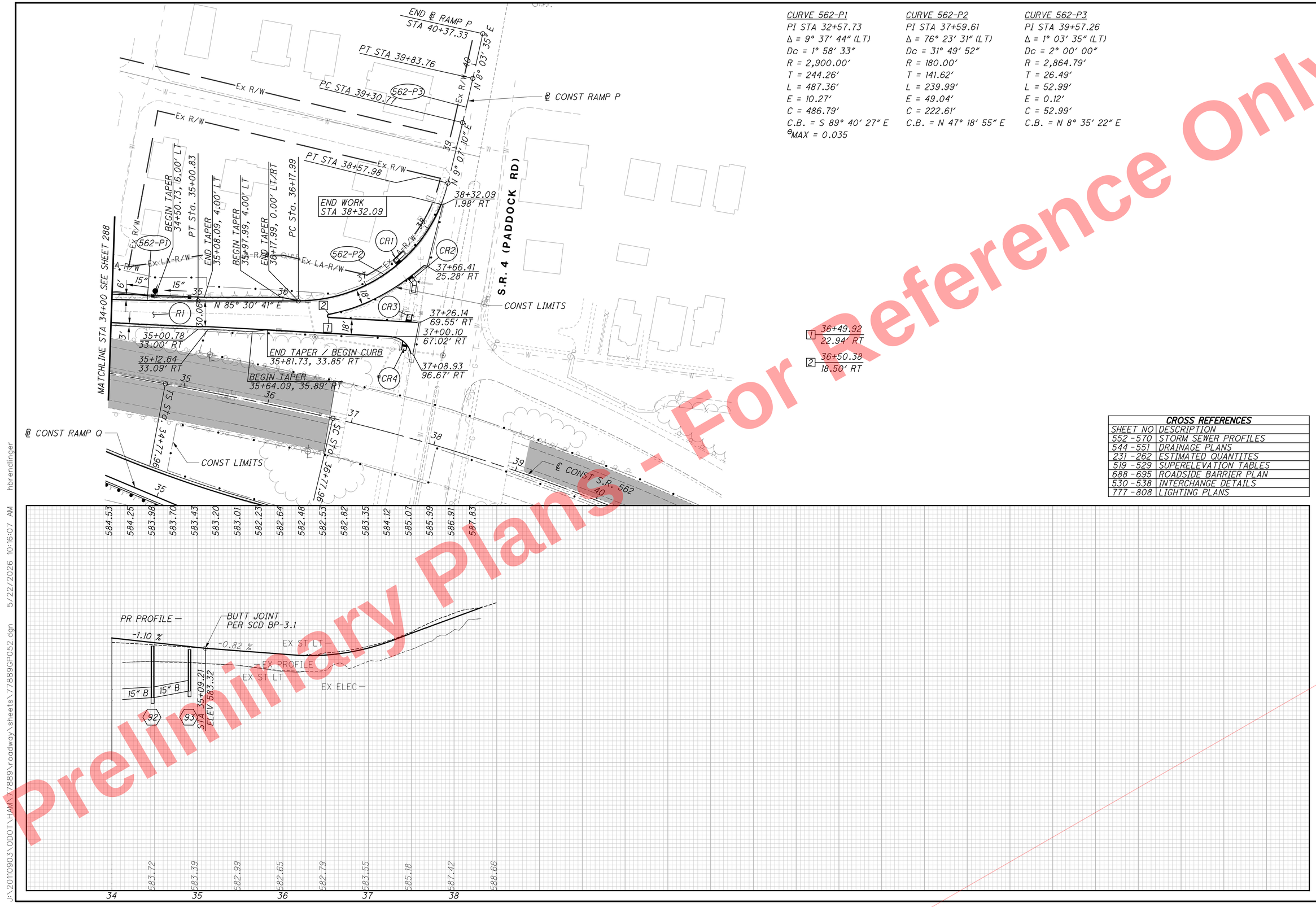

CURVE 562-P1
PI STA 32+57.73
Δ = 9° 37′ 44″ (LT)
Dc = 1° 58′ 33″
R = 2,900.00′
T = 244.26′
L = 487.36′
E = 10.27′
C = 486.79′
C.B. = S 89° 40′ 27″ E
e MAX = 0.035

CURVE 562-P2
PI STA 37+59.61
Δ = 76° 23′ 31″ (LT)
Dc = 31° 49′ 52″
R = 180.00′
T = 141.62′
L = 239.99′
E = 49.04′
C = 222.61′
C.B. = N 47° 18′ 55″ E

CURVE 562-P3
PI STA 39+57.26
Δ = 1° 03′ 35″ (LT)
Dc = 2° 00′ 00″
R = 2,864.79′
T = 26.49′
L = 52.99′
E = 0.12′
C = 52.99′
C.B. = N 8° 35′ 22″ E

1 36+49.92 22.94' RT
2 36+50.38 18.50' RT

CROSS REFERENCES	
SHEET NO	DESCRIPTION
552 - 570	STORM SEWER PROFILES
544 - 551	DRAINAGE PLANS
231 - 262	ESTIMATED QUANTITES
519 - 529	SUPERELEVATION TABLES
688 - 695	ROADSIDE BARRIER PLAN
530 - 538	INTERCHANGE DETAILS
777 - 808	LIGHTING PLANS

HORIZONTAL SCALE IN FEET
0 25 50 100
CALCULATED SEA
CHECKED DLR

PLAN AND PROFILE - S.R. 562 RAMP P
STA 34+00.00 TO END WORK

HAM-75-7.78

289
1047

Preliminary Plans - Not For Reference Only

J:\2011093\ODOT\HAM\77889\roadway\sheets\77889GP052.dgn 5/22/2026 10:16:07 AM hbrendlinger

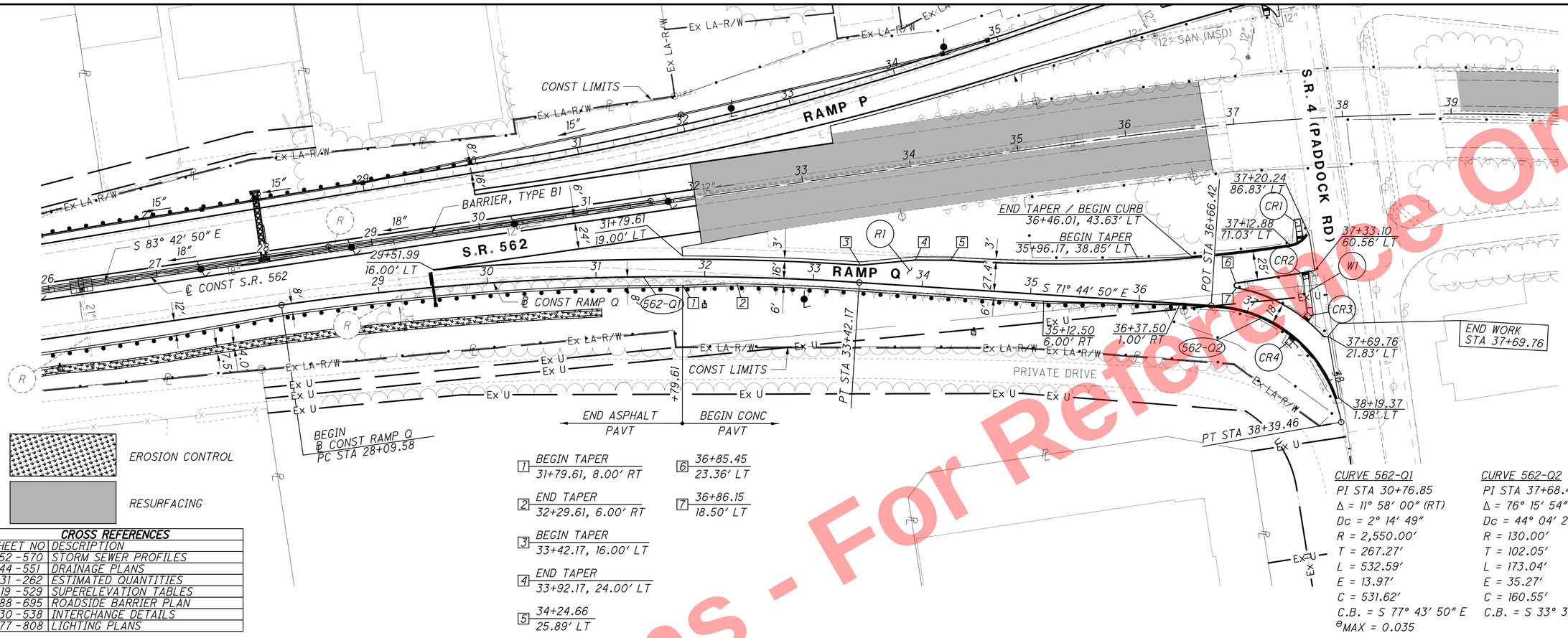

CROSS REFERENCES	
SHEET NO	DESCRIPTION
552 - 570	STORM SEWER PROFILES
544 - 551	DRAINAGE PLANS
231 - 262	ESTIMATED QUANTITIES
519 - 529	SUPERELEVATION TABLES
688 - 695	ROADSIDE BARRIER PLAN
530 - 538	INTERCHANGE DETAILS
777 - 808	LIGHTING PLANS

1 BEGIN TAPER
31+79.61, 8.00' RT

2 END TAPER
32+29.61, 6.00' RT

3 BEGIN TAPER
33+42.17, 16.00' LT

4 END TAPER
33+92.17, 24.00' LT

5 34+24.66
25.89' LT

6 36+85.45
23.36' LT

7 36+86.15
18.50' LT

CURVE 562-Q1
PI STA 30+76.85
Δ = 11° 58' 00" (RT)
Dc = 2° 14' 49"
R = 2,550.00'
T = 267.27'
L = 532.59'
E = 13.97'
C = 531.62'
C.B. = S 77° 43' 50" E
e_{MAX} = 0.035

CURVE 562-Q2
PI STA 37+68.47
Δ = 76° 15' 54" (RT)
Dc = 44° 04' 25"
R = 130.00'
T = 102.05'
L = 173.04'
E = 35.27'
C = 160.55'
C.B. = S 33° 36' 53" E



Preliminary Plans - Not For Reference Only

HORIZONTAL SCALE IN FEET
0 25 50 100

CALCULATED SEA CHECKED DLR

PLAN AND PROFILE - S.R. 562 RAMP Q
STA 28+09.58 TO STA 36+00.00

HAM-75-7.85

290
1047

J:\20110903\ODOT\HAM\7889\roadway\sheets\77889GP050.dgn 5/22/2026 10:16:11 AM hbrendlinger

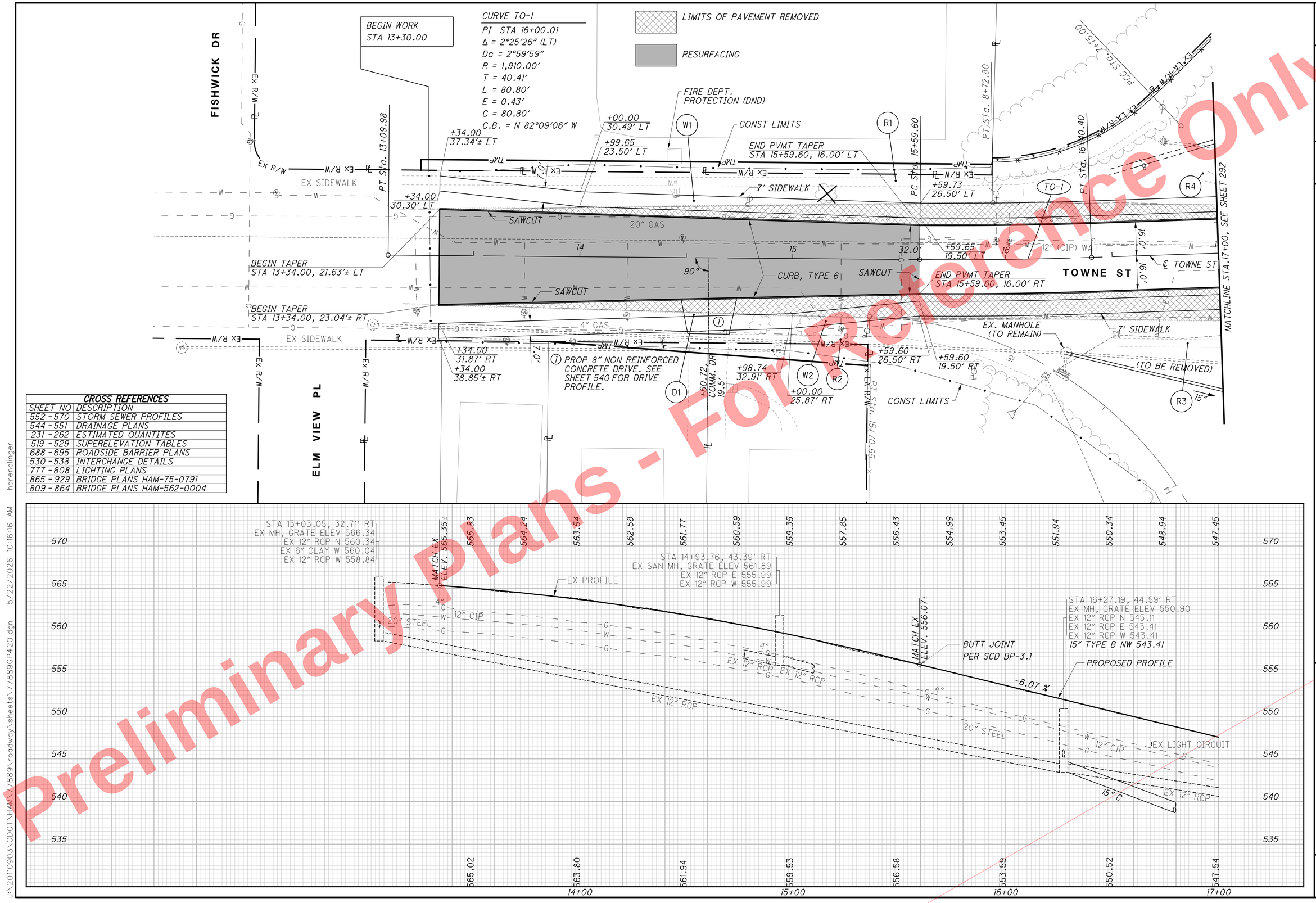

CROSS REFERENCES	
SHEET NO	DESCRIPTION
552 - 570	STORM SEWER PROFILES
544 - 551	DRAINAGE PLANS
231 - 262	ESTIMATED QUANTITES
519 - 529	SUPERELEVATION TABLES
688 - 695	ROADSIDE BARRIER PLANS
530 - 538	INTERCHANGE DETAILS
777 - 808	LIGHTING PLANS
865 - 929	BRIDGE PLANS HAM-75-0791
809 - 864	BRIDGE PLANS HAM-562-0004

Preliminary Plans - For Reference Only

HORIZONTAL SCALE IN FEET 0 10 20 40

CALCULATED CFR
CHECKED JLM

PLAN AND PROFILE - TOWNE ST
STA. 13+09.98 TO STA. 17+00.00

HAM-75-7.85

J:\20110903\ODOT\HAM\77889\roadway\sheets\77889GP420.dgn 5/22/2026 10:16:16 AM hbrendlinger

CROSS REFERENCES	
SHEET NO	DESCRIPTION
552 - 570	STORM SEWER PROFILES
544 - 551	DRAINAGE PLANS
231 - 262	ESTIMATED QUANTITIES
519 - 529	SUPERELEVATION TABLES
688 - 695	ROADSIDE BARRIER PLANS
530 - 538	INTERCHANGE DETAILS
777 - 808	LIGHTING PLANS
865 - 929	BRIDGE PLANS HAM-75-0791
809 - 864	BRIDGE PLANS HAM-562-0004

HORIZONTAL SCALE IN FEET (0, 10, 20, 40)

CALCULATED CFR CHECKED JLM

PROFILE - TOWNE ST
STA. 17+00.00 TO STA. 21+16.51

HAM-75-7.85

292
1047

I.R. 75 (NB)

I.R. 75 (SB)

TOWNE ST.

CEDAR ST.

MATCHLINE STA 17+00, SEE SHEET 291

I
STA 20+10.43 TOWNE ST=
STA 0+00.00 CEDAR ST

CURVE TO-2
PI STA 17+61.35
Δ = 2°01'08" (RT)
Dc = 2°59'59"
R = 1,910.00'
T = 33.65'
L = 67.30'
E = 0.30'
C = 67.30'
C.B. = N 82°21'15" W

POT Sta. 17+27.70

POT STA. 17+95.00

BEGIN WALL H1
STA 17+89.70, 26.98' LT

WALL H1

WALL H

END WALL H, END WALL H1
STA 20+24.79, 26.97' LT
STA. 20+38.51, 26.50' LT

BEGIN TAPER
STA 20+34.41, 16.00' LT

+88.51
23.84' LT

+88.51
19.50' LT

END TAPER
STA 21+16.51, 16.35' LT

END TAPER
STA 21+16.51, 18.00' RT

POT Sta. 0+00.00

PC STA. 452+14.57

BEGIN PVMT MILL & OVERLAY
STA 20+34.41, 17.31' RT

CONST LIMITS

BEGIN WALL I1
STA 17+72.56, 26.97' RT

WALL I1

WALL I

TO BE RELOCATED

℄ CONST
I.R. 75

END/BEGIN WALL I & WALL I1
STA 20+07.83, 26.97' RT

7' SIDEWALK

℄ TOWNE ST

℄ CEDAR ST

20" GAS

6" WATER LINE ABANDONED

12" WAT (CIP)

8" WAT (DIP)

4" WAT (DIP)

8" SAN

DND

SAWCUT

EX R/W

EX LA R/W

LIMITS OF PAVEMENT REMOVED

RESURFACING

A = STA 17+60.00, 42.78 RT
BEGIN 6" ABANDONED WATER LINE REMOVAL

B = STA 19+85.53, 13.32 RT
END 6" ABANDONED WATER LINE REMOVAL

(TO BE REMOVED)
STA 17+42.8511, 20.80' LT
EX CB, GRATE ELEV 544.52
EX 12" RCP SW 541.62

(TO BE REMOVED)
STA 17+33.9663, 33.08' RT
EX CB, GRATE ELEV 544.98
EX 12" RCP NW 541.28

(TO BE REMOVED)
STA 17+79.9320, 46.61' LT
EX CB, GRATE ELEV 542.12
EX 12" RCP NW 538.32

(TO BE REMOVED)
STA 17+84.2363, 39.55' LT
EX MH, GRATE ELEV 543.03
EX 30" RCP N 530.03
EX 12" RCP NE 537.03
EX 12" RCP E 537.33
EX 12" RCP SE 538.33
EX 12" RCP W 532.22±
EX 33" RCP SW 530.03

STA 18+81.02, 35.82' LT
EX MH, GRATE ELEV 537.77
EX 12" RCP E 532.57
EX 8" DRN S 534.07
EX 12" RCP W 532.57
EX 8" DRN NW 532.57

STA 19+51.01, 35.46' LT
EX MH, GRATE ELEV 535.36
EX 8" DRN NE 533.01
EX 12" RCP E 532.81
EX 8" DRN S 532.91
EX 8" DRN SW 532.91
EX 8" DRN NW 532.91

MIN. VERTICAL CLEARANCE
15'-6" REQUIRED
16'-8 1/2" PROVIDED

PROPOSED I.R. 75 BRIDGE

EX PROFILE

PROPOSED PROFILE

-6.07 %

-1.45 %

P.V.I. STA 19+20.00
ELEV = 534.20'
250.00' VC

PVC STA. 17+95.00
ELEV. 541.78

PVC STA. 20+45.00
ELEV. 532.38

STA 20+34.75, 1.54' RT
EX SAN MH, GRATE ELEV 532.58
EX 8" RCP W 527.29
EX 8" RCP S 527.29

MATCH EX.
ELEV. 531.35

36" B

15" C

EX 12" RCP

12" GAS (CIP)

4" GAS (DIP)

EX 8" WAT

EX 8" SAN RCP

547.45 545.94 544.43 542.91 541.39 539.96 538.70 537.48 536.43 535.44 534.67 534.00 533.38 532.78 532.32 531.91 531.59

547.54 544.49 541.44 538.73 536.45 534.69 533.40 532.34 531.59 530.75 530.40

17+00 18+00 19+00 20+00 21+00 22+00

560 555 550 545 540 535 530 525 520

Preliminary Plans - For Reference Only

J:\20110903\ODOT\HAM\7.78891\roadway\sheets\778891GP421.dgn 5/22/2026 10:16:19 AM hbrendlinger

J:\20110903\ODOT\HAM\77889\roadway\sheets\77889XS830.dgn 5/22/2026 10:16:20 AM hbrendlinger

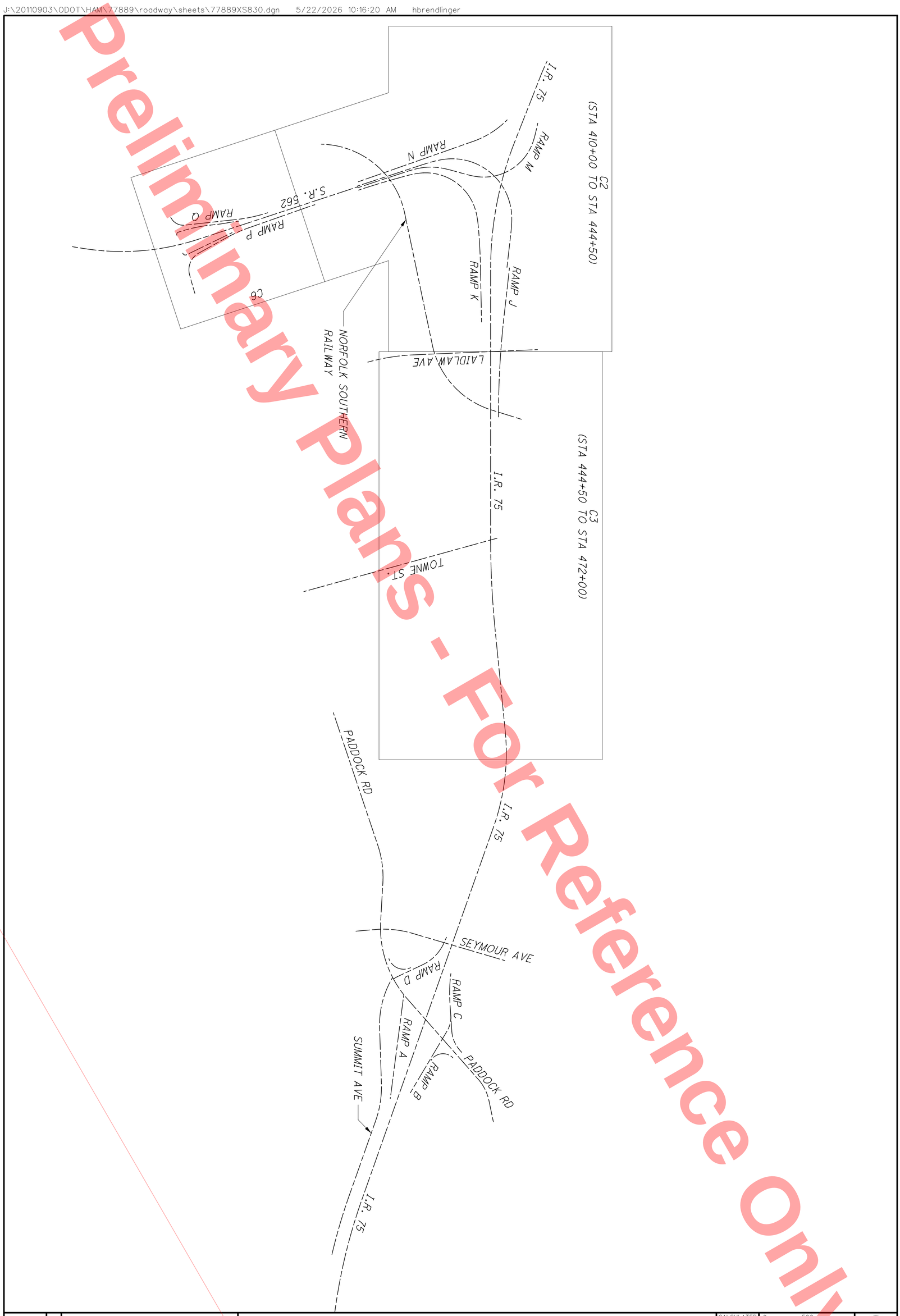

Preliminary Plans - For Reference Only

293 / 1047	C1	HAM-75-7.85	CROSS SECTION LAYOUT	CALCULATED AAF / CHECKED EDK	0 500 250 1000 HORIZONTAL SCALE IN FEET

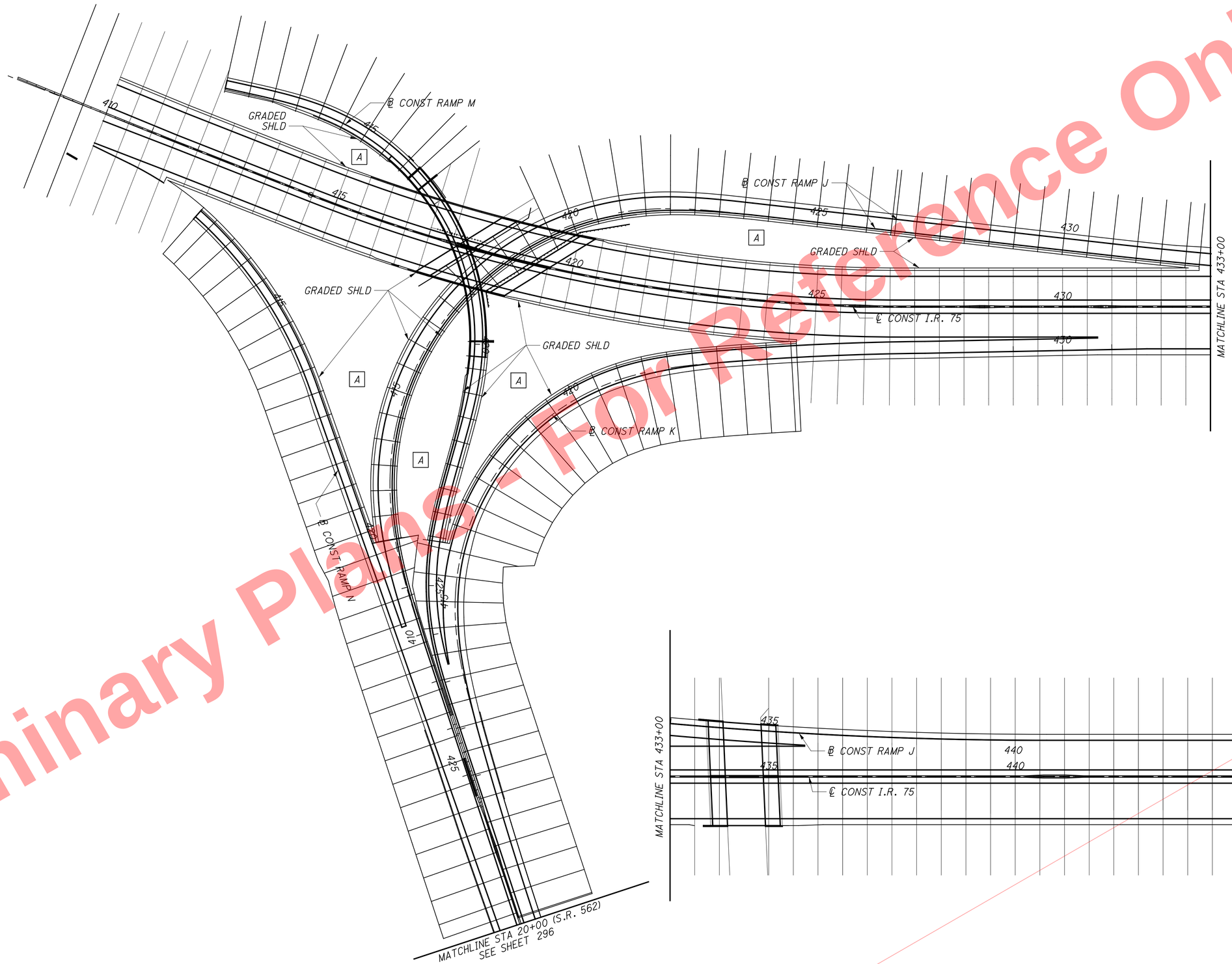

A FOR INFIELD GRADING, SEE GRADING DETAILS, SHEETS 581 AND 582

Preliminary Plans - For Reference Only

HORIZONTAL SCALE IN FEET
0 50 100 200

CALCULATED AAF
CHECKED EDK

CROSS SECTION LAYOUT I.R. 75
STA 409+00 TO STA 444+50

HAM-75-7.85

C2

294
1047

J:\20110903\ODOT\HAM\77889\roadway\sheets\77889XS831.dgn 5/22/2026 10:16:22 AM hbrendlinger

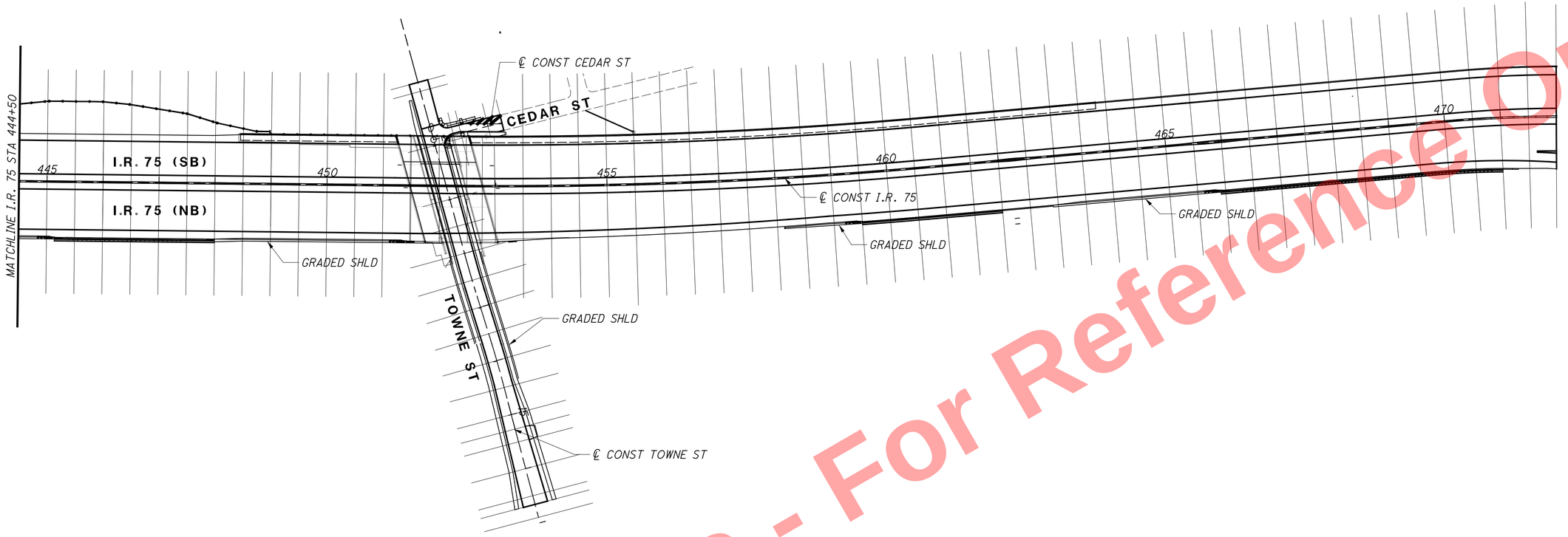

Preliminary Plans - For Reference Only

N

0 50 100 200
HORIZONTAL SCALE IN FEET

CALCULATED DPF
CHECKED SEK

I.R. 75 CROSS SECTION LAYOUT
STA. 444+50 TO STA. 457+00

HAM-75-7.85

C3

295
1047

J:\20110903\ODOT\HAM\77889\roadway\sheets\77889XL401.dgn 5/22/2026 10:16:23 AM hbrendlinger

J:\20110903\ODOT\HAM\77889\roadway\sheets\77889XS834.dgn 5/22/2026 10:16:24 AM hbrendlinger

Preliminary Plans - For Reference Only

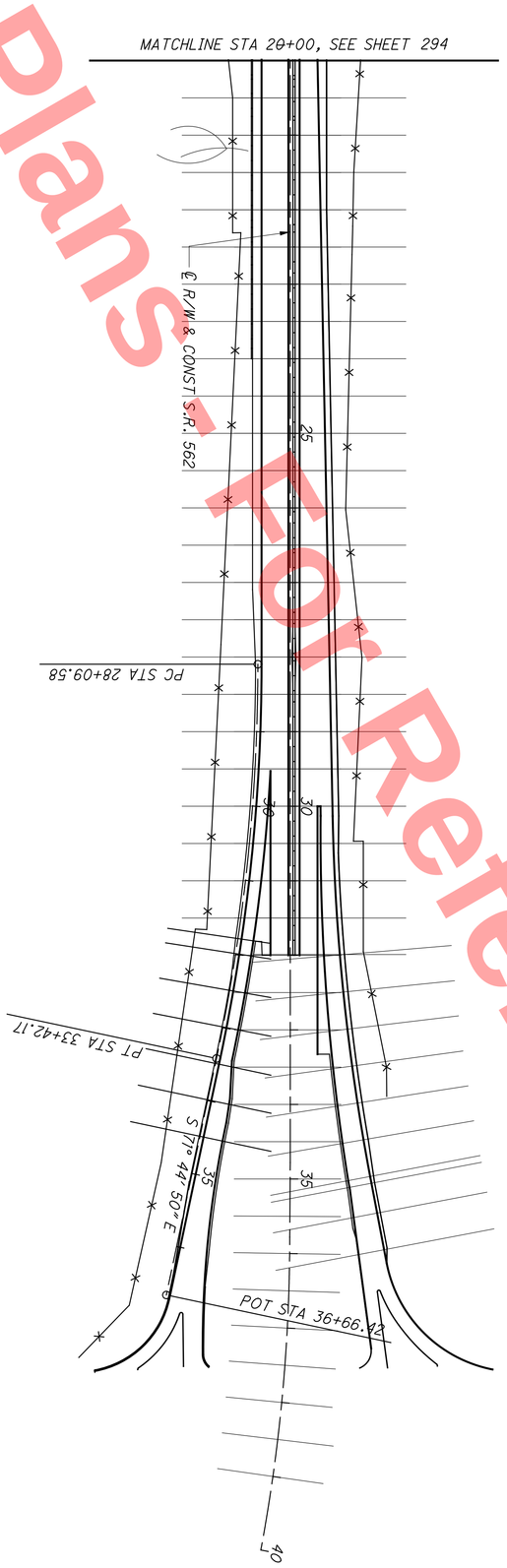

296 / 1047	C6	HAM-75-7.85	CROSS SECTION LAYOUT S.R. 562	CALCULATED AAF / CHECKED EDK	0 50 100 200 HORIZONTAL SCALE IN FEET	N

SEEDING	
END WIDTH	SQ. YDS.

END AREA	
CUT	FILL

VOLUME	
CUT	FILL

CALCULATED SEA

CHECKED DLR

SUBGRADE STABILIZATION IS NOT SHOWN IN THE CROSS SECTIONS.
REFER TO THE TYPICAL SECTIONS FOR LOCATIONS.

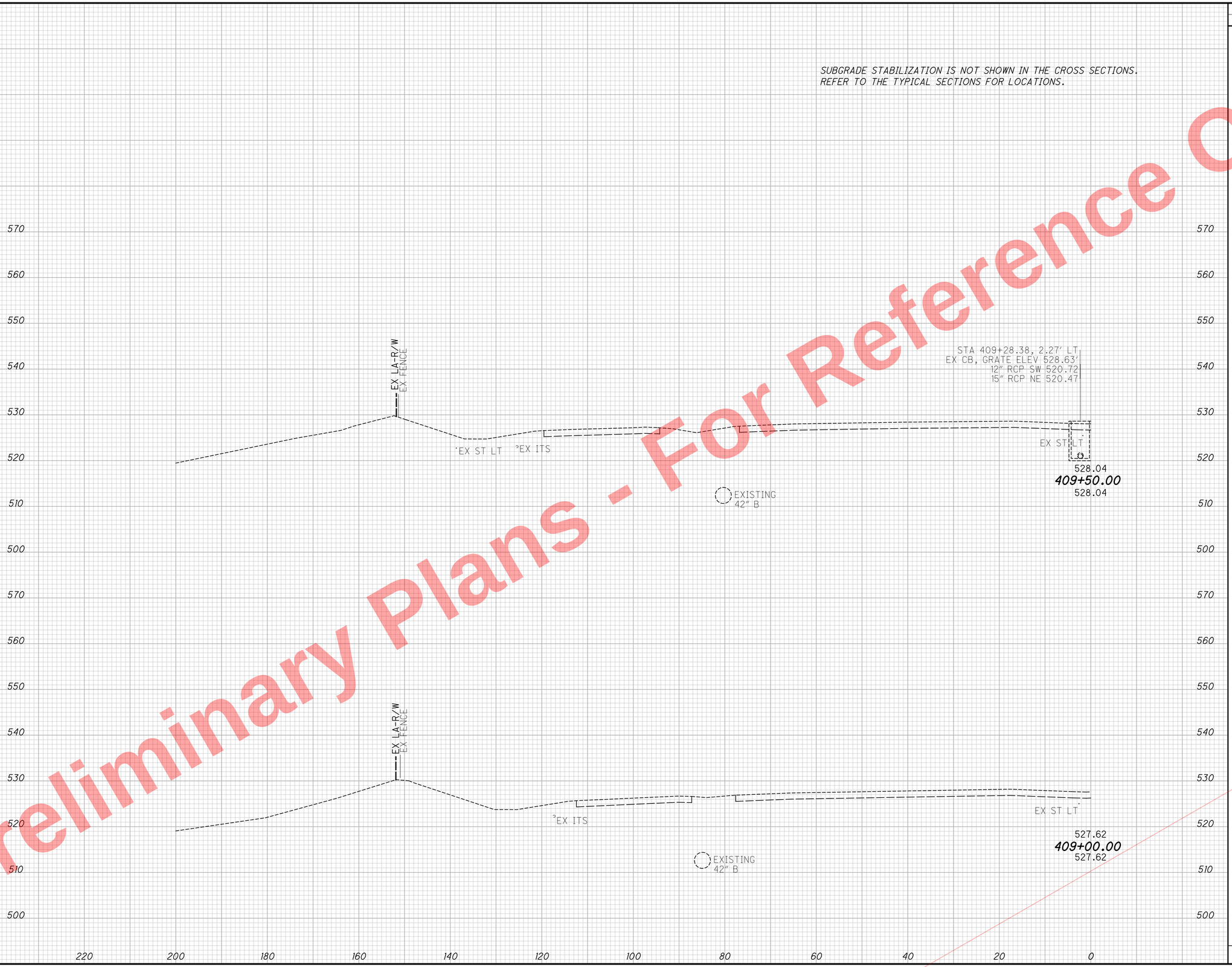

Preliminary Plans - For Reference Only

CROSS SECTIONS I.R. 75 SOUTHBOUND
STA. 409+00.00 TO STA. 409+50.00

HAM-75-7.85

297
1047

J:\20110903\ODOT\HAM\7889\roadway\sheets\77889XS001.dgn 5/22/2026 10:16:26 AM hbrendlinger

SEEDING	
END WIDTH	SQ. YDS.

END AREA	
CUT	FILL

VOLUME	
CUT	FILL

CALCULATED SEA
CHECKED DLR

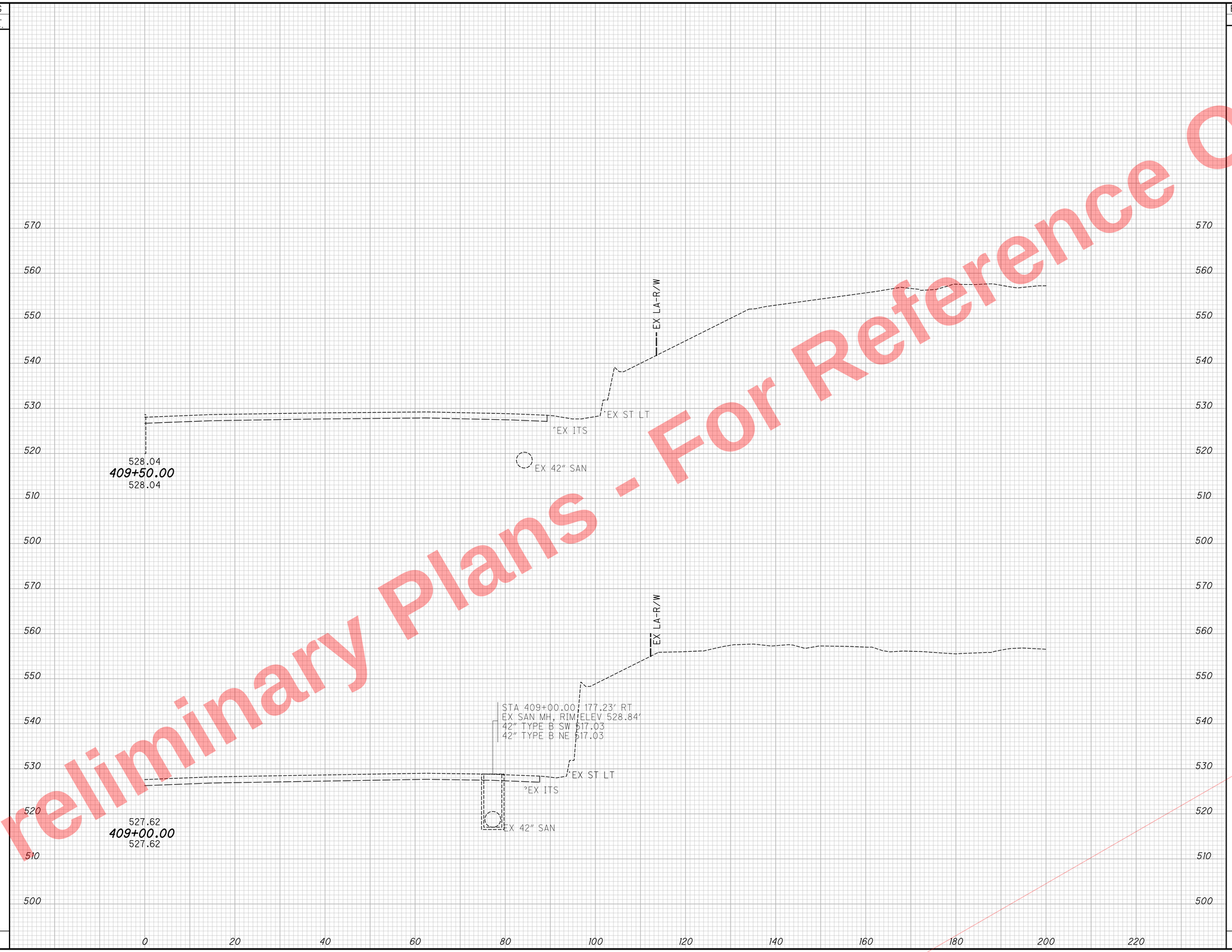

Preliminary Plans - For Reference Only

CROSS SECTIONS I.R. 75 NORTHBOUND
STA. 409+00.00 TO STA. 409+50.00

HAM-75-7.85

J:\20110903\ODOT\HAM\7889\roadway\sheets\7889XS001.dgn 5/22/2026 10:16:26 AM hbrendlinger

SEEDING	
END WIDTH	SQ. YDS.
22	0
0	

PAVEMENT REMOVAL QUANTITIES HAVE BEEN DEDUCTED FROM EXCAVATION QUANTITIES

END AREA		VOLUME	
CUT	FILL	CUT	FILL

CALCULATED SEA
CHECKED DLR

570 560 550 540 530 520 510 500

EX LA-R/W
EX FENCE
4" ITS CONDUIT
3" ST LGT CONDUIT
526.0
EX ITS
EX ST LT
EX ST LT
EX 42" B
529.18
410+01.00
529.02

220 200 180 160 140 120 100 80 60 40 20 0

CROSS SECTIONS I.R. 75 SOUTHBOUND
STA. 410+00.00

HAM-75-7.85

299
1047

Preliminary Plans - For Reference Only

J:\20110903\ODOT\HAM\77889\roadway\sheets\77889XS001.dgn 5/22/2026 10:16:27 AM hbrendlinger

SEEDING	
END WIDTH	SQ. YDS.

PAVEMENT REMOVAL QUANTITIES HAVE BEEN DEDUCTED FROM EXCAVATION QUANTITIES

END AREA		VOLUME	
CUT	FILL	CUT	FILL
74	0		
		0	0
		0	0

CALCULATED SEA
CHECKED DLR

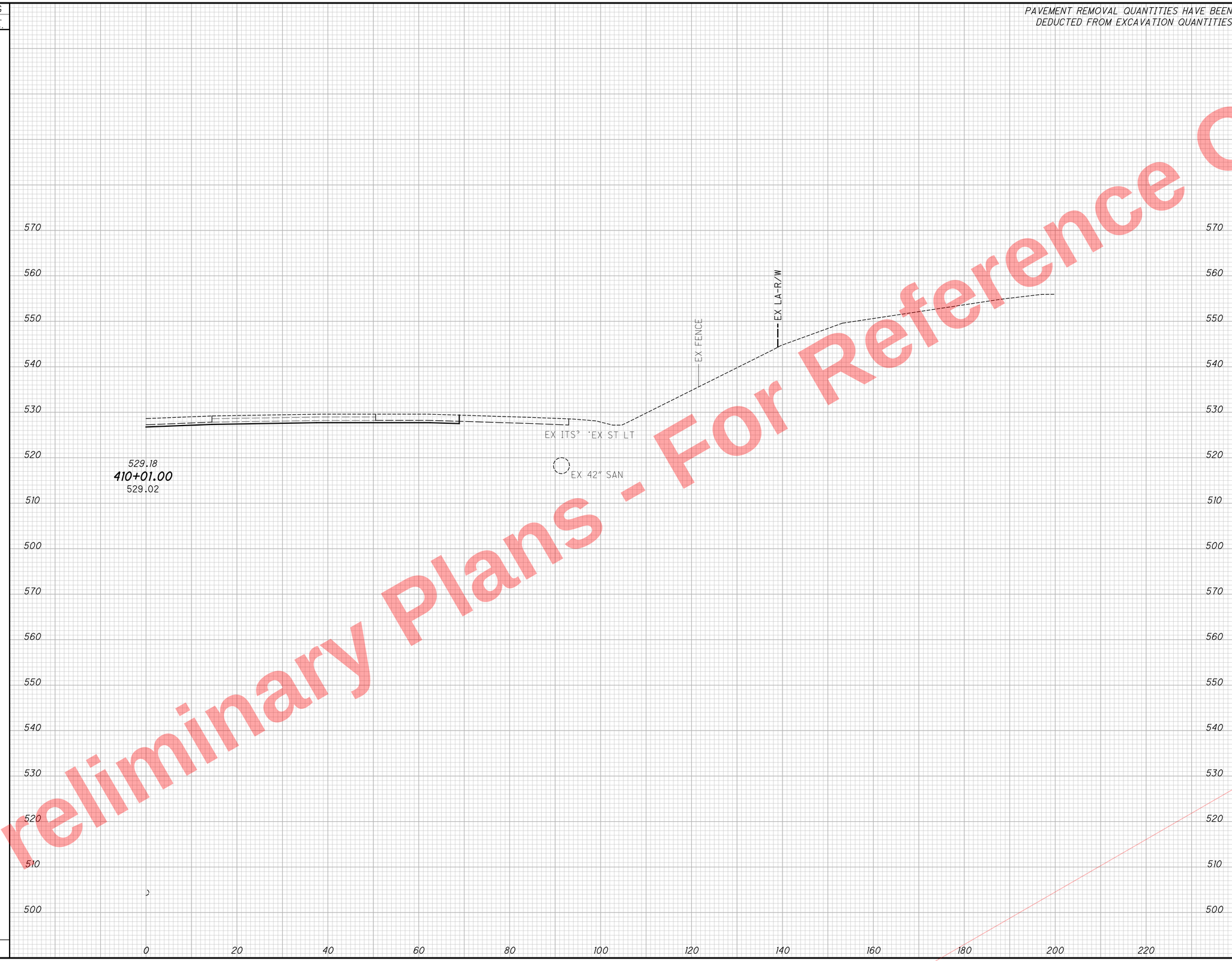

CROSS SECTIONS I.R. 75 NORTHBOUND
STA. 410+00.00

HAM-75-7.85

300
1047

Preliminary Plans - For Reference Only

J:\20110903\ODOT\HAM\7889\roadway\sheets\77889XS001.dgn 5/22/2026 10:16:27 AM hbrendlinger

SEEDING	
END WIDTH	SQ. YDS.
	41
	211
	34
	152
	363

PAVEMENT REMOVAL QUANTITIES HAVE BEEN DEDUCTED FROM EXCAVATION QUANTITIES

END AREA		VOLUME	
CUT	FILL	CUT	FILL

CALCULATED SEA
CHECKED DLR

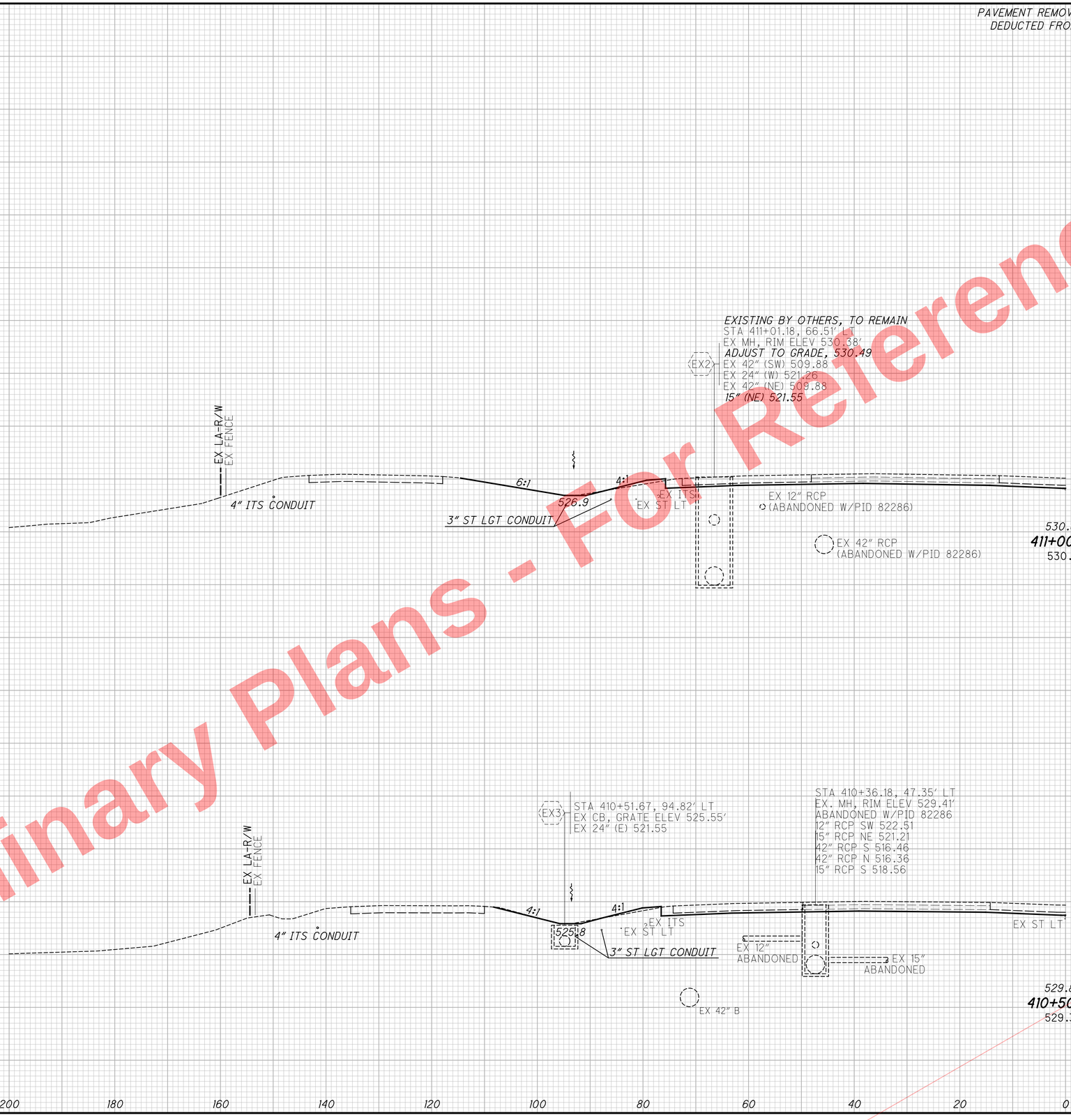

Preliminary Plans - For Reference Only

CROSS SECTIONS I.R. 75 SOUTHBOUND
STA. 410+50.00 TO STA. 411+00.00

HAM-75-7.85

301
1047

J:\2011090\3\ODOT\HAM\77889\roadway\sheets\77889XS001.dgn 5/22/2026 10:16:37 AM hbrendlinger

SEEDING	
END WIDTH	SQ. YDS.

PAVEMENT REMOVAL QUANTITIES HAVE BEEN DEDUCTED FROM EXCAVATION QUANTITIES

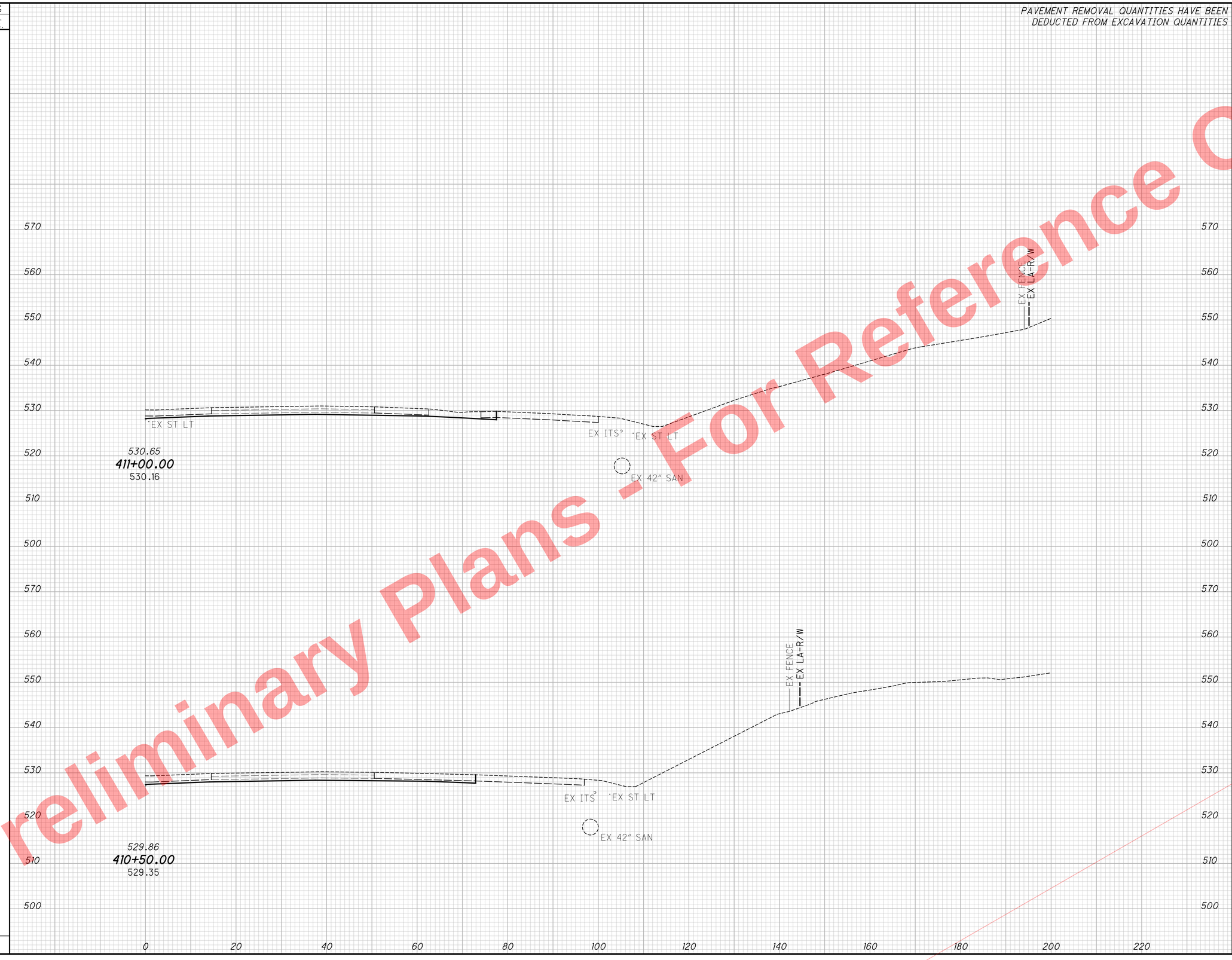

END AREA		VOLUME	
CUT	FILL	CUT	FILL
85	4		
		149	7
76	3		
		135	3
		284	10

CALCULATED SEA
CHECKED DLR

CROSS SECTIONS I.R. 75 NORTHBOUND
STA. 410+50.00 TO STA. 411+00.00

HAM-75-7.85

302
1047

Preliminary Plans - For Reference Only

J:\20110903\ODOT\HAM\77889\roadway\sheets\77889XS001.dgn 5/22/2026 10:16:38 AM hbrendlinger

SEEDING	
END WIDTH	SQ. YDS.
	71
	323
	44
	239
	562

PAVEMENT REMOVAL QUANTITIES HAVE BEEN DEDUCTED FROM EXCAVATION QUANTITIES

END AREA		VOLUME	
CUT	FILL	CUT	FILL

CALCULATED SEA
CHECKED DLR

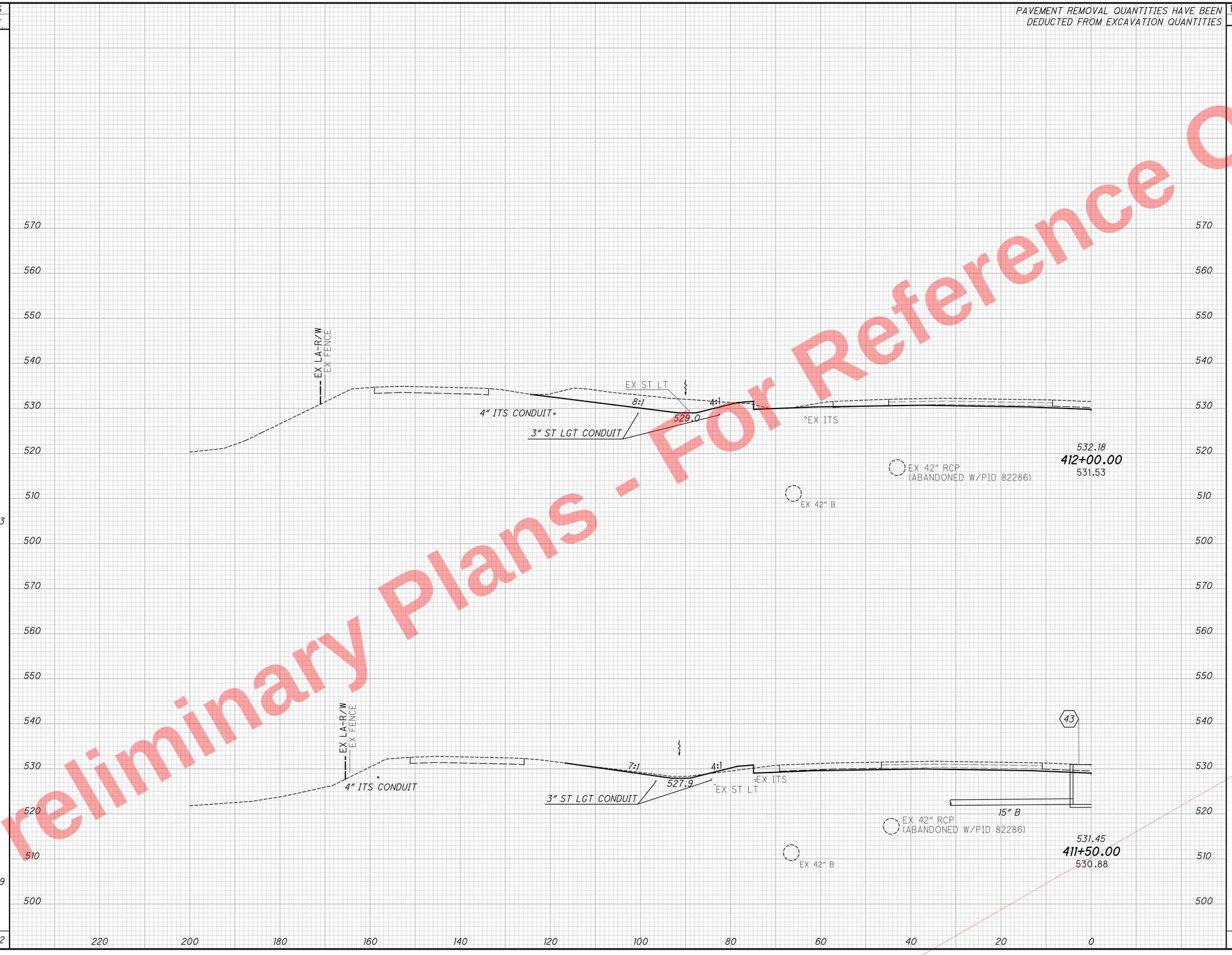

Preliminary Plans - For Reference Only

CROSS SECTIONS I.R. 75 SOUTHBOUND STA. 411+50.00 TO STA. 412+00.00

HAM-75-7.85

303
1047

J:\20110903\ODOT\HAM\7889\roadway\sheets\77889XS001.dgn 5/22/2026 10:16:38 AM hbrendlinger

PAVEMENT REMOVAL QUANTITIES HAVE BEEN DEDUCTED FROM EXCAVATION QUANTITIES

SEEDING		END AREA		VOLUME	
END WIDTH	SQ. YDS.	CUT	FILL	CUT	FILL
		138	21		
				201	25
		79	6		
				151	9
				352	34

CALCULATED SEA
CHECKED DLR

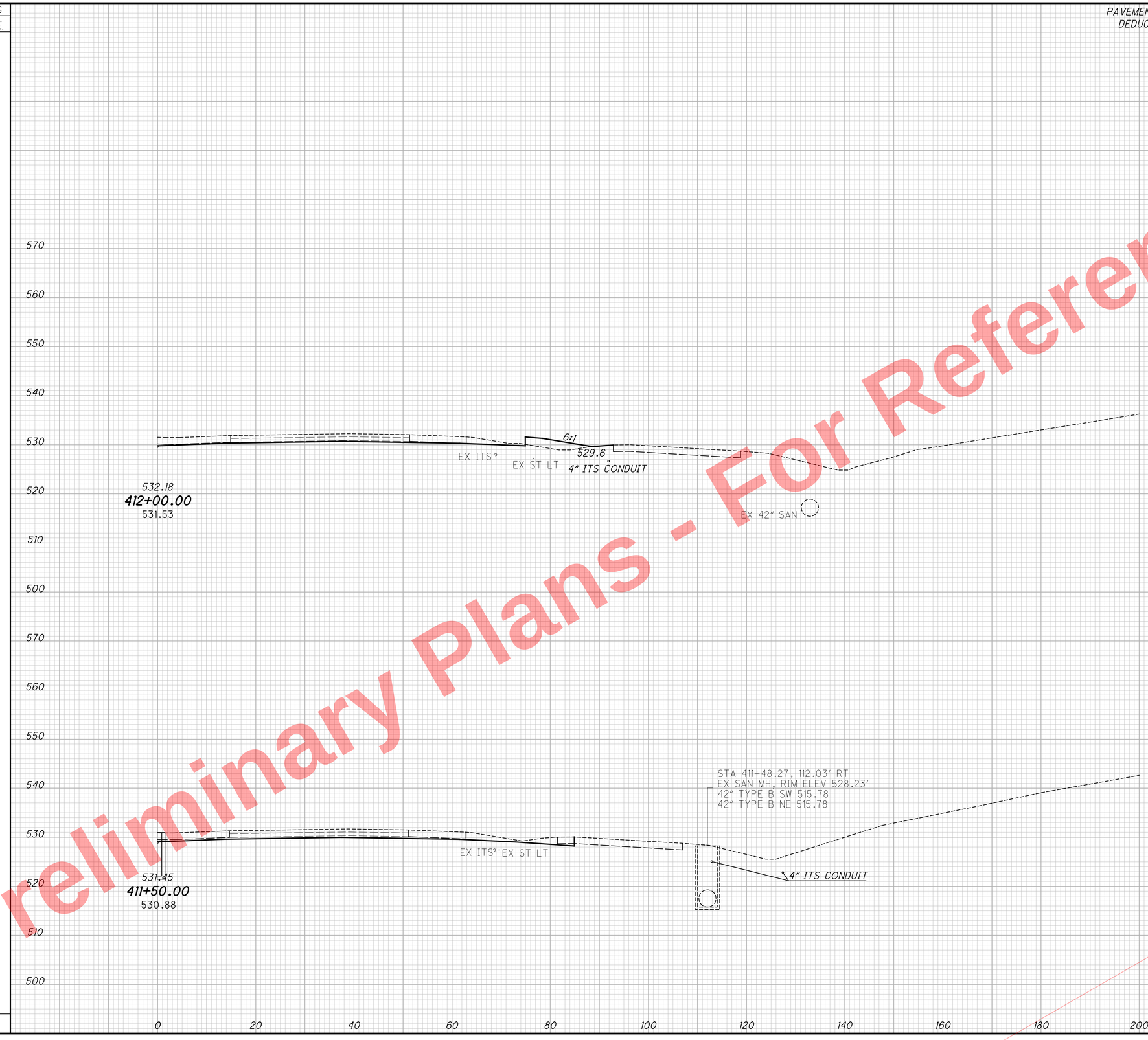

CROSS SECTIONS I.R. 75 NORTHBOUND
STA. 411+50.00 TO STA. 412+00.00

HAM-75-7.85

304
1047

Preliminary Plans - Not For Reference Only

J:\20110903\ODOT\HAM\77889\roadway\sheets\77889XS001.dgn 5/22/2026 10:16:39 AM hbrendlinger

SEEDING	
END WIDTH	SQ. YDS.
70	378
64	378
	756

PAVEMENT REMOVAL QUANTITIES HAVE BEEN DEDUCTED FROM EXCAVATION QUANTITIES

END AREA		VOLUME	
CUT	FILL	CUT	FILL

CALCULATED SEA | CHECKED DLR

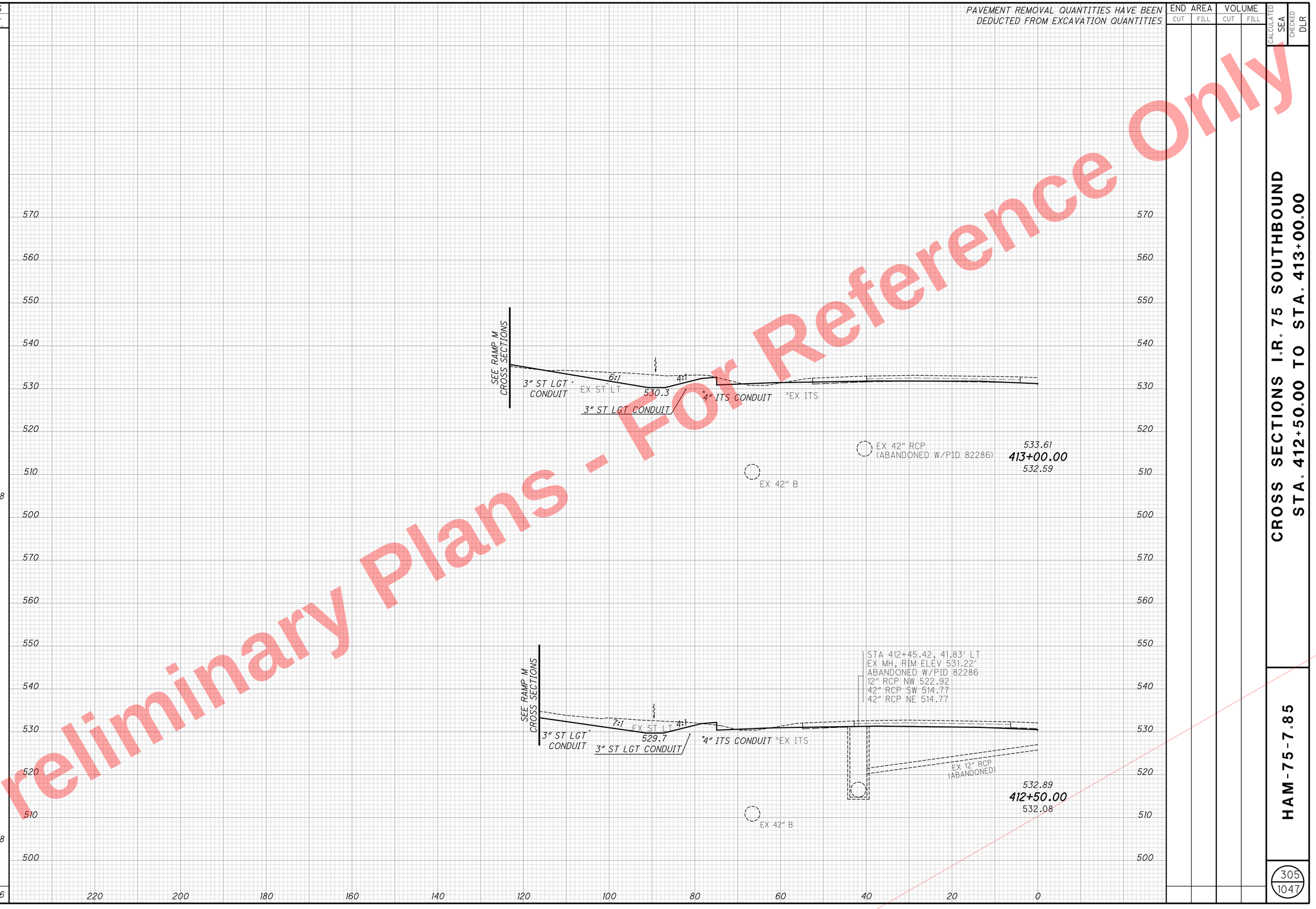

Preliminary Plans - For Reference Only

CROSS SECTIONS I.R. 75 SOUTHBOUND
STA. 412+50.00 TO STA. 413+00.00

HAM-75-7.85

305
1047

J:\20110903\ODOT\HAM\7889\roadway\sheets\77889XS001.dgn 5/22/2026 10:16:40 AM hbrendlinger

SEEDING	
END WIDTH	SQ. YDS.

PAVEMENT REMOVAL QUANTITIES HAVE BEEN DEDUCTED FROM EXCAVATION QUANTITIES

END AREA		VOLUME	
CUT	FILL	CUT	FILL
78	73		
		155	96
90	30		
		211	47
		366	143

CALCULATED SEA
CHECKED DLR

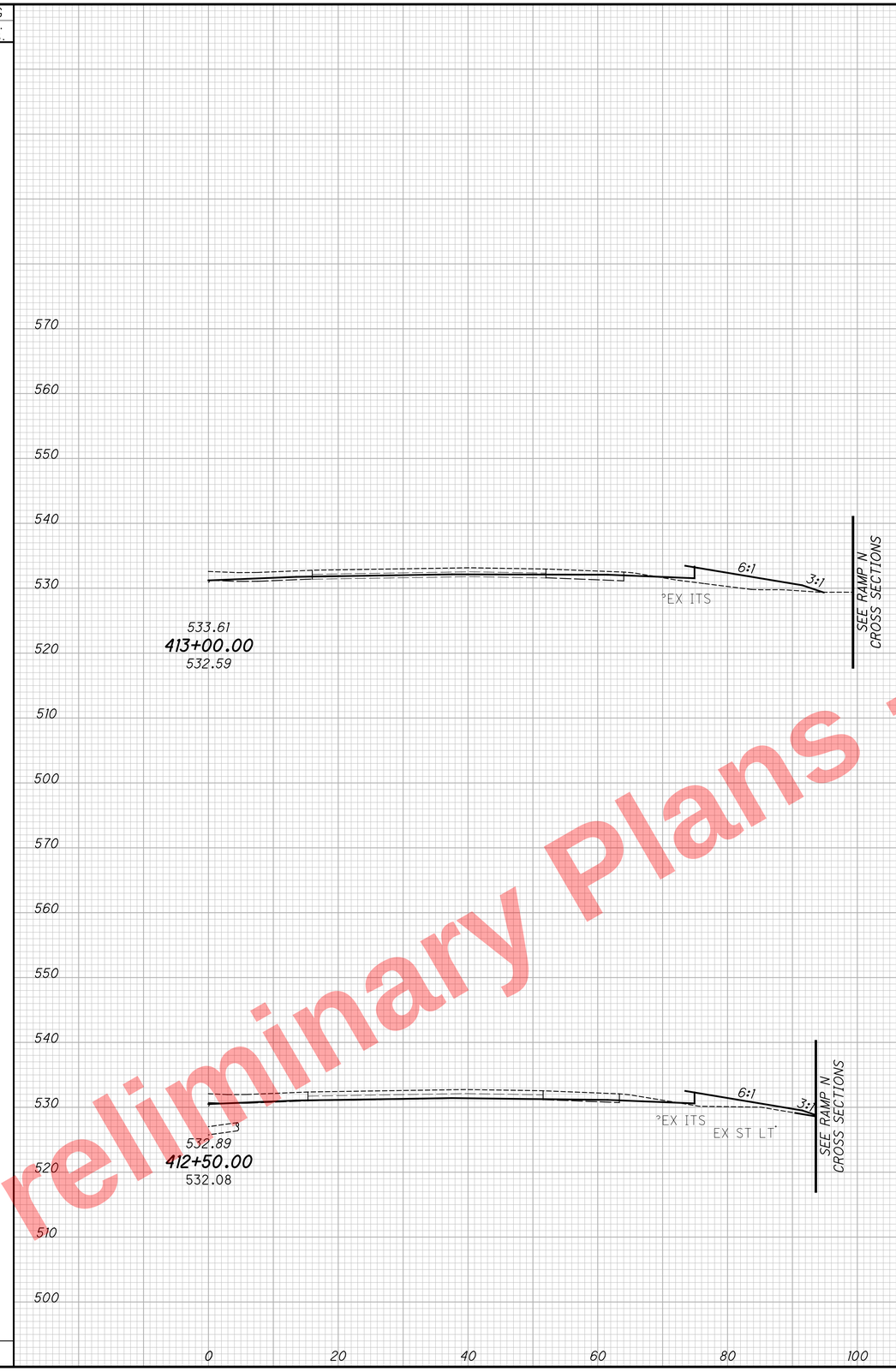

SECTIONS I.R. 75 NORTHBOUND
CROSS SECTIONS
412+50.00 TO STA. 413+00.00
STA. 412+50.00

HAM-75-7.85

306
1047

Preliminary Plans - For Reference Only

J:\20110903\ODOT\HAM\77889\roadway\sheets\77889XS001.dgn 5/22/2026 10:16:40 AM hbrendlinger

SEEDING	
END WIDTH	SQ. YDS.
78	439
79	417
	856

PAVEMENT REMOVAL QUANTITIES HAVE BEEN DEDUCTED FROM EXCAVATION QUANTITIES

END AREA		VOLUME	
CUT	FILL	CUT	FILL

CALCULATED SEA
CHECKED DLR

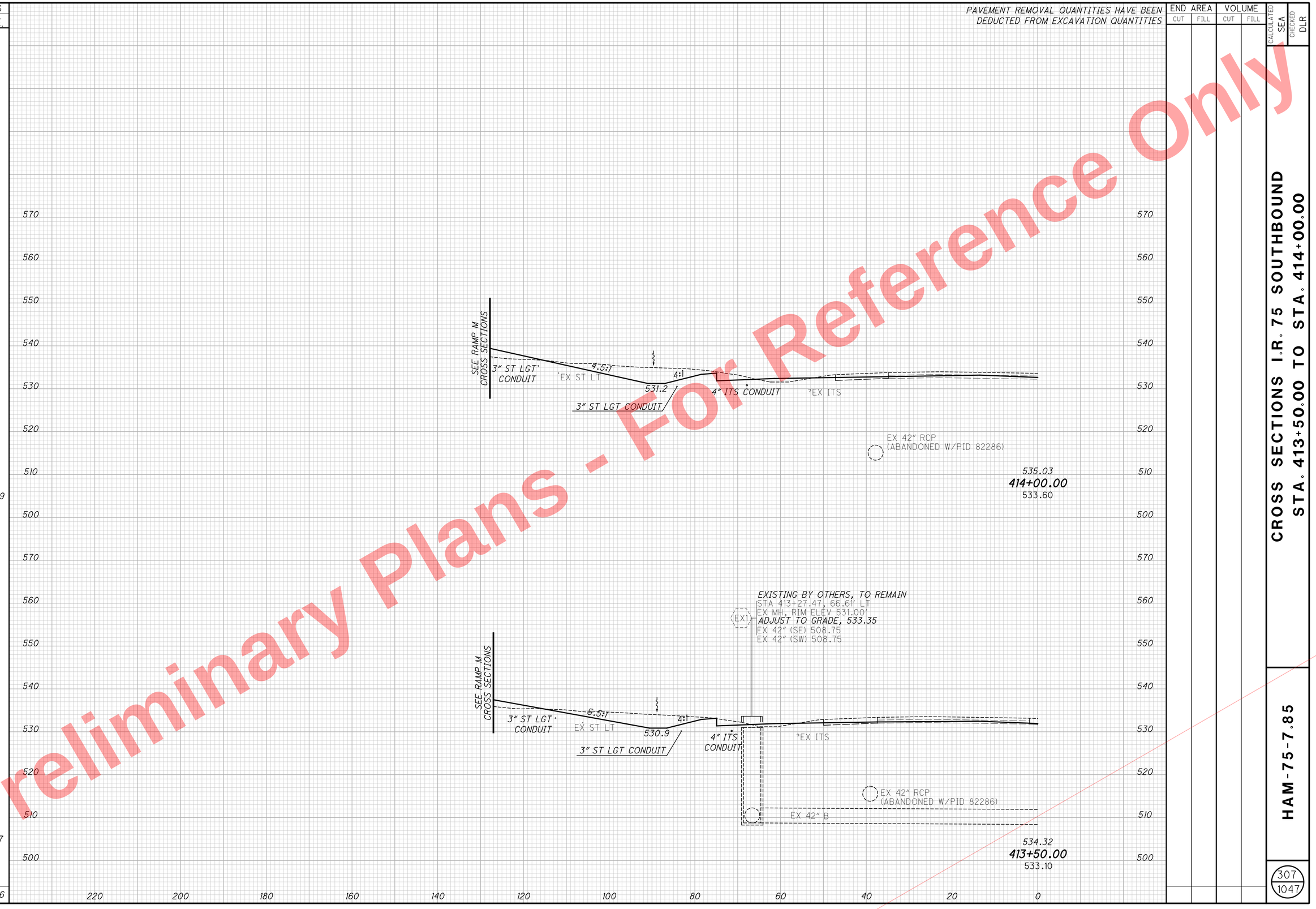

CROSS SECTIONS I.R. 75 SOUTHBOUND
STA. 413+50.00 TO STA. 414+00.00

HAM-75-7.85

307
1047

Preliminary Plans - For Reference Only

J:\20110903\ODOT\HAM\77889\roadway\sheets\77889XS001.dgn 5/22/2026 10:16:41 AM hbrendlinger

PAVEMENT REMOVAL QUANTITIES HAVE BEEN DEDUCTED FROM EXCAVATION QUANTITIES

EXISTING BY OTHERS, TO REMAIN
STA 414+16.63, 85.95' RT
EX MH, RIM ELEV 530.40',
ADJUST TO GRADE, 533.70
EX 42" (NE) 517.13
(EMERGENCY SPILLWAY)
EX 42" (SE) 507.15
EX 42" (SW) 507.15

EX 15" B (TO BE REMOVED)
EX ITS
15" B
535.03
414+00.00
533.60
EX LOAD TRANSFER PLATFORM (DND)
6:1
3:1
SEE RAMP N CROSS SECTIONS
EXISTING STORMWATER DETENTION AREA

EX4
EXISTING BY OTHERS, TO REMAIN
ADJUST TO GRADE, 534.23
REPLACE FRAME AND GRATE WITH MH FRAME AND LID
STA 413+49.78, 11.14' RT
EX CB, GRATE ELEV 532.82'
EX 15" (NE) 527.57'
EX 15" (SE) 527.57'
15" (NE) 528.25
(TO BE REMOVED)

EX5
EXISTING BY OTHERS, TO REMAIN
STA 413+47.13, 83.50' RT
EX MH, RIM ELEV 530.52'
RECONSTRUCT TO GRADE, 532.75
EX 15" (NW) 527.30
EX 24" (SE) 519.00
EX 42" (NW) 507.95
EX 42" (NE) 507.95

15" B EX BY OTHERS (TO REMAIN)
EX ITS
534.32
413+50.00
533.10
EX LOAD TRANSFER PLATFORM (DND)
EX 42" B
6:1
3:1
SEE RAMP N CROSS SECTIONS

570 560 550 540 530 520 510 500
0 20 40 60 80 100 120 140 160 180 200 220

SEEDING END WIDTH	SEEDING SQ. YDS.	END AREA CUT	END AREA FILL	VOLUME CUT	VOLUME FILL
		93	169		
				157	277
		77	131		
				143	189
				300	466

CALCULATED SEA
CHECKED DLR

CROSS SECTIONS I.R. 75 NORTHBOUND
STA. 413+50.00 TO STA. 414+00.00

HAM-75-7.85

308
1047

J:\2011090\3\ODOT\HAM\77889\roadway\sheets\77889XS001.dgn 5/22/2026 10:16:42 AM hbrendlinger

Preliminary Plans - For Reference Only

SEEDING	
END WIDTH	SQ. YDS.
81	455
82	450
	905

PAVEMENT REMOVAL QUANTITIES HAVE BEEN DEDUCTED FROM EXCAVATION QUANTITIES

END AREA		VOLUME	
CUT	FILL	CUT	FILL

CALCULATED SEA
CHECKED DLR

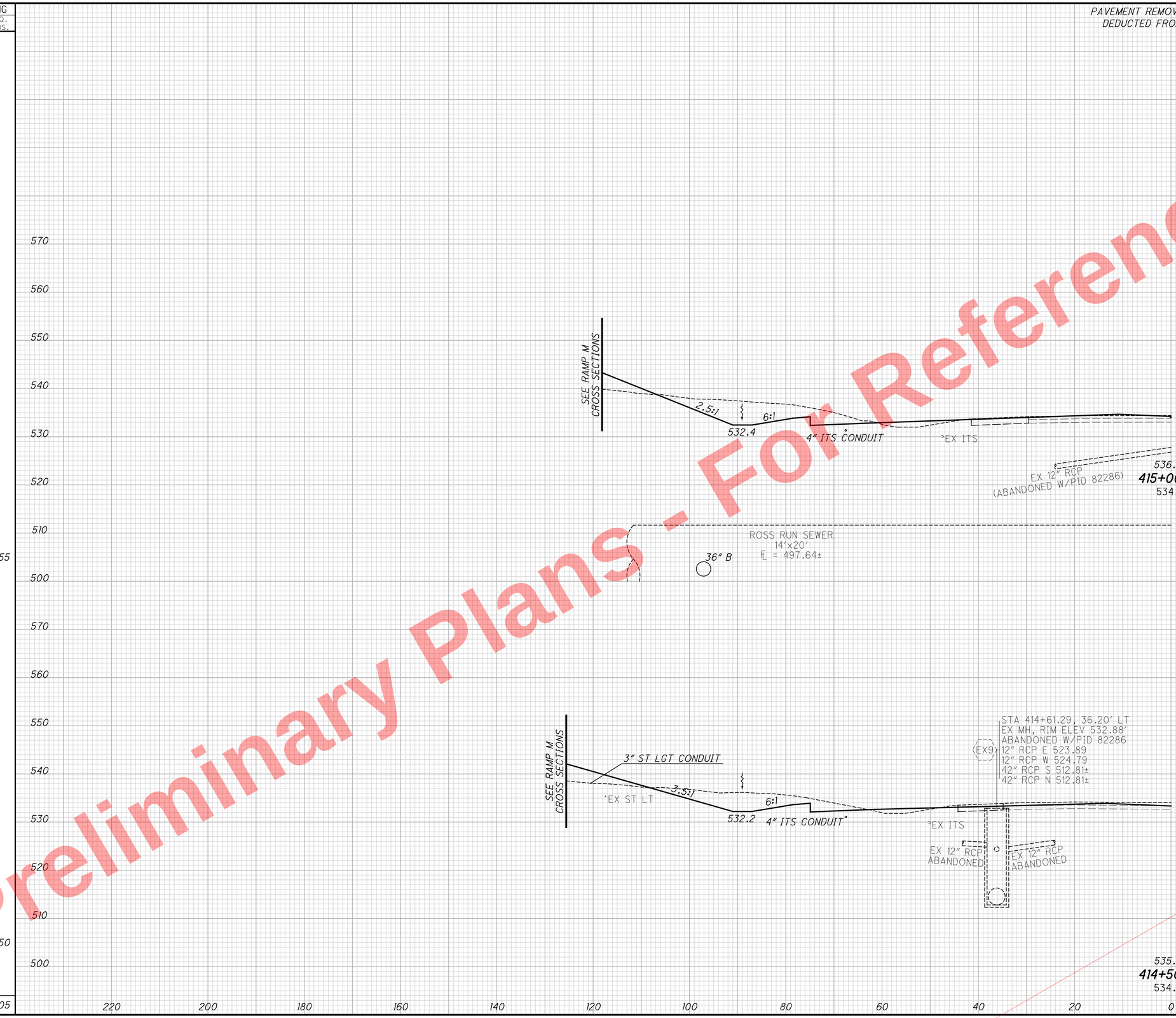

Preliminary Plans - For Reference Only

CROSS SECTIONS I.R. 75 SOUTHBOUND
STA. 414+50.00 TO STA. 415+00.00

HAM-75-7.85

309
1047

J:\20110903\ODOT\HAM\77889\roadway\sheets\77889XS001.dgn 5/22/2026 10:16:42 AM hbrendlinger

SEEDING	
END WIDTH	SQ. YDS.

PAVEMENT REMOVAL QUANTITIES HAVE BEEN DEDUCTED FROM EXCAVATION QUANTITIES

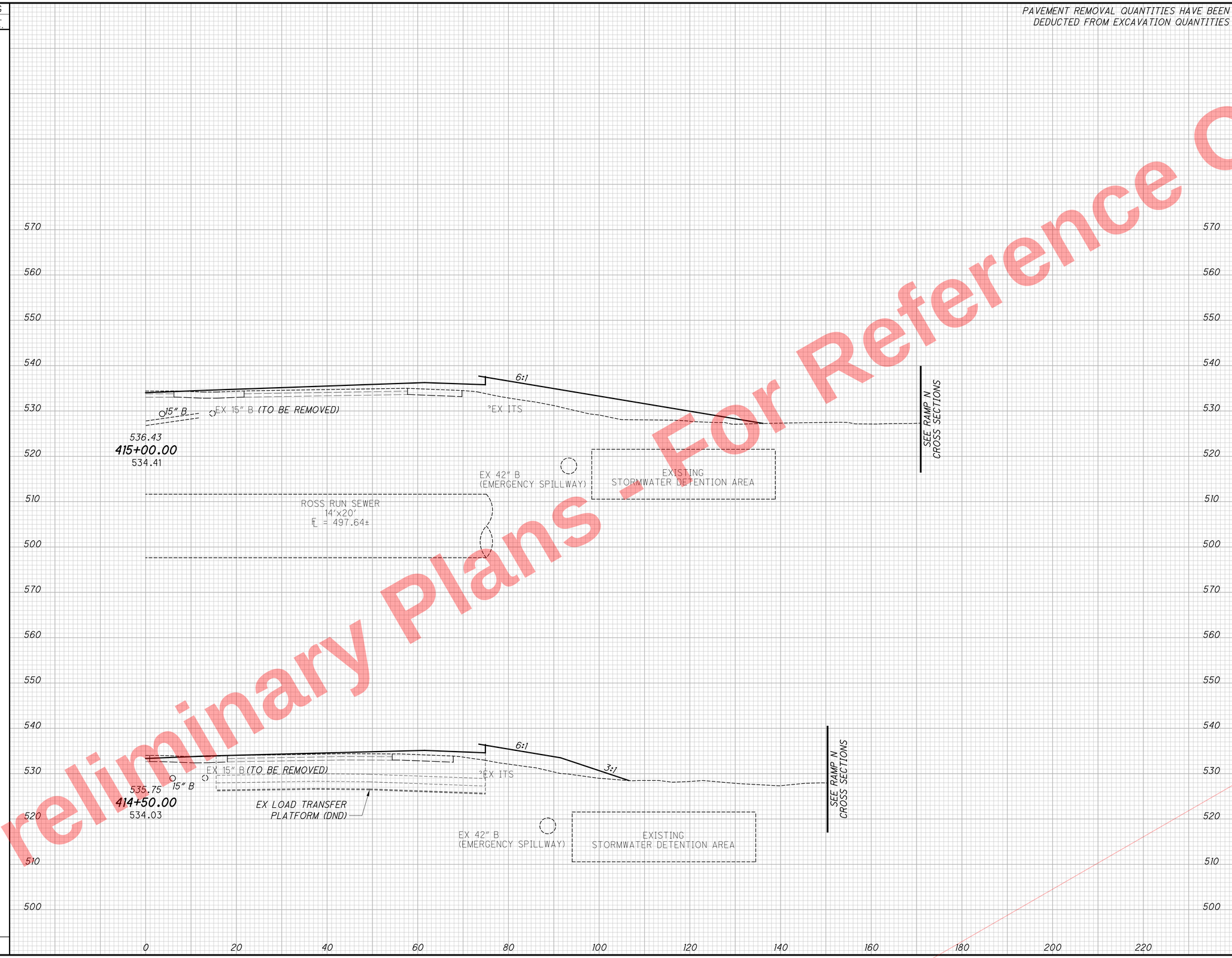

END AREA		VOLUME	
CUT	FILL	CUT	FILL
124	313		
		205	523
98	252		
		176	390
		381	913

CALCULATED SEA
CHECKED DLR

CROSS SECTIONS I.R. 75 NORTHBOUND
STA. 414+50.00 TO STA. 415+00.00

HAM-75-7.85

310
1047

Preliminary Plans - For Reference Only

J:\20110903\ODOT\HAM\77889\roadway\sheets\77889XS001.dgn 5/22/2026 10:16:43 AM hbrendlinger

SEEDING	
END WIDTH	SQ. YDS.
54	339
67	411
	750

PAVEMENT REMOVAL QUANTITIES HAVE BEEN DEDUCTED FROM EXCAVATION QUANTITIES

END AREA		VOLUME	
CUT	FILL	CUT	FILL

CALCULATED SEA
CHECKED DLR

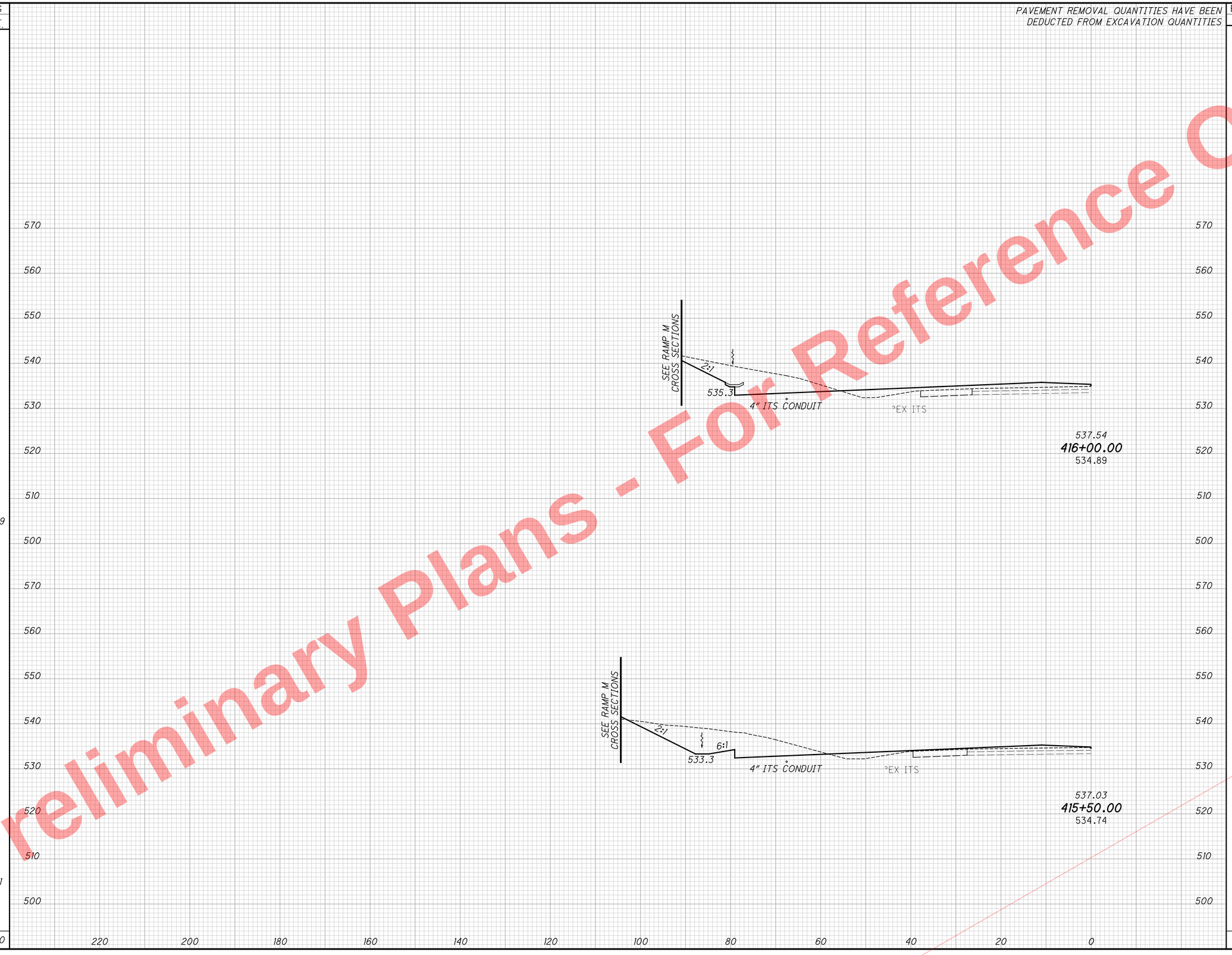

Preliminary Plans - For Reference Only

J:\20110903\ODOT\HAM\77889\roadway\sheets\77889XS001.dgn 5/22/2026 10:16:44 AM hbrendlinger

CROSS SECTIONS I.R. 75 SOUTHBOUND
STA. 415+50.00 TO STA. 416+00.00

HAM-75-7.85

311
1047

PAVEMENT REMOVAL QUANTITIES HAVE BEEN DEDUCTED FROM EXCAVATION QUANTITIES

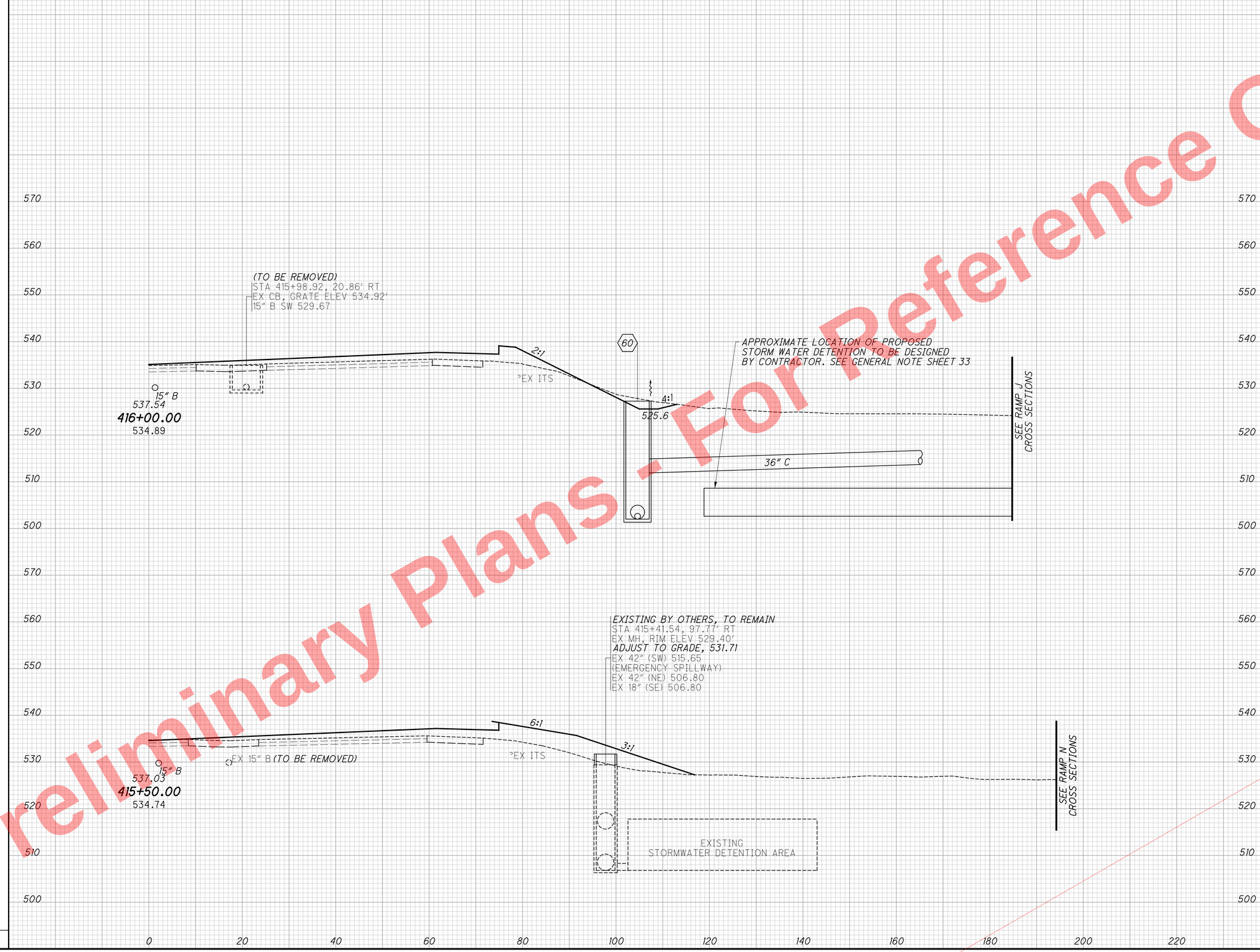

SEEDING END WIDTH	SEEDING SQ. YDS.	END AREA CUT	END AREA FILL	VOLUME CUT	VOLUME FILL
		136	314		
				267	607
		152	341		
				256	605
				523	1212

CALCULATED SEA
CHECKED DLR

CROSS SECTIONS I.R. 75 NORTHBOUND
STA. 415+50.00 TO STA. 416+00.00

HAM-75-7.85

312
1047

Preliminary Plans - For Reference Only

J:\20110903\ODOT\HAM\77889\roadway\sheets\77889XS001.dgn 5/22/2026 10:16:44 AM hbrendlinger

SEEDING	
END WIDTH	SQ. YDS.
	79
	361
	49
	289
	650

PAVEMENT REMOVAL QUANTITIES HAVE BEEN DEDUCTED FROM EXCAVATION QUANTITIES

END AREA		VOLUME	
CUT	FILL	CUT	FILL

CALCULATED SEA
CHECKED DLR

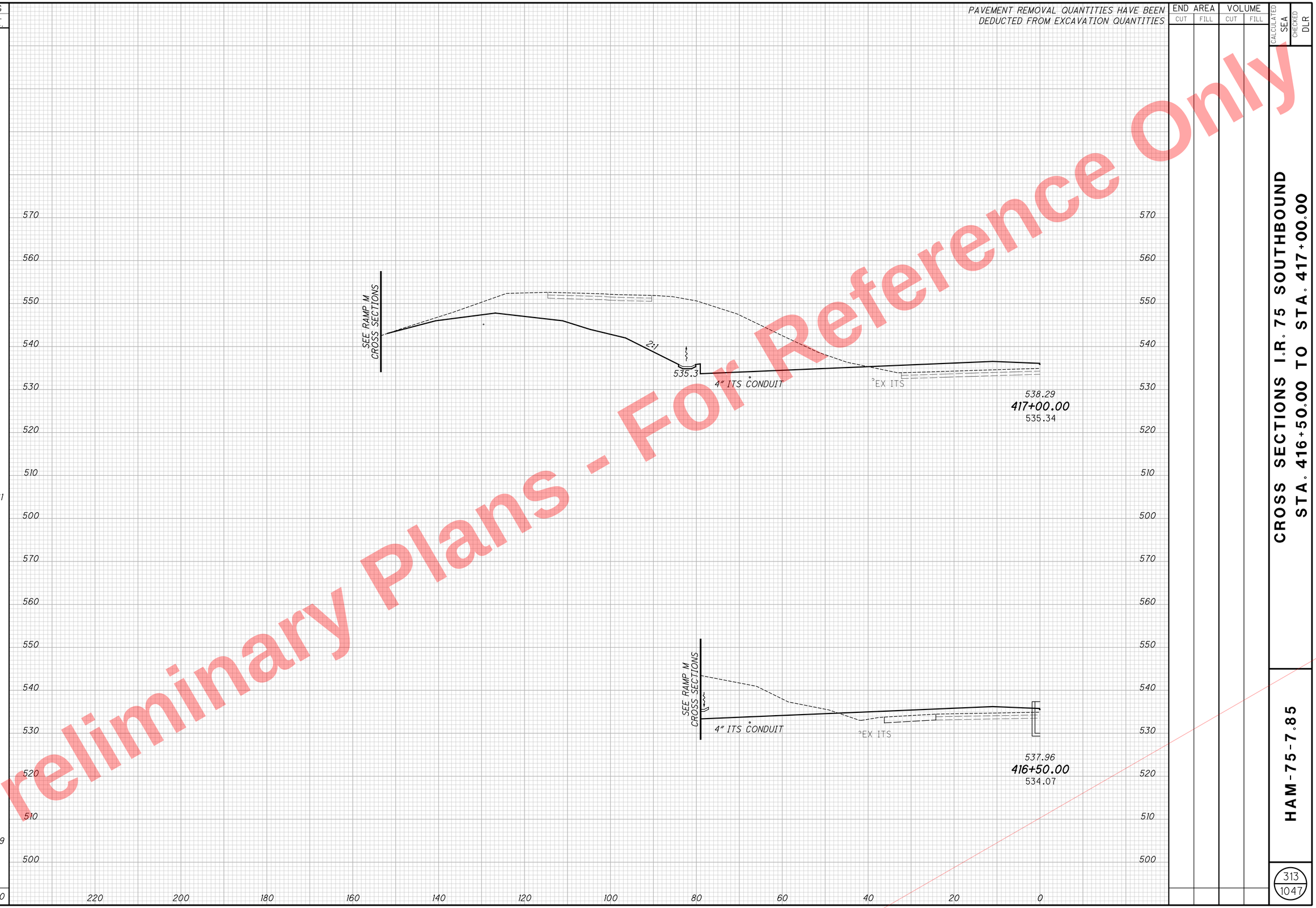

Preliminary Plans - For Reference Only

J:\20110903\ODOT\HAM\77889\roadway\sheets\77889XS001.dgn 5/22/2026 10:16:45 AM hbrendlinger

CROSS SECTIONS I.R. 75 SOUTHBOUND
STA. 416+50.00 TO STA. 417+00.00

HAM-75-7.85

313
1047

SEEDING	
END WIDTH	SQ. YDS.

PAVEMENT REMOVAL QUANTITIES HAVE BEEN DEDUCTED FROM EXCAVATION QUANTITIES

END AREA		VOLUME	
CUT	FILL	CUT	FILL
763	310		
186	386	879	644
		298	648
		1177	1292

CALCULATED SEA
CHECKED DLR

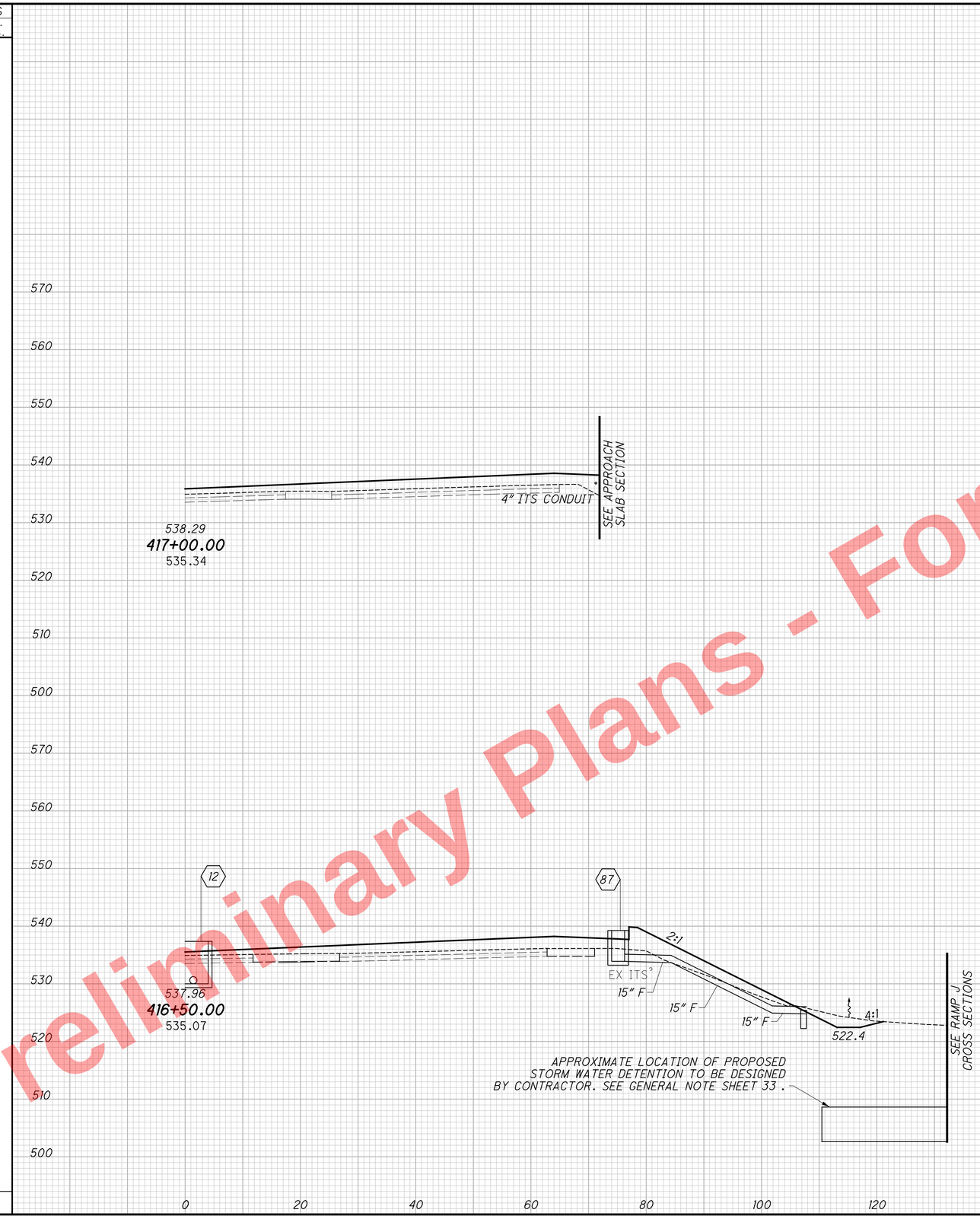

SECTIONS I.R. 75 NORTHBOUND
416+50.00 TO STA. 417+00.00

CROSS SECTIONS
STA. 416+50.00 TO STA. 417+00.00

HAM-75-7.85

314
1047

Preliminary Plans - For Reference Only

J:\20110903\ODOT\HAM\77889\roadway\sheets\77889XS001.dgn 5/22/2026 10:16:46 AM hbrendlinger

SEEDING	
END WIDTH	SQ. YDS.
98	293
77	80
30	306
	679

PAVEMENT REMOVAL QUANTITIES HAVE BEEN DEDUCTED FROM EXCAVATION QUANTITIES

END AREA		VOLUME	
CUT	FILL	CUT	FILL

CALCULATED SEA

CHECKED DLR

SKEW = 42.78° LF

BRIDGE APPROACH SLAB SECTION STRUCTURE HAM-75-0791

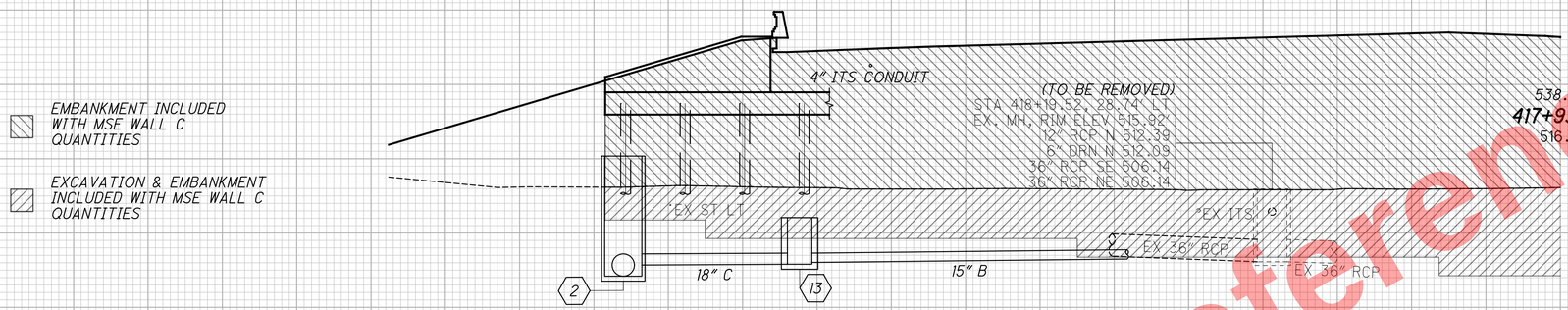

SKEW = 42.26° LF

BRIDGE APPROACH SLAB SECTION STRUCTURE HAM-75-0791

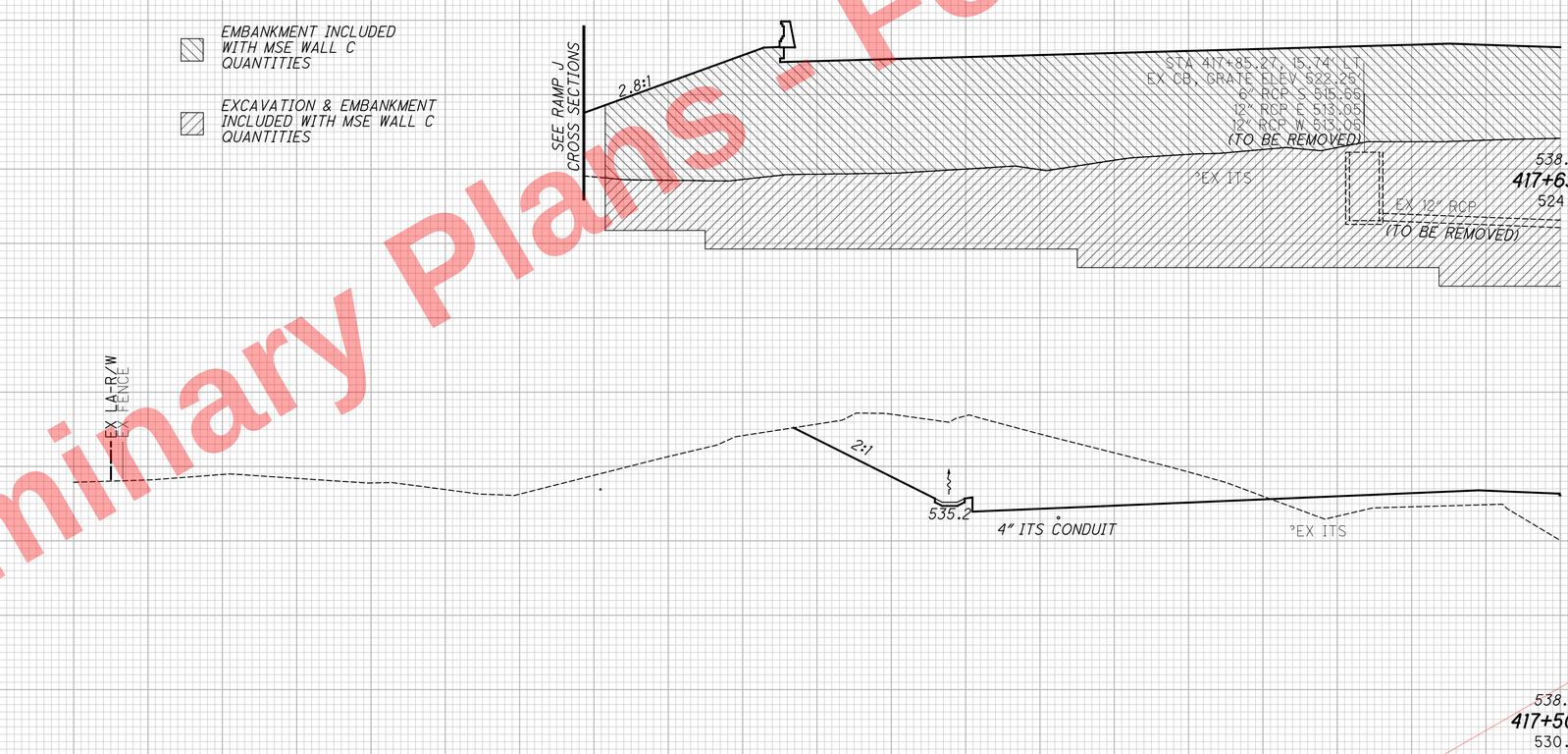

Preliminary Plans - For Reference Only

CROSS SECTIONS I.R. 75 SOUTHBOUND
STA. 417+50.00 TO STA. 417+93.36

HAM-75-7.85

315
1047

J:\20110903\ODOT\HAM\77889\roadway\sheets\77889XS001.dgn 5/22/2026 10:16:46 AM hbrendlinger

PAVEMENT REMOVAL QUANTITIES HAVE BEEN DEDUCTED FROM EXCAVATION QUANTITIES

SEEDING

END WIDTH	SQ. YDS.

SKEW = 42.78° LF

BRIDGE APPROACH SLAB SECTION
STRUCTURE HAM-75-0791

538.75
417+93.36
516.12

4" ITS CONDUIT
(TO BE REMOVED)
STA 417+26.26, 71.62' RT
EX MH, RIM ELEV 621.38'
12" RCP SE 508.48
6" DRN S 519.18
12" RCP N 508.48

EX ITS

EMBANKMENT INCLUDED WITH MSE WALL C QUANTITIES

EXCAVATION & EMBANKMENT INCLUDED WITH MSE WALL C QUANTITIES

SKEW = 42.26° LF

BRIDGE APPROACH SLAB SECTION
STRUCTURE HAM-75-0791

538.61
417+63.36
524.13

(TO BE REMOVED)
STA 417+45.16, 40.51' RT
EX MH, RIM ELEV 522.02
EX 12" RCP SE 510.57
EX 12" RCP NW 510.57
EX 8" RCP SW 511.84
EX 8" RCP N 511.84

EX 12" RCP (TO BE REMOVED)

EX 12" RCP

EX ITS

2.7:1

18" B

EMBANKMENT INCLUDED WITH MSE WALL C QUANTITIES

EXCAVATION & EMBANKMENT INCLUDED WITH MSE WALL C QUANTITIES

SEE APPROACH SLAB SECTION

538.54
417+50.00
530.06

END AREA CUT	END AREA FILL	VOLUME CUT	VOLUME FILL
0	352		
		0	227
0	56		
		109	72
442	234		
		1115	504
		1224	803

CALCULATED SEA
CHECKED DLR

CROSS SECTIONS I.R. 75 NORTHBOUND
STA. 417+50.00 TO STA. 417+93.36

HAM-75-7.85

316
1047

Preliminary Plans - For Reference Only

J:\2011090\3\ODOT\HAM\77889\roadway\sheets\77889XS001.dgn 5/22/2026 10:16:47 AM hbrendlinger

SEEDING	
END WIDTH	SQ. YDS.
56	13
	26
	64
16	
	819
	896

PAVEMENT REMOVAL QUANTITIES HAVE BEEN DEDUCTED FROM EXCAVATION QUANTITIES

END AREA		VOLUME	
CUT	FILL	CUT	FILL

CALCULATED SEA
CHECKED DLR

SKEW = 45.57° LF

BRIDGE APPROACH SLAB SECTION
STRUCTURE HAM-75-0791

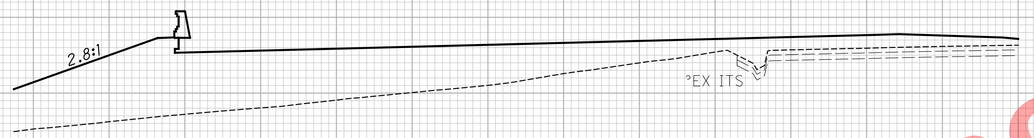

539.51
419+52.73
536.32

SEE APPROACH SLAB SECTION

539.50
419+50.00
536.30

SKEW = 45.05° LF

BRIDGE APPROACH SLAB SECTION
STRUCTURE HAM-75-0791

(TO BE REMOVED)
STA 419+47.48, 23.86' LT
EX MH, RIM ELEV 535.43'
12" RCP S 527.70
12" RCP SW 528.83
12" RCP W 524.13

UNCLASSIFIED EXCAVATION INCLUDED WITH HAM-75-0791 BRIDGE QUANTITIES

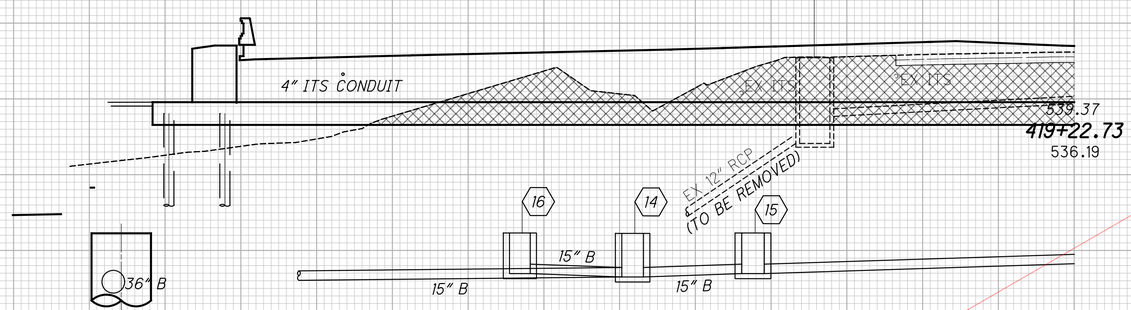

Preliminary Plans - For Reference Only

CROSS SECTIONS I.R. 75 SOUTHBOUND
STA. 419+22.73 TO STA. 419+52.73

HAM-75-7.85

317
1047

J:\2011090\3\ODOT\HAM\77889\roadway\sheets\77889XS001.dgn 5/22/2026 10:16:48 AM hbrendlinger

PAVEMENT REMOVAL QUANTITIES HAVE BEEN DEDUCTED FROM EXCAVATION QUANTITIES

SKEW = 45.57° LF

BRIDGE APPROACH SLAB SECTION
STRUCTURE HAM-75-0791

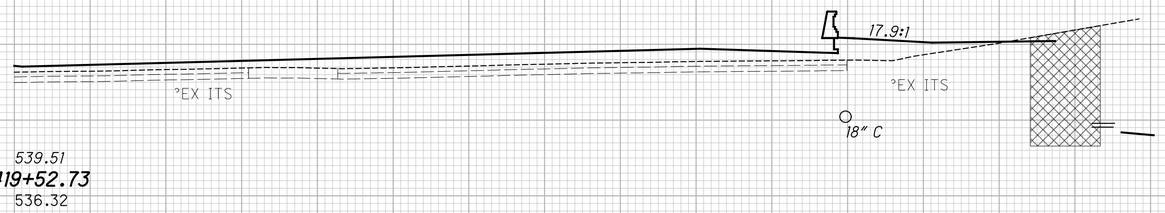

SKEW = 45.05° LF

BRIDGE APPROACH SLAB SECTION
STRUCTURE HAM-75-0791

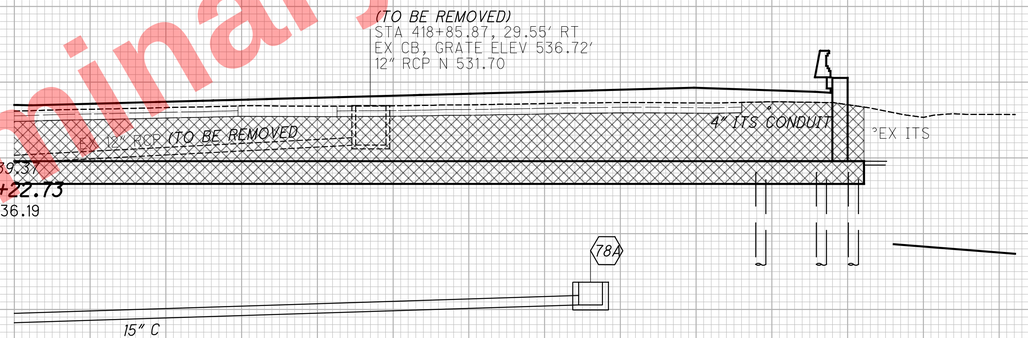

UNCLASSIFIED EXCAVATION INCLUDED WITH HAM-75-0791 BRIDGE QUANTITIES

SEEDING END WIDTH	SEEDING SQ. YDS.	END AREA CUT	END AREA FILL	VOLUME CUT	VOLUME FILL
		73	1004		
				4	63
		0	248		
				157	579
		312	899		
				0	0
				161	642

CALCULATED SEA
CHECKED DLR

CROSS SECTIONS I.R. 75 NORTHBOUND
STA. 419+22.73 TO STA. 419+52.73

HAM-75-7.85

318
1047

Preliminary Plans - For Reference Only

J:\2011090\3\ODOT\HAM\77889\roadway\sheets\77889XS001.dgn 5/22/2026 10:16:48 AM hbrendlinger

SEEDING	
END WIDTH	SQ. YDS.
46	206
26	221
	427

PAVEMENT REMOVAL QUANTITIES HAVE BEEN DEDUCTED FROM EXCAVATION QUANTITIES

END AREA		VOLUME	
CUT	FILL	CUT	FILL

CALCULATED SEA

CHECKED DLR

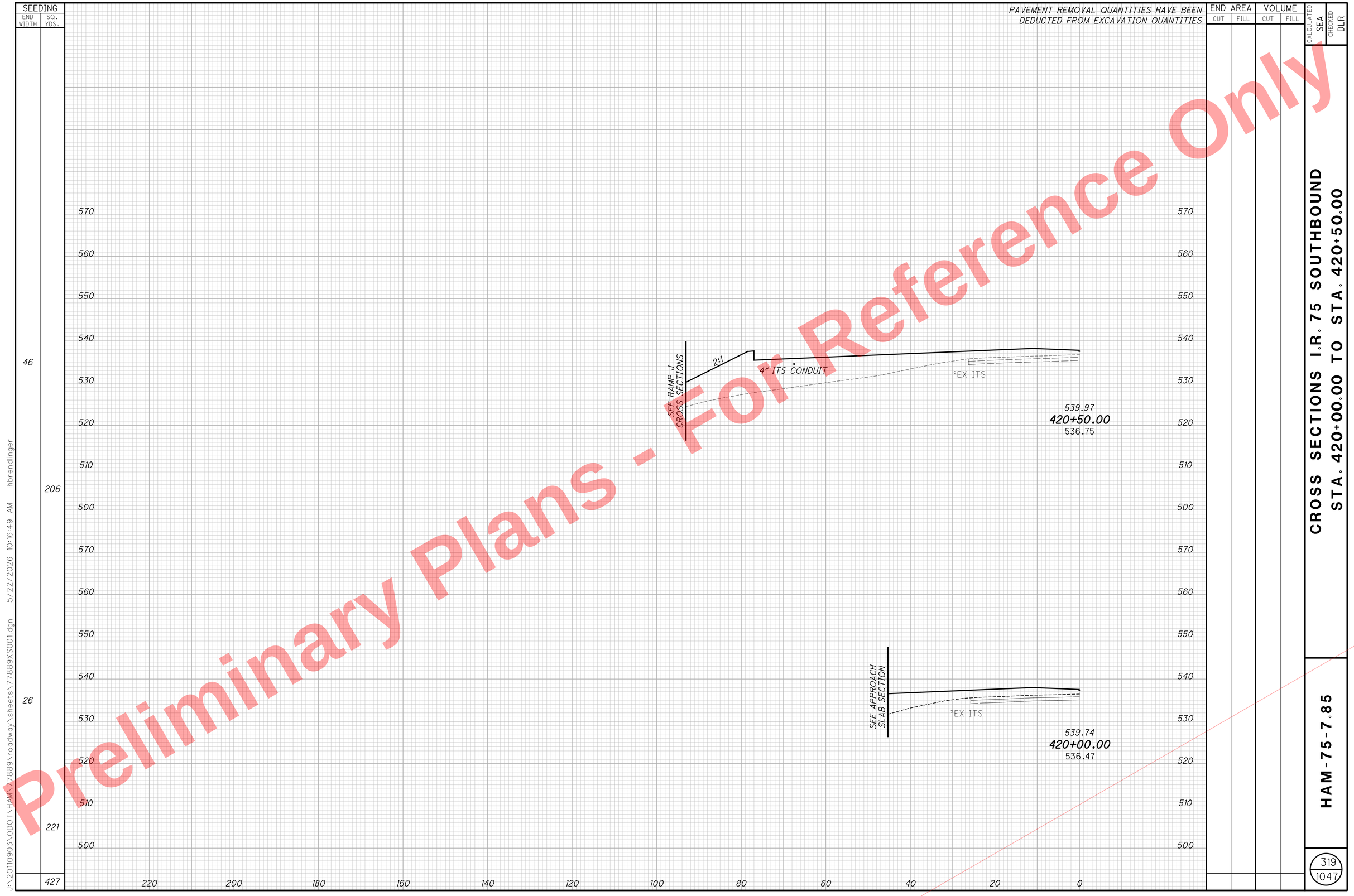

CROSS SECTIONS I.R. 75 SOUTHBOUND
STA. 420+00.00 TO STA. 420+50.00

HAM-75-7.85

319
1047

Preliminary Plans - For Reference Only

J:\20110903\ODOT\HAM\7889\roadway\sheets\77889XS001.dgn 5/22/2026 10:16:49 AM hbrendlinger

SEEDING	
END WIDTH	SQ. YDS.

PAVEMENT REMOVAL QUANTITIES HAVE BEEN DEDUCTED FROM EXCAVATION QUANTITIES

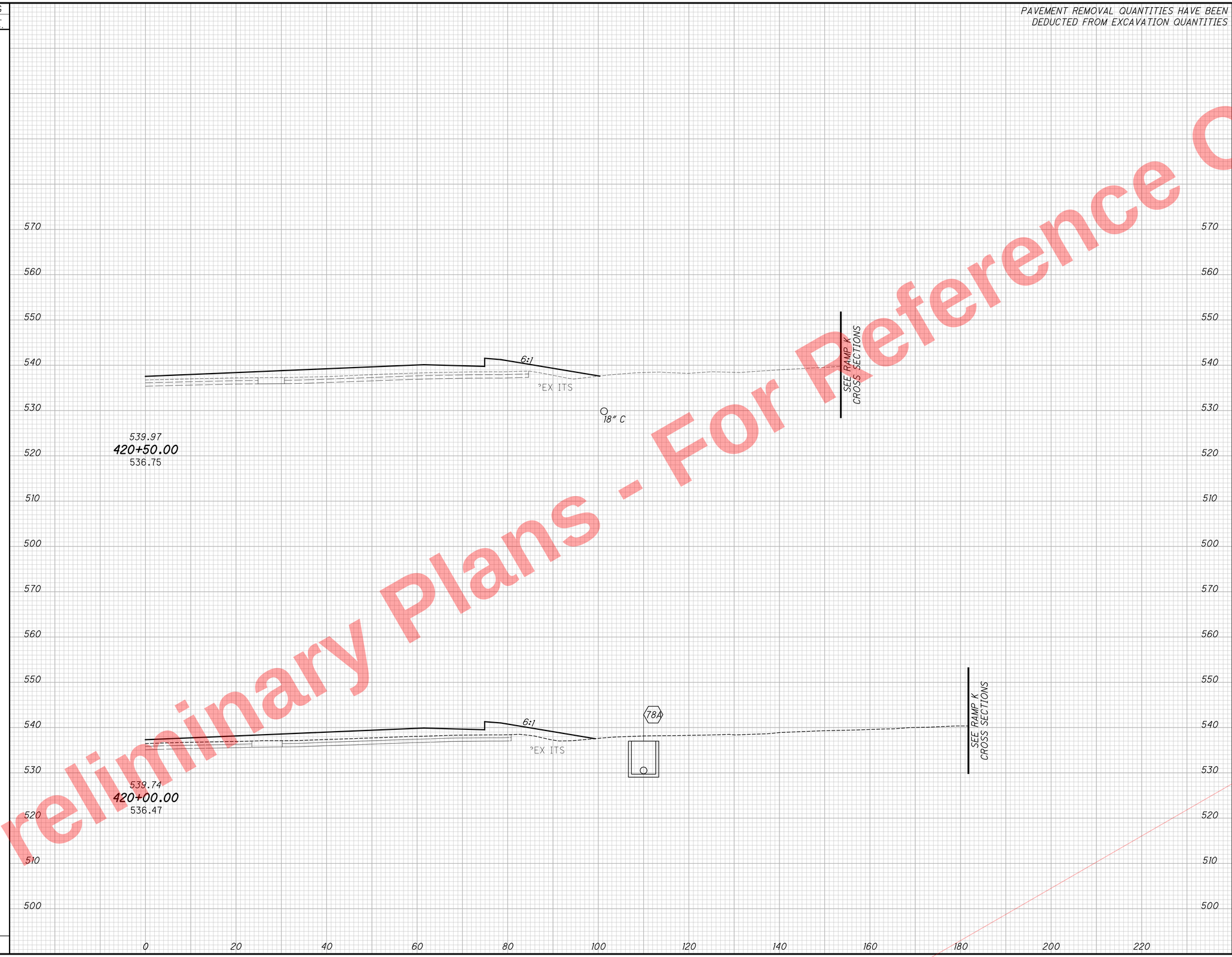

END AREA		VOLUME	
CUT	FILL	CUT	FILL
0	726		
		0	1038
0	395		
		64	1224
		64	2262

CALCULATED SEA
CHECKED DLR

CROSS SECTIONS I.R. 75 NORTHBOUND
STA. 420+00.00 TO STA. 420+50.00

HAM-75-7.85

320
1047

Preliminary Plans - For Reference Only

J:\20110903\ODOT\HAM\7889\roadway\sheets\77889XS001.dgn 5/22/2026 10:16:49 AM hbrendlinger

SEEDING	
END WIDTH	SQ. YDS.
86	466
80	355
	821

PAVEMENT REMOVAL QUANTITIES HAVE BEEN DEDUCTED FROM EXCAVATION QUANTITIES

END AREA		VOLUME	
CUT	FILL	CUT	FILL

CALCULATED SEA
CHECKED DLR

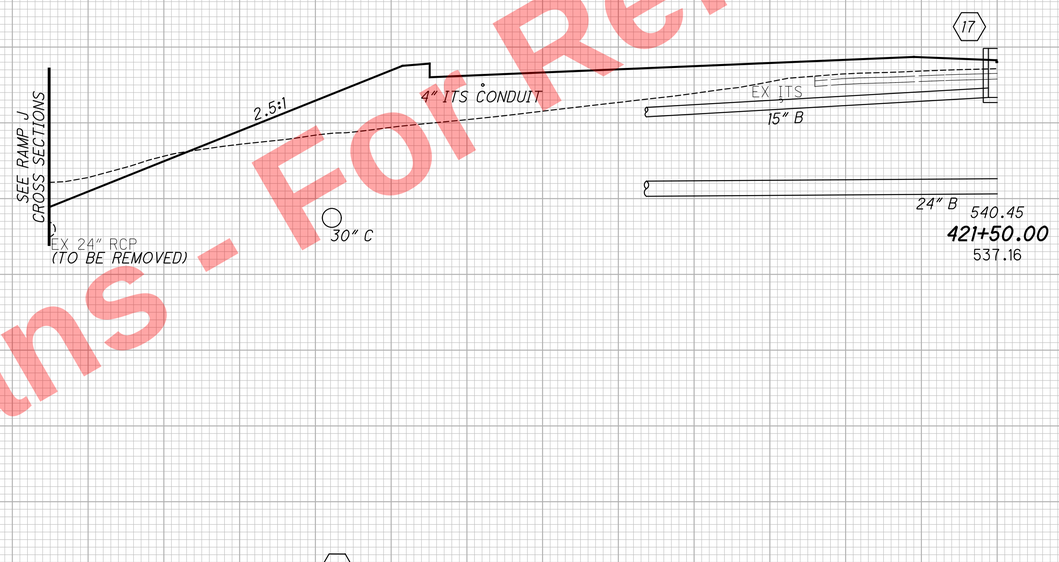

Preliminary Plans - For Reference Only

CROSS SECTIONS I.R. 75 SOUTHBOUND
STA. 421+00.00 TO STA. 421+50.00

HAM-75-7.85

321
1047

J:\2011090\3\ODOT\HAM\77889\roadway\sheets\77889XS001.dgn 5/22/2026 10:16:50 AM hbrendlinger

SEEDING	
END WIDTH	SQ. YDS.

PAVEMENT REMOVAL QUANTITIES HAVE BEEN DEDUCTED FROM EXCAVATION QUANTITIES

END AREA		VOLUME	
CUT	FILL	CUT	FILL
26	696		
		34	1289
10	696		
		9	1316
		43	2605

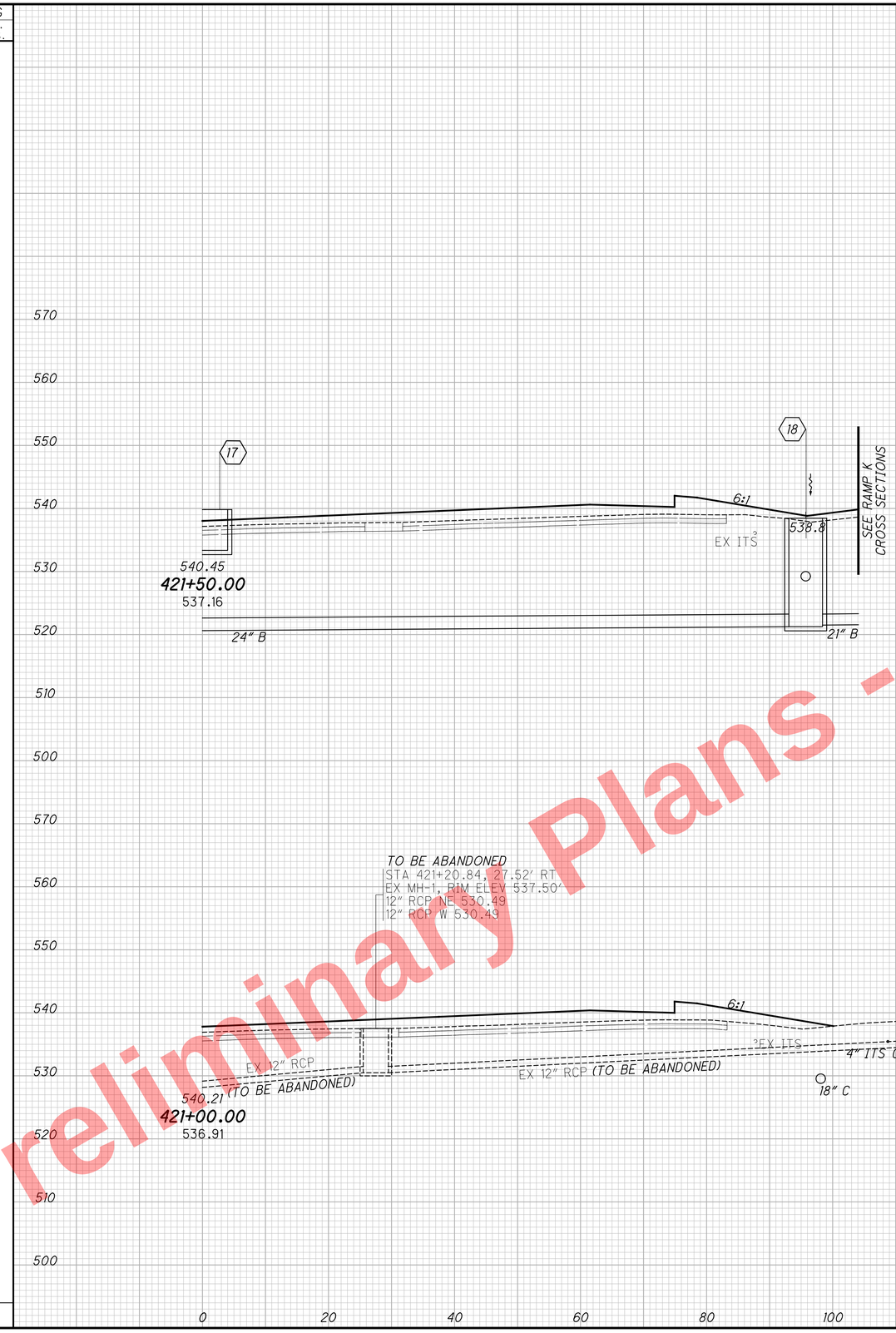

Preliminary Plans - For Reference Only

CALCULATED SEA
CHECKED DLR

CROSS SECTIONS I.R. 75 NORTHBOUND
STA. 421+00.00 TO STA. 421+50.00

HAM-75-7.85

322
1047

J:\20110903\ODOT\HAM\77889\roadway\sheets\77889XS001.dgn 5/22/2026 10:16:51 AM hbrendlinger

SEEDING	
END WIDTH	SQ. YDS.
87	489
87	484
	973

PAVEMENT REMOVAL QUANTITIES HAVE BEEN DEDUCTED FROM EXCAVATION QUANTITIES

END AREA		VOLUME	
CUT	FILL	CUT	FILL

CALCULATED SEA
CHECKED DLR

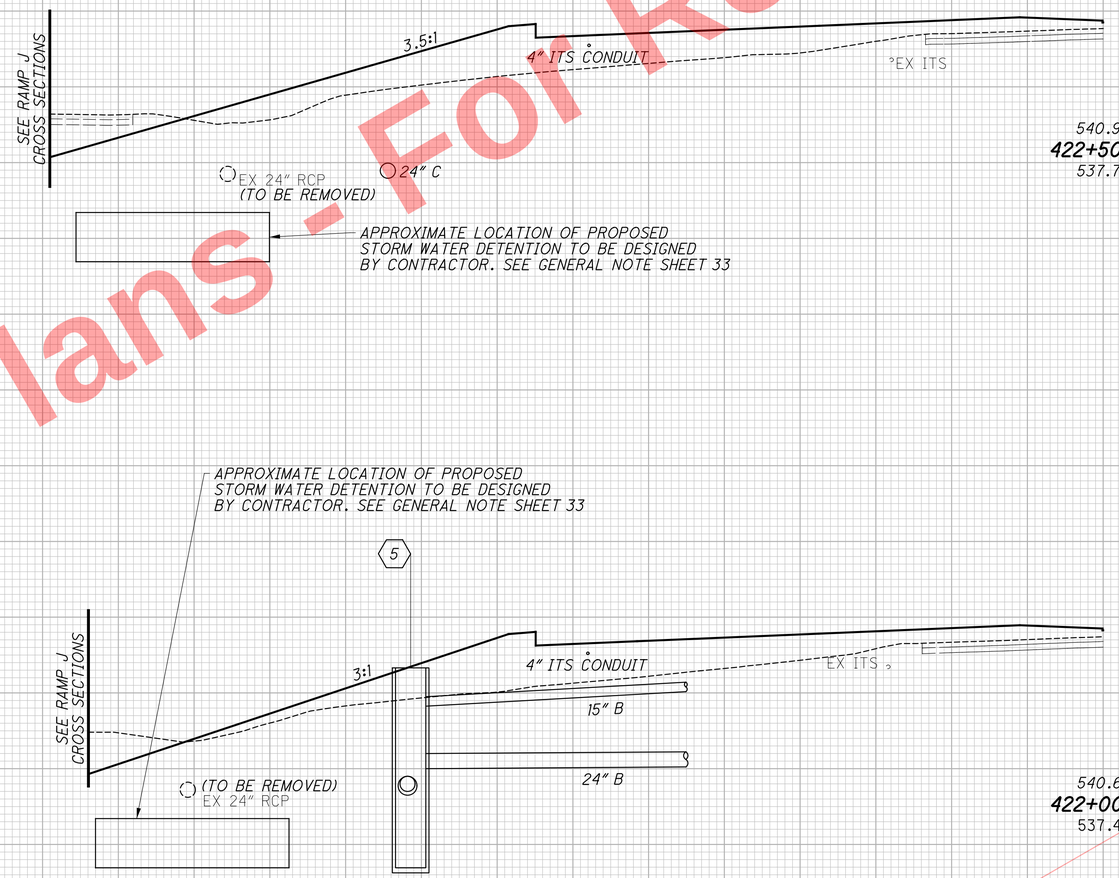

Preliminary Plans - For Reference Only

CROSS SECTIONS I.R. 75 SOUTHBOUND
STA. 422+00.00 TO STA. 422+50.00

HAM-75-7.85

323
1047

J:\20110903\ODOT\HAM\77889\roadway\sheets\77889XS001.dgn 5/22/2026 10:16:51 AM hbrendlinger

SEEDING	
END WIDTH	SQ. YDS.

PAVEMENT REMOVAL QUANTITIES HAVE BEEN DEDUCTED FROM EXCAVATION QUANTITIES

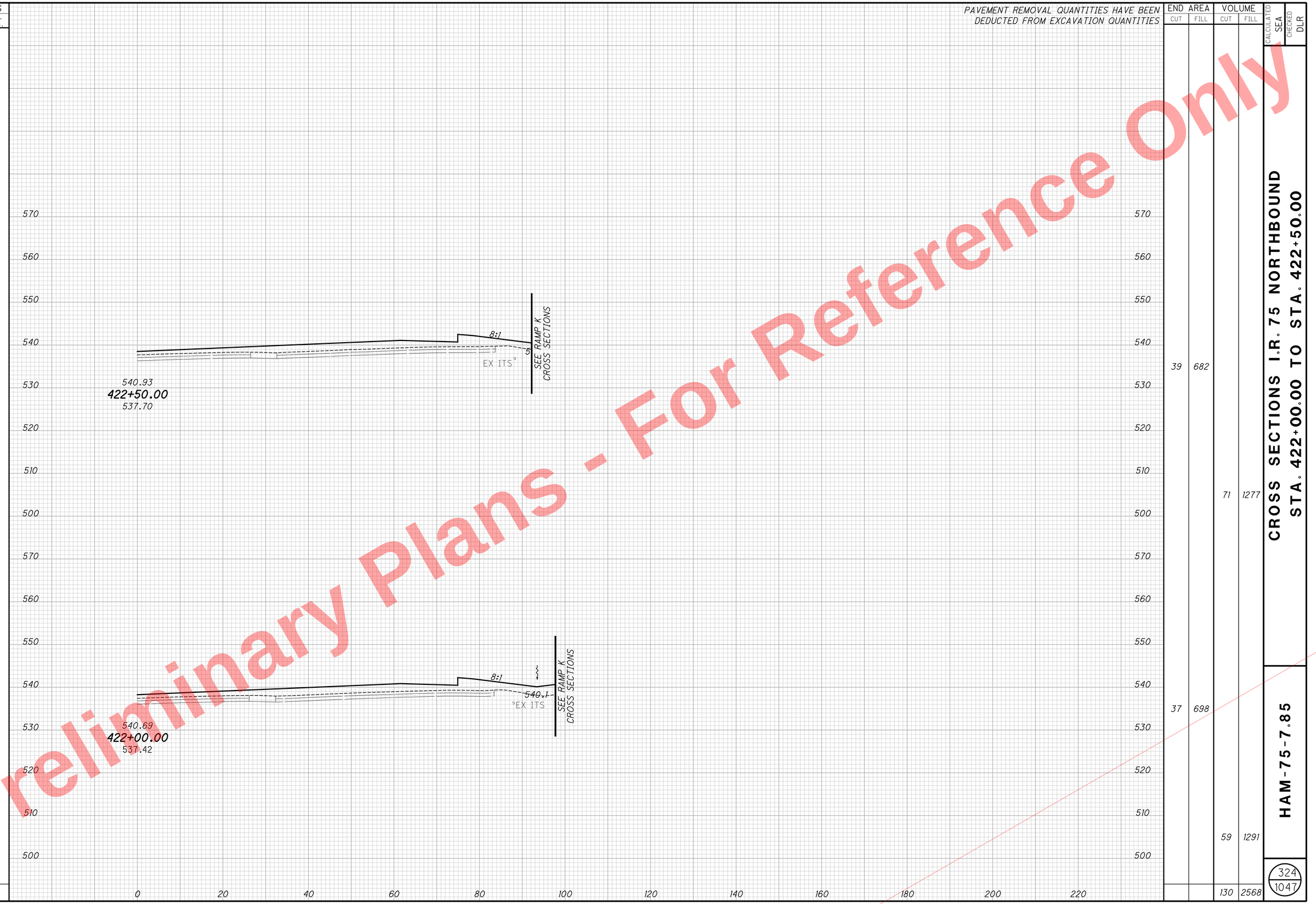

END AREA		VOLUME	
CUT	FILL	CUT	FILL
39	682		
		71	1277
37	698		
		59	1291
		130	2568

CALCULATED SEA
CHECKED DLR

CROSS SECTIONS I.R. 75 NORTHBOUND
STA. 422+00.00 TO STA. 422+50.00

HAM-75-7.85

324
1047

Preliminary Plans - For Reference Only

J:\20110903\ODOT\HAM\77889\roadway\sheets\77889XS001.dgn 5/22/2026 10:16:52 AM hbrendlinger

SEEDING	
END WIDTH	SQ. YDS.
80	456
84	477
	933

PAVEMENT REMOVAL QUANTITIES HAVE BEEN DEDUCTED FROM EXCAVATION QUANTITIES

END AREA		VOLUME	
CUT	FILL	CUT	FILL

CALCULATED SEA
CHECKED DLR

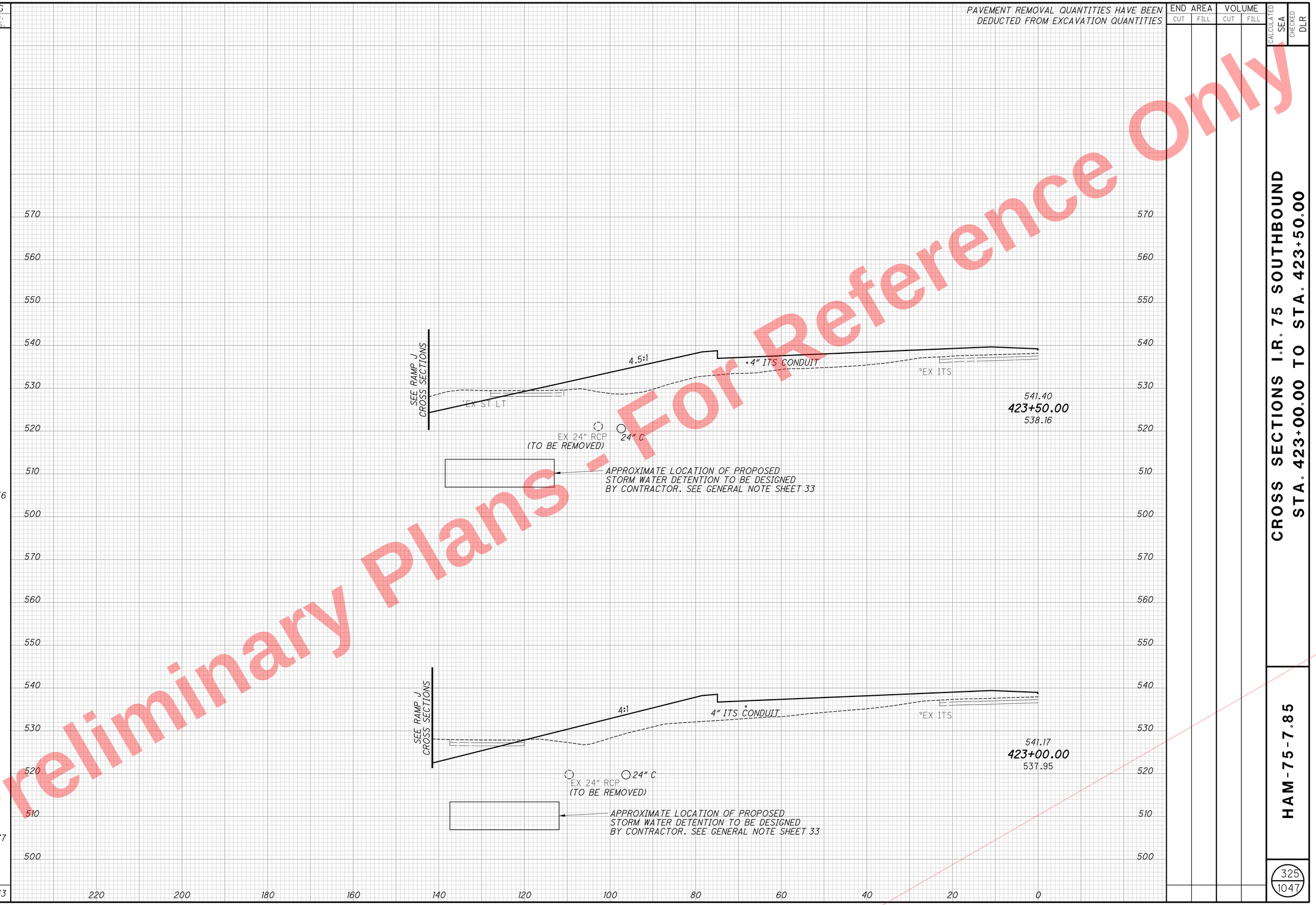

Preliminary Plans - For Reference Only

CROSS SECTIONS I.R. 75 SOUTHBOUND
STA. 423+00.00 TO STA. 423+50.00

HAM-75-7.85

325
1047

J:\20110903\ODOT\HAM\77889\roadway\sheets\77889XS001.dgn 5/22/2026 10:16:52 AM hbrendlinger

PAVEMENT REMOVAL QUANTITIES HAVE BEEN DEDUCTED FROM EXCAVATION QUANTITIES

SEEDING		END AREA		VOLUME		CALCULATED	CHECKED
END WIDTH	SQ. YDS.	CUT	FILL	CUT	FILL	SEA	DLR

SEEDING	
END WIDTH	SQ. YDS.
	72
	411
	76
	439
	850

PAVEMENT REMOVAL QUANTITIES HAVE BEEN DEDUCTED FROM EXCAVATION QUANTITIES

END AREA		VOLUME	
CUT	FILL	CUT	FILL

CALCULATED SEA
CHECKED DLR

570 560 550 540 530 520 510 500

SEE RAMP U CROSS SECTIONS

5.1:1

4" ITS CONDUIT

EX ITS

EX ST LT

24" C

EX 21" RCP (TO BE ABANDONED)

541.88
424+50.00
538.70

APPROXIMATE LOCATION OF PROPOSED STORM WATER DETENTION TO BE DESIGNED BY CONTRACTOR. SEE GENERAL NOTE SHEET 33

(TO BE REMOVED)
STA 423+84.02, 97.72' LT
EX MH, RIM ELEV 530.46'
24" RCP SW = 520.66
21" RCP NE = 520.66 (TBA)
15" RCP NW = 523.46
12" RCP SE = 523.86
12" RCP NW = 524.56

6

(TO BE REMOVED)
424+25.62, 113.01' LT
EX MH, RIM ELEV 531.47'
12" RCP S 528.47

SEE RAMP J CROSS SECTIONS

5:1

4" ITS CONDUIT

EX ITS

EX ST LT

EX 12" RCP (TO BE ABANDONED)

EX 15" RCP (TO BE REMOVED

5' TO BE REMOVED

541.64
424+00.00
538.34

APPROXIMATE LOCATION OF PROPOSED STORM WATER DETENTION TO BE DESIGNED BY CONTRACTOR. SEE GENERAL NOTE SHEET 33

220 200 180 160 140 120 100 80 60 40 20 0

Preliminary Plans - For Reference Only

CROSS SECTIONS I.R. 75 SOUTHBOUND
STA. 424+00.00 TO STA. 424+50.00

HAM-75-7.85

J:\20110903\ODOT\HAM\77889\roadway\sheets\77889XS001.dgn 5/22/2026 10:16:53 AM hbrendlinger

SEEDING	
END WIDTH	SQ. YDS.

PAVEMENT REMOVAL QUANTITIES HAVE BEEN DEDUCTED FROM EXCAVATION QUANTITIES

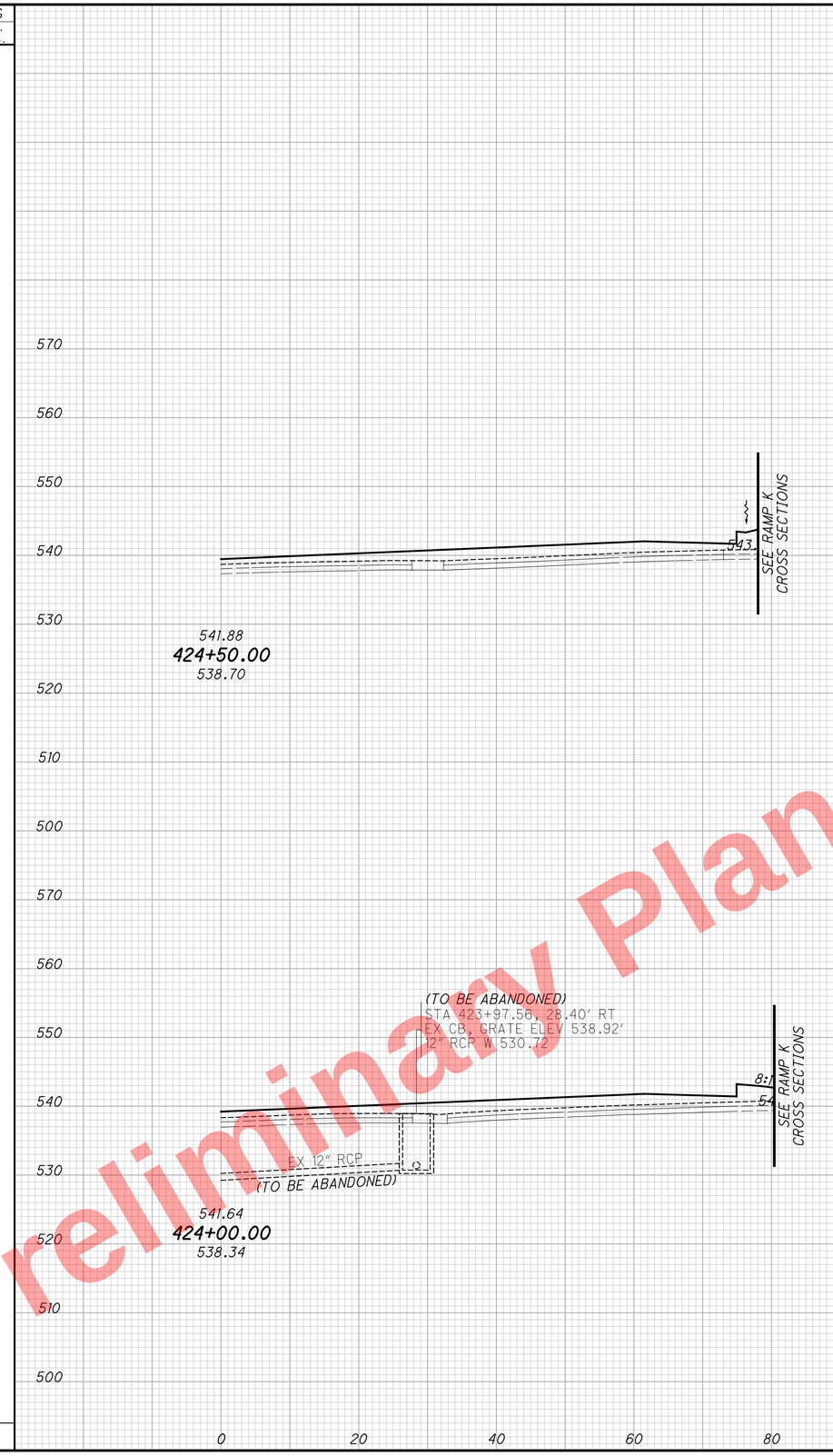

END AREA		VOLUME	
CUT	FILL	CUT	FILL
12	611		
		40	1162
31	644		
		74	1203
		114	2365

CALCULATED SEA
CHECKED DLR

CROSS SECTIONS I.R. 75 NORTHBOUND
STA. 424+00.00 TO STA. 424+50.00

HAM-75-7.85

328
1047

Preliminary Plans - For Reference Only

J:\20110903\ODOT\HAM\77889\roadway\sheets\77889XS001.dgn 5/22/2026 10:16:54 AM hbrendlinger

SEEDING	
END WIDTH	SQ. YDS.
115	633
112	517
	1150

PAVEMENT REMOVAL QUANTITIES HAVE BEEN DEDUCTED FROM EXCAVATION QUANTITIES

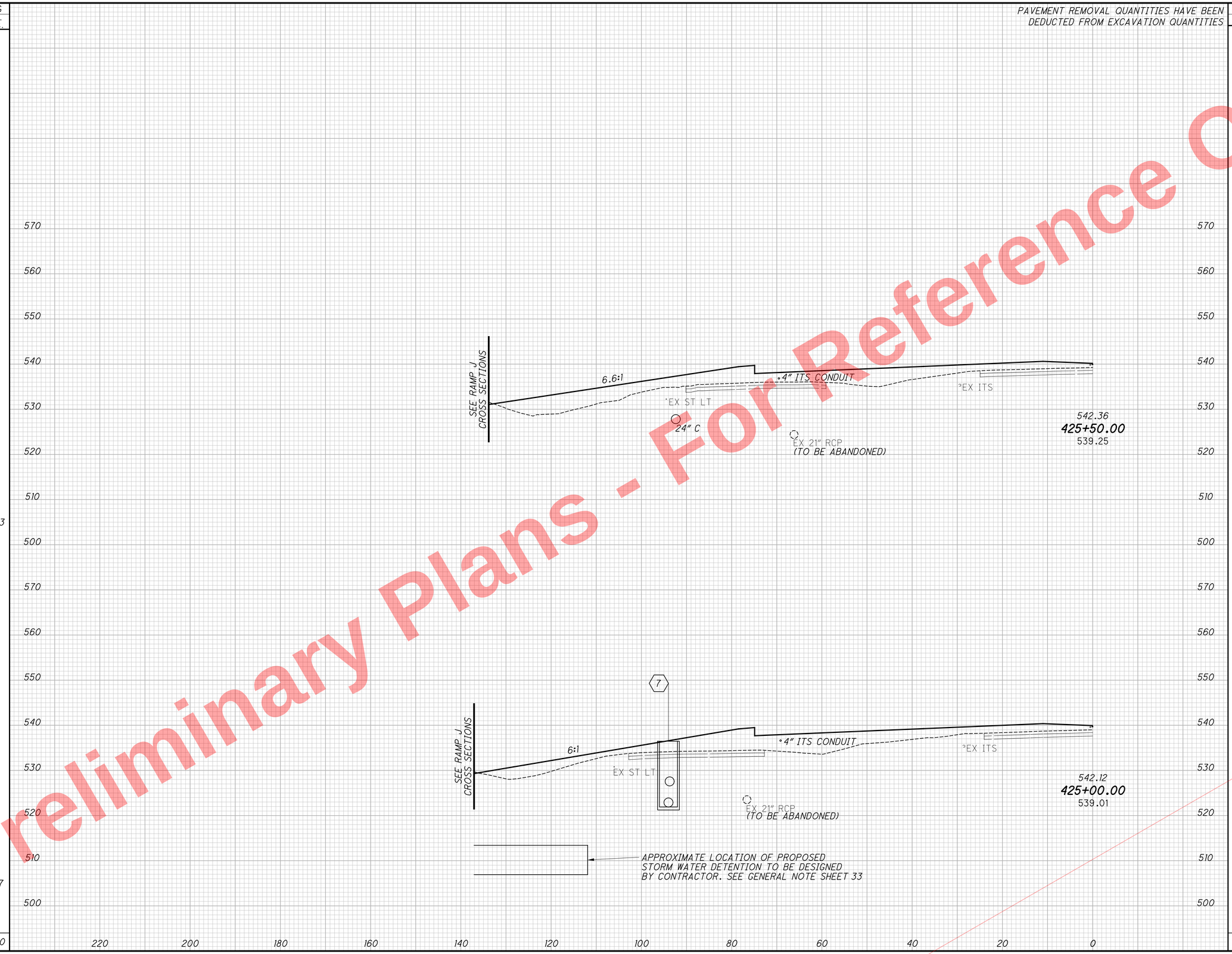

END AREA		VOLUME	
CUT	FILL	CUT	FILL

CALCULATED SEA
CHECKED DLR

CROSS SECTIONS I.R. 75 SOUTHBOUND
STA. 425+00.00 TO STA. 425+50.00

HAM-75-7.85

329
1047

Preliminary Plans - For Reference Only

J:\20110903\ODOT\HAM\77889\roadway\sheets\77889XS001.dgn 5/22/2026 10:16:55 AM hbrendlinger

SEEDING	
END WIDTH	SQ. YDS.

PAVEMENT REMOVAL QUANTITIES HAVE BEEN DEDUCTED FROM EXCAVATION QUANTITIES

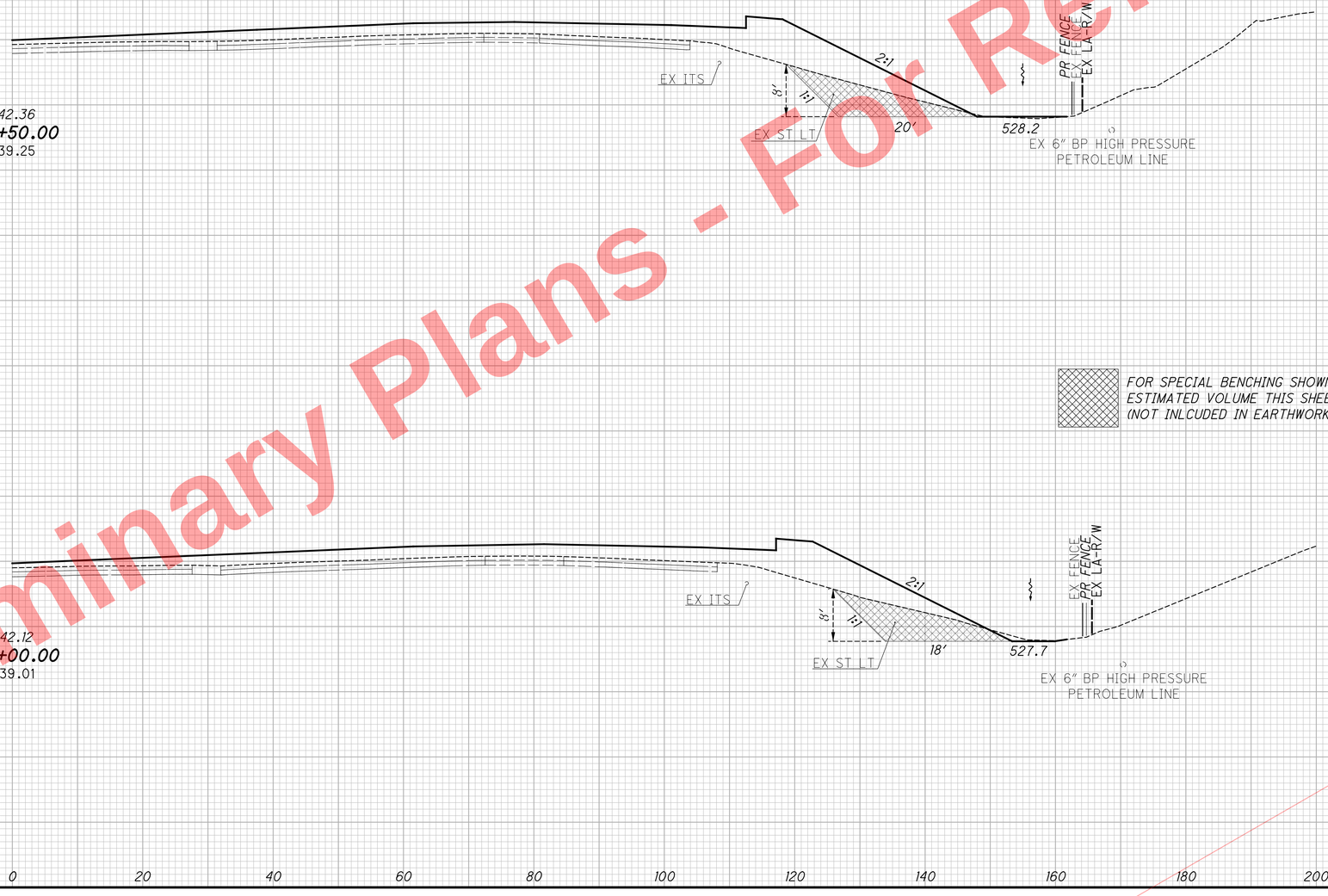

END AREA		VOLUME	
CUT	FILL	CUT	FILL
1	889		
		4	1637
4	879		
		15	1380
		19	3017

CALCULATED SEA
CHECKED DLR

CROSS SECTIONS I.R. 75 NORTHBOUND
STA. 425+00.00 TO STA. 425+50.00

HAM-75-7.85

330
1047

Preliminary Plans - For Reference Only

J:\20110903\ODOT\HAM\7889\roadway\sheets\77889XS001.dgn 5/22/2026 10:16:55 AM hbrendlinger

SEEDING	
END WIDTH	SQ. YDS.
	108
	623
	115
	639
1262	

PAVEMENT REMOVAL QUANTITIES HAVE BEEN DEDUCTED FROM EXCAVATION QUANTITIES

END AREA		VOLUME	
CUT	FILL	CUT	FILL

CALCULATED SEA
CHECKED DLR

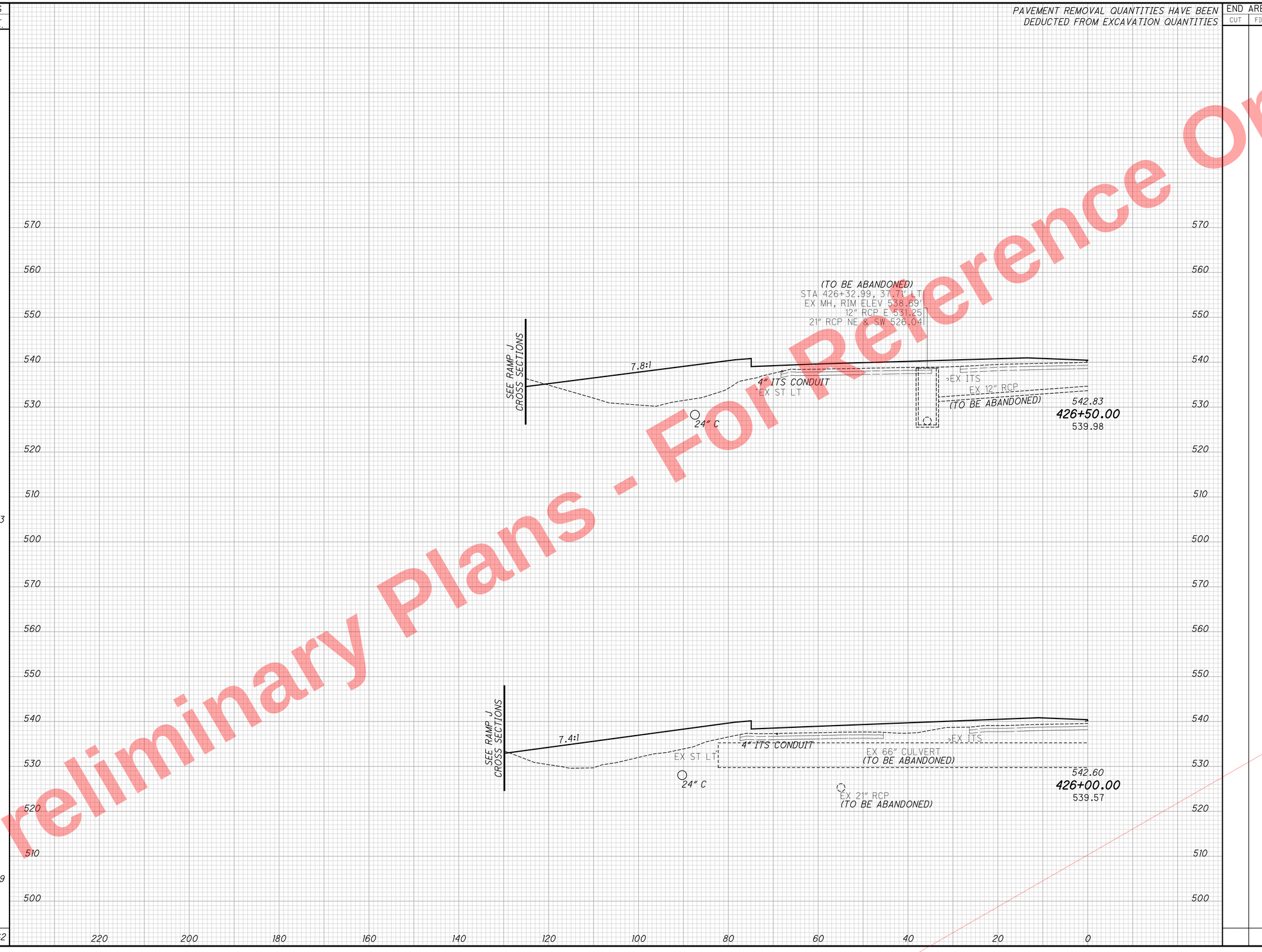

CROSS SECTIONS I.R. 75 SOUTHBOUND STA. 426+00.00 TO STA. 426+50.00

HAM-75-7.85

331
1047

Preliminary Plans - Not For Reference Only

J:\20110903\ODOT\HAM\77889\roadway\sheets\77889XS001.dgn 5/22/2026 10:16:56 AM hbrendlinger

SEEDING	
END WIDTH	SQ. YDS.

PAVEMENT REMOVAL QUANTITIES HAVE BEEN DEDUCTED FROM EXCAVATION QUANTITIES

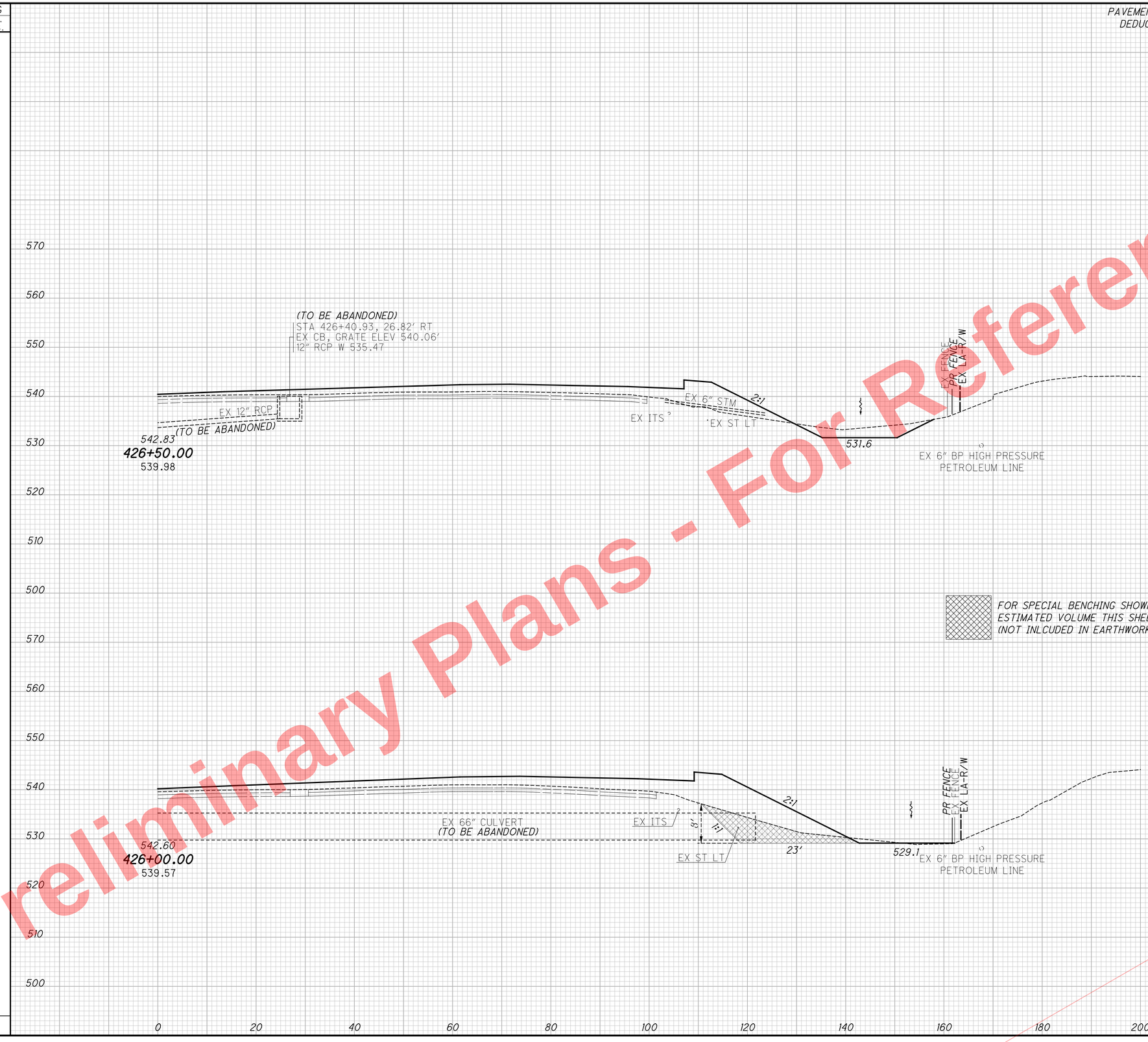

END AREA		VOLUME	
CUT	FILL	CUT	FILL
50	794		
		51	1550
5	880		
		5	1638
		56	3188

CALCULATED SEA
CHECKED DLR

CROSS SECTIONS I.R. 75 NORTHBOUND
STA. 426+00.00 TO STA. 426+50.00

HAM-75-7.85

332
1047

Preliminary Plans - For Reference Only

J:\20110903\ODOT\HAM\7889\roadway\sheets\77889XS001.dgn 5/22/2026 10:16:56 AM hbrendlinger

SEEDING	
END WIDTH	SQ. YDS.
	83
	516
	103
	589
1105	

PAVEMENT REMOVAL QUANTITIES HAVE BEEN DEDUCTED FROM EXCAVATION QUANTITIES

END AREA		VOLUME	
CUT	FILL	CUT	FILL

CALCULATED SEA
CHECKED DLR

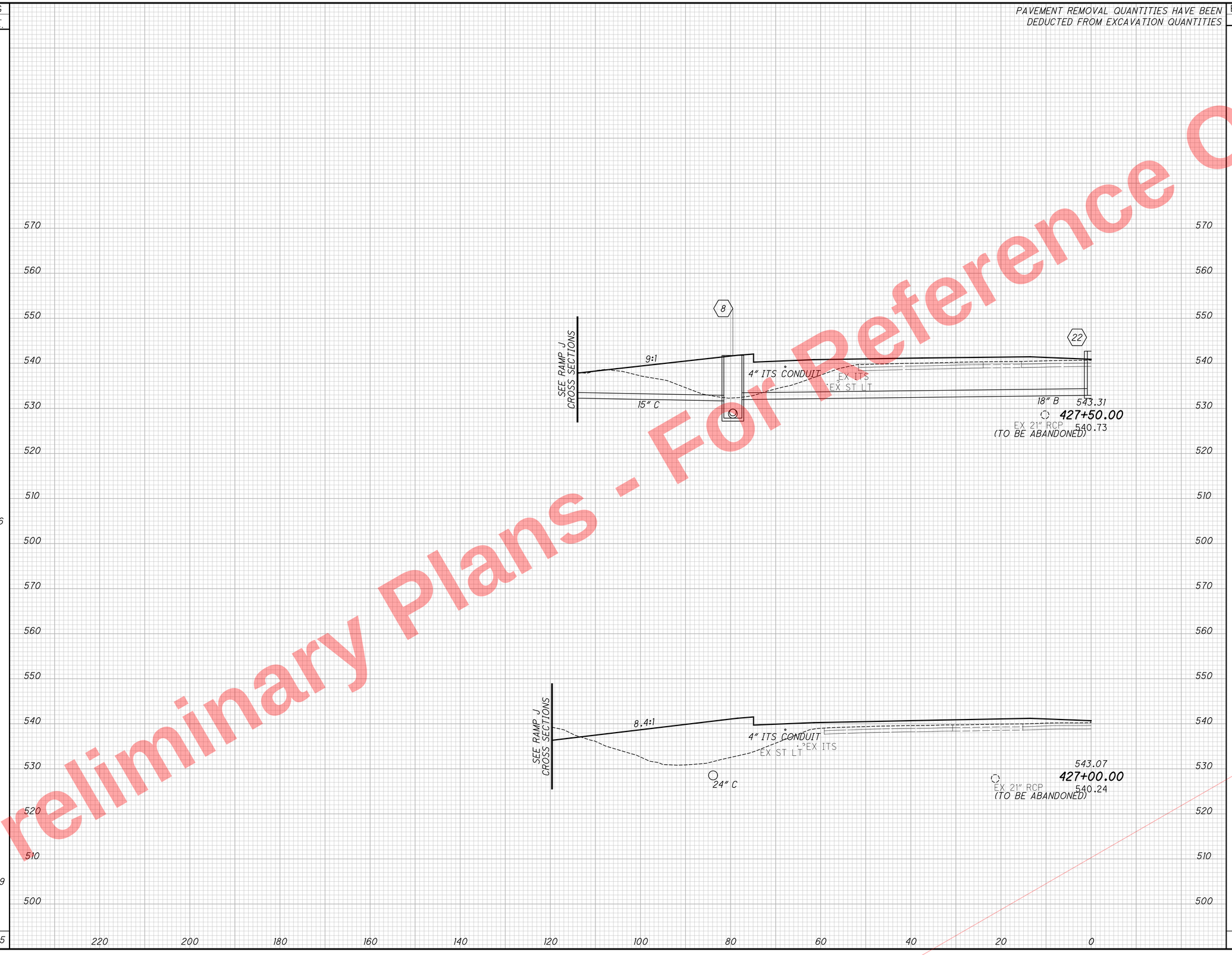

Preliminary Plans - For Reference Only

CROSS SECTIONS I.R. 75 SOUTHBOUND
STA. 427+00.00 TO STA. 427+50.00

HAM-75-7.85

333
1047

J:\20110903\ODOT\HAM\7889\roadway\sheets\77889XS001.dgn 5/22/2026 10:16:57 AM hbrendlinger

PAVEMENT REMOVAL QUANTITIES HAVE BEEN DEDUCTED FROM EXCAVATION QUANTITIES

SEEDING		END AREA		VOLUME	
END WIDTH	SQ. YDS.	CUT	FILL	CUT	FILL
		88	641		
				242	1256
		173	716		
				206	1399
				448	2655

CALCULATED SEA | CHECKED DLR

CROSS SECTIONS I.R. 75 NORTHBOUND
STA. 427+00.00 TO STA. 427+50.00

HAM-75-7.85

334
1047

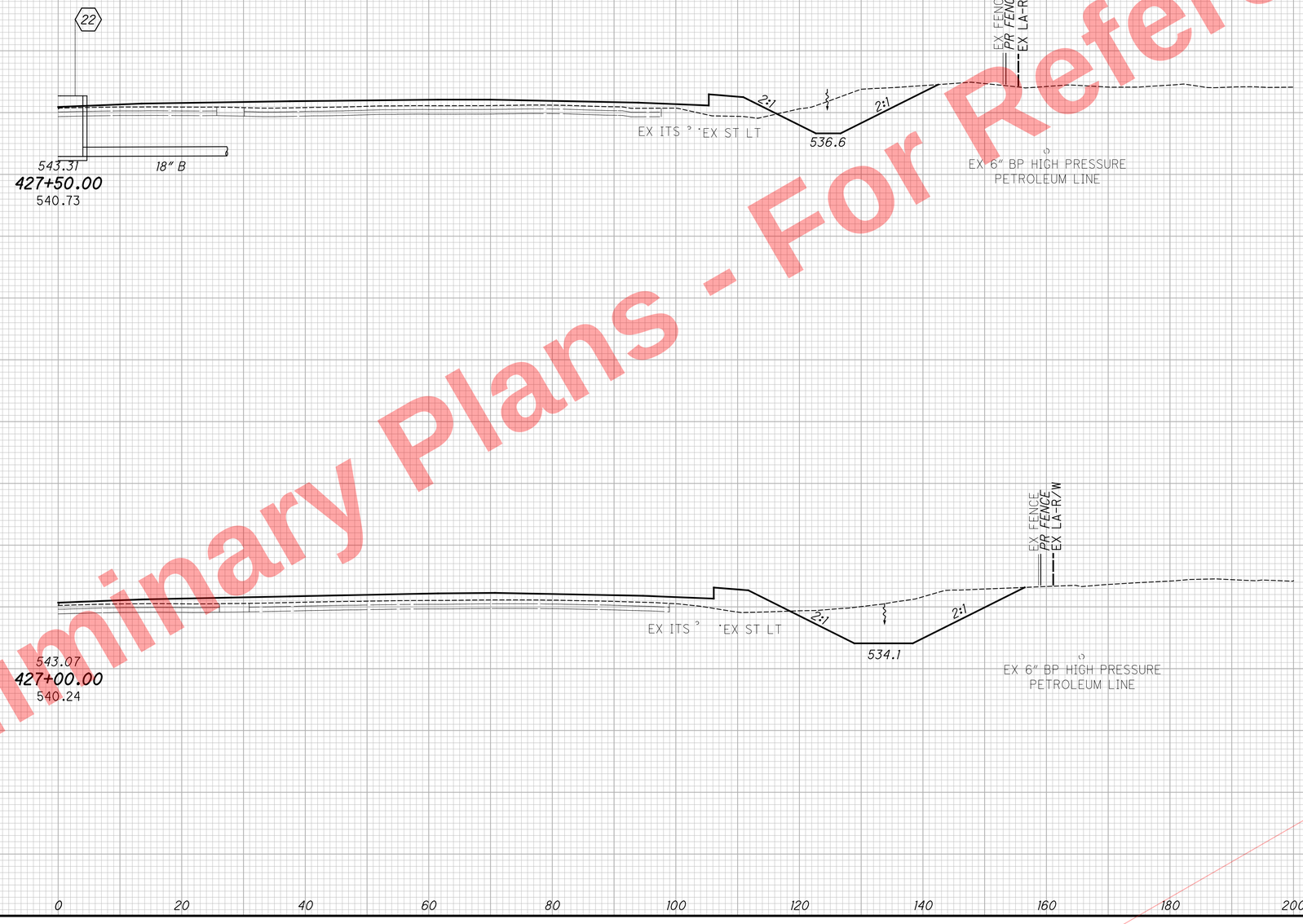

Preliminary Plans - For Reference Only

J:\20110903\ODOT\HAM\7889\roadway\sheets\77889XS001.dgn 5/22/2026 10:16:58 AM hbrendlinger

SEEDING	
END WIDTH	SQ. YDS.
67	395
75	439
	834

PAVEMENT REMOVAL QUANTITIES HAVE BEEN DEDUCTED FROM EXCAVATION QUANTITIES

END AREA		VOLUME	
CUT	FILL	CUT	FILL

CALCULATED SEA

CHECKED DLR

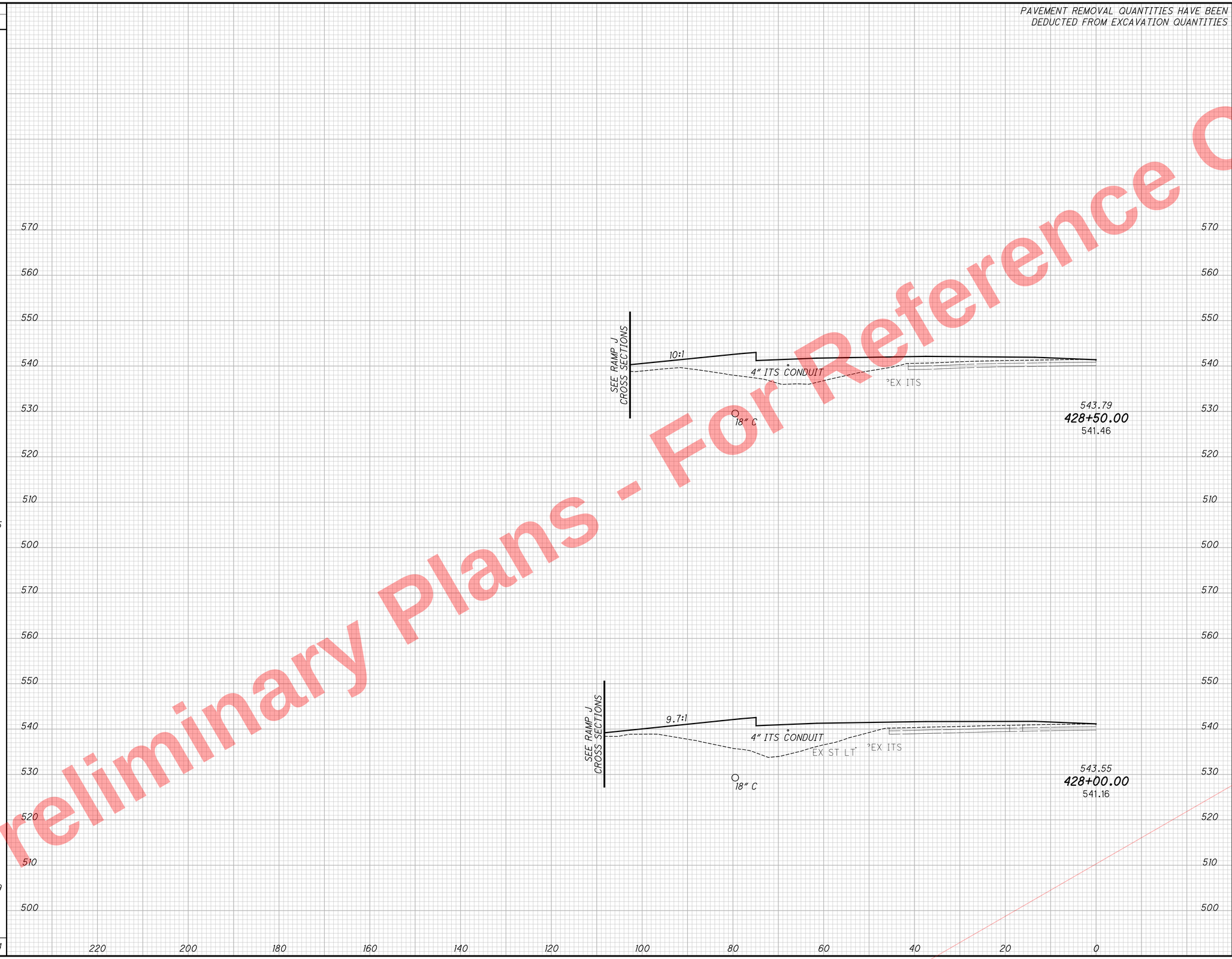

Preliminary Plans - Not For Reference Only

CROSS SECTIONS I.R. 75 SOUTHBOUND
STA. 428+00.00 TO STA. 428+50.00

HAM-75-7.85

335
1047

J:\20110903\ODOT\HAM\77889\roadway\sheets\77889XS001.dgn 5/22/2026 10:16:58 AM hbrendlinger

SEEDING	
END WIDTH	SQ. YDS.

PAVEMENT REMOVAL QUANTITIES HAVE BEEN DEDUCTED FROM EXCAVATION QUANTITIES

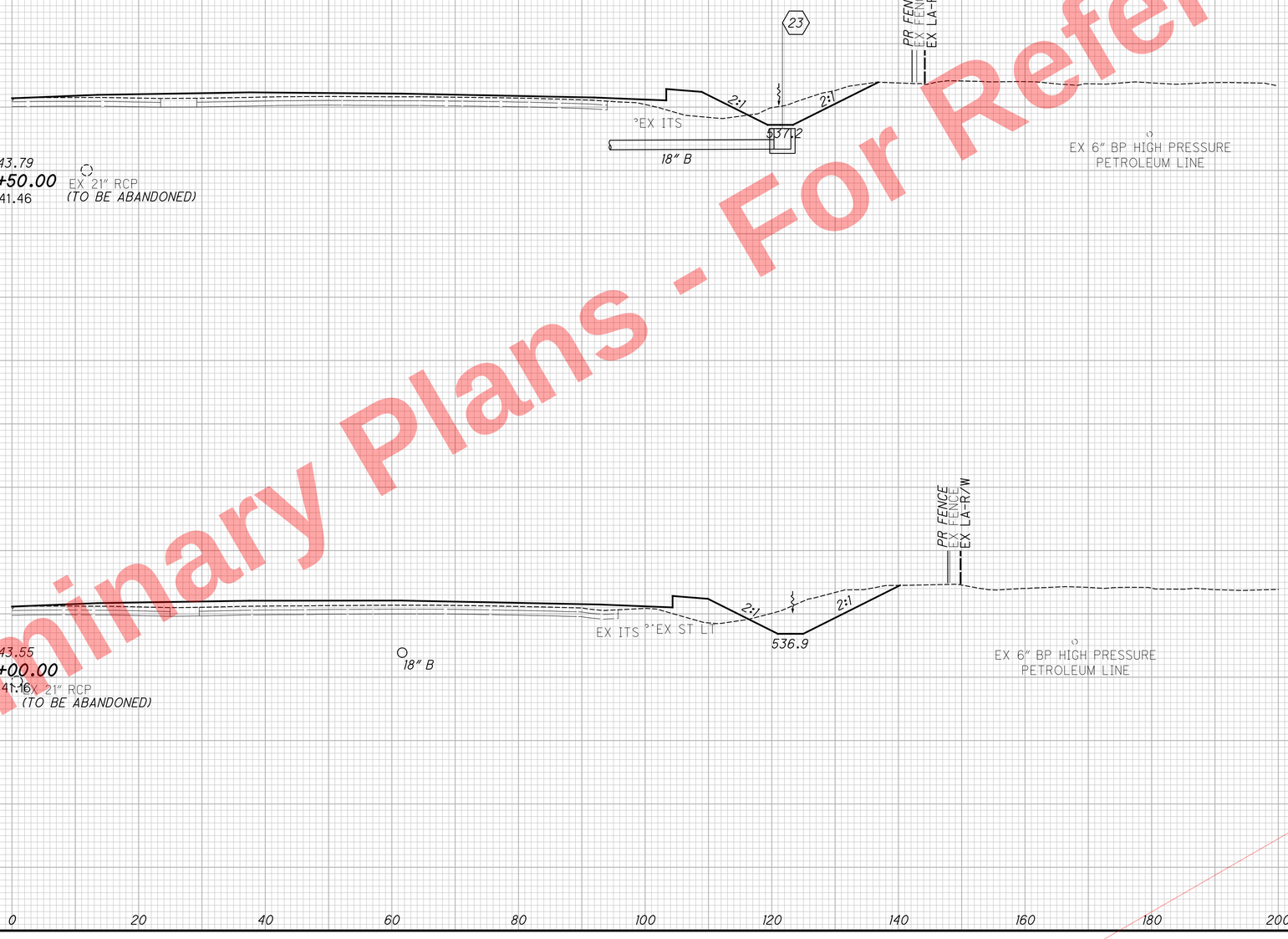

END AREA		VOLUME	
CUT	FILL	CUT	FILL
43	525		
		104	1023
70	580		
		146	1130
		250	2153

CALCULATED SEA
CHECKED DLR

CROSS SECTIONS I-75 NORTHBOUND
STA. 428+00.00 TO STA. 428+50.00

HAM-75-7.85

336
1047

Preliminary Plans - For Reference Only

J:\20110903\ODOT\HAM\7889\roadway\sheets\77889XS001.dgn 5/22/2026 10:16:59 AM hbrendlinger

SEEDING	
END WIDTH	SQ. YDS.
55	317
59	356
	673

PAVEMENT REMOVAL QUANTITIES HAVE BEEN DEDUCTED FROM EXCAVATION QUANTITIES

END AREA		VOLUME	
CUT	FILL	CUT	FILL

CALCULATED SEA
CHECKED DLR

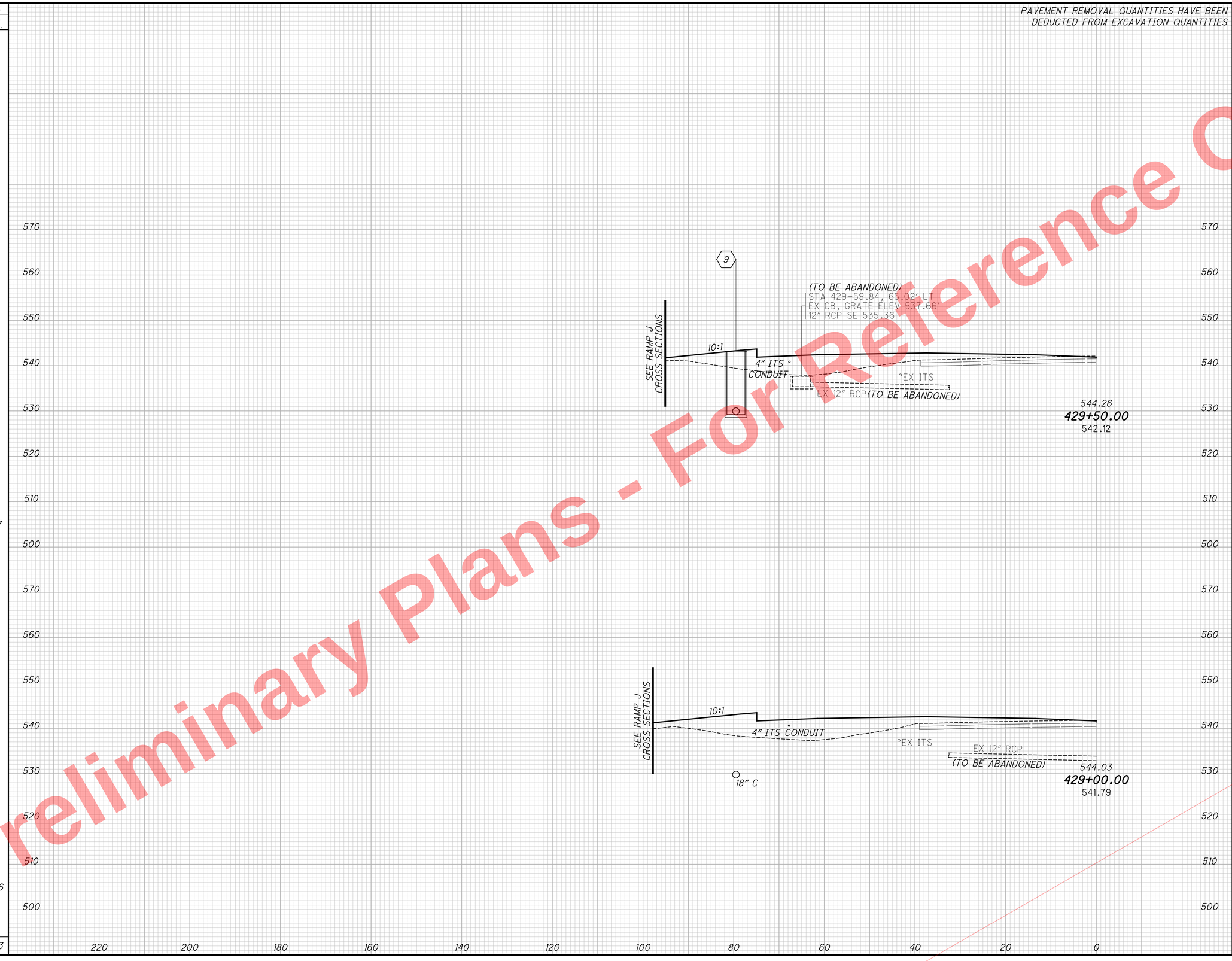

Preliminary Plans - For Reference Only

CROSS SECTIONS I.R. 75 SOUTHBOUND
STA. 429+00.00 TO STA. 429+50.00

HAM-75-7.85

337
1047

J:\20110903\ODOT\HAM\7889\roadway\sheets\77889XS001.dgn 5/22/2026 10:17:00 AM hbrendlinger

SEEDING	
END WIDTH	SQ. YDS.

PAVEMENT REMOVAL QUANTITIES HAVE BEEN DEDUCTED FROM EXCAVATION QUANTITIES

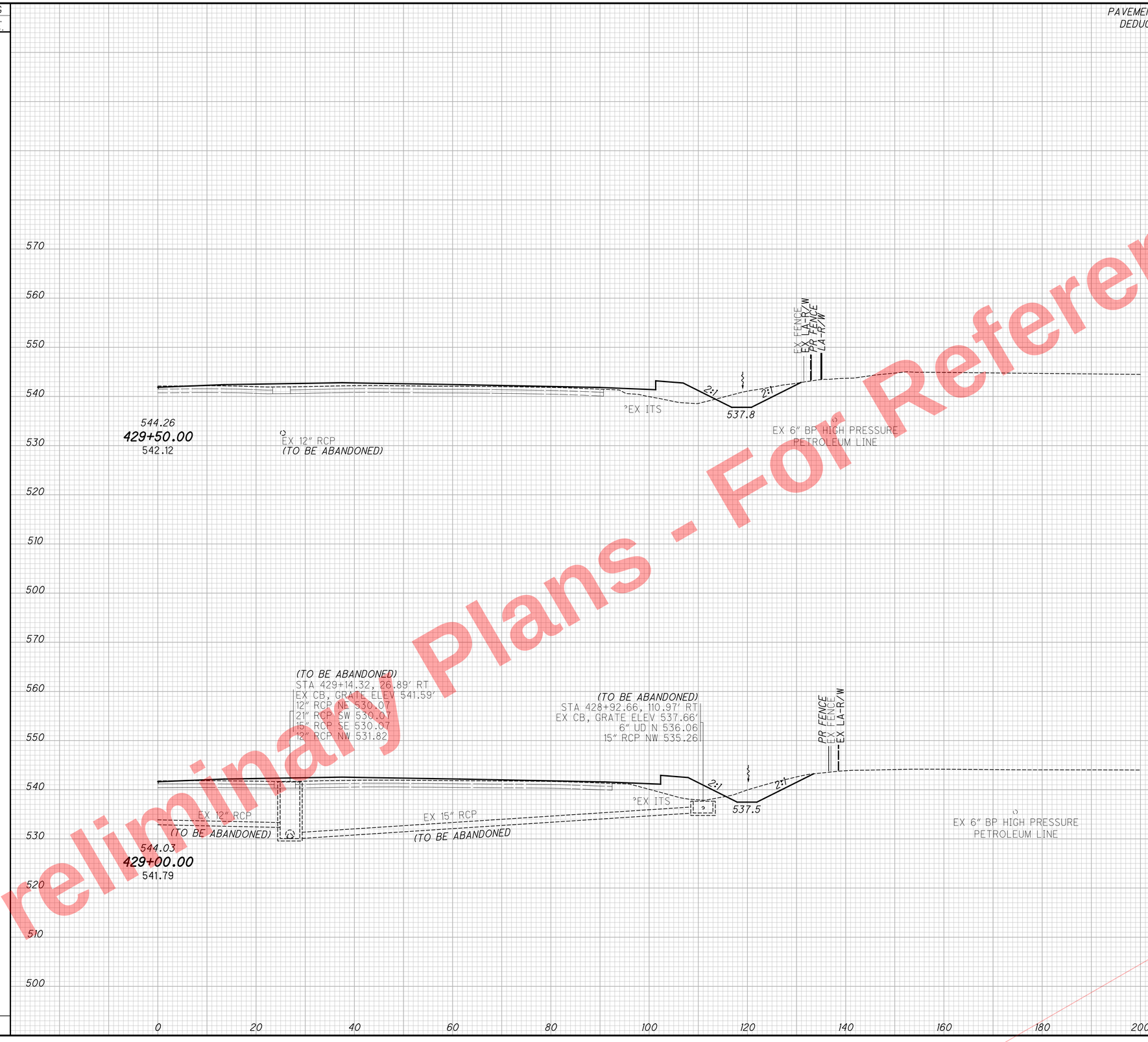

END AREA		VOLUME	
CUT	FILL	CUT	FILL
34	454		
		60	878
31	494		
		68	944
		128	1822

CALCULATED SEA
CHECKED DLR

CROSS SECTIONS I.R. 75 NORTHBOUND
STA. 429+00.00 TO STA. 429+50.00

HAM-75-7.85

338
1047

Preliminary Plans - For Reference Only

J:\20110903\ODOT\HAM\7889\roadway\sheets\77889XS001.dgn 5/22/2026 10:17:00 AM hbrendlinger

SEEDING	
END WIDTH	SQ. YDS.
	46
	272
	51
	300
	572

PAVEMENT REMOVAL QUANTITIES HAVE BEEN DEDUCTED FROM EXCAVATION QUANTITIES

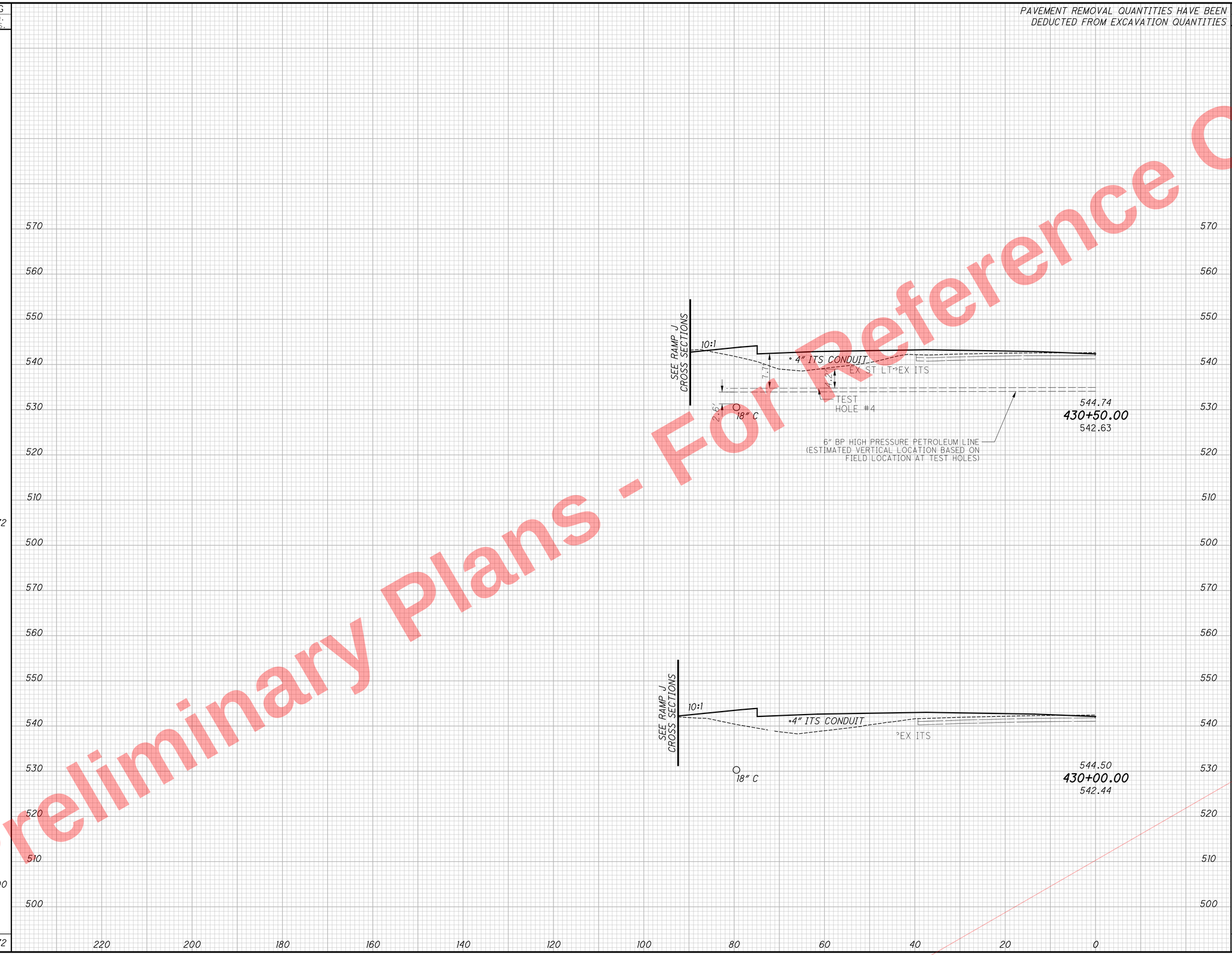

END AREA		VOLUME	
CUT	FILL	CUT	FILL

CALCULATED SEA
CHECKED DLR

CROSS SECTIONS I.R. 75 SOUTHBOUND
STA. 430+00.00 TO STA. 430+50.00

HAM-75-7.85

339
1047

Preliminary Plans - For Reference Only

J:\20110903\ODOT\HAM\77889\roadway\sheets\77889XS001.dgn 5/22/2026 10:17:01 AM hbrendlinger

SEEDING	
END WIDTH	SQ. YDS.

PAVEMENT REMOVAL QUANTITIES HAVE BEEN DEDUCTED FROM EXCAVATION QUANTITIES

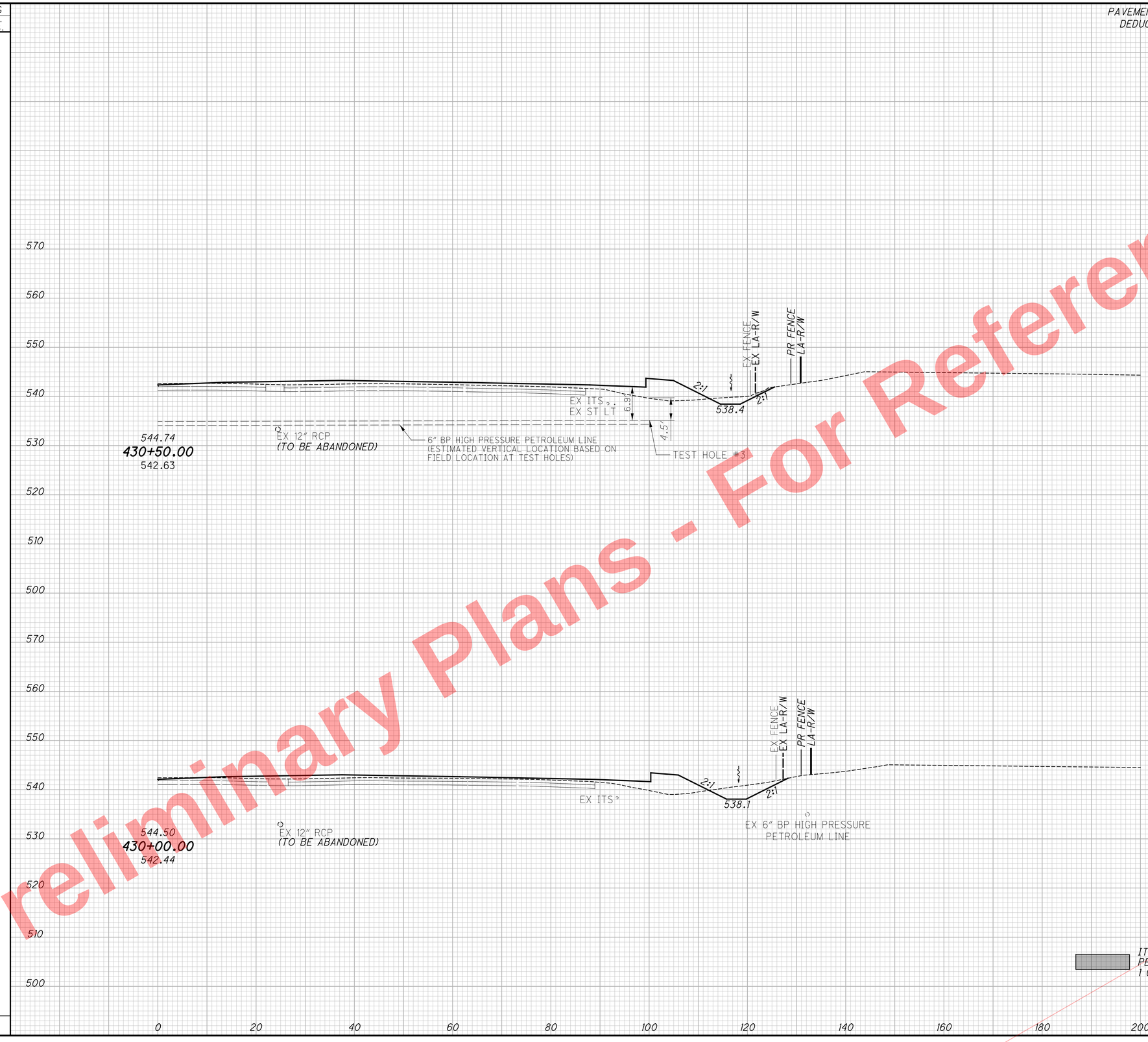

END AREA		VOLUME	
CUT	FILL	CUT	FILL
11	410		
		34	769
26	420		
		55	810
		89	1579

CALCULATED SEA
CHECKED DLR

CROSS SECTIONS I.R. 75 NORTHBOUND
STA. 430+00.00 TO STA. 430+50.00

HAM-75-7.85

340
1047

Preliminary Plans - For Reference Only

J:\20110903\ODOT\HAM\7889\roadway\sheets\77889XS001.dgn 5/22/2026 10:17:01 AM hbrendlinger

SEEDING	
END WIDTH	SQ. YDS.
38	
	228
42	
	244
	472

PAVEMENT REMOVAL QUANTITIES HAVE BEEN DEDUCTED FROM EXCAVATION QUANTITIES

END AREA		VOLUME	
CUT	FILL	CUT	FILL

CALCULATED SEA

CHECKED DLR

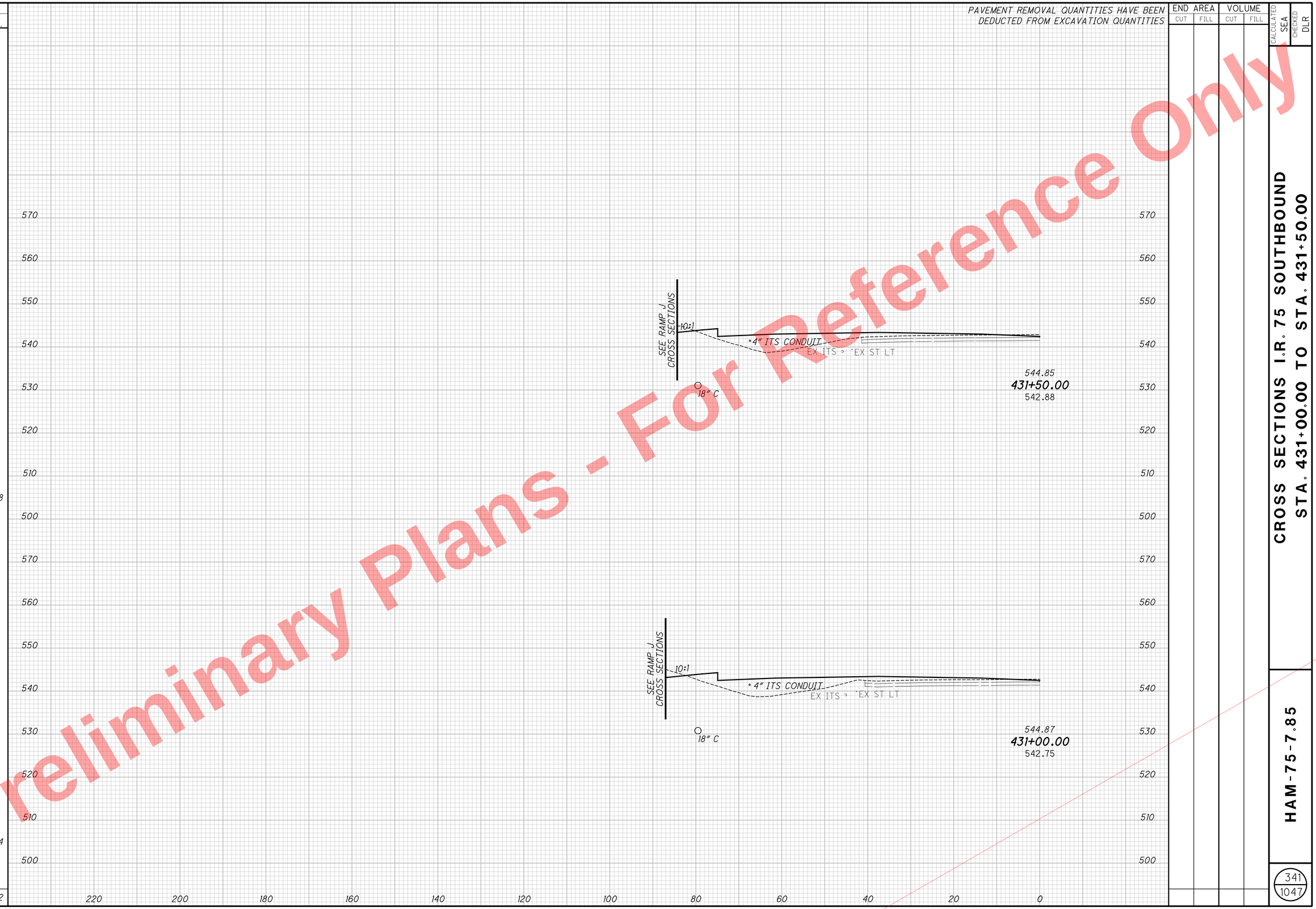

CROSS SECTIONS I.R. 75 SOUTHBOUND
STA. 431+00.00 TO STA. 431+50.00

HAM-75-7.85

341
1047

Preliminary Plans - Not For Reference Only

J:\20110903\ODOT\HAM\77889\roadway\sheets\77889XS001.dgn 5/22/2026 10:17:02 AM hbrendlinger

PAVEMENT REMOVAL QUANTITIES HAVE BEEN DEDUCTED FROM EXCAVATION QUANTITIES

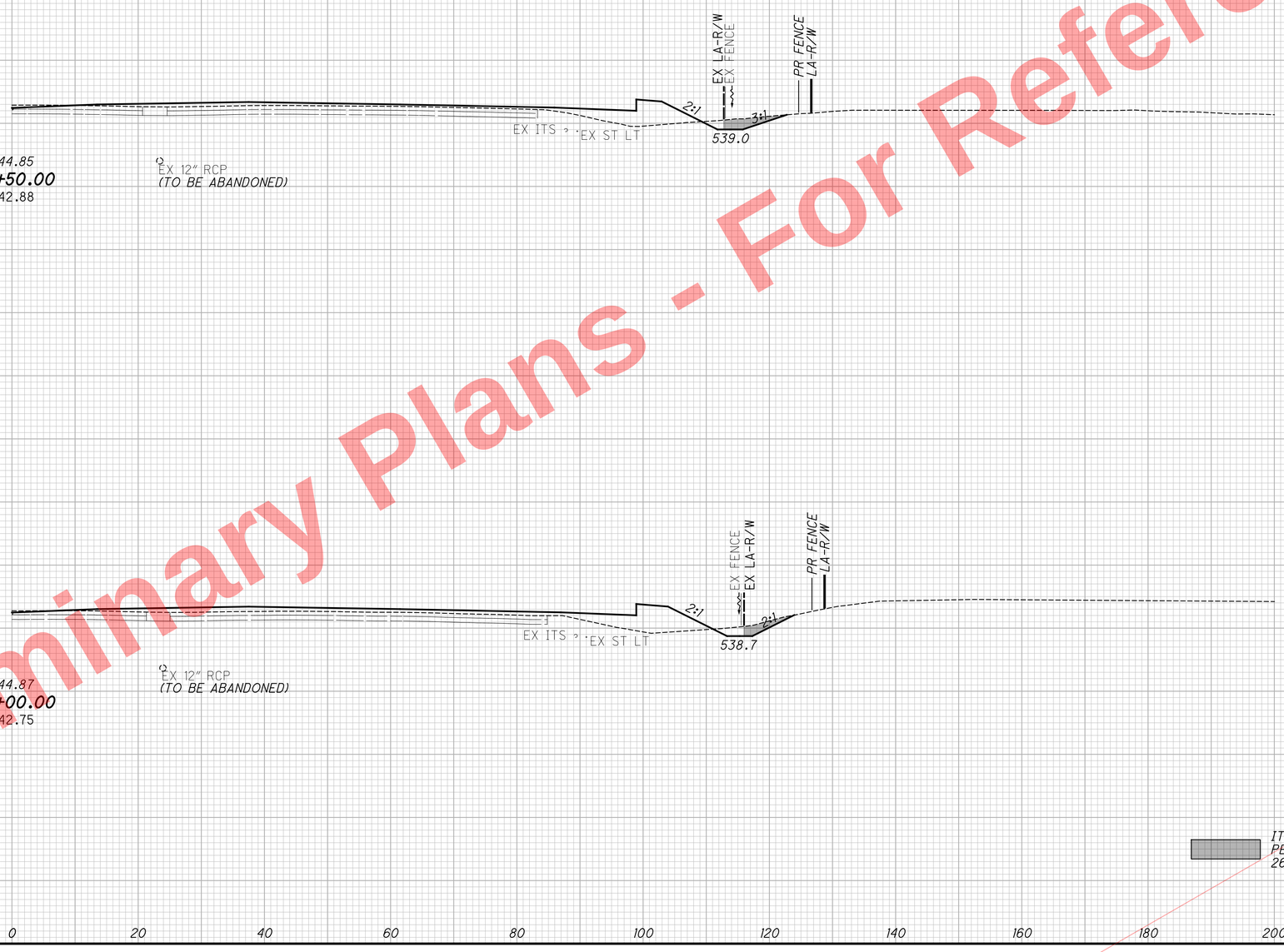

SEEDING END WIDTH	SEEDING SQ. YDS.	END AREA CUT	END AREA FILL	VOLUME CUT	VOLUME FILL
		7	358		
				15	700
		10	398		
				19	749
				34	1449

CALCULATED SEA
CHECKED DLR

CROSS SECTIONS I.R. 75 NORTHBOUND
STA. 431+00.00 TO STA. 431+50.00

HAM-75-7.85

342
1047

Preliminary Plans - Not For Reference Only

J:\20110903\ODOT\HAM\77889\roadway\sheets\77889XS001.dgn 5/22/2026 10:17:03 AM hbrendlinger

SEEDING	
END WIDTH	SQ. YDS.
25	167
34	206
	373

PAVEMENT REMOVAL QUANTITIES HAVE BEEN DEDUCTED FROM EXCAVATION QUANTITIES

END AREA		VOLUME	
CUT	FILL	CUT	FILL

CALCULATED SEA
CHECKED DLR

570 560 550 540 530 520 510 500

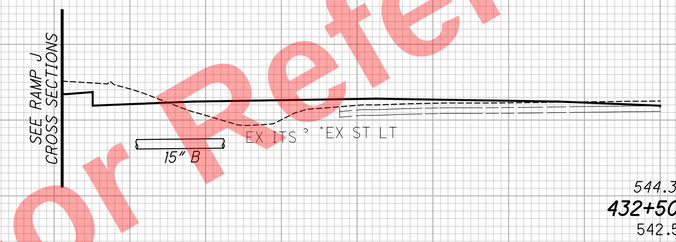



220 200 180 160 140 120 100 80 60 40 20 0

CROSS SECTIONS I.R. 75 SOUTHBOUND
STA. 432+00.00 TO STA. 432+50.00

HAM-75-7.85

343
1047

Preliminary Plans - For Reference Only

J:\20110903\ODOT\HAM\7889\roadway\sheets\77889XS001.dgn 5/22/2026 10:17:03 AM hbrendlinger

PAVEMENT REMOVAL QUANTITIES HAVE BEEN DEDUCTED FROM EXCAVATION QUANTITIES

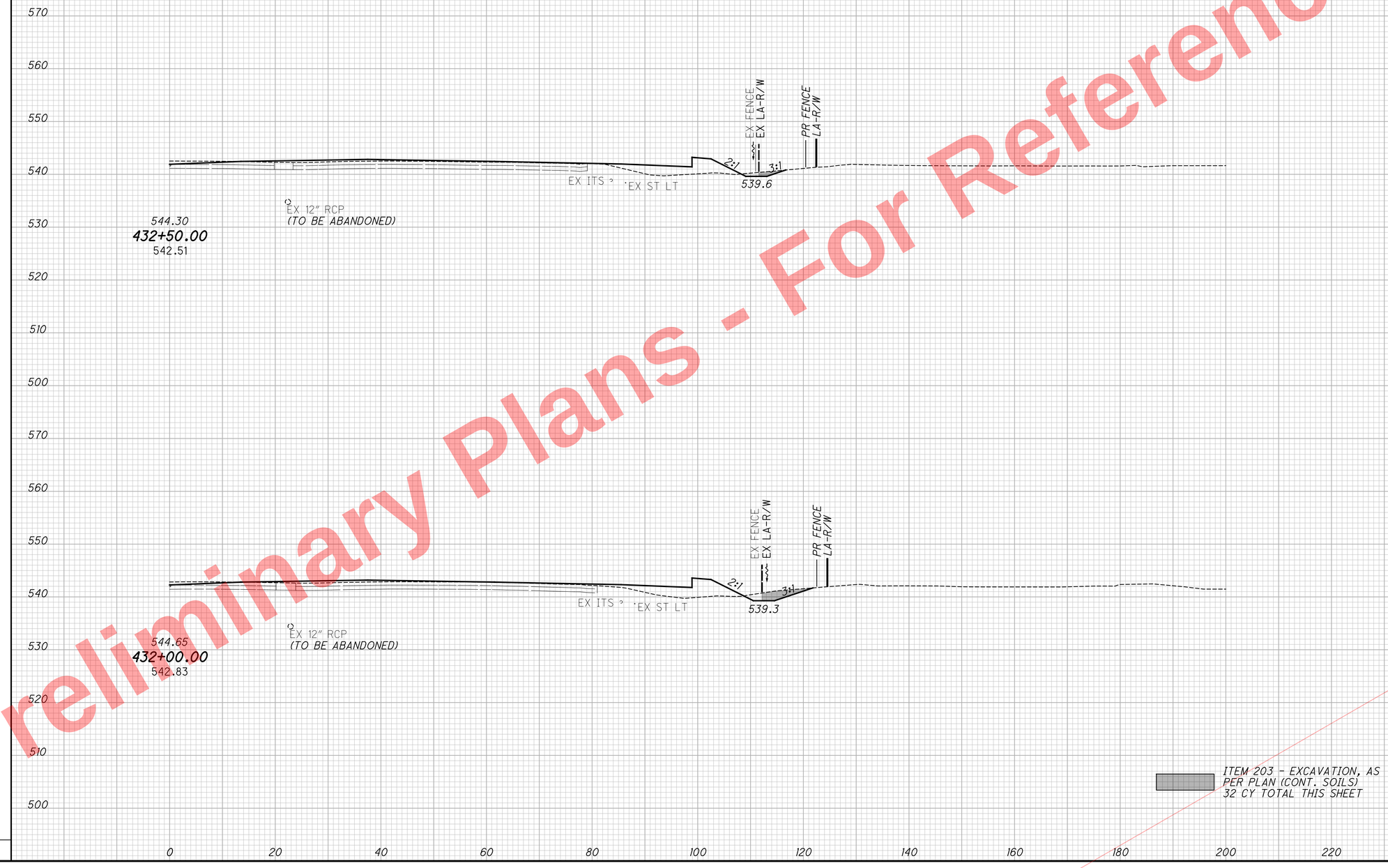

SEEDING END WIDTH	SEEDING SQ. YDS.	END AREA CUT	END AREA FILL	VOLUME CUT	VOLUME FILL
				56	1133
				19	606
		14	297		
				37	527
		26	272		

CALCULATED SEA
CHECKED DLR

CROSS SECTIONS I.R. 75 NORTHBOUND
STA. 432+00.00 TO STA. 432+50.00

HAM-75-7.85

344
1047

Preliminary Plans - For Reference Only

J:\20110903\ODOT\HAM\77889\roadway\sheets\77889XS001.dgn 5/22/2026 10:17:04 AM hbrendlinger

PAVEMENT REMOVAL QUANTITIES HAVE BEEN DEDUCTED FROM EXCAVATION QUANTITIES

SEEDING	
END WIDTH	SQ. YDS.
35	250
53	217
	467

END AREA		VOLUME	
CUT	FILL	CUT	FILL

CALCULATED SEA
CHECKED DLR

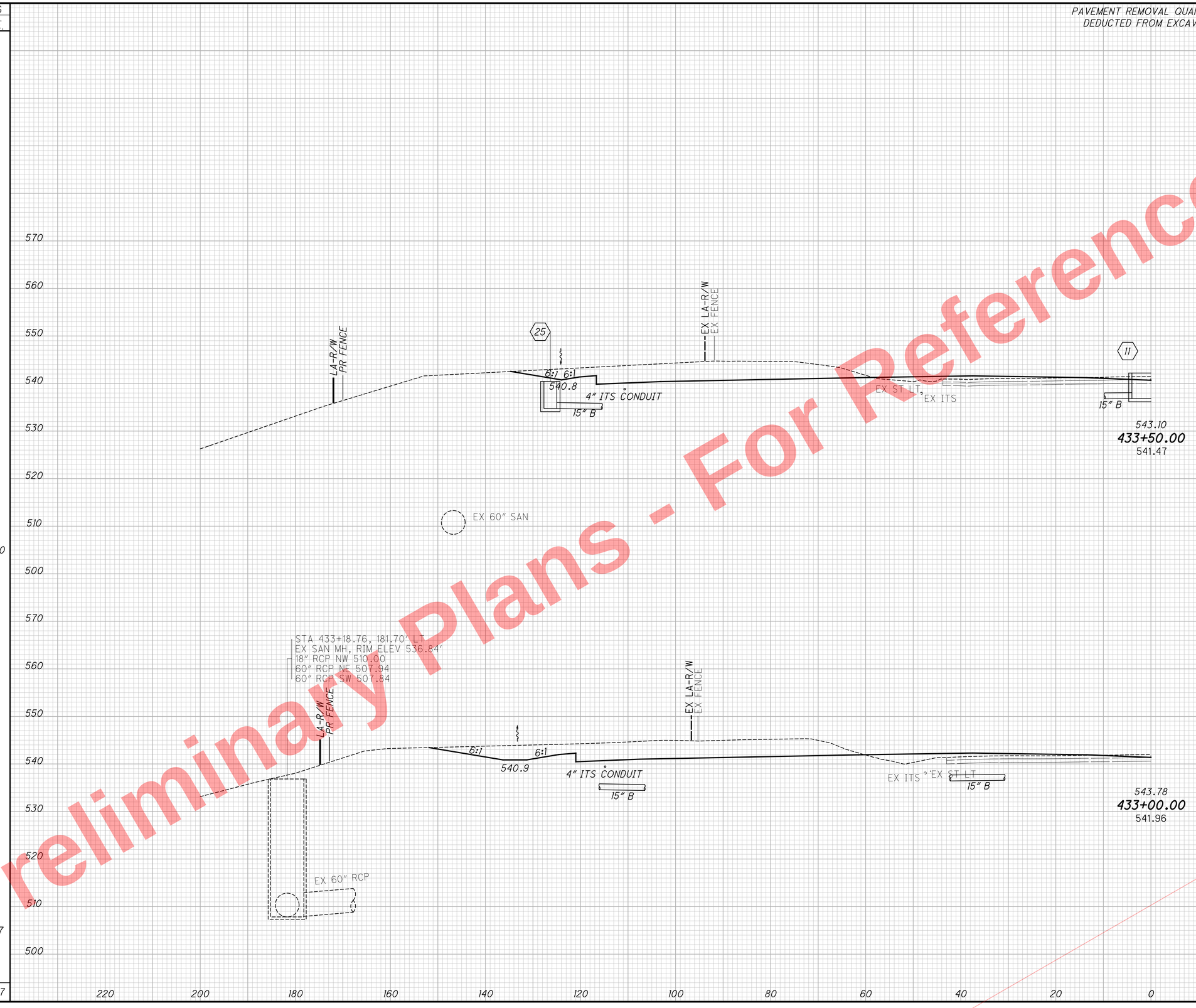

Preliminary Plans - Not For Reference Only

CROSS SECTIONS I.R. 75 SOUTHBOUND
STA. 433+00.00 TO STA. 433+50.00

HAM-75-7.85

345
1047

J:\20110903\ODOT\HAM\77889\roadway\sheets\77889XS001.dgn 5/22/2026 10:17:04 AM hbrendlinger

PAVEMENT REMOVAL QUANTITIES HAVE BEEN DEDUCTED FROM EXCAVATION QUANTITIES

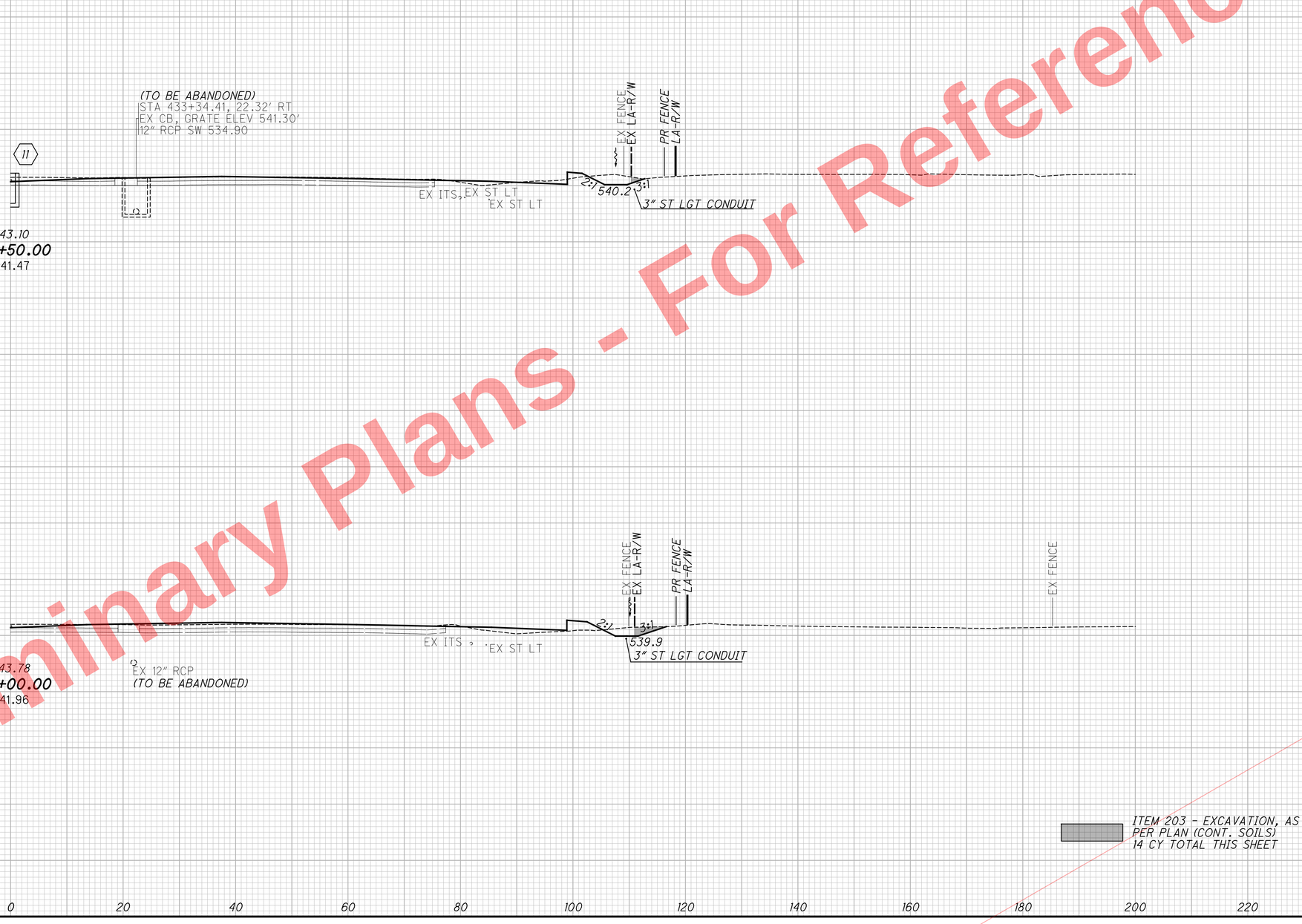

SEEDING END WIDTH	SEEDING SQ. YDS.	END AREA CUT	END AREA FILL	VOLUME CUT	VOLUME FILL
		237	179		
				473	370
		274	221		
				278	456
				751	826

CALCULATED SEA
CHECKED DLR

CROSS SECTIONS I.R. 75 NORTHBOUND
STA. 433+00.00 TO STA. 433+50.00

HAM-75-7.85

346
1047

Preliminary Plans - Not For Reference Only

J:\20110903\ODOT\HAM\77889\roadway\sheets\77889XS001.dgn 5/22/2026 10:17:05 AM hbrendlinger

SEEDING	
END WIDTH	SQ. YDS.
49	157
49	150
	307

PAVEMENT REMOVAL QUANTITIES HAVE BEEN DEDUCTED FROM EXCAVATION QUANTITIES

END AREA		VOLUME	
CUT	FILL	CUT	FILL

CALCULATED SEA
CHECKED DLR

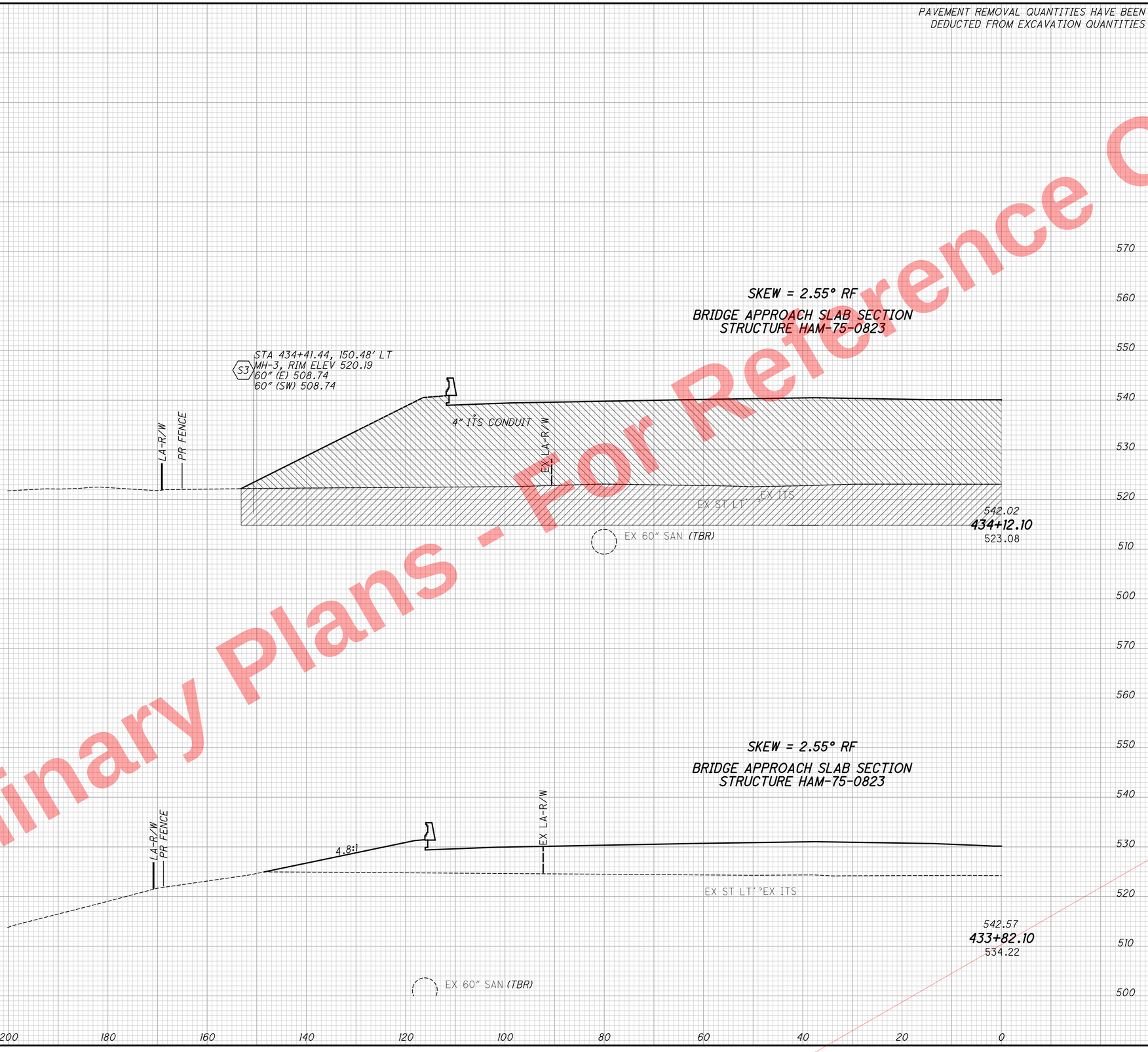

Preliminary Plans - For Reference Only

CROSS SECTIONS I.R. 75 SOUTHBOUND
STA. 433+82.10 TO STA. 434+12.10

HAM-75-7.85

347
1047

J:\20110903\ODOT\HAM\7889\roadway\sheets\77889XS001.dgn 5/22/2026 10:17:06 AM hbrendlinger

PAVEMENT REMOVAL QUANTITIES HAVE BEEN DEDUCTED FROM EXCAVATION QUANTITIES

SEEDING

END WIDTH	SQ. YDS.

SKEW = 2.55° RF

BRIDGE APPROACH SLAB SECTION
STRUCTURE HAM-75-0823

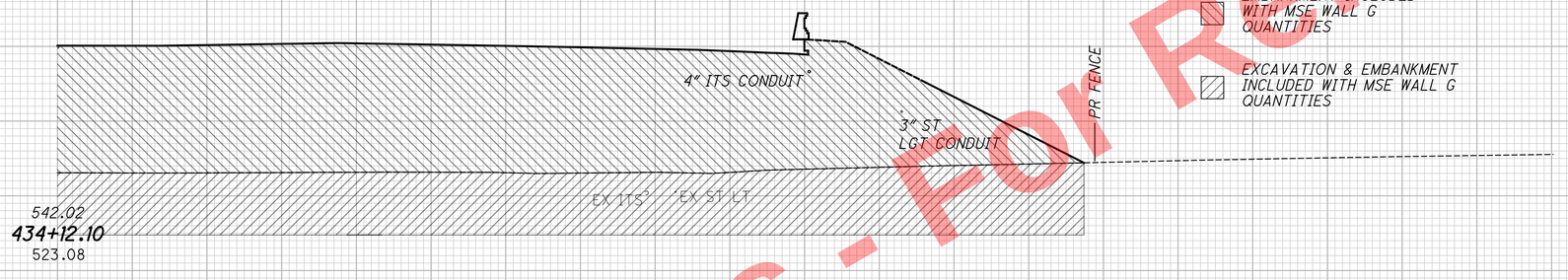

SKEW = 2.55° RF

BRIDGE APPROACH SLAB SECTION
STRUCTURE HAM-75-0823



END AREA CUT	END AREA FILL	VOLUME CUT	VOLUME FILL
0	0		
		0	829
0	1493		
		141	994
		141	1823

CALCULATED SEA
CHECKED DLR

CROSS SECTIONS I.R. 75 NORTHBOUND
STA. 433+82.10 TO STA. 434+12.10

HAM-75-7.85

348
1047

Preliminary Plans - For Reference Only

J:\2011090\3\ODOT\HAM\77889\roadway\sheets\77889XS001.dgn 5/22/2026 10:17:06 AM hbrendlinger

SEEDING	
END WIDTH	SQ. YDS.
45	140
39	0
	140

PAVEMENT REMOVAL QUANTITIES HAVE BEEN DEDUCTED FROM EXCAVATION QUANTITIES

END AREA		VOLUME	
CUT	FILL	CUT	FILL

CALCULATED SEA
CHECKED DLR

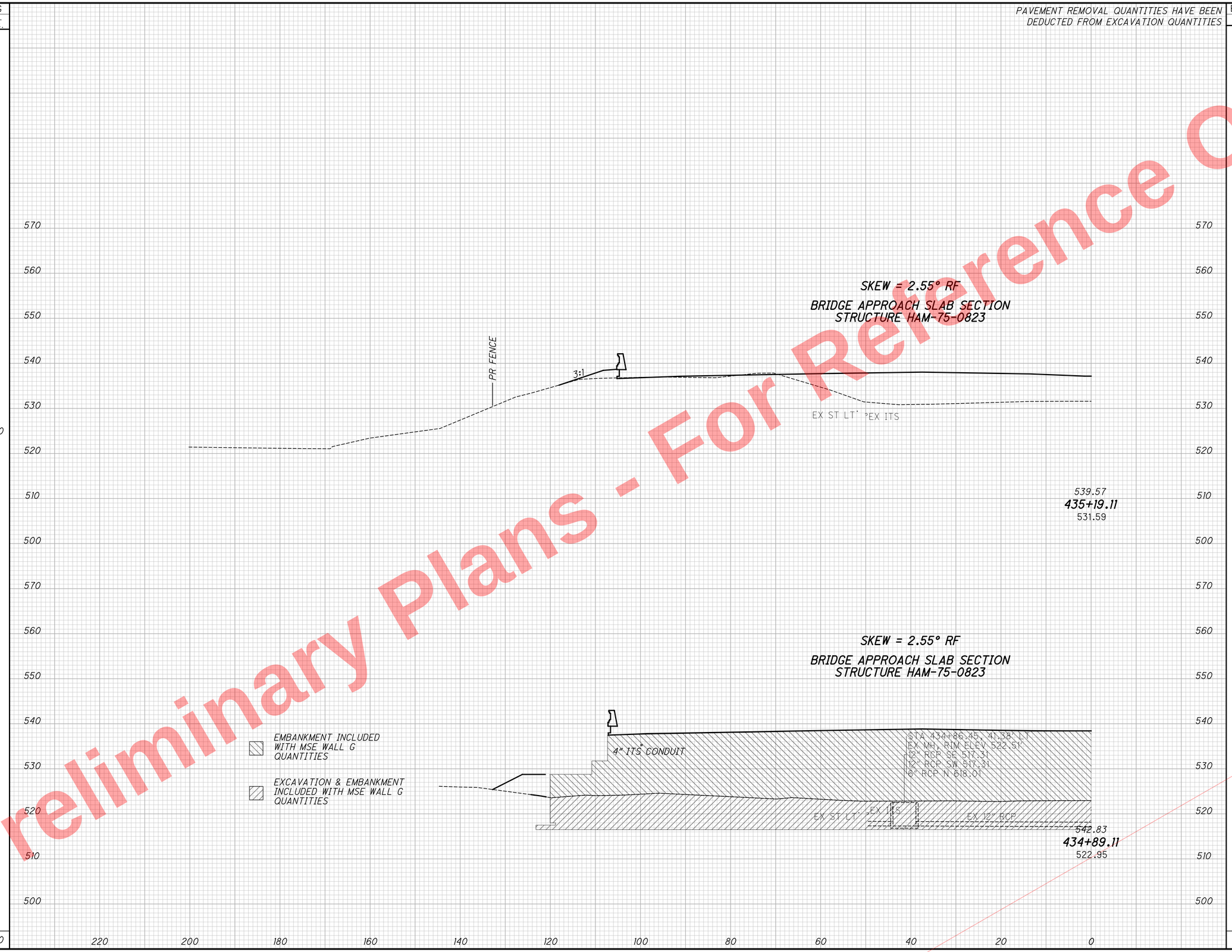

SKEW = 2.55° RF

BRIDGE APPROACH SLAB SECTION
STRUCTURE HAM-75-0823

EMBANKMENT INCLUDED WITH MSE WALL G QUANTITIES

EXCAVATION & EMBANKMENT INCLUDED WITH MSE WALL G QUANTITIES

SKEW = 2.55° RF

BRIDGE APPROACH SLAB SECTION
STRUCTURE HAM-75-0823

CROSS SECTIONS I.R. 75 SOUTHBOUND
STA. 434+89.11 TO STA. 435+19.11

HAM-75-7.85

349
1047

Preliminary Plans - Not For Reference Only

J:\20110903\ODOT\HAM\77889\roadway\sheets\77889XS001.dgn 5/22/2026 10:17:07 AM hbrendlinger

SEEDING	
END WIDTH	SQ. YDS.

PAVEMENT REMOVAL QUANTITIES HAVE BEEN DEDUCTED FROM EXCAVATION QUANTITIES

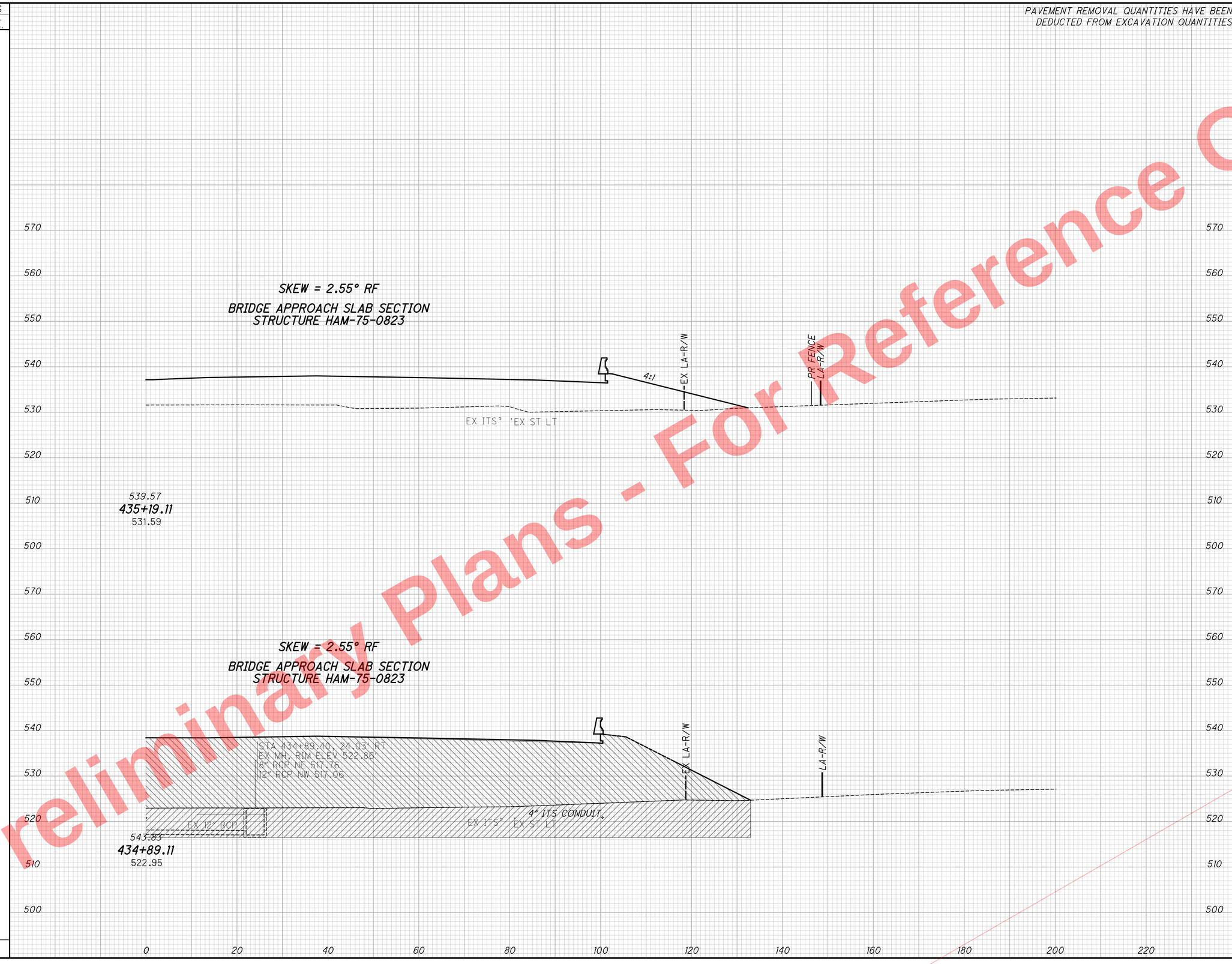

END AREA		VOLUME	
CUT	FILL	CUT	FILL
3	1181		
		2	677
0	37		
		0	0
		2	677

CALCULATED SEA
CHECKED DLR

CROSS SECTIONS I.R. 75 NORTHBOUND
STA. 434+89.11 TO STA. 435+19.11

HAM-75-7.85

350
1047

Preliminary Plans - Not For Reference Only

J:\20110903\ODOT\HAM\77889\roadway\sheets\77889XS001.dgn 5/22/2026 10:17:08 AM hbrendlinger

SEEDING	
END WIDTH	SQ. YDS.
75	406
70	199
	605

PAVEMENT REMOVAL QUANTITIES HAVE BEEN DEDUCTED FROM EXCAVATION QUANTITIES

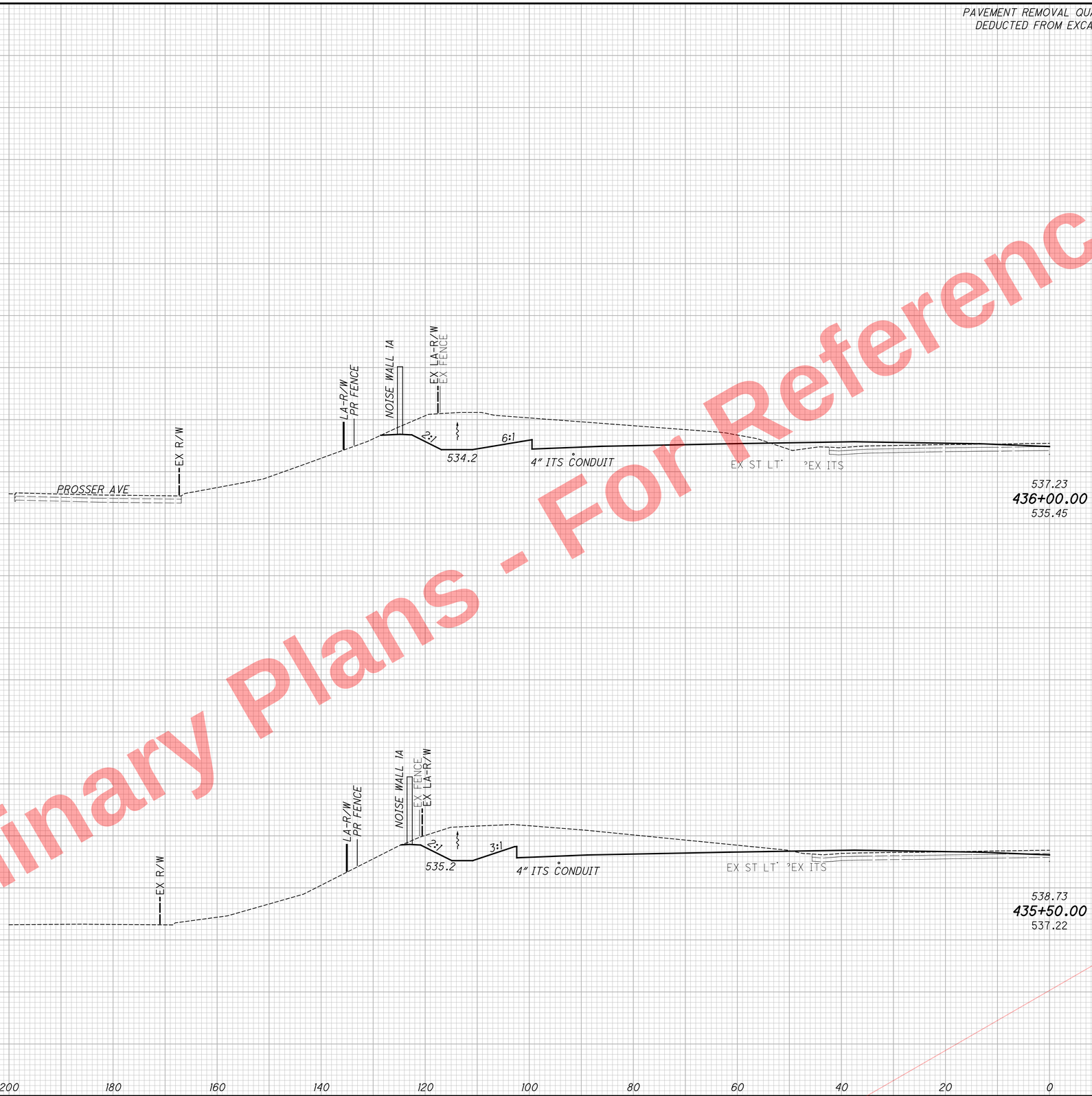

END AREA		VOLUME	
CUT	FILL	CUT	FILL

CALCULATED SEA
CHECKED DLR

CROSS SECTIONS I.R. 75 SOUTHBOUND
STA. 435+50.00 TO STA. 436+00.00

HAM-75-7.85

351
1047

Preliminary Plans - For Reference Only

J:\20110903\ODOT\HAM\77889\roadway\sheets\77889XS001.dgn 5/22/2026 10:17:08 AM hbrendlinger

SEEDING	
END WIDTH	SQ. YDS.

PAVEMENT REMOVAL QUANTITIES HAVE BEEN DEDUCTED FROM EXCAVATION QUANTITIES

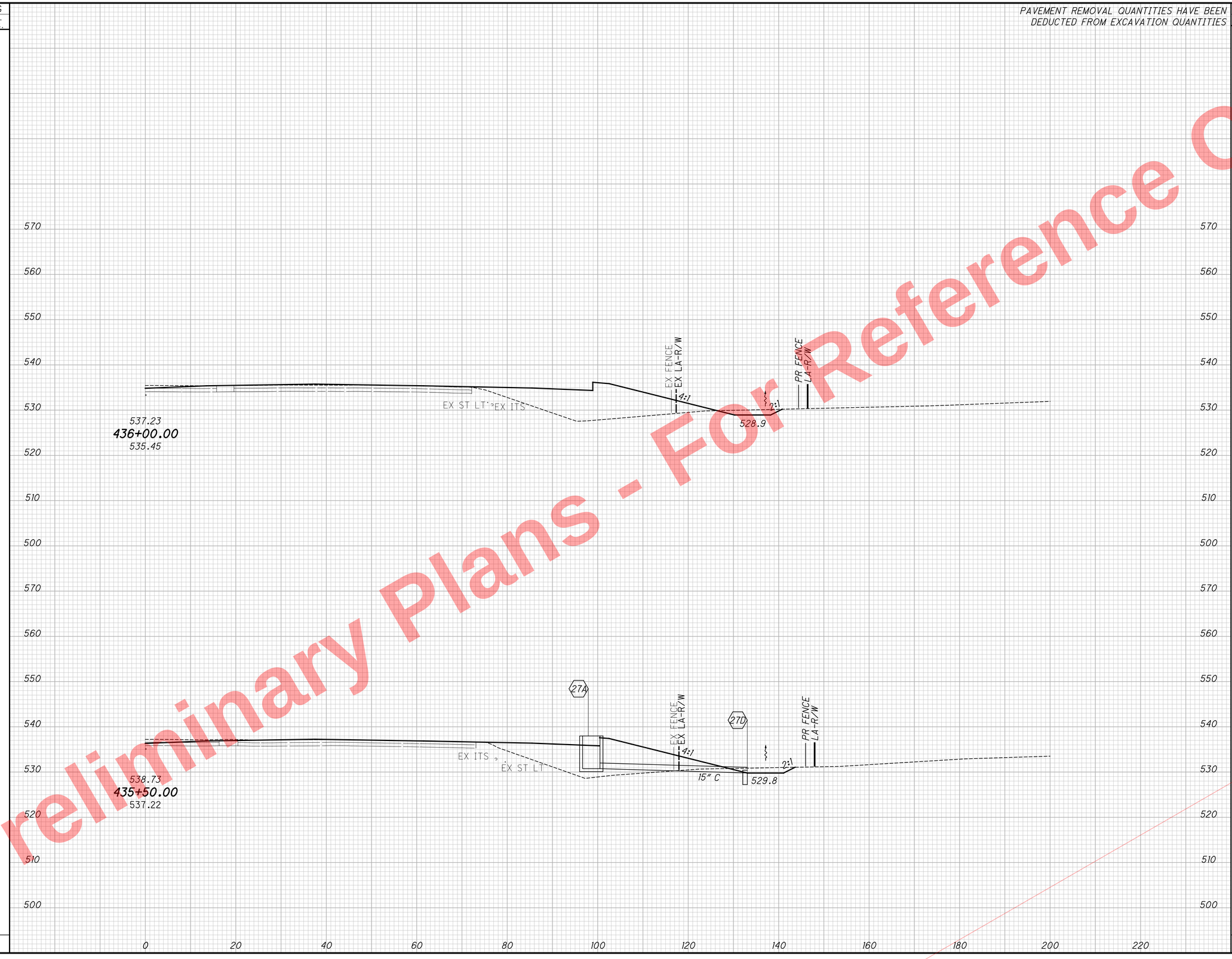

END AREA		VOLUME	
CUT	FILL	CUT	FILL
313	406		
		542	734
272	387		
		158	897
		700	1631

CALCULATED SEA
CHECKED DLR

CROSS SECTIONS I.R. 75 NORTHBOUND
STA. 435+50.00 TO STA. 436+00.00

HAM-75-7.85

352
1047

Preliminary Plans - For Reference Only

J:\20110903\ODOT\HAM\7889\roadway\sheets\77889XS001.dgn 5/22/2026 10:17:09 AM hbrendlinger

SEEDING	
END WIDTH	SQ. YDS.
75	417
74	416
	833

PAVEMENT REMOVAL QUANTITIES HAVE BEEN DEDUCTED FROM EXCAVATION QUANTITIES

END AREA		VOLUME	
CUT	FILL	CUT	FILL

CALCULATED SEA
CHECKED DLR

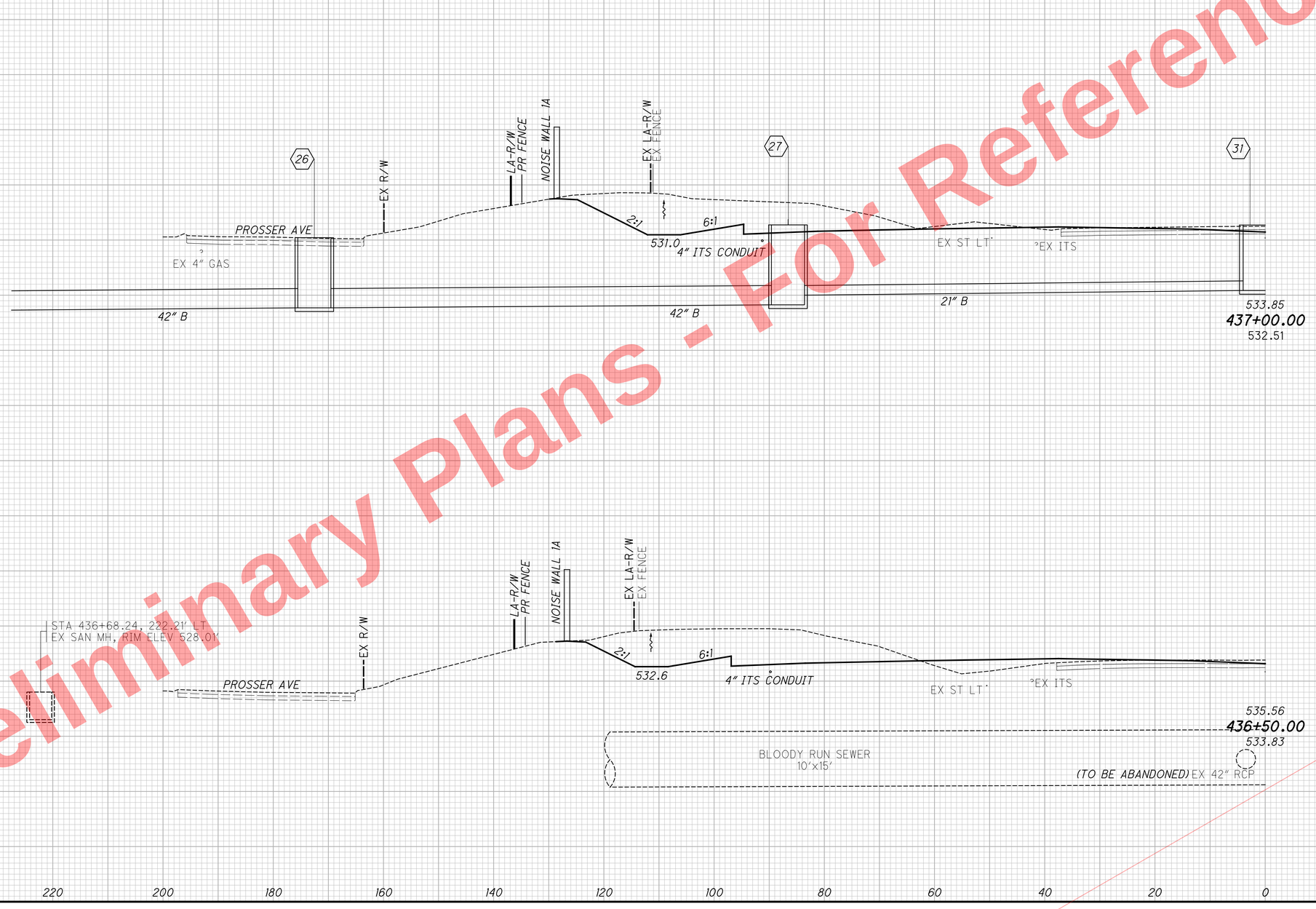

Preliminary Plans - For Reference Only

CROSS SECTIONS I.R. 75 SOUTHBOUND
STA. 436+50.00 TO STA. 437+00.00

HAM-75-7.85

353
1047

J:\20110903\ODOT\HAM\7889\roadway\sheets\77889XS001.dgn 5/22/2026 10:17:10 AM hbrendlinger

PAVEMENT REMOVAL QUANTITIES HAVE BEEN DEDUCTED FROM EXCAVATION QUANTITIES

SEEDING		END AREA		VOLUME	
END WIDTH	SQ. YDS.	CUT	FILL	CUT	FILL
		309	212		
				568	558
		304	391		
				571	737
				1139	1295

CALCULATED SEA
CHECKED DLR

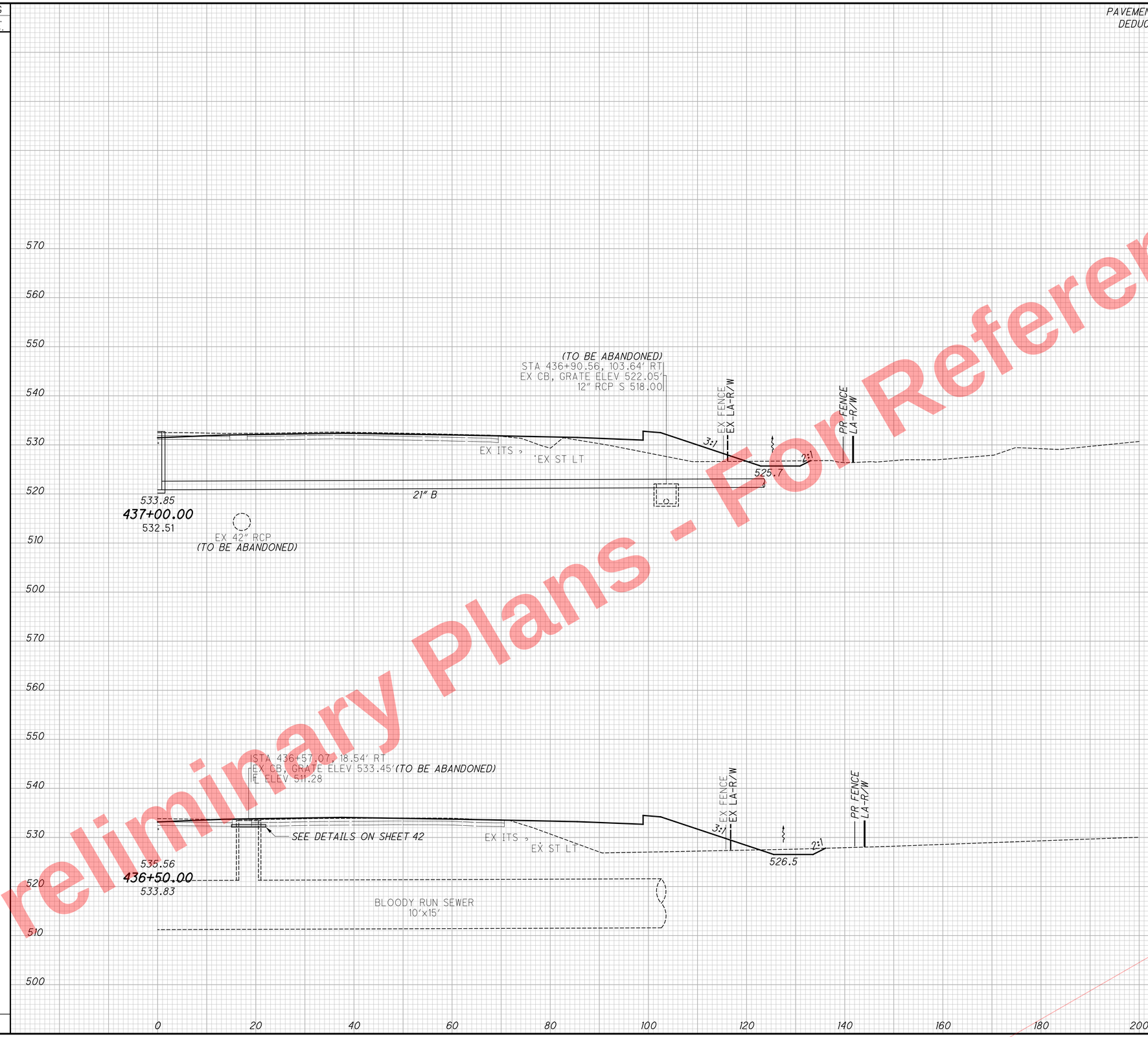

CROSS SECTIONS I.R. 75 NORTHBOUND
STA. 436+50.00 TO STA. 437+00.00

HAM-75-7.85

354
1047

Preliminary Plans - For Reference Only

J:\20110903\ODOT\HAM\7889\roadway\sheets\77889XS001.dgn 5/22/2026 10:17:10 AM hbrendlinger

SEEDING	
END WIDTH	SQ. YDS.
76	433
79	427
	860

PAVEMENT REMOVAL QUANTITIES HAVE BEEN DEDUCTED FROM EXCAVATION QUANTITIES

END AREA		VOLUME	
CUT	FILL	CUT	FILL

CALCULATED SEA
CHECKED DLR

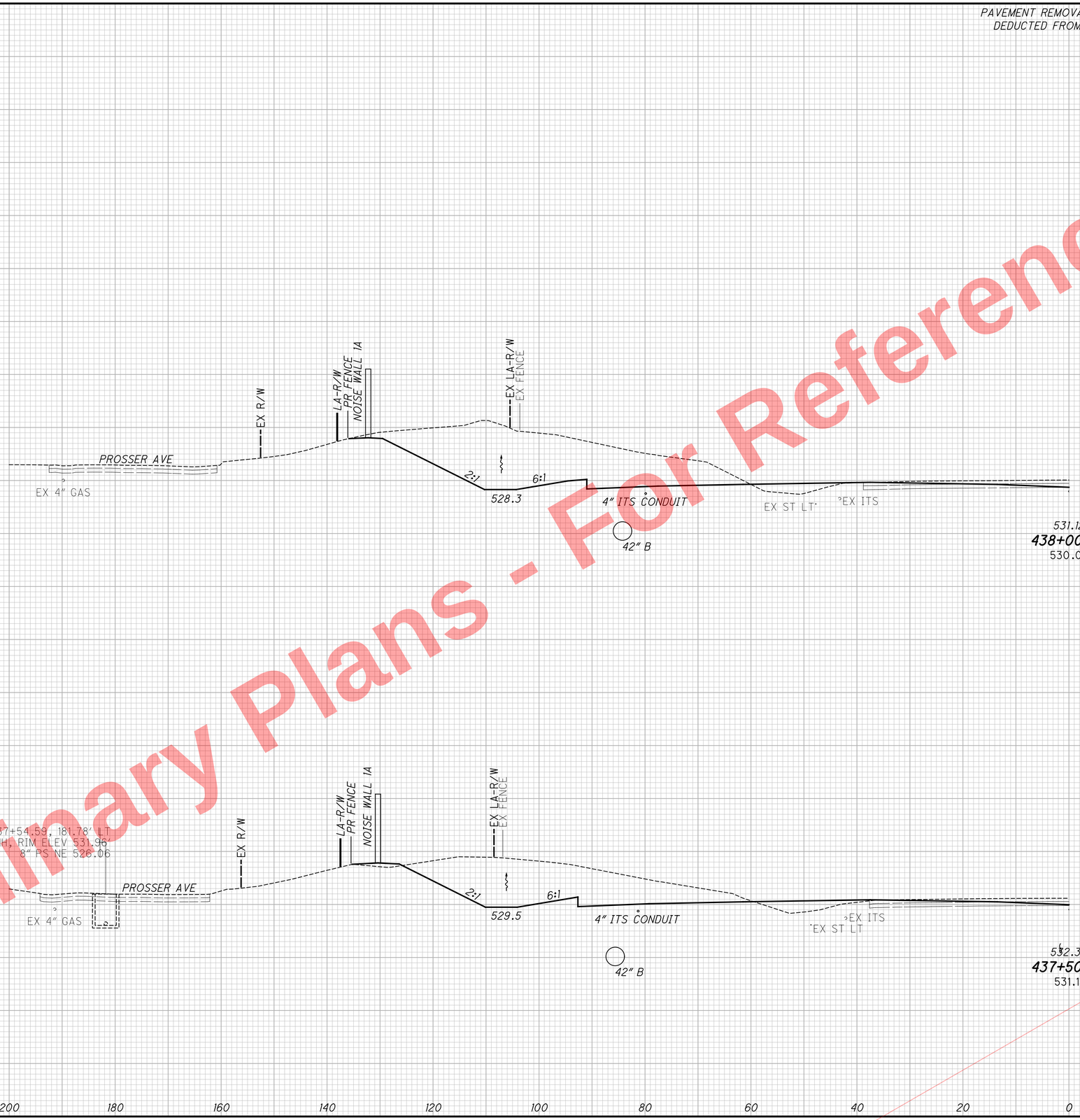

Preliminary Plans - For Reference Only

CROSS SECTIONS I.R. 75 SOUTHBOUND
STA. 437+50.00 TO STA. 438+00.00

HAM-75-7.85

355
1047

J:\20110903\ODOT\HAM\77889\roadway\sheets\77889XS001.dgn 5/22/2026 10:17:11 AM hbrendlinger

SEEDING	
END WIDTH	SQ. YDS.

PAVEMENT REMOVAL QUANTITIES HAVE BEEN DEDUCTED FROM EXCAVATION QUANTITIES

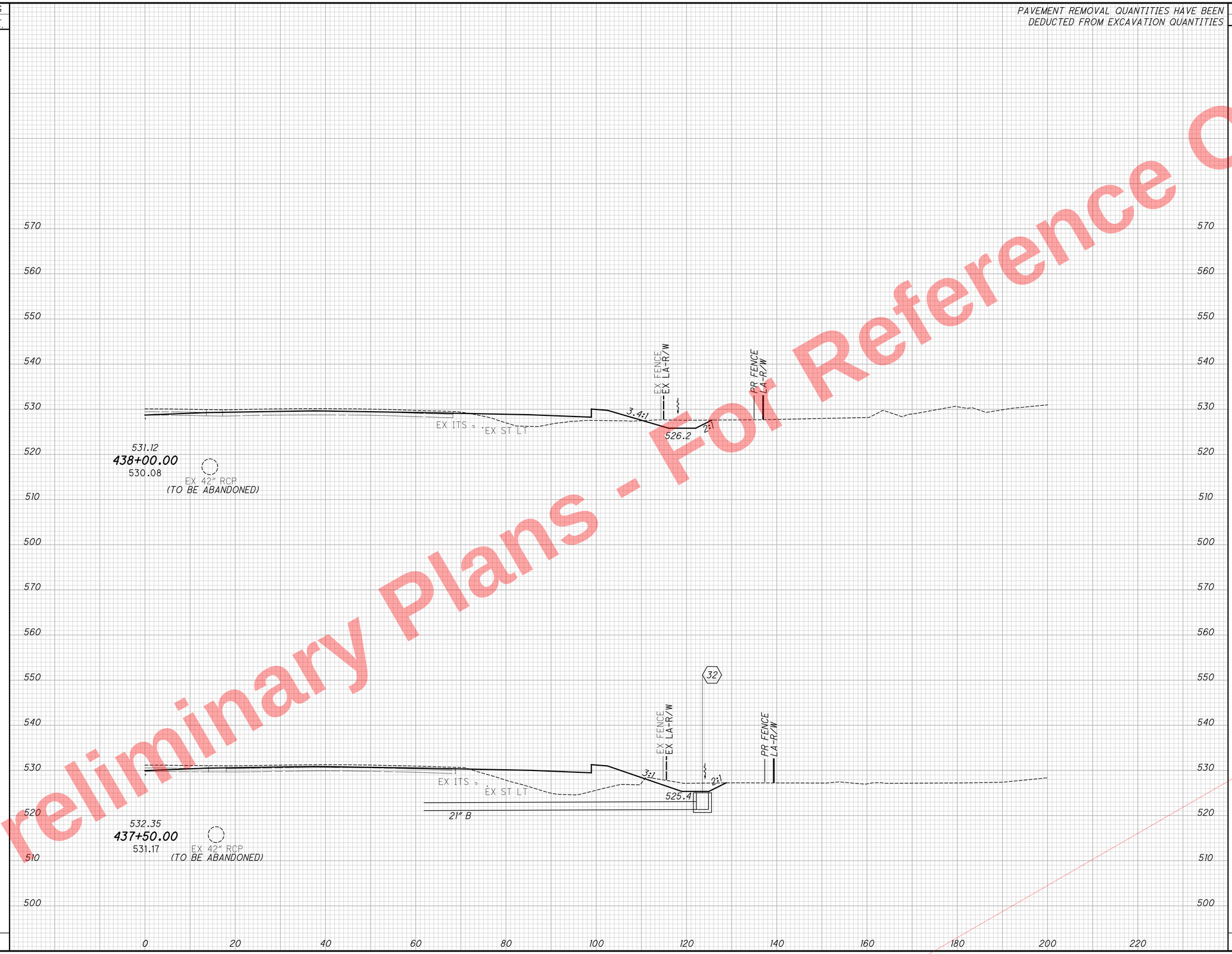

END AREA		VOLUME	
CUT	FILL	CUT	FILL
516	162		
		828	385
378	253		
		637	431
		1465	816

CALCULATED SEA
CHECKED DLR

CROSS SECTIONS I.R. 75 NORTHBOUND
STA. 437+50.00 TO STA. 438+00.00

HAM-75-7.85

356
1047

Preliminary Plans - For Reference Only

J:\20110903\ODOT\HAM\7889\roadway\sheets\77889XS001.dgn 5/22/2026 10:17:12 AM hbrendlinger

SEEDING	
END WIDTH	SQ. YDS.
96	539
96	478
	1017

PAVEMENT REMOVAL QUANTITIES HAVE BEEN DEDUCTED FROM EXCAVATION QUANTITIES

END AREA		VOLUME	
CUT	FILL	CUT	FILL

CALCULATED SEA
CHECKED DLR

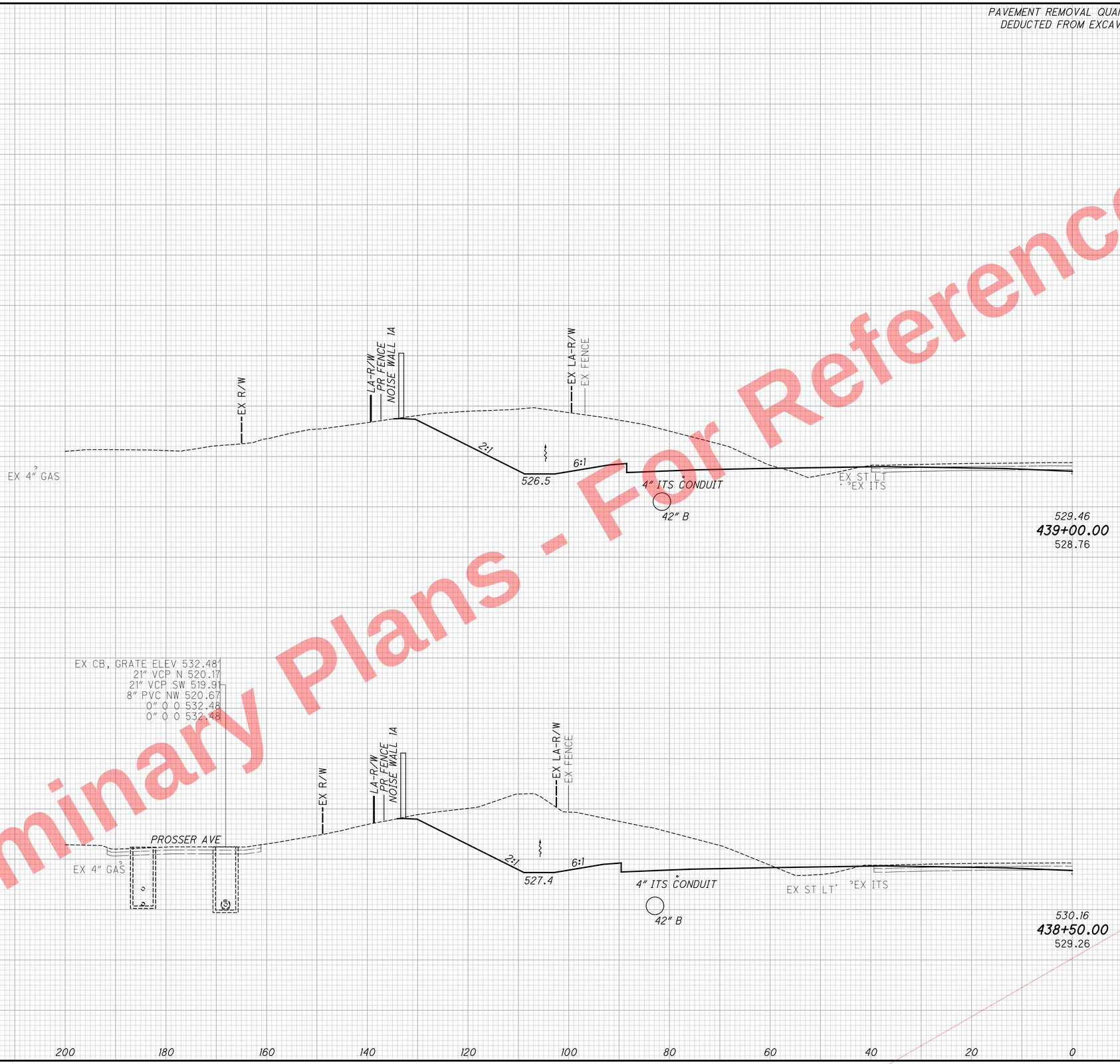

Preliminary Plans - For Reference Only

CROSS SECTIONS I.R. 75 SOUTHBOUND
STA. 438+50.00 TO STA. 439+00.00

HAM-75-7.85

357
1047

J:\20110903\ODOT\HAM\7889\roadway\sheets\77889XS001.dgn 5/22/2026 10:17:12 AM hbrendlinger

PAVEMENT REMOVAL QUANTITIES HAVE BEEN DEDUCTED FROM EXCAVATION QUANTITIES

SEEDING	
END WIDTH	SQ. YDS.

END AREA	
CUT	FILL
962	66
588	100

VOLUME	
CUT	FILL
1435	154
1022	243
2457	397

CALCULATED SEA
CHECKED DLR

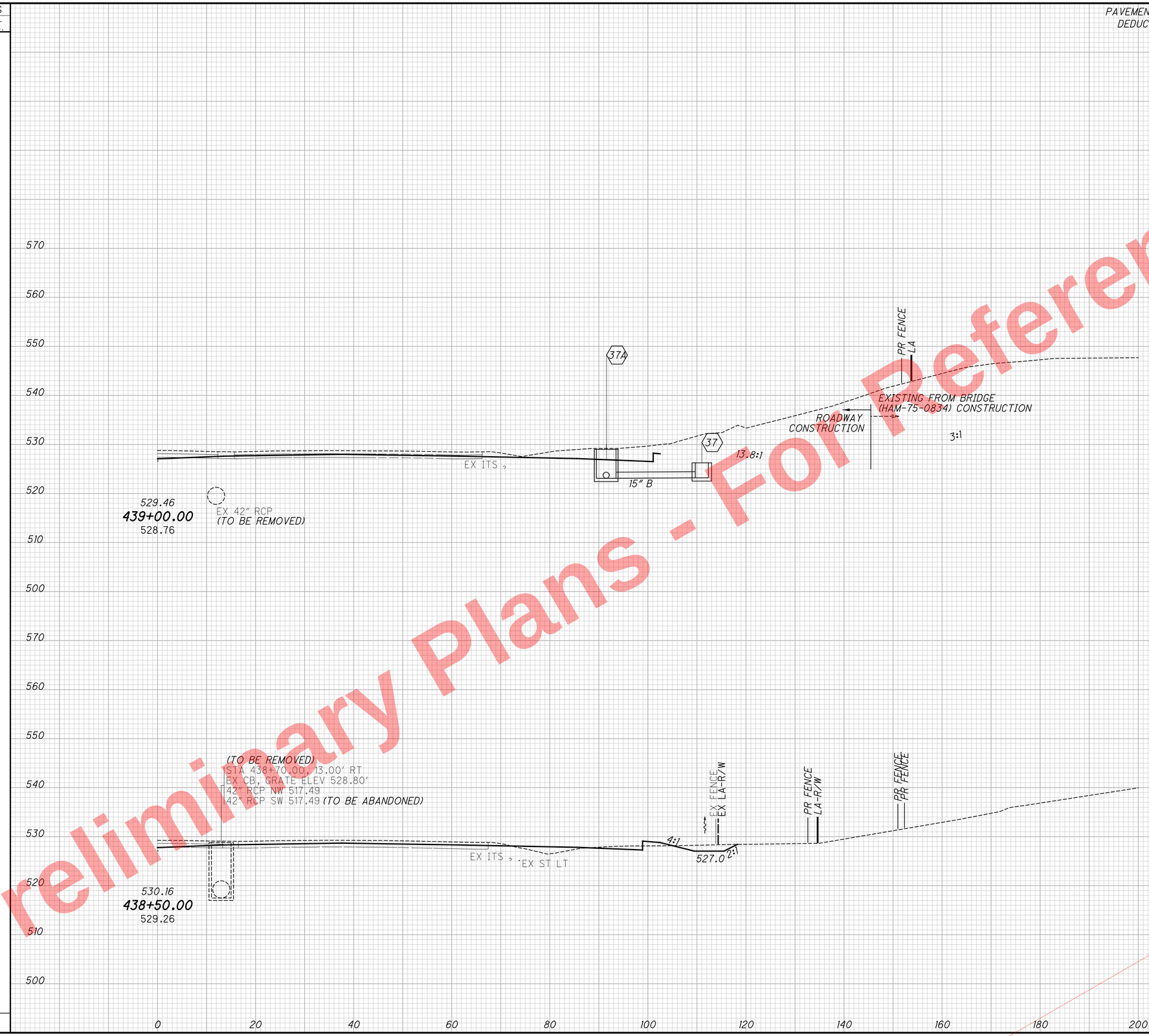

CROSS SECTIONS I.R. 75 NORTHBOUND
STA. 438+50.00 TO STA. 439+00.00

HAM-75-7.85

358
1047

Preliminary Plans - For Reference Only

J:\20110903\ODOT\HAM\77889\roadway\sheets\77889XS001.dgn 5/22/2026 10:17:13 AM hbrendlinger

SEEDING	
END WIDTH	SQ. YDS.
54	300
52	416
	716

PAVEMENT REMOVAL QUANTITIES HAVE BEEN DEDUCTED FROM EXCAVATION QUANTITIES

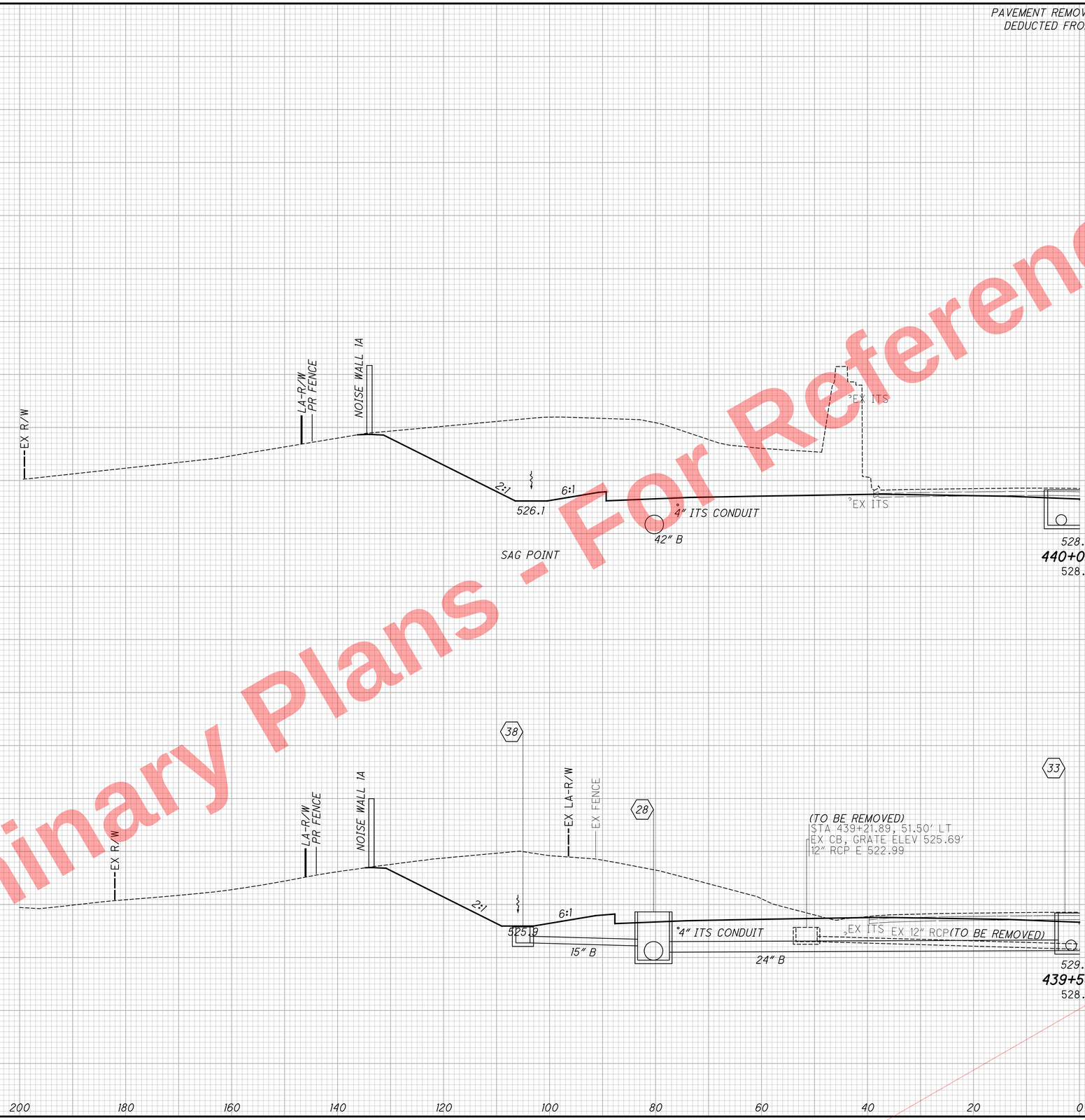

END AREA		VOLUME	
CUT	FILL	CUT	FILL

CALCULATED SEA
CHECKED DLR

CROSS SECTIONS I.R. 75 SOUTHBOUND
STA. 439+50.00 TO STA. 440+00.00

HAM-75-7.85

359
1047

Preliminary Plans - For Reference Only

J:\20110903\ODOT\HAM\7889\roadway\sheets\77889XS001.dgn 5/22/2026 10:17:14 AM hbrendlinger

SEEDING	
END WIDTH	SQ. YDS.

PAVEMENT REMOVAL QUANTITIES HAVE BEEN DEDUCTED FROM EXCAVATION QUANTITIES

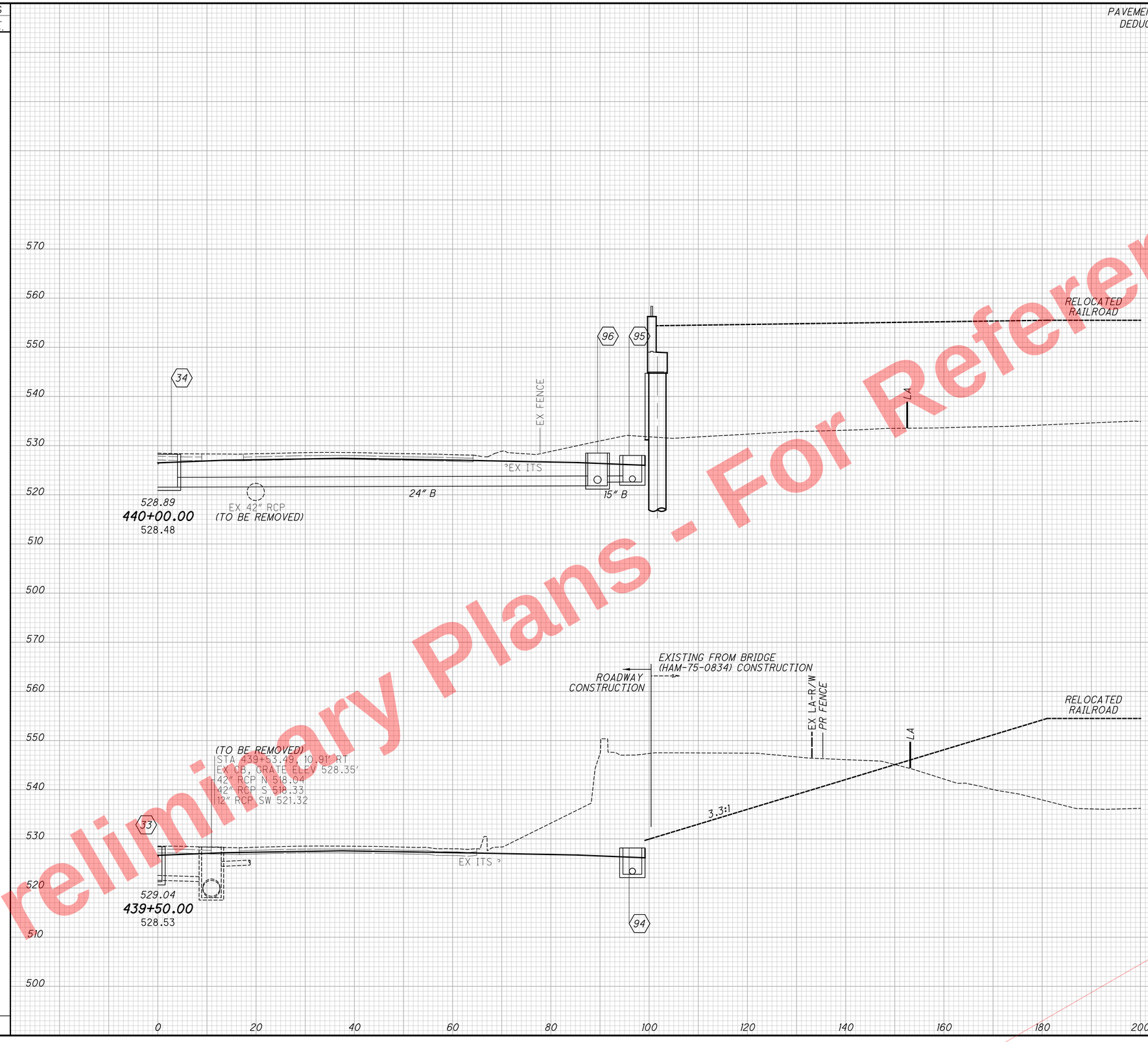

Preliminary Plans - For Reference Only

END AREA		VOLUME	
CUT	FILL	CUT	FILL
1079	16		
		1957	49
1035	37		
		1849	96
		3806	145

CALCULATED SEA
CHECKED DLR

CROSS SECTIONS I.R. 75 NORTHBOUND
STA. 439+50.00 TO STA. 440+00.00

HAM-75-7.85

360
1047

J:\20110903\ODOT\HAM\7889\roadway\sheets\77889XS001.dgn 5/22/2026 10:17:14 AM hbrendlinger

SEEDING	
END WIDTH	SQ. YDS.
0	50
18	200
	250

PAVEMENT REMOVAL QUANTITIES HAVE BEEN DEDUCTED FROM EXCAVATION QUANTITIES

END AREA		VOLUME	
CUT	FILL	CUT	FILL

CALCULATED SEA
CHECKED DLR

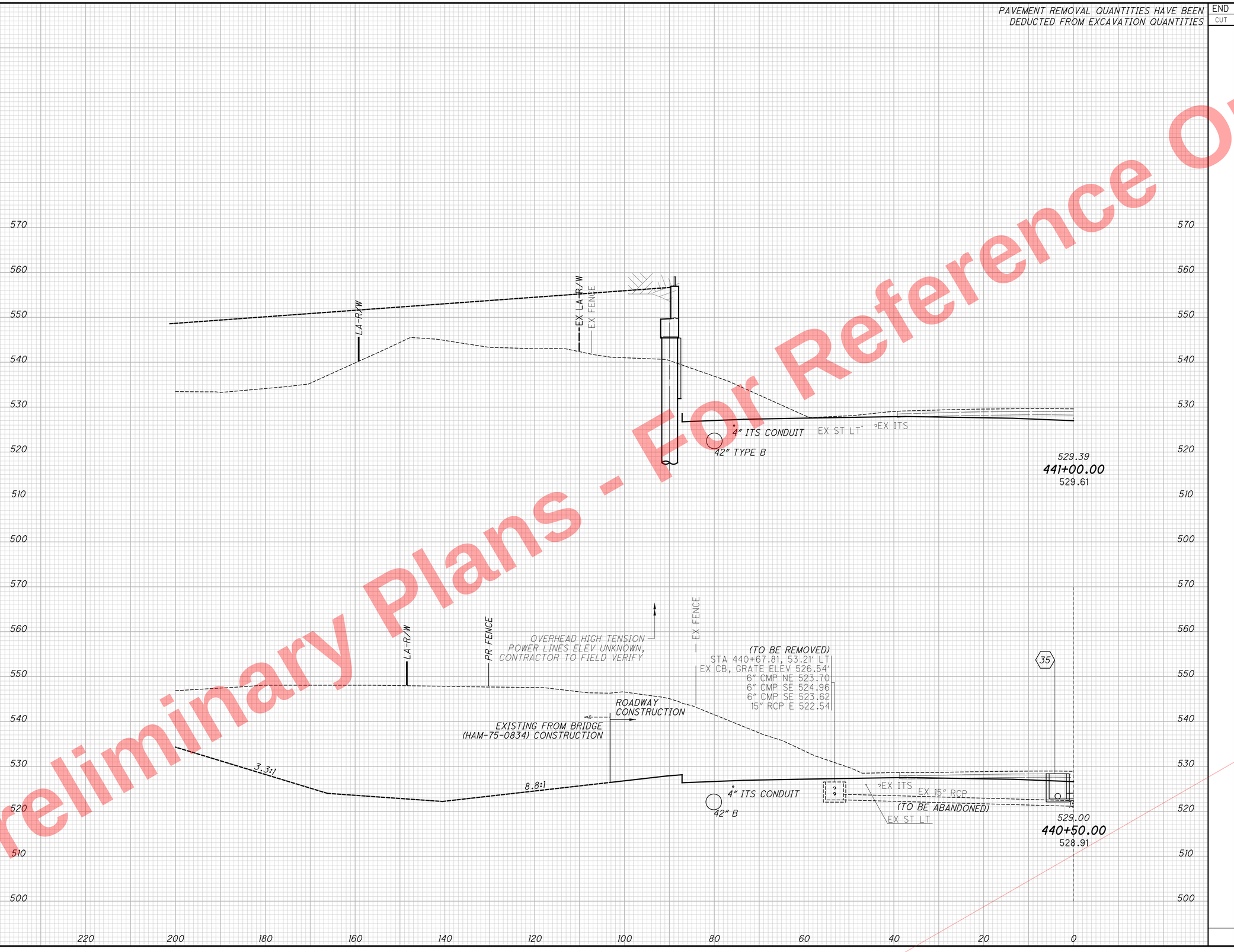

Preliminary Plans - For Reference Only

CROSS SECTIONS I.R. 75 SOUTHBOUND
STA. 440+50.00 TO STA. 441+00.00

HAM-75-7.85

361
1047

J:\20110903\ODOT\HAM\77889\roadway\sheets\77889XS001.dgn 5/22/2026 10:17:15 AM hbrendlinger

SEEDING	
END WIDTH	SQ. YDS.

PAVEMENT REMOVAL QUANTITIES HAVE BEEN DEDUCTED FROM EXCAVATION QUANTITIES

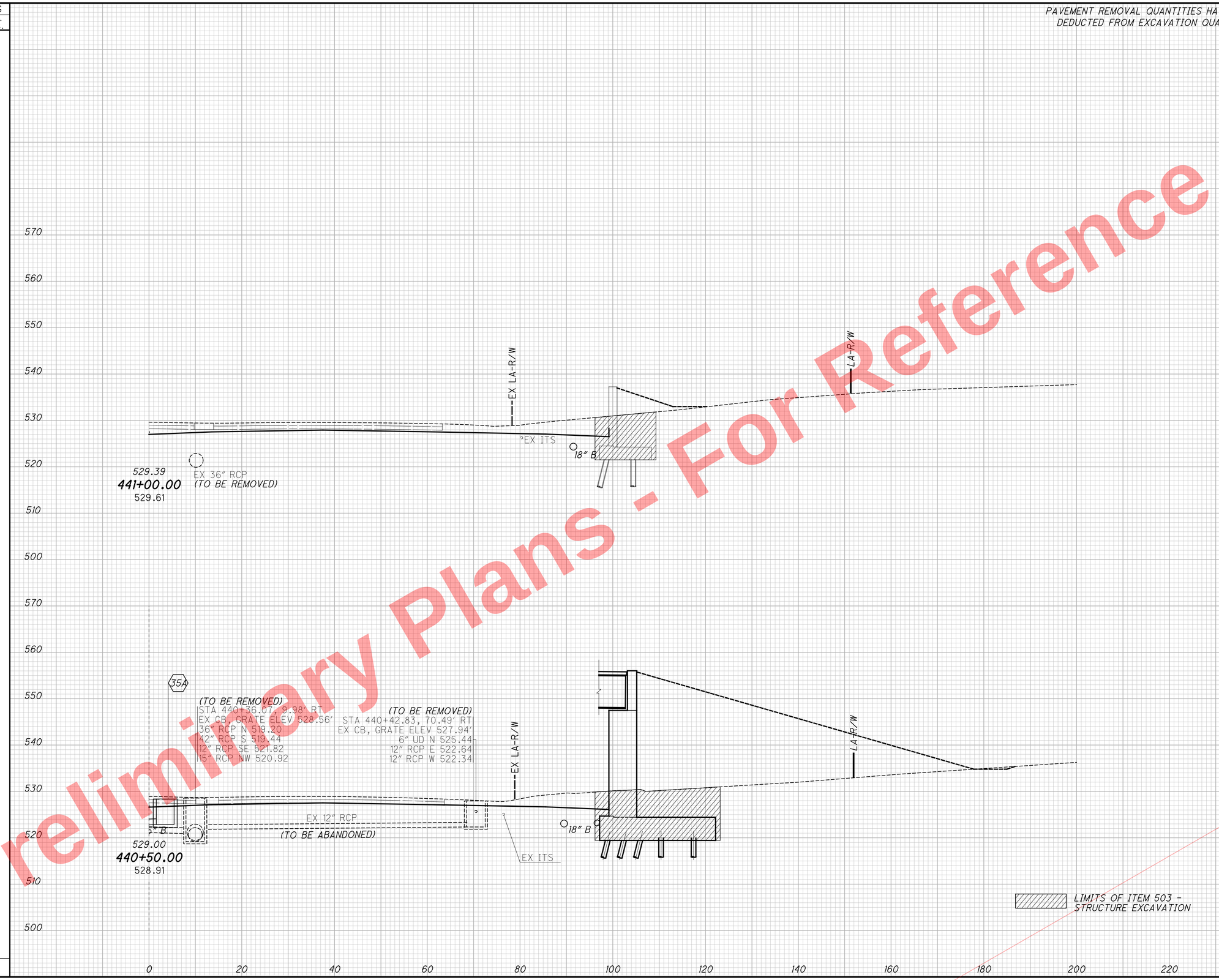

END AREA		VOLUME	
CUT	FILL	CUT	FILL
309	0		
		990	4
760	4		
		1703	19
		2693	23

CALCULATED SEA
CHECKED DLR

CROSS SECTIONS I.R. 75 NORTHBOUND
STA. 440+50.00 TO STA. 441+00.00

HAM-75-7.85

362
1047

Preliminary Plans - For Reference Only

J:\20110903\ODOT\HAM\7889\roadway\sheets\77889XS001.dgn 5/22/2026 10:17:16 AM hbrendlinger

SEEDING	
END WIDTH	SQ. YDS.
	54
	261
	39
	111
	372

PAVEMENT REMOVAL QUANTITIES HAVE BEEN DEDUCTED FROM EXCAVATION QUANTITIES

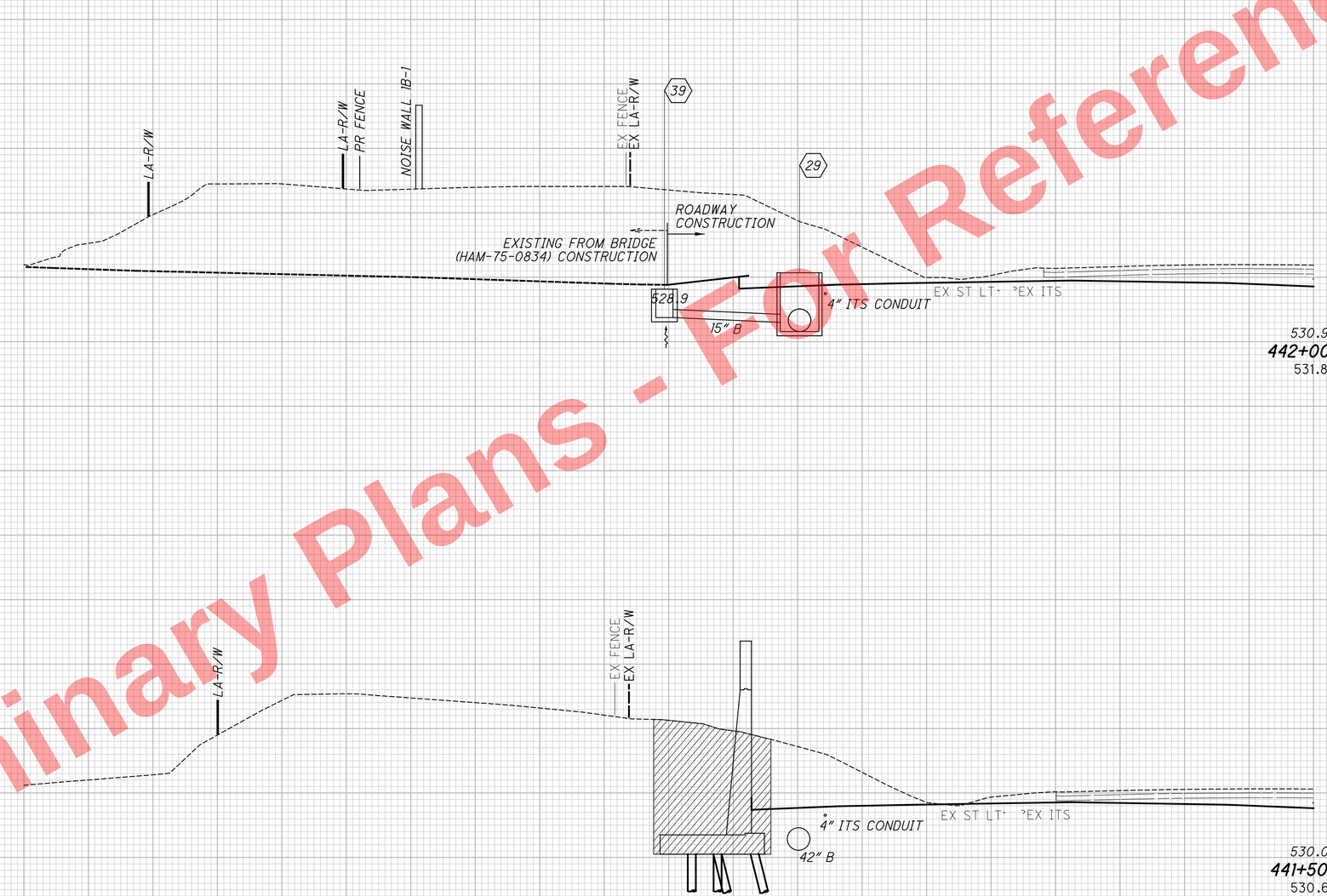

END AREA		VOLUME	
CUT	FILL	CUT	FILL

CALCULATED SEA
CHECKED DLR

CROSS SECTIONS I.R. 75 SOUTHBOUND
STA. 441+50.00 TO STA. 442+00.00

HAM-75-7.85

363
1047

Preliminary Plans - Not For Reference Only

J:\20110903\ODOT\HAM\77889\roadway\sheets\77889XS001.dgn 5/22/2026 10:17:16 AM hbrendlinger

PAVEMENT REMOVAL QUANTITIES HAVE BEEN DEDUCTED FROM EXCAVATION QUANTITIES

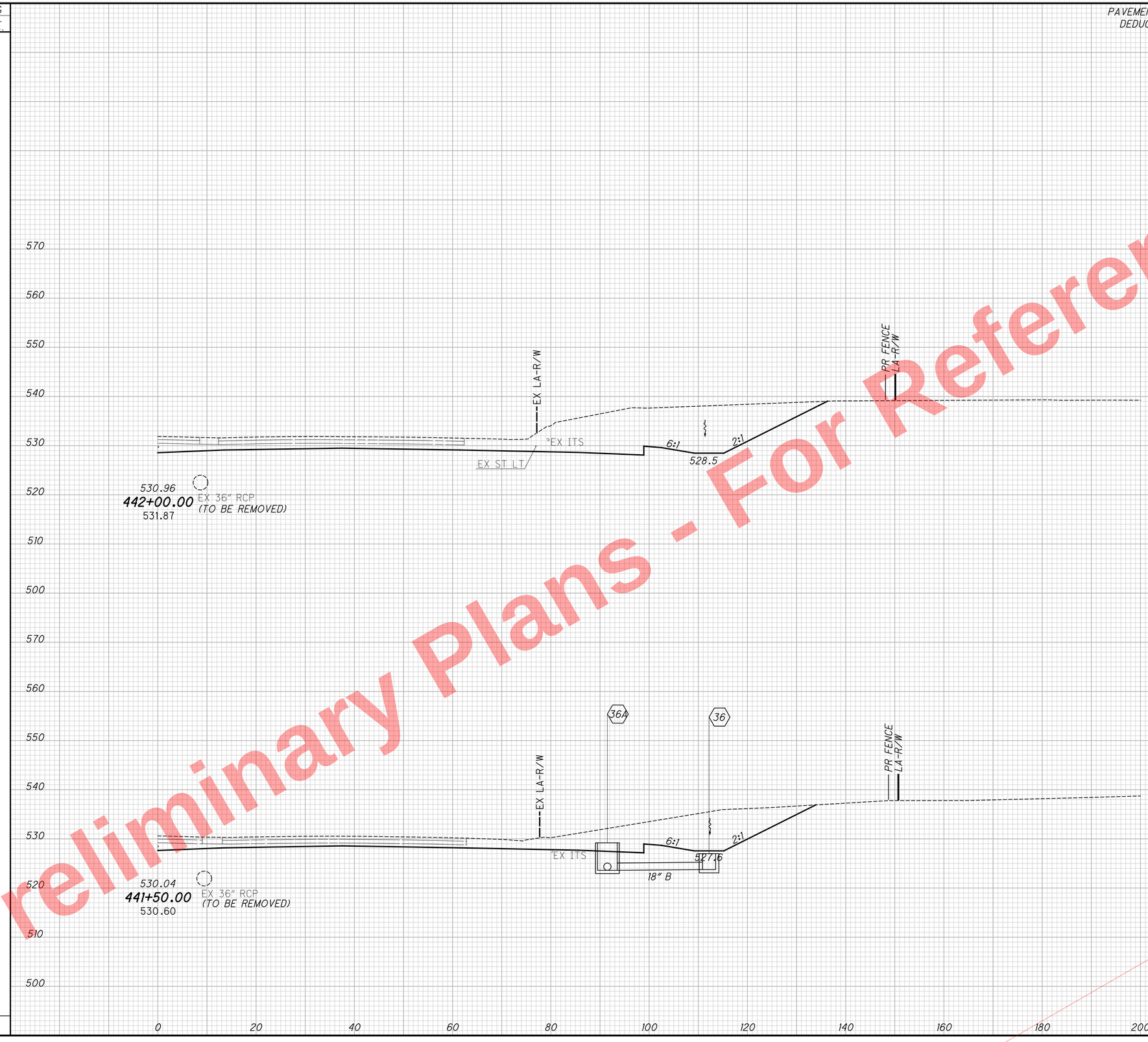

SEEDING END WIDTH	SEEDING SQ. YDS.	END AREA CUT	END AREA FILL	VOLUME CUT	VOLUME FILL
		954	0		
				1372	0
		528	1		
				775	1
				2147	1

CALCULATED SEA
CHECKED DLR

CROSS SECTIONS I.R. 75 NORTHBOUND
STA. 441+50.00 TO STA. 442+00.00

HAM-75-7.85

364
1047

Preliminary Plans - For Reference Only

J:\20110903\ODOT\HAM\77889\roadway\sheets\77889XS001.dgn 5/22/2026 10:17:17 AM hbrendlinger

SEEDING	
END WIDTH	SQ. YDS.
96	544
99	428
	972

PAVEMENT REMOVAL QUANTITIES HAVE BEEN DEDUCTED FROM EXCAVATION QUANTITIES

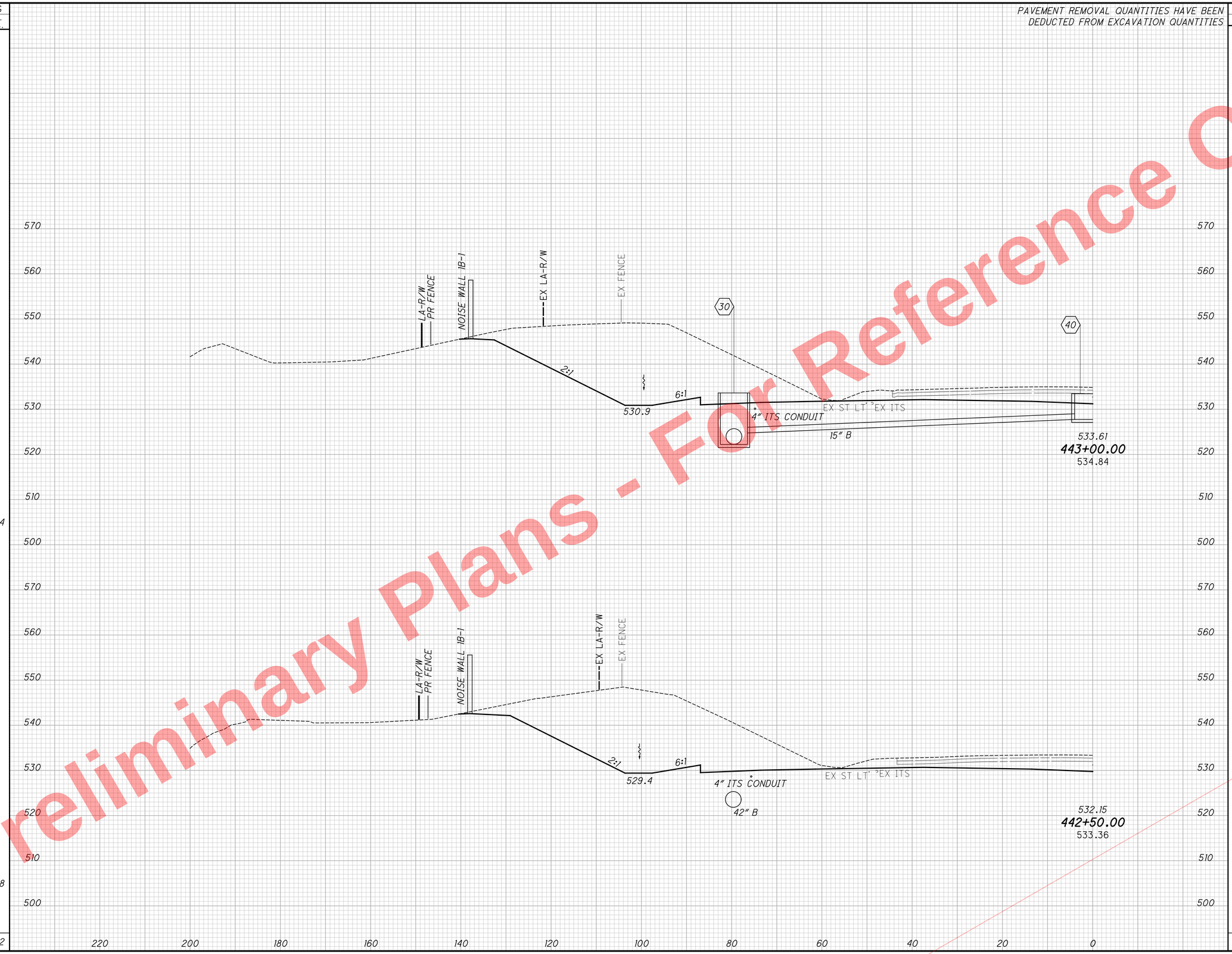

END AREA		VOLUME	
CUT	FILL	CUT	FILL

CALCULATED SEA
CHECKED DLR

CROSS SECTIONS I.R. 75 SOUTHBOUND
STA. 442+50.00 TO STA. 443+00.00

HAM-75-7.85

365
1047

Preliminary Plans - For Reference Only

J:\20110903\ODOT\HAM\7889\roadway\sheets\77889XS001.dgn 5/22/2026 10:17:18 AM hbrendlinger

SEEDING	
END WIDTH	SQ. YDS.

PAVEMENT REMOVAL QUANTITIES HAVE BEEN DEDUCTED FROM EXCAVATION QUANTITIES

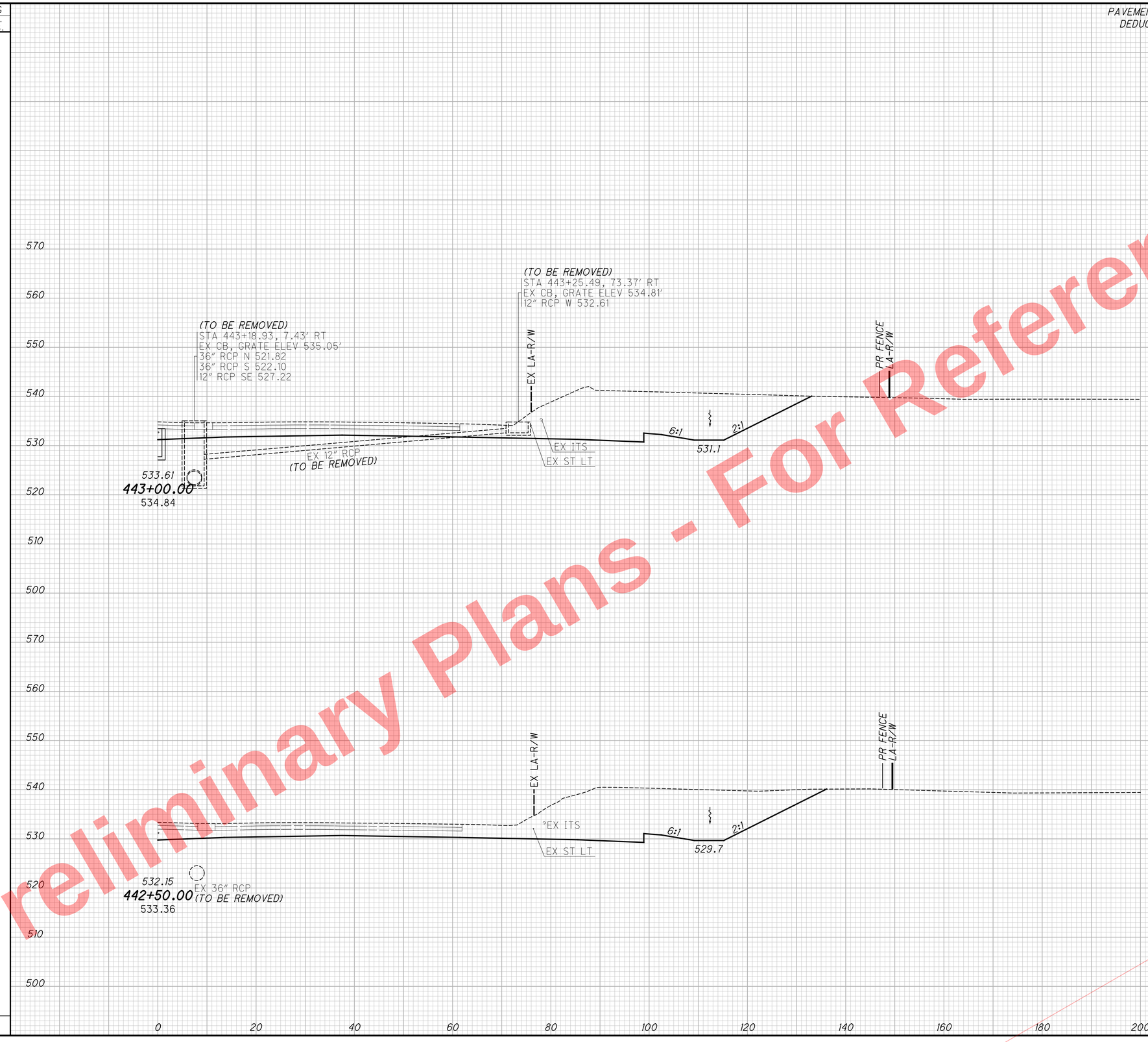

END AREA		VOLUME	
CUT	FILL	CUT	FILL
1436	0		
		2673	0
1450	0		
		2226	0
		4899	0

CALCULATED SEA
CHECKED DLR

CROSS SECTIONS I.R. 75 NORTHBOUND
STA. 442+50.00 TO STA. 443+00.00

HAM-75-7.85

366
1047

Preliminary Plans - For Reference Only

J:\20110903\ODOT\HAM\77889\roadway\sheets\77889XS001.dgn 5/22/2026 10:17:18 AM hbrendlinger

SEEDING	
END WIDTH	SQ. YDS.
107	
99	
	1122

PAVEMENT REMOVAL QUANTITIES HAVE BEEN DEDUCTED FROM EXCAVATION QUANTITIES

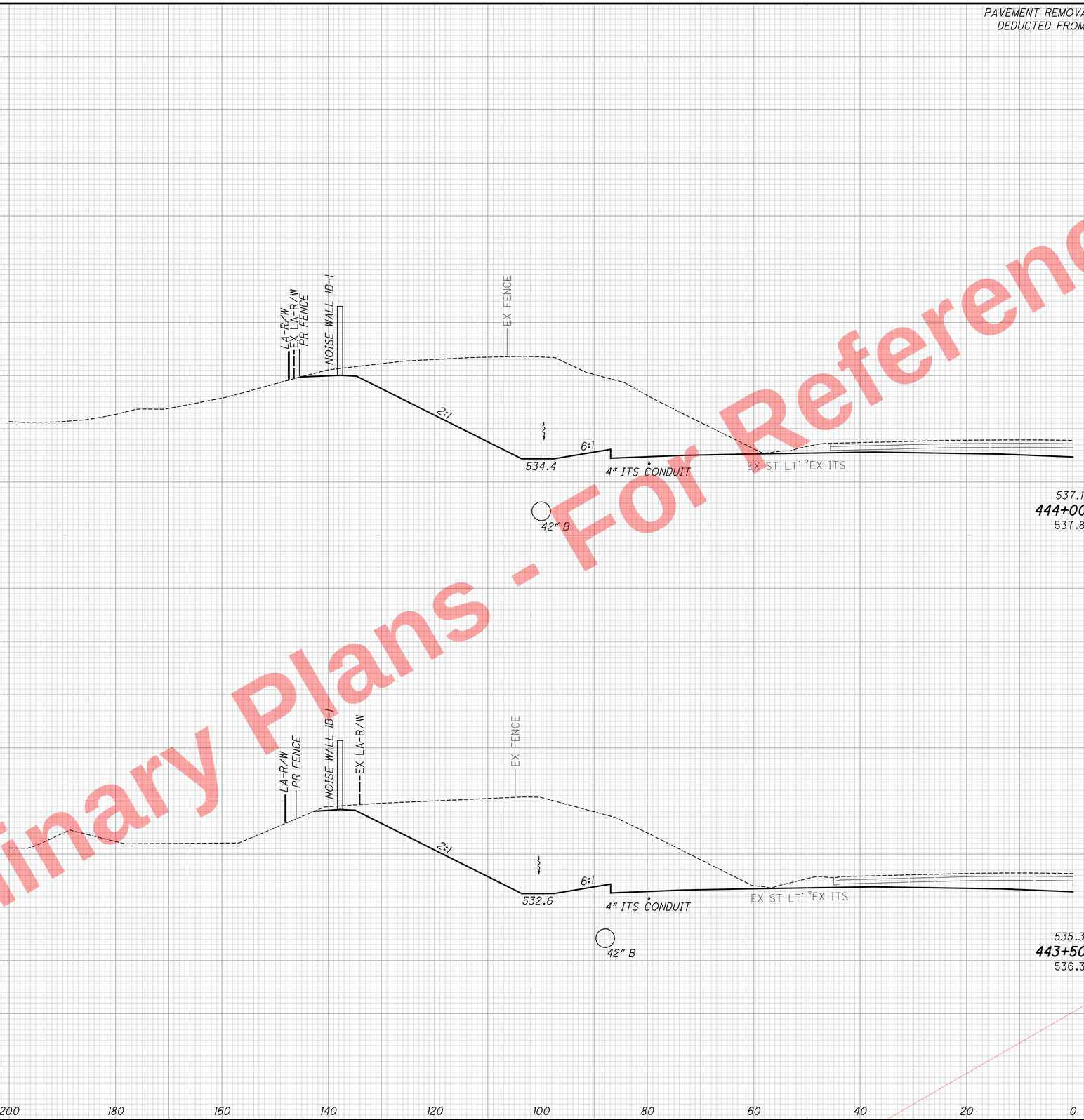

END AREA		VOLUME	
CUT	FILL	CUT	FILL

CALCULATED SEA
CHECKED DLR

CROSS SECTIONS I.R. 75 SOUTHBOUND
STA. 443+50.00 TO STA. 444+00.00

HAM-75-7.85

367
1047

Preliminary Plans - Not For Reference Only

J:\20110903\ODOT\HAM\77889\roadway\sheets\77889XS001.dgn 5/22/2026 10:17:19 AM hbrendlinger

SEEDING	
END WIDTH	SQ. YDS.

PAVEMENT REMOVAL QUANTITIES HAVE BEEN DEDUCTED FROM EXCAVATION QUANTITIES

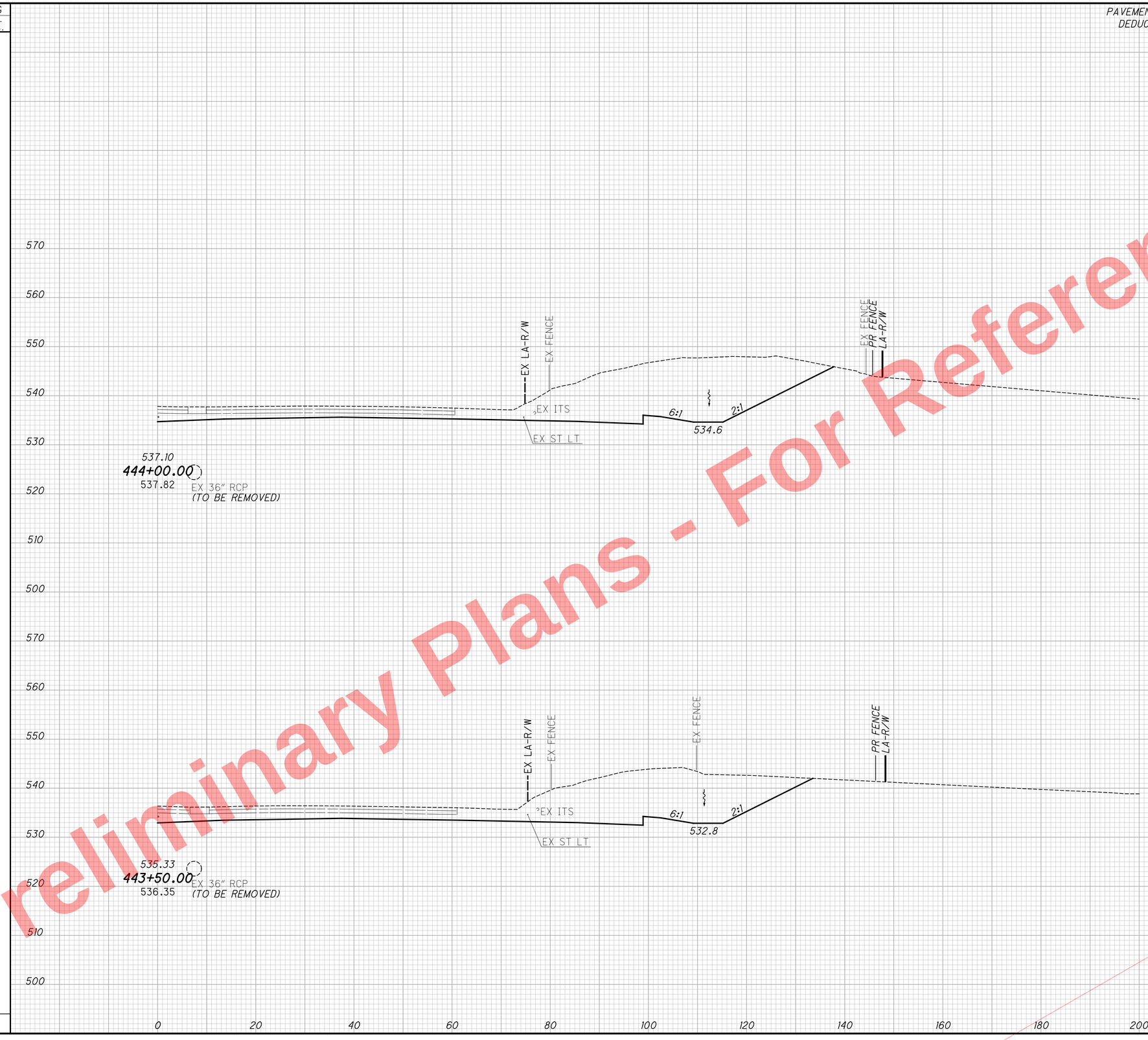

END AREA		VOLUME	
CUT	FILL	CUT	FILL
1554	0		
		2747	0
1412	0		
		2637	0
		5384	0

CALCULATED SEA
CHECKED DLR

CROSS SECTIONS I.R. 75 NORTHBOUND
STA. 443+50.00 TO STA. 444+00.00

HAM-75-7.85

368
1047

Preliminary Plans - Not For Reference Only

J:\20110903\ODOT\HAM\77889\roadway\sheets\77889XS001.dgn 5/22/2026 10:17:20 AM hbrendlinger

SEEDING	
END WIDTH	SQ. YDS.
130	718
129	0
	718

PAVEMENT REMOVAL QUANTITIES HAVE BEEN DEDUCTED FROM EXCAVATION QUANTITIES

END AREA		VOLUME	
CUT	FILL	CUT	FILL

CALCULATED CFR | CHECKED SSK

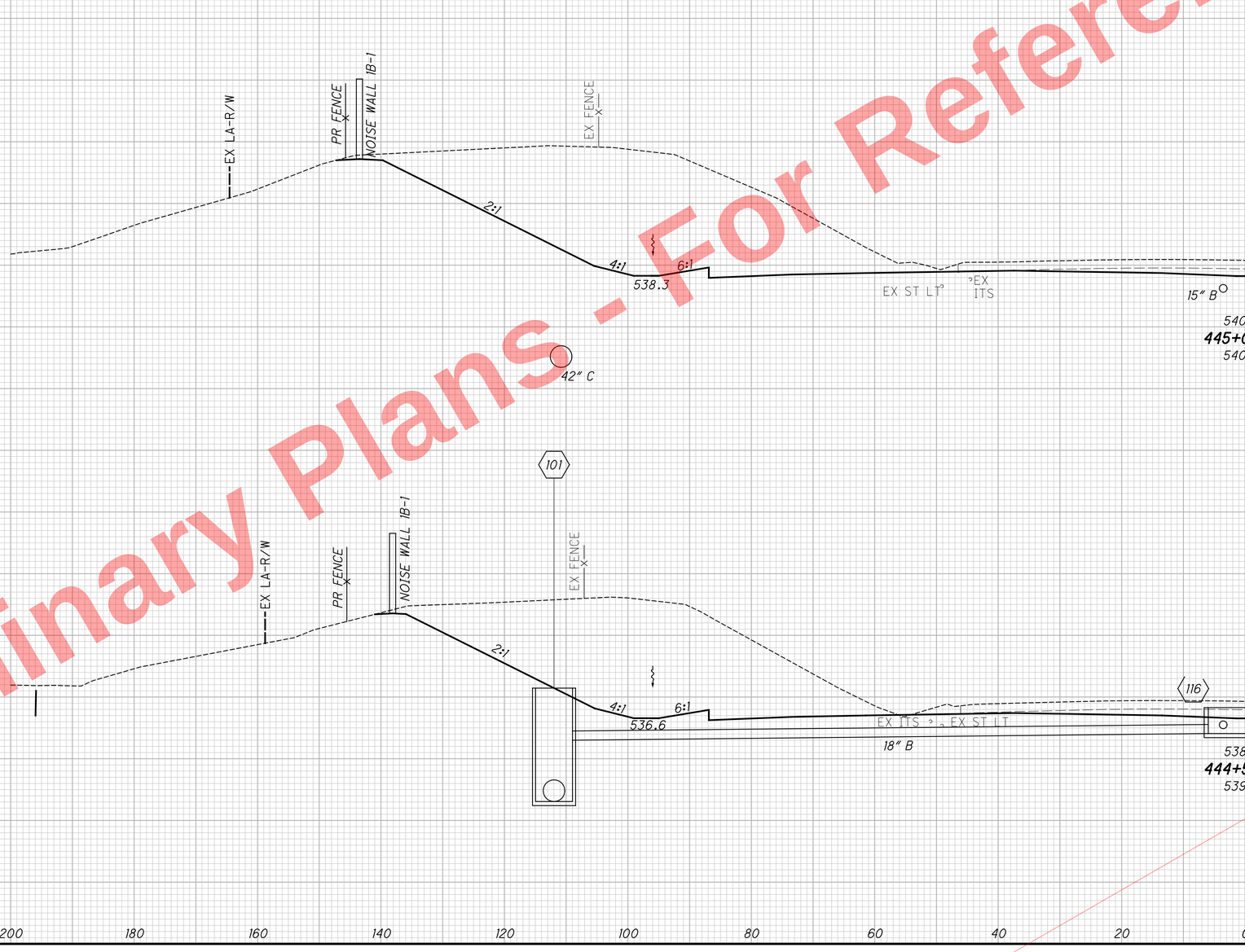

CROSS SECTIONS I.R. 75 SOUTHBOUND
STA. 444+50.00 TO STA. 445+00.00

HAM-75-7.85

369
1047

Preliminary Plans - For Reference Only

J:\20110903\ODOT\HAM\77889\roadway\sheets\77889XS410.dgn 5/22/2026 10:17:21 AM hbrendlinger

SEEDING	
END WIDTH	SQ. YDS.

PAVEMENT REMOVAL QUANTITIES HAVE BEEN DEDUCTED FROM EXCAVATION QUANTITIES

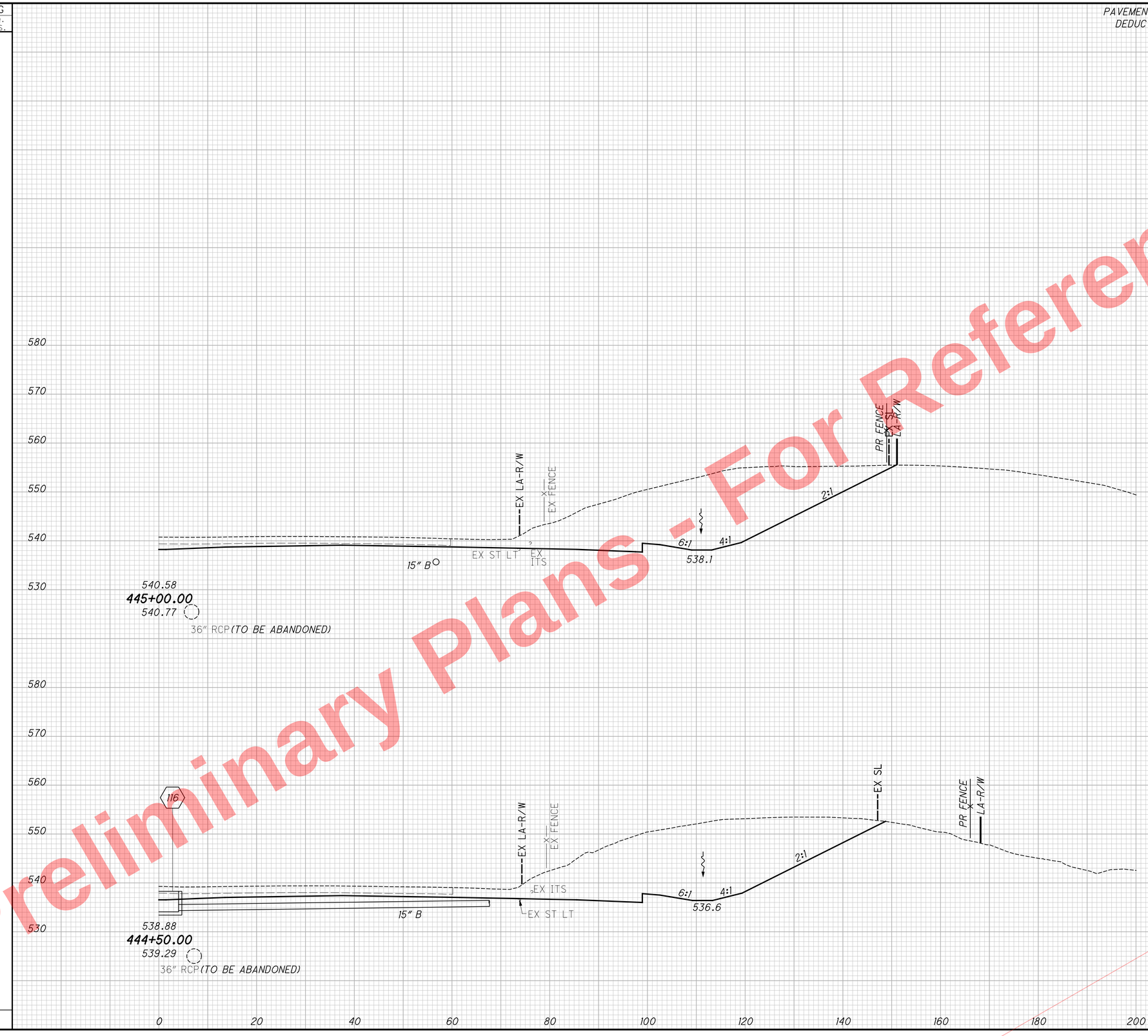

END AREA		VOLUME	
CUT	FILL	CUT	FILL
1819	0		
		3291	0
1736	0		
		0	0
		3291	0

CALCULATED CFR
CHECKED SSK

CROSS SECTIONS I.R. 75 NORTHBOUND
STA. 444+50.00 TO STA. 445+00.00

HAM-75-7.85

370
1047

Preliminary Plans - For Reference Only

J:\20110903\ODOT\HAM\77889\roadway\sheets\77889XS411.dgn 5/22/2026 10:17:22 AM hbrendlinger

SEEDING	
END WIDTH	SQ. YDS.
78	474
	92.88
	619
	1093

PAVEMENT REMOVAL QUANTITIES HAVE BEEN DEDUCTED FROM EXCAVATION QUANTITIES

END AREA		VOLUME	
CUT	FILL	CUT	FILL

CALCULATED CFR
CHECKED SSK

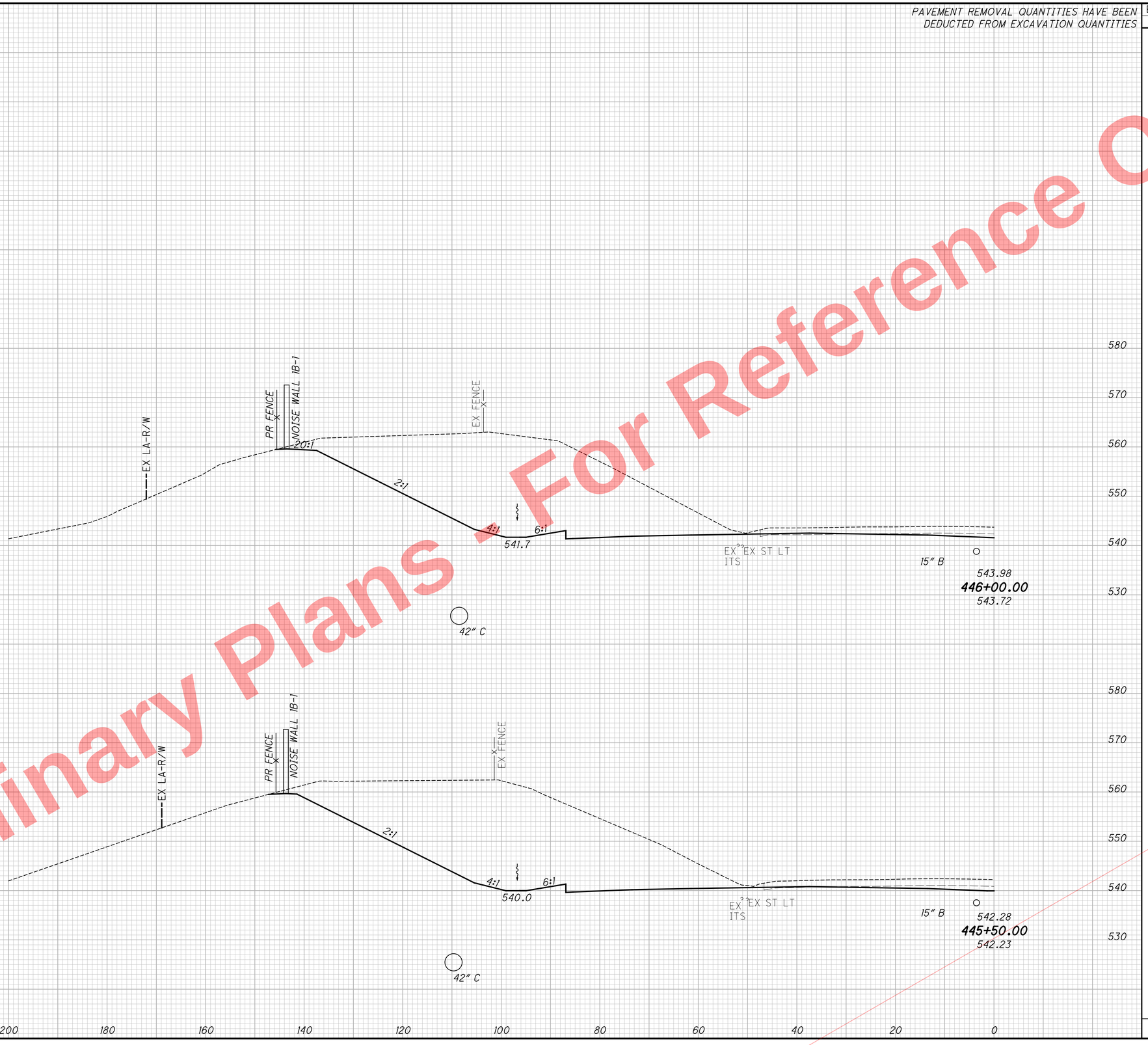

CROSS SECTIONS I.R. 75 SOUTHBOUND
STA. 445+50.00 TO STA. 446+00.00

HAM-75-7.85

371
1047

Preliminary Plans - For Reference Only

J:\20110903\ODOT\HAM\7889\roadway\sheets\7889XS412.dgn 5/22/2026 10:17:23 AM hbrendlinger

SEEDING	
END WIDTH	SQ. YDS.

PAVEMENT REMOVAL QUANTITIES HAVE BEEN DEDUCTED FROM EXCAVATION QUANTITIES

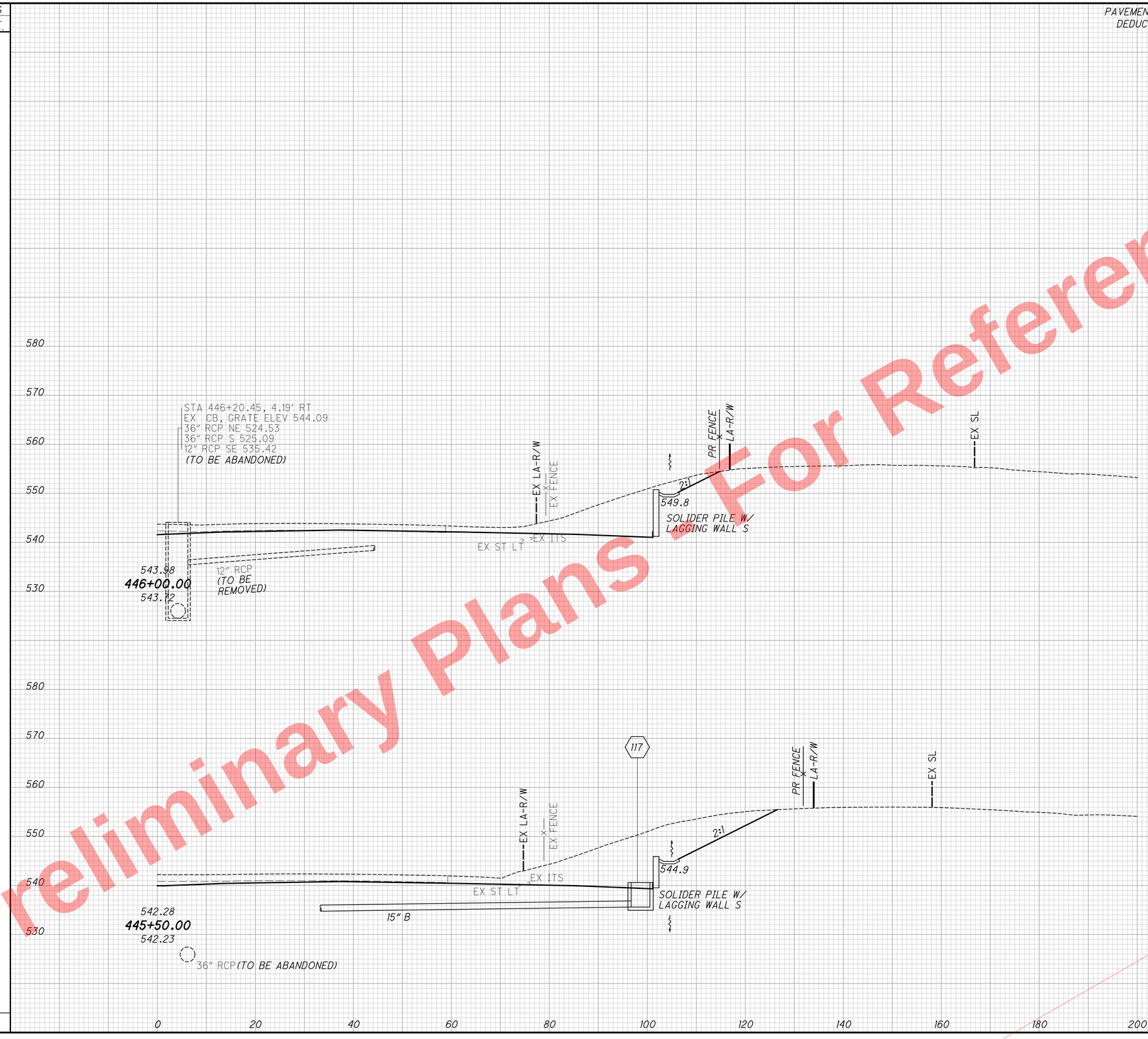

END AREA		VOLUME	
CUT	FILL	CUT	FILL
1261	8		
		2552	10
1495	2		
		3068	2
		5620	12

CALCULATED CFR
CHECKED SSK

CROSS SECTIONS I.R. 75 NORTHBOUND
STA. 445+50.00 TO STA. 446+00.00

HAM-75-7.85

372
1047

For Reference Only
Preliminary Plans - Not for Construction

J:\20110903\ODOT\HAM\77889\roadway\sheets\77889XS413.dgn 5/22/2026 10:17:24 AM hbrendlinger

SEEDING	
END WIDTH	SQ. YDS.
61	354
66	401
	755

PAVEMENT REMOVAL QUANTITIES HAVE BEEN DEDUCTED FROM EXCAVATION QUANTITIES

END AREA		VOLUME	
CUT	FILL	CUT	FILL

CALCULATED CFR
CHECKED SSK

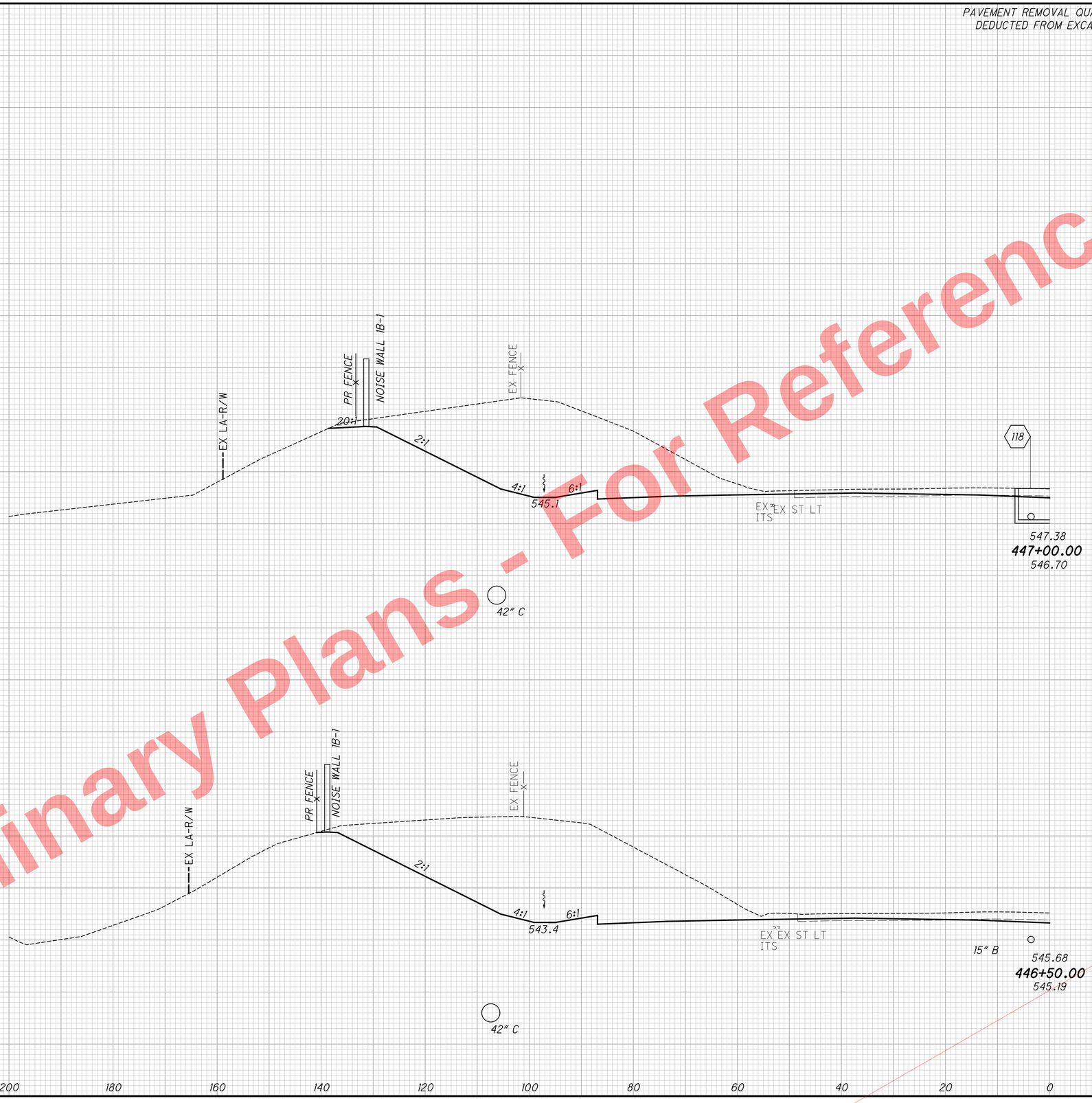

Preliminary Plans - For Reference Only

CROSS SECTIONS I.R. 75 SOUTHBOUND
STA. 446+50.00 TO STA. 447+00.00

HAM-75-7.85

373
1047

J:\20110903\ODOT\HAM\7889\roadway\sheets\77889XS414.dgn 5/22/2026 10:17:24 AM hbrendlinger

SEEDING		END AREA		VOLUME	
END WIDTH	SQ. YDS.	CUT	FILL	CUT	FILL
		866	45		
				1818	66
		1098	27		
				2184	32
				4002	98

PAVEMENT REMOVAL QUANTITIES HAVE BEEN DEDUCTED FROM EXCAVATION QUANTITIES

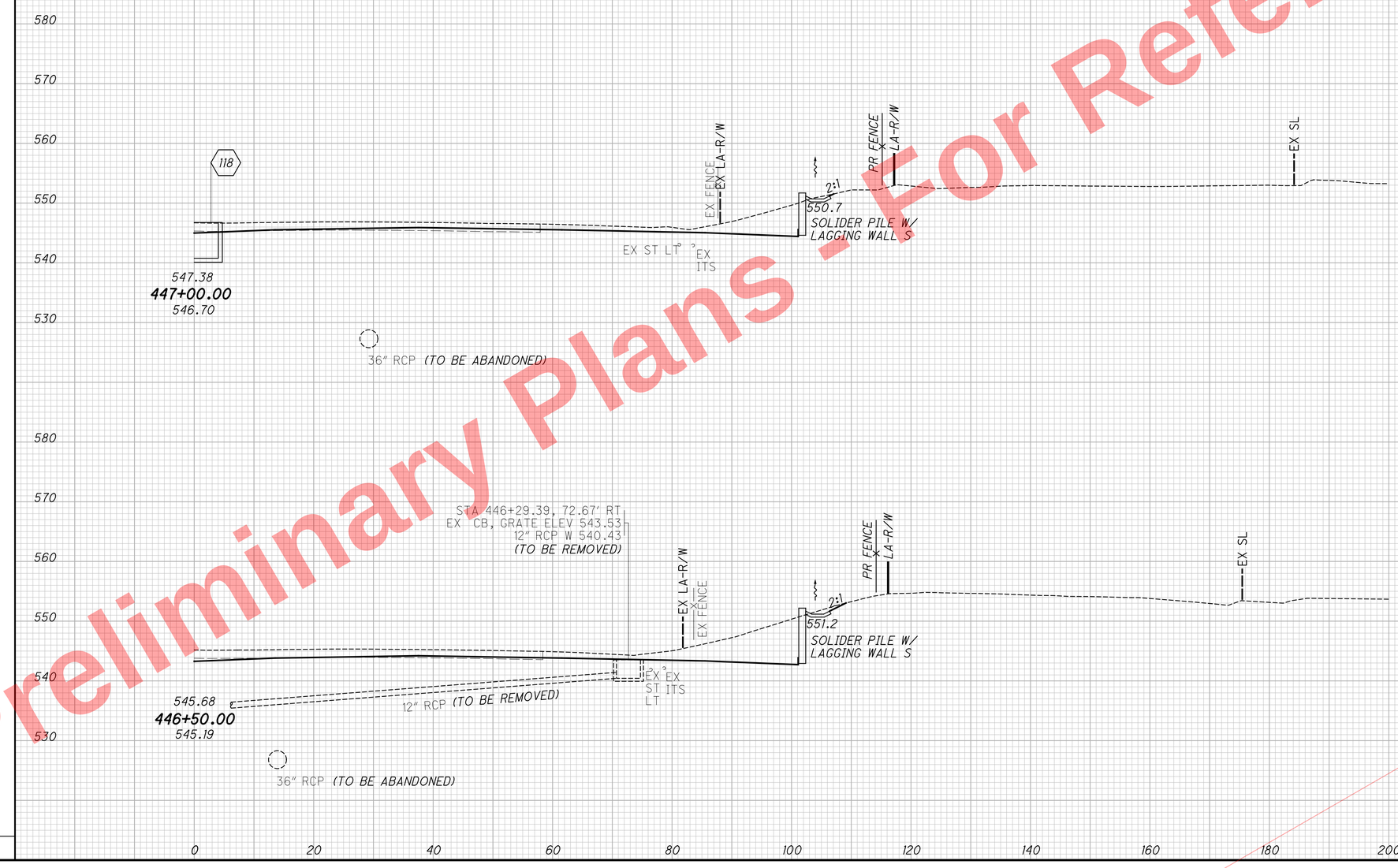

CALCULATED CFR
CHECKED SSK

CROSS SECTIONS I.R. 75 NORTHBOUND
STA. 446+50.00 TO STA. 447+00.00

HAM-75-7.85

374
1047

Preliminary Plans - For Reference Only

J:\20110903\ODOT\HAM\7889\roadway\sheets\77889XS415.dgn 5/22/2026 10:17:25 AM hbrendlinger

SEEDING	
END WIDTH	SQ. YDS.
	41
	283
	61
	339
	622

PAVEMENT REMOVAL QUANTITIES HAVE BEEN DEDUCTED FROM EXCAVATION QUANTITIES

END AREA		VOLUME	
CUT	FILL	CUT	FILL

CALCULATED CFR
CHECKED SSK



CROSS SECTIONS I.R. 75 SOUTHBOUND
STA. 447+50.00 TO STA. 448+00.00

HAM-75-7.85

375
1047

Preliminary Plans - For Reference Only

J:\20110903\ODOT\HAM\7889\roadway\sheets\77889XS416.dgn 5/22/2026 10:17:26 AM hbrendlinger

PAVEMENT REMOVAL QUANTITIES HAVE BEEN DEDUCTED FROM EXCAVATION QUANTITIES

SEEDING	
END WIDTH	SQ. YDS.

END AREA		VOLUME	
CUT	FILL	CUT	FILL
241	121		
		920	178
		1499	107
753	71		
		2419	285

CALCULATED CFR
CHECKED SSK

CROSS SECTIONS I.R. 75 NORTHBOUND
STA. 447+50.00 TO STA. 448+00.00

HAM-75-7.85

376
1047

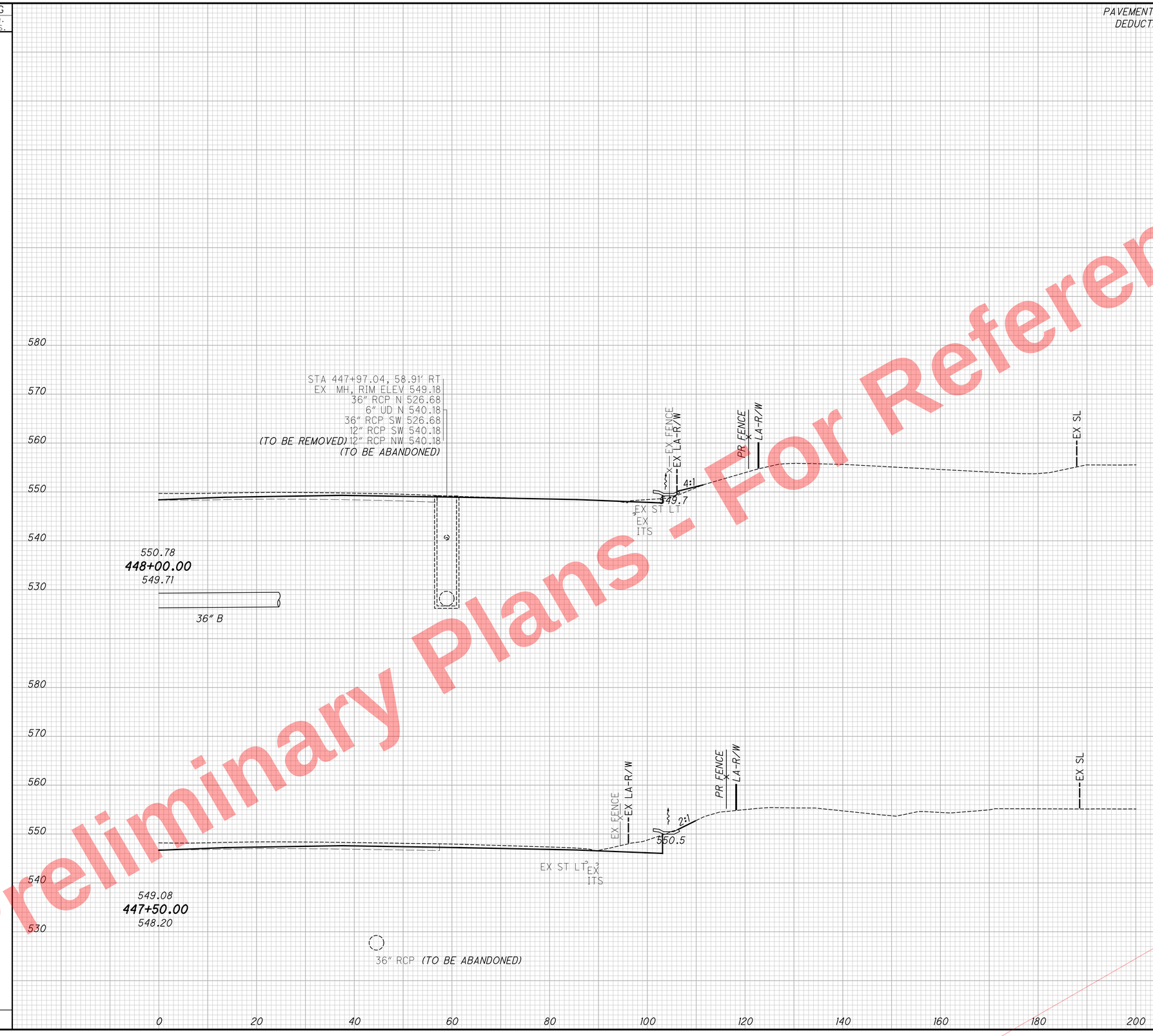

Preliminary Plans - For Reference Only

J:\20110903\ODOT\HAM\77889\roadway\sheets\77889XS417.dgn 5/22/2026 10:17:27 AM hbrendlinger

SEEDING	
END WIDTH	SQ. YDS.
31	224
50	253
	477

PAVEMENT REMOVAL QUANTITIES HAVE BEEN DEDUCTED FROM EXCAVATION QUANTITIES

END AREA		VOLUME	
CUT	FILL	CUT	FILL

CALCULATED CFR
CHECKED SSK

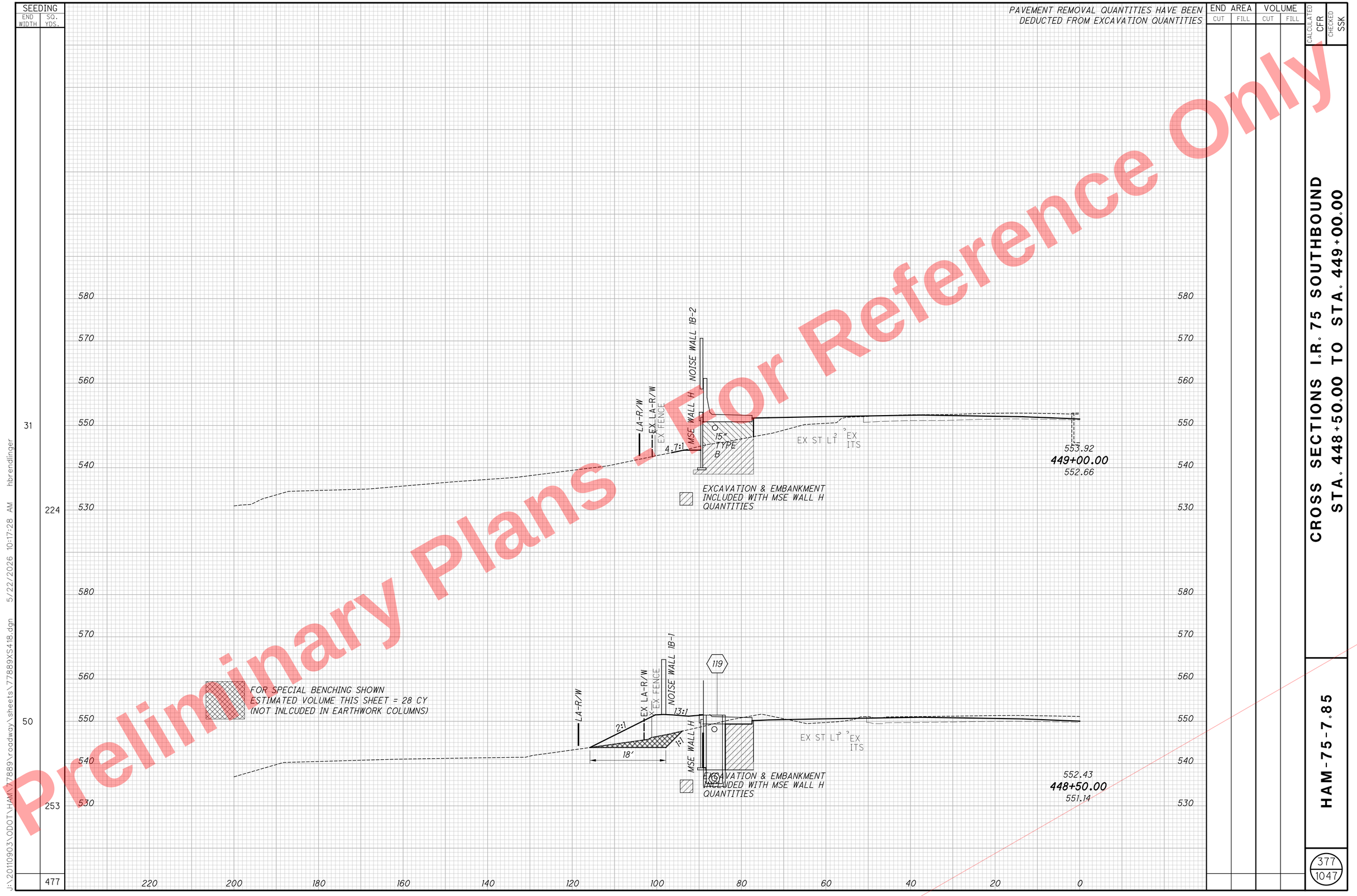

CROSS SECTIONS I.R. 75 SOUTHBOUND
STA. 448+50.00 TO STA. 449+00.00

HAM-75-7.85

377
1047

Preliminary Plans - For Reference Only

J:\20110903\ODOT\HAM\77889\roadway\sheets\77889XS418.dgn 5/22/2026 10:17:28 AM hbrendlinger

SEEDING	
END WIDTH	SQ. YDS.

PAVEMENT REMOVAL QUANTITIES HAVE BEEN DEDUCTED FROM EXCAVATION QUANTITIES

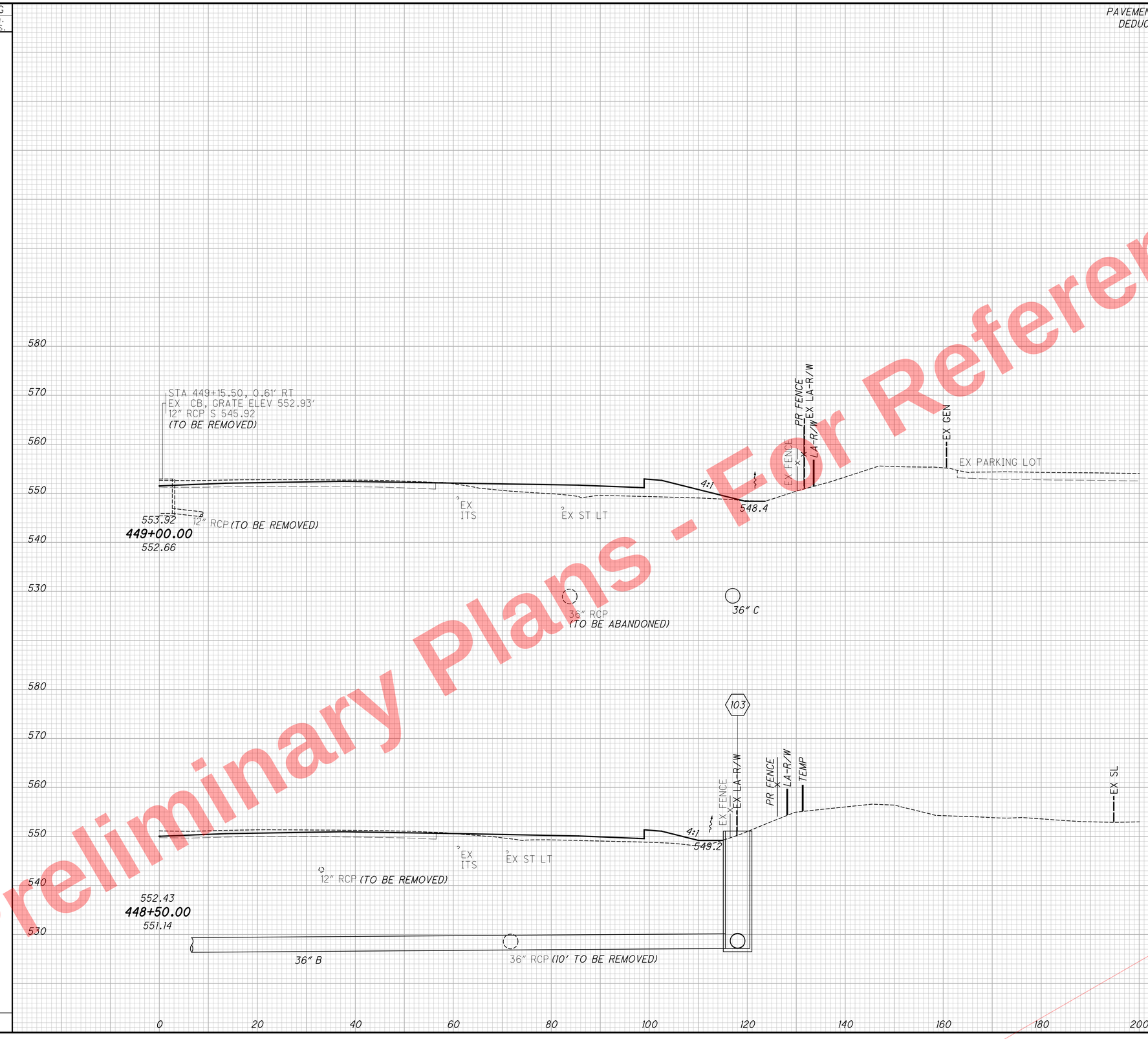

END AREA		VOLUME	
CUT	FILL	CUT	FILL
1	298		
		8	542
		8	287
		230	378
		238	920

CALCULATED CFR
CHECKED SSK

CROSS SECTIONS I.R. 75 NORTHBOUND
STA. 448+50.00 TO STA. 449+00.00

HAM-75-7.85

378
1047

Preliminary Plans - For Reference Only

J:\20110903\ODOT\HAM\77889\roadway\sheets\77889XS419.dgn 5/22/2026 10:17:28 AM hbrendlinger

SEEDING	
END WIDTH	SQ. YDS.
65	313
48	218
	531

PAVEMENT REMOVAL QUANTITIES HAVE BEEN DEDUCTED FROM EXCAVATION QUANTITIES

END AREA		VOLUME	
CUT	FILL	CUT	FILL

CALCULATED CFR
CHECKED SSK

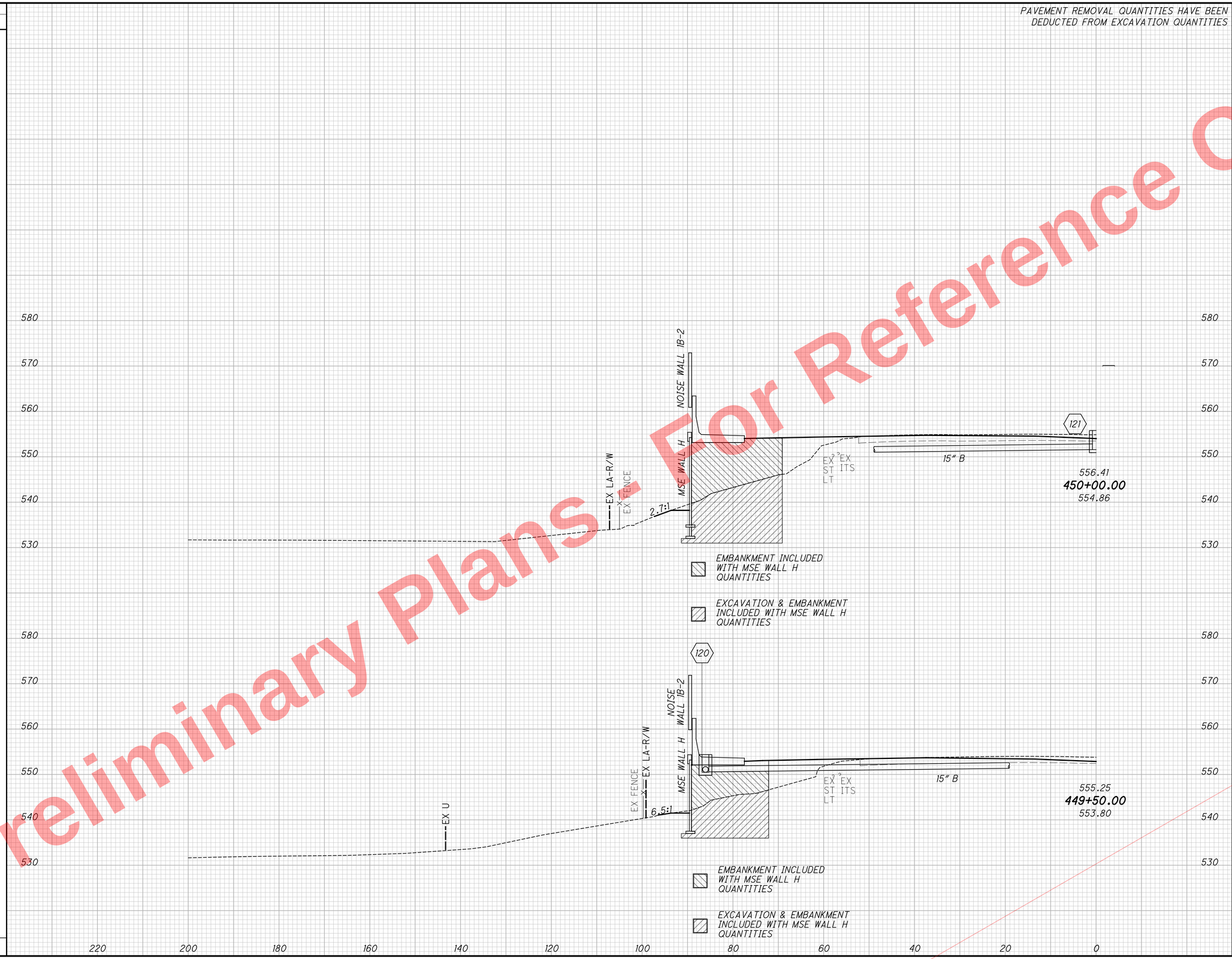

CROSS SECTIONS I.R. 75 SOUTHBOUND
STA. 449+50.00 TO STA. 450+00.00

HAM-75-7.85

379
1047

Preliminary Plans - For Reference Only

J:\20110903\ODOT\HAM\77889\roadway\sheets\77889XS420.dgn 5/22/2026 10:17:29 AM hbrendlinger

PAVEMENT REMOVAL QUANTITIES HAVE BEEN DEDUCTED FROM EXCAVATION QUANTITIES

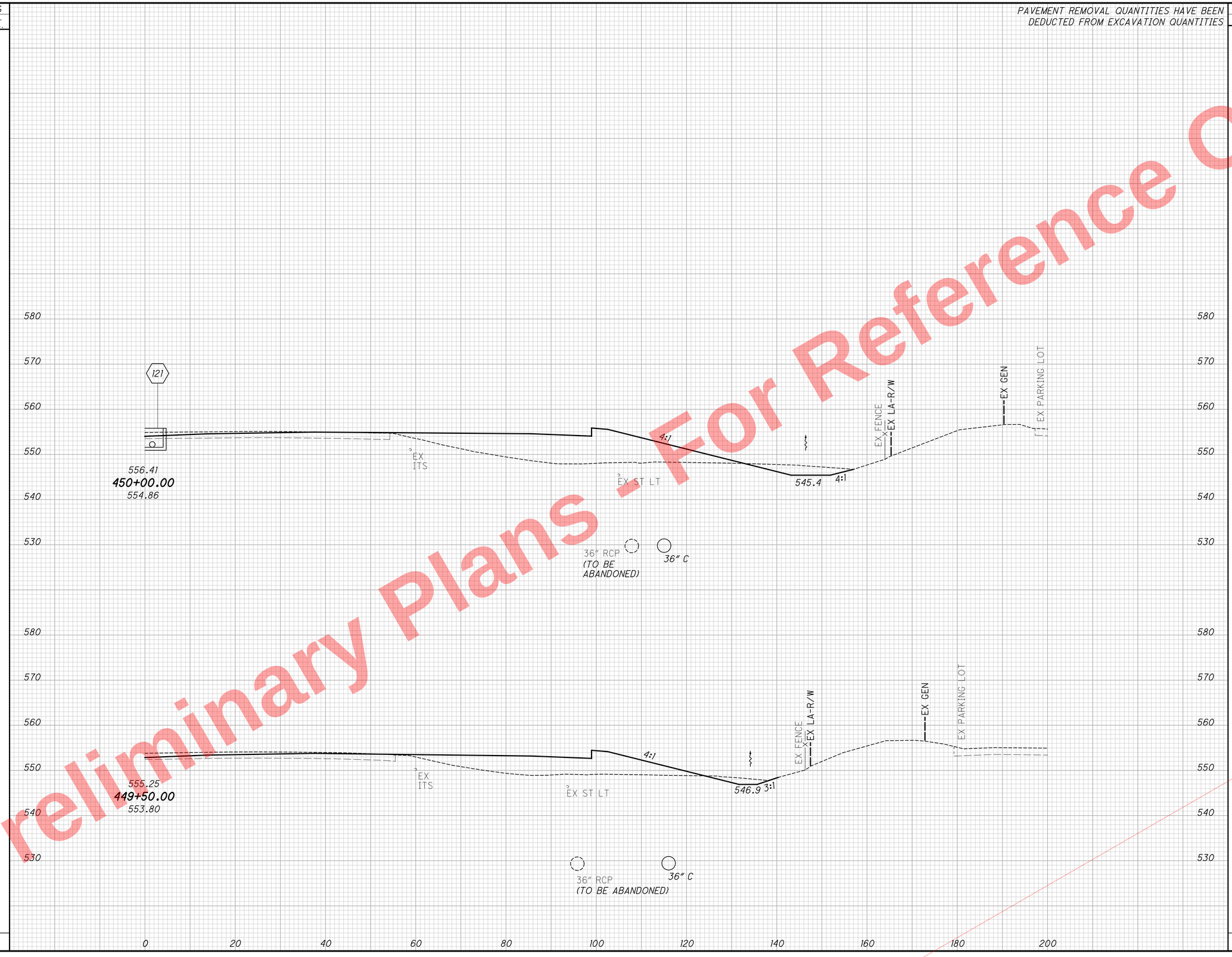

SEEDING END WIDTH	SEEDING SQ. YDS.	END AREA CUT	END AREA FILL	VOLUME CUT	VOLUME FILL
		12	535		
				16	874
		5	410		
				5	655
				21	1529

CALCULATED CFR
CHECKED SSK

CROSS SECTIONS I.R. 75 NORTHBOUND
STA. 449+50.00 TO STA. 450+00.00

HAM-75-7.85

380
1047

Preliminary Plans - For Reference Only

J:\20110903\ODOT\HAM\7889\roadway\sheets\7889XS421.dgn 5/22/2026 10:17:30 AM hbrendlinger

SEEDING	
END WIDTH	SQ. YDS.
78	
	454
85	
	417
	871

PAVEMENT REMOVAL QUANTITIES HAVE BEEN DEDUCTED FROM EXCAVATION QUANTITIES

END AREA		VOLUME	
CUT	FILL	CUT	FILL

CALCULATED CFR | CHECKED SSK

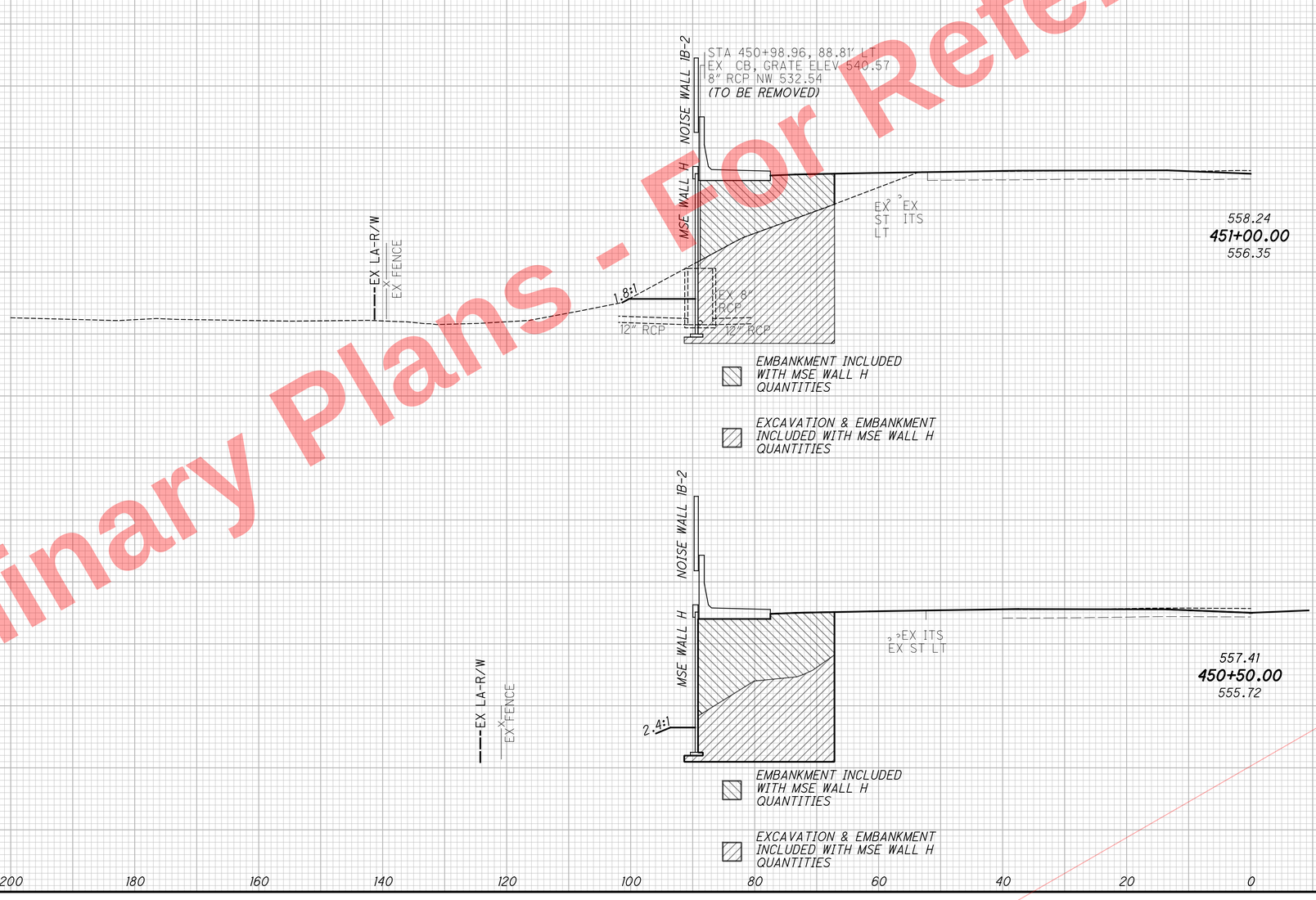

CROSS SECTIONS I.R. 75 SOUTHBOUND
STA. 450+50.00 TO STA. 451+00.00

HAM-75-7.85

381
1047

Preliminary Plans - For Reference Only

J:\20110903\ODOT\HAM\77889\roadway\sheets\77889XS422.dgn 5/22/2026 10:17:31 AM hbrendlinger

PAVEMENT REMOVAL QUANTITIES HAVE BEEN DEDUCTED FROM EXCAVATION QUANTITIES

SEEDING	
END WIDTH	SQ. YDS.

END AREA		VOLUME	
CUT	FILL	CUT	FILL
23	757		
		41	1339
22	690		
		32	1134
		73	2473

CALCULATED CFR
CHECKED SSK

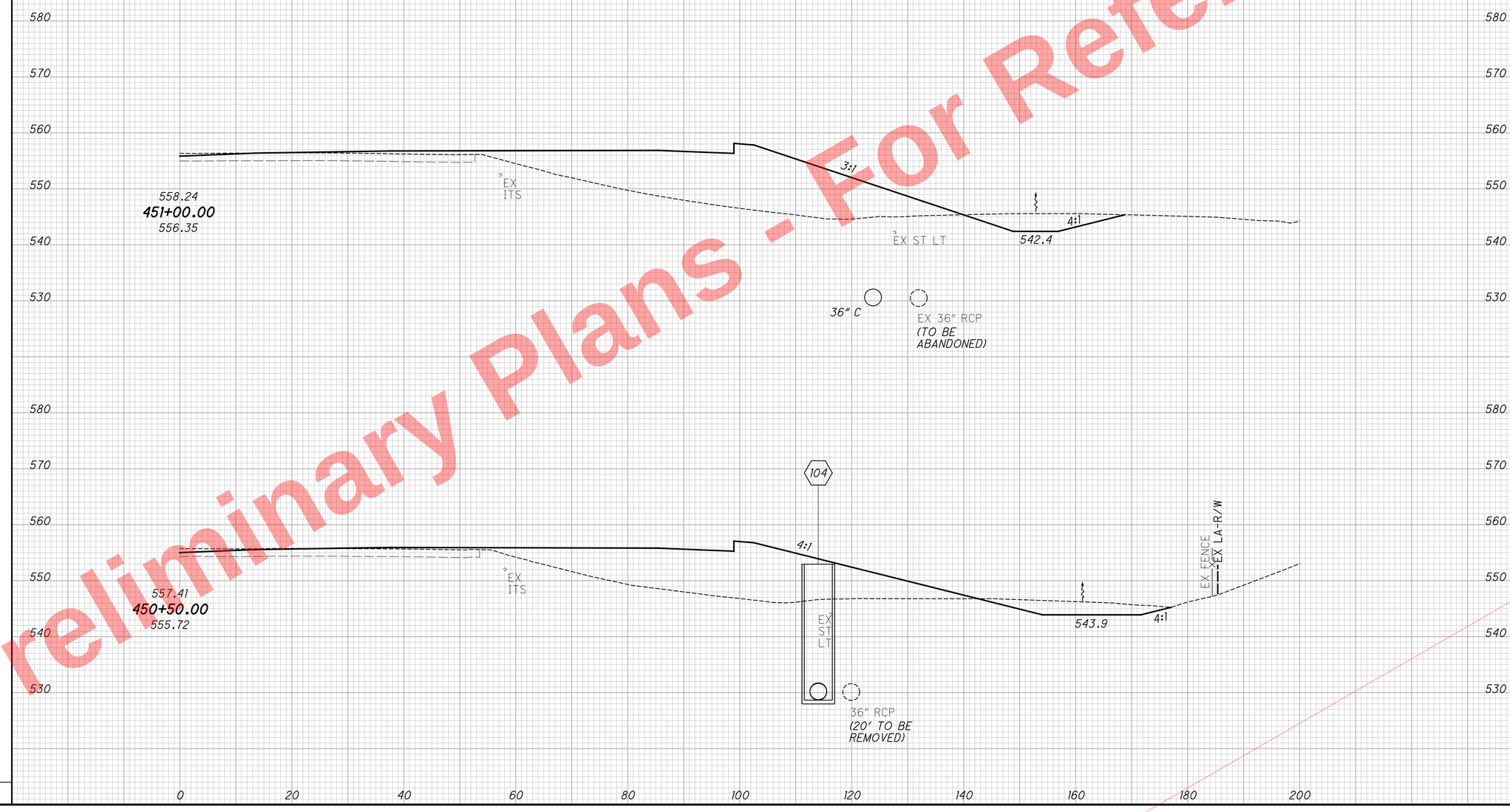

CROSS SECTIONS I.R. 75 NORTHBOUND
STA. 450+50.00 TO STA. 451+00.00

HAM-75-7.85

382
1047

Preliminary Plans - For Reference Only

J:\20110903\ODOT\HAM\7889\roadway\sheets\77889XS423.dgn 5/22/2026 10:17:32 AM hbrendlinger

SEEDING	
END WIDTH	SQ. YDS.
0	0
103	
485	485

PAVEMENT REMOVAL QUANTITIES HAVE BEEN DEDUCTED FROM EXCAVATION QUANTITIES

END AREA		VOLUME	
CUT	FILL	CUT	FILL

CALCULATED CFR
CHECKED SSK

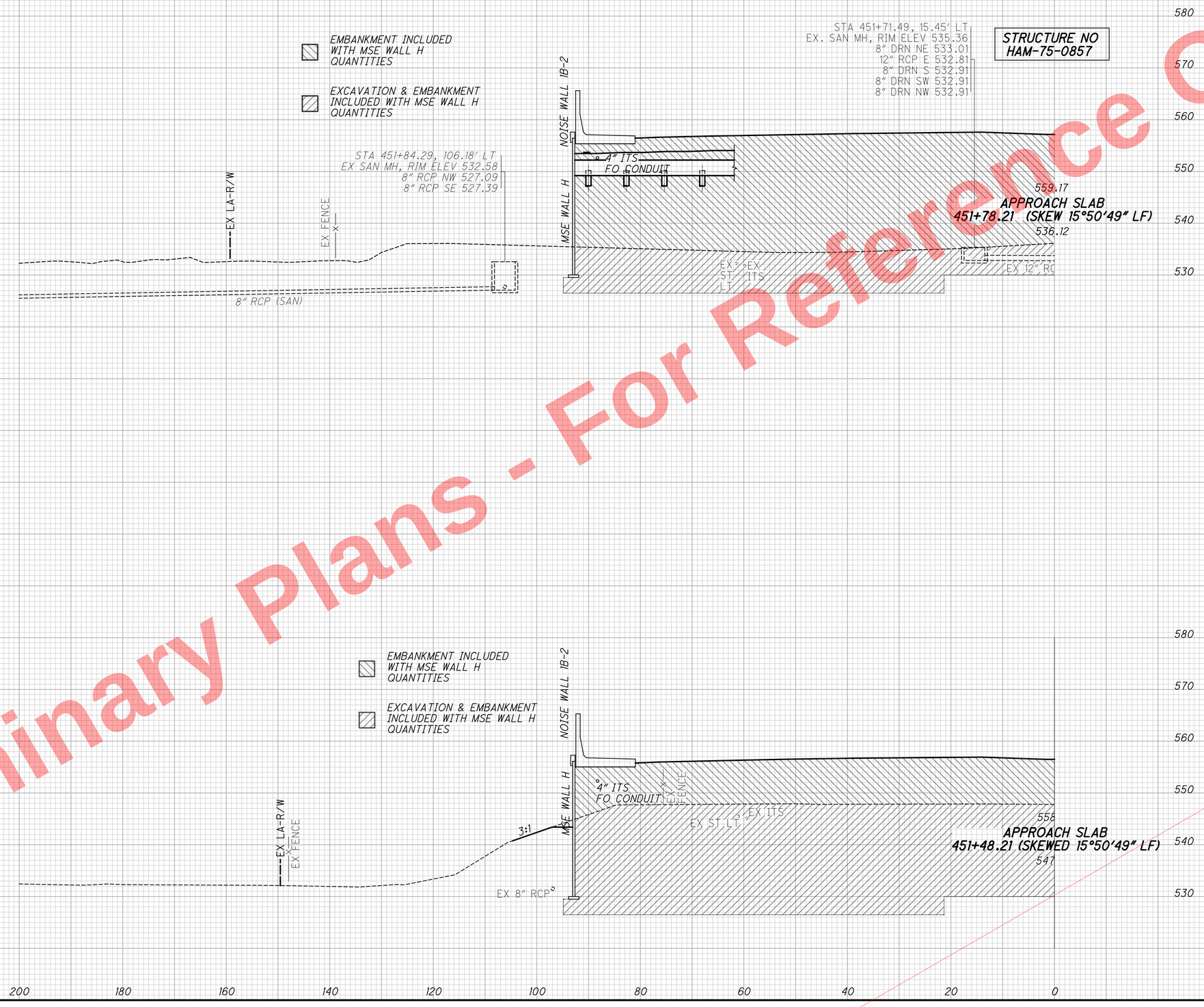

CROSS SECTIONS I.R. 75 SOUTHBOUND
STA. 451+48.21 TO STA. 451+78.21

HAM-75-7.85

383
1047

Preliminary Plans - For Reference Only

J:\20110903\ODOT\HAM\77889\roadway\sheets\77889XS424.dgn 5/22/2026 10:17:33 AM hbrendlinger

PAVEMENT REMOVAL QUANTITIES HAVE BEEN DEDUCTED FROM EXCAVATION QUANTITIES

SEEDING	
END WIDTH	SQ. YDS.

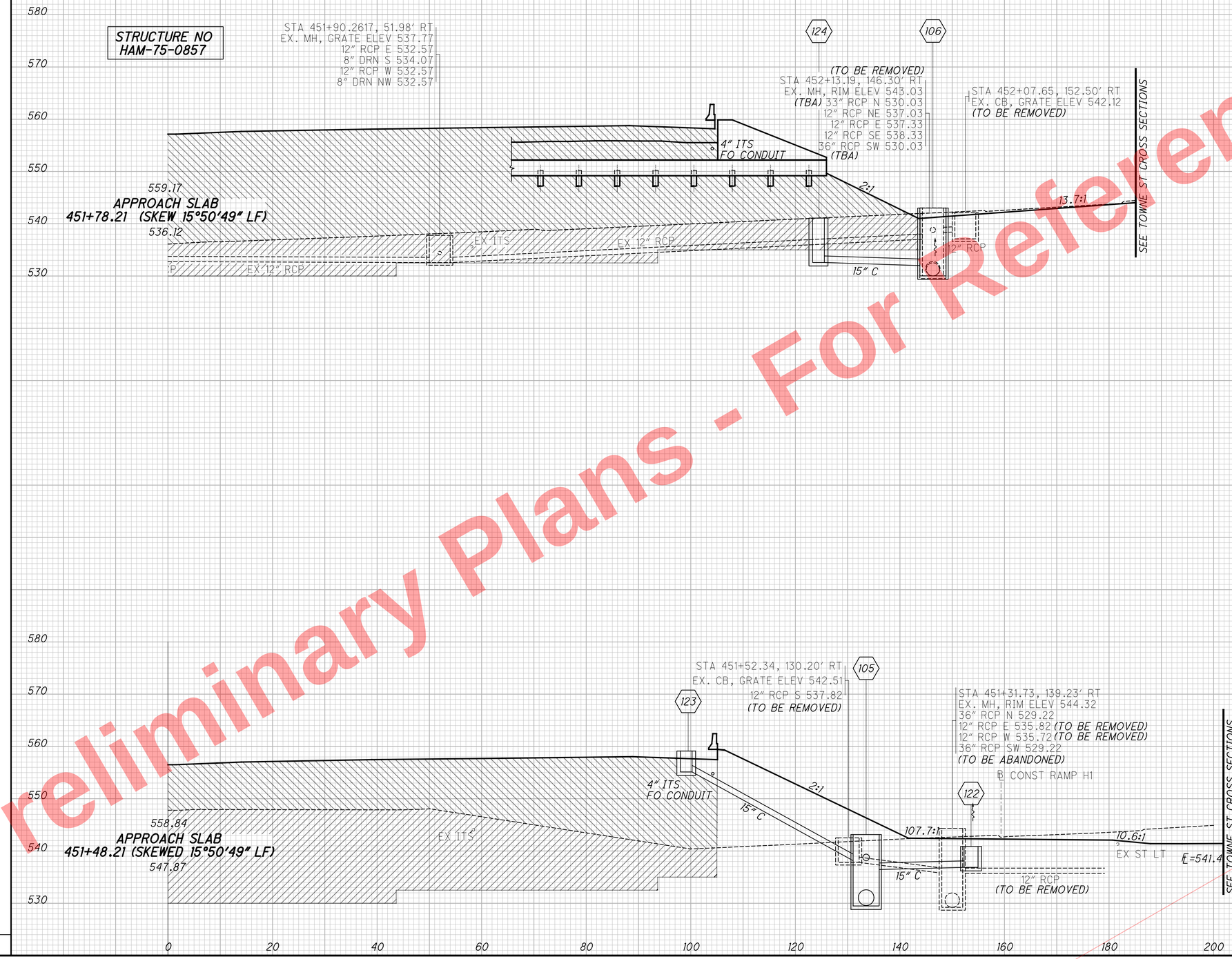

END AREA		VOLUME	
CUT	FILL	CUT	FILL
17	0		
		13	1231
6	2216		
		25	2654
		38	3885

CALCULATED CFR
CHECKED SSK

CROSS SECTIONS I.R. 75 NORTHBOUND
STA. 451+48.21 TO STA. 451+78.21

HAM-75-7.85

384
1047

Preliminary Plans - For Reference Only

J:\20110903\ODOT\HAM\77889\roadway\sheets\77889XS425.dgn 5/22/2026 10:17:33 AM hbrendlinger

SEEDING	
END WIDTH	SQ. YDS.
0	

PAVEMENT REMOVAL QUANTITIES HAVE BEEN DEDUCTED FROM EXCAVATION QUANTITIES

END AREA		VOLUME	
CUT	FILL	CUT	FILL

CALCULATED CFR
CHECKED SSK

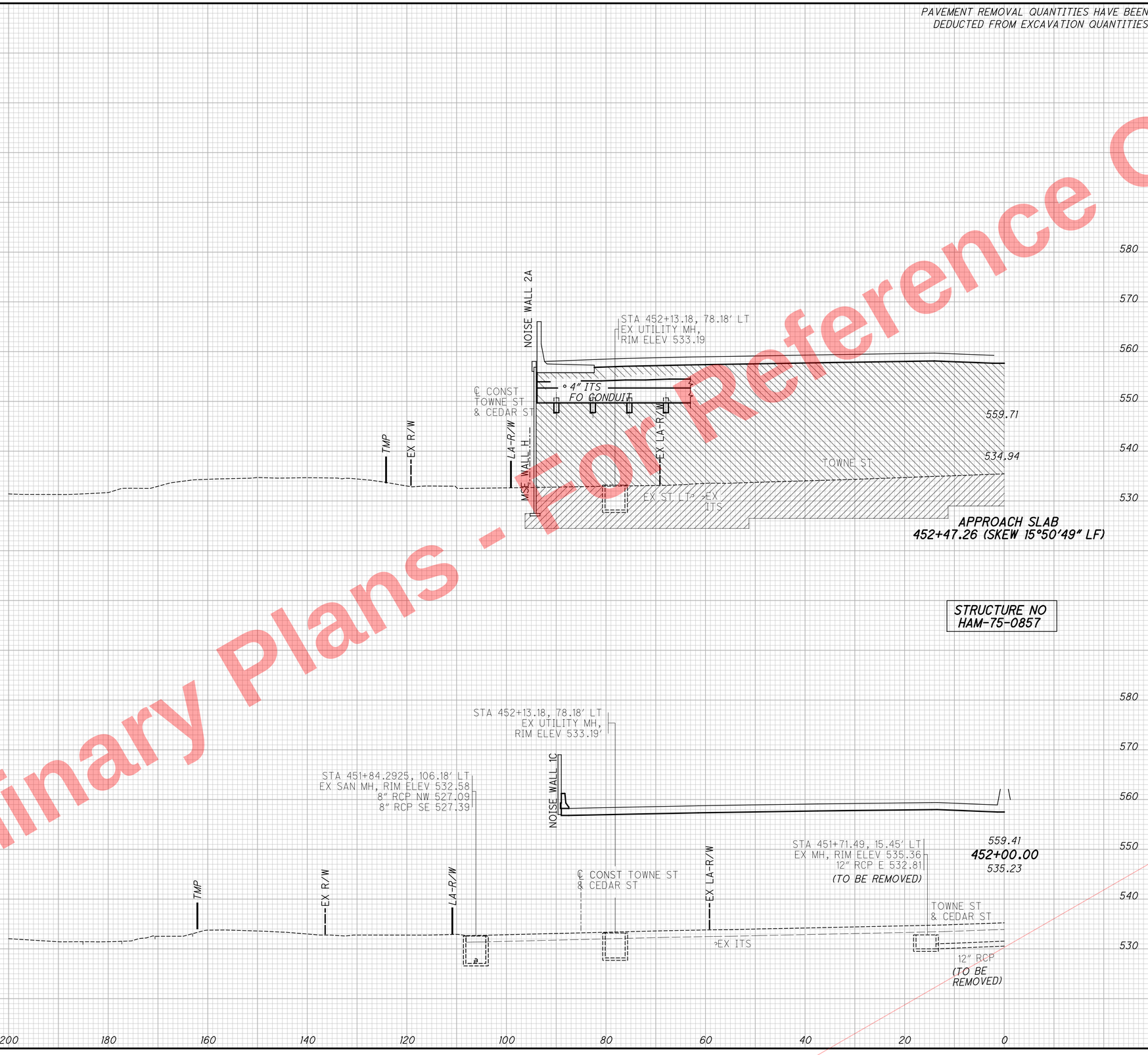

CROSS SECTIONS I.R. 75 SOUTHBOUND
STA. 452+00.00 TO STA. 452+47.26

HAM-75-7.85

385
1047

Preliminary Plans - For Reference Only

J:\20110903\ODOT\HAM\7889\roadway\sheets\77889XS426.dgn 5/22/2026 10:17:34 AM hbrendlinger

SEEDING	
END WIDTH	SQ. YDS.

PAVEMENT REMOVAL QUANTITIES HAVE BEEN DEDUCTED FROM EXCAVATION QUANTITIES

END AREA		VOLUME	
CUT	FILL	CUT	FILL
0	0		
		0	0
0	0		
		0	0
0	0		

CALCULATED CFR
CHECKED SSK

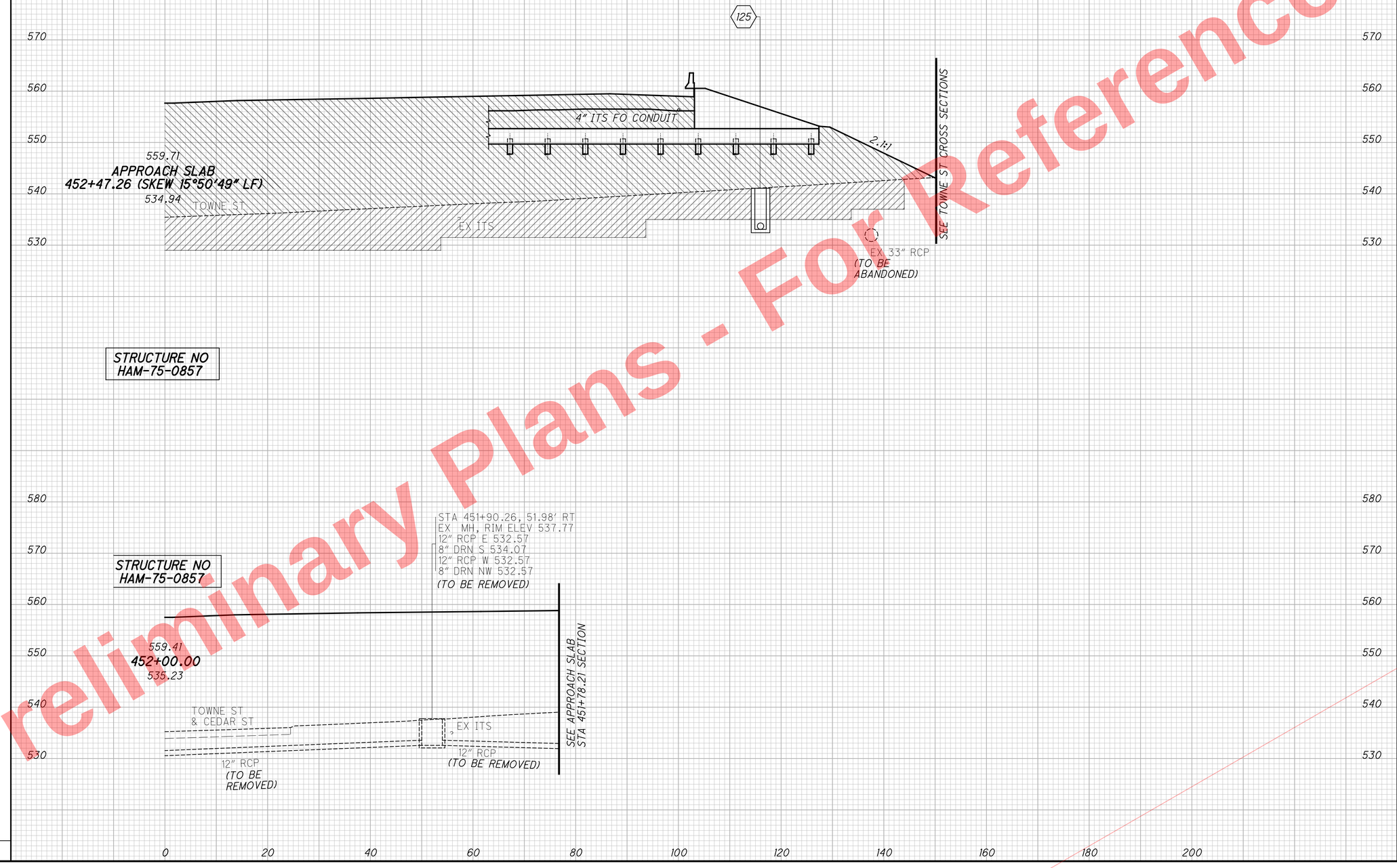

CROSS SECTIONS I.R. 75 NORTHBOUND
STA. 452+00.00 TO STA. 452+47.26

HAM-75-7.85

386
1047

Preliminary Plans - For Reference Only

J:\20110903\ODOT\HAM\7889\roadway\sheets\77889XS427.dgn 5/22/2026 10:17:35 AM hbrendlinger

SEEDING	
END WIDTH	SQ. YDS.
80	0

PAVEMENT REMOVAL QUANTITIES HAVE BEEN DEDUCTED FROM EXCAVATION QUANTITIES

END AREA		VOLUME	
CUT	FILL	CUT	FILL

CALCULATED CFR | CHECKED SSK

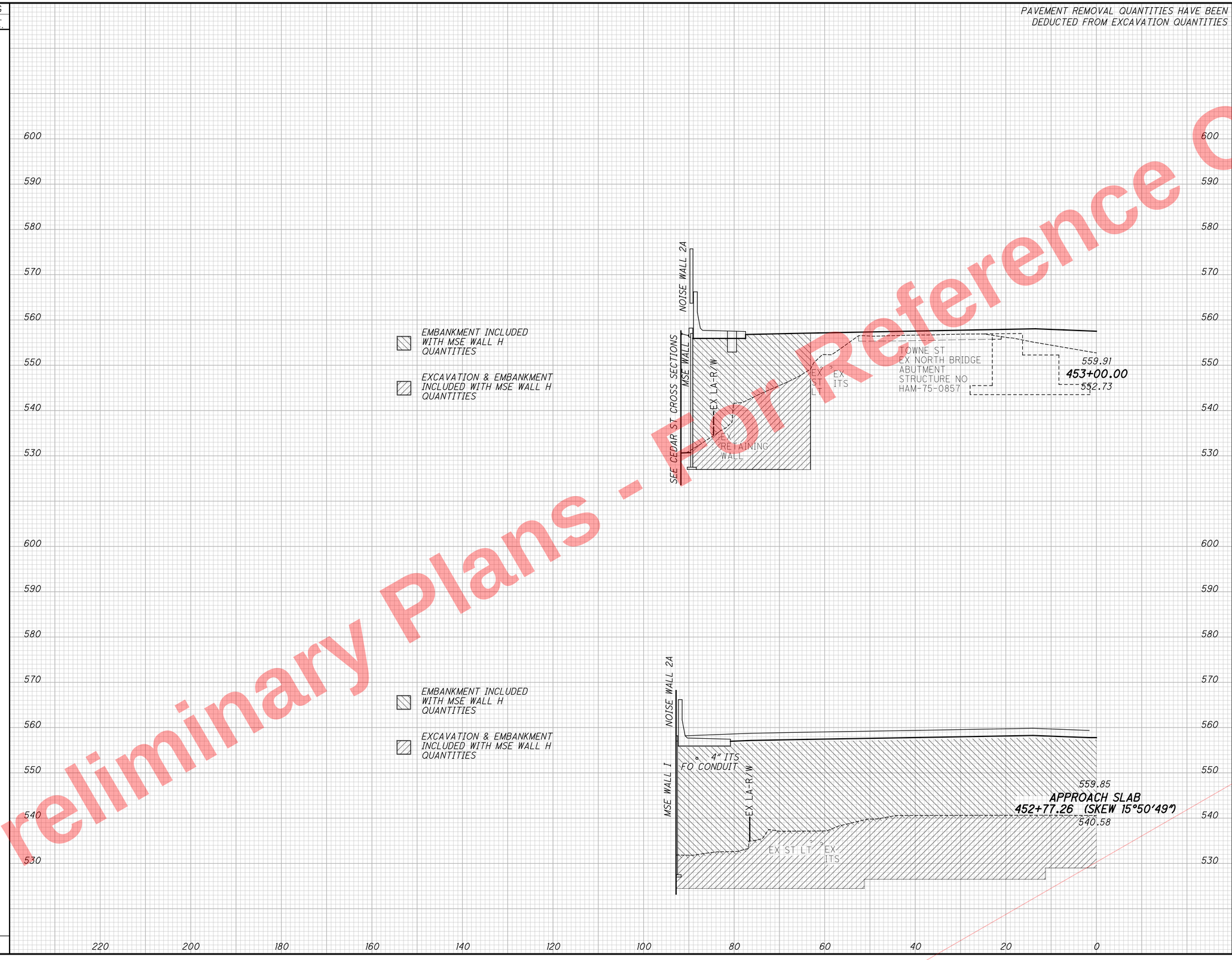

Preliminary Plans - For Reference Only

CROSS SECTIONS I.R. 75 SOUTHBOUND
STA. 452+77.26 TO STA. 453+00.00

HAM-75-7.85

387
1047

J:\20110903\ODOT\HAM\7889\roadway\sheets\77889XS428.dgn 5/22/2026 10:17:36 AM hbrendlinger

SEEDING	
END WIDTH	SQ. YDS.

PAVEMENT REMOVAL QUANTITIES HAVE BEEN DEDUCTED FROM EXCAVATION QUANTITIES

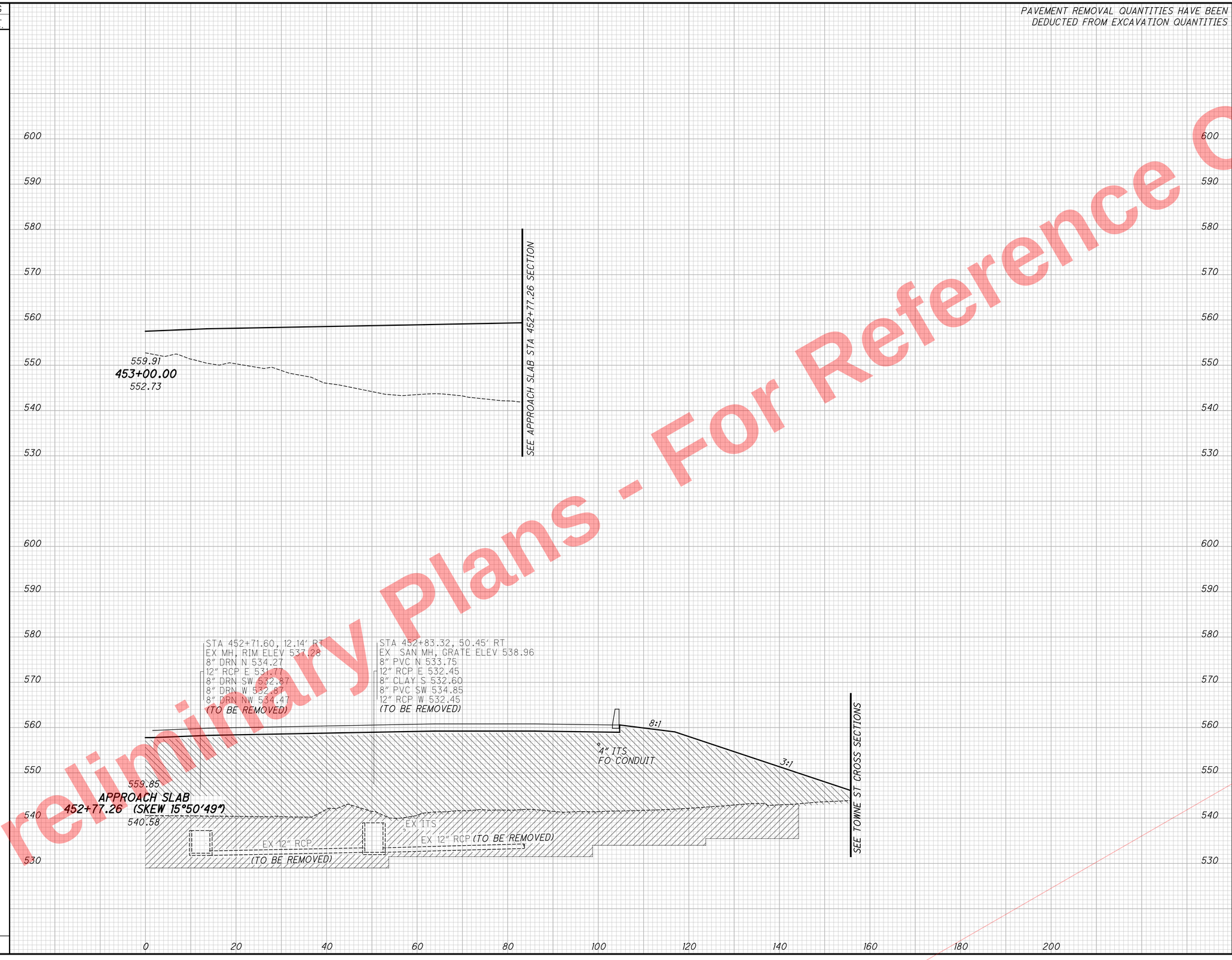

END AREA		VOLUME	
CUT	FILL	CUT	FILL
4	2050		
		0	0
0	0		
		0	0
		0	0
		0	0

CALCULATED	CHECKED
CFR	SSK

CROSS SECTIONS I.R. 75 NORTHBOUND
STA. 452+77.26 TO STA. 453+00.00

HAM-75-7.85

388
1047

Preliminary Plans - For Reference Only

J:\20110903\ODOT\HAM\77889\roadway\sheets\77889XS429.dgn 5/22/2026 10:17:36 AM hbrendlinger

SEEDING	
END WIDTH	SQ. YDS.
82	494
96	488
	982

PAVEMENT REMOVAL QUANTITIES HAVE BEEN DEDUCTED FROM EXCAVATION QUANTITIES

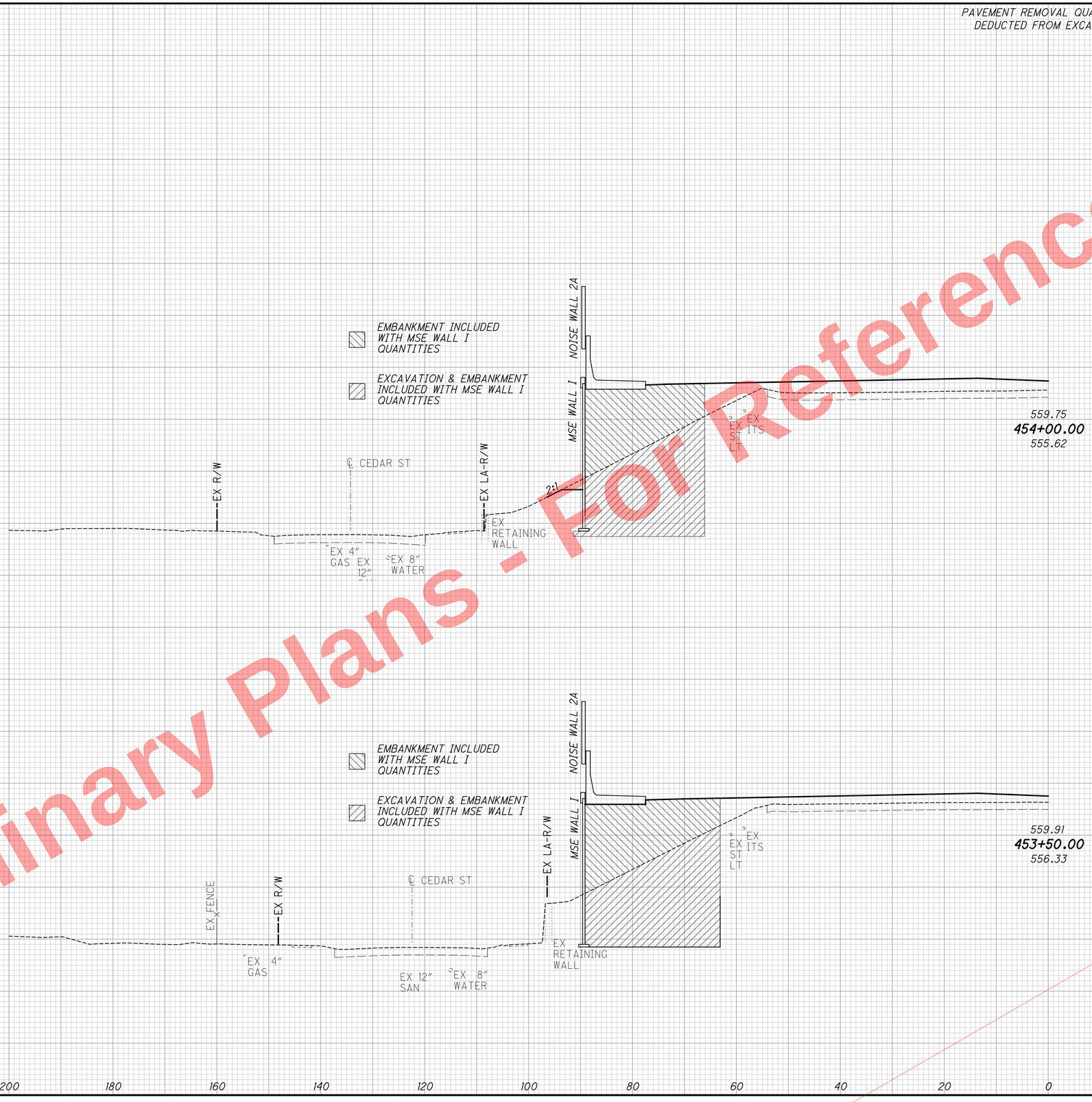

END AREA		VOLUME	
CUT	FILL	CUT	FILL

CALCULATED CFR
CHECKED SSK

CROSS SECTIONS I.R. 75 SOUTHBOUND
STA. 453+50.00 TO STA. 454+00.00

HAM-75-7.85

389
1047

Preliminary Plans - For Reference Only

J:\20110903\ODOT\HAM\77889\roadway\sheets\77889XS430.dgn 5/22/2026 10:17:37 AM hbrendlinger

SEEDING	
END WIDTH	SQ. YDS.

PAVEMENT REMOVAL QUANTITIES HAVE BEEN DEDUCTED FROM EXCAVATION QUANTITIES

END AREA		VOLUME	
CUT	FILL	CUT	FILL
28	1508		
		91	2739
70	1451		
		68	3242
		159	5981

CALCULATED CFR
CHECKED SSK

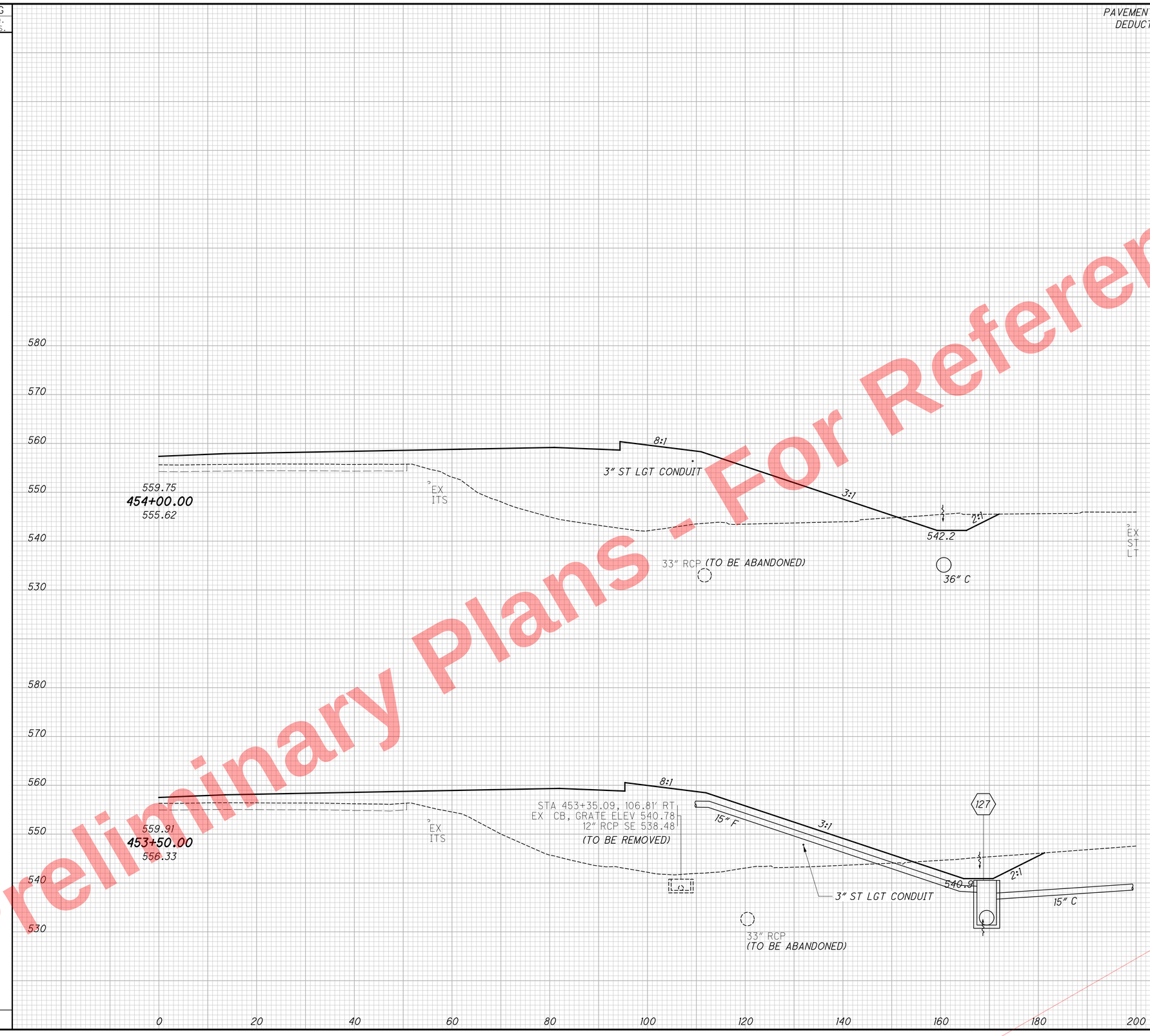

CROSS SECTIONS I.R. 75 NORTHBOUND
STA. 453+50.00 TO STA. 454+00.00

HAM-75-7.85

390
1047

Preliminary Plans - For Reference Only

J:\20110903\ODOT\HAM\77889\roadway\sheets\77889XS431.dgn 5/22/2026 10:17:38 AM hbrendlinger

SEEDING	
END WIDTH	SQ. YDS.
80	446
80	452
	898

PAVEMENT REMOVAL QUANTITIES HAVE BEEN DEDUCTED FROM EXCAVATION QUANTITIES

END AREA		VOLUME	
CUT	FILL	CUT	FILL

CALCULATED CFR
CHECKED SSK

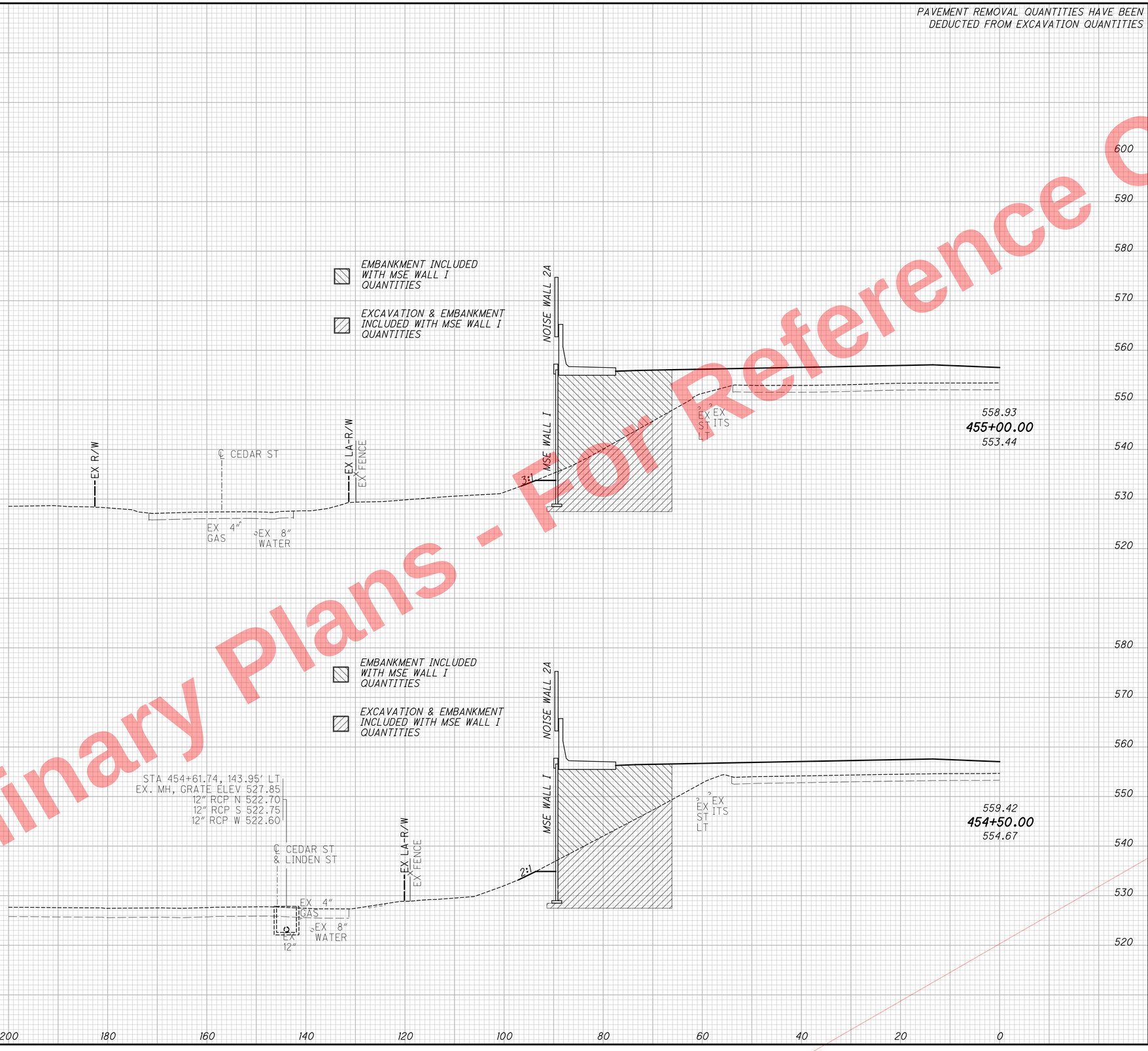

Preliminary Plans - For Reference Only

CROSS SECTIONS I.R. 75 SOUTHBOUND
STA. 454+50.00 TO STA. 455+00.00

HAM-75-7.85

391
1047

J:\20110903\ODOT\HAM\7889\roadway\sheets\77889XS432.dgn 5/22/2026 10:17:39 AM hbrendlinger

PAVEMENT REMOVAL QUANTITIES HAVE BEEN DEDUCTED FROM EXCAVATION QUANTITIES

SEEDING	
END WIDTH	SQ. YDS.

END AREA		VOLUME	
CUT	FILL	CUT	FILL
24	1581		
		32	2891
11	1541		
		36	2823
		68	5714

CALCULATED CFR | CHECKED SSK

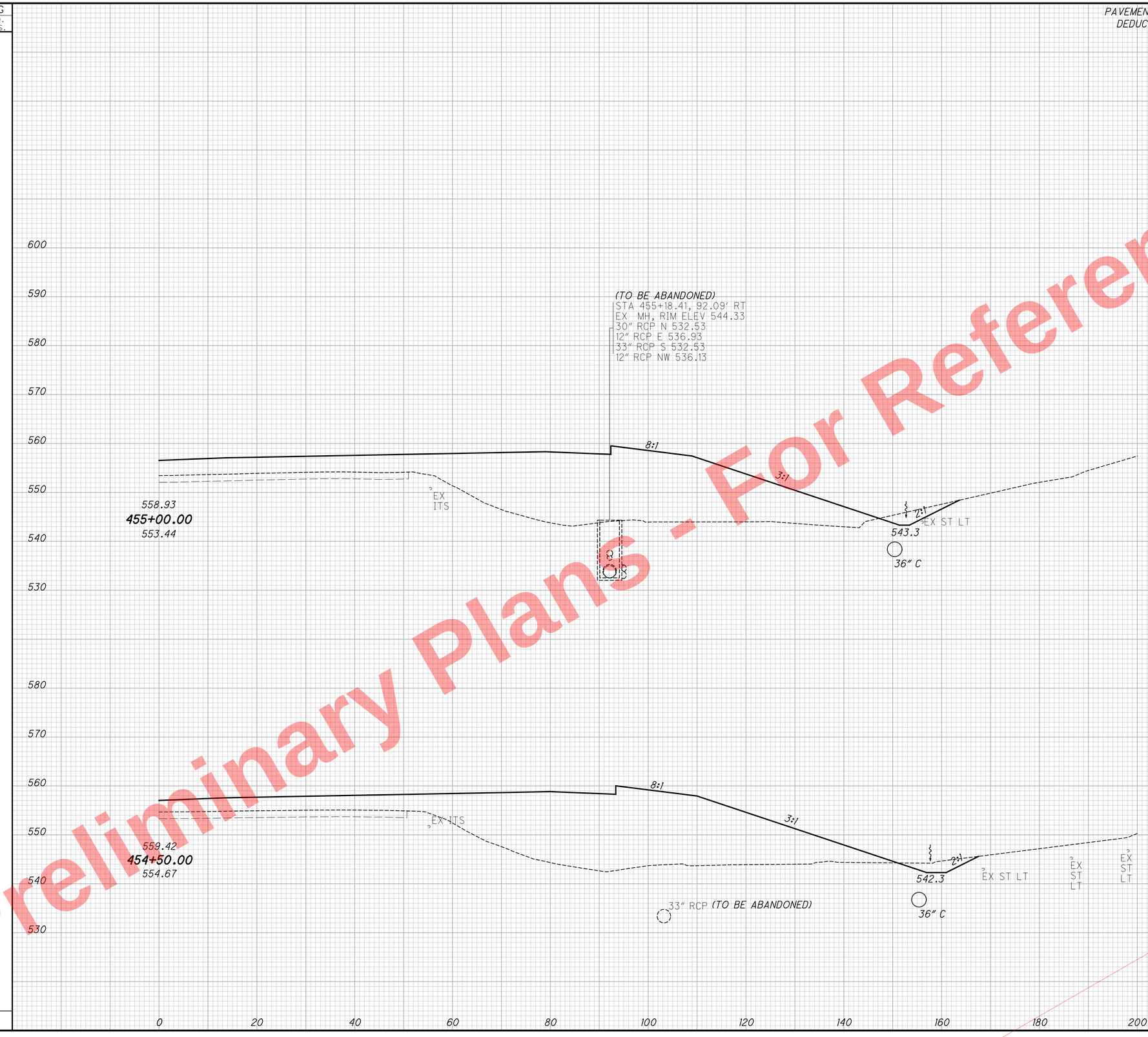

CROSS SECTIONS I.R. 75 NORTHBOUND
STA. 454+50.00 TO STA. 455+00.00

HAM-75-7.85

392
1047

J:\20110903\ODOT\HAM\7889\roadway\sheets\77889XS433.dgn 5/22/2026 10:17:39 AM hbrendlinger

Preliminary Plans - For Reference Only

SEEDING	
END WIDTH	SQ. YDS.
63	365
69	414
	779

PAVEMENT REMOVAL QUANTITIES HAVE BEEN DEDUCTED FROM EXCAVATION QUANTITIES

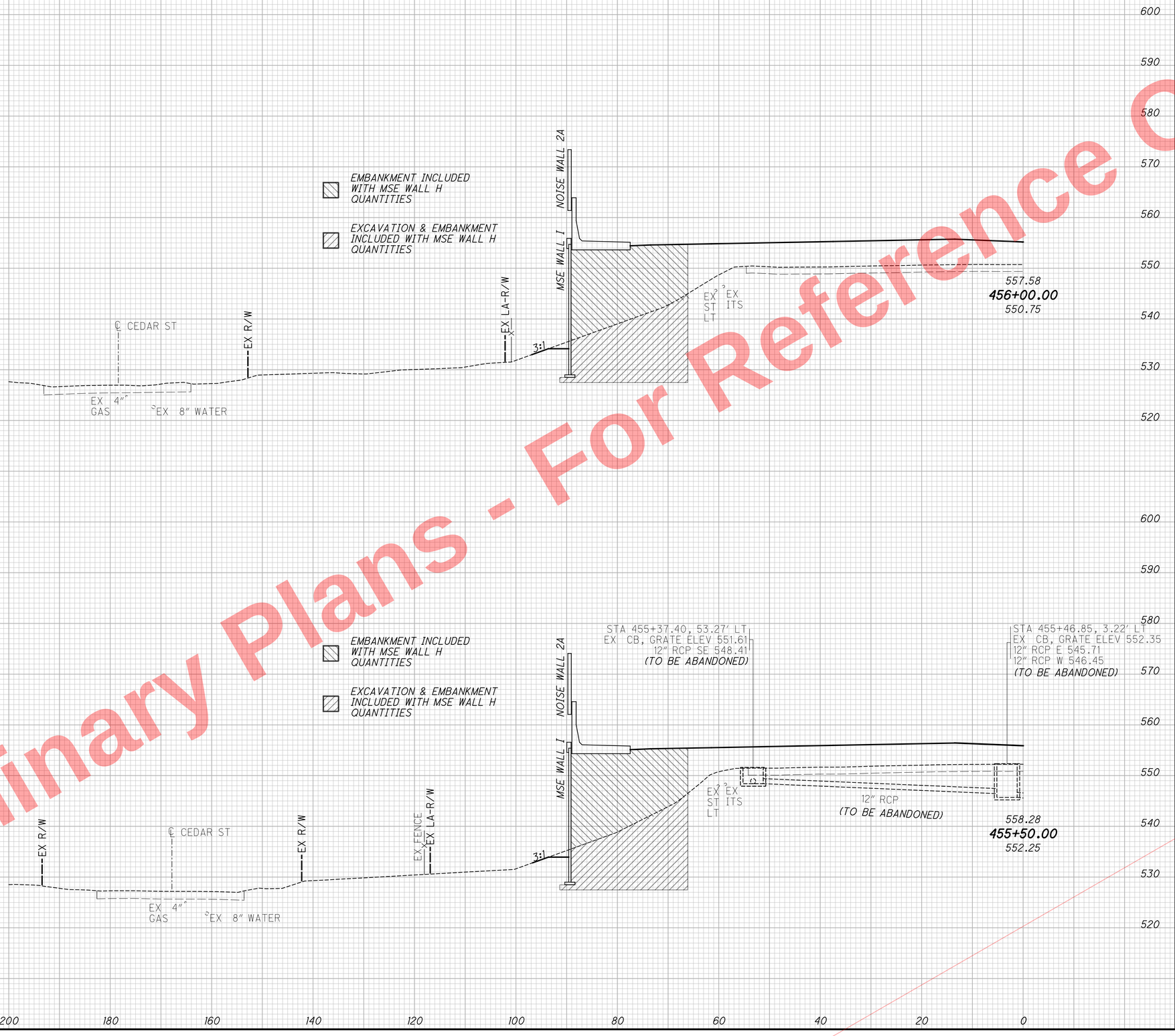

END AREA		VOLUME	
CUT	FILL	CUT	FILL

CALCULATED CFR
CHECKED SSK

CROSS SECTIONS I.R. 75 SOUTHBOUND
STA. 455+50.00 TO STA. 456+00.00

HAM-75-7.85

393
1047

Preliminary Plans - For Reference Only

J:\20110903\ODOT\HAM\77889\roadway\sheets\77889XS434.dgn 5/22/2026 10:17:40 AM hbrendlinger

SEEDING	
END WIDTH	SQ. YDS.

PAVEMENT REMOVAL QUANTITIES HAVE BEEN DEDUCTED FROM EXCAVATION QUANTITIES

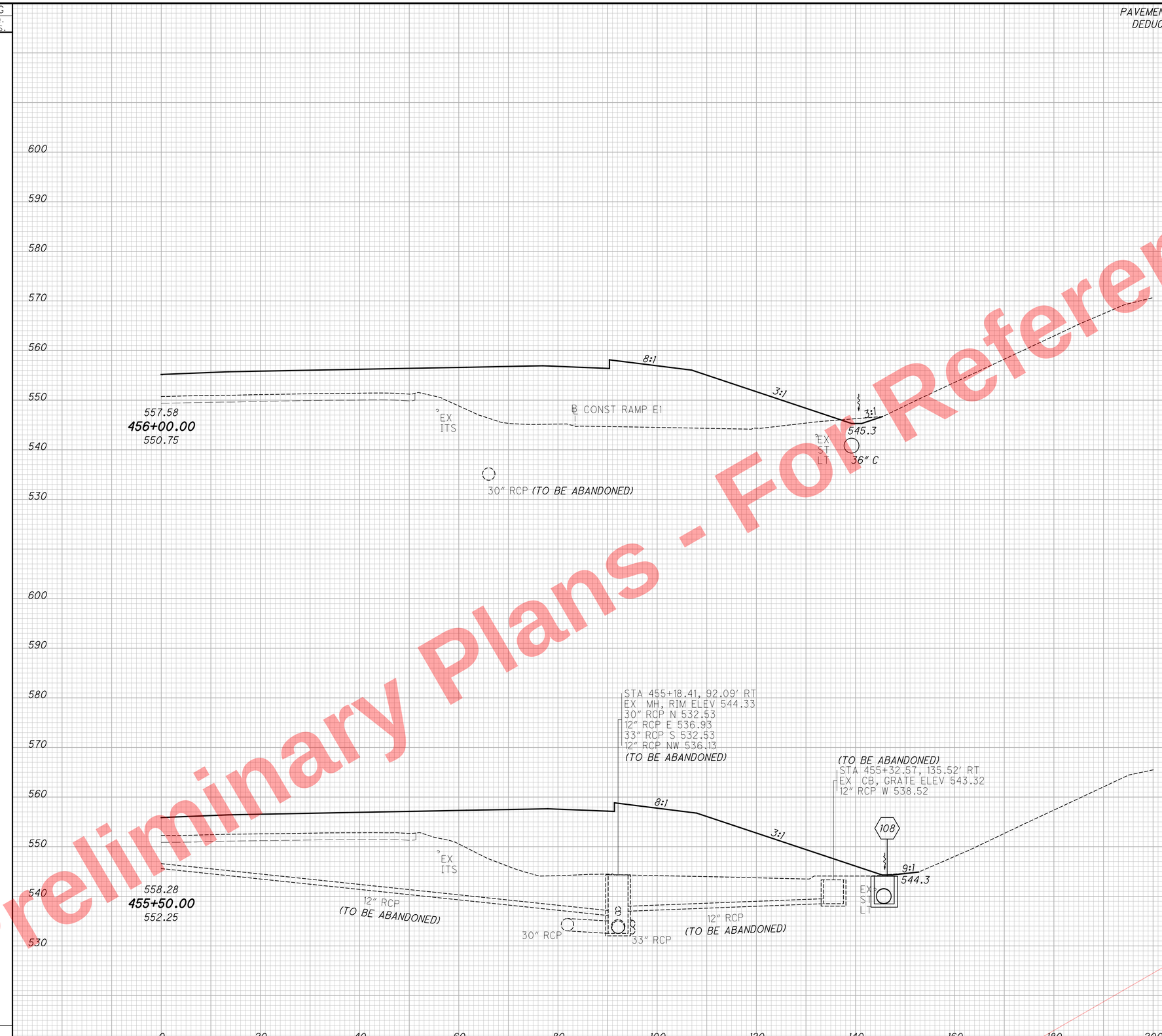

END AREA		VOLUME	
CUT	FILL	CUT	FILL
5	1552		
		5	2894
1	1573		
		23	2921
		28	5815

CALCULATED CFR
CHECKED SSK

CROSS SECTIONS I.R. 75 NORTHBOUND
STA. 455+50.00 TO STA. 456+00.00

HAM-75-7.85

394
1047

Preliminary Plans - For Reference Only

J:\20110903\ODOT\HAM\77889\roadway\sheets\77889XS435.dgn 5/22/2026 10:17:41 AM hbrendlinger

SEEDING	
END WIDTH	SQ. YDS.
53	312
59	338
650	

PAVEMENT REMOVAL QUANTITIES HAVE BEEN DEDUCTED FROM EXCAVATION QUANTITIES

END AREA		VOLUME	
CUT	FILL	CUT	FILL

CALCULATED CFR
CHECKED SSK

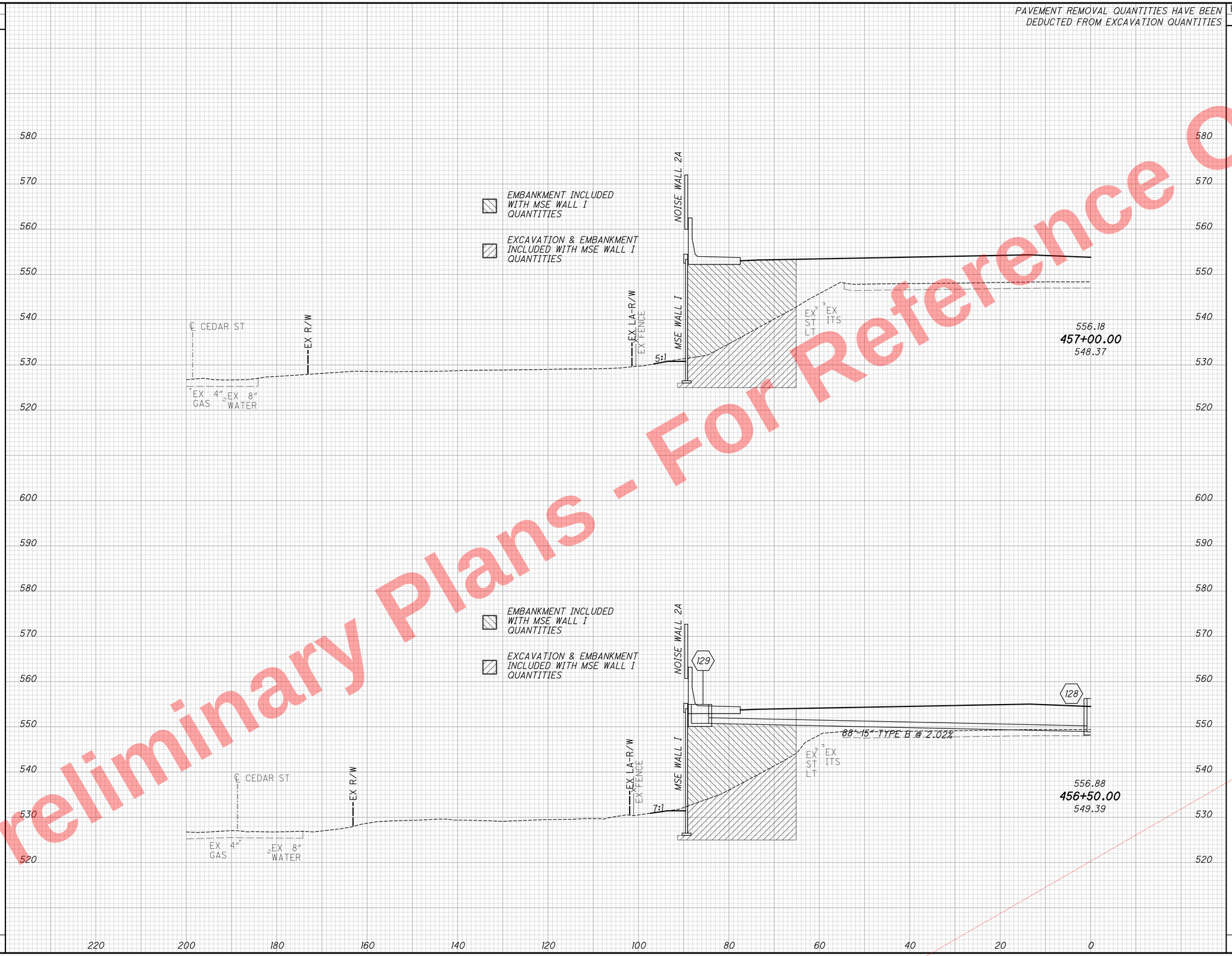

CROSS SECTIONS I.R. 75 SOUTHBOUND
STA. 456+50.00 TO STA. 457+00.00

HAM-75-7.85

395
1047

Preliminary Plans - For Reference Only

J:\20110903\ODOT\HAM\77889\roadway\sheets\77889XS436.dgn 5/22/2026 10:17:42 AM hbrendlinger

PAVEMENT REMOVAL QUANTITIES HAVE BEEN DEDUCTED FROM EXCAVATION QUANTITIES

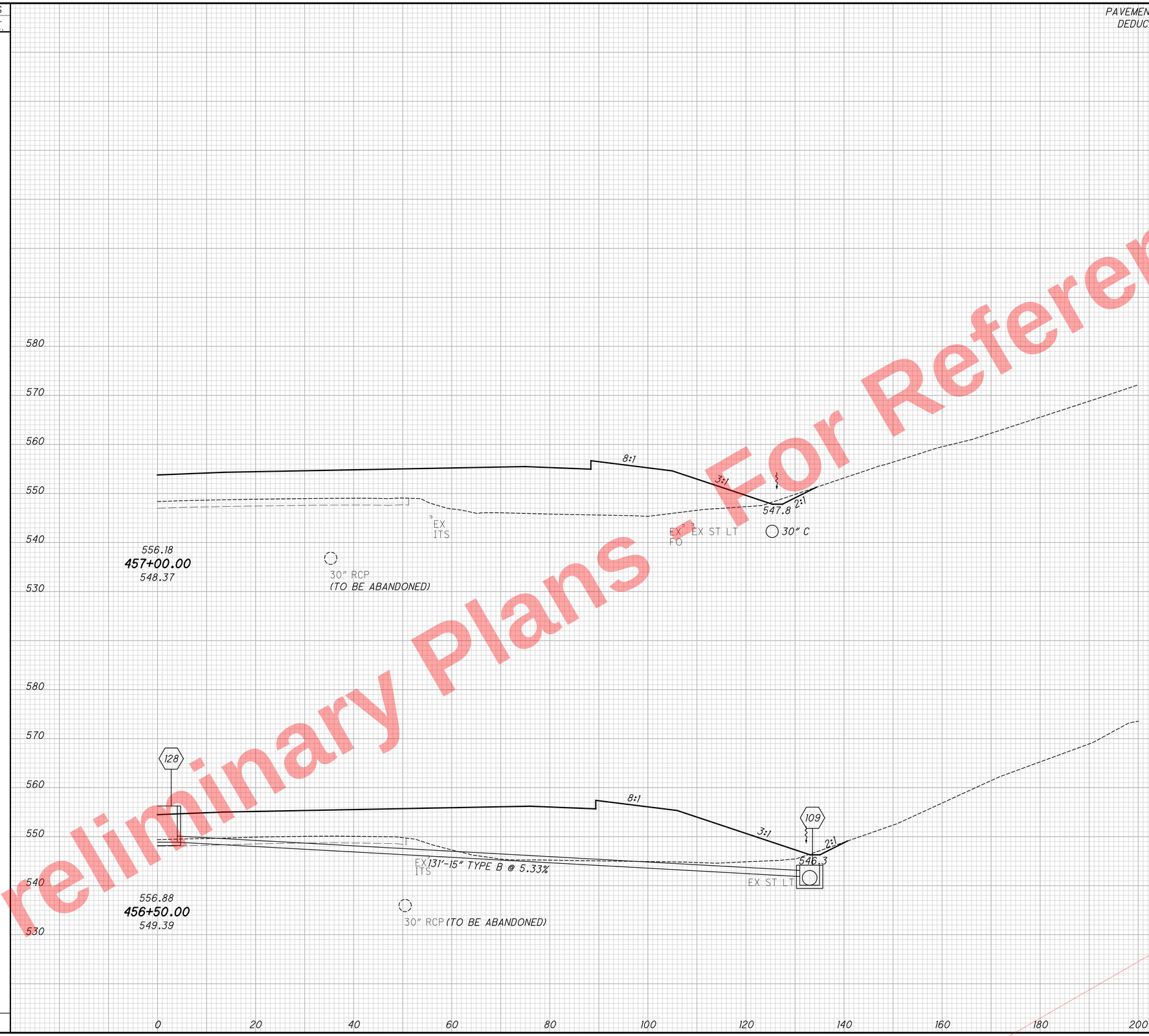

SEEDING		END AREA		VOLUME	
END WIDTH	SQ. YDS.	CUT	FILL	CUT	FILL
		7	1416		
				11	2705
		5	1505		
				12	2798
				16	5645

CALCULATED CFR
CHECKED SSK

CROSS SECTIONS I.R. 75 NORTHBOUND
STA. 456+50.00 TO STA. 457+00.00

HAM-75-7.85

396
1047

Preliminary Plans - For Reference Only

J:\20110903\ODOT\HAM\77889\roadway\sheets\77889XS437.dgn 5/22/2026 10:17:43 AM hbrendlinger

SEEDING	
END WIDTH	SQ. YDS.
74	393
67	335
	728

PAVEMENT REMOVAL QUANTITIES HAVE BEEN DEDUCTED FROM EXCAVATION QUANTITIES

END AREA		VOLUME	
CUT	FILL	CUT	FILL

CALCULATED CFR
CHECKED SSK

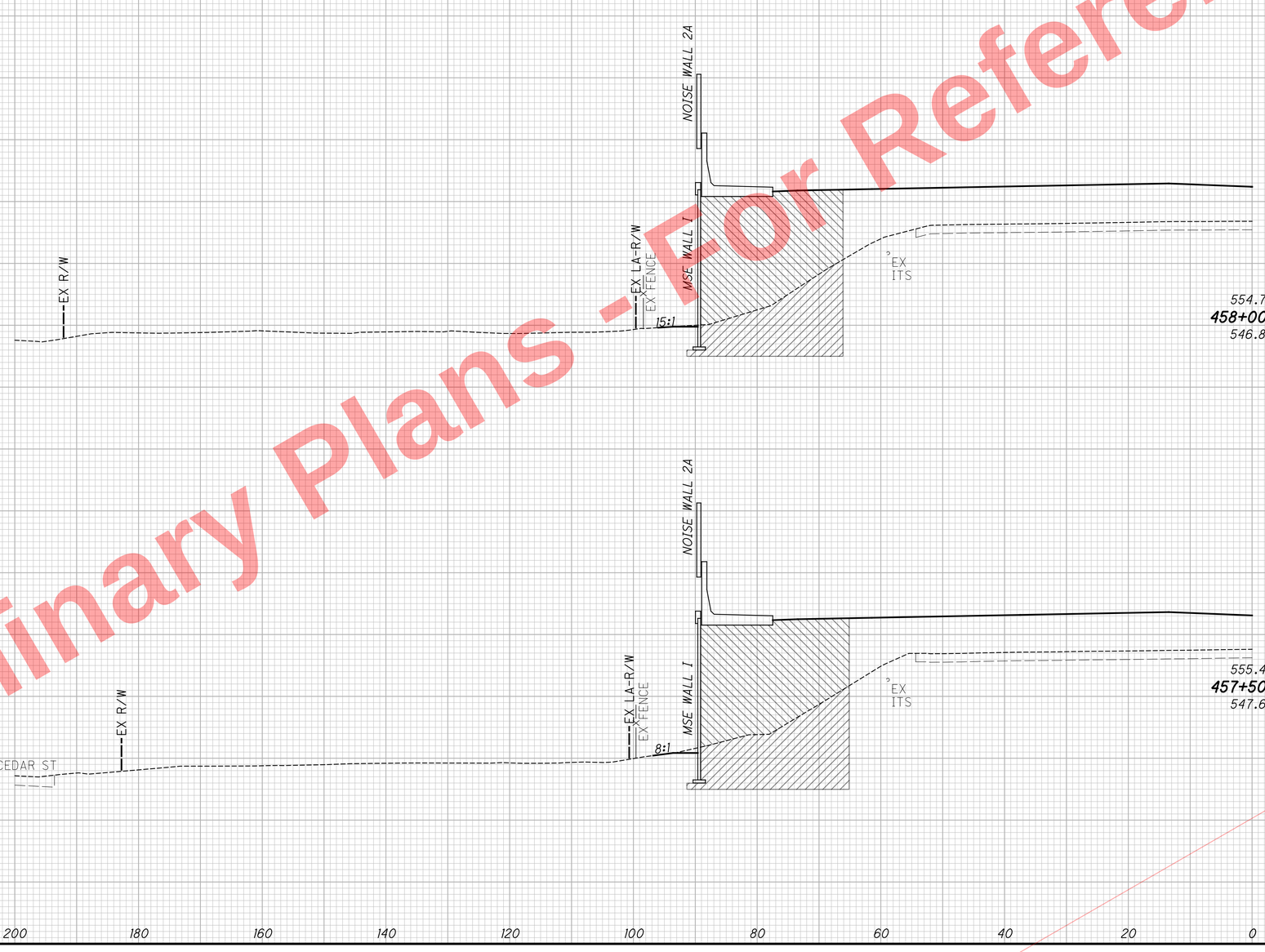

CROSS SECTIONS I.R. 75 SOUTHBOUND
STA. 457+50.00 TO STA. 458+00.00

HAM-75-7.85

397
1047

Preliminary Plans - Not For Reference Only

J:\20110903\ODOT\HAM\77889\roadway\sheets\77889XS438.dgn 5/22/2026 10:17:43 AM hbrendlinger

SEEDING	
END WIDTH	SQ. YDS.

PAVEMENT REMOVAL QUANTITIES HAVE BEEN DEDUCTED FROM EXCAVATION QUANTITIES

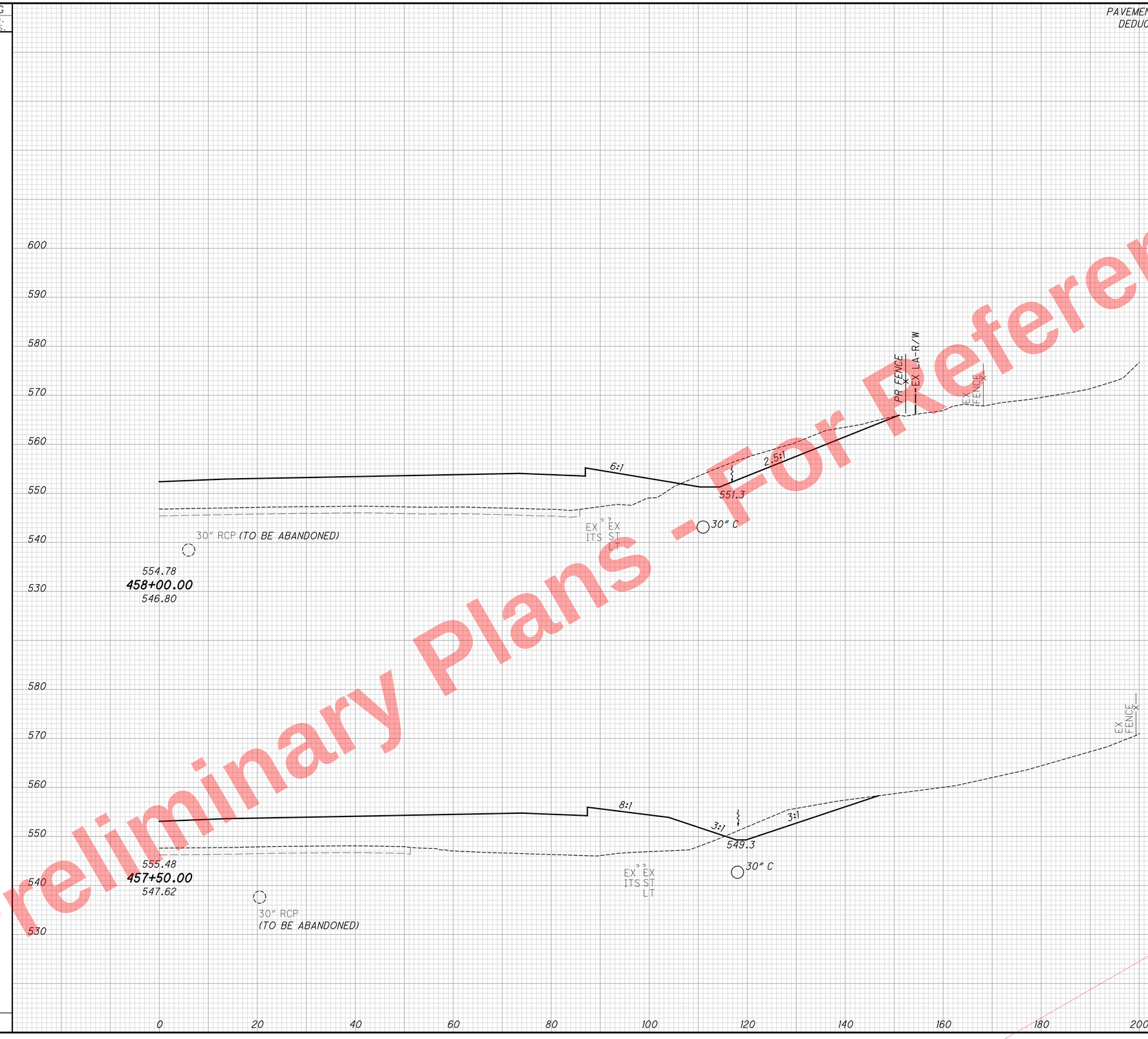

END AREA		VOLUME	
CUT	FILL	CUT	FILL
110	1269		
		162	2402
65	1325		
		67	2538
		293	5082

CALCULATED CFR
CHECKED SSK

CROSS SECTIONS I.R. 75 NORTHBOUND
STA. 457+50.00 TO STA. 458+00.00

HAM-75-7.85

398
1047

Preliminary Plans - Not For Reference Only

J:\20110903\ODOT\HAM\77889\roadway\sheets\77889XS439.dgn 5/22/2026 10:17:44 AM hbrendlinger

SEEDING	
END WIDTH	SQ. YDS.
52	276
48	338
	614

PAVEMENT REMOVAL QUANTITIES HAVE BEEN DEDUCTED FROM EXCAVATION QUANTITIES

END AREA		VOLUME	
CUT	FILL	CUT	FILL

CALCULATED CFR
CHECKED SSK

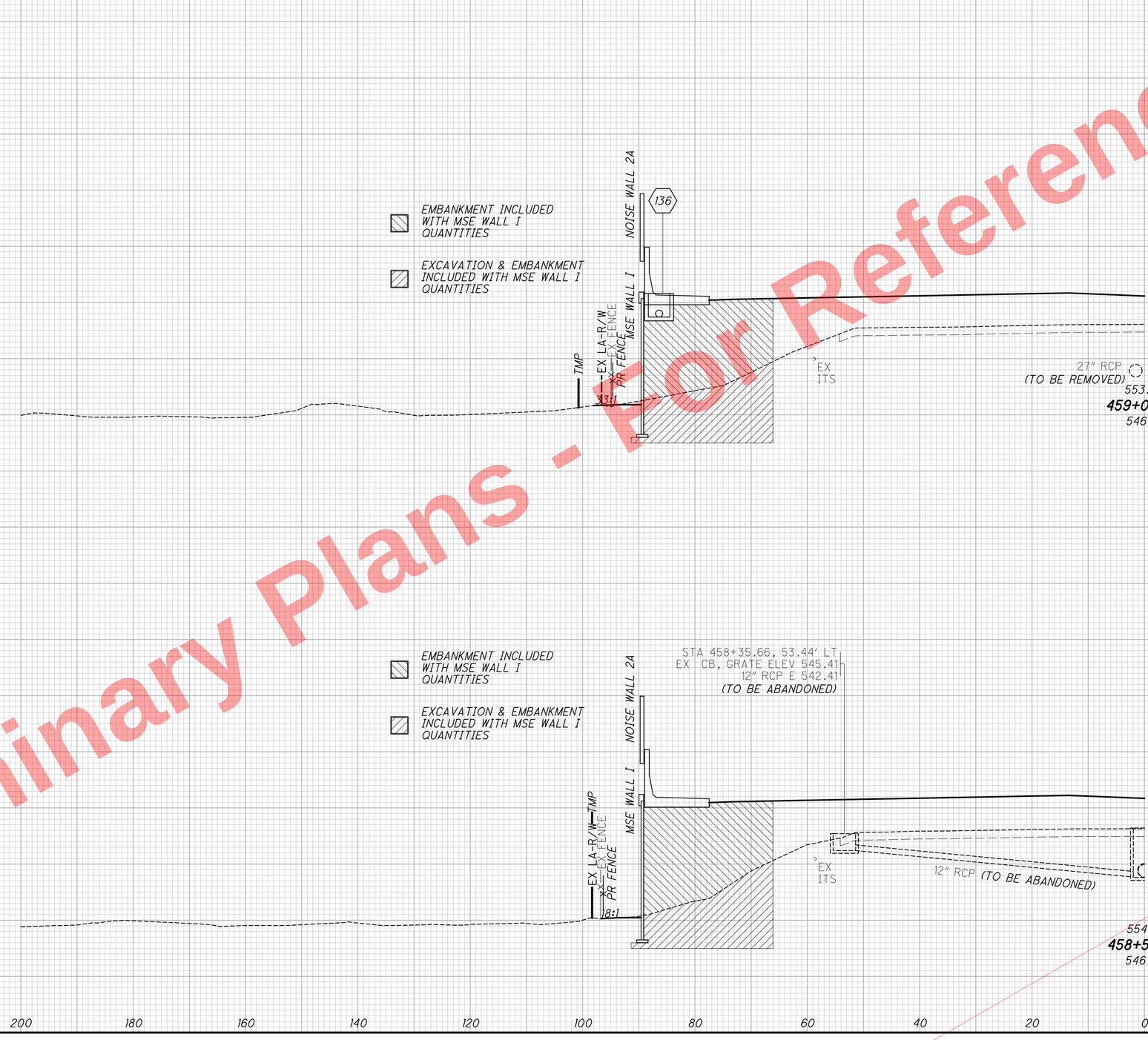

Preliminary Plans - For Reference Only

CROSS SECTIONS I.R. 75 SOUTHBOUND
STA. 458+50.00 TO STA. 459+00.00

HAM-75-7.85

399
1047

J:\20110903\ODOT\HAM\7889\roadway\sheets\77889XS440.dgn 5/22/2026 10:17:45 AM hbrendlinger

SEEDING	
END WIDTH	SQ. YDS.

PAVEMENT REMOVAL QUANTITIES HAVE BEEN DEDUCTED FROM EXCAVATION QUANTITIES

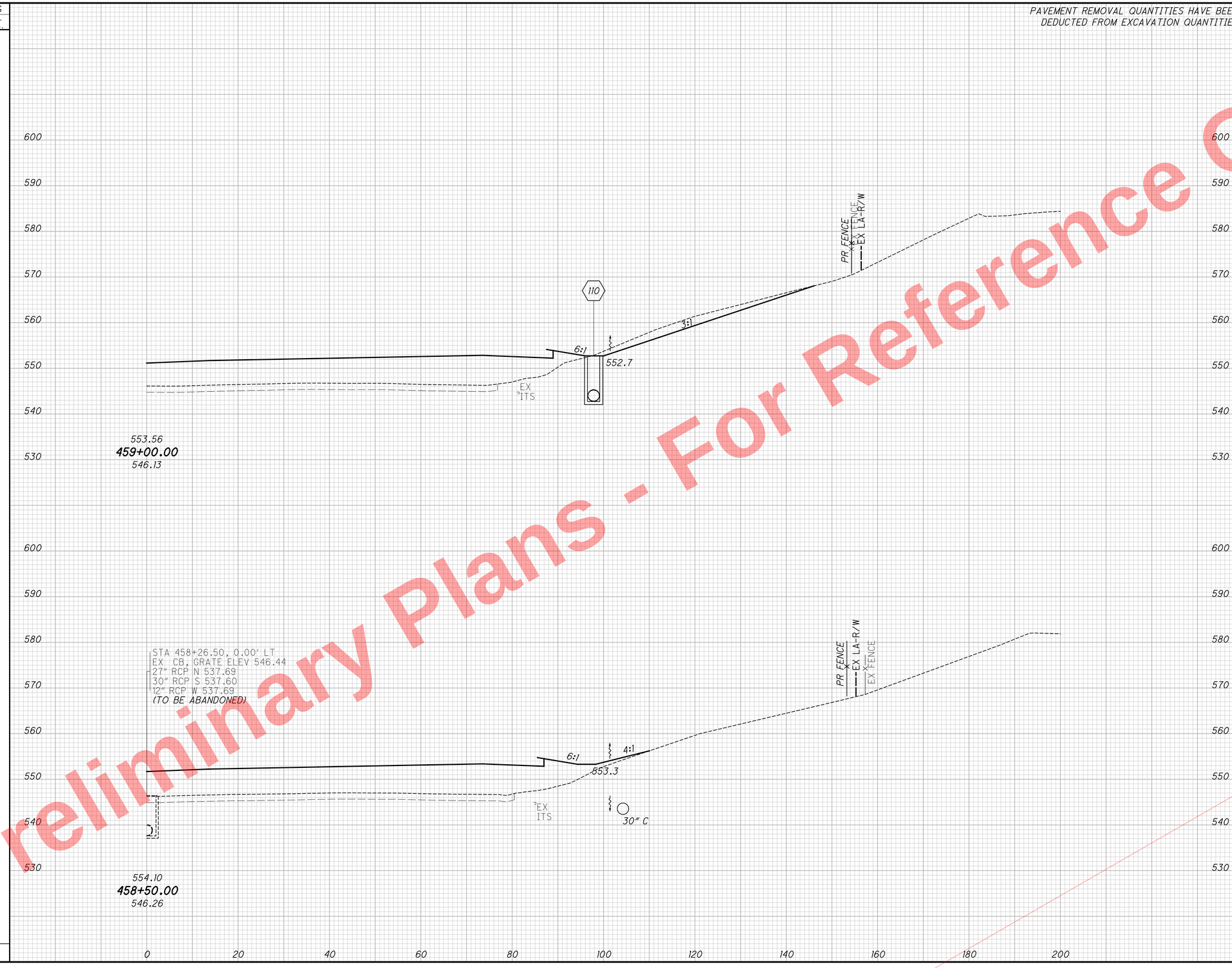

END AREA		VOLUME	
CUT	FILL	CUT	FILL
64	1096		
		60	2104
1	1176		
		103	2264
		285	4355

CALCULATED CFR
CHECKED SSK

CROSS SECTIONS I.R. 75 NORTHBOUND
STA. 458+50.00 TO STA. 459+00.00

HAM-75-7.85

400
1047

Preliminary Plans - For Reference Only

J:\20110903\ODOT\HAM\77889\roadway\sheets\77889XS441.dgn 5/22/2026 10:17:46 AM hbrendlinger

SEEDING	
END WIDTH	SQ. YDS.
20	134
28	222
	356

PAVEMENT REMOVAL QUANTITIES HAVE BEEN DEDUCTED FROM EXCAVATION QUANTITIES

END AREA		VOLUME	
CUT	FILL	CUT	FILL

CALCULATED CFR
CHECKED SSK

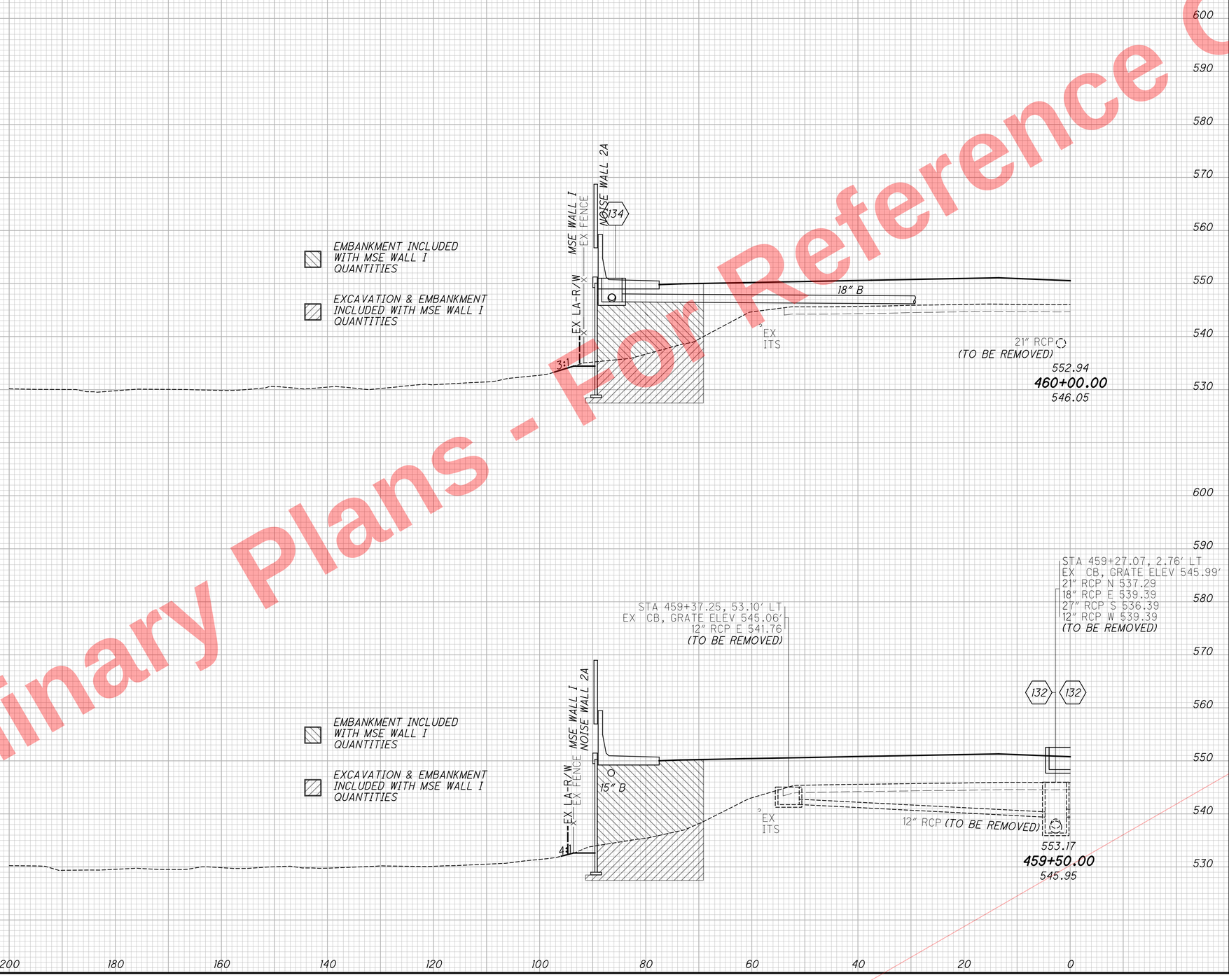

CROSS SECTIONS I.R. 75 SOUTHBOUND
STA. 459+50.00 TO STA. 460+00.00

HAM-75-7.85

401
1047

Preliminary Plans - For Reference Only

J:\20110903\ODOT\HAM\77889\roadway\sheets\77889XS442.dgn 5/22/2026 10:17:54 AM hbrendlinger

SEEDING	
END WIDTH	SQ. YDS.

PAVEMENT REMOVAL QUANTITIES HAVE BEEN DEDUCTED FROM EXCAVATION QUANTITIES

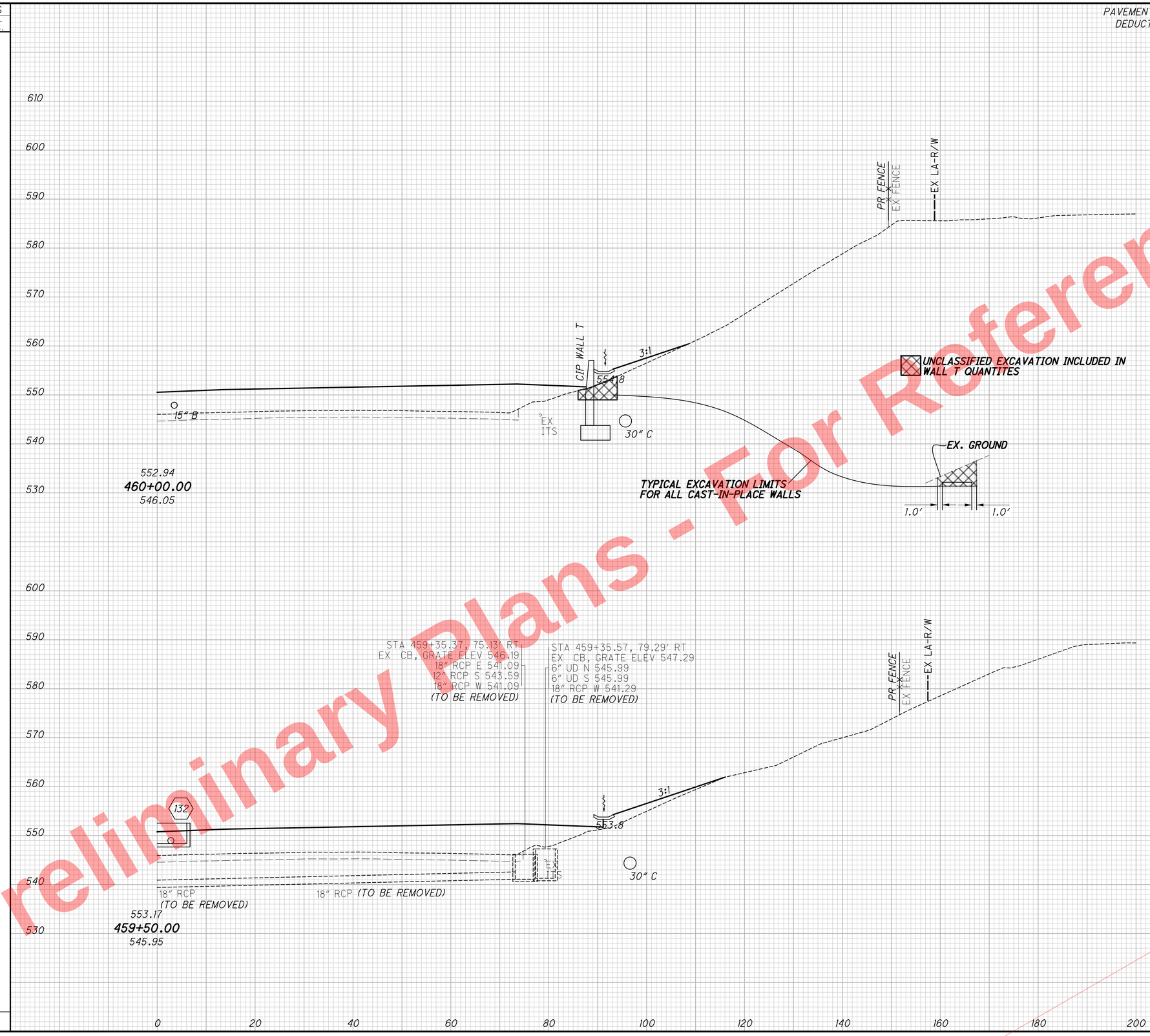

END AREA		VOLUME	
CUT	FILL	CUT	FILL
2	963		
		5	1881
3	1069		
		62	2005
		83	3876

CALCULATED	CHECKED
CFR	SSK

CROSS SECTIONS I.R. 75 NORTHBOUND
STA. 459+50.00 TO STA. 460+00.00

HAM-75-7.85

402
1047

Preliminary Plans - For Reference Only

J:\20110903\ODOT\HAM\77889\roadway\sheets\77889XS443.dgn 5/22/2026 10:17:55 AM hbrendlinger

SEEDING	
END WIDTH	SQ. YDS.
24	
	123
21	
	113
	236

PAVEMENT REMOVAL QUANTITIES HAVE BEEN DEDUCTED FROM EXCAVATION QUANTITIES

END AREA		VOLUME	
CUT	FILL	CUT	FILL

CALCULATED CFR
CHECKED SSK

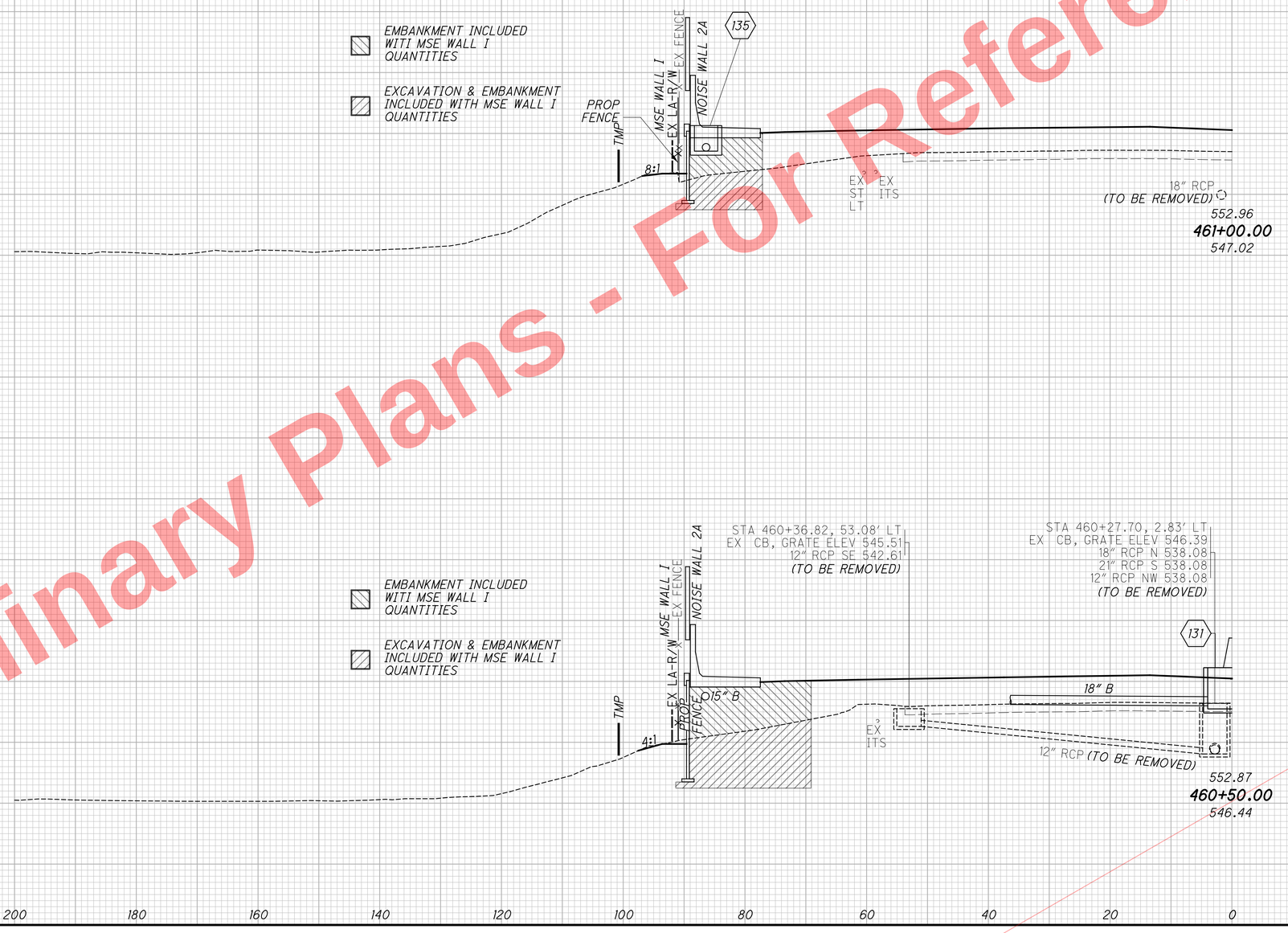

CROSS SECTIONS I.R. 75 SOUTHBOUND
STA. 460+50.00 TO STA. 461+00.00

HAM-75-7.85

403
1047

Preliminary Plans - For Reference Only

J:\20110903\ODOT\HAM\77889\roadway\sheets\77889XS444.dgn 5/22/2026 10:17:56 AM hbrendlinger

PAVEMENT REMOVAL QUANTITIES HAVE BEEN DEDUCTED FROM EXCAVATION QUANTITIES

SEEDING		END AREA		VOLUME	
END WIDTH	SQ. YDS.	CUT	FILL	CUT	FILL
		5	803		
				8	1531
		4	850		
				6	1679
				6	3200

CALCULATED CFR
CHECKED SSK

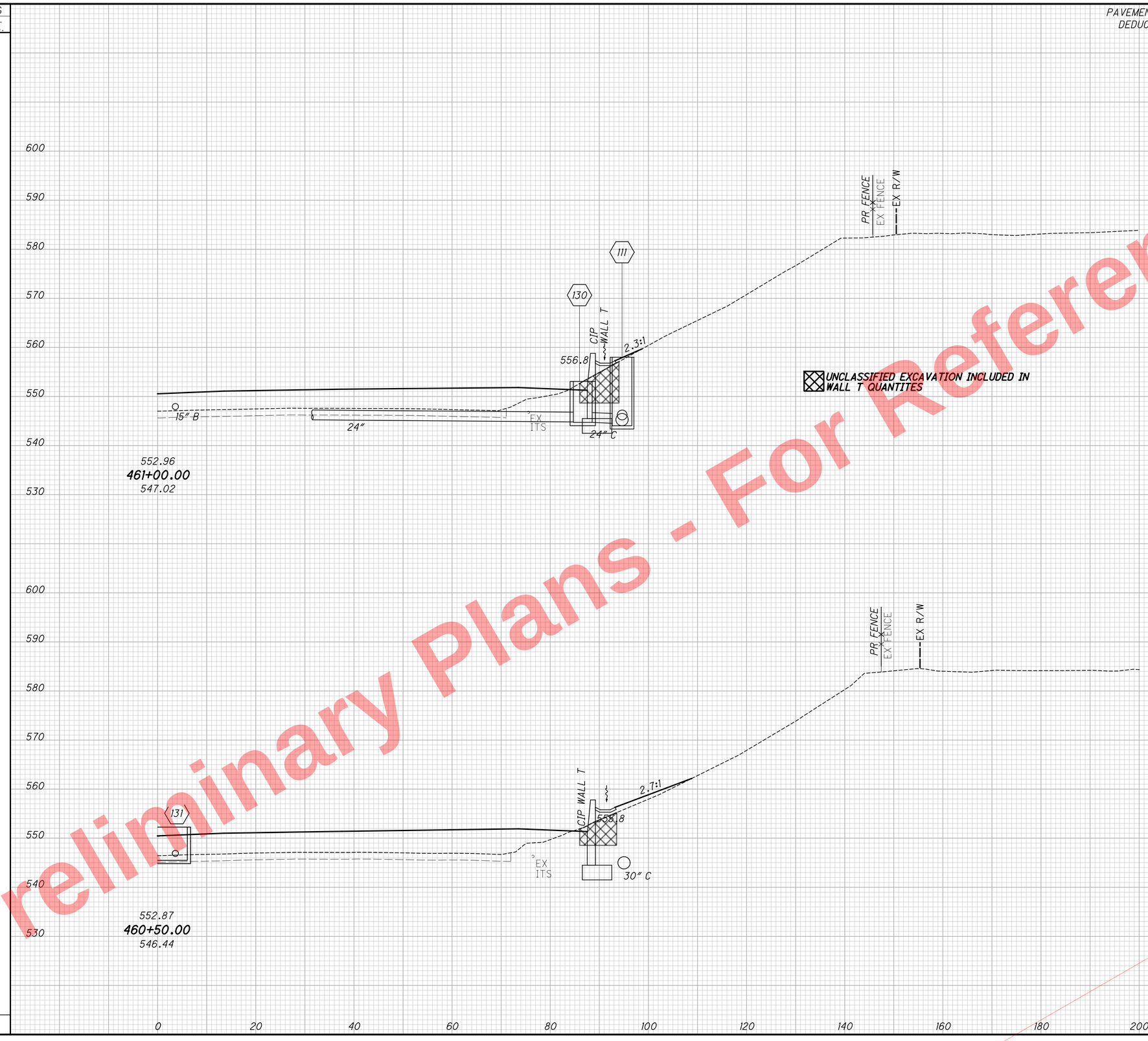

CROSS SECTIONS I.R. 75 NORTHBOUND
STA. 460+50.00 TO STA. 461+00.00

HAM-75-7.85

404
1047

Preliminary Plans - For Reference Only

J:\20110903\ODOT\HAM\77889\roadway\sheets\77889XS445.dgn 5/22/2026 10:17:57 AM hbrendlinger

SEEDING	
END WIDTH	SQ. YDS.
67	
	205
7	
	86
	291

PAVEMENT REMOVAL QUANTITIES HAVE BEEN DEDUCTED FROM EXCAVATION QUANTITIES

END AREA		VOLUME	
CUT	FILL	CUT	FILL

CALCULATED CFR
CHECKED SSK

CROSS SECTIONS I.R. 75 SOUTHBOUND
STA. 461+50.00 TO STA. 462+00.00

HAM-75-7.85

405
1047

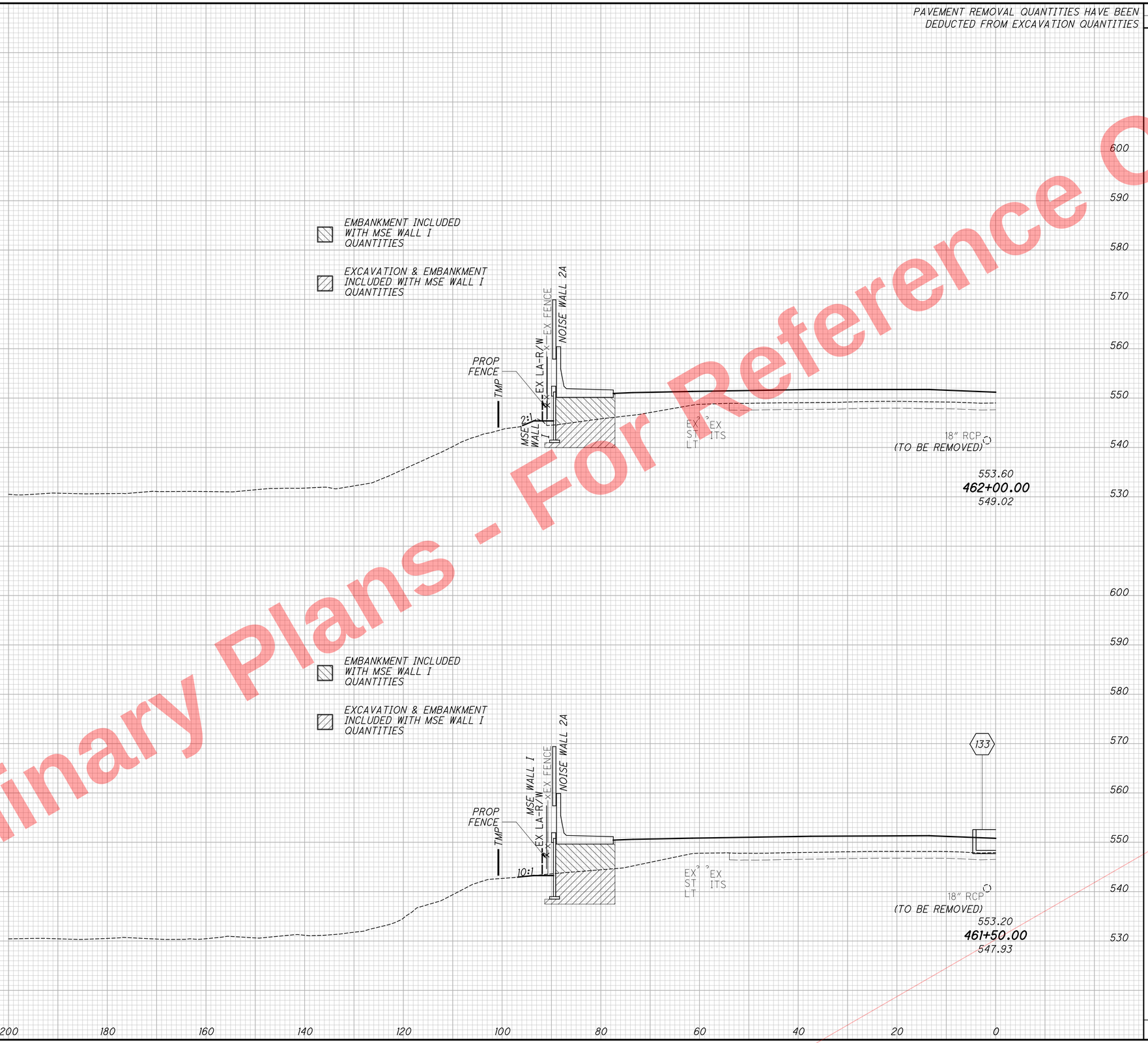

Preliminary Plans - For Reference Only

J:\20110903\ODOT\HAM\77889\roadway\sheets\77889XS446.dgn 5/22/2026 10:17:57 AM hbrendlinger

SEEDING	
END WIDTH	SQ. YDS.

PAVEMENT REMOVAL QUANTITIES HAVE BEEN DEDUCTED FROM EXCAVATION QUANTITIES

GRADING DETAIL FOR CCTV WORK PAD
APPLIES STA 461+95 TO 462+30

553.60
462+00.00
549.02

553.20
461+50.00
547.93

EX FENCE
PR FENCE
EX LA-R/W
2.5:1
13:1
2:1
553.4
EX ST LT
EX ITS
24" C
4" ITS FO CONDUIT
TOWANDE TERRACE
CIP WALL T
133
15" B
UNCLASSIFIED EXCAVATION INCLUDED IN WALL T QUANTITES

END AREA		VOLUME	
CUT	FILL	CUT	FILL
627	594		
		596	1191
17	692		
		20	1384
		617	2571

CALCULATED CFR
CHECKED SSK

CROSS SECTIONS I.R. 75 NORTHBOUND
STA. 461+50.00 TO STA. 462+00.00

HAM-75-7.85

406
1047

Preliminary Plans - For Reference Only

J:\20110903\ODOT\HAM\77889\roadway\sheets\77889XS447.dgn 5/22/2026 10:17:58 AM hbrendlinger

SEEDING	
END WIDTH	SQ. YDS.
55	374
80	408
	782

PAVEMENT REMOVAL QUANTITIES HAVE BEEN DEDUCTED FROM EXCAVATION QUANTITIES

END AREA		VOLUME	
CUT	FILL	CUT	FILL

CALCULATED CFR
CHECKED SSK

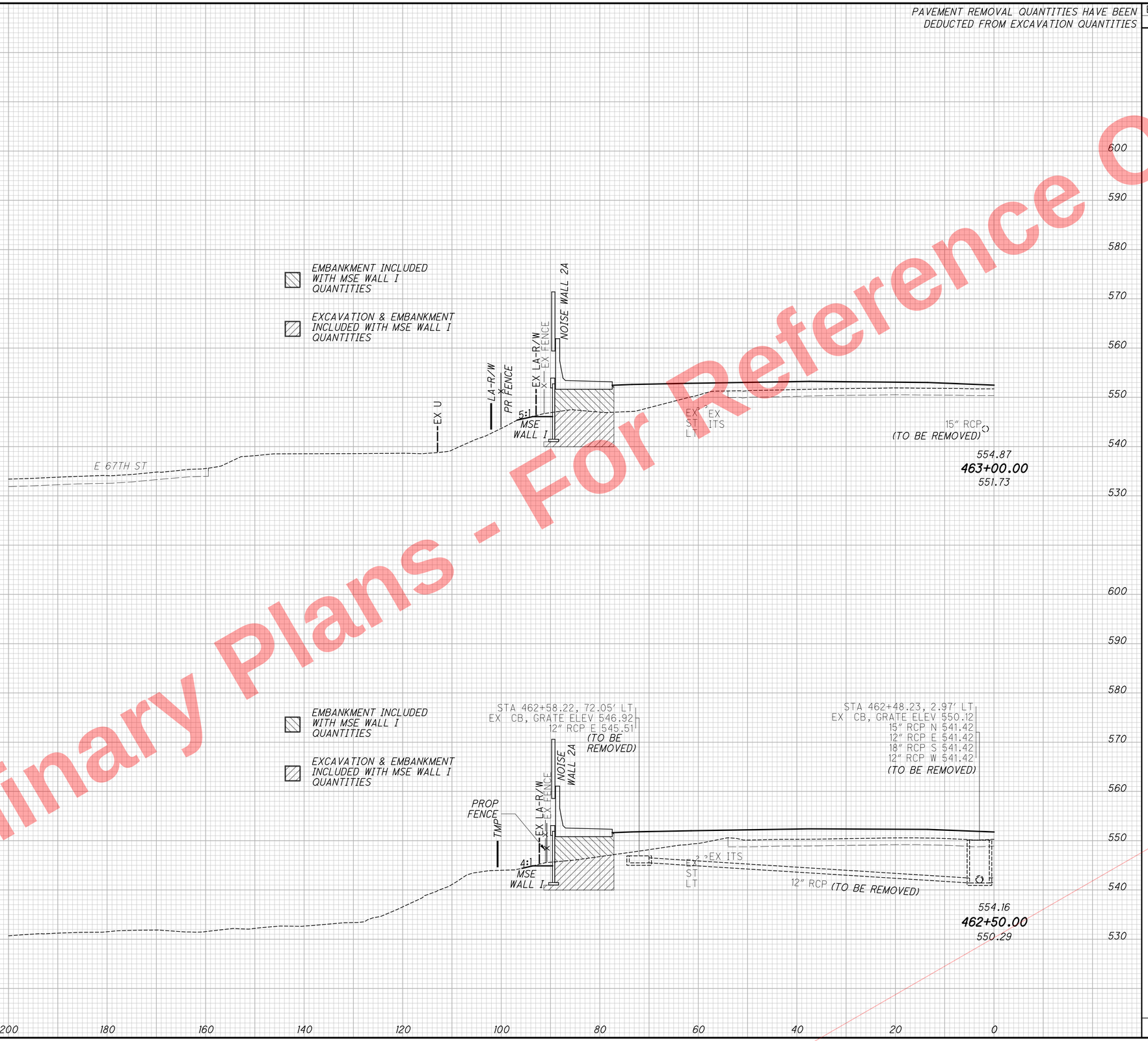

Preliminary Plans - For Reference Only

CROSS SECTIONS I.R. 75 SOUTHBOUND
STA. 462+50.00 TO STA. 463+00.00

HAM-75-7.85

J:\20110903\ODOT\HAM\77889\roadway\sheets\77889XS448.dgn 5/22/2026 10:17:59 AM hbrendlinger

PAVEMENT REMOVAL QUANTITIES HAVE BEEN DEDUCTED FROM EXCAVATION QUANTITIES

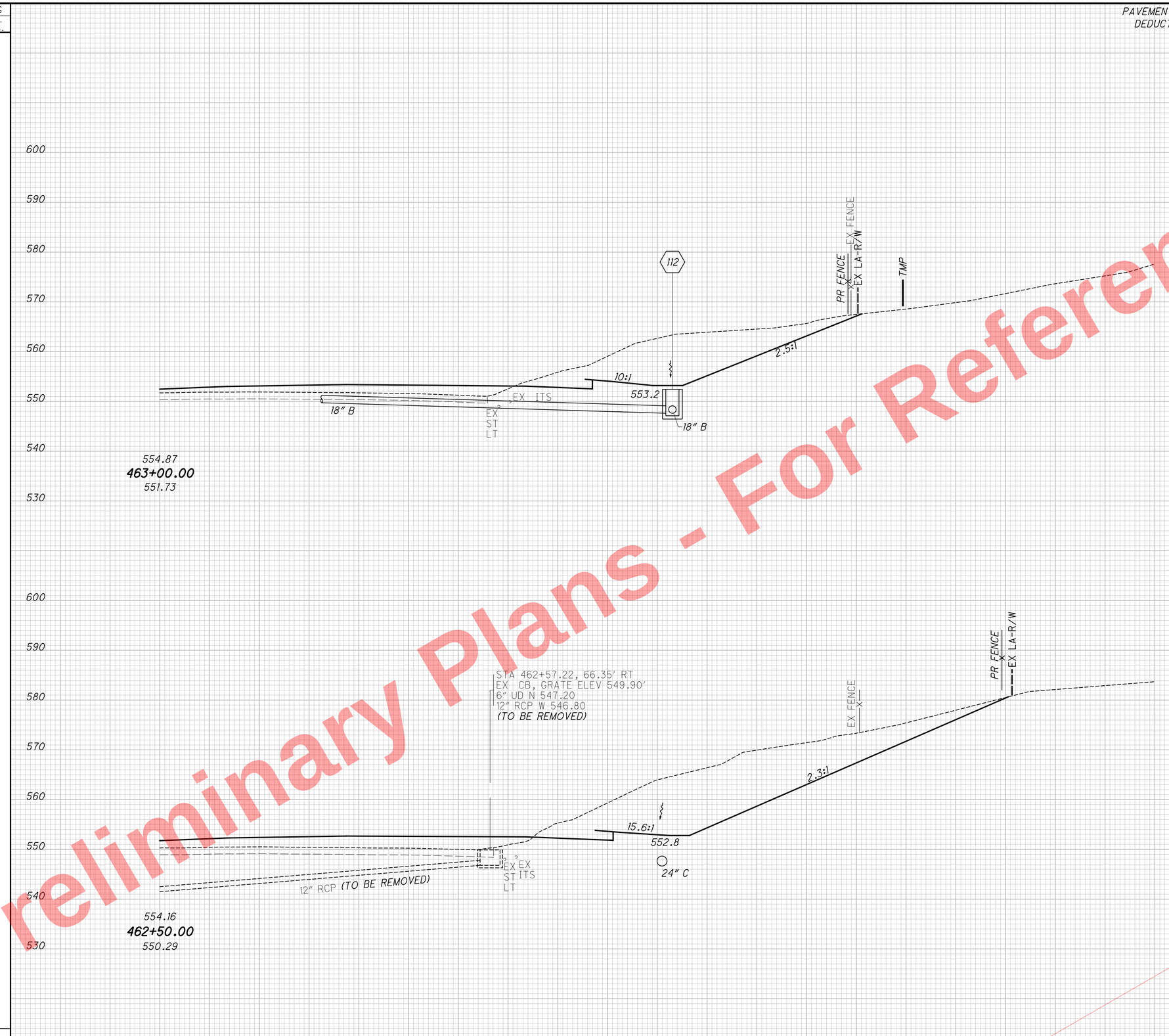

END AREA		VOLUME	
CUT	FILL	CUT	FILL
355	424		
		922	853
641	497		
		1174	1010
		2101	1862

SEEDING	
END WIDTH	SQ. YDS.

CALCULATED CFR
CHECKED SSK

CROSS SECTIONS I.R. 75 NORTHBOUND
STA. 462+50.00 TO STA. 463+00.00

HAM-75-7.85

408
1047

Preliminary Plans - For Reference Only

J:\20110903\ODOT\HAM\77889\roadway\sheets\77889XS449.dgn 5/22/2026 10:18:00 AM hbrendlinger

SEEDING	
END WIDTH	SQ. YDS.
69	322
47	282
	604

PAVEMENT REMOVAL QUANTITIES HAVE BEEN DEDUCTED FROM EXCAVATION QUANTITIES

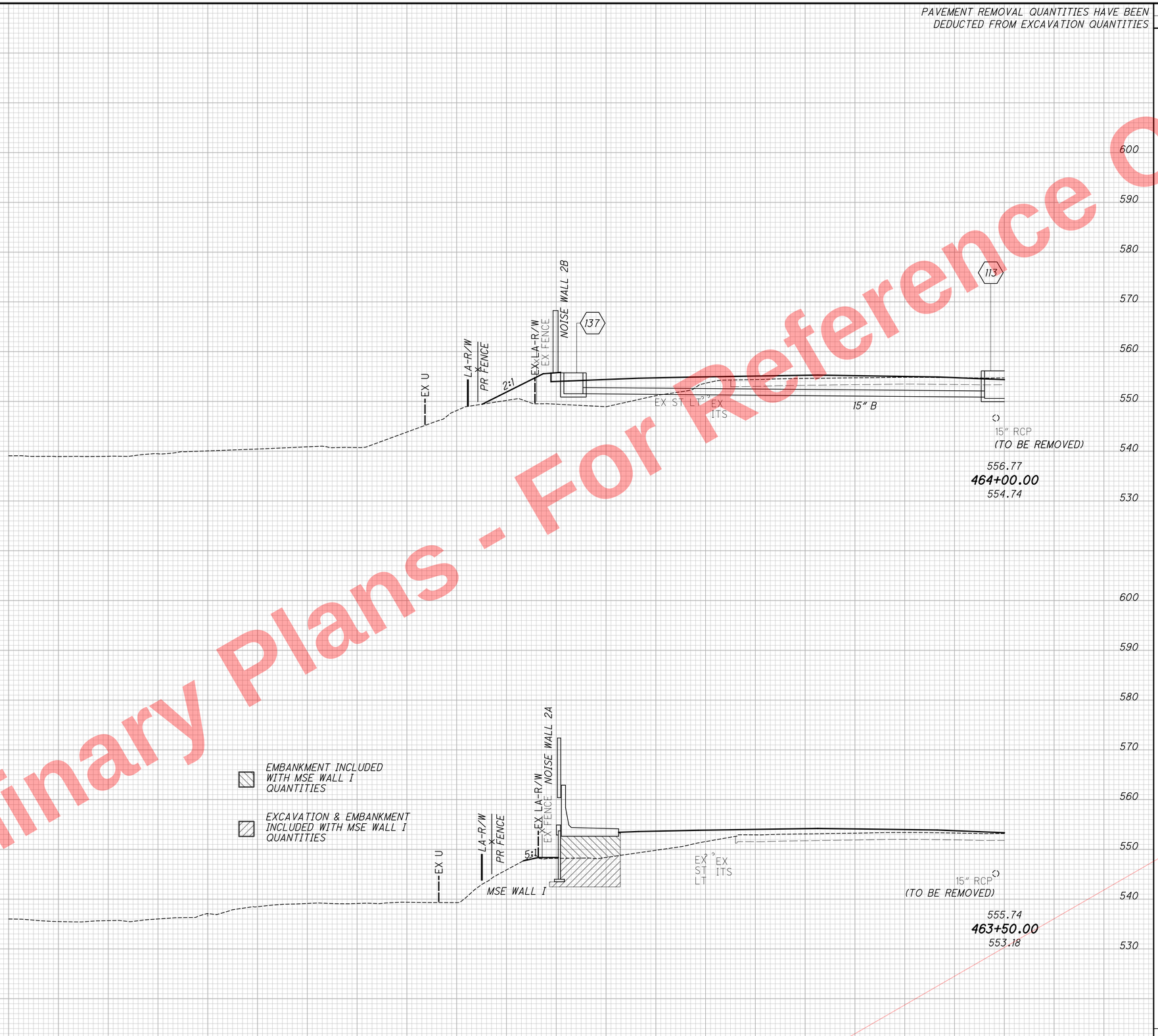

END AREA		VOLUME	
CUT	FILL	CUT	FILL

CALCULATED CFR
CHECKED SSK

CROSS SECTIONS I.R. 75 SOUTHBOUND
STA. 463+50.00 TO STA. 464+00.00

HAM-75-7.85

409
1047

Preliminary Plans - For Reference Only

J:\20110903\ODOT\HAM\77889\roadway\sheets\77889XS450.dgn 5/22/2026 10:18:00 AM hbrendlinger

SEEDING	
END WIDTH	SQ. YDS.

PAVEMENT REMOVAL QUANTITIES HAVE BEEN DEDUCTED FROM EXCAVATION QUANTITIES

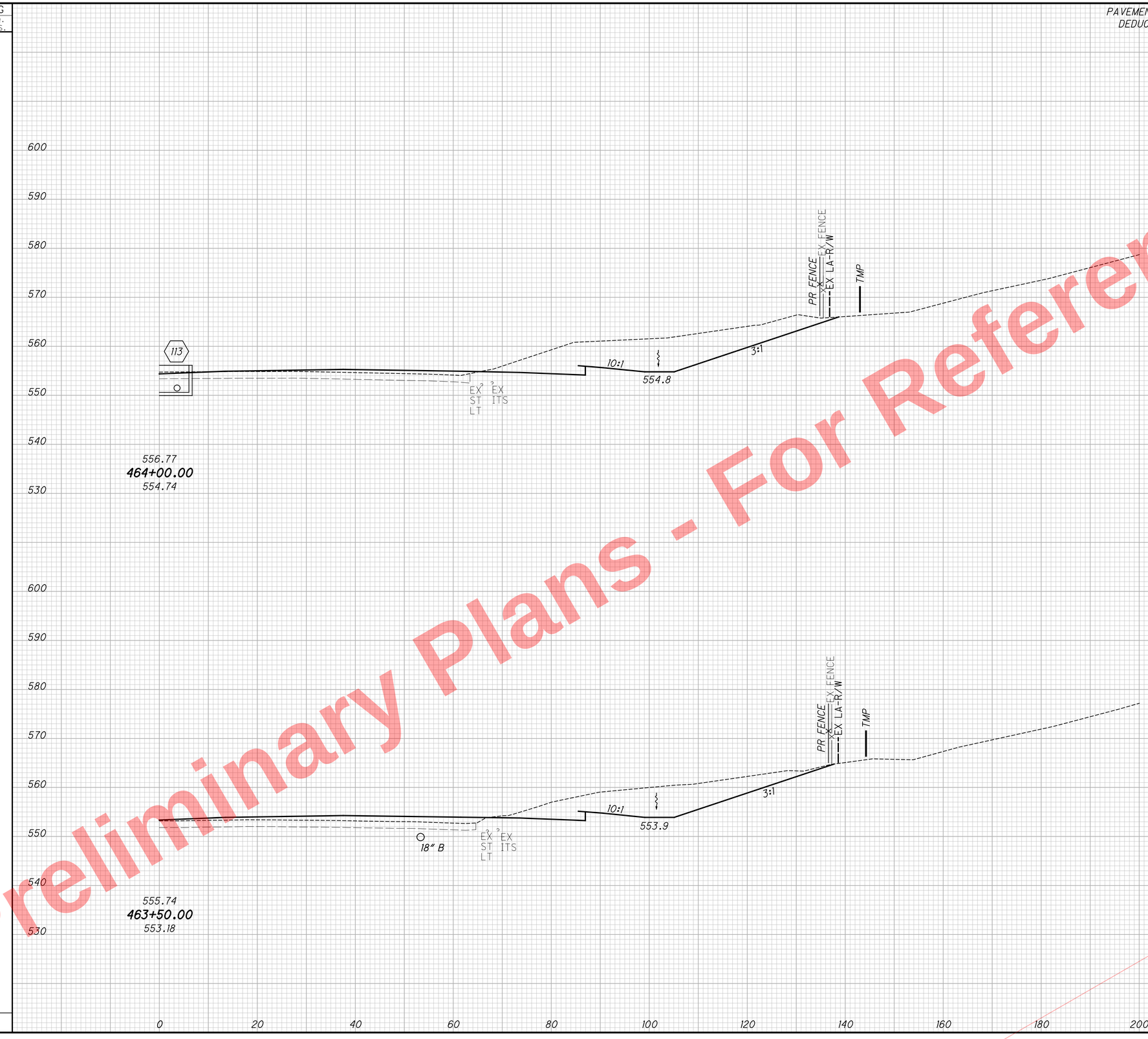

END AREA		VOLUME	
CUT	FILL	CUT	FILL
321	377		
		524	656
245	332		
		556	700
		1084	1354

CALCULATED CFR
CHECKED SSK

CROSS SECTIONS I.R. 75 NORTHBOUND
STA. 463+50.00 TO STA. 464+00.00

HAM-75-7.85

410
1047

Preliminary Plans - For Reference Only

J:\20110903\ODOT\HAM\77889\roadway\sheets\77889XS451.dgn 5/22/2026 10:18:01 AM hbrendlinger

SEEDING	
END WIDTH	SQ. YDS.
	63
	375
	72
	391
	766

PAVEMENT REMOVAL QUANTITIES HAVE BEEN DEDUCTED FROM EXCAVATION QUANTITIES



END AREA		VOLUME	
CUT	FILL	CUT	FILL

CALCULATED CFR
CHECKED SSK

CROSS SECTIONS I.R. 75 SOUTHBOUND
STA. 464+50.00 TO STA. 465+00.00

HAM-75-7.85

411
1047

Preliminary Plans - For Reference Only

J:\20110903\ODOT\HAM\77889\roadway\sheets\77889XS452.dgn 5/22/2026 10:18:02 AM hbrendlinger

SEEDING	
END WIDTH	SQ. YDS.

PAVEMENT REMOVAL QUANTITIES HAVE BEEN DEDUCTED FROM EXCAVATION QUANTITIES

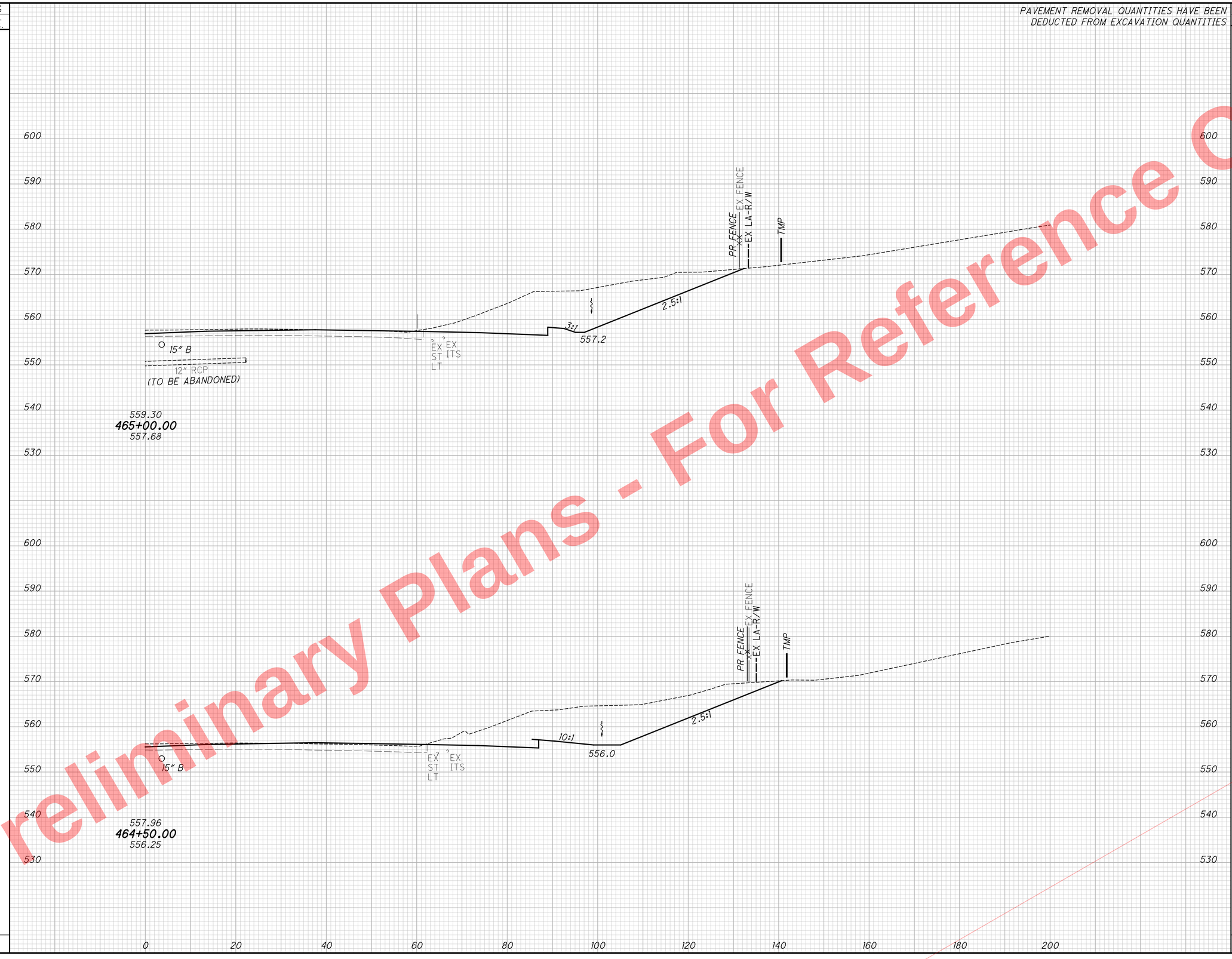

END AREA		VOLUME	
CUT	FILL	CUT	FILL
386	316		
		731	606
404	339		
		671	663
		1407	1269

CALCULATED CFR
CHECKED SSK

CROSS SECTIONS I.R. 75 NORTHBOUND
STA. 464+50.00 TO STA. 465+00.00

HAM-75-7.85

412
1047

Preliminary Plans - For Reference Only

J:\20110903\ODOT\HAM\77889\roadway\sheets\77889XS453.dgn 5/22/2026 10:18:03 AM hbrendlinger

SEEDING	
END WIDTH	SQ. YDS.
63	365
68	366
	731

PAVEMENT REMOVAL QUANTITIES HAVE BEEN DEDUCTED FROM EXCAVATION QUANTITIES

END AREA		VOLUME	
CUT	FILL	CUT	FILL

CALCULATED CFR
CHECKED SSK

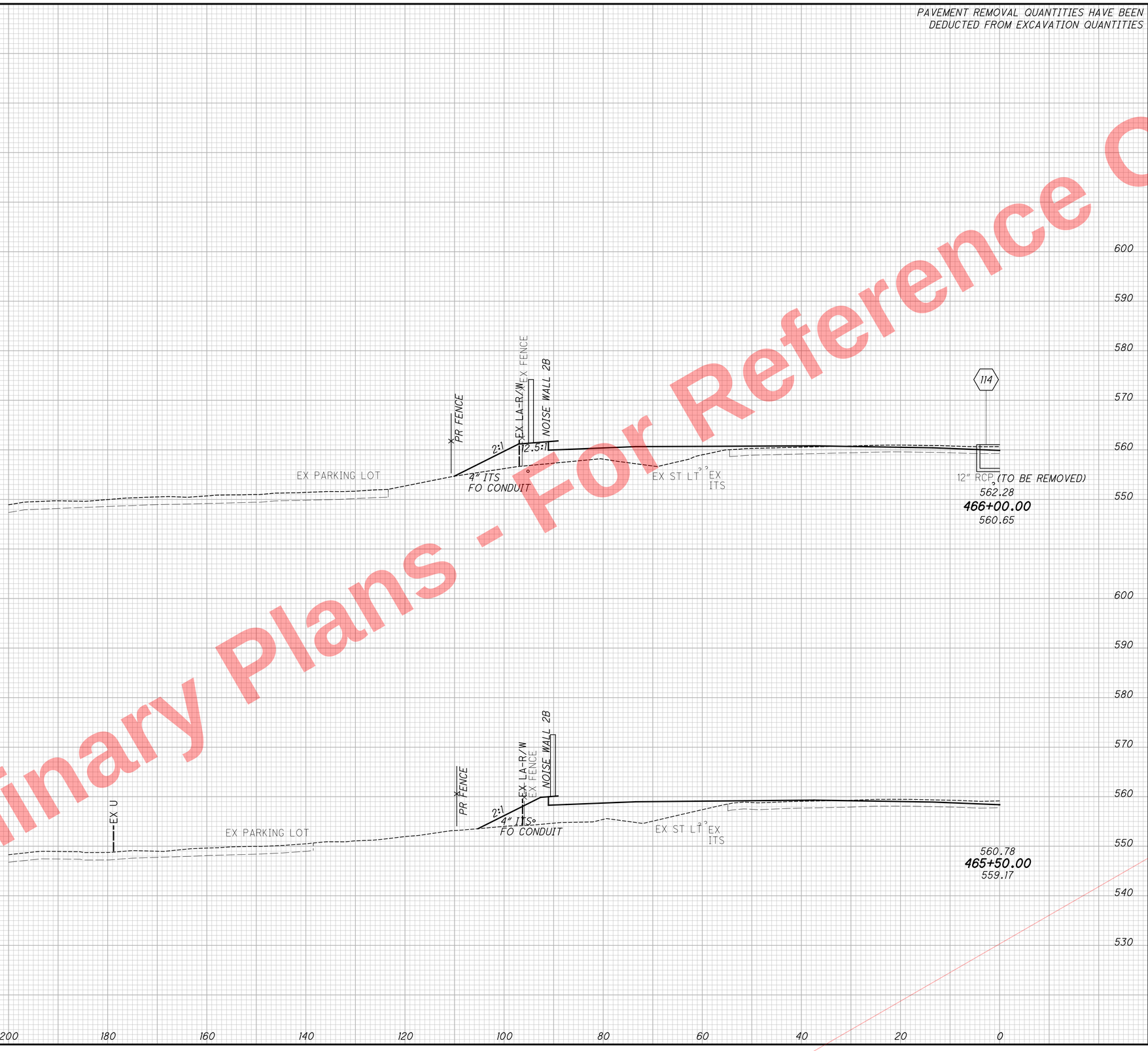

Preliminary Plans - For Reference Only

CROSS SECTIONS I.R. 75 SOUTHBOUND
STA. 465+50.00 TO STA. 466+00.00

HAM-75-7.85

413
1047

J:\20110903\ODOT\HAM\7889\roadway\sheets\77889XS454.dgn 5/22/2026 10:18:04 AM hbrendlinger

SEEDING	
END WIDTH	SQ. YDS.

PAVEMENT REMOVAL QUANTITIES HAVE BEEN DEDUCTED FROM EXCAVATION QUANTITIES

END AREA		VOLUME	
CUT	FILL	CUT	FILL
407	287		
		827	534
486	290		
		807	561
		1800	1090

CALCULATED CFR
CHECKED SSK

CROSS SECTIONS I.R. 75 NORTHBOUND
STA. 465+50.00 TO STA. 466+00.00

HAM-75-7.85

414
1047

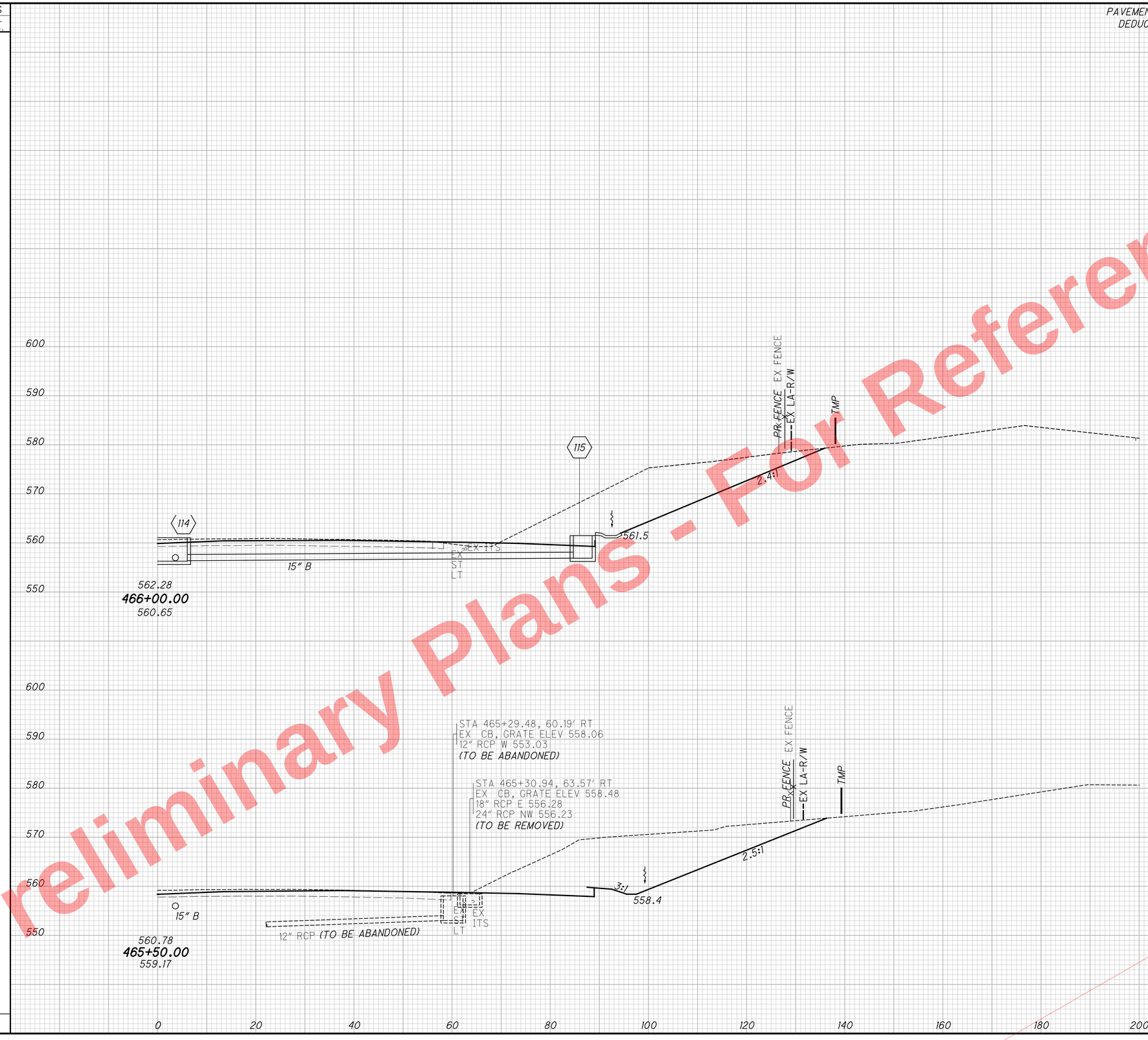

Preliminary Plans - For Reference Only

J:\20110903\ODOT\HAM\77889\roadway\sheets\77889XS455.dgn 5/22/2026 10:18:05 AM hbrendlinger

SEEDING	
END WIDTH	SQ. YDS.
51	303
58	337
	640

PAVEMENT REMOVAL QUANTITIES HAVE BEEN DEDUCTED FROM EXCAVATION QUANTITIES

END AREA		VOLUME	
CUT	FILL	CUT	FILL

CALCULATED CFR
CHECKED SSK

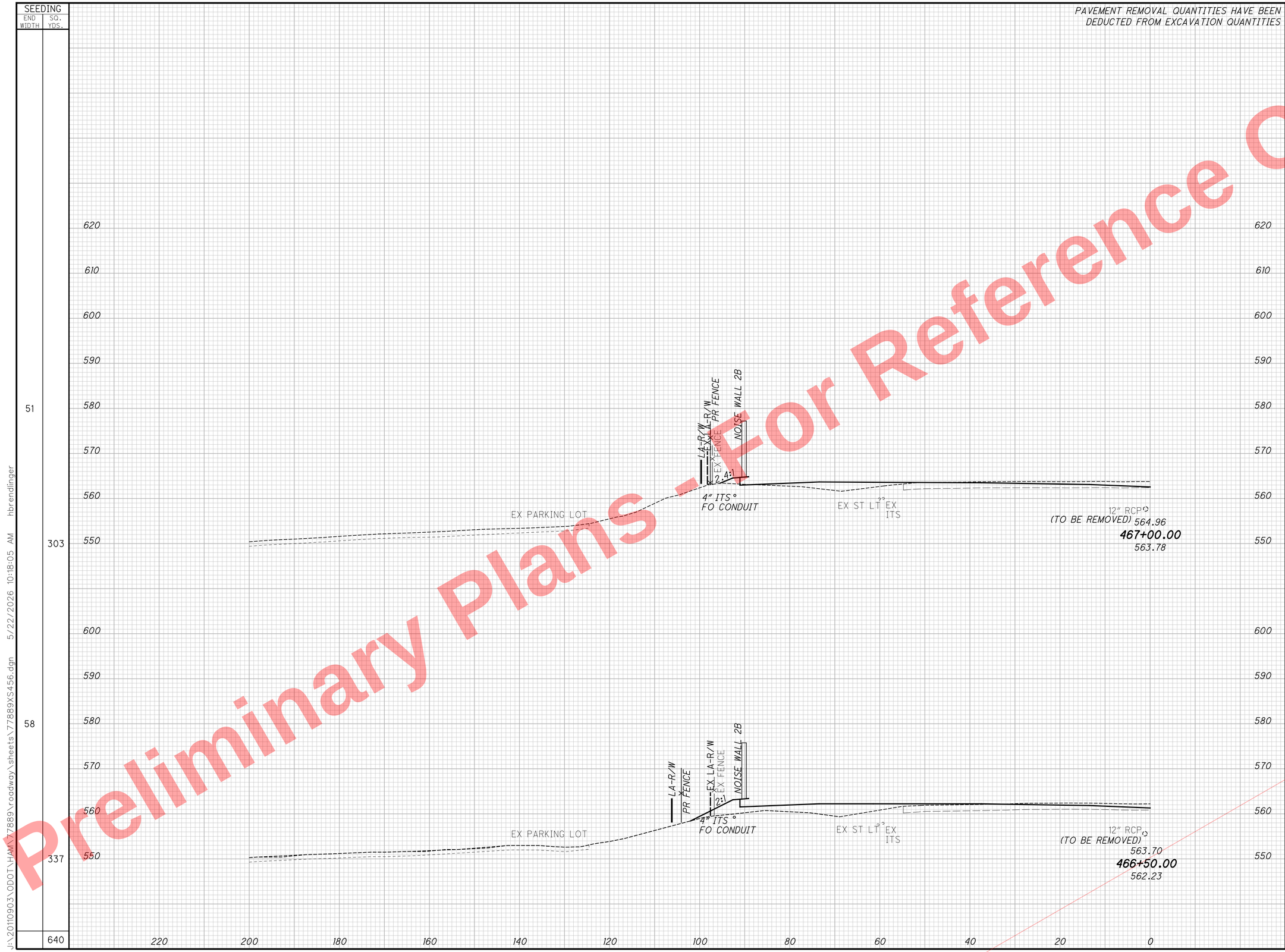

Preliminary Plans - For Reference Only

CROSS SECTIONS I.R. 75 SOUTHBOUND
STA. 466+50.00 TO STA. 467+00.00

HAM-75-7.85

415
1047

J:\20110903\ODOT\HAM\77889\roadway\sheets\77889XS456.dgn 5/22/2026 10:18:05 AM hbrendlinger

SEEDING	
END WIDTH	SQ. YDS.

PAVEMENT REMOVAL QUANTITIES HAVE BEEN DEDUCTED FROM EXCAVATION QUANTITIES

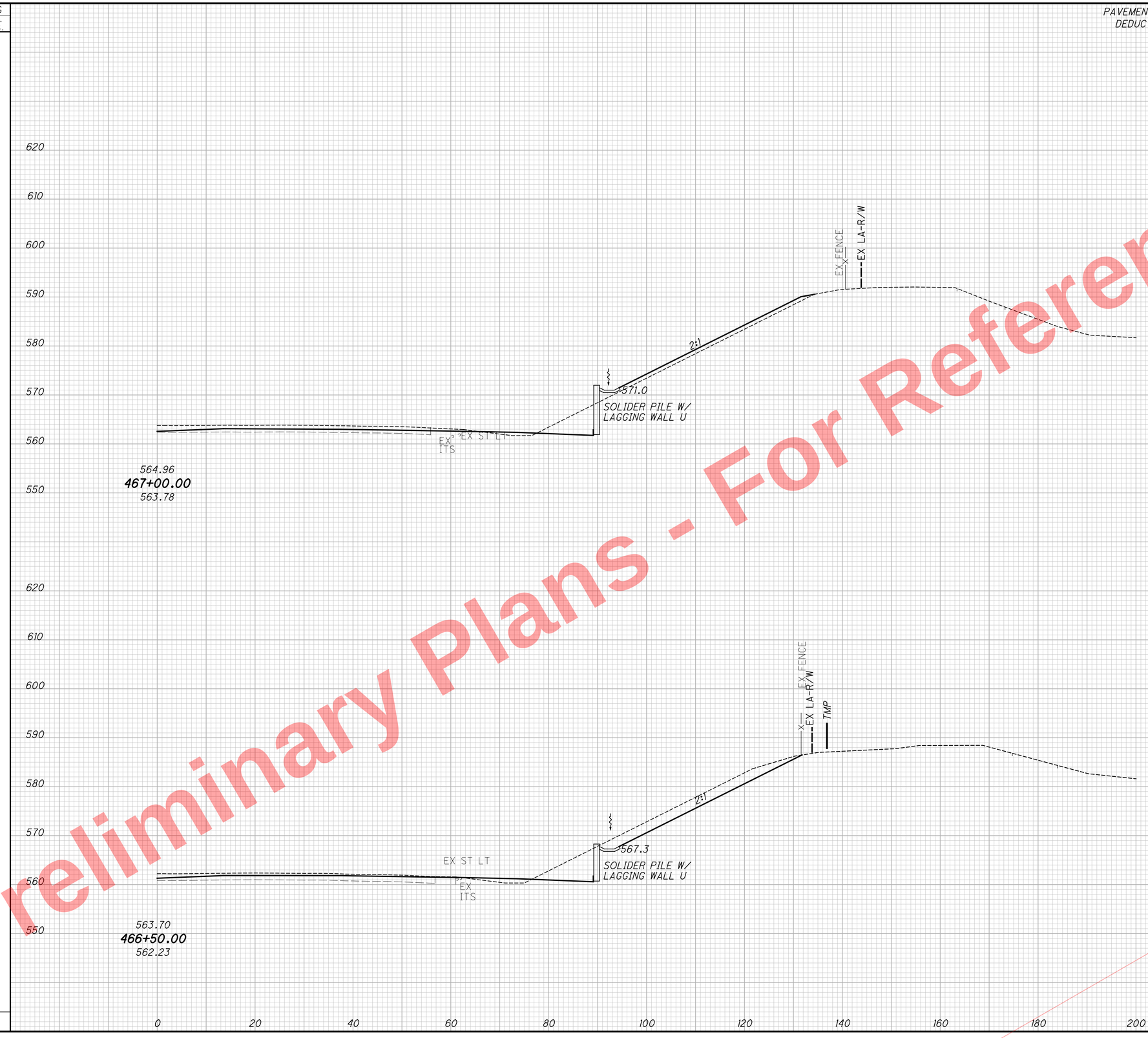

END AREA		VOLUME	
CUT	FILL	CUT	FILL
40	164		
		150	333
122	196		
		490	447
		1918	746

CALCULATED CFR
CHECKED SSK

CROSS SECTIONS I.R. 75 NORTHBOUND
STA. 466+50.00 TO STA. 467+00.00

HAM-75-7.85

416
1047

Preliminary Plans - For Reference Only

J:\20110903\ODOT\HAM\77889\roadway\sheets\77889XS457.dgn 5/22/2026 10:18:06 AM hbrendlinger

SEEDING	
END WIDTH	SQ. YDS.
39	234
46	268
	502

PAVEMENT REMOVAL QUANTITIES HAVE BEEN DEDUCTED FROM EXCAVATION QUANTITIES

END AREA		VOLUME	
CUT	FILL	CUT	FILL

CALCULATED CFR
CHECKED SSK

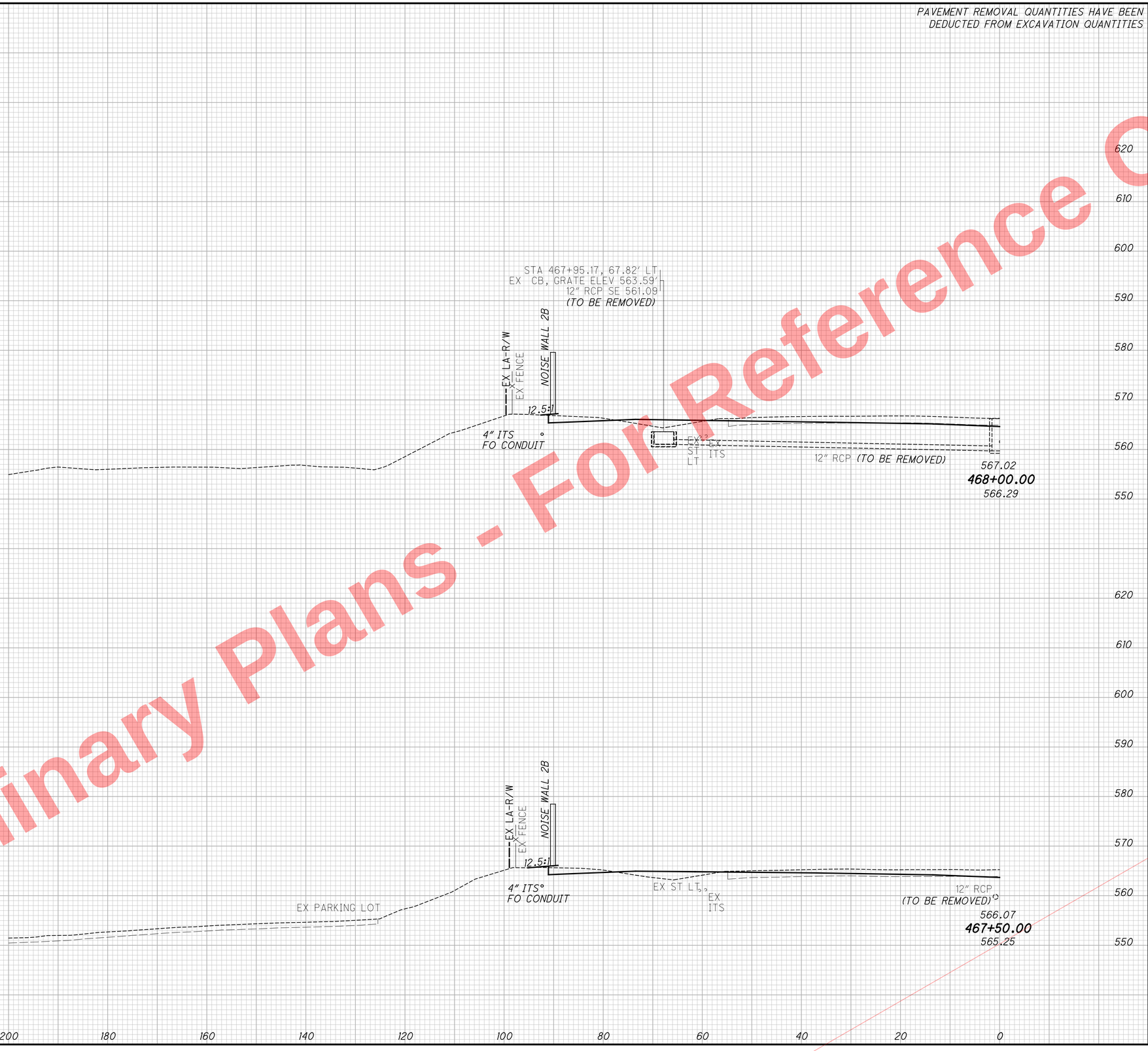

CROSS SECTIONS I.R. 75 SOUTHBOUND
STA. 467+50.00 TO STA. 468+00.00

HAM-75-7.85

417
1047

Preliminary Plans - For Reference Only

J:\20110903\ODOT\HAM\77889\roadway\sheets\77889XS458.dgn 5/22/2026 10:18:07 AM hbrendlinger

SEEDING	
END WIDTH	SQ. YDS.

PAVEMENT REMOVAL QUANTITIES HAVE BEEN DEDUCTED FROM EXCAVATION QUANTITIES

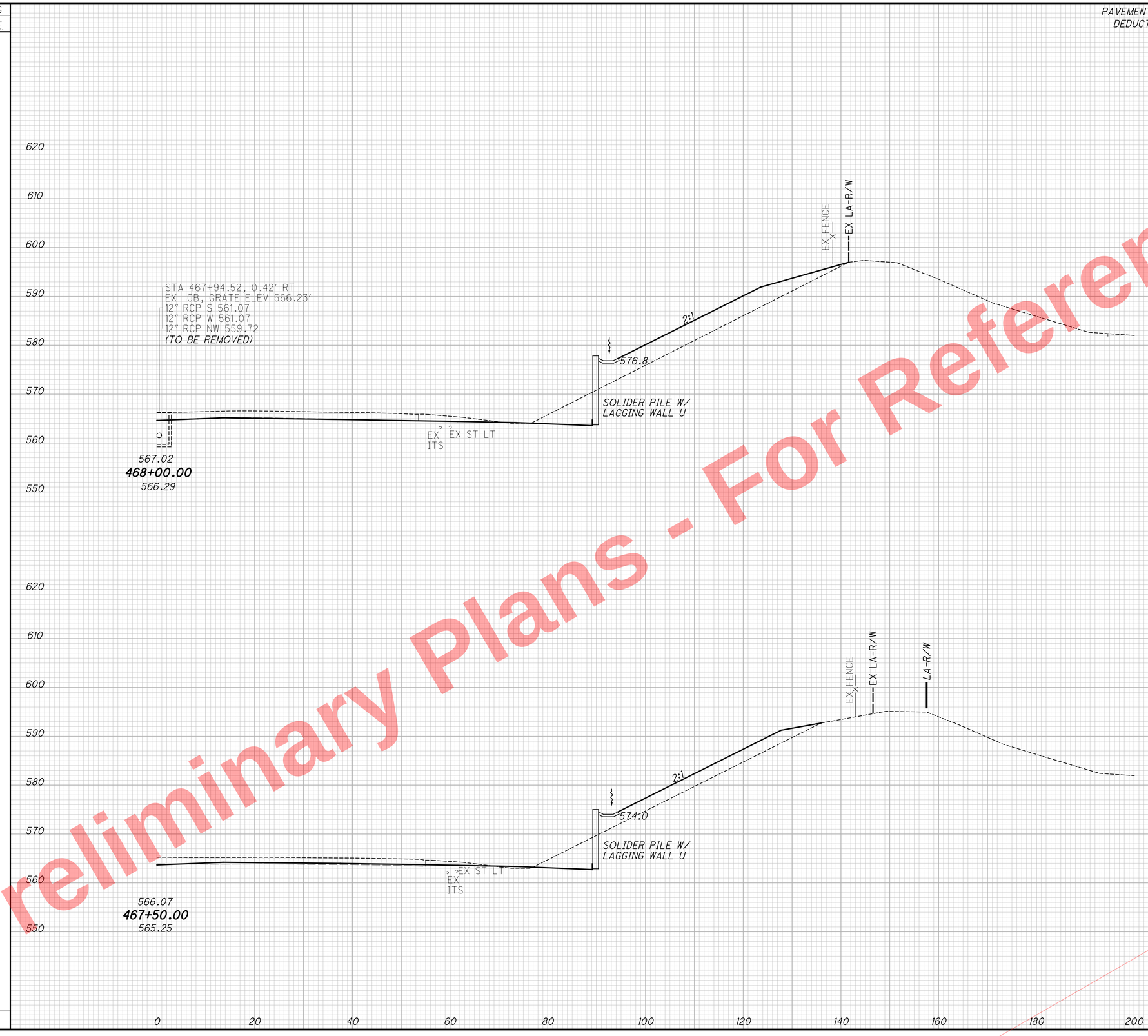

END AREA		VOLUME	
CUT	FILL	CUT	FILL
345	29		
		708	87
419	65		
		846	177
		1554	264

CALCULATED CFR
CHECKED SSK

CROSS SECTIONS I.R. 75 NORTHBOUND
STA. 467+50.00 TO STA. 468+00.00

HAM-75-7.85

418
1047

Preliminary Plans - For Reference Only

J:\20110903\ODOT\HAM\77889\roadway\sheets\77889XS459.dgn 5/22/2026 10:18:08 AM hbrendlinger

SEEDING	
END WIDTH	SQ. YDS.
44	264
51	249
	513

PAVEMENT REMOVAL QUANTITIES HAVE BEEN DEDUCTED FROM EXCAVATION QUANTITIES

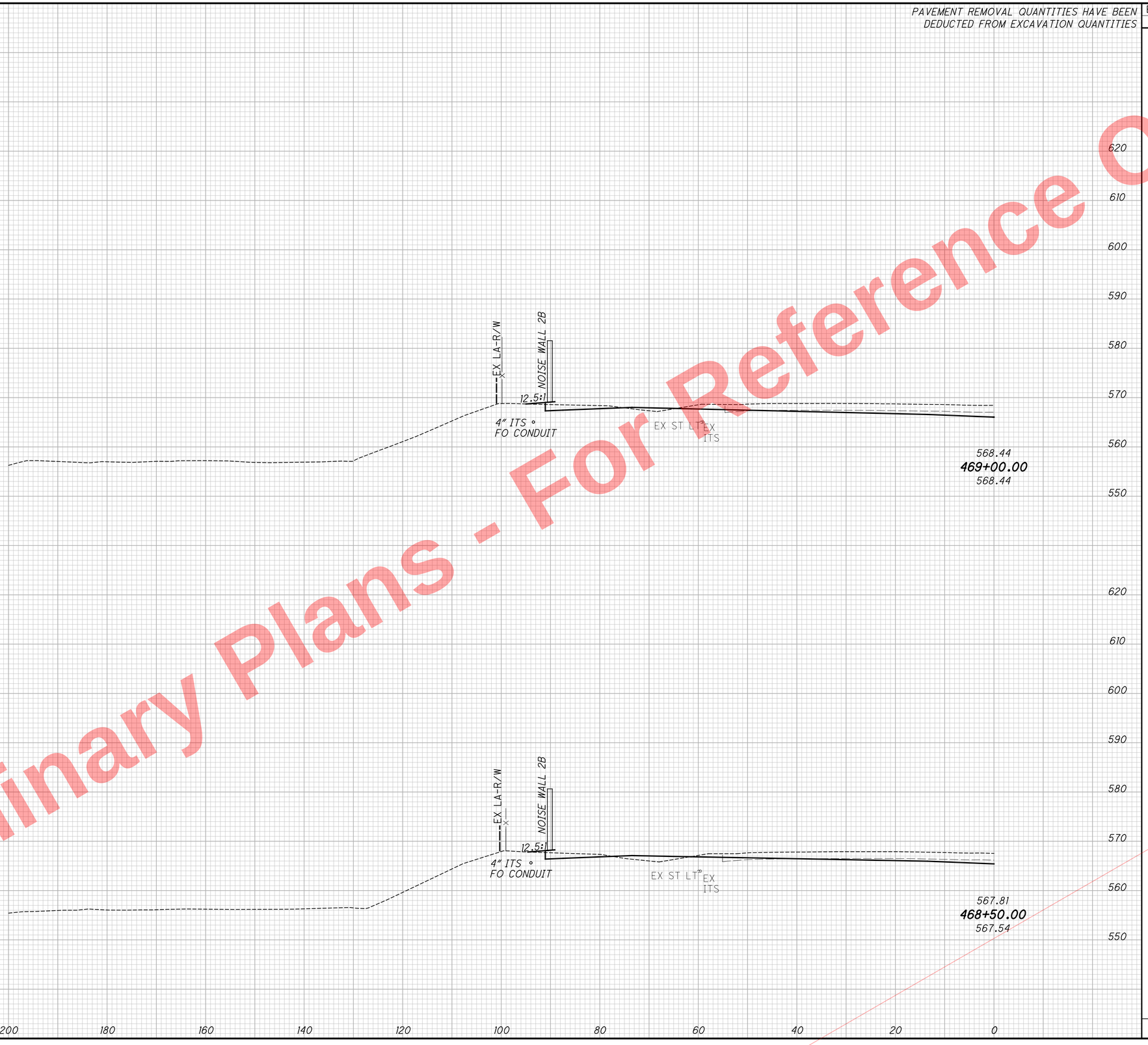

END AREA		VOLUME	
CUT	FILL	CUT	FILL

CALCULATED CFR
CHECKED SSK

CROSS SECTIONS I.R. 75 SOUTHBOUND
STA. 468+50.00 TO STA. 469+00.00

HAM-75-7.85

419
1047

Preliminary Plans - For Reference Only

J:\20110903\ODOT\HAM\77889\roadway\sheets\77889XS460.dgn 5/22/2026 10:18:09 AM hbrendlinger

PAVEMENT REMOVAL QUANTITIES HAVE BEEN DEDUCTED FROM EXCAVATION QUANTITIES

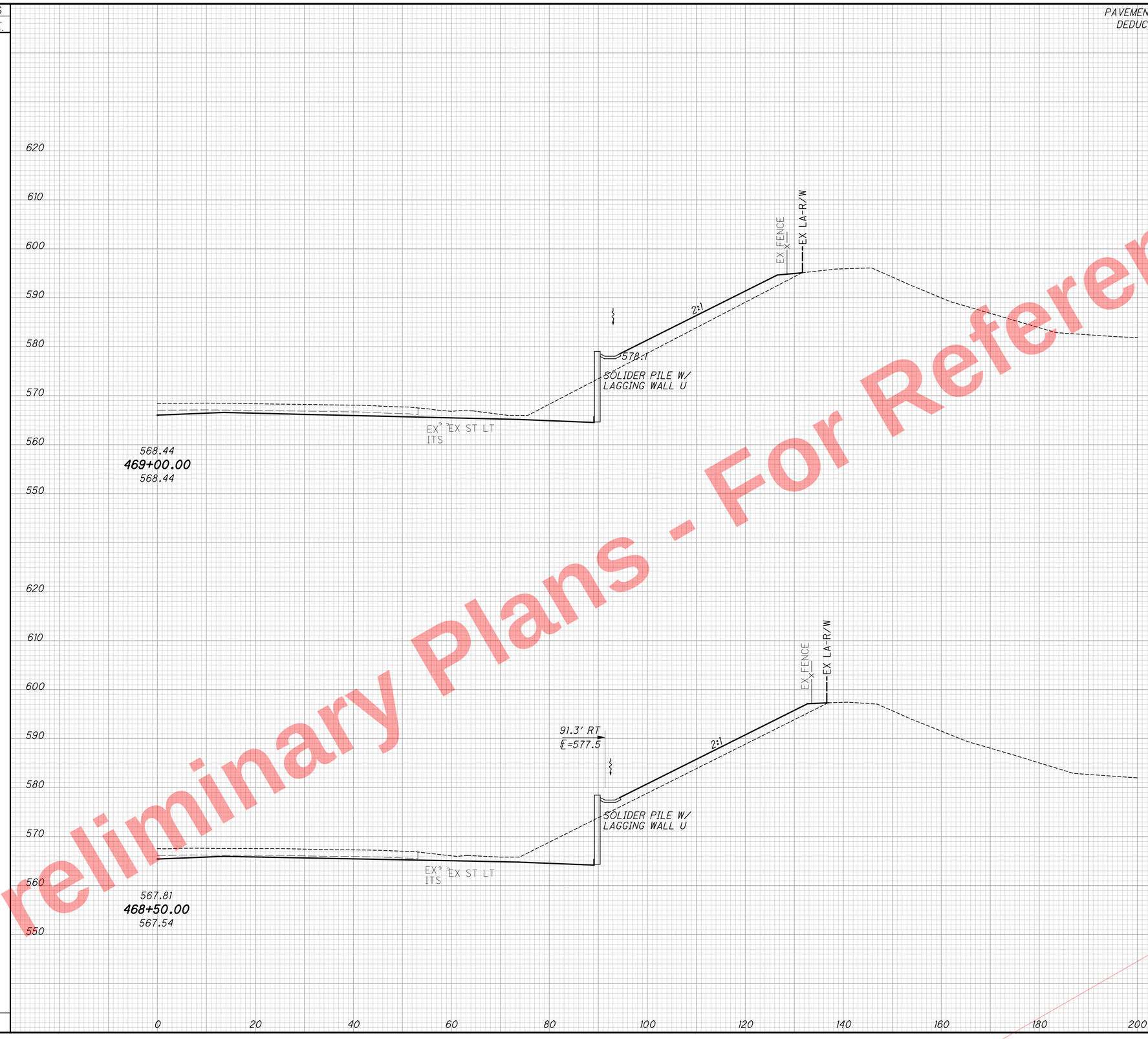

SEEDING END WIDTH	SEEDING SQ. YDS.	END AREA CUT	END AREA FILL	VOLUME CUT	VOLUME FILL
		475	10		
				853	27
		446	19		
				733	44
				1586	71

CALCULATED CFR
CHECKED SSK

CROSS SECTIONS I.R. 75 NORTHBOUND
STA. 468+50.00 TO STA. 469+00.00

HAM-75-7.85

420
1047

Preliminary Plans - For Reference Only

J:\20110903\ODOT\HAM\77889\roadway\sheets\77889XS461.dgn 5/22/2026 10:18:09 AM hbrendlinger

SEEDING	
END WIDTH	SQ. YDS.
35	185
32	211
	396

PAVEMENT REMOVAL QUANTITIES HAVE BEEN DEDUCTED FROM EXCAVATION QUANTITIES

END AREA		VOLUME	
CUT	FILL	CUT	FILL

CALCULATED CFR

CHECKED SSK

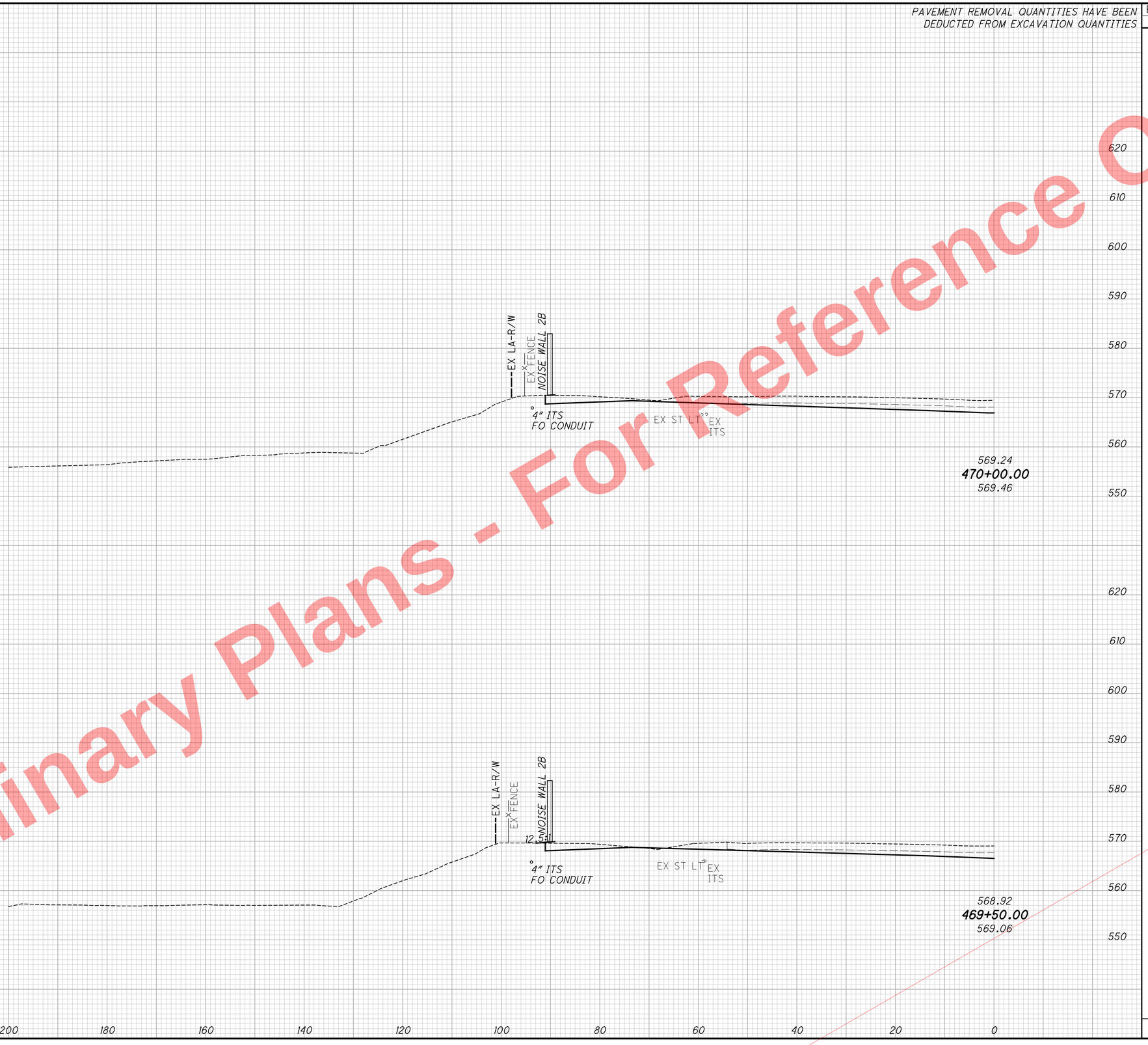

CROSS SECTIONS I.R. 75 SOUTHBOUND
STA. 469+50.00 TO STA. 470+00.00

HAM-75-7.85

421
1047

Preliminary Plans - For Reference Only

J:\20110903\ODOT\HAM\77889\roadway\sheets\77889XS462.dgn 5/22/2026 10:18:10 AM hbrendlinger

SEEDING	
END WIDTH	SQ. YDS.

PAVEMENT REMOVAL QUANTITIES HAVE BEEN DEDUCTED FROM EXCAVATION QUANTITIES

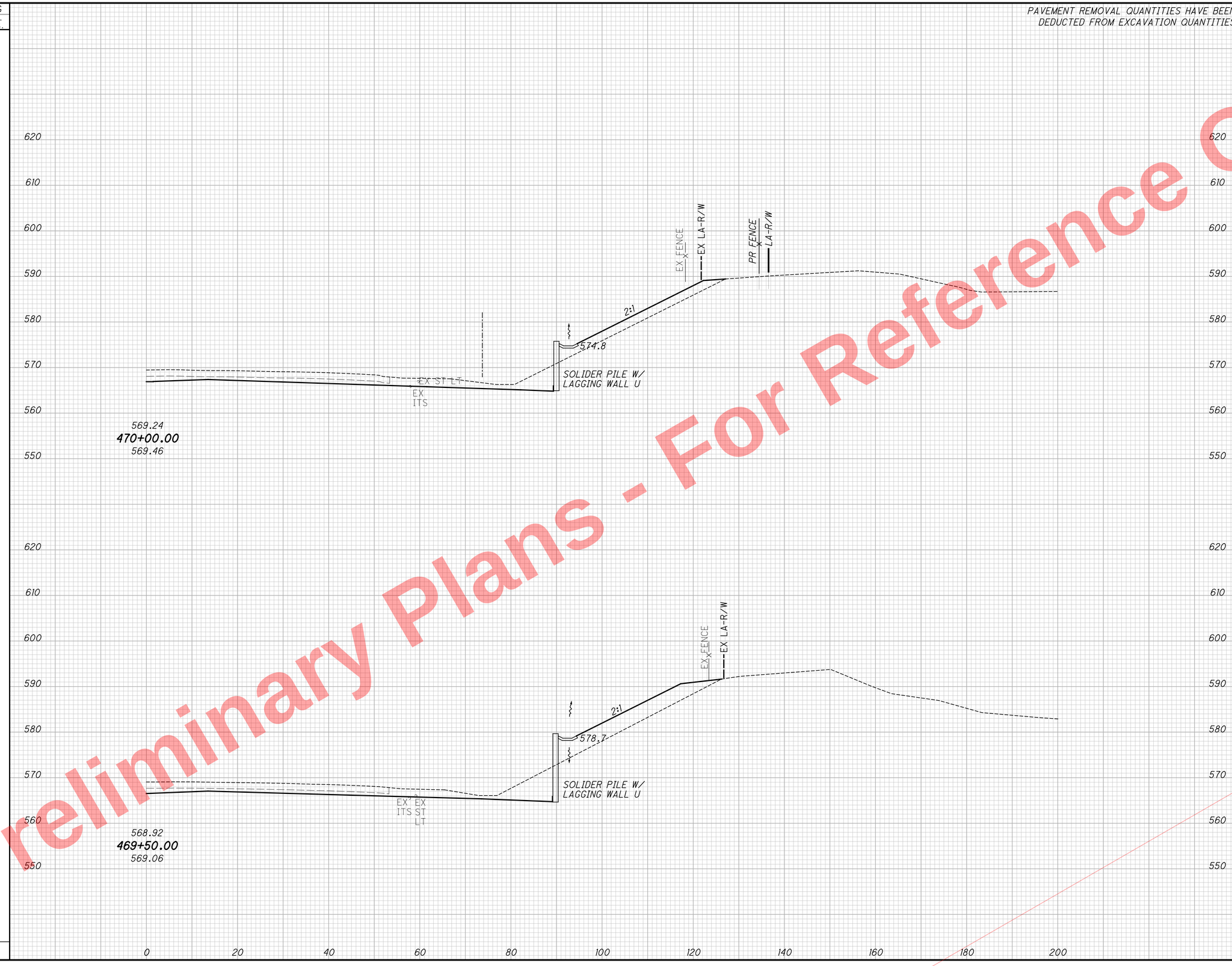

END AREA		VOLUME	
CUT	FILL	CUT	FILL
617	0		
		1021	3
486	4		
		890	13
		1911	16

CALCULATED CFR
CHECKED SSK

CROSS SECTIONS I.R. 75 NORTHBOUND
STA. 469+50.00 TO STA. 470+00.00

HAM-75-7.85

422
1047

Preliminary Plans - For Reference Only

J:\20110903\ODOT\HAM\77889\roadway\sheets\77889XS463.dgn 5/22/2026 10:18:11 AM hbrendlinger

SEEDING	
END WIDTH	SQ. YDS.
46	256
46	226
	482

PAVEMENT REMOVAL QUANTITIES HAVE BEEN DEDUCTED FROM EXCAVATION QUANTITIES

END AREA		VOLUME	
CUT	FILL	CUT	FILL

CALCULATED CFR
CHECKED SSK

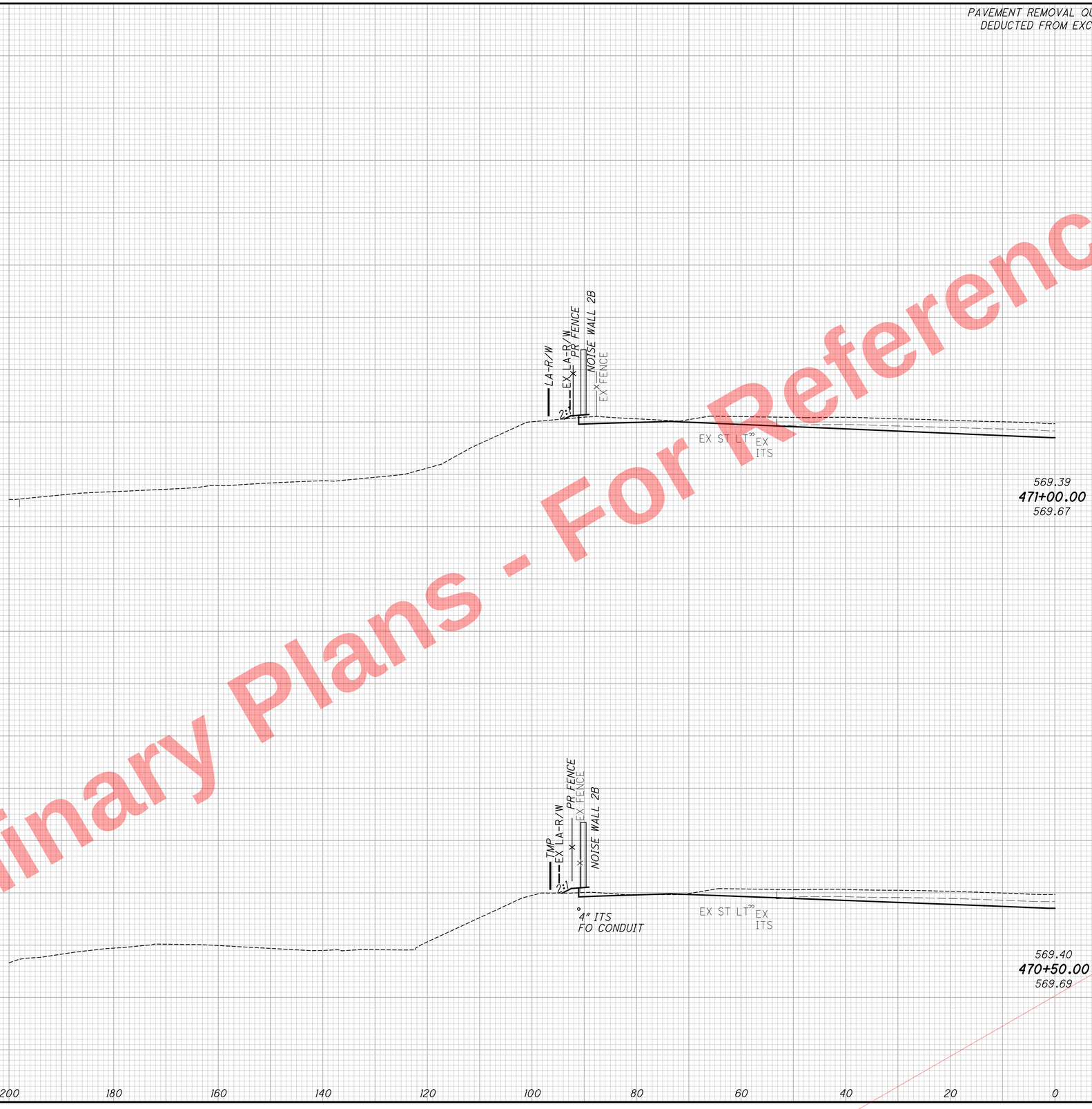

CROSS SECTIONS I.R. 75 SOUTHBOUND
STA. 470+50.00 TO STA. 471+00.00

HAM-75-7.85

423
1047

Preliminary Plans - For Reference Only

J:\20110903\ODOT\HAM\77889\roadway\sheets\77889XS464.dgn 5/22/2026 10:18:12 AM hbrendlinger

PAVEMENT REMOVAL QUANTITIES HAVE BEEN DEDUCTED FROM EXCAVATION QUANTITIES

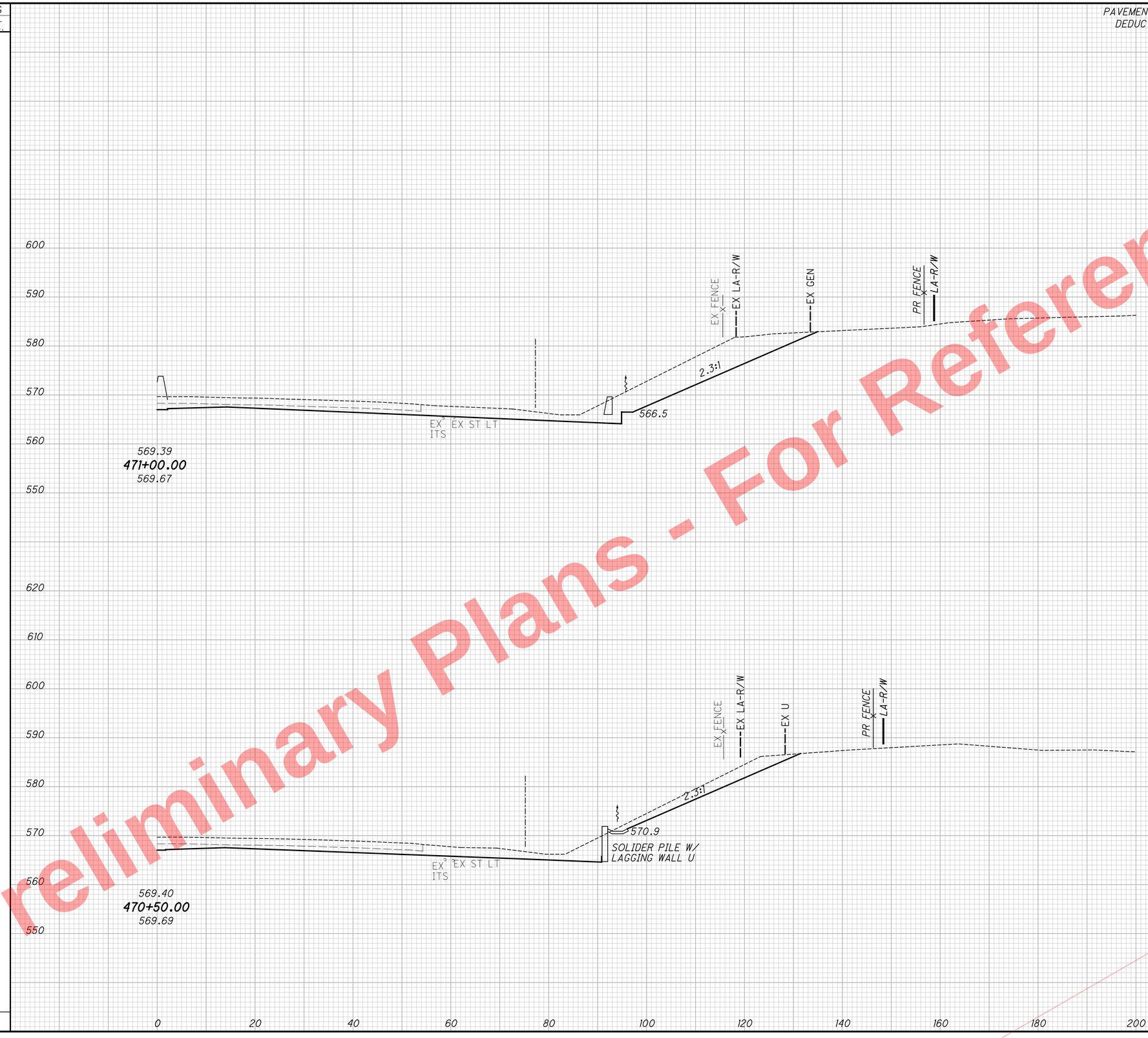

SEEDING END WIDTH	SEEDING SQ. YDS.	END AREA CUT	END AREA FILL	VOLUME CUT	VOLUME FILL
		753	1		
				1328	4
		682	3		
				1202	3
				2530	7

CALCULATED CFR
CHECKED SSK

CROSS SECTIONS I.R. 75 NORTHBOUND
STA. 470+50.00 TO STA. 471+00.00

HAM-75-7.85

424
1047

Preliminary Plans - For Reference Only

J:\20110903\ODOT\HAM\7889\roadway\sheets\77889XS465.dgn 5/22/2026 10:18:13 AM hbrendlinger

SEEDING	
END WIDTH	SQ. YDS.
107	797
78	343
	864

PAVEMENT REMOVAL QUANTITIES HAVE BEEN DEDUCTED FROM EXCAVATION QUANTITIES

END AREA		VOLUME	
CUT	FILL	CUT	FILL

CALCULATED CFR
CHECKED SSK

620 610 600 590 580 570 560 550

LA-R/W
4" ITS FO CONDUIT
2:1
NOISE WALL 2B
EX LA-R/W
EX FENCE
EX ST LT
EX ITS

568.78
472+00.00
569.05

LA-R/W
PR FENCE
4" ITS FO CONDUIT
2:1
EX LA-R/W
NOISE WALL 2B
EX FENCE
EX ST LT
EX ITS

569.19
471+50.00
569.53

220 200 180 160 140 120 100 80 60 40 20 0

CROSS SECTIONS I.R. 75 SOUTHBOUND
STA. 471+50.00 TO STA. 472+00.00

HAM-75-7.85

425
1047

Preliminary Plans - For Reference Only

J:\20110903\ODOT\HAM\77889\roadway\sheets\77889XS466.dgn 5/22/2026 10:18:13 AM hbrendlinger

SEEDING	
END WIDTH	SQ. YDS.

PAVEMENT REMOVAL QUANTITIES HAVE BEEN DEDUCTED FROM EXCAVATION QUANTITIES

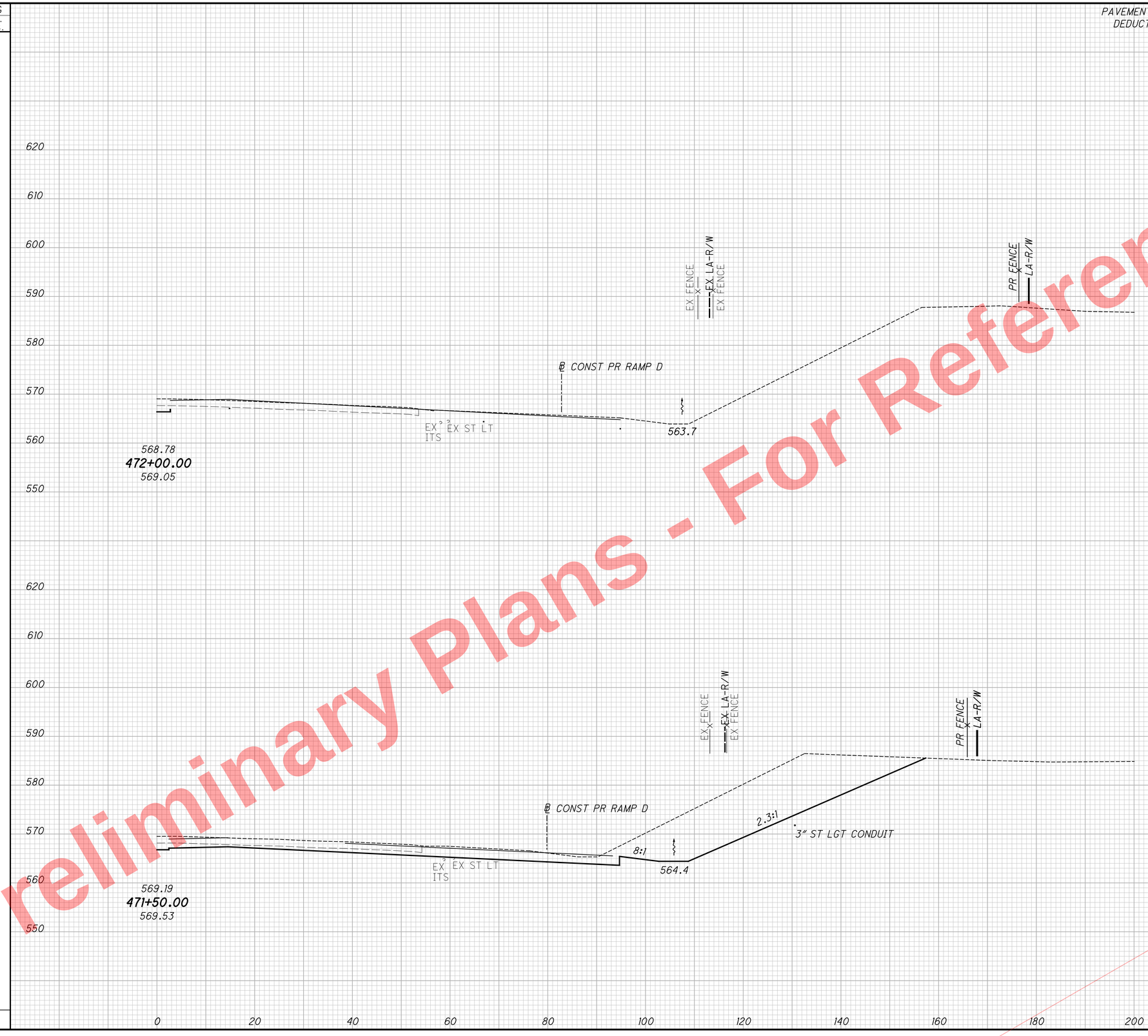

END AREA		VOLUME	
CUT	FILL	CUT	FILL
1409	110		
		2725	340
1342	4		
		1940	4
		4487	108

CALCULATED CFR
CHECKED SSK

CROSS SECTIONS I.R. 75 NORTHBOUND
STA. 471+50.00 TO STA. 472+00.00

HAM-75-7.85

426
1047

Preliminary Plans - For Reference Only

J:\20110903\ODOT\HAM\77889\roadway\sheets\77889XS467.dgn 5/22/2026 10:18:14 AM hbrendlinger

PAVEMENT REMOVAL QUANTITIES HAVE BEEN DEDUCTED FROM EXCAVATION QUANTITIES

SEEDING END WIDTH	SEEDING SQ. YDS.	END AREA CUT	END AREA FILL	VOLUME CUT	VOLUME FILL
30	145	27	1	60	1
22	0	37	0	0	0
	145			60	1

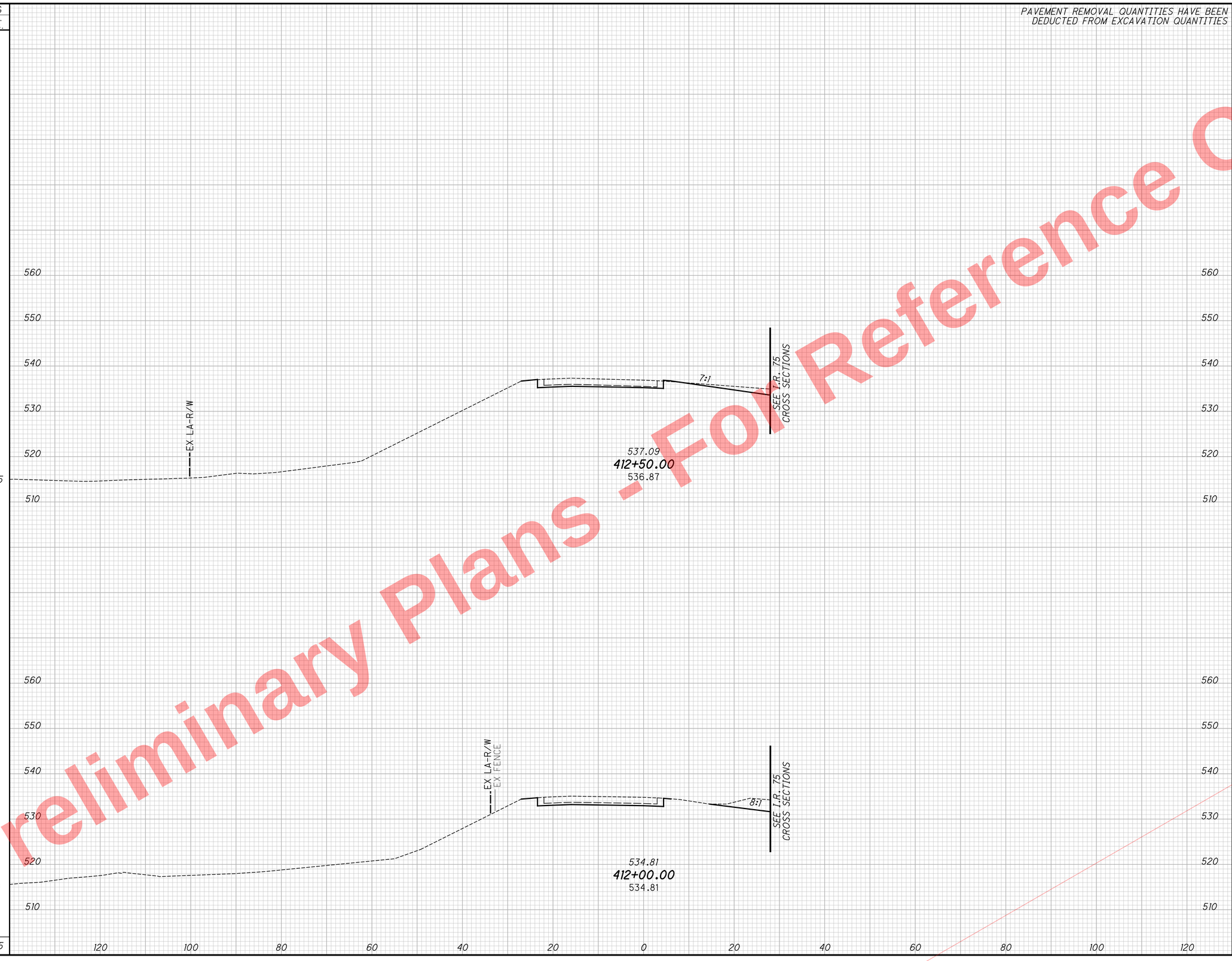

CALCULATED SEA
CHECKED DLR

CROSS SECTIONS RAMP M
STA. 412+00.00 TO STA. 412+50.00

HAM-75-7.85

427
1047

Preliminary Plans - For Reference Only

J:\20110903\ODOT\HAM\7889\roadway\sheets\77889XS005.dgn 5/22/2026 10:18:15 AM hbrendlinger

PAVEMENT REMOVAL QUANTITIES HAVE BEEN DEDUCTED FROM EXCAVATION QUANTITIES

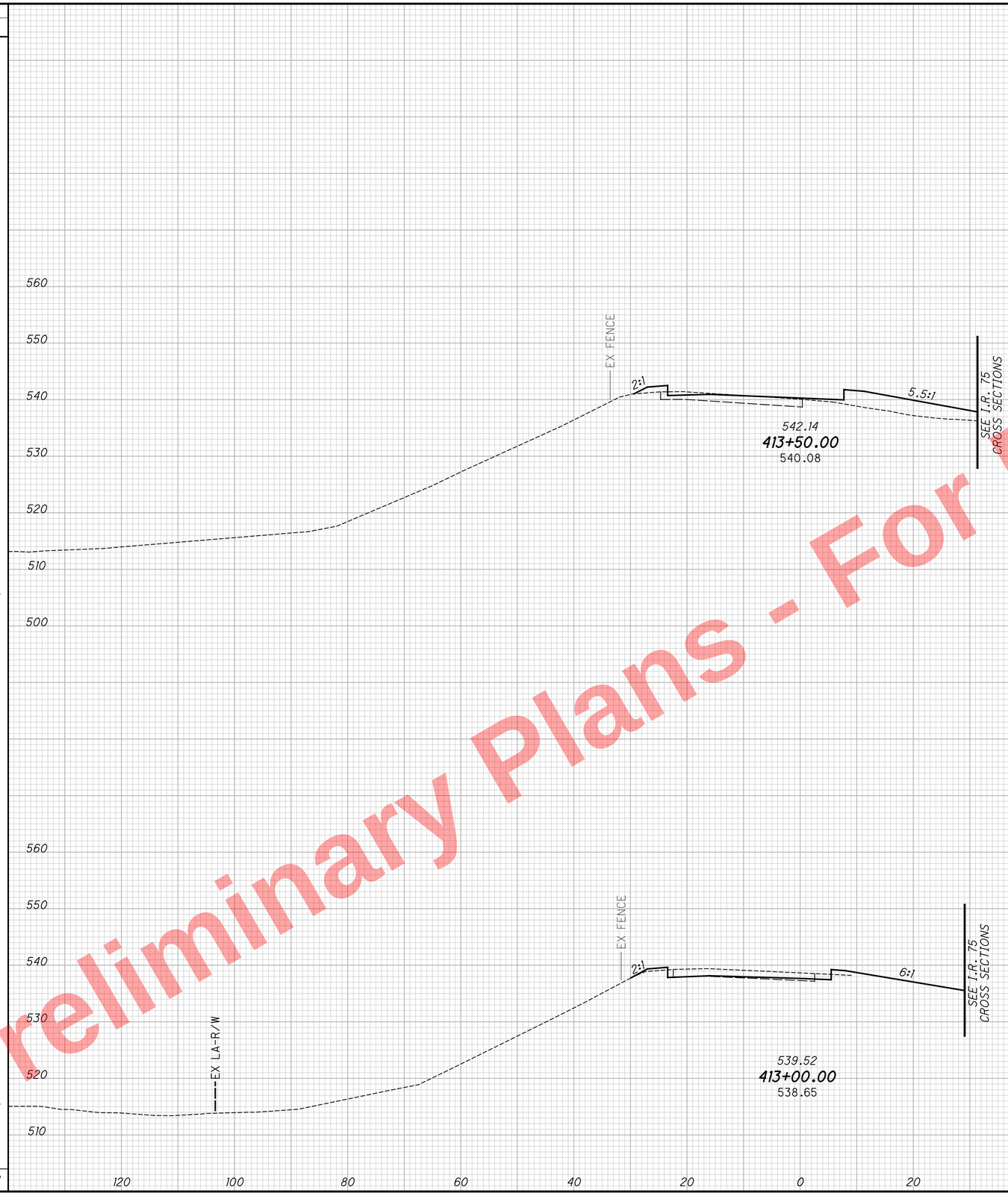

SEEDING END WIDTH	SEEDING SQ. YDS.	END AREA CUT	END AREA FILL	VOLUME CUT	VOLUME FILL
33		0	97		
	183			4	97
33		4	7		
	178			29	7
	361			33	104

CALCULATED SEA
CHECKED DLR

CROSS SECTIONS RAMP M
STA. 413+00.00 TO STA. 413+50.00

HAM-75-7.85

428
1047

Preliminary Plans - For Reference Only

J:\20110903\ODOT\HAM\77889\roadway\sheets\77889XS005.dgn 5/22/2026 10:18:15 AM hbrendlinger

PAVEMENT REMOVAL QUANTITIES HAVE BEEN DEDUCTED FROM EXCAVATION QUANTITIES

SEEDING END WIDTH	SEEDING SQ. YDS.	END AREA CUT	END AREA FILL	VOLUME CUT	VOLUME FILL
36	194	0	237	0	363
33	189	0	154	0	233
	383			0	596

CALCULATED SEA
CHECKED DLR

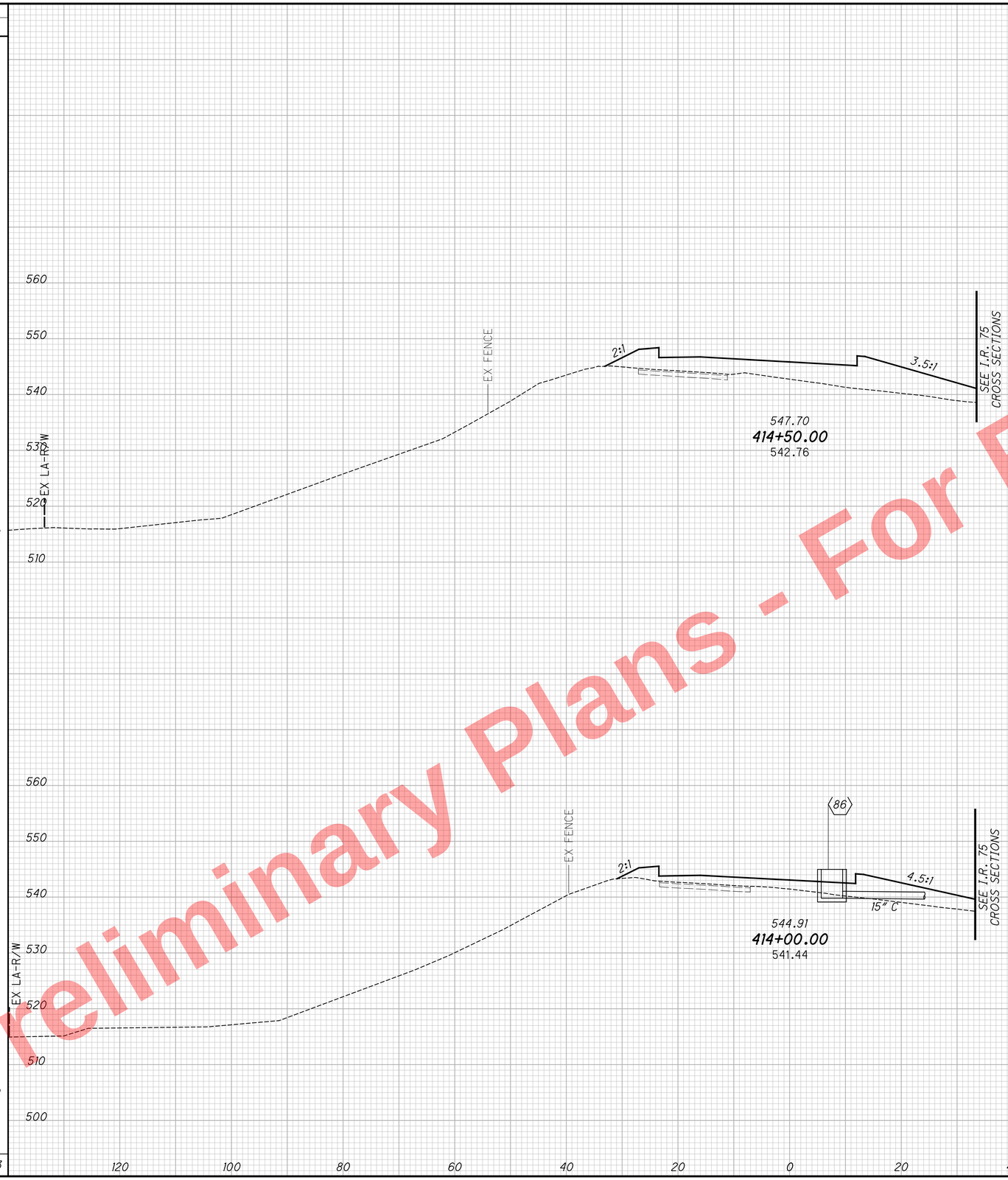

CROSS SECTIONS RAMP M
STA. 414+00.00 TO STA. 414+50.00

HAM-75-7.85

429
1047

J:\20110903\ODOT\HAM\77889\roadway\sheets\77889XS005.dgn 5/22/2026 10:18:15 AM hbrendlinger

Preliminary Plans - For Reference Only

PAVEMENT REMOVAL QUANTITIES HAVE BEEN DEDUCTED FROM EXCAVATION QUANTITIES

SEEDING END WIDTH	SEEDING SQ. YDS.	END AREA CUT	END AREA FILL	VOLUME CUT	VOLUME FILL
44	250	0	416	0	686
45	228	0	326	0	521
	478			0	1207

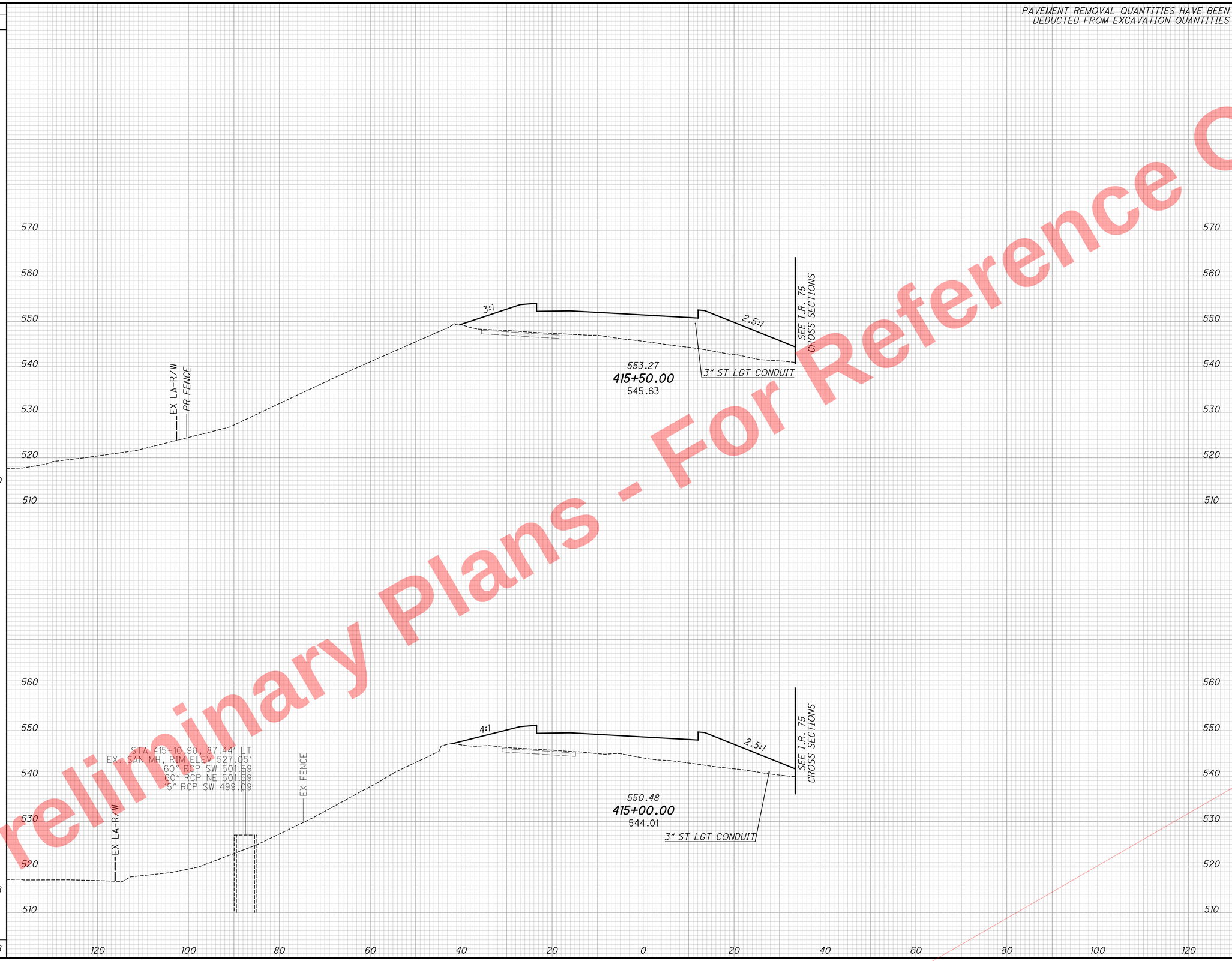

CALCULATED SEA
CHECKED DLR

CROSS SECTIONS RAMP M
STA. 415+00.00 TO STA. 415+50.00

HAM-75-7.85

430
1047

Preliminary Plans - For Reference Only

J:\20110903\ODOT\HAM\77889\roadway\sheets\77889XS005.dgn 5/22/2026 10:18:16 AM hbrendlinger

PAVEMENT REMOVAL QUANTITIES HAVE BEEN DEDUCTED FROM EXCAVATION QUANTITIES

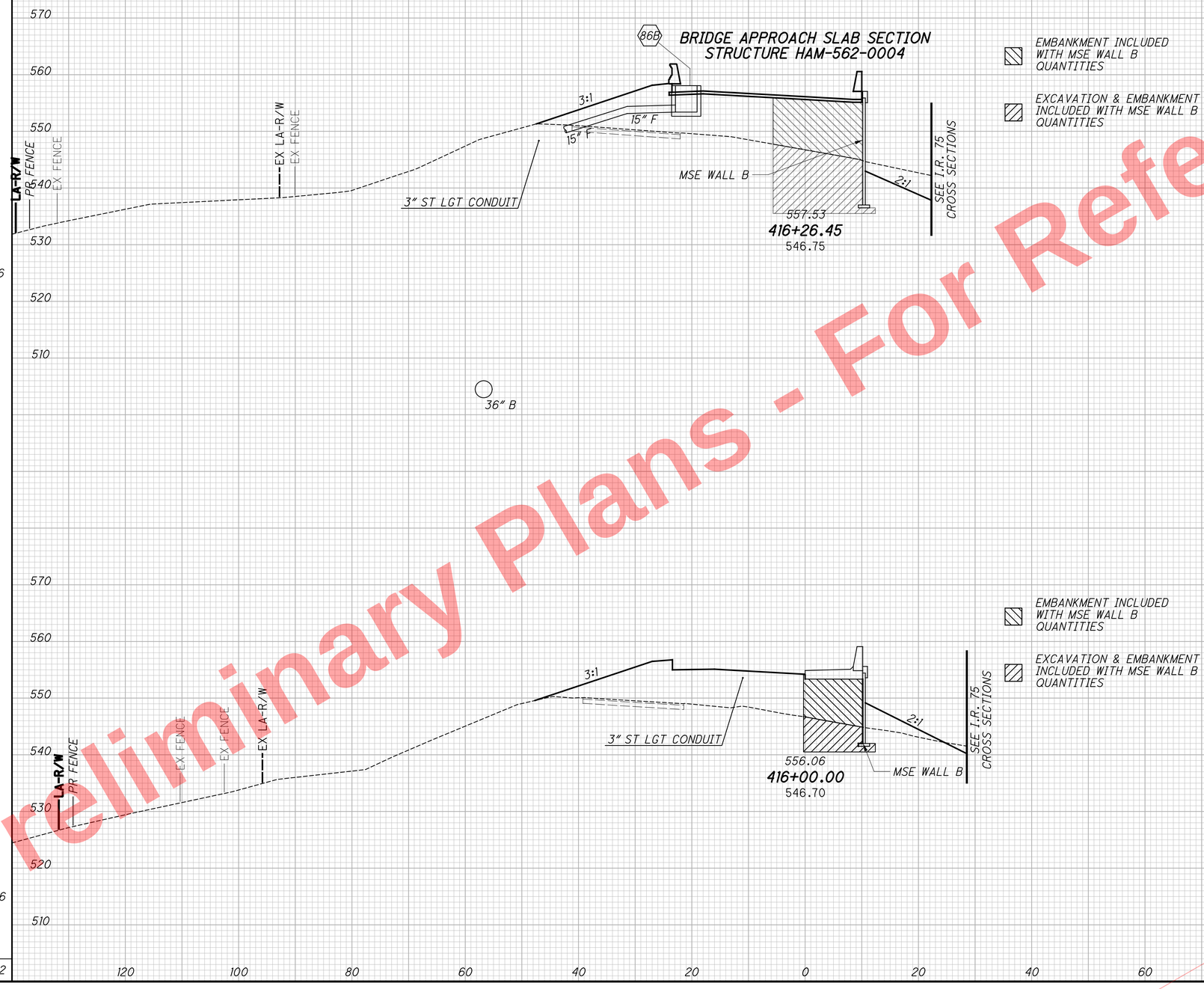

SEEDING END WIDTH	SEEDING SQ. YDS.	END AREA CUT	END AREA FILL	VOLUME CUT	VOLUME FILL
37	126	35	359	19	292
47	256	3	237	2	604
	382			21	896

CALCULATED SEA
CHECKED DLR

CROSS SECTIONS RAMP M
STA. 416+00.00 TO STA. 416+26.45

HAM-75-7.85

431
1047

Preliminary Plans - For Reference Only

J:\20110903\ODOT\HAM\7889\roadway\sheets\77889XS005.dgn 5/22/2026 10:18:16 AM hbrendlinger

PAVEMENT REMOVAL QUANTITIES HAVE BEEN DEDUCTED FROM EXCAVATION QUANTITIES

BRIDGE APPROACH SLAB SECTION
STRUCTURE HAM-562-0004

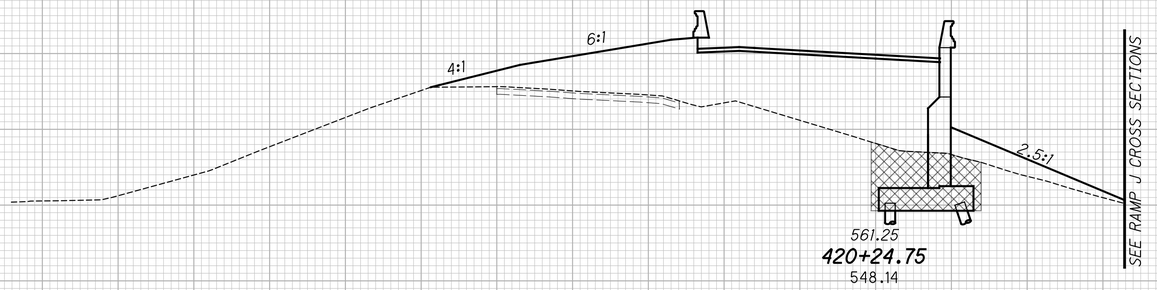

EMBANKMENT INCLUDED WITH MSE WALL B QUANTITIES

EXCAVATION & EMBANKMENT INCLUDED WITH MSE WALL B QUANTITIES

UNCLASSIFIED EXCAVATION INCLUDED WITH HAM-562-0004 BRIDGE QUANTITIES

BRIDGE APPROACH SLAB SECTION
STRUCTURE HAM-562-0004



EMBANKMENT INCLUDED WITH MSE WALL B QUANTITIES

EXCAVATION & EMBANKMENT INCLUDED WITH MSE WALL B QUANTITIES

UNCLASSIFIED EXCAVATION INCLUDED WITH HAM-562-0004 BRIDGE QUANTITIES

BRIDGE APPROACH SLAB SECTION
STRUCTURE HAM-562-0004

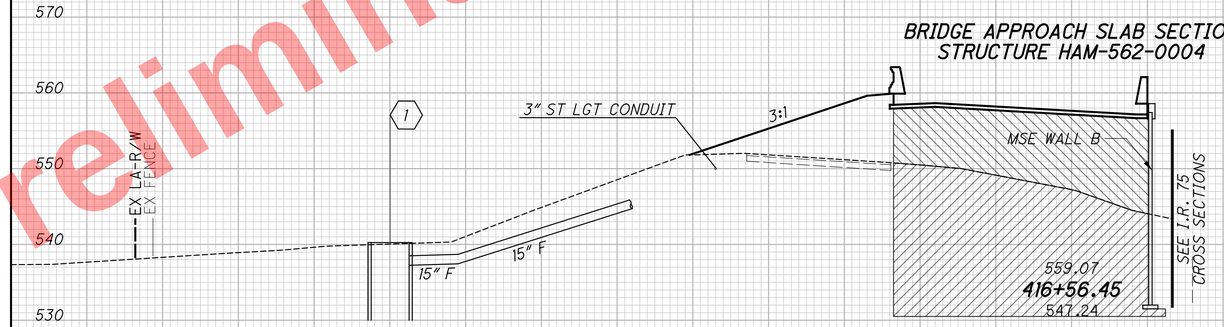

EMBANKMENT INCLUDED WITH MSE WALL B QUANTITIES

EXCAVATION & EMBANKMENT INCLUDED WITH MSE WALL B QUANTITIES

SEEDING END WIDTH	SEEDING SQ. YDS.	END AREA CUT	END AREA FILL	VOLUME CUT	VOLUME FILL
60	173	0	458	55	446
42	1391	99	345	0	0
31	114	27	146	34	280
	1678			89	726

CALCULATED SEA
CHECKED DLR

CROSS SECTIONS RAMP M
STA. 416+56.45 TO STA. 420+24.75

HAM-75-7.85

432
1047

For Reference Only
Preliminary Plans - Not for Construction

J:\20110903\ODOT\HAM\7889\roadway\sheets\77889XS005.dgn 5/22/2026 10:18:16 AM hbrendlinger

PAVEMENT REMOVAL QUANTITIES HAVE BEEN DEDUCTED FROM EXCAVATION QUANTITIES





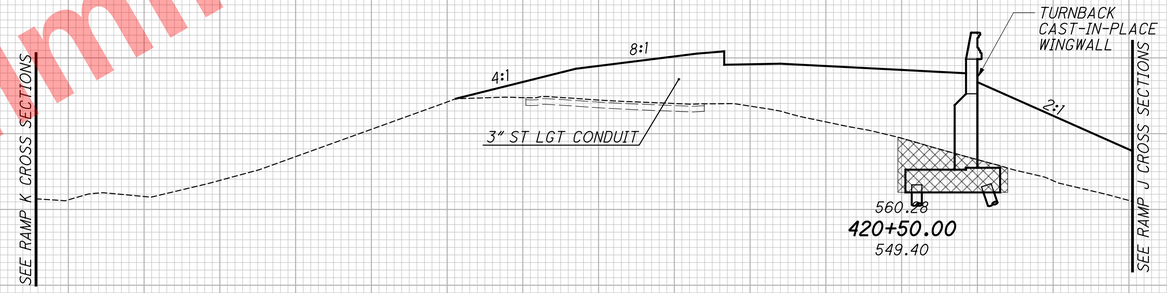

EMBANKMENT INCLUDED WITH MSE WALL B QUANTITIES

EXCAVATION & EMBANKMENT INCLUDED WITH MSE WALL B QUANTITIES

UNCLASSIFIED EXCAVATION INCLUDED WITH HAM-562-0004 BRIDGE QUANTITIES

SEEDING END WIDTH	SEEDING SQ. YDS.	END AREA CUT	END AREA FILL	VOLUME CUT	VOLUME FILL
53	311	0	466	0	980
59	328	0	592	0	1013
59	168	0	502	0	449
	807			0	2442

CALCULATED SEA
CHECKED DLR

CROSS SECTIONS RAMP M
STA. 420+50.00 TO STA. 421+50.00

HAM-75-7.85

433
1047

Preliminary Plans - For Reference Only

J:\20110903\ODOT\HAM\7889\roadway\sheets\77889XS005.dgn 5/22/2026 10:18:16 AM hbrendlinger

PAVEMENT REMOVAL QUANTITIES HAVE BEEN DEDUCTED FROM EXCAVATION QUANTITIES

SEEDING END WIDTH	SEEDING SQ. YDS.	END AREA CUT	END AREA FILL	VOLUME CUT	VOLUME FILL
31	172	0	195	0	433
31	233	0	272	18	589
52	294	19	364	18	768
	699			36	1790

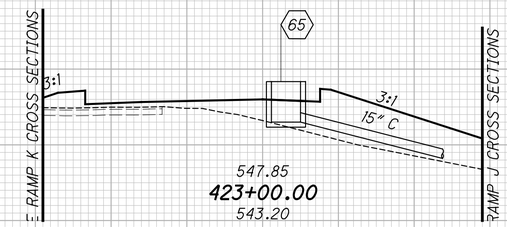

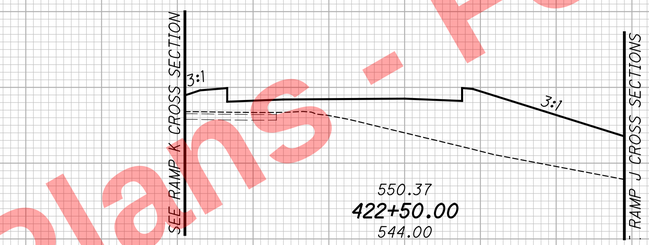

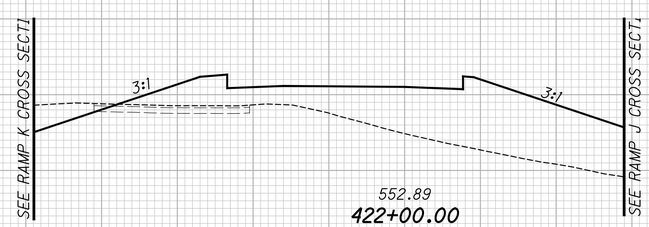

560
550
540
530

120 100 80 60 40 20 0 20 40 60 80 100 120

CALCULATED SEA
CHECKED DLR

CROSS SECTIONS RAMP M
STA. 422+00.00 TO STA. 423+00.00

HAM-75-7.85

434
1047

Preliminary Plans - For Reference Only

J:\20110903\ODOT\HAM\77889\roadway\sheets\77889XS005.dgn 5/22/2026 10:18:16 AM hbrendlinger

PAVEMENT REMOVAL QUANTITIES HAVE BEEN DEDUCTED FROM EXCAVATION QUANTITIES

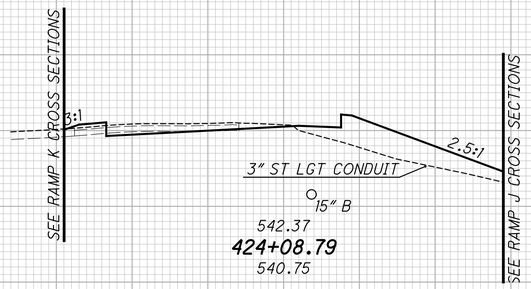

542.37
424+08.79
540.75

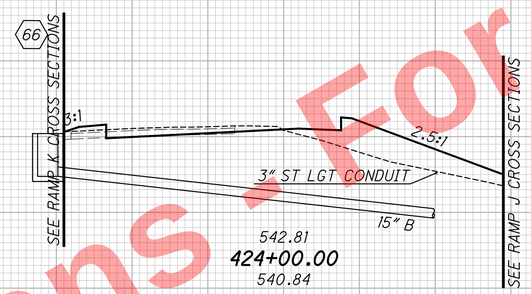

542.81
424+00.00
540.84

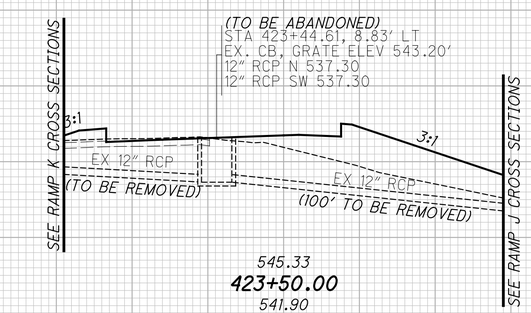

545.33
423+50.00
541.90

SEEDING END WIDTH	SEEDING SQ. YDS.	END AREA CUT	END AREA FILL	VOLUME CUT	VOLUME FILL
32	31	6	77	2	26
32	178	4	83	4	208
31	172	0	142	0	312
	381			6	546

CALCULATED SEA
CHECKED DLR

CROSS SECTIONS RAMP M
STA. 423+50.00 TO STA. 424+08.79

HAM-75-7.85

435
1047

Preliminary Plans Not For Reference Only

J:\20110903\ODOT\HAM\77889\roadway\sheets\77889XS005.dgn 5/22/2026 10:18:17 AM hbrendlinger

PAVEMENT REMOVAL QUANTITIES HAVE BEEN DEDUCTED FROM EXCAVATION QUANTITIES

SEEDING		END AREA		VOLUME		CALCULATED	CHECKED
END WIDTH	SQ. YDS.	CUT	FILL	CUT	FILL	SEA	DLR
50	190		19	15			
				27	13		
45	0		23	5			
				0	0		
	190			27	13		

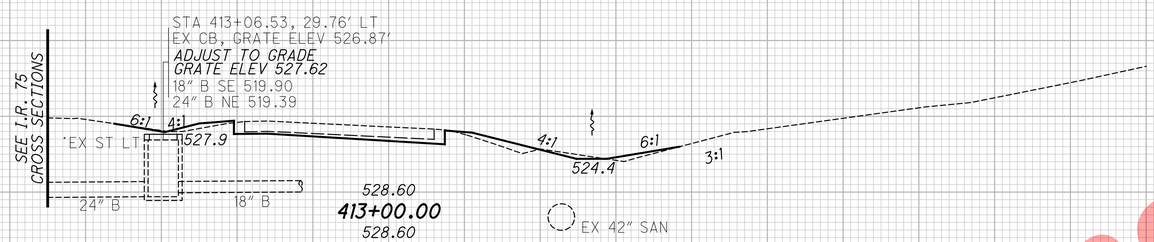

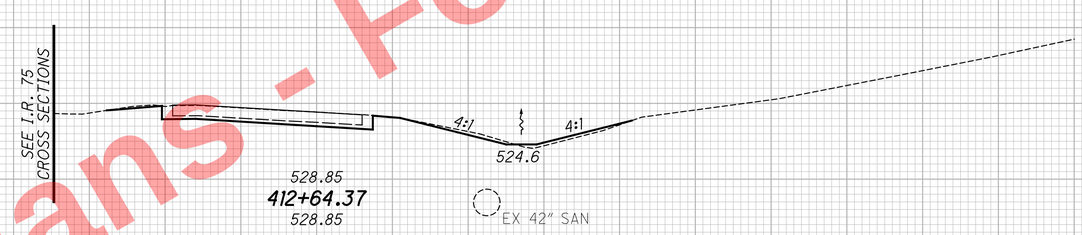

120 100 80 60 40 20 0 20 40 60 80 100

CROSS SECTIONS RAMP N
STA. 412+64.37 TO STA. 413+00.00

HAM-75-7.85

436
1047

For Reference Only
Preliminary Plans - Fo

J:\20110903\ODOT\HAM\7889\roadway\sheets\77889XS006.dgn 5/22/2026 10:18:18 AM hbrendlinger

PAVEMENT REMOVAL QUANTITIES HAVE BEEN DEDUCTED FROM EXCAVATION QUANTITIES

SEEDING END WIDTH	SEEDING SQ. YDS.	END AREA CUT	END AREA FILL	VOLUME CUT	VOLUME FILL
50	228	29	24	39	39
32	194	14	19	23	35
38	244	11	19	28	31
	666			90	105

CALCULATED SEA
CHECKED DLR

SEE I.R. 75 CROSS SECTIONS

STA 414+25.38, 11.25' RT
EX SAN MH, RIM ELEV 526.03'
42" B NE 514.18 (TO BE REMOVED)
42" B SW 514.18

EX ST LT

4:1

4:1

523.2

527.25
414+50.00
526.87

SEE I.R. 75 CROSS SECTIONS

EX ST LT

4:1

4:1

523.6

527.64
414+00.00
527.33

EX 42" SAN

SEE I.R. 75 CROSS SECTIONS

STA 413+57.03, 25.12' RT
EX CB, GRATE ELEV 522.77'
18" B NW 520.27

EX ST LT

4:1

4:1

523.1

EX 18" B

528.13
413+50.00
528.13

EX 42" SAN

540
530
520
510

120 100 80 60 40 20 0 20 40 60 80 100 120

Preliminary Plans - Not For Reference Only

CROSS SECTIONS RAMP N
STA. 413+50.00 TO STA. 414+50.00

HAM-75-7.85

437
1047

J:\20110903\ODOT\HAM\77889\roadway\sheets\77889XS006.dgn 5/22/2026 10:18:18 AM hbrendlinger

PAVEMENT REMOVAL QUANTITIES HAVE BEEN DEDUCTED FROM EXCAVATION QUANTITIES

SEEDING		END AREA		VOLUME		
END WIDTH	SQ. YDS.	CUT	FILL	CUT	FILL	
47	266	10	110	26	162	
48	278	18	65	41	99	
50	283	27	42	51	61	
	827			118	322	

CALCULATED SEA
CHECKED DLR

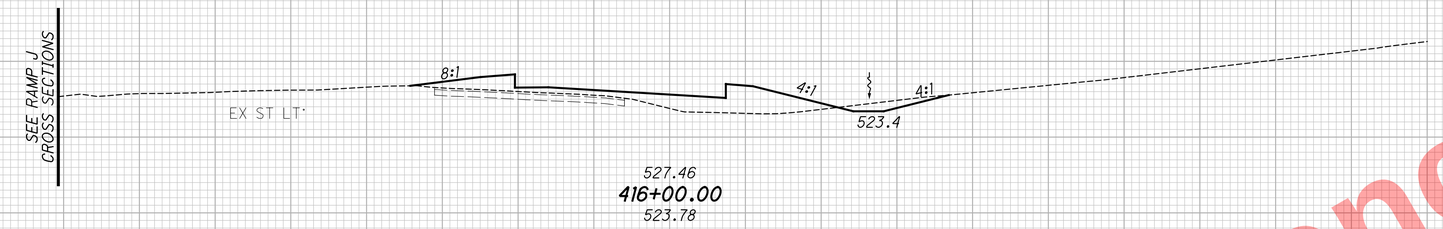

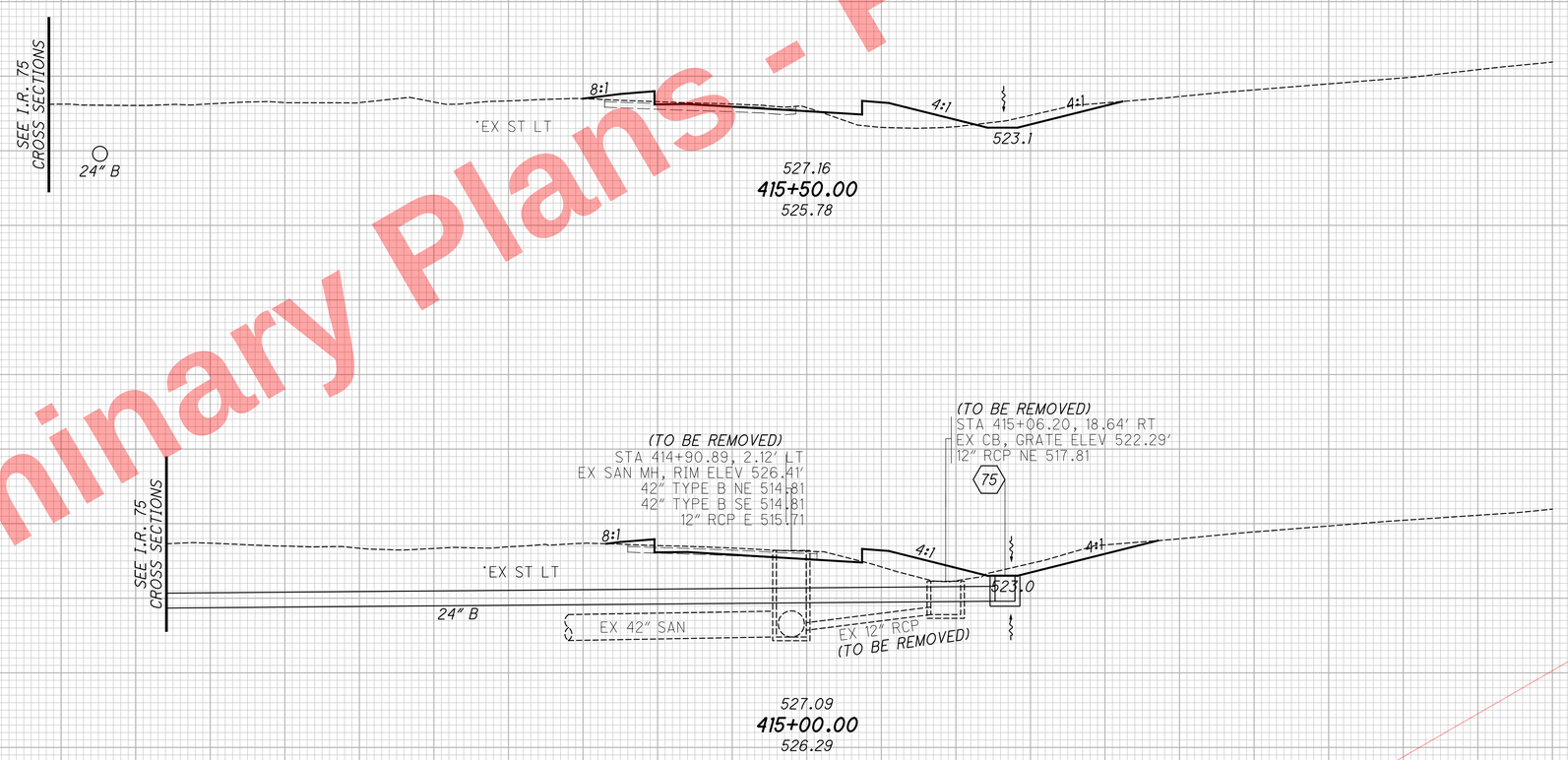

CROSS SECTIONS RAMP N
STA. 415+00.00 TO STA. 416+00.00

HAM-75-7.85

438
1047

Preliminary Plans - For Reference Only

J:\20110903\ODOT\HAM\7889\roadway\sheets\77889XS006.dgn 5/22/2026 10:18:18 AM hbrendlinger

PAVEMENT REMOVAL QUANTITIES HAVE BEEN DEDUCTED FROM EXCAVATION QUANTITIES

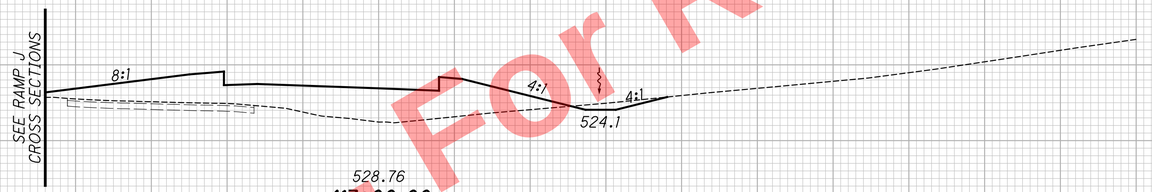

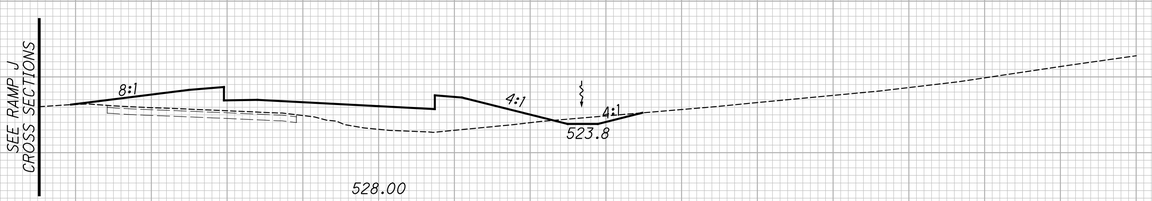

SEEDING END WIDTH	SEEDING SQ. YDS.	END AREA CUT	END AREA FILL	VOLUME CUT	VOLUME FILL
57	305	7	241	13	374
51	278	7	164	16	254
	583			29	628

CALCULATED SEA
CHECKED DLR

CROSS SECTIONS RAMP N
STA. 416+50.00 TO STA. 417+00.00

HAM-75-7.85

439
1047

Preliminary Plans For Reference Only

J:\20110903\ODOT\HAM\7889\roadway\sheets\77889XS006.dgn 5/22/2026 10:18:18 AM hbrendlinger

PAVEMENT REMOVAL QUANTITIES HAVE BEEN DEDUCTED FROM EXCAVATION QUANTITIES

SEEDING END WIDTH	SEEDING SQ. YDS.	END AREA CUT	END AREA FILL	VOLUME CUT	VOLUME FILL
73	367	25	406	33	672
59	322	10	320	16	519
	689			49	1191

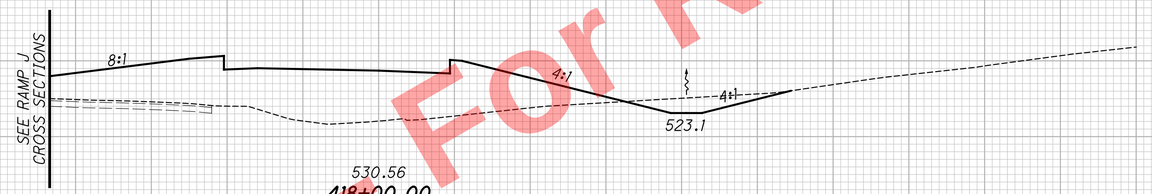

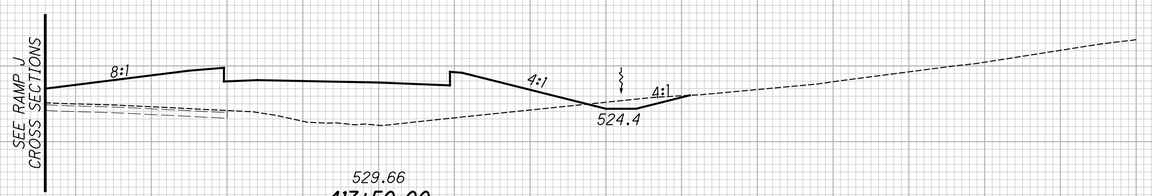

120 100 80 60 40 20 0 20 40 60 80 100 120

CALCULATED SEA
CHECKED DLR

CROSS SECTIONS RAMP N
STA. 417+50.00 TO STA. 418+00.00

HAM-75-7.85

440
1047

Preliminary Plans
For Reference Only

J:\20110903\ODOT\HAM\7889\roadway\sheets\77889XS006.dgn 5/22/2026 10:18:19 AM hbrendlinger

PAVEMENT REMOVAL QUANTITIES HAVE BEEN DEDUCTED FROM EXCAVATION QUANTITIES

SEEDING END WIDTH	SEEDING SQ. YDS.	END AREA CUT	END AREA FILL	VOLUME CUT	VOLUME FILL
77	433	6	537	22	961
77	417	17	500	40	839
	850			62	1800

CALCULATED SEA | CHECKED DLR

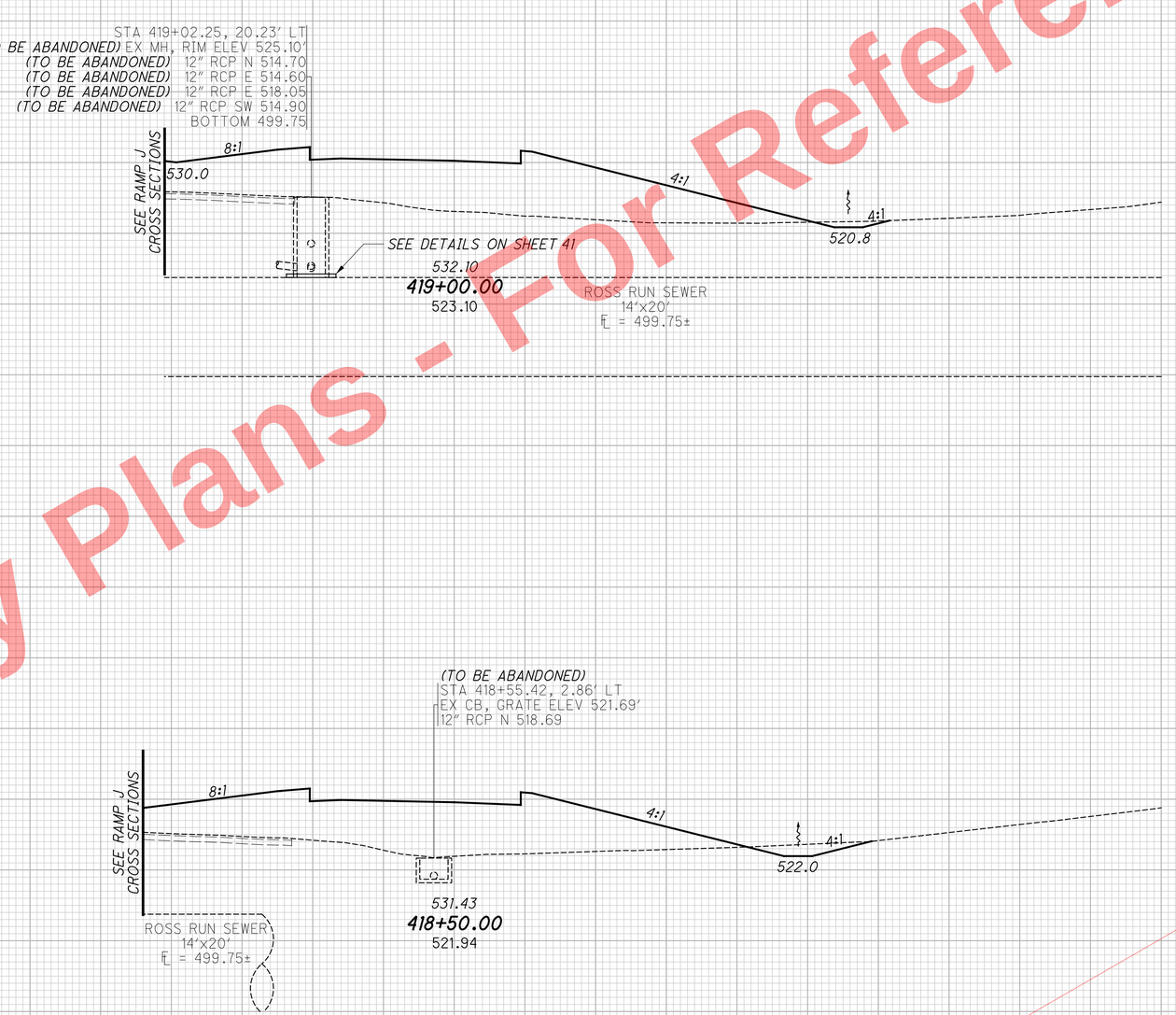

CROSS SECTIONS RAMP N
STA. 418+50.00 TO STA. 419+00.00

HAM-75-7.85

441
1047

Preliminary Plans - For Reference Only

J:\20110903\ODOT\HAM\77889\roadway\sheets\77889XS006.dgn 5/22/2026 10:18:19 AM hbrendlinger

PAVEMENT REMOVAL QUANTITIES HAVE BEEN DEDUCTED FROM EXCAVATION QUANTITIES

SEEDING END WIDTH	SEEDING SQ. YDS.	END AREA CUT	END AREA FILL	VOLUME CUT	VOLUME FILL
57	328	0	532	0	987
59	384	0	534	5	992
	712			5	1979

CALCULATED SEA
CHECKED DLR

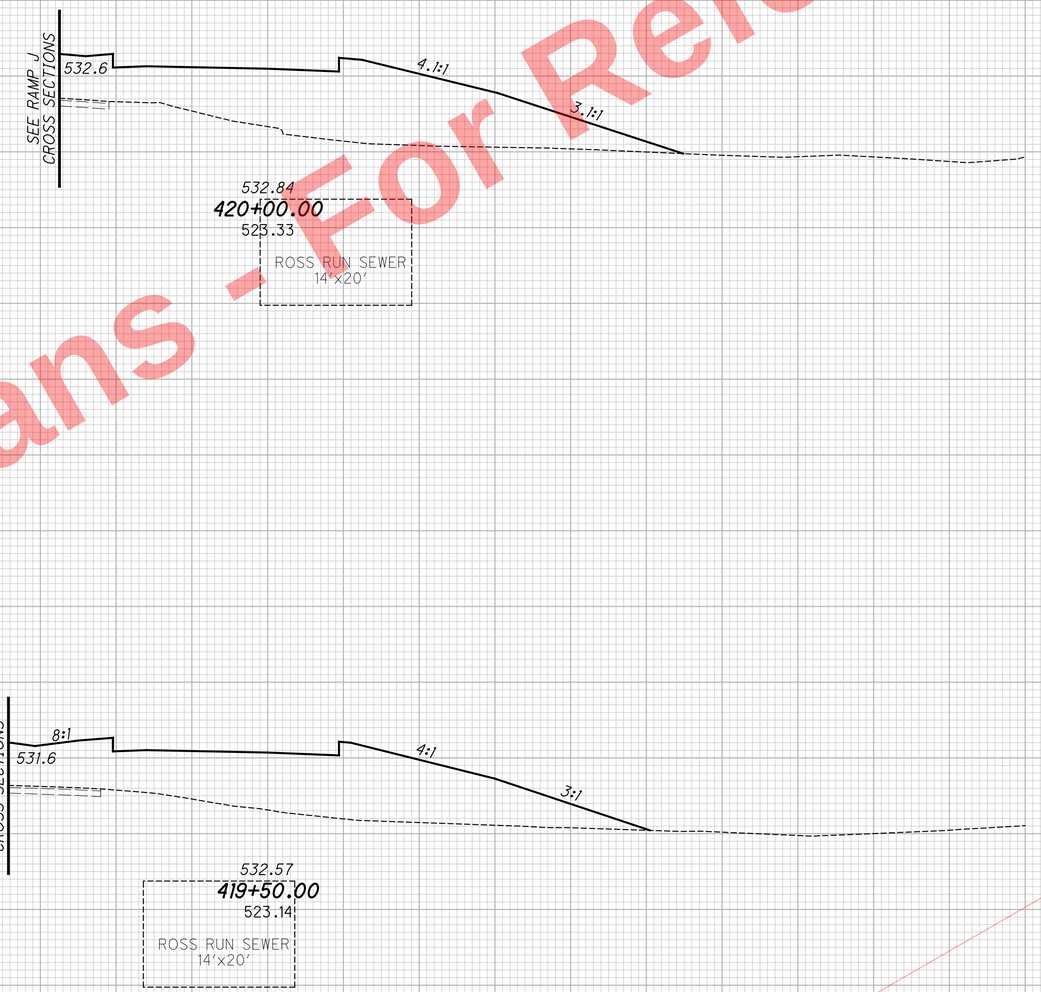

CROSS SECTIONS RAMP N
STA. 419+50.00 TO STA. 420+00.00

HAM-75-7.85

442
1047

Preliminary Plans - For Reference Only

J:\20110903\ODOT\HAM\7889\roadway\sheets\77889XS006.dgn 5/22/2026 10:18:19 AM hbrendlinger

PAVEMENT REMOVAL QUANTITIES HAVE BEEN DEDUCTED FROM EXCAVATION QUANTITIES

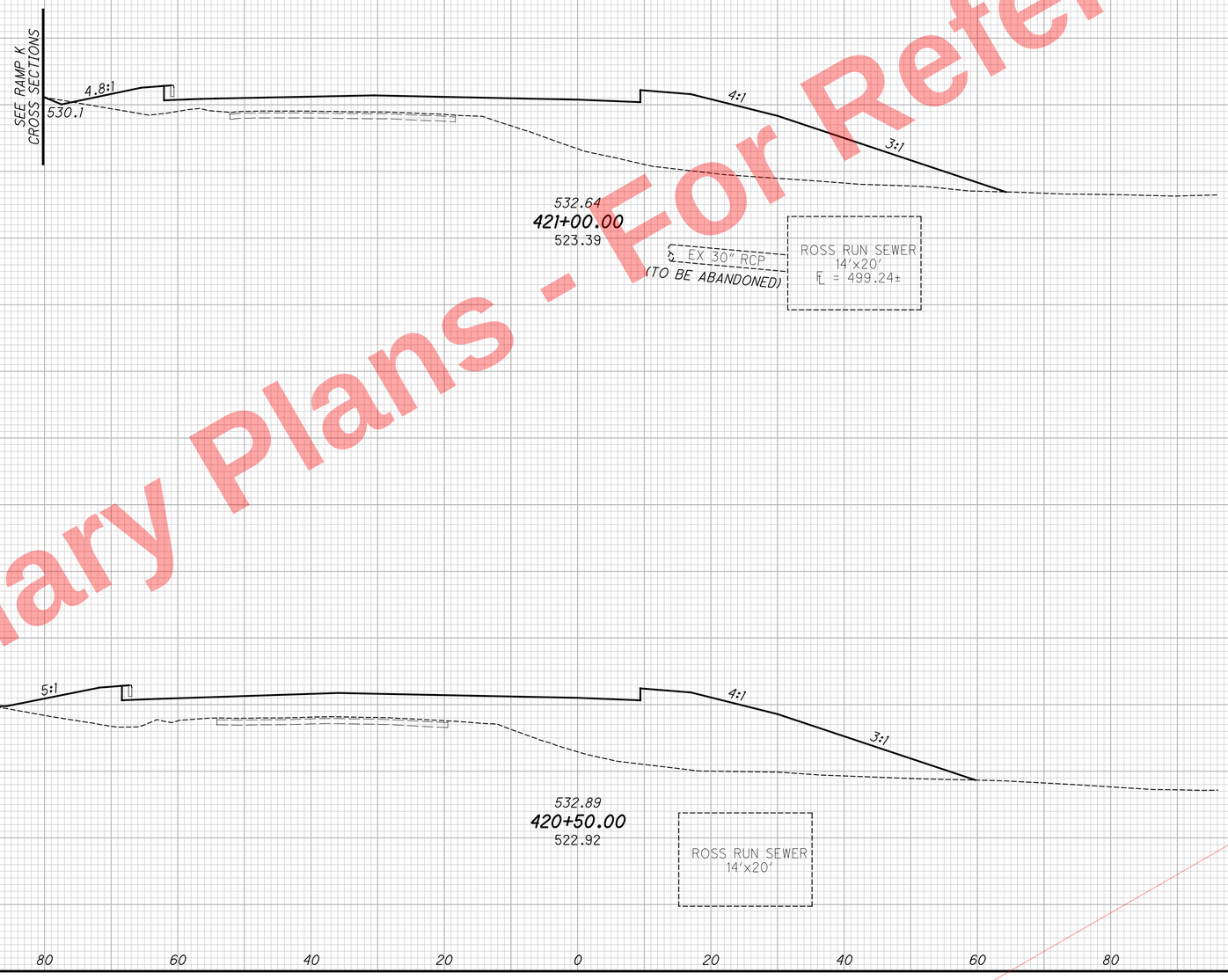

SEEDING END WIDTH	SEEDING SQ. YDS.	END AREA CUT	END AREA FILL	VOLUME CUT	VOLUME FILL
79	478	1	711	10	1411
92	417	9	812	9	1245
	895			19	2656

CALCULATED SEA
CHECKED DLR

CROSS SECTIONS RAMP N
STA. 420+50.00 TO STA. 421+00.00

HAM-75-7.85

443
1047

Preliminary Plans - For Reference Only

J:\20110903\ODOT\HAM\7889\roadway\sheets\7889XS006.dgn 5/22/2026 10:18:19 AM hbrendlinger

SEEDING	
END WIDTH	SQ. YDS.
54	328
62	394
	722

PAVEMENT REMOVAL QUANTITIES HAVE BEEN DEDUCTED FROM EXCAVATION QUANTITIES

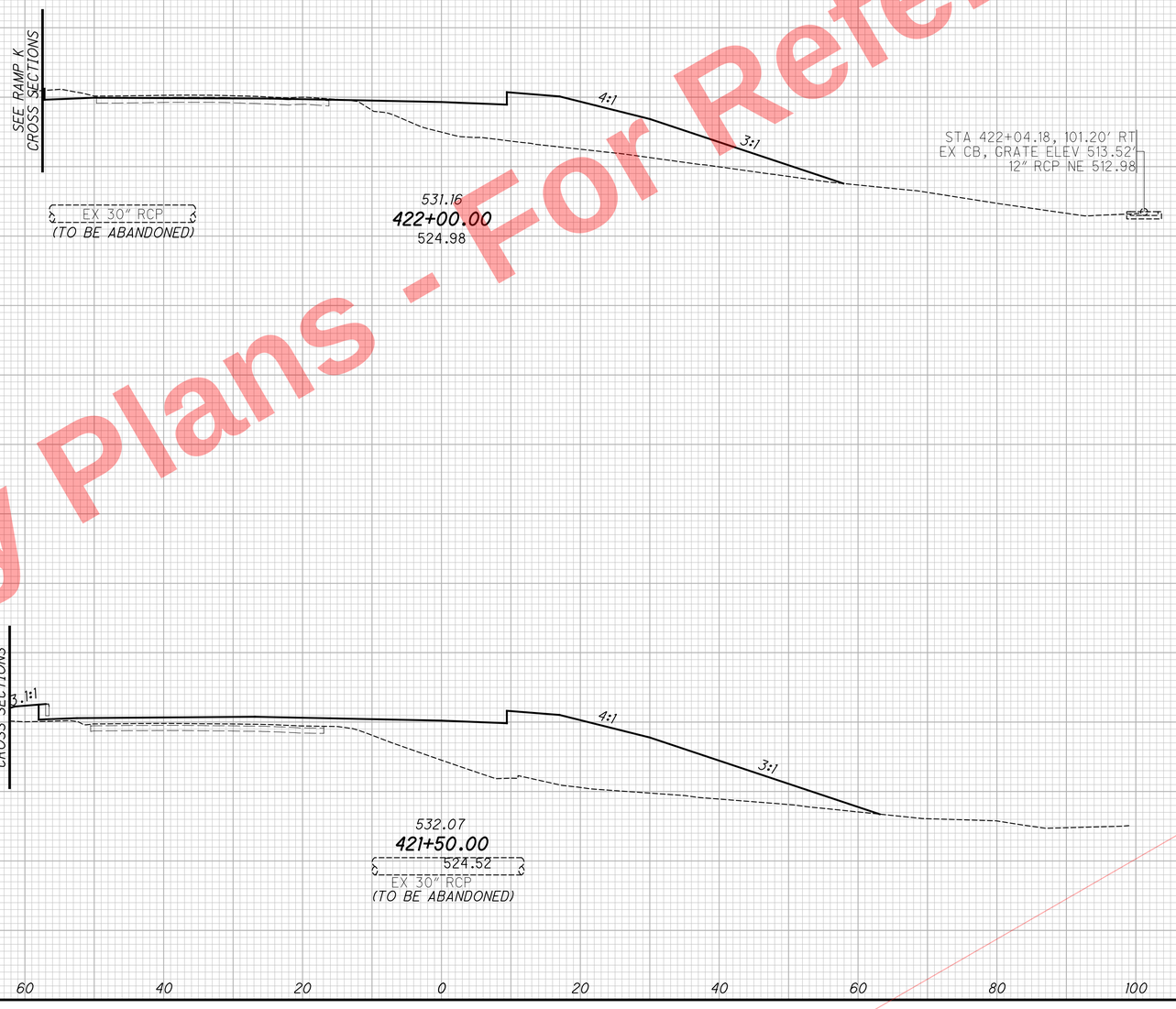

END AREA		VOLUME	
CUT	FILL	CUT	FILL
8	315		
0	519		
		7	772
		1	1139
		8	1911

CALCULATED SEA
CHECKED DLR

CROSS SECTIONS RAMP N
STA. 421+50.00 TO STA. 422+00.00

HAM-75-7.85

444
1047

Preliminary Plans - For Reference Only

J:\20110903\ODOT\HAM\7889\roadway\sheets\77889XS006.dgn 5/22/2026 10:18:19 AM hbrendlinger

PAVEMENT REMOVAL QUANTITIES HAVE BEEN DEDUCTED FROM EXCAVATION QUANTITIES

SEEDING END WIDTH	SEEDING SQ. YDS.	END AREA CUT	END AREA FILL	VOLUME CUT	VOLUME FILL
26	167	83	46	110	149
34	244	35	115	40	398
	411			150	547

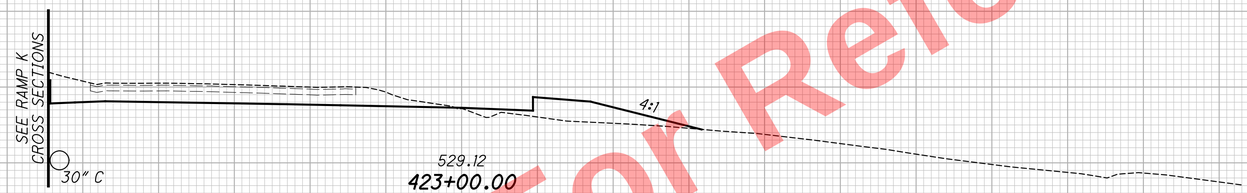

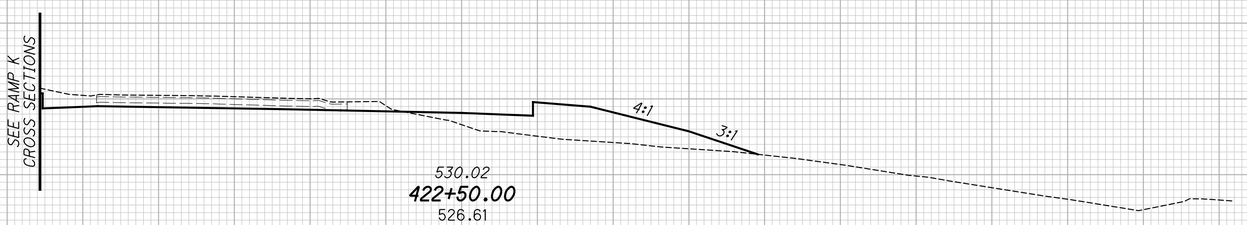

550 540 530 520 510 500

120 100 80 60 40 20 0 20 40 60 80 100 120

CALCULATED SEA
CHECKED DLR

CROSS SECTIONS RAMP N
STA. 422+50.00 TO STA. 423+00.00

HAM-75-7.85

445
1047

Preliminary Plans - For Reference Only

J:\20110903\ODOT\HAM\7889\roadway\sheets\77889XS006.dgn 5/22/2026 10:18:20 AM hbrendlinger

PAVEMENT REMOVAL QUANTITIES HAVE BEEN DEDUCTED FROM EXCAVATION QUANTITIES

SEEDING END WIDTH	SEEDING SQ. YDS.	END AREA CUT	END AREA FILL	VOLUME CUT	VOLUME FILL
26	150	206	0	320	6
28	150	140	7	206	48
	300			526	54

CALCULATED SEA
CHECKED DLR

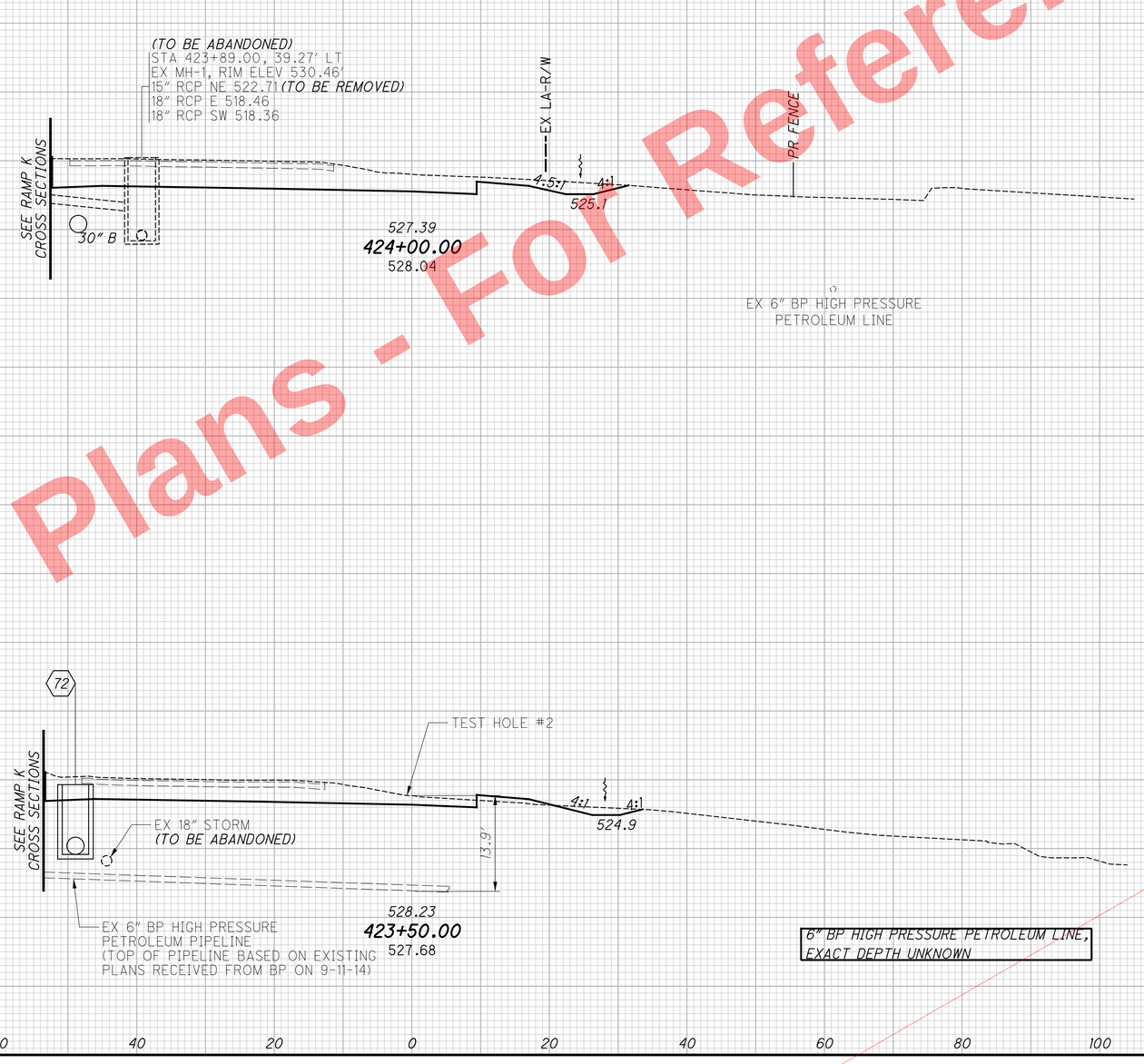

CROSS SECTIONS RAMP N
STA. 423+50.00 TO STA. 424+00.00

HAM-75-7.85

446
1047

Preliminary Plans - For Reference Only

J:\20110903\ODOT\HAM\7889\roadway\sheets\77889XS006.dgn 5/22/2026 10:18:20 AM hbrendlinger

PAVEMENT REMOVAL QUANTITIES HAVE BEEN DEDUCTED FROM EXCAVATION QUANTITIES

SEEDING END WIDTH	SEEDING SQ. YDS.	END AREA CUT	END AREA FILL	VOLUME CUT	VOLUME FILL
9		491	0		
	56			651	0
10		212	0		
	100			387	0
	156			1038	0

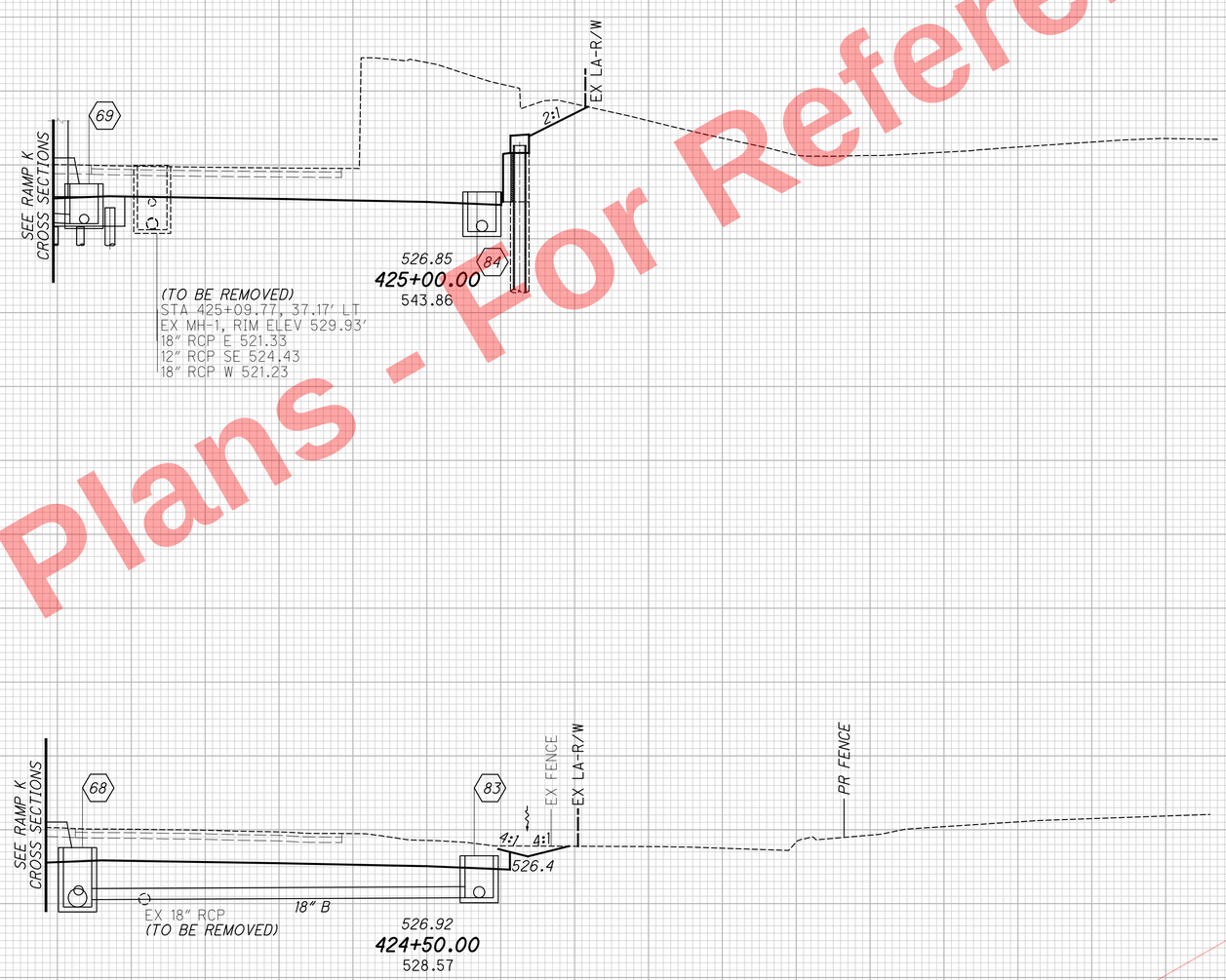

CALCULATED SEA
CHECKED DLR

CROSS SECTIONS RAMP N
STA. 424+50.00 TO STA. 425+00.00

HAM-75-7.85

447
1047

Preliminary Plans - For Reference Only

J:\20110903\ODOT\HAM\7889\roadway\sheets\7889XS006.dgn 5/22/2026 10:18:20 AM hbrendlinger

PAVEMENT REMOVAL QUANTITIES HAVE BEEN DEDUCTED FROM EXCAVATION QUANTITIES

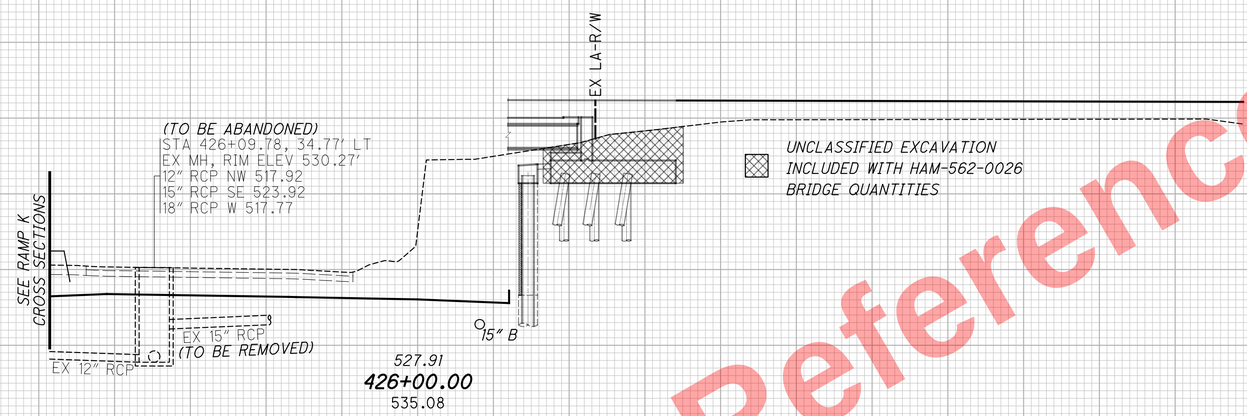

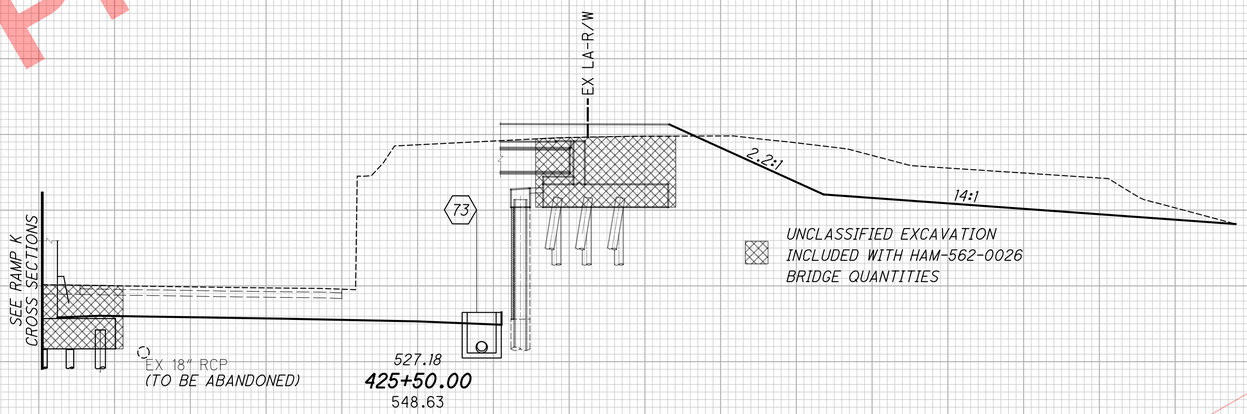

SEEDING END WIDTH	SEEDING SQ. YDS.	END AREA CUT	END AREA FILL	VOLUME CUT	VOLUME FILL
0	0	376	0	866	0
0	28	560	0	973	0
	28			1839	0

CALCULATED SEA
CHECKED DLR

CROSS SECTIONS RAMP N
STA. 425+50.00 TO STA. 426+00.00

HAM-75-7.85

448
1047

Preliminary Plans - For Reference Only

J:\20110903\ODOT\HAM\77889\roadway\sheets\77889XS006.dgn 5/22/2026 10:18:20 AM hbrendlinger

PAVEMENT REMOVAL QUANTITIES HAVE BEEN DEDUCTED FROM EXCAVATION QUANTITIES

SEEDING END WIDTH	SEEDING SQ. YDS.	END AREA CUT	END AREA FILL	VOLUME CUT	VOLUME FILL
33	189	210	0	511	0
34	94	343	0	665	0
	283			1176	0

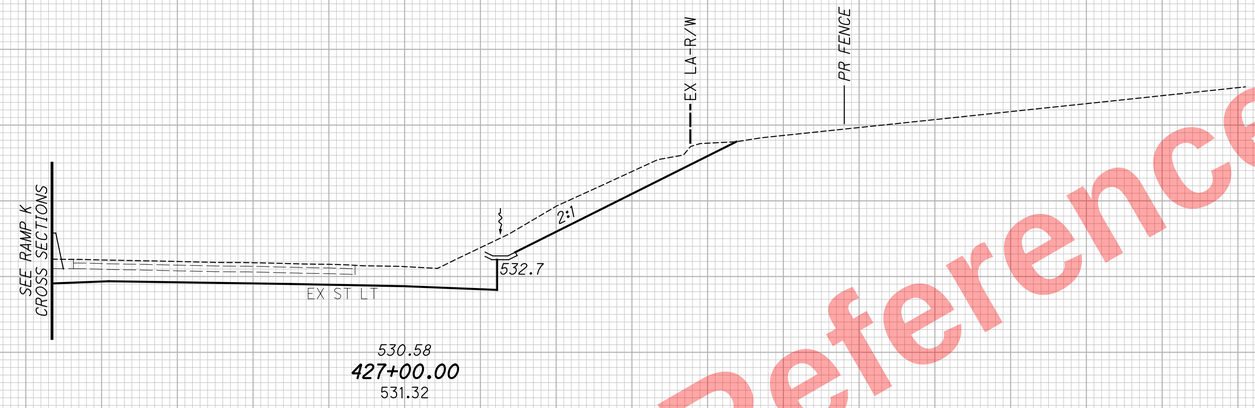

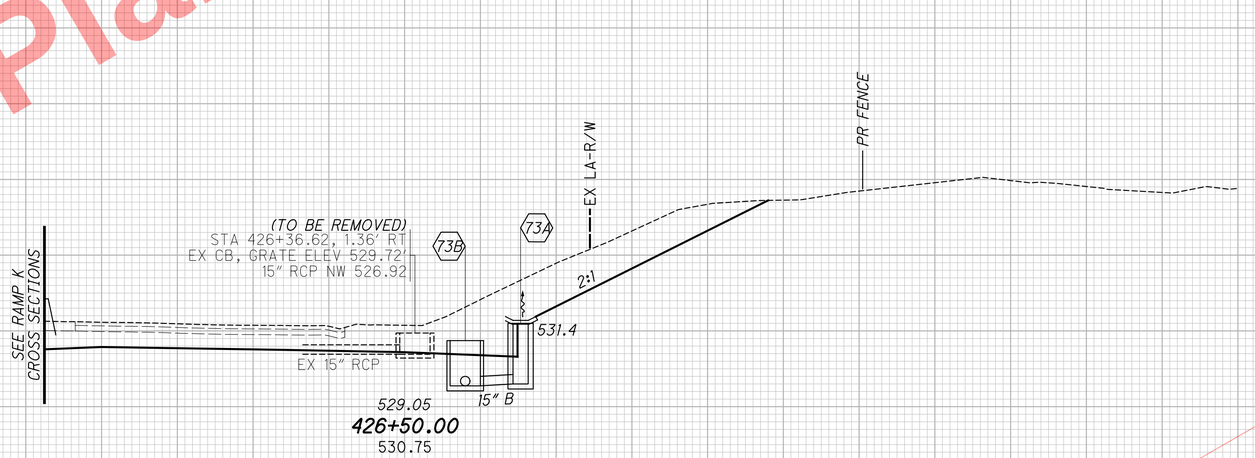

120 100 80 60 40 20 0 20 40 60 80 100 120

CALCULATED SEA
CHECKED DLR

CROSS SECTIONS RAMP N
STA. 426+50.00 TO STA. 427+00.00

HAM-75-7.85

449
1047

Preliminary Plans - For Reference Only

J:\20110903\ODOT\HAM\7889\roadway\sheets\7889XS006.dgn 5/22/2026 10:18:21 AM hbrendlinger

PAVEMENT REMOVAL QUANTITIES HAVE BEEN DEDUCTED FROM EXCAVATION QUANTITIES

SEEDING END WIDTH	SEEDING SQ. YDS.	END AREA CUT	END AREA FILL	VOLUME CUT	VOLUME FILL
24		115	0		
	150			257	0
29		162	0		
	172			345	0
	322			602	0

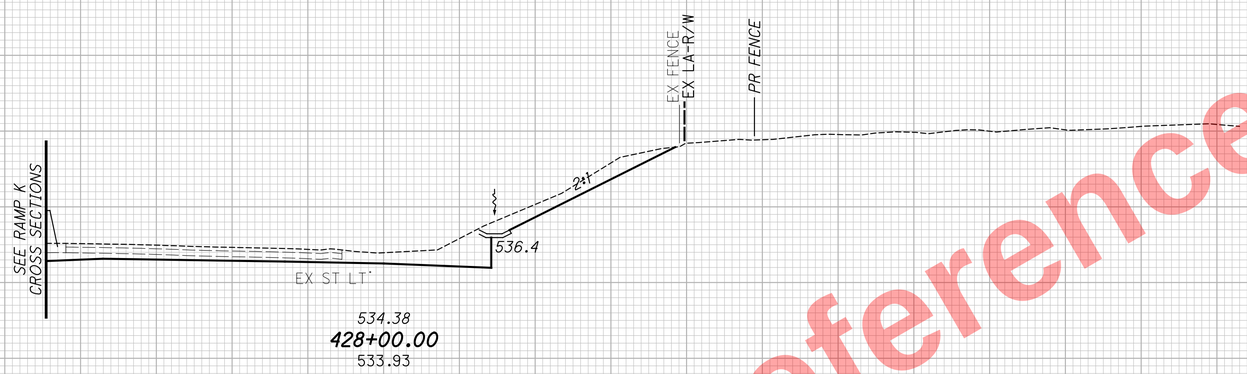

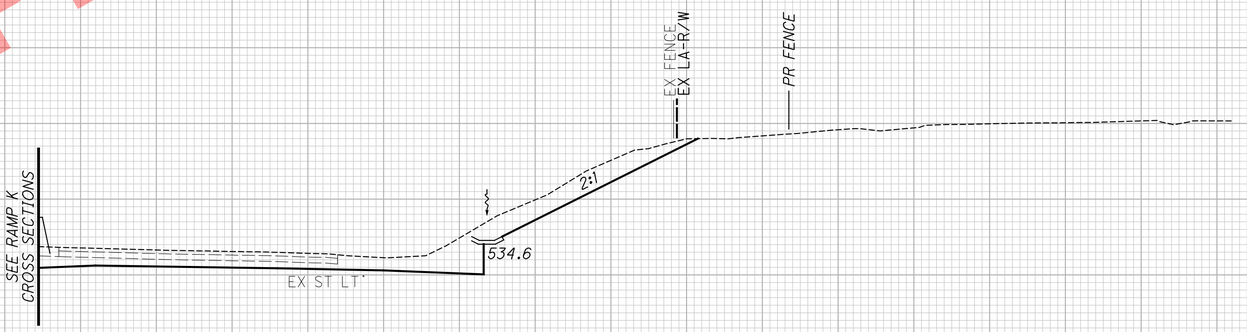

CALCULATED SEA
CHECKED DLR

CROSS SECTIONS RAMP N
STA. 427+50.00 TO STA. 428+00.00

HAM-75-7.85

450
1047

Preliminary Plans - For Reference Only

J:\20110903\ODOT\HAM\7889\roadway\sheets\77889XS006.dgn 5/22/2026 10:18:21 AM hbrendlinger

PAVEMENT REMOVAL QUANTITIES HAVE BEEN DEDUCTED FROM EXCAVATION QUANTITIES

SEEDING END WIDTH	SEEDING SQ. YDS.	END AREA CUT	END AREA FILL	VOLUME CUT	VOLUME FILL
65	308	7	373	9	607
47	0	2	301	0	0
	308			9	607

CALCULATED SEA
CHECKED DLR

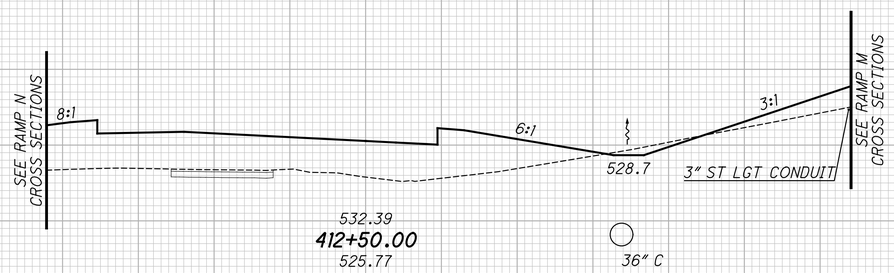

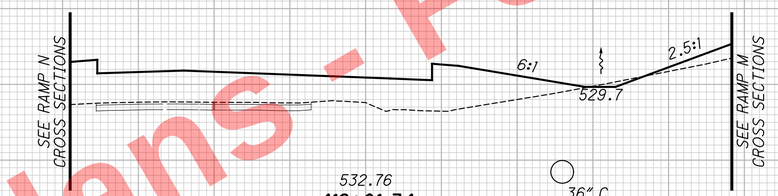

540 530 520 510

120 100 80 60 40 20 0 20 40 60 80 100 120

CROSS SECTIONS RAMPJ
STA. 412+01.34 TO STA. 412+50.00

HAM-75-7.85

451
1047

Preliminary Plans - For Reference Only

J:\20110903\ODOT\HAM\7889\roadway\sheets\77889XS003.dgn 5/22/2026 10:18:22 AM hbrendlinger

PAVEMENT REMOVAL QUANTITIES HAVE BEEN DEDUCTED FROM EXCAVATION QUANTITIES

SEEDING END WIDTH	SEEDING SQ. YDS.	END AREA CUT	END AREA FILL	VOLUME CUT	VOLUME FILL
148	728	46	592	63	1062
112	556	22	555	33	949
87	423	14	470	19	780
	1707			115	2791

CALCULATED SEA CHECKED DLR

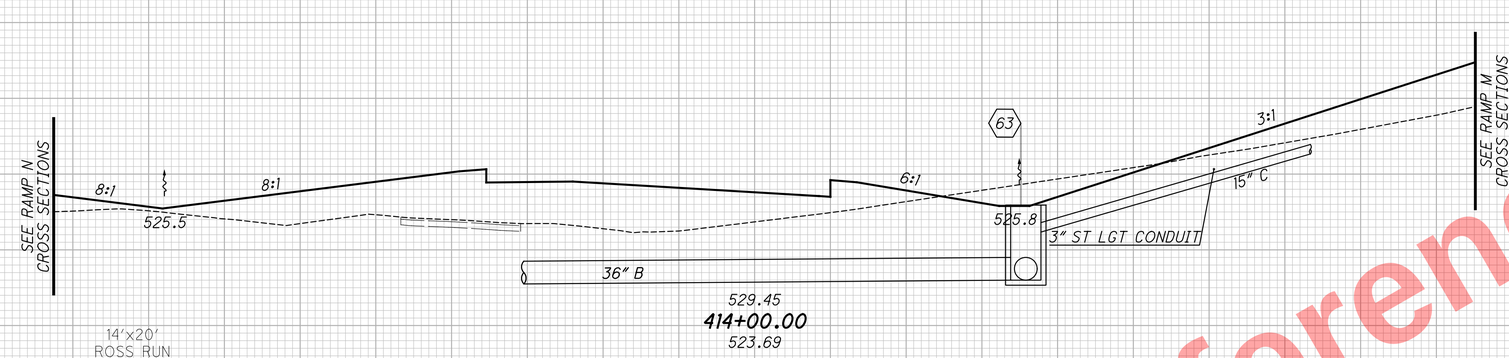

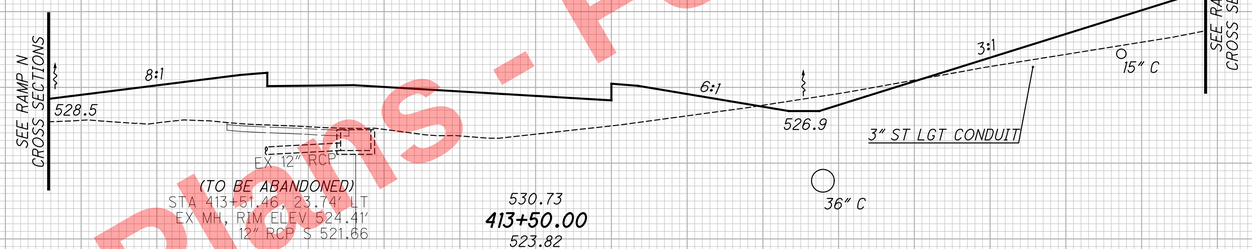

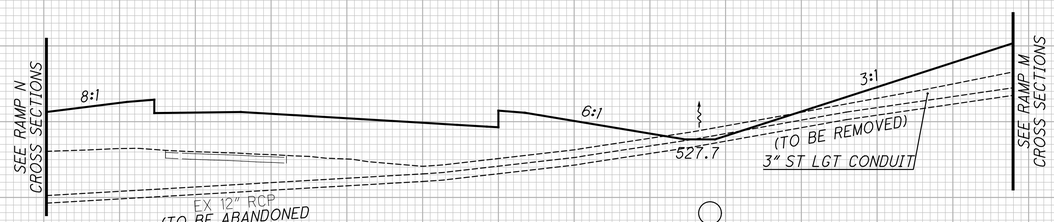

Preliminary Plans - For Reference Only

CROSS SECTIONS RAMPJ
STA. 413+00.00 TO STA. 414+00.00

HAM-75-7.85

452
1047

J:\20110903\ODOT\HAM\7889\roadway\sheets\77889XS003.dgn 5/22/2026 10:18:22 AM hbrendlinger

SEEDING	
END WIDTH	SQ. YDS.
158	916
ST LT 171	994
187	934
	2844

PAVEMENT REMOVAL QUANTITIES HAVE BEEN DEDUCTED FROM EXCAVATION QUANTITIES

SEE RAMP M CROSS SECTIONS

550 540 530 520 510 500

8:1 8:1 519.0 3:1 2.5:1 522.0

36" C

APPROXIMATE LOCATION OF PROPOSED STORM WATER DETENTION TO BE DESIGNED BY CONTRACTOR. SEE GENERAL NOTE SHEET 34

523.85
415+50.00
522.97

SEE RAMP M CROSS SECTIONS

8:1 8:1 520.5 6:1 2.5:1 523.4

36" C

14'x20' ROSS RUN

525.96
415+00.00
523.17

3" ST LGT CONDUIT

SEE RAMP N CROSS SECTIONS

62

8:1 8:1 521.7 6:1 3:1 524.8

36" C 36" B

14'x20' ROSS RUN

527.86
414+50.00
523.71

3" ST LGT CONDUIT

SEE RAMP M CROSS SECTIONS

120 100 80 60 40 20 0 20 40 60 80 100 120

END AREA		VOLUME	
CUT	FILL	CUT	FILL
166	337	275	720
131	441	233	892
120	523	154	1032
		662	2644

CALCULATED SEA
CHECKED DLR

CROSS SECTIONS RAMP J
STA. 414+50.00 TO STA. 415+50.00

HAM-75-7.85

453
1047

For Reference Only
Preliminary Plans - Pending

J:\20110903\ODOT\HAM\77889\roadway\sheets\77889XS003.dgn 5/22/2026 10:18:23 AM hbrendlinger

PAVEMENT REMOVAL QUANTITIES HAVE BEEN DEDUCTED FROM EXCAVATION QUANTITIES

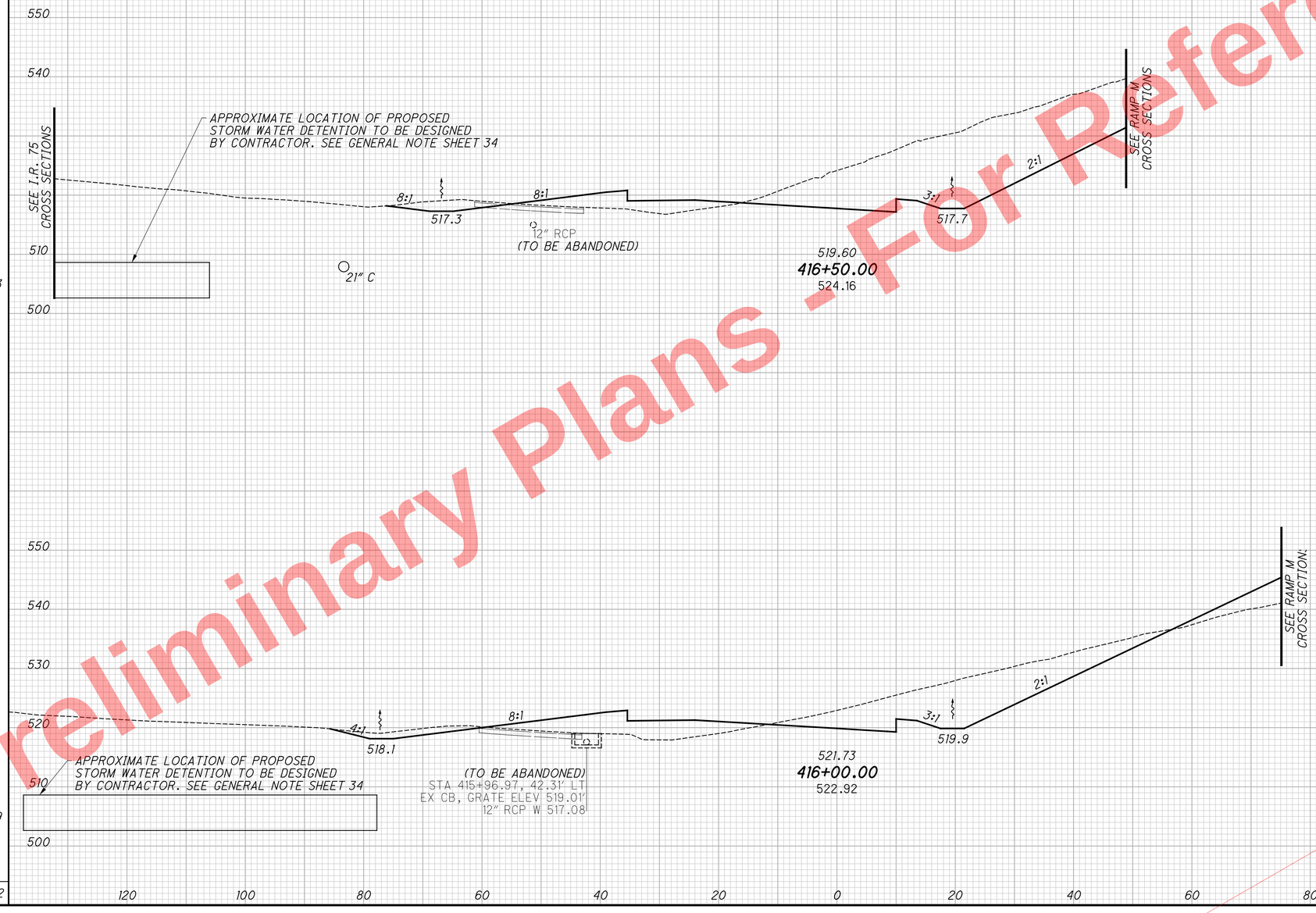

SEEDING END WIDTH	SEEDING SQ. YDS.	END AREA CUT	END AREA FILL	VOLUME CUT	VOLUME FILL
85	583	581	76	824	221
124	789	309	162	440	462
	1372			1264	683

CALCULATED SEA
CHECKED DLR

CROSS SECTIONS RAMPJ
STA. 416+00.00 TO STA. 416+50.00

HAM-75-7.85

454
1047

Preliminary Plans - For Reference Only

J:\20110903\ODOT\HAM\7889\roadway\sheets\77889XS003.dgn 5/22/2026 10:18:23 AM hbrendlinger

PAVEMENT REMOVAL QUANTITIES HAVE BEEN DEDUCTED FROM EXCAVATION QUANTITIES

SEEDING END WIDTH	SEEDING SQ. YDS.	END AREA CUT	END AREA FILL	VOLUME CUT	VOLUME FILL
169	895	1759	44	2825	129
151	662	1292	95	1735	158
	1557			4560	287

CALCULATED SEA
CHECKED DLR

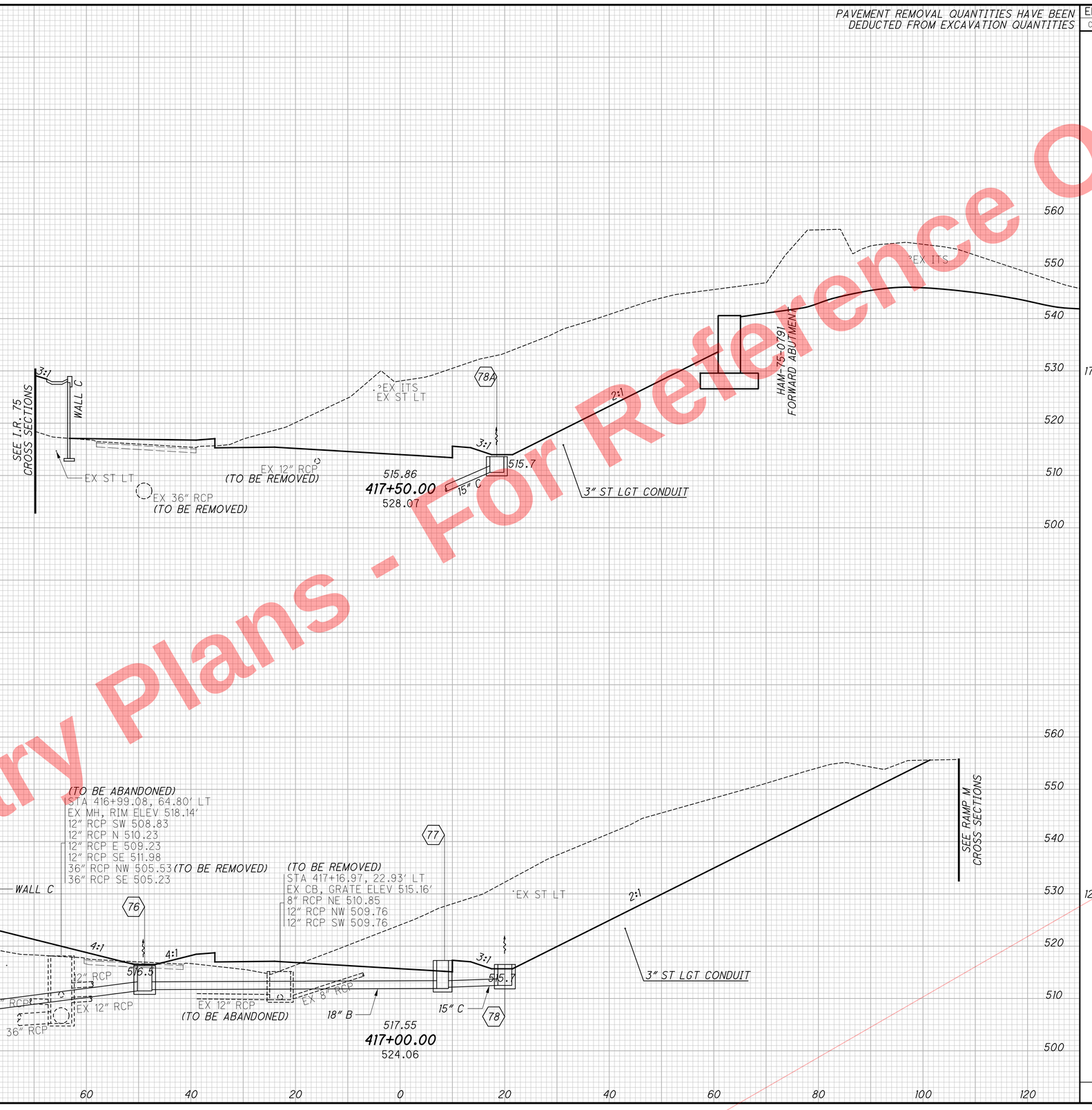

CROSS SECTIONS RAMP J
STA. 417+00.00 TO STA. 417+50.00

HAM-75-7.85

455
1047

Preliminary Plans - For Reference Only

J:\20110903\ODOT\HAM\77889\roadway\sheets\77889XS003.dgn 5/22/2026 10:18:23 AM hbrendlinger

PAVEMENT REMOVAL QUANTITIES HAVE BEEN DEDUCTED FROM EXCAVATION QUANTITIES

SEEDING END WIDTH	SEEDING SQ. YDS.
40	228
40	583
	811

END AREA CUT	END AREA FILL	VOLUME CUT	VOLUME FILL
911	0		
		1638	24
857	26		
		2423	65
		4061	89

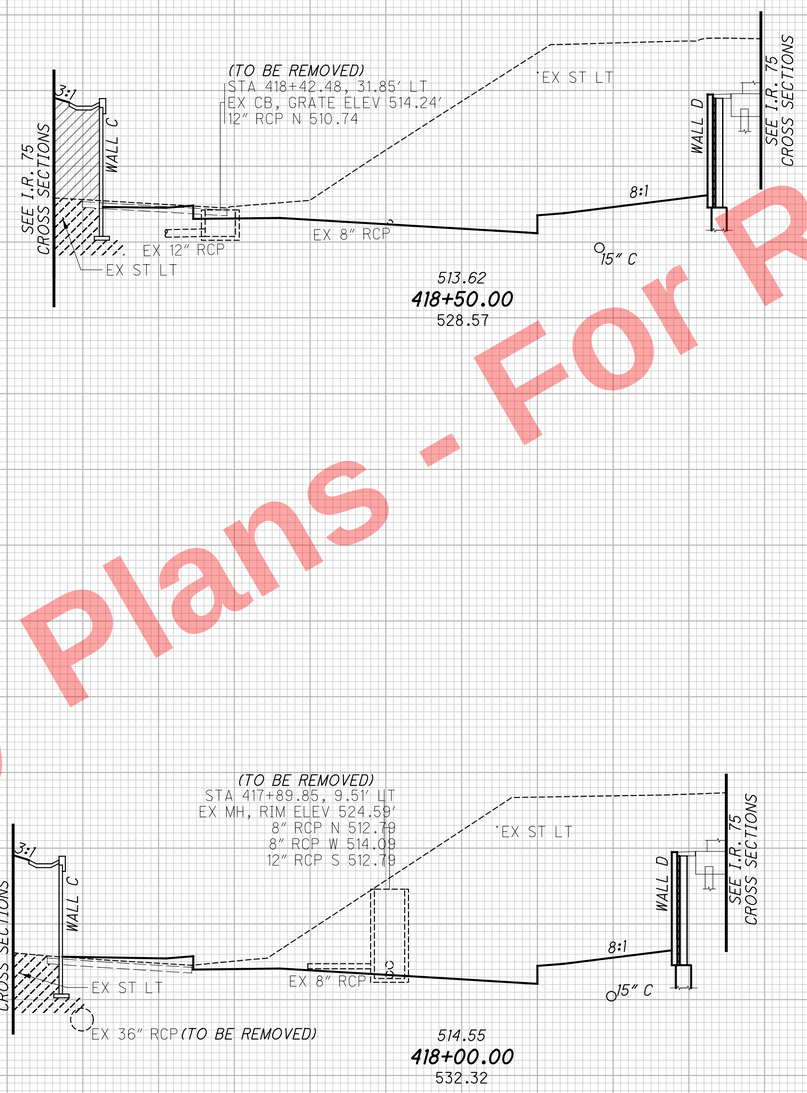

CALCULATED SEA
CHECKED DLR

CROSS SECTIONS RAMP J
STA. 418+00.00 TO STA. 418+50.00

HAM-75-7.85

456
1047

Preliminary Plans - For Reference Only

J:\20110903\ODOT\HAM\77889\roadway\sheets\77889XS003.dgn 5/22/2026 10:18:23 AM hbrendlinger

PAVEMENT REMOVAL QUANTITIES HAVE BEEN DEDUCTED FROM EXCAVATION QUANTITIES

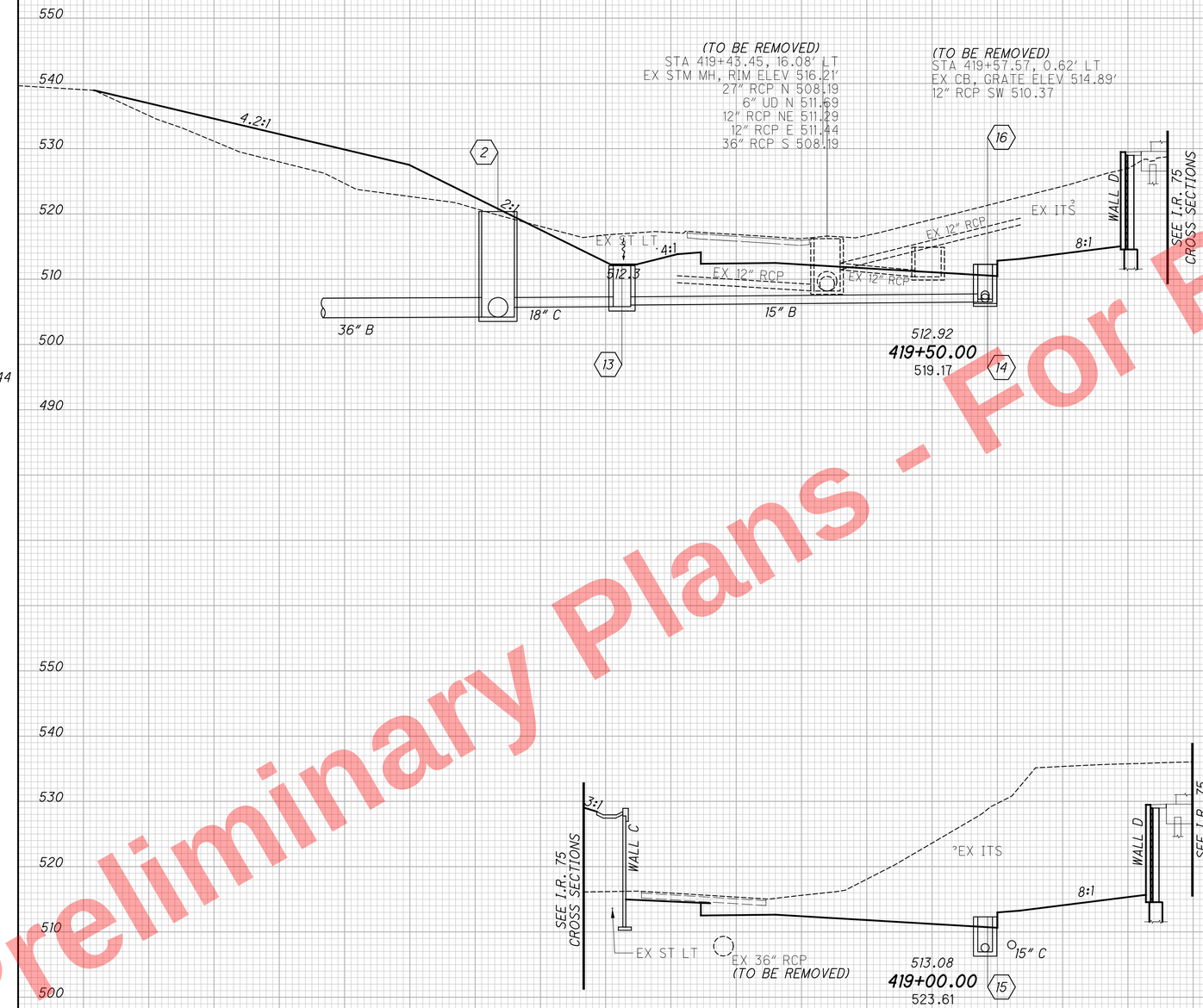

SEEDING END WIDTH	SEEDING SQ. YDS.	END AREA CUT	END AREA FILL	VOLUME CUT	VOLUME FILL
119		528	210		
	444			1232	194
40		793	0		
	222			1578	0
	666			2810	194

CALCULATED SEA
CHECKED DLR

CROSS SECTIONS RAMPJ
STA. 419+00.00 TO STA. 419+50.00

HAM-75-7.85

457
1047

Preliminary Plans - For Reference Only

J:\20110903\ODOT\HAM\77889\roadway\sheets\77889XS003.dgn 5/22/2026 10:18:24 AM hbrendlinger

PAVEMENT REMOVAL QUANTITIES HAVE BEEN DEDUCTED FROM EXCAVATION QUANTITIES

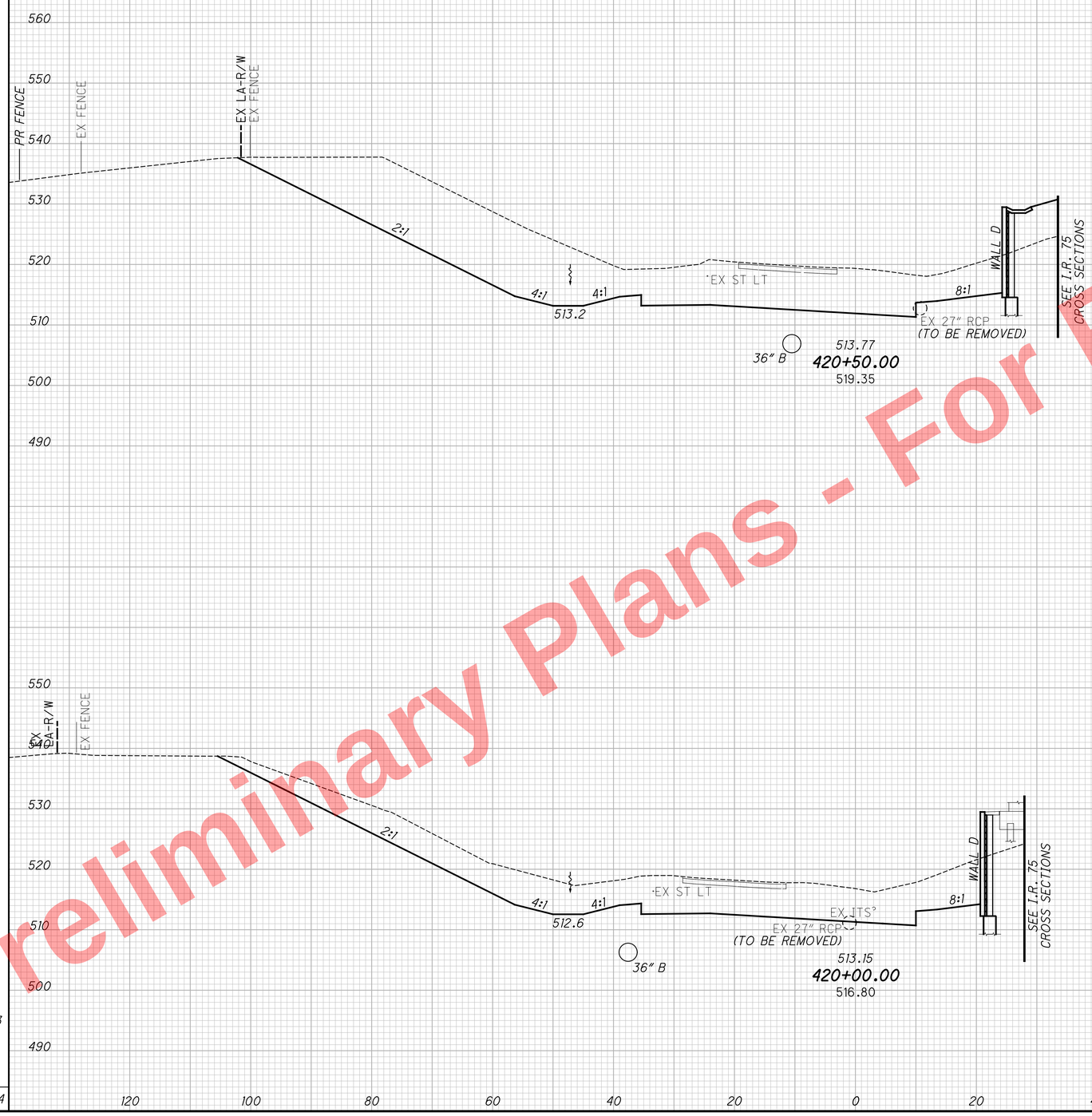

SEEDING END WIDTH	SEEDING SQ. YDS.	END AREA CUT	END AREA FILL	VOLUME CUT	VOLUME FILL
94	511	964	43	1457	58
90	583	609	20	1053	213
	1094			2510	271

CALCULATED SEA
CHECKED DLR

CROSS SECTIONS RAMPJ
STA. 420+00.00 TO STA. 420+50.00

HAM-75-7.85

458
1047

Preliminary Plans - For Reference Only

J:\20110903\ODOT\HAM\7889\roadway\sheets\77889XS003.dgn 5/22/2026 10:18:24 AM hbrendlinger

PAVEMENT REMOVAL QUANTITIES HAVE BEEN DEDUCTED FROM EXCAVATION QUANTITIES

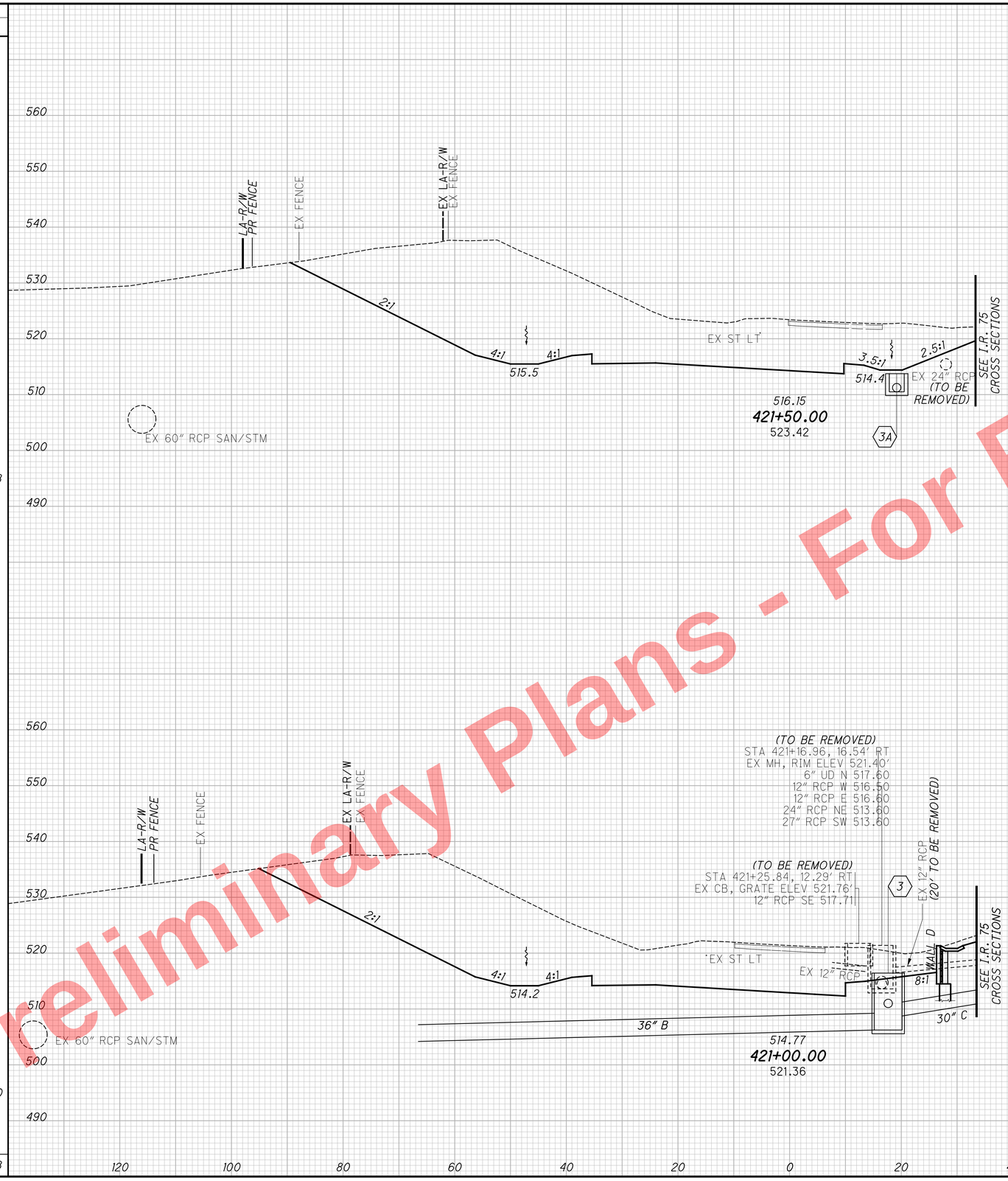

SEEDING END WIDTH	SEEDING SQ. YDS.	END AREA CUT	END AREA FILL	VOLUME CUT	VOLUME FILL
86	478	1297	0	2275	0
86	500	1160	0	1967	40
	978			4242	40

CALCULATED SEA
CHECKED DLR

CROSS SECTIONS RAMPJ
STA. 421+00.00 TO STA. 421+50.00

HAM-75-7.85

459
1047

Preliminary Plans - For Reference Only

J:\20110903\ODOT\HAM\77889\roadway\sheets\77889XS003.dgn 5/22/2026 10:18:24 AM hbrendlinger

PAVEMENT REMOVAL QUANTITIES HAVE BEEN DEDUCTED FROM EXCAVATION QUANTITIES

SEEDING END WIDTH	SEEDING SQ. YDS.	END AREA CUT	END AREA FILL	VOLUME CUT	VOLUME FILL
79	450	1300	0	2431	0
82	466	1325	0	2428	0
	916			4859	0

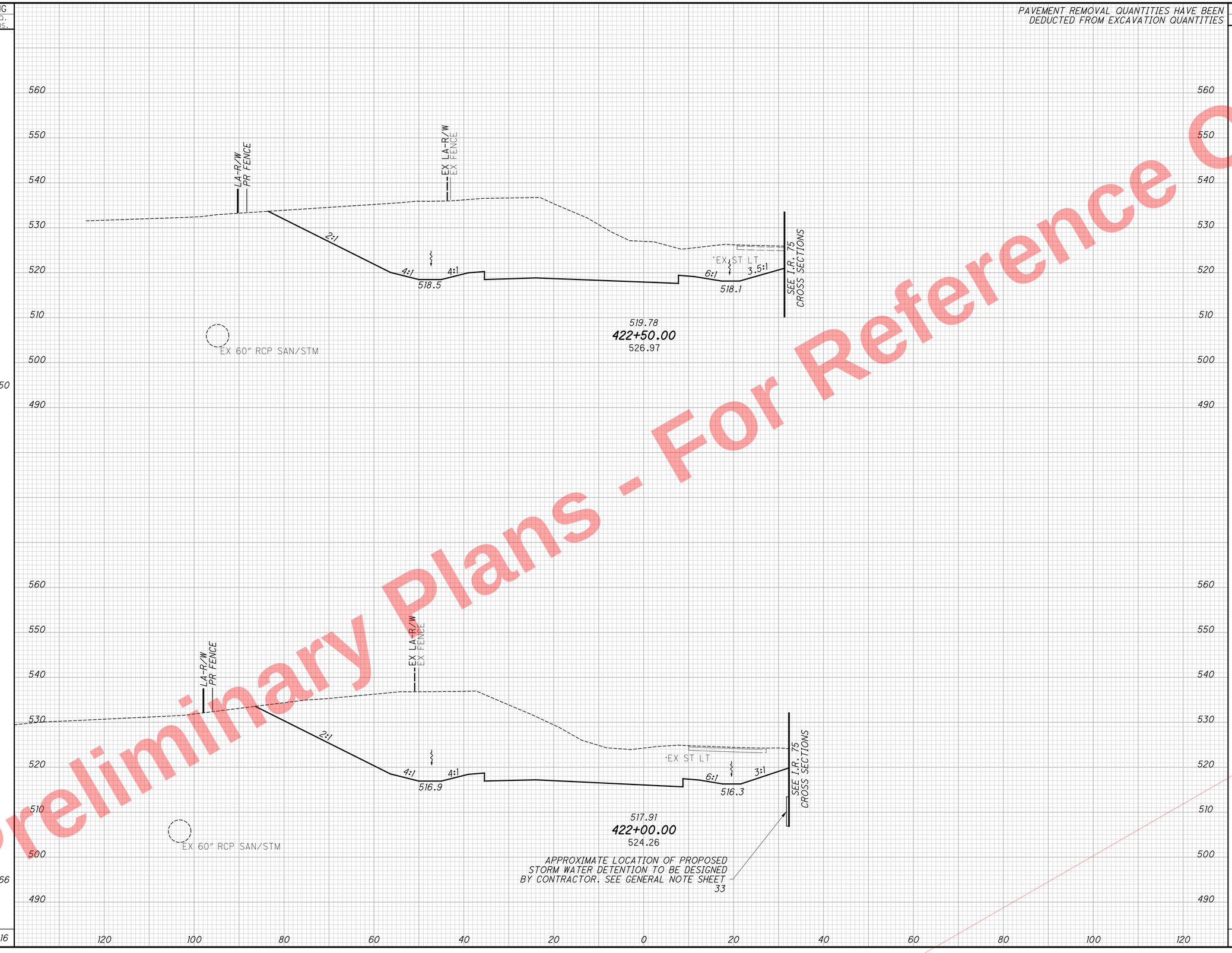

CALCULATED SEA
CHECKED DLR

CROSS SECTIONS RAMPJ
STA. 422+00.00 TO STA. 422+50.00

HAM-75-7.85

460
1047

Preliminary Plans - For Reference Only

J:\20110903\ODOT\HAM\77889\roadway\sheets\77889XS003.dgn 5/22/2026 10:18:25 AM hbrendlinger

Preliminary Plans - For Reference Only

PAVEMENT REMOVAL QUANTITIES HAVE BEEN DEDUCTED FROM EXCAVATION QUANTITIES

SEEDING END WIDTH	SEEDING SQ. YDS.	END AREA CUT	END AREA FILL	VOLUME CUT	VOLUME FILL
56		1006	0		
	345			2113	0
68		1276	0		
	411			2385	0
	756			4498	0

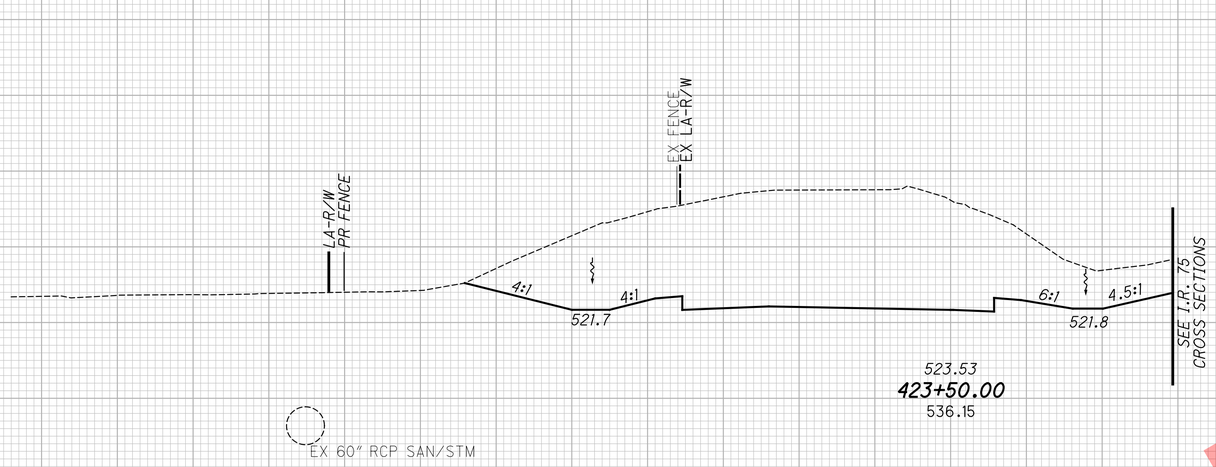

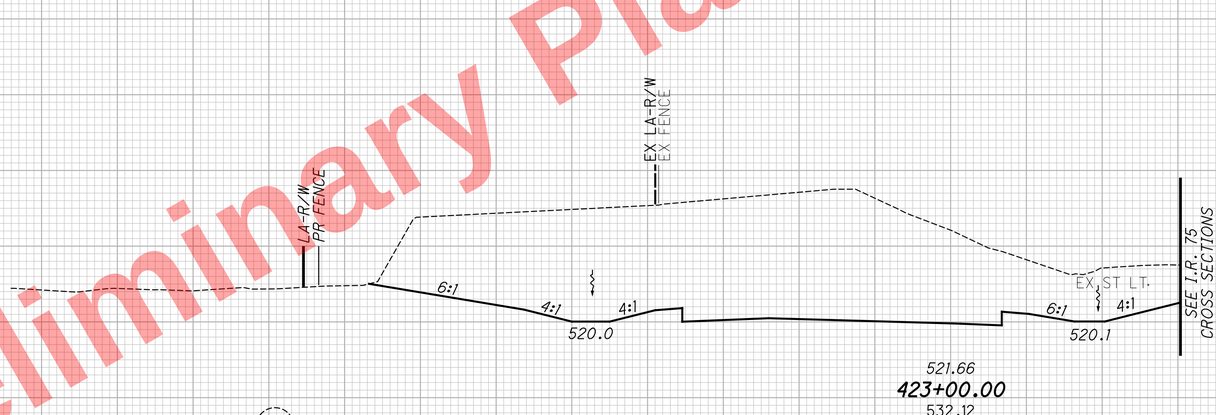

120 100 80 60 40 20 0 20 40 60 80 100 120

CALCULATED SEA
CHECKED DLR

CROSS SECTIONS RAMPJ
STA. 423+00.00 TO STA. 423+50.00

HAM-75-7.85

461
1047

J:\20110903\ODOT\HAM\7889\roadway\sheets\77889XS003.dgn 5/22/2026 10:18:25 AM hbrendlinger

PAVEMENT REMOVAL QUANTITIES HAVE BEEN DEDUCTED FROM EXCAVATION QUANTITIES

SEEDING END WIDTH	SEEDING SQ. YDS.	END AREA CUT	END AREA FILL	VOLUME CUT	VOLUME FILL
54	322	745	0	1533	0
61	328	910	0	1774	0
	650			3307	0



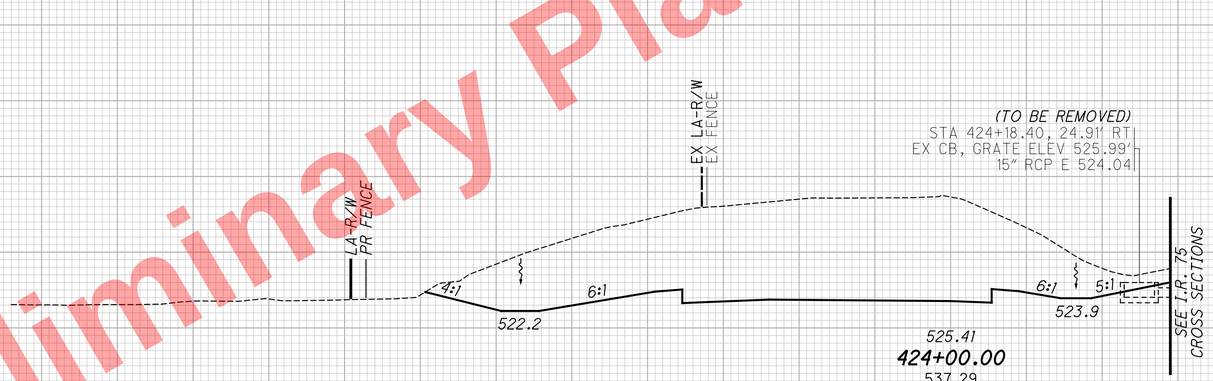

120 100 80 60 40 20 0 20 40 60 80 100 120

CALCULATED SEA
CHECKED DLR

CROSS SECTIONS RAMP J
STA. 424+00.00 TO STA. 424+50.00

HAM-75-7.85

462
1047

Preliminary Plans - For Reference Only

J:\20110903\ODOT\HAM\7889\roadway\sheets\77889XS003.dgn 5/22/2026 10:18:25 AM hbrendlinger

SEEDING	
END WIDTH	SQ. YDS.
54	322
61	322
	644

PAVEMENT REMOVAL QUANTITIES HAVE BEEN DEDUCTED FROM EXCAVATION QUANTITIES

STA 425+74.82, 69.18' LT
EX MH, RIM ELEV 523.09'
24" RCP NW 511.47
60" RCP NE 505.00
60" RCP SW 505.00

LA-R/W
PR FENCE
EX LA-R/W
EX FENCE
EX 24" RCP
6:1
6:1
6.5:1
529.4
531.03
425+50.00
536.51
SEE T.R. 75 CROSS SECTIONS

560 550 540 530 520 510 500

120 100 80 60 40 20 0 20 40 60 80 100 120

LA-R/W
PR FENCE
EX LA-R/W
EX FENCE
6:1
6:1
6:1
527.6
529.16
425+00.00
536.41
SEE T.R. 75 CROSS SECTIONS
EX 60" RCP SAN/STM

END AREA		VOLUME	
CUT	FILL	CUT	FILL
490	0		
		1020	0
611	0		
		1256	0
		2276	0

CALCULATED SEA
CHECKED DLR

CROSS SECTIONS RAMPJ
STA. 425+00.00 TO STA. 425+50.00

HAM-75-7.85

463
1047

Preliminary Plans - For Reference Only

J:\20110903\ODOT\HAM\77889\roadway\sheets\77889XS003.dgn 5/22/2026 10:18:25 AM hbrendlinger

PAVEMENT REMOVAL QUANTITIES HAVE BEEN DEDUCTED FROM EXCAVATION QUANTITIES

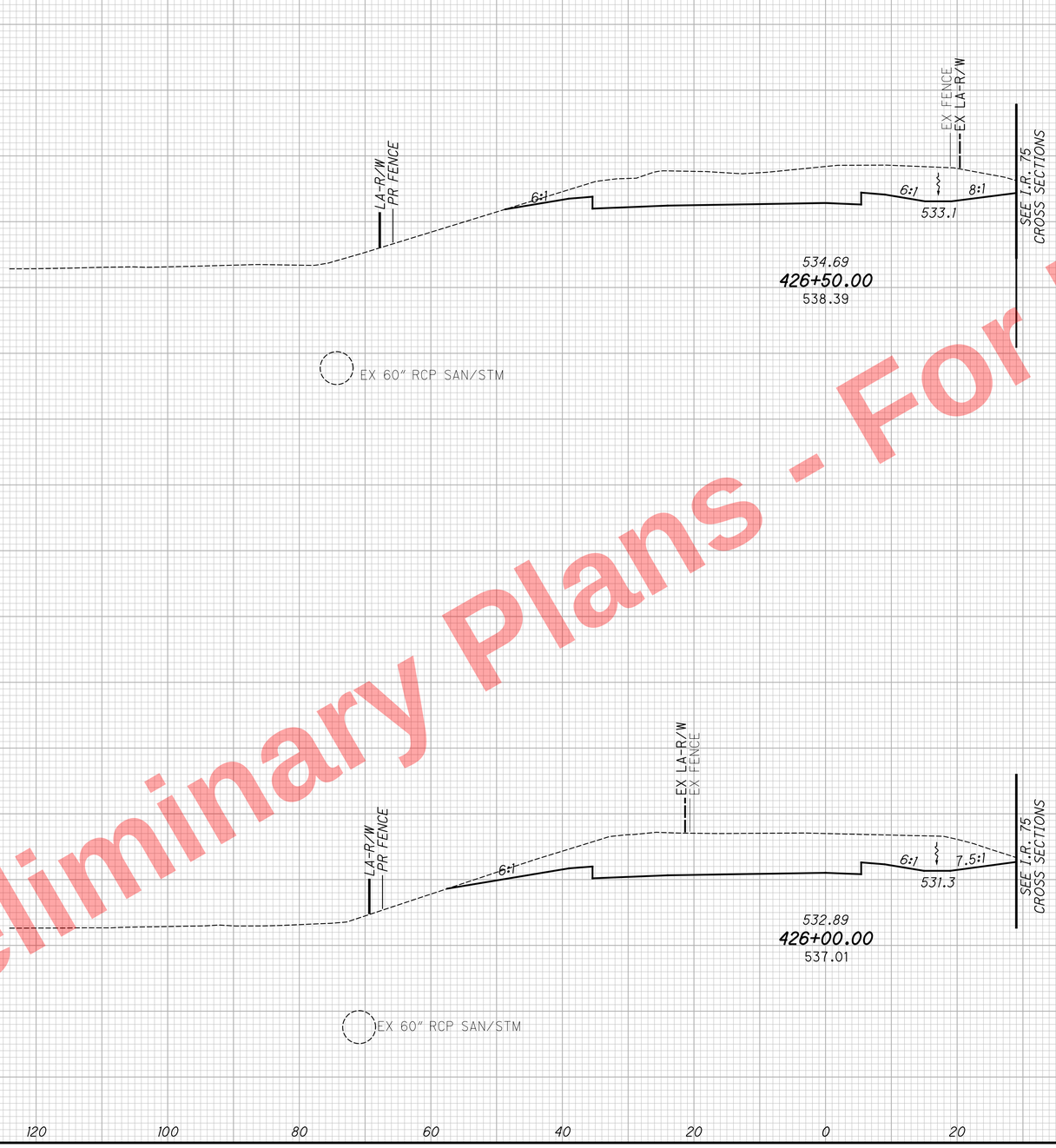

SEEDING END WIDTH	SEEDING SQ. YDS.	END AREA CUT	END AREA FILL	VOLUME CUT	VOLUME FILL
40	250	319	0	655	0
49	289	389	0	814	0
	539			1469	0

CALCULATED SEA
CHECKED DLR

CROSS SECTIONS RAMPJ
STA. 426+00.00 TO STA. 426+50.00

HAM-75-7.85

464
1047

Preliminary Plans - For Reference Only

J:\20110903\ODOT\HAM\77889\roadway\sheets\77889XS003.dgn 5/22/2026 10:18:26 AM hbrendlinger

SEEDING	
END WIDTH	SQ. YDS.
39	
	35
	35

PAVEMENT REMOVAL QUANTITIES HAVE BEEN DEDUCTED FROM EXCAVATION QUANTITIES

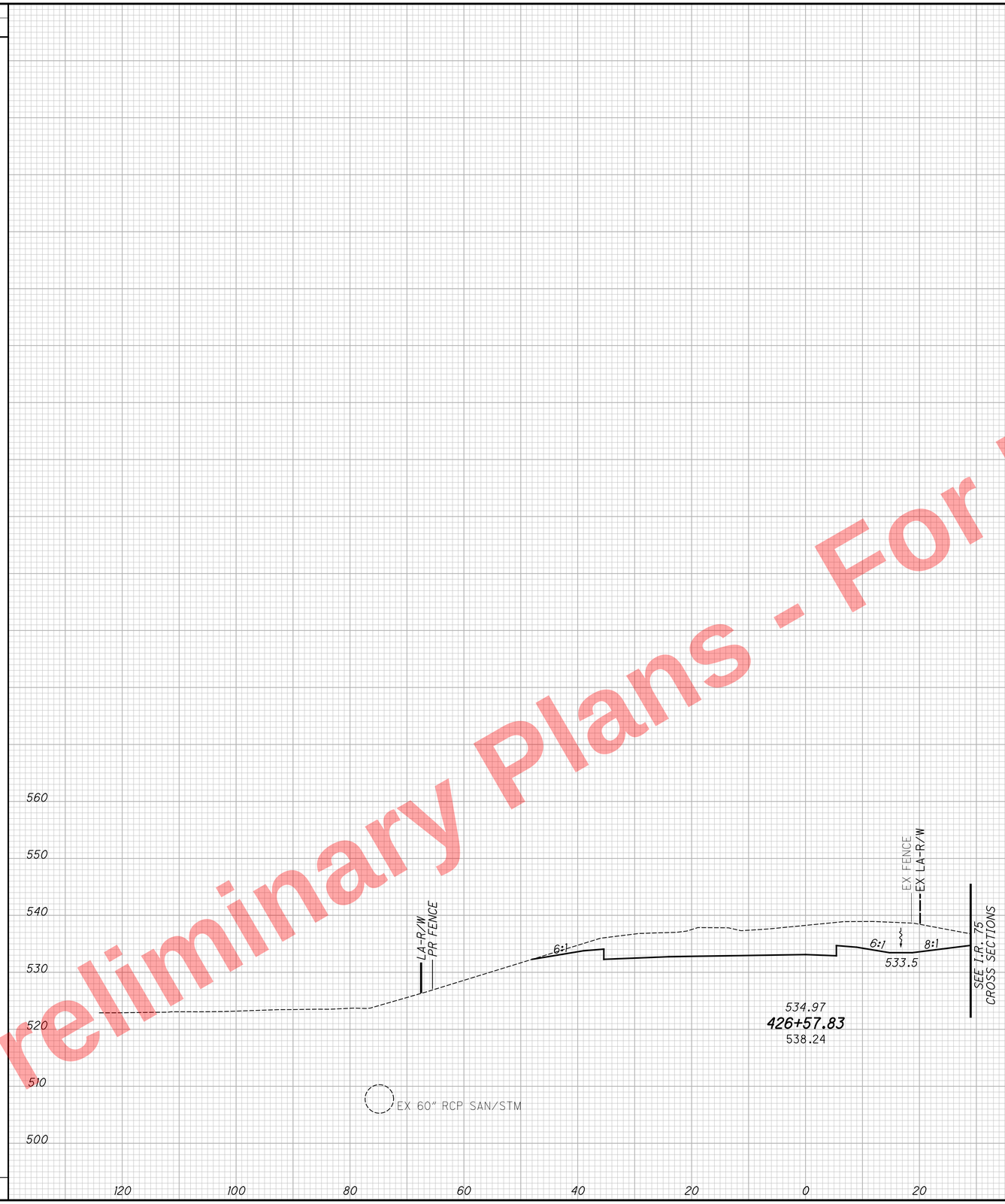

END AREA		VOLUME	
CUT	FILL	CUT	FILL
304	0		
		90	0
		90	0

CALCULATED SEA
CHECKED DLR

CROSS SECTIONS RAMPJ
STA. 426+57.83

HAM-75-7.85

465
1047

Preliminary Plans - For Reference Only

J:\20110903\ODOT\HAM\77889\roadway\sheets\77889XS003.dgn 5/22/2026 10:18:26 AM hbrendlinger

Preliminary Plans - For Reference Only

PAVEMENT REMOVAL QUANTITIES HAVE BEEN DEDUCTED FROM EXCAVATION QUANTITIES

SEEDING END WIDTH	SEEDING SQ. YDS.	END AREA CUT	END AREA FILL	VOLUME CUT	VOLUME FILL
37	206	90	10	280	10
36	241	212	0	0	0
				280	10

CALCULATED SEA
CHECKED DLR

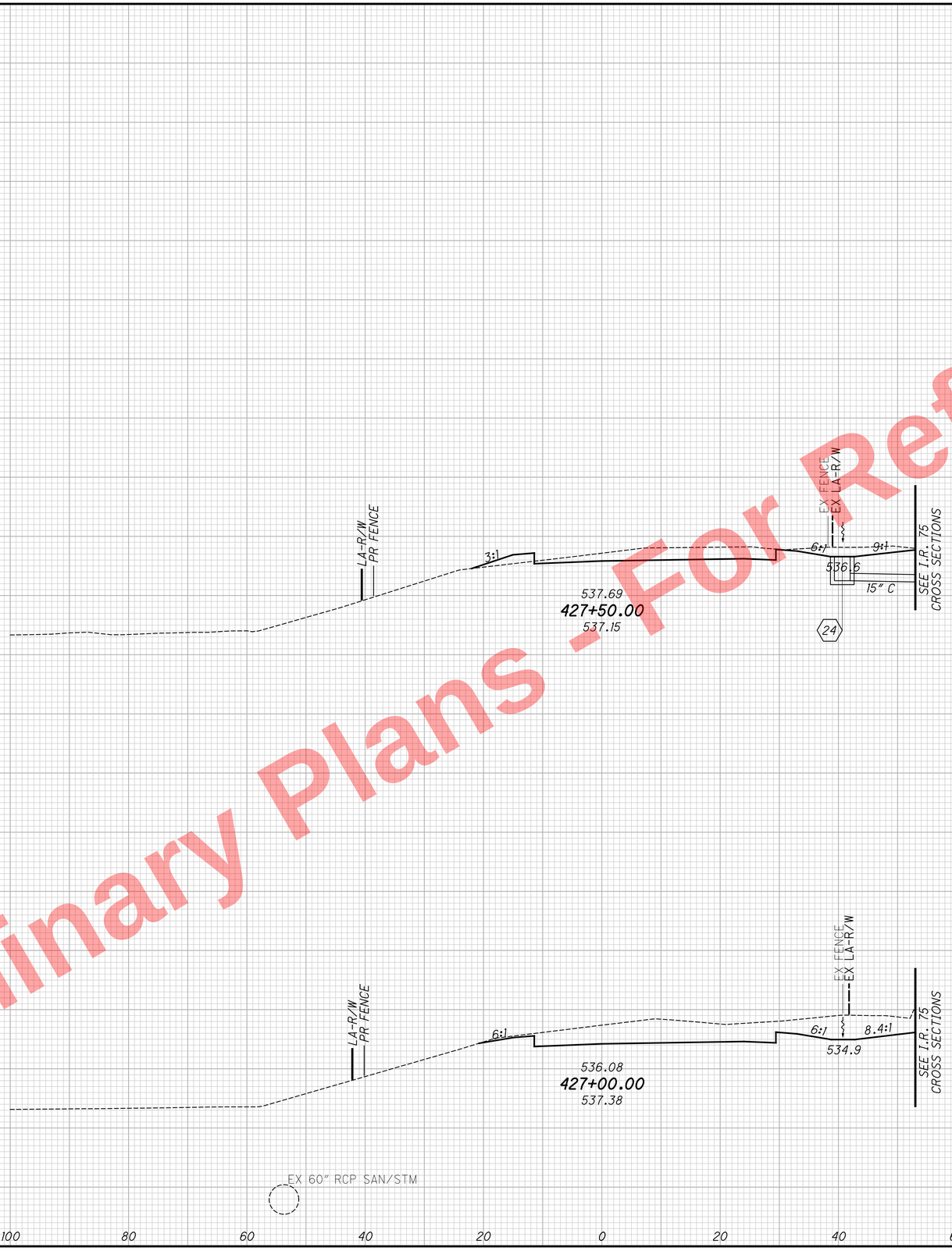

CROSS SECTIONS RAMPJ
STA. 427+00.00 TO STA. 427+50.00

HAM-75-7.85

466
1047

J:\20110903\ODOT\HAM\77889\roadway\sheets\77889XS003.dgn 5/22/2026 10:18:26 AM hbrendlinger

PAVEMENT REMOVAL QUANTITIES HAVE BEEN DEDUCTED FROM EXCAVATION QUANTITIES



SEEDING END WIDTH	SEEDING SQ. YDS.	END AREA CUT	END AREA FILL	VOLUME CUT	VOLUME FILL
52	261	0	125	5	171
41	233	5	59	27	81
42	222	25	29	106	36
	716			138	288

CALCULATED SEA
CHECKED DLR

CROSS SECTIONS RAMPJ
STA. 428+00.00 TO STA. 429+00.00

HAM-75-7.85

467
1047

Preliminary Plans - For Reference Only

J:\20110903\ODOT\HAM\77889\roadway\sheets\77889XS003.dgn 5/22/2026 10:18:27 AM hbrendlinger

PAVEMENT REMOVAL QUANTITIES HAVE BEEN DEDUCTED FROM EXCAVATION QUANTITIES



SEEDING END WIDTH	SEEDING SQ. YDS.	END AREA CUT	END AREA FILL	VOLUME CUT	VOLUME FILL
34	222	15	51	14	157
45	267	0	119	0	245
50	289	0	146	0	251
	778			14	653

CALCULATED SEA
CHECKED DLR

CROSS SECTIONS RAMPJ
STA. 429+50.00 TO STA. 430+50.00

HAM-75-7.85

468
1047

Preliminary Plans - For Reference Only

J:\20110903\ODOT\HAM\77889\roadway\sheets\77889XS003.dgn 5/22/2026 10:18:27 AM hbrendlinger

PAVEMENT REMOVAL QUANTITIES HAVE BEEN DEDUCTED FROM EXCAVATION QUANTITIES

SEEDING END WIDTH	SEEDING SQ. YDS.	END AREA CUT	END AREA FILL	VOLUME CUT	VOLUME FILL
37	273	185	0	322	0
60	266	162	0	165	47
	539			487	47

CALCULATED SEA
CHECKED DLR

CROSS SECTIONS RAMPJ
STA. 431+00.00 TO STA. 431+50.00

HAM-75-7.85

469
1047

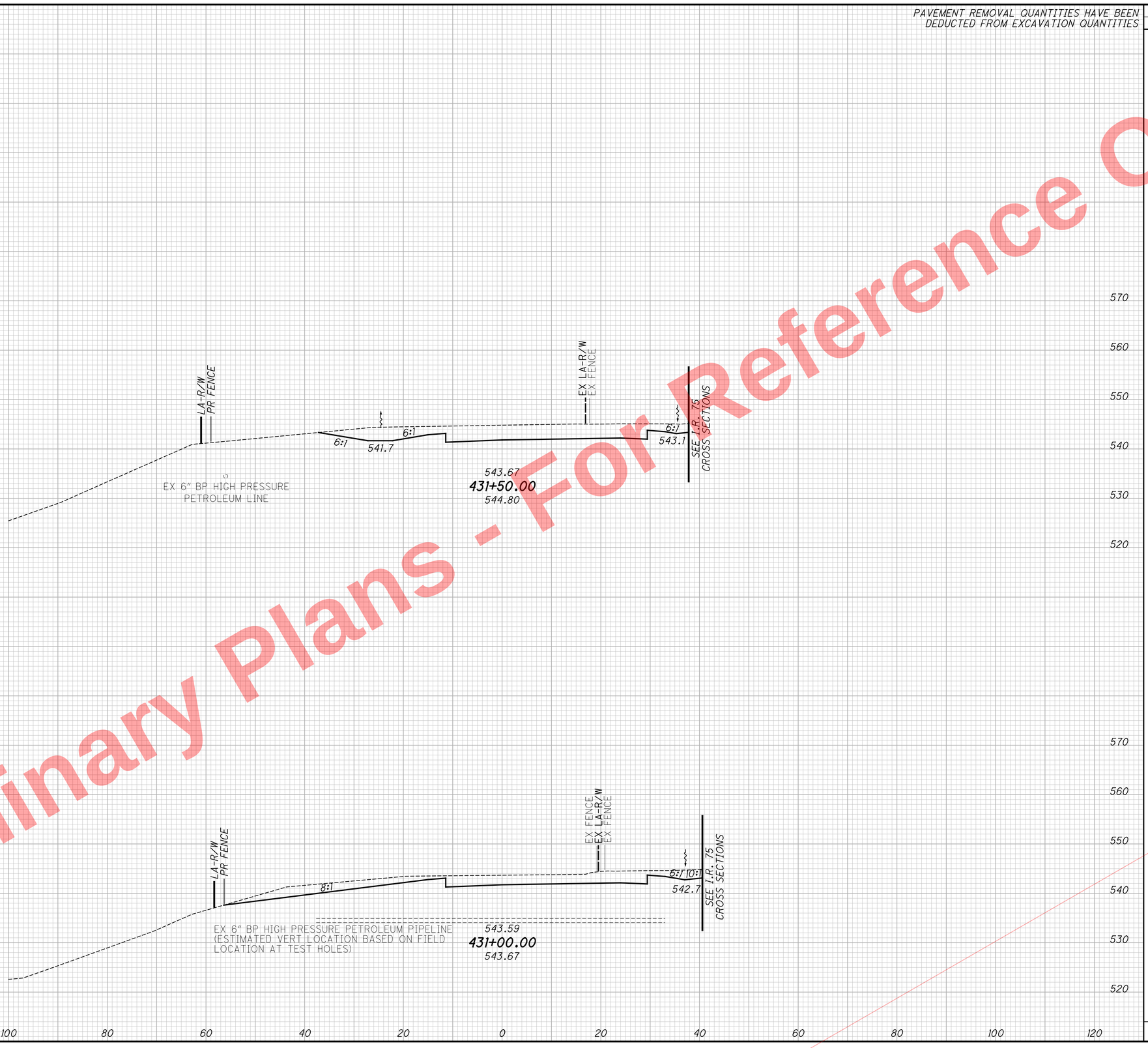

Preliminary Plans - For Reference Only

J:\20110903\ODOT\HAM\77889\roadway\sheets\77889XS003.dgn 5/22/2026 10:18:27 AM hbrendlinger

PAVEMENT REMOVAL QUANTITIES HAVE BEEN DEDUCTED FROM EXCAVATION QUANTITIES

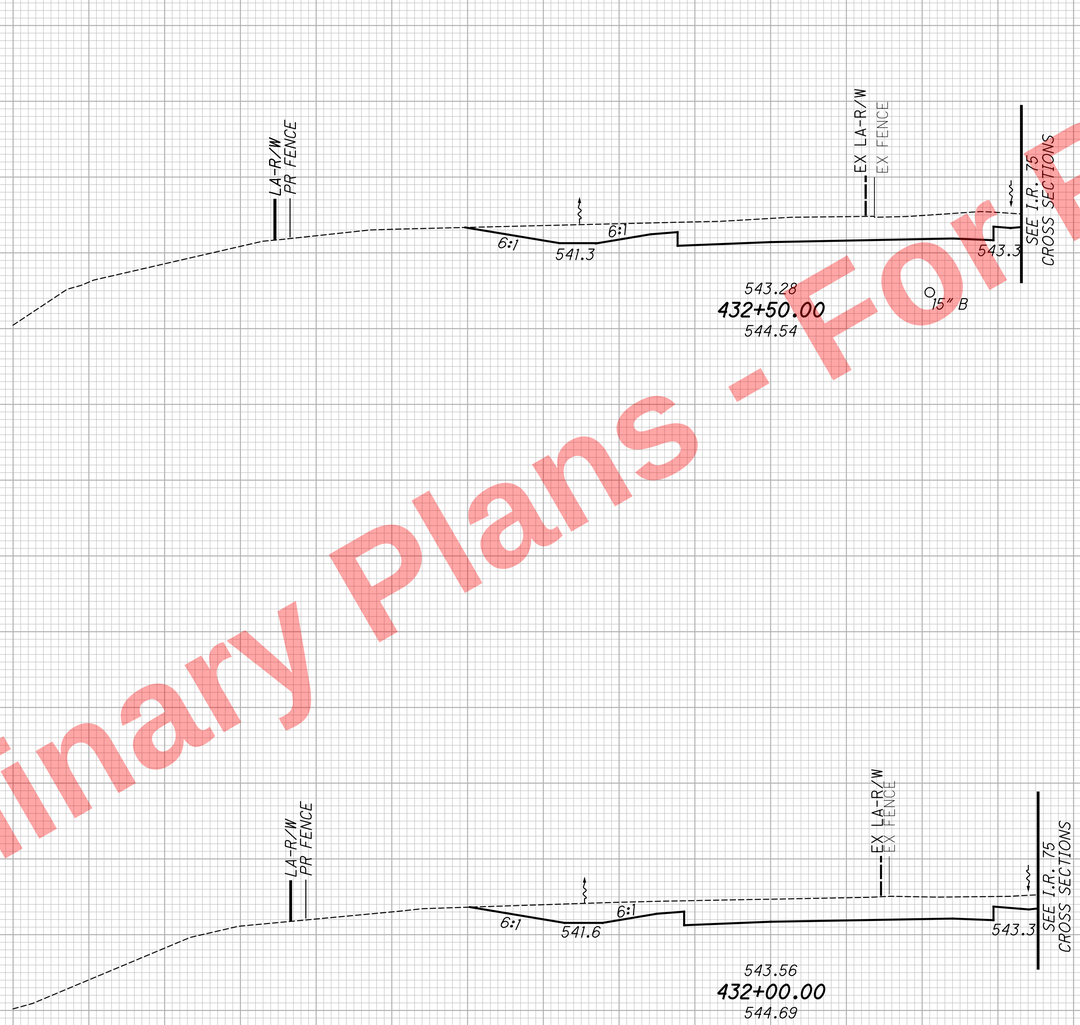

SEEDING END WIDTH	SEEDING SQ. YDS.	END AREA CUT	END AREA FILL	VOLUME CUT	VOLUME FILL
35		185	0		
	200			340	0
37		182	0		
	211			340	0
	411			680	0

CALCULATED SEA
CHECKED DLR

CROSS SECTIONS RAMPJ
STA. 432+00.00 TO STA. 432+50.00

HAM-75-7.85

470
1047

Preliminary Plans - For Reference Only

J:\20110903\ODOT\HAM\7889\roadway\sheets\77889XS003.dgn 5/22/2026 10:18:27 AM hbrendlinger

SEEDING	
END WIDTH	SQ. YDS.
36	
	114
	114

PAVEMENT REMOVAL QUANTITIES HAVE BEEN DEDUCTED FROM EXCAVATION QUANTITIES

END AREA		VOLUME	
CUT	FILL	CUT	FILL
212	0		
		210	0
		210	0

CALCULATED SEA
CHECKED DLR

CROSS SECTIONS RAMPJ

STA. 432+78.47

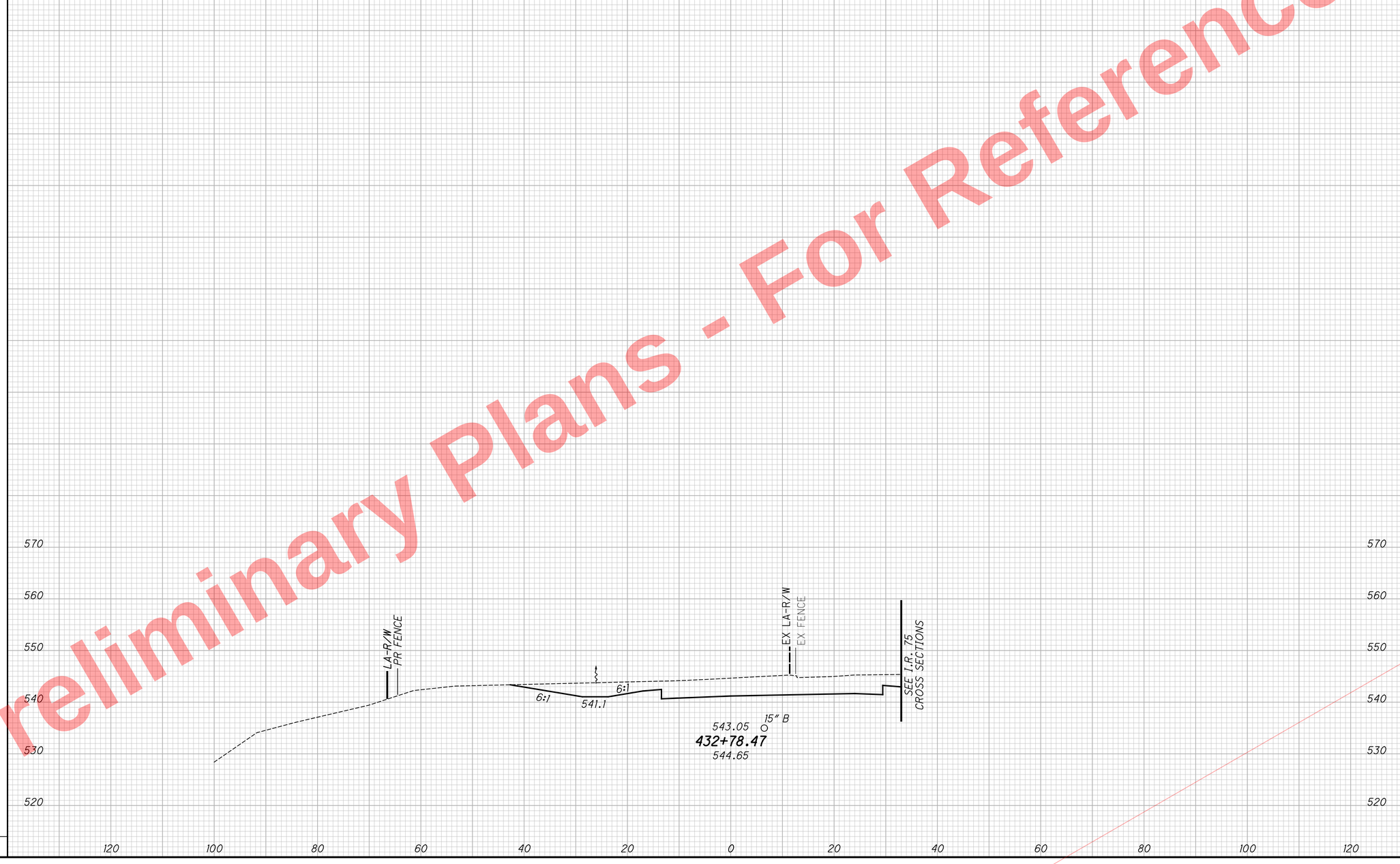

HAM-75-7.85

471
1047

Preliminary Plans - For Reference Only

J:\20110903\ODOT\HAM\77889\roadway\sheets\77889XS003.dgn 5/22/2026 10:18:28 AM hbrendlinger

SEEDING	
END WIDTH	SQ. YDS.
11	
	0
0	

PAVEMENT REMOVAL QUANTITIES HAVE BEEN DEDUCTED FROM EXCAVATION QUANTITIES

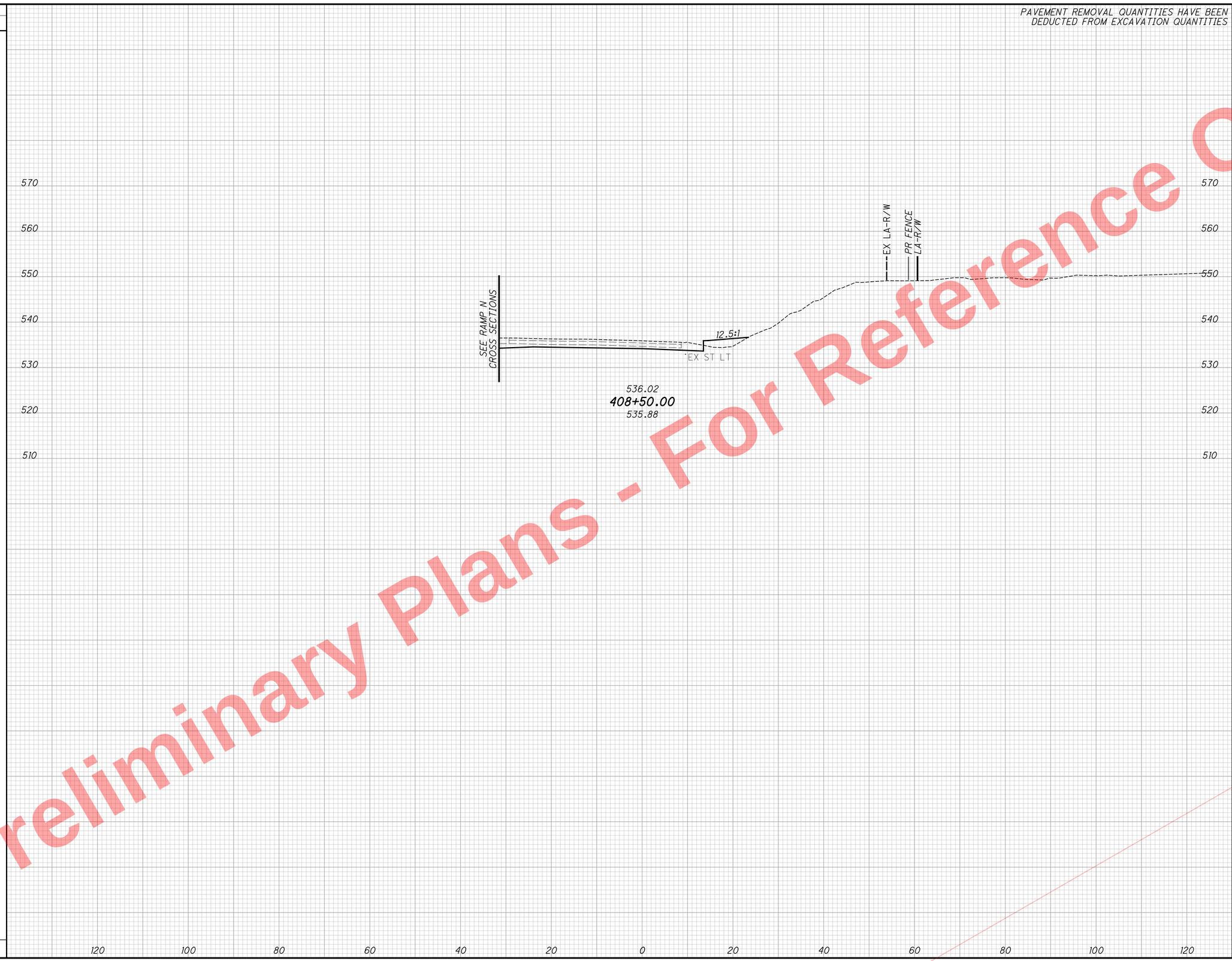

END AREA	
CUT	FILL
32	13
0	0

VOLUME	
CUT	FILL
0	0

CALCULATED SEA
CHECKED DLR

CROSS SECTIONS RAMP K

STA. 408+50.00

HAM-75-7.85

472
1047

Preliminary Plans - Not For Reference Only

J:\20110903\ODOT\HAM\77889\roadway\sheets\77889XS004.dgn 5/22/2026 10:18:29 AM hbrendlinger

PAVEMENT REMOVAL QUANTITIES HAVE BEEN DEDUCTED FROM EXCAVATION QUANTITIES

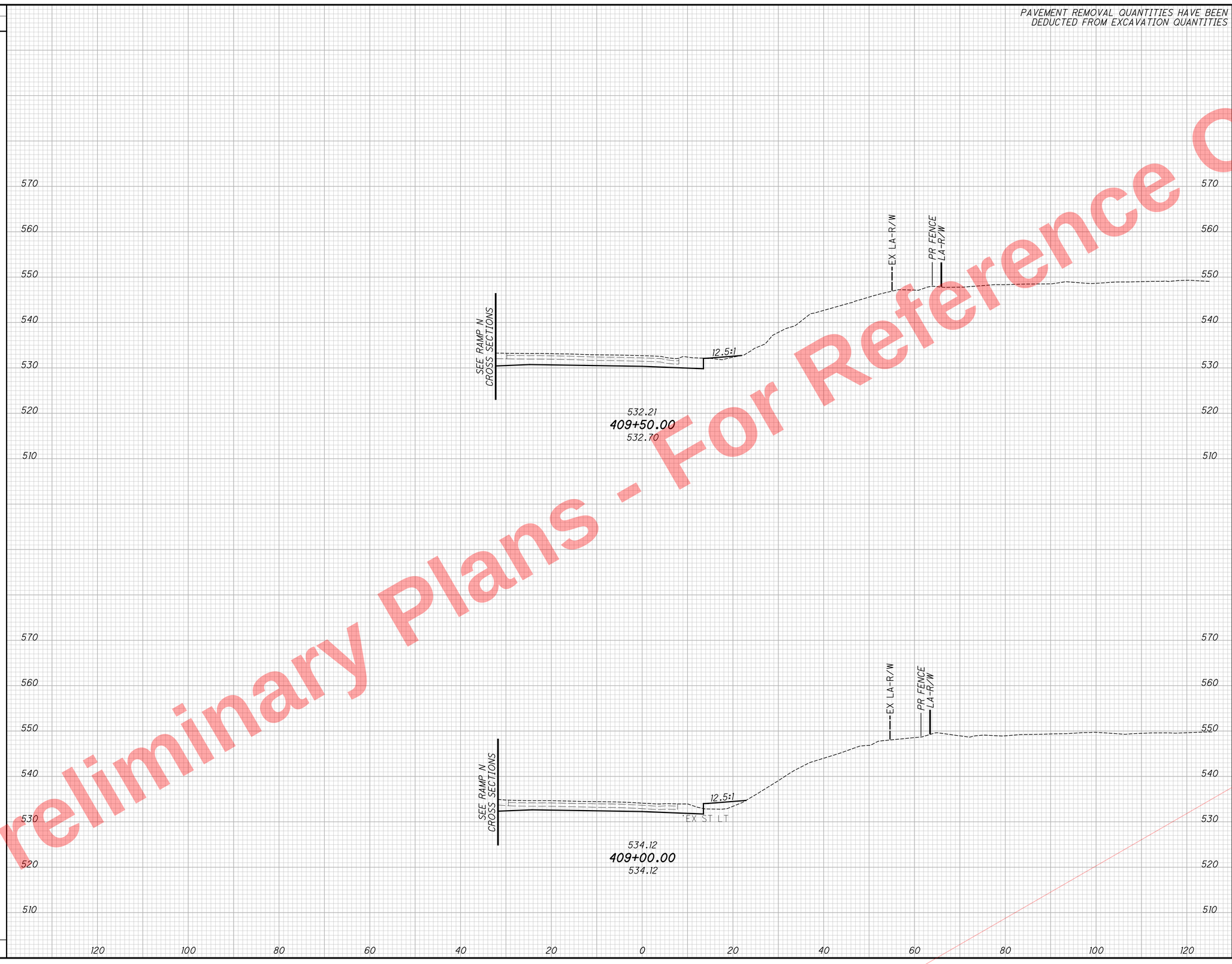

SEEDING END WIDTH	SEEDING SQ. YDS.	END AREA CUT	END AREA FILL	VOLUME CUT	VOLUME FILL
9	53	61	2	95	11
10	58	42	10	69	21
	111			164	32

CALCULATED SEA
CHECKED DLR

CROSS SECTIONS RAMP K
STA. 409+00.00 TO STA. 409+50.00

HAM-75-7.85

473
1047

Preliminary Plans - For Reference Only

J:\20110903\ODOT\HAM\7889\roadway\sheets\77889XS004.dgn 5/22/2026 10:18:29 AM hbrendlinger

PAVEMENT REMOVAL QUANTITIES HAVE BEEN DEDUCTED FROM EXCAVATION QUANTITIES

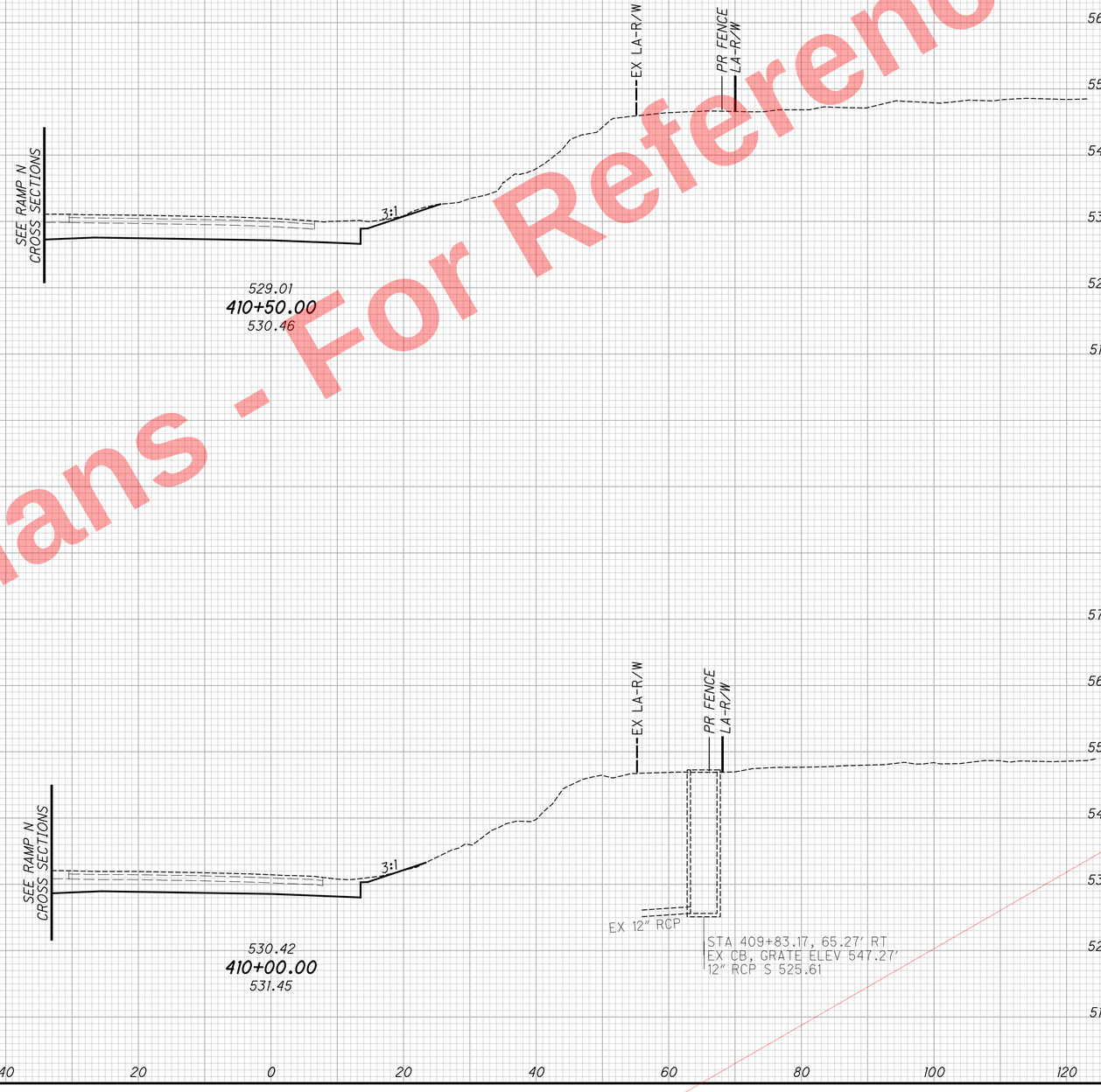

SEEDING END WIDTH	SEEDING SQ. YDS.	END AREA CUT	END AREA FILL	VOLUME CUT	VOLUME FILL
14	72	118	0	193	0
11	56	91	0	140	4
	128			333	4

CALCULATED SEA
CHECKED DLR

CROSS SECTIONS RAMP K
STA. 410+00.00 TO STA. 410+50.00

HAM-75-7.85

474
1047

Preliminary Plans - For Reference Only

J:\20110903\ODOT\HAM\7889\roadway\sheets\77889XS004.dgn 5/22/2026 10:18:29 AM hbrendlinger

PAVEMENT REMOVAL QUANTITIES HAVE BEEN DEDUCTED FROM EXCAVATION QUANTITIES

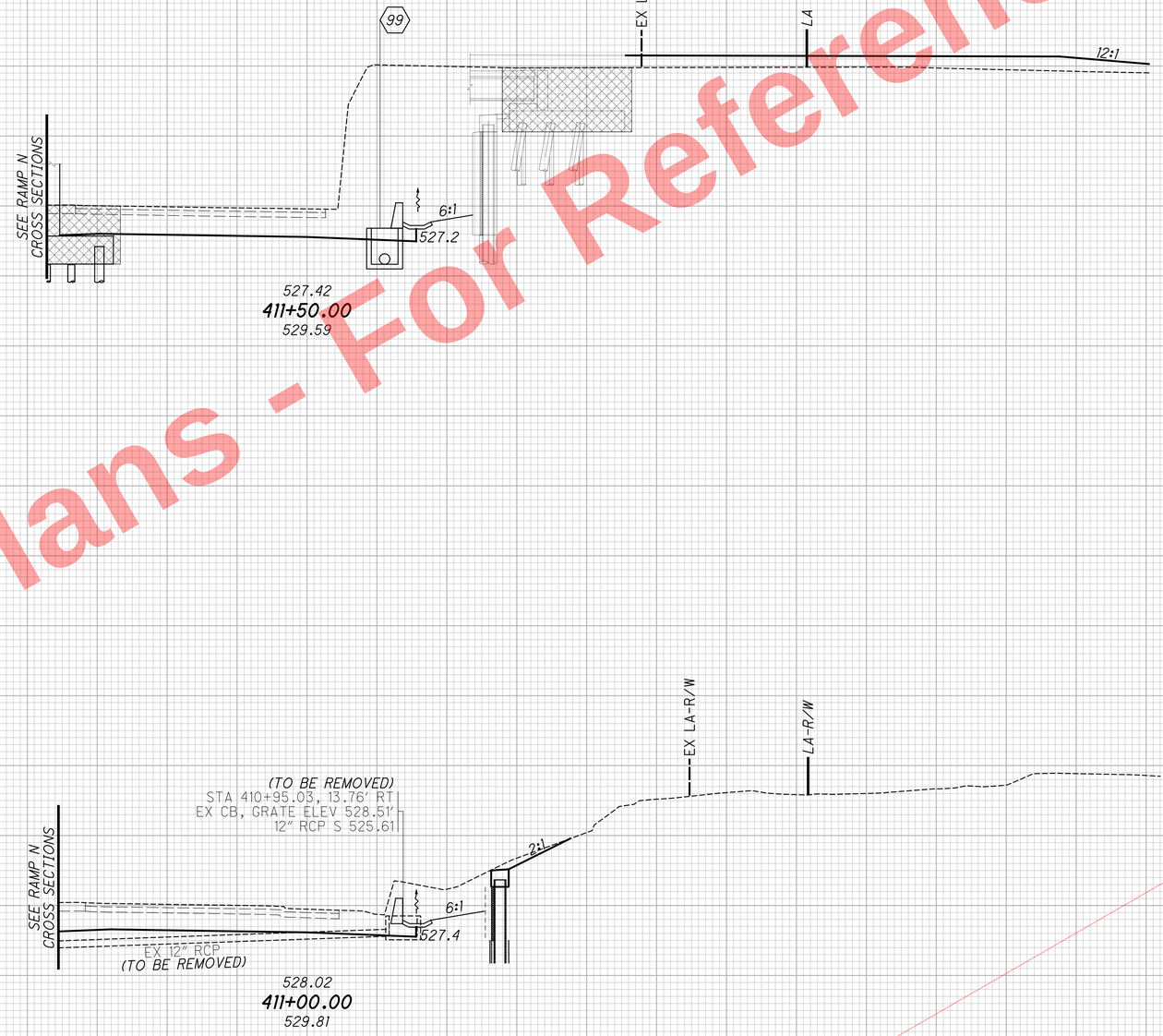

Preliminary Plans - For Reference Only

SEEDING END WIDTH	SEEDING SQ. YDS.	END AREA CUT	END AREA FILL	VOLUME CUT	VOLUME FILL
0					
	28	550	8	700	7
10					
	67	206	0	300	0
	95			1000	7

CALCULATED SEA
CHECKED DLR

CROSS SECTIONS RAMP K
STA. 411+00.00 TO STA. 411+50.00

HAM-75-7.85

475
1047

J:\20110903\ODOT\HAM\7889\roadway\sheets\77889XS004.dgn 5/22/2026 10:18:30 AM hbrendlinger

PAVEMENT REMOVAL QUANTITIES HAVE BEEN DEDUCTED FROM EXCAVATION QUANTITIES

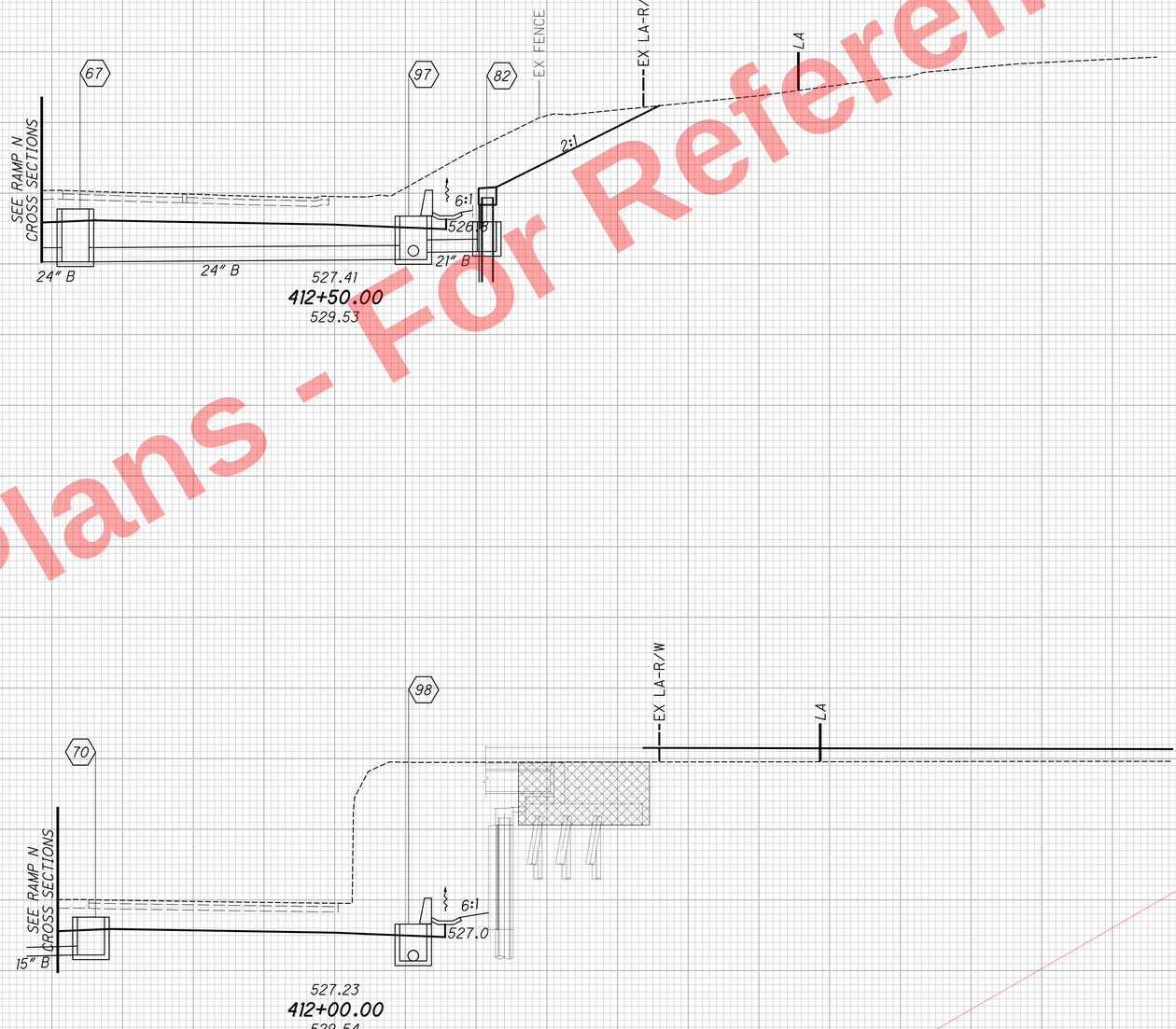

SEEDING END WIDTH	SEEDING SQ. YDS.	END AREA CUT	END AREA FILL	VOLUME CUT	VOLUME FILL
26		353	0		
	72			882	0
0		599	0		
	0			1065	7
	72			1947	7

CALCULATED SEA
CHECKED DLR

CROSS SECTIONS RAMP K
STA. 412+00.00 TO STA. 412+50.00

HAM-75-7.85

476
1047

Preliminary Plans - For Reference Only

J:\20110903\ODOT\HAM\7889\roadway\sheets\77889XS004.dgn 5/22/2026 10:18:30 AM hbrendlinger

PAVEMENT REMOVAL QUANTITIES HAVE BEEN DEDUCTED FROM EXCAVATION QUANTITIES

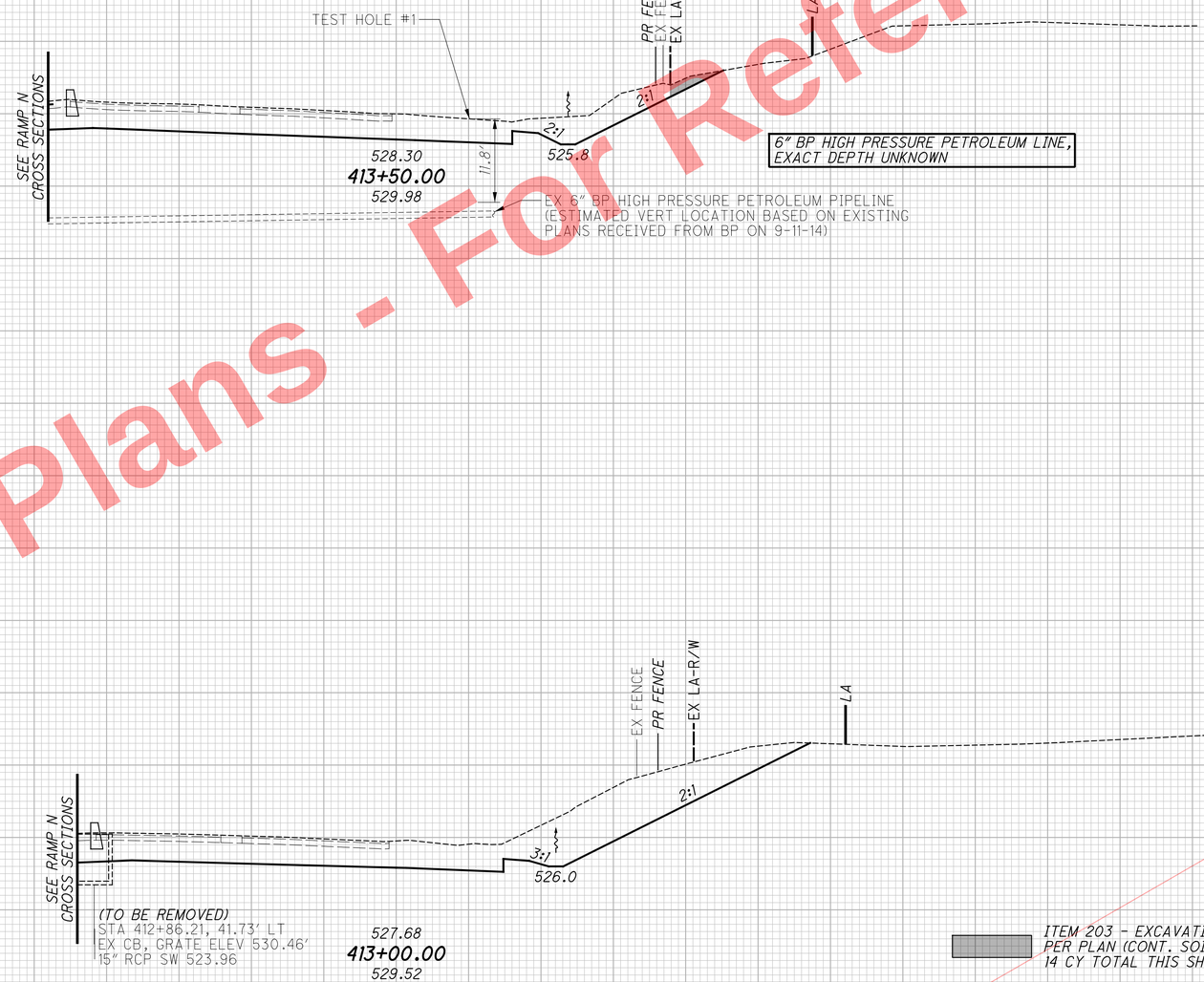

SEEDING END WIDTH	SEEDING SQ. YDS.	END AREA CUT	END AREA FILL	VOLUME CUT	VOLUME FILL
36		247	0		
	245			591	0
50		391	0		
	212			689	0
	457			1280	0

CALCULATED SEA
CHECKED DLR

CROSS SECTIONS RAMP K
STA. 413+00.00 TO STA. 413+50.00

HAM-75-7.85

477
1047

Preliminary Plans - For Reference Only

J:\20110903\ODOT\HAM\7889\roadway\sheets\77889XS004.dgn 5/22/2026 10:18:30 AM hbrendlinger

PAVEMENT REMOVAL QUANTITIES HAVE BEEN DEDUCTED FROM EXCAVATION QUANTITIES

SEEDING END WIDTH	SEEDING SQ. YDS.
	47
	239
	38
	211
	450

END AREA CUT	END AREA FILL	VOLUME CUT	VOLUME FILL
196	13		
		390	12
226	0		
		438	0
		828	12

CALCULATED SEA
CHECKED DLR

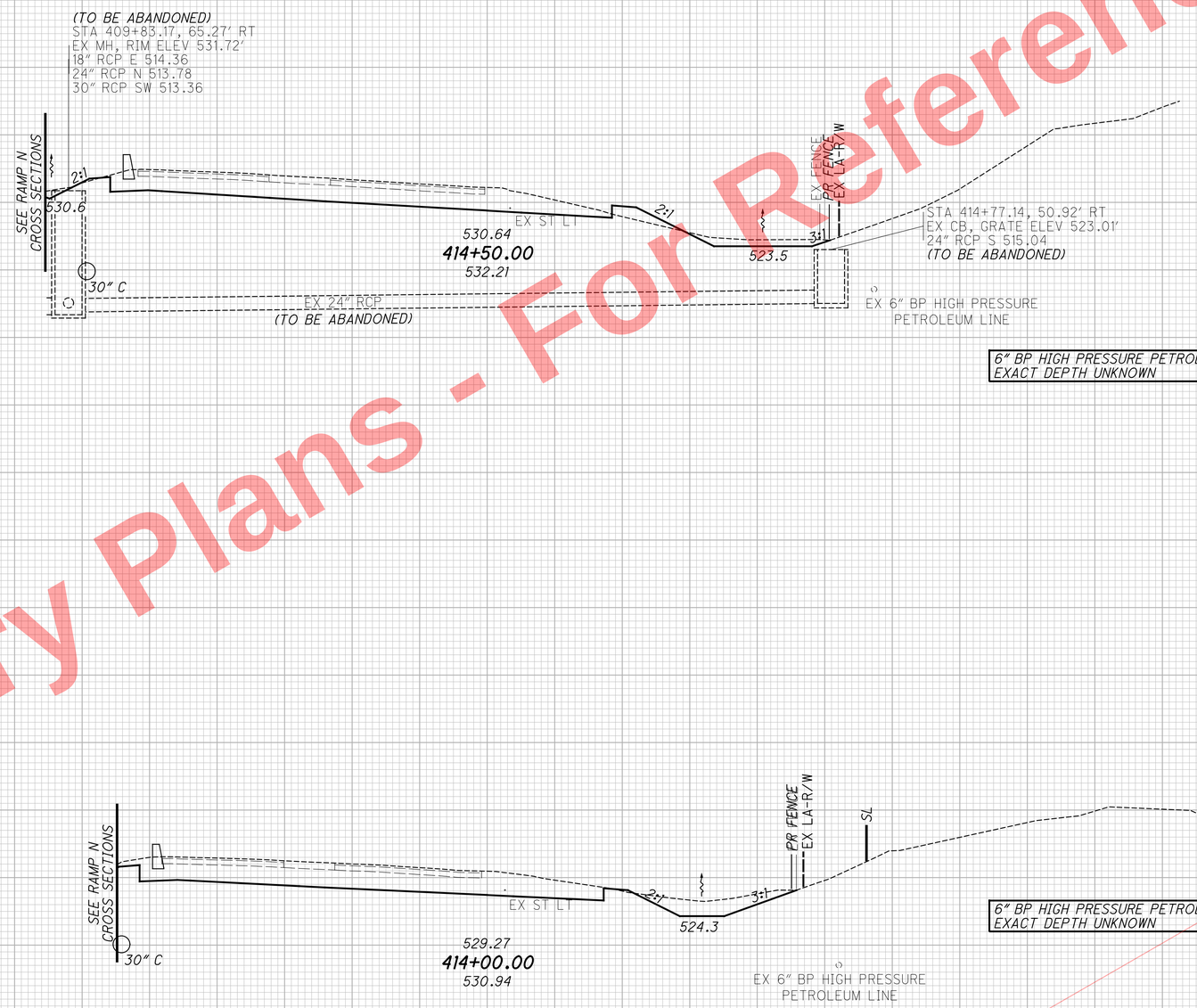

CROSS SECTIONS RAMP K
STA. 414+00.00 TO STA. 414+50.00

HAM-75-7.85

478
1047

Preliminary Plans - For Reference Only

J:\20110903\ODOT\HAM\7889\roadway\sheets\77889XS004.dgn 5/22/2026 10:18:30 AM hbrendlinger

PAVEMENT REMOVAL QUANTITIES HAVE BEEN DEDUCTED FROM EXCAVATION QUANTITIES

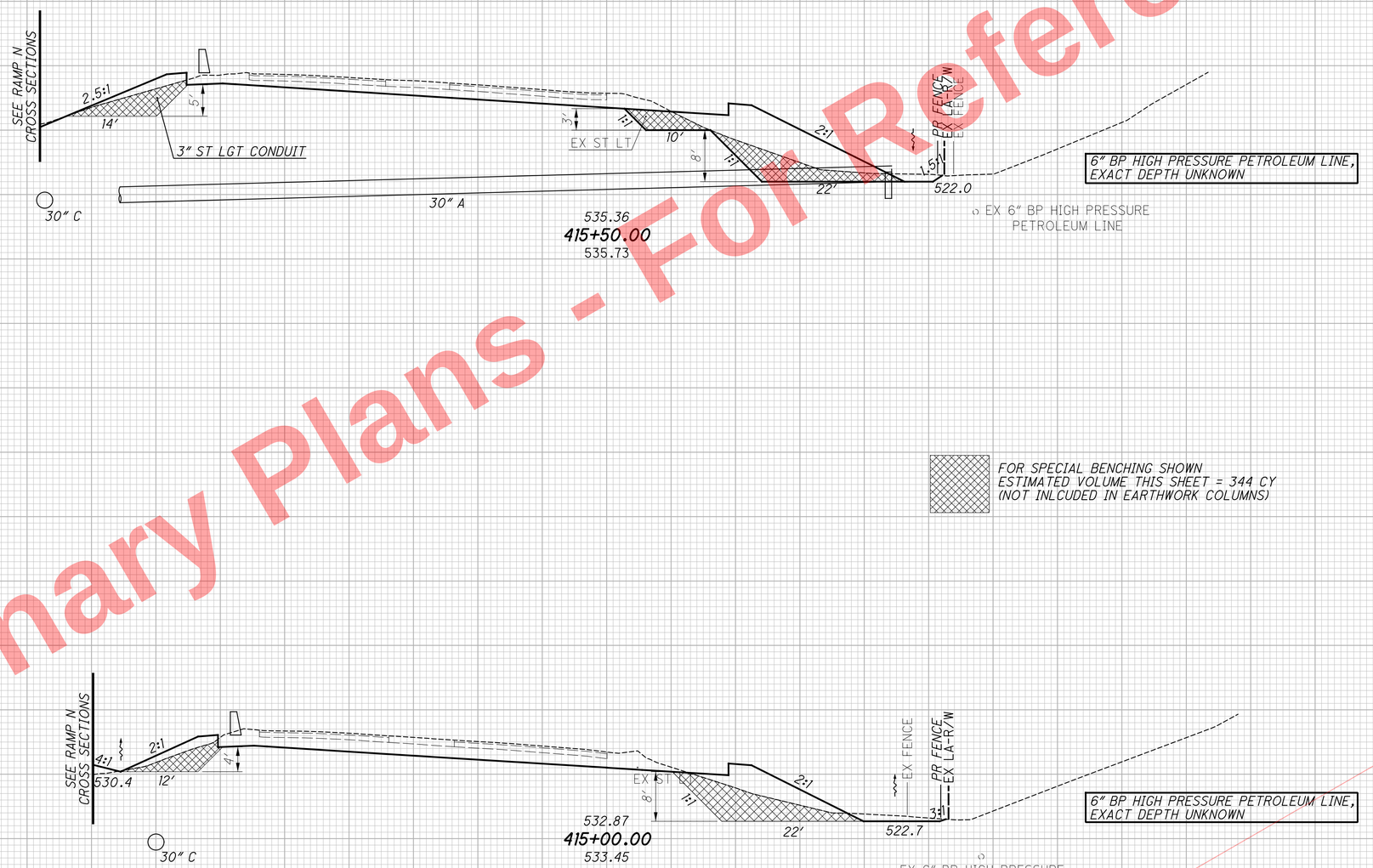

FOR SPECIAL BENCHING SHOWN
ESTIMATED VOLUME THIS SHEET = 344 CY
(NOT INLCUDED IN EARTHWORK COLUMNS)

SEEDING END WIDTH	SEEDING SQ. YDS.	END AREA CUT	END AREA FILL	VOLUME CUT	VOLUME FILL
64	350	101	137	223	196
60	300	140	74	311	80
	650			534	276

CALCULATED SEA
CHECKED DLR

CROSS SECTIONS RAMP K
STA. 415+00.00 TO STA. 415+50.00

HAM-75-7.85

479
1047

Preliminary Plans - For Reference Only

J:\20110903\ODOT\HAM\7889\roadway\sheets\77889XS004.dgn 5/22/2026 10:18:31 AM hbrendlinger

PAVEMENT REMOVAL QUANTITIES HAVE BEEN DEDUCTED FROM EXCAVATION QUANTITIES

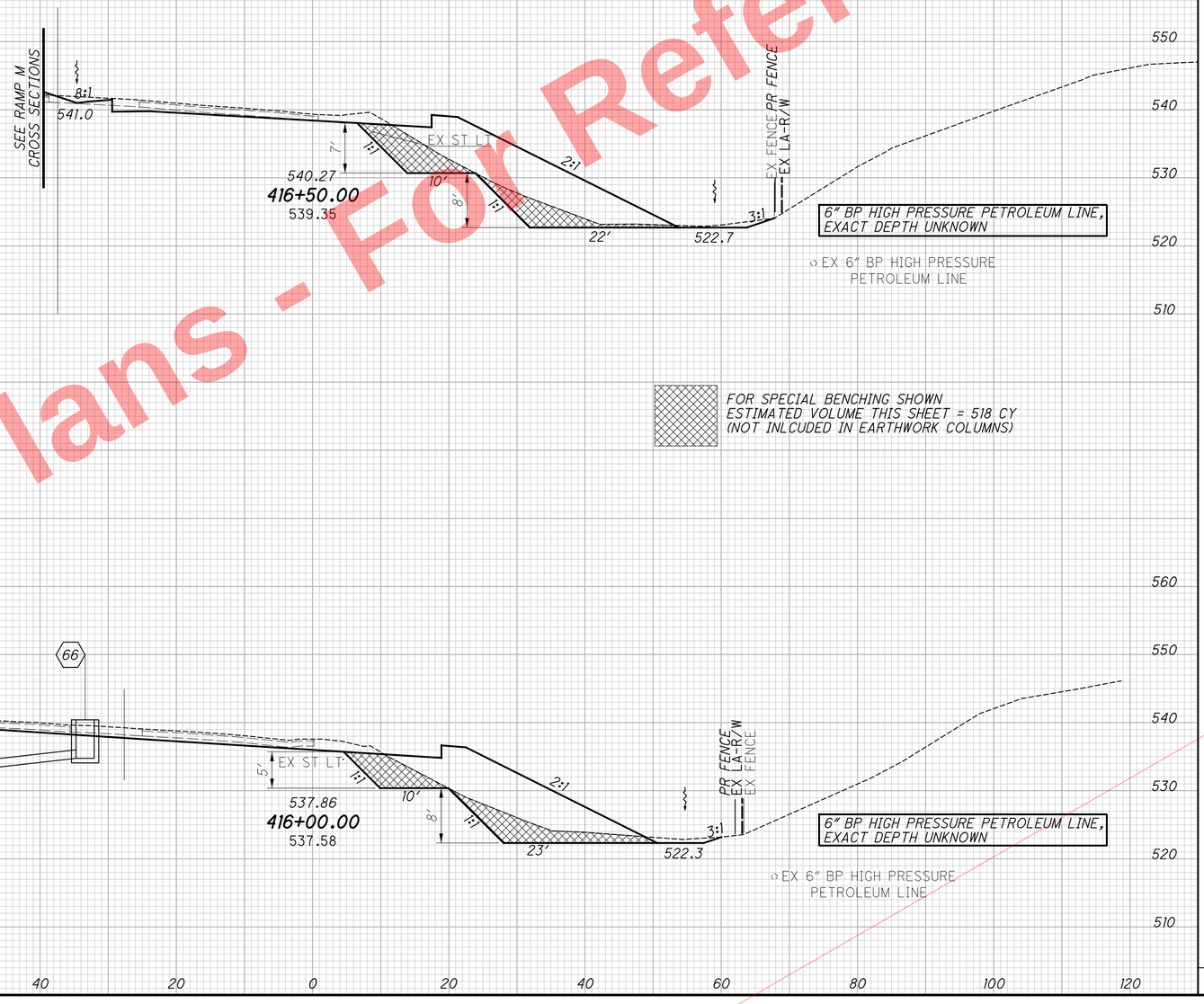

SEEDING END WIDTH	SEEDING SQ. YDS.	END AREA CUT	END AREA FILL	VOLUME CUT	VOLUME FILL
68	389	27	202	62	403
71	377	40	234	131	344
	766			193	747

CALCULATED SEA
CHECKED DLR

CROSS SECTIONS RAMP K
STA. 416+00.00 TO STA. 416+50.00

HAM-75-7.85

480
1047

Preliminary Plans - For Reference Only

J:\20110903\ODOT\HAM\7889\roadway\sheets\77889XS004.dgn 5/22/2026 10:18:31 AM hbrendlinger

PAVEMENT REMOVAL QUANTITIES HAVE BEEN DEDUCTED FROM EXCAVATION QUANTITIES

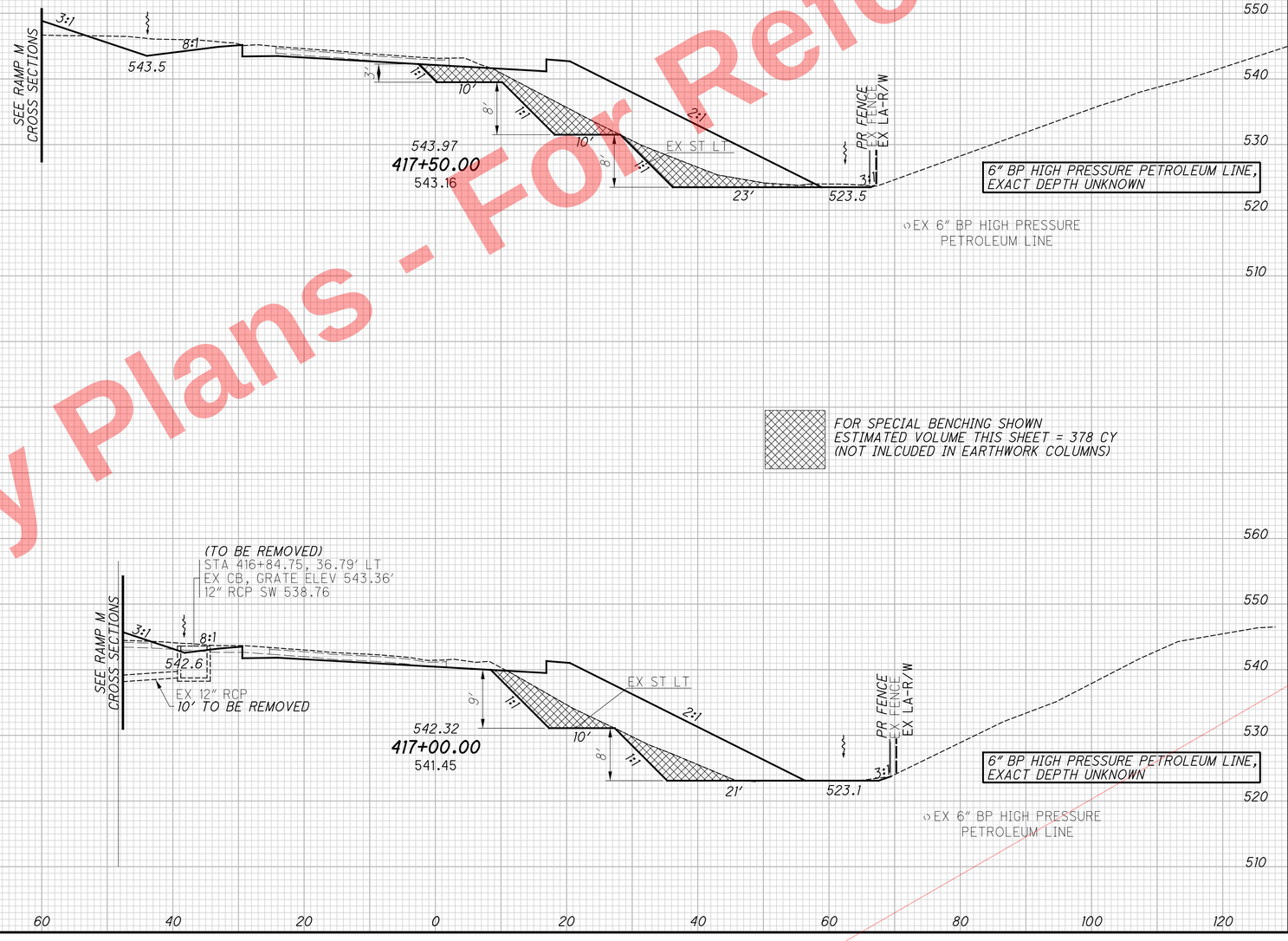

FOR SPECIAL BENCHING SHOWN
ESTIMATED VOLUME THIS SHEET = 378 CY
(NOT INLCUDED IN EARTHWORK COLUMNS)

SEEDING END WIDTH	SEEDING SQ. YDS.	END AREA CUT	END AREA FILL	VOLUME CUT	VOLUME FILL
89	467	56	255	71	446
78	406	21	227	44	397
	873			115	843

CALCULATED SEA
CHECKED DLR

CROSS SECTIONS RAMP K
STA. 417+00.00 TO STA. 417+50.00

HAM-75-7.85

481
1047

For Reference Only
Preliminary Plans - Fo

J:\20110903\ODOT\HAM\7889\roadway\sheets\77889XS004.dgn 5/22/2026 10:18:31 AM hbrendlinger

SEEDING	
END WIDTH	SQ. YDS.
87	489
88	495
	984

PAVEMENT REMOVAL QUANTITIES HAVE BEEN DEDUCTED FROM EXCAVATION QUANTITIES

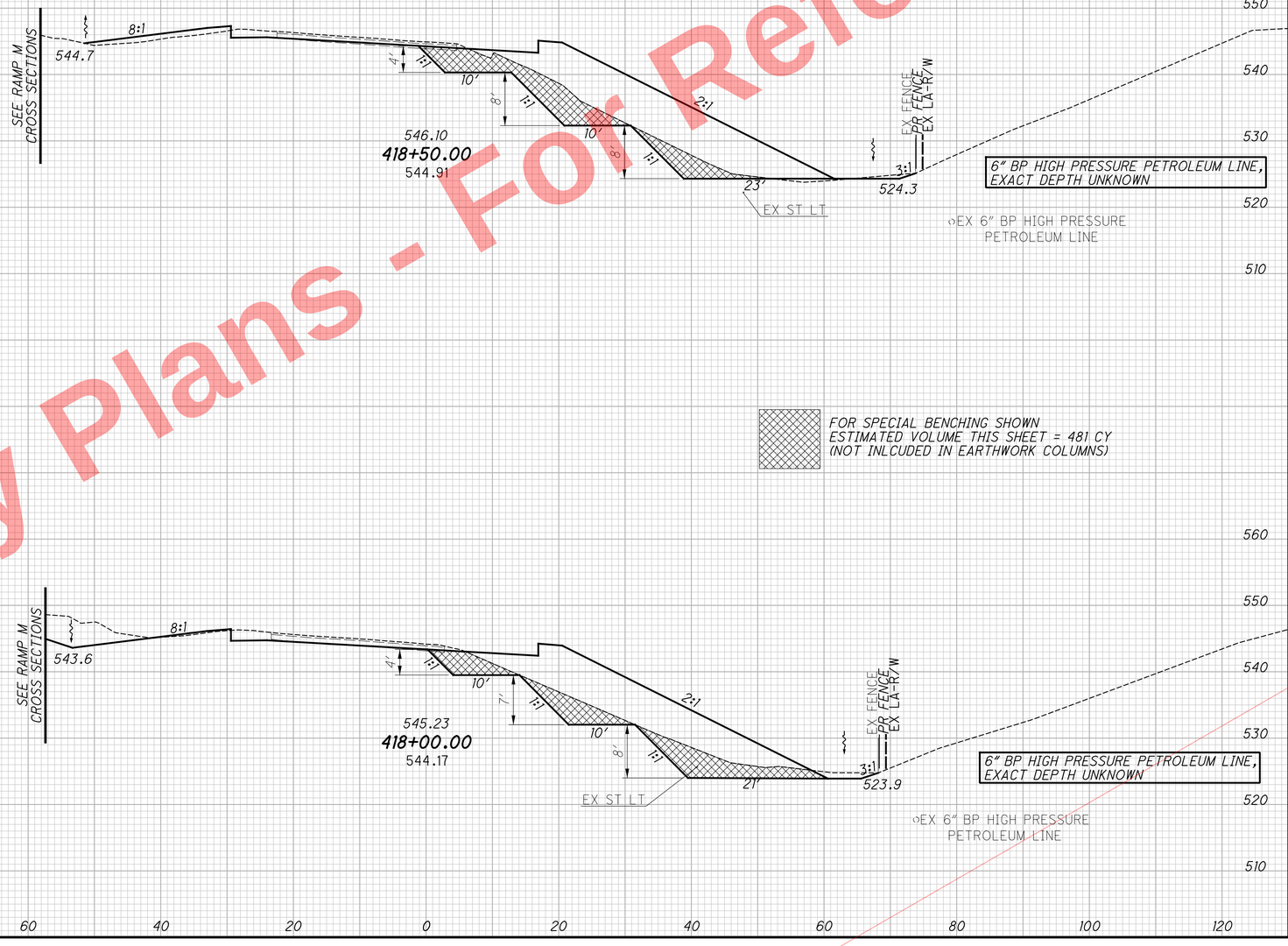

END AREA		VOLUME	
CUT	FILL	CUT	FILL
11	304		
		65	502
59	239		
		106	457
		171	959

CALCULATED SEA
CHECKED DLR

CROSS SECTIONS RAMP K
STA. 418+00.00 TO STA. 418+50.00

HAM-75-7.85

482
1047

Preliminary Plans - Not For Reference Only

J:\20110903\ODOT\HAM\77889\roadway\sheets\77889XS004.dgn 5/22/2026 10:18:31 AM hbrendlinger

PAVEMENT REMOVAL QUANTITIES HAVE BEEN DEDUCTED FROM EXCAVATION QUANTITIES

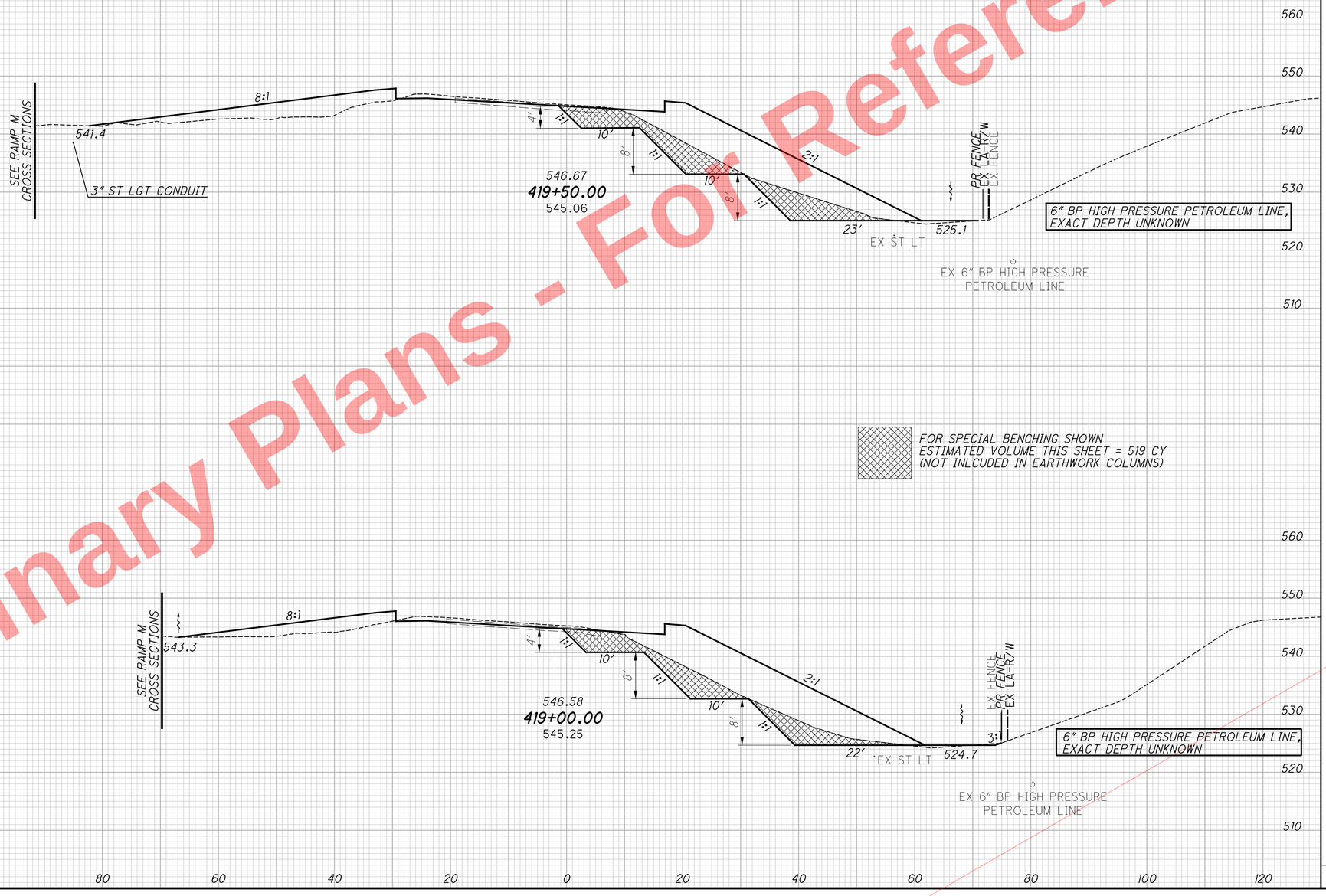

SEEDING END WIDTH	SEEDING SQ. YDS.	END AREA CUT	END AREA FILL	VOLUME CUT	VOLUME FILL
115	605	6	365	11	655
103	534	6	342	16	598
	1139			27	1253

CALCULATED SEA
CHECKED DLR

CROSS SECTIONS RAMP K
STA. 419+00.00 TO STA. 419+50.00

HAM-75-7.85

483
1047

Preliminary Plans - For Reference Only

J:\20110903\ODOT\HAM\7889\roadway\sheets\77889XS004.dgn 5/22/2026 10:18:32 AM hbrendlinger

PAVEMENT REMOVAL QUANTITIES HAVE BEEN DEDUCTED FROM EXCAVATION QUANTITIES

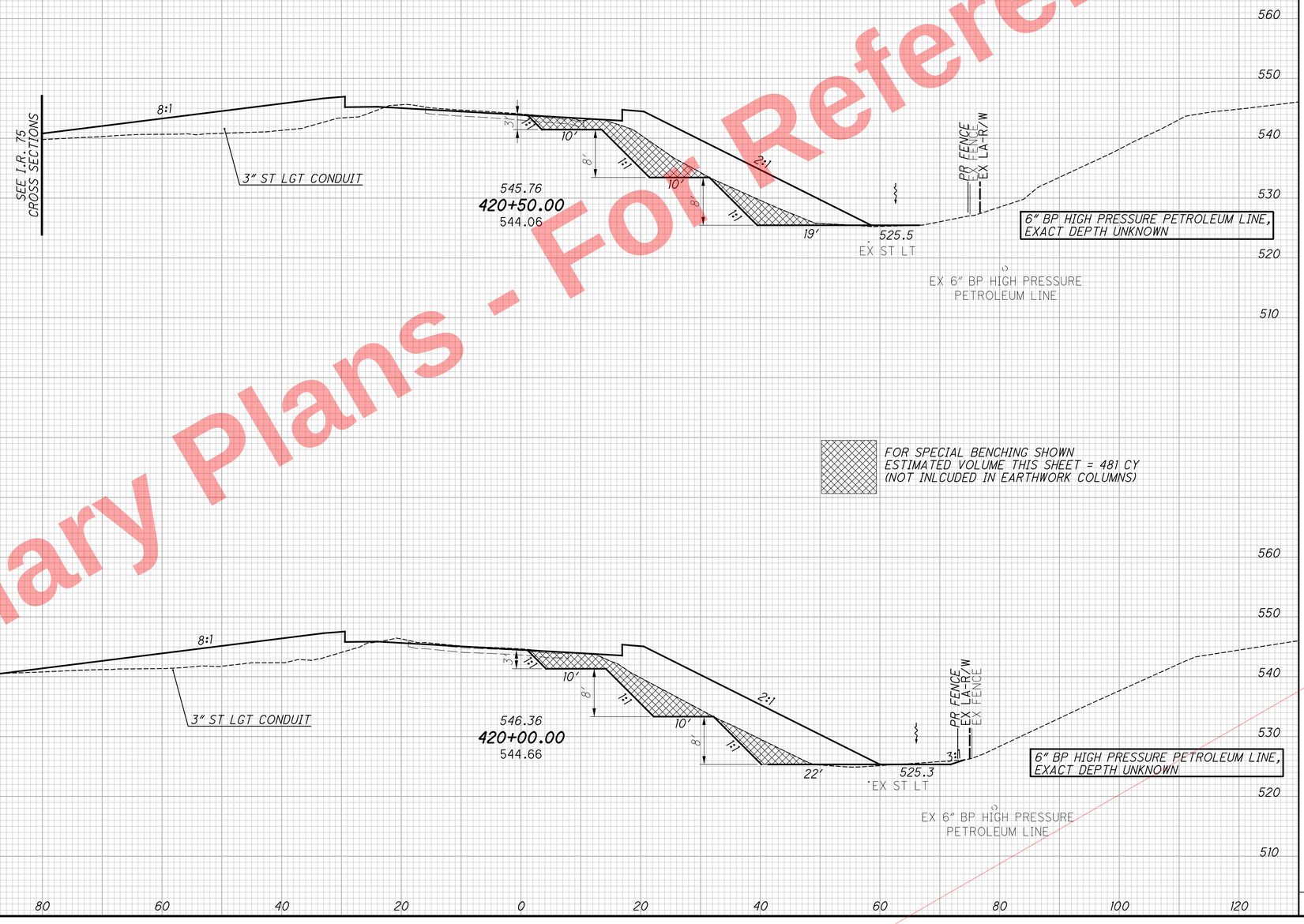

SEEDING END WIDTH	SEEDING SQ. YDS.	END AREA CUT	END AREA FILL	VOLUME CUT	VOLUME FILL
108	644	3	364	8	694
123	666	6	385	11	694
	1310			19	1388

CALCULATED SEA
CHECKED DLR

CROSS SECTIONS RAMP K
STA. 420+00.00 TO STA. 420+50.00

HAM-75-7.85

484
1047

Preliminary Plans - For Reference Only

J:\20110903\ODOT\HAM\7889\roadway\sheets\77889XS004.dgn 5/22/2026 10:18:32 AM hbrendlinger

PAVEMENT REMOVAL QUANTITIES HAVE BEEN DEDUCTED FROM EXCAVATION QUANTITIES

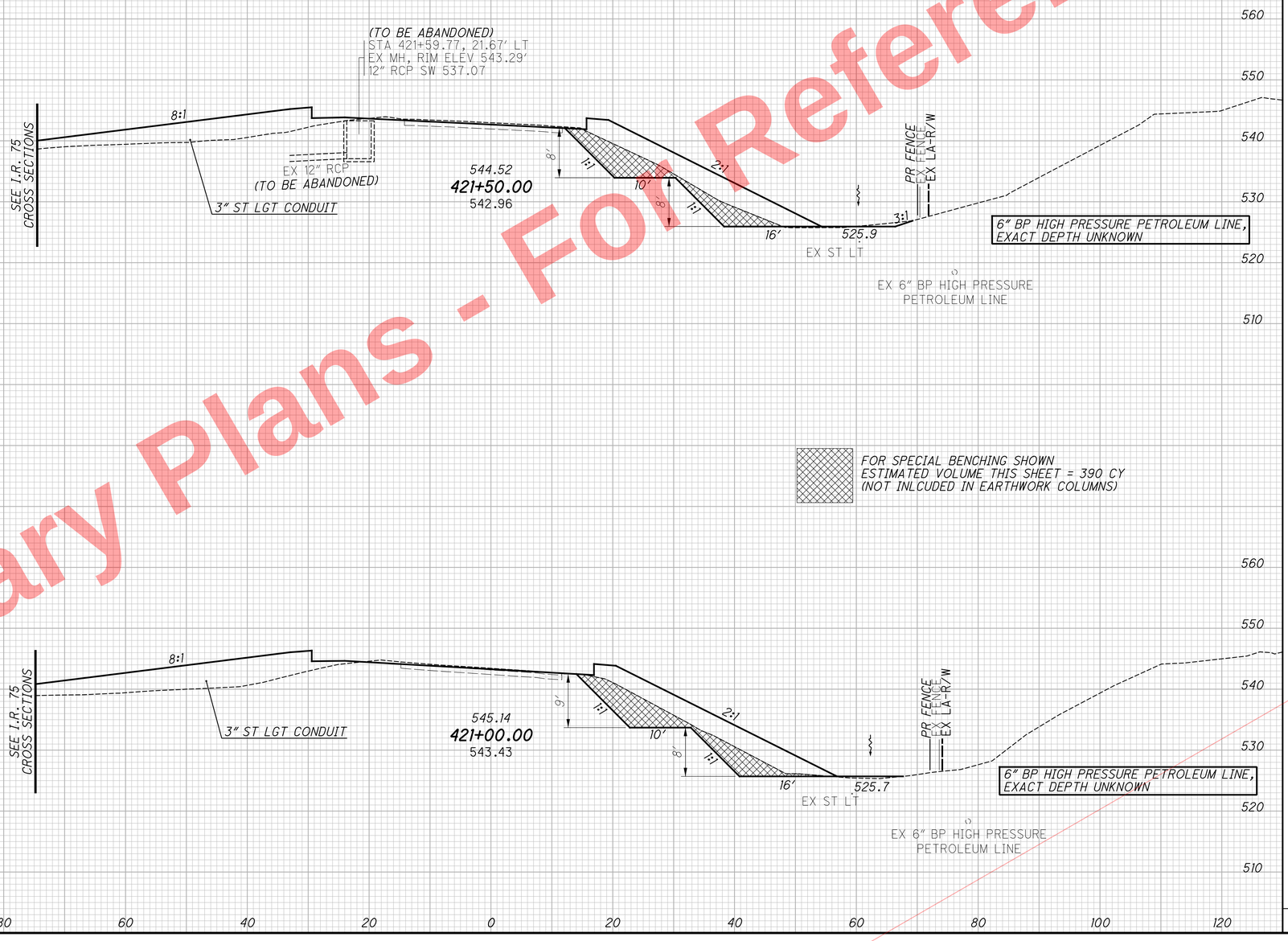

SEEDING END WIDTH	SEEDING SQ. YDS.	END AREA CUT	END AREA FILL	VOLUME CUT	VOLUME FILL
	583	5	281	7	548
	103	2	311	5	626
	1172			12	1174

CALCULATED SEA
CHECKED DLR

CROSS SECTIONS RAMP K
STA. 421+00.00 TO STA. 421+50.00

HAM-75-7.85

485
1047

J:\20110903\ODOT\HAM\7889\roadway\sheets\77889XS004.dgn 5/22/2026 10:18:32 AM hbrendlinger

For Reference Only
Preliminary Plans - For

SEEDING END WIDTH	SEEDING SQ. YDS.
82	461
84	528
	989

PAVEMENT REMOVAL QUANTITIES HAVE BEEN DEDUCTED FROM EXCAVATION QUANTITIES

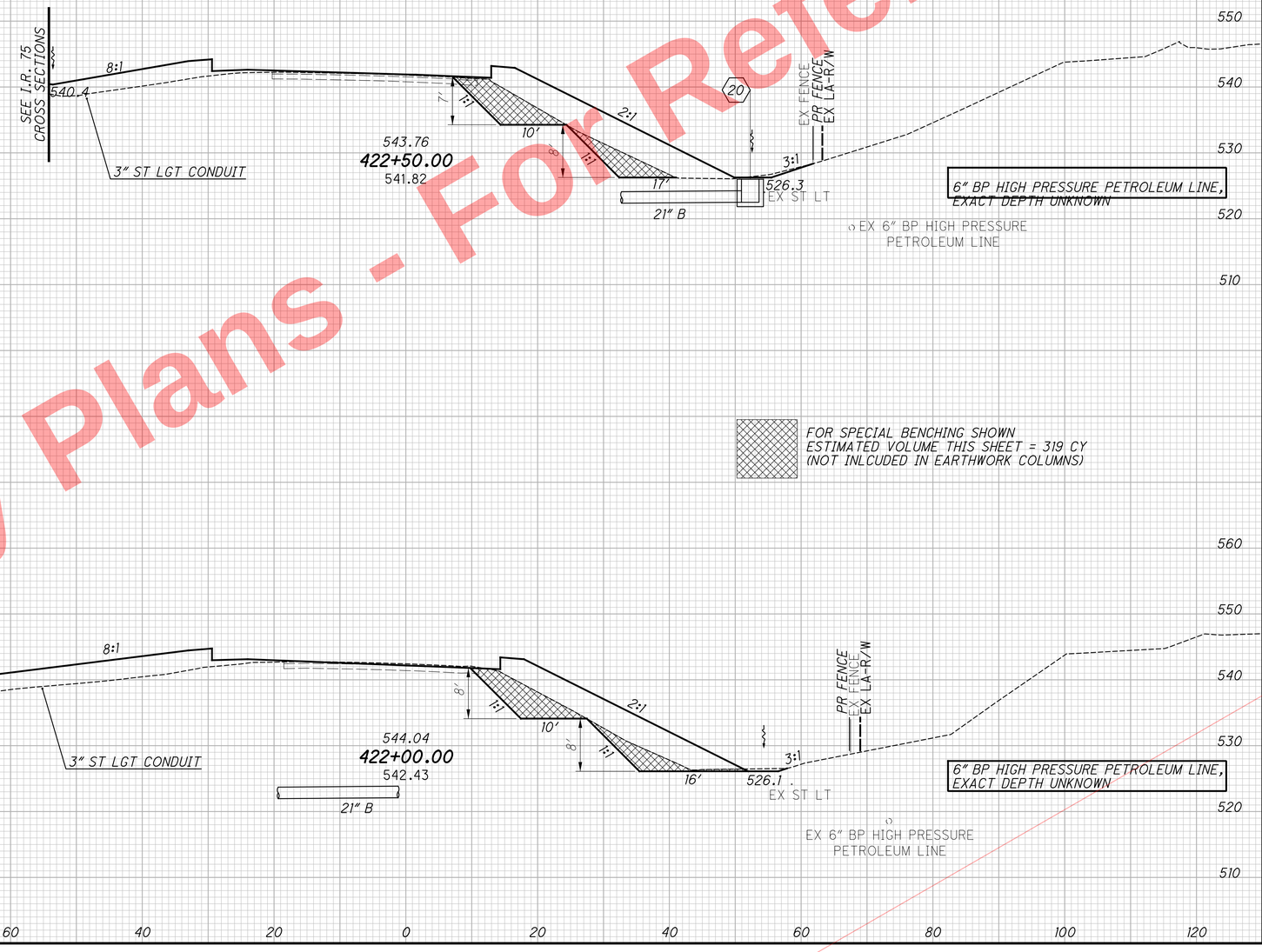

END AREA CUT	END AREA FILL	VOLUME CUT	VOLUME FILL
3	246		
		4	473
2	265		
		7	505
		11	978

CALCULATED SEA
CHECKED DLR

CROSS SECTIONS RAMP K
STA. 422+00.00 TO STA. 422+50.00

HAM-75-7.85

486
1047

Preliminary Plans - For Reference Only

J:\20110903\ODOT\HAM\77889\roadway\sheets\77889XS004.dgn 5/22/2026 10:18:32 AM hbrendlinger

PAVEMENT REMOVAL QUANTITIES HAVE BEEN DEDUCTED FROM EXCAVATION QUANTITIES

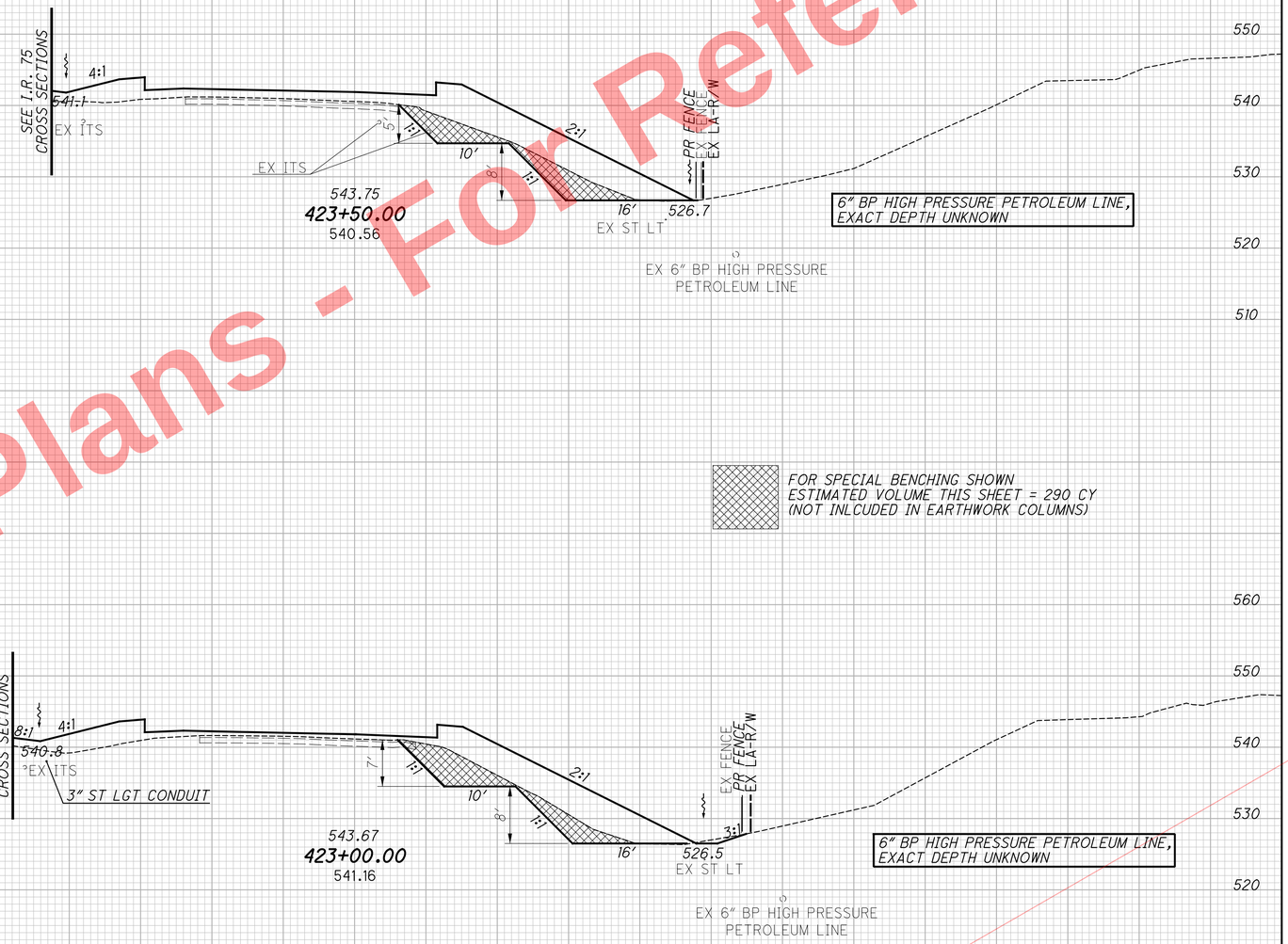

SEEDING END WIDTH	SEEDING SQ. YDS.	END AREA CUT	END AREA FILL	VOLUME CUT	VOLUME FILL
57	356	0	263	2	471
69	422	3	246	5	456
	778			7	927

CALCULATED SEA
CHECKED DLR

CROSS SECTIONS RAMP K
STA. 423+00.00 TO STA. 423+50.00

HAM-75-7.85

487
1047

J:\20110903\ODOT\HAM\7889\roadway\sheets\77889XS004.dgn 5/22/2026 10:18:33 AM hbrendlinger

For Reference Only
Preliminary Plans - Not for Construction

SEEDING	
END WIDTH	SQ. YDS.
55	311
56	316
	627

PAVEMENT REMOVAL QUANTITIES HAVE BEEN DEDUCTED FROM EXCAVATION QUANTITIES

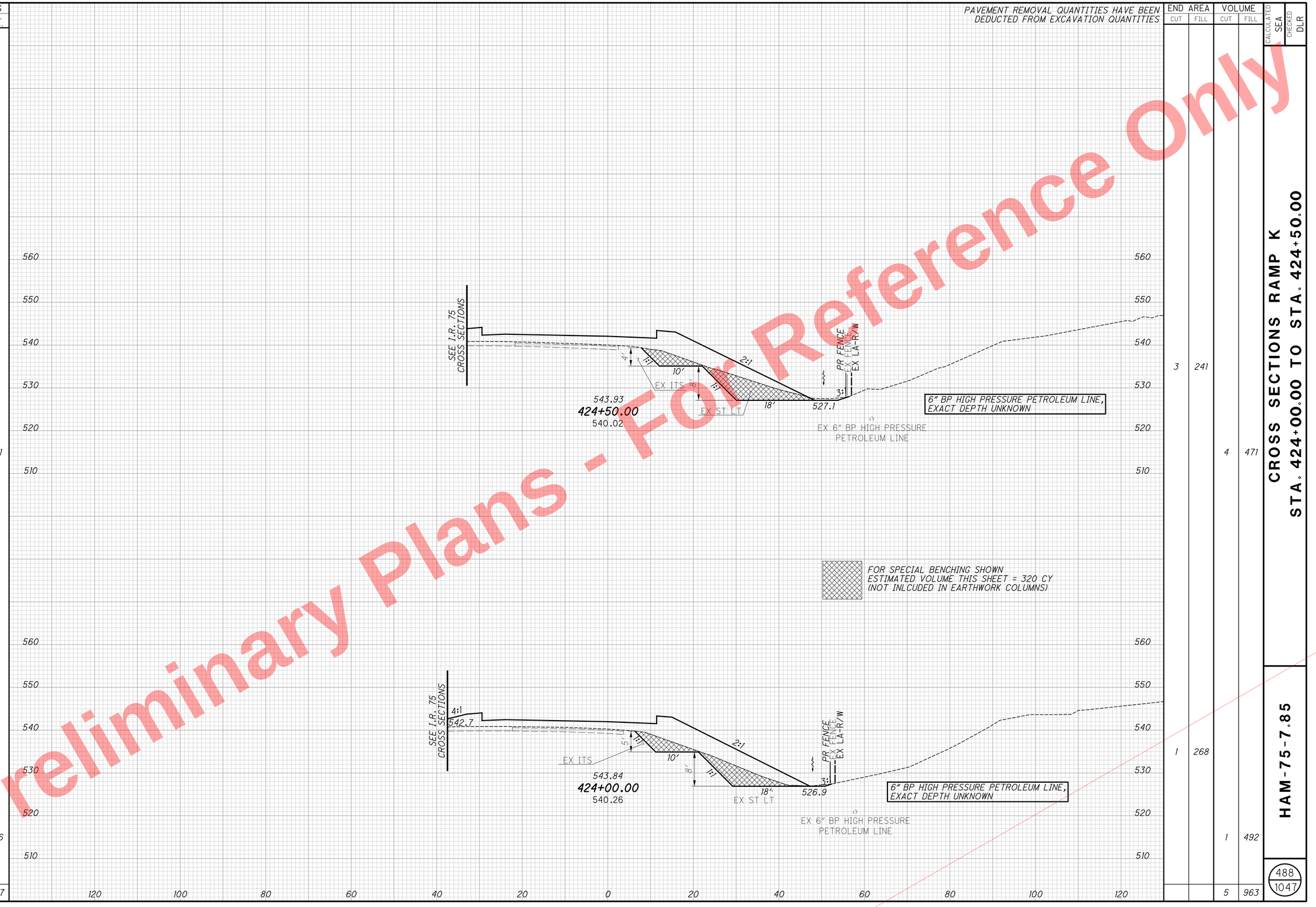

END AREA		VOLUME	
CUT	FILL	CUT	FILL
3	241		
1	268		
		4	471
		1	492
		5	963

CALCULATED SEA
CHECKED DLR

CROSS SECTIONS RAMP K
STA. 424+00.00 TO STA. 424+50.00

HAM-75-7.85

488
1047

Preliminary Plans - For Reference Only

J:\20110903\ODOT\HAM\77889\roadway\sheets\77889XS004.dgn 5/22/2026 10:18:33 AM hbrendlinger

SEEDING	
END WIDTH	SQ. YDS.
56	
69	
69	

PAVEMENT REMOVAL QUANTITIES HAVE BEEN DEDUCTED FROM EXCAVATION QUANTITIES

END AREA		VOLUME	
CUT	FILL	CUT	FILL
3	218		
		1	94
		1	94

CALCULATED SEA
CHECKED DLR

CROSS SECTIONS RAMP K
STA. 424+61.11

HAM-75-7.85

489
1047

FOR SPECIAL BENCHING SHOWN
ESTIMATED VOLUME THIS SHEET = 42 CY
(NOT INLCUDED IN EARTHWORK COLUMNS)

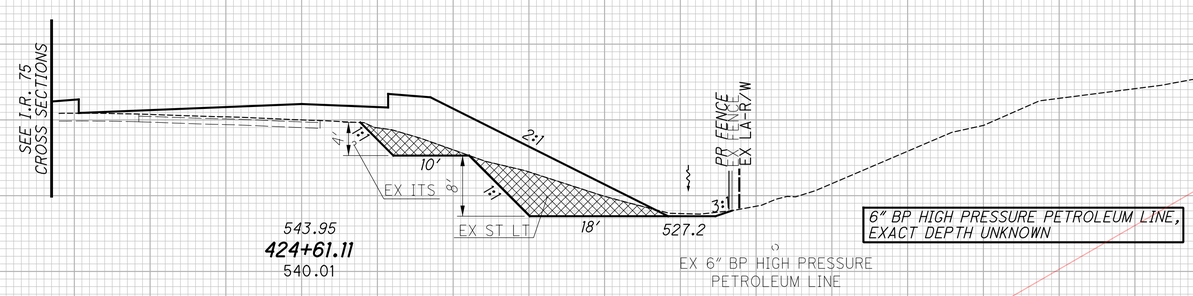

Preliminary Plans - Not For Reference Only

J:\20110903\ODOT\HAM\77889\roadway\sheets\77889XS004.dgn 5/22/2026 10:18:33 AM htbrendlinger

PAVEMENT REMOVAL QUANTITIES HAVE BEEN DEDUCTED FROM EXCAVATION QUANTITIES

SEEDING END WIDTH	SEEDING SQ. YDS.	END AREA CUT	END AREA FILL	VOLUME CUT	VOLUME FILL
23		100	9		
	144			212	17
28		129	9		
	0			0	0
	144			212	17

CALCULATED SEA
CHECKED DLR

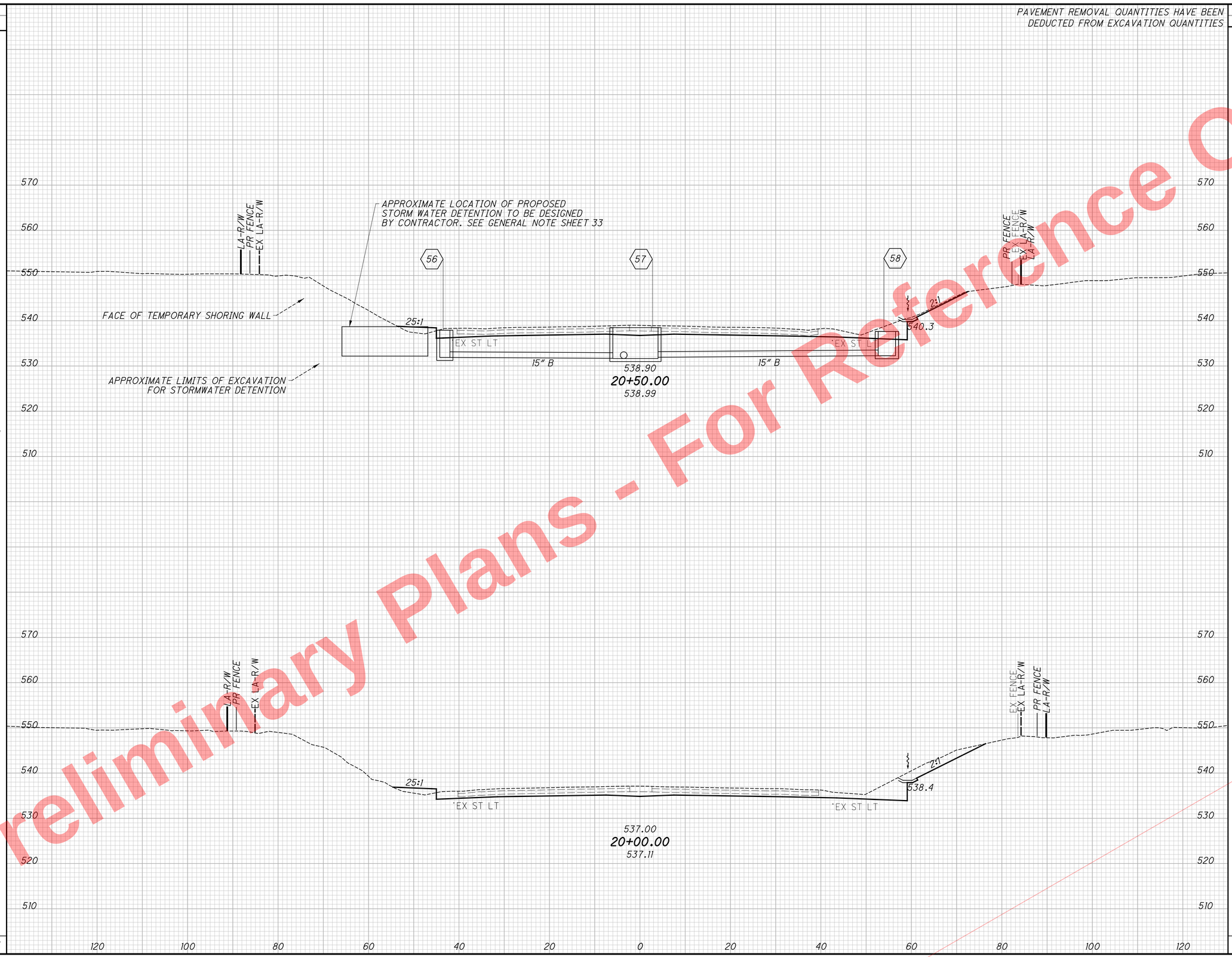

Preliminary Plans - For Reference Only

CROSS SECTIONS S.R. 562
STA. 20+00.00 TO STA. 20+50.00

HAM-75.7.85

490
1047

J:\20110903\ODOT\HAM\77889\roadway\sheets\77889XS002.dgn 5/22/2026 10:18:34 AM hbrendlinger

SEEDING END WIDTH	SEEDING SQ. YDS.
11	94
21	123
	217

PAVEMENT REMOVAL QUANTITIES HAVE BEEN DEDUCTED FROM EXCAVATION QUANTITIES

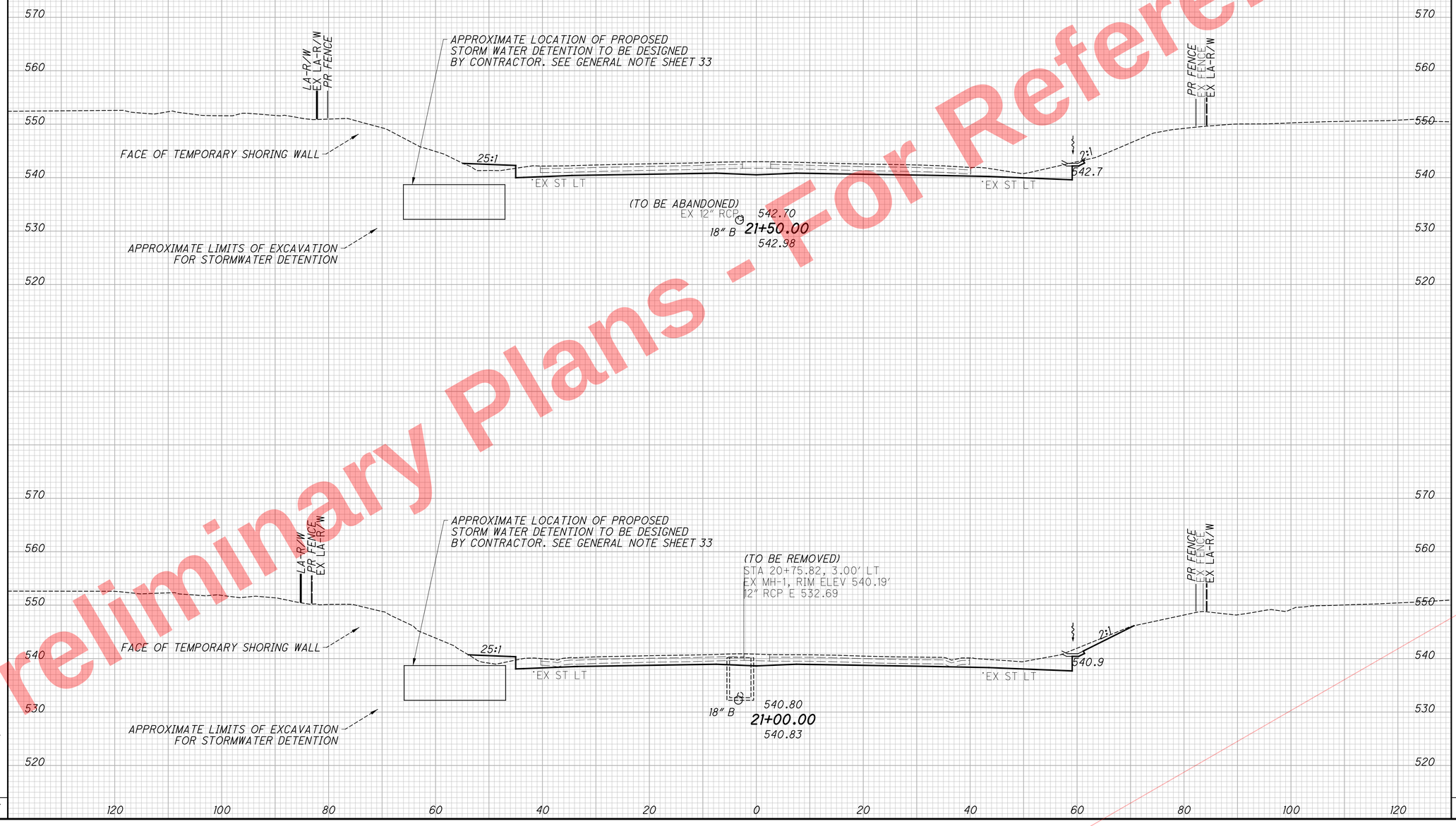

END AREA CUT	END AREA FILL	VOLUME CUT	VOLUME FILL
101	9	185	17
99	9	184	17
		369	34

CALCULATED SEA
CHECKED DLR

CROSS SECTIONS S.R. 562
STA. 21+00.00 TO STA. 21+50.00

HAM-75.7.85

491
1047

Preliminary Plans - For Reference Only

J:\20110903\ODOT\HAM\7889\roadway\sheets\77889XS002.dgn 5/22/2026 10:18:34 AM hbrendlinger

SEEDING	
END WIDTH	SQ. YDS.
22	134
25	105
	239

PAVEMENT REMOVAL QUANTITIES HAVE BEEN DEDUCTED FROM EXCAVATION QUANTITIES

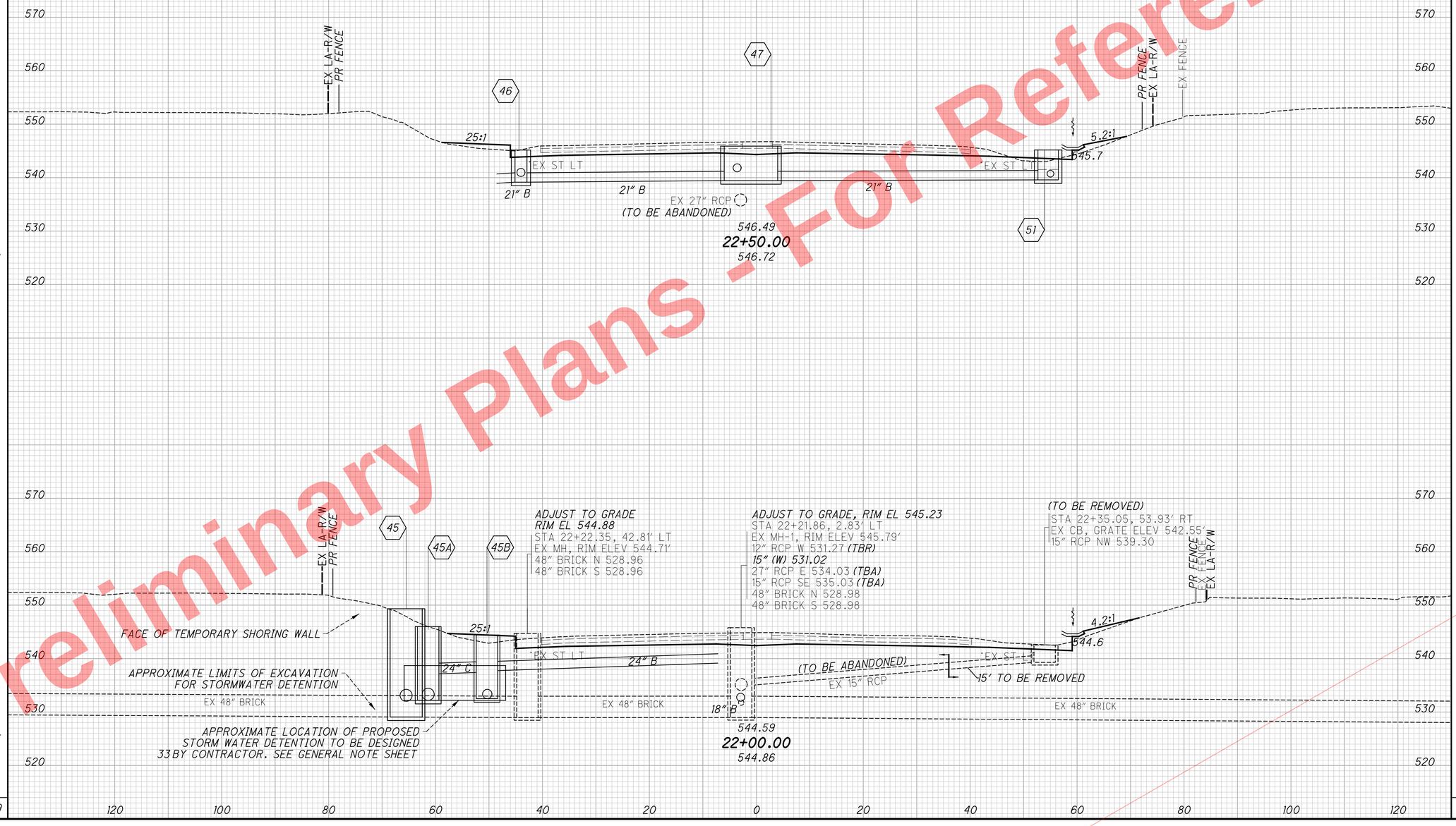

END AREA		VOLUME	
CUT	FILL	CUT	FILL
74	20		
88	20		
		150	37
		175	26
		325	63

CALCULATED SEA
CHECKED DLR

CROSS SECTIONS S.R. 562
STA. 22+00.00 TO STA. 22+50.00

HAM-75.7.85

492
1047

Preliminary Plans - For Reference Only

J:\20110903\ODOT\HAM\7889\roadway\sheets\77889XS002.dgn 5/22/2026 10:18:34 AM hbrendlinger

Preliminary Plans - For Reference Only

SEEDING		END AREA		VOLUME	
END WIDTH	SQ. YDS.	CUT	FILL	CUT	FILL
21	122	68	22	128	49
22	128	70	31	133	48
	250			261	97

CALCULATED SEA
CHECKED DLR

PAVEMENT REMOVAL QUANTITIES HAVE BEEN DEDUCTED FROM EXCAVATION QUANTITIES

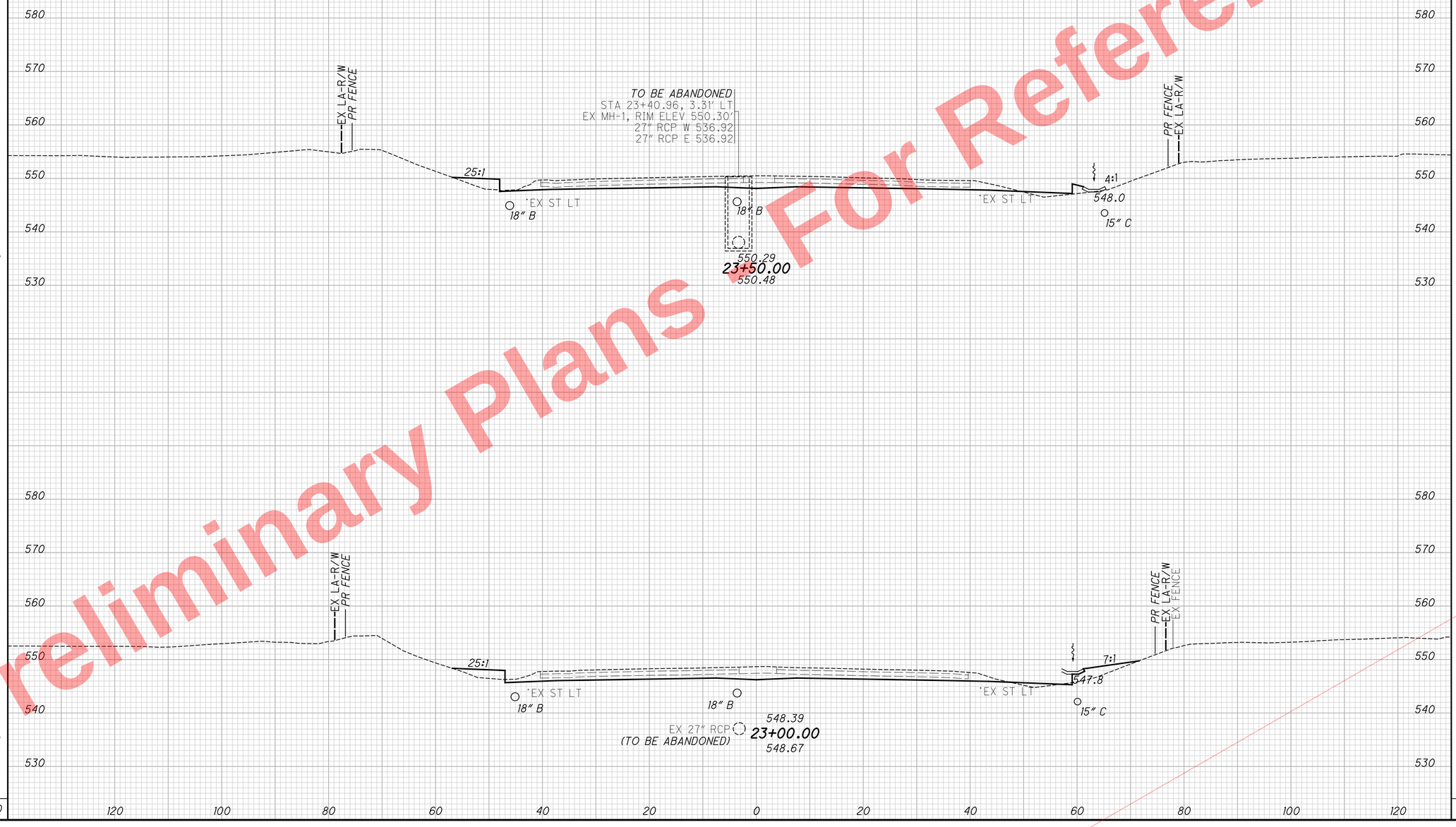

CROSS SECTIONS S.R. 562
STA. 23+00.00 TO STA. 23+50.00

HAM-75.7.85

493
1047

J:\20110903\ODOT\HAM\7889\roadway\sheets\77889XS002.dgn 5/22/2026 10:18:35 AM hbrendlinger

PAVEMENT REMOVAL QUANTITIES HAVE BEEN DEDUCTED FROM EXCAVATION QUANTITIES

SEEDING END WIDTH	SEEDING SQ. YDS.	END AREA CUT	END AREA FILL	VOLUME CUT	VOLUME FILL
32	172	73	28	131	50
29	139	69	27	127	45
	311			258	95

CALCULATED SEA
CHECKED DLR

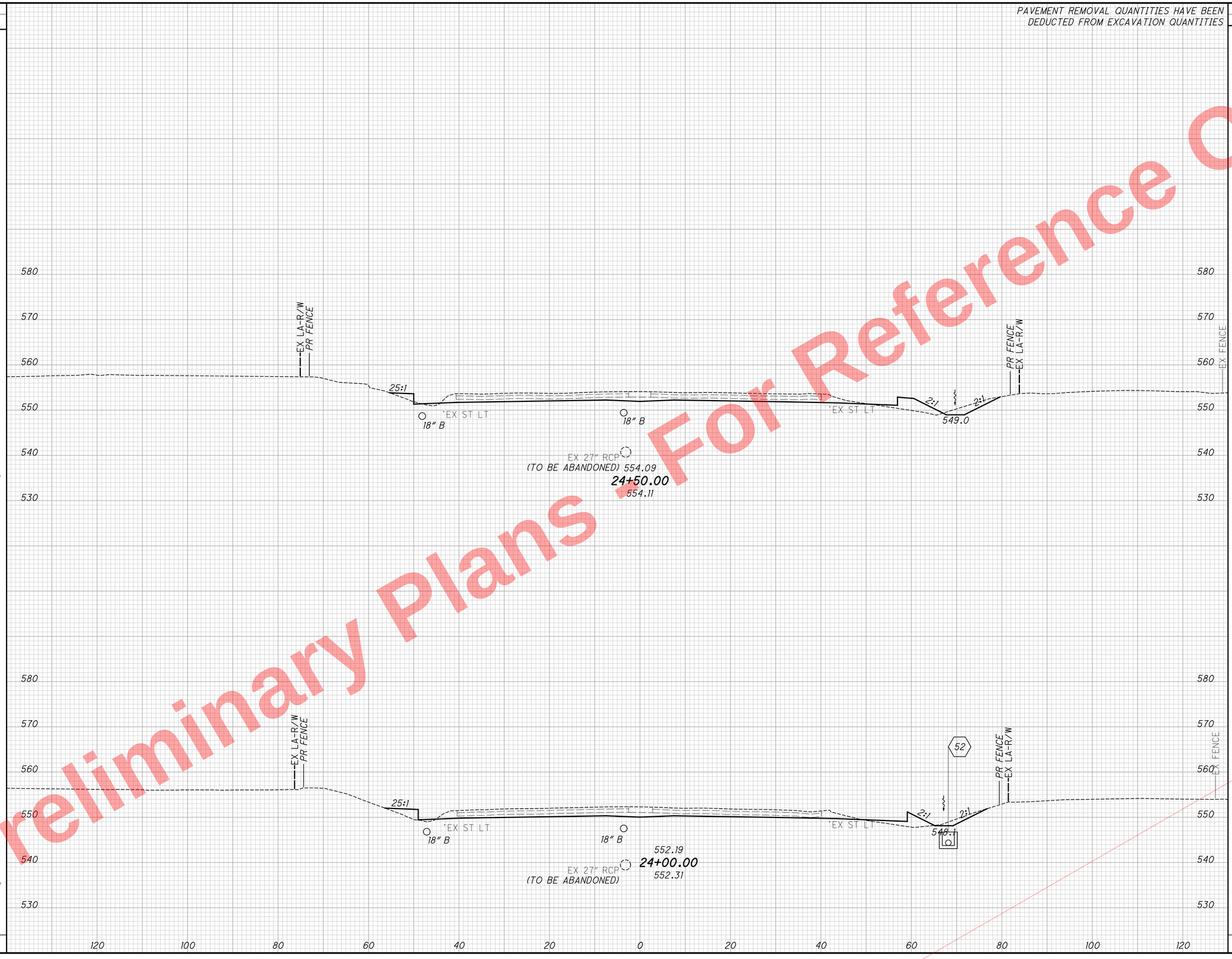

Preliminary Plans - For Reference Only

CROSS SECTIONS S.R. 562
STA. 24+00.00 TO STA. 24+50.00

HAM-75.7.85

494
1047

J:\20110903\ODOT\HAM\7889\roadway\sheets\77889XS002.dgn 5/22/2026 10:18:35 AM hbrendlinger

Preliminary Plans - For Reference Only

PAVEMENT REMOVAL QUANTITIES HAVE BEEN DEDUCTED FROM EXCAVATION QUANTITIES

SEEDING END WIDTH	SEEDING SQ. YDS.	END AREA CUT	END AREA FILL	VOLUME CUT	VOLUME FILL
35	172	71	46	129	81
27	166	69	41	132	64
	338			261	145

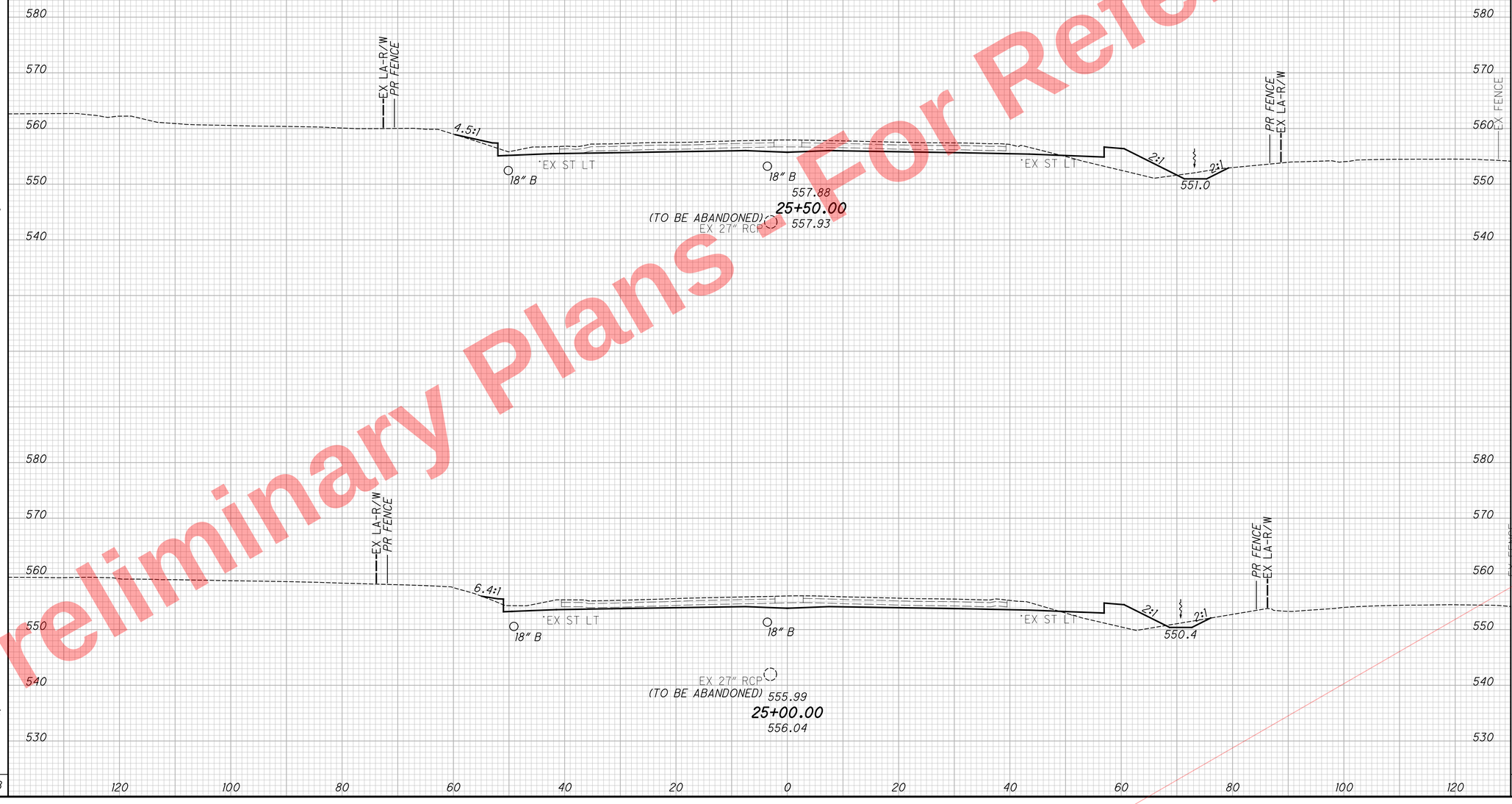

CALCULATED SEA
CHECKED DLR

CROSS SECTIONS S.R. 562
STA. 25+00.00 TO STA. 25+50.00

HAM-75.7.85

495
1047

J:\20110903\ODOT\HAM\7889\roadway\sheets\77889XS002.dgn 5/22/2026 10:18:35 AM hbrendlinger

PAVEMENT REMOVAL QUANTITIES HAVE BEEN DEDUCTED FROM EXCAVATION QUANTITIES

SEEDING END WIDTH	SEEDING SQ. YDS.
35	
	183
30	
	183
	366

END AREA CUT	END AREA FILL	VOLUME CUT	VOLUME FILL
85	40		
		157	56
		144	62
85	21		
		301	118

CALCULATED SEA
CHECKED DLR

CROSS SECTIONS S.R. 562
STA. 26+00.00 TO STA. 26+50.00

HAM-75.7.85

496
1047

590 580 570 560 550 540

(TO BE ABANDONED)
STA 26+30.03, 2.84' LT
EX MH-1, RIM ELEV 561.25'
27" RCP W 544.03
18" RCP E 544.03
21" RCP S 551.31

48

EX LA-R/W
PR FENCE

25:1

EX ST LT

15" B

18" B

561.68
26+50.00
561.74

EX 21" RCP
(TO BE ABANDONED)

(TO BE REMOVED)
STA 26+29.74, 72.29' RT
EX CB, GRATE ELEV 553.34'
21" RCP N 549.02

2:1

563.4

PR FENCE
EX LA-R/W

88

EX LA-R/W
PR FENCE

25:1

EX ST LT

18" B
559.78
26+00.00
559.86

(TO BE ABANDONED)
EX 27" RCP

2:1

553.0

PR FENCE
EX LA-R/W

EX FENCE

120 100 80 60 40 20 0 20 40 60 80 100 120

J:\20110903\ODOT\HAM\7889\roadway\sheets\7889XS002.dgn 5/22/2026 10:18:35 AM hbrendlinger

Preliminary Plans - For Reference Only

PAVEMENT REMOVAL QUANTITIES HAVE BEEN DEDUCTED FROM EXCAVATION QUANTITIES

GRADING DETAIL FOR ITS CABINET APPLIES STA 27+70 TO 27+80

EX LA-R/W
PR FENCE
3:1
4:1
10.0'

89
4:1
EX ST LT
18" B
565.48
27+50.00
565.60
EX 18" RCP
(TO BE ABANDONED)
2:1
556.8
PR FENCE
EX LA-R/W

25:1
15" B
563.58
27+00.00
563.72
555.1

590
580
570
560
550
540

120 100 80 60 40 20 0 20 40 60 80 100 120

SEEDING END WIDTH	SEEDING SQ. YDS.	END AREA CUT	END AREA FILL	VOLUME CUT	VOLUME FILL
35	195	82	35	155	73
34	195	85	44	157	77
	390			312	150

CALCULATED SEA
CHECKED DLR

CROSS SECTIONS S.R. 562
STA. 27+00.00 TO STA. 27+50.00

HAM-75.7.85

497
1047

Preliminary Plans - For Reference Only

J:\20110903\ODOT\HAM\7889\roadway\sheets\77889XS002.dgn 5/22/2026 10:18:35 AM hbrendlinger

SEEDING END WIDTH	SEEDING SQ. YDS.
38	211
37	206
	417

PAVEMENT REMOVAL QUANTITIES HAVE BEEN DEDUCTED FROM EXCAVATION QUANTITIES

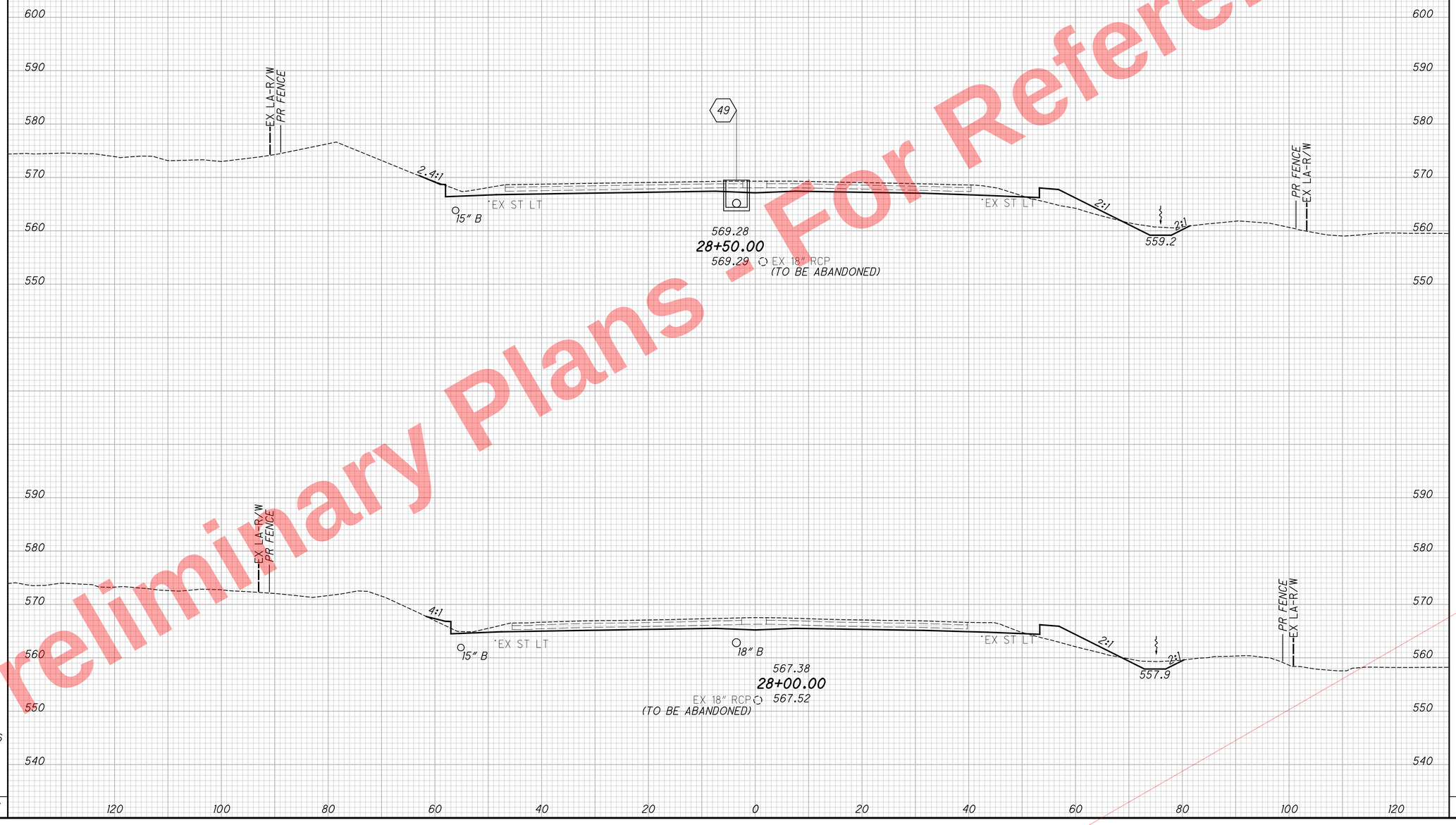

END AREA CUT	END AREA FILL	VOLUME CUT	VOLUME FILL
95	27	167	54
84	31	155	61
		322	115

CALCULATED SEA
CHECKED DLR

CROSS SECTIONS S.R. 562
STA. 28+00.00 TO STA. 28+50.00

HAM-75.7.85

498
1047

Preliminary Plans - For Reference Only

J:\20110903\ODOT\HAM\7889\roadway\sheets\77889XS002.dgn 5/22/2026 10:18:36 AM hbrendlinger

PAVEMENT REMOVAL QUANTITIES HAVE BEEN DEDUCTED FROM EXCAVATION QUANTITIES

SEEDING END WIDTH	SEEDING SQ. YDS.	END AREA CUT	END AREA FILL	VOLUME CUT	VOLUME FILL
44	239	98	33	188	60
40	217	105	32	186	54
	456			374	114

CALCULATED SEA
CHECKED DLR

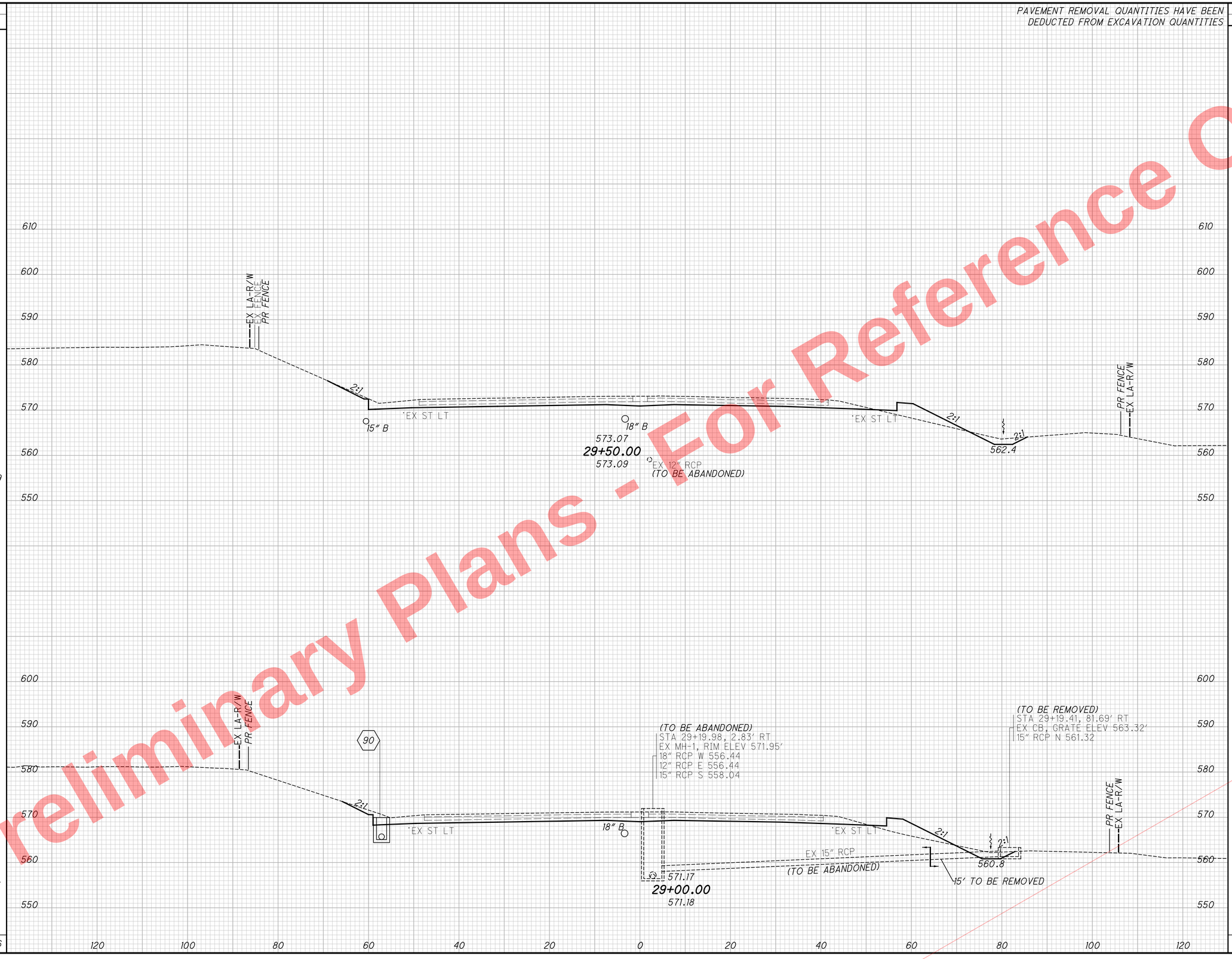

CROSS SECTIONS S.R. 562
STA. 29+00.00 TO STA. 29+50.00

HAM-75.7.85

499
1047

Preliminary Plans - For Reference Only

J:\20110903\ODOT\HAM\7889\roadway\sheets\77889XS002.dgn 5/22/2026 10:18:36 AM hbrendlinger

PAVEMENT REMOVAL QUANTITIES HAVE BEEN DEDUCTED FROM EXCAVATION QUANTITIES

SEEDING END WIDTH	SEEDING SQ. YDS.	END AREA CUT	END AREA FILL	VOLUME CUT	VOLUME FILL
39	255	116	32	215	59
53	272	116	32	198	60
	527			413	119

CALCULATED SEA
CHECKED DLR

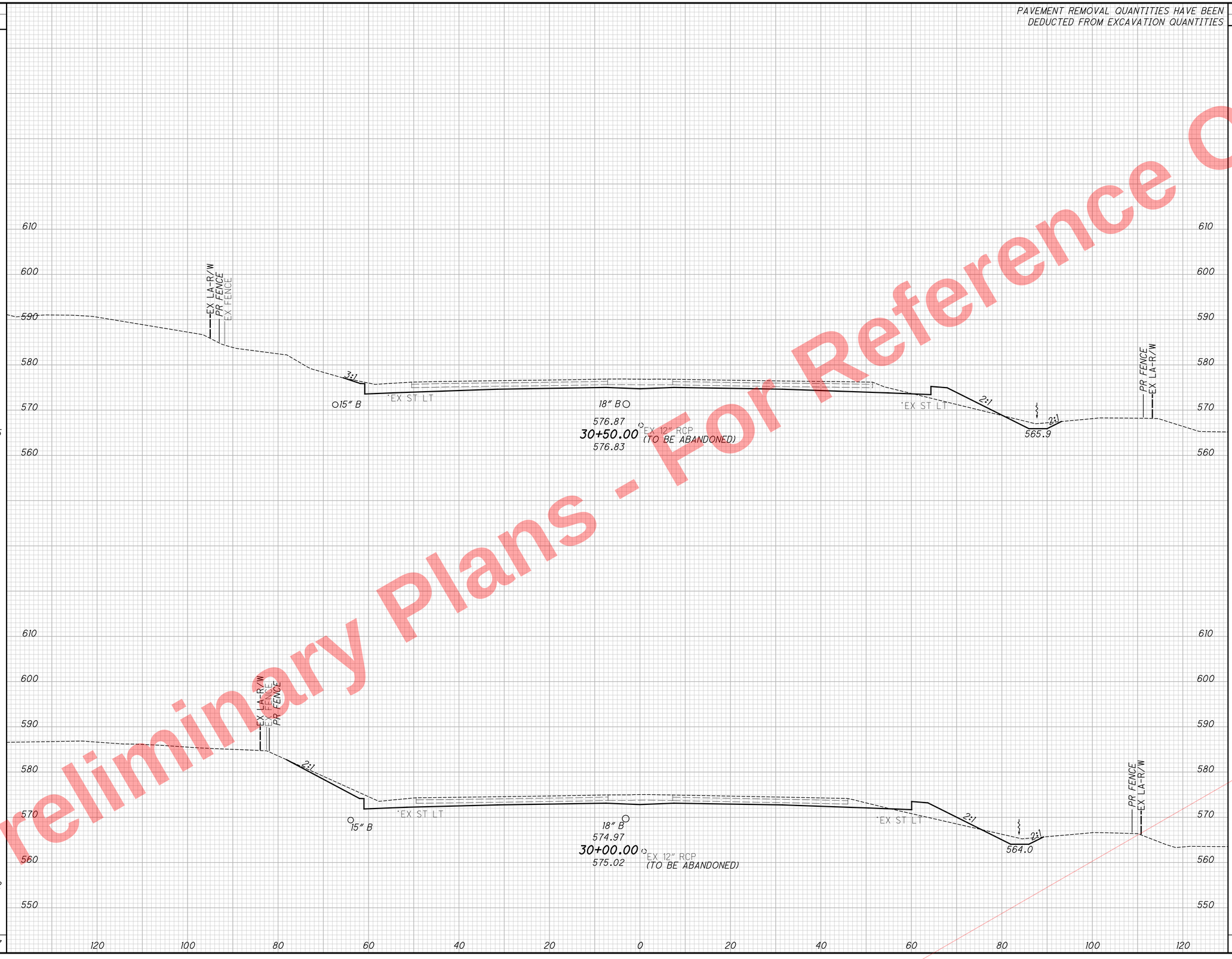

Preliminary Plans - For Reference Only

J:\20110903\ODOT\HAM\7889\roadway\sheets\77889XS002.dgn 5/22/2026 10:18:36 AM hbrendlinger

CROSS SECTIONS S.R. 562
STA. 30+00.00 TO STA. 30+50.00

HAM-75.7.85

500
1047

Preliminary Plans - For Reference Only

PAVEMENT REMOVAL QUANTITIES HAVE BEEN DEDUCTED FROM EXCAVATION QUANTITIES

SEEDING END WIDTH	SEEDING SQ. YDS.	END AREA CUT	END AREA FILL	VOLUME CUT	VOLUME FILL
28	211	133	15	243	35
46	239	130	23	227	51
	450			470	86

CALCULATED SEA
CHECKED DLR

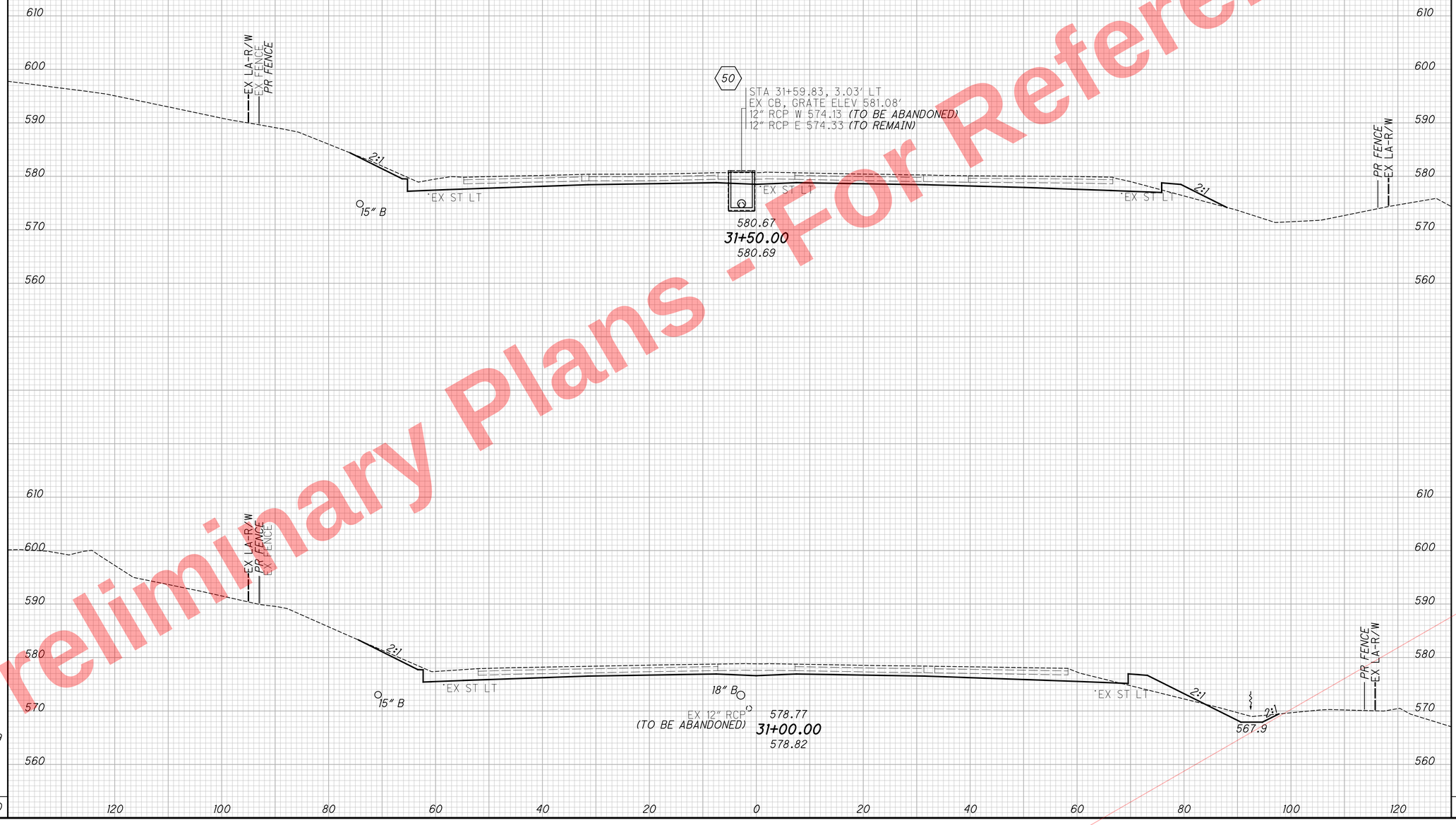

CROSS SECTIONS S.R. 562
STA. 31+00.00 TO STA. 31+50.00

HAM-75.7.85

501
1047

J:\20110903\ODOT\HAM\7889\roadway\sheets\7889XS002.dgn 5/22/2026 10:18:44 AM hbrendlinger

SEEDING	
END WIDTH	SQ. YDS.
9	104
	104

PAVEMENT REMOVAL QUANTITIES HAVE BEEN DEDUCTED FROM EXCAVATION QUANTITIES

END AREA		VOLUME	
CUT	FILL	CUT	FILL
88	3	200	16
		200	16

CALCULATED SEA
CHECKED DLR

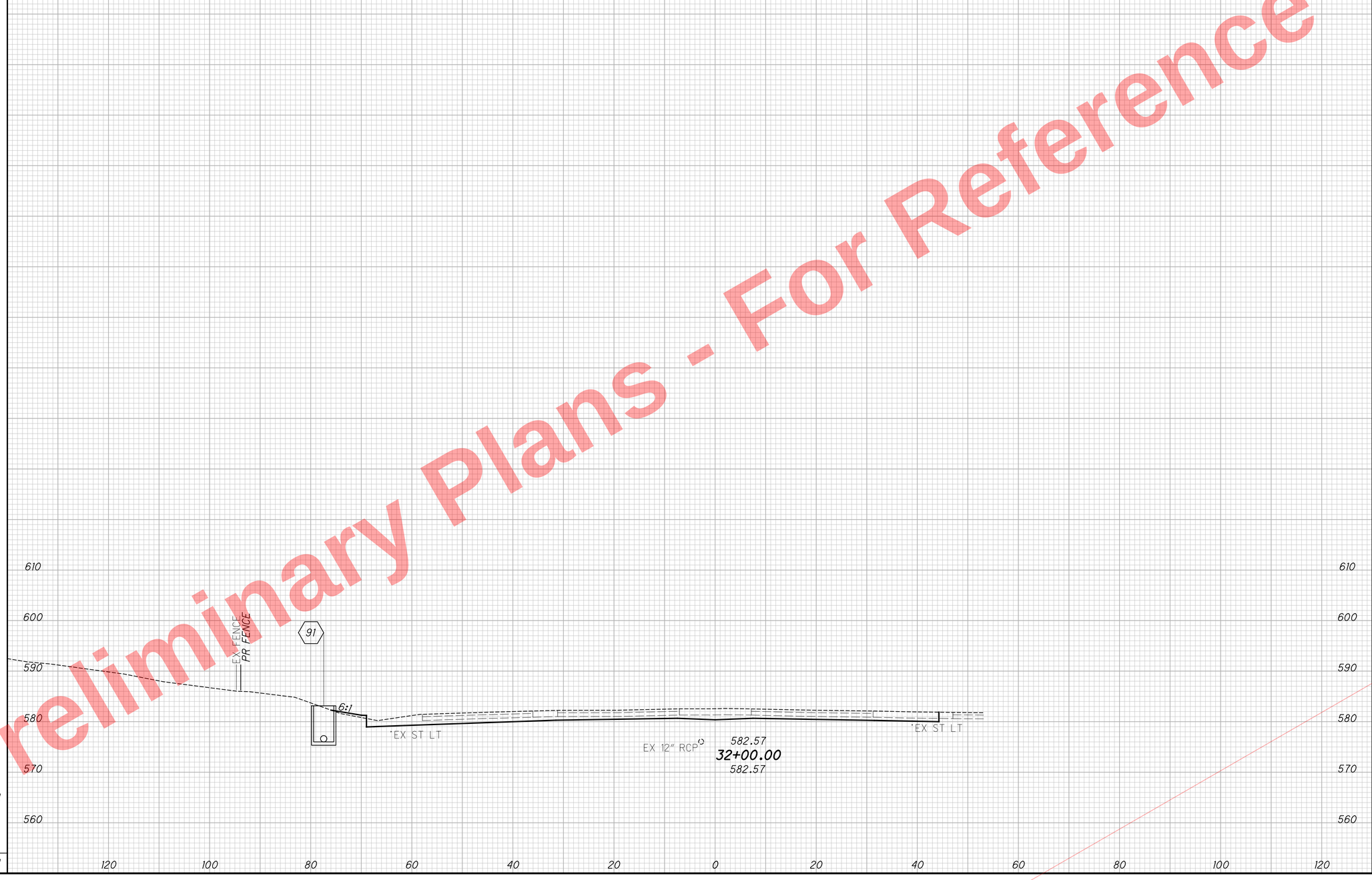

CROSS SECTIONS S.R. 562
STA. 32+00.00

HAM-75.7.85

502
1047

Preliminary Plans - For Reference Only

J:\20110903\ODOT\HAM\7889\roadway\sheets\7889XS002.dgn 5/22/2026 10:18:44 AM hbrendlinger

SEEDING	
END WIDTH	SQ. YDS.
7	56
12	0
	56

PAVEMENT REMOVAL QUANTITIES HAVE BEEN DEDUCTED FROM EXCAVATION QUANTITIES

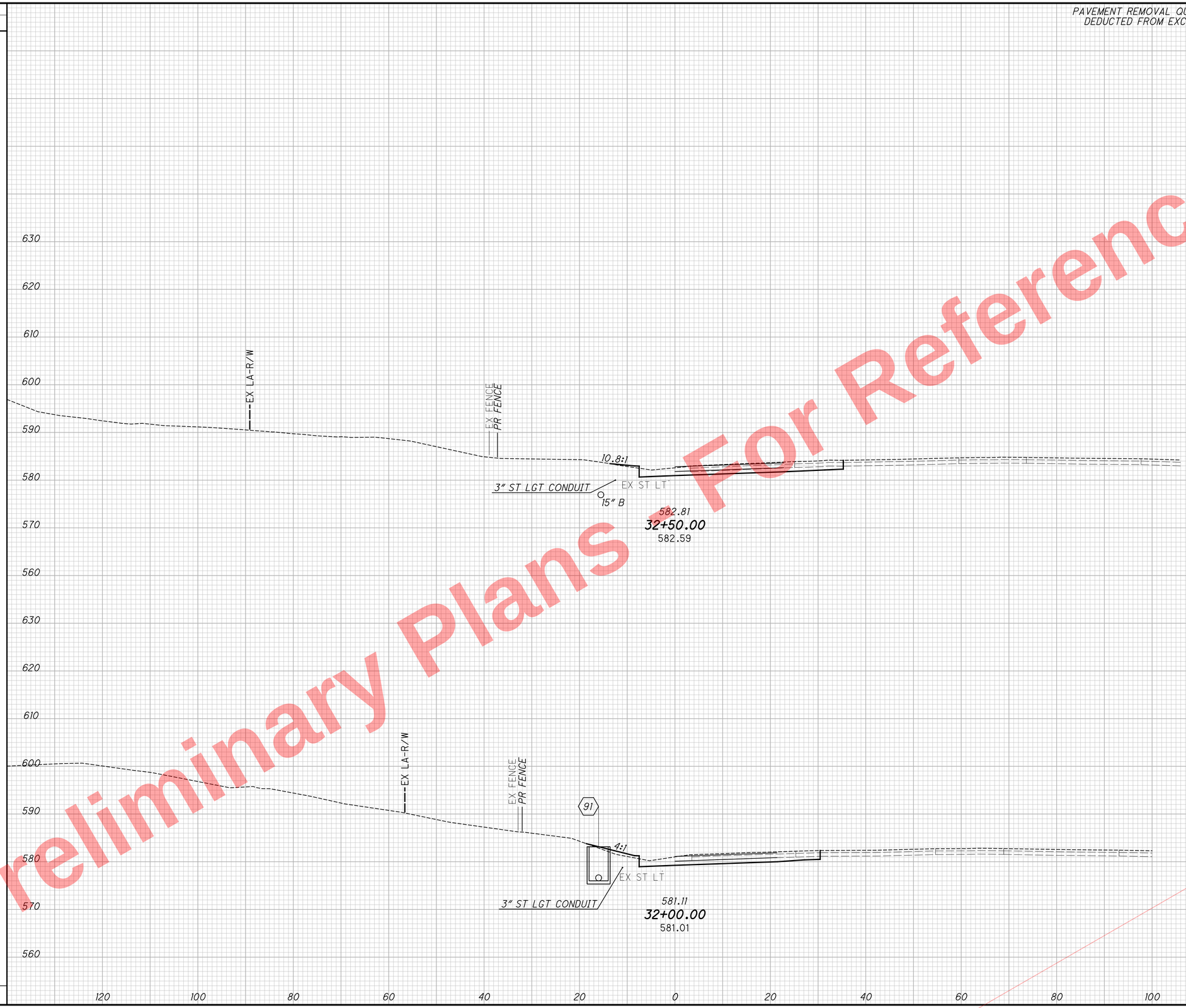

END AREA		VOLUME	
CUT	FILL	CUT	FILL
41	1	75	6
40	5	0	0
		75	6

CALCULATED SEA
CHECKED DLR

CROSS SECTIONS RAMP P
STA. 32+00.00 TO STA. 32+50.00

HAM-75-7.85

503
1047

Preliminary Plans - For Reference Only

J:\20110903\ODOT\HAM\77889\roadway\sheets\77889XS009.dgn 5/22/2026 10:18:45 AM hbrendlinger

PAVEMENT REMOVAL QUANTITIES HAVE BEEN DEDUCTED FROM EXCAVATION QUANTITIES

SEEDING END WIDTH	SEEDING SQ. YDS.	END AREA CUT	END AREA FILL	VOLUME CUT	VOLUME FILL
12	39	14	5	45	5
2	28	35	0	70	1
	67			115	6

CALCULATED SEA
CHECKED DLR

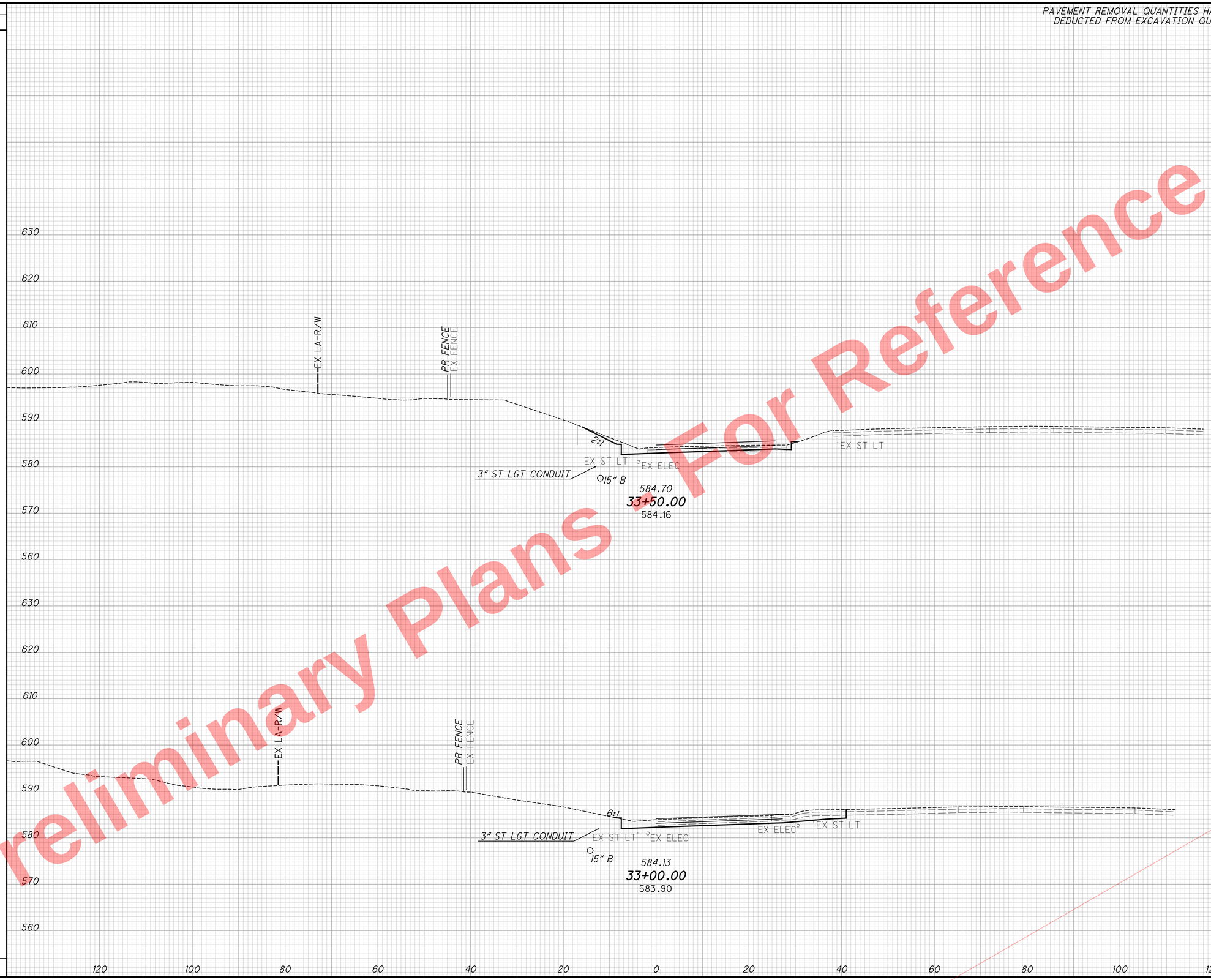

Preliminary Plans
For Reference Only

CROSS SECTIONS RAMP P
STA. 33+00.00 TO STA. 33+50.00

HAM-75-7.85

504
1047

J:\20110903\ODOT\HAM\7889\roadway\sheets\77889XS009.dgn 5/22/2026 10:18:45 AM hbrendlinger

PAVEMENT REMOVAL QUANTITIES HAVE BEEN DEDUCTED FROM EXCAVATION QUANTITIES

SEEDING END WIDTH	SEEDING SQ. YDS.	END AREA CUT	END AREA FILL	VOLUME CUT	VOLUME FILL
11	83	16	1	23	10
18	89	9	9	21	13
	172			44	23

CALCULATED SEA
CHECKED DLR

CROSS SECTIONS RAMP P
STA. 34+00.00 TO STA. 34+50.00

HAM-75-7.85

505
1047

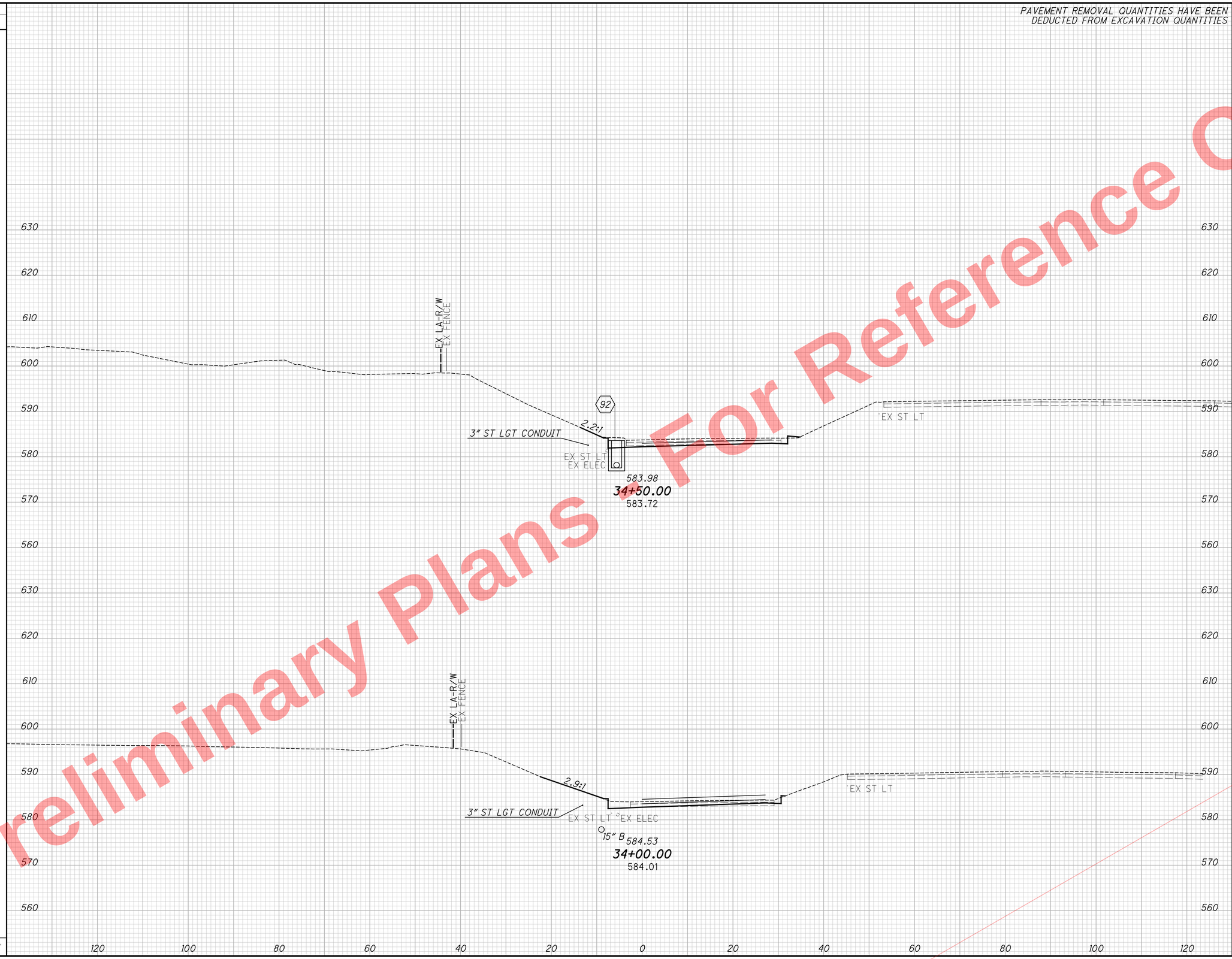

Preliminary Plans
For Reference Only

J:\20110903\ODOT\HAM\77889\roadway\sheets\77889XS009.dgn 5/22/2026 10:18:45 AM hbrendlinger

Preliminary Plans - For Reference Only

PAVEMENT REMOVAL QUANTITIES HAVE BEEN DEDUCTED FROM EXCAVATION QUANTITIES

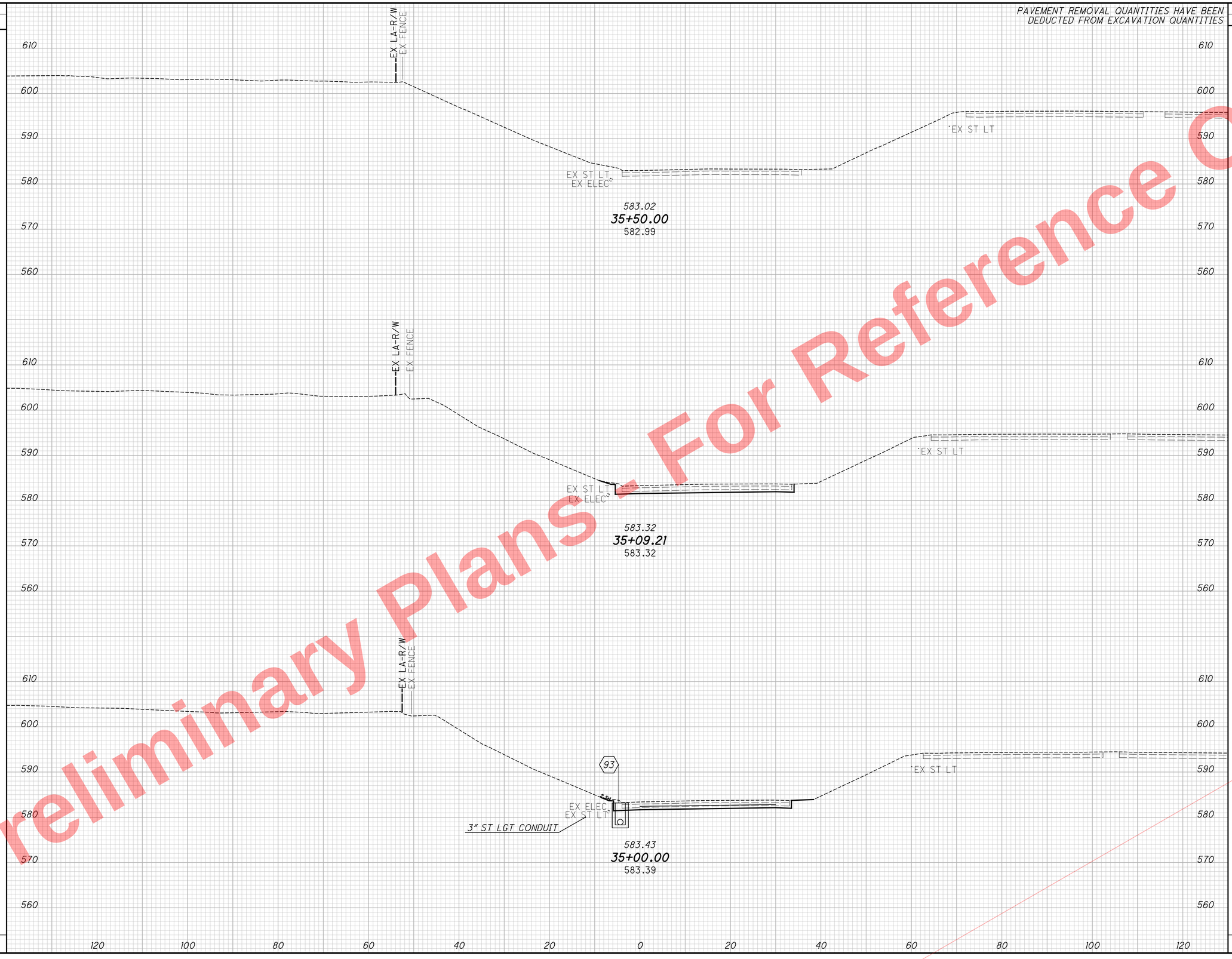

SEEDING END WIDTH	SEEDING SQ. YDS.	END AREA CUT	END AREA FILL	VOLUME CUT	VOLUME FILL
6	8	26	0	9	0
9	55	25	0	38	1
	63			47	1

CALCULATED SEA
CHECKED DLR

CROSS SECTIONS RAMP P
STA. 35+00.00 TO STA. 35+50.00

HAM-75-7.85

506
1047

J:\20110903\ODOT\HAM\7889\roadway\sheets\77889XS009.dgn 5/22/2026 10:18:45 AM hbrendlinger

PAVEMENT REMOVAL QUANTITIES HAVE BEEN DEDUCTED FROM EXCAVATION QUANTITIES

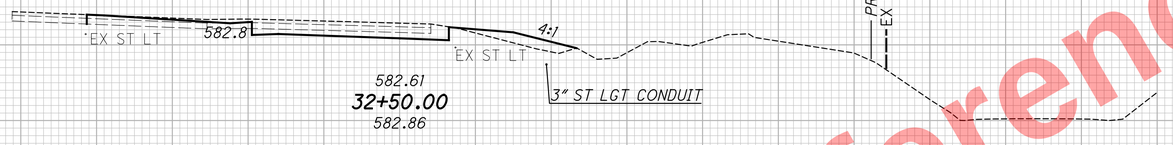



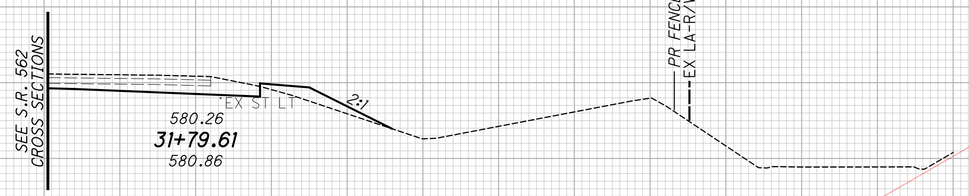

SEEDING END WIDTH	SEEDING SQ. YDS.	END AREA CUT	END AREA FILL	VOLUME CUT	VOLUME FILL
40	200	22	15	48	28
31	57	30	15	23	12
19	0	32	17	0	0
	257			71	40

CALCULATED SEA
CHECKED DLR

CROSS SECTIONS RAMP Q
STA. 31+79.61 TO STA. 32+50.00

HAM-75-7.85

507
1047

Preliminary Plans - For Reference Only

J:\20110903\ODOT\HAM\77889\roadway\sheets\77889XS007.dgn 5/22/2026 10:18:46 AM hbrendlinger

PAVEMENT REMOVAL QUANTITIES HAVE BEEN DEDUCTED FROM EXCAVATION QUANTITIES

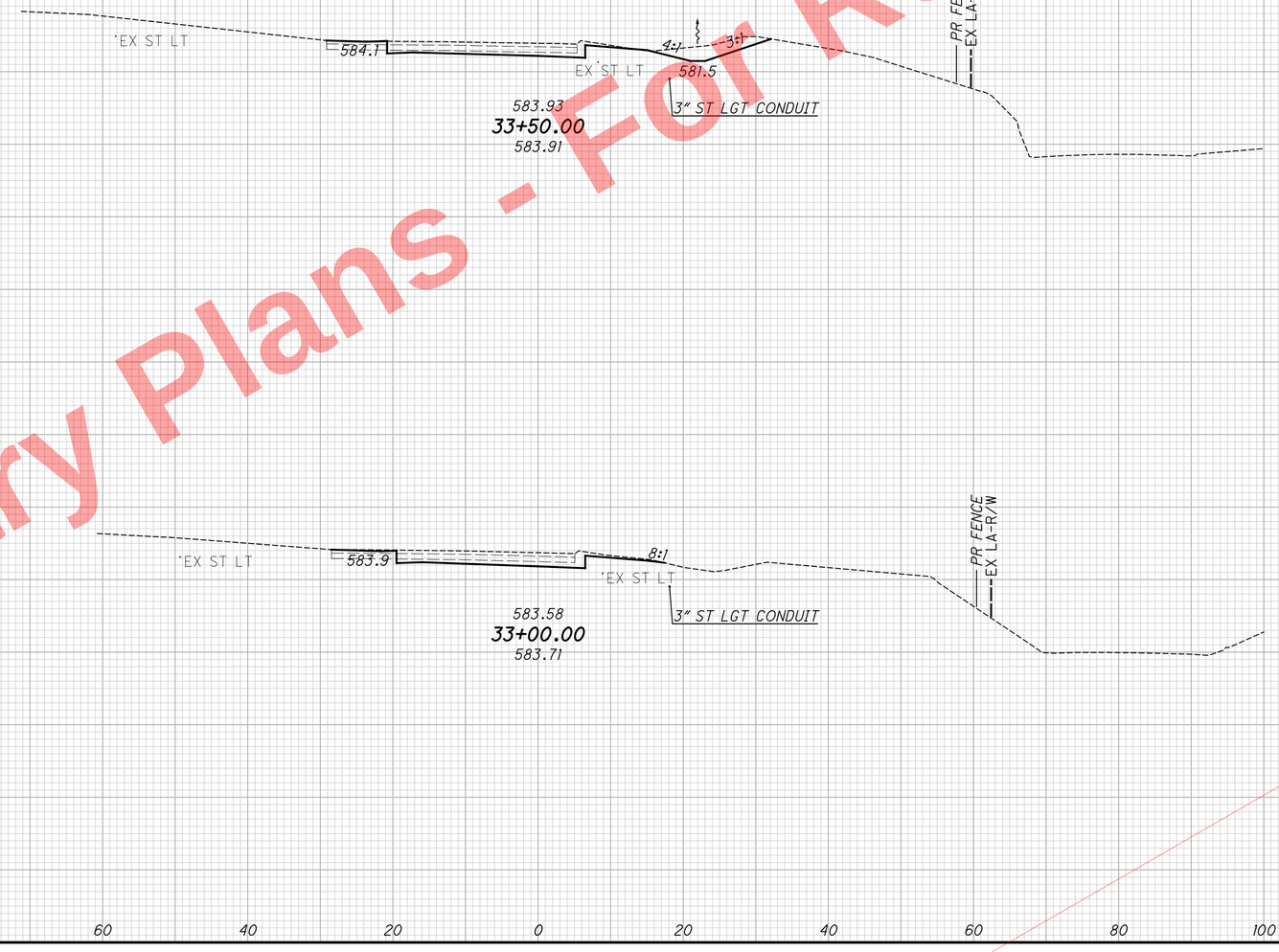

SEEDING END WIDTH	SEEDING SQ. YDS.	END AREA CUT	END AREA FILL	VOLUME CUT	VOLUME FILL
36	156	37	0	53	0
20	172	20	0	39	14
	328			92	14

CALCULATED SEA
CHECKED DLR

CROSS SECTIONS RAMP Q
STA. 33+00.00 TO STA. 33+50.00

HAM-75-7.85

508
1047

Preliminary Plans - For Reference Only

J:\20110903\ODOT\HAM\77889\roadway\sheets\77889XS007.dgn 5/22/2026 10:18:46 AM hbrendlinger

PAVEMENT REMOVAL QUANTITIES HAVE BEEN DEDUCTED FROM EXCAVATION QUANTITIES

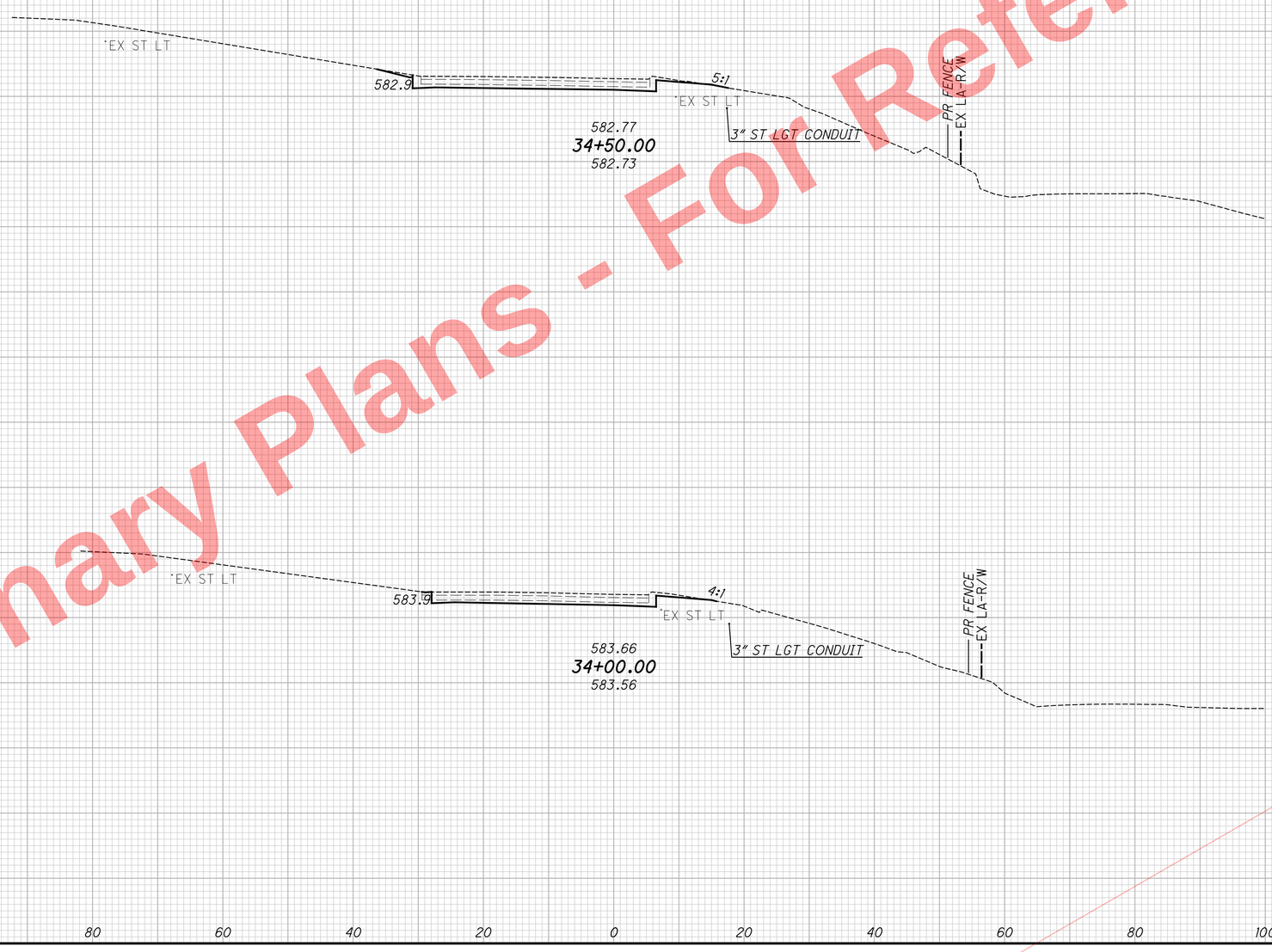

SEEDING END WIDTH	SEEDING SQ. YDS.	END AREA CUT	END AREA FILL	VOLUME CUT	VOLUME FILL
18	83	26	0	42	0
12	139	19	0	52	0
	222			94	0

CALCULATED SEA
CHECKED DLR

CROSS SECTIONS RAMP Q
STA. 34+00.00 TO STA. 34+50.00

HAM-75-7.85

509
1047

Preliminary Plans - For Reference Only

J:\20110903\ODOT\HAM\7889\roadway\sheets\77889XS007.dgn 5/22/2026 10:18:46 AM hbrendlinger

PAVEMENT REMOVAL QUANTITIES HAVE BEEN DEDUCTED FROM EXCAVATION QUANTITIES

SEEDING END WIDTH	SEEDING SQ. YDS.	END AREA CUT	END AREA FILL	VOLUME CUT	VOLUME FILL
29	144	10	4	23	6
23	35	15	2	8	1
17	0	14	1	0	0
	179			31	7

CALCULATED SSK
CHECKED JLM

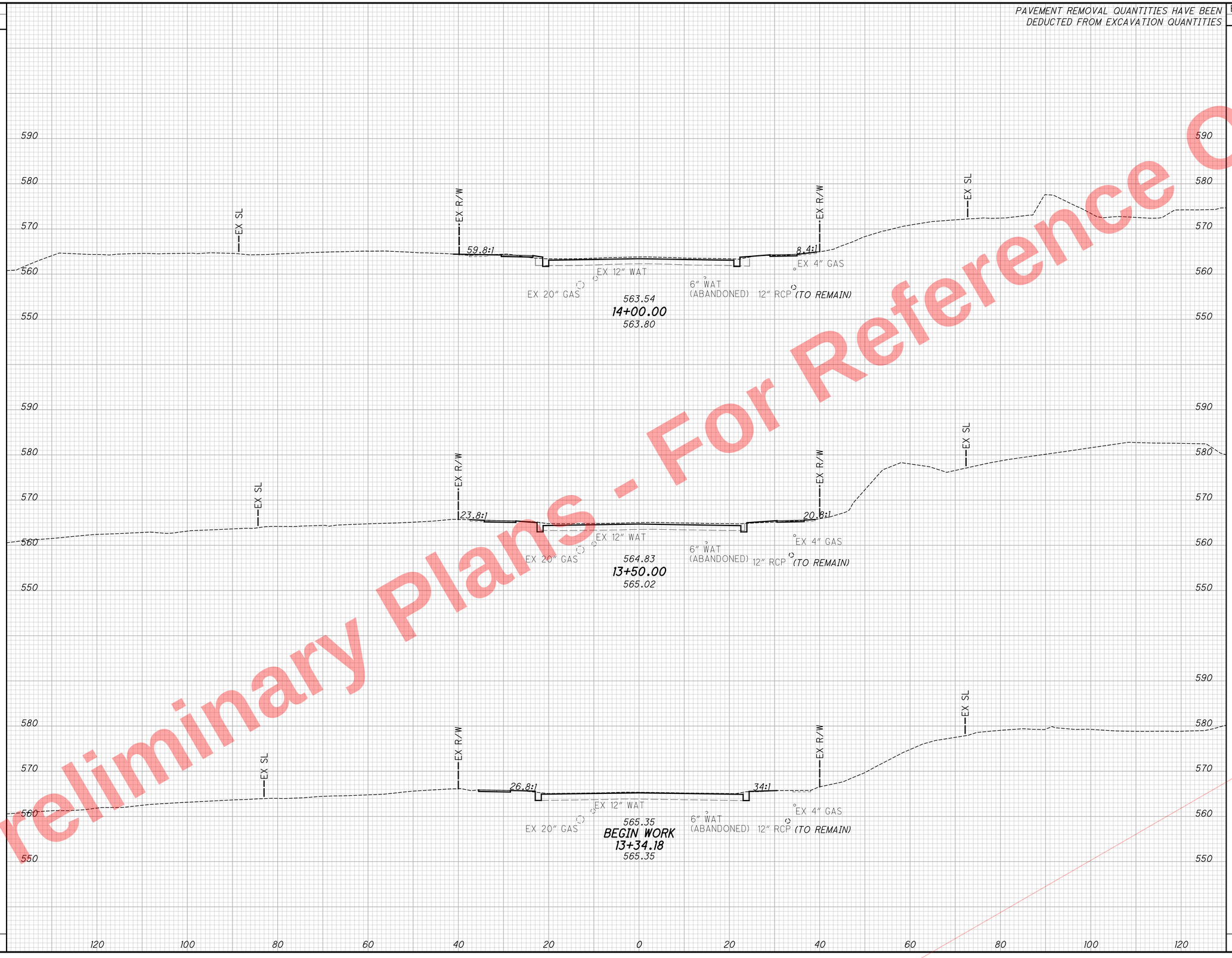

CROSS SECTIONS TOWNE ST.
STA. 13+34.18 TO STA. 14+00.00

HAM-75-7.85

510
1047

J:\20110903\ODOT\HAM\7889\roadway\sheets\77889XS935.dgn 5/22/2026 10:18:47 AM hbrendlinger

For Reference Only
Preliminary Plans - Not

PAVEMENT REMOVAL QUANTITIES HAVE BEEN DEDUCTED FROM EXCAVATION QUANTITIES

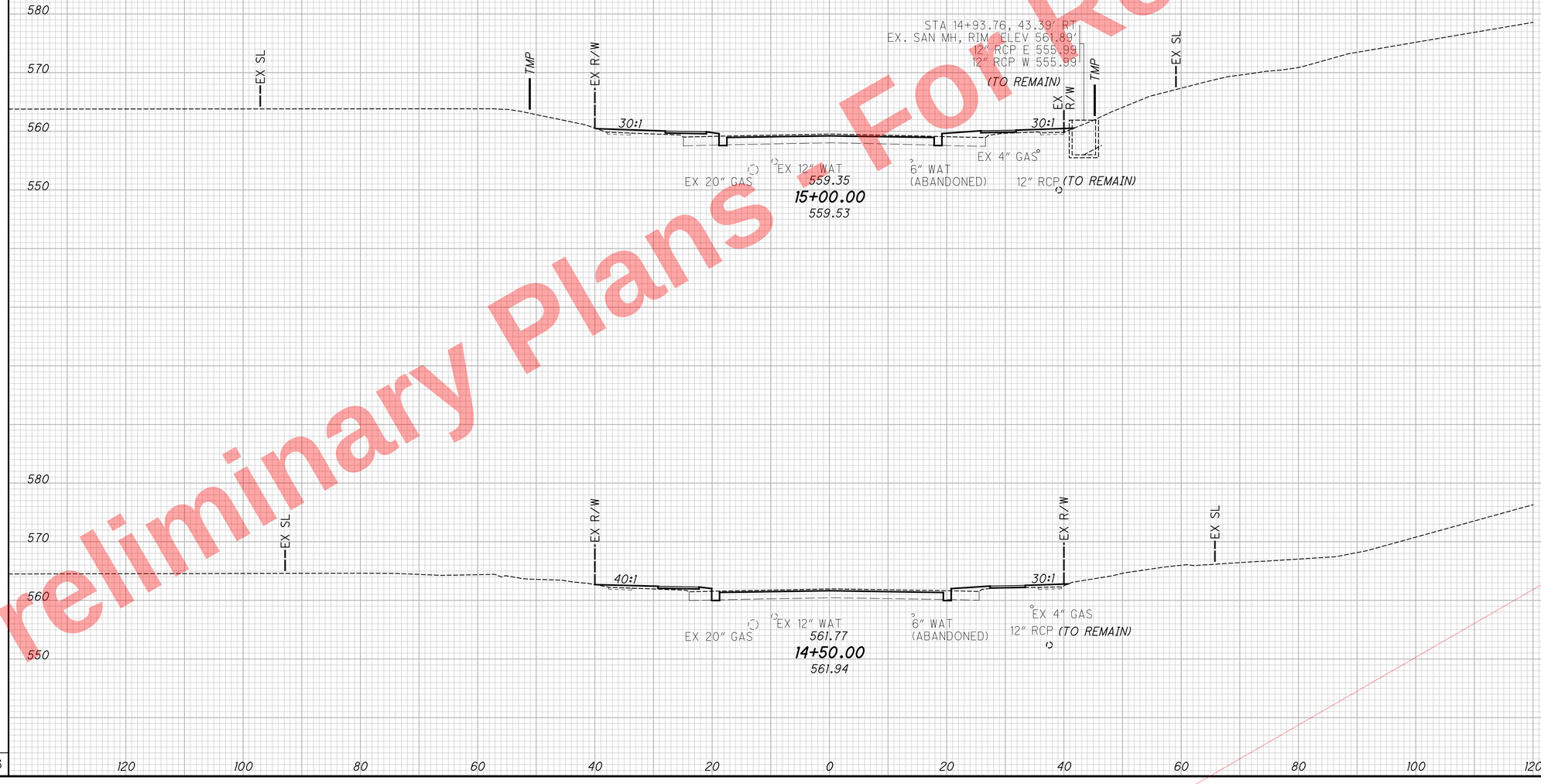

SEEDING END WIDTH	SEEDING SQ. YDS.	END AREA CUT	END AREA FILL	VOLUME CUT	VOLUME FILL
36	191	6	24	13	36
33	172	9	15	17	17
	363			30	53

CALCULATED SSK
CHECKED JLM

CROSS SECTIONS TOWNE ST.
STA. 14+50.00 TO STA. 15+00.00

HAM-75-7.85

511
1047

For Reference Only
Preliminary Plans - Not for Construction

J:\20110903\ODOT\HAM\77889\roadway\sheets\77889XS936.dgn 5/22/2026 10:18:47 AM hbrendlinger

PAVEMENT REMOVAL QUANTITIES HAVE BEEN DEDUCTED FROM EXCAVATION QUANTITIES

SEEDING END WIDTH	SEEDING SQ. YDS.	END AREA CUT	END AREA FILL	VOLUME CUT	VOLUME FILL
54	240	23	55	35	105
32	215	15	59	15	126
45	226	1	77	6	94
	681			56	325

CALCULATED SSK
CHECKED JLM

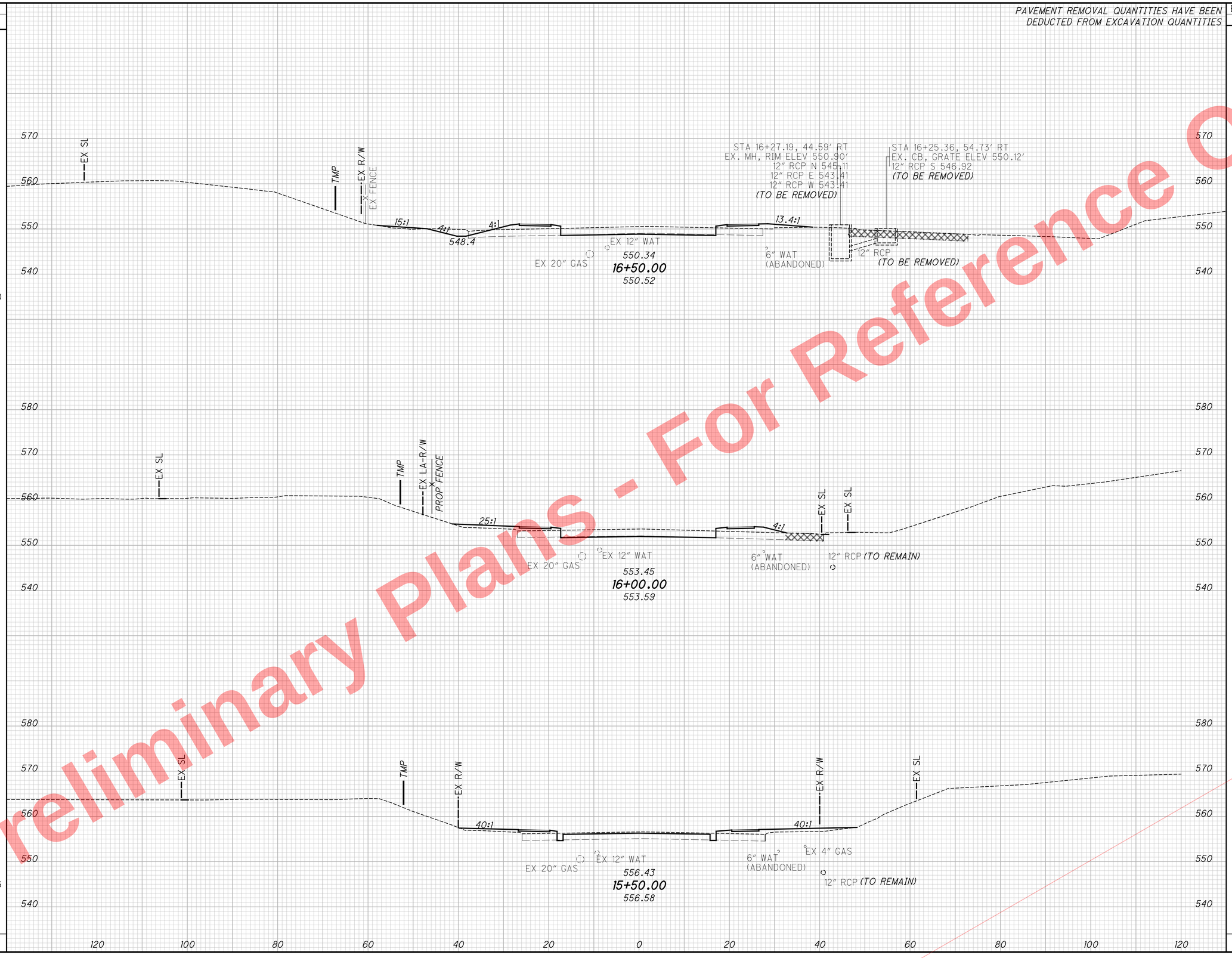

CROSS SECTIONS TOWNE ST. STA. 15+50.00 TO STA. 16+50.00

HAM-75-7.85

512
1047

Preliminary Plans - For Reference Only

J:\20110903\ODOT\HAM\7889\roadway\sheets\77889XS937.dgn 5/22/2026 10:18:48 AM hbrendlinger

PAVEMENT REMOVAL QUANTITIES HAVE BEEN DEDUCTED FROM EXCAVATION QUANTITIES

SEEDING END WIDTH	SEEDING SQ. YDS.	END AREA CUT	END AREA FILL	VOLUME CUT	VOLUME FILL
55	786	19	566	170	995
228	886	165	509	214	518
91	404	66	50	83	96
	2076			467	1609

CALCULATED SSK CHECKED JLM

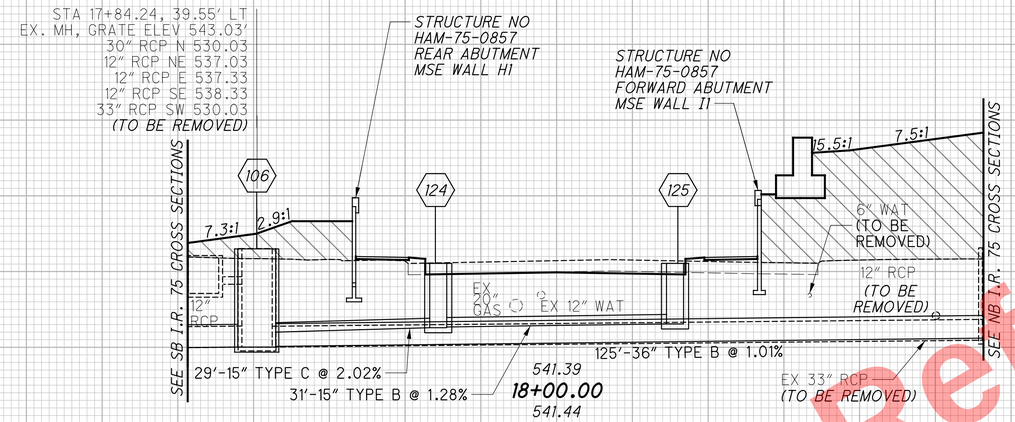

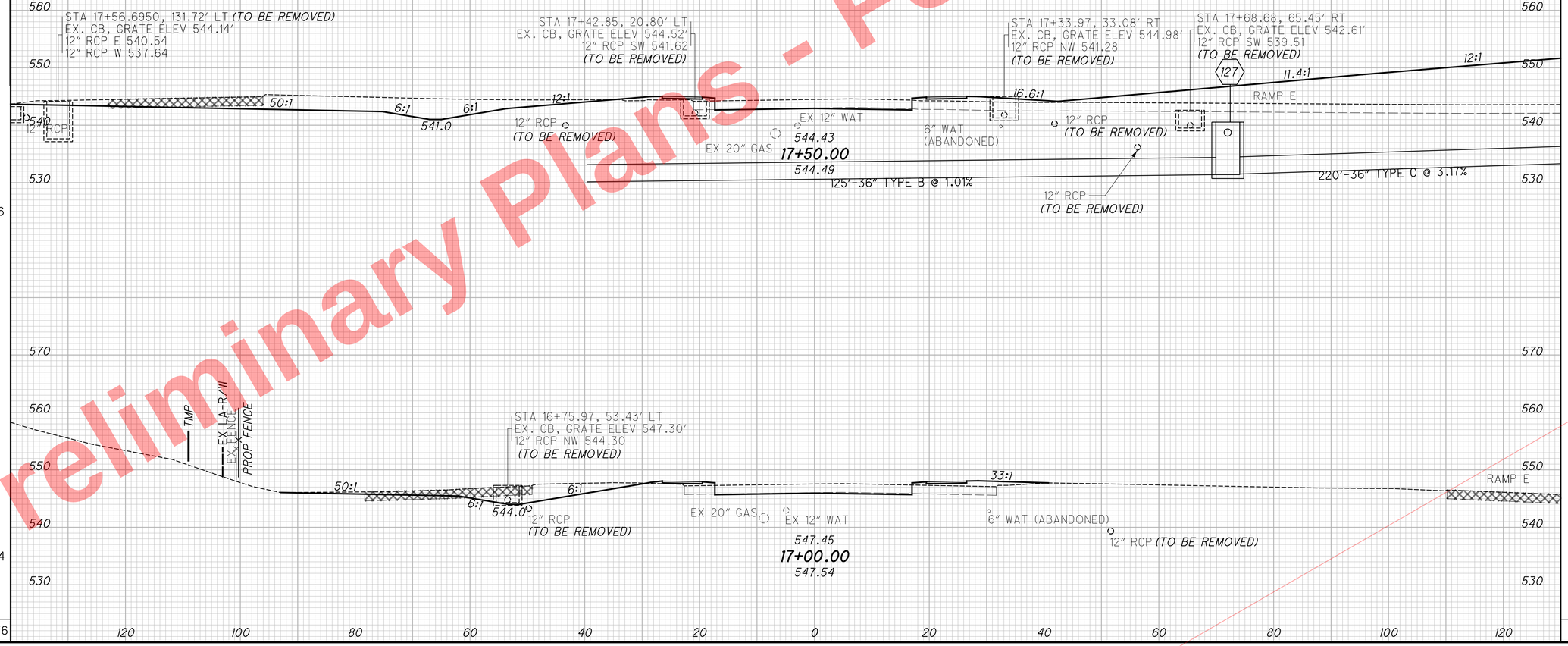

Preliminary Plans - For Reference Only

CROSS SECTIONS TOWNE ST.
STA. 17+00.00 TO STA. 18+00.00

HAM-75-7.85

513
1047

J:\20110903\ODOT\HAM\7889\roadway\sheets\77889XS938.dgn 5/22/2026 10:18:49 AM hbrendlinger

PAVEMENT REMOVAL QUANTITIES HAVE BEEN DEDUCTED FROM EXCAVATION QUANTITIES

SEEDING END WIDTH	SEEDING SQ. YDS.
10	56
10	56
10	180
	292

END AREA CUT	END AREA FILL	VOLUME CUT	VOLUME FILL
24	23	43	43
22	23	39	44
21	24	36	546
		118	633

CALCULATED SSK
CHECKED JLM

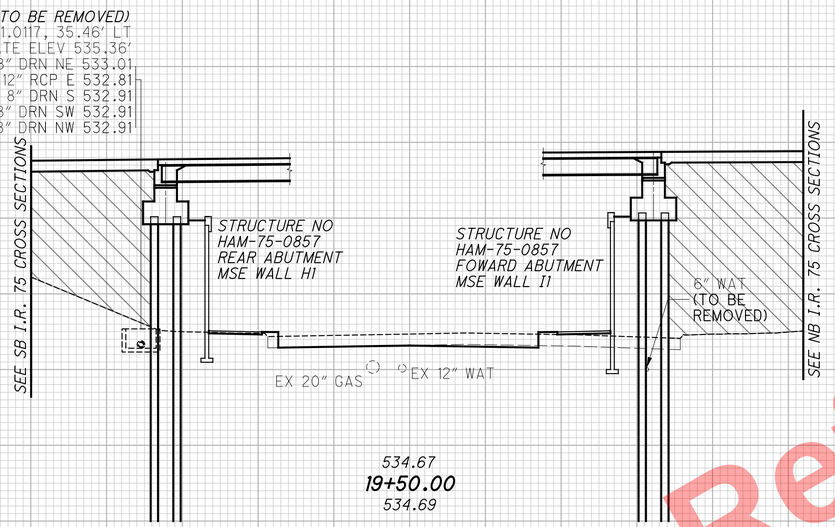

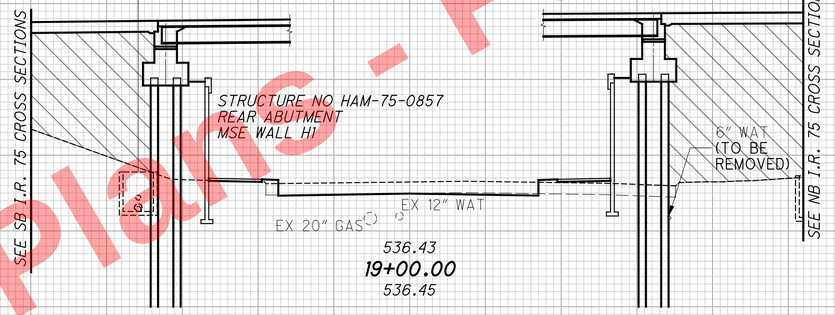

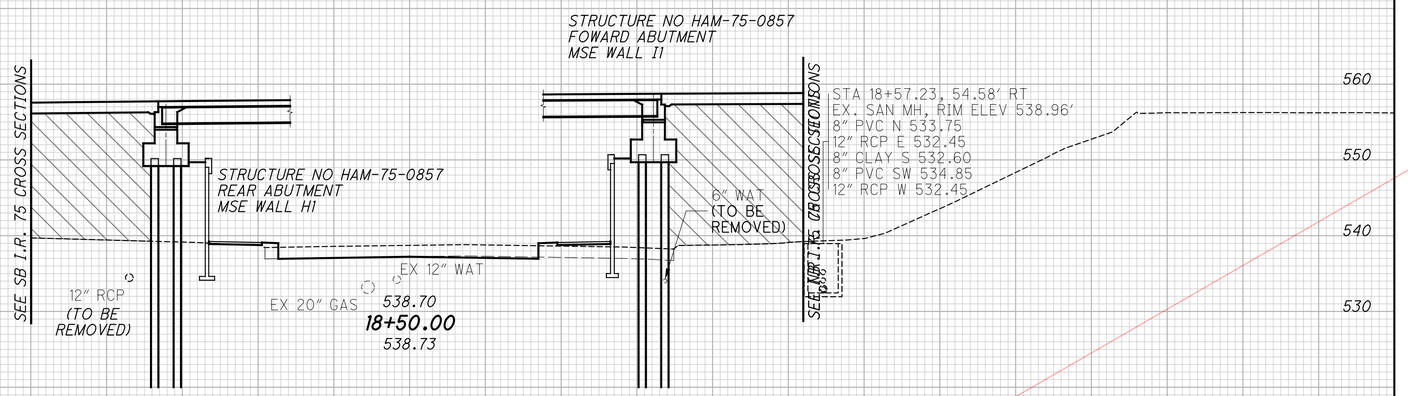

Preliminary Plans - For Reference Only

CROSS SECTIONS TOWNE ST.
STA. 18+50.00 TO STA. 19+50.00

HAM-75-7.85

514
1047

J:\20110903\ODOT\HAM\77889\roadway\sheets\77889XS939.dgn 5/22/2026 10:18:49 AM hbrendlinger

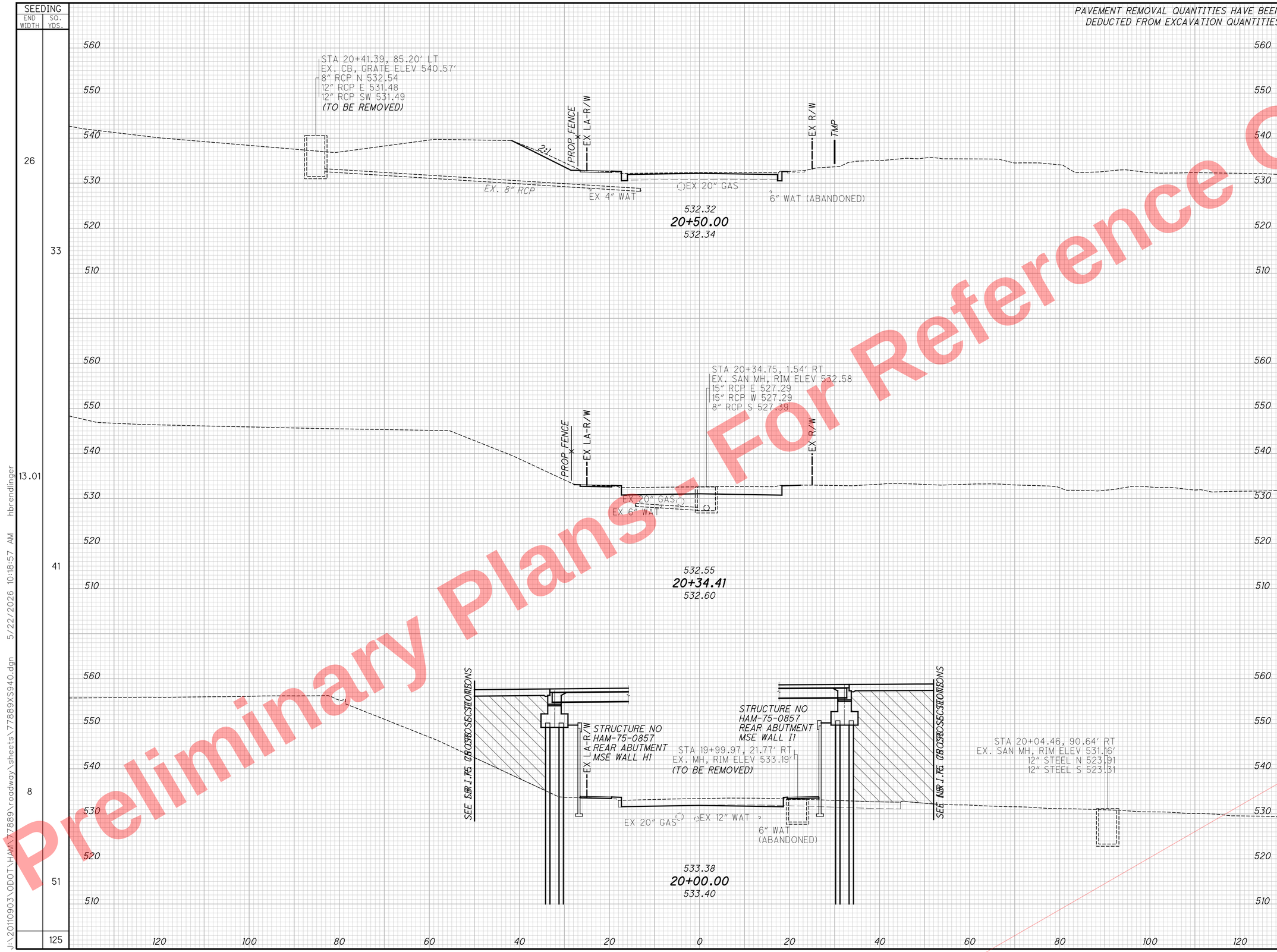

SEEDING END WIDTH	SEEDING SQ. YDS.	END AREA CUT	END AREA FILL	VOLUME CUT	VOLUME FILL
26		14	25		
	33			23	62
13.01		62	1		
	41			81	1
8		11	41		
	51			33	60
	125			137	123

CALCULATED SSK
CHECKED JLM

CROSS SECTIONS TOWNE ST.
STA. 20+00.00 TO STA. 20+50.00

HAM-75-7.85

Preliminary Plans - For Reference Only

J:\20110903\ODOT\HAM\77889\roadway\sheets\77889XS940.dgn 5/22/2026 10:18:57 AM hbrendlinger

PAVEMENT REMOVAL QUANTITIES HAVE BEEN DEDUCTED FROM EXCAVATION QUANTITIES

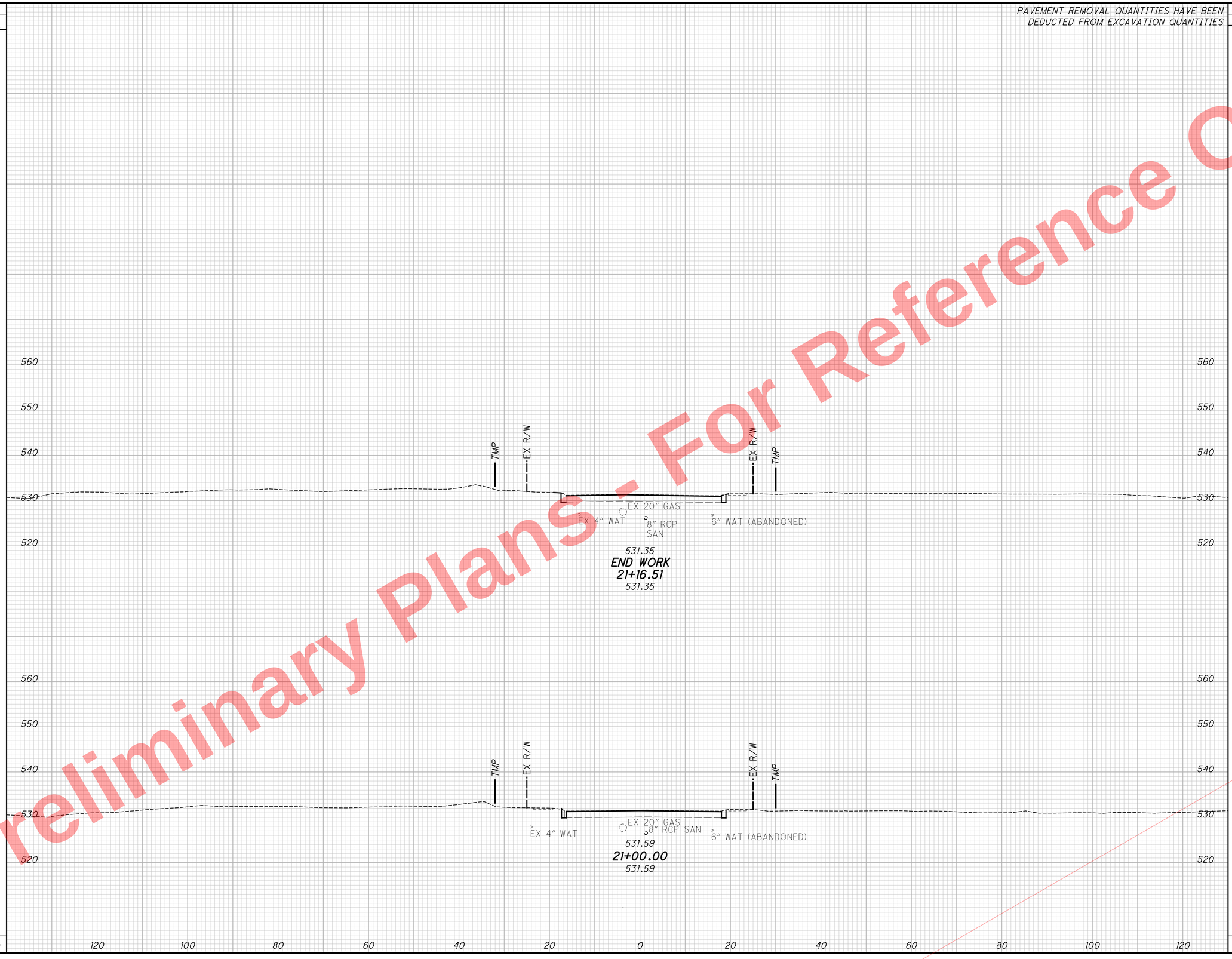

SEEDING END WIDTH	SEEDING SQ. YDS.	END AREA CUT	END AREA FILL	VOLUME CUT	VOLUME FILL
7	14	4	48	2	29
8	92	3	48	16	67
	106			18	96

CALCULATED SSK
CHECKED JLM

CROSS SECTIONS TOWNE ST.
STA. 21+00.00TO STA. 21+50.00

HAM-75-7.85

516
1047

Preliminary Plans - For Reference Only

J:\20110903\ODOT\HAM\7889\roadway\sheets\77889XS941.dgn 5/22/2026 10:19:05 AM hbrendlinger

PAVEMENT REMOVAL QUANTITIES HAVE BEEN DEDUCTED FROM EXCAVATION QUANTITIES

SEEDING END WIDTH	SEEDING SQ. YDS.	END AREA CUT	END AREA FILL	VOLUME CUT	VOLUME FILL
11	61	14	5	19	12
12	16	7	8	3	3
9	0	7	5	0	0
	77			22	15

CALCULATED CFR
CHECKED SSK

EMBANKMENT INCLUDED WITH MSE WALL I QUANTITIES

EXCAVATION & EMBANKMENT INCLUDED WITH MSE WALL I QUANTITIES

NOISE WALL NO 2
COMBINATION TRAFFIC
NOISE WALL BARRIER
MSE WALL I
SEE SB I.R. 75 CROSS SECTIONS
EX LA-R/W
EX RETAINING WALL (TO BE REMOVED)
EX RCP
EX FO
2.68' RT
V 543.09
W 532.81
E 532.16
(TO BE REMOVE)

STA 0+55.95, 111.92' RT
EX. SAN MH, RIM ELEV 537.28'
8" DRN N 534.27
12" RCP E 531.77
8" DRN SW 532.87
8" DRN W 532.87
8" DRN NW 534.47'

EX WAT

(TO BE REMOVED)
STA 0+22.00, 9.97' RT
EX MH, RIM ELEV 533.19

520 530 540 550 560 570 580

120 100 80 60 40 20 0 20 40 60 80 100 120

Preliminary Plans - Not For Reference Only

CROSS SECTIONS CEDAR ST
STA. 0+36.40 TO STA. 1+00.00

HAM-75-7.85

517
1047

J:\20110903\ODOT\HAM\77889\roadway\sheets\77889XS942.dgn 5/22/2026 10:19:06 AM hbrendlinger

Preliminary Plans - For Reference Only

PAVEMENT REMOVAL QUANTITIES HAVE BEEN DEDUCTED FROM EXCAVATION QUANTITIES

SEEDING END WIDTH	SEEDING SQ. YDS.	END AREA CUT	END AREA FILL	VOLUME CUT	VOLUME FILL
11	31	0	0	14	6
11	31	19	0	16	2
	62			30	8

CALCULATED CFR
CHECKED SSK

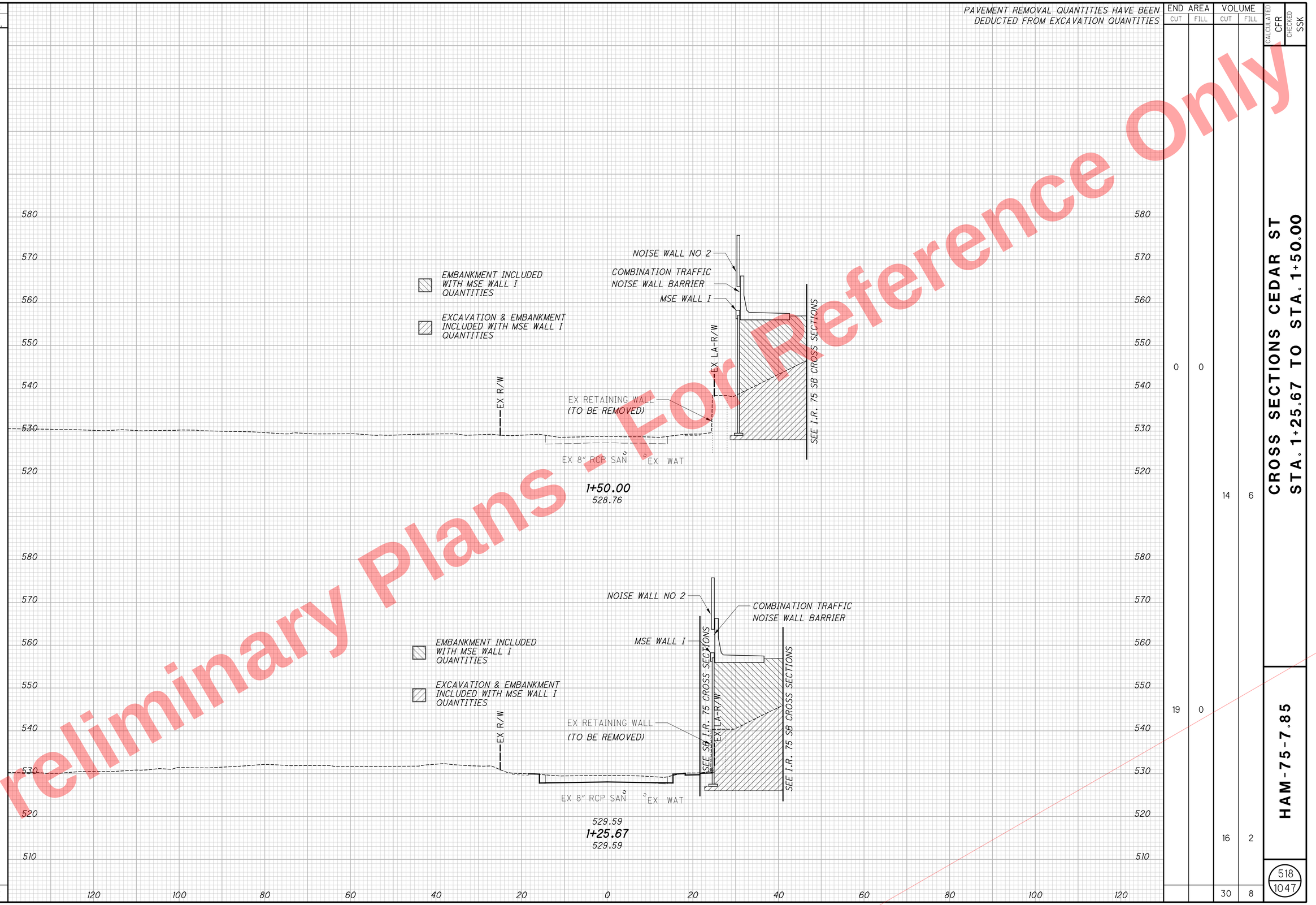

CROSS SECTIONS CEDAR ST
STA. 1+25.67 TO STA. 1+50.00

HAM-75-7.85

518
1047

J:\20110903\ODOT\HAM\7889\roadway\sheets\77889XS943.dgn 5/22/2026 10:19:06 AM hbrendlinger

SUPERELEVATION TABLE - I.R. 75 - CURVE NO 75-2

PI STA 420+66.70 | Dc = 1° 45′ 0″

REMARKS	OUTSIDE EDGE OF TRAVELED WAY					CENTERLINE OF LANES					INSIDE EDGE (PROFILE GRADE)		STATION	INSIDE EDGE (PROFILE GRADE)		CENTERLINE OF LANES					OUTSIDE EDGE OF TRAVELED WAY					REMARKS
	ELEVATION	ELEVATION CORRECTION	CROSS SLOPE	TRANSITION RATE	WIDTH	ELEVATION	ELEVATION CORRECTION	CROSS SLOPE	TRANSITION RATE	WIDTH	ELEVATION	OFFSET		OFFSET	ELEVATION	WIDTH	TRANSITION RATE	CROSS SLOPE	ELEVATION CORRECTION	ELEVATION	WIDTH	TRANSITION RATE	CROSS SLOPE	ELEVATION CORRECTION	ELEVATION	
HF	528.80	-0.38	-0.0160		24.00	529.18	0.00	0.0000	229:1	24.00	529.18	13.50	410+00.00	13.50	529.18	24.00		0.0160	0.38	529.56	24.00	229:1	0.0000	0.00	529.56	HF
	529.24	-0.38	-0.0160		24.00	529.62	0.11	0.0046		24.00	529.51	13.50	410+25.00	13.50	529.51	24.00		0.0160	0.38	529.89	24.00		-0.0046	-0.11	529.78	
	529.69	-0.38	-0.0160		24.00	530.08	0.22	0.0091		24.00	529.86	13.50	410+50.00	13.50	529.86	24.00		0.0160	0.38	530.24	24.00		-0.0091	-0.22	530.03	
	530.19	-0.38	-0.0160		24.00	530.58	0.33	0.0137		24.00	530.25	13.50	410+75.00	13.50	530.25	24.00		0.0160	0.38	530.63	24.00		-0.0137	-0.33	530.31	
NC	530.46	-0.38	-0.0160		24.00	530.84	0.38	0.0160	229:1	24.00	530.46	13.50	410+87.87	13.50	530.46	24.00		0.0160	0.38	530.84	24.00	229:1	-0.0160	-0.38	530.46	NC
NC	532.56	-0.38	-0.0160		24.00	532.94	0.38	0.0160	222:1	24.00	532.56	13.50	412+26.87	13.50	532.56	24.00		0.0160	0.38	532.94	24.00	222:1	-0.0160	-0.38	532.56	NC
	532.79	-0.38	-0.0160		24.00	533.17	0.28	0.0117		24.00	532.89	13.50	412+50.00	13.50	532.89	24.00		0.0160	0.38	533.27	24.00		-0.0117	-0.28	532.99	
	533.03	-0.38	-0.0160		24.00	533.42	0.17	0.0070		24.00	533.25	13.50	412+75.00	13.50	533.25	24.00		0.0160	0.38	533.63	24.00		-0.0070	-0.17	533.47	
	533.28	-0.38	-0.0160		24.00	533.66	0.05	0.0023		24.00	533.61	13.50	413+00.00	13.50	533.61	24.00		0.0160	0.38	533.99	24.00		-0.0023	-0.05	533.94	
HF	533.40	-0.38	-0.0160		24.00	533.78	0.00	0.0000		24.00	533.78	13.50	413+12.12	13.50	533.78	24.00		0.0160	0.38	534.16	24.00		0.0000	0.00	534.16	FLAT
	533.50	-0.40	-0.0160		25.00	533.90	-0.06	-0.0024		24.00	533.96	13.50	413+25.00	13.50	533.96	24.00		0.0160	0.38	534.34	24.00		0.0024	0.06	534.40	
	533.77	-0.38	-0.0160		24.00	534.15	-0.17	-0.0071		24.00	534.32	13.50	413+50.00	13.50	534.32	24.00		0.0160	0.38	534.70	24.00		0.0071	0.17	534.87	
	534.01	-0.38	-0.0160		24.00	534.40	-0.28	-0.0118		24.00	534.68	13.50	413+75.00	13.50	534.68	24.00		0.0160	0.38	535.06	24.00		0.0118	0.28	535.35	
RC	534.22	-0.38	-0.0160	222:1	24.00	534.61	-0.38	-0.0160		24.00	534.99	13.50	413+97.37	13.50	534.99	24.00	222:1	0.0160	0.38	535.37	24.00		0.0160	0.38	535.76	RC
	534.24	-0.40	-0.0165		24.00	534.63	-0.40	-0.0165		24.00	535.03	13.50	414+00.00	13.50	535.03	24.00		0.0165	0.40	535.43	24.00		0.0165	0.40	535.82	
	534.37	-0.51	-0.0212		24.00	534.88	-0.51	-0.0212		24.00	535.39	13.50	414+25.00	13.50	535.39	24.00		0.0212	0.51	535.90	24.00		0.0212	0.51	536.41	
PC	534.48	-0.60	-0.0252		24.00	535.09	-0.60	-0.0252		24.00	535.69	13.50	414+46.39	13.50	535.69	24.00		0.0252	0.60	536.29	24.00		0.0252	0.60	536.90	PC
	534.51	-0.62	-0.0259		24.00	535.13	-0.62	-0.0259		24.00	535.75	13.50	414+50.00	13.50	535.75	24.00		0.0259	0.62	536.37	24.00		0.0259	0.62	536.99	
	534.63	-0.73	-0.0306		24.00	535.37	-0.73	-0.0306		24.00	536.10	13.50	414+75.00	13.50	536.10	24.00		0.0306	0.73	536.83	24.00		0.0306	0.73	537.57	
	534.74	-0.85	-0.0353		24.00	535.58	-0.85	-0.0353		24.00	536.43	13.50	415+00.00	13.50	536.43	24.00		0.0353	0.85	537.28	24.00		0.0353	0.85	538.12	
	534.82	-0.96	-0.0400		24.00	535.78	-0.96	-0.0400		24.00	536.74	13.50	415+25.00	13.50	536.74	24.00		0.0400	0.96	537.70	24.00		0.0400	0.96	538.66	
FS	534.85	-1.01	-0.0420	222:1	24.00	535.86	-1.01	-0.0420	222:1	24.00	536.87	13.50	415+35.90	13.50	536.87	24.00	222:1	0.0420	1.01	537.88	24.00	222:1	0.0420	1.01	538.89	FS
	535.01	-1.01	-0.0420		24.00	536.02	-1.01	-0.0420		24.00	537.03	13.50	415+50.00	13.50	537.03	24.00		0.0420	1.01	538.04	24.00		0.0420	1.01	539.05	
	535.27	-1.01	-0.0420		24.00	536.28	-1.01	-0.0420		24.00	537.29	13.50	415+75.00	13.50	537.29	24.00		0.0420	1.01	538.30	24.00		0.0420	1.01	539.31	
	535.52	-1.01	-0.0420		24.00	536.53	-1.01	-0.0420		24.00	537.54	13.50	416+00.00	13.50	537.54	24.00		0.0420	1.01	538.55	24.00		0.0420	1.01	539.56	
	535.74	-1.01	-0.0420		24.00	536.75	-1.01	-0.0420		24.00	537.76	13.50	416+25.00	13.50	537.76	24.00		0.0420	1.01	538.77	24.00		0.0420	1.01	539.78	
	535.94	-1.01	-0.0420		24.00	536.95	-1.01	-0.0420		24.00	537.96	13.50	416+50.00	13.50	537.96	24.00		0.0420	1.01	538.97	24.00		0.0420	1.01	539.98	
	536.11	-1.01	-0.0420		24.00	537.12	-1.01	-0.0420		24.00	538.13	13.50	416+75.00	13.50	538.13	24.00		0.0420	1.01	539.14	24.00		0.0420	1.01	540.15	
	536.27	-1.01	-0.0420		24.00	537.28	-1.01	-0.0420		24.00	538.29	13.50	417+00.00	13.50	538.29	24.00		0.0420	1.01	539.30	24.00		0.0420	1.01	540.31	
	536.40	-1.01	-0.0420		24.00	537.41	-1.01	-0.0420		24.00	538.42	13.50	417+25.00	13.50	538.42	24.00		0.0420	1.01	539.43	24.00		0.0420	1.01	540.44	
	536.52	-1.01	-0.0420		24.00	537.53	-1.01	-0.0420		24.00	538.54	13.50	417+50.00	13.50	538.54	24.00		0.0420	1.01	539.55	24.00		0.0420	1.01	540.56	
	536.64	-1.01	-0.0420		24.00	537.65	-1.01	-0.0420		24.00	538.66	13.50	417+75.00	13.50	538.66	24.00		0.0420	1.01	539.67	24.00		0.0420	1.01	540.68	
	536.76	-1.01	-0.0420		24.00	537.77	-1.01	-0.0420		24.00	538.78	13.50	418+00.00	13.50	538.78	24.00		0.0420	1.01	539.79	24.00		0.0420	1.01	540.80	
	536.88	-1.01	-0.0420		24.00	537.89	-1.01	-0.0420		24.00	538.90	13.50	418+25.00	13.50	538.90	24.00		0.0420	1.01	539.91	24.00		0.0420	1.01	540.92	
	537.00	-1.01	-0.0420		24.00	538.01	-1.01	-0.0420		24.00	539.02	13.50	418+50.00	13.50	539.02	24.00		0.0420	1.01	540.03	24.00		0.0420	1.01	541.04	
	537.12	-1.01	-0.0420		24.00	538.13	-1.01	-0.0420		24.00	539.14	13.50	418+75.00	13.50	539.14	24.00		0.0420	1.01	540.15	24.00		0.0420	1.01	541.16	
	537.24	-1.01	-0.0420		24.00	538.25	-1.01	-0.0420		24.00	539.26	13.50	419+00.00	13.50	539.26	24.00		0.0420	1.01	540.27	24.00		0.0420	1.01	541.28	
	537.36	-1.01	-0.0420		24.00	538.37	-1.01	-0.0420		24.00	539.38	13.50	419+25.00	13.50	539.38	24.00		0.0420	1.01	540.39	24.00		0.0420	1.01	541.40	
	537.48	-1.01	-0.0420		24.00	538.49	-1.01	-0.0420		24.00	539.50	13.50	419+50.00	13.50	539.50	24.00		0.0420	1.01	540.51	24.00		0.0420	1.01	541.52	
	537.60	-1.01	-0.0420		24.00	538.61	-1.01	-0.0420		24.00	539.62	13.50	419+75.00	13.50	539.62	24.00		0.0420	1.01	540.63	24.00		0.0420	1.01	541.64	
	537.72	-1.01	-0.0420		24.00	538.73	-1.01	-0.0420		24.00	539.74	13.50	420+00.00	13.50	539.74	24.00		0.0420	1.01	540.75	24.00		0.0420	1.01	541.76	
	537.83	-1.01	-0.0420		24.00	538.84	-1.01	-0.0420		24.00	539.85	13.50	420+25.00	13.50	539.85	24.00		0.0420	1.01	540.86	24.00		0.0420	1.01	541.87	
	537.95	-1.01	-0.0420		24.00	538.96	-1.01	-0.0420		24.00	539.97	13.50	420+50.00	13.50	539.97	24.00		0.0420	1.01	540.98	24.00		0.0420	1.01	541.99	
	538.07	-1.01	-0.0420		24.00	539.08	-1.01	-0.0420		24.00	540.09	13.50	420+75.00	13.50	540.09	24.00		0.0420	1.01	541.10	24.00		0.0420	1.01	542.11	
	538.19	-1.01	-0.0420		24.00	539.20	-1.01	-0.0420		24.00	540.21	13.50	421+00.00	13.50	540.21	24.00		0.0420	1.01	541.22	24.00		0.0420	1.01	542.23	
	538.31	-1.01	-0.0420		24.00	539.32	-1.01	-0.0420		24.00	540.33	13.50	421+25.00	13.50	540.33	24.00		0.0420	1.01	541.34	24.00		0.0420	1.01	542.35	
	538.43	-1.01	-0.0420		24.00	539.44	-1.01	-0.0420		24.00	540.45	13.50	421+50.00	13.50	540.45	24.00		0.0420	1.01	541.46	24.00		0.0420	1.01	542.47	
	538.55	-1.01	-0.0420		24.00	539.56	-1.01	-0.0420		24.00	540.57	13.50	421+75.00	13.50	540.57	24.00		0.0420	1.01	541.58	24.00		0.0420	1.01	542.59	
	538.67	-1.01	-0.0420		24.00	539.68	-1.01	-0.0420		24.00	540.69	13.50	422+00.00	13.50	540.69	24.00		0.0420	1.01	541.70	24.00		0.0420	1.01	542.71	
	538.79	-1.01	-0.0420		24.00	539.80	-1.01	-0.0420		24.00	540.81	13.50	422+25.00	13.50	540.81	24.00		0.0420	1.01	541.82	24.00		0.0420	1.01	542.83	
	538.91	-1.01	-0.0420		24.00	539.92	-1.01	-0.0420		24.00	540.93	13.50	422+50.00	13.50	540.93	24.00		0.0420	1.01	541.94	24.00		0.0420	1.01	542.95	
	539.03	-1.01	-0.0420		24.00	540.04	-1.01	-0.0420		24.00	541.05	13.50	422+75.00	13.50	541.05	24.00		0.0420	1.01	542.06	24.00		0.0420	1.01	543.07	
	539.15	-1.01	-0.0420		24.00	540.16	-1.01	-0.0420		24.00	541.17	13.50	423+00.00	13.50	541.17	24.00		0.0420	1.01	542.18	24.00		0.0420	1.01	543.19	

CALCULATED SEA
CHECKED DLR

SUPERELEVATION TABLE - I.R. 75 - CURVE NO 2

SUPERELEVATION

HAM-75-7.85

519
1047

For Reference Only
Preliminary Plans Not

SUPERELEVATION TABLE - I.R. 75 - CURVE NO 75-2

PI STA 420+66.70 | Dc = 1° 45′ 0″

REMARKS	OUTSIDE EDGE OF TRAVELED WAY					CENTERLINE OF LANES					INSIDE EDGE (PROFILE GRADE)		STATION	INSIDE EDGE (PROFILE GRADE)		CENTERLINE OF LANES					OUTSIDE EDGE OF TRAVELED WAY					REMARKS
	ELEVATION	ELEVATION CORRECTION	CROSS SLOPE	TRANSITION RATE	WIDTH	ELEVATION	ELEVATION CORRECTION	CROSS SLOPE	TRANSITION RATE	WIDTH	ELEVATION	OFFSET		OFFSET	ELEVATION	WIDTH	TRANSITION RATE	CROSS SLOPE	ELEVATION CORRECTION	ELEVATION	WIDTH	TRANSITION RATE	CROSS SLOPE	ELEVATION CORRECTION	ELEVATION	
	539.26	-1.01	-0.0420		24.00	540.27	-1.01	-0.0420		24.00	541.28	13.50	423+25.00	13.50	541.28	24.00		0.0420	1.01	542.29	24.00		0.0420	1.01	543.30	
	539.38	-1.01	-0.0420		24.00	540.39	-1.01	-0.0420		24.00	541.40	13.50	423+50.00	13.50	541.40	24.00		0.0420	1.01	542.41	24.00		0.0420	1.01	543.42	
	539.50	-1.01	-0.0420		24.00	540.51	-1.01	-0.0420		24.00	541.52	13.50	423+75.00	13.50	541.52	24.00		0.0420	1.01	542.53	24.00		0.0420	1.01	543.54	
	539.62	-1.01	-0.0420		24.00	540.63	-1.01	-0.0420		24.00	541.64	13.50	424+00.00	13.50	541.64	24.00		0.0420	1.01	542.65	24.00		0.0420	1.01	543.66	
	539.74	-1.01	-0.0420		24.00	540.75	-1.01	-0.0420		24.00	541.76	13.50	424+25.00	13.50	541.76	24.00		0.0420	1.01	542.77	24.00		0.0420	1.01	543.78	
	539.86	-1.01	-0.0420		24.00	540.87	-1.01	-0.0420		24.00	541.88	13.50	424+50.00	13.50	541.88	24.00		0.0420	1.01	542.89	24.00		0.0420	1.01	543.90	
	539.98	-1.01	-0.0420		24.00	540.99	-1.01	-0.0420		24.00	542.00	13.50	424+75.00	13.50	542.00	24.00		0.0420	1.01	543.01	24.00		0.0420	1.01	544.02	
	540.10	-1.01	-0.0420		24.00	541.11	-1.01	-0.0420		24.00	542.12	13.50	425+00.00	13.50	542.12	24.00		0.0420	1.01	543.13	24.00		0.0420	1.01	544.14	
	540.22	-1.01	-0.0420		24.00	541.23	-1.01	-0.0420		24.00	542.24	13.50	425+25.00	13.50	542.24	24.00		0.0420	1.01	543.25	24.00		0.0420	1.01	544.26	
	540.34	-1.01	-0.0420		24.00	541.35	-1.01	-0.0420		24.00	542.36	13.50	425+50.00	13.50	542.36	24.00		0.0420	1.01	543.37	24.00		0.0420	1.01	544.38	
	540.46	-1.01	-0.0420		24.00	541.47	-1.01	-0.0420		24.00	542.48	13.50	425+75.00	13.50	542.48	24.00		0.0420	1.01	543.49	24.00		0.0420	1.01	544.50	
FS	540.49	-1.01	-0.0420	222:1	24.00	541.50	-1.01	-0.0420	222:1	24.00	542.51	13.50	425+82.98	13.50	542.51	24.00	222:1	0.0420	1.01	543.52	24.00	222:1	0.0420	1.01	544.53	FS
	540.74	-0.93	-0.0388	↕	24.00	541.67	-0.93	-0.0388	↕	24.00	542.60	13.50	426+00.00	13.50	542.60	24.00	↕	0.0388	0.93	543.53	24.00	↕	0.0388	0.93	544.46	
	541.08	-0.82	-0.0341	↕	24.00	541.90	-0.82	-0.0341	↕	24.00	542.72	13.50	426+25.00	13.50	542.72	24.00	↕	0.0341	0.82	543.54	24.00	↕	0.0341	0.82	544.36	
	541.42	-0.71	-0.0294	↕	24.00	542.12	-0.71	-0.0294	↕	24.00	542.83	13.50	426+50.00	13.50	542.83	24.00	↕	0.0294	0.71	543.54	24.00	↕	0.0294	0.71	544.24	
PC	541.73	-0.60	-0.0252	↕	24.00	542.34	-0.60	-0.0252	↕	24.00	542.94	13.50	426+72.49	13.50	542.94	24.00	↕	0.0252	0.60	543.54	24.00	↕	0.0252	0.60	544.15	PT
	541.76	-0.59	-0.0247	↕	24.00	542.36	-0.59	-0.0247	↕	24.00	542.95	13.50	426+75.00	13.50	542.95	24.00	↕	0.0247	0.59	543.54	24.00	↕	0.0247	0.59	544.14	
	542.11	-0.48	-0.0200	↕	24.00	542.59	-0.48	-0.0200	↕	24.00	543.07	13.50	427+00.00	13.50	543.07	24.00	↕	0.0200	0.48	543.55	24.00	↕	0.0200	0.48	544.03	
RC	542.41	-0.38	-0.0160	222:1	24.00	542.80	-0.38	-0.0160	↕	24.00	543.18	13.50	427+21.51	13.50	543.18	24.00	222:1	0.0160	0.38	543.56	24.00	↕	0.0160	0.38	543.95	RC
	542.44	-0.38	-0.0160		24.00	542.82	-0.37	-0.0153	↕	24.00	543.19	13.50	427+25.00	13.50	543.19	24.00		0.0160	0.38	543.57	24.00	↕	0.0153	0.37	543.94	
	542.67	-0.38	-0.0160		24.00	543.05	-0.26	-0.0107	↕	24.00	543.31	13.50	427+50.00	13.50	543.31	24.00		0.0160	0.38	543.69	24.00	↕	0.0107	0.26	543.95	
	542.90	-0.38	-0.0160		24.00	543.29	-0.14	-0.0060	↕	24.00	543.43	13.50	427+75.00	13.50	543.43	24.00		0.0160	0.38	543.81	24.00	↕	0.0060	0.14	543.96	
	543.14	-0.38	-0.0160		24.00	543.52	-0.03	-0.0013	↕	24.00	543.55	13.50	428+00.00	13.50	543.55	24.00		0.0160	0.38	543.93	24.00	↕	0.0013	0.03	543.96	
HF	543.20	-0.38	-0.0160		24.00	543.58	0.00	0.0000	↕	24.00	543.58	13.50	428+06.76	13.50	543.58	24.00		0.0160	0.38	543.96	24.00	↕	0.0000	0.00	543.96	FLAT
	543.37	-0.38	-0.0160		24.00	543.75	0.08	0.0034	↕	24.00	543.67	13.50	428+25.00	13.50	543.67	24.00		0.0160	0.38	544.05	24.00	↕	-0.0034	-0.08	543.97	
	543.60	-0.38	-0.0160		24.00	543.98	0.19	0.0081	↕	24.00	543.79	13.50	428+50.00	13.50	543.79	24.00		0.0160	0.38	544.17	24.00	↕	-0.0081	-0.19	543.98	
	543.83	-0.38	-0.0160		24.00	544.22	0.31	0.0128	↕	24.00	543.91	13.50	428+75.00	13.50	543.91	24.00		0.0160	0.38	544.29	24.00	↕	-0.0128	-0.31	543.99	
NC	543.99	-0.38	-0.0160		24.00	544.37	0.38	0.0160	222:1	24.00	543.99	13.50	428+92.01	13.50	543.99	24.00		0.0160	0.38	544.37	24.00	222:1	-0.0160	-0.38	543.99	NC

CALCULATED SEA
CHECKED DLR

SUPERELEVATION TABLE - I.R. 75 - CURVE NO 2

SUPERELEVATION

HAM-75-7.85

520
1047

For Reference Only
Preliminary Plans - Not for Construction

J:\20110903\ODOT\HAM\77889\roadway\sheets\77889GE002.dgn 5/22/2026 10:19:08 AM hbrendlinger

SUPERELEVATION TABLE - I.R. 75 SB - CURVE 75-3

P.I. STA. 456+41.20	Dc = 0°40' 00"

REMARKS	LEFT SIDE															INSIDE EDGE (PROFILE GRADE)		STATION
	ELEVATION	ELEVATION CORRECTION	CROSS SLOPE	TRANSITION RATE	WIDTH	ELEVATION	ELEVATION CORRECTION	CROSS SLOPE	TRANSITION RATE	WIDTH	ELEVATION	ELEVATION CORRECTION	CROSS SLOPE	TRANSITION RATE	WIDTH	ELEVATION	OFFSET	
NC	553.92	-0.24	-0.0200		12	554.16	-0.38	-0.0160		24	554.54	0.38	0.0160	1:222	24	554.16		449+08.29
	554.33	-0.24	-0.0200		12	554.57	-0.38	-0.0160		24	554.96	0.35	0.0144		24	554.61		449+25.00
	554.92	-0.24	-0.0200		12	555.16	-0.38	-0.0160		24	555.54	0.29	0.0121		24	555.25		449+50.00
	555.46	-0.24	-0.0200		12	555.70	-0.38	-0.0160		24	556.08	0.23	0.0098		24	555.85		449+75.00
	555.96	-0.24	-0.0200		12	556.20	-0.38	-0.0160		24	556.59	0.18	0.0074		24	556.41		450+00.00
	556.43	-0.24	-0.0200		12	556.67	-0.38	-0.0160		24	557.05	0.12	0.0051		24	556.93		450+25.00
	556.85	-0.24	-0.0200		12	557.09	-0.38	-0.0160		24	557.48	0.07	0.0027		24	557.41		450+50.00
	557.24	-0.24	-0.0200		12	557.48	-0.38	-0.0160		24	557.86	0.01	0.0004		24	557.85		450+75.00
HF	557.30	-0.24	-0.0200		12	557.54	-0.38	-0.0160		24	557.92	0.00	0.0000		24	557.92		450+79.24
	557.57	-0.24	-0.0200		12	557.81	-0.38	-0.0160		24	558.19	-0.05	-0.0019		24	558.24		451+00.00
	557.87	-0.24	-0.0200		12	558.11	-0.38	-0.0160		24	558.50	-0.10	-0.0043		24	558.60		451+25.00
	558.13	-0.24	-0.0200		12	558.37	-0.38	-0.0160		24	558.75	-0.16	-0.0066		24	558.91		451+50.00
	558.34	-0.24	-0.0200		12	558.58	-0.38	-0.0160		24	558.96	-0.22	-0.0090		24	559.18		451+75.00
	558.51	-0.24	-0.0200		12	558.75	-0.38	-0.0160		24	559.14	-0.27	-0.0113		24	559.41		452+00.00
PC	558.59	-0.24	-0.0200		12	558.83	-0.38	-0.0160		24	559.22	-0.30	-0.0127		24	559.52		452+14.57
	558.65	-0.24	-0.0200		12	558.89	-0.38	-0.0160		24	559.27	-0.33	-0.0136		24	559.60		452+25.00
	558.73	-0.24	-0.0200		12	558.97	-0.38	-0.0160		24	559.36	-0.38	-0.0160		24	559.74		452+50.00
RC	558.73	-0.24	-0.0200		12	558.97	-0.38	-0.0160	1:222	24	559.36	-0.38	-0.0160		24	559.74		452+50.19
	558.74	-0.24	-0.0200	1:222	12	558.98	-0.43	-0.0180		24	559.41	-0.43	-0.0180		24	559.84		452+71.56
	558.73	-0.24	-0.0197		12	558.97	-0.44	-0.0183		24	559.41	-0.44	-0.0183		24	559.85		452+75.00
BEGIN FS	558.73	-0.23	-0.0190	1:222	12	558.96	-0.46	-0.0190	1:222	24	559.41	-0.46	-0.0190	1:222	24	559.87		452+82.24
	558.77	-0.23	-0.0190		12	559.00	-0.46	-0.0190		24	559.45	-0.46	-0.0190		24	559.91		453+00.00
	558.79	-0.23	-0.0190		12	559.02	-0.46	-0.0190		24	559.47	-0.46	-0.0190		24	559.93		453+25.00
	558.77	-0.23	-0.0190		12	559.00	-0.46	-0.0190		24	559.45	-0.46	-0.0190		24	559.91		453+50.00
	558.71	-0.23	-0.0190		12	558.94	-0.46	-0.0190		24	559.39	-0.46	-0.0190		24	559.85		453+75.00
	558.61	-0.23	-0.0190		12	558.84	-0.46	-0.0190		24	559.29	-0.46	-0.0190		24	559.75		454+00.00
	558.47	-0.23	-0.0190		12	558.70	-0.46	-0.0190		24	559.15	-0.46	-0.0190		24	559.61		454+25.00
	558.28	-0.23	-0.0190		12	558.51	-0.46	-0.0190		24	558.96	-0.46	-0.0190		24	559.42		454+50.00
	558.06	-0.23	-0.0190		12	558.29	-0.46	-0.0190		24	558.74	-0.46	-0.0190		24	559.20		454+75.00
	557.79	-0.23	-0.0190		12	558.02	-0.46	-0.0190		24	558.47	-0.46	-0.0190		24	558.93		455+00.00
	557.48	-0.23	-0.0190		12	557.71	-0.46	-0.0190		24	558.16	-0.46	-0.0190		24	558.62		455+25.00
	557.14	-0.23	-0.0190		12	557.37	-0.46	-0.0190		24	557.82	-0.46	-0.0190		24	558.28		455+50.00
	556.79	-0.23	-0.0190		12	557.02	-0.46	-0.0190		24	557.47	-0.46	-0.0190		24	557.93		455+75.00
	556.44	-0.23	-0.0190		12	556.67	-0.46	-0.0190		24	557.12	-0.46	-0.0190		24	557.58		456+00.00
	556.09	-0.23	-0.0190		12	556.32	-0.46	-0.0190		24	556.77	-0.46	-0.0190		24	557.23		456+25.00
	555.74	-0.23	-0.0190		12	555.97	-0.46	-0.0190		24	556.42	-0.46	-0.0190		24	556.88		456+50.00
	555.39	-0.23	-0.0190		12	555.62	-0.46	-0.0190		24	556.07	-0.46	-0.0190		24	556.53		456+75.00
	555.04	-0.23	-0.0190		12	555.27	-0.46	-0.0190		24	555.72	-0.46	-0.0190		24	556.18		457+00.00
	554.69	-0.23	-0.0190		12	554.92	-0.46	-0.0190		24	555.37	-0.46	-0.0190		24	555.83		457+25.00
	554.34	-0.23	-0.0190		12	554.57	-0.46	-0.0190		24	555.02	-0.46	-0.0190		24	555.48		457+50.00
	553.99	-0.23	-0.0190		12	554.22	-0.46	-0.0190		24	554.67	-0.46	-0.0190		24	555.13		457+75.00
	553.64	-0.23	-0.0190		12	553.87	-0.46	-0.0190		24	554.32	-0.46	-0.0190		24	554.78		458+00.00
	553.29	-0.23	-0.0190		12	553.52	-0.46	-0.0190		24	553.97	-0.46	-0.0190		24	554.43		458+25.00
	552.96	-0.23	-0.0190		12	553.19	-0.46	-0.0190		24	553.64	-0.46	-0.0190		24	554.10		458+50.00
	552.67	-0.23	-0.0190		12	552.90	-0.46	-0.0190		24	553.35	-0.46	-0.0190		24	553.81		458+75.00
	552.42	-0.23	-0.0190		12	552.65	-0.46	-0.0190		24	553.10	-0.46	-0.0190		24	553.56		459+00.00
	552.20	-0.23	-0.0190		12	552.43	-0.46	-0.0190		24	552.88	-0.46	-0.0190		24	553.34		459+25.00
	552.03	-0.23	-0.0190		12	552.26	-0.46	-0.0190		24	552.71	-0.46	-0.0190		24	553.17		459+50.00
	551.90	-0.23	-0.0190		12	552.13	-0.46	-0.0190		24	552.58	-0.46	-0.0190		24	553.04		459+75.00
END FS	551.80	-0.23	-0.0190	1:222	12	552.03	-0.46	-0.0190	1:222	24	552.48	-0.46	-0.0190	1:222	24	552.94		459+99.47
	551.80	-0.23	-0.0190		12	552.03	-0.46	-0.0190		24	552.49	-0.45	-0.0190		24	552.94		460+00.00
	551.80	-0.24	-0.0200	1:222	12	552.04	-0.43	-0.0181		24	552.48	-0.43	-0.0180		24	552.91		460+10.15
	551.85	-0.24	-0.0200		12	552.09	-0.40	-0.0167		24	552.49	-0.40	-0.0166		24	552.89		460+25.00
RC	551.87	-0.24	-0.0200		12	552.11	-0.39	-0.0161	1:222	24	552.50	-0.38	-0.0160		24	552.88		460+31.52
	551.90	-0.24	-0.0200		12	552.14	-0.39	-0.0161		24	552.53	-0.34	-0.0143		24	552.87		460+50.00
PT	551.95	-0.24	-0.0200		12	552.19	-0.39	-0.0161		24	552.58	-0.30	-0.0127		24	552.88		460+67.13
	551.98	-0.24	-0.0200		12	552.22	-0.39	-0.0161		24	552.60	-0.29	-0.0119		24	552.89		460+75.00
	552.10	-0.24	-0.0200		12	552.34	-0.39	-0.0161		24	552.73	-0.23	-0.0096		24	552.96		461+00.00
	552.26	-0.24	-0.0200		12	552.50	-0.39	-0.0161		24	552.89	-0.17	-0.0073		24	553.06		461+25.00
	552.46	-0.24	-0.0200		12	552.70	-0.39	-0.0161		24	553.08	-0.12	-0.0049		24	553.20		461+50.00
	552.69	-0.24	-0.0200		12	552.93	-0.39	-0.0161		24	553.32	-0.06	-0.0026		24	553.38		461+75.00

CALCULATED CT | CHECKED SSK

SUPERELEVATION TABLE - I.R. 75 - CURVE NO 3

SUPERELEVATION

HAM-75-7.85

521
1047

Preliminary Plans - Not For Reference Only

J:\20110903\ODOT\HAM\77889\roadway\sheets\77889GE401.dgn 5/22/2026 10:19:08 AM hbrendlinger

SUPERELEVATION TABLE - I.R. 75 SB - CURVE 75-3

P.I. STA. 456+41.20	Dc = 0°40' 00"

REMARKS	LEFT SIDE															INSIDE EDGE (PROFILE GRADE)		STATION
	ELEVATION	ELEVATION CORRECTION	CROSS SLOPE	TRANSITION RATE	WIDTH	ELEVATION	ELEVATION CORRECTION	CROSS SLOPE	TRANSITION RATE	WIDTH	ELEVATION	ELEVATION CORRECTION	CROSS SLOPE	TRANSITION RATE	WIDTH	ELEVATION	OFFSET	
	552.97	-0.24	-0.02		12	553.21	-0.39	-0.0161		24	553.59	-0.01	-0.0002		24	553.60		462+00.00
HF	552.99	-0.24	-0.02		12	553.23	-0.39	-0.0161		24	553.62	0.00	0.0000			553.62		462+02.50
	553.28	-0.24	-0.02		12	553.52	-0.39	-0.0161		24	553.91	0.05	0.0021			553.86		462+25.00
	553.64	-0.24	-0.02		12	553.88	-0.39	-0.0161		24	554.27	0.11	0.0044			554.16		462+50.00
	554.03	-0.24	-0.02		12	554.27	-0.39	-0.0161		24	554.65	0.16	0.0068			554.49		462+75.00
	554.46	-0.24	-0.02		12	554.70	-0.39	-0.0161		24	555.09	0.22	0.0091			554.87		463+00.00
	554.94	-0.24	-0.02		12	555.18	-0.39	-0.0161		24	555.57	0.28	0.0115			555.29		463+25.00
	555.44	-0.24	-0.02		12	555.68	-0.39	-0.0161		24	556.07	0.33	0.0138			555.74		463+50.00
NC	555.96	-0.24	-0.02		12	556.20	-0.39	-0.0161		24	556.58	0.38	0.0160	1:222		556.20		463+73.42

CALCULATED CT | CHECKED SSK

SUPERELEVATION TABLE - I.R. 75 - CURVE NO 3

SUPERELEVATION

HAM-75-7.85

522
1047

Preliminary Plans - For Reference Only

J:\20110903\ODOT\HAM\7889\roadway\sheets\77889GE402.dgn 5/22/2026 10:19:16 AM hbrendlinger

SUPERELEVATION TABLE - I.R. 75 NB - CURVE 75-3

P.I. STA. 456+41.20	Dc = 0° 40' 00"

STATION	INSIDE EDGE (PROFILE GRADE)		RIGHT SIDE																		REMARKS
	OFFSET	ELEVATION	WIDTH	TRANSITION RATE	CROSS SLOPE	ELEVATION CORRECTION	ELEVATION	WIDTH	TRANSITION RATE	CROSS SLOPE	ELEVATION CORRECTION	ELEVATION	WIDTH	TRANSITION RATE	CROSS SLOPE	ELEVATION CORRECTION	ELEVATION	WIDTH	TRANSITION RATE	CROSS SLOPE	ELEVATION CORRECTION	ELEVATION	
449+08.29		554.16	24		0.0160	0.38	554.54	24	1:222	-0.0160	-0.38	554.16	12	1:222	-0.0160	-0.19	553.97	12	1:222	-0.0160	-0.19	553.78	NC
449+25.00		554.61	24		0.0160	0.38	554.99	24		-0.0144	-0.35	554.65	12		-0.0144	-0.17	554.47	12		-0.0144	-0.17	554.30	
449+50.00		555.25	24		0.0160	0.38	555.63	24		-0.0121	-0.29	555.34	12		-0.0121	-0.15	555.20	12		-0.0121	-0.15	555.05	
449+75.00		555.85	24		0.0160	0.38	556.23	24		-0.0098	-0.23	556.00	12		-0.0098	-0.12	555.88	12		-0.0098	-0.12	555.77	
450+00.00		556.41	24		0.0160	0.38	556.79	24		-0.0074	-0.18	556.62	12		-0.0074	-0.09	556.53	12		-0.0074	-0.09	556.44	
450+25.00		556.93	24		0.0160	0.38	557.31	24		-0.0051	-0.12	557.19	12		-0.0051	-0.06	557.13	12		-0.0051	-0.06	557.07	
450+50.00		557.41	24		0.0160	0.38	557.79	24		-0.0027	-0.07	557.73	12		-0.0027	-0.03	557.70	12		-0.0027	-0.03	557.66	
450+75.00		557.85	24		0.0160	0.38	558.23	24		-0.0004	-0.01	558.22	12		-0.0004	0.00	558.22	12		-0.0004	0.00	558.21	
450+79.24		557.92	24		0.0160	0.38	558.30	24		0.0000	0.00	558.30	12		0.0000	0.00	558.30	12		0.0000	0.00	558.30	HF
451+00.00		558.24	24		0.0160	0.38	558.62	24		0.0019	0.05	558.67	12		0.0019	0.02	558.69	12		0.0019	0.02	558.72	
451+25.00		558.60	24		0.0160	0.38	558.98	24		0.0043	0.10	559.09	12		0.0043	0.05	559.14	12		0.0043	0.05	559.19	
451+50.00		558.91	24		0.0160	0.38	559.29	24		0.0066	0.16	559.45	12		0.0066	0.08	559.53	12		0.0066	0.08	559.61	
451+75.00		559.18	24		0.0160	0.38	559.56	24		0.0090	0.22	559.78	12		0.0090	0.11	559.89	12		0.0090	0.11	559.99	
452+00.00		559.41	24		0.0160	0.38	559.79	24		0.0113	0.27	560.07	12		0.0113	0.14	560.20	11.5		0.0113	0.13	560.33	
452+14.57		559.52	24		0.0160	0.38	559.90	24		0.0127	0.30	560.21	12		0.0127	0.15	560.36	11.3		0.0127	0.14	560.50	PC
452+25.00		559.60	24		0.0160	0.38	559.98	24		0.0136	0.33	560.31	12		0.0136	0.16	560.48	11.1		0.0136	0.15	560.62	
452+50.00		559.74	24		0.0160	0.38	560.12	24		0.0160	0.38	560.51	12		0.0160	0.19	560.70	10.7		0.0160	0.17	560.87	
452+50.19		559.74	24	1:222	0.0160	0.38	560.12	24		0.0160	0.38	560.51	12		0.0160	0.19	560.70	10.7		0.0160	0.17	560.87	RC
452+75.00		559.85	24	↕	0.0183	0.44	560.29	24		0.0183	0.44	560.73	12		0.0183	0.22	560.95	10.3		0.0183	0.19	561.13	
452+82.24		559.87	24	1:222	0.0190	0.46	560.33	24	1:222	0.0190	0.46	560.78	12	1:222	0.0190	0.23	561.01	10.1	1:222	0.0190	0.19	561.20	BEGIN FS
453+00.00		559.91	24		0.0190	0.46	560.37	24		0.0190	0.46	560.82	12		0.0190	0.23	561.05	9.8		0.0190	0.19	561.23	
453+25.00		559.93	24		0.0190	0.46	560.39	24		0.0190	0.46	560.84	12		0.0190	0.23	561.07	9.4		0.0190	0.18	561.24	
453+50.00		559.91	24		0.0190	0.46	560.37	24		0.0190	0.46	560.82	12		0.0190	0.23	561.05	9.0		0.0190	0.17	561.21	
453+75.00		559.85	24		0.0190	0.46	560.31	24		0.0190	0.46	560.76	12		0.0190	0.23	560.99	8.6		0.0190	0.16	561.14	
454+00.00		559.75	24		0.0190	0.46	560.21	24		0.0190	0.46	560.66	12		0.0190	0.23	560.89	8.2		0.0190	0.16	561.03	
454+25.00		559.61	24		0.0190	0.46	560.07	24		0.0190	0.46	560.52	12		0.0190	0.23	560.75	7.8		0.0190	0.15	560.88	
454+50.00		559.42	24		0.0190	0.46	559.88	24		0.0190	0.46	560.33	12		0.0190	0.23	560.56	7.3		0.0190	0.14	560.68	
454+75.00		559.20	24		0.0190	0.46	559.66	24		0.0190	0.46	560.11	12		0.0190	0.23	560.34	6.9		0.0190	0.13	560.45	
455+00.00		558.93	24		0.0190	0.46	559.39	24		0.0190	0.46	559.84	12		0.0190	0.23	560.07	6.5		0.0190	0.12	560.17	
455+25.00		558.62	24		0.0190	0.46	559.08	24		0.0190	0.46	559.53	12		0.0190	0.23	559.76	6.1		0.0190	0.12	559.85	
455+50.00		558.28	24		0.0190	0.46	558.74	24		0.0190	0.46	559.19	12		0.0190	0.23	559.42	5.7		0.0190	0.11	559.50	
455+75.00		557.93	24		0.0190	0.46	558.39	24		0.0190	0.46	558.84	12		0.0190	0.23	559.07	5.3		0.0190	0.10	559.14	
456+00.00		557.58	24		0.0190	0.46	558.04	24		0.0190	0.46	558.49	12		0.0190	0.23	558.72	4.8		0.0190	0.09	558.78	
456+25.00		557.23	24		0.0190	0.46	557.69	24		0.0190	0.46	558.14	12		0.0190	0.23	558.37	4.4		0.0190	0.08	558.43	
456+50.00		556.88	24		0.0190	0.46	557.34	24		0.0190	0.46	557.79	12		0.0190	0.23	558.02	4.0		0.0190	0.08	558.07	
456+75.00		556.53	24		0.0190	0.46	556.99	24		0.0190	0.46	557.44	12		0.0190	0.23	557.67	3.6		0.0190	0.07	557.71	
457+00.00		556.18	24		0.0190	0.46	556.64	24		0.0190	0.46	557.09	12		0.0190	0.23	557.32	3.2		0.0190	0.06	557.35	
457+25.00		555.83	24		0.0190	0.46	556.29	24		0.0190	0.46	556.74	12		0.0190	0.23	556.97	2.8		0.0190	0.05	556.92	
457+50.00		555.48	24		0.0190	0.46	555.94	24		0.0190	0.46	556.39	12		0.0190	0.23	556.62	2.3		0.0190	0.04	556.58	
457+75.00		555.13	24		0.0190	0.46	555.59	24		0.0190	0.46	556.04	12		0.0190	0.23	556.27	1.9		0.0190	0.04	556.23	
458+00.00		554.78	24		0.0190	0.46	555.24	24		0.0190	0.46	555.69	12		0.0190	0.23	555.92	1.5		0.019	0.03	555.89	
458+25.00		554.43	24		0.0190	0.46	554.89	24		0.0190	0.46	555.34	12		0.0190	0.23	555.57	1.1		0.019	0.02	555.55	
458+50.00		554.10	24		0.0190	0.46	554.56	24		0.0190	0.46	555.01	12		0.0190	0.23	555.24	0.7		0.019	0.01	555.23	
458+75.00		553.81	24		0.0190	0.46	554.27	24		0.0190	0.46	554.72	12		0.0190	0.23	554.95	0.3		0.019	0.00	554.95	
459+00.00		553.56	24		0.0190	0.46	554.02	24		0.0190	0.46	554.47	12		0.0190	0.23	554.70						
459+25.00		553.34	24		0.0190	0.46	553.80	24		0.0190	0.46	554.25	12		0.0190	0.23	554.48						
459+50.00		553.17	24		0.0190	0.46	553.63	24		0.0190	0.46	554.08	12		0.0190	0.23	554.31						
459+75.00		553.04	24		0.0190	0.46	553.50	24		0.0190	0.46	553.95	12		0.0190	0.23	554.18						
459+99.47		552.94	24	1:222	0.0190	0.46	553.40	24	1:222	0.0190	0.46	553.85	12	1:222	0.0190	0.23	554.08						END FS
460+00.00		552.94	24	↕	0.0190	0.45	553.39	24		0.0190	0.45	553.85	12		0.0190	0.23	554.08						
460+25.00		552.89	24	↕	0.0166	0.40	553.29	24		0.0166	0.40	553.69	12		0.0166	0.20	553.89						
460+31.52		552.88	24	1:222	0.0160	0.38	553.26	24		0.0160	0.38	553.65	12		0.0160	0.19	553.84						RC
460+50.00		552.87	24		0.0160	0.38	553.25	24		0.0143	0.34	553.60	12		0.0143	0.17	553.77						
460+67.13		552.88	24		0.0160	0.38	553.26	24		0.0127	0.30	553.57	12		0.0127	0.15	553.72						PT
460+75.00		552.89	24		0.0160	0.38	553.27	24		0.0119	0.29	553.56	12		0.0119	0.14	553.70						
461+00.00		552.96	24		0.0160	0.38	553.34	24		0.0096	0.23	553.57	12		0.0096	0.12	553.69						
461+25.00		553.06	24		0.0160	0.38	553.44	24		0.0073	0.17	553.62	12		0.0073	0.09	553.71						
461+50.00		553.20	24		0.0160	0.38	553.58	24		0.0049	0.12	553.70	12		0.0049	0.06	553.76						
461+75.00		553.38	24		0.0160	0.38	553.76	24		0.0026	0.06	553.83	12		0.0026	0.03	553.86						
462+00.00		553.60	24		0.0160	0.38	553.98	24		0.0002	0.01	553.99	12		0.0002	0.00	553.99						
462+02.50		553.62	24		0.0160	0.38	554.00	24		0.0000	0.00	554.00	12		0.0000	0.00	554.00						HF

Preliminary Plans - For Reference Only

CALCULATED CT
CHECKED SSK

SUPERELEVATION TABLE - I.R. 75 - CURVE NO 3

SUPERELEVATION

HAM-75-7.85

523
1047

J:\20110903\ODOT\HAM\77889\roadway\sheets\77889GE403.dgn 5/22/2026 10:19:24 AM hbrendlinger

SUPERELEVATION TABLE - I.R. 75 NB - CURVE 75-3

P.I. STA. 456+41.20	Dc = 0° 40' 00"

STATION	INSIDE EDGE (PROFILE GRADE)		RIGHT SIDE																			REMARKS
	OFFSET	ELEVATION	WIDTH	TRANSITION RATE	CROSS SLOPE	ELEVATION CORRECTION	ELEVATION	WIDTH	TRANSITION RATE	CROSS SLOPE	ELEVATION CORRECTION	ELEVATION	WIDTH	TRANSITION RATE	CROSS SLOPE	ELEVATION CORRECTION	ELEVATION	WIDTH	TRANSITION RATE	CROSS SLOPE	ELEVATION CORRECTION	ELEVATION	
462+25.00		553.86	24		0.0160	0.38	554.24	24		-0.0021	-0.05	554.19	12		-0.0021	-0.03	554.17						
462+50.00		554.16	24		0.0160	0.38	554.54	24		-0.0044	-0.11	554.44	12		-0.0044	-0.05	554.38						
462+75.00		554.49	24		0.0160	0.38	554.87	24		-0.0068	-0.16	554.71	12		-0.0068	-0.08	554.63						
463+00.00		554.87	24		0.0160	0.38	555.25	24		-0.0091	-0.22	555.03	12		-0.0091	-0.11	554.93						
463+25.00		555.29	24		0.0160	0.38	555.67	24		-0.0115	-0.28	555.40	12		-0.0115	-0.14	555.26						
463+50.00		555.74	24		0.0160	0.38	556.12	24		-0.0138	-0.33	555.79	12		-0.0138	-0.17	555.63						
463+73.42		556.20	24		0.0160	0.38	556.58	24	1:222	-0.0160	-0.38	556.20	12	1:222	-0.0160	-0.19	556.01						NC

For Reference Only
Preliminary Plans - Fo

CALCULATED CT
CHECKED SSK

SUPERELEVATION TABLE - I.R. 75 - CURVE NO 3

SUPERELEVATION

HAM-75-7.85

524
1047

J:\20110903\ODOT\HAM\7889\roadway\sheets\77889GE404.dgn 5/22/2026 10:19:25 AM hbrendlinger

SUPERELEVATION TABLE - I.R. 75 SB - CURVE 75-4

P.I. STA. 474+88.06	Dc = 2° 45′ 00″

REMARKS	LEFT SIDE															INSIDE EDGE (PROFILE GRADE)		STATION
	ELEVATION	ELEVATION CORRECTION	CROSS SLOPE	TRANSITION RATE	WIDTH	ELEVATION	ELEVATION CORRECTION	CROSS SLOPE	TRANSITION RATE	WIDTH	ELEVATION	ELEVATION CORRECTION	CROSS SLOPE	TRANSITION RATE	WIDTH	ELEVATION	OFFSET	
NC	558.45	-0.19	-0.0160	1:222	12	558.64	-0.38	-0.0160	1:222	24	559.02	0.38	0.0160		24	558.64		464+76.22
	559.19	-0.17	-0.0138		12	559.35	-0.33	-0.0138		24	559.68	0.38	0.0160		24	559.30		465+00.00
	560.00	-0.14	-0.0114		12	560.14	-0.27	-0.0114		24	560.41	0.38	0.0160		24	560.03		465+25.00
	560.84	-0.11	-0.0091		12	560.94	-0.22	-0.0091		24	561.16	0.38	0.0160		24	560.78		465+50.00
	561.67	-0.08	-0.0067		12	561.75	-0.16	-0.0067		24	561.91	0.38	0.0160		24	561.53		465+75.00
	562.50	-0.05	-0.0044		12	562.56	-0.11	-0.0044		24	562.66	0.38	0.0160		24	562.28		466+00.00
	563.32	-0.02	-0.0020		12	563.34	-0.05	-0.0020		24	563.39	0.38	0.0160		24	563.01		466+25.00
HF	564.00	0.00	0.0000		12	564.00	0.00	0.0000		24	564.00	0.38	0.0160		24	563.61		466+46.79
	564.09	0.00	0.0003		12	564.09	0.01	0.0003		24	564.08	0.38	0.0160		24	563.70		466+50.00
	564.83	0.03	0.0026		12	564.80	0.06	0.0026		24	564.74	0.38	0.0160		24	564.35		466+75.00
	565.53	0.06	0.0050		12	565.47	0.12	0.0050		24	565.35	0.38	0.0160		24	564.96		467+00.00
	566.18	0.09	0.0073		12	566.10	0.18	0.0073		24	565.92	0.38	0.0160		24	565.54		467+25.00
	566.80	0.12	0.0097		12	566.69	0.23	0.0097		24	566.45	0.38	0.0160		24	566.07		467+50.00
	567.38	0.14	0.0120		12	567.24	0.29	0.0120		24	566.95	0.38	0.0160		24	566.56		467+75.00
	567.92	0.17	0.0144		12	567.75	0.34	0.0144		24	567.40	0.38	0.0160		24	567.02		468+00.00
RC	568.27	0.19	0.0160		12	568.08	0.38	0.0160		24	567.69	0.38	0.0160	1:222	24	567.31		468+17.36
	568.44	0.20	0.0167		12	568.24	0.40	0.0167		24	567.83	0.40	0.0167		24	567.43		468+25.00
	568.95	0.23	0.0191		12	568.72	0.46	0.0191		24	568.27	0.46	0.0191		24	567.81		468+50.00
	569.43	0.26	0.0214		12	569.17	0.51	0.0214		24	568.66	0.51	0.0214		24	568.15		468+75.00
	569.87	0.29	0.0238		12	569.58	0.57	0.0238		24	569.01	0.57	0.0238		24	568.44		469+00.00
	570.27	0.31	0.0261		12	569.95	0.63	0.0261		24	569.33	0.63	0.0261		24	568.70		469+25.00
	570.63	0.34	0.0284		12	570.28	0.68	0.0284		24	569.60	0.68	0.0284		24	568.92		469+50.00
	570.95	0.37	0.0308		12	570.58	0.74	0.0308		24	569.84	0.74	0.0308		24	569.10		469+75.00
	571.23	0.40	0.0331		12	570.83	0.80	0.0331		24	570.03	0.80	0.0331		24	569.24		470+00.00
PC	571.45	0.42	0.0353		12	571.03	0.85	0.0353		24	570.18	0.85	0.0353		24	569.33		470+23.46
	571.47	0.43	0.0355		12	571.04	0.85	0.0355		24	570.19	0.85	0.0355		24	569.34		470+25.00
	571.67	0.45	0.0378		12	571.22	0.91	0.0378		24	570.31	0.91	0.0378		24	569.40		470+50.00
	571.83	0.48	0.0402		12	571.35	0.96	0.0402		24	570.39	0.96	0.0402		24	569.42		470+75.00
	571.95	0.51	0.0425		12	571.44	1.02	0.0425		24	570.42	1.02	0.0425		24	569.40		471+00.00
	572.04	0.54	0.0449		12	571.50	1.08	0.0449		24	570.42	1.08	0.0449		24	569.35		471+25.00
	572.08	0.57	0.0472		12	571.52	1.13	0.0472		24	570.38	1.13	0.0472		24	569.25		471+50.00
	572.09	0.59	0.0495		12	571.49	1.19	0.0495		24	570.30	1.19	0.0495		24	569.11		471+75.00
	572.05	0.62	0.0519		12	571.43	1.25	0.0519		24	570.18	1.25	0.0519		24	568.94		472+00.00 BK

Preliminary Plans - Not for Reference Only

CALCULATED CT
CHECKED SSK

SUPERELEVATION TABLE - I.R. 75 - CURVE NO 4

HAM-75-7.85

J:\20110903\ODOT\HAM\77889\roadway\sheets\77889CE405.dgn 5/22/2026 10:19:25 AM hbrendlinger

SUPERELEVATION TABLE - RAMP K - CURVE NO 562-K2

PI STA 419+50.81 | Dc = 11° 45′ 00″

LEFT SIDE					BASELINE CONTROL		RIGHT SIDE					REMARKS
EDGE ELEVATION	TRANSITION RATE	ELEVATION CORRECTION	CROSS SLOPE	WIDTH	STATION	PROFILE GRADE	WIDTH	CROSS SLOPE	ELEVATION CORRECTION	TRANSITION RATE	EDGE ELEVATION	
					412+42.98							
					412+50.00							
					412+75.00							
					413+00.00							
					413+25.00							
					413+50.00							
					413+75.00							
					414+00.00							
					414+25.00							
					414+50.00							
					414+67.98							
					414+75.00							
					415+00.00							
					415+25.00							
					415+50.00							
					415+75.00							
					416+00.00							
539.88		1.37	0.0570	24.00	416+13.15	538.51	5.50	-0.0570	-0.31		538.20	
540.47		1.37	0.0570	24.00	416+25.00	539.10	5.50	-0.0570	-0.31		538.79	
541.64		1.37	0.0570	24.00	416+50.00	540.27	5.50	-0.0570	-0.31		539.96	
542.71		1.37	0.0570	24.00	416+75.00	541.34	5.50	-0.0570	-0.31		541.03	
543.69		1.37	0.0570	24.00	417+00.00	542.32	5.50	-0.0570	-0.31		542.01	
544.56		1.37	0.0570	24.00	417+25.00	543.19	5.50	-0.0570	-0.31		542.88	
545.34		1.37	0.0570	24.00	417+50.00	543.97	5.50	-0.0570	-0.31		543.66	
546.02		1.37	0.0570	24.00	417+75.00	544.65	5.50	-0.0570	-0.31		544.34	
546.60		1.37	0.0570	24.00	418+00.00	545.23	5.50	-0.0570	-0.31		544.92	
547.09		1.37	0.0570	24.00	418+25.00	545.72	5.50	-0.0570	-0.31		545.41	
547.47		1.37	0.0570	24.00	418+50.00	546.10	5.50	-0.0570	-0.31		545.79	
547.76		1.37	0.0570	24.00	418+75.00	546.39	5.50	-0.0570	-0.31		546.08	
547.95		1.37	0.0570	24.00	419+00.00	546.58	5.50	-0.0570	-0.31		546.27	
548.04		1.37	0.0570	24.00	419+25.00	546.67	5.50	-0.0570	-0.31		546.36	
548.04		1.37	0.0570	24.00	419+50.00	546.67	5.50	-0.0570	-0.31		546.36	
547.94		1.37	0.0570	24.00	419+75.00	546.57	5.50	-0.0570	-0.31		546.26	
547.73		1.37	0.0570	24.00	420+00.00	546.36	5.50	-0.0570	-0.31		546.05	
547.44		1.37	0.0570	24.00	420+25.00	546.07	5.50	-0.0570	-0.31		545.76	
547.13		1.37	0.0570	24.00	420+50.00	545.76	5.50	-0.0570	-0.31		545.45	
546.82		1.37	0.0570	24.00	420+75.00	545.45	5.50	-0.0570	-0.31		545.14	
546.51		1.37	0.0570	24.00	421+00.00	545.14	5.50	-0.0570	-0.31		544.83	
546.44	225:1	1.37	0.0570	24.00	421+05.87	545.07	5.50	-0.0570	-0.31	983:1	544.76	CS / FS
546.11	↑	1.28	0.0535	24.00	421+25.00	544.83	4.97	-0.0535	-0.27	1088:1	544.56	
545.69	|	1.17	0.0488	24.00	421+50.00	544.52	4.29	-0.0488	-0.21	1260:1	544.31	
545.32	|	1.06	0.0442	24.00	421+75.00	544.26	3.60	-0.0442	-0.16	1502:1	544.10	
544.99	|	0.95	0.0396	24.00	422+00.00	544.04	2.91	-0.0396	-0.12	1858:1	543.92	
544.72	|	0.84	0.0350	24.00	422+25.00	543.88	2.22	-0.0350	-0.08	2435:1	543.80	
544.49	|	0.73	0.0303	24.00	422+50.00	543.76	1.54	-0.0303	-0.05	3510:1	543.71	
544.31	|	0.62	0.0257	24.00	422+75.00	543.69	0.85	-0.0257	-0.02	6359:1	543.67	
544.18	|	0.51	0.0211	24.00	423+00.00	543.67	0.16	-0.0211	0.00	33784:1	543.67	
544.16	225:1	0.48	0.0200	24.00	423+05.87	543.68	0.00	-0.0200	0.00	N/A	543.68	SC / NC

FOR STA 412+42.98 TO 416+00.00, SEE SUPERELEVATION TABLE - RAMP M - CURVE NO. 562-M2

SUPERELEVATION TABLE - RAMP N - CURVE NO 562-N1

PI STA 414+98.05 | Dc = 6° 45′ 24″

LEFT SIDE					BASELINE CONTROL		RIGHT SIDE					REMARKS
EDGE ELEVATION	TRANSITION RATE	ELEVATION CORRECTION	CROSS SLOPE	WIDTH	STATION	PROFILE GRADE	WIDTH	CROSS SLOPE	ELEVATION CORRECTION	TRANSITION RATE	EDGE ELEVATION	
529.81		0.96	0.0600	16.00	412+64.37	528.85						FS
529.74		0.96	0.0600	16.00	412+75.00	528.78						
529.56		0.96	0.0600	16.00	413+00.00	528.60						
529.53		0.96	0.0600	16.00	413+03.58	528.57						PC
529.34		0.96	0.0600	16.00	413+25.00	528.38						
529.09		0.96	0.0600	16.00	413+50.00	528.13						
528.85		0.96	0.0600	16.00	413+75.00	527.89						
528.60		0.96	0.0600	16.00	414+00.00	527.64						
528.38		0.96	0.0600	16.00	414+25.00	527.42						
528.21		0.96	0.0600	16.00	414+50.00	527.25						
528.10		0.96	0.0600	16.00	414+75.00	527.14						
528.05		0.96	0.0600	16.00	415+00.00	527.09						
528.06		0.96	0.0600	16.00	415+25.00	527.10						
528.12		0.96	0.0600	16.00	415+50.00	527.16						
528.24		0.96	0.0600	16.00	415+75.00	527.28						
528.42		0.96	0.0600	16.00	416+00.00	527.46						
528.66		0.96	0.0600	16.00	416+25.00	527.70						
528.68	185:1	0.96	0.0600	16.00	416+26.70	527.72						FS
528.83	↑	0.83	0.0521	16.00	416+50.00	528.00						
529.05	|	0.70	0.0437	16.00	416+75.00	528.35						
529.17	|	0.64	0.0400	16.00	416+85.90	528.53						PT
529.32	|	0.56	0.0352	16.00	417+00.00	528.76						
529.64	↓	0.43	0.0268	16.00	417+25.00	529.21						
529.90	185:1	0.32	0.0200	16.00	417+45.10	529.58						

CALCULATED SEA
CHECKED DLR

SUPERELEVATION TABLE - RAMP K AND RAMP N

HAM-75-7.85

526
1047

Preliminary Plans - Not For Reference Only

J:\20110903\ODOT\HAM\77889\roadway\sheets\77889GE003.dgn 5/22/2026 10:19:26 AM hbrendlinger

SUPERELEVATION TABLE - RAMP J - CURVE NO 562-J1

PI STA 420+13.05 | Dc = 10° 15' 00"

LEFT EOP					LEFT BREAKLINE #2 (GORE)					LEFT BREAKLINE #1					BASELINE CONTROL		RIGHT SIDE					REMARKS
EDGE ELEVATION	TRANSITION RATE	ELEVATION CORRECTION	CROSS SLOPE	WIDTH	EDGE ELEVATION	TRANSITION RATE	ELEVATION CORRECTION	CROSS SLOPE	WIDTH	EDGE ELEVATION	TRANSITION RATE	ELEVATION CORRECTION	CROSS SLOPE	WIDTH	STATION	PROFILE GRADE	WIDTH	CROSS SLOPE	ELEVATION CORRECTION	TRANSITION RATE	EDGE ELEVATION	
530.07		-0.320	-0.020	16.00	530.39		-0.162	-0.020	8.10	530.55	167:1	-0.38	-0.0160	24.00	409+84.33	530.94	0.00	0.0160	0.00	N/A	530.94	TS / NC
530.45		-0.320	-0.020	16.00	530.77		-0.168	-0.020	8.41	530.93		-0.29	-0.0121	24.00	410+00.00	531.22	0.25	0.0121	0.00	16000:1	531.23	
531.03		-0.320	-0.020	16.01	531.35		-0.180	-0.020	8.98	531.53		-0.14	-0.0058	24.00	410+25.00	531.67	0.64	0.0058	0.00	6250:1	531.68	
531.55		-0.320	-0.020	16.01	531.87		-0.194	-0.020	9.70	532.07		0.01	0.0004	24.00	410+50.00	532.06	1.02	-0.0004	0.00	3922:1	532.06	
531.99		-0.320	-0.020	16.02	532.31		-0.214	-0.020	10.68	532.52		0.16	0.0067	24.00	410+75.00	532.36	1.39	-0.0067	-0.01	2878:1	532.35	
532.34		-0.321	-0.020	16.03	532.66		-0.240	-0.020	12.01	532.91		0.31	0.0129	24.00	411+00.00	532.60	1.76	-0.0129	-0.02	2273:1	532.57	
532.61		-0.321	-0.020	16.05	532.94		-0.276	-0.020	13.79	533.21		0.46	0.0192	24.00	411+25.00	532.75	2.13	-0.0192	-0.04	1878:1	532.71	
532.80		-0.322	-0.020	16.08	533.12		-0.323	-0.020	16.13	533.44		0.61	0.0254	24.00	411+50.00	532.83	2.50	-0.0254	-0.06	1600:1	532.77	
532.89		-0.323	-0.020	16.13	533.21		-0.383	-0.020	19.14	533.59		0.76	0.0317	24.00	411+75.00	532.83	2.87	-0.0317	-0.09	1394:1	532.74	
										533.67		0.91	0.0379	24.00	412+00.00	532.76	3.24	-0.0379	-0.12	1235:1	532.64	
										533.67		1.06	0.0442	24.00	412+25.00	532.61	3.62	-0.0442	-0.16	1105:1	532.45	
										533.60		1.21	0.0504	24.00	412+50.00	532.39	3.99	-0.0504	-0.20	1003:1	532.19	
										533.45		1.36	0.0567	24.00	412+75.00	532.09	4.36	-0.0567	-0.25	917:1	531.84	
										533.37	167:1	1.42	0.0590	24.00	412+84.33	531.96	4.50	-0.0590	-0.27	889:1	531.69	SC / FS
										533.13		1.42	0.0590	24.00	413+00.00	531.71	4.50	-0.0590	-0.27		531.45	
										532.68		1.42	0.0590	24.00	413+25.00	531.26	4.50	-0.0590	-0.27		530.99	
										532.15		1.42	0.0590	24.00	413+50.00	530.73	4.50	-0.0590	-0.27		530.47	
										531.54		1.42	0.0590	24.00	413+75.00	530.13	4.50	-0.0590	-0.27		529.86	
										530.86		1.42	0.0590	24.00	414+00.00	529.45	4.50	-0.0590	-0.27		529.18	
										530.11		1.42	0.0590	24.00	414+25.00	528.69	4.50	-0.0590	-0.27		528.42	
										529.27		1.42	0.0590	24.00	414+50.00	527.86	4.50	-0.0590	-0.27		527.59	
										528.37		1.42	0.0590	24.00	414+75.00	526.95	4.50	-0.0590	-0.27		526.68	
										527.38		1.42	0.0590	24.00	415+00.00	525.96	4.50	-0.0590	-0.27		525.69	
										526.33		1.42	0.0590	24.00	415+25.00	524.91	4.50	-0.0590	-0.27		524.65	
										525.27		1.42	0.0590	24.00	415+50.00	523.85	4.50	-0.0590	-0.27		523.58	
										524.21		1.42	0.0590	24.00	415+75.00	522.79	4.50	-0.0590	-0.27		522.52	
										523.15		1.42	0.0590	24.00	416+00.00	521.73	4.50	-0.0590	-0.27		521.46	
										522.08		1.42	0.0590	24.00	416+25.00	520.66	4.50	-0.0590	-0.27		520.39	
										521.02		1.42	0.0590	24.00	416+50.00	519.60	4.50	-0.0590	-0.27		519.33	
										519.96		1.42	0.0590	24.00	416+75.00	518.54	4.50	-0.0590	-0.27		518.27	
										518.97		1.42	0.0590	24.00	417+00.00	517.55	4.50	-0.0590	-0.27		517.28	
										518.07		1.42	0.0590	24.00	417+25.00	516.65	4.50	-0.0590	-0.27		516.38	
										517.28		1.42	0.0590	24.00	417+50.00	515.86	4.50	-0.0590	-0.27		515.59	
										516.57		1.42	0.0590	24.00	417+75.00	515.15	4.50	-0.0590	-0.27		514.88	
										515.97		1.42	0.0590	24.00	418+00.00	514.55	4.50	-0.0590	-0.27		514.28	
										515.46		1.42	0.0590	24.00	418+25.00	514.04	4.50	-0.0590	-0.27		513.77	
										515.04		1.42	0.0590	24.00	418+50.00	513.62	4.50	-0.0590	-0.27		513.35	
										514.72		1.42	0.0590	24.00	418+75.00	513.30	4.50	-0.0590	-0.27		513.03	
										514.50		1.42	0.0590	24.00	419+00.00	513.08	4.50	-0.0590	-0.27		512.81	
										514.37		1.42	0.0590	24.00	419+25.00	512.95	4.50	-0.0590	-0.27		512.68	
										514.34		1.42	0.0590	24.00	419+50.00	512.92	4.50	-0.0590	-0.27		512.65	
										514.41		1.42	0.0590	24.00	419+75.00	512.99	4.50	-0.0590	-0.27		512.72	
										514.57		1.42	0.0590	24.00	420+00.00	513.15	4.50	-0.0590	-0.27		512.88	
										514.83		1.42	0.0590	24.00	420+25.00	513.41	4.50	-0.0590	-0.27		513.14	
										515.19		1.42	0.0590	24.00	420+50.00	513.77	4.50	-0.0590	-0.27		513.50	
										515.64		1.42	0.0590	24.00	420+75.00	514.22	4.50	-0.0590	-0.27		513.95	
										516.19		1.42	0.0590	24.00	421+00.00	514.77	4.50	-0.0590	-0.27		514.50	
										516.83		1.42	0.0590	24.00	421+25.00	515.41	4.50	-0.0590	-0.27		515.14	
										517.28	218:1	1.42	0.0590	24.00	421+40.56	515.86	4.50	-0.0590	-0.27	1163:1	515.59	CS / FS
										517.52		1.37	0.0572	24.00	421+50.00	516.15	4.31	-0.0572	-0.25	1214:1	515.90	
										518.24		1.26	0.0524	24.00	421+75.00	516.98	3.82	-0.0524	-0.20	1370:1	516.78	
										519.05		1.14	0.0476	24.00	422+00.00	517.91	3.32	-0.0476	-0.16	1576:1	517.75	
										519.87		1.03	0.0429	24.00	422+25.00	518.84	2.82	-0.0429	-0.12	1855:1	518.72	
										520.69		0.91	0.0381	24.00	422+50.00	519.78	2.32	-0.0381	-0.09	2255:1	519.69	
										521.52		0.80	0.0333	24.00	422+75.00	520.72	1.83	-0.0333	-0.06	2859:1	520.66	
										522.34		0.68	0.0285	24.00	423+00.00	521.66	1.33	-0.0285	-0.04	3934:1	521.62	
										523.16		0.57	0.0237	24.00	423+25.00	522.59	0.83	-0.0237	-0.02	6304:1	522.57	
										523.99		0.46	0.0190	24.00	423+50.00	523.53	0.33	-0.0190	-0.01	15856:1	523.52	
										524.49	218:1	0.38	0.0160	24.00	423+65.55	524.11	0.00	-0.0160	0.00	N/A	524.11	ST / NC
										524.80	175:1	0.33	0.0138	24.00	423+75.00	524.47						
										525.60		0.19	0.0078	24.00	424+00.00	525.41						
										526.38		0.04	0.0019	24.00	424+25.00	526.34						
										527.18		-0.10	-0.0041	24.00	424+50.00	527.28						
										527.98		-0.24	-0.0100	24.00	424+75.00	528.22						
										528.78	175:1	-0.38	-0.0160	24.00	425+00.00	529.16						RC

CALCULATED SEA
CHECKED DLR

SUPERELEVATION TABLE - RAMP J

HAM-75-7.85

527
1047

Preliminary Plans - For Reference Only

J:\20110903\ODOT\HAM\77889\roadway\sheets\77889GE004.dgn 5/22/2026 10:19:27 AM hbrendlinger

SUPERELEVATION TABLE - RAMP M - CURVE NO 562-M1

PI STA 418+44.83 | Dc = 11° 44′ 43″

LEFT SIDE					BASELINE CONTROL	
EDGE ELEVATION	TRANSITION RATE	ELEVATION CORRECTION	CROSS SLOPE	WIDTH	STATION	PROFILE GRADE
536.88	273:1	0.26	0.0160	16.00	412+39.90	536.62
537.38	↕	0.29	0.0183	16.00	412+50.00	537.09
538.66		0.38	0.0240	16.00	412+75.00	538.28
540.00		0.48	0.0297	16.00	413+00.00	539.52
541.37		0.57	0.0355	16.00	413+25.00	540.80
542.80		0.66	0.0412	16.00	413+50.00	542.14
544.27		0.75	0.0469	16.00	413+75.00	543.52
545.75		0.84	0.0526	16.00	414+00.00	544.91
546.64	273:1	0.90	0.0560	16.00	414+14.90	545.74
547.20		0.90	0.0560	16.00	414+25.00	546.30
548.60		0.90	0.0560	16.00	414+50.00	547.70
549.99		0.90	0.0560	16.00	414+75.00	549.09
551.38		0.90	0.0560	16.00	415+00.00	550.48
552.78		0.90	0.0560	16.00	415+25.00	551.88
554.17		0.90	0.0560	16.00	415+50.00	553.27
555.57		0.90	0.0560	16.00	415+75.00	554.67
556.96		0.90	0.0560	16.00	416+00.00	556.06
558.35		0.90	0.0560	16.00	416+25.00	557.45
559.65		0.90	0.0560	16.00	416+50.00	558.75
560.81		0.90	0.0560	16.00	416+75.00	559.91
561.83		0.90	0.0560	16.00	417+00.00	560.93
562.70		0.90	0.0560	16.00	417+25.00	561.80
563.44		0.90	0.0560	16.00	417+50.00	562.54
564.03		0.90	0.0560	16.00	417+75.00	563.13
564.48		0.90	0.0560	16.00	418+00.00	563.58
564.79		0.90	0.0560	16.00	418+25.00	563.89
564.95		0.90	0.0560	16.00	418+50.00	564.05
564.98		0.90	0.0560	16.00	418+75.00	564.08
564.86		0.90	0.0560	16.00	419+00.00	563.96
564.60		0.90	0.0560	16.00	419+25.00	563.70
564.20		0.90	0.0560	16.00	419+50.00	563.30
563.66		0.90	0.0560	16.00	419+75.00	562.76
562.97		0.90	0.0560	16.00	420+00.00	562.07
562.15		0.90	0.0560	16.00	420+25.00	561.25
561.87	216:1	0.90	0.0560	16.00	420+32.40	560.97
561.09	↕	0.81	0.0509	16.00	420+50.00	560.28
559.87		0.70	0.0437	16.00	420+75.00	559.17
558.51		0.58	0.0364	16.00	421+00.00	557.93
557.14		0.47	0.0292	16.00	421+25.00	556.67
555.76		0.35	0.0219	16.00	421+50.00	555.41
554.38		0.23	0.0147	16.00	421+75.00	554.15
553.01		0.12	0.0074	16.00	422+00.00	552.89
552.60	216:1	0.08	0.0053	16.00	422+07.38	552.52

SUPERELEVATION TABLE - RAMP M - CURVE NO 562-M2

PI STA 425+16.31 | Dc = 10° 00′ 00″

CALCULATED SEA | CHECKED DLR

LEFT EOP							LEFT BREAKLINE #2 (GORE)						LEFT BREAKLINE #1					BASELINE CONTROL		
REMARKS	EDGE ELEVATION	TRANSITION RATE	ELEVATION CORRECTION	CROSS SLOPE	WIDTH	REMARKS	EDGE ELEVATION	TRANSITION RATE	ELEVATION CORRECTION	CROSS SLOPE	WIDTH	EDGE ELEVATION	TRANSITION RATE	ELEVATION CORRECTION	CROSS SLOPE	WIDTH	STATION	PROFILE GRADE	REMARKS
												552.60		0.08	0.0053	16.00	422+07.38	552.52	ST
												551.60	216:1	0.00	0.0000	16.00	422+25.65	551.60	RC
												551.63	↕	0.00	0.0002	16.00	422+25.00	551.63	
												550.26		-0.11	-0.0071	16.00	422+50.00	550.37	
												550.03		-0.13	-0.0083	16.00	422+54.25	550.16	TS
												548.88		-0.23	-0.0143	16.00	422+75.00	549.11	
												547.51		-0.34	-0.0215	16.00	423+00.00	547.85	
												547.40		-0.35	-0.0221	16.00	423+02.00	547.75	NC
												546.13		-0.46	-0.0288	16.00	423+25.00	546.59	
												544.75		-0.58	-0.0360	16.00	423+50.00	545.33	
												543.38		-0.69	-0.0433	16.00	423+75.00	544.07	
												542.00		-0.81	-0.0505	16.00	424+00.00	542.81	
							540.15	144:1	-1.37	-0.0570	24.00	541.52		-0.85	-0.0531	16.00	424+08.79	542.37	
FS	538.32	116:1	-1.69	-0.0570	29.67		540.01	145:1	-1.36	-0.0573	23.74	541.37		-0.86	-0.0539	16.00	424+11.56	542.23	
	537.62	↕	-1.69	-0.0570	29.66		539.31	154:1	-1.32	-0.0586	22.45	540.63		-0.92	-0.0578	16.00	424+25.00	541.55	
	537.40		-1.69	-0.0570	29.66	FS	539.10	156:1	-1.30	-0.0590	22.05	540.40	216:1	-0.94	-0.0590	16.00	424+29.25	541.34	SC/FS
	537.28		-1.69	-0.0570	29.66		538.97	158:1	-1.29	-0.0590	21.80	540.26		-0.94	-0.0590	16.00	424+31.94	541.20	
	536.47		-1.69	-0.0570	29.66		538.16	171:1	-1.19	-0.0590	20.12	539.35		-0.94	-0.0590	16.00	424+50.00	540.29	
	535.34		-1.69	-0.0570	29.65		537.03	193:1	-1.05	-0.0590	17.84	538.09		-0.94	-0.0590	16.00	424+75.00	539.03	
	534.22		-1.69	-0.0570	29.64		535.91	221:1	-0.92	-0.0590	15.61	536.83		-0.94	-0.0590	16.00	425+00.00	537.77	
	533.08		-1.69	-0.0570	29.63		534.77	257:1	-0.79	-0.0590	13.44	535.57		-0.94	-0.0590	16.00	425+25.00	536.51	
	531.95		-1.69	-0.0570	29.62		533.64	305:1	-0.67	-0.0590	11.32	534.31		-0.94	-0.0590	16.00	425+50.00	535.25	
FS	531.02		-1.69	-0.0570	29.6		532.70	361:1	-0.56	-0.0590	9.55	533.27		-0.94	-0.0590	16.00	425+71.74	534.21	
	530.91	117:1	-1.66	-0.0564	29.51		532.57	371:1	-0.55	-0.0590	9.31	533.12		-0.94	-0.0590	16.00	425+75.00	534.06	
	530.34	119:1	-1.55	-0.0534	29.08	FS	531.90	432:1	-0.47	-0.0590	7.99	532.37	307:1	-0.94	-0.0590	16.00	425+92.03	533.31	CS/FS
	530.14	119:1	-1.50	-0.0520	28.9		531.64	473:1	-0.42	-0.0574	7.30	532.06	↕	-0.92	-0.0574	16.00	426+00.00	532.98	
	529.53	121:1	-1.35	-0.0476	28.42		530.88	665:1	-0.27	-0.0523	5.19	531.16		-0.84	-0.0523	16.00	426+25.00	531.99	
	529.00	123:1	-1.21	-0.0432	27.94		530.21	1082:1	-0.15	-0.0472	3.19	530.36		-0.76	-0.0472	16.00	426+50.00	531.11	
	528.54	126:1	-1.06	-0.0388	27.35		529.60	2696:1	-0.05	-0.0422	1.28	529.66		-0.67	-0.0421	16.00	426+75.00	530.33	
	528.27	129:1	-0.96	-0.0357	26.79							529.22	307:1	-0.62	-0.0385	16.00	426+92.80	529.84	
	528.16	132:1	-0.90	-0.0344	26.22							529.07	310:1	-0.59	-0.0370	15.88	427+00.00	529.65	
	527.86	140:1	-0.74	-0.0300	24.59							528.59	324:1	-0.49	-0.0320	15.20	427+25.00	529.08	
	527.62	148:1	-0.60	-0.0256	23.39							528.22	345:1	-0.38	-0.0269	14.26	427+50.00	528.61	
	527.51	152:1	-0.51	-0.0226	22.74							528.03	363:1	-0.32	-0.0234	13.55	427+67.01	528.34	ST
	527.47	153:1	-0.48	-0.0212	22.48							527.95	372:1	-0.29	-0.0218	13.21	427+75.00	528.24	
	527.40	159:1	-0.37	-0.0168	21.73							527.76	405:1	-0.20	-0.0167	12.15	428+00.00	527.97	
	527.40	160:1	-0.35	-0.0162	21.63							527.75	410:1	-0.19	-0.0160	12.00	428+03.50	527.94	NC
NC	527.39	160:1	-0.34	-0.0160	21.56							527.74	410:1	-0.19	-0.0160	12.00	428+04.50	527.93	

SUPERELEVATION TABLE - RAMP M

HAM-75-7.85

528
1047

Preliminary Plans - For Reference Only

J:\20110903\ODOT\HAM\77889\roadway\sheets\77889GE005.dgn 5/22/2026 10:19:28 AM hbrendlinger

SUPERELEVATION TABLE - RAMP Q - CURVE NO 562-Q1

PI STA 30+76.85 | Dc = 2° 14′ 49″

LEFT SIDE					BASELINE CONTROL		RIGHT SIDE					REMARKS
EDGE ELEVATION	TRANSITION RATE	ELEVATION CORRECTION	CROSS SLOPE	WIDTH	STATION	PROFILE GRADE	WIDTH	CROSS SLOPE	ELEVATION CORRECTION	TRANSITION RATE	EDGE ELEVATION	
567.36	581:1	0.36	0.0300	12.00	28+09.58	567.00						PC
567.95		0.39	0.0322	12.05	28+25.00	567.56						
568.69	569:1	0.43	0.0350	12.24	28+44.56	568.26						FS
568.89		0.43	0.0350	12.32	28+50.00	568.46						
569.84		0.45	0.0350	12.84	28+75.00	569.39						
570.79		0.48	0.0350	13.61	29+00.00	570.31						
571.74		0.51	0.0350	14.63	29+25.00	571.23						
572.69		0.56	0.0350	16.00	29+50.00	572.13						
573.59		0.56	0.0350	16.00	29+75.00	573.03						
574.47		0.56	0.0350	16.00	30+00.00	573.91						
574.75		0.56	0.0350	16.00	30+08.00	574.19						
575.35		0.56	0.0350	16.00	30+25.00	574.79						
576.22		0.56	0.0350	16.00	30+50.00	575.66						
577.08		0.56	0.0350	16.00	30+75.00	576.52						
577.92		0.56	0.0350	16.00	31+00.00	577.36						
578.81		0.56	0.0350	16.00	31+25.00	578.25						
579.73		0.56	0.0350	16.00	31+50.00	579.17						
580.65		0.56	0.0350	16.00	31+75.00	580.09						
581.58		0.56	0.0350	16.00	32+00.00	581.02						
582.44		0.56	0.0350	16.00	32+25.00	581.88						
583.17		0.56	0.0350	16.00	32+50.00	582.61						
583.73		0.56	0.0350	16.00	32+75.00	583.17						
584.14		0.56	0.0350	16.00	33+00.00	583.58						
584.24	342:1	0.56	0.0350	16.00	33+08.00	583.68						FS
584.34		0.51	0.0319	16.00	33+25.00	583.83						
584.38		0.46	0.0288	16.00	33+42.17	583.92						PT
584.40		0.47	0.0273	17.25	33+50.00	583.93						
584.35		0.48	0.0228	21.25	33+75.00	583.87						
584.10		0.44	0.0182	24.46	34+00.00	583.66						
583.91		0.40	0.0160	25.15	34+12.00	583.51						

SUPERELEVATION TABLE RAMP P - CURVE NO 562-P1

PI STA 32+57.73 | Dc = 1° 58′ 33″

LEFT SIDE					CENTERLINE CONTROL		RIGHT SIDE					REMARKS
EDGE ELEVATION	TRANSITION RATE	ELEVATION CORRECTION	CROSS SLOPE	WIDTH	STATION	PROFILE GRADE	WIDTH	CROSS SLOPE	ELEVATION CORRECTION	TRANSITION RATE	EDGE ELEVATION	
					29+58.47	572.67	16.00	0.016	0.26	276:1	572.93	
					29+75.00	573.25	16.00	0.020	0.32	276:1	573.57	
					30+00.00	574.07	16.00	0.025	0.40	276:1	574.47	
					30+13.47	574.51	16.00	0.028	0.45	276:1	574.96	PC
					30+25.00	574.89	16.35	0.031	0.51	270:1	575.40	
					30+42.47	575.48	16.85	0.035	0.59	262:1	576.07	FS
					30+50.00	575.74	17.06	0.035	0.60		576.34	
					30+75.00	576.65	17.78	0.035	0.62		577.27	
					31+00.00	577.56	18.50	0.035	0.65		578.21	
					31+25.00	578.46	19.21	0.035	0.67		579.13	
					31+50.00	579.35	19.93	0.035	0.70		580.05	
					31+75.00	580.24	20.66	0.035	0.72		580.96	
					32+00.00	581.11	21.37	0.035	0.75		581.86	
					32+25.00	581.96	22.09	0.035	0.77		582.73	
					32+50.00	582.81	22.82	0.035	0.80		583.61	
					32+75.00	583.56	23.52	0.035	0.82		584.38	
					33+00.00	584.13	24.24	0.035	0.85		584.98	
					33+25.00	584.51	24.96	0.035	0.87		585.38	
					33+50.00	584.70	25.68	0.035	0.90		585.60	
					33+75.00	584.71	26.39	0.035	0.92		585.63	
					34+00.00	584.52	27.11	0.035	0.95		585.47	
					34+16.83	584.34	27.59	0.035	0.97	-3538:1	585.31	FS
					34+25.00	584.25	27.83	0.035	0.98	-3508:1	585.23	
					34+50.00	583.98	28.55	0.035	1.01	-3419:1	584.99	
					34+75.00	583.70	29.26	0.036	1.04	-3336:1	584.74	
					35+00.00	583.43	29.98	0.036	1.07	-3256:1	584.50	
					35+00.83	583.42	30.00	0.036	1.08	-3254:1	584.50	PT

Preliminary Plans - For Reference Only

CALCULATED SEA
CHECKED DLR

SUPERELEVATION TABLE - RAMP Q & P

HAM-75-7.85

529
1047

J:\20110903\ODOT\HAM\7889\roadway\sheets\77889GE006.dgn 5/22/2026 10:19:29 AM hbrendlinger

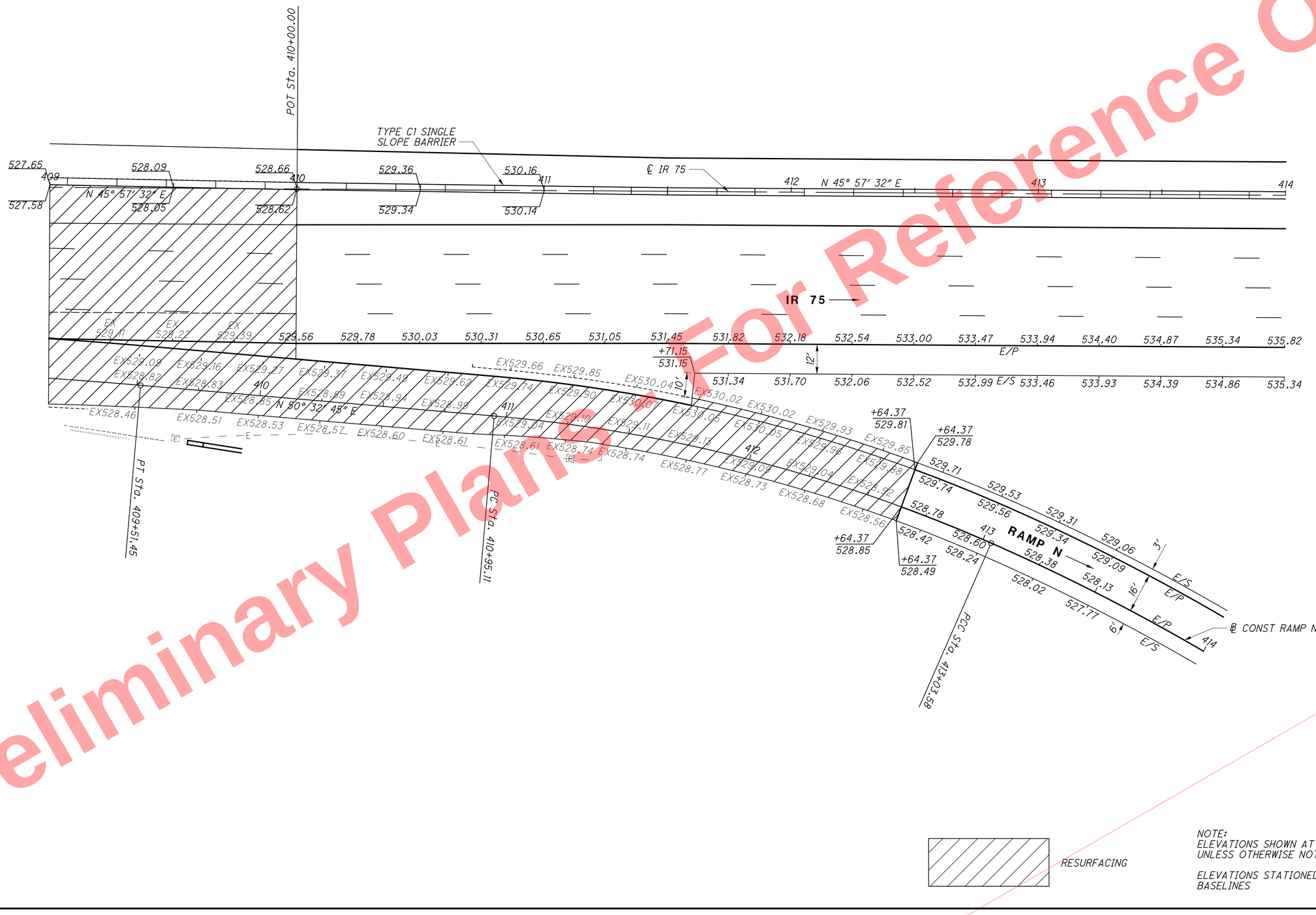

Preliminary Plans - For Reference Only

HORIZONTAL SCALE IN FEET
0 10 20 40

CALCULATED DLR
CHECKED EDK

PAVEMENT DETAIL - I.R. 75 INTERCHANGE RAMP N

HAM-75-7.85

530
1047

J:\20110903\ODOT\HAM\77889\roadway\sheets\77889G015.dgn 5/22/2026 10:19:31 AM hbrendlinger

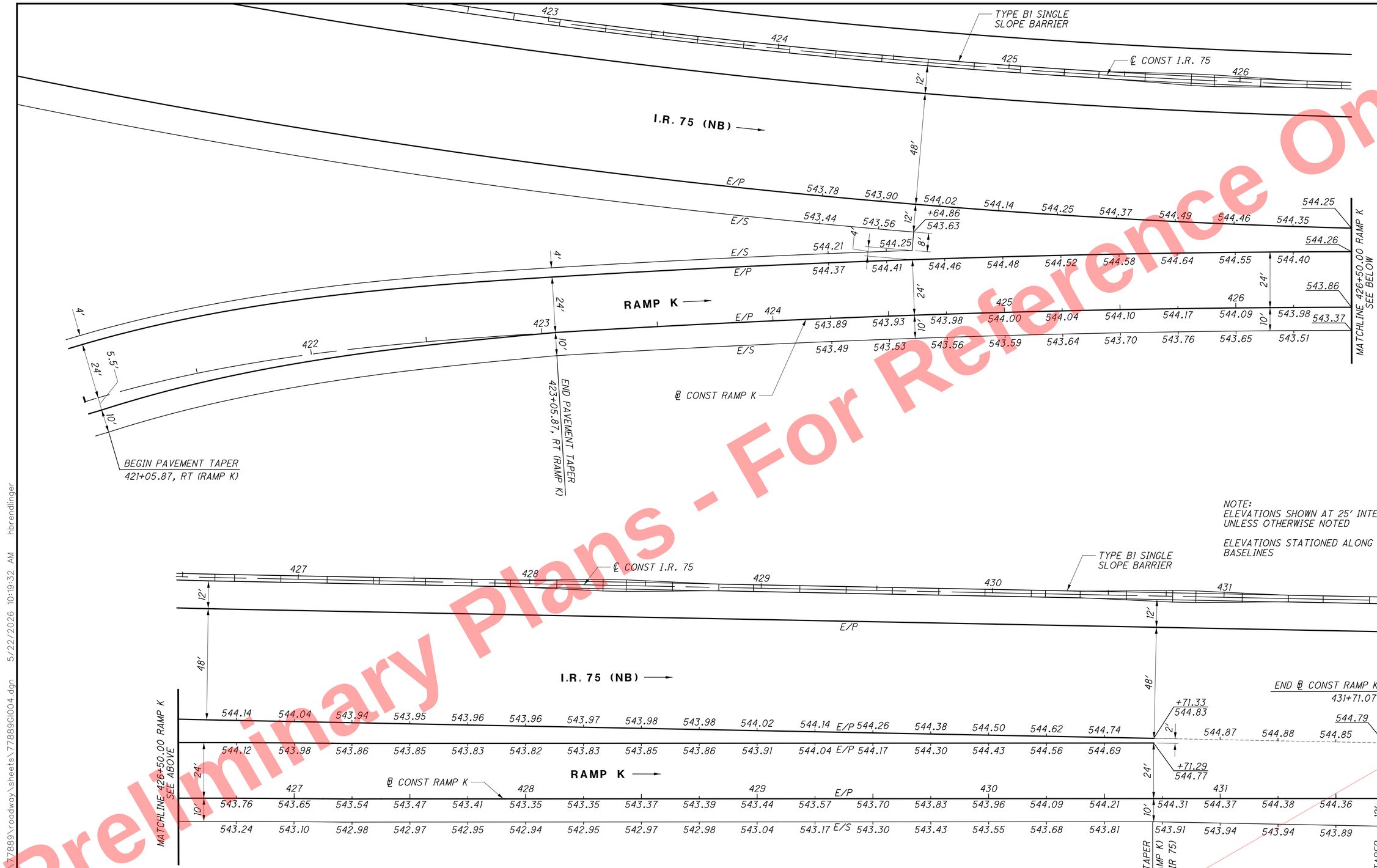

NOTE:
ELEVATIONS SHOWN AT 25' INTERVALS UNLESS OTHERWISE NOTED

ELEVATIONS STATIONED ALONG RAMP BASELINES

Preliminary Plans - Not For Reference Only

HORIZONTAL SCALE IN FEET
0 10 20 40

CALCULATED DLR
CHECKED EDK

PAVEMENT DETAIL - I.R. 75 INTERCHANGE RAMP K

HAM-75-7.85

531
1047

J:\20110903\ODOT\HAM\77889\roadway\sheets\77889GI004.dgn 5/22/2026 10:19:32 AM hbrendlinger

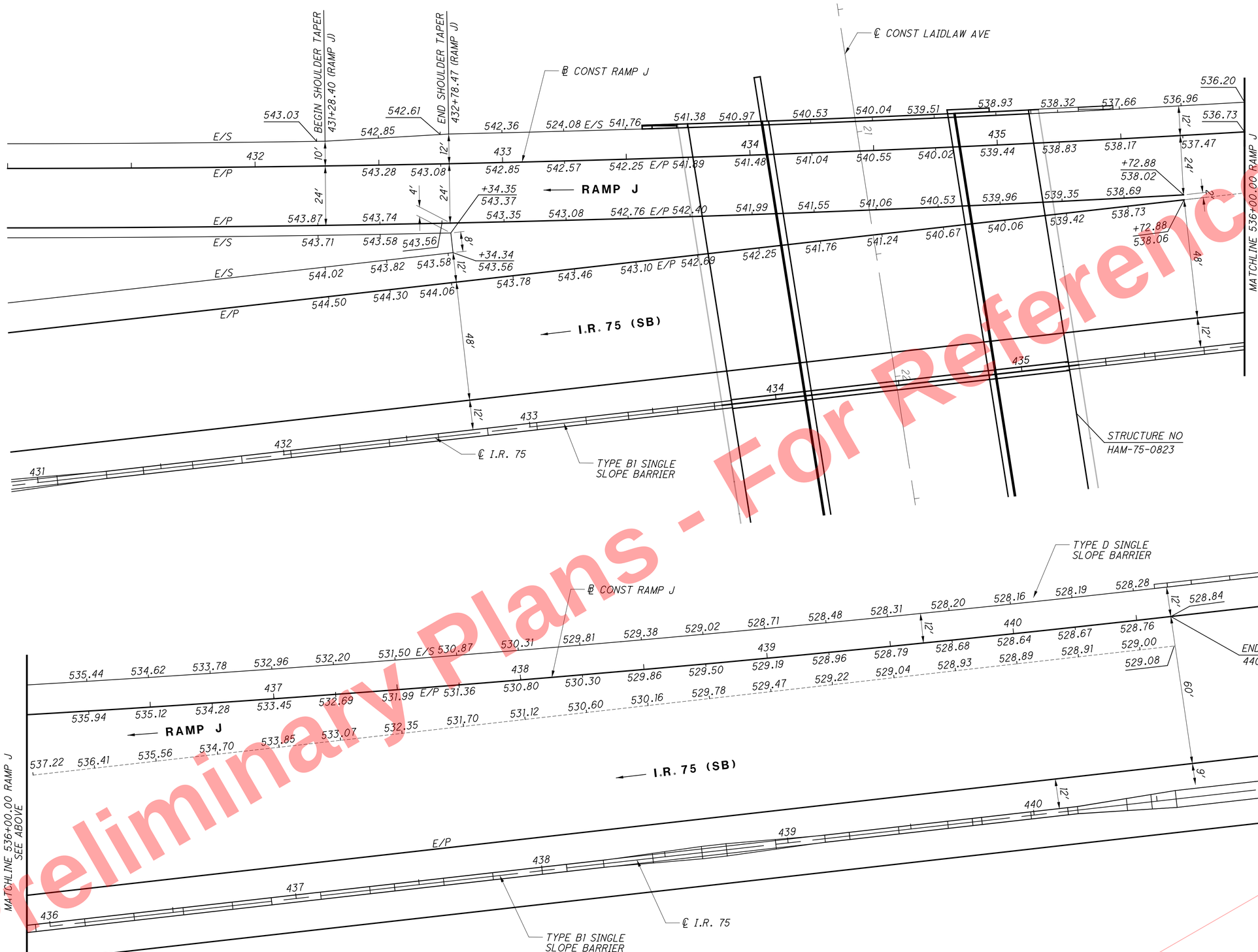

Preliminary Plans - For Reference Only

J:\20110903\ODOT\HAM\77889\roadway\sheets\77889G007.dgn 5/22/2026 10:19:34 AM hbrendlinger

HORIZONTAL SCALE IN FEET

CALCULATED DLR CHECKED EDK

PAVEMENT DETAIL - I.R. 75 INTERCHANGE RAMP J

HAM-75-7.85

532 / 1047

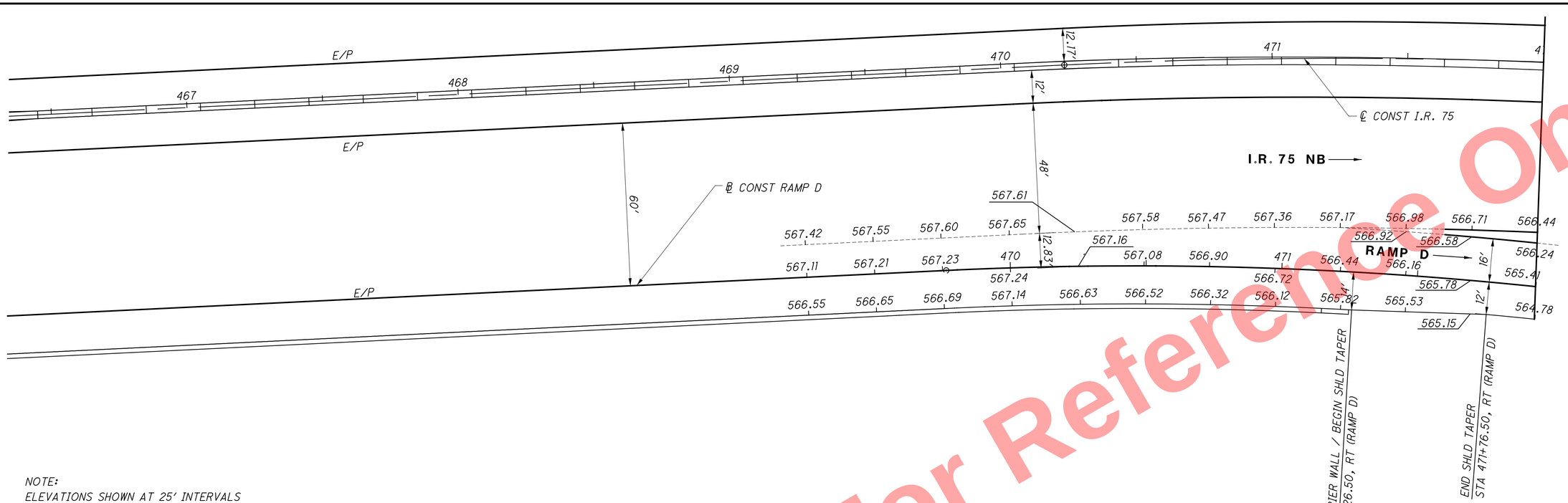

NOTE:
ELEVATIONS SHOWN AT 25' INTERVALS
UNLESS OTHERWISE NOTED

ELEVATIONS STATIONED ALONG RAMP
BASELINES

Preliminary Plans - For Reference Only

HORIZONTAL SCALE IN FEET
0 25 50 100

CALCULATED JLM
CHECKED SSK

PAVEMENT DETAIL - I.R. 75 INTERCHANGE
RAMP D

HAM-75-7.85

533
1047

J:\20110903\OPDT\HAM\77889\roadway\sheets\77889GI405.dgn 5/22/2026 10:19:35 AM hbrendlinger

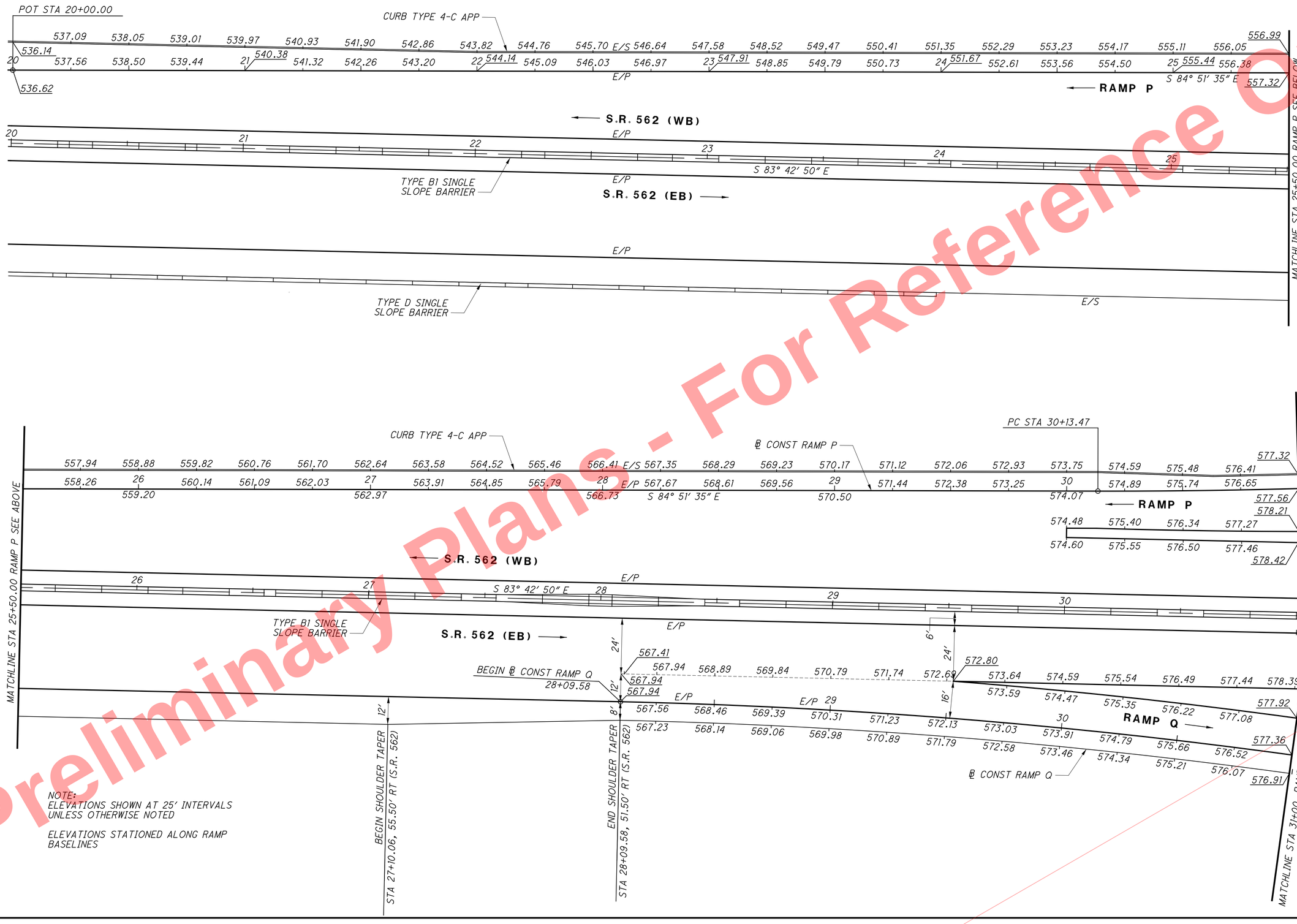

NOTE:
ELEVATIONS SHOWN AT 25′ INTERVALS UNLESS OTHERWISE NOTED

ELEVATIONS STATIONED ALONG RAMP BASELINES

Preliminary Plans - For Reference Only

HORIZONTAL SCALE IN FEET
0 10 20 40

CALCULATED DLR
CHECKED EDK

PAVEMENT DETAIL - S.R. 562 INTERCHANGE RAMP P & RAMP Q

HAM-75-7.85

534
1047

J:\20110903\ODOT\HAM\7889\roadway\sheets\77889G014.dgn 5/22/2026 10:19:35 AM hbrendlinger

PAVEMENT DETAIL - S.R. 562 INTERCHANGE
RAMP Q

HAM-75-7.85

535
1047

CALCULATED DLR
CHECKED EDK

HORIZONTAL SCALE IN FEET
0 10 20 40

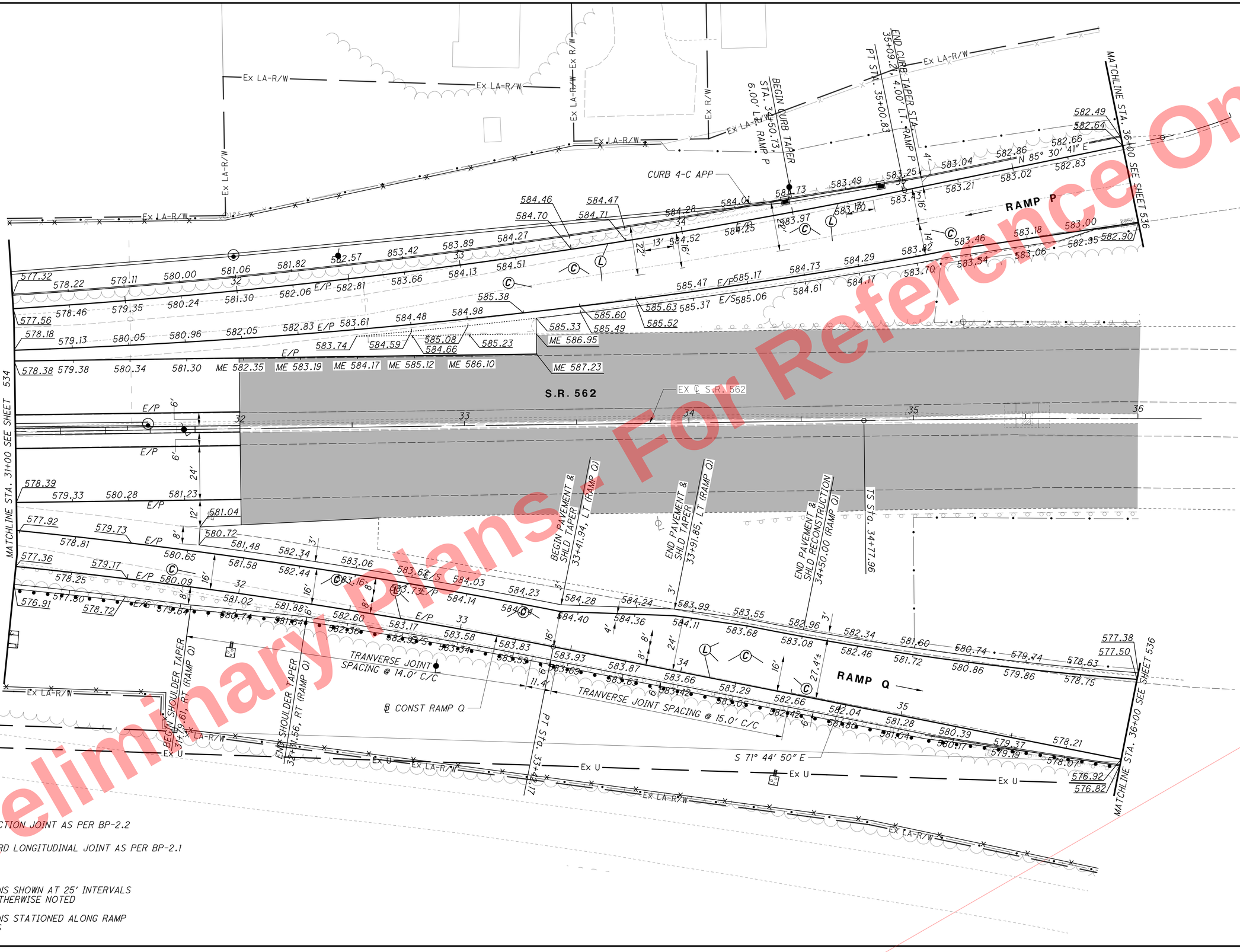

Preliminary Plans - For Reference Only

Ⓒ CONTRACTION JOINT AS PER BP-2.2

Ⓛ STANDARD LONGITUDINAL JOINT AS PER BP-2.1

NOTE:
ELEVATIONS SHOWN AT 25' INTERVALS
UNLESS OTHERWISE NOTED

ELEVATIONS STATIONED ALONG RAMP
BASELINES

J:\20110903\ODOT\HAM\77889\roadway\sheets\77889ql010.dgn 5/22/2026 10:19:43 AM hbrendlinger

Preliminary Plans - For Reference Only

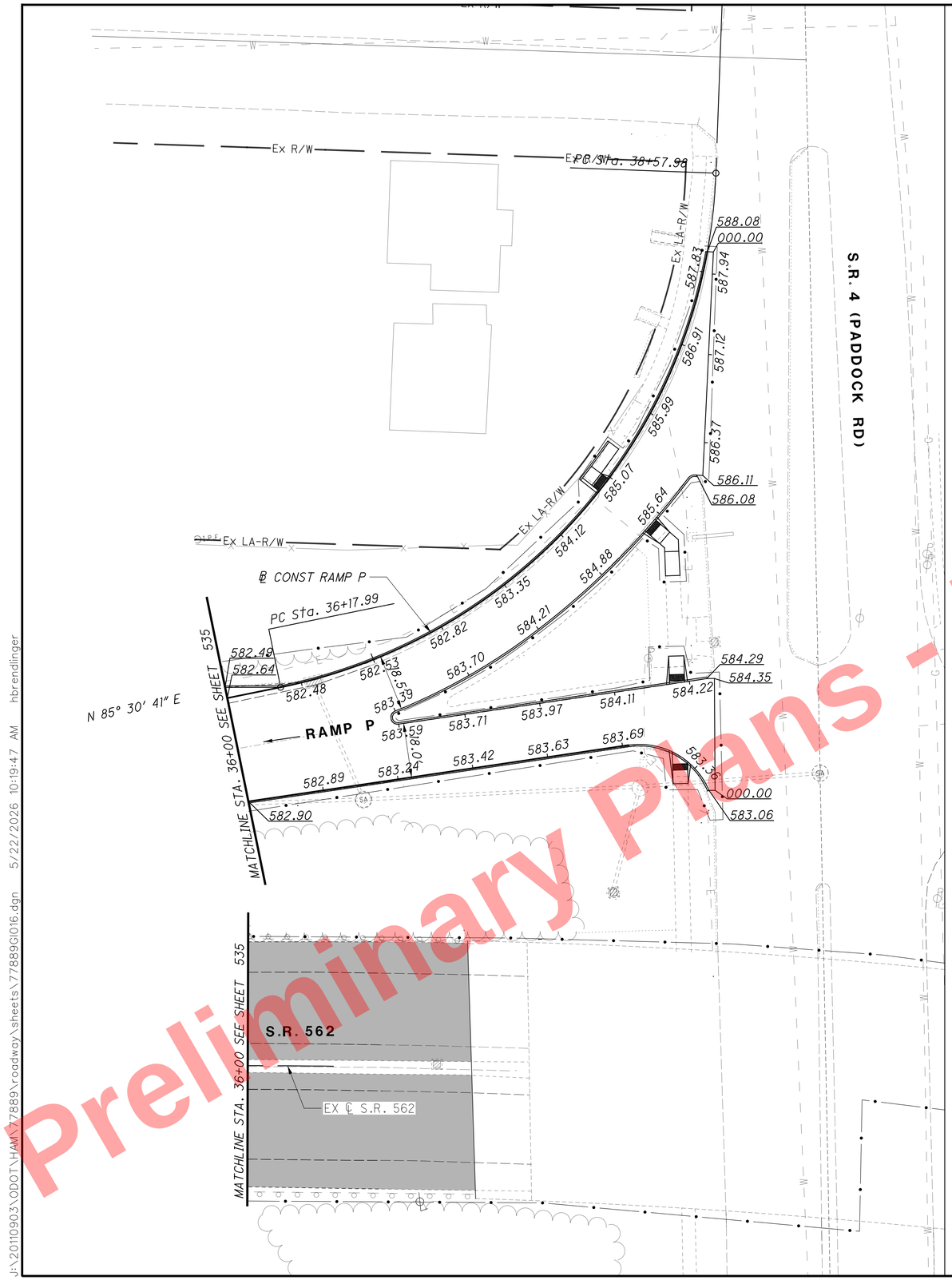

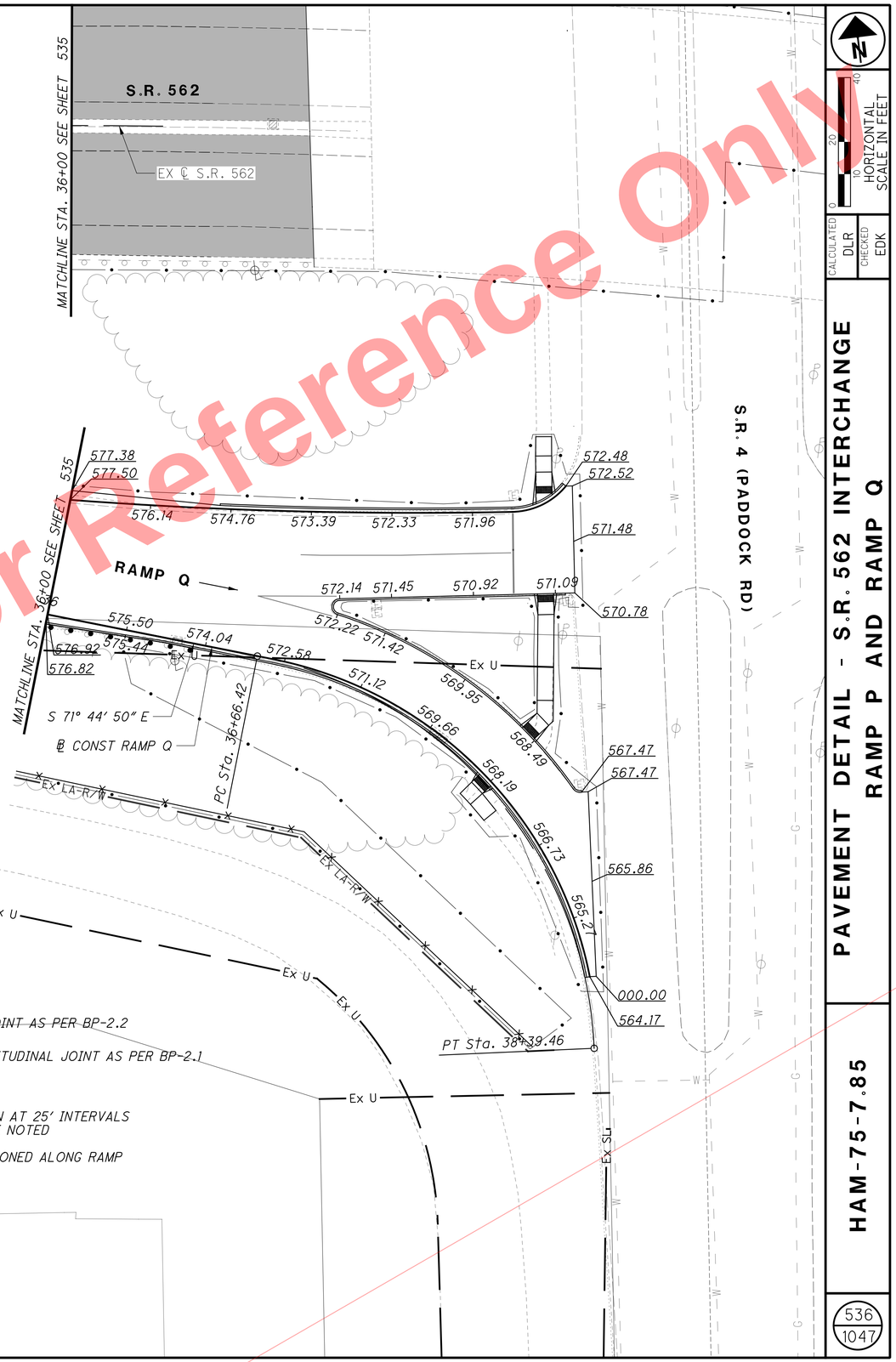

Ⓒ CONTRACTION JOINT AS PER BP-2.2

Ⓛ STANDARD LONGITUDINAL JOINT AS PER BP-2.1

NOTE:
ELEVATIONS SHOWN AT 25' INTERVALS
UNLESS OTHERWISE NOTED

ELEVATIONS STATIONED ALONG RAMP
BASELINES

HORIZONTAL SCALE IN FEET
0 10 20 40

CALCULATED DLR
CHECKED EDK

PAVEMENT DETAIL - S.R. 562 INTERCHANGE
RAMP P AND RAMP Q

HAM-75-7.85

536
1047

J:\20110903\ODOT\HAM\77889\roadway\sheets\77889GI016.dgn 5/22/2026 10:19:47 AM hbrendlinger

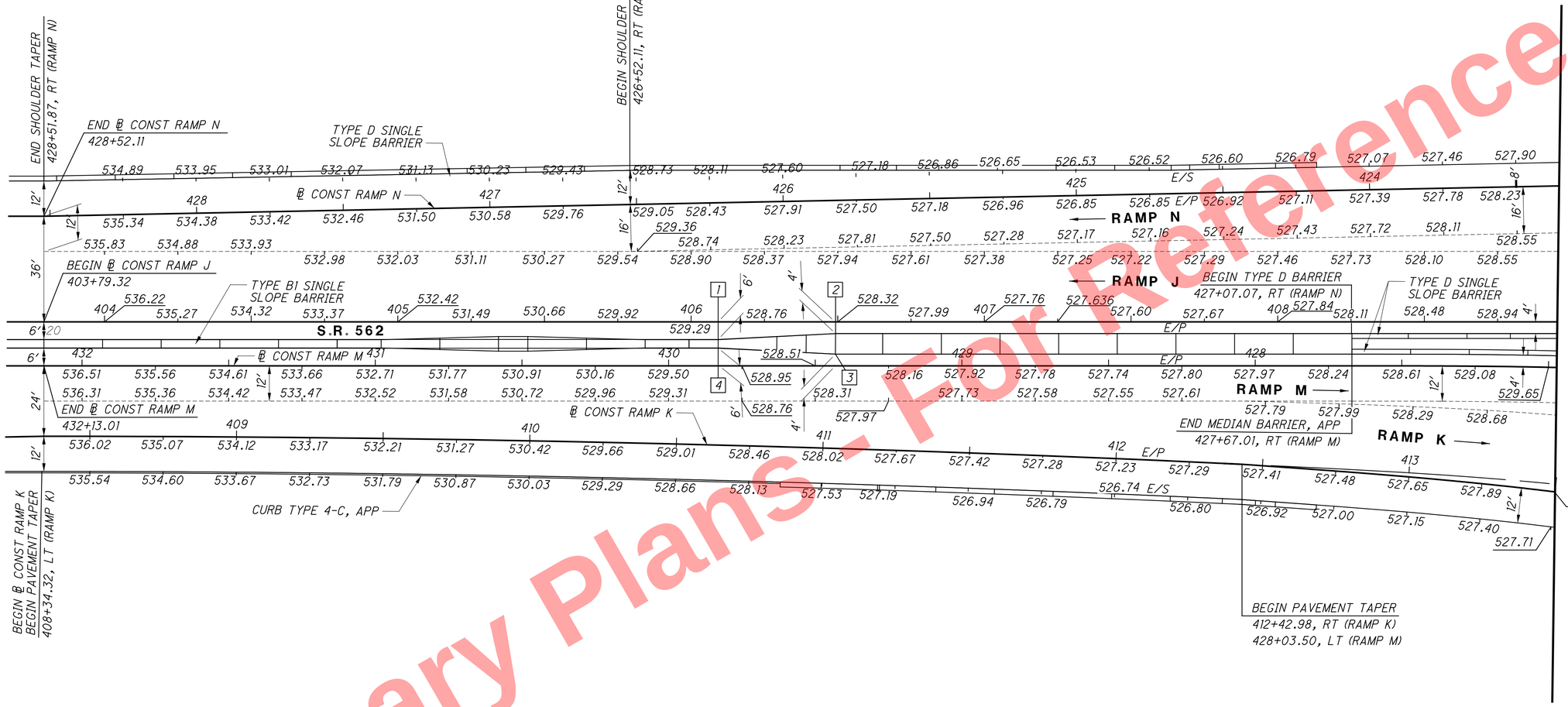

NOTE:
ELEVATIONS SHOWN AT 25' INTERVALS UNLESS OTHERWISE NOTED

ELEVATIONS STATIONED ALONG RAMP BASELINES

HORIZONTAL SCALE IN FEET
0 10 20 40

CALCULATED DLR
CHECKED EDK

PAVEMENT DETAIL - S.R. 562 INTERCHANGE
RAMPS K, J, M & N

HAM-75-7.85

537
1047

Preliminary Plans - For Reference Only

J:\20110903\ODOT\HAM\77889\roadway\sheets\77889GI001.dgn 5/22/2026 10:19:49 AM hbrendlinger

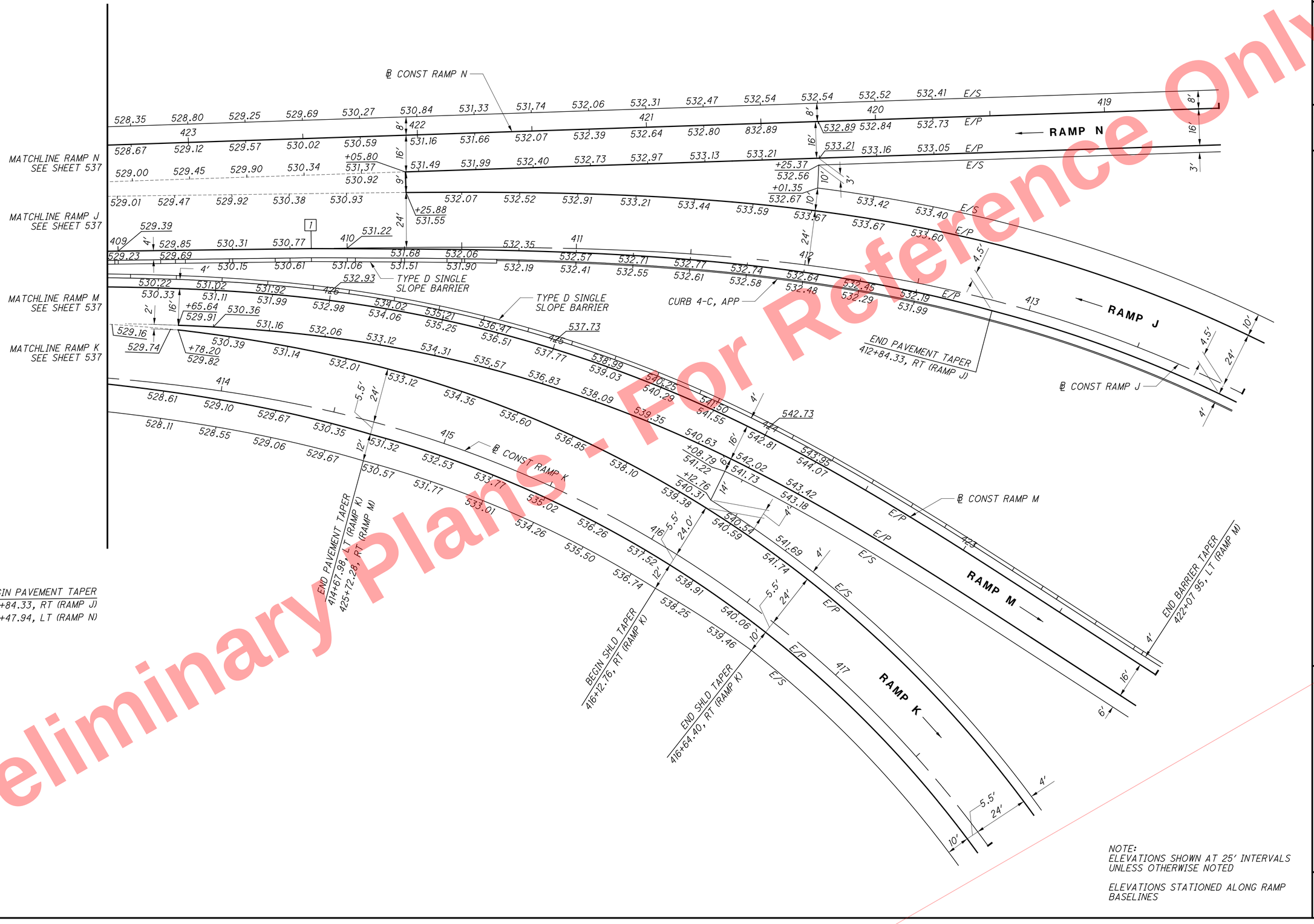

Preliminary Plans - Not For Reference Only

HORIZONTAL SCALE IN FEET
0 10 20 40
CALCULATED DLR CHECKED EDK

PAVEMENT DETAIL - S.R. 562 INTERCHANGE
RAMPS K, J, M & N

HAM-75-7.85

538
1047

J:\20110903\ODOT\HAM\77889\roadway\sheets\77889gl002.dgn 5/22/2026 10:19:50 AM hbrendlinger

Preliminary Plans - For Reference Only

INTERSECTION DETAILS
TOWNE STREET AND CEDAR STREET

HAM-75-7.85

CALCULATED JLM
CHECKED SSK

HORIZONTAL SCALE IN FEET
0 5 10 20

J:\20110903\ODOT\HAM\77889\roadway\sheets\77889GI408.dgn 5/22/2026 10:19:51 AM hbrendlinger

EX DRIVE
EX DRIVE
EX DRIVE
EX WALK
EX WALK
EX WALK
EX WALK
EX WALK
EX WALK
EX WALK
EX WALK

14.4' ±
14.0'±
529.39
529.62
529.40
B
℄ CONST CEDAR STREET
STA 1+25.67
MATCH EX PVMT
530.38
530.62
530.46
1
7.0'
PROP MSE WALL
PROP 7' WALK
531.18
531.41
531.35
CEDAR STREET
531.98
532.21
12'
A
E/P
E/P
E/P
E/S
E/S
E/P
I.R. 75 (SB)
I.R. 75 (NB)
℄ CONST I.R. 75
453
A = STA 0+49.36, 2.5' LT
B = STA 1+14.71, 14.0' RT
STA 19+92.12, 36.00' RT (TOWNE)
STA 00+36.40, 17.50' RT (CEDAR)
STA 20+39.22, 32.35' RT (TOWNE)
STA 00+31.70, 29.50' LT (CEDAR)
532.39
532.44
532.47
15'
532.61
532.79
10' TYP.
532.97
532.64
533.15
533.18
PROP MSE WALL
PROP 7' WALK
3.34'
532.51
532.12
1.86'
533.74
534.42
535.18
536.18
E/P
537.23
21
20
534.00
534.67
535.33
19
537.48
℄ CONST TOWNE STREET
532.78
533.38
TOWNE STREET
536.43
TOWNE ST STA 20+10.43 =
CEDAR ST STA 0+00.00
E/P
532.52
533.13
533.74
534.42
452
535.18
536.18
E/P
537.23
B
PROP 7' WALK
PROP MSE WALL
PROP MSE WALL

RESURFACING

NOTE:
ELEVATIONS SHOWN AT 25' INTERVALS UNLESS OTHERWISE NOTED

ELEVATIONS STATIONED ALONG RAMP BASELINES

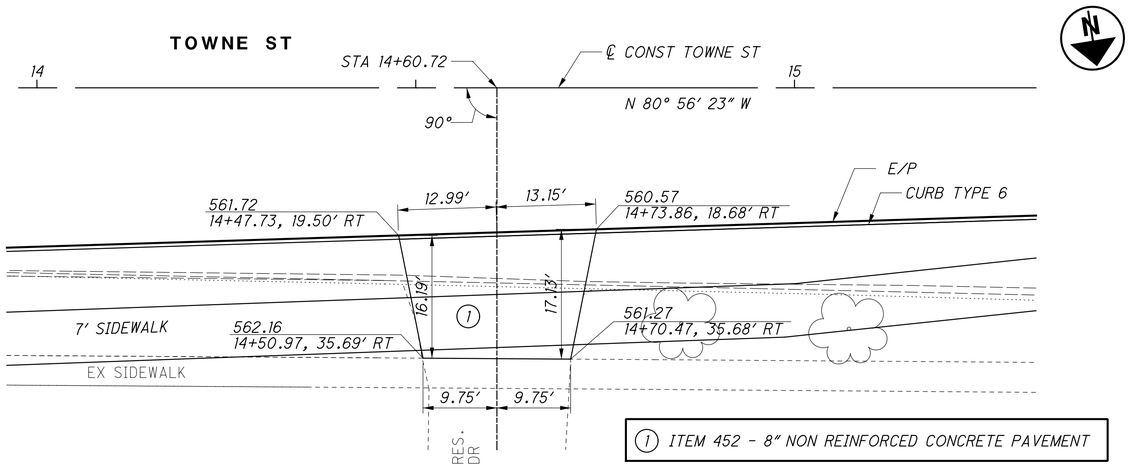

TOWNE ST STA 14+60.72

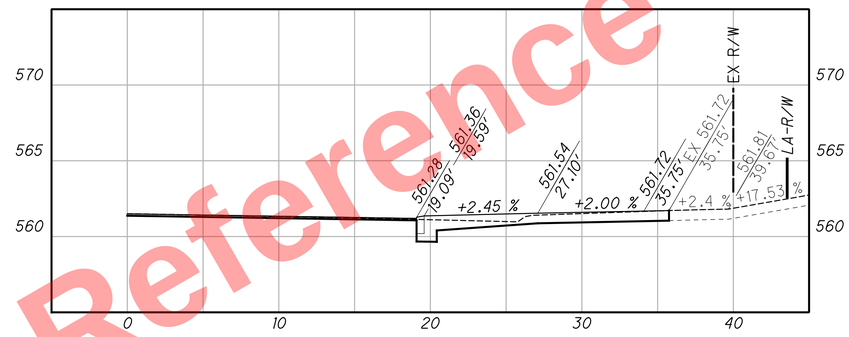

TOWNE ST STA 14+60.72 RT
SCALE 1″=5′

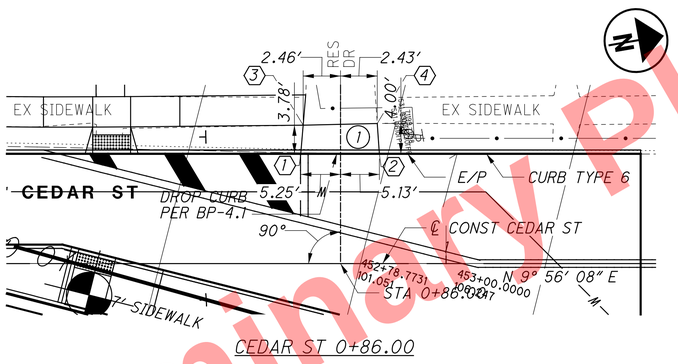

1 531.07, 0+80.81, 14.50′ RT
2 530.71, 0+91.19, 14.50′ RT
3 531.24, 0+81.13, 18.28′ RT
4 530.89, 0+90.91, 18.50′ RT

CEDAR ST 0+86.00

1 ITEM 452 - 8″ NON REINFORCED CONCRETE PAVEMENT

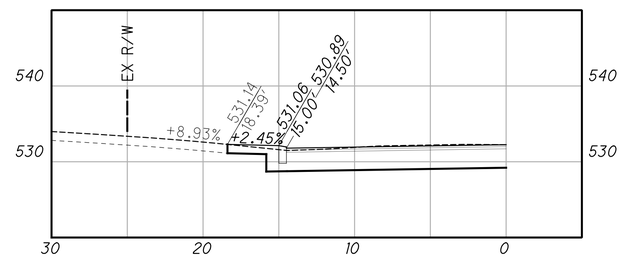

CEDAR ST 0+86.00 LT
SCALE 1″=5′

Preliminary Plans - Not For Reference Only

HORIZONTAL SCALE IN FEET
0 5 10 20
CALCULATED CFR
CHECKED SSK

DRIVEWAY DETAILS
TOWNE ST & CEDAR ST

HAM-75-7.85

540
1047

J:\20110903\ODOT\HAM\77889\roadway\sheets\77889GD401.dgn 5/22/2026 10:20:06 AM hbrendlinger

Preliminary Plans - For Reference Only

EX DRIVE

EX DRIVE

EX DRIVE

EX CONC WALK

E/P

℄ CONST CEDAR STREET

CEDAR STREET

PR 4' CONC WALK

PR 7' CONC WALK

EX WALK

531.30 ME

531.24 ME

532.40

532.34

1.56%

7.69%

531.84

3.5'

531.90

533.08 ME

531.79

1.56%

1.56%

5.0'

1.56%

532.97 ME

531.87

531.98

531.92

CURB RAMP, TYPE C2, CEDAR
STA. 0+55.85, 14.50' LT

7.69%

6.5'

1.56%

532.48

532.42

532.48

532.43

532.42

CURB RAMP, TYPE B2, CEDAR
STA. 0+19.94, 20.18' LT

1.56%

1.56%

532.48

532.76

532.82 ME

0.95%

7.69%

1.56%

532.33

1.56%

1.20%

5.0'

532.68 ME

532.70

532.39

532.26

7.0'

1.56%

6.5'

2.92%

532.37

532.07

5.0'

1.56%

532.18

1.56%

1.56%

CURB RAMP, TYPE B1, CEDAR
STA 0+53.84, 0.85' LT

532.15

1.56%

532.26

7.5'

CURB RAMP, TYPE A3, CEDAR
STA. 0+23.01, 2.59' RT

533.66

13.7'

4.0'

533.72

532.77

6.49%

1.56%

1.56%

7.0'

2.31%

7.69%

1.56%

PROP 7' CONC WALK

532.99

533.62

7.4'

533.56

20

TOWNE STREET

℄ CONST TOWNE STREET

TOWNE ST STA 20+10.43 =
CEDAR ST STA 0+00.00

RESURFACING

N

0 2.5 5 10
HORIZONTAL
SCALE IN FEET

CALCULATED JLM
CHECKED SSK

CURB RAMP DETAILS
TOWNE STREET AND CEDAR STREET

HAM-75-7.85

541
1047

J:\20110903\ODOT\HAM\77889\roadway\sheets\77889GA001.dgn 5/22/2026 10:20:07 AM hbrendlinger

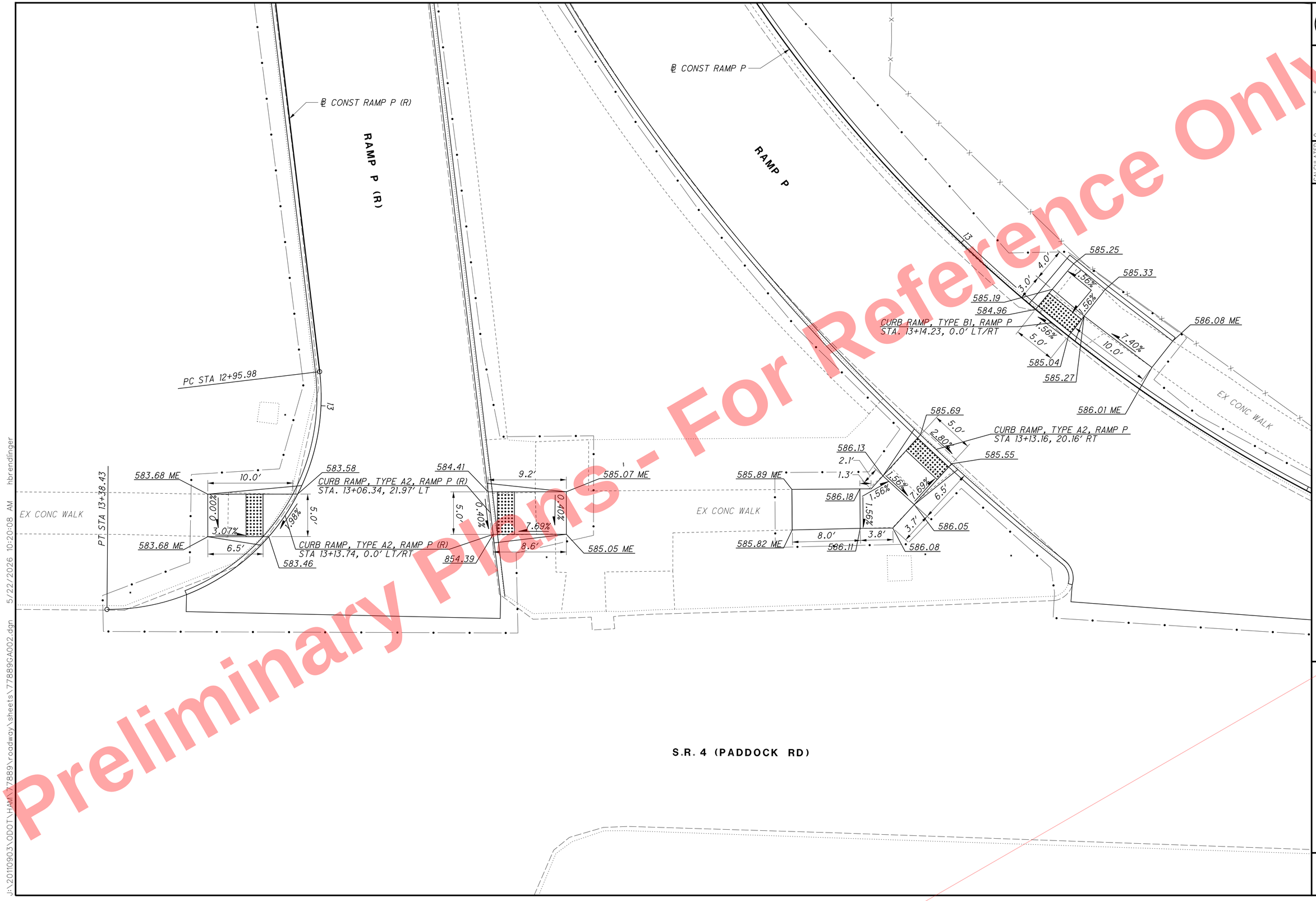

Preliminary Plans - For Reference Only

J:\20110903\ODOT\HAM\77889\roadway\sheets\77889GA002.dgn 5/22/2026 10:20:08 AM hbrendlinger

HORIZONTAL SCALE IN FEET
0 2.5 5 10

CALCULATED JLM
CHECKED SSK

CURB RAMP DETAILS
RAMP P AND S.R. 4 (PADDOCK RD)

HAM-75-7.85

542
1047

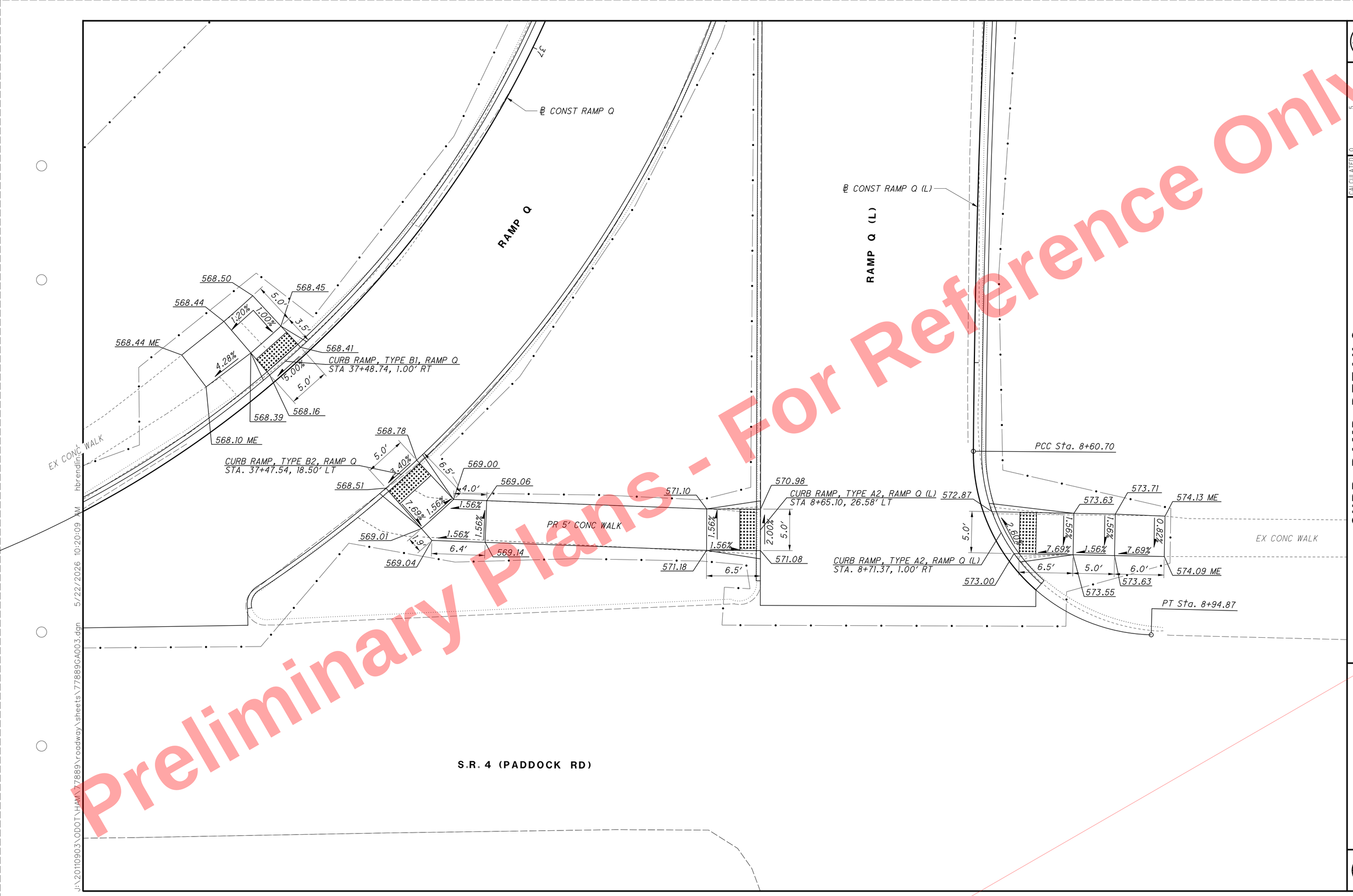

Preliminary Plans - For Reference Only

J:\20110903\ODOT\HAM\77889\roadway\sheets\77889GA003.dgn 5/22/2026 10:20:09 AM hbrendlin

HORIZONTAL SCALE IN FEET
0 2.5 5 10

CALCULATED JLM
CHECKED SSK

CURB RAMP DETAILS
RAMP Q AND S.R. 4 (PADDOCK RD)

HAM-75-7.85

543
1047

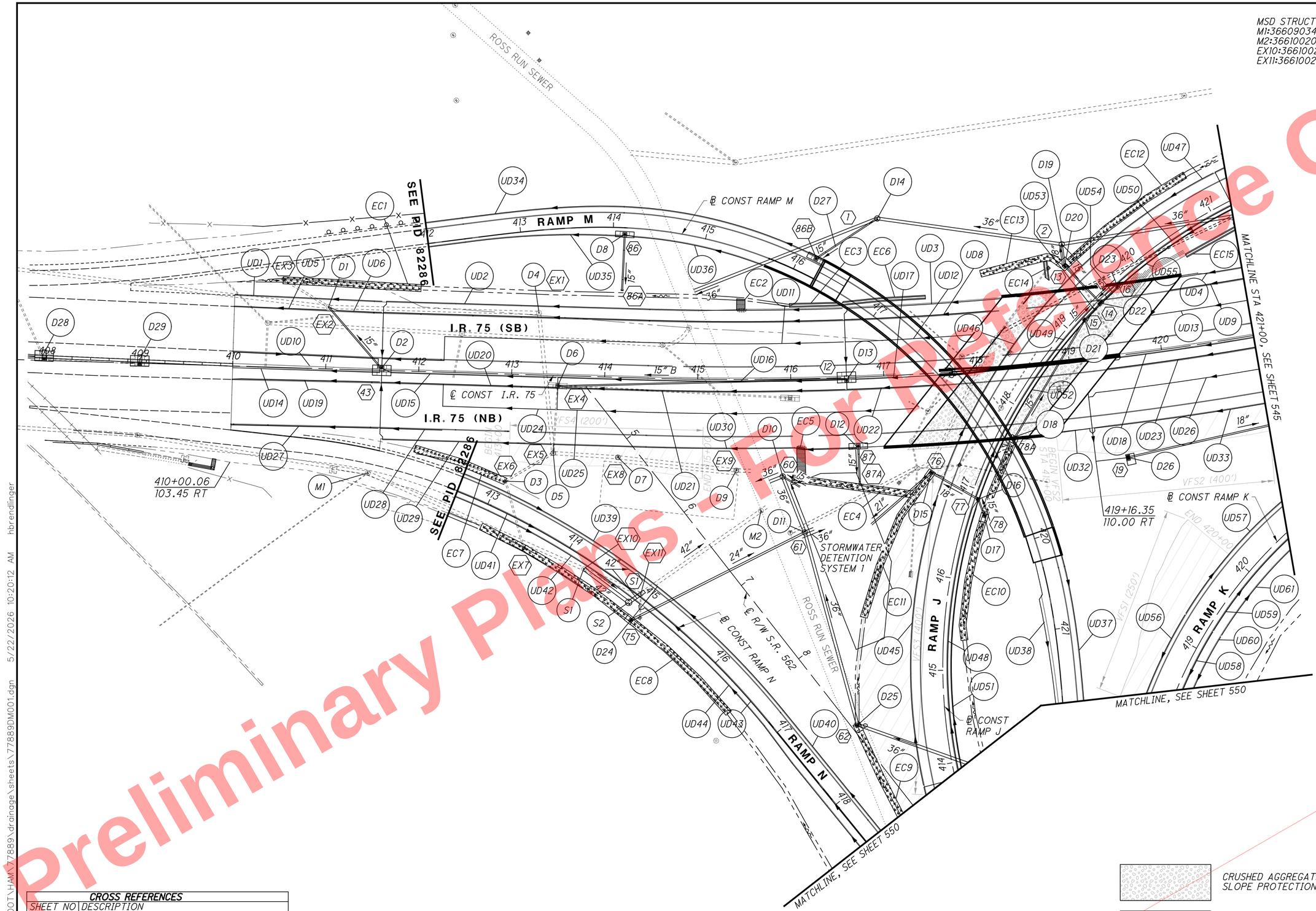

CROSS REFERENCES	
SHEET NO	DESCRIPTION
31 - 47	GENERAL NOTES
231 - 262	ESTIMATED QUANTITIES
552 - 570	STORM SEWER PROFILES
571	CULVERT DETAIL
572 - 577	STORMWATER DETENTION SYSTEM DETAILS
683 - 684	SANITARY SEWER PROFILES

SS NO. 7168

HORIZONTAL SCALE IN FEET
0 25 50 100

CALCULATED RSH
CHECKED DLR

DRAINAGE PLANS - I.R. 75
STA 410+00 TO STA 421+00

HAM-75-7.85

544
1047

Preliminary Plans - For Reference Only

J:\20110903\ODOT\HAM\77889\drainage\sheets\77889DM001.dgn 5/22/2026 10:20:12 AM hbrendlinger

MSD STRUCTURE NUMBER:
EX12: 36502002

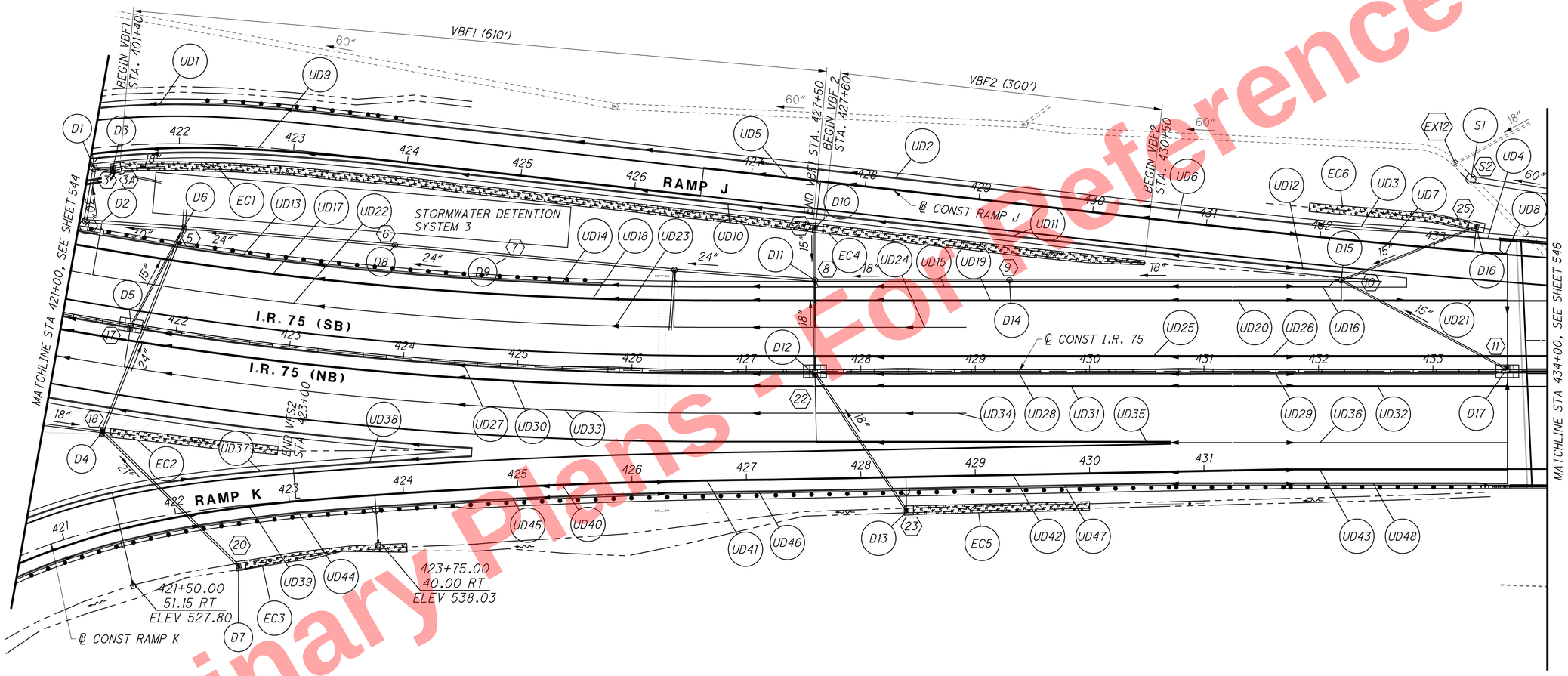

CROSS REFERENCES	
SHEET NO	DESCRIPTION
31 - 47	GENERAL NOTES
231 - 262	ESTIMATED QUANTITIES
552 - 570	STORM SEWER PROFILES
571	CULVERT DETAIL
572 - 577	STORMWATER DETENTION SYSTEM DETAILS
683 - 684	SANITARY SEWER PROFILES

SS NO. 7168

HORIZONTAL SCALE IN FEET
0 25 50 100

CALCULATED RSH
CHECKED DLR

DRAINAGE PLANS - I.R. 75
STA 421+00 TO STA 434+00

HAM-75-7.85

545
1047

Preliminary Plans - For Reference Only

J:\2011\0903\ODOT\HAM\77889\drainage\sheets\77889DM002.dgn 5/22/2026 10:20:16 AM hbrendlinger

MSD STRUCTURE NUMBER:
M1:36507017
M2:36502007
M3:36502011
S2; EX13:36502003
S2 WILL REPLACE EX13
S3:36507016
S5: DROP MANHOLE
S6:36507008

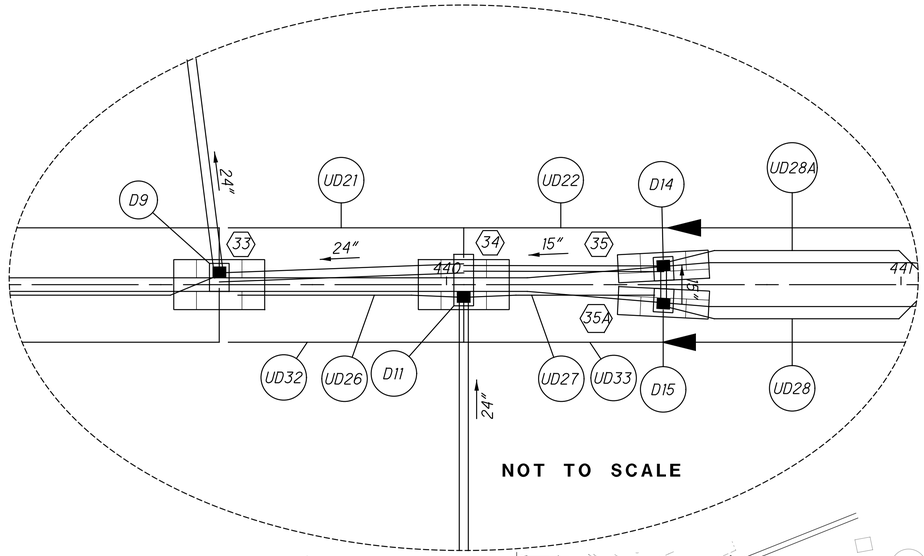

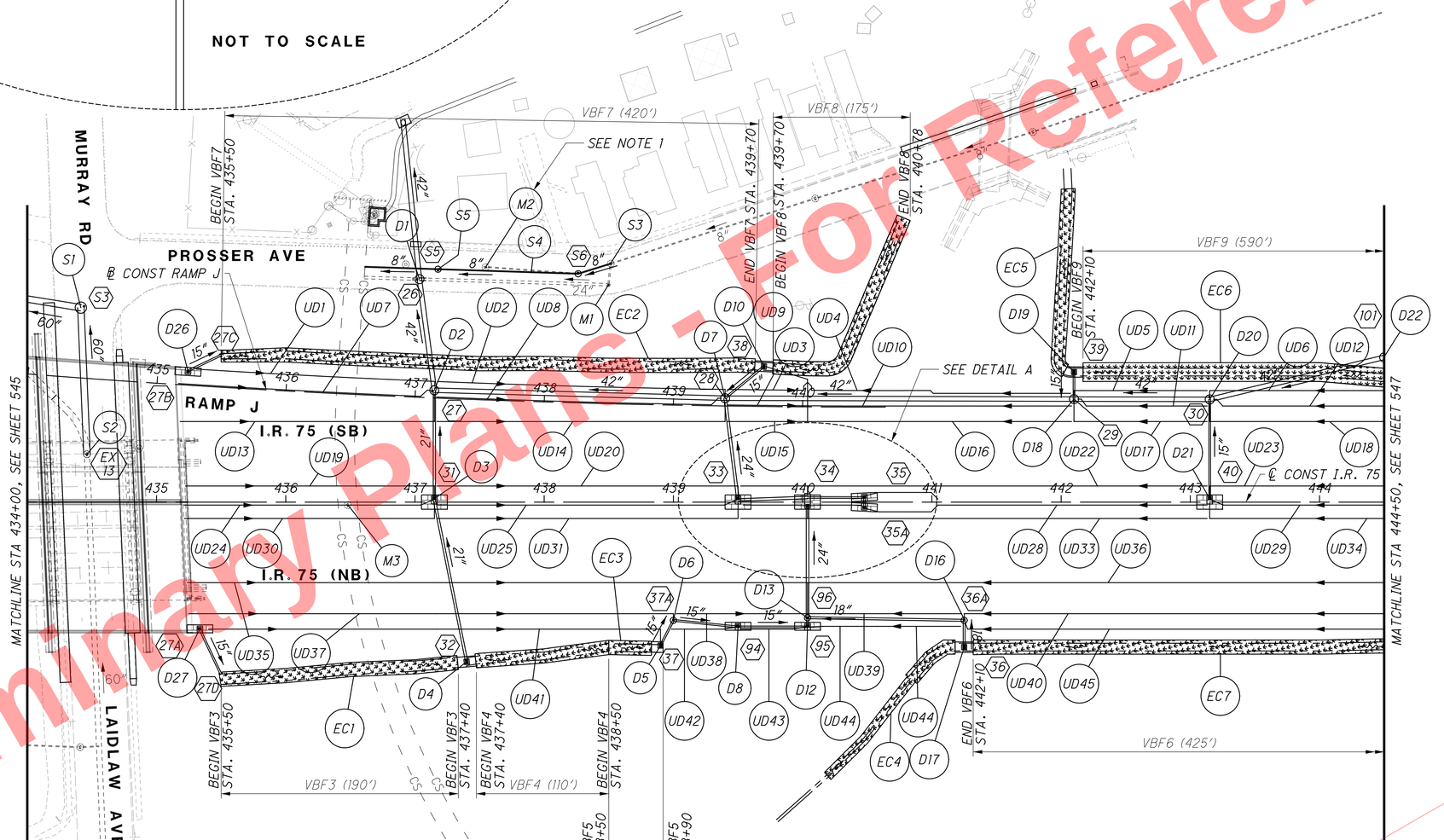

CROSS REFERENCES	
SHEET NO	DESCRIPTION
31 - 47	GENERAL NOTES
231 - 262	ESTIMATED QUANTITIES
552 - 570	STORM SEWER PROFILES
571	CULVERT DETAIL
572 - 577	STORMWATER DETENTION SYSTEM DETAILS
683 - 684	SANITARY SEWER PROFILES

NOTE 1:
ALL EXISTING LATERAL CONNECTIONS WILL NEED TO BE RECONNECTED TO THE NEW 8 INCH SANITARY SEWER IN PROSSER AVENUE. ANY CONNECTIONS WILL NEED TO VERIFY EXISTING FLOOR ELEVATION OF CONNECTED STRUCTURE IS ABOVE ELEVATION 525.00.

SS NO. 7168

HORIZONTAL SCALE IN FEET
0 25 50 100

CALCULATED RSH
CHECKED DLR

DRAINAGE PLANS - I.R. 75
STA 434+00 TO STA 444+50

HAM-75-7.85

546
1047

Preliminary Plans - Not For Reference Only

J:\20110903\ODOT\HAM\77889\drainage\sheets\77889DM003.dgn 5/22/2026 10:20:17 AM hbrendlinger

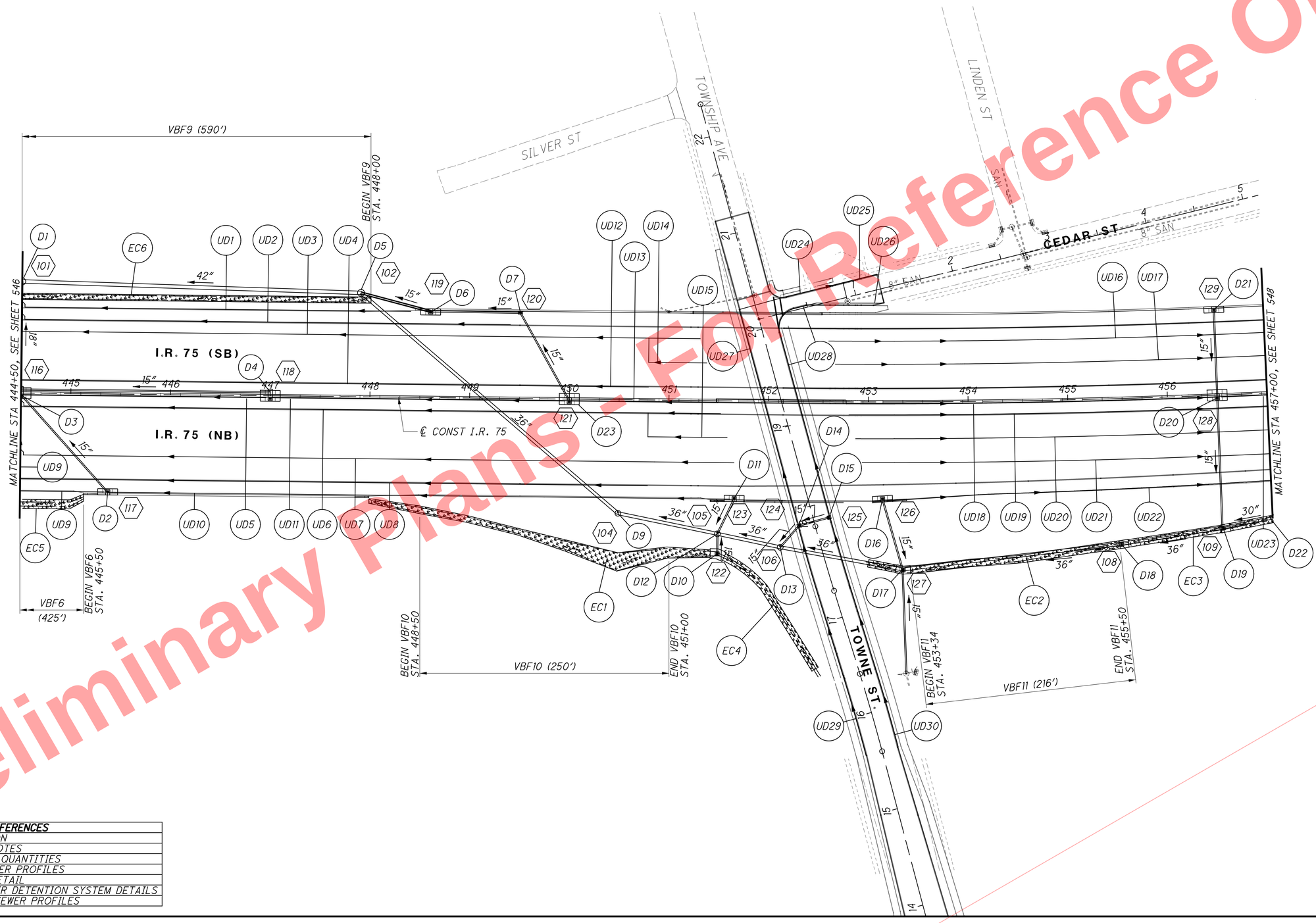

Preliminary Plans - For Reference Only

CROSS REFERENCES	
SHEET NO	DESCRIPTION
31 - 47	GENERAL NOTES
231 - 262	ESTIMATED QUANTITIES
552 - 570	STORM SEWER PROFILES
571	CULVERT DETAIL
572 - 577	STORMWATER DETENTION SYSTEM DETAILS
683 - 684	SANITARY SEWER PROFILES

HORIZONTAL SCALE IN FEET
0 25 50 100

CALCULATED CT
CHECKED SSK

DRAINAGE PLANS - I.R. 75
STA 444+50 TO STA 457+00

HAM-75-7.85

547
1047

J:\20110903\ODOT\HAM\77889\drainage\sheets\77889DM401.dgn 5/22/2026 10:20:19 AM hbrendlinger

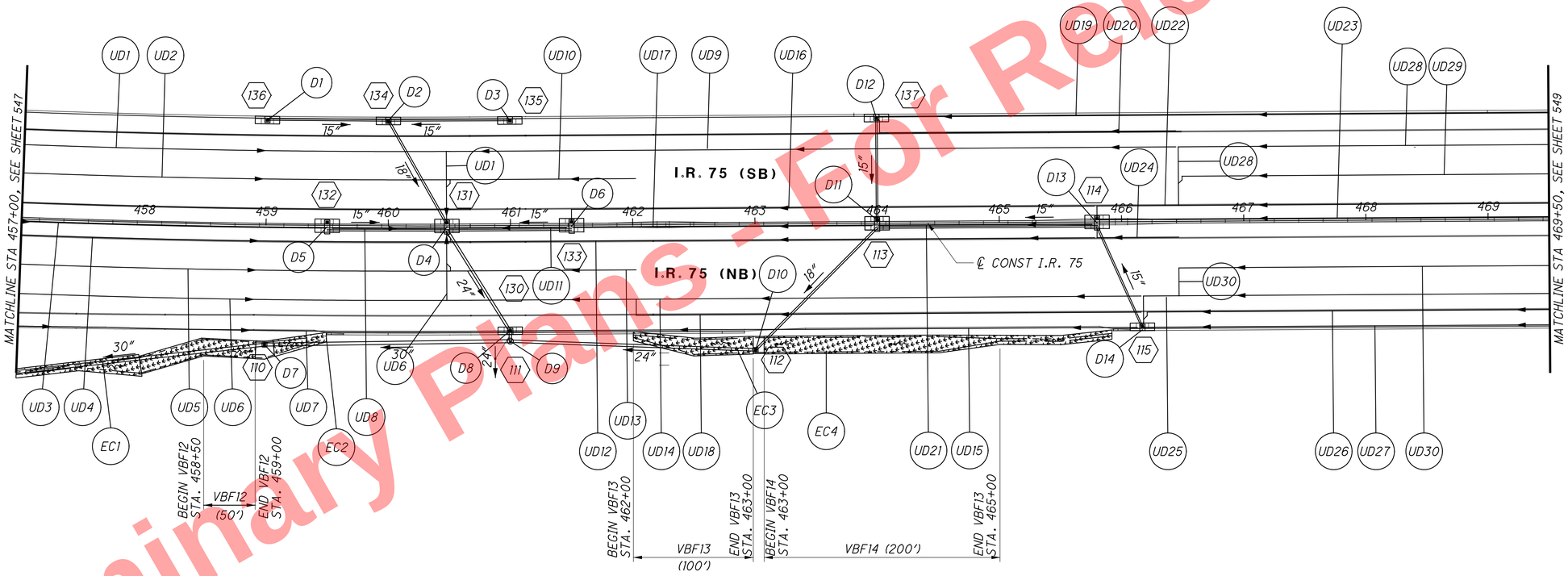

Preliminary Plans - For Reference Only

CROSS REFERENCES	
SHEET NO	DESCRIPTION
31 - 47	GENERAL NOTES
231 - 262	ESTIMATED QUANTITIES
552 - 570	STORM SEWER PROFILES
571	CULVERT DETAIL
572 - 577	STORMWATER DETENTION SYSTEM DETAILS
683 - 684	SANITARY SEWER PROFILES

HORIZONTAL SCALE IN FEET
0 25 50 100

CALCULATED CT
CHECKED SSK

DRAINAGE PLANS - I.R. 75
STA 457+00 TO STA 469+50

HAM-75-7.85

548
1047

J:\20110903\ODOT\HAM\77889\drainage\sheets\77889DM402.dgn 5/22/2026 10:20:21 AM hbrendlinger

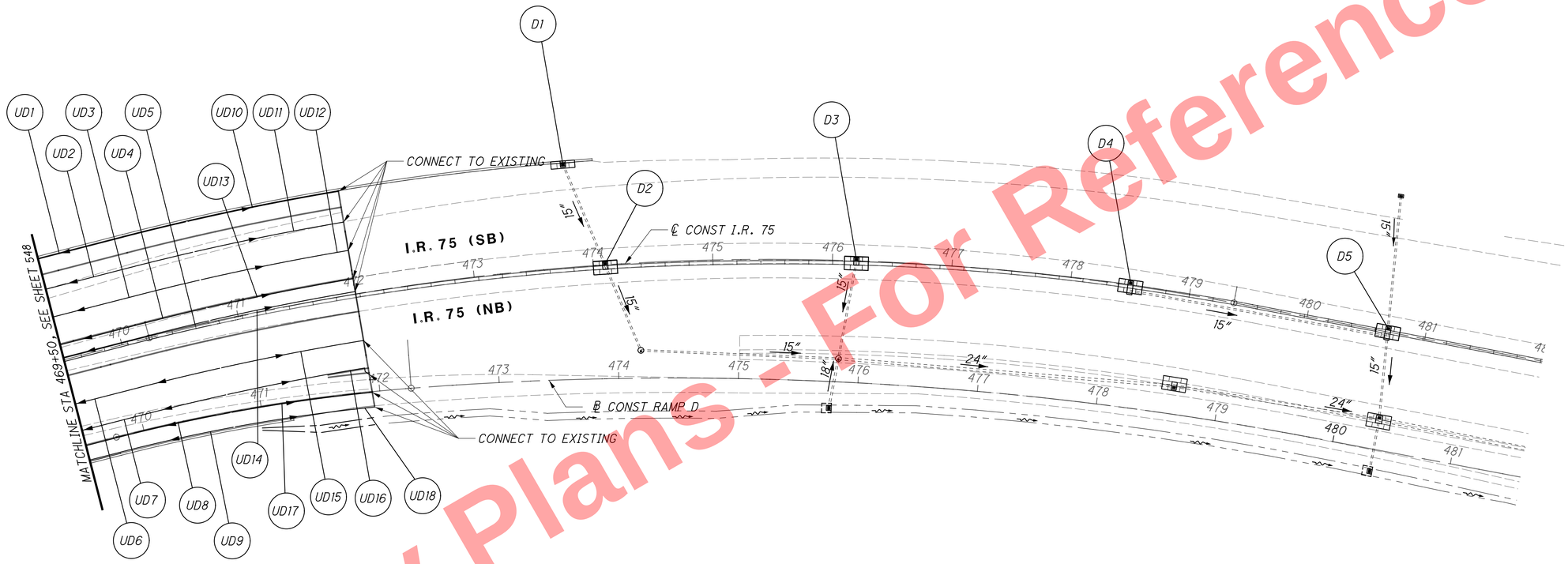

CROSS REFERENCES	
SHEET NO	DESCRIPTION
31 - 47	GENERAL NOTES
231 - 262	ESTIMATED QUANTITIES
552 - 570	STORM SEWER PROFILES
571	CULVERT DETAIL
572 - 577	STORMWATER DETENTION SYSTEM DETAILS
683 - 684	SANITARY SEWER PROFILES

HORIZONTAL SCALE IN FEET
0 25 50 100

CALCULATED CT
CHECKED SSK

DRAINAGE PLANS - I.R. 75
STA 469+50 TO STA 482+00

HAM-75-7.85

549
1047

Preliminary Plans - For Reference Only

J:\20110903\ODOT\HAM\77889\drainage\sheets\77889DM403.dgn 5/22/2026 10:20:22 AM hbrendlinger

CROSS REFERENCES	
SHEET NO	DESCRIPTION
31 - 47	GENERAL NOTES
231 - 262	ESTIMATED QUANTITIES
552 - 570	STORM SEWER PROFILES
571	CULVERT DETAIL
572 - 577	STORMWATER DETENTION SYSTEM DETAILS
683 - 684	SANITARY SEWER PROFILES

ITEM 670 - SLOPE EROSION PROTECTION

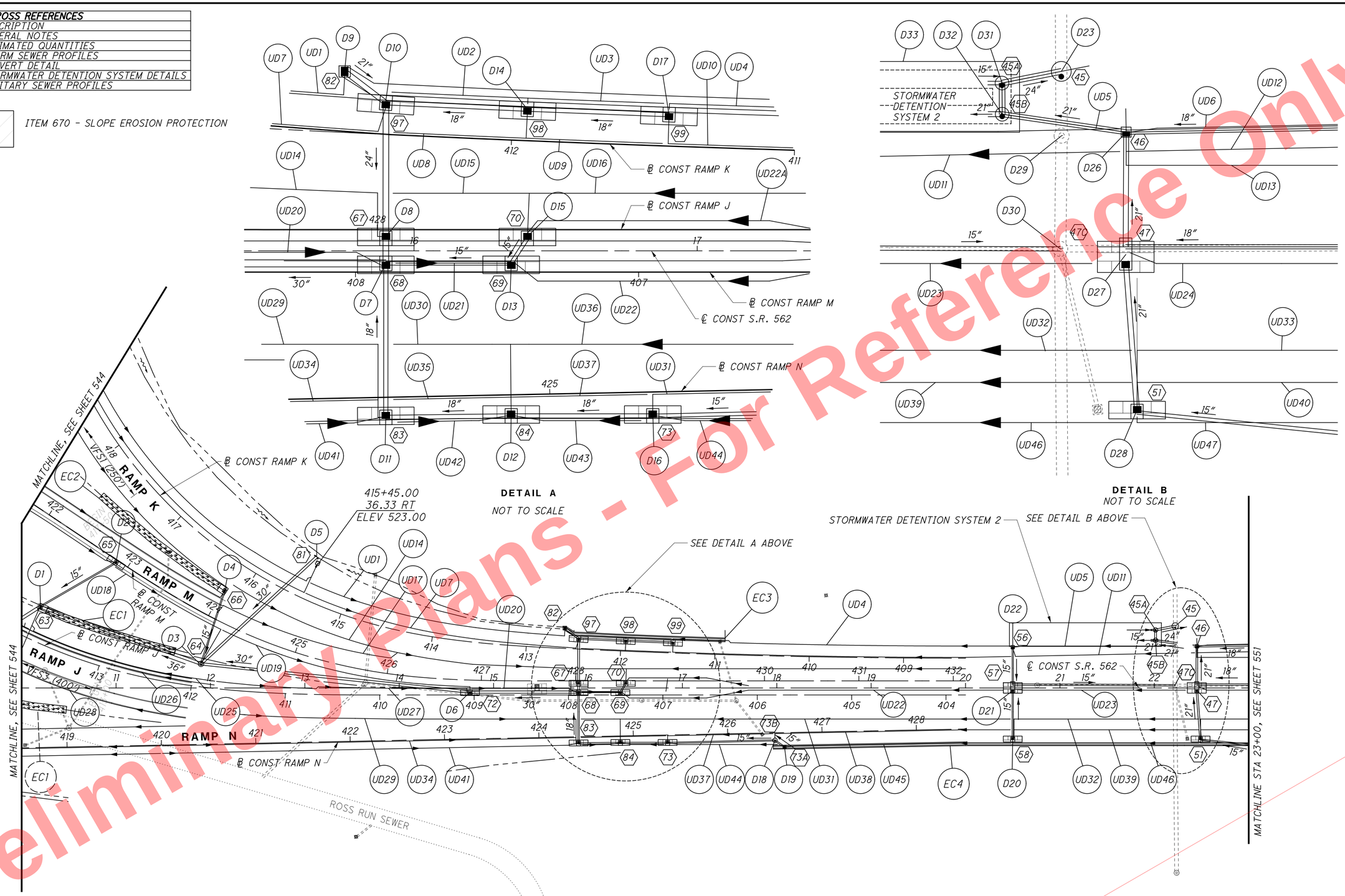

Preliminary Plans - For Reference Only

HORIZONTAL SCALE IN FEET

CALCULATED RSH
CHECKED DLR

DRAINAGE PLANS - S.R. 562
STA 10+00 TO STA 23+00

HAM-75-7.85

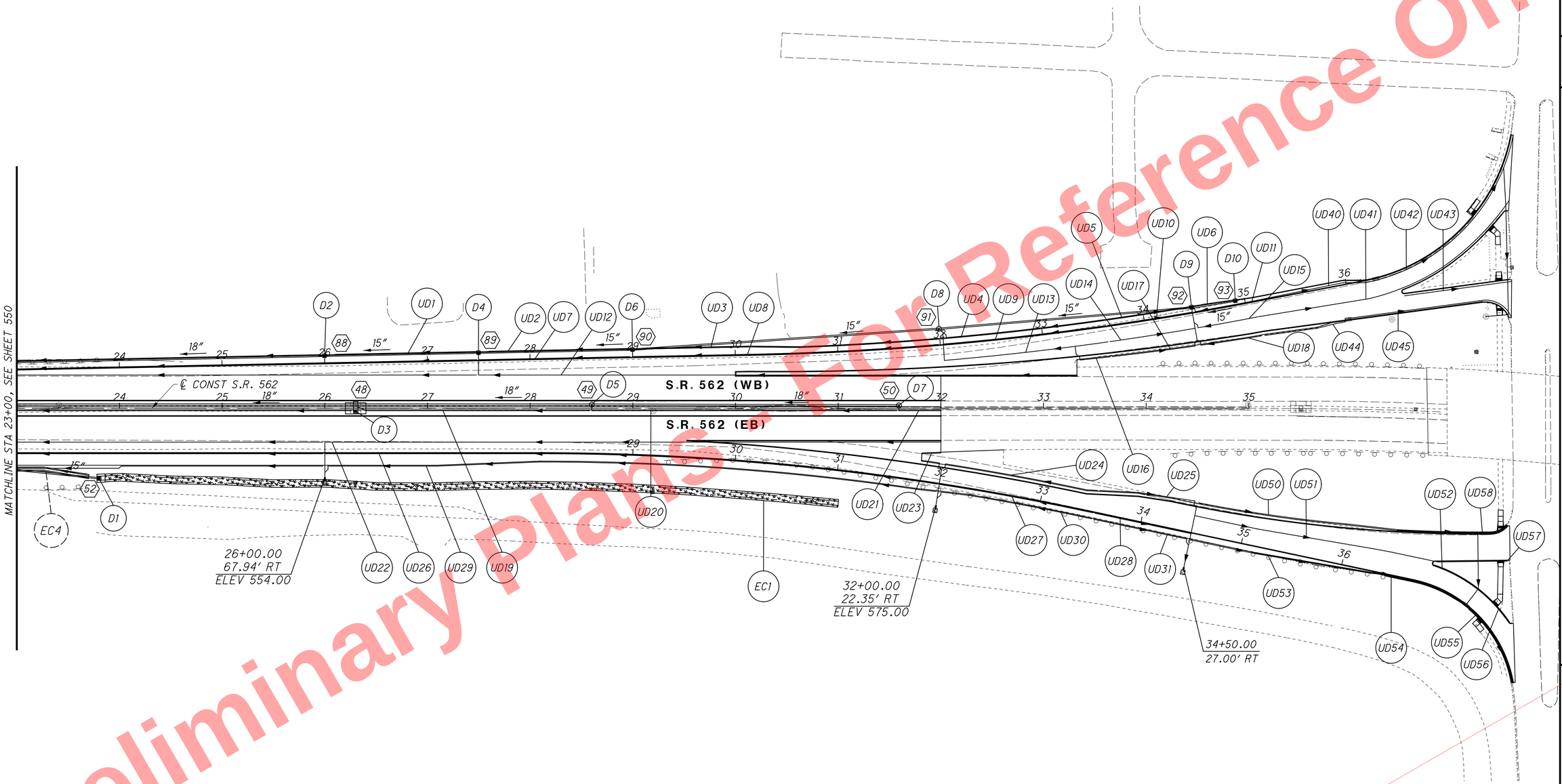

CROSS REFERENCES	
SHEET NO	DESCRIPTION
31 - 47	GENERAL NOTES
231 - 262	ESTIMATED QUANTITIES
552 - 570	STORM SEWER PROFILES
571	CULVERT DETAIL
572 - 577	STORMWATER DETENTION SYSTEM DETAILS
683 - 684	SANITARY SEWER PROFILES

HORIZONTAL SCALE IN FEET
0 25 50 100

CALCULATED RSH
CHECKED DLR

DRAINAGE PLANS - S.R. 562
STA 23+00 TO STA 35+00

HAM-75-7.85

551
1047

J:\2011093\ODOT\HAM\77889\drainage\sheets\77889DM005.dgn 5/22/2026 10:20:25 AM htrendlinger

Preliminary Plans - Not For Reference Only

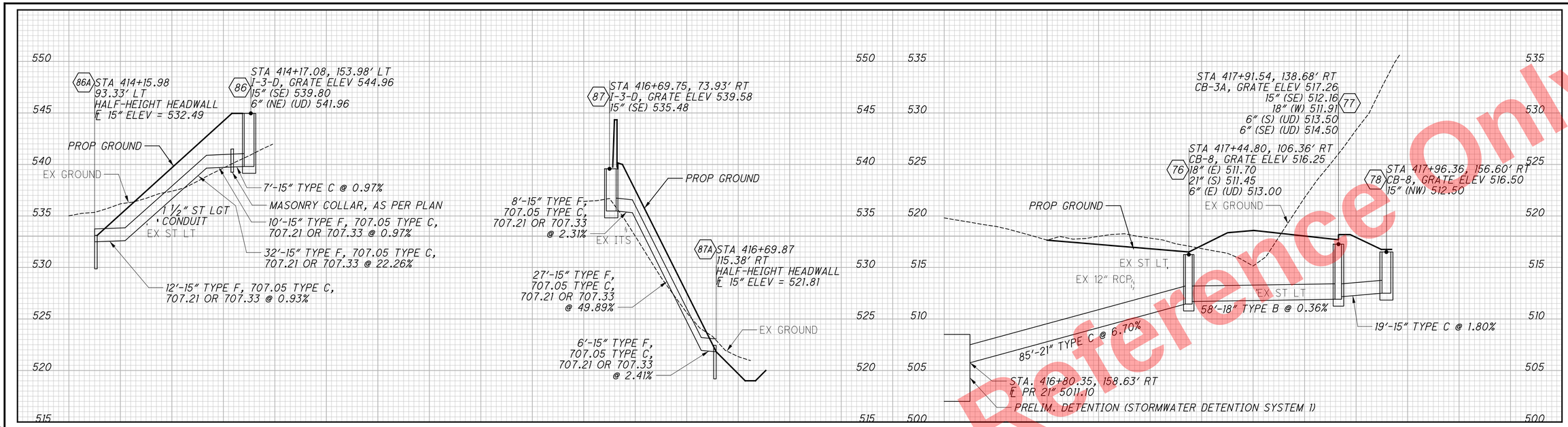

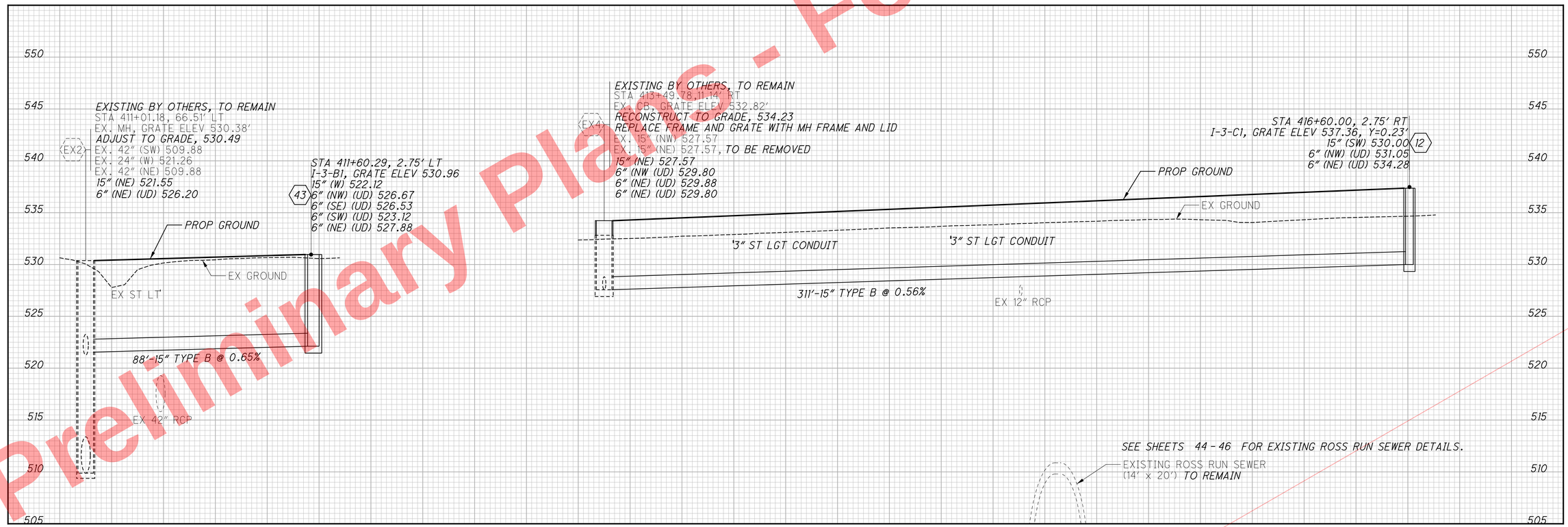

Preliminary Plans - Not For Reference Only

CALCULATED RSH
CHECKED EDK

STORM SEWER PROFILES

HAM-75-7.85

552
1047

\\cmhdata01\projects01\2011\0903\ODOT\HAM 77889 drainage sheets\77889DF001.dgn 5/22/2026 10:20:26 AM hbrendlinger

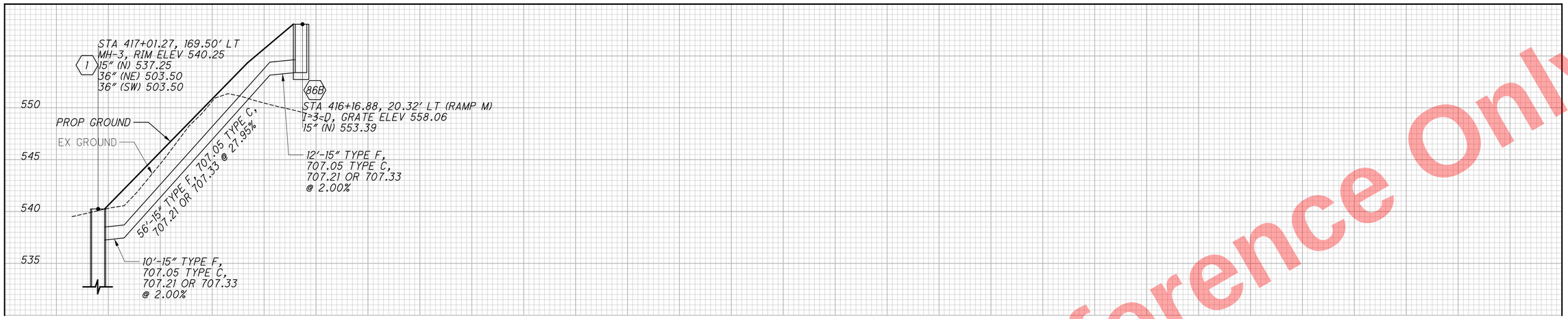

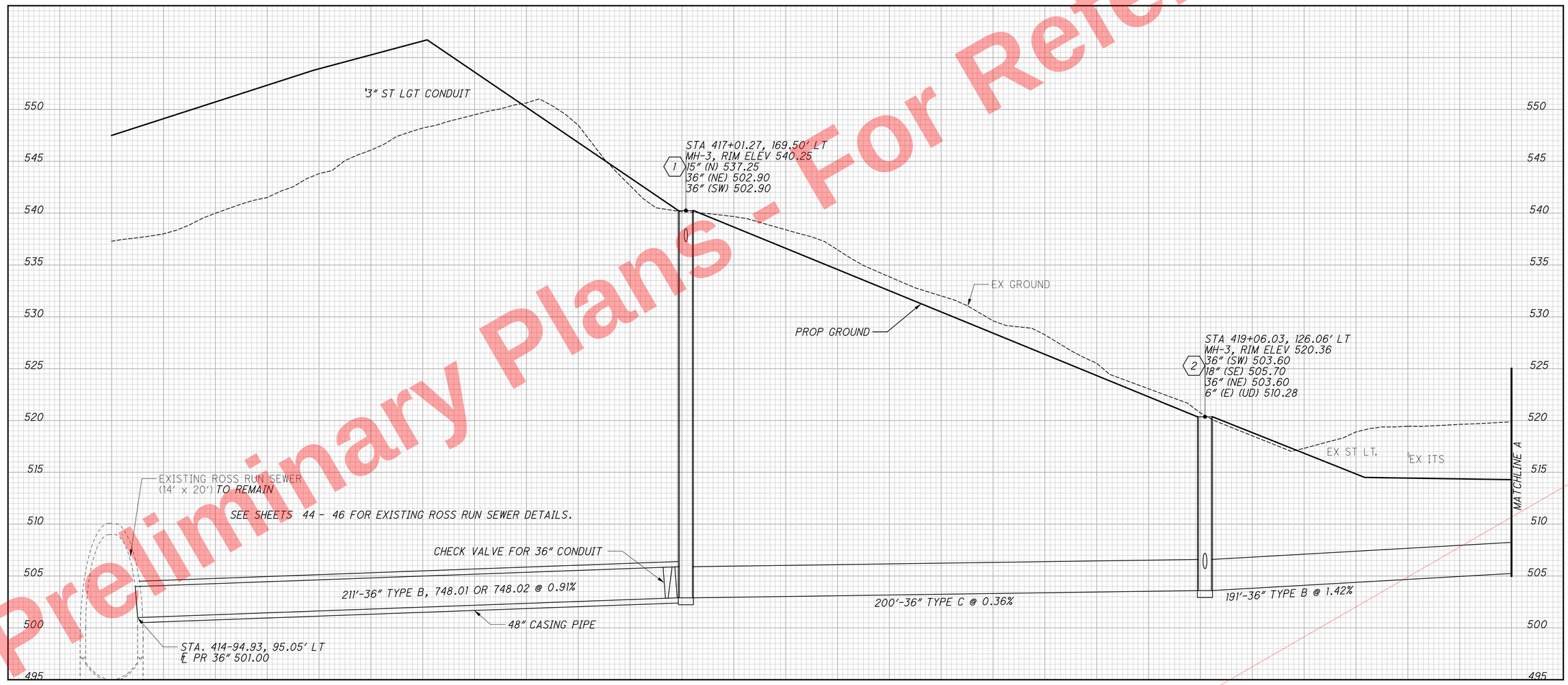

CALCULATED RSH
CHECKED EDK

STORM SEWER PROFILES

HAM-75-7.85

553
1047

Preliminary Plans - For Reference Only

\\cmhdata01\projects\2011\20110903\ODOT\HAM\77889\drainage\sheets\77889DF002.dgn 5/22/2026 10:20:27 AM hbrendlinger

A PIPE DEPTH CONFIRMED PER SUE IN MAY, 2013

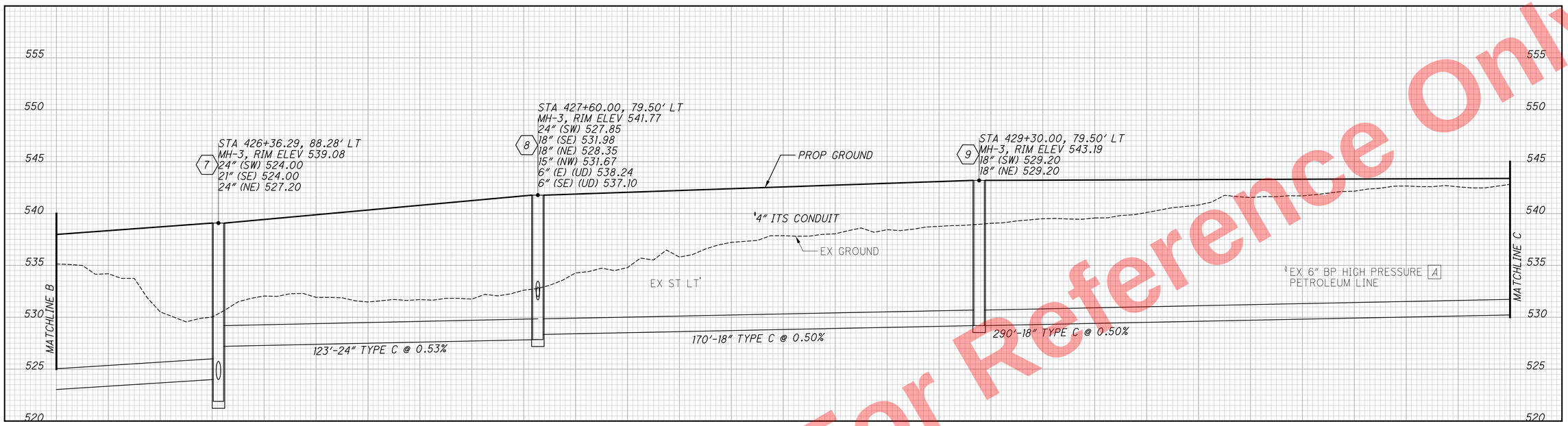

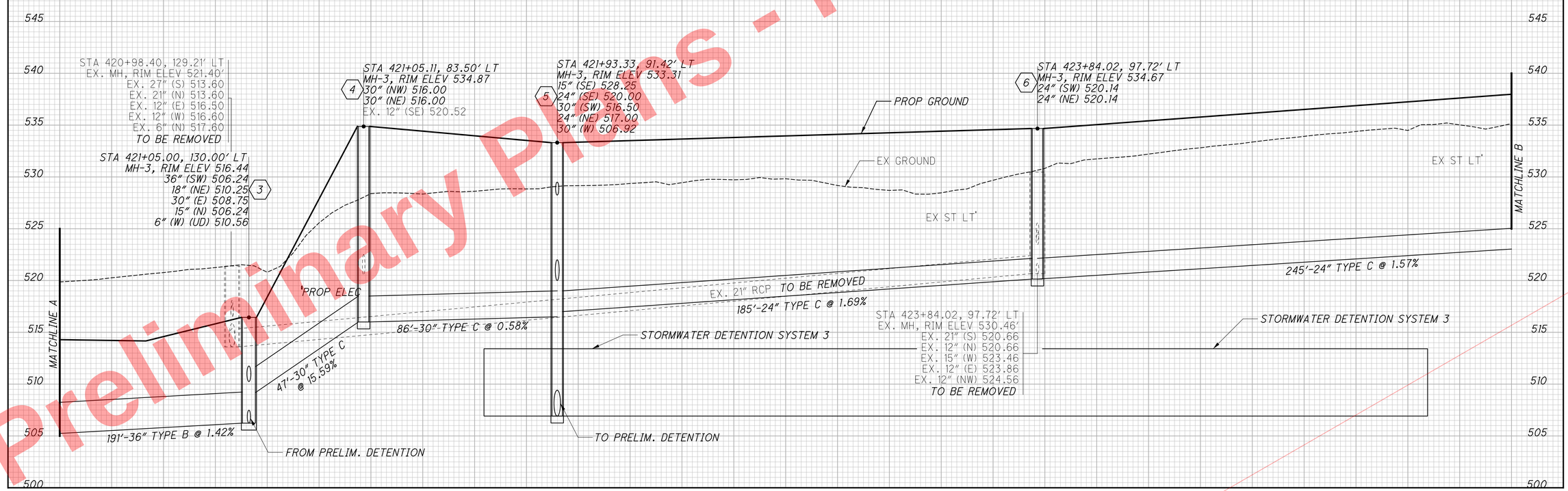

Preliminary Plans - For Reference Only

CALCULATED RSH
CHECKED EDK

STORM SEWER PROFILES

HAM-75-7.85

554
1047

\\cmhdata01\project01\2011\0903\ODOT\HAM 77889 drainage sheets\77889DF003.dgn 5/22/2026 10:20:27 AM hbrendlinger

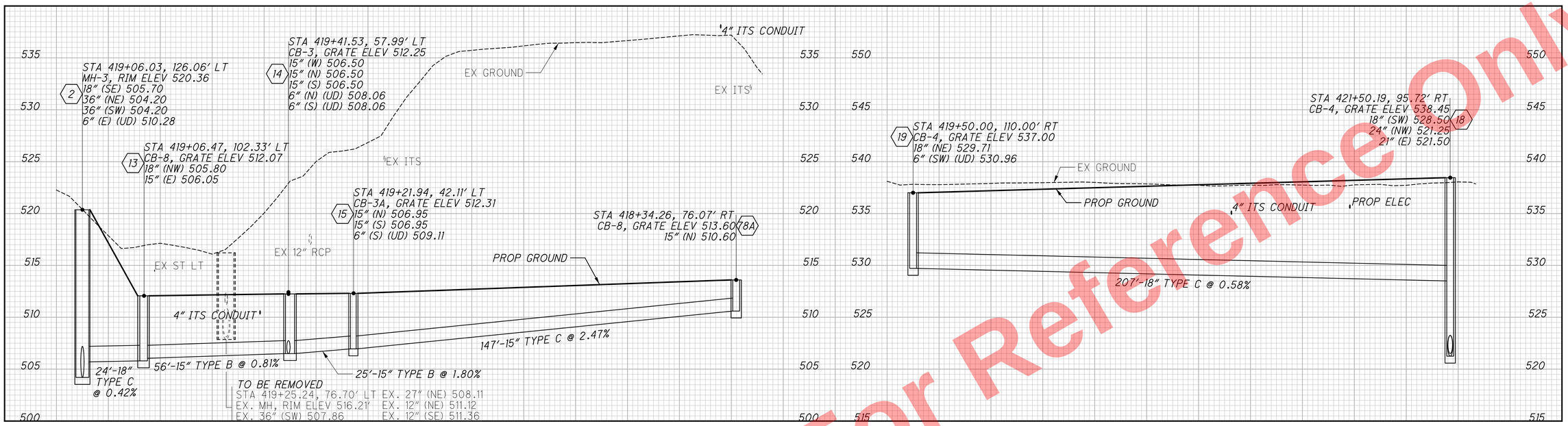

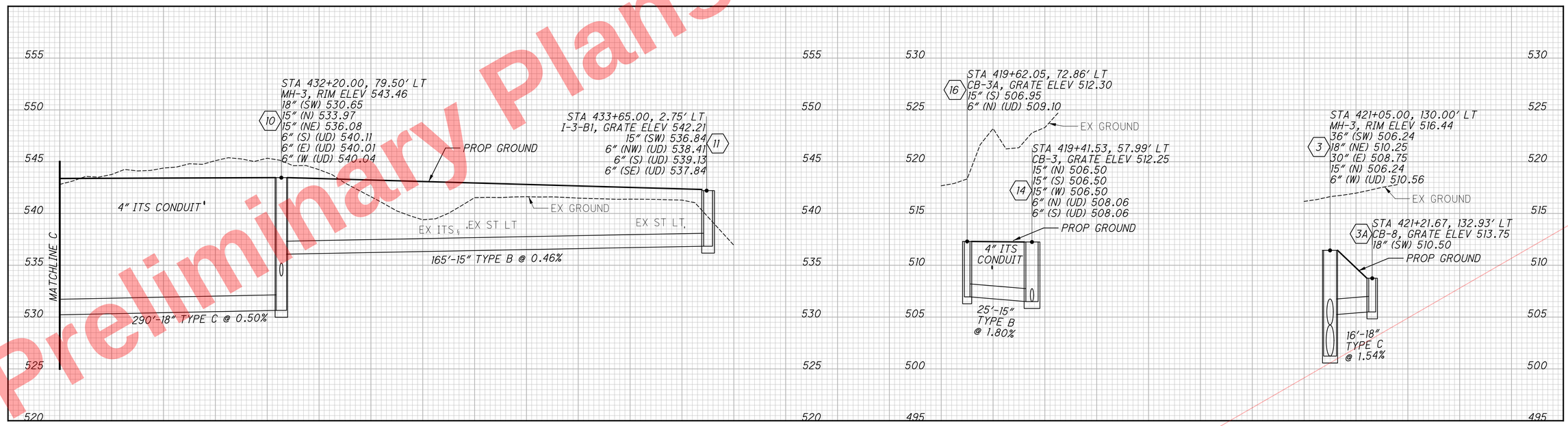

Preliminary Plans - For Reference Only

CALCULATED RSH
CHECKED EDK

STORM SEWER PROFILES

HAM-75-7.85

555
1047

\\cmhdata01\project01\20110903\ODOT\HAM\77889\drainage\sheets\77889DF004.dgn 5/22/2026 10:20:28 AM hbrendlinger

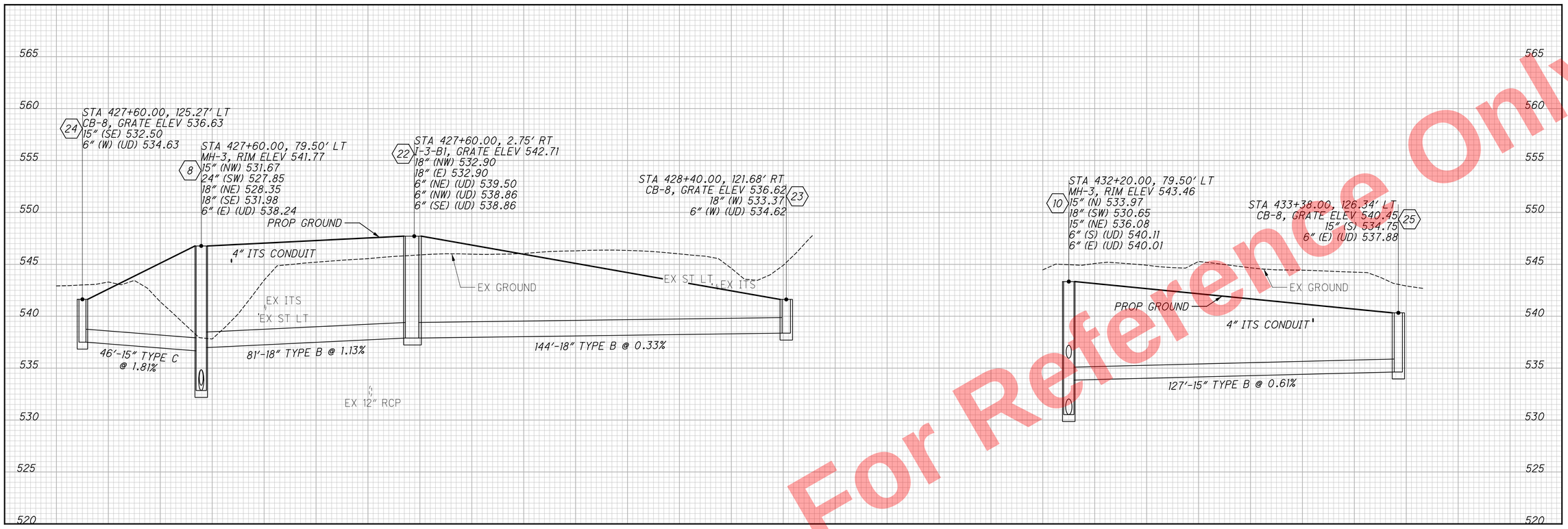

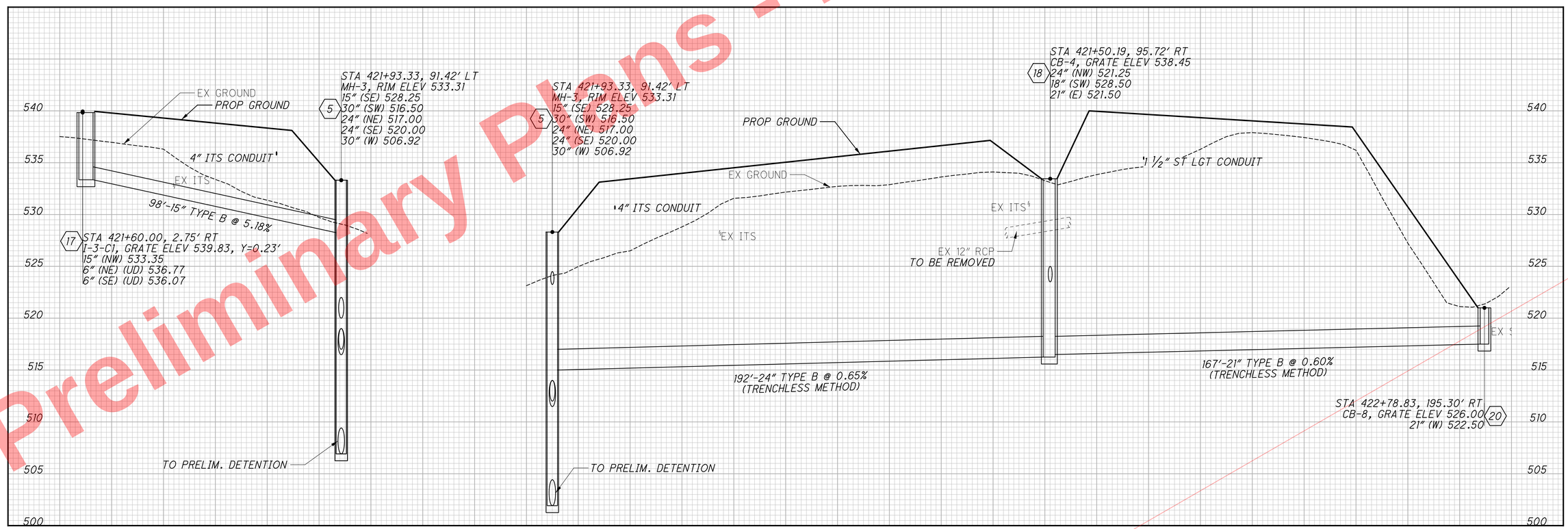

Preliminary Plans - For Reference Only

CALCULATED RSH
CHECKED EDK

STORM SEWER PROFILES

HAM-75-7.85

556
1047

\\cmhdata01\project01\2011\0903\ODOT\HAM\77889\drainage\sheets\77889DF005.dgn 5/22/2026 10:20:28 AM hbrendlinger

\\cmhdata01\projects01\20110903\ODOT\HAM-77889\drainage\sheets\77889DF006.dgn 5/22/2026 10:20:29 AM hbrendlinger

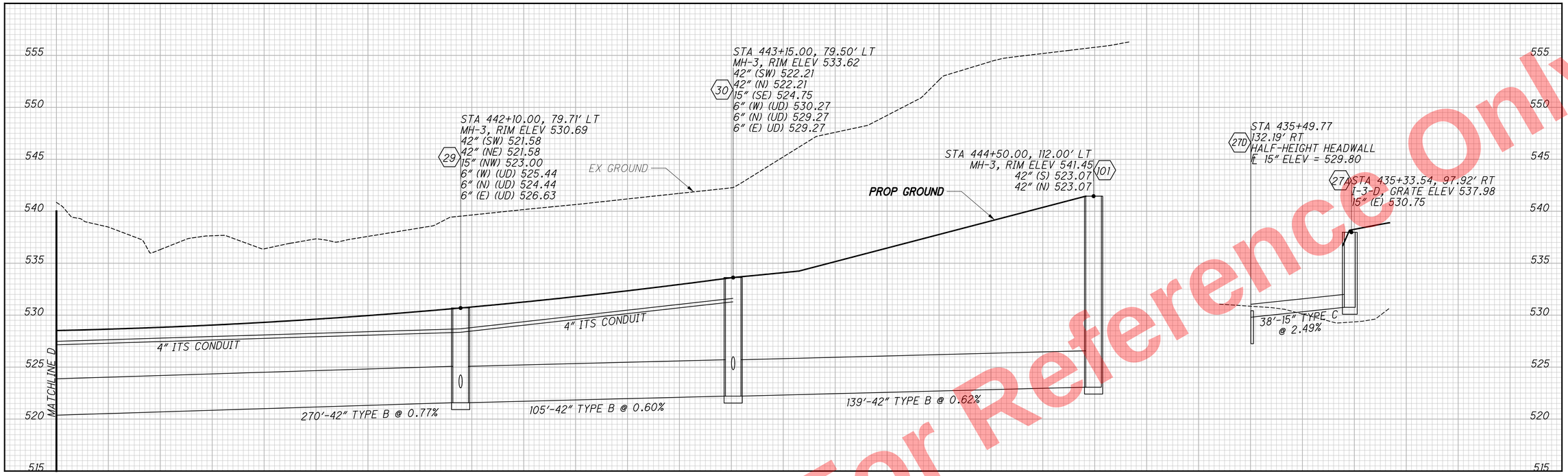

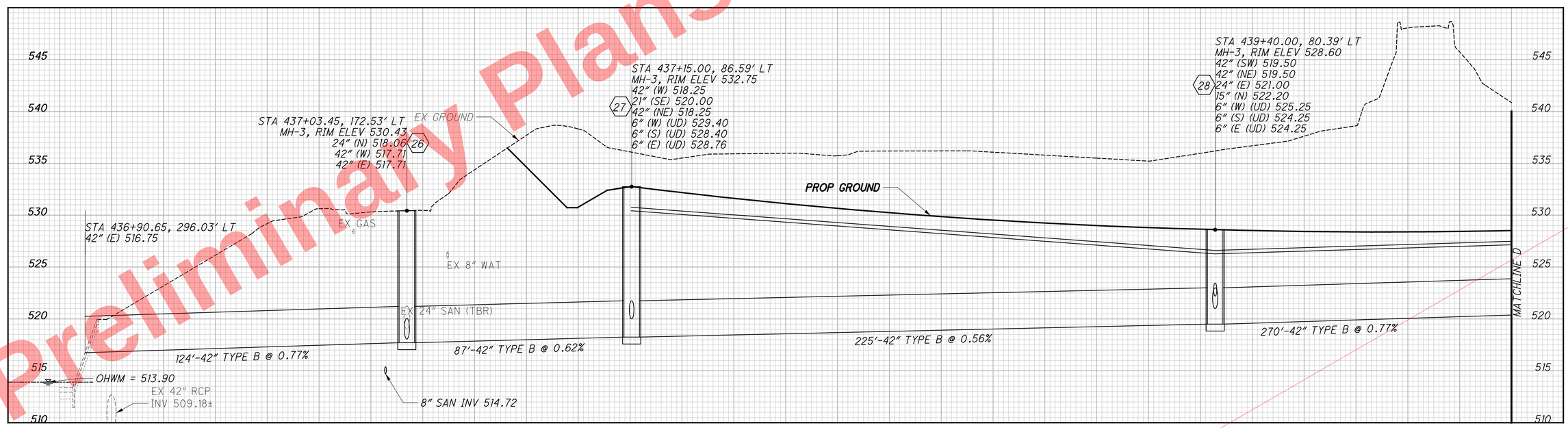

Preliminary Plans - For Reference Only

CALCULATED RSH
CHECKED EDK

STORM SEWER PROFILES

HAM-75-7.85

Preliminary Plans - For Reference Only

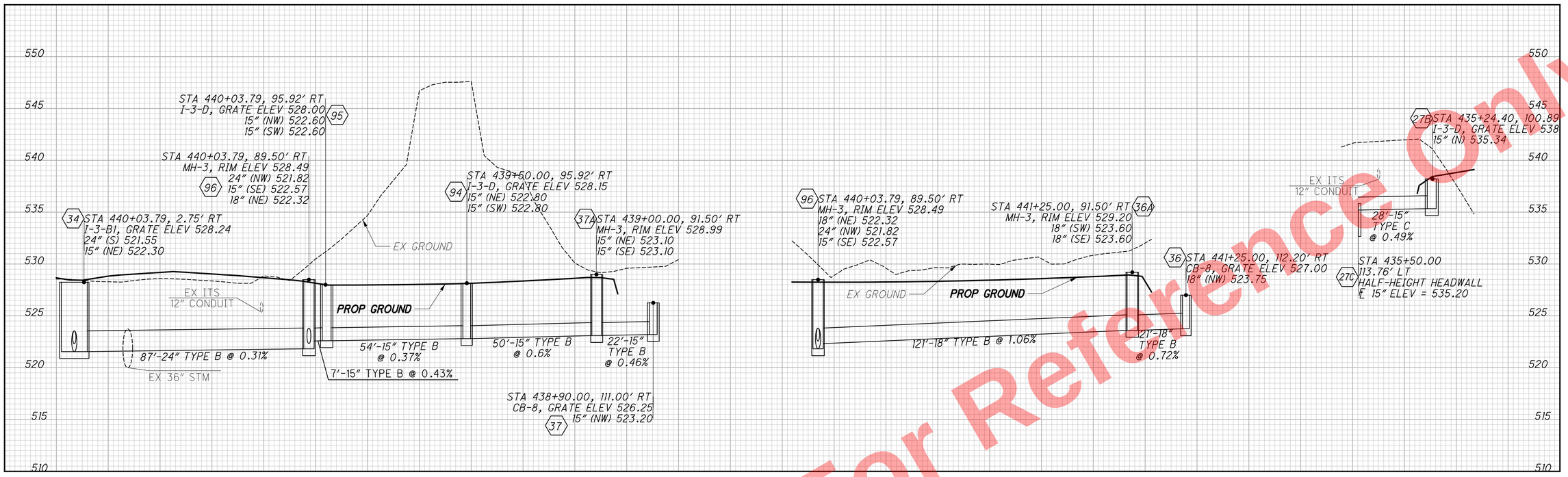

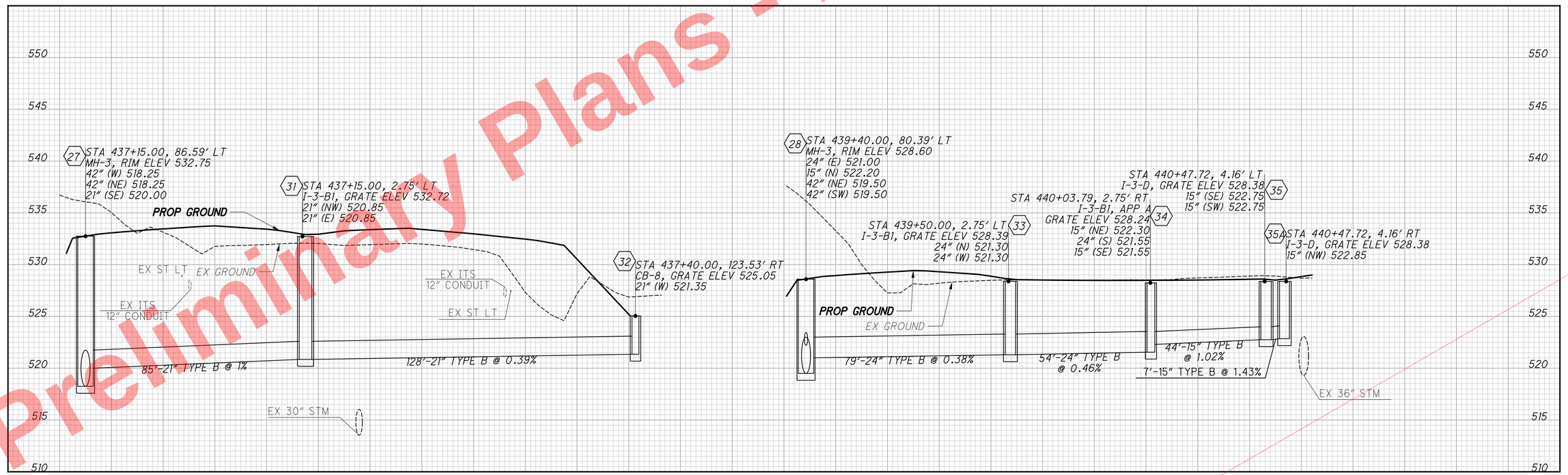

CALCULATED RSH
CHECKED EDK

STORM SEWER PROFILES

HAM-75-7.85

558
1047

\\cmhdata01\project01\20110903\ODOT\HAM 77889\drainage\sheets\77889DF007.dgn 5/22/2026 10:20:30 AM hbrendlinger

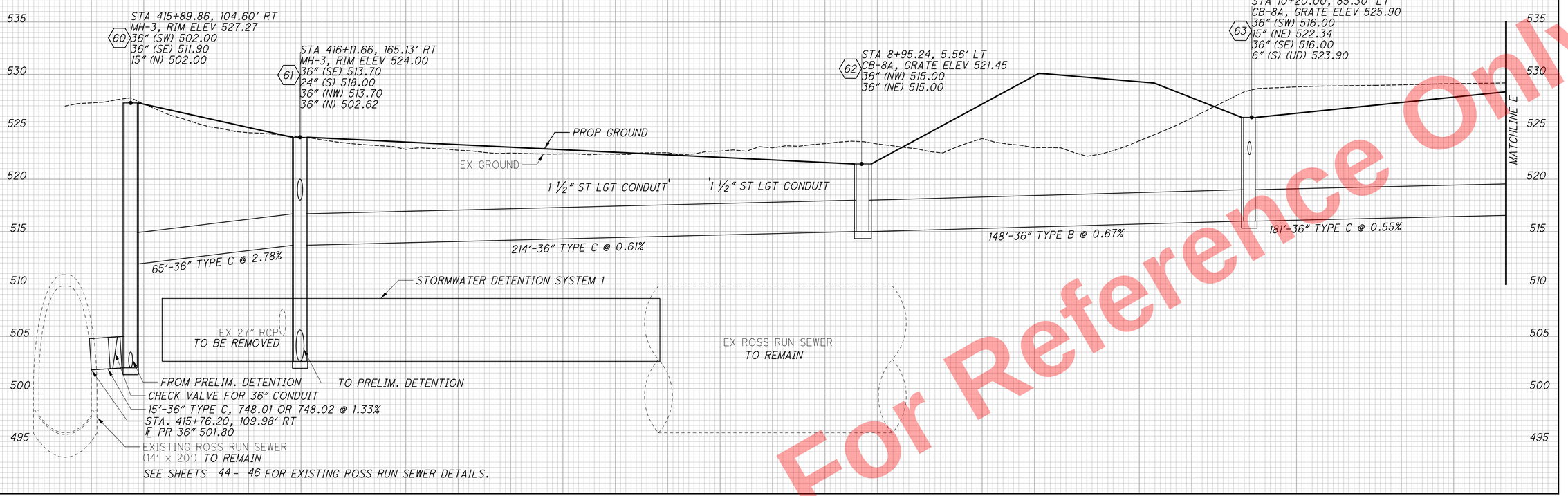

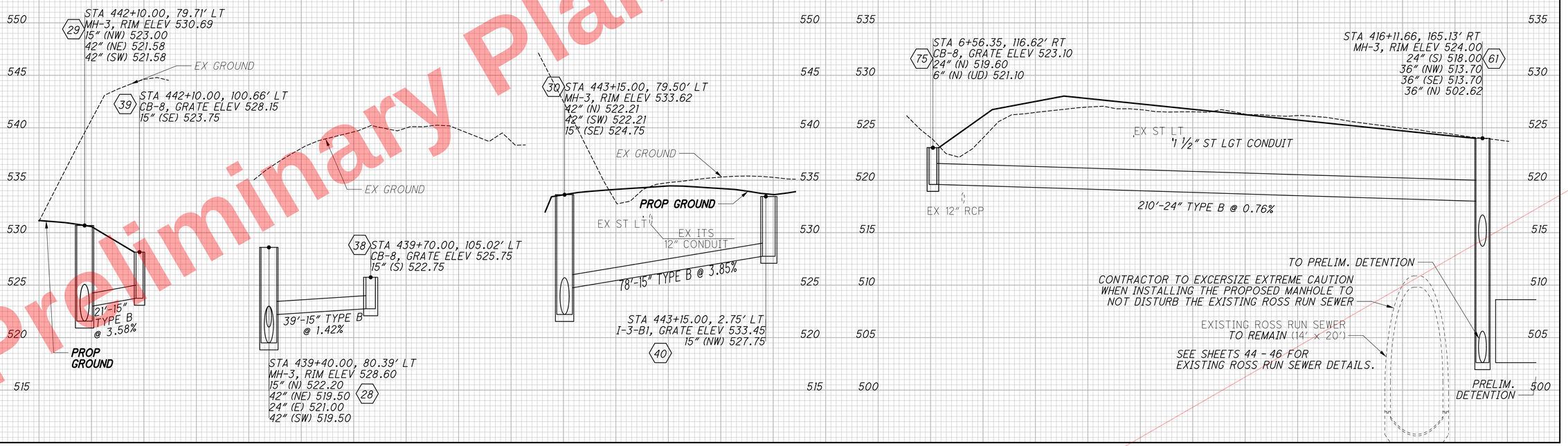

Preliminary Plans - For Reference Only

CALCULATED RSH
CHECKED EDK

STORM SEWER PROFILES

HAM-75-7.85

559
1047

\\cmhdata01\projects\2011\20110903\ODOT\HAM\77889\drainage\sheets\77889DF008.dgn 5/22/2026 10:20:30 AM hbrendlinger

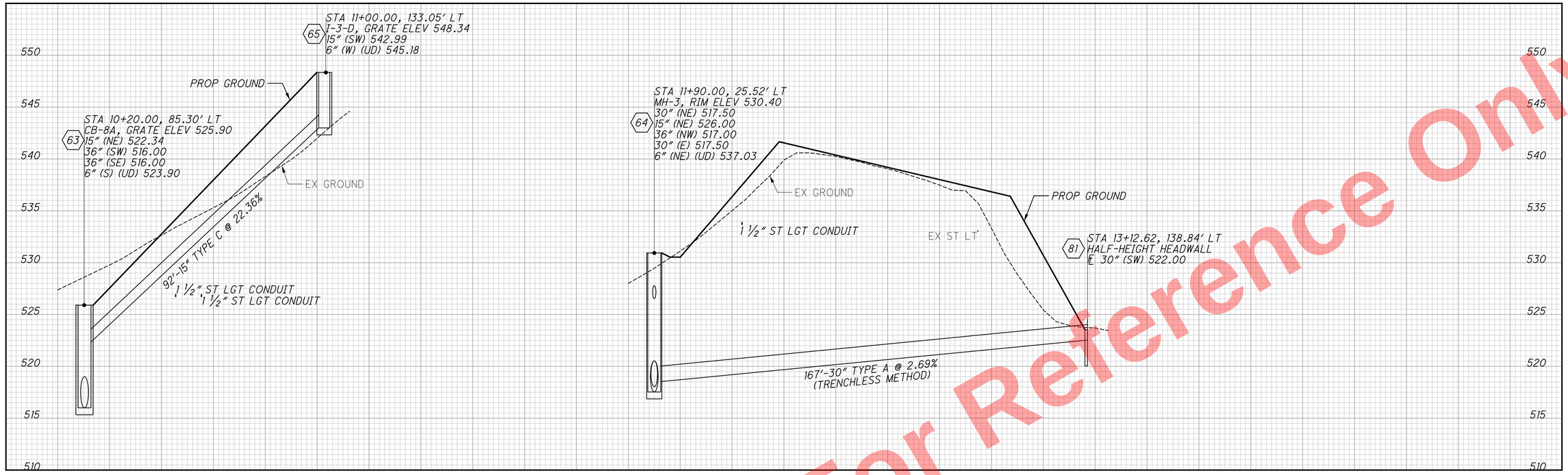

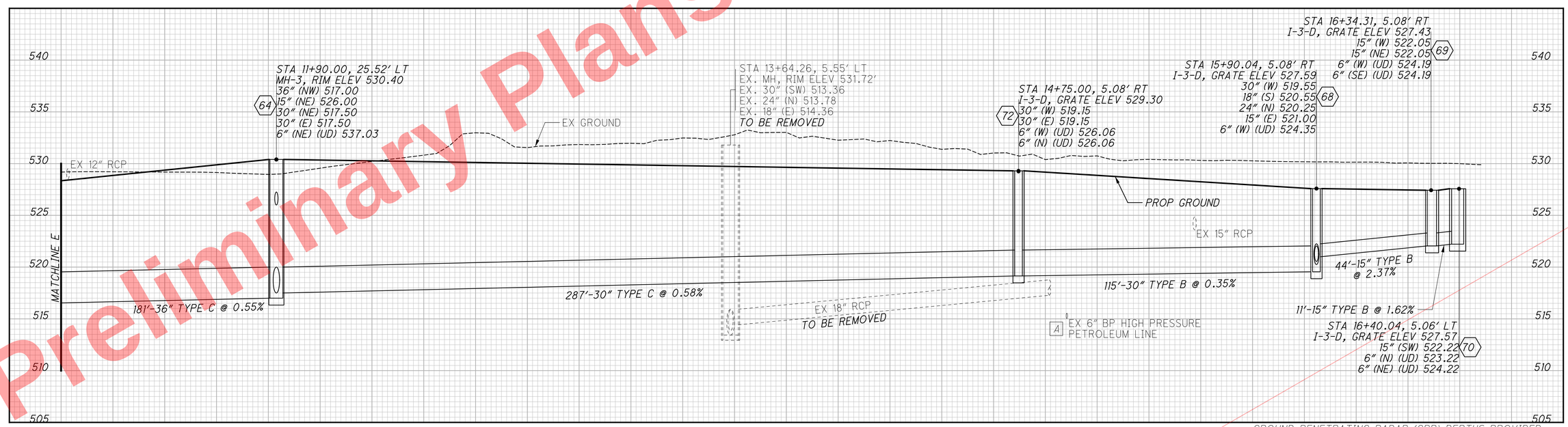

A GROUND PENETRATING RADAR (GPR) DEPTHS PROVIDED BY BP ON 5/27/14 ARE APPROXIMATE BASED ON FIELD OBSERVATIONS.

ACTUAL PIPE ELEVATIONS SHOWN BASED ON EXISTING PLANS PROVIDED BY BP ON 9/11/14.

CALCULATED RSH
CHECKED EDK

STORM SEWER PROFILES

HAM-75-7.85

560
1047

Preliminary Plans - For Reference Only

\\cmhdata01\projects01\20110903\ODOT\HAM 77889\drainage\sheets\77889DF009.dgn 5/22/2026 10:20:31 AM hbrendlinger

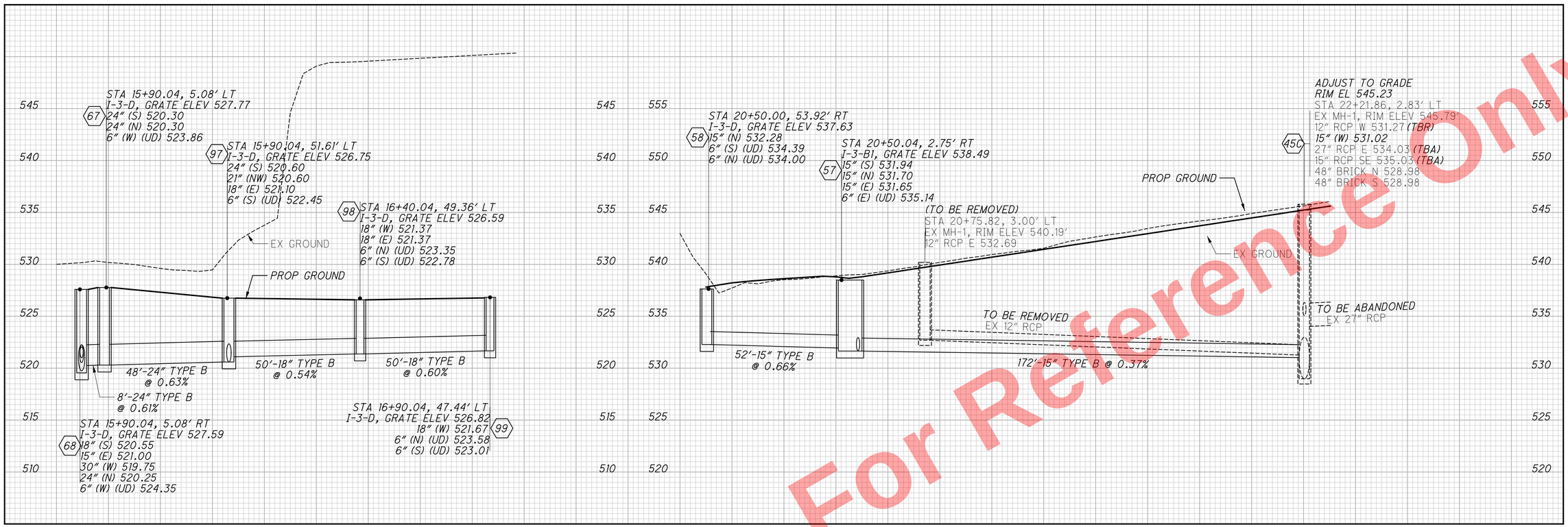

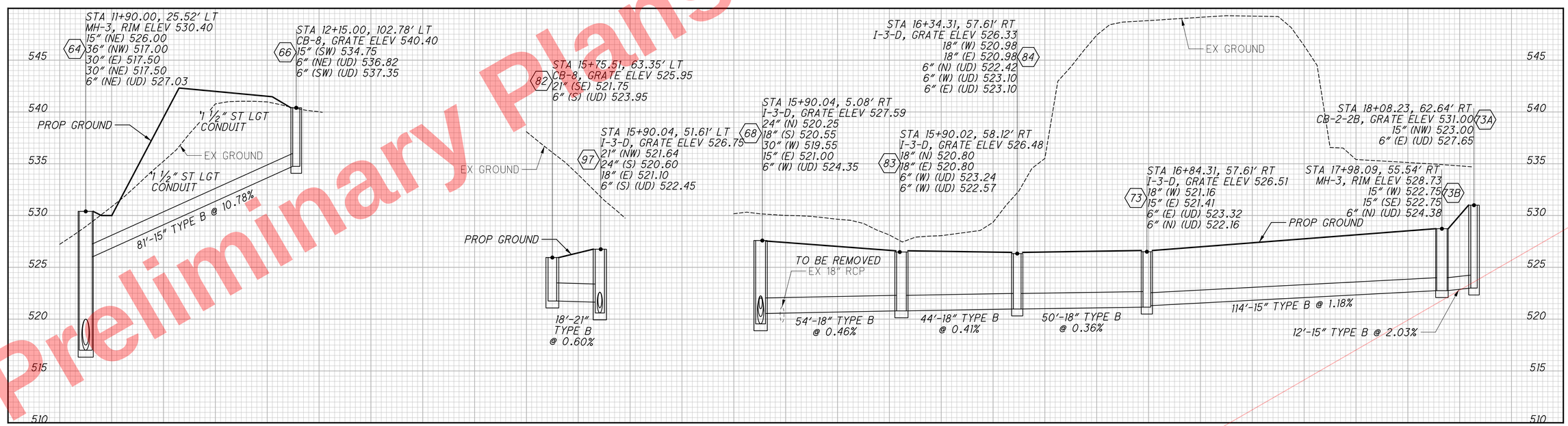

Preliminary Plans - For Reference Only

CALCULATED RSH
CHECKED EDK

STORM SEWER PROFILES

HAM-75-7.85

561
1047

\\cmhdata01\projects\20110903\ODOT\HAM\77889\drainage\sheets\77889DF010.dgn 5/22/2026 10:20:32 AM hbrendlinger

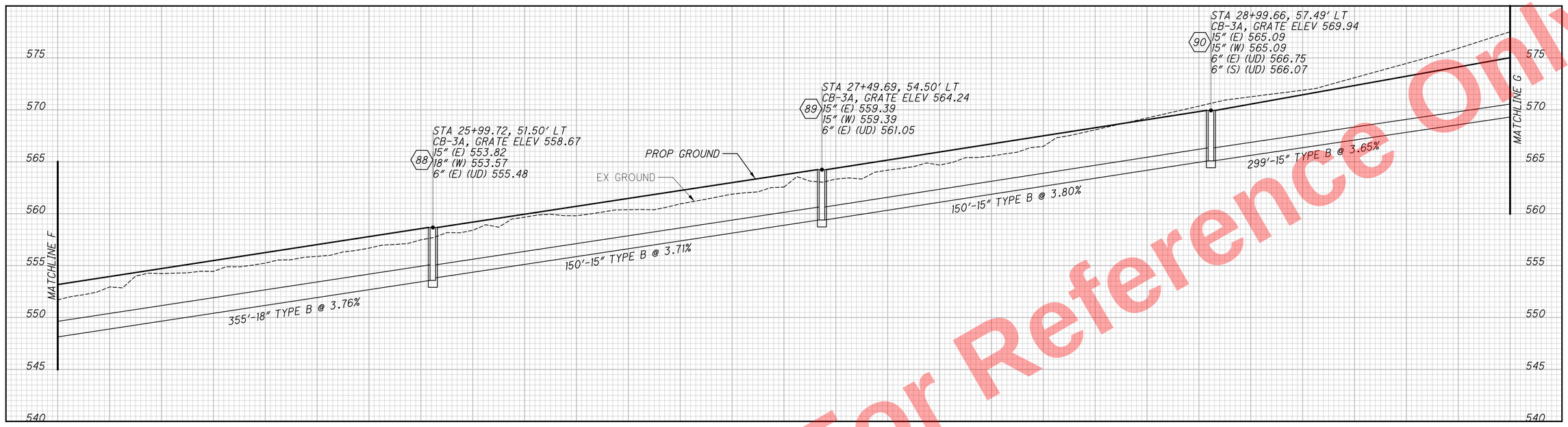

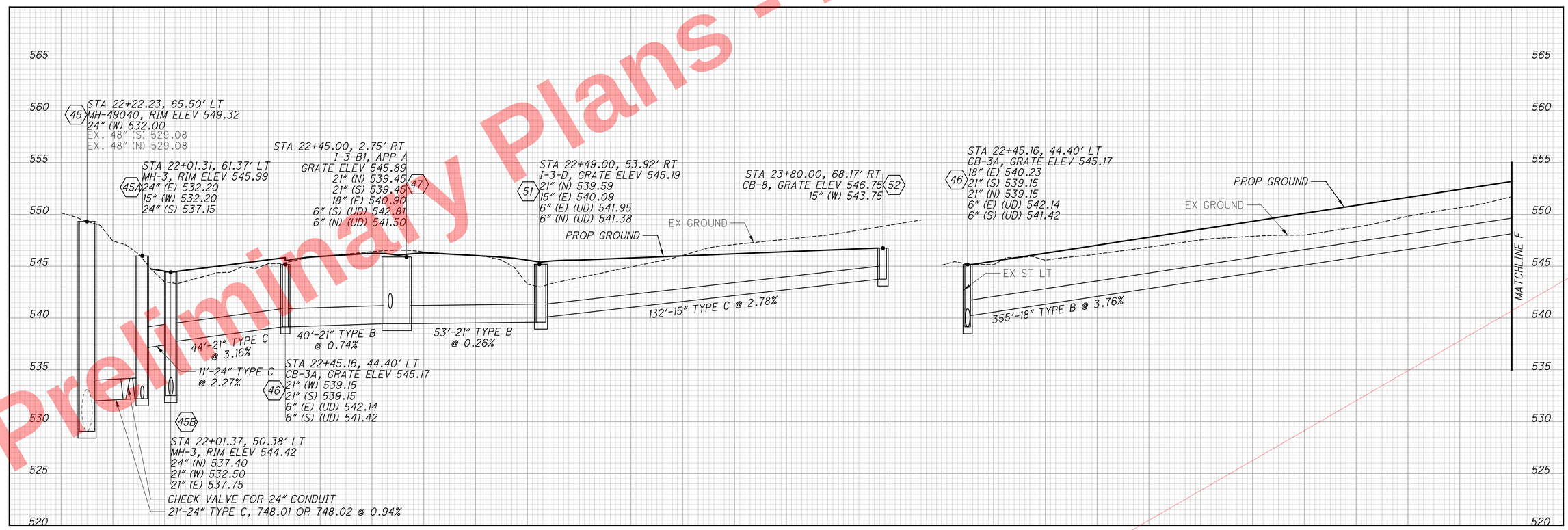

Preliminary Plans - For Reference Only

CALCULATED RSH
CHECKED EDK

STORM SEWER PROFILES

HAM-75-7.85

562
1047

\\cmhdata01\project01\20110903\ODOT\HAM 77889\drainage\sheets\77889DF011.dgn 5/22/2026 10:20:32 AM hbrendlinger

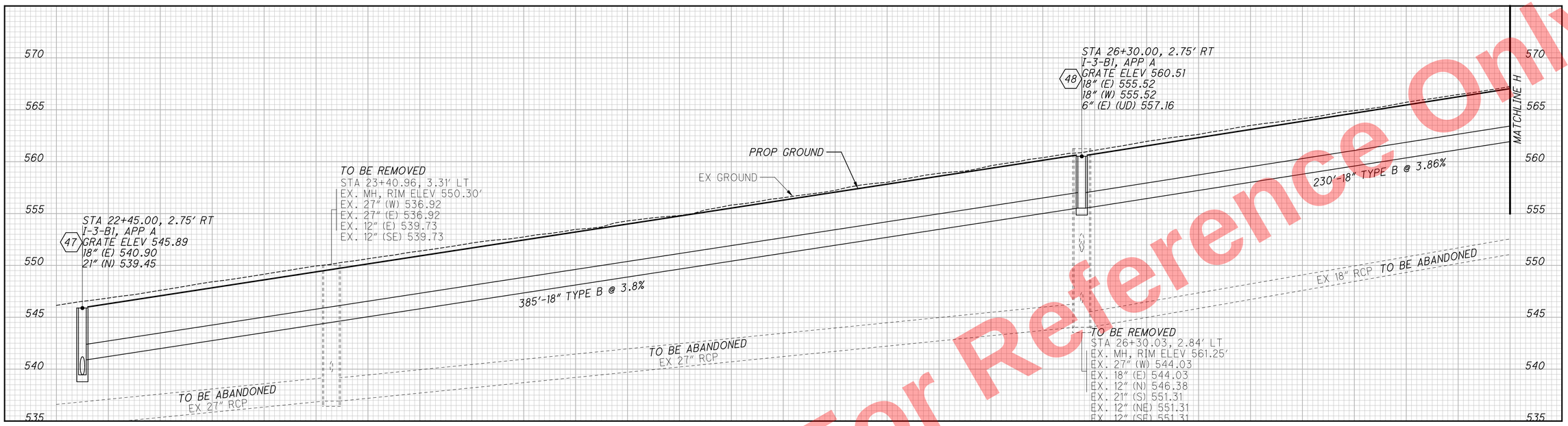

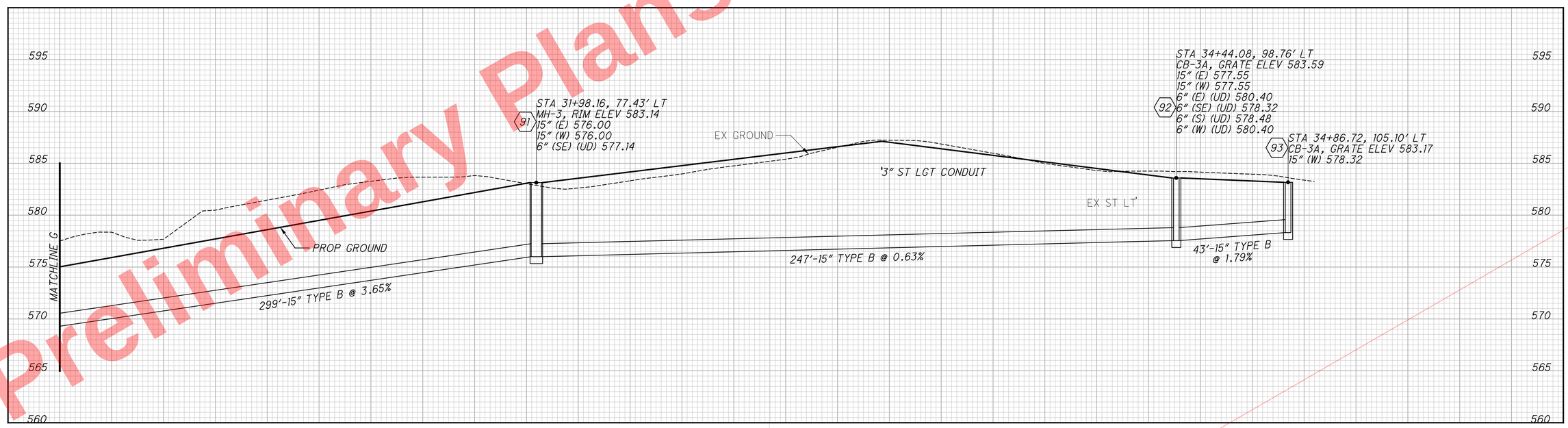

Preliminary Plans - For Reference Only

CALCULATED RSH
CHECKED EDK

STORM SEWER PROFILES

HAM-75-7.85

563
1047

\\cmhdata01\project01\20110903\ODOT\HAM\77889\drainage\sheets\77889DF012.dgn 5/22/2026 10:20:33 AM hbrendlinger

\\cmhdata01\project01\20110903\ODOT\HAM\77889\drainage\sheets\77889DF013.dgn 5/22/2026 10:20:33 AM hbrendlinger

Preliminary Plans - For Reference Only



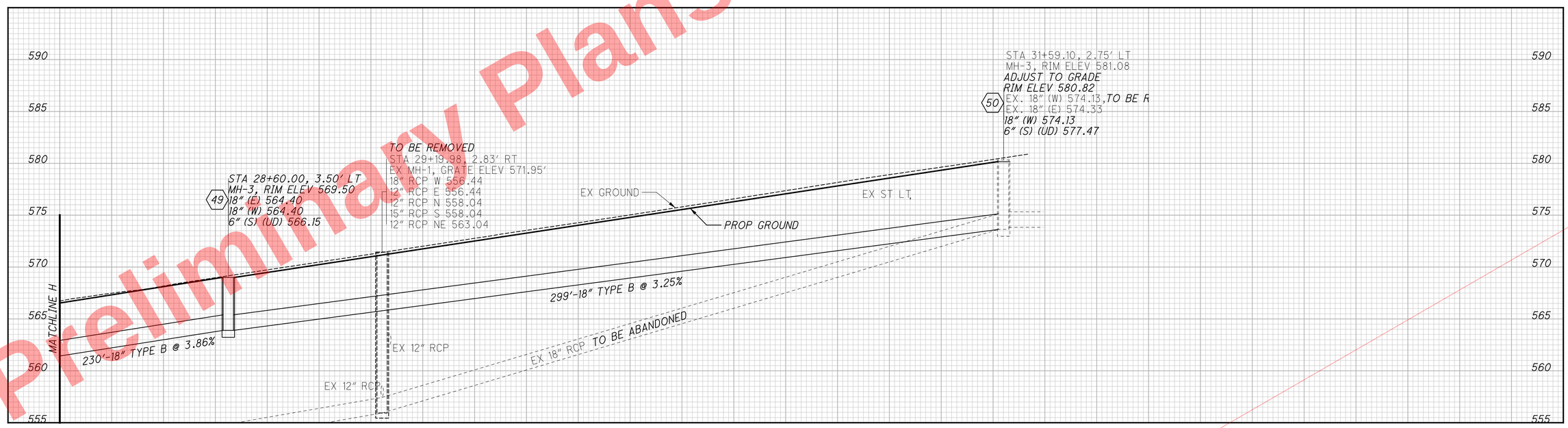

CALCULATED RSH
CHECKED EDK

STORM SEWER PROFILES

HAM-75-7.85

564
1047

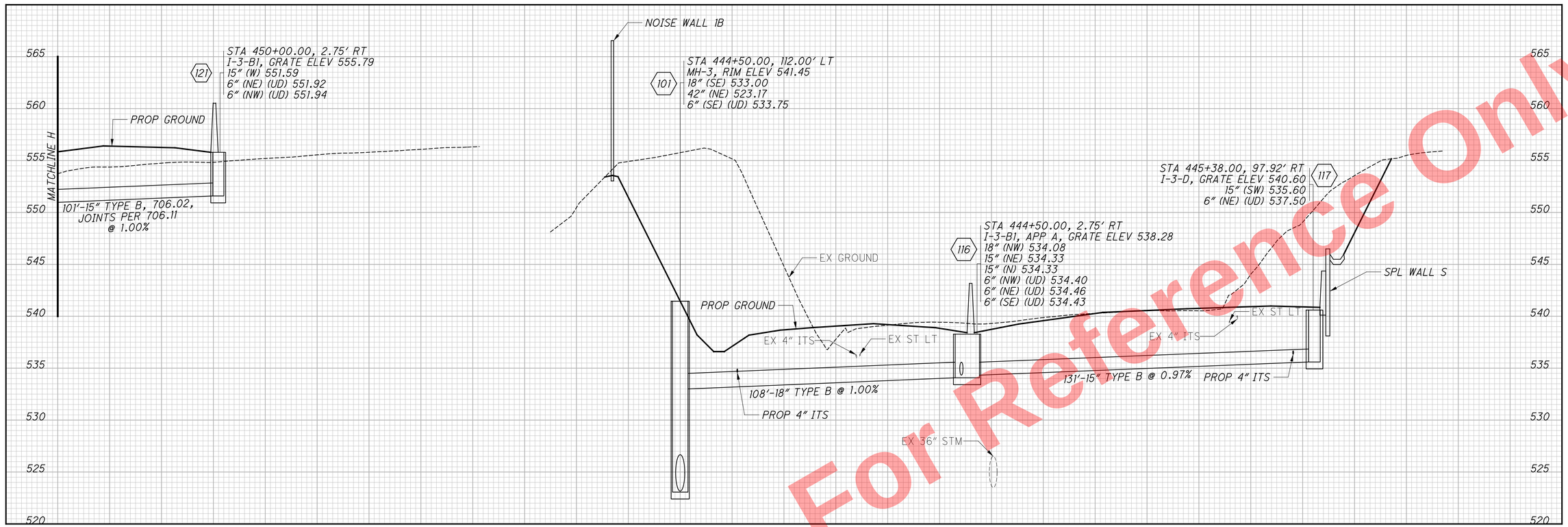

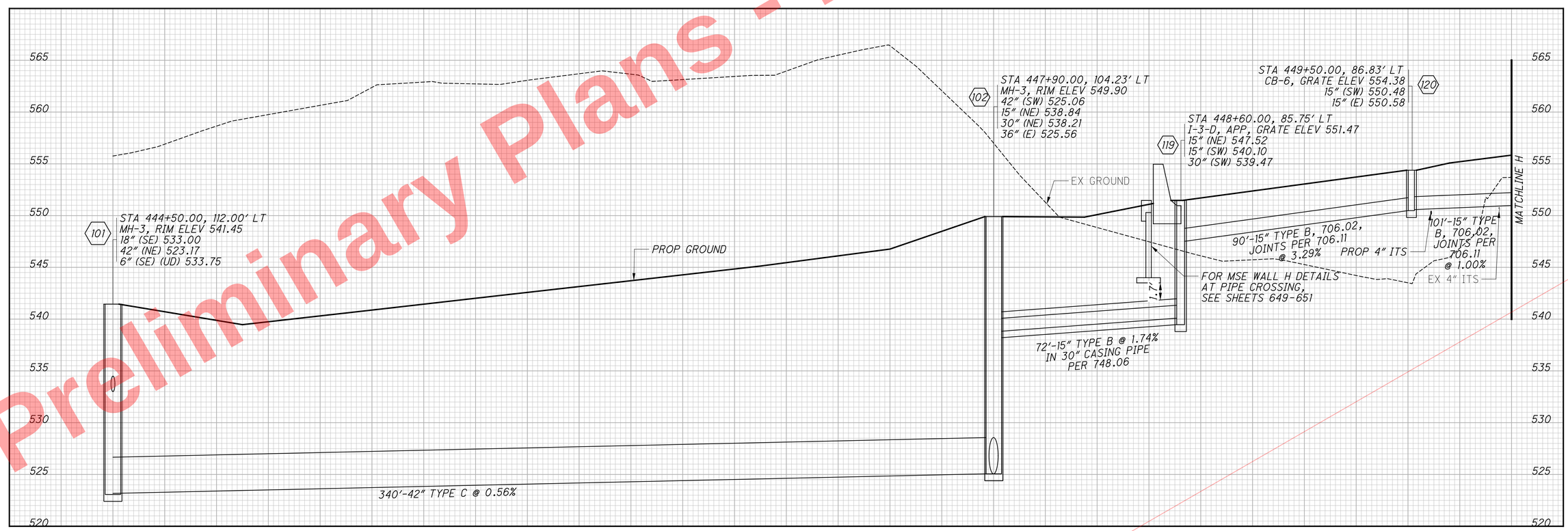

Preliminary Plans - Not For Reference Only

CALCULATED ECH
CHECKED SSK

STORM SEWER PROFILES

HAM-75-7.85

565
1047

J:\20110903\ODOT\HAM\77889\drainage\sheets\77889DF401.dgn 5/22/2026 10:20:35 AM hbrendlinger

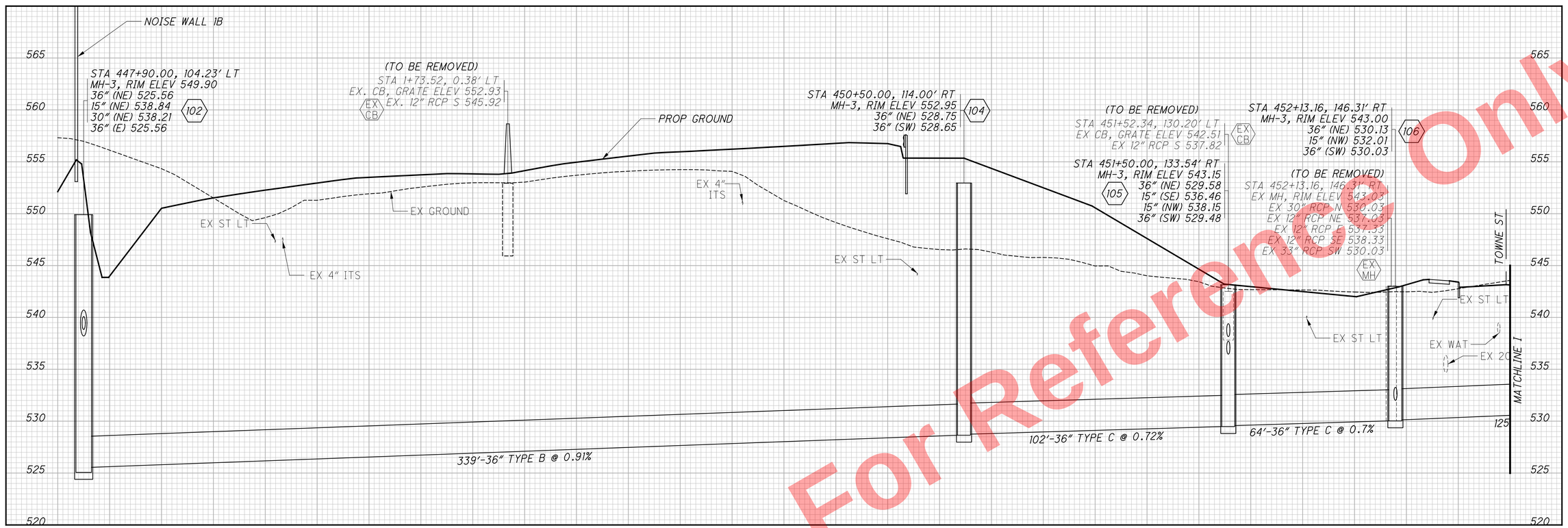

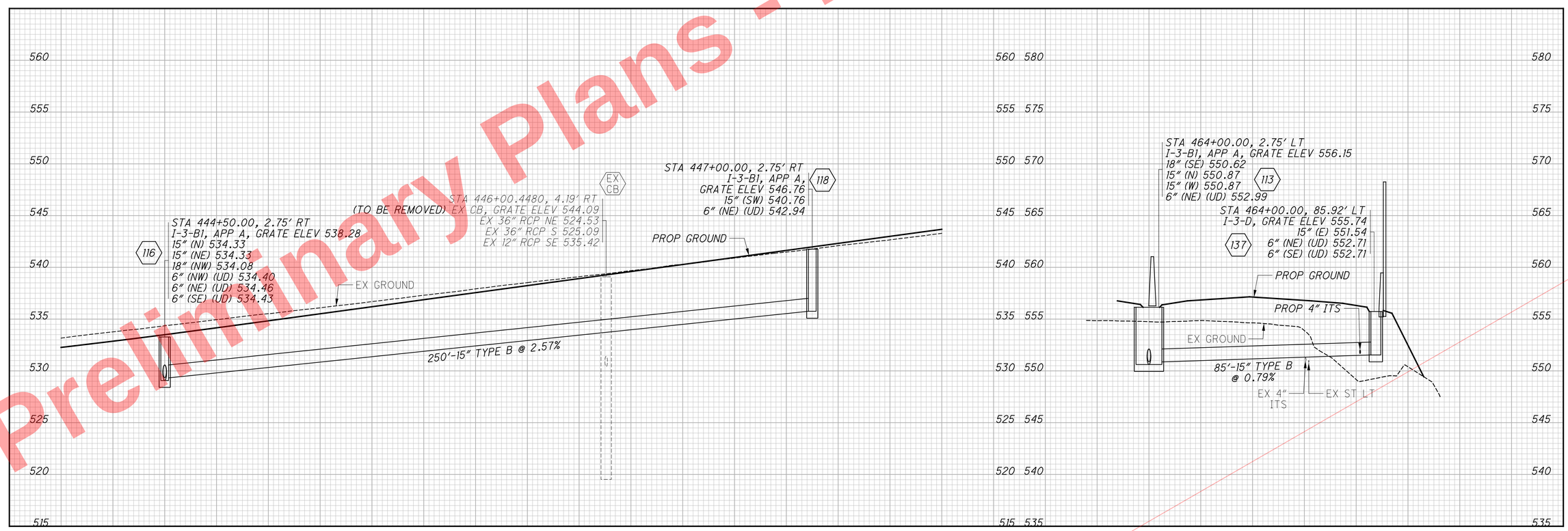

Preliminary Plans - Not For Reference Only

CALCULATED ECH
CHECKED SSK

STORM SEWER PROFILES

HAM-75-7.85

566
1047

J:\20110903\ODOT\HAM\7889\drainage\sheets\77889DF402.dgn 5/22/2026 10:20:36 AM hbrendlinger

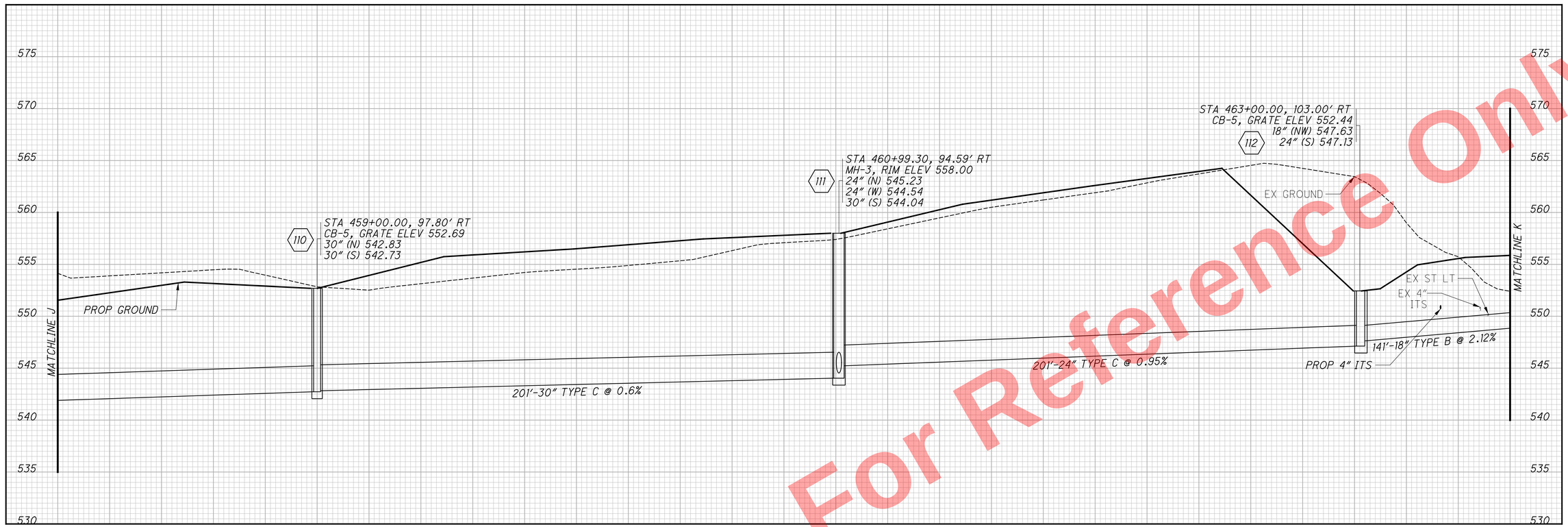

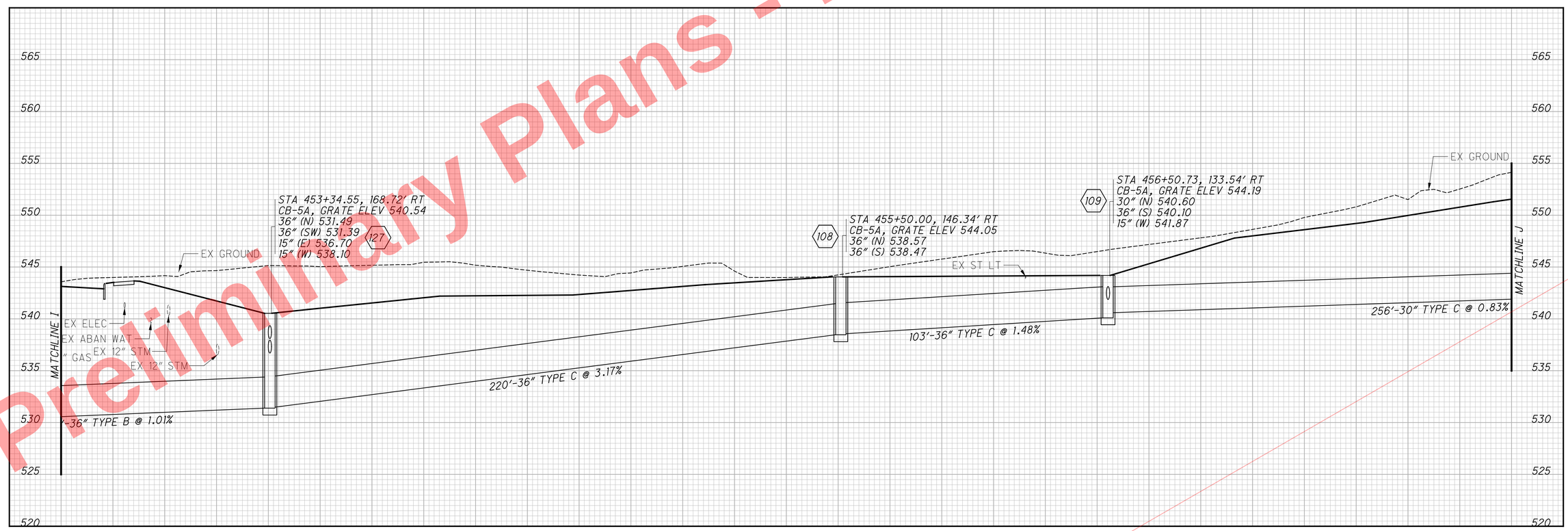

Preliminary Plans - Not For Reference Only

CALCULATED ECH
CHECKED SSK

STORM SEWER PROFILES

HAM-75-7.85

567
1047

J:\20110903\ODOT\HAM\7889\drainage\sheets\77889DF403.dgn 5/22/2026 10:20:37 AM hbrendlinger

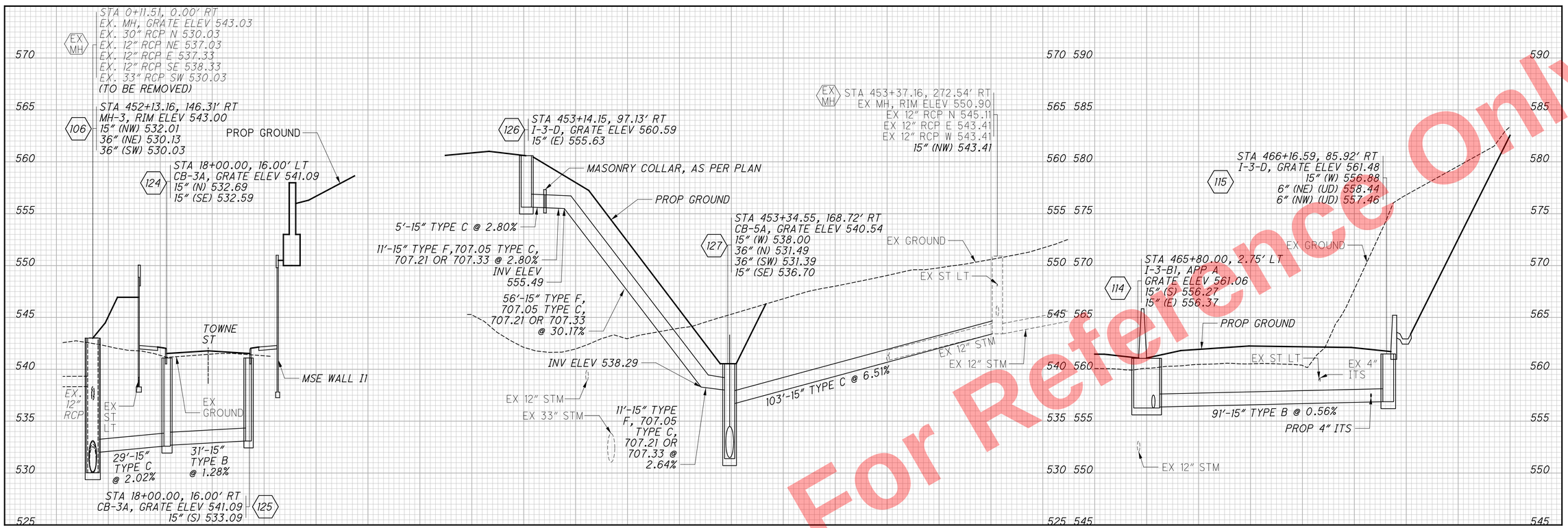

Preliminary Plans - Not For Reference Only

CALCULATED ECH
CHECKED SSK

STORM SEWER PROFILES

HAM-75-7.85

568
1047

J:\20110903\ODOT\HAM\7889\drainage\sheets\77889DF404.dgn 5/22/2026 10:20:38 AM hbrendlinger

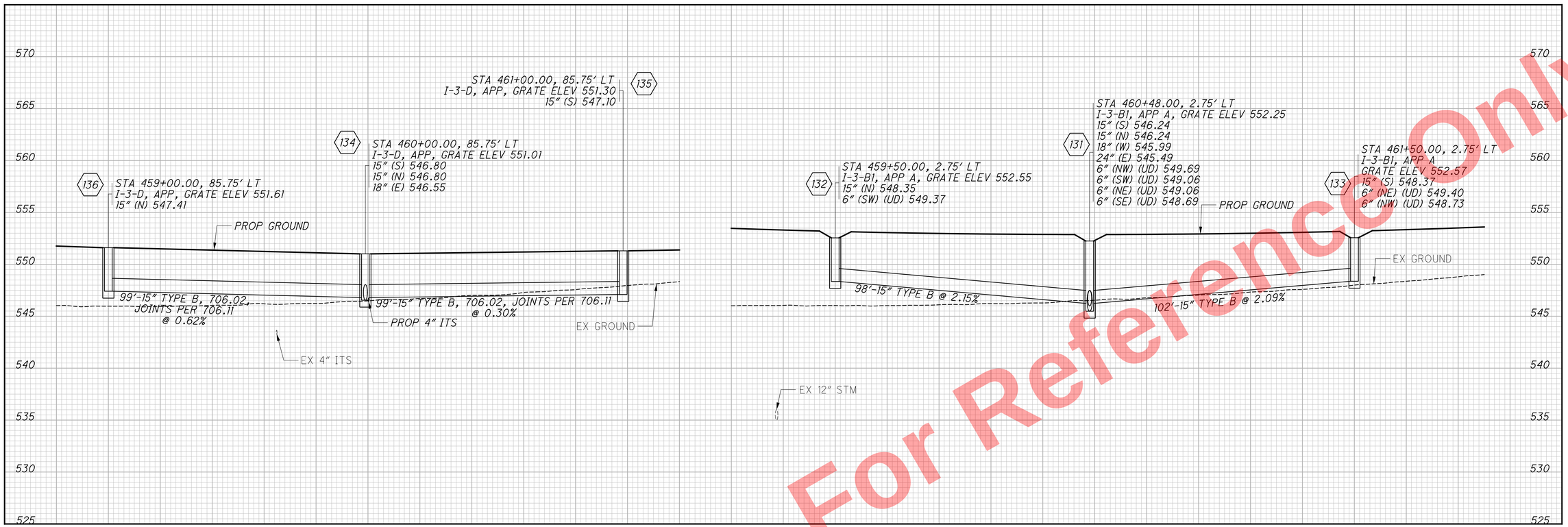

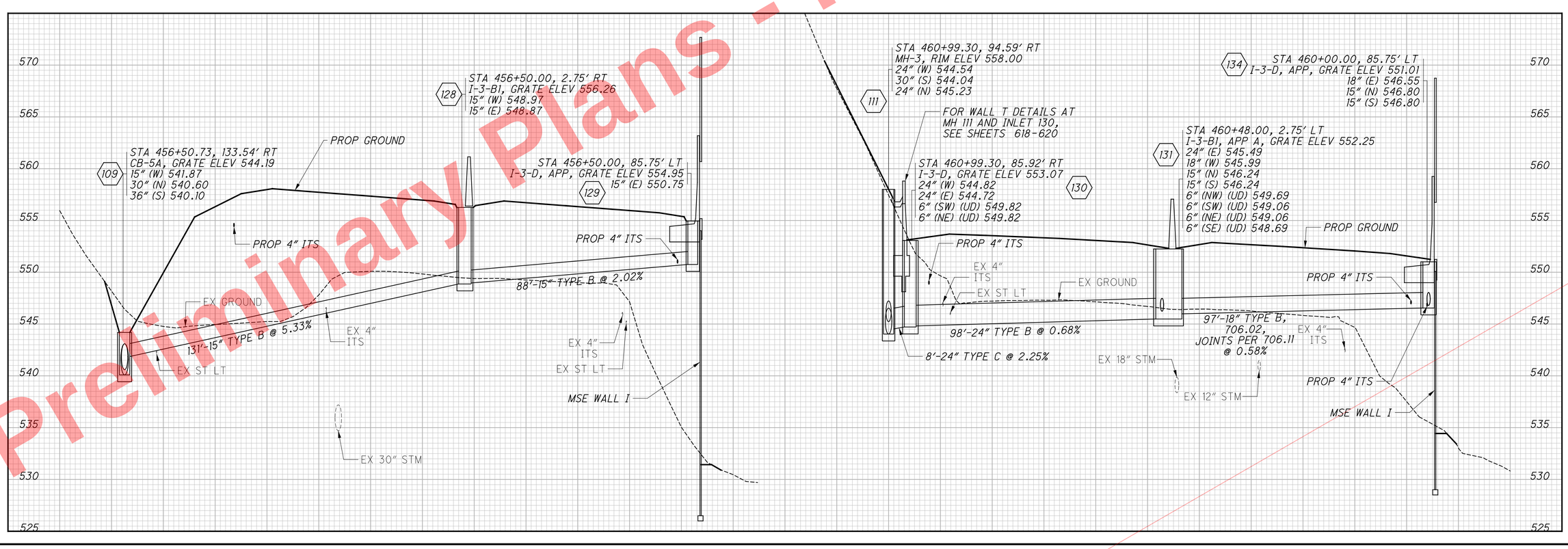

Preliminary Plans - Not For Reference Only

CALCULATED ECH
CHECKED SSK

STORM SEWER PROFILES

HAM-75-7.85

569
1047

J:\20110903\ODOT\HAM\7889\drainage\sheets\77889DF405.dgn 5/22/2026 10:20:38 AM hbrendlinger

Preliminary Plans - For Reference Only

J:\20110903\ODOT\HAM\7889\drainage\sheets\77889DF406.dgn 5/22/2026 10:20:39 AM hbrendlinger

560 555 550 545 540 535 530 525 520 515

580 575 570 565 560 555 550 545 540 535

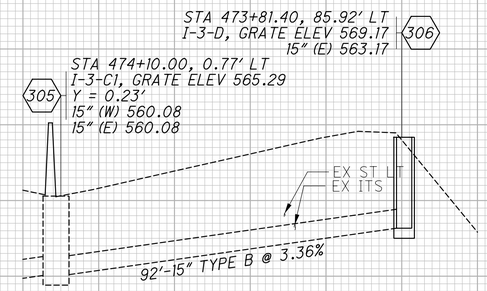

CALCULATED ECH
CHECKED SSK

STORM SEWER PROFILES

HAM-75-7.85

570
1047

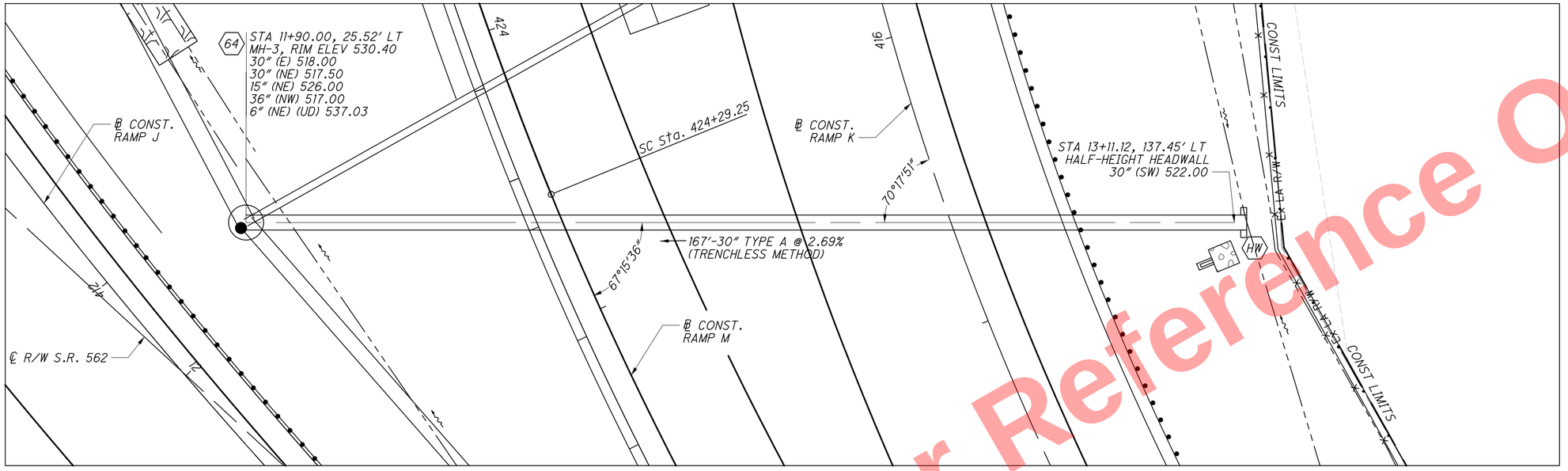

PLAN

HYDRAULIC DESIGN DATA
DRAINAGE AREA = 5.20 AC
Q_{50} = 23.03 cfs
Q_{100} = 26.34 cfs
HW_{50} = 524.63'
HW_{100} = 524.97'
V_{50} = 7.76 fps
V_{100} = 7.99 fps

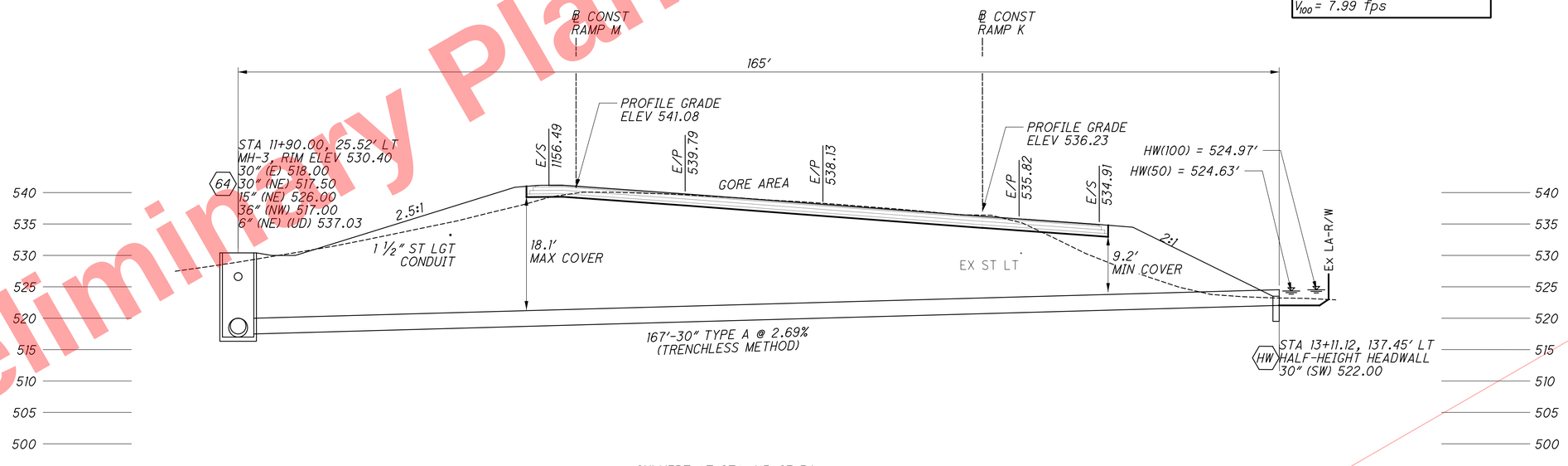

CULVERT AT STA 415+67.54

PROFILE

Preliminary Plans - For Reference Only

CULVERT DETAIL - RAMP K
STA 415+67.54

HAM-75-7.85

CALCULATED RSH
CHECKED DLR

HORIZONTAL SCALE IN FEET
0 5 10 20

571
1047

J:\20110903\ODOT\HAM\77889\drainage\sheets\77889DC001.dgn 5/22/2026 10:20:41 AM htbrendlinger

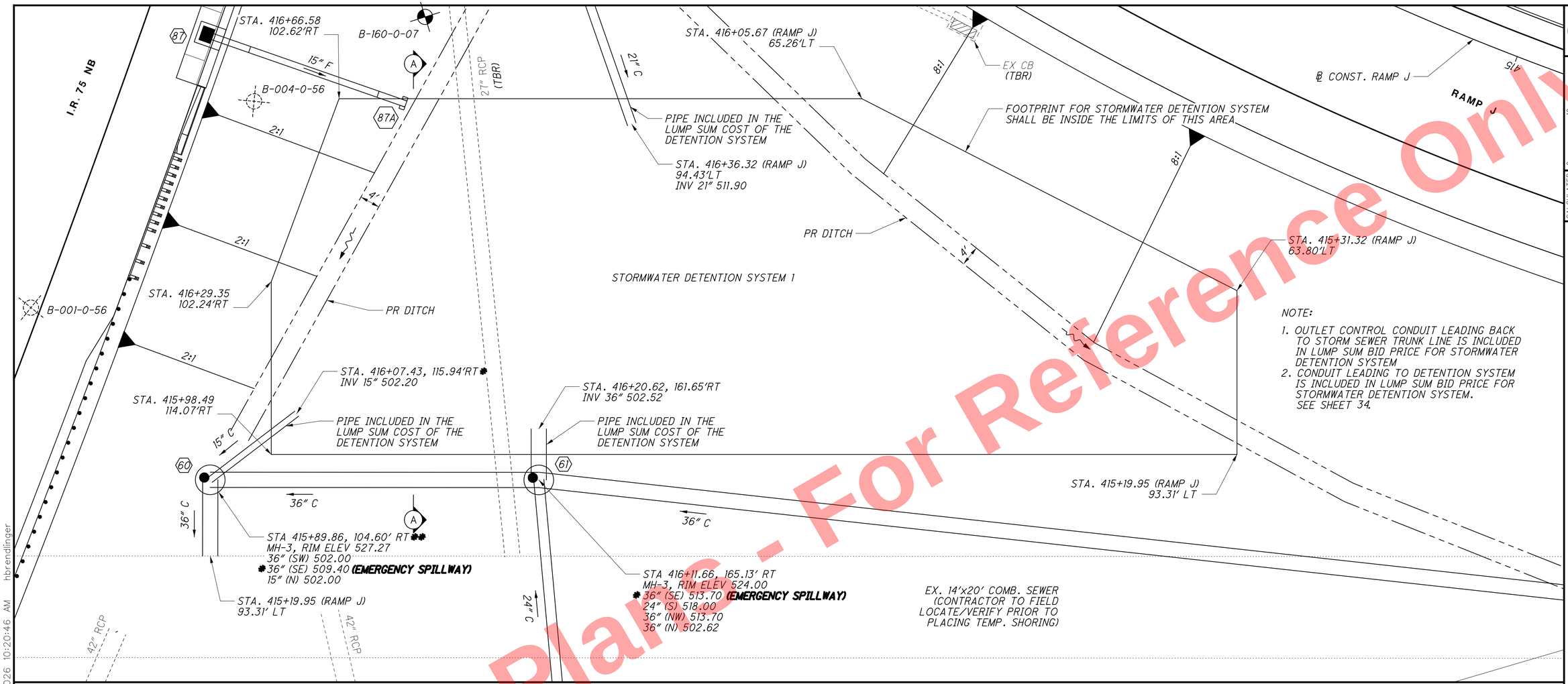

NOTE:

1. OUTLET CONTROL CONDUIT LEADING BACK TO STORM SEWER TRUNK LINE IS INCLUDED IN LUMP SUM BID PRICE FOR STORMWATER DETENTION SYSTEM
2. CONDUIT LEADING TO DETENTION SYSTEM IS INCLUDED IN LUMP SUM BID PRICE FOR STORMWATER DETENTION SYSTEM. SEE SHEET 34.

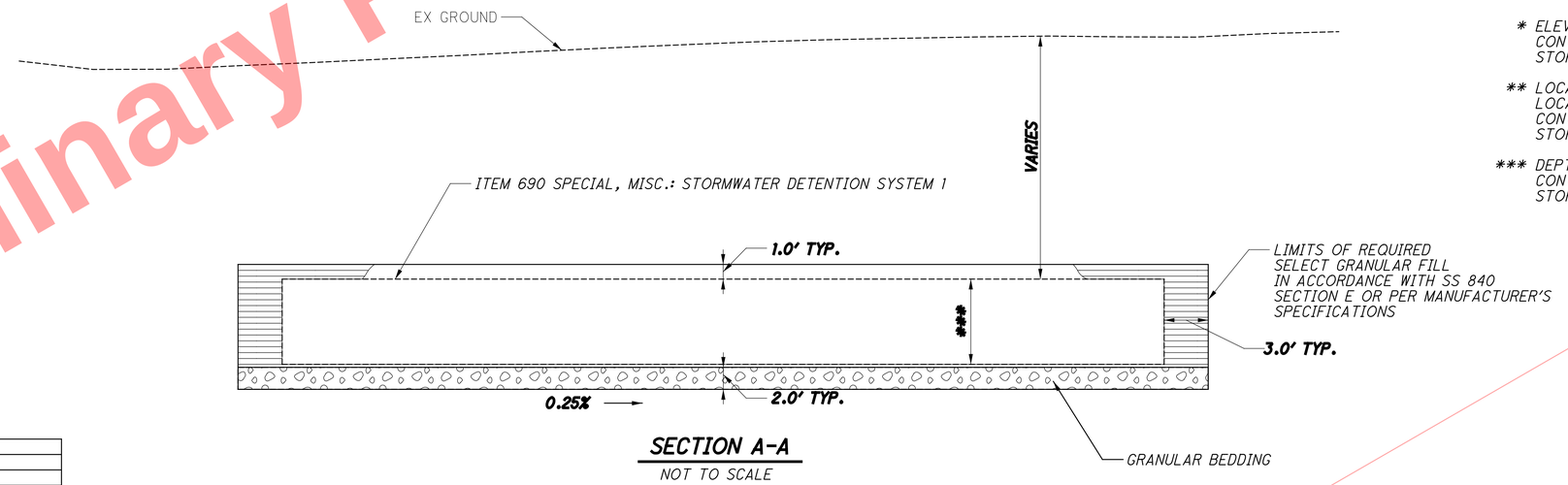

SECTION A-A

NOT TO SCALE

* ELEVATION MAY VARY BASED ON CONTRACTOR/MANUFACTURER DESIGN OF STORMWATER DETENTION SYSTEM.

** LOCATION IS APPROXIMATE. FINAL LOCATION TO BE DETERMINED BY CONTRACTOR/MANUFACTURER OF STORMWATER DETENTION SYSTEM.

*** DEPTH WILL BE BASED ON CONTRACTOR/MANUFACTURER DESIGN OF STORMWATER DETENTION SYSTEM.

CROSS REFERENCES	
SHEET NO	DESCRIPTION
34	GENERAL NOTE
544 - 551	DRAINAGE PLANS
552 - 570	STORM SEWER PROFILES
683 - 684	SANITARY SEWER PROFILES

Preliminary Plans - Not For Reference Only

HORIZONTAL SCALE IN FEET
0 5 10 20

CALCULATED RSH
CHECKED DLR

STORMWATER DETENTION SYSTEM DETAILS
STORMWATER DETENTION SYSTEM 1

HAM-75-7.85

572
1047

J:\2011090\3\ODOT\HAM\77889\drainage\sheets\77889DD004.dgn 5/22/2026 10:20:46 AM hbrendlinger

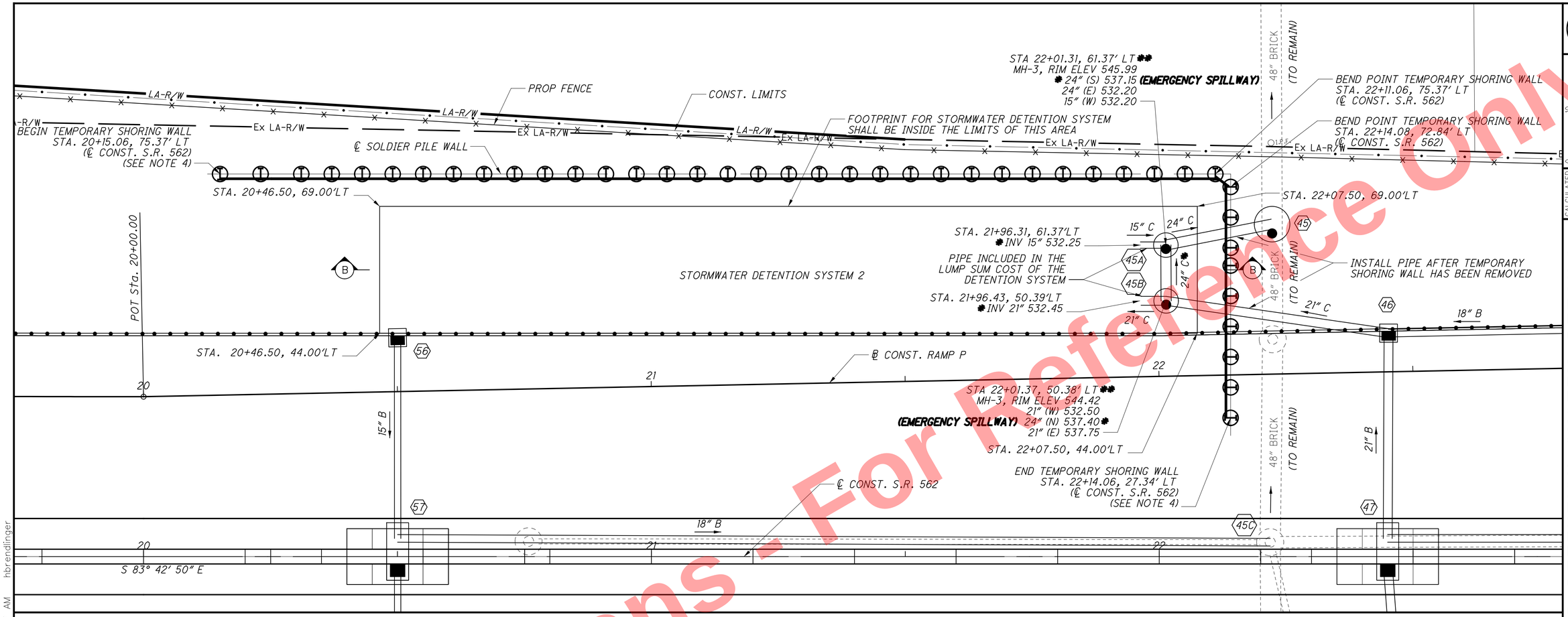

NOTE:

1. OUTLET CONTROL CONDUIT LEADING BACK TO STORM SEWER TRUNK LINE IS INCLUDED IN LUMP SUM BID PRICE FOR STORMWATER DETENTION SYSTEM
2. CONDUIT LEADING TO DETENTION SYSTEM IS INCLUDED IN LUMP SUM BID PRICE FOR STORMWATER DETENTION SYSTEM
3. SEE SHEET 34 .
4. FOR TEMPORARY SHORING WALL DETAILS SEE SHEET 575 .

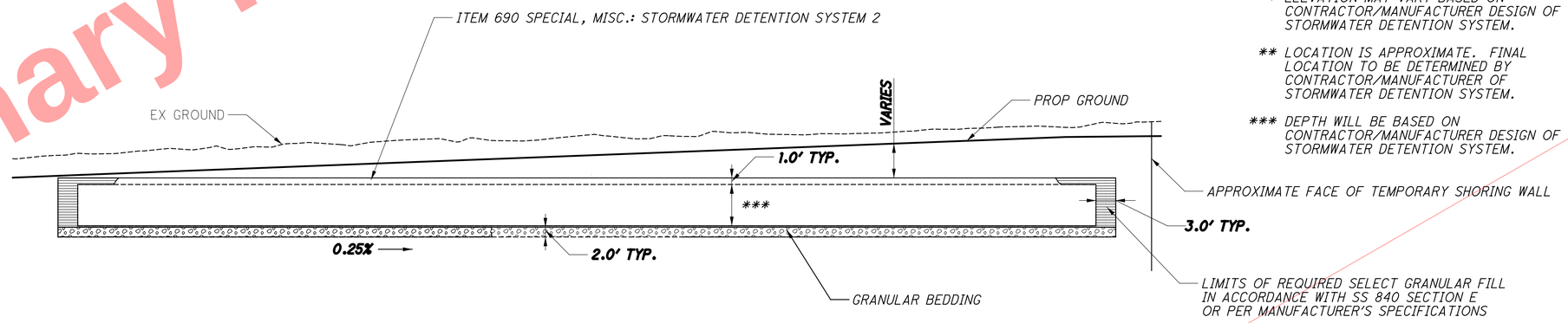

* ELEVATION MAY VARY BASED ON CONTRACTOR/MANUFACTURER DESIGN OF STORMWATER DETENTION SYSTEM.

** LOCATION IS APPROXIMATE. FINAL LOCATION TO BE DETERMINED BY CONTRACTOR/MANUFACTURER OF STORMWATER DETENTION SYSTEM.

*** DEPTH WILL BE BASED ON CONTRACTOR/MANUFACTURER DESIGN OF STORMWATER DETENTION SYSTEM.

SECTION B-B

NOT TO SCALE

CROSS REFERENCES	
SHEET NO	DESCRIPTION
34	GENERAL NOTE
544 - 551	DRAINAGE PLANS
552 - 570	STORM SEWER PROFILES
683 - 684	SANITARY SEWER PROFILES

HORIZONTAL SCALE IN FEET
0 5 10 20

CALCULATED RSH
CHECKED DLR

STORMWATER DETENTION SYSTEM DETAILS
STORMWATER DETENTION SYSTEM 2

HAM-75-7.85

573
1047

Preliminary Plans - For Reference Only

J:\20110903\ODOT\HAM\77889\drainage\sheets\77889D004.dgn 5/22/2026 10:20:47 AM hbrendlinger

NOTE:

1. OUTLET CONTROL CONDUIT LEADING BACK TO STORM SEWER TRUNK LINE IS INCLUDED IN LUMP SUM BID PRICE FOR STORMWATER DETENTION SYSTEM
2. CONDUIT LEADING TO DETENTION SYSTEM IS INCLUDED IN LUMP SUM BID PRICE FOR STORMWATER DETENTION SYSTEM SEE SHEET 34 .
3. FOR ADDITIONAL TEMPORARY SHORING NOTES AND DETAILS SEE SHEET 577.

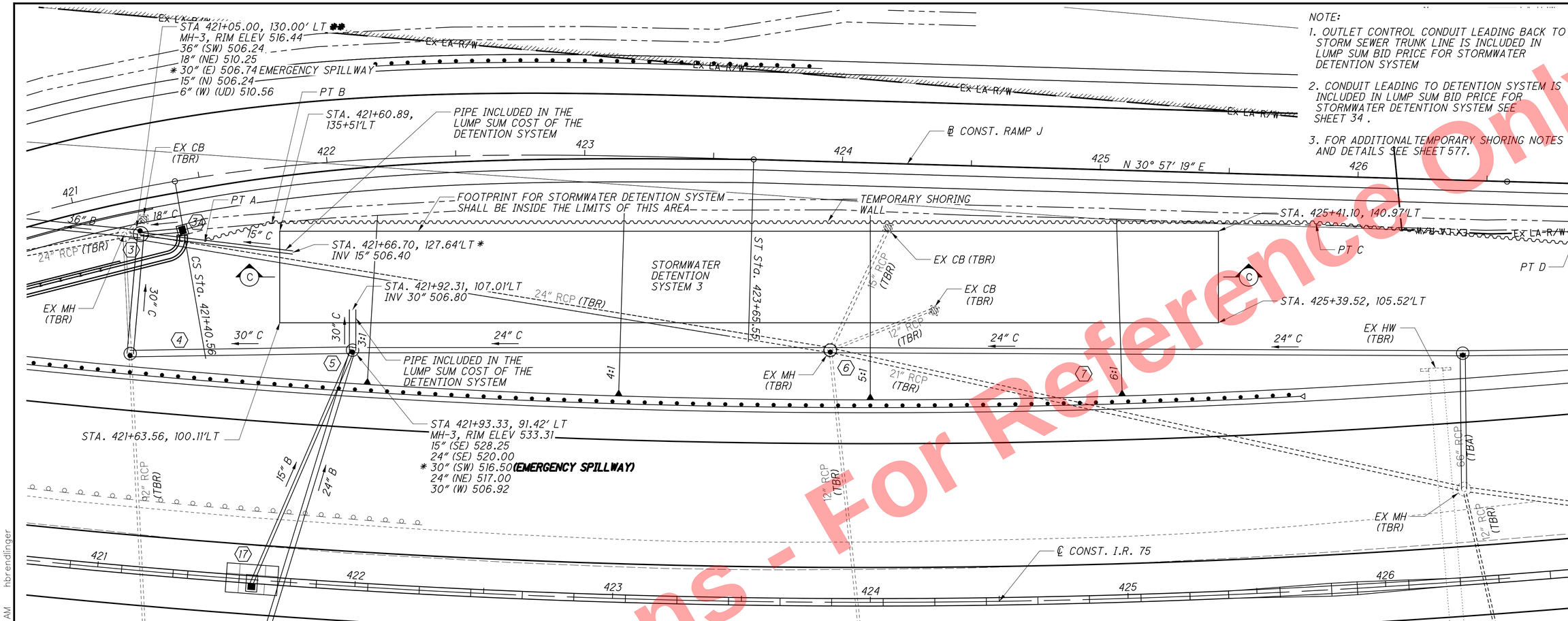

* ELEVATION MAY VARY BASED ON CONTRACTOR/MANUFACTURER DESIGN OF STORMWATER DETENTION SYSTEM.

** LOCATION IS APPROXIMATE. FINAL LOCATION TO BE DETERMINED BY CONTRACTOR/MANUFACTURER OF STORMWATER DETENTION SYSTEM.

*** DEPTH WILL BE BASED ON CONTRACTOR/MANUFACTURER DESIGN OF STORMWATER DETENTION SYSTEM.

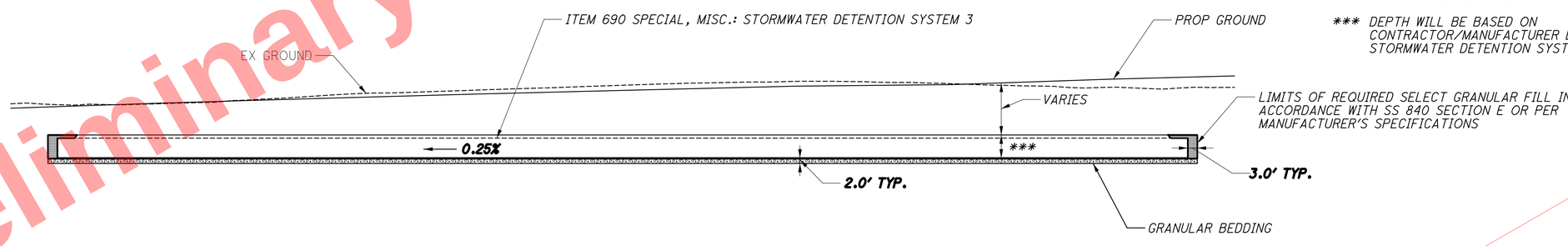

SECTION C-C

NOT TO SCALE

POINT	REFERENCE ALIGNMENT	STATION	OFFSET	DESCRIPTION
A	℄ CONST RAMP J	421+48.29	24.93' RT	BEGIN TEMP SHORING WALL
B	℄ CONST RAMP J	421+76.12	21.52' RT	BEND PT #1
C	℄ CONST RAMP J	425+84.28	18.55' RT	BEND PT #2
D	℄ CONST RAMP J	426+57.83	23.68' RT	END TEMP SHORING WALL

CROSS REFERENCES	
SHEET NO	DESCRIPTION
34	GENERAL NOTE
544 - 551	DRAINAGE PLANS
552 - 570	STORM SEWER PROFILES
683 - 684	SANITARY SEWER PROFILES

HORIZONTAL SCALE IN FEET 0 10 20 40

CALCULATED RSH
CHECKED DLR

STORMWATER DETENTION SYSTEM DETAILS
STORMWATER DETENTION SYSTEM 3

HAM-75-7.85

Preliminary Plans - For Reference Only

J:\20110903\ODOT\HAM\77889\drainage\sheets\77889DD004.dgn 5/22/2026 10:20:47 AM hbrendlinger

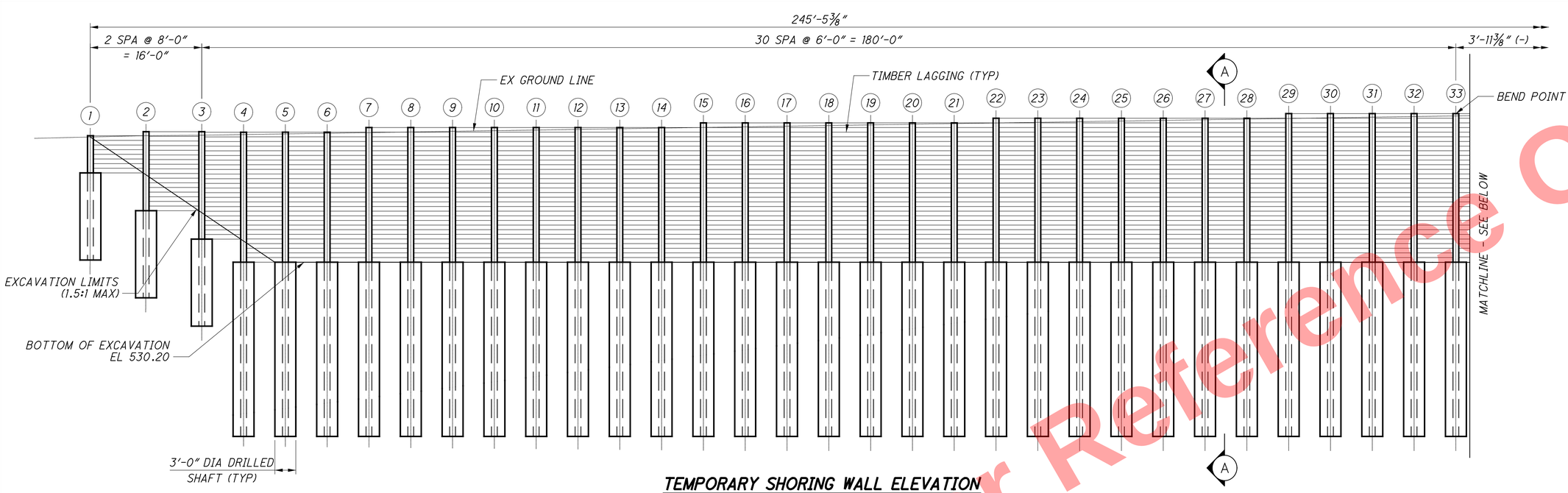

TEMPORARY SHORING WALL ELEVATION

(MEASURED ALONG ℄ SOLDIER PILE AND DRILLED SHAFT)

SEQUENCE OF CONSTRUCTION:

1. PREBORE HOLES FOR SOLDIER PILES. PROVIDE TEMPORARY CASING IF REQUIRED TO KEEP HOLE OPEN FOR PILE AND LOW STRENGTH MORTAR BACKFILL PLACEMENT.
2. INSTALL PILES AND PLACE LOW STRENGTH MORTAR AS SHOWN. REMOVE CASINGS AS LOW STRENGTH MORTAR BACKFILL IS PLACED.
3. INSTALL LAGGING AS EXCAVATION PROGRESSES FROM TOP DOWN. REMOVE LOW STRENGTH MORTAR FROM SOLDIER PILES AS NECESSARY TO INSTALL LAGGING. AT NO TIME SHOULD MORE THAN 3'-0" OF UNSUPPORTED EXCAVATION BE PERMITTED. BACKFILL ANY GAP BETWEEN THE BACK OF HARDWOOD LAGGING AND THE EXCAVATED SOIL FACE WITH NO. 57, CRUSHED CARBONATE STONE.
4. CONSTRUCT DETENTION BASIN AND PERFORM ANY ASSOCIATED WORK.
5. BACKFILL AND REMOVE SOLIDER PILES AND LAGGING TO 1'-0" BELOW FINAL GRADE OR ROADWAY BASE.

LEGEND

(#) - SOLDIER PILE NUMBER

NOTES:

1. FOR ADDITIONAL NOTES SEE SHEET 576/1047.
2. FOR ADDITIONAL SECTIONS AND DETAILS SEE SHEET 577/1047.
3. FOR PILE LOCATIONS AND TOP OF WALL ELEVATIONS SE SHEET 577/1047.

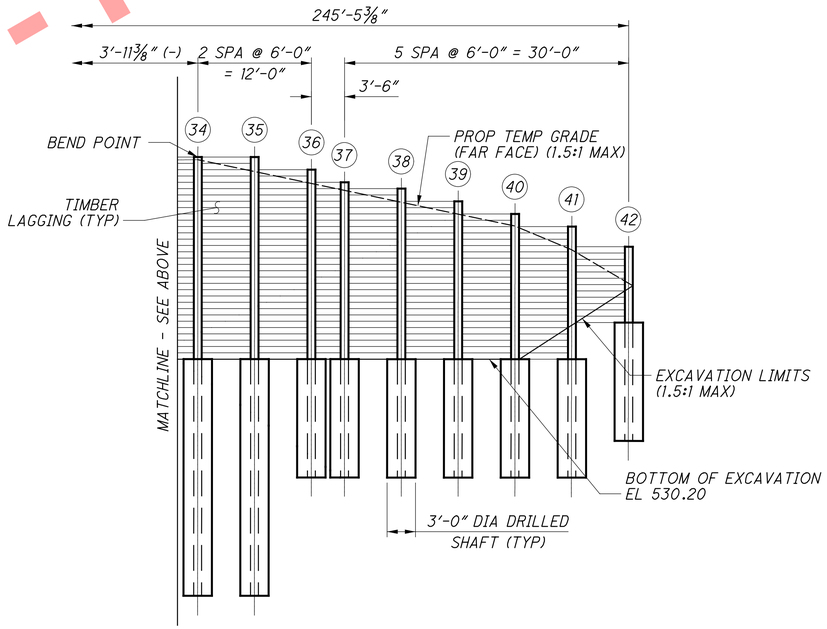

TEMPORARY SHORING WALL ELEVATION

(MEASURED ALONG ℄ SOLDIER PILE AND DRILLED SHAFT)

CALCULATED BDE CHECKED RMW

TEMPORARY SHORING DETAILS DETENTION BASIN 2

HAM-75-7.85

575 1047

Preliminary Plans - For Reference Only

J:\20110903\ODOT\HAM\7889\drainage\sheets\77889DD001.dgn 5/22/2026 10:20:48 AM hbrendlinger

ITEM 503 - COFFERDAMS AND EXCAVATION BRACING, AS PER PLAN:

DESIGN SPECIFICATIONS:

THE DESIGN CONFORMS TO THE 9TH EDITION OF THE "LRFD BRIDGE DESIGN SPECIFICATIONS" ADOPTED BY THE AMERICAN ASSOCIATION OF STATE HIGHWAY AND TRANSPORTATION OFFICIALS, 2020 AND FHWA-RD-75-128 LATERAL SUPPORT SYSTEMS AND UNDERPINNING, 1976 (TIMBER LAGGINING DESIGN ONLY).

DESIGN DATA:

THE FOLLOWING ABOVE GRADE DESIGN DATA WAS OBTAINED FROM THE GEOTECHNICAL REPORT. SOIL PARAMETERS BELOW THE BOTTOM OF EXCAVATION ARE ASSUMED FROM SOIL BORING B-275-0-07. CONTRACTOR SHALL HAVE A CONFIRMATION BORING DRILLED BY LICENSED GEOTECHNICAL ENGINEER IN THE STATE OF OHIO AND CONFIRM WALL DESIGN.

ANGLE OF INTERNAL FRICTION OF RETAINED SOIL (DRAINED): ϕ = 26°
UNIT WEIGHT OF RETAINED SOILS = 115 PCF
ESTIMATED GROUND WATER TABLE ELEVATION = 516.00
MAXIMUM DEFLECTION LIMIT = 1.0% OF RETAINED WALL HEIGHT
LIVE LOAD SURCHARGE: NONE

SOLDIER PILES SHALL BE ASTM A709 GRADE 50 (YIELD STRENGTH = 50 KSI) OR AN ENGINEER APPROVED EQUAL.

LAGGING PLATES SHALL BE ASTM A709 GRADE 50 (YIELD STRENGTH = 50 KSI) OR AN ENGINEER APPROVED EQUAL.

LAGGING SHALL BE HARDWOOD WITH A MINIMUM THICKNESS OF 3 INCHES.

THE CONTRACTOR MAY CHOOSE THE METHOD OF ATTACHING THE LAGGING TO THE SOLDIER PILES. POSITIONING THE LAGGING OUTSIDE THE SOLDIER PILE FLANGES IS SHOWN. OTHER METHODS ARE ACCEPTABLE WITH APPROVAL FROM THE ENGINEER.

LOW STRENGTH MORTAR SHALL CONFORM TO C&MS ITEM 613.

CONSTRUCT DRILLED SHAFTS IN ACCORDANCE WITH C&MS ITEM 524. TEMPORARY CASINGS SHALL BE REMOVED PER C&MS 524.04.C WHILE THE LOW STRENGTH MORTAR IS WORKABLE.

WELDED STUDS SHALL BE INSTALLED IN ACCORDANCE WITH C&MS 513.22 AND AS SHOWN ON THE PLANS.

PRE AND POST CONSTRUCTION SURVEY:

BEFORE INSTALLATION OF TEMPORARY SHORING WALL BEGINS, CONDUCT A CONDITION SURVEY OF ALL EXISTING BUILDINGS, STRUCTURES, AND UTILITIES WITHIN 200 FEET OF THE TEMPORARY SHORING WALL. THE PURPOSE OF THE SURVEY IS TO DOCUMENT THE CONDITION OF THE BUILDINGS, STRUCTURES, AND UTILIZES PRIOR TO TEMPORARY SHORING WALL CONSTRUCTION, SO THAT CLAIMS OF DAMAGE CAUSED BY TEMPORARY SHORING WALL CONSTRUCTION CAN BE VERIFIED.

RECORD THE PRE AND POST CONSTRUCTION CONDITION OF EXISTING STRUCTURES AND BUILDING MATERIALS, USING WRITTEN TEXT, PHOTOGRAPHS, AND VIDEO RECORDINGS. INSPECT INTERIOR WALLS, CEILINGS, AND FLOORS THAT ARE ACCESSIBLE. INSPECT THE EXTERIOR OF THE BUILDING THAT IS VISIBLE FROM GROUND LEVEL. ALSO RECORD THE LOCATION, SIZE, AND TYPE OF ALL CRACKS AND OTHER STRUCTURAL DEFICIENCIES.

IF THE OWNER OR OCCUPANTS FAIL TO ALLOW ACCESS TO THE PROPERTY FOR THE PRE CONSTRUCTION SURVEY, SEND A CERTIFIED LETTER TO THE OWNER OR OCCUPANT. DOCUMENT THE NOTIFICATION EFFORT AND THE CERTIFIED LETTER IN THE REPORT.

SUBMIT A FINAL REPORT TO THE ENGINEER THAT SUMMARIZES THE PRE AND POST CONSTRUCTION CONDITION OF THE BUILDINGS, STRUCTURES, AND UTILITIES, AND THAT IDENTIFIES AREAS OF CONCERN.

BASIS OF PAYMENT:

THE DESIGN SHOWN ON THE PLANS FOR TEMPORARY SUPPORT OF EXCAVATION IS ONE REPRESENTATIVE DESIGN THAT MAY BE USED TO CONSTRUCT THE PROJECT. THE CONTRACTOR MAY CONSTRUCT THE DESIGN SHOWN ON THE PLANS OR PREPARE AN ALTERNATE DESIGN TO SUPPORTS THE SIDES OF EXCAVATIONS. IF CONSTRUCTING AN ALTERNATIVE DESIGN FOR TEMPORARY SUPPORT OF EXCAVATION, PREPARE AND PROVIDE PLANS IN ACCORDANCE WITH C&MS 501.05. THE DEPARTMENT WILL PAY FOR THE TEMPORARY SUPPORT OF EXCAVATION AT THE CONTRACT LUMP SUM PRICE FOR COFFERDAMS AND EXCAVATION BRACING. THE DEPARTMENT WILL NOT MAKE ADDITIONAL PAYMENT FOR PROVIDING AN ALTERNATE DESIGN.

ALL WORK NECESSARY TO CONSTRUCT THE TEMPORARY SOLDIER PILE WALL AS SHOWN IN THE PLANS, INCLUDING ALL NECESSARY MATERIAL, LABOR, AND INCIDENTAL ITEMS SHALL BE INCLUDED WITH ITEM 503-COFFERDAMS AND EXCAVATION BRACING, AS PER PLAN, FOR PAYMENT.

Preliminary Plans - For Reference Only

CALCULATED BDE
CHECKED RMW

TEMPORARY SHORING GENERAL NOTES
DETENTION BASIN 2

HAM-75-7.85

576
1047

J:\20110903\ODOT\HAM\77889\drainage\sheets\77889DD003.dgn 5/22/2026 10:20:49 AM hbrendlinger

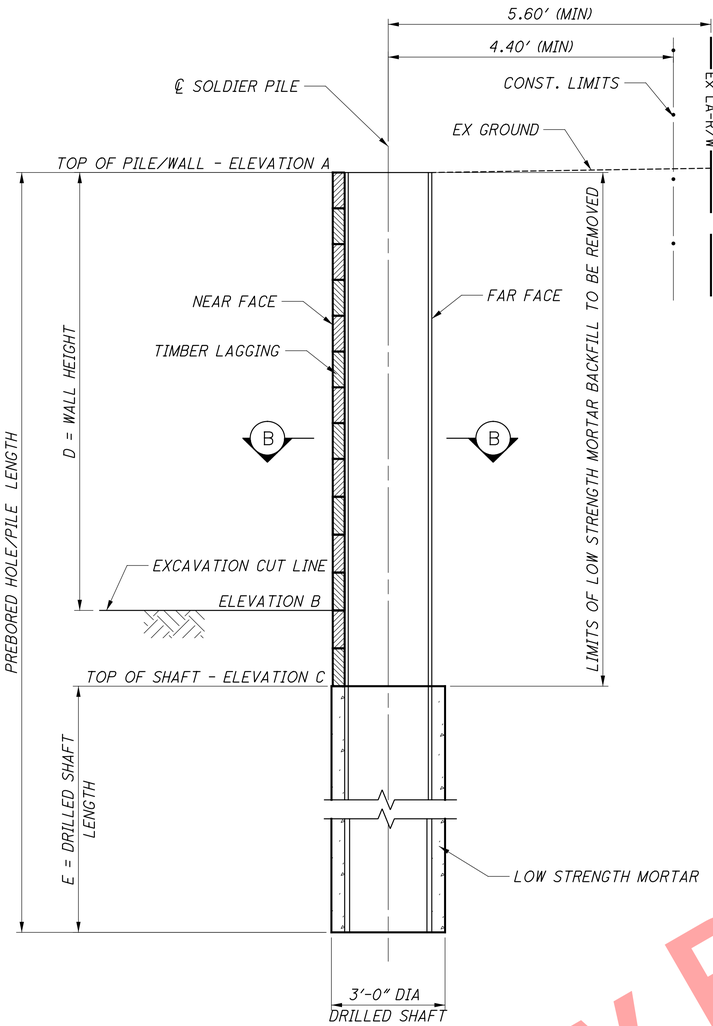

SECTION A-A

TEMPORARY SOLDER PILE WALL DATA TABLE

SOLDIER PILE NUMBER	STA (ALONG ℄ CONST. S.R. 562)	OFFSET (ALONG ℄ CONST. S.R. 562)	TOP OF PILE/WALL ELEVATION A	EXCAVATION CUT LINE ELEVATION B	TOP OF SHAFT ELEVATION C	WALL HEIGHT D	DRILLED SHAFT LENGTH E	PREBORED HOLE/PILE LENGTH	SOLDIER PILE SIZE
1	20+15.06	75.37' LT	548.47	548.47	543.25	0.00'	15.00'	20.22'	W27x129
2	20+23.06	75.37' LT	548.66	543.25	538.03	5.41'	15.00'	25.63'	W27x129
3	20+31.06	75.37' LT	548.71	538.03	534.12	10.68'	15.00'	29.60'	W27x129
4	20+37.06	75.37' LT	549.16	534.12	530.20	15.05'	25.00'	43.96'	W27x129
5	20+43.06	75.37' LT	549.31	530.20	530.20	19.11'	25.00'	44.11'	W27x129
6	20+49.06	75.37' LT	549.84	530.20	530.20	19.64'	25.00'	44.64'	W27x129
7	20+55.06	75.37' LT	549.80	530.20	530.20	19.60'	25.00'	44.60'	W27x129
8	20+61.06	75.37' LT	549.49	530.20	530.20	19.29'	25.00'	44.29'	W27x129
9	20+67.06	75.37' LT	549.68	530.20	530.20	19.48'	25.00'	44.48'	W27x129
10	20+73.06	75.37' LT	549.99	530.20	530.20	19.79'	25.00'	44.79'	W27x129
11	20+79.06	75.37' LT	549.80	530.20	530.20	19.60'	25.00'	44.60'	W27x129
12	20+85.06	75.37' LT	550.07	530.20	530.20	19.87'	25.00'	44.87'	W27x129
13	20+91.06	75.37' LT	549.62	530.20	530.20	19.42'	25.00'	44.42'	W27x129
14	20+97.06	75.37' LT	549.72	530.20	530.20	19.52'	25.00'	44.52'	W27x129
15	21+03.06	75.37' LT	550.26	530.20	530.20	20.06'	25.00'	45.06'	W27x129
16	21+09.06	75.37' LT	550.60	530.20	530.20	20.40'	25.00'	45.40'	W27x129
17	21+15.06	75.37' LT	550.56	530.20	530.20	20.36'	25.00'	45.36'	W27x129
18	21+21.06	75.37' LT	550.35	530.20	530.20	20.15'	25.00'	45.15'	W27x129
19	21+27.06	75.37' LT	550.69	530.20	530.20	20.49'	25.00'	45.49'	W27x129
20	21+33.06	75.37' LT	550.38	530.20	530.20	20.18'	25.00'	45.18'	W27x129
21	21+39.06	75.37' LT	550.48	530.20	530.20	20.28'	25.00'	45.28'	W27x129
22	21+45.06	75.37' LT	550.67	530.20	530.20	20.47'	25.00'	45.47'	W27x129
23	21+51.06	75.37' LT	550.72	530.20	530.20	20.52'	25.00'	45.52'	W27x129
24	21+57.06	75.37' LT	551.07	530.20	530.20	20.87'	25.00'	45.87'	W27x129
25	21+63.06	75.37' LT	550.94	530.20	530.20	20.74'	25.00'	45.74'	W27x129
26	21+69.06	75.37' LT	551.36	530.20	530.20	21.16'	25.00'	46.16'	W27x129
27	21+75.06	75.37' LT	550.61	530.20	530.20	20.41'	25.00'	45.41'	W27x129
28	21+81.06	75.37' LT	550.72	530.20	530.20	20.52'	25.00'	45.52'	W27x129
29	21+87.06	75.37' LT	550.92	530.20	530.20	20.72'	25.00'	45.72'	W27x129
30	21+93.06	75.37' LT	550.72	530.20	530.20	20.52'	25.00'	45.52'	W27x129
31	21+99.06	75.37' LT	550.92	530.20	530.20	20.72'	25.00'	45.72'	W27x129
32	22+05.06	75.37' LT	551.38	530.20	530.20	21.18'	25.00'	46.18'	W27x129
33	22+11.06	75.37' LT	551.92	530.20	530.20	21.72'	25.00'	46.72'	W27x129
34	22+14.08	72.84' LT	551.35	530.20	530.20	21.15'	25.00'	46.15'	W27x129
35	22+14.08	66.84' LT	548.87	530.20	530.20	18.67'	25.00'	43.67'	W27x129
36	22+14.08	60.84' LT	546.65	530.20	530.20	16.45'	15.00'	31.45'	W27x129
37	22+14.08	57.34' LT	545.40	530.20	530.20	15.20'	15.00'	30.20'	W27x129
38	22+14.08	51.34' LT	543.81	530.20	530.20	13.61'	15.00'	28.61'	W27x129
39	22+14.08	45.34' LT	544.39	530.20	530.20	14.19'	15.00'	29.19'	W27x129
40	22+14.08	39.34' LT	542.33	530.20	530.20	12.13'	15.00'	27.13'	W27x129
41	22+14.08	33.34' LT	540.26	530.20	530.20	10.06'	15.00'	25.06'	W27x129
42	22+14.08	27.34' LT	538.20	534.20	530.20	4.00'	15.00'	23.00'	W27x129

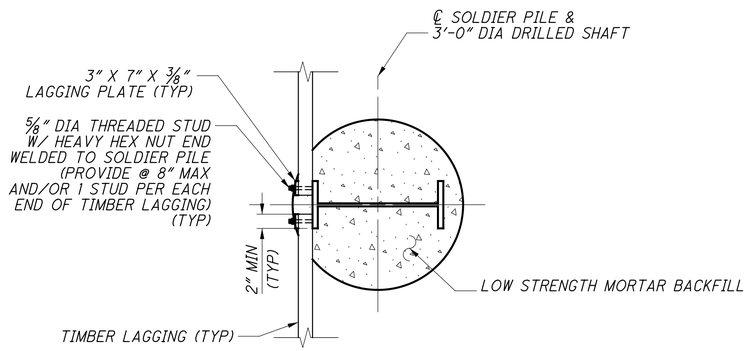

SECTION B-B

CALCULATED BDE CHECKED RMW

TEMPORARY SHORING DETAILS
DETENTION BASIN 2

HAM-75-7.85

577
1047

Preliminary Plans - For Reference Only

J:\20110903\ODOT\HAM\7889\drainage\sheets\77889DD002.dgn 5/22/2026 10:20:49 AM hbrendlinger

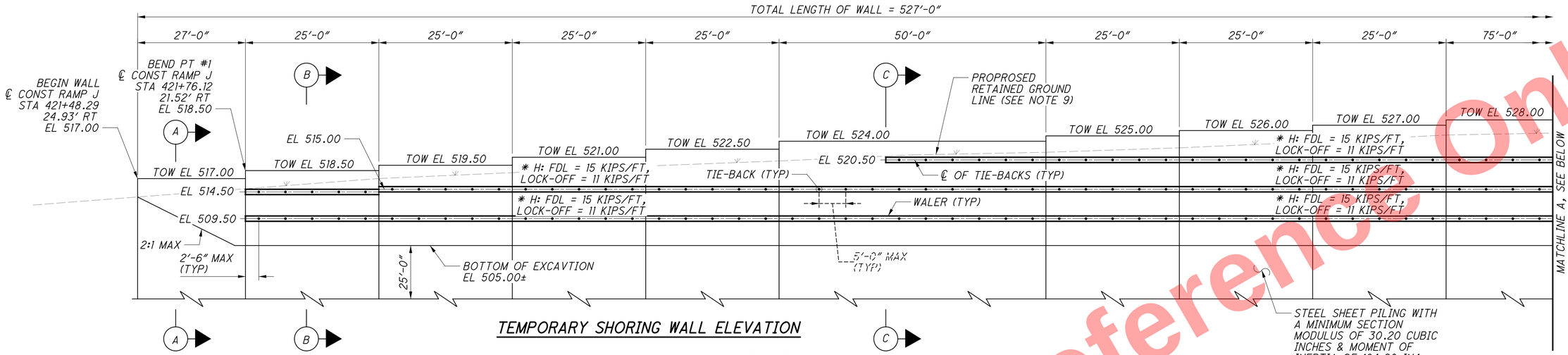

TEMPORARY SHORING WALL ELEVATION

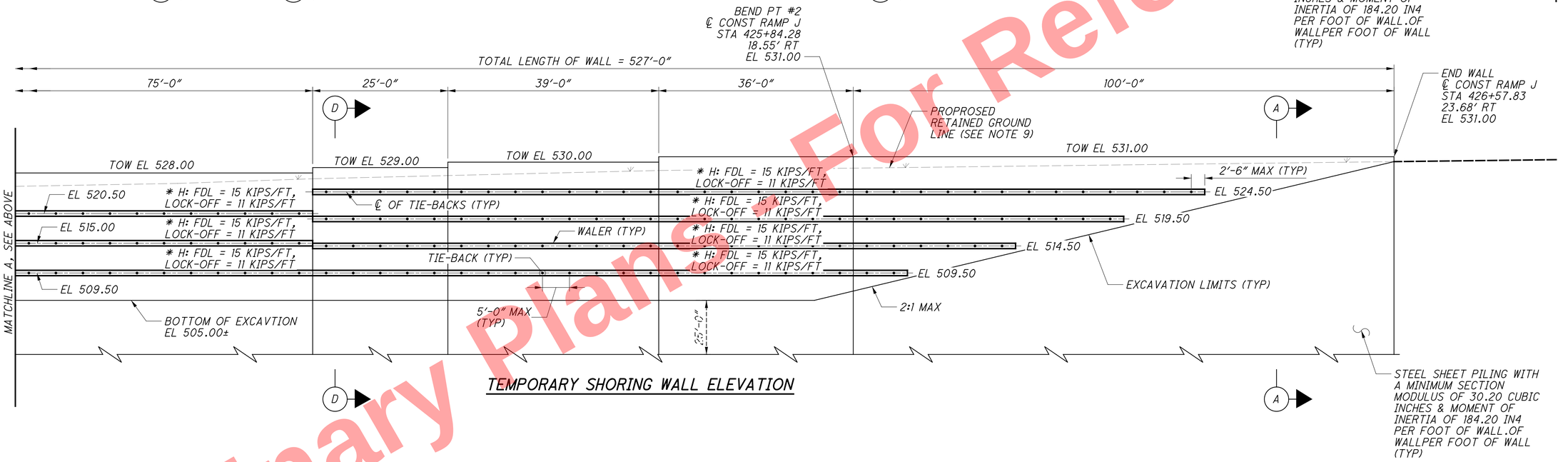

TEMPORARY SHORING WALL ELEVATION

LEGEND

* = LENGTH OF TIE-BACKS TO BE DETERMINED BY CONTRACTOR.

H = HORIZONTAL COMPONENT OF REQUIRED TIE-BACK DESIGN LOAD PER FOOT OF WALER.

FDL = FACTORED DESIGN LOAD.

NOTES

1. FOR SHEET PILING LOCATIONS, SEE SITE PLAN ON SHEET 574
2. FOR SECTIONS A-A, B-B, C-C AND D-D, SEE SHEET 579
3. SHEET PILING SHALL MEET THE REQUIREMENTS OF CMS 711.03. MINIMUM YIELD STRENGTH SHALL BE 50 KSI.
4. THE MAXIMUM SPACING OF THE TIE-BACKS IS 5'-0" AND MINIMUM OF 3 TIE-BACKS PER WALER IS REQUIRED.
5. INSTALL AND TEST TIE-BACKS IN ACCORDANCE WITH SUPPLEMENTAL SPECIFICATION 866, GROUND ANCHORS, 2017, ODOT.
6. TEMPORARY TIE-BACKS DO NOT REQUIRE CORROSION PROTECTION.
7. FILL THE VOID BETWEEN THE DRILL HOLE AND THE SHEATHING OF THE UNBOUNDED LENGTH WITH GROUT.
8. PAYMENT FOR SHEET PILING, TIE-BACKS, WALERS, EXPANSION ANCHORS, STEEL ANGLES, REMOVAL OF ALL COMPONENTS AFTER NO LONGER NECESSARY FOR SPECIFIC CONSTRUCTION PHASE, AND ALL OTHER ITEMS ASSOCIATED WITH TEMPORARY SHORING WILL BE INCLUDING IN THE CONTRACT LUMP SUM PRICE FOR "COFFERDAMS AND EXCAVATION BRACING, AS PER PLAN, STORMWATER DETENTION #3.
9. PROPOSED GROUND LINE REPRESENTS PROPOSED RAMP J CONSTRUCTION UPON DURING MOT PHASE 2. GROUND LINE SHALL BE CONSIDERED APPROXIMATE.

Preliminary Plans
For Reference Only

CALCULATED MJR
CHECKED RMW

TEMPORARY SHORING DETAILS - DETENTION BASIN 3

HAM-75-7.85

578
1047

J:\2011\0903\ODOT\HAM\77889\drainage\sheets\77889_DD001.dgn 5/22/2026 10:20:50 AM hbrendlinger

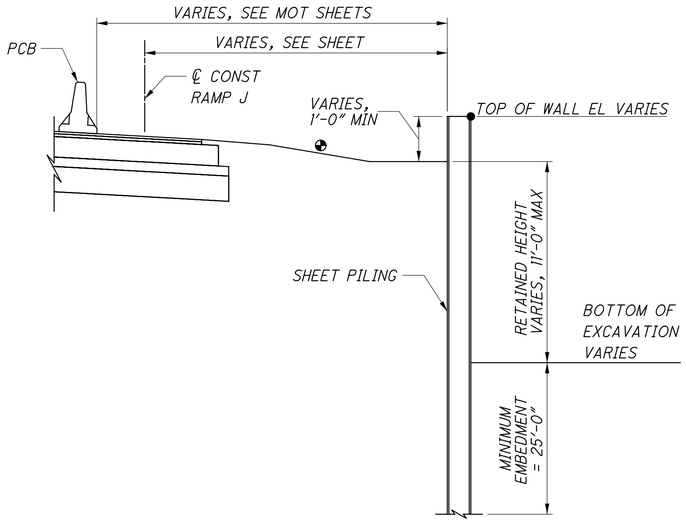

SECTION A-A

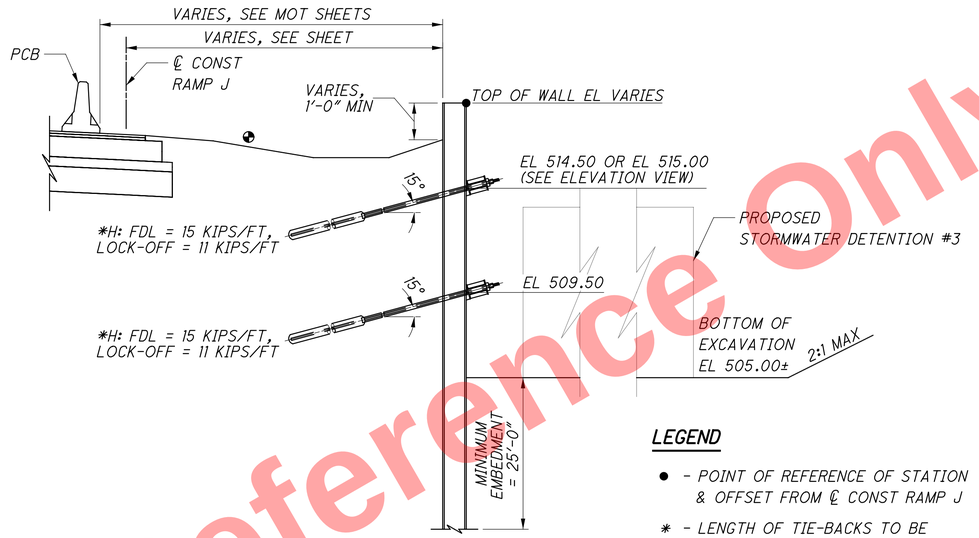

SECTION B-B

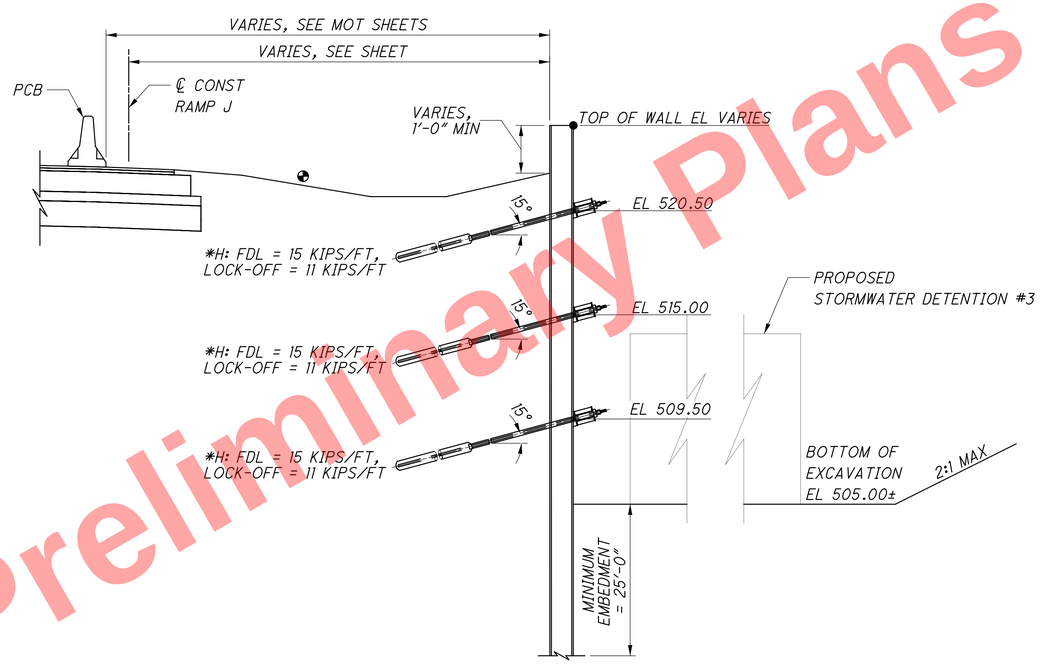

SECTION C-C

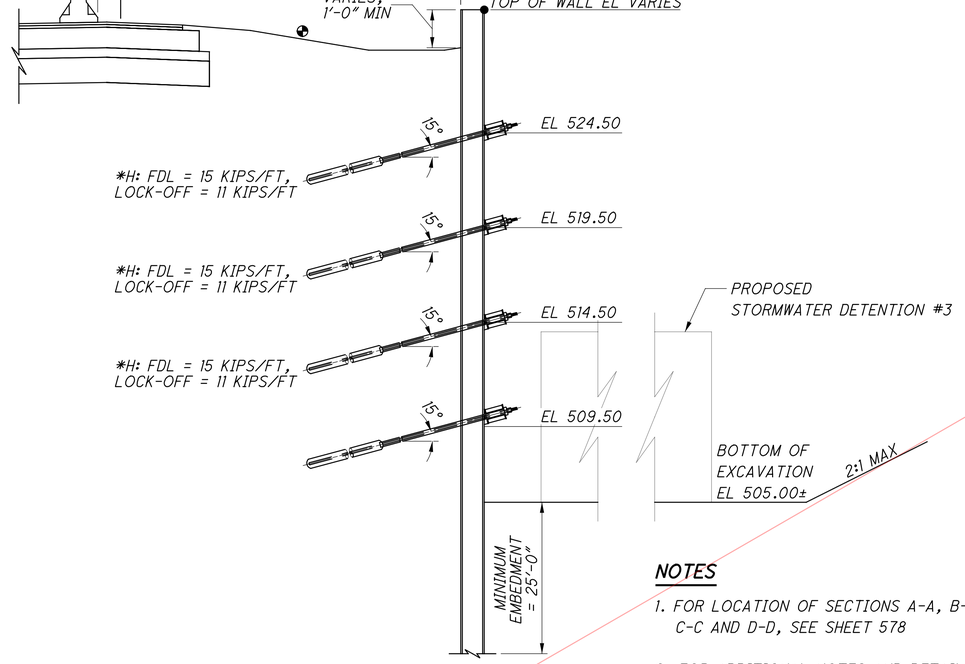

SECTION D-D

LEGEND

- ● - POINT OF REFERENCE OF STATION & OFFSET FROM ℄ CONST RAMP J
- ✱ - LENGTH OF TIE-BACKS TO BE DETERMINED BY CONTRACTOR.
- H - HORIZONTAL COMPONENT OF REQUIRED TIE-BACK DESIGN LOAD PER FOOT OF WALER.
- FDL - FACTORED DESIGN LOAD
- PCB - PORTABLE CONCRETE BARRIER
- ◒ - SEE CROSS SECTIONS FOR GRADING

NOTES

1. FOR LOCATION OF SECTIONS A-A, B-B, C-C AND D-D, SEE SHEET 578
2. FOR ADDITIONAL NOTES AND DETAILS, SEE SHEET 578 AND SHEET 577
3. FOR SITE PLAN, SEE SHEET 574

CALCULATED MJR
CHECKED RMW

TEMPORARY SHORING DETAILS - DETENTION BASIN 3

HAM-75-7.85

579
1047

Preliminary Plans - For Reference Only

J:\2011\0903\00DT\HAM\77889\drainage\sheets\77889_DD001.dgn 5/22/2026 10:20:51 AM hbrendlinger

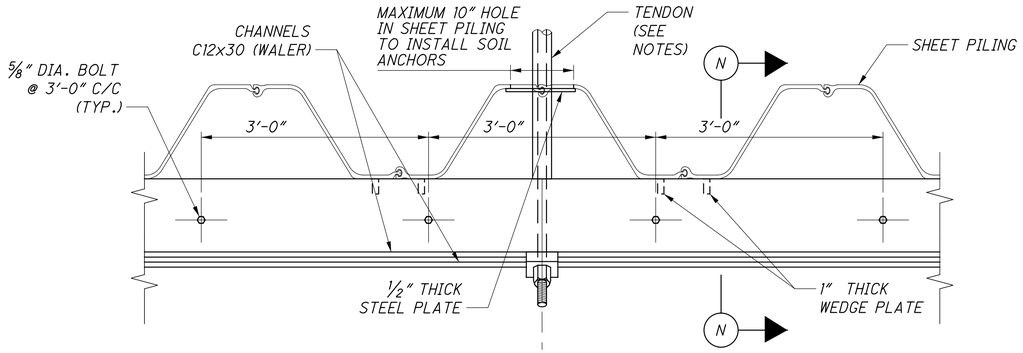

VIEW L-L

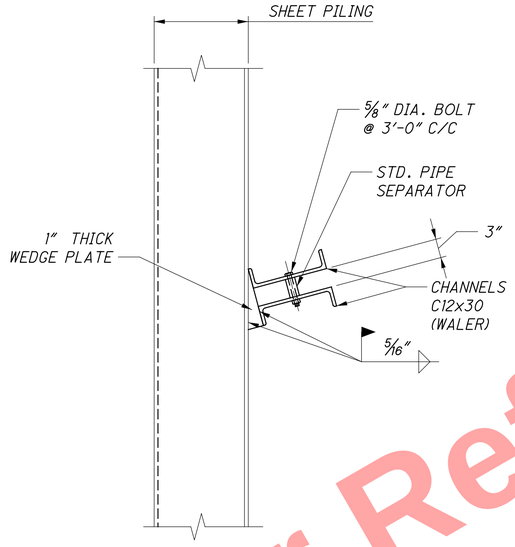

SECTION N-N

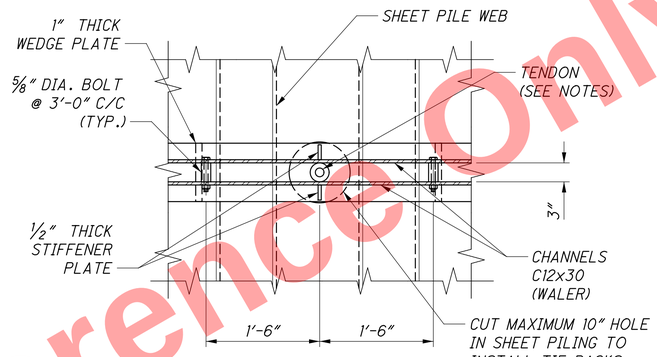

SECTION M-M

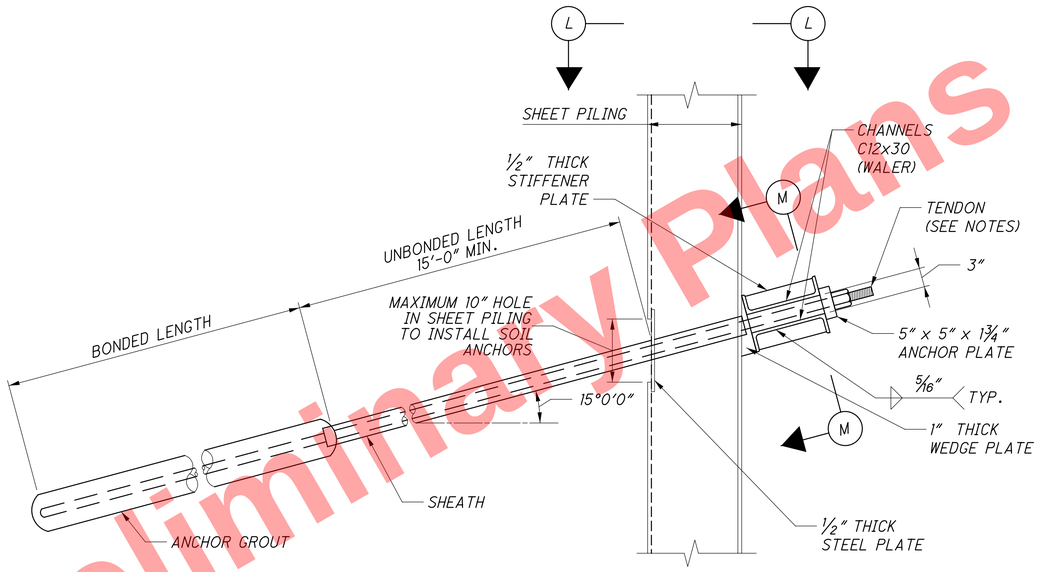

TYPICAL TIE-BACK DETAIL

NOTES

1. TENDON SHALL BE EITHER A 1 3/8" DIAMETER THREADED BAR (ASTM A722 GRADE 150) OR A LOW RELAXATION FOUR-STRAND (ASTM A416 GRADE 270) SEVEN-WIRE UNCOATED STRAND.
2. ALL STEEL SHALL BE GRADE 50. ALL BOLTS SHALL BE 5/8" DIA. HIGH STRENGTH BOLTS ASTM A325.
3. SEE GENERAL NOTES FOR ABBREVIATION LEGEND.
4. THE HOLES FOR THE ANCHORS WILL NOT BE CUT UNTIL AFTER DRIVING IS COMPLETE.
5. INSTALL AND TEST TIE-BACKS IN ACCORDANCE WITH SUPPLEMENTAL SPECIFICATION 866.

CALCULATED MJR
CHECKED RMW

TEMPORARY SHORNG DETAILS - DETENTION BASIN 3

HAM-75-7.85

580
1047

Preliminary Plans - For Reference Only

J:\20110903\ODOT\HAM\77889\drainage\sheets\77889_DD002.dgn 5/22/2026 10:20:51 AM hbrendlinger

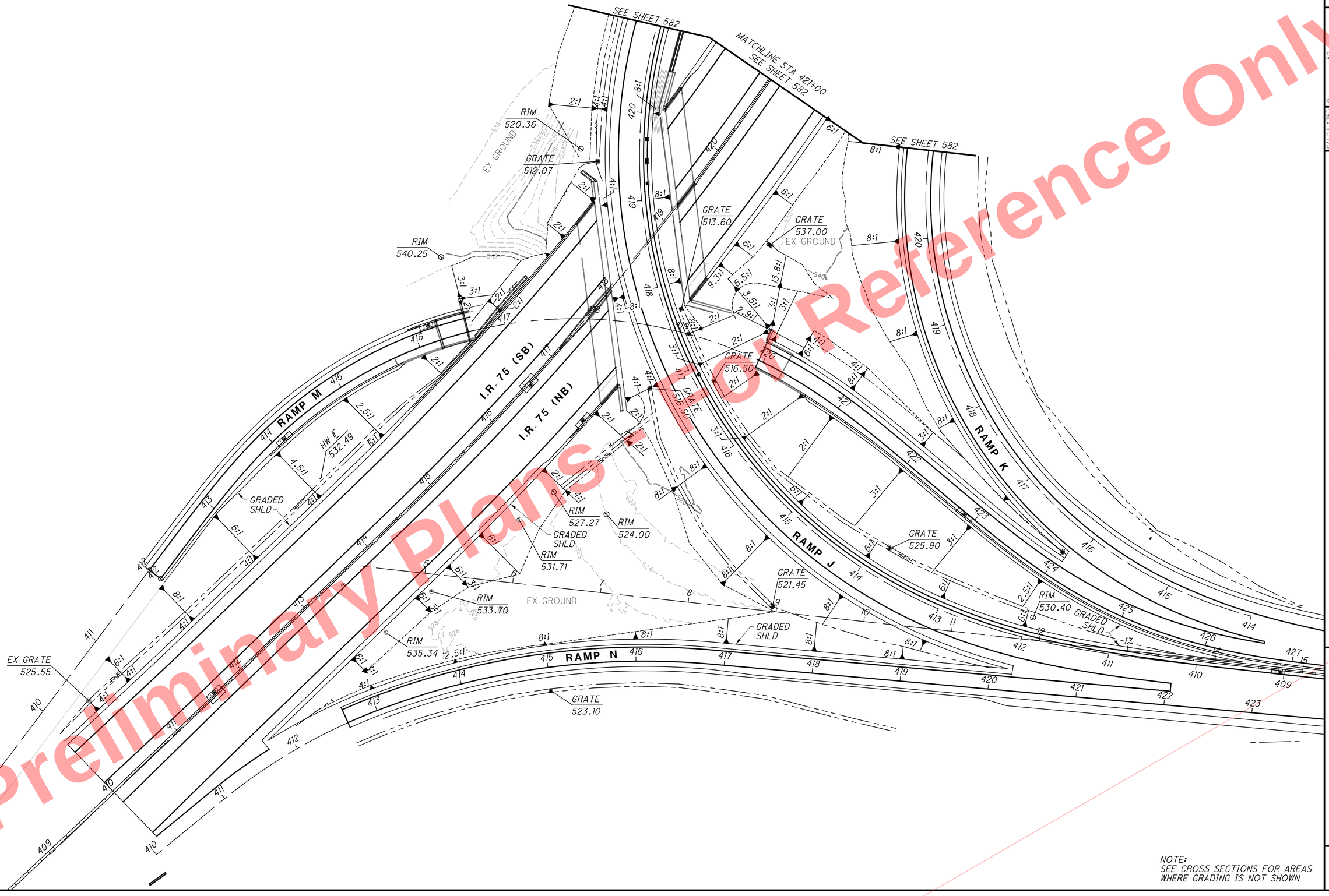

NOTE:
SEE CROSS SECTIONS FOR AREAS
WHERE GRADING IS NOT SHOWN

Preliminary Plans - For Reference Only

HORIZONTAL SCALE IN FEET
0 25 50 100

CALCULATED
CHECKED

GRADING DETAILS
NORWOOD LATERAL INTERCHANGE

HAM-75-7.85

J:\20110903\ODOT\HAM\77889\roadway\sheets\77889XG001.dgn 5/22/2026 10:20:52 AM hbrendlinger

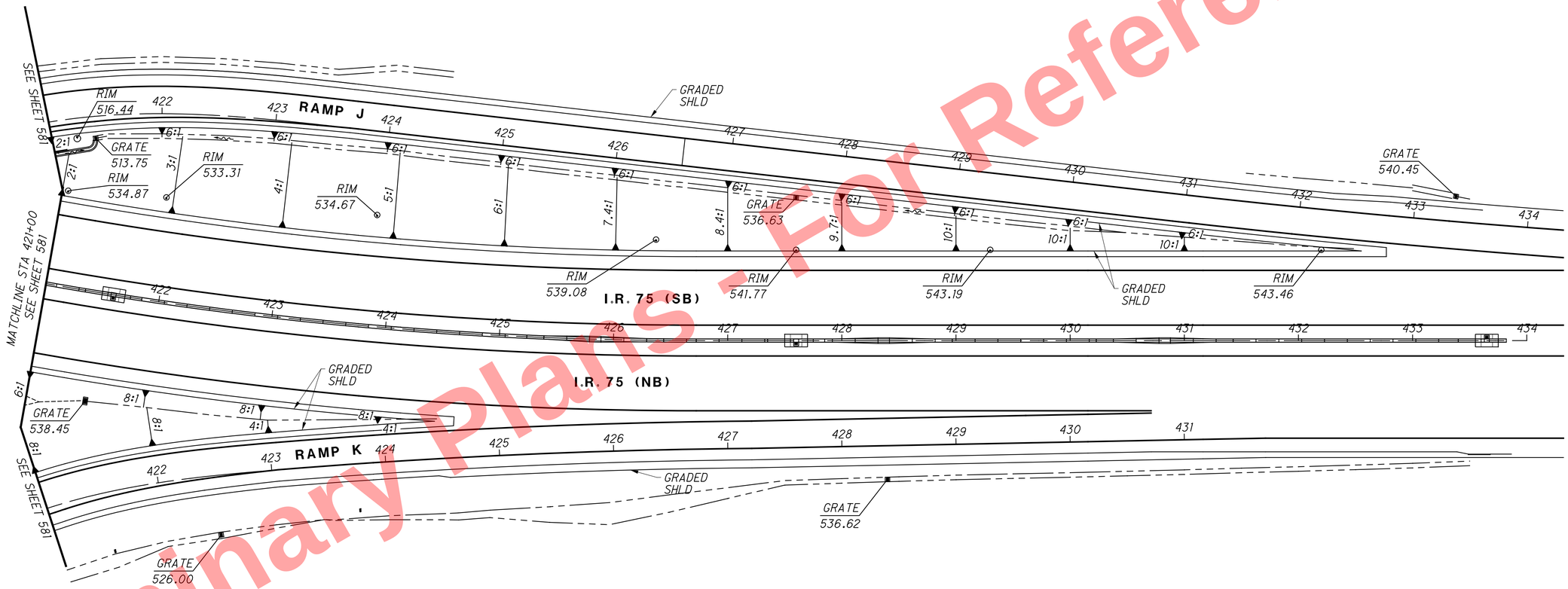

Preliminary Plans - For Reference Only

NOTE:
SEE CROSS SECTIONS FOR AREAS WHERE GRADING IS NOT SHOWN

HORIZONTAL SCALE IN FEET
0 25 50 100

CALCULATED | CHECKED

GRADING DETAILS
NORWOOD LATERAL INTERCHANGE

HAM-75-7.85

582
1047

J:\20110903\ODOT\HAM\77889\roadway\sheets\77889XG002.dgn 5/22/2026 10:20:54 AM hbrendlinger

Preliminary Plans - For Reference Only

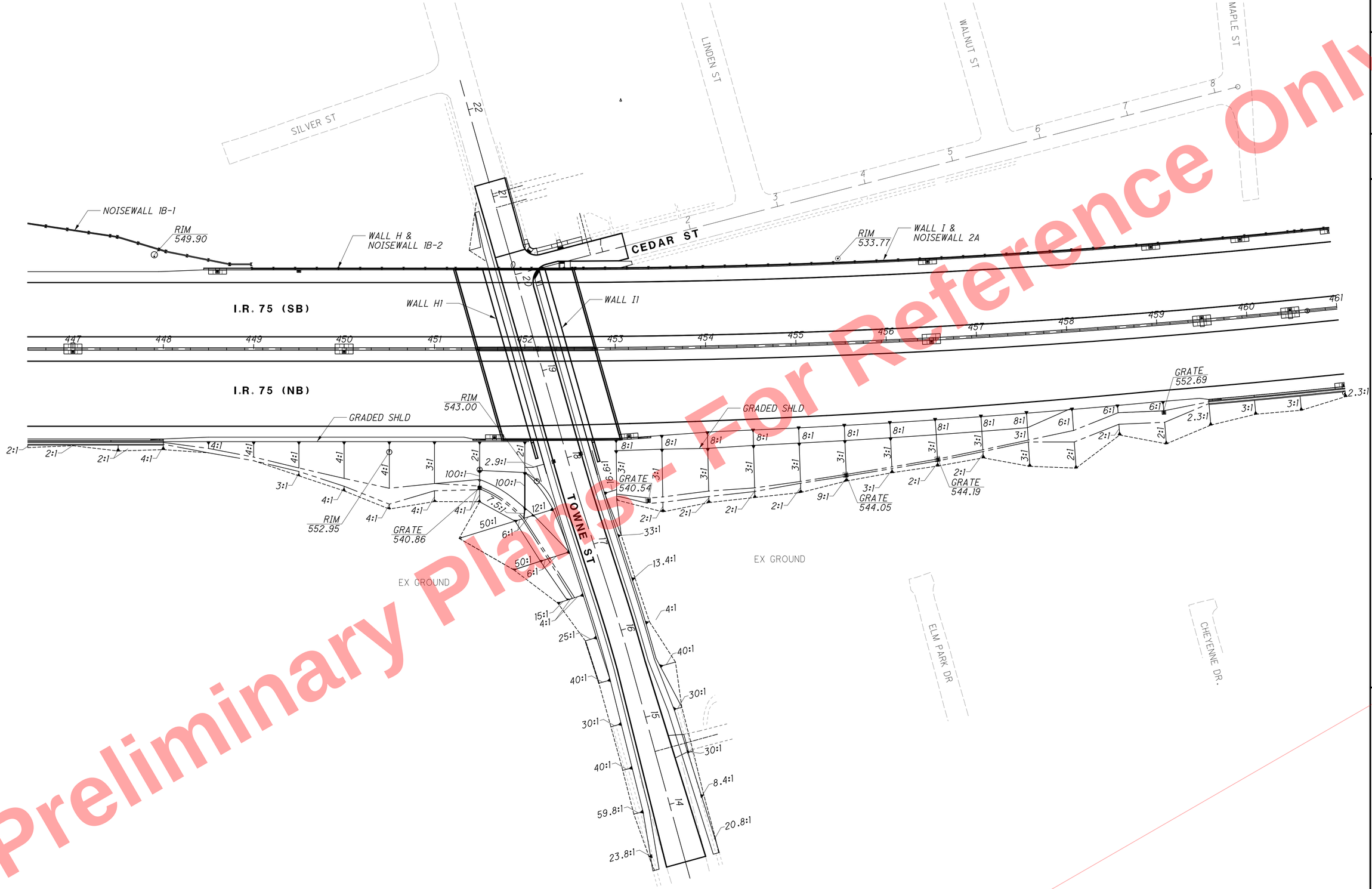

Preliminary Plans - For Reference Only

J:\20110903\ODOT\HAM\77889\roadway\sheets\77889XG003.dgn 5/22/2026 10:20:56 AM hbrendlinger

HORIZONTAL SCALE IN FEET
0 25 50 100

CALCULATED CFR
CHECKED SEK

GRADING DETAILS
TOWNE ST INTERCHANGE

HAM-75-7.85

583
1047

Preliminary Plans - For Reference Only

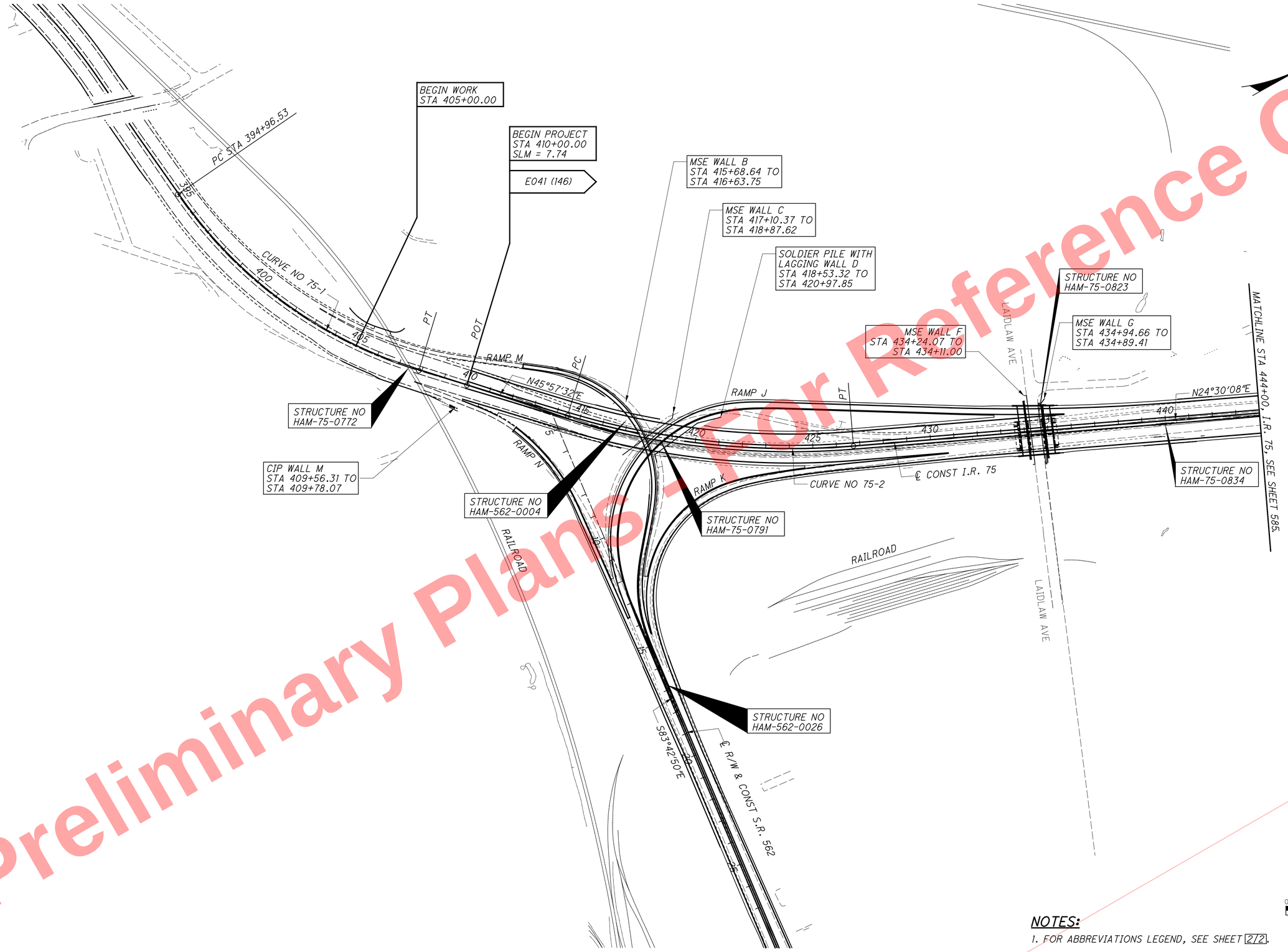

NOTES:

1. FOR ABBREVIATIONS LEGEND, SEE SHEET 272.

0 100 200 400
HORIZONTAL SCALE IN FEET

RESOURCE INTERNATIONAL INC.
8550 PRESIDENTIAL GATEWAY
COLUMBUS, OHIO 43231
(614) 823-4949

DESIGNED	DRAWN	REVIEWED	DATE
MMS	MMS	SSK	3-18-26
CHECKED	REVISED	STRUCTURE FILE NUMBER	
JWE			

RETAINING WALL SCHEMATIC PLAN 1 OF 2
STA 410+00 TO STA 444+00

HAM-75-7.85
PID No. 121447

1 / 2

584
1047

G:\projects\2010\B-10-020 HAM-75-7.85\77889\structures\WALL_00A\sheets\77889WB401.dgn 5/13/2026 2:04:01 PM meets

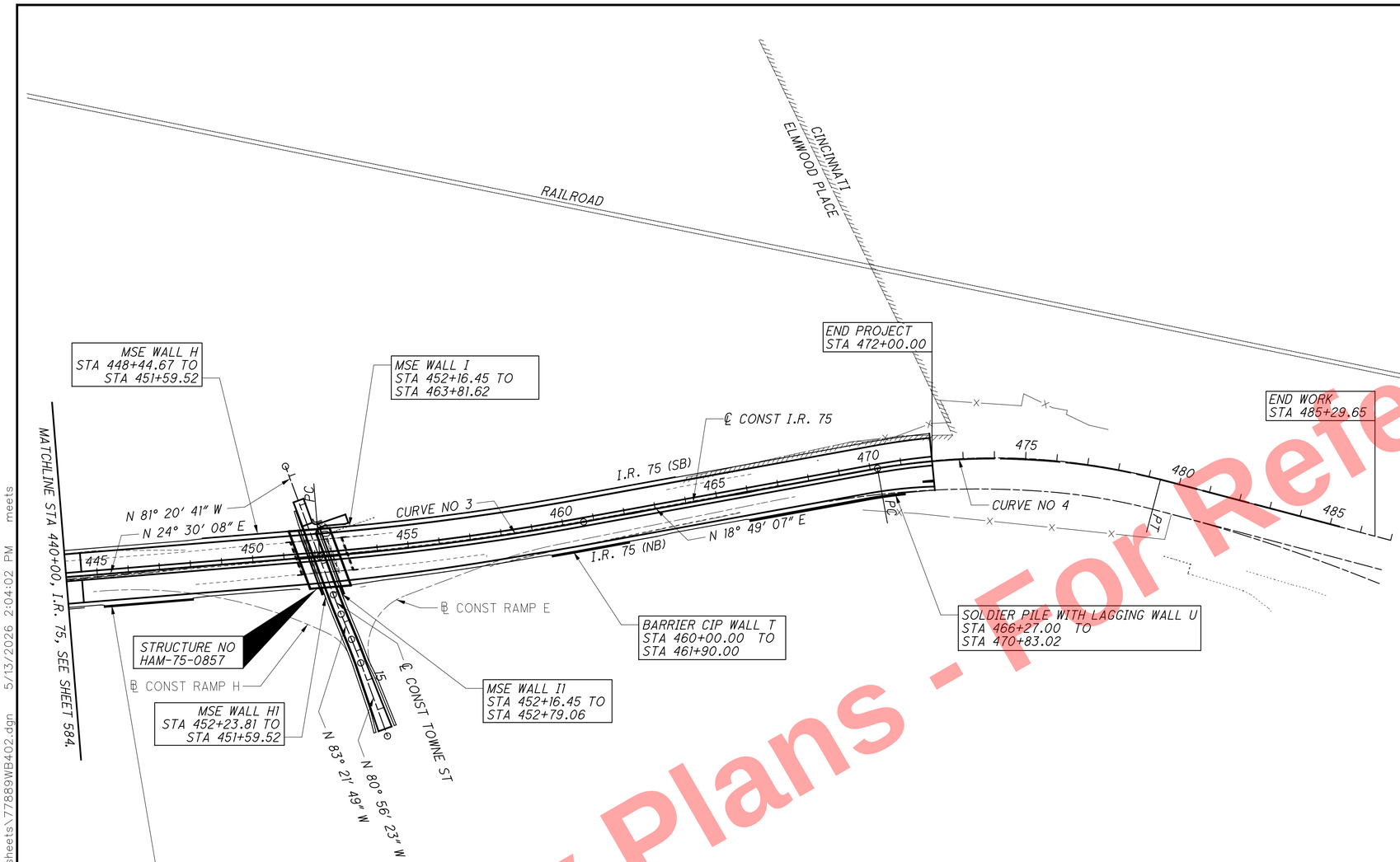

Preliminary Plans - For Reference Only

ABBREVIATIONS:

AVE = AVENUE
CONST = CONSTRUCTION
CIP = CAST IN PLACE
EOP = EDGE OF PAVEMENT
EX = EXISTING
MSE = MECHANICALLY STABILIZED EARTH
NO = NUMBER
I.R. 75 = INTERSTATE ROUTE 75
PROP = PROPOSED
NB = NORTHBOUND
SB = SOUTHBOUND
SLM = STRAIGHT LINE MILEAGE
ST = STREET
STA = STATION
TWP = TOWNSHIP

0 100 200 400
HORIZONTAL SCALE IN FEET

RESOURCE INTERNATIONAL INC.
8550 PRESIDENTIAL GATEWAY
COLUMBUS, OHIO 43231
(614) 823-4949

DESIGNED	DRAWN	REVIEWED	DATE
MMS	MMS	SSK	3-18-26
CHECKED	REVISED	STRUCTURE FILE NUMBER	
JWE			

RETAINING WALL SCHEMATIC PLAN 2 OF 2
STA 444+00 TO STA 472+00

HAM-75-7.85
PID No. 121447

2 / 2

585
1047

G:\projects\2010\B-10-020 HAM-75-7.85\77889\structures\WALL_00A\sheets\77889WB402.dgn 5/13/2026 2:04:02 PM meets

PROPOSED WORK
THE PROPOSED WORK CONSISTS OF BUILDING SOLDIER PILE WITH LAGGING RETAINING WALLS ALONG I.R. 75 AS FOLLOWS:
WALLS D (ANCHORED), S, AND U.

REFERENCE SHALL BE MADE TO SUPPLEMENTAL SPECIFICATION
866 DATED 4-21-17

REFERENCE SHALL BE MADE TO SUPPLEMENT
1083 DATED 1-20-17

DESIGN SPECIFICATIONS
THIS STRUCTURE CONFORMS TO "THE LRFD BRIDGE DESIGN SPECIFICATIONS" ADOPTED BY THE AMERICAN ASSOCIATION OF STATE HIGHWAY AND TRANSPORTATION OFFICIALS, 9TH EDITION, 2020, AND THE ODOT BRIDGE DESIGN MANUAL, 2020.

DESIGN DATA
CONCRETE CLASS QC1 - COMPRESSIVE STRENGTH 4000 PSI
REINFORCING STEEL - ASTM A615 OR A996 GRADE 60, MINIMUM YIELD STRENGTH 60,000 PSI
STRUCTURAL STEEL FOR SOLDIER PILES - ASTM A709 GRADE 50 YIELD STRENGTH 50,000 PSI

ITEM 503 - UNCLASSIFIED EXCAVATION, AS PER PLAN
THIS WORK CONSISTS OF EXCAVATION OF THE SOIL IN BETWEEN THE SOLDIER PILES TO PERMIT LAGGING INSTALLATION OR EMBANKMENT REQUIRED TO CREATE A DRILLING BENCH TO INSTALL SOLDIER PILES. EACH WALL IS TO BE CONSTRUCTED IN A TOP-DOWN MANNER. THEREFORE, EXCAVATION OF THE NEW WALL SHALL BE MINIMIZED UNTIL ALL SOLDIER PILES ARE INSTALLED. IT IS NOT ACCEPTABLE TO EXCAVATE MORE THAN 3 FEET OF EXISTING GRADE FOR INSTALLATION OF SOLDIER PILES. THE EXCAVATION SHALL BE PERFORMED IN ACCORDANCE WITH CMS 503, EXCEPT AS MODIFIED AND SHOWN ON THIS SHEET.

MAINTENANCE OF TRAFFIC
FOR MAINTENANCE OF TRAFFIC DETAILS, SEE THE ROADWAY PLANS.

ITEM 507 - STEEL PILES, MISC.: SOLDIER PILES HP12X53:
ITEM 507 - STEEL PILES, MISC.: SOLDIER PILES W18X86:
THIS WORK CONSISTS OF FURNISHING AND PLACING STEEL SOLDIER PILES INTO DRILLED HOLES AS WELL AS MONITORING PLUMBNESS. FURNISH SOLDIER PILES CONSISTING OF STRUCTURAL STEEL MEMBERS THAT MEET THE PLAN REQUIREMENTS AND CONFORM TO ASTM A709, GRADE 50. DO NOT FIELD WELD OR SPLICE STEEL SOLDIER PILES.

MEASUREMENT FOR PAYMENT WILL BE THE DISTANCE BETWEEN THE ENDS OF THE SOLDIER PILE. PAYMENT IS FULL COMPENSATION FOR FURNISHING AND PLACING THE SOLDIER PILES AND MONITORING THEIR PLUMBNESS UNTIL THE PLACEMENT OF THE CONCRETE FACING HAS BEGUN. THE DEPARTMENT WILL PAY FOR SOLDIER PILES AT THE CONTRACT UNIT PRICE BID PER FOOT FOR ITEM 507 STEEL PILES, MISC.: SOLDIER PILES.

ITEM 511 - CLASS QC1 CONCRETE, RETAINING/WINGWALL, NOT INCLUDING FOOTING, AS PER PLAN:
THE CUBIC YARD CONCRETE QUANTITY IS BASED ON BOTH THE STRUCTURAL THICKNESS OF THE WALL PLUS AN ADDITIONAL 2" AESTHETIC THICKNESS DUE TO THE FORMLINER. COST OF FORMLINERS FOR THE AESTHETIC TREATMENT SHALL BE INCLUDED IN THE PRICE BID PER CUBIC YARD FOR THIS ITEM. THE AESTHETIC TREATMENT SHALL BE AN "ASHLAR STONE", ARCHITECTURAL POLYMER 905. ALL WALLS (UNLESS SPECIFIED) SHALL HAVE ARCHITECTURAL POLYMERS 905, USING THE PATTERN OUTLINED PER SHEET 669/1047 . FINISH WITH A MINIMUM OF 1" AND A MAXIMUM OF 2" RELIEF. HORIZONTAL CONSTRUCTION JOINTS ARE PROHIBITED FOR THE CAST-IN-PLACE FACING FOR BOTH CANTILEVERED SOLDIER PILE WALLS AND ANCHORED WALLS.

ITEM 512 - SEALING OF CONCRETE SURFACES (EPOXY-URETHANE), AS PER PLAN
SEALING OF CONCRETE SURFACES (EPOXY-URETHANE) SHALL BE APPLIED TO ALL EXPOSED SURFACES OF THE CONCRETE FACING OF THE RETAINING WALL INCLUDING THE TOP, BACK SIDE OF WALL DOWN TO THE GUTTER OR TOE OF BARRIER, AND THE FRONT VERTICAL SIDE OF THE CONCRETE FROM TOP TO BOTTOM. THE FINISH COAT COLOR FOR THE RETAINING WALL SHALL BE LIGHT NEUTRAL MEETING FEDERAL COLOR STANDARD NO. 595B-17778. THE ADDITIONAL MATERIAL AND LABOR REQUIRED TO SEAL THE AESTHETIC TREATMENT FINISH WITH THE MINIMUM OF 1" AND MAXIMUM OF 2" RELIEF SHALL BE INCLUDED IN THE UNIT PRICE BID PER SQUARE YARD PER CMS 512.09.

ITEM 512 - TYPE 2 WATERPROOFING, AS PER PLAN
TYPE 2 WATERPROOFING SHALL BE ATTACHED TO THE WOOD LAGGING, 3 FEET WIDE FULL HEIGHT CENTERED AT ALL EXPANSION AND CONTRACTION JOINTS. TYPE 2 WATERPROOFING SHALL ALSO BE ATTACHED TO THE BACK OF THE JOINTS AND THE CONCRETE FACING ABOVE THE SOLDIER PILES & LAGGING.

ITEM 524 - DRILLED SHAFTS, 24" DIAMETER, ABOVE BEDROCK, AS PER PLAN (WALLS D, AND S)
ITEM 524 - DRILLED SHAFTS, 30" DIAMETER, ABOVE BEDROCK, AS PER PLAN (WALL U)
THIS WORK CONSISTS OF FURNISHING AND INSTALLING DRILLED SHAFTS FOR SOLDIER PILE AND LAGGING WALLS. THE DRILLED SHAFTS ARE REINFORCED WITH SOLDIER PILES INSTEAD OF REINFORCING STEEL CAGES. THE SOLDIER PILES EXTEND ABOVE THE TOP OF THE DRILLED SHAFT. FURNISH AND INSTALL THE DRILLED SHAFTS IN ACCORDANCE WITH CMS 524 EXCEPT AS MODIFIED AND SUPPLEMENTED BELOW.

EXCAVATE THE HOLE FOR THE DRILLED SHAFT WITHIN 3 INCHES OF THE PLAN LOCATION. THE DESIGN IS BASED ON A MINIMUM TIP ELEVATION AS NOTED IN THE TABLE ON SHEETS 17/25 & 23/25. IF FIELD CONDITIONS INDICATE GREATER DEPTHS, NOTIFY THE ENGINEER FOR FURTHER EVALUATION.

ALIGN THE SOLDIER PILE VERTICALLY WITHIN THE HOLE. PLACE THE SOLDIER PILE SO THAT THE FLANGES ARE PARALLEL TO THE CENTERLINE OF THE ROW OF DRILLED SHAFTS AND THE TOP IS AT THE PLAN ELEVATION. SUPPORT THE SOLDIER PILE SO THAT IT DOES NOT MOVE DURING CONCRETE PLACEMENT. DO NOT ALLOW THE VERTICAL ALIGNMENT OF THE SOLDIER PILE TO VARY BY MORE THAN 1/4" PER FOOT OF DEPTH. DO NOT ALLOW THE ORIENTATION OF THE FLANGES TO VARY BY MORE THAN 10 DEGREES.

USE CLASS QC1 CONCRETE ACCORDING TO CMS 511. PLACE CONCRETE TO THE ELEVATION OF THE BOTTOM OF THE LAGGING. THE CONTRACTOR MAY PLACE CONCRETE USING THE FREE FALL METHOD PROVIDED THE DEPTH OF WATER IS LESS THAN 6 INCHES AND THE CONCRETE FALLS WITHOUT STRIKING THE SIDES OF THE HOLE. POURING CONCRETE ALONG THE WEB OF THE SOLDIER PILE IS ACCEPTABLE.

CHECK THE POSITION, THE VERTICAL ALIGNMENT, AND ORIENTATION OF THE SOLDIER PILE IMMEDIATELY AFTER CONCRETE PLACEMENT. MAKE CORRECTIONS AS NECESSARY TO MEET THE ABOVE TOLERANCES.

FILL THE HOLE ABOVE THE BOTTOM OF THE LAGGING TO THE EXISTING GROUND SURFACE WITH LOW STRENGTH MORTAR BACKFILL (LSM) PER ITEM 613. REMOVE CONCRETE AND LSM AS EVEN WITH THE FRONT FACE OF THE SOLDIER PILE IN ORDER TO PLACE THE LAGGING.

THE DEPARTMENT WILL CONSIDER CONSTRUCTION OF THE DRILLED SHAFTS FOR THE INSTALLATION OF THE SOLDIER PILES UTILIZING CONTINUOUS FLIGHT AUGER (CFA) METHODS. USE OF CFA METHODS IS CONSIDERED AN ALTERNATIVE TO ITEM 524 - DRILLED SHAFTS, 24" DIAMETER, ABOVE BEDROCK, AS PER PLAN OR ITEM 524 - DRILLED SHAFTS, 30" DIAMETER, ABOVE BEDROCK, AS PER PLAN. THE CONTRACTOR SHALL SUBMIT THE CFA INSTALLATION PLAN IN LIEU OF THE DRILLED SHAFT INSTALLATION. THE CFA INSTALLATION PLAN SHALL INCLUDE THE PROVISIONS OUTLINED IN ITEM 524. THE CONTINUOUS FLIGHT AUGERS MUST BE HOLLOW, AND CONTINUOUS TO INDUCE PLACEMENT OF THE GROUT/LSM UNDER PRESSURE AT THE BOTTOM OF THE DRILLED EXCAVATION. ONCE THE DESIGN SHAFT TIP ELEVATION IS REACHED, PLACE THE GROUT/LSM TO THE ELEVATIONS SHOWN IN THE PROJECT PLANS BY PUMPING. A MINIMUM OF 10 FT. OF PRESSURE HEAD MUST BE MAINTAINED DURING CASTING OF THE SHAFT. PROVIDE A CALIBRATED, AUTOMATED INLINE MONITORING SYSTEM TO DOCUMENT THE QUANTITY OF GROUT/LSM PLACED IN THE DRILLED EXCAVATION. SUBMIT THE FLOWMETER DOCUMENTATION FOR EACH DRILLED SHAFT TO THE ENGINEER THE DAY AFTER SHAFT CASTING. IMMEDIATELY RE-DRILL ANY SHAFT (DO NOT PLACE SOLDIER BEAM) IN WHICH THE AMOUNT OF GROUT/LSM UTILIZED IS LESS THAN THE THEORETICAL VOLUME.

PROVIDE PROOF OF INLINE FLOWMETER CALIBRATION WITH THE CFA INSTALLATION PLAN. THE INLINE FLOW METER MUST HAVE BEEN CALIBRATED BY AN INDEPENDENT THIRD PARTY WITHIN 12 MONTHS OF THE CFA CONSTRUCTION DATE. THE COST OF THE INLINE MONITORING SYSTEM IS INCIDENTAL TO THE COST OF THE DRILLED SHAFT. NO ADDITIONAL COMPENSATION WILL BE PERMITTED FOR SHAFTS RE-DRILLED WHEN THE INLINE FLOWMETER INDICATES THE INITIAL GROUT/LSM VOLUME WAS LESS THAN THE THEORETICAL VOLUME.

WHEN UTILIZING A CFA INSTALLATION METHOD, PROVIDE TESTING OF THE GROUT AND LEAN MIX SAMPLES BY AN INDEPENDENT TESTING LAB. QUALITY CONTROL CUBES OR 3"X6" (OR LARGER) CYLINDERS ARE ACCEPTABLE. THE DEPARTMENT WILL OBTAIN 3"X6" CYLINDERS FOR EVERY 5TH SET OF CUBES OR CYLINDERS AS QUALITY ASSURANCE SAMPLES. THE COST FOR PROVIDING CUBE SAMPLES AND TESTING IS INCIDENTAL TO THE DRILLED SHAFT COST.

THE CONTRACTOR PROPOSING TO UTILIZE CFA METHODS OF DRILLED SHAFT INSTALLATION MUST BE ODOT PREQUALIFIED AND HAVE DEMONSTRATED 5 PREVIOUS PROJECTS IN WHICH CONTINUOUS FLIGHT AUGERS WERE SUCCESSFULLY UTILIZED FOR SOLDIER PILE INSTALLATION. INCLUDE THE PREVIOUS PROJECT INFORMATION, LOCATION, YEAR AND REFERENCE CONTACT WITH THE CFA INSTALLATION PLAN.

MEASUREMENT FOR PAYMENT FOR DRILLED SHAFTS ABOVE BEDROCK, AS PER PLAN WILL BE LIMITED TO THE ACTUAL DRILLED DISTANCE BETWEEN THE GROUND SURFACE AT THE BOTTOM OF THE DRILL BENCH AND THE MINIMUM TIP ELEVATION, AS DETERMINED BY THE ENGINEER. PAYMENT IS FULL COMPENSATION FOR DRILLING THE HOLES, CONSTRUCTING THE DRILLED SHAFTS, SUPPORTING THE SOLDIER PILES, FURNISHING AND PLACING CONCRETE AND LSM, AND REMOVAL OF CONCRETE OR LSM FROM AROUND THE SOLDIER PILE AS NECESSARY TO PLACE LAGGING. THE DEPARTMENT WILL PAY FOR ACCEPTED QUANTITIES AT THE CONTRACT UNIT PRICE BID PER FOOT FOR ITEM 524 - DRILLED SHAFTS, 24" DIAMETER, ABOVE BEDROCK, AS PER PLAN OR ITEM 524 - DRILLED SHAFTS, 30" DIAMETER, ABOVER BEDROCK, AS PER PLAN.

Preliminary plans - For Reference Only

G:\projects\2010\B-10-020 HAM-75-7.85\77889\structures\sheets\Split Phase 1\77889_00DWN401.dgn 5/13/2026 2:04:03 PM meets

RESOURCE INTERNATIONAL INC.
8550 PRESIDENTIAL GATEWAY
COLUMBUS, OHIO 43231
(614) 823-4949

DESIGNED MMS | DRAWN MMS | REVIEWED SSK | DATE 3-18-26
CHECKED JWE | REVISED | STRUCTURE FILE NUMBER

RETAINING WALL GENERAL NOTES
SOLDIER PILE WITH LAGGING RETAINING WALLS D (ANCHORED), S, AND U

HAM-75-7.85
PID No. 77889

ITEM SPECIAL - RETAINING WALL: TIMBER LAGGING:
THIS ITEM CONSISTS OF FURNISHING AND INSTALLING UNTREATED HARDWOOD LAGGING TO SERVE AS TEMPORARY LAGGING FOR THE SOLDIER PILE WALL. THE LAGGING SHALL CONSIST OF HARDWOOD TIMBER WITH NOMINAL 3" X 8" DIMENSIONS. LAGGING SHALL BE PLACED IN A TOP DOWN MANNER AS EXCAVATION PROCEEDS DOWNWARD. AT NO TIME SHOULD MORE THAN 3 FT. OF UNSUPPORTED EXCAVATION BE PERMITTED. BACKFILL ANY VOID CREATED BETWEEN THE WOOD LAGGING AND EXCAVATED FACE WITH NO. 57 CRUSHED CARBONATE STONE. REDUCE THE UNSUPPORTED HEIGHT AS NECESSARY TO PREVENT CAVING AND SLOUGHING OF THE SOILS BETWEEN THE SOLDIER PILES. PROVIDE 1/4" TO 7/8" HORIZONTAL JOINT SPACING BETWEEN THE LAGGING BOARDS TO PERMIT DRAINAGE.

CONNECT LAGGING TO SOLDIER PILES USING THREADED STUD SHEAR CONNECTORS, LAGGING WASHERS, AND NUTS PROVIDED AND INSTALLED PER CMS 513. LAGGING PLATES AND NUTS SHALL BE ASTM A709 GRADE 36 YIELD STRENGTH 36,000 PSI OR BETTER. THREADED STUDS SHALL BE ASTM F1554 OR BETTER.

THE DEPARTMENT WILL MEASURE THE TEMPORARY HARDWOOD LAGGING BY THE NUMBER OF SQUARE FEET AND WILL DETERMINE THE AREA FROM PLAN DIMENSIONS USING A LENGTH MEASURED ALONG A HORIZONTAL LINE ALONG THE CENTERLINE OF THE SOLDIER PILES AND A HEIGHT FROM THE BOTTOM OF THE LAGGING TO THE TOP. PAYMENT IS FULL COMPENSATION FOR FURNISHING AND PLACING ALL MATERIALS AND INCIDENTALS NECESSARY TO COMPLETE THE WORK. THE DEPARTMENT WILL PAY FOR ACCEPTED QUANTITIES AT THE CONTRACT UNIT PRICE BID PER SQUARE FOOT FOR ITEM SPECIAL - RETAINING WALL: TIMBER LAGGING.

ABBREVIATIONS:

C/C - CENTER TO CENTER
CJ - CONSTRUCTION JOINT
CLR - CLR
CONST - CONSTRUCTION
DIA - DIAMETER
EF - EACH FACE
ELEV - ELEVATION
EOP - EDGE OF PAVEMENT
EX - EXISTING
FF - FAR FACE
I.R. 75 - INTERSTATE ROUTE 75
INC - INCREMENT
LT - LEFT
LSM - LOW STRENGTH MORTAR
MAX - MAXIMUM
MIN - MINIMUM
NB - NORTH BOUND
NF - NEAR FACE
PEJF - PREFORMED EXPANSION JOINT FILLER
PERF CPP - PERFORATED CORRUGATED PLASTIC PIPE
PROP - PROPOSED
RT - RIGHT
SER - SERIES
SPA - SPACING
ST - STRAIGHT
STA - STATION
TYP - TYPICAL

Preliminary Plans - For Reference Only

G:\projects\2010\B-10-020 HAM-75-7.85\77889\structures\sheets\Split Phase 1\77889_00DWN402.dgn 5/13/2026 2:04:03 PM meets

RESOURCE INTERNATIONAL INC.
8550 PRESIDENTIAL GATEWAY
COLUMBUS, OHIO 43231
(614) 823-4949

DESIGNED	DRAWN	REVIEWED	DATE
MMS	MMS	SSK	3-18-26
CHECKED	REVISED	STRUCTURE FILE NUMBER	
JWE			

RETAINING WALL GENERAL NOTES
SOLDIER PILE WITH LAGGING WALLS D (ANCHORED), S, AND U

HAM-75-7.85
PID No. 77889

ESTIMATED QUANTITIES									AS PER PLAN REFERENCE SHEET
WALL D	WALL S	WALL U	ITEM	ITEM EXT.	PARTICIPATION 02/IMS/03	TOTAL	UNIT	DESCRIPTION	
LUMP	LUMP	LUMP	503	21301	LUMP	LUMP		UNCLASSIFIED EXCAVATION, AS PER PLAN	1 / 25
1776	553		507	00400	2329	2329	FT	STEEL PILES, MISC.: SOLDIER PILES HP12X53	1 / 25
		1779	507	00400	1779	1779	FT	STEEL PILES, MISC.: SOLDIER PILES W18X86	1 / 25
25419	5514	19557	509	10000	50490	50490	LB	EPOXY COATED REINFORCING STEEL	
171	80	239	511	46011	490	490	CU YD	CLASS QC1 CONCRETE, RETAINING/WINGWALL, NOT INCLUDING FOOTING, AS PER PLAN	1 / 25
511	103	398	512	10101	1012	1012	SQ YD	SEALING OF CONCRETE SURFACES (EPOXY URETHANE), AS PER PLAN	1 / 25
47	21	68	512	33001	136	136	SQ YD	TYPE 2 WATERPROOFING, AS PER PLAN	1 / 25
43	777	204	516	13600	1024	1024	SQ FT	1" PREFORMED EXPANSION JOINT FILLER	
494	184	561	518	20000	1239	1239	SQ YD	PREFABRICATED GEOCOMPOSITE DRAIN	
100	48	108	518	39900	256	256	FT	4" NON-PERFORATED CORRUGATED PLASTIC PIPE, INCLUDING SPECIALS	
1882	596		524	94503	2478	2478	FT	DRILLED SHAFTS, 24" DIAMETER ABOVE BEDROCK, AS PER PLAN	1 / 25
		2234	524	94603	2234	2234	FT	DRILLED SHAFTS, 30" DIAMETER ABOVE BEDROCK, AS PER PLAN	1 / 25
5152	1545	4802	SPECIAL	530E51020	11499	11499	SQ FT	SPECIAL - RETAINING WALL.: TIMBER LAGGING	2 / 25
77			601	21000	77	77	SQ YD	CONCRETE SLOPE PROTECTION	
16	286	505	601	37500	807	807	FT	PAVED GUTTER, TYPE 1-2	
379			611	01100	379	379	FT	6" CONDUIT, TYPE C	
3			866	00100	3	3	EACH	GROUND ANCHOR, 30 KIP MAX TEST LOAD	
39			866	00100	39	39	EACH	GROUND ANCHOR, 63 KIP MAX TEST LOAD	
39			866	00100	39	39	EACH	GROUND ANCHOR, 89 KIP MAX TEST LOAD	
LUMP			866	00300	LUMP	LUMP		INVESTIGATIVE ANCHOR PULLOUT TESTS	
5			866	00400	5	5	EACH	PERFORMANCE TEST	
2			866	00500	2	2	EACH	EXTENDED CREEP TEST	

Preliminary Plans - For Reference Only

NOTE:

1. FOR ABBREVIATIONS LEGEND, SEE SHEET 2/25

RESOURCE INTERNATIONAL INC.
6550 PRESIDENTIAL GATEWAY
COLUMBUS, OHIO 43231
(614) 823-4949

DESIGNED MMS | DRAWN MMS | REVIEWED SSK | DATE 3-18-26
CHECKED JWE | REVISED | STRUCTURE FILE NUMBER

ESTIMATED QUANTITIES
SOLDIER PILE WITH LAGGING WALLS D (ANCHORED), S, AND U

HAM-75-7.85
PID No. 77889

3 / 25

588
1047

G:\projects\2010\B-10-020 HAM-75-7.85\77889\structures\sheets\Split Phase 1\77889_00DWQ401.dgn 5/13/2026 2:04:03 PM meets

\\cmhdata01\project01\20110903\ODOT\HAM\77889\structures\WALL_00D\sheets\77889_00DWP001.dgn 5/22/2026 10:21:02 AM hbrendlinger

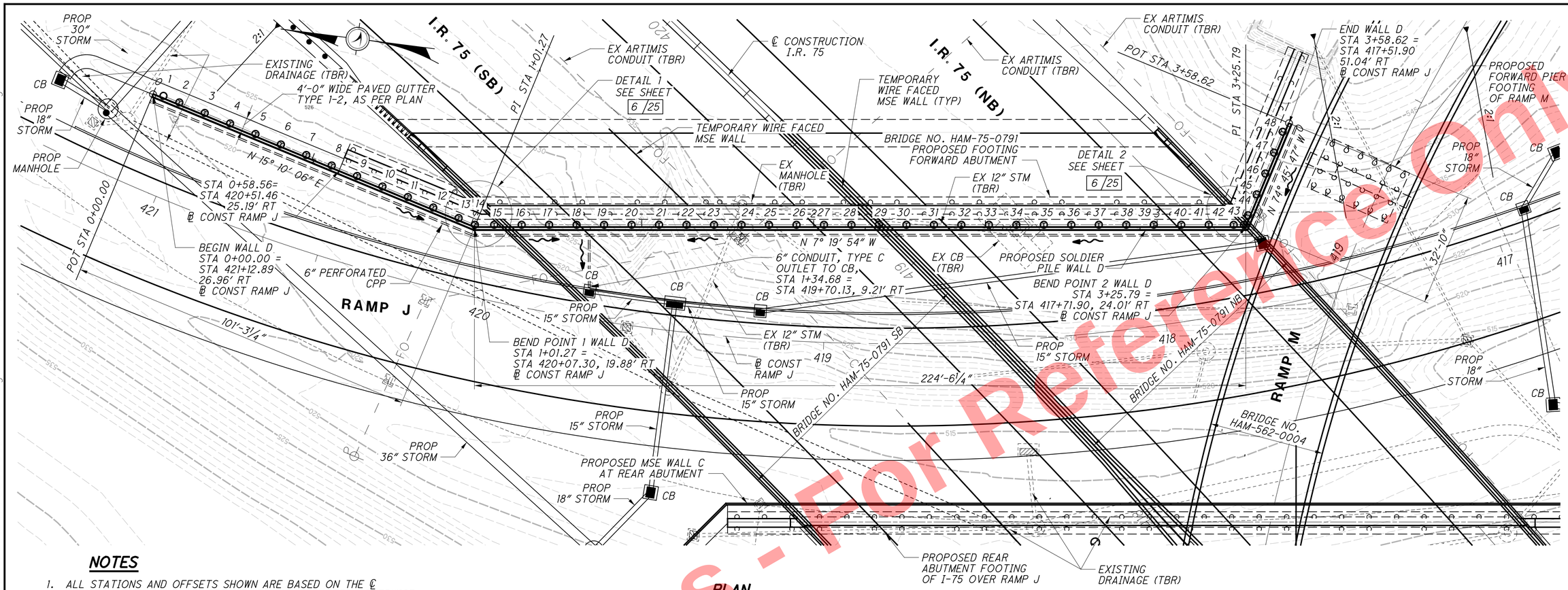

NOTES

1. ALL STATIONS AND OFFSETS SHOWN ARE BASED ON THE ℄ CONSTRUCTION RAMP J UNDER I.R. 75 UNLESS NOTED OTHERWISE.
2. SEE SHEET 2/25 FOR ABBREVIATION LEGEND.
3. ALL STATIONS/OFFSETS MEASURED ABOUT ℄ WALL D.

PLAN

AT FORWARD ABUTMENT OF BRIDGE NO. HAM-75-0791 OVER RAMP J

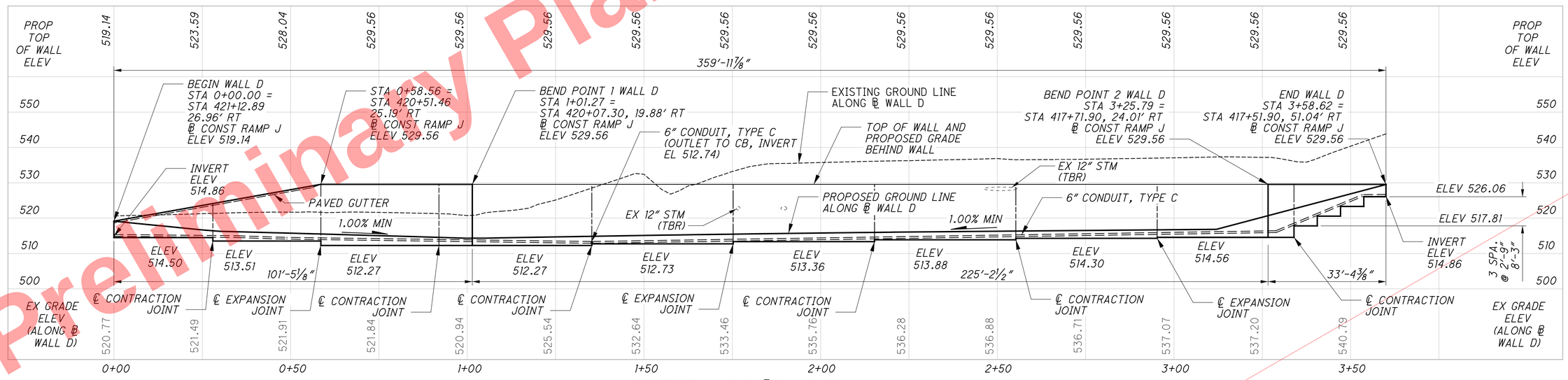

PROFILE ALONG ℄ WALL D

Preliminary Plans - Not for Reference Only

DESIGN AGENCY
EMH&T
Engineers • Surveyors • Planners • Scientists
5500 New Albany Road, Columbus, Ohio 43054
Phone: 614.775.4500 www.emht.com

DESIGNED	DRAWN	REVIEWED	DATE
RJE	GB	CAS	5-22-26
CHECKED	REVISED	STRUCTURE FILE NUMBER	
RMW	-		

SITE PLAN
SOLDIER PILE WALL D - ALONG EAST EDGE OF RAMP J

HAM-75-7.85
PID No. 121447

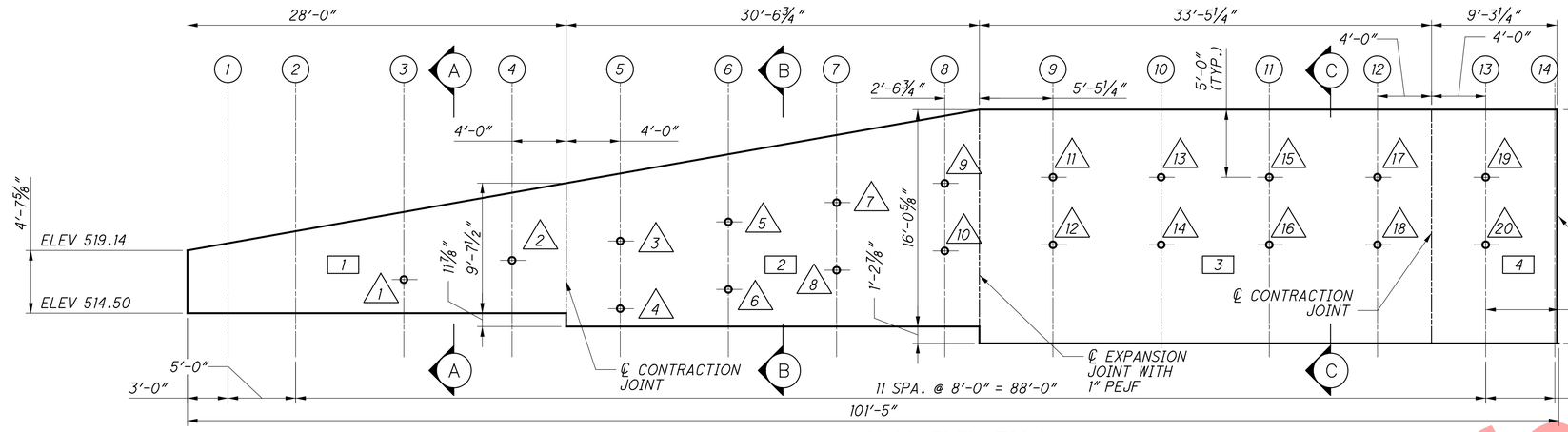

WALL ELEVATION

(FROM SOLDIER PILE NO. 1 THRU. NO. 14)

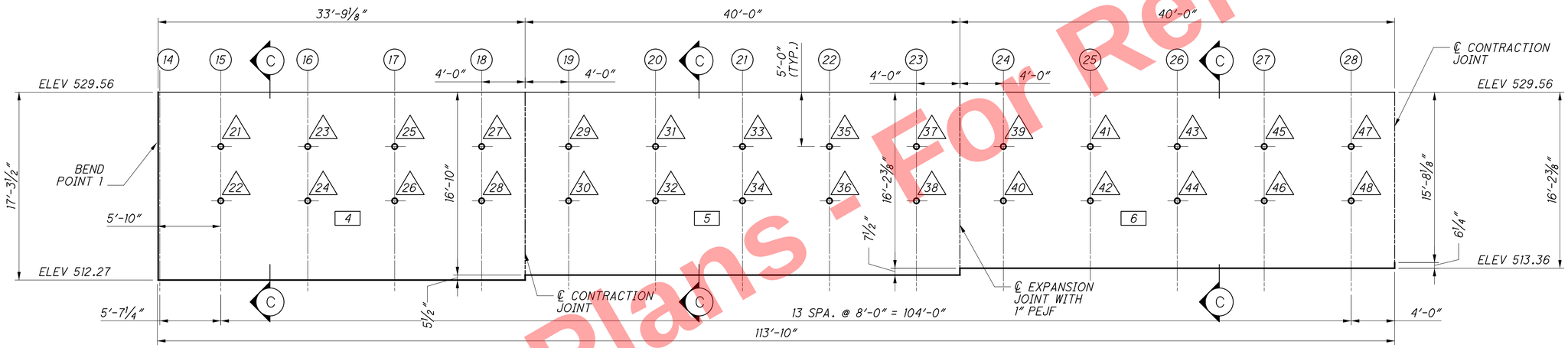

WALL ELEVATION

(FROM SOLDIER PILE NO. 14 THRU. NO. 28)

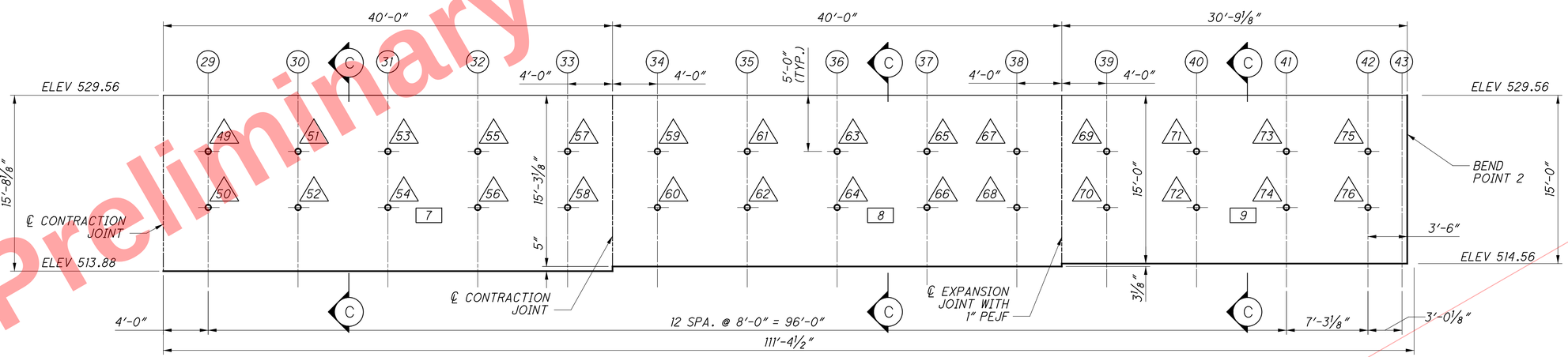

WALL ELEVATION

(FROM SOLDIER PILE NO. 29 THRU. NO. 43)

NOTES

1. FOR SECTION A-A AND SECTION B-B SEE SHEET 7 /25, AND FOR SECTION C-C AND D-D SEE SHEET 8 /25.
2. EMBANKMENT REQUIRED TO BE PLACED ON THE BACK SIDE OF THE PROPOSED WALL SHALL BE PERFORMED PRIOR TO INSTALLATION OF THE DRILLED SHAFTS. EMBANKMENT SHALL BE PLACED TO THE FINAL PROPOSED SURFACE ELEVATIONS BEHIND THE BACK OF PROPOSED WALL. DRILLED SHAFTS AND SOLDIER PILES SHALL BE INSTALLED DURING THE CORRESPONDING HAM-75-0791 BRIDGE CONSTRUCTION PHASE. ALL TIEBACKS, LAGGING TIMBERS AND CONCRETE FACING WALLS SHALL BE INSTALLED CONCURRENTLY WITH THE CONSTRUCTION OF RAMP J.
3. PILES 1 THROUGH 23 SHALL BE INSTALLED DURING PHASE 1 CONSTRUCTION. PILES 24 THROUGH 29 SHALL BE INSTALLED DURING PHASE 2 CONSTRUCTION. PILES 30 THROUGH 48 SHALL BE INSTALLED DURING PHASE 3 CONSTRUCTION.
4. ALL DIMENSIONS ARE MEASURED ALONG ℄ WALL D.
5. SEE SHEET 2 /25 FOR ABBREVIATION LEGEND.

LEGEND

- # = WALL PANEL NUMBER
- (#) = DRILLED SHAFT NUMBER
- = ANCHOR
- ## = ANCHOR NUMBER

Preliminary Plans - For Reference Only

DESIGN AGENCY EMH&T

DESIGNED	DRAWN	REVIEWED	DATE
RJE	GB	CAS	5-22-26
CHECKED	REVISED	STRUCTURE FILE NUMBER	
RMW	-		

ELEVATION
SOLDIER PILE WALL D - ALONG EAST EDGE OF RAMP J

HAM-75-7.85
PID No. 121447

5 / 25

590
1047

\\cmhdata01\projects01\20110903\ODOT\HAM 77889 structures\WALL_00D\sheets\77889_00DWD001.dgn 5/22/2026 10:21:03 AM hbrendlinger

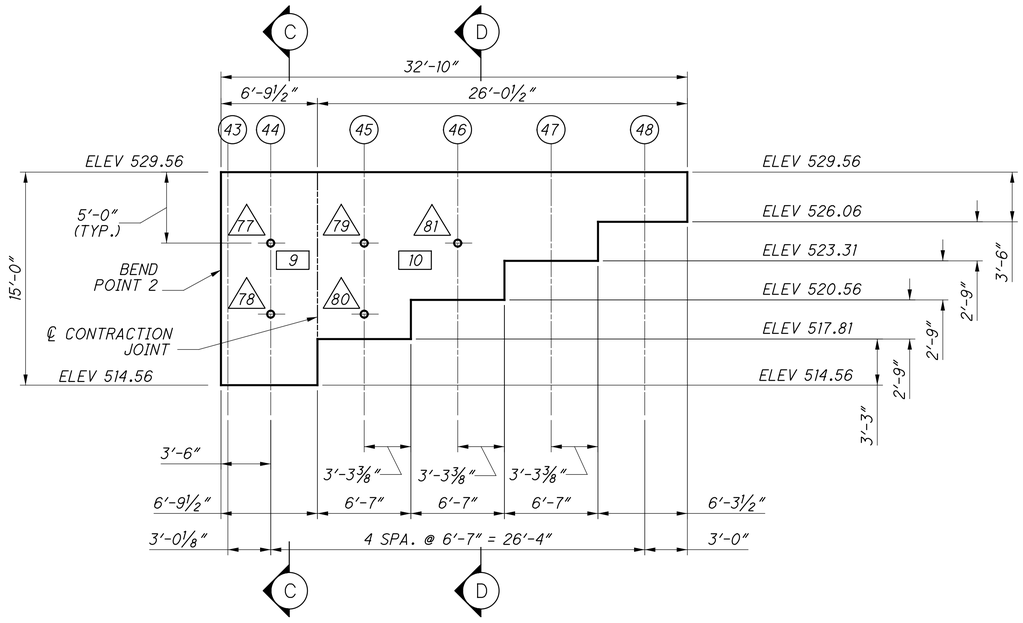

WALL ELEVATION

(FROM SOLDIER PILE NO. 43 THRU. NO. 48)

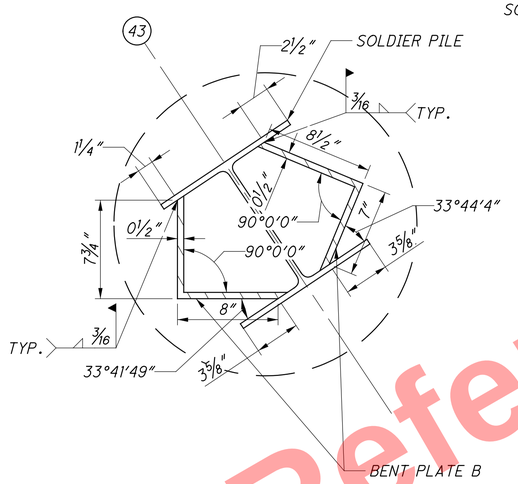

DETAIL 2

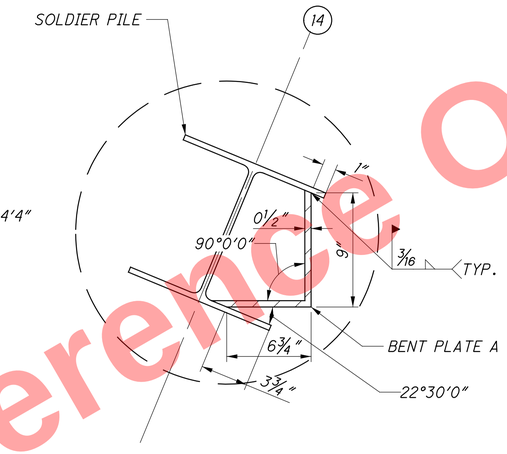

DETAIL 1

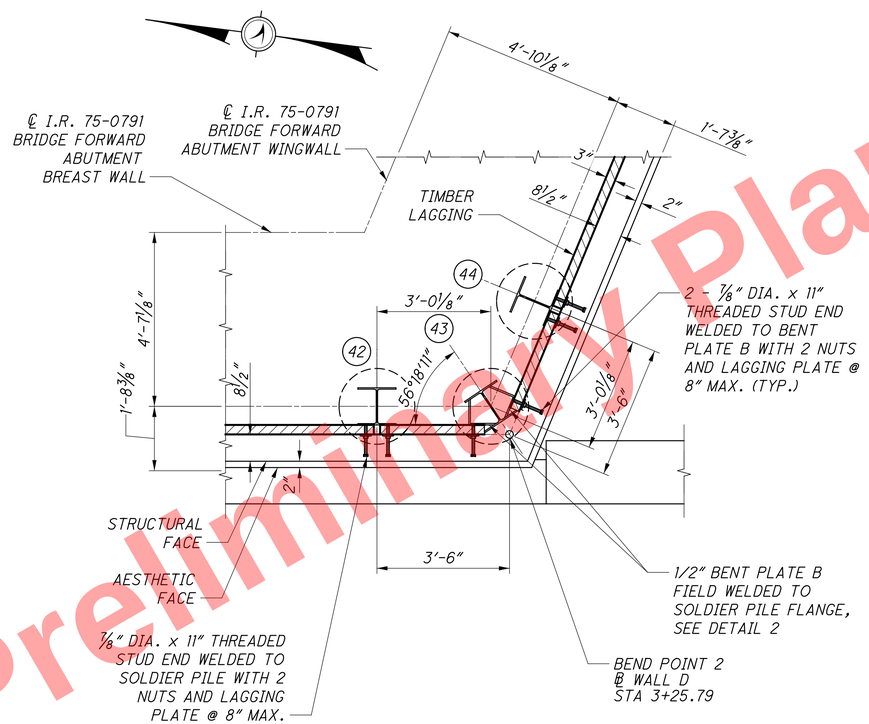

DETAIL 2

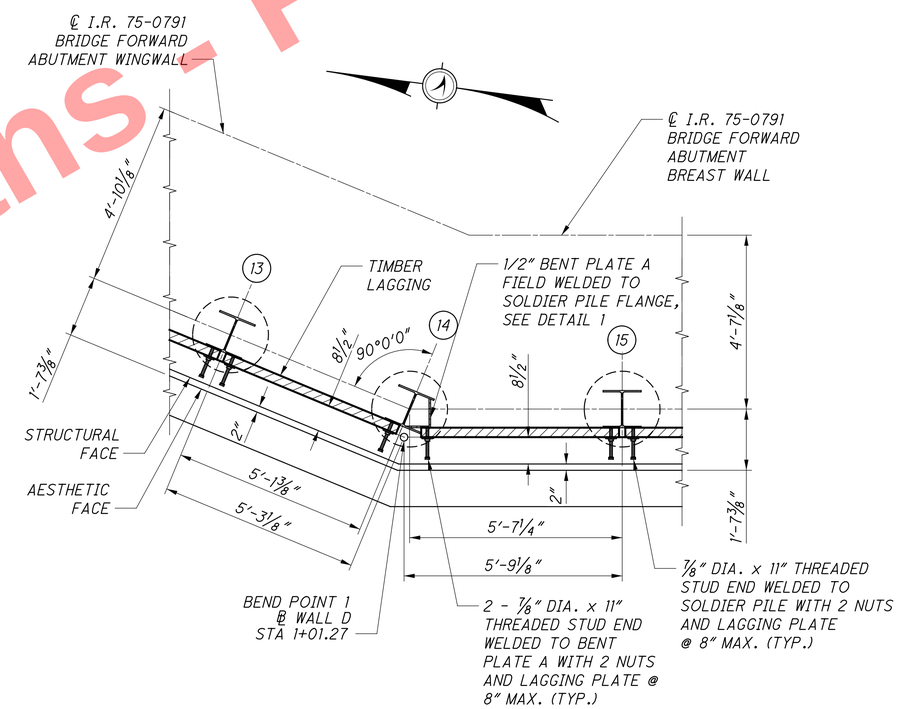

DETAIL 1

LEGEND

- # = WALL PANEL NUMBER
- # = DRILLED SHAFT NUMBER
- = ANCHOR
- ## = ANCHOR NUMBER

NOTES

1. FOR SECTION C-C AND SECTION D-D SEE SHEET 8/25.
2. ALL DIMENSIONS ARE MEASURED ALONG ℄ WALL D.
3. SEE SHEET 2/25 FOR ABBREVIATION LEGEND.

Preliminary Plans - For Reference Only

DESIGN AGENCY EMH&T

DESIGNED	DRAWN	REVIEWED	DATE
RJE	GB	CAS	5-22-26
CHECKED	REVISED	STRUCTURE FILE NUMBER	
RMW	-		

ELEVATION AND DETAILS

SOLDIER PILE WALL D - ALONG EAST EDGE OF RAMP J

HAM-75-7.85

PID No. 121447

\\cmhdata01\project01\20110903\ODOT\HAM\77889\structures\WALL_00D\sheets\77889_00DWD002.dgn 5/22/2026 10:21:04 AM hbrendlinger

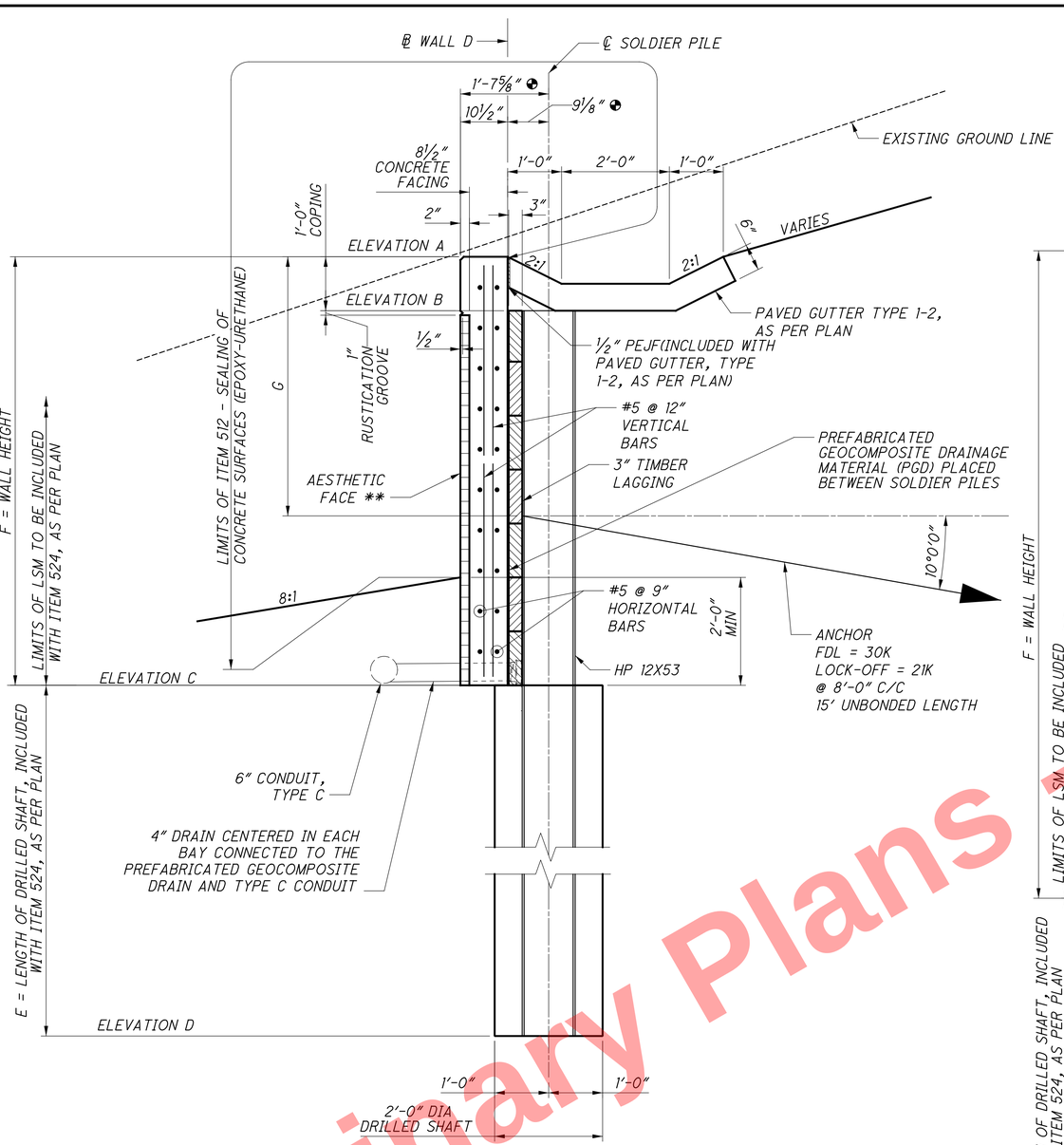

TYPICAL SECTION A-A
SOLDIER PILES WITH 1 TIEBACK ANCHOR

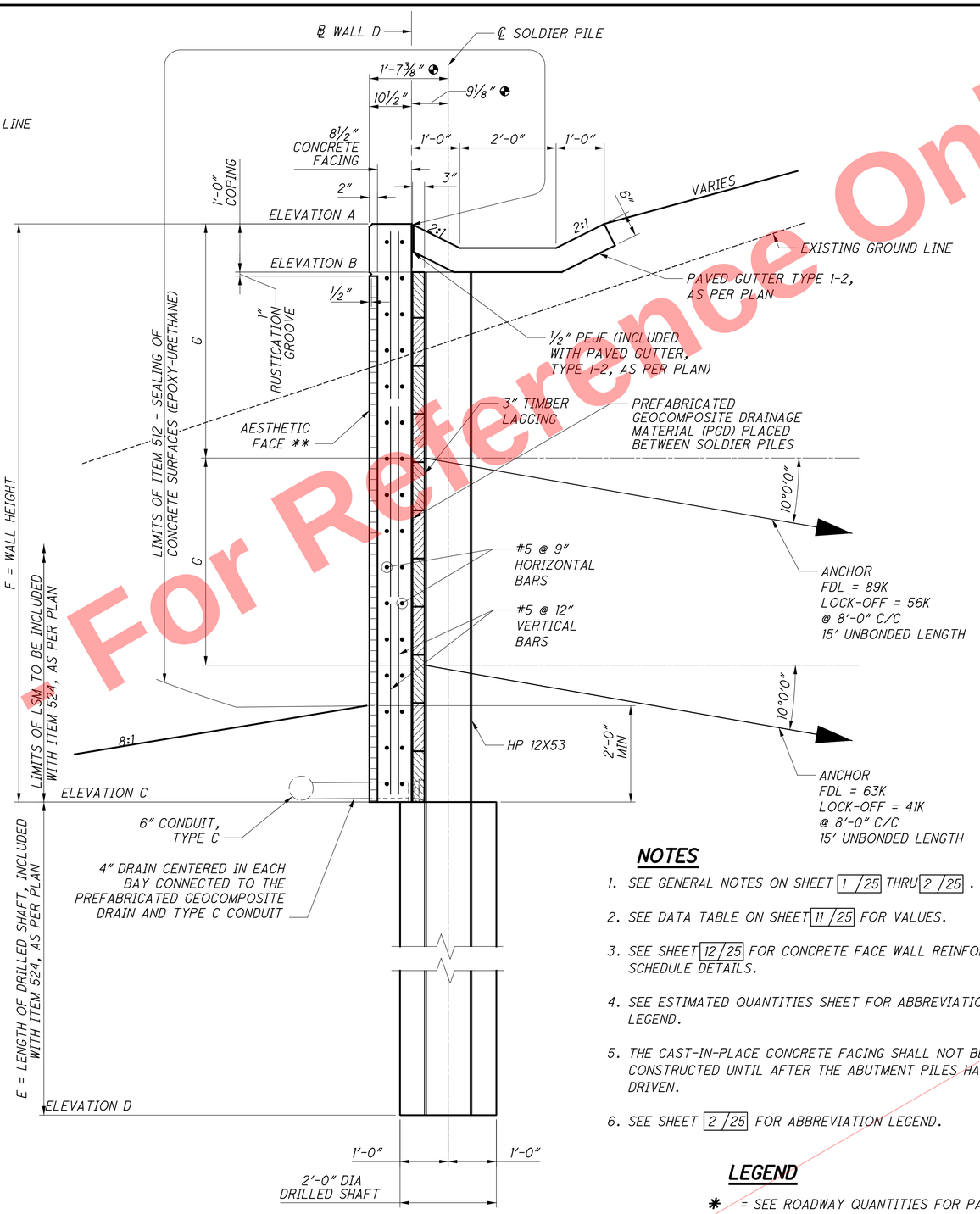

TYPICAL SECTION B-B
SOLDIER PILES WITH 2 TIEBACK ANCHORS

NOTES

1. SEE GENERAL NOTES ON SHEET 1 /25 THRU 2 /25 .
2. SEE DATA TABLE ON SHEET 11 /25 FOR VALUES.
3. SEE SHEET 12 /25 FOR CONCRETE FACE WALL REINFORCING SCHEDULE DETAILS.
4. SEE ESTIMATED QUANTITIES SHEET FOR ABBREVIATION LEGEND.
5. THE CAST-IN-PLACE CONCRETE FACING SHALL NOT BE CONSTRUCTED UNTIL AFTER THE ABUTMENT PILES HAVE BEEN DRIVEN.
6. SEE SHEET 2 /25 FOR ABBREVIATION LEGEND.

LEGEND

* = SEE ROADWAY QUANTITIES FOR PAYMENT

** = FOR AESTHETIC FACE TREATMENT SEE NOTE ITEM 511 - CLASS QC1 CONCRETE, AS PER PLAN ON SHEET 1 /25

= DIMENSION INCLUDES AN ASSUMED 1/4" PREFABRICATED GEOCOMPOSITE DRAINAGE MATERIAL

SOLDIER PILE WALL D CONSTRUCTION SEQUENCE:

IN FRONT OF HAM-75-0791 BRIDGE FORWARD ABUTMENT

1. REMOVE PORTIONS OF EXISTING APPROACH SLABS, PAVEMENT AND DECK TO FACILITATE INSTALLATION OF SOLDIER PILES.
2. INSTALL ALL DRILLED SHAFTS AND SOLDIER PILES DURING THE CORRESPONDING HAM-75-0791 BRIDGE CONSTRUCTION PHASE AS SPECIFIED ON SHEET 5 /25 .
3. EXCAVATE UNDER THE COMPLETED HAM-75-0791 BRIDGE TO THE DEPTH OF THE UPPER SOIL ANCHORS.
4. INSTALL TIMBER LAGGING AND THE UPPER SOIL ANCHOR SYSTEM ON THE SOLDIER PILES. TIMBER LAGGING SHALL BE PLACED AS SPECIFIED IN GENERAL NOTES.
5. COMPLETE EXCAVATION FOR RAMP J AT FRONT OF HAM-75-0791 FORWARD ABUTMENT AND INSTALL ALL TIMBER LAGGING, CONCRETE FACING WALLS ON THE SOLDIER PILES AS SHOWN ON THIS SHEET AND 8 /25 .

Preliminary Plans
For Reference Only

DESIGN AGENCY: EMH&T
DESIGNED: RJE | DRAWN: GB | REVIEWED: CAS | DATE: 5-22-26
CHECKED: RMW | REVISED: - | STRUCTURE FILE NUMBER:

TYPICAL SECTION 2 OF 2
SOLDIER PILE WALL D - ALONG EAST EDGE OF RAMP J

HAM-75-7.85
PID No. 121447

7 / 25

592 / 1047

\\cmhdata01\project01\2011093\ODOT\HAM 77889 structures\WALL_00D\sheets\77889_00DWD003.dgn 5/22/2026 10:21:04 AM hbrendlinger

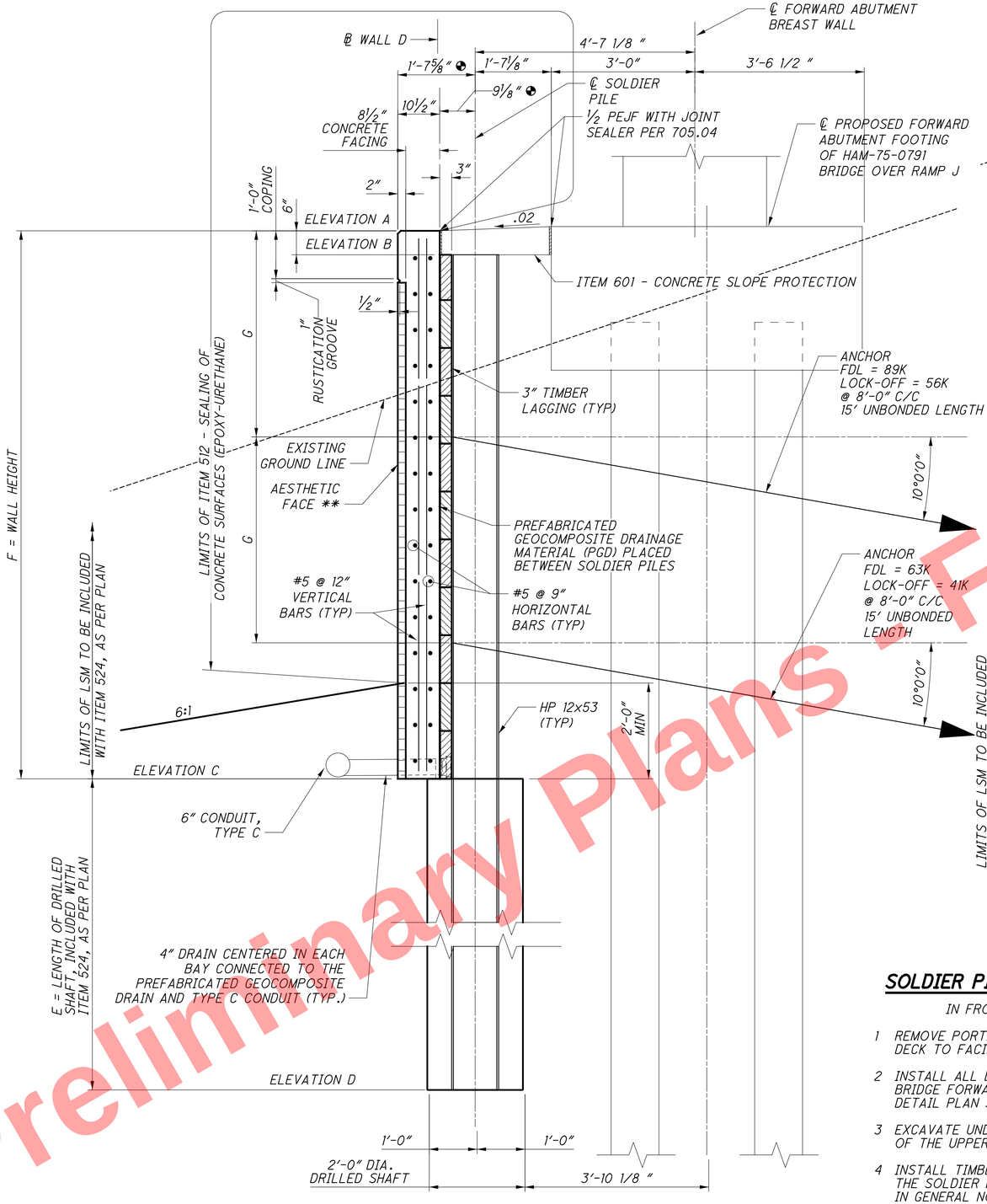

TYPICAL SECTION C-C
SOLDIER PILES WITH 2 TIEBACK ANCHOR

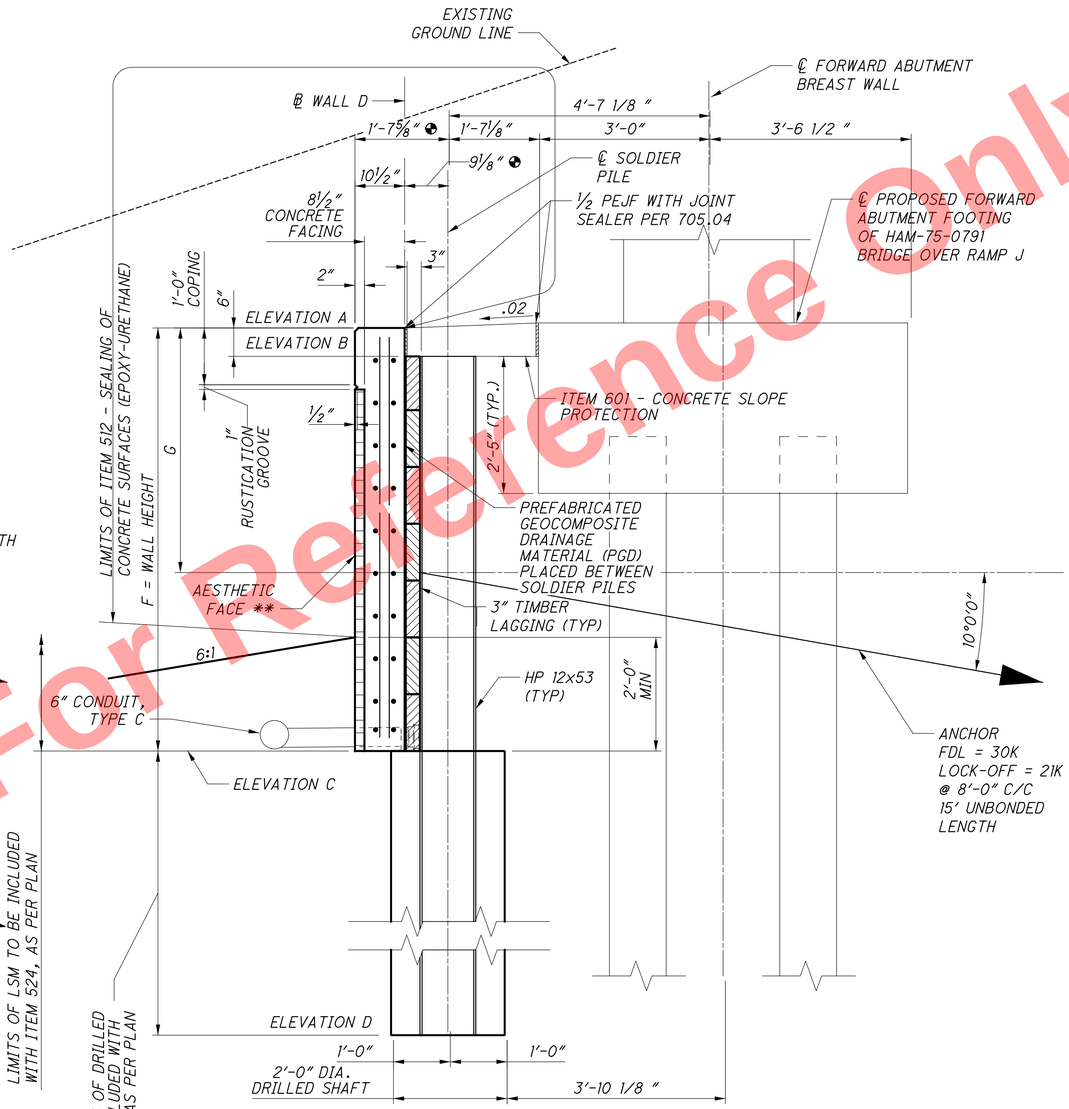

TYPICAL SECTION D-D
SOLDIER PILES WITH 1 TIEBACK ANCHOR

SOLDIER PILE WALL D CONSTRUCTION SEQUENCE:

IN FRONT OF HAM-75-0791 BRIDGE FORWARD ABUTMENT

1 REMOVE PORTIONS OF EXISTING APPROACH SLABS, PAVEMENT AND DECK TO FACILITATE INSTALLATION OF SOLDIER PILES.

2 INSTALL ALL DRILLED SHAFTS AND SOLDIER PILES IN HAM-75-0791 BRIDGE FORWARD ABUTMENT PHASE CONSTRUCTION AS SOLDIER PILE DETAIL PLAN SHOWN ON SHEET 5/25 AND 6/25 .

3 EXCAVATE UNDER THE COMPLETED HAM-75-0791 BRIDGE TO THE DEPTH OF THE UPPER SOIL ANCHORS.

4 INSTALL TIMBER LAGGING AND THE UPPER SOIL ANCHOR SYSTEM ON THE SOLDIER PILES. TIMBER LAGGING SHALL BE PLACED AS SPECIFIED IN GENERAL NOTES.

5 COMPLETE EXCAVATION FOR RAMP J AT FRONT OF HAM-75-0791 FORWARD ABUTMENT AND INSTALL ALL TIMBER LAGGING, CONCRETE FACE WALL ON THE SOLDIER PILES AS SHOWN ON THIS SHEET AND 7/25.

LEGEND

** = FOR AESTHETIC FACE TREATMENT SEE NOTE ITEM 511 - CLASS QCI CONCRETE, AS PER PLAN ON SHEET 1/25

◔ = DIMENSION INCLUDES AN ASSUMED 1/4" PREFABRICATED GEOCOMPOSITE DRAINAGE MATERIAL

NOTES

1 SEE GENERAL NOTES ON SHEET 1/25 THRU 2/25 .

2 SEE DATA TABLE ON SHEET 11/25 FOR VALUES.

3 SEE SHEET 12/25 FOR CONCRETE FACE WALL REINFORCING SCHEDULE DETAILS.

4 SEE SHEET 2/25 FOR ABBREVIATION LEGEND.

5 THE STRUCTURE FACING SHALL NOT BE CONSTRUCTED UNTIL AFTER THE ABUTMENT PILES HAS BEEN DRIVEN.

Preliminary Plans Not For Reference Only

DESIGN AGENCY EMH&T Engineers • Surveyors • Planners • Scientists

DESIGNED	DRAWN	REVIEWED	DATE
RJE	GB	CAS	5-22-26
CHECKED	REVISED	STRUCTURE FILE NUMBER	
RMW	-		

TYPICAL SECTION 1 OF 2
SOLDIER PILE WALL D - ALONG EAST EDGE OF RAMP J

HAM-75-7.85
PID No. 121447

8 / 25

593
1047

\\cmhdata01\projects\2011093\ODOT\HAM 77889\structures\WALL_00D\sheets\77889_00DWD004.dgn 5/22/2026 10:21:05 AM hbrendlinger

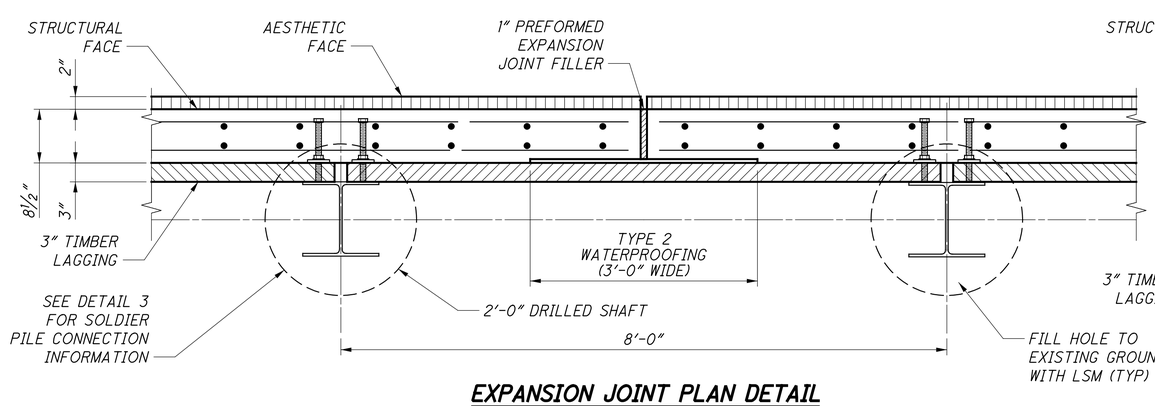

EXPANSION JOINT PLAN DETAIL

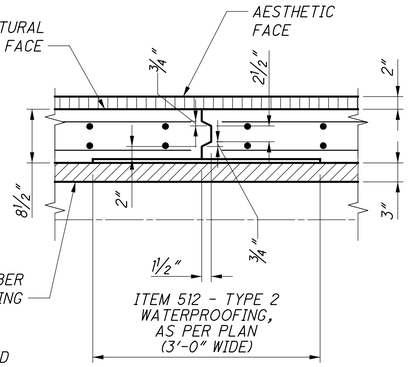

CONTRACTION JOINT PLAN DETAIL

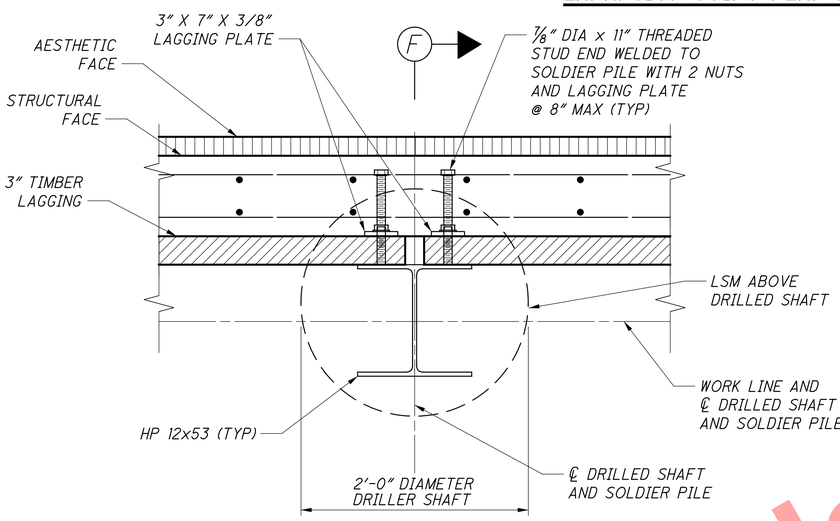

DETAIL 3

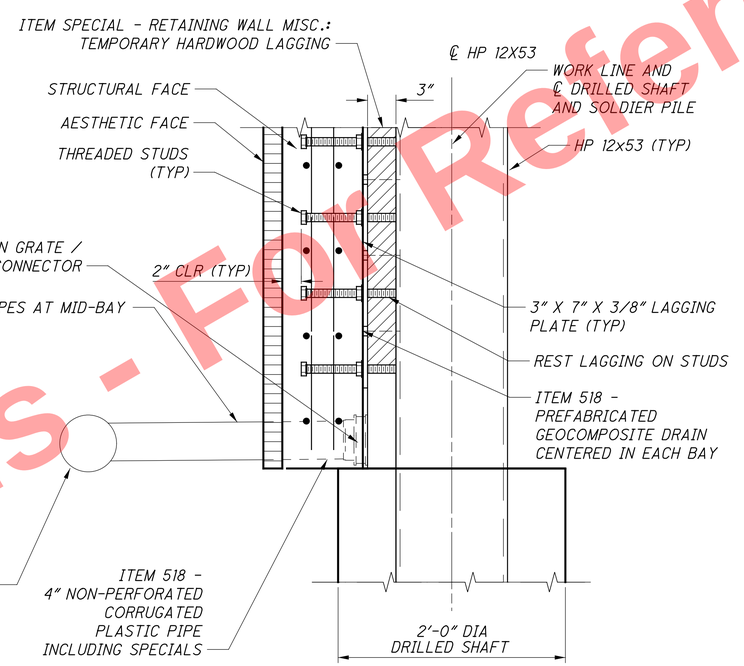

SECTION F-F

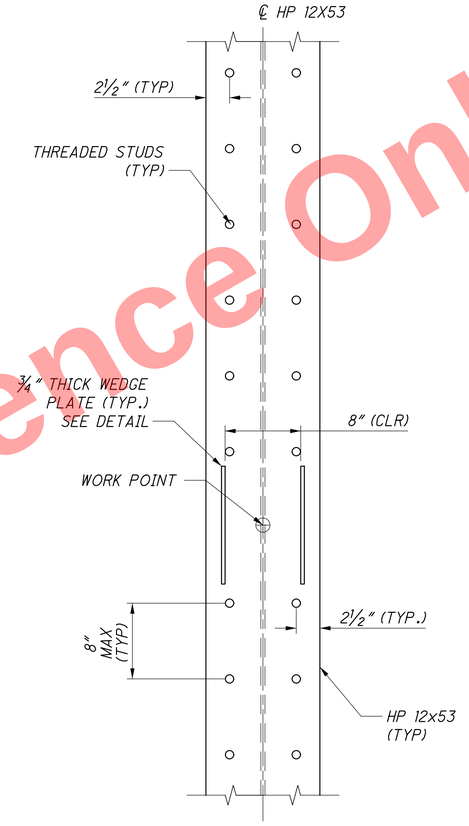

SOLDIER PILE ELEVATION

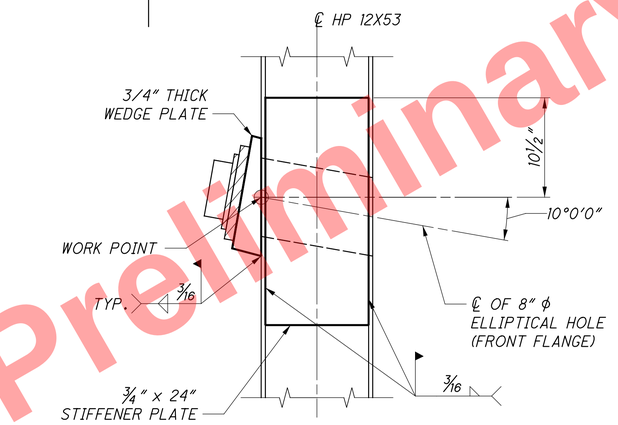

ANCHOR SECTION

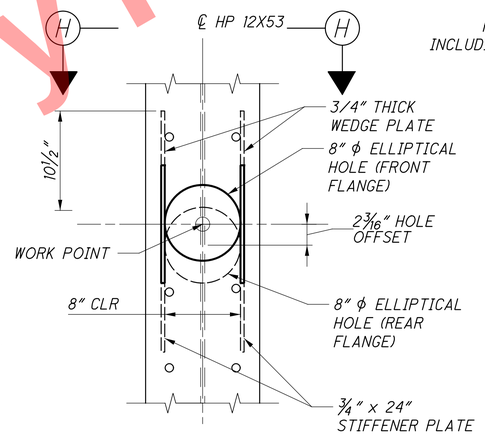

SECTION G-G

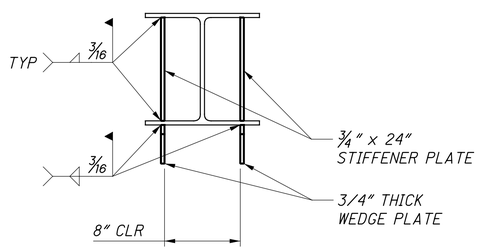

SECTION H-H

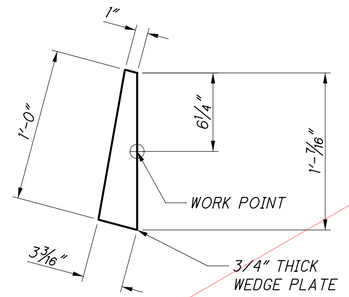

WEDGE PLATE DETAIL

NOTE

1. SEE SHEET 2/25 FOR ABBREVIATION LEGEND.

Preliminary Plans - Not For Reference Only

\\cmhdata01\project01\20110903\ODOT\HAM_77889\structures\WALL_00D\sheets\77889_00DWD005.dgn 5/22/2026 10:21:06 AM hbrendlinger

DESIGN AGENCY EMH&T

DESIGNED	DRAWN	REVIEWED	DATE
RJE	GB	CAS	5-22-26
CHECKED	REVISED	STRUCTURE FILE NUMBER	
RMW	-		

ANCHORED SOLDIER PILE WALL DETAILS

SOLDIER PILE WALL D - ALONG EAST EDGE OF RAMP J

HAM-75-7.85

PID No. 121447

9/25

594/1047

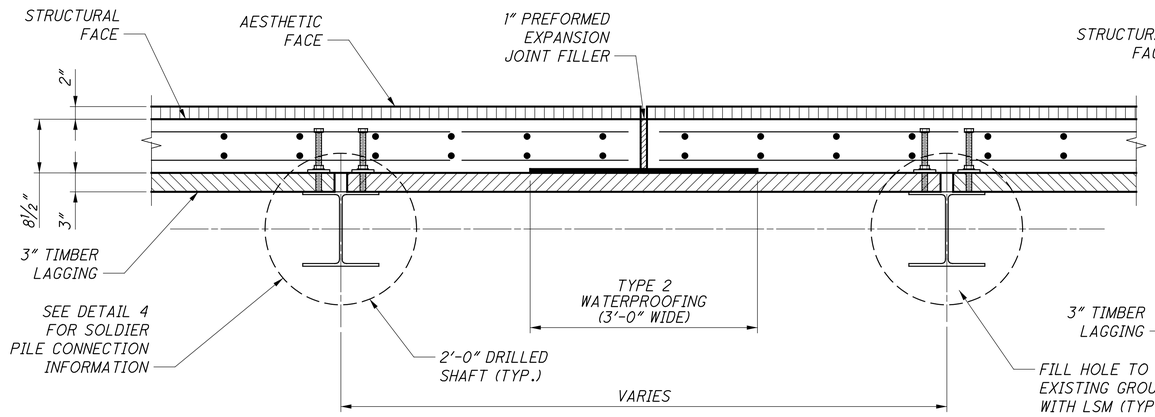

EXPANSION JOINT PLAN DETAIL

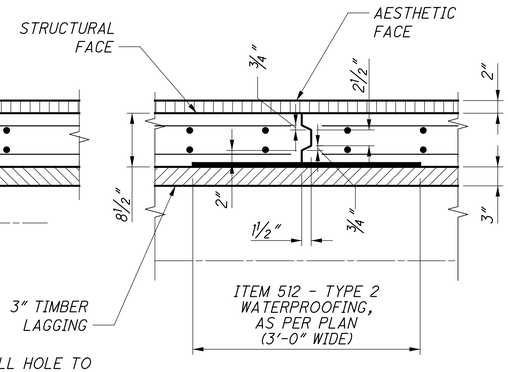

CONTRACTION JOINT PLAN DETAIL

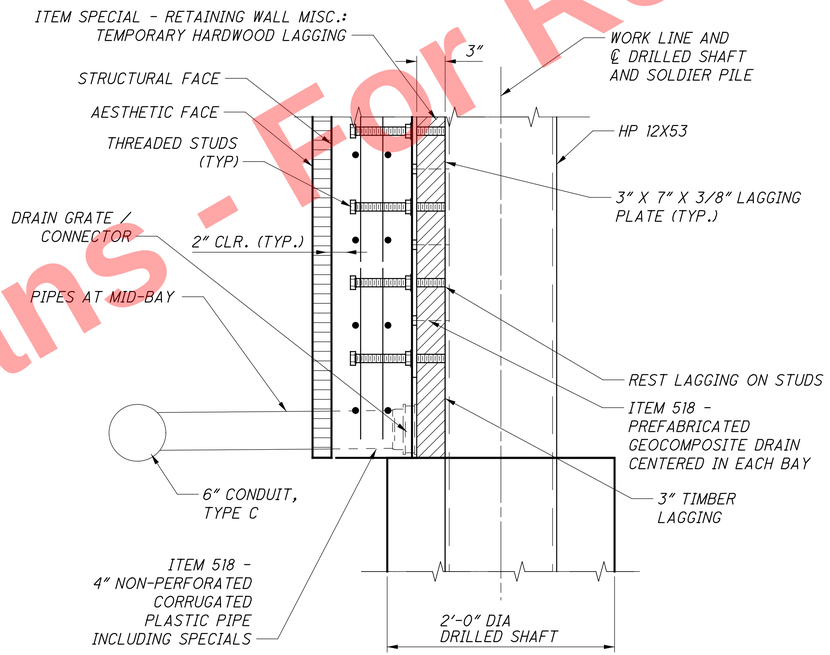

SECTION J-J

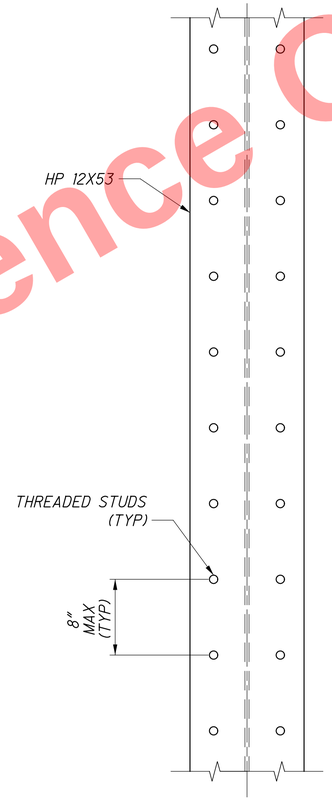

SOLDIER PILE ELEVATION

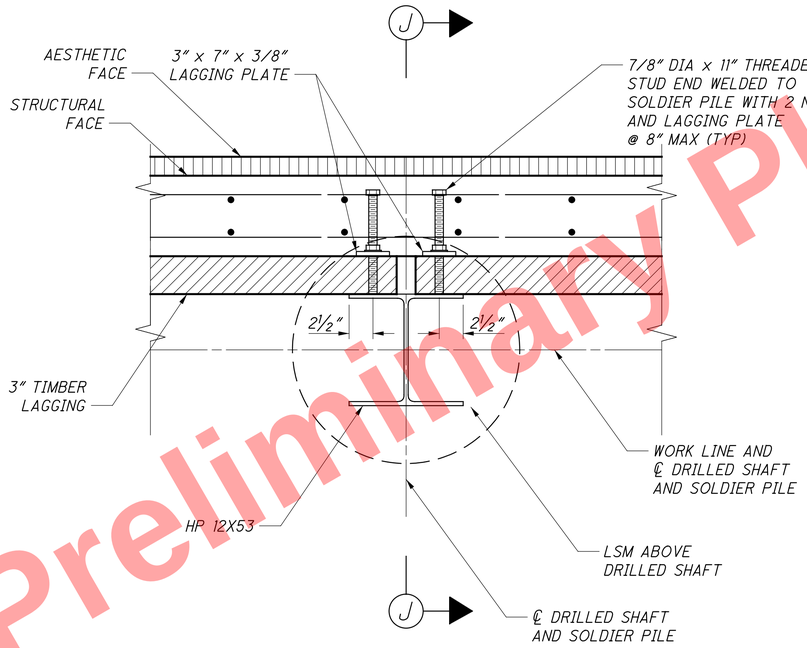

DETAIL 4

NOTE

1. SEE SHEET 2/25 FOR ABBREVIATION LEGEND.

Preliminary Plans - For Reference Only

DESIGN AGENCY: EMH&T

DESIGNED	DRAWN	REVIEWED	DATE
RJE	GB	CAS	5-22-26
CHECKED	REVISED	STRUCTURE FILE NUMBER	
RMW	-		

UNANCHORED SOLDIER PILE WALL DETAILS

SOLDIER PILE WALL D - ALONG EAST EDGE OF RAMP J

HAM-75-7.85

PID No. 121447

\\cmhdata01\project01\2011\20110903\ODOT\HAM\77889\structures\WALL_00D\sheets\77889_00DWD006.dgn 5/22/2026 10:21:07 AM hbrendlinger

LOCATION AND ELEVATION DATA TABLE

SOLDIER PILE NUMBER	SOLDIER PILE STATION WALL D	SOLDIER PILE OFFSET WALL D	SOLDIER PILE STATION CONST RAMP J	SOLDIER PILE OFFSET CONST RAMP J	TOP OF WALL ELEVATION A	TOP OF SOLDIER PILE ELEVATION B	TOP OF DRILLED SHAFT ELEVATION C	PILE TIP ELEVATION D	LENGTH OF DRILLED SHAFT E	WALL HEIGHT F	DISTANCE TO TOP ANCHOR G	SOLDIER PILE SIZE
1	0+03.00	0.74' LT	421+09.75	27.76' RT	519.67	518.67	514.50	491.50	23.00'	5.17'	-	HP 12X53
2	0+08.00	0.74' LT	421+04.49	27.84' RT	520.56	519.56	514.50	491.50	23.00'	6.06'	-	HP 12X53
3	0+16.00	0.74' LT	420+96.07	27.84' RT	521.99	520.99	514.50	491.50	23.00'	7.49'	5.00'	HP 12X53
4	0+24.00	0.74' LT	420+87.65	27.75' RT	523.41	522.41	514.50	491.50	23.00'	8.91'	5.00'	HP 12X53
5	0+32.00	0.74' LT	420+79.24	27.53' RT	524.83	523.83	513.50	490.50	23.00'	11.33'	5.00'	HP 12X53
6	0+40.00	0.74' LT	420+70.84	27.18' RT	526.26	525.26	513.50	490.50	23.00'	12.76'	5.00'	HP 12X53
7	0+48.00	0.74' LT	420+62.45	26.72' RT	527.68	526.68	513.50	490.50	23.00'	14.18'	5.00'	HP 12X53
8	0+56.00	0.74' LT	420+54.07	26.14' RT	529.10	528.10	513.50	490.50	23.00'	15.60'	5.00'	HP 12X53
9	0+64.00	0.74' LT	420+45.72	25.44' RT	529.56	529.06	512.27	489.27	23.00'	17.29'	5.00'	HP 12X53
10	0+72.00	0.74' LT	420+37.39	24.61' RT	529.56	529.06	512.27	489.27	23.00'	17.29'	5.00'	HP 12X53
11	0+80.00	0.74' LT	420+29.08	23.67' RT	529.56	529.06	512.27	489.27	23.00'	17.29'	5.00'	HP 12X53
12	0+88.00	0.74' LT	420+20.81	22.62' RT	529.56	529.06	512.27	489.27	23.00'	17.29'	5.00'	HP 12X53
13	0+96.00	0.74' LT	420+12.57	21.44' RT	529.56	529.06	512.27	489.27	23.00'	17.29'	5.00'	HP 12X53
14	1+01.41	0.74' LT	420+07.32	20.63' RT	529.56	529.06	512.27	489.27	23.00'	17.29'	5.00'	HP 12X53
15	1+07.02	0.74' LT	420+01.63	21.87' RT	529.56	529.06	512.27	489.27	23.00'	17.29'	5.00'	HP 12X53
16	1+15.02	0.74' LT	419+93.48	23.55' RT	529.56	529.06	512.27	489.27	23.00'	17.29'	5.00'	HP 12X53
17	1+23.02	0.74' LT	419+85.28	25.11' RT	529.56	529.06	512.27	489.27	23.00'	17.29'	5.00'	HP 12X53
18	1+31.02	0.74' LT	419+77.03	26.56' RT	529.56	529.06	512.27	489.27	23.00'	17.29'	5.00'	HP 12X53
19	1+39.02	0.74' LT	419+68.74	27.89' RT	529.56	529.06	512.73	489.73	23.00'	16.83'	5.00'	HP 12X53
20	1+47.02	0.74' LT	419+60.40	29.10' RT	529.56	529.06	512.73	489.73	23.00'	16.83'	5.00'	HP 12X53
21	1+55.02	0.74' LT	419+52.03	30.20' RT	529.56	529.06	512.73	489.73	23.00'	16.83'	5.00'	HP 12X53
22	1+63.02	0.74' LT	419+43.63	31.17' RT	529.56	529.06	512.73	489.73	23.00'	16.83'	5.00'	HP 12X53
23	1+71.02	0.74' LT	419+35.20	32.03' RT	529.56	529.06	512.73	489.73	23.00'	16.83'	5.00'	HP 12X53
24	1+79.02	0.74' LT	419+26.75	32.76' RT	529.56	529.06	513.36	490.36	23.00'	16.20'	5.00'	HP 12X53
25	1+87.02	0.74' LT	419+18.27	33.38' RT	529.56	529.06	513.36	490.36	23.00'	16.20'	5.00'	HP 12X53
26	1+95.02	0.74' LT	419+09.77	33.87' RT	529.56	529.06	513.36	490.36	23.00'	16.20'	5.00'	HP 12X53
27	2+03.02	0.74' LT	419+01.26	34.24' RT	529.56	529.06	513.36	490.36	23.00'	16.20'	5.00'	HP 12X53
28	2+11.02	0.74' LT	418+92.74	34.49' RT	529.56	529.06	513.36	490.36	23.00'	16.20'	5.00'	HP 12X53
29	2+19.02	0.74' LT	418+84.22	34.62' RT	529.56	529.06	513.88	490.88	23.00'	15.68'	5.00'	HP 12X53
30	2+27.02	0.74' LT	418+75.69	34.63' RT	529.56	529.06	513.88	490.88	23.00'	15.68'	5.00'	HP 12X53
31	2+35.02	0.74' LT	418+67.16	34.51' RT	529.56	529.06	513.88	490.88	23.00'	15.68'	5.00'	HP 12X53
32	2+43.02	0.74' LT	418+58.64	34.27' RT	529.56	529.06	513.88	490.88	23.00'	15.68'	5.00'	HP 12X53
33	2+51.02	0.74' LT	418+50.13	33.91' RT	529.56	529.06	513.88	490.88	23.00'	15.68'	5.00'	HP 12X53
34	2+59.02	0.74' LT	418+41.63	33.43' RT	529.56	529.06	514.30	491.30	23.00'	15.26'	5.00'	HP 12X53
35	2+67.02	0.74' LT	418+33.15	32.83' RT	529.56	529.06	514.30	491.30	23.00'	15.26'	5.00'	HP 12X53
36	2+75.02	0.74' LT	418+24.69	32.11' RT	529.56	529.06	514.30	491.30	23.00'	15.26'	5.00'	HP 12X53
37	2+83.02	0.74' LT	418+16.26	31.26' RT	529.56	529.06	514.30	491.30	23.00'	15.26'	5.00'	HP 12X53
38	2+91.02	0.74' LT	418+07.85	30.30' RT	529.56	529.06	514.30	491.30	23.00'	15.26'	5.00'	HP 12X53
39	2+99.02	0.74' LT	417+99.48	29.22' RT	529.56	529.06	514.56	491.56	23.00'	15.00'	5.00'	HP 12X53
40	3+07.02	0.74' LT	417+91.15	28.02' RT	529.56	529.06	514.56	491.56	23.00'	15.00'	5.00'	HP 12X53
41	3+15.02	0.74' LT	417+82.85	26.70' RT	529.56	529.06	514.56	491.56	23.00'	15.00'	5.00'	HP 12X53
42	3+22.29	0.74' LT	417+75.35	25.40' RT	529.56	529.06	514.56	491.56	23.00'	15.00'	5.00'	HP 12X53
43	3+26.28	0.74' LT	417+72.26	24.84' RT	529.56	529.06	514.56	491.56	23.00'	15.00'	5.00'	HP 12X53
44	3+29.29	0.74' LT	417+70.51	27.34' RT	529.56	529.06	514.56	491.56	23.00'	15.00'	5.00'	HP 12X53
45	3+35.87	0.74' LT	417+66.63	32.80' RT	529.56	529.06	517.81	494.81	23.00'	11.75'	5.00'	HP 12X53
46	3+42.46	0.74' LT	417+62.66	38.24' RT	529.56	529.06	520.56	497.56	23.00'	9.00'	5.00'	HP 12X53
47	3+49.04	0.74' LT	417+58.61	43.64' RT	529.56	529.06	523.31	500.31	23.00'	6.25'	-	HP 12X53
48	3+55.62	0.74' LT	417+54.48	49.03' RT	529.56	529.06	526.06	503.06	23.00'	3.50'	-	HP 12X53

NOTES

1. SEE SHEET 5/25 & 6/25 FOR WALL ELEVATION AND SOLDIER PILE DETAILS.

2. SEE SHEET 2/25 FOR ABBREVIATION LEGEND.

Preliminary Plans - Not For Reference Only

DESIGN AGENCY EMH&T

DESIGNED	DRAWN	REVIEWED	DATE
RJE	GB	CAS	5-22-26
CHECKED	REVISED	STRUCTURE FILE NUMBER	
RMW	-		

LOCATION AND ELEVATION DATA TABLE
SOLDIER PILE WALL D - ALONG EAST EDGE OF RAMP J

HAM-75-7.85
PID No. 121447

596
1047

\\cmhdata01\project01\2011\20110903\ODOT\HAM\77889\structures\WALL_00D\sheets\77889_00DWD007.dgn 5/22/2026 10:21:07 AM hbrendlinger

WALL PANEL TABLE

PANEL NUMBER	PANEL TYPE	PANEL LENGTH	ELEVATION A1	ELEVATION A2	ELEVATION A3	ELEVATION A4	A BARS		B BARS		C BARS		D BARS		E BARS		F BARS	
							NO.	MARK	NO.	MARK	NO.	MARK	NO.	MARK	NO.	MARK	NO.	MARK
1	DB	28'-0"	-	514.50	519.14	524.13	14	A501	2	B501	10	C501			58	E501		
2	DB	30'-6 3/4"	-	513.51	524.13	529.56	30	A502	2	B502	10	C502			62	E502		
3	DA	33'-5 1/4"	529.56	512.27	-	-	46	A503					68	D501				
4	DD	43'-0 3/8"	529.56	512.27	-	-	92	A504 AND A505					88	D501			48	F501
5	DA	40'-0"	529.56	512.73	-	-	44	A506					82	D502				
6	DA	40'-0"	529.56	513.36	-	-	44	A506					82	D503				
7	DA	40'-0"	529.56	513.88	-	-	42	A506					82	D504				
8	DA	40'-0"	529.56	514.30	-	-	42	A506					82	D505				
9	DD	37'-6 5/8"	529.56	514.56	-	-	84	A507 AND A508					78	D506			42	F502
10	DC	26'-0 1/2"	529.56	517.81	-	-					80	C503 TO C510						

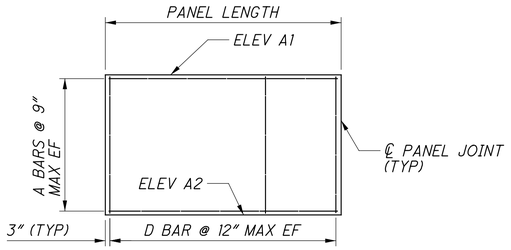

TYPE DA PANEL

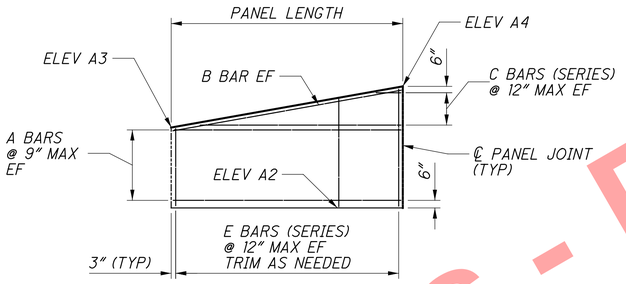

TYPE DB PANEL

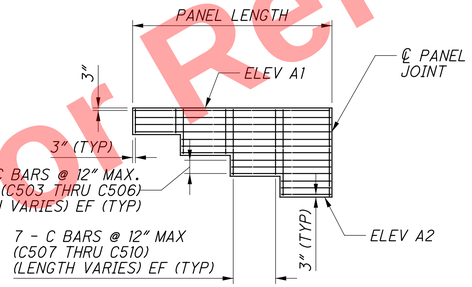

TYPE DC PANEL

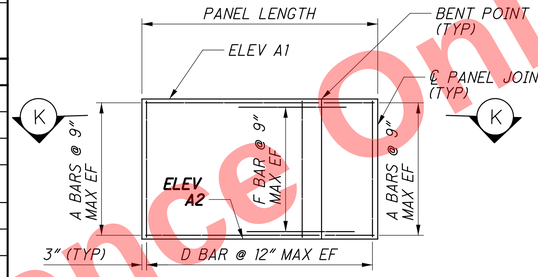

TYPE DD PANEL

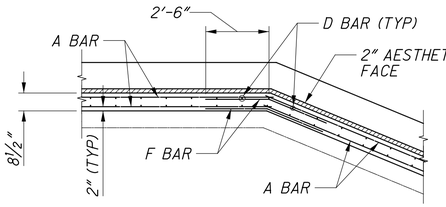

SECTION K-K
(TYP AT WALL BENDS)

NOTES

1. SEE SHEET 5/25 THROUGH 10/25 FOR WALL ELEVATION AND DETAILS.
2. SEE SHEET 2/25 FOR ABBREVIATION LEGEND.

REINFORCING SCHEDULE

MARK	NUMBER	LENGTH	WEIGHT (LBS)	TYPE	DIMENSIONS					
					A	B	C	D	E	INC.
A501	14	27'-8"	404	STR						
A502	30	30'-4 1/2"	950	STR						
A503	46	33'-1 1/2"	795	STR						
A504	46	9'-1"	436	STR						
A505	46	33'-7"	1611	STR						
A506	172	39'-8"	7166	STR						
A507	42	31'-5"	1376	STR						
A508	42	6'-9"	296	STR						
B501	2	28'-1 1/2"	59	STR						
B502	2	30'-9"	64	STR						
C501	2 SERIES OF 6	3'-10" TO 24'-10"	179	STR						
C502	2 SERIES OF 6	2'-1" TO 27'-5"	185	STR						
C503	6	25'-8 1/2"	161	STR						
C504	6	19'-5"	122	STR						
C505	6	12'-10"	80	STR						
C506	6	6'-3"	39	STR						

REINFORCING SCHEDULE

MARK	NUMBER	LENGTH	WEIGHT (LBS)	TYPE	DIMENSIONS					
					A	B	C	D	E	INC.
C507	14	11'-5"	167	STR						
C508	14	8'-8"	127	STR						
C509	14	5'-11"	86	STR						
C510	14	3'-2"	46	STR						
D501	156	17'-0"	2766	STR						
D502	82	16'-6"	1411	STR						
D503	82	15'-10"	1354	STR						
D504	82	15'-4"	1311	STR						
D505	82	14'-11"	1276	STR						
D506	78	15'-9"	1281	STR						
E501	2 SERIES OF 29	4'-4" TO 9'-3"	411	STR						
E502	2 SERIES OF 31	10'-4" TO 15'-8"	841	STR						
F501	48	5'-0"	250	19	2'-6"	2'-3 3/4"	11 1/2"			
F502	42	5'-0"	219	19	2'-6"	11 1/2"	2'-3 3/4"			
		TOTAL	25,419							

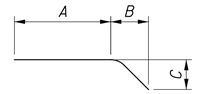

TYPE-19

NOTES

1. THE BAR SIZE NUMBER IS SPECIFIED ON THE PLANS IN THE BAR MARK COLUMN. THE FIRST DIGIT WHERE THREE DIGITS ARE USED, AND THE FIRST TWO DIGITS WHERE FOUR ARE USED, INDICATES THE BAR SIZE NUMBER. FOR EXAMPLE A501 IS A NO. 5 BAR. BAR DIMENSIONS SHOWN ARE OUT TO OUT, UNLESS OTHERWISE INDICATED.
2. ALL REINFORCING STEEL TO BE EPOXY COATED.
3. UNLESS OTHERWISE NOTED, THE FOLLOWING LAP LENGTHS SHALL APPLY:
   #5 BARS: 2'-5"

Preliminary Plans - For Reference Only

DESIGN AGENCY: EMH&T
DESIGNED: RJE | DRAWN: GB | REVIEWED: CAS | DATE: 5-22-26
CHECKED: RMW | REVISED: - | STRUCTURE FILE NUMBER

REINFORCING SCHEDULE
SOLDIER PILE WALL D - ALONG EAST EDGE OF RAMP J

HAM-75-7.85
PID No. 121447

12 / 25

597
1047

\\cmhdata01\project01\2011\0903\ODOT\HAM\77889\structures\WALL_00D\sheets\77889_00DWD008.dgn 5/22/2026 10:21:08 AM hbrendlinger

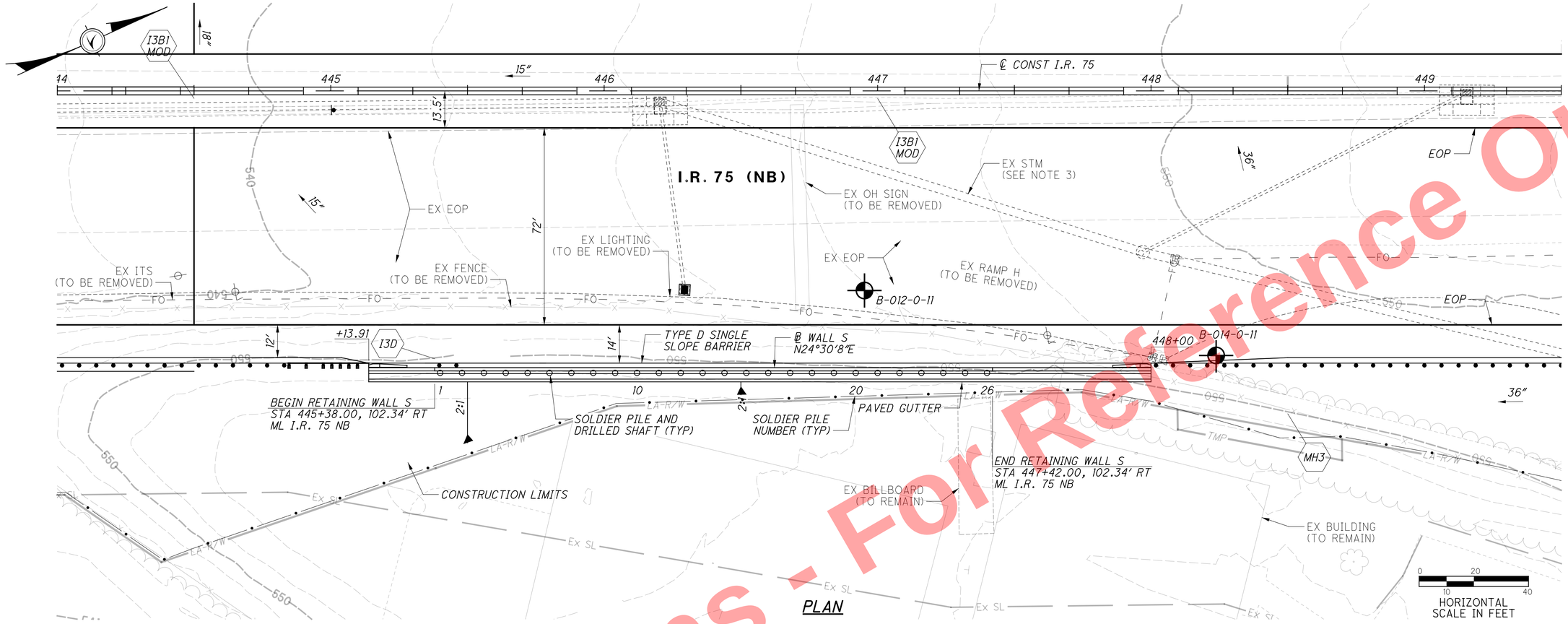

PLAN

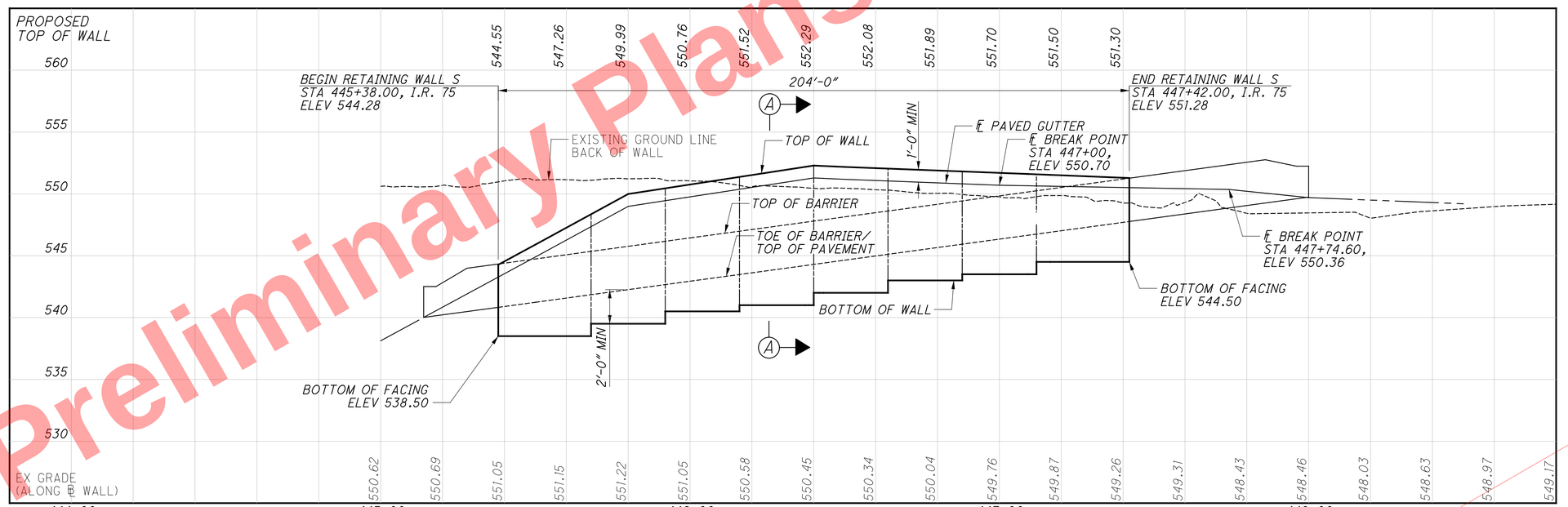

ELEVATION ALONG BACK OF WALL

LEGEND:

= BORING LOCATION

NOTES:

1. FOR SECTION A-A, SEE SHEET 15/25
2. FOR ABBREVIATIONS LEGEND, SEE SHEET 2/25
3. ALL EXISTING STORM SEWER IS TO BE REMOVED UNLESS OTHERWISE NOTED.
4. UNDERDRAIN AND 4" DRAIN PIPES NOT SHOWN FOR CLARITY (TYP). FOR WALL DRAINAGE INFORMATION, SEE SHEETS 15/25 TO 16/25

Preliminary Plans - For Reference Only

RESOURCE INTERNATIONAL INC.
8550 PRESIDENTIAL GATEWAY
COLUMBUS, OHIO 43231
(614) 823-4949

DESIGNED JLM | DRAWN SMJ | REVIEWED SSK | DATE 3-18-26
CHECKED NCK | REVISED | STRUCTURE FILE NUMBER

PLAN AND ELEVATION
SOLDIER PILE WITH LAGGING WALL S

HAM-75-7.85
PID No. 121447

13 / 25

598
1047

G:\projects\2010\B-10-020 HAM-75-7.85\77889\structures\WALL_00S\sheets\77889_00SWP401.dgn 5/13/2026 2:04:09 PM meets

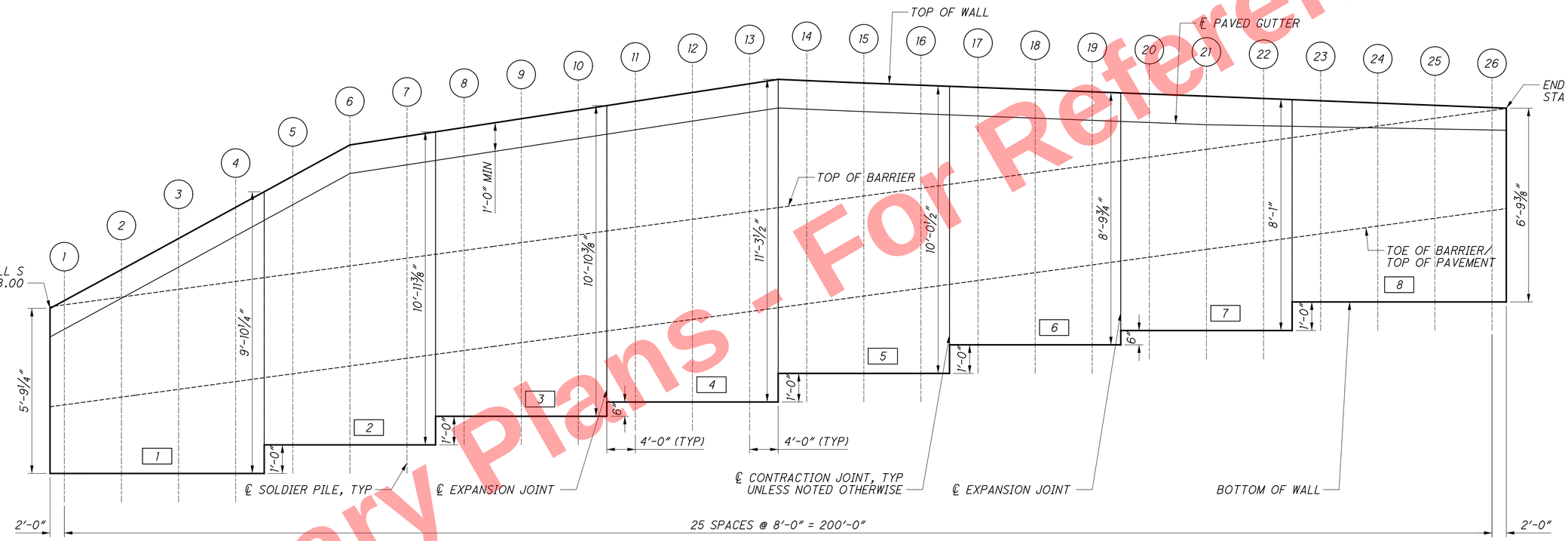

DEVELOPED ELEVATION

NOTES:

1. SEE SHEET 17/25 FOR PANEL DETAILS.
2. FOR WALL CROSS-SECTION, SEE SHEET 15/25.
3. FOR ABBREVIATIONS LEGEND, SEE SHEET 2/25.

LEGEND:

(#) = PILE NUMBER

[#] = PANEL NUMBER

Preliminary Plans - For Reference Only

RESOURCE INTERNATIONAL INC.
8550 PRESIDENTIAL GATEWAY
COLUMBUS, OHIO 43231
(614) 823-4949

DESIGNED	DRAWN	REVIEWED	DATE
JLM	SMJ	SSK	3-18-26
CHECKED	REVISED	STRUCTURE FILE NUMBER	
NCK			

WALL ELEVATION
SOLDIER PILE WITH LAGGING WALL S

HAM-75-7.85
PID No. 121447

G:\projects\2010\B-10-020 HAM-75-7.85\77889\structures\WALL_00S\sheets\77889_00SWD401.dgn 5/13/2026 2:04:09 PM meets

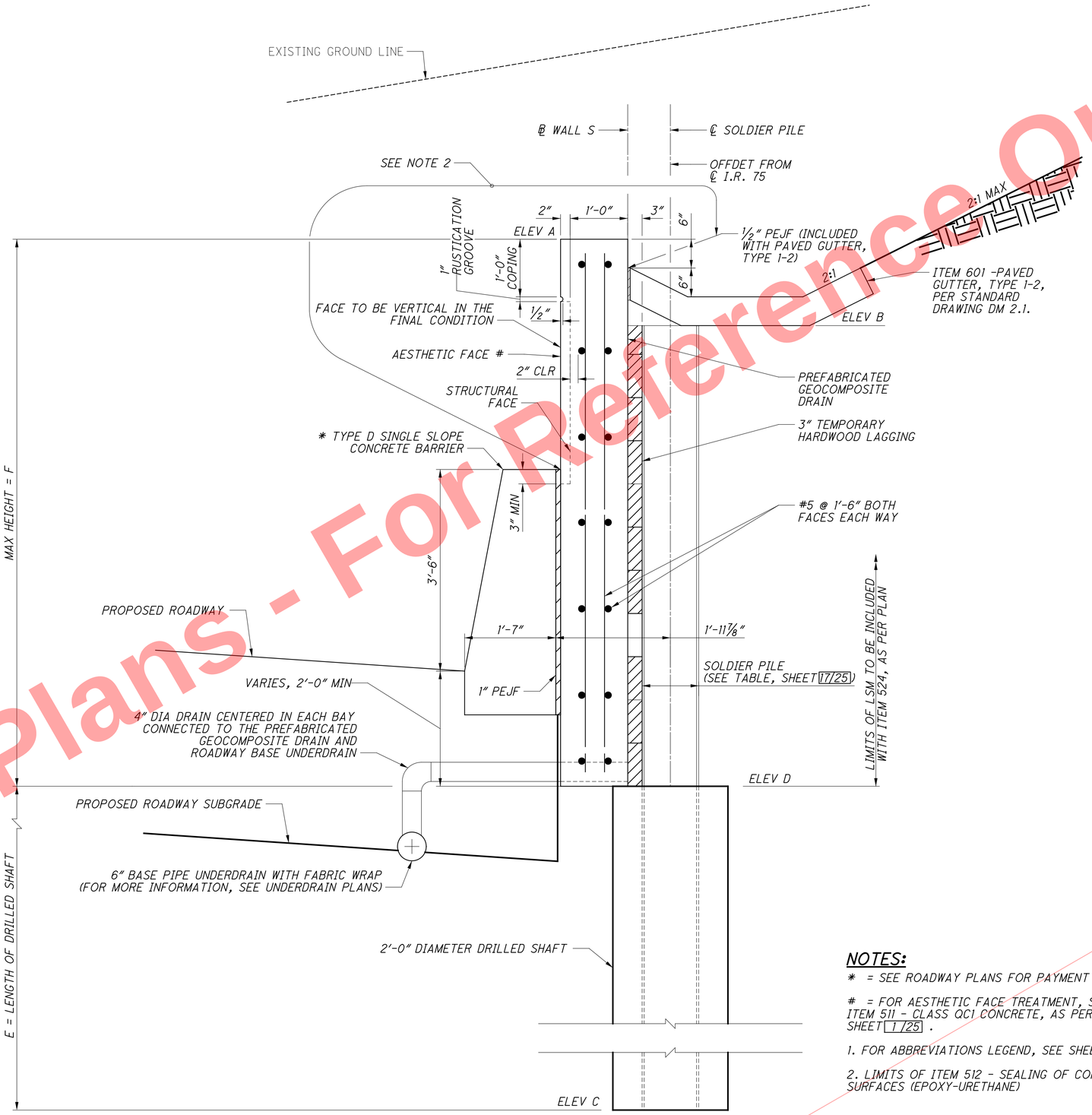

SECTION A-A

NOTES:

* = SEE ROADWAY PLANS FOR PAYMENT

\# = FOR AESTHETIC FACE TREATMENT, SEE NOTE ITEM 511 - CLASS QC1 CONCRETE, AS PER PLAN ON SHEET 1/25 .

1. FOR ABBREVIATIONS LEGEND, SEE SHEET 2/25

2. LIMITS OF ITEM 512 - SEALING OF CONCRETE SURFACES (EPOXY-URETHANE)

Preliminary Plans - Not For Reference Only

RESOURCE INTERNATIONAL INC.
6550 PRESIDENTIAL GATEWAY
COLUMBUS, OHIO 43231
(614) 823-4949

DESIGNED JLM | DRAWN SMJ | REVIEWED SSK | DATE 3-18-26
CHECKED NCK | REVISED | STRUCTURE FILE NUMBER

RETAINING WALL DETAILS 1 OF 2
SOLDIER PILE WITH LAGGING WALL S

HAM-75-7.85
PID No. 121447

15 / 25

600
1047

G:\projects\2010\B-10-020 HAM-75-7.85\77889\structures\WALL_00S\sheets\77889_00SWD402.dgn 5/13/2026 2:04:10 PM meets

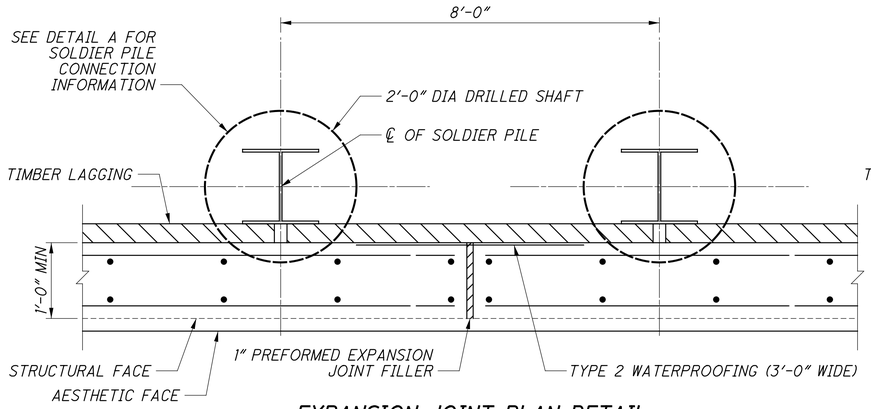

EXPANSION JOINT PLAN DETAIL

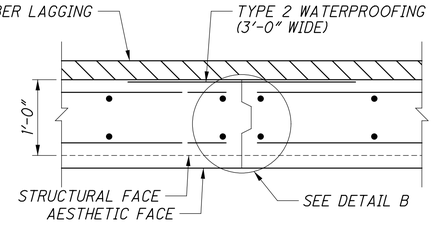

CONTRACTION JOINT PLAN DETAIL

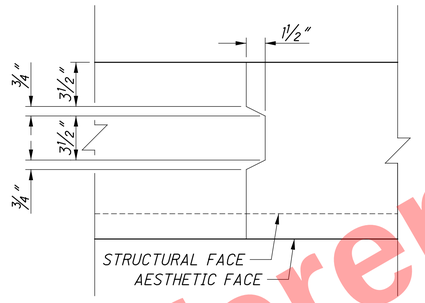

DETAIL B

(TIMBER LAGGING AND TYPE 2 WATERPROOFING NOT SHOWN FOR CLARITY)

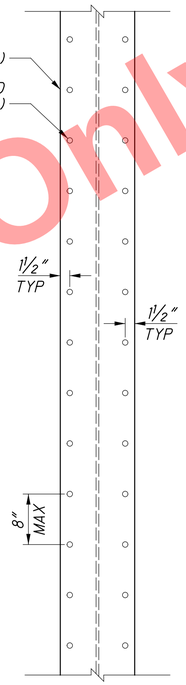

SOLDIER PILE ELEVATION

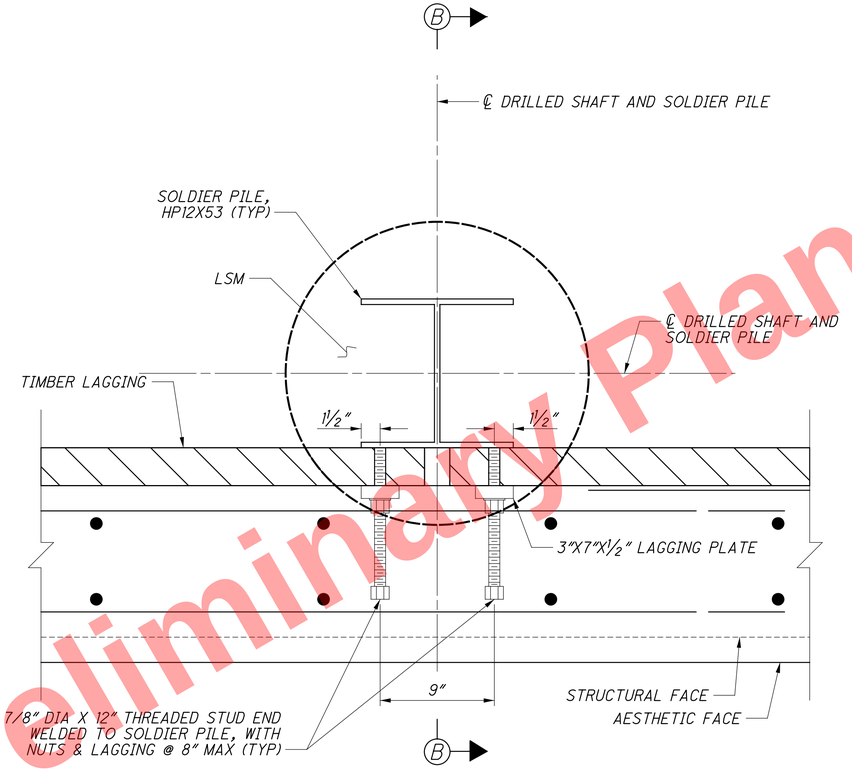

DETAIL A

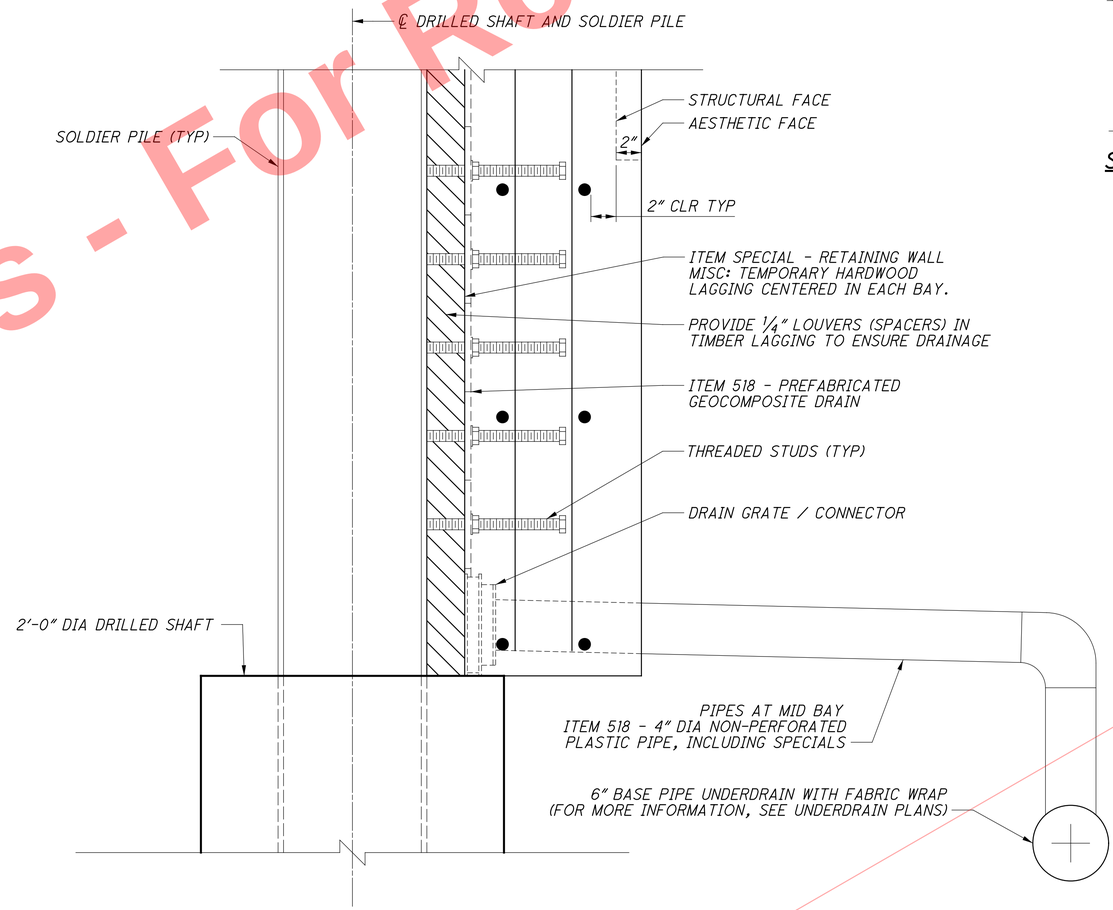

SECTION B-B

NOTES

1. FOR ABBREVIATIONS LEGEND, SEE SHEET 2/25 .

Preliminary Plans - For Reference Only

RESOURCE INTERNATIONAL INC.
8550 PRESIDENTIAL GATEWAY
COLUMBUS, OHIO 43231
(614) 823-4949

DESIGNED JLM | DRAWN SMJ | REVIEWED SSK | DATE 3-18-26
CHECKED NCK | REVISED | STRUCTURE FILE NUMBER

RETAINING WALL DETAILS 2 OF 2
SOLDIER PILE WITH LAGGING WALL S

HAM-75-7.85
PID No. 121447

16 / 25

601
1047

G:\projects\2010\B-10-020 HAM-75-7.85\77889\structures\WALL_00S\sheets\77889_00SWD403.dgn 5/13/2026 2:04:10 PM meets

RETAINING WALL DETAIL TABLE

SOLDIER PILE NUMBER	SOLDIER PILE STATION	SOLDIER PILE OFFSET (FT)	TOP OF WALL ELEV A	TOP OF SOLDIER PILE ELEV B	MINIMUM PILE TIP ELEV C	TOP OF DRILLED SHAFT ELEV D	LENGTH OF DRILLED SHAFT E MIN (FT)	WALL HEIGHT F (FT)	SOLDIER PILE SIZE	SOLDIER PILE LENGTH (FT)
1	445+40.00	103.07	544.55	543.05	526.50	538.50	12.00	6.05	HP 12X53	16.55
2	445+48.00	103.07	545.63	544.13	526.50	538.50	12.00	7.13	HP 12X53	17.63
3	445+56.00	103.07	546.72	545.22	526.50	538.50	12.00	8.22	HP 12X53	18.72
4	445+64.00	103.07	547.81	546.31	523.50	538.50	15.00	9.31	HP 12X53	22.81
5	445+72.00	103.07	548.90	547.40	524.50	539.50	15.00	9.40	HP 12X53	22.90
6	445+80.00	103.07	549.99	548.49	524.50	539.50	15.00	10.49	HP 12X53	23.99
7	445+88.00	103.07	550.30	548.80	524.50	539.50	15.00	10.80	HP 12X53	24.30
8	445+96.00	103.07	550.61	549.11	525.50	540.50	15.00	10.11	HP 12X53	23.61
9	446+04.00	103.07	550.91	549.41	525.50	540.50	15.00	10.41	HP 12X53	23.91
10	446+12.00	103.07	551.22	549.72	525.50	540.50	15.00	10.72	HP 12X53	24.22
11	446+20.00	103.07	551.52	550.02	526.00	541.00	15.00	10.52	HP 12X53	24.02
12	446+28.00	103.07	551.83	550.33	526.00	541.00	15.00	10.83	HP 12X53	24.33
13	446+36.00	103.07	552.14	550.64	526.00	541.00	15.00	11.14	HP 12X53	24.64
14	446+44.00	103.07	552.24	550.74	527.00	542.00	15.00	10.24	HP 12X53	23.74
15	446+52.00	103.07	552.16	550.66	527.00	542.00	15.00	10.16	HP 12X53	23.66
16	446+60.00	103.07	552.08	550.58	527.00	542.00	15.00	10.08	HP 12X53	23.58
17	446+68.00	103.07	552.01	550.51	528.00	543.00	15.00	9.01	HP 12X53	22.51
18	446+76.00	103.07	551.93	550.43	528.00	543.00	15.00	8.93	HP 12X53	22.43
19	446+84.00	103.07	551.85	550.35	531.00	543.00	12.00	8.85	HP 12X53	19.35
20	446+92.00	103.07	551.78	550.28	531.50	543.50	12.00	8.28	HP 12X53	18.78
21	447+00.00	103.07	551.70	550.20	531.50	543.50	12.00	8.20	HP 12X53	18.70
22	447+08.00	103.07	551.62	550.12	531.50	543.50	12.00	8.12	HP 12X53	18.62
23	447+16.00	103.07	551.54	550.04	532.50	544.50	12.00	7.04	HP 12X53	17.54
24	447+24.00	103.07	551.46	549.96	532.50	544.50	12.00	6.96	HP 12X53	17.46
25	447+32.00	103.07	551.38	549.88	532.50	544.50	12.00	6.88	HP 12X53	17.38
26	447+40.00	103.07	551.30	549.80	532.50	544.50	12.00	6.80	HP 12X53	17.30

RETAINING WALL PANEL TABLE

PANEL NUMBER	PANEL TYPE	PANEL LENGTH	ELEV A1	ELEV A2	ELEV A3	A BARS NO	A BARS MARK	B BARS NO	B BARS MARK	C BARS NO	C BARS MARK	D BARS NO	D BARS MARK	E BARS NO	E BARS MARK	F BARS NO	F BARS MARK
1	AA	30'	538.50	544.28	548.36	8	A501	2	B501	6	C501	42	D501				
2	AB	24'	539.50	548.36	550.45	12	A502	2	B502	4	C502	16	D502	18	E501		
3	AC	24'	540.50	550.45	551.37	14	A502	2	B503					34	E502		
4	AC	24'	541.00	551.37	552.29	14	A502	2	B503					34	E503		
5	AD	24'	542.00	552.29	552.05	14	A502	2	B503							34	F501 TO F503
6	AD	24'	543.00	552.05	551.82	12	A502	2	B503							34	F504 TO F506
7	AD	24'	543.50	551.82	551.59	12	A502	2	B503							34	F507 TO F509
8	AD	30'	544.50	551.59	551.28	10	A501	2	B504							168	F510

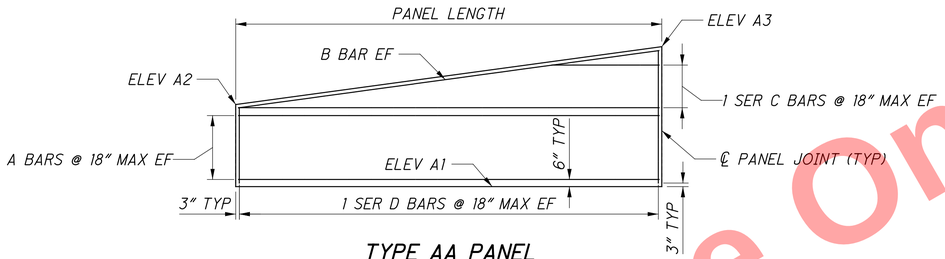

TYPE AA PANEL

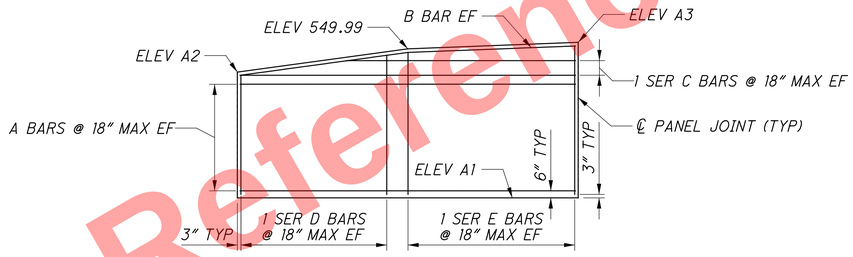

TYPE AB PANEL

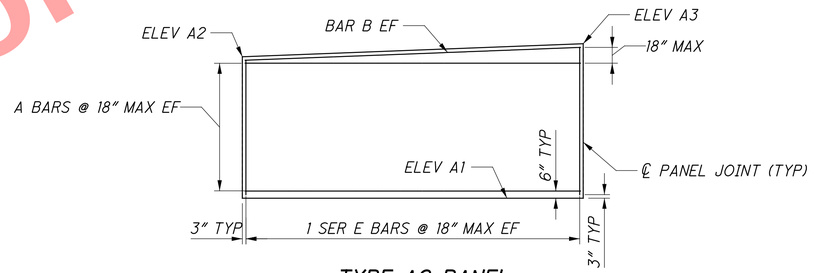

TYPE AC PANEL

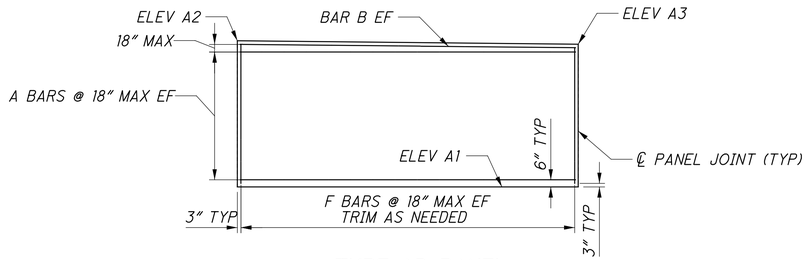

TYPE AD PANEL

NOTES:

1. FOR PILE SPACING, SEE SHEET 14/25 .
2. FOR REINFORCING STEEL SCHEDULE, SEE SHEET 18/25 .
3. FOR ABBREVIATIONS LEGEND, SEE SHEET 2/25 .

Preliminary Plans - For Reference Only

G:\projects\2010\B-10-020 HAM-75-7.85\77889\structures\WALL_005\sheets\77889_005WD404.dgn 5/13/2026 2:04:11 PM meets

RESOURCE INTERNATIONAL INC.
9350 PRESIDENTIAL GATEWAY
COLUMBUS, OHIO 43231
(614) 823-4949

DESIGNED JLM | DRAWN SMJ | REVIEWED SSK | DATE 3-18-26
CHECKED NCK | REVISED | STRUCTURE FILE NUMBER

RETAINING WALL DETAIL TABLE AND WALL PANELS
SOLDIER PILE WITH LAGGING WALL S

HAM-75-7.85
PID No. 121447

17 / 25

602
1047

MARK	NUMBER TOTAL	LENGTH	WEIGHT	TYPE	DIMENSIONS A	B	C	D	E	R	INC
CONCRETE FACING PANELS											
A501	18	29′-6″	554	ST.							
A502	78	23′-6″	1912	ST.							
B501	2	29′-9″	62	ST.							
B502	2	23′-6″	49	19	11′-11″	11′-8 3/4″	1′-1 5/8″				
B503	10	23′-6″	245	ST.							
B504	2	29′-6″	62	ST.							
	2	7′-5″									
C501	SER OF	TO	116	ST.							11′-0 1/2″
	3	29′-6″									
	2	16′									
C502	SER OF	TO	82	ST.							7′-6″
	2	23′-6″									
	2	5′-3″									
D501	SER OF	TO	319	ST.							2 7/16″
	21	9′-4″									
	2	8′-4″									
D502	SER OF	TO	151	ST.							0′-2 7/16″
	8	9′-9″									
	2	10′-0″									
E501	SER OF	TO	192	ST.							5/8″
	9	10′-5″									
	2	9′-5″									
E502	SER OF	TO	350	ST.							1/16″
	17	10′-4″									
	2	9′-10″									
E503	SER OF	TO	365	ST.							1/16″
	17	10′-9″									
F501	11	9′-9″	112	ST.							
F502	11	9′-8″	111	ST.							
F503	12	9′-7″	120	ST.							
F504	11	8′-6″	98	ST.							
F505	11	8′-5″	97	ST.							
F506	12	8′-4″	104	ST.							
F507	11	7′-9″	89	ST.							
F508	11	7′-8″	88	ST.							
F509	12	7′-7″	95	ST.							
	1	6′-3″									
F510	SER OF	TO	141	ST.							3/16″
	21	6′-7″									

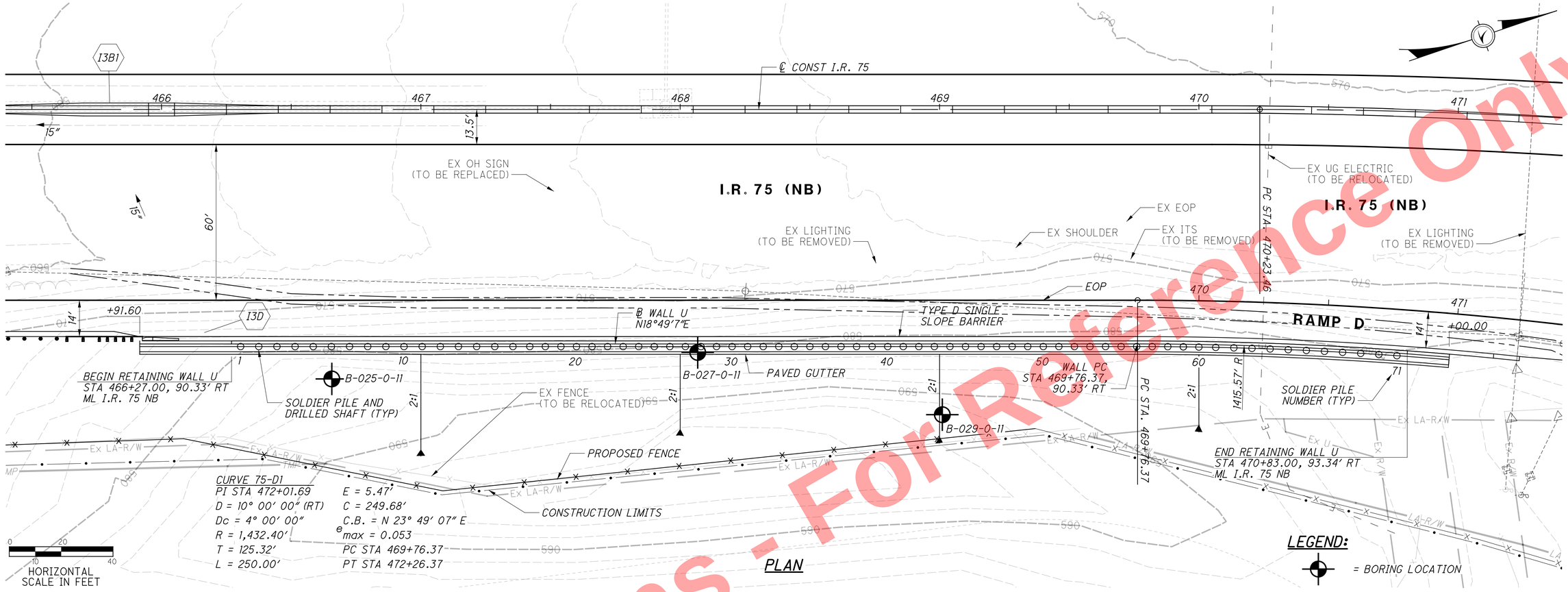

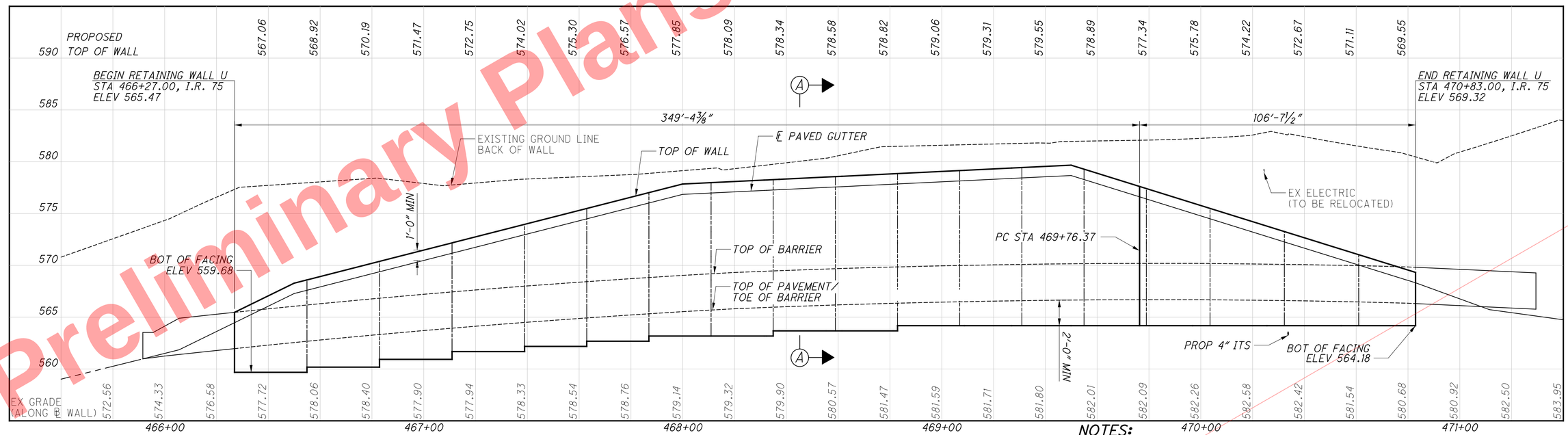

ELEVATION ALONG BACK OF WALL

NOTES:

1. FOR ABBREVIATIONS LEGEND, SEE SHEET 2/25
2. UNDERDRAIN AND 4" DRAIN PIPES NOT SHOWN FOR CLARITY (TYP). FOR WALL DRAINAGE INFORMATION, SEE SHEETS 21/25 TO 22/25

Preliminary Plans - For Reference Only

RESOURCE INTERNATIONAL INC.
8350 PRESIDENTIAL GATEWAY
COLUMBUS, OHIO 43231
(614) 823-4949

DESIGNED	DRAWN	REVIEWED	DATE
JLM	SMJ	SSK	3-18-26
CHECKED	REVISED	STRUCTURE FILE NUMBER	
NCK			

PLAN AND ELEVATION
SOLDIER PILE WITH LAGGING WALL U

HAM-75-7.85
PID No. 121447

19 / 25

604
1047

G:\projects\2010\B-10-020 HAM-75-7.85\77889\structures\WALL_00U\sheets\77889_00UWP401.dgn 5/13/2026 2:04:12 PM meets

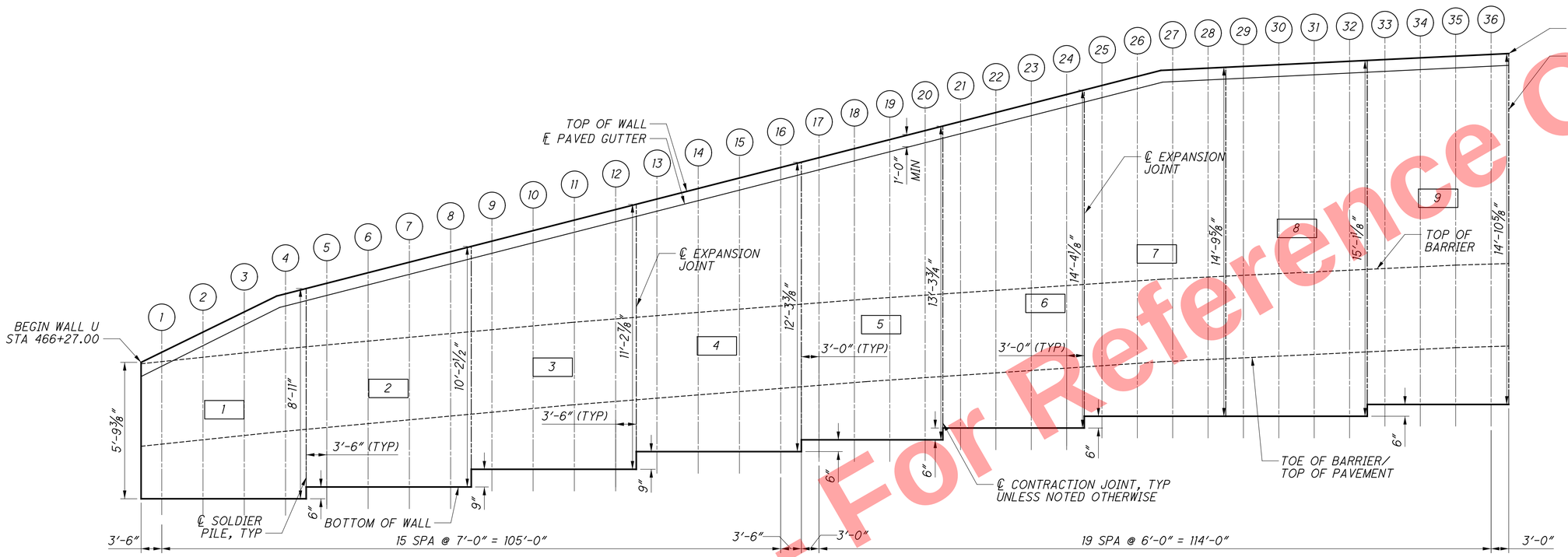

DEVELOPED ELEVATION

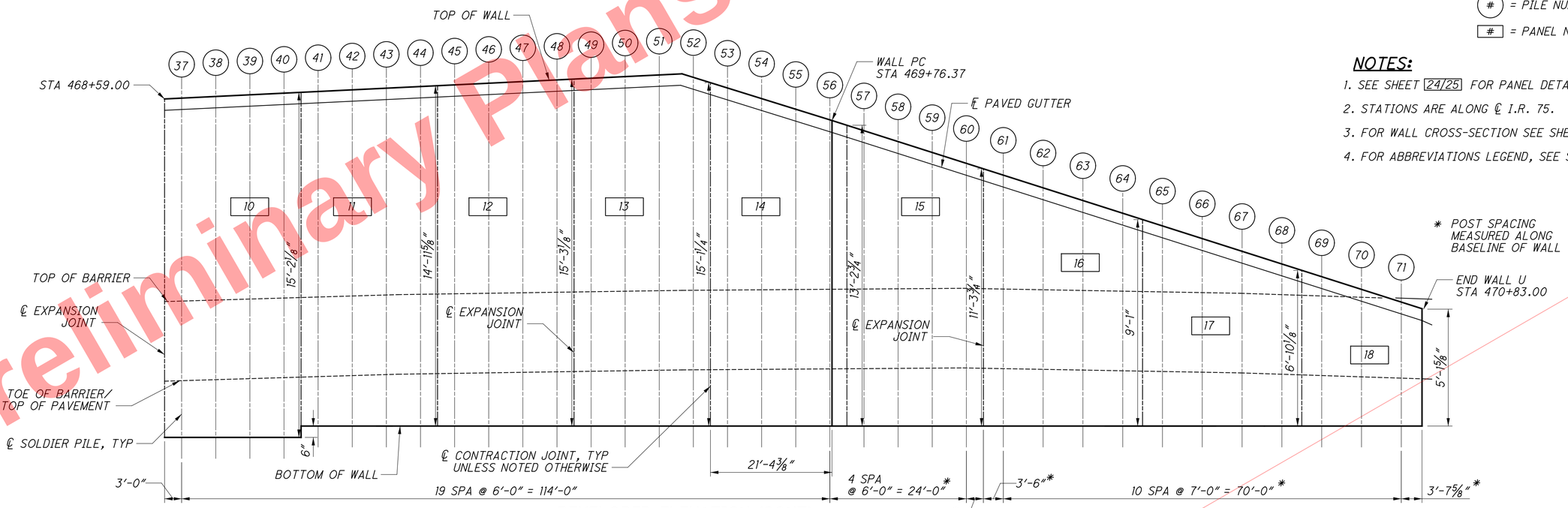

DEVELOPED ELEVATION (CONT)

LEGEND:

(#) = PILE NUMBER

[#] = PANEL NUMBER

NOTES:

1. SEE SHEET [24/25] FOR PANEL DETAILS.
2. STATIONS ARE ALONG ℄ I.R. 75.
3. FOR WALL CROSS-SECTION SEE SHEET [22/25].
4. FOR ABBREVIATIONS LEGEND, SEE SHEET [2/25].

Preliminary Plans - For Reference Only

RESOURCE INTERNATIONAL INC.
6550 PRESIDENTIAL GATEWAY
COLUMBUS, OHIO 43231
(614) 823-4949

DESIGNED JLM | DRAWN SMJ | REVIEWED SSK | DATE 3-18-26
CHECKED NCK | REVISED | STRUCTURE FILE NUMBER

WALL ELEVATION
SOLDIER PILE WITH LAGGING WALL U

HAM-75-7.85
PID No. 121447

20 / 25

605
1047

G:\projects\2010\B-10-020 HAM-75-7.85\77889\structures\WALL_00U\sheets\77889_00UWD401.dgn 5/13/2026 2:04:13 PM meets

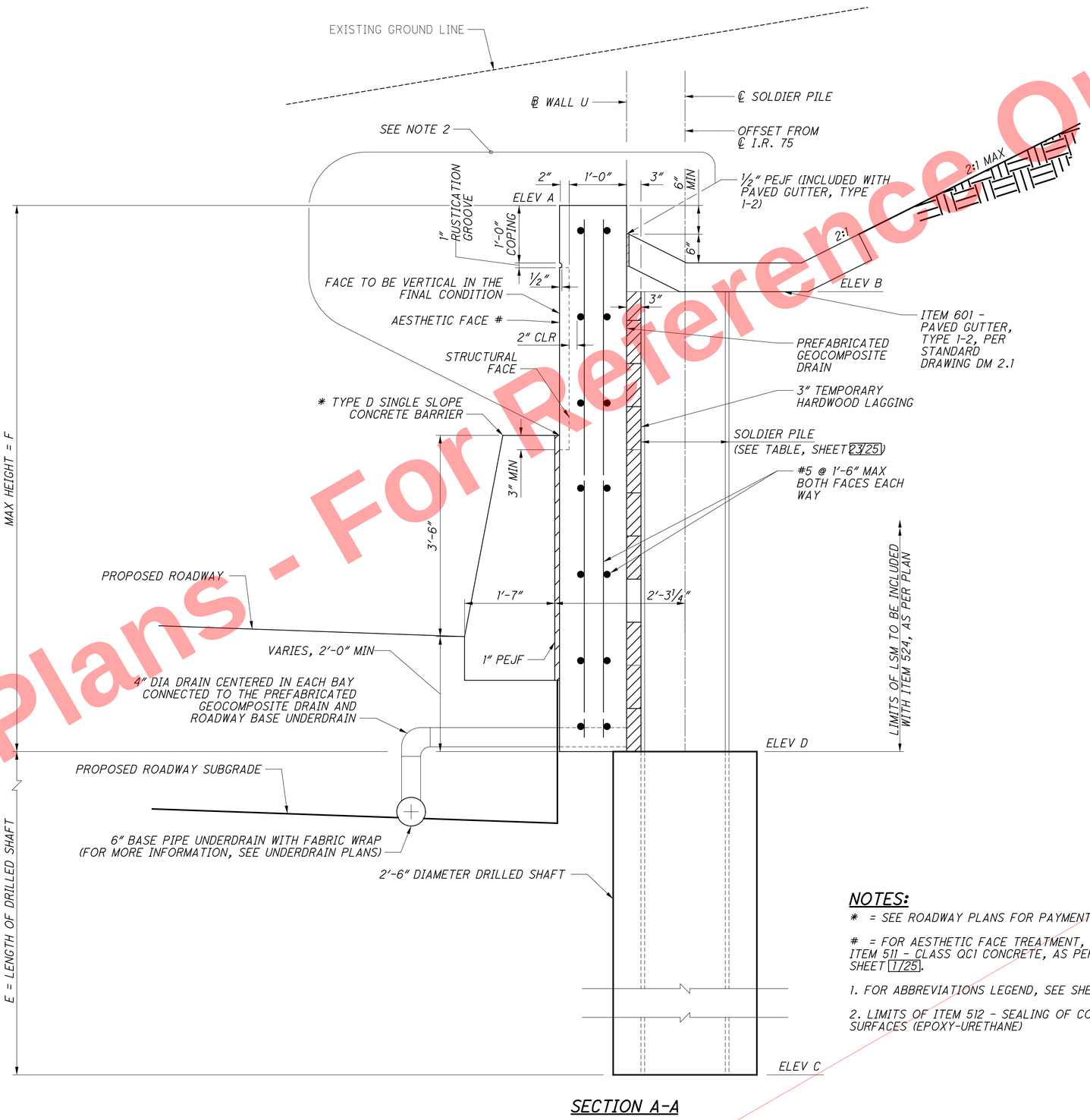

SECTION A-A

NOTES:

* = SEE ROADWAY PLANS FOR PAYMENT

\# = FOR AESTHETIC FACE TREATMENT, SEE NOTE ITEM 511 - CLASS QC1 CONCRETE, AS PER PLAN ON SHEET 17/25.

1. FOR ABBREVIATIONS LEGEND, SEE SHEET 2/25.

2. LIMITS OF ITEM 512 - SEALING OF CONCRETE SURFACES (EPOXY-URETHANE)

Preliminary Plans - Not For Reference Only

RESOURCE INTERNATIONAL INC.
6550 PRESIDENTIAL GATEWAY
COLUMBUS, OHIO 43231
(614) 823-4949

DESIGNED	DRAWN	REVIEWED	DATE
JLM	SMJ	SSK	3-18-26
CHECKED	REVISED	STRUCTURE FILE NUMBER	
NCK			

RETAINING WALL DETAILS 1 OF 2
SOLDIER PILE WITH LAGGING WALL U

HAM-75-7.85
PID No. 121447

21/25

606
1047

G:\projects\2010\B-10-020 HAM-75-7.85\77889\structures\WALL_00U\sheets\77889_00UWD402.dgn 5/13/2026 2:04:13 PM meets

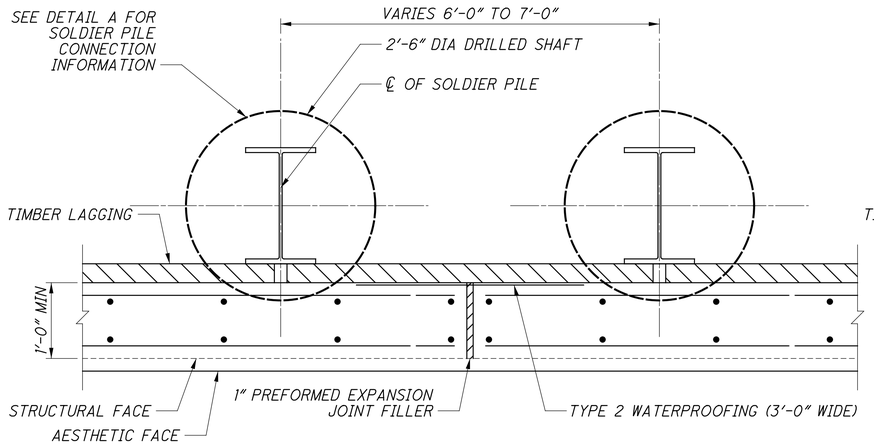

EXPANSION JOINT PLAN DETAIL

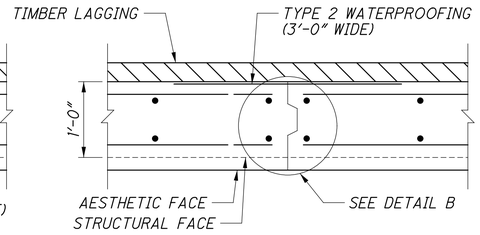

CONTRACTION JOINT PLAN DETAIL

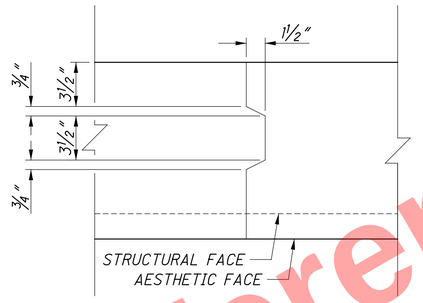

DETAIL B
(TIMBER LAGGING AND TYPE 2 WATERPROOFING NOT SHOWN FOR CLARITY)

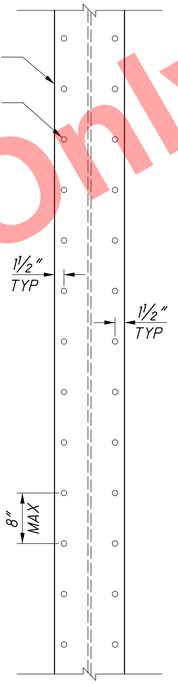

SOLDIER PILE ELEVATION

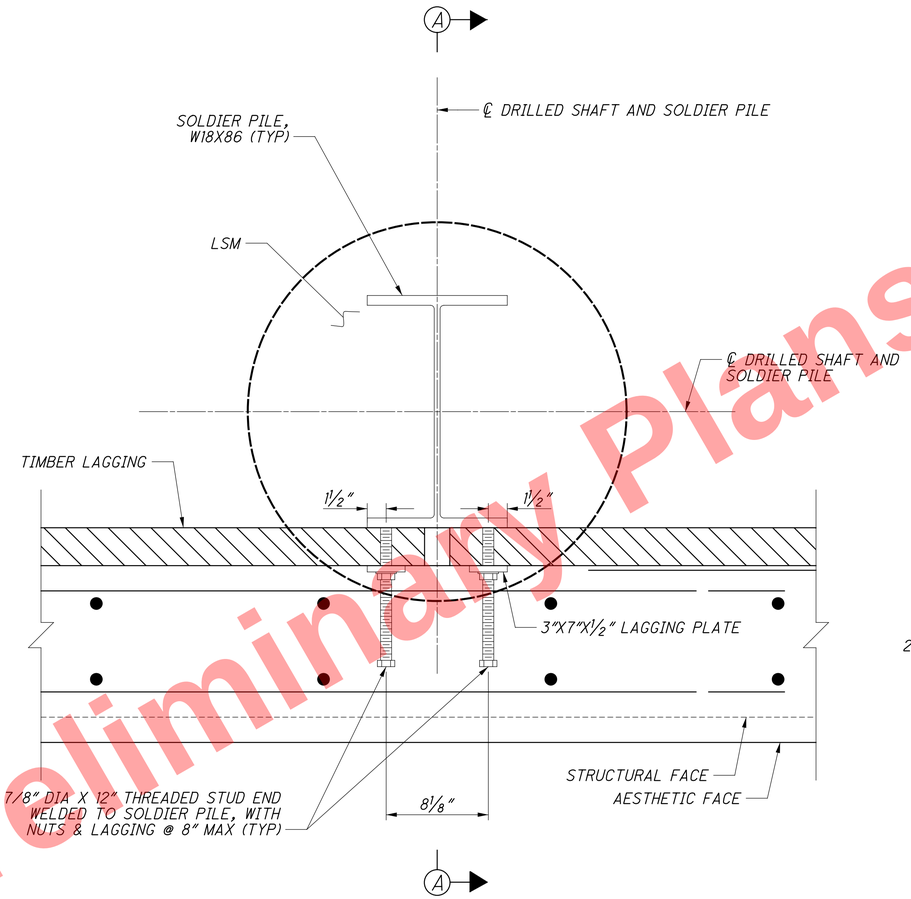

DETAIL A

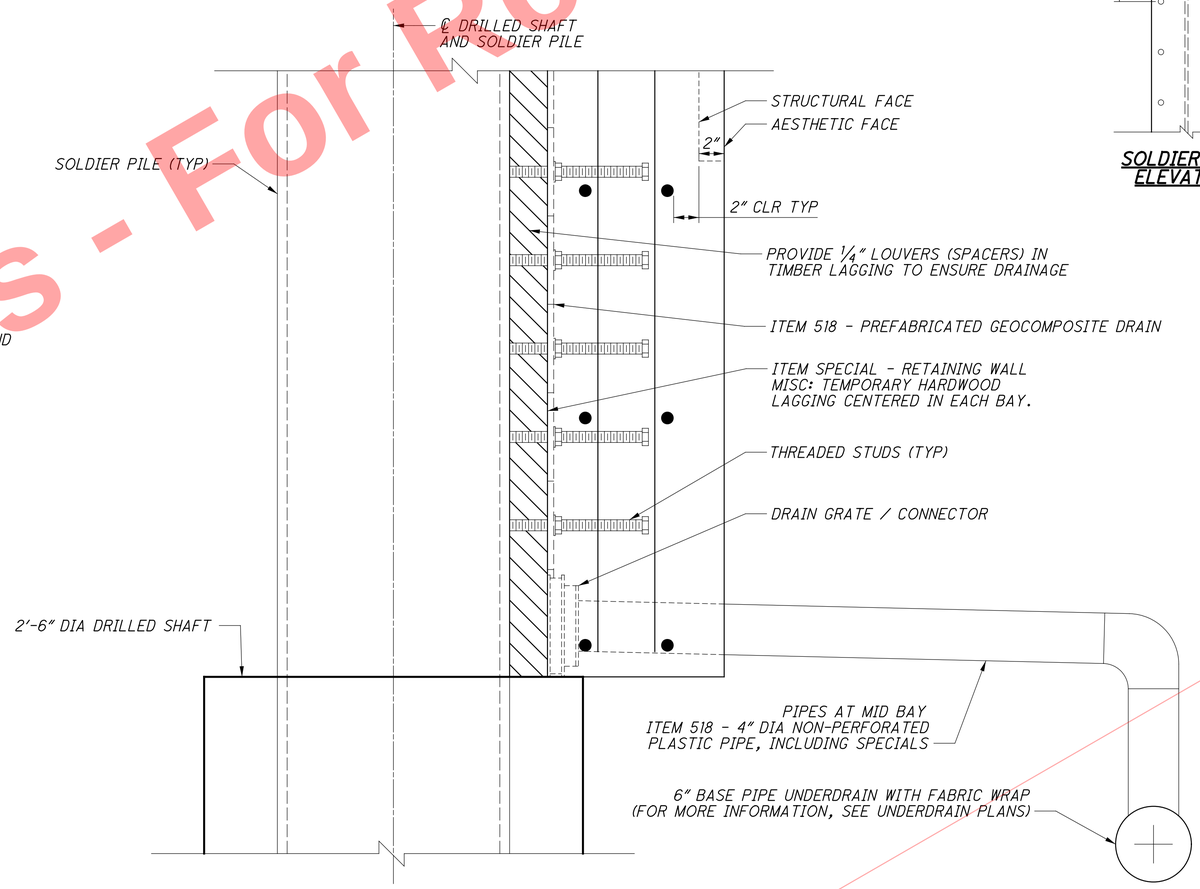

SECTION B-B

NOTES:

1. FOR ABBREVIATIONS LEGEND, SEE SHEET 2/25.

Preliminary Plans - Not For Reference Only

RESOURCE INTERNATIONAL INC.
8550 PRESIDENTIAL GATEWAY
COLUMBUS, OHIO 43231
(614) 823-4949

DESIGNED JLM | DRAWN SMJ | REVIEWED SSK | DATE 3-18-26
CHECKED NCK | REVISED | STRUCTURE FILE NUMBER

RETAINING WALL DETAILS 2 OF 2
SOLDIER PILE WITH LAGGING WALL U

HAM-75-7.85
PID No. 121447

22 / 25

607
1047

G:\projects\2010\B-10-020 HAM-75-7.85\77889\structures\WALL_00U\sheets\77889_00UWD403.dgn 5/13/2026 2:04:13 PM meets

RETAINING WALL DETAIL TABLE

SOLDIER PILE NUMBER	SOLDIER PILE STATION	SOLDIER PILE OFFSET (FT)	TOP OF WALL ELEV A	TOP OF SOLDIER PILE ELEV B	MINIMUM PILE TIP ELEV C	TOP OF DRILLED SHAFT ELEV D	LENGTH OF DRILLED SHAFT E MIN (FT)	WALL HEIGHT F (FT)	SOLDIER PILE SIZE	SOLDIER PILE LENGTH (FT)
1	466+30.50	91.35	565.90	564.40	551.68	559.68	8.00	6.22	W18X86	12.72
2	466+37.50	91.35	566.75	565.25	551.68	559.68	8.00	7.07	W18X86	13.57
3	466+44.50	91.35	567.61	566.11	551.68	559.68	8.00	7.93	W18X86	14.43
4	466+51.50	91.35	568.38	566.88	546.68	559.68	13.00	8.70	W18X86	20.20
5	466+58.50	91.35	568.82	567.32	547.18	560.18	13.00	8.64	W18X86	20.14
6	466+65.50	91.35	569.27	567.77	547.18	560.18	13.00	9.09	W18X86	20.59
7	466+72.50	91.35	569.72	568.22	547.18	560.18	13.00	9.54	W18X86	21.04
8	466+79.50	91.35	570.16	568.66	547.18	560.18	13.00	9.98	W18X86	21.48
9	466+86.50	91.35	570.61	569.11	547.93	560.93	13.00	9.68	W18X86	21.18
10	466+93.50	91.35	571.06	569.56	547.93	560.93	13.00	10.13	W18X86	21.63
11	467+00.50	91.35	571.50	570.00	547.93	560.93	13.00	10.57	W18X86	22.07
12	467+07.50	91.35	571.95	570.45	547.93	560.93	13.00	11.02	W18X86	22.52
13	467+14.50	91.35	572.40	570.90	548.68	561.68	13.00	10.72	W18X86	22.22
14	467+21.50	91.35	572.84	571.34	548.68	561.68	13.00	11.16	W18X86	22.66
15	467+28.50	91.35	573.29	571.79	548.68	561.68	13.00	11.61	W18X86	23.11
16	467+35.50	91.35	573.73	572.23	545.68	561.68	16.00	12.05	W18X86	26.55
17	467+42.00	91.35	574.15	572.65	546.18	562.18	16.00	11.97	W18X86	26.47
18	467+48.00	91.35	574.53	573.03	546.18	562.18	16.00	12.35	W18X86	26.85
19	467+54.00	91.35	574.92	573.42	546.18	562.18	16.00	12.74	W18X86	27.24
20	467+60.00	91.35	575.30	573.80	546.18	562.18	16.00	13.12	W18X86	27.62
21	467+66.00	91.35	575.68	574.18	546.68	562.68	16.00	13.00	W18X86	27.50
22	467+72.00	91.35	576.06	574.56	546.68	562.68	16.00	13.38	W18X86	27.88
23	467+78.00	91.35	576.45	574.95	546.68	562.68	16.00	13.77	W18X86	28.27
24	467+84.00	91.35	576.83	575.33	546.68	562.68	16.00	14.15	W18X86	28.65
25	467+90.00	91.35	577.21	575.71	547.18	563.18	16.00	14.03	W18X86	28.53
26	467+96.00	91.35	577.59	576.09	547.18	563.18	16.00	14.41	W18X86	28.91
27	468+02.00	91.35	577.87	576.37	547.18	563.18	16.00	14.69	W18X86	29.19
28	468+08.00	91.35	577.95	576.45	547.18	563.18	16.00	14.77	W18X86	29.27
29	468+14.00	91.35	578.02	576.52	547.18	563.18	16.00	14.84	W18X86	29.34
30	468+20.00	91.35	578.09	576.59	547.18	563.18	16.00	14.91	W18X86	29.41
31	468+26.00	91.35	578.17	576.67	547.18	563.18	16.00	14.99	W18X86	29.49
32	468+32.00	91.35	578.24	576.74	547.18	563.18	16.00	15.06	W18X86	29.56
33	468+38.00	91.35	578.31	576.81	547.68	563.68	16.00	14.63	W18X86	29.13
34	468+44.00	91.35	578.38	576.88	547.68	563.68	16.00	14.70	W18X86	29.20
35	468+50.00	91.35	578.46	576.96	547.68	563.68	16.00	14.78	W18X86	29.28
36	468+56.00	91.35	578.53	577.03	547.68	563.68	16.00	14.85	W18X86	29.35
37	468+62.00	91.35	578.60	577.10	547.68	563.68	16.00	14.92	W18X86	29.42
38	468+68.00	91.35	578.68	577.18	547.68	563.68	16.00	15.00	W18X86	29.50
39	468+74.00	91.35	578.75	577.25	547.68	563.68	16.00	15.07	W18X86	29.57
40	468+80.00	91.35	578.82	577.32	547.68	563.68	16.00	15.14	W18X86	29.64
41	468+86.00	91.35	578.89	577.39	548.18	564.18	16.00	14.71	W18X86	29.21
42	468+92.00	91.35	578.97	577.47	548.18	564.18	16.00	14.79	W18X86	29.29
43	468+98.00	91.35	579.04	577.54	548.18	564.18	16.00	14.86	W18X86	29.36
44	469+04.00	91.35	579.11	577.61	548.18	564.18	16.00	14.93	W18X86	29.43
45	469+10.00	91.35	579.18	577.68	548.18	564.18	16.00	15.00	W18X86	29.50
46	469+16.00	91.35	579.26	577.76	548.18	564.18	16.00	15.08	W18X86	29.58
47	469+22.00	91.35	579.33	577.83	548.18	564.18	16.00	15.15	W18X86	29.65
48	469+28.00	91.35	579.40	577.90	548.18	564.18	16.00	15.22	W18X86	29.72
49	469+34.00	91.35	579.48	577.98	548.18	564.18	16.00	15.30	W18X86	29.80
50	469+40.00	91.35	579.55	578.05	548.18	564.18	16.00	15.37	W18X86	29.87
51	469+46.00	91.35	579.62	578.12	548.18	564.18	16.00	15.44	W18X86	29.94
52	469+52.00	91.35	579.69	578.19	548.18	564.18	16.00	15.51	W18X86	30.01
53	469+58.00	91.35	579.05	577.55	548.18	564.18	16.00	14.87	W18X86	29.37
54	469+64.00	91.35	578.58	577.08	548.18	564.18	16.00	14.40	W18X86	28.90
55	469+70.00	91.35	578.11	576.61	548.18	564.18	16.00	13.93	W18X86	28.43
56	469+76.00	91.35	577.65	576.15	548.18	564.18	16.00	13.47	W18X86	27.97
57	469+82.00	91.36	577.18	575.68	548.18	564.18	16.00	13.00	W18X86	27.50
58	469+87.99	91.40	576.71	575.21	548.18	564.18	16.00	12.53	W18X86	27.03
59	469+93.99	91.46	576.25	574.75	551.18	564.18	13.00	12.07	W18X86	23.57
60	469+99.98	91.55	575.78	574.28	551.18	564.18	13.00	11.60	W18X86	23.10
61	470+06.48	91.67	575.27	573.77	551.18	564.18	13.00	11.09	W18X86	22.59
62	470+13.47	91.84	574.73	573.23	551.18	564.18	13.00	10.55	W18X86	22.05
63	470+20.46	92.04	574.19	572.69	551.18	564.18	13.00	10.01	W18X86	21.51
64	470+27.64	92.27	573.63	572.13	551.18	564.18	13.00	9.45	W18X86	20.95
65	470+34.95	92.51	573.06	571.56	551.18	564.18	13.00	8.88	W18X86	20.38
66	470+42.27	92.77	572.49	570.99	551.18	564.18	13.00	8.31	W18X86	19.81

RETAINING WALL DETAIL TABLE

SOLDIER PILE NUMBER	SOLDIER PILE STATION	SOLDIER PILE OFFSET (FT)	TOP OF WALL ELEV A	TOP OF SOLDIER PILE ELEV B	MINIMUM PILE TIP ELEV C	TOP OF DRILLED SHAFT ELEV D	LENGTH OF DRILLED SHAFT E MIN (FT)	WALL HEIGHT F (FT)	SOLDIER PILE SIZE	SOLDIER PILE LENGTH (FT)
67	470+49.59	93.03	571.92	570.42	556.18	564.18	8.00	7.74	W18X86	14.24
68	470+56.90	93.30	571.35	569.85	556.18	564.18	8.00	7.17	W18X86	13.67
69	470+64.22	93.59	570.78	569.28	556.18	564.18	8.00	6.60	W18X86	13.10
70	470+71.54	93.88	570.21	568.71	556.18	564.18	8.00	6.03	W18X86	12.53
71	470+78.86	94.18	569.64	568.14	556.18	564.18	8.00	5.46	W18X86	11.96

Preliminary Plans - For Reference Only

NOTES:

1. SEE SHEET 20/25 FOR PILE SPACING.
2. FOR ABBREVIATIONS LEGEND, SEE SHEET 2/25.

RESOURCE INTERNATIONAL INC.
5550 PRESIDENTIAL GATEWAY
COLUMBUS, OHIO 43231
(614) 823-4949

DESIGNED JLM | DRAWN SMJ | REVIEWED SSK | DATE 3-18-26 | CHECKED NCK | REVISED | STRUCTURE FILE NUMBER

RETAINING WALL DETAIL TABLE
SOLDIER PILE WITH LAGGING WALL U

HAM-75-7.85
PID No. 121447

608/1047

G:\projects\2010\B-10-020_HAM-75-7.85\77889\structures\WALL_00U\sheets\77889_00UWD404.dgn 5/13/2026 2:04:14 PM meets

WALL PANEL TABLE

PANEL NUMBER	PANEL TYPE	PANEL LENGTH	ELEV A1	ELEV A2	ELEV A3	A BARS NO	A BARS MARK	B BARS NO	B BARS MARK	C BARS NO	C BARS MARK	D BARS NO	D BARS MARK	E BARS NO	E BARS MARK
1	AA	28′	559.68	565.47	568.60	10	A501	2	B501	4	C501	32	D501	10	E501
2	AB	28′	560.18	568.60	570.38	14	A501	2	B502	2	C502	40	D502		
3	AB	28′	560.93	570.38	572.17	14	A501	2	B502	2	C502	40	D503		
4	AB	28′	561.68	572.17	573.96	16	A501	2	B502	2	C502	40	D504		
5	AB	24′	562.18	573.96	575.49	18	A502	2	B503	2	C502	34	D505		
6	AC	24′	562.68	575.49	577.02	28	A502	2	B503	2	C503	34	D506		
7	AD	24′	563.18	577.02	577.98	30	A502	2	B504			18	D507	18	E502
8	AE	24′	563.18	577.98	578.27	32	A502					34	D508		
9	AE	24′	563.7	578.3	578.6	32	A502					34	D509		
10	AE	24′	563.7	578.6	578.9	32	A502					34	D510		
11	AE	24′	564.18	578.86	579.15	32	A502					34	D511		
12	AE	24′	564.2	579.2	579.4	32	A502					34	D512		
13	AF	24′	564.2	579.4	579.3	32	A502	2	B505			28	D513	8	E503
14	AG	24′	564.18	579.28	577.41	28	A502	2	B503	4	C504	34	D514		
15	AH	24′	564.18	577.41	575.49	18	A502	2	B503	2	C505	34	D515		
16	AH	28′	564.2	575.49	573.3	14	A501	2	B502	2	C505	40	D516		
17	AH	28′	564.18	573.26	571.03	12	A501	2	B502	2	C505	40	D517		
18	AH	21.42′	564.2	571	569.3	10	A503	2	B506	2	C506	30	D518		

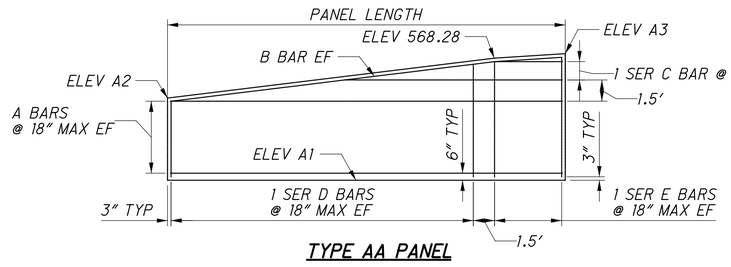

TYPE AA PANEL

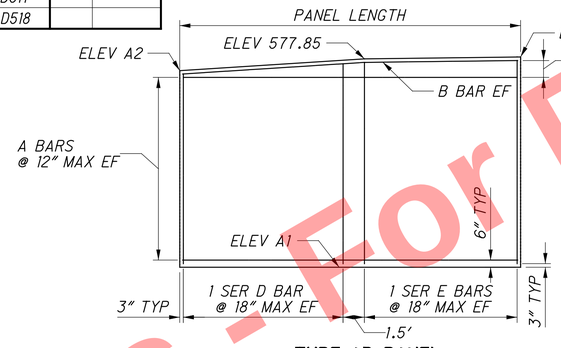

TYPE AD PANEL

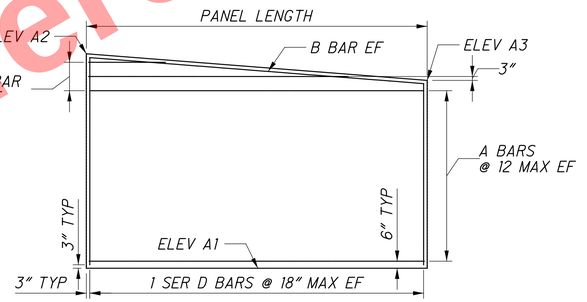

TYPE AG PANEL

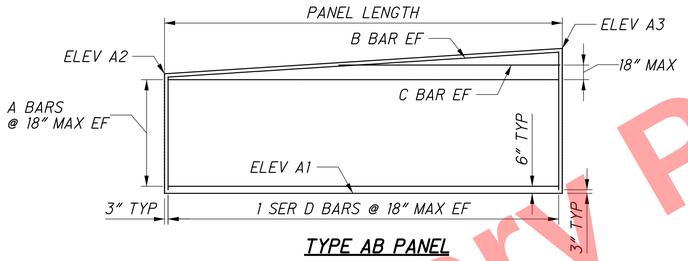

TYPE AB PANEL

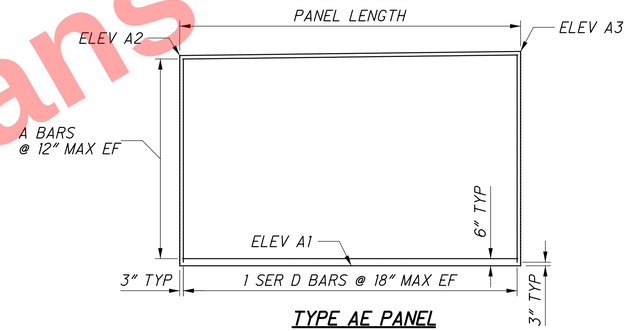

TYPE AE PANEL

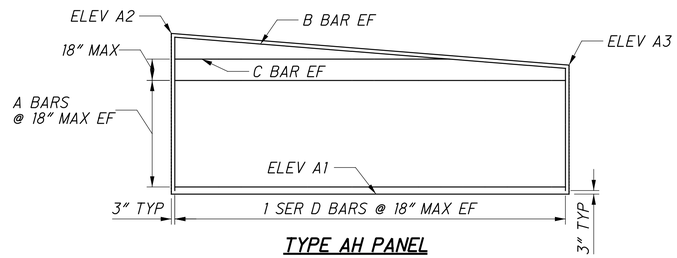

TYPE AH PANEL

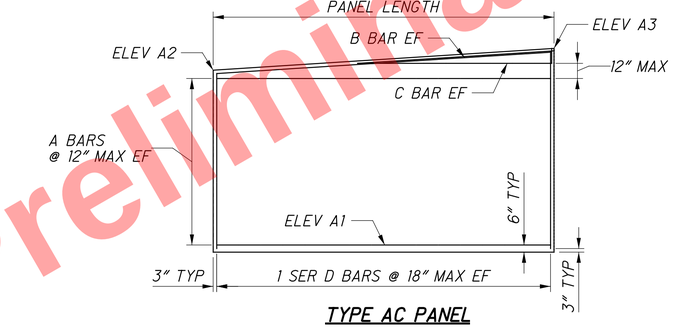

TYPE AC PANEL

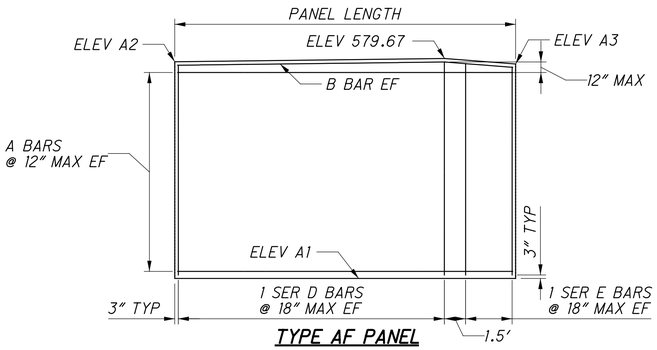

TYPE AF PANEL

NOTES:

1. SEE SHEET 25/25 FOR REINFORCING STEEL SCHEDULE.
2. LONGITUDINAL BARS ALONG WALL CURVE SHALL BE FIELD BENT.
3. FOR ABBREVIATIONS LEGEND, SEE SHEET 2/25 .

Preliminary Plans - For Reference Only

RESOURCE INTERNATIONAL INC.
8550 PRESIDENTIAL GATEWAY
COLUMBUS, OHIO 43231
(614) 823-4949

DESIGNED JLM | DRAWN SMJ | REVIEWED SSK | DATE 3-18-26
CHECKED NCK | REVISED | STRUCTURE FILE NUMBER

WALL PANELS
SOLDIER PILE WITH LAGGING WALL U

HAM-75-7.85
PID No. 121447

24/25

609
1047

G:\projects\2010\B-10-020 HAM-75-7.85\77889\structures\WALL_00U\sheets\77889_00UWD405.dgn 5/13/2026 2:04:14 PM meets

MARK	NUMBER TOTAL	LENGTH	WEIGHT	TYPE	DIMENSIONS A	B	C	D	E	R	INC
CONCRETE FACING PANELS											
A501	98	27′-6″	2811	ST							
A502	314	23′-6″	7696	ST							
A503	10	20′-11″	218	ST							
B501	2	27′-8″	58	19	22′-11 ¼″	4′-8 ¾″	3 ¼″				
B502	10	27′-6″	287	ST							
B503	8	23′-6″	196	ST							
B504	2	23′-7″	49	19	12′-10″	10′-9 ⅛″	6 ⅞″				
B505	2	23′-7″	49	19	18′-9 ½″	4′-9 ⅞″	5 ⅛″				
B506	2	21′-2″	44	ST							
	2	4′-8″									
C501	SER OF	TO	42	ST							10′-7″
	2	15′-3″									
C502	8	14′-2″	118	ST							
C503	2	12′-3″	26								
	2	4′-3″									
C504	SER OF	TO	45	ST							12′-10″
	2	17′-1″									
C505	2	19′-4″	40	ST							
C506	2	12′-9″	27	ST							
	2	5′-3″									
D501	SER OF	TO	220	ST							2 ⅛ ″
	16	7′-11″									
	2	7′-11″									
D502	SER OF	TO	367	ST							1 ⅛″
	20	9′-8″									
	2	8′-11″									
D503	SER OF	TO	410	ST							1 ⅛″
	20	10′-9″									
	2	10′-0″									
D504	SER OF	TO	454	ST							1 ⅛″
	20	11′-9″									
	2	11′-3″									
D505	SER OF	TO	428	ST							1 ⅛″
	17	12′-10″									
	2	12′-4″									
D506	SER OF	TO	464	ST							1 ⅛″
	17	13′-10″									
	2	13′-4″									
D507	SER OF	TO	258	ST							1 ¼″
	9	14′-2″									
	2	14′-3″									
D508	SER OF	TO	511	ST							¼″
	17	14′-7″									
	2	14′-1″									
D509	SER OF	TO	505	ST							3/16″
	17	14″-4″									
	2	14′-4″									
D510	SER OF	TO	514	ST							¼″
	17	14′-8″									
	2	14′-2″									
D511	SER OF	TO	507	ST							3/16″
	17	14′-5″									
	2	14′-5″									
D512	SER OF	TO	517	ST							¼″
	17	14′-9″									
	2	14′-7″									
D513	SER OF	TO	432	ST							⅜″
	14	15′-0″									

MARK	NUMBER TOTAL	LENGTH	WEIGHT	TYPE	DIMENSIONS A	B	C	D	E	R	INC
CONCRETE FACING PANELS											
	2	12′-9″									
D514	SER OF	TO	485	ST							1 ⅜″
	17	14′-7″									
	2	10′-10″									
D515	SER OF	TO	418	ST							1 7/16″
	17	12′-9″									
	2	8′-7″									
D516	SER OF	TO	403	ST							1 ⅜″
	20	10′-9″									
	2	6′-4″									
D517	SER OF	TO	311	ST							1 7/16″
	20	8′-7″									
	2	4′-7″									
D518	SER OF	TO	171	ST							1 ½″
	15	6′-4″									
	2	8′-1″									
E501	SER OF	TO	86	ST							1″
	5	8′-5″									
	2	14′-2″									
E502	SER OF	TO	267	ST							⅛″
	9	14′-3″									
	2	14′-7″									
E503	SER OF	TO	123	ST							1 1/16″
	4	15′-0″									
		TOTAL	19557								

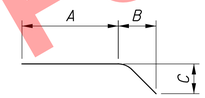

TYPE-19

NOTES:

1. THE BAR SIZE NUMBER IS SPECIFIED ON THE PLANS IN THE BAR MARK COLUMN. THE FIRST DIGIT WHERE 3 DIGITS ARE USED, AND THE FIRST 2 DIGITS WHERE FOUR DIGITS ARE USED, INDICATES THE BAR SIZE NUMBER. FOR EXAMPLE, B501 IS A NO 5 BAR AND 01 INDICATES BAR SEQUENCE NUMBER. BAR DIMENSIONS SHOWN ARE OUT TO OUT UNLESS OTHERWISE INDICATED.

2. SER INDICATES A SERIES BAR AND INC INDICATES THE LENGTH INCREMENT FOR SERIES BARS.

3. ALL REINFORCING STEEL TO BE EPOXY COATED.

4. FOR ABBREVIATIONS LEGEND, SEE SHEET [2/25] .

Preliminary Plans - For Reference Only

RESOURCE INTERNATIONAL INC.
5550 PRESIDENTIAL GATEWAY
COLUMBUS, OHIO 43231
(614) 823-4949

DESIGNED JLM | DRAWN SMJ | REVIEWED SSK | DATE 3-18-26
CHECKED NCK | REVISED | STRUCTURE FILE NUMBER

REINFORCING STEEL SCHEDULE

SOLDIER PILE WITH LAGGING WALL U

HAM-75-7.85
PID No. 121447

25 / 25

610
1047

G:\projects\2010\B-10-020 HAM-75-7.85\77889\structures\WALL_00U\sheets\77889_00UWL401.dgn 5/13/2026 2:04:15 PM meets

PROPOSED WORK

THE PROPOSED WORK CONSISTS OF BUILDING CAST-IN-PLACE REINFORCED CONCRETE RETAINING WALLS IN THE FOLLOWING LOCATIONS:

WALLS T - ALONG I.R. 75 NB ML.
WALL M - ALONG RAMP N, EXTENDING HAM-75-0772 BRIDGE WINGWALL.

REFERENCE SHALL BE MADE TO SUPPLEMENTAL SPECIFICATION

NONE

REFERENCE SHALL BE MADE TO SUPPLEMENT

1083 DATED 1-20-17

DESIGN SPECIFICATIONS

THIS STRUCTURE CONFORMS TO THE 9TH EDITION OF THE "LRFD BRIDGE DESIGN SPECIFICATIONS" ADOBTED BY THE AMERICAN ASSOCIATION OF STATE HIGHWAY AND TRANSPORTATION OFFICIALS, 2020, AND THE ODOT BRIDGE DESIGN MANUAL, 2020.

DESIGN PARAMETERS

ANGLE OF FRICTION = 30°
UNIT WEIGHT OF SOIL = 125 PCF
ALLOWABLE COEFFICIENT OF FRICTION = 0.5

DESIGN DATA

CONCRETE CLASS QC1 - COMPRESSIVE STRENGTH 4000 PSI

REINFORCING STEEL - ASTM A615 OR A996 GRADE 60, MINIMUM YIELD STRENGTH 60,000 PSI

FOUNDATION BEARING PRESSURE

RETAINING WALL FOOTINGS, AS DESIGNED, PRODUCE THE FOLLOWING BEARING PRESSURES:

WALL	FOUNDATION BEARING PRESSURE (KSF)	
	MAX SERVICE	MAX FACTORED
T	2.25	2.81
M	1.84	2.52

MAINTENANCE OF TRAFFIC

FOR MAINTENANCE OF TRAFFIC DETAILS, SEE THE ROADWAY PLANS.

ITEM 512 - SEALING OF CONCRETE SURFACES (EPOXY-URETHANE)

SEALING OF CONCRETE SURFACES (EPOXY-URETHANE) SHALL BE APPLIED TO ALL EXPOSED SURFACES OF THE CONCRETE FACING OF THE RETAINING WALL INCLUDING THE TOP, BACKSIDE OF WALL DOWN TO THE GUTTER OR TOE OF BARRIER, AND THE FRONT VERTICAL SIDE OF THE CONCRETE FROM TOP TO BOTTOM. THE FINISH COAT COLOR FOR THE RETAINING WALL SHALL BE LIGHT NEUTRAL MEETING FEDERAL COLOR STANDARD NO. 595B-17778.

ITEM 503 - UNCLASSIFIED EXCAVATION, AS PER PLAN

ALL EXCAVATION AND BACKFILL REQUIRED TO CONSTRUCT THE PROPOSED EMBANKMENT BETWEEN THE VERTICAL LIMITS OF THE UNCLASSIFIED EXCAVATION FOR THE RETAINING WALL SHALL BE INCLUDED WITH ITEM 503 - UNCLASSIFIED EXCAVATION, AS PER PLAN FOR PAYMENT. UNCLASSIFIED EXCAVATION WILL BE MEASURED PER CMS 503.09. SEE DETAIL ON SHEET [2/11].

CAST IN PLACE FOOTINGS

THE CONTRACTOR SHOULD CUT THE FOOTING AND FOOTING KEYWAY TO NEAT EXCAVATION LINES WITHOUT FORMING PRIOR TO PLACING THE FOOTING CONCRETE AND REINFORCING STEEL. FORM THE FOOTING ONLY WHEN THE EXCAVATION WALLS ARE UNSTABLE.

ITEM 503 - COFFERDAMS AND EXCAVATION BRACING, AS PER PLAN (WALL M):

TEMPORARY SHORING IS REQUIRED TO CONSTRUCT THE CIP WALLS WITHIN THE AVAILABLE RIGHT-OF-WAY.

TEMPORARY SHORING REQUIRED IN ADDITION TO THE SHORING FOR CONSTRUCTION PAID FOR WITH THE DRAINAGE OF WALL EXCAVATIONS IS ALSO INCLUDED FOR PAYMENT IN THE LUMP SUM BID FOR THIS ITEM.

WALL M: SEE WALL DETAIL SHEETS

THE DESIGN SHOWN IN THE PLANS FOR TEMPORARY SUPPORT OF THE EXCAVATION IS ONE REPRESENTATIVE DESIGN THAT MAY BE USED TO CONSTRUCT THE PROJECT. THE CONTRACTOR MAY CONSTRUCT THE DESIGN SHOWN ON THE PLANS OR PREPARE AN ALTERNATE DESIGN FOR TEMPORARY SUPPORT OF THE EXCAVATION, PREPARE AND PROVIDE PLANS IN ACCORDANCE WITH C&MS 501.05.

ITEM 530 - SPECIAL - FORM LINER: (WALL M):

FORM LINERS SHALL BE USED TO PRODUCE THE TEXTURED SURFACES ACCORDING TO THE LIMITS SHOWN ON THE PLANS. THE FORM LINERS USED TO PRODUCE THE ARCHITECTURAL SURFACE TEXTURES SHALL BE APPROVED BY THE DIRECTOR. PROVIDE A FORMLINER THAT MATCHES THE ADJACENT DRY STAKED PATTERN OF THE ADJACENT HAM-75-0772 STRUCTURE. INCLUDE A SMOOTH COPING AS INDICATED IN THE WALL DETAILS.

METHOD OF MEASUREMENT: THE DEPARTMENT WILL MEASURE FORM LINERS BY THE NUMBER OF SQUARE FEET. THE DEPARTMENT WILL DETERMINE THE AREA OF THE FORM LINERS USING NOMINAL DIMENSIONS AS SHOWN ON THE PLANS. THE DEPARTMENT WILL NOT ADJUST PAY QUANTITIES FOR JOINT RSTIFICATIONS OR OTHER FORM LINER CONTRUCTION DETAILS.

BASIS OF PAYMENT: THE DEPARTMENT WILL PAY FOR FALSEWORK, STRUCTURAL FORMWORK, FURNISHING, PLACING, CONSOLIDATING, FINISHING, AND CURING PROTLAND CEMENT CONCRETE SEPARATELY. PAYMENT FOR ITEM 530, SPECIAL - FORM LINER INCLUDES ALL MATERIALS AND LABOR REQUIRED TO PRODUCE THE TEXTURED CONCRETE SURFACES SHOWN ON THE PLANS AND DESCRIBED HEREIN.

ITEM 601 - PAVED GUTTER, TYPE 1-2, AS PER PLAN (WALL M)

PAVED GUTTER, AS PER PLAN, SHALL MEET ALL THE REQUIREMENTS OF SCD DM-2.1. WIDTH SHALL BE PER SCD DM-2.1, UNLESS OTHERWISE NOTED ON THE PLANS.

ABBREVIATIONS:

CJ - CONSTRUCTION JOINT
C/C - CENTER TO CENTER
CLR - CLEAR
CONST - CONSTRUCTION
EF - EACH FACE
ELEV - ELEVATION
EX - EXISTING
FF - FAR FACE
I.R. 75 - INTERSTATE ROUTE 75
INC - INCREMENT
LT - LEFT
MAX - MAXIMUM
MIN - MINIMUM
NB - NORTH BOUND
NF - NEAR FACE
PEJF - PREFORMED EXPANSION JOINT FILLER
PROP - PROPOSED
RT - RIGHT
SER - SERIES
SPA - SPACING
STA - STATION
ST - STRAIGHT
TYP - TYPICAL

Preliminary Plans - For Reference Only

RESOURCE INTERNATIONAL INC.
5550 PRESIDENTIAL GATEWAY
COLUMBUS, OHIO 43231
(614) 823-4949

DESIGNED	DRAWN	REVIEWED	DATE
JLM	SMJ	SSK	3-18-26
CHECKED	REVISED	STRUCTURE FILE NUMBER	
NCK			

GENERAL NOTES
CAST IN PLACE RETAINING WALL T AND M

HAM-75-7.85
PID No. 121447

1 / 11

611
1047

G:\projects\2010\B-10-020 HAM-75-7.85\77889\structures\WALL_00T\sheets\77889_00TWN401.dgn 5/13/2026 2:04:15 PM meets

ESTIMATED QUANTITIES								AS PER PLAN REFERENCE SHEET
WALL T	WALL M	ITEM	ITEM EXT.	PARTICIPATION 02/IMS/03	TOTAL	UNIT	DESCRIPTION	
42		203	22000	42	42	CU YD	EMBANKMENT, USING NATURAL SOIL, 703.16.A	
LUMP		503	11100	LUMP	LUMP		COFFERDAMS AND EXCAVATION BRACING	
	LUMP	503	11101	LUMP	LUMP		COFFERDAMS AND EXCAVATION BRACING, AS PER PLAN	1 / 11
LUMP	LUMP	503	21301	LUMP	LUMP		UNCLASSIFIED EXCAVATION, AS PER PLAN	1 / 11
15586	2065	509	10000	17651	17651	LB	EPOXY COATED REINFORCING STEEL	
151	25	511	50212	176	176	CU YD	CLASS QC1 CONCRETE WITH QC/QA, SUBSTRUCTURE	
131	20	512	10100	151	151	SQ YD	SEALING OF CONCRETE SURFACES (EPOXY URETHANE)	1 / 11
19	4	512	33000	23	23	SQ YD	TYPE 2 WATERPROOFING	
19		516	13400	19	19	SQ FT	¾" PREFORMED EXPANSION JOINT FILLER	
20	22	516	13600	42	42	SQ FT	1" PREFORMED EXPANSION JOINT FILLER	
58	13	518	21200	71	71	CU YD	POROUS BACKFILL WITH GEOTEXTILE FABRIC	
191		518	40000	191	191	FT	6" PERFORATED CORRUGATED PLASTIC PIPE	
10		518	40010	10	10	FT	6" NON-PERFORATED CORRUGATED PLASTIC PIPE, INCLUDING SPECIALS	
	22	518	42200	22	22	FT	8" PERFORATED CORRUGATED STEEL PIPE, 707.01	
	2	518	42300	2	2	FT	8" NON-PERFORATED CORRUGATED STEEL PIPE, INCLUDING SPECIALS, 707.01	
	153	530	13000	153	153	SF	SPECIAL - FORMLINER	1 / 11
252		601	37500	252	252	FT	PAVED GUTTER, TYPE 1-2	
	28	601	37501	28	28	FT	PAVED GUTTER, TYPE 1-2, AS PER PLAN	1 / 11

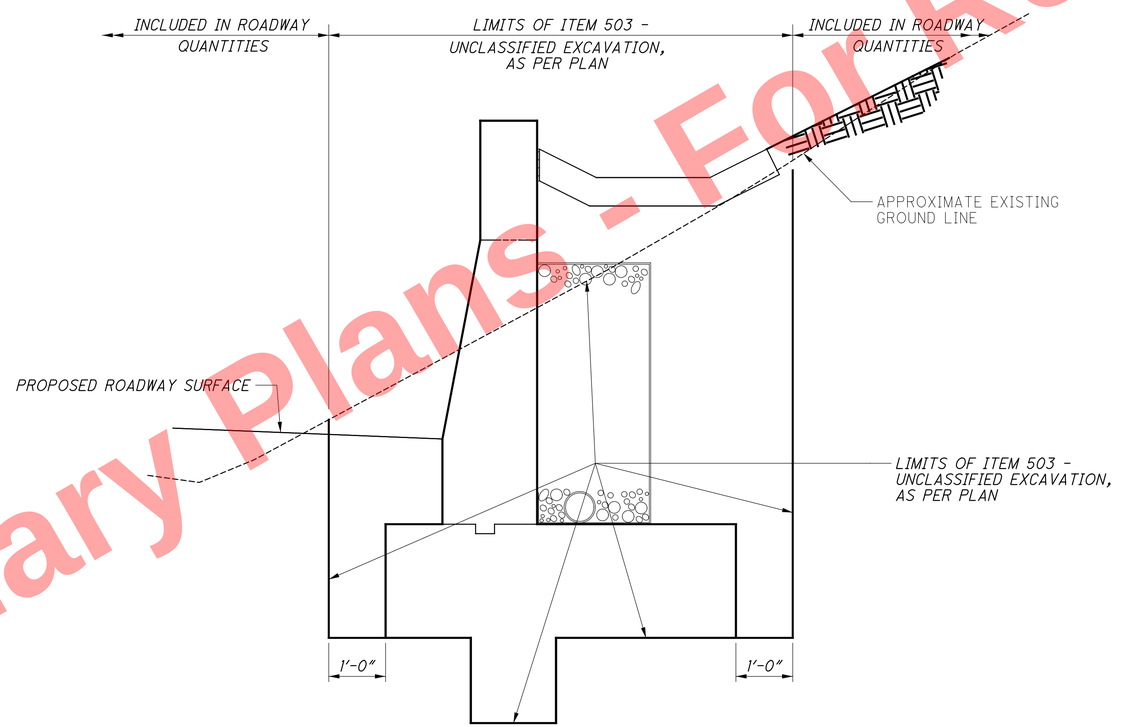

UNCLASSIFIED EXCAVATION, AS PER PLAN, PAYMENT LIMITS

NOTES:

1. FOR ABBREVIATIONS LEGEND, SEE SHEET 1 / 11
2. FOR ADDITIONAL UNCLASSIFIED EXCAVATION, AS PER PLAN, PAYMENT LIMITS, SEE SHEET 1 / 11

Preliminary Plans - For Reference Only

RESOURCE INTERNATIONAL INC.
5550 PRESIDENTIAL GATEWAY
COLUMBUS, OHIO 43231
(614) 823-4949

DESIGNED MMS | DRAWN MMS | REVIEWED SSK | DATE 3-18-26
CHECKED JWE | REVISED | STRUCTURE FILE NUMBER

ESTIMATED QUANTITIES
CAST-IN-PLACE RETAINING WALL T AND M

HAM-75-7.85
PID No. 121447

2 / 11

612
1047

G:\projects\2010\B-10-020 HAM-75-7.85\77889\structures\WALL_00T\sheets\77889_00TWQ401.dgn 5/13/2026 2:04:15 PM meets

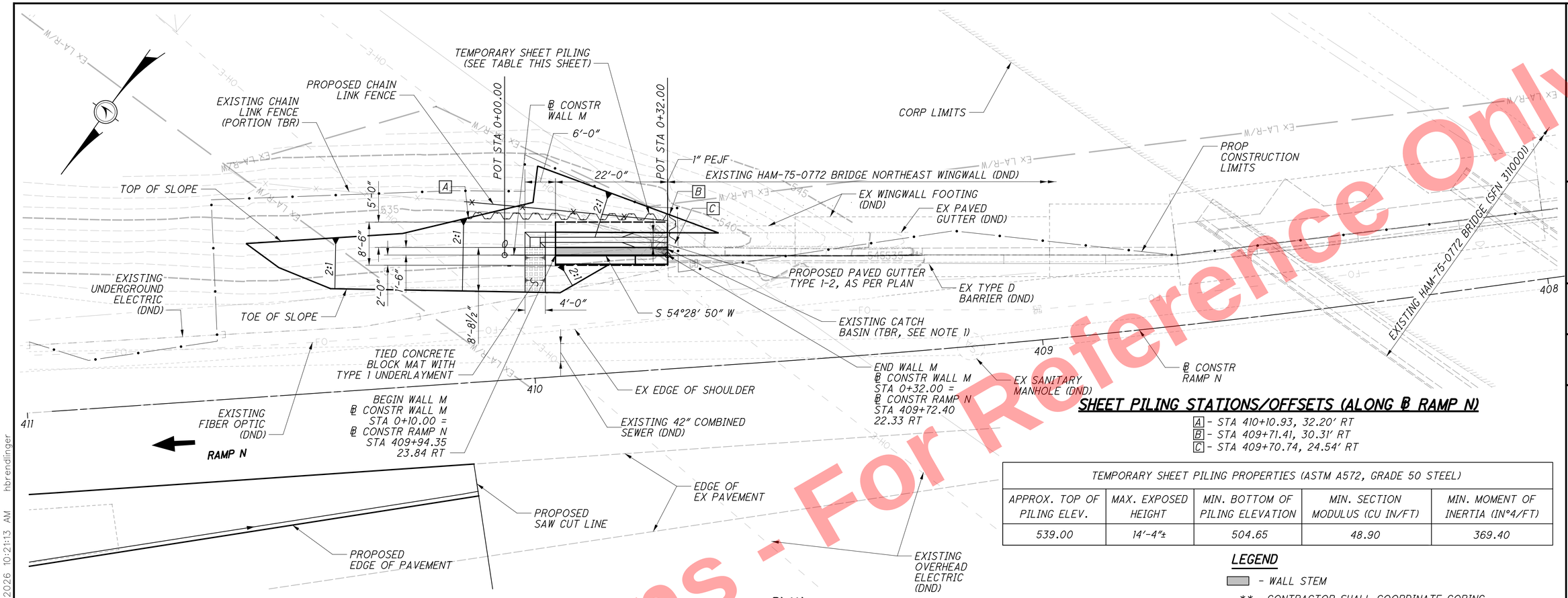

SHEET PILING STATIONS/OFFSETS (ALONG ℄ RAMP N)

A - STA 410+10.93, 32.20' RT
B - STA 409+71.41, 30.31' RT
C - STA 409+70.74, 24.54' RT

TEMPORARY SHEET PILING PROPERTIES (ASTM A572, GRADE 50 STEEL)				
APPROX. TOP OF PILING ELEV.	MAX. EXPOSED HEIGHT	MIN. BOTTOM OF PILING ELEVATION	MIN. SECTION MODULUS (CU IN/FT)	MIN. MOMENT OF INERTIA (IN^4/FT)
539.00	14'-4"±	504.65	48.90	369.40

LEGEND

- WALL STEM
** - CONTRACTOR SHALL COORDINATE COPING GEOMETRY AND TIE IN WITH THE EXISTING WINGWALL TO ENSURE UNIFORM FINAL CONDITION

PLAN

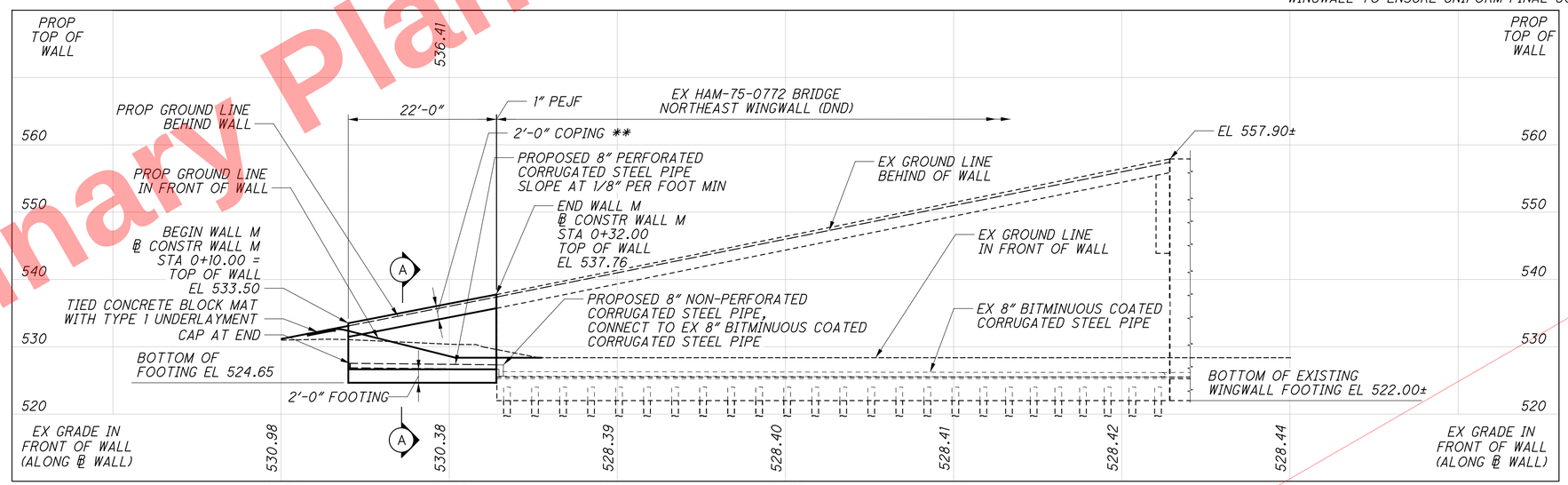

PROFILE ALONG ℄ CONST WALL M

(NORTHEAST WING WALL ADDITION, EXISTING CONCRETE BARRIER NOT SHOWN FOR CLARITY)

LEGEND

1. ALL STORM PIPES CONNECTED TO THE EXISTING CATCH BASIN IS ARE BE REMOVED.

Preliminary Plans - For Reference Only

DESIGN AGENCY EMH&T
DESIGNED RJE | DRAWN GB | CHECKED RMW | REVIEWED CAS | DATE 5-22-26 | REVISED - | STRUCTURE FILE NUMBER

PLAN AND PROFILE
CAST-IN-PLACE RETAINING WALL M

HAM-75-7.85
PID No. 121447

3 / 11

613
1047

J:\20110903\ODOT\HAM\77889\structures\WALL_00M\sheets\77889_00MWP001.dgn 5/22/2026 10:21:13 AM hbrendlinger

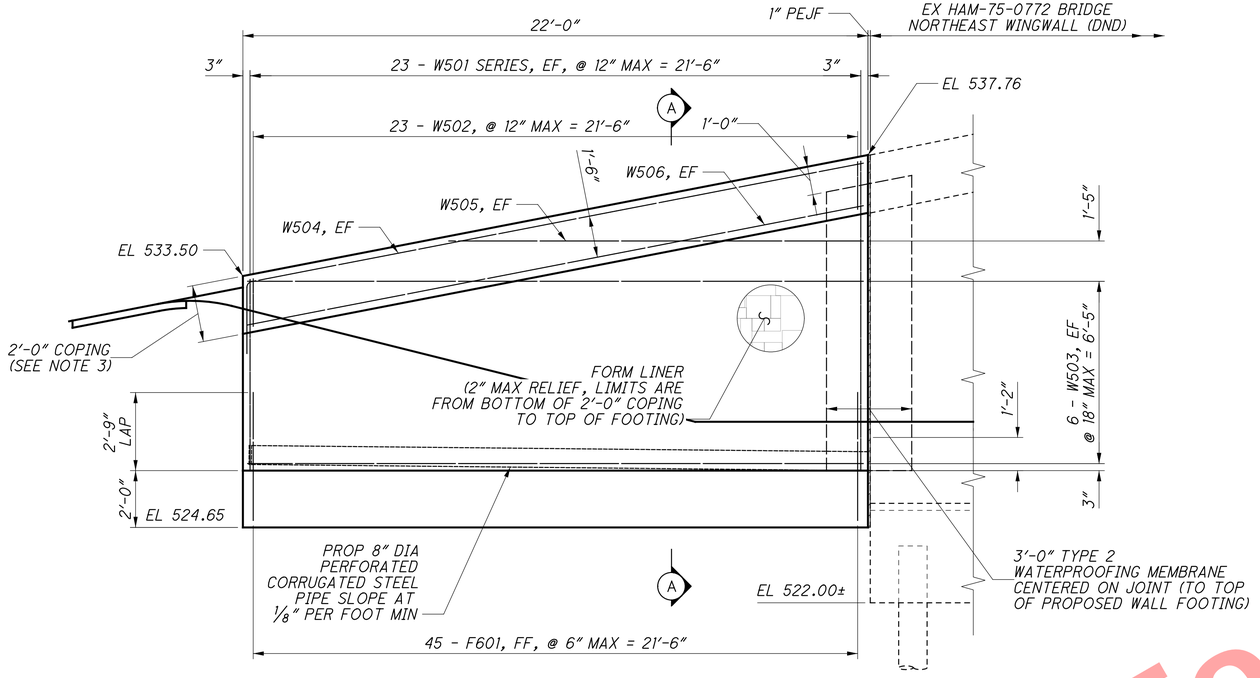

ELEVATION

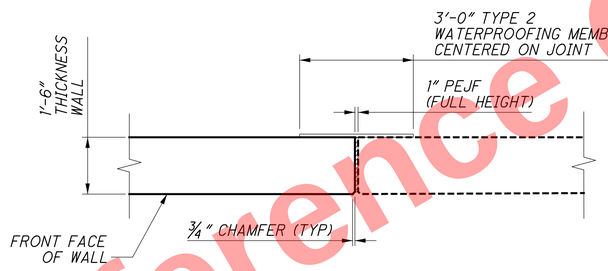

EXPANSION JOINT DETAIL

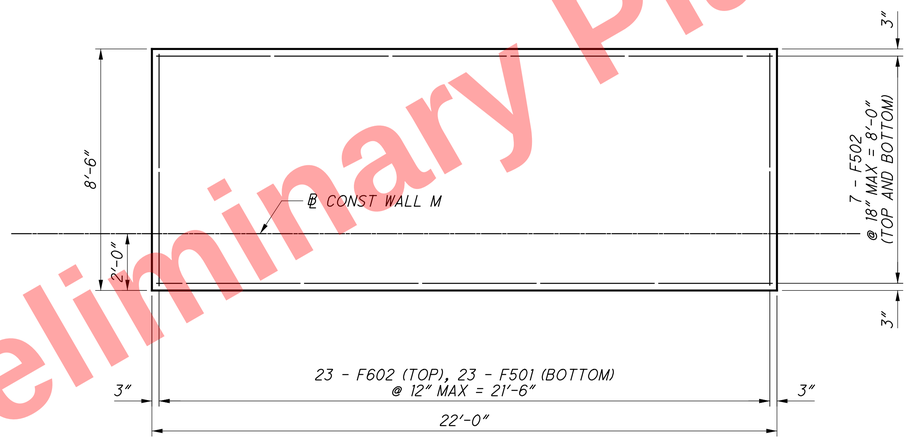

FOOTING PLAN

NOTES

1. FOR SECTION A-A SEE SHEET 5/11
2. SEE GENERAL NOTES FOR ABBREVIATION LEGENDS.
3. CONTRACTOR SHALL COORDINATE COPING GEOMETRY AND TIE IN WITH THE EXISTING WINGWALL TO ENSURE UNIFORM FINAL CONDITION.

Preliminary Plans - For Reference Only

DESIGN AGENCY
EMH&T
Engineers • Surveyors • Planners • Scientists
5500 New Albany Road, Columbus, OH 43054
Phone: 614.775.4500

DESIGNED	DRAWN	REVIEWED	DATE
RJE	GB	CAS	5-22-26
CHECKED	REVISED	STRUCTURE FILE NUMBER	
RMW	-		

WALL DETAILS
CAST-IN-PLACE RETAINING WALL M

HAM-75-7.85
PID No. 121447

4 / 11

614
1047

J:\2010903\ODOT\HAM\77889\structures\WALL_00M\sheets\77889_00MWD001.dgn 5/22/2026 10:24:4 AM hbrendlinger

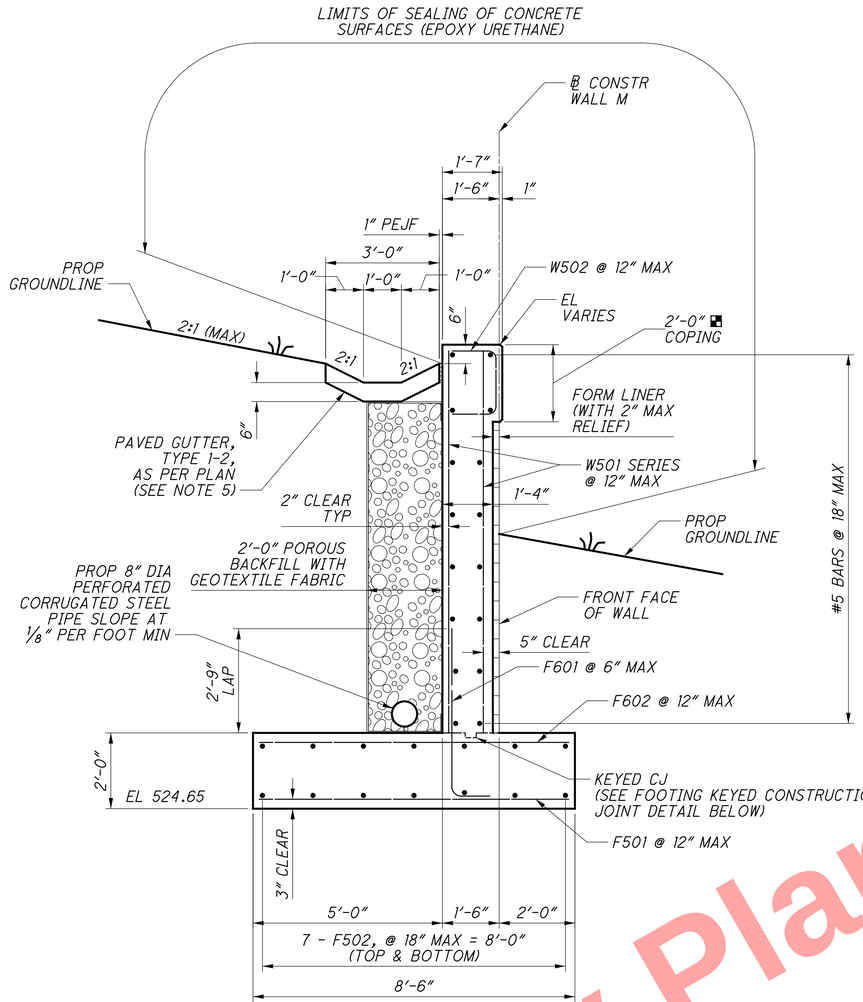

SECTION A-A

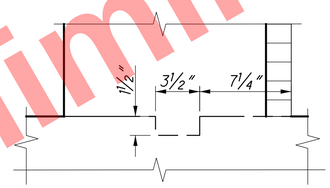

FOOTING KEYED CONSTRUCTION JOINT DETAIL

MARK	NUMBER TOTAL	LENGTH	WEIGHT	TYPE	DIMENSIONS A	B	C	D	E	R	INC
WALL											
W501	2 SR OF 23	6'-8" TO 10'-9½"	419	STR							0'-2¼"
W502	23	3'-11"	94	2	1'-3"	1'-8"	1'-3"				
W503	12	21'-8"	271	STR							
W504	2	24'-6"	51	19	22'-1"	0'-6"	2'-5½"				
W505	2	14'-7"	30	STR							
W506	2	22'-1"	46	STR							
SUB-TOTAL			911								
FOUNDATION											
F501	23	8'-2"	196	STR							
F502	14	21'-8"	316	STR							
F601	45	5'-4"	360	1	1'-0"	4'-6"					
F602	23	8'-2"	282	STR							
SUB-TOTAL			1,154								
TOTAL			2,065								

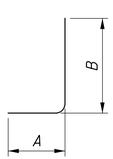

TYPE-1

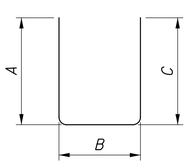

TYPE-2

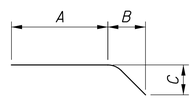

TYPE-19

LEGEND

■ - MEASURED PERPENDICULAR TO TOP OF WALL. CONTRACTOR SHALL COORDINATE COPING GEOMETRY AND TIE-IN WITH THE EXISTING WINGWALL TO ENSURE UNIFORM FINAL CONDITION.

NOTES

1. THE LIMITS OF SEALING OF CONCRETE SURFACES ARE TO BE EXTENDED DOWN TO THE PROPOSED TOP OF GROUND ELEVATIONS AT THE FRONT FACE OF STEM AND WINGWALLS DURING THE HAM-75-7.85 PROJECT.
2. THE BAR SIZE ON THE PLANS IN THE BAR COLUMN. THE FIRST DIGIT WHERE THREE DIGITS ARE USED, AND THE FIRST TWO DIGITS WHERE FOUR ARE USED, INDICATES THE BAR SIZE NUMBER. FOR THE NUMBER S601 IS A NO. 6 BAR. BAR DIMENSIONS SHOWN ARE OUT TO OUT, UNLESS OTHERWISE INDICATED. R INDICATES I INSIDE RADIUS, UNLESS OTHERWISE NOTED. "STD" WRITTEN IN PLACE OF A DIMENSION INDICATES A STANDARD BEND AT THE END OF THE BAR.
3. ALL REINFORCING STEEL TO EPOXY COATED.
4. SEE GENERAL NOTES FOR ABBREVIATION LEGENDS.
5. PROPOSED PAVED GUTTER SHALL BE POURED ADJACENT TO THE EDGE OF THE EXISTING PAVED GUTTER BEHIND THE EXISTING WINGWALL.

Preliminary Plans - For Reference Only

DESIGN AGENCY EMH&T
REVIEWED CAS DATE 5-22-26
DRAWN GB REVISED -
DESIGNED RJE CHECKED RMW
STRUCTURE FILE NUMBER

WALL DETAILS
CAST-IN-PLACE RETAINING WALL M

HAM-75-7.85
PID No. 121447

5 / 11

615
1047

J:\2011\0903\ODOT\HAM\77889\structures\WALL_00M\sheets\77889_00MWD002.dgn 5/22/2026 10:2:45 AM hbrendlinger

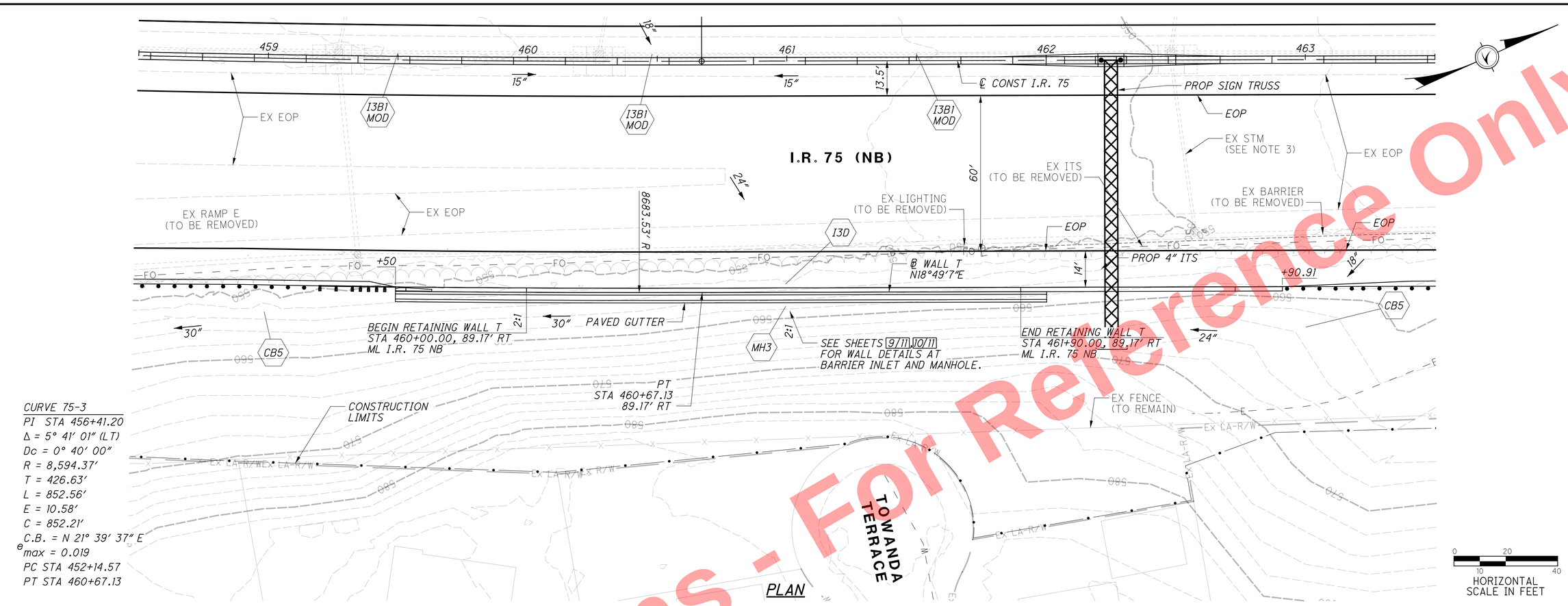

PLAN

CURVE 75-3
PI STA 456+41.20
Δ = 5° 41' 01" (LT)
Dc = 0° 40' 00"
R = 8,594.37'
T = 426.63'
L = 852.56'
E = 10.58'
C = 852.21'
C.B. = N 21° 39' 37" E
e_{max} = 0.019
PC STA 452+14.57
PT STA 460+67.13

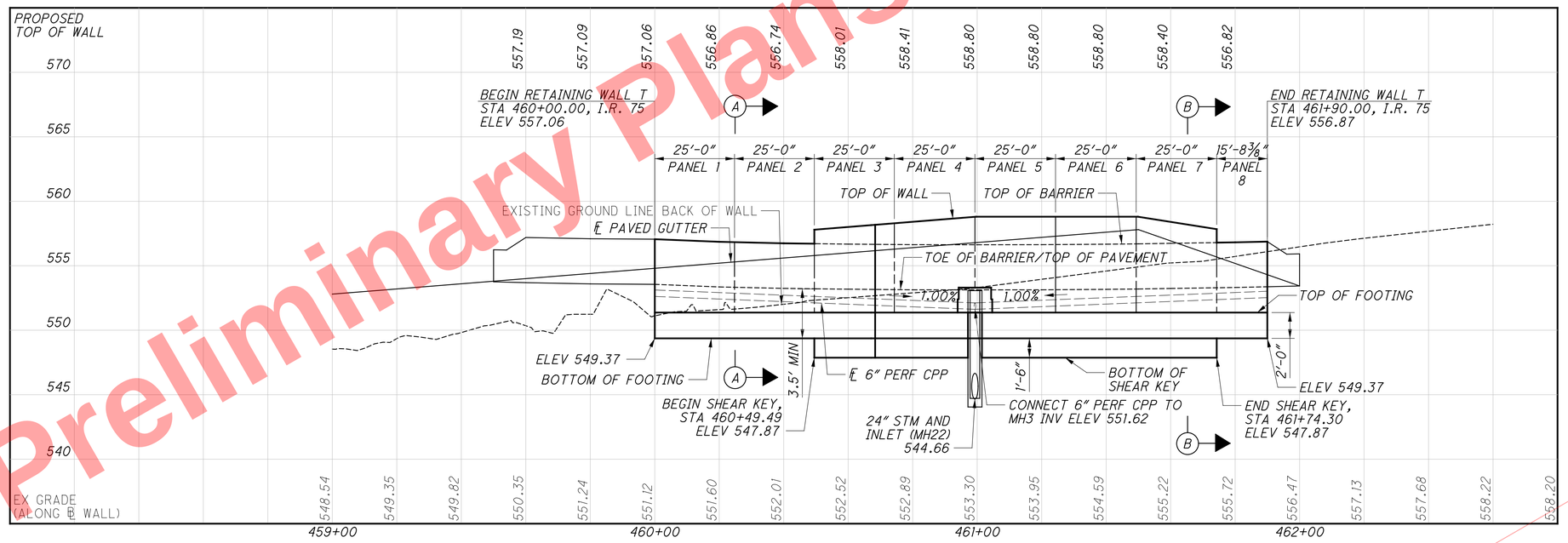

ELEVATION ALONG BACK OF WALL

NOTES:

1. FOR SECTIONS A-A AND B-B, SEE SHEET 9/11
2. FOR ABBREVIATIONS LEGEND, SEE SHEET 1/11
3. ALL EXISTING STORM SEWER IS TO BE REMOVED UNLESS OTHERWISE NOTED.

Preliminary Plans - For Reference Only

RESOURCE INTERNATIONAL INC.
8555D PRESIDENTIAL GATEWAY
COLUMBUS, OHIO 43231
(614) 823-4949

DESIGNED JLM | DRAWN SMJ | REVIEWED SSK | DATE 3-18-26
CHECKED NCK | REVISED | STRUCTURE FILE NUMBER

PLAN AND ELEVATION
CAST-IN-PLACE BARRIER RETAINING WALL T

HAM-75-7.85
PID No. 121447

6 / 11

616
1047

C:\projects\2010\B-10-020 HAM-75-7.85\77889\structures\WALL_00T\sheets\77889_00TWP401.dgn 5/13/2026 2:04:17 PM meets

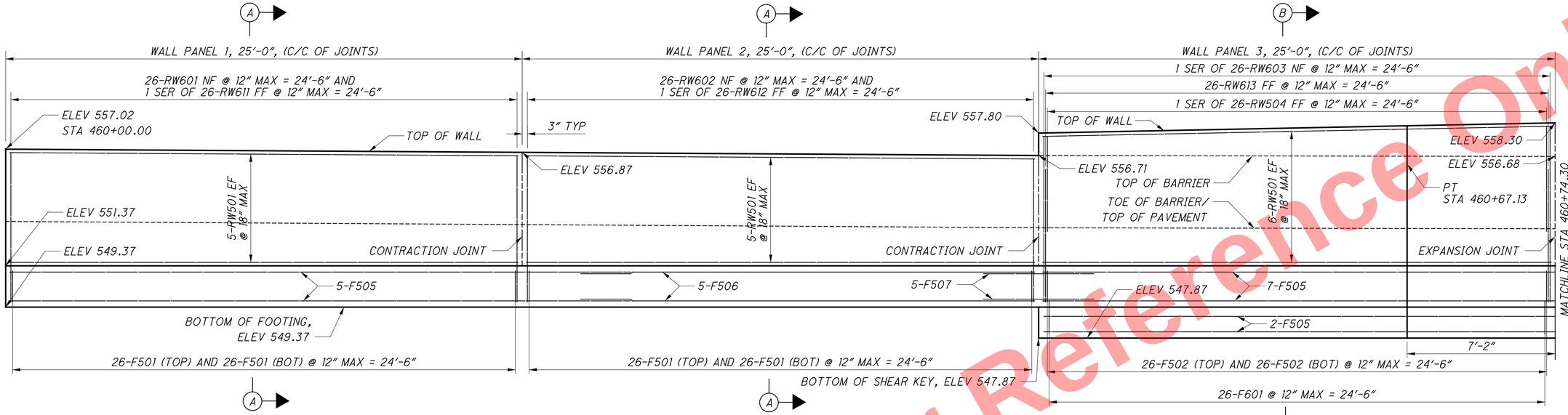

DEVELOPED ELEVATION

REAR FACE OF WALL

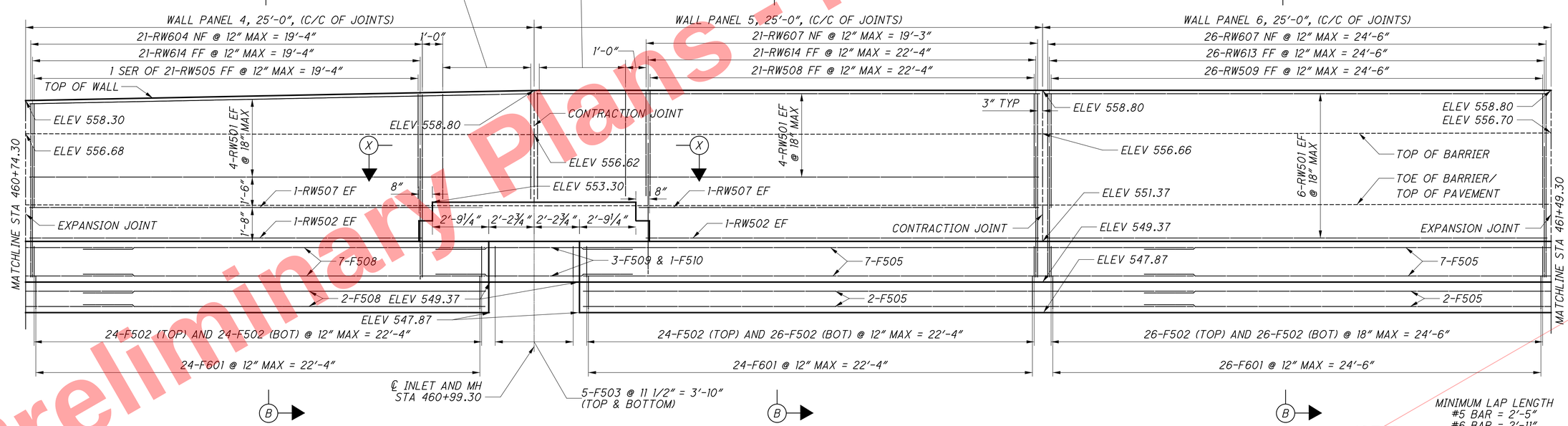

DEVELOPED ELEVATION

REAR FACE OF WALL

MINIMUM LAP LENGTH
#5 BAR = 2'-5"
#6 BAR = 2'-11"

NOTES:

1. SEE SHEET 10/11 FOR ADDITIONAL DETAILS FOR BARRIER INLET OPENING
2. STATIONS ARE ALONG I.R.75
3. SEE SHEET 1/11 FOR ABBREVIATIONS LEGEND

Preliminary Plans - For Reference Only

RESOURCE INTERNATIONAL INC.
5550 PRESIDENTIAL GATEWAY
COLUMBUS, OHIO 43231
(614) 823-4949

DESIGNED JLM | DRAWN SMJ | REVIEWED SSK | DATE 3-18-26
CHECKED NCK | REVISED | STRUCTURE FILE NUMBER

WALL ELEVATION 1 OF 2
CAST-IN-PLACE BARRIER RETAINING WALL T

HAM-75-7.85
PID No. 121447

7 / 11

617
1047

G:\projects\2010\B-10-020_HAM-75-7.85\77889\structures\WALL_00T\sheets\77889_00TWD401.dgn 5/13/2026 2:04:18 PM meets

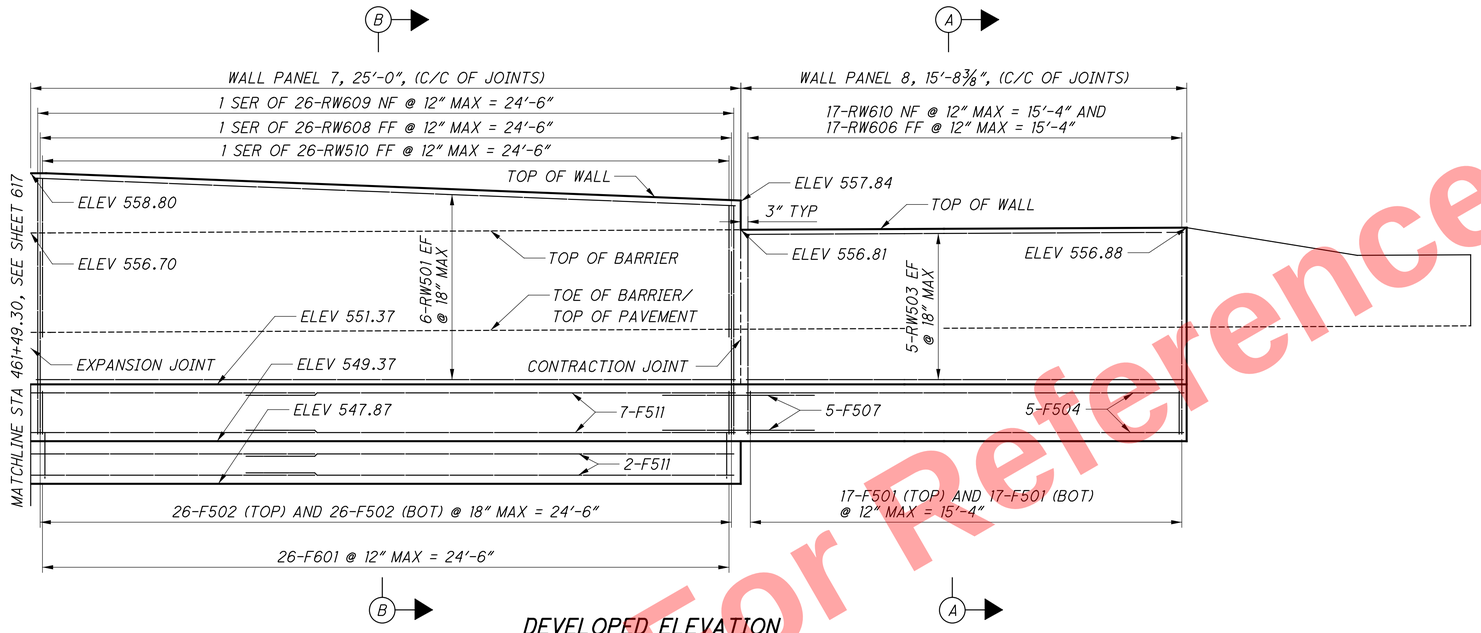

DEVELOPED ELEVATION

REAR FACE OF WALL

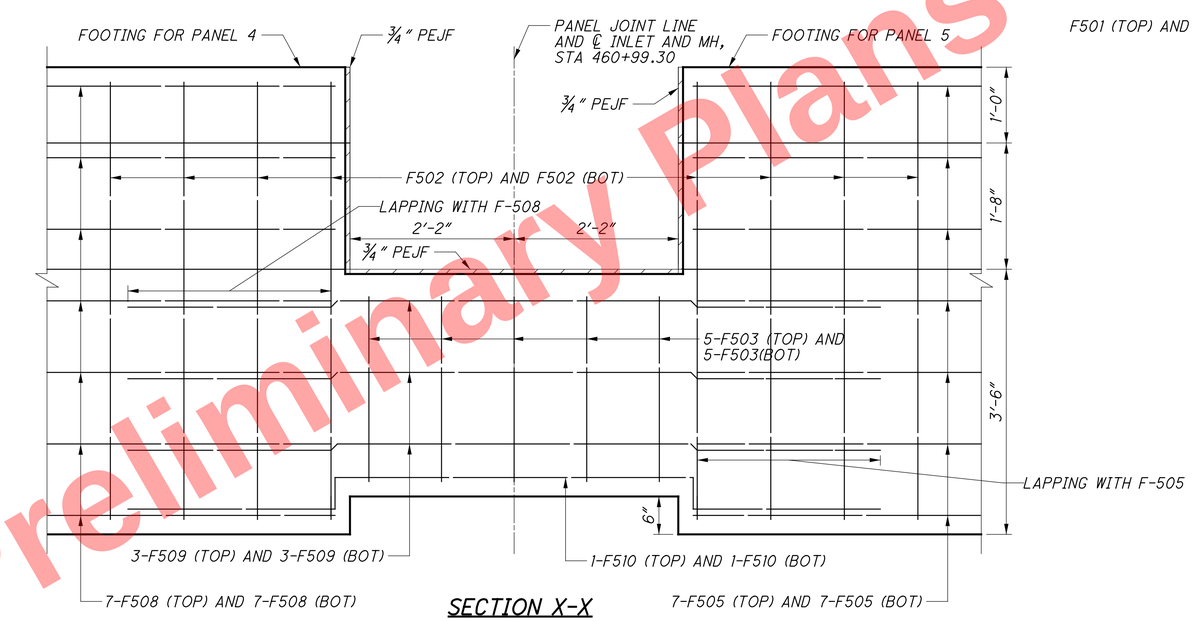

SECTION X-X

JUNCTION OF PANEL 4 AND PANEL 5
(ONLY REINFORCEMENT FOR FOOTING SHOWN)

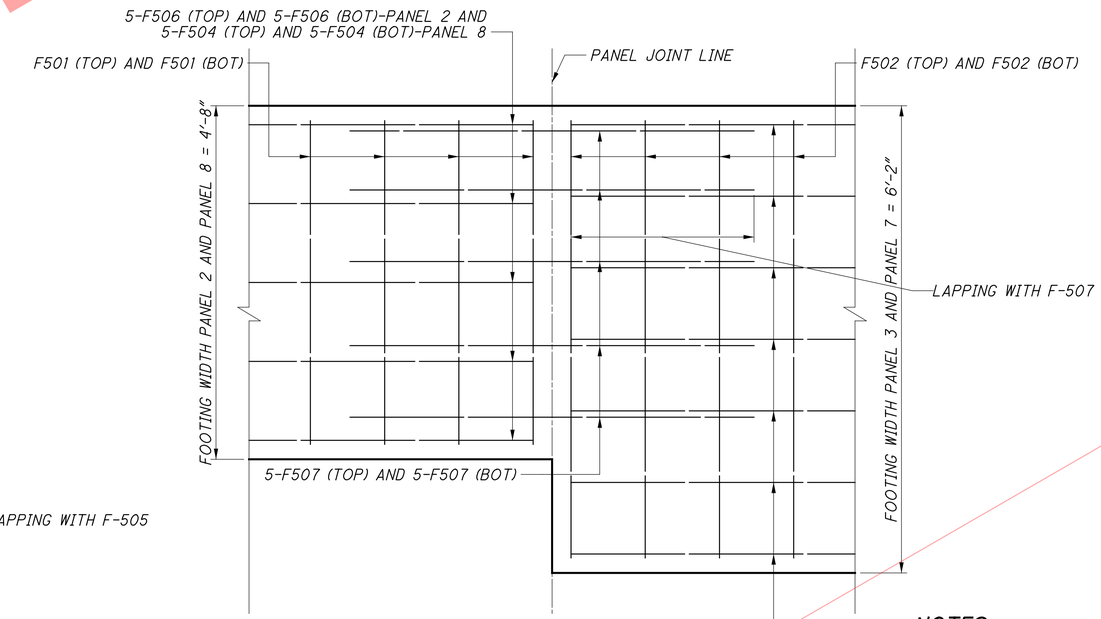

FOOTING WIDTH TRANSITION PLAN

NOTES:

1. FOR ABBREVIATIONS LEGEND, SEE SHEET 1 / 11

MINIMUM LAP LENGTH
#5 BAR = 2'-5"
#6 BAR = 2'-11"

Preliminary Plans - For Reference Only

RESOURCE INTERNATIONAL INC.
6550 PRESIDENTIAL GATEWAY
COLUMBUS, OHIO 43231
(614) 823-4949

DESIGNED	DRAWN	REVIEWED	DATE
JLM	SMJ	SSK	3-18-26
CHECKED	REVISED	STRUCTURE FILE NUMBER	
NCK			

WALL ELEVATION 2 OF 2

CAST-IN-PLACE BARRIER RETAINING WALL T

HAM-75-7.85
PID No. 121447

G:\projects\2010\B-10-020 HAM-75-7.85\77889\structures\WALL_00T\sheets\77889_00TWD402.dgn 5/13/2026 2:04:18 PM meets

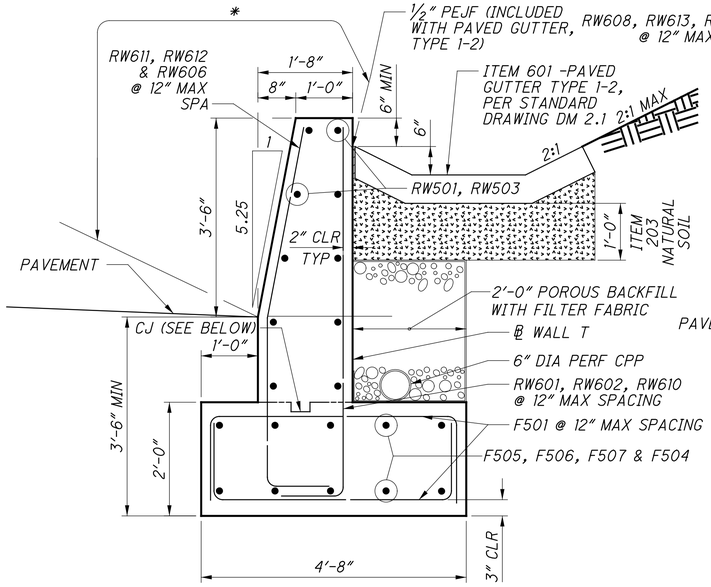

SECTION A-A

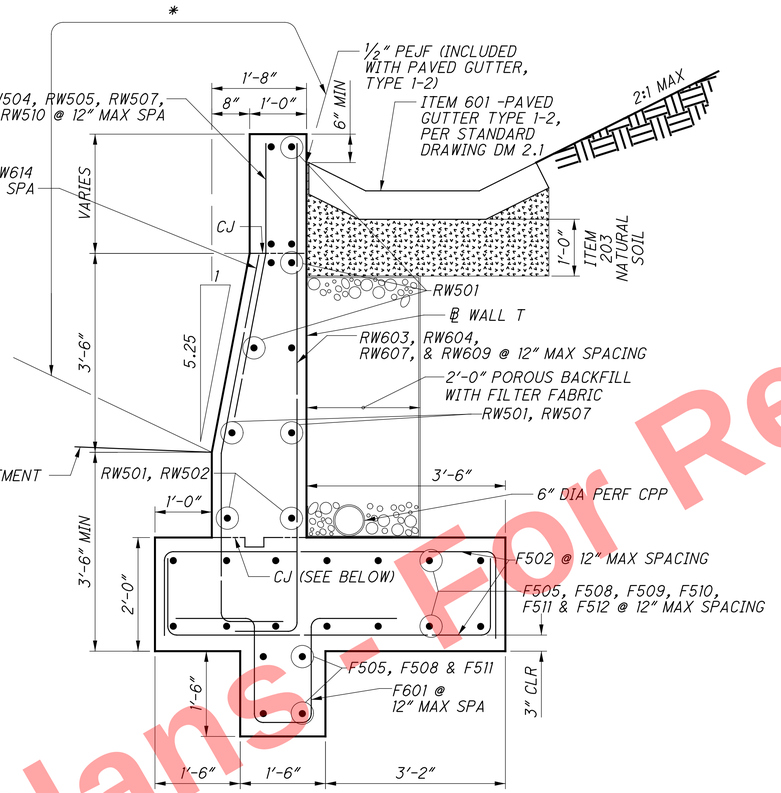

SECTION B-B

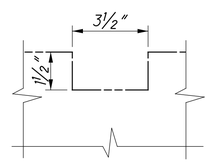

FOOTING CONSTRUCTION JOINT DETAIL

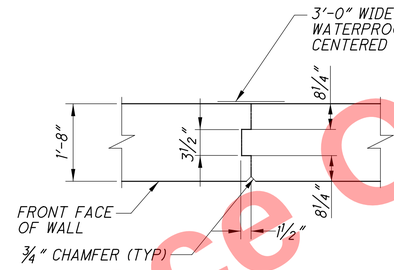

CONTRACTION JOINT DETAIL

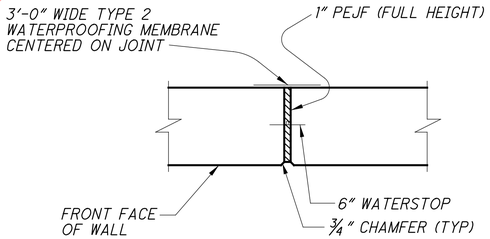

EXPANSION JOINT DETAIL

LEGEND:

* - LIMITS OF ITEM 512 - SEALING OF CONCRETE SURFACES (EPOXY-URETHANE)

NOTES:

1. PROVIDE 2" CLEARANCE FROM THE FACE OF WALL TO FACE FO REINFORCING BAR EXCEPT WHERE NOTED OTHERWISE.
2. FOR ABBREVIATIONS LEGEND, SEE SHEET 7 / 11

MINIMUM LAP LENGTHS:
#5 BAR = 2'-5"
#6 BAR = 2'-11"

Preliminary Plans - For Reference Only

RESOURCE INTERNATIONAL INC.
8555 PRESIDENTIAL GATEWAY
COLUMBUS, OHIO 43231
(614) 823-4949

DESIGNED	DRAWN	REVIEWED	DATE
JLM	SMJ	SSK	3-18-26
CHECKED	REVISED	STRUCTURE FILE NUMBER	
NCK			

TYPICAL SECTION AND WALL DETAILS
CAST-IN-PLACE BARRIER RETAINING WALL T

HAM-75-7.85
PID No. 121447

9 / 11

619
1047

G:\projects\2010\B-10-020 HAM-75-7.85\77889\structures\WALL_00T\sheets\77889_00TWD403.dgn 5/13/2026 2:04:18 PM meets

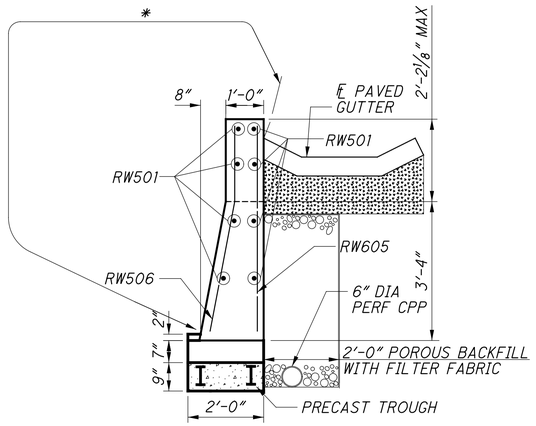

SECTION C-C

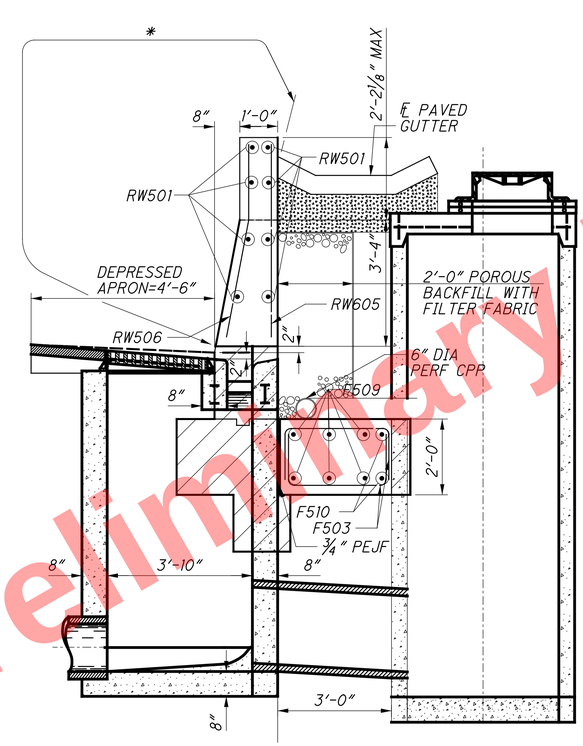

SECTION D-D

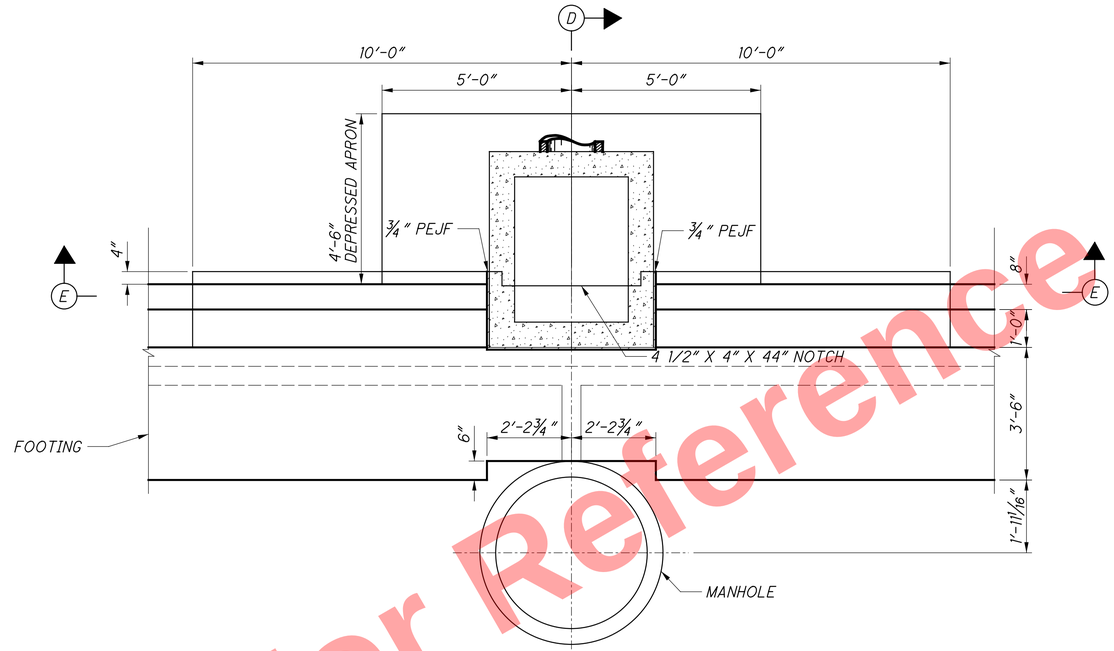

PLAN VIEW

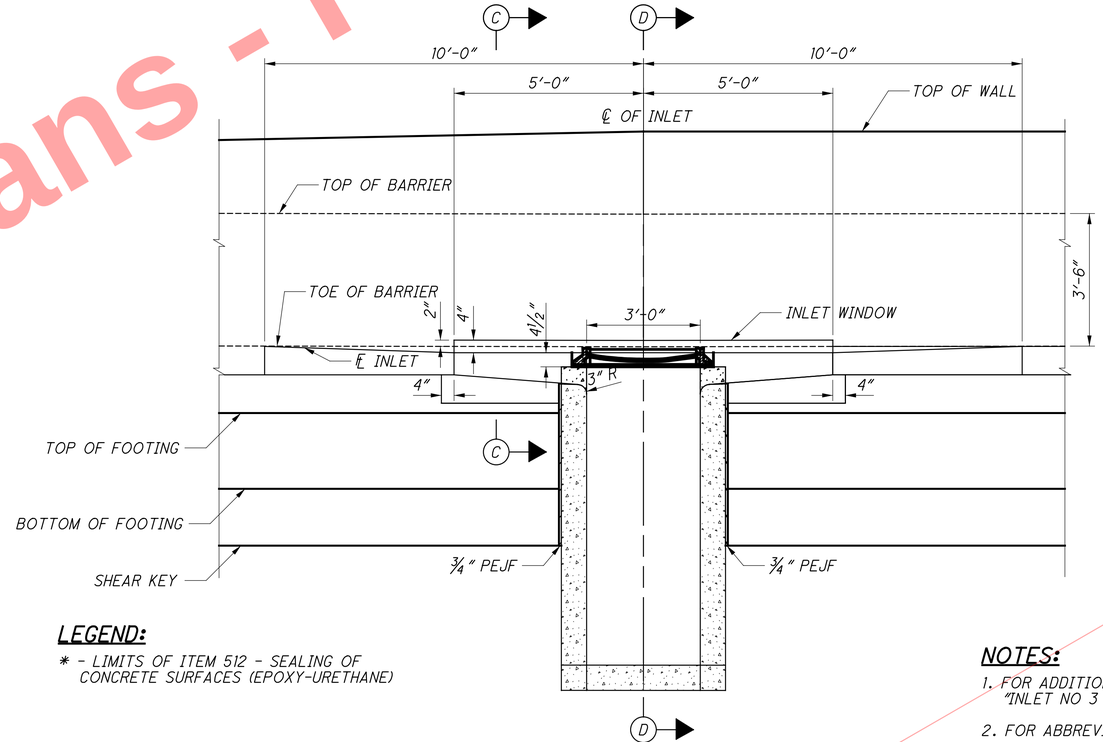

SECTION E-E

LEGEND:

* - LIMITS OF ITEM 512 - SEALING OF CONCRETE SURFACES (EPOXY-URETHANE)

NOTES:

1. FOR ADDITIONAL DETAILS, SEE SCD I-2.3 "INLET NO 3 BARRIER, TYPE D"
2. FOR ABBREVIATIONS LEGEND, SEE SHEET 1 / 11

Preliminary Plans - For Reference Only

RESOURCE INTERNATIONAL INC.
6550 PRESIDENTIAL GATEWAY
COLUMBUS, OHIO 43231
(614) 823-4949

DESIGNED	DRAWN	REVIEWED	DATE
JLM	SMJ	SSK	3-18-26
CHECKED	REVISED	STRUCTURE FILE NUMBER	
NCK			

TYPICAL INLET DETAILS
CAST-IN-PLACE BARRIER RETAINING WALL T

HAM-75-7.85
PID No. 121447

10 / 11

620
1047

G:\projects\2010\B-10-020_HAM-75-7.85\77889\structures\WALL_00T\sheets\77889_00TWD404.dgn 5/13/2026 2:04:19 PM meets

MARK	NUMBER TOTAL	LENGTH	WEIGHT	TYPE	DIMENSIONS A	B	C	D	E	R	INC
RETAINING WALL T											
RW501	72	24'-8"	1852	ST							
RW502	4	19'-0"	79	ST							
RW503	10	15'-4"	160	ST							
	1	3'-10"			11"						
RW504	SER OF	TO	112	19	TO	2'-10 1/2"	6 1/2"				1/4"
	26	4'-5"			1'-5 1/2"						
	1	4'-4"			1'-5 3/8"						
RW505	SER OF	TO	100	19	TO	2'-10 1/2"	6 1/2"				1/4"
	21	4'-10"			1'-10 1/2"						
RW506**	12	5'-3"	66	19	2'-0"	3'-2"	7 1/4"				
RW507	4	19'-8"	82	ST							
RW508**	21	4'-11"	108	19	2'-0"	2'-10 1/2"	6 1/2"				
RW509**	26	4'-10"	131	19	1'-11 1/8"	2'-10 1/2"	6 1/2"				
	1	3'-9"			10 1/4"						
RW510	SER OF	TO	116	19	TO	2'-10 1/2"	6 1/2"				1/2"
	26	4'-10"			1'-11 1/4"						
RW601**	26	8'-1"	316	1	1'-1"	7'-2"					
RW602**	26	7'-11"	309	1	1'-1"	7'-0"					
	1	8'-11"				8'-0 1/8"					
RW603	SER OF	TO	358	1	1'-1"	TO					1/4"
	26	9'-5"				8'-6"					
	1	9'-5"				8'-6"					
RW604	SER OF	TO	305	1	1'-1"	TO					1/4"
	21	9'-11"				8'-10 5/8"					
RW605**	12	5'-1"	92	ST							
RW606	17	8'-0"	204	10	3'-4"	7 3/4"	3'-8 1/4"	1'-1"			
RW607**	47	9'-11"	700	1	1'-1"	9'-0"					
	1	8-9"					3'-7"				
RW608	SER OF	TO	343	10	3'-4"	7 3/4"	TO	1'-11"			1/16"
	26	8'-10"					3'-8"				
	1	9'-0"				8'-1/2"					
RW609	SER OF	TO	369	1	1'-1"	TO					1/16"
	26	9'-11"				9'-0"					
RW610**	17	8'-0"	204	1	1'-1"	7'-1"					
	1	8'-1"					3'-9"				
RW611	SER OF	TO	319	10	3'-4"	7 3/4"	TO	1'-1"			1/16"
	26	8'-3"					3'-11"				
	1	7'-11"					3'-7"				
RW612	SER OF	TO	312	10	3'-4"	7 3/4"	TO	1'-1"			1/16"
	26	8'-1"					3'-9"				
RW613	52	7'-10"	612	10	3'-4"	7 3/4"	3'-6 1/2"	1'-1"			
RW614	42	7'-10"	494	10	3'-4"	7 3/4"	3'-6"	1'-1"			
F501	138	7'-1"	1020	2	1'-6"	4'-4"	1'-6"				
F502	252	8'-7"	2256	2	1'-6"	5'-10"	1'-6"				
F503	10	5'-5"	56	2	1'-6"	2'-8"	1'-6"				
F504	10	15'-4"	160	ST							
F505	64	30'-0"	2003	ST							
F506	10	22'-1"	230	ST							
F507	20	5'-2"	108	ST							
F508	18	19'-10"	372	ST							
F509	6	9'-7"	60	ST							
F510	2	10'-0"	21	6	4'-9 1/2"	6"	2'-5"				
F511	18	17'-4"	325	ST							
F601	126	6'-6"	1230	6	1'-2"	1'-6"	1'-6"				
		TOTAL	15586								

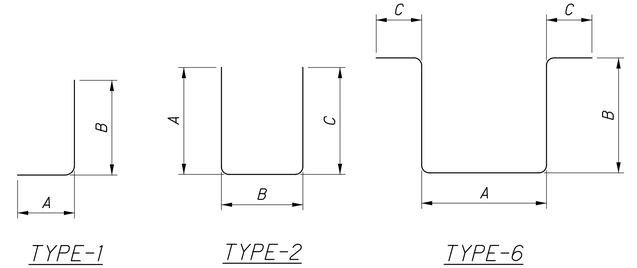

NOTES:

1. THE BAR SIZE NUMBER IS SPECIFIED ON THE PLANS IN THE BAR MARK COLUMN. THE FIRST DIGIT WHERE 3 DIGITS ARE USED, AND THE FIRST 2 DIGITS WHERE FOUR DIGITS ARE USED, INDICATES THE BAR SIZE NUMBER. FOR EXAMPLE, RW601 IS A NO 6 BAR. BAR DIMENSIONS SHOWN ARE OUT TO OUT UNLESS OTHERWISE INDICATED. "R" INDICATES INSIDE RADIUS, UNLESS OTHERWISE NOTED. "STD" WRITTEN IN PLACE OF A DIMENSION INDICATES A STANDARD BEND AT THE END OF THE BAR.

2. ALL REINFORCING STEEL TO BE EPOXY COATED.

3. FOR ABBREVIATIONS SEE SHEET 1 / 11 .

LEGEND

** - FIELD CUT

Preliminary Plans - For Reference Only

RESOURCE INTERNATIONAL INC.
5550 PRESIDENTIAL GATEWAY
COLUMBUS, OHIO 43231
(614) 823-4949

DESIGNED JLM | DRAWN SMJ | REVIEWED SSK | DATE 3-18-26
CHECKED NCK | REVISED | STRUCTURE FILE NUMBER

REINFORCING STEEL SCHEDULE

CAST-IN-PLACE BARRIER RETAINING WALL T

HAM-75-7.85
PID No. 121447

11 / 11

621
1047

G:\projects\2010\B-10-020 HAM-75-7.85\77889\structures\WALL_00T\sheets\77889_00TWL401.dgn 5/13/2026 2:04:19 PM meets

REFERENCE SHALL BE MADE TO SUPPLEMENTAL SPECIFICATION

840 DATED 4-15-22
867 DATED 4-15-22

REFERENCE SHALL BE MADE TO SUPPLEMENT

1083 DATED 1-20-17

DESIGN SPECIFICATIONS

THIS STRUCTURE CONFORMS TO THE 9TH EDITION OF THE "LRFD BRIDGE DESIGN SPECIFICATIONS" ADOPTED BY THE AMERICAN ASSOCIATION OF STATE HIGHWAY AND TRANSPORTATION OFFICIALS, 2020, AND THE ODOT BRIDGE DESIGN MANUAL, 2020.

DESIGN DATA

CONCRETE CLASS QC1 - COMPRESSIVE STRENGTH 4000 PSI (CIP FACING AND SLEEPER SLAB)

REINFORCING STEEL - ASTM A615 OR A996 GRADE 60, MINIMUM YIELD STRENGTH 60,000 PSI

FOUNDATION BEARING RESISTANCE

THE FACTORED BEARING RESISTANCE FOR EACH WALL IS LISTED IN THE TABLE BELOW:

FOUNDATION BEARING RESISTANCE

WALL NUMBER	WALL LIMITS FROM STA	WALL LIMITS TO STA	FACTORED BEARING RESISTANCE
B	ALL		15.1
C	ALL		8.9
F	ALL		16.9
G	ALL		16.2
H	ALL		7.7
H1	ALL		18.2
I	452+52	453+60	7.7
	453+60	456+40	13.2
	456+40	460+40	6.7
	460+40	463+56	14.1
I1	ALL		6.7

MINIMUM SOIL REINFORCEMENT LENGTHS

THE FOLLOWING TABLE LISTS THE MINIMUM SOIL REINFORCEMENT LENGTHS FOR EACH WALL. SOIL REINFORCEMENT LENGTHS FOR ALL OTHER MSE WALL LOCATIONS NOT INCLUDED IN THE TABLE SHALL BE 0.7H OR 8'-0", WHICHEVER IS GREATER, WHERE H = THE WALL HEIGHT AS DETERMINED ACCORDING TO 840.04.

SOIL REINFORCEMENT LENGTHS

MSE WALL	WALL STATION RANGE FROM STA	WALL STATION RANGE TO STA	SOIL REINFORCEMENT LENGTH
C	0+00.00	0+13.44	20'-0"
	0+13.44	0+63.51	27'-0"
	0+63.51	2+62.00	29'-0"
	2+62.00	2+82.58	21'-6"

PROPRIETARY RETAINING WALL DATA:

THE PROPRIETARY WALL SUPPLIER SHALL DESIGN THE INTERNAL STABILITY OF THE MECHANICALLY STABILIZED EARTH (MSE) WALL IN ACCORDANCE WITH SS840 TO SUPPORT THE ABUTMENTS. THE DESIGN FOR INTERNAL STABILITY SHALL INCLUDE A NOMINAL (I.E. UNFACTORED) HORIZONTAL STRIP LOAD DUE TO FRICTION (FR) FROM THE SUPERSTRUCTURES LISTED IN THE FOLLOWING TABLE, APPLIED PERPENDICULAR TO THE FACE OF WALL AT THE BASE OF THE CONCRETE FOOTING. THIS STRIP LOAD DOES NOTE INCLUDE EARTH PRESSURE LOADS FROM THE ABUTMENT BACKFILL. HOWEVER, THE PROPRIETARY WALL SUPPLIER SHALL INCLUDE EARTH PRESSURE LOADS FROM THE ABUTMENT BACKFILL IN THE DESIGN CALCULATIONS.

BRIDGE SUPERSTRUCTURE LOADINGS

MSE WALL	BRIDGE NUMBER	HORIZONTAL LOAD (K/FT)
B	HAM-562-0004	2.29
C	HAM-75-0791	0.42
F	HAM-75-0823	1.23
G	HAM-75-0823	1.23
H1	HAM-75-0857	1.1
I1	HAM-75-0857	1.1

ITEM 203 - GRANULAR MATERIAL, TYPE B, AS PER PLAN

THIS PAY ITEM INCLUDES THE PORTION OF GRANULAR MATERIAL WHICH WILL ENCASE SOIL REINFORCEMENTS FROM THE PORTION OF MSE WALL ADJACENT TO THE BARRIER AND MOMENT SLAB. THIS GRANULAR MATERIAL SHALL MEET THE REQUIREMENTS OF SUPPLEMENTAL SPECIFICATION 840.

ITEM 503 - COFFERDAMS AND EXCAVATION BRACING, AS PER PLAN

THE DESIGN SHOWN ON THE PLANS FOR TEMPORARY SUPPORT OF EXCAVATION IS ONE REPRESENTATIVE DESIGN THAT MAY BE USED TO CONSTRUCT THE PROJECT. THE CONTRACTOR MAY CONSTRUCT THE DESIGN SHOWN ON THE PLANS OR PREPARE AN ALTERNATE DESIGN TO SUPPORT THE SIDES OF EXCAVATIONS. IF CONSTRUCTING AN ALTERNATE DESIGN FOR TEMPORARY SUPPORT OF EXCAVATION, PREPARE AND PROVIDE PLANS IN ACCORDANCE WITH CMS 501.05. THE DEPARTMENT WILL PAY FOR THE TEMPORARY SUPPORT OF EXCAVATION AT THE CONTRACT LUMP SUM PRICE FOR COFFERDAMS AND EXCAVATION BRACING. NO ADDITIONAL PAYMENT WILL BE MADE FOR PROVIDING AN ALTERNATE DESIGN.

ITEM 512 - SEALING OF CONCRETE SURFACES (EPOXY-URETHANE), AS PER PLAN

SEALING OF THE MSE WALL PANELS, COPINGS, AND RAILING SHALL BE AS PER ITEM 512 AND THE COLOR SHALL BE LIGHT NEUTRAL MEETING FEDERAL COLOR STANDARD NO. 595B-17778. THE ADDITIONAL MATERIAL AND LABOR REQUIRED TO SEAL THE AESTHETIC TREATMENT FINISH WITH THE MINIMUM OF 1" AND MAXIMUM OF 1½" RELIEF SHALL BE INCLUDED IN THE UNIT PRICE BID PER SQUARE YARD PER CMS 512.09.

ITEM 517 - RAILING, MISC.: TRAFFIC BARRIER ON MSE WALL

THIS ITEM PERTAINS TO ALL BARRIER AND MOMENT SLABS THAT DO NOT SUPPORT NOISE BARRIERS. THIS ITEM SHALL INCLUDE, BUT IS NOT LIMITED TO THE CONCRETE, CONCRETE REINFORCEMENT, DOWELS, SLEEVES, PEJF, AND JOINT SEAL NECESSARY TO FORM AND PLACE THE CONCRETE RAILING AND BARRIER MOMENT SLAB. PAYMENT FOR THIS ITEM SHALL ALSO INCLUDE ALL OTHER NECESSARY MATERIAL, LABOR, AND EQUIPMENT AND SHALL BE INCLUDED IN THE UNIT PRICE BID PER LINEAR FOOT FOR ITEM 517 - RAILING, MISC.: TRAFFIC BARRIER ON MSE WALL

ITEM 517 - RAILING (COMBINATION NOISE AND TRAFFIC BARRIER ON MSE WALL WITH FLEXIBLE PAVEMENT)

THIS ITEM PERTAINS TO THE BARRIER AND MOMENT SLABS THAT SUPPORT NOISE BARRIERS. THIS ITEM SHALL INCLUDE, BUT IS NOT LIMITED TO THE CONCRETE, CONCRETE REINFORCEMENT, DOWELS, SLEEVES, PEJF, AND JOINT SEAL NECESSARY TO FORM AND PLACE THE CONCRETE RAILING AND BARRIER MOMENT SLAB. PAYMENT FOR THIS ITEM SHALL ALSO INCLUDE ALL OTHER NECESSARY MATERIAL, LABOR, AND EQUIPMENT AND SHALL BE INCLUDED IN THE UNIT PRICE BID PER LINEAR FOOT FOR ITEM 517 - RAILING (COMBINATION NOISE AND TRAFFIC BARRIER ON MSE WALL WITH FLEXIBLE PAVEMENT). NOISE BARRIER ATTACHED TO THESE BARRIER AND MOMENT SLABS SHALL BE INCLUDED FOR PAYMENT WITH ITEM 606 - SPECIAL: NOISE BARRIER (REFLECTIVE), PARAPET MOUNTED.

ITEM 690E98400
ITEM SPECIAL - TEMPORARY SURCHARGE

DESCRIPTION: THIS ITEM CONSISTS OF DESIGNING, CONSTRUCTING, AND REMOVING A TEMPORARY SURCHARGE BEHIND THE REAR ABUTMENT OF THE HAM-562-0004, REAR ABUTMENT OF THE HAM-75-0791 BRIDGE, REAR AND FORWARD ABUTMENTS OF THE HAM-75-0823 BRIDGE, AND REAR AND FORWARD ABUTMENTS OF THE HAM-75-0857 BRIDGE.

AS DIRECTED IN THE PILE DRIVING CONSTRAINTS, A TEMPORARY SURCHARGE IS NECESSARY AT THE ABUTMENTS TO MITIGATE EMBANKMENT SETTLEMENT. CONSTRUCT THE TEMPORARY SURCHARGE SO IT EXTENDS VERTICALLY FROM THE ELEVATION OF THE BOTTOM OF THE PROPOSED ABUTMENT FOOTING TO THE PROPOSED ROADWAY SUBGRADE ELEVATION. CONSTRUCT THE TEMPORARY SURCHARGE USING ITEM 203 EMBANKMENT WITH A DRY DENSITY OF AT LEAST 105 PCF AFTER COMPACTION. ALTERNATE MATERIALS, SUCH AS PRECAST CONCRETE, MAY BE UTILIZED FOR ALL OR A PORTION OF THE REQUIRED SURCHARGE LOAD PROVIDED THE APPLIED SURCHARGE IS GREATER THAN OR EQUIVALENT TO THE SURCHARGE OF EMBANKMENT WITH A DRY UNIT WEIGHT OF 105 PCF. SUPPORT THE SIDES OF THE TEMPORARY SURCHARGE SO THAT THE TOP OF THE SURCHARGE MATERIAL IS NO MORE THAN 2 FEET (MEASURED HORIZONTALLY) FROM THE BACK FACE OF THE PROPOSED MSE WALLS. CONSTRUCT THE TEMPORARY SURCHARGE SO THAT IT EXTENDS AT LEAST 100 FEET BEHIND EACH ABUTMENT.

REMOVE THE TEMPORARY SURCHARGE AFTER THE CONDITIONS SPECIFIED IN THE PILE DRIVING CONSTRAINTS ARE SATISFIED AND THE ENGINEER AUTHORIZES REMOVAL.

PREPARE AND PROVIDE SHOP DRAWINGS AND DESIGN CALCULATIONS FOR THE TEMPORARY SURCHARGE, INCLUDING THE METHOD USED TO SUPPORT THE SIDES OF THE TEMPORARY SURCHARGE AND ALL DETAILS OF THE SUPPORT SYSTEM. ENSURE THE TEMPORARY SURCHARGE DESIGN ACCOMMODATES THE LOCATION AND COMPOSITION OF THE PROPOSED MSE WALLS FOR THE BRIDGE STRUCTURE. HAVE TWO OHIO REGISTERED ENGINEERS SIGN, SEAL, AND DATE THE DRAWINGS AND CALCULATIONS ACCORDING TO C&MS 501.05. SUBMIT THE DRAWINGS AND CALCULATIONS TO THE ENGINEER AT LEAST 30 DAYS BEFORE CONSTRUCTION OF THE TEMPORARY SURCHARGE BEGINS.

BASIS OF PAYMENT: THE DEPARTMENT WILL PAY FOR ALL LABOR, EQUIPMENT AND MATERIALS NECESSARY TO DESIGN, CONSTRUCT AND REMOVE THE TEMPORARY SURCHARGE AT THE CONTRACT LUMP SUM BID PRICE FOR ITEM SPECIAL 690E98400: SPECIAL - TEMPORARY SURCHARGE.

ITEM 840 - MECHANICALLY STABILIZED EARTH WALL, AS PER PLAN

DO NOT FABRICATE WALL TOP PANELS OR INSTALL COPINGS, BARRIER MOMENT SLABS, OR RAILINGS LOCATED ON TOP OF MSE WALLS UNTIL AFTER THE MSE WALL EMBANKMENT HAS BEEN CONSTRUCTED TO WITHIN 1 FOOT OF THE PROPOSED FINISHED GRADE AND THE SETTLEMENT REQUIREMENTS HAVE BEEN MET. THE CONTRACTOR SHALL FABRICATE THE TOP PANEL TO ACCOUNT FOR THE ACTUAL SETTLEMENT. NO SEPARATE PAYMENT WILL BE MADE TO EXCAVATE AND RE-COMPACT MATERIAL NECESSARY TO PLACE THE TOP PANEL, BUT THE COST THEREOF SHALL BE INCLUDED WITH ITEM 840 - MECHANICALLY STABILIZED EARTH WALL, AS PER PLAN FOR PAYMENT.

MSE WALL PHASED CONSTRUCTION:
MSE WALLS C, F, G, H1, AND I1 WILL BE CONSTRUCTED IN PHASES. IN ORDER TO ASSURE THAT THE WALL COPINGS ARE IN LINE, DO NOT INSTALL PERMANENT COPING ON TOP OF THESE WALLS UNTIL ALL PHASES OF WALL CONSTRUCTION ARE COMPLETE.

ITEM 840 - FOUNDATION PREPARATION, AS PER PLAN

THIS ITEM APPLIES TO MSE WALLS C, H1, AND I1, WHICH ALL REQUIRE AN UNDERCUT THAT EXCEEDS 1'-0" IN DEPTH. THE EXISTING SOILS WITHIN THE LIMITS OF THIS UNDERCUT SHALL BE REPLACED WITH ITEM 203 - GRANULAR MATERIAL, TYPE C. ITEM 203 MATERIAL SHALL BE PAID FOR UNDER ITEM 840 - FOUNDATION PREPARATION, AS PER PLAN.

IN ADDITION TO THE FOUNDATION PREPARATION REQUIREMENTS OF ITEM 840, IF UNSUITABLE SOILS ARE ENCOUNTERED AT THE SUBGRADE ELEVATION, PROOF ROLL THE SUBGRADE AND UNDERCUT AS REQUIRED IN THE GEOTECHNICAL REPORT.

ITEM 840 - CONCRETE COPING

PROVIDE EPOXY COATED REINFORCING AND CLASS QC1 CONCRETE AS SHOWN IN THE PLANS. THE COPING SHALL NOT BE CONSTRUCTED UNTIL ALL PHASES OF MSE WALL CONSTRUCTION ARE COMPLETE. THE COPING JOINTS SHALL BE PLACED ON A MAXIMUM 20'-0" SPACING AND SHALL ALIGN WITH A PANEL JOINT. CONCRETE AND REINFORCING STEEL IN THE COPING, ADDITIONAL CONCRETE AND REINFORCING STEEL AT ROADWAY FEATURES, PEJF BETWEEN COPING AND BARRIER, AND EXPANSION AND CONTRACTION JOINTS SHALL BE INCLUDED IN THE UNIT BID PRICE PER FOOT FOR THIS ITEM.

ITEM 840 - AESTHETIC SURFACE TREATMENT

ALL MSE WALL PANELS SHALL HAVE AN "ASHLAR STONE" FINISH WITH A MINIMUM OF 1" AND A MAXIMUM OF 2" RELIEF. THE MSE WALL ASHLAR STONE SHALL MATCH THE ARCHITECTURAL POLYMERS NO. 905 PATTERN SPECIFIED FOR THE PROJECT IN THE NOISE WALL PLANS PER SHEET 669/1047.

ALL MSE WALL BASELINES ARE ALONG THE STRUCTURAL FACE OF A 5½" MINIMUM FACING PANEL.

Preliminary Plans - Reference Only

DESIGN AGENCY EMH&T
Engineers • Surveyors • Planners • Scientists
5500 New Albany Road, Columbus, Ohio 43054
Phone: 614.775.4500 www.emht.com

DESIGNED	DRAWN	REVIEWED	DATE
RJE	GB	CAS	5-22-26
CHECKED	REVISED	STRUCTURE FILE NUMBER	
RMW/TDA	-		

GENERAL NOTES - MSE WALLS
MSE RETAINING WALL NUMBERS B, C, F, G, H, AND I

HAM-75-7.85
PID No. 121447

J:\2011093\ODOT\HAM\77889\structures\WALL_00B\sheets\77889_00BWN001.dgn 5/22/2026 10:21:15 AM hbrendlinger

ITEM SPECIAL - SETTLEMENT PLATFORMS

DESCRIPTION: THIS ITEM CONSISTS OF FURNISHING, CONSTRUCTING, AND MAINTAINING SETTLEMENT PLATFORMS AND OBTAINING SETTLEMENT READINGS AS REQUIRED BY THE PLANS OR AS DIRECTED BY THE ENGINEER. AT THE OPTION AND EXPENSE OF THE CONTRACTOR, ADDITIONAL SETTLEMENT PLATFORMS MAY BE INSTALLED AT LOCATIONS APPROVED BY THE ENGINEER. SETTLEMENT READINGS SHALL BE TAKEN WEEKLY DURING CONSTRUCTION AND DURING ANY SPECIFIED WAITING PERIOD. THE READINGS SHALL BE PLOTTED ON GRAPH PAPER PRESENTING DEFORMATION (ON THE NEGATIVE Y-AXIS) AND FILL HEIGHT (ON THE POSITIVE Y-AXIS) VERSUS TIME (ON THE X-AXIS). IN ORDER TO CREATE THE GRAPH, USE THE SETTLEMENT PLATFORM SPREADSHEET LOCATED AT HTTP://WWW.DOT.STATE.OH.US/DIVISIONS/PRODMGT/GEOTECHNICAL/GEOTECHNICAL_DOCUMENTS/BLANK_SETTLEMENT_READING_PLOTS-ENGLISH.XLS ON THE OFFICE OF GEOTECHNCIAL ENGINEERING WEBSITE PUBLICATIONS AND DOCUMENTS SECTION. MARK THE TOP OF EACH SETTLEMENT PLATFORM SECTION AND OBTAIN THE SETTLEMENT PLATFORM READING AT THE SAME LOCATION FOR EACH CONSECUTIVE READING. COPY OF EACH CUMULATIVE PLOT SHALL BE SENT TO THE DISTRICT GEOTECHNICAL ENGINEER AND THE OFFICE OF GEOTECHNICAL ENGINEERING, ATTENTION: GEOTECHNICAL DESIGN COORDINATOR, AFTER EACH SETTLEMENT READING IS RECORDED.

CONSTRUCTION METHODS: THE PLATFORM SHALL CONFORM TO THE DETAILS SHOWN ON THE PLANS. THE PLATFORM SHALL BE SET ON A LEVEL SURFACE. THE PIPE SHALL BE FIRMLY SECURED TO THE PLATFORM AND SHALL BE MAINTAINED IN A PLUMB POSITION DURING THE PLACEMENT OF THE EMBANKMENT. THE PIPE SHALL BE MARKED AT INTERVALS TO FACILITATE MEASUREMENT OF THE DEPTH OF FILL. THE CONTRACTOR SHALL STOP WORK IN ANY LOCATION WHERE THE SETTLEMENT PLATFORM HAS BEEN DISTURBED OR DAMAGED. PLATFORMS OR PIPES DAMAGED OR DISPLACED DURING CONSTRUCTION SHALL BE RESTORED TO THEIR PROPER CONDITION AT THE CONTRACTOR'S EXPENSE.

PRIOR TO PAVING, THE TOP OF THE SETTLEMENT PLATFORM PIPE SHALL BE CUT OFF 600MM (TWO FEET) BELOW THE FINISHED SURFACE OF THE SUBGRADE OR FINISHED GROUND SURFACE, WHICHEVER IS APPLICABLE.

MATERIALS: SOUND LUMBER SUCH AS 19MM (¾") EXTERIOR GRADE PLYWOOD SHALL BE USED FOR THE BASE. THE PIPE SHALL BE 64MM (2½") STANDARD BLACK PIPE WITH THREADED FITTINGS AS SHOWN ON THE PLANS. A STEEL PLATE 915MM X 915MM X 3.2MM (36" X 36" X ⅛") MAY BE SUBSTITUTED FOR THE LUMBER FOR THE PLATFORMS, AT THE CONTRACTOR'S OPTION.

THE DEPARTMENT WILL CONSIDER VIBRATING WIRE SETTLEMENT MONITORING PLATFORMS IN LIEU OF THE CONVENTIONAL SETTLEMENT PLATFORMS. THE CONTRACTOR SHOULD PROVIDE DETAILS OF THE PROPOSED VIBRATING WIRE SETTLEMENT PLATFORMS AS WELL AS DESIGN DRAWINGS OF THE PROPOSED PLATFORM AND CABLING LAYOUT TO THE ENGINEER AT LEAST 30 DAYS PRIOR TO CONSTRUCTION. THE DEPARTMENT WILL REQUIRE 10 WORKING DAYS FOR REVIEW AND APPROVAL. THE DESIGN DRAWINGS SHOULD ILLUSTRATE THE PROPOSED SETTLEMENT VIBRATING WIRE SETTLEMENT PLATFORM LOCATIONS WITH ALL EXISTING AND PROPOSED SITE FEATURES TO VERIFY THE PROPOSED CABLING WILL NOT CONFLICT WITH EXISTING FACILITIES, PROPOSED FACILITIES OR UTILITIES. NO ADDITIONAL PAYMENT WILL BE PROVIDED IF THE CONTRACTOR ELECTS TO UTILIZE VIBRATING WIRE SETTLEMENT PLATFORMS.

WAITING PERIOD: A 30 CALENDAR DAY WAITING PERIOD IS ANTICIPATED FOR SETTLEMENT MITIGATION OF ALL MSE WALLS, WITH THE EXCEPTION OF MSE WALL C, IN WHICH A 90 CALENDAR DAY WAITING PERIOD IS ANTICIPATED. THE WAITING PERIOD COMMENCES ONCE THE EMBANKMENT HAS REACHED THE DESIGN SUBGRADE LEVEL. MONITOR THE SETTLEMENT PLATFORMS AT LEAST WEEKLY FROM INSTALLATION TO THE TERMINATION OF THE WAITING PERIOD. THE WAITING PERIOD MAY BE REDUCED OR EXTENDED BASED ON THE SETTLEMENT PLATFORM READINGS. COMMENCEMENT OF CONSTRUCTION MAY OCCUR ONCE THE SETTLEMENT PLATFORM READINGS ILLUSTRATE ⅛" OR LESS OF TOTAL MOVEMENT OVER A TWO WEEK WAITING PERIOD AND APPROVAL TO BEGIN WORK BY THE ENGINEER.

METHOD OF MEASUREMENT: THE NUMBER OF SETTLEMENT PLATFORMS TO BE PAID FOR SHALL BE THE ACTUAL NUMBER OF SETTLEMENT PLATFORMS COMPLETED, MAINTAINED, AND ACCEPTED BY THE ENGINEER.

BASIS OF PAYMENT: PAYMENT SHALL BE MADE AT THE CONTRACT UNIT PRICE EACH FOR ITEM SPECIAL - SETTLEMENT PLATFORMS WHICH IS COMPENSATION FOR CONSTRUCTING MAINTAINING, AND MONITORING THE SETTLEMENT PLATFORMS INCLUDING FURNISHING ALL LABOR, EQUIPMENT, MATERIALS, AND INCIDENTALS NECESSARY TO COMPLETE THE WORK. PAYMENT SHALL NOT BE MADE FOR SETTLEMENT PLATFORMS WHICH BECOME USELESS DUE TO DAMAGE CAUSED BY THE CONTRACTOR'S OPERATIONS.

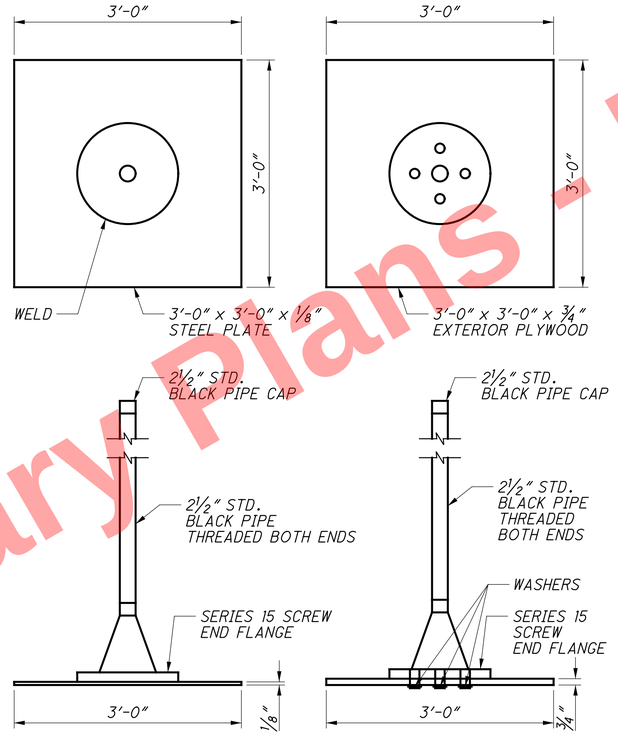

SETTLEMENT PLATFORM

ABBREVIATION LEGEND

ABUT. - ABUTMENT
ADT - AVERAGE DAILY TRAFFIC
ADTT - AVERAGE DAILY TRUCK TRAFFIC
APP SLAB - APPROACH SLAB
AVE. - AVENUE
℄ - BASELINE
BM - BENCH MARK
BOT. - BOTTOM
BTW. - BETWEEN
BRG - BEARING
BTA - BRIDGE TERMINAL ASSEMBLY
C/C - CENTER TO CENTER
CB - CATCH BASIN
CIP - CAST IN PLACE
CJ - CONSTRUCTION JOINT
℄ - CENTERLINE
CLR - CLEARANCE
CONST - CONSTRUCTION
DIA - DIAMETER
EB - EAST BOUND
EF - EACH FACE
ELEV - ELEVATION
E/P - EDGE OF PAVEMENT
E/S - EDGE OF SHOULDER
EQ. - EQUAL
EST. - ESTIMATED
EX - EXISTING
EXP - EXPANSION
FA - FORWARD ABUTMENT
F/F - FACE TO FACE
FF - FAR FACE
FTG - FOOTING
FWD - FORWARD
GEN - GENERAL
GR - GUARD RAIL
HMWM - HIGH MOLECULAR WEIGHT METHACRYLATE
INCR. - INCREMENT
INT. - INTEGRAL
I.R. - INTERSTATE ROUTE
LT - LEFT
MAX - MAXIMUM
MECH. CONN. - MECHANICAL CONNECTOR
MIN - MINIMUM
MISC - MISCELLANEOUS
M.O.T. - MAINTENANCE OF TRAFFIC
MSE - MECHANICALLY STABALIZED EARTH
N/A - NOT APPLICABLE
NB - NORTHBOUND
NF - NEAR FACE
NO - NUMBER
NPCPP - NON-PERFORATED CORRUGATED PLASTIC PIPE
O/O - OUT TO OUT
O.C. - ON CENTER
OD - OUTSIDE DIAMETER
PC - POINT OF CURVE
PT - POINT OF TANGENT
P.V.I. - POINT OF VERTICAL INTERSECTION
PCB - PORTABLE CONCRETE BARRIER
PCPP - PERFORATED CORRUGATED PLASTIC PIPE
PVMT - PAVEMENT
PEJF - PREFORMED EXPANSION JOINT FILLER
PG - PROFILE GRADE
PROP - PROPOSED
PT. - POINT
PVMT. - PAVEMENT
RA - REAR ABUTMENT
RD - ROAD
REF. - REFERENCE
REQ'D - REQUIRED
RT - RIGHT
SB - SOUTHBOUND
SER. - SERIES
SHLD - SHOULDER
SPA - SPACES
S.R. - STATE ROUTE
ST - STREET
STA - STATION
SCD - STANDARD CONSTRUCTION DRAWING
STD - STANDARD
SUPER. - SUPERSTRUCTURE
TEMP - TEMPORARY
TOW - TOP OF WALL
T/S - TOE OF SLOPE
T/T - TOP TO TOE
TYP - TYPICAL
UNO - UNLESS NOTED OTHERWISE
VC - VERTIAL CURVE
VERT - VERTICAL
W/ - WITH
WB - WEST BOUND

For Reference Only
Preliminary Plans - Not for Construction

DESIGN AGENCY EMH&T
DATE 5-22-26
REVIEWED CAS
DRAWN GB
REVISED -
DESIGNED RJE
CHECKED RMW/TDA
STRUCTURE FILE NUMBER

GENERAL NOTES - MSE WALLS
MSE RETAINING WALL NUMBERS B, C, F, G, H, AND I

HAM-75-7.85
PID No. 121447

2 / 43

623
1047

J:\2011\0903\ODOT\HAM\77889\structures\WALL_00B\sheets\77889_00BWN002.dgn 5/22/2026 10:21:16 AM hbrendlinger

ESTIMATED QUANTITIES (02/IMS/03)

WALL B	WALL C	WALL F	WALL G	WALL H	WALL H1	WALL I	WALL I1			ITEM	ITEM EXT	TOTAL	UNIT	DESCRIPTION	SEE STRUCTURE SHEET NO.
						LUMP	LUMP			202	11200		LUMP	PORTIONS OF STRUCTURE REMOVED	
5	1187	815	608		442		820			203	20000	3877	CU YD	EMBANKMENT	
	4791	1614	1384							203	35110	7789	CU YD	GRANULAR MATERIAL, TYPE B	
290					830		1348			203	35111	2468	CU YD	GRANULAR MATERIAL, TYPE B, AS PER PLAN	1/43
1	4	4	4	3	3	9	3			SPECIAL	20365000	31	EACH	SPECIAL - SETTLEMENT PLATFORM	2/43
LUMP	LUMP	LUMP	LUMP	LUMP	LUMP	LUMP	LUMP			503	11101		LUMP	COFFERDAMS AND EXCAVATION BRACING, AS PER PLAN	1/43
215	409	388	296	1045	246	4667	253			512	10101	7519	SQ YD	SEALING OF CONCRETE SURFACES (EPOXY-URETHANE), AS PER PLAN	1/43
34	274				204		240			516	13200	752	SQ FT	1/2" PREFORMED EXPANSION JOINT FILLER	
		247	225							516	13600	472	SQ FT	1" PREFORMED EXPANSION JOINT FILLER	
				12		12				516	13900	24	SQ FT	2" PREFORMED EXPANSION JOINT FILLER	
55				51						517	76300	106	FT	RAILING, MISC.: TRAFFIC BARRIER ON MSE WALL	1/43
				227		1128				517	80010	1355	FT	RAILING (COMBINATION NOISE AND TRAFFIC BARRIER ON MSE WALL WITH FLEXIBLE PAVEMENT)	1/43
7	56	37	33		52		51			601	21000	236	SQ YD	CONCRETE SLOPE PROTECTION	
	23									601	37500	23	FT	PAVED GUTTER, TYPE 1-2	
LUMP										SPECIAL	69098400		LUMP	SPECIAL - TEMPORARY SURCHARGE WALL B	1/43
	LUMP									SPECIAL	69098400		LUMP	SPECIAL - TEMPORARY SURCHARGE WALL C	1/43
		LUMP								SPECIAL	69098400		LUMP	SPECIAL - TEMPORARY SURCHARGE WALL F	1/43
			LUMP							SPECIAL	69098400		LUMP	SPECIAL - TEMPORARY SURCHARGE WALL G	1/43
					LUMP					SPECIAL	69098400		LUMP	SPECIAL - TEMPORARY SURCHARGE WALL H1	1/43
							LUMP			SPECIAL	69098400		LUMP	SPECIAL - TEMPORARY SURCHARGE WALL I1	1/43
2082	4556	4235	3398	6300	4076	26,607	4172			840	20001	55,426	SQ FT	MECHANICALLY STABILIZED EARTH WALL, AS PER PLAN	1/43
835	10190	1387	1043	2104	2907	7463	2889			840	21000	28,818	CU YD	WALL EXCAVATION	
219		793	696	667		2778				840	22000	5153	SQ YD	FOUNDATION PREPARATION	
	1227				656		700			840	22001	2583	SQ YD	FOUNDATION PREPARATION, AS PER PLAN	1/43
796	9084	3276	2412	3744	3500	17,578	3800			840	23000	44,190	CU YD	SELECT GRANULAR BACKFILL	
	163	37	35		11		11			840	23050	257	CU YD	NATURAL SOIL	
230	792	625	575	848	472	2670	480			840	25010	6692	FT	6" DRAINAGE PIPE, PERFORATED	
3	85	10	11		240	20				840	25020	369	FT	6" DRAINAGE PIPE, NON-PERFORATED	
139	285	299	278	322	236	1173	237			840	26000	2969	FT	CONCRETE COPING	1/43
1805	3990	3647	2841	5671	3605	24,223	3703			840	26050	49,485	SQ FT	AESTHETIC SURFACE TREATMENT	1/43
1	1	1	1	1	1	3	3			840	27000	12	DAY	ON-SITE ASSISTANCE	
	LUMP									867	00100		LUMP	TEMPORARY WIRE FACED MECHANICALLY STABILIZED EARTH WALL (WALL C-1)	
	LUMP									867	00100		LUMP	TEMPORARY WIRE FACED MECHANICALLY STABILIZED EARTH WALL (WALL C-2)	
		LUMP								867	00100		LUMP	TEMPORARY WIRE FACED MECHANICALLY STABILIZED EARTH WALL (WALL F1)	
		LUMP								867	00100		LUMP	TEMPORARY WIRE FACED MECHANICALLY STABILIZED EARTH WALL (WALL F2)	
			LUMP							867	00100		LUMP	TEMPORARY WIRE FACED MECHANICALLY STABILIZED EARTH WALL (WALL G1)	
			LUMP							867	00100		LUMP	TEMPORARY WIRE FACED MECHANICALLY STABILIZED EARTH WALL (WALL G2)	
				LUMP						867	00100		LUMP	TEMPORARY WIRE FACED MECHANICALLY STABILIZED EARTH WALL (WALL H1-1)	
				LUMP						867	00100		LUMP	TEMPORARY WIRE FACED MECHANICALLY STABILIZED EARTH WALL (WALL H1-2)	
						LUMP				867	00100		LUMP	TEMPORARY WIRE FACED MECHANICALLY STABILIZED EARTH WALL (WALL I1-1)	
						LUMP				867	00100		LUMP	TEMPORARY WIRE FACED MECHANICALLY STABILIZED EARTH WALL (WALL I1-2)	

NOTE

1. SEE SHEET 2/43 FOR ABBREVIATION LEGEND.

Preliminary Plans - For Reference Only

J:\20110903\ODOT\HAM\7889\structures\WALL_00B\sheets\77889_00BEQ001.dgn 5/22/2026 10:21:17 AM hbrendlinger

DESIGN AGENCY: EMH&T
DESIGNED: RJE | DRAWN: GB | REVIEWED: CAS | DATE: 5-22-26
CHECKED: RMW/TDA | REVISED: - | STRUCTURE FILE NUMBER:

ESTIMATED QUANTITIES - MSE WALLS
MSE RETAINING WALL NUMBERS B, C, F, G, H, AND I

HAM-75-7.85
PID No. 121447

624
1047

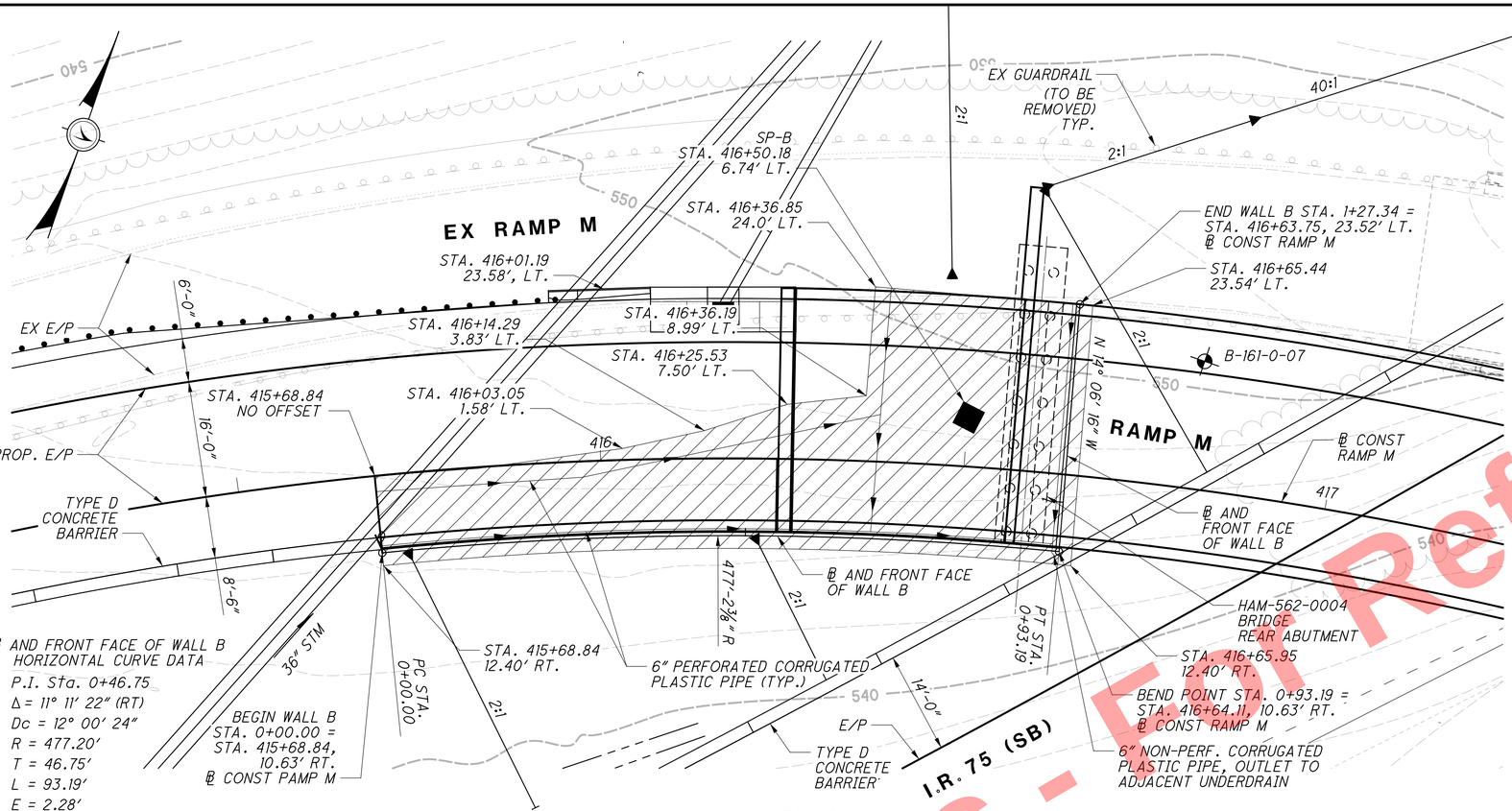

PLAN

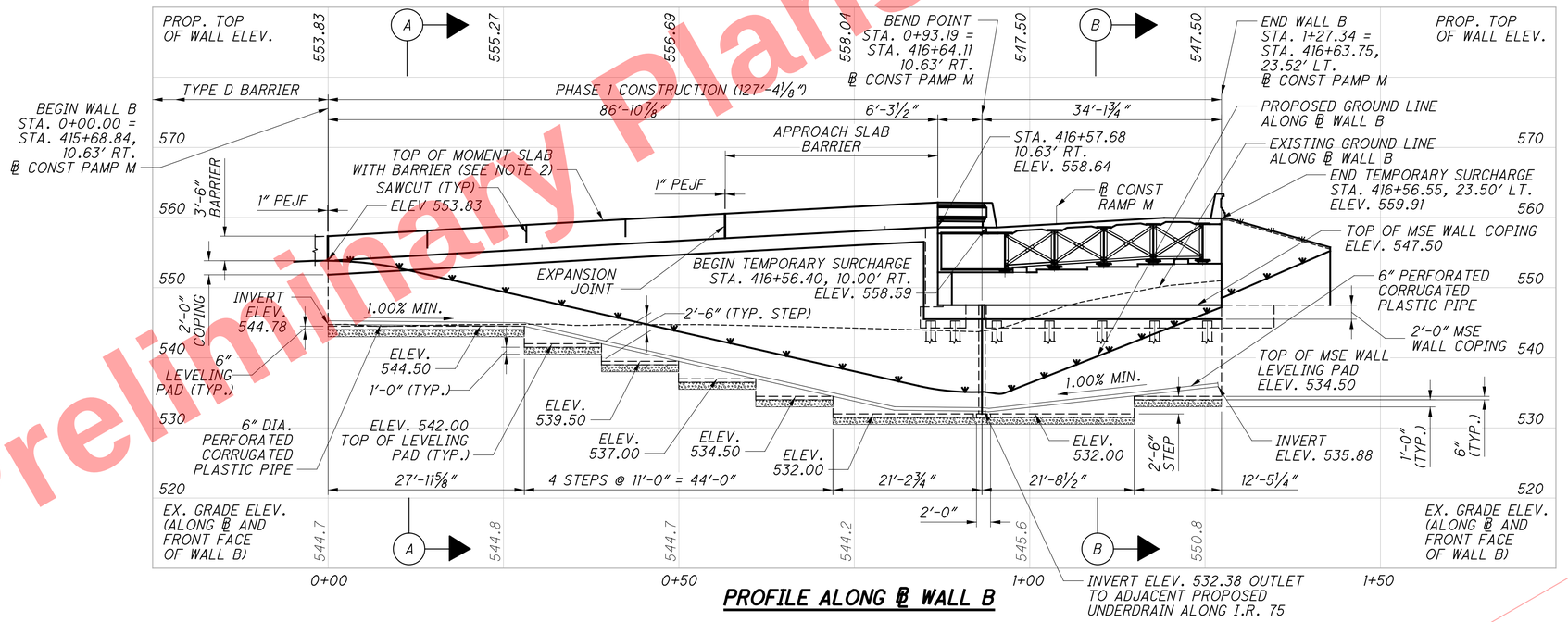

PROFILE ALONG ℄ WALL B

LEGEND

- PLAN BOUNDARY FOR ITEMS INCLUDED WITH MSE WALL FOR PAYMENT
- 6" DIAMETER PERFORATED CORRUGATED PLASTIC PIPE
- SETTLEMENT PLATFORM
- DENOTES LIMITS OF ITEM 203, GRANULAR MATERIAL, TYPE C

NOTES

1. ALL STATIONS, OFFSETS, ELEVATIONS AND DIMENSIONS MEASURED ABOUT THE FRONT FACE OF MSE WALL PANEL.
2. FOR DETAILS OF MOMENT SLAB WITH BARRIER, SEE SHEET 6/43 .
3. FOR SECTIONS A-A AND B-B, SEE SHEET 5/43 .
4. SEE SHEET 2/43 FOR ABBREVIATION LEGEND.

Preliminary Plans - Not for Construction
Reference Only

DESIGN AGENCY: EMH&T
DESIGNED RJE | DRAWN GB | REVIEWED CAS | DATE 5-22-26
CHECKED RMW/TDA | REVISED - | STRUCTURE FILE NUMBER

PLAN AND PROFILE
MSE RETAINING WALL B

HAM-75-7.85
PID No. 121447

4 / 43

625
1047

J:\20110903\ODOT\HAM\77889\structures\WALL_00B\sheets\77889_00BWP001.dgn 5/22/2026 10:21:20 AM hbrendlinger

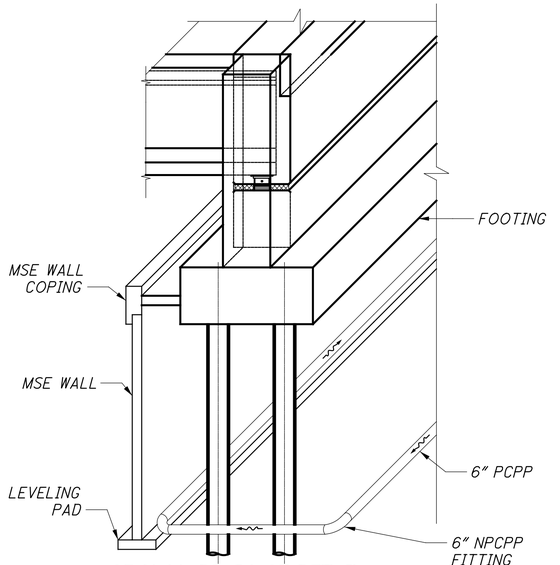

MSE WALL DRAINAGE DETAIL

NOTES

1. SEE SHEET 2/43 FOR ABBREVIATION LEGEND.
2. ITEM 203 - GRANULAR MATERIAL, TYPE C SHALL BE INCLUDED FOR PAYMENT WITH ITEM 840 - FOUNDATION PREPARATION.

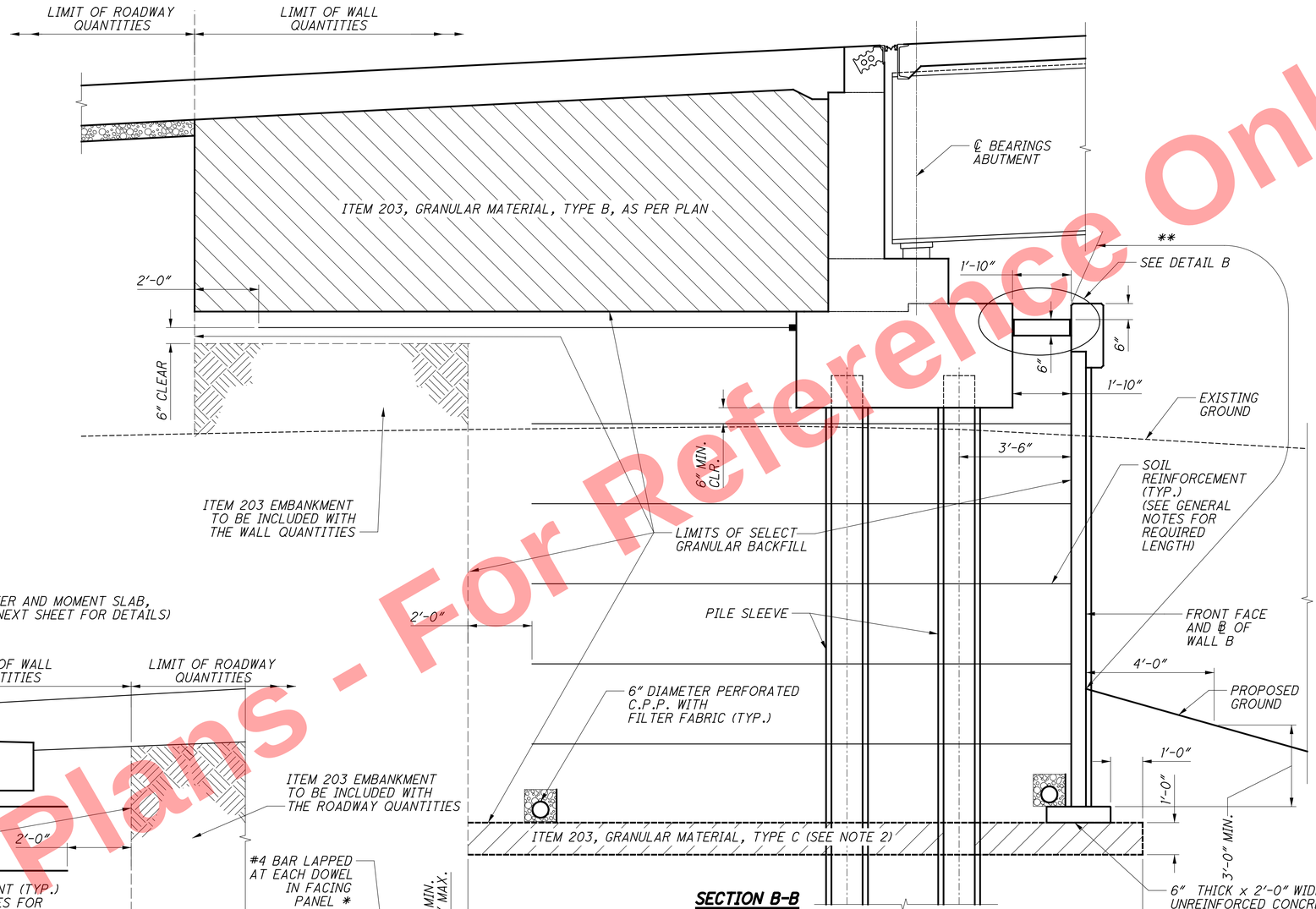

SECTION B-B

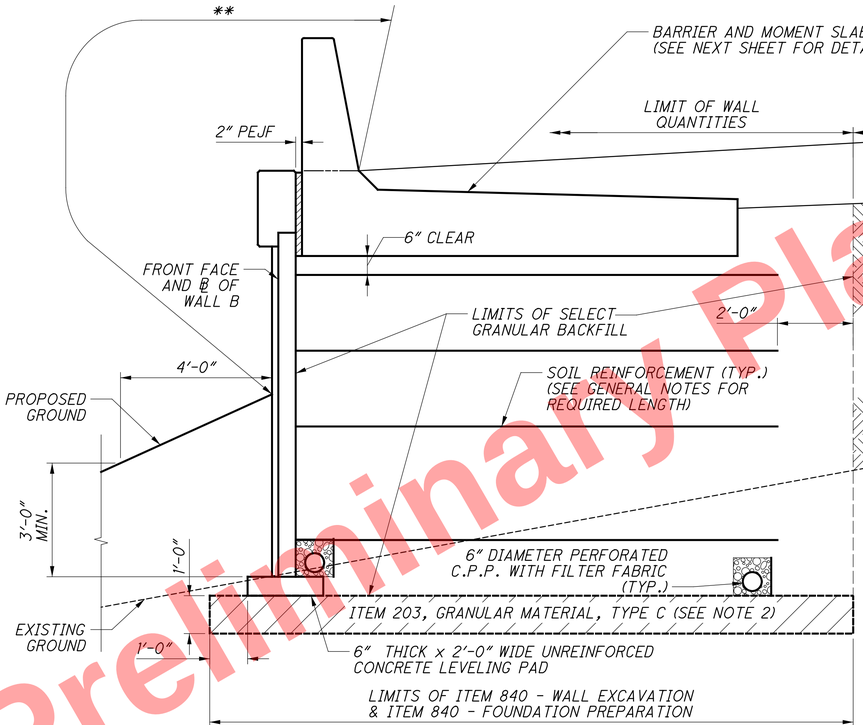

SECTION A-A

TYPICAL SECTION SHOWN IS A GENERAL REPRESENTATION AND NOT THE ACTUAL ELEVATION DIFFERENCE BETWEEN THE MSE WALL AND THE BARRIER MOMENT SLAB. ROADWAY PROFILE GRADES CONTROL BARRIER MOMENT SLAB ELEVATIONS.

LEGEND

* - INCLUDE WITH ITEM 840 - CONCRETE COPING, FOR PAYMENT

** - LIMITS OF ITEM 512 - SEALING OF CONCRETE SURFACES (EPOXY-URETHANE)

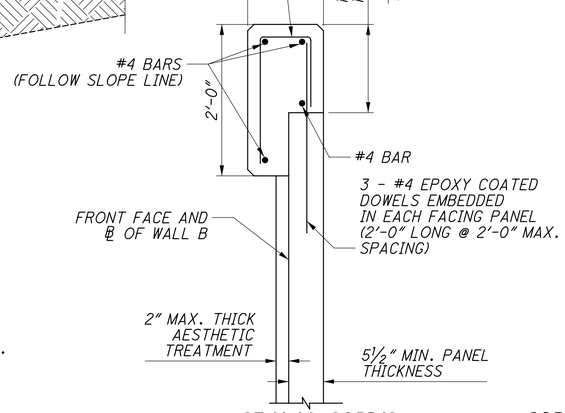

MSE WALL COPING

ALL REINFORCING STEEL TO BE EPOXY COATED

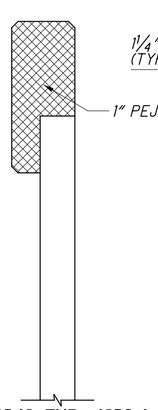

COPING EXPANSION JOINTS

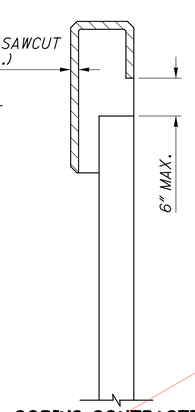

COPING CONTRACTION JOINTS

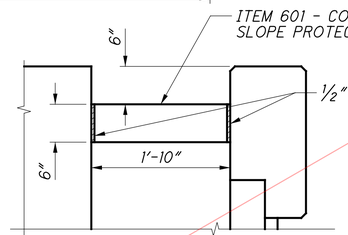

DETAIL B

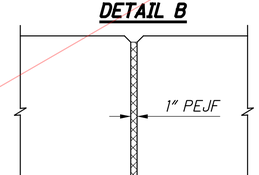

COPING EXPANSION JOINTS

Preliminary Plans - Not For Reference Only

DESIGN AGENCY EMH&T

DESIGNED	DRAWN	REVIEWED	DATE
RJE	GB	CAS	5-22-26
CHECKED	REVISED	STRUCTURE FILE NUMBER	
RMW/TDA	-		

MSE WALL DETAILS
MSE RETAINING WALL B

HAM-75-7.85
PID No. 121447

5 / 43

626
1047

J:\20110903\ODOT\HAM\77889\structures\WALL_00B\sheets\77889_00BWD001.dgn 5/22/2026 10:21:22 AM hbrendlinger

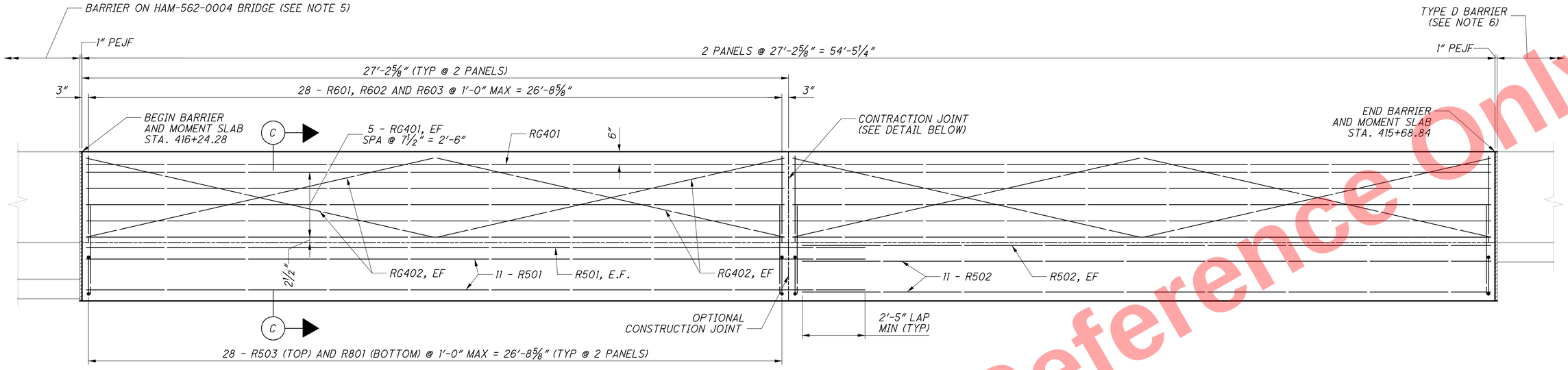

BARRIER AND MOMENT SLAB ELEVATION

LOOKING SOUTH (TRAFFIC SIDE)
ALL DIMENSIONS MEASURED ABOUT THE TOE OF BARRIER

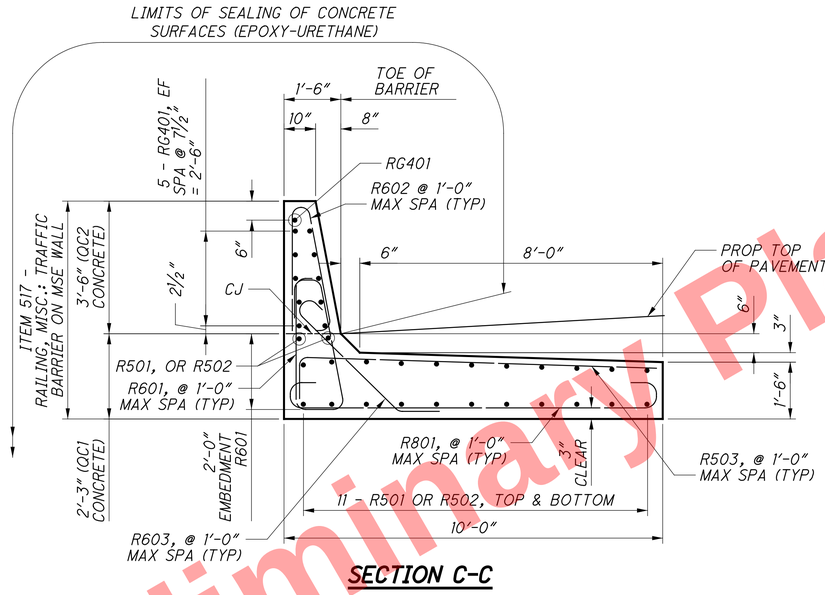

SECTION C-C

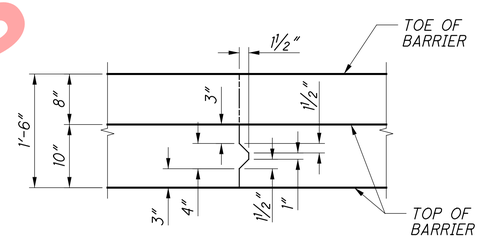

CONTRACTION JOINT

BARRIER NOTES

1. ALL ITEMS SHOWN ON THIS SHEET, EXCLUDING PAVEMENT AND CONCRETE SEALING, ARE INCIDENTAL TO ITEM 517 - RAILING, MISC.: TRAFFIC BARRIER ON MSE WALL.
2. FOR ADDITIONAL BARRIER DETAILS NOT SHOWN ON THIS SHEET, REFER TO ODOT STANDARD DRAWING SBR-1-20.
3. SEE SHEET 2/43 FOR ABBREVIATION LEGEND.
4. ROADWAY PROFILE GRADES CONTROL BARRIER MOMENT SLAB ELEVATIONS. REFER TO ROADWAY SHEETS AS NECESSARY.
5. SEE HAM-562-0004 BRIDGE PLANS FOR DETAILS.
6. SEE ROADWAY SHEETS FOR DETAILS.

Preliminary Plans - For Reference Only

DESIGN AGENCY: EMH&T
DESIGNED: RJE
DRAWN: GB
REVIEWED: CAS
DATE: 5-22-26
CHECKED: RMW/TDA
REVISED: -
STRUCTURE FILE NUMBER

BARRIER AND MOMENT SLAB DETAILS
MSE RETAINING WALL B

HAM-75-7.85
PID No. 121447

6 / 43

627
1047

J:\2011090\3\ODOT\HAM\77889\structures\WALL_00B\sheets\77889_00BWD002.dgn 5/22/2026 10:21:23 AM hbrendlinger

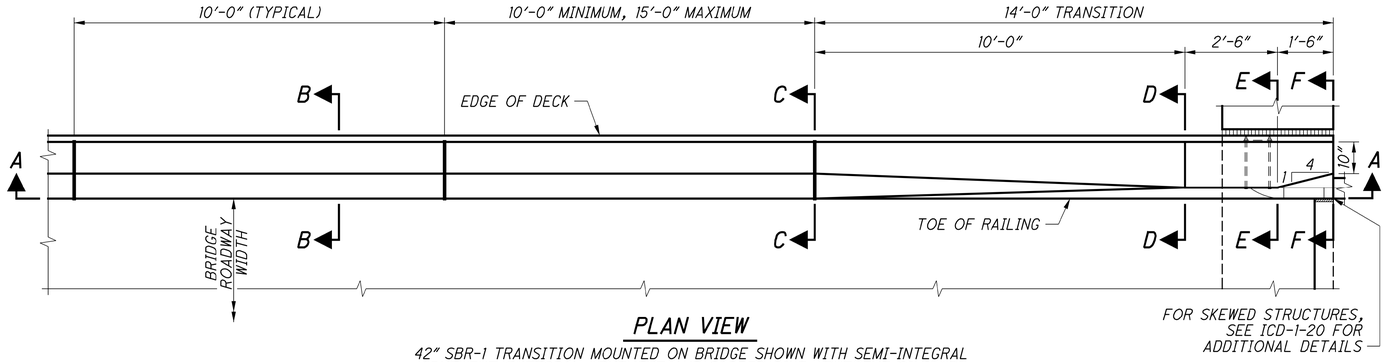

PLAN VIEW

42" SBR-1 TRANSITION MOUNTED ON BRIDGE SHOWN WITH SEMI-INTEGRAL ABUTMENT (INTEGRAL ABUTMENT AND CAPPED PILE ABUTMENT SIMILAR)

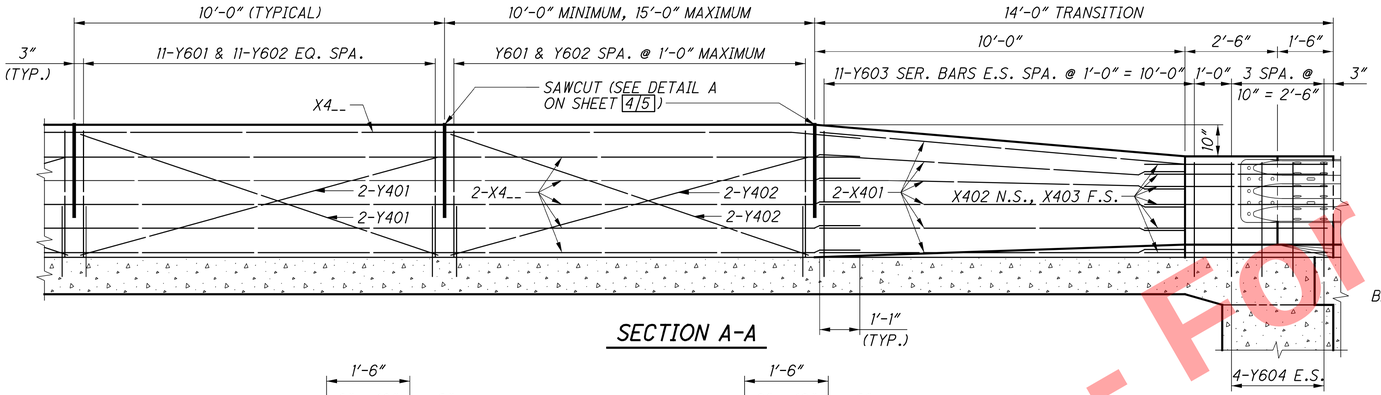

SECTION A-A

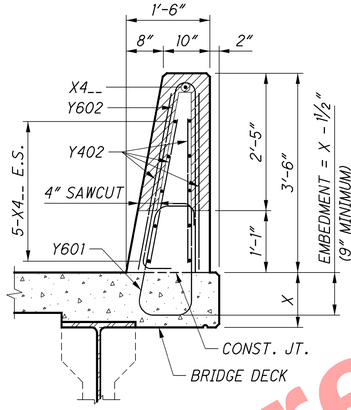

SECTION C-C

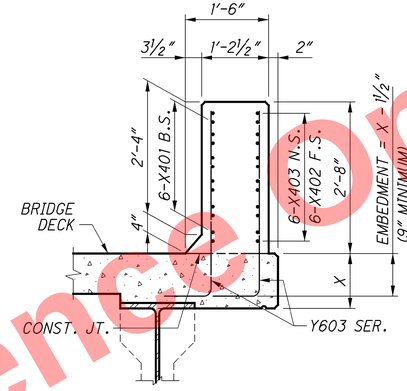

SECTION D-D

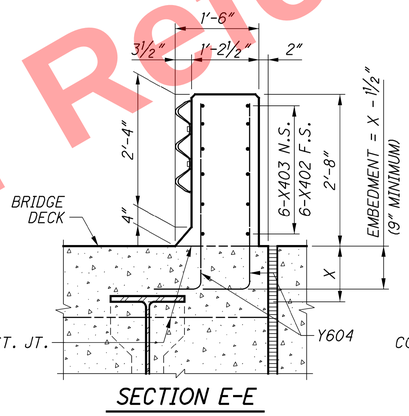

SECTION E-E

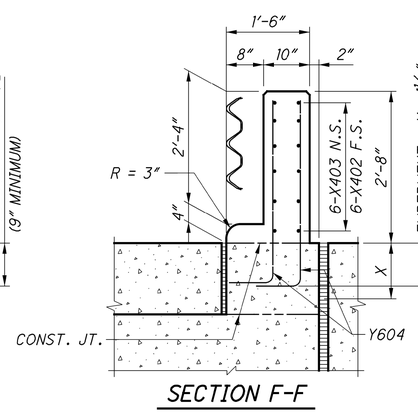

SECTION F-F

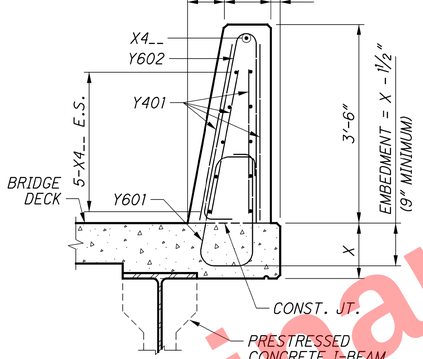

SECTION B-B

REINFORCED CONCRETE DECK ON STEEL OR PRESTRESSED CONCRETE I-BEAMS/GIRDERS (SAWCUT NOT SHOWN)

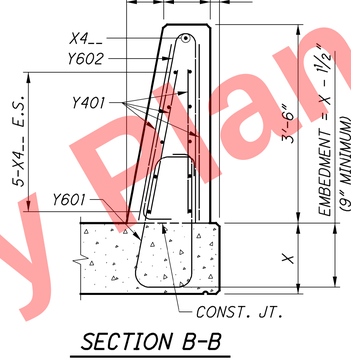

SECTION B-B

CONTINUOUS OR SINGLE SPAN REINFORCED CONCRETE SLAB BRIDGE (SAWCUT NOT SHOWN)

LEGEND:

E.S. = EACH SIDE
F.S = FAR SIDE
N.S. = NEAR SIDE

NOTES:

1. FOR ALL SINGLE SLOPE CONCRETE BRIDGE RAILINGS INCLUDING THE 14'-0" TRANSITIONS, PROJECT PLANS SHALL INCLUDE PLAN VIEW, ELEVATION VIEW, SECTIONS, REINFORCING MARKS, REINFORCING BENDING DIAGRAMS, AND REINFORCING QUANTITIES.
2. SEE APPROPRIATE STANDARD BRIDGE DRAWING FOR ABUTMENT DETAILS.
3. FOR BRIDGE TERMINAL ASSEMBLY, SEE STD. CONSTR. DWGS. MGS-3.1 AND MGS-3.2.
4. FOR SAWCUT PERIMETER LENGTH, SEE DETAIL A ON SHEET 4/5.
5. FOR DEFLECTION JOINT DETAILS AND ADDITIONAL NOTES, SEE SHEET 5/5.
6. USE GLASS FIBER REINFORCED POLYMER (GFRP) FOR ALL HORIZONTAL X4__ BARS AND STIFFENING BARS (Y401 & Y402 BARS).
7. TIE Y401 & Y402 STIFFENING BARS LOCATED INSIDE THE VERTICAL REINFORCEMENT AT EACH HORIZONTAL BAR. TIE Y401 & Y402 STIFFENING BARS LOCATED OUTSIDE OF THE VERTICAL REINFORCEMENT AT EACH VERTICAL BAR.
8. PLACE STIFFENING BARS IN ALL SAWCUT PANELS 10'-0" AND GREATER. DO NOT ADD STIFFENING BARS TO 14'-0" TRANSITIONS. DO NOT SLIPFORM UNSTIFFENED SAWCUT PANELS. DO NOT OMIT STIFFENING BARS FOR CONVENTIONALLY FORMED CONSTRUCTION.
9. X402 BAR MAY BE PROVIDED AS EPOXY COATED STEEL REINFORCEMENT IF A GFRP FABRICATED SHAPE IS NOT AVAILABLE.

REINFORCEMENT FOR 42" SBR-1 TRANSITION MOUNTED ON BRIDGE OR APPROACH SLAB

MARK	LENGTH	TYPE	MATERIAL	INCRE.	BENDING DIAGRAMS
X401	10'-0"	STR	GFRP		
X402	6'-4"	BENT	GFRP		
X403	5'-1"	STR	GFRP		
X4__	⊕	STR	GFRP		
Y401	10'-0"	STR	GFRP		
Y402	⊕	STR	GFRP		
Y601	5'-5"+2.25A	BENT	STEEL		
Y602	7'-0"	BENT	STEEL		
Y603 SER. OF 11	A + B + 10"	BENT	STEEL	3'-4" TO (1") 2'-6"	
Y604	A + 3'-4"	BENT	STEEL		

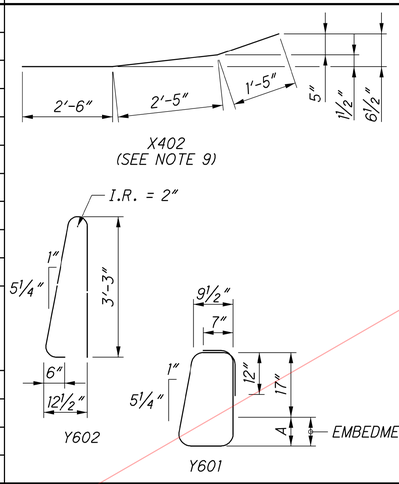

⊕ SEE PROJECT PLANS

OFFICE OF STRUCTURAL ENGINEERING

REVISION
07-17-2020
01-20-2023

STDS ENGINEER

STANDARD BRIDGE DRAWING
42" SINGLE SLOPE CONCRETE BRIDGE RAILING

DESIGN AGENCY

STATE OF OHIO DEPARTMENT OF TRANSPORTATION

SCD NUMBER
SBR-1-20

1 / 5
7 / 43

628
1047

Preliminary Plans - For Reference Only

J:\2010903\ODOT\HAM\77889\structures\WALL_00B\sheets\77889_00BWD003.dgn 5/22/2026 10:21:23 AM hbrendlinger

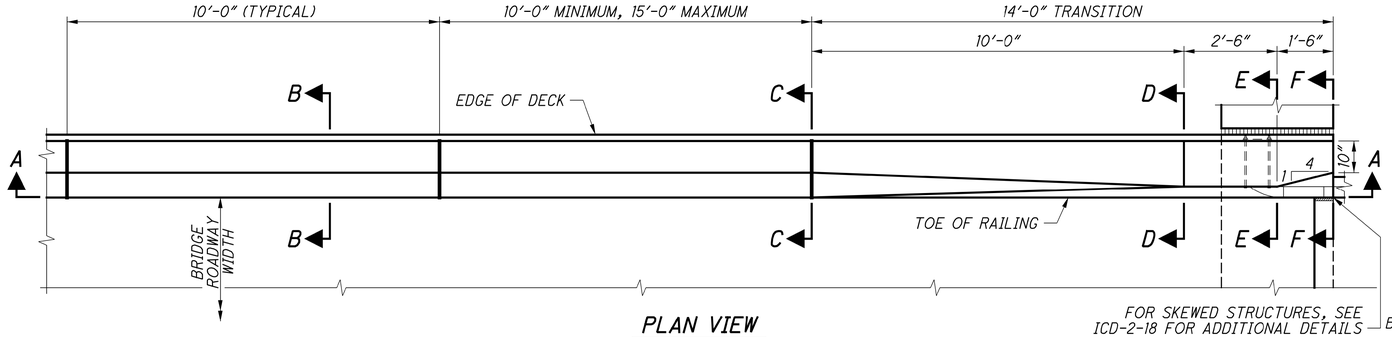

PLAN VIEW

42" SBR-1 TRANSITION MOUNTED ON BRIDGE SHOWN WITH INTEGRAL ABUTMENT AND ADJACENT BOX BEAM SUPERSTRUCTURE

FOR SKEWED STRUCTURES, SEE ICD-2-18 FOR ADDITIONAL DETAILS

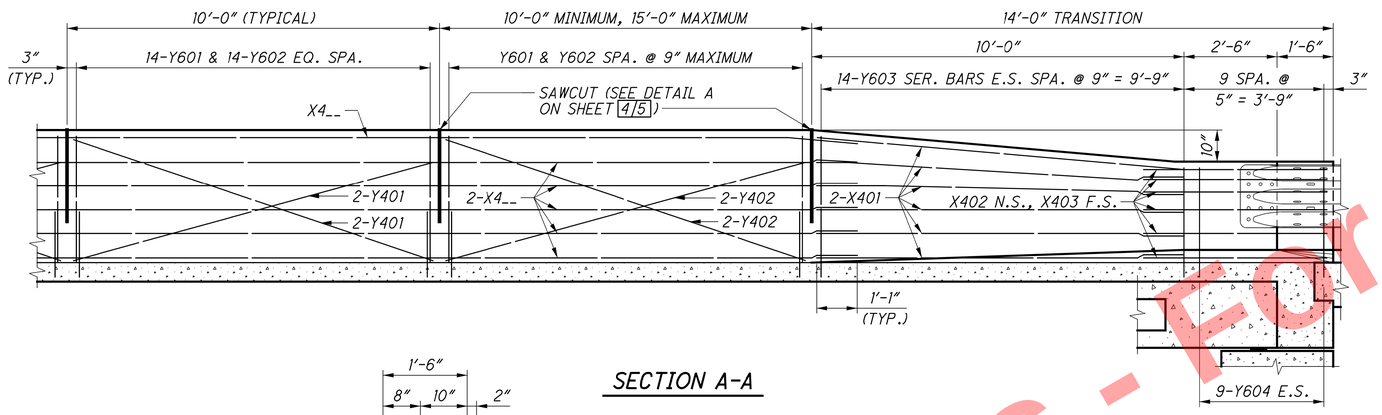

SECTION A-A

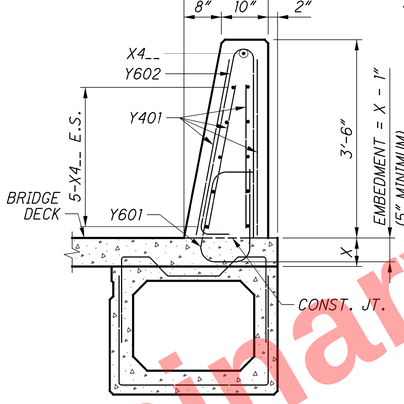

SECTION B-B

COMPOSITE PRESTRESSED CONCRETE BOX BEAMS (SAWCUT NOT SHOWN)

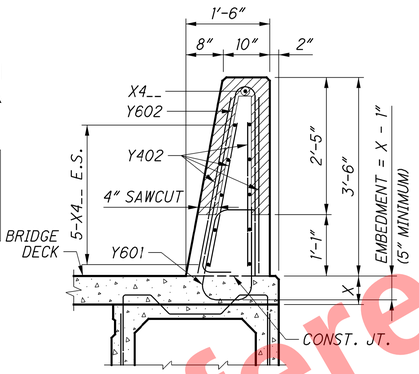

SECTION C-C

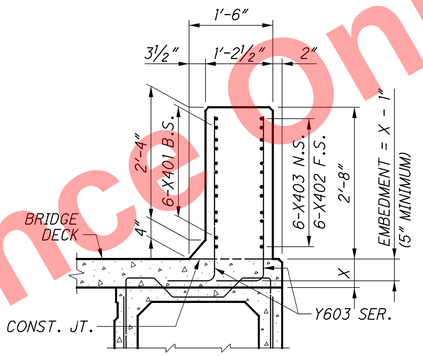

SECTION D-D

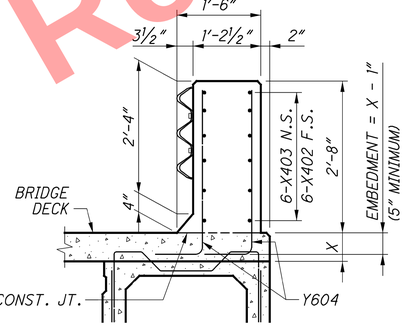

SECTION E-E

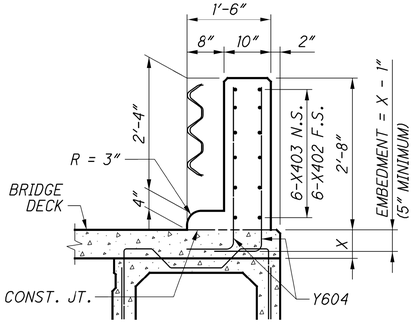

SECTION F-F

LEGEND:

E.S. = EACH SIDE
F.S = FAR SIDE
N.S. = NEAR SIDE

NOTES:

1. FOR ALL SINGLE SLOPE CONCRETE BRIDGE RAILINGS INCLUDING THE 14'-0" TRANSITIONS, PROJECT PLANS SHALL INCLUDE PLAN VIEW, ELEVATION VIEW, SECTIONS, REINFORCING MARKS, REINFORCING BENDING DIAGRAMS, AND REINFORCING QUANTITIES.
2. SEE APPROPRIATE STANDARD BRIDGE DRAWING FOR ABUTMENT DETAILS.
3. FOR BRIDGE TERMINAL ASSEMBLY, SEE STD. CONSTR. DWGS. MGS-3.1 AND MGS-3.2.
4. FOR SAWCUT PERIMETER LENGTH, SEE DETAIL A ON SHEET 4/5.
5. FOR DEFLECTION JOINT DETAILS AND ADDITIONAL NOTES, SEE SHEET 5/5.
6. THE HORIZONTAL LEGS OF THE Y615 BARS ARE INTENDED TO LAP WITH THE BOTTOM TRANSVERSE STEEL IN THE DECK. THE SPACING MAY BE ADJUSTED THE MINIMUM DISTANCE NECESSARY TO AVOID INTERFERENCE WITH THE TRANSVERSE DECK REINFORCEMENT.
7. USE GLASS FIBER REINFORCED POLYMER (GFRP) FOR ALL HORIZONTAL X4__ BARS AND STIFFENING BARS (Y401 & Y402 BARS).
8. TIE Y401 & Y402 STIFFENING BARS LOCATED INSIDE THE VERTICAL REINFORCEMENT AT EACH HORIZONTAL BAR. TIE Y401 & Y402 STIFFENING BARS LOCATED OUTSIDE OF THE VERTICAL REINFORCEMENT AT EACH VERTICAL BAR.
9. PLACE STIFFENING BARS IN ALL SAWCUT PANELS 10'-0" AND GREATER. DO NOT ADD STIFFENING BARS TO 14'-0" TRANSITIONS. DO NOT SLIPFORM UNSTIFFENED SAWCUT PANELS. DO NOT OMIT STIFFENING BARS FOR CONVENTIONALLY FORMED CONSTRUCTION.
10. X402 BAR MAY BE PROVIDED AS EPOXY COATED STEEL REINFORCEMENT IF A GFRP FABRICATED SHAPE IS NOT AVAILABLE.

REINFORCEMENT FOR 42" SBR-1 TRANSITION MOUNTED ON COMPOSITE BOX BEAM BRIDGE

MARK	LENGTH	TYPE	MATERIAL	INCRE.	BENDING DIAGRAMS
X401	10'-0"	STR	GFRP		
X402	6'-4"	BENT	GFRP		
X403	5'-1"	STR	GFRP		
X4__	⊕	STR	GFRP		
Y401	10'-0"	STR	GFRP		
Y402	⊕	STR	GFRP		
Y601	5'-5"+2.25A	BENT	STEEL		
Y602	7'-0"	BENT	STEEL		
Y603 SER. OF 14	A + B + 10"	BENT	STEEL	3'-4" TO (3¼") 2'-6"	
Y604	A + 3'-4"	BENT	STEEL		

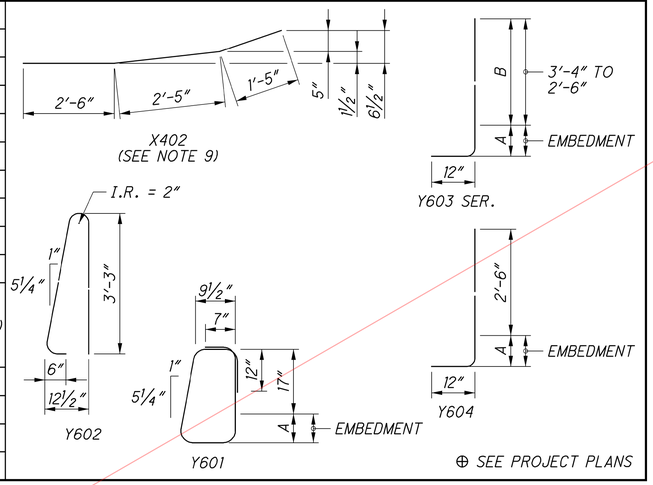

⊕ SEE PROJECT PLANS

OFFICE OF STRUCTURAL ENGINEERING

REVISION
07-17-2020
01-20-2023

STDS ENGINEER

STANDARD BRIDGE DRAWING
42" SINGLE SLOPE CONCRETE BRIDGE RAILING

DESIGN AGENCY

STATE OF OHIO DEPARTMENT OF TRANSPORTATION

SCD NUMBER
SBR-1-20

2 / 5
8 / 43

629
1047

Preliminary Plans - For Reference Only

J:\2011093\ODOT\HAM\77889\structures\WALL_00B\sheets\77889_00BWD004.dgn 5/22/2026 10:23:15 AM hbrendlinger

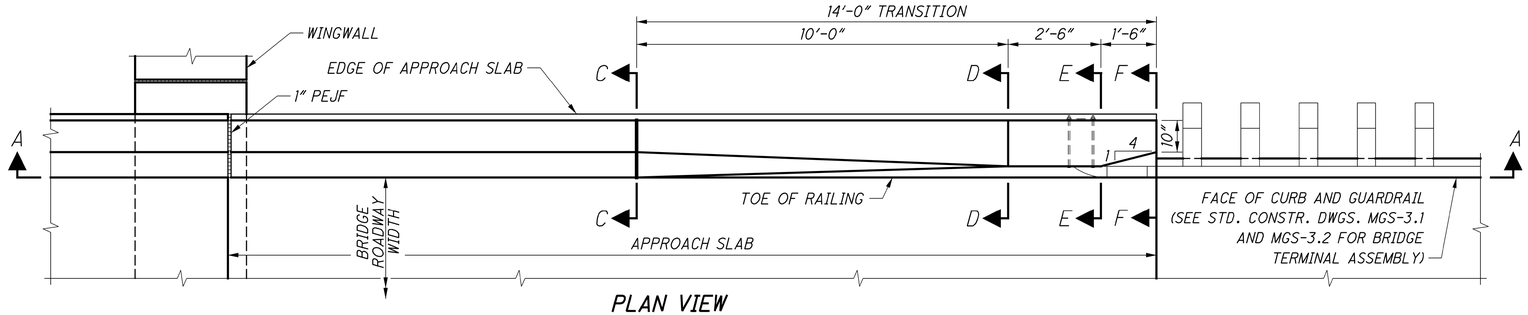

PLAN VIEW

42" SBR-1 TRANSITION MOUNTED ON APPROACH SLAB WITH SEMI-INTEGRAL ABUTMENT SHOWN (INTEGRAL ABUTMENT AND CAPPED PILE ABUTMENT SIMILAR)

LEGEND:

E.S. = EACH SIDE
F.S. = FAR SIDE
N.S. = NEAR SIDE
PEJF = PREFORMED EXPANSION JOINT FILLER

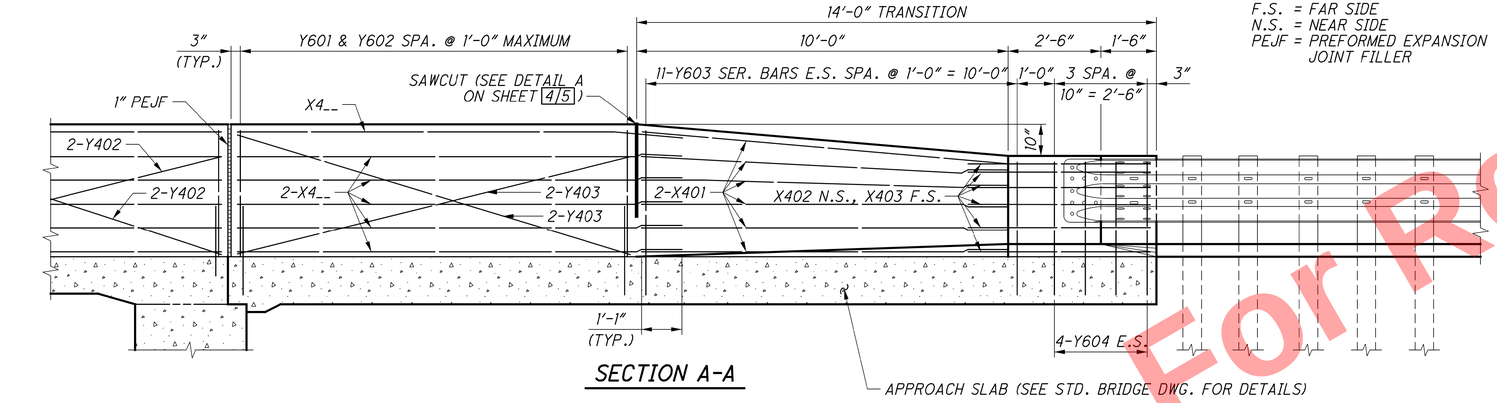

SECTION A-A

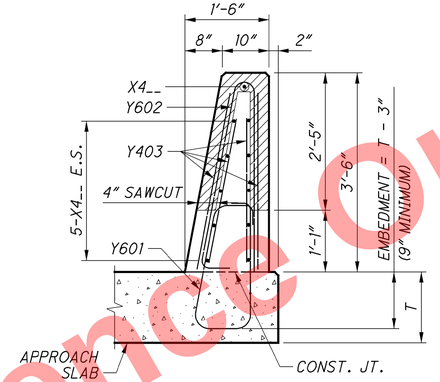

SECTION C-C

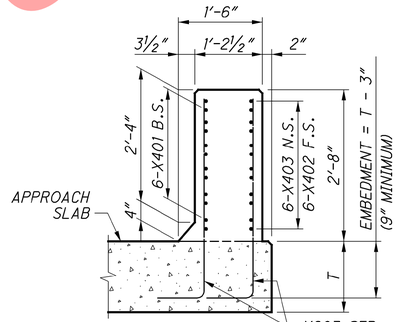

SECTION D-D

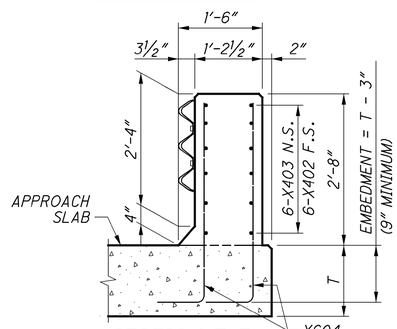

SECTION E-E

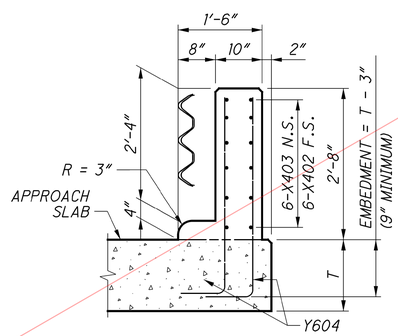

SECTION F-F

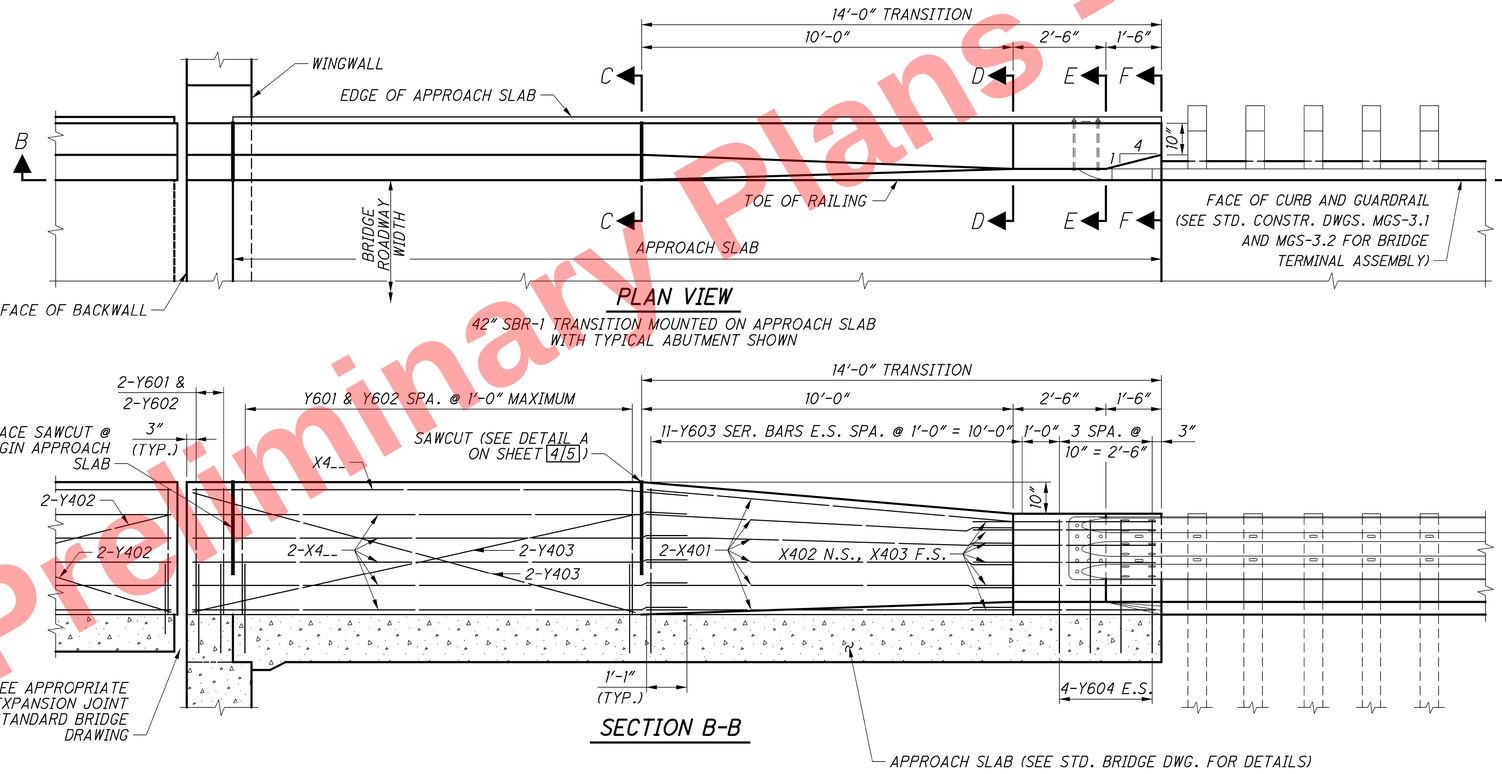

PLAN VIEW

42" SBR-1 TRANSITION MOUNTED ON APPROACH SLAB WITH TYPICAL ABUTMENT SHOWN

SECTION B-B

Preliminary Plans - For Reference Only

OFFICE OF STRUCTURAL ENGINEERING

REVISION
07-17-2020
01-20-2023

STDS ENGINEER

STANDARD BRIDGE DRAWING
42" SINGLE SLOPE CONCRETE BRIDGE RAILING

DESIGN AGENCY

STATE OF OHIO DEPARTMENT OF TRANSPORTATION

SCD NUMBER
SBR-1-20

3 / 5
9 / 43

630
1047

J:\2011\0903\ODOT\HAM\77889\structures\WALL_00B\sheets\77889_00BWD005.dgn 5/22/2026 10:24:38 AM hbrendlinger

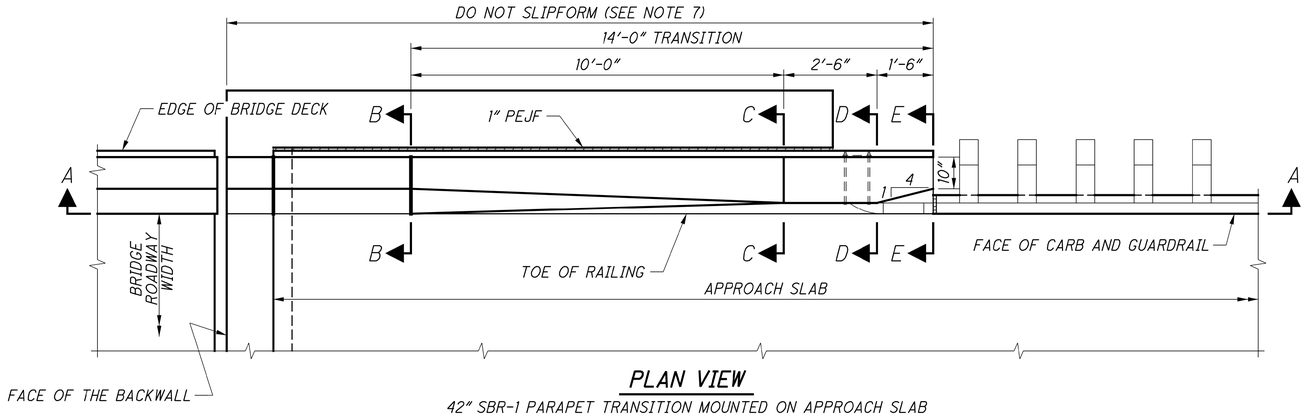

PLAN VIEW

42" SBR-1 PARAPET TRANSITION MOUNTED ON APPROACH SLAB SHOWN WITH TYPICAL ABUTMENT AND TURNBACK WINGWALL

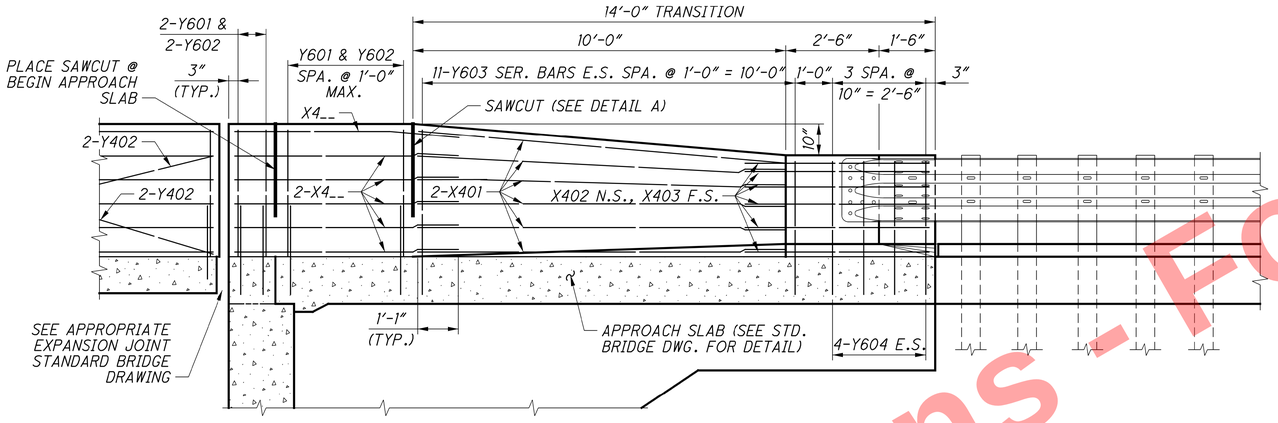

SECTION A-A

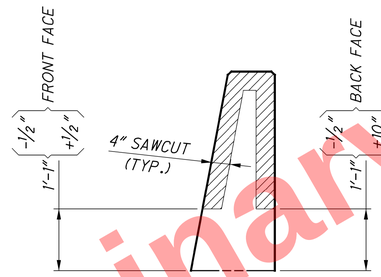

SECTION C-C

SECTION THROUGH SAWCUT
SAWCUT PERIMETER = 5'-9"

LEGEND:

E.S. = EACH SIDE
F.S = FAR SIDE
N.S. = NEAR SIDE
PEJF = PREFORMED EXPANSION JOINT FILLER

NOTES:

1. FOR ALL SINGLE SLOPE CONCRETE BRIDGE RAILINGS INCLUDING THE 14'-0" TRANSITIONS, PROJECT PLANS SHALL INCLUDE PLAN VIEW, ELEVATION VIEW, SECTIONS, REINFORCING MARKS, REINFORCING BENDING DIAGRAMS, AND REINFORCING QUANTITIES.
2. SEE APPROPRIATE STANDARD BRIDGE DRAWING FOR ABUTMENT DETAILS.
3. FOR BRIDGE TERMINAL ASSEMBLY, SEE STD. CONSTR. DWGS. MGS-3.1 AND MGS-3.2.
4. FOR SAWCUT PERIMETER LENGTH, SEE DETAIL A ON SHEET 4/5.
5. FOR DEFLECTION JOINT DETAILS AND ADDITIONAL NOTES, SEE SHEET 5/5.
6. USE GLASS FIBER REINFORCED POLYMER (GFRP) FOR ALL HORIZONTAL X4__ BARS AND STIFFENING BARS (Y401 & Y402 BARS).
7. TIE Y401 & Y402 STIFFENING BARS LOCATED INSIDE THE VERTICAL REINFORCEMENT AT EACH HORIZONTAL BAR. TIE Y401 & Y402 STIFFENING BARS LOCATED OUTSIDE OF THE VERTICAL REINFORCEMENT AT EACH VERTICAL BAR.
8. PLACE STIFFENING BARS IN ALL SAWCUT PANELS 10'-0" AND GREATER. DO NOT ADD STIFFENING BARS TO 14'-0" TRANSITIONS. DO NOT SLIPFORM UNSTIFFENED SAWCUT PANELS. DO NOT OMIT STIFFENING BARS FOR CONVENTIONALLY FORMED CONSTRUCTION.
9. X402 BAR MAY BE PROVIDED AS EPOXY COATED STEEL REINFORCEMENT IF A GFRP FABRICATED SHAPE IS NOT AVAILABLE.

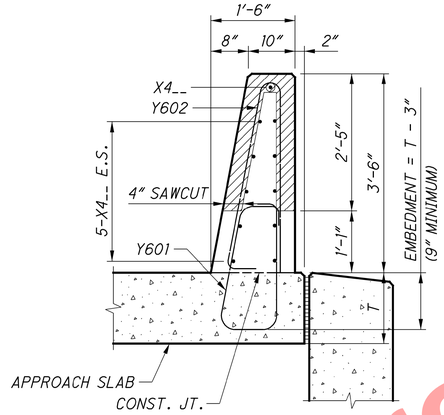

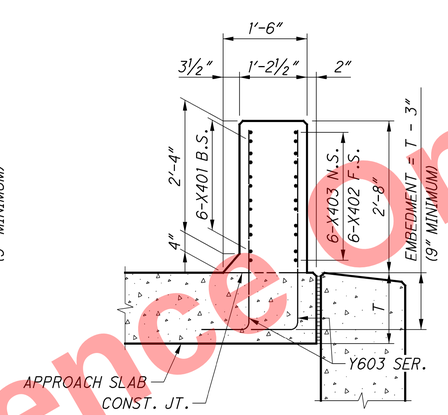

SECTION B-B

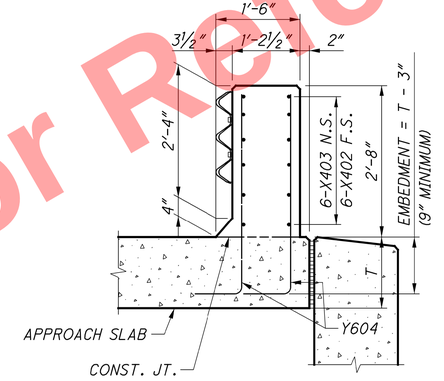

SECTION C-C

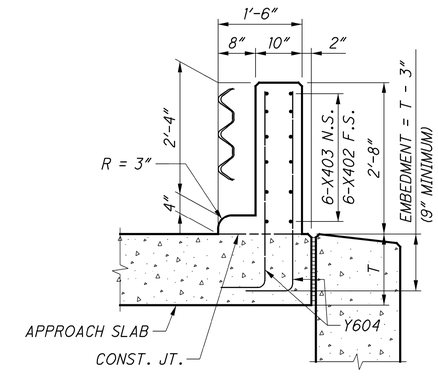

SECTION D-D

SECTION E-E

REINFORCEMENT FOR 42" SBR-1 TRANSITION MOUNTED ON APPROACH SLAB

MARK	LENGTH	TYPE	MATERIAL	INCRE.	BENDING DIAGRAMS
X401	10'-0"	STR	GFRP		
X402	6'-4"	BENT	GFRP		
X403	5'-1"	STR	GFRP		
X4__	⊕	STR	GFRP		
Y401	10'-0"	STR	GFRP		
Y402	⊕	STR	GFRP		
Y601	5'-5"+2.25A	BENT	STEEL		
Y602	7'-0"	BENT	STEEL		
Y603 SER. OF 11	A + B + 10"	BENT	STEEL	3'-4" TO (1") 2'-6"	
Y604	A + 3'-4"	BENT	STEEL		

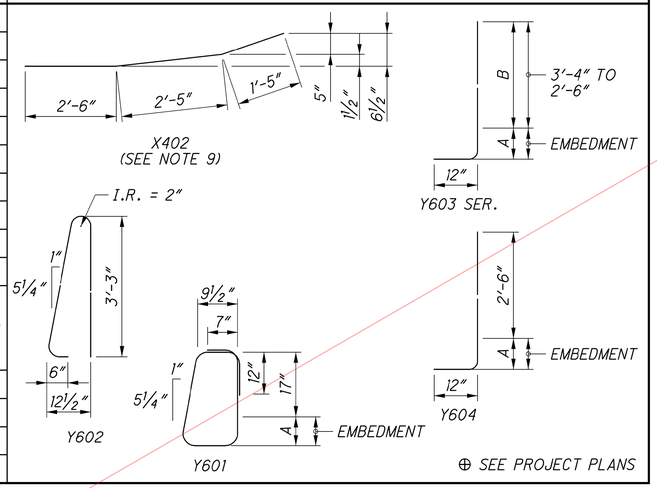

⊕ SEE PROJECT PLANS

OFFICE OF STRUCTURAL ENGINEERING

REVISION
07-17-2020
01-20-2023

STDS ENGINEER

STANDARD BRIDGE DRAWING
42" SINGLE SLOPE CONCRETE BRIDGE RAILING

DESIGN AGENCY

STATE OF OHIO DEPARTMENT OF TRANSPORTATION

SCD NUMBER
SBR-1-20

4 / 5
10 / 43
631
1047

Preliminary Plans - For Reference Only

J:\2011\0903\ODOT\HAM\77889\structures\WALL_00B\sheets\77889_00BWD006.dgn 5/22/2026 10:25:54 AM hbrendlinger

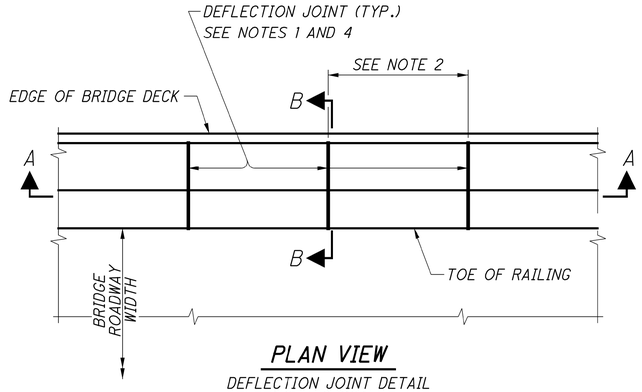

PLAN VIEW

DEFLECTION JOINT DETAIL
(NOT TO SCALE)

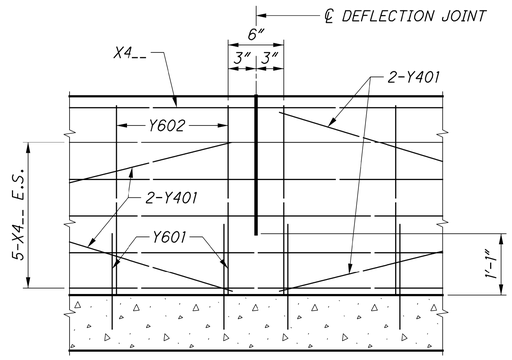

SECTION A-A

DETAIL AT DEFLECTION JOINTS
FOR SINGLE SLOPE CONCRETE BRIDGE RAILING
(NOT TO SCALE)

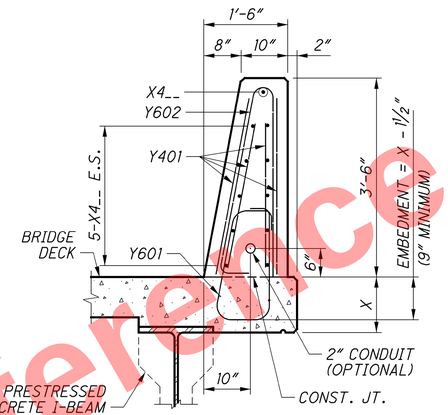

SECTION B-B

REINFORCED CONCRETE DECK ON STEEL OR
PRESTRESSED CONCRETE I-BEAMS/GIRDERS SHOWN

NOTES:

1. FOR THE ENTIRE LENGTH OF SINGLE SLOPE CONCRETE BRIDGE RAILINGS, PROJECT PLANS SHALL SHOW THE LOCATIONS OF DEFLECTION JOINTS.
2. DEFLECTION JOINT SPACING SHALL BE 10′-0″ EXCEPT FOR THE LAST JOINT SPACING ADJACENT TO EITHER A 14′-0″ TRANSITION OR AN OPEN JOINT. EXCEPTION PANELS MAY VARY IN LENGTH BETWEEN 10′-0″ AND 15′-0″.
3. PAYMENT FOR GLASS FIBER REINFORCED POLYMER (GFRP) STIFFENING REINFORCEMENT SHALL BE INCLUDED WITH CONTRACT PRICE FOR ITEM 509 - NO._ GFRP DEFORMED BARS.
4. LIMITS OF SAWCUT IS SHOWN IN DETAIL A, SHEET 4/5. THE 4″ SAWCUT DEPTH SHOWN IN DETAIL A IS THE MINIMUM REQUIRED. HOWEVER, THE CONTRACTOR HAS AN OPTION TO PERFORM FULL DEPTH SAWCUT.

DESIGN CRITERIA:

42″ SINGLE SLOPE CONCRETE BRIDGE RAILINGS MEET THE REQUIREMENTS OF NCHRP 350 & MASH TEST LEVEL 5 AND "AASHTO LRFD BRIDGE DESIGN SPECIFICATIONS, 9TH EDITION".

DESIGN DATA:

CONCRETE - COMPRESSIVE STRENGTH = 4.5 KSI
REINFORCING STEEL - MINIMUM YIELD STRENGTH = 60 KSI
GFRP - C&MS 705.28 (MODULUS = 8700 KSI)
AREA OF STANDARD 42″ SBR-1 CROSS SECTION = 588.0 SQ. IN.
VOLUME OF 42″ SBR-1 14′-0″ TRANSITION SECTION = 1.82 CU. YD.

DEFLECTION JOINTS FOR CONCRETE RAILING:
FOR SLIPFORMED CONSTRUCTION:

AS SOON AS CUTTING OPERATIONS CAN BEGIN WITHOUT DAMAGING THE CONCRETE, SAWCUT 1 ¼ INCH DEEP DEFLECTION CONTROL JOINTS ALONG THE PERIMETER OF THE RAILING.

AFTER THE CURING PERIOD AND BEFORE APPLYING LOAD TO THE RAILING, PERFORM 4 INCH SAWCUT AS SHOWN IN DETAIL A, SHEET 3/4. APPLIED RAILING LOAD INCLUDES: CONSTRUCTION LOADS ON THE DECK (EXCLUDING PERSONNEL; HAND OPERATED EQUIPMENT AND MANUALLY POWERED VEHICLES); AND VEHICLE TRAFFIC IN THE LANE IMMEDIATELY ADJACENT TO THE RAILING AFTER REMOVAL OF TRAFFIC CONTROL DEVICES.

FOR CONVENTIONALLY FORMED CONSTRUCTION:
REMOVE THE FORMS BEFORE APPLYING LOAD TO THE RAILING. AS SOON AS THE FORMS ARE REMOVED, PERFORM 4-INCH SAWCUT AS SHOWN IN DETAIL A, SHEET 4/5. THE 1¼ INCH SAWCUTS ARE NOT REQUIRED.

THE CONTRACTOR HAS AN OPTION TO PERFORM FULL DEPTH SAWCUT. HOWEVER, THE SAWCUT SHALL NOT BE LESS THAN 1′-0½″ FROM THE TOP OF THE CONCRETE DECK SLAB.

USE AN EDGE GUIDE, FENCE, OR JIG TO ENSURE THAT THE CUT JOINT IS STRAIGHT, TRUE, AND ALIGNED ON ALL FACES OF THE RAILING. THE JOINT WIDTH SHALL BE THE WIDTH OF THE SAW BLADE, A NOMINAL WIDTH OF ¼ INCH.

SEAL THE PERIMETER OF THE DEFLECTION JOINTS TO A MINIMUM DEPTH OF ONE INCH WITH A POLYURETHANE OR POLYMERIC MATERIAL CONFORMING TO ASTM C920, TYPE S. LEAVE THE BOTTOM ½ INCH OF BOTH THE INSIDE AND OUTSIDE FACES OF THE RAILING UNSEALED TO ALLOW ANY WATER WHICH MAY ENTER THE JOINT TO ESCAPE.

FOR TRANSITION SECTION, PLACE A DEFLECTION JOINT AT THE BEGINNING OF THE 14′-0″ TRANSITION. DEFLECTION JOINTS ARE NOT REQUIRED WITHIN THE 14′-0″ TRANSITION SECTION.

MAXIMUM SPACING OF VERTICAL REINFORCING BARS FOR STANDARD 42″ SBR-1 CONCRETE RAILING:

THE MAXIMUM SPACING OF VERTICAL REINFORCING BARS FOR THE STANDARD 42″ SBR-1 CONCRETE RAILING SHALL BE 12″, UNLESS NOTED OTHERWISE.

MAXIMUM SPACING OF VERTICAL REINFORCING BARS FOR 42″ SBR-1 TRANSITIONS:

THE MAXIMUM SPACING OF VERTICAL REINFORCING BARS FOR THE 42″ SBR-1 TRANSITION SECTION SHALL BE AS SHOWN ON SHEETS 1/5, 2/5, 3/5, OR 4/5.

MINIMUM EMBEDMENT OF VERTICAL REINFORCING BARS:

THE MINIMUM EMBEDMENT IS 9″. IF THE MINIMUM EMBEDMENT FOR THE VERTICAL REINFORCING BARS INTO THE BRIDGE DECK OR APPROACH SLAB IS NOT MET, THEN THE DESIGNER SHALL CALCULATE THE REQUIRED REINFORCEMENT ACCORDING TO SECTION 13 OF THE "AASHTO LRFD BRIDGE DESIGN SPECIFICATIONS" ADOPTED BY THE AMERICAN ASSOCIATION OF STATE HIGHWAY AND TRANSPORTATION OFFICIALS.

OFFICE OF STRUCTURAL ENGINEERING

REVISION
07-17-2020
01-20-2023

STDS ENGINEER

STANDARD BRIDGE DRAWING
42″ SINGLE SLOPE CONCRETE BRIDGE RAILING

DESIGN AGENCY
STATE OF OHIO DEPARTMENT OF TRANSPORTATION

SCD NUMBER
SBR-1-20

5 / 5
11 / 43

632
1047

Preliminary Plans - For Reference Only

J:\2010903\ODOT\HAM\77889\structures\WALL_00B\sheets\77889_00BWD007.dgn 5/22/2026 10:27:08 AM hbrendlinger

MARK	NUMBER TOTAL	LENGTH	WEIGHT	TYPE	DIMENSIONS						
					A	B	C	D	E	R	INC
WALL B CAST-IN-PLACE BARRIER WITH MOMENT SLAB REINFORCING LIST*											
RG401 ■	22	26'-10"		STR							
RG402 ■	16	13'-9"		STR							
R501	24	30'-0"	751	STR							
R502	24	26'-6"	663	STR							
R503	56	10'-6"	613	1	1'-0"	9'-8"					
R601	56	10'-0"	841	41	0'-10"	0'-7"	1'-0"	3'-5"	1'-6"		
R602	56	7'-2"	603	39	0'-6"	3'-3"	3'-3"	1'-1"		0'-2"	
R603	56	5'-6"	463	18	3'-10"	0'-9"	0'-9"				
R801	56	11'-4"	1695	17	9'-8"						
	SUB-TOTAL		5,629								

* REINFORCING INCLUDED WITH ITEM 517 - RAILING, CONCRETE, AS PER PLAN

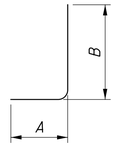

TYPE-1

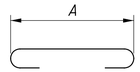

TYPE-17

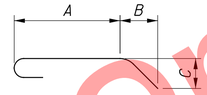

TYPE-18

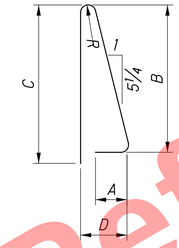

TYPE-39

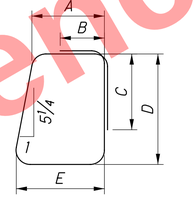

TYPE-41

LEGEND

■- RG4XX - GLASS FIBER REINFORCED POLYMER (GFRP) BAR

NOTES

1. THE BAR SIZE NUMBER IS SPECIFIED ON THE PLANS IN THE BAR MARK COLUMN. THE FIRST DIGIT WHERE THREE DIGITS ARE USED, AND THE FIRST TWO DIGITS WHERE FOUR ARE USED, INDICATES THE BAR SIZE NUMBER. FOR EXAMPLE S601 IS A NO. 6 BAR. BAR DIMENSIONS SHOWN ARE OUT TO OUT, UNLESS OTHERWISE INDICATED. R INDICATES INSIDE RADIUS, UNLESS OTHERWISE NOTED. "STD" WRITTEN IN PLACE OF A DIMENSION INDICATES A STANDARD BEND AT THE END OF THE BAR.

2. ALL REINFORCING STEEL TO BE EPOXY COATED.

3. UNLESS OTHERWISE NOTED, THE FOLLOWING LAP LENGTHS SHALL APPLY:
   #5 BARS: 2'-5", #6 BARS: 3'-7"

4. SEE SHEET 2/43 FOR ABBREVIATION LEGEND.

Preliminary Plans - For Reference Only

DESIGN AGENCY EMH&T

DESIGNED	DRAWN	REVIEWED	DATE
RJE	GB	CAS	5-22-26
CHECKED	REVISED	STRUCTURE FILE NUMBER	
RWW/TDA	-		

REINFORCING STEEL LIST
MSE RETAINING WALL B

HAM-75-7.85
PID No. 121447

12/43

633/1047

J:\20110903\ODOT\HAM\77889\structures\WALL_00B\sheets\77889_00BWL001.dgn 5/22/2026 10:28:16 AM hbrendlinger

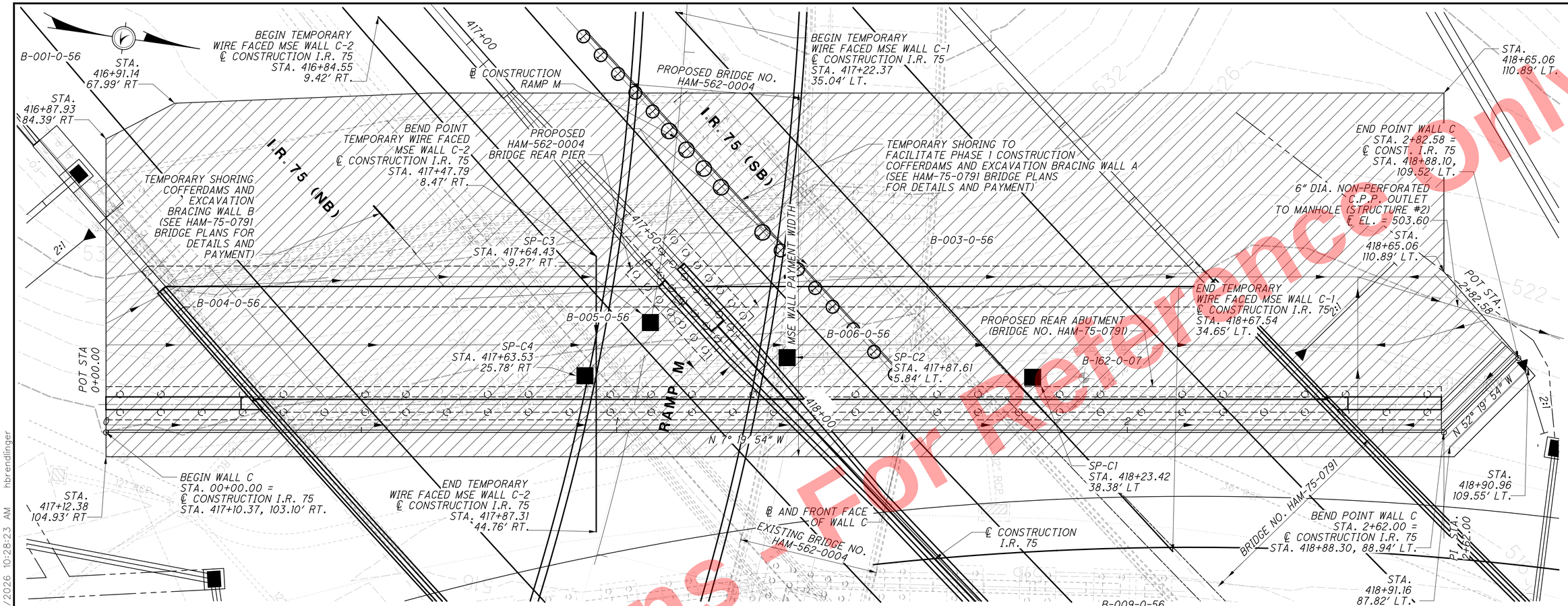

LEGEND

- 6" DIA. PERFORATED C.P.P.
- SETTLEMENT PLATFORM
- PLAN BOUNDARY FOR ITEMS INCLUDED WITH MSE WALL FOR PAYMENT
- ITEM 203, GRANULAR MATERIAL, TYPE C

PLAN

AT REAR ABUTMENT OF HAM-75-0791 BRIDGE

NOTES

1. ALL STATIONS AND OFFSETS ARE ALONG ℄ CONSTRUCTION I.R. 75 UNLESS OTHERWISE SHOWN.
2. FOR SECTIONS A-A AND B-B, SEE SHEET 15 / 43 . FOR SECTION C-C, SEE SHEET 14 / 43 .
3. SEE SHEET 2 / 43 FOR ABBREVIATION LEGEND.

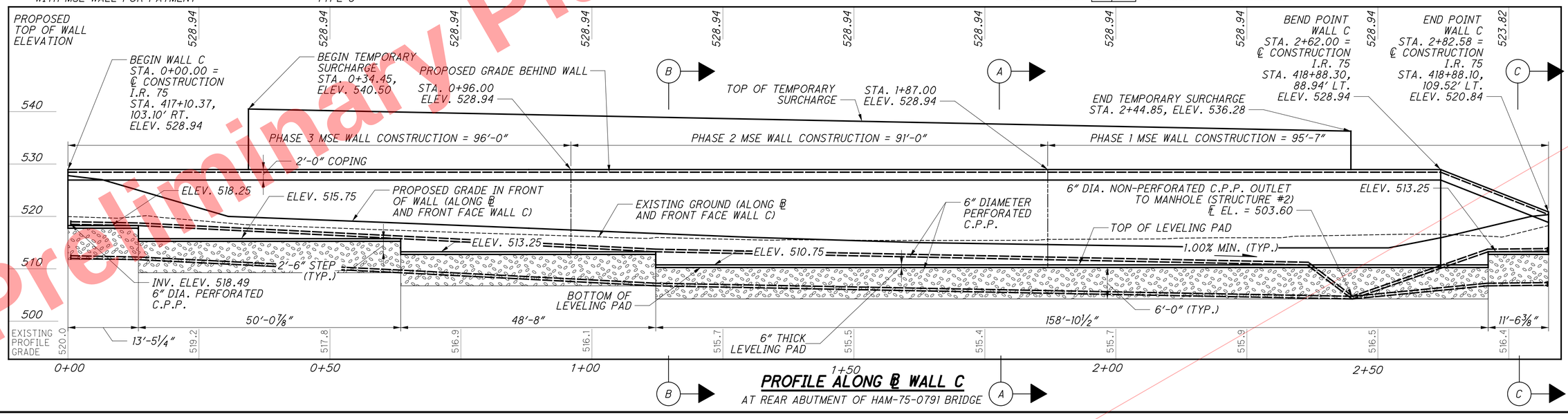

PROFILE ALONG ℄ WALL C

AT REAR ABUTMENT OF HAM-75-0791 BRIDGE

Preliminary Plans - For Reference Only

DESIGN AGENCY EMH&T

DESIGNED	DRAWN	REVIEWED	DATE
RJE	GB	CAS	5-22-26
CHECKED	REVISED	STRUCTURE FILE NUMBER	
RWM/TDA	-		

PLAN AND PROFILE
MSE RETAINING WALL C

HAM-75-7.85
PID No. 121447

13 / 43

634
1047

J:\2011\0903\ODOT\HAM\77889\structures\WALL_00C\sheets\77889_00CWP001.dgn 5/22/2026 10:28:23 AM hbrendlinger

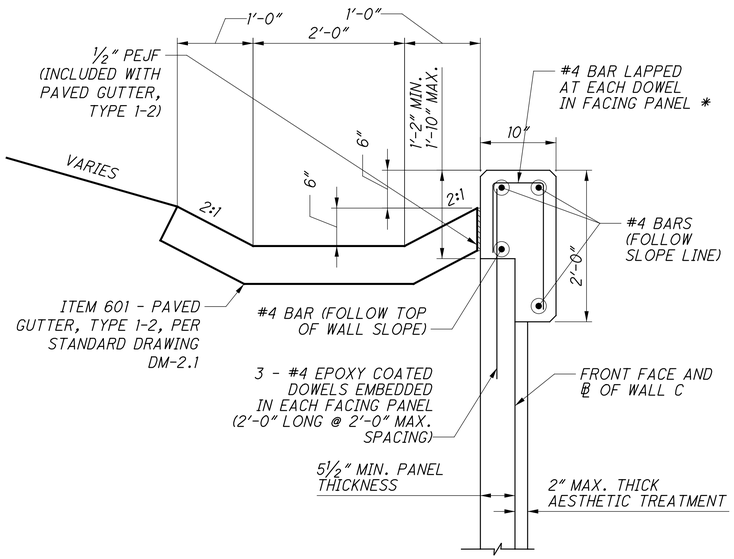

DETAIL A

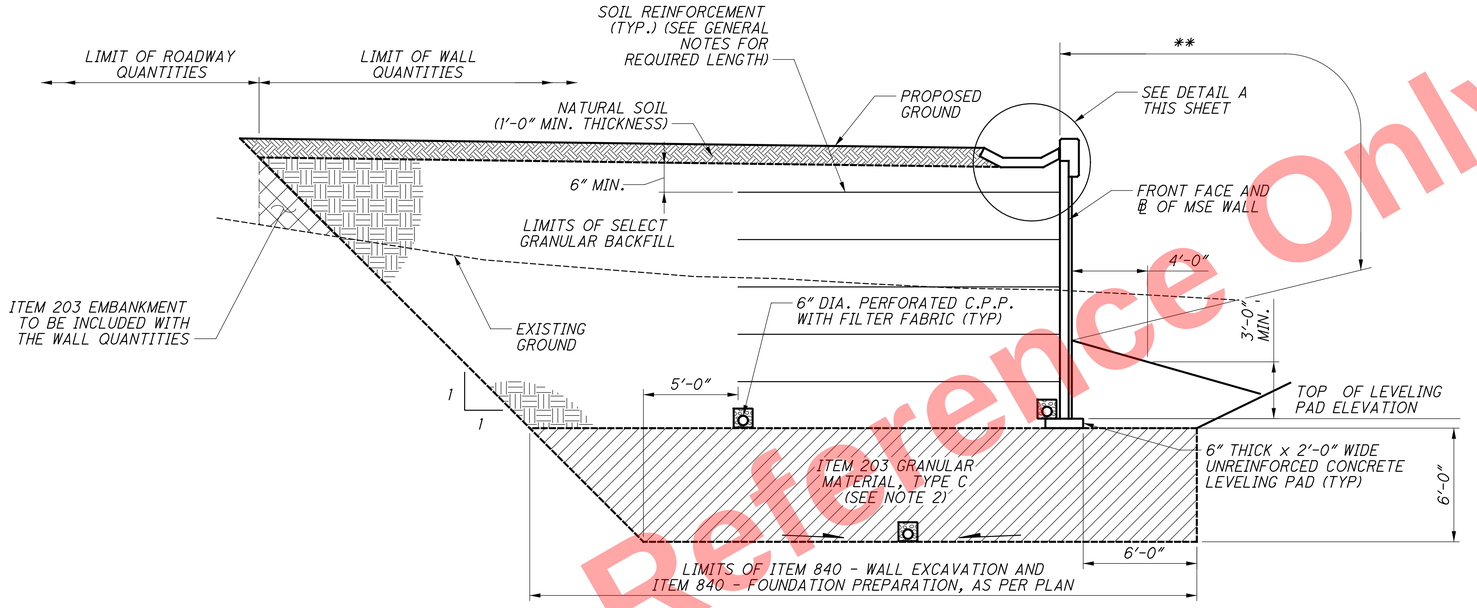

SECTION C-C

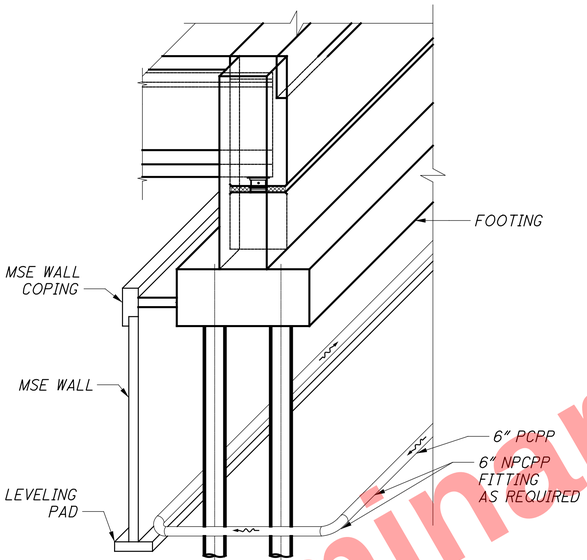

MSE WALL DRAINAGE DETAIL

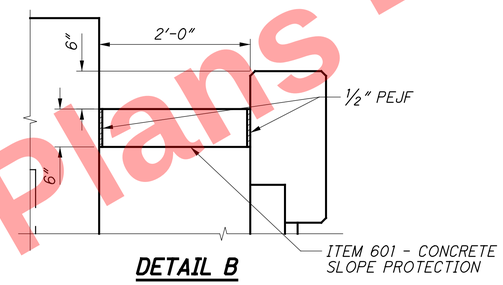

DETAIL B

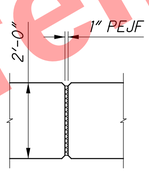

COPING EXPANSION JOINTS

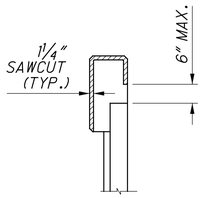

COPING CONTRACTION JOINTS

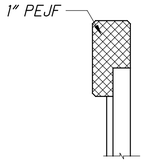

COPING EXPANSION JOINTS

LEGEND

* - INCLUDE WITH ITEM 840 - CONCRETE COPING, FOR PAYMENT

** - LIMITS OF ITEM 512 - SEALING OF CONCRETE SURFACES (EPOXY-URETHANE)

NOTES

1. SEE SHEET 2/43 FOR ABBREVIATION LEGEND.
2. ITEM 203 - GRANULAR MATERIAL, TYPE C SHALL BE INCLUDED FOR PAYMENT WITH ITEM 840 - FOUNDATION PREPARATION, AS PER PLAN.
3. FOR LOCATION OF SECTION C-C, SEE SHEET 13/43 .

Preliminary Plans - For Reference Only

DESIGN AGENCY EMH&T
DESIGNED RJE
DRAWN GB
CHECKED RMW/TDA
REVIEWED CAS
DATE 5-22-26
REVISED -
STRUCTURE FILE NUMBER

MSE WALL DETAILS
MSE RETAINING WALL C

HAM-75-7.85
PID No. 121447

14 / 43

635
1047

J:\20110903\ODOT\HAM\77889\structures\WALL_00C\sheets\77889_00CWD003.dgn 5/22/2026 10:28:24 AM hbrendlinger

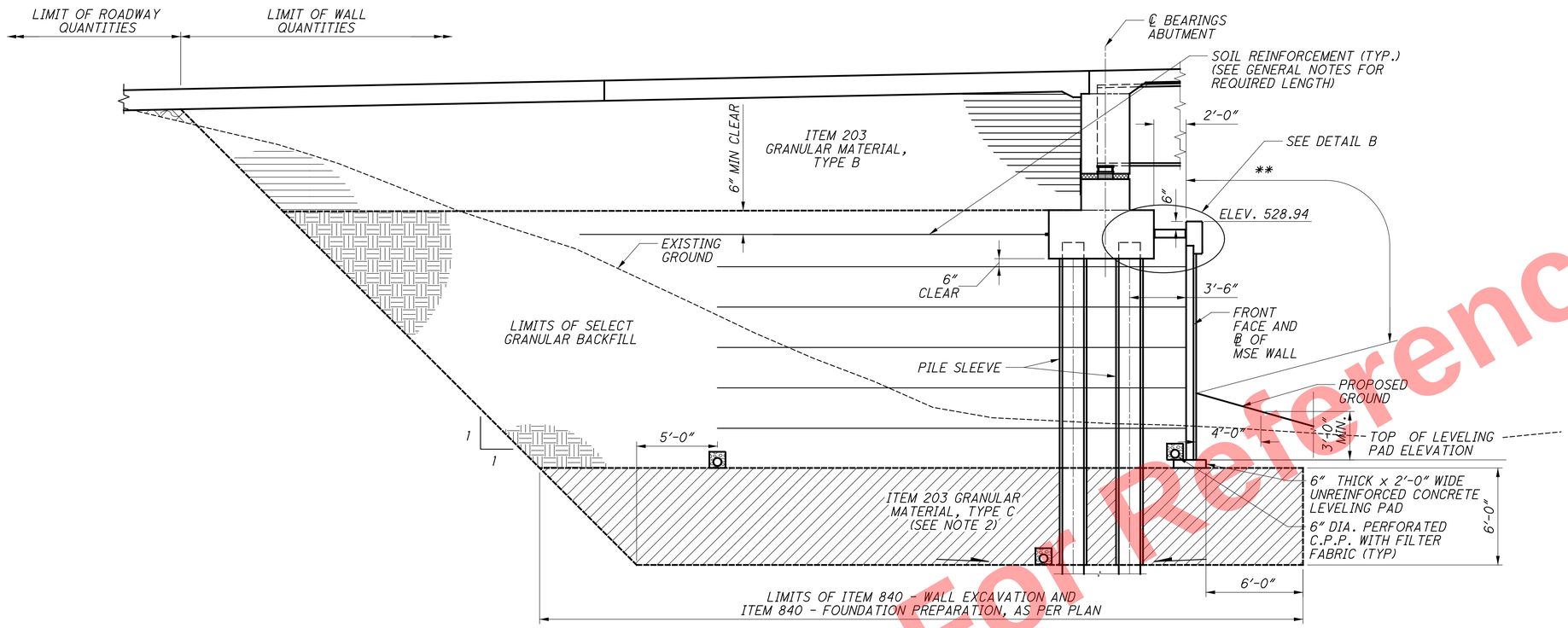

SECTION A-A

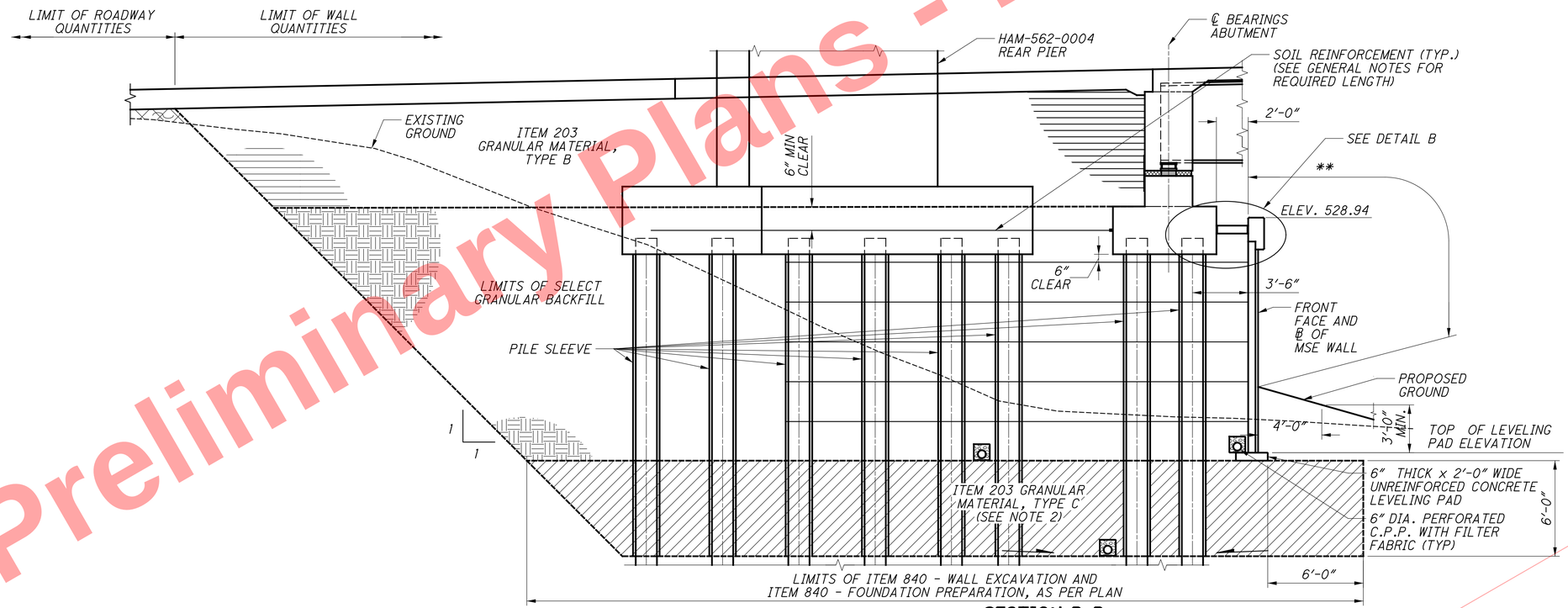

SECTION B-B

LEGEND

** - LIMITS OF ITEM 512 - SEALING OF CONCRETE SURFACES (EPOXY-URETHANE)

NOTES

1. SEE SHEET 2/43 FOR ABBREVIATION LEGEND.
2. ITEM 203 - GRANULAR MATERIAL, TYPE C SHALL BE INCLUDED FOR PAYMENT WITH ITEM 840 - FOUNDATION PREPARATION, AS PER PLAN.
3. FOR LOCATION OF SECTIONS A-A AND B-B, SEE SHEET 13/43.
4. FOR DETAIL B, SEE SHEET 14/43.

Preliminary Plans - Not For Reference Only

DESIGN AGENCY: EMH&T
DESIGNED: RJE | DRAWN: GB | REVIEWED: CAS | DATE: 5-22-26
CHECKED: RMW/TDA | REVISED: - | STRUCTURE FILE NUMBER:

MSE WALL DETAILS
MSE RETAINING WALL C

HAM-75-7.85
PID No. 121447

15/43

636/1047

J:\2011090\3\ODOT\HAM\77889\structures\WALL_00C\sheets\77889_00CWD001.dgn 5/22/2026 10:28:25 AM hbrendlinger

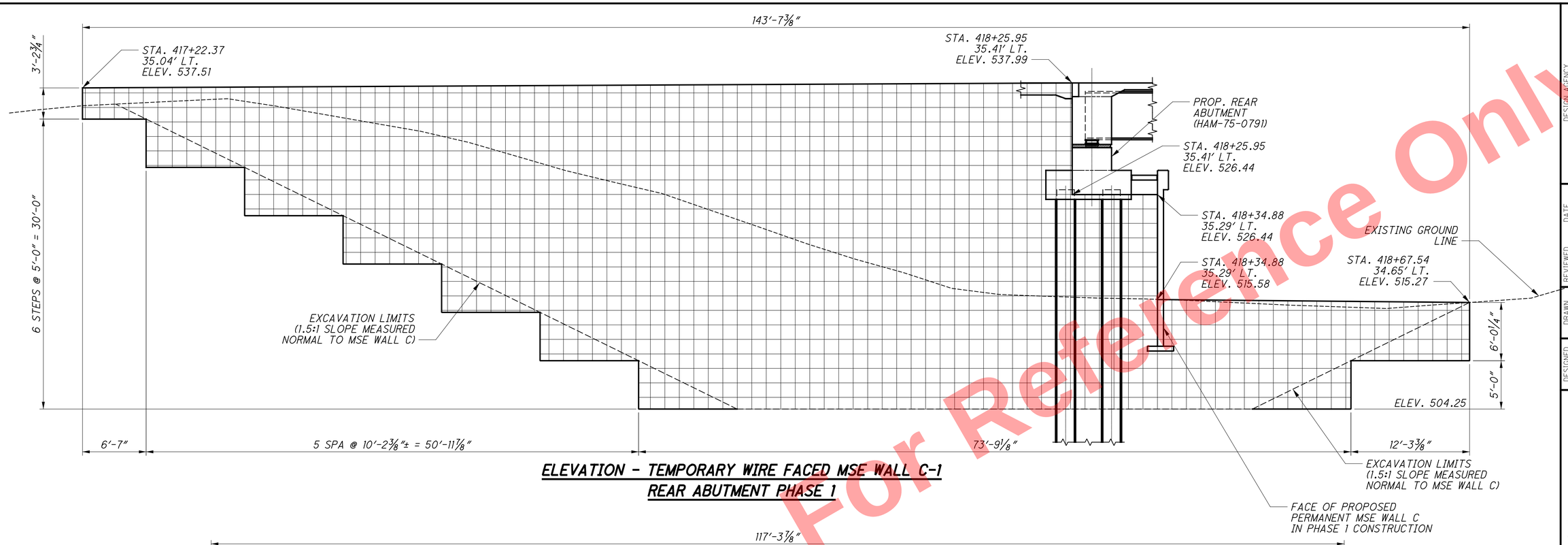

ELEVATION - TEMPORARY WIRE FACED MSE WALL C-1
REAR ABUTMENT PHASE 1

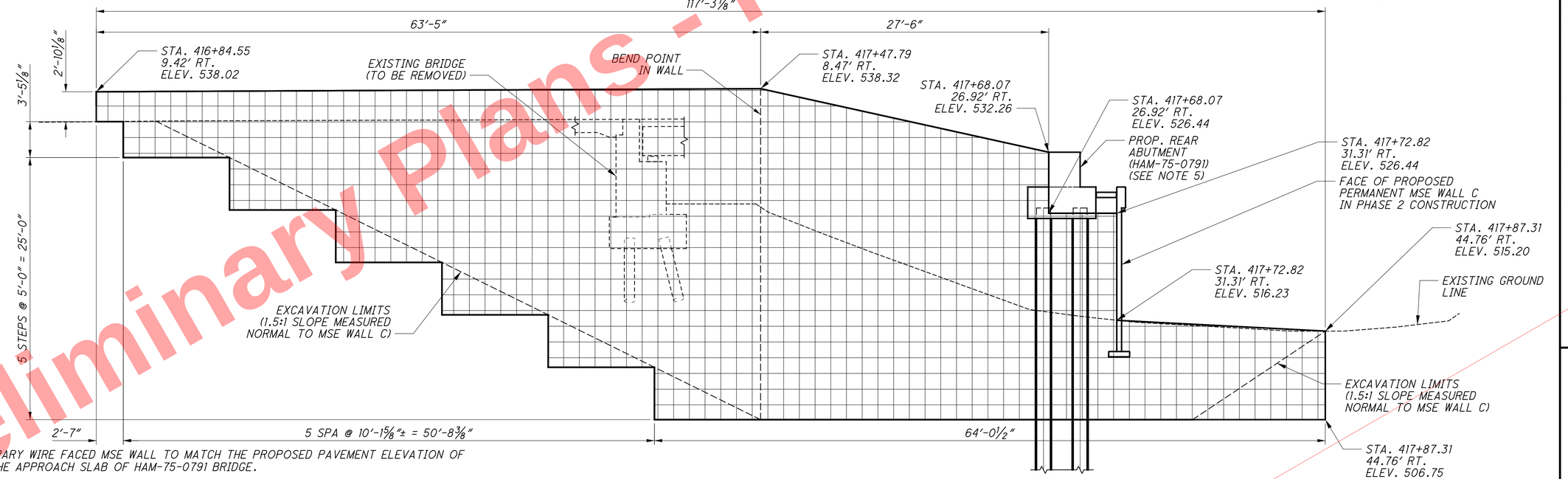

ELEVATION - TEMPORARY WIRE FACED MSE WALL C-2
REAR ABUTMENT PHASE 2

NOTES

1. TOP OF THE TEMPORARY WIRE FACED MSE WALL TO MATCH THE PROPOSED PAVEMENT ELEVATION OF IR 75 OR TOP OF THE APPROACH SLAB OF HAM-75-0791 BRIDGE.
2. SEE HAM-75-0791 BRIDGE PLANS FOR ADDITIONAL INFORMATION AT THE BRIDGE ABUTMENTS AND TEMPORARY SHORING DETAILS.
3. SEE PROPOSED PERMANENT MSE WALL DETAILS ON SHEET 15 / 43
4. SEE SHEET 2 / 43 FOR ABBREVIATION LEGEND.
5. THE REAR ABUTMENT OF THE HAM-75-0791 BRIDGE IS ONLY BUILT TO THE BEAM SEAT ELEVATION IN THE LOATION OF THE TEMPORARY WIRE FACE MSE WALL C-2 IN PHASE 2 CONSTRUCTION.

LEGEND

- TEMPORARY MSE WALL FACE

Preliminary Plans - For Reference Only

DESIGN AGENCY
EMH&T
Engineers • Surveyors • Planners • Scientists
5500 New Albany Road, Columbus, Ohio 43054
Phone: 614.775.4500

DESIGNED	DRAWN	REVIEWED	DATE
RJE	GB	CAS	5-22-26
CHECKED	REVISED	STRUCTURE FILE NUMBER	
TDA	-		

TEMPORARY MSE WALL DETAILS
MSE RETAINING WALL C

HAM-75-7.85
PID No. 121447

16 / 43

637
1047

J:\20110903\ODOT\HAM\77889\structures\WALL_00C\sheets\77889_00CWD002.dgn 5/22/2026 10:28:25 AM hbrendlinger

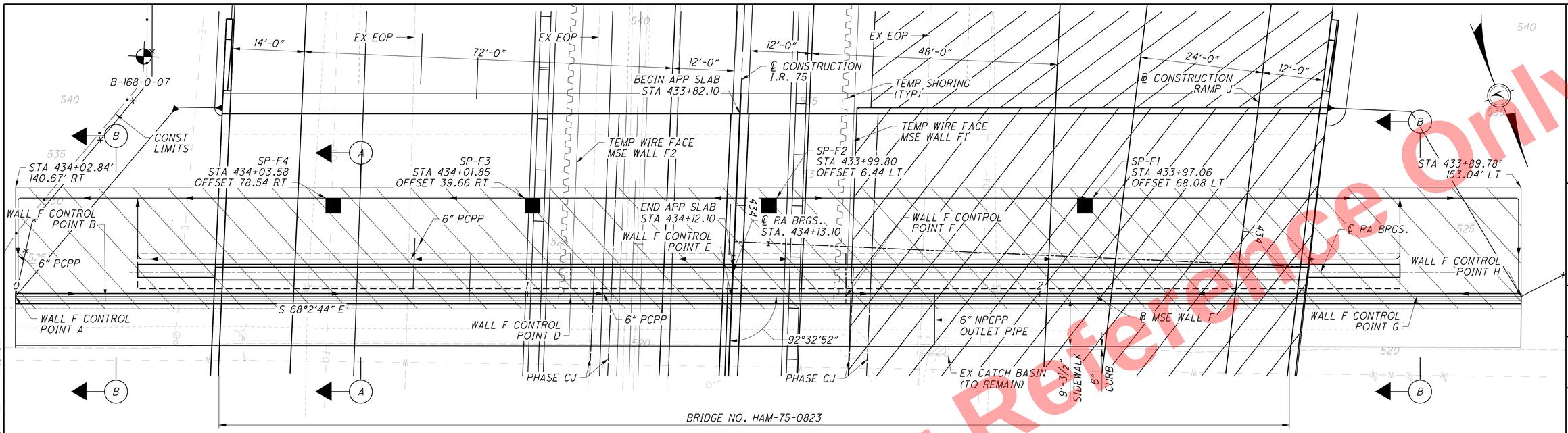

PLAN

WALL F CONTROL POINT TABLE				
WALL CONTROL POINT	℄ CONST IR 75		WALL STATION	TOW ELEV
	STATION	OFFSET (FT)		
A	434+24.07	139.73 RT.	0+00.00	523.50
B	434+23.29	122.22 RT.	0+17.53	532.27
C	NOT USED			
D	434+19.26	31.44 RT.	1+08.40	532.27
E	434+17.86	0.00	1+39.85	532.27
F	434+16.87	22.24 LT.	1+62.13	532.27
G	434+11.91	133.60 LT.	2+73.60	532.27
H	434+11.00	153.98 LT.	2+94.00	522.07

NOTES:

1. ALL TOP OF WALL ELEVATIONS ARE GIVEN TO TOP OF COPING.
2. WALL BASELINE IS LOCATED AT THE BACK FACE OF MSE WALL.
3. SEE SHEET 18/43 FOR SECTIONS A-A AND B-B.
4. ALL STATION AND OFFSETS ARE ALONG ℄ I.R. 75 UNLESS NOTED OTHERWISE.
5. SEE GENERAL NOTES FOR SETTLEMENT PLATFORM DETAILS.
6. SEE SHEET 2/43 FOR ABBREVIATION LEGEND.

LEGEND:

TOW - TOP OF WALL

- WALL EXCAVATION AND SELECT GRANULAR EMBANKMENT

- SETTLEMENT PLATFORM

PCPP = PERFORATED CORRUGATED POLYETHYLENE PIPE

NPCPP = NON-PERFORATED CORRUGATED POLYETHYLENE PIPE

6" DIA. PCPP OR NPCPP

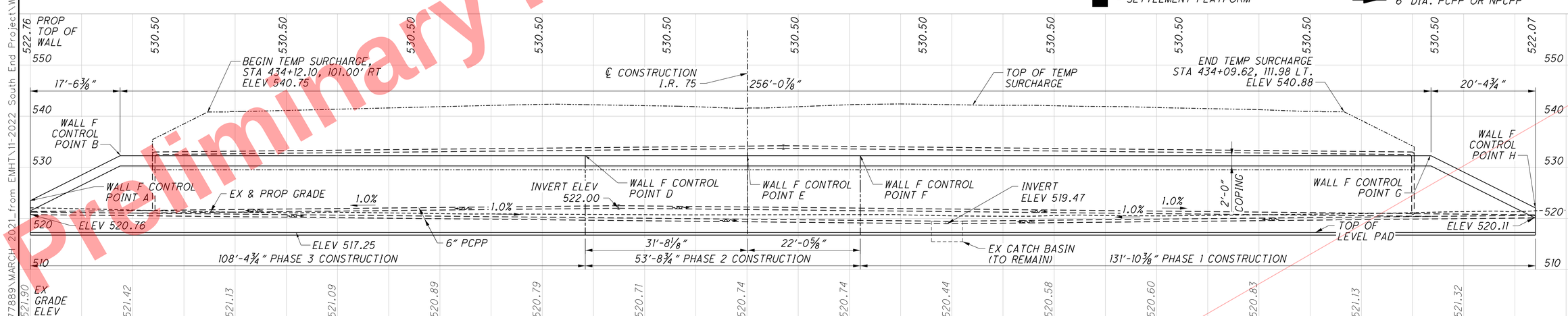

ELEVATION

Preliminary Plans - For Reference Only

DESIGN AGENCY: 4215 North Avenue, Suite 200, Columbus, OH 43219

DESIGNED	DRAWN	REVIEWED	DATE
TML	TML	NCM	5-22-26
CHECKED	REVISED	STRUCTURE FILE NUMBER	
JWE			

MSE WALL F PLAN & ELEVATION

MSE RETAINING WALL F

HAM-75-7.85

PID No. 121447

F:\HAM\77889\MARCH 2021_from EMHT\11-2022 South End Project\Wall F\sheets\77889_00FWP601.dgn 3/11/2026 11:04:27 AM PAntonelli

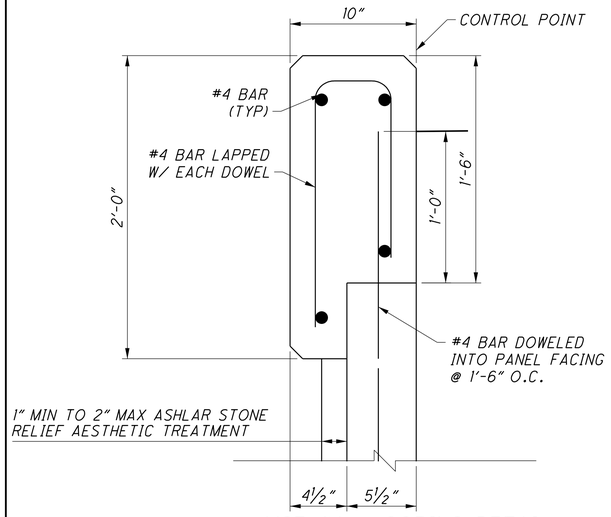

MSE WALL COPING DETAIL
(ALL REINFORCING STEEL TO BE EPOXY COATED)

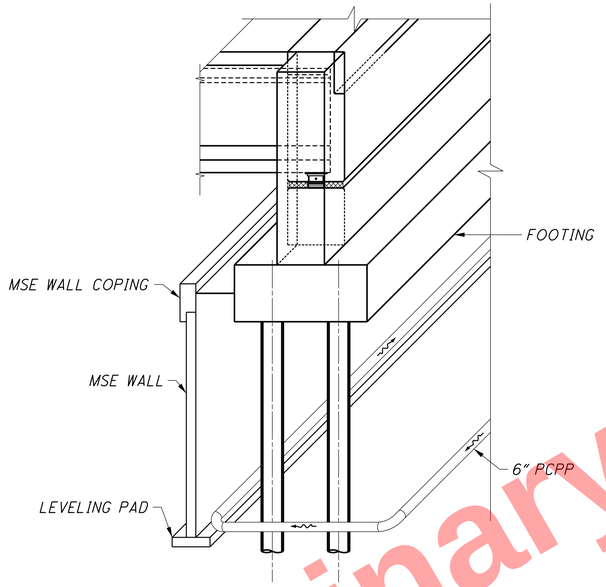

MSE WALL DRAINAGE DETAIL

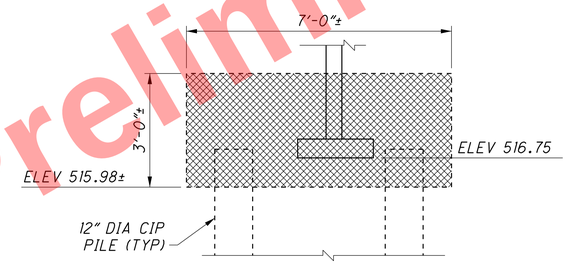

EX. FOOTING REMOVAL DETAIL
(RA & WALL F)

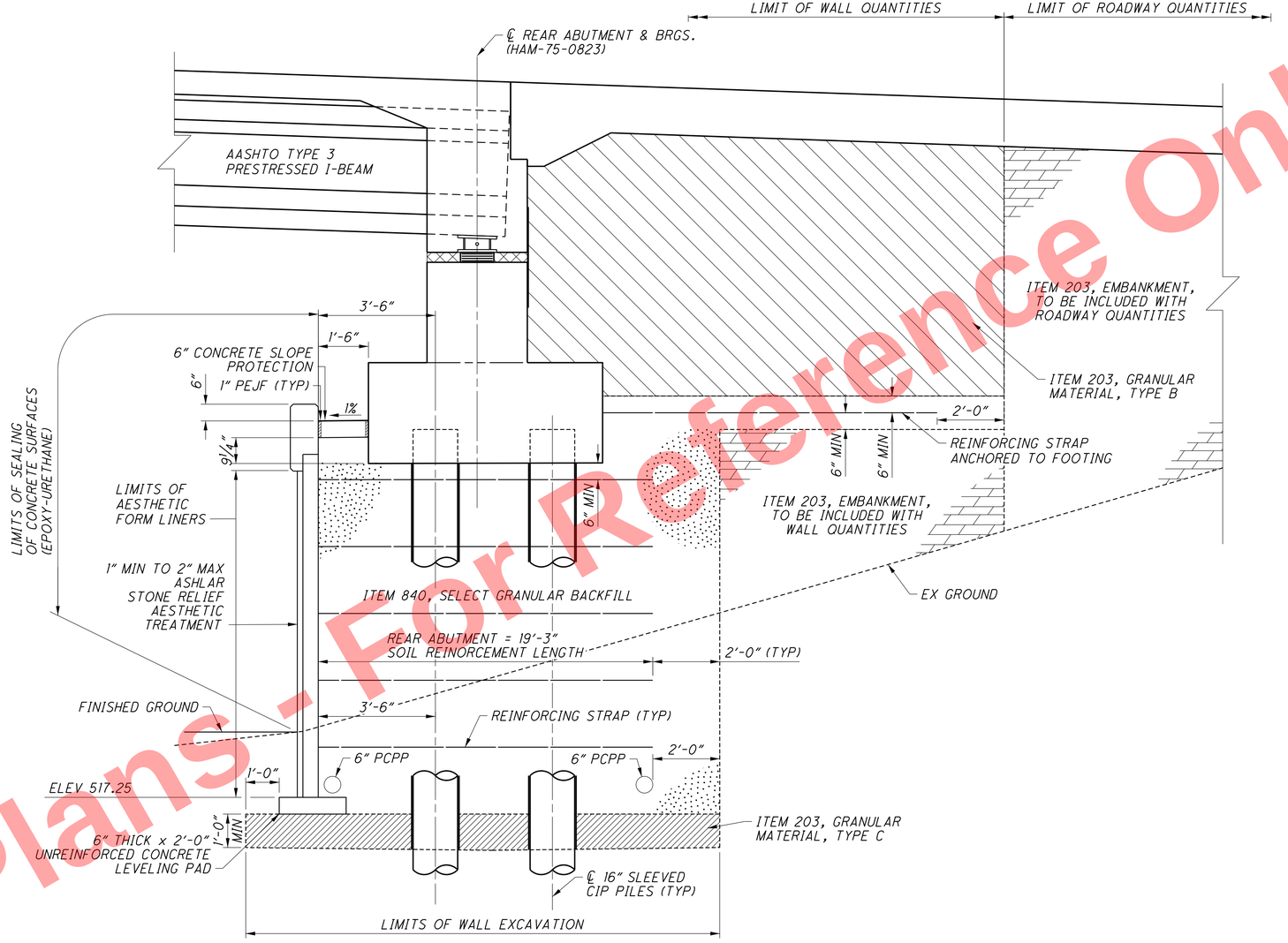

SECTION A-A

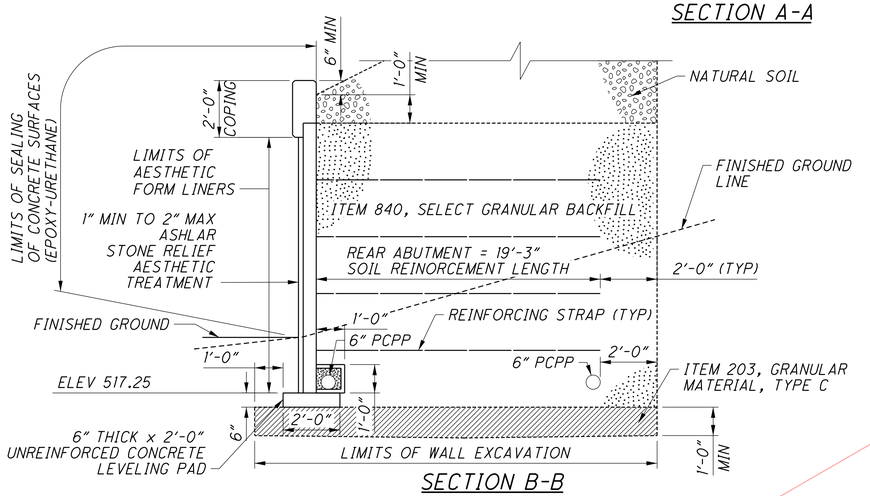

SECTION B-B

LEGEND:

= MINIMUM REMOVAL LIMITS

NOTES:

1. SEE HAM-75-0823 PLANS FOR ABUTMENT DETAILS.
2. SEE SHEET 1/43 FOR AESTHETIC NOTES.
3. SEE SHEET 2/43 FOR ABBREVIATION LEGEND.

Preliminary Plans - For Reference Only

DESIGN AGENCY: JMT, 4215 North Avenue, Suite 200, Columbus, OH 43219

DESIGNED	DRAWN	REVIEWED	DATE
TML	TML	NCM	5-22-26
CHECKED	REVISED	STRUCTURE FILE NUMBER	
JAD			

MSE WALL DETAILS
MSE RETAINING WALL F

HAM-75-7.85
PID No. 121447

F:\HAM\121447\structures\Wall_F\sheets\77889_00FWD601.dgn 5/11/2026 10:58:15 AM PAntonelli

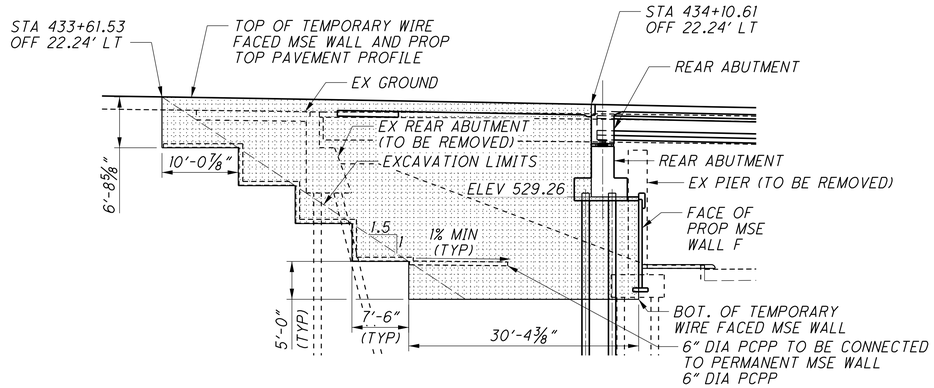

ELEVATION - TEMPORARY WIRE FACED MSE WALL F1

REAR ABUTMENT PHASE 1

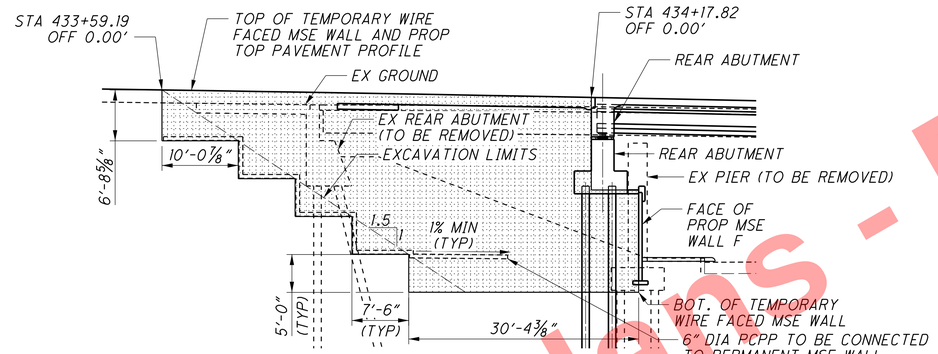

ELEVATION - TEMPORARY WIRE FACED MSE WALL F2

REAR ABUTMENT PHASE 2

LEGEND:

= TEMPORARY MSE WALL FACE

NOTES:

1. SEE HAM-75-0823 BRIDGE PLANS FOR ABUTMENT DETAILS.
2. TOP OF TEMPORARY WIRE FACED MSE WALL TO MATCH PROPOSED PAVEMENT ELEVATION OF I.R. 75.
3. SEE HAM-75-0823 BRIDGE PLANS FOR TEMPORARY SHORING DETAILS AND QUANTITIES.
4. SEE SHEET 2/43 FOR ABBREVIATION LEGEND.

Preliminary Plans - For Reference Only

DESIGN AGENCY
4215 North Avenue, Suite 200, Columbus, OH 43219

DESIGNED	DRAWN	REVIEWED	DATE
CMH	CMH	NCM	5-22-26
CHECKED	REVISED	STRUCTURE FILE NUMBER	
JAD			

TEMPORARY MSE WALL DETAILS
MSE RETAINING WALL F

HAM-75-7.85
PID No. 121447

F:\HAM\121447\structures\Wall_F\sheets\77889_00FWD602.dgn 5/11/2026 10:58:30 AM PAntonelli

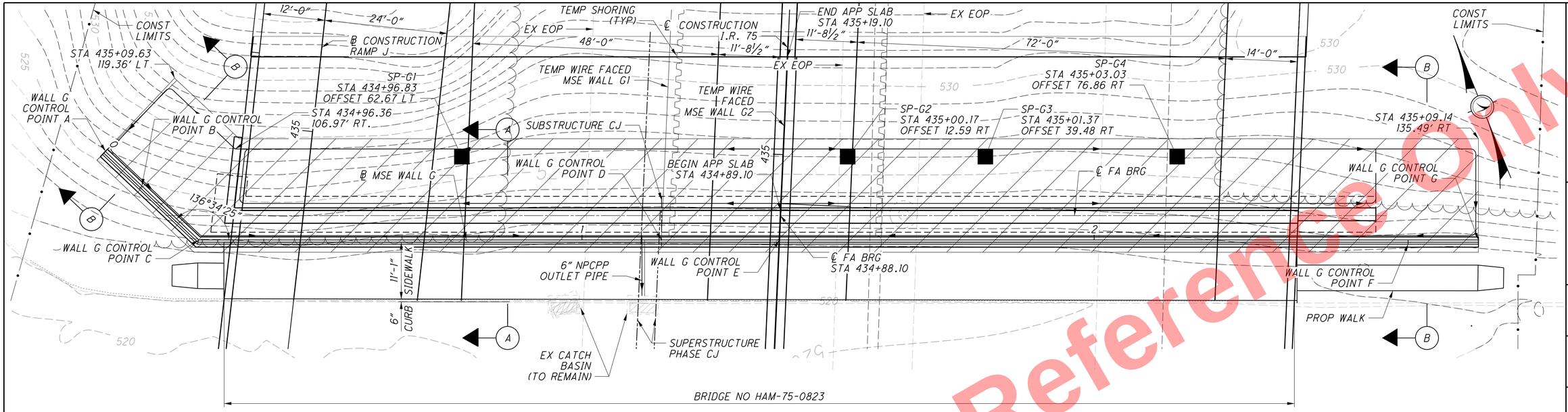

PLAN

WALL G CONTROL POINT TABLE				
WALL CONTROL POINT	℄ CONST IR 75 STATION	℄ CONST IR 75 OFFSET (FT)	WALL STATION	TOW ELEV
A	434+94.66	132.32 LT.	0+00.00	526.08
B	434+88.32	124.81 LT.	0+09.83	530.60
C	434+78.30	113.42 LT.	0+25.00	530.60
D	434+82.33	23.00 LT.	1+15.51	530.60
E	434+83.35	0.00	1+38.53	530.60
F	434+88.80	122.66 RT.	2+61.31	530.60
G	434+89.41	136.37 RT.	2+75.03	523.74

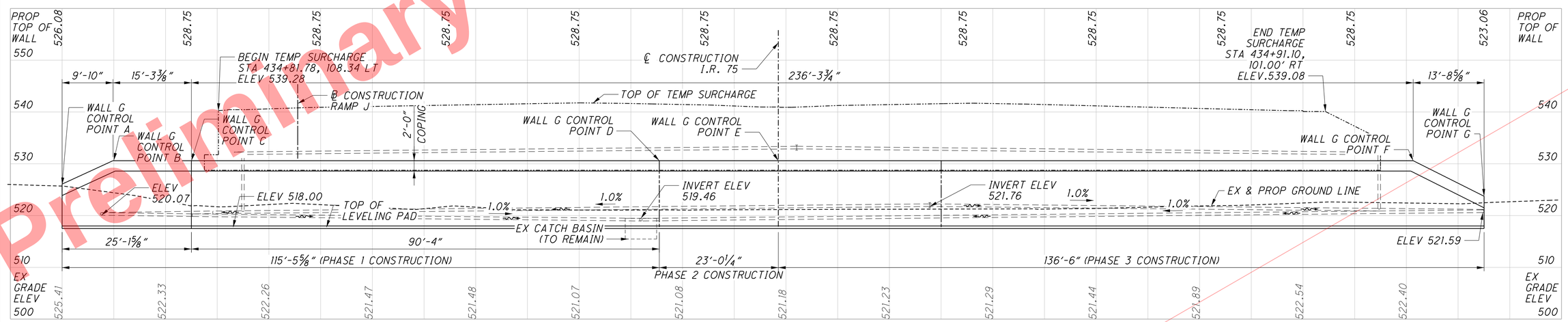

ELEVATION

NOTES:

1. ALL TOP OF WALL ELEVATIONS ARE GIVEN TO TOP OF COPING.
2. WALL BASELINE IS LOCATED AT THE BACK FACE OF MSE WALL.
3. SEE SHEET 21/43 FOR SECTIONS A-A AND B-B.
4. ALL STATION AND OFFSETS ARE ALONG ℄ CONST I.R. 75 UNLESS NOTED OTHERWISE.
5. SEE GENERAL NOTES FOR SETTLEMENT PLATFORM DETAILS.
6. SEE SHEET 2/43 FOR ABBREVIATION LEGEND.

LEGEND:

TOW - TOP OF WALL

- WALL EXCAVATION AND SELECT GRANULAR EMBANKMENT
- SETTLEMENT PLATFORM

PCPP = PERFORATED CORRUGATED POLYETHYLENE PIPE

NPCPP = NON-PERFORATED CORRUGATED POLYETHYLENE PIPE

6" DIA. PCPP OR NPCPP

Preliminary Plans - For Reference Only

DESIGN AGENCY
OHIO DEPARTMENT OF TRANSPORTATION
400 High Avenue, Suite 200, Columbus, OH 43215

DESIGNED	DRAWN	REVIEWED	DATE
TML	TML	NCM	5-22-26
CHECKED	REVISED	STRUCTURE FILE NUMBER	
JAD			

MSE WALL G PLAN & ELEVATION
MSE RETAINING WALL G

HAM-75-7.85
PID No. 121447

20/43

641/1047

F:\HAM\121447\structures\Wall_G\sheets\77889_00GWP601.dgn 5/11/2026 11:02:35 AM PAntonelli

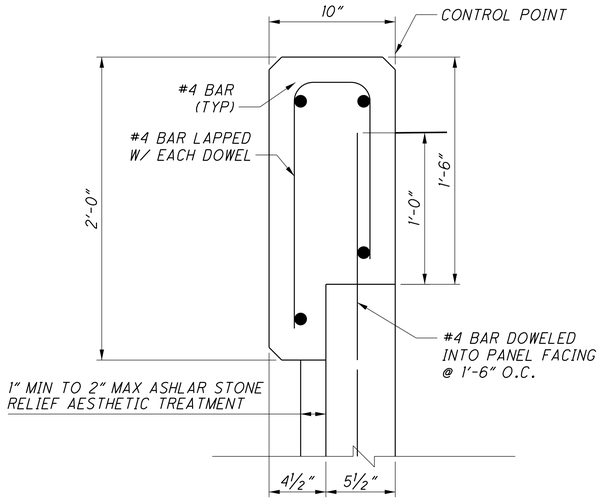

MSE WALL COPING DETAIL

(ALL REINFORCING STEEL TO BE EPOXY COATED)

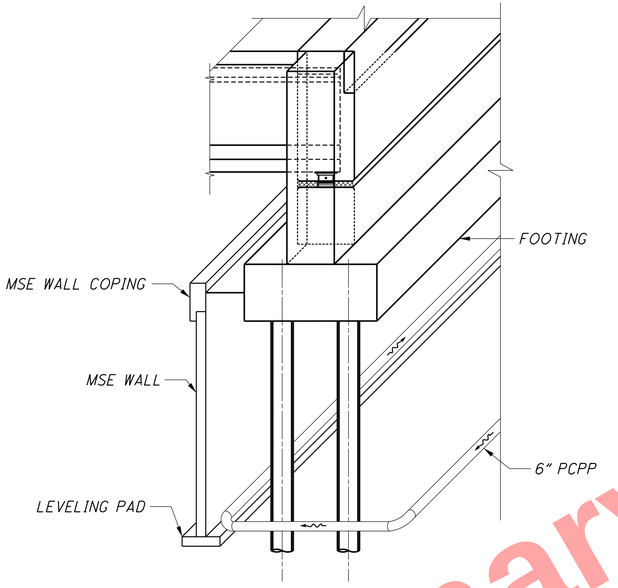

MSE WALL DRAINAGE DETAIL

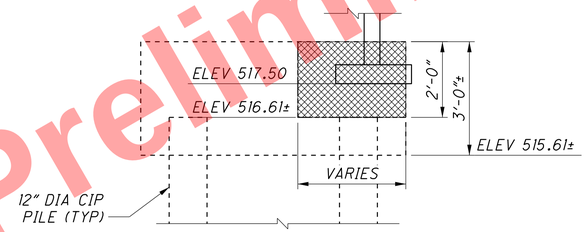

EX. FOOTING REMOVAL DETAIL

(FA & WALL G)

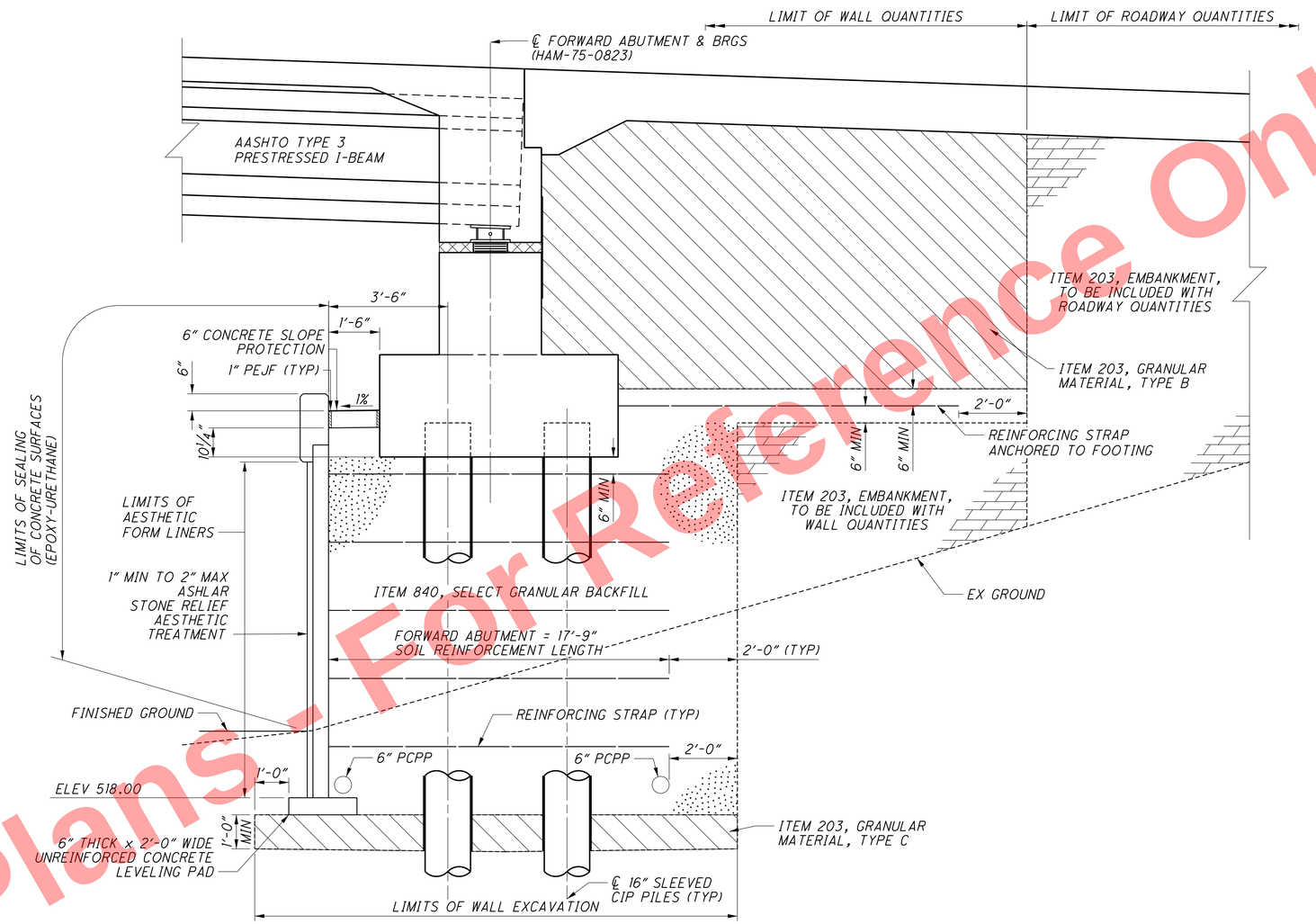

SECTION A-A

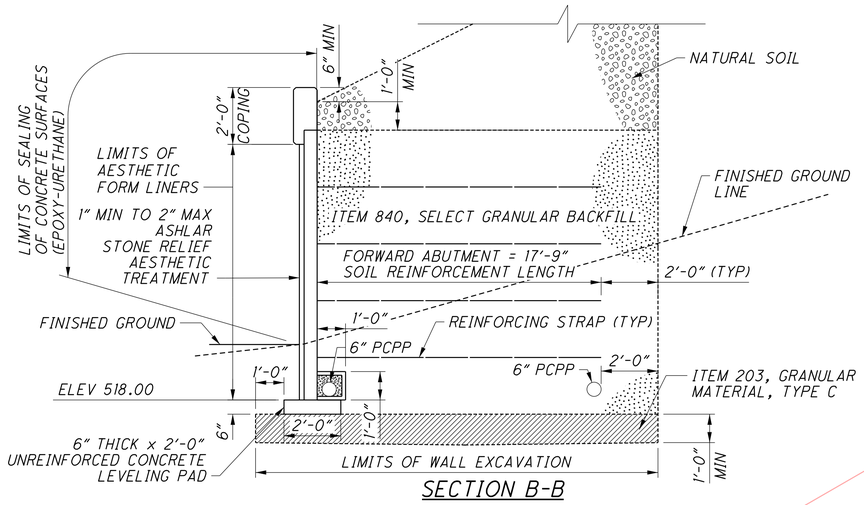

SECTION B-B

LEGEND:

= MINIMUM REMOVAL LIMITS

NOTES:

1. SEE HAM-75-0823 PLANS FOR ABUTMENT DETAILS.
2. SEE SHEET 1/43 FOR AESTHETIC NOTES.
3. SEE SHEET 2/43 FOR ABBREVIATION LEGEND.

DESIGN AGENCY: JMT, 4215 North Avenue, Suite 200, Columbus, OH 43219

DESIGNED	DRAWN	REVIEWED	DATE
TML	TML	NCM	5-22-26
CHECKED	REVISED	STRUCTURE FILE NUMBER	
JAD			

MSE WALL DETAILS

MSE RETAINING WALL G

HAM-75-7.85

PID No. 121447

Preliminary Plans - For Reference Only

F:\HAM\121447\structures\Wall_G\sheets\77889_00GWD601.dgn 5/11/2026 11:02:48 AM PAntonelli

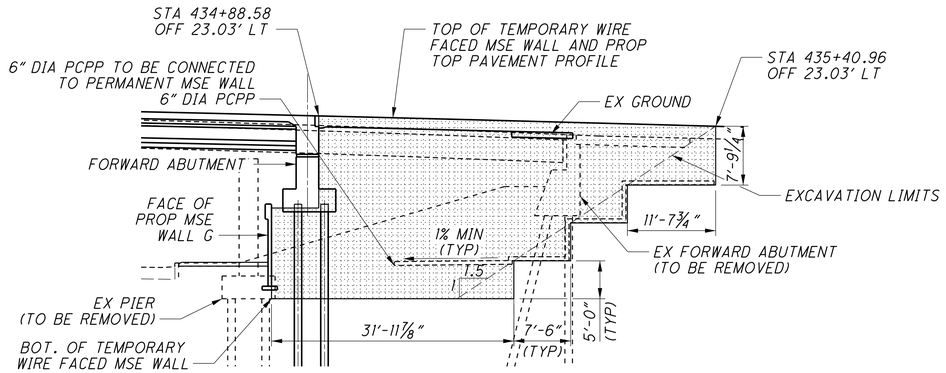

ELEVATION - TEMPORARY WIRE FACED MSE WALL G1

FORWARD ABUTMENT PHASE 1

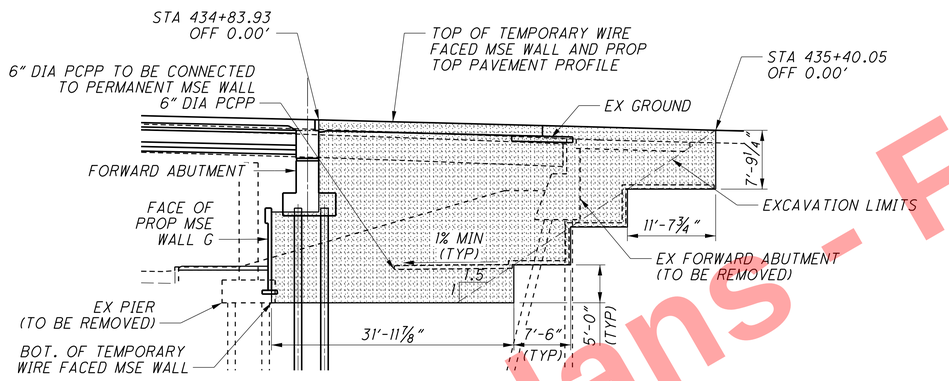

ELEVATION - TEMPORARY WIRE FACED MSE WALL G2

FORWARD ABUTMENT PHASE 2

LEGEND:

= TEMPORARY MSE WALL FACE

NOTES:

1. SEE HAM-75-0823 BRIDGE PLANS FOR ABUTMENT DETAILS.
2. TOP OF TEMPORARY WIRE FACED MSE WALL TO MATCH PROPOSED PAVEMENT ELEVATION OF IR-75.
3. SEE HAM-75-0823 BRIDGE PLANS FOR TEMPORARY SHORING DETAILS AND QUANTITIES.
4. SEE SHEET 2/43 FOR ABBREVIATION LEGEND.

Preliminary Plans - For Reference Only

DESIGN AGENCY
4215 North Avenue, Suite 200, Columbus, OH 43219

DESIGNED	DRAWN	REVIEWED	DATE
CMH	CMH	NCM	5-22-26
CHECKED	REVISED	STRUCTURE FILE NUMBER	
JAD			

TEMPORARY MSE WALL DETAILS
MSE RETAINING WALL G

HAM-75-7.85
PID No. 121447

F:\HAM\121447\structures\Wall_G\sheets\77889_00GWD602.dgn 5/11/2026 11:03:02 AM PAntonelli

Preliminary Plans - For Reference Only

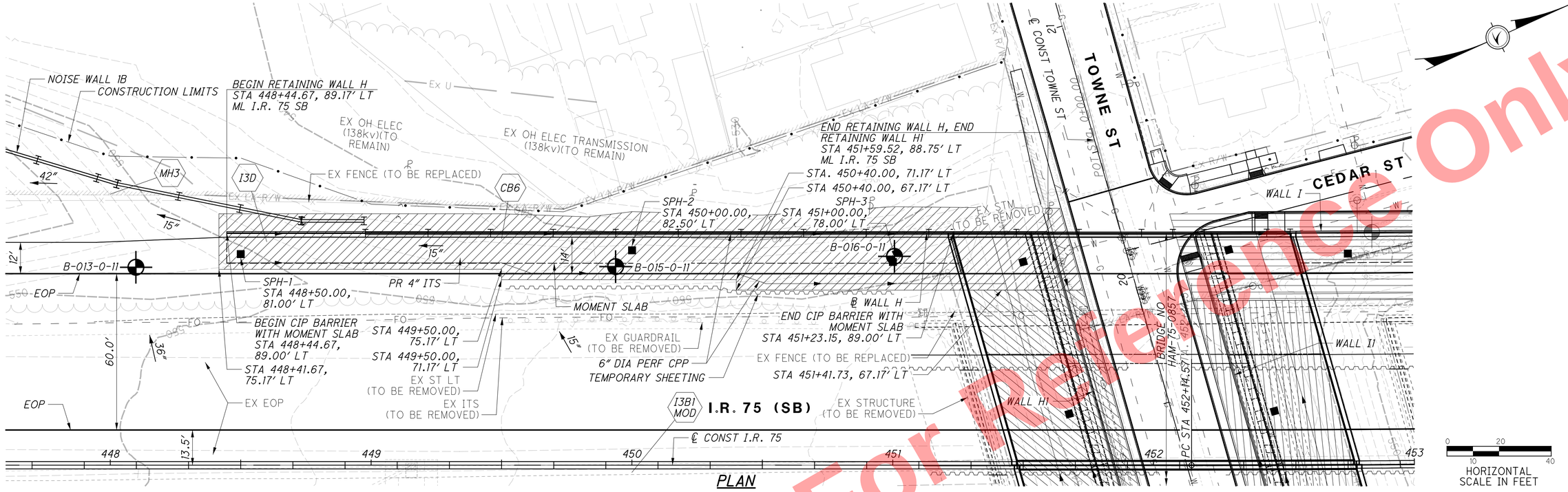

PLAN

HORIZONTAL SCALE IN FEET
0 10 20 40

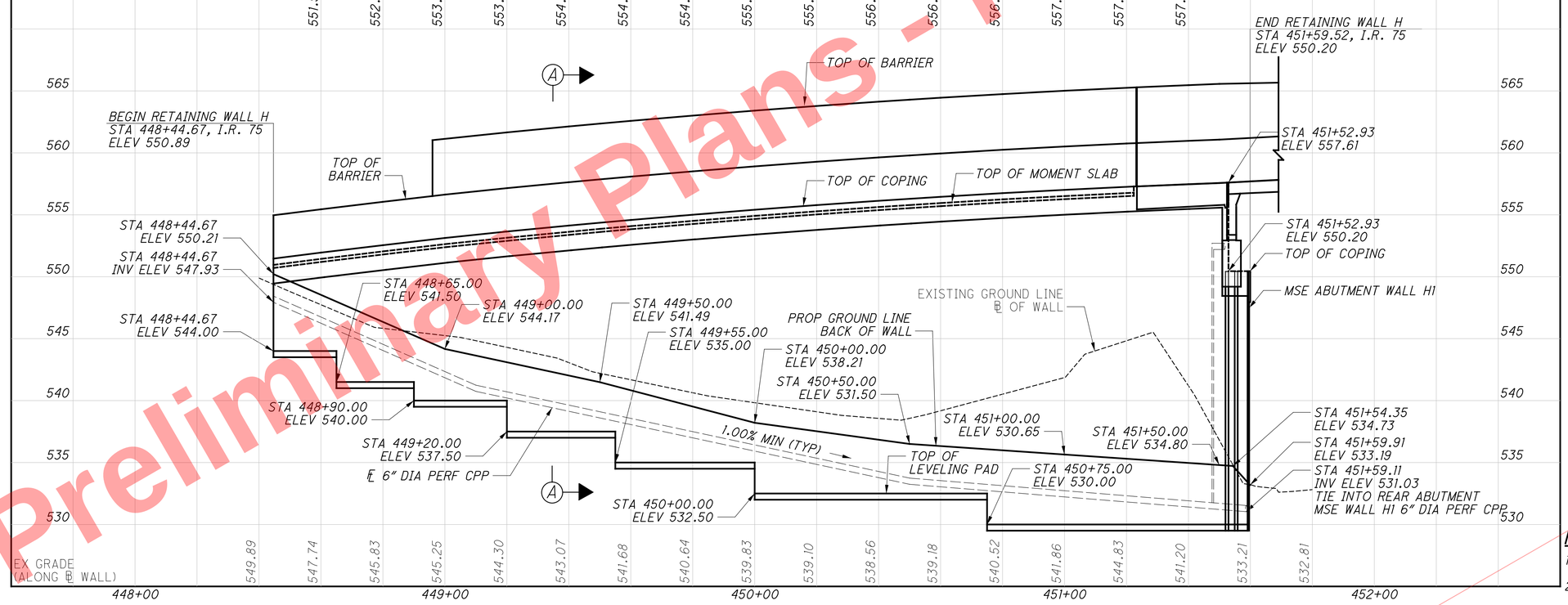

ELEVATION ALONG BACK FACE OF WALL

LEGEND:

- = BORING LOCATION
- = SETTLEMENT PLATFORM
- = PLAN BOUNDARY FOR ITEMS INCLUDED WITH MSE WALL H FOR PAYMENT
- = PLAN BOUNDARY FOR ITEMS INCLUDED WITH MSE WALL H1 FOR PAYMENT

NOTES:

1. FOR SECTION A-A, SEE SHEET 25/43
2. FOR ABBREVIATIONS LEGEND, SEE SHEET 2/43
3. ALL EXISTING STORM SEWER IS TO BE REMOVED UNLESS OTHERWISE NOTED.

RESOURCE INTERNATIONAL INC.
9350 PRESIDENTIAL GATEWAY
COLUMBUS, OHIO 43231
(614) 823-4949

DESIGNED MMS | DRAWN MMS | REVIEWED SSK | DATE 3-18-26
CHECKED JWE | REVISED | STRUCTURE FILE NUMBER

PLAN AND ELEVATION
MSE RETAINING WALL H

HAM-75-7.85
PID No. 121447

23 / 43

644
1047

\\san1.resourceinternational.com\two\projects\2010\B-10-020 HAM-75-7.85\77889\structures\WALL_00H\sheets\77889_00HWP401.dgn 5/13/2026 2:04:21 PM meets

PLAN BOUNDARY FOR ITEMS INCLUDED WITH MSE WALL H1 FOR PAYMENT

PLAN BOUNDARY FOR ITEMS INCLUDED WITH MSE WALL H FOR PAYMENT

MH3
CB3A
EX ITS (TO BE REMOVED)
EOP
BEGIN TEMPORARY WIRE FACED MSE WALL H1-2 STA 451+11.78, 0.25' RT ℄ CONSTRUCTION I.R. 75
EX STRUCTURE (TO BE REMOVED)
℄ CONST I.R. 75
STA 451+41.73, 67.17' LT, ML I.R. 75 SB
STA 20+08.88, 49.97' LT, TOWNE ST
BEGIN TEMPORARY WIRE FACED MSE WALL H1-1 STA 450+97.61, 42.25' LT ℄ CONSTRUCTION I.R. 75
EX ST LT (TO BE REMOVED)
B-016-0-11
MOMENT SLAB
EX GUARDRAIL (TO BE REMOVED)
EX CURB (TO BE REMOVED)
EX OHE TRANSMISSION (138kV/TO REMAIN)
STA 17+87.87, 40.98 LT
STA 18+08.45, 49.97 LT
STA 18+08.45, 40.97 LT
SPH1-1 STA 18+85.01, 38.00' LT
6" DIA PERF CPP
TEMPORARY SHORING TO FACILITATE PHASE 2 CONSTRUCTION
PHASE CONSTRUCTION JOINT
TEMPORARY SHORING TO FACILITATE PHASE 1 CONSTRUCTION
ABUTMENT 6" PERFORATED CORRUGATED PLASTIC PIPE
℄ REAR ABUTMENT MSE WALL H1 S81°20'41"E
END TEMPORARY WIRE FACED MSE WALL H1-2 STA 451+84.78, 0.25' RT ℄ CONSTRUCTION I.R. 75
END TEMPORARY WIRE FACED MSE WALL H1-1 STA 451+72.71, 42.25' LT ℄ CONSTRUCTION I.R. 75
SPH1-3 STA 20+17.05, 39.06' LT
WALL H
CONSTRUCTION LIMITS
EX WATER (TO REMAIN)
B-181-0-07
EX LA R/W
EX STRUCTURE (TO BE REMOVED)
STA 19+32.41, 26.51' LT
SPH1-2 STA 19+56.13, 38.00' LT
BRIDGE NO HAM-76-0857
BEGIN RETAINING WALL H1 STA 452+23.59, 137.49' RT, ML I.R. 75 NB STA 17+89.70, 26.98' LT, TOWNE ST
STA 452+26.46, 138.76' RT, ML I.R. 75 NB STA 17+87.70, 24.52' LT, TOWNE ST
PT STA 17+95.00
℄ CONST TOWNE ST
STA 452+12.74 I.R. 75 = STA 19+24.88 TOWNE STREET
6" NPCPP IN FRONT OF WALL
EX 20" GAS (TO REMAIN)
PHASE CONSTRUCTION JOINT
EX ST LT (TO BE REMOVED)
END RETAINING WALL H1 STA 451+59.52, 88.75' LT, ML I.R. 75 SB STA 20+24.79, 26.97' LT, TOWNE ST
HORIZONTAL SCALE IN FEET

PLAN

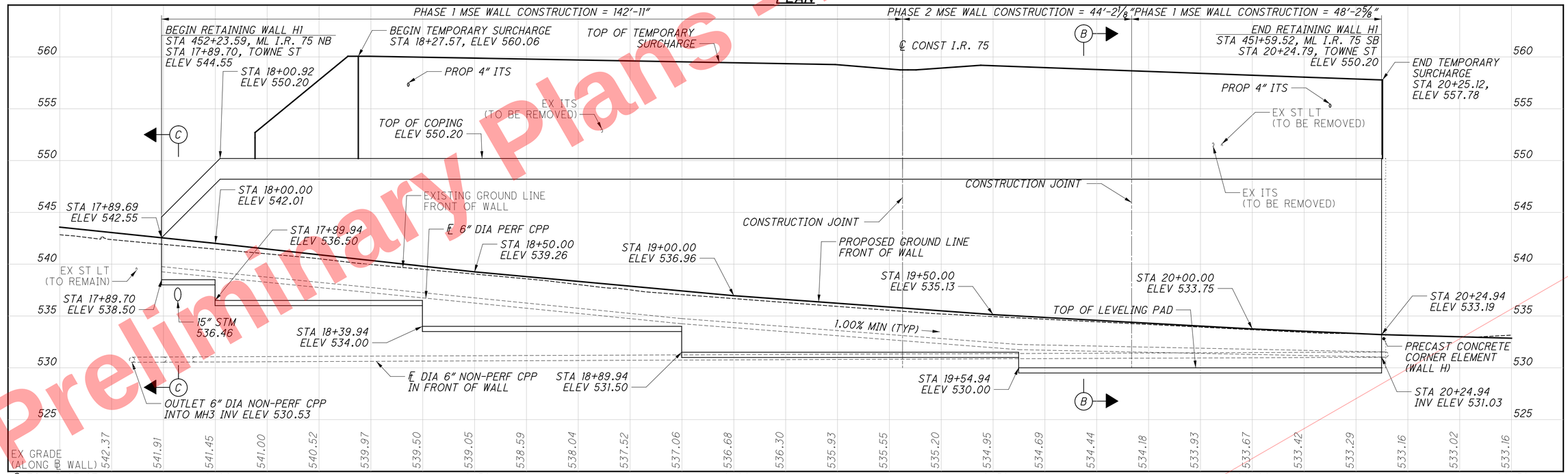

ELEVATION ALONG BACK FACE OF WALL

LEGEND:

= BORING LOCATION

NOTES:

1. FOR SECTIONS B-B AND C-C, SEE SHEET 25/43
2. FOR ADDITIONAL NOTES AND LEGEND INFORMATION, SEE SHEET 23/43
3. FOR ABBREVIATIONS LEGEND, SEE SHEET 2/43

Preliminary Plans - For Reference Only

RESOURCE INTERNATIONAL INC.
8350 PRESIDENTIAL GATEWAY
COLUMBUS, OHIO 43231
(614) 823-4949

DESIGNED MMS | DRAWN MMS | REVIEWED SSK | DATE 3-18-26
CHECKED JWE | REVISED | STRUCTURE FILE NUMBER

PLAN AND ELEVATION
REAR ABUTMENT MSE RETAINING WALL H1 - TOWNE STREET

HAM-75-7.85
PID No. 121447

24 / 43

645
1047

\\sanl.resourceinternational.com\two\projects\2010\B-10-020 HAM-75-7.85\77889\structures\WALL_00H\sheets\77889_00HWP401.dgn 5/13/2026 2:04:22 PM meets

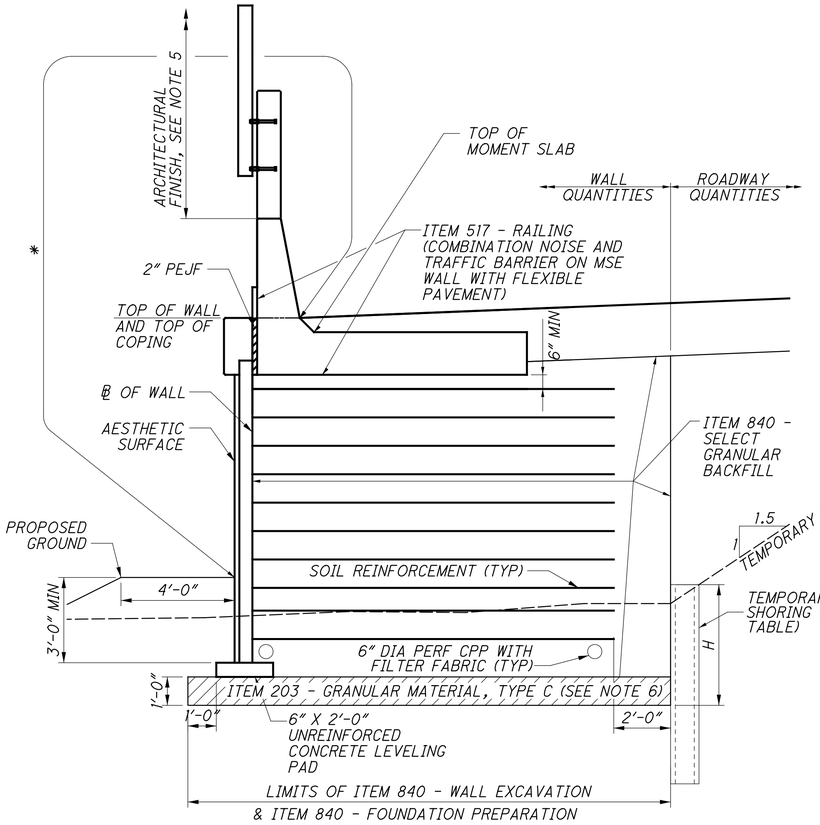

MOMENT SLAB SECTION
WITH NOISEWALL

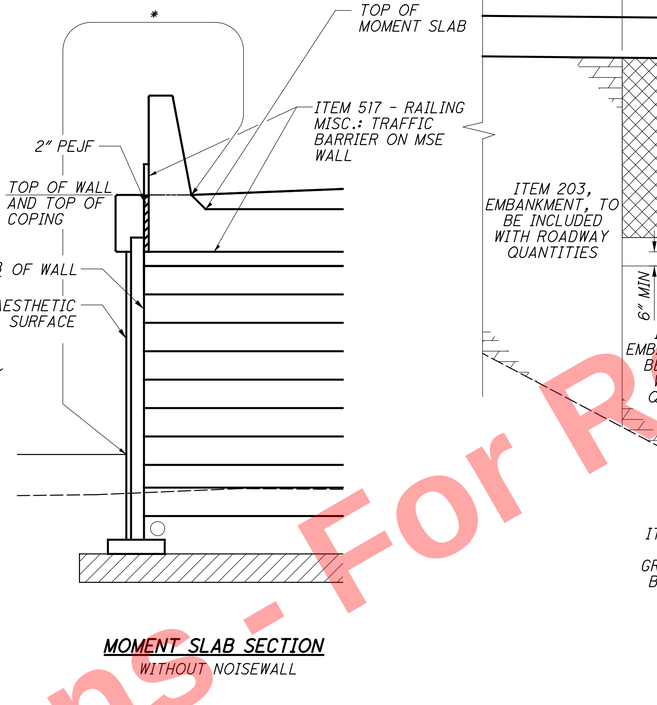

MOMENT SLAB SECTION
WITHOUT NOISEWALL

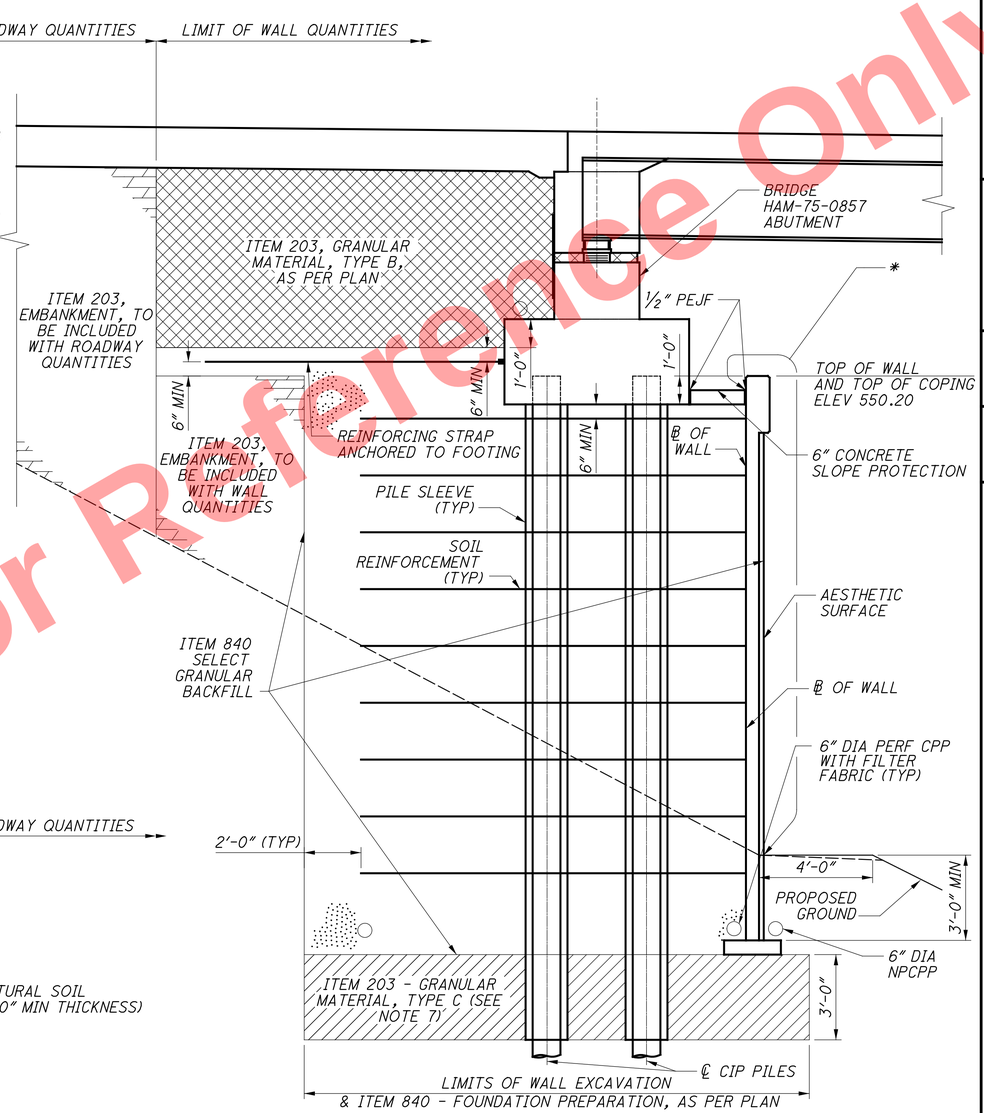

BRIDGE SECTION

* LIMITS OF ITEM 512 - SEALING OF CONCRETE SURFACES (EPOXY-URETHANE)

NOTES

6. ITEM 203 - GRANULAR MATERIAL, TYPE C SHALL BE INCLUDED FOR PAYMENT WITH ITEM 840 - FOUNDATION PREPARATION.
7. ITEM 203 - GRANULAR MATERIAL, TYPE C SHALL BE INCLUDED FOR PAYMENT WITH ITEM 840 - FOUNDATION PREPARATION, AS PER PLAN.

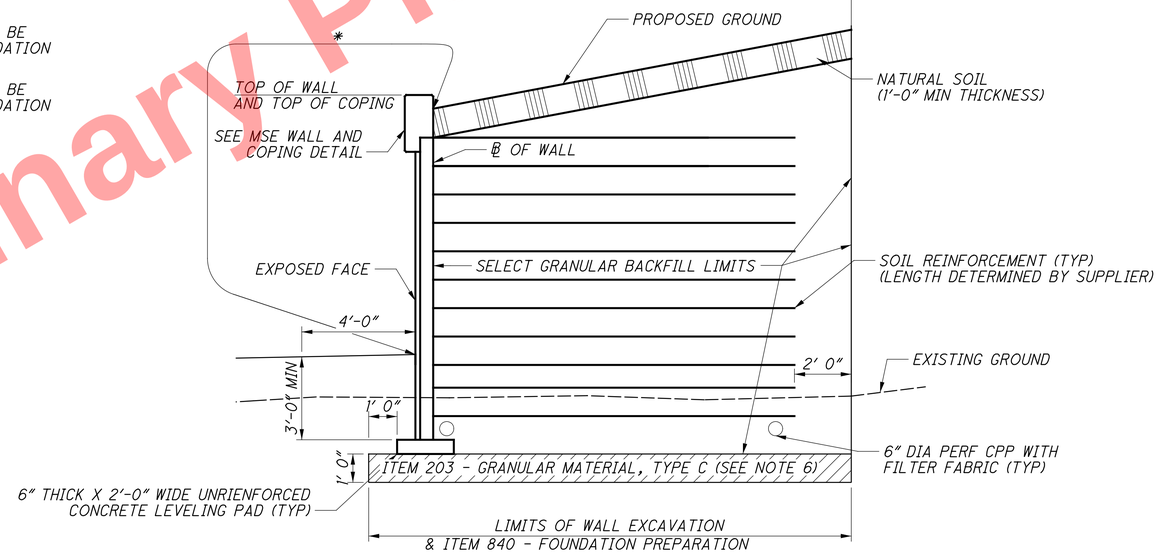

MSE WALL SECTION

TEMPORARY SHORING TABLE		
STATION	ALIGNMENT	WALL HEIGHT (H)
		(FT)
450+00.00	I.R. 75	1
450+50.00	I.R. 75	4.5
451+00.00	I.R. 75	7
451+50.00	I.R. 75	7.5

* TEMPORARY SHORING NOT NEEDED FROM STATION 448+50 TO 449+50

NOTES

1. SEE BRIDGE PLANS HAM-75-0857 FOR ADDITIONAL ABUTMENT AND WINGWALL DETAILS.
2. SOIL REINFORCEMENT SHALL BE CONSTRUCTED SO AS TO AVOID INTERFERENCE WITH BRIDGE PILING.
3. FOR ABBREVIATIONS LEGEND, SEE SHEET 2/43
4. SEE SHEET 30/43 FOR COPING DETAIL.
5. THE ARCHITECTURAL FINISH SHALL BE BEIGE ASHLAR STONE (MANUFACTURED BY ARCHITECTURAL POLYMERS, #905 SMALL AGED ASHLAR STONE) ON THE FREEWAY SIDE AND BEIGE DRY STACK (MANUFACTURED BY ARCHITECTURAL POLYMERS, #9110 LARGE STONE OHIO DRY STACK) ON THE PARK AND RESIDENTIAL SIDE. THE FEGERAL COLOR NUMBER FOR BEIGE IS NO. 17778.

Preliminary Plans - For Reference Only

RESOURCE INTERNATIONAL INC.
8550 PRESIDENTIAL GATEWAY
COLUMBUS, OHIO 43231
(614) 823-4949

DESIGNED	DRAWN	REVIEWED	DATE
JLM	SMJ	SSK	3-18-26
CHECKED	REVISED	STRUCTURE FILE NUMBER	
NCK			

TYPICAL MSE WALL DETAILS 1 OF 2

MSE RETAINING WALLS H & H1

HAM-75-7.85
PID No. 121447

25 / 43

646
1047

\\san1.resourceinternational.com\two\projects\2010\B-10-020 HAM-75-7.85\77889\structures\WALL_00H\sheets\77889_00HWD401.dgn 5/13/2026 2:04:23 PM meets

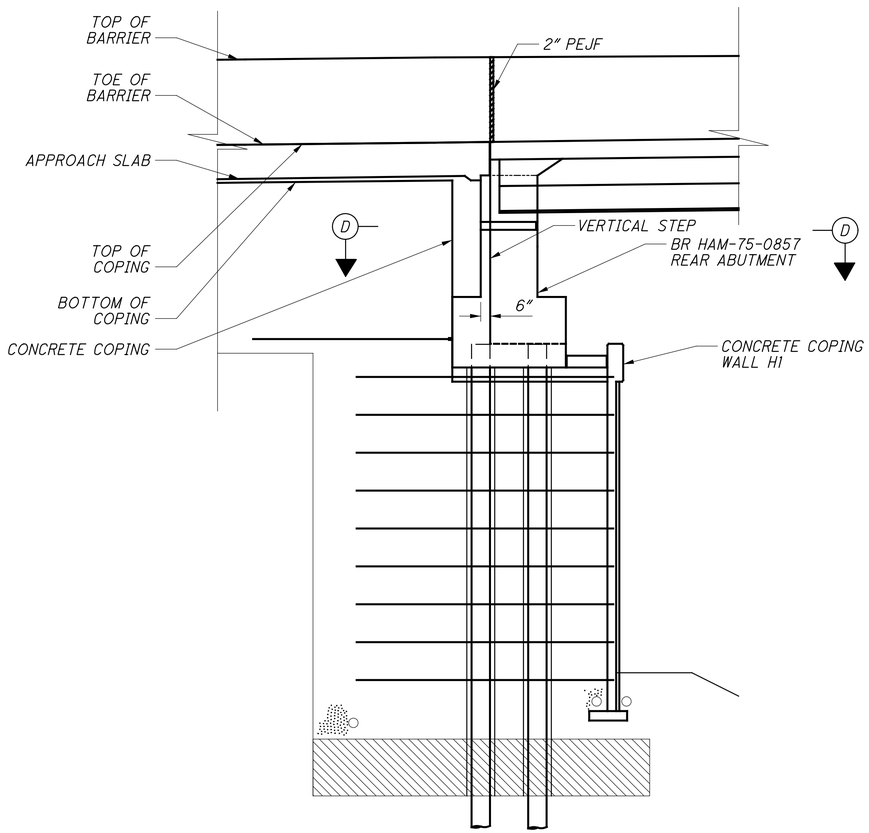

WALL TRANSITION DETAIL AT ABUTMENT

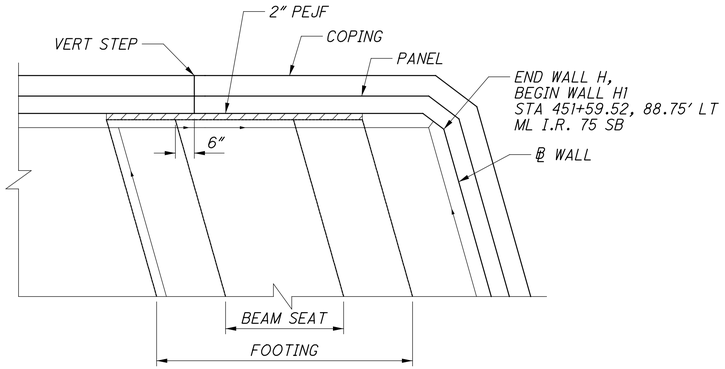

SECTION D-D

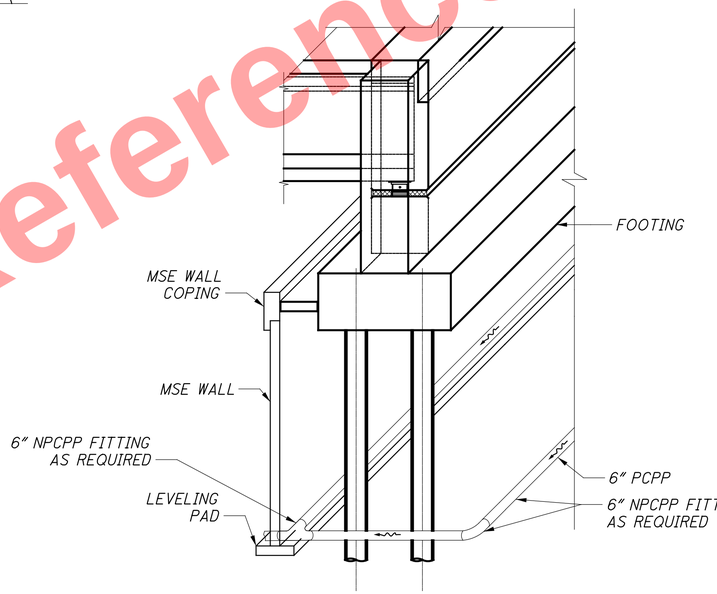

TYPICAL RISER DETAIL

(CONNECTION FROM BRIDGE DRAINAGE SYSTEM TO MSE WALL DRAINAGE SYSTEM)

* MEASURED PERPENDICULAR TO SKEW

NOTES:

1. SEE HAM-75-0857 BRIDGE PLANS FOR ADDITIONAL PRESSURE RELIEF JOINT DETAILS AND PAYMENT.
2. FOR ABBREVIATIONS LEGEND, SEE SHEET 2/43

Preliminary Plans - For Reference Only

RESOURCE INTERNATIONAL INC.
8550 PRESIDENTIAL GATEWAY
COLUMBUS, OHIO 43231
(614) 823-4949

DESIGNED JLM | DRAWN SMJ | REVIEWED SSK | DATE 3-18-26
CHECKED NCK | REVISED | STRUCTURE FILE NUMBER

TYPICAL MSE WALL DETAILS 2 OF 2
MSE RETAINING WALLS H & H1

HAM-75-7.85
PID No. 121447

26 / 43

647
1047

\\san1.resourceinternational.com\two\projects\2010\B-10-020 HAM-75-7.85\77889\structures\WALL_00H\sheets\77889_00HWD402.dgn 5/13/2026 2:04:23 PM meets

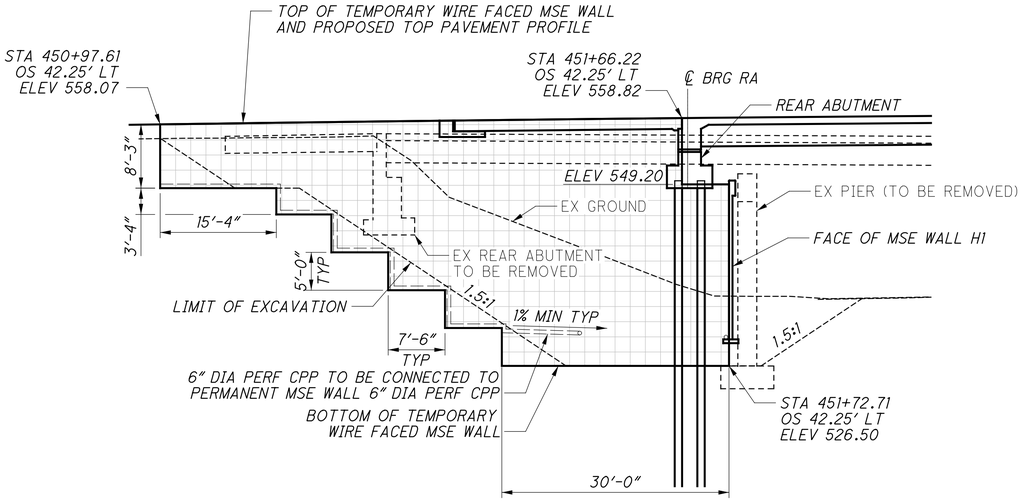

TEMPORARY WIRE FACED MSE WALL H1-1 ELEVATION

REAR ABUTMENT PHASE 1

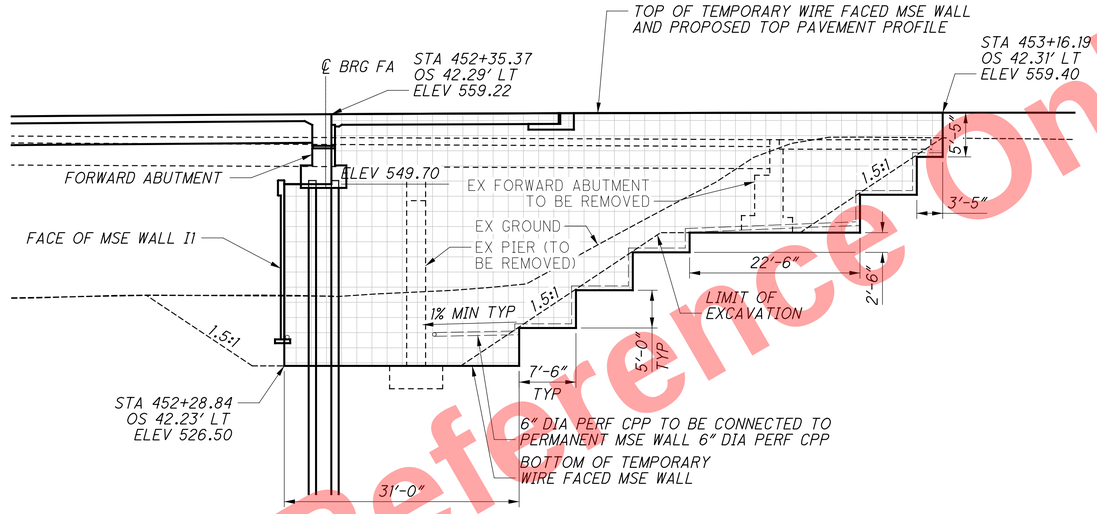

TEMPORARY WIRE FACED MSE WALL I1-1 ELEVATION

FORWARD ABUTMENT PHASE 1

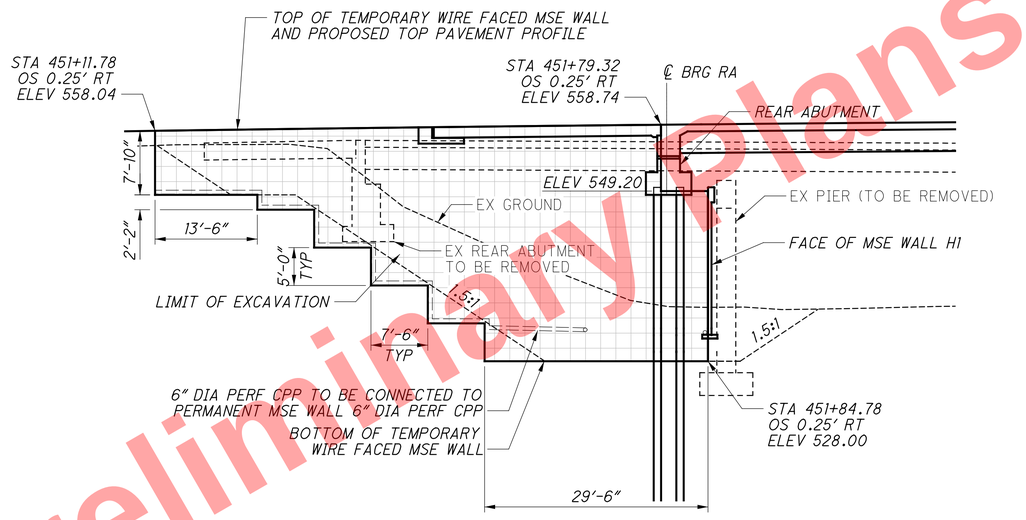

TEMPORARY WIRE FACED MSE WALL H1-2 ELEVATION

REAR ABUTMENT PHASE 2
(PARAPET NOT SHOWN FOR CLARITY)

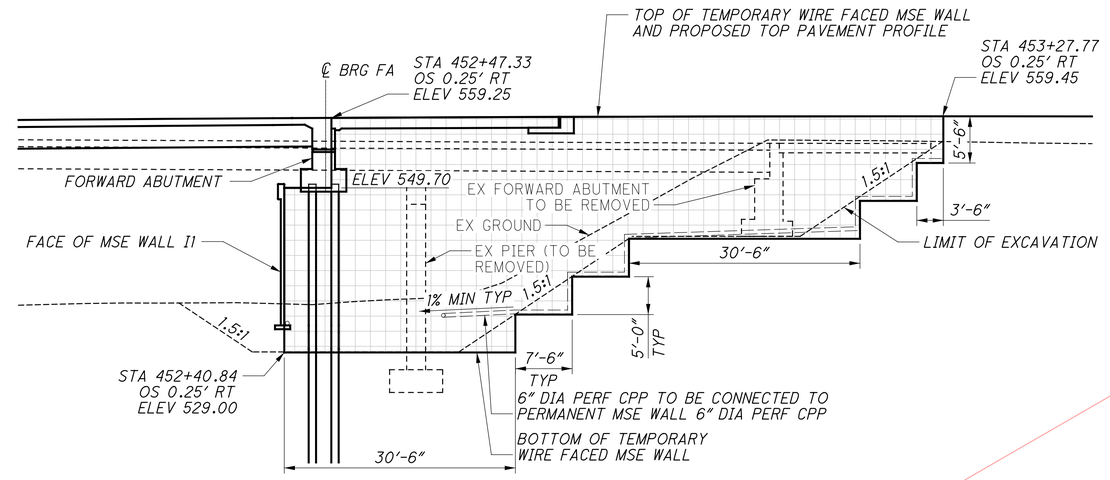

TEMPORARY WIRE FACED MSE WALL I1-2 ELEVATION

FORWARD ABUTMENT PHASE 2
(PARAPET NOT SHOWN FOR CLARITY)

NOTES:

1. SEE HAM-75-0857 PLANS FOR ABUTMENT DETAILS.
2. TOP OF TEMPORARY WIRE FACED MSE WALL TO MATCH PROPOSED PAVEMENT ELEVATION OF I.R. 75.
3. SEE HAM-75-0857 BRIDGE PLANS FOR ADDITIONAL TEMPORARY SHORING DETAILS AND QUANTITIES.
4. SEE MSE WALL I/I1 PLANS FOR PERMANENT MSE WALL DETAILS AT THE FORWARD ABUTMENT.
5. FOR ABBREVIATIONS LEGEND, SEE SHEET 2/43 .

LEGEND:

PERF CPP = PERFORATED CORRUGATED POLYETHYLENE PIPE

= ITEM 867 - TEMPORARY WIRE FACED MECHANICALLY STABILIZED EARTH WALL

Preliminary Plans - For Reference Only

RESOURCE INTERNATIONAL INC.
8350 PRESIDENTIAL GATEWAY
COLUMBUS, OHIO 43231
(614) 823-4949

DESIGNED MMS | DRAWN MMS | REVIEWED NCK | DATE 3-18-26
CHECKED JWE | REVISED | STRUCTURE FILE NUMBER

TEMPORARY MSE WALL DETAILS
MSE RETAINING WALLS H1 AND I1

HAM-75-7.85
PID No. 121447

27 / 43

648
1047

\\san1.resourceinternational.com\two\projects\2010\B-10-020 HAM-75-7.85\77889\structures\WALL_00H\sheets\77889_00HWD403.dgn 5/13/2026 2:04:24 PM meets

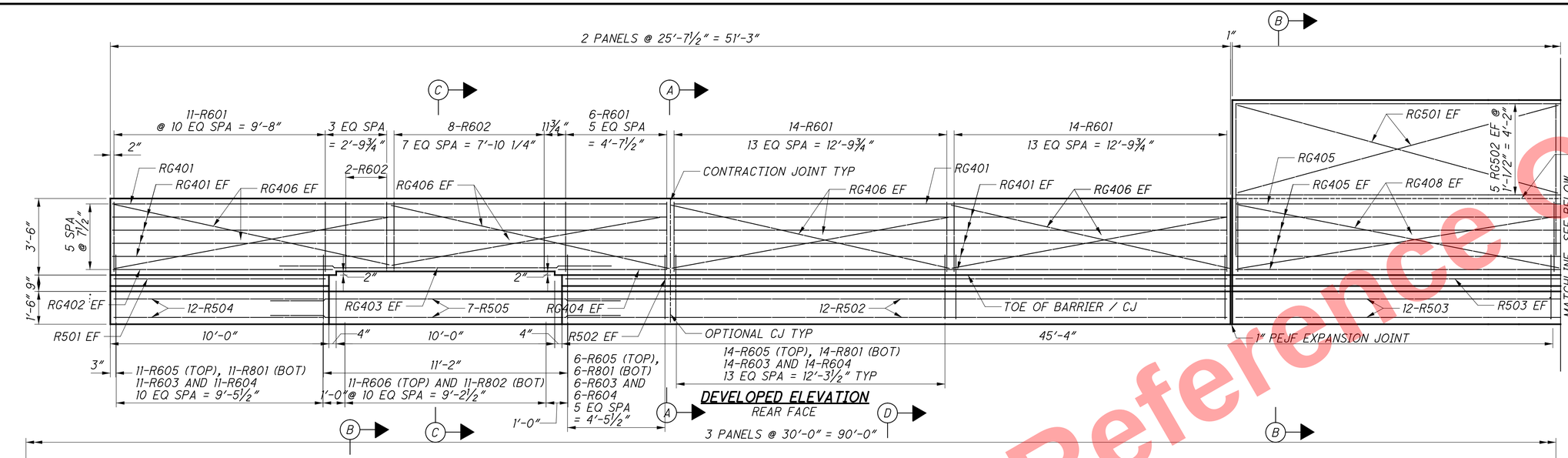

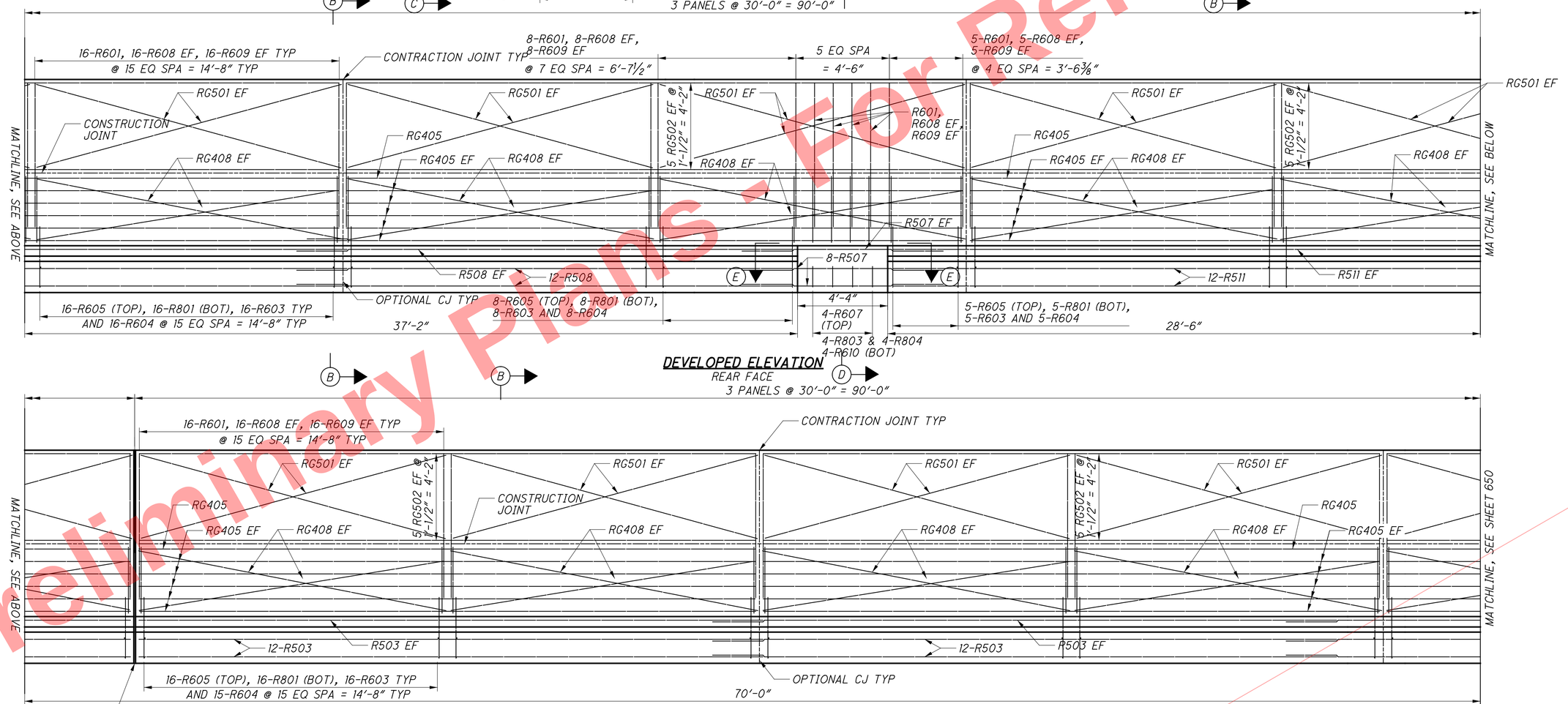

MINIMUM LAP LENGTHS
#5 BAR = 2'-5"
#6 BAR = 2'-11"

NOTES:

1. SEE SHEET 30/43 FOR SECTION A-A, B-B, C-C AND D-D AND SEE SHEET 29/43 FOR SECTION E-E.
2. FOR ABBREVIATIONS LEGEND, SEE SHEET 2/43

Preliminary Plans - For Reference Only

\\san1.resourceinternational.com\two\projects\2010\B-10-020 HAM-75-7.85\77889_00HWD404.dgn 5/13/2026 2:04:24 PM meets

RESOURCE INTERNATIONAL INC.
6550 PRESIDENTIAL GATEWAY
COLUMBUS, OHIO 43231
(614) 823-4949

DESIGNED	DRAWN	REVIEWED	DATE
JLM	SMJ	SSK	3-18-26
CHECKED	REVISED	STRUCTURE FILE NUMBER	
NCK			

BARRIER AND MOMENT SLAB DETAILS

MSE RETAINING WALL H

HAM-75-7.85

PID No. 121447

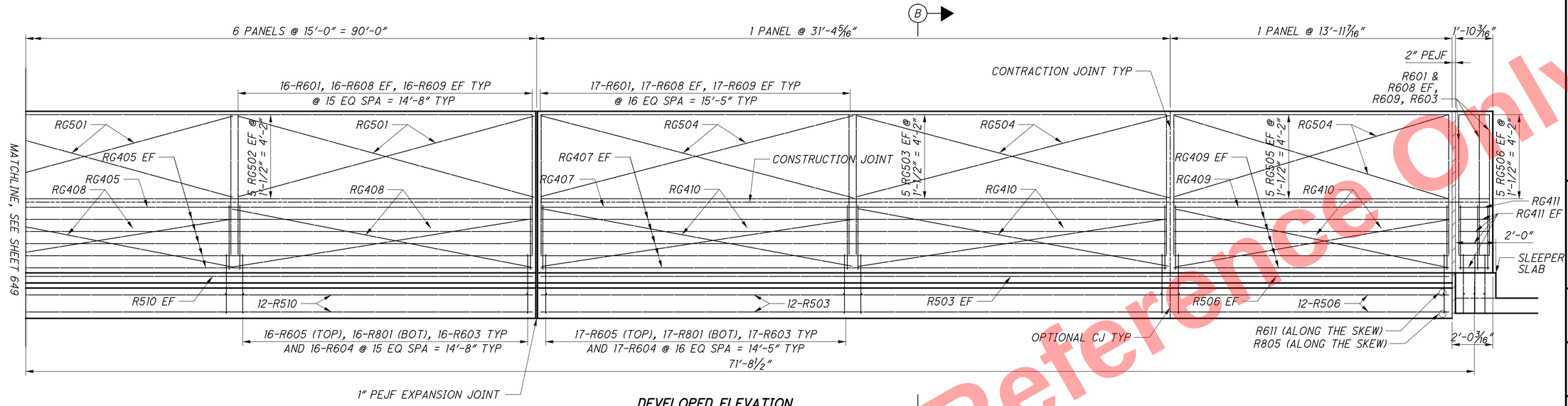

DEVELOPED ELEVATION
REAR FACE

SECTION E-E

MINIMUM LAP LENGTHS
#5 BAR = 2'-5"
#6 BAR = 2'-11"

NOTES:

1. SEE SHEET 30/43 FOR SECTION B-B.
2. FOR ABBREVIATIONS LEGEND, SEE SHEET 2/43.

Preliminary Plans - For Reference Only

RESOURCE INTERNATIONAL INC.
6550 PRESIDENTIAL GATEWAY
COLUMBUS, OHIO 43231
(614) 823-4949

DESIGNED JLM | DRAWN SMJ | REVIEWED SSK | DATE 3-18-26 | CHECKED NCK | REVISED | STRUCTURE FILE NUMBER

BARRIER AND MOMENT SLAB DETAILS SHEET 2 OF 4
MSE RETAINING WALL H

HAM-75-7.85
PID No. 121447

29/43

650/1047

\\son1.resourceinternational.com\two\projects\2010\B-10-020 HAM-75-7.85\77889\structures\WALL_00H\sheets\77889_00HWD405.dgn 5/13/2026 2:04:25 PM meets

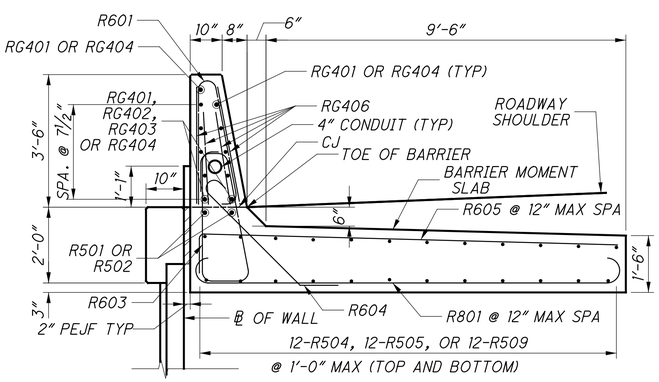

SECTION A-A

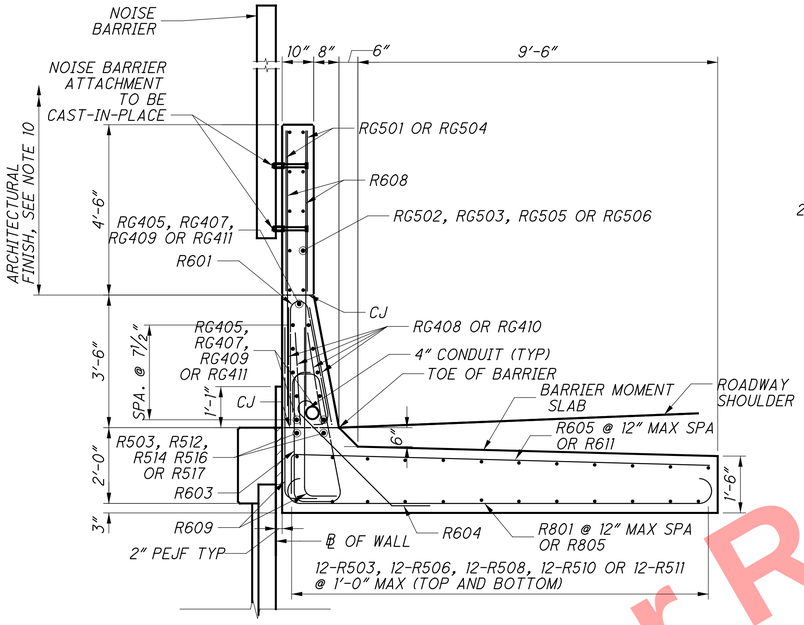

SECTION B-B

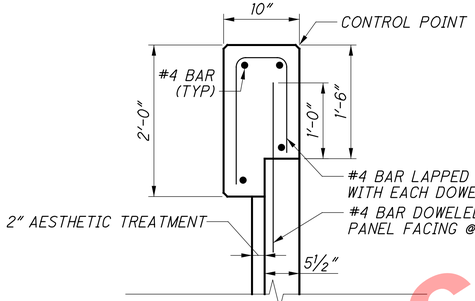

COPING DETAIL

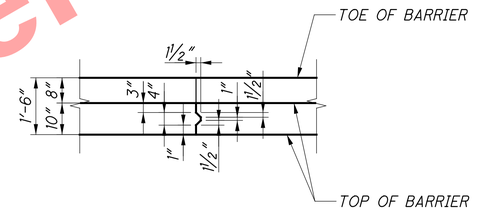

CONTRACTION JOINT

MINIMUM LAP LENGTHS:
#5 LAP LENGTH = 2′-5″
#6 LAP LENGTH = 2′-11″

NOTES:

1. ALL ITEMS SHOWN ON THIS SHEET, EXCLUDING PAVEMENT, ARE INCIDENTAL TO RAILING MISC: TRAFFIC BARRIER ON MSE WALL AND RAILING (COMBINATION NOISE AND TRAFFIC BARRIER ON MSE WALL)
2. CONTROL JOINT: SAWCUT 1¼″ DEEP CONTROL JOINTS ALONG THE PERIMETER AS SHOWN ON THIS SHEET AS SOON AS THE SAW CAN BE OPERATED WITHOUT DAMAGING THE CONCRETE.

   USE AN EDGE GUIDE, FENCE OR JIG TO ENSURE THAT THE CUT JOINT IS STRAIGHT, TRUE AND ALIGNED ON ALL FACES OF THE BARRIER. THE JOINT WIDTH SHALL BE THE WIDTH OF THE SAW BLADE, A NOMINAL WIDTH OF ¼″.

   SEAL THE PERIMETER OF THE CONTROL JOINT TO A MINIMUM DEPTH OF 1″ WITH A POLYURETHANE OR POLYMERIC MATERIAL CONFORMING TO C920, TYPE S. LEAVE THE BOTTOM ½″ OF BOTH THE INSIDE AND OUTSIDE FACES OF THE BARRIER UNSEALED TO ALLOW ANY WATER WHICH MAY ENTER THE JOINT TO ESCAPE.
3. SAWCUT CONTROL JOINTS SHALL HAVE A MINIMUM SPACING OF 6′ AND A MAXIMUM SPACING OF 15′-8″. THE CONTRACTOR SHALL ADJUST THE JOINT LOCATIONS IN THE FIELD AS NEEDED TO AVOID CONFLICTS WITH THE TRANSVERSE REBAR.
4. SEE NOISE BARRIER PLAN SHEETS FOR NOISE BARRIER DETAILS.
5. SEE SHEET 25/43 FOR CONCRETE SEALING LIMITS.
6. SEE ROADWAY PLANS AND ODOT STANDARD CONSTRUCTION DRAWINGS FOR ADDITIONAL DRAINAGE INLET DETAILS.
7. FOR ABBREVIATIONS LEGEND, SEE SHEET 2/43.
8. THE COPING SHALL NOT BE CONSTRUCTED UNTIL ALL PHASES OF MSE WALL CONSTRUCTION ARE COMPLETE.
9. THE COPING JOINTS SHALL BE PLACED ON A MAXIMUM 20 FT. SPACING AND SHALL ALIGN WITH A PANEL JOINT.
10. THE ARCHITECTURAL FINISH SHALL BE BEIGE ASHLAR STONE (MANUFACTURED BY ARCHITECTURAL POLYMERS, #905 SMALL AGED ASHLAR STONE) ON THE FREEWAY SIDE AND BEIGE DRY STACK (MANUFACTURED BY ARCHITECTURAL POLYMERS, #9110 LARGE STONE OHIO DRY STACK) ON THE PARK AND RESIDENTIAL SIDE. THE FEGERAL COLOR NUMBER FOR BEIGE IS NO. 17778.

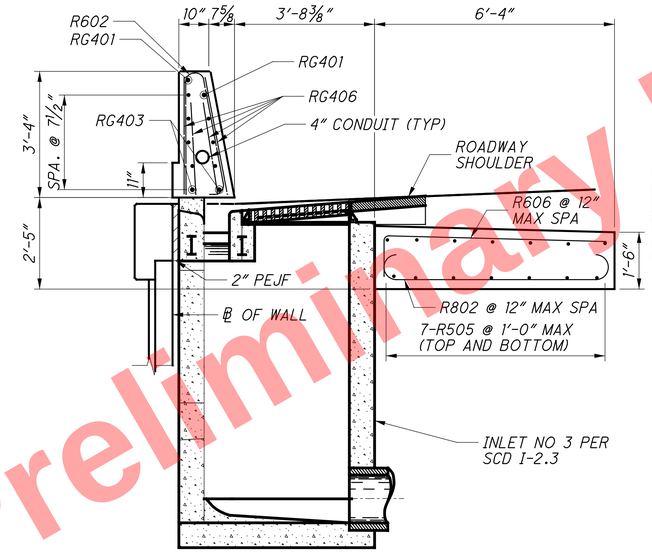

SECTION C-C

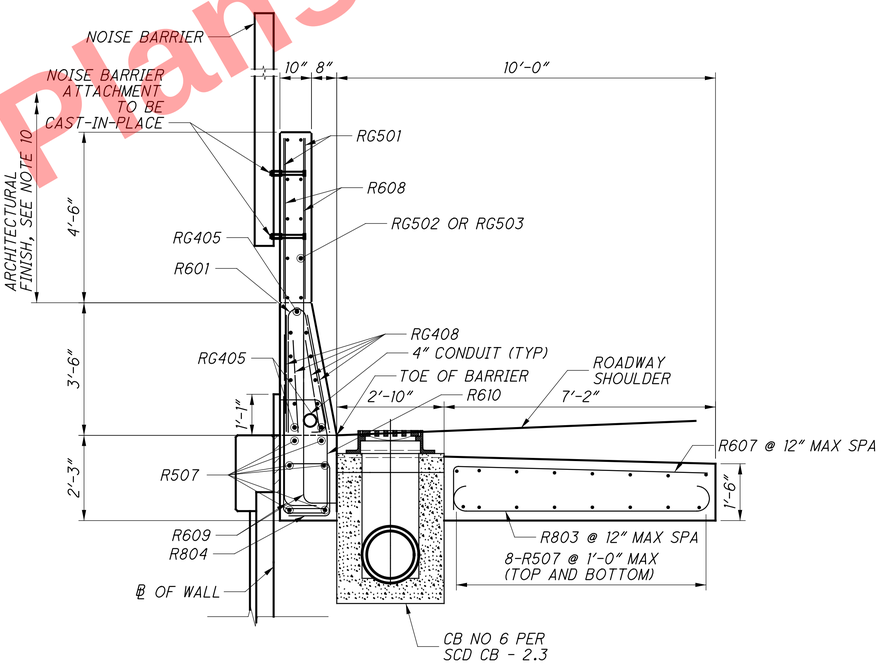

SECTION D-D

Preliminary Plans - For Reference Only

RESOURCE INTERNATIONAL INC.
8550 PRESIDENTIAL GATEWAY
COLUMBUS, OHIO 43231
(614) 823-4949

DESIGNED JLM | DRAWN SMJ | REVIEWED SSK | DATE 3-18-26
CHECKED MMS | REVISED | STRUCTURE FILE NUMBER

BARRIER AND MOMENT SLAB DETAILS SHEET 3 OF 4
MSE RETAINING WALL H

HAM-75-7.85
PID No. 121447

30/43

651/1047

\\sont.resourceinternational.com\two\projects\2010\B-10-020 HAM-75-7.85\77889\structures\WALL_00H\sheets\77889_00HWD406.dgn 5/13/2026 2:04:25 PM meets

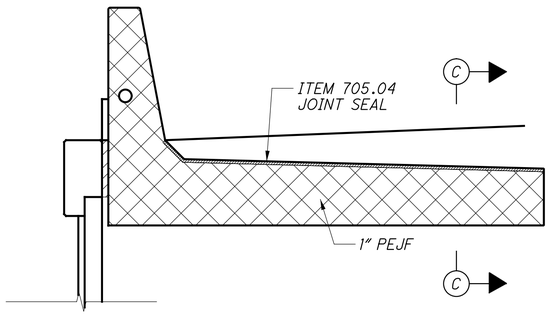

SECTION A-A: BARRIER AND MOMENT SLAB AT EXPANSION JOINT

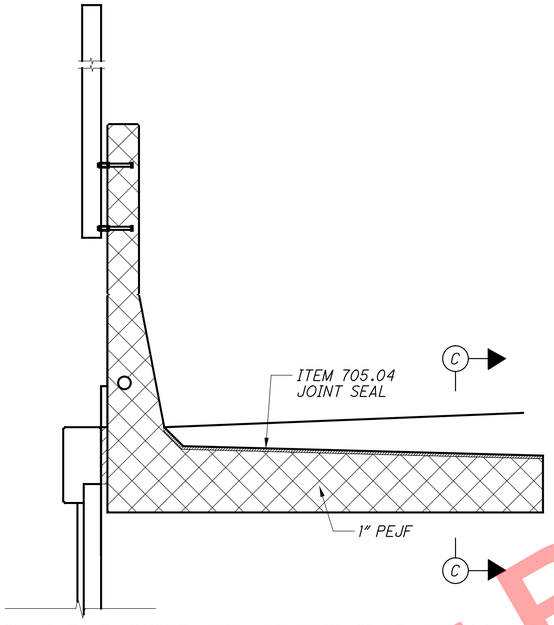

SECTION B-B: BARRIER AND MOMENT SLAB AT EXPANSION JOINT

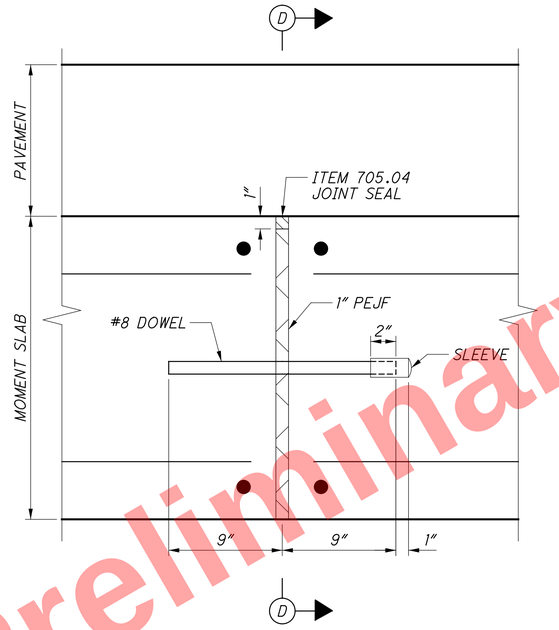

SECTION C-C

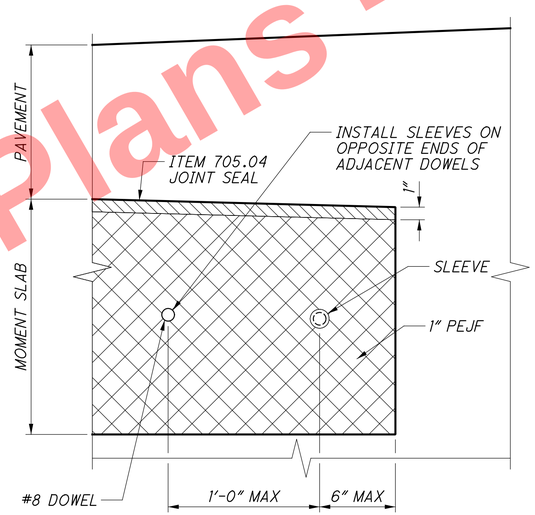

SECTION D-D

NOTES:

1. ALL ITEMS SHOWN ON THIS SHEET, EXCLUDING PAVEMENT, ARE INCIDENTAL TO ITEM 517-RAILING, CONCRETE, AS PER PLAN.

2. FOR ABBREVIATIONS LEGEND, SEE SHEET 2/43

3. MAXIMUM SPACING OF EXPANSION JOINTS SHALL BE 90'-0".

Preliminary Plans - For Reference Only

\\sonl.resourceinternational.com\two\projects\2010\B-10-020 HAM-75-7.85\77889\structures\WALL_00H\sheets\77889_00HWD407.dgn 5/13/2026 2:04:26 PM meets

RESOURCE INTERNATIONAL INC.
8550 PRESIDENTIAL GATEWAY
COLUMBUS, OHIO 43231
(614) 823-4949

DESIGNED	DRAWN	REVIEWED	DATE
JLM	SMJ	SSK	3-18-26
CHECKED	REVISED	STRUCTURE FILE NUMBER	
NCK			

BARRIER AND MOMENT SLAB DETAILS SHEET 4 OF 4
MSE RETAINING WALL H, & I

HAM-75-7.85
PID No. 121447

MARK	NUMBER TOTAL	LENGTH	WEIGHT	TYPE	DIMENSIONS A	B	C	D	E	R	INC
REINFORCING SCHEDULE											
R501	2	9′-8″	20	ST.							
R502	26	30′-3″	820	ST.							
R503	104	30′-0″	3254	ST.							
R504	24	9′-7″	240	ST.							
R505	14	16′-0″	234	ST.							
R506	26	18′-8″	506	ST.							
R507	22	9′-8″	222	ST.							
R508	26	23′-11″	649	ST.							
R509	NOT	USED									
R510	26	34′-5″	933	ST.							
R511	26	33′-5″	906	ST.							
R601	292	7′-2″	3140	39	6″	3′-3″	3′-3″	1′-1″		2″	
R602	10	6′-0″	90	39	5″	3′-0″	3′-0″	1′-1″		2″	
R603	287	10′-0″	4311	41	10″	7″	1′-0″	3′-5″	1′-6″		
R604	287	5′-6″	2371	18	3′-10″	9″	9″				
R605	287	12′-0″	5173	1	1′-0″	11′-2″					
R606	11	7′-2″	118	1	1′-2″	6′-0″					
R607	4	8′-0″	48	1	1′-2″	6′-10″					
R608	494	6′-9″	5008	ST.							
R609	494	5′-10″	4326	1	9″	5′-0″					
R610	4	4′-9″	29	14	1′-2″	2′-0″	11″	2 ¼″	11″		
R611	1	12′-7″	19	1	1′-0″	11′-9″					
R801	287	12′-10″	9834	17	11′-2″						
R802	11	7′-8″	225	17	6′-0″						
R803	4	8′-6″	91	17	6′-10″						
R804	4	3′-9″	40	2	1′-2″	1′-4 ½″	1′-2″				
R805	1	13′-5″	36	17	11′-9″						
		TOTAL	42643								

MARK	NUMBER TOTAL	LENGTH	TYPE	DIMENSIONS A	B	C	D	E	R	INC
GLASS FIBER BARS										
RG401	20	25′-4″	ST							
RG402	2	10′-0″	ST							
RG403	2	15′-2″	ST							
RG404	2	5′-0″	ST							
RG405	66	29′-8″	ST							
RG406	16	12′-8″	ST							
RG407	11	31′-0″	ST							
RG408	48	14′-6″	ST							
RG409	11	13′-7″	ST							
RG410	12	15′-4″	ST							
RG411	11	1′-6″	ST							
	TOTAL	4094	FT							
RG501	48	15′-2″	ST							
RG502	60	29′-8″	ST							
RG503	10	31′-0″	ST							
RG504	12	14′-2″	ST							
RG505	10	13′-7″	ST							
RG506	10	1′-6″	ST							
	TOTAL	3138	FT							

* REINFORCING INCLUDED WITH ITEM - 517 - RAILING, CONCRETE, AS PER PLAN

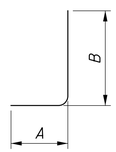

TYPE-1

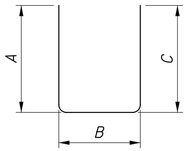

TYPE-2

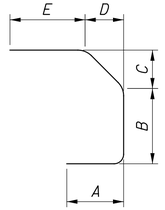

TYPE-14

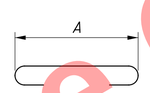

TYPE-17

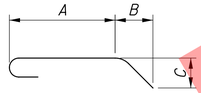

TYPE-18

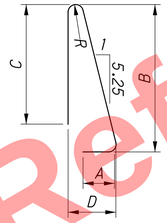

TYPE-39

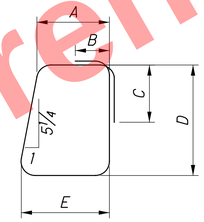

TYPE-41

NOTES:

1. THE BAR SIZE NUMBER IS SPECIFIED ON THE PLANS IN THE BAR MARK COLUMN. THE FIRST DIGIT WHERE 3 DIGITS ARE USED, AND THE FIRST 2 DIGITS WHERE FOUR DIGITS ARE USED, INDICATES THE BAR SIZE NUMBER. FOR EXAMPLE, F601 IS A NO 6 BAR. BAR DIMENSIONS SHOWN ARE OUT TO OUT UNLESS OTHERWISE INDICATED. "R" INDICATES INSIDE RADIUS, UNLESS OTHERWISE NOTED. "STD" WRITTEN IN PLACE OF A DIMENSION INDICATES A STANDARD BEND AT THE END OF THE BAR.

2. ALL REINFORCING STEEL TO BE EPOXY COATED.

3. FOR ABBREVIATIONS LEGEND, SEE SHEET 2/43.

LEGEND:

** - FIELD CUT

Preliminary Plans - For Reference Only

RESOURCE INTERNATIONAL INC.
6550 PRESIDENTIAL GATEWAY
COLUMBUS, OHIO 43231
(614) 823-4949

DESIGNED JLM | DRAWN SMJ | REVIEWED SSK | DATE 3-18-26 | CHECKED NCK | REVISED | STRUCTURE FILE NUMBER

REINFORCING STEEL SCHEDULE
MSE RETAINING WALLS H & H1

HAM-75-7.85
PID No. 121447

32/43

653/1047

\\sonl.resourceinternational.com\two\projects\2010\B-10-020 HAM-75-7.85\77889\structures\WALL_00H\sheets\77889_00HWL401.dgn 5/13/2026 2:04:26 PM meets

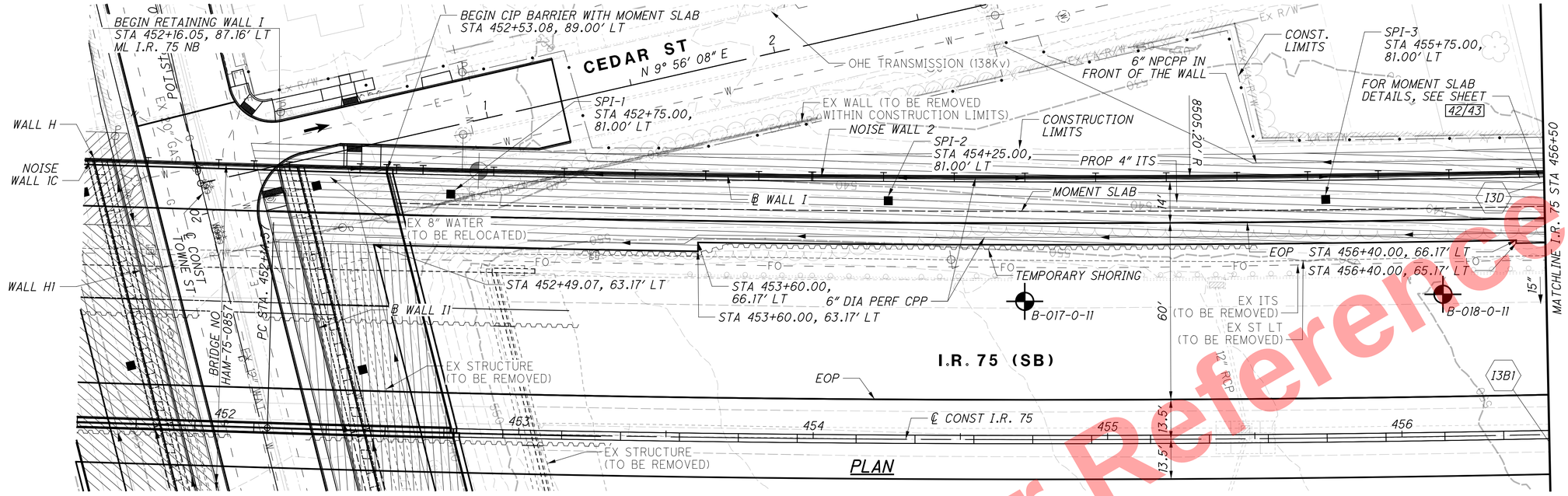

CURVE 75-3
PI STA 456+41.20
Δ = 5° 41' 01" (LT)
Dc = 0° 40' 00"
R = 8,594.37'
T = 426.63'
L = 852.56'
E = 10.58'
C = 852.21'
C.B. = N 21° 39' 37" E
e max = 0.019
PC STA 452+14.57
PT STA 460+67.13

0 20 10 40
HORIZONTAL
SCALE IN FEET

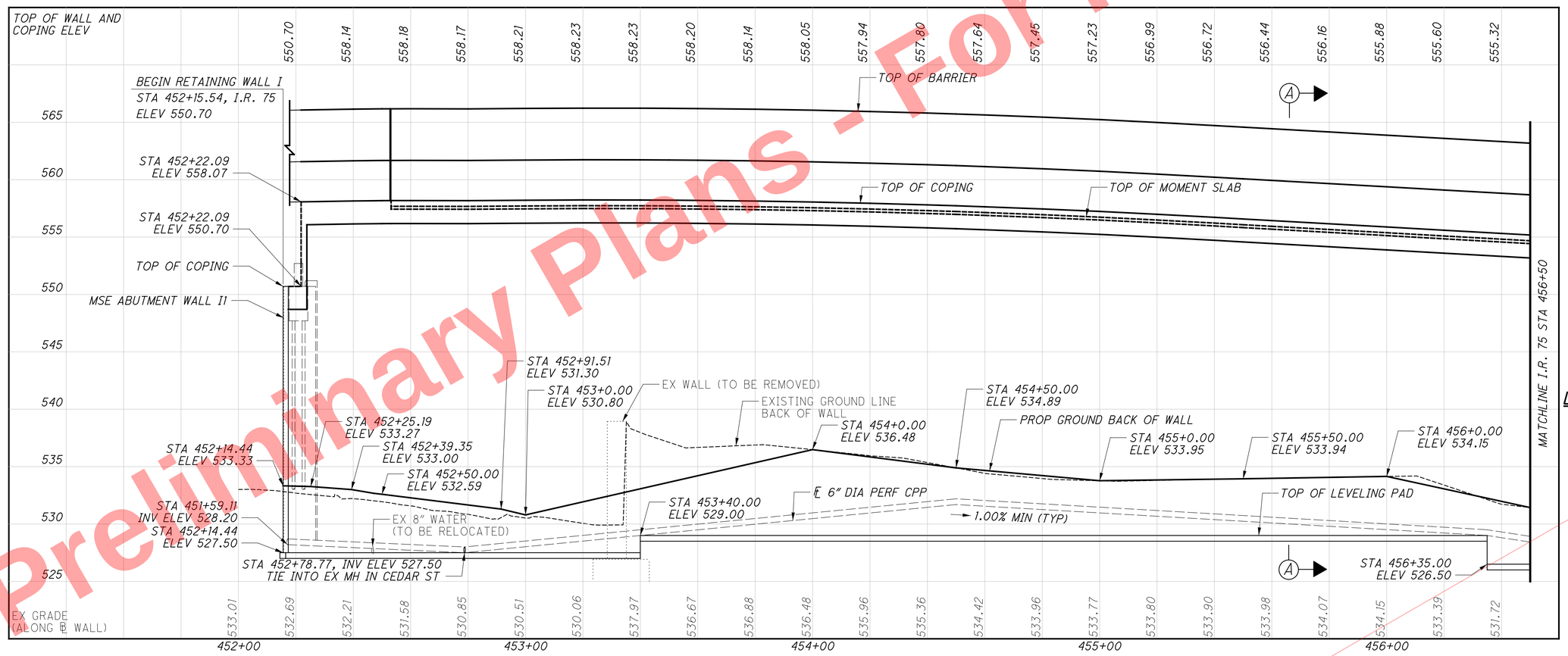

ELEVATION ALONG BACK FACE OF WALL

LEGEND:

= BORING LOCATION

= PLAN BOUNDARY FOR ITEMS INCLUDED WITH MSE WALL I1 FOR PAYMENT

= PLAN BOUNDARY FOR ITEMS INCLUDED WITH MSE WALL I FOR PAYMENT

NOTES:

1. FOR ABBREVIATIONS LEGEND, SEE SHEET 2/43

Preliminary Plans - For Reference Only

RESOURCE INTERNATIONAL INC.
9350 PRESIDENTIAL GATEWAY
COLUMBUS, OHIO 43231
(614) 825-4949

DESIGNED MMS | DRAWN MMS | REVIEWED SSK | DATE 3-18-26
CHECKED JWE | REVISED | STRUCTURE FILE NUMBER

PLAN AND ELEVATION
MSE RETAINING WALL I

HAM-75-7.85
PID No. 121447

33 / 43

654
1047

\\san1.resourceinternational.com\two\projects\2010\B-10-020 HAM-75-7.85\77889\structures\WALL_00\sheets\77889_00IWP401.dgn 5/13/2026 2:04:27 PM meets

Preliminary Plans - For Reference Only

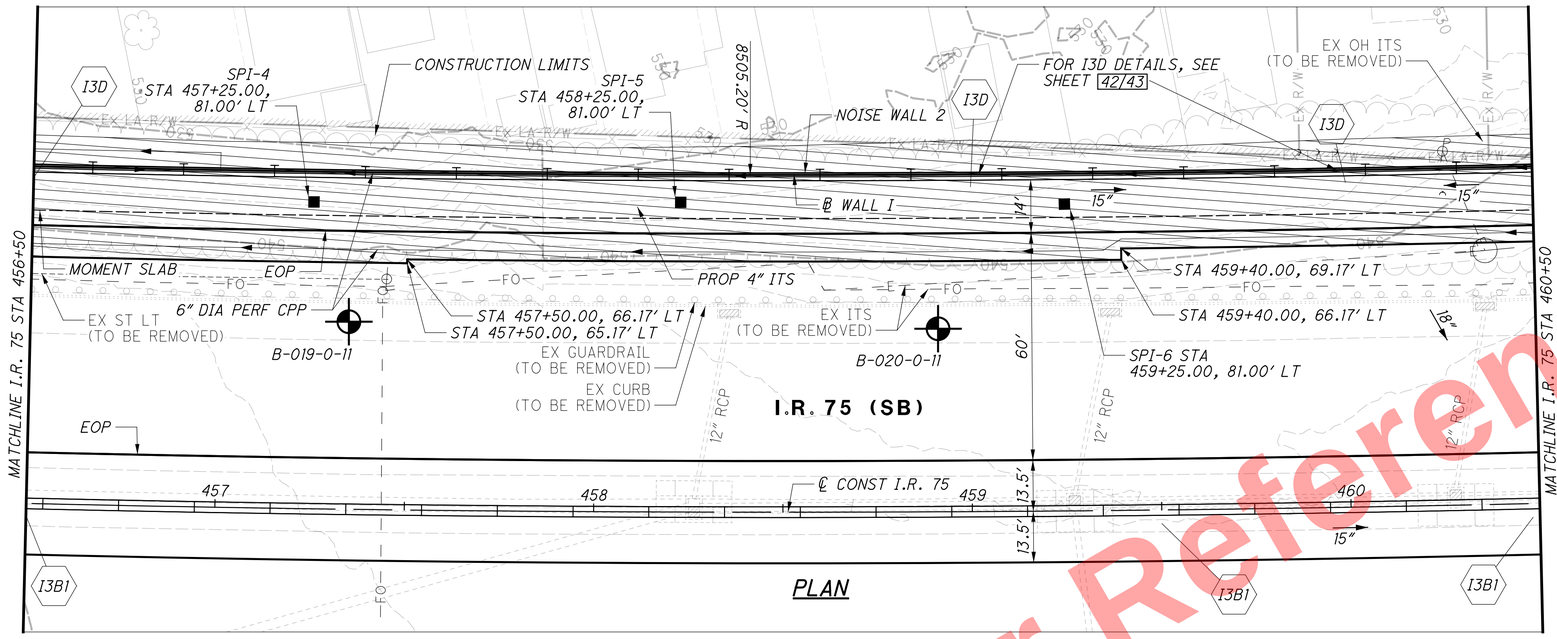

0 10 20 40
HORIZONTAL SCALE IN FEET

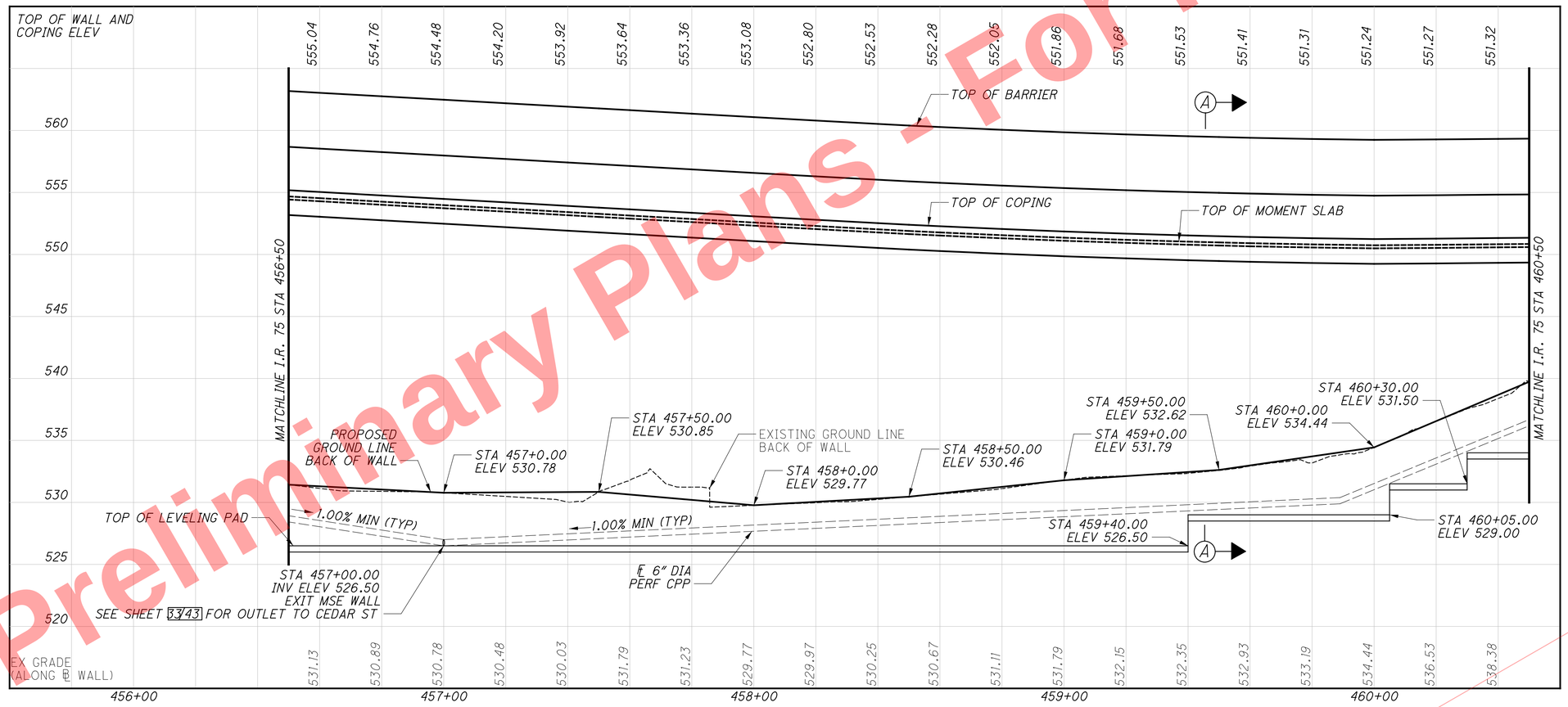

ELEVATION ALONG BACK FACE OF WALL

LEGEND:

= BORING LOCATION

= PLAN BOUNDARY FOR ITEMS INCLUDED WITH MSE WALL I FOR PAYMENT

NOTES:

1. FOR CURVE DATA, SEE SHEET 33/43.
2. FOR ABBREVIATIONS LEGEND, SEE SHEET 2/43.
3. ALL EXISTING STORM SEWER WITHIN CONSTRUCTION LIMITS TO BE REMOVED UNLESS OTHERWISE NOTED.

RESOURCE INTERNATIONAL INC.
8550 PRESIDENTIAL GATEWAY
COLUMBUS, OHIO 43231
(614) 823-4949

DESIGNED MMS | DRAWN MMS | REVIEWED SSK | DATE 3-18-26
CHECKED JWE | REVISED | STRUCTURE FILE NUMBER

PLAN AND ELEVATION
MSE RETAINING WALL I

HAM-75-7.85
PID No. 121447

34 / 43

655
1047

\\san1.resourceinternational.com\two\projects\2010\B-10-020 HAM-75-7.85\77889\structures\WALL_001\sheets\77889_001WP402.dgn 5/13/2026 2:04:28 PM meets

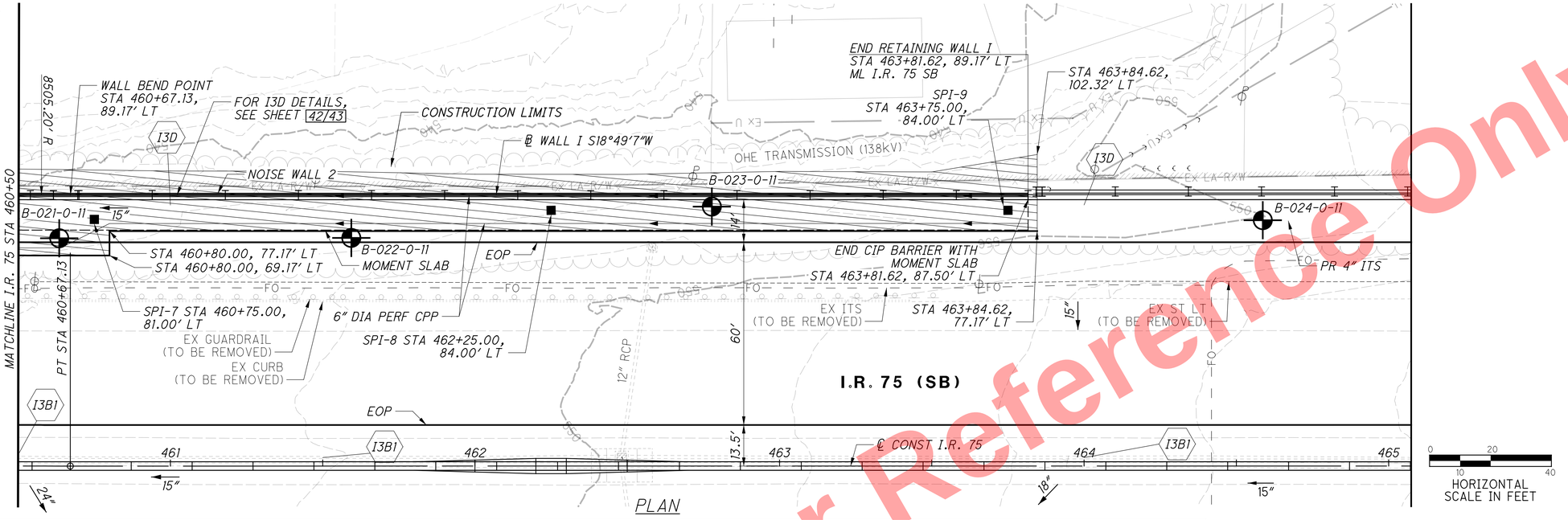

PLAN

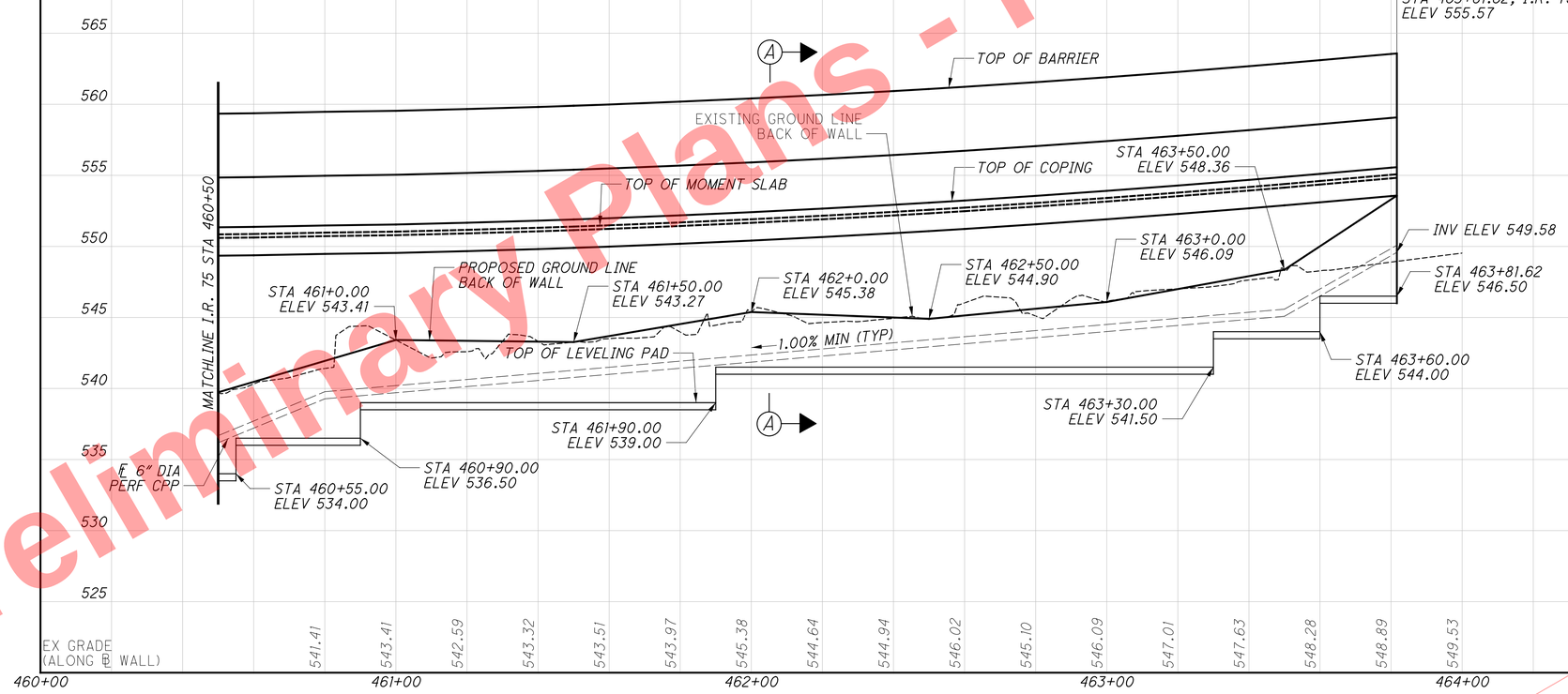

ELEVATION ALONG BACK FACE OF WALL

LEGEND:

= BORING LOCATION

= PLAN BOUNDARY FOR ITEMS INCLUDED WITH MSE WALL I FOR PAYMENT

NOTES:

1. FOR CURVE DATA, SEE SHEET 33/43 .
2. FOR ABBREVIATIONS LEGEND, SEE SHEET 2/43 .
3. ALL EXISTING STORM SEWER WITHIN CONSTRUCTION LIMITS TO BE REMOVED UNLESS OTHERWISE NOTED.

Preliminary Plans - For Reference Only

RESOURCE INTERNATIONAL INC.
8550 PRESIDENTIAL GATEWAY
COLUMBUS, OHIO 43231
(614) 823-4949

DESIGNED MMS | DRAWN MMS | REVIEWED SSK | DATE 3-18-26
CHECKED JEW | REVISED | STRUCTURE FILE NUMBER

PLAN AND ELEVATION
MSE RETAINING WALL I

HAM-75-7.85
PID No. 121447

35 / 43

656
1047

\\san1.resourceinternational.com\two\projects\2010\B-10-020 HAM-75-7.85\77889\structures\WALL_00\sheets\77889_00WP403.dgn 5/13/2026 2:04:29 PM meets

Preliminary Plans - Not For Reference Only

\\son1.resourceinternational.com\two\projects\2010\B-10-020 HAM-75-7.85\77889_01\WP401\structures\WALL_001\sheets\77889_01WP401.dgn 5/13/2026 2:04:30 PM meets

LEGEND:

PLAN BOUNDARY FOR ITEMS INCLUDED WITH MSE WALL I FOR PAYMENT

PLAN BOUNDARY FOR ITEMS INCLUDED WITH MSE WALL I1 FOR PAYMENT

NOTES:

1. FOR WALL I1 NOTES, SEE SHEET 1 / 43
2. FOR ABBREVIATIONS LEGEND, SEE SHEET 2 / 43

CONSTRUCTION LIMITS
EX 12" STM (TO REMAIN)
EOP
MOMENT SLAB
END TEMPORARY WIRE FACED MSE WALL I1-1 STA 453+16.19, 42.31' LT ℄ CONSTRUCTION I.R. 75 SEE SHEET 22/38
END TEMPORARY WIRE FACED MSE WALL I1-2 STA 453+27.77, 0.75' RT ℄ CONSTRUCTION I.R. 75 SEE SHEET 22/38
TEMPORARY SHORING TO FACILITATE PHASE 1 CONSTRUCTION
℄ CONST I.R. 75
6" NPCPP
PROP 4" ITS
EX ITS (TO BE REMOVED)
EX ST LT (TO BE REMOVED)
TEMPORARY SHORING TO FACILITATE PHASE 2 CONSTRUCTION
℄ WALL I
PHASE CONSTRUCTION JOINT
EX STRUCTURE (TO BE REMOVED)
6" DIA PERF CPP
SPI1-1 STA 20+00.00, 38.00' RT
SPI1-2 STA 19+35.66, 38.00' RT
STA 19+17.39, 26.51' RT
SPI1-3 STA 18+63.07, 38.00' RT
STA 20+09.05, 24.51' RT
STA 18+11.81, 46.97 RT
STA 17+70.56, 46.84 RT
ABUTMENT 6" PERFORATED CORRUGATED PLASTIC PIPE
℄ FORWARD ABUTMENT MSE WALL I1 S81°20'41"E
EX 8" WATER (TO BE RELOCATED)
EX ITS (TO BE RELOCATED)
BEGIN TEMPORARY WIRE FACED MSE WALL I1-1 STA 452+28.84, 42.23' LT ℄ CONSTRUCTION I.R. 75 SEE SHEET 22/38
BEGIN TEMPORARY WIRE FACED MSE WALL I1-2 STA 452+40.84, 0.25' RT ℄ CONSTRUCTION I.R. 75 SEE SHEET 22/38
BRIDGE NO HAM-75-0857
BEGIN RETAINING WALL I1 STA 452+16.05, 87.16' LT, ML I.R. 75 SB STA 20+07.83, 26.97' RT, TOWNE ST
PC STA 452+14.57
STA 452+12.74 I.R. 75 = STA 19+17.39 TOWNE STREET
END RETAINING WALL I1 STA 452+79.27, 139.07' RT, ML I.R. 75 NB STA 17+72.56, 26.97' RT, TOWNE ST
STA 452+73.08, 142.92' LT, ML I.R. 75 NB STA 17+70.56, 20.02' RT, TOWNE ST
PT STA 17+95.00
℄ CONST TOWNE ST
HORIZONTAL SCALE IN FEET

PLAN

PHASE 1 MSE WALL CONSTRUCTION = 46'-7¼"
PHASE 2 MSE WALL CONSTRUCTION = 44'-2⅛"
PHASE 3 MSE WALL CONSTRUCTION = 144'-8⅝"
END TEMPORARY SURCHARGE STA 20+09.22, ELEV 558.28
BEGIN RETAINING WALL I1 STA 452+16.05, ML I.R. 75 SB STA 20+07.83, TOWNE ST ELEV 550.70
BEGIN TEMPORARY SURCHARGE STA 18+12.44, ELEV 560.56
END RETAINING WALL I1 STA 452+79.27, ML I.R. 75 NB STA 17+72.56, TOWNE ST ELEV 544.16
PROP 4" ITS
TOP OF TEMPORARY SURCHARGE
EX ST LT (TO BE REMOVED)
EX ITS (TO BE REMOVED)
℄ CONST I.R. 75
EX ITS TO BE REMOVED
TOP OF COPING ELEV 550.70
STA 17+85.51 ELEV 550.70
CJ
FACE OF WALL I
STA 19+00.00 ELEV 536.94
EXISTING GROUND LINE FRONT OF WALL
STA 18+50.00 ELEV 539.24
STA 18+00.00 ELEV 541.99
STA 17+72.56 ELEV 544.16
STA 17+72.56 ELEV 543.66
STA 17+72.56 ELEV 539.00
PROPOSED GROUND LINE FRONT OF WALL
STA 19+50.00 ELEV 535.11
STA 20+00.00 ELEV 533.73
STA 18+18.06 ELEV 535.00
STA 17+93.03 ELEV 537.50
1.00% MIN (TYP)
STA 18+63.06 ELEV 532.50
STA 19+28.06 ELEV 530.00
EX 30" RCP ELEV 530.65 TO BE REMOVED
℄ CONST CEDAR ST
℄ 6" DIA PERF CPP
STA 19+68.06 ELEV 527.50
EX 8" WATER (TO BE RELOCATED)

ELEVATION ALONG BACK FACE OF WALL

560 555 550 545 540 535 530 525

EX GRADE (ALONG ℄ WALL): 532.80 532.96 533.12 533.27 533.47 533.79 534.12 534.43 534.80 535.17 535.53 535.90 536.27 536.72 537.16 537.61 538.05 538.53 538.93 539.45 540.05 540.64 541.22 541.82 542.42 543.05 543.63 544.21

℄ TOWNE ST STA 20+00 19+50 19+00 18+50 18+00 17+49.38

RESOURCE INTERNATIONAL INC. 8550 PRESIDENTIAL GATEWAY COLUMBUS, OHIO 43231 (614) 823-4949

DESIGNED MMS | DRAWN MMS | REVIEWED SSK | DATE 3-18-26
CHECKED JWE | REVISED | STRUCTURE FILE NUMBER

PLAN AND ELEVATION
FORWARD ABUTMENT MSE RETAINING WALL I1 - TOWNE STREET

HAM-75-7.85
PID No. 121447

36 / 43

657 / 1047

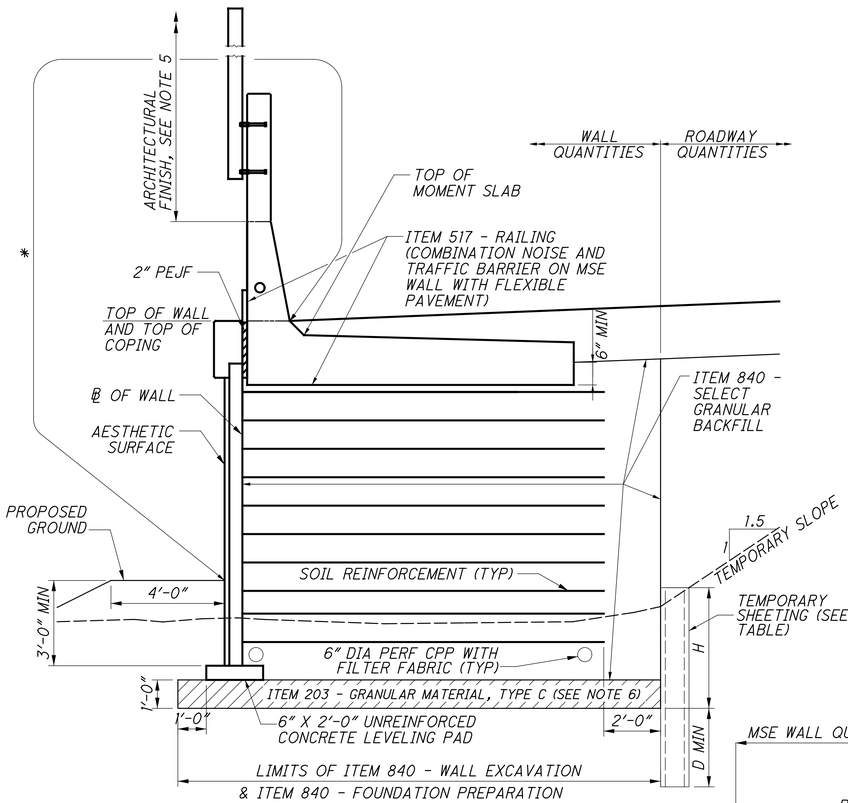

MOMENT SLAB SECTION

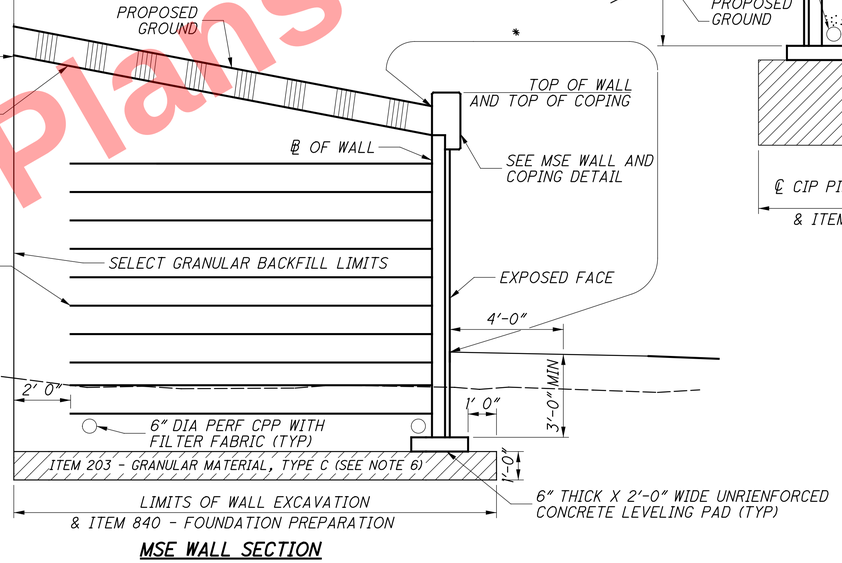

MSE WALL SECTION

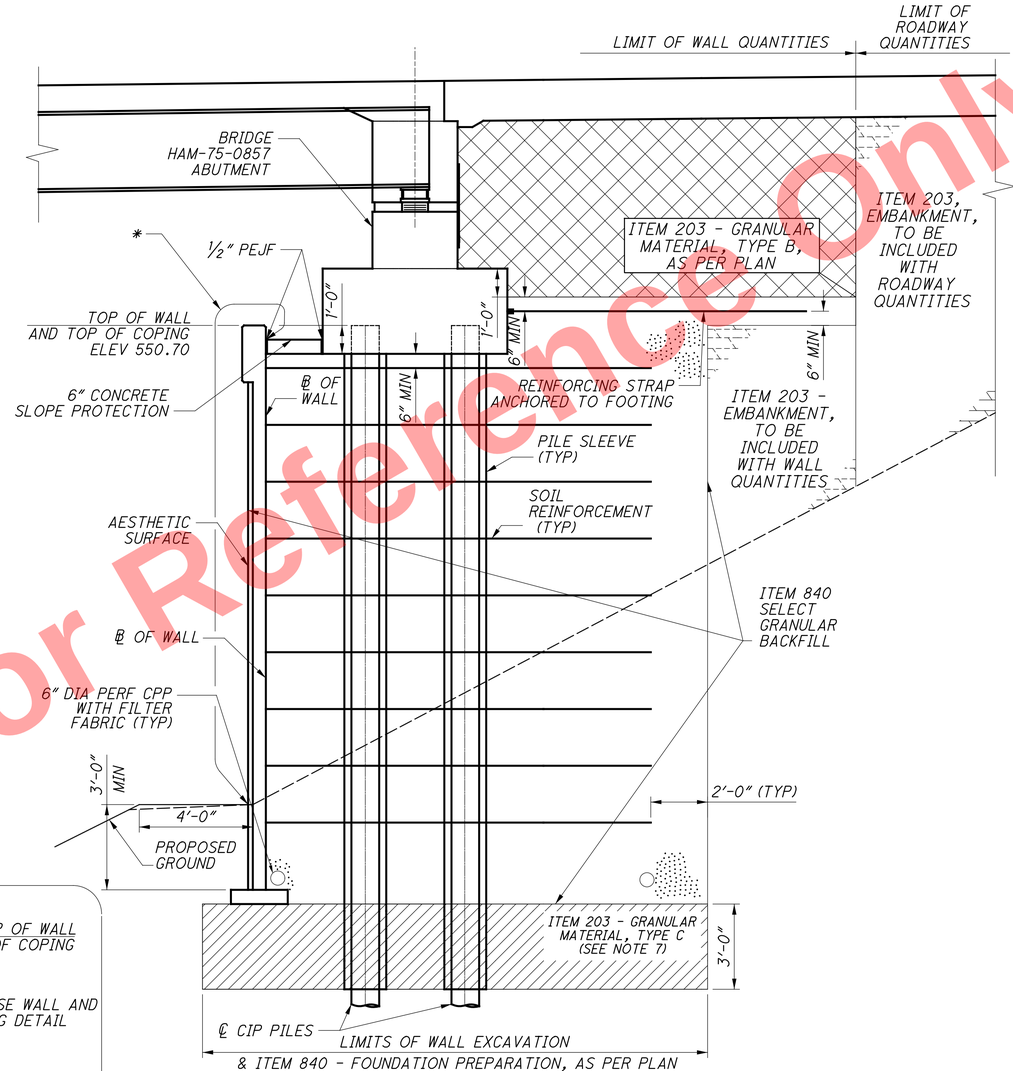

BRIDGE SECTION

* LIMITS OF ITEM 512 - SEALING OF CONCRETE SURFACES (EPOXY-URETHANE)

NOTES

6. ITEM 203 - GRANULAR MATERIAL, TYPE C SHALL BE INCLUDED FOR PAYMENT WITH ITEM 840 - FOUNDATION PREPARATION.
7. ITEM 203 - GRANULAR MATERIAL, TYPE C SHALL BE INCLUDED FOR PAYMENT WITH ITEM 840 - FOUNDATION PREPARATION, AS PER PLAN.

TEMPORARY SHORING TABLE

STATION	ALIGNMENT	WALL HEIGHT (H)	EMBENDMENT (D)	MINIMUM SECTION MODULUS
		(FT)	(FT)	(IN^3/FT)
453+00.00	I.R. 75	8	18	18
453+50.00	I.R. 75	6		
454+00.00	I.R. 75	4		
454+50.00	I.R. 75	3		
455+00.00	I.R. 75	2		

NOTE:
TEMPORARY SHORING NOT NEEDED FROM STATION 455+50.00 TO STATION 463+81.56.

NOTES

1. SEE BRIDGE PLANS HAM-75-0857 FOR ADDITIONAL ABUTMENT AND WINGWALL DETAILS.
2. SOIL REINFORCEMENT SHALL BE CONSTRUCTED SO AS TO AVOID INTERFERENCE WITH BRIDGE PILING.
3. FOR ABBREVIATIONS LEGEND, SEE SHEET 17/43.
4. SEE SHEET 42/43 FOR MSE WALL COPING DETAILS.
5. THE ARCHITECTURAL FINISH SHALL BE BEIGE ASHLAR STONE (MANUFACTURED BY ARCHITECTURAL POLYMERS, #905 SMALL AGED ASHLAR STONE) ON THE FREEWAY SIDE AND BEIGE DRY STACK (MANUFACTURED BY ARCHITECTURAL POLYMERS, #9110 LARGE STONE OHIO DRY STACK) ON THE PARK AND RESIDENTIAL SIDE. THE FEGERAL COLOR NUMBER FOR BEIGE IS NO. 17778.

Preliminary Plans - Not For Reference Only

RESOURCE INTERNATIONAL INC.
8550 PRESIDENTIAL GATEWAY
COLUMBUS, OHIO 43231
(614) 823-4949

DESIGNED JLM | DRAWN SMJ | REVIEWED SSK | DATE 3-18-26
CHECKED NCK | REVISED | STRUCTURE FILE NUMBER

TYPICAL MSE WALL DETAILS 1 OF 2
MSE RETAINING WALLS I & 11

HAM-75-7.85
PID No. 121447

37 / 43

658 / 1047

\\sanl.resourceinternational.com\two\projects\2010\B-10-020 HAM-75-7.85\77889\structures\WALL_00\sheets\77889_00IWD401.dgn 5/13/2026 2:04:30 PM meets

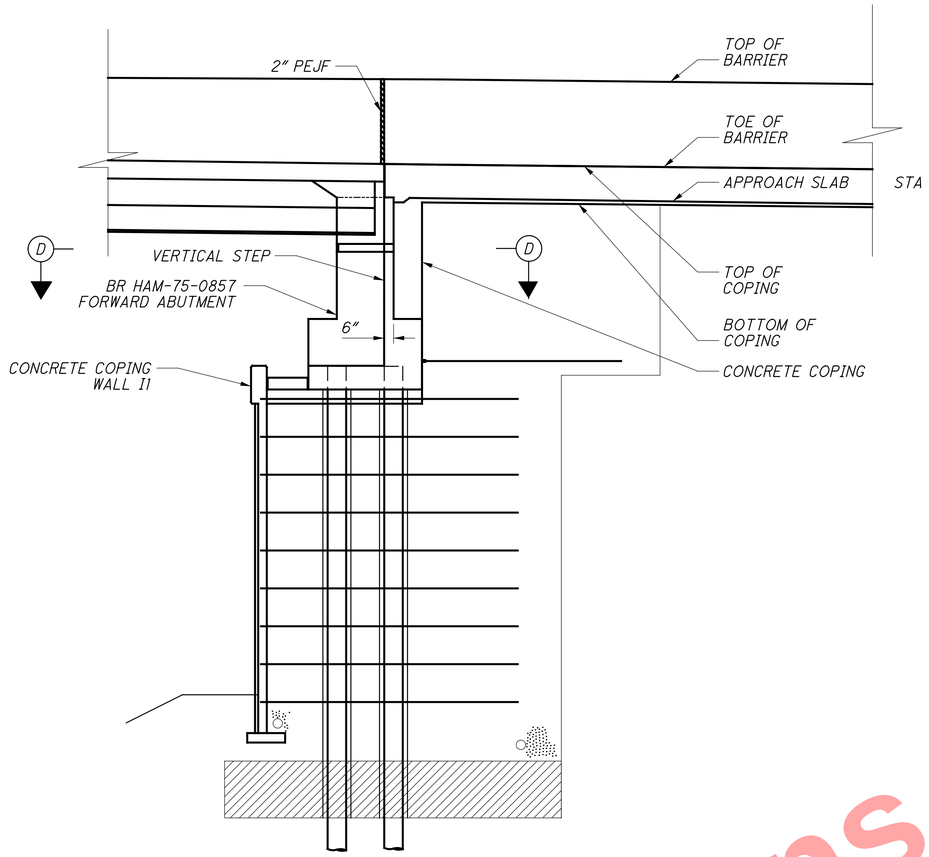

WALL TRANSITION DETAIL AT ABUTMENT

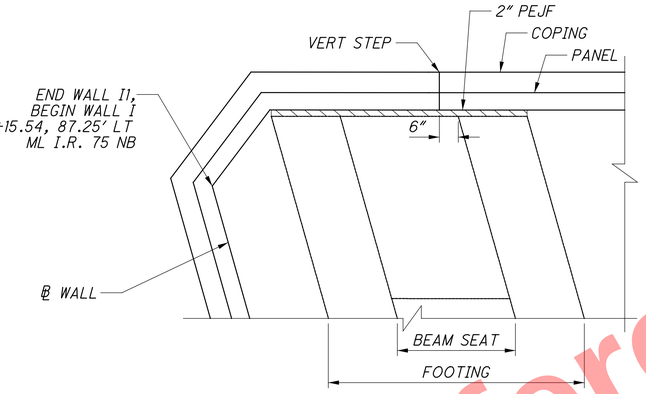

SECTION D-D

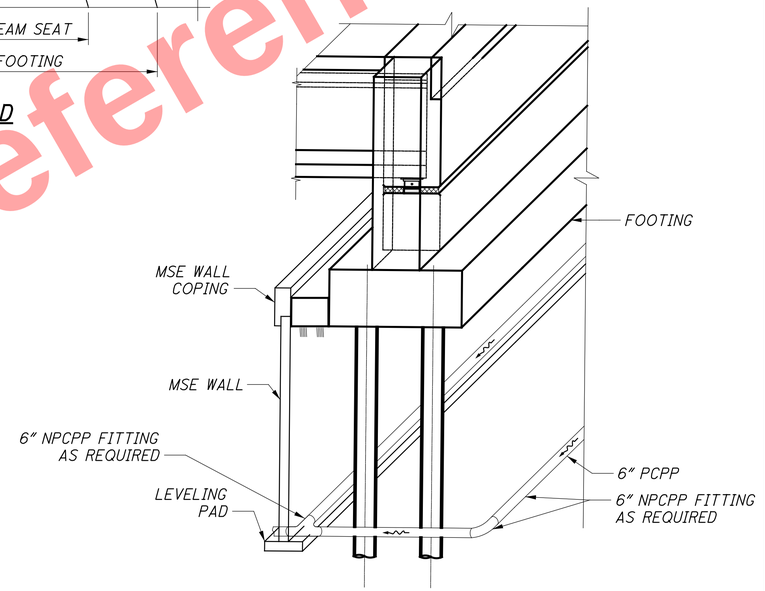

TYPICAL RISER DETAIL

(CONNECTION FROM BRIDGE DRAINAGE SYSTEM TO MSE WALL DRAINAGE SYSTEM)

* MEASURED PERENDICULAR TO SKEW

NOTES:

1. SEE BRIDGE PLANS FOR ADDITIONAL PRESSURE RELIEF JOINT DETAILS AND PAYMENT.
2. SEE WALLS H/H1 PLANS, SHEET 648, FOR TEMPORARY MSE WIRE WALL DETAILS.
3. FOR ABBREVIATIONS LEGEND, SEE SHEET 2/43.

Preliminary Plans - For Reference Only

RESOURCE INTERNATIONAL INC.
8550 PRESIDENTIAL GATEWAY
COLUMBUS, OHIO 43231
(614) 823-4949

DESIGNED JLM | DRAWN SMJ | REVIEWED SSK | DATE 3-18-26
CHECKED NCK | REVISED | STRUCTURE FILE NUMBER

TYPICAL MSE WALL DETAILS 2 OF 2
MSE RETAINING WALLS I & I1

HAM-75-7.85
PID No. 121447

38 / 43

659
1047

\\san1.resourceinternational.com\two\projects\2010\B-10-020 HAM-75-7.85\77889\structures\WALL_001\sheets\77889_001WD402.dgn 5/13/2026 2:04:31 PM meets

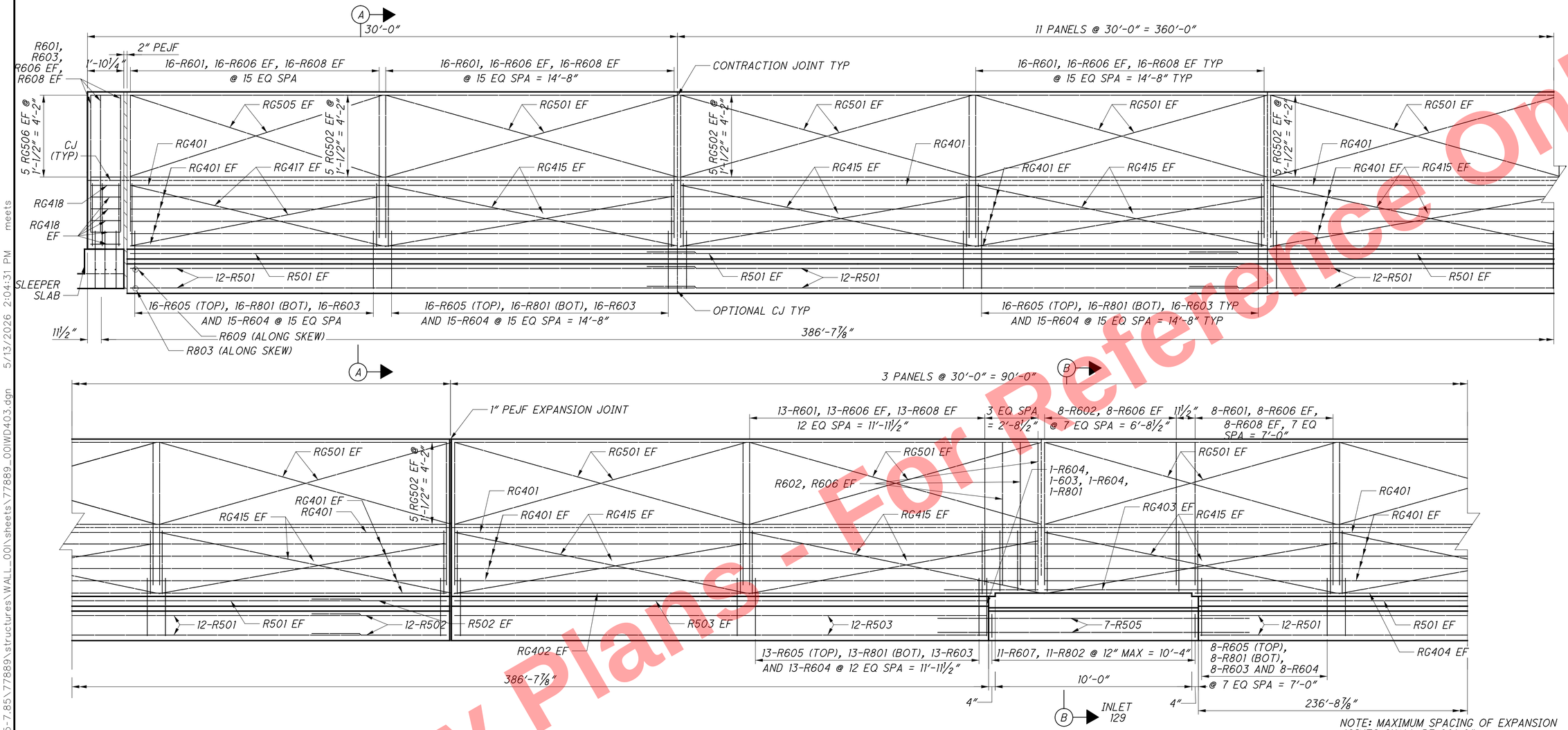

Preliminary Plans - For Reference Only

\\san1.resourceinternational.com\two\projects\2010\B-10-020 HAM-75-7.85\77889_00\WD403.dgn 5/13/2026 2:04:31 PM meets
\\san1.resourceinternational.com\two\projects\2010\B-10-020 HAM-75-7.85\77889\structures\WALL_001\sheets

RESOURCE INTERNATIONAL INC.
6550 PRESIDENTIAL GATEWAY
COLUMBUS, OHIO 43231
(614) 823-4949

DESIGNED	DRAWN	REVIEWED	DATE
JLM	SMJ	SSK	3-18-26
CHECKED	REVISED	STRUCTURE FILE NUMBER	
NCK			

BARRIER AND SLEEPER SLAB DETAILS 1 OF 4

MSE RETAINING WALL 1

HAM-75-7.85

PID No. 121447

39 / 43

660
1047

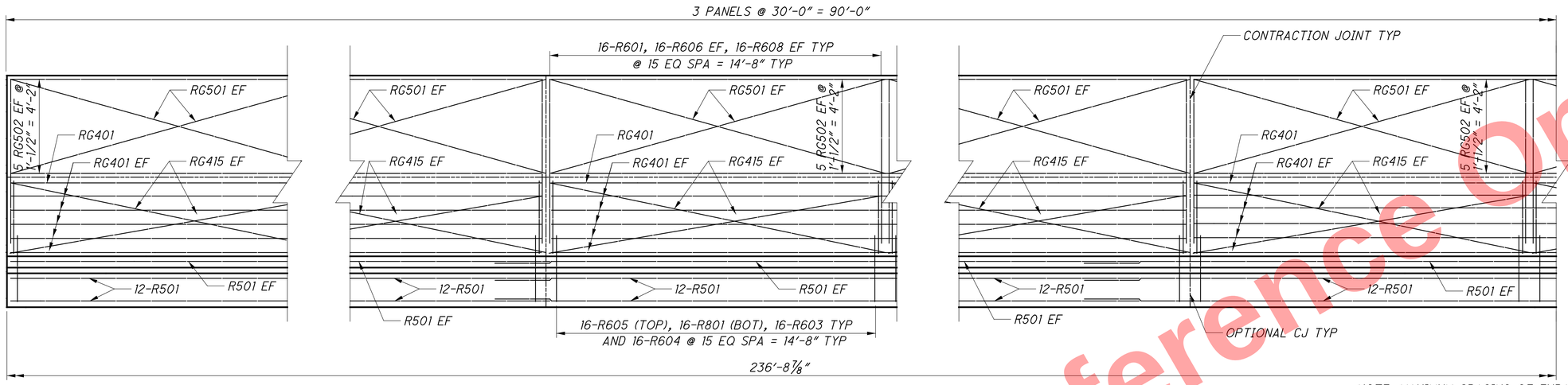

NOTE: MAXIMUM SPACING OF EXPANSION JOINTS SHALL BE 90'-0".
SEE SHEET 652 FOR ADDITIONAL DETAILS.

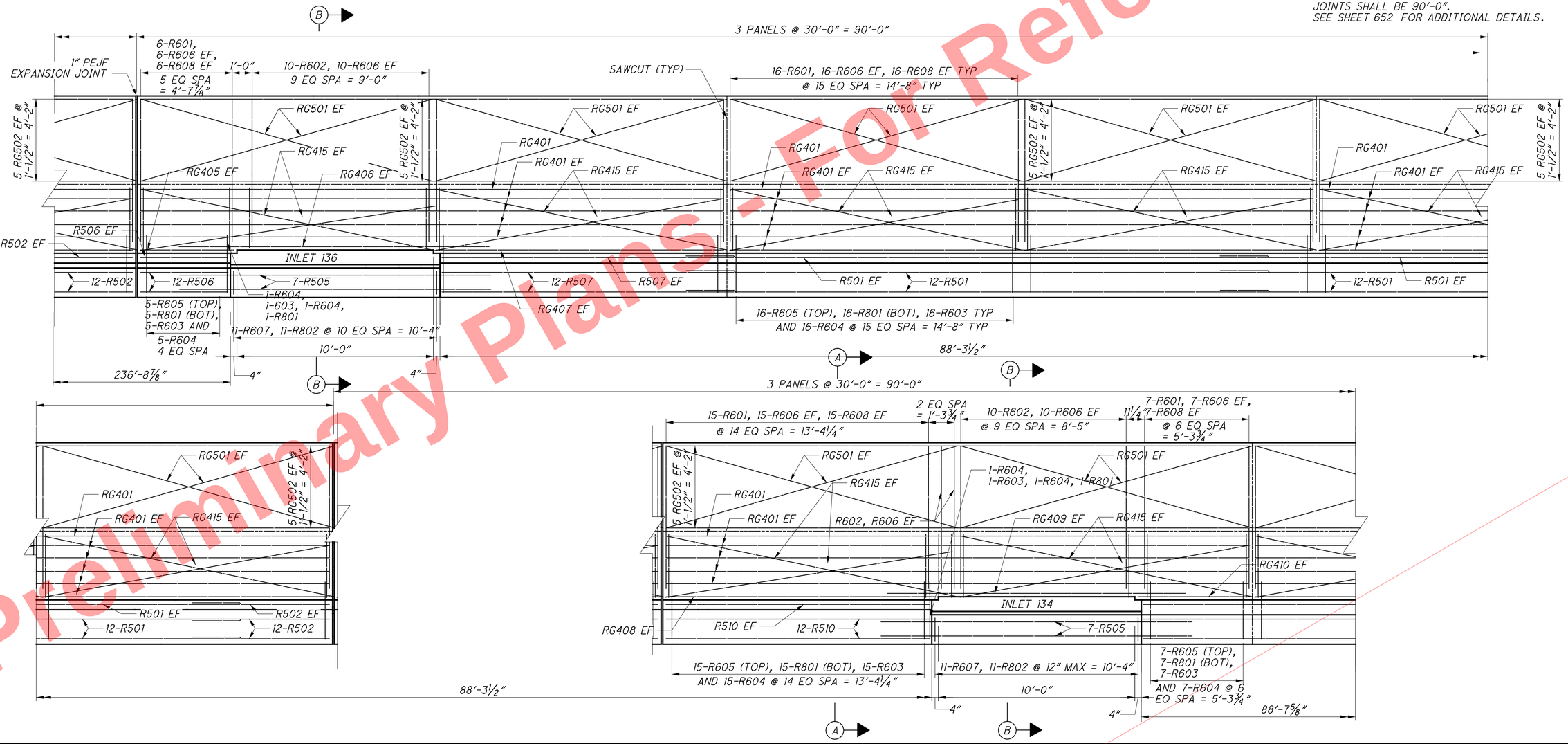

Preliminary Plans - Not For Reference Only

RESOURCE INTERNATIONAL INC.
6550 PRESIDENTIAL GATEWAY
COLUMBUS, OHIO 43231
(614) 823-4949

DESIGNED	DRAWN	REVIEWED	DATE
JLM	SMJ	SSK	3-18-26
CHECKED	REVISED	STRUCTURE FILE NUMBER	
NCK			

BARRIER AND SLEEPER SLAB DETAILS 2 OF 4
MSE RETAINING WALL I

HAM-75-7.85
PID No. 121447

\\son1.resourceinternational.com\two\projects\2010\B-10-020 HAM-75-7.85\77889\structures\WALL_00\sheets\77889_00WD404.dgn 5/13/2026 2:04:32 PM meets

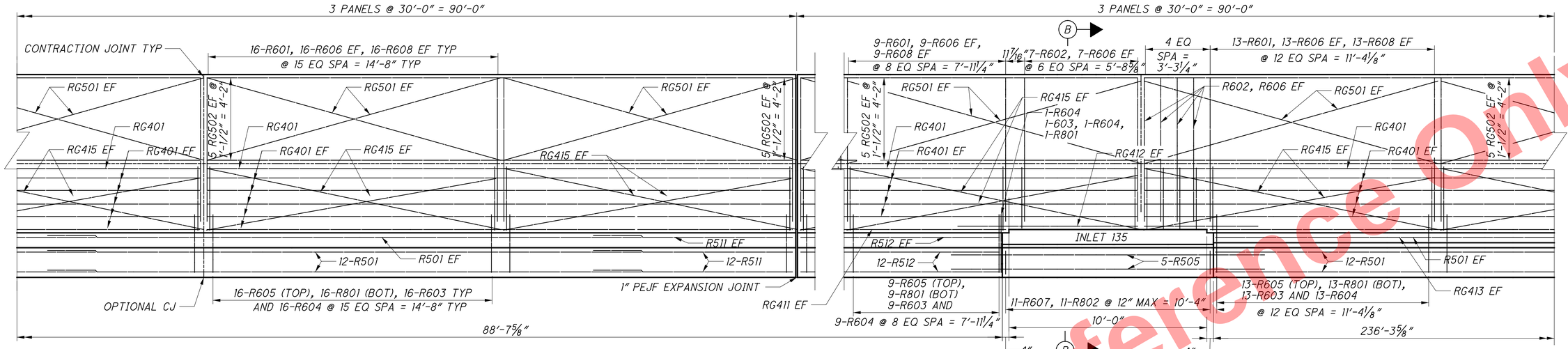

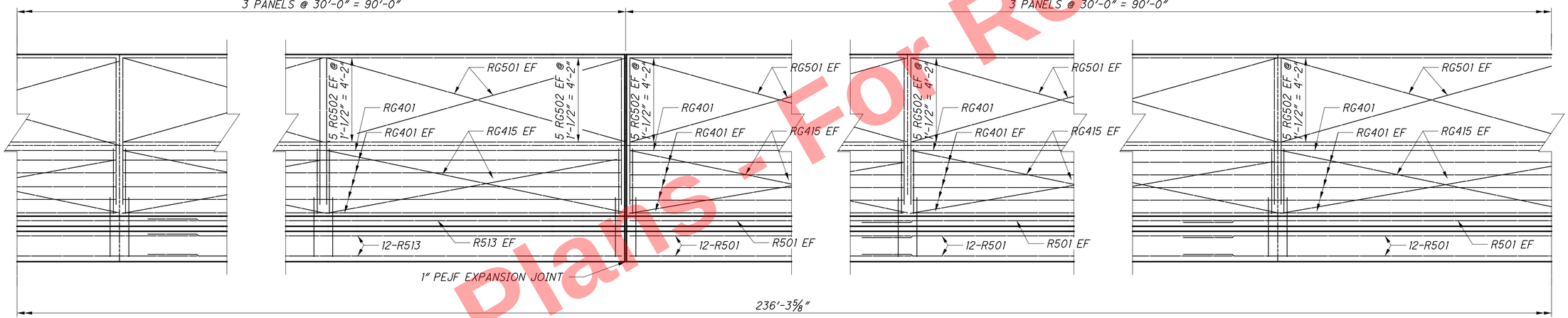

NOTE: MAXIMUM SPACING OF EXPANSION JOINTS SHALL BE 90'-0". SEE SHEET 652 FOR ADDITIONAL DETAILS.

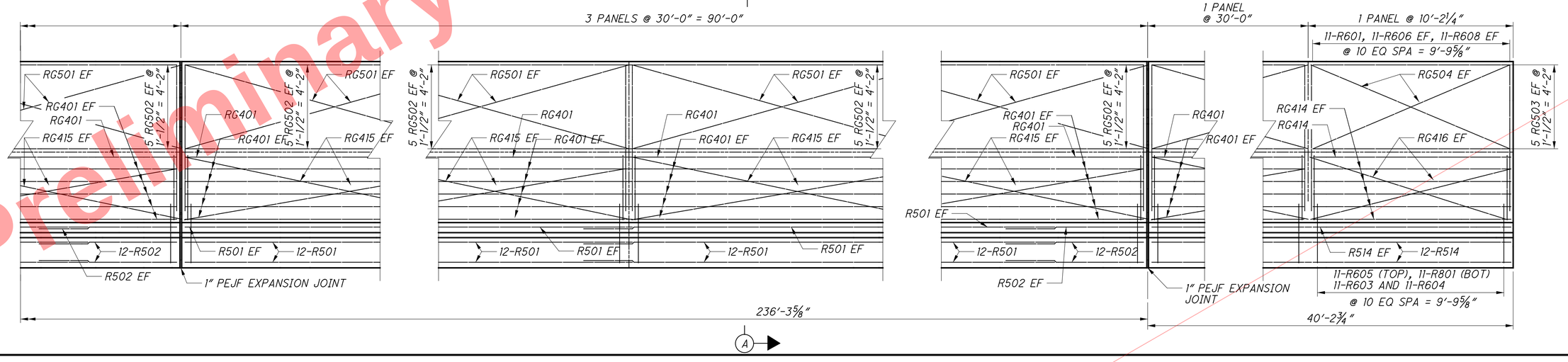

Preliminary Plans - Not For Reference Only

RESOURCE INTERNATIONAL INC.
5350 PRESIDENTIAL GATEWAY
COLUMBUS, OHIO 43231
(614) 823-4949

DESIGNED JLM | DRAWN SMJ | REVIEWED SSK | DATE 3-18-26
CHECKED NCK | REVISED | STRUCTURE FILE NUMBER

BARRIER AND SLEEPER SLAB DETAILS 3 OF 4

MSE RETAINING WALL 1

HAM-75-7.85
PID No. 121447

41 / 43

662
1047

\\sam1.resourceinternational.com\two\projects\2010\B-10-020 HAM-75-7.85\77889\structures\WALL_001\sheets\77889_001WD405.dgn 5/13/2026 2:04:32 PM meets

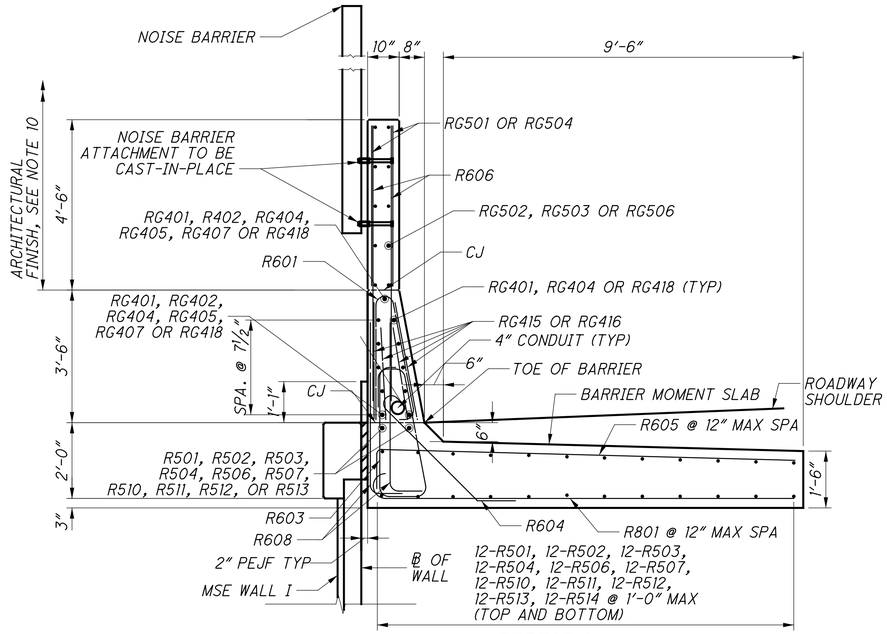

SECTION A-A

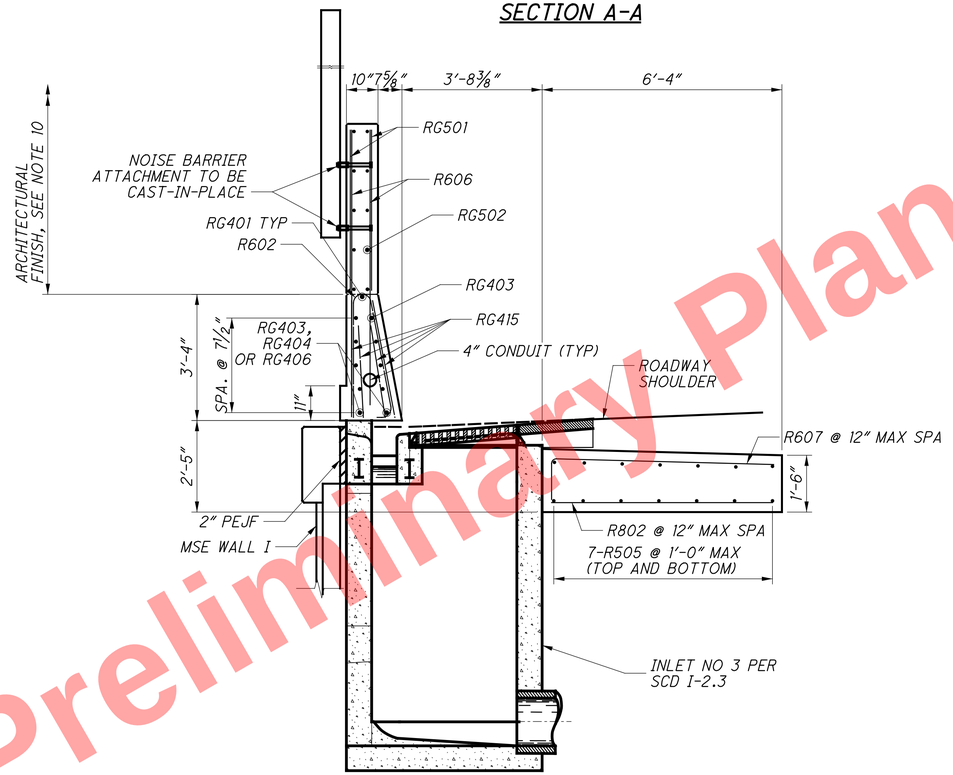

SECTION B-B

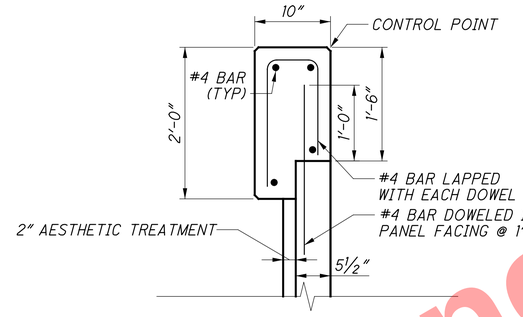

COPING DETAIL

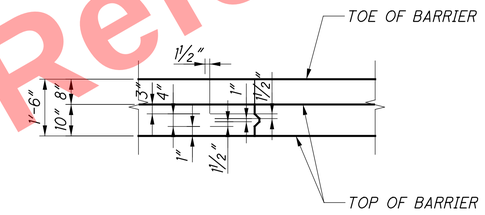

CONTRACTION JOINT

BARRIER NOTES:

1. ALL ITEMS SHOWN ON THIS SHEET, EXCLUDING PAVEMENT, ARE INCIDENTAL TO RAILING MISC: TRAFFIC BARRIER ON MSE WALL AND RAILING (COMBINATION NOISE AND TRAFFIC BARRIER ON MSE WALL).
2. CONTROL JOINT: SAWCUT 1¼" DEEP CONTROL JOINTS ALONG THE PERIMETER AS SHOWN ON THIS SHEET AS SOON AS THE SAW CAN BE OPERATED WITHOUT DAMAGING THE CONCRETE.

   USE AN EDGE GUIDE, FENCE OR JIG TO ENSURE THAT THE CUT JOINT IS STRAIGHT, TRUE AND ALIGNED ON ALL FACES OF THE BARRIER. THE JOINT WIDTH SHALL BE THE WIDTH OF THE SAW BLADE, A NOMINAL WIDTH OF ¼".

   SEAL THE PERIMETER OF THE CONTROL JOINT TO A MINIMUM DEPTH OF 1" WITH A POLYURETHANE OR POLYMERIC MATERIAL CONFORMING TO C920, TYPE S. LEAVE THE BOTTOM ½" OF BOTH THE INSIDE AND OUTSIDE FACES OF THE BARRIER UNSEALED TO ALLOW ANY WATER WHICH MAY ENTER THE JOINT TO ESCAPE.
3. SAWCUT CONTROL JOINTS SHALL HAVE A MINIMUM SPACING OF 6' AND A MAXIMUM SPACING OF 15'. SEE PLANS FOR BARRIER CONTROL JOINT LOCATIONS.
4. SEE NOISE BARRIER PLAN SHEETS FOR NOISE BARRIER DETAILS.
5. SEE SHEET 37/43 FOR CONCRETE SEALING LIMITS.
6. SEE ROADWAY PLANS AND ODOT STANDARD CONSTRUCTION DRAWINGS FOR ADDITIONAL DRAINAGE INLET DETAILS.
7. FOR ABBREVIATIONS LEGEND, SEE SHEET 2/43.
8. THE COPING SHALL NOT BE CONSTRUCTED UNTIL ALL PHASES OF MSE WALL CONSTRUCTION ARE COMPLETE.
9. THE COPING JOINTS SHALL BE PLACED ON A MAXIMUM 20 FT. SPACING AND SHALL ALIGN WITH A PANEL JOINT.
10. THE ARCHITECTURAL FINISH SHALL BE BEIGE ASHLAR STONE (MANUFACTURED BY ARCHITECTURAL POLYMERS, #905 SMALL AGED ASHLAR STONE) ON THE FREEWAY SIDE AND BEIGE DRY STACK (MANUFACTURED BY ARCHITECTURAL POLYMERS, #9110 LARGE STONE OHIO DRY STACK) ON THE PARK AND RESIDENTIAL SIDE. THE FEGERAL COLOR NUMBER FOR BEIGE IS NO. 17778.

MINIMUM LAP LENGTHS:
#5 LAP LENGTH = 2'-5"
#6 LAP LENGTH = 2'-11"

Preliminary Plans - For Reference Only

RESOURCE INTERNATIONAL INC.
8550 PRESIDENTIAL GATEWAY
COLUMBUS, OHIO 43231
(614) 823-4949

DESIGNED JLM | DRAWN SMJ | REVIEWED SSK | DATE 3-18-26
CHECKED NCK | REVISED | STRUCTURE FILE NUMBER

BARRIER AND SLEEPER SLAB DETAILS 4 OF 4
MSE RETAINING WALL I

HAM-75-7.85
PID No. 121447

42 / 43

663
1047

\\son1.resourceinternational.com\two\projects\2010\B-10-020 HAM-75-7.85\77889_00\WD406.dgn 5/13/2026 2:04:33 PM meets
\sheets\77889_00\structures\WALL_00\

MARK	NUMBER TOTAL	LENGTH	WEIGHT	TYPE	DIMENSIONS A	B	C	D	E	R	INC
REINFORCING SCHEDULE											
R501	630	30'-0"	19713	ST.							
R502	40	7'-3"	302	ST.							
R503	26	27'-0"	732	ST.							
R504	26	22'-5"	608	ST.							
R505	56	16'-0"	935	ST.							
R506	26	4'-7"	124	ST.							
R507	26	17'-0"	461	ST.							
NOT	USED										
R509	120	7'-3"	907	ST.							
R510	26	12'-5"	337	ST.							
R511	26	8'-0"	217	ST.							
R512	26	23'-0"	624	ST.							
R513	26	28'-9"	780	ST.							
R514	26	39'-10"	1080	ST.							
R601	1172	7'-2"	12604	39	6"	3'-3"	3'-3"	1'-1"			
R602	41	6'-0"	369	39	3'-0"	3'-0"	1"	1'-1"			
R603	1172	10'-0"	17603	41	10"	7"	1'-0"	3'-5"	1'-6"		
R604	1172	5'-6"	9682	18	3'-10"	9"	9"				
R605	1172	12'-0"	21124	1	1'-0"	11'-2"					
R606	2428	6'-9"	24616	ST.							
R607	44	8'-0"	529	1	1'-2"	6'-10"					
R608	2344	5'-10"	20526	1	9"	5'-0"					
R609	1	12'-7"	19	1	1'-0"	11'-9"					
R801	1172	12'-10"	40158	17	11'-2"						
R802	44	7'-8"	900	17	6'-0"						
R803	1	13'-5"	36	17	11'-9"						
		TOTAL	174986								

MARK	NUMBER TOTAL	LENGTH	TYPE	DIMENSIONS A	B	C	D	E	R	INC
GLASS FIBER BARS										
RG401	395	29'-8"	ST							
RG402	2	27'-4"	ST							
RG403	2	10'-0"	ST							
RG404	2	22'-0"	ST							
RG405	2	4'-9"	ST							
RG406	2	15'-9"	ST							
RG407	2	14'-7"	ST							
RG408	2	13'-8"	ST							
RG409	2	15'-2"	ST							
RG410	2	5'-7"	ST							
RG411	2	23'-0"	ST							
RG412	2	9'-0"	ST							
RG413	2	26'-4"	ST							
RG414	2	9'-9"	ST							
RG415	292	15'-0"	ST							
RG416	4	10'-3"	ST							
RG417	4	13'-0"	ST							
RG418	11	1'-6"	ST							
	TOTAL	16599	FT							
RG501	292	15'-4"	ST							
RG502	148	29'-8"	ST							
RG503	10	9'-9"	ST							
RG504	2	10'-7"	ST							
RG505	4	13'-6"	ST							
RG506	10	1'-6"	ST							
	TOTAL	9054	FT							

* REINFORCING INCLUDED WITH ITEM - 517 - RAILING, CONCRETE, AS PER PLAN

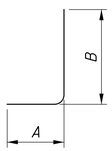

TYPE-1

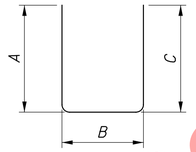

TYPE-2

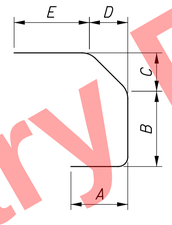

TYPE-14

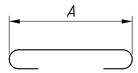

TYPE-17

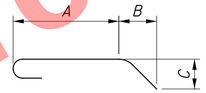

TYPE-18

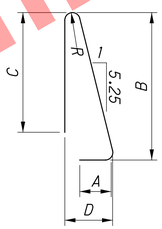

TYPE-39

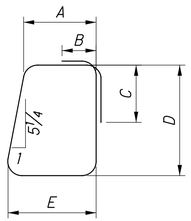

TYPE-41

NOTES:

1. THE BAR SIZE NUMBER IS SPECIFIED ON THE PLANS IN THE BAR MARK COLUMN. THE FIRST DIGIT WHERE 3 DIGITS ARE USED, AND THE FIRST 2 DIGITS WHERE FOUR DIGITS ARE USED, INDICATES THE BAR SIZE NUMBER. FOR EXAMPLE, F601 IS A NO 6 BAR. BAR DIMENSIONS SHOWN ARE OUT TO OUT UNLESS OTHERWISE INDICATED. "R" INDICATES INSIDE RADIUS, UNLESS OTHERWISE NOTED. "STD" WRITTEN IN PLACE OF A DIMENSION INDICATES A STANDARD BEND AT THE END OF THE BAR.

2. ALL REINFORCING STEEL TO BE EPOXY COATED.

3. FOR ABBREVIATIONS LEGEND, SEE SHEET 2 / 43.

LEGEND:

** - FIELD CUT

Preliminary Plans - For Reference Only

RESOURCE INTERNATIONAL INC.
5550 PRESIDENTIAL GATEWAY
COLUMBUS, OHIO 43231
(614) 823-4949

DESIGNED JLM | DRAWN SMJ | REVIEWED SSK | DATE 3-18-26
CHECKED NCK | REVISED | STRUCTURE FILE NUMBER

REINFORCING STEEL SCHEDULE
MSE RETAINING WALLS I & 11

HAM-75-7.85
PID No. 121447

\\son1.resourceinternational.com\two\projects\2010\B-10-020 HAM-75-7.85\77889\structures\WALL_001\sheets\77889_001WL401.dgn 5/13/2026 2:04:33 PM meets

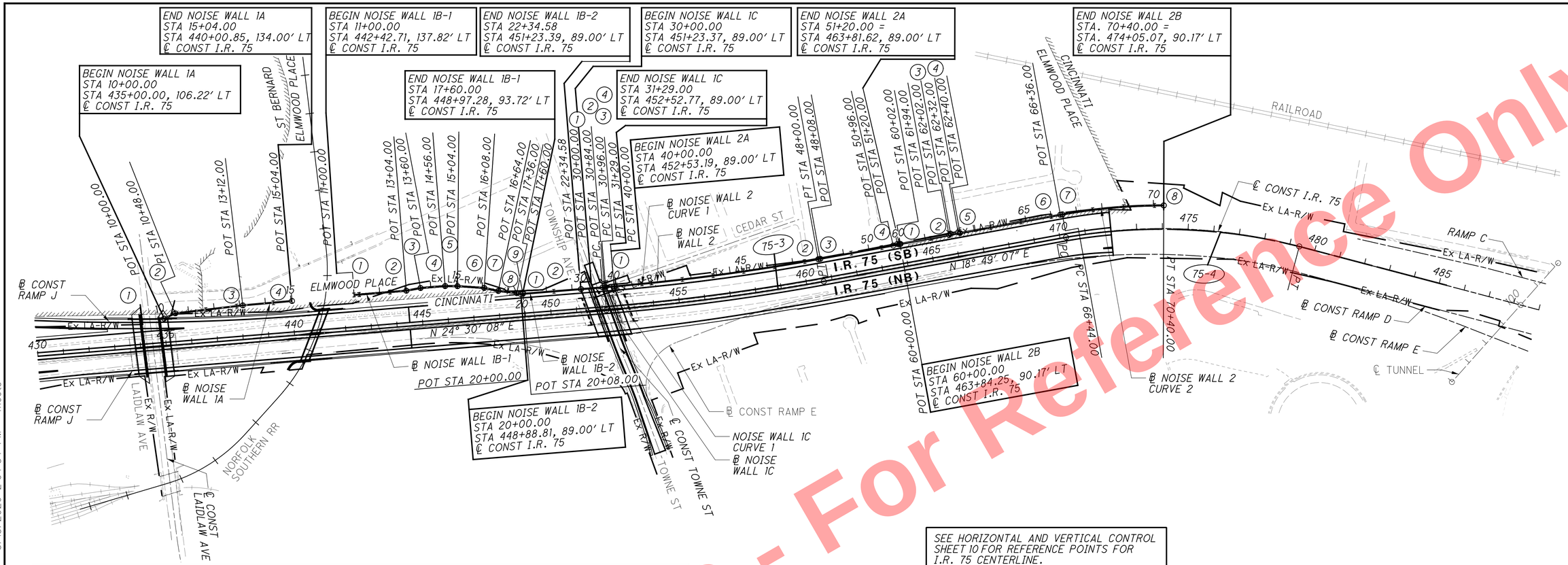

SEE HORIZONTAL AND VERTICAL CONTROL SHEET 10 FOR REFERENCE POINTS FOR I.R. 75 CENTERLINE.

NOISE WALL BASELINE GEOMETRY

PI NO	NOISE BARRIER STATION	I.R. 75	I.R. 75 OFFSET	NORTHING	EASTING	BEARING
	WALL 1A					
1	10+00.00	435+00.00	106.22' LT	435,822.84	1,405,540.60	N 4° 16' 32" E
2	10+48.00	435+45.04	122.81' LT	435,870.71	1,405,544.17	N 22° 23' 05" E
3	13+12.00	438+08.86	132.57' LT	436,114.82	1,405,644.71	N 24° 04' 28" E
4	15+04.00	440+00.85	134.00' LT	436,290.11	1,405,723.03	
	WALL 1B-1					
1	11+00.00	442+42.71	137.82' LT	436,511.78	1,405,819.86	N 24° 30' 33" E
2	13+04.00	444+46.71	137.79' LT	436,697.40	1,405,904.49	N 18° 21' 58" E
3	13+60.00	445+02.39	143.78' LT	436,750.54	1,405,922.14	N 24° 32' 10" E
4	14+56.00	445+98.39	143.72' LT	436,837.88	1,405,962.00	N 29° 38' 40" E
5	15+04.00	446+46.20	139.42' LT	436,879.59	1,405,985.74	N 33° 01' 59" E
6	16+08.00	447+49.05	123.99' LT	436,966.78	1,406,042.44	N 41° 12' 17" E
7	16+64.00	448+02.69	107.90' LT	437,008.91	1,406,079.33	N 35° 51' 23" E
8	17+36.00	448+73.28	93.72' LT	437,067.27	1,406,121.50	N 24° 30' 08" E
9	17+60.00	448+97.28	93.72' LT	437,089.11	1,406,131.45	
	WALL 1B-2					
1	20+00.00	448+88.81	89.00' LT	437,079.44	1,406,132.24	N 24° 30' 08" E
2	20+08.00	448+96.81	89.00' LT	437,086.72	1,406,135.56	N 24° 30' 08" E
3	22+34.58	451+23.39	89.00' LT	437,292.37	1,406,229.29	
	WALL 1C					
1	30+00.00	451+23.37	89.00' LT	437,292.88	1,406,229.52	N 24° 30' 08" E
2	30+84.00	452+07.37	89.00' LT	437,369.32	1,406,264.36	N 24° 29' 45" E
3	PC 30+96.00	452+19.42	89.00' LT	437,380.24	1,406,269.33	BK N 24° 28' 12" E
4	PT 31+29.00	452+52.77	89.00' LT	437,410.30	1,406,282.94	AH N 24° 14' 51" E

NOISE WALL BASELINE GEOMETRY

PI NO	NOISE BARRIER STATION	I.R. 75	I.R. 75 OFFSET	NORTHING	EASTING	BEARING
	WALL 2A					
1	PC 40+00.00	452+53.19	89.00' LT	437,410.68	1,406,283.11	
2	PT 48+00.00	460+61.56	89.00' LT	438,154.48	1,406,576.86	N 18° 49' 53" E
3	48+08.00	460+69.62	89.00' LT	438,162.05	1,406,579.44	N 18° 49' 07" E
4	50+96.00	463+57.62	89.00' LT	438,434.66	1,406,672.34	N 16° 01' 56" E
5	51+20.00	463+81.62	89.00' LT	438,457.72	1,406,678.97	
	WALL 2B					
1	60+00.00	463+84.25	90.17' LT	438,460.24	1,406,679.83	N 18° 49' 07" E
2	60+02.00	463+86.25	90.17' LT	438,462.13	1,406,680.47	N 18° 49' 07" E
3	61+94.00	465+78.25	90.17' LT	438,643.87	1,406,742.41	N 14° 40' 53" W
4	62+02.00	465+84.92	94.58' LT	438,651.61	1,406,740.38	N 18° 49' 07" E
5	62+32.00	466+14.92	94.58' LT	438,680.00	1,406,750.06	N 52° 19' 07" E
6	62+40.00	466+21.59	90.17' LT	438,684.89	1,406,756.39	N 18° 49' 07" E
7	66+36.00	470+17.60	90.17' LT	439,059.73	1,406,884.13	N 18° 49' 33" E
8	PC 66+44.00	470+25.50	90.17' LT	439,067.30	1,406,886.71	
9	PT 70+40.00	474+05.07	90.17' LT	439,428.30	1,407,048.14	

Preliminary Plans - For Reference Only

NOISE WALL 1 & 2 SCHEMATIC PLAN
I.R. 75
HAM-75-7.85
665
1047

G:\projects\2010\B-10-020 HAM-75-7.85\77889\structures\WALL_001\sheets\77889_001WB401.dgn 5/13/2026 2:04:34 PM meets

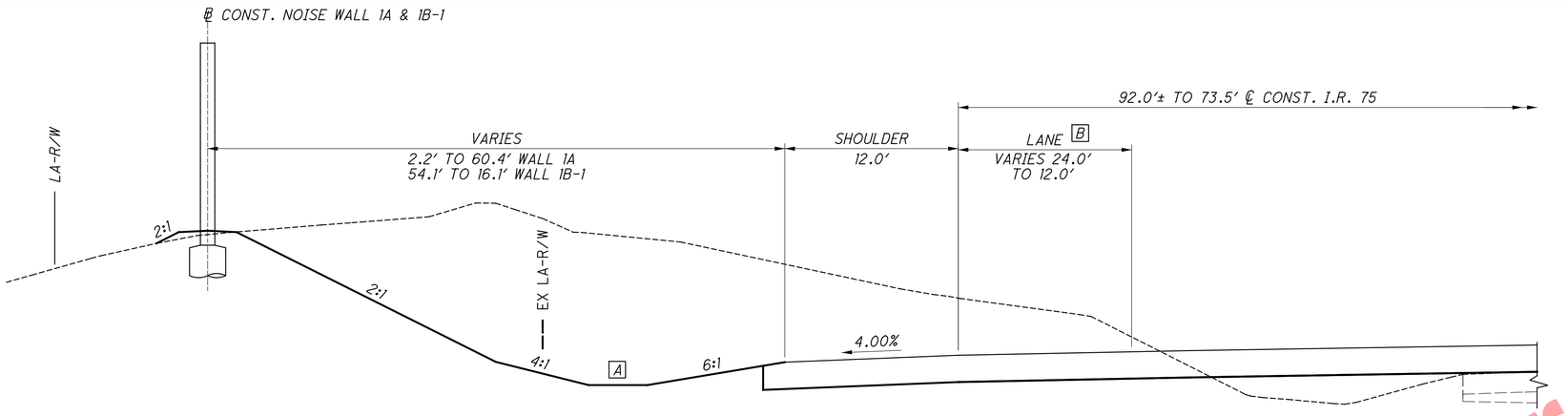

A CROSS SECTION SHEETS:
- NOISE WALL 1A SHEETS 355 TO 363.
- NOISE WALL 1B-1, 1B-2 & 1C SHEETS 367 TO 389.

B I.R. 75 SB AUXILIARY/ACCELERATION LANE (RAMP J)

TYPICAL SECTION - WALL 1A & 1B-1

STA. 10+00.00 TO STA. 15+04.00 - WALL 1A

STA. 11+00.00 TO STA. 17+60.00 - WALL 1B-1

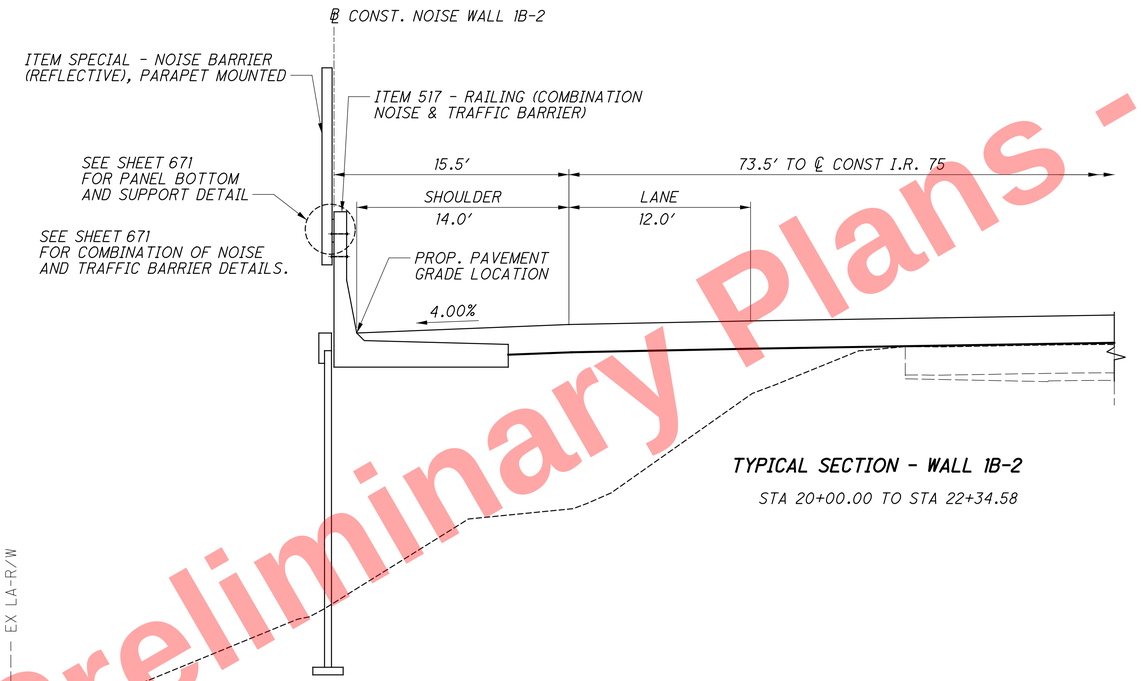

TYPICAL SECTION - WALL 1B-2

STA 20+00.00 TO STA 22+34.58

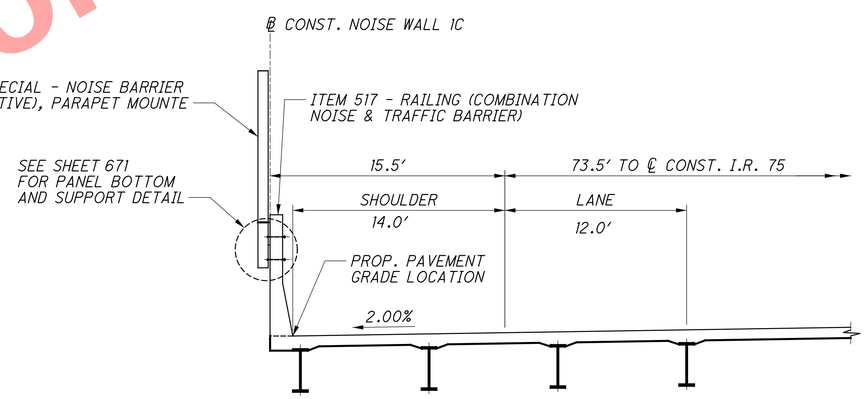

TYPICAL SECTION - WALL 1C

STA 30+00.00 TO STA 31+29.00

Preliminary Plans - For Reference Only

NOISE WALL 1A & 1B TYPICAL SECTIONS

HAM-75-7.85

666
1047

G:\projects\2010\B-10-020 HAM-75-7.85\77889\structures\WALL_001\sheets\77889_001WY401.dgn 5/13/2026 2:04:35 PM meets

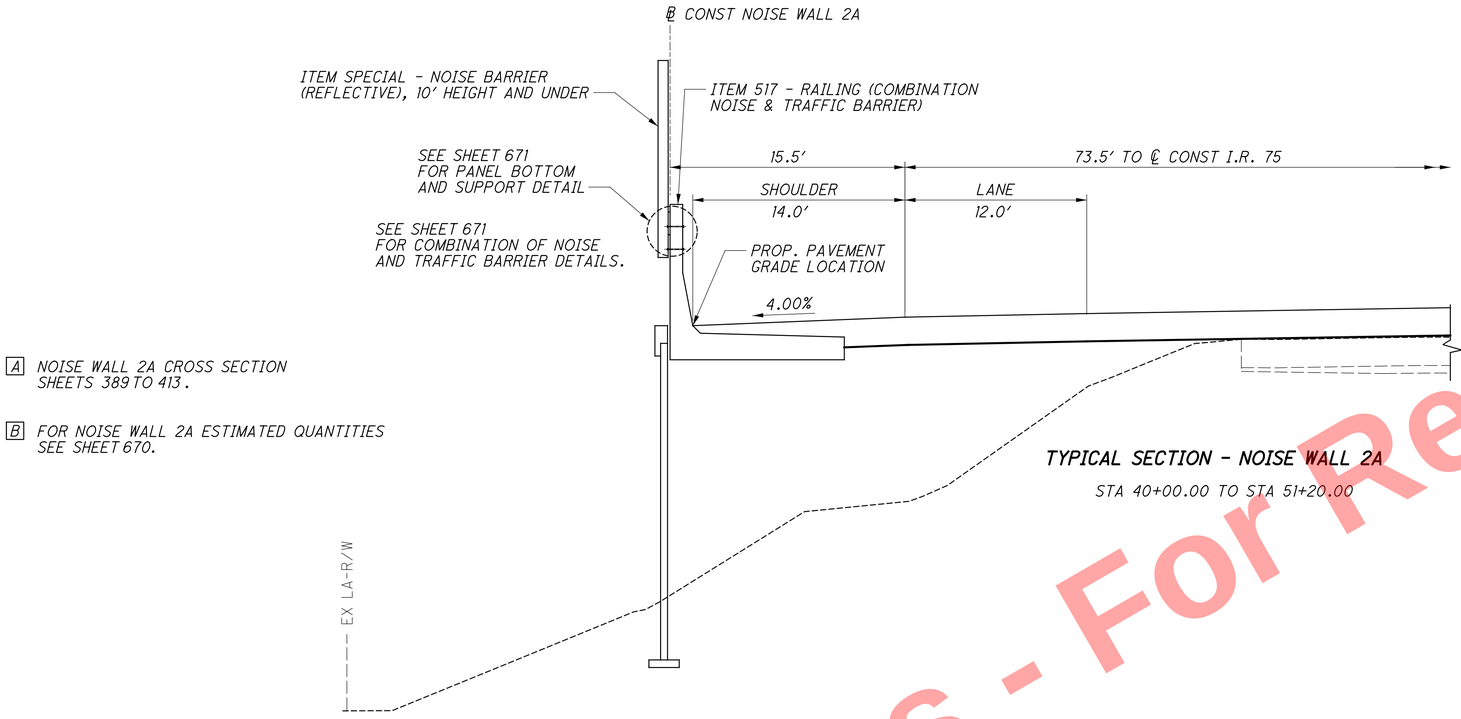

A NOISE WALL 2A CROSS SECTION SHEETS 389 TO 413.

B FOR NOISE WALL 2A ESTIMATED QUANTITIES SEE SHEET 670.

TYPICAL SECTION - NOISE WALL 2A

STA 40+00.00 TO STA 51+20.00

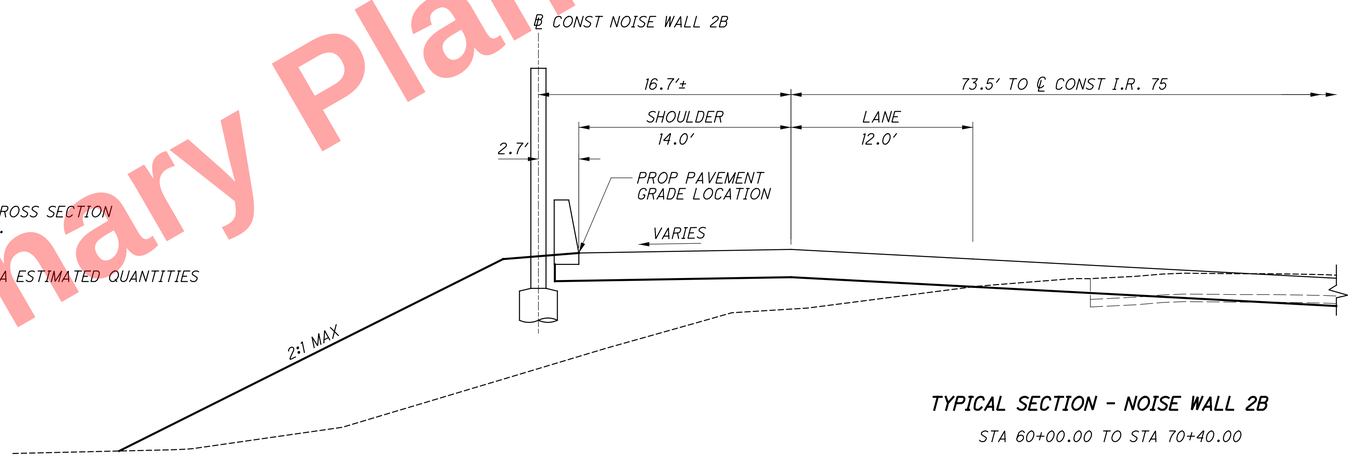

A NOISE WALL #2B CROSS SECTION SHEETS 413 TO 429.

B FOR NOISE WALL 2A ESTIMATED QUANTITIES SEE SHEET 670.

TYPICAL SECTION - NOISE WALL 2B

STA 60+00.00 TO STA 70+40.00

Preliminary Plans - For Reference Only

NOISEWALL 2 TYPICAL SECTIONS

HAM-75-7.85

667
1047

G:\projects\2010\B-10-020 HAM-75-7.85\77889\structures\WALL_002\sheets\77889_002WY401.dgn 5/13/2026 2:04:36 PM meets

NOISE WALL NOTES

1. SEE ODOT STANDARD CONSTRUCTION DRAWING NBS-1-09 FOR FURTHER DETAILS.

2. SHOP DRAWING SUBMITTALS SHALL INCLUDE:
   SCALED DRAWINGS ON 11 X 17 SHEETS IN PDF FORMAT
   SHOW THE ACOUSTIC PROFILE LINE SHOWN ON THESE PLANS
   ON SHOP DRAWINGS ALL CALCULATIONS IN PDF FORMAT

3. ALL NOISE BARRIER PANELS AND POSTS SHALL HAVE A 12" INTEGRAL CAP WITH A 1.5" RUSTIFICATION GROOVE OR RELIEF.

4. THE ARCHITECTURAL TREATMENT ON THE NOISE PANELS SHALL BE CREATED USING CONCRETE CAST IN FORMLINERS ON BOTH SIDES OF THE PANELS. STAMPING OF THE ARCHITECTURAL PATTERNS IS NOT ACCEPTABLE.

5. THE ARCHITECTURAL FINISH SHALL BE BEIGE ARCHITECTURAL POLYMERS NO. 905 SMALLED AGED PER SHEET 669 ON THE FREEWAY SIDE AND ARCHITECTURAL POLYMERS NO. 9110 LARGE STONE DRY STACK ON THE PARK AND RESIDENTIAL SIDE. FEDERAL COLOR NUMBER FOR BEIGE IS NO. 17778. THE ARCHITECTURAL POLYMERS PATTERN 905 SHALL MEET THE CUT SHEET ILLUSTRATED ON SHEET 669 .

6. SEE ODOT STANDARD CONSTRUCTION DRAWING NBS-1-09 FOR FURTHER DETAILS.

7. THESE NOTES APPLY TO EACH NOISE BARRIER ITEM:
   NOISE BARRIER (REFLECTIVE)
   NOISE BARRIER (REFLECTIVE), PARAPET MOUNTED

8. SEAL NOISE BARRIER PANEL AND POSTS WITH ITEM 512 - SEALING OF CONCRETE SURFACES (EPOXY-URETHANE).

COMBINATION NOISE AND TRAFFIC BARRIER

DESIGN SPECIFICATIONS:
THE STRUCTURE CONFORMS TO "THE LRFD BRIDGE DESIGN SPECIFICATIONS" ADOPTED BY THE AMERICAN ASSOCIATION OF STATE HIGHWAY AND TRANSPORTATION OFFICIALS, 5TH EDITION, 2012, AND THE ODOT BRIDGE DESIGN MANUAL, 2007.

DESIGN DATA:
CONCRETE - MINIMUM COMPRESSIVE STRENGTH = 4000 PSI
REINFORCING STEEL - MINIMUM YIELD STRENGTH = 60,000 PSI
STRUCTURAL STEEL - MINIMUM YIELD STRENGTH = 50,000 PSI

MATERIAL:
STRUCTURAL STEEL - ASTM A709, GRADE 50
(FURNISH ACCORDING TO 711.01)
HIGH STRENGTH BOLTS - 1" DIAMETER, ASTM A325
(FURNISH ACCORDING TO 711.09)

FABRICATION:
FABRICATE STRUCTURAL STEEL MEMBERS ACCORDING TO 513.

GALVANIZING:
GALVANIZE ALL STRUCTURAL STEEL SHAPES, PLATES, HARDWARE AND ACCERSSORIES IN ACCORDANCE WITH 711.02.

PAINT OVER ALL GALVANIZE STRUCTURAL STEEL SHAPES, PLATES, HARDWARE AND ACCERSSORIES. PAINT SHALL MATCH SURFACE COLOR OF NOISE WALLS.

EXPANSION & CONTRACTION JOINTS:
PLACE EXPANSION JOINTS AT A MAXIMUM SPACING OF 90'-0" AND CONTRACTION JOINTS AT A MAXIMUM SPACING OF 15'-0", UNLESS NOTED OTHERWISE.

CONSTRUCT THE EXPANSION JOINT FROM THE BOTTOM OF THE SLEEPER SLAB TO THE TOP OF THE 8'-0" CAST-IN-PLACE WALL. DO NOT EXTEND REINFORCING STEEL THROUGH EXPANSION JOINTS.

FOOTINGS:
FOR BARRIERS WITH SLEEPER SLABS ON MSE WALLS, PLACE THE BOTTOM OF THE SLEEPER SLAB PARALLEL THE THE ROADWAY GRADE.

FORMLINERS:
REFER TO THE PROJECT PLANS FOR SPECIFIC INFORMATION REGARDING FORMLINERS. THE TRAFFIC FACE OF THE BARRIER MAY BE TEXTURED TO A MAXIMUM DEPTH OF 1/2" ABOVE THE 42" SINGLE SLOPE BARRIER. THE OPPOSITE FACE OF THE BARRIER MAY BE TEXTURED TO A MAXIMUM DEPTH OF 1" ABOVE THE 42" BARRIER. MAINTAIN A MINIMUM CLEAR COVER OF 2" OVER REINFORCING STEEL.

REINFORCING STEEL:
FURNISH AND INSTALL EPOXY COATED REINFORCING STEEL ACCORDING TO CMS 509. THE MINIMUM LAP LENGTHS ARE 3'-7" FOR #5 BARS AND 4'-4" FOR #6 BARS.

METHOD OF MEASUREMENT:
THE DEPARTMENT WILL MEASURE THE COMBINATION NOISE AND TRAFFIC BARRIER BY THE NUMBER OF FEET MEASURED ALONG ITS LENGTH.

THE DEPARTMENT WILL MEASURE THE NOISE BARRIER BY THE NUMBER OF SQUARE FEET. THE DEPARTMENT WILL MEASURE THE TOTAL AREA AS THE SUM OF THE AREA OF THE INDIVIDUAL PANEL SECTIONS. THE DEPARTMENT WILL MEASURE THE HEIGHT OF AN INDIVIDUAL PANEL SECTION FROM THE BOTTOM OF THE LOWEST PANEL TO THE TOP OF THE CAP. THE DEPARTMENT WILL MEASURE THE WIDTH OF AN INDIVIDUAL PANEL SECTION AS THE CENTER TO CENTER SPACING OF ADJACENT STEEL POSTS.

BASIS OF PAYMENT:
THE DEPARTMENT WILL INCLUDE THE COSTS ASSOCIATED WITH FURNISHING AND INSTALLING THE CONCRETE AND REINFORCING STEEL WITH THE BARRIER FOR PAYMENT. THE DEPARTMENT WILL PAY FOR ACCEPTED QUANTITIES OF THE COMBINATION NOISE AND TRAFFIC BARRIER AS FOLLOWS:

ITEM 517 - RAILING (COMBINATION NOISE AND TRAFFIC BARRIER ON MSE WALL WITH FLEXIBLE PAVEMENT)

THE DEPARTMENT WILL INCLUDE THE COSTS ASSOCIATED WITH FURNISHING AND INSTALLING ALL ANCHOR BOLTS, STEEL POSTS AND PANELS WITH THE NOISE BARRIERS FOR PAYMENT. THE DEPARTMENT WILL PAY FOR ACCEPTED QUANTITIES OF THE NOISE BARRIERS AS FOLLOWS:

ITEM SPECIAL - NOISE BARRIER (REFLECTIVE)

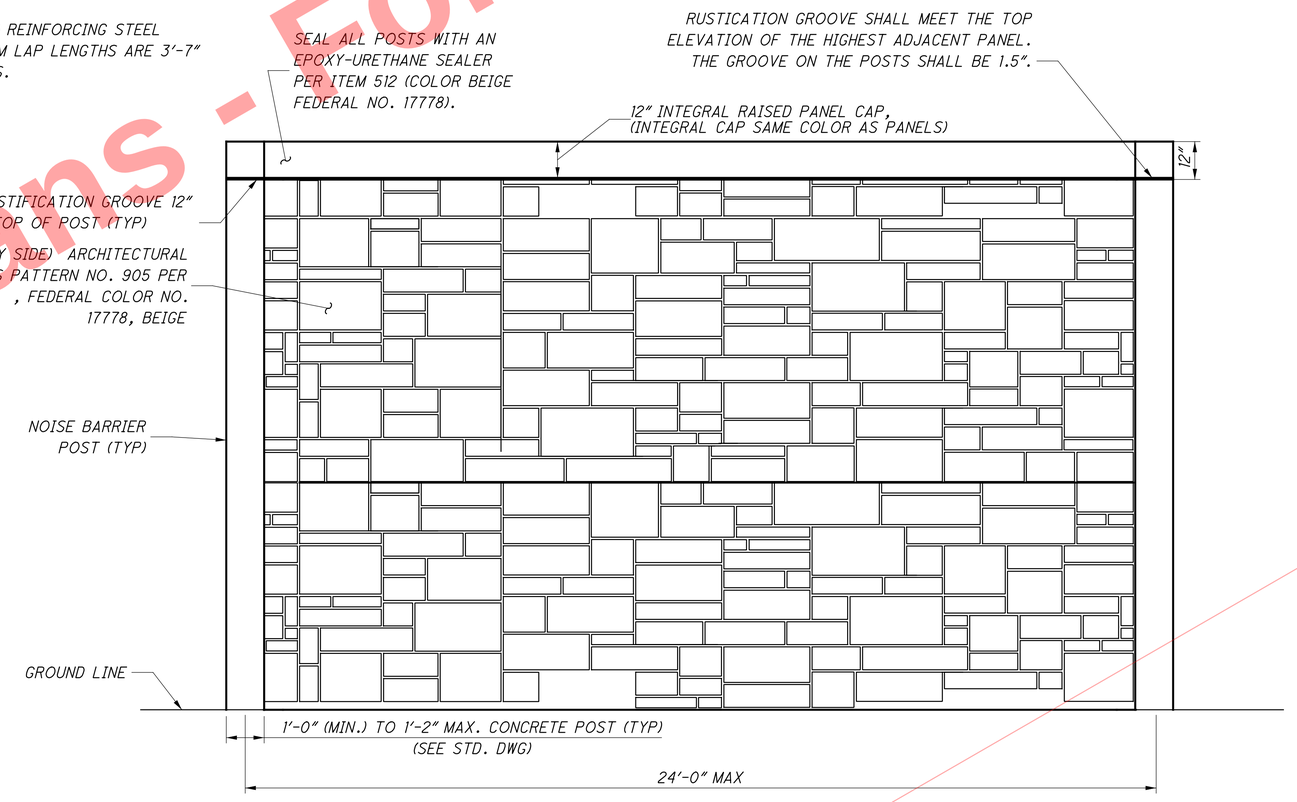

NOISE BARRIER ELEVATION

Preliminary Plans - For Reference Only

CALCULATED CFR CHECKED NCK

NOISE WALL GENERAL NOTES AND DETAILS

HAM-75-7.85

668
1047

G:\projects\2010\B-10-020 HAM-75-7.85\77889\structures\WALL_001\sheets\77889_001WN401.dgn 5/13/2026 2:04:36 PM meets

Preliminary Plans - For Reference Only

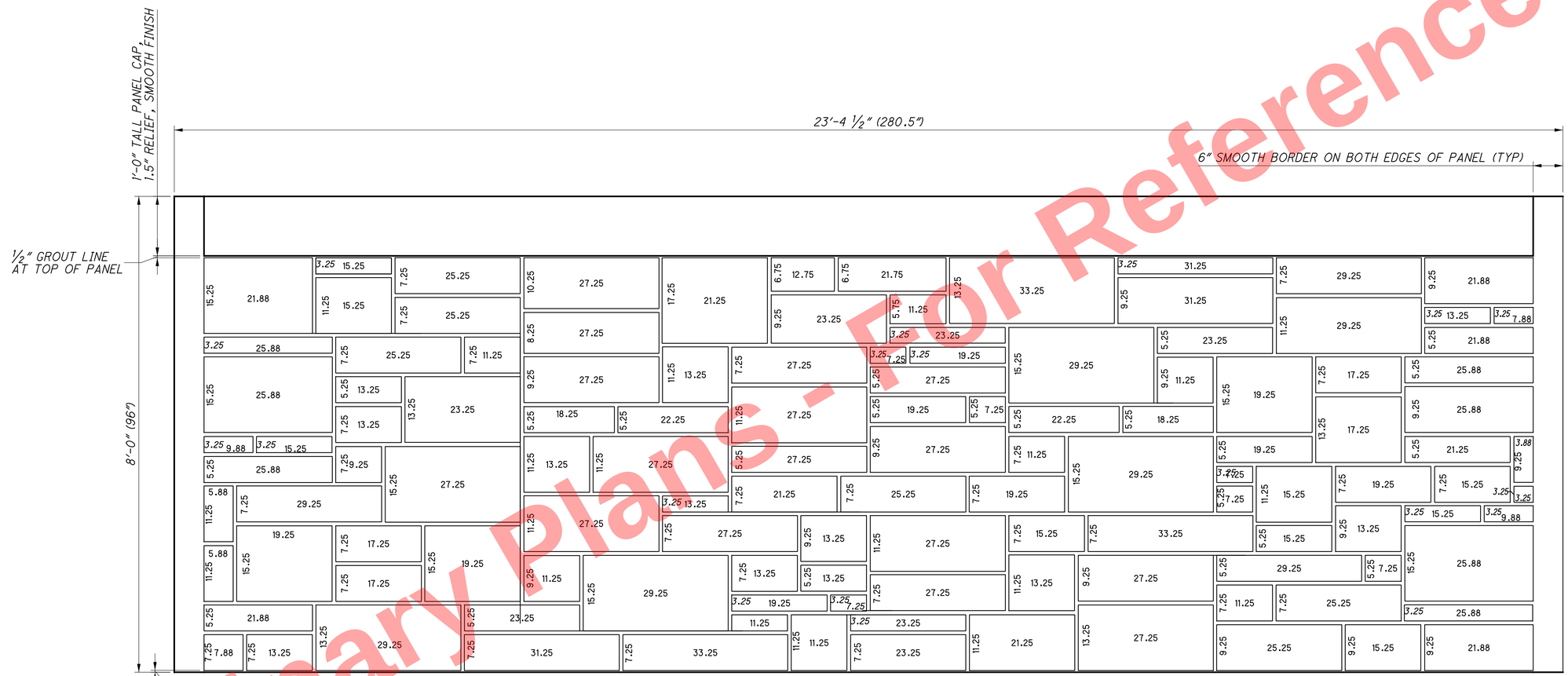

ARCHITECTURAL POLYMERS NO. 905 PATTERN ELEVATION

(DIMENSIONS FOR INDIVIDUAL BLOCKS ARE IN INCHES)

NOTES:

1. GROUT LINE BETWEEN INDIVIDUAL STONES COMPRISING THE 905 PATTERN ARE TO BE 0.75" IN WIDTH UNLESS OTHERWISE NOTED.
2. INDIVIDUAL BLOCKS COMPRISING THE 905 PATTERN ARE TO PROVIDE A PATTERN RELIEF OF 1 TO 2 INCHES ABOVE THE ADJACENT SMOOTH GROUT LINE OR PANEL EDGE.
3. CREATE A 12" SMOOTH INTEGRAL PANEL CAP WITH A 1.5" RELIEF.

SAMPLE NOISE BARRIER PANEL

CALCULATED CFR
CHECKED NCK

ARCHITECTURAL POLYMERS NO. 905

HAM-75-7.85

669
1047

G:\projects\2010\B-10 020 HAM-75-7.85\77889\structures\WALL_001\sheets\77889_001WD403.dgn 5/13/2026 2:04:36 PM meets

REFER TO THE FOLLOWING STANDARD BRIDGE DRAWINGS:

NBS-1-09 REVISED 07-15-22

ITEM 513 - STRUCTURAL STEEL, MISC.: C10x15.3
ITEM 513 - STRUCTURAL STEEL, MISC.: L4X4X1/2

STRUCTURAL STEEL IS ASTM A709, GRADE 50 AS PER CMS 711.01.

GALVANIZE ALL STRUCTURAL STEEL PER CMS 711.02.

PAYMENT FOR THIS WORK INCLUDES ALL MATERIAL, LABOR AND EQUIPMENT REQUIRED TO FABRICATE, GALVANIZE, TRANSPORT AND ERECT THESE STRUCTURAL STEEL SHAPES. THE DEPARTMENT WILL PAY FOR ACCEPTED QUANTITIES AT THE CONTRACT UNIT PRICE BID PER FOOT FOR ITEM 513 - STRUCTURAL STEEL MISC.: C10x15.3, AND ITEM 513 - STRUCTURAL STEEL, MISC.: L4x4x1/2.

ITEM 513 - STRUCTURAL STEEL, MISC.: 5/8" DIA. A325 BOLTS

THIS ITEM IS USED TO MOUNT THE C10x15.3 TO THE EXISTING W8x28 SUPPORT POST THAT IS PART OF NOISE WALL 1B-2. THE BOLTS ARE ASTM A325. NUTS SHALL BE ASTM A563, GRADE DH AND WASHERS SHALL BE ASTM F436.

GALVANIZE THE BOLTS, NUTS AND WASHERS PER CMS 711.02. ENSURE THAT THE ENTIRE LENGTH OF BOLTS AND ALL SURFACES OF NUTS AND WASHERS ARE GALVANIZED.

PAYMENT FOR THIS ITEM INCLUDES ALL MATERIAL, LABOR AND EQUIPMENT REQUIRED TO GALVANIZE, TRANSPORT AND INSTALL THE BOLTS, NUTS AND WASHERS. THE DEPARTMENT WILL PAY FOR ACCEPTED QUANTITIES AT THE CONTRACT UNIT PRICE BID PER EACH FOR ITEM 513 - STRUCTURAL STEEL, MISC.: 5/8" DIA. A325 BOLTS.

ITEM 513 - STRUCTURAL STEEL, MISC.: 5/8" DIA. THREADED ANCHOR RODS

THIS ITEM IS USED TO MOUNT THE C10x15.3 TO THE EXISTING GROUND MOUNTED CONCRETE POST THAT IS PART OF NOISE WALL 1B-1 & 2B AS WELL AS MOUNT THE L4x4x1/2 ANGLES TO THE CONBINATION NOISE AND TRAFFIC BARRIER AND MSE WALL COPING. THE 5/8" DIA. THREADED RODS FOR ADHESIVE ANCHORS SHALL BE ASTM A193 GRADE 87 WITH ASTM A563 NUTS AND ASTM F436 WASHERS.

GALVANIZE THE THREADED RODS, NUTS AND WASHERS PER CMS 711.02. ENSURE THAT THE ENTIRE LENGTH OF THE THREADED RODS AND ALL SURFACES OF NUTS AND WASHERS ARE GALVANIZED.

USE AN ANCHOR ADHESIVE EVALUATED ACCORDING TO ICCES REPORT AC308 "ACCEPTANCE CRITERIA FOR POST-INSTALLED ADHESIVE ANCHORS IN CONCRETE ELEMENTS", FOR CRACKED AND UNCRACKED CONCRETE APPLICATIONS. PUBLISHED ICCES REPORTS FOR ACCEPTABLE PRODUCTS ARE AVAILABLE AT: WWW.ICC-ES.ORG/EVALUATION REPORTS/INDEX.SHTML

SELECT FROM ONE OF THE APPROVED PRODUCTS:
POWERS PE1000+ EPOXY ADHESIVE ANCHOR SYSTEM (ICCES REPORT ESR-2583)
CHEMOFASTC-RE 385 EPOXY ADHESIVE ANCHOR SYSTEM (ICCES REPORT ESR-2538)
SIMPSON STRONG-TIE SET-XP EPOXY ADHESIVE ANCHORS (ICCES REPORT ESR-2508)
WURTH WIT-PE500 EPOXY ADHESIVE ANCHORS (ICCES REPORT ESR-3051)
HILTI-HY 200-R ADHESIVE ANCHOR SYSTEM (ICCES REPORT ESR-3187)

INSTALL ADHESIVE ANCHORS ACCORDING TO THE MANUFACTURER'S INSTALLATION INSTRUCTIONS PUBLISHED IN SECTION 4.3 OF THE ICCES REPORTS LISTED ABOVE. THE MINIMUM ENBEDMENT DEPTH (H) FOR ANCHORS SHALL BE 5".

PAYMENT FOR THIS ITEM INCLUDES ALL MATERIAL, LABOR AND EQUIPMENT REQUIRED TO GALVANIZE, TRANSPORT AND INSTALL THE THREADED RODS, NUTS AND WASHERS. THE DEPARTMENT WILL PAY FOR ACCEPTED QUANTITIES AT THE CONTRACT UNIT PRICE BID PER EACH FOR ITEM 513 - STRUCTURAL STEEL, MISC.: 5/8" DIA. THREADED ANCHOR RODS.

ITEM SPECIAL - NOISE BARRIER (METAL PANELS)

METAL PANELS SHALL BE PROVIDED BY THE FOLLOWING VENDOR

EMPIRE INTERNATIONAL
36744 CONSTITUTION DRIVE
TRINIDAD, COLORADO 81082
PHONE: 1-719-846-2300
FAX: 1-719-846-7466

PANELS ARE FABRICATED FROM 22 GAUGE COLD-FORMED SHEET STEEL AND GALVANIZED ACCORDING TO ASTM A-653, CLASS G-90. PANELS MAY HAVE A SMOOTH SURFACE WITH MINIMAL OR NO RELIEF PATTERN.

PAYMENT FOR THIS ITEM INCLUDES ALL MATERIAL, LABOR AND EQUIPMENT REQUIRED TO FABRICATE, GALVANIZE, TRANSPORT AND ERECT THE PANELS. THE DEPARTMENT WILL PAY FOR ACCEPTED QUANTITIES AT THE CONTRACT UNIT PRICE BID PER SQUARE FOOT FOR ITEM SPECIAL - NOISE BARRIER (METAL PANELS).

EXISTING STRUCTURE VERIFICATION

DETAILS AND DIMENSIONS SHOWN ON THESE PLANS PERTAINING TO THE EXISTING NOISE WALLS HAVE BEEN OBTAINED FROM PLANS OF THE NOISE WALLS AND FROM FIELD OBSERVATIONS AND MEASUREMENTS. CONSEQUENTLY, THEY ARE INDICATIVE OF THE EXISTING NOISE WALLS AND THE PROPOSED WORK BUT THEY SHALL BE CONSIDERED TENTATIVE AND APPROXIMATE. THE CONTRACTOR IS REFERRED TO CMS SECTIONS 102.05, 105.02 AND 513.04.

BASE CONTRACT BID PRICES UPON A RECOGNITION OF THE UNCERTAINTIES DESCRIBED ABOVE AND UPON A PREBID EXAMINATION OF THE EXISTING NOISE WALLS. HOWEVER, THE DEPARTMENT WILL PAY FOR ALL PROJECT WORK BASED UPON ACTUAL DETAILS AND DIMENSIONS THAT HAVE BEEN VERIFIED IN THE FIELD.

ESTIMATED QUANTITIES												AS PER PLAN REFERENCE SHEET
1A	1B-1	1B-2	1C	2A	2B	ITEM	ITEM EXT.	PARTICIPATION 02/IMS/03	TOTAL	UNIT	DESCRIPTION	
		30		6		513	95000	36	36	FT	STRUCTURAL STEEL, MISC.: C10X15.3	
		5				513	95000	5	5	FT	STRUCTURAL STEEL, MISC.: L4X4X1/2	
		11				513	95030	11	11	EACH	STRUCTURAL STEEL, MISC.: 5/8" DIA. A325 BOLTS	
		15		4		513	95030	19	19	EACH	STRUCTURAL STEEL, MISC.: 5/8" DIA. THREADED ANCHOR RODS	
5,784	7,509				11,972	SPECIAL	606E10210	25265	25,265	SQ FT	NOISE BARRIER (REFLECTIVE)	
		1,035	535	6,992		SPECIAL	606E10920	8562	8,562	SQ FT	NOISE BARRIER (REFLECTIVE), PARAPET MOUNTED	
		36				SPECIAL	606E10920	36	36	SQ FT	NOISE BARRIER (METAL PANELS)	

Preliminary Plans - For Reference Only

G:\projects\2010\B-10-020 HAM-75-7.85\77889\structures\WALL_001\sheets\77889_001WN402.dgn 5/13/2026 2:04:37 PM meets

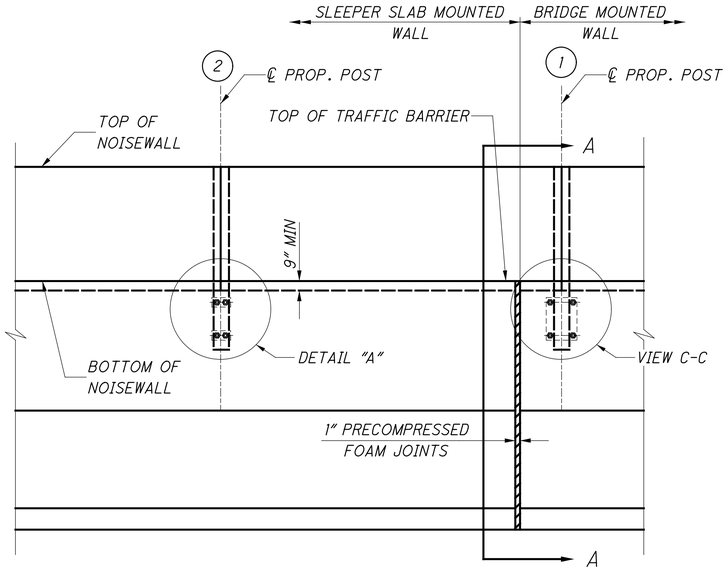

ELEVATION

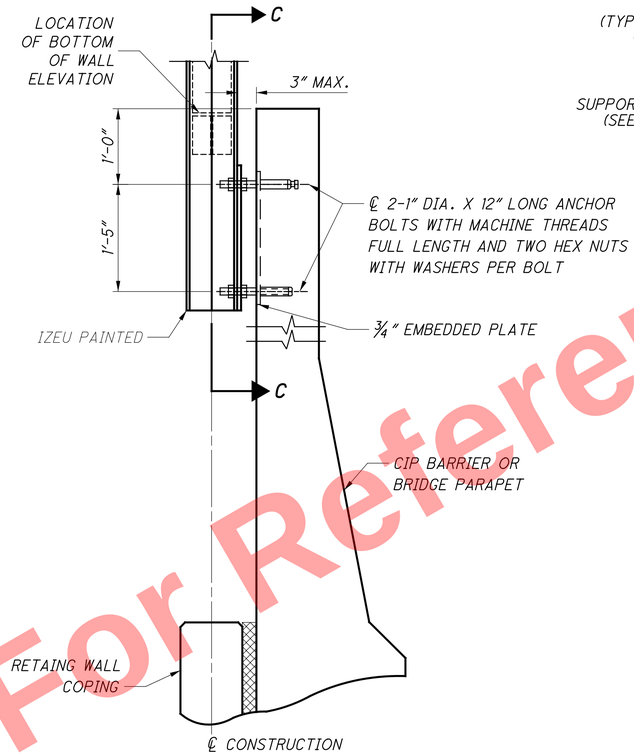

SECTION A-A

PANEL BOTTOM AND SUPPORT CLIP DETAIL

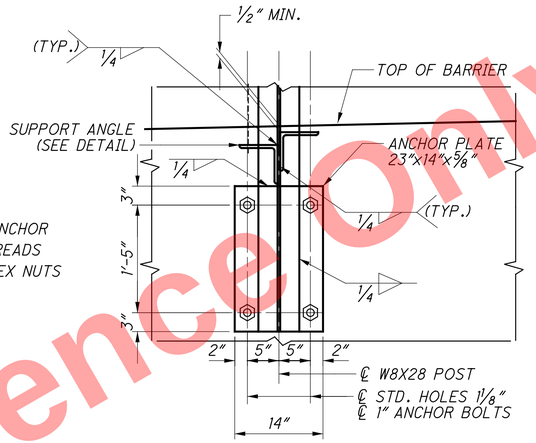

VIEW C-C

(ALL POST EXCEPT FIRST POST OFF THE BRIDGE AS SHOWN IN DETAIL A)

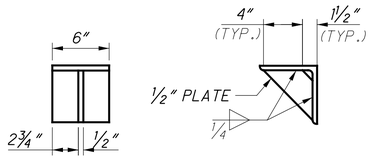

SUPPORT ANGLE DETAILS

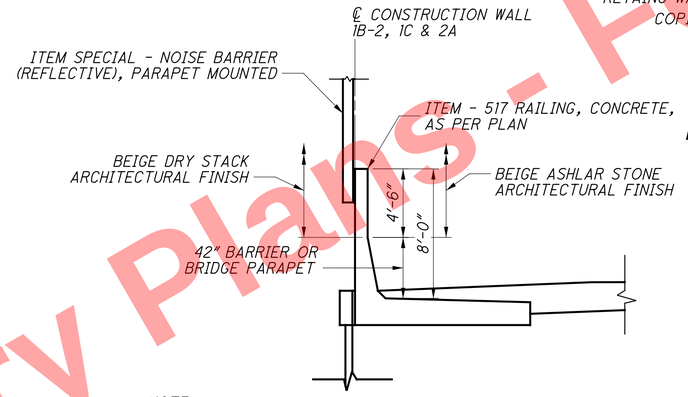

NOTE:
THE ARCHITECTURAL FINISH SHALL BE BEIGE ASHLAR STONE (MANUFACTURED BY ARCHITECTURAL POLYMERS, #905 SMALL AGED ASHLAR STONE) ON THE FREEWAY SIDE AND BEIGE DRY STACK (MANUFACTURED BY ARCHITECTURAL POLYMERS, #9110 LARGE STONE OHIO DRY STACK) ON THE PARK AND RESIDENTIAL SIDE. THE FEDERAL COLOR NUMBER FOR BEIGE IS NO. 17778.

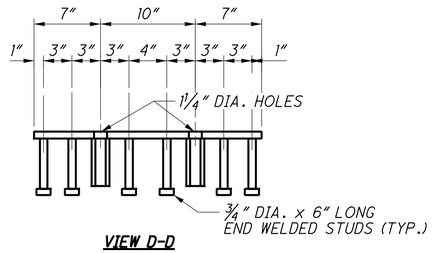

VIEW D-D

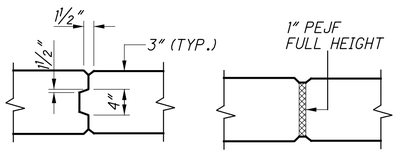

CONTRACTION JOINT **EXPANSION JOINT**

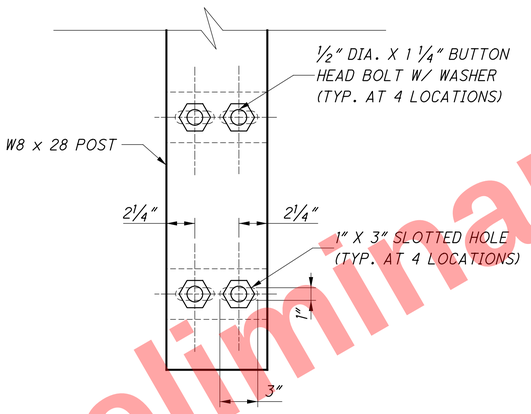

DETAIL A

AT POST NO. (2) EACH END OF PARAPET

(SEE NOTE BELOW)

NOTE:
PANEL FABRICATOR SHALL FABRICATE SPECIAL PANELS TO BE PLACED BETWEEN POST 1 AND 2. THE LENGTH OF THESE PANELS SHALL BE MEASURED IN THE FIELD AND AS DIRECTED BY THE ENGINEER WITH ENOUGH OVERLAP TO COVER ADJACENT PANELS. SLOTTED HOLES SHALL BE PROVIDED OVER POST NO. 2 TO PROVIDE A FREE END FOR ANY MOVEMENTS CAUSED BY BRIDGE EXPANSION OR CONTRACTION. THESE HOLES SHALL BE 1" X 3" IN SIZE AND BOLTS SHALL BE 1/2" DIA. X 1 1/4" BUTTON HEAD WITH NUTS AND WASHER. ALL OTHER PANEL ATTACHMENTS SHALL BE BOLTED WITH SIMILAR BOLTS AS EXISTING. PAYMENTS FOR ALL ABOVE MATERIAL AND LABOR SHALL BE INCLUDED WITH ITEM 606 - SPECIAL - NOISE BARRIER (REFLECTIVE), PARAPET MOUNTED.

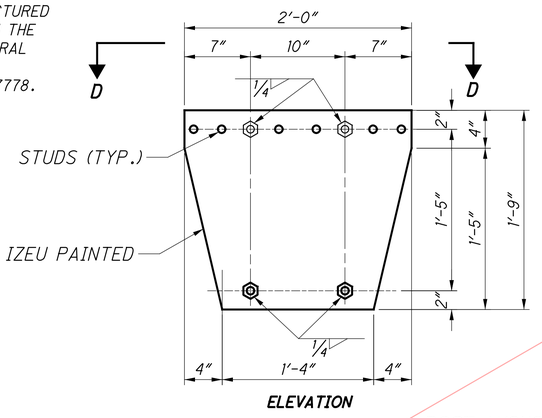

ELEVATION

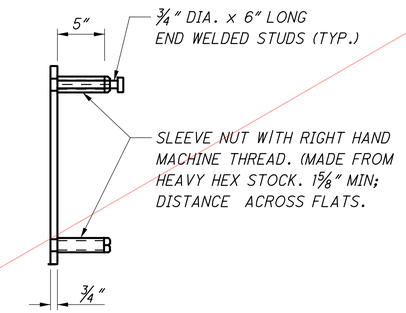

END VIEW

POST ANCHOR DEVICE

Preliminary Plans - For Reference Only

CALCULATED MMS
CHECKED NCK

NOISE BARRIER DETAILS

HAM-75-7.85

671
1047

G:\projects\2010\B-10-020 HAM-75-7.85\77889\structures\WALL_001\sheets\77889_001WD405.dgn 5/13/2026 2:04:37 PM meets

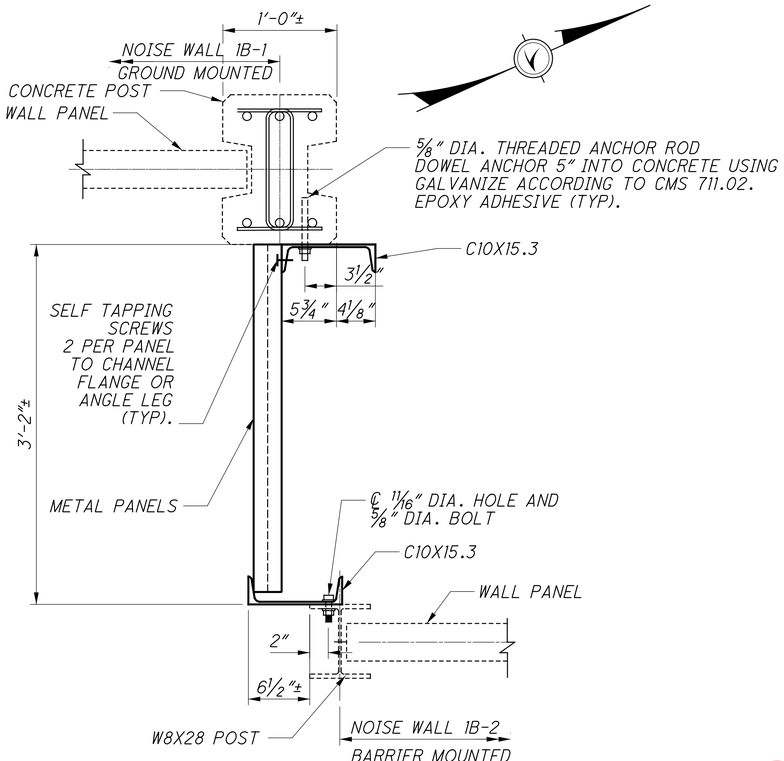

BETWEEN WALL
1B-1 & 1B-2

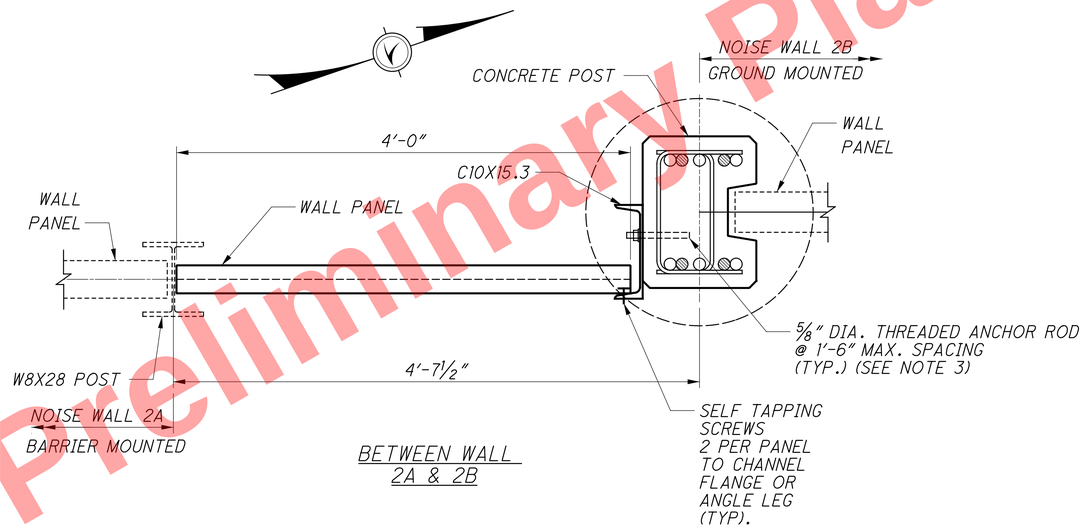

BETWEEN WALL
2A & 2B

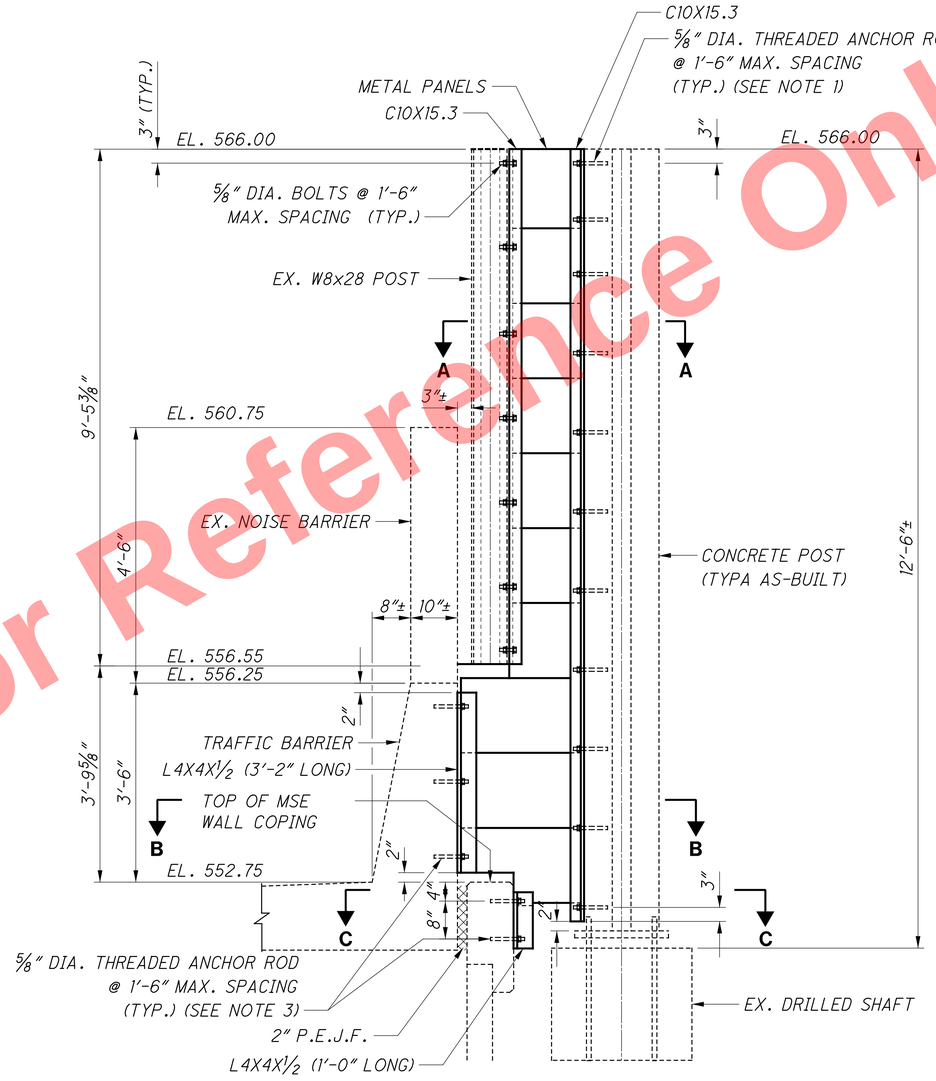

ELEVATION

(BETWEEN WALL 1B-1 & 1B-2)
(LOOKING SOUTH)

NOTES:

1. ACCURATELY PLACE 5/8" DIA. THREADED ANCHOR RODS TO AVOID INTERFERENCE WITH EXISTING REINFORCING STEEL. USE CONCRETE POST SHOP DRAWINGS AND AVAILABLE PLAN INFORMATION TO LOCATE REINFORCING STEEL.

CALCULATED MMS
CHECKED NCK

NOISE WALL PANEL DETAIL
(BETWEEN NOISE WALLS 1B-1&1B-2 AND 2A&2B)

HAM-75-7.85

672
1047

Preliminary Plans - For Reference Only

G:\projects\2010\B-10-020 HAM-75-7.85\77889\structures\WALL_001\sheets\77889_001WD404.dgn 5/13/2026 2:04:38 PM meets

WALL 1A FOUNDATION DATA

POST NO.	POST TYPE	WORK POINT STATION	DRILLED SHAFT TOP ELEVATION	SHAFT LENGTH
1	B	10+00.00	536.67	7
2	A	10+24.00	537.67	7
3	A	10+48.00	536.67	7
4	A	10+72.00	536.67	7
5	A	10+96.00	536.67	12
6	A	11+20.00	536.67	12
7	A	11+44.00	536.67	12
8	A	11+68.00	536.67	12
9	A	11+92.00	536.67	12
10	A	12+16.00	536.67	12
11	A	12+40.00	536.67	12
12	A	12+64.00	536.67	12
13	A	12+88.00	536.67	12
14	A	13+12.00	536.67	12
15	A	13+36.00	536.67	12
16	A	13+60.00	536.67	12
17	A	13+84.00	536.67	12
18	A	14+08.00	536.67	12
19	A	14+32.00	536.67	12
20	A	14+56.00	536.67	12
21	A	14+80.00	536.67	12
22	B	15+04.00	536.67	12

WALL 1B-1 FOUNDATION DATA

POST NO.	POST TYPE	WORK POINT STATION	DRILLED SHAFT TOP ELEVATION	SHAFT LENGTH
1	A	11+00.00	541.67	12
2	A	11+20.00	541.67	12
3	A	11+36.00	542.67	12
4	A	11+52.00	543.67	12
5	A	11+68.00	544.67	12
6	A	11+84.00	545.67	12
7	A	12+00.00	546.67	12
8	A	12+16.00	546.67	12
9	A	12+32.00	547.67	12
10	A	12+48.00	547.67	12
11	A	12+64.00	548.67	12
12	A	12+80.00	549.67	12
13	A	12+96.00	550.67	12
14	A	13+04.00	551.67	12
15	A	13+20.00	552.67	12
16	A	13+36.00	553.67	12
17	A	13+52.00	554.67	12
18	A	13+60.00	555.67	9.5
19	A	13+68.00	555.67	9.5
20	A	13+84.00	556.67	9.5
21	A	14+00.00	557.67	9.5
22	A	14+16.00	557.67	9.5
23	A	14+32.00	558.67	9.5
24	A	14+56.00	558.67	9.5
25	A	14+80.00	558.67	9.5
26	A	15+04.00	558.67	9.5
27	A	15+28.00	557.67	9.5
28	A	15+52.00	556.67	9.5
29	A	15+76.00	555.67	9.5
30	A	16+00.00	554.67	9.5
31	A	16+08.00	553.67	7
32	A	16+16.00	553.67	7
33	A	16+24.00	552.67	7
34	A	16+32.00	552.67	7
35	A	16+40.00	551.67	7
36	A	16+48.00	550.67	7
37	A	16+56.00	550.67	7
38	A	16+64.00	550.67	7
39	A	16+88.00	550.67	7
40	A	17+12.00	550.67	7
41	A	17+36.00	550.67	7
42	B	17+60.00	551.67	7

WALL 2B FOUNDATION DATA

POST NO.	POST TYPE	WORK POINT STATION	DRILLED SHAFT TOP ELEVATION	SHAFT LENGTH
1	B	60+00.00	554.67	12
2	A	60+13.00	554.67	12
3	A	60+26.00	554.67	12
4	A	60+50.00	554.67	12
5	A	60+74.00	555.67	12
6	A	60+98.00	556.67	12
7	A	61+22.00	556.67	7
8	A	61+46.00	557.67	7
9	A	61+70.00	559.67	7
10	D	61+94.00	560.67	7
11	D	62+02.00	560.67	7
12	A	62+17.00	560.67	7
13	A	62+32.00	560.67	7
14	A	62+40.00	561.67	7
15	D	62+64.00	562.67	7
16	D	62+88.00	562.67	7
17	A	63+12.00	563.67	7
18	A	63+36.00	564.67	7
19	A	63+60.00	564.67	7
20	A	63+84.00	565.67	7
21	A	64+08.00	565.67	7
22	A	64+32.00	566.67	7
23	A	64+56.00	566.67	7
24	A	64+80.00	567.67	7
25	A	65+04.00	567.67	7
26	A	65+28.00	567.67	7
27	A	65+52.00	568.67	7
28	A	65+76.00	568.67	7
29	A	66+00.00	568.67	7
30	A	66+24.00	569.67	7
31	A	66+36.00	569.67	7
32	A	66+44.00	569.67	7
33	A	66+68.00	569.67	7
34	A	66+92.00	569.67	7
35	A	67+16.00	570.67	7
36	A	67+40.00	570.67	7
37	A	67+64.00	570.67	7
38	A	67+88.00	570.67	7
39	A	68+12.00	570.67	7
40	A	68+36.00	570.67	7
41	A	68+60.00	569.67	7
42	A	68+84.00	569.67	7
43	A	69+08.00	569.67	7
44	A	69+32.00	569.67	7
45	A	69+44.00	568.67	7
46	A	69+56.00	568.67	7
47	A	69+80.00	568.67	7
48	A	70+04.00	567.67	7
49	A	70+28.00	567.67	7
50	B	70+40.00	567.67	7

Preliminary Plans - Not For Reference Only

CALCULATED CFR
CHECKED NCK

NOISE WALL FOUNDATION DATA

HAM-75-7.85

673
1047

5/13/2026 2:04:38 PM meets
G:\projects\2010\B-10-020 HAM-75-7.85\77889\structures\WALL_001\sheets\77889_001WD402.dgn 5/13

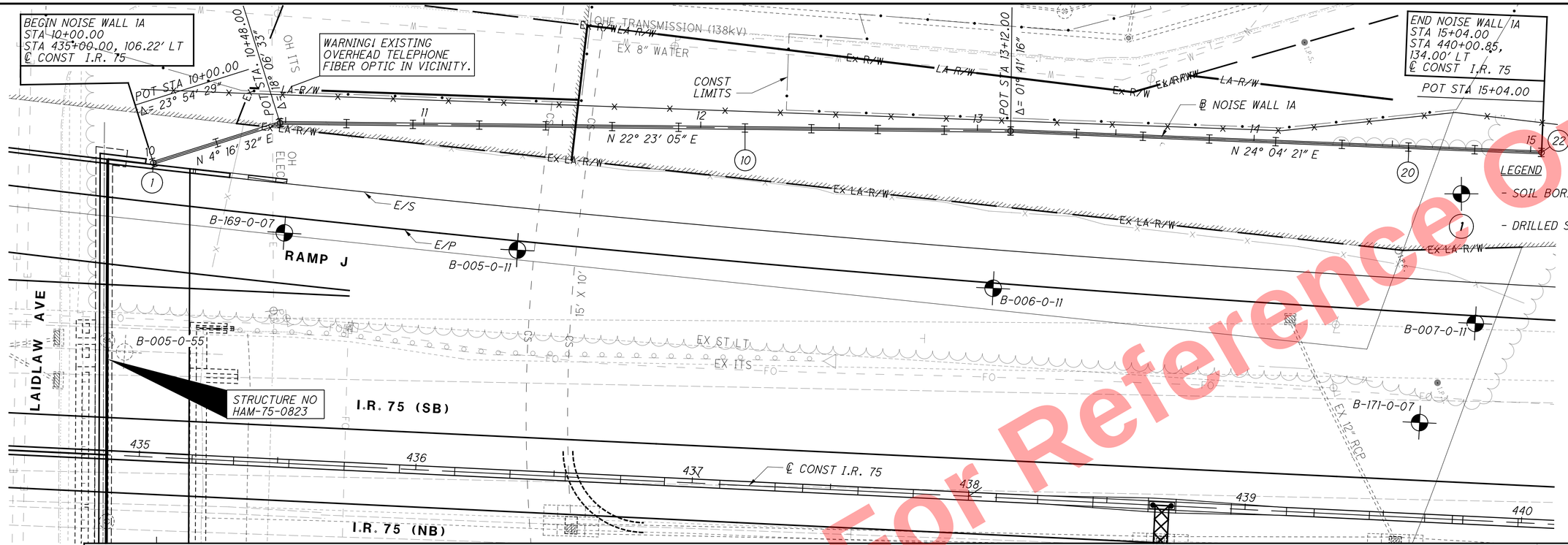

ACOUSTIC PROFILE ELEV	541.00	547.12	547.74	547.30	547.10	546.88	547.20	547.70	547.76	546.95	546.65	548.78	548.68	548.55	548.42	548.21	547.67	548.12	548.11	548.08	548.50
TOP OF WALL ELEV	548.00	548.00	548.00	548.00	548.00	548.00	548.00	548.00	548.00	548.00	549.00	549.00	549.00	549.00	549.00	549.00	549.00	549.00	549.00	549.00	549.00
BOTTOM OF WALL ELEV	538.00	537.00	537.00	537.00	537.00	537.00	537.00	537.00	537.00	537.00	537.00	537.00	537.00	537.00	537.00	537.00	537.00	537.00	537.00	537.00	537.00
PANEL NO	1	2	3	4	5	6	7	8	9	10	11	12	13	14	15	16	17	18	19	20	21
PROP GRADE ELEV	538.90	538.47	538.05	537.64	537.23	537.22	537.26	537.37	537.49	537.65	537.82	537.93	538.04	538.08	538.10	537.86	537.57	537.29	537.01	537.73	538.60
EX GROUND ELEV	538.15	540.38	539.91	539.95	539.57	538.91	537.27	537.77	538.10	537.46	537.27	539.32	539.12	538.90	538.86	538.66	538.14	537.64	537.57	537.83	538.97

21 PANELS @ 24' = 504'

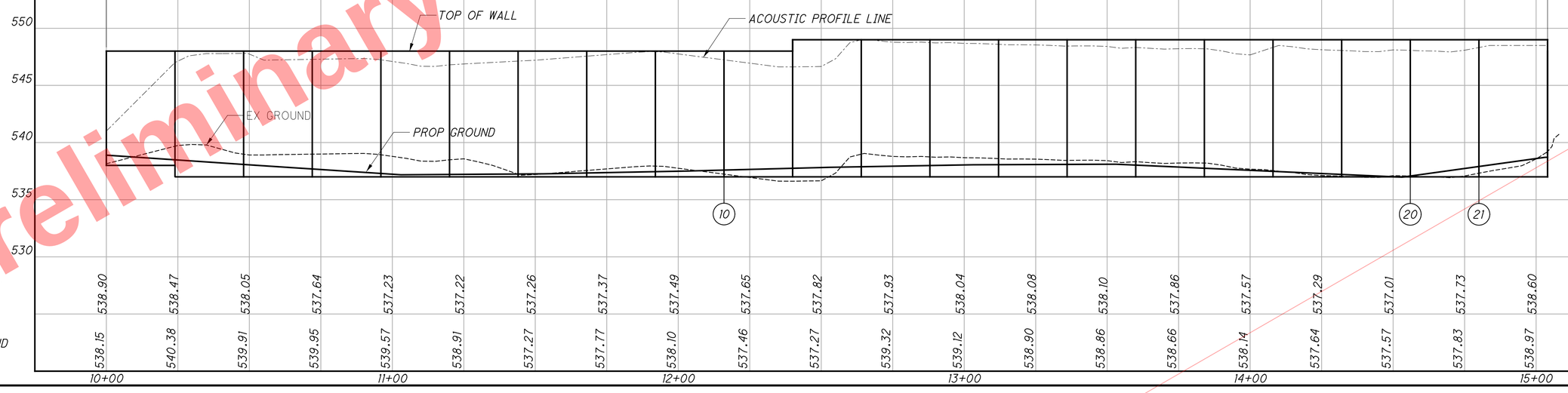

10+00 11+00 12+00 13+00 14+00 15+00

PLAN AND PROFILE - NOISE WALL 1A
STA. 10+00 TO STA. 15+04

HAM-75-7.85

674
1047

CALCULATED CFR
CHECKED NCK

HORIZONTAL SCALE IN FEET
0 10 20 40

5/13/2026 2:04:43 PM meets
G:\projects\2010\B-10-020 HAM-75-7.85\77889\structures\WALL_001\sheets\77889_001WP401.dgn

Preliminary Plans - For Reference Only

Preliminary Plans - For Reference Only

BEGIN NOISE WALL 1B-1
STA 11+00.00
STA 442+42.71,
137.82' LT
℄ CONST I.R. 75

POT STA 11+00.00
Δ= 00° 00' 00"

POT STA 13+04.00
Δ= 06° 08' 35"

N 24° 30' 33" E

N 18° 21' 58" E

LEGEND
- SOIL BORING
1 - DRILLED SHAFT NUMBERS

OHE TRANSMISSION (138kV)

OHE TO BILLBOARD

WARNING! EXISTING OVERHEAD ELECTRIC LINE IN VICINITY.

LA-R/W

Ex LA-R/W

CONST. LIMITS

℄ NOISE WALL 1B-1

EX. R/W FENCE

B-173-0-07

B-009-0-11

B-010-0-11

E/S

E/P

I.R. 75 (SB)

EX ST LT

EX ITS

FO

STRUCTURE NO HAM-75-0824

EX. 6" CMP

℄ CONST I.R. 75

EX 36" RCP

42"

18"

15"

MATCHLINE STA 13+50, SEE SHEET 676

HORIZONTAL SCALE IN FEET
0 10 20 40

CALCULATED CFR
CHECKED NCK

PLAN AND PROFILE - NOISE WALL 1B-1
STA. 11+00 TO STA. 13+50

HAM-75-7.85

675
1047

	1	2	3	4	5	6	7	8	9	10	11	12	13	14	15	16
ACOUSTIC PROFILE ELEV	553.93	555.13	556.48	557.43	558.75	560.20	561.65	563.11	564.56	566.00	566.00					
TOP OF WALL ELEV	555.00	556.00	557.00	558.00	560.00	561.00	563.00	564.00	565.00	566.00	566.00					
BOTTOM OF WALL ELEV	542.00	543.00	544.00	546.00	547.00	548.00	549.00	550.00	552.00	554.00	555.00					
PANEL NO	1	2	3	4	5	6	7	8	9	10	11	12	13	14	15	16

1 PANELS @ 20' = 20'
11 PANELS @ 16' = 176'
3 PANELS @ 16' = 48'
1 PANEL @ 8' = 8'

TOP OF WALL
ACOUSTIC PROFILE
PROP. GRADE
EX. GROUND
2:1
2:1

FOR ADDITIONAL INFORMATION ON PROP GRADE SEE HAM-75-7.85 RR BRIDGE STRUCTURE PLANS HAM-75-0824 (NSBR BRIDGE C7-0.95)

	11+00	12+00	13+00
PROP. GRADE ELEV.	542.14	543.67	545.19	546.61	547.99	548.98	549.82	551.30	553.05	554.84	556.64
EX. GROUND ELEV.	542.93	544.13	545.65	546.74	548.87	549.62	550.92	552.28	553.24	555.61	557.26

565
560
555
550
545

MATCHLINE STA. 13+50, SEE SHEET 676

G:\projects\2010\B-10-020_HAM-75-7.85\77889\structures\WALL_001\sheets\77889_001WP402.dgn 5/13/2026 2:04:44 PM meets

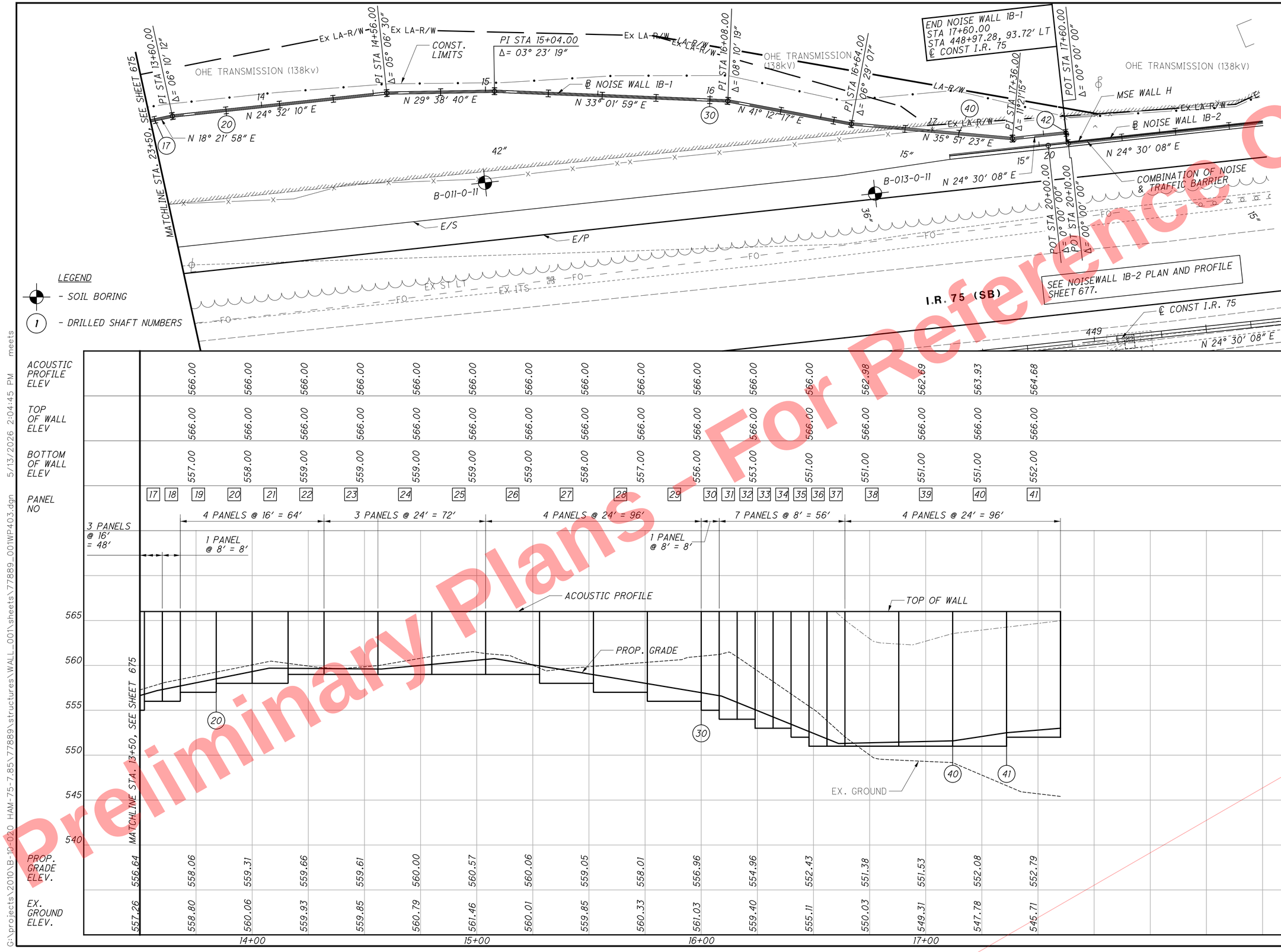

LEGEND

- SOIL BORING
- DRILLED SHAFT NUMBERS

| | | |

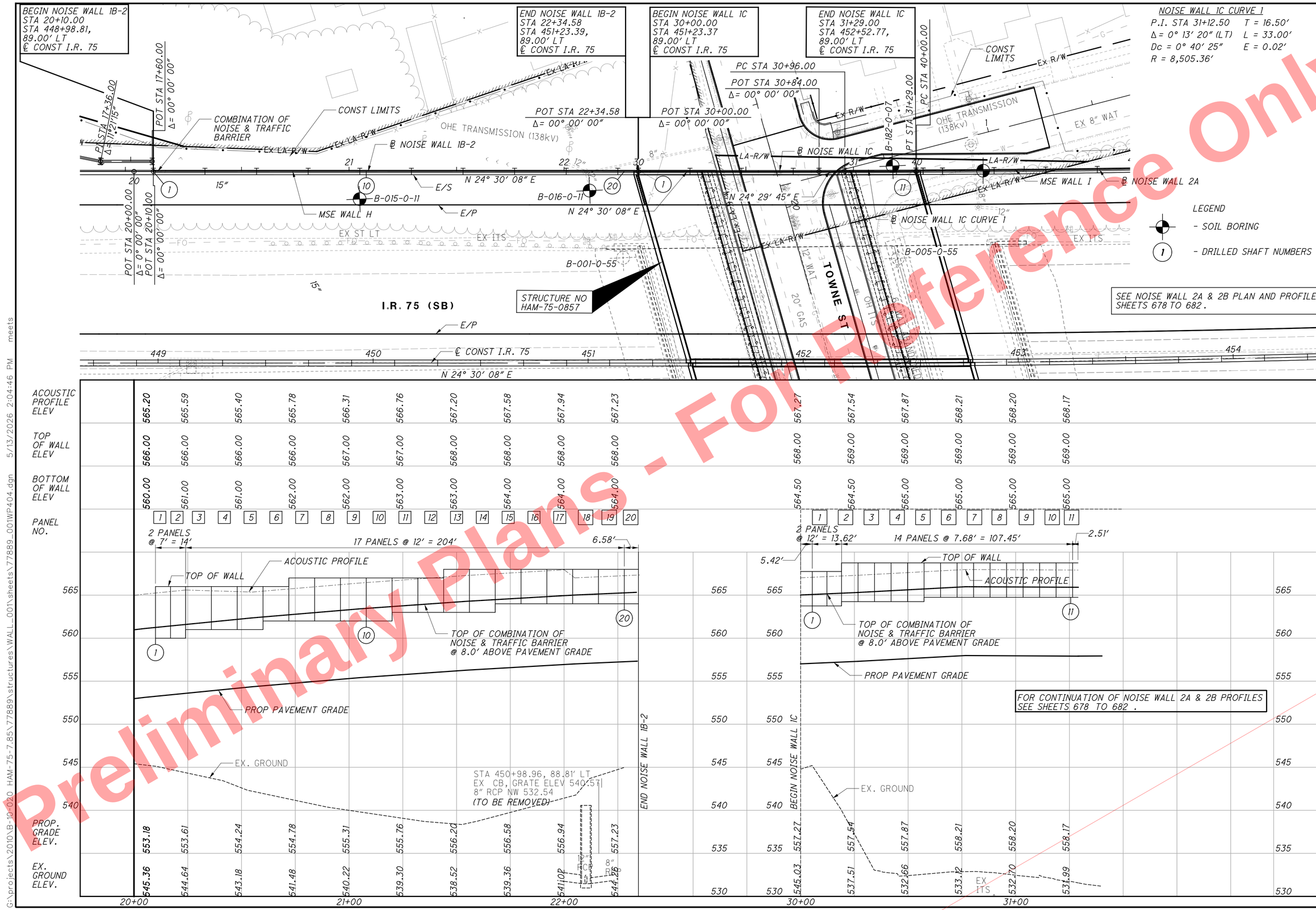

ACOUSTIC PROFILE ELEV	565.20	565.59	565.40	565.78	566.31	566.76	567.20	567.58	567.94	567.23					567.27	567.54	567.87	568.21	568.20	568.17		
TOP OF WALL ELEV	566.00	566.00	566.00	566.00	567.00	567.00	568.00	568.00	568.00	568.00					568.00	569.00	569.00	569.00	569.00	569.00		
BOTTOM OF WALL ELEV	560.00	561.00	561.00	562.00	562.00	563.00	563.00	564.00	564.00	564.00					564.50	564.50	565.00	565.00	565.00	565.00		
PANEL NO.	1	2	3	4	5	6	7	8	9	10	11	12	13	14	15	16	17	18	19	20		
PROP. GRADE ELEV.	553.18	553.61	554.24	554.78	555.31	555.76	556.20	556.58	556.94	557.23					557.27	557.54	557.87	558.21	558.20	558.17		
EX. GROUND ELEV.	545.36	544.64	543.18	541.48	540.22	539.30	538.52	539.36	541.02	544.26					545.03	537.51	532.66	533.12	532.70	531.99		

HORIZONTAL SCALE IN FEET 0 10 20 40

CALCULATED CFR
CHECKED NCK

PLAN AND PROFILE - NOISE WALL 1B-2 & 1C
STA. 28+50 TO STA. 31+29.00

HAM-75-7.85

Preliminary Plans - For Reference Only

G:\projects\2010\B-10-020 HAM-75-7.85\77889\structures\WALL_001\sheets\77889_001WP404.dgn 5/13/2026 2:04:46 PM meets

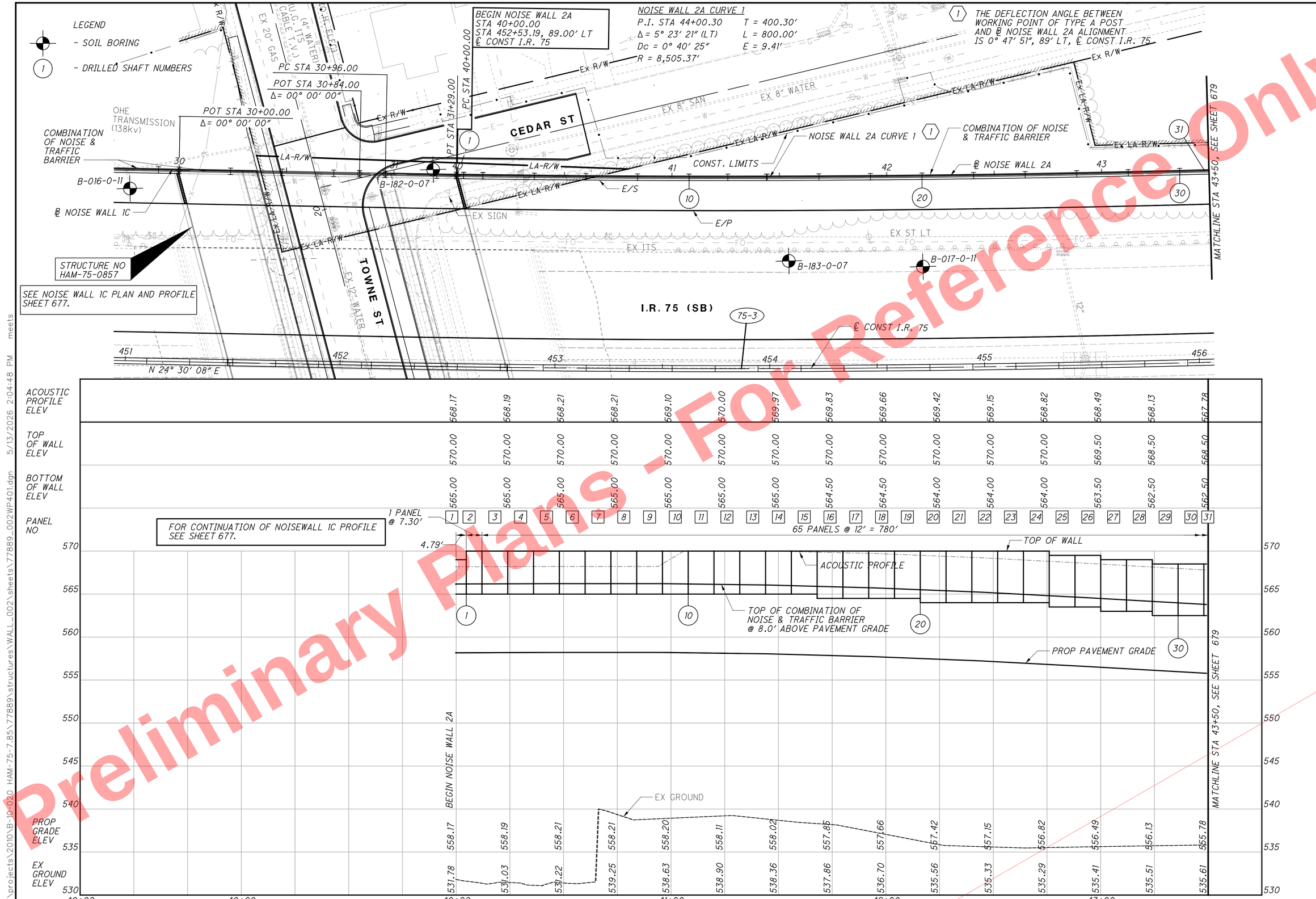

ACOUSTIC PROFILE ELEV	568.17	568.19	568.21	568.21	569.10	570.00	569.97	569.83	569.66	569.42	569.15	568.82	568.49	568.13	567.78
TOP OF WALL ELEV	570.00	570.00	570.00	570.00	570.00	570.00	570.00	570.00	570.00	570.00	570.00	570.00	569.50	568.50	568.50
BOTTOM OF WALL ELEV	565.00	565.00	565.00	565.00	565.00	565.00	565.00	564.50	564.50	564.00	564.00	564.00	563.50	562.50	562.50
PANEL NO	1	2	3	4	5	6	7	8	9	10	11	12	13	14	15	16	17	18	19	20	21	22	23	24	25	26	27	28	29	30	31
PROP GRADE ELEV	558.17	558.19	558.21	558.21	558.20	558.11	558.02	557.85	557.66	557.42	557.15	556.82	556.49	556.13	555.78
EX GROUND ELEV	531.78	531.03	531.22	539.25	538.63	538.90	538.36	537.86	536.70	535.56	535.33	535.29	535.41	535.51	535.61

Preliminary Plans - For Reference Only

HORIZONTAL SCALE IN FEET 0 10 20 40

CALCULATED CFR
CHECKED NCK

PLAN AND PROFILE - NOISE WALL 2A
STA. 40+00 TO STA. 43+50

HAM-75-7.85

G:\projects\2010\B-10-020 HAM-75-7.85\77889\structures\WALL_002\sheets\77889_002WP401.dgn 5/13/2026 2:04:48 PM meets

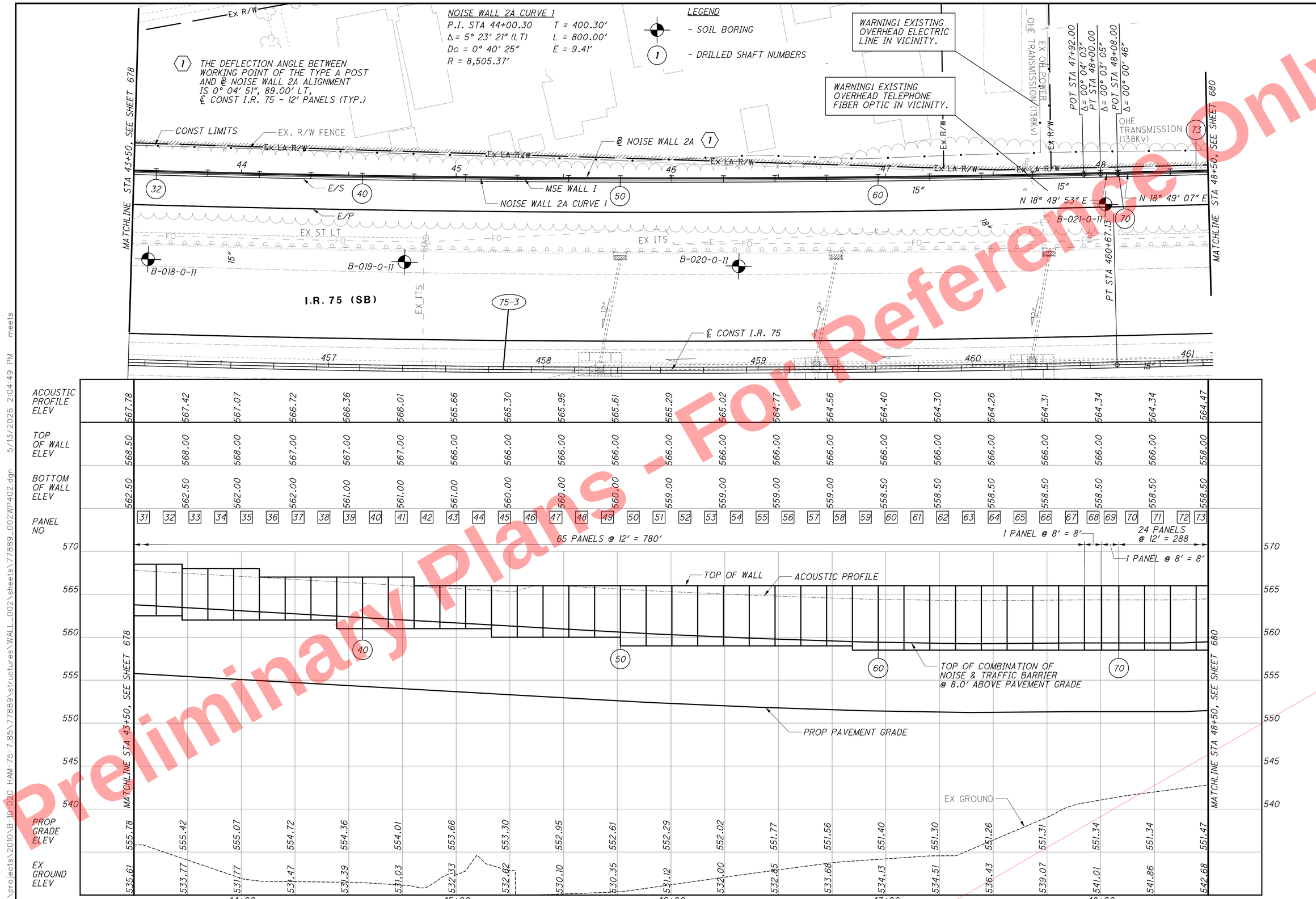

Preliminary Plans - For Reference Only

HORIZONTAL SCALE IN FEET

CALCULATED CFR
CHECKED NCK

PLAN AND PROFILE - NOISE WALL 2A
STA. 43+50 TO STA. 48+50

HAM-75-7.85

G:\projects\2010\B-10-020 HAM-75-7.85\77889\structures\WALL_002\sheets\77889_002WP402.dgn 5/13/2026 2:04:49 PM meets

Preliminary Plans - For Reference Only

LEGEND
- SOIL BORING
1 - DRILLED SHAFT NUMBERS
COMBINATION OF NOISE & TRAFFIC BARRIER
CONST LIMITS
℄ NOISE WALL 2A
℄ NOISE WALL 2B
LA-R/W
EX LA-R/W
OHE TRANSMISSION (138kv)
OHE TRANSMISSION (138Kv)
FO
EX ITS
EX ST LT
E/P
E/S
SINGLE SLOPE BARRIER, TYPE D
B-022-0-11
B-023-0-11
B-024-0-11
B-187-0-07
N 18° 49' 07" E
N 16° 01' 56" E
N 18° 49' 07" E
POT STA 50+96.00
Δ = 02° 47' 11"
POT STA 51+20.00
MATCHLINE STA 48+50, SEE SHEET 679
MATCHLINE STA 61+50, SEE SHEET 681
I.R. 75 (SB)
℄ CONST I.R. 75

1 END COMBINATION OF NOISE AND TRAFFIC BARRIER
STA 51+20.0000 ℄ CONST NOISE WALL 2A
STA 463+81.62, 89.00' LT, ℄ CONST I.R. 75

END NOISE WALL 2A
STA 51+20.00
STA 463+81.62, 89.00' LT
℄ CONST I.R. 75

BEGIN NOISE WALL 2B
STA 60+00.00
STA 463+84.25, 91.17' LT
℄ CONST I.R. 75

462 463 464 465

| | | |

Preliminary Plans - For Reference Only

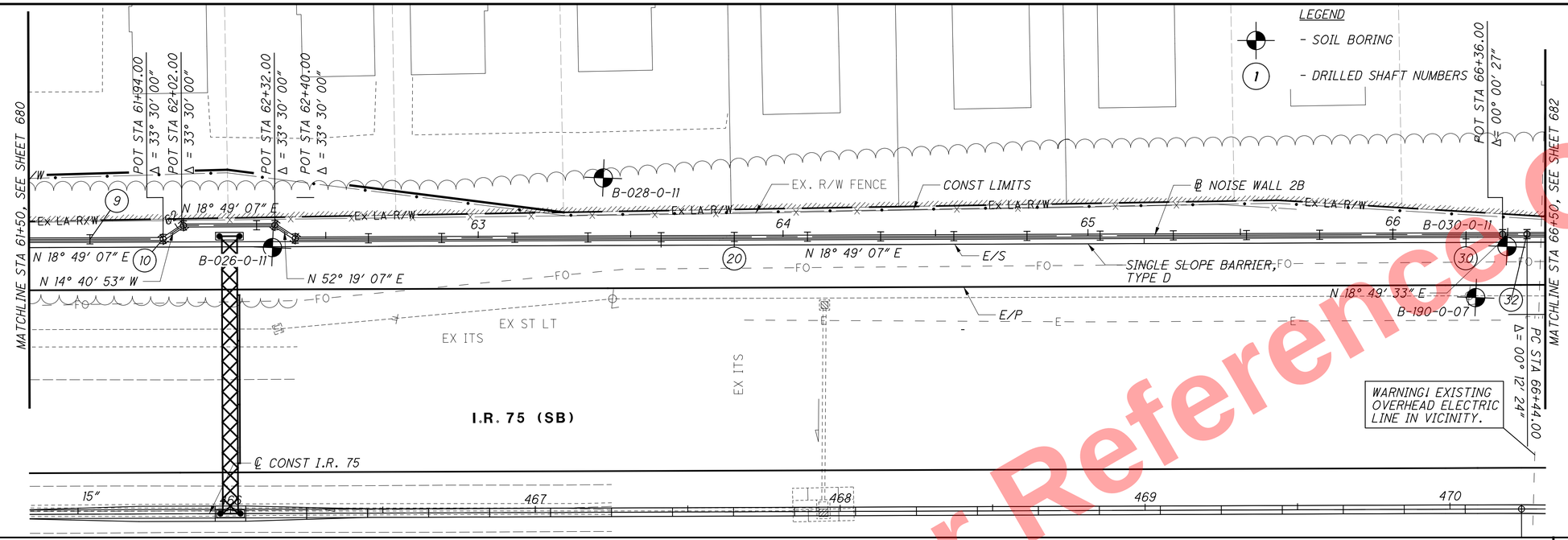

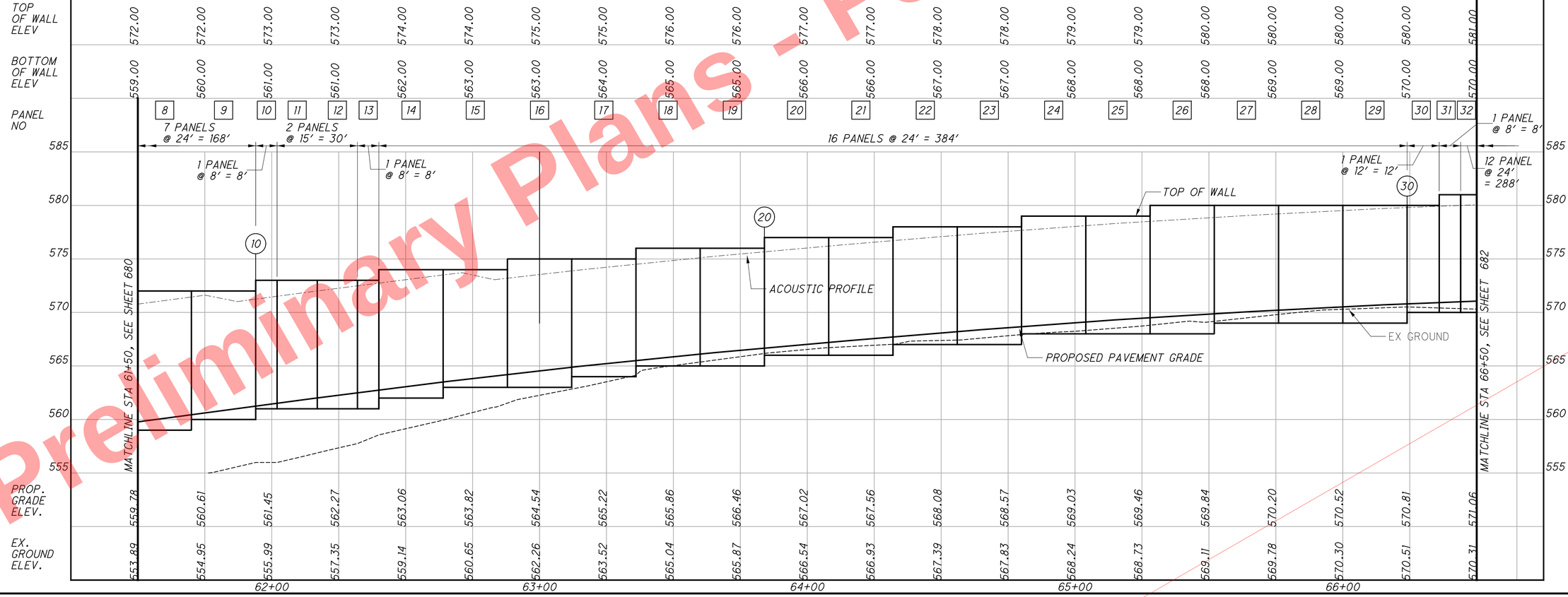

Preliminary Plans - For Reference Only

PLAN AND PROFILE - NOISE WALL 2B
STA. 61+50 TO STA. 66+50

HAM-75-7.85

681
1047

HORIZONTAL SCALE IN FEET
0 10 20 40

CALCULATED CFR
CHECKED NCK

5/13/2026 2:04:50 PM meets
G:\projects\2010\B-10-020 HAM-75-7.85\77889\structures\WALL_002\sheets\77889_002WP404.dgn 5/13/

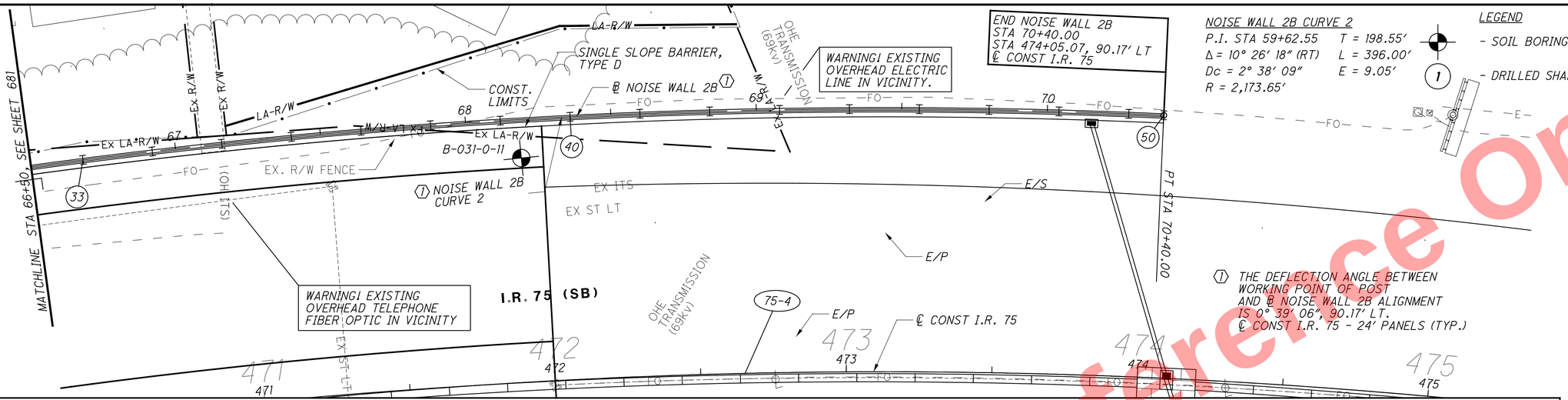

ACOUSTIC PROFILE ELEV	579.96	580.21	580.40	580.59	580.68	580.75	580.77	580.79	580.67	580.48	580.23	579.93	579.27	578.28	576.88	574.95	573.03			
TOP OF WALL ELEV	581.00	581.00	581.00	581.00	581.00	581.00	581.00	581.00	581.00	581.00	581.00	581.00	581.00	581.00	581.00	581.00	577.00			
BOTTOM OF WALL ELEV	570.00	570.00	570.00	571.00	571.00	571.00	571.00	571.00	571.00	570.00	570.00	570.00	569.00	569.00	569.00	568.00	568.00			
PANEL NO	32	33	34	35	36	37	38	39	40	41	42	43	44	45	46	47	48	49		
	12 PANELS @ 24' = 288'											1 PANEL @ 12' = 12'		1 PANEL @ 12' = 12'	3 PANELS @ 24' = 72'			1 PANEL @ 12' = 12'		

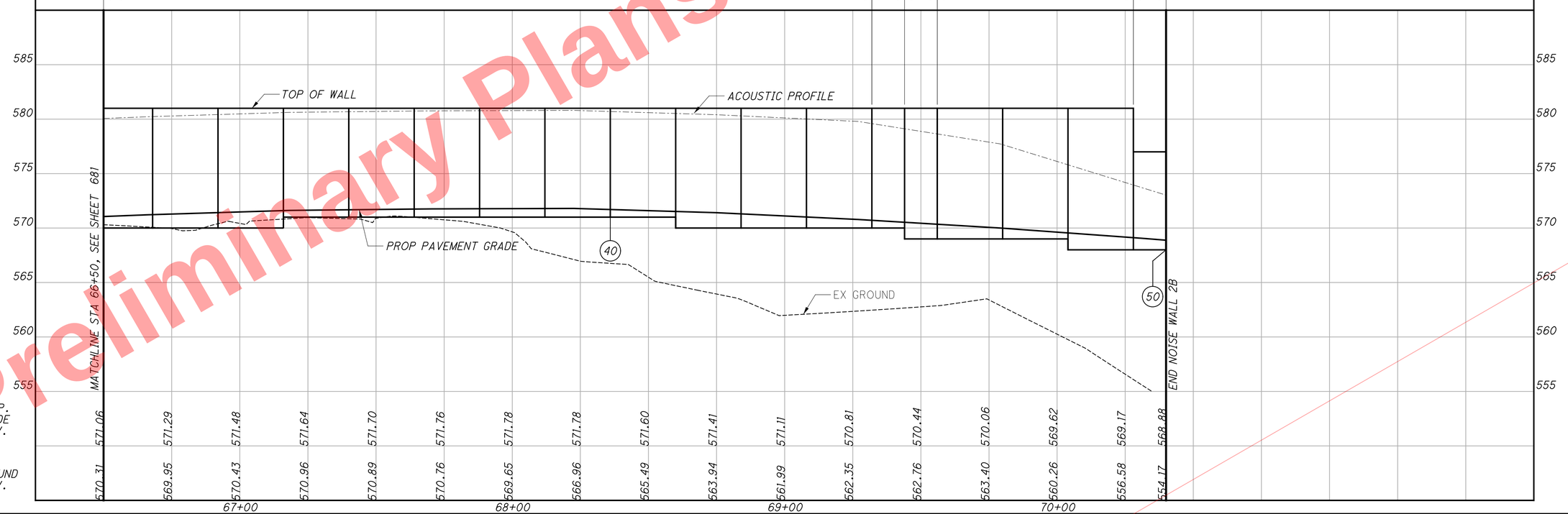

PROP. GRADE ELEV.	571.06	571.29	571.48	571.64	571.70	571.76	571.78	571.78	571.60	571.41	571.11	570.81	570.44	570.06	569.62	569.17	568.88			
EX. GROUND ELEV.	570.31	569.95	570.43	570.96	570.89	570.76	569.65	566.96	565.49	563.94	561.99	562.35	562.76	563.40	560.26	556.58	554.17			

67+00 68+00 69+00 70+00

Preliminary Plans - Not For Reference Only

PLAN AND PROFILE - NOISE WALL 2B
STA. 66+50 TO STA. 70+40

HORIZONTAL SCALE IN FEET
0 10 20 40

CALCULATED CFR
CHECKED NCK

HAM-75-7.85

682
1047

G:\projects\2010\B-10-020 HAM-75-7.85\77889\structures\WALL_002\sheets\77889_002WP405.dgn 5/13/2026 2:04:51 PM meets

Preliminary Plans - For Reference Only

J:\20110903\ODOT\HAM\7889\utilities\sheets\77889UF001.dgn 5/22/2026 10:28:26 AM hbrendlinger

CALCULATED RSH
CHECKED EDK

SANITARY SEWER PROFILES

HAM-75-7.85

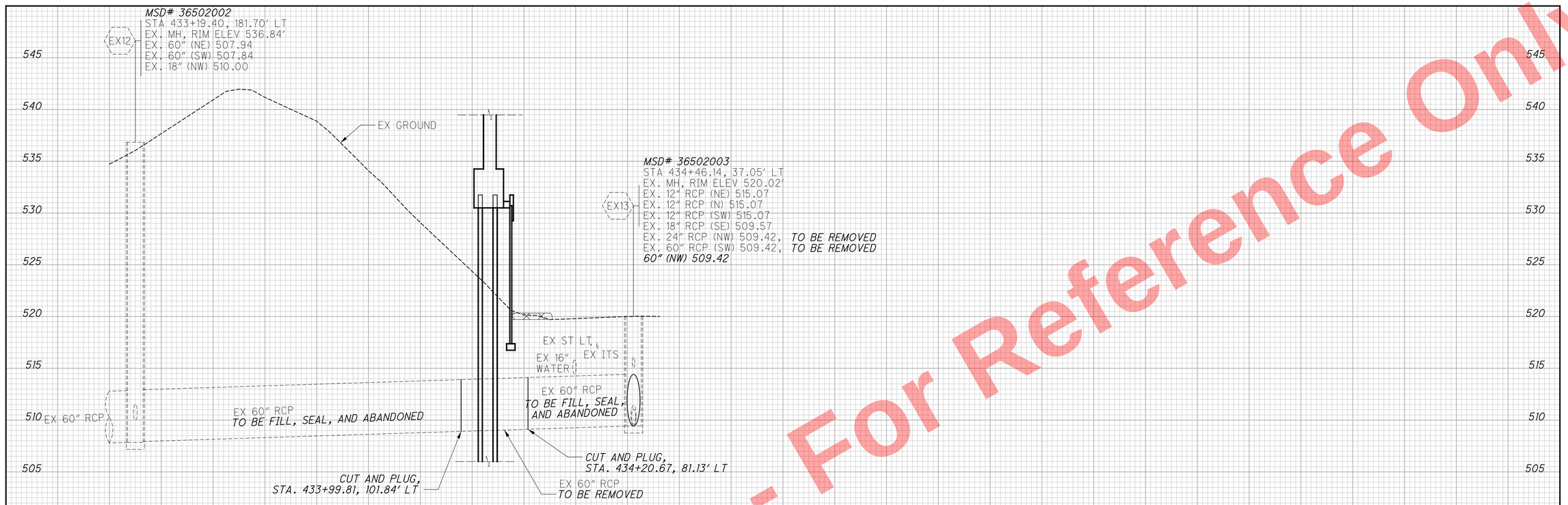

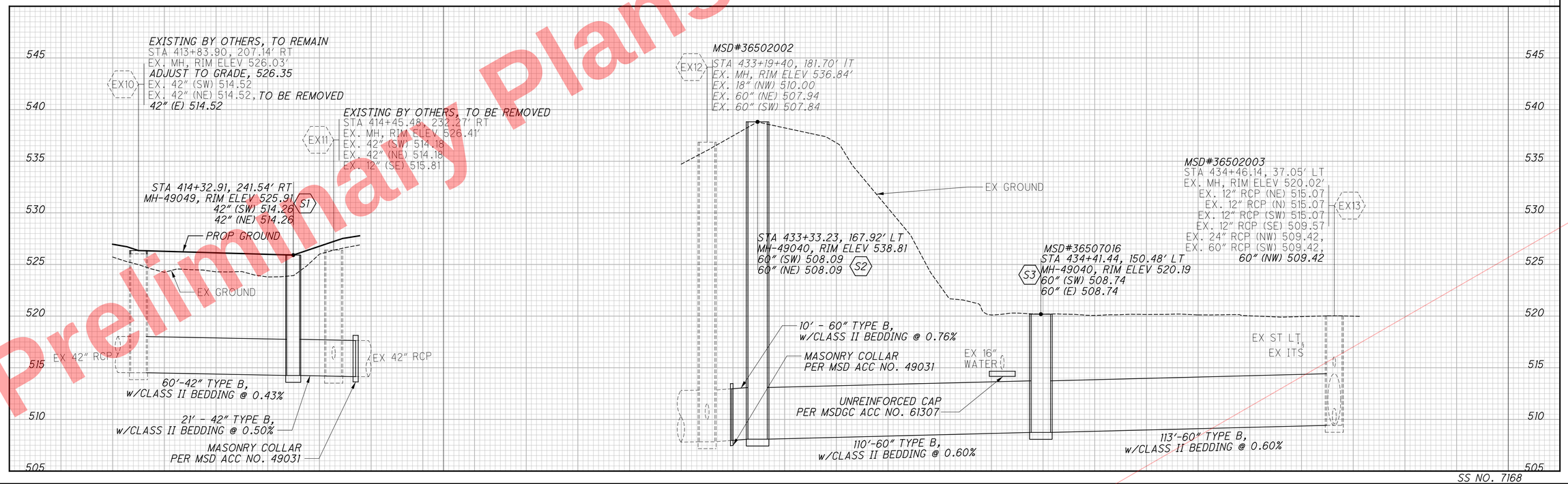

SS NO. 7168

Preliminary Plans - For Reference Only

CALCULATED RSH
CHECKED EDK

SANITARY SEWER PROFILES

HAM-75-7.85

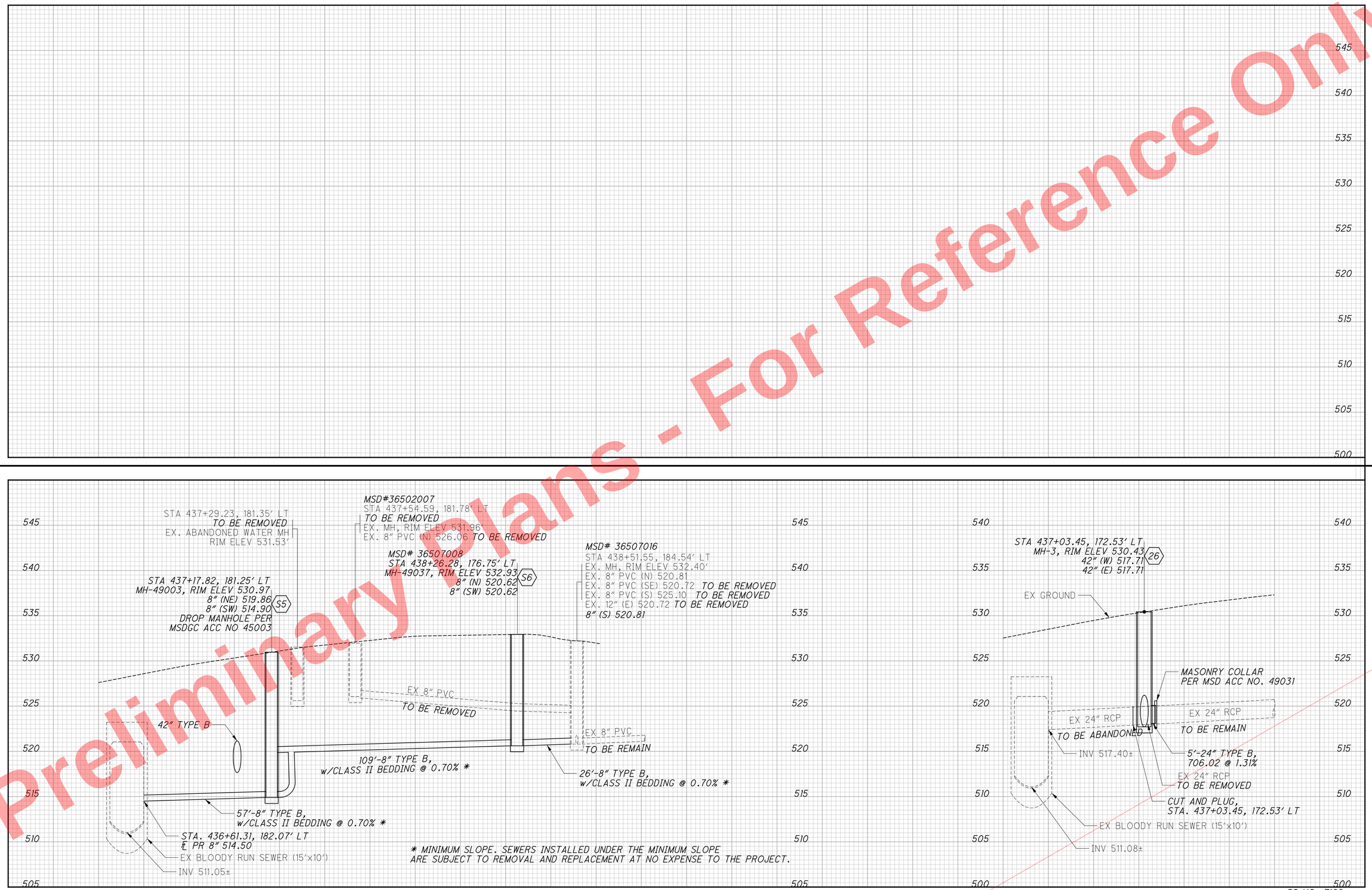

SS NO. 7168

684
1047

J:\20110903\ODOT\HAM\7889\utilities\sheets\77889UF002.dgn 5/22/2026 10:28:27 AM hbrendlinger

GENERAL PROVISIONS

The Contractor is advised that there are several changes to the most recent edition of the City of Cincinnati Supplement dated January 1, 2023. These General Provisions include these changes. The Supplement and a Summary of Changes can be purchased or downloaded from the City's website:
http://www.cincinnati-oh.gov/dote/assets/File/2023%20CITY%20SUPPLEMENT-FINAL.pdf

Water main items are to be constructed in accordance with the provisions of the State of Ohio, Department of Transportation, Construction and Material Specifications, dated January 1, 2023, and modified by the City of Cincinnati Supplement to said State of Ohio Specifications, effective January 1, 2023, and any supplements or changes thereto. Copies of the State specifications are on file at the Office of Contract Sales of the State of Ohio, Department of Transportation, 25 South Front Street, Columbus, Ohio, and at the offices of the City Engineer of Cincinnati, Ohio. Submittal of a bid for this project implies that the Contractor has taken all provisions of the Supplement into account.

The Greater Cincinnati Water Works (GCWW) understands that differing site conditions results in extra work/change orders to the project. Change orders on GCWW contracts will be done in strict accordance with Item 109.05 C of the State of Ohio Department of Transportation Construction and Material Specifications dated January 1, 2023 or most recent edition and as modified in this City of Cincinnati Supplement. GCWW limits the mark up on wages and fringe benefits as described in 109.05 C. 2. "Labor" to 30%. It is expressly understood that regardless of the nature of the claim, or change in scope of work, the Contractor is not entitled to compensation for loss of anticipated profit or production.

As defined in the City of Cincinnati Supplement, sections 107.07 and 107.071, the Contractor is required to submit, at the time of the pre-construction meeting, a Site Safety Plan. Furthermore, the Contractor shall have an authorized and competent safety representative assigned to the project site.

The Contractor is advised that he has certain responsibilities under Section 153.64 of The Ohio Revised Code. For all underground utilities, contact the Ohio Utilities Protection Service at 1-800-362-2764 (toll free) 48 hours in advance of work. The Contractor is advised that all utility information has been shown on the contract plans from information provided by the owner of each utility in compliance with Sec. 153.64 of the Ohio Revised Code. In cases where utility information is incorrect and it results in a change in the contract plans the Contractor shall first notify the owner of the utility to determine the necessary course of action. The Contractor shall submit any subsequent claims as a result of downtime or additional work to the owner of the conflicting utility. The GCWW will not accept claims for any utility other than those as a result of incorrect water main and related appurtenance information.

The Contractor must locate or "pot hole" all utilities within the alignment of the proposed main a minimum of 50 feet ahead of pipe laying. Test holes must be dug, or trench excavated, a minimum of 50 feet (15.2 m) in advance of pipe laying, to assure proper clearance between the water main and any utility crossing, or underground structure. All utilities and structures shall be suitably braced and supported. The Contractor shall understand that any obstructions encountered in the installation of the main, due to the failure of having 50 feet (15.2m) of trench excavated ahead of laying operations, may require removal and relaying of the pipe at the contractors expense. The GCWW will not accept a claim for different utility conditions encountered when test holes are not performed as required.

Item 1120, "Exploratory Excavation", shall not include excavations within the limits of the proposed trench as defined in 1101.04 and 1101.05. Test holes are required on all utilities within 50 feet of the last laid pipe. Test holes within the alignment of the proposed trench are included in the Contractor's unit bid for Item 1101. Locations to be explored will vary from areas within the roadway to areas outside of the roadway.

It is the nature of construction that unmarked utilities or utilities not shown on the plans may be encountered within the excavation for the proposed work. The contractor is responsible for identifying all utilities encountered within the excavation and removing any abandoned utilities as necessary for the work. If abandoned utilities are encountered that: are shown on the plans, are crossing the trench, or do not impede the excavation; no extra payment will be made to the contractor. Such work shall be included in the contractor's unit price bid for the appropriate "Item 1101 Furnishing & Laying Pipe and Fittings". If abandoned utilities are encountered that: are not shown on the plans, are along the length of the trench, and impede the excavation, such work will be paid via the contractor's unit price for "Item 202 Existing Pipe Removal".

Street pavement or sidewalk should not be disturbed for a distance of more than 200 Feet (61.0 m) ahead of the last laid pipe. Backfill shall be completed within 50 feet (15.2 m) of the last laid pipe. Temporary or permanent surface restoration must be installed within a distance of 200 feet (61.0 m) of the laid pipe, including those areas where main installations occur within a closed lane or closed street condition. Roadway plates may be used as a temporary measure for a period not to exceed 24 hours without the approval of the GCWW.

Any undermined pavement of more than 6 inches horizontal must be removed prior to starting trench backfill. If undermining of pavement occurs more than 1 foot, then pavement must be shored to protect traffic, or arrangements made for additional lane closures must be made. If problems continue to occur regarding trenching integrity, sheeting and bracing can be required by the City Engineer or the City Engineer's representative, at the contractor's expense. If any tunneling is necessary, adequate information shown in both plan and profile and tunneling procedures must be submitted to the City Engineer's Office prior to commencement of work.

The GCWW has made every effort to depict the pipe sewers and lateral information on the plans. The Contractor is advised that sewer laterals are shown in plan view only. The Contractor shall determine the elevation of the sewer laterals in advance of laying the water main at these crossings. If the sewer laterals require changing in order to avoid conflict with the water main, or if the Contractor encounters a pipe sewer or lateral in the excavation that was not shown on the plans and requires a change of grade or alignment due to the installation of the water main, the Contractor shall furnish all necessary labor, material, tools, and equipment required to change the grade or alignment of pipe sewers and laterals of various sizes, allowing installation of water mains and appurtenances as shown on the plans, or as directed by the GCWW Inspector. This work shall include all necessary excavation, backfill, and restoration. The Contractor will be compensated under Item 1123, "Changing Pipe Sewers 8 Inch and Under". When crossing sanitary and combination sewers, a vertical clearance of 18" must be maintained.

Notice of Confidentiality – Public Infrastructure Record

This Document is a Public Infrastructure Record of the City of Cincinnati and its Greater Cincinnati Water Works, and is not subject to the public disclosure requirements of the public records laws of the State of Ohio and federal government. This Document is being provided on the basis of your reported need, and shall be considered confidential. By accepting this Document, you agree that it will not be shared or otherwise disclosed to anyone other than persons who have a direct need to know for the sole purpose of carrying out the project for which this Document was obtained. Anyone receiving this Document is bound by the same confidentiality requirements and must take precautions to protect against its dissemination.

The failure to observe the confidentiality requirements of this Notice shall serve as the basis for the City of Cincinnati to immediately seek legal recourse, including the recovery of actual damages resulting from unauthorized access or disclosure of the Document.

1-800-362-2764
OHIO Utilities Protection SERVICE
Call Before You Dig

The Contractor is advised that due to the alignment of the proposed water main, it may be necessary to install a temporary valve box over an existing chambered valve that must remain in service during the water main installation as directed by the GCWW Inspector. The chamber shall be abandoned, a valve box (furnished by the contractor) placed over the valve, and upon project completion, the valve box must be removed. The contractor will not receive additional compensation for this work, but should include the cost of this work in his unit bid price for Item 1101, "Furnishing & Laying Ductile Iron Pipe and Fittings".

It is the Contractor's responsibility to provide adequate water supply for domestic and fire fighting purposes. In order to accomplish the water main connections with a minimum amount of inconvenience to the consumers, it may be necessary to do the work at other than normal working hours or as may be scheduled by the GCWW.

The Contractor is advised that the operating pressure of the existing water main within the limits of the subject project is approximately **160-185 P.S.I.**

In order to minimize the inconvenience of the consumers, the number of shutdowns required to do the proposed water main work shall be limited. Only one shutdown, limited to 8 hours, will be allowed during a 24 hour period.

All water service branches have a minimum cover of 3.0 feet.

The Contractor is advised that it shall be necessary to install temporary Plug/caps on the existing and proposed water mains in order to maintain service during testing and water main and branch connections. These temporary Plug shall be furnished by the contractor. He is responsible for their proper installation. The cost for this work shall be included in the Contractor's unit bid price for the appropriate Item 1101, "Furnishing & Laying Ductile Iron Pipe and Fittings".

The Contractor is required to excavate and expose the existing utilities and existing water mains along the line of the proposed water main and all proposed connection points to verify location, diameter, line and grade. Also, if the removal of the bulkhead or plug is required all excavation and temporary/permanent restoration shall be compensated under the Contractor's unit bid price for Item 1101, "Furnishing & Laying Ductile Iron Pipe and Fittings".

The Contractor is advised that all C.J. Plug are to be restrained with a Field Lok Gasket and all M.J. caps are to be restrained using a M.J.R.G.. This includes temporary Plug and caps for testing purposes. When a temporary plug is used, the contractor is permitted to remove the plug by cutting the section of pipe containing the plug and using a solid sleeve at that point to complete the tie-in. In the event that a cap is used, the contractor shall remove the M.J.R.G. and cap before completing the tie-in.

The Contractor is advised that on any fire hydrant required to be relocated with this project, all bolt assemblies shall be replaced. The cost for this work shall be included in the unit bid price for Item 1113 "Relocating Existing Fire Hydrants". No part of any fire hydrant setting shall be installed closer than five feet to any driveway, inlet, utility pole or guy wire anchor. No part of any fire hydrant setting shall be installed closer than five feet to any driveway, inlet, utility pole or guy wire anchor. Contractor shall provide all labor, material, equipment and traffic control to test fire flow on all fire hydrants included in this water main replacement project in accordance with the fire hydrant flow testing scope included with the bid documents. If necessary, existing adjacent hydrants may need to be included in the fire hydrant testing. The need to test existing hydrants will be determined by the GCWW inspector. Contractor shall provide all labor, material and equipment to paint [all] fire hydrants [numbered F.H.#1 – F.H.#2] that are located within the Cincinnati City limits in accordance with the fire hydrant painting scope included with the bid documents. Painting shall only apply to fire hydrants inside the Cincinnati City limits as noted on the plans.

Item 1111, "Water Works Valve Chambers", shall also cover the furnishing and installing of Precast Reinforced Concrete Chambers in accordance with O.D.O.T. Specification 706.13. All pertinent provisions of this item and GCWW Standard Drawing No. 104-1A shall apply. Precast chambers shall be used in all locations where space permits and as directed by the GCWW.

Air cocks may be necessary for the proper operation of the water system. The Air Release Assembly, which may not be shown on the drawing, will be furnished and installed by the Contractor per the detail on these plans, if required by the GCWW.

It shall be the Contractor's responsibility to arrange for the removal and replacement of any poles and guys necessary for the installation of the proposed water mains, and any cost connected thereto shall be at his expense.

All pipe and specials shall be in accordance with City of Cincinnati Specification 40-110-16.

All procured water main and appurtenance materials, other than those furnished through the GCWW must be properly certified; certified for GCWW Inspection: or already inspected by the GCWW. Pipe, fittings, valves and fire hydrants must be GCWW inspected and stamped materials.

The Contractor should be advised that all Fittings (Bends, Offset Bends, Tees, Crosses, Sleeves, Caps and Plug) supplied for this job may be either ANSI/AWWA C-110 Full-body Ductile Iron, Cement Lined Fittings or ANSI/AWWA C-153 Compact Ductile Iron, Fusion Bonded Epoxy Coated Fittings in accordance with City of Cincinnati, Department of Purchasing, Standard Specification No. 40-110-12 for Pipe and Fittings Water, Ductile Iron 3" to 60". All fittings are subject to inspection and approval by appropriate GCWW Inspection personnel. Minor pinholes and abrasions to epoxy coated valves and fittings are to be repaired using 3M Hot Melt Patch Compounds (H.M.P.C.) in the stick form. Repair procedures shall be in accordance with the General Application Steps identified for the H.M.P.C. All repairs to epoxy coated fittings are subject to inspection and approval by appropriate GCWW Inspection personnel.

All rejected material, including pipe and fittings, shall be removed from the project site immediately.

The Contractor must maintain access to sidewalks at all times. Storage of any materials within the public Right of Way, including sidewalks, is not permitted unless approved by GCWW, the Project Engineer, or as indicated on the approved plans.

All copper tubing shall be type "K" of a standard nominal size: 3/4", 1", 1-1/2" and 2". All fittings will have copper flare type connections and shall be in accordance with City of Cincinnati Specification No. 40-113-05.

The contractor shall furnish the necessary certifications for branch material.

All proposed water mains will be hydrostatically tested for leakage in accordance with 1101.054,'Hydrostatic Test for Leakage', of the appropriate Item 1101, "Furnishing & Laying Ductile Iron Pipe and Fittings".

The Contractor will be responsible for filling, flushing, and pressure testing new water mains, 20" or smaller. The contractor will provide all labor, material and equipment (including the necessary pumps to apply the pressure test). The Water Works will provide the necessary meter and gauge. All costs for this work shall be included in the contractor's unit bid price for Item 1101, "Furnishing & Laying Ductile Iron Pipe and Fittings". Once the filling and pressure testing are completed, the Contractor will be responsible for flushing the proposed water main and the CGWW will be responsible for bacteria sampling. The GCWW will be responsible for filling, pressure testing and flushing new water mains greater than 20".

The Contractor is responsible for all pipe sewers disturbed in the completion of this project. In the event it becomes necessary to repair or replace existing pipe sewers, the Contractor must notify Sewer Maintenance, (513)244-1369, before proceeding with the work.

The Contractor is advised that his unit bid prices for the appropriate Item 1101, "Furnish & Install Pipe and Fittings", includes final restoration of all disturbed surfaces. The GCWW will not make full compensation under Item 1101 until final restoration is complete.

"All valve and air release box assemblies shall be domestically manufactured.

All box assemblies for 12-inch and smaller gate valves and 1-inch air releases shall be either Tyler Union Series 6850, EJ Series 8500, or Bingham & Taylor Series 4905, or GCWW approved equal. Box assemblies for these applications require a frost plug and "BOXLOK."

All box assemblies for 16-inch and above butterfly or gate valves and 2-inch air releases shall be EJ Series 460, or GCWW approved equal. Box assemblies for these applications require a frost plug.

All costs associated with adherence to these requirements shall be included in the Contractor's unit bid price for Item 1116 – Furnishing and Installing Valve Box Complete.

SUGGESTED BILL OF MATERIAL

FURNISHED BY CONTRACTOR

QTY	UNIT	DESCRIPTION
1	EACH	6" DUCTILE IRON PIPE, C.J., TH. CL. 55, 20' LENGTH
7	EACH	8" DUCTILE IRON PIPE, C.J., TH. CL. 55, 20' LENGTH
1	EACH	12" DUCTILE IRON PIPE, C.J., TH. CL. 56, 20' LENGTH
1	EACH	16" DUCTILE IRON PIPE, C.J., TH. CL. 56, 20' LENGTH
2	EACH	16" WIDE POLYETHYLINE TUBE, 16" WIDE X 20' LONG, 4 MIL CROSS LAMINATE
8	EACH	20" WIDE POLYETHYLINE TUBE, 20" WIDE X 20' LONG, 4 MIL CROSS LAMINATE
2	EACH	27" WIDE POLYETHYLINE TUBE, 20" WIDE X 20' LONG, 4 MIL CROSS LAMINATE
2	EACH	34" WIDE POLYETHYLINE TUBE, 20" WIDE X 20' LONG, 4 MIL CROSS LAMINATE
2	EACH	1 1/2" WIDE POLYETHYLINE TAPE WITH ADHESIVE (100' ROLL)
4	EACH	8" 45 DEGREE BEND, 2 M.J.
1	EACH	8" CAP, M.J. (TEMP.)
2	EACH	8" SOLID SLEEVE, 2 M.J.
2	EACH	12" SOLID SLEEVE, 2 M.J.
1	EACH	16" SOLID SLEEVE, 2 M.J.
1	EACH	8" X 6" TEE, 2 M.J. X FLG.
1	EACH	16" X 6" TEE, 2 M.J. X FLG.
1	EACH	12" X 8" TEE, 3 M.J.
2	EACH	6" VALVE, FLG, X M.J.
1	EACH	8" VALVE, 2 M.J.
2	EACH	6" FLANGE TYTE GASKET
3	EACH	VALVE BOX COMPLETE, IRON
3	EACH	VALVE BOX FROST PLUG
3	EACH	VALVE BOX BOXLOK (VALVE BOX ALIGNMENT DEVICE)
2	EACH	6" FH EXTENSION (6" LONG)
4	EACH	6" MECHANICAL JOINT RESTRAIN GLAND (MJRG)
19	EACH	8" MECHANICAL JOINT RESTRAIN GLAND (MJRG)
2	EACH	12" MECHANICAL JOINT RESTRAIN GLAND (MJRG)
4	EACH	16" MECHANICAL JOINT RESTRAIN GLAND (MJRG)
5	EACH	8" FIELD LOK GASKET

SERVICE BRANCH MATERIALS FURNISHED BY CONTRACTOR

QTY	UNIT	DESCRIPTION
1	EACH	3/4" FERRULE
1	EACH	3/4" INSULATING COUPLING
1	EACH	CURB BOX

FURNISHED BY GCWW

QTY	UNIT	DESCRIPTION
2	EACH	6" FIRE HYDRANT, KENNEDY K81-D

***Note: Contractor shall verify the size and material of each service branch at the property line prior to installing branch. Cost for this work to be included in Item 1126-"Furnishing and Installing Copper Service Pipe w/ Aqua Shield".

The materials listed are only suggested for use during the water main and branch relocation work as proposed on the drawings. The contractor shall furnish additional material where needed. No allowance will be made for unused material nor will any extra payment be made for additional specials required to complete the water main work. Before ordering material the contractor is responsible for making his own field measurements and for field verifying the O.D. of existing water mains where sleeves and pipe couplings are involved.

Note 1:
Valves furnished by the contractor shall be; American Resilient Wedge Gate Valve Series 2500, U.S. Pipe Metroseal Gate Valve, Kennedy Valve Ken Seal II Resilient Gate Valve, Clow F-6100 Series Resilient Wedge Gate Valve, Mueller 2360 Resilient Wedge Gate Valve.

Note 2:
Low-Lead Brass Material Requirements:
All components in contact with water shall be fabricated from Sebiloy II or Federalloy I-836 alloys or a material approved by the Engineer. All components that do not come in contact with water shall comply with the requirements of ASTM B 62 Copper Alloy Number.
Coated or washed metals are not acceptable if their lead levels exceed .25% by weight prior to the coating or washing process. All service fittings and materials shall be certified as suitable for contact with drinking water by an accredited certification organization in accordance with ANSI/NSF Standard 61, Drinking Water Systems Components – Health Effects. All service fittings shall either be stamped or embossed with the letter "NL", to indicate "No-Lead", or marked to indicate that the product is manufactured from the low-lead alloys.

Note 3:
Special Note on Service Pipe in Corrosive Soils:
Service tubing is to be soft K Copper manufactured to the requirements of ASTM B88. Service tubing coating shall have NOVA Polyethylene LLDPE extrusion resin PP-0118-F coating to meet minimum of .026 mil thickness containing UV inhibitors. Service tubing shall have identification & traceability on both copper & plastic continuously line-marked with tube contents, ASTM specification, size, & descending footage. Unique lot number printed on both copper & plastic allowing product to be traced back to origin and time of manufacturing. Service tubing shall be Aqua Shield as manufactured by KAMCO Products Inc. or approved equal.

Note 4:
Mechanical Joint Restrain Gland (MJRG):
All mechanical joint restraint glands furnished by the contractor shall be any of the following:
EBAA--Megalug
TYLER/UNION--Tufgrip
STAR--Stargrip
FORD--Uni-Flange Series 1400

All products shall be domestically manufactured.

STANDARD WATER MAIN TRENCH INSTALLATION DETAIL
(TEMPORARY RESTORATION)

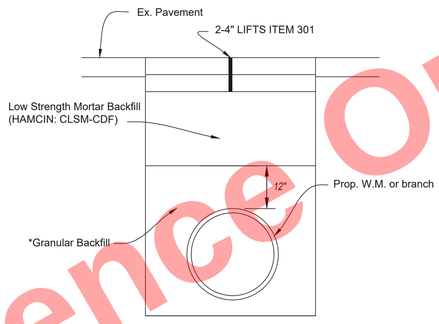

**PERMANENT RESTORATION SHALL BE DONE IN ACCORDANCE WITH THE CONTRACT SPECIFICATIONS AND/OR PROJECT PLAN TYPICAL SECTIONS.

IN AREAS WHERE THE PAVEMENT; BASE AND/OR SUB-BASE IS TO BE REPLACED AS PART OF THE ROADWAY CONTRACT, THE COST FOR PERMANENT PAVEMENT RESTORATION SHALL BE INCLUDED UNDER THE APPROPRIATE PAVEMENT BID ITEMS. COST FOR TEMPORARY PAVEMENT RESTORATION IN THESE AREAS SHALL BE INCLUDED IN THE CONTRACTOR'S APPROPRIATE UNIT BID PRICE FOR ITEM 1101 OR ITEM 1126.

UNLESS OTHERWISE NOTED ON THE PLANS, AREAS WHERE THE EXISTING PAVEMENT, BASE AND/OR SUB-BASE ARE NOT TO BE DISTURBED, THE COST FOR TEMPORARY AND PERMANENT PAVEMENT RESTORATION SHALL BE INCLUDED IN THE CONTRACTOR'S APPROPRIATE UNIT BID PRICE FOR ITEM 1101 OR ITEM 1126.

*BACKFILL OF THE WATER MAIN AND BRANCH TRENCH SHALL BE DONE IN ACCORDANCE WITH G.C.W.W. SPECIFICATIONS. ALL WATER MAINS AND BRANCHES INSTALLED OUTSIDE OF THE PAVEMENT AREA SHALL UTILIZE GRANULAR BACKFILL IN LIEU OF THE CONTROL DENSITY FILL. ALL COSTS FOR BACKFILL SHALL BE INCLUDED UNDER ITEM 1101 OR ITEM 1126.

CONTROLLED DENSITY FILL MUST MEET BOTH HAMCIN: CLSM-CDF PERFORMANCE SPECIFICATION AND O.D.O.T. SPECIFICATION. ALL FLOWABLE FILL PRODUCTS SHALL MEET THE REQUIREMENTS OF THE CURRENT HAMCIN CLSM-CDF BACKFILL SPECIFICATION (DATED MARCH 2015). COPIES OF THE HAMCIN CLSM-CDF BACKFILL SPECIFICATION ARE MADE AVAILABLE AT THE GCWW ENGINEERING OFFICES AT 4747 SPRING GROVE AVENUE, CINCINNATI DEPARTMENT OF TRANSPORTATION & ENGINEERING AT 801 PLUM STREET, OR THEIR WEBSITE:
HTTP://WWW.CINCINNATI-OH.GOV/DOTE.MANUALS-PERMITS-SUPPLEMENTS/
ALSO, THE CONTRACTOR SHALL SUBMIT, PRIOR TO THE START OF CONSTRUCCTION, THE NECESSARY DOCUMENTATION FOR REVIEW AND APPROVAL BY THE GCWW.

PLEASE NOTE THAT THE G.C.W.W. REQUIREMENT IS IN ADDITION TO HAMCIN SPECIFICATIONS FOR FLOWABLE FILL PRODUCTS. A COPY OF THE G.C.W.W. REQUIREMENT IS AVAILABLE AT THE G.C.W.W. ENGINEERING OFFICE LOCATED AT 4747 SPRING GROVE AVENUE. CONTACT THE SUPERVISOR OF INSPECTION AT 591-7870.

PRIOR TO THE START OF CONSTRUCTION, THE CONTRACTOR SHALL SUBMIT THE NECESSARY CONTROLLED DENSITY FILL COMPLIANCE DOCUMENTATION FOR REVIEW AND APPROVAL BY THE G.C.W.W.

GCWW NOTE:
ALL FIELD LAYOUT OF WATER MAIN PIPE AND SPECIALS SHALL BE THE RESPONSIBILITY OF THE CONTRACTOR AND SHALL BE PERFORMED BY A LICENSED SURVEYOR.

INDEX

General Provisions 1
Suggested Bill of Materials 1
GCWW General Summary 2
Plan 3
Restoration Details 1

HAM 75-7.85 (PHASE 2)

APPROVED: DS-1002 / MF-17140

GCWW SUPERVISING ENGINEER - DESIGN — 3/2/26 DATE

STATE OF OHIO · JOSEPH KORAN · PE.65488 · REGISTERED PROFESSIONAL ENGINEER

OhioEPA — Ohio Environmental Protection Agency "Self-Certification" letter required prior to the start of construction.

☒ OEPA CERTIFICATION EXEMPT
☐ NON - EXEMPT

OEPA REVIEW — 3/2/26 DATE

Preliminary Plans - For Reference Only

GREATER CINCINNATI WATER WORKS
ENGINEERING DIVISION / DESIGN SECTION
3045 EASTERN AVENUE, CINCINNATI, OHIO 45226

HORIZONTAL AND VERTICAL SCALE IN FEET
0 10 20 40

CALCULATED E.G.B. CHECKED R.R.

REVISIONS

HAM 75-7.85 (PHASE 2)
COVER SHEET

DS-1002
MF-17140

01
03

685
1047

HAM 75-7.85 (PHASE 2)

	GENERAL SUMMARY						
ODOT ITEM	ODOT ITEM NUMBER AND/OR EXTENSION	PROJECT COST	GCWW COST	TOTAL QUANTITY	UNITS	DESCRIPTION	GCWW SPEC. NUMBER
SPECIAL	638E11602	19	0	19	LIN. FT.	FURNISHING AND LAYING 6" DUCTILE IRON PIPE AND FITTINGS (CIN. 1101)	1101
SPECIAL	638E11604	145	0	145	LIN. FT.	FURNISHING AND LAYING 8" DUCTILE IRON PIPE AND FITTINGS (CIN. 1101)	1101
SPECIAL	638E11608	5	0	5	LIN. FT.	FURNISHING AND LAYING 12" DUCTILE IRON PIPE AND FITTINGS (CIN. 1101)	1101
SPECIAL	638E11610	20	0	20	LIN. FT.	FURNISHING AND LAYING 16" DUCTILE IRON PIPE AND FITTINGS (CIN. 1101)	1101
SPECIAL	602E20001	2	0	2	CU. YD.	CONCRETE, CLASS C (CIN. 1110)	1110
SPECIAL	638E20750	2	0	2	EACH	FURNISHING AND INSTALLING FIRE HYDRANT (CIN. 1112)	1112
1112	638E98000	1	0	1	EACH	FIRE HYDRANT FLOW TESTING (EXISTING)	1112
1112	638E98000	2	0	2	EACH	FIRE HYDRANT FLOW TESTING (NEW)	1112
1112	638E98000	1	0	1	EACH	FIRE HYDRANT PAINTING (EXISTING)	1112
1112	638E98000	2	0	2	EACH	FIRE HYDRANT PAINTING (NEW)	1112
SPECIAL	638E20760	2	0	2	EACH	REMOVING FIRE HYDRANT (CIN. 1114)	1114
SPECIAL	638E20762	2	0	2	EACH	FURNISHING AND INSTALLING FIRE HYDRANT EXTENSION, 6" LONG (CIN. 1115)	1115
SPECIAL	638E20498	3	0	3	EACH	FURNISHING AND INSTALLING VALVE BOX, COMPLETE (CIN. 1116)	1116
SPECIAL	203E10001	5	0	5	CU. YD.	*ADDITIONAL EXCAVATION (CIN. 1119)	1119
SPECIAL	203E10001	5	0	5	CU. YD.	*EXPLORATORY EXCAVATION (CIN. 1120)	1120
SPECIAL	638E98000	1	0	1	EACH	REMOVING EXISTING MANHOLE CURB AND COVER (CIN. 1122)	1122
SPECIAL	638E98000	2	0	2	EACH	REMOVING EXISTING VALVE BOX (CIN. 1122)	1122
SPECIAL	638E20500	8	0	8	EACH	VALVE BOX ADJUSTED TO GRADE	1125
SPECIAL	638E20806	1	0	1	EACH	RECONNECTING EXISTING 3/4" SERVICE BRANCH (CIN.1128)	1128
SPECIAL	638E20904	1	0	1	EACH	FURNISHING AND INSTALLING CURB AND ROADWAY BOX (RECONNECT) (CIN. 1131)	1131
1132	638E98000	2	0	2	EACH	RESETTING EXISTING CURB AND ROADWAY BOX	1132
509	509E25000	216	0	216	POUND	REINFORCING STEEL	509
602	602E98200	1	0	1	CU. YD.	*BRICK MASONRY	602
SPECIAL	638E30002	1	0	1	MBF	*SHEETING AND BRACING ORDERED LEFT IN PLACE	637
	* CONTINGENCY						

Preliminary Plans - For Reference Only

HORIZONTAL AND VERTICAL SCALE IN FEET
0 10 20 40

CALCULATED E.G.B.
CHECKED R.R.

REVISIONS

GREATER CINCINNATI WATER WORKS
ENGINEERING DIVISION / DESIGN SECTION
3045 EASTERN AVENUE, CINCINNATI, OHIO, 45226

HAM 75-7.85 (PHASE 2)
GCWW GENERAL SUMMARY

DS-1002
MF-17140

02
03

686
1047

HAM 75-7.85 (PHASE 2)

NOTICE OF CONFIDENTIALITY - PUBLIC INFRASTRUCTURE RECORD

THIS DOCUMENT IS A PUBLIC INFRASTRUCTURE RECORD OF THE CITY OF CINCINNATI AND ITS GREATER CINCINNATI WATER WORKS, AND IS NOT SUBJECT TO THE PUBLIC DISCLOSURE REQUIREMENTS OF THE PUBLIC RECORDS LAWS OF THE STATE OF OHIO AND FEDERAL GOVERNMENT. THIS DOCUMENT IS BEING PROVIDED ON THE BASIS OF YOUR REPORTED NEED, AND SHALL BE CONSIDERED CONFIDENTIAL. BY ACCEPTING THIS DOCUMENT, YOU AGREE THAT IT WILL NOT BE SHARED OR OTHERWISE DISCLOSED TO ANYONE OTHER THAN PERSONS WHO HAVE A DIRECT NEED TO KNOW FOR THE SOLE PURPOSE OF CARRYING OUT THE PROJECT FOR WHICH THIS DOCUMENT WAS OBTAINED. ANYONE RECEIVING THIS DOCUMENT IS BOUND BY THE SAME CONFIDENTIALITY REQUIREMENTS AND MUST TAKE PRECAUTIONS TO PROTECT AGAINST ITS DISSEMINATION.

THE FAILURE TO OBSERVE THE CONFIDENTIALITY REQUIREMENTS OF THIS NOTICE SHALL SERVE AS THE BASIS FOR THE CITY OF CINCINNATI TO IMMEDIATELY SEEK LEGAL RECOURSE, INCLUDING THE RECOVERY OF ACTUAL DAMAGES RESULTING FROM UNAUTHORIZED ACCESS OR DISCLOSURE OF THE DOCUMENT.

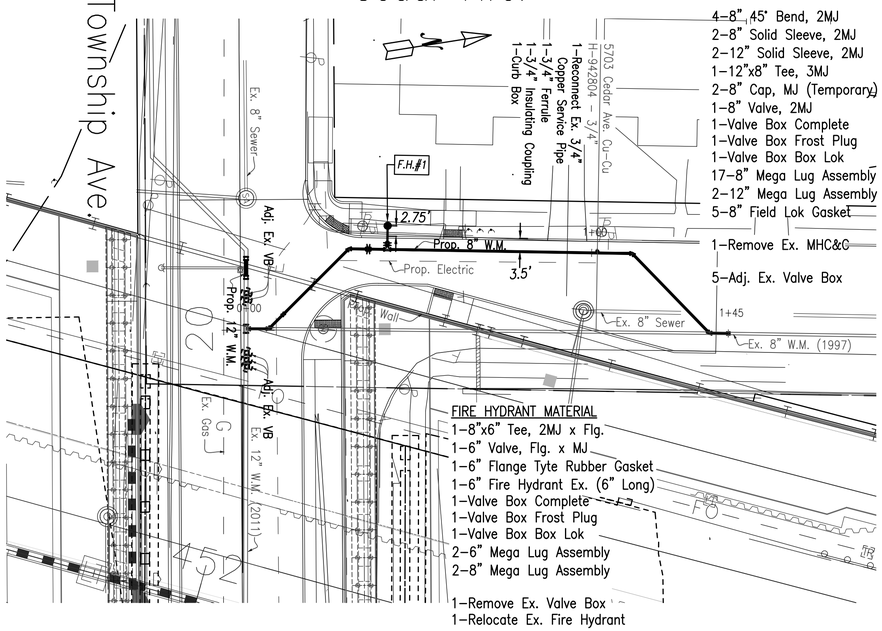

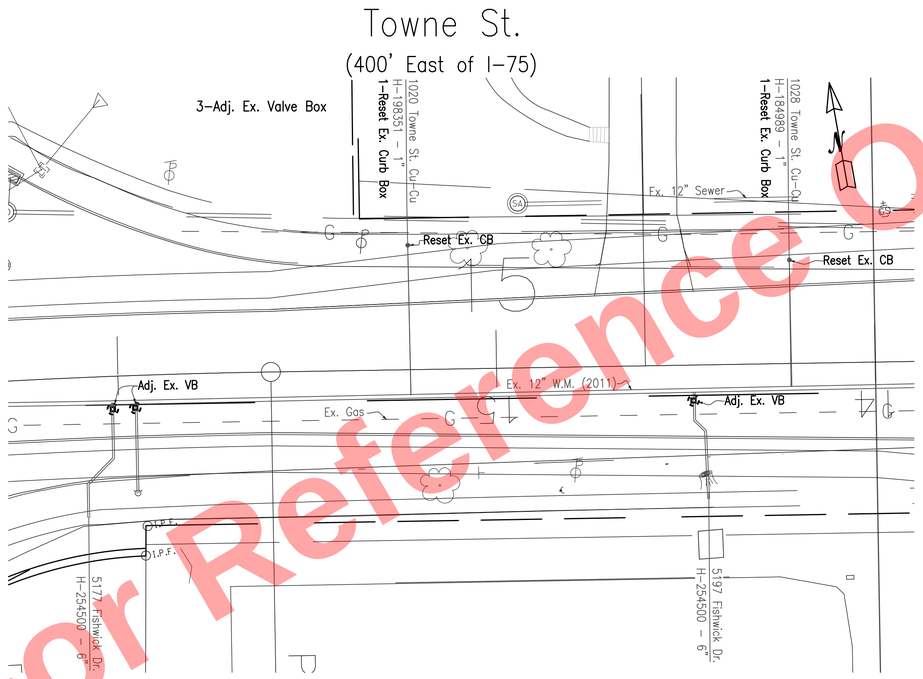

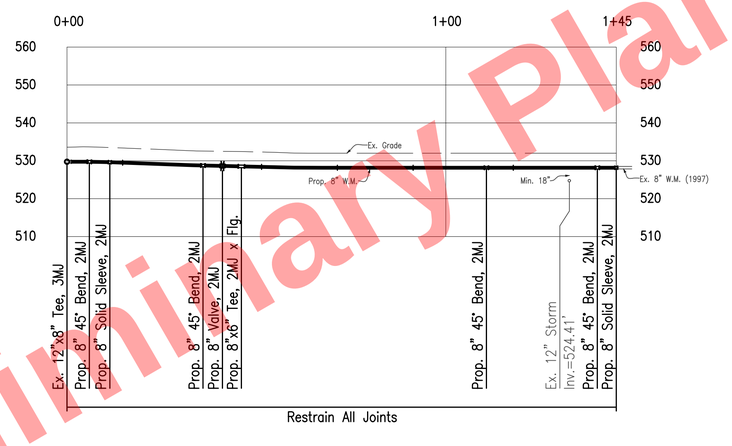

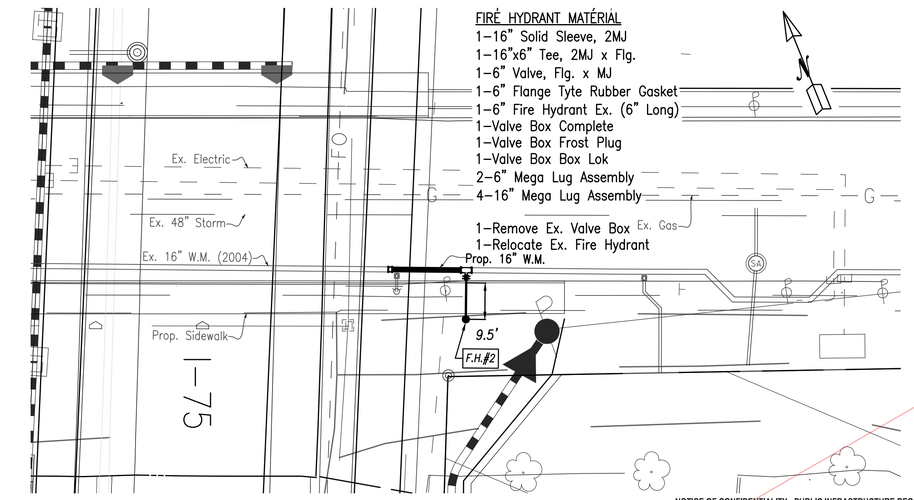

Preliminary Plans - For Reference Only

NOTICE OF CONFIDENTIALITY - PUBLIC INFRASTRUCTURE RECORD

THIS DOCUMENT IS A PUBLIC INFRASTRUCTURE RECORD OF THE CITY OF CINCINNATI AND ITS GREATER CINCINNATI WATER WORKS, AND IS NOT SUBJECT TO THE PUBLIC DISCLOSURE REQUIREMENTS OF THE PUBLIC RECORDS LAWS OF THE STATE OF OHIO AND FEDERAL GOVERNMENT. THIS DOCUMENT IS BEING PROVIDED ON THE BASIS OF YOUR REPORTED NEED, AND SHALL BE CONSIDERED CONFIDENTIAL. BY ACCEPTING THIS DOCUMENT, YOU AGREE THAT IT WILL NOT BE SHARED OR OTHERWISE DISCLOSED TO ANYONE OTHER THAN PERSONS WHO HAVE A DIRECT NEED TO KNOW FOR THE SOLE PURPOSE OF CARRYING OUT THE PROJECT FOR WHICH THIS DOCUMENT WAS OBTAINED. ANYONE RECEIVING THIS DOCUMENT IS BOUND BY THE SAME CONFIDENTIALITY REQUIREMENTS AND MUST TAKE PRECAUTIONS TO PROTECT AGAINST ITS DISSEMINATION.

THE FAILURE TO OBSERVE THE CONFIDENTIALITY REQUIREMENTS OF THIS NOTICE SHALL SERVE AS THE BASIS FOR THE CITY OF CINCINNATI TO IMMEDIATELY SEEK LEGAL RECOURSE, INCLUDING THE RECOVERY OF ACTUAL DAMAGES RESULTING FROM UNAUTHORIZED ACCESS OR DISCLOSURE OF THE DOCUMENT.

HORIZONTAL AND VERTICAL SCALE IN FEET
0 10 20 40

CALCULATED E.G.B.
CHECKED R.R.

REVISIONS

GREATER CINCINNATI WATER WORKS
ENGINEERING DIVISION / DESIGN SECTION
3645 EASTERN AVENUE, CINCINNATI, OHIO 45226

CEDAR AVE., TOWNE ST., LAIDLAW AVE.
PLAN AND PROFILE

DS-1002
MF-17140

03
03

687
1047

HAM 75-7.85 (PHASE 2)

LEGEND

E.A. = END ANCHORAGE
E.S. = END SECTION
A.A. = ANCHOR ASSEMBLY
BTA = BRIDGE TERMINAL ASSEMBLY
APP = AS PER PLAN

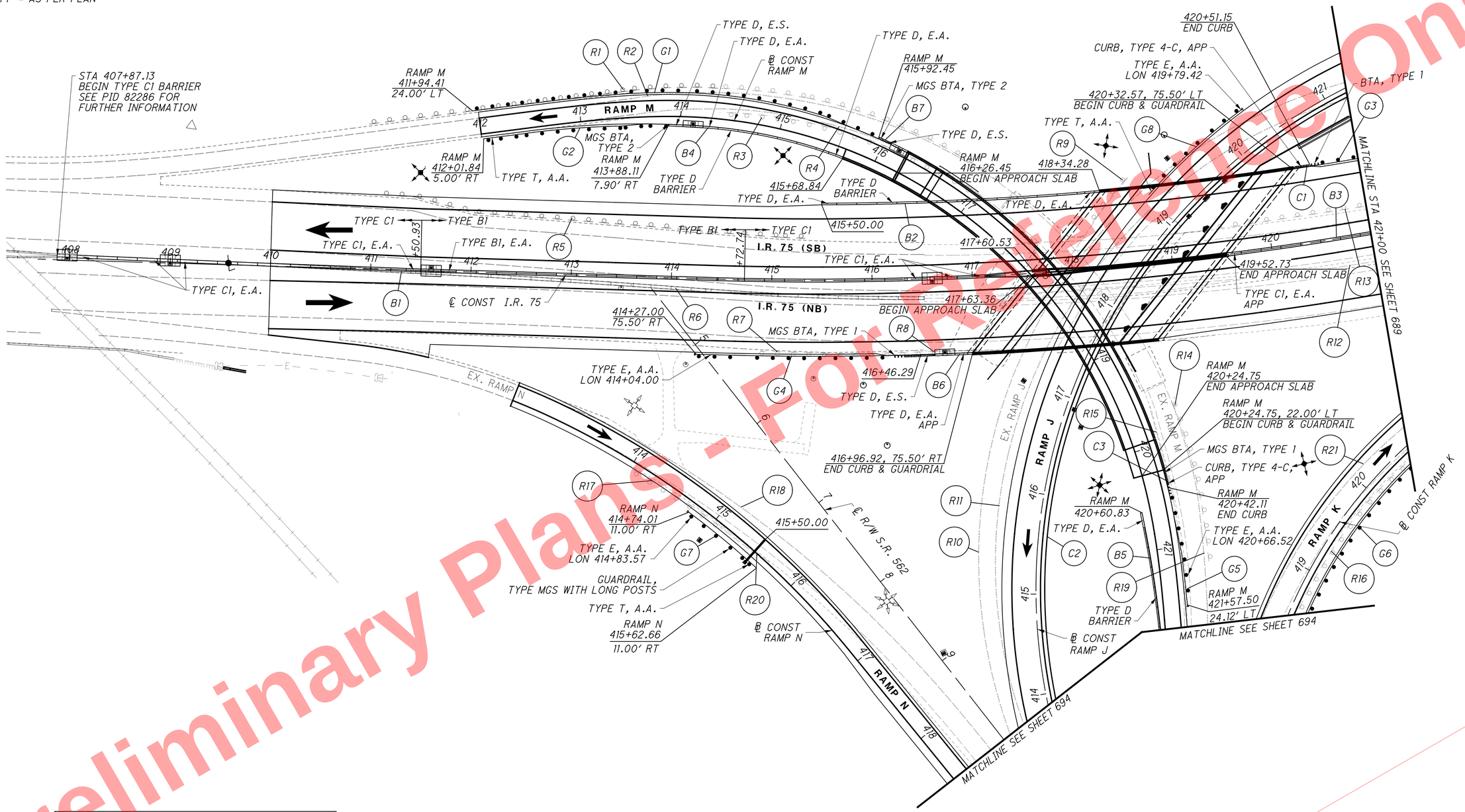

FOR ESTIMATED QUANTITIES SEE SHEET 237

ALL GUARDRAIL ASSUMED TO BE TYPE MGS, UNLESS OTHERWISE NOTED

Preliminary Plans - For Reference Only

HORIZONTAL SCALE IN FEET
0 25 50 100

CALCULATED SEA CHECKED DLR

ROADSIDE BARRIER PLAN
STA 408+00 TO STA 421+00

HAM-75-7.85

688
1047

J:\20110903\ODOT\HAM\77889\roadway\sheets\77889GR001.dgn 5/22/2026 10:28:33 AM hbrendlinger

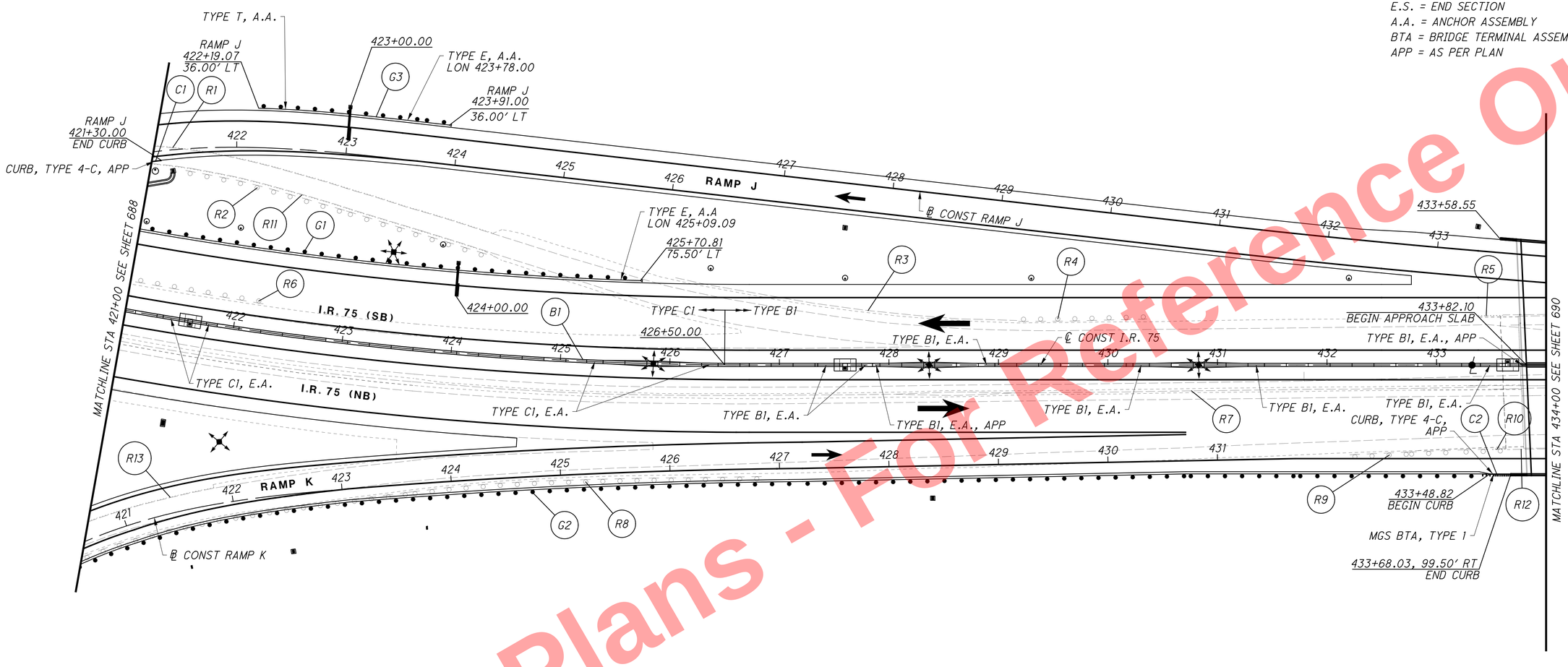

FOR ESTIMATED QUANTITIES SEE SHEET 237

ALL GUARDRAIL ASSUMED TO BE TYPE MGS, UNLESS OTHERWISE NOTED

Preliminary Plans - For Reference Only

HORIZONTAL SCALE IN FEET

CALCULATED SEA CHECKED DLR

ROADSIDE BARRIER PLAN
STA 421+00 TO STA 434+00

HAM-75-7.85

689
1047

J:\20110903\ODOT\HAM\7889\roadway\sheets\77889GR002.dgn 5/22/2026 10:28:36 AM hbrendlinger

LEGEND

E.A. = END ANCHORAGE
E.S. = END SECTION
A.A. = ANCHOR ASSEMBLY
BTA = BRIDGE TERMINAL ASSEMBLY
APP = AS PER PLAN

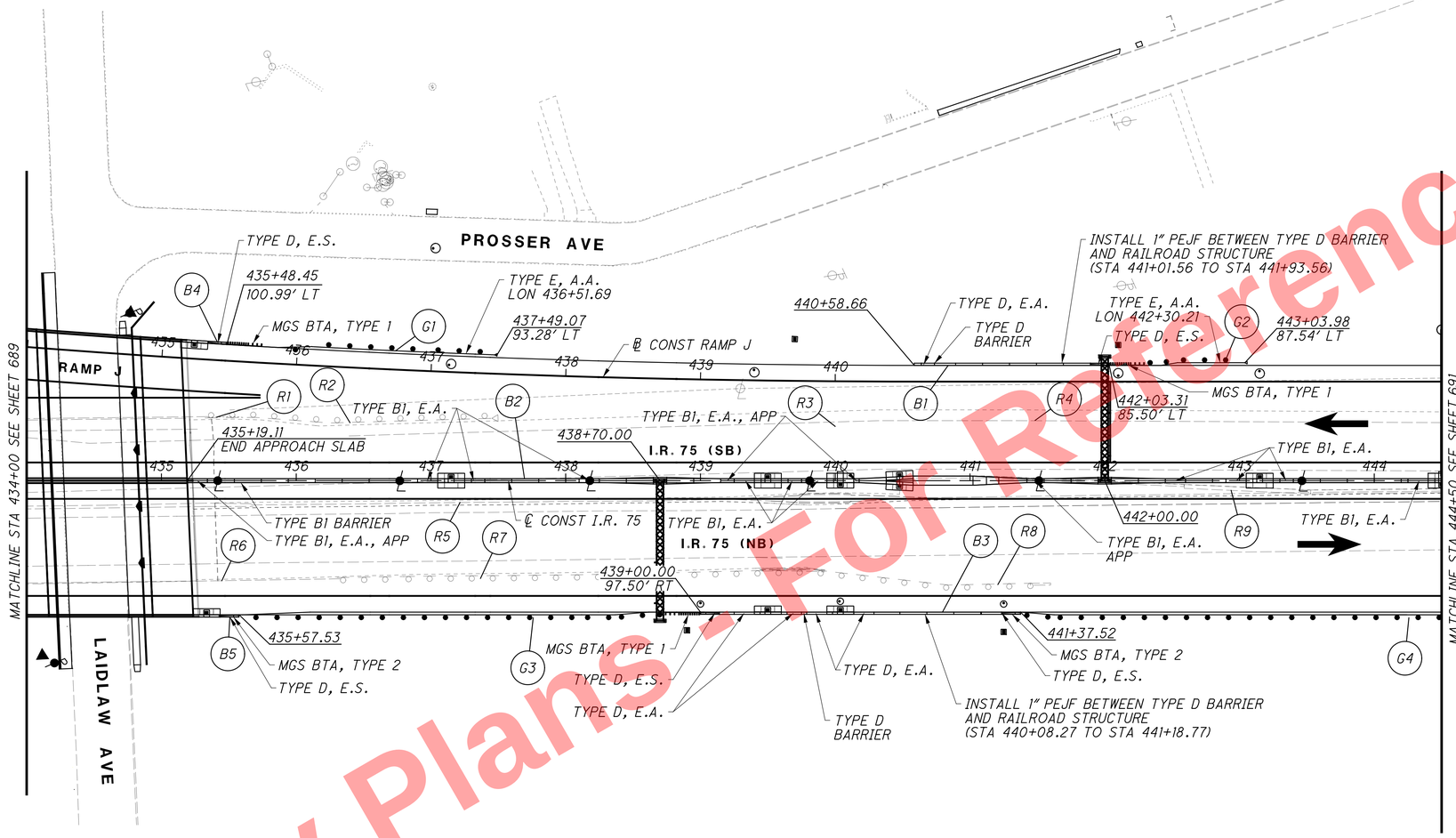

FOR ESTIMATED QUANTITIES SEE SHEET 237

ALL GUARDRAIL ASSUMED TO BE TYPE MGS, UNLESS OTHERWISE NOTED

HORIZONTAL SCALE IN FEET
0 25 50 100

CALCULATED SEA
CHECKED DLR

ROADSIDE BARRIER PLAN
STA 434+00 TO STA 444+50

HAM-75-7.85

690
1047

Preliminary Plans - For Reference Only

J:\20110903\ODOT\HAM\7889\roadway\sheets\77889GR003.dgn 5/22/2026 10:28:39 AM hbrendlinger

LEGEND

E.A. = END ANCHORAGE
E.S. = END SECTION
A.A. = ANCHOR ASSEMBLY
BTA = BRIDGE TERMINAL ASSEMBLY
APP = AS PER PLAN

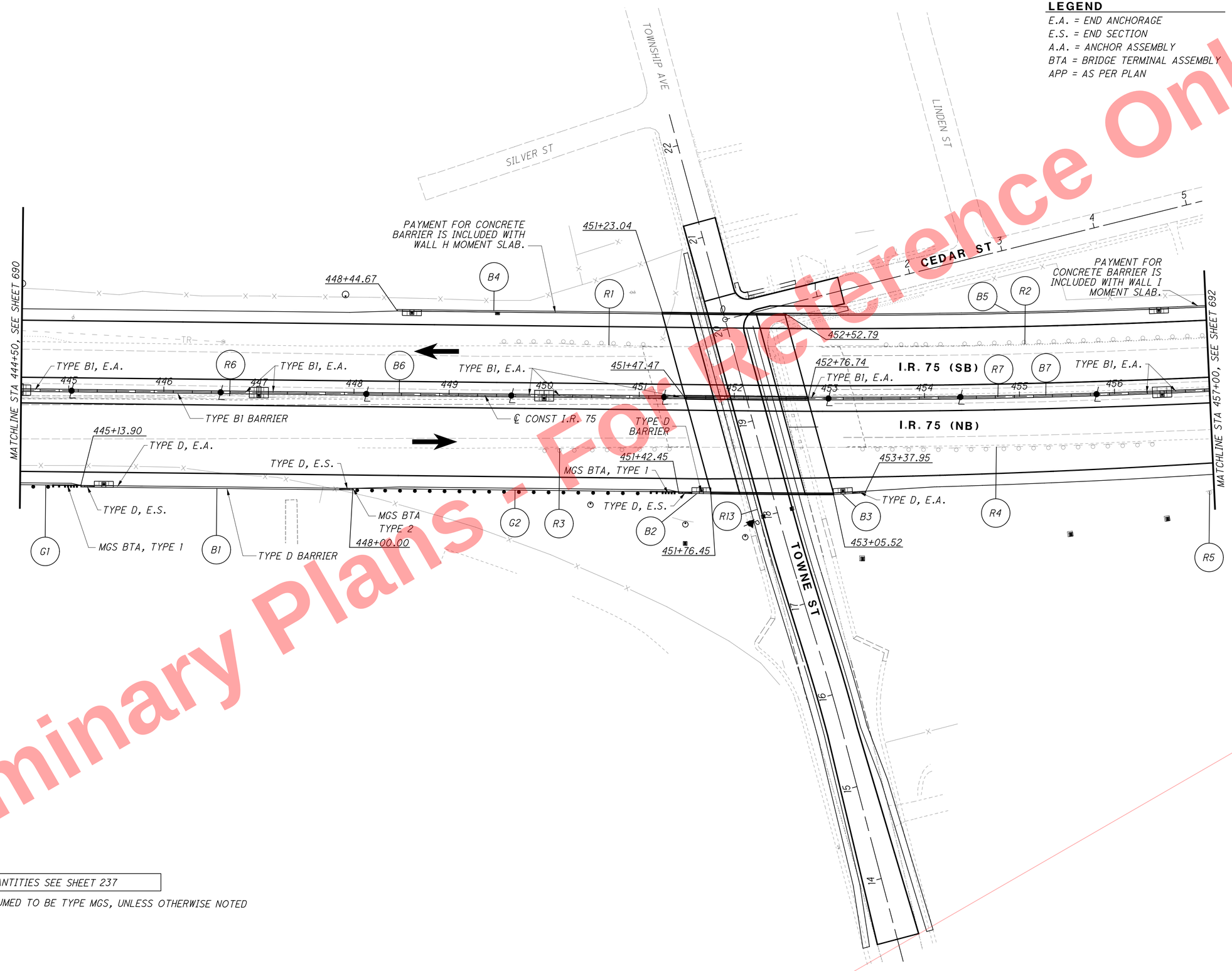

FOR ESTIMATED QUANTITIES SEE SHEET 237

ALL GUARDRAIL ASSUMED TO BE TYPE MGS, UNLESS OTHERWISE NOTED

Preliminary Plans - Not For Reference Only

HORIZONTAL SCALE IN FEET
0 25 50 100

CALCULATED BLM
CHECKED SSK

ROADSIDE BARRIER PLAN
STA 444+50 TO STA 457+00

HAM-75-7.85

691
1047

J:\20110903\ODOT\HAM\7889\roadway\sheets\77889GR401.dgn 5/22/2026 10:28:41 AM hbrendlinger

LEGEND

E.A. = END ANCHORAGE
E.S. = END SECTION
A.A. = ANCHOR ASSEMBLY
BTA = BRIDGE TERMINAL ASSEMBLY
APP = AS PER PLAN

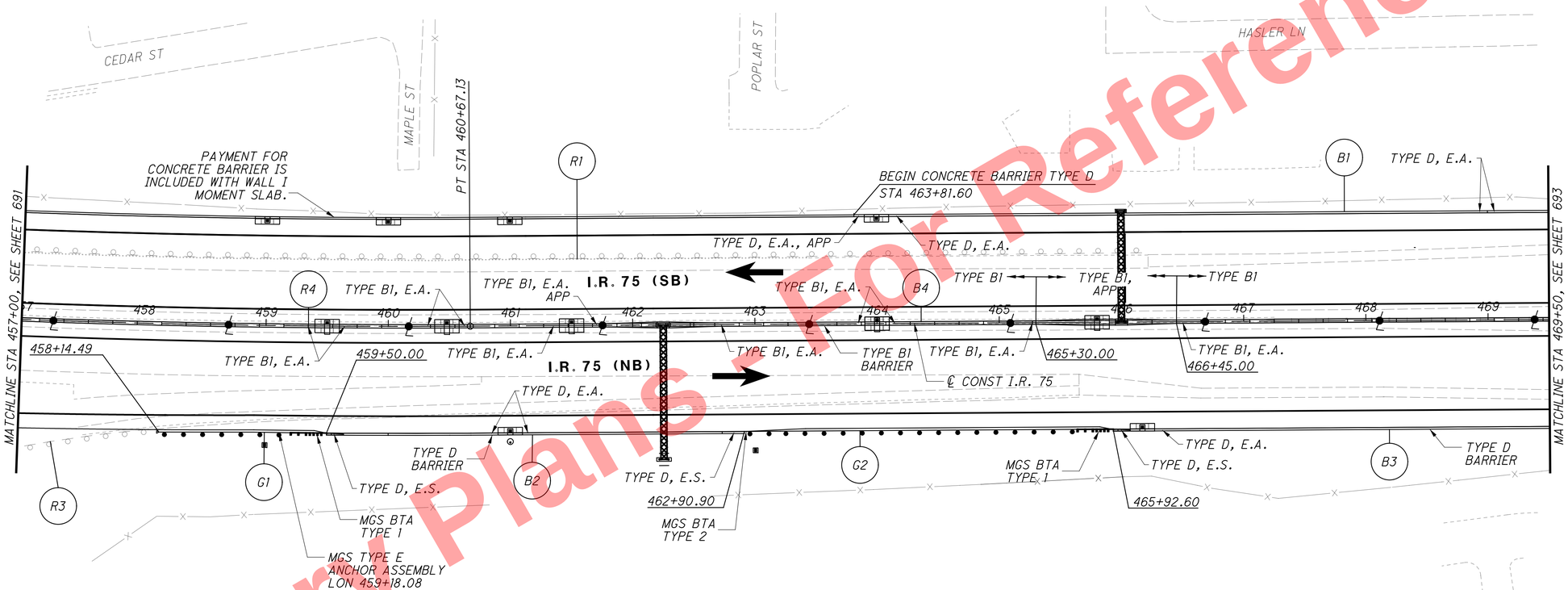

FOR ESTIMATED QUANTITIES SEE SHEET 237

ALL GUARDRAIL ASSUMED TO BE TYPE MGS, UNLESS OTHERWISE NOTED

Preliminary Plans - For Reference Only

HORIZONTAL SCALE IN FEET
0 25 50 100

CALCULATED BLM
CHECKED SSK

ROADSIDE BARRIER PLAN
STA 457+00 TO STA 469+50

HAM-75-7.85

692
1047

J:\20110903\ODOT\HAM\77889\roadway\sheets\77889GR402.dgn 5/22/2026 10:28:42 AM hbrendlinger

Preliminary Plans - For Reference Only

LEGEND

E.A. = END ANCHORAGE
E.S. = END SECTION
A.A. = ANCHOR ASSEMBLY
BTA = BRIDGE TERMINAL ASSEMBLY
APP = AS PER PLAN

HORIZONTAL SCALE IN FEET
0 25 50 100

CALCULATED BLM
CHECKED SSK

HASLER LN
66TH ST
LONGVIEW ST
LONGVIEW ST

MATCHLINE STA 469+50 SEE SHEET 692

TYPE D BARRIER
B2
R1
B3
B1
TYPE D BARRIER

474+05.07
TYPE D, E.A.
BTA, TYPE 1
TYPE C1, E.A.
TYPE C1, E.A., APP
TYPE C1, E.A.
TYPE C1, E.A.
TYPE C1, E.A., APP
479+56.11
TYPE C1 TYPE B1
TYPE B1, E.A.
482+25.00
TYPE B1, E.A.
℄ CONST I.R. 75
I.R. 75 (SB)
I.R. 75 (NB)
℄ CONST RAMP D
470+05.06
TYPE B1 TYPE C1
471+15.12
TYPE D, E.A.

470 471 472 473 474 475 476 477 478 479 480 481 482 483

REGINA GRAETER WAY

FOR ESTIMATED QUANTITIES SEE SHEET 237

ALL GUARDRAIL ASSUMED TO BE TYPE MGS, UNLESS OTHERWISE NOTED

ROADSIDE BARRIER PLAN
STA 469+50 TO STA 482+00

HAM-75-7.85

693
1047

J:\20110903\ODOT\HAM\77889\roadway\sheets\77889GR403.dgn 5/22/2026 10:28:44 AM hbrendlinger

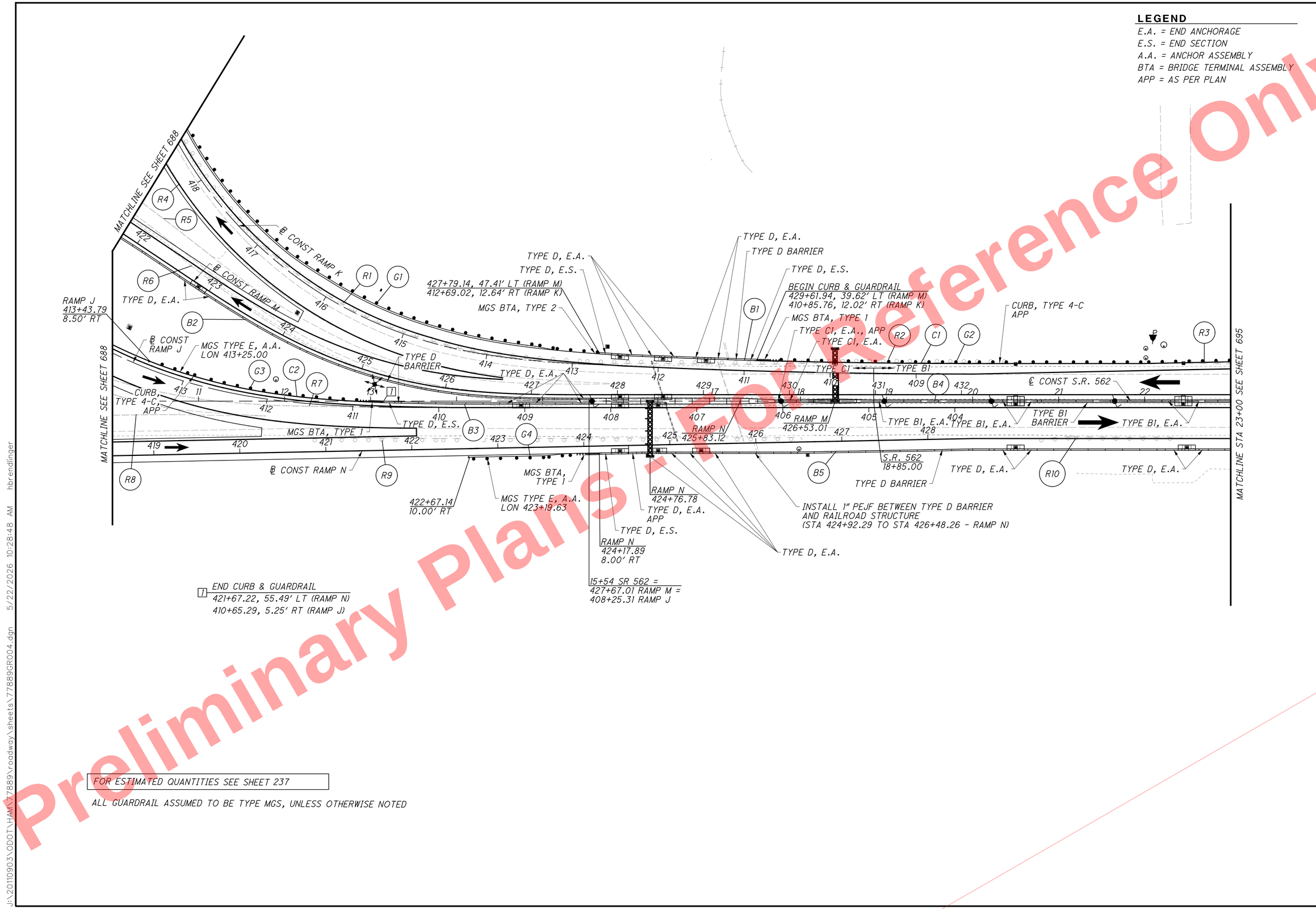

Preliminary Plans - For Reference Only

J:\20110903\ODOT\HAM\77889\roadway\sheets\77889GR004.dgn 5/22/2026 10:28:48 AM hbrendlinger

LEGEND

E.A. = END ANCHORAGE
E.S. = END SECTION
A.A. = ANCHOR ASSEMBLY
BTA = BRIDGE TERMINAL ASSEMBLY
APP = AS PER PLAN

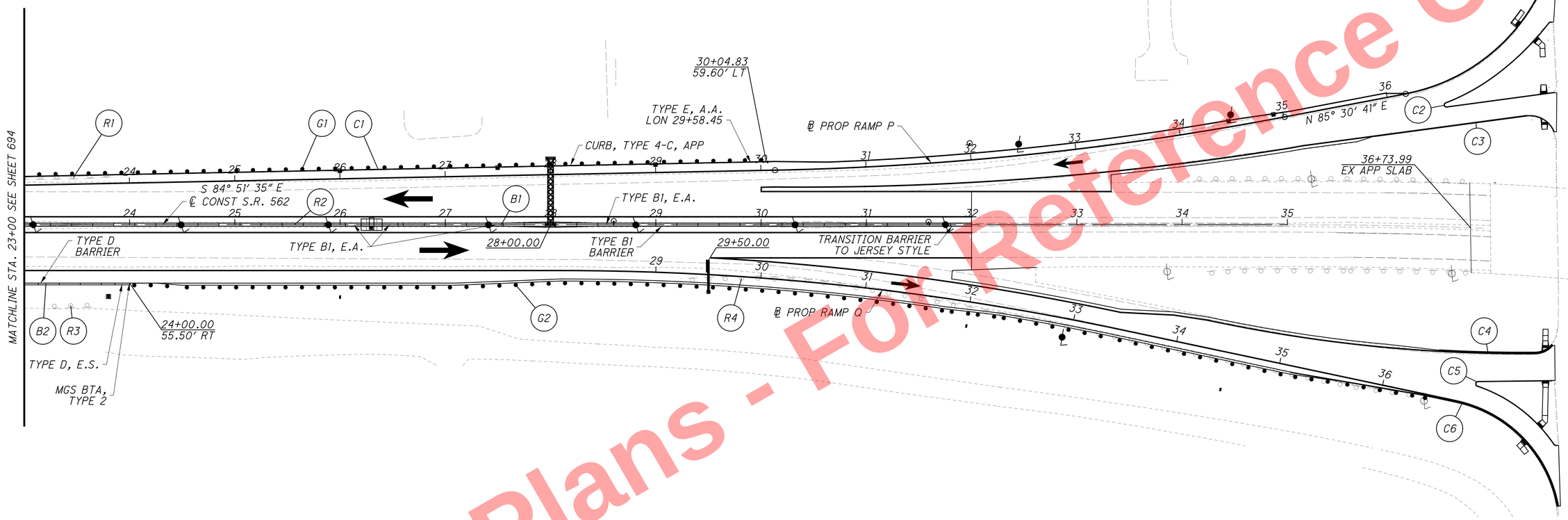

FOR ESTIMATED QUANTITIES SEE SHEET 237

ALL GUARDRAIL ASSUMED TO BE TYPE MGS, UNLESS OTHERWISE NOTED

Preliminary Plans - For Reference Only

HORIZONTAL SCALE IN FEET
0 25 50 100

CALCULATED SEA
CHECKED DLR

ROADSIDE BARRIER PLAN
STA 23+00 TO STA 35+00

HAM-75-7.85

695
1047

J:\20110903\ODOT\HAM\77889\roadway\sheets\77889GR005.dgn 5/22/2026 10:28:52 AM hbrendlinger



Preliminary Plans - For Reference Only

PAVEMENT AND BARRIER DETAILS -HAM-75-7.85
BEGIN TO STA. 414+50.00 TO STA 426+50.00

HORIZONTAL SCALE IN FEET
0 10 20 40

CALCULATED TGW
CHECKED ---

HAM-75-7.85

696
1047

J:\20110903\ODOT\HAM\77889\roadway\sheets\77889GR1000.dgn 5/22/2026 10:28:53 AM hbrendlinger

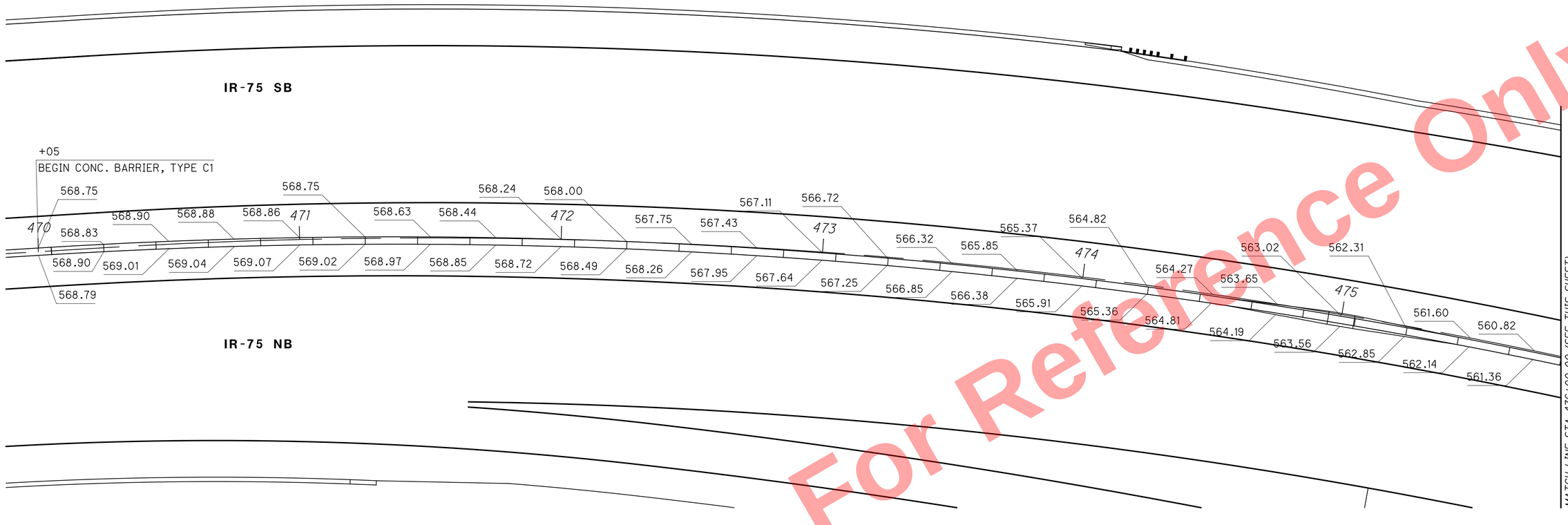

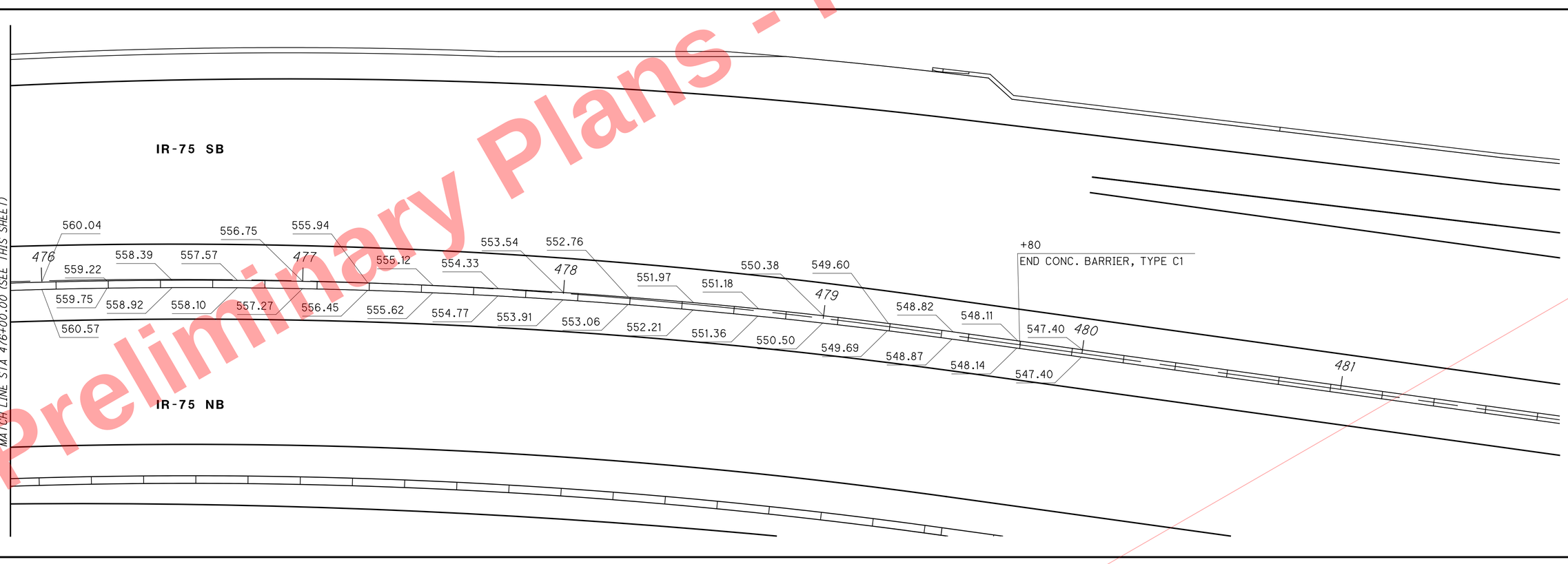

Preliminary Plans - Not For Reference Only

HORIZONTAL SCALE IN FEET
0 10 20 40

CALCULATED TGW
CHECKED ---

PAVEMENT AND BARRIER DETAILS -HAM-75-7.85
BEGIN TO STA. 470+00.00 TO STA 480+00.00

HAM-75-7.85

697
1047

J:\20110903\ODOT\HAM\77889\roadway\sheets\77889GR1001.dgn 5/22/2026 10:29:02 AM hbrendlinger

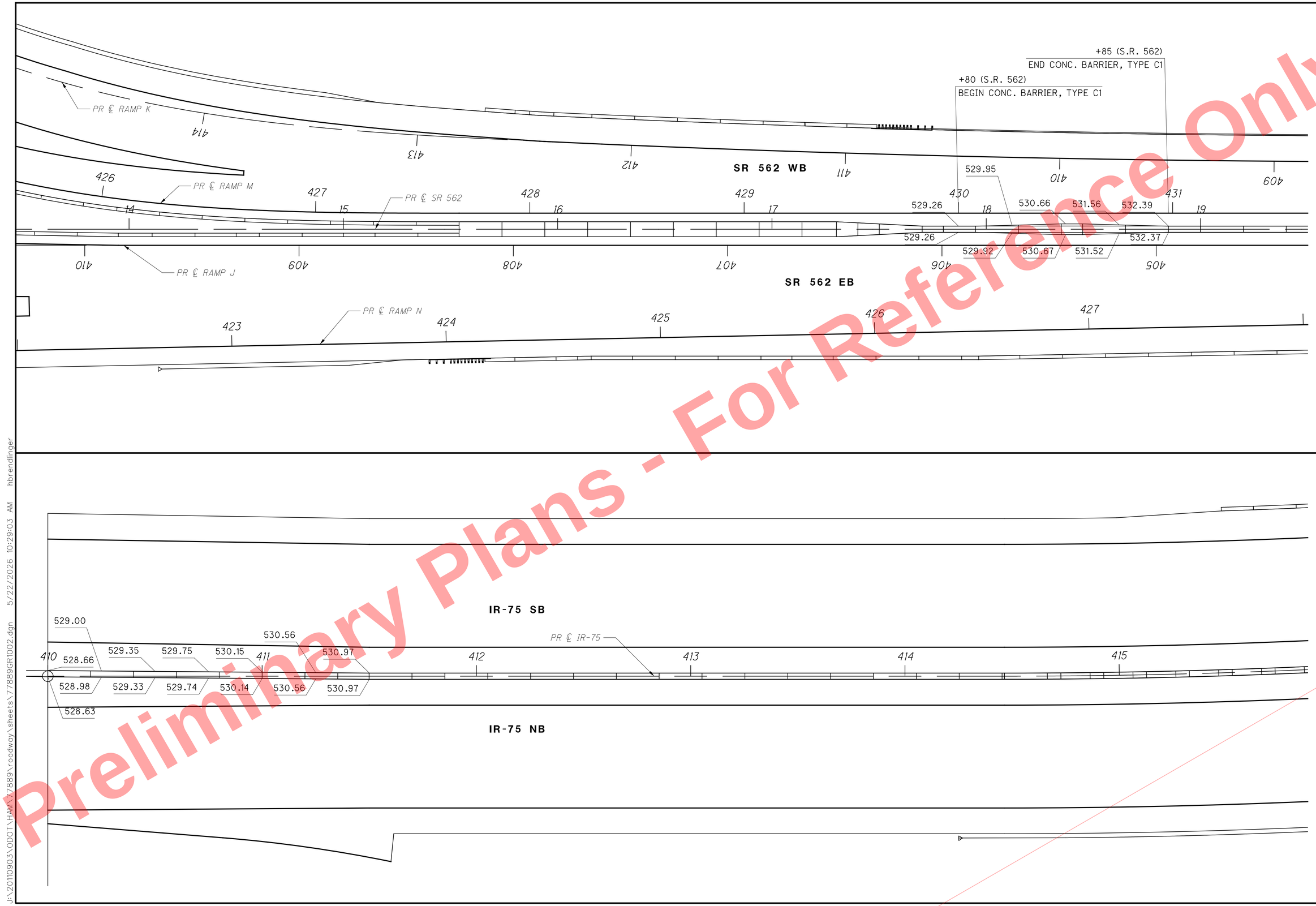

Preliminary Plans - Not For Reference Only

HORIZONTAL SCALE IN FEET
0 10 20 40

CALCULATED TGW
CHECKED ---

PAVEMENT AND BARRIER DETAILS -HAM-75-7.85
IR-75 AND SR 562

HAM-75-7.85

698
1047

J:\20110903\ODOT\HAM\77889\roadway\sheets\77889GR1002.dgn 5/22/2026 10:29:03 AM hbrendlinger

GENERAL

THESE SPECIFICATIONS, TOGETHER WITH THE ACCOMPANYING PLANS, ARE INTENDED TO DESCRIBE THE TYPE, SIZE, AND LOCATION OF THE PRODUCTS AND MATERIALS TO BE PROVIDED AND INSTALLED UNDER VARIOUS BID ITEMS RELATED TO TRAFFIC CONTROL. THE CONTRACTOR SHALL FURNISH AND INSTALL TRAFFIC CONTROL DEVICES AND RELATED MATERIALS IN COMPLIANCE WITH THESE PLANS AND SPECIFICATIONS, AS WELL AS THE 2023 OHIO DEPARTMENT OF TRANSPORTATION CONSTRUCTION AND MATERIAL SPECIFICATIONS, THE OHIO MANUAL OF UNIFORM TRAFFIC CONTROL DEVICES FOR STREETS AND HIGHWAYS, AND THE STANDARD CONSTRUCTION DRAWINGS ISSUED BY THE OHIO DEPARTMENT OF TRANSPORTATION. THESE SPECIFICATIONS SET FORTH THE MINIMUM PERFORMANCE AND OPERATING REQUIREMENTS OF THE TRAFFIC CONTROL ITEMS REFERRED TO HEREIN.

ITEM 630 CONCRETE MEDIAN BARRIER SIGN BRACKET, AS PER PLAN

EACH SIGN SUPPORT ASSEMBLY SHALL MEET THE REQUIREMENTS OF 630 AND CONFORM TO THE DIMENSIONS IN THE DETAILS BELOW.

ALL HARDWARE SHALL BE GALVANIZED STEEL OR STAINLESS STEEL AS SPECIFIED IN THE DETAILS BELOW.

ALL WORK AND MATERIALS SHALL BE IN ACCORDANCE WITH STANDARD SPECIFICATION. PAYMENT FOR THIS ITEM SHALL BE MADE AT THE CONTRACT PRICE BID PER EACH CONCRETE MEDIAN BARRIER SIGN BRACKET, AS PER PLAN.

TOP VIEW

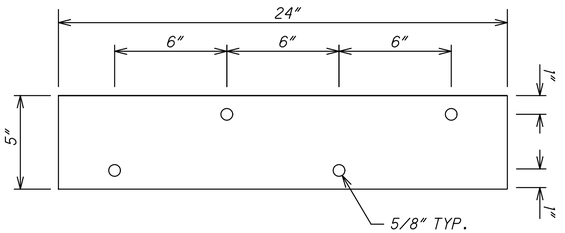

SIDE VIEW

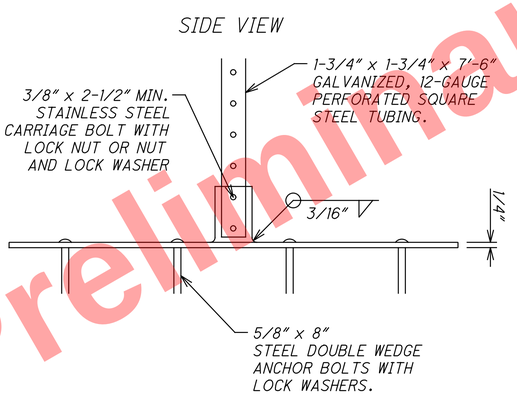

REFERENCE LOCATION SIGNS

THE LOCATION OF REFERENCE LOCATION SIGNS ON THE PLANS ARE APPROXIMATE AND MORE PRECISE LOCATION WILL BE PROVIDED BY THE DEPARTMENT. THE CONTRACTOR SHALL NOTIFY THE ENGINEER AT LEAST 30 DAYS IN ADVANCE OF THE PLANNED DATE OF REFERENCE LOCATION SIGN INSTALLATION. THE ENGINEER WILL CONTACT THE OFFICE OF TECHNICAL SERVICES WHICH WILL LOCATE THE LONGITUDINAL POSITION OF REFERENCE LOCATION SIGNS BY MEANS OF A PAINT MARK ON THE PAVEMENT EDGE. ALTERNATE MARKS WILL NOT BE PROVIDED ON DIVIDED HIGHWAYS AND THE CONTRACTOR SHALL SET REFERENCE LOCATION SIGNS FOR THE OPPOSITE ROADWAY ACROSS FROM THE PROVIDED MARK. DELINEATORS WHOSE NORMAL POSITION FALLS WITHIN 50 FEET OF A REFERENCE LOCATION SIGN SHALL BE OMITTED.

TC-12.31 BASE PLATE CONNECTION

ALL REFERENCE ITEMS THAT REFER TO THE TC-12.31 STANDARD DRAWING SHALL HAVE BASE CONNECTION FABRICATED AS PER THE "STANDARD BASE DESIGN" WHICH UTILIZES COMPLETE JOINT PENETRATION (CJP) WELDS.

SIGNING LEGEND	
	PROPOSED SIGN
	EXISTING SIGN TO BE REMOVED
	EXISTING SIGN TO REMAIN

PAVEMENT MARKING LEGEND	
XX	PROPOSED PAVEMENT MARKINGS, THERMO
XX	PROPOSED PAVEMENT MARKINGS, EPOXY
XX	PROPOSED PAVEMENT MARKINGS, TYPE A4
XX	EXISTING PAVEMENT MARKINGS TO REMAIN

LINE SPECIFICATIONS - I.R. 75 AND S.R. 562

THERMO	EPOXY	TYPE A4	
YE	YE	YE	EDGE LINE, 6" YELLOW
WE	WE	WE	EDGE LINE, 6" WHITE
LL	LL	LL	LANE LINE, 6" WHITE
CH	CH	CH	CHANNELIZING LINE, 12" WHITE
WT	WT	WT	TRANSVERSE/DIAGONAL LINE, 24" WHITE
CM	CM	CM	CHEVRON MARKING, 24" WHITE
WD6	WD6	WD6	DOTTED LINE, 6" WHITE (3' SEGMENT/9' GAP)
WD12	WD12	WD12	DOTTED LINE, 12" WHITE (3' SEGMENT/9' GAP)
LA	LA	LA	LANE ARROW
LRA	LRA	LRA	LANE REDUCTION ARROW
WA	WA	WA	WRONG WAY ARROW
R	R	R	REMOVAL OF PAVEMENT MARKING

LINE SPECIFICATIONS - LOCAL STREETS	
ITEM 644	
DY	CENTER LINE, DOUBLE SOLID, 4" YELLOW
SL	STOP LINE, 24" WHITE
XW	CROSSWALK LINE, 12" WHITE
YT	TRANSVERSE LINE, 24" YELLOW
LA	LANE ARROW

Preliminary Plans - For Reference Only

CALCULATED MKM
CHECKED SMM

TRAFFIC CONTROL GENERAL NOTES

HAM-75-7.85

699
1047

J:\20110903\ODOT\HAM\77889\traffic\sheets\77889TN001.dgn 5/22/2026 10:29:04 AM hbrendlinger

SHEET NUMBER											PART.			ITEM	ITEM EXT	GRAND TOTAL	UNIT	DESCRIPTION	SEE SHEET NO.
702	703	704	705	706	707	708	709	710	711	712									
					59									620	00500	59	EACH	DELINEATOR, POST GROUND MOUNTED	
					6									620	11000	6	EACH	DELINEATOR, BRACKET MOUNTED	
					16									620	31200	16	EACH	REMOVAL OF DELINEATOR	
					7									620	60000	7	EACH	DELINEATOR, POST SURFACE MOUNTED	
74	536	291	291	17										621	00100	1,209	EACH	RPM	
72	441	197	37	8										621	54000	755	EACH	RAISED PAVEMENT MARKER REMOVED	
								5	11					625	32000	16	EACH	GROUND ROD	
								244	654	265				630	03100	1,163	FT	GROUND MOUNTED SUPPORT, NO. 3 POST	
									48					630	04100	48	FT	GROUND MOUNTED SUPPORT, NO. 4 POST	
								64.7	32.5					630	06400	97.2	FT	GROUND MOUNTED STRUCTURAL BEAM SUPPORT, S4X7.7	
									32.9					630	06500	32.9	FT	GROUND MOUNTED STRUCTURAL BEAM SUPPORT, W6X9	
								47						630	07500	47	FT	GROUND MOUNTED STRUCTURAL BEAM SUPPORT, W10X22	
								53.6						630	08000	53.6	FT	GROUND MOUNTED STRUCTURAL BEAM SUPPORT, W12X30	
										12				630	08004	12	FT	ONE WAY SUPPORT, NO. 3 POST	
								7	36	18				630	08600	61	EACH	SIGN POST REFLECTOR	
								8	4					630	09000	12	EACH	BREAKAWAY STRUCTURAL BEAM CONNECTION	
								1	4					630	72340	5	EACH	OVERHEAD SIGN SUPPORT, TYPE TC-12.31, DESIGN 12	
									3					630	72410	3	EACH	OVERHEAD SIGN SUPPORT, TYPE TC-15.116, DESIGN 1	
								2	1					630	72430	3	EACH	OVERHEAD SIGN SUPPORT, TYPE TC-15.116, DESIGN 3	
								12						630	75000	12	EACH	SIGN ATTACHMENT ASSEMBLY	
								273.5	421.63	114				630	80100	809.13	SF	SIGN, FLAT SHEET	
								258	60					630	80200	318	SF	SIGN, GROUND MOUNTED EXTRUSHEET	
								1,909.5	2,790					630	80224	4,699.5	SF	SIGN, OVERHEAD EXTRUSHEET	
								11	3					630	81021	14	EACH	CONCRETE MEDIAN BARRIER SIGN BRACKET, AS PER PLAN	699
								2	3					630	84010	5	EACH	CONCRETE BARRIER MEDIAN OVERHEAD SIGN SUPPORT FOUNDATION, TYPE TC-21.50	
								8	4					630	84500	12	EACH	GROUND MOUNTED STRUCTURAL BEAM SUPPORT FOUNDATION	
								3	8					630	84510	11	EACH	RIGID OVERHEAD SIGN SUPPORT FOUNDATION	
						59	17							630	84900	76	EACH	REMOVAL OF GROUND MOUNTED SIGN AND DISPOSAL	
						3								630	85400	3	EACH	REMOVAL OF GROUND MOUNTED MAJOR SIGN AND DISPOSAL	
						1								630	85600	1	EACH	REMOVAL OF GROUND MOUNTED MAJOR SIGN AND REERECTION	
						46	12							630	86002	58	EACH	REMOVAL OF GROUND MOUNTED POST SUPPORT AND DISPOSAL	
						10	3							630	86102	13	EACH	REMOVAL OF GROUND MOUNTED STRUCTURAL BEAM SUPPORT AND DISPOSAL	
							2							630	87100	2	EACH	REMOVAL OF OVERHEAD MOUNTED SIGN AND REERECTION	
						19	10							630	87400	29	EACH	REMOVAL OF OVERHEAD MOUNTED SIGN AND DISPOSAL	
						7	6							630	87500	13	EACH	REMOVAL OF POLE MOUNTED SIGN AND DISPOSAL	
						4	1							630	89706	5	EACH	REMOVAL OF OVERHEAD SIGN SUPPORT AND DISPOSAL, TYPE TC-12.30	
						2	3							630	89802	5	EACH	REMOVAL OF OVERHEAD SIGN SUPPORT AND DISPOSAL, TYPE TC-7.65	
							10							630	89894	10	EACH	REMOVAL OF TEMPORARY OVERLAY SIGN AND DISPOSAL	
						11	1							630	89902	12	EACH	REMOVAL OF MISCELLANEOUS TRAFFIC CONTROL ITEM, BARRIER MOUNTED SIGN SUPPORT AND DISPOSAL	
						1								630	89902	1	EACH	REMOVAL OF MISCELLANEOUS TRAFFIC CONTROL ITEM, PARTIAL TRUSS REMOVAL	

CALCULATED MKM
CHECKED SMM

TRAFFIC CONTROL SUBSUMMARY

HAM-75-7.85

700
1047

Preliminary Plans - Not For Reference Only

J:\20110903\ODOT\HAM\77889\traffic\sheets\77889TG001.dgn 5/22/2026 10:29:04 AM hbrendlinger

SHEET NUMBER												PART.			ITEM	ITEM EXT	GRAND TOTAL	UNIT	DESCRIPTION	SEE SHEET NO.
702	703	704	705	706																
				0.18											644	00300	0.18	MILE	CENTER LINE	
			25												644	00500	25	FT	STOP LINE	
			153												644	00620	153	FT	CROSSWALK LINE, 12"	
				17											644	00700	17	FT	TRANSVERSE/DIAGONAL LINE	
				574											644	00720	574	FT	CHEVRON MARKING	
				11											644	01300	11	EACH	LANE ARROW	
				2											644	01350	2	EACH	LANE REDUCTION ARROW	
				2											644	01360	2	EACH	WRONG WAY ARROW	
				1,652											644	30000	1,652	FT	REMOVAL OF PAVEMENT MARKING	
0.53	0.05														645	00118	0.58	MILE	EDGE LINE, 6", TYPE A4	
	0.56														645	00220	0.56	MILE	LANE LINE, 6", TYPE A4	
		412													645	00418	412	FT	CHANNELIZING LINE, 12", TYPE A4	
			265												645	01522	265	FT	DOTTED LINE, 6", TYPE A4	
			394												645	01566	394	FT	DOTTED LINE, 12", TYPE A4	
				40											646	10620	40	FT	CHEVRON MARKING	
9.96	0.82														807	14010	10.78	MILE	WET REFLECTIVE THERMOPLASTIC PAVEMENT MARKING, EDGE LINE, 6"	
	10.77														807	14110	10.77	MILE	WET REFLECTIVE THERMOPLASTIC PAVEMENT MARKING, LANE LINE, 6"	
		10,346													807	14310	10,346	FT	WET REFLECTIVE THERMOPLASTIC PAVEMENT MARKING, CHANNELIZING LINE, 12"	
			5,933												807	14410	5,933	FT	WET REFLECTIVE THERMOPLASTIC PAVEMENT MARKING, DOTTED LINE, 6"	
			10,795												807	14430	10,795	FT	WET REFLECTIVE THERMOPLASTIC PAVEMENT MARKING, DOTTED LINE, 12"	
9.96	11.59														850	10010	21.55	MILE	GROOVING FOR 6" RECESSED PAVEMENT MARKING, (ASPHALT)	
			5,933												850	10110	5,933	FT	GROOVING FOR 6" RECESSED PAVEMENT MARKING, (ASPHALT)	
		10,346	10,795												850	10130	21,141	FT	GROOVING FOR 12" RECESSED PAVEMENT MARKING, (ASPHALT)	
0.53	0.61														850	20010	1.14	MILE	GROOVING FOR 6" RECESSED PAVEMENT MARKING, (CONCRETE)	
			265												850	20110	265	FT	GROOVING FOR 6" RECESSED PAVEMENT MARKING, (CONCRETE)	
		412	394												850	20130	806	FT	GROOVING FOR 12" RECESSED PAVEMENT MARKING, (CONCRETE)	

CALCULATED MKM
CHECKED SMM

TRAFFIC CONTROL SUBSUMMARY

HAM-75-7.85

701
1047

Preliminary Plans - For Reference Only

J:\20110903\ODOT\HAM\7889\traffic\sheets\77889TG002.dgn 5/22/2026 10:29:05 AM hbrendlinger

SHEET NO.	REF NO.	LOCATION	STATION TO STATION			SIDE	621 RPM, 2-WAY YELLOW/RED EACH	621 RAISED PAVEMENT MARKER REMOVED EACH		645 EDGE LINE, 6", TYPE A4, WHITE FT	645 EDGE LINE, 6", TYPE A4, YELLOW FT	807 WET REFLECTIVE THERMOPLASTIC PAVEMENT MARKING, EDGE LINE, 6", WHITE FT	807 WET REFLECTIVE THERMOPLASTIC PAVEMENT MARKING, EDGE LINE, 6", YELLOW FT		850 GROOVING FOR 6" RECESSED PAVEMENT MARKING, (ASPHALT) FT	850 GROOVING FOR 6" RECESSED PAVEMENT MARKING, (CONCRETE) FT
713	WE-1	C.L. CONST. I.R. 75	395+50	TO	404+22	RT						872			872	
714	WE-2	C.L. CONST. I.R. 75	411+62	TO	417+09	RT						547			547	
714	WE-3	C.L. CONST. I.R. 75	417+09	TO	418+92	RT				183						183
714 - 715	WE-4	C.L. CONST. I.R. 75	418+92	TO	424+65	RT						573			573	
713	WE-5	C.L. CONST. I.R. 75	394+73	TO	401+96	LT						723			723	
714	WE-6	C.L. CONST. I.R. 75	408+88	TO	418+21	LT						933			933	
714	WE-7	C.L. CONST. I.R. 75	418+21	TO	420+17	LT				196						196
714 - 715	WE-8	C.L. CONST. I.R. 75	420+17	TO	432+76	LT						1259			1259	
715 - 717	WE-9	RAMP J	435+15	TO	451+27	LT						1612			1612	
717	WE-10	C.L. CONST. I.R. 75	451+27	TO	452+57	LT				130						130
713 - 714 , 724	WE-11	RAMP M	401+96	TO	416+26	LT						1430			1430	
724	WE-12	RAMP M	416+26	TO	420+25	LT				399						399
724 - 725	WE-13	RAMP M	420+25	TO	424+09	LT						384			384	
713 - 714 , 724 - 725	WE-14	RAMP N	404+22	TO	423+52	CL						1930			1930	
715 , 724 - 725	WE-15	RAMP J	412+01	TO	433+78	LT						2177			2177	
725 - 726	WE-16	C.L. CONST. S.R. 562	15+00	TO	27+00	RT						1200			1200	
726	WE-17	C.L. CONST. S.R. 562	31+81	TO	36+76	RT						495			495	
725 - 726	WE-18	C.L. CONST. S.R. 562	14+77	TO	30+00	LT						1523			1523	
726	WE-19	C.L. CONST. S.R. 562	33+33	TO	36+76	LT						343			343	
726	WE-20	C.L. CONST. S.R. 562	36+76	TO	39+06	LT				230						230
726	WE-21	C.L. CONST. S.R. 562	39+06	TO	42+38	LT						332			332	
726	WE-22	C.L. CONST. S.R. 562	42+43	TO	47+50	LT						507			507	
726	WE-23	RAMP Q	27+00	TO	37+49	CL						1049			1049	
726	WE-24	RAMP Q	36+84	TO	37+22	LT						38			38	
726	WE-25	RAMP P	30+00	TO	37+67	CL						767			767	
726	WE-26	RAMP P	36+50	TO	37+26	RT						76			76	
717 - 719	WE-27	C.L. CONST. I.R. 75	452+57	TO	478+04	LT						2547			2547	
717 - 719	WE-28	C.L. CONST. I.R. 75	453+00	TO	475+23	RT						2223			2223	
715	WE-29	C.L. CONST. I.R. 75	430+71	TO	433+86	RT						315			315	
717	WE-30	C.L. CONST. I.R. 75	451+72	TO	453+00	RT				128						128
715 , 724 - 725	WE-31	RAMP K	413+44	TO	430+71	RT						1727			1727	
715	WE-32	C.L. CONST. I.R. 75	433+86	TO	435+23	RT				137						137
715	WE-33	RAMP J	433+78	TO	435+15	LT				137						137
715 - 717	WE-34	C.L. CONST. I.R. 75	435+23	TO	451+72	RT						1649			1649	
719	WE-35	C.L. CONST. I.R. 75	475+23	TO	475+68	RT						45			45	
720 - 722	WE-36	C.L. CONST. I.R. 75	491+00	TO	507+72	LT						1672			1672	
722 - 723	WE-37	C.L. CONST. I.R. 75	507+26	TO	526+00	LT						1874			1874	
713 - 714	YE-1	C.L. CONST. I.R. 75	395+50	TO	417+51	RT							2201		2201	
714	YE-2	C.L. CONST. I.R. 75	417+51	TO	419+39	RT					188					188
714 - 715	YE-3	C.L. CONST. I.R. 75	419+39	TO	433+83	RT							1444		1444	
717	YE-4	C.L. CONST. I.R. 75	451+52	TO	452+81	RT					129					129
717 - 719	YE-5	C.L. CONST. I.R. 75	452+81	TO	472+00	RT							1919		1919	
713 - 714	YE-6	C.L. CONST. I.R. 75	396+58	TO	417+76	LT							2118		2118	
714	YE-7	C.L. CONST. I.R. 75	417+76	TO	419+67	LT					191					191
714 - 715	YE-8	C.L. CONST. I.R. 75	419+67	TO	433+82	LT							1415		1415	
717	YE-9	C.L. CONST. I.R. 75	451+44	TO	452+74	LT					130					130
717 - 719	YE-10	C.L. CONST. I.R. 75	452+74	TO	472+00	LT							1926		1926	
714 , 724	YE-11	RAMP M	408+79	TO	416+26	CL	10	12					747		747	
724	YE-12	RAMP M	416+26	TO	420+25	CL		4			399					399
724 - 725	YE-13	RAMP M	420+25	TO	426+89	CL	9	12					664		664	
714 , 724 - 725	YE-14	RAMP N	411+72	TO	420+25	LT	12	12					853		853	
715 , 724 - 725	YE-15	RAMP K	416+13	TO	424+61	LT	12	11					848		848	
715 , 724 - 725	YE-16	RAMP J	408+80	TO	432+79	RT	31	21					2399		2399	
725 - 726	YE-17	C.L. CONST. S.R. 562	15+00	TO	36+76	RT							2176		2176	
725 - 726	YE-18	C.L. CONST. S.R. 562	14+77	TO	36+76	LT							2199		2199	
726	YE-19	C.L. CONST. S.R. 562	36+76	TO	39+06	LT					230					230
726	YE-20	C.L. CONST. S.R. 562	39+06	TO	47+50	LT							844		844	
						SUB-TOTALS				1540 FT	1267 FT	30822 FT	21753 FT		52575 FT	2807 FT
TOTALS CARRIED TO SUBSUMMARY							74	72		0.53 MI		9.96 MI			9.96 MI	0.53 MI

Preliminary Plans - For Reference Only

CALCULATED MKM
CHECKED SMM

PAVEMENT MARKING ESTIMATED QUANTITIES

HAM-75-7.85

J:\20110903\ODOT\HAM\77889\traffic\sheets\77889TS001.dgn 5/22/2026 10:29:05 AM hbrendlinger

SHEET NO.	REF NO.	LOCATION	STATION TO STATION			SIDE	621 RPM, 1-WAY WHITE EACH	621 RPM, 2-WAY WHITE/RED EACH	621 RPM, 2-WAY YELLOW/RED EACH	621 RAISED PAVEMENT MARKER REMOVED EACH		645 EDGE LINE, 6", TYPE A4, YELLOW FT	645 LANE LINE, 6", TYPE A4 FT	807 WET REFLECTIVE THERMOPLASTIC PAVEMENT MARKING, EDGE LINE, 6", YELLOW FT	807 WET REFLECTIVE THERMOPLASTIC PAVEMENT MARKING, LANE LINE, 6" FT		850 GROOVING FOR 6" RECESSED PAVEMENT MARKING, (ASPHALT) FT	850 GROOVING FOR 6" RECESSED PAVEMENT MARKING, (CONCRETE) FT
726	YE-21	RAMP Q	31+81	TO	37+12	LT			8	9				531			531	
726	YE-22	RAMP Q	36+86	TO	37+49	LT			2					63			63	
726	YE-23	RAMP P	33+33	TO	37+05	RT			6	7				372			372	
726	YE-24	RAMP P	36+49	TO	37+63	RT			2	3				114			114	
715	YE-25	C.L. CONST. I.R. 75	433+83	TO	435+20	RT						137						137
715 - 717	YE-26	C.L. CONST. I.R. 75	435+20	TO	451+52	RT								1632			1632	
715	YE-27	C.L. CONST. I.R. 75	433+82	TO	435+19	LT						137						137
715 - 717	YE-28	C.L. CONST. I.R. 75	435+19	TO	451+44	LT								1625			1625	
713 - 714	LL-1	C.L. CONST. I.R. 75	395+50	TO	417+19	RT	19								2169		2169	
713 - 714	LL-2	C.L. CONST. I.R. 75	395+50	TO	417+30	RT	19			19					2180		2180	
713 - 714	LL-3	C.L. CONST. I.R. 75	395+50	TO	417+40	RT	19			19					2190		2190	
714	LL-4	C.L. CONST. I.R. 75	417+19	TO	419+03	RT							184					184
714	LL-5	C.L. CONST. I.R. 75	417+30	TO	419+15	RT				2			185					185
714	LL-6	C.L. CONST. I.R. 75	417+40	TO	419+27	RT				2			187					187
714 - 715	LL-7	C.L. CONST. I.R. 75	419+03	TO	433+84	RT	13								1481		1481	
714 - 715	LL-8	C.L. CONST. I.R. 75	419+15	TO	433+84	RT	13			14					1469		1469	
714 - 715	LL-9	C.L. CONST. I.R. 75	419+27	TO	433+83	RT	13			14					1456		1456	
715 , 724 - 725	LL-10	RAMP K	416+13	TO	429+00	LT		17							1287		1287	
717	LL-11	C.L. CONST. I.R. 75	451+62	TO	452+91	RT							129					129
717	LL-12	C.L. CONST. I.R. 75	451+59	TO	452+88	RT				2			129					129
717	LL-13	C.L. CONST. I.R. 75	451+55	TO	452+84	RT				2			129					129
717 - 719	LL-14	C.L. CONST. I.R. 75	452+91	TO	475+68	RT	20								2277		2277	
717 - 719	LL-15	C.L. CONST. I.R. 75	452+88	TO	472+00	RT	17			17					1912		1912	
717 - 719	LL-16	C.L. CONST. I.R. 75	452+84	TO	472+00	RT	17			17					1916		1916	
713 - 714	LL-17	C.L. CONST. I.R. 75	396+58	TO	417+87	LT	19			20					2129		2129	
713 - 714	LL-18	C.L. CONST. I.R. 75	396+58	TO	417+98	LT	19			20					2140		2140	
713 - 714	LL-19	C.L. CONST. I.R. 75	393+76	TO	418+09	LT	21								2433		2433	
714	LL-20	C.L. CONST. I.R. 75	417+87	TO	419+79	LT				3			192					192
714	LL-21	C.L. CONST. I.R. 75	417+98	TO	419+92	LT				3			194					194
714	LL-22	C.L. CONST. I.R. 75	418+09	TO	420+04	LT							195					195
714 - 715	LL-23	C.L. CONST. I.R. 75	419+79	TO	433+81	LT	13			14					1402		1402	
714 - 715	LL-24	C.L. CONST. I.R. 75	419+92	TO	433+80	LT	13			14					1388		1388	
714 - 715	LL-25	C.L. CONST. I.R. 75	420+04	TO	433+80	LT	12			5					1376		1376	
717	LL-26	C.L. CONST. I.R. 75	451+41	TO	452+70	LT				2			129					129
717	LL-27	C.L. CONST. I.R. 75	451+38	TO	452+67	LT				2			129					129
717	LL-28	C.L. CONST. I.R. 75	451+34	TO	452+64	LT							130					130
717 - 719	LL-29	C.L. CONST. I.R. 75	452+70	TO	472+00	LT	17			17					1930		1930	
717 - 719	LL-30	C.L. CONST. I.R. 75	452+67	TO	472+00	LT	17			17					1933		1933	
717 - 723	LL-31	C.L. CONST. I.R. 75	452+64	TO	530+10	LT	66			80					7746		7746	
715 , 724 - 725	LL-32	RAMP J	408+80	TO	432+79	LT/RT		31							2399		2399	
725 - 726	LL-33	C.L. CONST. S.R. 562	15+00	TO	36+76	RT	19			21					2176		2176	
726	LL-34	C.L. CONST. S.R. 562	30+00	TO	36+76	LT	7			18					676		676	
726	LL-35	C.L. CONST. S.R. 562	36+76	TO	39+06	LT				3			230					230
726	LL-36	C.L. CONST. S.R. 562	39+06	TO	47+50	LT	8			9					844		844	
715	LL-37	C.L. CONST. I.R. 75	433+84	TO	435+21	RT							137					137
715	LL-38	C.L. CONST. I.R. 75	433+84	TO	435+21	RT				2			137					137
715	LL-39	C.L. CONST. I.R. 75	433+83	TO	435+20	RT				2			137					137
715 - 717	LL-40	C.L. CONST. I.R. 75	435+20	TO	451+55	RT	15			14					1635		1635	
715 - 717	LL-41	C.L. CONST. I.R. 75	435+21	TO	451+59	RT	15			14					1638		1638	
715 - 717	LL-42	C.L. CONST. I.R. 75	435+21	TO	451+62	RT	15								1641		1641	
715	LL-43	C.L. CONST. I.R. 75	433+81	TO	435+18	LT				2			137					137
715	LL-44	C.L. CONST. I.R. 75	433+80	TO	435+17	LT				2			137					137
715	LL-45	C.L. CONST. I.R. 75	433+80	TO	435+17	LT				2			137					137
715 - 717	LL-46	C.L. CONST. I.R. 75	435+18	TO	451+41	LT	15			14					1623		1623	
715 - 717	LL-47	C.L. CONST. I.R. 75	435+17	TO	451+38	LT	15			14					1621		1621	
715 - 717	LL-48	C.L. CONST. I.R. 75	435+17	TO	451+34	LT	14								1617		1617	
722	LL-49	RAMP B	507+26	TO	507+73	RT									47		47	
726	LL-50	PADDOCK RD	37+76			LT/RT									141		141	
						SUB-TOTALS	470	48	18			274 FT	2964 FT	4337 FT	56872 FT		61209 FT	3238 FT
TOTALS CARRIED TO SUBSUMMARY								536		441		0.05 MI	0.56 MI	0.82 MI	10.77 MI		11.59 MI	0.61 MI

CALCULATED MKM
CHECKED SMM

PAVEMENT MARKING ESTIMATED QUANTITIES

HAM-75-7.85

703
1047

Preliminary Plans - For Reference Only

J:\20110903\ODOT\HAM\77889\traffic\sheets\77889TS002.dgn 5/22/2026 10:29:06 AM hbrendlinger

SHEET NO.	REF NO.	LOCATION	STATION TO STATION			SIDE	621 RPM, 2-WAY WHITE/RED EACH	621 RAISED PAVEMENT MARKER REMOVED EACH		645 CHANNELIZING LINE, 12", TYPE A4 FT	807 WET REFLECTIVE THERMOPLASTIC PAVEMENT MARKING, CHANNELIZING LINE, 12" FT		850 GROOVING FOR 12" RECESSED PAVEMENT MARKING, (ASPHALT) FT	850 GROOVING FOR 12" RECESSED PAVEMENT MARKING, (CONCRETE) FT
713 - 714	CH-1	C.L. CONST. I.R. 75	407+65	TO	411+62	RT	11	20			397		397	
715	CH-2	C.L. CONST. I.R. 75	424+65	TO	430+71	RT	16	6			606		606	
713 - 714	CH-3	C.L. CONST. I.R. 75	401+96	TO	408+88	LT	18	31			692		692	
715	CH-4	C.L. CONST. I.R. 75	432+76	TO	433+79	LT	4	5			103		103	
715	CH-5	RAMP J	432+79	TO	433+78	RT	3				99		99	
715	CH-6	RAMP J	432+79	TO	433+79	RT	4	5			100		100	
714	CH-7	RAMP N	409+13	TO	411+72	LT	7	9			259		259	
713 - 714	CH-8	RAMP M	401+96	TO	408+79	RT	18	31			683		683	
715	CH-9	RAMP K	424+61	TO	430+71	LT	16	6			610		610	
725	CH-10	RAMP N	420+25	TO	423+52	LT	9	5			327		327	
725	CH-11	RAMP J	408+80	TO	412+01	LT	9	5			321		321	
725	CH-12	RAMP M	424+09	TO	426+89	LT	8	13			280		280	
725	CH-13	RAMP K	413+44	TO	416+13	LT	8	14			269		269	
719	CH-14	C.L. CONST. I.R. 75	471+59	TO	475+23	RT	10	5			364		364	
726	CH-15	C.L. CONST. S.R. 562	27+00	TO	31+81	RT	13	5			481		481	
726	CH-16	C.L. CONST. S.R. 562	30+00	TO	33+33	LT	9	6			333		333	
726	CH-17	C.L. CONST. S.R. 562	42+38	TO	44+18	LT	6	5			180		180	
726	CH-18	RAMP Q	29+53	TO	31+81	LT	7	5			228		228	
726	CH-19	RAMP Q	34+21	TO	37+12	LT	8	2			291		291	
726	CH-20	RAMP Q	36+63	TO	36+84	LT	2	2			21		21	
726	CH-21	RAMP Q	36+63	TO	36+84	LT	2	2			21		21	
726	CH-22	RAMP P	30+00	TO	33+33	RT	9	5			333		333	
726	CH-23	RAMP P	36+29	TO	36+49	RT	2				20		20	
726	CH-24	RAMP P	36+29	TO	36+50	RT	2				21		21	
726	CH-25	C.L. CONST. S.R. 562	42+43	TO	44+18	LT	5	5			175		175	
715	CH-26	C.L. CONST. I.R. 75	433+79	TO	435+16	LT				137				137
715	CH-27	RAMP J	433+79	TO	435+16	LT				137				137
715	CH-28	RAMP J	433+78	TO	435+16	LT				138				138
715	CH-29	C.L. CONST. I.R. 75	435+16	TO	436+09	LT	3				93		93	
715	CH-30	RAMP J	435+16	TO	436+09	LT	3				93		93	
715 - 716	CH-31	C.L. I.R. 75/RAMP J	435+16	TO	438+00	LT	8				284		284	
719	CH-32	C.L. CONST. I.R. 75	471+59	TO	475+23	RT	10	5			364		364	
720	CH-33	C.L. CONST. I.R. 75	483+01	TO	491+00	LT	21				799		799	
722	CH-34	C.L. CONST. I.R. 75	507+72	TO	511+06	LT	9				334		334	
722	CH-35	RAMP B	507+73	TO	515+59	RT	21				786		786	
725	CH-36	RAMP K	412+34	TO	416+13	LT	10				379		379	
						SUB-TOTALS								
						TOTALS CARRIED TO SUBSUMMARY	291	197		412	10346		10346	412

CALCULATED MKM
CHECKED SMM

PAVEMENT MARKING ESTIMATED QUANTITIES

HAM-75-7.85

704
1047

Preliminary Plans - For Reference Only

J:\20110903\ODOT\HAM\77889\traffic\sheets\77889TS003.dgn 5/22/2026 10:29:07 AM hbrendlinger

SHEET NO.			REF NO.	LOCATION	STATION TO STATION			SIDE	621 RPM, 2-WAY WHITE/RED EACH	621 RAISED PAVEMENT MARKER REMOVED EACH		644 STOP LINE, 24" FT	644 CROSSWALK LINE, 12" FT		645 DOTTED LINE, 6", TYPE A4 FT	645 DOTTED LINE, 12", TYPE A4 FT		807 WET REFLECTIVE THERMOPLASTIC PAVEMENT MARKING, DOTTED LINE, 6" FT	807 WET REFLECTIVE THERMOPLASTIC PAVEMENT MARKING, DOTTED LINE, 12" FT		850 GROOVING FOR 6" RECESSED PAVEMENT MARKING, (ASPHALT) FT	850 GROOVING FOR 12" RECESSED PAVEMENT MARKING, (ASPHALT) FT	850 GROOVING FOR 6" RECESSED PAVEMENT MARKING, (CONCRETE) FT	850 GROOVING FOR 12" RECESSED PAVEMENT MARKING, (CONCRETE) FT	
715			WD12-1	C.L. CONST. I.R. 75	430+71	TO	433+85	RT	6										314			314			
715			WD12-2	C.L. CONST. I.R. 75	433+85	TO	435+22	RT								137									137	
715	-	717	WD12-3	C.L. CONST. I.R. 75	435+22	TO	451+66	RT	28										1644			1644			
717			WD12-4	C.L. CONST. I.R. 75	451+66	TO	452+94	RT								128									128	
716	-	717	WD12-5	C.L. CONST. I.R. 75	438+00	TO	451+31	LT	23	4									1331			1331			
717			WD12-6	C.L. CONST. I.R. 75	451+31	TO	452+60	LT								129									129	
717	-	720	WD12-7	C.L. CONST. I.R. 75	452+60	TO	483+01	LT	52										3041			3041			
725	-	726	WD12-8	C.L. CONST. S.R. 562	15+00	TO	27+00	RT	21										1200			1200			
725	-	726	WD12-9	C.L. CONST. S.R. 562	16+00	TO	30+00	LT	24										1400			1400			
717	-	719	WD12-10	C.L. CONST. I.R. 75	452+94	TO	471+59	RT	32	8									1865			1865			
713			WD6-1	C.L. CONST. I.R. 75	403+22	TO	407+65	RT	8	14									443			443			
713			WD6-2	C.L. CONST. I.R. 75	394+73	TO	401+96	LT	13										723			723			
725	-	726	WD6-3	C.L. CONST. S.R. 562	20+00	TO	30+00	LT	18										1000			1000			
715			WD6-4	C.L. CONST. I.R. 75	429+00	TO	433+85	RT	9	11									485			485			
717			WD6-5	C.L. CONST. I.R. 75	451+69	TO	452+97	RT								128								128	
717	-	718	WD6-6	C.L. CONST. I.R. 75	452+97	TO	458+91	RT	11										594			594			
715			WD6-7	C.L. CONST. I.R. 75	433+85	TO	435+22	RT								137								137	
715	-	717	WD6-8	C.L. CONST. I.R. 75	435+22	TO	451+69	RT	28										1647			1647			
722	-	723	WD6-9	C.L. CONST. I.R. 75	515+59	TO	526+00	LT	18										1041			1041			
726			SL-1	RAMP Q	37+12	TO		LT				25													
717			XW-1	TOWNSHIP AVE	19+97	TO	20+34	RT					51													
726			XW-2	RAMP Q	37+17	TO		LT					60													
726			XW-3	RAMP Q	37+49	TO		LT					42													
								SUB-TOTALS																		
				TOTALS CARRIED TO SUBSUMMARY					291	37		25	153		265	394		5933	10795		5933	10795	265	394	

Preliminary Plans - For Reference Only

CALCULATED MKM
CHECKED SMM

PAVEMENT MARKING ESTIMATED QUANTITIES

HAM-75-7.85

705
1047

J:\20110903\ODOT\HAM\77889\traffic\sheets\77889TS004.dgn 5/22/2026 10:29:07 AM hbrendlinger

SHEET NO.	REF NO.	LOCATION	STATION TO STATION			SIDE	621 RPM, 2-WAY YELLOW/YELLOW EACH	621 RAISED PAVEMENT MARKER REMOVED EACH		644 CENTER LINE DOUBLE SOLID, 4" YELLOW FT	644 TRANSVERSE/DIAGONAL LINE,24" YELLOW FT	644 CHEVRON MARKING, 24" WHITE FT	644 LANE ARROW EACH	644 LANE REDUCTION ARROW EACH	644 WRONG WAY ARROW EACH	644 REMOVAL OF PAVEMENT MARKING FT		646 CHEVRON MARKING, 24" WHITE FT
714	CM-1	C.L. CONST. I.R. 75	409+13	TO	411+62	RT						91						
715	CM-2	C.L. CONST. I.R. 75	432+76	TO	433+79	LT						54						
725	CM-3	RAMP K	413+44	TO	416+13	LT						109						
726	CM-4	C.L. CONST. S.R. 562	42+38	TO	44+18	LT						77						
715	CM-5	C.L. CONST. I.R. 75	433+79	TO	435+16	LT												40
715	CM-6	C.L. CONST. I.R. 75	435+16	TO	436+09	LT						20						
719	CM-7	C.L. CONST. I.R. 75	471+59	TO	475+23	RT						114						
722	CM-8	C.L. CONST. I.R. 75	507+72	TO	511+06	LT						109						
717	YT-1	CEDAR ST	0+47	TO	0+81	RT					17							
726	LA-1	RAMP Q	34+65			LT							1					
726	LA-2	RAMP Q	35+31			LT							1					
726	LA-3	RAMP Q	35+97			LT							1					
726	LA-4	RAMP Q	36+62			LT							2					
726	LA-5	RAMP Q	36+70			LT							1					
726	LA-6	RAMP Q	37+09			LT							2					
726	LA-7	RAMP Q	37+39			LT							1					
726	LA-8	C.L. CONST. S.R. 562	38+66			LT							1					
726	LA-9	C.L. CONST. S.R. 562	39+46			LT							1					
716	LRA-1	C.I. CONST. I.R. 75	444+00			RT								1				
717	LRA-2	C.I. CONST. I.R. 75	451+38			RT								1				
717	DY-1	CEDAR ST	0+81			LT	1			8								
717	DY-2	CEDAR ST	0+47	TO	1+04	LT	2			57								
717	DY-3	CEDAR ST	1+04	TO	2+56	CL	3			152								
717	DY-4	TOWNSHIP AVE	20+39	TO	21+17	CL	2	1		78								
717	DY-5	TOWNE ST	13+35	TO	19+93	CL	9	7		658								
726	WA-1	RAMP Q	33+99			LT									1			
726	WA-2	RAMP Q	33+99			LT									1			
713	R-1	C.L. CONST. I.R. 75	393+76	TO	403+40	LT										964		
713	R-2	C.L. CONST. I.R. 75	396+52	TO	403+40	LT										688		
						SUB-TOTALS				953 FT								
		TOTALS CARRIED TO SUBSUMMARY					17	8		0.18 MI	17	574	11	2	2	1652		40

Preliminary Plans - For Reference Only

CALCULATED MKM
CHECKED SMM

PAVEMENT MARKING ESTIMATED QUANTITIES

HAM-75-7.85

J:\20110903\ODOT\HAM\77889\traffic\sheets\77889TS005.dgn 5/22/2026 10:29:08 AM hbrendlinger

SHEET NO.	REF NO.	LOCATION	STATION TO STATION			SIDE	620 DELINEATOR, POST GROUND MOUNTED, TYPE C, WHITE EACH	620 DELINEATOR, POST GROUND MOUNTEDTYPE D, YELLOW EACH	620 DELINEATOR, BRACKET MOUNTED EACH	620 REMOVAL OF DELINEATOR EACH	620 DELINEATOR, POST SURFACE MOUNTED EACH
714		RAMP M	408+79	TO	412+00	LT	2				
724		RAMP M	412+00	TO	416+26	LT	6			4	
724		RAMP M	416+26	TO	420+25	LT			6		
724		RAMP M	420+25	TO	422+00	LT	1				
724		RAMP M	422+00	TO	423+00	RT		1		1	
725		RAMP M	423+00	TO	424+09	RT		1			
714		RAMP N	411+72	TO	413+00	LT		2			
724		RAMP N	413+00	TO	418+00	LT		6			
725		RAMP N	418+00	TO	420+25	LT		2			
725		RAMP K	416+13	TO	417+00	LT		2			
724		RAMP K	417+00	TO	423+00	LT		7			
715		RAMP K	423+00	TO	424+61	LT		2			
725		RAMP J	412+01	TO	413+50	LT	2				
724		RAMP J	413+50	TO	423+50	LT	14				
715		RAMP J	423+50	TO	432+76	LT	7				
				TO							
726		RAMP Q	31+80	TO	34+50	LT		2		2	
726		RAMP Q	36+63	TO	36+84	LT				7	7
726		RAMP P	33+30	TO	35+10	RT		2		2	
						SUB-TOTALS	32	27			
						TOTALS CARRIED TO SUBSUMMARY	59		6	16	7

Preliminary Plans - Not For Reference Only

CALCULATED MKM
CHECKED SMM

DELINEATOR ESTIMATED QUANTITIES

HAM-75-7.85

707
1047

J:\20110903\ODOT\HAM\7889\traffic\sheets\77889TS007.dgn 5/22/2026 10:29:08 AM hbrendlinger

SHEET NO.	REF. NO.	LOCATION	STATION	SIDE	CODE	SIZE (INCHES)	630 REMOVAL OF GROUND MOUNTED SIGN AND DISPOSAL EACH	630 REMOVAL OF GROUND MOUNTED MAJOR SIGN AND DISPOSAL EACH	630 REMOVAL OF GROUND MOUNTED MAJOR SIGN AND REERECTION EACH	630 REMOVAL OF GROUND MOUNTED POST SUPPORT AND DISPOSAL EACH	630 REMOVAL OF GROUND MOUNTED STRUCTURAL BEAM SUPPORT AND DISPOSAL EACH	630 REMOVAL OF OVERHEAD MOUNTED SIGN AND DISPOSAL EACH	630 REMOVAL OF POLE MOUNTED SIGN AND DISPOSAL EACH	630 REMOVAL OF OVERHEAD SIGN SUPPORT AND DISPOSAL, TYPE TC-12.30 EACH	630 REMOVAL OF OVERHEAD SIGN SUPPORT AND DISPOSAL, TYPE TC-7.65 EACH	630 REMOVAL OF MISCELLANEOUS TRAFFIC CONTROL ITEM, BARRIER MOUNTED SIGN SUPPORT AND DISPOSAL EACH	630 REMOVAL OF MISCELLANEOUS TRAFFIC CONTROL ITEM,PARTIAL TRUSS REMOVAL EACH
727	R-1	CL CONST. IR. 75	374+75	RT								3					
727	R-2	CL CONST. IR. 75	395+00	RT								2					
727	R-3	CL CONST. IR. 75	403+00	RT			4			2		2				1	
728	R-4	CL CONST. IR. 75	411+40	RT			2									1	
728	R-5	CL CONST. IR. 75	412+00	RT			1				2						
728	R-6	CL CONST. IR. 75	416+63	RT			2									1	
728	R-7	CL CONST. IR. 75	421+91	RT			1			1							
728	R-8	CL CONST. IR. 75	421+85	RT												1	
728	R-9	CL CONST. IR. 75	421+88	LT			1			1							
729	R-10	RAMP K	424+99	RT			1			2							
729	R-11	CL CONST. IR. 75	425+64	LT			2			2							
729	R-12	RAMP J	426+27	LT			1				2						
729	R-13	CL CONST. IR. 75	426+97	RT			2									1	
729	R-14	CL CONST. IR. 75	432+24	RT			2									1	
729	R-15	CL CONST. IR. 75	436+26	RT								2	1	1			
728	R-16	CL CONST. IR. 75	409+79	LT			1			2							
729	R-17	CL CONST. IR. 75	423+21	RT			1			2							
730	R-18	CL CONST. IR. 75	441+52	LT				1			2						
730	R-19	CL CONST. IR. 75	442+78	RT			2									1	
730	R-20	CL CONST. IR. 75	446+68	RT								2			1		
730	R-21	CL CONST. IR. 75	448+01	RT			2									1	
731	R-22	CL CONST. IR. 75	453+30	CL			2									1	
731	R-23	CL CONST. IR. 75	454+43	LT								2	1	1			
731	R-24	CL CONST. IR. 75	458+62	CL			2									1	
731	R-25	CL CONST. IR. 75	463+89	CL			2									1	
731	R-26	CEDAR ST	0+33	LT			1										
731	R-27	CEDAR ST	1+77	RT			1			1							
731	R-28	TOWNE ST	17+72	RT			3			2							
731	R-29	TOWNE ST	18+45	RT			1			1							
	R-30	NOT USED															
	R-31	NOT USED															
732	R-32	CL CONST. IR. 75	471+42	RT				2			2						
729	R-33	CL CONST. IR. 75	429+50	RT			2			2			2				1
734	R-34	RAMP J	420+98	LT			1			2							
734	R-35	RAMP M	414+91	LT			1			1							
734	R-36	RAMP M	415+40	LT			1			1							
734	R-37	RAMP M	415+56	LT			1			1							
734	R-38	RAMP J	419+88	LT			1			2							
734	R-39	RAMP J	418+51	LT			1			2							
734	R-40	RAMP J	417+46	LT			1			2							
734	R-41	RAMP J	422+11	RT								2	1	1			
734	R-42	RAMP J	413+96	LT			1			2							
734	R-43	RAMP N	413+45	LT			1			1							
734	R-44	RAMP N	414+94	LT			1			1							
734	R-45	RAMP N	415+13	RT			1			2							
734	R-46	RAMP N	415+50	LT								2	1	1			
734	R-47	RAMP N	416+60	LT			1			1							
734	R-48	RAMP K	417+79	LT			1			1							
734	R-49	RAMP K	418+66	LT			1			1							
734	R-50	RAMP K	418+65	RT			1			1							
734	R-51	RAMP K	419+54	LT			1			1							
734	R-52	RAMP K	420+42	LT			1			1							
734	R-53	RAMP K	423+98	LT			1			2							
735	R-54	RAMP N	418+16	LT			1			2							
735	R-55	RAMP K	415+68	LT								2	1		1		
735	R-56	CL CONST. S.R. 562	15+07	LT			1			1							
731	R-57	CL CONST. IR. 75	456+00	RT					1		2						
TOTALS CARRIED TO SUBSUMMARY							59	3	1	46	10	19	7	4	2	11	1

Preliminary Plans - For Reference Only

CALCULATED MKM
CHECKED SMM

SIGNING ESTIMATED QUANTITIES

HAM-75-7.85

J:\20110903\ODOT\HAM\77889\traffic\sheets\77889TS008.dgn 5/22/2026 10:29:09 AM hbrendlinger

SHEET NO.	REF. NO.	LOCATION	STATION	SIDE	CODE	SIZE (INCHES)	630 REMOVAL OF GROUND MOUNTED SIGN AND DISPOSAL EACH	630 REMOVAL OF GROUND MOUNTED POST SUPPORT AND DISPOSAL EACH	630 REMOVAL OF GROUND MOUNTED STRUCTURAL BEAM SUPPORT AND DISPOSAL EACH	630 REMOVAL OF OVERHEAD MOUNTED SIGN AND REERECTION EACH	630 REMOVAL OF OVERHEAD MOUNTED SIGN AND DISPOSAL EACH	630 REMOVAL OF POLE MOUNTED SIGN AND DISPOSAL EACH	630 REMOVAL OF OVERHEAD SIGN SUPPORT AND DISPOSAL, TYPE TC-12.30 EACH	630 REMOVAL OF OVERHEAD SIGN SUPPORT AND DISPOSAL, TYPE TC-7.65 EACH	630 REMOVAL OF TEMPORARY OVERLAY SIGN AND DISPOSAL EACH	630 REMOVAL OF MISCELLANEOUS TRAFFIC CONTROL ITEM, BARRIER MOUNTED SIGN SUPPORT AND DISPOSAL EACH
735	R-58	RAMP N	424+31	LT			1	2								
734	R-59	RAMP J	416+44	LT			1	2								
735	R-60	RAMP N	424+72	LT			2	1								
735	R-61	CL CONST. S.R. 562	17+79	LT							2	1		1		
735	R-62	CL CONST. S.R. 562	20+82	LT			2	2								
735	R-63	CL CONST. S.R. 562	20+72	RT			2	2								
734	R-64	RAMP J	415+46	LT			1	2								
735	R-65	CL CONST. S.R. 562	21+98	RT							4	1		1		
736	R-66	CL CONST. S.R. 562	23+00	LT							2	1		1		
736	R-67	CL CONST. S.R. 562	26+79	CL			2									1
736	R-68	CL CONST. S.R. 562	29+67	LT								2				
736	R-69	CL CONST. S.R. 562	30+52	RT							2	1	1			
736	R-70	RAMP Q	34+00	RT			4		2							
736	R-71	CL CONST. S.R. 562	32+81	RT			1		1							
735	R-72	RAMP N	423+50	LT			1	1								
733	R-73	CL CONST. IR. 75	514+70	LT						1					5	
733	R-74	CL CONST. IR. 75	523+95	LT						1					5	
TOTALS CARRIED TO SUBSUMMARY							17	12	3	2	10	6	1	3	10	1

CALCULATED MKM
CHECKED SMM

SIGNING ESTIMATED QUANTITIES

HAM-75-7.85

709
1047

Preliminary Plans - For Reference Only

J:\20110903\ODOT\HAM\7889\traffic\sheets\77889TS009.dgn 5/22/2026 10:29:09 AM hbrendlinger

SHEET NO.	REF. NO.	LOCATION	STATION	SIDE	CODE	SIZE (INCHES)	625 GROUND ROD EACH	630 GROUND MOUNTED SUPPORT, NO. 3 POST FT	630 GROUND MOUNTED STRUCTURAL BEAM SUPPORT, S4X7.7 FT	630 GROUND MOUNTED STRUCTURAL BEAM SUPPORT, W10X22 FT	630 GROUND MOUNTED STRUCTURAL BEAM SUPPORT, W12X30 FT	630 SIGN POST REFLECTOR, RED EACH	630 SIGN POST REFLECTOR, YELLOW EACH	630 BREAKAWAY STRUCTURAL BEAM CONNECTION EACH	630 OVERHEAD SIGN SUPPORT, TYPE TC-12.31, DESIGN 12 EACH	630 OVERHEAD SIGN SUPPORT, TYPE TC-15.116, DESIGN 3 EACH	630 SIGN ATTACHMENT ASSEMBLY EACH	630 SIGN, FLAT SHEET SF	630 SIGN, GROUND MOUNTED EXTRUSHEET SF	630 SIGN, OVERHEAD EXTRUSHEET SF	630 CONCRETE MEDIAN BARRIER SIGN BRACKET, AS PER PLAN EACH	630 CONCRETE BARRIER MEDIAN OVERHEAD SIGN SUPPORT FOUNDATION, TYPE TC-21.50 EACH	630 GROUND MOUNTED STRUCTURAL BEAM SUPPORT FOUNDATION EACH	630 RIGID OVERHEAD SIGN SUPPORT FOUNDATION EACH
727	S-1	CL CONST. I.R. 75	374+75	RT	E1-H5P	84" X 30"														17.5				
						168" X 108"											3			126				
727	S-2	CL CONST. I.R. 75	395+00	RT	E1-H5P	84" X 30"														17.5				
						168" X 108"											3			126				
727	S-3	CL CONST. I.R. 75	403+00	RT	E1-H5P	84" X 30"														17.5				
						204" X 96"											3			136				
					E1-H5P	84" X 30"														17.5				
						204" X 144"											3			204				
	S-4	NOT USED																						
728	S-5	CL CONST. I.R. 75	411+00	LT	W4-1R-48	48" X 48"		14.0 / 15.0					2					16						
728	S-6	CL CONST. I.R. 75	411+40	CL	D10-5-18	18" X 60"												7.5						
					D10-5-18	18" X 60"												7.5				1		
728	S-7	CL CONST. I.R. 75	412+00	RT	E5-H1A-72	72" X 60"			16 / 16.6					2					30				2	
728	S-8	CL CONST. I.R. 75	416+65	CL	D10-5-18	18" X 60"												7.5						
					D10-5-18	18" X 60"												7.5				1		
728	S-9	CL CONST. I.R. 75	421+81	CL	D10-5-18	18" X 60"												7.5						
					D10-5-18	18" X 60"												7.5				1		
728	S-10	CL CONST. I.R. 75	421+91	RT	D10-1-12	12" X 24"		12										2						
728	S-11	CL CONST. I.R. 75	421+83	LT	D10-1-12	12" X 24"		12										2						
729	S-12	CL CONST. I.R. 75	423+82	RT	W4-3R-48	48" X 48"		16.5 / 16.0					2					16						
729	S-13	CL CONST. I.R. 75	424+00	LT	E1-H5P	84" X 30"	1								1					17.5				1
						192" X 96"														128				
729	S-14	CL CONST. I.R. 75	427+00	CL	D10-5-18	18" X 60"												7.5						
					D10-5-18	18" X 60"												7.5				1		
729	S-15	RAMP J	429+50	LT	D10-H5a-30	30" X 30"		14.5										6.25						
729	S-16	CL CONST. I.R. 75	431+50	LT	E5-H1a-72	72" X 60"			15.9 / 16.2					2					30				2	
729	S-17	CL CONST. I.R. 75	432+25	CL	D10-5-18	18" X 60"												7.5						
					D10-5-18	18" X 60"												7.5				1		
730	S-18	CL CONST. I.R. 75	437+50	CL	D10-5-18	18" X 60"												7.5						
					D10-5-18	18" X 60"												7.5				1		
730	S-19	CL CONST. I.R. 75	438+70	RT	E1-H5P	84" X 30"	2									1				17.5			1	
						204" X 180"														255				1
730	S-20	CL CONST. I.R. 75	442+00	LT	E1-H5P	84" X 30"	2									1				17.5			1	
						696" X 168"														812				1
730	S-21	CL CONST. I.R. 75	442+75	CL	D10-5-18	18" X 60"												7.5						
					D10-5-18	18" X 60"												7.5				1		
730	S-22	CL CONST. I.R. 75	445+00	RT	R2-1-48	48" X 60"		14.5 / 15.5										20						
730	S-23	CL CONST. I.R. 75	448+50	LT	R2-1-48	48" X 60"		16.5 / 17.5										20						
730	S-24	CL CONST. I.R. 75	448+00	CL	D10-5-18	18" X 60"												7.5						
					D10-5-18	18" X 60"												7.5				1		
730	S-25	CL CONST. I.R. 75	447+00	LT	216" X 132"						29.3/24.3			2					198				2	
731	S-26	CL CONST. I.R. 75	453+30	CL	D10-5-18	18" X 60"												7.5						
					D10-5-18	18" X 60"												7.5				1		
731	S-27	CL CONST. I.R. 75	456+00	RT						22.3/24.7				2									2	
731	S-28	CL CONST. I.R. 75	458+50	CL	D10-5-18	18" X 60"												7.5						
					D10-5-18	18" X 60"												7.5				1		
731	S-29	CL CONST. I.R. 75	463+90	CL	D10-5-18	18" X 60"												7.5						
					D10-5-18	18" X 60"												7.5				1		
	S-30	NOT USED																						
731	S-31	CEDAR STREET	0+68	LT	R5-1-30	30" X 30"		15				1						6.25						
					R7-1-12	12" X 18"												1.5						
			0+68	RT	R5-1-30	30" X 30"		15				1						6.25						
					R7-1-12	12" X 18"												1.5						
731	S-32	CEDAR STREET	1+48	LT	R7-1-12	12" X 18"		12										1.5						
			1+68	RT	R7-1-12	12" X 18"		12										1.5						
			2+38	LT	R7-1-12	12" X 18"		12										1.5						
731	S-33	CEDAR STREET	2+50	LT	W14-2-30	30" X 30"		14					1					6.25						
	S-34	NOT USED																						
												2	5											
TOTALS CARRIED TO SUBSUMMARY							5	244.0	64.7	47.0	53.6	7		8	1	2	12	273.5	258	1909.5	11	2	8	3

CALCULATED MKM
CHECKED SMM

SIGNING ESTIMATED QUANTITIES

HAM-75-7.85

710
1047

Preliminary Plans - For Reference Only

J:\20110903\ODOT\HAM\77889\traffic\sheets\77889TS011.dgn 5/22/2026 10:29:10 AM hbrendlinger

SHEET NO.	REF. NO.	LOCATION	STATION	SIDE	CODE	SIZE (INCHES)	625 GROUND ROD EACH	630 GROUND MOUNTED SUPPORT, NO. 3 POST FT	630 GROUND MOUNTED SUPPORT, NO. 4 POST FT	630 GROUND MOUNTED STRUCTURAL BEAM SUPPORT, W6X9 FT	630 SIGN POST REFLECTOR, YELLOW EACH	630 BREAKAWAY STRUCTURAL BEAM CONNECTION EACH	630 OVERHEAD SIGN SUPPORT, TYPE TC-12.31, DESIGN 12 EACH	630 OVERHEAD SIGN SUPPORT, TYPE TC-15.116, DESIGN 1 EACH	630 OVERHEAD SIGN SUPPORT, TYPE TC-15.116, DESIGN 3 EACH	630 SIGN, FLAT SHEET SF	630 SIGN, GROUND MOUNTED EXTRUSHEET SF	630 SIGN, OVERHEAD EXTRUSHEET SF	630 CONCRETE MEDIAN BARRIER SIGN BRACKET, AS PER PLAN EACH	630 CONCRETE BARRIER MEDIAN OVERHEAD SIGN SUPPORT FOUNDATION, TYPE TC-21.50 EACH	630 GROUND MOUNTED STRUCTURAL BEAM SUPPORT FOUNDATION EACH	630 RIGID OVERHEAD SIGN SUPPORT FOUNDATION EACH		
732	S-35	CL CONST. I.R. 75	466+00	LT	E1-H5P	84" X 30"	2									1			17.5		1		1		
						696" X 192"													928						
732	S-36	CL CONST. I.R. 75	471+23	RT	E1-H5P	84" X 30"								1					17.5				1		
						216" X 156"													234						
734	S-37	RAMP M	412+25	LT	D10-H5a-30	30" X 30"		15.5										6.25							
734	S-38	RAMP J	423+00	LT	E1-H5P	72" X 30"	1							1					15				1		
						180" X 108"													135						
734	S-39	RAMP N	415+50	LT	E1-H5P	72" X 30"	1							1					15				1		
						180" 108"													135						
734	S-40	RAMP N	416+00	RT	D10-H5a-30	30" X 30"		14.5										6.25							
734	S-41	RAMP K	418+00	RT	D10-H5a-30	30" X 30"		15										6.25							
735	S-42	RAMP N	419+73	LT	W4-3L-48	48" X 48"		16 / 17				2						16							
735	S-43	RAMP N	423+50	RT	D10-1-12	12" X 24"		12										2							
735	S-44	RAMP K	412+50	RT	D10-1-12	12" X 24"		12										2							
735	S-45	CL CONST. S.R. 562	15+60	CL	D10-5-18	18" X 60"												7.5			1				
					D10-5-18	18" X 60"												7.5							
735	S-46	CL CONST. S.R. 562	16+25	RT	E1-H5P	84" X 30"	2								1				17.5			1	1		
						180" X 108"													135						
					E1-H5P	72" X 30"													15						
						180" X 132"													165						
735	S-47	CL CONST. S.R. 562	18+40	LT		360" X 156"	2								1				390		1		1		
735	S-48	CL CONST. S.R. 562	20+82	LT	M4-6-36	36" X 18"		15 / 15										4.5							
					M1-5-45-3	45" X 36"												11.25							
735	S-49	CL CONST. S.R. 562	20+72	RT	M3-2-36	36" X 18"		15 / 15										4.5							
					M1-5-45-3	45" X 36"												11.25							
735	S-50	CL CONST. S.R. 562	21+48	CL	D10-5-18	18" X 60"												7.5			1				
					D10-5-18	18" X 60"												7.5							
736	S-51	CL CONST. S.R. 562	23+00	RT	R2-1-48	48" X 60"		15.5 / 15.5										20							
736	S-52	CL CONST. S.R. 562	26+79	CL	D10-5-18	18" X 60"												7.5			1				
					D10-5-18	18" X 60"												7.5							
736	S-53	CL CONST. S.R. 562	28+00	LT		360" X 156"	2								1				390				1		
736	S-54	CL CONST. S.R. 562	29+50	RT	E1-H5P	72" X 30"	1							1					15				1		
						180" X 132"													165						
736	S-55	CL CONST. S.R. 562	32+50	RT	E5-H1A-72	72" X 60"				16.4 / 16.1			2					30				2		
736	S-56	CL CONST. S.R. 562	34+00	RT	M1-5-36-2	36" X 36"												9							
					M6-4-30	30" X 21"					15.7 / 17.2		2					4.38					2		
					D3-H5-120	120" X 36"														30					
734	S-57	RAMP M	413+10	LT	W1-8L-36	36" X 48"		14.5 / 14.5				2						12							
734	S-58	RAMP M	414+30	LT	W1-8L-36	36" X 48"		14.5 / 14.5				2						12							
734	S-59	RAMP M	415+50	LT	W1-8L-36	36" X 48"		14.5 / 14.5				2						12							
734	S-60	RAMP M	421+00	LT	W13-3-48	48" X 60"		15.5 / 15.5				2						20							
734	S-61	RAMP M	422+75	LT	W1-2L-36	36" X 36"		18.0				1						9							
					W13-1P-30	30" X 30"												6.25							
734	S-62	RAMP K	417+30	LT	W1-8R-36	36" X 48"		14.5 / 14.5				2						12							
734	S-63	RAMP K	418+50	LT	W1-8R-36	36" X 48"		14.5 / 14.5				2						12							
734	S-64	RAMP K	419+70	LT	W1-8R-36	36" X 48"		14.5 / 14.5				2						12							
734	S-65	RAMP K	420+90	LT	W1-8R-36	36" X 48"		14.5 / 14.5				2						12							
735	S-66	RAMP K	413+50	RT	W13-3-48	48" X 60"		15.5 / 15.5				2						20							
735	S-67	RAMP K	411+00	RT	W1-2R-36	36" X 36"			16			1						9							
					W13-1P-30	30" X 30"												6.25							
728	S-68	RAMP N	409+50	RT	W1-2R-36	36" X 36"			16			1						9							
					W13-1P-30	30" X 30"												6.25							
728	S-69	RAMP N	412+50	LT	W1-8R-36	36" X 48"		14.5 / 14.5				2						12							
729	S-70	RAMP J	424+00	LT	W13-3-48	48" X 60"		15.5 / 15.5				2						20							
729	S-71	RAMP J	426+00	LT	W1-2L-36	36" X 36"			16			1						9							
					W13-1P-30	30" X 30"												6.25							
729	S-72	CL CONST. I.R 75	436+00	RT	W9-1R-48	48" X 48"		15.0 / 15.5				2						16							
731	S-73	CL CONST. I.R 75	454+10	RT	W4-2R-48	48" X 48"		15.0 / 15.0				2						16							
734	S-74	RAMP N	413+70	LT	W1-8R-36	36" X 48"		14.5 / 14.5				2						12							
734	S-75	RAMP N	414+90	LT	W1-8R-36	36" X 48"		14.5 / 14.5				2						12							
TOTALS CARRIED TO SUBSUMMARY							11	654.0	48	32.5	32.9	36	4	4	3	1	421.63	60	2790	3	3	4	8	

Preliminary Plans - Not For Reference Only

CALCULATED MKM CHECKED SMM

ESTIMATED QUANTITIES

SIGNING

HAM-75-7.85

711
1047

J:\20110903\ODOT\HAM\77889\traffic\sheets\77889TS012.dgn 5/22/2026 10:29:10 AM hbrendlinger

SHEET NO.	REF. NO.	LOCATION	STATION	SIDE	CODE	SIZE (INCHES)	630 GROUND MOUNTED SUPPORT, NO. 3 POST FT	630 ONE WAY SUPPORT, NO. 3 POST FT	630 SIGN POST REFLECTOR, YELLOW EACH	630 SIGN, FLAT SHEET SF
734	S-76	RAMP N	416+10	LT	W1-8R-36	36" X 48"	14.5 / 14.5		2	12
734	S-77	RAMP J	414+60	LT	W1-8L-36	36" X 48"	14.5 / 15		2	12
734	S-78	RAMP J	415+80	LT	W1-8L-36	36" X 48"	14.5 / 15		2	12
734	S-79	RAMP J	417+00	LT	W1-8L-36	36" X 48"	14.5 / 15		2	12
734	S-80	RAMP J	418+20	LT	W1-8L-36	36" X 48"	14.5 / 14.5		2	12
734	S-81	RAMP J	419+40	LT	W1-8L-36	36" X 48"	14.5 / 15		2	12
734	S-82	RAMP J	420+60	LT	W1-8L-36	36" X 48"	15 / 15		2	12
734	S-83	RAMP J	421+80	LT	W1-8L-36	36" X 48"	15 / 15		2	12
735	S-84	RAMP J	413+40	LT	W1-8L-36	36" X 48"	14.5 / 14.5		2	12
731	S-85	CEDAR STREET	0+19	LT	R6-1L-36	36" X 12"		12		3
					R6-1R-36	36" X 12"				3
TOTALS CARRIED TO SUBSUMMARY							265.0	12	18	114

Preliminary Plans - For Reference Only

CALCULATED MKM
CHECKED SMM

SIGNING ESTIMATED QUANTITIES

HAM-75-7.85

712
1047

J:\20110903\ODOT\HAM\7889\traffic\sheets\77889TS014.dgn 5/22/2026 10:29:11 AM hbrendlinger

NOTES:

1. INSTALL RAISED PAVEMENT MARKERS ACCORDING TO STANDARD CONSTRUCTION DRAWINGS TC-65.10 AND TC-65.11.

2. SEE SHEET 699 FOR PAVEMENT MARKING LEGENDS.

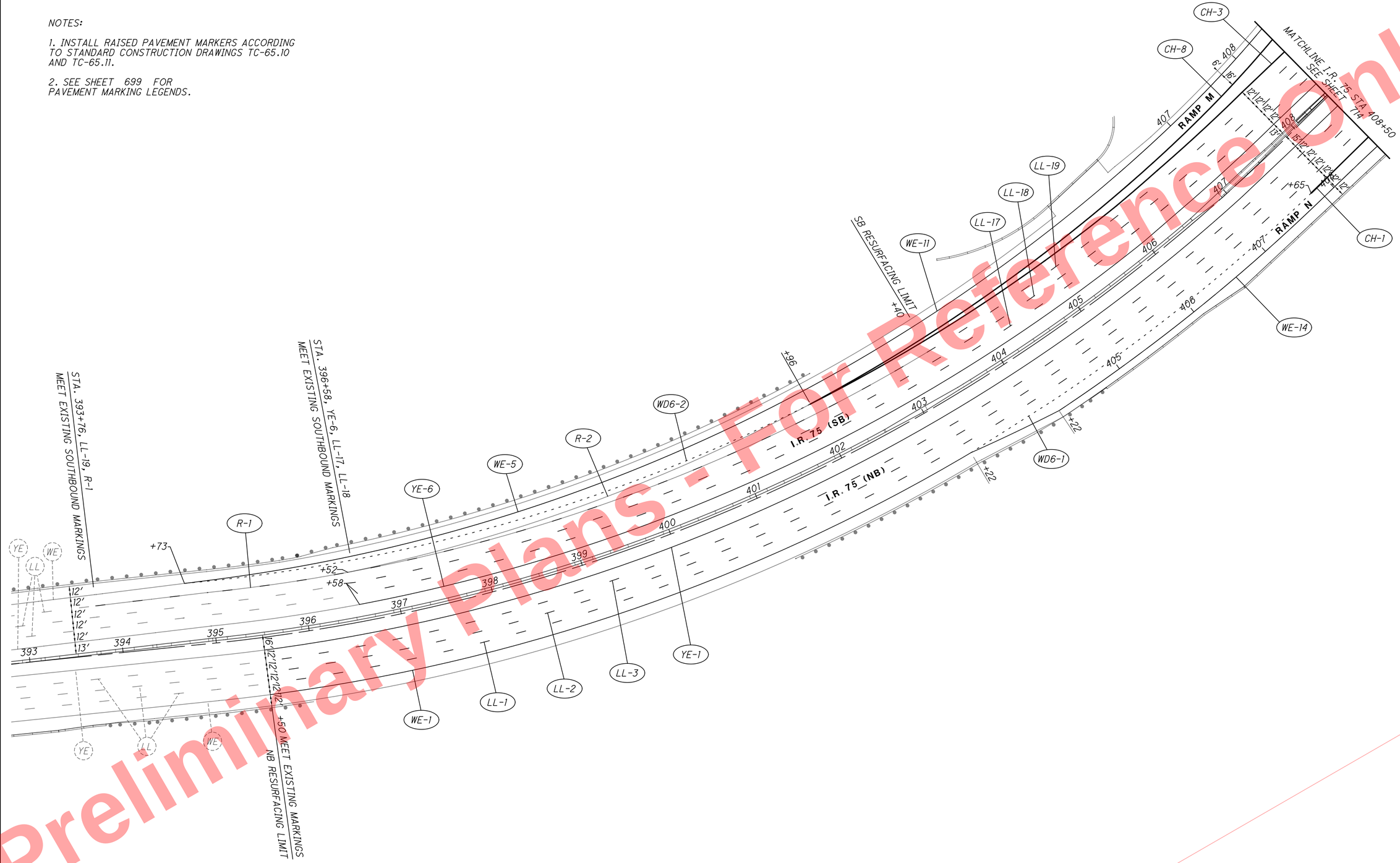

Preliminary Plans - For Reference Only

J:\20110903\ODOT\HAM\77889\traffic\sheets\77889TP001.dgn 5/22/2026 10:29:13 AM hbrendlinger

HORIZONTAL SCALE IN FEET
0 25 50 100

CALCULATED MKM
CHECKED SMM

I.R. 75 PAVEMENT MARKING PLAN
STA. 393+50 TO STA. 408+50

HAM-75-7.85

713
1047

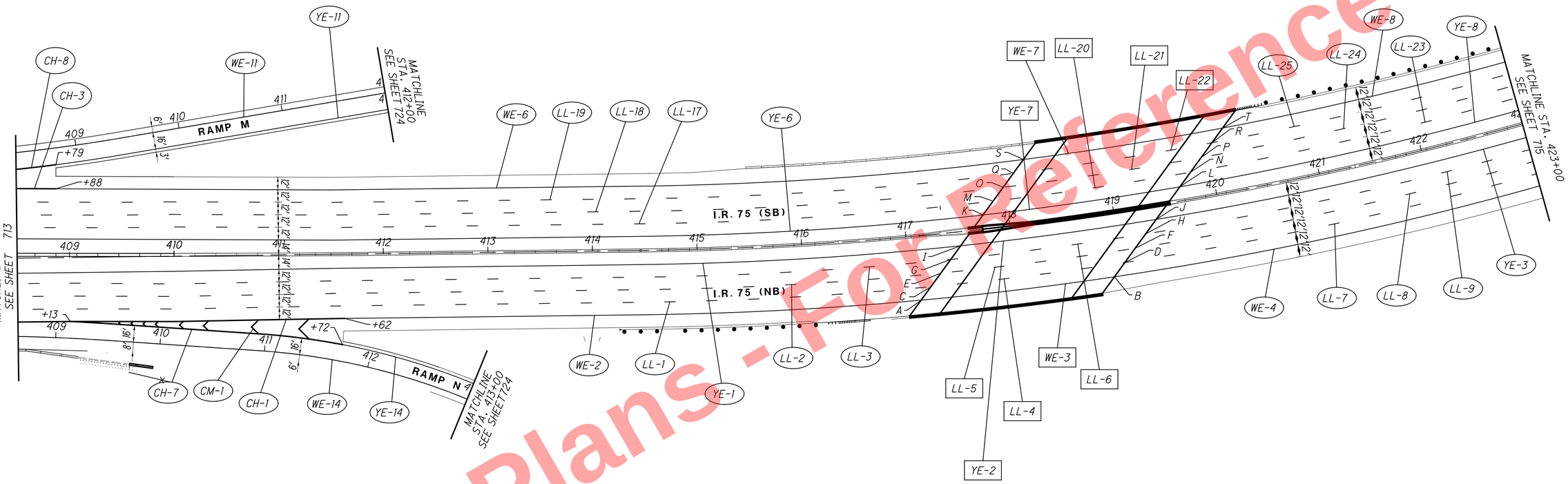

NOTES:

1. INSTALL RAISED PAVEMENT MARKERS ACCORDING TO STANDARD CONSTRUCTION DRAWINGS TC-65.10 AND TC-65.11.

2. SEE SHEET 699 FOR PAVEMENT MARKING LEGENDS.

HORIZONTAL SCALE IN FEET
0 25 50 100

CALCULATED MKM
CHECKED SMM

I.R. 75 PAVEMENT MARKING PLAN
STA. 408+50 TO STA. 423+00

HAM-75-7.85

714
1047

Preliminary Plans - Not For Reference Only

J:\2011093\ODOT\HAM\77889\traffic\sheets\77889TP002.dgn 5/22/2026 10:29:15 AM hbrendlinger

A - 433+85.37
B - 435+22.38
C - 433+84.84
D - 435+21.84
E - 433+84.30
F - 435+21.31
G - 433+83.77
H - 435+20.77
I - 433+83.24
J - 435+20.24
K - 433+82.70
L - 435+19.71
M - 433+81.50
N - 435+18.51
O - 433+80.97
P - 435+17.97
Q - 433+80.43
R - 435+17.44
S - 433+79.90
T - 435+16.90
U - 433+79.37
V - 435+16.37
W - 433+78.69
X - 435+16.13
Y - 433+78.15
Z - 435+15.59
AA - 433+77.61
BB - 435+15.06
CC - 433+85.90
DD - 435+22.91

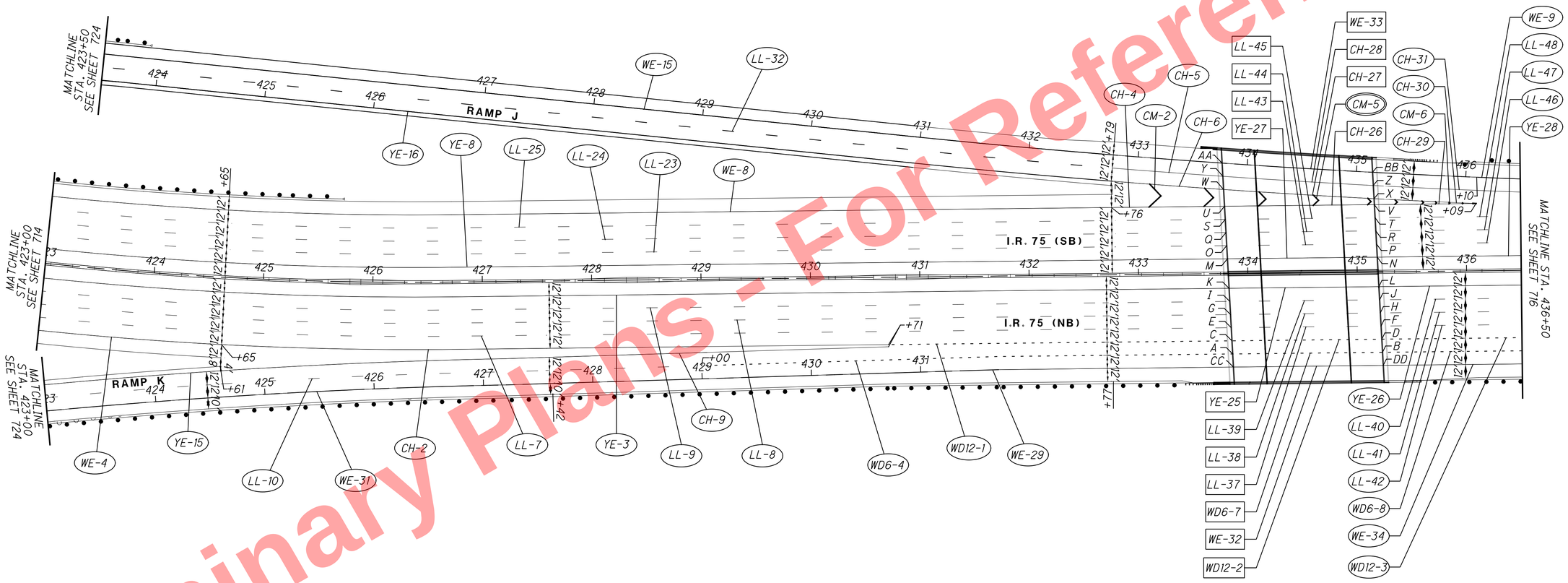

NOTES:

1. INSTALL RAISED PAVEMENT MARKERS ACCORDING TO STANDARD CONSTRUCTION DRAWINGS TC-65.10 AND TC-65.11.

2. SEE SHEET 699 FOR PAVEMENT MARKING LEGENDS.

HORIZONTAL SCALE IN FEET 0 25 50 100

CALCULATED MKM
CHECKED SMM

I.R. 75 PAVEMENT MARKING PLAN
STA. 423+00 TO STA. 436+50

HAM-75-7.85

Preliminary Plans - For Reference Only

J:\20110903\ODOT\HAM\77889\traffic\sheets\77889TP003.dgn 5/22/2026 10:29:17 AM hbrendlinger

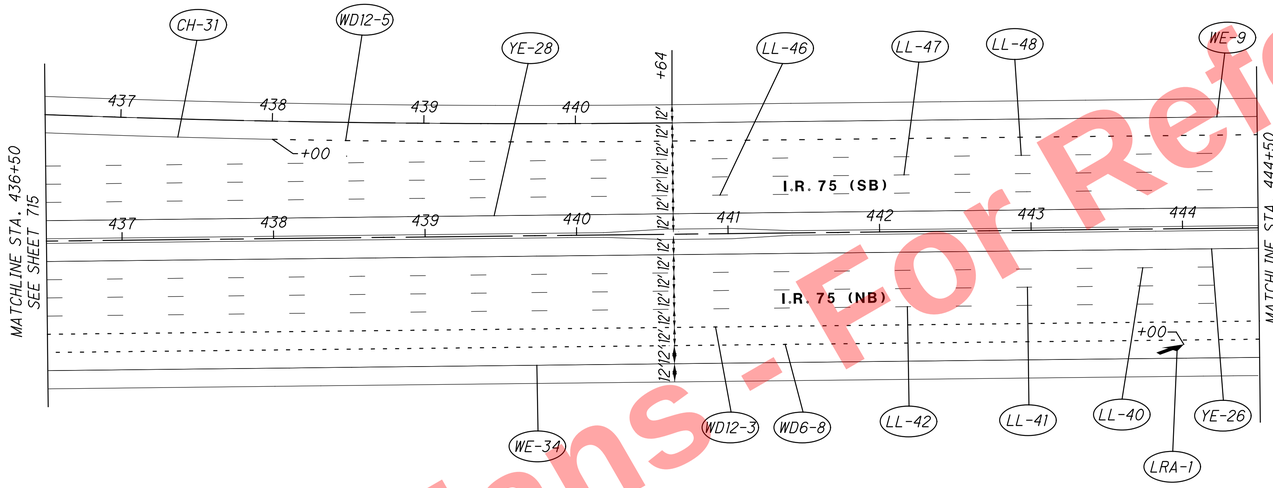

NOTES:

1. INSTALL RAISED PAVEMENT MARKERS ACCORDING TO STANDARD CONSTRUCTION DRAWINGS TC-65.10 AND TC-65.11.

2. SEE SHEET 699 FOR PAVEMENT MARKING LEGENDS.

HORIZONTAL SCALE IN FEET
0 25 50 100

CALCULATED MKM
CHECKED SMM

I.R. 75 PAVEMENT MARKING PLAN
STA. 436+50 TO STA. 444+50

HAM-75-7.85

716
1047

Preliminary Plans - For Reference Only

J:\20110903\ODOT\HAM\7889\traffic\sheets\77889TP004.dgn 5/22/2026 10:29:19 AM hbrendlinger

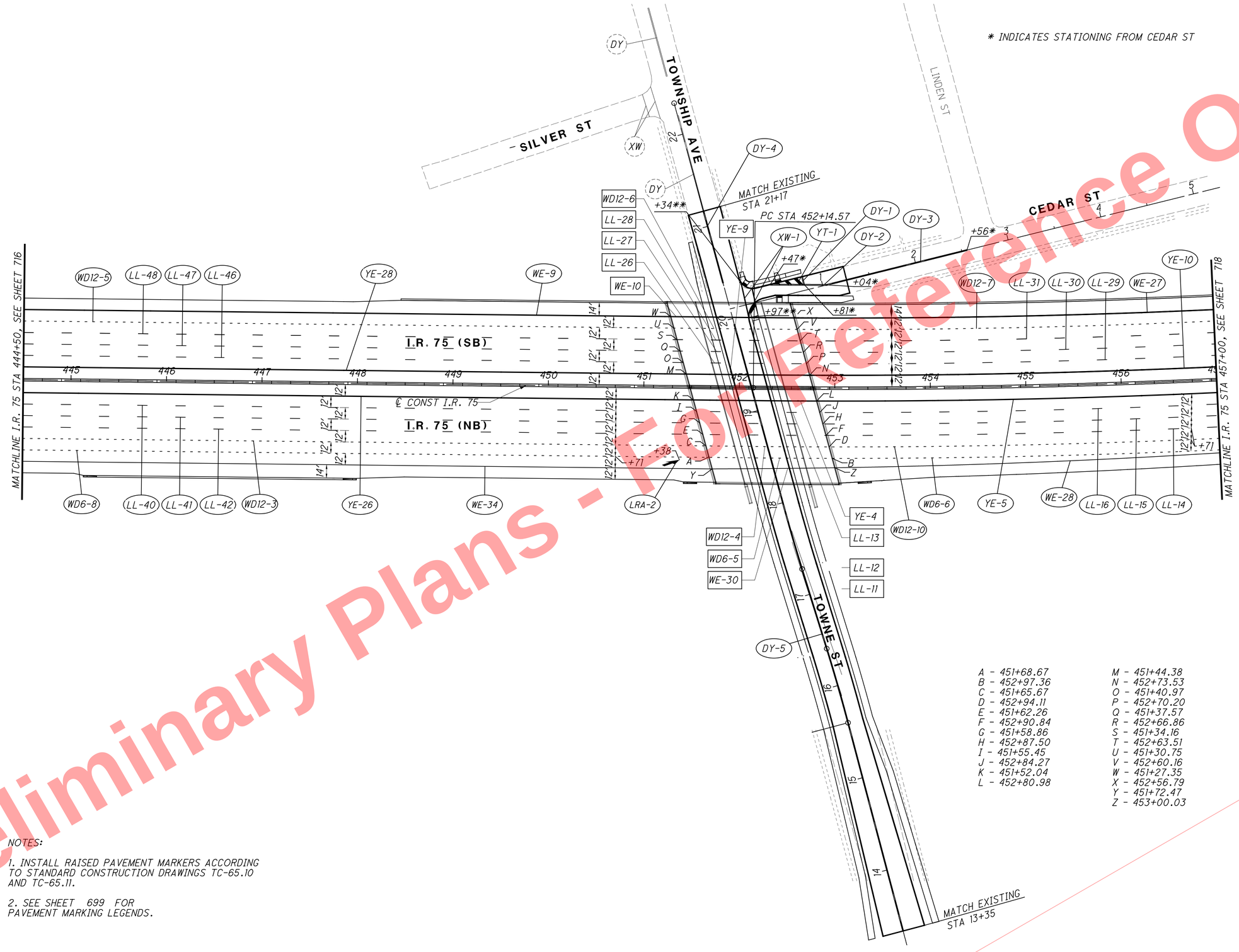

A - 451+68.67
B - 452+97.36
C - 451+65.67
D - 452+94.11
E - 451+62.26
F - 452+90.84
G - 451+58.86
H - 452+87.50
I - 451+55.45
J - 452+84.27
K - 451+52.04
L - 452+80.98
M - 451+44.38
N - 452+73.53
O - 451+40.97
P - 452+70.20
Q - 451+37.57
R - 452+66.86
S - 451+34.16
T - 452+63.51
U - 451+30.75
V - 452+60.16
W - 451+27.35
X - 452+56.79
Y - 451+72.47
Z - 453+00.03

NOTES:

1. INSTALL RAISED PAVEMENT MARKERS ACCORDING TO STANDARD CONSTRUCTION DRAWINGS TC-65.10 AND TC-65.11.

2. SEE SHEET 699 FOR PAVEMENT MARKING LEGENDS.

Preliminary Plans - For Reference Only

HORIZONTAL SCALE IN FEET
0 25 50 100
CALCULATED MKM
CHECKED SMM

I.R. 75 PAVEMENT MARKING PLAN
STA 444+50 TO STA 457+00

HAM-75-7.85

717
1047

J:\20110903\ODOT\HAM\77889\traffic\sheets\77889TP401.dgn 5/22/2026 10:29:20 AM hbrendlinger

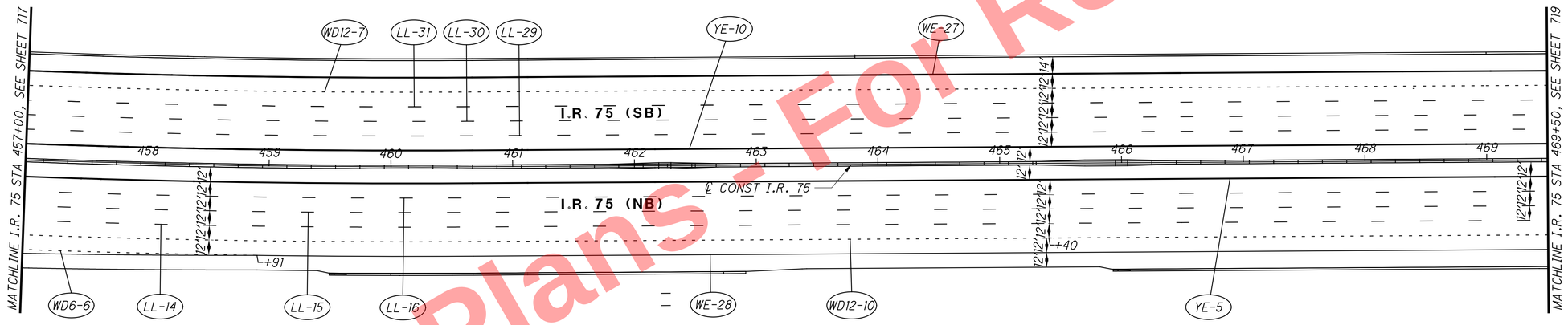

NOTES:

1. INSTALL RAISED PAVEMENT MARKERS ACCORDING TO STANDARD CONSTRUCTION DRAWINGS TC-65.10 AND TC-65.11.

2. SEE SHEET 699 FOR PAVEMENT MARKING LEGENDS.

Preliminary Plans - For Reference Only

HORIZONTAL SCALE IN FEET
0 25 50 100

CALCULATED MKM
CHECKED SMM

I.R. 75 PAVEMENT MARKING PLAN
STA 457+00 TO STA 469+50

HAM-75-7.85

718
1047

J:\20110903\ODOT\HAM\77889\traffic\sheets\77889TP402.dgn 5/22/2026 10:29:21 AM hbrendlinger

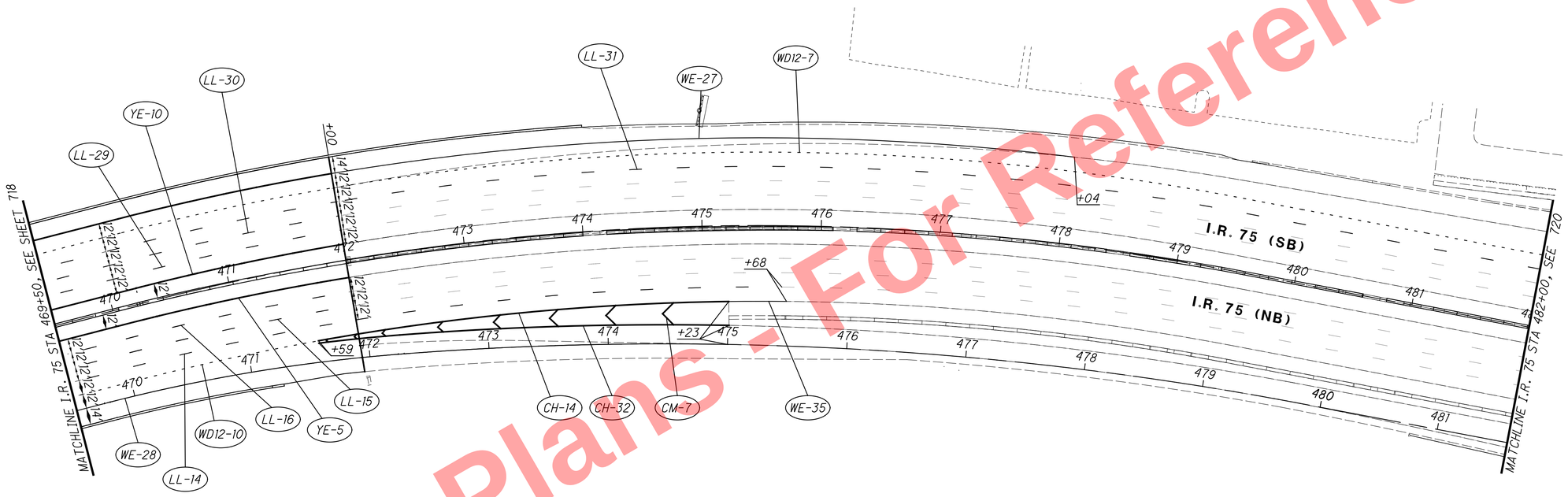

NOTES:

1. INSTALL RAISED PAVEMENT MARKERS ACCORDING TO STANDARD CONSTRUCTION DRAWINGS TC-65.10 AND TC-65.11.

2. SEE SHEET 699 FOR PAVEMENT MARKING LEGENDS.

Preliminary Plans - For Reference Only

HORIZONTAL SCALE IN FEET
0 25 50 100

CALCULATED MKM
CHECKED SMM

I.R. 75 PAVEMENT MARKING PLAN
STA 469+50 TO STA 482+00

HAM-75-7.85

719
1047

J:\20110903\ODOT\HAM\77889\traffic\sheets\77889TP403.dgn 5/22/2026 10:29:22 AM hbrendlinger

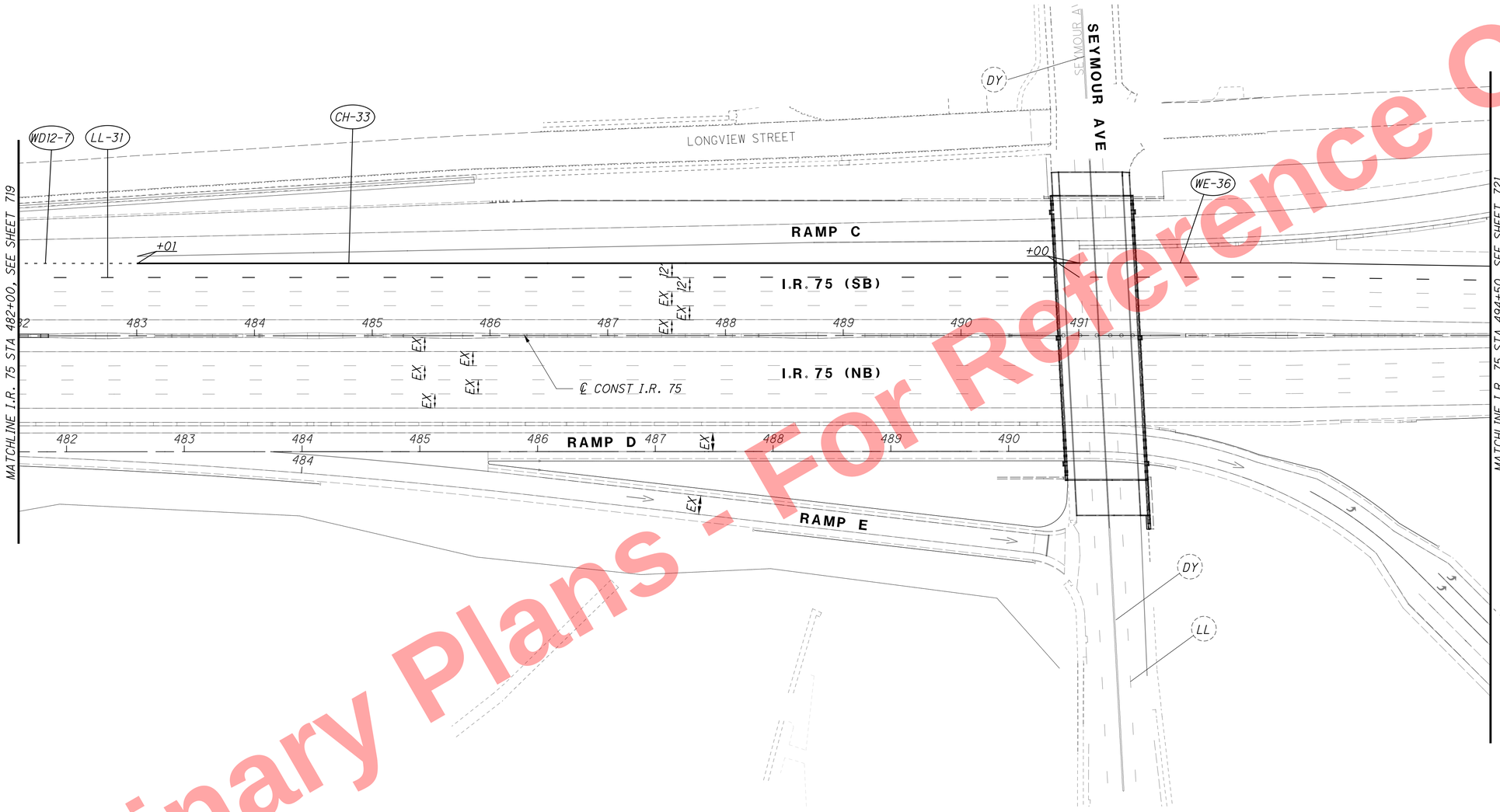

NOTES:

1. INSTALL RAISED PAVEMENT MARKERS ACCORDING TO STANDARD CONSTRUCTION DRAWINGS TC-65.10 AND TC-65.11.

2. SEE SHEET 699 FOR PAVEMENT MARKING LEGENDS.

HORIZONTAL SCALE IN FEET
0 25 50 100

CALCULATED MKM
CHECKED SMM

I.R. 75 PAVEMENT MARKING PLAN STA 482+00 TO STA 494+50

HAM-75-7.85

720
1047

Preliminary Plans - For Reference Only

J:\20110903\ODOT\HAM\77889\traffic\sheets\77889TP404.dgn 5/22/2026 10:29:23 AM hbrendlinger

NOTES:

1. INSTALL RAISED PAVEMENT MARKERS ACCORDING TO STANDARD CONSTRUCTION DRAWINGS TC-65.10 AND TC-65.11.

2. INSTALL RAISED PAVEMENT MARKERS ON RAMP B AND RAMP D ACCORDING TO STANDARD CONSTRUCITON DRAWING TC-73.20.

3. SEE SHEET 699 FOR PAVEMENT MARKING LEGENDS.

Preliminary Plans - For Reference Only

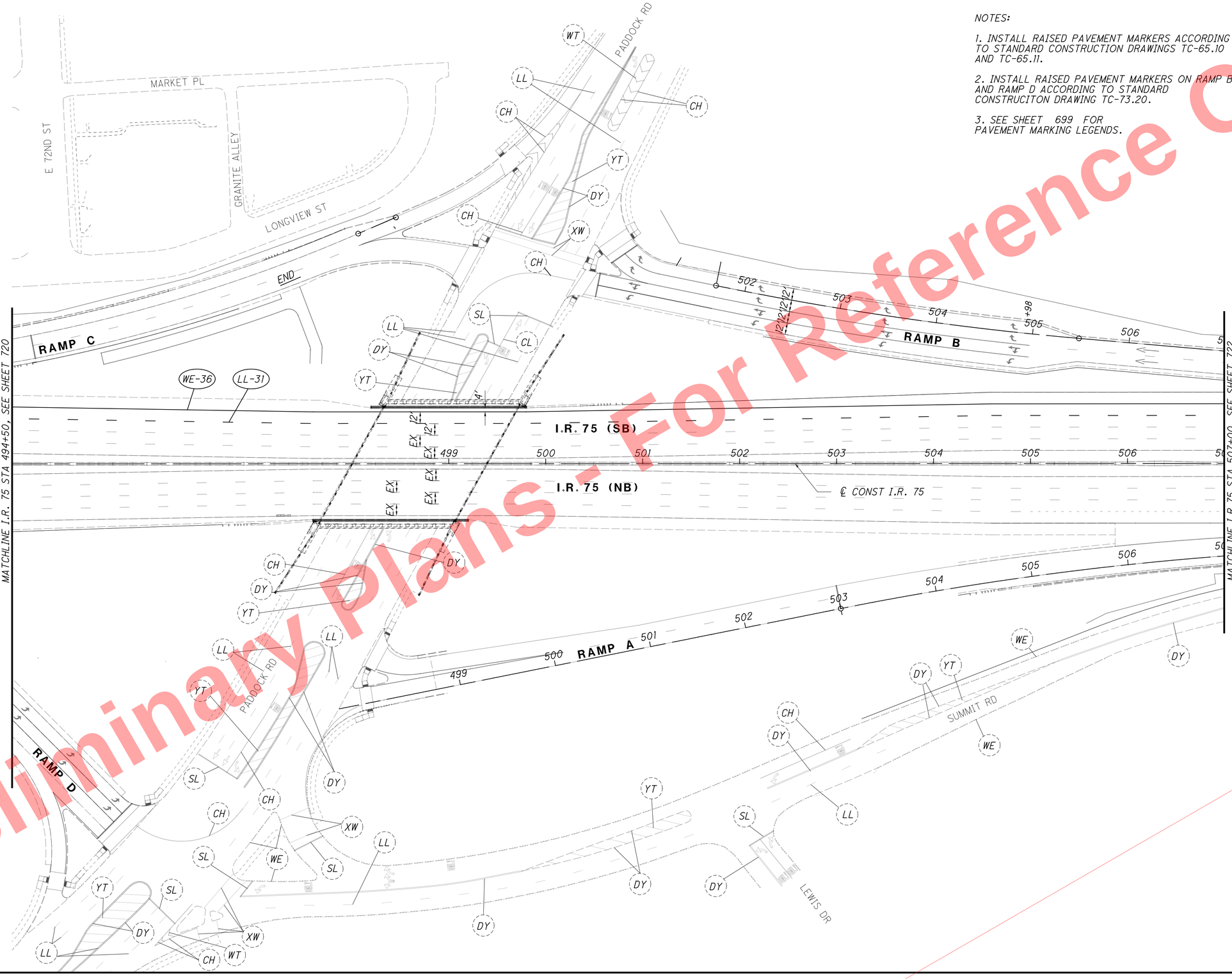

HORIZONTAL SCALE IN FEET
0 25 50 100

CALCULATED MKM
CHECKED SMM

I.R. 75 PAVEMENT MARKING PLAN STA 494+50 TO STA 507+00

HAM-75-7.85

721
1047

J:\20110903\ODOT\HAM\77889\traffic\sheets\77889TP405.dgn 5/22/2026 10:29:25 AM hbrendlinger

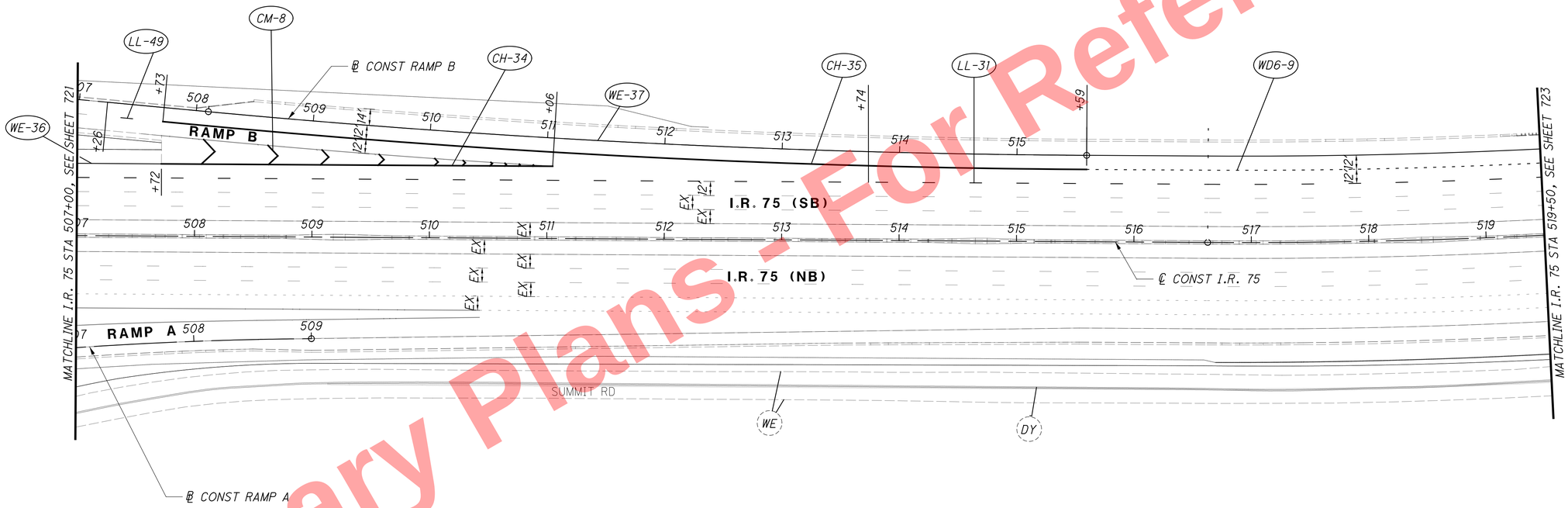

NOTES:

1. INSTALL RAISED PAVEMENT MARKERS ACCORDING TO STANDARD CONSTRUCTION DRAWINGS TC-65.10 AND TC-65.11.

2. SEE SHEET 699 FOR PAVEMENT MARKING LEGENDS.

Preliminary Plans - For Reference Only

HORIZONTAL SCALE IN FEET
0 25 50 100

CALCULATED MKM
CHECKED SMM

I.R. 75 PAVEMENT MARKING PLAN
STA 507+00 TO STA 519+50

HAM-75-7.85

722
1047

J:\20110903\ODOT\HAM\7889\traffic\sheets\77889TP406.dgn 5/22/2026 10:29:26 AM hbrendlinger

NOTES:

1. INSTALL RAISED PAVEMENT MARKERS ACCORDING TO STANDARD CONSTRUCTION DRAWINGS TC-65.10 AND TC-65.11.

2. SEE SHEET 699 FOR PAVEMENT MARKING LEGENDS.

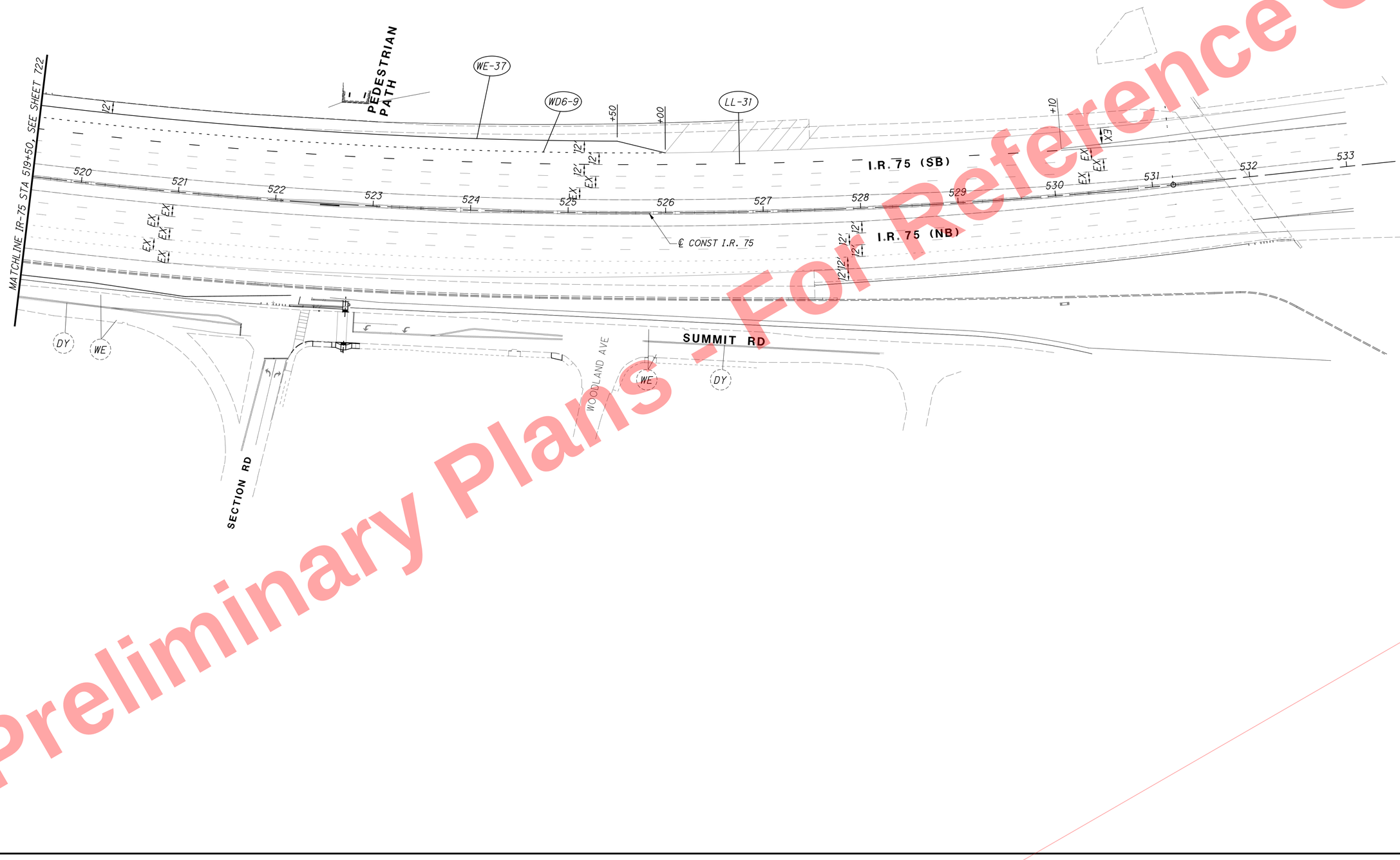

Preliminary Plans - For Reference Only

HORIZONTAL SCALE IN FEET
0 25 50 100

CALCULATED MKM
CHECKED SMM

I.R. 75 PAVEMENT MARKING PLAN
STA 519+50 TO STA 533+00

HAM-75-7.85

723
1047

J:\20110903\ODOT\HAM\77889\traffic\sheets\77889TP407.dgn 5/22/2026 10:29:27 AM hbrendlinger

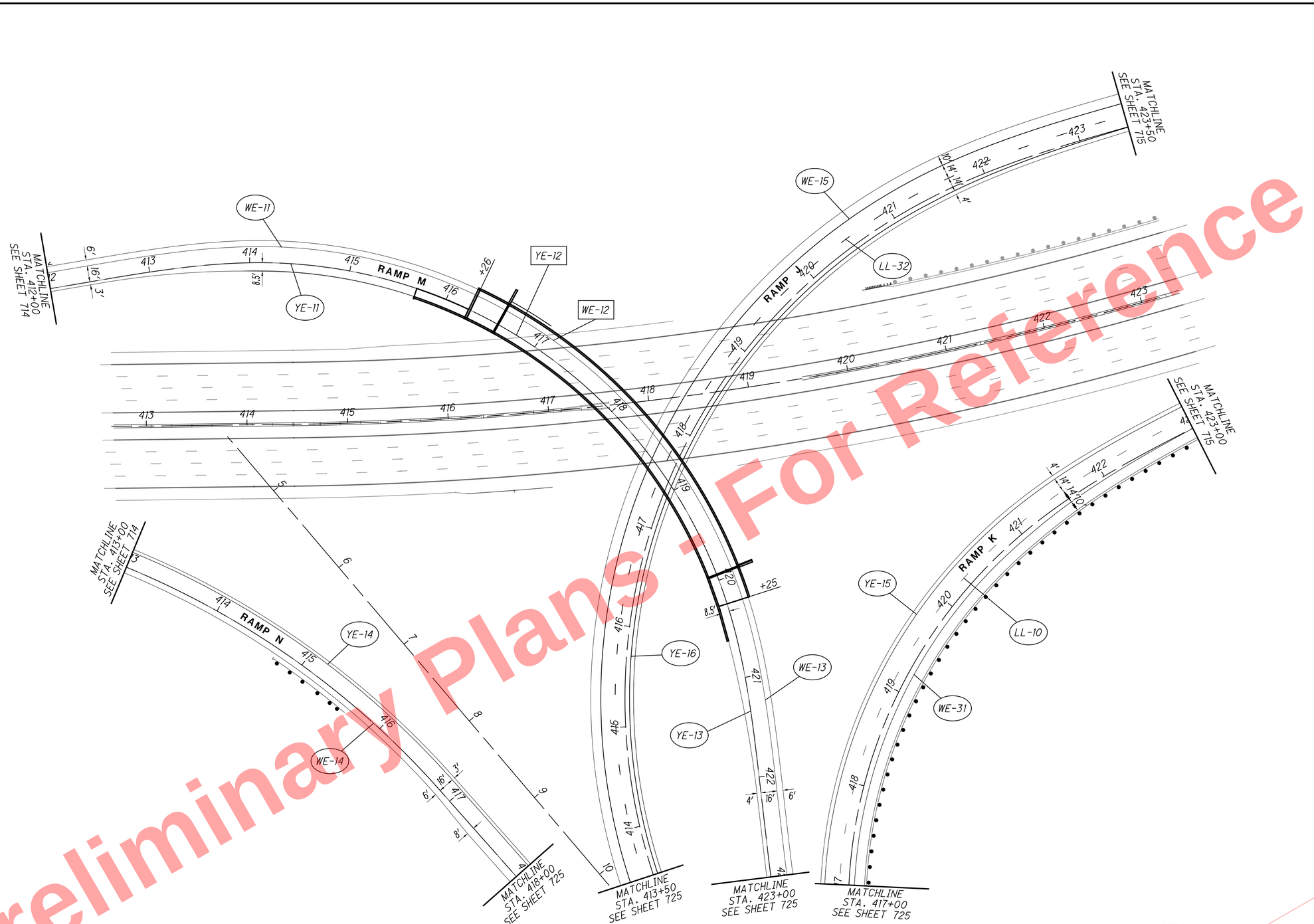

NOTES:

1. INSTALL RAISED PAVEMENT MARKERS ACCORDING TO STANDARD CONSTRUCTION DRAWINGS TC-65.10 AND TC-65.11.

2. SEE SHEET 699 FOR PAVEMENT MARKING LEGENDS.

HORIZONTAL SCALE IN FEET
0 25 50 100

CALCULATED MKM
CHECKED SMM

RAMPS J,K,M & N PAVEMENT MARKING PLAN
STA. 412+00 TO STA. 423+00

HAM-75-7.85

724
1047

Preliminary Plans - For Reference Only

J:\20110903\ODOT\HAM\77889\traffic\sheets\77889TP005.dgn 5/22/2026 10:29:28 AM hbrendlinger

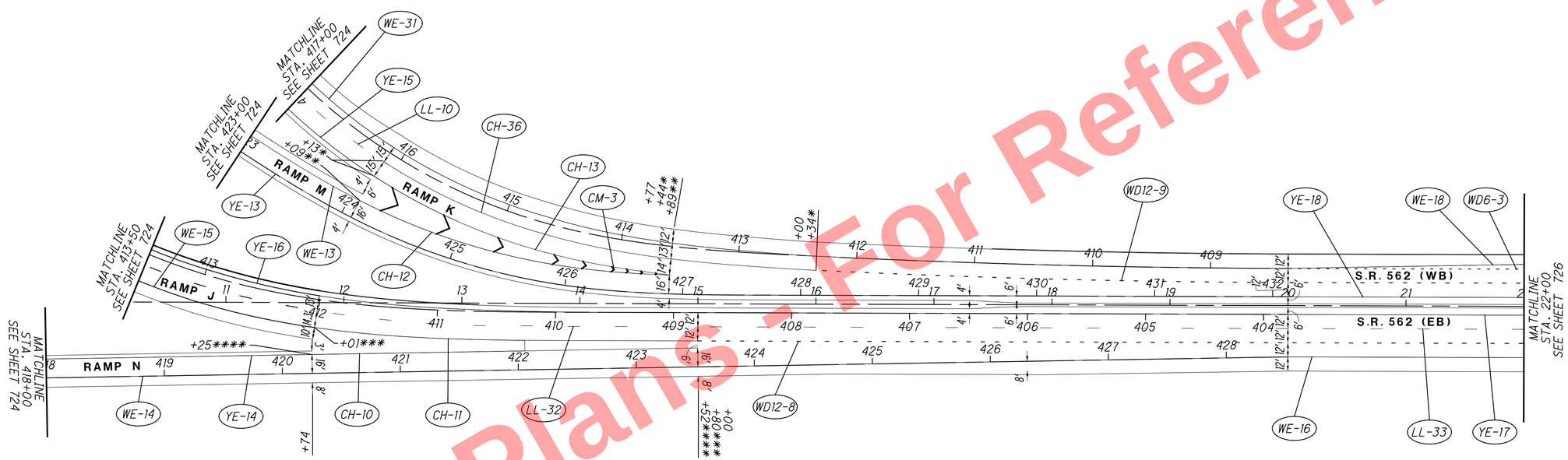

* DENOTES STATIONING FROM RAMP K

** DENOTES STATIONING FROM RAMP M

*** DENOTES STATIONING FROM RAMP J

**** DENOTES STATIONING FROM RAMP N

NOTES:

1. INSTALL RAISED PAVEMENT MARKERS ACCORDING TO STANDARD CONSTRUCTION DRAWINGS TC-65.10 AND TC-65.11.

2. SEE SHEET 699 FOR PAVEMENT MARKING LEGENDS.

HORIZONTAL SCALE IN FEET
0 25 50 100

CALCULATED MKM
CHECKED SMM

S.R. 562 PAVEMENT MARKING PLAN
STA. 418+00 TO STA. 22+00

HAM-75-7.85

725
1047

Preliminary Plans - For Reference Only

J:\20110903\ODOT\HAM\7889\traffic\sheets\77889TP006.dgn 5/22/2026 10:29:29 AM hbrendlinger

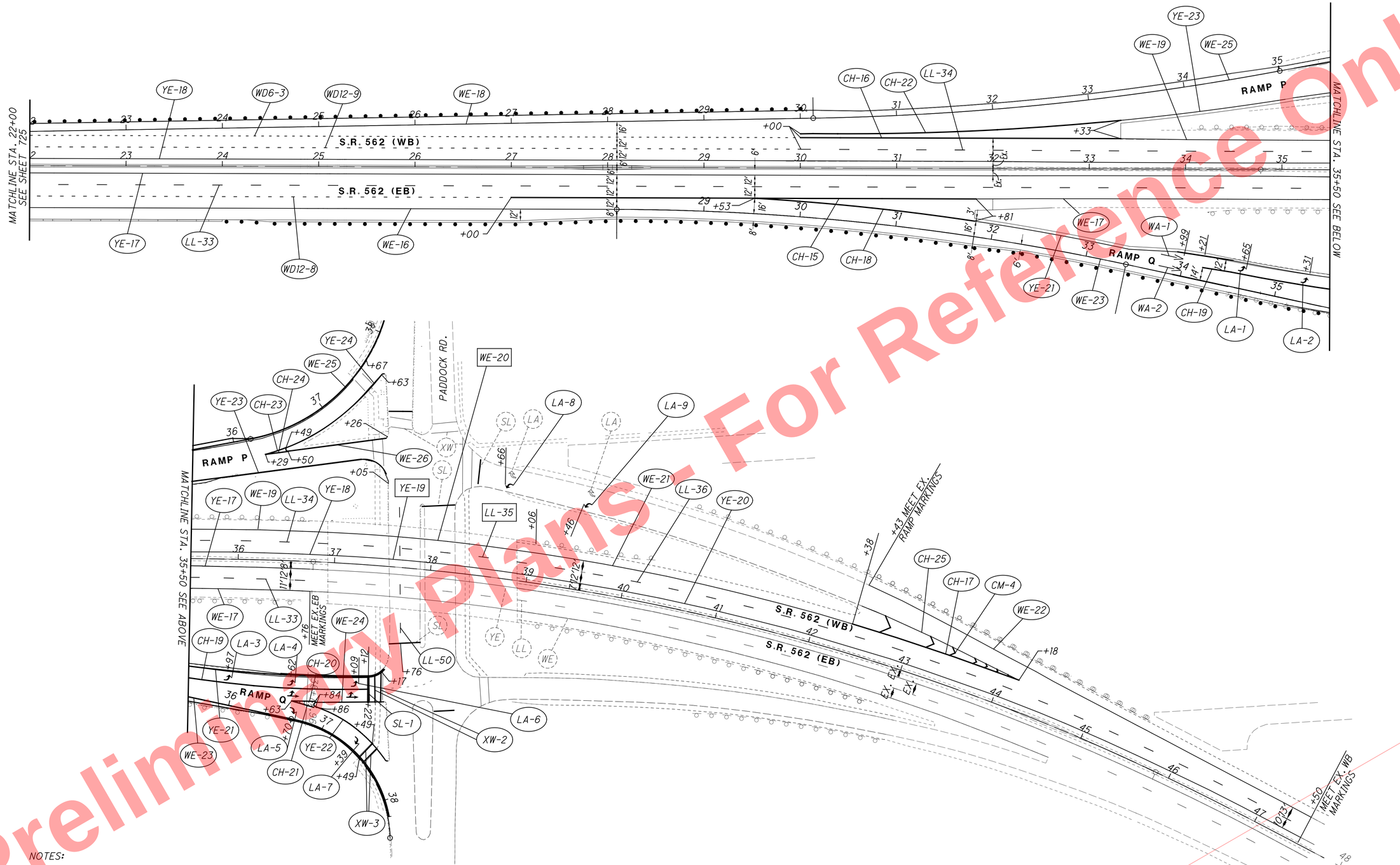

Preliminary Plans - Not For Reference Only

HORIZONTAL SCALE IN FEET
0 25 50 100

CALCULATED MKM
CHECKED SMM

S.R. 562 PAVEMENT MARKING PLAN
STA. 22+00 TO STA. 48+00

HAM-75-7.85

726
1047

J:\2011093\ODOT\HAM\77889\traffic\sheets\77889TP007.dgn 5/22/2026 10:29:31 AM hbrendlinger

J:\20110903\ODOT\HAM\77889\traffic\sheets\77889TP022.dgn 5/22/2026 10:29:36 AM hbrendlinger

Preliminary Plans - For Reference Only

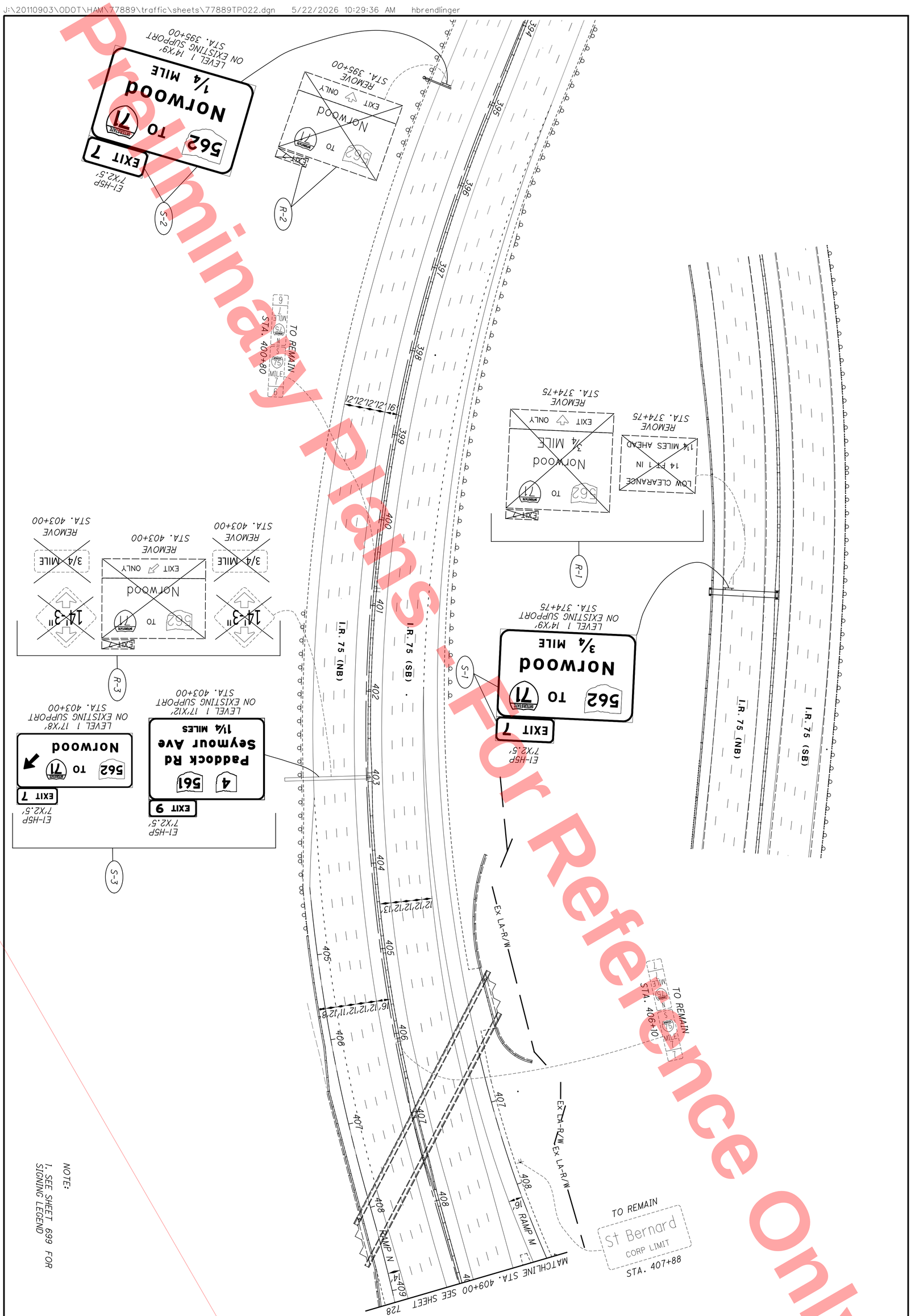

727 / 1047	HAM-75-7.85	I.R. 75 SIGNING PLAN STA. 371+00 TO STA. 409+00	CALCULATED MKM CHECKED SMM	0 50 25 100 HORIZONTAL SCALE IN FEET

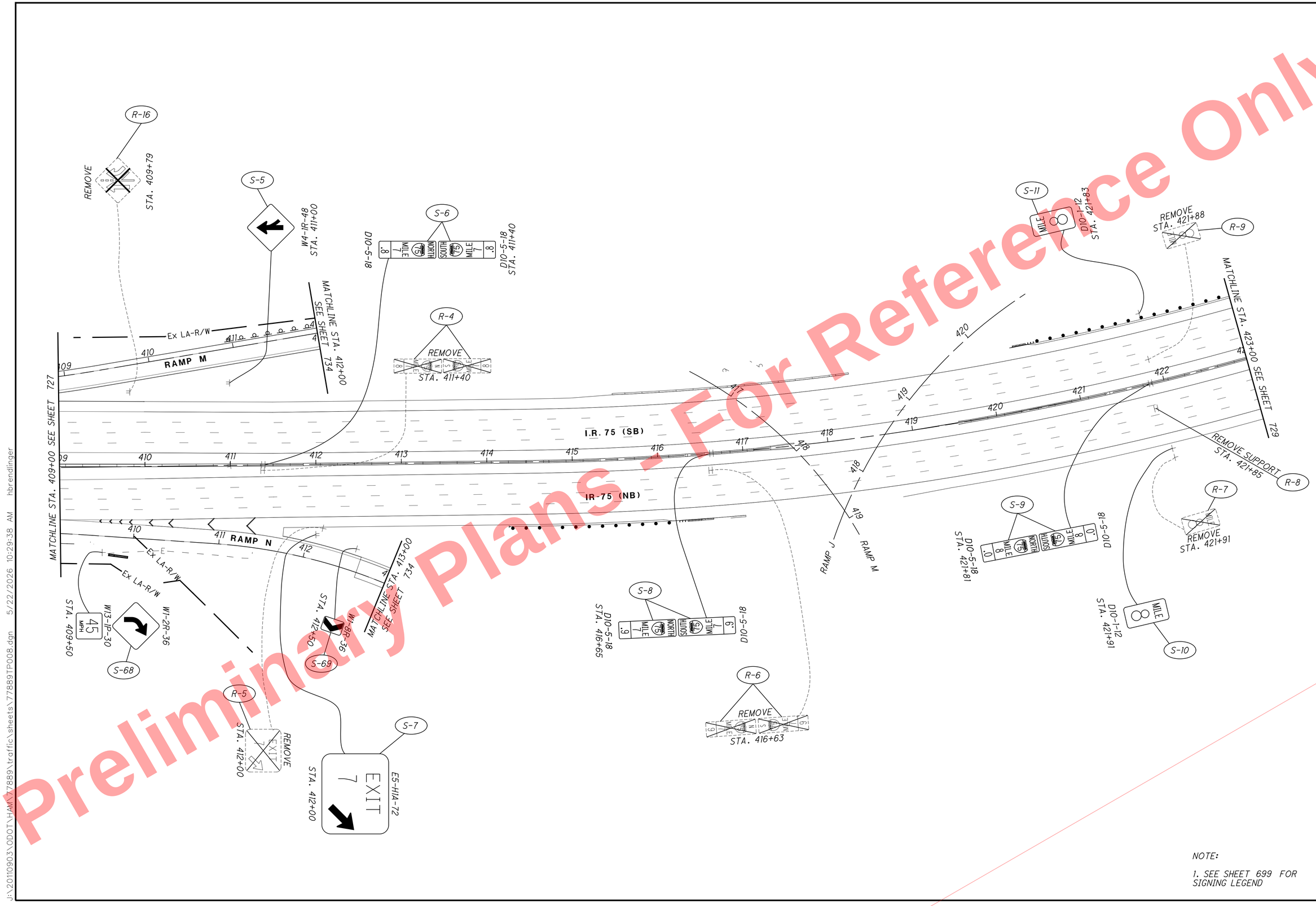

Preliminary Plans - For Reference Only

NOTE:

1. SEE SHEET 699 FOR SIGNING LEGEND

HORIZONTAL SCALE IN FEET
0 25 50 100

CALCULATED MKM
CHECKED SMM

I.R. 75 SIGNING PLAN
STA. 409+00 TO STA. 423+00

HAM-75-7.85

728
1047

J:\20110903\ODOT\HAM\77889\traffic\sheets\77889TP008.dgn 5/22/2026 10:29:38 AM hbrendlinger

J:\20110903\ODOT\HAM\77889\traffic\sheets\77889TP009.dgn 5/22/2026 10:29:41 AM hbrendlinger

Preliminary Plans - For Reference Only

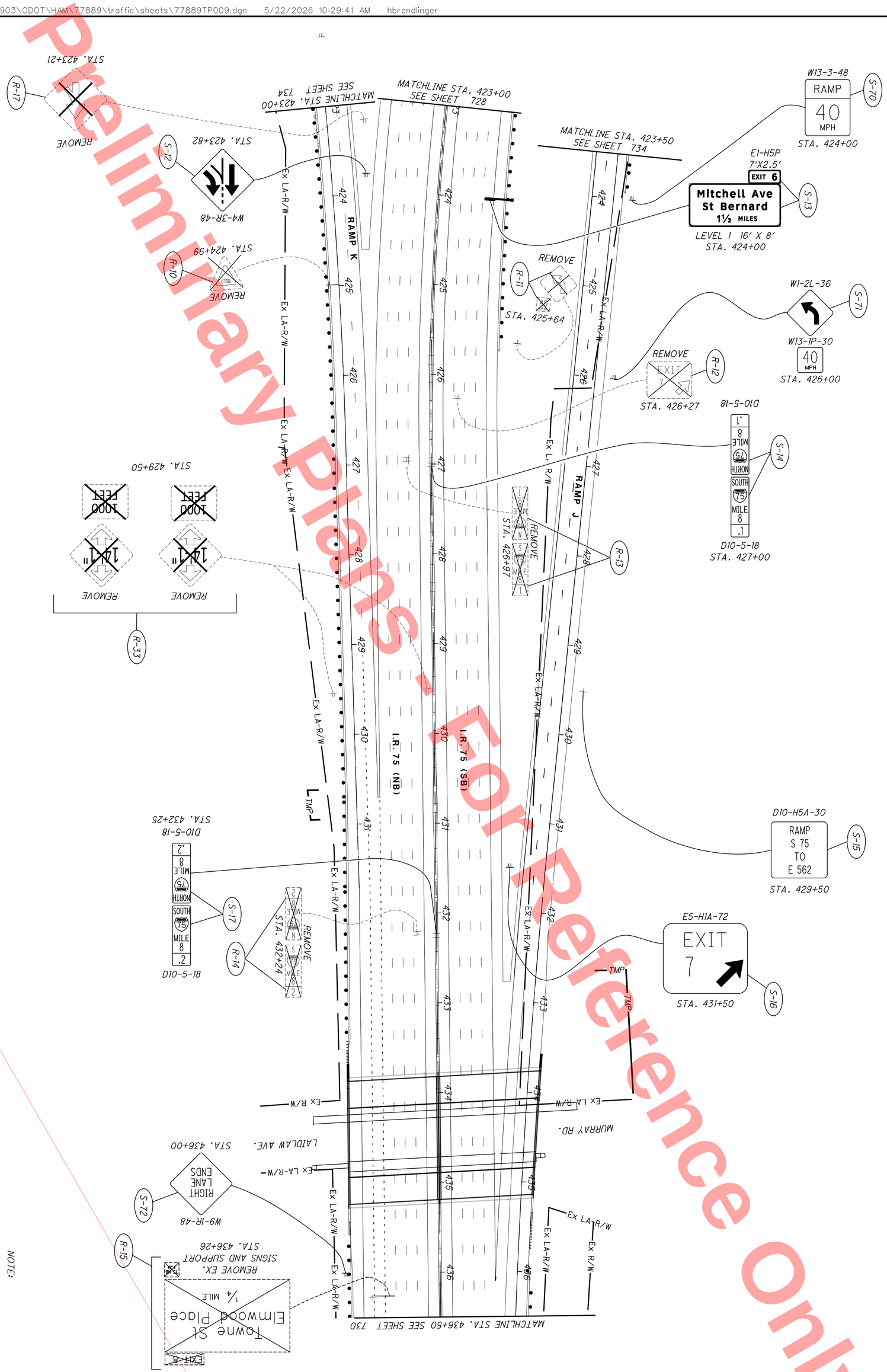

NOTE:
1. SEE SHEET 699 FOR SIGNING LEGEND

729
1047

HAM-75-7.85

I.R. 75 SIGNING PLAN
STA. 423+00 TO STA. 436+50

CALCULATED MKM
CHECKED SMM

0 25 50 100
HORIZONTAL SCALE IN FEET

Preliminary Plans - For Reference Only

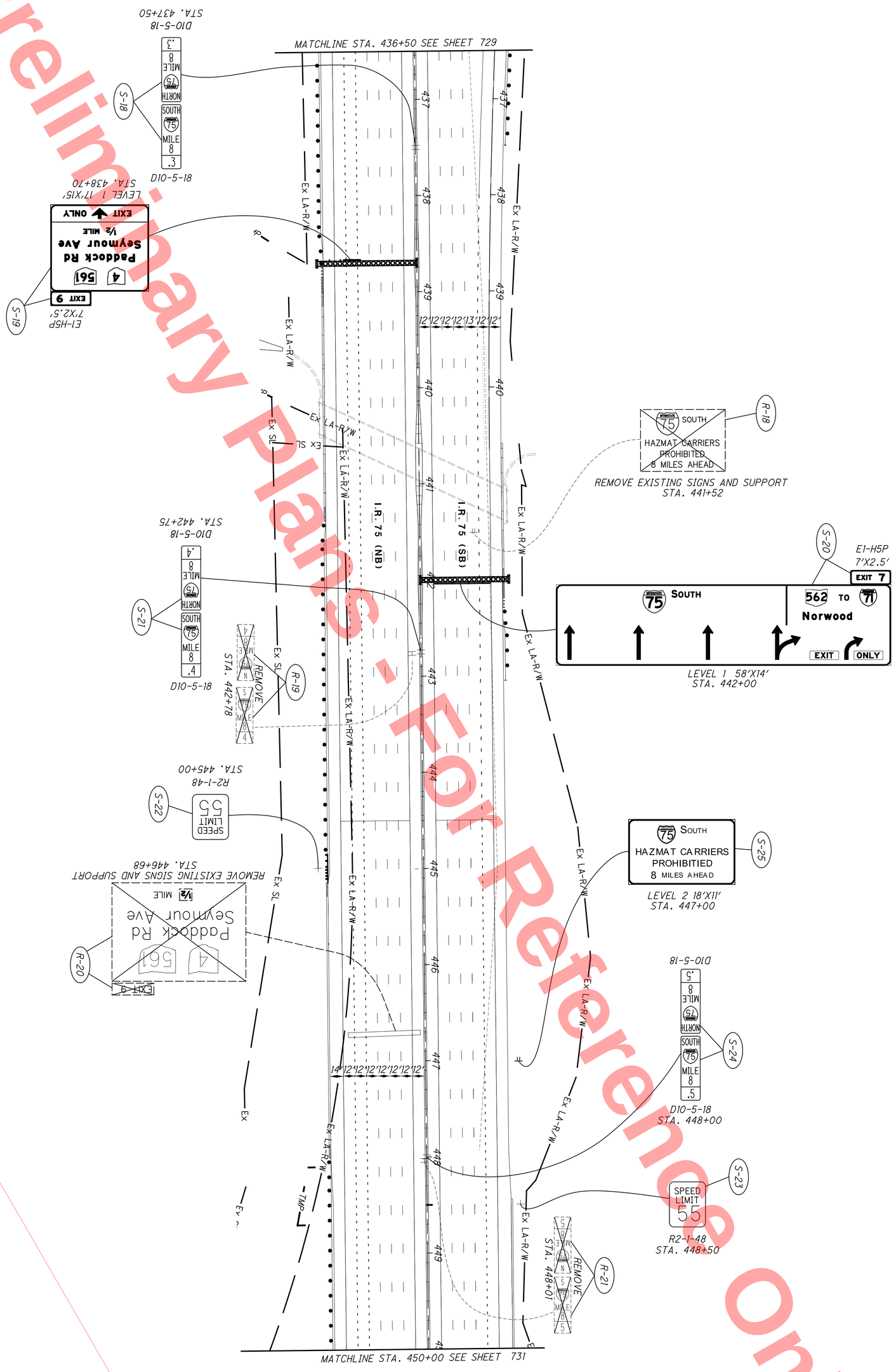

NOTE:
1. SEE SHEET 699 FOR SIGNING LEGEND

730 / 1047	HAM-75-7.85	I.R. 75 SIGNING PLAN STA. 436+50 TO STA. 450+00	CALCULATED MKM CHECKED SMM	0 50 25 100 HORIZONTAL SCALE IN FEET

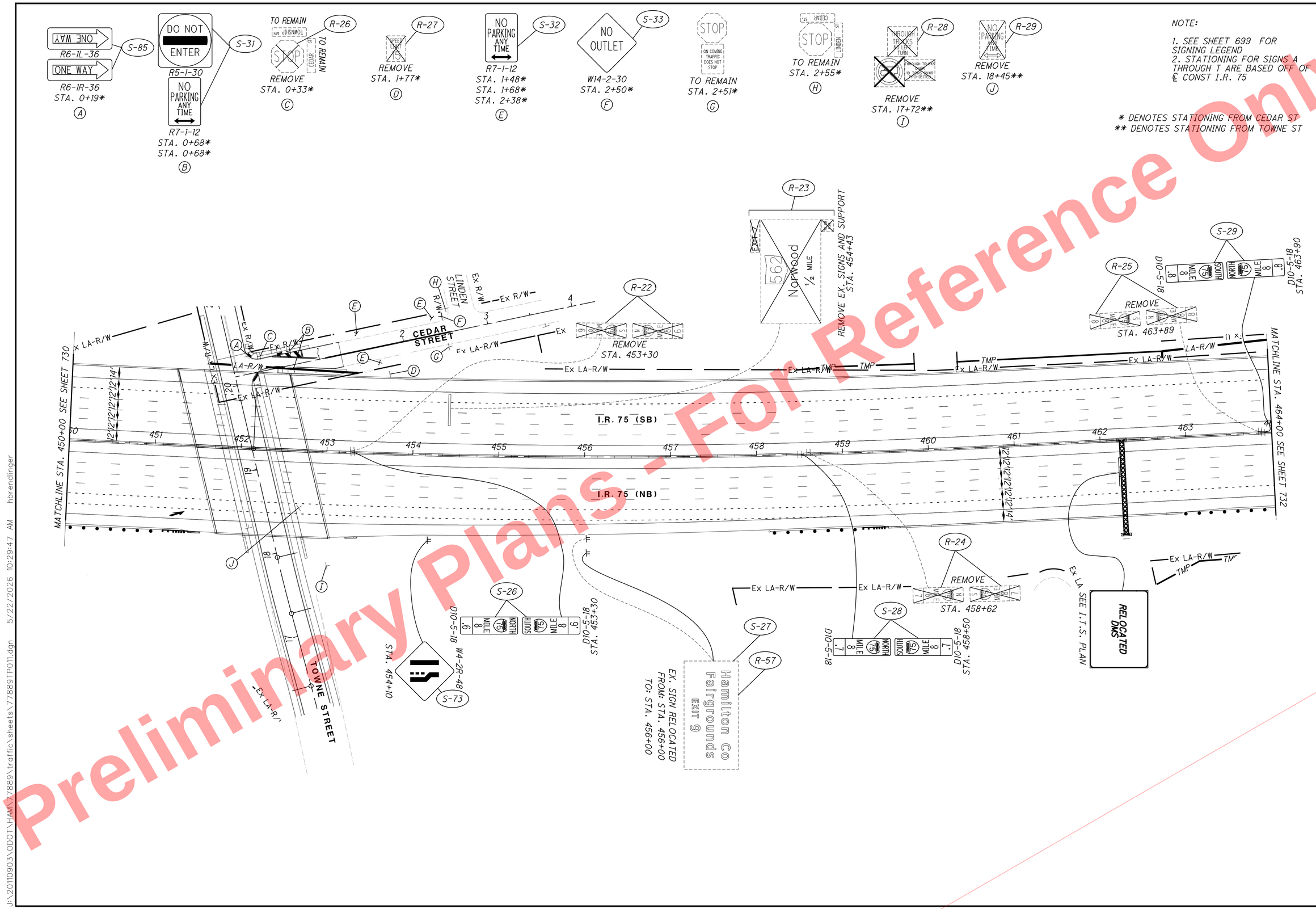

Preliminary Plans - For Reference Only

HORIZONTAL SCALE IN FEET 0 25 50 100

CALCULATED MKM
CHECKED SMM

I.R. 75 SIGNING PLAN
STA. 450+00 TO STA. 464+00

HAM-75-7.85

J:\20110903\ODOT\HAM\77889\traffic\sheets\77889TP011.dgn 5/22/2026 10:29:47 AM hbrendlinger

J:\20110903\ODOT\HAM\77889\traffic\sheets\77889TP012.dgn 5/22/2026 10:29:52 AM hbrendlinger

Preliminary Plans - For Reference Only

NOTE:
1. SEE SHEET 699 FOR SIGNING LEGEND

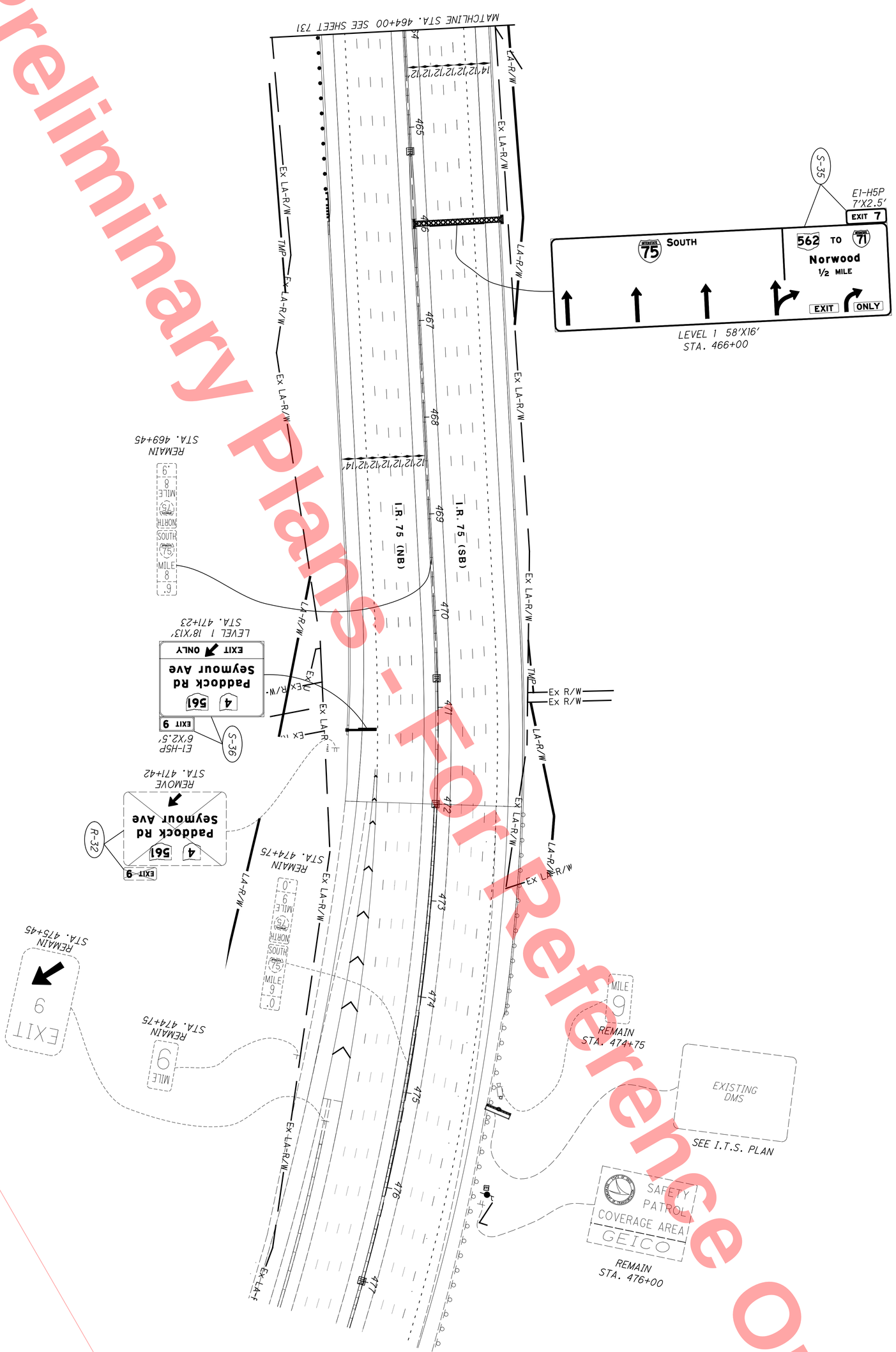

732 / 1047	HAM-75-7.85	I.R. 75 SIGNING PLAN STA. 464+00 TO STA. 477+50	CALCULATED MKM CHECKED SMM	0 50 100 HORIZONTAL SCALE IN FEET

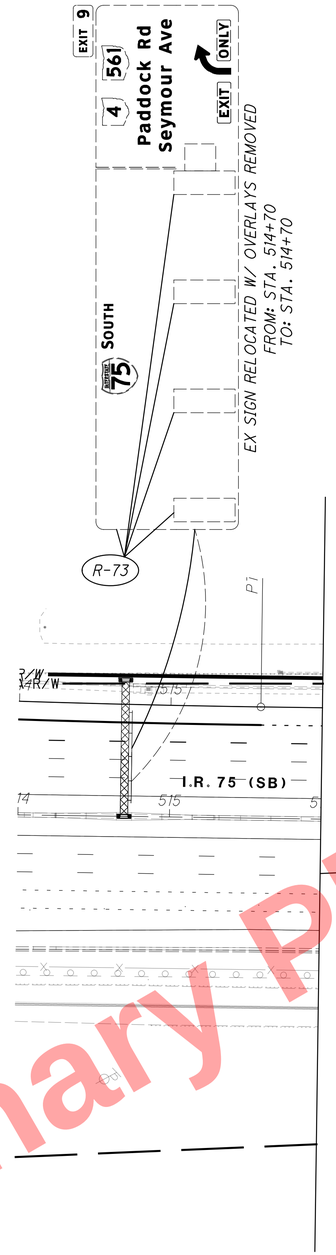

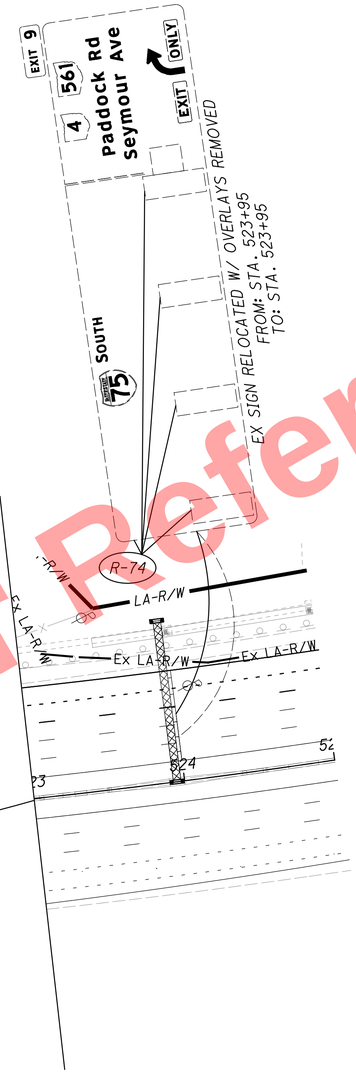

Preliminary Plans - For Reference Only

NOTE:

1. SEE SHEET 699 FOR SIGNING LEGEND

CALCULATED MKM
CHECKED SMM

0 25 50 100
HORIZONTAL SCALE IN FEET

I.R. 75 SIGNING PLAN
STA. 514+00 TO STA. 526+00

HAM-75-7.85

733
1047

J:\20110903\ODOT\HAM\77889\traffic\sheets\77889TP015.dgn 5/22/2026 10:29:55 AM hbrendlinger

RAMPS J,K,M & N SIGNING PLAN
STA. 412+00 TO STA. 423+00

HAM-75-7.85

CALCULATED MKM
CHECKED SMM

HORIZONTAL SCALE IN FEET
0 25 50 100

734
1047

NOTE:

1. SEE SHEET 699 FOR SIGNING LEGEND

Preliminary Plans - Not For Reference Only

J:\20110903\ODOT\HAM\77889\traffic\sheets\77889TP019.dgn 5/22/2026 10:29:58 AM hbrendlinger

J:\20110903\ODOT\HAM\77889\traffic\sheets\77889TP020.dgn 5/22/2026 10:30:01 AM hbrendlinger

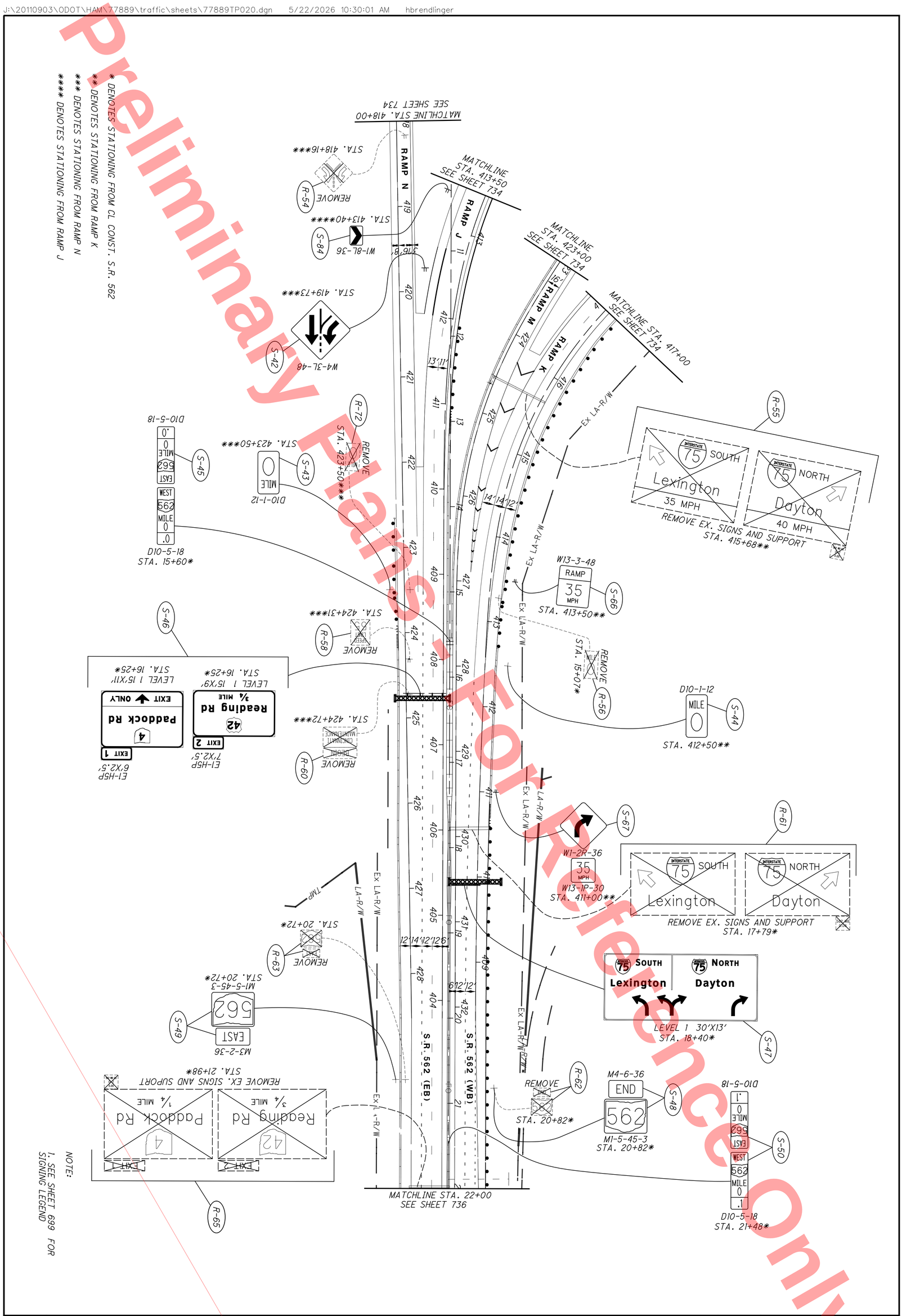

Preliminary Plans - For Reference Only

735 / 1047	HAM-75-7.85	S.R. 562 SIGNING PLAN STA. 418+00 TO STA. 22+00	CALCULATED MKM CHECKED SMM	0 25 50 100 HORIZONTAL SCALE IN FEET

J:\20110903\ODOT\HAM\77889\traffic\sheets\77889TP021.dgn 5/22/2026 10:30:04 AM hbrendlinger

Preliminary Plans - For Reference Only

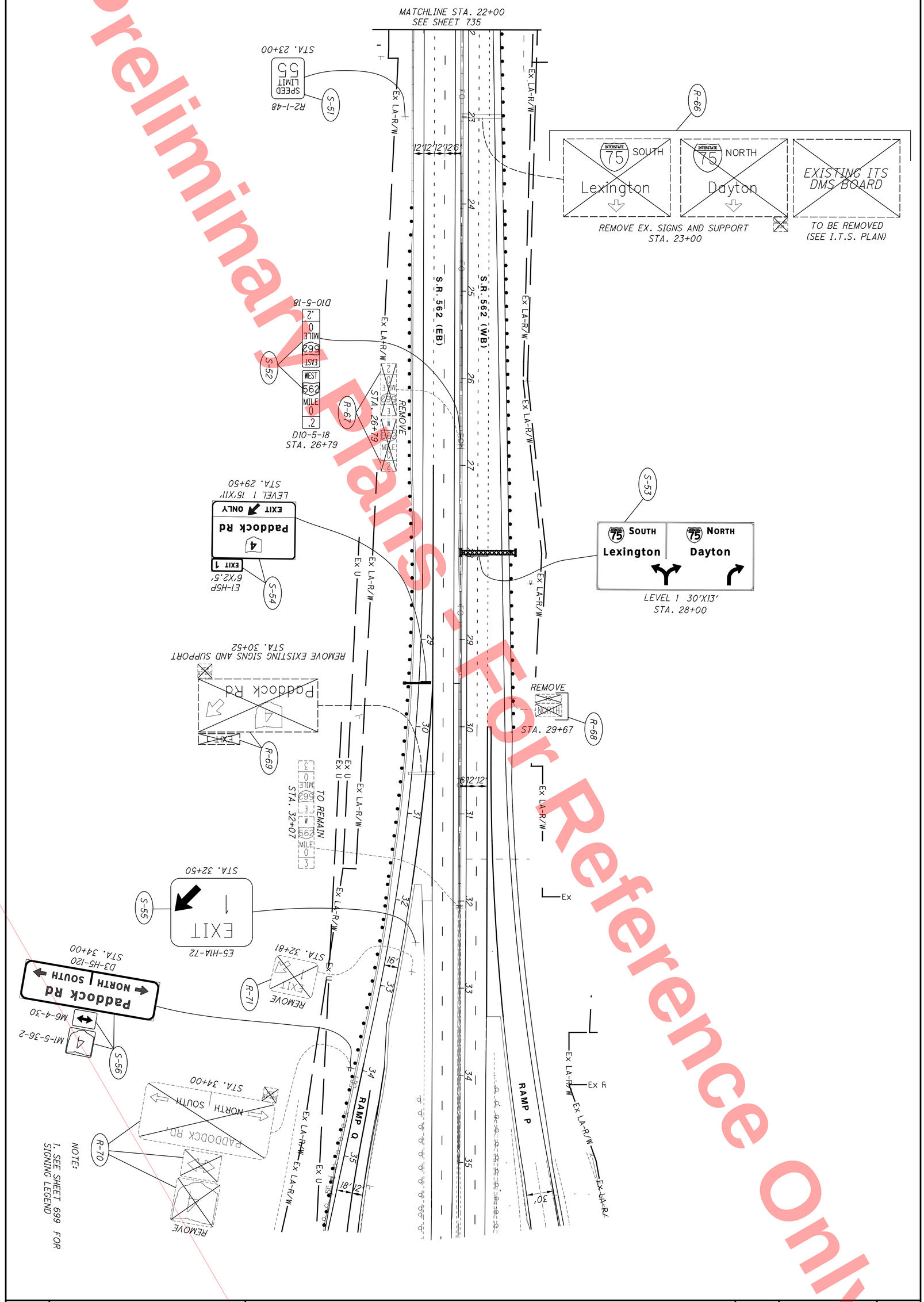

736 / 1047	HAM-75-7.85	S.R. 562 SIGNING PLAN STA. 22+00 TO STA. 36+00	CALCULATED MKM CHECKED SMM	0 50 25 100 HORIZONTAL SCALE IN FEET

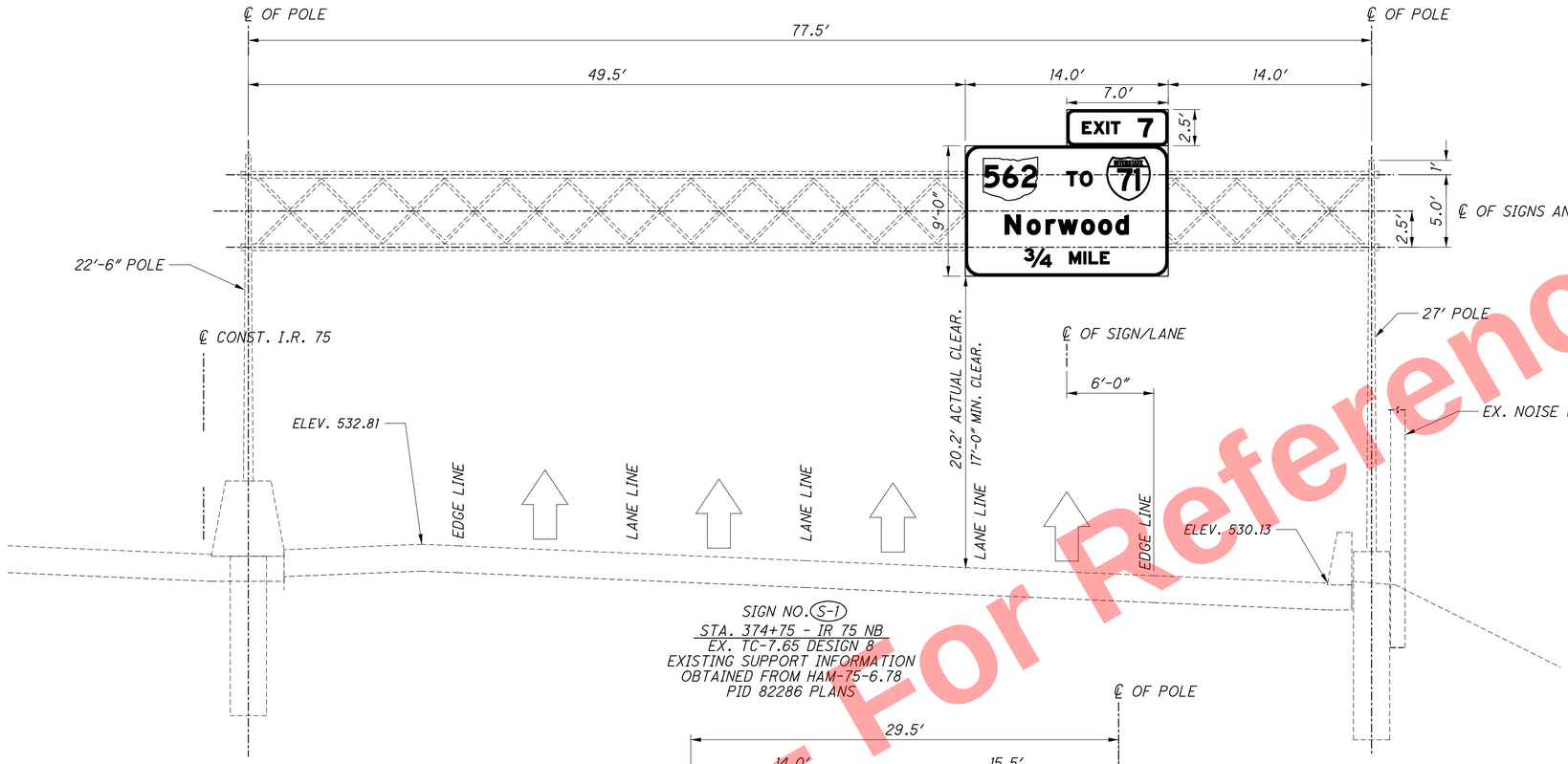

Preliminary Plans - For Reference Only

J:\20110903\ODOT\HAM\7889\traffic\sheets\77889TE001.dgn 5/22/2026 10:30:07 AM hbrendlinger

HORIZONTAL SCALE IN FEET
0 5 10

CALCULATED MKM
CHECKED SMM

SIGN ELEVATION DETAILS
I-75 STA. 374+75 AND STA. 395+00

HAM-75-7.85

737
1047

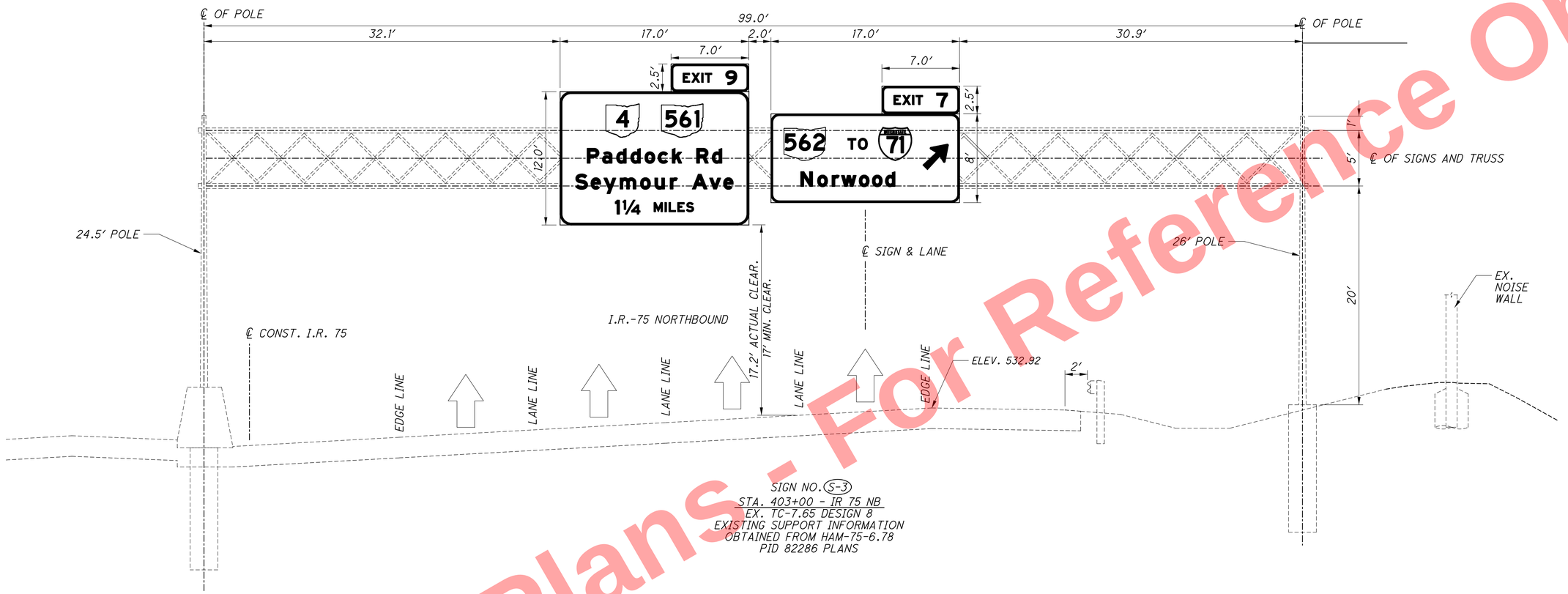

Preliminary Plans - For Reference Only

HORIZONTAL SCALE IN FEET
0 5 10

CALCULATED MKM
CHECKED SMM

SIGN ELEVATION DETAILS
I-75 STA. 403+00 AND STA. 412+00

HAM-75-7.85

738
1047

J:\20110903\ODOT\HAM\77889\traffic\sheets\77889TE001A.dgn 5/22/2026 10:30:09 AM hbrendlinger

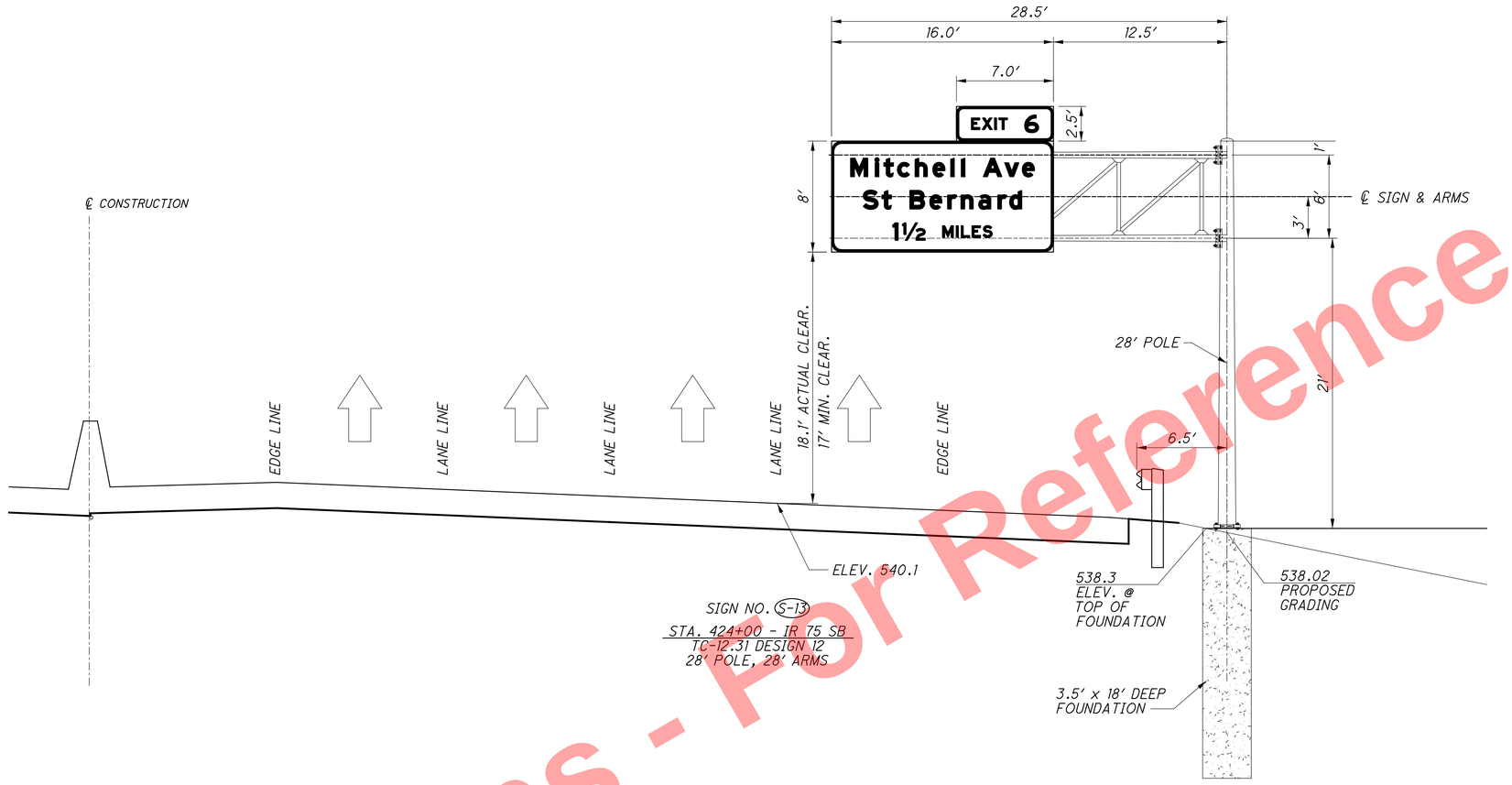

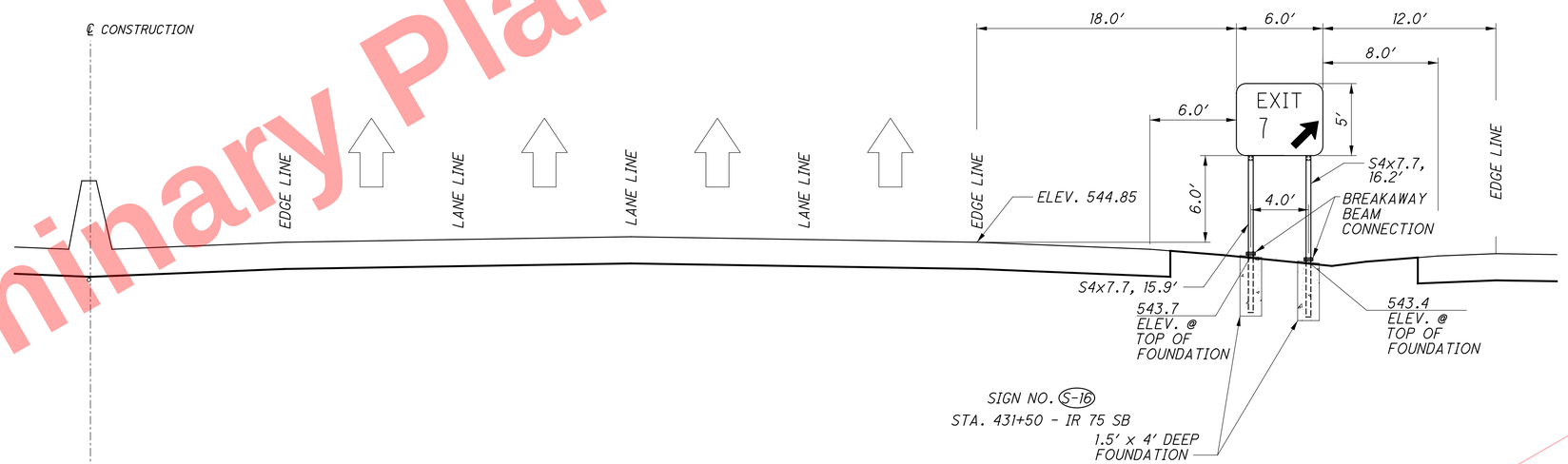

Preliminary Plans - For Reference Only

HORIZONTAL SCALE IN FEET
0 5 10

CALCULATED MKM
CHECKED SMM

SIGN ELEVATION DETAILS
I-75 STA. 424+00 AND STA. 431+50

HAM-75-7.85

739
1047

J:\20110903\ODOT\HAM\77889\traffic\sheets\77889TE002.dgn 5/22/2026 10:30:10 AM hbrendlinger

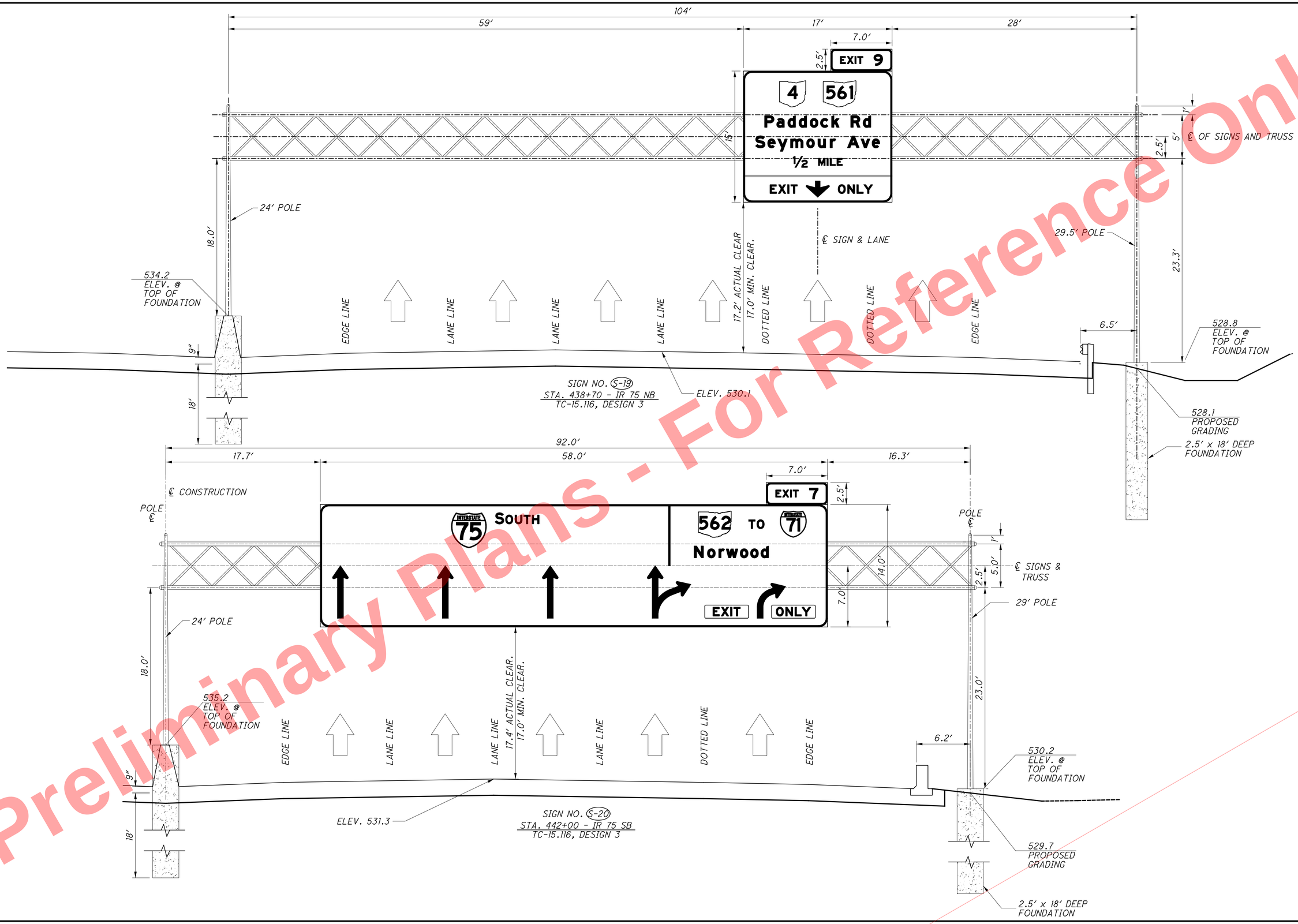

Preliminary Plans - For Reference Only

HORIZONTAL SCALE IN FEET
0 5 10

CALCULATED MKM
CHECKED SMM

SIGN ELEVATION DETAILS
I-75 STA. 438+70 AND STA. 442+00

HAM-75-7.85

740
1047

J:\2011093\ODOT\HAM\77889\traffic\sheets\77889TE003.dgn 5/22/2026 10:30:11 AM hbrendlinger

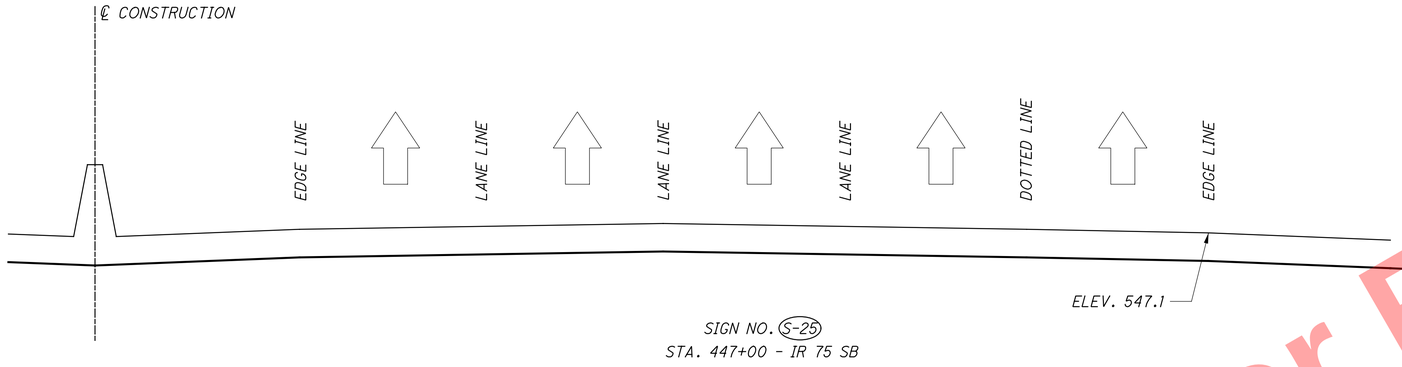

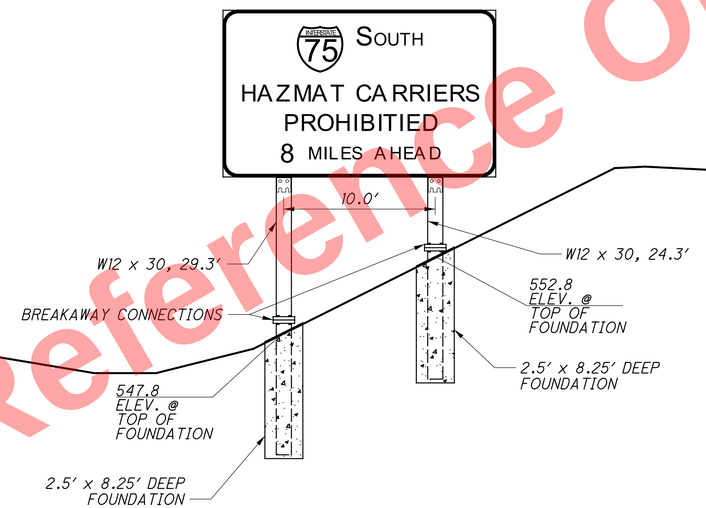



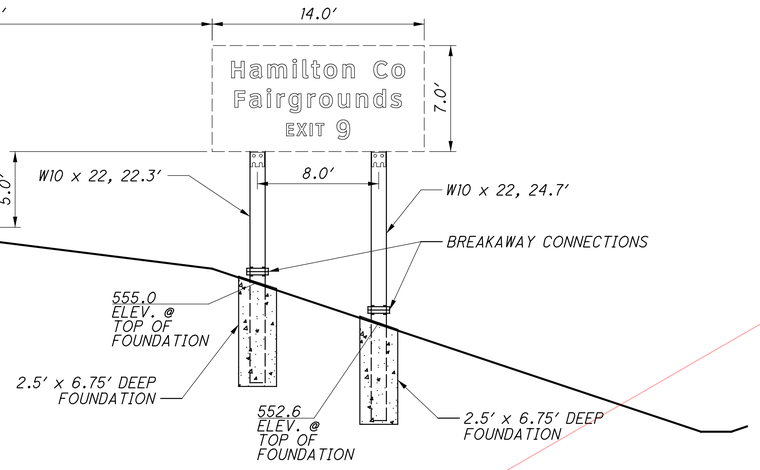

Preliminary Plans - For Reference Only

HORIZONTAL SCALE IN FEET
0 5 10

CALCULATED MKM
CHECKED SMM

SIGN ELEVATION DETAILS
I-75 STA. 456+00 AND STA. 447+00

HAM-75-7.85

741
1047

J:\20110903\ODOT\HAM\7889\traffic\sheets\77889TE004.dgn 5/22/2026 10:30:13 AM hbrendlinger

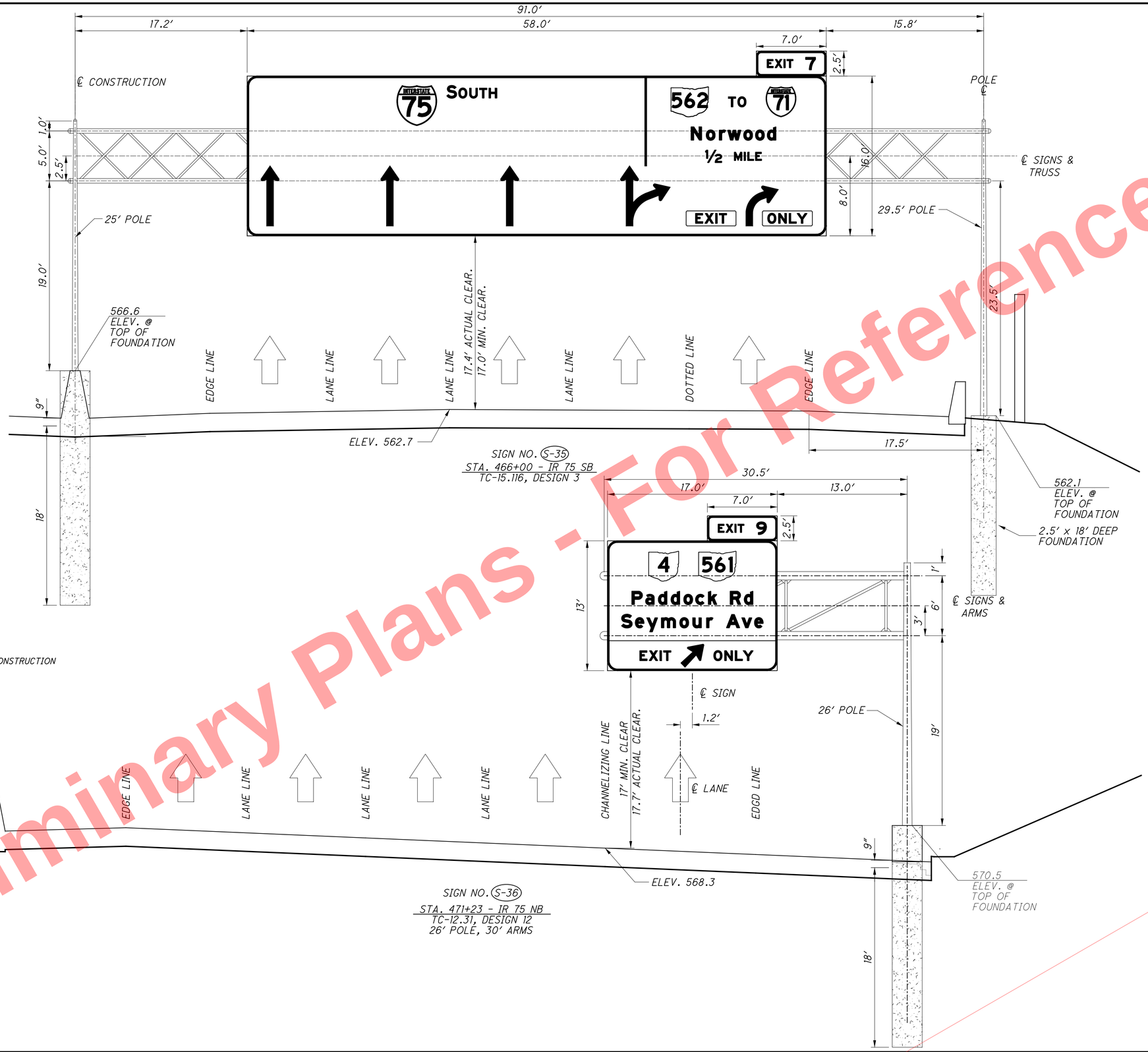

Preliminary Plans - For Reference Only

J:\20110903\ODOT\HAM\77889\traffic\sheets\77889TE005.dgn 5/22/2026 10:30:14 AM hbrendlinger

HORIZONTAL SCALE IN FEET
0 5 10

CALCULATED MKM
CHECKED SMM

SIGN ELEVATION DETAILS
I-75 STA. 466+00 AND 471+23

HAM-75-7.85

742
1047

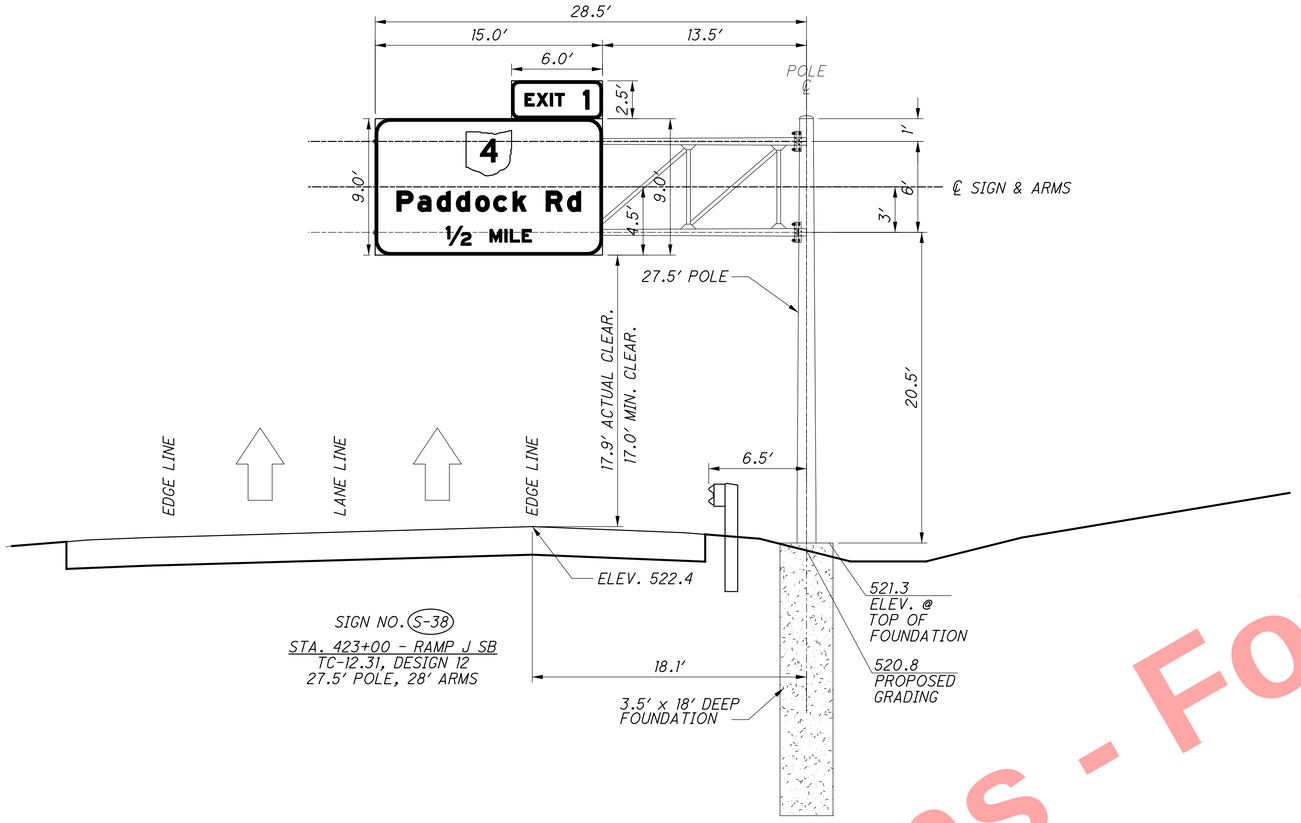

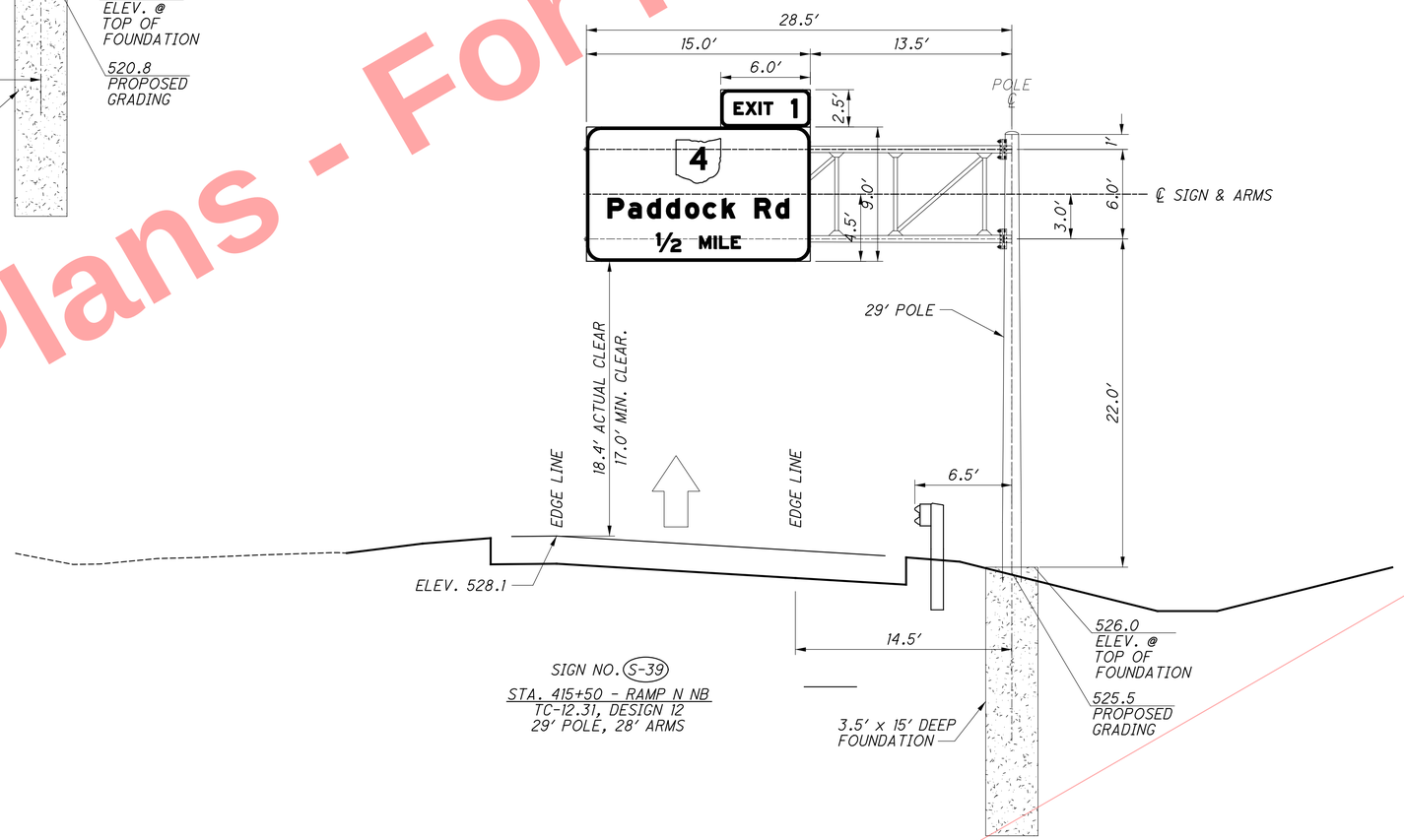

Preliminary Plans - For Reference Only

HORIZONTAL SCALE IN FEET
0 5 10

CALCULATED MKM
CHECKED SMM

SIGN ELEVATION DETAILS
RAMP J 423+00 SB AND RAMP N 415+50 NB

HAM-75-7.85

743
1047

J:\20110903\ODOT\HAM\77889\traffic\sheets\77889TE011.dgn 5/22/2026 10:30:15 AM hbrendlinger

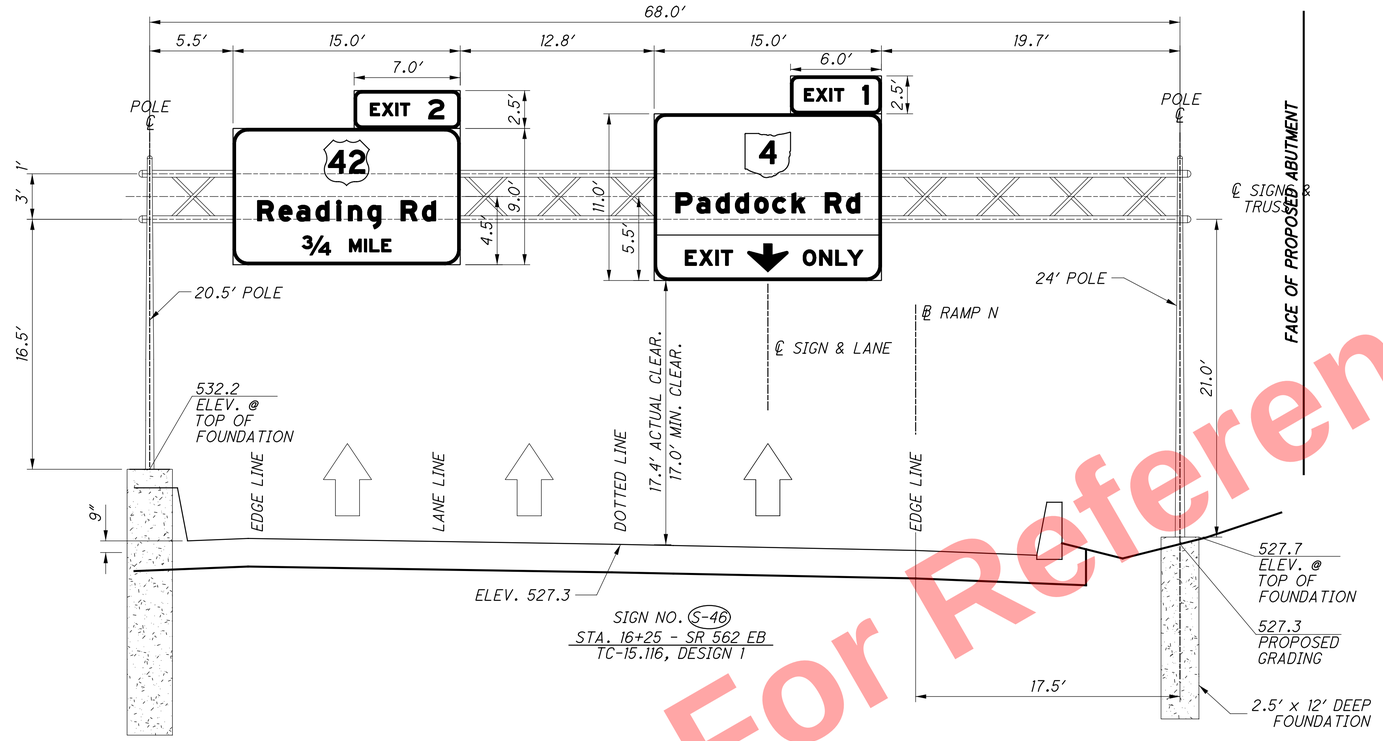

Preliminary Plans - For Reference Only

J:\20110903\ODOT\HAM\77889\traffic\sheets\77889TE012.dgn 5/22/2026 10:30:16 AM hbrendlinger

HORIZONTAL SCALE IN FEET
0 5 10

CALCULATED MKM
CHECKED SMM

SIGN ELEVATION DETAILS
SR 562 STA. 16+25 AND STA. 18+40

HAM-75-7.85

744
1047

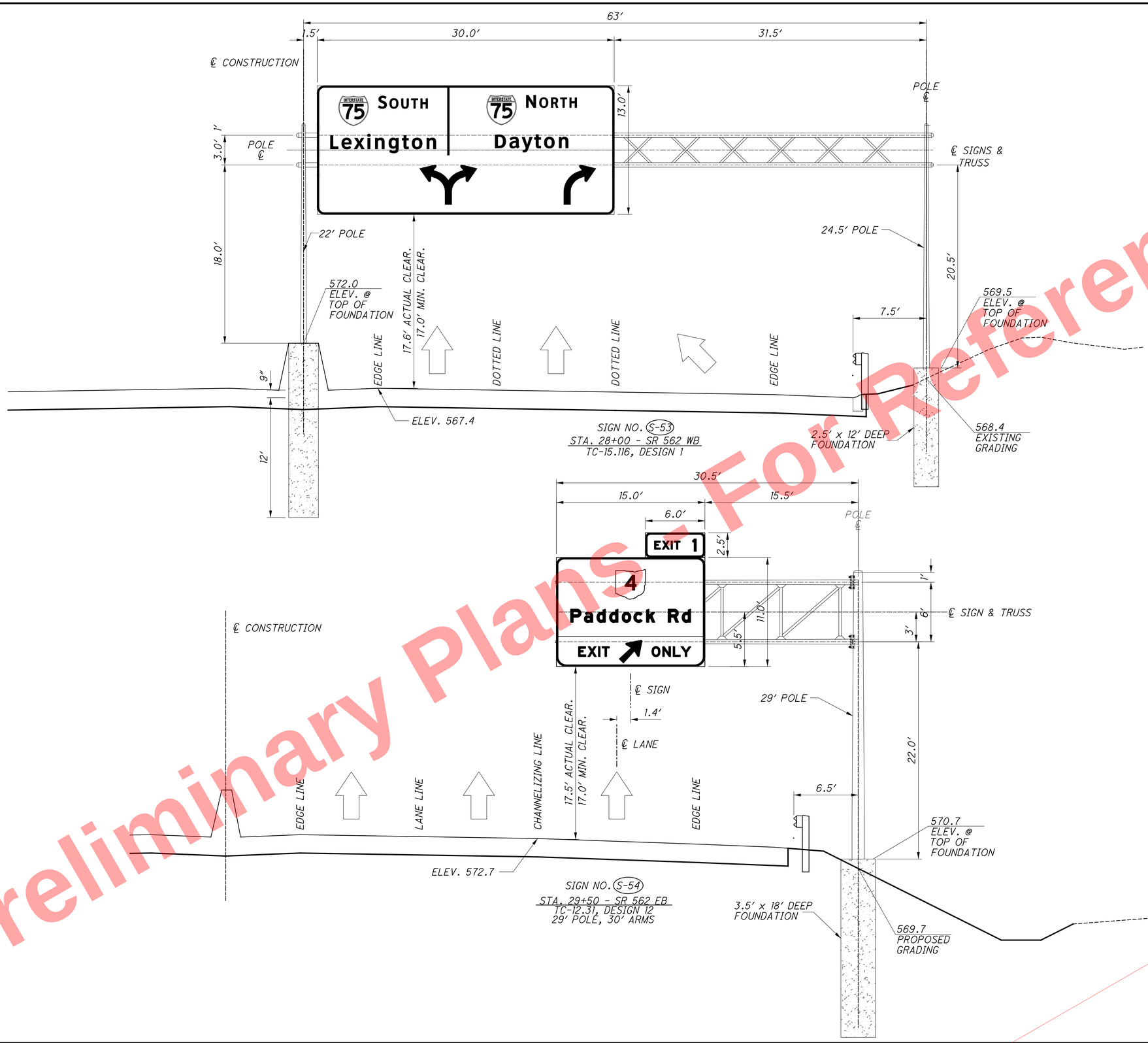

Preliminary Plans - For Reference Only

HORIZONTAL SCALE IN FEET
0 5 10

CALCULATED MKM
CHECKED SMM

SIGN ELEVATION DETAILS
SR 562 STA. 28+00 AND STA. 29+50

HAM-75-7.85

745
1047

J:\20110903\ODOT\HAM\77889\traffic\sheets\77889TE013.dgn 5/22/2026 10:30:17 AM hbrendlinger

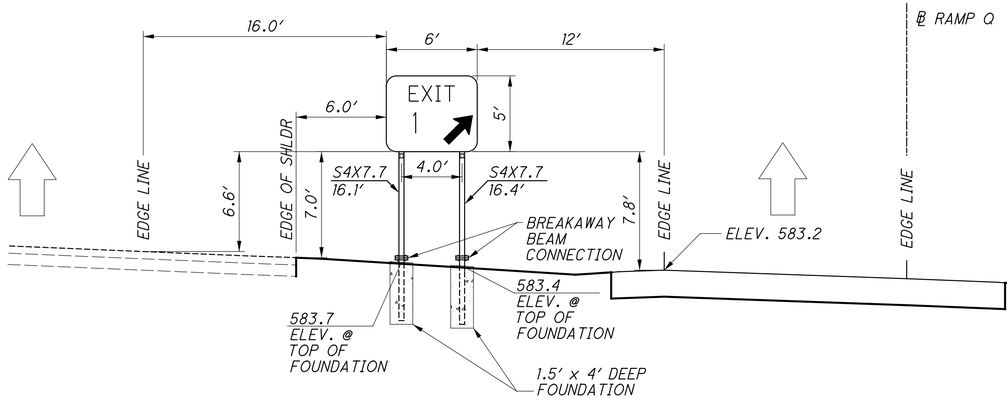

SIGN NO. S-55
STA. 32+50 - RAMP Q EB

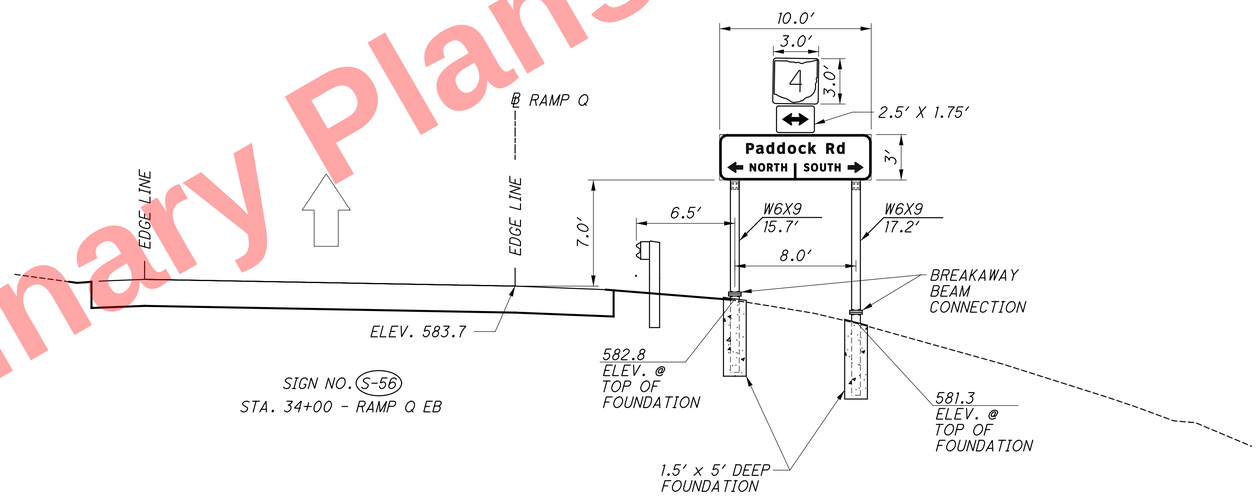

SIGN NO. S-56
STA. 34+00 - RAMP Q EB

Preliminary Plans - For Reference Only

HORIZONTAL SCALE IN FEET
0 5 10

CALCULATED MKM
CHECKED SMM

SIGN ELEVATION DETAILS
RAMP Q STA. 32+50 & 34+00

HAM-75-7.85

746
1047

J:\20110903\ODOT\HAM\7889\traffic\sheets\77889TE014.dgn 5/22/2026 10:30:18 AM hbrendlinger

TRAFFIC SIGNAL NOTES

THESE SPECIFICATIONS, TOGETHER WITH THE ACCOMPANYING PLANS, ARE INTENDED TO DESCRIBE THE TYPE, SIZE, AND LOCATION OF THE PRODUCTS AND MATERIALS TO BE PROVIDED AND INSTALLED UNDER VARIOUS BID ITEMS RELATED TO TRAFFIC SIGNAL CONTROL. THE CONTRACTOR SHALL FURNISH AND INSTALL TRAFFIC SIGNAL DEVICES AND RELATED MATERIALS IN COMPLIANCE WITH THESE PLANS AND SPECIFICATIONS, AS WELL AS THE 2023 OHIO DEPARTMENT OF TRANSPORTATION CONSTRUCTION AND MATERIAL SPECIFICATIONS, THE OHIO MANUAL OF UNIFORM TRAFFIC CONTROL DEVICES FOR STREETS AND HIGHWAYS, AND THE STANDARD CONSTRUCTION DRAWINGS ISSUED BY THE OHIO DEPARTMENT OF TRANSPORTATION. THESE SPECIFICATIONS SET FORTH THE MINIMUM PERFORMANCE AND OPERATING REQUIREMENTS OF THE TRAFFIC SIGNAL CONTROL AND HIGHWAY LIGHTING ITEMS REFERRED TO HEREIN.

GUARANTEE

THE CONTRACTOR SHALL GUARANTEE THAT THE TRAFFIC CONTROL SYSTEM INSTALLED AS PART OF THIS CONTRACT SHALL OPERATE SATISFACTORILY FOR A PERIOD OF 180 DAYS FOLLOWING COMPLETION OF THE 10-DAY PERFORMANCE TEST. IN THE EVENT OF UNSATISFACTORY OPERATION THE CONTRACTOR SHALL CORRECT FAULTY INSTALLATIONS, MAKE REPAIRS AND REPLACE DEFECTIVE PARTS WITH NEW PARTS OF EQUAL OR BETTER QUALITY. EQUIPMENT, MATERIAL AND LABOR COSTS INCURRED IN CORRECTING AN UNSATISFACTORY OPERATION SHALL BE BORNE BY THE CONTRACTOR.

THE GUARANTEE SHALL COVER THE FOLLOWING ITEMS OF THE TRAFFIC CONTROL SYSTEM: CONTROLLERS AND ASSOCIATED EQUIPMENT, DETECTION EQUIPMENT, INTERCONNECTION ITEMS AND MASTER CONTROL EQUIPMENT.

CUSTOMARY MANUFACTURER'S GUARANTEES FOR THE FOREGOING ITEMS SHALL BE TURNED OVER TO THE ENGINEER AND THE HAMILTON COUNTY ENGINEER'S OFFICE FOLLOWING ACCEPTANCE OF THE EQUIPMENT.

THE COST OF GUARANTEEING THE TRAFFIC CONTROL SYSTEM WILL BE INCIDENTAL TO AND INCLUDED IN THE CONTRACT UNIT PRICE OF THE VARIOUS ITEMS MAKING UP THE SYSTEM.

DETECTION MAINTENANCE

IF VEHICLE DETECTION BECOMES UNEXPECTEDLY DISABLED, REQUIRES MODIFICATION, OR IS SCHEDULED TO BE TEMPORARILY REMOVED DURING THE CONSTRUCTION PROJECT, THE CONTRACTOR SHALL IMMEDIATELY NOTIFY THE PROJECT ENGINEER, THE COUNTY TRAFFIC ENGINEER AND DISTRICT TRAFFIC ENGINEER. IF THE LOSS OF VEHICLE DETECTION IS KNOWN PRIOR TO THE START OF CONSTRUCTION, IT SHALL BE DISCUSSED AT THE PRECONSTRUCTION MEETING. AT SUCH TIME, THE DISTRICT TRAFFIC ENGINEER SHALL ADVISE THE PROJECT ENGINEER AND CONTRACTOR ON THE APPROPRIATE ACTION TO RECTIFY ANY LOSS OF VEHICLE DETECTION. THIS MAY INCLUDE PLACING THE TRAFFIC SIGNAL ON MINIMUM OR MAXIMUM RECALL, MODIFYING THE MINIMUM GREEN TIMES, AND REMOVING THE MALFUNCTIONING DETECTION FROM SERVICE.

WHERE NONINTRUSIVE DETECTION (I.E. VIDEO, RADAR) ALREADY EXISTS, THE CONTRACTOR SHALL INSURE THAT DETECTION IS OPERATING AND MAINTAINED BY RECONFIGURING THE DETECTION UNITS ACCORDINGLY DURING ALL CONSTRUCTION PHASES. THIS IS TO AVOID THE SIGNAL FROM MAXING OUT THE EFFECTED SIGNAL PHASE AND CREATING UNNECESSARY DELAYS.

LOCATIONS WHERE NON-INTRUSIVE DETECTION IS PROPOSED AND THE EXISTING VEHICLE DETECTION IS TO BE ABANDON, THE NON-INTRUSIVE VEHICLE DETECTION SHALL BE INSTALLED, CONFIGURED AND MADE FULLY FUNCTIONAL PRIOR TO THE EXISTING DETECTION BEING DISABLED. THE CONTRACTOR SHALL CONTINUE TO MAINTAIN AND MODIFY THE DETECTION UNTIL FINAL ACCEPTANCE OF THE TRAFFIC SIGNAL. THIS IS TO ENSURE VEHICLE DETECTION REMAINS FULLY FUNCTIONAL THROUGHOUT CONSTRUCTION.

WORK INSPECTION

THE CONTRACTOR SHALL PROVIDE THE PROJECT ENGINEER AND DISTRICT TRAFFIC ENGINEER WITH 72-HOUR NOTICE OF ANY SIGNAL WORK TO BE PERFORMED AT THE INTERSECTION SITE(S) SO THAT INSPECTION SERVICES CAN BE SUPPLIED.

MAINTENANCE OF TRAFFIC SIGNAL INSTALLATION

THE CONTRACTOR SHALL BE RESPONSIBLE FOR MAINTAINING TRAFFIC SIGNAL INSTALLATIONS WITHIN THE PROJECT UNDER THE FOLLOWING CONDITIONS:

1. EXISTING SIGNAL INSTALLATIONS WHICH THE PLANS REQUIRE THE CONTRACTOR TO ADJUST, MODIFY, ADD ONTO OR REMOVE, OR WHICH THE CONTRACTOR ACTUALLY ADJUSTS, MODIFIES OR OTHERWISE DISTURBS. THE CONTRACTOR SHALL BE RESPONSIBLE FOR THE ENTIRE INSTALLATION (AT AN INTERSECTION) FROM THE TIME HIS OPERATIONS FIRST DISTURB THE INSTALLATION UNTIL THE INSTALLATION HAS BEEN SUBSEQUENTLY REMOVED OR MODIFIED AND THE WORK IS ACCEPTED.

2. NEW OR REUSED SIGNAL INSTALLATIONS OR DEVICES, INSTALLED BY THE CONTRACTOR. THE CONTRACTOR SHALL BE RESPONSIBLE FOR MAINTENANCE OF THESE FROM THE TIME OF INSTALLATION UNTIL THE WORK IS ACCEPTED.

THE CONTRACTOR SHALL CORRECT AS QUICKLY AS POSSIBLE ALL OUTAGES OR MALFUNCTIONS. HE SHALL PROVIDE THE MAINTAINING AGENCY AND THE ENGINEER SUCH ADDRESSES AND PHONE NUMBERS WHERE HIS MAINTENANCE FORCES CAN BE CONTACTED. THE CONTRACTOR SHALL PROVIDE ONE OR MORE PERSONS TO RECEIVE ALL CALLS AND DISPATCH THE NECESSARY MAINTENANCE FORCES TO CORRECT OUTAGES. SUCH A PERSON OR PERSONS MAY BE USED TO PERFORM OTHER DUTIES AS LONG AS PROMPT ATTENTION IS GIVEN TO THESE CALLS AND A PERSON IS READILY AVAILABLE CONTINUOUSLY 24 HOURS A DAY, 7 DAYS A WEEK. ALL LAMP OUTAGES, CABLE OUTAGES, ELECTRICAL FAILURES, EQUIPMENT MALFUNCTIONS AND MISALIGNED SIGNAL HEADS SHALL BE CORRECTED TO THE SATISFACTION OF THE ENGINEER WITH THE SIGNAL BACK TO SERVICE WITHIN FOUR HOURS AFTER THE CONTRACTOR HAS BEEN NOTIFIED OF THE OUTAGE.

ITEM 809 STOP LINE RADAR DETECTION, AS PER PLAN

THIS ITEM OF WORK SHALL CONSIST OF FURNISHING AND INSTALLING A RADAR DETECTION UNIT. THE DETECTION UNIT SHALL INCLUDE THE FOLLOWING:

1. POWER SHALL BE PROVIDED FROM THE TRAFFIC CABINET

2. ALL REQUIRED INPUT CARDS SHALL BE INCLUDED IN THE TRAFFIC CABINET AND SHALL BE COMPATIBLE WITH CALTRANS, NEMA TS1 AND NEMA TS2 DETECTOR RACKS. THE CARDS SHALL PROVIDE TRUE PRESENCE DETECTOR CALLS OR CONTACT CLOSURE TO THE TRAFFIC CONTROLLER.

3. THE UNIT SHALL BE MOUNTED DIRECTLY TO A POLE OR MAST ARM, AS RECOMMENDED BY THE MANUFACTURER. CABLE(S) SHALL BE PROVIDED AS REQUIRED AND RECOMMENDED BY THE MANUFACTURER.

4. SURGE PROTECTION DEVICES, AS RECOMMENDED BY THE MANUFACTURER SHALL BE INCLUDED BOTH AT THE POLE WHERE THE UNIT IS LOCATED TO PROTECT THE UNIT AND IN THE TRAFFIC CABINET TO PROTECT THE CABINET ELECTRONICS.

5. THE MANUFACTURER'S REPRESENTATIVE SHALL BE ON SITE DURING INSTALLATION AND TESTING AND SHALL PROVIDE ONSITE TRAINING ON THE SETUP, OPERATION AND MAINTENANCE OF THE UNIT.

6. A SERIAL TO ETHERNET COMMUNICATIONS MODULE AND ETHERNET CABLE (MINIMUM 7 FEET).

7. THE POWER SUPPLY AND COMMUNICATION MODULES SHALL BE SECURED TO A SINGLE PANEL THAT CAN BE MOUNTED INTERIOR TO THE TRAFFIC CABINET. THE PANEL SHALL INCLUDE MODULAR-PLUG STYLE CONNECTIONS FOR UP TO FOUR (4) SENSOR CABLES. ADDITIONAL SENSORS MAY BE HARD-WIRED TO THE COMMUNICATION MODULES, AS NECESSARY.

8. THE CONTRACTOR SHALL INSTALL THE RADAR DETECTION PRIOR TO MILLING/DISABLING EXISTING LOOPS.

9. THE INSTALLATION SHALL INCLUDE ALL CONTROLLER PROGRAMMING FOR COMPLETE INSTALLATION, WHICH INCLUDES MODIFICATIONS FOR REMOVAL OF EXISTING DETECTION.

10. THE CONTRACTOR SHALL REMOVE EXISTING MESSENGER WIRE LASHING RODS AND REINSTALL THEM AS NECESSARY FOR THE INSTALLATION OF ANY NEW CABLES ON EXISTING INTERSECTION SIGNAL SPANS. THE CABLES SHALL ENTER THE EXISTING STRAIN POLE THROUGH THE POLE CABLE ENTRANCE FITTING AND USE THE EXISTING CONDUIT SYSTEM TO GET TO THE CONTROLLER CABINET. THE NEW CABLES SHALL BE SUPPORTED BY A NEW CABLE SUPPORT ASSEMBLY AT THE TOP OF THE STRAIN POLE.

PAYMENT FOR ITEM 809 STOP LINE DETECTION, AS PER PLAN SHALL BE MADE AT THE CONTRACT UNIT PRICE FOR EACH UNIT, COMPLETE AND IN PLACE INCLUDING ALL REQUIRED CABINET HARDWARE, MOUNTING BRACKETS, CABES, MESSENGER WIRE DELASHING/RELASHING, CONDUIT AND CONNECTIONS TESTED AND ACCEPTED.

STATE OF OHIO
JORDAN C. STEELE
E-76138
REGISTERED PROFESSIONAL ENGINEER

5/19/26

For Power Distribution and Grounding Only on Sheets 747 through 808.

CALCULATED MSJ
CHECKED JDS

TRAFFIC SIGNAL GENERAL NOTES

HAM-75-7.85

747
1047

Preliminary Plans - For Reference Only

SHEET NUMBER	ITEM	ITEM EXT.	TOTAL (CARRIED TO GENERAL SUMMARY)	UNIT	DESCRIPTION	SEE SHEET NO.
749						
1	809	69101	1	EACH	STOP LINE RADAR DETECTION, AS PER PLAN	747

CALCULATED DRM
CHECKED JDS

TRAFFIC SIGNAL SUBSUMMARY

HAM-75-7.85

748
1047

Preliminary Plans - Not For Reference Only

J:\20110903\ODOT\HAM\77889\signals\sheets\77889CG001.dgn 5/22/2026 10:30:21 AM hbrendlinger

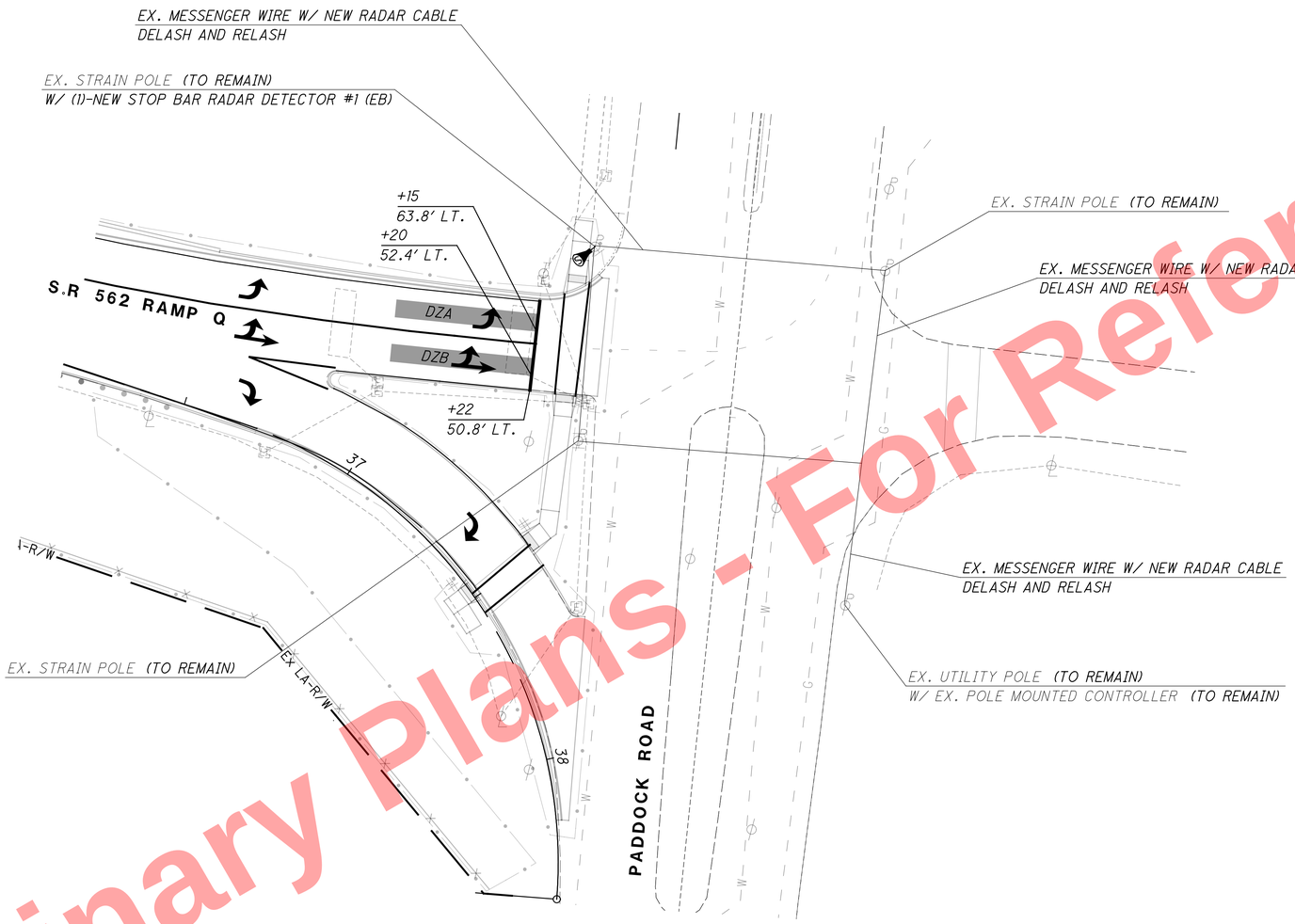

RADAR DETECTION CHART

DETECTION ZONE	MOVEMENT	WIDTH	DELAY PROGRAMMED IN CONTROLLER (SEC)	EXTENSION PROGRAMMED IN CONTROLLER (SEC)	DETECTOR UNIT NUMBER	PURPOSE	DETECTION ZONE LENGTH (FT)
DZA	EBLT	5'	EX.	EX.	1	PRESENCE	40
DZB	EB	5'	EX.	EX.	1	PRESENCE	40

Preliminary Plans - For Reference Only

J:\20110903\ODOT\HAM\7889\signals\sheets\77889CP004.dgn 5/22/2026 10:30:28 AM hbrendlinger

HORIZONTAL SCALE IN FEET
0 10 20 40

CALCULATED MSJ
CHECKED JDS

TRAFFIC SIGNAL PLAN
LOOP DETECTOR REPLACEMENTS

HAM-75-7.85

749
1047

GENERAL

THESE SPECIFICATIONS, TOGETHER WITH THE ACCOMPANYING PLANS ARE INTENDED TO DESCRIBE THE TYPE, SIZE, AND LOCATION OF THE PRODUCTS AND MATERIALS TO BE PROVIDED AND INSTALLED UNDER THE VARIOUS BID ITEMS RELATED TO ITS. THE CONTRACTOR SHALL FURNISH AND INSTALL ITS DEVICES AND RELATED MATERIALS IN COMPLIANCE WITH THESE PLANS AND SPECIFICATIONS, AS WELL AS:

- 2023 OHIO DEPARTMENT OF TRANSPORTATION CONSTRUCTION AND MATERIAL SPECIFICATIONS
- STANDARD CONSTRUCTION DRAWINGS ISSUED BY THE OHIO DEPARTMENT OF TRANSPORTATION

THESE SPECIFICATIONS SET FORTH THE MINIMUM PERFORMANCE AND OPERATING REQUIREMENTS OF THE ITS ITEMS REFERRED TO HEREIN.

ANY WORK INVOLVING RELOCATING OR NEW ITS EQUIPMENT (CCTV, DMS, RAMP METERS, SFRVD) NEEDS TO BE COORDINATED WITH ODOT OFFICE OF TRAFFIC OPERATIONS/ITS SECTION AT LEAST 10 WORKING DAYS PRIOR. THE CONTRACTOR SHALL SUBMIT TWO (2) COMPLETE SETS OF CATALOG CUTS, DIAGRAMS, BROCHURES, OR OTHER DESCRIPTIVE DATA FOR THE ITEMS HE INTENDS TO FURNISH FOR THE ITS EQUIPMENT AND RAMP METER EQUIPMENT AT THE PRECONSTRUCTION MEETING. ONE SET IS FOR THE PROJECT ENGINEER AND ONE SET IS TO BE SENT TO THE ODOT OFFICE OF TRAFFIC ENGINEERING, SIGNAL AND ITS SECTION, FOR APPROVAL PRIOR TO ANY EQUIPMENT BEING ORDERED.

ITS DOWNTIME

DOWNTIME SHALL BE PER THE REQUIREMENTS OF SUPPLEMENTAL SPECIFICATION 809, EXCEPT AS NOTED BELOW.

DYNAMIC MESSAGE SIGNS (DMS):
EXTENDED DOWNTIME IS ANTICIPATED FOR BOTH DYNAMIC MESSAGE SIGNS DUE TO CONSTRUCTION SEQUENCING. NORTHBOUND DMS #12 MAY BE REMOVED IN CONSTRUCTION PHASE 3 AND SHALL BE FULLY OPERATIONAL ON THE NEW TRUSS SUPPORT ONCE ALL ROADWAY CONSTRUCTION IS COMPLETE. ANY ADDITIONAL DOWNTIME BEYOND WHAT IS SPECIFIED SHALL BE DISINCENTIVIZED AS GIVEN BELOW.

DISINCENTIVE: $400/DAY OR $17/HOUR - BEGINNING AFTER THE ALLOWABLE DOWNTIME.

ITEM 809 CONDUIT, MULTICELL, MISC.: 2" HDPE WITH 4-14MM/10MM INNERDUCTS
ITEM 809 CONDUIT, MULTICELL, MISC.: 2" HDPE WITH 4-14MM/10MM INNERDUCTS, JACKED OR DRILLED

FURNISH AND INSTALL 2" HDPE MULTICELL CONDUIT IN THE MEDIAN BARRIER WALL AND LATERAL CROSSINGS TO ITS DEVICES. THE OUTER DUCT SHALL BE 2" NOMINAL SIZE, SCHEDULE 40, AND PER CMS 725.052. THE 2" OUTER DUCT SHALL BE SCHEDULE 80 WHEN INSTALLED UNDER THE ROADWAY. THE OUTER DUCT SHALL BE ONE CONTINUOUS PIECE FROM JUNCTION BOX TO JUNCTION BOX IN THE BARRIER WALL AND BETWEEN PULL BOXES IN THE GROUND.

FURNISH AND INSTALL 4-14MM/10MM MICRODUCTS, FROM THE DEPARTMENTS TRAFFIC AUTHORIZED PRODUCTS (TAP) LIST PER SUPPLEMENTAL SPECIFICATION 904.03, INSIDE THE 2" OUTER DUCT. THE INNERDUCTS SHALL BE CONTINUOUS FROM A PULL BOX NEXT TO AN ITS CABINET TO ANOTHER PULL NEXT TO AN ITS CABINET.

INSTALLATION WITHIN 6 FEET OF GUARDRAIL WILL BE AT LEAST 30 INCHES DEEP TRENCH AND ENCASED IN CONCRETE.

WHEN ENTERING A PULL BOX, OUTER DUCT SHALL BE BROUGHT IN 3 INCHES. THE INNERDUCTS SHALL BE CONTINOUS STRAIGHT THROUGH PULL BOXES UNLESS THEY ARE NEXT TO ITS CABINETS, IN WHICH CASE THE INNERDUCTS SHALL EXTEND 3 INCHES PAST THE EDGE OF THE OUTER DUCT TO ACCOMMODATE THE ATTACHMENT OF JETTING MACHINES FOR FIBER INSTALLATION. INNERDUCTS SHALL BE CAPPED IN PULL BOXES PER MANUFACTURERS RECOMENDATIONS.

FOR LATERAL CROSSINGS UNDER THE ROADWAY FROM A JUNCTION BOX WHERE THE BACKBONE CABLING IS INTENDED TO CROSS TO AN ITS DEVICE AND THEN RETURN TO THE MEDIAN BARRIER WALL, THERE SHALL BE 2 -2" HDPE OUTER DUCTS INSTALLED EACH WITH 4-14MM/10MM INNERDUCTS. THE INNERDUCTS SHALL BE CONTINUOUS THROUGH THE JUNCTION BOX IN THE MEDIAN BARRIER WALL FROM EACH DIRECTION AND PROCEED UNDER THE ROADWAY. THE 2 -2" HDPE OUTER DUCTS WITH 4 INNDERCUTS SHALL CONTINUE THROUGH ADDITIONAL PULL BOXES UNTIL THEY REACH THE LOCATION OF SPLICE ENCLOSURE.

METHOD OF MEASUREMENT
THE CONDUIT WILL BE MEASURED BY THE AMOUNT OF CONDUIT IN FEET FURNISHED AND INSTALLED FROM CENTER TO CENTER OF PULL BOXES, FOUNDATION, ETC., AND WILL INCLUDE ALL FITTING AND APPURTENANCES, JOINTS, BENDS, GROUNDS, CONCRETE ENCASEMENT, AND EXPANSION FITTINGS AT BRIDGES WHERE SPECIFIED.

BASIS OF PAYMENT
THE PAYMENT FOR THESE ITEMS WILL BE MADE FOR THE ACCEPTED LINEAR FOOT QUANTITIES AT THE CONTRACT BID PRICE.

ITEM 809 CONDUIT, MULTICELL, MISC.: 4" HDPE
ITEM 809 CONDUIT, MULTICELL, MISC.: 4" HDPE, JACKED OR DRILLED

DESCRIPTION
THIS CONDUIT IS INTENDED FOR USE IN UNDERGROUND OR ENCASED INSIDE CONCRETE BARRIER WALL SITUATIONS REQUIRING MORE THAN ONE SINGLE CONDUIT. THIS INCLUDES THE MAIN CONDUIT RACEWAY ALONG THE FREEWAY, CONNECTION FROM PULL BOXES TO THE ROADSIDE CABINETS AND FOR RUNS OF CONDUIT FOR MULTIPLE PURPOSES, E.G., AT RAMP METER INSTALLATIONS, FOR LOOP LEAD-IN CABLE, SIGNAL CABLE FOR RAMP METER DISPLAYS, SIGNAL CABLE FOR RAMP METER SIGNING FLASHERS & ILLUMINATION AND POWER.

THE CONTRACTOR SHALL PLUG ALL UNUSED CELLS WITH CONDUIT CAPS TO ASSURE AIR AND WATER INTEGRITY OF EACH INDIVIDUAL INNERDUCT.

MATERIALS
THE TRAFFIC SURVEILLANCE RACEWAY SHALL CONSIST OF A FACTORY-ASSEMBLED SYSTEM OF FOUR (4) INNERDUCTS ASSEMBLED WITHIN A PROTECTIVE OUTER DUCT. THE CONDUIT SHALL ADHERE TO 725.20 AND BE POLYVINYL CHLORIDE, HIGH DENSITY POLYETHYLENE (HDPE), OR APPROVED EQUIVALENT. THE INNERDUCTS SHALL BE A MINIMUM OF 1.10 INCH INSIDE DIAMETER.

THE OUTER DUCT SHALL BE NOMINAL 4 INCH INSIDE DIAMETER AND MAXIMUM OUTSIDE DIAMETER OF 4.8 INCH.

THE HDPE CONDUIT SHALL BE COPIED ON REELS.

WHERE COUPLINGS ARE NEEDED, THE COUPLING SHALL BE DESIGNED IN A MANNER TO PERMIT EASY FIELD ASSEMBLY. THE COUPLING SHALL BE MARKED OR KEYED IN A MANNER TO ENSURE THE INNERDUCTS ARE PROPERLY ALIGNED, ANY COLOR CODES ARE CONTINUED, AND THE ADJOINING SECTION IS INSERTED TO THE PROPER DEPTH IN THE BELL. ALL KEYS AND/OR MARKINGS SHALL BE VISIBLE AFTER ASSEMBLY TO ALLOW THE INSPECTION OF EACH JOINT FOR PROPER ASSEMBLY BEFORE BURIAL. THE SEALING SYSTEM SHALL BE DESIGNED TO ASSURE AIR INTEGRITY OF EACH INDIVIDUAL INNERDUCT AND WATER INTEGRITY OF THE ENTIRE SYSTEM.

WHERE INNERDUCT(S) WITHIN A MULTI-CELL DUCT ARE TO REMAIN EMPTY, ONE 1/4-INCH NYLON ROPE SHALL BE INSTALLED IN EACH OF THE OPEN INNERDUCTS, THE ROPE WILL REMAIN TO BE USED FOR A FUTURE CABLE INSTALLATION. ALSO, EACH INNERDUCT SHALL BE PLUGGED TO MAINTAIN THE AIR AND WATER INTEGRITY. IN ADDITION, THE OUTER DUCT SHALL BE CAPPED TO MAINTAIN THE AIR AND WATER INTEGRITY OF THE ENTIRE SYSTEM. FOR MULTI-CELL DUCT INSTALLED IN MEDIAN WALLS, ALL ROPES AND PLUGS SHALL BE INSTALLED PRIOR TO ANY CONCRETE PLACEMENT.

INSTALLATION
FOR INSTALLATIONS UNDER ROADWAYS, INSTALLATION WILL BE AT LEAST 30 INCHES DEEP, JACKED OR DRILLED UNDER PAVEMENT, EXCEPT AS NOTED ON THE PLANS. ALL JOINTS WILL BE JOINED ACCORDING TO THE MANUFACTURERS RECOMMENDATIONS, IN ORDER TO PROVIDE AN AIR-TIGHT ENCLOSURE OF THE INTERIOR DUCTS AND A WATER-TIGHT ENCLOSURE OF THE OUTER DUCT.

FOR HDPE CONDUITS, INSTALLATION WILL BE IN 30-INCH DEEP TRENCH, DRILLED OR PLOWED TO A MINIMUM OF 30 INCHES DEEP, ENCASED INSIDE CONCRETE BARRIER WALL, OR AS NOTED ON THE PLANS. THE HDPE CONDUIT SHALL BE INSTALLED IN CONTINUOUS LENGTHS WITHOUT JOINTS OR COUPLINGS BETWEEN PULL BOXES OR JUNCTION BOXES.

EXPANSION FITTINGS FOR CONDUIT ON STRUCTURES SHALL BE OZ (TYPE AX), SPRING CITY (TYPE AF) OR CROUSE-HINDS (TYPE XJ-4) OR APPROVED EQUAL. EACH EXPANSION FITTING SHALL HAVE A COPPER EXTERNAL BONDING JUMPER.

INSTALLATION WITHIN 6 FEET OF GUARDRAIL WILL BE AT LEAST 30 INCHES DEEP TRENCH AND ENCASED IN CONCRETE.

WHEN ENTERING A PULL BOX, CONDUIT SHALL BE BROUGHT IN 3 INCHES MINIMUM AND A MAXIMUM OF 6 INCHES FROM THE EDGE OF THE PULL BOX WALL KNOCKOUT.

METHOD OF MEASUREMENT
THE CONDUIT WILL BE MEASURED BY THE AMOUNT OF CONDUIT IN FEET FURNISHED AND INSTALLED OF EACH TYPE SCHEDULE 40 OR 80 MEASURED FROM CENTER-TO-CENTER OF PULL BOXES, FOUNDATION, ETC., AND WILL INCLUDE ALL FITTINGS AND APPURTENANCES, JOINTS, BENDS, GROUNDS, CONCRETE ENCASEMENT, AND EXPANSION FITTINGS AT BRIDGES WHERE SPECIFIED.

BASIS OF PAYMENT
THE PAYMENT FOR THESE ITEMS WILL BE MADE FOR THE ACCEPTED LINEAR FOOT QUANTITIES AT THE CONTRACT BID PRICE.

ITEM 809 CONDUIT, MULTICELL, MISC.: 2" HDPE WITH 4-14MM/10MM INNERDUCTS, ON STRUCTURE
ITEM 809 CONDUIT, MULTICELL, MISC.: 4" HDPE, ON STRUCTURE

EXPANSION FITTINGS FOR CONDUIT ON STRUCTURE SHALL BE OZ (TYPE AX), SPRING CITY (TYPE AF) OR CROUSE-HINDS (TYPE XJ-4) OR APPROVED EQUAL. EACH EXPANSION FITTING SHALL HAVE A COPPER EXTERNAL BONDING JUMPER.

METHOD OF MEASUREMENT
THE CONDUIT WILL BE MEASURED BY THE AMOUNT OF CONDUIT IN FEET FURNISHED AND INSTALLED FROM CENTER TO CENTER OF PULL BOXES, FOUNDATION, ETC., AND WILL INCLUDE ALL FITTING AND APPURTENANCES, JOINTS, BENDS, GROUNDS, CONCRETE ENCASEMENTM AND EXPANSION FITTINGS AT BRIDGES WHERE SPECIFIED.

BASIS OF PAYMENT
THE PAYMENT FOR THESE ITEMS WILL BE MADE FOR THE ACCEPTED LINEAR FOOT QUANTITIES AT THE CONTRACT BID PRICE.

ITEM 809 32" ITS PULL BOX WITH PAD AND STANDARD LID ASSEMBLY
ITEM 809 32" ITS PULL BOX WITH PAD AND HINGED LID ASSEMBLY

PULL BOX SHALL BE INSTALLED WITH A CONCRETE PAD AS PER STANDARD CONSTRUCTION DRAWING ITS-14.11.

UNDERDRAINS FOR PULL BOXES

REFERENCE IS MADE TO THE STANDARD DRAWINGS FOR DETAILS OF DRAINING PULL BOXES. UNDERDRAINS FOR PULL BOXES SHALL BE USED AS DIRECTED BY THE ENGINEER AND SHALL BE PROVIDED.

WHERE THE LENGTH REQUIRED FOR A SATISFACTORY OUTLET DOES NOT EXCEED APPROXIMATELY 20 FEET. AN ANIMAL GUARD SHALL BE INCLUDED AT THE OUTLET END OF THE DRAIN PER CMS 625.11. PULL BOXES SHALL INCLUDE UNDERDRAINS AND NO SEPARATE PAY ITEM SHALL BE PROVIDED.

CCTV INSTALLATIONS
DYNAMIC MESSAGE SIGN INSTALLATIONS
ETHERNET CABLE INSTALLATIONS
FIBER OPTIC CABLE INSTALLATIONS
ITS CABINET INSTALLATIONS
ITS JUNCTION BOX

THE CONTRACTOR SHALL FURNISH AND INSTALL THESE ITEMS ACCORDING TO ODOT SUPPLEMENTAL SPECIFICATION 809, AS WELL AS ANY STANDARD CONSTRUCTION DRAWINGS NOTED ON THE PLANS.

UNDERGROUND WARNING/MARKING TAPE

THE CONTRATOR SHALL FURNISH AND INSTALL THIS ITEM ACCORDING TO ODOT SUPPLEMENTAL SPECIFICATIONS 804/904 AND CMS 725.22.

COMMUNICATION CABLE MARKER

THE CONTRACTOR SHALL FURNISH AND INSTALL THIS ITEM ACCORDING TO ODOT SUPPLEMENTAL SPECIFICATIONS 804/904.

TRACER WIRE INSTALLATION

THE CONTRATOR SHALL FURNISH AND INSTALL TRACER WIRE IN ACCORDANCE TO ODOT SUPPLEMENTAL SPECIFICATION 804, AS WELL AS ANY STANDARD CONSTRUCTION DRAWINGS NOTED ON THE PLANS. PAYMENT SHALL BE INCIDENTAL TO FIBER OPTIC CABLE OR CONDUIT, IF NO FIBER IS INSTALLED.

Preliminary Plans - For Reference Only

CALCULATED DRM CHECKED JDS

ITS NOTES

HAM-75 / 7.85

750
1047

J:\20110903\ODOT\HAM\77889\signals\sheets\77889GN101.dgn 5/22/2026 10:30:29 AM hbrendlinger

ITEM 630 OVERHEAD SIGN SUPPORT, DMS TRUSS, 115', AS PER PLAN

THE CONTRACTOR SHALL FURNISH AND INSTALL THIS ITEM ACCORDING TO ODOT SUPPLEMENTAL SPECIFICATION 809, AS WELL AS ANY STANDARD CONSTRUCTION DRAWINGS NOTED ON THE PLANS.

REFERENCE TO 115' IN THE NOTE HEADING IS PROVIDED TO CORRELATE THE PROPOSED STRUCTURE WITH THE DESIGN 2 SPECIFICATIONS AS DOCUMENTED IN ODOT STANDARD CONSTRUCTION DRAWING ITS-35.13. THE ACTUAL TRUSS LENGTH SHALL BE 110' PER THE DETAILS PROVIDED HEREIN.

THE CONTRACTOR SHALL FURNISH SHOP DRAWINGS TO THE PROJECT ENGINEER FOR APPROVAL. THE DRAWINGS SHALL BE STAMPED BY A PROFESSIONAL ENGINEER FROM THE MANUFACTURER. THE ITEM SHALL NOT BE RELEASED FOR CONSTRUCTION UNTIL APPROVED BY THE OFFICE OF TMSO - ITS SECTION.

ALL COSTS RESULTING FROM THE ABOVE REQUIREMENTS SHALL BE INCLUDED IN THE UNIT PRICE BID PER EACH FOR ITEM 630 OVERHEAD SIGN SUPPORT, DMS TRUSS, 115', AS PER PLAN.

ITEM 630 CATWALK, DMS TRUSS, AS PER PLAN

IN ADDITION TO THE REQUIREMENTS OF CMS 630.06, THE CATWALK FOR THE DYNAMIC MESSAGE SIGN TRUSS SHALL CONFORM TO THE REQUIREMENTS CONTAINED IN THESE PLANS AND ODOT STANDARD DRAWING ITS-35.11.

ALL COSTS RESULTING FROM THE ABOVE REQUIREMENTS SHALL BE INCLUDED IN THE UNIT PRICE BID PER EACH FOR ITEM 630 CATWALK, DMS TRUSS, AS PER PLAN.

ITEM 632 POWER CABLE, MISC.: 1 CONDUCTOR, 1/0 AWG

IN ADDITION TO THE REQUIREMENTS OF CMS 632.23, POWER CABLE SHALL BE 1/0 AWG.

ALL COSTS RESULTING FROM THE ABOVE REQUIREMENTS SHALL BE INCLUDED IN THE UNIT PRICE BID FOR ITEM 632 POWER CABLE, MISC.: 1 CONDUCTOR, 1/0 AWG.

ITEM 809 ITS POWER SERVICE, POLE MOUNTED, 120/240V, 60 AMP

POWER SERVICE FOR ALL ITS EQUIPMENT SHALL BE OBTAINED FROM DUKE ENERGY CORP. THE POWER SERVICE SHALL BE OBTAINED AT THE LOCATIONS AS SHOWN ON THE PLANS OR AN ALTERNATIVE LOCATION AS DETERMINED BY DUKE ENERGY CORP. THE CONTRACTOR SHALL COORDINATE WITH DUKE ENERGY CORP., JEFF VENTRE, TRAFFIC SERVICES AT (513) 200-5215 FOR THE FINAL LOCATIONS OF POWER SOURCES. POWER SUPPLIED SHALL BE 120 /240 VOLTS AND SHALL BE METERED.

A SEPARATE DISCONNECT SWITCH AND ENCLOSURE SHALL BE FURNISHED AND INSTALLED ON THE ITS FIELD CABINET AT STATION 419+66, 130' RT AS NOTED IN THE PLANS AND SHALL BE CONSIDERED INCIDENTAL TO THE POWER SERVICE.

THE POWER SERVICE FOR ITS EQUIPMENT SHALL BE PER THE DETAILS FURNISHED IN ODOT STANDARD CONSTRUCTION DRAWINGS ITS 15.10 AND ITS-15.11. FOR 120/240V POWER SERVICE, THE DISCONNECT SWITCH AND METER SHALL BE MOUNTED ON THE POWER SERVICE POLE PER ITS 15.11.

THIS ITEM OF WORK SHALL INCLUDE FURNISHING AND INSTALLING WOOD POLES AS NEEDED TO RECEIVE POWER COMPANY CIRCUITS. SEPARATE PAYMENT FOR WOOD POLES WILL NOT BE MADE.

THE CCTV RELATED POWER SERVICES SHALL BE MARKED WITH "ITS". DISCONNECT SWITCHES SHALL BE FUSIBLE, RATED FOR 60 AMPS WITH NEMA 4X ENCLOSURE, AND SHALL BE FUSED AT 30 AMPS.

PAYMENT FOR THIS ITEM SHALL BE AT THE UNIT PRICE BID FOR EACH, COMPLETE AND IN PLACE, AFTER ALL CONNECTIONS HAVE BEEN TESTED AND ACCEPTED.

ITEM 632 SIGNALIZATION, MISC.: REMOVAL OF FIBER OPTIC CABLE AND POWER CABLE

ALL FIBER OPTIC CABLE THAT IS CALLED FOR REMOVAL IN THE PLANS SHALL BE REMOVED WITH CARE SO AS TO NOT DAMAGE THE CABLE DURING REMOVAL. THE FIBER SHALL BE COILED ON WOODEN REELS AND TURNED OVER TO THE ODOT ITS ENGINEER. CARE SHALL BE TAKEN AND THE FIBER OPTIC CABLE SHALL BE REMOVED IN SUCH MANNER THAT THE CABLE REMAINS IN THE LONGEST COMPLETE SECTIONS AS POSSIBLE.

EXISTING CONDUIT WITH FIBER OPTIC CABLES CALLED OUT FOR REMOVAL MAY BE ABANDONED IN PLACE, UNLESS IT CONFLICTS WITH ANY PROPOSED IMPROVEMENTS, IN WHICH CASE IT SHALL BE REMOVED. ANY CONDUIT THAT IS REQUIRED TO BE REMOVED SHALL BE INCIDENTAL TO THIS PAY ITEM.

POWER CABLE SHALL BE REMOVED AND PROPERLY DISPOSED OF BY THE CONTRACTOR.

PAYMENT FOR THIS ITEM SHALL BE AT THE LUMP SUM PRICE BID AND SHALL INCLUDE THE REMOVAL AND RETURN OF ALL FIBER OPTIC CABLE.

ITEM 633 CONTROLLER WORK PAD, AS PER PLAN

THIS ITEM CONSISTS OF DESIGNING AND CONSTRUCTION OF A CONTROLLER WORK PAD IN A SLOPED AREA. THE WORK PAD SHOULD BE DESIGNED IN A MANNER SIMILAR TO THE PLANS SHOWN IN ODOT SCD ITS-50.12. THIS ITEM IS TO ALSO INCLUDE 2" DIAMETER X .1875" THICKNESS GALVANIZED STEEL RAILING TO BE CAST IN PLACE OR PLACED IN SOCKETS OF THE WORK PAD WITH MORTAR.

THE CONTRACTOR SHALL FURNISH SHOP DRAWINGS TO THE PROJECT ENGINEER FOR APPROVAL. THE DRAWINGS SHALL BE STAMPED BY A PROFESSIONAL ENGINEER FROM THE MANUFACTURER. THIS ITEM SHALL NOT BE RELEASED FOR CONSTRUCTION UNTIL APPROVED BY THE OFFICE OF TRAFFIC OPERATIONS.

ENGINEER SHALL DETERMINE IN THE FIELD WHETHER THE GALVANIZED STEEL RAILINGS SHALL BE PROVIDED OR NOT AT EACH WORK PAD LOCATION.

ITEM 633 CABINET FOUNDATION, AS PER PLAN

THIS ITEM CONSISTS OF PROVIDING A CABINET FOUNDATION SUITABLE FOR INSTALLATION IN A SLOPED AREA.

THE CONTRACTOR SHALL FURNISH SHOP DRAWINGS TO THE PROJECT ENGINEER FOR APPROVAL. THE DRAWINGS SHALL BE STAMPED BY A PROFESSIONAL ENGINEER FROM THE MANUFACTURER. THE ITEM SHALL NOT BE RELEASED FOR CONSTRUCTION UNTIL APPROVED BY THE OFFICE OF TRAFFIC OPERATIONS.

ITEM 809 ITS DEVICE, MISC.: REMOVAL OF ITS CABINET ASSEMBLY
ITEM 809 ITS DEVICE, MISC.: REMOVAL OF DMS SIGN
ITEM 809 ITS DEVICE, MISC.: REMOVAL OF SIDE-FIRED RADAR VEHICLE DETECTOR
ITEM 809 ITS DEVICE, MISC.: REMOVAL OF WIRELESS RADIO EQUIPMENT
ITEM 809 ITS DEVICE, MISC.: REMOVAL OF CCTV POLE, CAMERA, FOUNDATION, AND CABINET ASSEMBLY

ALL EXISTING TRAFFIC ITS/SURVEILLANCE EQUIPMENT THAT IS TO BE REMOVED AS SHOWN IN THE PLANS SHALL BE TURNED OVER TO THE ODOT ITS ENGINEER. THE CONTRACTOR SHALL SECURELY STORE THE EQUIPMENT AND CONTACT THE ODOT ITS ENGINEER (CEN.ITS.LAB@DOT.OHIO.GOV) TO SCHEDULE DELIVERY. THE ODOT ITS ENGINEER SHALL PROVIDE THE CONTRACTOR WITH WRITTEN DOCUMENTATION OF ANY ITEMS THAT ARE TO BE DISPOSED OF BY THE CONTRACTOR.

EXISTING FOUNDATIONS SHALL BE REMOVED AND DISPOSED OF BY THE CONTRACTOR.

BEFORE ANY EQUIPMENT IS REMOVED THE CONTRACTOR SHALL REVIEW THE ITS DOWNTIME NOTES IN THESE PLANS TO ENSURE THAT THEY ARE IN COMPLIANCE WITH THE NOTIFICATION REQUIREMENTS.

ITEM 809 ITS DEVICE, MISC.: RELOCATE EXISTING DMS

THIS ITEM CONSISTS OF RELOCATING AN EXISTING ODOT DYNAMIC MESSAGE SIGN (DMS) FROM AN EXISTING PEDESTAL SUPPORT TO A PROPOSED TRUSS, AND INCLUDES REMOVAL, STORAGE, REINSTALLATION, AND TESTING OF THE SIGN IN ACCORDANCE WITH SS 809.

PRIOR TO RELOCATION, THE CONTRACTOR SHALL SCHEDULE A FIELD INSPECTION WITH AN ODOT REPRESENTATIVE TO ENSURE THAT THE EXISTING DMS AND ASSOCIATED COMMUNICATION AND POWER DEVICES ARE IN SOUND WORKING ORDER. IF IT IS DETERMINED DURING THE INSPECTION THAT ANY COMPONENT OF THE EXISTING DMS ASSEMBLY IS DAMAGED OR MALFUNCTIONING, IT SHALL BE REPLACED BY ODOT. ANY DAMAGE TO THE SIGN OR EQUIPMENT THAT IS IDENTIFIED AFTER THE RELOCATION PROCESS AND NOT PREVIOUSLY DOCUMENTED DURING THE FIELD INSPECTION WILL BE ASSUMED TO HAVE BEEN CAUSED BY THE CONTRACTOR, AND THE AFFECTED ITEM SHALL BE REPLACED IN KIND BY THE CONTRACTOR AT ODOT'S DISCRETION.

THE EXISTING DMS CONTROLLER AND ALL ASSOCIATED OPERATIONAL DEVICES CURRENTLY INSTALLED WITHIN THE EXISTING ITS CABINET SHALL BE REMOVED AND REINSTALLED WITHIN THE NEW GROUND MOUNTED CABINET ADJACENT TO THE PROPOSED TRUSS, AS SHOWN ON THE PLANS. THE CONTRACTOR SHALL CAREFULLY REMOVE AND PROTECT EQUIPMENT DURING RELOCATION, PROVIDE ALL NECESSARY MOUNTING HARDWARE, AND RECONNECT ALL POWER, COMMUNICATIONS, GROUNDING, AND SURGE PROTECTION SYSTEMS REQUIRED FOR SATISFACTORY OPERATION. ALL RELOCATED EQUIPMENT SHALL BE INSTALLED IN ACCORDANCE WITH ODOT STANDARDS, THE MANUFACTURER'S RECOMMENDATIONS, AND THE CONTRACT DOCUMENTS. UPON COMPLETION, THE CONTRACTOR SHALL TEST AND VERIFY FULL DMS FUNCTIONALITY AND RESTORE ALL DISTURBED AREAS. ALL LABOR, MATERIALS, EQUIPMENT, AND INCIDENTALS REQUIRED TO COMPLETE THIS WORK SHALL BE INCLUDED.

Preliminary Plans - For Reference Only

CALCULATED DRM
CHECKED JDS

ITS NOTES

HAM-75/7.85

751
1047

J:\20110903\ODOT\HAM\77889\signals\sheets\77889GN104.dgn 5/22/2026 10:30:30 AM hbrendlinger

ITEM 809 MAINTAINING ITS DURING CONSTRUCTION

IT IS THE CONTRACTOR'S RESPONSIBILITY TO MAINTAIN AND RESTORE AS NECESSARY THE FUNCTIONALITY OF ALL ITS EQUIPMENT WITHIN THE PROJECT AREA FOR THE DURATION OF THE PROJECT.

THE CONTRACTOR SHALL MAINTAIN ALL PREEXISTING OR NEWLY INSTALLED PERMANENT ITS/TRAFFIC DEVICES AND INFRASTRUCTURE DURING CONSTRUCTION ACCORDING TO ODOT SUPPLEMENTAL SPECIFICATION 809.

THE EXISTING ITS CAMERAS SHALL BE MAINTAINED AT ALL TIMES. TEMPORARY SUPPORTS AND/OR RELOCATION SHALL BE FURNISHED AND INSTALLED BY THE CONTRACTOR AS NEEDED TO MAINTAIN THE FIBER OPTIC CABLE AND CAMERA SYSTEMS.

WHEN THE SEQUENCE OF CONSTRUCTION ACTIVITIES REQUIRES, OR SHOULD THE CONTRACTOR DESIRE, THE REMOVAL OF THE EXISTING ITS BEFORE THE NEW ITS IS OPERATIONAL, THE CONTRACTOR SHALL BE RESPONSIBLE FOR PROVIDING A FULLY FUNCTIONING TEMPORARY SYSTEM. THE CONTRACTOR SHALL REVIEW THE ITS DOWNTIME REQUIREMENTS PRIOR TO THE REMOVAL OF ANY ITS EQUIPMENT. SEE SUPPLEMENTAL SPECIFICATION 809.

PRIOR TO INSTALLING SUCH TEMPORARY ITS EQUIPMENT, THE CONTRACTOR SHALL PREPARE AND SUBMIT TEMPORARY ITS PLANS TO THE ENGINEER FOR REVIEW AND APPROVAL. THIS PLAN SHALL SHOW LOCATIONS OF ANY POLES, FIBER OPTIC CABLE, AND OTHER PERTINENT INFORMATION. THE MINIMUM OVERHEAD CABLE CLEARANCE SHALL BE 20 FEET. TEMPORARY OVERHEAD CONSTRUCTION SHALL NOT BE LESS THAN GRADE "A" FOR STRENGTH REQUIREMENTS AS DEFINED BY THE NATIONAL ELECTRIC SAFETY CODE. TEMPORARY ITS SHALL MEET FEDERAL AND STATE SAFETY CRITERIA.

ALL MATERIALS NECESSARY TO COMPLETE THE TEMPORARY ITS SHALL BE FURNISHED AND INSTALLED BY THE CONTRACTOR. WHEN NO LONGER NEEDED, THE TEMPORARY ITS INSTALLATION SHALL BE REMOVED AND DELIVERED TO THE MAINTAINING AGENCY OR PROPERLY DISPOSED OF BY THE CONTRACTOR, AS DIRECTED BY THE ENGINEER.

THE MAINTAINING AGENCY WILL PAY FOR ELECTRICAL ENERGY CONSUMED BY EXISTING POWER SERVICES AND BY PROPOSED PERMANENT POWER SERVICES AFTER ACCEPTANCE OF THE ITS WORK. THE CONTRACTOR WILL PAY FOR ELECTRICAL ENERGY, INSTALLATION, REMOVAL AND MAINTENANCE OF ANY TEMPORARY POWER SERVICES.

THE LUMP SUM PRICE BID FOR ITEM 809 MAINTAINING ITS DURING CONSTRUCTION SHALL INCLUDE PAYMENT FOR ALL LABOR, EQUIPMENT, MATERIALS AND INCIDENTALS NECESSARY TO MAINTAIN THE EXISTING ITS AS SPECIFIED HEREIN.

ITEM 809 AS-BUILT CONSTRUCTION PLANS

PRIOR TO THE FINAL ACCEPTANCE OF THE PROJECT, PROVIDE AS-BUILT PLANS OF THE ENTIRE ITS PORTION OF THE PROJECT TO THE DEPARTMENT ITS ENGINEER IN THE FOLLOWING FORMATS: DGN FILES AND PDF FILE. INCLUDED WITH THE PDF IS ACTUAL FIELD DATA OF ALL SITES. THIS DATA INCLUDES THE FOLLOWING:

A. ITS ASSET INVENTORY USING DEPARTMENT ITS ASSET FIELD MAPS APPLICATION. ESTABLISH A MYODOT ACCOUNT FOR ACCESS TO THE DEPARTMENT ESRI ARCGIS FIELD MAPS APPLICATION FOR THE ITS ASSET INVENTORY (HTTPS://MYODOT.DOT.STATE.OH.US/SSL/MAIN.ASPX; HTTPS://EXTRANET.DOT.STATE.OH.US/AMLT/COLLECTORPROGRAM/PAGES/HOME.ASPX). USE A DATA COLLECTION DEVICE COMPATIBLE WITH THE DEPARTMENT ESRI ARCGIS FIELD MAPS APPLICATION FOR THE COLLECTION EFFORTS. COMPATIBLE DEVICES INCLUDE AT LEAST APPLE AND ANDROID TABLETS AND PHONES. PROVIDE OTHER SURVEY EQUIPMENT NECESSARY TO COLLECT THE REQUIRED ATTRIBUTES. COLLECT AT LEAST THE FOLLOWING ITEMS INSTALLED IN THE AS-BUILT LOCATIONS AS OUTLINED IN THE DEPARTMENT'S ITS DATA COLLECTION MODELS USING THE DEPARTMENT ITS ASSET FIELD MAPS APPLICATION:
   1. POWER SERVICE ATTRIBUTES.
   2. CABINET ATTRIBUTES.
   3. DEVICE ATTRIBUTES.
   4. PULL BOX ATTRIBUTES WITH CABLE TYPES.
   5. LINE ATTRIBUTES (POWER/COMMUNICATIONS)

   TAKE PICTURES OF EACH ASSET AND STORE IN THE DEPARTMENT ITS ASSET FIELD MAPS APPLICATION. NAME EACH PICTURE UNIQUELY SO EACH ASSET CAN BE IDENTIFIED BY LOCATION. INCLUDE PICTURES OF THE OVERALL AREA, POWER SERVICE AND UTILITY POWER, INSIDE CABINET, OUTSIDE CABINET, ENTIRE SUPPORT, EACH DEVICE FRONT AND BACK, PULL BOXES LOOKING UPSTREAM AND DOWNSTREAM, POWER SERVICE DISCONNECTS, POWER AND COMMUNICATION LINE LOCATIONS AND OTHER PICTURES THAT HELP IDENTIFY THE ASSET. WHEN TAKING PICTURES OF UNDERGROUND POWER AND COMMUNICATION LINES, FIRST MARK THE LOCATIONS WITH FLAGS OR PAINT.

   COLLECT THE UNDERGROUND POWER AND COMMUNICATION LINES, INCLUDING FIBER OPTIC CABLE, INSTALLED WITH THE PROJECT IN THE AS-BUILT LOCATIONS. THE LOCATION OF UNDERGROUND POWER AND COMMUNICATION LINES MUST MEET THE ACCURACY REQUIREMENTS FOR A CLASS II PLANIMETRIC FEATURE AS FOUND IN THE DEPARTMENT SURVEY AND MAPPING SPECIFICATION MANUAL.

   COORDINATION WITH THE DEPARTMENT OFFICE OF ASSET INVENTORY AND SYSTEM INTEGRATION PERSONNEL MAY BE NECESSARY TO ENSURE APPLICATION ACCESS AND PERMISSIONS, ASSET COLLECTION METHODS, AND INTEGRATION OF DATA INTO THE DEPARTMENT ENVIRONMENT.

   THIS WORK IS PAID UNDER ITEM 809 AS-BUILT CONSTRUCTION PLANS AND CARRIED TO THE ITS SUBSUMMARY.

B. METER NUMBERS AND UTILITY PROVIDER OF ALL POWER SERVICES WITH THEIR SERVICE LOCATIONS.

GPS COORDINATES/AS-BUILT PLANS

PRIOR TO THE FINAL ACCEPTANCE TO THE PROJECT, THE CONTRACTOR SHALL PROVIDE AS-BUILT PLANS OF THE ENTIRE ITS PORTION OF THE PROJECT TO THE ODOT ITS ENGINEER IN THE FOLLOWING FORMATS: DGN FILE, PDF FILE, AND ONE (1) HALF-SIZE PLAN HARD COPIES. ALL HARD COPIES SHALL BE SUBMITTED IN SEPARATE 3-RING BINDERS, NOTING THE CONTENTS ON THE OUTSIDE OF THE BINDER.

INCLUDED WITH THE PDF AND HARD COPY VERSIONS OF THIS DOCUMENTATION, THE CONTRACTOR SHALL PROVIDE ACTUAL FIELD DATA OF ALL SITES. THIS DATA SHALL INCLUDE THE FOLLOWING:

-GPS COORDINATES OF ALL PULL BOXES, POLES, CABINETS AND POWER SERVICES WITH COORDINATING DEVICE I NUMBER. (DEVICE ID # SHALL BE PROVIDED BY THE ODOT ITS ENGINEER PRIOR TO THE COLLECTION OF THE DATA).

-METER NUMBERS AND UTILITY OF ALL POWER SERVICES WITH THEIR SERVICE LOCATIONS.

THE COST OF PROVIDING THESE AS-BUILT DRAWINGS SHALL BE INCLUDED IN THE BID PRICE FOR THE ITEMS INSTALLED.

ITEM 809 ITS DEVICE, MISC.: RELOCATE CCTV CAMERA AND WIRELESS RADIO EQUIPMENT

THIS ITEM OF WORK SHALL CONSIST OF RELOCATING EXISTING CAMERA AND RADIO EQUIPMENT AS SHOWN ON THE PLAN. THE CONTRACTOR SHALL RELOCATE THE SPECIFIED EQUIPMENT AND ANY OTHER MISCELLANEOUS ITEMS ASSOCIATED WITH THE ABOVE LISTED EQUIPMENT.

PRIOR TO RELOCATION, THE CONTRACTOR AND THE ENGINEER SHALL INSPECT THE EQUIPMENT AND CABLE TO DOCUMENT ANY EXISTING DAMAGE. ANY DAMAGE IDENTIFIED AFTER THE RELOCATION PROCESS AND NOT PREVIOUSLY DOCUMENTED WILL BE PRESUMED TO HAVE BEEN CAUSED BY THE CONTRACTOR. ANY DAMAGED EQUIPMENT OR CABLES WILL BE REPAIRED OR REPLACED AS DIRECTED BY THE ENGINEER AT THE CONTRACTOR'S EXPENSE.

THE CONTRACTOR SHALL BE RESPONSIBLE FOR PROVIDING A COMPLETE, FUNCTIONAL SYSTEM INCLUDING ALL NECESSARY CABLES AND CONNECTORS IN ACCORDANCE TO THE SPECIFICATIONS AND AS SPECIFIED ON THE PLANS. ALL MISCELLANEOUS CABLES SHALL BE FURNISHED AND INSTALLED AS NEEDED UNDER THIS ITEM OF WORK TO RENDER THE SYSTEMS FULLY OPERATIONAL.

THE WORK AS DESCRIBED HEREIN WILL BE MEASURED AS ONE UNIT AND SHALL INCLUDE ALL MATERIALS, EQUIPMENT AND INCIDENTALS, COMPLETE IN PLACE. TERMINATIONS, CONNECTIONS, AND OTHER MISCELLANEOUS ITEMS AND MATERIALS SHALL BE CONSIDERED INCIDENTAL TO THIS WORK AND NO SEPARATE PAYMENT WILL BE MADE.

GROUNDING

ALL ITS EQUIPMENT SHALL BE GROUNDED PER ITS-50.10.

PAYMENT FOR SITE GROUNDING SHALL BE INCIDENTAL TO THE CONDUCTORS SUPPLIED BY THE PROJECT, UNLESS OTHERWISE NOTED.

Preliminary Plans - For Reference Only

CALCULATED DRM CHECKED JDS

ITS NOTES

HAM-75-7.85

752 1047

J:\20110903\ODOT\HAM\77889\signals\sheets\77889CP214.dgn 5/22/2026 10:30:31 AM hbrendlinger

SHEET NUMBER							ITEM	ITEM EXT.	TOTAL CARRIED TO GENERAL SUMMARY	UNIT	DESCRIPTION	SEE SHEET NO.
751	752	754	755	756	757	758						
				15	23		625	25400	38	FT	CONDUIT, 2", 725.04	
				20	36		625	25408	56	FT	CONDUIT, 2", 725.051	
				285	74	104	625	25500	463	FT	CONDUIT, 3", 725.04	
				22		152	625	25504	174	FT	CONDUIT, 3", 725.051	
				305			625	25902	305	FT	CONDUIT, JACKED OR DRILLED, 725.04, 3"	
				828	536	198	625	29000	1562	FT	TRENCH	
				6	1	1	625	30700	8	EACH	PULL BOX, 725.08, 18"	
		43	4				625	31510	47	EACH	PULL BOX REMOVED	
				7	3	3	625	32000	13	EACH	GROUND ROD	
				828	536	198	625	36010	1562	FT	UNDERGROUND WARNING/MARKING TAPE	
		2					625	75510	2	EACH	POWER SERVICE REMOVED	
				1			625	76000	1	EACH	ARC FLASH CALCULATIONS AND LABEL, CCTV #12	
					1		625	76000	1	EACH	ARC FLASH CALCULATIONS AND LABEL, DMS #12	
						1	625	76000	1	EACH	ARC FLASH CALCULATIONS AND LABEL, VDS	
						1	625	76000	1	EACH	ARC FLASH CALCULATIONS AND LABEL, CCTV #113	
					1		630	70021	1	EACH	OVERHEAD SIGN SUPPORT, DMS TRUSS, 115', AS PER PLAN	751
					1		630	70051	1	EACH	CATWALK, DMS TRUSS, AS PER PLAN	751
					1		630	70070	1	EACH	CONCRETE BARRIER MEDIAN OVERHEAD SIGN SUPPORT FOUNDATION, DMS TRUSS	
					1		630	70080	1	EACH	OVERHEAD SIGN SUPPORT FOUNDATION, DMS TRUSS	
		1	1				630	89702	2	EACH	REMOVAL OF OVERHEAD SIGN SUPPORT AND DISPOSAL	
		3	2				630	89812	5	EACH	REMOVAL OF WOOD POLE AND DISPOSAL	
					1048		632	69310	1048	FT	POWER CABLE, 1 CONDUCTOR, NO. 2 AWG	
				2013		1485	632	69350	3498	FT	POWER CABLE, MISC.: 1 CONDUCTOR, 1/0 AWG	751
				1			632	70400	1	EACH	CONDUIT RISER, 2" DIAMETER	
LUMP							632	90300	LUMP		SIGNALIZATION, MISC.: REMOVAL OF FIBER OPTIC CABLE AND POWER CABLE	751
				1	1	2	633	67101	4	EACH	CABINET FOUNDATION, AS PER PLAN	751
				1	1	2	633	67201	4	EACH	CONTROLLER WORK PAD, AS PER PLAN	751
				8262	7131	1895	804	21030	17288	FT	FIBER OPTIC CABLE, AIRBLOWN/PUSHABLE, 72 FIBER	
				10	9	6	809	00530	25	EACH	ITS JUNCTION BOX, 24X17X6 INCHES	
				1	1		809	01900	2	EACH	32" ITS PULL BOX WITH PAD AND STANDARD LID ASSEMBLY	750
				2	1	4	809	01920	7	EACH	32" ITS PULL BOX WITH PAD AND HINGED LID ASSEMBLY	750
				3	2	4	809	11000	9	EACH	COMMUNICATION CABLE MARKER	
				522	415	14	809	25000	951	FT	CONDUIT, MULTICELL, MISC.: 2" HDPE WITH 4-14MM/10MM INNERDUCTS	750
				463	101	284	809	25000	848	FT	CONDUIT, MULTICELL, MISC.: 2" HDPE WITH 4-14MM/10MM INNERDUCTS, JACKED OR DRILLED	750
				383	108		809	25000	491	FT	CONDUIT, MULTICELL, MISC.: 2" HDPE WITH 4-14MM/10MM INNERDUCTS, ON STRUCTURE	750
				522	430	22	809	25000	974	FT	CONDUIT, MULTICELL, MISC.: 4" HDPE	750
				463	101	284	809	25000	848	FT	CONDUIT, MULTICELL, MISC.: 4" HDPE, JACKED OR DRILLED	750
				383	108		809	25000	491	FT	CONDUIT, MULTICELL, MISC.: 4" HDPE, ON STRUCTURE	750
				1		1	809	55000	2	EACH	ITS POWER SERVICE, POLE MOUNTED, 120/240V, 60 AMP	751
				130	147	175	809	64550	452	FT	ETHERNET CABLE, OUTDOOR RATED	
				1		2	809	65000	3	EACH	ITS CABINET - GROUND MOUNTED	
					1		809	65040	1	EACH	ITS CABINET - DMS	
						1	809	65990	1	EACH	ITS DEVICE, MISC.: RELOCATE CCTV CAMERA AND WIRELESS RADIO EQUIPMENT	752
					1		809	65990	1	EACH	ITS DEVICE, MISC.: RELOCATE EXISTING DMS	751
		1					809	65990	1	EACH	ITS DEVICE, MISC.: REMOVAL OF CCTV POLE, CAMERA, FOUNDATION, AND CABINET ASSEMBLY	751
			1				809	65990	1	EACH	ITS DEVICE, MISC.: REMOVAL OF DMS SIGN	751
		6	3				809	65990	9	EACH	ITS DEVICE, MISC.: REMOVAL OF ITS CABINET ASSEMBLY	751
		3	2				809	65990	5	EACH	ITS DEVICE, MISC.: REMOVAL OF SIDE-FIRED RADAR VEHICLE DETECTOR	751
		3	6				809	65990	9	EACH	ITS DEVICE, MISC.: REMOVAL OF WIRELESS RADIO EQUIPMENT	751
	LUMP						809	70000	LUMP		MAINTAINING ITS DURING CONSTRUCTION	752
	LUMP						809	70050	LUMP		AS-BUILT CONSTRUCTION PLANS	752

CALCULATED DRM CHECKED JDS

ITS SUBSUMMARY

HAM-75-7.85

753
1047

Preliminary Plans - For Reference Only

J:\20110903\ODOT\HAM\77889\signals\sheets\77889CG101.dgn 5/22/2026 10:30:31 AM hbrendlinger

REFERENCE NO.	SHEET NO.	STATION FROM	STATION TO	SIDE	625 PULL BOX REMOVED EACH	625 POWER SERVICE REMOVED EACH	630 REMOVAL OF OVERHEAD SIGN SUPPORT AND DISPOSAL EACH	630 REMOVAL OF WOOD POLE AND DISPOSAL EACH	809 ITS DEVICE, MISC.: REMOVAL OF CCTV POLE, CAMERA, FOUNDATION, AND CABINET ASSEMBLY EACH	809 ITS DEVICE, MISC.: REMOVAL OF ITS CABINET ASSEMBLY EACH	809 ITS DEVICE, MISC.: REMOVAL OF SIDE-FIRED RADAR VEHICLE DETECTOR EACH	809 ITS DEVICE, MISC.: REMOVAL OF WIRELESS RADIO EQUIPMENT EACH
1	760	403+00		RT	1							
2	760	409+00		RT	1							
1	761	411+50		RT	1							
2	761	411+59		RT	1							
3	761	416+80		RT	1							
4	761	417+27		RT	1							
5	761	417+34		RT	1							
6	761	418+41		RT	1							
7	761	418+87		RT	1							
8	761	419+00		RT				1	1	1	1	1
9	761	419+33		RT	1							
10	761	420+05		RT	1			1		1	1	1
11	761	410+00		LT	1							
12	761	414+00		LT	1							
13	761	416+20		LT				1		1	1	1
14	761	417+36		LT	1							
15	761	419+40		LT	1							
16	761	419+41		LT						1		
17	761	419+74		LT	1							
18	761	419+78		LT		1						
19	761	419+87		LT	1							
20	761	419+95		LT	1							
1	762	423+58		RT	1							
2	762	423+64		RT	1							
3	762	433+51		RT	1							
4	762	435+76		RT	1							
5	762	426+61		LT	1							
6	762	426+68		LT	1							
7	762	433+47		LT	1							
8	762	435+46		LT		1						
9	762	435+77		LT						1		
1	763	440+48		RT	1							
2	763	448+00		RT	1							
3	763	448+09		RT	1							
4	763	440+45		LT	1							
5	763	446+62		LT	1							
1	764	451+30		RT	1							
2	764	453+66		RT	1							
3	764	457+44		RT	1							
4	764	457+47		RT	1							
5	764	450+99		LT	1							
6	764	453+68		LT	1							
7	764	457+44		LT	1							
8	764	458+61		LT	1							
1	765	464+42		RT	1							
2	765	464+80		RT	2		1			1		
3	765	464+42		LT	1							
4	765	470+50		RT	1							
TOTALS CARRIED TO SUBSUMMARY					43	2	1	3	1	6	3	3

CALCULATED DRM
CHECKED JDS

ITS ESTIMATED QUANTITIES

HAM-75-7.85

754
1047

Preliminary Plans - For Reference Only

J:\20110903\ODOT\HAM\77889\signals\sheets\77889CS101.dgn 5/22/2026 10:30:32 AM hbrendlinger

REFERENCE NO.	SHEET NO.	STATION FROM	STATION TO	SIDE	625 PULL BOX REMOVED EACH	630 REMOVAL OF OVERHEAD SIGN SUPPORT AND DISPOSAL EACH	630 REMOVAL OF WOOD POLE AND DISPOSAL EACH	809 ITS DEVICE, MISC.: REMOVAL OF DMS SIGN EACH	809 ITS DEVICE, MISC.: REMOVAL OF ITS CABINET ASSEMBLY EACH	809 ITS DEVICE, MISC.: REMOVAL OF SIDE-FIRED RADAR VEHICLE DETECTOR EACH	809 ITS DEVICE, MISC.: REMOVAL OF WIRELESS RADIO EQUIPMENT EACH
1	767	12+95		LT	1						
2	767	13+08		LT					1		1
3	767	13+18		LT			1				1
4	767	17+87		LT					1	1	1
5	767	22+54		LT					1		1
6	767	22+61		LT	1						
7	767	22+63		LT							1
8	767	22+68		LT	1						
9	767	23+00		LT		1		1			
10	767	23+31		LT			1			1	1
11	767	12+95		LT	1						
TOTALS CARRIED TO SUBSUMMARY					4	1	2	1	3	2	6

CALCULATED DRM
CHECKED JDS

ITS ESTIMATED QUANTITIES

HAM-75-7.85

755
1047

Preliminary Plans - For Reference Only

J:\20110903\ODOT\HAM\7889\signals\sheets\77889CS102.dgn 5/22/2026 10:30:32 AM hbrendlinger

ITS ESTIMATED QUANTITIES

CALCULATED DRM
CHECKED JDS

HAM-75-7.85

REFERENCE NO.	SHEET NO.	SIDE	STATION TO STATION		625 CONDUIT, 2", 725.04 FT	625 CONDUIT, 2", 725.051 FT	625 CONDUIT, 3", 725.04 FT	625 CONDUIT, 3", 725.051 FT	625 CONDUIT, JACKED OR DRILLED, 725.04, 3" FT	625 TRENCH FT	625 PULL BOX, 725.08, 18" EACH	625 GROUND ROD EACH	625 UNDERGROUND WARNING/MARKING TAPE FT	625 ARC FLASH CALCULATIONS AND LABEL, CCTV #12 EACH	632 POWER CABLE, MISC.: 1 CONDUCTOR, 1/0 AWG FT	632 CONDUIT RISER, 2" DIAMETER EACH	633 CABINET FOUNDATION, AS PER PLAN EACH	633 CONTROLLER WORK PAD, AS PER PLAN EACH	804 FIBER OPTIC CABLE, AIRBLOWN/PUSHABLE, 72 FIBER FT	809 ITS JUNCTION BOX, 17X24X6 INCHES EACH	809 32" ITS PULL BOX WITH PAD AND STANDARD LID ASSEMBLY EACH	809 32" ITS PULL BOX WITH PAD AND HINGED LID ASSEMBLY EACH	809 COMMUNICATION CABLE MARKER EACH	809 CONDUIT, MULTICELL, MISC.: 2" HDPE WITH 4-14MM/10MM INNERDUCTS FT	809 CONDUIT, MULTICELL, MISC.: 2" HDPE WITH 4-14MM/10MM INNERDUCTS, JACKED OR DRILLED FT	809 CONDUIT, MULTICELL, MISC.: 2" HDPE WITH 4-14MM/10MM INNERDUCTS, ON STRUCTURE FT	809 CONDUIT, MULTICELL, MISC.: 4" HDPE FT	809 CONDUIT, MULTICELL, MISC.: 4" HDPE, JACKED OR DRILLED FT	809 CONDUIT, MULTICELL, MISC.: 4" HDPE, ON STRUCTURE FT	809 ITS POWER SERVICE, POLE MOUNTED, 120/240V, 60 AMP EACH	809 ETHERNET CABLE, OUTDOOR RATED FT	809 ITS CABINET - GROUND MOUNTED EACH
1	768	RT	394+35																150													
2	768	RT	394+35	399+00															482													
3	768	RT	399+00																150													
4	768	RT/LT	399+00	399+00															170						170							
5	768	LT	399+00																150													
6	768	LT	399+00	403+00															380													
7	768	LT	403+00																150													
8	768	LT	403+00	406+75															355													
9	768	LT	406+75																150													
10	768 - 769	LT	406+75	409+88															313													
1	769	LT	409+88																150													
2	769	LT	409+88	411+78						188			188						188					188			188					
3	769	LT	411+78																150			1	1									
4	769	LT	411+78	411+90															55					55			55					
5	769	LT	411+90																150			1	1									
6	769	LT/CL	411+90	411+90															110					110			110					
7	769	CL	411+90																	1													
8	769	CL	411+90	417+10															520													
9	769	CL	417+10																	1													
10	769	CL	417+10	419+75															265						265			265					
11	769	CL	419+75																	1													
12	769	CL/RT	419+75	419+66															256					128			128					
13	769	RT	419+66		15	20		22		21	1	2	21	1	45		1	1	450		1		1							130	1	
14	769 - 775	RT/LT	419+66	10+89						334			334						334					334		334						
15	769	LT	419+78								1	1			48	1													1			
16	769	LT	419+78	421+12			132			132			132		426																	
17	769	LT	421+12								1	1																				
18	769	LT	421+12	421+15					55						195																	
19	769	LT	421+15								1	1																				
20	769	LT	421+15	421+12					53						189																	
21	769	LT	421+12								1	1																				
22	769	LT/RT	421+12	421+13					197						621																	
23	769	RT	421+13								1	1																				
24	769	RT	419+66	421+13			153			153			153		489																	
25	769 - 770	CL	419+75	424+00															425													
1	770	CL	424+00																	1													
2	770	CL	424+00	429+00															500													
3	770	CL	429+00																	1													
4	770	CL	429+00	433+92															492													
5	770	CL	433+92																	1													
6	770	CL	433+92	435+10															118													
7	770	CL	435+10																	1													
8	770 - 771	CL	435+10	439+00															390													
1	771	CL	439+00																	1													
2	771	CL	439+00	444+00															500													
3	771	CL	444+00																	1													
4	771 - 772	CL	444+00	451+59															759													
1	772	CL	451+59																	1													
TOTALS CARRIED TO SUBSUMMARY					15	20	285	22	305	828	6	7	828	1	2013	1	1	1	8262	10	1	2	3	522	463	383	522	463	383	1	130	1

Preliminary Plans - For Reference Only

J:\20110903\ODOT\HAM\77889\signals\sheets\77889CS103.dgn 5/22/2026 10:30:33 AM hbrendlinger

REFERENCE NO.	SHEET NO.	SIDE	STATION TO STATION		625 CONDUIT, 2", 725.04 FT	625 CONDUIT, 2", 725.051 FT	625 CONDUIT, 3", 725.04 FT	625 TRENCH FT	625 PULL BOX, 725.08, 18" EACH	625 GROUND ROD EACH	625 UNDERGROUND WARNING/MARKING TAPE FT	625 ARC FLASH CALCULATIONS AND LABEL, DMS #12 EACH	630 OVERHEAD SIGN SUPPORT, DMS TRUSS, 115', AS PER PLAN EACH	630 CATWALK, DMS TRUSS, AS PER PLAN EACH	630 CONCRETE BARRIER MEDIAN OVERHEAD SIGN SUPPORT FOUNDATION, DMS TRUSS EACH	630 OVERHEAD SIGN SUPPORT FOUNDATION, DMS TRUSS EACH	632 POWER CABLE, 1 CONDUCTOR, NO. 2 AWG FT	633 CABINET FOUNDATION, AS PER PLAN EACH	633 CONTROLLER WORK PAD, AS PER PLAN EACH	804 FIBER OPTIC CABLE, AIRBLOWN/PUSHABLE, 72 FIBER FT	809 ITS JUNCTION BOX, 17X24X6 EACH	809 32" ITS PULL BOX WITH PAD AND STANDARD LID ASSEMBLY EACH	809 32" ITS PULL BOX WITH PAD AND HINGED LID ASSEMBLY EACH	809 COMMUNICATION CABLE MARKER EACH	809 CONDUIT, MULTICELL, MISC.: 2" HDPE WITH 4-14MM/10MM INNERDUCTS FT	809 CONDUIT, MULTICELL, MISC.: 2" HDPE WITH 4-14MM/10MM INNERDUCTS, JACKED OR DRILLED FT	809 CONDUIT, MULTICELL, MISC.: 2" HDPE WITH 4-14MM/10MM INNERDUCTS, ON STRUCTURE FT	809 CONDUIT, MULTICELL, MISC.: 4" HDPE FT	809 CONDUIT, MULTICELL, MISC.: 4" HDPE, JACKED OR DRILLED FT	809 CONDUIT, MULTICELL, MISC.: 4" HDPE, ON STRUCTURE FT	809 ITS DEVICE, MISC.: RELOCATE EXISTING DMS EACH	809 ETHERNET CABLE, OUTDOOR RATED FT	809 ITS CABINET - DMS EACH
2	772	CL	451+59	452+67																108					108			108							
3	772	CL	452+67																		1															
4	772	CL	452+67	457+95																528																
5	772	CL	457+95																		1															
6	772	CL/RT	457+95	457+95																202								101				101				
7	772	RT	457+95																	300			1	1												
8	772	RT	457+95	462+02				415			415									830					415				415							
9	772	RT	462+02			36	9	18	1	1	18	1					152	1	1	300		1		1								27	1		
10	772	RT	462+02	462+25				15			15																		15				120			
11	772	RT	462+02	462+25	23			23			23						596																			
12	772	RT	462+25							2			1	1	1	1																1				
13	772	RT	462+02	462+56			65	65			65						300																			
14	772	CL	457+95	463+29																534																
15	772	CL	463+29																		1															
16	772 - 773	CL	463+29	465+25																196																
1	773	CL	465+25																		1															
2	773	CL	465+25	470+70																545																
3	773	CL	470+70																		1															
4	773	CL	470+70	472+00																130																
5	773	CL	472+00																		1															
6	773	CL	472+00	477+00																500																
7	773	CL	477+00																		1															
8	773	LT	474+73																	150																
9	773 - 774	LT	474+73	480+20																547																
1	774	LT	480+20																	150																
2	774	LT	480+20	486+50																636																
3	774	CL	477+00	482+00																500																
4	774	CL	482+00																		1															
5	774	CL	482+00	485+29																329																
6	774	CL	485+29																		1															
7	774	CL	485+29	487+00																171																
8	774	LT	486+50																	150																
9	774	LT	486+50	487+00																50																
10	774	LT	487+00																	150																
11	774	LT/CL	487+00	487+00																125																
TOTALS CARRIED TO SUBSUMMARY					23	36	74	536	1	3	536	1	1	1	1	1	1048	1	1	7131	9	1	1	2	415	101	108	430	101	108	1	147	1				

CALCULATED DRM
CHECKED JDS

ITS ESTIMATED QUANTITIES

HAM-75-7.85

757
1047

Preliminary Plans - For Reference Only

J:\20110903\ODOT\HAM\7889\signals\sheets\77889CS104.dgn 5/22/2026 10:30:34 AM hbrendlinger

REFERENCE NO.	SHEET NO.	SIDE	STATION TO STATION		625 CONDUIT, 3", 725.04 FT	625 CONDUIT, 3", 725.051 FT	625 TRENCH FT	625 PULL BOX, 725.08, 18" EACH	625 GROUND ROD EACH	625 UNDERGROUND WARNING/MARKING TAPE FT	625 ARC FLASH CALCULATIONS AND LABEL, VDS EACH	625 ARC FLASH CALCULATIONS AND LABEL, CCTV #113 EACH	632 POWER CABLE, MISC.: 1 CONDUCTOR, 1/0 AWG FT	633 CABINET FOUNDATION, AS PER PLAN EACH	633 CONTROLLER WORK PAD, AS PER PLAN EACH	804 FIBER OPTIC CABLE, AIRBLOWN/PUSHABLE, 72 FIBER FT	809 ITS JUNCTION BOX, 17X24X6 INCHES EACH	809 32" ITS PULL BOX WITH PAD AND HINGED LID ASSEMBLY EACH	809 COMMUNICATION CABLE MARKER EACH	809 CONDUIT, MULTICELL, MISC.: 2" HDPE WITH 4-14MM/10MM INNERDUCTS FT	809 CONDUIT, MULTICELL, MISC.: 2" HDPE WITH 4-14MM/10MM INNERDUCTS, JACKED OR DRILLED FT	809 CONDUIT, MULTICELL, MISC.: 4" HDPE FT	809 CONDUIT, MULTICELL, MISC.: 4" HDPE, JACKED OR DRILLED FT	809 ITS POWER SERVICE, POLE MOUNTED, 120/240V, 60 AMP EACH	809 ETHERNET CABLE, OUTDOOR RATED FT	809 ITS CABINET - GROUND MOUNTED FT	809 ITS DEVICE, MISC.: RELOCATE CCTV CAMERA AND WIRELESS RADIO EQUIPMENT FT
1	775	LT	10+89													150		1	1									
2	775	LT	10+68	10+89												38					38		38					
3	775	LT	10+68														1											
4	775	LT	10+68	15+38												502												
5	775	LT	15+38														1											
6	775	LT/CL	15+38	18+00												265												
7	775	CL	18+00														1											
8	775	CL/LT	18+00	18+01												180					90		90					
9	775	LT	18+01													150		1	1									
10	775	LT	18+01	18+01			14			14										14		14						
11	775	LT	18+01						1		1			1	1											1		
12	775	LT	18+01	21+70									1143															
13	775	LT	21+70					1	1																			
14	775	LT	21+70	22+63	104		104			104			342															
15	775	LT	22+63																					1	75		1	
16	775	CL	18+00	21+89												389												
17	775	CL	21+89														1											
18	775	CL/LT	21+89	21+89												71					71		71					
19	775	LT	21+81						1			1		1	1										5	1		
20	775	LT	21+81	21+89		8	8			8												8			8			
21	775	LT	21+89													150		1	1						5			
22	775	LT	21+89	22+59		144	72			72															82			
23	775	CL	31+52														1											
24	775	CL/LT	31+52	31+52																	85		85					
25	775	LT	31+52															1	1									
26	775	CL	27+00														1											
TOTALS CARRIED TO SUBSUMMARY					104	152	198	1	3	198	1	1	1485	2	2	1895	6	4	4	14	284	22	284	1	175	2	1	

CALCULATED DRM
CHECKED JDS

ITS ESTIMATED QUANTITIES

HAM-75-7.85

758
1047

Preliminary Plans - For Reference Only

J:\20110903\ODOT\HAM\77889\signals\sheets\77889CS105.dgn 5/22/2026 10:30:34 AM hbrendlinger

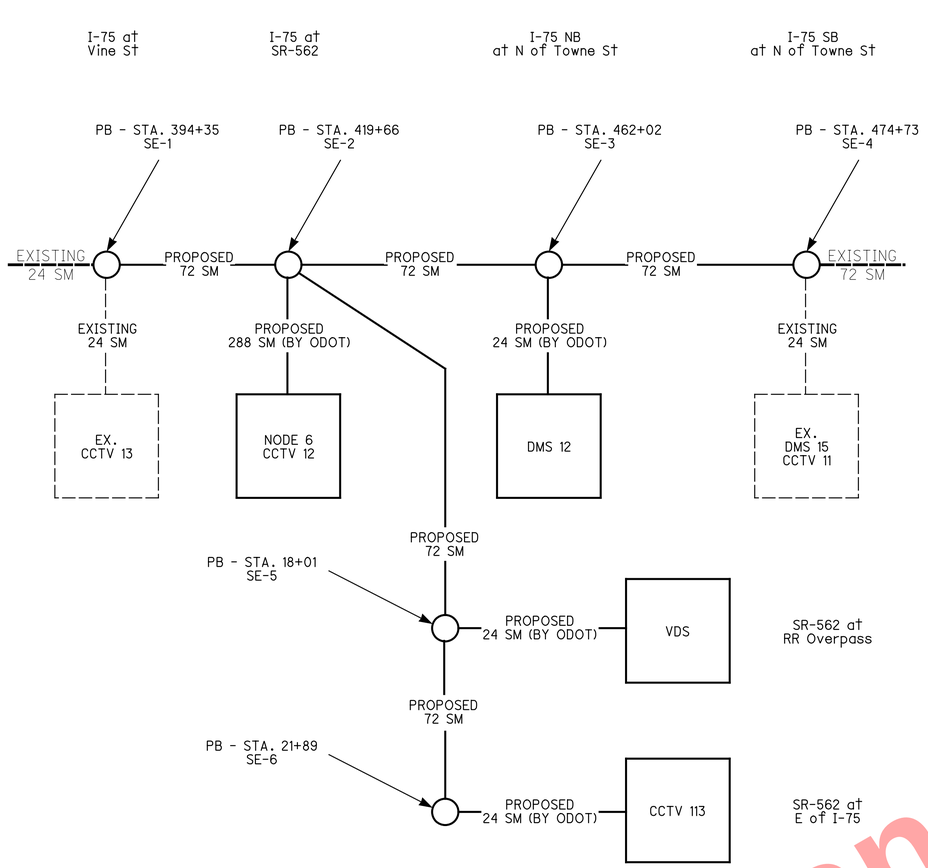

Notes:

- Node locations shall be maintained at all times.
- Tracer Wire - All conduit runs shall be locatable with tracer wire per Supplemental Specification 804.
- ITS overview schematic is provided for reference only. ODOT shall be responsible for performing all splicing.

PROPOSED SCHEMATIC WIRING

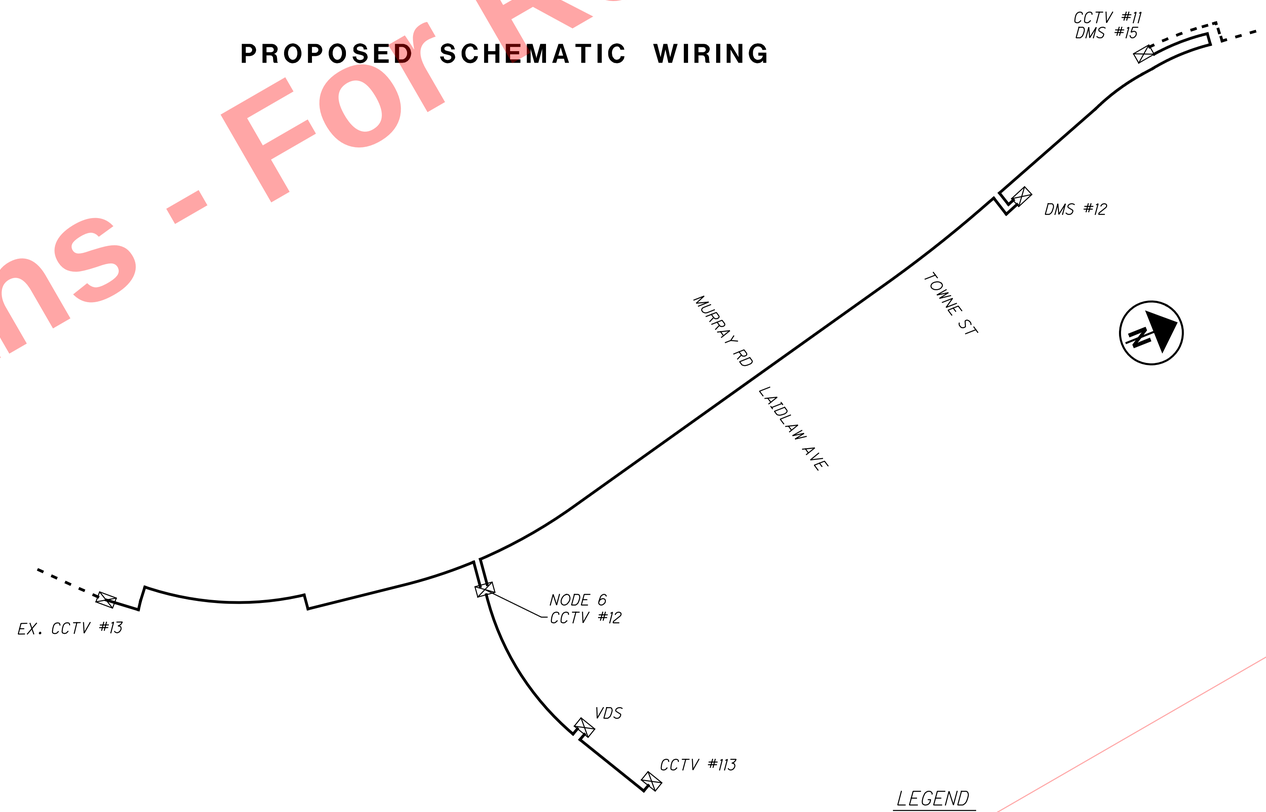

ITS conduit removed by this project not shown for clarity.

Preliminary Plans - Not For Reference Only

CALCULATED DRM
CHECKED JDS

ITS OVERVIEW SCHEMATIC & WIRING

HAM-75-7.85

759
1047

J:\20110903\ODOT\HAM\77889\signals\sheets\77889CP213.dgn 5/22/2026 10:30:35 AM hbrendlinger

THE CONTRACTOR SHALL BE RESPONSIBLE FOR MAINTAINING THE OPERATION OF THE ITS SYSTEM FOR THE DURATION OF THE PROJECT. THE ITS SYSTEM SHALL BE OPERATIONAL AT ALL TIMES. EXISTING LOOP DETECTORS IN THE CORRIDOR DO NOT NEED TO BE MAINTAINED. THE EXISTING CAMERAS SHALL BE MAINTAINED AT ALL TIMES. TEMPORARY SUPPORTS AND OR RELOCATION SHALL BE FURNISHED AND INSTALLED AS NEEDED TO MAINTAIN THE FIBER OPTIC CABLE AND CAMERA SYSTEMS.

NOTES:
1. EXISTING ITS EQUIPMENT LOCATIONS ARE APPROXIMATE.

2. THE ITS SYSTEM SHALL BE KEPT FULLY FUNCTIONAL THROUGHOUT CONSTRUCTION. EXTENDED DMS OUTAGE IS ANTICIPATED.

3. ALL REMOVED ITS EQUIPMENT SHALL BE DELIVERED TO THE ODOT FIELD OFFICE.

4. THE LOCATION OF EXISTING FIBER OPTIC CABLE IN THIS AREA IS NOT FULLY KNOWN AT THE TIME OF DESIGN. THE CONTRACTOR SHALL COORDINATE WITH ODOT AND PERFORM FIELD INVESTIGATIONS AS NEEDED TO IDENTIFY THE TRUE LOCATION OF EXISTING FIBER OPTIC CABLE. FIBER OPTIC CABLE THAT IS NO LONGER NEEDED TO PROVIDE ITS CONNECTIONS AS SHOWN IN THE ITS OVERVIEW SCHEMATIC SHALL BE REMOVED BY THE CONTRACTOR. EXISTING CONDUIT MAY BE ABANDONED IN PLACE UNLESS IT CONFLICTS WITH THE PROPOSED IMPROVEMENTS, IN WHICH CASE IT SHALL REMOVED AND DISPOSED OF BY THE CONTRACTOR.

EXISTING CONDITIONS ARE BASED UPON THE AVAILABLE INFORMATION FROM ODOT GIS, FIELD SURVEYS, AND RECORD PLANS.

ITS CONDUIT (TO REMAIN)
(INSTALLED BY HAM-75-6.78)

ITS CONDUIT (TO REMAIN)
(INSTALLED BY HAM-75-6.78)

POWER CONDUIT W/ CABLES (TO REMAIN)
(INSTALLED BY HAM-75-6.78)

PULL BOX (TO REMAIN)
INSTALLED BY HAM-75-6.78
STA. 394+35

ITS CONDUIT (SEE NOTE 4)
INSTALLED BY HAM-75-6.78

PULL BOX (TO REMAIN)
INSTALLED BY HAM-75-6.78
STA. 399+00

ITS CONDUIT (SEE NOTE 4)
INSTALLED BY HAM-75-6.78

PULL BOX (TO REMAIN)
INSTALLED BY HAM-75-6.78
STA. 403+00

ITS CONDUIT (SEE NOTE 4)
INSTALLED BY HAM-75-6.78

PULL BOX (TO REMAIN)
INSTALLED BY HAM-75-6.78
STA. 406+75

ITS CONDUIT (SEE NOTE 4)
INSTALLED BY HAM-75-6.78

CCTV POLE (TO REMAIN)
W/ EX. CCTV CAMERA #13 (TO REMAIN)
W/ EX. SFRV DETECTOR (TO REMAIN)
W/ EX. GROUND MTD CABINET K#123 (TO REMAIN)
W/ EX. CONTROLLER (TO REMAIN)
(INSTALLED BY HAM-75-6.78)
STA. 394+50, 83.4' RT

ITS CONDUIT (SEE NOTE 4)
INSTALLED BY HAM-75-6.78

PULL BOX (TO REMAIN)
INSTALLED BY HAM-75-6.78
STA. 399+00

PULL BOX (TO REMAIN)
W/ SPLICE ENCLOSURE (TO REMAIN)
INSTALLED BY HAM-75-6.78
STA. 394+35, 78.0' RT.

ITS CONDUIT (SEE NOTE 4)
INSTALLED BY HAM-75-6.78

(1) PULL BOX (TO BE REMOVED)
INSTALLED BY HAM-75-6.78
STA. 403+00

ITS CONDUIT (SEE NOTE 4)
INSTALLED BY HAM-75-6.78

(2) PULL BOX (TO BE REMOVED)
INSTALLED BY HAM-75-6.78
STA. 409+00 (℄ RAMP N)

Ex LA-R/W
I.R. 75 (SB)
I.R. 75 (NB)
394
395
396
397
398
399
400
401
402
403
404
405
406
407
408
409
CL
FO
E
MATCHLINE STA. 409+00
SEE SHEET 761

HORIZONTAL SCALE IN FEET
0 25 50 100
CALCULATED DRM
CHECKED JDS

ITS DEMOLITION PLAN
STA. 394+00 TO STA. 409+00

HAM-75-7.85

760
1047

For Reference Only
Preliminary Plans - Not for Construction

J:\20110903\ODOT\HAM\77889\signals\sheets\77889CP101.dgn 5/22/2026 10:30:37 AM hbrendlinger

CODED NOTES

(R) THE CONTRACTOR SHALL REMOVE ALL ITS CABLES/INCLUDING BUT NOT LIMITED TO FIBER OPTIC CABLE, POWER SERVICE CABLE, AND ALL MISCELLANEOUS ITS DEVICE CABLES. THE EXISTING ITS CONDUIT MAY BE ABANDONED IN PLACE, UNLESS IT CONFLICTS WITH ANY PROPOSED IMPROVEMENTS IN WHICH CASE IT SHALL BE REMOVED AND PROPERLY DISPOSED OF BY THE CONTRACTOR.

(13) WOOD POLE (TO BE REMOVED)
W/ SIDE-FIRED RADAR VEHICLE DETECTOR (TO BE REMOVED)
W/ CONTROLLER CABINET (TO BE REMOVED)
W/ DISCONNECT SWITCH (TO BE REMOVED)
W/ WIRELESS RADIO (TO BE REMOVED)
STA. 416+20, 167' LT.
INSTALLED BY HAM-562-0.65

PULL BOX (TO REMAIN)
INSTALLED BY HAM-75-6.78
STA. 409+88

(12) PULL BOX (TO BE REMOVED)
INSTALLED BY HAM-75-6.78
STA. 414+00

(11) PULL BOX (TO BE REMOVED)
INSTALLED BY HAM-75-6.78
STA. 410+00

EX. DUKE ENERGY OVERHEAD POWER SERVICE CABLES
(TO BE REMOVED BY DUKE ENERGY)

EX. DUKE ENERGY POWER SOURCE POLE (TO REMAIN)
STA. 419+47, 236' LT

(17) PULL BOX (TO BE REMOVED)
STA. 419+74, 92' LT

(16) GROUND MOUNTED CABINET K#122, NODE 6 (TO BE REMOVED)
W/ EX. CONTROLLER (TO BE REMOVED)
W/ EX. CABINET FOUNDATION (TO BE REMOVED)
STA. 419+41, 32' LT
(SEE NOTE 3)

(15) PULL BOX (TO BE REMOVED)
STA. 419+40, 32' LT

(14) PULL BOX (TO BE REMOVED)
INSTALLED BY HAM-75-6.78
STA. 417+36, 36' LT

(18) EX. ODOT POWER SERVICE POLE, METER & DISCONNECT (TO BE REMOVED)
W/ DOWN GUY (TO BE REMOVED)
STA. 419+78, 155' LT

PULL BOX (TO BE REMOVED) (19)
STA. 419+87, 132' LT

PULL BOX (TO BE REMOVED) (20)
STA. 419+95, 108' LT

MATCHLINE STA. 409+00
SEE SHEET 760

MATCHLINE STA. 423+00
SEE SHEET 762

I.R. 75 (SB)

I.R. 75 (NB)

RAMP M

RAMP N

RAMP J

RAMP K

(1) PULL BOX (TO BE REMOVED)
INSTALLED BY HAM-75-6.78
STA. 411+50

(2) PULL BOX (TO BE REMOVED)
INSTALLED BY HAM-75-6.78
STA. 411+59

(3) PULL BOX (TO BE REMOVED)
INSTALLED BY HAM-75-6.78
STA. 416+80, 78' RT

(6) PULL BOX (TO BE REMOVED)
STA. 418+41, 81' RT

(4) PULL BOX (TO BE REMOVED)
STA. 417+27, 186' RT.

(5) PULL BOX (TO BE REMOVED)
STA. 417+34, 188' RT.

MATCHLINE STA. 415+00
SEE SHEET 767

(10) WOOD POLE (TO BE REMOVED)
W/ SIDE-FIRED RADAR VEHICLE DETECTOR (TO BE REMOVED)
W/ CONTROLLER CABINET (TO BE REMOVED)
W/ WIRELESS RADIO (TO BE REMOVED)
W/ 32" PULL BOX (TO BE REMOVED)
STA. 420+05, 328' RT.
INSTALLED BY HAM-562-0.65

PULL BOX (TO BE REMOVED) (9)
STA. 419+33, 82' RT

CCTV POLE (TO REMAIN)
W/ CCTV CAMERA #12 (TO REMAIN)
STA. 419+58, 130' RT

PULL BOX (TO BE REMOVED) (7)
STA. 418+87, 136' RT

WOOD POLE (TO BE REMOVED) (8)
W/ SIDE-FIRED RADAR VEHICLE DETECTOR (TO BE REMOVED)
W/ CONTROLLER CABINET (TO BE REMOVED)
W/ CCTV CAMERA (TO BE REMOVED)
W/ WIRELESS RADIO (TO BE REMOVED)
STA. 419+00, 190' RT.
INSTALLED BY HAM-562-0.65

NOTES:
1. EXISTING ITS EQUIPMENT LOCATIONS ARE APPROXIMATE.
2. THE ITS SYSTEM SHALL BE KEPT FULLY FUNCTIONAL THROUGHOUT CONSTRUCTION. EXTENDED DMS OUTAGE IS ANTICIPATED.
3. EXISTING ITS NODE CONTROLLERS SHALL BE MAINTAINED UNTIL TEMPORARY OR PROPOSED FIBER OPTIC SYSTEMS ARE IN PLACE AND OPERATIONAL.
4. ALL EXISTING ITS CONDUIT ON THIS SHEET SHALL BE ABANDONED IN PLACE AND ALL EXISTING FIBER OPTIC CABLE SHALL BE REMOVED, UNLESS OTHERWISE NOTED.

EXISTING CONDITIONS ARE BASED UPON THE AVAILABLE INFORMATION FROM ODOT GIS, FIELD SURVEYS, AND RECORD PLANS.

Preliminary Plans - Not For Construction
For Reference Only

HORIZONTAL SCALE IN FEET
0 25 50 100

CALCULATED DRM
CHECKED JDS

ITS DEMOLITION PLAN
STA. 409+00 TO STA. 423+00

HAM-75-7.85

761
1047

J:\20110903\ODOT\HAM\7889\signals\sheets\77889CP102.dgn 5/22/2026 10:30:39 AM hbrendlinger

CODED NOTES

(R) THE CONTRACTOR SHALL REMOVE ALL ITS CABLES/INCLUDING BUT NOT LIMITED TO FIBER OPTIC CABLE, POWER SERVICE CABLE, AND ALL MISCELLANEOUS ITS DEVICE CABLES. THE EXISTING ITS CONDUIT MAY BE ABANDONED IN PLACE, UNLESS IT CONFLICTS WITH ANY PROPOSED IMPROVEMENTS IN WHICH CASE IT SHALL BE REMOVED AND PROPERLY DISPOSED OF BY THE CONTRACTOR.

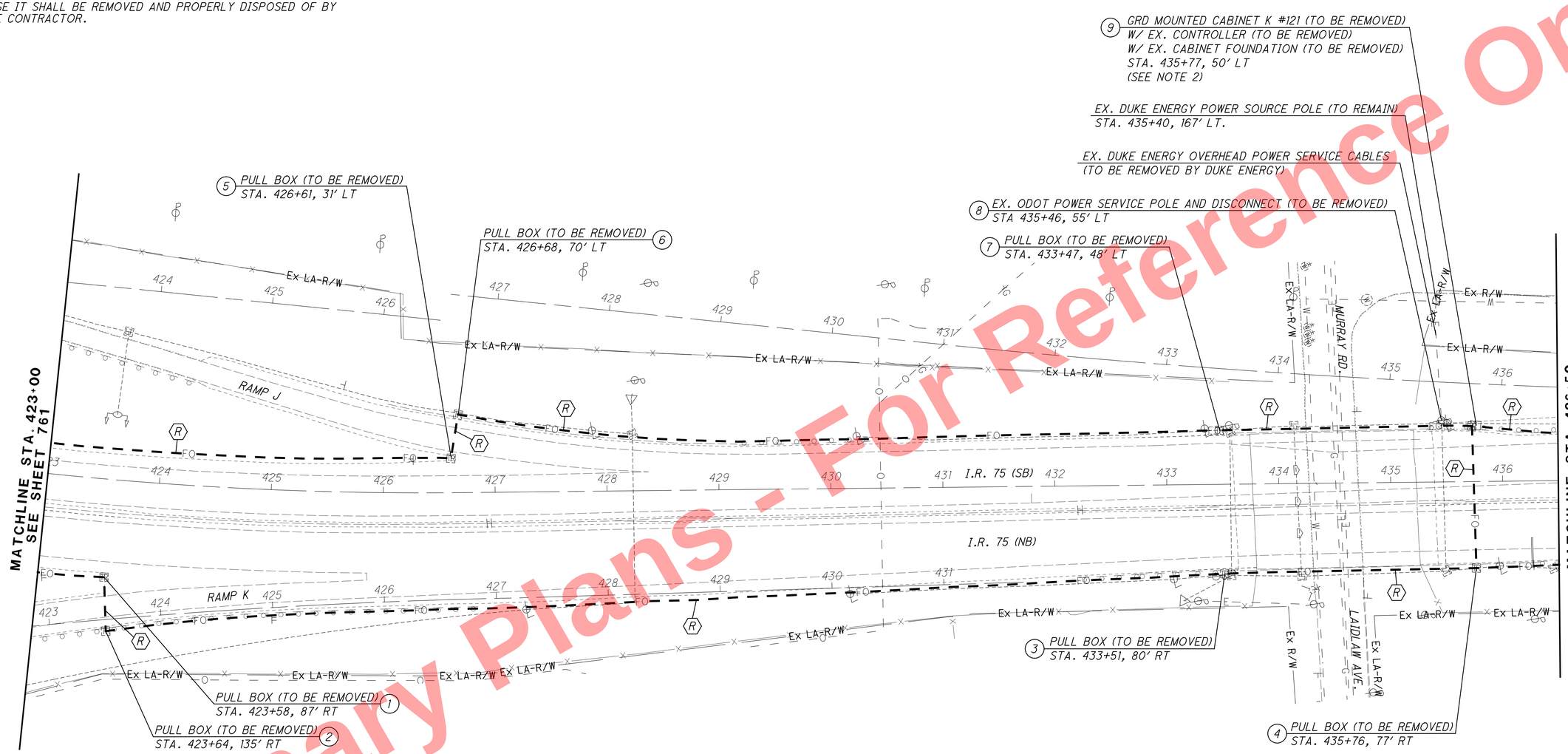

NOTES:
1. EXISTING ITS EQUIPMENT LOCATIONS ARE APPROXIMATE.

2. THE ITS SYSTEM SHALL BE KEPT FULLY FUNCTIONAL THROUGHOUT CONSTRUCTION. EXTENDED DMS OUTAGE IS ANTICIPATED.

EXISTING CONDITIONS ARE BASED UPON THE AVAILABLE INFORMATION FROM ODOT GIS, FIELD SURVEYS, AND RECORD PLANS.

HORIZONTAL SCALE IN FEET
0 25 50 100

CALCULATED DRM
CHECKED JDS

ITS DEMOLITION PLAN
STA. 423+00 TO STA. 436+50

HAM-75-7.85

762
1047

Preliminary Plans - For Reference Only

J:\20110903\ODOT\HAM\77889\signals\sheets\77889CP103.dgn 5/22/2026 10:30:41 AM hbrendlinger

CODED NOTES

(R) THE CONTRACTOR SHALL REMOVE ALL ITS CABLES/INCLUDING BUT NOT LIMITED TO FIBER OPTIC CABLE, POWER SERVICE CABLE, AND ALL MISCELLANEOUS ITS DEVICE CABLES. THE EXISTING ITS CONDUIT MAY BE ABANDONED IN PLACE, UNLESS IT CONFLICTS WITH ANY PROPOSED IMPROVEMENTS IN WHICH CASE IT SHALL BE REMOVED AND PROPERLY DISPOSED OF BY THE CONTRACTOR.

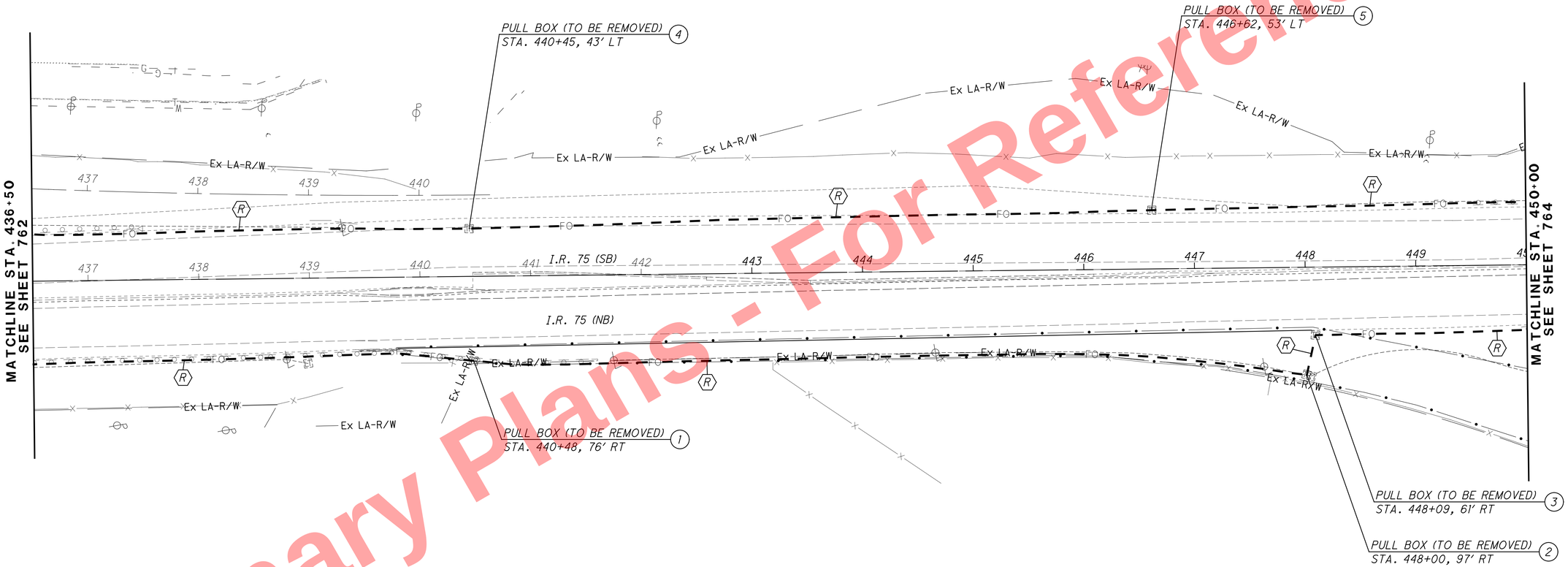

NOTES:
1. EXISTING ITS EQUIPMENT LOCATIONS ARE APPROXIMATE.

2. THE ITS SYSTEM SHALL BE KEPT FULLY FUNCTIONAL THROUGHOUT CONSTRUCTION. EXTENDED DMS OUTAGE IS ANTICIPATED.

EXISTING CONDITIONS ARE BASED UPON THE AVAILABLE INFORMATION FROM ODOT GIS, FIELD SURVEYS, AND RECORD PLANS.

Preliminary Plans - For Reference Only

HORIZONTAL SCALE IN FEET
0 25 50 100

CALCULATED DRM
CHECKED JDS

ITS DEMOLITION PLAN
STA. 436+50 TO STA. 450+00

HAM-75-7.85

763
1047

J:\2011093\ODOT\HAM\7889\signals\sheets\77889CP104.dgn 5/22/2026 10:30:44 AM hbrendlinger

CODED NOTES

(R) THE CONTRACTOR SHALL REMOVE ALL ITS CABLES/INCLUDING BUT NOT LIMITED TO FIBER OPTIC CABLE, POWER SERVICE CABLE, AND ALL MISCELLANEOUS ITS DEVICE CABLES. THE EXISTING ITS CONDUIT MAY BE ABANDONED IN PLACE, UNLESS IT CONFLICTS WITH ANY PROPOSED IMPROVEMENTS IN WHICH CASE IT SHALL BE REMOVED AND PROPERLY DISPOSED OF BY THE CONTRACTOR.

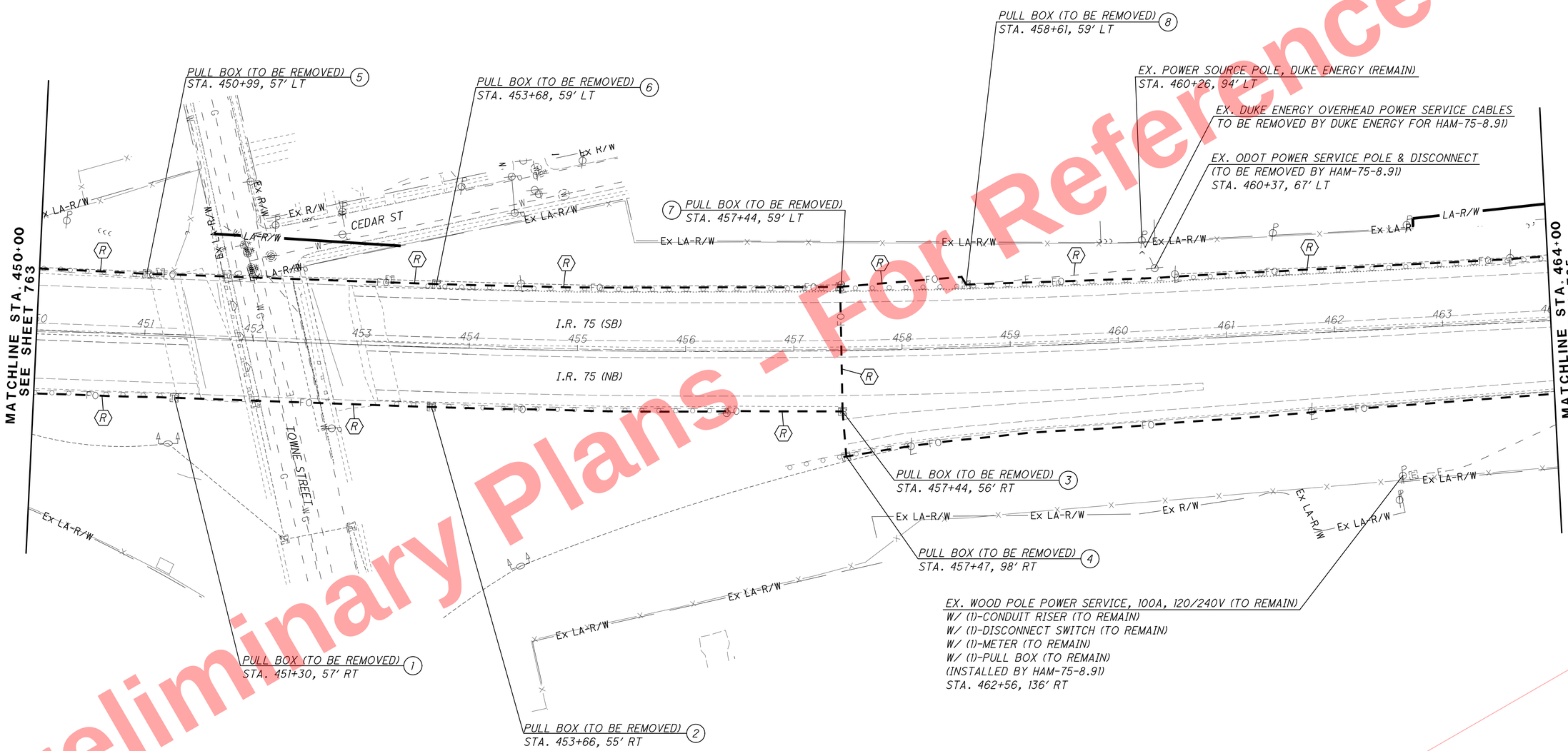

NOTES:
1. EXISTING ITS EQUIPMENT LOCATIONS ARE APPROXIMATE.

2. THE ITS SYSTEM SHALL BE KEPT FULLY FUNCTIONAL THROUGHOUT CONSTRUCTION. EXTENDED DMS OUTAGE IS ANTICIPATED.

EXISTING CONDITIONS ARE BASED UPON THE AVAILABLE INFORMATION FROM ODOT GIS, FIELD SURVEYS, AND RECORD PLANS.

Preliminary Plans - For Reference Only

HORIZONTAL SCALE IN FEET
0 25 50 100

CALCULATED DRM
CHECKED JDS

ITS DEMOLITION PLAN
STA. 450+00 TO STA. 464+00

HAM-75-7.85

764
1047

J:\20110903\ODOT\HAM\77889\signals\sheets\77889CP105.dgn 5/22/2026 10:30:46 AM hbrendlinger

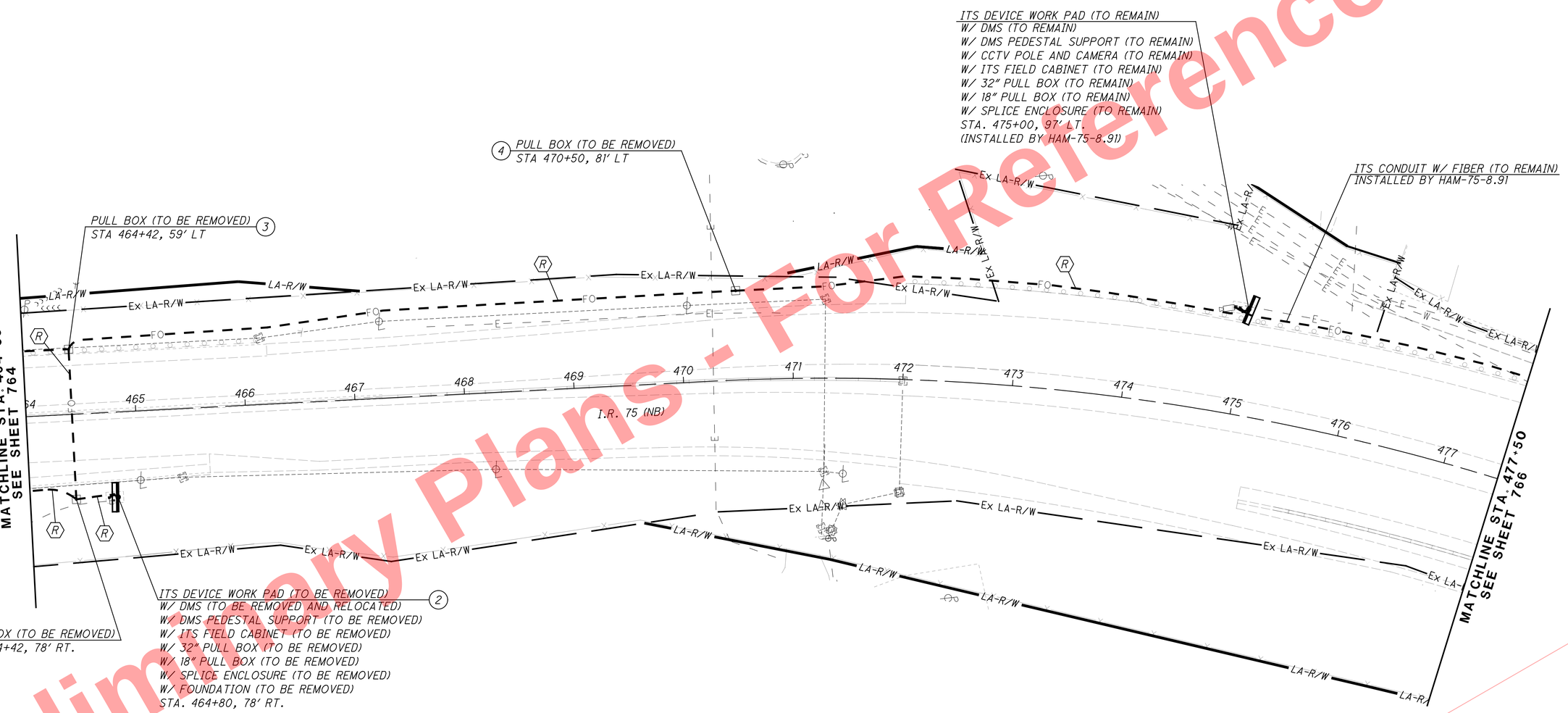

CODED NOTES

(R) THE CONTRACTOR SHALL REMOVE ALL ITS CABLES, INCLUDING BUT NOT LIMITED TO, FIBER OPTIC CABLE, POWER SERVICE CABLE, AND ALL MISCELLANEOUS ITS DEVICE CABLES. THE EXISTING ITS CONDUIT MAY BE ABANDONED IN PLACE, UNLESS IT CONFLICTS WITH ANY PROPOSED IMPROVEMENTS IN WHICH CASE IT SHALL BE REMOVED AND PROPERLY DISPOSED OF BY THE CONTRACTOR.

NOTES:

1. EXISTING ITS EQUIPMENT LOCATIONS ARE APPROXIMATE.
2. THE ITS SYSTEM SHALL BE KEPT FULLY FUNCTIONAL THROUGHOUT CONSTRUCTION. EXTENDED DMS OUTAGE IS ANTICIPATED.
3. EXISTING ITS NODE CONTROLLER SHALL BE MAINTAINED UNTIL TEMPORARY OR PROPOSED FIBER OPTIC SYSTEMS ARE IN PLACE AND OPERATIONAL.

EXISTING CONDITIONS ARE BASED UPON THE AVAILABLE INFORMATION FROM ODOT GIS, FIELD SURVEYS, AND RECORD PLANS.

Preliminary Plans - For Reference Only

HORIZONTAL SCALE IN FEET
0 25 50 100

CALCULATED DRM
CHECKED JDS

ITS DEMOLITION PLAN
STA. 464+00 TO STA. 477+50

HAM-75-7.85

765
1047

J:\2011090 3\ODOT\HAM\77889\signals\sheets\77889CP106.dgn 5/22/2026 10:30:50 AM hbrendlinger

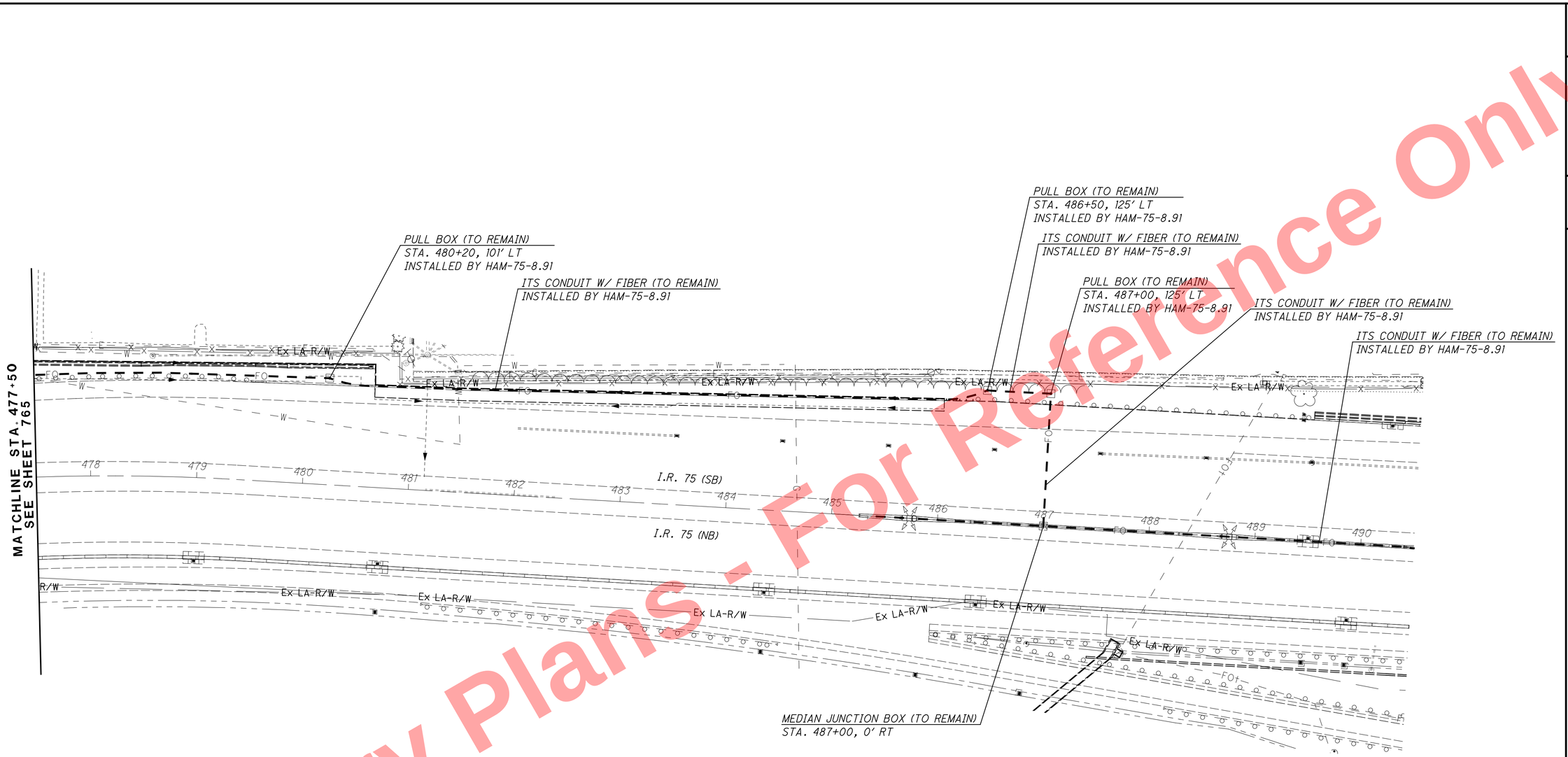

NOTES:

1. EXISTING ITS EQUIPMENT LOCATIONS ARE APPROXIMATE.

2. THE ITS SYSTEM SHALL BE KEPT FULLY FUNCTIONAL THROUGHOUT CONSTRUCTION. EXTENDED DMS OUTAGE IS ANTICIPATED.

EXISTING CONDITIONS ARE BASED UPON THE AVAILABLE INFORMATION FROM ODOT GIS, FIELD SURVEYS, AND RECORD PLANS.

Preliminary Plans - Not For Reference Only

HORIZONTAL SCALE IN FEET
0 25 50 100

CALCULATED DRM
CHECKED JDS

ITS DEMOLITION PLAN
STA. 477+50 TO STA. 490+50

HAM-75-7.85

766
1047

J:\20110903\ODOT\HAM\77889\signals\sheets\77889CP107.dgn 5/22/2026 10:30:52 AM hbrendlinger

CODED NOTES

(R) THE CONTRACTOR SHALL REMOVE ALL ITS CABLES/INCLUDING BUT NOT LIMITED TO FIBER OPTIC CABLE, POWER SERVICE CABLE, AND ALL MISCELLANEOUS ITS DEVICE CABLES. THE EXISTING ITS CONDUIT MAY BE ABANDONED IN PLACE, UNLESS IT CONFLICTS WITH ANY PROPOSED IMPROVEMENTS IN WHICH CASE IT SHALL BE REMOVED AND PROPERLY DISPOSED OF BY THE CONTRACTOR.

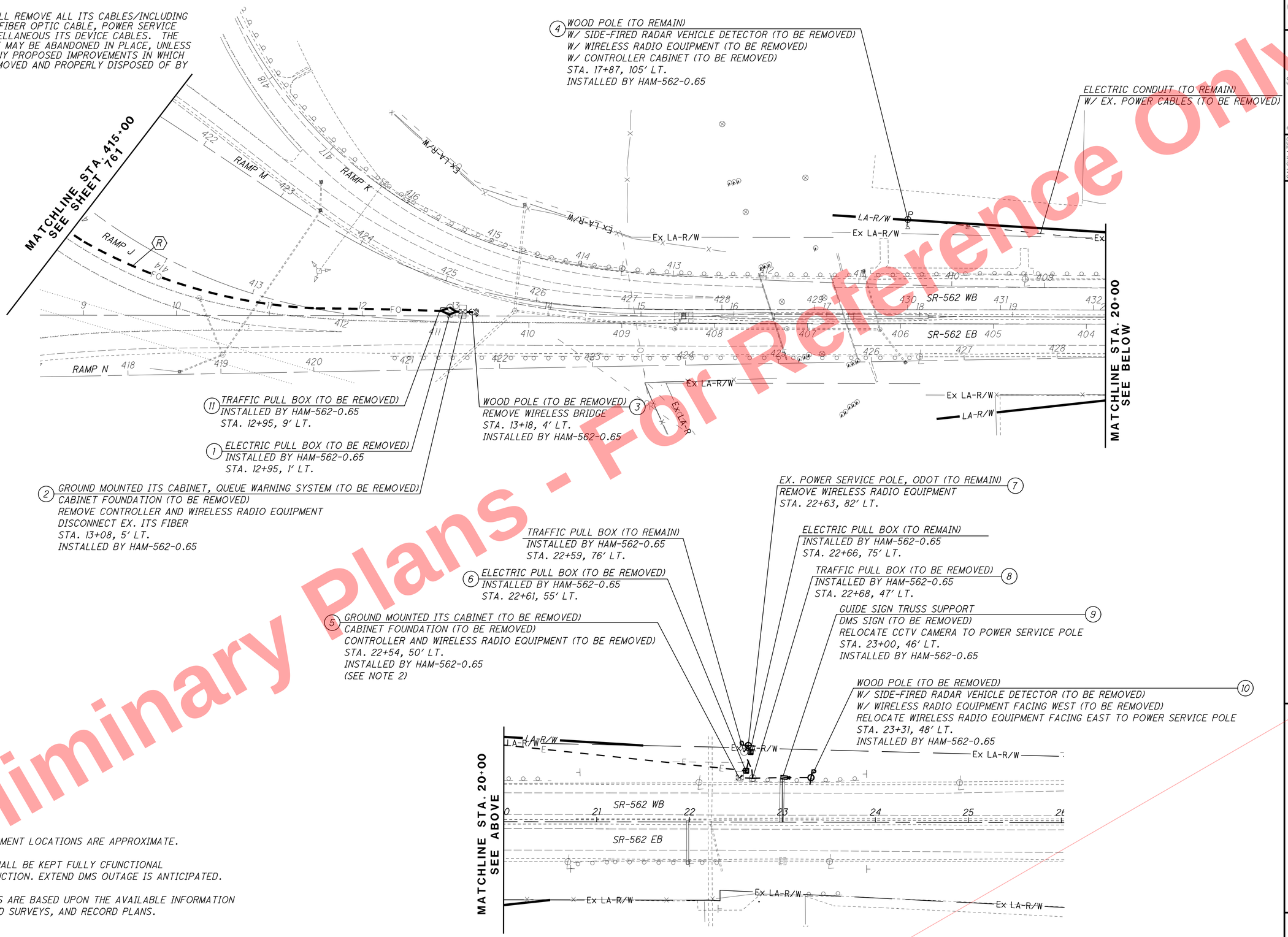

NOTES:

1. EXISTING ITS EQUIPMENT LOCATIONS ARE APPROXIMATE.

2. THE ITS SYSTEM SHALL BE KEPT FULLY CFUNCTIONAL THROUGHOUT CONSTRUCTION. EXTEND DMS OUTAGE IS ANTICIPATED.

EXISTING CONDIUTIONS ARE BASED UPON THE AVAILABLE INFORMATION FROM ODOT GIS, FIELD SURVEYS, AND RECORD PLANS.

Preliminary Plans - Not For Reference Only

HORIZONTAL SCALE IN FEET
0 25 50 100

CALCULATED DRM
CHECKED JDS

ITS DEMOLITION PLAN
STA. 415+00 TO STA. 26+00

HAM-75-7.85

767
1047

J:\20110903\ODOT\HAM\77889\signals\sheets\77889CP112.dgn 5/22/2026 10:30:56 AM hbrendlinger

NOTES:
1. EXISTING ITS EQUIPMENT LOCATIONS ARE APPROXIMATE.

2. THE ITS SYSTEM SHALL BE KEPT FULLY FUNCTIONAL THROUGHOUT CONSTRUCTION. EXTENDED DMS OUTAGE IS ANTICIPATED.

3. CONDUIT IN BARRIER IS INCIDENTAL TO ITEM 622 CONCRETE BARRIER.

4. TRACER WIRE SHALL BE FURNISHED AND INSTALLED IN ALL NEW ITS CONDUITS.

EX. 4" MULTICELL CONDUIT (TO REMAIN)
INSTALLED BY HAM-75-6.78

EX. CONDUIT W/ (1)-POWER CABLE (TO REMAIN)
INSTALLED BY HAM-75-6.78

EX. PULL BOX (TO REMAIN)
INSTALLED BY HAM-75-6.78
STA. 394+35

EX. 4" MULTICELL CONDUIT
INSTALLED BY HAM-75-6.78

SEE DETAIL A

EX. PULL BOX (TO REMAIN)
INSTALLED BY HAM-75-6.78
W/ (1)-NEW 72 STRAND FIBER OPTIC CABLE, AIRBLOWN/PUSHABLE SLACK = 150'
STA. 399+00

EX. 4" MULTICELL CONDUIT (TO REMAIN)
INSTALLED BY HAM-75-6.78
W/ (1)-NEW 72 STRAND FIBER OPTIC CABLE, AIRBLOWN/PUSHABLE=380' (6)

EX. PULL BOX (TO REMAIN) (7)
INSTALLED BY HAM-75-6.78
W/ (1)-NEW 72 STRAND FIBER OPTIC CABLE, AIRBLOWN/PUSHABLE SLACK = 150'
STA. 403+00

EX. 4" MULTICELL CONDUIT (TO REMAIN)
INSTALLED BY HAM-75-6.78
W/ (1)-NEW 72 STRAND FIBER OPTIC CABLE, AIRBLOWN/PUSHABLE=355' (8)

EX. 4" MULTICELL CONDUIT (TO REMAIN) (10)
INSTALLED BY HAM-75-6.78
W/ (1)-NEW 72 STRAND FIBER OPTIC CABLE, AIRBLOWN/PUSHABLE=313'

EX. PULL BOX (TO REMAIN) (9)
INSTALLED BY HAM-75-6.78
W/ (1)-NEW 72 STRAND FIBER OPTIC CABLE, AIRBLOWN/PUSHABLE SLACK = 150'
STA. 406+75

EX. 4" MULTICELL CONDUIT (TO REMAIN)
INSTALLED BY HAM-75-6.78
W/ (1)-NEW 72 STRAND FIBER OPTIC CABLE, AIRBLOWN/PUSHABLE=482' (2)

EX. PULL BOX (TO REMAIN) (3)
INSTALLED BY HAM-75-6.78
W/ (1)-NEW 72 STRAND FIBER OPTIC CABLE, AIRBLOWN/PUSHABLE SLACK = 150'
STA. 399+00

EX. 4" MULTICELL CONDUIT (TO REMAIN)
INSTALLED BY HAM-75-6.78

EX. PULL BOX (TO REMAIN) (1)
INSTALLED BY HAM-75-6.78
W/ (1)-NEW 72 STRAND FIBER OPTIC CABLE, AIRBLOWN/PUSHABLE SLACK = 150'
W/ SPLICE ENCLOSURE #1 (BY ODOT)
STA. 394+35

EX. 4" MULTICELL CONDUIT (TO REMAIN)
INSTALLED BY HAM-75-6.78
W/ FIBER OPTIC DROP CABLE BY ODOT

EX. CCTV WORK PAD AND CCTV POLE (TO REMAIN)
W/ EX. GROUND MOUNTED CONTROLLER K#123 (TO REMAIN)
INSTALLED BY HAM-75-6.78

DETAIL A
SCALE: 1"=15'

2" HDPE MULTICELL CONDUIT W/ (1)-72 STRAND FIBER OPTIC CABLE AIRBLOWN/PUSHABLE
4" HDPE MULTICELL CONDUIT (EMPTY FOR FUTURE USE)
JACKED/DRILLED UNDER PAVEMENT=170' (4)

EX. CCTV POLE ASSEMBLY (TO REMAIN)
W/ EX. CCTV CAMERA #13 (TO REMAIN)
W/ EX. SFRV DETECTOR (TO REMAIN)
W/ EX. GROUND MTD. CABINET K#123 (TO REMAIN)
W/ EX. CONTROLLER (TO REMAIN)
INSTALLED BY HAM-75-6.78
STA. 394+50, 83.5' RT

I.R. 75 (SB)
I.R. 75 (NB)
RAMP M
RAMP N
Ex LA-R/W
OH-E
FO

MATCHLINE STA. 409+00
SEE SHEET 769

HORIZONTAL SCALE IN FEET
0 25 50 100

CALCULATED DRM
CHECKED JDS

ITS PLAN
STA. 394+00 TO STA. 409+00

HAM-75-7.85

768
1047

Preliminary Plans - For Reference Only

J:\20110903\ODOT\HAM\77889\signals\sheets\77889CP201.dgn 5/22/2026 10:31:00 AM hbrendlinger

NOTES:
1. THE ITS SYSTEM SHALL BE KEPT FULLY FUNCTIONAL THROUGHOUT CONSTRUCTION. EXTENDED DMS OUTAGE IS ANTICIPATED.

2. SEE SHEET 899 FOR BRIDGE CONDUIT LOCATION DETAILS.

3. CONDUIT IN BARRIER IS INCIDENTAL TO ITEM 622 CONCRETE BARRIER.

4. TRACER WIRE SHALL BE FURNISHED AND INSTALLED IN ALL NEW ITS CONDUITS.

1 PULL BOX (TO REMAIN)
INSTALLED BY HAM-75-6.78
W/ (1)-NEW 72 STRAND FIBER OPTIC CABLE,
AIRBLOWN/PUSHABLE SLACK = 150'
STA. 409+88

2 (1)-2" HDPE MULTICELL CONDUIT W/ (1)-72 STRAND FIBER OPTIC CABLE, AIRBLOWN/PUSHABLE
(1)-4" HDPE MULTICELL CONDUIT (EMPTY FOR FUTURE USE)
IN TRENCH= 188'

3 PULL BOX, 32" W/ HINGED LID
W/ (1)-COMMUNICATION MARKER
W/ NEW 72 STRAND FIBER OPTIC CABLE, AIRBLOWN/PUSHABLE SLACK = 150'
STA. 411+78, 163' LT

4 (1)-2" HDPE MULTICELL CONDUIT
W/ (1)-72 STRAND FIBER OPTIC CABLE, AIRBLOWN/PUSHABLE
(1)-4" HDPE MULTICELL CONDUIT (EMPTY FOR FUTURE USE)
JACKED/DRILLED UNDER PAVEMENT= 55'

5 PULL BOX, 32" W/ HINGED LID
W/ (1)-COMMUNICATION MARKER
W/ (1)-NEW 72 STRAND FIBER OPTIC CABLE, AIRBLOWN/PUSHABLE SLACK = 150'
STA. 411+90 110' LT

6 (1)-2" HDPE MULTICELL CONDUIT
W/ (1)-72 STRAND FIBER OPTIC CABLE, AIRBLOWN/PUSHABLE
(1)-4" HDPE MULTICELL CONDUIT (EMPTY FOR FUTURE USE)
JACKED/DRILLED UNDER PAVEMENT= 110'

7 MEDIAN JUNCTION BOX
STA. 411+90, 0' RT

8 (1)-2" HDPE MULTICELL CONDUIT W/ (1)-72 STRAND FIBER OPTIC CABLE, AIRBLOWN/PUSHABLE
(1)-4" HDPE MULTICELL CONDUIT (EMPTY FOR FUTURE USE)
IN BARRIER= 520' (SEE NOTE 3)

9 MEDIAN JUNCTION BOX
STA. 417+10, 0' RT

10 (1)-2" HDPE MULTICELL CONDUIT
W/ (1)-72 STRAND FIBER OPTIC CABLE, AIRBLOWN/PUSHABLE
(1)-4" HDPE MULTICELL CONDUIT (EMPTY FOR FUTURE USE)
IN BRIDGE PARAPET= 265'

11 MEDIAN JUNCTION BOX
STA. 419+75, 0' RT

12 (1)-2" HDPE MULTICELL CONDUIT W/ (2)-72 STRAND FIBER OPTIC CABLES, AIRBLOWN/PUSHABLE
(1)-4" HDPE MULTICELL CONDUIT (EMPTY FOR FUTURE USE)
JACKED/DRILLED UNDER PAVEMENT= 128'

13 (1)-2" PVC CONDUIT W/ (FOR FIBER OPTIC DROP CABLE BY ODOT)
(1)-2" PVC CONDUIT W/ (1)-CCTV CABLE
(2)-2" PVC CONDUITS (EMPTY)
IN TRENCH= 5'

13 (1)-3" PVC CONDUIT W/ (1)-CCTV CABLE
(1)-3" PVC CONDUIT (EMPTY)
IN TRENCH= 11'

EX. CCTV POLE ASSEMBLY #12 (TO REMAIN)
INSTALLED BY HAM-75-6.78
STA. 419+58, 130' RT.

14 (1)-2" HDPE MULTICELL CONDUIT W/ (1)-72 STRAND FIBER OPTIC CABLE, AIRBLOWN/PUSHABLE
(1)-4" HDPE MULTICELL CONDUIT (EMPTY FOR FUTURE USE)
IN TRENCH= 334'

13 PROPOSED ITS DEVICE WORK PAD (ITS-10.11)
W/(1)-GROUND MOUNTED ITS FIELD CABINET AND DISCONNECT SWITCH (NEW NODE 6)
W/(1)-PULL BOX, 32" W/ STANDARD LID W/(1)-SPLICE ENCLOSURE #2 (BY ODOT)
W/ (1)-COMMUNICATION CABLE MARKER
W/ (3)-NEW 72 STRAND FIBER OPTIC CABLES, AIRBLOWN/PUSHABLE SLACK = 150'
(ONE SLACK LOOP PER 72 STRAND CABLE)
W/(1)-PULL BOX, 18", 725.08
STA. 419+66, 130' RT
ODOT TO FURNISH AND INSTALL SPLICE ENCLOSURE,TERMINATION PANEL,
AND DROP CABLES

DETAIL A
SCALE: 1" = 15'

13 (1)-2" CONDUIT, 725.04 W/ (2)-#1/0 AWG POWER CABLES & (1)-#1/0 AWG GROUND (HOT, NEUTRAL, GROUND TO ITS FIELD CABINET)
(1)-2" CONDUIT, 725.04 (EMPTY)
IN TRENCH= 5'

15 PROPOSED POWER SERVICE, 60 AMP, 120/240V (ITS-15.11)
PROPOSED WOOD POLE SERVICE POLE
W/ (1)-CONDUIT RISER, 2"
W/ (1)-DISCONNECT SWITCH
W/ (1)-METER
W/ (1)-PULL BOX, 18", 725.08
STA. 419+78, 155' LT

16 3" CONDUIT, 725.04 W/ (2)-#1/0 AWG POWER CABLES & (1)-#1/0 AWG GROUND
IN TRENCH= 132' (WIRING INCLUDES HOT, NEUTRAL, GROUND)

17 PULL BOX, 18", 725.08
STA. 421+12, 192' LT

18 3" CONDUIT, 725.04 W/ (3)-#1/0 AWG POWER CABLES
JACKED/DRILLED UNDER PAVEMENT= 55'
(WIRING INCLUDES HOT, NEUTRAL, GROUND)

19 PULL BOX, 18", 725.08
STA. 421+15, 137' LT

20 3" CONDUIT, 725.04 W/ (2)-#1/0 AWG POWER CABLES & (1)-#1/0 AWG GROUND
JACKED/DRILLED UNDER PAVEMENT= 53'
(WIRING INCLUDES HOT, NEUTRAL, GROUND)

21 PULL BOX, 18", 725.08
STA. 421+12, 84' LT

22 3" CONDUIT, 725.04
W/ (2)-#1/0 AWG POWER CABLES &
(1)-#1/0 AWG GROUND
JACKED/DRILLED UNDER
PAVEMENT= 197' (WIRING INCLUDES
HOT, NEUTRAL, GROUND)

23 PULL BOX, 18", 725.08
STA. 421+13, 113' RT

25 (1)-2" HDPE MULTICELL CONDUIT
W/ (1)-72 STRAND FIBER OPTIC CABLE, AIRBLOWN/PUSHABLE
(1)-4" HDPE MULTICELL CONDUIT
(EMPTY FOR FUTURE USE)
IN BARRIER= 425' (SEE NOTE 3)

24 3" CONDUIT, 725.04 W/ (2)-#1/0 AWG POWER CABLES & (1)-#1/0 AWG GROUND
IN TRENCH= 153' (WIRING INCLUDES HOT, NEUTRAL, GROUND)

PROPOSED POWER SERVICE
CABLE (BY DUKE ENERGY)

EX. WOOD POLE, DUKE ENERGY
(POWER SOURCE) (TO REMAIN)
STA. 419+47, 236' LT.

MATCHLINE STA. 409+00
SEE SHEET 768

MATCHLINE STA. 423+00
SEE SHEET 770

MATCHLINE STA. 415+00
SEE SHEET 775

SEE DETAIL A

RAMP M
RAMP N
RAMP J
RAMP K
I.R. 75 (SB)
I.R. 75 (NB)

Preliminary Plans - For Reference Only

HORIZONTAL SCALE IN FEET
0 25 50 100

CALCULATED DRM
CHECKED JDS

ITS PLAN
STA. 409+00 TO STA. 423+00

HAM-75-7.85

769
1047

J:\20110903\ODOT\HAM\77889\signals\sheets\77889CP202.dgn 5/22/2026 10:31:04 AM hbrendlinger

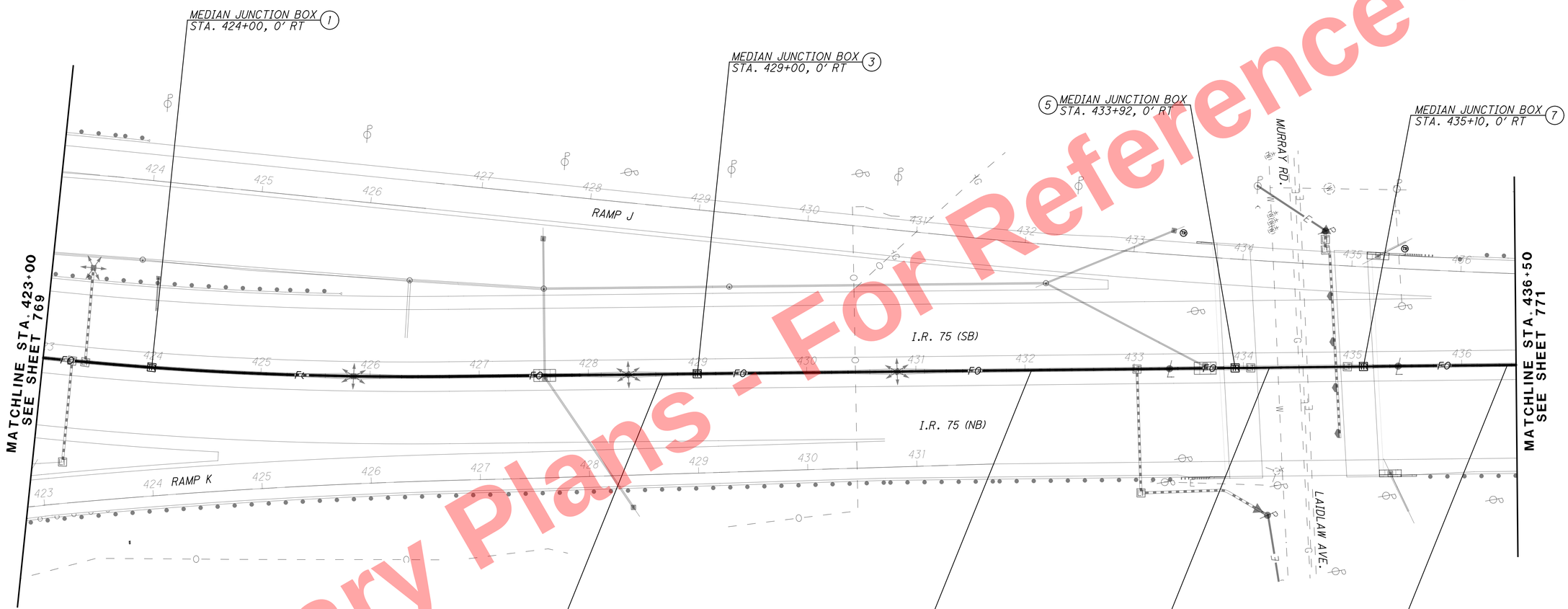

2 (1)-2" HDPE MULTICELL CONDUIT W/ (1)-72 STRAND FIBER OPTIC CABLE, AIRBLOWN/PUSHABLE
(1)-4" HDPE MULTICELL CONDUIT (EMPTY FOR FUTURE USE)
IN BARRIER= 500' (SEE NOTE 3)

4 (1)-2" HDPE MULTICELL CONDUIT W/ (1)-72 STRAND FIBER OPTIC CABLE, AIRBLOWN/PUSHABLE
(1)-4" HDPE MULTICELL CONDUIT (EMPTY FOR FUTURE USE)
IN BARRIER= 492' (SEE NOTE 3)

6 (1)-2" HDPE MULTICELL CONDUIT W/ (1)-72 STRAND FIBER OPTIC CABLE, AIRBLOWN/PUSHABLE
(1)-4" HDPE MULTICELL CONDUIT (EMPTY FOR FUTURE USE)
IN BRIDGE PARAPET= 118' (SEE NOTE 2)

8 (1)-2" HDPE MULTICELL CONDUIT W/ (1)-72 STRAND FIBER OPTIC CABLE, AIRBLOWN/PUSHABLE
(1)-4" HDPE MULTICELL CONDUIT (EMPTY FOR FUTURE USE)
IN BARRIER= 390' (SEE NOTE 3)

NOTES:

1. THE ITS SYSTEM SHALL BE KEPT FULLY FUNCTIONAL THROUGHOUT CONSTRUCTION. EXTENDED DMS OUTAGE IS ANTICIPATED.

2. SEE SHEET 968 FOR BRIDGE CONDUIT LOCATION DETAILS.

3. CONDUIT IN BARRIER IS INCIDENTAL TO ITEM 622 CONCRETE BARRIER.

4. TRACER WIRE SHALL BE FURNISHED AND INSTALLED IN ALL NEW ITS CONDUITS.

Preliminary Plans - For Reference Only

J:\20110903\ODOT\HAM\77889\signals\sheets\77889CP203.dgn 5/22/2026 10:31:08 AM hbrendlinger

HORIZONTAL SCALE IN FEET
0 25 50 100

CALCULATED DRM
CHECKED JDS

ITS PLAN
STA. 423+00 TO STA. 436+50

HAM-75-7.85

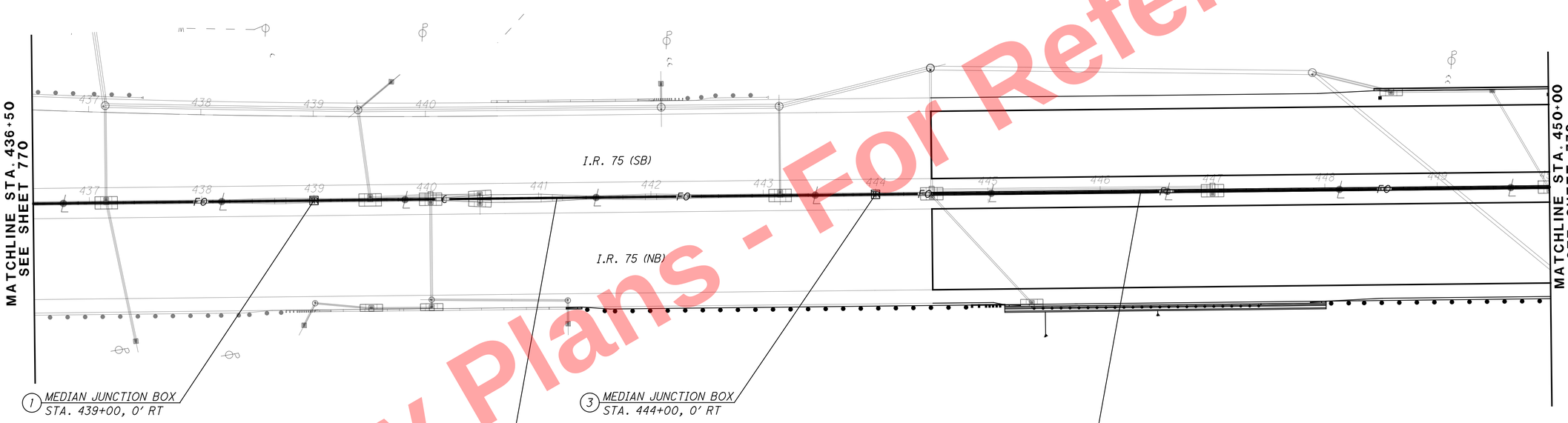

1 MEDIAN JUNCTION BOX
STA. 439+00, 0' RT

3 MEDIAN JUNCTION BOX
STA. 444+00, 0' RT

2 (1)-2" HDPE MULTICELL CONDUIT W/ (1)-72 STRAND FIBER OPTIC CABLE, AIRBLOWN/PUSHABLE
(1)-4" HDPE MULTICELL CONDUIT (EMPTY FOR FUTURE USE)
IN BARRIER= 500' (SEE NOTE 3)

4 (1)-2" HDPE MULTICELL CONDUIT W/ (1)-72 STRAND FIBER OPTIC CABLE, AIRBLOWN/PUSHABLE
(1)-4" HDPE MULTICELL CONDUIT (EMPTY FOR FUTURE USE)
IN BARRIER= 759' (SEE NOTE 3)

NOTES:
1. THE ITS SYSTEM SHALL BE KEPT FULLY FUNCTIONAL THROUGHOUT CONSTRUCTION. EXTENDED DMS OUTAGE IS ANTICIPATED.

2. CONDUIT IN BARRIER IS INCIDENTAL TO ITEM 622 CONCRETE BARRIER.

3. TRACER WIRE SHALL BE FURNISHED AND INSTALLED IN ALL NEW ITS CONDUITS.

Preliminary Plans - For Reference Only

0 25 50 100
HORIZONTAL SCALE IN FEET

CALCULATED DRM
CHECKED JDS

ITS PLAN
STA. 436+50 TO STA. 450+00

HAM-75-7.85

J:\20110903\ODOT\HAM\77889\signals\sheets\77889CP204.dgn 5/22/2026 10:31:12 AM hbrendlinger

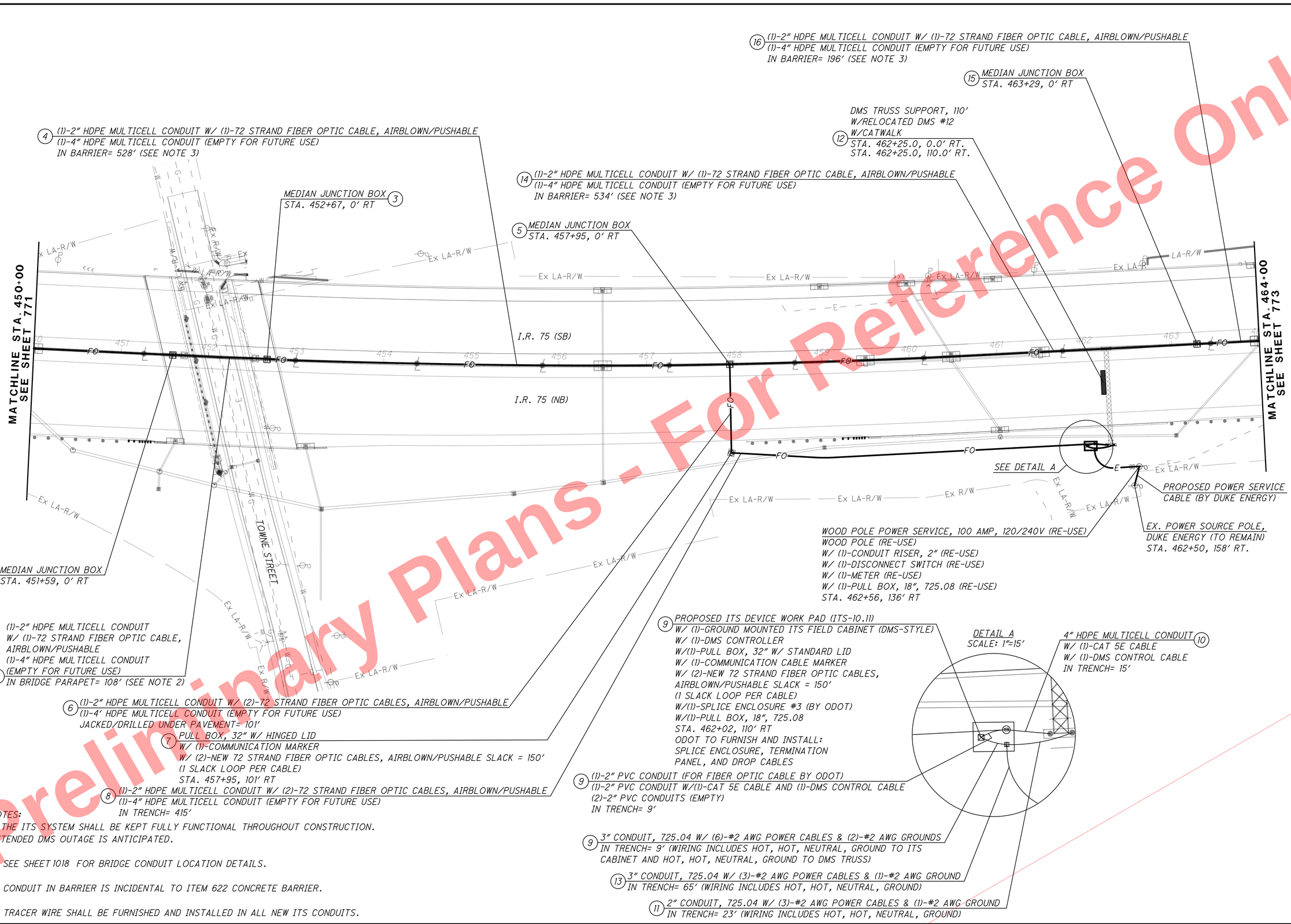

NOTES:

1. THE ITS SYSTEM SHALL BE KEPT FULLY FUNCTIONAL THROUGHOUT CONSTRUCTION. EXTENDED DMS OUTAGE IS ANTICIPATED.

2. SEE SHEET 1018 FOR BRIDGE CONDUIT LOCATION DETAILS.

3. CONDUIT IN BARRIER IS INCIDENTAL TO ITEM 622 CONCRETE BARRIER.

4. TRACER WIRE SHALL BE FURNISHED AND INSTALLED IN ALL NEW ITS CONDUITS.

Preliminary Plans - For Reference Only

J:\20110903\ODOT\HAM\77889\signals\sheets\77889CP205.dgn 5/22/2026 10:31:16 AM hbrendlinger

HORIZONTAL SCALE IN FEET
0 25 50 100
CALCULATED DRM
CHECKED JDS

ITS PLAN
STA. 450+00 TO STA. 464+00

HAM-75-7.85

772
1047

(8) EXISTING ITS DEVICE WORK PAD (TO REMAIN)
W/ (1)-EX. GROUND MOUNTED ITS FIELD CABINET (TO REMAIN)
W/ (1)-EX. TERMINATION PANEL, 72 FIBER (TO REMAIN)
W/ (1)-EX. PULL BOX, 32" W/ (1)-EX. SPLICE ENCLOSURE #4 (TO REMAIN)
W/ (1)-NEW 72 STRAND FIBER OPTIC CABLE, AIRBLOWN/PUSHABLE SLACK = 150'
W/ (1)-EX. PULL BOX, 18", 725.08 (TO REMAIN)
STA. 474+73, 95' LT
RE-SPLICING TO ACCOMODATE THE PROPOSED 72 STRAND FIBER OPTIC CABLE SHALL BE PERFORMED BY ODOT

EXISTING CCTV CONCRETE POLE W/ LOWERING UNIT, 70' (TO REMAIN)
W/ (1)-EX. CCTV IP-CAMERA SYSTEM, ENHANCED TYPE #11 (TO REMAIN)

DETAIL A
SCALE: 1"=15'

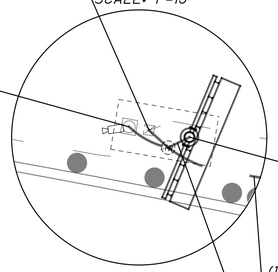

EX. DMS PEDESTAL SUPPORT (TO REMAIN)
W/ EX. DMS #15 (TO REMAIN)
W/ EX. CATWALK (TO REMAIN)
STA. 475+00, 97' LT

(1)-EX. 2" HDPE MULTICELL CONDUIT (TO REMAIN)
W/ (1)-EX. 72 STRAND FIBER OPTIC CABLE, AIRBLOWN/PUSHABLE (TO REMAIN) (9)
W/ (1)-NEW 72 STRAND FIBER OPTIC CABLE, AIRBLOWN/PUSHABLE=547'
(1)-EX. 4" HDPE MULTICELL CONDUIT, EMPTY (TO REMAIN)

EX. 4" HDPE MULTICELL CONDUIT W/ EX. DMS CABLES
(TO REMAIN)

NOTES:
1. THE ITS SYSTEM SHALL BE KEPT FULLY FUNCTIONAL THROUGHOUT CONSTRUCTION. EXTENDED DMS OUTAGE IS ANTICIPATED.

2. CONDUIT IN BARRIER IS INCIDENTAL TO ITEM 622 CONCRETE BARRIER.

3. TRACER WIRE SHALL BE FURNISHED AND INSTALLED IN ALL NEW ITS CONDUITS.

(6) (1)-2" HDPE MULTICELL CONDUIT W/ NEW (1)-72 STRAND FIBER OPTIC CABLE, AIRBLOWN/PUSHABLE
(1)-4" HDPE MULTICELL CONDUIT, EMPTY
IN BARRIER = 500' (SEE NOTE 2)

EX. POWER SOURCE POLE,
DUKE ENERGY (TO REMAIN)
STA. 476+22, 298' LT.

EXISTING OVERHEAD
SERVICE CABLE
(TO REMAIN)

SEE DETAIL A

EX. POWER SERVICE POLE (TO REMAIN)
STA. 475+85, 102' LT.

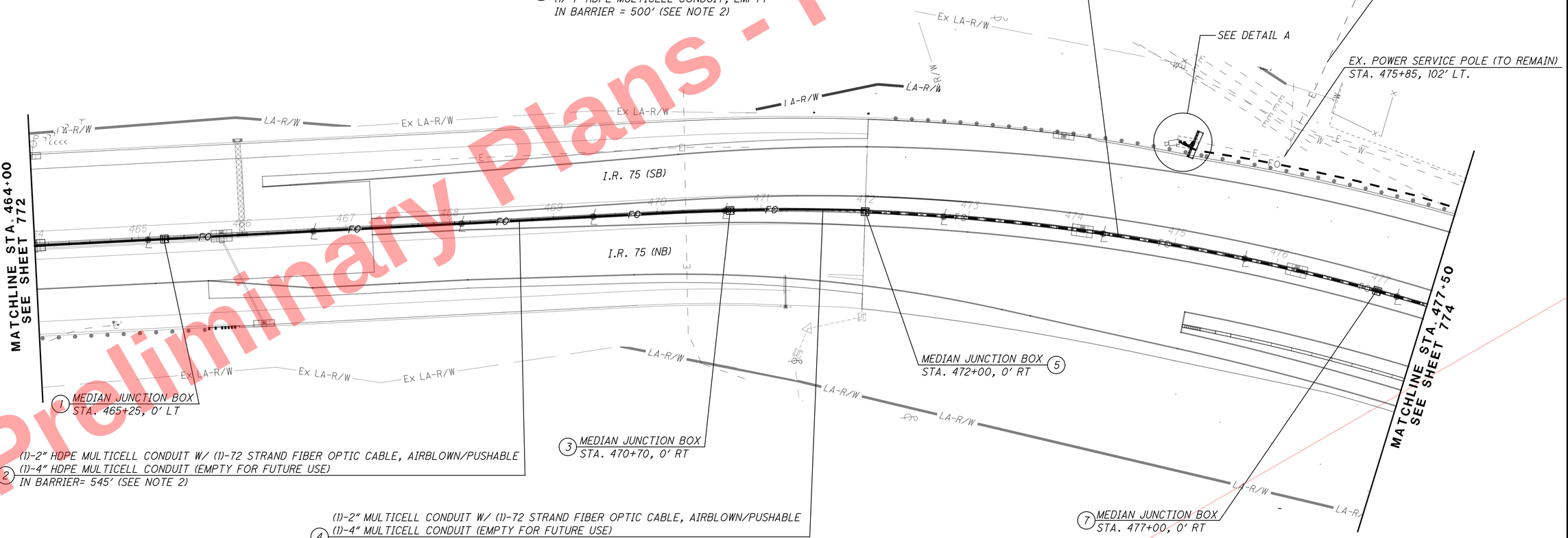

(1) MEDIAN JUNCTION BOX
STA. 465+25, 0' LT

(2) (1)-2" HDPE MULTICELL CONDUIT W/ (1)-72 STRAND FIBER OPTIC CABLE, AIRBLOWN/PUSHABLE
(1)-4" HDPE MULTICELL CONDUIT (EMPTY FOR FUTURE USE)
IN BARRIER= 545' (SEE NOTE 2)

(3) MEDIAN JUNCTION BOX
STA. 470+70, 0' RT

(4) (1)-2" MULTICELL CONDUIT W/ (1)-72 STRAND FIBER OPTIC CABLE, AIRBLOWN/PUSHABLE
(1)-4" MULTICELL CONDUIT (EMPTY FOR FUTURE USE)
IN BARRIER = 130' (SEE NOTE 2)

MEDIAN JUNCTION BOX (5)
STA. 472+00, 0' RT

(7) MEDIAN JUNCTION BOX
STA. 477+00, 0' RT

HORIZONTAL SCALE IN FEET
0 25 50 100

CALCULATED DRM
CHECKED JDS

ITS PLAN
STA. 464+00 TO STA. 477+50

HAM-75-7.85

773
1047

Preliminary Plans - For Reference Only

J:\20110903\ODOT\HAM\77889\signals\sheets\77889CP206.dgn 5/22/2026 10:31:20 AM hbrendlinger

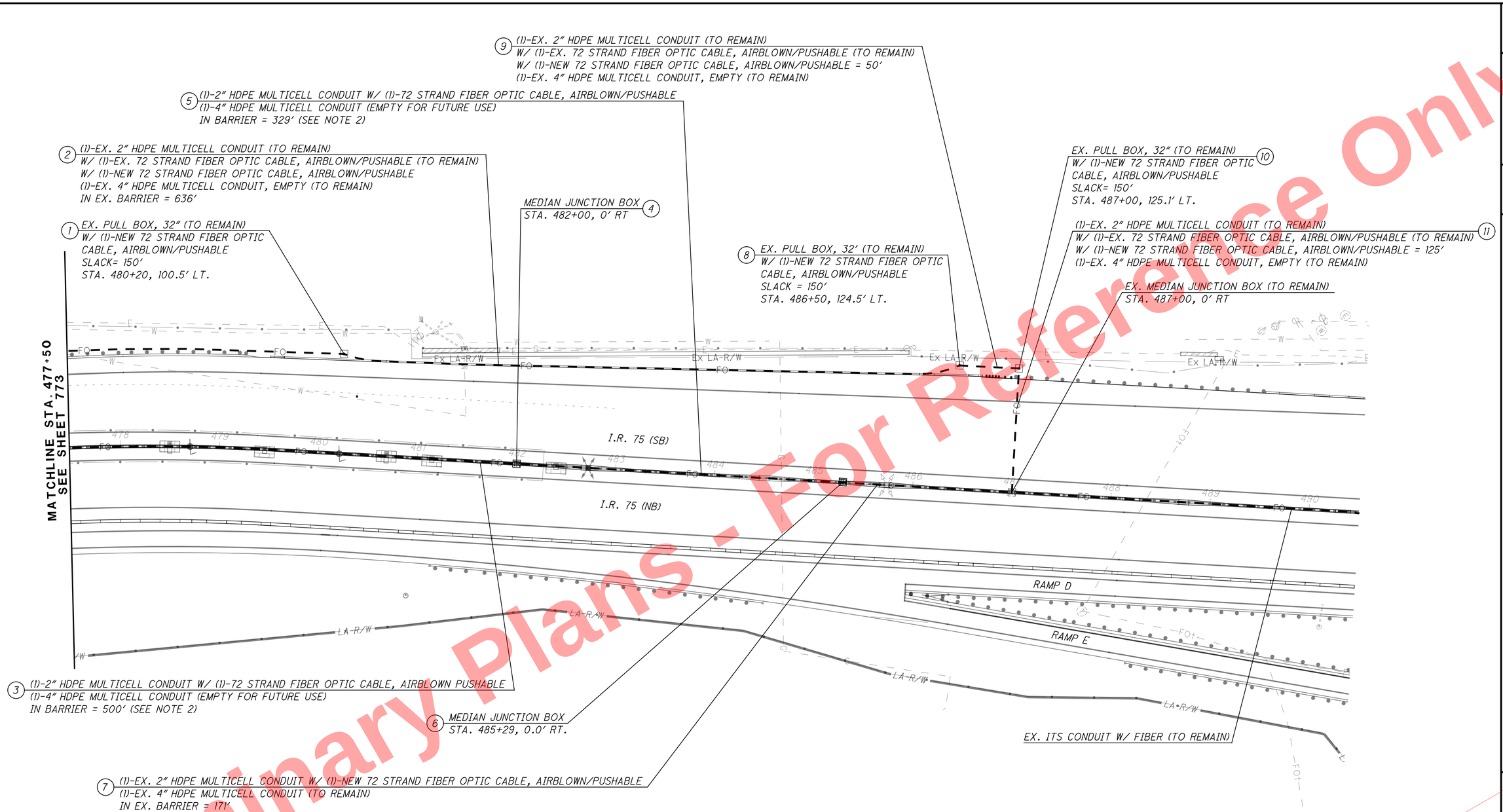

NOTES:
1. THE ITS SYSTEM SHALL BE KEPT FULLY FUNCTIONAL THROUGHOUT CONSTRUCTION. EXTENDED DMS OUTAGE IS ANTICIPATED.

2. CONDUIT IN BARRIER IS INCIDENTAL TO ITEM 622 CONCRETE BARRIER.

3. TRACER WIRE SHALL BE FURNISHED AND INSTALLED IN ALL NEW ITS CONDUITS.

Preliminary Plans - For Reference Only

HORIZONTAL SCALE IN FEET 0 25 50 100

CALCULATED DRM
CHECKED JDS

ITS PLAN
STA. 477+50 TO STA. 490+50

HAM-75-7.85

J:\20110903\ODOT\HAM\77889\signals\sheets\77889CP207.dgn 5/22/2026 10:31:23 AM hbrendlinger

NOTES:
1. CONDUIT IN BARRIER IS INCIDENTAL TO ITEM 622 CONCRETE BARRIER.

2. TRACER WIRE SHALL BE FURNISHED AND INSTALLED IN ALL NEW ITS CONDUIT.

MATCHLINE STA. 415+00
SEE SHEET 769

1 PULL BOX, 32" W/ HINGED LID
W/ (1)-COMMUNICATION CABLE MARKER
W/ (1)-NEW 72 STRAND FIBER OPTIC CABLE, AIRBLOWN/PUSHABLE SLACK = 150'
STA. 10+89, 183' LT.

2 (1)-2" HDPE MULTICELL CONDUIT
W/ (1)-72 STRAND FIBER OPTIC CABLE, AIRBLOWN/PUSHABLE
(1)-4" HDPE MULTICELL CONDUIT (EMPTY FOR FUTURE USE)
JACKED/DRILLED UNDER PAVEMENT= 38'

3 MEDIAN JUNCTION BOX
STA. 10+68, 151' LT.

4 (1)-2" HDPE MULTICELL CONDUIT W/ (1)-72 STRAND FIBER OPTIC CABLE, AIRBLOWN/PUSHABLE
(1)-4" HDPE MULTICELL CONDUIT (EMPTY FOR FUTURE USE)
IN BARRIER= 502' (SEE NOTE 1)

5 MEDIAN JUNCTION BOX
STA 15+38, 2' LT.

6 (1)-2" HDPE MULTICELL CONDUIT
W/ (1)-72 STRAND FIBER OPTIC CABLE, AIRBLOWN/PUSHABLE
(1)-4" HDPE MULTICELL CONDUIT (EMPTY FOR FUTURE USE)
IN BARRIER= 265' (SEE NOTE 1)

7 MEDIAN JUNCTION BOX
STA 18+00, 0' LT.

8 (1)-2" HDPE MULTICELL CONDUIT
W/ (2)-72 STRAND FIBER OPTIC CABLES, AIRBLOWN/PUSHABLE
(1)-4" HDPE MULTICELL CONDUIT
(EMPTY FOR FUTURE USE)
JACKED/DRILLED UNDER
PAVEMENT= 90'

9 PULL BOX, 32" W/ HINGED LID
W/ (1)-COMMUNICATION CABLE MARKER
W/ (2)-NEW 72 STRAND FIBER OPTIC CABLES, AIRBLOWN/PUSHABLE SLACK = 150'
(ONE SLACK LOOP PER 72 STRAND CABLE)
W/ (1)-SPLICE ENCLOSURE #5 (BY ODOT)
STA 18+01, 90' LT.

10 (1)-2" HDPE MULTICELL CONDUIT
W/ (1)-24 STRAND FIBER OPTIC CABLE (BY ODOT)
(1)-4" HDPE MULTICELL CONDUIT (EMPTY FOR FUTURE USE)
IN TRENCH= 14'

EX. WOOD POLE (TO REMAIN)
(FOR FUTURE ITS)
STA. 22+63, 82' LT.

DETAIL A
SCALE: 1" = 15'

11 GROUND MOUNTED ITS FIELD CABINET
W/ (1)-TERMINATION PANEL (BY ODOT)
STA. 18+01, 103' LT.
(INTERCEPT EX. POWER CONDUIT/CABLES)

SEE DETAIL A

MATCHLINE STA. 20+00
SEE BELOW

DETAIL B
SCALE: 1" = 15'

22 (1)-3" PVC CONDUIT W/ (1)-CCTV CABLE AND (1)-RADIO CABLE
(1)-3" PVC CONDUIT (EMPTY)
IN TRENCH= 72'

21 PULL BOX, 32" W/ HINGED LID
W/ (1)-COMMUNICATION CABLE MARKER
W/ (1)-NEW 72 STRAND FIBER OPTIC CABLE, AIRBLOWN/PUSHABLE SLACK = 150'
W/ (1)-SPLICE ENCLOSURE #6 (BY ODOT)
STA. 21+89, 71' LT.

20 (1)-4" HDPE MULTICELL CONDUIT W/ (1)-24 STRAND FIBER OPTIC CABLE (BY ODOT)
(1)-3" PVC CONDUIT W/ (1)-CCTV CABLE
IN TRENCH= 8'

19 GROUND MOUNTED ITS FIELD CABINET
W/ (1)-TERMINATION PANEL (BY ODOT)
STA 21+81, 71' LT.

14 3" CONDUIT, 725.04 W/ (2)-#1/0 AWG POWER SERVICE CABLES & (1)-#1/0 AWG GROUND
IN TRENCH= 104' (WIRING INCLUDES HOT, NEUTRAL, GROUND)

15 PROPOSED WOOD POLE POWER SERVICE, 60 AMP, 120/240V (ITS-15.11)
EX. SERVICE POLE (TO REMAIN)
W/ (1)-RELOCATED CCTV CAMERA #113
W/ (1)-NEW DISCONNECT SWITCH AND METER
W/ RELOCATED WIRELESS RADIO EQUIPMENT FACING EAST
STA. 22+63, 83' LT

EX. ELECTRIC PULL BOX (TO REMAIN)
STA. 22+66, 76' LT

EX. 32" PULL BOX
(TO REMAIN)
STA. 22+59, 59' LT.

12 EX. ELECTRIC CONDUIT (REMAIN)
W/ (2)-NEW #1/0 AWG POWER SERVICE CABLES
& (1)-NEW #1/0 AWG GROUND
(WIRING INCLUDES HOT, NEUTRAL, GROUND)
(REMOVE EX. POWER SERVICE CABLES)

13 PULL BOX, 18", 725.08
STA 21+70, 65' LT.
(INTERCEPT EX. ELECTRIC CONDUIT)

18 (1)-2" HDPE MULTICELL CONDUIT
W/ (1)-72 STRAND FIBER OPTIC CABLE, AIRBLOWN/PUSHABLE
(1)-4" HDPE MULTICELL CONDUIT (EMPTY FOR FUTURE USE)
JACKED/DRILLED UNDER PAVEMENT= 71'

26 MEDIAN JUNCTION BOX
STA. 27+00, 0' RT.

25 PULL BOX, 32" W/ HINGED LID
W/ (1)-COMMUNICATION CABLE MARKER
STA. 31+52, 85' LT.

24 (1)-2" HDPE MULTICELL CONDUIT
(EMPTY FOR FUTURE USE)
(1)-4" HDPE MULTICELL CONDUIT
(EMPTY FOR FUTURE USE)
JACKED/DRILLED UNDER PAVEMENT = 85'

MATCHLINE STA. 20+00
SEE ABOVE

17 MEDIAN JUNCTION BOX
STA. 21+89, 0' LT.

16 (1)-2" HDPE MULTICELL CONDUIT W/ (1)-72 STRAND FIBER OPTIC CABLE, AIRBLOWN/PUSHABLE
(1)-4" HDPE MULTICELL CONDUIT (EMPTY FOR FUTURE USE)
IN BARRIER= 389' (SEE NOTE 1)

(1)-2" HDPE MULTICELL CONDUIT (EMPTY FOR FUTURE USE)
(1)-4" HDPE MULTICELL CONDUIT (EMPTY FOR FUTURE USE)
IN BARRIER= 511' (SEE NOTE 1)

(1)-2" HDPE MULTICELL CONDUIT (EMPTY FOR FUTURE USE)
(1)-4" HDPE MULTICELL CONDUIT (EMPTY FOR FUTURE USE)
IN BARRIER= 452' (SEE NOTE 1)

23 MEDIAN JUNCTION BOX
STA. 31+52, 0' RT.

(1)-2" HDPE MULTICELL CONDUIT (EMPTY FOR FUTURE USE)
(1)-4" HDPE MULTICELL CONDUIT (EMPTY FOR FUTURE USE)
IN BARRIER= 48' (SEE NOTE 1)

RAMP J
RAMP K
RAMP M
RAMP N
SR-562 WB
SR-562 EB
Ex LA-R/W
LA-R/W
FO
E
Ex L

HORIZONTAL SCALE IN FEET
0 25 50 100
CALCULATED DRM
CHECKED JDS

ITS PLAN
STA. 415+00 TO STA. 30+00

HAM-75-7.85

775
1047

Preliminary Plans - For Reference Only

J:\20110903\ODOT\HAM\77889\signals\sheets\77889CP215.dgn 5/22/2026 10:31:28 AM hbrendlinger

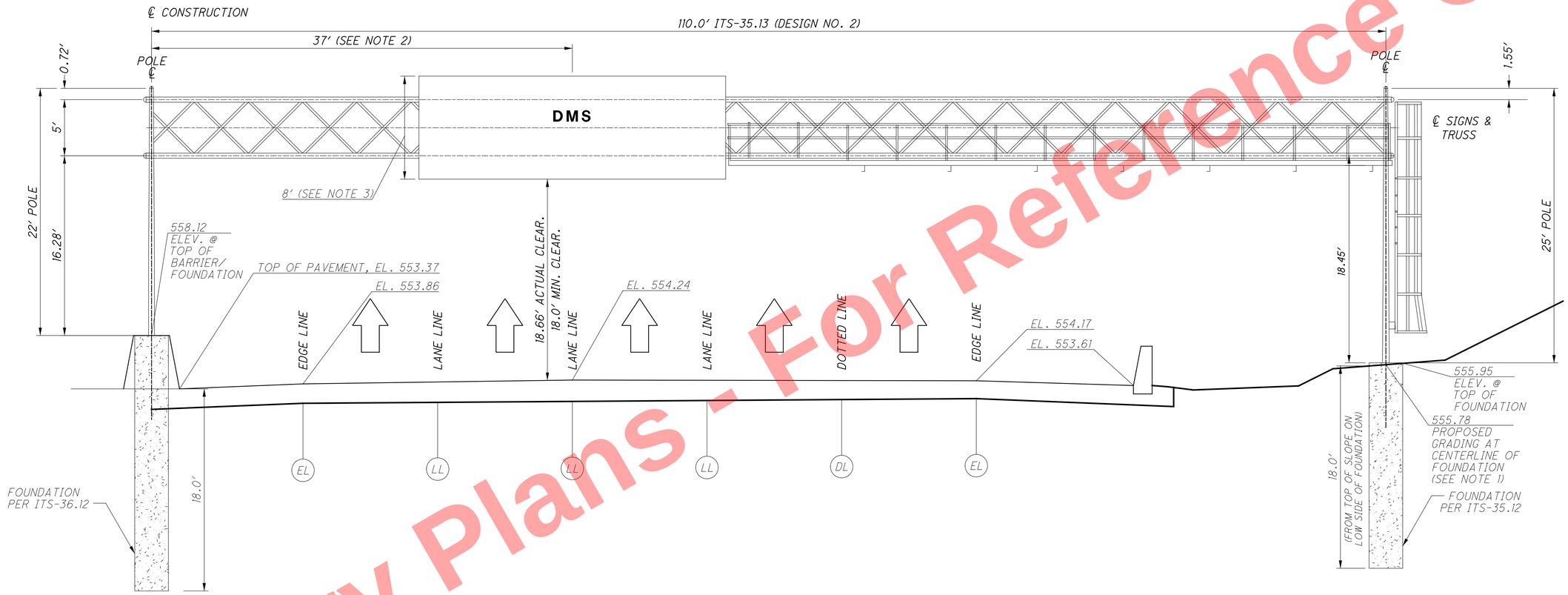

STA. 462+25 - I-75 NORTHBOUND
(VIEW LOOKING NORTH)

NOTE 1:

PROVIDE A FLAT SURFACE FOR EASE OF DMS CATWALK/TRUSS MAINTENANCE.
FLAT SURFACE SHALL BE A MINIMUM OF 4' EACH DIRECTION FROM CENTER OF POLE.

NOTE 2:

FINAL HORIZONTAL POSITION OF THE DMS SIGN SHALL BE APPROVED BY THE ENGINEER.

NOTE 3:

THE DMS SHALL BE VERTICALLY CENTERED BETWEEN THE TRUSSES. 8' IS SHOWN FOR CLEARANCE CALCULATIONS, ACTUAL DMS DIMENSIONS MAY VARY.

Preliminary Plans - For Reference Only

HORIZONTAL SCALE IN FEET
0 5 10

CALCULATED DRM
CHECKED JDS

DMS ELEVATION DETAIL
I-75 STA. 462+25

HAM-75-7.85

776
1047

J:\20110903\ODOT\HAM\7889\signals\sheets\77889CD119.dgn 5/22/2026 10:31:29 AM hbrendlinger

GENERAL LIGHTING NOTES

THE CONTRACTOR SHALL CONFORM TO THE NATIONAL ELECTRIC CODE, NATIONAL ELECTRICAL SAFETY CODE AND THE OHIO MANUAL OF UNIFORM TRAFFIC CONTROL DEVICES FOR STREETS AND HIGHWAY IN PERFORMING CONTRACT WORK. THE HIGHWAY LIGHTING SHALL BE CONSTRUCTED IN ACCORDANCE WITH THE 2023 OHIO DEPARTMENT OF TRANSPORTATION CONSTRUCTION AND MATERIAL SPECIFICATIONS. THIS DOCUMENT SHALL GOVERN ALL MATERIALS AND WORKMANSHIP INVOLVED IN THE IMPROVEMENTS SHOWN ON THESE PLANS, EXCEPT AS SUCH SPECIFICATIONS ARE MODIFIED BY THE FOLLOWING SPECIFICATIONS OR BY THE CONSTRUCTION DETAILS SET FORTH HEREIN.

ITEM 625, POWER SERVICE, AS PER PLAN

IN ADDITION TO THE REQUIREMENTS OF THE SPECIFICATIONS, THE FOLLOWING SHALL BE INCLUDED IN THIS ITEM OF WORK:

THE POWER SUPPLYING AGENCY FOR THIS PROJECT IS:

DUKE ENERGY
7600 COLERAIN AVENUE
CINCINNATI, OH 45329
PHONE: 513-514-8124
CONTACT: EVAN ANTHONY

THE ENGINEER SHALL ENSURE THAT EACH POWER SERVICE ELECTRICAL ENERGY ACCOUNT IS IN THE NAME OF AND THAT THE BILLING ADDRESS IS TO THE MAINTAINING AGENCY NOTED IN THE PLANS. THIS SHALL BE DONE NOT ONLY FOR EACH NEW POWER SERVICE ESTABLISHED BY THIS PROJECT BUT ALSO FOR EACH EXISTING POWER SERVICE, SINCE THERE MAY BE A REASSIGNMENT OF THE RESPONSIBILITY FOR AN EXISTING SERVICE AS A RESULT OF THE WORK PERFORMED BY THIS PROJECT.

240/480V POWER SERVICE FOR ODOT HIGHWAY LIGHTING SHALL BE GROUND MOUNTED IN ACCORDANCE WITH HL-40.20. THE CONTRACTOR SHALL BE RESPONSIBLE FOR FURNISHING AND INSTALLING A NEW WOOD SERVICE POLE AT THE LOCATION SHOWN IN THE PLANS FOR RECEIVING INCOMING SECONDARY POWER FROM THE ELECTRIC UTILITY. THE CONTRACTOR SHALL INSTALL ALL CONDUIT (INCLUDING RISER) AND POWER CABLES BETWEEN THE ODOT WOOD SERVICE POLE AND THE GROUND MOUNTED LIGHTING CONTROLLER ASSEMBLY AS SHOWN IN THE PLANS. 480V GROUND MOUNTED LIGHTING CONTROLLER ASSEMBLIES SHALL INCLUDE A METER BASE AND A CURRENT TRANSFORMER (CT) ENCLOSURE PER DUKE ENERGY SPECIFICATIONS.

120/240V POWER SERVICE FOR CINCINNATI HIGHWAY AND UNDERPASS LIGHTING SHALL BE POLE MOUNTED IN ACCORDANCE WITH CINCINNATI STANDARD CONSTRUCITON DRAWING ES-7 AND SHALL INCLUDE A METER BASE PER DUKE ENERGY SPECIFICATIONS AND A DISCONNECT SWITCH.

PAYMENT WILL BE MADE AT THE UNIT BID PRICE FOR EACH C&MS ITEM 625, POWER SERVICE, AS PER PLAN WHICH SHALL BE FULL COMPENSATION FOR ALL LABOR, MATERIALS AND INCIDENTALS REQUIRED TO COMPLETE THIS ITEM IN A SATISFACTORY AND WORKMANLIKE MANNER.

GUARANTEE

THE CONTRACTOR SHALL GUARANTEE THAT THE LIGHTING INSTALLED AS PART OF THIS CONTRACT SHALL OPERATE SATISFACTORILY FOR A PERIOD OF 90 DAYS FOLLOWING COMPLETION OF THE 10 DAY PERFORMANCE TEST. IN THE EVENT OF UNSATISFACTORY OPERATION, THE CONTRACTOR SHALL CORRECT FAULTY INSTALLATIONS, MAKE REPAIRS AND REPLACE DEFECTIVE PARTS WITH NEW PARTS OF EQUAL OR BETTER QUALITY. EQUIPMENT, MATERIAL AND LABOR COSTS INCURRED IN CORRECTING AN UNSATISFACTORY OPERATION SHALL BE BORNE BY THE CONTRACTOR.

CUSTOMARY MANUFACTURER'S GUARANTEES FOR THE FOREGOING ITEMS SHALL BE TURNED OVER TO THE STATE FOLLOWING ACCEPTANCE OF THE EQUIPMENT.

GUARANTEE (CONTINUED)

THE COST OF GUARANTEEING THE LIGHTING WILL BE INCIDENTAL TO AND INCLUDED IN THE CONTRACT UNIT PRICE OF THE VARIOUS ITEMS MAKING UP THE SYSTEM.

PADLOCKS AND KEYS

PADLOCKS FURNISHED SHALL BE EITHER BRASS OR BRONZE, EQUAL TO MASTER NO. 4BKA OR WILSON BOHANNAN 660A, AND SHALL BE KEYED IN ACCORDANCE WITH CMS 631.06. PAYMENT SHALL BE INCLUDED IN THE BID FOR THE ITEM(S) BEING LOCKED.

ITEM 625, SERVICE TO UNDERPASS LIGHTING, AS PER PLAN

THIS ITEM SHALL CONSIST OF PROVIDING COMPLETE ELECTRICAL POWER, EXCEPT FOR LUMINAIRES AND STRUCTURE GROUNDING, FOR UNDERPASS LIGHTING SYSTEMS. THE INSTALLATION WORK SHALL INCLUDE DISCONNECT SWITCH, STRUCTURE JUNCTION BOXES, CONDUITS, CONDUIT EXPANSION FITTINGS, CONDUIT RISERS, CONDUIT GROUNDING, MOUNTINGS, FITTINGS, CABLES AND ALL INCIDENTALS NECESSARY TO COMPLETE, READY FOR USE, THE SERVICE AS DETAILED ON THE PLANS.

ALL EXPOSED, STRUCTURE MOUNTED PVC CONDUIT IN EXCESS OF 10 FOOT LENGTHS SHALL INCLUDE PVC EXPANSION JOINTS.

ALL STRUCTURE JUNCTION BOXES THAT ARE REQUIRED TO ESTABLISH A FULLY FUNCTIONING UNDERPASS LIGHTING SYSTEM SHALL BE CONSIDERED AS INCIDENTAL TO THIS ITEM. STRUCTURE JUNCTION BOXES SHALL CONFORM TO THE REQUIREMENTS OF HL-20.14 AND ODOT'S C&MS.

STRUCTURE JUNCTION BOXES SHALL HAVE AN EMBOSSMENT IN THE BACK OF THE BOX THAT SHALL BE DRILLED AND TAPPED FOR A 1/4"-20 CAP SCREW FOR CONNECTION OF GROUNDS.

WHEN ENCASED IN CONCRETE, THE JUNCTION BOX SHALL HAVE INWARD FLANGED COVERS AND MAY HAVE IN LIEU OF BOSSED DRILLED AND TAPPED CONNECTIONS, SLIP HOLES FIELD DRILLED TO ACCOMMODATE THE CONDUITS ENTERING THE BOX SO LONG AS EACH METALLIC CONDUIT IS EQUIPPED WITH A GROUNDING BUSHING JUMPED TO THE BOX ITSELF.

WHEN SURFACE MOUNTED, THE JUNCTION BOX MAY HAVE IN LIEU OF BOSSED DRILLED AND TAPPED CONNECTIONS, FIELD INSTALLED HUBS TO ACCOMMODATE THE CONDUITS ENTERING THE BOX.

THE PRICE BID FOR ITEM 625, SERVICE TO UNDERPASS LIGHTING, AS PER PLAN, SHALL INCLUDE PAYMENT FOR ALL EQUIPMENT, LABOR AND MATERIALS NECESSARY TO COMPLETE THE WORK AS SPECIFIED, COMPONENT PARTS NOT SPECIFICALLY MENTIONED, BUT REQUIRED FOR SATISFACTORY OPERATION OF THIS ITEM, SHALL BE FURNISHED AND CONSIDERED PAID FOR AS PART OF THE ITEM.

ITEM 625, LUMINAIRE, INSTALLATION ONLY, AS PER PLAN

THIS ITEM OF WORK SHALL CONSIST OF INSTALLING AN EXISTING LUMINAIRE REMOVED FROM A PREVIOUS LOCATION ON THE PROJECT OR SUPPLIED TO THE PROJECT SITE BY OTHERS.

THE LUMINAIRE SHALL BE CLEANED, REPAIRS MADE TO ENSURE THAT IT IS IN GOOD SERVICEABLE CONDITION, ADJUSTMENTS MADE TO THE OPTICAL COMPONENTS TO ENSURE THAT THE SPECIFIED DISTRIBUTION IS BEING PRODUCED.

PAYMENT WILL BE MADE AT THE UNIT PRICE BID UNDER ITEM 625, "LUMINAIRE, INSTALLATION ONLY, AS PER PLAN" FOR EACH LUMINAIRE INSTALLED AND SHALL BE FULL COMPENSATION FOR ALL MATERIAL, LABOR, EQUIPMENT, AND INCIDENTALS NECESSARY TO COMPLETE THIS ITEM IN A WORKMANLIKE MANNER.

ITEM 625, CONDUIT, 4", 725.051, AS PER PLAN

IN ADDITION TO THE REQUIREMENTS OF ODOT'S CONSTRUCTION AND MATERIAL SPECIFICATIONS, CONDUIT, 4", 725.051, AS PER PLAN SHALL INCLUDE ALL EXPANSION FITTINGS AS INCIDENTAL TO THIS ITEM OF WORK.

PAYMENT WILL BE MADE AT THE UNIT BID PRICE FOR FEET FOR CMS ITEM 625, CONDUIT, 4", 725.051, AS PER PLAN WHICH SHALL BE FULL COMPENSATION FOR ALL LABOR, MATERIALS AND INCIDENTALS REQUIRED TO COMPLETE THIS ITEM IN A SATISFACTORY AND WORKMANLIKE MANNER.

GROUNDING AND BONDING

THE REQUIREMENTS OF THE CONSTRUCTION AND MATERIAL SPECIFICATIONS (C&MS) AND THE HL AND TC SERIES OF STANDARD CONSTRUCTION DRAWINGS ARE MODIFIED AS FOLLOWS:

1. ALL METALLIC PARTS CONTAINING ELECTRICAL CONDUCTORS SHALL BE PERMANENTLY JOINED TO FORM AN EFFECTIVE GROUND FAULT CURRENT PATH BACK TO THE GROUNDED CONDUCTOR IN THE POWER SERVICE DISCONNECT SWITCH.
   a. PROVIDE AN EQUIPMENT GROUNDING CONDUCTOR IN METALLIC CONDUITS (725.04) IN ADDITION TO THE CONDUCTORS SPECIFIED AND BOND THE CONDUIT TO THIS GROUNDING CONDUCTOR.
   b. WHEN AN EQUIPMENT GROUNDING CONDUCTOR IS REQUIRED IN PLASTIC CONDUIT (725.05), THE INSTALLATION SHALL INCLUDE A SEPARATE EQUIPMENT GROUNDING CONDUCTOR IN ADDITION TO THE CONDUCTORS SPECIFIED.
   c. METAL PULL BOX LIDS SHALL BE BONDED BY ATTACHMENT OF THE EQUIPMENT GROUNDING CONDUCTOR TO THE FRAME DIAGONAL AS PROVIDED ON HL-30.11.
   d. IF MULTIPLE CONDUIT RUNS BEGIN AND END AT THE SAME POINTS, ONLY ONE EQUIPMENT GROUNDING CONDUCTOR IS REQUIRED.
2. CONDUITS.
   a. ANY 725.04 CONDUIT SHALL HAVE GROUNDING BUSHINGS INSTALLED AT ALL TERMINATION POINTS. THE BUSHING MATERIAL SHALL BE COMPATIBLE WITH GALVANIZED STEEL CONDUIT AND THE GROUNDING LUG MATERIAL SHALL BE COMPATIBLE FOR USE WITH COPPER WIRE. THREADED OR COMPRESSION TYPE BUSHINGS MAY BE USED.
   b. ANY 725.05 CONDUIT SHALL HAVE THE INSIDE AND OUTSIDE DIAMETERS OF THE CONDUIT DEBURRED AT ALL TERMINATION POINTS.
   c. BOTH ENDS OF METALLIC CONDUIT SHALL BE BONDED TO THE EQUIPMENT GROUNDING CONDUCTOR.
   d. METALLIC CONDUIT MAY BE BONDED TO METALLIC BOXES THROUGH THE USE OF CONDUIT FITTINGS UL APPROVED FOR THIS TYPE OF CONNECTION, WITH THE BOX BONDED TO THE EQUIPMENT GROUNDING CONDUCTOR.
3. WIRE FOR GROUNDING AND BONDING.
   a. USE INSULATED, COPPER WIRE FOR THE EQUIPMENT GROUNDING CONDUCTOR. BONDING JUMPERS IN BOXES AND ENCLOSURES MAY BE BARE OR INSULATED COPPER WIRE. WIRE SIZE SHALL BE AS FOLLOWS:
      i. USE SAME SIZE EQUIPMENT GROUNDING CONDUCTOR AS THE DUCT CABLE OR DISTRIBUTION CABLE CIRCUIT CONDUCTORS, WITH THE MINIMUM CONDUCTOR SIZE OF #4 AWG. BONDING JUMPERS WILL BE MINIMUM SIZE #4 AWG.
      ii. THE INSULATION SHALL BE GREEN OR GREEN WITH YELLOW STRIPE(S). FOR #4 AWG OR LARGER, INSULATION MAY ALSO BE BLACK WITH GREEN TAPE/LABELS INSTALLED AT ALL ACCESS POINTS.
4. GROUND ROD.
   a. A 3/4 INCH SCHEDULE 40 PVC CONDUIT WILL BE USED IN FOUNDATIONS AND CONCRETE WALLS FOR THE GROUNDING CONDUCTOR (GROUND WIRE) RACEWAY TO THE GROUND ROD. SHOULD METALLIC CONDUIT BE USED, BOTH ENDS OF THE CONDUIT SHALL BE BONDED TO THE GROUNDING CONDUCTOR.
   b. THE TYPICAL GROUNDING CONDUCTOR (GROUND WIRE) SHALL BE #4 AWG, INSULATED, COPPER.

GROUNDING AND BONDING (CONTINUED)

5. POWER SERVICE AND DISCONNECT SWITCH.
   a. AT THE POWER SERVICE LOCATION, THE GROUNDING CONDUCTOR (GROUND WIRE) FROM THE DISCONNECT SWITCH NEUTRAL (AC-) BAR TO THE GROUND ROD SHALL BE A CONTINUOUS, UNSPLICED CONDUCTOR. IF SPLICED, IT SHALL BE AN EXOTHERMIC WELD BUTT SPLICE.
   b. THE SERVICE NEUTRAL (AC-) SHALL ONLY BE CONNECTED TO GROUND AT THE PRIMARY POWER SERVICE DISCONNECT SWITCH.
   i. IF SECONDARY DISCONNECT SWITCHES ARE CONNECTED AFTER THE PRIMARY DISCONNECT SWITCH, THE NEUTRAL (AC-) SHALL ONLY BE GROUNDED AT THE PRIMARY SWITCH. EQUIPMENT GROUNDING CONDUCTORS SHALL BE BROUGHT TO THE PRIMARY SWITCH, BUT SHALL BE GROUNDED AT BOTH SECONDAY AND PRIMARY SWITCHES.
6. STRUCTURE GROUNDING
   HL-50.21 SHOWS A 1/0 AWG STRANDED COPPER CABLE USED FOR STRUCTURE GROUNDING. ADDITIONALLY, THIS SAME CABLE SHALL BE INSULATED AND ANY CONNECTIONS AND BARE COPPER STRANDS EXPOSED TO CONCRETE SHALL BE COVERED WITH MASTIC TO PREVENT CONTACT WITH THE CONCRETE.
7. PAYMENT
   ALL MATERIALS AND WORK REQUIRED TO COMPLETE THE EFFECTIVE GROUND FAULT CURRENT PATH SYSTEM ARE INCIDENTAL TO THE CONDUCTORS INSTALLED BY THE CONTRACT.

ITEM 625, DISTRIBUTION CABLE REMOVED, AS PER PLAN

THE CONTRACTOR SHALL REMOVE AND DISPOSE OF ALL EXISTING DISTRIBUTION CABLE THAT IS NOT TO REMAIN IN SERVICE. DISTRIBUTION CABLE REMOVAL SHALL INCLUDE, BUT IS NOT LIMITED TO, THE FOLLOWING LOCATIONS UNLESS OTHERWISE NOTED:

IR-75: FROM STA. 407+30 TO STA. 485+73.5
SR-562: FROM STA. 5+00 TO STA. 35+23

THE CONTRACTOR SHALL NOT REMOVE DISTRIBUTION CABLE SERVICING THE SURFACE STREET LIGHTING SYSTEMS UNLESS EXPLICITLY STATED IN THE PLANS.

EXISTING LIGHTING CONDUIT WITH CIRCUIT CABLES CALLED OUT FOR REMOVAL MAY BE ABANDONED IN PLACE, UNLESS IT CONFLICTS WITH ANY PROPOSED IMPROVEMENTS, IN WHICH CASE IT SHALL BE REMOVED. ANY CONDUIT THAT IS REQUIRED TO BE REMOVED SHALL BE INCIDENTAL TO THIS PAY ITEM.

THE FOLLOWING ESTIMATED QUANTITY HAS BEEN INCLUDED FOR USE AND CARRIED TO THE LIGHTING SUBSUMMARY:

ITEM 625, DISTRIBUTION CABLE REMOVED, AS PER PLAN, 42,580 FT.

ITEM 625, SPECIAL - MAINTAIN EXISTING LIGHTING

EXISTING ROADWAYS WHICH ARE TO REMAIN OPEN TO TRAFFIC DURING CONSTRUCTION OF THIS PROJECT AND WHICH ARE LIGHTED SHALL HAVE THE LIGHTING MAINTAINED AS DESCRIBED HEREIN.

BEFORE ANY WORK IS STARTED IN THE IMMEDIATE VICINITY OF THE EXISTING LIGHTING CIRCUITS, REPRESENTATIVES OF ODOT, THE MAINTAINING AGENCY AND THE CONTRACTOR SHALL MAKE A VISUAL INSPECTION OF THE EXISTING ROADWAY LIGHTING CIRCUITS TO BE MAINTAINED. DURING THIS INSPECTION, A WRITTEN RECORD OF THE CONDITION OF EXISTING LIGHTING SHALL BE MADE BY ODOT'S REPRESENTATIVE. THIS WRITTEN REPORT SHALL NOTE INDIVIDUAL LUMINAIRES WHICH ARE NOT IN WORKING ORDER, INDIVIDUAL POLES WHICH ARE NOT STANDING, AND INDIVIDUAL CIRCUITS WHICH ARE NOT IN WORKING ORDER. THE COMPLETED REPORT SHALL BE SIGNED BY THE REPRESENTATIVES OF ODOT, THE MAINTAINING AGENCY AND THE CONTRACTOR.

Preliminary Plans - Not to be used for Construction

CALCULATED DRM CHECKED JDS

LIGHTING NOTES

HAM-75/7.85

777
1047

J:\20110903\ODOT\HAM\77889\lighting\sheets\77889LN001.dgn 5/22/2026 10:31:30 AM hbrendlinger

ITEM 625, SPECIAL - MAINTAIN EXISTING LIGHTING (CONTINUED)

IF, AS A RESULT OF THIS INSPECTION, IT IS DETERMINED THAT THE CONDITION OF THE EXISTING SYSTEM IS BELOW THAT REQUIRED FOR THE SAFETY OF THE TRAVELING PUBLIC, THEN THE MAINTAINING AGENCY SHALL MAKE THE REPAIRS NECESSARY TO RETURN THE SYSTEM TO AN ACCEPTABLE CONDITION. FOLLOWING THESE REPAIRS, THE SYSTEM SHALL AGAIN BE INSPECTED AND A REPORT SHALL BE MADE AND SIGNED AS OUTLINED HEREIN.

WHEN THE EXISTING SYSTEM IS IN AN ACCEPTABLE CONDITION, IT SHALL BE TURNED OVER TO THE CONTRACTOR WHO SHALL THEN BE REQUIRED TO MAINTAIN THE EXISTING LIGHTING TO THE CONDITION OUTLINED IN THIS REPORT WITH THE EXCEPTION OF KNOCKDOWNS DUE TO TRAFFIC ACCIDENTS.

REPLACEMENT OF KNOCKED DOWN UNITS SHALL BE DONE ONLY WHEN THE ENGINEER HAS DETERMINED THAT THE REPLACEMENT OF THE KNOCKED DOWN UNIT IS NECESSARY AND SHALL BE PAID SEPARATELY ON A UNIT BASIS.

BETTERMENTS SHALL BE COVERED IN ITEMS OF WORK PERTAINING TO THE CONSTRUCTION OF PERMANENT IMPROVEMENT.

WHEN THE SEQUENCE OF CONSTRUCTION ACTIVITIES REQUIRES, OR SHOULD THE CONTRACTOR DESIRE, THE REMOVAL OF THE EXISTING LIGHTING BEFORE THE NEW LIGHTING IS OPERATIONAL, THE CONTRACTOR SHALL BE RESPONSIBLE FOR PROVIDING TEMPORARY LIGHTING ON THIS PORTION OF THE ROADWAY.

PRIOR TO INSTALLING SUCH LIGHTING, THE CONTRACTOR SHALL PREPARE AND SUBMIT FOUR SETS OF THE TEMPORARY LIGHTING PLAN TO THE ENGINEER FOR REVIEW AND APPROVAL.

THIS PLAN SHALL SHOW LOCATIONS OF POLES, LENGTHS OF BRACKET ARMS, STYLES OF LUMINAIRES, MOUNTING HEIGHTS, WIRING METHODS AND OTHER PERTINENT INFORMATION. THE TEMPORARY LIGHTING SHALL PROVIDE AN AVERAGE INITIAL INTENSITY OF 1.2 FOOTCANDLES WITH AN AVERAGE TO MINIMUM UNIFORMITY NOT TO EXCEED 3:1. MOUNTING HEIGHT OF TEMPORARY LUMINAIRES SHALL NOT BE LESS THAN 30 FEET, AND THE MINIMUM OVERHEAD CONDUCTOR CLEARANCE SHALL BE 20 FEET. TEMPORARY OVERHEAD CONSTRUCTION SHALL NOT BE LESS THAN GRADE "B" FOR STRENGTH REQUIREMENTS AS DEFINED BY THE NATIONAL ELECTRIC SAFETY CODE. WOOD POLES WITH OVERHEAD WIRING MAY BE USED. HOWEVER, TEMPORARY LIGHTING SHALL MEET FEDERAL AND STATE SAFETY CRITERIA. IF BREAKAWAY POLES ARE USED TO MEET THESE CRITERIA, THEN UNDERGROUND WIRING SHALL BE USED. RECONDITIONED OR USED MATERIALS MAY BE FURNISHED FOR TEMPORARY LIGHTING.

ALL MATERIALS NECESSARY TO COMPLETE THE TEMPORARY LIGHTING SHALL BE FURNISHED AND INSTALLED BY THE CONTRACTOR. WHEN NO LONGER NEEDED, THE TEMPORARY LIGHTING INSTALLATION SHALL BE REMOVED AND PROPERLY DISPOSED OF BY THE CONTRACTOR.

THE MAINTAINING AGENCY WILL PAY FOR ELECTRICAL ENERGY CONSUMED BY EXISTING POWER SERVICES AND BY PROPOSED PERMANENT POWER SERVICES AFTER ACCEPTANCE OF THE LIGHTING WORK. THE CONTRACTOR WILL PAY FOR ELECTRICAL ENERGY, INSTALLATION, REMOVAL AND MAINTENANCE OF ANY TEMPORARY POWER SERVICES.

IT SHALL BE THE CONTRACTOR'S RESPONSIBILITY TO INVESTIGATE AND REPAIR ALL HIGHWAY LIGHTING OUTAGES WITHIN A 72 HOUR TIMEFRAME.

DISINCENTIVE: $7,500 PER DAY - BEGINNING AFTER THE ALLOWABLE 72 HOUR DOWNTIME.

ITEM 625, SPECIAL - MAINTAIN EXISTING LIGHTING (CONTINUED)

THE LUMP SUM PRICE BID FOR ITEM 625, SPECIAL, MAINTAIN EXISTING LIGHTING SHALL INCLUDE PAYMENT FOR ALL LABOR, EQUIPMENT, MATERIALS AND INCIDENTALS NECESSARY TO MAINTAIN THE EXISTING LIGHTING AS SPECIFIED HEREIN.

ITEM 625, SPECIAL - REPLACEMENT OF EXISTING LIGHTING UNIT

THIS ITEM SHALL BE FOR THE REPLACEMENT OF ONE EXISTING LIGHTING UNIT AND SHALL INCLUDE A POLE, LUMINAIRE, AND ANY FOUNDATION REPAIR NECESSARY (UP TO AND INCLUDING FOUNDATION REPLACEMENT, CONNECTOR KITS AND CABLES).

THE FOLLOWING ESTIMATED QUANTITY HAS BEEN INCLUDED FOR USE AND CARRIED TO THE LIGHTING SUBSUMMARY:

ITEM 625, SPECIAL - REPLACEMENT OF EXISTING LIGHTING UNIT, 2 EACH.

PAYMENT WILL BE MADE AT THE UNIT BID PRICE FOR EACH CMS ITEM 625, SPECIAL, REPLACEMENT OF EXISTING LIGHTING UNIT WHICH SHALL BE FULL COMPENSATION FOR ALL LABOR, MATERIALS AND INCIDENTALS REQUIRED TO COMPLETE THIS ITEM IN A SATISFACTORY AND WORKMANLIKE MANNER.

CONDUIT EXPANSION AND DEFLECTION

EXPANSION FITTINGS SHALL BE OZ TYPE AX, CROUSE HINDS TYPE XJG, OR EQUAL APPROVED BY THE ENGINEER. EACH EXPANSION FITTING SHALL PROVIDE EITHER 4 OR 8 INCHES TOTAL MOVEMENT AS SPECIFIED BY THE PLAN DETAILS AND SHALL HAVE AN EXTERNAL COPPER BONDING JUMPER, UNLESS SPECIFIED OTHERWISE BY THE PLAN DETAILS.

DEFLECTION COUPLINGS SHALL BE OZ TYPE DX, CROUSE HINDS TYPE XD, OR EQUAL APPROVED BY THE ENGINEER. EACH DEFLECTION COUPLING SHALL HAVE AN EXTERNAL COPPER BONDING JUMPER, UNLESS SPECIFIED OTHERWISE BY THE PLAN DETAILS. MINIMUM DEFLECTION CAPABILITY: 25°.

EXPANSION AND DEFLECTION FITTINGS FULLY OR PARTIALLY EMBEDDED IN CONCRETE, SOIL, OR SIMILAR MATERIAL SHALL BE COMPLETELY WRAPPED IN A NEOPRENE SLEEVE OR SHEET OF 1/2-INCH MINIMUM THICKNESS. SECURE NEOPRENE WRAP WITH TIE-WRAPS PRIOR TO EMBEDMENT OF THE FITTING.

LIGHT TOWER DECALS

NEW LIGHT TOWER DECALS SHALL BE PLACED ON ALL PROPOSED LIGHT TOWERS TO MATCH THE ALPHA NUMBERIC IDENTIFIER AS DETAILED WITHIN THE PLANS TO CONFORM WITH THE ODOT CONSTRUCTION AND MATERIAL SPECIFICATIONS. THE CONTRACTOR IS ALSO REQUIRED TO REMOVE AND DISPOSE OF EXISTING DECALS AND HAVE NEW ONES INSTALLED ON ALL EXISTING TOWERS CONNECTED TO EXISTING CONTROLLER "A". IDENTIFICATION OF THE LIGHT TOWERS AND THE REMOVAL OF ANY PREVIOUS IDENTIFIER SHALL BE CONSIDERED INCIDENTAL TO THE PROJECT.

ITEM 625, CONNECTION, FUSED PULL APART, AS PER PLAN

IN ADDITION TO THE REQUIREMENTS OF ITEM 625, THE CONTRACTOR SHALL REMOVE THE PORTION OF THE EXISTING CONNECTOR KIT FROM THE END OF THE POLE AND BRACKET CABLES TO PERMIT THE NEW CONNECTION TO BE INSTALLED.

PAYMENT WILL BE MADE AT THE UNIT PRICE BID UNDER ITEM 625, "CONNECTION, FUSED PULL APART, AS PER PLAN" FOR EACH CONNECTION AND SHALL BE FULL COMPENSATION FOR ALL MATERIAL, LABOR, EQUIPMENT AND INCIDENTALS NECESSARY TO COMPLETE THIS ITEM IN A WORKMANLIKE MANNER.

ITEM 625, LIGHT TOWER FOUNDATION, MISC.: MEDIAN, 36" X 20' DEEP

LIGHT TOWER FOUNDATIONS INSTALLED IN THE MEDIAN BARRIER SHALL BE AS PER HL-20.24.

PAYMENT SHALL BE AS PER ITEM 625 FOR EACH FOUNDATION.

ITEM 625, LUMINAIRE, HIGH MAST, SOLID STATE (LED), AS PER PLAN, 480V

IN ADDITION TO MEETING THE REQUIREMENTS OF ODOT SUPPLEMENTAL SPECIFICATIONS 813 AND 913, THE FOLLOWING SHALL APPLY:

LUMINAIRES FOR HIGH-MAST LIGHTING UNITS WITH SYMMETRIC DISTRIBUTION SHALL BE:

HOLOPHANE, HMLED4-P1-30K-HVOLT-HGR-AW
GE, ERHM-03-5-30-VW-7-30-GRAY
COOPER, CST-CA6-230-730-8-T5-AP

OR EQUAL AS APPROVED BY THE ENGINEER.

IN ADDITION, OTHER LUMINAIRES WILL BE CONSIDERED IF THE DESIGNED INTENSITY AND UNIFORMITY ARE PROVIDED USING THE DESIGNED POLE LOCATIONS AND THE DESIGNED NUMBER AND TYPE OF FIXTURES PER POLE.

PAYMENT WILL BE MADE AT THE UNIT PRICE BID UNDER C&MS ITEM 625, LUMINAIRE, HIGH MAST, SOLID STATE (LED), AS PER PLAN, 480V, FOR EACH LUMINAIRE WHICH SHALL BE FULL COMPENSATION FOR ALL LABOR, MATERIALS AND INCIDENTALS REQUIRED TO COMPLETE THIS ITEM IN A SATISFACTORY AND WORKMANLIKE MANNER.

ITEM 625, LUMINAIRE, LOW MAST, SOLID STATE (LED), AS PER PLAN, (VOLTAGE)

IN ADDITION TO MEETING THE REQUIREMENTS OF ODOT SUPPLEMENTAL SPECIFICATIONS 813 AND 913, THE FOLLOWING SHALL APPLY:

LUMINAIRES FOR LOW-MAST LIGHTING UNITS WITH SYMMETRIC DISTRIBUTION OPERATING AT 240V SHALL BE:

HOLOPHANE, HMLED4-P1-30K-MVOLT-HGR-AW
GE, ERHM-03-3-30-VW-7-30-GRAY
COOPER, CST-CA6-230-730-3-T5-AP

OR EQUAL AS APPROVED BY THE ENGINEER.

LUMINAIRES FOR LOW-MAST LIGHTING UNITS WITH SYMMETRIC DISTRIBUTION OPERATING AT 480V SHALL BE:

HOLOPHANE, HMLED4-P1-30K-HVOLT-HGR-AW
GE, ERHM-03-5-30-VW-7-30-GRAY
COOPER, CST-CA6-230-730-8-T5-AP

OR EQUAL AS APPROVED BY THE ENGINEER.

IN ADDITION, OTHER LUMINAIRES WILL BE CONSIDERED IF THE DESIGNED INTENSITY AND UNIFORMITY ARE PROVIDED USING THE DESIGNED POLE LOCATIONS AND THE DESIGNED NUMBER AND TYPE OF FIXTURES PER POLE.

LOW MAST LUMINAIRES THAT ARE TO BE OWNED AND MAINTAINED BY ODOT SHALL OPERATE AT 480V, AND LOW MAST LUMINAIRES THAT ARE TO BE OWNED AND MAINTAINED BY THE CITY OF CINCINNATI SHALL OPERATE AT 240V.

PAYMENT WILL BE MADE AT THE UNIT PRICE BID UNDER C&MS ITEM 625, LUMINAIRE, LOW MAST, SOLID STATE (LED), AS PER PLAN, (VOLTAGE) FOR EACH LUMINAIRE WHICH SHALL BE FULL COMPENSATION FOR ALL LABOR, MATERIALS AND INCIDENTALS REQUIRED TO COMPLETE THIS ITEM IN A SATISFACTORY AND WORKMANLIKE MANNER.

ITEM 625, LUMINAIRE, UNDERPASS, SOLID STATE (LED), AS PER PLAN, (VOLTAGE)

IN ADDITION TO THE REQUIREMENTS OF ODOT'S CONSTRUCTION AND MATERIAL SPECIFICATIONS, LUMINAIRES FOR UNDERPASS LIGHTING SHALL BE AS FOLLOWS:

LUMINAIRES FOR UNDERPASS LIGHTING UNITS OPERATING AT 240V SHALL BE:

HOLOPHANE, TNLEDMED-PK1-30K-MVOLT-UDP-DGRA-SCRW
COOPER, GWC-SA1-C-730-3-T4FT-AP

OR EQUAL AS APPROVED BY THE ENGINEER.

LUMINAIRES FOR UNDERPASS LIGHTING UNITS OPERATING AT 480V SHALL BE:

HOLOPHANE, TNLEDMED-PK1-30K-HVOLT-UDP-DGRA-SCRW
COOPER, GWC-SA1-C-730-8-T4FT-AP

OR EQUAL AS APPROVED BY THE ENGINEER.

LUMINAIRES FOR UNDERPASS LIGHTING UNITS WHICH ARE WALL MOUNTED SHALL BE FURNISHED WITH AN INTEGRAL FUSE HOLDER AND 10-AMPERE FUSES. UNDERPASS LUMINAIRES THAT ARE TO BE OWNED AND MAINTAINED BY ODOT SHALL OPERATE AT 480V, AND UNDERPASS LUMINAIRES THAT ARE TO BE OWNED AND MAINTAINED BY THE CITY OF CINCINNATI SHALL OPERATE AT 240V.

PAYMENT WILL BE MADE AT THE UNIT PRICE BID UNDER C&MS ITEM 625, LUMINAIRE, UNDERPASS, AS PER PLAN, (VOLTAGE) FOR EACH LUMINAIRE WHICH SHALL BE FULL COMPENSATION FOR ALL LABOR, MATERIALS, AND INCIDENTALS REQUIRED TO COMPLETE THIS ITEM IN A SATISFACTORY AND WORKMANLIKE MANNER.

HIGH VOLTAGE TEST WAIVED FOR EXISTING CIRCUITS

THE HIGH VOLTAGE TEST SHALL NOT BE PERFORMED ON ANY CIRCUITS CONSTRUCTED BY THIS PROJECT THAT SPLICE WITH EXISTING CIRCUITRY TO REMAIN, SINCE THE TEST COULD DAMAGE THE PORTION OF THE COMPLETED CIRCUIT WHICH HAS BEEN IN SERVICE PRIOR TO THIS PROJECT.

ITEM 625, LIGHT POLE FOUNDATION, 24" X 6' DEEP, AS PER PLAN

THIS ITEM OF WORK SHALL CONSIST OF INSTALLING A NEW FOUNDATION FOR A RELOCATED LIGHT POLE AT THE LOCATION SPECIFIED.

CONTRACTOR IS REQUIRED TO FIELD MEASURE EXISTING LIGHT POLE BOLT CIRCLE AND MATCH WITH NEW FOUNDATION.

PAYMENT WILL BE MADE AT THE UNIT PRICE BID UNDER ITEM 625, "LIGHT POLE FOUNDATION, 24" X 6', AS PER PLAN" FOR EACH LIGHT POLE FOUNDATION WHICH SHALL INCLUDE ALL LABOR, MATERIALS AND INCIDENTALS REQUIRED TO COMPLETE THIS ITEM IN A SATISFACTORY AND WORKMANLIKE MANNER.

Preliminary Plans - For Reference Only

J:\2011093\ODOT\HAM\77889\lighting\sheets\77889LN002.dgn 5/22/2026 10:31:30 AM hbrendlinger

ITEM 625, LIGHTING, MISC.: REMOVAL OF UNDERPASS LIGHTING

THIS ITEM OF WORK SHALL CONSIST OF REMOVING ALL CONDUITS, WIRING, UNDERPASS LIGHTING FIXTURES, JUNCTION BOXES, AND ANY OTHER EXISTING MISCELLANEOUS APPURTENANCES THAT CONTRIBUTE TO THE OVERALL UNDERPASS LIGHTING SYSTEM.

UNDERPASS LIGHTING FIXTURES SHALL BE RETURNED TO ODOT AFTER REMOVAL. ALL OTHER EQUIPMENT SHALL BE PROPERLY DISPOSED OF BY THE CONTRACTOR.

THE PRICE BID FOR ITEM 625 "LIGHTING MISC.: REMOVAL OF UNDERPASS LIGHTING" SHALL INCLUDE PAYMENT FOR ALL LABOR, MATERIALS, AND INCIDENTALS REQUIRED TO COMPLETE THIS ITEM IN A SATISFACTORY AND WORKMANLIKE MANNER. THERE ARE 3 EXISTING UNDERPASS LIGHTING SYSTEMS THAT THE CONTRACTOR IS REQUIRED TO REMOVE. THESE EXISTING UNDERPASS LIGHTING SYSTEMS ARE ON RAMP J, LAIDLAW AVENUE, AND TOWNE STREET.

PAYMENT SHALL BE PER EACH SYSTEM.

ITEM 625, RE-ERECT EXISTING LIGHT TOWER, AS PER PLAN
ITEM 625, LIGHT POLE (INSTALLATION ONLY), AS PER PLAN

THIS ITEM OF WORK SHALL CONSIST OF INSTALLING AN EXISTING LIGHT POLE/TOWER REMOVED FROM A PREVIOUS LOCATION ON THE PROJECT OR SUPPLIED TO THE PROJECT SITE BY OTHERS.

THE CONTRACTOR SHALL CLEAN THE LIGHT POLE/TOWER AND MAKE ANY REPAIRS NEEDED FOR THE POLE TO BE IN GOOD SERVICEABLE CONDITION IF NEEDED. THE EXISTING POLE NUMBER DECAL SHALL BE REMOVED IF IT IS IN POOR CONDITION OR THE POLE NUMBER HAS CHANGED. A POLE NUMBER DECAL SHALL BE SUPPLIED AND APPLIED IF THE EXISTING DECAL IS REMOVED OR MISSING.

THE CONTRACTOR SHALL FURNISH AND INSTALL NEW ANCHOR BOLTS FOR THE RE-ERECTED POLE OR TOWER. THE SETTING OF THE ANCHOR BOLTS SHALL BE INCLUDED WITH THE FOUNDATION.

PAYMENT WILL BE MADE AT THE UNIT PRICE BID UNDER ITEM 625, "LIGHT POLE (INSTALLATION ONLY), AS PER PLAN" OR ITEM 625, "RE-ERECT EXISTING LIGHT TOWER" FOR EACH POLE/TOWER INSTALLED AND SHALL BE FULL COMPENSATION FOR ALL MATERIAL, LABOR, EQUIPMENT AND INCIDENTALS NECESSARY TO COMPLETE THIS ITEM IN A WORKMANLIKE MANNER.

ITEM 625, ARC FLASH CALCULATIONS AND LABEL, (BY LOCATION)

UNDER THIS ITEM OF WORK, THE CONTRACTOR SHALL CALCULATE THE ARC FLASH HAZARD FOR NEW AND MODIFIED EXISTING STREET LIGHTING ELECTRICAL ENCLOSURES AT THE LOCATION PROVIDED, PROVIDING DOCUMENTATION OF THE CALCULATIONS, AND APPLYING THE APPROPRIATE EXTERNAL ARC FLASH HAZARD EQUIPMENT LABEL PER THE REQUIREMENTS OF SUPPLEMENTAL SPECIFICATION 825. THE FOLLOWING ITEMS HAVE BEEN CARRIED TO THE LIGHTING SUBSUMMARY:

ITEM 625, ARC FLASH CALCULATIONS AND LABEL, PS-A, 1 EACH
ITEM 625, ARC FLASH CALCULATIONS AND LABEL, PS-B, 1 EACH
ITEM 625, ARC FLASH CALCULATIONS AND LABEL, PS-C, 1 EACH
ITEM 625, ARC FLASH CALCULATIONS AND LABEL, PS-F, 1 EACH
ITEM 625, ARC FLASH CALCULATIONS AND LABEL, PS-G, 1 EACH
ITEM 625, ARC FLASH CALCULATIONS AND LABEL, PS-H, 1 EACH

PAYMENT SHALL BE PER SUPPLEMENTAL SPECIFICATION 825.

ITEM 625, MEDIAN LIGHT POLE FOUNDATION, 10' DEEP, AS PER PLAN

THE LOW MAST LIGHT FOUNDATION AT SR 526 STA. 15+57.60 WILL BE CONSTRUCTED INSIDE THE 7.0' WIDE CONCRETE BARRIER, SINGLE SLOPE, TYPE C1, AS PER PLAN

THE LOW MAST LIGHT POLE FOUNDATION AT IR 75 STA 461+75.3 WILL BE CONSTRUCTED INSIDE THE 40' BARRIER TRANSITION FOR THE OVERHEAD SIGN AT STA 462+25.00

POWER SERVICE DATA

POWER SERVICE	LINE VOLTAGE (VOLTS)	CONNECTED LOAD (KVA)	ENCLOSURE RATING (AMPS)	CIRCUIT NO.	CIRCUIT LOAD (AMPS)	CIRCUIT FUSE SIZE (AMPS)	CIRCUIT CABLE SIZE (AWG)	MAINTAINING AGENCY
PS-A	240/480	6.6	60	A-A	13.6	30	4	ODOT
PS-B	240/480	14.8	60	B-A	24.0	60	4	ODOT
				B-B	6.8	30	4	
PS-C	240/480	9.3	60	C-A	6.3	30	4	ODOT
				C-B	7.7	30	4	
PS-F	120/240	0.3	60	F-A	1.1	30	4	CITY OF CINCINNATI
PS-G	120/240	3.1	60	G-A	5.3	30	4	CITY OF CINCINNATI
				G-B	7.4	30	4	
PS-H	120/240	0.3	60	H-A	0.9	30	4	CITY OF CINCINNATI

ITEM 625, LIGHTING, MISC.: REMOVAL OF EXISTING TEMPORARY LIGHTING

UNDER THIS ITEM OF WORK, THE CONTRACTOR SHALL COORDINATE WITH ODOT FOR THE REMOVAL OF THE EXISTING TEMPORARY LIGHTING SYSTEM INSTALLED BETWEEN IR 75 STA. 472+00 AND 486+00. TEMPORARY LIGHTING SHALL NOT BE REMOVED UNTIL THE PROPOSED LIGHTING IS INSTALLED AND OPERATIONAL OR UNTIL AN ALTERNATE MEANS OF HIGHWAY LIGHTING IS IN PLACE, AND THE REQUIREMENTS OF ITEM 625, SPECIAL-MAINTAIN EXISTING LIGHTING ARE SATISFIED. THE TEMPOARARY LIGHTING SYSTEM THAT IS TO BE REMOVED BY THE CONTRACTOR IS NOT SHOWN ON THE PLANS.

THE LUMP SUM PRICE BID FOR ITEM 625, LIGHTING, MISC.: REMOVAL OF EXISTING TEMPORARY LIGHTING SHALL INCLUDE PAYMENT FOR ALL LABOR, EQUIPMENT, MATERIALS, AND INCIDENTALS NECESSARY TO COMPLETE THIS ITEM IN A SATISFACTORY AND WORKMANLIKE MANNER.

TYPICAL LIGHT POLE/TOWER INFORMATION

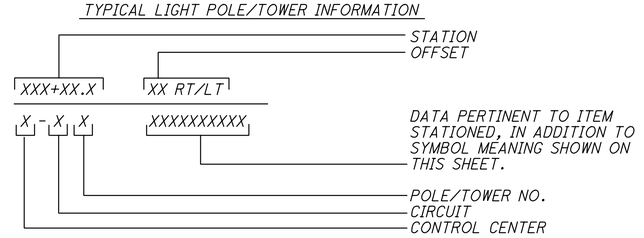

PLAN LEGEND

EXISTING LIGHT TOWER

EXISTING LIGHT POLE

EXISTING UNDERPASS LIGHT

PROPOSED UNDERPASS LIGHT

PROPOSED MEDIAN MOUNTED 50' POLE WITH LOW MAST ARM, PER HL-10.11 WITH 1-LOW MAST LED SYMMETRIC MEDIUM CUT-OFF LUMINAIRE. PROVIDE BASE PLATE, ANCHOR BOLTS, JUNCTION BOX, AND FOUNDATION AS DETAILED ON HL-20.13 FOR MEDIAN BARRIER MOUNTED LIGHT POLES.

PROPOSED MEDIAN BARRIER OR GROUND MOUNTED 100' LIGHT TOWER WITH 4-LED SYMMETRIC MEDIUM CUT-OFF HIGH MAST LUMINAIRES. TOWERS SHALL BE PER HL-10.31, GROUND MOUNTED FOUNDATIONS SHALL BE PER HL-20.21 AND MEDIAN MOUNTED FOUNDATIONS SHALL BE PER HL 20.24, WITH ALL WIRING PER HL-60.21.

PROPOSED MEDIAN BARRIER OR GROUND MOUNTED 100' LIGHT TOWER WITH 6-LED SYMMETRIC MEDIUM CUT-OFF HIGH MAST LUMINAIRES. TOWERS SHALL BE PER HL-10.31, GROUND MOUNTED FOUNDATIONS SHALL BE PER HL-20.21 AND MEDIAN MOUNTED FOUNDATIONS SHALL BE PER HL 20.24, WITH ALL WIRING PER HL-60.21.

PROPOSED PULL BOX (TYPE & SIZE NOTED ON THE PLANS)

EXISTING PULL BOX

PROPOSED POWER SERVICE
GROUND MOUNTED PER HL-40.20 FOR ODOT MAINTAINED CONTROLLER
POLE MOUNTED PER ES-7 FOR CITY OF CINCINNATI MAINTAINED CONTROLLER

EXISTING POWER SERVICE

PROPOSED UNDERGROUND LIGHTING CIRCUIT IN DUCT CABLE (SIZE NOTED ON THE PLANS)

PROPOSED LIGHTING CONDUIT , OF SIZE AND TYPE AS NOTED ON THE PLANS, CONTAINING DISTRIBUTION CABLE OF SIZE, TYPE AND NUMBER AS NOTED ON THE PLANS; LOCATED UNDERGROUND OR ON STRUCTURE, AS NOTED ON THE PLANS.

EXISTING LIGHTING CONDUIT

Preliminary Plans
Not for Construction or Reference Only

CALCULATED DRM CHECKED JDS

LIGHTING NOTES AND LEGEND

HAM-75-7.85

779
1047

J:\20110903\ODOT\HAM\77889\lighting\sheets\77889LM001.dgn 5/22/2026 10:31:31 AM hbrendlinger

SHEET NUMBER												ITEM	ITEM EXT.	TOTALS CARRIED TO GENERAL SUMMARY	UNIT	DESCRIPTION	SEE SHEET NO.
777	778	779	781	782	783	784	785	786	787	788							
			1									202	62000	1	EACH	JUNCTION BOX REMOVED	
						2	14	32	30	10		625	00450	88	EACH	CONNECTION, FUSED PULL APART	
										14		625	00451	14	EACH	CONNECTION, FUSED PULL APART, AS PER PLAN	778
						24	15	3		6		625	00480	48	EACH	CONNECTION, UNFUSED PERMANENT	
						1	7	16	9	5		625	10494	38	EACH	LIGHT POLE, LOW MAST, ALM50	
									6	3		625	10503	9	EACH	LIGHT POLE (INSTALLATION ONLY), AS PER PLAN	779
						5						625	13200	5	EACH	LIGHT TOWER, BBBB100	
						1	4		1			625	13400	6	EACH	LIGHT TOWER, BBBBBB100	
										3		625	14001	3	EACH	LIGHT POLE FOUNDATION, 24" X 6' DEEP, AS PER PLAN	778
						1	7	15	14	5		625	14306	42	EACH	MEDIAN LIGHT POLE FOUNDATION, 10' DEEP	
								1	1			625	14307	2	EACH	MEDIAN LIGHT POLE FOUNDATION, 10' DEEP, AS PER PLAN	779
						3	1					625	15100	4	EACH	LIGHT TOWER FOUNDATION, 36" X 20' DEEP	
						3			1			625	15200	4	EACH	LIGHT TOWER FOUNDATION, 36" X 25' DEEP	
							3		1			625	15700	4	EACH	LIGHT TOWER FOUNDATION, MISC.: MEDIAN, 36" X 20' DEEP	778
						3795	9474	7005	8759	2730		625	23200	31763	FT	NO. 4 AWG 2400 VOLT DISTRIBUTION CABLE	
										2496		625	23300	2496	FT	NO. 2 AWG 2400 VOLT DISTRIBUTION CABLE	
						150	1050	2400	2250	750		625	23400	6600	FT	NO. 10 AWG POLE AND BRACKET CABLE	
						2062						625	24320	2062	FT	1-1/2" DUCT CABLE WITH THREE NO. 4 AWG 2400 VOLT CABLES	
						225	244			758		625	25500	1227	FT	CONDUIT, 3", 725.04	
						216	89	81				625	25605	386	FT	CONDUIT, 4", 725.051, AS PER PLAN	777
						354	489			477		625	25908	1320	FT	CONDUIT, JACKED OR DRILLED, 725.052, 3"	
						32	24		6			625	26263	62	EACH	LUMINAIRE, HIGH MAST, SOLID STATE (LED), AS PER PLAN, 480V	778
									7	5		625	26273	12	EACH	LUMINAIRE, LOW MAST, SOLID STATE (LED), AS PER PLAN, 240V	778
						1	7	16	2			625	26273	26	EACH	LUMINAIRE, LOW MAST, SOLID STATE (LED), AS PER PLAN, 480V	778
							4	3				625	27503	7	EACH	LUMINAIRE, UNDERPASS, SOLID STATE (LED), AS PER PLAN, 240V	778
						7						625	27503	7	EACH	LUMINAIRE, UNDERPASS, SOLID STATE (LED), AS PER PLAN, 480V	778
									12	3		625	27561	15	EACH	LUMINAIRE, INSTALLATION ONLY, AS PER PLAN	777
						2197	122			758		625	29000	3077	FT	TRENCH	
						2	2	2				625	29910	6	EACH	TRANSITION JUNCTION BOX	
						4	13	16	17	7		625	29930	57	EACH	MEDIAN JUNCTION BOX	
						7	3	1		6		625	30700	17	EACH	PULL BOX, 725.08, 18"	
							1					625	30706	1	EACH	PULL BOX, 725.08, 24"	
			20	14	11							625	31510	45	EACH	PULL BOX REMOVED	
						22	33	50	39	8		625	32000	152	EACH	GROUND ROD	
						3	1	2				625	33000	6	EACH	STRUCTURE GROUNDING SYSTEM	
							2	1		1		625	34001	4	EACH	POWER SERVICE, AS PER PLAN	777
									1			625	35021	1	EACH	RE-ERECT EXISTING LIGHT TOWER, AS PER PLAN	779
						2197	122			758		625	36010	3077	FT	UNDERGROUND WARNING/MARKING TAPE	
						1	1	1				625	37101	3	EACH	SERVICE TO UNDERPASS LIGHTING, AS PER PLAN	777
												625	38000	LUMP		HIGH VOLTAGE TEST	
												SPECIAL	62540000	LUMP		MAINTAIN EXISTING LIGHTING	777
	2											SPECIAL	62540010	2	EACH	REPLACEMENT OF EXISTING LIGHTING UNIT	778
			7	2								625	75350	9	EACH	LIGHT TOWER REMOVED	
			14	21	2							625	75400	37	EACH	LIGHT POLE REMOVED	
					3							625	75402	3	EACH	LIGHT POLE REMOVED FOR STORAGE	
			14	21	5							625	75500	40	EACH	LIGHT POLE FOUNDATION REMOVED	
					3							625	75504	3	EACH	LUMINAIRE REMOVED FOR STORAGE	
			42	29	2							625	75506	73	EACH	LUMINAIRE REMOVED	
			2	2								625	75510	4	EACH	POWER SERVICE REMOVED	
			7	2								625	75540	9	EACH	LIGHT TOWER FOUNDATION REMOVED	
42580												625	75551	42580	FT	DISTRIBUTION CABLE REMOVED, AS PER PLAN	777
			2		4							625	75800	6	EACH	DISCONNECT CIRCUIT	
												625	76000	1	EACH	ARC FLASH CALCULATIONS AND LABEL, PS-A	779
		1										625	76000	1	EACH	ARC FLASH CALCULATIONS AND LABEL, PS-B	779
		1										625	76000	1	EACH	ARC FLASH CALCULATIONS AND LABEL, PS-C	779
		1										625	76000	1	EACH	ARC FLASH CALCULATIONS AND LABEL, PS-F	779
		1										625	76000	1	EACH	ARC FLASH CALCULATIONS AND LABEL, PS-G	779
		1										625	76000	1	EACH	ARC FLASH CALCULATIONS AND LABEL, PS-H	779
			2	1								625	98000	3	EACH	LIGHTING, MISC.: REMOVAL OF UNDERPASS LIGHTING	779
												625	98200	LUMP		LIGHTING, MISC.: REMOVAL OF EXISTING TEMPORARY LIGHTING	779

CALCULATED CJV
CHECKED DRM

LIGHTING SUBSUMMARY

HAM-75-7.85

780
1047

Preliminary Plans - For Reference Only

J:\20110903\ODOT\HAM\77889\lighting\sheets\77889LG001.dgn 5/22/2026 10:31:31 AM hbrendlinger

REFERENCE NO.	SHEET NO.	SIDE	ROADWAY	STATION TO STATION	202 JUNCTION BOX REMOVED EACH	625 PULL BOX REMOVED EACH	625 LIGHT TOWER REMOVED EACH	625 LIGHT POLE REMOVED EACH	625 LIGHT POLE FOUNDATION REMOVED EACH	625 LUMINAIRE REMOVED EACH	625 POWER SERVICE REMOVED EACH	625 LIGHT TOWER FOUNDATION REMOVED EACH	625 DISCONNECT CIRCUIT EACH	625 LIGHTING, MISC: REMOVAL OF UNDERPASS LIGHTING EACH
1	792	LT	RAMP M	409+14									1	
2	792	LT	RAMP M	409+66		1								
3	792	RT	RAMP M	409+64		1								
4	792	LT	I.R. 75	411+20			1			4		1		
5	792	RT	I.R. 75	411+21	1									
6	792	RT	I.R. 75	411+21		1								
7	792	RT	RAMP N	411+38		1								
8	792	LT	I.R. 75	414+99			1			4		1		
9	792	RT	I.R. 75	417+16		1								
10	792	RT	I.R. 75	418+07			1			2		1		
11	792	RT	I.R. 75	418+03		1								
12	792	RT	RAMP J	418+33						3				1
13	792	LT	I.R. 75	418+44			1			2		1		
14	792	LT	I.R. 75	418+78		1								
15	792	RT	I.R. 75	421+41			1			2		1		
16	792	RT	I.R. 75	416+08						4				
17	792	RT	I.R. 75	413+67									1	
1	793	LT	I.R. 75	423+61		1								
2	793	LT	I.R. 75	423+57			1			2		1		
3	793	RT	I.R. 75	427+27				1	1	1				
4	793	LT	I.R. 75	427+87				1	1	1				
5	793	LT	I.R. 75	428+22							1			
6	793	LT	I.R. 75	428+23		1								
7	793	RT	I.R. 75	430+16				1	1	1				
8	793	LT	I.R. 75	430+24				1	1	1				
9	793	RT	I.R. 75	433+06				1	1	1				
10	793	RT	I.R. 75	433+14							1			
11	793	LT	I.R. 75	433+34				1	1	1				
12	793	LT	I.R. 75	433+57		1								
13	793	RT	I.R. 75	433+57		1								
14	793	LT	I.R. 75	434+14		1								
15	793	RT	I.R. 75	434+20		1								
16	793	LT	I.R. 75	435+46		1								
17	793	RT	I.R. 75	435+49		1								
18	793	LT	I.R. 75	435+51				1	1	1				
19	793	RT	I.R. 75	435+97				1	1	1				
20	793	RT	I.R. 75	436+45		1								
21	793	RT	I.R. 75	434+17						3				1
22	793	RT	I.R. 75	428+24		1								
1	794	RT	I.R. 75	438+79				1	1	1				
2	794	RT	I.R. 75	438+98		1								
3	794	LT	I.R. 75	439+30				1	1	1				
4	794	RT	I.R. 75	441+75				1	1	1				
5	794	RT	I.R. 75	444+65				1	1	1				
6	794	LT	I.R. 75	445+04				1	1	1				
7	794	RT	I.R. 75	447+62				1	1	1				
8	794	RT	I.R. 75	448+05		1								
1	795	LT	I.R. 75	451+11		1								
2	795	RT	I.R. 75	451+25			1			2		1		
TOTALS CARRIED TO SUBSUMMARY					1	20	7	14	14	42	2	7	2	2

CALCULATED CJV
CHECKED DRM

LIGHTING ESTIMATED QUANTITIES

HAM-75-7.85

781
1047

Preliminary Plans - For Reference Only

J:\20110903\ODOT\HAM\77889\lighting\sheets\77889LS001.dgn 5/22/2026 10:31:32 AM hbrendlinger

REFERENCE NO.	SHEET NO.	SIDE	ROADWAY	STATION TO STATION	625 PULL BOX REMOVED EACH	625 LIGHT TOWER REMOVED EACH	625 LIGHT POLE REMOVED EACH	625 LIGHT POLE FOUNDATION REMOVED EACH	625 LUMINAIRE REMOVED EACH	625 POWER SERVICE REMOVED EACH	625 LIGHT TOWER FOUNDATION REMOVED EACH	625 LIGHTING MISC: REMOVAL OF UNDERPASS LIGHTING EACH
3	795	LT	I.R. 75	451+73	1							
4	795	LT	I.R. 75	451+88					3			1
5	795	RT	I.R. 75	452+05	1							
6	795	RT	I.R. 75	452+38	1							
7	795	RT	I.R. 75	452+97	1							
8	795	RT	I.R. 75	453+23	1							
9	795	LT	I.R. 75	453+24	1							
10	795	RT	I.R. 75	453+50	1							
11	795	RT	I.R. 75	453+71						1		
12	795	LT	I.R. 75	454+47			1	1	1			
13	795	RT	I.R. 75	454+51		1			2		1	
14	795	LT	I.R. 75	457+45			1	1	1			
15	795	RT	I.R. 75	458+06			1	1	1			
16	795	LT	I.R. 75	460+56			1	1	1			
17	795	RT	I.R. 75	461+74			1	1	1			
18	795	LT	I.R. 75	463+65			1	1	1			
1	796	RT	I.R. 75	465+01			1	1	1			
2	796	RT	I.R. 75	465+40	1							
3	796	LT	I.R. 75	466+16	1							
4	796	LT	I.R. 75	467+26			1	1	1			
5	796	RT	I.R. 75	468+25			1	1	1			
6	796	LT	I.R. 75	470+06			1	1	1			
7	796	RT	I.R. 75	471+28	1							
8	796	LT	I.R. 75	471+30	1							
9	796	RT	I.R. 75	471+26						1		
10	796	RT	I.R. 75	471+46			1	1	1			
1	798	LT	S.R. 562	11+53		1			3		1	
2	798	LT	S.R. 562	12+23	1							
3	798	LT	S.R. 562	12+48	1							
4	798	LT	S.R. 562	14+80			1	1	1			
5	798	RT	S.R. 562	18+00			1	1	1			
6	798	LT	S.R. 562	19+13			1	1	1			
7	798	RT	S.R. 562	20+69			1	1	1			
1	799	LT	S.R. 562	22+10			1	1	1			
2	799	RT	S.R. 562	23+00	1							
3	799	RT	S.R. 562	23+51			1	1	1			
4	799	LT	S.R. 562	24+91			1	1	1			
5	799	RT	S.R. 562	26+44			1	1	1			
6	799	LT	S.R. 562	27+75			1	1	1			
7	799	RT	S.R. 562	29+10			1	1	1			
TOTALS CARRIED TO SUBSUMMARY					14	2	21	21	29	2	2	1

CALCULATED CJV
CHECKED DRM

LIGHTING ESTIMATED QUANTITIES

HAM-75-7.85

782
1047

Preliminary Plans - For Reference Only

J:\20110903\ODOT\HAM\77889\lighting\sheets\77889LS002.dgn 5/22/2026 10:31:33 AM hbrendlinger

REFERENCE NO.	SHEET NO.	SIDE	ROADWAY	STATION TO STATION	625 PULL BOX REMOVED EACH	625 LIGHT POLE REMOVED EACH	625 LIGHT POLE REMOVED FOR STORAGE EACH	625 LIGHT POLE FOUNDATION REMOVED EACH	625 LUMINAIRE REMOVED FOR STORAGE EACH	625 LUMINAIRE REMOVED EACH	625 DISCONNECT CIRCUIT EACH							
8	799	LT	S.R. 562	30+18		1		1		1								
9	799	RT	S.R. 562	31+22	1													
10	799	RT	S.R. 562	31+23		1		1		1								
11	799	LT	S.R. 562	31+38	1													
12	799	RT	S.R. 562	31+57	1													
13	799	RT	S.R. 562	31+82	1													
14	799	RT	S.R. 562	31+86	1													
15	799	LT	S.R. 562	32+07	1													
16	799	LT	S.R. 562	32+45			1	1	1									
17	799	LT	S.R. 562	32+76	1													
18	799	LT	S.R. 562	32+80	1													
19	799	RT	S.R. 562	32+86			1	1	1									
20	799	RT	S.R. 562	32+88	1													
21	799	RT	S.R. 562	33+86							1							
22	799	LT	S.R. 562	34+03	1													
23	799	RT	S.R. 562	34+19	1													
24	799	LT	S.R. 562	34+47			1	1	1		1							
25	799	RT	S.R. 562	34+59							1							
26	799	LT	S.R. 562	35+23							1							
TOTALS CARRIED TO SUBSUMMARY					11	2	3	5	3	2	4							

CALCULATED CJV
CHECKED DRM

LIGHTING ESTIMATED QUANTITIES

HAM-75-7.85

783
1047

Preliminary Plans - For Reference Only

J:\20110903\ODOT\HAM\77889\lighting\sheets\77889LS003.dgn 5/22/2026 10:31:33 AM hbrendlinger

REFERENCE NO.	SHEET NO.	SIDE	ROADWAY	STATION TO STATION		625 CONNECTION, FUSED PULL APART EACH	625 CONNECTION, UNFUSED PERMANENT EACH	625 LIGHT POLE, LOW MAST, ALM50 EACH	625 LIGHT TOWER, BBBB100 EACH	625 LIGHT TOWER, BBBBBB100 EACH	625 MEDIAN LIGHT POLE FOUNDATION, 10' DEEP EACH	625 LIGHT TOWER FOUNDATION, 36" X 20' DEEP EACH	625 LIGHT TOWER FOUNDATION, 36" X 25' DEEP EACH	625 NO. 4 AWG 2400 VOLT DISTRIBUTION CABLE FT	625 NO. 10 POLE AND BRACKET CABLE FT	625 1-1/2" DUCT CABLE WITH THREE NO. 4 AWG 2400 VOLT CABLES FT	625 CONDUIT, 3", 725.04 FT	625 CONDUIT, 4", 725.051, AS PER PLAN FT	625 CONDUIT, JACKED OR DRILLED, 725.052, 3" FT	625 LUMINAIRE, HIGH MAST, SOLID STATE (LED), AS PER PLAN, 480V EACH	625 LUMINAIRE, LOW MAST, SOLID STATE (LED), AS PER PLAN, 480V EACH	625 LUMINAIRE, UNDERPASS, SOLID STATE (LED), AS PER PLAN, 480V EACH	625 TRENCH FT	625 TRANSITION JUNCTION BOX EACH	625 MEDIAN JUNCTION BOX EACH	625 PULL BOX, 725.08, 18" EACH	625 GROUND ROD EACH	625 STRUCTURE GROUNDING SYSTEM EACH	625 UNDERGROUND WARNING/MARKING TAPE FT	625 SERVICE TO UNDERPASS LIGHTING, AS PER PLAN EACH
1	800	CL	I.R. 75	407+30.0	408+07.0									210																
2	800	CL	I.R. 75	408+07.0	409+58.1									543																
1	801	CL	I.R. 75	409+73.9			3																	1						
2	801	RT	I.R. 75	409+73.9	409+73.9									336					102											
3	801	RT	I.R. 75	409+73.9			3																			1				
4	801	CL	I.R. 75	409+73.9	410+05.8									126																
5	801	CL	I.R. 75	410+05.8			3																	1						
6	801	RT	RAMP M	409+95.8	410+05.8									321					97											
7	801	RT	RAMP M	409+95.8			3																			1				
8	801	RT	RAMP M	409+95.8	410+03.2									168					46											
9	801	LT	RAMP M	410+03.2																						1				
10	801	LT	RAMP M	409+14.0	410+03.2									300			90							90					90	
11	801	RT	RAMP M	409+95.8	411+47.0											155								145					145	
12	801	LT	I.R. 75	411+47.0					1			1								4							2			
13	801	LT	I.R. 75	411+47.0	415+10.0											372								362					362	
14	801	LT	I.R. 75	415+10.0					1				1							4							2			
15	801	LT	RAMP M	415+09.2	418+44.7											328								318					318	
16	801	LT	I.R. 75	418+44.7					1				1							4							2			
17	801	CL	I.R. 75	410+05.8	413+18.0									969																
18	801	CL	I.R. 75	413+18.0																						1				
19	801	CL	I.R. 75	413+18.0	413+67.0											80								70					70	
20	801	RT	I.R. 75	416+08.0																6										
21	801	LT	I.R. 75	417+49.0																						1				
22	801	CL	I.R. 75	417+49.0	419+65.0													216												
23	801	CL	I.R. 75	419+65.0																						1				
24	801	RT	RAMP J	419+80.0																			1							
25	801	RT	RAMP J	419+52.0																			1							
26	801	RT	RAMP J	419+21.0																			1							
27	801	RT	RAMP J	418+99.0																			1							
28	801	RT	RAMP J	418+51.0																			1							
29	801	RT	RAMP J	418+17.0																			1							
30	801	RT	RAMP J	417+87.0																			1							
31	801	RT	I.R. 75	418+38.5				3																		1				1
32	801	RT	I.R. 75	418+10.0	418+38.5									435			135							135					135	
33	801	RT	I.R. 75	418+10.0						1			1							6							2			
34	801	RT	I.R. 75	418+10.0	418+43.1											172								162					162	
35	801	RT	I.R. 75	418+43.1			3																			1				
36	801	RT	I.R. 75	418+43.1	13+04.8 (SR 562)											346								336					336	
37	801	RT	I.R. 75	418+43.1	418+88.3									183					51											
38	801	RT	I.R. 75	418+88.3			3																			1				
39	801	RT	I.R. 75	418+88.3	420+02.0											210								200					200	
40	801	RT	I.R. 75	420+02.0					1			1								4							2			
41	801	RT	I.R. 75	420+02.0	422+02.0											248								238					238	
42	801	RT	I.R. 75	422+02.0					1			1								4							2			
43	801	RT	I.R. 75	422+02.0	423+26.7											151								141					141	
44	801	RT	I.R. 75	417+00.0	420+00.0																							3			
45	801	LT	I.R. 75	415+63.0	434+14.0																						9				
46	801	LT	RAMP M	415+09.2	415+10.0									204					58											
47	801	LT	RAMP M	415+09.2			3																			1				
48	801	CL	I.R. 75	409+58.1		2		1			1				150						1				1		1			
TOTALS CARRIED TO SUBSUMMARY						2	24	1	5	1	1	3	3	3795	150	2062	225	216	354	32	1	7	2197	2	4	7	22	3	2197	1

CALCULATED CJV
CHECKED DRM

LIGHTING ESTIMATED QUANTITIES

HAM-75-7.85

784
1047

Preliminary Plans - For Reference Only

J:\20110903\ODOT\HAM\7.7889\lighting\sheets\77889LS004.dgn 5/22/2026 10:31:34 AM hbrendlinger

REFERENCE NO.	SHEET NO.	SIDE	ROADWAY	STATION TO STATION		625 CONNECTION, FUSED PULL APART EACH	625 CONNECTION, UNFUSED PERMANENT EACH	625 LIGHT POLE, LOW MAST, ALM50 EACH	625 LIGHT TOWER, BBBBBB100 EACH	625 MEDIAN LIGHT POLE FOUNDATION, 10' DEEP EACH	625 LIGHT TOWER FOUNDATION, 36" X 20' DEEP EACH	625 LIGHT TOWER FOUNDATION, MISC.: MEDIAN, 36" X 20' DEEP EACH	625 NO. 4 AWG 2400 VOLT DISTRIBUTION CABLE FT	625 NO. 10 POLE AND BRACKET CABLE FT	625 CONDUIT, 3", 725.04 FT	625 CONDUIT, 4", 725.051, AS PER PLAN FT	625 CONDUIT, JACKED OR DRILLED, 725.052, 3" FT	625 LUMINAIRE, HIGH MAST, SOLID STATE (LED), AS PER PLAN, 480V EACH	625 LUMINAIRE, LOW MAST, SOLID STATE (LED), AS PER PLAN, 480V EACH	625 LUMINAIRE, UNDERPASS, SOLID STATE (LED), AS PER PLAN, 240V EACH	625 TRENCH FT	625 TRANSITION JUNCTION BOX EACH	625 MEDIAN JUNCTION BOX EACH	625 PULL BOX, 725.08, 18" EACH	625 PULL BOX, 725.08, 24" EACH	625 GROUND ROD EACH	625 STRUCTURE GROUNDING SYSTEM EACH	625 POWER SERVICE, AS PER PLAN EACH	625 UNDERGROUND WARNING/MARKING TAPE FT	625 SERVICE TO UNDERPASS LIGHTING, AS PER PLAN EACH
49	801	CL	I.R. 75	409+58.1	409+73.9								78																		
50	801	RT	I.R. 75	409+55.0	409+94.0																				2						
51	801	RT	I.R. 75	413+18.0	413+18.0								279				83														
52	801	RT	I.R. 75	413+18.0			3																	1							
1	802	RT	I.R. 75	423+26.7			3																	1							
2	802	RT	I.R. 75	423+26.7	423+26.7								303				91														
3	802	CL	I.R. 75	423+26.7			3																1								
4	802	CL	I.R. 75	423+26.7	423+38.8								66																		
5	802	CL	I.R. 75	423+38.8			3																1								
6	802	LT	I.R. 75	423+38.5	423+38.8								291				87														
7	802	LT	I.R. 75	423+38.5					1		1							6							2						
8	802	CL	I.R. 75	423+38.8	425+84.0								768																		
9	802	CL	I.R. 75	425+84.0					1			1						6					1		2						
10	802	CL	I.R. 75	425+84.0	428+36.7								786																		
11	802	CL	I.R. 75	428+36.7					1			1						6					1		2						
12	802	CL	I.R. 75	428+36.7	430+82.8								768																		
13	802	CL	I.R. 75	430+82.8					1			1						6					1		2						
14	802	CL	I.R. 75	430+82.8	433+02.6								690																		
15	802	CL	I.R. 75	433+02.6																			1								
16	802	CL	I.R. 75	433+02.6	433+04.9								744				228														
17	802	RT	I.R. 75	433+04.9																						1					
18	802	RT	I.R. 75	433+04.9	434+11.4								792		244						122									122	
19	802	RT	I.R. 75	434+11.4																								1			
20	802	LT	I.R. 75	434+77.0																								1			
21	802	LT	I.R. 75	434+76.4			3																	1							1
22	802	LT	I.R. 75	434+82.0																1											
23	802	LT	I.R. 75	434+83.8																1											
24	802	RT	I.R. 75	434+85.7																1											
25	802	RT	I.R. 75	434+84.9																1											
26	802	CL	I.R. 75	433+02.6	433+34.0								120																		
27	802	CL	I.R. 75	433+34.0		2		1		1				150					1				1		1						
28	802	CL	I.R. 75	433+34.0	434+06.8								255																		
29	802	CL	I.R. 75	434+06.8																		1									
30	802	CL	I.R. 75	434+06.8	434+95.3								297			89															
31	802	CL	I.R. 75	434+95.3																		1									
32	802	CL	I.R. 75	434+95.3	435+41.8								171																		
33	802	CL	I.R. 75	435+41.8		2		1		1				150					1				1		1						
34	802	CL	I.R. 75	435+41.8	436+76.9								435																		
35	802	RT	I.R. 75	434+24.0	16+03.0																				8						
36	802	CL	I.R. 75	434+00.0	435+00.0																					1					
37	802	LT	I.R. 75	434+94.0	440+69.0																				4						
38	802	RT	I.R. 75	434+89.0	439+63.0																				4						
1	803	CL	I.R. 75	436+76.9		2		1		1				150					1				1		1						
2	803	CL	I.R. 75	436+76.9	438+17.9								453																		
3	803	CL	I.R. 75	438+17.9		2		1		1				150					1				1		1						
4	803	CL	I.R. 75	438+17.9	439+81.1								522																		
5	803	CL	I.R. 75	439+81.1		2		1		1				150					1				1		1						
6	803	CL	I.R. 75	439+81.1	441+51.1								540																		
7	803	CL	I.R. 75	441+51.1		2		1		1				150					1				1		1						
8	803	CL	I.R. 75	441+51.1	443+46.3								615																		
9	803	CL	I.R. 75	443+46.3		2		1		1				150					1				1		1						
10	803	CL	I.R. 75	443+46.3	445+03.0								501																		
TOTALS CARRIED TO SUBSUMMARY						14	15	7	4	7	1	3	9474	1050	244	89	489	24	7	4	122	2	13	3	1	33	1	2	122	1

Preliminary Plans - For Reference Only

CALCULATED CJV
CHECKED DRM

LIGHTING ESTIMATED QUANTITIES

HAM-75-7.85

785
1047

J:\20110903\ODOT\HAM\77889\lighting\sheets\77889LS005.dgn 5/22/2026 10:31:34 AM hbrendlinger

REFERENCE NO.	SHEET NO.	SIDE	ROADWAY	STATION TO STATION		625 CONNECTION, FUSED PULL APART EACH	625 CONNECTION, UNFUSED PERMANENT EACH	625 LIGHT POLE, LOW MAST, ALM50 EACH	625 MEDIAN LIGHT POLE FOUNDATION, 10' DEEP EACH	625 MEDIAN LIGHT POLE FOUNDATION, 10' DEEP, AS PER PLAN EACH	625 NO. 4 AWG 2400 VOLT DISTRIBUTION CABLE FT	625 NO. 10 POLE AND BRACKET CABLE FT	625 CONDUIT, 4", 725.051, AS PER PLAN FT	625 LUMINAIRE, LOW MAST, SOLID STATE (LED) AS PER PLAN, 480V EACH	625 LUMINAIRE, UNDERPASS, SOLID STATE (LED), AS PER PLAN, 240V EACH	625 TRANSITION JUNCTION BOX EACH	625 MEDIAN JUNCTION BOX EACH	625 PULL BOX, 725.08, 18" EACH	625 GROUND ROD EACH	625 STRUCTURE GROUNDING SYSTEM EACH	625 POWER SERVICE, AS PER PLAN EACH	625 SERVICE TO UNDERPASS LIGHTING, AS PER PLAN EACH
11	803	CL	I.R. 75	445+03.0		2		1	1			150		1			1		1			
12	803	CL	I.R. 75	445+03.0	446+59.8						501											
13	803	CL	I.R. 75	446+59.8		2		1	1			150		1			1		1			
14	803	CL	I.R. 75	446+59.8	448+13.0						492											
15	803	CL	I.R. 75	448+13.0		2		1	1			150		1			1		1			
16	803	CL	I.R. 75	448+13.0	449+65.6						489											
17	803	CL	I.R. 75	449+65.6		2		1	1			150		1			1		1			
18	803	CL	I.R. 75	440+50.0																1		
19	803	LT	I.R. 75	441+94.0	451+59.0														6			
20	803	RT	I.R. 75	441+19.0	449+05.0														5			
1	804	CL	I.R. 75	449+65.6	451+26.0						513											
2	804	CL	I.R. 75	451+26.0		2		1	1			150		1			1		1			
3	804	CL	I.R. 75	451+26.0	451+72.0						168											
4	804	CL	I.R. 75	451+72.0												1						
5	804	CL	I.R. 75	451+72.0	452+53.2						273		81									
6	804	CL	I.R. 75	452+53.2												1						
7	804	CL	I.R. 75	452+53.2	452+99.0						168											
8	804	CL	I.R. 75	452+99.0		2		1	1			150		1			1		1			
9	804	LT	TOWNE	17+96.5																	1	
10	804	LT	TOWNE	18+04.1			3											1				1
11	804	LT	TOWNE	18+78.6											1							
12	804	LT	TOWNE	19+27.6											1							
13	804	LT	TOWNE	19+76.6											1							
14	804	CL	I.R. 75	454+37.8		2		1	1			150		1			1		1			
15	804	CL	I.R. 75	454+37.8	455+81.1						462											
16	804	CL	I.R. 75	455+81.1		2		1	1			150		1			1		1			
17	804	CL	I.R. 75	455+81.1	457+25.9						465											
18	804	CL	I.R. 75	457+25.9		2		1	1			150		1			1		1			
19	804	CL	I.R. 75	457+25.9	458+69.3						462											
20	804	CL	I.R. 75	458+69.3		2		1	1			150		1			1		1			
21	804	CL	I.R. 75	458+69.3	460+16.7						474											
22	804	CL	I.R. 75	460+16.7		2		1	1			150		1			1		1			
23	804	CL	I.R. 75	460+16.7	461+75.3						507											
24	804	CL	I.R. 75	461+75.3		2		1		1		150		1			1		1			
25	804	CL	I.R. 75	461+75.3	463+44.5						537											
26	804	CL	I.R. 75	463+44.5		2		1	1			150		1			1		1			
27	804	CL	I.R. 75	451+60.0	452+60.0															1		
28	804	RT	I.R. 75	451+23.0	452+62.0														3			
29	804	LT	I.R. 75	453+61.0	476+86.0														10			
30	804	RT	I.R. 75	457+74.0	480+00.0														10			
1	805	CL	I.R. 75	463+44.5	465+09.1						525											
2	805	CL	I.R. 75	465+09.1		2		1	1			150		1			1		1			
3	805	CL	I.R. 75	465+09.1	466+68.5						510											
4	805	CL	I.R. 75	466+68.5		2		1	1			150		1			1		1			
5	805	CL	I.R. 75	466+68.5	468+11.1						459											
6	805	CL	I.R. 75	468+11.1		2		1	1			150		1			1		1			
TOTALS CARRIED TO SUBSUMMARY						32	3	16	15	1	7005	2400	81	16	3	2	16	1	50	2	1	1

CALCULATED CJV
CHECKED DRM

LIGHTING ESTIMATED QUANTITIES

HAM-75-7.85

786
1047

Preliminary Plans - For Reference Only

J:\20110903\ODOT\HAM\77889\lighting\sheets\77889LS006.dgn 5/22/2026 10:31:35 AM hbrendlinger

REFERENCE NO.	SHEET NO.	SIDE	ROADWAY	STATION TO STATION		625 CONNECTION, FUSED PULL APART EACH	625 LIGHT POLE, LOW MAST, ALM50 EACH	625 LIGHT POLE (INSTALLATION ONLY), AS PER PLAN EACH	625 LIGHT TOWER, BBBBBB100 EACH	625 MEDIAN LIGHT POLE FOUNDATION, 10' DEEP EACH	625 MEDIAN LIGHT POLE FOUNDATION, 10' DEEP, AS PER PLAN EACH	625 LIGHT TOWER FOUNDATION, 36" X 25' DEEP EACH	625 LIGHT TOWER FOUNDATION, MISC.: MEDIAN, 36" X 20' DEEP EACH	625 NO. 4 AWG 2400 VOLT DISTRIBUTION CABLE FT	625 NO. 10 POLE AND BRACKET CABLE FT	625 LUMINAIRE, HIGH MAST, SOLID STATE (LED), AS PER PLAN, 480V EACH	625 LUMINAIRE, LOW MAST, SOLID STATE (LED) AS PER PLAN, 240V EACH	625 LUMINAIRE, LOW MAST, SOLID STATE (LED), AS PER PLAN, 480V EACH	625 LUMINAIRE, INSTALLATION ONLY, AS PER PLAN EACH	625 MEDIAN JUNCTION BOX EACH	625 GROUND ROD EACH	625 RE-ERECT EXISTING LIGHT TOWER, AS PER PLAN EACH
7	805	CL	I.R. 75	468+11.1	469+38.1									411								
8	805	CL	I.R. 75	469+38.1		2	1			1					150			1		1	1	
9	805	CL	I.R. 75	469+38.1	470+65.0									411								
10	805	CL	I.R. 75	470+65.0		2	1			1					150			1		1	1	
11	805	CL	I.R. 75	470+65.0	472+00.0									435								
12	805	CL	I.R. 75	472+00.0																1		
13	805	RT	I.R. 75	471+45.6	472+00.0									378								
14	805	RT	I.R. 75	472+00.0	472+00.0									678								
15	805	CL	I.R. 75	472+00.0	472+75.7									258								
16	805	CL	I.R. 75	472+75.7		2		1		1					150				1	1	1	
17	805	CL	I.R. 75	472+75.7	474+30.3									495								
18	805	CL	I.R. 75	474+30.3		2		1		1					150				1	1	1	
19	805	CL	I.R. 75	474+30.3	475+68.7									447								
20	805	CL	I.R. 75	475+68.7		2		1		1					150				1	1	1	
21	805	CL	I.R. 75	475+68.7	477+19.8									483								
22	805	CL	I.R. 75	477+19.8		2		1		1					150				1	1	1	
1	806	CL	I.R. 75	477+19.8	478+70.4									482								
2	806	CL	I.R. 75	478+70.4		2		1		1					150				1	1	1	
3	806	CL	I.R. 75	478+70.4	480+21.0									482								
4	806	CL	I.R. 75	480+21.0		2		1		1					150				1	1	1	
5	806	CL	I.R. 75	480+21.0	482+72.1									784								
6	806	CL	I.R. 75	482+72.1									1						6	1	2	1
1	807	LT	S.R. 562	13+04.8					1			1				6					2	
2	807	CL	S.R. 562	15+57.6		2	1				1				150		1			1	1	
3	807	CL	S.R. 562	15+57.6	17+77.3									690								
4	807	CL	S.R. 562	17+77.3		2	1			1					150		1			1	1	
5	807	CL	S.R. 562	17+77.3	18+97.3									390								
6	807	CL	S.R. 562	18+97.3		2	1			1					150		1			1	1	
7	807	CL	S.R. 562	18+97.3	20+21.7									405								
8	807	CL	S.R. 562	20+21.7		2	1			1					150		1			1	1	
9	807	CL	S.R. 562	20+21.7	21+65.1									462								
10	807	CL	S.R. 562	21+65.1		2	1			1					150		1			1	1	
11	807	CL	S.R. 562	21+65.1	22+09.9									165								
12	807	CL	S.R. 562	17+07.0	33+89.0																8	
13	807	RT	S.R. 562	15+20.0	16+69.0																3	
14	807	RT	S.R. 562	17+53.0	37+46.0																9	
1	808	CL	S.R. 562	23+08.5		2	1			1					150		1			1	1	
2	808	CL	S.R. 562	23+08.5	24+48.9									453								
3	808	CL	S.R. 562	24+48.9		2	1			1					150		1			1	1	
4	808	CL	S.R. 562	24+48.9	25+88.9									450								
TOTALS CARRIED TO SUBSUMMARY						30	9	6	1	14	1	1	1	8759	2250	6	7	2	12	17	39	1

Preliminary Plans - For Reference Only

J:\2010903\ODOT\HAM\77889\lighting\sheets\77889LS007.dgn 5/22/2026 10:31:36 AM hbrendlinger

CALCULATED CJV
CHECKED DRM

LIGHTING ESTIMATED QUANTITIES

HAM-75-7.85

787
1047

REFERENCE NO.	SHEET NO.	SIDE	ROADWAY	STATION TO STATION		625 CONNECTION, FUSED PULL APART EACH	625 CONNECTION, FUSED PULL APART, AS PER PLAN EACH	625 CONNECTION, UNFUSED PERMANENT EACH	625 LIGHT POLE, LOW MAST, ALM50 EACH	625 LIGHT POLE (INSTALLATION ONLY), AS PER PLAN EACH	625 LIGHT POLE FOUNDATION, 24" X 6' DEEP, AS PER PLAN EACH	625 MEDIAN LIGHT POLE FOUNDATION, 10' DEEP EACH	625 NO. 4 AWG 2400 VOLT DISTRIBUTION CABLE FT	625 NO. 2 AWG 2400 VOLT DISTRIBUTION CABLE FT	625 NO. 10 POLE AND BRACKET CABLE FT	625 CONDUIT, 3", 725.04 FT	625 CONDUIT, JACKED OR DRILLED, 725.052, 3" FT	625 LUMINAIRE, LOW MAST, SOLID STATE (LED), AS PER PLAN, 240V EACH	625 LUMINAIRE, INSTALLATION ONLY, AS PER PLAN EACH	625 TRENCH FT	625 MEDIAN JUNCTION BOX EACH	625 PULL BOX, 725.08, 18" EACH	625 GROUND ROD EACH	625 POWER SERVICE, AS PER PLAN EACH	625 UNDERGROUND WARNING/MARKING TAPE FT			
5	808	CL	S.R. 562	25+88.9		2			1			1			150			1			1		1					
6	808	CL	S.R. 562	25+88.9	27+41.0								486															
7	808	CL	S.R. 562	27+41.0		2			1			1			150			1			1		1					
8	808	CL	S.R. 562	27+41.0	28+81.0								450															
9	808	CL	S.R. 562	28+81.0		2			1			1			150			1			1		1					
10	808	CL	S.R. 562	28+81.0	30+32.3								486															
11	808	CL	S.R. 562	30+32.3		2			1			1			150			1			1		1					
12	808	CL	S.R. 562	30+32.3	31+75.1								459															
13	808	CL	S.R. 562	31+75.1		2			1			1			150			1			1		1					
14	808	CL	S.R. 562	31+96.2																	1							
15	808	RT	S.R. 562	31+80.1	31+96.2												93											
16	808	RT	S.R. 562	31+80.1																		1						
17	808	RT	S.R. 562	31+80.1	32+86.0											107				107					107			
18	808	RT	S.R. 562	32+86.0			2			1	1								1	107			1		94			
19	808	RT	S.R. 562	32+86.0	33+77.6									312		94				94					94			
20	808	RT	S.R. 562	33+77.6				3														1						
21	808	RT	S.R. 562	33+77.6	34+58.9									282		84				84					84			
22	808	RT	S.R. 562	34+58.9			2																					
23	808	RT	S.R. 562	33+77.6	33+78.3									276			82											
24	808	RT	S.R. 562	33+85.7			2																					
25	808	LT	S.R. 562	31+79.4	31+96.2												73											
26	808	LT	S.R. 562	31+79.4																		1						
27	808	LT	S.R. 562	31+79.4	32+44.7											66				66					66			
28	808	LT	S.R. 562	32+44.7			2			1	1								1				1					
29	808	LT	S.R. 562	32+44.7	34+46.6									645		205				205					205			
30	808	LT	S.R. 562	34+46.6			2			1	1								1				1					
31	808	LT	S.R. 562	34+46.6	35+12.4									234		68				68					68			
32	808	LT	S.R. 562	35+12.4				3														1						
33	808	LT	S.R. 562	35+12.4	36+28.3									390		120				120					120			
34	808	LT	S.R. 562	36+28.3			2																					
35	808	LT	S.R. 562	35+12.4	35+15.7									255			75											
36	808	LT	S.R. 562	35+22.7			2																					
37	808	LT	S.R. 562	22+09.9																						1		
38	808	LT	S.R. 562	22+09.9	22+09.9								522				154											
39	808	CL	S.R. 562	22+09.9																	1							
40	808	CL	S.R. 562	22+09.9	23+08.5								327															
41	808	RT	S.R. 562	33+78.3																		1						
42	808	RT	S.R. 562	33+78.3	33+85.7									51		7				7					7			
43	808	LT	S.R. 562	35+15.7																		1						
44	808	LT	S.R. 562	35+15.7	35+22.7									51		7				7					7			
TOTALS CARRIED TO SUBSUMMARY						10	14	6	5	3	3	5	2730	2496	750	758	477	5	3	758	7	6	8	1	758			

Preliminary Plans - For Reference Only

CALCULATED CJV
CHECKED DRM

LIGHTING ESTIMATED QUANTITIES

HAM-75-7.85

788
1047

J:\2010903\ODOT\HAM\77889\lighting\sheets\77889LS008.dgn 5/22/2026 10:31:36 AM hbrendlinger

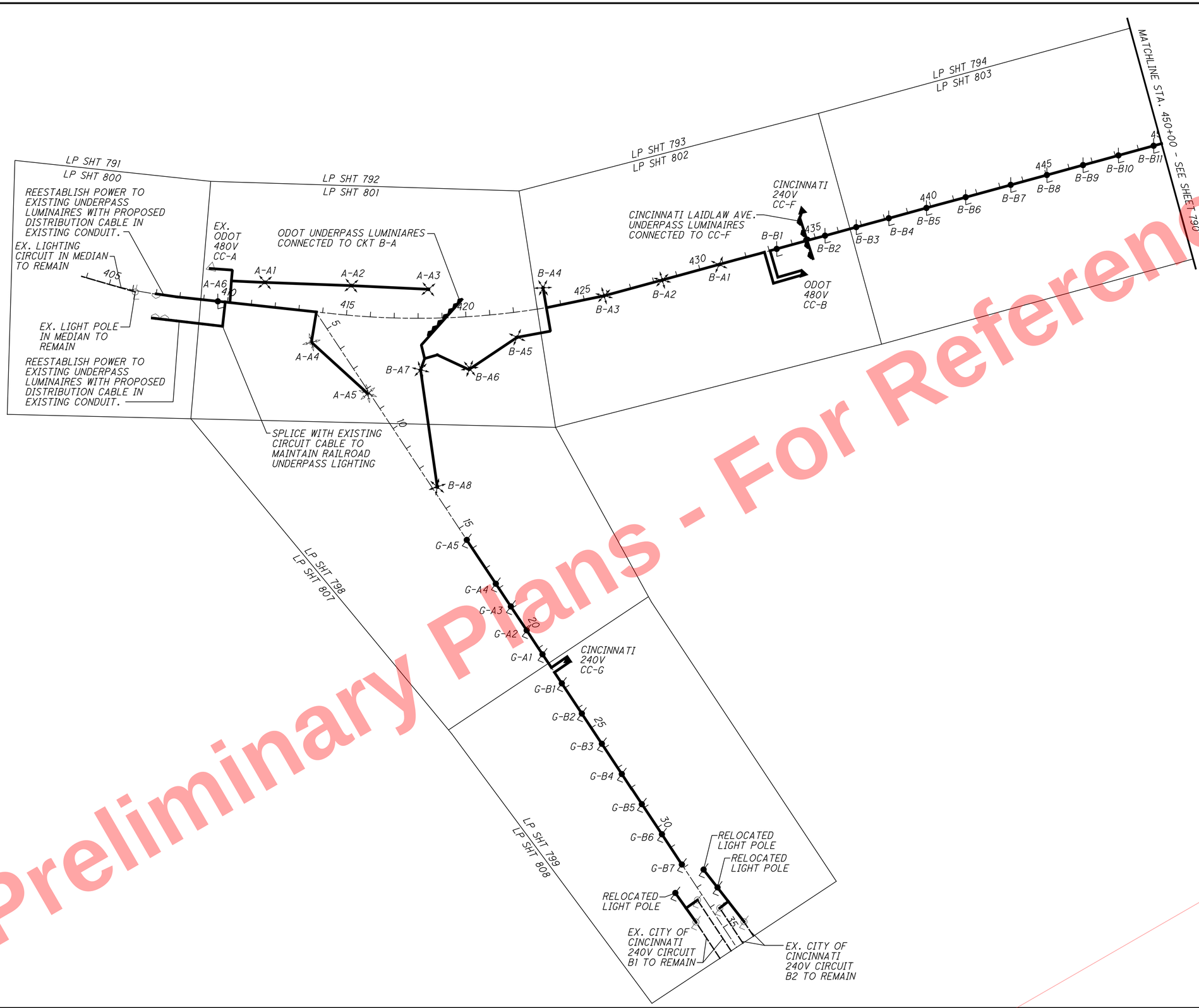

Preliminary Plans - Not For Reference Only

J:\20110903\ODOT\HAM\77889\lighting\sheets\77889LB001.dgn 5/22/2026 10:31:37 AM hbrendlinger

HORIZONTAL SCALE IN FEET
0 100 200 400

CALCULATED DRM
CHECKED JDS

LIGHTING SCHEMATIC PLAN
STA. 396+00.00 TO STA. 450+00.00

HAM-75-7.85

789
1047

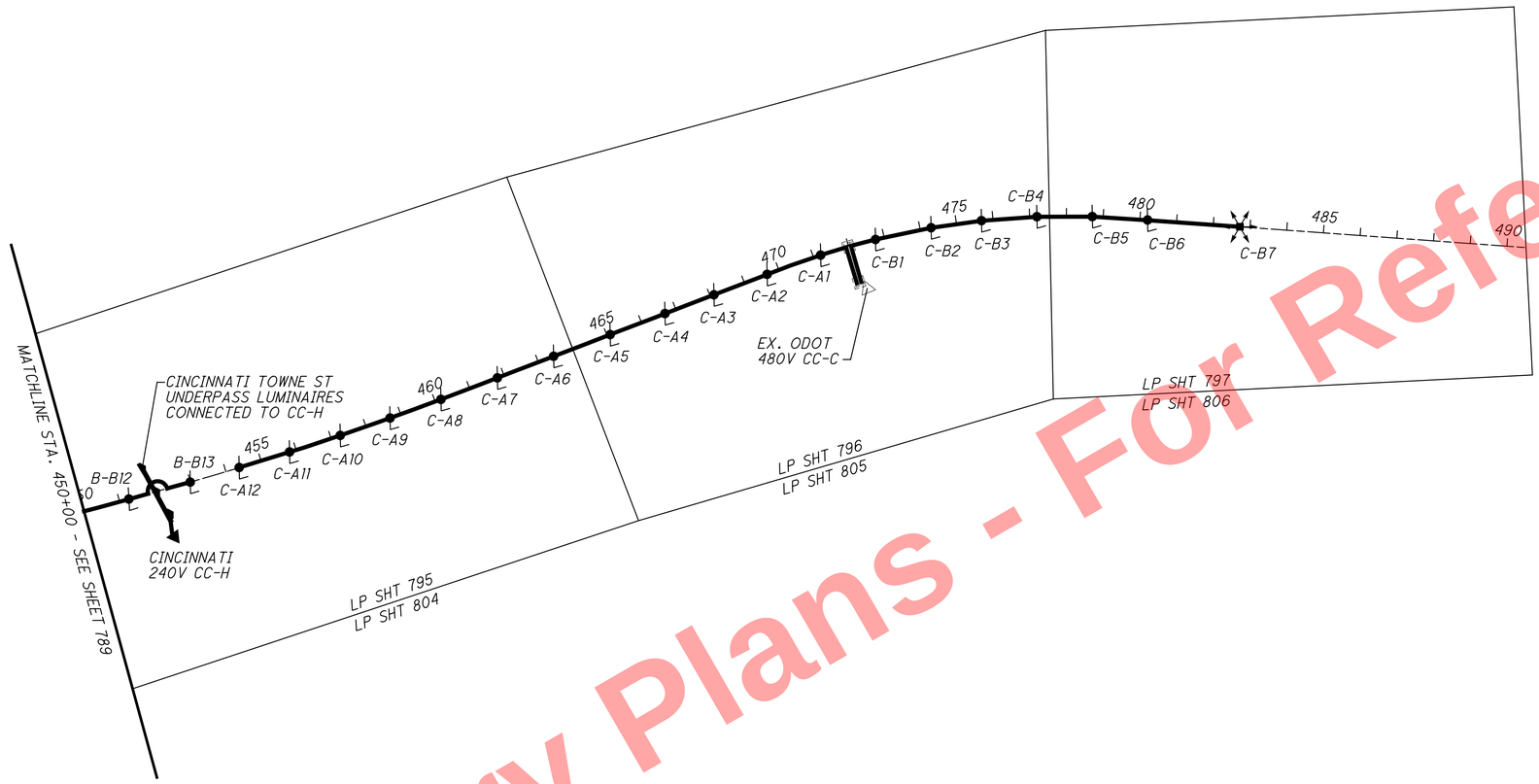

Preliminary Plans - For Reference Only

J:\20110903\ODOT\HAM\77889\lighting\sheets\77889LB002.dgn 5/22/2026 10:31:39 AM hbrendlinger

HORIZONTAL SCALE IN FEET
0 100 200 400

CALCULATED DRM
CHECKED JDS

LIGHTING SCHEMATIC PLAN
STA. 450+00.00 TO STA. 490+50.00

HAM-75-7.85

790
1047

CODED NOTES

(R) THE CONTRACTOR SHALL REMOVE ALL LIGHTING CABLES, INCLUDING BUT NOT LIMITED TO LIGHTING CIRCUIT CABLE, POWER SERVICE CABLE, AND ALL MISCELLANEOUS LIGHTING CABLES. THE EXISTING LIGHTING CONDUIT MAY BE ABANDONED IN PLACE, UNLESS IT CONFLICTS WITH ANY PROPOSED IMPROVEMENTS IN WHICH CASE IT SHALL BE REMOVED AND PROPERLY DISPOSED OF BY THE CONTRACTOR.

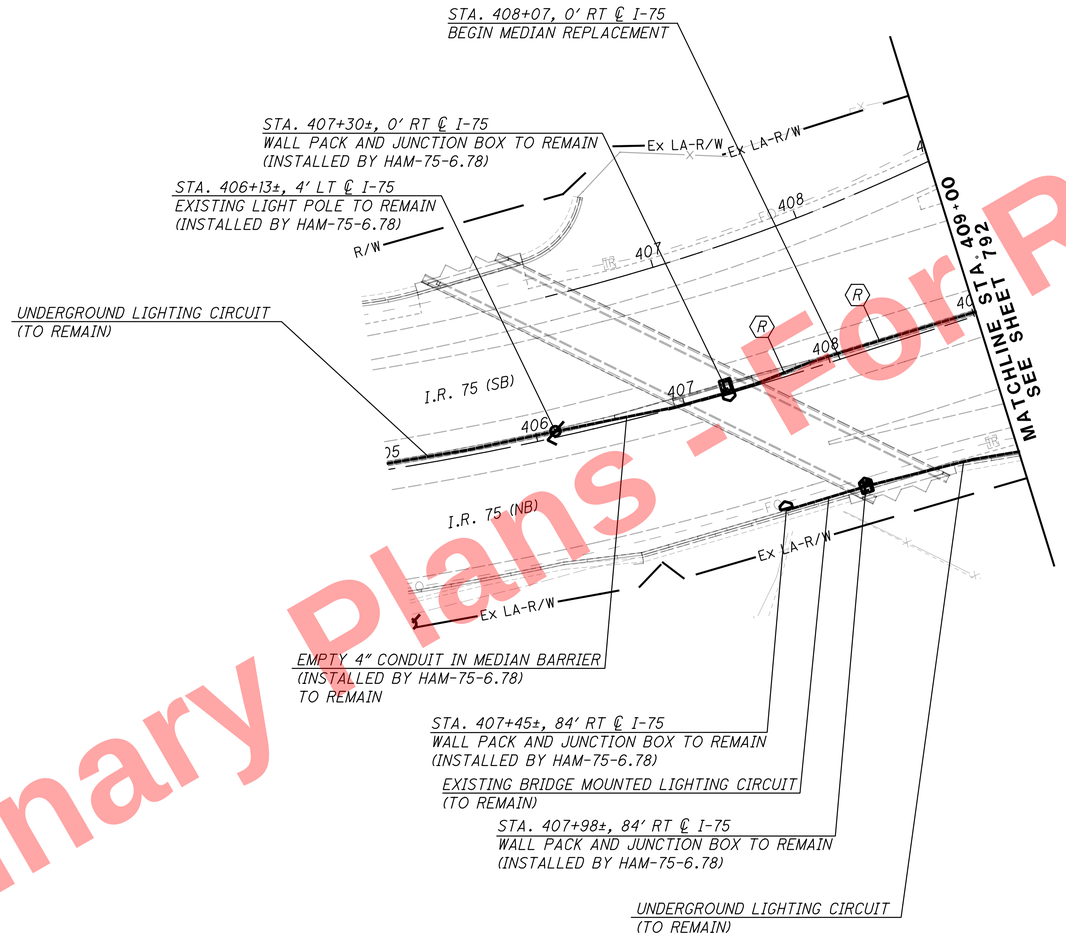

NOTES:

1. ALL LIGHTING EQUIPMENT INSTALLED BY HAM-75-6.78 SOUTH OF STA. 406+50 SHALL REMAIN.

Preliminary Plans - Not For Reference Only

HORIZONTAL SCALE IN FEET
0 25 50 100

CALCULATED DRM
CHECKED JDS

LIGHTING DEMOLITION PLAN - I.R. 75
STA. 405+00 TO STA. 409+00

HAM-75-7.85

791
1047

J:\20110903\ODOT\HAM\77889\lighting\sheets\77889LP051.dgn 5/22/2026 10:31:43 AM hbrendlinger

Preliminary Plans - For Reference Only

STA. 409+14±, 29' LT ℄ RAMP M
(1) CONTROL CENTER "A" TO REMAIN
(INSTALLED BY HAM-75-6.78)
DISCONNECT EXISTING CIRCUIT

STA. 409+66±, 23' LT ℄ RAMP M
(2) REMOVE PULL BOX
(INSTALLED BY HAM-75-6.78)

STA. 409+64±, 29' RT ℄ RAMP M
(3) REMOVE PULL BOX
(INSTALLED BY HAM-75-6.78)

(4) STA. 411+20±, 80' LT ℄ I-75
REMOVE FOUR LUMINAIRES,
TOWER AND FOUNDATION
(INSTALLED BY HAM-75-6.78)

STA. 414+99±, 122' LT ℄ I-75
(8) REMOVE FOUR LUMINAIRES,
TOWER AND FOUNDATION
(INSTALLED BY HAM-75-6.78)

STA. 418+44±, 126' LT ℄ I-75
(13) REMOVE TWO LUMINAIRES, TOWER
AND FOUNDATION

STA. 418+78±, 79' LT ℄ I-75
(14) REMOVE PULL BOX

MATCHLINE STA. 409+00
SEE SHEET 791

MATCHLINE STA. 423+00
SEE SHEET 793

MATCHLINE STA. 11+00
SEE SHEET 798

I.R. 75 (SB)

I.R. 75 (NB)

RAMP M

RAMP N

RAMP J

RAMP K

Ex LA-R/W

LA-R/W

STA. 409+87±, 23' RT ℄ RAMP N
JUNCTION BOX IN BARRIER TO REMAIN
(INSTALLED BY HAM-75-6.78)

(5) STA. 411+21±, 1' RT ℄ I-75
REMOVE JUNCTION BOX
(INSTALLED BY HAM-75-6.78)

(6) STA. 411+21±, 67' RT ℄ I-75
REMOVE PULL BOX
(INSTALLED BY HAM-75-6.78)

(7) STA. 411+38±, 14' RT ℄ RAMP N
REMOVE PULL BOX
(INSTALLED BY HAM-75-6.78)

(17) STA. 413+67±, 128' RT ℄ I-75
HIGH MAST TOWER TO REMAIN
(INSTALLED BY HAM-75-6.78)
DISCONNECT EXISTING CIRCUIT

UNDERGROUND LIGHTING CIRCUIT
TO REMAIN

(16) STA. 416+08±, 321' RT ℄ I-75
HIGH MAST TOWER TO REMAIN
W/ (4)-EXISTING LUMINAIRES
(TO BE REMOVED)
(INSTALLED BY HAM-75-6.78)

(9) STA. 417+16±, 104' RT ℄ I-75
REMOVE PULL BOX

(10) STA. 418+07±, 136' RT ℄ I-75
REMOVE TWO LUMINAIRES, TOWER
AND FOUNDATION

STA. 418+33±, 9' RT ℄ RAMP J
(12) REMOVE THREE LUMINAIRES,
CONDUIT AND WIRING FROM
RAMP J UNDERPASS
(SEE NOTE 1)

STA. 418+03±, 82' RT ℄ I-75
(11) REMOVE PULL BOX

STA. 421+41±, 255' RT ℄ I-75
(15) REMOVE TWO LUMINAIRES,
TOWER AND FOUNDATION

NOTES:

1. THE CONTRACTOR SHALL REMOVE ALL UNDERPASS WALLPACKS, CONDUIT, WIRING, AND ANY OTHER MISCELLANEOUS UNDERPASS LIGHTING MATERIALS MOUNTED ON THE RAMP J BRIDGE STRUCTURE.

CODED NOTES

(R) THE CONTRACTOR SHALL REMOVE ALL LIGHTING CABLES, INCLUDING BUT NOT LIMITED TO LIGHTING CIRCUIT CABLE, POWER SERVICE CABLE, AND ALL MISCELLANEOUS LIGHTING CABLES. THE EXISTING LIGHTING CONDUIT MAY BE ABANDONED IN PLACE, UNLESS IT CONFLICTS WITH ANY PROPOSED IMPROVEMENTS IN WHICH CASE IT SHALL BE REMOVED AND PROPERLY DISPOSED OF BY THE CONTRACTOR.

HORIZONTAL SCALE IN FEET
0 25 50 100

CALCULATED DRM
CHECKED JDS

LIGHTING DEMOLITION PLAN - I.R. 75
STA. 409+00 TO STA. 423+00

HAM-75-7.85

792
1047

J:\2011090\3.ODOT\HAM\7889\lighting\sheets\778891P052.dgn 5/22/2026 10:31:48 AM hbrendlinger

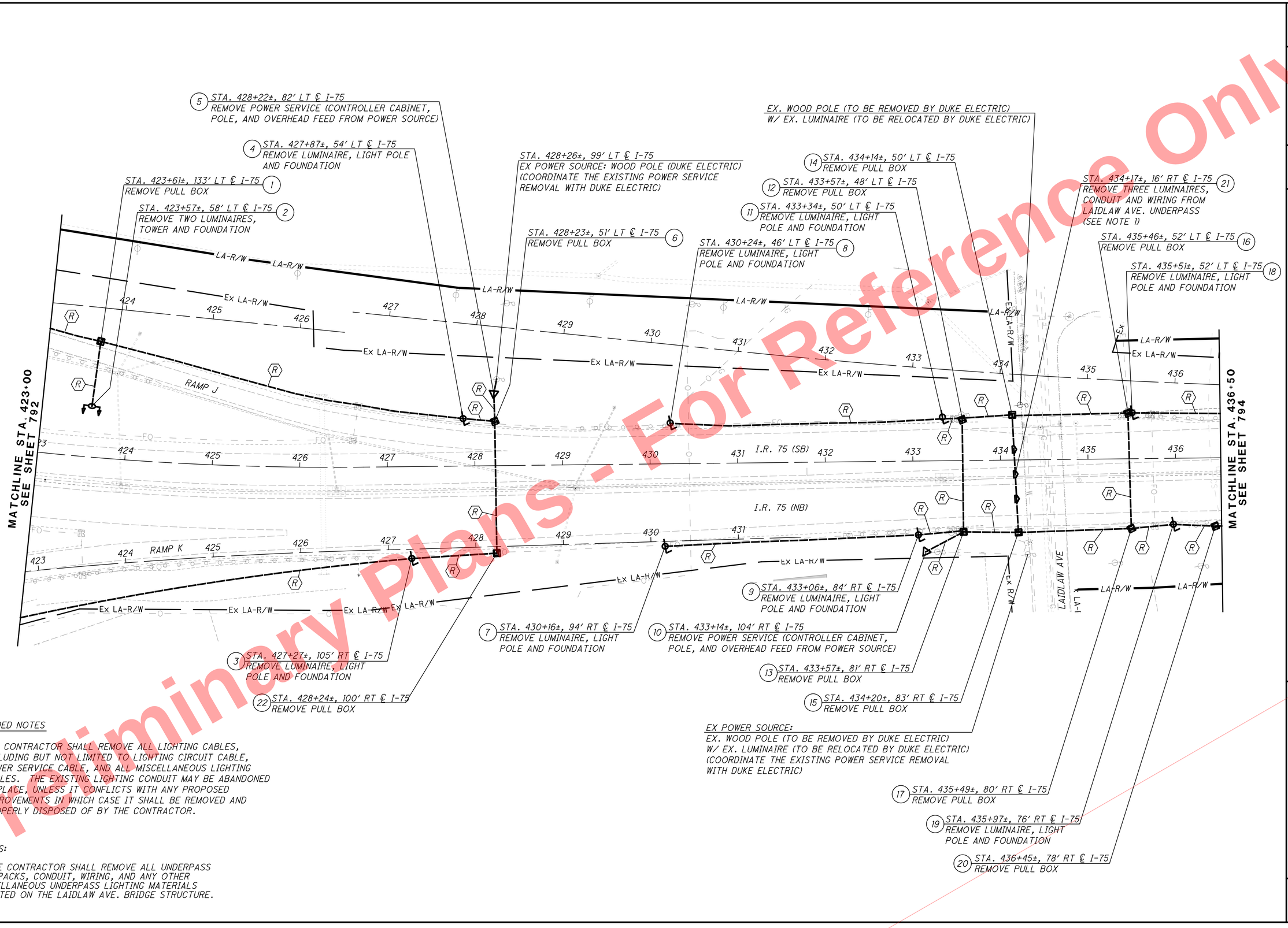

CODED NOTES

(R) THE CONTRACTOR SHALL REMOVE ALL LIGHTING CABLES, INCLUDING BUT NOT LIMITED TO LIGHTING CIRCUIT CABLE, POWER SERVICE CABLE, AND ALL MISCELLANEOUS LIGHTING CABLES. THE EXISTING LIGHTING CONDUIT MAY BE ABANDONED IN PLACE, UNLESS IT CONFLICTS WITH ANY PROPOSED IMPROVEMENTS IN WHICH CASE IT SHALL BE REMOVED AND PROPERLY DISPOSED OF BY THE CONTRACTOR.

NOTES:

1. THE CONTRACTOR SHALL REMOVE ALL UNDERPASS WALLPACKS, CONDUIT, WIRING, AND ANY OTHER MISCELLANEOUS UNDERPASS LIGHTING MATERIALS MOUNTED ON THE LAIDLAW AVE. BRIDGE STRUCTURE.

Preliminary Plans - For Reference Only

HORIZONTAL SCALE IN FEET
0 25 50 100

CALCULATED DRM
CHECKED JDS

LIGHTING DEMOLITION PLAN - I.R. 75
STA. 423+00 TO STA. 436+50

HAM-75-7.85

793
1047

J:\2011093\ODOT\HAM\7889\lighting\sheets\77889LP053.dgn 5/22/2026 10:31:51 AM hbrendlinger

CODED NOTES

(R) *THE CONTRACTOR SHALL REMOVE ALL LIGHTING CABLES, INCLUDING BUT NOT LIMITED TO LIGHTING CIRCUIT CABLE, POWER SERVICE CABLE, AND ALL MISCELLANEOUS LIGHTING CABLES. THE EXISTING LIGHTING CONDUIT MAY BE ABANDONED IN PLACE, UNLESS IT CONFLICTS WITH ANY PROPOSED IMPROVEMENTS IN WHICH CASE IT SHALL BE REMOVED AND PROPERLY DISPOSED OF BY THE CONTRACTOR.*

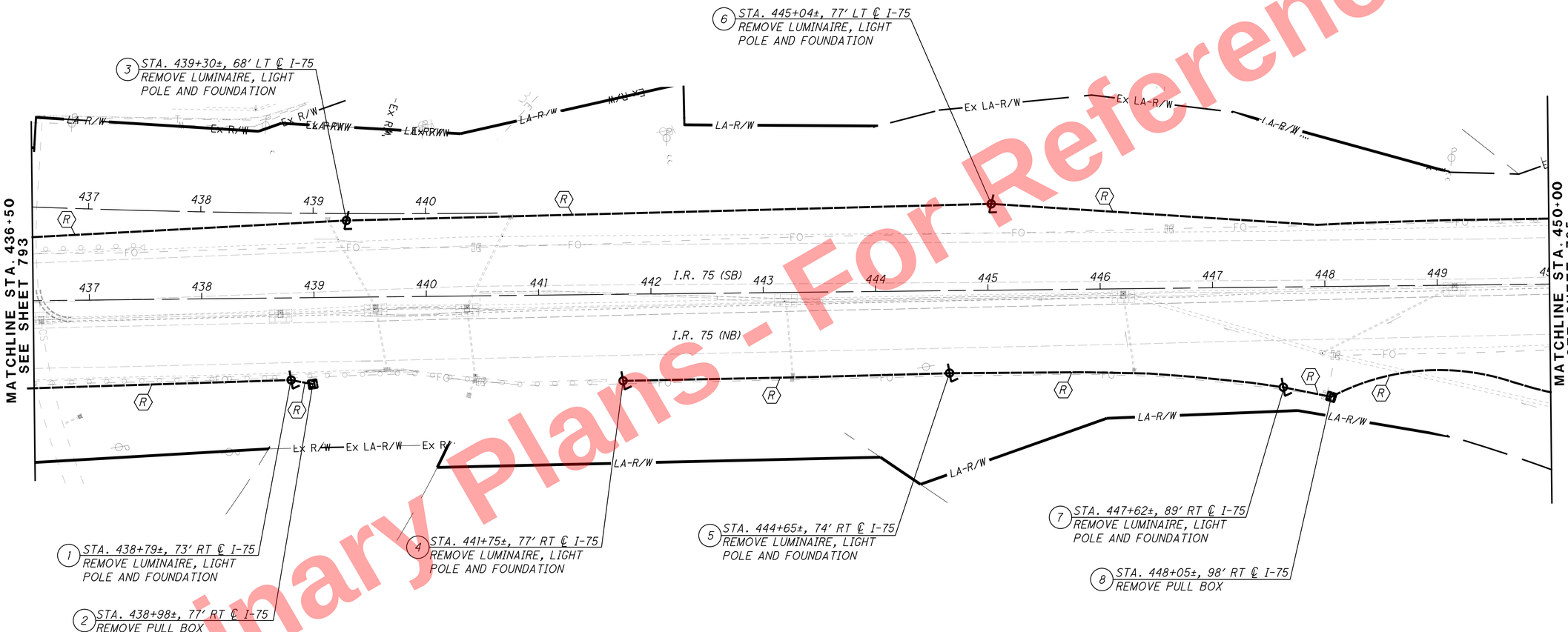

HORIZONTAL SCALE IN FEET
0 25 50 100

CALCULATED DRM
CHECKED JDS

LIGHTING DEMOLITION PLAN - I.R. 75
STA. 436+50 TO STA. 450+00

HAM-75-7.85

794
1047

Preliminary Plans - For Reference Only

J:\20110903\ODOT\HAM\77889\lighting\sheets\77889LP054.dgn 5/22/2026 10:31:53 AM hbrendlinger

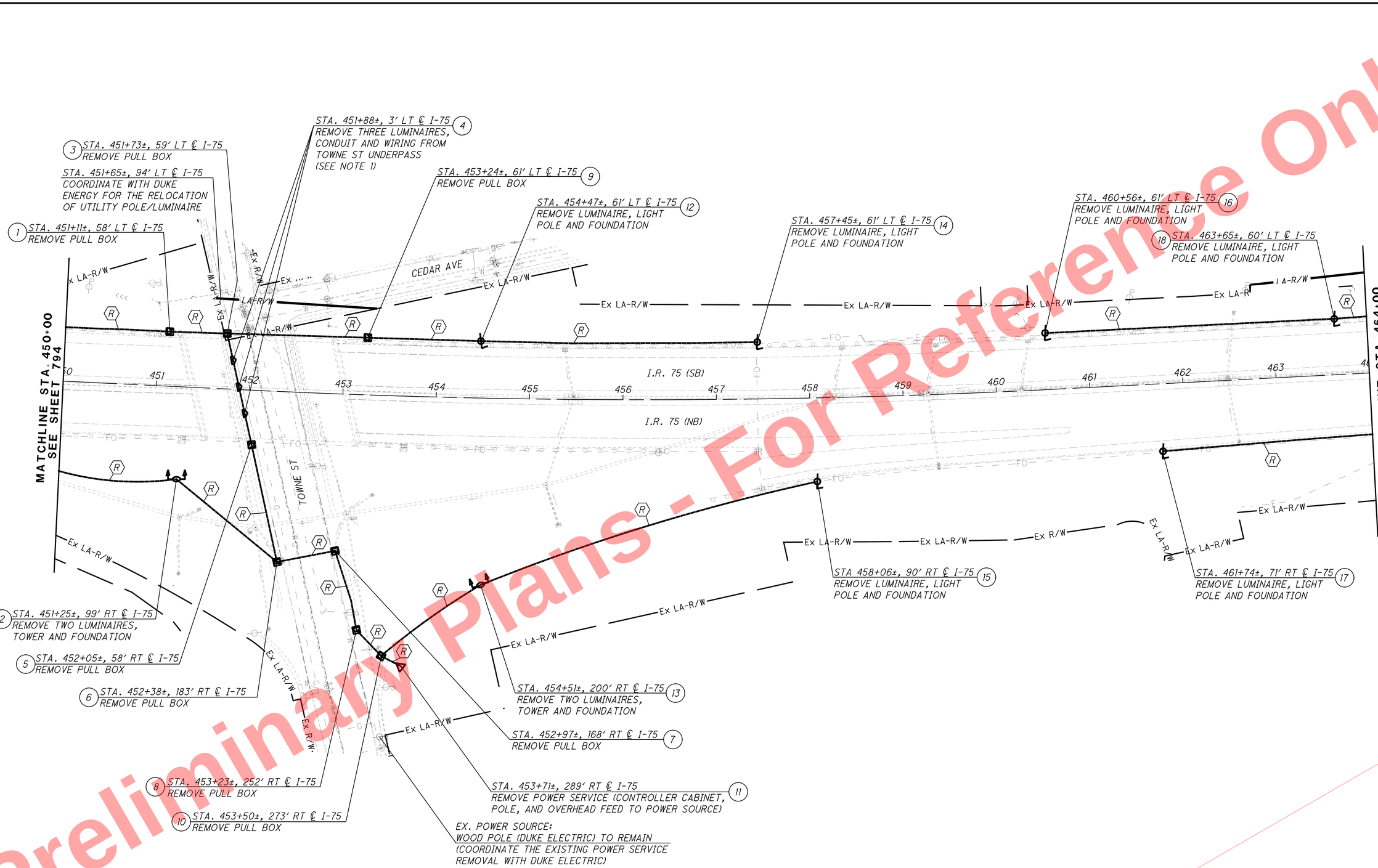

NOTES:

1. THE CONTRACTOR SHALL REMOVE ALL UNDERPASS WALLPACKS, CONDUIT, WIRING, AND ANY OTHER MISCELLANEOUS UNDERPASS LIGHTING MATERIALS MOUNTED ON THE TOWNE ST. BRIDGE STRUCTURE.

CODED NOTES

(R) THE CONTRACTOR SHALL REMOVE ALL LIGHTING CABLES, INCLUDING BUT NOT LIMITED TO LIGHTING CIRCUIT CABLE, POWER SERVICE CABLE, AND ALL MISCELLANEOUS LIGHTING CABLES. THE EXISTING LIGHTING CONDUIT MAY BE ABANDONED IN PLACE, UNLESS IT CONFLICTS WITH ANY PROPOSED IMPROVEMENTS IN WHICH CASE IT SHALL BE REMOVED AND PROPERLY DISPOSED OF BY THE CONTRACTOR.

Preliminary Plans - Not For Reference Only

HORIZONTAL SCALE IN FEET
0 25 50 100

CALCULATED DRM
CHECKED JDS

LIGHTING DEMOLITION PLAN - I.R. 75
STA. 450+00 TO STA. 464+00

HAM-75-7.85

795
1047

J:\20110903\ODOT\HAM\77889\lighting\sheets\77889LP055.dgn 5/22/2026 10:31:55 AM hbrendlinger

CODED NOTES

(R) THE CONTRACTOR SHALL REMOVE ALL LIGHTING CABLES, INCLUDING BUT NOT LIMITED TO LIGHTING CIRCUIT CABLE, POWER SERVICE CABLE, AND ALL MISCELLANEOUS LIGHTING CABLES. THE EXISTING LIGHTING CONDUIT MAY BE ABANDONED IN PLACE, UNLESS IT CONFLICTS WITH ANY PROPOSED IMPROVEMENTS IN WHICH CASE IT SHALL BE REMOVED AND PROPERLY DISPOSED OF BY THE CONTRACTOR.

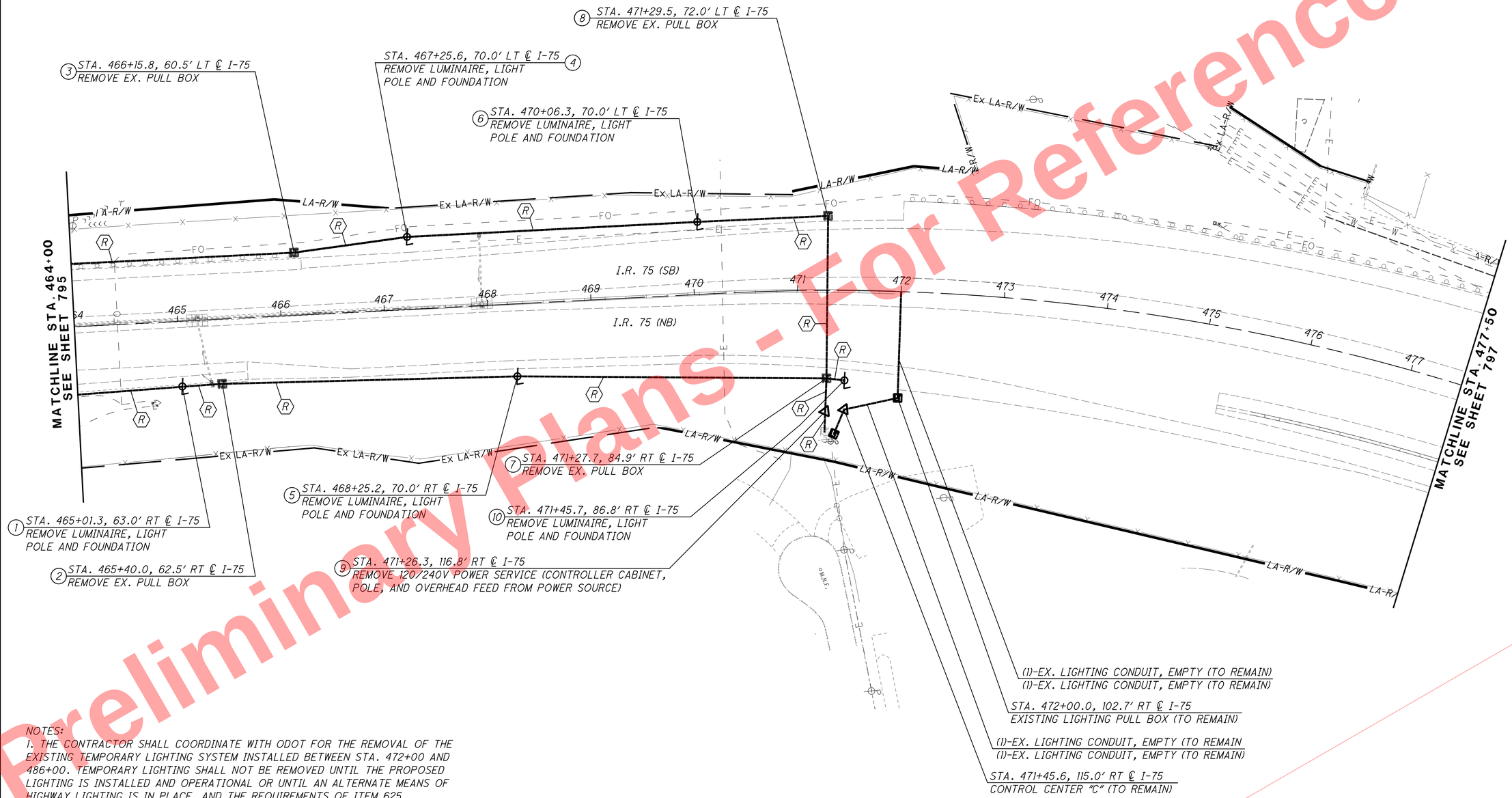

3 STA. 466+15.8, 60.5' LT ℄ I-75
REMOVE EX. PULL BOX

4 STA. 467+25.6, 70.0' LT ℄ I-75
REMOVE LUMINAIRE, LIGHT POLE AND FOUNDATION

6 STA. 470+06.3, 70.0' LT ℄ I-75
REMOVE LUMINAIRE, LIGHT POLE AND FOUNDATION

8 STA. 471+29.5, 72.0' LT ℄ I-75
REMOVE EX. PULL BOX

1 STA. 465+01.3, 63.0' RT ℄ I-75
REMOVE LUMINAIRE, LIGHT POLE AND FOUNDATION

2 STA. 465+40.0, 62.5' RT ℄ I-75
REMOVE EX. PULL BOX

5 STA. 468+25.2, 70.0' RT ℄ I-75
REMOVE LUMINAIRE, LIGHT POLE AND FOUNDATION

7 STA. 471+27.7, 84.9' RT ℄ I-75
REMOVE EX. PULL BOX

10 STA. 471+45.7, 86.8' RT ℄ I-75
REMOVE LUMINAIRE, LIGHT POLE AND FOUNDATION

9 STA. 471+26.3, 116.8' RT ℄ I-75
REMOVE 120/240V POWER SERVICE (CONTROLLER CABINET, POLE, AND OVERHEAD FEED FROM POWER SOURCE)

(1)-EX. LIGHTING CONDUIT, EMPTY (TO REMAIN)
(1)-EX. LIGHTING CONDUIT, EMPTY (TO REMAIN)

STA. 472+00.0, 102.7' RT ℄ I-75
EXISTING LIGHTING PULL BOX (TO REMAIN)

(1)-EX. LIGHTING CONDUIT, EMPTY (TO REMAIN
(1)-EX. LIGHTING CONDUIT, EMPTY (TO REMAIN)

STA. 471+45.6, 115.0' RT ℄ I-75
CONTROL CENTER "C" (TO REMAIN)

NOTES:
1. THE CONTRACTOR SHALL COORDINATE WITH ODOT FOR THE REMOVAL OF THE EXISTING TEMPORARY LIGHTING SYSTEM INSTALLED BETWEEN STA. 472+00 AND 486+00. TEMPORARY LIGHTING SHALL NOT BE REMOVED UNTIL THE PROPOSED LIGHTING IS INSTALLED AND OPERATIONAL OR UNTIL AN ALTERNATE MEANS OF HIGHWAY LIGHTING IS IN PLACE, AND THE REQUIREMENTS OF ITEM 625, SPECIAL-MAINTAIN EXISTING LIGHTING ARE SATISFIED. THE TEMPOARARY LIGHTING SYSTEM THAT IS TO BE REMOVED BY THE CONTRACTOR IS NOT SHOWN ON THE PLANS.

Preliminary Plans - For Reference Only

HORIZONTAL SCALE IN FEET
0 25 50 100

CALCULATED DRM
CHECKED JDS

LIGHTING DEMOLITION PLAN - I.R. 75
STA. 464+00 TO STA. 477+50

HAM-75-7.85

796
1047

J:\20110903\ODOT\HAM\77889\lighting\sheets\77889LP056.dgn 5/22/2026 10:31:58 AM hbrendlinger

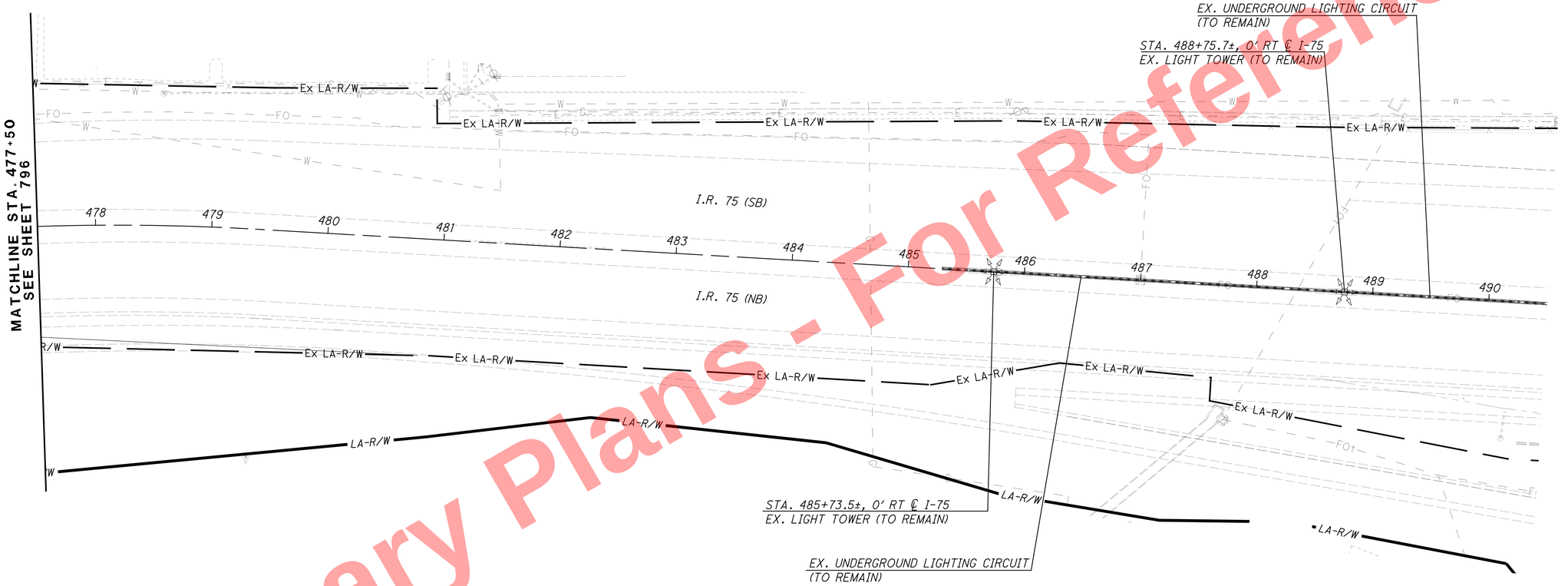

NOTES:
1. THE CONTRACTOR SHALL COORDINATE WITH ODOT FOR THE REMOVAL OF THE EXISTING TEMPORARY LIGHTING SYSTEM INSTALLED BETWEEN STA. 472+00 AND 486+00. TEMPORARY LIGHTING SHALL NOT BE REMOVED UNTIL THE PROPOSED LIGHTING IS INSTALLED AND OPERATIONAL OR UNTIL AN ALTERNATE MEANS OF HIGHWAY LIGHTING IS IN PLACE, AND THE REQUIREMENTS OF ITEM 625, SPECIAL-MAINTAIN EXISTING LIGHTING ARE SATISFIED. THE TEMPOARARY LIGHTING SYSTEM THAT IS TO BE REMOVED BY THE CONTRACTOR IS NOT SHOWN ON THE PLANS.

Preliminary Plans - Not For Reference Only

HORIZONTAL SCALE IN FEET
0 25 50 100

CALCULATED DRM
CHECKED JDS

LIGHTING DEMOLITION PLAN - I.R. 75
STA. 477+50 TO STA. 490+50

HAM-75-7.85

797
1047

J:\2011093\ODOT\HAM\77889\lighting\sheets\77889LP057.dgn 5/22/2026 10:32:09 AM hbrendlinger

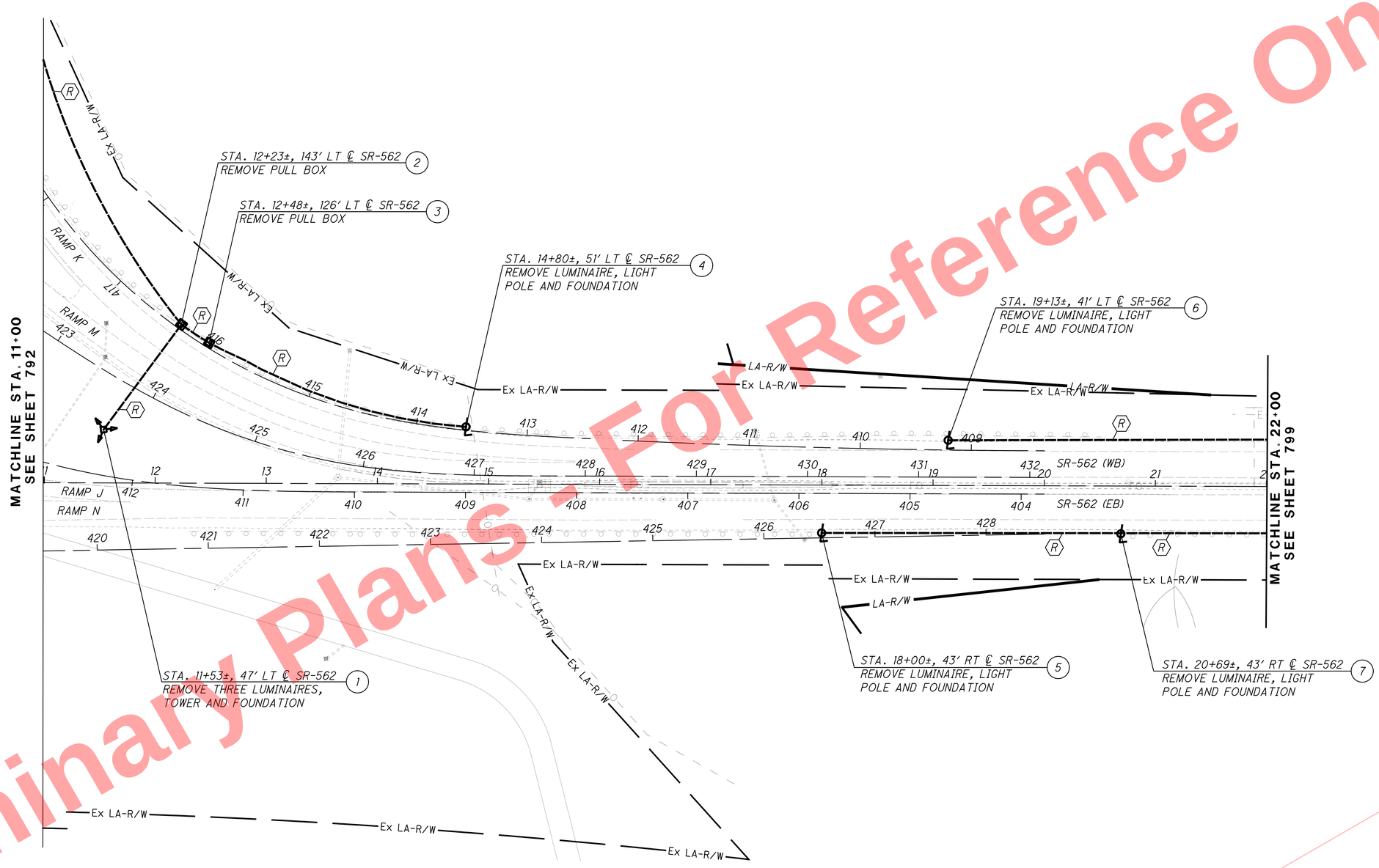

CODED NOTES

(R) THE CONTRACTOR SHALL REMOVE ALL LIGHTING CABLES, INCLUDING BUT NOT LIMITED TO LIGHTING CIRCUIT CABLE, POWER SERVICE CABLE, AND ALL MISCELLANEOUS LIGHTING CABLES. THE EXISTING LIGHTING CONDUIT MAY BE ABANDONED IN PLACE, UNLESS IT CONFLICTS WITH ANY PROPOSED IMPROVEMENTS IN WHICH CASE IT SHALL BE REMOVED AND PROPERLY DISPOSED OF BY THE CONTRACTOR.

HORIZONTAL SCALE IN FEET
0 25 50 100

CALCULATED DRM
CHECKED JDS

LIGHTING DEMOLITION PLAN - S.R. 562
STA. 11+00 TO STA. 22+00

HAM-75-7.85

798
1047

Preliminary Plans - For Reference Only

J:\20110903\ODOT\HAM\77889\lighting\sheets\77889LP061.dgn 5/22/2026 10:32:11 AM hbrendlinger

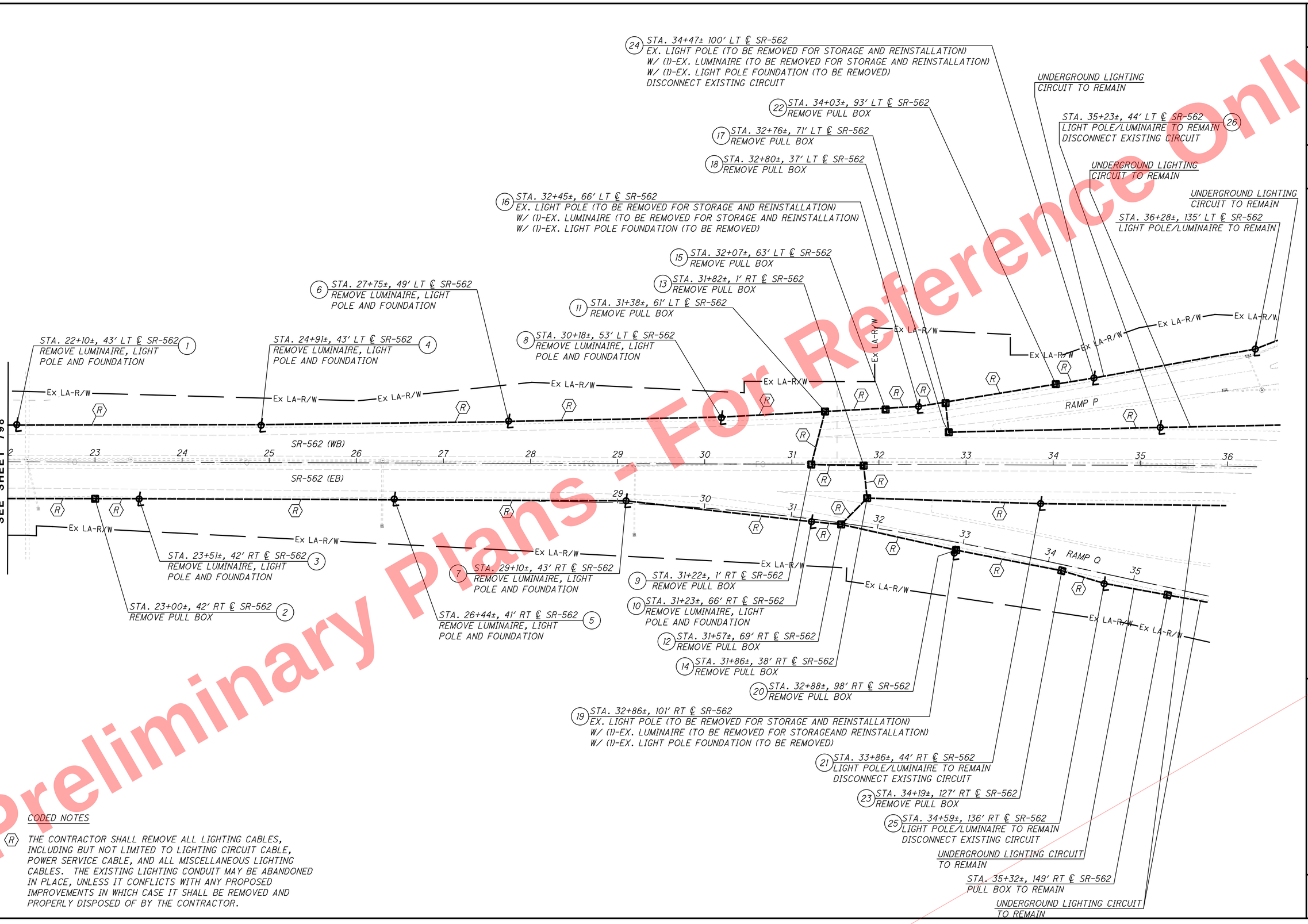

CODED NOTES

(R) THE CONTRACTOR SHALL REMOVE ALL LIGHTING CABLES, INCLUDING BUT NOT LIMITED TO LIGHTING CIRCUIT CABLE, POWER SERVICE CABLE, AND ALL MISCELLANEOUS LIGHTING CABLES. THE EXISTING LIGHTING CONDUIT MAY BE ABANDONED IN PLACE, UNLESS IT CONFLICTS WITH ANY PROPOSED IMPROVEMENTS IN WHICH CASE IT SHALL BE REMOVED AND PROPERLY DISPOSED OF BY THE CONTRACTOR.

HORIZONTAL SCALE IN FEET
0 25 50 100

CALCULATED DRM
CHECKED JDS

LIGHTING DEMOLITION PLAN - S.R. 562
STA. 22+00 TO STA. 36+00

HAM-75-7.85

799
1047

Preliminary Plans - For Reference Only

J:\20110903\ODOT\HAM\77889\lighting\sheets\77889LP062.dgn 5/22/2026 10:32:13 AM hbrendlinger

CODED NOTES

1. (1)-EMPTY 4" PVC CONDUIT IN MEDIAN BARRIER*
2. (1)-4" PVC CONDUIT IN MEDIAN BARRIER* W/ (3)-NO. 4 AWG CABLES
3. (1)-1.5" DUCT CABLE IN TRENCH W/ (3)-NO. 4 AWG CABLES
4. (1)-3" CONDUIT, 725.04 IN TRENCH W/ (3)-NO. 4 AWG CABLES
5. NOT USED
6. NOT USED
7. (1)-3" CONDUIT, 725.04 IN TRENCH W/ (3)-NO. 2 AWG CABLES
8. NOT USED
9. (1)-EMPTY 4" PVC CONDUIT IN BRIDGE PARAPET
10. (1)-4" PVC CONDUIT IN BRIDGE PARAPET W/ (3)-NO. 4 AWG CABLES
11. (1)-EMPTY 3" CONDUIT, 725.04 IN TRENCH
12. (1)-3" CONDUIT, 725.04 JACKED/DRILLED UNDER PAVEMENT W/ (3)-NO. 4 AWG CABLES
13. (1)-3" CONDUIT, 725.04 JACKED/DRILLED UNDER PAVEMENT W/ (3)-NO. 2 AWG CABLES
14. (1)-EMPTY 3" CONDUIT, 725.04 JACKED/DRILLED UNDER PAVEMENT

*4" PVC CONDUIT SHALL BE CONSIDERED INCIDENTAL TO THE MEDIAN BARRIER.

NOTE:
1. FOR LIGHTING LEGEND, SEE SHEET 779 .

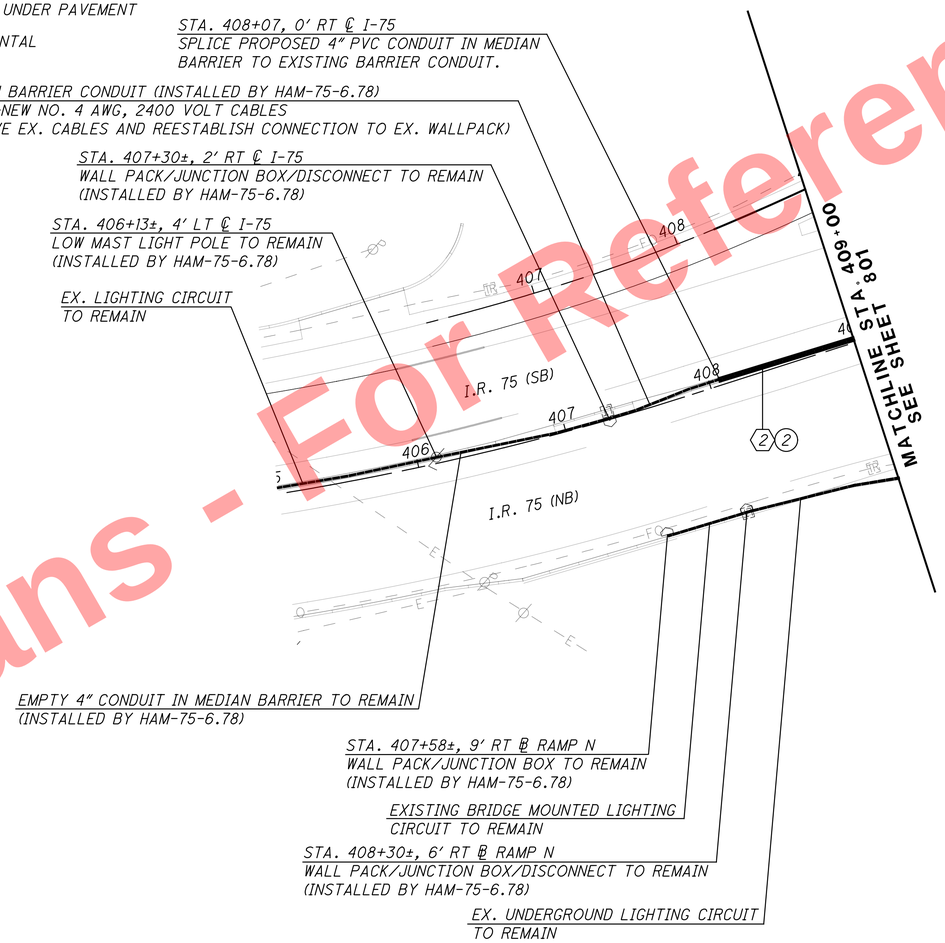

Preliminary Plans - For Reference Only

J:\20110903\ODOT\HAM\77889\lighting\sheets\77889LP101.dgn 5/22/2026 10:32:16 AM hbrendlinger

N

0 25 50 100 HORIZONTAL SCALE IN FEET

CALCULATED DRM CHECKED JDS

LIGHTING PLAN- I.R. 75
STA. 405+00 TO STA. 409+00

HAM-75-7.85

800
1047

STA. 409+14.0, 28.6' LT ℄ RAMP M
EXISTING CONTROL CENTER "A" TO REMAIN
(INSTALLED BY HAM-75-6.78)

STA. 409+58.1, 0' RT ℄ I-75, (48)
A-A6, 1-LED, TYPE V, 50'
W/ MEDIAN JUNCTION BOX

STA. 410+03.2, 21.8' LT ℄ RAMP M (9)
18" PULL BOX, 725.08

(12)(8)

STA. 409+95.8, 23.7' RT ℄ RAMP M (7)
18" PULL BOX, 725.08
W/ (3)-SPLICE KITS (A-A)

STA. 415+09.2, 21.8' LT ℄ RAMP M (47)
18" PULL BOX, 725.08
W/ (3)-SPLICE KITS (A-A)

STA. 417+49.0, 2.5' LT ℄ I-75 (21)
TRANSITION JUNCTION BOX

STA. 418+44.7, 121.0' LT ℄ I-75 (16)
A-A3, 4-LED, TYPE V, 100'

STA. 419+65.0, 0' RT ℄ I-75 (23)
TRANSITION JUNCTION BOX

NOTE:
1. FOR LIGHTING LEGEND, SEE SHEET 779 .

BEGIN FENCE GROUNDING (45)
PER HL-50.11 ALONG FENCE
FROM: STA. 415+63
TO: STA. 434+14

STA. 415+10.0, 124.5' LT ℄ I-75 (14)
A-A2, 4-LED, TYPE V, 100'

STA. 411+47.0, 97.5' LT ℄ I-75 (12)
A-A1, 4-LED, TYPE V, 100'

(12)(46)

(3)(11)

(4)(10)

(3)(15)

(3)(13)

(2)(49)

(12)(6)

(2)(17)

(9)(22)

(1)

(2)(12)

(2)(4)

(51)(12)

(3)(19)

(3)(43)

(3)(41)

(39)(3)

(4)(32)

(3)(34)

(12)(37)

(3)(36)

(42) STA. 422+02.0, 105.0' RT ℄ I-75
B-A5, 4-LED, TYPE V, 100'

STA. 420+02.0, 217.0' RT ℄ I-75 (40)
B-A6, 4-LED, TYPE V, 100'

STA. 418+38.5, 88' RT ℄ I-75 (31)
SERVICE TO UNDERPASS LIGHTING:
INSTALL 18" PULL BOX, 725.08
W/ (3)-CABLE SPLICE KITS (B-A) AND
(1)-STRUCTURE MOUNTED 30A FUSED
DISCONNECT SWITCH
(SEE RAMP J UNDERPASS DETAIL)

(18) STA. 413+18.0, 0' RT ℄ I-75
MEDIAN JUNCTION BOX

(44) INSTALL STRUCTURE GROUNDING
FOR BRIDGES AT I.R. 75 SB,
I.R. 75 NB, AND RAMP M

I.R. 75 (SB)

I.R. 75 (NB)

PROPOSED UNDERGROUND
RETENTION SITE

RAMP M

RAMP J

RAMP K

RAMP N

Fx LA-R/W

Ex LA-R/W

MW-R/W

LA-R/W

EX. UNDERGROUND
LIGHTING CIRCUIT
TO REMAIN

STA. 409+52.8,
101.7' RT ℄ I-75
JUNCTION BOX IN
BARRIER TO REMAIN
(INSTALLED BY
HAM-75-6.78)

(3) STA. 409+73.9, 100.1' RT ℄ I-75
18" PULL BOX, 725.08
(INTERCEPT EX. DUCT CABLE)
W/ (3)-SPLICE KITS (A-A)
(SPLICE W/ EX. CIRCUIT)

STA. 410+05.8, 0' RT ℄ I-75 (5)
MEDIAN JUNCTION BOX
W/ (3)-SPLICE KITS (A-A)

(52) STA. 413+18.0, 82.7' RT ℄ I-75
18" PULL BOX, 725.08
W/ (3)-SPLICE KITS (A-A)

STA. 409+73.9, 0' RT ℄ I-75 (1)
MEDIAN JUNCTION BOX
W/ (3)-SPLICE KITS (A-A)

INSTALL FENCE GROUNDING (50)
PER HL-50.11 ALONG FENCE
FROM: STA. 409+55
TO: STA. 409+94

STA. 413+67±, 128' RT ℄ I-75
A-A4, EXISTING TOWER TO REMAIN
(CONNECT LIGHTING CIRCUIT)

EX. UNDERGROUND LIGHTING
CIRCUIT TO REMAIN

(20) STA. 416+08±, 321' RT ℄ I-75
A-A5, EXISTING TOWER TO REMAIN
W/ (6)-NEW LED LUMINAIRES

(33) STA. 418+10.0, 216.0' RT ℄ I-75
B-A7, 6-LED, TYPE V, 100'

(35) STA. 418+43.1, 373' RT ℄ I-75
18" PULL BOX, 725.08
W/ (3)-SPLICE KITS (B-A)

(38) STA. 418+88.3, 374' RT ℄ I-75
18" PULL BOX, 725.08
W/ (3)-SPLICE KITS (B-A)

MATCHLINE STA. 409+00
SEE SHEET 800

MATCHLINE STA. 423+00
SEE SHEET 802

MATCHLINE STA. 11+00
SEE SHEET 807

RAMP J UNDERPASS DETAIL

SEE UNDERPASS
LIGHTING NOTE 1

STA. 419+80, 23' RT ℄ RAMP J (24)
B-A14, 1-LED, UNDERPASS LIGHT

STA. 419+52, 28' RT ℄ RAMP J (25)
B-A13, 1-LED, UNDERPASS LIGHT

STA. 419+21, 31' RT ℄ RAMP J (26)
B-A12, 1-LED, UNDERPASS LIGHT

STA. 418+99, 32' RT ℄ RAMP J (27)
B-A11, 1-LED, UNDERPASS LIGHT

STA. 418+51, 31' RT ℄ RAMP J (28)
B-A10, 1-LED, UNDERPASS LIGHT

STA. 418+17, 29' RT ℄ RAMP J (29)
B-A9, 1-LED, UNDERPASS LIGHT

STA. 417+87, 25' RT ℄ RAMP J (30)
B-A8, 1-LED, UNDERPASS LIGHT
MOUNTED ALONG TOP OF WALL
(TYP. OF RAMP J UNDERPASS LUMINAIRES)

STA. 417+79, 23' RT ℄ RAMP J
ROUND JUNCTION BOX WITH MOUNTING EARS AND GASKETED CAST MALLEABLE IRON COVER. PROVIDE UNFUSED BOLTED CONNECTIONS (WALL MOUNTED). JUNCTION BOX SHALL BE CONSIDERED INCIDENTAL TO ITEM 625, SERVICE TO UNDERPASS LIGHTING, AS PER PLAN. SEE REFERENCE ITEM #31 ON THIS SHEET FOR PAYMENT.

RAMP J UNDERPASS LIGHTING NOTES

1. ALL OVERHEAD UNDERPASS CONDUIT SHALL BE 3/4" SCH. 80 PVC. CIRCUIT CABLE SHALL BE (3)-#10 AWG, 600V, TYPE XHHW. PAYMENT FOR THIS WORK SHALL BE CONSIDERED INCIDENTAL TO ITEM 625, SERVICE TO UNDERPASS LIGHTING, AS PER PLAN.

CODED NOTES

(1) (1)-EMPTY 4" PVC CONDUIT IN MEDIAN BARRIER*

(2) (1)-4" PVC CONDUIT IN MEDIAN BARRIER* W/ (3)-NO. 4 AWG CABLES

(3) (1)-1.5" DUCT CABLE IN TRENCH W/ (3)-NO. 4 AWG CABLES

(4) (1)-3" CONDUIT, 725.04 IN TRENCH W/ (3)-NO. 4 AWG CABLES

(5) NOT USED

(6) NOT USED

(7) (1)-3" CONDUIT, 725.04 IN TRENCH W/ (3)-NO. 4 AWG CABLES

(8) NOT USED

(9) (1)-EMPTY 4" PVC CONDUIT IN BRIDGE PARAPET

(10) (1)-4" PVC CONDUIT IN BRIDGE PARAPET W/ (3)-NO. 4 AWG CABLES

(11) (1)-EMPTY 3" CONDUIT, 725.04 IN TRENCH

(12) (1)-3" CONDUIT, 725.04 JACKED/DRILLED UNDER PAVEMENT W/ (3)-NO. 4 AWG CABLES

(13) (1)-3" CONDUIT, 725.04 JACKED/DRILLED UNDER PAVEMENT W/ (3)-NO. 2 AWG CABLES

(14) (1)-EMPTY 3" CONDUIT, 725.04 JACKED/DRILLED UNDER PAVEMENT

*4" PVC CONDUIT SHALL BE CONSIDERED INCIDENTAL TO THE MEDIAN BARRIER.

HORIZONTAL SCALE IN FEET
0 25 50 100

CALCULATED DRM
CHECKED JDS

LIGHTING PLAN - I.R. 75
STA. 409+00 TO STA. 423+00

HAM-75-7.85

801
1047

Preliminary plans - For Reference Only

J:\20110903\ODOT\HAM-7.78891\lighting\sheets\7788911P102.dgn 5/22/2026 10:32:21 AM hbrendlinger

CODED NOTES

1. (1)-EMPTY 4" PVC CONDUIT IN MEDIAN BARRIER*
2. (1)-4" PVC CONDUIT IN MEDIAN BARRIER* W/ (3)-NO. 4 AWG CABLES
3. (1)-1.5" DUCT CABLE IN TRENCH W/ (3)-NO. 4 AWG CABLES
4. (1)-3" CONDUIT, 725.04 IN TRENCH W/ (3)-NO. 4 AWG CABLES
5. NOT USED
6. NOT USED
7. (1)-3" CONDUIT, 725.04 IN TRENCH W/ (3)-NO. 2 AWG CABLES
8. NOT USED
9. (1)-EMPTY 4" PVC CONDUIT IN BRIDGE PARAPET
10. (1)-4" PVC CONDUIT IN BRIDGE PARAPET W/ (3)-NO. 4 AWG CABLES
11. (1)-EMPTY 3" CONDUIT, 725.04 IN TRENCH
12. (1)-3" CONDUIT, 725.04 JACKED/DRILLED UNDER PAVEMENT W/ (3)-NO. 4 AWG CABLES
13. (1)-3" CONDUIT, 725.04 JACKED/DRILLED UNDER PAVEMENT W/ (3)-NO. 2 AWG CABLES
14. (1)-EMPTY 3" CONDUIT, 725.04 JACKED/DRILLED UNDER PAVEMENT

*4" PVC CONDUIT SHALL BE CONSIDERED INCIDENTAL TO THE MEDIAN BARRIER.

LAIDLAW AVE. POWER SERVICE AND UNDERPASS LIGHTING DETAIL

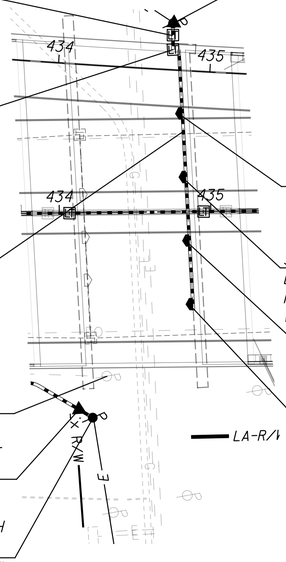

21 STA. 434+76.4, 116.7' LT. ℄ I-75
SERVICE TO UNDERPASS LIGHTING:
INSTALL 18" PULL BOX, 725.08
W/ (3)-SPLICE KITS (F-A)
AND STRUCTURE MOUNTED
DISCONNECT SWITCH

STA. 434+76.4, 107.2' LT ℄ I-75
ROUND JUNCTION BOX WITH MOUNTING EARS AND GASKETED CAST MALLEABLE IRON COVER. PROVIDE UNFUSED BOLTED CONNECTIONS (WALL MOUNTED). JUNCTION BOX SHALL BE CONSIDERED INCIDENTAL TO ITEM 625, SERVICE TO UDNERPASS LIGHTING, AS PER PLAN.

ALL OVERHEAD UNDERPASS CONDUIT SHALL BE ¾" SCH. 80 PVC. CIRCUIT CABLE SHALL BE (3)-#10 AWG, 600V, TYPE XHHW. PAYMENT FOR THIS WORK SHALL BE CONSIDERED INCIDENTAL TO ITEM 625, SERVICE TO UNDERPASS LIGHTING, AS PER PLAN.

EX. POWER SOURCE:
WOOD POLE (DUKE ENERGY)
COORDINATE WITH DUKE FOR REMOVAL

19 STA. 434+11.4, 129.6' RT ℄ I-75
NEW 480V GROUND MOUNTED CONTROLLER "B" (HL-40.20)
W/ (1)-METER AND DISCONNECT SWITCH

STA. 434+20.6, 135.3' RT
NEW WOOD POLE (FOR 480V ODOT POWER SERVICE)
W/ (1)-CONDUIT RISER, 2"
W/ (1)-18" ELECTRIC PULL BOX, 725.08

20 STA. 434+77.0, 124.7' LT. ℄ I-75
NEW WOOD POLE (FOR 120/240V CITY OF CINCINNATI POWER SERVICE)
W/ (1)-120/240V LIGHTING CONTROLLER "F" (ES-7)
W/ (1)-CONDUIT RISER, 2"
W/ (1)-METER AND DISCONNECT SWITCH

NOTE:
1. FOR LIGHTING LEGEND, SEE SHEET 779.

22 STA. 434+82.0, 64.9' LT ℄ I-75
LED UNDERPASS LIGHT (CINCINNATI) MOUNTED ALONG TOP OF ABUTMENT WALL BELOW BEAM SEATS

23 STA. 434+83.8, 23.0' LT ℄ I-75
LED UNDERPASS LIGHT (CINCINNATI) MOUNTED ALONG TOP OF ABUTMENT WALL BELOW BEAM SEATS

24 STA. 434+85.7, 18.9' RT ℄ I-75
LED UNDERPASS LIGHT (CINCINNATI) MOUNTED ALONG TOP OF ABUTMENT WALL BELOW BEAM SEATS

25 STA. 434+84.9, 60.9' RT. ℄ I-75
LED UNDERPASS LIGHT (CINCINNATI) MOUNTED ALONG TOP OF ABUTMENT WALL BELOW BEAM SEATS

7 STA. 423+38.5, 86.5' LT ℄ I-75
B-A4, 6-LED, TYPE V, 100'

9 STA. 425+84.0, 0' RT ℄ I-75
B-A3, 6-LED, TYPE V, 100'
W/ MEDIAN JUNCTION BOX

LA-R/W

RAMP J

RAMP K

I.R. 75 (SB)

I.R. 75 (NB)

MATCHLINE STA. 423+00
SEE SHEET 801

MATCHLINE STA. 436+50
SEE SHEET 803

Ex LA-R/W

5 STA. 423+38.8, 0' RT. ℄ I-75
MEDIAN JUNCTION BOX
W/ (3)-SPLICE KITS (B-A)

3 STA. 423+26.7, 0' RT. ℄ I-75
MEDIAN JUNCTION BOX
W/ (3)-SPLICE KITS (B-A)

1 STA. 423+26.7, 93.2' RT ℄ I-75
18" PULL BOX, 725.08
W/ (3)-SPLICE KITS (B-A)

11 STA. 428+36.7, 0' RT ℄ I-75
B-A2, 6-LED, TYPE V, 100'
W/ MEDIAN JUNCTION BOX

13 STA. 430+82.8, 0' RT ℄ I-75
B-A1, 6-LED, TYPE V, 100'
W/ MEDIAN JUNCTION BOX

17 STA. 433+04.9, 113.4' RT ℄ I-75
24" PULL BOX, 725.08

29 STA. 434+06.8, 0' RT ℄ I-75
TRANSITION JUNCTION BOX

27 STA. 433+34.0, 0' RT ℄ I-75
B-B1, 1-LED, TYPE V, 50'
W/ MEDIAN JUNCTION BOX

15 STA. 433+02.6, 0' RT. ℄ I-75
MEDIAN JUNCTION BOX

END FENCE GROUNDING
PER HL-50.11 ALONG FENCE
FROM: STA. 415+63
TO: STA. 434+14

35 BEGIN FENCE GROUNDING
PER HL-50.11 ALONG FENCE
FROM: STA. 434+24 (I.R. 75)
TO: STA. 16+03 (S.R. 562)

EX. 480V POWER SOURCE:
WOOD POLE (DUKE ENERGY)

OVERHEAD POWER SERVICE CABLES (BY DUKE ENERGY)

EX. WOOD POLE (DUKE ENERGY)

EX. WOOD POLE (DUKE ENERGY)

EX. 120/240V POWER SOURCE:
WOOD POLE (DUKE ENERGY)

OVERHEAD POWER SERVICE CABLES (BY DUKE ENERGY)

10 30 BEGIN FENCE GROUNDING 37
PER HL-50.11 ALONG FENCE
FROM: STA. 434+94
TO: STA. 440+69

31 STA. 434+95.3, 0' RT ℄ I-75
TRANSITION JUNCTION BOX

33 STA. 435+41.8, 0' RT ℄ I-75,
B-B2, 1-LED, TYPE V, 50'
W/ MEDIAN JUNCTION BOX

Ex LA-R/W

LA-R/W

LAIDLAW AVE

Ex LA-R/W

36 INSTALL STRUCTURE GROUNDING FOR PROPOSED LAIDLAW AVE OVERPASS STRUCTURE

38 BEGIN FENCE GROUNDING
PER HL-50.11 ALONG FENCE
FROM: STA. 434+89
TO: STA. 439+63

OVERHEAD POWER SERVICE CABLES (BY DUKE ENERGY)

OVERHEAD POWER SERVICE CABLES (BY DUKE ENERGY)

HORIZONTAL SCALE IN FEET
0 25 50 100

CALCULATED DRM
CHECKED JDS

LIGHTING PLAN - I.R. 75
STA. 423+00 TO STA. 436+50

HAM-75-7.85

802
1047

Preliminary Plans - Not For Reference Only

J:\20110903\ODOT\HAM\77889\lighting\sheets\77889LP103.dgn 5/22/2026 10:32:25 AM hbrendlinger

CODED NOTES

1. (1)-EMPTY 4" PVC CONDUIT IN MEDIAN BARRIER*
2. (1)-4" PVC CONDUIT IN MEDIAN BARRIER* W/ (3)-NO. 4 AWG CABLES
3. (1)-1.5" DUCT CABLE IN TRENCH W/ (3)-NO. 4 AWG CABLES
4. (1)-3" CONDUIT, 725.04 IN TRENCH W/ (3)-NO. 4 AWG CABLES
5. NOT USED
6. NOT USED
7. (1)-3" CONDUIT, 725.04 IN TRENCH W/ (3)-NO. 2 AWG CABLES
8. NOT USED
9. (1)-EMPTY 4" PVC CONDUIT IN BRIDGE PARAPET
10. (1)-4" PVC CONDUIT IN BRIDGE PARAPET W/ (3)-NO. 4 AWG CABLES
11. (1)-EMPTY 3" CONDUIT, 725.04 IN TRENCH
12. (1)-3" CONDUIT, 725.04 JACKED/DRILLED UNDER PAVEMENT W/ (3)-NO. 4 AWG CABLES
13. (1)-3" CONDUIT, 725.04 JACKED/DRILLED UNDER PAVEMENT W/ (3)-NO. 2 AWG CABLES
14. (1)-EMPTY 3" CONDUIT, 725.04 JACKED/DRILLED UNDER PAVEMENT

*4" PVC CONDUIT SHALL BE CONSIDERED INCIDENTAL TO THE MEDIAN BARRIER.

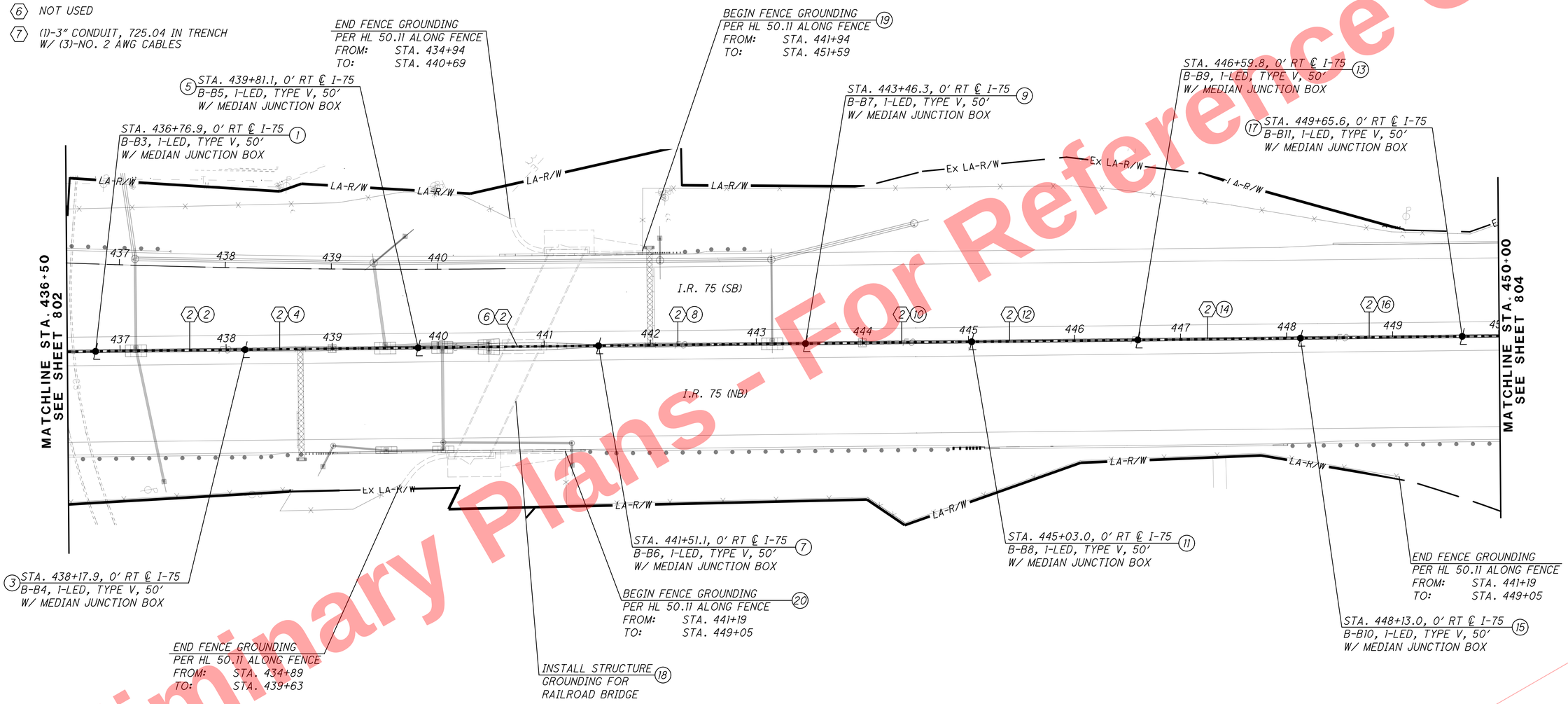

NOTE:
FOR LIGHTING LEGEND, SEE SHEET 779

Preliminary Plans - For Reference Only

HORIZONTAL SCALE IN FEET
0 25 50 100

CALCULATED DRM
CHECKED JDS

LIGHTING PLAN - I.R. 75
STA. 436+50 TO STA. 450+00

HAM-75-7.85

803
1047

J:\20110903\ODOT\HAM\77889\lighting\sheets\77889LP104.dgn 5/22/2026 10:32:28 AM hbrendlinger

CODED NOTES

1. (1)-EMPTY 4" PVC CONDUIT IN MEDIAN BARRIER*
2. (1)-4" PVC CONDUIT IN MEDIAN BARRIER* W/ (3)-NO. 4 AWG CABLES
3. (1)-1.5" DUCT CABLE IN TRENCH W/ (3)-NO. 4 AWG CABLES
4. (1)-3" CONDUIT, 725.04 IN TRENCH W/ (3)-NO. 4 AWG CABLES
5. NOT USED
6. NOT USED
7. (1)-3" CONDUIT, 725.04 IN TRENCH W/ (3)-NO. 2 AWG CABLES
8. NOT USED
9. (1)-EMPTY 4" PVC CONDUIT IN BRIDGE PARAPET
10. (1)-4" PVC CONDUIT IN BRIDGE PARAPET W/ (3)-NO. 4 AWG CABLES
11. (1)-EMPTY 3" CONDUIT, 725.04 IN TRENCH
12. (1)-3" CONDUIT, 725.04 JACKED/DRILLED UNDER PAVEMENT W/ (3)-NO. 4 AWG CABLES
13. (1)-3" CONDUIT, 725.04 JACKED/DRILLED UNDER PAVEMENT W/ (3)-NO. 2 AWG CABLES
14. (1)-EMPTY 3" CONDUIT, 725.04 JACKED/DRILLED UNDER PAVEMENT

*4" PVC CONDUIT SHALL BE CONSIDERED INCIDENTAL TO THE MEDIAN BARRIER.

TOWNE ST. POWER SERVICE AND UNDERPASS LIGHTING DETAIL

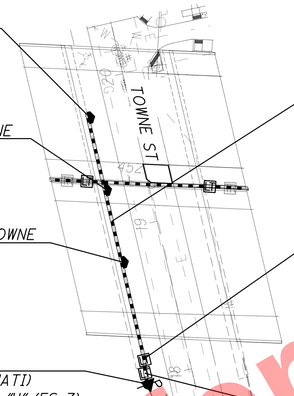

(13) STA. 19+76.6, 29.0' LT ℄ TOWNE
LED UNDERPASS LIGHT MOUNTED ALONG TOP OF ABUTMENT WALL BELOW BEAM SEATS

(12) STA. 19+27.6, 29.0' LT ℄ TOWNE
LED UNDERPASS LIGHT MOUNTED ALONG TOP OF ABUTMENT WALL BELOW BEAM SEATS

(11) STA. 18+78.6, 29.0' LT ℄ TOWNE
LED UNDERPASS LIGHT MOUNTED ALONG TOP OF ABUTMENT WALL BELOW BEAM SEATS

(9) STA. 17+96.5, 30.5' LT ℄ TOWNE
NEW WOOD POLE (FOR CITY OF CINCINNATI)
W/ (1)-120/240V LIGHTING CONTROLLER "H" (ES-7)
W/ (1)-CONDUIT RISER, 2"
W/ (1)-METER AND DISCONNECT SWITCH

ALL OVERHEAD UNDERPASS CONDUIT SHALL BE ¾" SCH. 80 PVC. CIRCUIT CABLE SHALL BE (3)-#10 AWG, 600V, TYPE XHHW. PAYMENT FOR THIS WORK SHALL BE CONSIDERED INCIDENTAL TO ITEM 625, SERVICE TO UNDERPASS LIGHTING, AS PER PLAN.

STA. 18+12.7, 29.0' LT ℄ TOWNE (10)
ROUND JUNCTION BOX WITH MOUNTING EARS AND GASKETED CAST MALLEABLE IRON COVER. PROVIDE UNFUSED BOLTED CONNECTIONS (WALL MOUNTED). JUNCTION BOX SHALL BE CONSIDERED INCIDENTAL TO ITEM 625, SERVICE TO UNDERPASS LIGHTING, AS PER PLAN.

STA. 18+04.1, 30.5' LT ℄ TOWNE
SERVICE TO UNDERPASS LIGHTING:
INSTALL 18" PULL BOX, 725.08
W/ (3)-SPLICE KITS (H-A) AND
STRUCTURE MTD. DISCONNECT SWITCH

(27) INSTALL STRUCTURE GROUNDING FOR TOWN STREET BRIDGE

END FENCE GROUNDING
PER HL 50.11 ALONG FENCE
FROM: STA. 441+94
TO: STA. 451+59

STA. 452+53.2, 0' RT ℄ I-75, (6)
TRANSITION JUNCTION BOX

STA. 452+99.0, 0' RT, ℄ I-75, (8)
B-B13, 1-LED, TYPE V, 50'
W/ MEDIAN JUNCTION BOX

BEGIN FENCE GROUNDING (29)
PER HL 50.11 ALONG FENCE
FROM: STA. 453+61
TO: STA. 476+86

(4) STA. 451+72.0, 0' RT ℄ I-75,
TRANSITION JUNCTION BOX

STA. 454+37.8, 0' RT ℄ I-75, (14)
C-A12, 1-LED, TYPE V, 50'
W/ MEDIAN JUNCTION BOX

STA. 457+25.9, 0' RT ℄ I-75, (18)
C-A10, 1-LED, TYPE V, 50'
W/ MEDIAN JUNCTION BOX

(22) STA. 460+16.7, 0' RT ℄ I-75,
C-A8, 1-LED, TYPE V, 50'
W/ MEDIAN JUNCTION BOX

(26) STA. 463+44.5, 0' RT ℄ I-75,
C-A6, 1-LED, TYPE V, 50'
W/ MEDIAN JUNCTION BOX

MATCHLINE STA. 450+00
SEE SHEET 803

MATCHLINE STA. 464+00
SEE SHEET 805

I.R. 75 (SB)

I.R. 75 (NB)

TOWNE ST

(28) BEGIN FENCE GROUNDING
PER HL 50.11 ALONG FENCE
FROM: STA. 451+23
TO: STA. 452+62

(2) STA. 451+26.0, 0' RT ℄ I-75,
B-B12, 1-LED, TYPE V, 50'
W/ MEDIAN JUNCTION BOX

SEE TOWNE ST POWER SERVICE AND UNDERPASS LIGHTING DETAIL THIS SHEET

END FENCE GROUNDING
PER HL 50.11 ALONG FENCE
FROM: STA. 451+23
TO: STA. 452+62

OVERHEAD POWER SERVICE CABLES (BY DUKE ENERGY)

EX. 120/240V POWER SOURCE WOOD POLE (DUKE ENERGY)

STA. 455+81.1, 0' RT ℄ I-75, (16)
C-A11, 1-LED, TYPE V, 50'
W/ MEDIAN JUNCTION BOX

BEGIN FENCE GROUNDING (30)
PER HL 50.11 ALONG FENCE
FROM: STA. 457+74
TO: STA. 480+00

STA. 458+69.3, 0' RT ℄ I-75 (20)
C-A9, 1-LED, TYPE V, 50'
W/ MEDIAN JUNCTION BOX

STA. 461+75.3, 0' RT ℄ I-75, (24)
C-A7, 1-LED, TYPE V, 50'
W/ MEDIAN JUNCTION BOX

NOTE:
FOR LIGHTING LEGEND, SEE SHEET 779

Preliminary Plans - For Reference Only

HORIZONTAL SCALE IN FEET
0 25 50 100

CALCULATED DRM
CHECKED JDS

LIGHTING PLAN - I.R. 75
STA. 450+00 TO STA. 464+00

HAM-75-7.85

804
1047

J:\20110903\ODOT\HAM\77889\lighting\sheets\77889LP105.dgn 5/22/2026 10:32:32 AM hbrendlinger

CODED NOTES

1. (1)-EMPTY 4" PVC CONDUIT IN MEDIAN BARRIER*
2. (1)-4" PVC CONDUIT IN MEDIAN BARRIER* W/ (3)-NO. 4 AWG CABLES
3. (1)-1.5" DUCT CABLE IN TRENCH W/ (3)-NO. 4 AWG CABLES
4. (1)-3" CONDUIT, 725.04 IN TRENCH W/ (3)-NO. 4 AWG CABLES
5. NOT USED
6. NOT USED
7. (1)-3" CONDUIT, 725.04 IN TRENCH W/ (3)-NO. 2 AWG CABLES
8. NOT USED
9. (1)-EMPTY 4" PVC CONDUIT IN BRIDGE PARAPET
10. (1)-4" PVC CONDUIT IN BRIDGE PARAPET W/ (3)-NO. 4 AWG CABLES
11. (1)-EMPTY 3" CONDUIT, 725.04 IN TRENCH
12. (1)-3" CONDUIT, 725.04 JACKED/DRILLED UNDER PAVEMENT W/ (3)-NO. 4 AWG CABLES
13. (1)-3" CONDUIT, 725.04 JACKED/DRILLED UNDER PAVEMENT W/ (3)-NO. 2 AWG CABLES
14. (1)-EMPTY 3" CONDUIT, 725.04 JACKED/DRILLED UNDER PAVEMENT

*4" PVC CONDUIT SHALL BE CONSIDERED INCIDENTAL TO THE MEDIAN BARRIER.

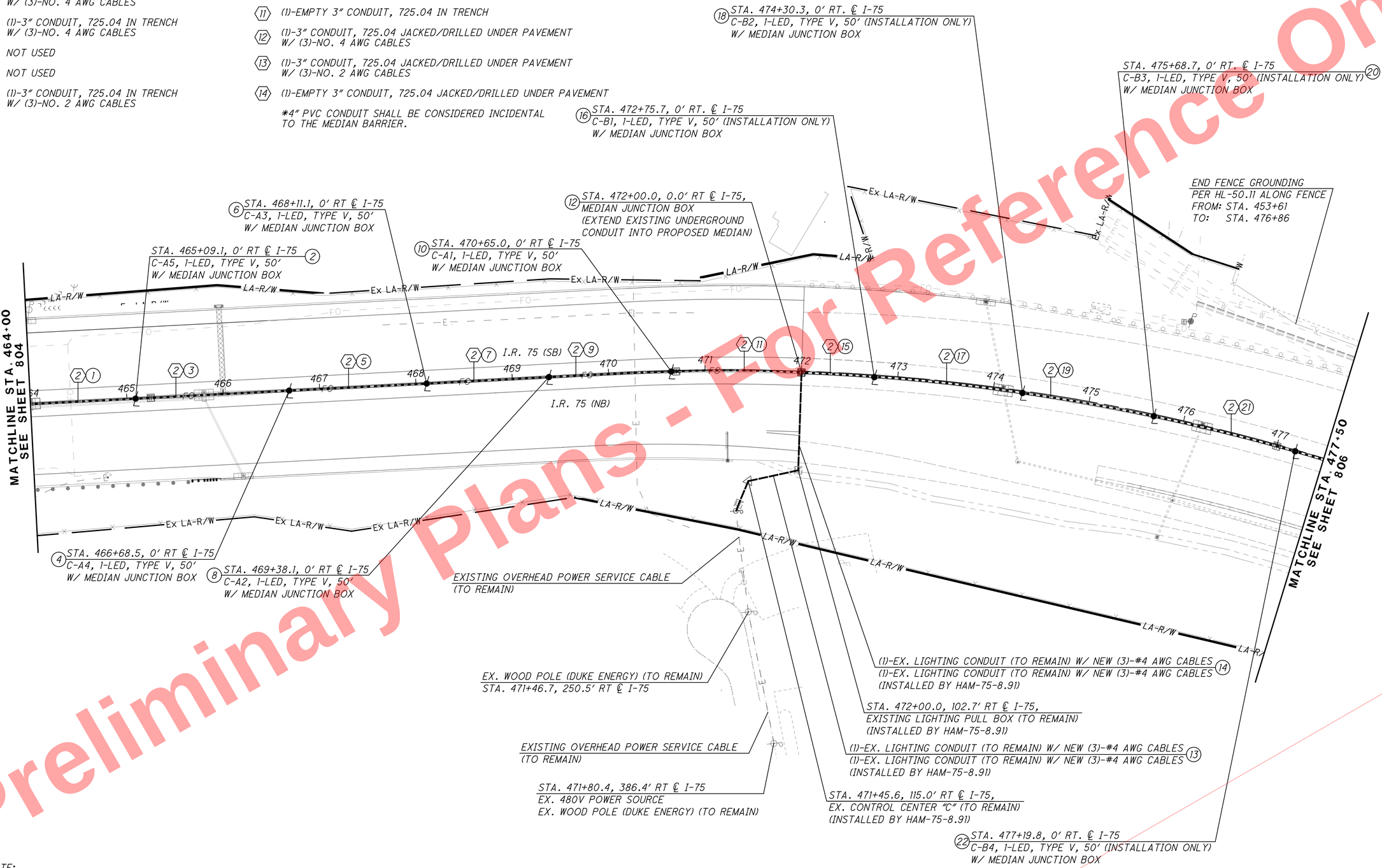

NOTE:
FOR LIGHTING LEGEND, SEE SHEET 779

Preliminary Plans - For Reference Only

HORIZONTAL SCALE IN FEET
0 25 50 100

CALCULATED DRM CHECKED JDS

LIGHTING PLAN - I.R. 75
STA. 464+00 TO STA. 477+50

HAM-75-7.85

805
1047

J:\20110903\ODOT\HAM\77889\lighting\sheets\77889LP106.dgn 5/22/2026 10:32:36 AM hbrendlinger

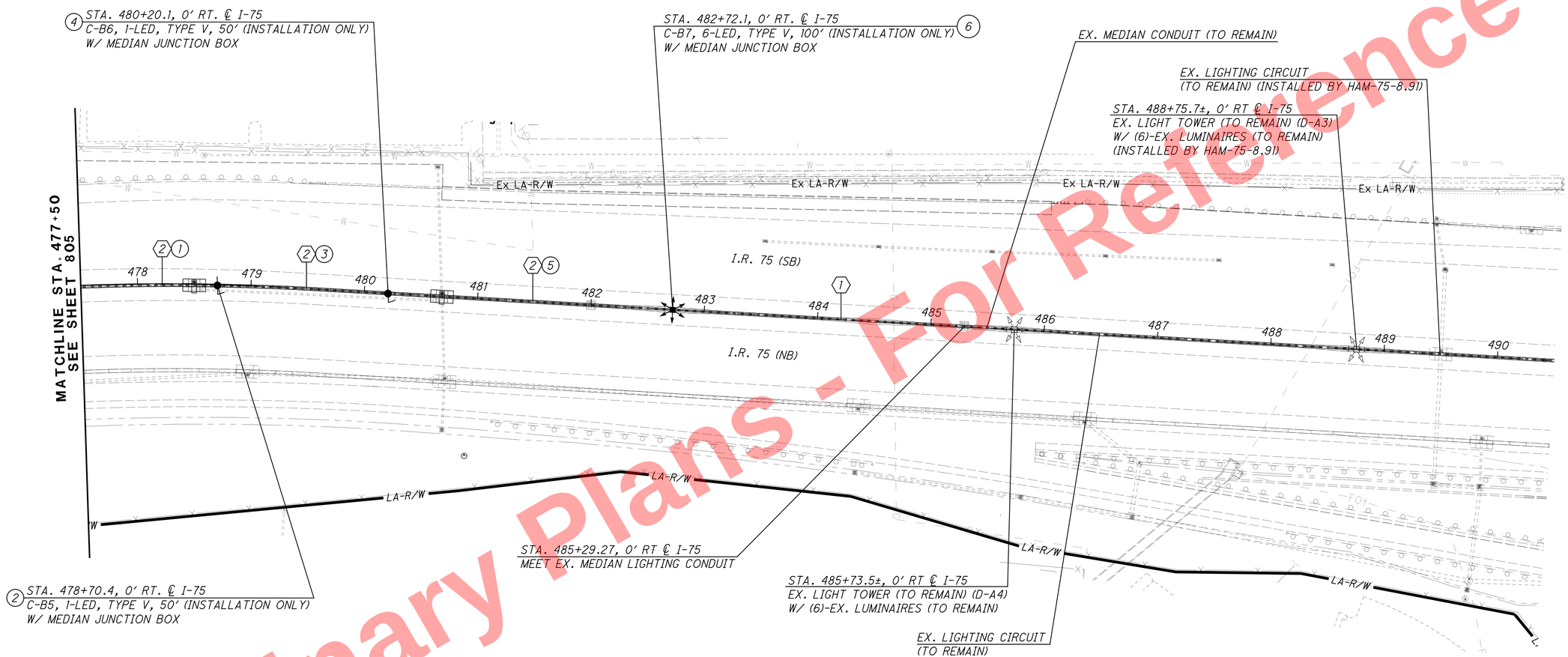

CODED NOTES

1. (1)-EMPTY 4" PVC CONDUIT IN MEDIAN BARRIER*
2. (1)-4" PVC CONDUIT IN MEDIAN BARRIER* W/ (3)-NO. 4 AWG CABLES
3. (1)-1.5" DUCT CABLE IN TRENCH W/ (3)-NO. 4 AWG CABLES
4. (1)-3" CONDUIT, 725.04 IN TRENCH W/ (3)-NO. 4 AWG CABLES
5. NOT USED
6. NOT USED
7. (1)-3" CONDUIT, 725.04 IN TRENCH W/ (3)-NO. 2 AWG CABLES
8. NOT USED
9. (1)-EMPTY 4" PVC CONDUIT IN BRIDGE PARAPET
10. (1)-4" PVC CONDUIT IN BRIDGE PARAPET W/ (3)-NO. 4 AWG CABLES
11. (1)-EMPTY 3" CONDUIT, 725.04 IN TRENCH
12. (1)-3" CONDUIT, 725.04 JACKED/DRILLED UNDER PAVEMENT W/ (3)-NO. 4 AWG CABLES
13. (1)-3" CONDUIT, 725.04 JACKED/DRILLED UNDER PAVEMENT W/ (3)-NO. 2 AWG CABLES
14. (1)-EMPTY 3" CONDUIT, 725.04 JACKED/DRILLED UNDER PAVEMENT

*4" PVC CONDUIT SHALL BE CONSIDERED INCIDENTAL TO THE MEDIAN BARRIER.

NOTE:
FOR LIGHTING LEGEND, SEE SHEET 779

HORIZONTAL SCALE IN FEET
0 25 50 100

CALCULATED DRM
CHECKED JDS

LIGHTING PLAN - I.R. 75
STA. 477+50 TO STA. 490+50

HAM-75-7.85

806
1047

J:\20110903\ODOT\HAM\77889\lighting\sheets\77889LP107.dgn 5/22/2026 10:32:39 AM hbrendlinger

Preliminary Plans - For Reference Only

Preliminary Plans - For Reference Only

CODED NOTES

1. (1)-EMPTY 4" PVC CONDUIT IN MEDIAN BARRIER*
2. (1)-4" PVC CONDUIT IN MEDIAN BARRIER* W/ (3)-NO. 4 AWG CABLES
3. (1)-1.5" DUCT CABLE IN TRENCH W/ (3)-NO. 4 AWG CABLES
4. (1)-3" CONDUIT, 725.04 IN TRENCH W/ (3)-NO. 4 AWG CABLES
5. NOT USED
6. NOT USED
7. (1)-3" CONDUIT, 725.04 IN TRENCH W/ (3)-NO. 2 AWG CABLES
8. NOT USED
9. (1)-EMPTY 4" PVC CONDUIT IN BRIDGE PARAPET
10. (1)-4" PVC CONDUIT IN BRIDGE PARAPET W/ (3)-NO. 4 AWG CABLES
11. (1)-EMPTY 3" CONDUIT, 725.04 IN TRENCH
12. (1)-3" CONDUIT, 725.04 JACKED/DRILLED UNDER PAVEMENT W/ (3)-NO. 4 AWG CABLES
13. (1)-3" CONDUIT, 725.04 JACKED/DRILLED UNDER PAVEMENT W/ (3)-NO. 2 AWG CABLES
14. (1)-EMPTY 3" CONDUIT, 725.04 JACKED/DRILLED UNDER PAVEMENT

*4" PVC CONDUIT SHALL BE CONSIDERED INCIDENTAL TO THE MEDIAN BARRIER.

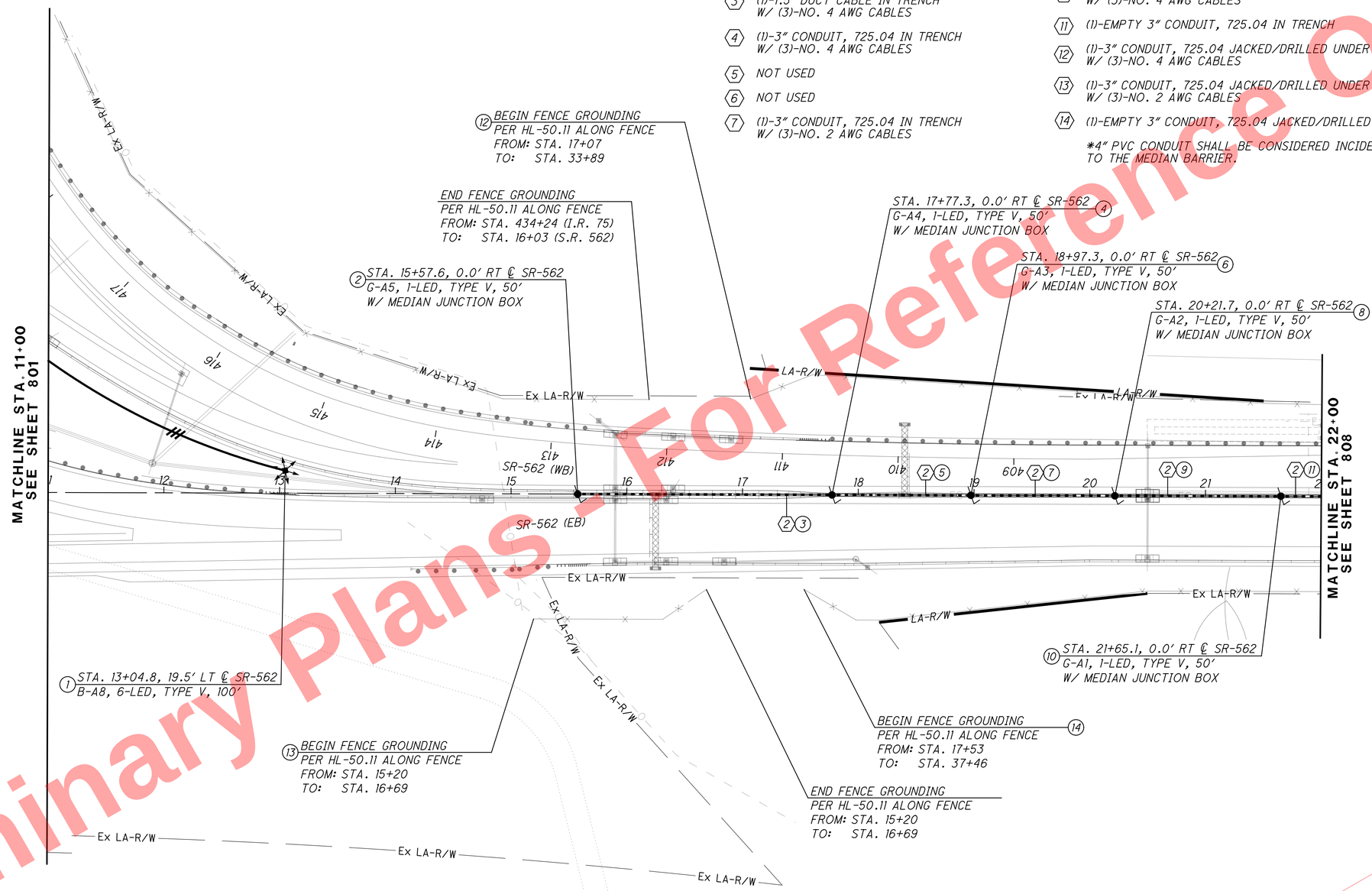

NOTE:
FOR LIGHTING LEGEND, SEE SHEET 779

HORIZONTAL SCALE IN FEET
0 25 50 100

CALCULATED DRM
CHECKED JDS

S.R. 562 LIGHTING PLAN
STA. 11+00 TO STA. 22+00

HAM-75-7.85

807
1047

J:\20110903\ODOT\HAM\7889\lighting\sheets\77889LP111.dgn 5/22/2026 10:32:42 AM hbrendlinger

CODED NOTES

1. (1)-EMPTY 4" PVC CONDUIT IN MEDIAN BARRIER*
2. (1)-4" PVC CONDUIT IN MEDIAN BARRIER* W/ (3)-NO. 4 AWG CABLES
3. (1)-1.5" DUCT CABLE IN TRENCH W/ (3)-NO. 4 AWG CABLES
4. (1)-3" CONDUIT, 725.04 IN TRENCH W/ (3)-NO. 4 AWG CABLES
5. NOT USED
6. NOT USED
7. (1)-3" CONDUIT, 725.04 IN TRENCH W/ (3)-NO. 2 AWG CABLES
8. NOT USED
9. (1)-EMPTY 4" PVC CONDUIT IN BRIDGE PARAPET
10. (1)-4" PVC CONDUIT IN BRIDGE PARAPET W/ (3)-NO. 4 AWG CABLES
11. (1)-EMPTY 3" CONDUIT, 725.04 IN TRENCH
12. (1)-3" CONDUIT, 725.04 JACKED/DRILLED UNDER PAVEMENT W/ (3)-NO. 4 AWG CABLES
13. (1)-3" CONDUIT, 725.04 JACKED/DRILLED UNDER PAVEMENT W/ (3)-NO. 2 AWG CABLES
14. (1)-EMPTY 3" CONDUIT, 725.04 JACKED/DRILLED UNDER PAVEMENT

*4" PVC CONDUIT SHALL BE CONSIDERED INCIDENTAL TO THE MEDIAN BARRIER.

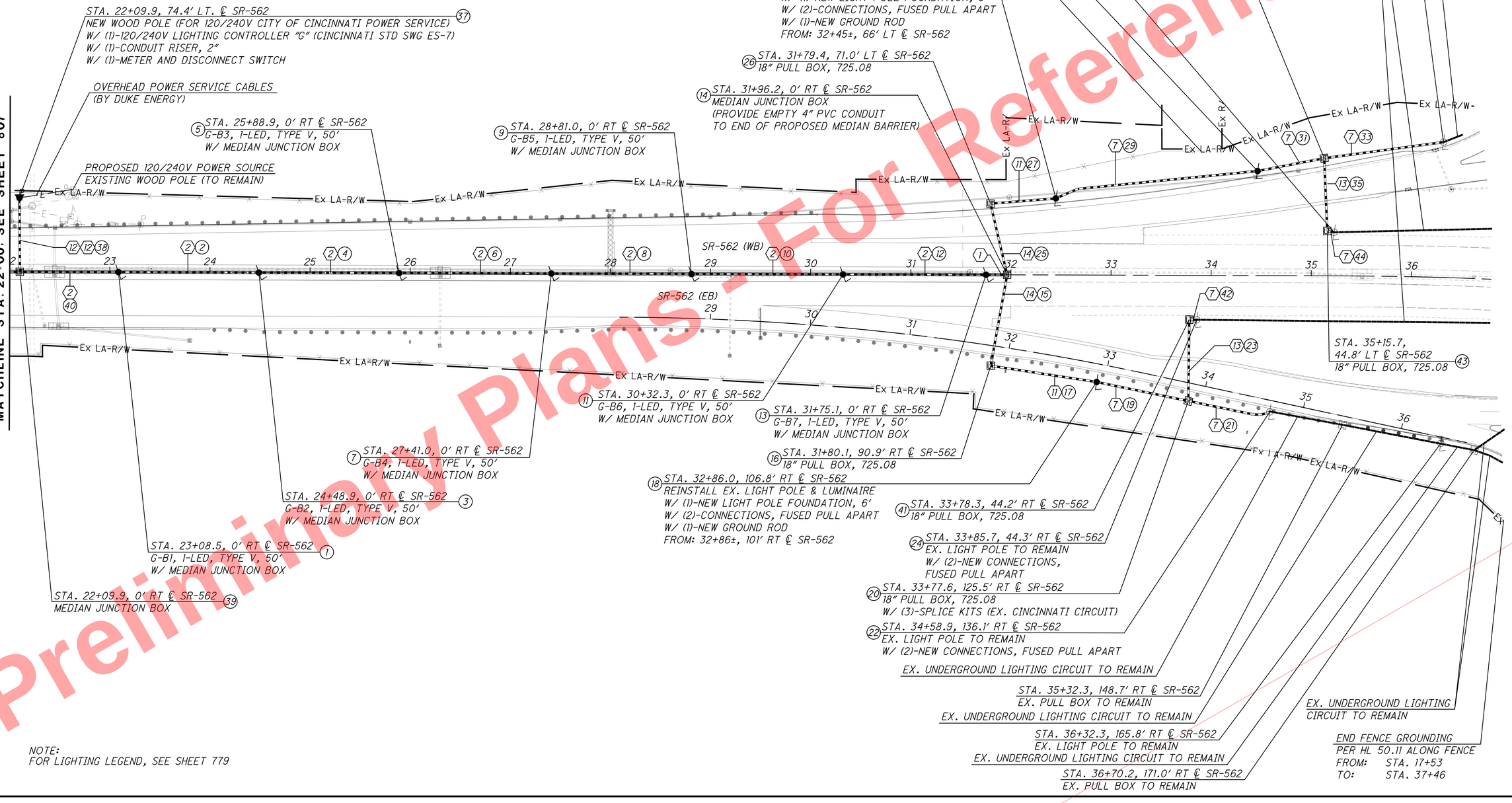

NOTE:
FOR LIGHTING LEGEND, SEE SHEET 779

Preliminary Plans - For Reference Only

J:\20110903\ODOT\HAM\77889\lighting\sheets\77889LP112.dgn 5/22/2026 10:32:45 AM hbrendlinger

HORIZONTAL SCALE IN FEET
0 25 50 100

CALCULATED DRM
CHECKED JDS

S.R. 562 LIGHTING PLAN
STA. 22+00 TO STA. 36+00

HAM-75-7.85

808
1047

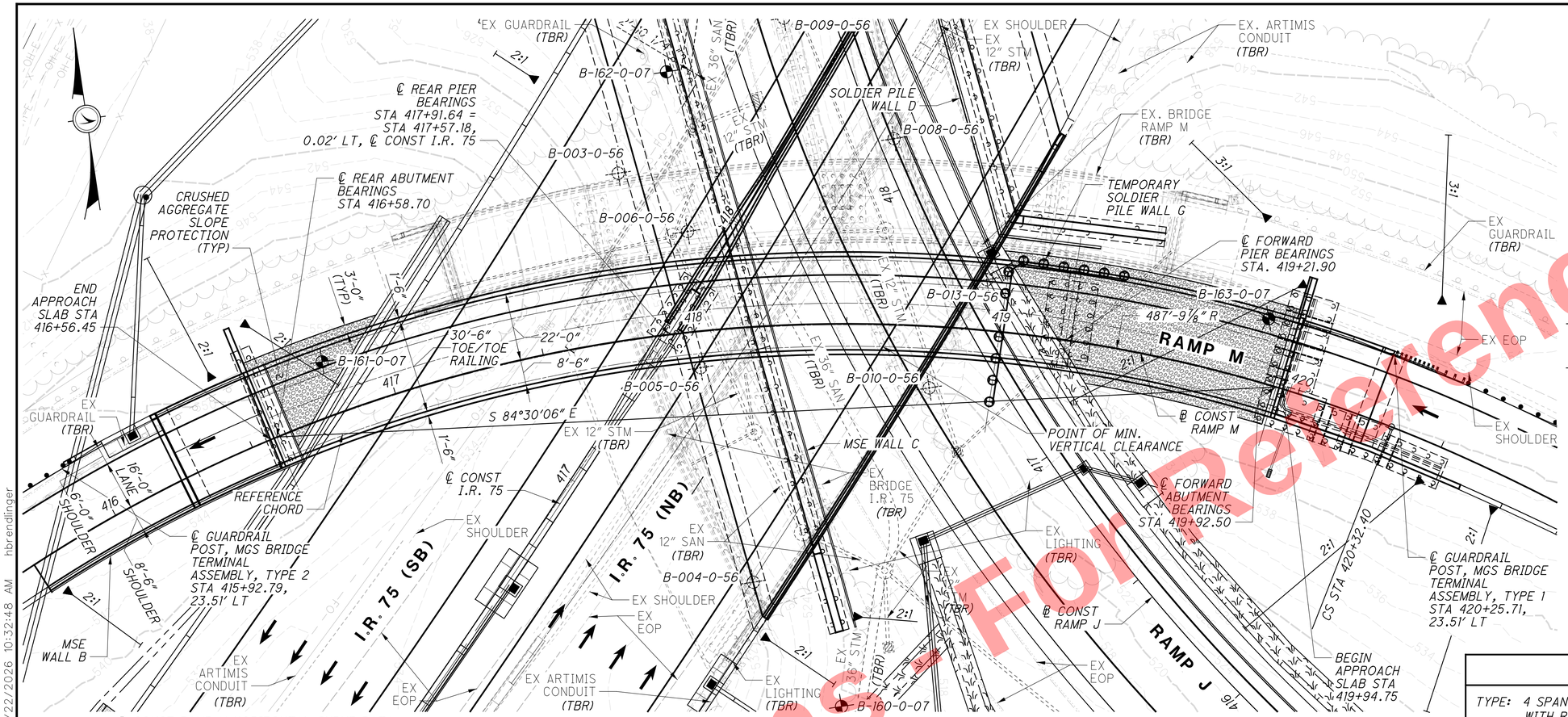

PLAN

℄ CONST RAMP M HORIZONTAL CURVE DATA

P.I. STA 418+44.83
Δ = 93° 04' 47" (RT)
Dc = 11° 44' 43"
R = 487.82'

Δc = 72° 31' 37" (RT)
Lc = 617.50'
E = 225.18'
C = 577.09'

C.B.1 = N 40° 24' 29" E
C.B. = N 83° 31' 25" E
C.B.2 = N 53° 21' 41" W

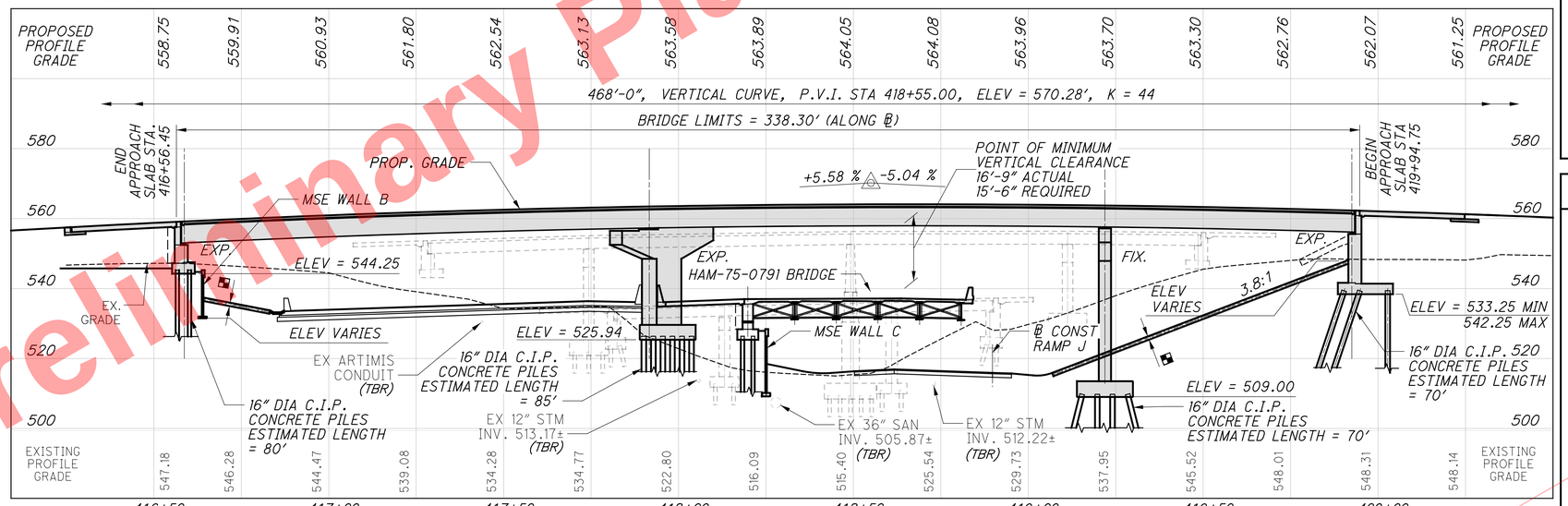

PROFILE ALONG ℄ CONST RAMP M

TRAFFIC DATA

CURRENT YEAR ADT (2010) = 173,800
DESIGN YEAR ADT (2030) = 203,000
DESIGN YEAR ADTT (2030) = 107,590

BENCHMARK DATA

BM #404 STA.434+88.14,
ELEV 523.26 , OFFSET 312.54', RIGHT

BM #405 STA.434+03.68,
ELEV 521.92 , OFFSET 388.27', LEFT

FOR ADDITIONAL BENCHMARK INFORMATION, SEE ROADWAY PLAN SHEET 10/1047

LEGEND

- PROJECT SOIL BORING LOCATION
- HISTORICAL SOIL BORING LOCATION
- LIMITS OF ITEM 601 - CRUSHED AGGREGATE SLOPE PROTECTION

NOTES

1. EARTH WORK LIMITS SHOWN ARE APPROXIMATE. ACTUAL SLOPES SHALL CONFORM TO PLAN CROSS SECTIONS.
2. SEE ROADWAY PLANS FOR GUARDRAIL DETAILS AND PAYMENT.
3. SEE GENERAL NOTES FOR ABBREVIATION LEGEND.

EXISTING STRUCTURE

TYPE: 4 SPAN CONTINUOUS STEEL BEAM SUPERSTRUCTURE WITH REINFORCED CONCRETE DECK ON REINFORCED CONCRETE ABUTMENTS AND COLUMN PIERS
SPANS: 47'-11¾", 79'-10⅞", 66'-5⅜", 39'-11⅞" C/C BEARINGS
ROADWAY: 21'-4" F/F RAILING
SKEW: ALL CENTERLINE BEARINGS ARE ON RADIAL LINES
DESIGN LOADING: CF 2000-51 ADEQUATE FOR AASHO ALTERNATE LOADING
DECK: REINFORCED CONCRETE
SUBSTRUCTURE: CONCRETE ABUTMENTS AND DEEP FOUNDATION PIERS
DATE BUILT: 1958
STRUCTURE FILE NUMBER: 3113779
APPROACH SLABS: 20' LONG
WEARING SURFACE: 1" MONOLITHIC CONCRETE

PROPOSED STRUCTURE

TYPE: 3 SPAN CONTINUOUS STEEL GIRDER SUPERSTRUCTURE WITH COMPOSITE REINFORCED CONCRETE DECK ON REINFORCED CONCRETE STUB ABUTMENTS AND T-TYPE PIERS
SPANS: 110'-10 3/16", 144'-8¾", AND 71'- 8 15/16" C/C BEARINGS, MEASURED ALONG REFERENCE CHORD
ROADWAY: 30'-6" T/T RAILING
DESIGN LOADING: HL-93
FUTURE WEARING SURFACE LOADING: 60 PSF
SKEW: VARIES (SEE REFERENCE CHORD DIAGRAM) ON GENERAL PLAN
WEARING SURFACE: MONOLITHIC CONCRETE (MACRO-FIBERS)
APPROACH SLABS: AS-1-15 AND AS-2-15 (30' LONG) T=17" MODIFIED, TYPE C INSTALLATION (REAR), TYPE A INSTALLATION (FORWARD)
ALIGNMENT: 11°45'08 CURVE RIGHT
CROWN: 1.40% AND 5.60%
LATITUDE: N 39°10'30.39"
LONGITUDE: W 84°29'22.08"

Preliminary Plans
Not For Reference Only

DESIGN AGENCY: EMH&T
DATE: 5-22-26
REVIEWED: CAS
STRUCTURE FILE NUMBER: 3113787
DRAWN: GB
REVISED: -
DESIGNED: RJE
CHECKED: RMW

HAMILTON COUNTY
STA. 416+56.45
STA. 419+94.75

SITE PLAN
BRIDGE NO. HAM-562-0004
RAMP M OVER I.R. 75

HAM-75-7.85
PID No. 121447

1 / 56
809/1047

J:\20110903\ODOT\HAM\7889\structures\HAM562_0004P\sheets\562_0004CSP001.dgn 5/22/2026 10:32:48 AM hbrendlinger

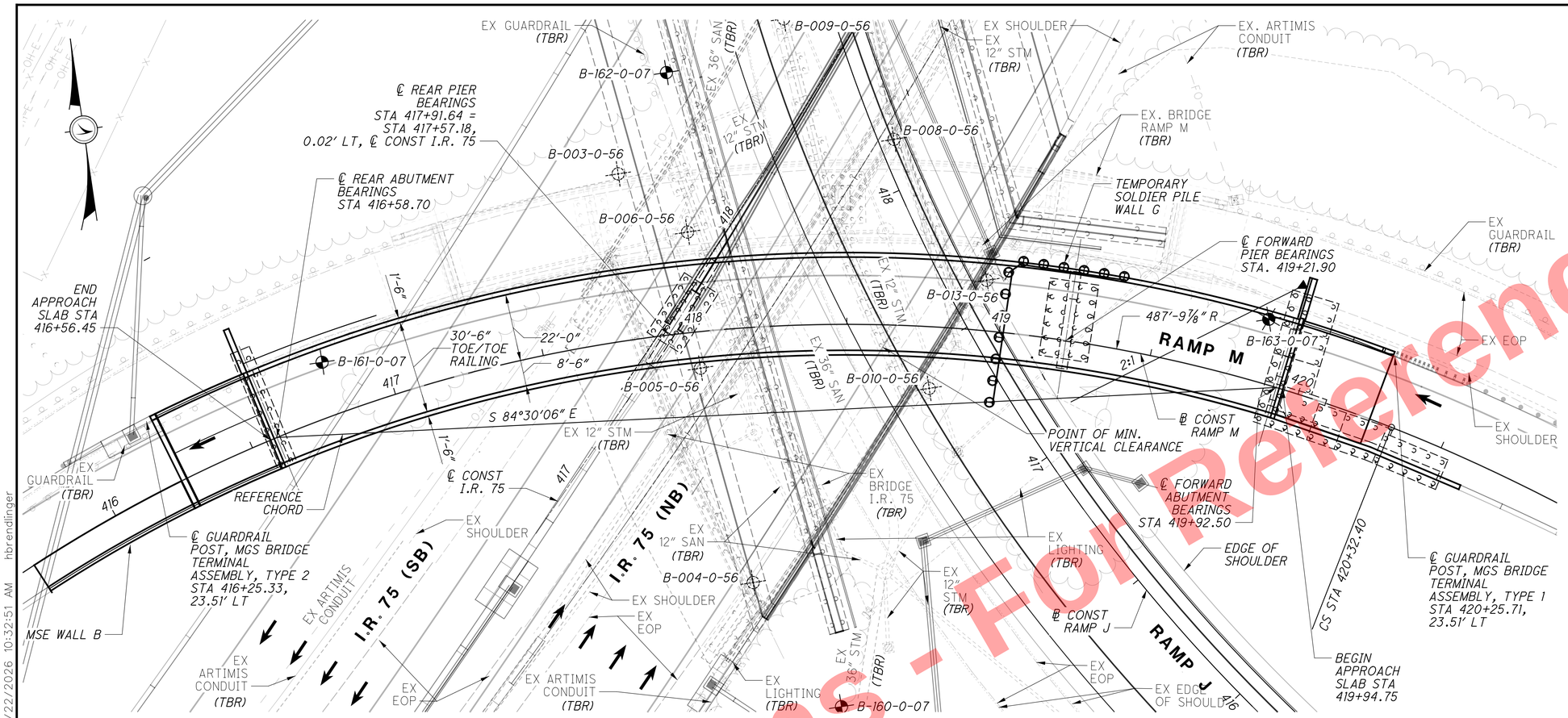

PLAN

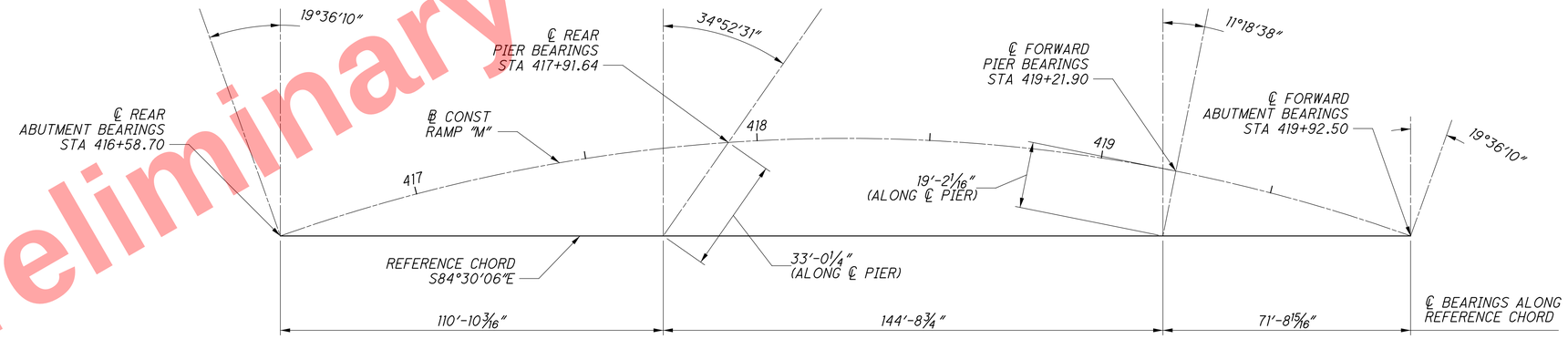

REFERENCE CHORD DIAGRAM

NOTE

1. SEE GENERAL NOTES FOR ABBREVIATION LEGEND.

Preliminary Plans - For Reference Only

DESIGN AGENCY EMH&T

DESIGNED	DRAWN	REVIEWED	DATE
RJE	GB	CAS	5-22-26
CHECKED	REVISED	STRUCTURE FILE NUMBER	
RMW	-	3113787	

HAMILTON COUNTY
STA. 416+56.45
STA. 419+94.75

GENERAL PLAN
BRIDGE NO. HAM-562-0004
RAMP M OVER I.R. 75

HAM-75-7.85
PID No. 121447

2 / 56

810
1047

J:\20110903\ODOT\HAM\77889\structures\HAM562_0004P\sheets\562_0004CGP001.dgn 5/22/2026 10:32:51 AM hbrendlinger

REFER TO THE FOLLOWING STANDARD BRIDGE DRAWINGS:

AS-1-15	REVISED	1-20-23
AS-2-15	REVISED	1-20-23
EXJ-4-87	REVISED	1-20-23
PCB-91	REVISED	7-17-20
SBR-1-20	REVISED	1-20-23

DESIGN SPECIFICATIONS:

THIS STRUCTURE CONFORMS TO THE 9TH EDITION OF THE "LRFD BRIDGE DESIGN SPECIFICATIONS" ADOPTED BY THE AMERICAN ASSOCIATION OF STATE HIGHWAY AND TRANSPORTATION OFFICIALS, 2020, AND THE ODOT BRIDGE DESIGN MANUAL, 2020.

SPECIAL DESIGN SPECIFICATIONS:

THIS BRIDGE REQUIRED THE USE OF A THREE DIMENSIONAL MODEL USING THE FINITE ELEMENT DESIGN METHOD TO ANALYZE THE STRUCTURE. THE COMPUTER PROGRAM USED FOR STRUCTURAL ANALYSIS WAS MIDAS CIVIL 2022 (v1.2). THE BRIDGE COMPONENTS DESIGNED BY THIS METHOD AND THE LIVE LOAD DISTRIBUTION FACTORS USED WERE:

DEAD LOAD DISTRIBUTION: SLAB LOADS ARE DISTRIBUTED BASED UPON GIRDER SPACING AND TRIBUTARY WIDTHS. FUTURE WEARING SURFACE, AND RAILING LOADS ARE DISTRIBUTED EQUALLY TO ALL GIRDERS.

LIVE LOADS WERE GENERATED AUTOMATICALLY BY THE DESIGN PROGRAM AND WERE APPLIED WITHIN USER DETERMINED LANES. THE DESIGN PROGRAM DISTRIBUTED THE LIVE LOADS BASED ON THE LONGITUDINAL AND TRANSVERSE STIFFNESS.

OPERATIONAL IMPORTANCE:

A LOAD MODIFIER OF 1.05 HAS BEEN ASSUMED FOR THE DESIGN OF THIS STRUCTURE IN ACCORDANCE WITH THE AASHTO LRFD BRIDGE DESIGN SPECIFICATIONS, ARTICLE 1.3.5 AND THE ODOT BRIDGE DESIGN MANUAL.

DESIGN LOADING:

HL-93
FUTURE WEARING SURFACE (FWS) OF 0.060 KIPS/SQ.FT.

DESIGN DATA:

CONCRETE CLASS QC3 - COMPRESSIVE STRENGTH 4.5 KSI (SUPERSTRUCTURE)
CONCRETE CLASS SCC - COMPRESSIVE STRENGTH 4.5 KSI (SUPERSTRUCTURE)
CONCRETE CLASS QC1/QC3 - COMPRESSIVE STRENGTH 4.0 KSI (SUBSTRUCTURE)

CONCRETE REINFORCEMENT:
EPOXY COATED STEEL REINFORCEMENT - MINIMUM YIELD STRENGTH 60 KSI (ABUTMENTS AND PIERS)
GFRP REINFORCEMENT (RAILING)
STAINLESS STEEL REINFORCEMENT - MINIMUM YIELD STRENGTH 60 KSI (DECK AND RAILING)
GALVANIZED STEEL REINFORCEMENT - MINIMUM YIELD STRENGTH 60-KSI (APPROACH SLAB AND RAILING)

STRUCTURAL STEEL - ASTM A709 GRADE 50W - YIELD STRENGTH 50 KSI

STEEL CIP PILES - ASTM A252 GRADE 2 - YIELD STRENGTH 35 PSI

MONOLITHIC WEARING SURFACE:

MONOLITHIC WEARING SURFACE IS ASSUMED, FOR DESIGN PURPOSES, TO BE 1 INCH THICK.

EXISTING STRUCTURE PLANS:

CONSTRUCTION PLANS FOR THE EXISTING BRIDGE ARE ON FILE AT THE DEPARTMENT OF TRANSPORTATION, DISTRICT 8 OFFICE, 505 SOUTH STATE ROUTE 741, LEBANON, OHIO AND ARE AVAILABLE FOR REFERENCE.

ITEM 202 - STRUCTURE REMOVED, OVER 20 FOOT SPAN, AS PER PLAN

UPLIFT IS OCCURING AT BOTH THE REAR AND FORWARD ABUTMENT BEARINGS OF THE EXISTING BRIDGE RESULTING IN THE EXISTING BEARINGS TO CURRENTLY BE "FLOATING". THE CONTRACTOR SHALL KEEP THIS IN MIND WHEN PREPARING THE REMOVAL SEQUENCE IN HIS DEMOLITION PLAN TO ENSURE THAT THE REMOVAL OF THE BRIDGE IS PERFORMED IN A SAFE MANNER.

THE EXISTING REAR ABUTMENT SHALL BE REMOVED IN ITS ENTIRETY DURING PHASE 1 REMOVAL.

THE EXISTING PIER 1 SHALL BE REMOVED TO THE ELEVATION OF MSE WALL C UNDERCUT DURING PHASE 1 REMOVAL.

THE EXISTING PIER 2 SHALL BE REMOVED TO 1'-0" BELOW FINAL GRADE OF RAMP J DURING PHASE 2 REMOVAL.

THE PORTION OF EXISTING PIER 3 ABOVE GRADE SHALL BE REMOVED DURING PHASE 2 REMOVAL. THE REMAINING PORTION OF PIER 3 SHALL BE REMOVED DURING PHASE 3 REMOVAL.

THE EXISTING FORWARD ABUTMENT SHALL BE REMOVED IN ITS ENTIRETY DURING PHASE 2 REMOVAL.

THE CONTRACTOR MUST REVIEW THE STRUCTURE WHEN PREPARING HIS BID. THE CONTRACTOR WILL REVIEW THE CONDITION OF THE STRUCTURE TO DETERMINE WHAT DEBRIS WILL FALL FROM THE STRUCTURE DURING REMOVAL. THE CONTRACTOR WILL DETERMINE THE CORRESPONDING COST TO CLEAN-UP ANY AND ALL DEBRIS WHICH FALLS FROM THE STRUCTURE DURING ANY REMOVAL OPERATION. THE COST TO CLEAR AND CLEAN-UP ALL DEBRIS DURING REMOVAL SHALL BE INCLUDED WITH THE BID FOR THIS ITEM OF WORK. NO ADDITIONAL COST WILL BE RECOGNIZED TO CLEAN DEBRIS RESULTING FROM THE STRUCTURE REMOVAL OPERATION.

EXISTING STRUCTURE VERIFICATION:

DETAILS AND DIMENSIONS SHOWN ON THESE PLANS PERTAINING TO THE EXISTING STRUCTURE HAVE BEEN OBTAINED FROM PLANS OF THE EXISTING STRUCTURE AND FROM FIELD OBSERVATIONS AND MEASUREMENTS. CONSEQUENTLY, THEY ARE INDICATIVE OF THE EXISTING STRUCTURE AND THE PROPOSED WORK BUT THEY SHALL BE CONSIDERED TENTATIVE AND APPROXIMATE. THE CONTRACTOR IS REFERRED TO CMS SECTIONS 102.05, 105.02 AND 513.04.

BASE CONTRACT BID PRICES UPON A RECOGNITION OF THE UNCERTAINTIES DESCRIBED ABOVE AND UPON A PREBID EXAMINATION OF THE EXISTING STRUCTURE. HOWEVER, THE DEPARTMENT WILL PAY FOR ALL PROJECT WORK BASED UPON ACTUAL DETAILS AND DIMENSIONS THAT HAVE BEEN VERIFIED IN THE FIELD.

ITEM 503 - COFFERDAMS AND EXCAVATION BRACING, AS PER PLAN (WALL G)

THE DESIGN SHOWN ON THE PLANS FOR TEMPORARY SUPPORT OF EXCAVATION IS ONE REPRESENTATIVE DESIGN THAT MAY BE USED TO CONSTRUCT THE PROJECT. THE CONTRACTOR MAY CONSTRUCT THE DESIGN SHOWN ON THE PLANS OR PREPARE AN ALTERNATE DESIGN TO SUPPORT THE SIDES OF EXCAVATIONS. IF CONSTRUCTING AN ALTERNATE DESIGN FOR TEMPORARY SUPPORT OF EXCAVATION, PREPARE AND PROVIDE PLANS IN ACCORDANCE WITH C&MS 501.05. THE DEPARTMENT WILL PAY FOR THE TEMPORARY SUPPORT OF EXCAVATION AT THE CONTRACT LUMP SUM PRICE FOR COFFERDAMS AND EXCAVATION BRACING. THE DEPARTMENT WILL NOT MAKE ADDITIONAL PAYMENT FOR PROVIDING AN ALTERNATE DESIGN.

PILES DRIVEN TO TIP ELEVATION FOR PILE/SOIL SETUP:

THE FOLLOWING ARE ULTIMATE BEARING VALUES (UBV) PER PILE AT THE SUBSTRUCTURE UNITS:

REAR ABUTMENT: 375 KIPS/PILE
REAR PIER: 336 KIPS/PILE
FORWARD PIER: 385 KIPS/PILE
FORWARD ABUTMENT: 325 KIPS/PILE

PART OF THE ULTIMATE BEARING VALUE WILL BE ACHIEVED THROUGH PILE/SOIL SETUP, WHICH IS A TIME-DEPENDENT INCREASE IN RESISTANCE THAT OCCURS IN SOME SOILS.

NOTIFY THE ENGINEER AT LEAST 5 DAYS BEFORE DRIVING PILES SO THAT THE ENGINEER CAN NOTIFY THE DISTRICT GEOTECHNICAL ENGINEER, THE OFFICE OF CONSTRUCTION ADMINISTRATION, AND THE OFFICE OF GEOTECHNICAL ENGINEERING.

DRIVE THE FIRST TWO PILES IN EACH SUBSTRUCTURE TO THE TIP ELEVATION GIVEN BELOW FOR THE SUBSTRUCTURE. DRIVE THE THIRD AND FOURTH PILES TO 75% AND 85% OF THE LENGTH OF THE FIRST TWO PILES. PERFORM DYNAMIC LOAD TESTING ON ALL FOUR PILES WHILE DRIVING. AFTER DRIVING THE FOUR PILES, CEASE ALL DRIVING OPERATIONS AT THE SUBSTRUCTURE FOR A MINIMUM OF 10 DAYS. INCLUDE THE WAITING PERIOD AS A SEPARATE ACTIVITY IN THE PROGRESS SCHEDULE. AFTER THE WAITING PERIOD, PERFORM PILE RESTRIKES ON THE FOUR PILES (TWO RESTRIKE ITEMS). PERFORM A CAPWAP ANALYSIS ON EACH PILE TESTED FOR EVERY DYNAMIC LOAD TEST AND EVERY RESTRIKE TEST.

SUBMIT ALL TEST RESULTS TO THE ENGINEER. THE ENGINEER WILL REVIEW THE TEST RESULTS AND ESTABLISH DRIVING CRITERIA FOR THE PILING IN THE SUBSTRUCTURE WITH THE ASSISTANCE OF THE DISTRICT GEOTECHNICAL ENGINEER, THE OFFICE OF CONSTRUCTION ADMINISTRATION, AND THE OFFICE OF GEOTECHNICAL ENGINEERING. PERFORM THE DRIVING CRITERIA WITH PILE SETUP FOR THE FIRST STAGE OF BRIDGE CONSTRUCTION. DO NOT ORDER PILES FOR SUBSEQUENT PHASES UNTIL AFTER THE DRIVING CRITERIA HAS BEEN ESTABLISHED WITH SETUP. THE DEPARTMENT WILL ADJUST THE FURNISHED PILE QUANTITIES BASED ON THE RESTRIKE TEST RESULTS.

IF THE DYNAMIC LOAD TESTING INDICATES A PILE HAS ACHIEVED THE ULTIMATE BEARING VALUE ABOVE THE TIP ELEVATION DURING THE INITIAL DRIVING (BEFORE THE WAITING PERIOD), STOP DRIVING AND NOTIFY THE ENGINEER. IF THE RESTRIKE TEST RESULTS ON THE FOUR PILES INDICATE THAT A PILE DID NOT ACHIEVE THE REQUIRED ULTIMATE BEARING VALUE, DRIVE THE PILE TO THE ESTABLISHED DRIVING CRITERIA. THE DEPARTMENT WILL PAY FOR SPLICING OF THE PILES BEYOND THE ESTIMATED LENGTH PROVIDED IN THE PLANS UNDER C&MS 109.05 WITH A NEGOTIATED PRICE PER SPLICE.

REAR ABUTMENT
16" DIAMETER CIP PILES, 85 FEET LONG, ORDER LENGTH
TIP ELEVATION 465.25
2 DYNAMIC LOAD TESTING ITEMS
2 RESTRIKE

PIER 1
16" DIAMETER CIP PILES 90 FEET LONG, ORDER LENGTH
TIP ELEVATION 441.94
2 DYNAMIC LOAD TESTING ITEMS
2 RESTRIKE

PIER 2
16" DIAMETER CIP PILES 75 FEET LONG, ORDER LENGTH
TIP ELEVATION 440.00
2 DYNAMIC LOAD TESTING ITEMS
2 RESTRIKE

FORWARD ABUTMENT
16" DIAMETER CIP PILES 75 FEET LONG, ORDER LENGTH
TIP ELEVATION 469.25 (MIN), 473.25 (MAX)
2 DYNAMIC LOAD TESTING ITEMS
2 RESTRIKE

ITEM 507 - 16" CAST-IN-PLACE REINFORCED CONCRETE PILES, FURNISHED, AS PER PLAN

IN ADDITION TO THE REQUIREMENTS OF ITEM 507 AND CMS 711.03, FURNISH ASTM A252, GRADE 2, STEEL PIPES FOR ALL PILES. FURNISH PIPES WITH THE FOLLOWING MINIMUM THICKNESSES:

REAR ABUTMENT: 7/16"
REAR PIER: 3/8"
FORWARD PIER: 7/16"
FORWARD ABUTMENT: 3/8"

PILE DRIVING CONSTRAINTS:

PILE DRIVING AT THE REAR ABUTMENT AND REAR PIER MAY NOT BEGIN UNTIL SUFFICIENT EMBANKMENT AND MSE WALL SETTLEMENT HAS OCCURRED AS DOCUMENTED BY THE SETTLEMENT PLATFORMS. THE ANTICIPATED WAITING PERIOD TO PERMIT SUFFICIENT EMBANKMENT SETTLEMENT AT THE REAR ABUTMENT IS 30 DAYS AND 90 DAYS AT THE REAR PIER. THE DISTRICT GEOTECHNICAL ENGINEER MAY REDUCE OR EXTEND THE WAITING PERIOD BASED ON THE MAGNITUDE AND RATE OF THE EMBANKMENT SETTLEMENT AS DETERMINED BY THE SETTLEMENT PLATFORMS. THE SETTLEMENT WAITING PERIOD BEGINS ONCE THE APPROACH EMBANKMENT REACHES THE DESIGN SUBGRADE LEVEL FOR A MINIMUM DISTANCE OF 100 FEET BEHIND THE REAR ABUTMENT. BEGIN PILE DRIVING ONLY FOLLOWING TERMINATION OF THE SETTLEMENT MONITORING WAITING PERIOD BY THE DISTRICT GEOTECHNICAL ENGINEER.

DRIVING OF PILES TO THE DESIGN ULTIMATE BEARING VALUE PRIOR TO MSE WALL CONSTRUCTION, SURCHARGE PLACEMENT AND SETTLEMENT WAITING PERIOD TERMINATION IS AN ALTERNATIVE TO DRIVING THE PILES FOLLOWING THE SETTLEMENT WAITING PERIOD. PILES DRIVEN PRIOR TO THE WAITING PERIOD ARE TO BE INSTALLED AS PER THE PILES DRIVEN TO TIP ELEVATION FOR PILE/SOIL SETUP REQUIREMENTS. ALL PILES DRIVEN TO THE UBV PRIOR TO THE WAITING PERIOD TERMINATION REQUIRE RESTRIKING FOLLOWING THE END OF THE SETTLEMENT WAITING PERIOD. RESTRIKE AND MOBILIZED EACH PILE A MINIMUM OF 0.5 INCHES. SELECT THE APPROPRIATE PILE DRIVING EQUIPMENT TO ENSURE EACH PILE MOVES 0.5 INCHES UPON RESTRIKE. ADDITIONAL COMPENSATION WILL NOT BE CONSIDERED FOR PILE RESTRIKING WHEN PILES ARE DRIVEN PRIOR TO THE SETTLEMENT WAITING PERIOD. THE CONTRACTOR IS TO SURVEY EACH PILE DRIVEN PRIOR TO CONSTRUCTION OF THE MSE WALL AND PROVIDE THE ENGINEER A RECORD OF THE PILE PLUMBNESS AND TOP OF LOCATION RELATIVE TO THE PLAN LOCATION. CORRECT ANY PILE ALIGNMENT ISSUES THAT ARE IDENTIFIED IN THE PILE SURVEY PRIOR TO MSE WALL CONSTRUCTION AT NO ADDITIONAL COST TO THE DEPARTMENT. ANY PILE CORRECTIONS ARE TO BE ACCEPTED BY THE ENGINEER PRIOR TO IMPLEMENTATION.

ITEM 509 - STAINLESS STEEL REINFORCEMENT, AS PER PLAN

ALL REINFORCING STEEL IN THE SUPERSTRUCTURE SHALL BE LEAN DUPLEX STAINLESS STEEL CONFORMING TO THE REQUIREMENTS OF ASTM A955/A955M STANDARD SPECIFICATION FOR DEFORMED AND PLAIN SOLID STAINESS STEEL BARS FOR CONCRETE REINFORCEMENT. UNS (UNIFIED NUMBERING SYSTEM FOR METALS AND ALLOYS) DESIGNATIONS: S31803 OR S32304. ALL STAINLESS STEEL REINFORCING SHALL BE PAID FOR UNDER ITEM 509 - STAINLESS STEEL REINFORCEMENT, AS PER PLAN.

ALL REINFORCING STEEL IN THE ABUTMENTS AND PIERS SHALL BE EPOXY COATED REINFORCING STEEL AND PAID FOR UNDER ITEM 509 - EPOXY COATED STEEL REINFORCEMENT.

ITEM 523 - DYNAMIC LOAD TESTS

PERFORM DYNAMIC LOAD TESTS PER ITEM 523 AT LOCATIONS AND FREQUENCY OUTLINED IN THE PLANS. EACH UNIT OF PAYMENT FOR THE DYNAMIC LOAD TEST INCLUDES TESTING OF TWO PILES WITH SIGNAL MATCHING ON ONE OF THE TWO PILES TESTED.

Preliminary Plans - For Reference Only

J:\20110903\ODOT\HAM\77889\structures\HAM562_0004P\sheets\562_0004CGN001.dgn 5/22/2026 10:32:52 AM hbrendlinger

DESIGN AGENCY EMH&T
DESIGNED RJE | DRAWN GB | CHECKED RMW | REVIEWED CAS | DATE 5-22-26 | REVISED - | STRUCTURE FILE NUMBER 3113787

GENERAL NOTES
BRIDGE NO. HAM-562-0004
RAMP M OVER I.R. 75

HAM-75-7.85
PID No. 121447

ITEM 511 - CLASS QC3 CONCRETE, MISC.: CONCRETE WITH QC/QA, BRIDGE DECK, AS PER PLAN

THIS ITEM MODIFIES THE STANDARD 511 CONCRETE FOR STRUCTURES SPECIFICATION TO INCLUDE MACRO-SYNTHETIC, AND CORROSION INHIBITORS INTO THE SUPERSTRUCTURE CONCRETE. THIS ITEM SHALL CONFORM TO CMS 511 WITH THE FOLLOWING CONDITIONS AND REVISIONS:

PROVIDE MATERIALS CONFORMING TO 511.02 EXCEPT AS MODIFIED BELOW:

PORTLAND CEMENT CONCRETE:	499.03, CLASS QC 3 MEETING A DESIGN STRENGTH OF 4,500 PSI, WITH MACRO-SYNTHETIC FIBERS WITH MODIFICATION PER 511.02
FIBERS FOR CONCRETE:	ASTM C 1116, TYPE III
CORROSION INHIBITOR:	515.15

THE CLASS QC3 CONCRETE FOR THE SUPERSTRUCTURE SHALL MEET THE FOLLOWING CRITERIA:
WATER/CEMENT RATIO = 0.40 MAXIMUM; MINIMUM 4 LBS/CY MACRO-SYNTHETIC FIBERS (1.5 IN. MIN. TO 2.5 IN. MAX.) MEETING ASTM C1116 TYPE III SHALL BE ADDED TO THE MIX.

MIX SHALL INCLUDE A MIGRATING CORROSION INHIBITOR AS MANUFACTURED BY AN APPROVED SUPPLIER LISTED ON ODOT'S QUALIFIED APPROVED SUPPLIERS, ITEM 515.15. THE DOSAGE RATE LISTED ON THE ODOT QUALIFIED APPROVED SUPPLIERS LIST WILL APPLY.

THE MACRO-SYNTHETIC FIBERS SHALL BE INCORPORATED INTO THE MIX IN SUCH A WAY THAT NO 'BALLING' OCCURS. UPON INSPECTION OF THE MIX AT THE TIME OF PLACEMENT, IF ANY 'BALLING' OCCURS, THE ENGINEER SHALL REJECT THE REMAINDER OF THE LOAD AT ANY TIME DURING THE POUR. IT IS IMPORTANT TO FOLLOW INDUSTRY STANDARDS AND ASTM SPECIFICATIONS ON THE PREMIXING OF THE CEMENT, AGGREGATE, AND MACRO-SYNTHETIC FIBERS PRIOR TO THE ADDITION OF WATER AND ADMIXTURES. PROVIDE MACRO-SYNTHETIC -FIBERS THAT ARE MONOFILAMENT FIBERS MADE FROM VIRGIN POLYPROPYLENE, POLYETHYLENE, OR CO-POLYMERS THAT ARE INERT TO ALKALI ATTACK. ENSURE THE MACRO-SYNTHETIC FIBERS HAVE A MINIMUM TENSILE STRENGTH OF 70 KSI, A MINIMUM MODULUS OF ELASTICITY OF 800 KSI, A MINIMUM FILAMENT DIAMETER OF 0.012 INCHES, AND ASPECT RATIO BETWEEN 60 AND 100, AND ARE BETWEEN 1.0 AND 2.5 INCHES IN LENGTH. STORE THE MACRO-SYNTHETIC FIBERS ACCORDING TO THE MANUFACTURE'S RECOMMENDATION AND KEEP THE MATERIAL FREE FROM DUST, DIRT AND MOISTURE.

USE A MINIMUM DOSAGE RATE OF MACRO-SYNTHETIC FIBERS OF 4.0 LBS/CY OF CONCRETE. DETERMINE THE FINAL PROPOSED DOSAGE RATE THROUGH MIX TESTING. ENSURE THE FIBER REINFORCED CONCRETE MEETS OR EXCEEDS A MINIMUM EQUIVALENT FLEXURAL STRENGTH RATIO OF 25% ACCORDING TO ASTM C 1609. ENSURE THE FINAL PROPOSED MIX IS WORKABLE AND ABLE TO BE PRODUCED SUCH THAT BALLING OR CLUMPING OF THE FIBERS IS NOT A PROBLEM AS DETERMINED BY THE ENGINEER. UTILIZE A LABORATORY REGULARLY INSPECTED BY THE CEMENT AND CONCRETE REFERENCE LABORATORY (CCRL) OF THE NATIONAL INSTITUTE OF STANDARDS AND TECHNOLOGY, OR OTHER APPROVED REFERENCE LABORATORY, TO PERFORM THE TESTING. BEFORE USE, SUBMIT DOCUMENTATION TO THE PROJECT ENGINEER CERTIFYING BOTH THE MACRO-SYNTHETIC FIBERS AND THE MIX MEET OR EXCEED THE REQUIRED PROPERTIES. SAMPLING WILL BE ALLOWED FOR TESTING PURPOSES. A DEMONSTRATION OF THE MIX PRODUCTION OR TRIAL MIX, MAY BE REQUIRED BY THE ENGINEER PRIOR TO PLACING ANY OF THE MIX ON THE PROJECT.

ITEM 511 - CLASS QC3 CONCRETE, MISC.: CONCRETE WITH QC/QA, BRIDGE DECK, AS PER PLAN (CONT.)

THE BATCH WEIGHTS SHALL BE CORRECTED TO COMPENSATE FOR THE MOISTURE CONTAINED IN THE AGGREGATE AT THE TIME OF USE. A CHEMICAL ADMIXTURE (705.12, TYPE A OR D) SHALL BE USED. THE TRANSIT MIXER CHARGE SHALL BE LIMITED TO 3/4 OF ITS RATED CAPACITY OR 6 CUBIC YARDS, WHICHEVER IS SMALLER. THE FIRST THREE TRANSIT MIXER LOADS ARE REQUIRED TO BE AT THE MINIMUM YARDAGE LISTED ABOVE TO SHOW PROOF OF THE SUCCESSFUL BATCHING OPERATION. AFTER CONSISTENCY IN THE DELIVERED MATERIAL HAS BEEN ESTABLISHED, THE CONCRETE SUPPLIER MAY INCREASE THE BATCH DELIVERED QUANTITIES AS LONG AS THE QUALITY REMAINS ACCEPTABLE TO THE ENGINEER. THE ENGINEER CAN REDUCE THE BATCH LOAD SIZE AT ANY TIME AS NEEDED TO CORRECT/IMPROVE CONCRETE QUALITY.

CONCRETE SUPPLIERS SHOULD RECOGNIZE THAT THE CORROSION INHIBITOR AND ADMIXTURES MAY HAVE AN EFFECT ON STRENGTH, ENTRAINED AIR CONTENT, WORKABILITY, ETC. OF THEIR CONCRETE MIXES. THE CORROSION INHIBITOR IS SUGGESTED TO BE A MCI PRODUCT BY CORTEC OR AN APPROVED EQUAL FROM THE QUALIFIED PRODUCTS LIST. THE CONCRETE SUPPLIER'S CHOICE OF ONE OF THESE CORROSION INHIBITORS DOES NOT ALLEVIATE MEETING DESIGN REQUIREMENTS. PLEASE BE ADVISED THAT SOME PRODUCTS ON THE LIST EFFECT THE DELIVERED MIX PROPERTIES GREATLY WHILE OTHER PRODUCTS DO NOT.

APPROACH SLABS, DIAPHRAGMS, AND BRIDGE RAILING CONCRETE (WHEN APPLICABLE) ARE TO USE THE SAME MIX DESIGN AS THE BRIDGE DECK. THE CONTRACTOR SHOULD BE ADVISED THAT CONCRETE RETARDING AGENTS MAY NEED TO BE ADDED TO OFFSET THE EFFECTS OF THE MIGRATING CORROSION INHIBITOR SELECTED. USE SELF-COMPACTING CONCRETE ON DECORATIVE RAILING SIMILAR TO TEXAS RAILING AND MACRO-SYNTHETIC CONCRETE PER THIS SPECIFICATION ON TRADITIONAL CONCRETE RAILING WHEN APPLICABLE.

THE CONTRACTOR SHALL PROVIDE TRADITIONAL BRIDGE DECK FORMS CONFORMING TO CMS 508. PERMANENT STAY-IN-PLACE (SIP) FORMS ARE NOT ALLOWED. THE PLACING OF THE DECK AND THE APPROACH SLABS IN THE SAME CONCRETE POUR IS NOT PERMITTED.

ITEM 511 - CLASS QC SCC CONCRETE WITH QC/QA, BRIDGE DECK (PARAPET), AS PER PLAN

THE EXTERIOR FACE OF THE BRIDGE RAILING SHALL HAVE A FORM LINER PATTERN APPLIED THAT MATCHES THE ARCHITECTURAL "TEXAS RAIL" DETAILS SHOWN IN THE PLANS USING CLASS SCC CONCRETE. THIS ITEM SHALL INCLUDE ALL MATERIALS, EQUIPMENT AND LABOR REQUIRED TO CONSTRUCT THE "TEXAS" TYPE BRIDGE RAILING. QUANTITY SHALL INCLUDE SAW CUTTING, JOINT SEALER, FORM LINERS AND ANY OTHER MISCELLANEOUS ITEMS REQUIRED TO FULLY CONSTRUCT THE RAILING. THIS ITEM SHALL ONLY INCLUDE THE RAILING ON THE BRIDGE. RAILING ON APPROACH SLABS SHALL BE PAID FOR UNDER ITEM 526 - REINFORCED CONCRETE APPROACH SLABS (T=17"), AS PER PLAN.

PAYMENT FOR THIS WORK SHALL INCLUDE ALL NECESSARY MATERIAL, LABOR, AND EQUIPMENT TO COMPLETE THIS TASK. PAYMENT SHALL BE MADE UNDER ITEM 511 - CLASS QC SCC CONCRETE WITH QC/QA, BRIDGE DECK (PARAPET), AS PER PLAN

ITEM 511 - CLASS QC3 CONCRETE, MISC.: CONCRETE WITH QC/QA, PIER ABOVE FOOTINGS, AS PER PLAN
ITEM 511 - CLASS QC3 CONCRETE, MISC.: CONCRETE WITH QC/QA, ABUTMENT NOT INCLUDING FOOTING, AS PER PLAN

THIS ITEM MODIFIES THE STANDARD 511 CONCRETE FOR STRUCTURES SPECIFICATION TO INCLUDE MACRO-SYNTHETIC, AND CORROSION INHIBITORS INTO THE SUBSTRUCTURE CONCRETE. THIS ITEM SHALL CONFORM TO CMS 511 WITH THE FOLLOWING CONDITIONS AND REVISIONS:

PROVIDE MATERIALS CONFORMING TO 511.02 EXCEPT AS MODIFIED BELOW:

PORTLAND CEMENT CONCRETE:	499.03, CLASS QC 3 MEETING A DESIGN STRENGTH OF 4,500 PSI, WITH MACRO-SYNTHETIC FIBERS WITH MODIFICATION PER 511.02
FIBERS FOR CONCRETE:	ASTM C 1116, TYPE III
CORROSION INHIBITOR:	515.15

THE CLASS QC3 CONCRETE FOR THE SUBSTRUCTURE SHALL MEET THE FOLLOWING CRITERIA:
WATER/CEMENT RATIO = 0.40 MAXIMUM; MINIMUM 4 LBS/CY MACRO-SYNTHETIC FIBERS (1.0 IN. MIN. TO 2.5 IN. MAX.) MEETING ASTM C1116 TYPE III SHALL BE ADDED TO THE MIX.

MIX SHALL INCLUDE A MIGRATING CORROSION INHIBITOR AS MANUFACTURED BY AN APPROVED SUPPLIER LISTED ON ODOT'S QUALIFIED APPROVED SUPPLIERS, ITEM 515.15. THE DOSAGE RATE LISTED ON THE ODOT QUALIFIED APPROVED SUPPLIERS LIST WILL APPLY.

THE MACRO-SYNTHETIC FIBERS SHALL BE INCORPORATED INTO THE MIX IN SUCH A WAY THAT NO 'BALLING' OCCURS. UPON INSPECTION OF THE MIX AT THE TIME OF PLACEMENT, IF ANY 'BALLING' OCCURS, THE ENGINEER SHALL REJECT THE REMAINDER OF THE LOAD AT ANY TIME DURING THE POUR. IT IS IMPORTANT TO FOLLOW INDUSTRY STANDARDS AND ASTM SPECIFICATIONS ON THE PREMIXING OF THE CEMENT, AGGREGATE, AND MACRO-SYNTHETIC FIBERS PRIOR TO THE ADDITION OF WATER AND ADMIXTURES. PROVIDE MACRO-SYNTHETIC -FIBERS THAT ARE MONOFILAMENT FIBERS MADE FROM VIRGIN POLYPROPYLENE, POLYETHYLENE, OR CO-POLYMERS THAT ARE INERT TO ALKALI ATTACK. ENSURE THE MACRO-SYNTHETIC FIBERS HAVE A MINIMUM TENSILE STRENGTH OF 70 KSI, A MINIMUM MODULUS OF ELASTICITY OF 800 KSI, A MINIMUM FILAMENT DIAMETER OF 0.012 INCHES, AND ASPECT RATIO BETWEEN 60 AND 100, AND ARE BETWEEN 1.0 AND 2.5 INCHES IN LENGTH. STORE THE MACRO-SYNTHETIC FIBERS ACCORDING TO THE MANUFACTURE5#32S RECOMMENDATION AND KEEP THE MATERIAL FREE FROM DUST, DIRT AND MOISTURE.

ITEM 511 - CLASS QC3 CONCRETE, MISC.: CONCRETE WITH QC/QA, PIER ABOVE FOOTINGS, AS PER PLAN
ITEM 511 - CLASS QC3 CONCRETE, MISC.: CONCRETE WITH QC/QA, ABUTMENT NOT INCLUDING FOOTING, AS PER PLAN (CONT.)

USE A MINIMUM DOSAGE RATE OF MACRO-SYNTHETIC FIBERS OF 4.0 LBS/CY OF CONCRETE. DETERMINE THE FINAL PROPOSED DOSAGE RATE THROUGH MIX TESTING. ENSURE THE FIBER REINFORCED CONCRETE MEETS OR EXCEEDS A MINIMUM EQUIVALENT FLEXURAL STRENGTH RATIO OF 25% ACCORDING TO ASTM C 1609. ENSURE THE FINAL PROPOSED MIX IS WORKABLE AND ABLE TO BE PRODUCED SUCH THAT BALLING OR CLUMPING OF THE FIBERS IS NOT A PROBLEM AS DETERMINED BY THE ENGINEER. UTILIZE A LABORATORY REGULARLY INSPECTED BY THE CEMENT AND CONCRETE REFERENCE LABORATORY (CCRL) OF THE NATIONAL INSTITUTE OF STANDARDS AND TECHNOLOGY, OR OTHER APPROVED REFERENCE LABORATORY, TO PERFORM THE TESTING. BEFORE USE, SUBMIT DOCUMENTATION TO THE PROJECT ENGINEER CERTIFYING BOTH THE MACRO-SYNTHETIC FIBERS AND THE MIX MEET OR EXCEED THE REQUIRED PROPERTIES. SAMPLING WILL BE ALLOWED FOR TESTING PURPOSES. A DEMONSTRATION OF THE MIX PRODUCTION OR TRIAL MIX, MAY BE REQUIRED BY THE ENGINEER PRIOR TO PLACING ANY OF THE MIX ON THE PROJECT.

THE BATCH WEIGHTS SHALL BE CORRECTED TO COMPENSATE FOR THE MOISTURE CONTAINED IN THE AGGREGATE AT THE TIME OF USE. A CHEMICAL ADMIXTURE (705.12, TYPE A OR D) SHALL BE USED. THE ENGINEER CAN REDUCE THE BATCH LOAD SIZE AT ANY TIME AS NEEDED TO CORRECT/IMPROVE CONCRETE QUALITY.

CONCRETE SUPPLIERS SHOULD RECOGNIZE THAT THE CORROSION INHIBITOR AND ADMIXTURES MAY HAVE AN EFFECT ON STRENGTH, ENTRAINED AIR CONTENT, WORKABILITY, ETC. OF THEIR CONCRETE MIXES. THE CORROSION INHIBITOR IS SUGGESTED TO BE A MCI PRODUCT BY CORTEC OR AN APPROVED EQUAL FROM THE QUALIFIED PRODUCTS LIST. THE CONCRETE SUPPLIER5#32S CHOICE OF ONE OF THESE CORROSION INHIBITORS DOES NOT ALLEVIATE MEETING DESIGN REQUIREMENTS. PLEASE BE ADVISED THAT SOME PRODUCTS ON THE LIST EFFECT THE DELIVERED MIX PROPERTIES GREATLY WHILE OTHER PRODUCTS DO NOT.

THE CONTRACTOR SHOULD BE ADVISED THAT CONCRETE RETARDING AGENTS MAY NEED TO BE ADDED TO OFFSET THE EFFECTS OF THE MIGRATING CORROSION INHIBITOR SELECTED.

Preliminary Plans - Not For Construction
For Reference Only

DESIGN AGENCY EMH&T
DESIGNED RJE | DRAWN GB | CHECKED RMW | REVIEWED CAS | REVISED - | DATE 5-22-26 | STRUCTURE FILE NUMBER 3113787
GENERAL NOTES
BRIDGE NO. HAM-562-0004
RAMP M OVER I.R. 75
HAM-75-7.85
PID No. 121447
4 / 56
812 / 1047
J:\2011093\ODOT\HAM\77889\structures\HAM562_0004P\sheets\562_0004CGN002.dgn 5/22/2026 10:32:53 AM hbrendlinger

ITEM 514 - FIELD PAINTING STRUCTURAL STEEL, INTERMEDIATE COAT, AS PER PLAN
ITEM 514 - FIELD PAINTING STRUCTURAL STEEL, FINISH COAT, AS PER PLAN

ALL EXPOSED STEEL GIRDER SURFACES WITHIN THE END 10' OF EACH GIRDER ADJACENT TO THE ABUTMENTS, AS WELL AS THE ENTIRE LENGTH OF THE FASCIA GIRDER OUTSIDE SURFACES, LOWER FLANGES, AND 6" FROM THE BASE OF INSIDE WEB SHALL HAVE A THREE COAT IZEU PAINT SYSTEM APPLIED. THE PRIME COAT SHALL BE SHOP APPLIED. THE APPLICATION OF THE PRIME COAT SHALL BE PAID FOR UNDER ITEM 513, STRUCTURAL STEEL MEMBERS, LEVEL 5. THE INTERMEDIATE AND FINISH COATS SHALL BE FIELD APPLIED PER ITEM 514. SEE TRANSVERSE DECK SECTION ON SHEET 37/56 FOR EXACT LIMITS OF PAINTING OF THE FACIA GIRDERS. THE COLOR OF THE FINISH COAT SHALL BE FEDERAL COLOR NUMBER 14277 (GREEN).

ITEM 518, 6" NON-PERFORATED CORRUGATED PLASTIC PIPE, INCLUDING SPECIALS, AS PER PLAN

PAYMENT FOR ALL ITEMS SHOWN FOR PIPE TERMINATION ARE INCLUDED WITH ITEM 518, 6" NON-PERFORATED CORRUGATED PLASTIC PIPE.

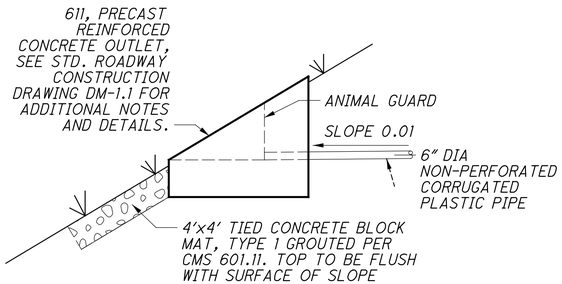

TERMINATION OF 6" NPCPP DETAIL

ITEM 523 - DYNAMIC LOAD TESTING

PERFORM DYNAMIC LOAD TESTS PER ITEM 523 AT LOCATIONS AND FREQUENCY OUTLINED IN THE PLANS. EACH UNIT OF PAYMENT FOR THE DYNAMIC LOAD TEST INCLUDES TESTING OF TWO PILES WITH SIGNAL MATCHING ON ONE OF THE TWO PILES TESTED.

ITEM 526 - REINFORCED CONCRETE APPROACH SLABS (T=17"), AS PER PLAN

THIS ITEM SHALL INCLUDE ALL THE COST OF ALL CONCRETE AND GALVANIZED REINFORCING STEEL FOR THE APPROACH SLABS AND RAILINGS ON APPROACH SLABS. SEALING OF THE RAILINGS SHALL BE PAID FOR UNDER ITEM 512 - SEALING OF CONCRETE SURFACES (EPOXY-URETHANE).

DECK PLACEMENT DESIGN ASSUMPTIONS:

THE FOLLOWING ASSUMPTIONS OF CONSTRUCTION MEANS AND METHODS WERE MADE FOR THE ANALYSIS AND DESIGN OF THE SUPERSTRUCTURE. THE CONTRACTOR IS RESPONSIBLE FOR THE DESIGN OF THE FALSEWORK SUPPORT SYSTEM WITHIN THESE PARAMETERS AND WILL ASSUME RESPONSIBILITY FOR SUPERSTRUCTURE ANALYSIS FOR DEVIATION FROM THESE DESIGN ASSUMPTIONS.

AN EIGHT WHEEL FINISHING MACHINE WITH A MAXIMUM WHEEL LOAD OF 2.40 KIP.

A MINIMUM OUT-TO-OUT WHEEL SPACING AT EACH END OF THE MACHINE OF 103 IN.

A MAXIMUM SPACING OF OVERHANG FALSEWORK BRACKETS OF 48 IN.

A MAXIMUM DISTANCE FROM THE CENTERLINE OF THE FASCIA GIRDER TO THE FACE OF THE SAFETY HANDRAIL OF 65 IN.

ABBREVIATION LEGEND

ABUT. - ABUTMENT
ADT - AVERAGE DAILY TRAFFIC
ADTT - AVERAGE DAILY TRUCK TRAFFIC
APP SLAB - APPROACH SLAB
AVE. - AVENUE
℄ - BASELINE
BM - BENCH MARK
BOT. - BOTTOM
BTW. - BETWEEN
BRG - BEARING
BTA - BRIDGE TERMINAL ASSEMBLY
C/C - CENTER TO CENTER
CB - CATCH BASIN
CIP - CAST IN PLACE
CJ - CONSTRUCTION JOINT
C.J. - CONTRACTION JOINT
D.J. - DEFLECTION JOINT
℄ - CENTERLINE
CLR - CLEARANCE
CONST - CONSTRUCTION
DIA - DIAMETER
D.J. - DEFLECTION JOINT
EB - EAST BOUND
EF - EACH FACE
ELEV - ELEVATION
E/P - EDGE OF PAVEMENT
E/S - EDGE OF SHOULDER
EQ. - EQUAL
EST. - ESTIMATED
EX - EXISTING
EXP - EXPANSION
FA - FORWARD ABUTMENT
F/F - FACE TO FACE
FF - FAR FACE
FTG - FOOTING
FWD - FORWARD
GEN - GENERAL
GR - GUARD RAIL
HMWM - HIGH MOLECULAR WEIGHT METHACRYLATE
INCR. - INCREMENT
INT. - INTEGRAL
I.R. - INTERSTATE ROUTE
LT - LEFT
MAX - MAXIMUM
MECH. CONN. - MECHANICAL CONNECTOR
MIN - MINIMUM
MISC - MISCELLANEOUS
M.O.T. - MAINTENANCE OF TRAFFIC
MSE - MECHANICALLY STABALIZED EARTH
N/A - NOT APPLICABLE
NB - NORTHBOUND
NF - NEAR FACE
NO - NUMBER
NPCPP - NON-PERFORATED CORRUGATED PLASTIC PIPE
O/O - OUT TO OUT
O.C. - ON CENTER
OD - OUTSIDE DIAMETER
PC - POINT OF CURVE
PT - POINT OF TANGENT
P.V.I. - POINT OF VERTICAL INTERSECTION
PCPP - PERFORATED CORRUGATED PLASTIC PIPE
PVMT - PAVEMENT
PEJF - PREFORMED EXPANSION JOINT FILLER
PG - PROFILE GRADE
PROP - PROPOSED
PT. - POINT
PVMT. - PAVEMENT
RA - REAR ABUTMENT
RD - ROAD
REF. - REFERENCE
REQ'D - REQUIRED
RT - RIGHT
SB - SOUTHBOUND
SER. - SERIES
SHLD - SHOULDER
SPA - SPACES
SR - STATE ROUTE
ST - STREET
STA - STATION
SCD - STANDARD CONSTRUCTION DRAWING
STD - STANDARD
SUPER. - SUPERSTRUCTURE
TEMP - TEMPORARY
TOW - TOP OF WALL
T/S - TOE OF SLOPE
T/T - TOP TO TOE
TYP - TYPICAL
UNO - UNLESS NOTED OTHERWISE
VC - VERTIAL CURVE
VERT - VERTICAL
W/ - WITH
WB - WEST BOUND

Preliminary Plans - For Reference Only

DESIGN AGENCY: EMH&T
DESIGNED: RJE | DRAWN: GB | CHECKED: RMW | REVIEWED: CAS | REVISED: - | DATE: 5-22-26 | STRUCTURE FILE NUMBER: 3113787

GENERAL NOTES
BRIDGE NO. HAM-562-0004
RAMP M OVER I.R. 75

HAM-75-7.85
PID No. 121447

5 / 56

813
1047

J:\20110903\ODOT\HAM\17889\structures\HAM562_0004P\sheets\562_0004CGN003.dgn 5/22/2026 10:32:53 AM hbrendlinger

ESTIMATED QUANTITIES

CALC. BY: RJE | DATE: 4/11/23
CHECKED BY: RMW | DATE: 5/8/23

ITEM	EXT.	PARTICIPATION 03/IMS/10	TOTAL	UNIT	DESCRIPTION	ABUTMENTS	PIERS	SUPER-STRUCTURE	GENERAL	SEE STRUCTURE SHEET NO.
202	11003	LUMP	LUMP		STRUCTURE REMOVED, OVER 20 FOOT SPAN, AS PER PLAN					3/56
202	22900	109	109	SQ YD	APPROACH SLAB REMOVED				109	
503	11101	LUMP	LUMP		COFFERDAMS AND EXCAVATION BRACING, AS PER PLAN (WALL G)					3/56
503	21300	LUMP	LUMP		UNCLASSIFIED EXCAVATION					
505	11100	LUMP	LUMP		PILE DRIVING EQUIPMENT MOBILIZATION					
507	00700	8890	8890	FT	16" CAST-IN-PLACE REINFORCED CONCRETE PILES, DRIVEN	4830	4060			
507	00751	9485	9485	FT	16" CAST-IN-PLACE REINFORCED CONCRETE PILES, FURNISHED, AS PER PLAN	4320	5165			3/56
509	10000	94,506	94,506	POUND	EPOXY COATED REINFORCING STEEL	47,299	47,207			
509	28001	112,426	112,426	POUND	STAINLESS STEEL REINFORCEMENT, AS PER PLAN			112,426		3/56
509	30020	14,835	14,835	FT	NO. 4 GFRP DEFORMED BARS	1174		12,133	1,528	
509	30030	1772	1772	FT	NO. 5 GFRP DEFORMED BARS	148		1,501	123	
511	34463	136	136	CU YD	CLASS QC SCC CONCRETE WITH QC/QA, BRIDGE DECK (PARAPET), AS PER PLAN			136		4/56
511	46512	338	338	CU YD	CLASS QC1 CONCRETE WITH QC/QA, FOOTING	219	119			
511	53014	346	346	CU YD	CLASS QC3 CONCRETE, MISC.: CONCRETE WITH QC/QA, BRIDGE DECK, AS PER PLAN			346		4/56
511	53014	170	170	CU YD	CLASS QC3 CONCRETE, MISC.: CONCRETE WITH QC/QA, PIER ABOVE FOOTINGS, AS PER PLAN		170			4/56
511	53014	271	271	CU YD	CLASS QC3 CONCRETE, MISC.: CONCRETE WITH QC/QA, ABUTMENT NOT INCLUDING FOOTING, AS PER PLAN	271				4/56
512	10100	1530	1530	SQ YD	SEALING OF CONCRETE SURFACES (EPOXY-URETHANE)	314	304	824	88	
513	10300	757,074	757,074	POUND	STRUCTURAL STEEL MEMBERS, LEVEL 5			757,074		
513	20000	5436	5436	EACH	WELDED STUD SHEAR CONNECTORS			5436		
514	00061	9152	9152	SQ FT	FIELD PAINTING STRUCTURAL STEEL, INTERMEDIATE COAT, AS PER PLAN			9152		5/56
514	00067	9152	9152	SQ FT	FIELD PAINTING STRUCTURAL STEEL, FINISH COAT, AS PER PLAN			9152		5/56
516	10010	34	34	FT	ARMORLESS PREFORMED JOINT SEAL				34	
516	11210	66	66	FT	STRUCTURAL EXPANSION JOINT INCLUDING ELASTOMERIC STRIP SEAL				66	
516	13600	111	111	SQ FT	1" PREFORMED EXPANSION JOINT FILLER				111	
516	44201	3	3	EACH	ELASTOMERIC BEARING WITH INTERNAL LAMINATES AND LOAD PLATE (NEOPRENE), AS PER PLAN, 15"x11"x3.94" ELASTOMERIC PAD WITH 26"x12"x2 1/4" (@ CL BEARINGS) BEVELED LOAD PLATE	3				22/56
516	44201	2	2	EACH	ELASTOMERIC BEARING WITH INTERNAL LAMINATES AND LOAD PLATE (NEOPRENE), AS PER PLAN, 15"x11"x3.67" ELASTOMERIC PAD WITH 26"x12"x2 1/4" (@ CL BEARINGS) BEVELED LOAD PLATE AND 1 1/2" MASONRY PLATE	2				22/56
516	44201	3	3	EACH	ELASTOMERIC BEARING WITH INTERNAL LAMINATES AND LOAD PLATE (NEOPRENE), AS PER PLAN, 17"x15"x3.94" ELASTOMERIC PAD WITH 26"x16"x3 3/16" (@ CL BEARINGS) BEVELED LOAD PLATE		3			22/56
516	44201	2	2	EACH	ELASTOMERIC BEARING WITH INTERNAL LAMINATES AND LOAD PLATE (NEOPRENE), AS PER PLAN, 17"x15"x3.67" ELASTOMERIC PAD WITH 26"x16"x3 3/16" (@ CL BEARINGS) BEVELED LOAD PLATE AND 1 1/2" MASONRY PLATE		2			22/56
516	44201	5	5	EACH	ELASTOMERIC BEARING WITH INTERNAL LAMINATES AND LOAD PLATE (NEOPRENE), AS PER PLAN, 15"x11"x3.67" ELASTOMERIC PAD WITH 26"x12"x1 11/16" (@ CL BEARINGS) BEVELED LOAD PLATE AND 1 1/2" MASONRY PLATE	5				23/56
516	44201	5	5	EACH	ELASTOMERIC BEARING WITH INTERNAL LAMINATES AND LOAD PLATE (NEOPRENE), AS PER PLAN, 15"x11"x3.94" ELASTOMERIC PAD WITH 36"x12"x2 3/8" (@ CL BEARINGS) BEVELED LOAD PLATE		5			23/56

For Reference Only
Preliminary Plans - For

DESIGN AGENCY: EMH&T
DESIGNED RMW/RJE | DRAWN GB | CHECKED GB/RMW | REVIEWED CAS | DATE 5-22-26 | REVISED - | STRUCTURE FILE NUMBER 3113787

ESTIMATED QUANTITIES
BRIDGE NO. HAM-562-0004
RAMP M OVER I.R. 75

HAM-75-7.85
PID No. 121447

6 / 56

814
1047

J:\2011093\ODOT\HAM\27889\structures\HAM562_0004P\sheets\562_0004CEQ001.dgn 5/22/2026 10:32:54 AM hbrendlinger

ESTIMATED QUANTITIES (CONTINUED)

CALC. BY: RJE | DATE: 4/11/23
CHECKED BY: RMW | DATE: 5/8/23

ITEM	EXT.	PARTICIPATION 03/IMS/10	TOTAL	UNIT	DESCRIPTION	ABUTMENTS	PIERS	SUPER-STRUCTURE	GENERAL	SEE STRUCTURE SHEET NO.
518	21200	136	136	CU YD	POROUS BACKFILL WITH GEOTEXTILE FABRIC	136				
518	40000	94	94	FT	6" PERFORATED CORRUGATED PLASTIC PIPE	94				
518	40011	21	21	FT	6" NON-PERFORATED CORRUGATED PLASTIC PIPE, INCLUDING SPECIALS, AS PER PLAN	21				5/56
523	20000	8	8	EACH	DYNAMIC LOAD TESTING				8	
523	20500	8	8	EACH	RESTRIKE				8	
526	30001	224	224	SQ YD	REINFORCED CONCRETE APPROACH SLABS (T=17"), AS PER PLAN				224	5/56
526	90010	33	33	FT	TYPE A INSTALLATION				33	
526	90030	34	34	FT	TYPE C INSTALLATION				34	
601	20000	469	469	SQ YD	CRUSHED AGGREGATE SLOPE PROTECTION				469	

Preliminary Plans - For Reference Only

DESIGN AGENCY
EMH&T
Engineers • Surveyors • Planners • Scientists
5500 New Albany Road, Columbus, Ohio 43054
Phone: 614.775.4500 www.emht.com

DESIGNED	DRAWN	REVIEWED	DATE
RMW/RJE	GB	CAS	5-22-26
CHECKED	REVISED	STRUCTURE FILE NUMBER	
GB/RMW	-	3113787	

ESTIMATED QUANTITIES (CONTINUED)
BRIDGE NO. HAM-562-0004
RAMP M OVER I.R. 75

HAM-75-7.85
PID No. 121447

7 / 56

815
1047

J:\20110903\ODOT\HAM\7889\structures\HAM562_0004P\sheets\562_0004CEQ002.dgn 5/22/2026 10:32:54 AM hbrendlinger

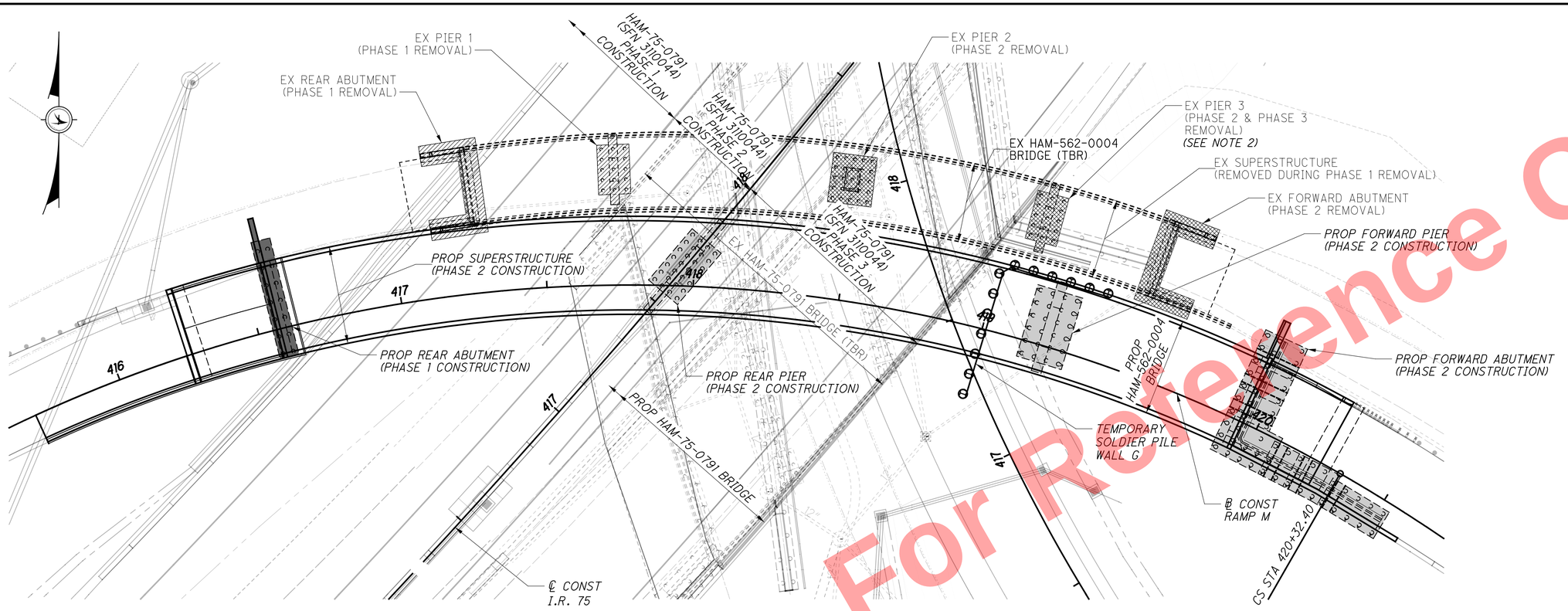

PLAN

SEQUENCE OF CONSTRUCTION

PHASE 1 REMOVAL

1. REMOVE EXISTING HAM-562-0004 BRIDGE SUPERSTRUCTURE, APPROACH SLABS, REAR ABUTMENT, AND PIER 1.

PHASE 1 CONSTRUCTION

1. CONSTRUCT PROPOSED HAM-562-0004 BRIDGE REAR ABUTMENT.

PHASE 2 REMOVAL

1. REMOVE EXISTING HAM-562-0004 BRIDGE PIER 2, PIER 3, AND FORWARD ABUTMENT.

PHASE 2 CONSTRUCTION

1. CONSTRUCT PROPOSED HAM-562-0004 BRIDGE REAR PIER, FORWARD PIER, FORWARD ABUTMENT, SUPERSTRUCTURE, AND APPROACH SLABS.

LEGEND

- PHASE 1 CONSTRUCTION
- PHASE 2 CONSTRUCTION
- PHASE 1 REMOVAL
- PHASE 2 REMOVAL

NOTE

1. FOR HAM-75-0791 CONSTRUCTION PHASING SEE SHEETS (872/1047), (873/1047), AND (874/1047).
2. THE ABOVE GRADE PORTION OF EXISTING PIER 3 STEM SHALL BE REMOVED DURING PHASE 2 CONSTRUCTION. THE REMAINDER OF PIER 3 SHALL BE REMOVED DURING PHASE 3 CONSTRUCTION.

Preliminary Plans - Not For Reference Only

DESIGN AGENCY
EMH&T
Engineers • Surveyors • Planners • Scientists
5500 New Albany Road, Columbus, OH 43054
Phone: 614.775.4500

DESIGNED	DRAWN	REVIEWED	DATE
RJE	GB	CAS	5-22-26
CHECKED	REVISED	STRUCTURE FILE NUMBER	
RMW	-	3113787	

PHASED CONSTRUCTION DETAILS
BRIDGE NO. HAM-562-0004
RAMP M OVER I.R. 75

HAM-75-7.85
PID No. 121447

8 / 56

816/1047

J:\2011093\ODOT\HAM\77889\structures\HAM562_0004P\sheets\562_0004CPC001.dgn 5/22/2026 10:32:56 AM hbrendlinger

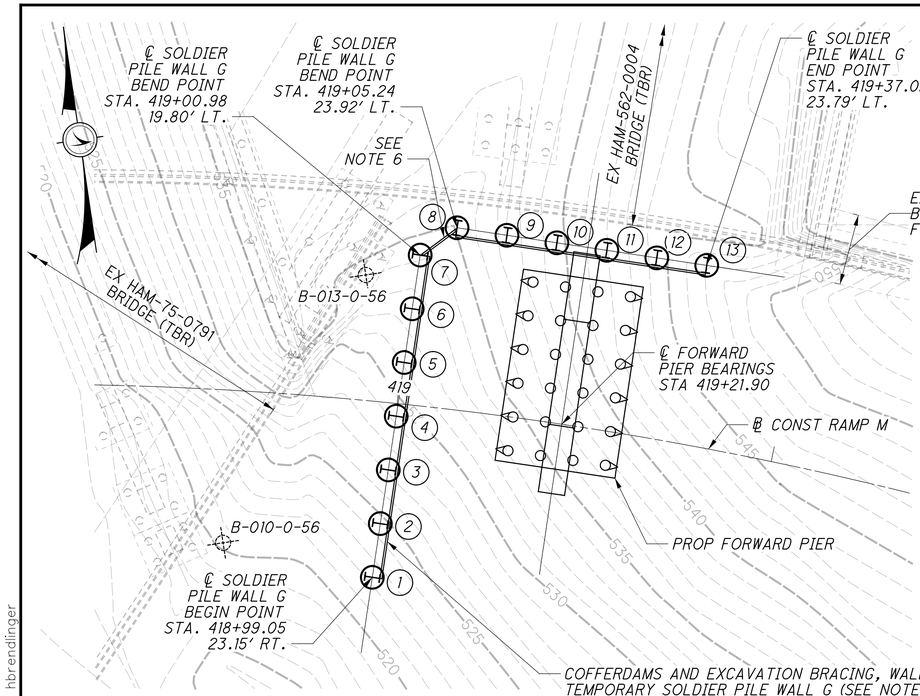

PLAN

(STATIONS AND OFFSETS PROVIDED ABOUT ℄ CONST RAMP M)

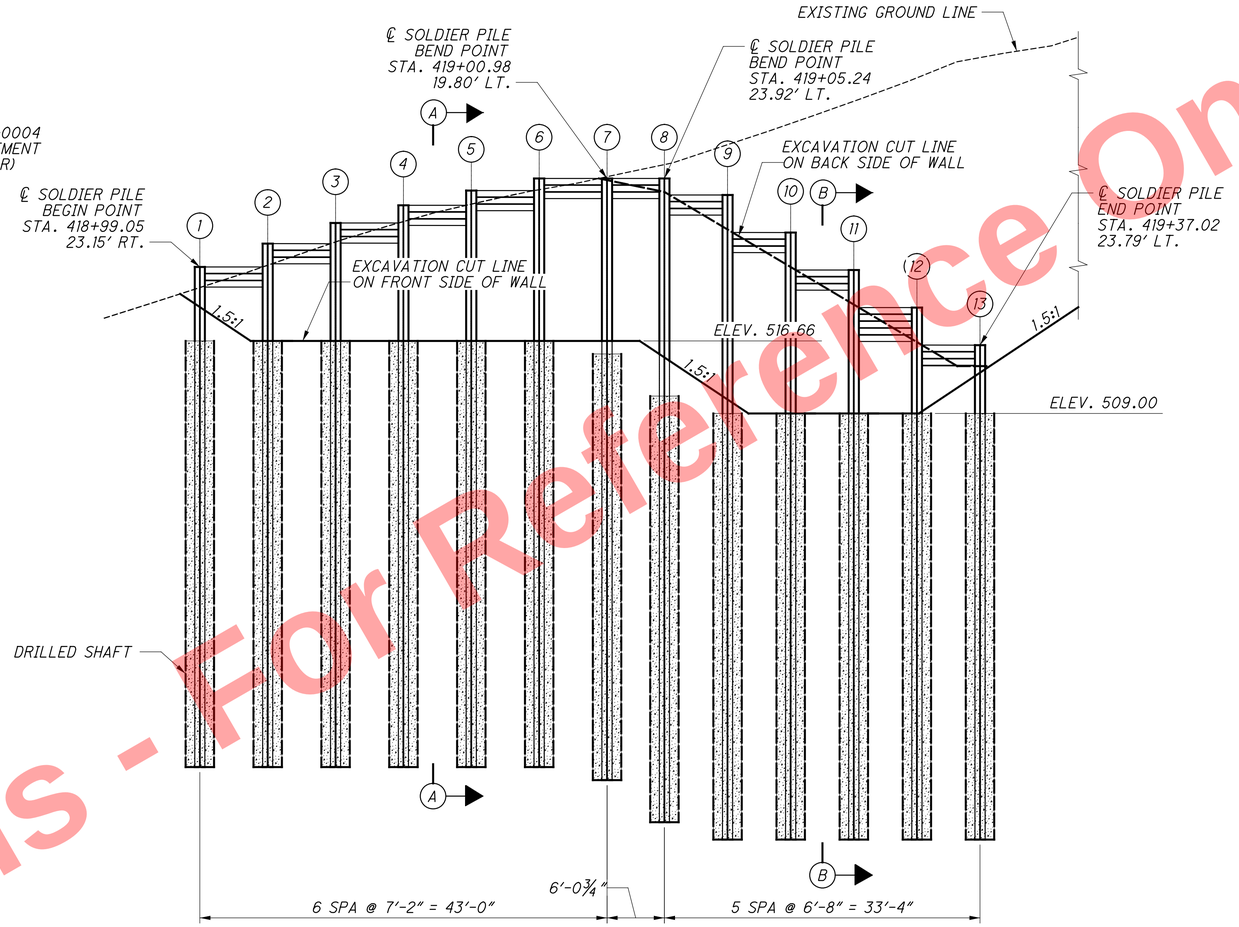

ELEVATION

(MEASURED ALONG ℄ SOLDIER PILE AND DRILLED SHAFT, STATIONS AND OFFSETS PROVIDED ABOUT ℄ CONST RAMP M)

LEGEND

(X) = SOLDIER PILE NUMBER

NOTES

1. SOLDIER PILES AND ATTACHED PLATES SHALL BE ASTM A709 GRADE 50 (MINIMUM YIELD STRENGTH = 50 KSI) STEEL. THREADED STUDS SHALL BE ASTM F1554, GRADE 55.
2. PAYMENT FOR SOLDIER PILES, DRILLED SHAFTS, LOW STRENGTH MORTAR BACKFILL, REMOVAL OF ALL COMPONENTS AFTER NO LONGER NECESSARY FOR A SPECIFIC CONSTRUCTION PHASE, AND ALL OTHER ITEMS ASSOCIATED WITH TEMPORARY SHORING WALL CONSTRUCTION SHALL BE INCLUDED IN THE CONTRACT LUMP SUM PRICE FOR ITEM 503, COFFERDAMS AND EXCAVATION BRACING, AS PER PLAN (WALL G), FOR PAYMENT.
3. SEE GENERAL NOTES FOR ABBREVIATION LEGEND.
4. DRILL ALL SOLDIER PILES PER ITEM 524 FROM THE EXISTING GROUND SURFACE TO THE DESIGN TIP ELEVATION. PLACE THE SOLDIER PILE IN THE EXCAVATED HOLE AND FILL THE DRILLED HOLE TO THE GROUND SURFACE WITH LOW STRENGTH MORTAR.
5. EXCAVATE THE LOW STRENGTH MORTAR IN A TOP-DOWN MANNER TO PERMIT LAGGING INSTALLATION. PERFORM EXCAVATION WITH A SMOOTH PLATE BUCKET TO MINIMIZE OVER EXCAVATION.
6. INSTALL WOOD LAGGING IN TOP-DOWN MANNER. ALL LAGGING SHALL BE ATTACHED TO THE FRONT FLANGE OF THE SOLDIER PILE, EXCEPT AT THE BEND POINT BETWEEN SOLDIER PILES 7 AND 8, WHICH SHALL BE INSTALLED ON THE BACK SIDES OF THE FLANGES. NO MORE THAN 5 FEET OF UNSUPPORTED EXCAVATION SHALL BE EXPOSED AT ANY GIVEN TIME. REDUCE EXPOSED EXCAVATION AS NECESSARY DUE TO WATER OR WEAK SOIL CONDITIONS.
7. SEE SHEET 10/56 FOR SECTION A-A, SECTION B-B, AND SOLDIER PILE WALL TABLE.
8. LAGGING SHALL BE HARDWOOD WITH A MINIMUM THICKNESS DIMENSION OF 3 INCHES
9. WELDED STUDS SHALL BE INSTALLED IN ACCORDANCE WITH C&MS 513.22 AND AS SHOWN ON THESE PLANS.

Preliminary Plans - For Reference Only

DESIGN AGENCY: EMH&T
DESIGNED: RJE | DRAWN: GB | REVIEWED: CAS | DATE: 5-22-26
CHECKED: RMW | REVISED: - | STRUCTURE FILE NUMBER: 3113787

TEMPORARY SHORING PLAN - TEMPORARY WALL G
BRIDGE NO. HAM-562-0004
RAMP M OVER I.R. 75

HAM-75-7.85
PID No. 121447

9 / 56

817 / 1047

J:\20110903\ODOT\HAM\7889\structures\HAM562_0004P\sheets\562_0004CSH001.dgn 5/22/2026 10:33:00 AM hbrendlinger

TEMPORARY SOLDIER PILE WALL G LOCATION AND ELEVATION DATA TABLE

SOLDIER PILE NUMBER	SOLDIER PILE STATION (ALONG ℄ CONST RAMP M)	SOLDIER PILE OFFSET (ALONG ℄ CONST RAMP M)	TOP OF SOLDIER PILE ELEVATION A	TOP OF DRILLED SHAFT ELEVATION B	PILE TIP ELEVATION C	LENGTH OF DRILLED SHAFT D	WALL HEIGHT E	SOLDIER PILE SIZE	DRILLED SHAFT DIAMETER
1	418+99.05	23.15' RT	522.29	516.66	491.66	25'-0"	5.63'	W24x131	3'-0"
2	418+99.39	15.99' RT	524.60	516.66	491.66	25'-0"	7.94'	W24x131	3'-0"
3	418+99.73	8.83' RT	527.13	516.66	491.66	25'-0"	10.47'	W24x131	3'-0"
4	419+00.06	1.68' RT	529.29	516.66	491.66	25'-0"	12.63'	W24x131	3'-0"
5	419+00.38	5.48' LT	531.11	516.66	491.66	25'-0"	14.45'	W24x131	3'-0"
6	419.00.68	12.64' LT	532.61	516.66	491.66	25'-0"	15.95'	W24x131	3'-0"
7	419+00.98	19.80' LT	533.64	515.28	490.28	25'-0"	18.36'	W24x131	3'-0"
8	419+05.24	23.92' LT	532.50	510.83	485.83	25'-0"	21.67'	W24x131	3'-0"
9	419+11.59	23.72' LT	528.50	509.00	484.00	25'-0"	19.50'	W24x131	3'-0"
10	419+17.95	23.61' LT	524.50	509.00	484.00	25'-0"	15.50'	W24x131	3'-0"
11	419+24.31	23.58' LT	520.50	509.00	484.00	25'-0"	11.50'	W24x131	3'-0"
12	419+30.67	23.65' LT	516.50	509.00	484.00	25'-0"	7.50'	W24x131	3'-0"
13	419+37.02	23.79' LT	514.00	509.00	484.00	25'-0"	5.00'	W24x131	3'-0"

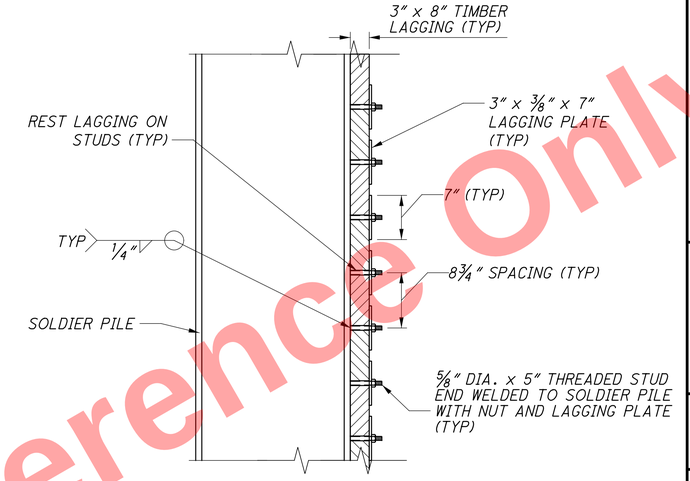

TIMBER LAGGING ATTACHMENT DETAIL

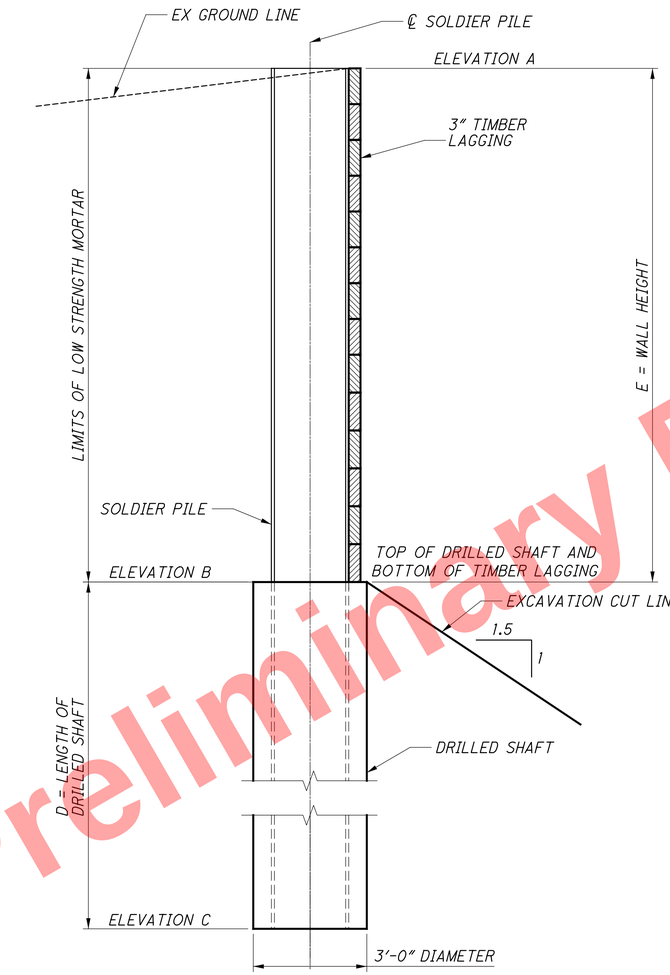

SECTION A-A

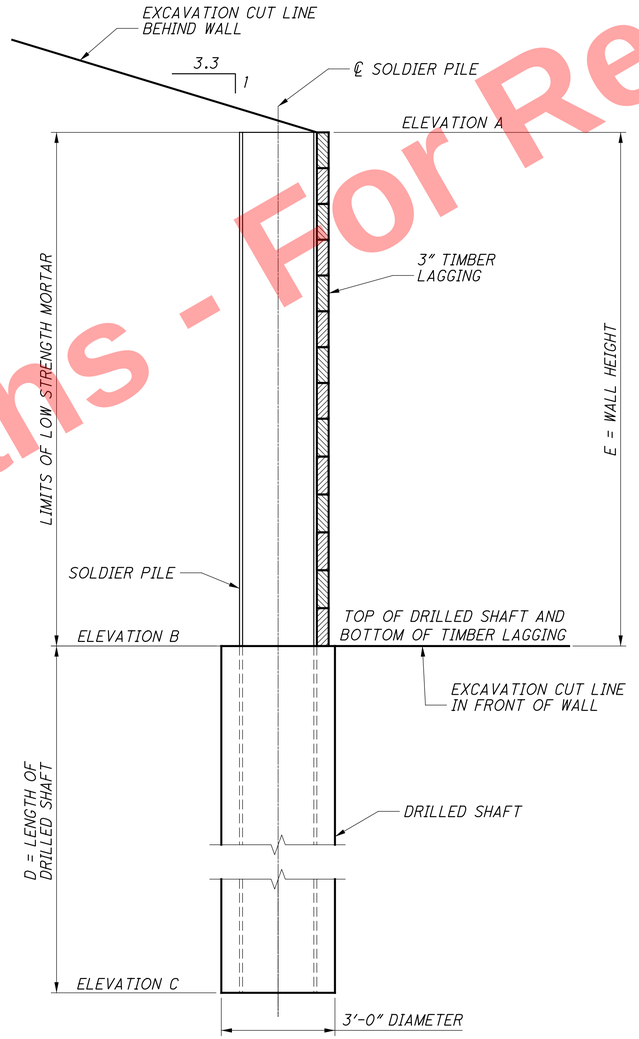

SECTION B-B

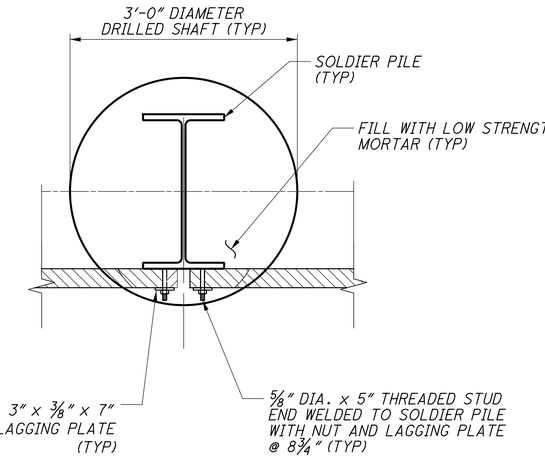

TYPICAL SECTION TEMPORARY SOLDIER PILE WALL

NOTES

1. FOR LOCATION OF SECTION A-A AND SECTION B-B, SEE SHEET 9/56.

Preliminary Plans - For Reference Only

DESIGN AGENCY: EMH&T
DESIGNED: RJE | DRAWN: GB | REVIEWED: CAS | DATE: 5-22-26
CHECKED: RMW | REVISED: - | STRUCTURE FILE NUMBER: 3113787

TEMPORARY SHORING DETAILS
BRIDGE NO. HAM-562-0004
RAMP M OVER I.R. 75

HAM-75-7.85
PID No. 121447

10/56

818/1047

J:\20110903\ODOT\HAM\27889\structures\HAM562_0004P\sheets\562_0004CSH007.dgn 5/22/2026 10:33:03 AM hbrendlinger

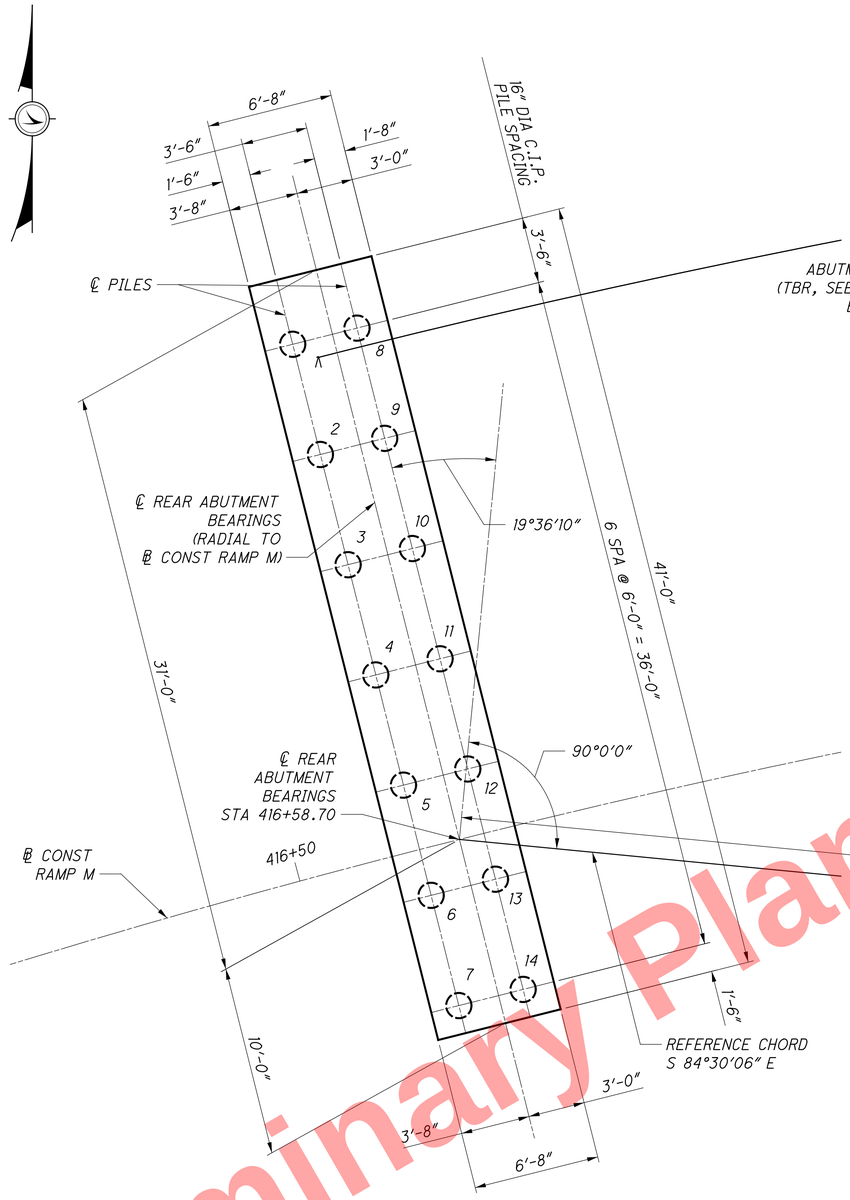

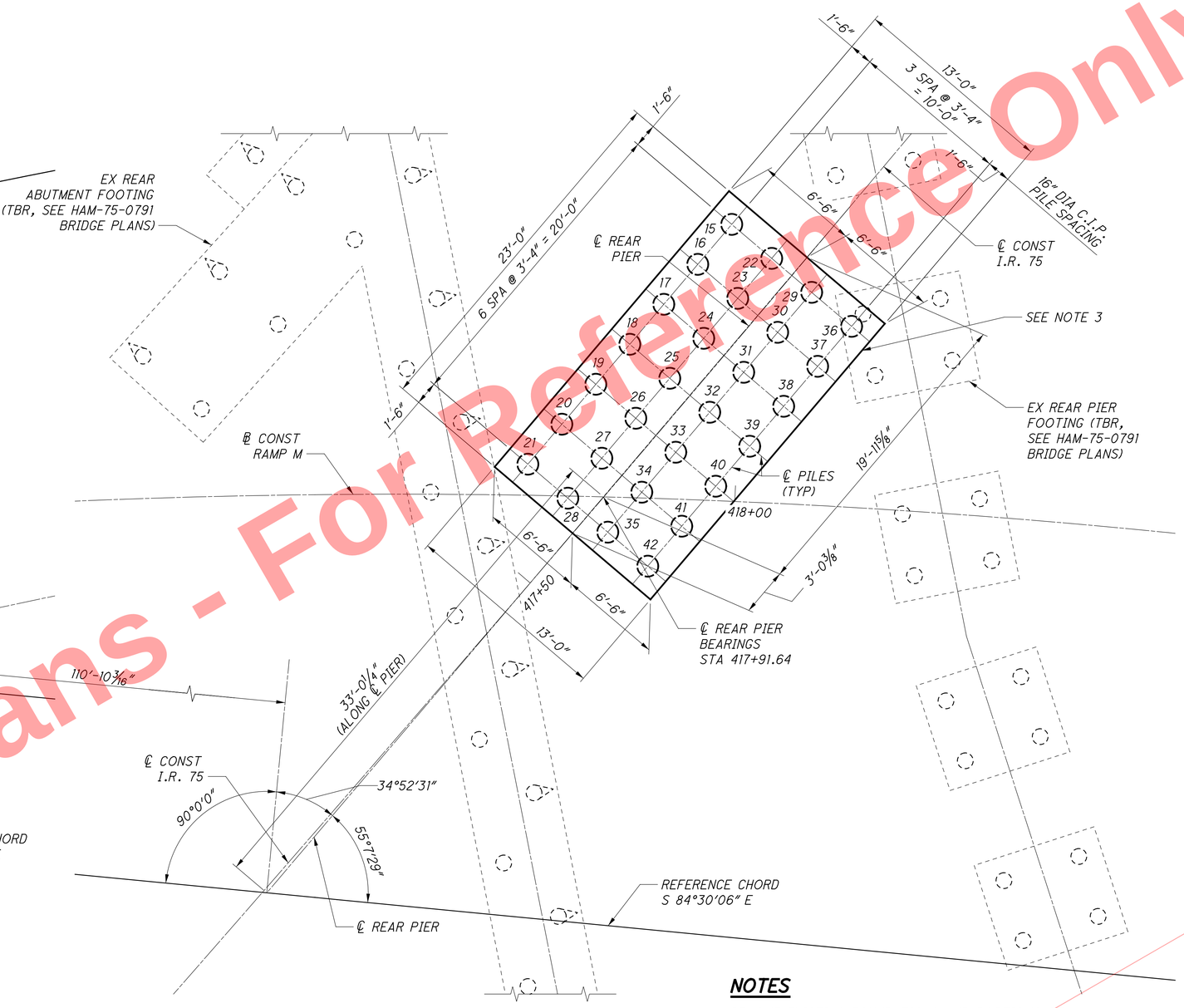

LEGEND

- PROPOSED 16" DIA CIP VERTICAL PILE
- EXISTING 12" CIP VERTICAL PILE
- EXISTING 12" CIP BATTERED PILE

FOUNDATION PLAN REAR ABUTMENT AND PIER

(TEMPORARY SHORING NOT SHOWN FOR CLARITY)

NOTES

1. REMOVE EXISTING FOUNDATIONS AND PORTIONS OF EXISTING FOUNDATIONS THAT INTERFERE WITH PROPOSED FOUNDATIONS PER 202.03.
2. ALL REAR PIER PILES ARE WITHIN THE LIMITS OF THE MSE WALL C BACKFILL AND SHALL BE SLEEVED AS INDICATED IN THE WALL PLANS. THE PILE SLEEVE SHALL BE A SAND-FILLED CORRUGATED POLETHYLENE SMOOTH LINED PIPE.
3. SEE GENERAL NOTES FOR ABBREVIATION LEGEND.

Preliminary Plans - For Reference Only

DESIGN AGENCY: EMH&T
DESIGNED: TDA/RMW
DRAWN: GB
REVIEWED: CAS
DATE: 5-22-26
CHECKED: RMW/RJE
REVISED: -
STRUCTURE FILE NUMBER: 3113787

FOUNDATION PLAN REAR ABUTMENT AND REAR PIER
BRIDGE NO. HAM-562-0004
RAMP M OVER I.R. 75

HAM-75-7.85
PID No. 121447

11 / 56

819
1047

J:\20110903\ODOT\HAM\77889\structures\HAM562_0004P\sheets\562_0004CFP001.dgn 5/22/2026 10:33:04 AM hbrendlinger

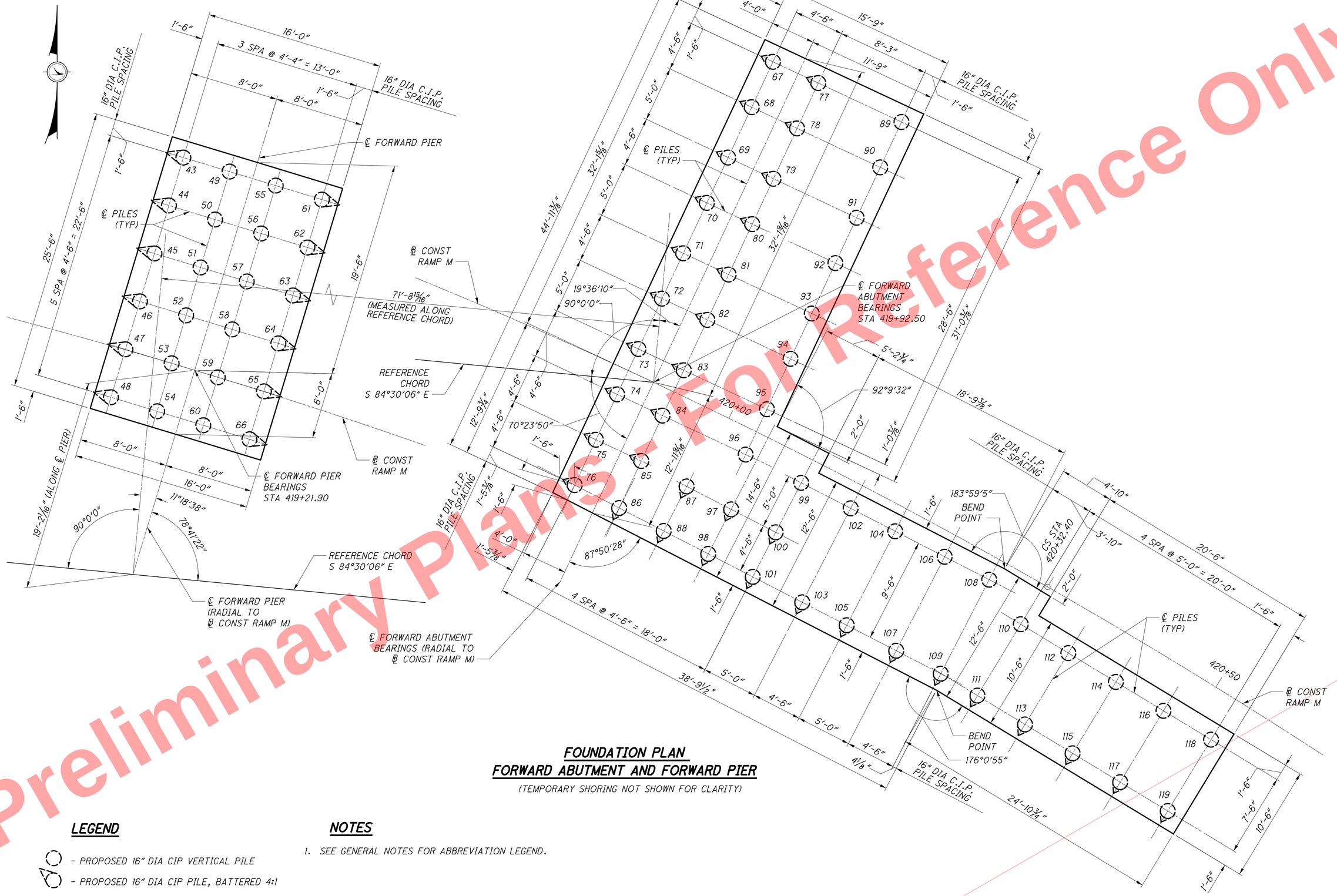

FOUNDATION PLAN
FORWARD ABUTMENT AND FORWARD PIER

(TEMPORARY SHORING NOT SHOWN FOR CLARITY)

LEGEND

- PROPOSED 16" DIA CIP VERTICAL PILE
- PROPOSED 16" DIA CIP PILE, BATTERED 4:1

NOTES

1. SEE GENERAL NOTES FOR ABBREVIATION LEGEND.

Preliminary Plans - Not For Reference Only

DESIGN AGENCY: EMH&T

DESIGNED	DRAWN	REVIEWED	DATE
TDA/RMW	GB	CAS	5-22-26
CHECKED	REVISED	STRUCTURE FILE NUMBER	
RMW/RJE	-	3113787	

FOUNDATION PLAN FORWARD ABUTMENT AND FORWARD PIER
BRIDGE NO. HAM-562-0004
RAMP M OVER I.R. 75

HAM-75-7.85
PID No. 121447

12 / 56

820 / 1047

J:\2011\0903\ODOT\HAM\77889 structures\HAM562_0004P\sheets\562_0004CFP002.dgn 5/22/2026 10:33:05 AM hbrendlinger

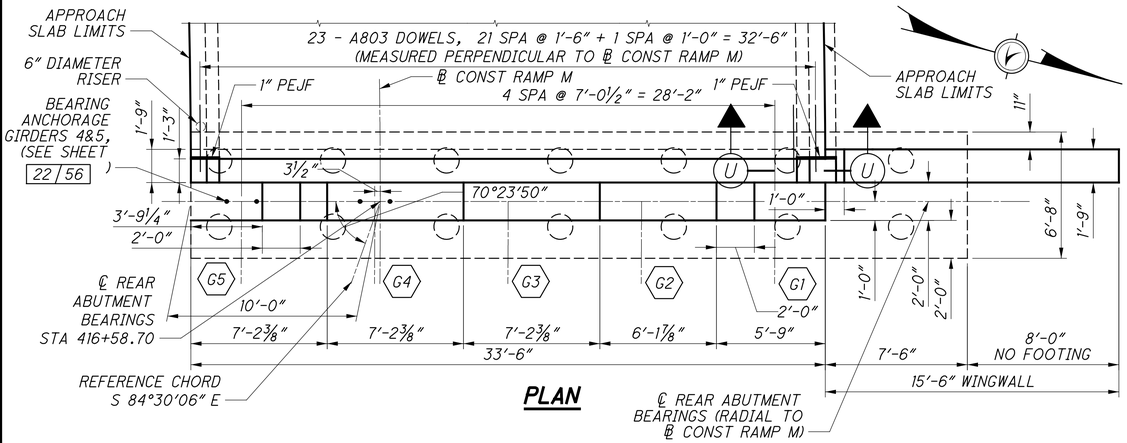

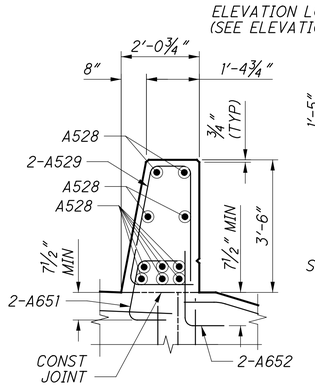

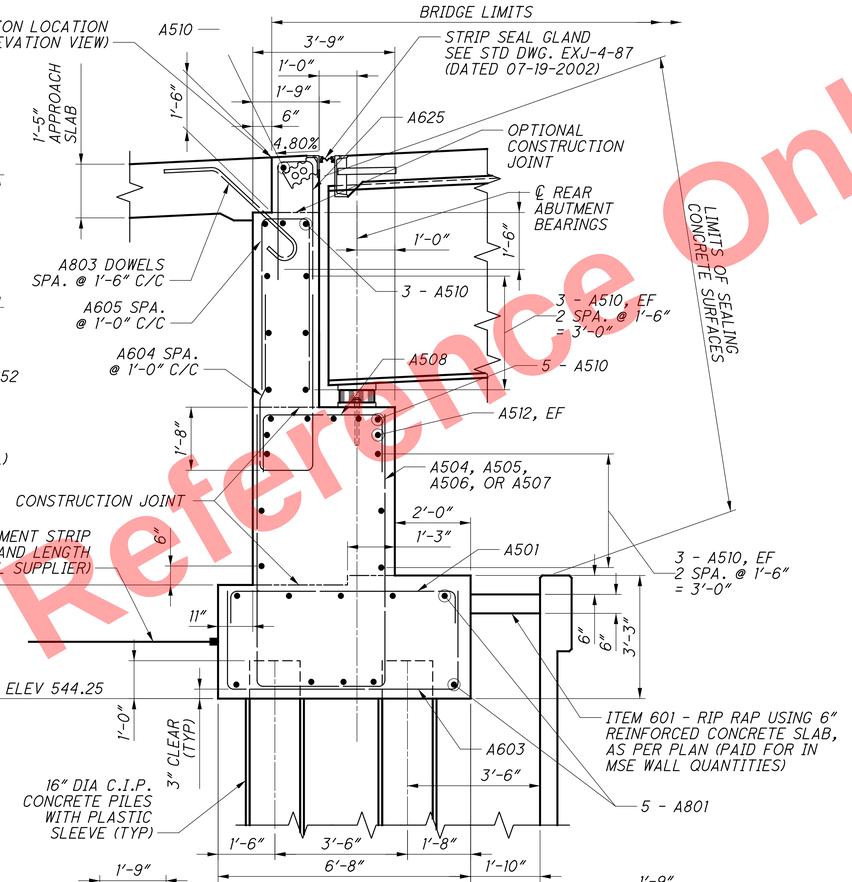

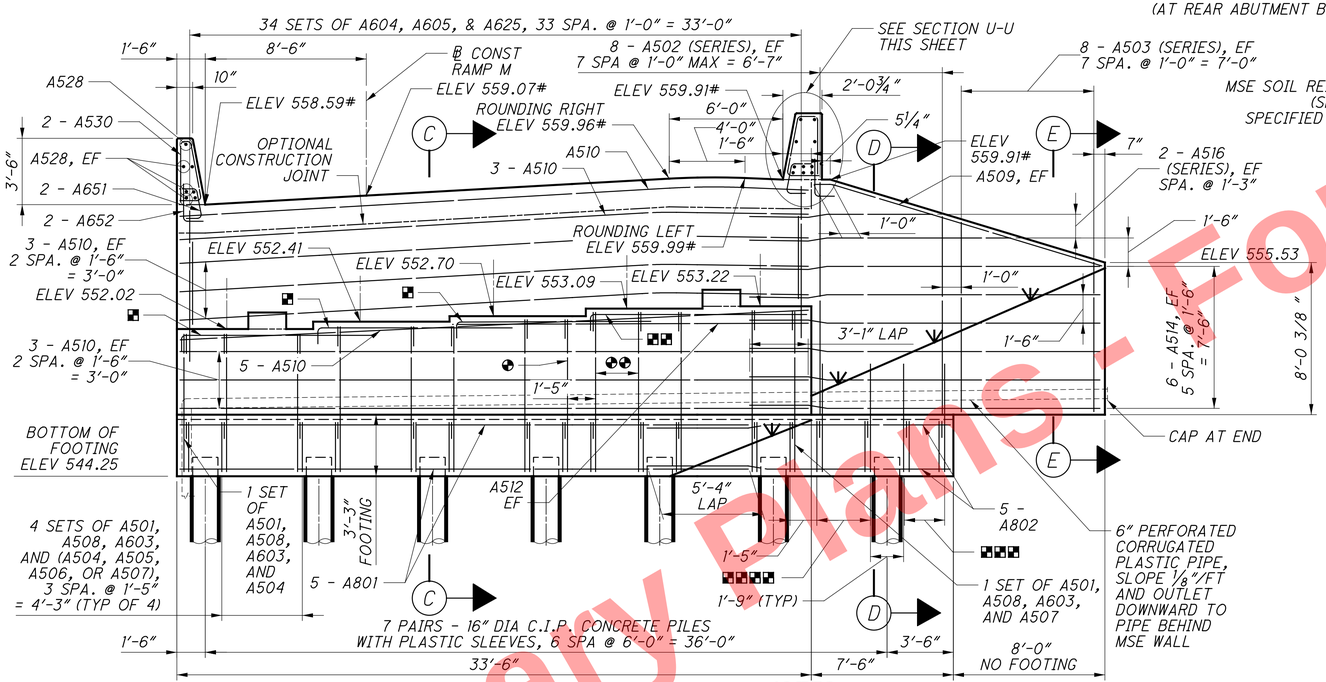

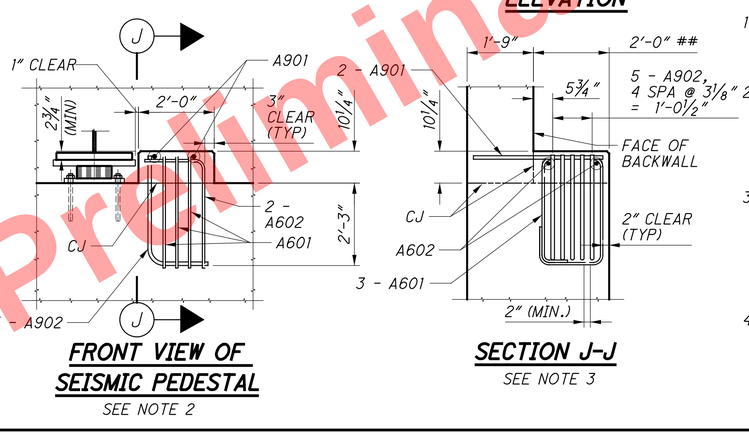

NOTES

1. STRIPS: SEE PROPRIETARY WALL SHOP DRAWINGS FOR MSE SOIL REINFORCEMENT STRIPS DETAILS IN ABUTMENT FOOTING HEEL. STRIPS ARE TO BE PLACED PRIOR TO POURING FOOTING CONCRETE.
2. THE 2'-0" WIDTH OF THE PEDESTAL SHALL BE MEASURED PARALLEL TO THE CENTERLINE OF BEARING. THE A902 AND A602 BARS SHALL BE PLACED PARALLEL TO THE CENTERLINE OF BEARING. THE A901 AND A601 BARS SHALL BE PLACED PARALLEL TO THE BEAMS. ABUTMENT REINFORCING NOT SHOWN FOR CLARITY.
3. THE LOCATION OF THE MAIN REINFORCEMENT IN THE BEAM SEAT MAY BE ADJUSTED HORIZONTALLY ±1" TO ACCOMMODATE THE A902 BARS.
   ## - THE SURFACE OF THE BEAM SEAT IN THIS AREA SHALL BE FINISHED WITH A SERRATED TROWEL. THE SERRATIONS SHALL BE ¼" DEEP MINIMUM. ABUTMENT REINFORCING NOT SHOWN FOR CLARITY.
4. BRIDGE SEAT REINFORCING, SETTING ANCHORS: ACCURATELY PLACE REINFORCING STEEL IN THE VICINITY OF THE BRIDGE SEAT TO AVOID INTERFERENCE WITH THE DRILLING OF BEARING ANCHOR HOLES. PRESETTING OF BEARING ANCHORS. SEE SHEET 22/56 FOR BEARING DETAILS.

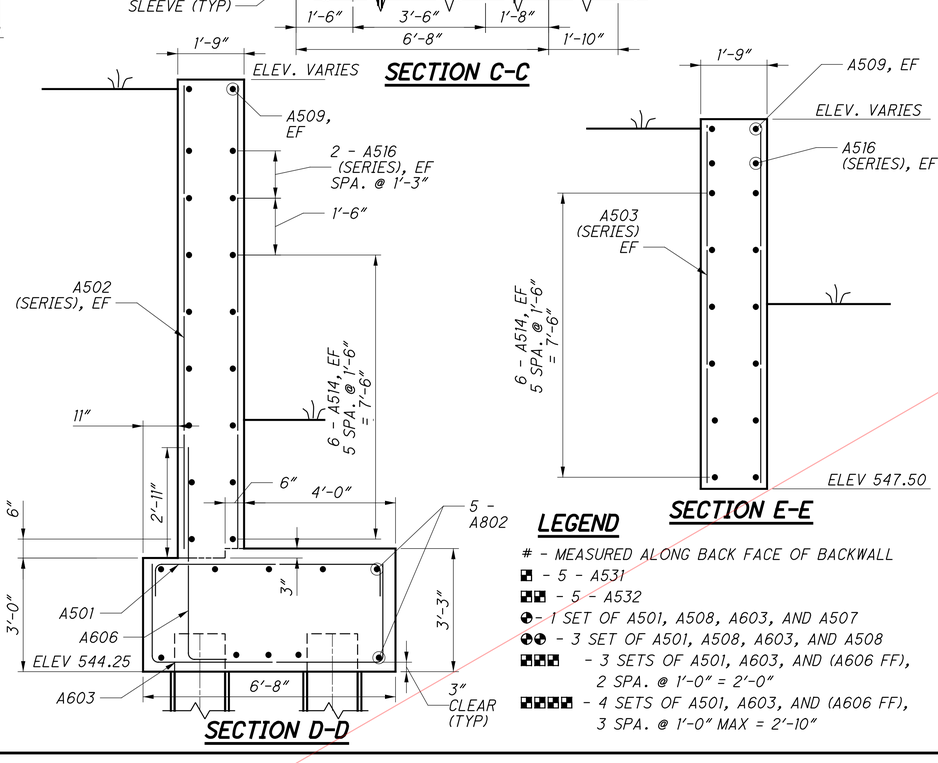

LEGEND

\# - MEASURED ALONG BACK FACE OF BACKWALL
▪ - 5 - A531
▪▪ - 5 - A532
◔ - 1 SET OF A501, A508, A603, AND A507
◔◔ - 3 SET OF A501, A508, A603, AND A508
▪▪▪ - 3 SETS OF A501, A603, AND (A606 FF), 2 SPA. @ 1'-0" = 2'-0"
▪▪▪▪ - 4 SETS OF A501, A603, AND (A606 FF), 3 SPA. @ 1'-0" MAX = 2'-10"

Preliminary Plans - For Reference Only

DESIGN AGENCY EMHT
DESIGNED TDA/RMW | DRAWN GB | REVIEWED CAS | DATE 5-22-26
CHECKED RMW/RJE | REVISED - | STRUCTURE FILE NUMBER 3113787

REAR ABUTMENT DETAILS
BRIDGE NO. HAM-562-0004
RAMP M OVER I.R. 75

HAM-75-7.85
PID No. 121447

13/56

821/1047

J:\20110903\ODOT\HAM\7889\structures\HAM562_0004P\sheets\562_0004CAR001.dgn 5/22/2026 10:33:05 AM hbrendlinger

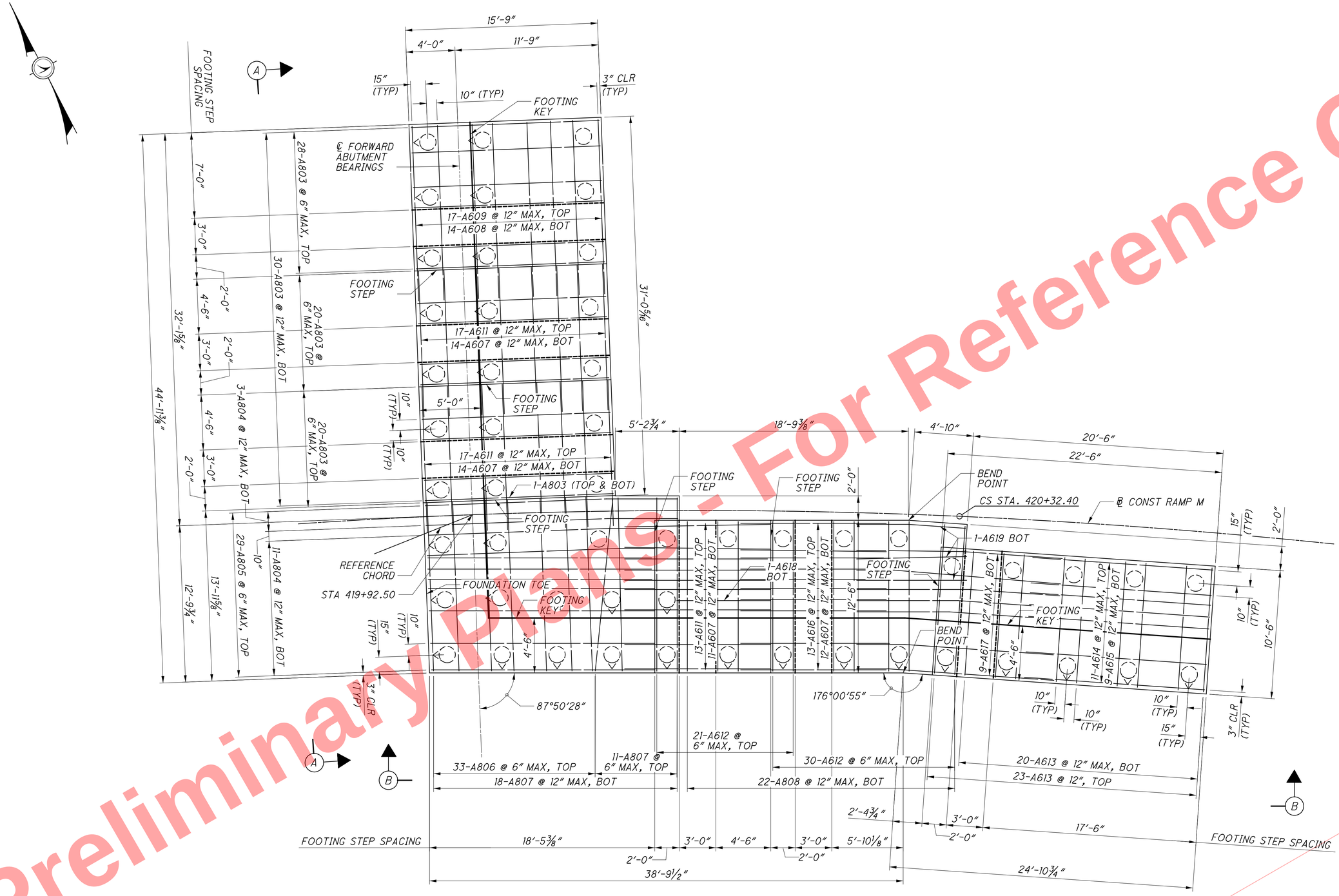

FOOTING PLAN

NOTES:

1. FOR VIEWS A-A AND B-B, SEE SHEET 15 / 56
2. FOR ADDITIONAL DETAILS ON BAR SPACING, SEE VIEWS A-A AND B-B, SHEET 15 / 56
3. SEE GENERAL NOTES FOR ABBREVIATION LEGEND.

Preliminary Plans - For Reference Only

DESIGN AGENCY: EMH&T
DESIGNED: TDA/RMW
DRAWN: GB
REVIEWED: CAS
DATE: 5-22-26
CHECKED: RMW/RJE
REVISED: -
STRUCTURE FILE NUMBER: 3113787

FORWARD ABUTMENT FOOTING PLAN
BRIDGE NO. HAM-562-0004
RAMP M OVER I.R. 75

HAM-75-7.85
PID No. 121447

14 / 56

822 / 1047

J:\20110903\ODOT\HAM\77889 structures\HAM562_0004P\sheets\562_0004CAF003.dgn 5/22/2026 10:33:06 AM hbrendlinger

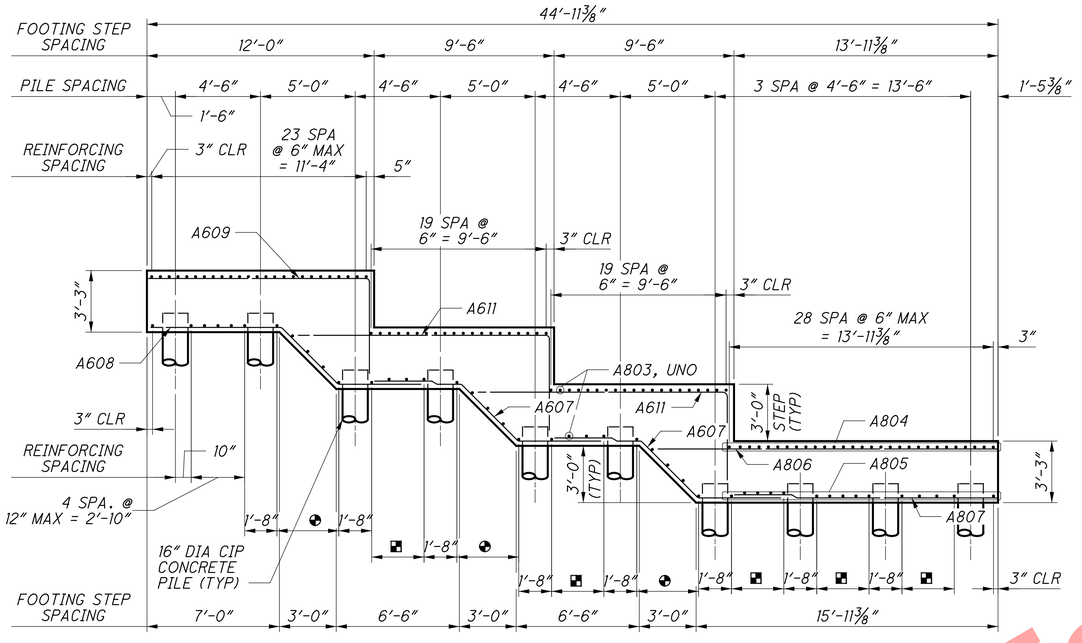

VIEW A-A

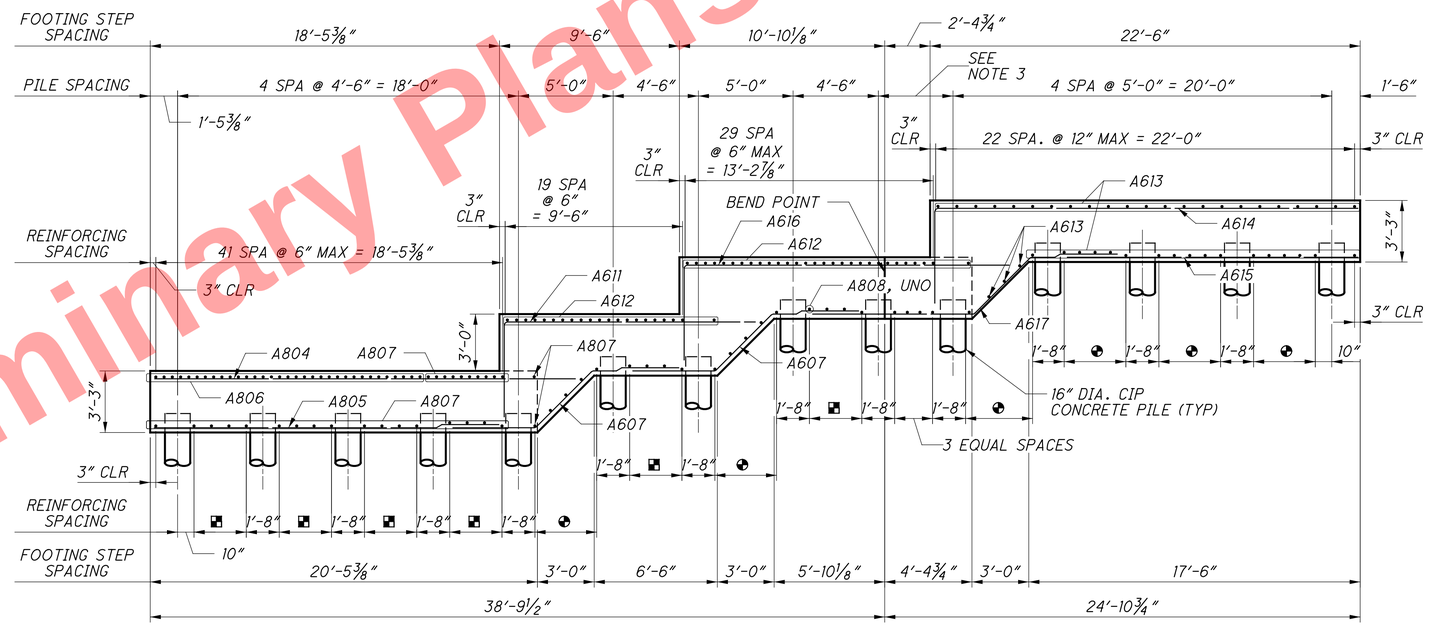

VIEW B-B

LEGEND

■ = 4 SPA. @ 12" MAX = 2'-10"
◒ = 5 SPA. @ 12" MAX = 3'-4"
UNO = UNLESS NOTED OTHERWISE

NOTES:

1. FOR FOOTING PLAN, SEE SHEET 14 / 56
2. ALL DIMENSIONS SHOWN WITH RESPECT TO FOUNDATION TOE.
3. PILE TO PILE DIMENSION ALONG TWO SEPARATE BEARINGS, THUS NOT SHOWN. FOR ADDITIONAL DETAILS ON PILE SPACING AND PLACEMENT, SEE THE FOUNDATION PLAN, SHEET 12 / 56
4. SEE GENERAL NOTES FOR ABBREVIATION LEGEND.
5. FOR LOCATION OF VIEW A-A AND B-B SEE SHEET 14 / 56

DESIGN AGENCY
EMH&T
Engineers • Surveyors • Planners • Scientists
5500 New Albany Road, Columbus, Ohio 43054
Phone: 614.775.4500

DESIGNED	DRAWN	REVIEWED	DATE
TBA/RMW	GB	CAS	5-22-26
CHECKED	REVISED	STRUCTURE FILE NUMBER	
RMW/RJE	-	3113787	

FORWARD ABUTMENT FOOTING ELEVATION
BRIDGE NO. HAM-562-0004
RAMP M OVER I.R. 75

HAM-75-7.85
PID No. 121447

15 / 56

823
1047

Preliminary Plans - For Reference Only

J:\20110903\ODOT\HAM\7889\structures\HAM562_0004P\sheets\562_0004CAF004.dgn 5/22/2026 10:33:07 AM hbrendlinger

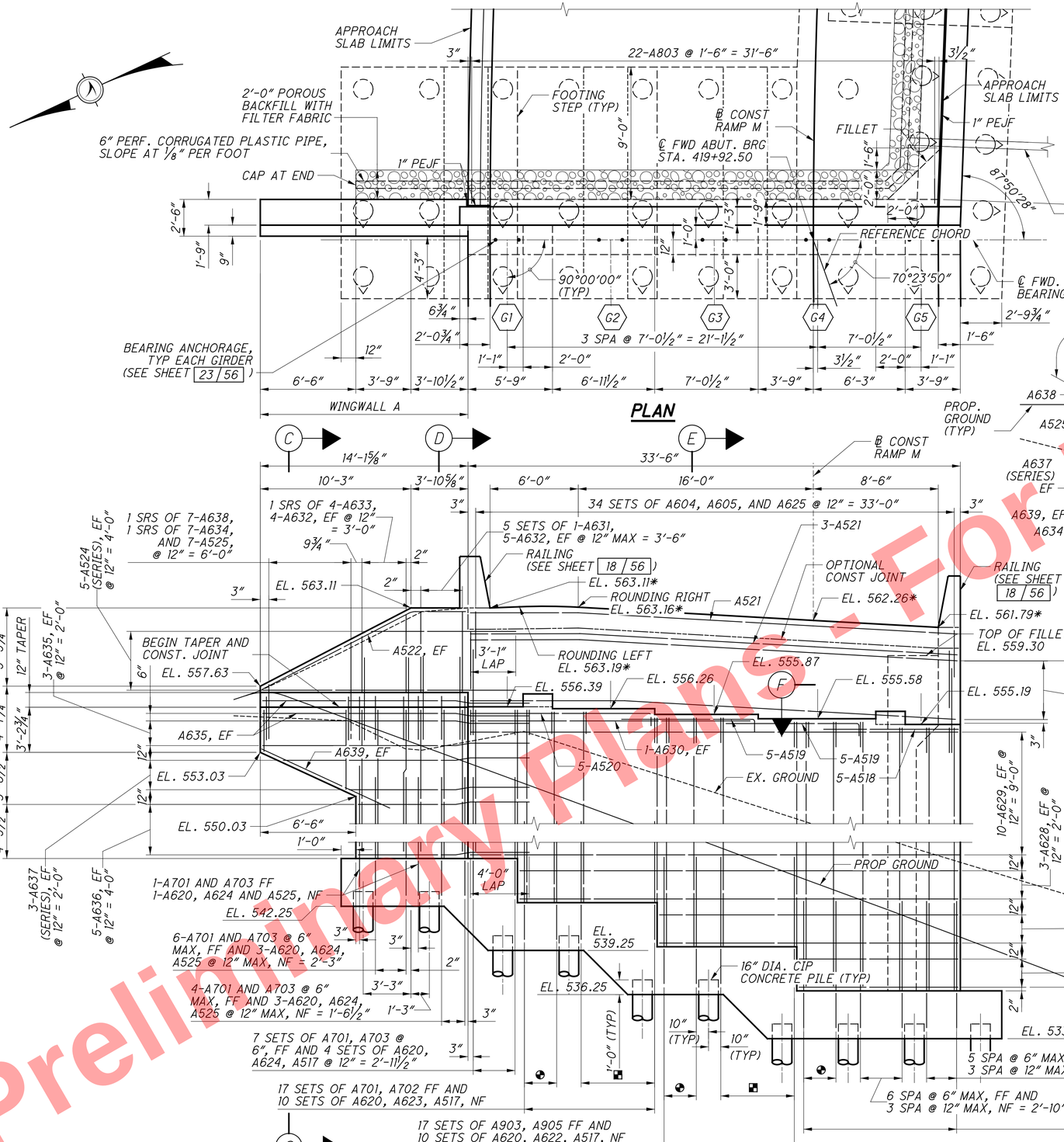

LEGEND

* = MEASURED ALONG BACK FACE OF BACKWALL

◕ = 5 SPA. @ 6" MAX, FF AND 3 SPA @ 12" MAX, NF = 2'-2¾"

◪ = 10 SPA @ 6", FF AND 5 SPA @ 12", NF = 5'-0"

NOTES

1. FOR SECTION F-F, SEE SHEET 18 / 56
2. FOR WINGWALL B DETAILS, SEE SHEET 17 / 56
3. FOR SEISMIC PEDESTAL DETAILS, SEE SHEET 18 / 56
4. FOR FOOTING REINFORCING DETAILS, SEE SHEET 14 / 56
5. SEE GENERAL NOTES FOR ABBREVIATION LEGEND.
6. BRIDGE SEAT REINFORCING, SETTING ANCHORS: ACCURATELY PLACE REINFORCING STEEL IN THE VICINITY OF THE BRIDGE SEAT TO AVOID INTERFERENCE WITH THE DRILLING OF BEARING ANCHOR HOLES. PRESETTING OF BEARING ANCHORS. SEE SHEET 23 / 56 FOR BEARING DETAILS.

Preliminary Plans - Not For Reference Only

DESIGN AGENCY: EMH&T
DESIGNED: TDA/RMW
DRAWN: GB
CHECKED: RMW/RJE
REVIEWED: CAS
DATE: 5-22-26
REVISED: -
STRUCTURE FILE NUMBER: 3113787

FORWARD ABUTMENT DETAILS
BRIDGE NO. HAM-562-0004
RAMP M OVER I.R. 75

HAM-75-7.85
PID No. 121447

16 / 56

824 / 1047

J:\2011090\3\ODOT\HAM\7889\structures\HAM562_0004P\sheets\562_0004CAF001.dgn 5/22/2026 10:33:08 AM hbrendlinger

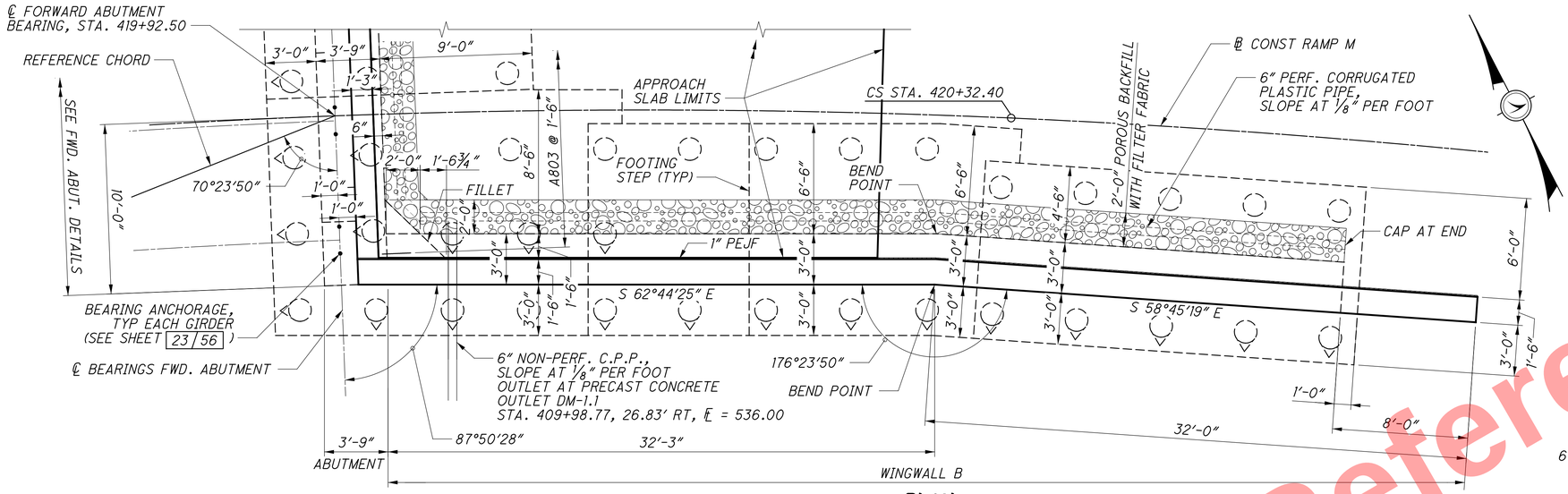

PLAN

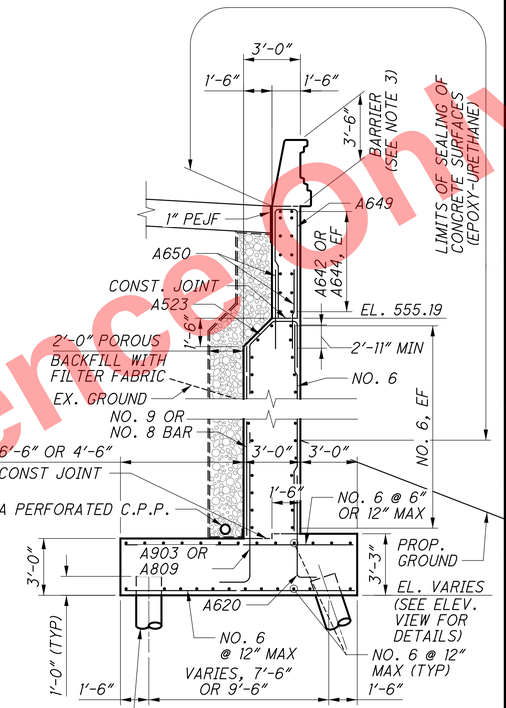

SECTION G-G

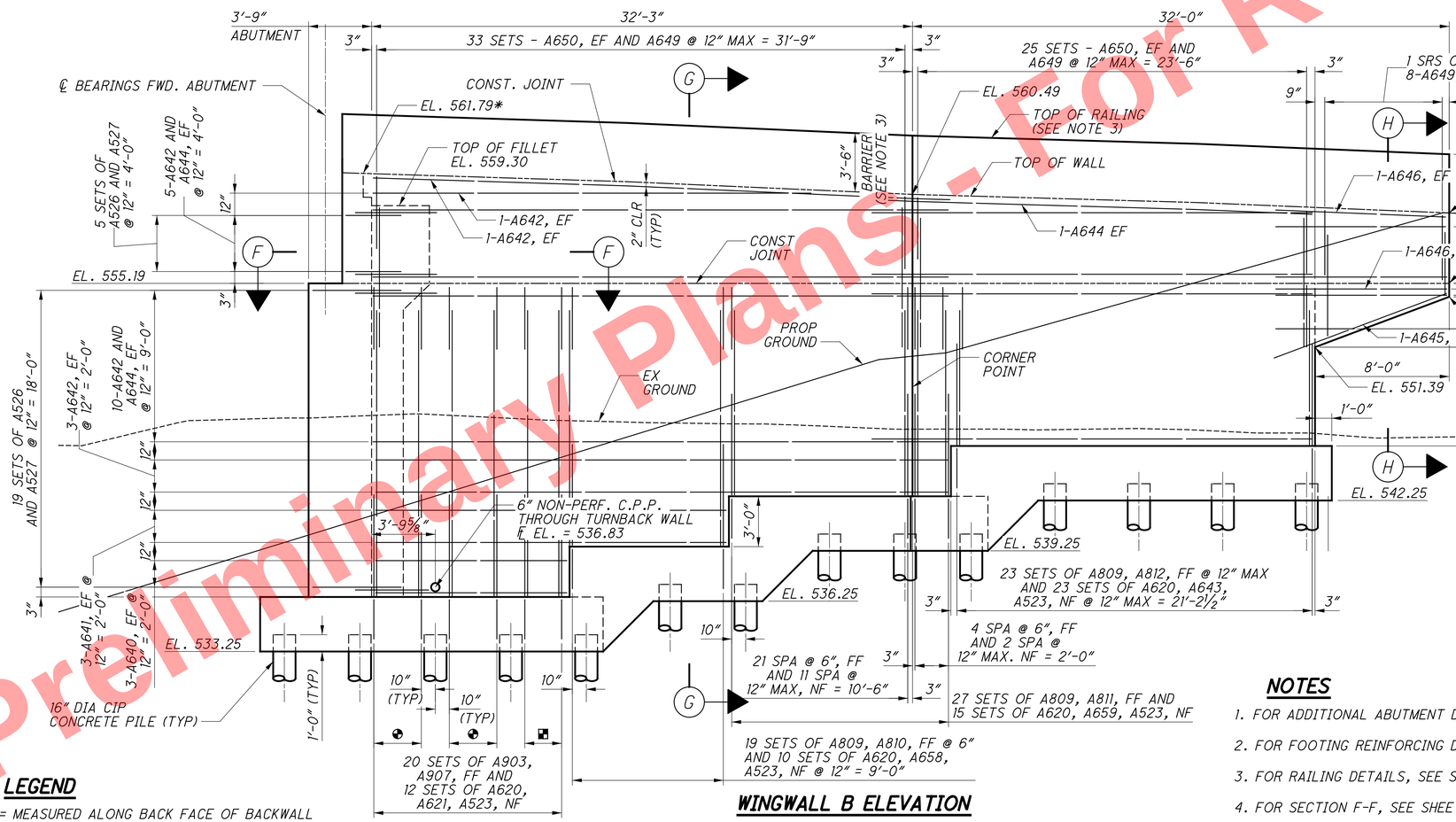

WINGWALL B ELEVATION

(FOOTING REINFORCING NOT SHOWN FOR CLARITY, SEE FOOTING PLAN/ELEVATION)

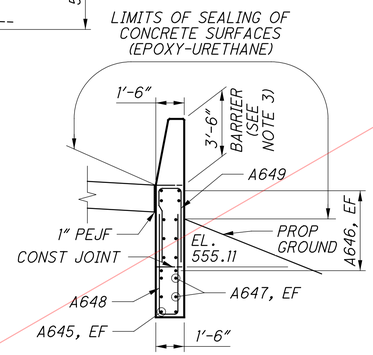

SECTION H-H

LEGEND

* = MEASURED ALONG BACK FACE OF BACKWALL
◔ = 6 SPA @ 6" MAX, FF AND 3 SPA @ 12" MAX, NF = 2'-10"
◪ = 5 SPA @ 6", FF AND 3 SPA @ 12", NF = 2'-4"

NOTES

1. FOR ADDITIONAL ABUTMENT DETAILS, SEE SHEET 16 / 56
2. FOR FOOTING REINFORCING DETAILS, SEE SHEET 14 / 56
3. FOR RAILING DETAILS, SEE SHEET 18 / 56
4. FOR SECTION F-F, SEE SHEET 18 / 56
5. SEE GENERAL NOTES FOR ABBREVIATION LEGEND.

Preliminary Plans - Not For Reference Only

DESIGN AGENCY: EMH&T
DESIGNED: TDA/RMW
DRAWN: GB
CHECKED: RMW/RJE
REVIEWED: CAS
DATE: 5-22-26
REVISED: -
STRUCTURE FILE NUMBER: 3113787

FORWARD ABUTMENT DETAILS (CONT.) - WINGWALL B
BRIDGE NO. HAM-562-0004
RAMP M OVER I.R. 75

HAM-75-7.85
PID No. 121447

17 / 56

825 / 1047

J:\2011093\ODOT\HAM\7889\structures\HAM562_0004P\sheets\562_0004CAF002.dgn 5/22/2026 10:33:09 AM hbrendlinger

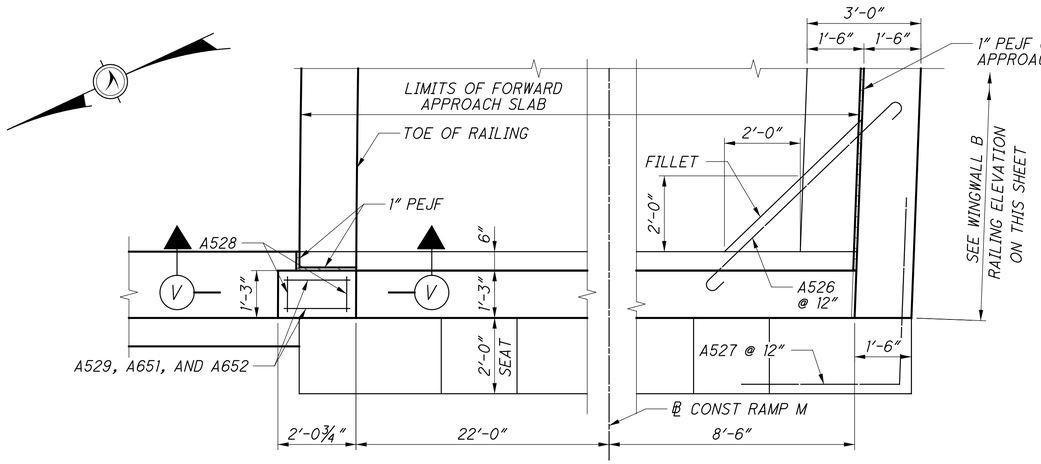

SECTION F-F

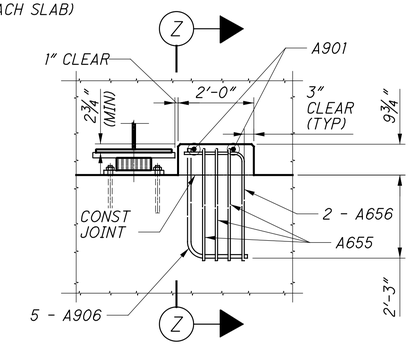

FRONT VIEW OF SEISMIC PEDESTAL

(ABUTMENT REINFORCING NOT SHOWN FOR CLARITY, SEE NOTE 1)

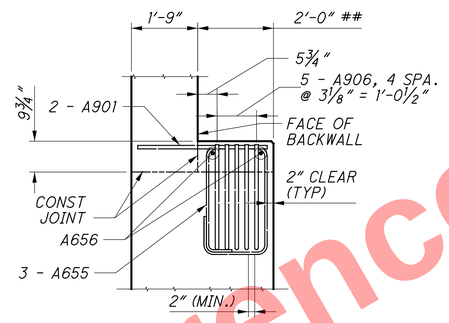

SECTION Z-Z

(ABUTMENT REINFORCING NOT SHOWN FOR CLARITY, SEE NOTES 1 & 2)

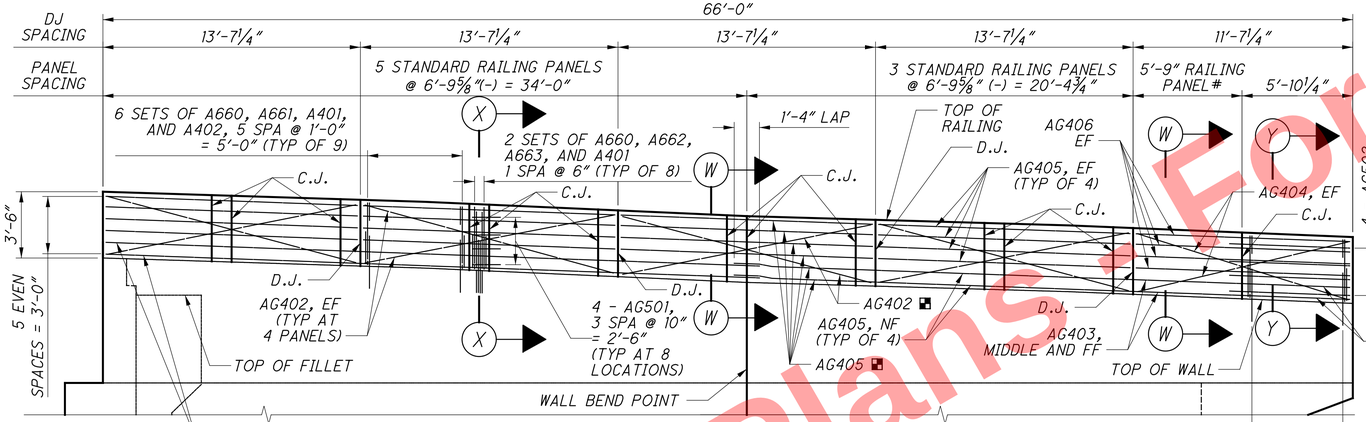

WINGWALL B RAILING ELEVATION

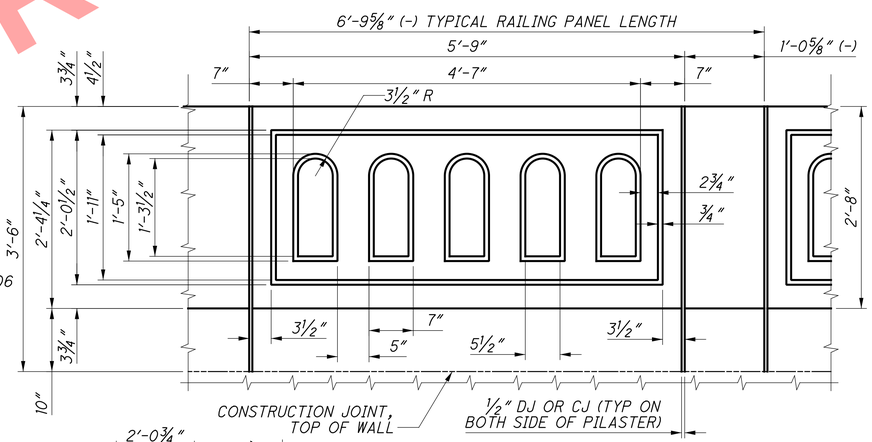

STANDARD RAILING PANEL (TYP OF 8)

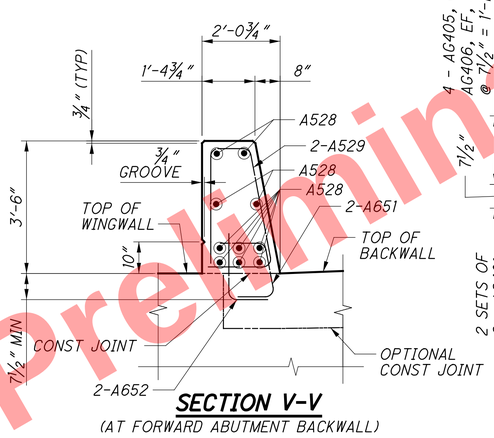

SECTION V-V

(AT FORWARD ABUTMENT BACKWALL)

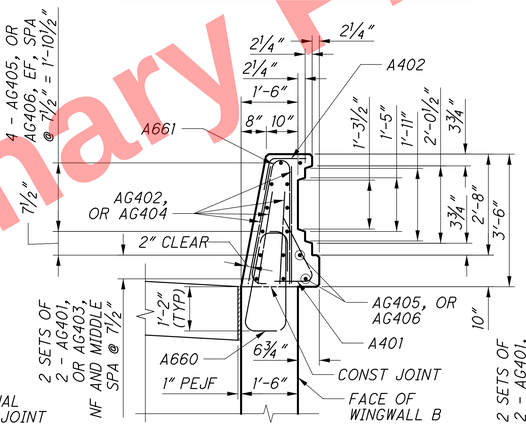

SECTION W-W

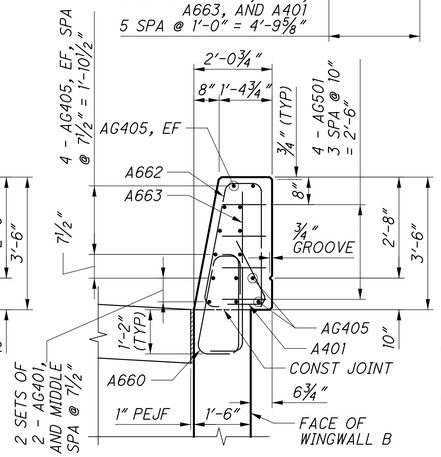

SECTION X-X

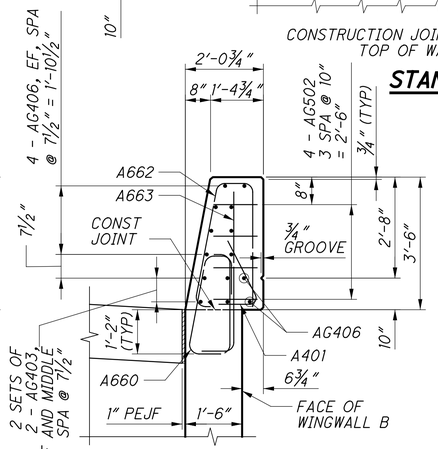

SECTION Y-Y

LEGEND

- SEE STANDARD RAILING PANEL ELEVATION FOR SIMILAR AESTHETIC DETAILS.
D.J. - DEFLECTION JOINT, DETAILS SEE SHEET 52/56
C.J. - CONTRACTION JOINT, DETAILS SEE SHEET 52/56
■ - FIELD BEND AS NECESSARY TO ACCOMMODATE BEND IN WINGWALL

NOTES

1. THE 2'-0" WIDTH OF THE PEDESTAL SHALL BE MEASURED PARALLEL TO THE CENTERLINE OF BEARING. THE A906 AND A656 BARS SHALL BE PLACED PARALLEL TO THE CENTERLINE OF BEARING. THE A901 AND A655 BARS SHALL BE PLACED PARALLEL TO THE BEAMS.
2. THE LOCATION OF THE MAIN REINFORCEMENT IN THE BEAM SEAT MAY BE ADJUSTED HORIZONTALLY ±1" TO ACCOMMODATE THE A906 BARS.

   ## - THE SURFACE OF THE BEAM SEAT IN THIS AREA SHALL BE FINISHED WITH A SERRATED TROWEL. THE SERRATIONS SHALL BE 1/4" DEEP MINIMUM.
3. SEE GENERAL NOTES FOR ABBREVIATION LEGEND.
4. FOR LOCATION OF SECTION F-F, SEE SHEET 17/56

Preliminary Plans - For Reference Only

DESIGN AGENCY: EMH&T
DESIGNED: RJE
DRAWN: GB
CHECKED: RMW
REVIEWED: CAS
DATE: 5-22-26
REVISED: -
STRUCTURE FILE NUMBER: 3113787

FORWARD ABUTMENT AND RAILING DETAILS
BRIDGE NO. HAM-562-0004
RAMP M OVER I.R. 75

HAM-75-7.85
PID No. 121447

18/56

826/1047

J:\20110903\ODOT\HAM\7.7889\structures\HAM562_0004P\sheets\562_0004CAF005.dgn 5/22/2026 10:33:10 AM hbrendlinger

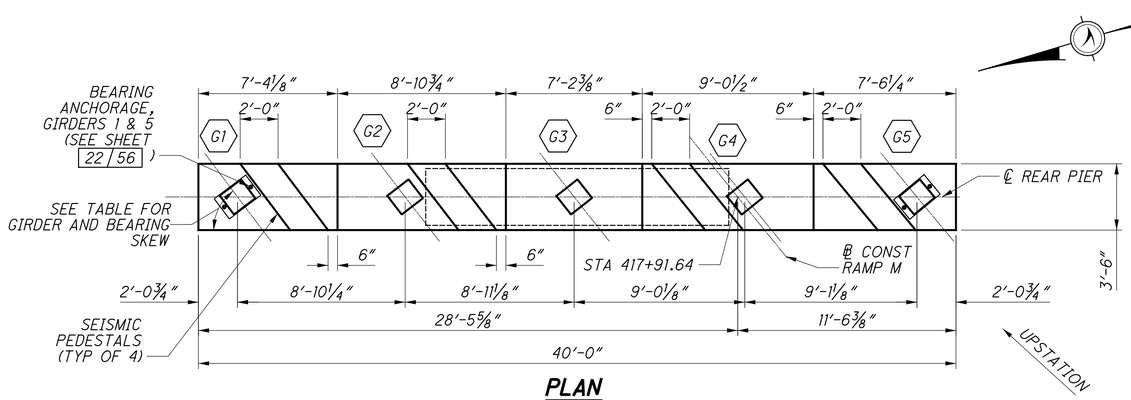

PLAN

FOUNDATION NOT SHOWN FOR CLARITY

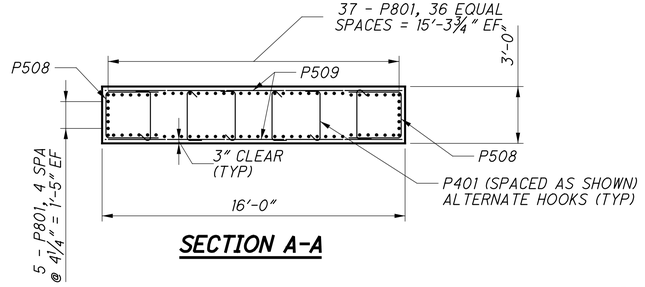

SECTION A-A

GIRDER/BEARING SKEW	
GIRDER	SKEW
G1	53°0'12"
G2	52°23'42"
G3	51°45'50"
G4	51°6'32"
G5	50°25'42"

NOTE: SEISMIC PEDESTALS ADJACENT TO A GIVEN GIRDER SHALL BE SKEWED AT THE SAME SKEW AS THE GIRDER.

LEGEND

■ - 5 - P517
■■ - 5 - P518
■■■ - 5 - P519

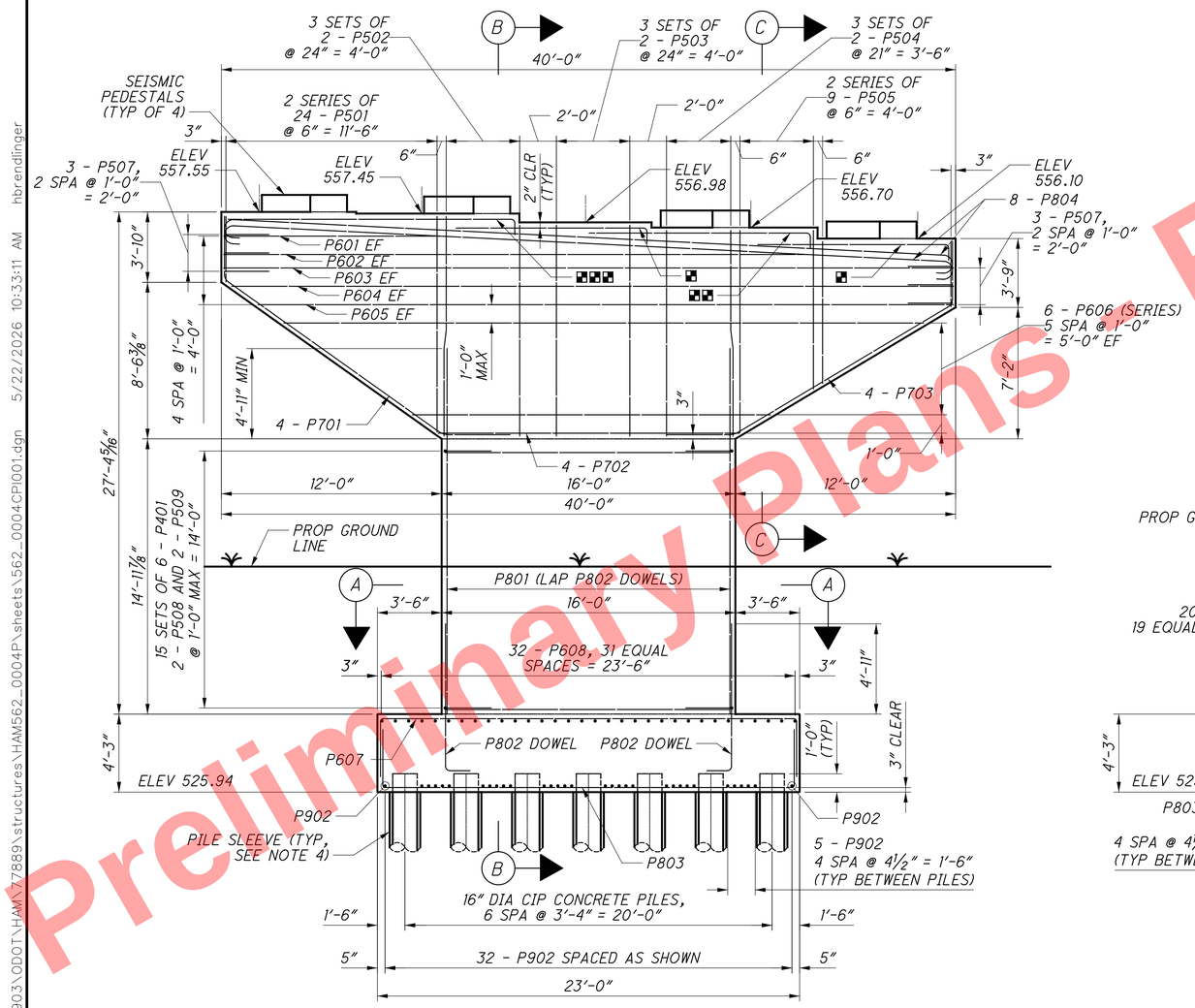

PIER ELEVATION

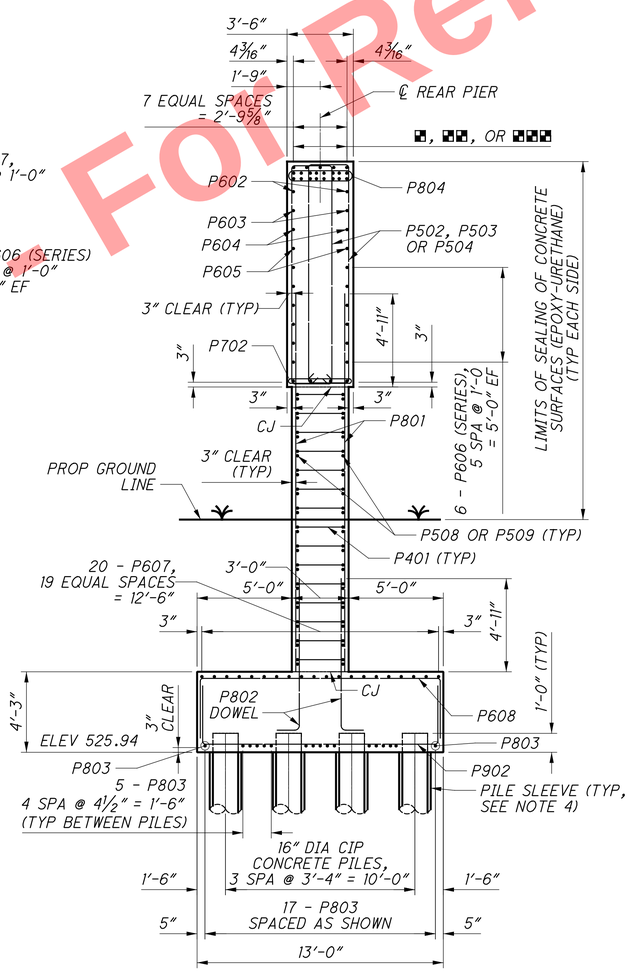

SECTION B-B

SECTION C-C

NOTES

1. FOR ADDITIONAL SEISMIC PEDESTAL DETAILS SEE SHEET 21/56
2. SEE GENERAL NOTES FOR ABBREVIATION LEGEND.
3. BRIDGE SEAT REINFORCING, SETTING ANCHORS: ACCURATELY PLACE REINFORCING STEEL IN THE VICINITY OF THE BRIDGE SEAT TO AVOID INTERFERENCE WITH THE DRILLING OF BEARING ANCHOR HOLES. PRESETTING OF BEARING ANCHORS. SEE SHEET 22/56 FOR BEARING DETAILS.
4. PILE SLEEVES SHALL BE INSTALLED PRIOR TO PLACEMENT OF MSE WALL BACKFILL.

Preliminary Plans - For Reference Only

DESIGN AGENCY: EMH&T
DESIGNED: TDA/RMW
DRAWN: GB
REVIEWED: CAS
DATE: 5-22-26
CHECKED: RMW/RJE
REVISED: -
STRUCTURE FILE NUMBER: 3113787

REAR PIER DETAILS
BRIDGE NO. HAM-562-0004
RAMP M OVER I.R. 75

HAM-75-7.85
PID No. 121447

19/56
827/1047

J:\20110903\ODOT\HAM\7889\structures\HAM562_0004P\sheets\562_0004CPI001.dgn 5/22/2026 10:33:11 AM hbrendlinger

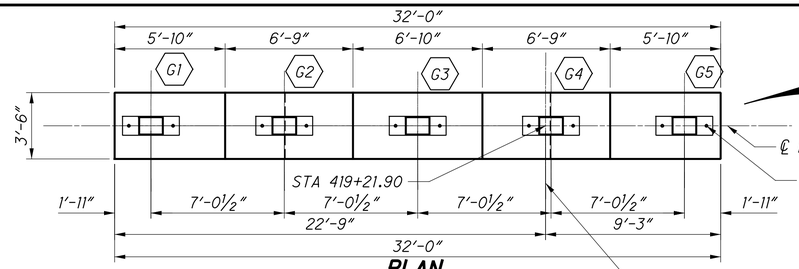

PLAN

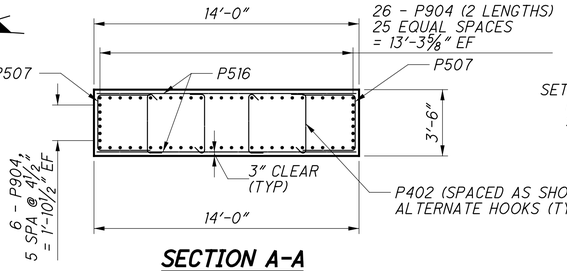

SECTION A-A

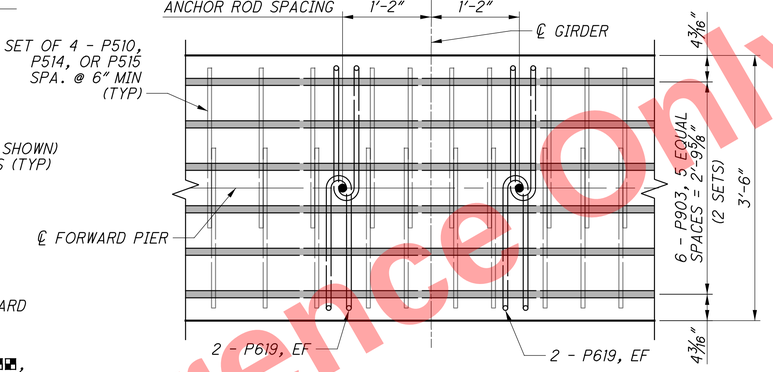

BEARING ANCHOR PLAN

(TYPICAL ALL GIRDERS, SEE NOTE 1)

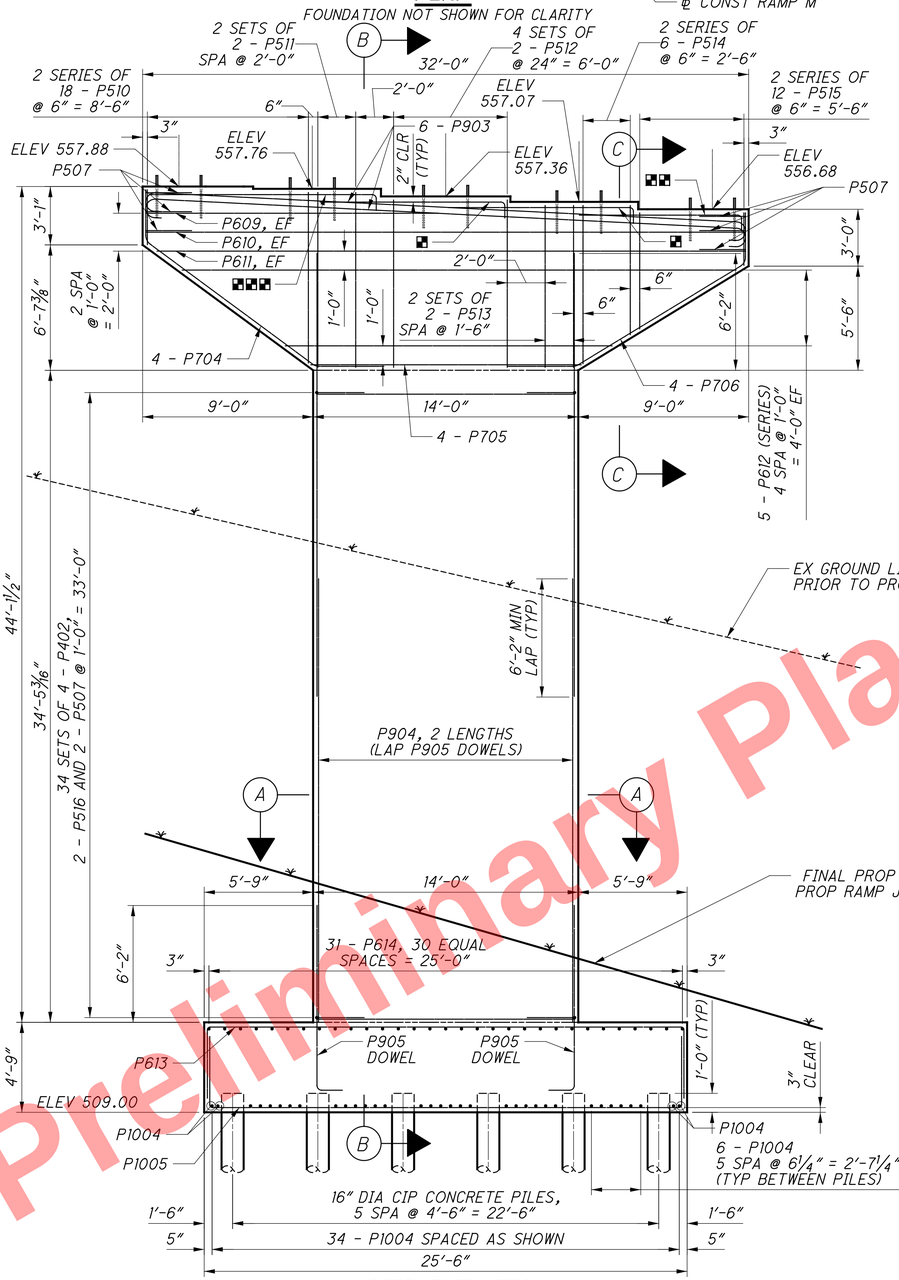

PIER ELEVATION

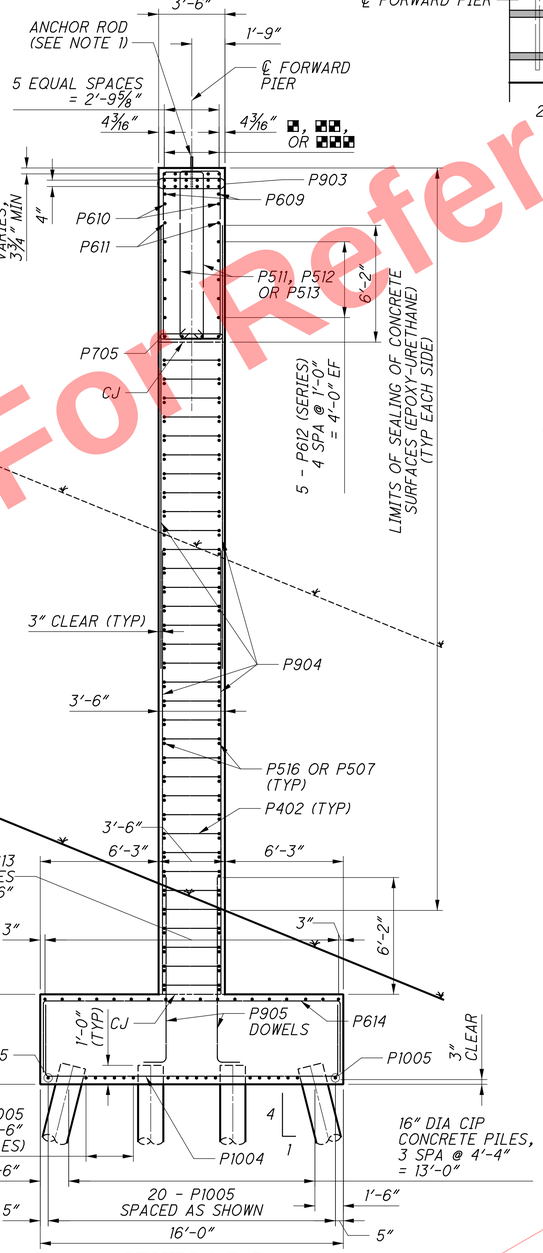

SECTION B-B

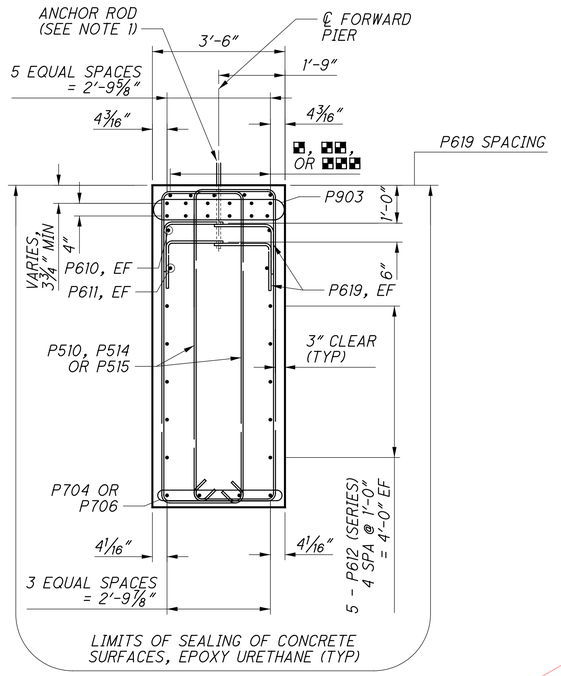

SECTION C-C

LEGEND

- ▪ - 5 - P520
- ▪▪ - 5 - P521
- ▪▪▪ - 5 - P522

NOTES

1. BRIDGE SEAT REINFORCING, SETTING ANCHORS: ACCURATELY PLACE REINFORCING STEEL IN THE VICINITY OF THE BRIDGE SEAT TO AVOID INTERFERENCE WITH THE PRESETTING OF BEARING ANCHORS. SEE SHEET 23/56 FOR BEARING DETAILS.
2. SEE GENERAL NOTES FOR ABBREVIATION LEGEND.

Preliminary Plans - For Reference Only

DESIGN AGENCY EMH&T

DESIGNED	DRAWN	REVIEWED	DATE
TDA/RMW	GB	CAS	5-22-26
CHECKED	REVISED	STRUCTURE FILE NUMBER	
RMW/RJE	-	3113787	

FORWARD PIER DETAILS
BRIDGE NO. HAM-562-0004
RAMP M OVER I.R. 75

HAM-75-7.85
PID No. 121447

20/56

828/1047

J:\20110903\ODOT\HAM\7889\structures\HAM562_0004P\sheets\562_0004CPI002.dgn 5/22/2026 10:33:12 AM hbrendlinger

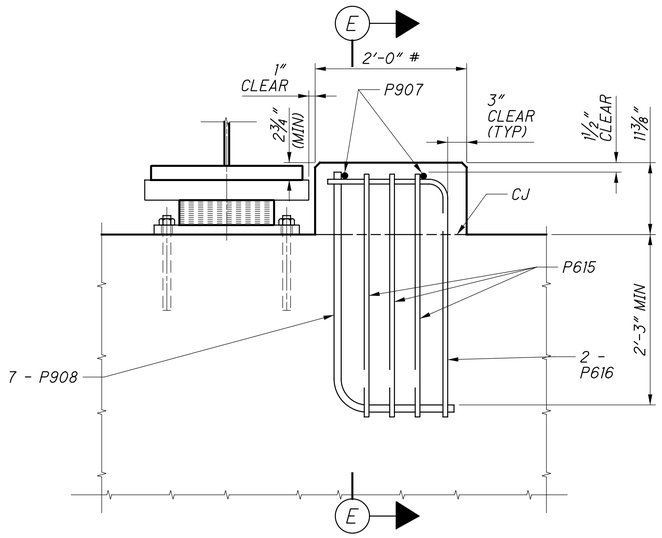

REAR PIER - FRONT VIEW OF SEISMIC PEDESTAL

THE 2'-0" WIDTH OF THE PEDESTAL SHALL BE MEASURED PARALLEL TO THE CENTERLINE OF BEARING. THE P908 AND P616 BARS SHALL BE PLACED PARALLEL TO THE CENTERLINE OF BEARING. THE P907 AND P615 BARS SHALL BE PLACED PARALLEL TO THE BEAMS.

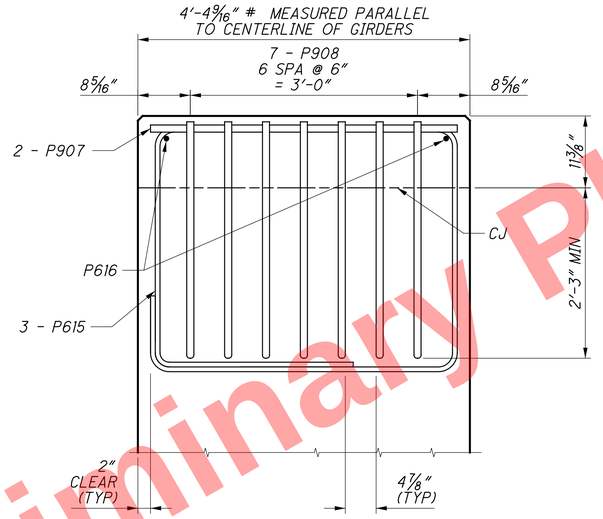

SECTION E-E

THE LOCATION OF THE REINFORCEMENT IN THE SEISMIC PEDESTAL MAY BE ADJUSTED HORIZONTALLY ±1" TO ACCOMMODATE THE BARS IN THE PIER CAP.
- THE SURFACE OF THE BEAM SEAT IN THIS AREA SHALL BE FINISHED WITH A SERRATED TROWEL. THE SERRATIONS SHALL BE ¼" DEEP MINIMUM.

NOTE

SEE GENERAL NOTES FOR ABBREVIATION LEGEND.

Preliminary Plans - For Reference Only

DESIGN AGENCY
EMH&T
Engineers • Surveyors • Planners • Scientists
5500 New Albany Road, Columbus, OH 43054
Phone: 614.775.4500

DESIGNED	DRAWN	REVIEWED	DATE
RMW	GB	CAS	5-22-26
CHECKED	REVISED	STRUCTURE FILE NUMBER	
RJE	-	3113787	

MISCELLANEOUS PIER DETAILS
BRIDGE NO. HAM-562-0004
RAMP M OVER I.R. 75

HAM-75-7.85
PID No. 121447

21 / 56

829
1047

J:\20110903\ODOT\HAM\17889\structures\HAM562_0004P\sheets\562_0004CPI003.dgn 5/22/2026 10:33:12 AM hbrendlinger

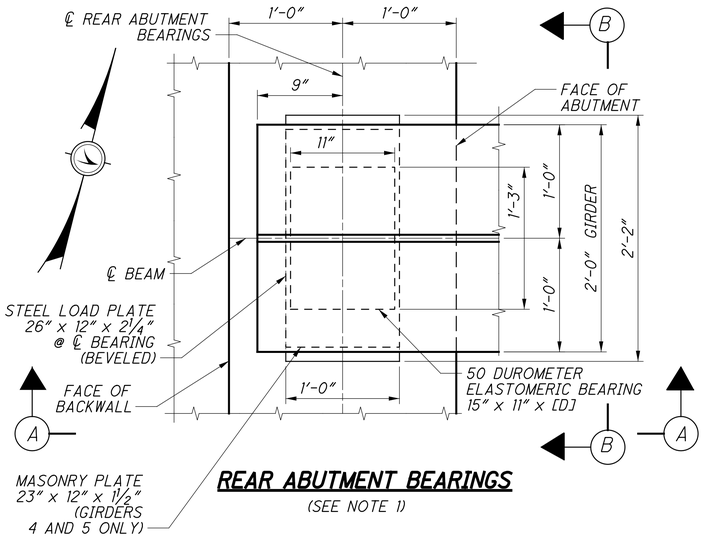

REAR ABUTMENT BEARINGS

(SEE NOTE 1)

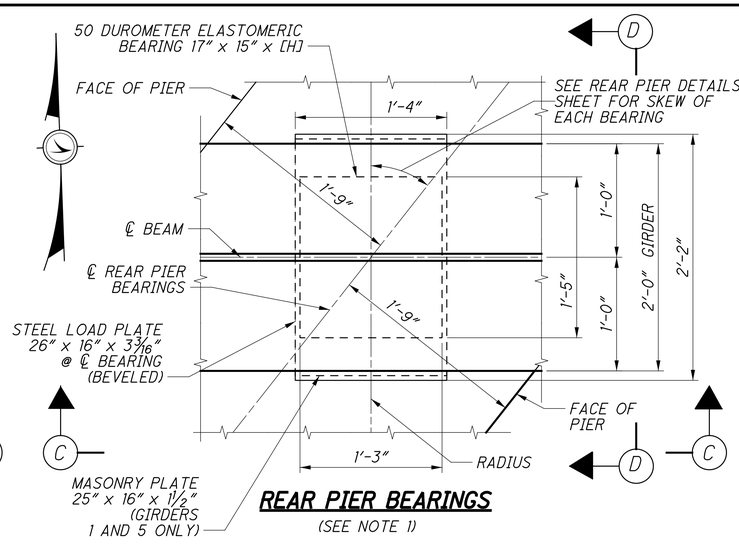

REAR PIER BEARINGS

(SEE NOTE 1)

REAR ABUTMENT BEARINGS		EXPANSION BEARING 50 DUROMETER	
INTERIOR ELASTOMERIC LAYERS	10 @ 0.300" = 3.000"	UNFACTORED DEAD LOAD	127.86 KIPS
STEEL PLATE LAMINATES	[A] @ 0.0747" = [B]	UNFACTORED FUTURE WEARING SURFACE	27.40 KIPS
EXTERIOR ELASTOMERIC LAYERS	1 @ [C] = [C]	UNFACTORED LIVE LOAD	75.67 KIPS
TOTAL THICKNESS	T = [D]	MAXIMUM DESIGN LOAD	230.93 KIPS

	[A]	[B]	[C]	[D]
GIRDERS 1-3	10	0.747"	0.1875"	3.94"
GIRDERS 4-5	9	0.672"	-	3.67"

REAR PIER BEARINGS		FIXED BEARING 50 DUROMETER	
INTERIOR ELASTOMERIC LAYERS	10 @ 0.300" = 3.000"	UNFACTORED DEAD LOAD	385.44 KIPS
STEEL PLATE LAMINATES	[E] @ 0.0747" = [F]	UNFACTORED FUTURE WEARING SURFACE	82.27 KIPS
EXTERIOR ELASTOMERIC LAYERS*	1 @ [G] = [G]	UNFACTORED LIVE LOAD	143.78 KIPS
TOTAL THICKNESS*	T = [H]	MAXIMUM DESIGN LOAD	611.49 KIPS

	[E]	[F]	[G]	[H]
GIRDERS 2-4	10	0.747"	0.1875"	3.94"
GIRDERS 1&5	9	0.672"	-	3.67"

ELASTOMERIC BEARING NOTES

ELASTOMERIC BEARINGS: THE ELASTOMER SHALL HAVE A HARDNESS OF 50 DUROMETER. THE BEARINGS WERE DESIGNED IN ACCORDANCE WITH SECTION 14.7.5 (METHOD B) OF THE AASHTO LRFD BRIDGE DESIGN SPECIFICATIONS. PERFORM THE LONG-TERM COMPRESSION PROOF LOAD TEST IN ACCORDANCE WITH THE AASHTO STANDARD SPECIFICATIONS FOR HIGHWAY BRIDGES, DIVISION II, SECTION 18.7.2.6 AND 18.7.4.5.

THE STEEL LOAD PLATE AND MASONRY PLATE SHALL BE BONDED BY VULCANIZATION TO THE ELASTOMER DURING THE MOLDING PROCESS.

WELDING: CONTROL WELDING SO THAT THE PLATE TEMPERATURE AT THE ELASTOMER BONDED SURFACE DOES NOT EXCEED 300°F AS DETERMINED BY USE OF PYROMETRIC STICKS OR OTHER TEMPERATURE MONITORING DEVICES.

THE UNIT BID PRICE SHALL INCLUDE ALL MATERIALS, LABOR, AND INCIDENTALS NECESSARY TO FURNISH AND INSTALL LAMINATED ELASTOMERIC BEARINGS. PAYMENT WILL BE MADE AT THE CONTRACT PRICE FOR ITEM 516, EACH, ELASTOMERIC BEARING WITH INTERNAL LAMINATES AND LOAD PLATE, AS PER PLAN (SEE ESTIMATED QUANTITIES).

LOAD PLATES: SHOP MARK THE LOAD PLATES WITH THE FOLLOWING INFORMATION: TOP, UPSTATION DIRECTION AND LOCATION (REAR ABUTMENT, REAR PIER, FORWARD PIER, OR FORWARD ABUTMENT). THE STEEL LOAD PLATES ARE ASTM A709 GRADE 50 STRUCTURAL STEEL. LOAD PLATE SHALL BE PAINTED SIMILAR TO GIRDER. PAYMENT INCLUDED IN ITEM 514.

BEARING REPOSITIONING: IF THE STEEL BEAMS ARE ERECTED AT AN AMBIENT TEMPERATURE HIGHER THAN 80°F OR LOWER THAN 40°F AND THE BEARING SHEAR DEFLECTION EXCEEDS 1/6 OF THE BEARING HEIGHT AT 60°F (±) 10°F, RAISE THE BEAMS TO ALLOW THE BEARINGS TO RETURN TO THEIR UNDEFORMED SHAPE AT 60°F (±) 10°F.

ANCHOR RODS SHALL BE ASTM F1554 GRADE 105 AND GALVANIZED AS PER CMS 711.02. WHERE DOWELS ARE SPECIFIED, HOLES TO BE DRILLED AND GROUTED WITH AN EPOXY NON-SHRINKING GROUT IN 2" x 1'-8" HOLES. GROUT SHALL MEET THE REQUIREMENTS OF 705.20. ANCHOR RODS SHALL EXTEND 1" ABOVE THE MASONRY PLATE UNLESS OTHERWISE SPECIFIED. ANCHOR RODS AND THE SETTING OF ANCHOR BOLTS SHALL BE INCLUDED WITH THE BEARINGS FOR PAYMENT.

CARE SHALL BE TAKEN TO AVOID PIER CAP AND BEAM SEAT REINFORCING WHEN PLACING ANCHOR RODS. A PACHOMETER SHALL BE USED TO LOCATE THE EXISTING STEEL TO CONFIRM CONFLICT IS AVOIDED.

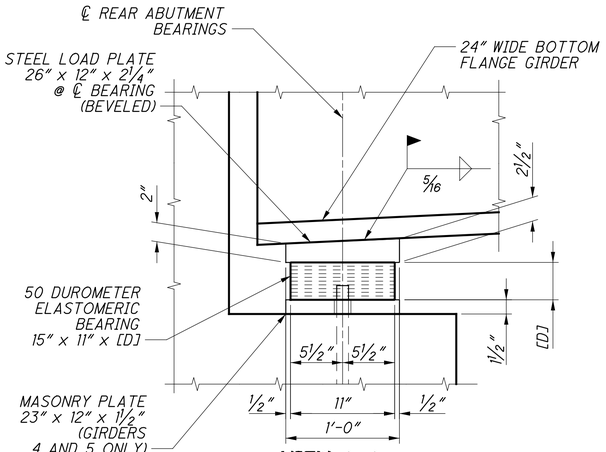

VIEW A-A

(SEE NOTE 1)

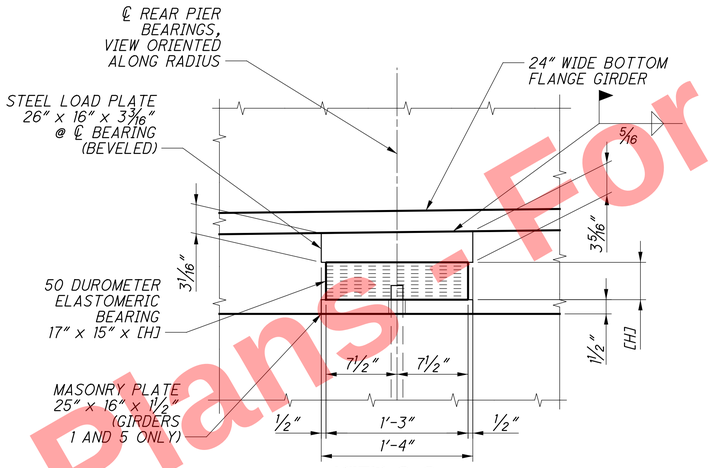

VIEW C-C

(SEE NOTE 1)

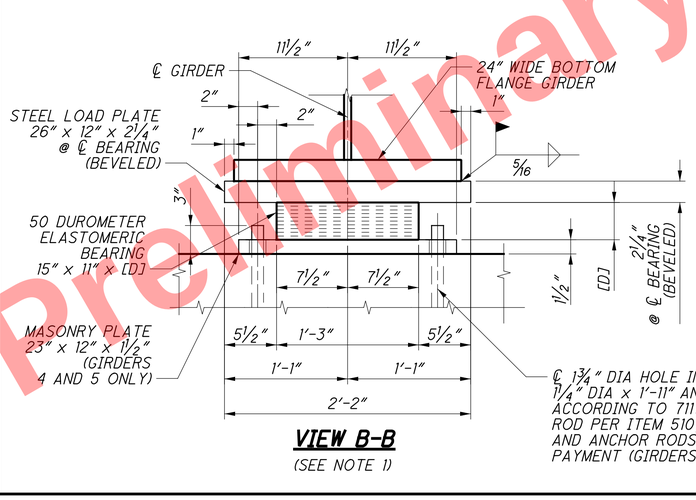

VIEW B-B

(SEE NOTE 1)

℄ 1¾" DIA HOLE IN MASONRY PLATE FOR 1¼" DIA x 1'-11" ANCHOR ROD. GALVANIZED ACCORDING TO 711.02 (TYP) INSTALL ANCHOR ROD PER ITEM 510, INCLUDE DOWEL HOLES AND ANCHOR RODS WITH ITEM 516 FOR PAYMENT (GIRDERS 4 AND 5 ONLY).

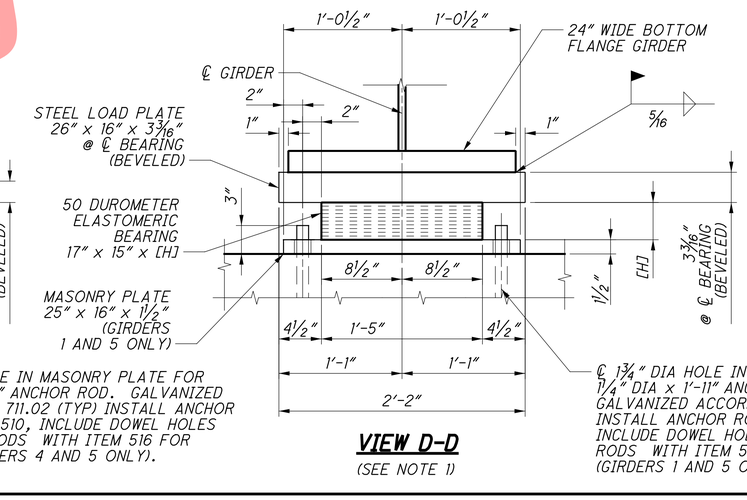

VIEW D-D

(SEE NOTE 1)

℄ 1¾" DIA HOLE IN MASONRY PLATE FOR 1¼" DIA x 1'-11" ANCHOR ROD. GALVANIZED ACCORDING TO 711.02 (TYP) INSTALL ANCHOR ROD PER ITEM 510, INCLUDE DOWEL HOLES AND ANCHOR RODS WITH ITEM 516 FOR PAYMENT (GIRDERS 1 AND 5 ONLY).

NOTES

1. MASONRY PLATE AND ANCHORAGE SHOWN FOR CLARITY AT SELECT LOCATIONS. ELASTOMERIC PAD SHALL BE PLACED DIRECTLY ON BEAM SEAT WITHOUT MASONRY PLATE AND ANCHORAGE UNLESS NOTED OTHERWISE.

Preliminary Plans - For Reference Only

DESIGN AGENCY: EMH&T
DESIGNED: RMW | DRAWN: GB | CHECKED: RJE | REVIEWED: CAS | DATE: 5-22-26 | REVISED: - | STRUCTURE FILE NUMBER: 3113787

ELASTOMERIC BEARING DETAILS
BRIDGE NO. HAM-562-0004
RAMP M OVER I.R. 75

HAM-75-7.85
PID No. 121447

22 / 56

830
1047

J:\2011093\ODOT\HAM\7.7889\structures\HAM562_0004P\sheets\562_0004CBR001.dgn 5/22/2026 10:33:13 AM hbrendlinger

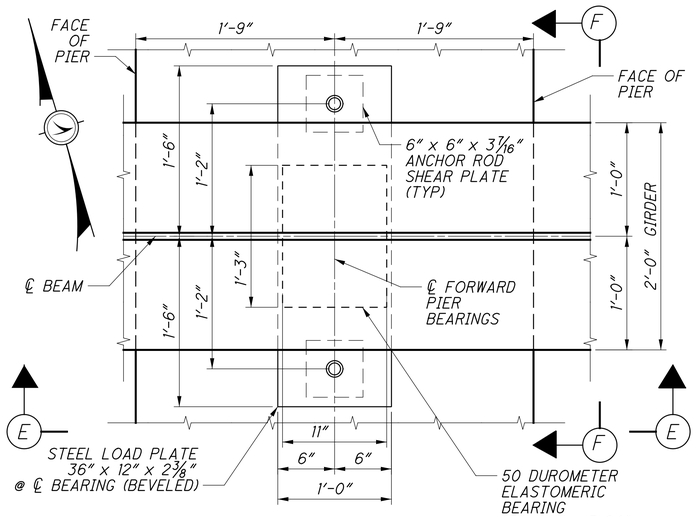

FORWARD PIER BEARINGS

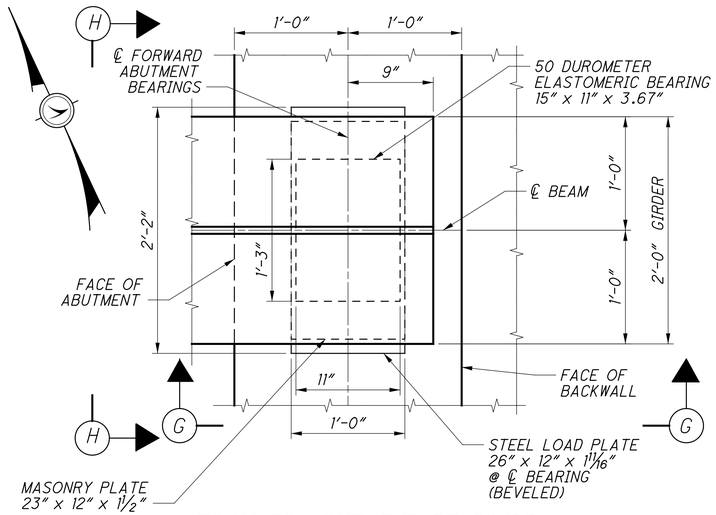

FORWARD ABUTMENT BEARINGS

FORWARD PIER BEARINGS		EXPANSION BEARING 50 DUROMETER	
INTERIOR ELASTOMERIC LAYERS	10 @ 0.300" = 3.000"	UNFACTORED DEAD LOAD	171.11 KIPS
STEEL PLATE LAMINATES	10 @ 0.0747" = 0.747"	UNFACTORED FUTURE WEARING SURFACE	41.13 KIPS
EXTERIOR ELASTOMERIC LAYERS	1 @ 0.1875" = 0.1875"	UNFACTORED LIVE LOAD	101.06 KIPS
TOTAL THICKNESS	T = 3.94"	MAXIMUM DESIGN LOAD	313.30 KIPS

FORWARD ABUTMENT BEARINGS		EXPANSION BEARING 50 DUROMETER	
INTERIOR ELASTOMERIC LAYERS	10 @ 0.300" = 3.000"	UNFACTORED DEAD LOAD	47.24 KIPS
STEEL PLATE LAMINATES	9 @ 0.0747" = 0.672"	UNFACTORED FUTURE WEARING SURFACE	10.84 KIPS
EXTERIOR ELASTOMERIC LAYERS	N/A	UNFACTORED LIVE LOAD	63.92 KIPS
TOTAL THICKNESS	T = 3.67"	MAXIMUM DESIGN LOAD	122.00 KIPS

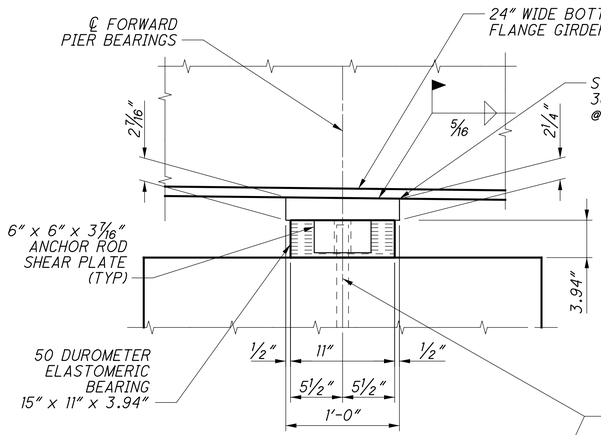

VIEW E-E

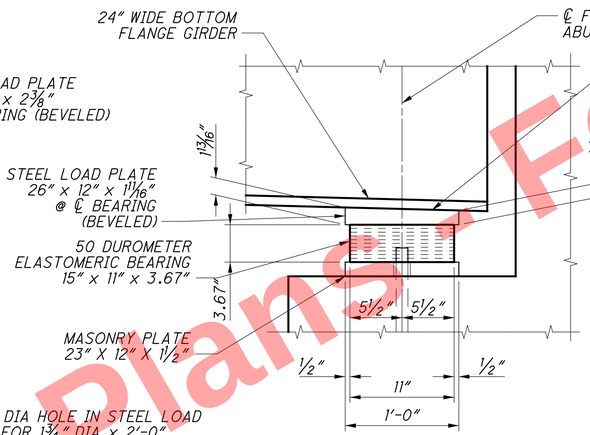

VIEW G-G

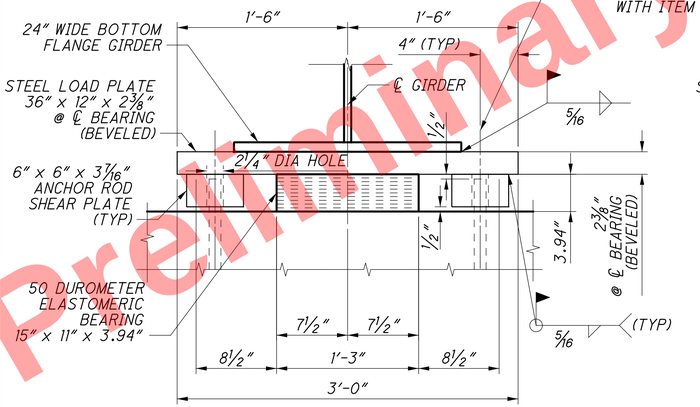

VIEW F-F

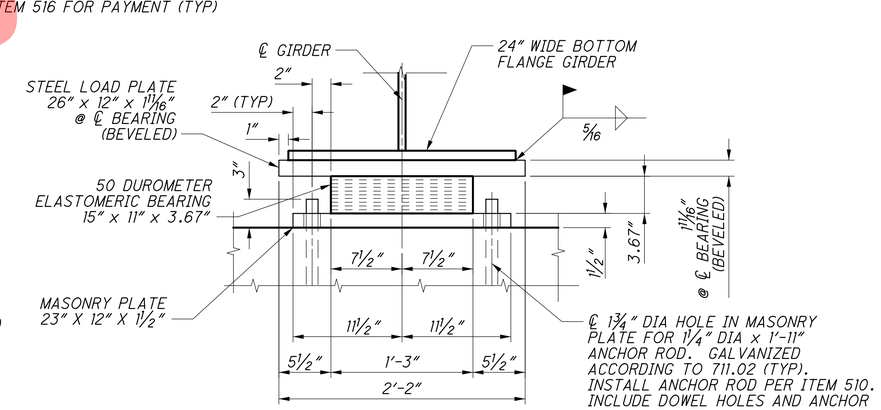

VIEW H-H

℄ 2 1/4" DIA HOLE IN STEEL LOAD PLATE FOR 1 3/4" DIA x 2'-0" ANCHOR ROD. GALVANIZED ACCORDING TO 711.02. INSTALL ANCHOR ROD 1'-8" INTO CONCRETE. INCLUDE CAST-IN-PLACE ANCHOR RODS WITH ITEM 516 FOR PAYMENT (TYP)

℄ 1 3/4" DIA HOLE IN MASONRY PLATE FOR 1 1/4" DIA x 1'-11" ANCHOR ROD. GALVANIZED ACCORDING TO 711.02 (TYP). INSTALL ANCHOR ROD PER ITEM 510. INCLUDE DOWEL HOLES AND ANCHOR RODS WITH ITEM 516 FOR PAYMENT.

NOTES

1. SEE GENERAL NOTES FOR ABBREVIATION LEGEND.
2. SEE ADDITIONAL NOTES ON SHEET 22/56

Preliminary Plans - For Reference Only

J:\20110903\ODOT\HAM\7889\structures\HAM562_0004P\sheets\562_0004CBR002.dgn 5/22/2026 10:33:14 AM hbrendlinger

DESIGN AGENCY EMH&T
Engineers • Surveyors • Planners • Scientists
5500 New Albany Road, Columbus, Ohio 43054
Phone: 614.775.4500 www.emht.com

DESIGNED	DRAWN	REVIEWED	DATE
RMW	GB	CAS	5-22-26
CHECKED	REVISED	STRUCTURE FILE NUMBER	
RJE	-	3113787	

HAM-75-7.85
PID No. 121447

23/56

831/1047

ELASTOMERIC BEARING DETAILS
BRIDGE NO. HAM-562-0004
RAMP M OVER I.R. 75

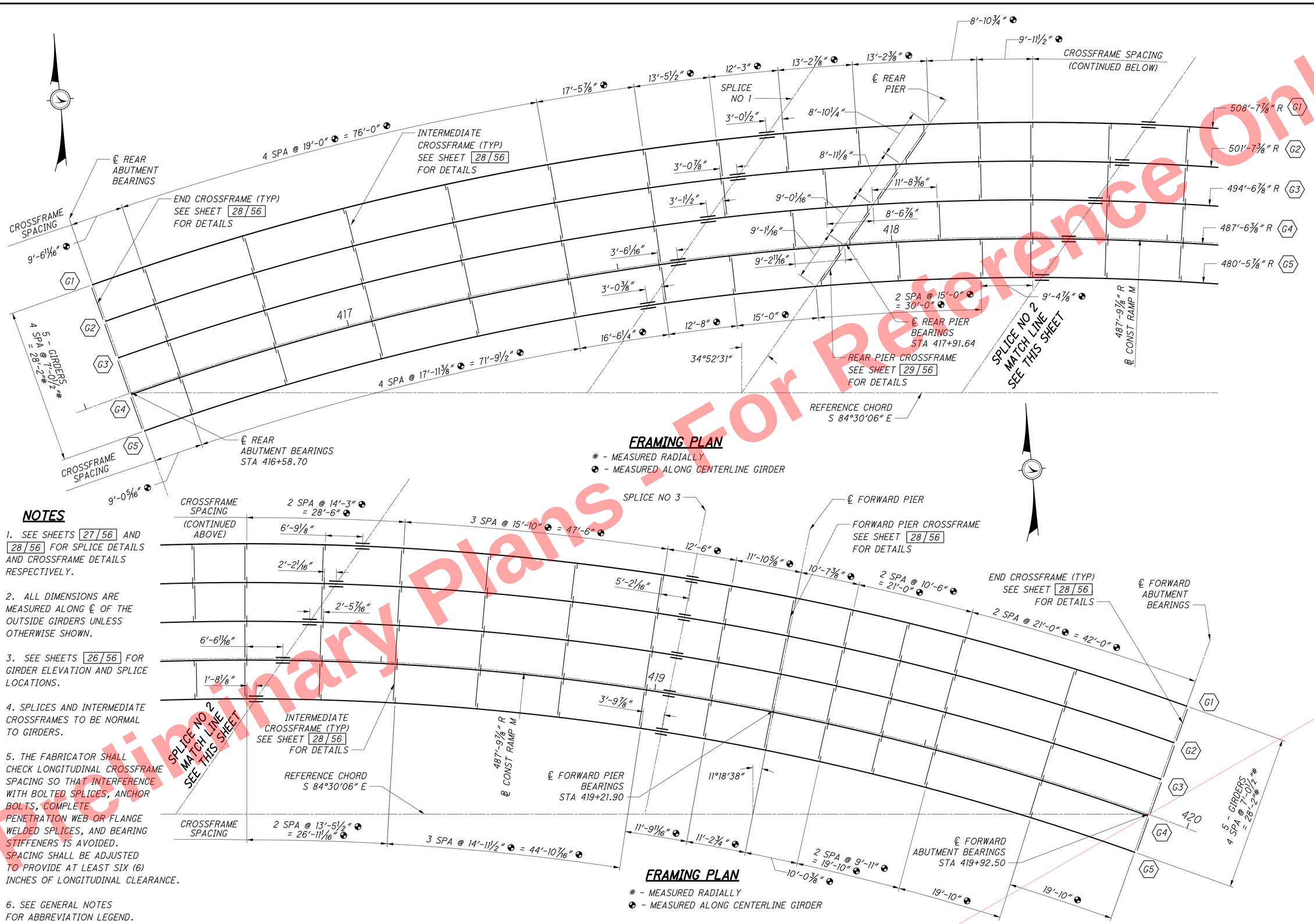

NOTES

1. SEE SHEETS 27/56 AND 28/56 FOR SPLICE DETAILS AND CROSSFRAME DETAILS RESPECTIVELY.

2. ALL DIMENSIONS ARE MEASURED ALONG ℄ OF THE OUTSIDE GIRDERS UNLESS OTHERWISE SHOWN.

3. SEE SHEETS 26/56 FOR GIRDER ELEVATION AND SPLICE LOCATIONS.

4. SPLICES AND INTERMEDIATE CROSSFRAMES TO BE NORMAL TO GIRDERS.

5. THE FABRICATOR SHALL CHECK LONGITUDINAL CROSSFRAME SPACING SO THAT INTERFERENCE WITH BOLTED SPLICES, ANCHOR BOLTS, COMPLETE PENETRATION WEB OR FLANGE WELDED SPLICES, AND BEARING STIFFENERS IS AVOIDED. SPACING SHALL BE ADJUSTED TO PROVIDE AT LEAST SIX (6) INCHES OF LONGITUDINAL CLEARANCE.

6. SEE GENERAL NOTES FOR ABBREVIATION LEGEND.

Preliminary Plans - For Reference Only

DESIGN AGENCY: EMH&T
DESIGNED: RMW | DRAWN: GB | CHECKED: RJE | REVIEWED: CAS | REVISED: - | DATE: 5-22-26
STRUCTURE FILE NUMBER: 3113787

FRAMING PLAN
BRIDGE NO. HAM-562-0004
RAMP M OVER I.R. 75

HAM-75-7.85
PID No. 121447

24/56

832/1047

J:\2010903\ODOT\HAM\7889\structures\HAM562_0004P\sheets\562_0004CSD005.dgn 5/22/2026 10:33:14 AM hbrendlinger

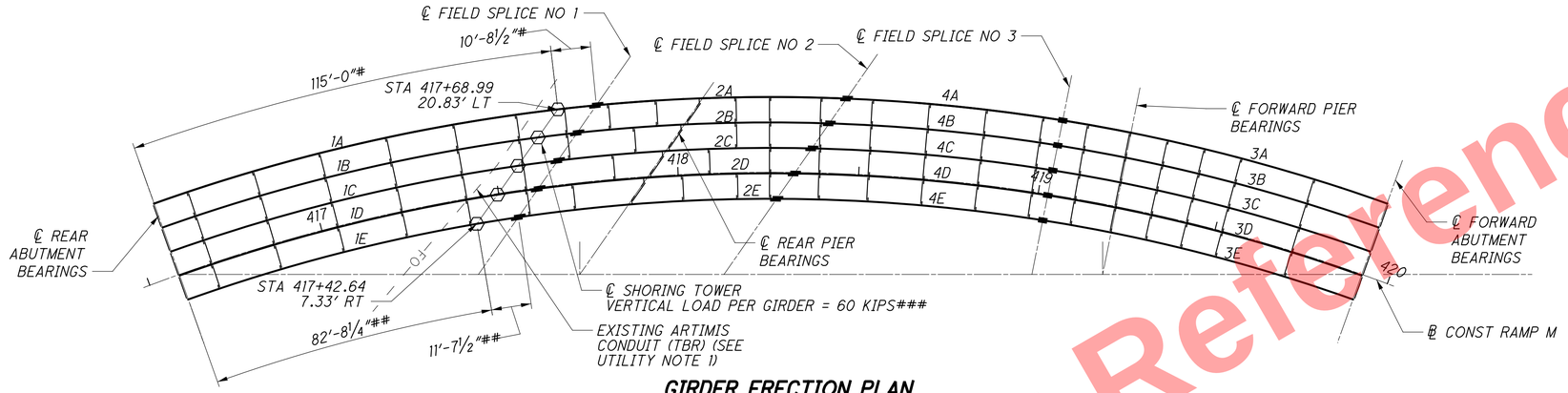

GIRDER ERECTION PLAN

(ALL STATIONS & OFFSETS MEASURED ABOUT ℄ CONST RAMP M)

UTILITY NOTE:

1. LOCATE THE EXISTING ARTIMIS CONDUIT PRIOR TO CONSTRUCTING THE TEMPORARY SHORING TOWER. IF THE EXISTING CONDUIT IS IN CONFLICT WITH THE TEMPORARY SHORING TOWER, RELOCATE THE CONDUIT TO EITHER IT'S PERMANENT PROPOSED LOCATION OR A TEMPORARY LOCATION. RELOCATION IS COVERED UNDER ITEM 809 - MAINTAINING ITS DURING CONSTRUCTION.

ERECTION NOTES:

1. THE CONTRACTOR'S ATTENTION IS DIRECTED TO REQUIREMENTS FOR STABILITY OF STEEL GIRDERS DURING ERECTION (CMS 513.26) AND THE SUBMITTAL REQUIREMENTS OF CMS 501.05.B.4. THE GIRDERS ON THIS BRIDGE SHALL BE STABILIZED DURING ERECTION BY THE USE OF FALSE WORK, TEMPORARY BRACING, COMPRESSION FLANGE STIFFENING TRUSS, OR BY THE USE OF A HOLDING CRANE UNTIL A SUFFICIENT NUMBER OF GIRDERS HAVE BEEN ERECTED AND CROSS FRAMES INSTALLED.

2. WHEN ERECTING GIRDERS OVER ACTIVE TRAFFIC, TWO OR MORE GIRDERS MUST BE ERECTED, INCLUDING CROSS FRAMES, BEFORE OPERATIONS ARE SUSPENDED.

3. THE METHODS USED BY THE CONTRACTOR SHALL BE DOCUMENTED ON THE ERECTION DRAWINGS WITH ALL SUPPORTING STABILITY CALCULATIONS SUBMITTED IN ACCORDANCE WITH CMS ITEMS 501 AND 513. THE CONTRACTOR MAY SUBMIT AN ALTERNATE MEANS OF ERECTION FROM THE ONE SHOWN IN THE PLANS.

4. WIND LOADING ON THE PARTIALLY ERECTED STRUCTURE SHALL BE CONSIDERED IN THE DEVELOPMENT OF THE ERECTION PLAN AND SHORING TOWERS. THE FOLLOWING HAS BEEN INCLUDED IN PRELIMINARY INVESTIGATIONS OF THE PARTIALLY ERECTED STRUCTURE AND ARE RECOMMENDED AS MINIMUM GUIDELINES. FOR STAGES IN WHICH A SINGLE GIRDER IS NOT CONNECTED TO ANOTHER GIRDER BY CROSS FRAMES, DETERMINE PRESSURES BASED UPON A 20 MPH DESIGN WIND VELOCITY. FOR ANY OTHER STAGE IN WHICH TWO GIRDERS ARE CONNECTED TOGETHER, DETERMINE PRESSURES BASED UPON A 40 MPH DESIGN WIND VELOCITY. SHOW WORK LIMITATIONS RELATIVE TO WIND SPEED AND PROCEDURES FOR HIGH WIND EVENTS.

5. THE GIRDER NUMBER SYSTEM USED HEREIN IS IDENTIFIED WITH NUMERIC PREFIX IDENTIFYING THE LIFT SEQUENCE FOLLOWED BY LETTER (A THOUGH E) WHICH IDENTIFIES ADDITIONAL LIFTS OF SIMILAR MEMBERS. THE NUMBERING SYSTEM IS INTENDED TO SHOW THE SEQUENTIAL INSTALLATION AND DOES NOT CORRESPOND TO ANY OTHER LABELING SYSTEM SHOWN IN THE PLANS.

6. THE SHORING TOWER SHOWN HEREIN ASSUMES THAT ERECTION ON THE WEST SIDE OF THE BRIDGE WILL BEGIN AT THE REAR ABUTMENT AND PROCEED TOWARD THE REAR PIER. THE CONTRACTOR AT HIS DISCRETION MAY CHOOSE AN ALTERNATE ERECTION SEQUENCE. ALL GIRDER ERECTION SHALL STRICTLY ADHERE TO THE PROVISIONS OF THE MAINTENANCE OF TRAFFIC PLANS.

7. FIELD SPLICES AND CROSS FRAME CONNECTIONS SHALL BE INSTALLED WITH AT LEAST THREE-FOURTHS OF THE HOLES WITH COMPLETELY TIGHTENED BOLTS TO RESIST THE CONSTRUCTION LOADS DURING ERECTION.

8. FIELD SPLICES AND CROSS FRAME CONNECTIONS THAT ARE MADE ON THE GROUND SHALL BE INSTALLED WITH ONE HUNDRED PERCENT (100%) OF THE HOLES WITH COMPLETELY TIGHTENED BOLTS.

LEGEND

⬡ - SHORING POINT LOCATION
\# - MEASURED ALONG ℄ GIRDER 1A
- MEASURED ALONG ℄ GIRDER 1E
- REACTIONS SHOWN INCLUDE STEEL WEIGHT PLUS 25% FACTOR FOR ERECTION LOADS.

ERECTION SEQUENCE:

1. SET ALL BEARING ON EACH SUBSTRUCTURE IN ORDER OF ERECTION.

2. SET GIRDERS 1A AND 1B. ERECT AS A UNIT AND STABILIZE GIRDERS LATERALLY AT REAR ABUTMENT AND SHORING TOWER BEFORE REMOVING LIFTING APPARATUS.

3. SET GIRDERS 1C THRU 1E INTO POSITION PLACING CROSS FRAMES BETWEEN EACH PAIR OF GIRDERS BEFORE REMOVING LIFTING APPARATUS.

4. SET GIRDERS 2A AND 2B. ERECT AS A UNIT AND STABILIZE GIRDERS LATERALLY AT REAR PIER AND BEFORE REMOVING LIFTING APPARATUS.

5. SET GIRDERS 2C THRU 2E INTO POSITION PLACING CROSS FRAMES BETWEEN EACH PAIR OF GIRDERS BEFORE REMOVING LIFTING APPARATUS.

6. SET GIRDERS 3A AND 3B. ERECT AS A UNIT AND STABILIZE GIRDERS LATERALLY AT FORWARD ABUTMENT AND FORWARD PIER BEFORE REMOVING LIFTING APPARATUS.

7. SET GIRDERS 3C THRU 3E INTO POSITION PLACING CROSS FRAMES BETWEEN EACH PAIR OF GIRDERS BEFORE REMOVING LIFTING APPARATUS.

8. CONNECT GIRDERS 4A AND 4B AS A UNIT TO GIRDERS 3A/3B AND 5A/5B BEFORE REMOVING LIFTING APPARATUS.

9. SET GIRDERS 4C THRU 4E INTO POSITION PLACING CROSS FRAMES BETWEEN EACH PAIR OF GIRDERS BEFORE REMOVING LIFTING APPARATUS.

Preliminary Plans - For Reference Only

DESIGN AGENCY
EMH&T
Engineers • Surveyors • Planners • Scientists
5500 New Albany Road, Columbus, Ohio 43054
Phone: 614.775.4500

DESIGNED	DRAWN	REVIEWED	DATE
RMW	GB	CAS	5-22-26
CHECKED	REVISED	STRUCTURE FILE NUMBER	
RJE	-	3113787	

ERECTION PLAN
BRIDGE NO. HAM-562-0004
RAMP M OVER I.R. 75

HAM-75-7.85
PID No. 121447

25/56

833
1047

J:\2011093\ODOT\HAM\77889\structures\HAM562_0004P\sheets\562_0004CSD001.dgn 5/22/2026 10:33:15 AM hbrendlinger

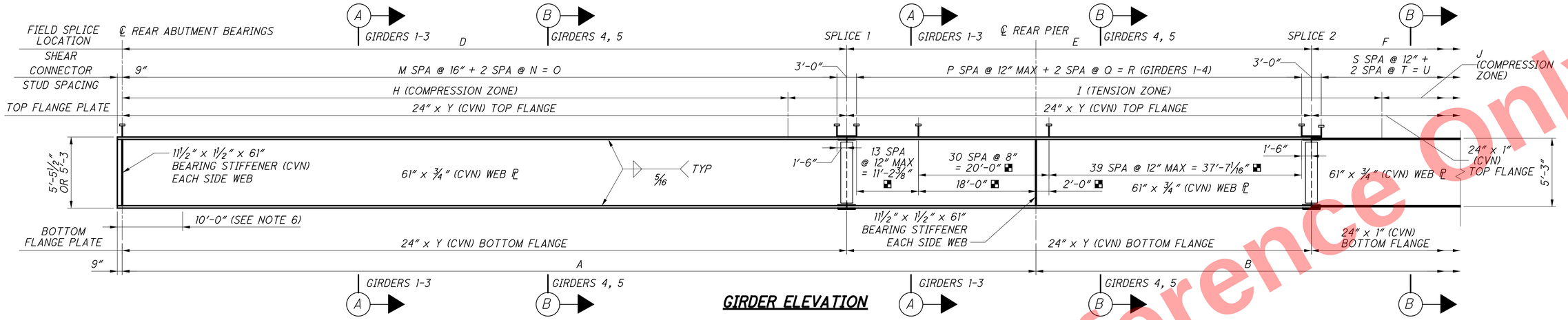

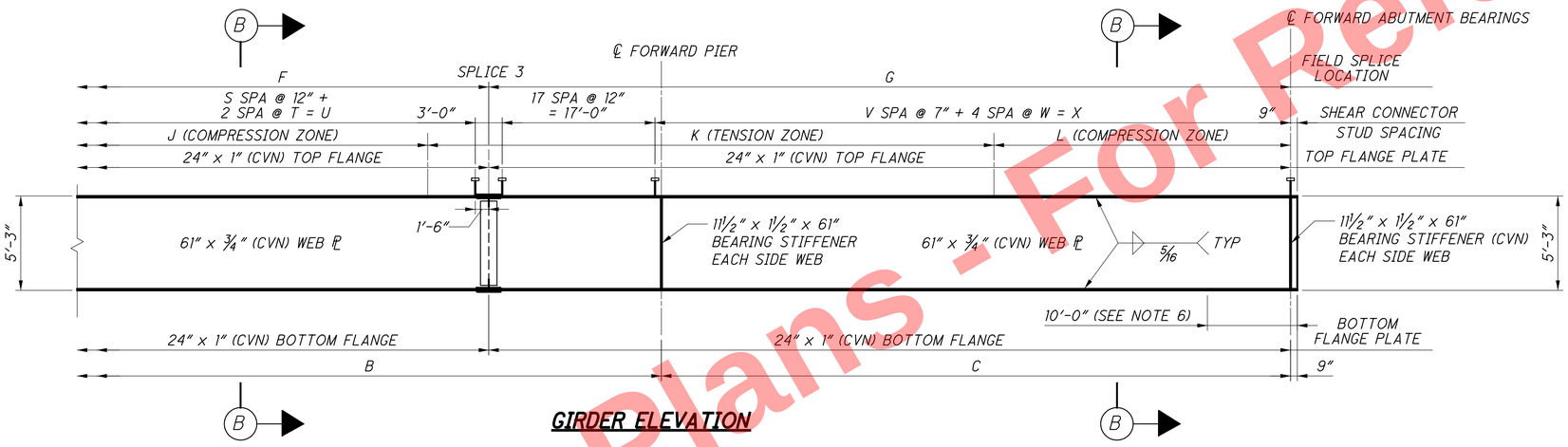

LEGEND

■ - APPLIES AT GIRDER 5 ONLY

GIRDER DIMENSIONS

GIRDER NUMBER	SPAN LENGHTS			FIELD SPLICE LOCATIONS				TENSION AND COMPRESSION ZONE					SHEAR CONNECTOR STUD SPACING											
	A	B	C	D	E	F	G	H	I	J	K	L	M	N	O	P	Q	R	S	T	U	V	W	X
1	155'-2 5/16"	119'-2 15/16"	73'-7 3/8"	125'-8 1/2"	69'-4 5/16"	60'-1 15/16"	92'-9 15/16"	111'-9 15/16"	105'-0 1/4"	31'-11 3/4"	65'-0"	34'-2 5/8"	92	9 1/4"	124'-2 1/2"	65	8 1/8"	66'-4 5/16"	56	6 15/16"+	57'-1 15/16"	124	6"-	74'-3 15/16"
2	147'-8 5/8"	122'-11 1/16"	72'-7 1/8"	117'-11 9/16"	69'-10 7/8"	63'-6 3/4"	91'-9 11/16"	109'-7 5/16"	94'-3 3/8"	42'-8 1/16"	60'-8 1/2"	35'-11 1/2"	86	10 3/4"+	116'-5 9/16"	65	11 7/16"	66'-10 7/8"	59	9 3/8"	60'-6 3/4"	122	6 7/16"-	73'-3 11/16"
3	140'-2 3/8"	126'-7 3/4"	71'-6 15/16"	110'-1 13/16"	70'-5 7/8"	66'-11 7/8"	90'-9 7/16"	105'-10 9/16"	83'-4 3/16"	54'-3 1/8"	58'-0 1/8"	36'-11"	80	11 7/8"+	108'-7 13/16"	66	8 15/16"	67'-5 7/8"	62	11 15/16"	63'-11 7/8"	120	6 7/8"-	72'-3 7/16"
4	132'-7 9/16"	130'-4 15/16"	70'-6 11/16"	102'-3 1/4"	71'-1 3/8"	70'-5 3/8"	89'-9 1/4"	98'-9 3/4"	81'-9 3/8"	58'-6"	62'-2 1/16"	32'-4 1/16"	74	12 9/16"+	100'-9 1/4"	67	6 11/16"	68'-1 3/8"	66	8 11/16"	67'-5 3/8"	119	5 9/16"	71'-3 1/4"
5	125'-0 1/16"	134'-2 7/8"	69'-6 7/16"	94'-3 11/16"	71'-9 7/16"	73'-11 1/4"	88'-9"	85'-1 13/16"	89'-1 11/16"	60'-0 3/8"	67'-1 9/16"	27'-3 15/16"	68	12 13/16"+	92'-9 11/16"	SEE GIRDER ELEVATION			69	11 5/8"	70'-11 1/4"	117	6"	70'- 3"

GIRDER NUMBER	GIRDER DIMENSION "Y"
1	2¼"
2	2¼"
3	2¼"
4	1"
5	1"

NOTES

1. CVN: WHERE A SHAPE OR PLATE IS DESIGNATED (CVN), FURNISH MATERIAL THAT MEETS THE MINIMUM NOTCH TOUGHNESS REQUIREMENTS AS SPECIFIED IN 711.01.

2. WELD ATTACHMENT OF SUPPORTS FOR CONCRETE DECK FINISHING MACHINE TO AREAS OF THE FASCIA STRINGER FLANGES DESIGNATED "COMPRESSION". DO NOT WELD ATTACHMENTS TO AREAS DESIGNATED "TENSION". FILLET WELDS TO COMPRESSION FLANGES SHALL BE AT LEAST 1" FROM EDGE OF FLANGE, BE NO MORE THAN 2" LONG, AND BE AT LEAST ¼" FOR THICKNESSES UP TO ¾" OR 5/16" FOR GREATER THAN ¾" THICK.

3. ALL DIMENSIONS MEASURED ALONG CENTERLINE OF BEAM.

4. SEE SHEET 27/56 FOR SPLICE AND STIFFENER DETAILS.

5. SEE SHEETS 22/56 AND 23/56 FOR BEARING DETAILS.

6. PARTIAL PAINTING OF A709 GRADE 50W STEEL: PAINT THE FULL PERIMETER OF THE LAST 10 FT OF EACH BEAM/GIRDER END ADJACENT TO THE ABUTMENTS INCLUDING ALL CROSS FRAMES AND OTHER STEEL WITHIN THESE LIMITS. THE PRIME COAT SHALL BE 708.01. THE TOP COAT COLOR SHALL BE FEDERAL COLOR NUMBER 14277 (GREEN). GIRDERS 1 AND 5 SHALL BE PAINTED ALONG THE VISIBLE FASCIA AREAS. SEE GENERAL NOTES FOR MORE INFORMATION.

7. SEE GENERAL NOTES FOR ABBREVIATION LEGEND.

Preliminary Plans - For Reference Only

DESIGN AGENCY EMH&T
DESIGNED RMW | DRAWN GB | CHECKED RJE | REVIEWED CAS | DATE 5-22-26 | REVISED - | STRUCTURE FILE NUMBER 3113787

GIRDER ELEVATION
BRIDGE NO. HAM-562-0004
RAMP M OVER I.R. 75

HAM-75-7.85
PID No. 121447

26/56

834/1047

J:\2011093\ODOT\HAM\77889\structures\HAM562_0004P\sheets\562_0004CSD012.dgn 5/22/2026 10:33:16 AM hbrendlinger

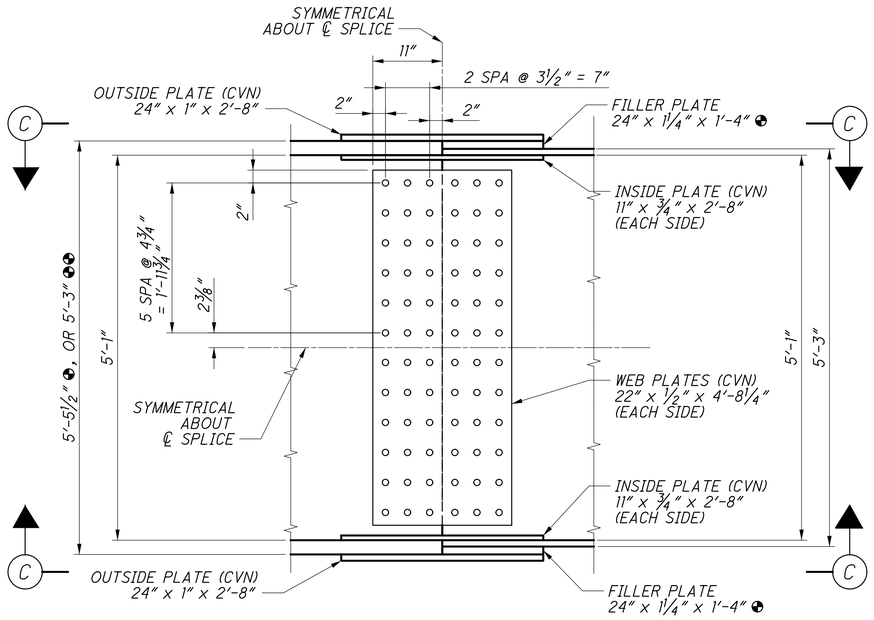

FIELD SPLICE NO 2 DETAIL

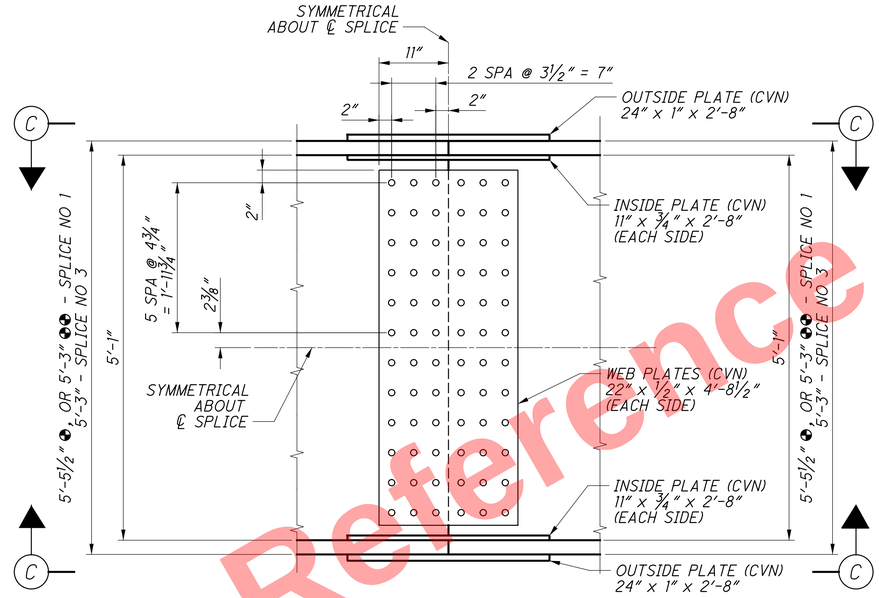

FIELD SPLICE NO 1 AND NO 3 DETAILS

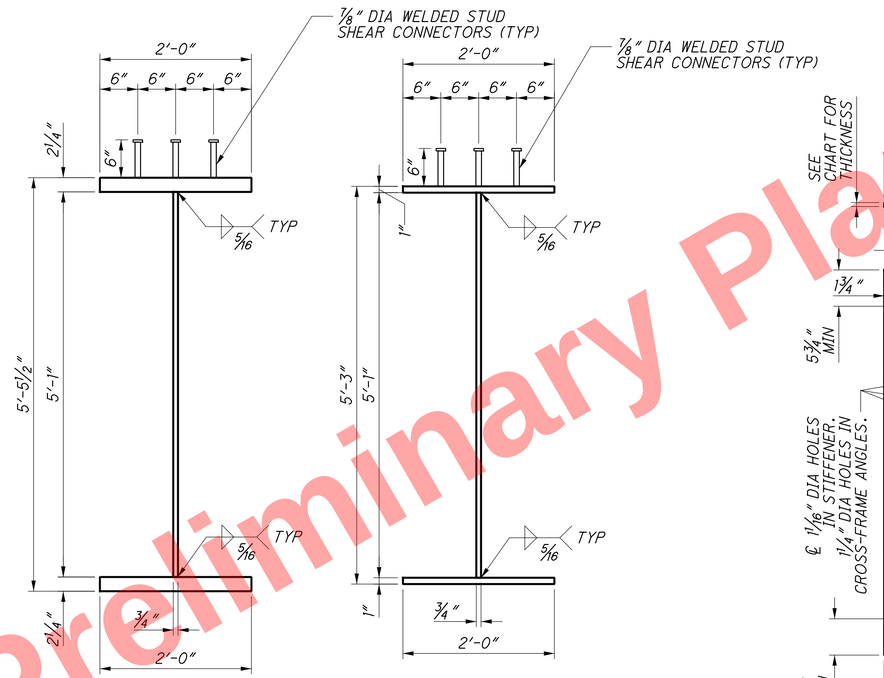

SECTION A-A

SECTION B-B

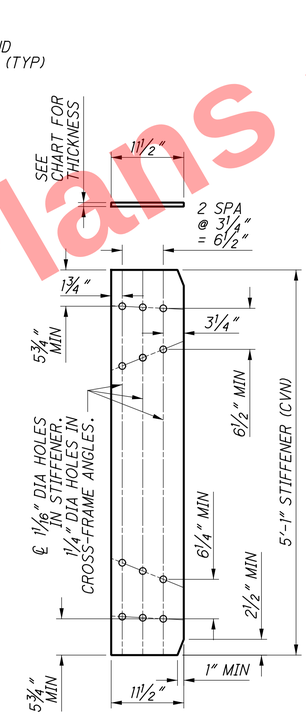

INTERMEDIATE CROSSFRAME AND FORWARD PIER BEARING STIFFENER DETAIL

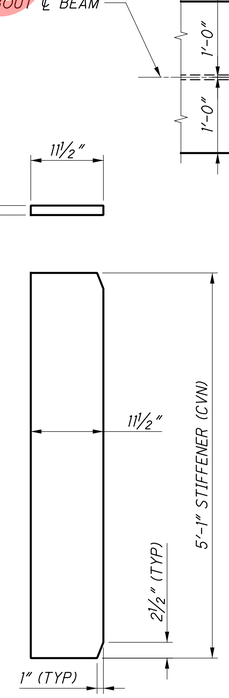

REAR AND FORWARD ABUTMENT AND REAR PIER BEARING STIFFENER DETAIL

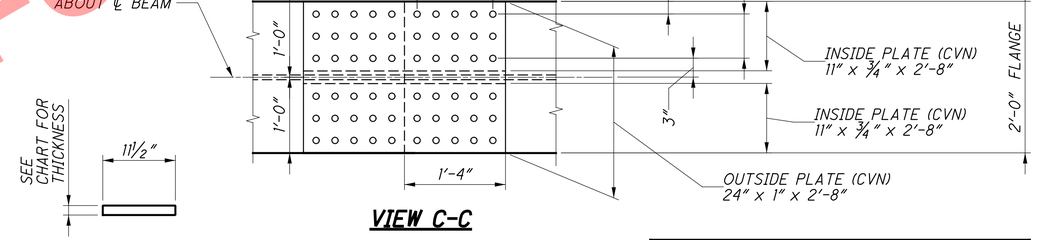

VIEW C-C

STIFFENER THICKNESS	
REAR ABUTMENT BEARING STIFFENER	1½″
REAR PIER BEARING STIFFENER	1½″
FORWARD PIER BEARING STIFFENER	1½″
FORWARD ABUTMENT BEARING STIFFENER	1½″
INTERMEDIATE STIFFENER DETAIL	⅝″

LEGEND

◕ - APPLIES AT GIRDERS 1, 2, & 3
◕◕ - APPLIES AT GIRDER 4 & 5

NOTES

1. CVN: WHERE A SHAPE OR PLATE IS DESIGNATED (CVN), FURNISH MATERIAL THAT MEETS THE MINIMUM NOTCH TOUGHNESS REQUIREMENTS AS SPECIFIED IN 711.01.
2. HIGH STRENGTH BOLTS FOR FIELD SPLICES SHALL BE 1″ DIAMETER ASTM A325, TYPE 3, UNLESS OTHERWISE NOTED.
3. MILL STIFFENERS FOR SNUG FIT PRIOR TO SHOP WELDING.
4. SEE GENERAL NOTES FOR ABBREVIATION LEGEND.
5. ALL INTERMEDIATE CROSSFRAME BOLTS SHALL BE ASTM F3125, GRADE 325, WITH THREADS EXCLUDED FROM THE SHEAR PLANE. ALL BOLTS SHALL BE TYPE 3 BOLTS. EACH ANCHOR ASSEMBLY SHALL INCLUDE A BOLT, NUT, AND TWO (2) WASHERS, TIGHTENED ACCORDING TO CMS 513 PRIOR TO DECK PLACEMENT. MINIMUM EDGE DISTANCES FOR BOLTS SHALL BE 1½″.

Preliminary Plans - For Reference Only

DESIGN AGENCY: EMH&T
DESIGNED: RMW | DRAWN: GB | REVIEWED: CAS | DATE: 5-22-26
CHECKED: RJE | REVISED: - | STRUCTURE FILE NUMBER: 3113787

SPLICE DETAILS AND STIFFENER DETAILS
BRIDGE NO. HAM-562-0004
RAMP M OVER I.R. 75

HAM-75-7.85
PID No. 121447

27 / 56

835 / 1047

J:\2011093\ODOT\HAM\7889\structures\HAM562_0004P\sheets\562_0004CSD006.dgn 5/22/2026 10:33:16 AM hbrendlinger

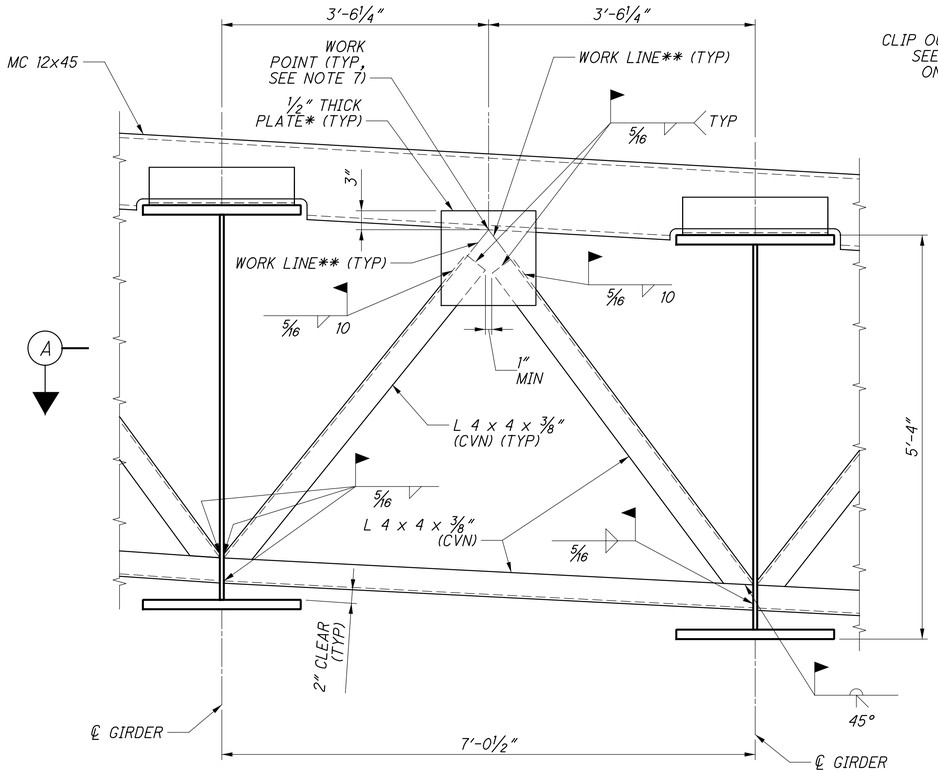

END CROSSFRAME DETAIL

VIEW FROM REAR ABUTMENT BACKWALL

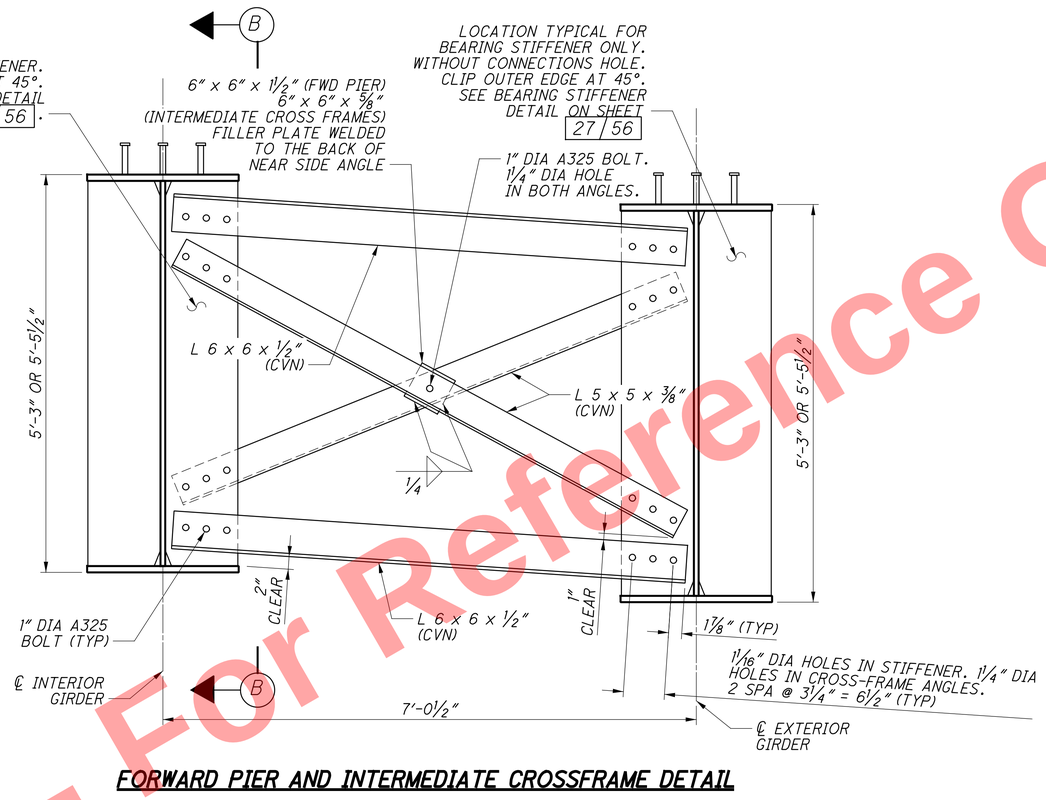

FORWARD PIER AND INTERMEDIATE CROSSFRAME DETAIL

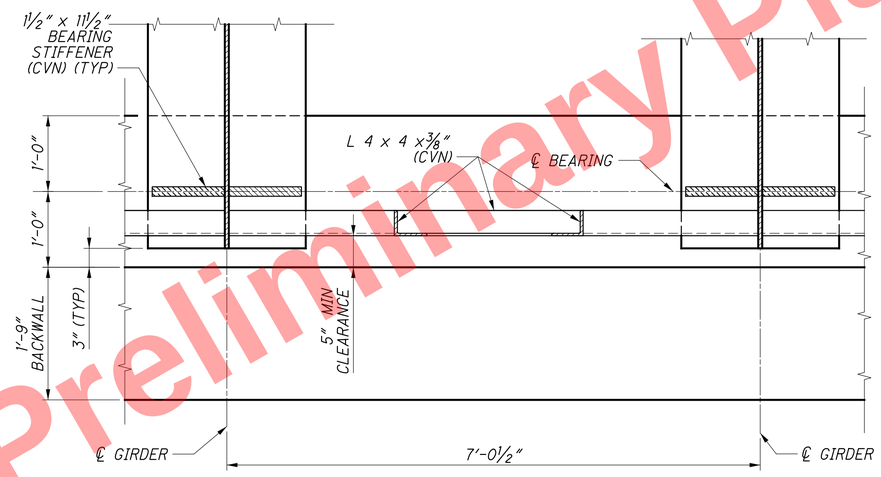

SECTION A-A

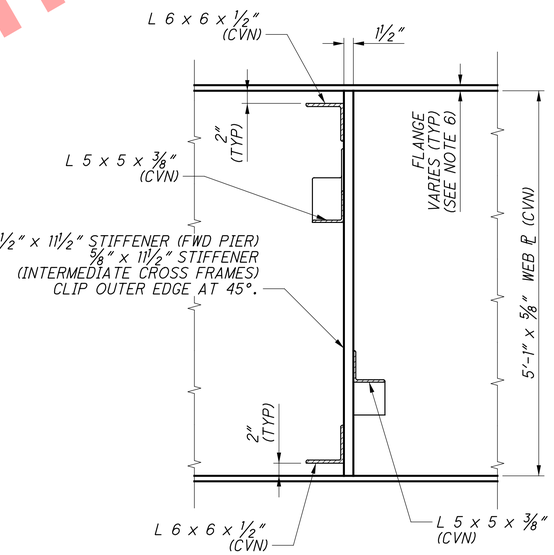

SECTION B-B

LEGEND

* - THE ½" THICK PLATE IS PART OF THE EXPANSION JOINT SYSTEM. SEE STANDARD DRAWING EXJ-4-87 FOR DETAILS INCLUDING MATERIAL AND COATING REQUIREMENTS.

** - THE WORK LINE SHALL BE THE INSIDE FACE OF THE PROTRUDING ANGLE LEG EXTENDED AS SHOWN. THE WORK POINT SHALL BE AT THE INTERSECTION OF THESE LINES.

NOTES

1. MATERIAL: ALL END CROSSFRAME MATERIAL SHALL BE A709 GRADE 50W.
2. GIRDER ENDS: FOR STRUCTURES ON GRADE, THE GIRDER ENDS SHALL BE FABRICATED TO BE VERTICAL AFTER ERECTION. A THREE INCH MINIMUM CLEARANCE AT 60° F SHALL BE MAINTAINED BETWEEN THE VERTICAL ENDS OF THE GIRDERS AND THE VERTICAL FACE OF THE BACKWALL UNLESS THE CONTRACT CRITERIA/PLANS SHOW OTHERWISE.
3. REFER TO STD DWG. EXJ-4-87 FOR ADDITIONAL END CROSSFRAME DETAILS NOT SHOWN.
4. MILL STIFFENERS FOR SNUG FIT PRIOR TO WELDING.
5. SEE GENERAL NOTES FOR ABBREVIATION LEGEND.
6. FOR ADDITIONAL FLANGE DIMENSIONS SEE BEAM ELEVATION ON SHEET 26/56
7. WORK POINTS: WORK POINTS SHALL BE COORDINATED BETWEEN EXPANSION JOINT AND STRUCTURAL STEEL SUPPLIERS TO ASSURE FIT UP AT ALL DESIGN LOCATIONS.
8. CVN: WHERE A SHAPE OR PLATE IS DESIGNATED (CVN), FURNISH MATERIAL THAT MEETS THE MINIMUM NOTCH TOUGHNESS REQUIREMENTS AS SPECIFIED IN 711.01.

DESIGN AGENCY
EMH&T
Engineers • Surveyors • Planners • Scientists
5500 New Albany Road, Columbus, Ohio 43054
Phone: 614.775.4500

DESIGNED	DRAWN	REVIEWED	DATE
RMW	GB	CAS	5-22-26
CHECKED	REVISED	STRUCTURE FILE NUMBER	
RJE	-	3113787	

END, INTERMEDIATE, AND FORWARD PIER CROSSFRAME DETAILS
BRIDGE NO. HAM-562-0004
RAMP M OVER I.R. 75

HAM-75-7.85
PID No. 121447

28/56

836/1047

Preliminary Plans - For Reference Only

J:\20110903\ODOT\HAM\77889\structures\HAM562_0004P\sheets\562_0004CSD007.dgn 5/22/2026 10:33:17 AM hbrendlinger

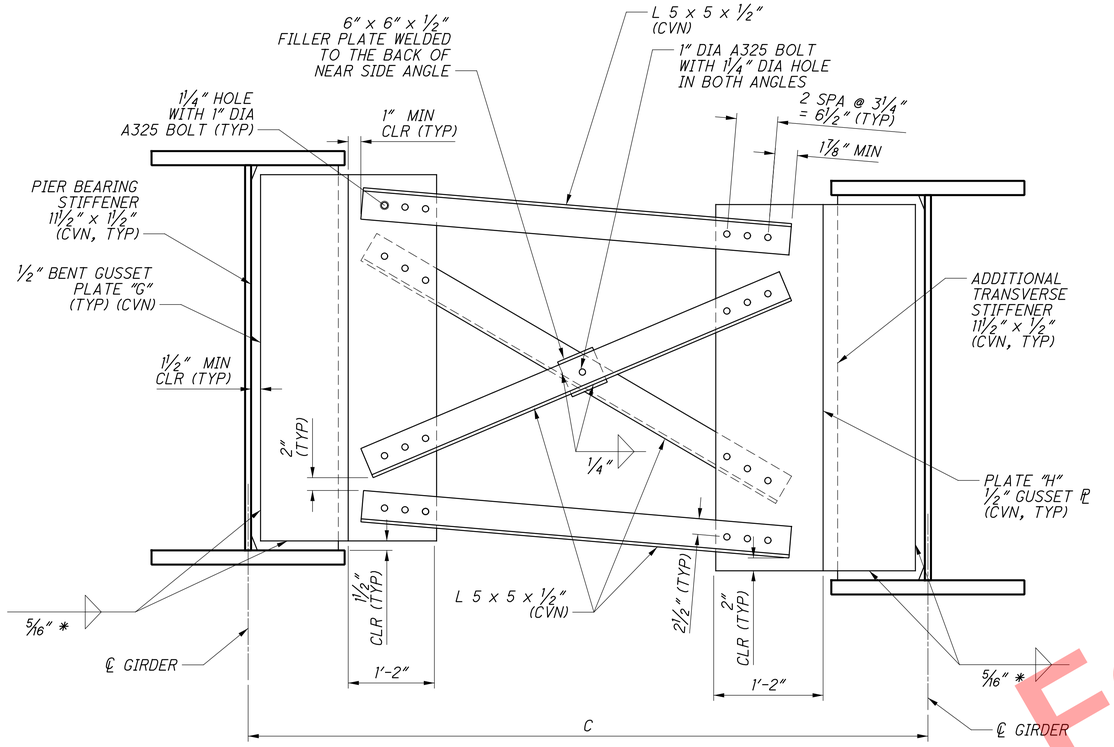

REAR PIER CROSSFRAME ELEVATION

(PIER CAP AND BEARING NOT SHOWN FOR CLARITY, CROSSFRAMES AND STIFFENERS NOT TO SCALE)

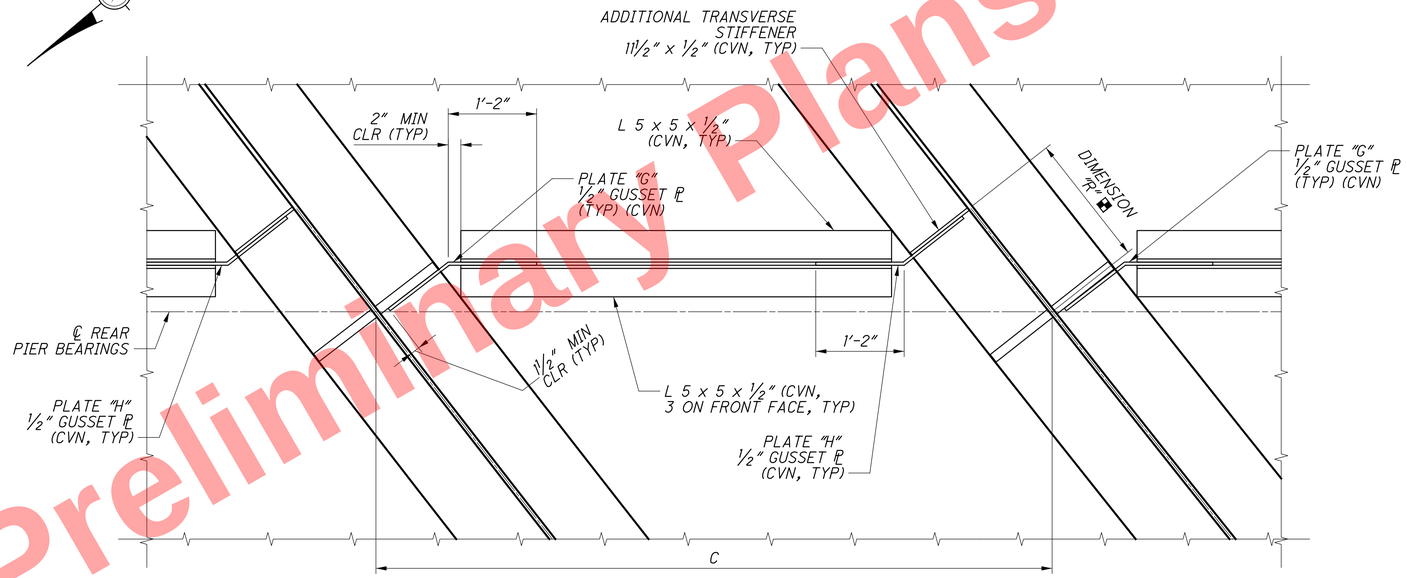

REAR PIER CROSSFRAME PLAN

(PIER CAP AND BEARING NOT SHOWN FOR CLARITY)

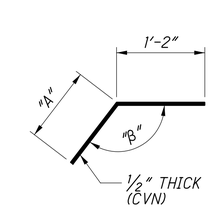

PLATE "G"

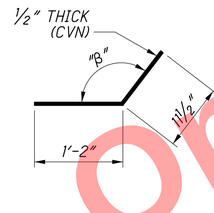

PLATE "H"

"A" - DIMENSION OF BENT ℄ PARALLEL TO STIFFENER. VARIES. SEE TABLE.
"B" - ANGLE VARIES SEE TABLE.

REAR PIER CROSSFRAME DETAILS

BAY NUMBER	GIRDER NUMBER	"C"	PLATE "G" "A"	PLATE "G" "B"	PLATE "H" "B"	PLATE "H" DIMENSION "R" ■
	⟨1⟩		1'-0 7/16"	143°00'12.36"	-	-
1		8'-10¼"				
	⟨2⟩		1'-0 3/16"	142°23'41.88"	142°35'27.04"	1'-8 9/16"
2		8'-11⅛"				
	⟨3⟩		1'-0"	141°45'50.17"	141°57'56.51"	1'-8⅞"
3		9'-0 1/16"				
	⟨4⟩		11 13/16"	141°06'32.08"	141°19'00.88"	1'-9¼"
4		9'-1 1/16"				
	⟨5⟩		-	-	140°38'34.63"	1'-9 5/8"

LEGEND

* - DO NOT WRAP WELDS AROUND CORNER.

■ - DIMENSION "R" VARIES. MEASURED ALONG ℄ GIRDER FROM ℄ BEARING TO ℄ ADDITIONAL STIFFENER ℄.

NOTES

1. ALL MATERIAL SHALL BE ASTM A709, GRADE 50W.
2. HIGH STRENGTH BOLTS SHALL BE 1" DIAMETER A325, TYPE III WITH THREADS EXCLUDED FROM SHEAR PLANE UNLESS OTHERWISE NOTED.
3. FOR BEARING STIFFENER DETAILS SEE SHEET 27/56.
4. FOR TRANSVERSE STIFFENER DETAILS SEE SHEET 27/56.
5. CVN: WHERE A SHAPE OR PLATE IS DESIGNATED (CVN), FURNISH MATERIAL THAT MEETS THE MINIMUM NOTCH TOUGHNESS REQUIREMENTS AS SPECIFIED IN C&MS 711.01.

Preliminary Plans - Not For Reference Only

DESIGN AGENCY EMH&T
DESIGNED RMW | DRAWN GB | CHECKED RJE | REVIEWED CAS | DATE 5-22-26 | REVISED - | STRUCTURE FILE NUMBER 3113787

REAR PIER CROSSFRAME DETAILS
BRIDGE NO. HAM-562-0004
RAMP M OVER I.R. 75

HAM-75-7.85
PID No. 121447

29/56

837/1047

J:\2011093\ODOT\HAM\7889\structures\HAM562_0004P\sheets\562_0004CSD008.dgn 5/22/2026 10:33:18 AM hbrendlinger

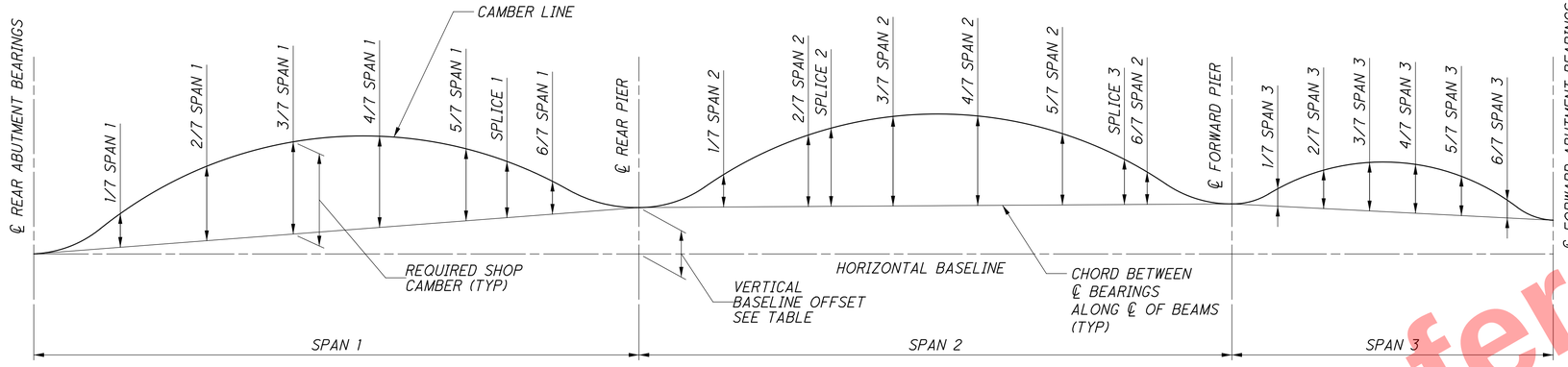

GIRDER 1 = 155′-2 5/16″
GIRDER 2 = 147′-8 5/8″
GIRDER 3 = 140′-2 3/8″
GIRDER 4 = 132′-7 9/16″
GIRDER 5 = 125′-0 1/16″

GIRDER 1 = 119′-2 15/16″
GIRDER 2 = 122′-11 1/16″
GIRDER 3 = 126′-7 3/4″
GIRDER 4 = 130′-4 15/16″
GIRDER 5 = 134′-2 7/8″

GIRDER 1 = 73′-7 3/8″
GIRDER 2 = 72′-7 1/8″
GIRDER 3 = 71′-6 15/16″
GIRDER 4 = 70′-6 1/16″
GIRDER 5 = 69′-6 1/16″

CAMBER DIAGRAM

NOTES

1. ALL VALUES IN THE DEFLECTION AND CAMBER TABLE ARE GIVEN TO THE NEAREST 1/16″.
2. POSITIVE VALUES FOR DEFLECTIONS INDICATE DOWNWARD DEFLECTIONS.
3. FOR FIELD SPLICE LOCATIONS, SEE BEAM ELEVATION AND SPLICE DETAILS SHEET.
4. SEE GENERAL NOTES FOR ABBREVIATION LEGEND.

VERTICAL BASELINE OFFSET (IN.)

GIRDER	PIER 1	PIER 2	FORWARD ABUTMENT
GIRDER 1	54 3/16 ″	54 13/16 ″	37 7/16 ″
GIRDER 2	53 5/16 ″	54 13/16 ″	37 7/16 ″
GIRDER 3	52 5/16 ″	54 13/16 ″	37 7/16 ″
GIRDER 4	51 3/16 ″	54 13/16 ″	37 7/16 ″
GIRDER 5	49 15/16 ″	54 13/16 ″	37 7/16 ″

CAMBER TABLE

		SPAN 1							PIER 1	SPAN 2								PIER 2	SPAN 3						
GIRDER 1	REAR ABUT.	1/7 SPAN	2/7 SPAN	3/7 SPAN	4/7 SPAN	5/7 SPAN	SPLICE 1	6/7 SPAN		1/7 SPAN	2/7 SPAN	SPLICE 2	3/7 SPAN	4/7 SPAN	5/7 SPAN	SPLICE 3	6/7 SPAN		1/7 SPAN	2/7 SPAN	3/7 SPAN	4/7 SPAN	5/7 SPAN	6/7 SPAN	FWD. ABUT.
DEFLECTION DUE TO WEIGHT OF STEEL	0″	13/16″	1 7/16″	1 11/16″	1 9/16″	1 1/8″	11/16″	1/2″	0″	-3/16″	-1/4″	-1/4″	-1/4″	-1/8″	-1/16″	-1/16″	-1/16″	0″	1/16″	1/16″	1/8″	1/8″	1/16″	1/16″	0″
DEFLECTION DUE TO WEIGHT OF SLAB	0″	1 1/16″	1 13/16″	2 1/8″	1 15/16″	1 3/8″	7/8″	5/8″	0″	-3/16″	-1/8″	-1/8″	-1/16″	1/16″	1/8″	1/16″	1/16″	0″	1/16″	1/8″	3/16″	3/16″	1/8″	1/16″	0″
DEFLECTION DUE TO REMAINING DEAD LOAD	0″	1/4″	7/16″	1/2″	7/16″	5/16″	3/16″	1/8″	0″	0″	0″	0″	0″	0″	0″	0″	0″	0″	0″	0″	0″	0″	0″	0″	0″
ADJUSTMENT REQUIRED FOR VERTICAL CURVE	0″	3 11/16″	6 1/8″	7 3/8″	7 3/8″	6 1/8″	4 5/8″	3 11/16″	0″	2 3/16″	3 5/8″	3 15/16″	4 3/8″	4 3/8″	3 5/8″	2 3/8″	2 3/16″	0″	13/16″	1 3/8″	0″	0″	0″	0″	0″
CAMBER LOSS DUE TO HEAT CURVING	0″	0″	0″	0″	0″	0″	0″	0″	0″	0″	0″	0″	0″	0″	0″	0″	0″	0″	0″	0″	0″	0″	0″	0″	0″
REQUIRED SHOP CAMBER	0″	5 13/16″	9 13/16″	11 11/16″	11 5/16″	8 15/16″	6 3/8″	4 15/16″	0″	1 13/16″	3 3/16″	3 9/16″	4 1/8″	4 5/16″	3 11/16″	2 7/16″	2 3/16″	0″	15/16″	1 9/16″	5/16″	5/16″	1/4″	3/16″	0″
GIRDER 2																									
DEFLECTION DUE TO WEIGHT OF STEEL	0″	5/8″	1 1/8″	1 5/16″	1 1/4″	7/8″	5/8″	7/16″	0″	-1/8″	-1/8″	-1/8″	-1/16″	0″	0″	0″	0″	0″	0″	1/16″	1/16″	1/16″	1/16″	1/16″	0″
DEFLECTION DUE TO WEIGHT OF SLAB	0″	7/8″	1 1/2″	1 3/4″	1 5/8″	1 1/8″	3/4″	1/2″	0″	-1/16″	0″	1/16″	1/8″	1/4″	3/16″	1/8″	1/8″	0″	0″	1/16″	1/8″	1/8″	1/8″	1/16″	0″
DEFLECTION DUE TO REMAINING DEAD LOAD	0″	3/16″	5/16″	3/8″	3/8″	1/4″	3/16″	1/8″	0″	0″	0″	0″	1/16″	1/16″	1/16″	0″	0″	0″	0″	0″	0″	0″	0″	0″	0″
ADJUSTMENT REQUIRED FOR VERTICAL CURVE	0″	3 7/16″	5 3/4″	6 7/8″	6 7/8″	5 3/4″	4 1/2″	3 7/16″	0″	2 3/8″	4″	4 1/4″	4 3/4″	4 3/4″	4″	2 9/16″	2 3/8″	0″	13/16″	1 3/8″	0″	0″	0″	0″	0″
CAMBER LOSS DUE TO HEAT CURVING	0″	0″	0″	0″	0″	0″	0″	0″	0″	0″	0″	0″	0″	0″	0″	0″	0″	0″	0″	0″	0″	0″	0″	0″	0″
REQUIRED SHOP CAMBER	0″	5 1/8″	8 11/16″	10 3/8″	10 1/16″	8″	6 1/16″	4 1/2″	0″	2 3/16″	3 7/8″	4 1/4″	4 7/8″	5″	4 1/4″	2 11/16″	2 1/2″	0″	7/8″	1 1/2″	3/16″	1/4″	3/16″	1/8″	0″
GIRDER 3																									
DEFLECTION DUE TO WEIGHT OF STEEL	0″	1/2″	13/16″	1″	15/16″	11/16″	1/2″	5/16″	0″	-1/16″	0″	0″	1/16″	1/8″	1/16″	1/16″	1/16″	0″	0″	0″	1/16″	1/16″	1/16″	0″	0″
DEFLECTION DUE TO WEIGHT OF SLAB	0″	11/16″	1 3/16″	1 7/16″	1 5/16″	15/16″	11/16″	3/8″	0″	0″	1/8″	3/16″	5/16″	3/8″	5/16″	3/16″	1/8″	0″	0″	1/16″	1/16″	1/16″	1/16″	1/16″	0″
DEFLECTION DUE TO REMAINING DEAD LOAD	0″	3/16″	1/4″	5/16″	5/16″	3/16″	1/8″	1/8″	0″	0″	0″	1/16″	1/16″	1/16″	1/16″	1/16″	0″	0″	0″	0″	0″	0″	0″	0″	0″
ADJUSTMENT REQUIRED FOR VERTICAL CURVE	0″	3 3/16″	5 5/16″	6 3/8″	6 3/8″	5 5/16″	4 3/8″	3 3/16″	0″	2 5/8″	4 5/16″	4 5/8″	5 3/16″	5 3/16″	4 5/16″	2 3/4″	2 5/8″	0″	13/16″	1 3/8″	0″	0″	0″	0″	0″
CAMBER LOSS DUE TO HEAT CURVING	0″	0″	0″	0″	0″	0″	0″	0″	0″	0″	0″	0″	0″	0″	0″	0″	0″	0″	0″	0″	0″	0″	0″	0″	0″
REQUIRED SHOP CAMBER	0″	4 1/2″	7 5/8″	9 1/8″	8 7/8″	7 1/8″	5 11/16″	4″	0″	2 9/16″	4 1/2″	4 7/8″	5 5/8″	5 3/4″	4 13/16″	3″	2 13/16″	0″	7/8″	1 7/16″	1/8″	3/16″	1/8″	1/16″	0″
GIRDER 4																									
DEFLECTION DUE TO WEIGHT OF STEEL	0″	5/16″	9/16″	5/8″	5/8″	7/16″	5/16″	3/16″	0″	0″	1/8″	1/8″	3/16″	1/4″	3/16″	1/16″	1/16″	0″	0″	0″	0″	0″	0″	0″	0″
DEFLECTION DUE TO WEIGHT OF SLAB	0″	9/16″	15/16″	1 1/8″	1″	11/16″	9/16″	5/16″	0″	1/16″	5/16″	3/8″	1/2″	9/16″	7/16″	3/16″	3/16″	0″	0″	0″	1/16″	1/16″	1/16″	1/16″	0″
DEFLECTION DUE TO REMAINING DEAD LOAD	0″	1/8″	3/16″	1/4″	1/4″	3/16″	1/8″	1/16″	0″	0″	1/16″	1/16″	1/16″	1/8″	1/16″	1/16″	1/16″	0″	0″	0″	0″	0″	0″	0″	0″
ADJUSTMENT REQUIRED FOR VERTICAL CURVE	0″	2 15/16″	4 7/8″	5 7/8″	5 7/8″	4 7/8″	4 1/4″	2 15/16″	0″	2 13/16″	4 3/4″	5″	5 11/16″	5 11/16″	4 3/4″	2 15/16″	2 13/16″	0″	13/16″	1 3/8″	0″	0″	0″	0″	0″
CAMBER LOSS DUE TO HEAT CURVING	0″	0″	0″	0″	0″	0″	0″	0″	0″	0″	0″	0″	0″	0″	0″	0″	0″	0″	0″	0″	0″	0″	0″	0″	0″
REQUIRED SHOP CAMBER	0″	3 15/16″	6 5/8″	7 7/8″	7 3/4″	6 3/16″	5 1/4″	3 1/2″	0″	2 15/16″	5 3/16″	5 1/2″	6 7/16″	6 9/16″	5 7/16″	3 1/4″	3 3/16″	0″	13/16″	1 3/8″	1/16″	1/8″	1/8″	1/16″	0″
GIRDER 5																									
DEFLECTION DUE TO WEIGHT OF STEEL	0″	3/16″	5/16″	5/16″	5/16″	3/16″	1/8″	1/16″	0″	1/16″	3/16″	1/4″	5/16″	3/8″	1/4″	1/8″	1/8″	0″	0″	0″	0″	0″	0″	0″	0″
DEFLECTION DUE TO WEIGHT OF SLAB	0″	7/16″	11/16″	13/16″	11/16″	7/16″	3/8″	3/16″	0″	1/8″	7/16″	1/2″	11/16″	3/4″	9/16″	1/4″	1/4″	0″	-1/16″	0″	0″	0″	0″	0″	0″
DEFLECTION DUE TO REMAINING DEAD LOAD	0″	1/16″	3/16″	3/16″	3/16″	1/8″	1/8″	1/16″	0″	0″	1/16″	1/16″	1/8″	1/8″	1/8″	1/16″	1/16″	0″	0″	0″	0″	0″	0″	0″	0″
ADJUSTMENT REQUIRED FOR VERTICAL CURVE	0″	2 11/16″	4 1/2″	5 3/8″	5 3/8″	4 1/2″	4 1/16″	2 11/16″	0″	3 1/8″	5 3/16″	5 3/8″	6 3/16″	6 3/16″	5 3/16″	3 1/8″	3 1/8″	0″	13/16″	1 3/8″	0″	0″	0″	0″	0″
CAMBER LOSS DUE TO HEAT CURVING	0″	0″	0″	0″	0″	0″	0″	0″	0″	0″	0″	0″	0″	0″	0″	0″	0″	0″	0″	0″	0″	0″	0″	0″	0″
REQUIRED SHOP CAMBER	0″	3 3/8″	5 5/8″	6 11/16″	6 1/2″	5 1/4″	4 11/16″	2 15/16″	0″	3 5/16″	5 7/8″	6 1/8″	7 5/16″	7 3/8″	6 1/8″	3 9/16″	3 9/16″	0″	3/4″	1 5/16″	0″	0″	1/16″	1/16″	0″

For Reference Only
Preliminary Plans

DESIGN AGENCY: EMH&T
DESIGNED: RMW | DRAWN: GB | REVIEWED: CAS | DATE: 5-22-26
CHECKED: RJE | REVISED: - | STRUCTURE FILE NUMBER: 3113787

CAMBER DIAGRAM AND DEFLECTION
BRIDGE NO. HAM-562-0004
RAMP M OVER I.R. 75

HAM-75-7.85
PID No. 121447

30 / 56

838
1047

J:\2011090\3\ODOT\HAM\7889\structures\HAM562_0004P\sheets\562_0004CSD009.dgn 5/22/2026 10:33:19 AM hbrendlinger

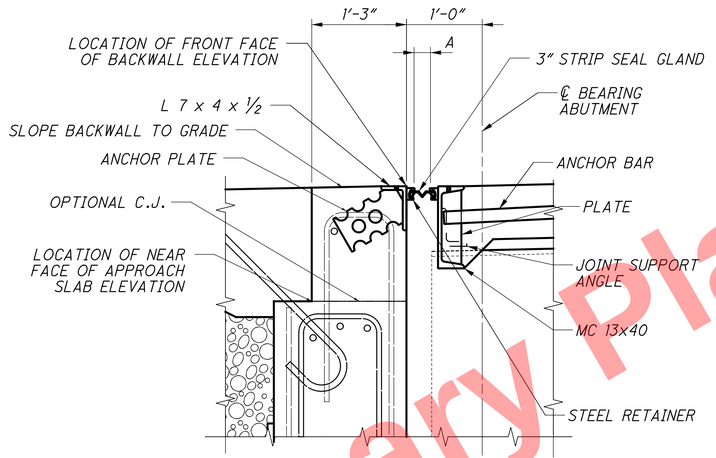

DETAIL A

SEE STD. DWG. EXJ-4-87 (REVISED 01-19-2018) FOR ADDITIONAL DETAILS AND NOTES

DIMENSION "A" (INCHES)		
TEMPERATURE (DEGREE F)	REAR ABUTMENT 4" SEAL	FORWARD ABUTMENT 3" SEAL
30	2.59	1.85
40	2.38	1.79
50	2.15	1.73
60	1.93	1.68
70	1.71	1.62
80	1.49	1.56
90	1.27	1.50

NOTES

1. BACKWALL CONCRETE:
IN ADDITION TO 511.10, DO NOT PLACE BACKWALL CONCRETE ABOVE THE OPTIONAL CONSTRUCTION JOINT AT THE APPROACH SLAB SEAT UNTIL AFTER THE DECK CONCRETE IN THE SPAN ADJACENT TO THE ABUTMENT HAS BEEN PLACED.

2. INSTALLATION OF SEAL:
DURING INSTALLATION OF THE SUPPORT/ARMOR FOR THE SUPERSTRUCTURE SIDE OF THE EXPANSION JOINT SEAL, OBSERVE THE SEATING OF BEAMS ON BEARINGS TO ASSURE THAT POSITIVE BEARING IS MAINTAINED.

3. STRIP SEALS:
STRIP SEAL GLANDS SHALL BE INSTALLED IN ONE CONTINUOUS PIECE.

4. SEE GENERAL NOTES FOR ABBREVIATION LEGEND.

Preliminary Plans - For Reference Only

J:\20110903\ODOT\HAM\7889\structures\HAM562_0004P\sheets\562_0004CEX001.dgn 5/22/2026 10:33:19 AM hbrendlinger

DESIGN AGENCY
EMH&T
Engineers & Surveyors • Planners & Scientists
5500 New Albany Road, Columbus, Ohio 43054
Phone: 614.775.4500 www.emht.com

DESIGNED	DRAWN	REVIEWED	DATE
RMW	GB	CAS	5-22-26
CHECKED	REVISED	STRUCTURE FILE NUMBER	
RJE	-	3113787	

EXPANSION JOINT DETAILS
BRIDGE NO. HAM-562-0004
RAMP M OVER I.R. 75

HAM-75-7.85
PID No. 121447

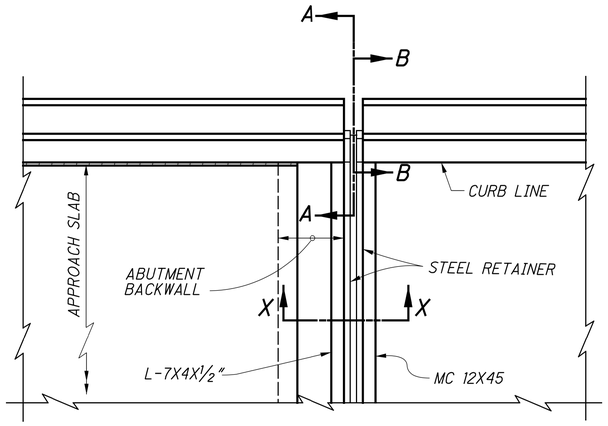

PART PLAN AT ABUTMENT

FOR SQUARE OR LOW SKEWED (15° OR LESS) BRIDGES WITH DEFLECTOR PARAPET RAILING

(BR-1 RAILING IS SHOWN, SBR-1-13 SHALL BE SIMILAR)

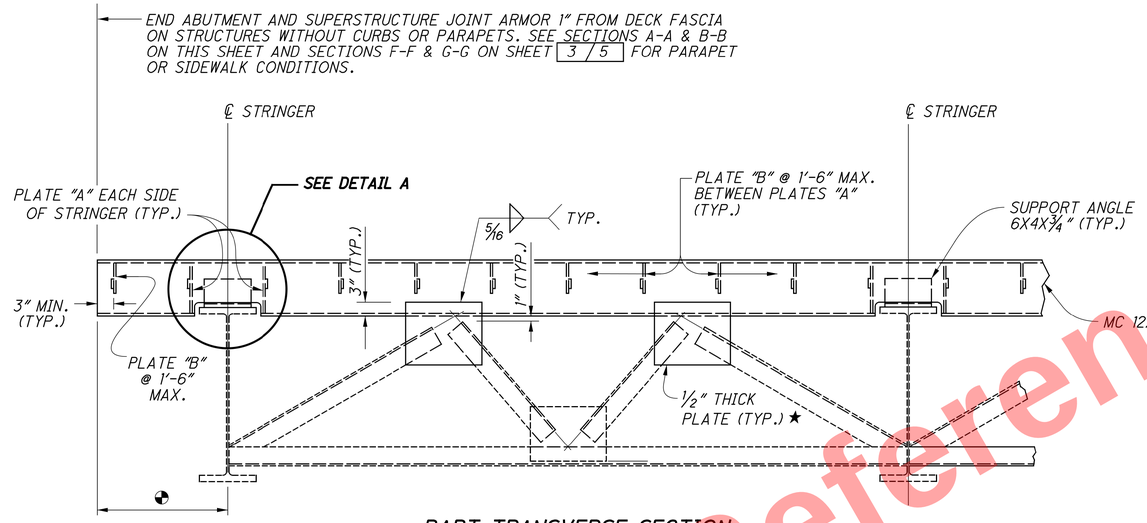

PART TRANSVERSE SECTION

SEE STD. BRIDGE DWG. GSD-1-19 FOR DETAILS OF END CROSSFRAMES AND GUSSET PLATES.

★ - INCLUDED WITH EXPANSION JOINT FOR COATING & PAYMENT.

◔ - FOR CANTILEVERS LESS THAN 2'-6", PLATE "A" MAY BE OMITTED AND THE BOTTOM LEG OF THE CHANNEL MAY BE TRIMMED TO THE END AS SHOWN IN SECTION B-B.

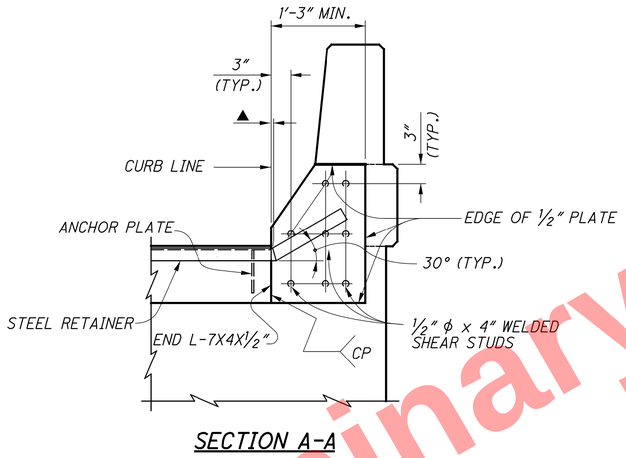

SECTION A-A

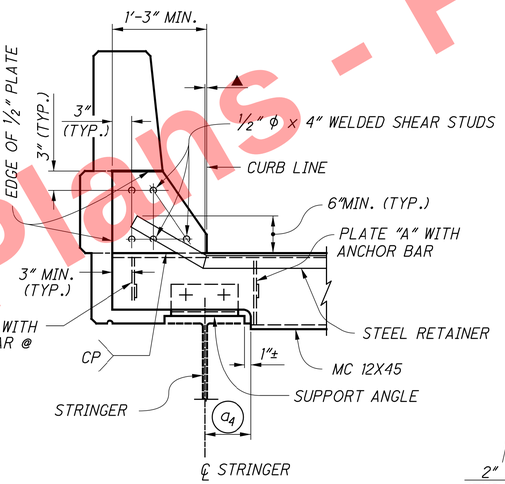

SECTION B-B

▲ - 0" MIN. TO 1/2" MAX. AT BREAKPOINT IN RETAINER FOR SQUARE BRIDGES. ON SKEWED BRIDGES THIS DIMENSION WILL ONLY APPLY TO THE SIDE OF JOINT ASSEMBLY WHICH IS NEAREST TO THE CURB LINE (SEE SHEET 2 / 5).

SEE SHEET 2 / 5 FOR SECTION X-X INCLUDING PLATE "A" DETAILS

SEE SHEET 2 / 5 FOR SECTION Y-Y INCLUDING PLATE "B" DETAILS

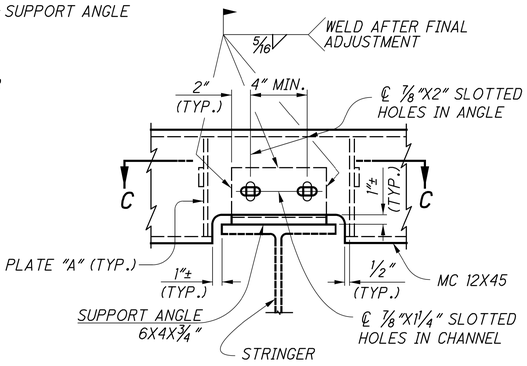

DETAIL A

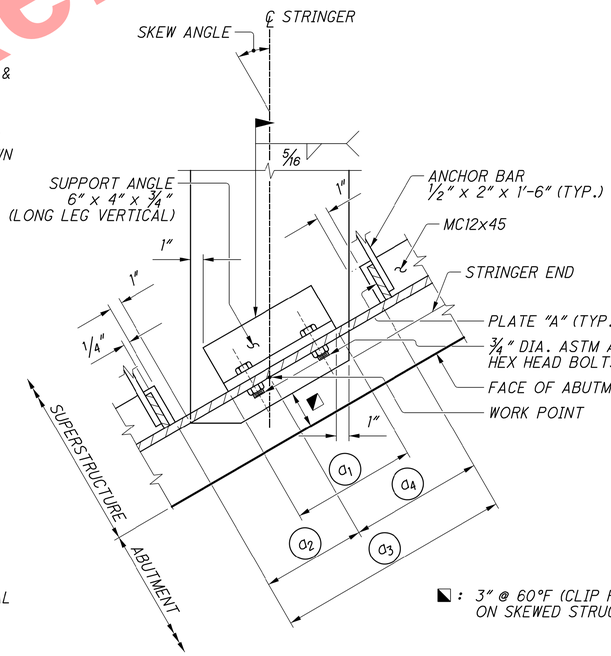

SECTION C-C

SEE NOTE 1
STRUCTURE WITH RIGHT FORWARD SKEW SHOWN.
FOR LEFT FORWARD SKEW, THE DIMENSIONS WILL BE MIRRORED IMAGE.

$$a_1 = \frac{\text{(TOP FLANGE WIDTH)}}{\cos\theta} - 2\left(\frac{1"}{\cos\theta}\right) - 4"\tan\theta$$

$$a_2 = 1" + \frac{1/2\ \text{(TOP FLANGE WIDTH)}}{\cos\theta}$$

$$a_3 = 1" + \frac{\text{(TOP FLANGE WIDTH)}}{\cos\theta} + 4"\tan\theta + 1"$$

$$a_4 = a_3 - a_2 = \text{SEE SECTIONS B-B \& C-C}$$

NOTES:

1. DESIGNER NEEDS TO VERIFY THAT THERE IS SUFFICIENT FLANGE WIDTH FOR PLACEMENT OF THE SUPPORT ANGLE 6" x 4" x 3/4" WITH LENGTH (a1)
2. SHOP BEND ANCHOR BARS AT LONGITUDINAL CONSTRUCTION JOINTS AND DECK EDGES

Preliminary Plans - For Reference Only

DESIGN AGENCY
OFFICE OF STRUCTURAL ENGINEERING

REVIEWED WTL/LMW
DRAWN JS
STRUCTURE FILE NUMBER EXJ-4-87
DESIGNED AJM
CHECKED GFJ/AJM

REVISIONS
11-12-93 07-15-22
02-14-97 01-20-23
07-15-02
01-19-18

STANDARD
STRIP STEEL EXPANSION JOINTS
BRIDGE RAILING

1 / 5
32 / 56
840 / 1047

J:\2011\0903\ODOT\HAM\77889\structures\HAM562_0004P\sheets\562_0004CEX002.dgn 5/22/2026 10:33:20 AM hbrendlinger

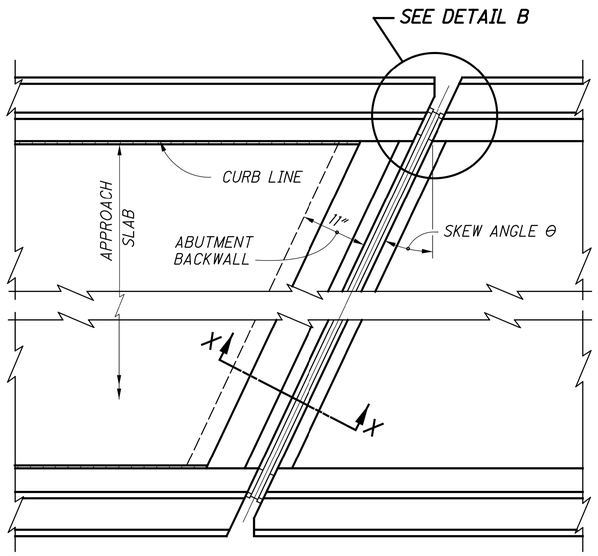

PLAN AT ABUTMENT

FOR SKEWED BRIDGES (OVER 15°) WITH DEFLECTOR PARAPET RAILING

(BR-1 RAILING IS SHOWN, SBR-1-13 SHALL BE SIMILAR)

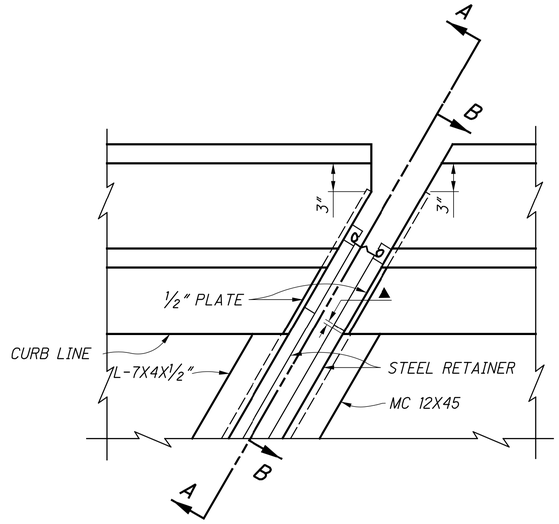

DETAIL B

SEE SHEET 1 / 5 FOR DEFINITION OF "▲", SECTION A-A AND SECTION B-B. SECTION A-A AND SECTION B-B ARE SIMILAR FOR SQUARE AND SKEWED BRIDGES EXCEPT FOR THE CONCRETE FORMING AT THE EDGE OF THE PARAPET.

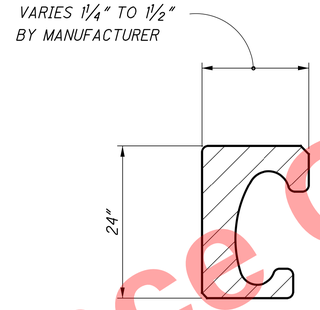

RETAINER DETAIL

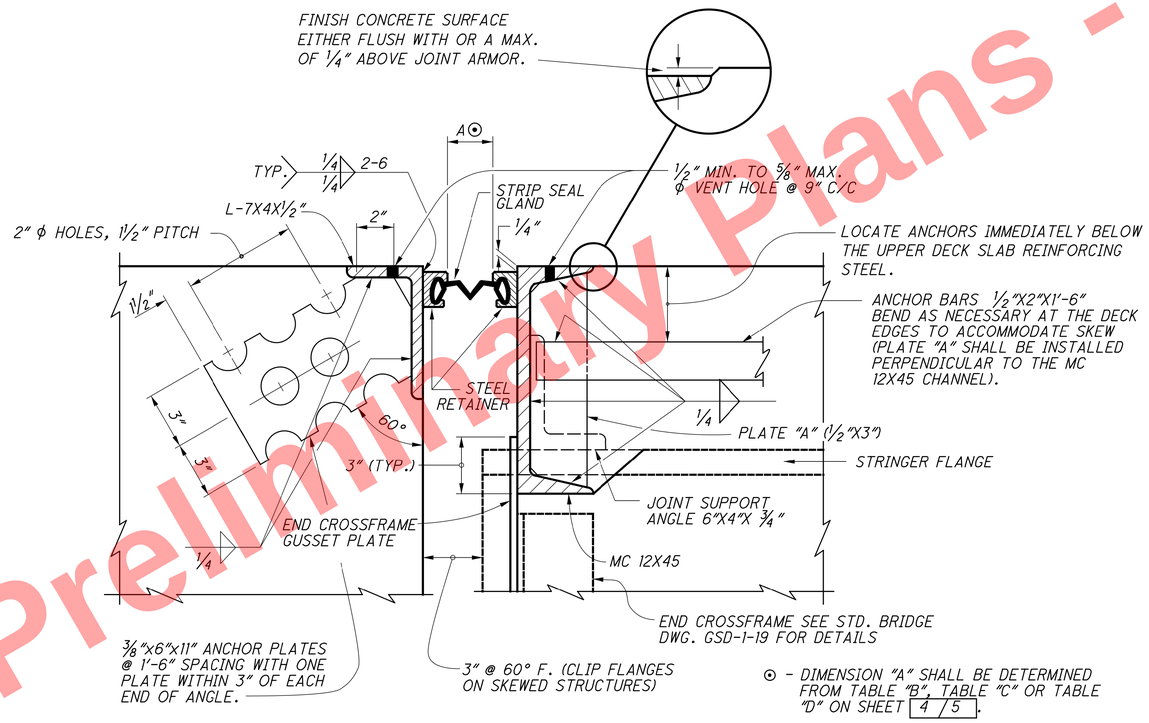

SECTION X-X

Preliminary Plans - For Reference Only

DESIGN AGENCY
OFFICE OF
STRUCTURAL ENGINEERING

REVISIONS
11-12-93
02-14-97
04-20-01
07-29-02
01-19-18
07-15-22
01-20-23

STANDARD
STRIP STEEL EXPANSION JOINTS
BRIDGE RAILING

DESIGNED AJM
DRAWN JS
CHECKED GFJ/AJM
REVIEWED WTL/LMW
STRUCTURE FILE NUMBER EXJ-4-87

2 / 5
33 / 56
841
1047

J:\2011\0903\ODOT\HAM\77889\structures\HAM562_0004P\sheets\562_0004CEX003.dgn 5/22/2026 10:34:26 AM hbrendlinger

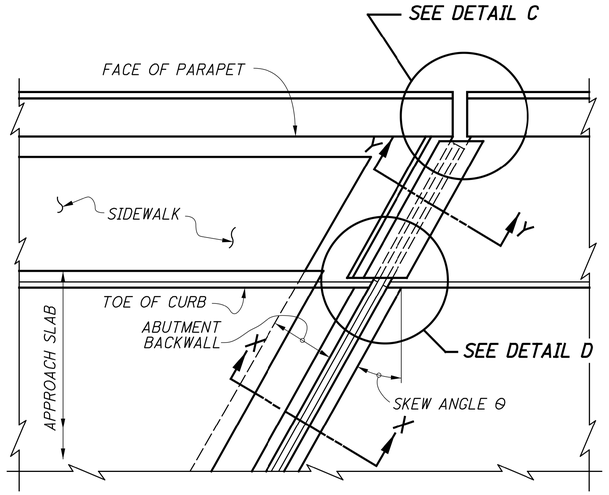

PART PLAN AT ABUTMENT

FOR BRIDGES WITH SIDEWALK PARAPET RAILING

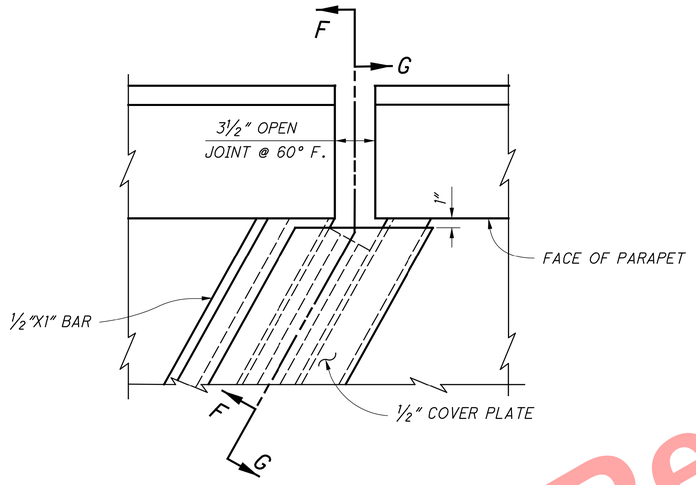

DETAIL C

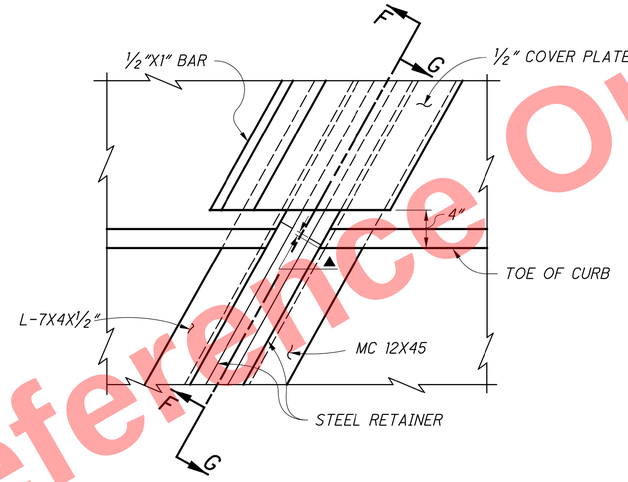

DETAIL D

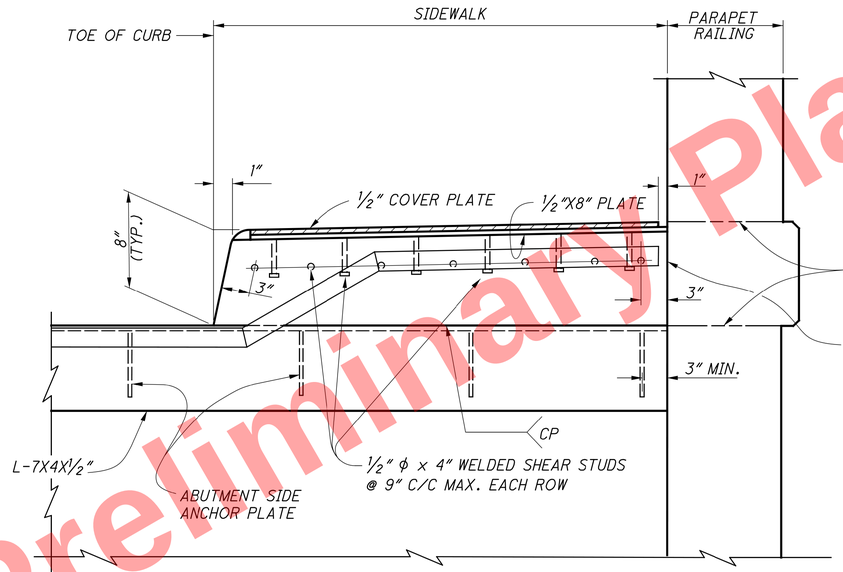

SECTION F-F

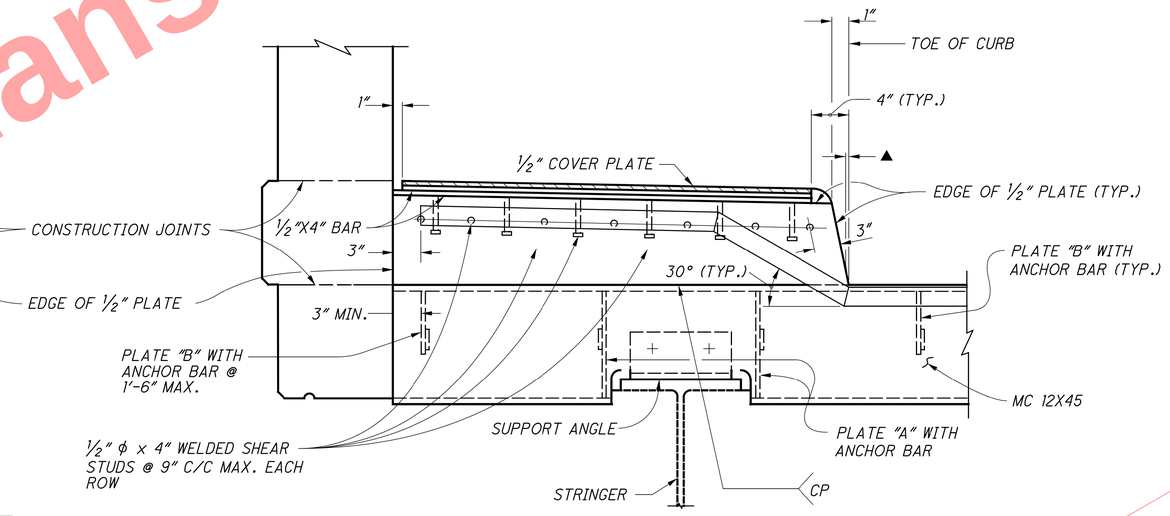

SECTION G-G

▲ - 0" MIN. TO ½" MAX. AT BREAKPOINT IN RETAINER FOR SQUARE BRIDGES. ON SKEWED BRIDGES THIS DIMENSION WILL ONLY APPLY TO THE SIDE OF JOINT ASSEMBLY WHICH IS NEAREST TO THE CURB LINE (SEE DETAIL "D" ABOVE).

FOR ADDITIONAL DETAILS, SEE DETAIL A ON SHEET 1 / 5 .

FOR SECTION X-X SEE SHEET 2 / 5 .

FOR SECTION Y-Y SEE SHEET 4 / 5 .

Preliminary Plans - For Reference Only

DESIGN AGENCY
OFFICE OF STRUCTURAL ENGINEERING

REVIEWED WTL/LMW
DRAWN JS
STRUCTURE FILE NUMBER EXJ-4-87
DESIGNED AJM
CHECKED GFJ/AJM

REVISIONS
11-12-93 07-15-22
02-14-97 01-20-23
04-20-01
07-29-02
01-19-18

STANDARD
STRIP STEEL EXPANSION JOINTS
BRIDGE RAILING

3 / 5
34 / 56
842
1047

J:\20110903\ODOT\HAM\77889\structures\HAM562_0004P\sheets\562_0004CEX004.dgn 5/22/2026 10:35:28 AM hbrendlinger

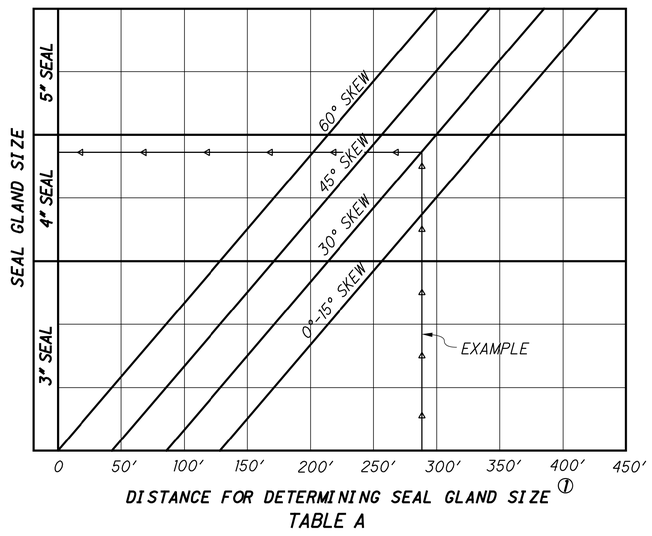

TABLE A

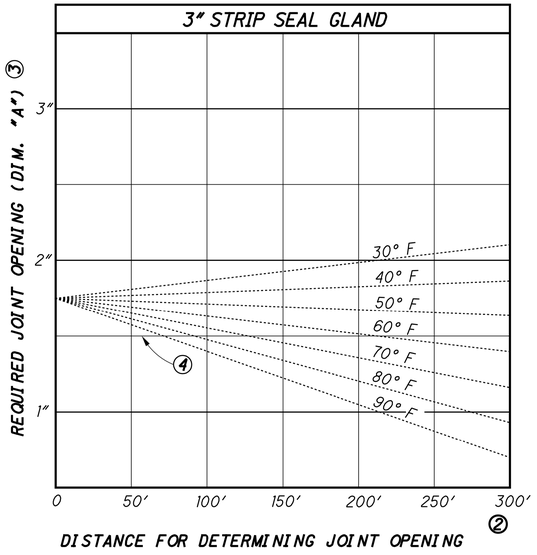

TABLE B

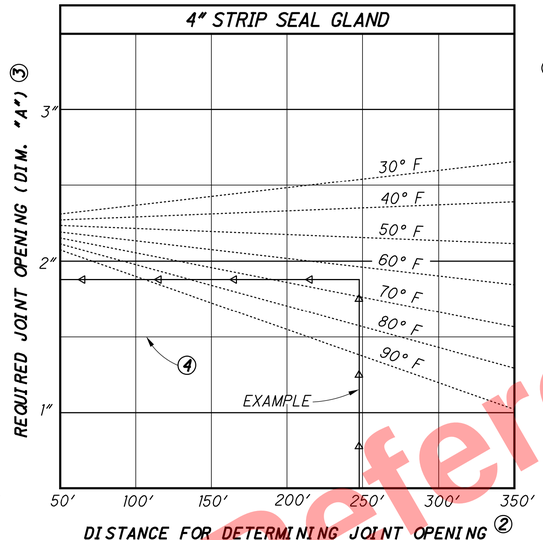

TABLE C

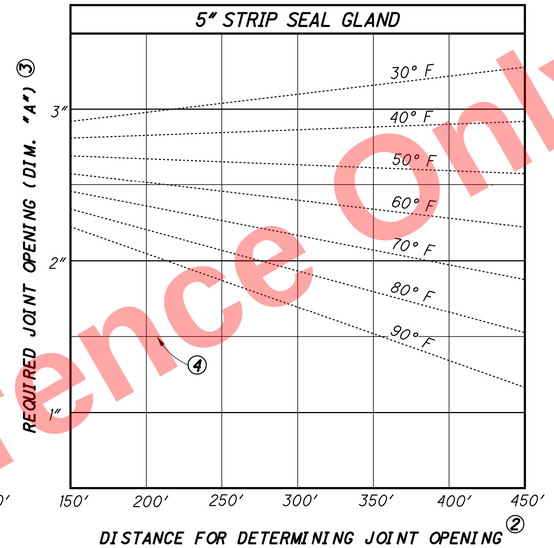

TABLE D

LEGEND

① - THIS IS THE ACTUAL DISTANCE FROM THE CENTERLINE OF JOINT TO THE THERMAL NEUTRAL POINT OF THE SUPERSTRUCTURE MEASURED ALONG THE CENTERLINE OF ROADWAY. THIS DIMENSION SHALL BE A MAXIMUM OF 299' FOR 60° SKEWS, 342' FOR 45° SKEWS, 385' FOR 30° SKEWS AND 427' FOR 0° THRU 15° SKEWS. THE THERMAL NEUTRAL POINT OF THE SUPERSTRUCTURE IS THAT POINT WHICH HAS ZERO HORIZONTAL MOVEMENT DURING TEMPERATURE CHANGES.

② - THIS DISTANCE FOR EXPANSION JOINTS HAVING SKEW ANGLES OF 15° OR LESS IS THE ACTUAL DISTANCE TO THE THERMAL NEUTRAL POINT OF THE SUPERSTRUCTURE ALONG THE CENTERLINE OF ROADWAY. THIS DISTANCE FOR EXPANSION JOINTS HAVING SKEW ANGLES OVER 15° BUT NOT GREATER THAN 60° IS ARRIVED AT BY MULTIPLYING THE ABOVE DEFINED DISTANCE ALONG THE CENTERLINE OF ROADWAY BY THE COSINE OF THE EXPANSION JOINT SKEW ANGLE.

③ - THIS IS THE JOINT OPENING (DIMENSION "A") REQUIRED AT THE TIME OF ABUTMENT BACKWALL CONCRETE PLACEMENT, BASED ON THE DAY'S ANTICIPATED PEAK AMBIENT TEMPERATURE.

④ - MINIMUM JOINT OPENING (DIMENSION "A") AT TIME OF SEAL GLAND INSTALLATION SHALL NOT BE LESS THAN 1½". IF THE JOINT OPENING IS LESS, INSTALLATION SHALL BE POSTPONED UNTIL THE TEMPERATURE DROPS A SUFFICIENT AMOUNT TO ALLOW THE MINIMUM 1½" OPENING.

EXAMPLE

GIVEN - THE DISTANCE FROM THE CENTERLINE OF THE JOINT TO THE THERMAL NEUTRAL POINT OF THE SUPERSTRUCTURE ALONG THE CENTERLINE OF THE ROADWAY IS 287.5'. THE SKEW ANGLE OF THE EXPANSION JOINT IS 30° AND THE ANTICIPATED AMBIENT TEMPERATURE AT TIME OF JOINT INSTALLATION IS 65° F.

FIND - REQUIRED STRIP SEAL GLAND SIZE AND THE JOINT OPENING (DIMENSION "A") AT THE TIME OF JOINT ARMOR INSTALLATION.

SOLUTION -
(A) ENTER TABLE "A" AT ① WITH 287.5' AND FIND THAT THE REQUIRED STRIP SEAL GLAND SIZE IS 4 INCHES.

(B) ENTER TABLE "C" AT ② WITH 287.5' X COSINE OF 30° = 248.98' AND FIND REQUIRED JOINT OPENING AT 65°F IS 1.86".

NOTE: STEP (B) REQUIRED ONLY AT TIME OF CONSTRUCTION.

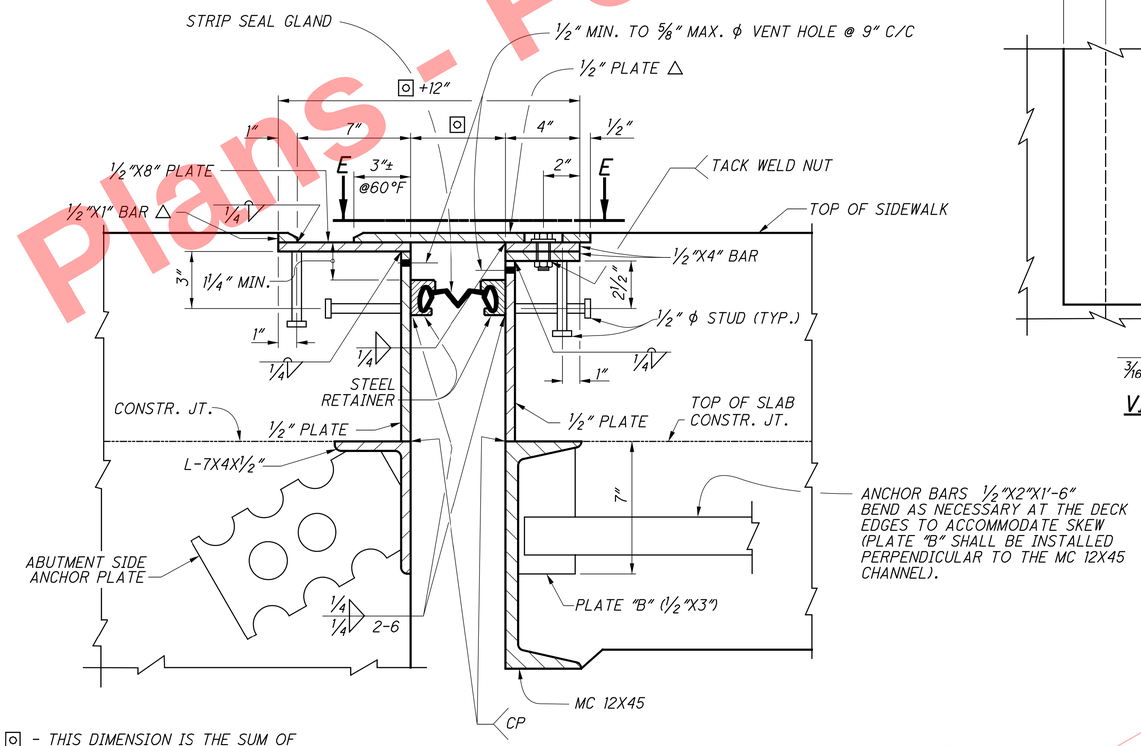

⊡ - THIS DIMENSION IS THE SUM OF (2 X STEEL RETAINER WIDTH + DIM. "A").

SECTION Y-Y

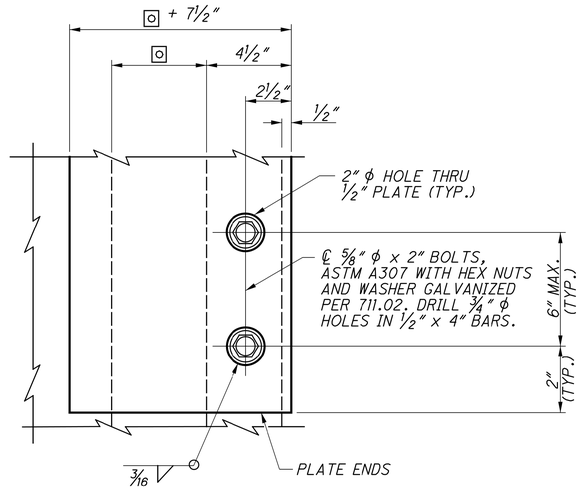

VIEW E-E

△ - PROVIDE A ½" HORIZONTAL x ¼" VERTICAL BEVEL AT THE EXPOSED EDGE OF THE ½" COVER PLATE AND ½" X 1" BAR

Preliminary Plans - For Reference Only

DESIGN AGENCY
OFFICE OF
STRUCTURAL ENGINEERING

REVIEWED WTL/LMW
DRAWN JS
DESIGNED AJM
CHECKED GFJ/AJM
STRUCTURE FILE NUMBER EXJ-4-87

REVISIONS
11-12-93 07-15-22
02-14-97 01-20-23
07-29-01
04-23-02
01-19-18

STANDARD
STRIP STEEL EXPANSION JOINTS
BRIDGE RAILING

4 / 5
35 / 56
843
1047

J:\2011\0903\ODOT\HAM\77889\structures\HAM562_0004P\sheets\562_0004CEX005.dgn 5/22/2026 10:36:30 AM hbrendlinger

GENERAL NOTES:

STRIP SEAL: FURNISH EXTRUDED POLYCHLOROPRENE MATERIAL CONFORMING TO ASTM D2628. DUE TO THE CONFIGURATION OF THE SEAL, THE RECOVERY TEST IS NOT APPLICABLE. THE PHYSICAL PROPERTIES OF THE STRIP SEAL SHALL CONFORM TO TABLE "E".

THE MANUFACTURER OR AN ACCREDITED LABORATORY SHALL TEST EACH LOT AS SPECIFIED AND SUBMIT TWO COPIES OF CERTIFIED TEST DATA SHOWING COMPLIANCE TO THE ODOT OFFICE OF MATERIALS MANAGEMENT. THE SEAL AND RETAINER ARE AN INTEGRAL SYSTEM DESIGNED AND SUPPLIED BY THE SAME MANUFACTURER. SEE "CONSTRUCTION PROCEDURE" FOR INSTALLATION.

TABLE E
(PHYSICAL PROPERTIES OF SEAL ELEMENT)

PROPERTY	REQUIREMENT	ASTM METHOD
TENSILE STRENGTH, MIN. PSI	2000	D412
ELONGATION @ BREAK, MIN. (PERCENT)	250	D412
HARDNESS, TYPE A DUROMETER, POINTS	60 ± 5	MODIFIED D2240
OVEN AGING, 70 HR @ 212°F TENSILE STRENGTH, LOSS, MAX. ELONGATION, LOSS, MAX. HARDNESS, TYPE A DUROMETER, POINTS CHANGE	 20 PERCENT 20 PERCENT 0 TO +10	D573 MODIFIED D2240
OIL SWELL, ASTM OIL 3 70 HR @ 212°F, WEIGHT CHANGE MAX	 45 PERCENT	D471
OZONE RESISTANCE 20 PERCENT STRAIN, 300 PPHM IN AIR, 70 HR @ 104°F (WIPED WITH TOLUENE TO REMOVE SURFACE CONTAMINATION)	NO CRACKS	D1149
LOW TEMPERATURE STIFFENING 7 DAYS @ 14°F HARDNESS, TYPE A DUROMETER, POINTS CHANGE COMPRESSION SET, 70 HR @ 212°F MAX.	 0 TO +15 40 PERCENT	D2240 MODIFIED D2240 D395 METHOD B

LUBRICANT-ADHESIVE: FURNISH A ONE PART MOISTURE CURING POLYURETHANE COMPOUND MEETING THE REQUIREMENTS OF ASTM D4070 AND AS SPECIFIED BY THE SEAL MANUFACTURER. SEE "CONSTRUCTION PROCEDURE" FOR APPLICATION.

JOINTS IN STRIP SEALS: FURNISH SEALS IN ONE CONTINUOUS PIECE UNLESS OTHERWISE APPROVED BY THE ENGINEER.

SEAL RETAINERS: FURNISH SOLID SHAPE STEEL RETAINERS, AS DIMENSIONED ON SHEET 2 OF 5 "RETAINER DETAIL", THAT ARE EXTRUDED, HOT ROLLED OR MACHINED. RETAINERS MANUFACTURED FROM BENT PLATE OR BUILT UP PIECES ARE NOT ACCEPTABLE. THE MANUFACTURER SHALL SPECIFY THE INTERNAL DIMENSIONS OF THE RETAINER TO ACHIEVE A POSITIVE SEAL AND ANCHORAGE.

AT JOINT UPTURNS, ESPECIALLY ON SKEWED BRIDGE DECKS, THE USE OF SPLIT RETAINERS MAY BE NECESSARY TO ENSURE PROPER SEAL GLAND INSTALLATION. WHERE THE SPLIT RETAINERS ARE REQUIRED, THE MANUFACTURER SHALL OBTAIN THE ENGINEER'S APPROVAL FOR THE DESIGN.

BEFORE THE GLAND IS INSTALLED, CORRECT ANY DEFECTS IN THE STEEL RETAINER OR THE ACTUAL EXPANSION JOINT THAT COULD CAUSE DAMAGE TO THE GLAND.

JOINTS IN RETAINERS: WELDS SHALL BE WATER TIGHT, PARTIAL PENETRATION WELDS AROUND THE OUTER PERIPHERY OF THE ABUTTING SURFACES. GRIND FLUSH ALL WELDS IN CONTACT WITH

THE SEAL AND JOINT ARMOR. DO NOT USE SHORT PIECES OF RETAINERS LESS THAN 6'-0" LONG, UNLESS REQUIRED AT CURBS OR SIDEWALKS. DO NOT PROVIDE ADDITIONAL SPLICES IN RETAINERS AT CURB OR SIDEWALK SECTIONS OTHER THAN THOSE DETAILED IN THE STANDARD BRIDGE DRAWINGS.

ARMOR STEEL: ALL CHANNEL SHAPES, ANGLE SHAPES AND ALL CROSS FRAME CONNECTION GUSSET PLATES, SHALL BE ASTM 709, GRADE 50 OR 50W. ALL OTHER STEEL PARTS INCLUDING RETAINERS, SHALL BE ASTM A709, GRADE 36, 50 OR 50W.

JOINTS IN ARMOR STEEL: SHOP OR FIELD JOINTS IN THE ARMOR SHALL BE COMPLETE PENETRATION WELDS GROUND FLUSH WHERE IN CONTACT WITH THE RETAINER.

ARMOR COATING: COAT ALL STEEL PARTS OF THE JOINT ASSEMBLY ACCORDING TO 516.

DO NOT FIELD PAINT METALIZED SURFACES EXCEPT AS NOTED. CLEAN AND PAINT THE AREAS ON THE ½" GUSSET PLATES DAMAGED DURING CROSSFRAME INSTALLATION IN CONFORMANCE WITH THE STRUCTURE'S PAINT SYSTEM. PROTECT THE METALIZED COATING WHEN BLASTING OR COATING ADJACENT STEEL MEMBERS. OVERSPRAY NEED NOT BE REMOVED.

TEMPORARY SUPPORTS: THE FABRICATOR SHALL DESIGN AND INSTALL TEMPORARY SUPPORTS TO RESIST SHIPPING, ERECTION AND CONSTRUCTION FORCES WITHOUT DAMAGE TO THE STEEL ARMOR OR COATING. THESE SUPPORTS SHALL BE ADJUSTABLE IN THE FIELD TO ACCOUNT FOR VARIABLE TEMPERATURE SETTINGS. INSTALL THE SUPPORTS AFTER THE FABRICATION AND COATING IS COMPLETE.

CONSTRUCTION PROCEDURE:

ARMOR INSTALLATION:

1. PLACE JOINT ASSEMBLY SO THE CHANNEL AND ANGLE REMAIN PARALLEL TO EACH OTHER AND PERPENDICULAR TO THE ROADWAY GRADIENT.
2. PLACE ABUTMENT BACKWALL CONCRETE AFTER THE SUPERSTRUCTURE CONCRETE IS PLACED IN THE SPAN ADJACENT TO THE ABUTMENT.
3. SET ABUTMENT EXPANSION JOINT WIDTH TO DIMENSION "A" NO MORE THAN FOUR HOURS PRIOR TO THE DAY'S PEAK AMBIENT TEMPERATURE. SEE PROJECT PLANS FOR DIMENSION "A".
4. PLACE THE BACKWALL CONCRETE DURING STABLE OR RISING AMBIENT TEMPERATURES. CONCLUDE PLACEMENT AT OR IMMEDIATELY BEFORE THE DAY'S PEAK AMBIENT TEMPERATURE.
5. HAND PLACE AND VIBRATE CONCRETE UNDER JOINT ARMOR TO ACHIEVE COMPLETE CONSOLIDATION.
6. LOOSEN ANY TEMPORARY JOINT ARMOR SUPPORTS AFTER INITIAL SET OF THE CONCRETE, PREFERABLY NOT LATER THAN TWO HOURS AFTER CONCLUSION OF THE CONCRETE PLACEMENT.

SEAL INSTALLATION:

1. EXAMINE THE RETAINER FOR SOILAGE OR DEFECTS THAT CAN DAMAGE THE SEAL PRIOR TO SEAL INSTALLATION. REPAIR DEFECTS.
2. NOT MORE THAN 24 HOURS PRIOR TO SEAL INSTALLATION, BLAST THE RETAINER INTERIOR PER SSPC SP6 "COMMERCIAL BLAST CLEANING", WITHOUT DAMAGING ADJACENT COATINGS. REMOVE ALL BLASTING MEDIA FROM THE RETAINER.
3. CLEAN ALL SURFACES OF THE SEAL WITH METHYL ETHYL KETONE (MEK), TOLUENE (T) OR OTHER MANUFACTURER SPECIFIED SOLVENT USING CLEAN DISPOSABLE CLOTHS. MAINTAIN THE SURFACE CLEANLINESS UNTIL INSTALLATION.
4. IMMEDIATELY BEFORE APPLYING THE LUBRICANT-ADHESIVE, BONDING SURFACES MUST BE CLEAN, DRY AND WARMER THAN 45°F. BONDING SURFACES MUST BE MAINTAINED IN THIS CONDITION UNTIL THE SEAL IS INSTALLED. LIBERALLY APPLY THE LUBRICANT-ADHESIVE TO BOTH THE RETAINER AND THE SEAL USING THE MANUFACTURER'S SPECIFIED METHODS FOR COMPLETE AND UNIFORM COVERAGE.
5. INSTALL THE SEAL WITH EQUIPMENT AND PROCEDURE SPECIFIED BY THE MANUFACTURER. ELONGATION OF THE SEAL OR STRUCTURAL DAMAGE TO THE SEAL CAUSED BY INSTALLATION METHODS WILL BE CAUSE FOR REJECTION.
6. REMOVE EXCESS LUBRICANT-ADHESIVE AFTER INSTALLATION.

DESIGNER NOTES:

PROJECT PLANS SHALL LIST DIMENSION "A" FOR TEMPERATURES BETWEEN 30°F AND 90°F IN 10° INCREMENTS.

JOINT SEAL GLANDS AT FIXED BEARINGS SHALL BE THE SAME SIZE AS AT THE EXPANSION BEARINGS WITH A DIMENSION "A" OF 2" AT ANY AMBIENT TEMPERATURE.

LIMITATION: SKEW ANGLES SHALL NOT BE GREATER THAN 60°.

THE DESIGNER SHALL SUPPLY DETAILS FOR STRUCTURES WITH ROADWAY GRADES GREATER THAN 2%.

Preliminary Plans - For Reference Only

DESIGN AGENCY
OFFICE OF STRUCTURAL ENGINEERING

REVIEWED WTL/LMW
DRAWN JS
STRUCTURE FILE NUMBER EXJ-4-87
DESIGNED AJM
CHECKED GFJ/AJM

REVISIONS
11-12-93 07-15-22
02-14-97 01-20-23
07-20-00
01-19-02
01-19-18

STANDARD
STRIP STEEL EXPANSION JOINTS
BRIDGE RAILING

5 / 5
36 / 56
844
1047

J:\2011\0903\ODOT\HAM\77889\structures\HAM562_0004P\sheets\562_0004CEX006.dgn 5/22/2026 10:37:37 AM hbrendlinger

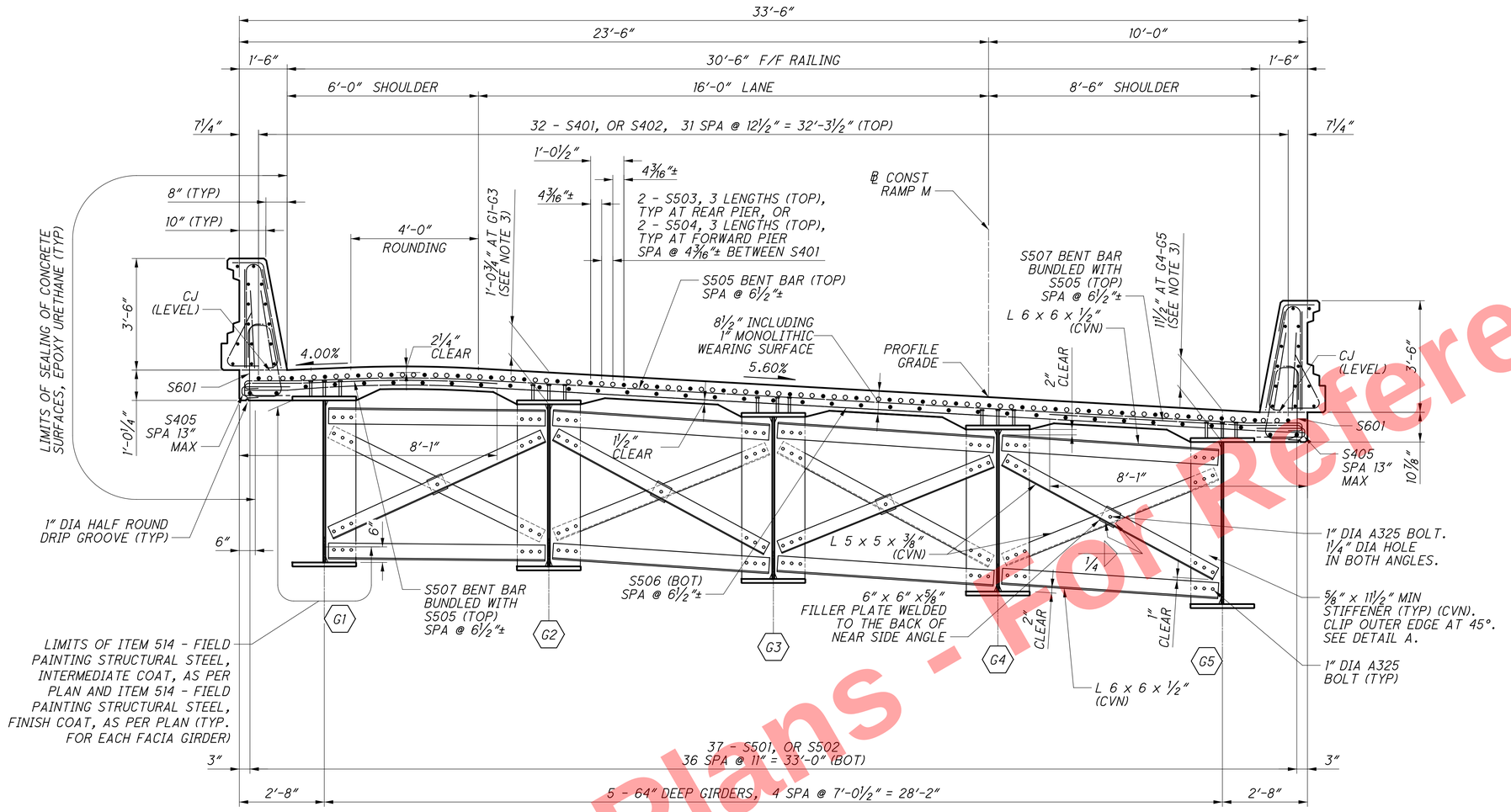

TYPICAL TRANSVERSE SECTION

SEE RAILING DETAILS SHEETS
FOR RAILING REINFORCING CALLOUTS

NOTES

1. FOR ADDITIONAL INTERMEDIATE CROSS FRAME AND STIFFENER DETAILS SEE SHEETS 27/56 TO 29/56.
2. CVN: WHERE A SHAPE OR PLATE IS DESIGNATED (CVN), FURNISH MATERIAL THAT MEETS THE MINIMUM NOTCH TOUGHNESS REQUIREMENTS AS SPECIFIED IN C&MS 711.01.
3. DECK SLAB CONCRETE QUANTITY:

   THE ESTIMATED QUANTITY OF DECK SLAB CONCRETE IS BASED ON THE CONSTANT DECK SLAB THICKNESS, AS SHOWN, PLUS THE QUANTITY OF CONCRETE THAT FORMS EACH GIRDER HAUNCH. THE ESTIMATE ASSUMES A CONSTANT HAUNCH THICKNESS OF 4¼" AT GIRDERS 1-3 AND 3" AT GIRDERS 4 & 5. A CONSTANT HAUNCH WIDTH OUTSIDE THE EDGE OF EACH BEAM FLANGE OF 9 INCHES IS ASSUMED. DEVIATE FROM THIS HAUNCH THICKNESS AS NECESSARY TO PLACE THE DECK SURFACE AT THE FINISHED GRADE. THE ALLOWABLE TOLERANCE FOR THE HAUNCH WIDTH OUTSIDE THE EDGE OF EACH BEAM FLANGE IS ±3 INCHES.

   THE HAUNCH THICKNESS WAS MEASURED AT THE CENTERLINE OF THE GIRDER, FROM THE SURFACE OF THE DECK TO THE BOTTOM OF THE TOP FLANGE MINUS THE DECK SLAB THICKNESS. THE AREA OF ALL EMBEDDED TOP FLANGE SPLICE PLATES HAS BEEN DEDUCTED FROM THE HAUNCH QUANTITY IN ACCORDANCE WITH 511.24.
4. SEE GENERAL NOTES FOR ABBREVIATION LEGEND.
5. FOR ADDITIONAL FLANGE DIMENSIONS SEE BEAM ELEVATION ON SHEET 26/56
6. ALL INTERMEDIATE CROSSFRAME BOLTS SHALL BE ASM F3125, GRADE 325, WITH THREADS EXCLUDED FROM THE SHEAR PLANE. ALL BOLTS SHALL BE TYPE 3 BOLTS. EACH ANCHOR ASSEMBLY SHALL INCLUDE A BOLT, NUT, AND TWO (2) WASHERS, TIGHTENED ACCORDING TO CMS 513 PRIOR TO DECK PLACEMENT. MINIMUM EDGE DISTANCES FOR BOLTS SHALL BE 1½"

Preliminary Plans - Not For Reference Only

DESIGN AGENCY
EMH&T
Engineers • Surveyors • Planners • Scientists
5500 New Albany Road, Columbus, Ohio 43054
Phone: 614.775.4500

DESIGNED	DRAWN	REVIEWED	DATE
RMW	GB	CAS	5-22-26
CHECKED	REVISED	STRUCTURE FILE NUMBER	
RJE	-	3113787	

TYPICAL TRANSVERSE SECTION
BRIDGE NO. HAM-562-0004
RAMP M OVER I.R. 75

HAM-75-7.85
PID No. 121447

37/56

845/1047

J:\2011093\ODOT\HAM\7889\structures\HAM562_0004P\sheets\562_0004CTS001.dgn 5/22/2026 10:38:50 AM hbrendlinger

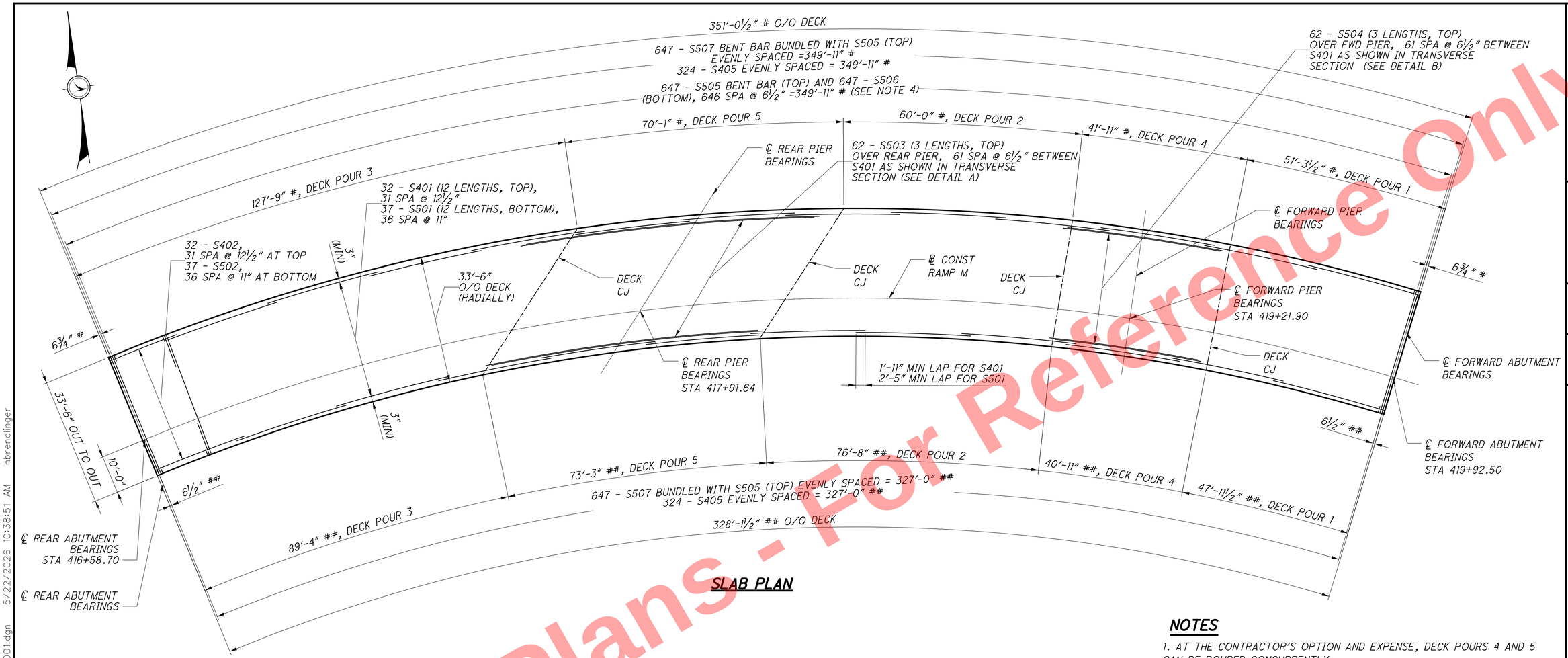

SLAB PLAN

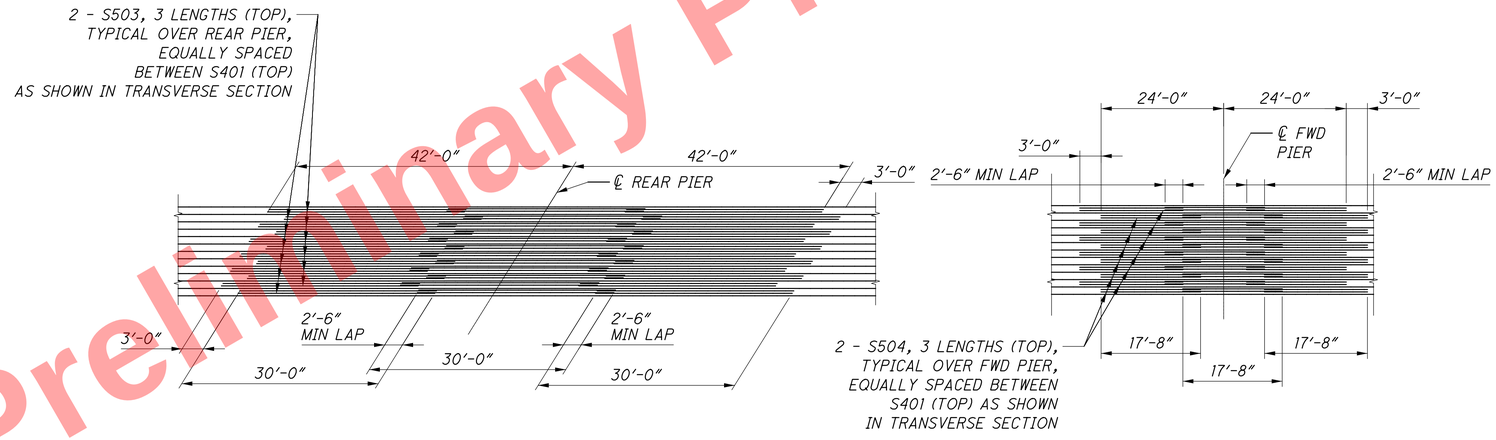

NOTES

1. AT THE CONTRACTOR'S OPTION AND EXPENSE, DECK POURS 4 AND 5 CAN BE POURED CONCURRENTLY.

2. THE CONCRETE DECK SHALL NOT BE POURED IN A SINGLE POUR FROM END TO END.

3. CONSTRUCTION JOINTS SHALL BE SEALED WITH A 2'-0" WIDE STRIP OF HIGH MOLECULAR WEIGHT METHACRYLIC RESIN ACCORDING TO 511.22.

4. THE TRANSVERSE REINFORCEMENT SHALL BE PLACED RADIALLY.

5. THE CONCRETE DECK AND APPROACH SLABS SHALL NOT BE PLACED IN THE SAME CONCRETE POUR.

6. THE USE OF STAY-IN-PLACE FORMS SHALL NOT BE ALLOWED.

7. DIAPHRAGMS: DO NOT PLACE THE DECK CONCRETE UNTIL ALL DIAPHRAGMS HAVE BEEN PROPERLY INSTALLED.

8. MATERIALS: DECK CONCRETE SHALL BE CLASS QC/QA CONCRETE, CLASS QC3.

9. SEE GENERAL NOTES FOR ABBREVIATION LEGEND.

LEGEND

\# - PLACED RADIALLY AND MEASURED ALONG THE LEFT EDGE OF DECK

- MEASURED RADIALLY ALONG THE RIGHT EDGE OF DECK

DETAIL A

STAGGER OF S503 OVER REAR PIER, SHOWED STRAIGHT FOR SIMPLICITY

DETAIL B

STAGGER OF S504 OVER FORWARD PIER, SHOWED STRAIGHT FOR SIMPLICITY

Preliminary Plans - For Reference Only

DESIGN AGENCY
EMH&T
Engineers • Surveyors • Planners • Scientists
5500 New Albany Road, Columbus, OH 43054
Phone: 614.775.4500

DESIGNED	DRAWN	REVIEWED	DATE
RMW	GB	CAS	5-22-26
CHECKED	REVISED	STRUCTURE FILE NUMBER	
RJE	-	3113787	

DECK PLAN
BRIDGE NO. HAM-562-0004
RAMP M OVER I.R. 75

HAM-75-7.85
PID No. 121447

38 / 56

846
1047

J:\20110903\ODOT\HAM\7889\structures\HAM562_0004P\sheets\562_0004CDP001.dgn 5/22/2026 10:38:51 AM hbrendlinger

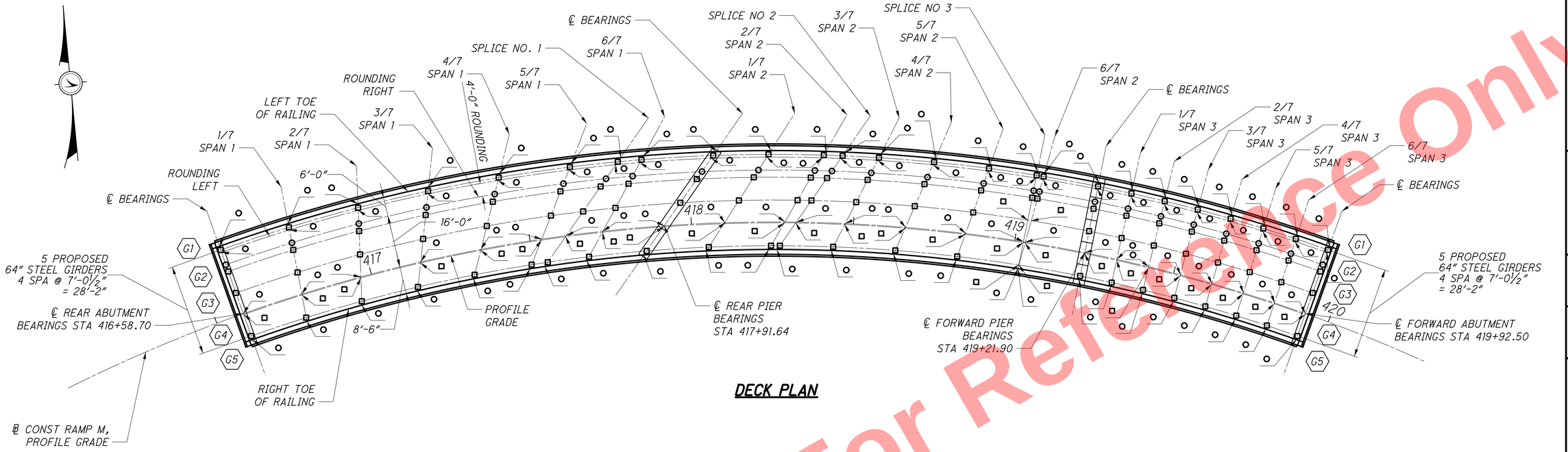

DECK PLAN

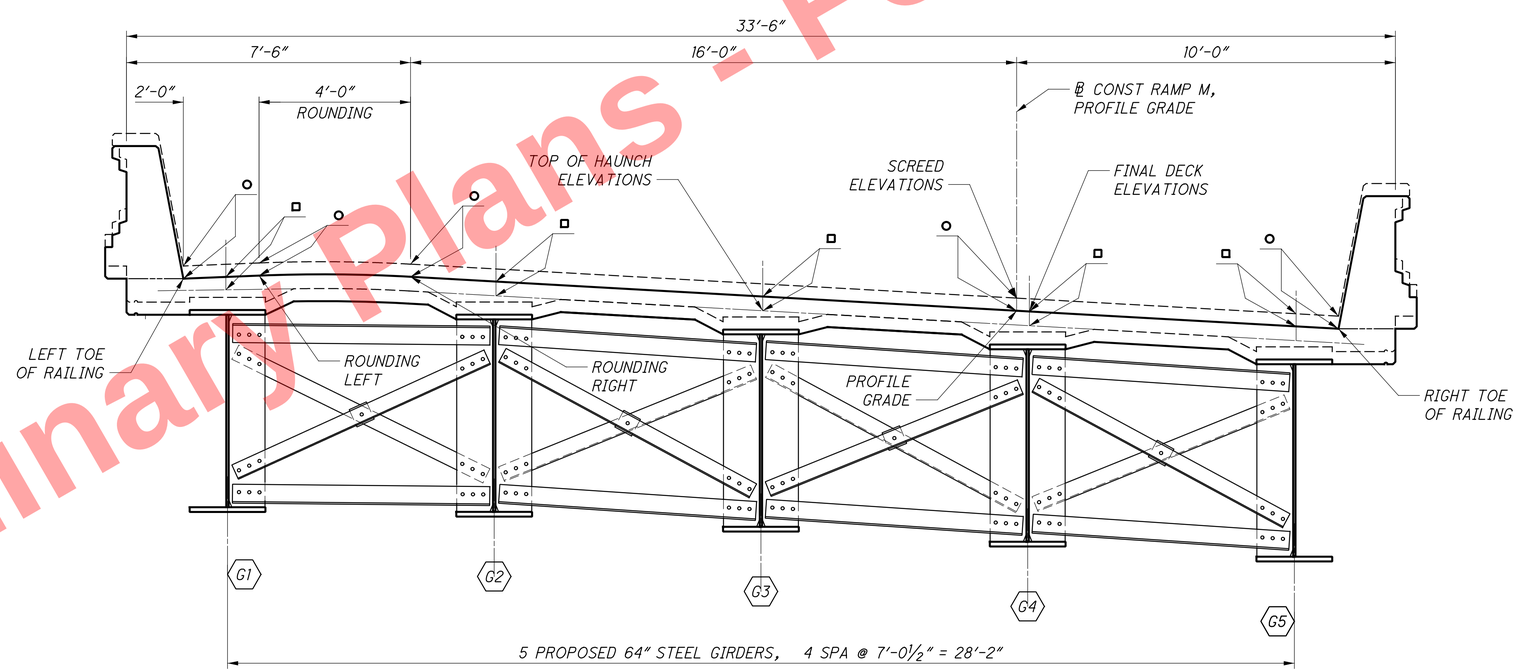

TYPICAL TRANSVERSE SECTION

LEGEND

- ○ - SCREED ELEVATIONS AND FINAL DECK ELEVATIONS.
- □ - TOP OF HAUNCH ELEVATIONS AND FINAL DECK ELEVATIONS.

NOTE

SEE GENERAL NOTES FOR ABBREVIATION LEGEND.

Preliminary Plans - For Reference Only

DESIGN AGENCY: EMH&T
DESIGNED: RMW | DRAWN: GB | REVIEWED: CAS | DATE: 5-22-26
CHECKED: RJE | REVISED: - | STRUCTURE FILE NUMBER: 3113787

DECK ELEVATION LOCATIONS
BRIDGE NO. HAM-562-0004
RAMP M OVER I.R. 75

HAM-75-7.85
PID No. 121447

39/56

847/1047

J:\2011093\ODOT\HAM\7.7889\structures\HAM562_0004P\sheets\562_0004CSD002.dgn 5/22/2026 10:38:51 AM hbrendlinger

SCREED ELEVATIONS*

		LEFT TOE OF RAILING		GIRDER 1		ROUNDING LEFT		ROUNDING RIGHT		GIRDER 2		GIRDER 3		PROFILE GRADE		GIRDER 4		GIRDER 5		RIGHT TOE OF RAILING	
		STATION	ELEVATION	STATION	ELEVATION	STATION	ELEVATION	STATION	ELEVATION	STATION	ELEVATION	STATION	ELEVATION	STATION	ELEVATION	STATION	ELEVATION	STATION	ELEVATION	STATION	ELEVATION
	REAR ABUTMENT	416+58.70	560.02	416+58.70	560.07	416+58.70	560.10	416+58.70	560.07	416+58.70	559.94	416+58.70	559.55	416+58.70	559.17	416+58.70	559.16	416+58.70	558.76	416+58.70	558.70
SPAN 1	1/7	416+80.08	561.09	416+79.96	561.13	416+79.67	561.15	416+79.46	561.09	416+79.22	560.95	416+78.46	560.51	416+77.69	560.08	416+77.66	560.07	416+76.83	559.62	416+76.69	559.55
	2/7	417+01.47	562.02	417+01.23	562.06	417+00.64	562.07	417+00.22	561.99	416+99.75	561.84	416+98.21	561.36	416+96.68	560.90	416+96.62	560.88	416+94.96	560.40	416+94.68	560.32
	3/7	417+22.85	562.80	417+22.49	562.83	417+21.61	562.84	417+20.97	562.75	417+20.27	562.60	417+17.97	562.09	417+15.67	561.61	417+15.58	561.59	417+13.09	561.08	417+12.67	561.00
	4/7	417+44.23	563.43	417+43.75	563.46	417+42.57	563.46	417+41.73	563.37	417+40.79	563.22	417+37.72	562.71	417+34.67	562.21	417+34.53	562.19	417+31.22	561.66	417+30.66	561.58
	5/7	417+65.61	563.91	417+65.01	563.94	417+63.54	563.94	417+62.49	563.86	417+61.31	563.71	417+57.48	563.20	417+53.66	562.70	417+53.49	562.68	417+49.35	562.16	417+48.65	562.07
	SPLICE 1	417+79.26	564.15	417+79.26	564.20	417+73.42	564.11	417+73.42	564.07	417+73.42	563.95	417+67.35	563.41	417+61.03	562.87	417+61.03	562.85	417+54.45	562.28	417+54.45	562.22
	6/7	417+87.00	564.27	417+86.28	564.30	417+84.51	564.31	417+83.25	564.24	417+81.84	564.09	417+77.23	563.59	417+72.65	563.11	417+72.45	563.09	417+67.48	562.57	417+66.64	562.49
	PIER 1	418+08.38	564.54	418+07.54	564.58	418+05.48	564.58	418+04.00	564.53	418+02.36	564.38	417+96.99	563.91	417+91.64	563.44	417+91.41	563.42	417+85.61	562.93	417+84.63	562.84
SPAN 2	1/7	418+24.60	564.71	418+23.88	564.75	418+22.11	564.77	418+20.85	564.73	418+19.44	564.59	418+14.83	564.15	418+10.25	563.73	418+10.05	563.71	418+05.08	563.25	418+04.24	563.18
	2/7	418+40.81	564.84	418+40.21	564.88	418+38.74	564.91	418+37.69	564.88	418+36.51	564.75	418+32.68	564.34	418+28.86	563.95	418+28.69	563.93	418+24.55	563.51	418+23.85	563.44
	SPLICE 2	418+45.78	564.87	418+45.78	564.92	418+41.40	564.93	418+41.40	564.91	418+41.40	564.79	418+36.88	564.38	418+32.19	563.98	418+32.19	563.96	418+27.33	563.54	418+27.33	563.48
	3/7	418+57.03	564.92	418+56.55	564.96	418+55.37	564.99	418+54.53	564.98	418+53.59	564.85	418+50.52	564.46	418+47.47	564.09	418+47.33	564.07	418+44.02	563.68	418+43.46	563.61
	4/7	418+73.25	564.94	418+72.89	564.98	418+72.01	565.02	418+71.37	565.00	418+70.67	564.88	418+68.37	564.50	418+66.07	564.14	418+65.98	564.12	418+63.49	563.74	418+63.07	563.68
	5/7	418+89.47	564.88	418+89.23	564.93	418+88.64	564.97	418+88.22	564.95	418+87.75	564.83	418+86.21	564.45	418+84.68	564.09	418+84.62	564.07	418+82.96	563.70	418+82.68	563.63
	SPLICE 3	419+03.48	564.79	419+03.48	564.83	419+03.22	564.87	419+03.22	564.84	419+03.22	564.72	419+02.95	564.33	419+02.69	563.96	419+02.68	563.94	419+02.40	563.56	419+02.29	563.49
	6/7	419+05.68	564.77	419+05.56	564.81	419+05.27	564.85	419+05.06	564.82	419+04.82	564.70	419+04.06	564.32	419+03.29	563.95	419+03.26	563.94	419+02.43	563.56	419+02.40	563.49
	PIER 2	419+21.90	564.59	419+21.90	564.63	419+21.90	564.67	419+21.90	564.64	419+21.90	564.51	419+21.90	564.12	419+21.90	563.74	419+21.90	563.72	419+21.90	563.33	419+21.90	563.26
SPAN 3	1/7	419+31.99	564.45	419+31.99	564.50	419+31.99	564.53	419+31.99	564.50	419+31.99	564.38	419+31.99	563.98	419+31.99	563.60	419+31.99	563.58	419+31.99	563.19	419+31.99	563.12
	2/7	419+42.07	564.30	419+42.07	564.35	419+42.07	564.38	419+42.07	564.34	419+42.07	564.22	419+42.07	563.82	419+42.07	563.44	419+42.07	563.42	419+42.07	563.03	419+42.07	562.96
	3/7	419+52.16	564.12	419+52.16	564.17	419+52.16	564.20	419+52.16	564.16	419+52.16	564.04	419+52.16	563.64	419+52.16	563.26	419+52.16	563.24	419+52.16	562.85	419+52.16	562.78
	4/7	419+62.24	563.92	419+62.24	563.96	419+62.24	564.00	419+62.24	563.96	419+62.24	563.84	419+62.24	563.44	419+62.24	563.06	419+62.24	563.04	419+62.24	562.64	419+62.24	562.58
	5/7	419+72.33	563.68	419+72.33	563.73	419+72.33	563.76	419+72.33	563.73	419+72.33	563.60	419+72.33	563.21	419+72.33	562.83	419+72.33	562.81	419+72.33	562.41	419+72.33	562.35
	6/7	419+82.41	563.42	419+82.41	563.47	419+82.41	563.50	419+82.41	563.47	419+82.41	563.35	419+82.41	562.95	419+82.41	562.57	419+82.41	562.55	419+82.41	562.16	419+82.41	562.09
	FWD. ABUTMENT	419+92.50	563.14	419+92.50	563.19	419+92.50	563.22	419+92.50	563.19	419+92.50	563.06	419+92.50	562.67	419+92.50	562.29	419+92.50	562.28	419+92.50	561.88	419+92.50	561.82

Preliminary Plans - For Review Only

NOTES

1. SCREED ELEVATIONS SHOWN REPRESENT THE THEORETICAL DECK SURFACE LOCATION PRIOR TO DEFLECTIONS CAUSED BY DECK PLACEMENT AND OTHER ANTICIPATED DEAD LOADS.
2. SEE GENERAL NOTES FOR ABBREVIATION LEGEND.

LEGEND

* - SEE DECK ELEVATION LOCATIONS SHEET FOR LOCATIONS OF ELEVATIONS

DESIGN AGENCY
EMH&T
Engineers • Surveyors • Planners • Scientists
5500 New Albany Road, Columbus, OH 43054
Phone: 614.775.4500

DESIGNED	DRAWN	REVIEWED	DATE
RMW	GB	CAS	5-22-26
CHECKED	REVISED	STRUCTURE FILE NUMBER	
RJE	-	3113787	

SCREED ELEVATIONS
BRIDGE NO. HAM-562-0004
RAMP M OVER I.R. 75

HAM-75-7.85
PID No. 121447

J:\20110903\ODOT\HAM\7889\structures\HAM562_0004P\sheets\562_0004CSD010.dgn 5/22/2026 10:38:52 AM hbrendlinger

TOP OF HAUNCH ELEVATIONS*

		GIRDER 1		GIRDER 2		GIRDER 3		GIRDER 4		GIRDER 5	
		STATION	ELEVATION	STATION	ELEVATION	STATION	ELEVATION	STATION	ELEVATION	STATION	ELEVATION
	REAR ABUTMENT	416+58.70	559.36	416+58.70	559.24	416+58.70	558.84	416+58.70	558.45	416+58.70	558.05
SPAN 1	1/7	416+79.96	560.42	416+79.22	560.25	416+78.46	559.80	416+77.66	559.36	416+76.83	558.91
	2/7	417+01.23	561.35	416+99.75	561.14	416+98.21	560.65	416+96.62	560.17	416+94.96	559.69
	3/7	417+22.49	562.13	417+20.27	561.89	417+17.97	561.39	417+15.58	560.88	417+13.09	560.37
	4/7	417+43.75	562.75	417+40.79	562.51	417+37.72	562.00	417+34.53	561.48	417+31.22	560.95
	5/7	417+65.01	563.23	417+61.31	563.00	417+57.48	562.49	417+53.49	561.97	417+49.35	561.45
	SPLICE 1	417+79.26	563.49	417+73.42	563.24	417+67.35	562.70	417+61.03	562.15	417+54.45	561.57
	6/7	417+86.28	563.60	417+81.84	563.38	417+77.23	562.88	417+72.45	562.38	417+67.48	561.86
	PIER 1	418+07.54	563.87	418+02.36	563.68	417+96.99	563.20	417+91.41	562.71	417+85.61	562.22
SPAN 2	1/7	418+23.88	564.04	418+19.44	563.89	418+14.83	563.45	418+10.05	563.00	418+05.08	562.55
	2/7	418+40.21	564.18	418+36.51	564.04	418+32.68	563.64	418+28.69	563.22	418+24.55	562.80
	SPLICE 2	418+45.78	564.21	418+41.40	564.08	418+36.88	563.67	418+32.19	563.26	418+27.33	562.83
	3/7	418+56.55	564.26	418+53.59	564.14	418+50.52	563.76	418+47.33	563.36	418+44.02	562.97
	4/7	418+72.89	564.27	418+70.67	564.17	418+68.37	563.79	418+65.98	563.41	418+63.49	563.03
	5/7	418+89.23	564.22	418+87.75	564.12	418+86.21	563.74	418+84.62	563.37	418+82.96	562.99
	SPLICE 3	419+03.48	564.12	419+03.22	564.01	419+02.95	563.62	419+02.68	563.23	419+02.40	562.85
	6/7	419+05.56	564.10	419+04.82	563.99	419+04.06	563.61	419+03.26	563.23	419+02.43	562.85
	PIER 2	419+21.90	563.93	419+21.90	563.80	419+21.90	563.41	419+21.90	563.01	419+21.90	562.62
SPAN 3	1/7	419+31.99	563.79	419+31.99	563.67	419+31.99	563.27	419+31.99	562.88	419+31.99	562.48
	2/7	419+42.07	563.64	419+42.07	563.51	419+42.07	563.11	419+42.07	562.72	419+42.07	562.32
	3/7	419+52.16	563.46	419+52.16	563.33	419+52.16	562.93	419+52.16	562.54	419+52.16	562.14
	4/7	419+62.24	563.25	419+62.24	563.13	419+62.24	562.73	419+62.24	562.33	419+62.24	561.93
	5/7	419+72.33	563.02	419+72.33	562.90	419+72.33	562.50	419+72.33	562.10	419+72.33	561.70
	6/7	419+82.41	562.76	419+82.41	562.64	419+82.41	562.24	419+82.41	561.85	419+82.41	561.45
	FWD. ABUTMENT	419+92.50	562.48	419+92.50	562.36	419+92.50	561.96	419+92.50	561.57	419+92.50	561.17

FINAL DECK SURFACE ELEVATIONS*

		LEFT TOE OF RAILING		GIRDER 1		ROUNDING LEFT		ROUNDING RIGHT		GIRDER 2		GIRDER 3		PROFILE GRADE		GIRDER 4		GIRDER 5		RIGHT TOE OF RAILING	
		STATION	ELEVATION	STATION	ELEVATION	STATION	ELEVATION	STATION	ELEVATION	STATION	ELEVATION	STATION	ELEVATION	STATION	ELEVATION	STATION	ELEVATION	STATION	ELEVATION	STATION	ELEVATION
	REAR ABUTMENT	416+58.70	560.02	416+58.70	560.07	416+58.70	560.10	416+58.70	560.07	416+58.70	559.94	416+58.70	559.55	416+58.70	559.17	416+58.70	559.16	416+58.70	558.76	416+58.70	558.70
SPAN 1	1/7	416+80.08	560.98	416+79.96	561.02	416+79.67	561.04	416+79.46	561.00	416+79.22	560.87	416+78.46	560.44	416+77.69	560.03	416+77.66	560.01	416+76.83	559.58	416+76.69	559.51
	2/7	417+01.47	561.83	417+01.23	561.87	417+00.64	561.88	417+00.22	561.83	416+99.75	561.69	416+98.21	561.24	416+96.68	560.80	416+96.62	560.78	416+94.96	560.32	416+94.68	560.25
	3/7	417+22.85	562.58	417+22.49	562.62	417+21.61	562.62	417+20.97	562.57	417+20.27	562.42	417+17.97	561.95	417+15.67	561.49	417+15.58	561.47	417+13.09	560.99	417+12.67	560.91
	4/7	417+44.23	563.23	417+43.75	563.26	417+42.57	563.26	417+41.73	563.21	417+40.79	563.05	417+37.72	562.57	417+34.67	562.10	417+34.53	562.08	417+31.22	561.59	417+30.66	561.51
	5/7	417+65.61	563.77	417+65.01	563.80	417+63.54	563.80	417+62.49	563.75	417+61.31	563.59	417+57.48	563.11	417+53.66	562.63	417+53.49	562.61	417+49.35	562.11	417+48.65	562.02
	SPLICE 1	417+79.26	564.06	417+79.26	564.11	417+73.42	564.02	417+73.42	563.99	417+73.42	563.87	417+67.35	563.34	417+61.03	562.81	417+61.03	562.80	417+54.45	562.24	417+54.45	562.18
	6/7	417+87.00	564.21	417+86.28	564.24	417+84.51	564.24	417+83.25	564.19	417+81.84	564.04	417+77.23	563.55	417+72.65	563.08	417+72.45	563.06	417+67.48	562.55	417+66.64	562.47
	PIER 1	418+08.38	564.54	418+07.54	564.58	418+05.48	564.58	418+04.00	564.53	418+02.36	564.38	417+96.99	563.91	417+91.64	563.44	417+91.41	563.42	417+85.61	562.93	417+84.63	562.84
SPAN 2	1/7	418+24.60	564.73	418+23.88	564.77	418+22.11	564.78	418+20.85	564.74	418+19.44	564.60	418+14.83	564.16	418+10.25	563.72	418+10.05	563.70	418+05.08	563.24	418+04.24	563.16
	2/7	418+40.81	564.85	418+40.21	564.90	418+38.74	564.92	418+37.69	564.88	418+36.51	564.75	418+32.68	564.33	418+28.86	563.92	418+28.69	563.90	418+24.55	563.47	418+23.85	563.40
	SPLICE 2	418+45.78	564.88	418+45.78	564.93	418+41.40	564.94	418+41.40	564.91	418+41.40	564.78	418+36.88	564.36	418+32.19	563.95	418+32.19	563.93	418+27.33	563.50	418+27.33	563.43
	3/7	418+57.03	564.92	418+56.55	564.97	418+55.37	565.00	418+54.53	564.96	418+53.59	564.84	418+50.52	564.43	418+47.47	564.04	418+47.33	564.02	418+44.02	563.61	418+43.46	563.55
	4/7	418+73.25	564.93	418+72.89	564.97	418+72.01	565.01	418+71.37	564.98	418+70.67	564.85	418+68.37	564.46	418+66.07	564.08	418+65.98	564.07	418+63.49	563.67	418+63.07	563.61
	5/7	418+89.47	564.87	418+89.23	564.92	418+88.64	564.96	418+88.22	564.93	418+87.75	564.81	418+86.21	564.42	418+84.68	564.05	418+84.62	564.03	418+82.96	563.64	418+82.68	563.58
	SPLICE 3	419+03.48	564.78	419+03.48	564.83	419+03.22	564.86	419+03.22	564.83	419+03.22	564.71	419+02.95	564.31	419+02.69	563.94	419+02.68	563.92	419+02.40	563.53	419+02.29	563.46
	6/7	419+05.68	564.76	419+05.56	564.81	419+05.27	564.84	419+05.06	564.81	419+04.82	564.69	419+04.06	564.30	419+03.29	563.93	419+03.26	563.92	419+02.43	563.53	419+02.40	563.46
	PIER 2	419+21.90	564.59	419+21.90	564.63	419+21.90	564.67	419+21.90	564.64	419+21.90	564.51	419+21.90	564.12	419+21.90	563.74	419+21.90	563.72	419+21.90	563.33	419+21.90	563.26
SPAN 3	1/7	419+31.99	564.45	419+31.99	564.50	419+31.99	564.53	419+31.99	564.50	419+31.99	564.37	419+31.99	563.98	419+31.99	563.60	419+31.99	563.59	419+31.99	563.19	419+31.99	563.13
	2/7	419+42.07	564.29	419+42.07	564.34	419+42.07	564.37	419+42.07	564.34	419+42.07	564.21	419+42.07	563.82	419+42.07	563.44	419+42.07	563.42	419+42.07	563.03	419+42.07	562.96
	3/7	419+52.16	564.11	419+52.16	564.15	419+52.16	564.19	419+52.16	564.15	419+52.16	564.03	419+52.16	563.64	419+52.16	563.26	419+52.16	563.24	419+52.16	562.85	419+52.16	562.78
	4/7	419+62.24	563.90	419+62.24	563.95	419+62.24	563.98	419+62.24	563.95	419+62.24	563.82	419+62.24	563.43	419+62.24	563.05	419+62.24	563.03	419+62.24	562.64	419+62.24	562.57
	5/7	419+72.33	563.67	419+72.33	563.72	419+72.33	563.75	419+72.33	563.72	419+72.33	563.59	419+72.33	563.20	419+72.33	562.82	419+72.33	562.80	419+72.33	562.41	419+72.33	562.34
	6/7	419+82.41	563.42	419+82.41	563.46	419+82.41	563.50	419+82.41	563.46	419+82.41	563.34	419+82.41	562.95	419+82.41	562.57	419+82.41	562.55	419+82.41	562.16	419+82.41	562.09
	FWD. ABUTMENT	419+92.50	563.14	419+92.50	563.19	419+92.50	563.22	419+92.50	563.19	419+92.50	563.06	419+92.50	562.67	419+92.50	562.29	419+92.50	562.28	419+92.50	561.88	419+92.50	561.82

LEGEND

* - SEE DECK ELEVATION LOCATIONS SHEET FOR LOCATIONS OF ELEVATIONS

NOTES

1. TOP OF HAUNCH ELEVATIONS SHOWN REPRESENT THE THEORETICAL LOCATION OF THE BOTTOM OF THE DECK ABOVE THE BEAM HAUNCH PRIOR TO DEFLECTIONS CAUSED BY DECK PLACEMENT AND OTHER ANTICIPATED DEAD LOADS.
2. FINAL DECK SURFACE ELEVATIONS SHOWN REPRESENT THE DECK SURFACE LOCATION AFTER ALL ANTICIPATED DEAD LOAD DEFLECTIONS HAVE occurred.
3. SEE GENERAL NOTES FOR ABBREVIATION LEGEND.

For Reference Only
Preliminary Plans

DESIGN AGENCY: EMH&T
DESIGNED: RMW | DRAWN: GB | CHECKED: RJE | REVIEWED: CAS | DATE: 5-22-26 | REVISED: - | STRUCTURE FILE NUMBER: 3113787

TOP OF HAUNCH AND FINAL DECK ELEVATIONS
BRIDGE NO. HAM-562-0004
RAMP M OVER I.R. 75

HAM-75-7.85
PID No. 121447

J:\2011093\ODOT\HAM\77889\structures\HAM562_0004P\sheets\562_0004CSD011.dgn 5/22/2026 10:38:53 AM hbrendlinger

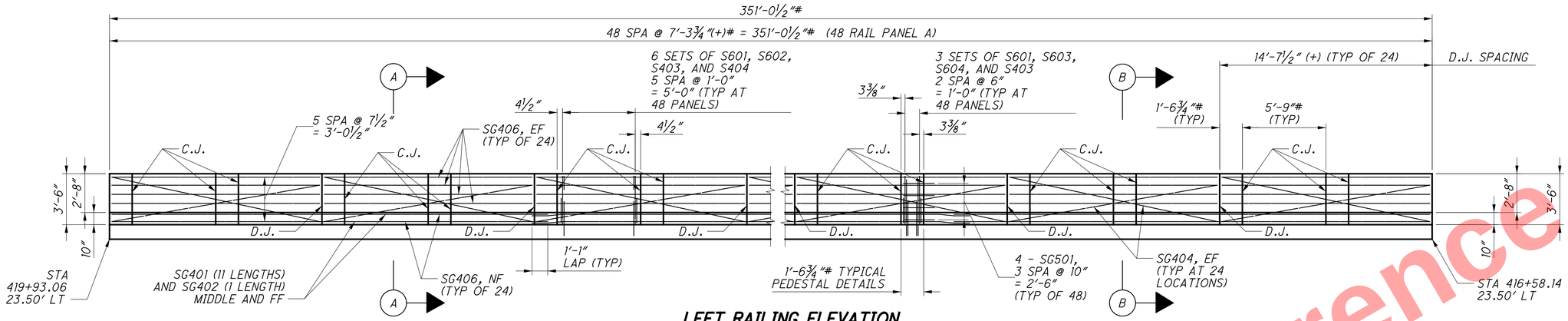

LEFT RAILING ELEVATION

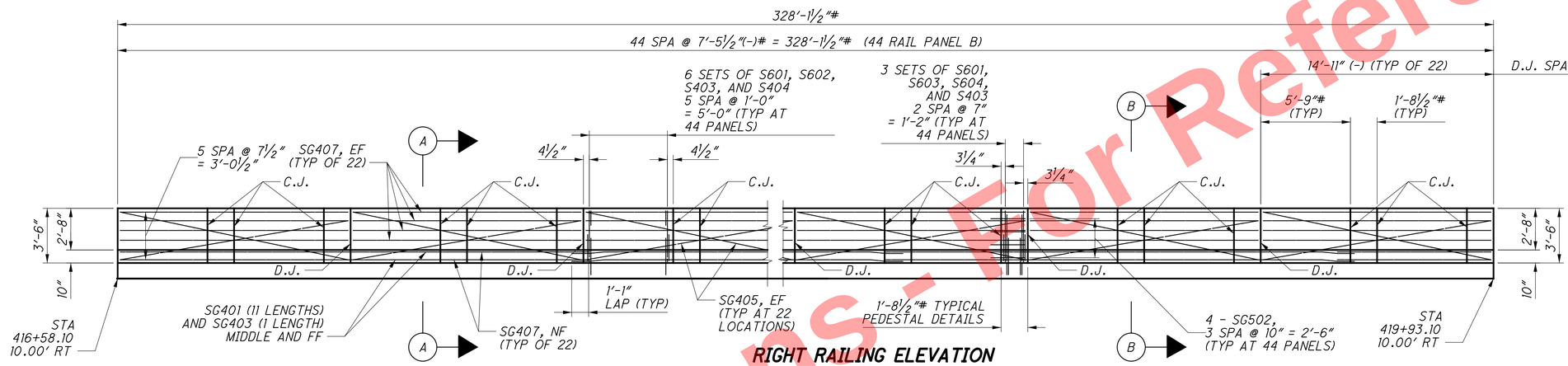

RIGHT RAILING ELEVATION

NOTES

1. ELEVATION VIEWS LOOKING AT EXTERIOR FACE OF RAILING.
2. SEE GENERAL NOTES FOR ABBREVIATION LEGEND.
3. FOR ADDITIONAL RAILING DETAILS NOT SHOWN ON THIS SHEET, REFER TO ODOT STANDARD DRAWING SBR-1-20.

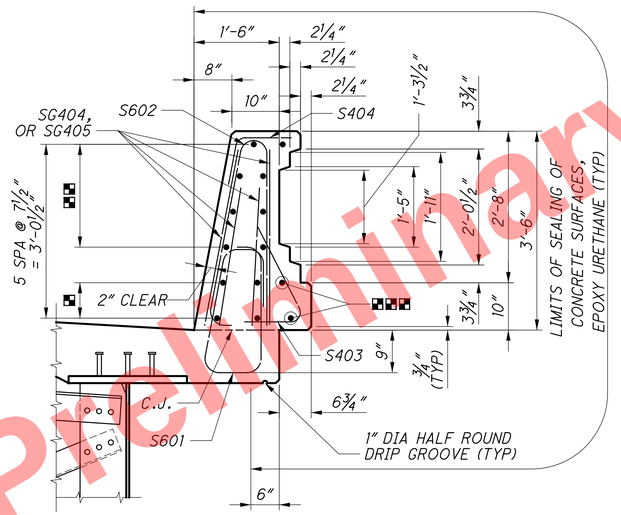

SECTION A-A

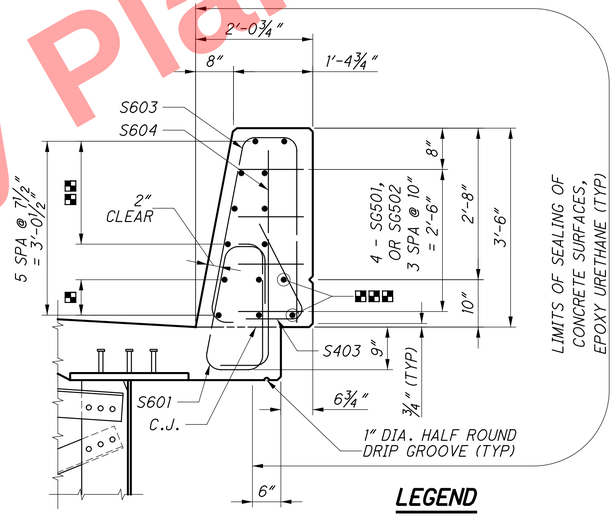

SECTION B-B

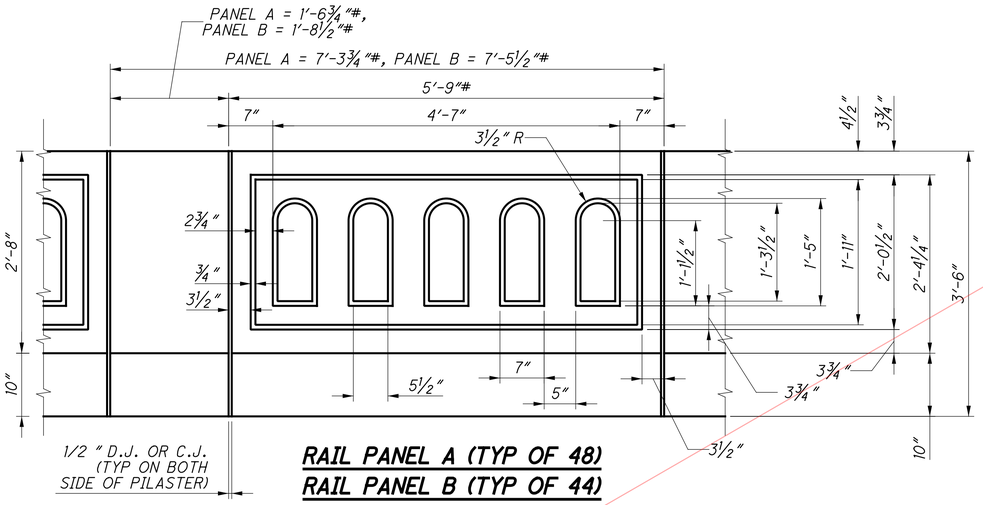

RAIL PANEL A (TYP OF 48)
RAIL PANEL B (TYP OF 44)

(DECK NOT SHOWN)

LEGEND

\# - DIMENSIONS MEASURED ALONG THE LEFT OR RIGHT EDGE OF DECK

▪ - 2 SETS OF SG401 (11 LENGTHS), AND SG402 OR SG403 (1 LENGTH), NF AND MIDDLE, SPA @ 7½"

▪▪▪▪ - 4 - SG406, OR SG407, EF, SPA @ 7½"

▪▪▪▪ - SG406, OR SG407

D.J. - DEFLECTION JOINT, DETAILS SEE SHEET 52/56

C.J. - CONTRACTION JOINT, DETAILS SEE SHEET 52/56

Preliminary Plans - For Reference Only

DESIGN AGENCY: EMH&T

DESIGNED	DRAWN	REVIEWED	DATE
RJE	GB	CAS	5-22-26
CHECKED	REVISED	STRUCTURE FILE NUMBER	
RMW	-	3113787	

RAILING DETAILS

BRIDGE NO. HAM-562-0004

RAMP M OVER I.R. 75

HAM-75-7.85

PID No. 121447

850/1047

J:\2011090\3\ODOT\HAM\77889\structures\HAM562_0004P\sheets\562_0004CRA001.dgn 5/22/2026 10:38:53 AM hbrendlinger

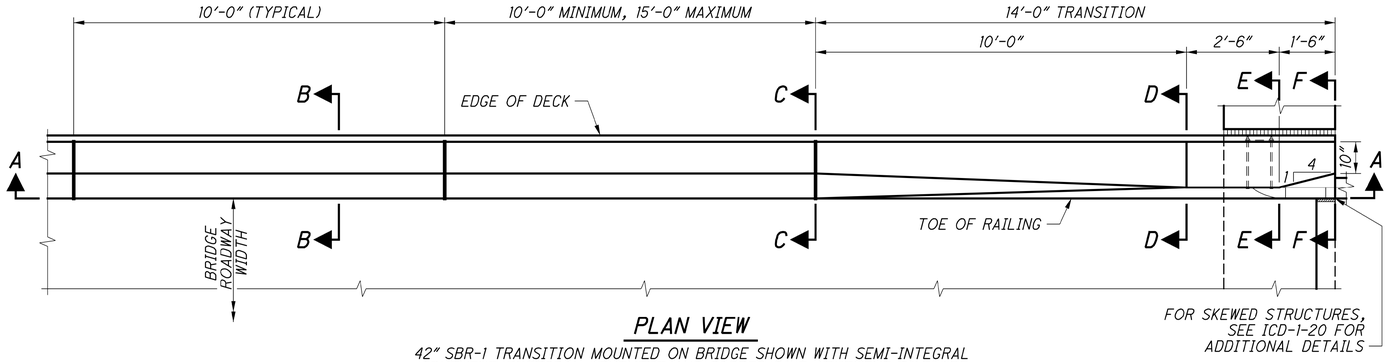

PLAN VIEW

42" SBR-1 TRANSITION MOUNTED ON BRIDGE SHOWN WITH SEMI-INTEGRAL ABUTMENT (INTEGRAL ABUTMENT AND CAPPED PILE ABUTMENT SIMILAR)

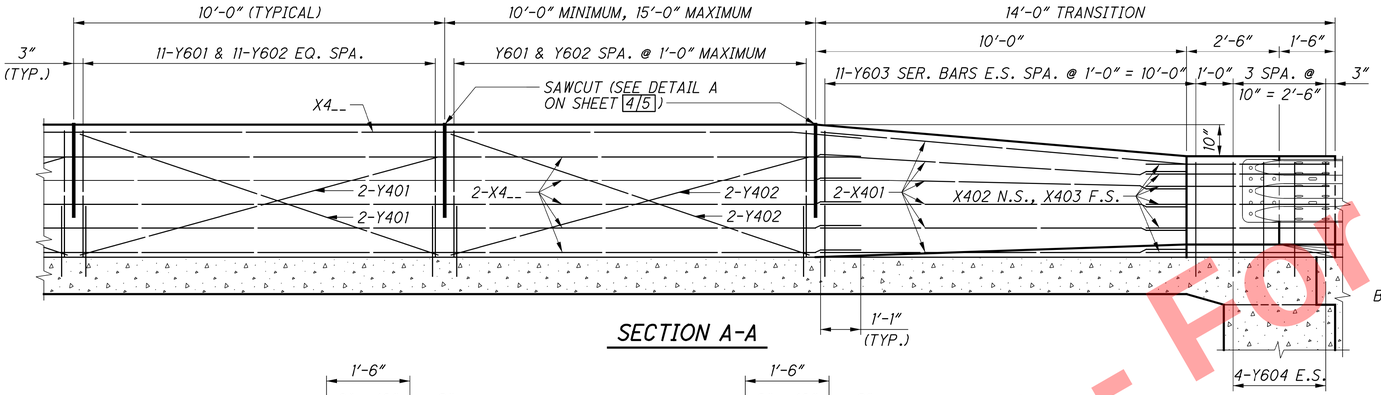

SECTION A-A

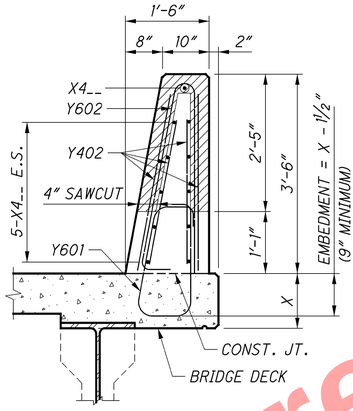

SECTION C-C

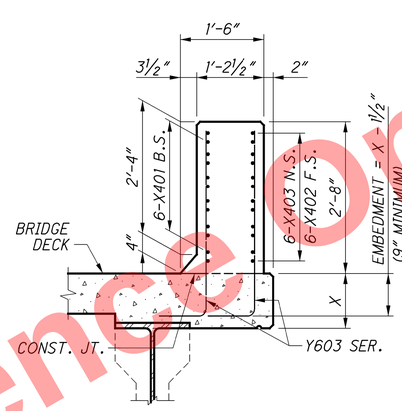

SECTION D-D

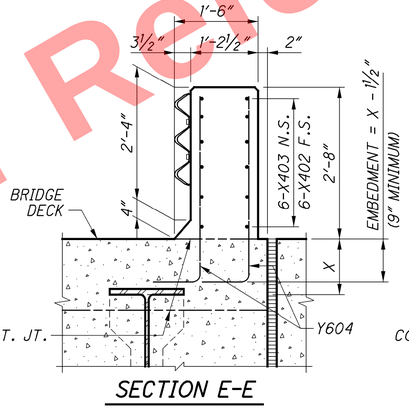

SECTION E-E

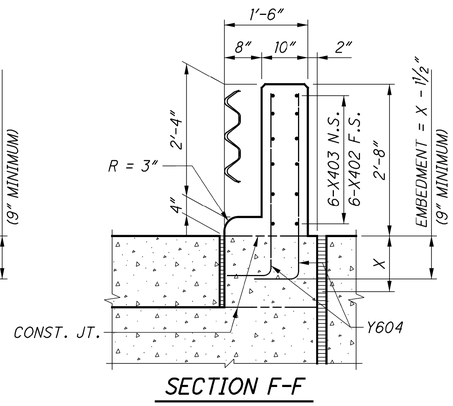

SECTION F-F

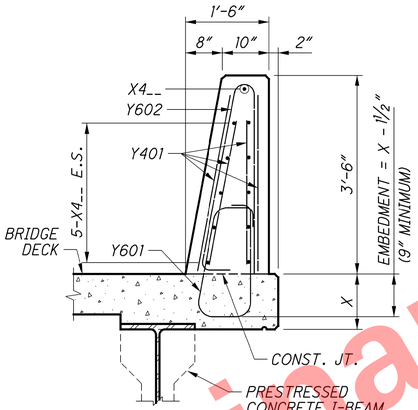

SECTION B-B

REINFORCED CONCRETE DECK ON STEEL OR PRESTRESSED CONCRETE I-BEAMS/GIRDERS (SAWCUT NOT SHOWN)

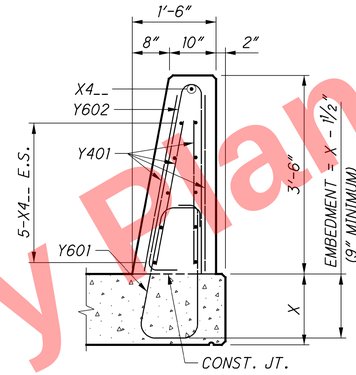

SECTION B-B

CONTINUOUS OR SINGLE SPAN REINFORCED CONCRETE SLAB BRIDGE (SAWCUT NOT SHOWN)

LEGEND:

E.S. = EACH SIDE
F.S = FAR SIDE
N.S. = NEAR SIDE

NOTES:

1. FOR ALL SINGLE SLOPE CONCRETE BRIDGE RAILINGS INCLUDING THE 14'-0" TRANSITIONS, PROJECT PLANS SHALL INCLUDE PLAN VIEW, ELEVATION VIEW, SECTIONS, REINFORCING MARKS, REINFORCING BENDING DIAGRAMS, AND REINFORCING QUANTITIES.
2. SEE APPROPRIATE STANDARD BRIDGE DRAWING FOR ABUTMENT DETAILS.
3. FOR BRIDGE TERMINAL ASSEMBLY, SEE STD. CONSTR. DWGS. MGS-3.1 AND MGS-3.2.
4. FOR SAWCUT PERIMETER LENGTH, SEE DETAIL A ON SHEET 4/5.
5. FOR DEFLECTION JOINT DETAILS AND ADDITIONAL NOTES, SEE SHEET 5/5.
6. USE GLASS FIBER REINFORCED POLYMER (GFRP) FOR ALL HORIZONTAL X4__ BARS AND STIFFENING BARS (Y401 & Y402 BARS).
7. TIE Y401 & Y402 STIFFENING BARS LOCATED INSIDE THE VERTICAL REINFORCEMENT AT EACH HORIZONTAL BAR. TIE Y401 & Y402 STIFFENING BARS LOCATED OUTSIDE OF THE VERTICAL REINFORCEMENT AT EACH VERTICAL BAR.
8. PLACE STIFFENING BARS IN ALL SAWCUT PANELS 10'-0" AND GREATER. DO NOT ADD STIFFENING BARS TO 14'-0" TRANSITIONS. DO NOT SLIPFORM UNSTIFFENED SAWCUT PANELS. DO NOT OMIT STIFFENING BARS FOR CONVENTIONALLY FORMED CONSTRUCTION.
9. X402 BAR MAY BE PROVIDED AS EPOXY COATED STEEL REINFORCEMENT IF A GFRP FABRICATED SHAPE IS NOT AVAILABLE.

REINFORCEMENT FOR 42" SBR-1 TRANSITION MOUNTED ON BRIDGE OR APPROACH SLAB

MARK	LENGTH	TYPE	MATERIAL	INCRE.	BENDING DIAGRAMS
X401	10'-0"	STR	GFRP		
X402	6'-4"	BENT	GFRP		
X403	5'-1"	STR	GFRP		
X4__	⊕	STR	GFRP		
Y401	10'-0"	STR	GFRP		
Y402	⊕	STR	GFRP		
Y601	5'-5"+2.25A	BENT	STEEL		
Y602	7'-0"	BENT	STEEL		
Y603 SER. OF 11	A + B + 10"	BENT	STEEL	3'-4" TO (1") 2'-6"	
Y604	A + 3'-4"	BENT	STEEL		

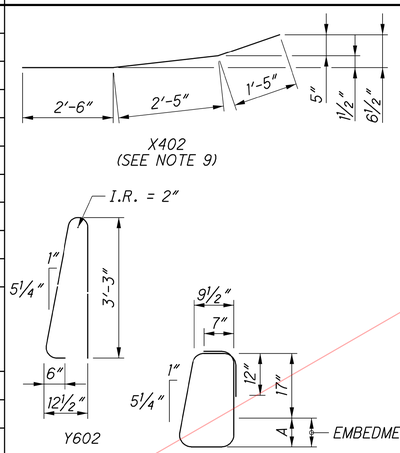

⊕ SEE PROJECT PLANS

OFFICE OF STRUCTURAL ENGINEERING

REVISION
07-17-2020
01-20-2023

STDS ENGINEER

STANDARD BRIDGE DRAWING
42" SINGLE SLOPE CONCRETE BRIDGE RAILING

DESIGN AGENCY

STATE OF OHIO DEPARTMENT OF TRANSPORTATION

SCD NUMBER
SBR-1-20

1 / 5
43 / 56
851 / 1047

Preliminary Plans - For Reference Only

J:\2011\0903\ODOT\HAM\77889\structures\HAM562_0004P\sheets\562_0004CRA005.dgn 5/22/2026 10:38:54 AM hbrendlinger

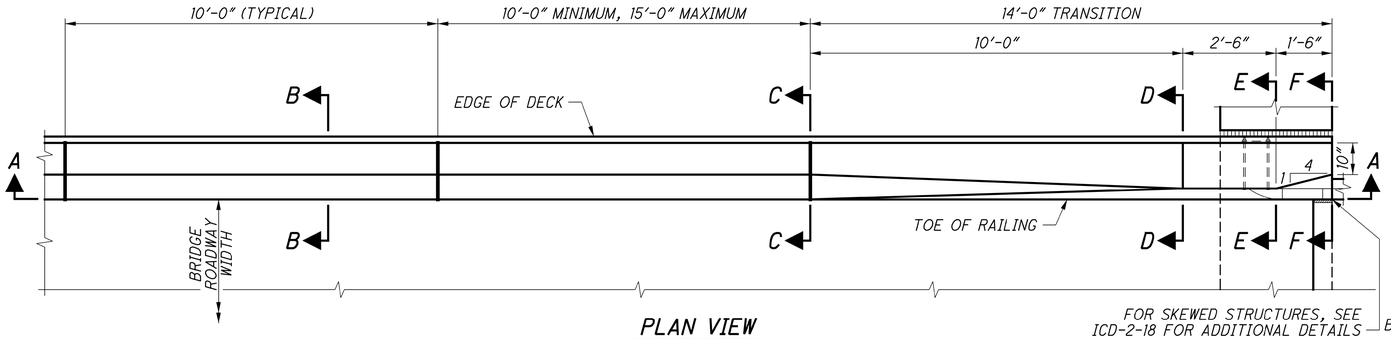

PLAN VIEW

42" SBR-1 TRANSITION MOUNTED ON BRIDGE SHOWN WITH INTEGRAL ABUTMENT AND ADJACENT BOX BEAM SUPERSTRUCTURE

FOR SKEWED STRUCTURES, SEE ICD-2-18 FOR ADDITIONAL DETAILS

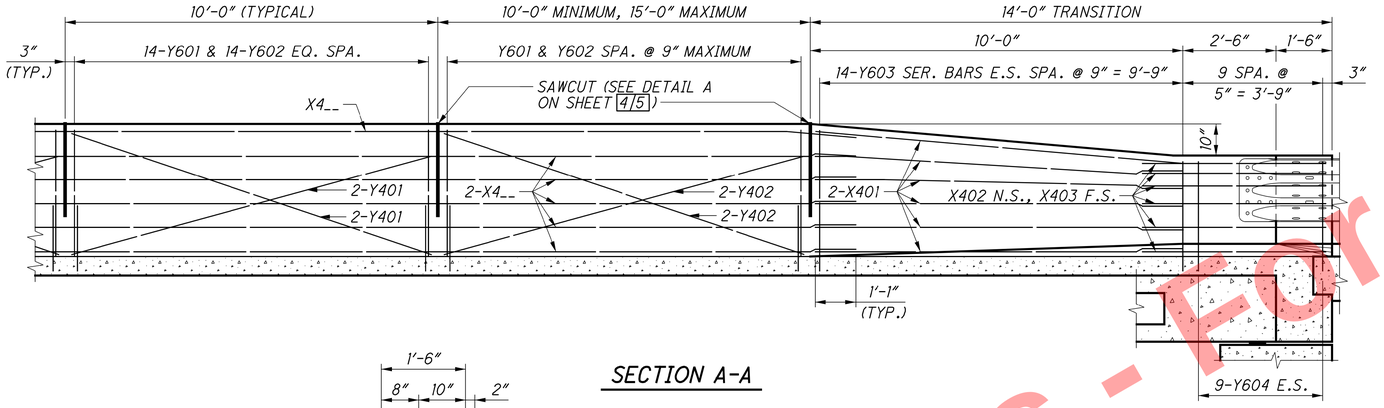

SECTION A-A

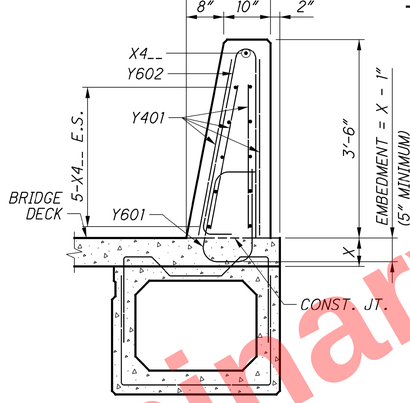

SECTION B-B

COMPOSITE PRESTRESSED CONCRETE BOX BEAMS (SAWCUT NOT SHOWN)

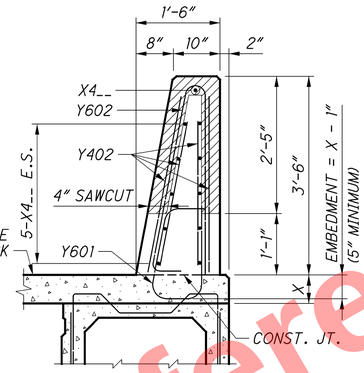

SECTION C-C

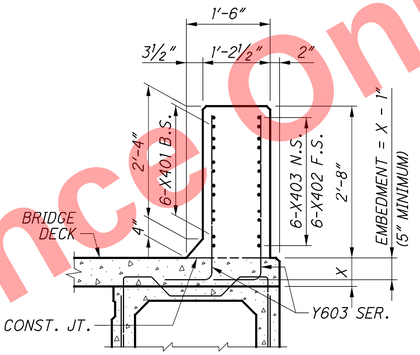

SECTION D-D

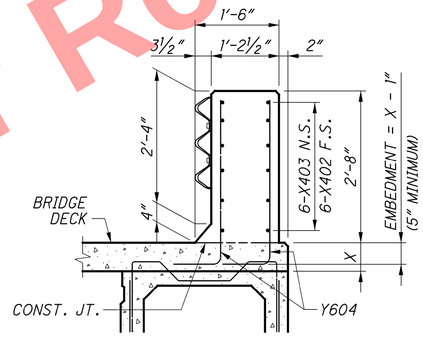

SECTION E-E

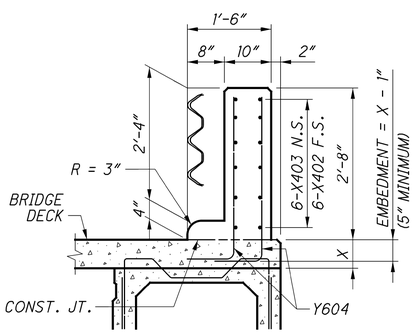

SECTION F-F

LEGEND:

E.S. = EACH SIDE
F.S = FAR SIDE
N.S. = NEAR SIDE

NOTES:

1. FOR ALL SINGLE SLOPE CONCRETE BRIDGE RAILINGS INCLUDING THE 14'-0" TRANSITIONS, PROJECT PLANS SHALL INCLUDE PLAN VIEW, ELEVATION VIEW, SECTIONS, REINFORCING MARKS, REINFORCING BENDING DIAGRAMS, AND REINFORCING QUANTITIES.
2. SEE APPROPRIATE STANDARD BRIDGE DRAWING FOR ABUTMENT DETAILS.
3. FOR BRIDGE TERMINAL ASSEMBLY, SEE STD. CONSTR. DWGS. MGS-3.1 AND MGS-3.2.
4. FOR SAWCUT PERIMETER LENGTH, SEE DETAIL A ON SHEET 4/5.
5. FOR DEFLECTION JOINT DETAILS AND ADDITIONAL NOTES, SEE SHEET 5/5.
6. THE HORIZONTAL LEGS OF THE Y615 BARS ARE INTENDED TO LAP WITH THE BOTTOM TRANSVERSE STEEL IN THE DECK. THE SPACING MAY BE ADJUSTED THE MINIMUM DISTANCE NECESSARY TO AVOID INTERFERENCE WITH THE TRANSVERSE DECK REINFORCEMENT.
7. USE GLASS FIBER REINFORCED POLYMER (GFRP) FOR ALL HORIZONTAL X4__ BARS AND STIFFENING BARS (Y401 & Y402 BARS).
8. TIE Y401 & Y402 STIFFENING BARS LOCATED INSIDE THE VERTICAL REINFORCEMENT AT EACH HORIZONTAL BAR. TIE Y401 & Y402 STIFFENING BARS LOCATED OUTSIDE OF THE VERTICAL REINFORCEMENT AT EACH VERTICAL BAR.
9. PLACE STIFFENING BARS IN ALL SAWCUT PANELS 10'-0" AND GREATER. DO NOT ADD STIFFENING BARS TO 14'-0" TRANSITIONS. DO NOT SLIPFORM UNSTIFFENED SAWCUT PANELS. DO NOT OMIT STIFFENING BARS FOR CONVENTIONALLY FORMED CONSTRUCTION.
10. X402 BAR MAY BE PROVIDED AS EPOXY COATED STEEL REINFORCEMENT IF A GFRP FABRICATED SHAPE IS NOT AVAILABLE.

REINFORCEMENT FOR 42" SBR-1 TRANSITION MOUNTED ON COMPOSITE BOX BEAM BRIDGE

MARK	LENGTH	TYPE	MATERIAL	INCRE.
X401	10'-0"	STR	GFRP	
X402	6'-4"	BENT	GFRP	
X403	5'-1"	STR	GFRP	
X4__	⊕	STR	GFRP	
Y401	10'-0"	STR	GFRP	
Y402	⊕	STR	GFRP	
Y601	5'-5"+2.25A	BENT	STEEL	
Y602	7'-0"	BENT	STEEL	
Y603 SER. OF 14	A + B + 10"	BENT	STEEL	3'-4" TO (3¼") 2'-6"
Y604	A + 3'-4"	BENT	STEEL	

BENDING DIAGRAMS

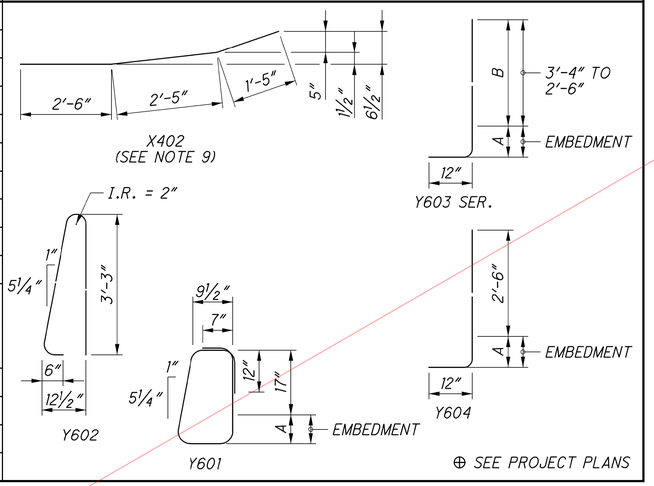

⊕ SEE PROJECT PLANS

OFFICE OF STRUCTURAL ENGINEERING

REVISION
07-17-2020
01-20-2023

STDS ENGINEER

STANDARD BRIDGE DRAWING
42" SINGLE SLOPE CONCRETE BRIDGE RAILING

DESIGN AGENCY

STATE OF OHIO DEPARTMENT OF TRANSPORTATION

SCD NUMBER
SBR-1-20

2 / 5
44 / 56
852 / 1047

Preliminary Plans - For Reference Only

J:\2011903\ODOT\HAM\77889\structures\HAM562_0004P\sheets\562_0004CRA006.dgn 5/22/2026 10:40:36 AM hbrendlinger

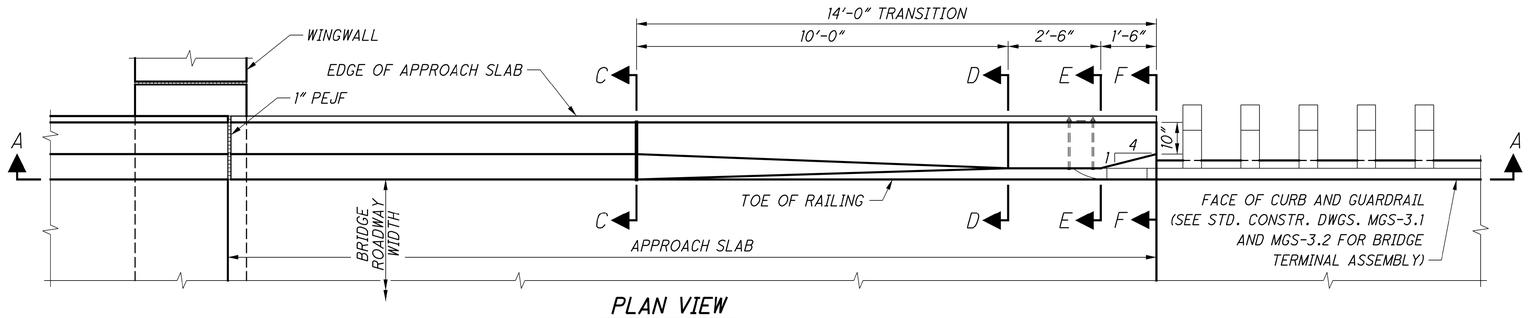

PLAN VIEW

42" SBR-1 TRANSITION MOUNTED ON APPROACH SLAB WITH SEMI-INTEGRAL ABUTMENT SHOWN (INTEGRAL ABUTMENT AND CAPPED PILE ABUTMENT SIMILAR)

LEGEND:

E.S. = EACH SIDE
F.S. = FAR SIDE
N.S. = NEAR SIDE
PEJF = PREFORMED EXPANSION JOINT FILLER

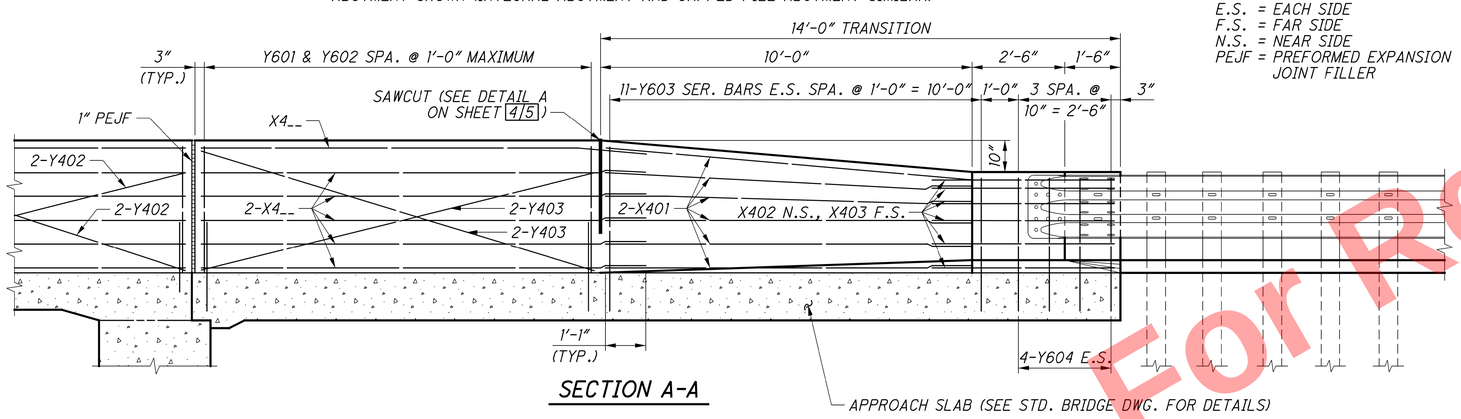

SECTION A-A

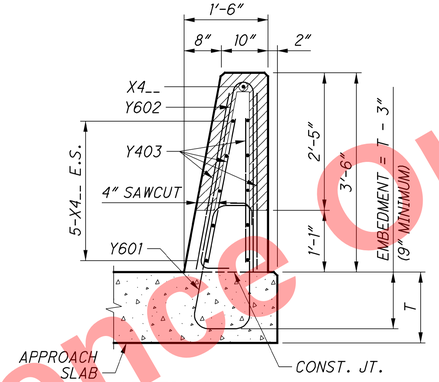

SECTION C-C

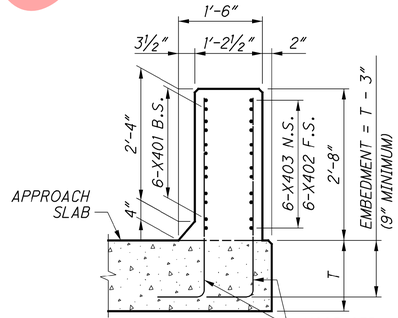

SECTION D-D

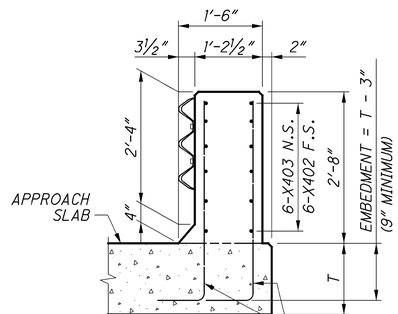

SECTION E-E

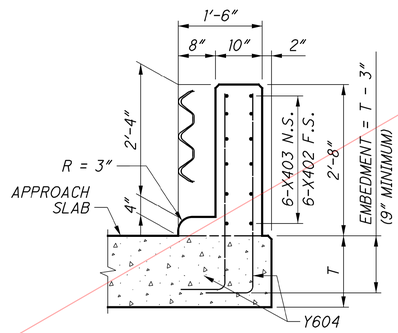

SECTION F-F

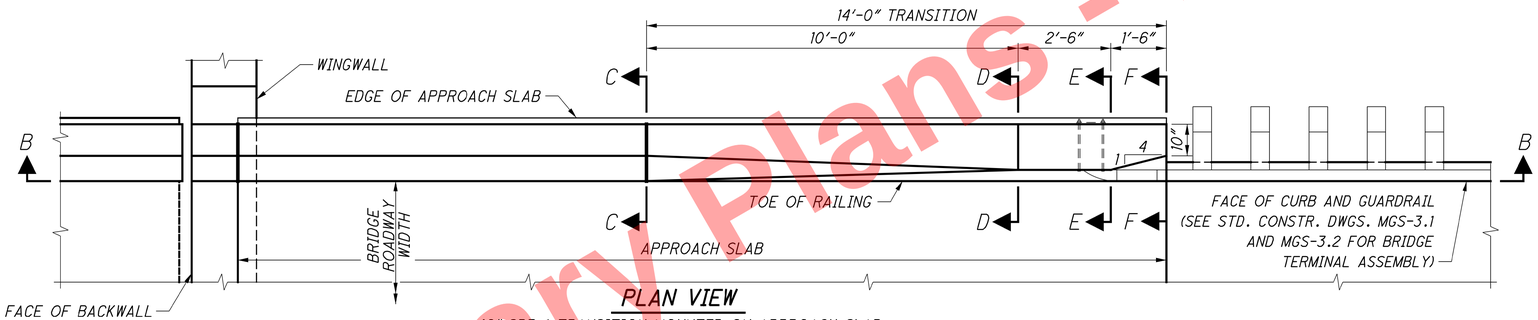

PLAN VIEW

42" SBR-1 TRANSITION MOUNTED ON APPROACH SLAB WITH TYPICAL ABUTMENT SHOWN

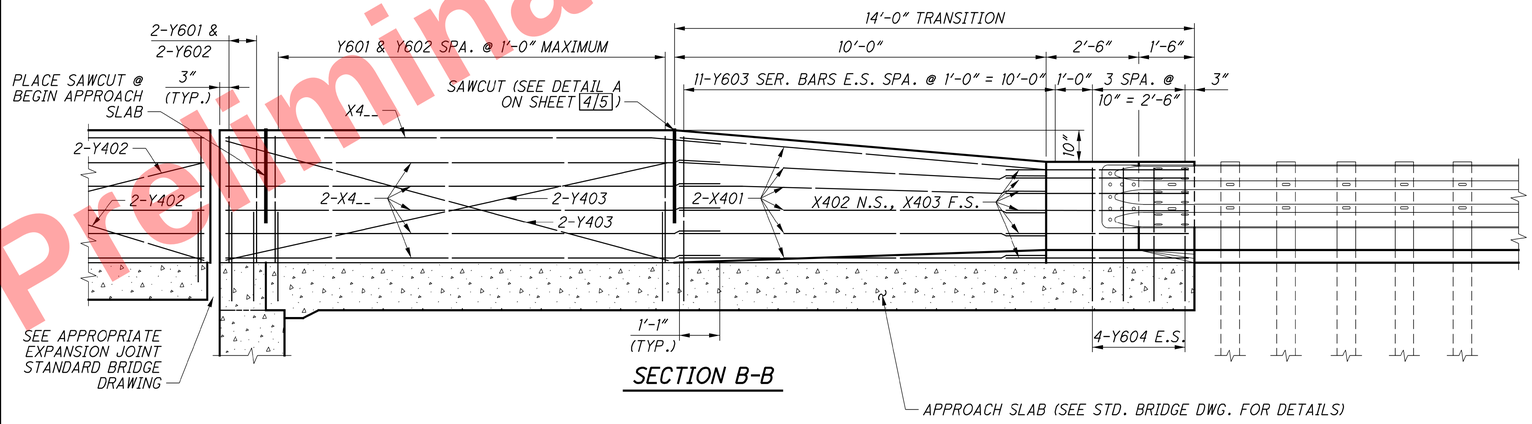

SECTION B-B

Preliminary Plans - For Reference Only

OFFICE OF STRUCTURAL ENGINEERING

REVISION
07-17-2020
01-20-2023

STDS ENGINEER

STANDARD BRIDGE DRAWING
42" SINGLE SLOPE CONCRETE BRIDGE RAILING

DESIGN AGENCY

STATE OF OHIO DEPARTMENT OF TRANSPORTATION

SCD NUMBER
SBR-1-20

3 / 5
45 / 56

853
1047

J:\2011093\ODOT\HAM\77889\structures\HAM562_0004P\sheets\562_0004CRA007.dgn 5/22/2026 10:41:49 AM hbrendlinger

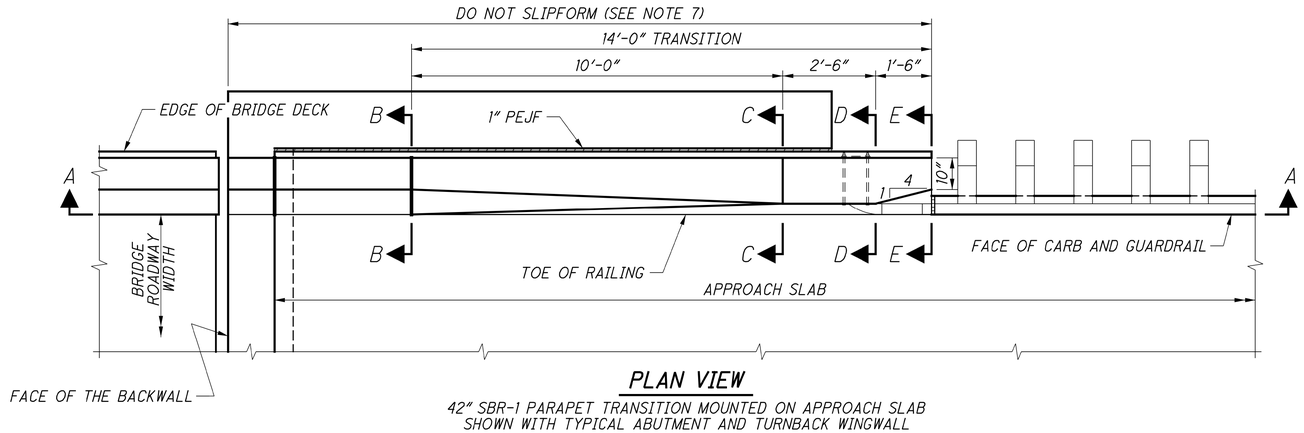

PLAN VIEW

42" SBR-1 PARAPET TRANSITION MOUNTED ON APPROACH SLAB
SHOWN WITH TYPICAL ABUTMENT AND TURNBACK WINGWALL

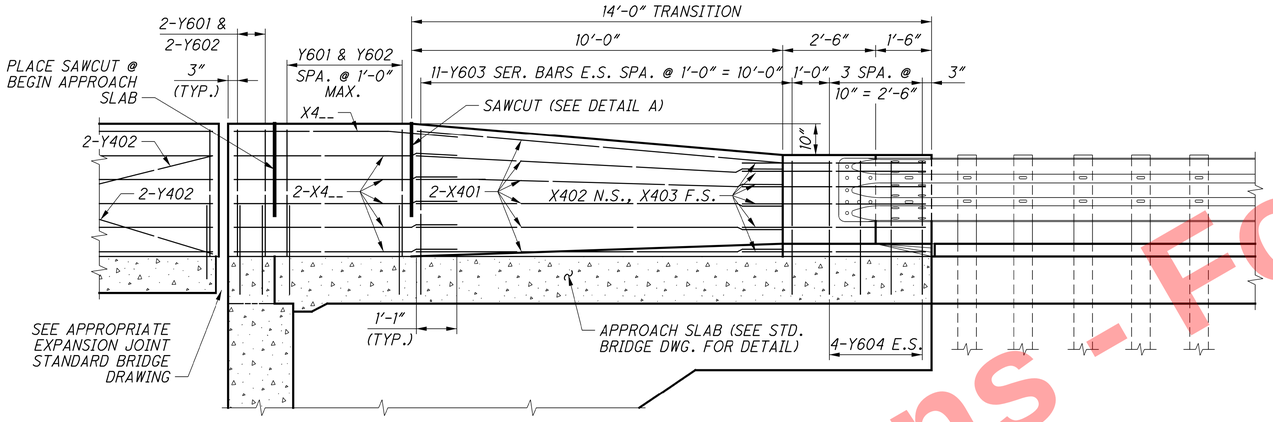

SECTION A-A

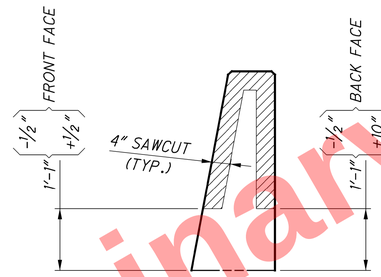

SECTION C-C

SECTION THROUGH SAWCUT
SAWCUT PERIMETER = 5'-9"

LEGEND:

E.S. = EACH SIDE
F.S = FAR SIDE
N.S. = NEAR SIDE
PEJF = PREFORMED EXPANSION JOINT FILLER

NOTES:

1. FOR ALL SINGLE SLOPE CONCRETE BRIDGE RAILINGS INCLUDING THE 14'-0" TRANSITIONS, PROJECT PLANS SHALL INCLUDE PLAN VIEW, ELEVATION VIEW, SECTIONS, REINFORCING MARKS, REINFORCING BENDING DIAGRAMS, AND REINFORCING QUANTITIES.
2. SEE APPROPRIATE STANDARD BRIDGE DRAWING FOR ABUTMENT DETAILS.
3. FOR BRIDGE TERMINAL ASSEMBLY, SEE STD. CONSTR. DWGS. MGS-3.1 AND MGS-3.2.
4. FOR SAWCUT PERIMETER LENGTH, SEE DETAIL A ON SHEET 4/5.
5. FOR DEFLECTION JOINT DETAILS AND ADDITIONAL NOTES, SEE SHEET 5/5.
6. USE GLASS FIBER REINFORCED POLYMER (GFRP) FOR ALL HORIZONTAL X4__ BARS AND STIFFENING BARS (Y401 & Y402 BARS).
7. TIE Y401 & Y402 STIFFENING BARS LOCATED INSIDE THE VERTICAL REINFORCEMENT AT EACH HORIZONTAL BAR. TIE Y401 & Y402 STIFFENING BARS LOCATED OUTSIDE OF THE VERTICAL REINFORCEMENT AT EACH VERTICAL BAR.
8. PLACE STIFFENING BARS IN ALL SAWCUT PANELS 10'-0" AND GREATER. DO NOT ADD STIFFENING BARS TO 14'-0" TRANSITIONS. DO NOT SLIPFORM UNSTIFFENED SAWCUT PANELS. DO NOT OMIT STIFFENING BARS FOR CONVENTIONALLY FORMED CONSTRUCTION.
9. X402 BAR MAY BE PROVIDED AS EPOXY COATED STEEL REINFORCEMENT IF A GFRP FABRICATED SHAPE IS NOT AVAILABLE.

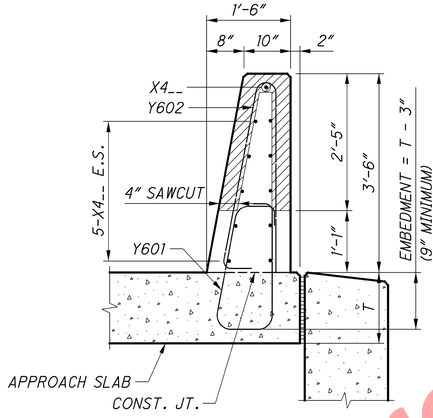

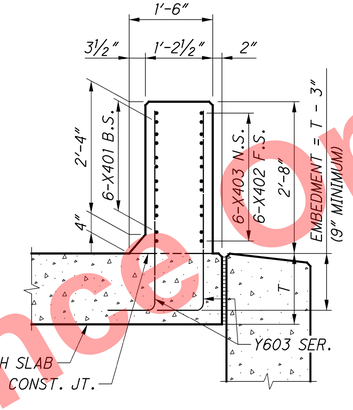

SECTION B-B

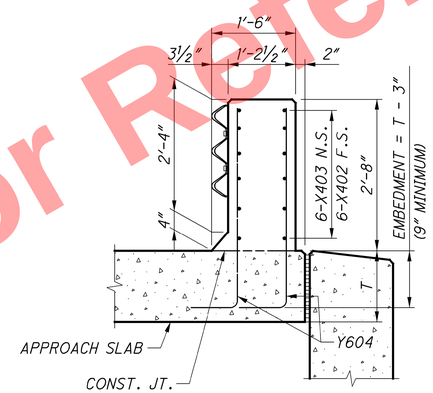

SECTION C-C

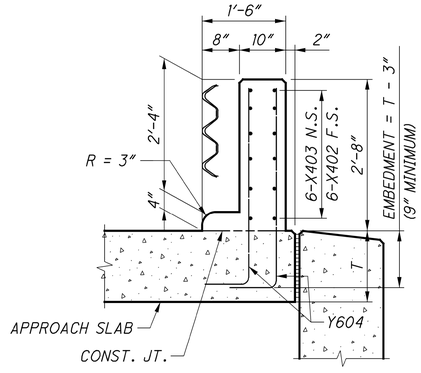

SECTION D-D

SECTION E-E

REINFORCEMENT FOR 42" SBR-1 TRANSITION MOUNTED ON APPROACH SLAB

MARK	LENGTH	TYPE	MATERIAL	INCRE.	BENDING DIAGRAMS
X401	10'-0"	STR	GFRP		
X402	6'-4"	BENT	GFRP		
X403	5'-1"	STR	GFRP		
X4__	⊕	STR	GFRP		
Y401	10'-0"	STR	GFRP		
Y402	⊕	STR	GFRP		
Y601	5'-5"+2.25A	BENT	STEEL		
Y602	7'-0"	BENT	STEEL		
Y603 SER. OF 11	A + B + 10"	BENT	STEEL	3'-4" TO (1") 2'-6"	
Y604	A + 3'-4"	BENT	STEEL		

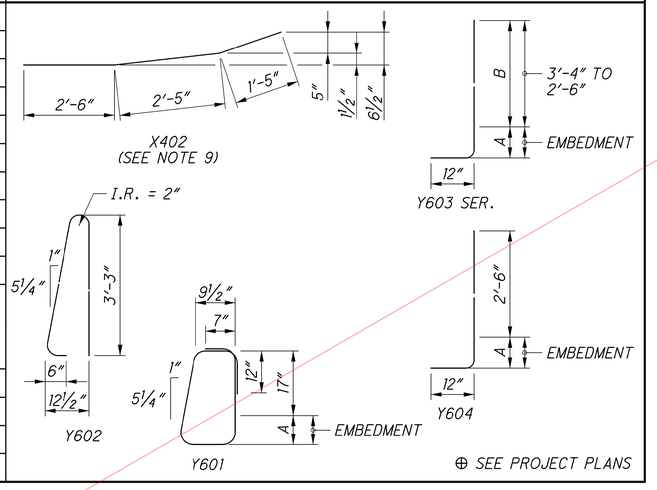

⊕ SEE PROJECT PLANS

OFFICE OF STRUCTURAL ENGINEERING

REVISION
07-17-2020
01-20-2023

STDS ENGINEER

STANDARD BRIDGE DRAWING
42" SINGLE SLOPE CONCRETE BRIDGE RAILING

DESIGN AGENCY

STATE OF OHIO DEPARTMENT OF TRANSPORTATION

SCD NUMBER
SBR-1-20

4 / 5
46 / 56

854
1047

Preliminary Plans - For Reference Only

J:\2011\0903\ODOT\HAM\77889\structures\HAM562_0004P\sheets\562_0004CRA008.dgn 5/22/2026 10:43:00 AM hbrendlinger

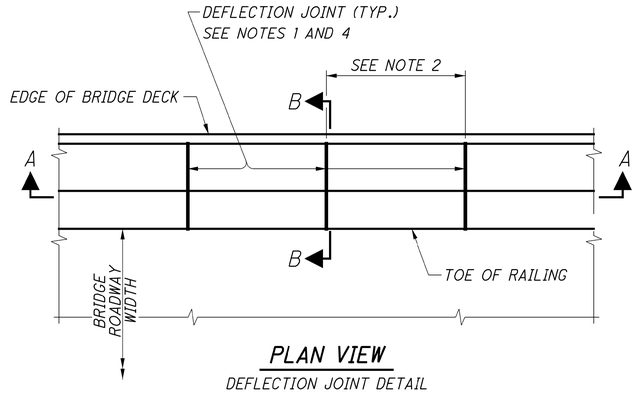

PLAN VIEW

DEFLECTION JOINT DETAIL
(NOT TO SCALE)

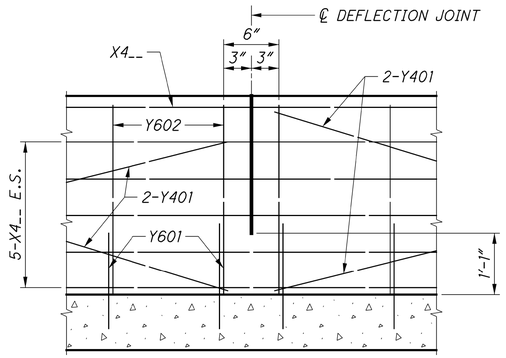

SECTION A-A

DETAIL AT DEFLECTION JOINTS
FOR SINGLE SLOPE CONCRETE BRIDGE RAILING
(NOT TO SCALE)

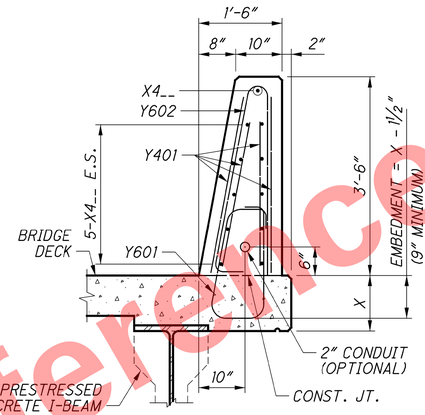

SECTION B-B

REINFORCED CONCRETE DECK ON STEEL OR
PRESTRESSED CONCRETE I-BEAMS/GIRDERS SHOWN

NOTES:

1. FOR THE ENTIRE LENGTH OF SINGLE SLOPE CONCRETE BRIDGE RAILINGS, PROJECT PLANS SHALL SHOW THE LOCATIONS OF DEFLECTION JOINTS.
2. DEFLECTION JOINT SPACING SHALL BE 10′-0″ EXCEPT FOR THE LAST JOINT SPACING ADJACENT TO EITHER A 14′-0″ TRANSITION OR AN OPEN JOINT. EXCEPTION PANELS MAY VARY IN LENGTH BETWEEN 10′-0″ AND 15′-0″.
3. PAYMENT FOR GLASS FIBER REINFORCED POLYMER (GFRP) STIFFENING REINFORCEMENT SHALL BE INCLUDED WITH CONTRACT PRICE FOR ITEM 509 - NO._ GFRP DEFORMED BARS.
4. LIMITS OF SAWCUT IS SHOWN IN DETAIL A, SHEET 4/5. THE 4″ SAWCUT DEPTH SHOWN IN DETAIL A IS THE MINIMUM REQUIRED. HOWEVER, THE CONTRACTOR HAS AN OPTION TO PERFORM FULL DEPTH SAWCUT.

DESIGN CRITERIA:

42″ SINGLE SLOPE CONCRETE BRIDGE RAILINGS MEET THE REQUIREMENTS OF NCHRP 350 & MASH TEST LEVEL 5 AND "AASHTO LRFD BRIDGE DESIGN SPECIFICATIONS, 9TH EDITION".

DESIGN DATA:

CONCRETE - COMPRESSIVE STRENGTH = 4.5 KSI
REINFORCING STEEL - MINIMUM YIELD STRENGTH = 60 KSI
GFRP - C&MS 705.28 (MODULUS = 8700 KSI)
AREA OF STANDARD 42″ SBR-1 CROSS SECTION = 588.0 SQ. IN.
VOLUME OF 42″ SBR-1 14′-0″ TRANSITION SECTION = 1.82 CU. YD.

DEFLECTION JOINTS FOR CONCRETE RAILING:
FOR SLIPFORMED CONSTRUCTION:

AS SOON AS CUTTING OPERATIONS CAN BEGIN WITHOUT DAMAGING THE CONCRETE, SAWCUT 1 ¼ INCH DEEP DEFLECTION CONTROL JOINTS ALONG THE PERIMETER OF THE RAILING.

AFTER THE CURING PERIOD AND BEFORE APPLYING LOAD TO THE RAILING, PERFORM 4 INCH SAWCUT AS SHOWN IN DETAIL A, SHEET 3/4. APPLIED RAILING LOAD INCLUDES: CONSTRUCTION LOADS ON THE DECK (EXCLUDING PERSONNEL; HAND OPERATED EQUIPMENT AND MANUALLY POWERED VEHICLES); AND VEHICLE TRAFFIC IN THE LANE IMMEDIATELY ADJACENT TO THE RAILING AFTER REMOVAL OF TRAFFIC CONTROL DEVICES.

FOR CONVENTIONALLY FORMED CONSTRUCTION:
REMOVE THE FORMS BEFORE APPLYING LOAD TO THE RAILING. AS SOON AS THE FORMS ARE REMOVED, PERFORM 4-INCH SAWCUT AS SHOWN IN DETAIL A, SHEET 4/5. THE 1¼ INCH SAWCUTS ARE NOT REQUIRED.

THE CONTRACTOR HAS AN OPTION TO PERFORM FULL DEPTH SAWCUT. HOWEVER, THE SAWCUT SHALL NOT BE LESS THAN 1′-0½″ FROM THE TOP OF THE CONCRETE DECK SLAB.

USE AN EDGE GUIDE, FENCE, OR JIG TO ENSURE THAT THE CUT JOINT IS STRAIGHT, TRUE, AND ALIGNED ON ALL FACES OF THE RAILING. THE JOINT WIDTH SHALL BE THE WIDTH OF THE SAW BLADE, A NOMINAL WIDTH OF ¼ INCH.

SEAL THE PERIMETER OF THE DEFLECTION JOINTS TO A MINIMUM DEPTH OF ONE INCH WITH A POLYURETHANE OR POLYMERIC MATERIAL CONFORMING TO ASTM C920, TYPE S. LEAVE THE BOTTOM ½ INCH OF BOTH THE INSIDE AND OUTSIDE FACES OF THE RAILING UNSEALED TO ALLOW ANY WATER WHICH MAY ENTER THE JOINT TO ESCAPE.

FOR TRANSITION SECTION, PLACE A DEFLECTION JOINT AT THE BEGINNING OF THE 14′-0″ TRANSITION. DEFLECTION JOINTS ARE NOT REQUIRED WITHIN THE 14′-0″ TRANSITION SECTION.

MAXIMUM SPACING OF VERTICAL REINFORCING BARS FOR STANDARD 42″ SBR-1 CONCRETE RAILING:

THE MAXIMUM SPACING OF VERTICAL REINFORCING BARS FOR THE STANDARD 42″ SBR-1 CONCRETE RAILING SHALL BE 12″, UNLESS NOTED OTHERWISE.

MAXIMUM SPACING OF VERTICAL REINFORCING BARS FOR 42″ SBR-1 TRANSITIONS:

THE MAXIMUM SPACING OF VERTICAL REINFORCING BARS FOR THE 42″ SBR-1 TRANSITION SECTION SHALL BE AS SHOWN ON SHEETS 1/5, 2/5, 3/5, OR 4/5.

MINIMUM EMBEDMENT OF VERTICAL REINFORCING BARS:

THE MINIMUM EMBEDMENT IS 9″. IF THE MINIMUM EMBEDMENT FOR THE VERTICAL REINFORCING BARS INTO THE BRIDGE DECK OR APPROACH SLAB IS NOT MET, THEN THE DESIGNER SHALL CALCULATE THE REQUIRED REINFORCEMENT ACCORDING TO SECTION 13 OF THE "AASHTO LRFD BRIDGE DESIGN SPECIFICATIONS" ADOPTED BY THE AMERICAN ASSOCIATION OF STATE HIGHWAY AND TRANSPORTATION OFFICIALS.

Preliminary Plans - For Reference Only

OFFICE OF STRUCTURAL ENGINEERING

REVISION
07-17-2020
01-20-2023

STDS ENGINEER

STANDARD BRIDGE DRAWING
42″ SINGLE SLOPE CONCRETE BRIDGE RAILING

DESIGN AGENCY
STATE OF OHIO DEPARTMENT OF TRANSPORTATION

SCD NUMBER
SBR-1-20

5 / 5
47 / 56
855
1047

J:\20II0903\ODOT\HAM\77889\structures\HAM562_0004P\sheets\562_0004CRA009.dgn 5/22/2026 10:44:13 AM hbrendlinger

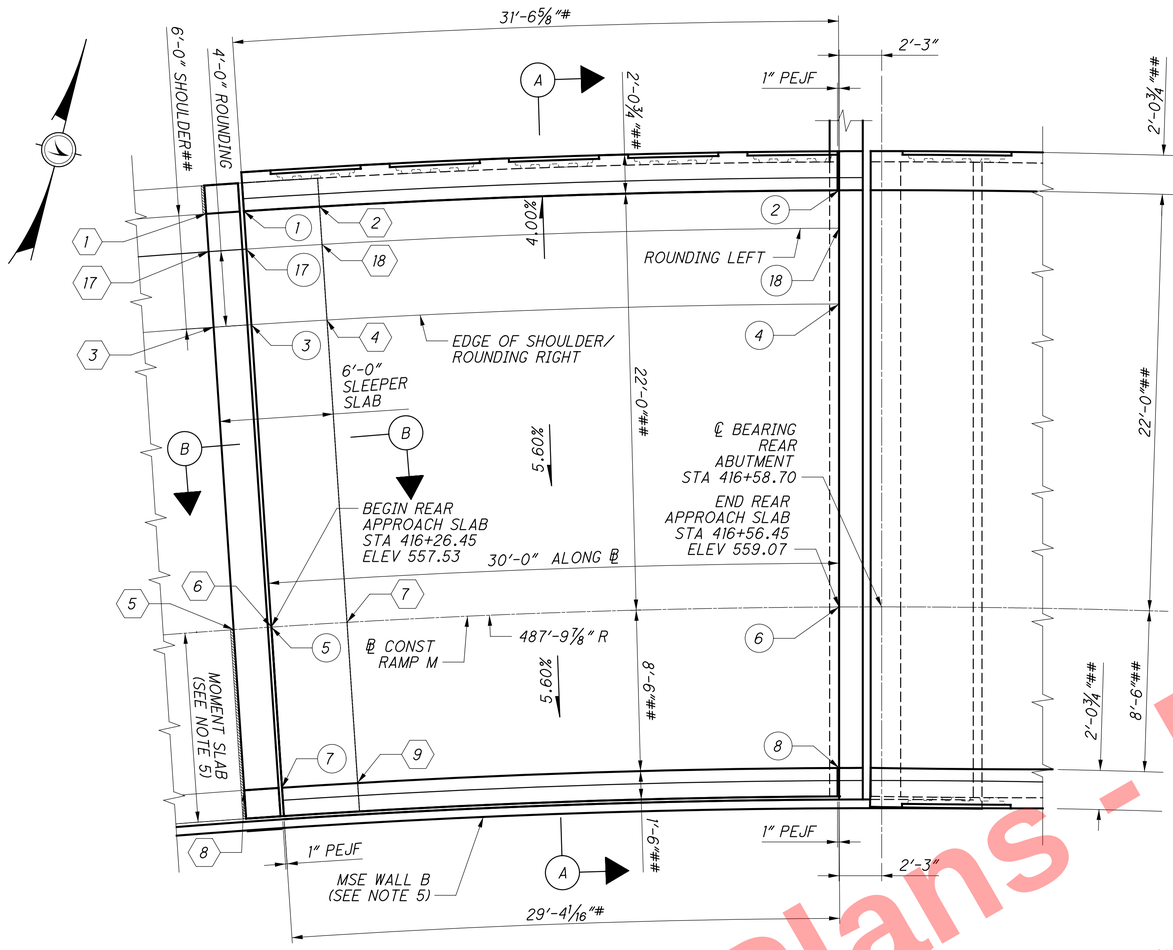

REAR APPROACH SLAB PLAN

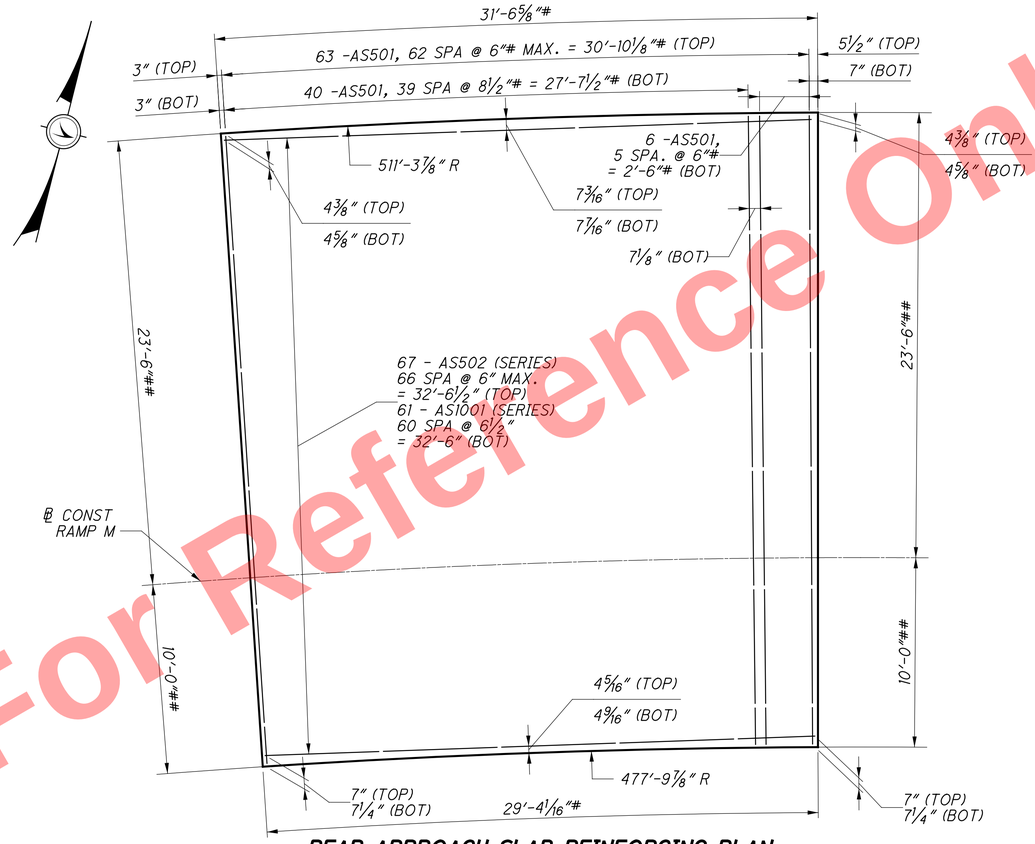

REAR APPROACH SLAB REINFORCING PLAN

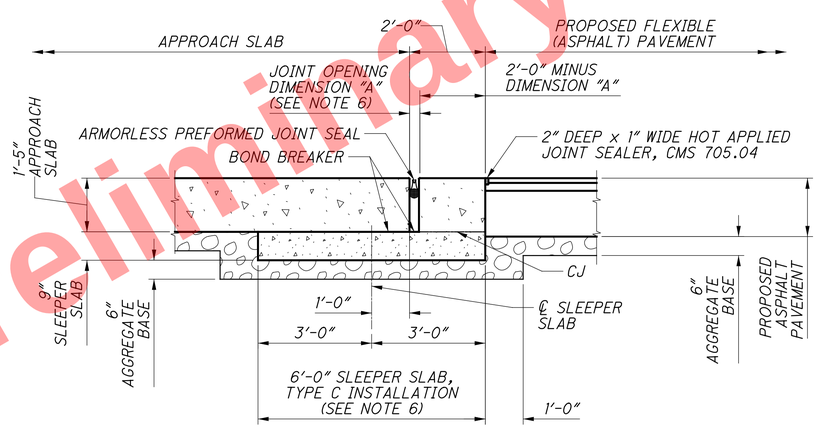

SECTION B-B

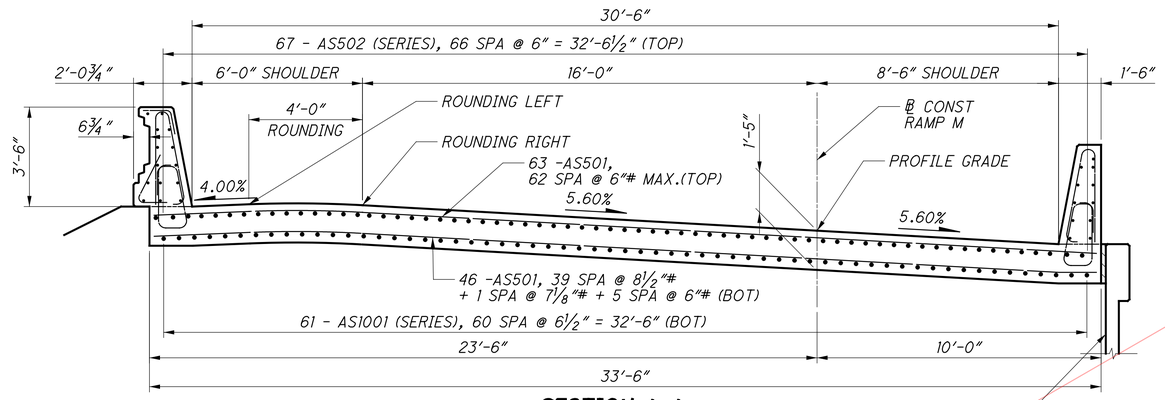

SECTION A-A

NOTES

1. FOR ADDITIONAL APPROACH SLAB DETAILS NOT SHOWN ON THIS SHEET, REFER TO ODOT STANDARD DRAWING AS-1-15.
2. ALL LABOR, MATERIALS, AND INCIDENTALS REQUIRED TO CONSTRUCT THE APPROACH SLAB AS SHOWN ON THIS SHEET AND AS-1-15 SHALL BE INCLUDED WITH ITEM 526 FOR PAYMENT.
3. AS501 BARS SHALL BE PLACED RADIALLY.
4. SEE GENERAL NOTES FOR ABBREVIATION LEGEND.
5. SEE MSE WALL B SHEET (627/1047) FOR MOMENT SLAB DETAILS.
6. SEE STD DWG AS-2-15 FOR EXPANSION JOINT OPENING DIMENSIONS AND OTHER APPROACH SLAB INSTALLATION DETAILS NOT SHOWN.

LEGEND

- DIMENSION MEASURED ALONG THE LEFT OR RIGHT EDGE OF APPROACH SLAB

- DIMENSION MEASURED RADIALLY

(X) - APPROACH SLAB SURFACE ELEVATION LOCATION NO. "X" (SEE SHEET 49/56)

⟨X⟩ - SLEEPER SLAB SURFACE ELEVATION LOCATION NO. "X" (SEE SHEET 49/56)

Preliminary Plans - For Reference Only

DESIGN AGENCY
EMH&T
Engineers & Surveyors • Planners & Scientists
5500 New Albany Road, Columbus, Ohio 43054
Phone: 614.775.4500 www.emht.com

DESIGNED	DRAWN	REVIEWED	DATE
RJE	GB	CAS	5-22-26
CHECKED	REVISED	STRUCTURE FILE NUMBER	
RMW	-	3113787	

REAR APPROACH SLAB DETAILS
BRIDGE NO. HAM-562-0004
RAMP M OVER I.R. 75

HAM-75-7.85
PID No. 121447

48/56

856/1047

J:\20110903\ODOT\HAM\7889\structures\HAM562_0004P\sheets\562_0004CDP002.dgn 5/22/2026 10:45:21 AM hbrendlinger

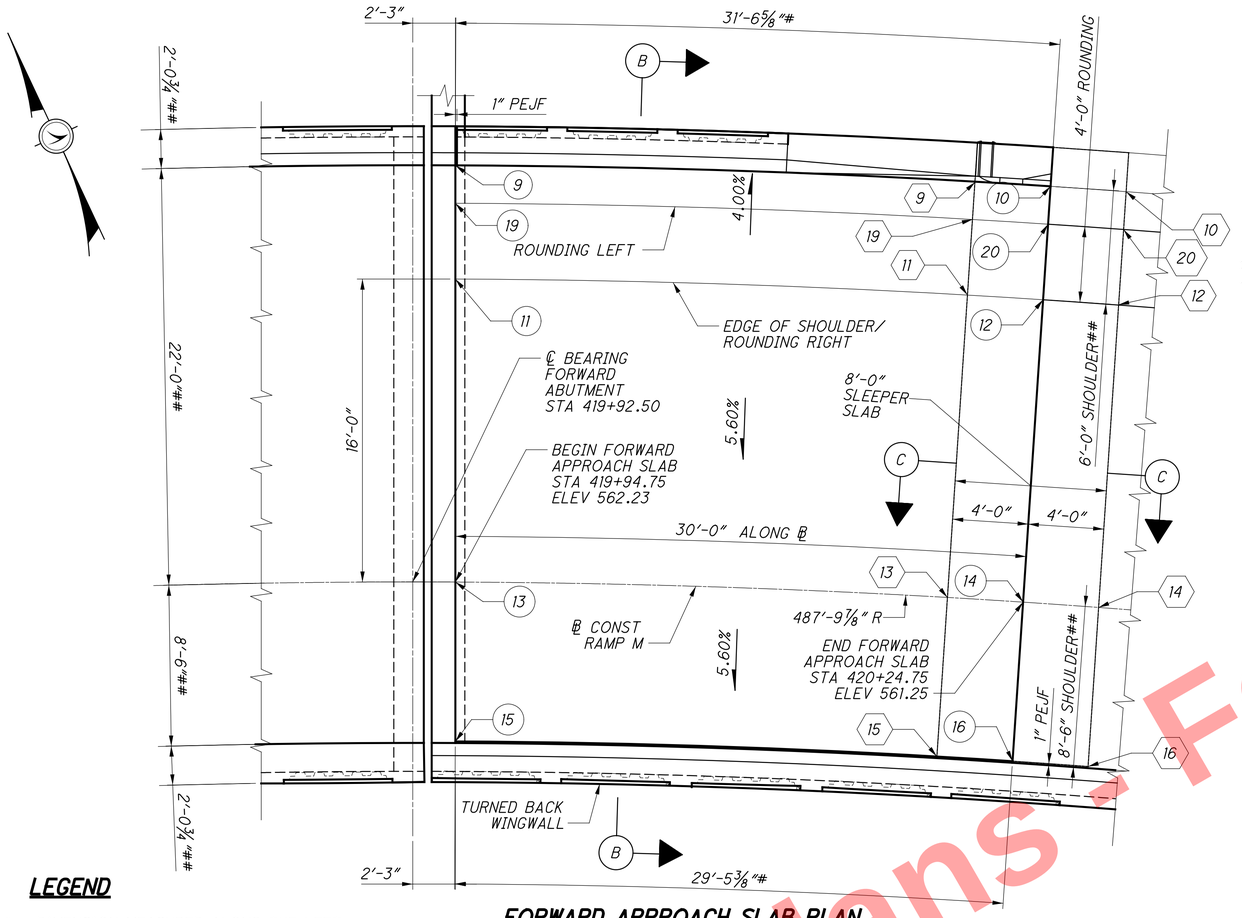

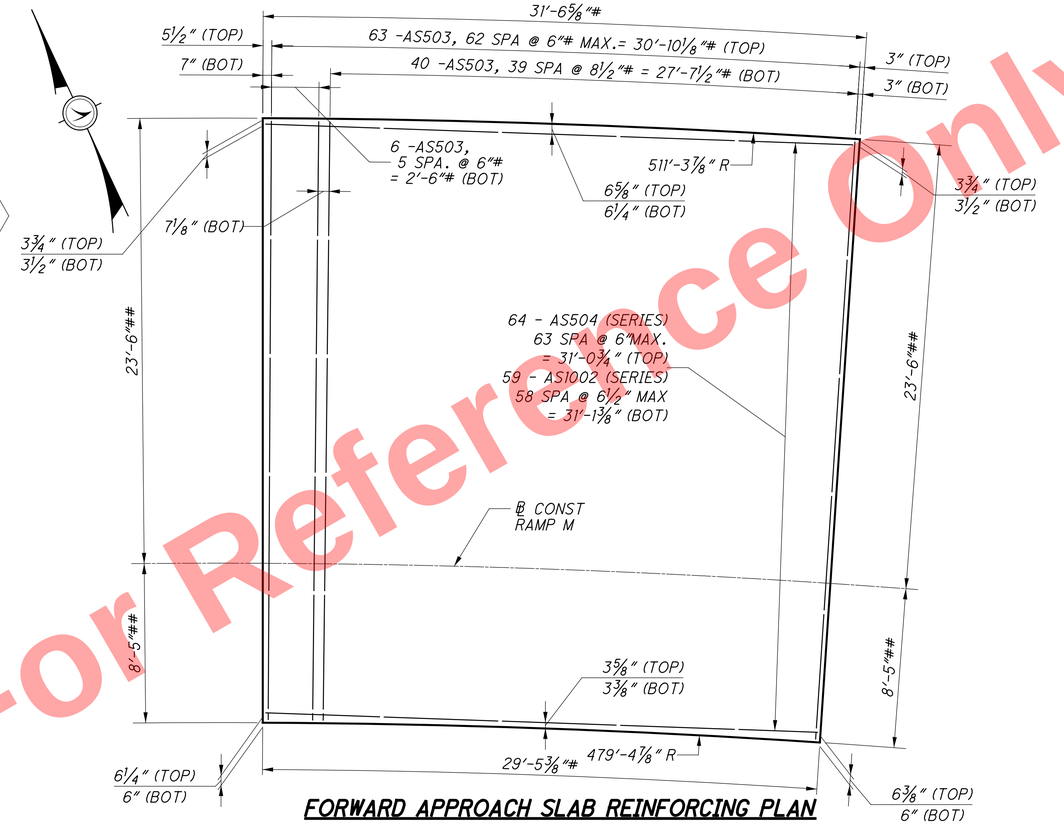

FORWARD APPROACH SLAB REINFORCING PLAN

LEGEND

- DIMENSION MEASURED ALONG THE LEFT OR RIGHT EDGE OF APPROACH SLAB

- DIMENSION MEASURED RADIALLY

(X) - APPROACH SLAB SURFACE ELEVATION LOCATION NO. "X"

⟨X⟩ - SLEEPER SLAB SURFACE ELEVATION LOCATION NO. "X"

FORWARD APPROACH SLAB PLAN

APPROACH SLAB SURFACE ELEVATIONS			
MARK	STATION	OFFSET	ELEVATION
1	416+26.45	22.00' LT	558.38
2	416+56.55	22.00' LT	559.92
3	416+26.45	16.00' LT	558.43
4	416+56.52	16.00' LT	559.96
5	416+26.45	NONE	557.53
6	416+56.45	NONE	559.07
7	416+26.45	8.50' RT	557.06
8	416+56.41	8.50' RT	558.59
9	419+94.65	22.00' LT	563.08
10	420+24.75	22.00' LT	562.10
11	419+94.68	16.00' LT	563.12
12	420+24.75	16.00' LT	562.15
13	419+94.75	NONE	562.23
14	420+24.75	NONE	561.25
15	419+94.79	8.46' RT	561.75
16	420+24.75	8.53' RT	560.78
17	416+26.45	20.00' LT	558.46
18	416+56.55	20.00' LT	560.00
19	419+94.79	20.00' LT	563.16
20	420+24.75	20.00' LT	562.18

SLEEPER SLAB SURFACE ELEVATIONS			
MARK	STATION	OFFSET	ELEVATION
1	416+24.54	22.00' LT	556.86
2	416+30.28	22.00' LT	557.17
3	416+24.51	16.00' LT	556.90
4	416+30.32	16.00' LT	557.22
5	416+24.45	NONE	556.01
6	416+30.45	NONE	556.33
7	416+24.41	8.50' RT	555.53
8	416+30.52	8.50' RT	555.86
9	420+20.92	22.00' LT	560.82
10	420+28.58	22.00' LT	560.55
11	420+20.88	16.00' LT	560.87
12	420+28.62	16.00' LT	560.59
13	420+20.75	NONE	559.98
14	420+28.75	NONE	559.69
15	420+20.68	8.62' RT	559.51
16	420+28.82	8.43' RT	559.21
17	416+24.54	20.00' LT	556.94
18	416+30.28	20.00' LT	557.25
19	420+20.92	20.00' LT	560.90
20	420+28.58	20.00' LT	560.63

NOTES

1. FOR ADDITIONAL APPROACH SLAB DETAILS NOT SHOWN ON THIS SHEET, REFER TO ODOT STANDARD DRAWING AS-1-15.
2. ALL LABOR, MATERIALS, AND INCIDENTALS REQUIRED TO CONSTRUCT THE APPROACH SLAB AS SHOWN ON THIS SHEET AND AS-1-15 SHALL BE INCLUDED WITH ITEM 526 FOR PAYMENT.
3. BARS AS503 PLACED RADIALLY.
4. SEE GENERAL NOTES FOR ABBREVIATION LEGEND.
5. OUTLET 6" DIA. UNDERDRAIN TO SLOPE ON THE NORTH SIDE OF THE APPROACH SLAB. TIE 6" UNDERDRAIN INTO THE ROADWAY UNDERDRAIN ON THE SOUTH SIDE OF THE APPROACH SLAB. PAYMENT FOR 6" DIA. UNDERDRAIN INCLUDED WITH ITEM 526-TYPE A INSTALLATION FOR PAYMENT

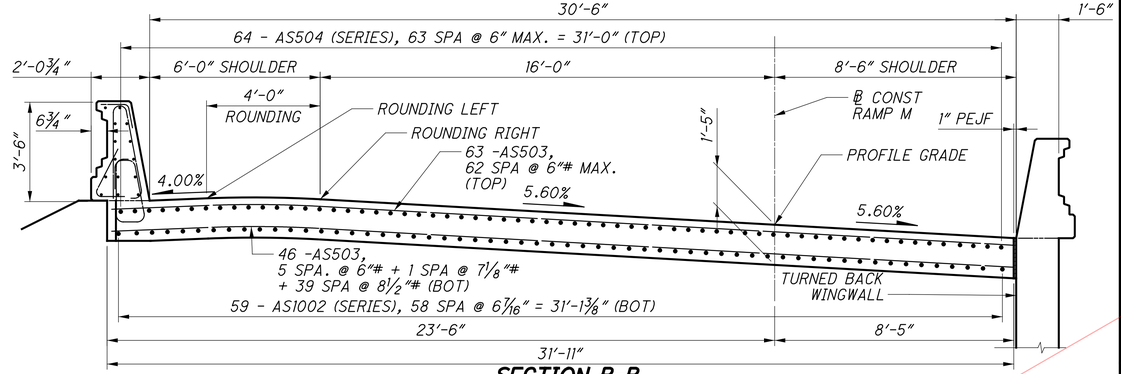

SECTION B-B

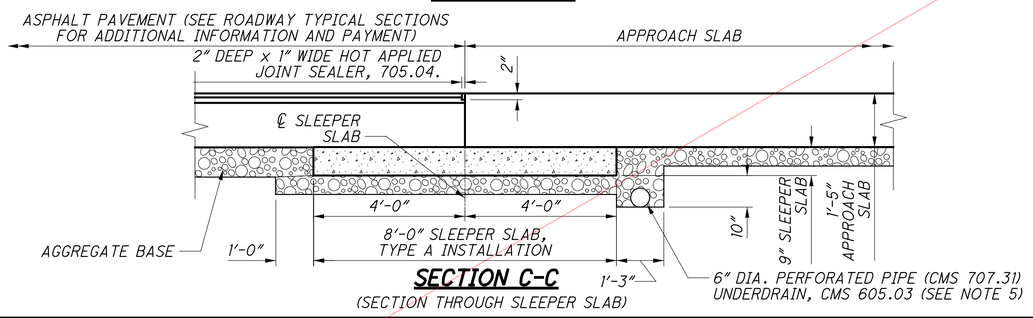

SECTION C-C

(SECTION THROUGH SLEEPER SLAB)

Preliminary Plans - For Reference Only

DESIGN AGENCY: EMH&T

DESIGNED	DRAWN	REVIEWED	DATE
RJE	GB	CAS	5-22-26
CHECKED	REVISED	STRUCTURE FILE NUMBER	
RMW	-	3113787	

FORWARD APPROACH SLAB DETAILS
BRIDGE NO. HAM-562-0004
RAMP M OVER I.R. 75

HAM-75-7.85
PID No. 121447

49 / 56

857
1047

J:\2011090\3_ODOT\HAM\7889\structures\HAM562_0004P\sheets\562_0004CDP003.dgn 5/22/2026 10:45:22 AM hbrendlinger

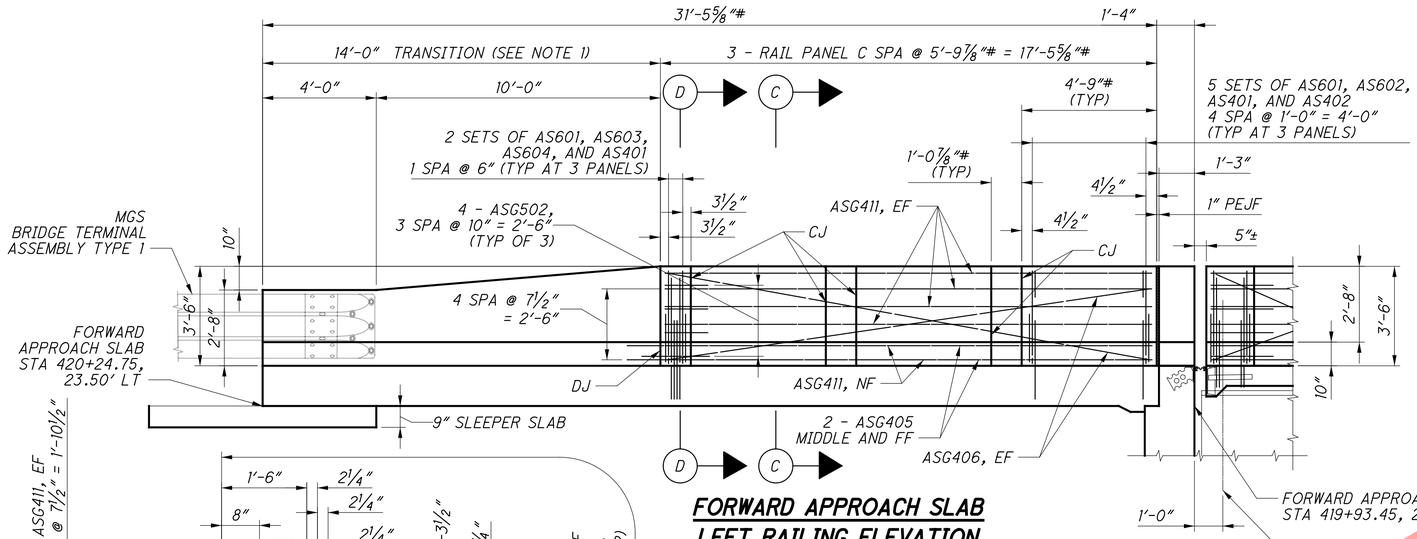

FORWARD APPROACH SLAB LEFT RAILING ELEVATION

(LOOKING AT EXTERIOR FACE OF RAILING)

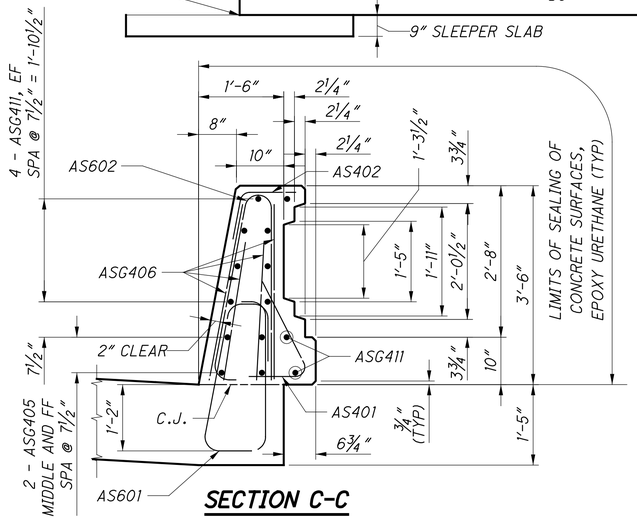

SECTION C-C

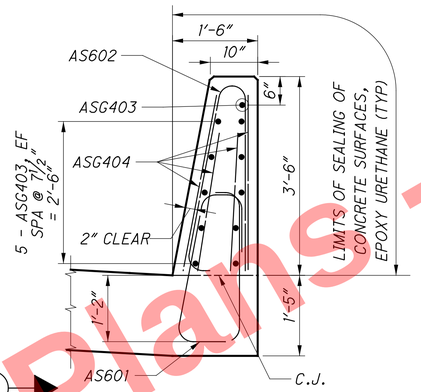

SECTION E-E

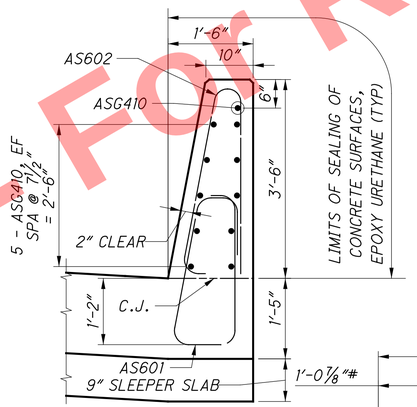

SECTION F-F

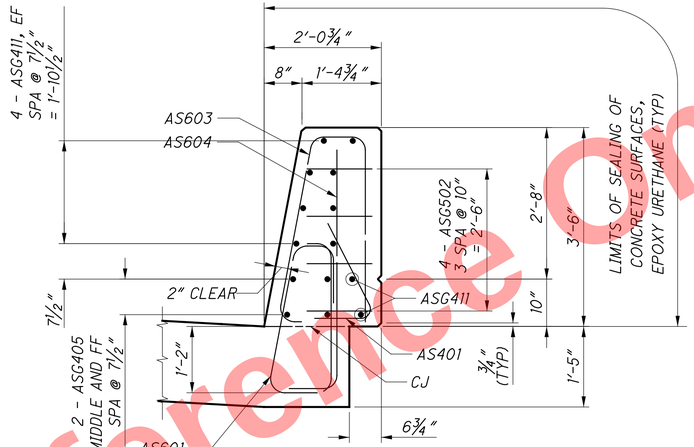

SECTION D-D

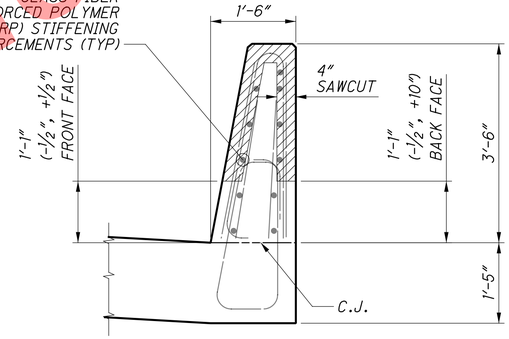

SECTION G-G (SAWCUT)

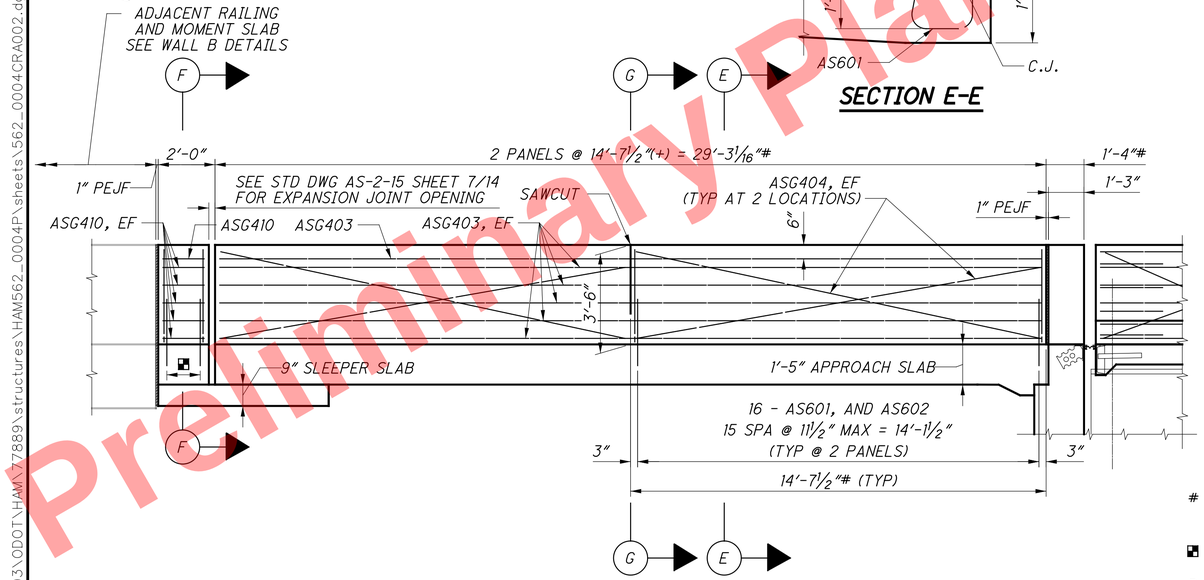

REAR APPROACH SLAB RIGHT RAILING ELEVATION

(LOOKING AT EXTERIOR FACE OF RAILING)

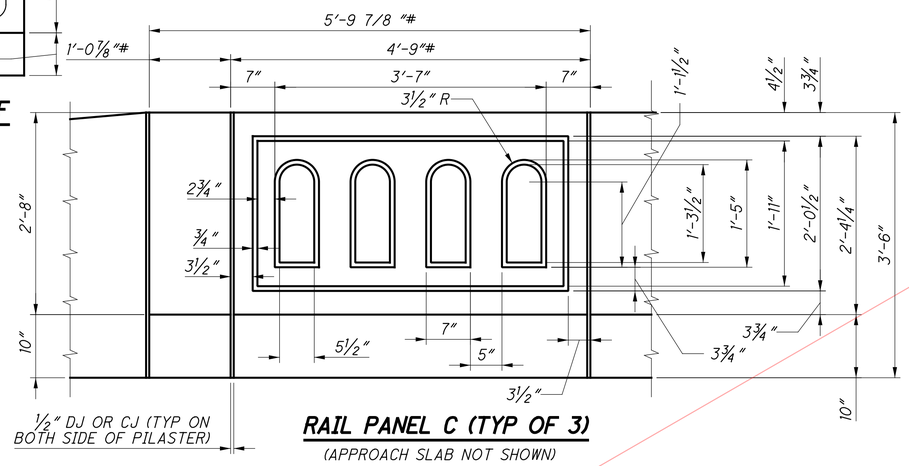

RAIL PANEL C (TYP OF 3)

(APPROACH SLAB NOT SHOWN)

LEGEND

- DIMENSION MEASURED ALONG THE LEFT OR RIGHT EDGE OF APPROACH SLAB

▪ - 3 - AS601, AND AS602, 2 SPA @ 9" = 1'-6"

D.J. - DEFLECTION JOINT, DETAILS SEE SHEET 52/56

C.J. - CONTRACTION JOINT, DETAILS SEE SHEET 52/56

NOTES

1. FOR RAILING TRANSITION DETAILS, SEE SHEET 52/56
2. SEE GENERAL NOTES FOR ABBREVIATION LEGEND.
3. FOR ADDITIONAL RAILING DETAILS NOT SHOWN ON THIS SHEET, INCLUDING THE APPROACH TRANSITION SECTION, REFER TO ODOT STANDARD DRAWING SBR-1-20.

Preliminary Plans - For Reference Only

DESIGN AGENCY: EMH&T

DESIGNED	DRAWN	REVIEWED	DATE
RJE	GB	CAS	5-22-26
CHECKED	REVISED	STRUCTURE FILE NUMBER	
RMW	-	3113787	

APPROACH SLAB RAILING DETAILS
BRIDGE NO. HAM-562-0004
RAMP M OVER I.R. 75

HAM-75-7.85
PID No. 121447

50/56

858/1047

J:\2011093\ODOT\HAM\77889\structures\HAM562_0004P\sheets\562_0004CRA002.dgn 5/22/2026 10:45:23 AM hbrendlinger

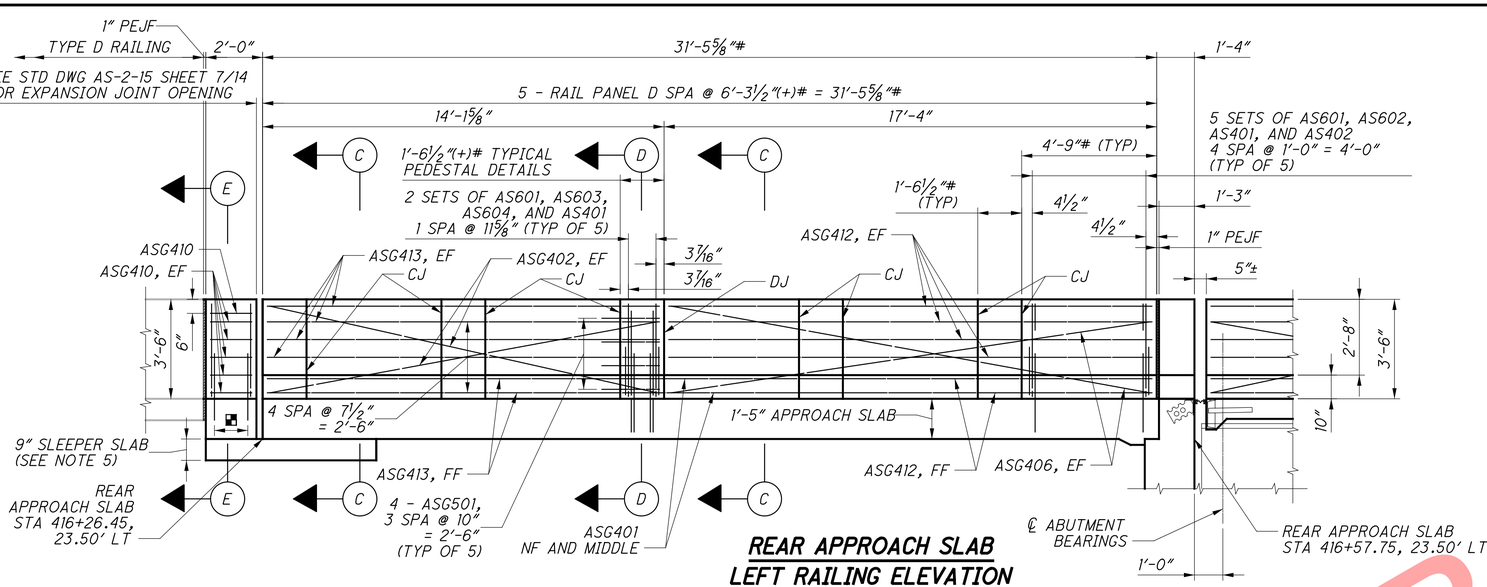

REAR APPROACH SLAB LEFT RAILING ELEVATION

(LOOKING AT INTERIOR FACE OF RAILING)

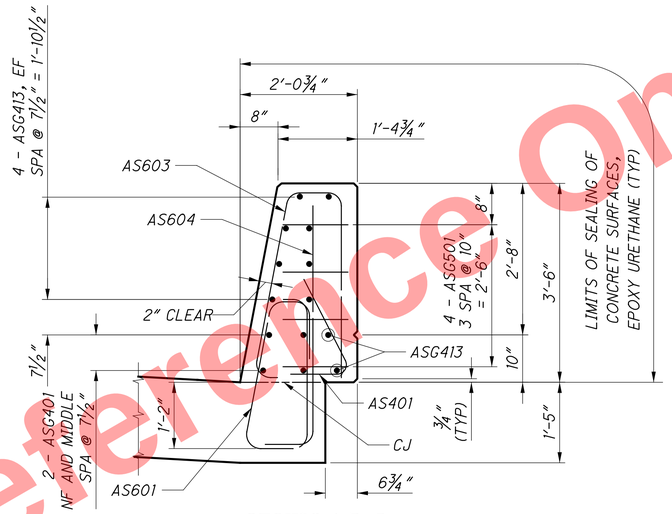

SECTION D-D

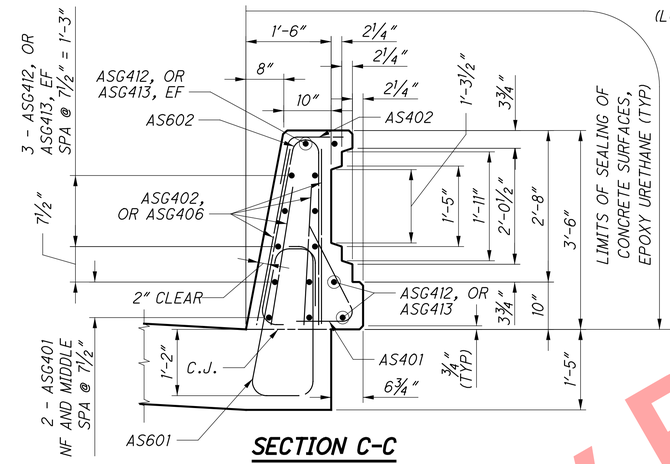

SECTION C-C

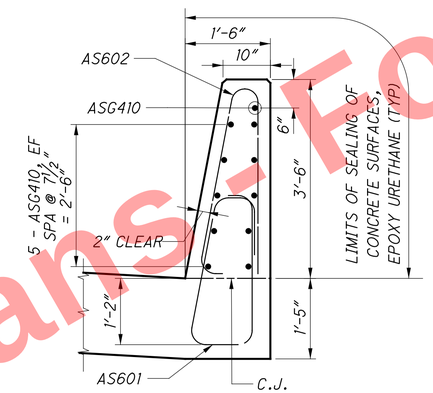

SECTION E-E

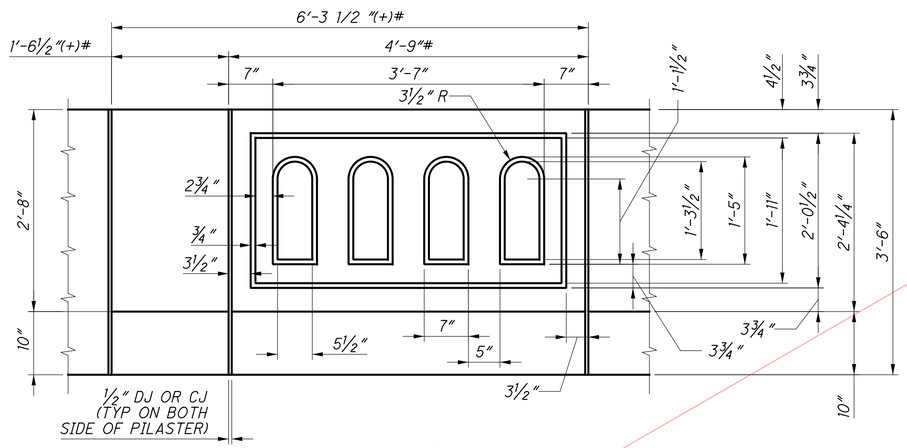

RAIL PANEL D (TYP OF 5)

(APPROACH SLAB NOT SHOWN)

LEGEND

\# - DIMENSION MEASURED ALONG THE LEFT OR RIGHT EDGE OF APPROACH SLAB

■ - 3 - AS601, AND AS602, 2 SPA @ 9" = 1'-6"

D.J. - DEFLECTION JOINT, DETAILS SEE SHEET 52/56

C.J. - CONTRACTION JOINT, DETAILS SEE SHEET 52/56

NOTES

1. ELEVATION VIEW LOOKING AT INTERIOR FACE OF RAILING.
2. FOR RAILING TRANSITION DETAILS SEE SHEET 52/56
3. SEE GENERAL NOTES FOR ABBREVIATION LEGEND.
4. FOR ADDITIONAL RAILING DETAILS NOT SHOWN ON THIS SHEET, REFER TO ODOT STANDARD DRAWING SBR-1-20.
5. SEE SHEET 48/56 AND STD DWG AS-2-15 (TYPE C INSTALLATION) FOR ADDITIONAL SLEEPER SLAB DETAILS

Preliminary Plans - For Reference Only

DESIGN AGENCY
EMH&T
Engineers • Surveyors • Planners • Scientists
5500 New Albany Road, Columbus, Ohio 43054
Phone: 614.775.4500

DESIGNED	DRAWN	REVIEWED	DATE
RJE	GB	CAS	5-22-26
CHECKED	REVISED	STRUCTURE FILE NUMBER	
RMW	-	3113787	

APPROACH SLAB RAILING DETAILS
BRIDGE NO. HAM-562-0004
RAMP M OVER I.R. 75

HAM-75-7.85
PID No. 121447

51/56

859
1047

J:\20110903\ODOT\HAM\7889\structures\HAM562_0004P\sheets\562_0004CRA004.dgn 5/22/2026 10:45:24 AM hbrendlinger

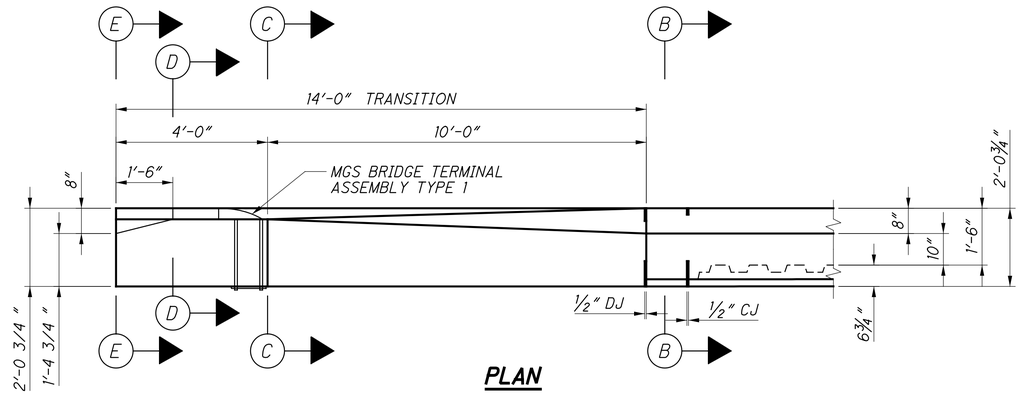

PLAN

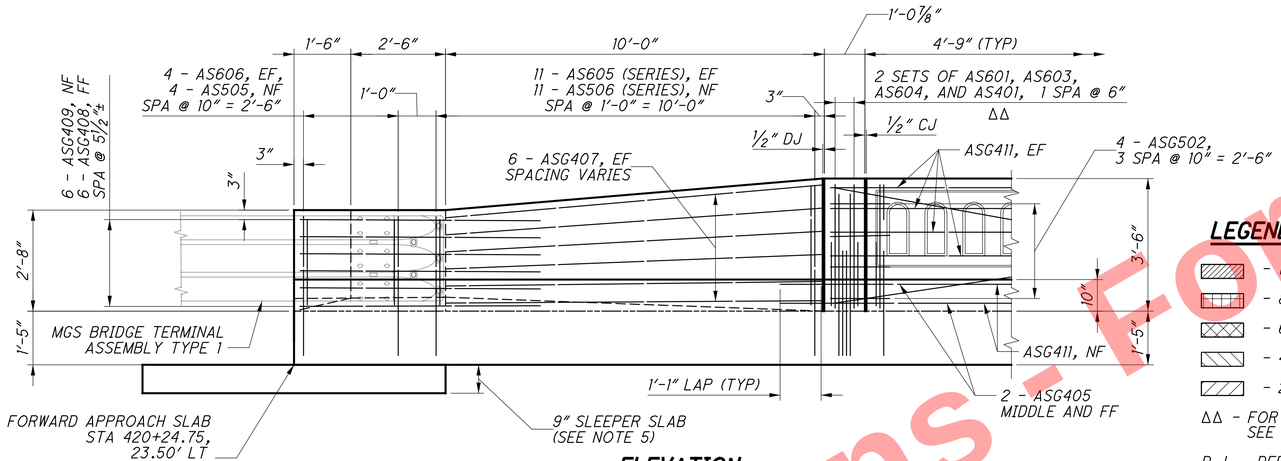

ELEVATION

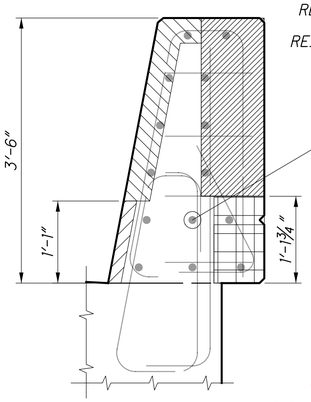

DEFLECTION JOINT

(SEE NOTE 6)

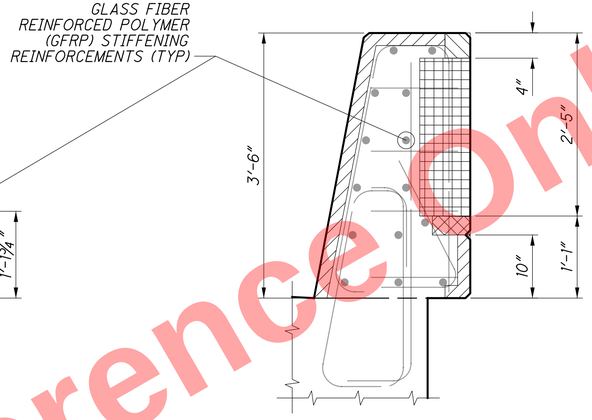

CONTRACTION JOINT

(SEE NOTE 6)

LEGEND

- 10" WIDE PREFORMED JOINT MATERIAL
- 8" WIDE PREFORMED JOINT MATERIAL
- 6" WIDE PREFORMED JOINT MATERIAL
- 4" WIDE PREFORMED JOINT MATERIAL
- 2" WIDE PREFORMED JOINT MATERIAL

ΔΔ - FOR ADDITIONAL DETAILS SEE SHEET 50/56

D.J. - DEFLECTION JOINT

C.J. - CONTRACTION JOINT

NOTES

1. FOR ADDITIONAL RAILING DETAILS NOT SHOWN ON THIS SHEET, REFER TO ODOT STANDARD DRAWING SBR-1-20.
2. DIMENSION GIVEN ARE ALONG ARC OUTSIDE FACE OF RAILING.
3. ELEVATION VIEW LOOKING AT EXTERIOR FACE OF RAILING.
4. SEE GENERAL NOTES FOR ABBREVIATION LEGEND.
5. SEE SHEET 49/56 AND STD DWG AS-2-15 (TYPE A INSTALLATION) FOR ADDITIONAL SLEEPER SLAB DETAILS.
6. DEFLECTION JOINTS AND CONTRACTION JOINTS ARE TO BE CAST INTO THE RAILINGS AND HELD IN WITH CHAMFER STRIPS. THE EXCESS MATERIAL WILL BE TRIMMED TO THE BASE OF THE CHAMFER. THE MATERIAL THAT WILL BE USED NEEDS TO NOT ABSORB WATER AND AS SUFFICIENT RIGIDITY TO NOT SIGNIFICANTLY MOVE DURING THE CASTING OF THE RAILING. THE JOINT MATERIAL IS TO BE 0.5" IN THICKNESS AND WILL BE NOMAFLEX BY NOMACO OR FIBER LITE BY W.R. MEADOWS OR SIMILAR PRODUCT APPROVED BY THE ENGINEER. THE GFRP FIBER SPLICE BARS THAT WERE SHOWN IN THE AS BID PLANS AND ARE INTENDED TO HOLD THE LONGITUDINAL BARS TOGETHER DURING SLIP FORMING ARE TO BE NON-PERFORMED.

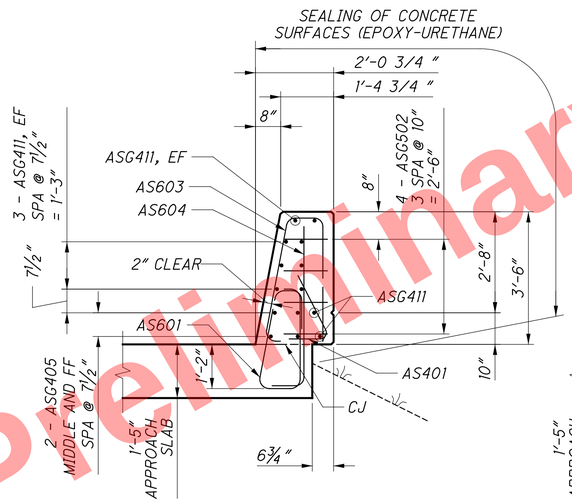

SECTION B-B

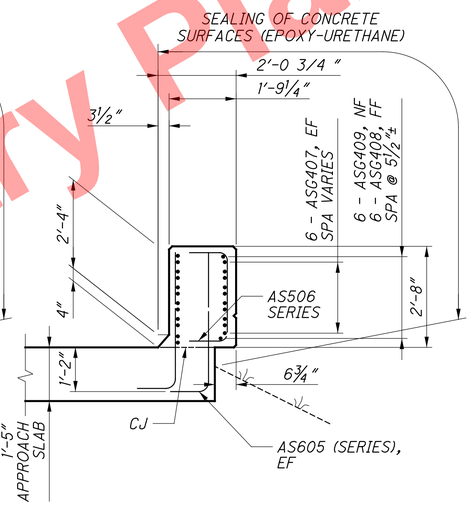

SECTION C-C

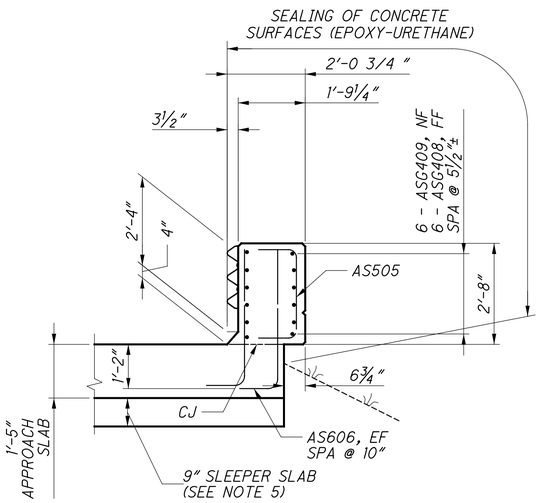

SECTION D-D

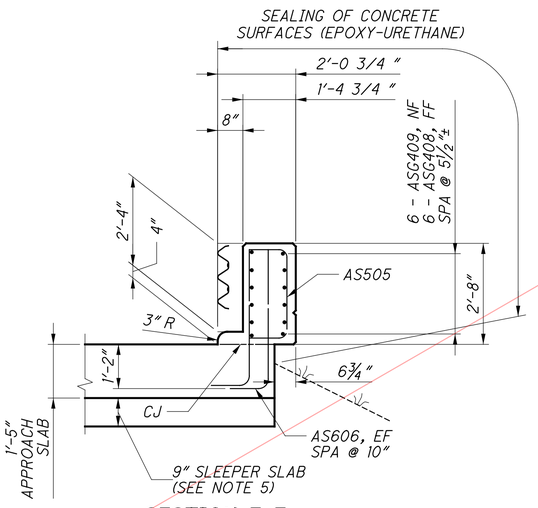

SECTION E-E

Preliminary Plans - Not For Reference Only

DESIGN AGENCY: EMH&T
DESIGNED: RJE | DRAWN: GB | CHECKED: RMW | REVIEWED: CAS | DATE: 5-22-26 | REVISED: - | STRUCTURE FILE NUMBER: 3113787

FORWARD APPROACH SLAB RAILING TRANSITION DETAILS
BRIDGE NO. HAM-562-0004
RAMP M OVER I.R. 75

HAM-75-7.85
PID No. 121447

52/56

860/1047

J:\2011090\3\ODOT\HAM\7889\structures\HAM562_0004P\sheets\562_0004CRA003.dgn 5/22/2026 10:45:25 AM hbrendlinger

MARK	NUMBER TOTAL	LENGTH	WEIGHT	TYPE	DIMENSIONS						
					A	B	C	D	E	R	INC
SUPERSTRUCTURE REINFORCING STEEL											
S401	384	30'-0"	7695	STR							
S402	32	13'-4"	285	STR							
S403	828	2'-8"	1475	11	0'-9"	1'-8"	1'-1"				
S404	552	1'-9"	645	19	0'-11"	0'-2"	0'-11"				
S405	648	3'-1"	1335	2	1'-5"	0'-5"	1'-5"				
S501	444	30'-0"	13893	STR							
S502	37	19'-7"	756	STR							
S503	186	30'-0"	5820	STR							
S504	186	17'-8"	3427	STR							
S505	647	34'-4"	23169	17	33'-2"						
S506	647	33'-2"	22382	STR							
S507	1294	8'-6"	11472	16	7'-11"						
S601	828	7'-5"	9224	41	0'-9½"	0'-7"	1'-0"	2'-4"	1'-2½"		
S602	552	7'-0"	5804	39	0'-6"	3'-3"	3'-3"	1'-0½"		0'-2"	
S603	276	7'-6"	3109	40	0'-6"	3'-3"	3'-3"	1'-6½"			
S604	276	4'-8"	1935	1	1'-0"	3'-10"					
SUB-TOTAL			112,426								

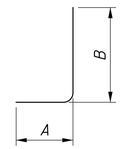

TYPE-1

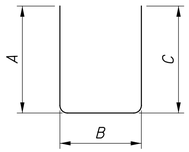

TYPE-2

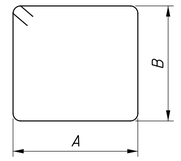

TYPE-3

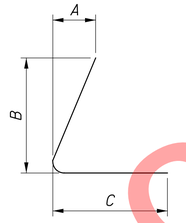

TYPE-11

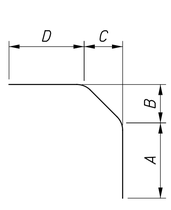

TYPE-14

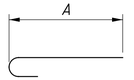

TYPE-16

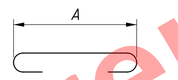

TYPE-17

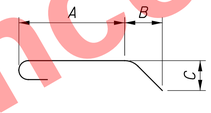

TYPE-18

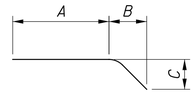

TYPE-19

TYPE-13

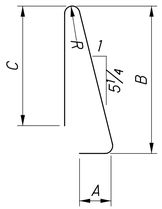

TYPE-23

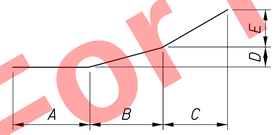

TYPE-25

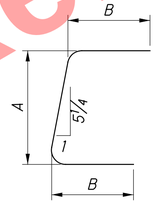

TYPE-28

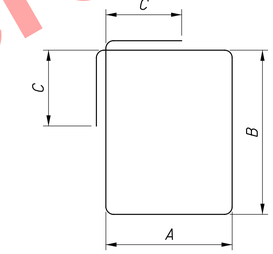

TYPE-33

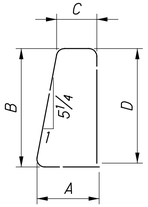

TYPE-35

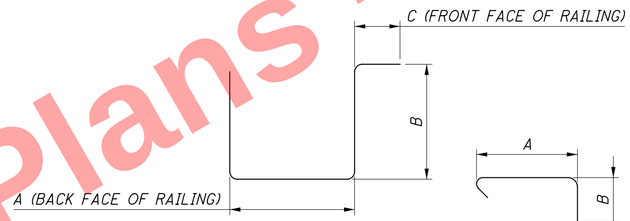

TYPE-36

TYPE-37

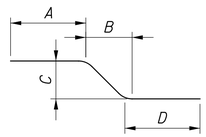

TYPE-38

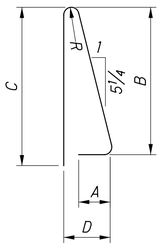

TYPE-39

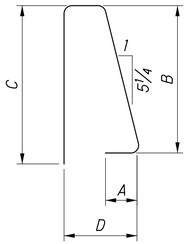

TYPE-40

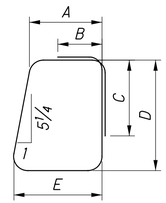

TYPE-41

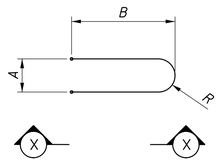

TYPE-42

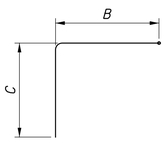

VIEW X-X

NOTES

1. THE BAR SIZE NUMBER IS SPECIFIED ON THE PLANS IN THE BAR MARK COLUMN. THE FIRST DIGIT WHERE THREE DIGITS ARE USED, AND THE FIRST TWO DIGITS WHERE FOUR ARE USED, INDICATES THE BAR SIZE NUMBER. FOR EXAMPLE S601 IS A NO. 6 BAR. BAR DIMENSIONS SHOWN ARE OUT TO OUT, UNLESS OTHERWISE INDICATED. R INDICATES INSIDE RADIUS, UNLESS OTHERWISE NOTED. "STD" WRITTEN IN PLACE OF A DIMENSION INDICATES A STANDARD BEND AT THE END OF THE BAR.

2. UNLESS OTHERWISE NOTED, THE FOLLOWING LAP LENGTHS SHALL APPLY:
   - #4 = 2'-6" (HORIZ) 1'-11" (VERT)
   - #5 = 3'-4" (HORIZ) 2'-5" (VERT)
   - #6 = 4'-0" (HORIZ) 3'-7" (VERT)

3. SEE GENERAL NOTES FOR ABBREVIATION LEGEND.

LEGEND

◕ - AG4XX, AG5XX, SG4XX, SG5XX, ASG4XX, OR ASG5XX - GLASS FIBER REINFORCED POLYMER (GFRP) BAR.

Preliminary Plans - Not For Reference Only

DESIGN AGENCY: EMH&T
DESIGNED GB | DRAWN GB | REVIEWED CAS | DATE 5-22-26
CHECKED RMW/RJE | REVISED - | STRUCTURE FILE NUMBER 3113787

REINFORCING STEEL LIST
BRIDGE NO. HAM-562-0004
RAMP M OVER I.R. 75

HAM-75-7.85
PID No. 121447

53 / 56

861
1047

J:\2011090\3\ODOT\HAM\7889\structures\HAM562_0004P\sheets\562_0004CRL001.dgn 5/22/2026 10:45:25 AM hbrendlinger

MARK	NUMBER REAR	NUMBER FORWARD	NUMBER TOTAL	LENGTH	WEIGHT	TYPE	DIMENSIONS A	B	C	D	E	R	INC
ABUTMENT REINFORCING STEEL													
A401		76	76	2′-8″	135	11	0′-9″	1′-8″	1′-1″				
A402		54	54	1′-9″	63	19	0′-11″	0′-2″	0′-11″				
A501	29		29	7′-7″	229	2	0′-10″	6′-2″	0′-10″				
A502	2 SR OF 8		2 SR OF 8	10′-5″ TO 12′-2″	188	STR							0′-3″
A503	2 SR OF 8		2 SR OF 8	7′-10″ TO 9′-11″	148	STR							0′-3 ½″
A504	5		5	17′-10″	93	2	7′-4″	3′-5″	7′-4″				
A505	4		4	18′-8″	78	2	7′-9″	3′-5″	7′-9″				
A506	5		5	19′-2″	100	2	8′-0″	3′-5″	8′-0″				
A507	8		8	20′-0″	167	2	8′-5″	3′-5″	8′-5″				
A508	22		22	6′-2″	142	2	1′-6″	3′-5″	1′-6″				
A509	2		2	15′-9″	33	19	0′-11″	14′-3″	4′-3″				
A510	21		21	33′-2″	726	STR							
A511	NOT USED												
A512	2		2	18′-9″	39	STR							
A513	NOT USED												
A514	12		12	18′-7″	233	STR							
A515	NOT USED												
A516	2 SR OF 2		2 SR OF 2	9′-7″ TO 13′-9″	49	STR							4′-2″
A517		36	36	6′-6″	244	2	1′-8″	3′-5″	1′-8″				
A518		5	5	9′-2″	48	STR							
A519		10	10	9′-9″	102	1	0′-10″	9′-1″					
A520		5	5	12′-11″	67	1	0′-10″	12′-3″					
A521		14	14	33′-2″	484	STR							
A522		2	2	15′-1″	31	19	3′-8″	10′-2″	5′-3″				
A523		60	60	8′-11″	558	14	3′-5″	1′-3″	1′-4″	1′-4″	2′-7″		
A524		2 SR OF 5	2 SR OF 5	9′-10″ TO 17′-7″	143	STR							1′-11¼″
A525		15	15	8′-4″	130	14	3′-5″	1′-6″	0′-7″	0′-10″	2′-7″		
A526		24	24	8′-3″	207	17	7′-1″						
A527		24	24	9′-8″	242	1	4′-11″	4′-11″					
A528	17	10	27	0′-11″	26	STR							
A529	2	2	4	8′-5″	35	35	1′-7″	3′-2″	1′-0″	3′-0″			
A530	2		2	7′-4″	15	23	0′-11″	3′-3″	3′-0″			0′-3″	
A531	15		15	10′-11″	171	1	0′-10″	10′-3″					
A532	5		5	12′-3″	64	1	0′-10″	11′-7″					
A601	6		6	10′-6″	95	33	1′-8″	3′-0″	1′-0″				
A602	4		4	4′-4″	26	1	1′-7″	2′-11″					
A603	29		29	11′-0″	479	2	2′-7″	6′-2″	2′-7″				
A604	34	34	68	11′-1″	1132	2	5′-0″	1′-5″	5′-0″				
A605	34	34	68	10′-9″	1098	2	4′-10″	1′-5″	4′-10″				
A606	7		7	6′-6″	68	1	1′-0″	5′-8″					
A607		51	51	13′-4″	1021	38	4′-7″	3′-0″	3′-0″	4′-7″			
A608		14	14	15′-9″	331	38	6′-11″	3′-0″	3′-0″	4′-8″			
A609		17	17	16′-6″	421	1	5′-0″	11′-8″					
A610	NOT USED												
A611		47	47	18′-1″	1277	1	5′-0″	13′-3″					
A612		51	51	12′-2″	932	STR							
A613		43	43	10′-2″	657	STR							

MARK	NUMBER REAR	NUMBER FORWARD	NUMBER TOTAL	LENGTH	WEIGHT	TYPE	DIMENSIONS A	B	C	D	E	R	INC
ABUTMENT REINFORCING STEEL (CONTINUED)													
A614		11	11	26′-10″	443	1	5′-0″	22′-0″					
A615		9	9	15′-4″	207	STR							
A616		13	13	21′-10″	426	1	5′-0″	17′-0″					
A617		9	9	17′-3″	233	38	4′-7″	3′-0″	3′-0″	8″-6″			
A618		1	1	7′-8″	12	STR							
A619		3	3	9′-0″	41	STR							
A620		104	104	5′-10″	911	1	1′-0″	5′-0″					
A621		24	24	18′-6″	667	STR							
A622		10	10	15′-10″	238	STR							
A623		10	10	13′-6″	203	STR							
A624		12	12	10′-8″	192	STR							
A625	34	34	68	7′-5″	758	2	3′-5″	0′-11″	3′-5″				
A626		6	6	10′-9″	97	STR							
A627		6	6	20′-3″	182	STR							
A628		6	6	29′-9″	268	STR							
A629		20	20	33′-2″	996	STR							
A630		2	2	19′-5″	58	STR							
A631		5	5	11′-5″	86	2	5′-2″	1′-5″	5′-2″				
A632		18	18	6′-1″	164	STR							
A633		1 SR OF 4	1 SR OF 4	8′-7″ TO 11′-7″	61	2	3′-9″ TO 5′-3″	1′-5″	3′-9″ TO 5′-3″				0′-6″
A634		1 SR OF 7	1 SR OF 7	7′-8″ TO 13′-0″	109	2	2′-11″ TO 5′-7″	2′-2″	2′-11″ TO 5′-7″				0′-5 ¼″
A635		10	10	18′-2″	273	STR							
A636		10	10	11′-8″	175	STR							
A637		2 SR OF 3	2 SR OF 3	12′-5″ TO 16′-9″	131	STR							2′-2″
A638		1 SR OF 7	1 SR OF 7	9′-7″ TO 19′-1″	151	2	4′-3″ TO 9′-0″	1′-5″	4′-3″ TO 9′-0″				0′-9½″
A639		2	2	9′-7″	29	STR							
A640		6	6	11′-4″	102	STR							
A641		6	6	20′-11″	189	STR							
A642		40	40	34′-2″	2053	STR							
A643		23	23	9′-6″	328	STR							
A644		32	32	26′-3″	1262	STR							
A645		2	2	10′-11″	33	STR							
A646		12	12	10′-2″	183	STR							
A647		2 SR OF 3	2 SR OF 3	4′-8″ TO 10′-2″	67	STR							2′-9″
A648		1 SR OF 8	1 SR OF 8	8′-0″ TO 13′-4″	128	2	3′-7″ TO 6′-3″	1′-2″	3′-7″ TO 6′-3″				0′-4½″
A649		66	66	8′-6″	843	2	3′-10″	1′-2″	3′-10″				
A650		116	116	8′-7″	1495	STR							
A651	4	2	6	3′-8″	33	28	1′-8″	1′-2″					
A652	4		4	2′-6″	15	1	1′-0″	1′-8″					
A653	NOT USED												
A654		70	70	2′-11″	307	STR							
A655		6	6	10′-5″	94	33	1′-8″	2′-11″	1′-0″				
A656		4	4	4′-3″	26	1	1′-7″	2′-10″					
A657	NOT USED												
A658		10	10	15′-6″	233	STR							
A659		15	15	12′-6″	282	STR							
A660		76	76	8′-3″	942	41	0′-9½″	0′-7″	1′-0″	2′-9″	1′-3½″		
A661		54	54	7′-0″	568	39	0′-6″	3′-3″	3′-3″	1′-0½″		0′-2″	
A662		22	22	7′-6″	248	40	0′-6″	3′-3″	3′-3″	1′-6½″			
A663		22	22	5′-1″	168	1	1′-0″	4′-3″					

Preliminary Plans - For Reference Only

J:\20110903\ODOT\HAM\7889\structures\HAM562_0004P\sheets\562_0004CRL002.dgn 5/22/2026 10:45:26 AM hbrendlinger

DESIGN AGENCY EMH&T
Engineers • Surveyors • Planners • Scientists
5500 New Albany Road, Columbus, Ohio 43054
Phone: 614.775.4500 www.emht.com

DESIGNED	DRAWN	REVIEWED	DATE
GB	GB	CAS	5-22-26
CHECKED	REVISED	STRUCTURE FILE NUMBER	
RWM/RJE	-	3113787	

REINFORCING STEEL LIST
BRIDGE NO. HAM-562-0004
RAMP M OVER I.R. 75

HAM-75-7.85
PID No. 121447

862/1047

MARK	NUMBER			LENGTH	WEIGHT	TYPE	DIMENSIONS						
	REAR	FORWARD	TOTAL				A	B	C	D	E	R	INC
ABUTMENT REINFORCING STEEL (CONTINUED)													
A701		36	36	7'-5"	546	1	1'-2"	6'-5"					
A702		17	17	13'-6"	469	STR							
A703		19	19	10'-9"	417	STR							
A801	10		10	30'-0"	801	STR							
A802	10		10	16'-0"	427	STR							
A803	23	22	45	5'-2"	621	18	3'-0"	1'-0"	1'-0"				
A804		14	14	20'-8"	773	STR							
A805		29	29	18'-1"	1400	STR							
A806		33	33	17'-11"	1579	STR							
A807		29	29	13'-9"	1065	STR							
A808		22	22	12'-2"	715	STR							
A809		69	69	9'-0"	1658	1	1'-4"	7'-11"					
A810		19	19	14'-0"	710	STR							
A811		27	27	11'-0"	793	STR							
A812		23	23	8'-0"	491	STR							
A901	4	2	6	3'-5"	70	STR							
A902	10		10	4'-3"	144	1	1'-7"	2'-11"					
A903		56	56	10'-3"	1952	1	1'-7"	8'-11"					
A904		19	19	18'-8"	1206	STR							
A905		17	17	16'-1"	930	STR							
A906		10	10	4'-1"	139	1	1'-7"	2'-9"					
A907		20	20	17'-0"	1156	STR							
				SUB-TOTAL	47,299								

MARK	NUMBER			LENGTH	WEIGHT	TYPE	DIMENSIONS						
	REAR	FORWARD	TOTAL				A	B	C	D	E	R	INC
PIER REINFORCING STEEL													
P401	90		90	3'-6"	210	37	2'-6"	0'-8"					
P402		136	136	4'-2"	379	37	3'-2"	0'-8"					
P501	2 SR OF 24		2 SR OF 24	12'-6" TO 28'-10"	1035	3	2'-4"	3'-7" TO 11'-9"					0'-4¼"
P502	6		6	29'-2"	183	3	2'-4"	11'-11"					
P503	6		6	28'-2"	176	3	2'-4"	11'-5"					
P504	6		6	27'-8"	173	3	2'-4"	11'-2"					
P505	2 SR OF 9		2 SR OF 9	22'-6" TO 27'-4"	468	3	2'-4"	8'-7" TO 11'-0"					0'-3¾"
P506	2 SR OF 15		2 SR OF 15	12'-6" TO 20'-10"	522	3	2'-4"	3'-7" TO 7'-9"					0'-3½"
P507	6	74	80	7'-9"	647	2	2'-5"	3'-2"	2'-5"				
P508	30		30	7'-1"	222	2	2'-5"	2'-6"	2'-5"				
P509	30		30	15'-6"	485	STR							
P510		2 SR OF 18	2 SR OF 18	10'-10" TO 23'-10"	651	3	2'-4"	2'-9" TO 9'-3"					0'-4½"
P511		4	4	23'-10"	99	3	2'-4"	9'-3"					
P512		8	8	23'-0"	192	3	2'-4"	8'-10"					
P513		4	4	22'-4"	93	3	2'-4"	8'-6"					
P514		2 SR OF 6	2 SR OF 6	18'-8" TO 21'-10"	253	3	2'-4"	6'-8" TO 8'-3"					0'-3¾"

MARK	NUMBER			LENGTH	WEIGHT	TYPE	DIMENSIONS						
	REAR	FORWARD	TOTAL				A	B	C	D	E	R	INC
PIER REINFORCING STEEL (CONTINUED)													
P515		2 SR OF 12	2 SR OF 12	10'-10" TO 17'-8"	357	3	2'-4"	2'-9" TO 6'-2"					0'-3¾"
P516		68	68	13'-8"	969	STR							
P517	10		10	10'-8"	111	1	0'-10"	10'-0"					
P518	5		5	12'-2"	63	1	0'-10"	11'-6"					
P519	5		5	16'-7"	86	1	0'-10"	15'-11"					
P520		10	10	9'-11"	103	1	0'-10"	9'-3"					
P521		5	5	8'-11"	47	1	0'-10"	8'-3"					
P522		5	5	12'-11"	67	1	0'-10"	12'-3"					
P601	2		2	11'-9"	35	STR							
P602	2		2	34'-0"	102	STR							
P603	2		2	39'-8"	119	STR							
P604	2		2	39'-3"	118	STR							
P605	2		2	37'-10"	114	STR							
P606	2 SR OF 6		2 SR OF 6	19'-5" TO 34'-10"	489	STR							3'-1"
P607	20		20	30'-0"	901	2	3'-10"	22'-8"	3'-10"				
P608	32		32	19'-10"	953	2	3'-9"	12'-8"	3'-9"				
P609		2	2	15'-5"	46	STR							
P610		2	2	31'-8"	95	STR							
P611		2	2	31'-1"	93	STR							
P612		2 SR OF 5	2 SR OF 5	17'-3" TO 29'-3"	349	STR							3'-0"
P613		18	18	33'-6"	906	2	4'-4"	25'-2"	4'-4"				
P614		31	31	24'-0"	1117	2	4'-4"	15'-8"	4'-4"				
P615	12		12	15'-2"	273	33	3'-11"	3'-1"	1'-0"				
P616	8		8	4'-7"	55	1	1'-7"	3'-2"					
P617	NOT USED												
P618	NOT USED												
P619		40	40	5'-11"	355	42	0'-6"	1'-9"	1'-3"			0'-3"	
P701	4		4	21'-6"	176	13	3'-5"	8'-5"	11'-10"	3'-8"			
P702	4		4	16'-0"	131	STR							
P703	4		4	20'-9"	170	13	3'-5"	7'-1"	11'-10"	3'-8"			
P704		4	4	17'-3"	141	13	2'-8"	6'-6"	8'-10"	3'-8"			
P705		4	4	14'-0"	114	STR							
P706		4	4	16'-7"	136	13	2'-8"	5'-4"	8'-10"	3'-8"			
P801	84		84	20'-0"	4486	STR							
P802	84		84	9'-1"	2037	1	1'-4"	8'-0"					
P803	17		17	29'-11"	1358	2	3'-10"	22'-8"	3'-10"				
P804	16		16	41'-4"	1766	17	39'-8"						
P901	NOT USED												
P902	32		32	19'-7"	2131	2	3'-9"	12'-8"	3'-9"				
P903		12	12	34'-2"	1394	17	31'-8"						
P904		128	128	23'-5"	10191	STR							
P905		64	64	11'-1"	2412	1	1'-7"	9'-9"					
P906	NOT USED												
P907	8		8	4'-0"	109	STR							
P908	28		28	4'-6"	428	1	1'-7"	3'-2"					
P1001	NOT USED												
P1002	NOT USED												
P1003	NOT USED												
P1004		34	34	23'-8"	3462	2	4'-4"	15'-8"	4'-4"				
P1005		20	20	33'-2"	2854	2	4'-4"	25'-2"	4'-4"				
				SUB-TOTAL	47,207								

Preliminary Plans - For Reference Only

J:\20110903\ODOT\HAM\7889\structures\HAM562_0004P\sheets\562_0004CRL003.dgn 5/22/2026 10:45:26 AM hbrendlinger

DESIGN AGENCY
EMH&T
Engineers • Surveyors • Planners • Scientists
5500 New Albany Road, Columbus, Ohio 43054
Phone: 614.775.4500 www.emht.com

DESIGNED	DRAWN	REVIEWED	DATE
GB	GB	CAS	5-22-26
CHECKED	REVISED	STRUCTURE FILE NUMBER	
RWM/RJE	-	3113787	

REINFORCING STEEL LIST
BRIDGE NO. HAM-562-0004
RAMP M OVER I.R. 75

HAM-75-7.85
PID No. 121447

55 / 56

863
1047

MARK	NUMBER			LENGTH	WEIGHT	TYPE	DIMENSIONS						
	REAR	FORWARD	TOTAL				A	B	C	D	E	R	INC
APPROACH SLAB REINFORCING STEEL*													
AS401	35	21	56	2′-8″	100	11	0′-9″	1′-8″	1′-1″				
AS402	25	15	40	1′-9″	47	19	0′-11″	0′-2″	0′-11″				
AS501	109		109	33′-2″	3771	STR							
AS502	1 SR OF 67		1 SR OF 67	28′-10″ TO 31′-1½″	2095	STR							0′-1/2″
AS503		109	109	31′-7″	3591	STR							
AS504		1 SR OF 64	1 SR OF 64	28′-11¼″ TO 31′-1½″	2005	STR							0′-1/2″
AS505		4	4	4′-1″	17	2	1′-0″	2′-4″	1′-0″				
AS506		1 SR OF 11	1 SR OF 11	4′-1″ TO 4′-11″	52	2	1′-0″	2′-4″ TO 3′-2″	1′-0″				0′-1″
AS601	73	21	94	8′-3″	1164	41	0′-9½″	0′-7″	1′-0″	2′-9″	1′-3½″		
AS602	63	15	78	7′-0″	820	39	0′-6″	3′-3″	3′-3″	1′-0½″		0′-2″	
AS603	10	6	16	7′-6″	180	40	0′-6″	3′-3″	3′-3″	1′-6½″			
AS604	10	6	16	5′-1″	122	1	1′-0″	4′-3″					
AS605		2 SR OF 11	2 SR OF 11	4′-6″ TO 5′-4″	162	1	1′-0″	3′-8″ TO 4′-6″					0′-1″
AS606		8	8	4′-6″	54	1	1′-0″	3′-8″					
AS1001	1 SR OF 61		1 SR OF 61	30′-4″ TO 32′-6″	8246	16	28′-10½″ TO 31′-0¾″						0′-0 7/16″
AS1002		1 SR OF 59	1 SR OF 59	30′-4″ TO 32′-6″	7976	16	28′-11½″ TO 31′-0⅞″						0′-0 7/16″
SUB-TOTAL					30,265*								

* - INCLUDED FOR PAYMENT WITH ITEM 526 - REINFORCED CONCRETE APPROACH SLABS (T=17"), AS PER PLAN

MARK	NUMBER TOTAL	LENGTH PER BAR (FEET)	TOTAL LENGTH (FEET)	TYPE	DIMENSIONS						
					A	B	C	D	E	R	INC
ABUTMENT, SUPERSTRUCTURE, AND APPROACH SLAB GFRP #4 ◕											
AG401	4	34′-6″	138	STR							
AG402	16	13′-7″	217	STR							
AG403	4	32′-6″	130	STR							
AG404	4	11′-7″	46	STR							
AG405	40	13′-3″	530	STR							
AG406	10	11′-3″	113	STR							
SUB-TOTAL ABUTMENT			1,174								
SG401	88	30′-0″	2640	STR							
SG402	4	32′-9″	131	STR							
SG403	4	9′-10″	39	STR							
SG404	96	14′-7″	1400	STR							
SG405	88	14′-11″	1313	STR							
SG406	240	14′-3″	3420	STR							
SG407	220	14′-6″	3190	STR							
SUB-TOTAL SUPERSTRUCTURE			12,133								
ASG401	4	31′-1″	124	STR							
ASG402	4	14′-1″	56	STR							
ASG403	11	28′-11″	318	STR							
ASG404	8	14′-6″	116	STR							
ASG405	4	18′-6″	74	STR							
ASG406	8	17′-4″	139	STR							
ASG407	12	10′-0″	120	STR							
ASG408	6	6′-4″	38	25	2′-6″	2′-5″	1′-4¼″	0′-1½″	0′-5″		
ASG409	6	5′-1″	31	STR							
ASG410	22	1′-6″	33	STR							
ASG411	10	17′-1″	171	STR							
ASG412	10	17′-0″	170	STR							
ASG413	10	13′-9″	138	STR							
SUB-TOTAL APPROACH SLAB			1,528								

MARK	NUMBER TOTAL	LENGTH PER BAR (FEET)	TOTAL LENGTH (FEET)	TYPE	DIMENSIONS						
					A	B	C	D	E	R	INC
ABUTMENT, SUPERSTRUCTURE, AND APPROACH SLAB GFRP #5 ◕											
AG501	32	3′-7″	115	36	0′-8½″	1′-2″	0′-10″				
AG502	4	8′-4″	33	36	5′-6″	1′-2″	0′-10″				
SUB-TOTAL ABUTMENT			148								
SG501	192	4′-0″	768	36	1′-2″	1′-2″	0′-10″				
SG502	176	4′-2″	733	36	1′-4″	1′-2″	0′-10″				
SUB-TOTAL SUPERSTRUCTURE			1,501								
ASG501	20	4′-0″	80	36	1′-2″	1′-2″	0′-10″				
ASG502	12	3′-7″	43	36	0′-8½″	1′-2″	0′-10″				
SUB-TOTAL APPROACH SLAB			123								

LEGEND

◕ - AG4XX, AG5XX, SG4XX, SG5XX, ASG4XX, OR ASG5XX - GLASS FIBER REINFORCED POLYMER (GFRP) BAR.

Preliminary Plans - For Reference Only

DESIGN AGENCY EMH&T

DESIGNED GB | DRAWN GB | CHECKED RWW/RJE | REVISED - | REVIEWED CAS | DATE 5-22-26 | STRUCTURE FILE NUMBER 3113787

REINFORCING STEEL LIST
BRIDGE NO. HAM-562-0004
RAMP M OVER I.R. 75

HAM-75-7.85
PID No. 121447

56 / 56

864
1047

J:\20110903\ODOT\HAM\7889\structures\HAM562_0004P\sheets\562_0004CRL004.dgn 5/22/2026 10:45:27 AM hbrendlinger

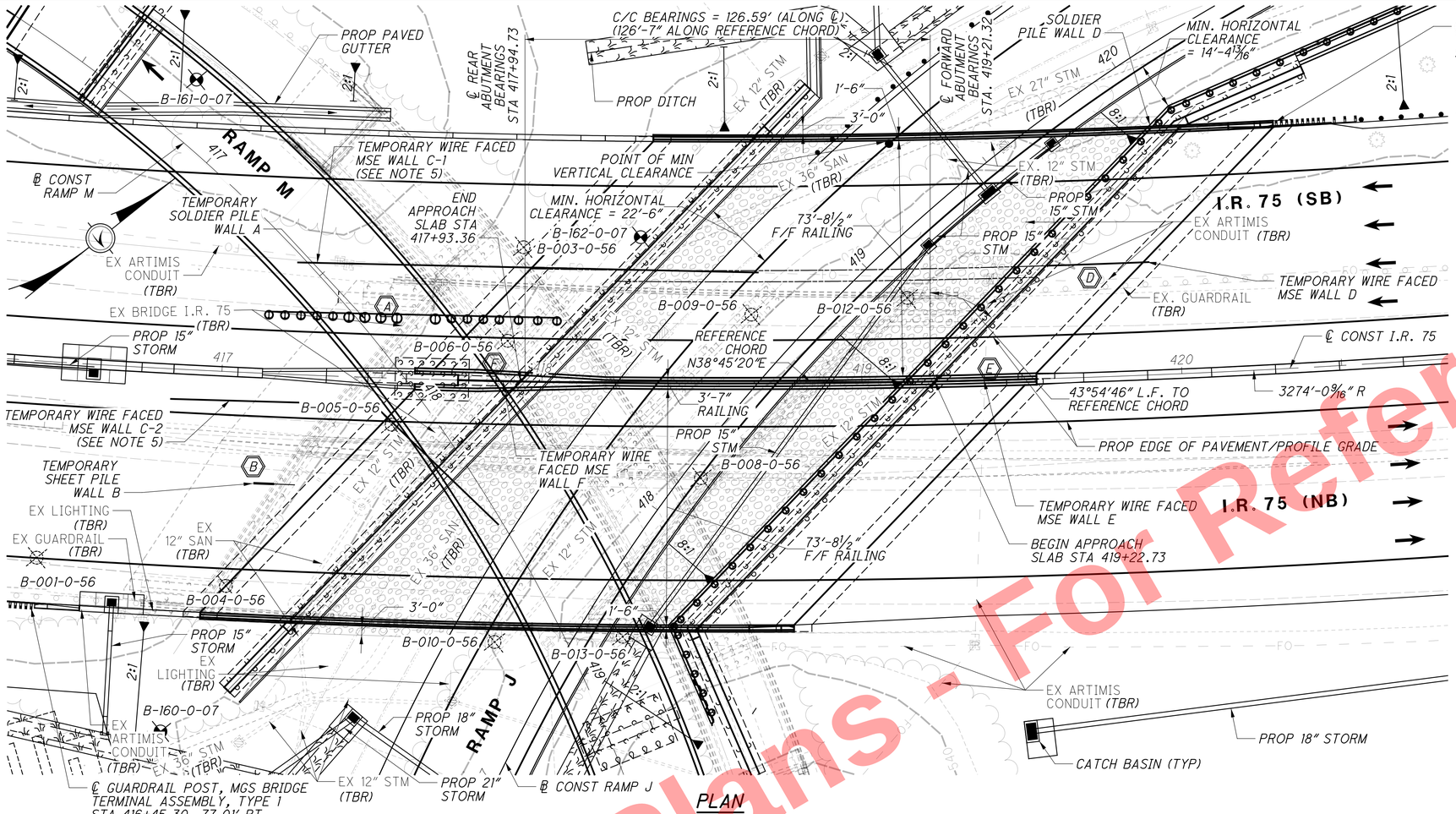

PLAN

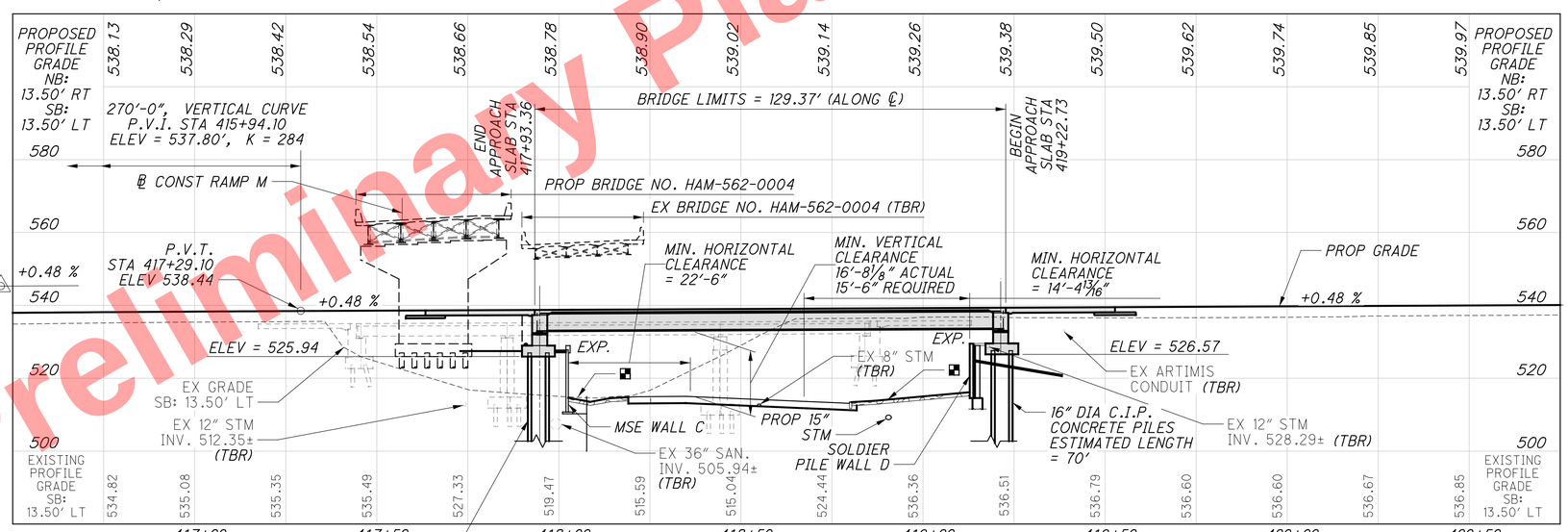

PROFILE ALONG ℄ CONST I.R. 75

℄ GUARDRAIL POST, MGS BRIDGE TERMINAL ASSEMBLY, TYPE 1
STA 420+33.53, 77.01′ LT

TRAFFIC DATA

CURRENT YEAR ADT (2010) = 173,800
DESIGN YEAR ADT (2030) = 203,000
DESIGN YEAR ADTT (2030) = 107,590

BENCHMARK DATA

BM #404, STA 434+88.14, ELEV 523.26, OFFSET 312.54′ RIGHT
BM #405, STA 434+03.68, ELEV 521.92 , OFFSET 388.27′ LEFT

FOR ADDITIONAL BENCHMARK INFORMATION, SEE ROADWAY PLAN SHEET 10/1047

NOTES

1. EARTH WORK LIMITS SHOWN ARE APPROXIMATE. ACTUAL SLOPES SHALL CONFORM TO PLAN CROSS SECTIONS.
2. SEE ROADWAY PLANS FOR GUARDRAIL DETAILS AND PAYMENT.
3. SEE SHEET 2/65 FOR REFERENCE CHORD DIAGRAM.
4. SEE GENERAL NOTES FOR ABBREVIATION LEGEND.
5. SEE MSE WALL SHEETS FOR DETAILS AND PAYMENT.

LEGEND

- PROJECT SOIL BORING LOCATION
- HISTORIC SOIL BORING LOCATION
- CRUSHED AGGREGATE SLOPE PROTECTION, 1′-0″ THICK
- LIMITS OF ITEM 601 - CRUSHED AGGREGATE SLOPE PROTECTION
- (X) TEMPORARY WALL (FOR TABLE SEE SHEET 2/65)

℄ CONST I.R. 75 HORIZONTAL CURVE DATA

PI STA 420+66.71
Δ = 21° 27′ 24″ (LT)
Dc = 1° 45′ 00″
R = 3,274.04′
T = 620.31′
L = 1,226.09′
E = 58.25′
C = 1,218.94′
C.B. = N 35° 13′ 50″ E

EXISTING STRUCTURE

TYPE: 3 SPAN CONTINUOUS STEEL BEAM SUPERSTRUCTURE WITH REINFORCED CONCRETE DECK ON REINFORCED CONCRETE ABUTMENTS AND COLUMN PIERS
SPANS: 37′-2 7/8″, 54′-0″, 37′-3 1/2″ C/C BEARINGS
ROADWAY: SB: 52′-8″, NB: 51′-8″ F/F RAILING
SKEW: VARIES
DESIGN LOADING: CF 2000-51 ADEQUATE FOR AASHTO ALTERNATE LOADING
DECK: REINFORCED CONCRETE
SUBSTRUCTURE: DEEP FOUNDATION ABUTMENTS AND DEEP FOUNDATION PIERS
DATE BUILT: 1958
STRUCTURE FILE NUMBER: 3110036
APPROACH SLABS: 25′ LONG
WEARING SURFACE: SB: 1 1/4″ LATEX MODIFIED CONCRETE OR 1 3/4″ DENSE CONCRETE OVERLAY
NB: MONOLITHIC CONCRETE DECK WITH EPOXY COATED RE-BAR

PROPOSED STRUCTURE

TYPE: SINGLE SPAN STEEL GIRDER SUPERSTRUCTURE WITH COMPOSITE REINFORCED CONCRETE DECK ON REINFORCED CONCRETE STUB ABUTMENTS
SPAN: 126′-7″ C/C BEARINGS ALONG REFERENCE CHORD
ROADWAY: 73′-11 1/2″ T/T RAILING (N.B. AND S.B.)
DESIGN LOADING: HL-93
FUTURE WEARING SURFACE LOADING: 60 PSF
SKEW: 43°54′46″ L.F. TO REFERENCE CHORD PER NOTE 3
WEARING SURFACE: MONOLITHIC CONCRETE (MACRO-FIBERS)
APPROACH SLABS: AS-1-15 (30′ LONG) T=17″ (MODIFIED) TYPE A INSTALLATION (AS-2-15)
ALIGNMENT: 1°45′00″ CURVE LEFT
CROWN: 4.20% AND 4.00%
LATITUDE: N 39°10′30.84″
LONGITUDE: W 84°29′20.12″

Preliminary Plans - For Reference Only

DESIGN AGENCY: EMH&T
DESIGNED RJE | DRAWN GB | CHECKED RMW | REVIEWED CAS | DATE 5-22-26
STRUCTURE FILE NUMBER 3110044
HAMILTON COUNTY
STA. 417+93.36
STA. 419+22.73

SITE PLAN
BRIDGE NO. HAM-75-0791
I.R. 75 OVER RAMP J

HAM-75-7.85
PID No. 121447

1/65
865/1047

J:\2011093\ODOT\HAM\77889\structures\HAM075_0791C\sheets\075_0791CSP001.dgn 5/22/2026 10:45:33 AM hbrendlinger

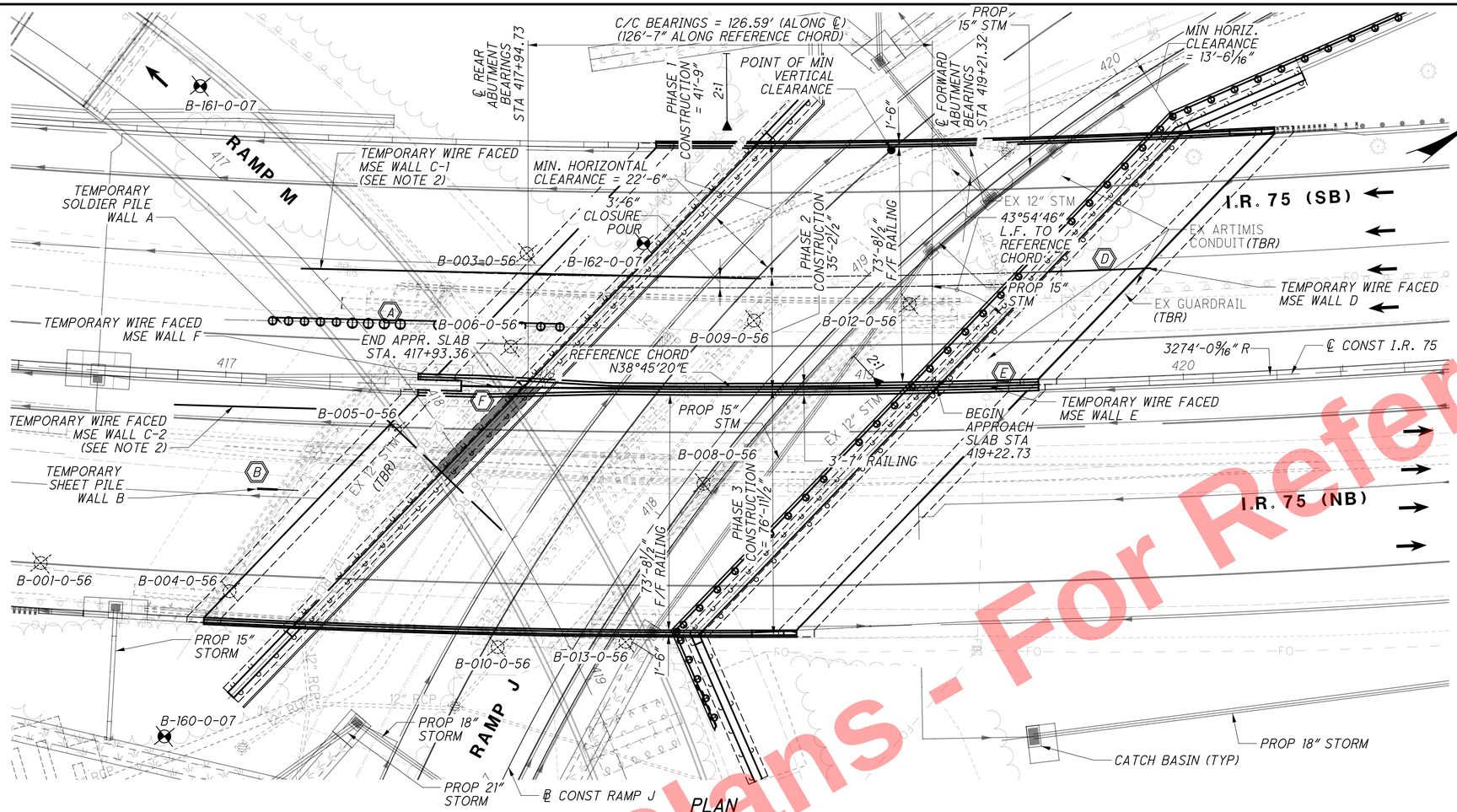

PLAN

TEMPORARY WALLS

A	COFFERDAMS AND EXCAVATION BRACING WALL A
B	COFFERDAMS AND EXCAVATION BRACING WALL B
D	TEMPORARY WIRE FACED MSE WALL D
E	TEMPORARY WIRE FACED MSE WALL E
F	TEMPORARY WIRE FACED MSE WALL F

℄ CONST I.R. 75 HORIZONTAL CURVE DATA

PI STA 420+66.71
Δ = 21° 27′ 24″ (LT)
Dc = 1° 45′ 00″
R = 3,274.04′
T = 620.31′
L = 1,226.09′
E = 58.25′
C = 1,218.94′
C.B. = N 35° 13′ 50″ E

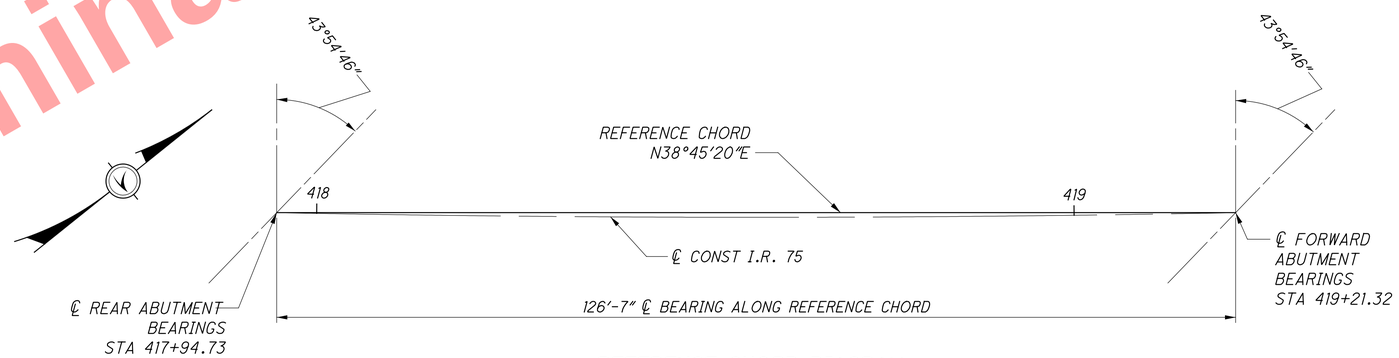

REFERENCE CHORD DIAGRAM

LEGEND

- (X) - WALL
- ▭ - LIMITS OF RIGHT BRIDGE REAR ABUTMENT BUILT IN PHASE 2 CONSTRUCTION

NOTES

1. SEE GENERAL NOTES FOR ABBREVIATION LEGEND.
2. SEE MSE WALL SHEETS FOR DETAILS AND PAYMENT.

Preliminary Plans - For Reference Only

DESIGN AGENCY EMH&T

DESIGNED	DRAWN	REVIEWED	DATE
RJE	GB	CAS	5-22-26
CHECKED	REVISED	STRUCTURE FILE NUMBER	
RMW	-	3110044	

GENERAL PLAN
BRIDGE NO. HAM-75-0791
I.R. 75 OVER RAMP J

HAM-75-7.85
PID No. 121447

2 / 65

866 / 1047

J:\20110903\ODOT\HAM\27889\structures\HAM075_0791C\sheets\075_0791CGP001.dgn 5/22/2026 10:45:36 AM hbrendlinger

REFER TO THE FOLLOWING STANDARD BRIDGE DRAWINGS:

AS-1-15	REVISED	1-20-23
AS-2-15	REVISED	1-20-23
PCB-91	REVISED	7-17-20
SBR-1-20	REVISED	1-20-23
SBR-2-20	REVISED	1-15-21
SICD-1-96	REVISED	7-18-14
SICD-2-14	REVISED	1-15-21

AND TO THE FOLLOWING SUPPLEMENTAL SPECIFICATIONS:

867 DATED 4-15-22

DESIGN SPECIFICATIONS:

THIS STRUCTURE CONFORMS TO THE 9TH EDITION OF THE "LRFD BRIDGE DESIGN SPECIFICATIONS" ADOPTED BY THE AMERICAN ASSOCIATION OF STATE HIGHWAY AND TRANSPORTATION OFFICIALS, 2020, AND THE ODOT BRIDGE DESIGN MANUAL, 2020.

SPECIAL DESIGN SPECIFICATIONS:

THIS BRIDGE REQUIRED THE USE OF A THREE DIMENSIONAL MODEL USING THE FINITE ELEMENT DESIGN METHOD TO ANALYZE THE STRUCTURE. THE COMPUTER PROGRAM USED FOR STRUCTURAL ANALYSIS WAS MIDAS CIVIL 2022 (v1.2). THE BRIDGE COMPONENTS DESIGNED BY THIS METHOD AND THE LIVE LOAD DISTRIBUTION FACTORS USED WERE:

DEAD LOAD DISTRIBUTION: SLAB LOADS ARE DISTRIBUTED BASED UPON GIRDER SPACING AND TRIBUTARY WIDTHS. FUTURE WEARING SURFACE, AND RAILING LOADS ARE DISTRIBUTED EQUALLY TO ALL GIRDERS.

LIVE LOADS WERE GENERATED AUTOMATICALLY BY THE DESIGN PROGRAM AND WERE APPLIED WITHIN USER DETERMINED LANES. THE DESIGN PROGRAM DISTRIBUTED THE LIVE LOADS BASED ON THE LONGITUDINAL AND TRANSVERSE STIFFNESS.

OPERATIONAL IMPORTANCE:

A LOAD MODIFIER OF 1.05 HAS BEEN ASSUMED FOR THE DESIGN OF THIS STRUCTURE IN ACCORDANCE WITH THE AASHTO LRFD BRIDGE DESIGN SPECIFICATIONS, ARTICLE 1.3.5 AND THE ODOT BRIDGE DESIGN MANUAL.

DESIGN LOADING:

VEHICULAR LIVE LOAD: HL-93
FUTURE WEARING SURFACE (FWS) OF 0.060 KIPS/FT²

DESIGN DATA:

CONCRETE CLASS QC3 - COMPRESSIVE STRENGTH 4.5 KSI (SUPERSTRUCTURE)
CONCRETE CLASS SCC - COMPRESSIVE STRENGTH 4.5 KSI (SUPERSTRUCTURE)
CONCRETE CLASS QC1/QC3 - COMPRESSIVE STRENGTH 4.0 KSI (SUBSTRUCTURE))

CONCRETE REINFORCEMENT:
EPOXY COATED STEEL REINFORCEMENT - MINIMUM YIELD STRENGTH 60 KSI (DECK, RAILING, AND ABUTMENTS)
GFRP REINFORCEMENT (RAILING)
GALVANIZED STEEL REINFORCEMENT - MINIMUM YIELD STRENGTH 60-KSI (APPROACH SLAB AND RAILING)

STRUCTURAL STEEL - ASTM A709 GRADE 50W - YIELD STRENGTH 50 KSI

STEEL CIP PILES - ASTM A252 GRADE 2 - YIELD STRENGTH 35 PSI

MONOLITHIC WEARING SURFACE:

MONOLITHIC WEARING SURFACE IS ASSUMED, FOR DESIGN PURPOSES, TO BE 1 INCH THICK.

ITEM 202 - STRUCTURE REMOVED, OVER 20 FOOT SPAN, AS PER PLAN:

THE EXISTING REAR ABUTMENT SHALL BE REMOVED A MINIMUM OF 5'-0" BELOW EXISTING GROUND OR AS NEEDED TO FACILITATE THE PROPOSED REAR ABUTMENT MSE WALL CONSTRUCTION.

THE EXISTING PIER 1 PILES SHALL BE REMOVED TO THE ELEVATION OF THE BOTTOM OF MSE WALL C UNDERCUT & ITEM 203 - GRANULAR MATERIAL TYPE C.

THE EXISTING PIER 2 AND EXISTING FORWARD ABUTMENT SHALL BE REMOVED AT LEAST TO THE BOTTOM OF RAMP J SUBGRADE ELEVATION.

THE CONTRACTOR MUST REVIEW THE STRUCTURE WHEN PREPARING HIS BID. THE CONTRACTOR WILL REVIEW THE CONDITION OF THE STRUCTURE TO DETERMINE WHAT DEBRIS WILL FALL FROM THE STRUCTURE DURING REMOVAL. THE CONTRACTOR WILL DETERMINE THE CORRESPONDING COST TO CLEAN-UP ANY AND ALL DEBRIS WHICH FALLS FROM THE STRUCTURE DURING ANY REMOVAL OPERATION. THE COST TO CLEAR AND CLEAN-UP ALL DEBRIS DURING REMOVAL SHALL BE INCLUDED WITH THE BID FOR THIS ITEM OF WORK. NO ADDITIONAL COST WILL BE RECOGNIZED TO CLEAN DEBRIS RESULTING FROM THE STRUCTURE REMOVAL OPERATION.

EXISTING STRUCTURE VERIFICATION:

DETAILS AND DIMENSIONS SHOWN ON THESE PLANS PERTAINING TO THE EXISTING STRUCTURE HAVE BEEN OBTAINED FROM PLANS OF THE EXISTING STRUCTURE AND FROM FIELD OBSERVATIONS AND MEASUREMENTS. CONSEQUENTLY, THEY ARE INDICATIVE OF THE EXISTING STRUCTURE AND THE PROPOSED WORK BUT THEY SHALL BE CONSIDERED TENTATIVE AND APPROXIMATE. THE CONTRACTOR IS REFERRED TO CMS SECTIONS 102.05, 105.02 AND 513.04.

BASE CONTRACT BID PRICES UPON A RECOGNITION OF THE UNCERTAINTIES DESCRIBED ABOVE AND UPON A PREBID EXAMINATION OF THE EXISTING STRUCTURE. HOWEVER, THE DEPARTMENT WILL PAY FOR ALL PROJECT WORK BASED UPON ACTUAL DETAILS AND DIMENSIONS THAT HAVE BEEN VERIFIED IN THE FIELD.

EXISTING STRUCTURE PLANS:

CONSTRUCTION PLANS FOR THE EXISTING BRIDGE ARE ON FILE AT THE DEPARTMENT OF TRANSPORTATION, DISTRICT 8 OFFICE, 505 SOUTH STATE ROUTE 741, LEBANON, OHIO AND ARE AVAILABLE FOR REFERENCE.

PILE DRIVING CONSTRAINTS:

PILE DRIVING MAY NOT BEGIN UNTIL SUFFICIENT EMBANKMENT AND MSE WALL SETTLEMENT HAS OCCURRED AS DOCUMENTED BY THE SETTLEMENT PLATFORMS. THE ANTICIPATED WAITING PERIOD TO PERMIT SUFFICIENT EMBANKMENT SETTLEMENT IS 90 DAYS. THE DISTRICT GEOTECHNICAL ENGINEER MAY REDUCE OR EXTEND THE WAITING PERIOD BASED ON THE MAGNITUDE AND RATE OF THE EMBANKMENT SETTLEMENT AS DETERMINED BY THE SETTLEMENT PLATFORMS. THE SETTLEMENT WAITING PERIOD BEGINS ONCE THE APPROACH EMBANKMENT REACHES THE DESIGN SUBGRADE LEVEL FOR A MINIMUM DISTANCE OF 100 FT. BEHIND EACH ABUTMENT. THE PLANS HAVE PROVISIONS FOR A TEMPORARY WALL AT THE ABUTMENT LOCATION TO PERMIT PLACEMENT OF EMBANKMENT TO THE DESIGN SUBGRADE LEVEL. BEGIN PILE DRIVING ONLY FOLLOWING TERMINATION OF THE SETTLEMENT MONITORING WAITING PERIOD BY THE DISTRICT GEOTECHNICAL ENGINEER.

PRIOR TO DRIVING THE FORWARD ABUTMENT PILES, IN AREA AT THE END OF THE NORTHEAST WINGWALL, CONSTRUCT THE SPILL THROUGH SLOPES AND THE BRIDGE APPROACH EMBANKMENT BEHIND THE ABUTMENTS UP TO THE LEVEL OF THE SUBGRADE ELEVATION FOR A MINIMUM DISTANCE OF 200 FEET BEHIND EACH ABUTMENT. DO NOT BEGIN THE EXCAVATION FOR THE ABUTMENT FOOTINGS AND THE INSTALLATION OF THE ABUTMENT PILES UNTIL AFTER THE ABOVE REQUIRED EMBANKMENT HAS BEEN CONSTRUCTED.

DRIVING OF PILES TO THE DESIGN ULTIMATE BEARING VALUE PRIOR TO MSE WALL CONSTRUCTION, SURCHARGE PLACEMENT AND SETTLEMENT WAITING PERIOD TERMINATION IS AN ALTERNATIVE TO DRIVING THE PILES FOLLOWING THE SETTLEMENT WAITING PERIOD. PILES DRIVEN PRIOR TO THE WAITING PERIOD ARE TO BE INSTALLED AS PER THE PILES DRIVEN TO TIP ELEVATION FOR PILE/SOIL SETUP REQUIREMENTS. ALL PILES DRIVEN TO THE UBV PRIOR TO THE WAITING PERIOD TERMINATION REQUIRE RESTRIKING FOLLOWING THE END OF THE SETTLEMENT WAITING PERIOD. RESTRIKE AND MOBILIZED EACH PILE A MINIMUM OF 0.5 INCHES. SELECT THE APPROPRIATE PILE DRIVING EQUIPMENT TO ENSURE EACH PILE MOVES 0.5 INCHES UPON RESTRIKE. ADDITIONAL COMPENSATION WILL NOT BE CONSIDERED FOR PILE RESTRIKING WHEN PILES ARE DRIVEN PRIOR TO THE SETTLEMENT WAITING PERIOD. THE CONTRACTOR IS TO SURVEY EACH PILE DRIVEN PRIOR TO CONSTRUCTION OF THE MSE WALL AND PROVIDE THE ENGINEER A RECORD OF THE PILE PLUMBNESS AND TOP OF LOCATION RELATIVE TO THE PLAN LOCATION. CORRECT ANY PILE ALIGNMENT ISSUES THAT ARE IDENTIFIED IN THE PILE SURVEY PRIOR TO MSE WALL CONSTRUCTION AT NO ADDITIONAL COST TO THE DEPARTMENT. ANY PILE CORRECTIONS ARE TO BE ACCEPTED BY THE ENGINEER PRIOR TO IMPLEMENTATION.

ITEM 203 - EMBANKMENT, AS PER PLAN:

PLACE AND COMPACT EMBANKMENT MATERIAL IN 6 INCH LIFTS FOR THE CONSTRUCTION OF BOTH THE APPROACH EMBANKMENT AS WELL AS EMBANKMENT REQUIRED AT THE NORTHEAST WINGWALL UP TO THE PROPOSED BOTTOM OF FOOTING ELEVATION.

ITEM 503 - COFFERDAMS AND EXCAVATION BRACING, AS PER PLAN (WALL A):
ITEM 503 - COFFERDAMS AND EXCAVATION BRACING, AS PER PLAN (WALL B):

THE DESIGN SHOWN ON THE PLANS FOR TEMPORARY SUPPORT OF EXCAVATION IS ONE REPRESENTATIVE DESIGN THAT MAY BE USED TO CONSTRUCT THE PROJECT. THE CONTRACTOR MAY CONSTRUCT THE DESIGN SHOWN ON THE PLANS OR PREPARE AN ALTERNATE DESIGN TO SUPPORT THE SIDES OF EXCAVATIONS. IF CONSTRUCTING AN ALTERNATE DESIGN FOR TEMPORARY SUPPORT OF EXCAVATION, PREPARE AND PROVIDE PLANS IN ACCORDANCE WITH C&MS 501.05. THE DEPARTMENT WILL PAY FOR THE TEMPORARY SUPPORT OF EXCAVATION AT THE CONTRACT LUMP SUM PRICE FOR COFFERDAMS AND EXCAVATION BRACING. THE DEPARTMENT WILL NOT MAKE ADDITIONAL PAYMENT FOR PROVIDING AN ALTERNATE DESIGN.

PILES DRIVEN TO TIP ELEVATION FOR PILE/SOIL SETUP:

THE ULTIMATE BEARING VALUE (UBV) IS 330 KIPS PER PILE FOR THE REAR ABUTMENT AND FORWARD ABUTMENT. PART OF THE ULTIMATE BEARING VALUE WILL BE ACHIEVED THROUGH PILE/SOIL SETUP, WHICH IS A TIME-DEPENDENT INCREASE IN RESISTANCE THAT OCCURS IN SOME SOILS.

NOTIFY THE ENGINEER AT LEAST 5 DAYS BEFORE DRIVING PILES SO THAT THE ENGINEER CAN NOTIFY THE DISTRICT GEOTECHNICAL ENGINEER, THE OFFICER OF CONSTRUCTION ADMINISTRATION, AND THE OFFICE OF GEOTECHNICAL ENGINEERING.

DRIVE THE FIRST TWO PILES IN EACH SUBSTRUCTURE TO THE TIP ELEVATION SPECIFIED FOR EACH SUBSTRUCTURE. DRIVE THE THIRD AND FOURTH PILES TO 75% AND 85% OF THE LENGTH OF THE FIRST TWO PILES. PERFORM DYNAMIC LOAD TESTING ON ALL FOUR PILES WHILE DRIVING. AFTER DRIVING THE FOUR PILES, CEASE ALL DRIVING OPERATIONS AT THE SUBSTRUCTURE FOR A MINIMUM OF 10 DAYS. INCLUDE THE WAITING PERIOD AS A SEPARATE ACTIVITY IN THE PROGRESS SCHEDULE. AFTER THE WAITING PERIOD, PERFORM PILE RESTRIKES ON THE FOUR PILES (TWO RESTRIKE ITEMS). PERFORM A CAPWAP ANALYSIS ON EACH PILE TESTED FOR EVERY DYNAMIC LOAD TEST AND EVERY RESTRIKE TEST.

SUBMIT ALL TEST RESULTS TO THE ENGINEER. THE ENGINEER WILL REVIEW THE TEST RESULTS AND ESTABLISH DRIVING CRITERIA FOR THE PILING IN THE SUBSTRUCTURE WITH THE ASSISTANCE OF THE DISTRICT GEOTECHNICAL ENGINEER, THE OFFICE OF CONSTRUCTION ADMINISTRATION, AND THE OFFICE OF GEOTECHNICAL ENGINEERING. THE DRIVING CRITERIA WITH PILE SETUP SHALL BE PERFORMED FOR THE FIRST PHASE OF BRIDGE CONSTRUCTION. THE CONTRACTOR SHALL NOT ORDER PILES FOR SUBSEQUENT PHASES UNTIL AFTER THE DRIVING CRITERIA HAS BEEN ESTABLISHED WITH SETUP. THE DEPARTMENT WILL ADJUST THE FURNISHED PILE QUANTITIES BASED ON THE RESTRIKE TEST RESULTS.

IF THE DYNAMIC LOAD TESTING INDICATES A PILE HAS ACHIEVED THE ULTIMATE BEARING VALUE ABOVE THE TIP ELEVATION DURING THE INITIAL DRIVING (BEFORE THE WAITING PERIOD), STOP DRIVING AND NOTIFY THE ENGINEER. IF THE RESTRIKE TEST RESULTS ON THE FOUR PILES INDICATE THAT A PILE DID NOT ACHIEVE THE REQUIRED ULTIMATE BEARING VALUE, DRIVE THE PILE TO THE ESTABLISHED DRIVING CRITERIA. THE DEPARTMENT WILL PAY FOR SPLICING OF THE PILES BEYOND THE ESTIMATED LENGTH PROVIDED IN THE PLANS UNDER C&MS 109.05 WITH A NEGOTIATED PRICE PER SPLICE.

REAR ABUTMENT
16" DIAMETER CIP PILES, 90 FEET LONG, ORDER LENGTH
TIP ELEVATION 441.94
2 DYNAMIC LOAD TESTING ITEM
2 RESTRIKE

FORWARD ABUTMENT
16" DIAMETER CIP PILES, 75 FEET LONG, ORDER LENGTH
TIP ELEVATION 457.57
2 DYNAMIC LOAD TESTING ITEM
2 RESTRIKE

ITEM 507 - 16" CAST-IN-PLACE REINFORCED CONCRETE PILES, FURNISHED, AS PER PLAN

IN ADDITION TO THE REQUIREMENTS OF ITEM 507 AND CMS 711.03, FURNISH ASTM A252, GRADE 2, STEEL PIPES FOR ALL PILES. FURNISH PIPES WITH THE FOLLOWING MINIMUM THICKNESSES:

REAR ABUTMENT: 3/8"
FORWARD ABUTMENT: 3/8"

ITEM 523 - DYNAMIC LOAD TESTS

PERFORM DYNAMIC LOAD TESTS PER ITEM 523 AT LOCATIONS AND FREQUENCY OUTLINED IN THE PLANS. EACH UNIT OF PAYMENT FOR THE DYNAMIC LOAD TEST INCLUDES TESTING OF TWO PILES WITH SIGNAL MATCHING ON ONE OF THE TWO PILES TESTED.

Preliminary Plans - Not for Reference Only

DESIGN AGENCY EMH&T
DESIGNED RJE | DRAWN GB | CHECKED RMW | REVIEWED CAS | DATE 5-22-26 | REVISED - | STRUCTURE FILE NUMBER 3110044

GENERAL NOTES
BRIDGE NO. HAM-75-0791
I.R. 75 OVER RAMP J

HAM-75-7.85
PID No. 121447

3 / 65

867
1047

J:\2011090\3\ODOT\HAM\77889\structures\HAM075_0791C\sheets\075_0791CGN001.dgn 5/22/2026 10:45:40 AM hbrendlinger

ITEM 511 - CLASS QC3 CONCRETE, MISC.: CONCRETE WITH QC/QA, BRIDGE DECK, AS PER PLAN
ITEM 511 - CLASS QC3 CONCRETE, MISC.: CONCRETE WITH QC/QA, BRIDGE DECK (MEDIAN RAILING), AS PER PLAN

THIS ITEM APPLIES TO THE CONCRETE IN THE BRIDGE DECK AND MEDIAN RAILING. THIS ITEM MODIFIES THE STANDARD 511 CONCRETE FOR STRUCTURES SPECIFICATION TO INCLUDE MACRO-SYNTHETIC, AND CORROSION INHIBITORS INTO THE SUPERSTRUCTURE CONCRETE. THIS ITEM SHALL CONFORM TO CMS 511 WITH THE FOLLOWING CONDITIONS AND REVISIONS:

PROVIDE MATERIALS CONFORMING TO 511.02 EXCEPT AS MODIFIED BELOW:

PORTLAND CEMENT CONCRETE:	499.03, CLASS QC 3 MEETING A DESIGN STRENGTH OF 4,500 PSI, WITH MACRO-SYNTHETIC FIBERS WITH MODIFICATION PER 511.02
FIBERS FOR CONCRETE:	ASTM C 1116, TYPE III
CORROSION INHIBITOR:	515.15

THE CLASS QC3 CONCRETE FOR THE SUPERSTRUCTURE SHALL MEET THE FOLLOWING CRITERIA:
WATER/CEMENT RATIO = 0.40 MAXIMUM; MINIMUM 4 LBS/CY MACRO-SYNTHETIC FIBERS (1.5 IN. MIN. TO 2.5 IN. MAX.) MEETING ASTM C1116 TYPE III SHALL BE ADDED TO THE MIX.

MIX SHALL INCLUDE A MIGRATING CORROSION INHIBITOR AS MANUFACTURED BY AN APPROVED SUPPLIER LISTED ON ODOT'S QUALIFIED APPROVED SUPPLIERS, ITEM 515.15. THE DOSAGE RATE LISTED ON THE ODOT QUALIFIED APPROVED SUPPLIERS LIST WILL APPLY.

THE MACRO-SYNTHETIC FIBERS SHALL BE INCORPORATED INTO THE MIX IN SUCH A WAY THAT NO 'BALLING' OCCURS. UPON INSPECTION OF THE MIX AT THE TIME OF PLACEMENT, IF ANY 'BALLING' OCCURS, THE ENGINEER SHALL REJECT THE REMAINDER OF THE LOAD AT ANY TIME DURING THE POUR. IT IS IMPORTANT TO FOLLOW INDUSTRY STANDARDS AND ASTM SPECIFICATIONS ON THE PREMIXING OF THE CEMENT, AGGREGATE, AND MACRO-SYNTHETIC FIBERS PRIOR TO THE ADDITION OF WATER AND ADMIXTURES. PROVIDE MACRO-SYNTHETIC -FIBERS THAT ARE MONOFILAMENT FIBERS MADE FROM VIRGIN POLYPROPYLENE, POLYETHYLENE, OR CO-POLYMERS THAT ARE INERT TO ALKALI ATTACK. ENSURE THE MACRO-SYNTHETIC FIBERS HAVE A MINIMUM TENSILE STRENGTH OF 70 KSI, A MINIMUM MODULUS OF ELASTICITY OF 800 KSI, A MINIMUM FILAMENT DIAMETER OF 0.012 INCHES, AND ASPECT RATIO BETWEEN 60 AND 100, AND ARE BETWEEN 1.0 AND 2.5 INCHES IN LENGTH. STORE THE MACRO-SYNTHETIC FIBERS ACCORDING TO THE MANUFACTURE'S RECOMMENDATION AND KEEP THE MATERIAL FREE FROM DUST, DIRT AND MOISTURE.

USE A MINIMUM DOSAGE RATE OF MACRO-SYNTHETIC FIBERS OF 4.0 LBS/CY OF CONCRETE. DETERMINE THE FINAL PROPOSED DOSAGE RATE THROUGH MIX TESTING. ENSURE THE FIBER REINFORCED CONCRETE MEETS OR EXCEEDS A MINIMUM EQUIVALENT FLEXURAL STRENGTH RATIO OF 25% ACCORDING TO ASTM C 1609. ENSURE THE FINAL PROPOSED MIX IS WORKABLE AND ABLE TO BE PRODUCED SUCH THAT BALLING OR CLUMPING OF THE FIBERS IS NOT A PROBLEM AS DETERMINED BY THE ENGINEER. UTILIZE A LABORATORY REGULARLY INSPECTED BY THE CEMENT AND CONCRETE REFERENCE LABORATORY (CCRL) OF THE NATIONAL INSTITUTE OF STANDARDS AND TECHNOLOGY, OR OTHER APPROVED REFERENCE LABORATORY, TO PERFORM THE TESTING. BEFORE USE, SUBMIT DOCUMENTATION TO THE PROJECT ENGINEER CERTIFYING BOTH THE MACRO-SYNTHETIC FIBERS AND THE MIX MEET OR EXCEED THE REQUIRED PROPERTIES. SAMPLING WILL BE ALLOWED FOR TESTING PURPOSES. A DEMONSTRATION OF THE MIX PRODUCTION OR TRIAL MIX, MAY BE REQUIRED BY THE ENGINEER PRIOR TO PLACING ANY OF THE MIX ON THE PROJECT.

ITEM 511 - CLASS QC3 CONCRETE, MISC.: CONCRETE WITH QC/QA, BRIDGE DECK, AS PER PLAN (CONT.)
ITEM 511 - CLASS QC3 CONCRETE, MISC.: CONCRETE WITH QC/QA, BRIDGE DECK (MEDIAN RAILING), AS PER PLAN (CONT.)

THE BATCH WEIGHTS SHALL BE CORRECTED TO COMPENSATE FOR THE MOISTURE CONTAINED IN THE AGGREGATE AT THE TIME OF USE. A CHEMICAL ADMIXTURE (705.12, TYPE A OR D) SHALL BE USED. THE TRANSIT MIXER CHARGE SHALL BE LIMITED TO 3/4 OF ITS RATED CAPACITY OR 6 CUBIC YARDS, WHICHEVER IS SMALLER. THE FIRST THREE TRANSIT MIXER LOADS ARE REQUIRED TO BE AT THE MINIMUM YARDAGE LISTED ABOVE TO SHOW PROOF OF THE SUCCESSFUL BATCHING OPERATION. AFTER CONSISTENCY IN THE DELIVERED MATERIAL HAS BEEN ESTABLISHED, THE CONCRETE SUPPLIER MAY INCREASE THE BATCH DELIVERED QUANTITIES AS LONG AS THE QUALITY REMAINS ACCEPTABLE TO THE ENGINEER. THE ENGINEER CAN REDUCE THE BATCH LOAD SIZE AT ANY TIME AS NEEDED TO CORRECT/IMPROVE CONCRETE QUALITY.

CONCRETE SUPPLIERS SHOULD RECOGNIZE THAT THE CORROSION INHIBITOR AND ADMIXTURES MAY HAVE AN EFFECT ON STRENGTH, ENTRAINED AIR CONTENT, WORKABILITY, ETC. OF THEIR CONCRETE MIXES. THE CORROSION INHIBITOR IS SUGGESTED TO BE A MCI PRODUCT BY CORTEC OR AN APPROVED EQUAL FROM THE QUALIFIED PRODUCTS LIST. THE CONCRETE SUPPLIER'S CHOICE OF ONE OF THESE CORROSION INHIBITORS DOES NOT ALLEVIATE MEETING DESIGN REQUIREMENTS. PLEASE BE ADVISED THAT SOME PRODUCTS ON THE LIST EFFECT THE DELIVERED MIX PROPERTIES GREATLY WHILE OTHER PRODUCTS DO NOT.

APPROACH SLABS, DIAPHRAGMS, AND MEDIAN RAILING CONCRETE ARE TO USE THE SAME MIX DESIGN AS THE BRIDGE DECK. THE CONTRACTOR SHOULD BE ADVISED THAT CONCRETE RETARDING AGENTS MAY NEED TO BE ADDED TO OFFSET THE EFFECTS OF THE MIGRATING CORROSION INHIBITOR SELECTED.

THE CONTRACTOR SHALL PROVIDE TRADITIONAL BRIDGE DECK FORMS CONFORMING TO CMS 508. PERMANENT STAY-IN-PLACE (SIP) FORMS ARE NOT ALLOWED. THE PLACING OF THE DECK AND THE APPROACH SLABS IN THE SAME CONCRETE POUR IS NOT PERMITTED.

ITEM 511 - CLASS QC SCC CONCRETE WITH QC/QA, BRIDGE DECK (PARAPET), AS PER PLAN

THIS WORK SHALL INCLUDE THE CONSTRUCTION OF THE EXTERIOR BRIDGE RAILINGS WITH A FORM LINER PATTERN APPLIED TO THE EXTERIOR FACE THAT MATCHES THE ARCHITECTURAL "TEXAS RAIL" DETAILS SHOWN IN THE PLANS USING CLASS SCC CONCRETE. THIS ITEM SHALL INCLUDE ALL MATERIALS, EQUIPMENT AND LABOR REQUIRED TO CONSTRUCT THE "TEXAS" TYPE BRIDGE RAILING. QUANTITY SHALL INCLUDE SAW CUTTING, JOINT SEALER, FORM LINERS AND ANY OTHER MISCELLANEOUS ITEMS REQUIRED TO FULLY CONSTRUCT THE RAILING. THIS ITEM SHALL ONLY INCLUDE THE EXTERIOR RAILING ON THE BRIDGE. EXTERIOR RAILING ON APPROACH SLABS SHALL BE PAID FOR UNDER ITEM 526 - REINFORCED CONCRETE APPROACH SLABS (T=17"), AS PER PLAN.

PAYMENT FOR THIS WORK SHALL INCLUDE ALL NECESSARY MATERIAL, LABOR, AND EQUIPMENT TO COMPLETE THIS TASK. PAYMENT SHALL BE MADE UNDER ITEM 511 - CLASS QC SCC CONCRETE WITH QC/QA, BRIDGE DECK (PARAPET), AS PER PLAN

Preliminary Plans - For Reference Only

J:\20110903\ODOT\HAM\77889\structures\HAM075_0791C\sheets\075_0791CGN002.dgn 5/22/2026 10:45:41 AM hbrendlinger

DESIGN AGENCY EMH&T
DESIGNED RJE | DRAWN GB | REVIEWED CAS | DATE 5-22-26
CHECKED RMW | REVISED - | STRUCTURE FILE NUMBER 3110044

GENERAL NOTES
BRIDGE NO. HAM-75-0791
I.R. 75 OVER RAMP J

HAM-75-7.85
PID No. 121447

868
1047

ITEM 511 - SEMI-INTEGRAL DIAPHRAGM GUIDE, AS PER PLAN
ITEM 511 - CLASS QC3 CONCRETE, MISC.: CONCRETE CLASS QC3 CONCRETE WITH QC/QA, ABUTMENT NOT INCLUDING FOOTING, AS PER PLAN

THESE ITEMS MODIFY THE STANDARD 511 CONCRETE FOR STRUCTURES SPECIFICATION TO INCLUDE MACRO-SYNTHETIC, AND CORROSION INHIBITORS INTO THE SUBSTRUCTURE CONCRETE. THESE ITEMS SHALL CONFORM TO CMS 511 WITH THE FOLLOWING CONDITIONS AND REVISIONS:

PROVIDE MATERIALS CONFORMING TO 511.02 EXCEPT AS MODIFIED BELOW:

PORTLAND CEMENT CONCRETE:	499.03, CLASS QC 3 MEETING A DESIGN STRENGTH OF 4,000 PSI, WITH MACRO-SYNTHETIC FIBERS WITH MODIFICATION PER 511.02
FIBERS FOR CONCRETE	ASTM C 1116, TYPE III
CORROSION INHIBITOR	515.15

THE CLASS QC3 CONCRETE FOR THE SUBSTRUCTURE SHALL MEET THE FOLLOWING CRITERIA:
WATER/CEMENT RATIO = 0.40 MAXIMUM; MINIMUM 4 LBS/CY MACRO-SYNTHETIC FIBERS (1.0 IN. MIN. TO 2.5 IN. MAX.) MEETING ASTM C1116 TYPE III SHALL BE ADDED TO THE MIX.

MIX SHALL INCLUDE A MIGRATING CORROSION INHIBITOR AS MANUFACTURED BY AN APPROVED SUPPLIER LISTED ON ODOT'S QUALIFIED APPROVED SUPPLIERS, ITEM 515.15. THE DOSAGE RATE LISTED ON THE ODOT QUALIFIED APPROVED SUPPLIERS LIST WILL APPLY.

THE MACRO-SYNTHETIC FIBERS SHALL BE INCORPORATED INTO THE MIX IN SUCH A WAY THAT NO 'BALLING' OCCURS. UPON INSPECTION OF THE MIX AT THE TIME OF PLACEMENT, IF ANY 'BALLING' OCCURS, THE ENGINEER SHALL REJECT THE REMAINDER OF THE LOAD AT ANY TIME DURING THE POUR. IT IS IMPORTANT TO FOLLOW INDUSTRY STANDARDS AND ASTM SPECIFICATIONS ON THE PREMIXING OF THE CEMENT, AGGREGATE, AND MACRO-SYNTHETIC FIBERS PRIOR TO THE ADDITION OF WATER AND ADMIXTURES. PROVIDE MACRO-SYNTHETIC-FIBERS THAT ARE MONOFILAMENT FIBERS MADE FROM VIRGIN POLYPROPYLENE, POLYETHYLENE, OR CO-POLYMERS THAT ARE INERT TO ALKALI ATTACK. ENSURE THE MACRO-SYNTHETIC FIBERS HAVE A MINIMUM TENSILE STRENGTH OF 70 KSI, A MINIMUM MODULUS OF ELASTICITY OF 800 KSI, A MINIMUM FILAMENT DIAMETER OF 0.012 INCHES, AND ASPECT RATIO BETWEEN 60 AND 100, AND ARE BETWEEN 1.0 AND 2.5 INCHES IN LENGTH. STORE THE MACRO-SYNTHETIC FIBERS ACCORDING TO THE MANUFACTURE'S RECOMMENDATION AND KEEP THE MATERIAL FREE FROM DUST, DIRT AND MOISTURE.

USE A MINIMUM DOSAGE RATE OF MACRO-SYNTHETIC FIBERS OF 4.0 LBS/CY OF CONCRETE. DETERMINE THE FINAL PROPOSED DOSAGE RATE THROUGH MIX TESTING. ENSURE THE FIBER REINFORCED CONCRETE MEETS OR EXCEEDS A MINIMUM EQUIVALENT FLEXURAL STRENGTH RATIO OF 25% ACCORDING TO ASTM C 1609. ENSURE THE FINAL PROPOSED MIX IS WORKABLE AND ABLE TO BE PRODUCED SUCH THAT BALLING OR CLUMPING OF THE FIBERS IS NOT A PROBLEM AS DETERMINED BY THE ENGINEER. UTILIZE A LABORATORY REGULARLY INSPECTED BY THE CEMENT AND CONCRETE REFERENCE LABORATORY (CCRL) OF THE NATIONAL INSTITUTE OF STANDARDS AND TECHNOLOGY, OR OTHER APPROVED REFERENCE LABORATORY, TO PERFORM THE TESTING. BEFORE USE, SUBMIT DOCUMENTATION TO THE PROJECT ENGINEER CERTIFYING BOTH THE MACRO-SYNTHETIC FIBERS AND THE MIX MEET OR EXCEED THE REQUIRED PROPERTIES. SAMPLING WILL BE ALLOWED FOR TESTING PURPOSES. A DEMONSTRATION OF THE MIX PRODUCTION OR TRIAL MIX, MAY BE REQUIRED BY THE ENGINEER PRIOR TO PLACING ANY OF THE MIX ON THE PROJECT.

ITEM 511 - SEMI-INTEGRAL DIAPHRAGM GUIDE, AS PER PLAN
ITEM 511 - CLASS QC3 CONCRETE, MISC.: CONCRETE CLASS QC3 CONCRETE WITH QC/QA, ABUTMENT NOT INCLUDING FOOTING, AS PER PLAN

THE BATCH WEIGHTS SHALL BE CORRECTED TO COMPENSATE FOR THE MOISTURE CONTAINED IN THE AGGREGATE AT THE TIME OF USE. A CHEMICAL ADMIXTURE (705.12, TYPE A OR D) SHALL BE USED. THE ENGINEER CAN REDUCE THE BATCH LOAD SIZE AT ANY TIME AS NEEDED TO CORRECT/IMPROVE CONCRETE QUALITY.

CONCRETE SUPPLIERS SHOULD RECOGNIZE THAT THE CORROSION INHIBITOR AND ADMIXTURES MAY HAVE AN EFFECT ON STRENGTH, ENTRAINED AIR CONTENT, WORKABILITY, ETC. OF THEIR CONCRETE MIXES. THE CORROSION INHIBITOR IS SUGGESTED TO BE A MCI PRODUCT BY CORTEC OR AN APPROVED EQUAL FROM THE QUALIFIED PRODUCTS LIST. THE CONCRETE SUPPLIER5#32S CHOICE OF ONE OF THESE CORROSION INHIBITORS DOES NOT ALLEVIATE MEETING DESIGN REQUIREMENTS. PLEASE BE ADVISED THAT SOME PRODUCTS ON THE LIST EFFECT THE DELIVERED MIX PROPERTIES GREATLY WHILE OTHER PRODUCTS DO NOT.

THE CONTRACTOR SHOULD BE ADVISED THAT CONCRETE RETARDING AGENTS MAY NEED TO BE ADDED TO OFFSET THE EFFECTS OF THE MIGRATING CORROSION INHIBITOR SELECTED.

ITEM 514 - FIELD PAINTING STRUCTURAL STEEL, INTERMEDIATE COAT, AS PER PLAN
ITEM 514 - FIELD PAINTING STRUCTURAL STEEL, FINISH COAT, AS PER PLAN

THE FASCIA GIRDER OUTSIDE SURFACES, LOWER FLANGE, AND 6" FROM THE BASE OF INSIDE WEB SHALL HAVE A THREE COAT IZEU PAINT SYSTEM APPLIED. THE PRIME COAT SHALL BE SHOP APPLIED. THE APPLICATION OF THE PRIME COAT SHALL BE PAID FOR UNDER ITEM 513, STRUCTURAL STEEL MEMBERS, LEVEL 4. THE INTERMEDIATE AND FINISH COATS SHALL BE FIELD APPLIED PER ITEM 514. SEE TRANSVERSE DECK SECTION ON SHEET 34/65 FOR EXACT LIMITS OF PAINTING OF THE FACIA GIRDERS. THE COLOR OF THE FINISH COAT SHALL BE FEDERAL COLOR NUMBER 14277 (GREEN).

ITEM 526 - REINFORCED CONCRETE APPROACH SLABS (T=17"), AS PER PLAN

THIS ITEM SHALL INCLUDE ALL THE COST OF ALL CONCRETE AND GALVANIZED REINFORCING STEEL FOR THE APPROACH SLABS AND RAILINGS ON APPROACH SLABS. SEALING OF THE RAILINGS SHALL BE PAID FOR UNDER ITEM 512 - SEALING OF CONCRETE SURFACES (EPOXY-URETHANE).

DECK PLACEMENT DESIGN ASSUMPTIONS:

THE FOLLOWING ASSUMPTIONS OF CONSTRUCTION MEANS AND METHODS WERE MADE FOR THE ANALYSIS AND DESIGN OF THE SUPERSTRUCTURE. THE CONTRACTOR IS RESPONSIBLE FOR THE DESIGN OF THE FALSEWORK SUPPORT SYSTEM WITHIN THESE PARAMETERS AND WILL ASSUME RESPONSIBILITY FOR SUPERSTRUCTURE ANALYSIS FOR DEVIATION FROM THESE DESIGN ASSUMPTIONS.

AN EIGHT WHEEL FINISHING MACHINE WITH A MAXIMUM WHEEL LOAD OF 3.2 KIPS.

A MINIMUM OUT-TO-OUT WHEEL SPACING AT EACH END OF THE MACHINE OF 103 IN.

A MAXIMUM SPACING OF OVERHANG FALSEWORK BRACKETS OF 48 IN.

A MAXIMUM DISTANCE FROM THE CENTERLINE OF THE FASCIA GIRDER TO THE FACE OF THE SAFETY HANDRAIL OF 65 IN.

ABBREVIATION LEGEND

ABUT. - ABUTMENT
ADT - AVERAGE DAILY TRAFFIC
ADTT - AVERAGE DAILY TRUCK TRAFFIC
APP SLAB - APPROACH SLAB
AVE. - AVENUE
℄ - BASELINE
BM - BENCH MARK
BOT. - BOTTOM
BTW. - BETWEEN
BRG - BEARING
BTA - BRIDGE TERMINAL ASSEMBLY
C/C - CENTER TO CENTER
CB - CATCH BASIN
CIP - CAST IN PLACE
CJ - CONSTRUCTION JOINT
℄ - CENTERLINE
CLR - CLEARANCE
CONST - CONSTRUCTION
DIA - DIAMETER
EB - EAST BOUND
EF - EACH FACE
ELEV - ELEVATION
E/P - EDGE OF PAVEMENT
E/S - EDGE OF SHOULDER
EQ. - EQUAL
EST. - ESTIMATED
EX - EXISTING
EXP - EXPANSION
FA - FORWARD ABUTMENT
F/F - FACE TO FACE
FF - FAR FACE
FTG - FOOTING
FWD - FORWARD
GEN - GENERAL
GR - GUARD RAIL
HMWM - HIGH MOLECULAR WEIGHT METHACRYLATE
INCR. - INCREMENT
INT. - INTEGRAL
I.R. - INTERSTATE ROUTE
LT - LEFT
MAX - MAXIMUM
MECH. CONN. - MECHANICAL CONNECTOR
MIN - MINIMUM
MISC - MISCELLANEOUS
M.O.T. - MAINTENANCE OF TRAFFIC
MSE - MECHANICALLY STABALIZED EARTH
N/A - NOT APPLICABLE
NB - NORTHBOUND
NF - NEAR FACE
NO - NUMBER
NPCPP - NON-PERFORATED CORRUGATED PLASTIC PIPE
O/O - OUT TO OUT
O.C. - ON CENTER
OD - OUTSIDE DIAMETER
PC - POINT OF CURVE
PGL - PROFILE GRADE LINE
PT - POINT OF TANGENT
P.V.I. - POINT OF VERTICAL INTERSECTION
PCB - PORTABLE CONCRETE BARRIER
PCPP - PERFORATED CORRUGATED PLASTIC PIPE
PVMT - PAVEMENT
PEJF - PREFORMED EXPANSION JOINT FILLER
PG - PROFILE GRADE
PROP - PROPOSED
PT. - POINT
PVMT. - PAVEMENT
RA - REAR ABUTMENT
RD - ROAD
REF. - REFERENCE
REQ'D - REQUIRED
RT - RIGHT
SB - SOUTHBOUND
SER. - SERIES
SHLD - SHOULDER
SPA - SPACES
S.R. - STATE ROUTE
ST - STREET
STA - STATION
SCD - STANDARD CONSTRUCTION DRAWING
STD - STANDARD
SUPER. - SUPERSTRUCTURE
TEMP - TEMPORARY
TOW - TOP OF WALL
T/S - TOE OF SLOPE
T/T - TOP TO TOE
TYP - TYPICAL
UNO - UNLESS NOTED OTHERWISE
VC - VERTIAL CURVE
VERT - VERTICAL
W/ - WITH
WB - WEST BOUND

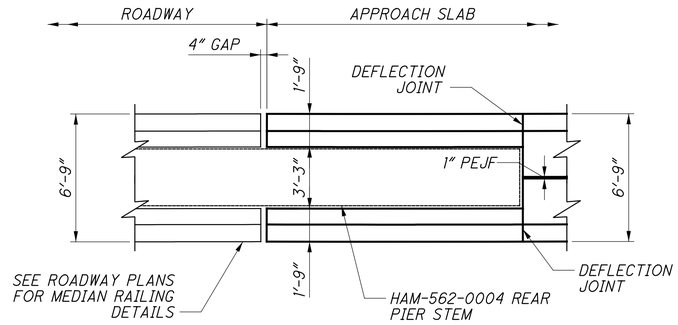

MEDIAN RAILING PLAN
REAR APPROACH SLAB

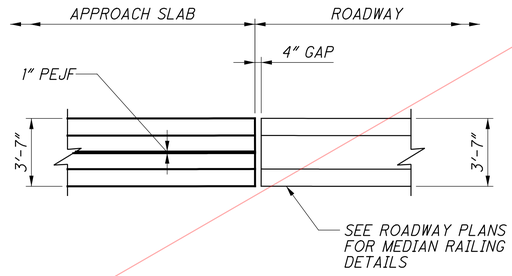

MEDIAN RAILING PLAN
FORWARD APPROACH SLAB

Preliminary plans - For Reference Only

DESIGN AGENCY: EMH&T
DESIGNED: RJE | CHECKED: RMW
DRAWN: GB | REVIEWED: CAS | DATE: 5-22-26
REVISED: - | STRUCTURE FILE NUMBER: 3110044

GENERAL NOTES
BRIDGE NO. HAM-75-0791
I.R. 75 OVER RAMP J

HAM-75-7.85
PID No. 121447

5 / 65

869
1047

J:\2011093\ODOT\HAM\7889\structures\HAM075_0791C\sheets\075_0791CGN003.dgn 5/22/2026 10:45:41 AM hbrendlinger

ESTIMATED QUANTITIES

CALC. BY: RJE — DATE: 4/11/23

CHECKED BY: TDA — DATE: 5/18/23

ITEM	ITEM EXT.	PARTICIPATION 03/IMS/10	TOTAL	UNIT	DESCRIPTION	LEFT BRIDGE ABUTMENT	LEFT BRIDGE SUPER.	LEFT BRIDGE GENERAL	RIGHT BRIDGE ABUTMENT	RIGHT BRIDGE SUPER.	RIGHT BRIDGE GENERAL	SHEET REF.
202	11003	LUMP	LUMP		STRUCTURE REMOVED, OVER 20 FOOT SPAN, AS PER PLAN							3/65
202	22900	582	582	SQ YD	APPROACH SLAB REMOVED			294			288	
203	20001	44	44	CU YD	EMBANKMENT, AS PER PLAN	44						3/65
503	11101	LUMP	LUMP		COFFERDAMS AND EXCAVATION BRACING, AS PER PLAN (WALL A)							3/65
503	11101	LUMP	LUMP		COFFERDAMS AND EXCAVATION BRACING, AS PER PLAN (WALL B)							3/65
503	21300	LUMP	LUMP		UNCLASSIFIED EXCAVATION							
505	11100	LUMP	LUMP		PILE DRIVING EQUIPMENT MOBILIZATION							
507	00700	9520	9520	FT	16" CAST-IN-PLACE REINFORCED CONCRETE PILES, DRIVEN	4675			4845			
507	00751	10140	10140	FT	16" CAST-IN-PLACE REINFORCED CONCRETE PILES, FURNISHED, AS PER PLAN	4980			5160			3/65
509	10000	226,540	226,540	POUND	EPOXY COATED REINFORCING STEEL	19,230	93,627		21,931	91,752		
509	30020	6,635	6,635	FT	NO. 4 GFRP DEFORMED BARS		2364	1027		2258	986	
509	30030	800	800	FT	NO. 5 GFRP DEFORMED BARS		294	119		276	111	
509	30040	6,259	6,259	FT	NO. 6 GFRP DEFORMED BARS		2061	1065		2079	1054	
511	34463	51	51	CU YD	CLASS QC SCC CONCRETE WITH QC/QA, BRIDGE DECK (PARAPET), AS PER PLAN		26			25		4/65
511	33501	4	4	EACH	SEMI-INTEGRAL DIAPHRAGM GUIDE, AS PER PLAN	2			2			5/65
511	46512	415	415	CU YD	CLASS QC1 CONCRETE WITH QC/QA, FOOTING	204			211			
511	53014	845	845	CU YD	CLASS QC3 CONCRETE, MISC.: CONCRETE WITH QC/QA, BRIDGE DECK, AS PER PLAN		426			419		4/65
511	53014	66	66	CU YD	CLASS QC3 CONCRETE, MISC.: CONCRETE WITH QC/QA, BRIDGE DECK (MEDIAN RAILING), AS PER PLAN		33			33		4/65
511	53014	230	230	CU YD	CLASS QC3 CONCRETE, MISC.: CONCRETE WITH QC/QA, ABUTMENT NOT INCLUDING FOOTING, AS PER PLAN	75			155			5/65
512	10100	1348	1348	SQ YD	SEALING OF CONCRETE SURFACES (EPOXY-URETHANE)	290	239	111	371	232	105	
512	10300	72	72	SQ YD	SEALING CONCRETE BRIDGE DECKS WITH HMWM RESIN			72				
512	33000	61	61	SQ YD	TYPE 2 WATERPROOFING	34			27			
513	10280	834,999	834,999	POUND	STRUCTURAL STEEL MEMBERS, LEVEL 4		415,870			419,129		
513	20000	6696	6696	EACH	WELDED STUD SHEAR CONNECTORS		3351			3345		
514	00061	2629	2629	SQ FT	FIELD PAINTING STRUCTURAL STEEL, INTERMEDIATE COAT, AS PER PLAN		1329			1300		5/65
514	00067	2629	2629	SQ FT	FIELD PAINTING STRUCTURAL STEEL, FINISH COAT, AS PER PLAN		1329			1300		5/65
516	13600	524	524	SQ FT	1" PREFORMED EXPANSION JOINT FILLER			262			262	
516	13800	142	142	SQ FT	1 1/2" PREFORMED EXPANSION JOINT FILLER			71			71	
516	13900	198	198	SQ FT	2" PREFORMED EXPANSION JOINT FILLER	105			93			
516	14020	491	491	FT	SEMI-INTEGRAL ABUTMENT EXPANSION JOINT SEAL	249			242			
516	44401	36	36	EACH	ELASTOMERIC BEARING WITH INTERNAL LAMINATES AND LOAD PLATE (NEOPRENE), AS PER PLAN, 14"x13"x4.77" ELASTOMERIC PAD WITH 15"x14"x1½" BOTTOM LOAD PLATE & 15"x25"x1½" TOP LOAD PLATE	18			18			25/65

Preliminary Plans - For Reference Only

J:\2011090\3\ODOT\HAM\77889\structures\HAM075_0791C\sheets\075_0791CEQ001.dgn 5/22/2026 10:45:42 AM hbrendlinger

DESIGN AGENCY: EMH&T

REVIEWED CAS — DATE 5-22-26

DRAWN GB — REVISED -

DESIGNED RJE — CHECKED RMW

STRUCTURE FILE NUMBER 3110044

ESTIMATED QUANTITIES
BRIDGE NO. HAM-75-0791
I.R. 75 OVER RAMP J

HAM-75-7.85
PID No. 121447

870
1047

ESTIMATED QUANTITIES (CONTINUED)

CALC. BY: RJE | DATE: 4/13/23
CHECKED BY: TDA | DATE: 5/18/23

ITEM	ITEM EXT.	PARTICIPATION 03/IMS/10	TOTAL	UNIT	DESCRIPTION	LEFT BRIDGE ABUTMENT	LEFT BRIDGE SUPER.	LEFT BRIDGE GENERAL	RIGHT BRIDGE ABUTMENT	RIGHT BRIDGE SUPER.	RIGHT BRIDGE GENERAL	SHEET REF
518	21200	180	180	CU YD	POROUS BACKFILL WITH GEOTEXTILE FABRIC	70			110			
518	40000	317	317	FT	6" PERFORATED CORRUGATED PLASTIC PIPE	158			159			
518	40010	71	71	FT	6" NON-PERFORATED CORRUGATED PLASTIC PIPE, INCLUDING SPECIALS	6			65			
523	20000	8	8	EACH	DYNAMIC LOAD TESTING			4			4	3/65
523	20500	8	8	EACH	RESTRIKE			4			4	
526	30001	1028	1028	SQ YD	REINFORCED CONCRETE APPROACH SLABS (T=17"), AS PER PLAN			520			508	5/65
526	90010	422	422	FT	TYPE A INSTALLATION			213			209	
601	20000	948	948	SQ YD	CRUSHED AGGREGATE SLOPE PROTECTION			439			509	
867	00100	LUMP	LUMP		TEMPORARY WIRE FACED MECHANICALLY STABILIZED EARTH WALL (WALL D)							
867	00100	LUMP	LUMP		TEMPORARY WIRE FACED MECHANICALLY STABILIZED EARTH WALL (WALL E)							
867	00100	LUMP	LUMP		TEMPORARY WIRE FACED MECHANICALLY STABILIZED EARTH WALL (WALL F)							

Preliminary Plans - For Reference Only

J:\20110903\ODOT\HAM\77889\structures\HAM075_0791C\sheets\075_0791CEQ002.dgn 5/22/2026 10:45:43 AM hbrendlinger

DESIGN AGENCY EMH&T

DESIGNED RJE | CHECKED RMW | DRAWN GB | REVISED - | REVIEWED CAS | DATE 5-22-26 | STRUCTURE FILE NUMBER 3110044

GENERAL NOTES (CONTINUED)
BRIDGE NO. HAM-75-0791
I.R. 75 OVER RAMP J

HAM-75-7.85
PID No. 121447

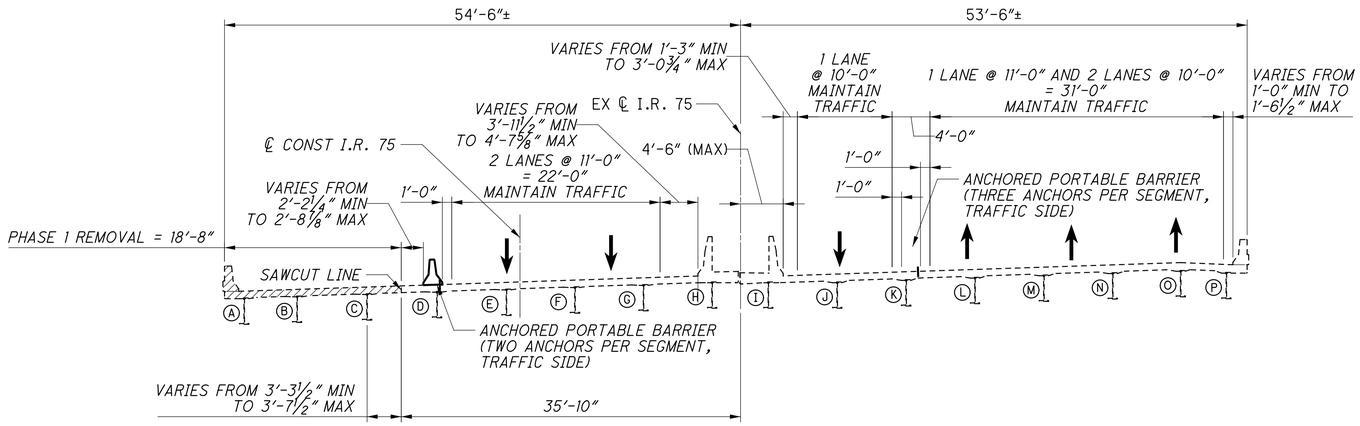

PHASE 1 REMOVAL

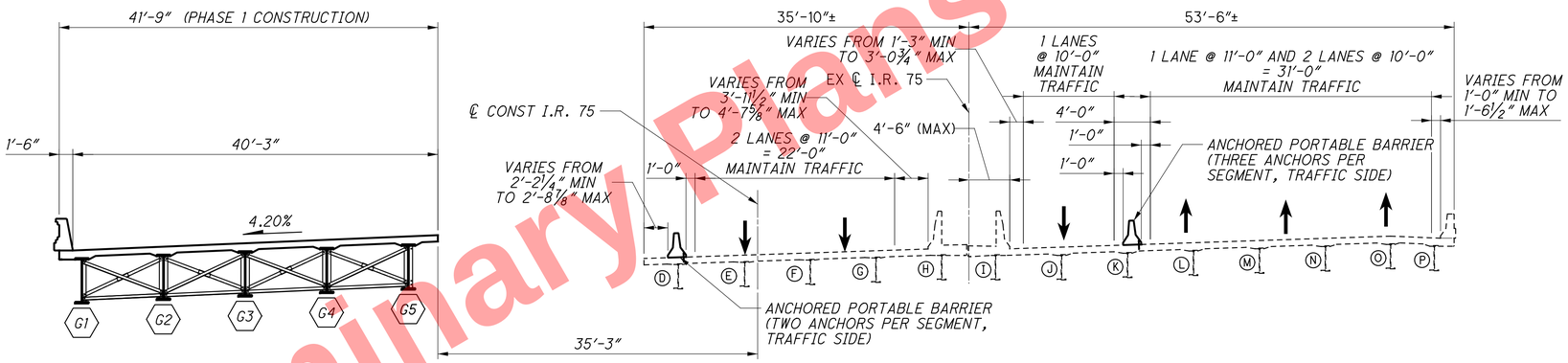

PHASE 1 CONSTRUCTION

SEQUENCE OF CONSTRUCTION

PHASE 1 REMOVAL

1. INSTALL ANCHORED PORTABLE BARRIER AND MOVE NORTHBOUND AND SOUTHBOUND TRAFFIC PER THE MAINTENANCE OF TRAFFIC PLANS.

2. REMOVE WESTERN PORTION OF THE EXISTING SOUTHBOUND BRIDGE.

PHASE 1 CONSTRUCTION

1. CONSTRUCT THE ABUTMENTS FOR THE WEST PORTION OF THE PROPOSED SOUTHBOUND BRIDGE AS SHOWN.

2. CONSTRUCT SUPERSTRUCTURE AND APPROACH SLABS FOR THE WEST PORTION OF THE PROPOSED SOUTHBOUND BRIDGE.

PHASE 2 REMOVAL

1. INSTALL UNANCHORED PORTABLE BARRIER AND MOVE SOUTHBOUND TRAFFIC TO THE NEWLY CONSTRUCTED PORTION OF BRIDGE PER THE MAINTENANCE OF TRAFFIC PLANS.

2. REMOVE REMAINDER OF THE EXISTING SOUTHBOUND BRIDGE AND WESTERN PORTION OF EXISTING NORTHBOUND BRIDGE.

PHASE 2 CONSTRUCTION

1. CONSTRUCT THE REAR ABUTMENT FOR THE REMAINDER OF THE PROPOSED SOUTHBOUND BRIDGE AND A PORTION OF THE NORTHBOUND BRIDGE ABUTMENT AS SHOWN IN THE BRIDGE PLANS. CONSTRUCT THE FORWARD ABUTMENT FOR THE REMAINDER OF THE PROPOSED SOUTHBOUND BRIDGE.

2. CONSTRUCT REMAINING PORTIONS OF THE SUPERSTRUCTURE FOR THE PROPOSED SOUTHBOUND BRIDGE.

PHASE 3 REMOVAL

1. MOVE NORTHBOUND TRAFFIC TO THE EAST PORTION OF THE SOUTHBOUND BRIDGE PER THE MAINTENANCE OF TRAFFIC PLANS.

2. REMOVE REMAINDER OF THE EXISTING NORTHBOUND BRIDGE.

PHASE 3 CONSTRUCTION

1. CONSTRUCT THE ABUTMENTS FOR THE REMAINDER OF THE PROPOSED NORTHBOUND BRIDGE AS SHOWN.

2. CONSTRUCT THE FULL LIMIT OF THE SUPERSTRUCTURE FOR THE NORTHBOUND BRIDGE AND APPROACH SLABS.

LEGEND

- DENOTES AREAS TO BE REMOVED PER ITEM 202 - STRUCTURE REMOVED, OVER 20' SPAN, AS PER PLAN
- (X) - EXISTING BEAM LINE DESIGNATION
- GX - PROPOSED GIRDER DESIGNATION

NOTE

1. SEE GENERAL NOTES FOR ABBREVIATION LEGEND.

Preliminary Plans - For Reference Only

DESIGN AGENCY: EMH&T
DESIGNED RJE | DRAWN RJE | CHECKED TDA | REVIEWED CAS | DATE 5-22-26 | REVISED - | STRUCTURE FILE NUMBER 3110044

PHASED CONSTRUCTION DETAILS
BRIDGE NO. HAM-75-0791
I.R. 75 OVER RAMP J

HAM-75-7.85
PID No. 121447

8 / 65

872
1047

J:\20110903\ODOT\HAM\7889\structures\HAM075_0791C\sheets\075_0791CPC002.dgn 5/22/2026 10:45:44 AM hbrendlinger

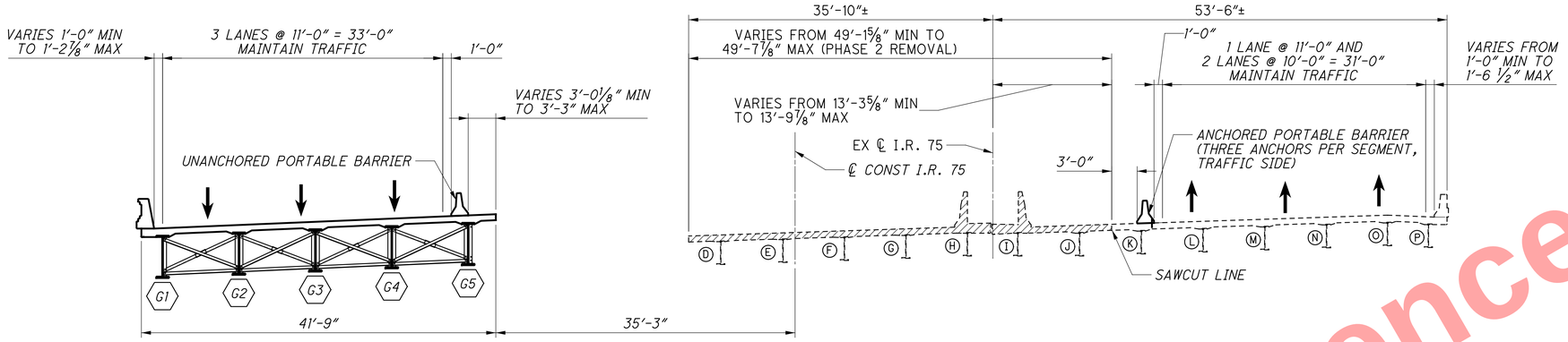

PHASE 2 REMOVAL

PHASE 2 CONSTRUCTION

LEGEND

- DENOTES AREAS TO BE REMOVED PER ITEM 202 - STRUCTURE REMOVED, OVER 20' SPAN, AS PER PLAN
- (X) - EXISTING BEAMLINE DESIGNATION
- GX - PROPOSED GIRDER DESIGNATION

NOTE

1. SEE GENERAL NOTES FOR ABBREVIATION LEGEND.

Preliminary Plans - For Reference Only

DESIGN AGENCY
EMH&T
Engineers • Surveyors • Planners • Scientists
5500 New Albany Road, Columbus, OH 43054
Phone: 614.775.4500

DESIGNED	DRAWN	REVIEWED	DATE
RJE	RJE	CAS	5-22-26
CHECKED	REVISED	STRUCTURE FILE NUMBER	
TDA	-	3110044	

PHASED CONSTRUCTION DETAILS
BRIDGE NO. HAM-75-0791
I.R. 75 OVER RAMP J

HAM-75-7.85
PID No. 121447

9 / 65

873
1047

J:\20110903\ODOT\HAM\77889\structures\HAM075_0791C\sheets\075_0791CPC003.dgn 5/22/2026 10:45:44 AM hbrendlinger

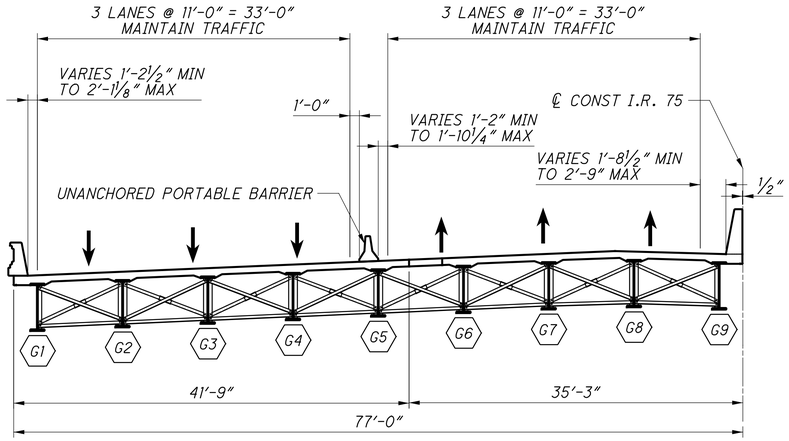

PHASE 3 REMOVAL

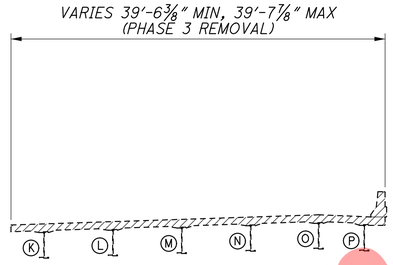

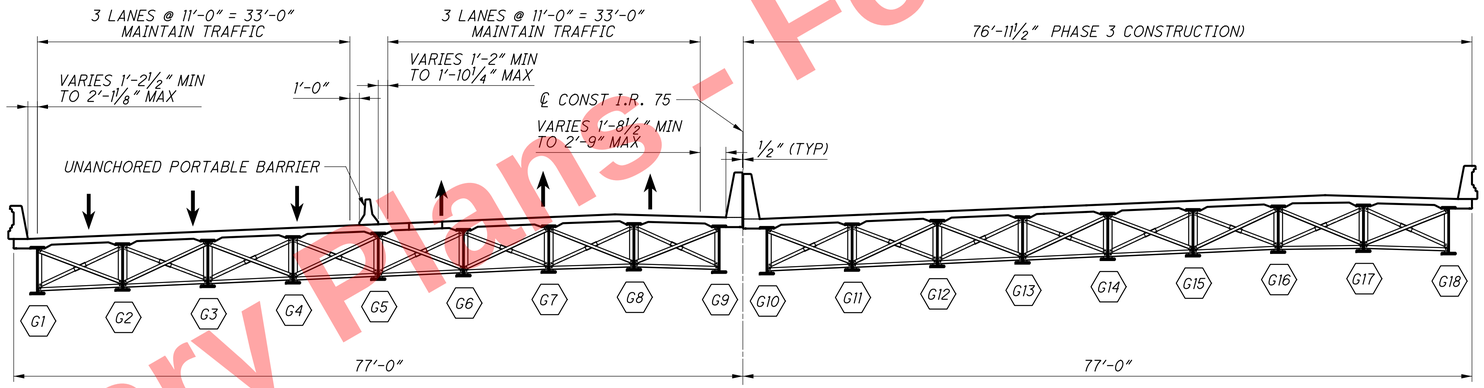

PHASE 3 CONSTRUCTION

NOTE

1. SEE GENERAL NOTES FOR ABBREVIATION LEGEND.

LEGEND

- DENOTES AREAS TO BE REMOVED PER ITEM 202 - STRUCTURE REMOVED, OVER 20' SPAN, AS PER PLAN
- GX - PROPOSED GIRDER DESIGNATION

Preliminary Plans - Not For Reference Only

DESIGN AGENCY
EMH&T
Engineers • Surveyors • Planners • Scientists
5500 New Albany Road, Columbus, Ohio 43054
Phone: 614.775.4500

DESIGNED	DRAWN	REVIEWED	DATE
RJE	RJE	CAS	5-22-26
CHECKED	REVISED	STRUCTURE FILE NUMBER	
TDA	-	3110044	

PHASED CONSTRUCTION DETAILS
BRIDGE NO. HAM-75-0791
I.R. 75 OVER RAMP J

HAM-75-7.85
PID No. 121447

10 / 65

874
1047

J:\2011090\3\ODOT\HAM\27889\structures\HAM075_0791C\sheets\075_0791CPC004.dgn 5/22/2026 10:45:45 AM hbrendlinger

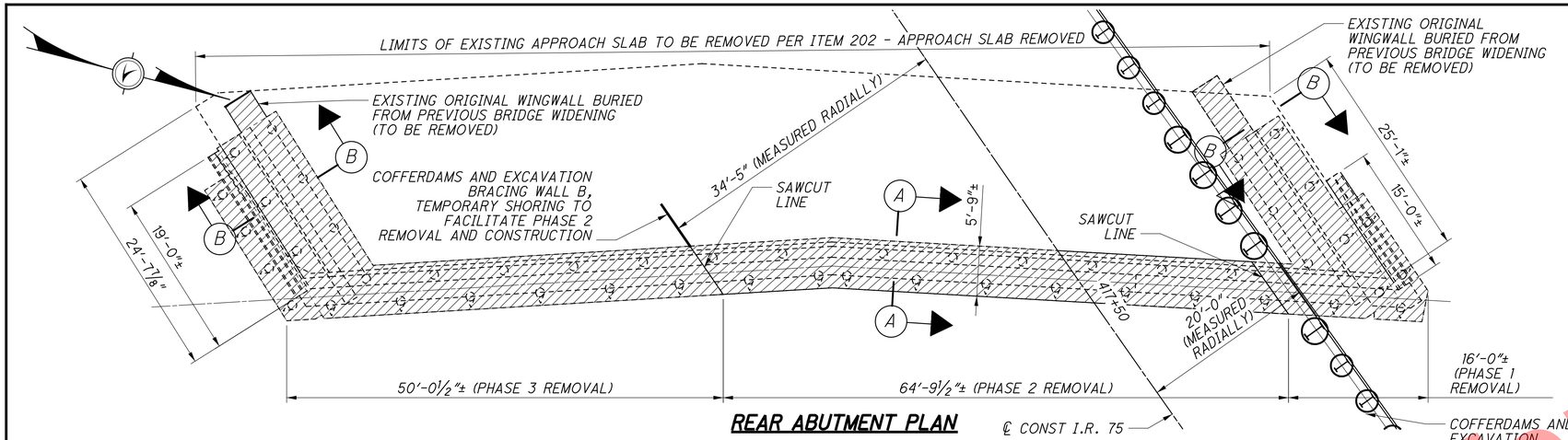

REAR ABUTMENT PLAN

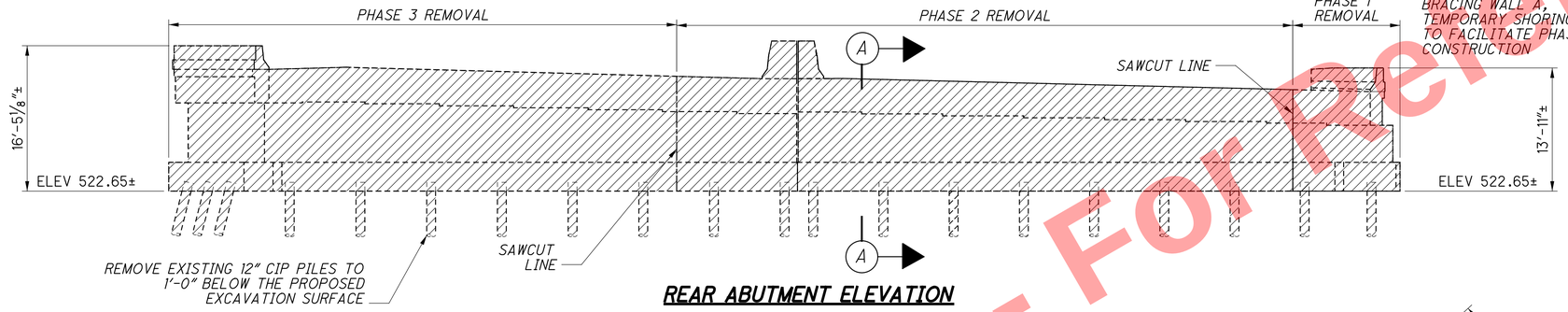

REAR ABUTMENT ELEVATION

NOTES:

1. FOR TEMPORARY SHORING DETAILS, SEE SHEETS 13/65 THRU 15/65 .
3. SEE GENERAL NOTES FOR ABBREVIATION LEGEND.

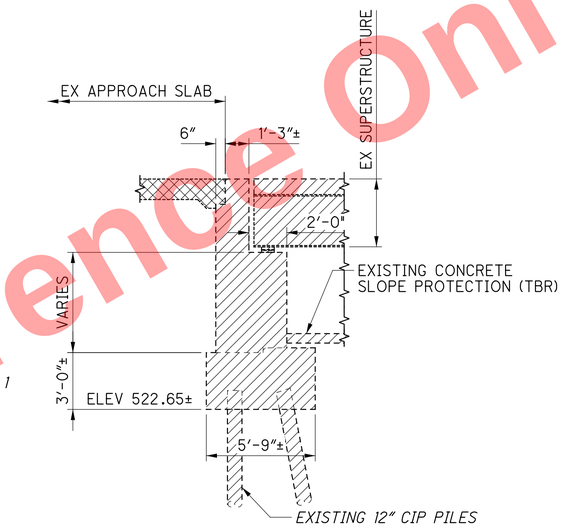

SECTION A-A

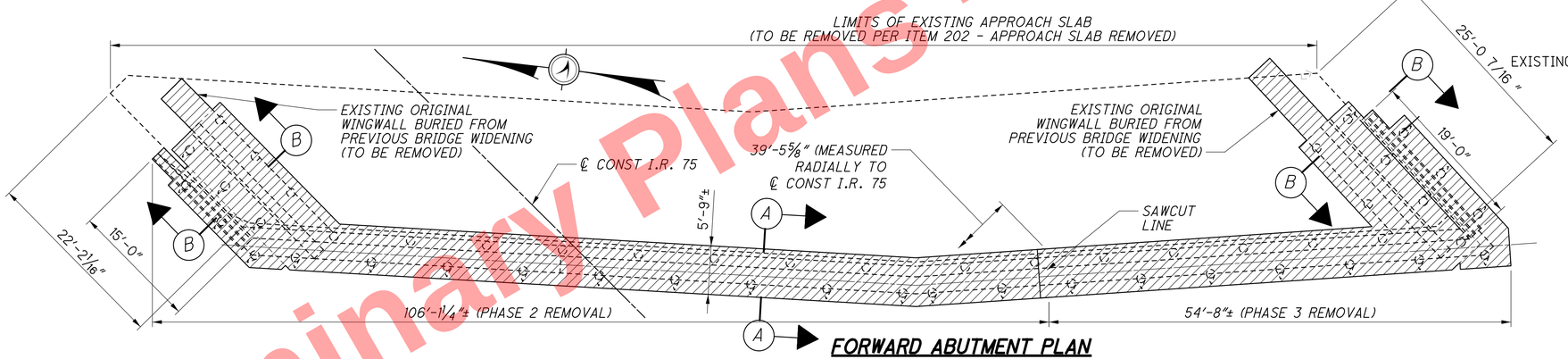

FORWARD ABUTMENT PLAN

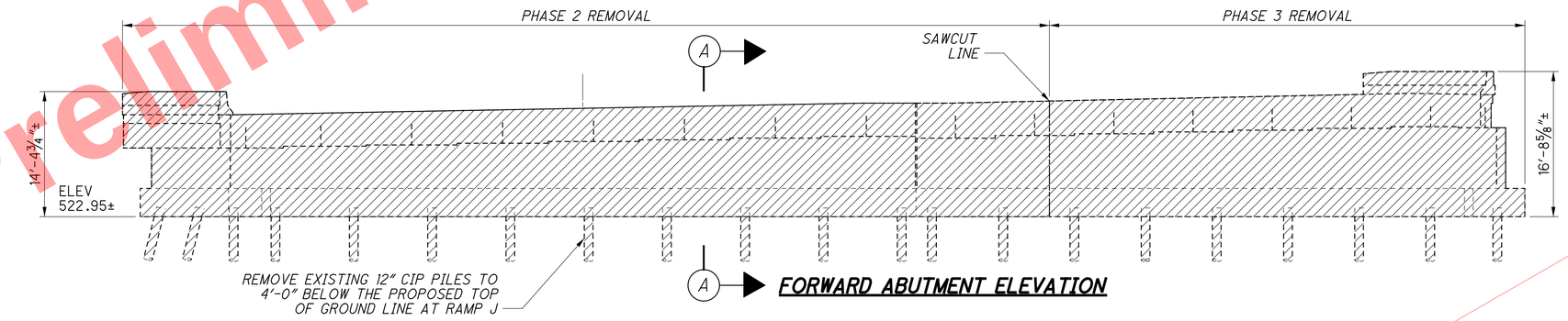

FORWARD ABUTMENT ELEVATION

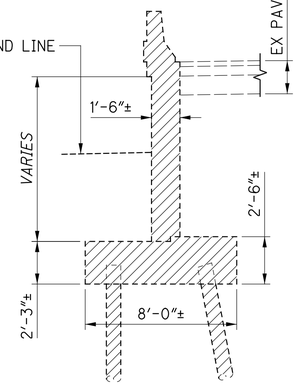

SECTION B-B

LEGEND

- DENOTES AREAS TO BE REMOVED PER ITEM 202 - STRUCTURE REMOVED, OVER 20' SPAN, AS PER PLAN
- DENOTES AREAS TO BE REMOVED PER ITEM 202 - APPROACH SLAB REMOVED

DESIGN AGENCY EMH&T

DESIGNED	DRAWN	REVIEWED	DATE
RJE	RJE	CAS	5-22-26
CHECKED	REVISED	STRUCTURE FILE NUMBER	
TDA	-	3110044	

ABUTMENT REMOVAL DETAILS
BRIDGE NO. HAM-75-0791
I.R. 75 OVER RAMP J

HAM-75-7.85
PID No. 121447

11/65

875/1047

Preliminary Plans - For Reference Only

J:\20110903\ODOT\HAM\7889\structures\HAM075_079IC\sheets\075_079ICRE001.dgn 5/22/2026 10:45:46 AM hbrendlinger

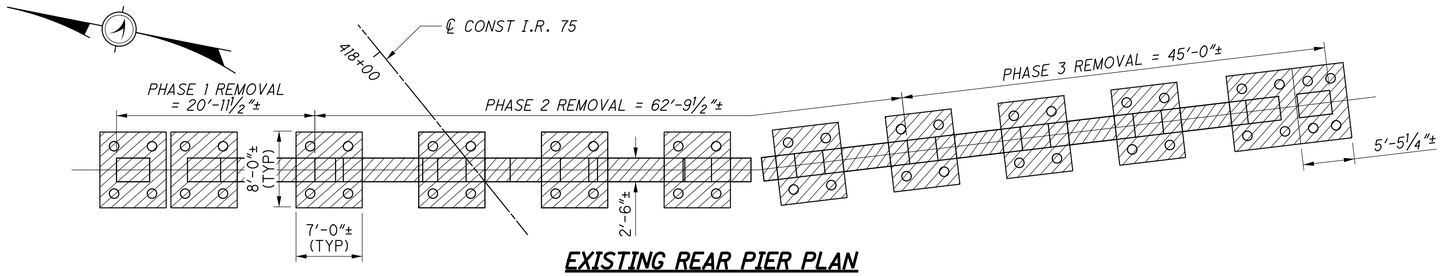

EXISTING REAR PIER PLAN

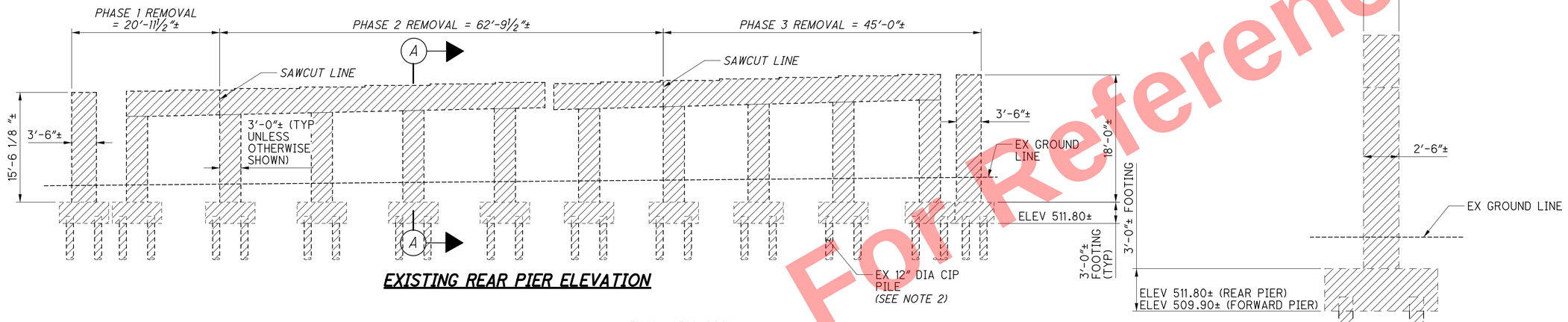

EXISTING REAR PIER ELEVATION

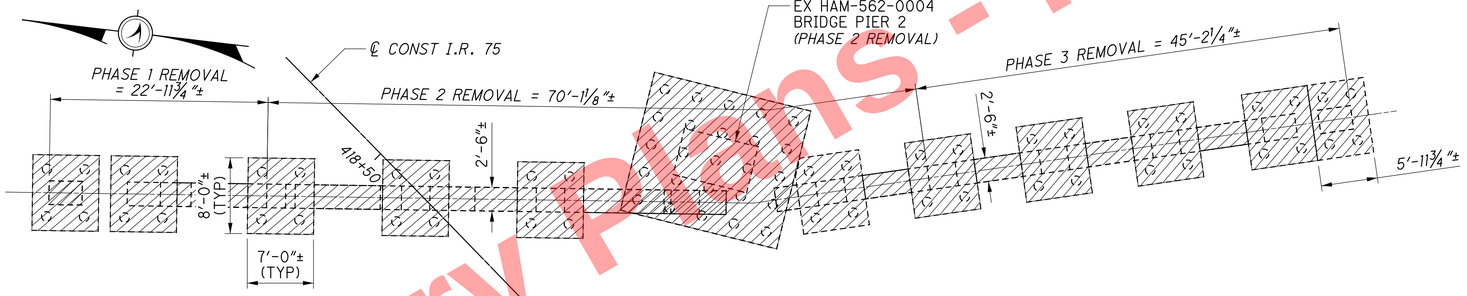

EXISTING FORWARD PIER PLAN

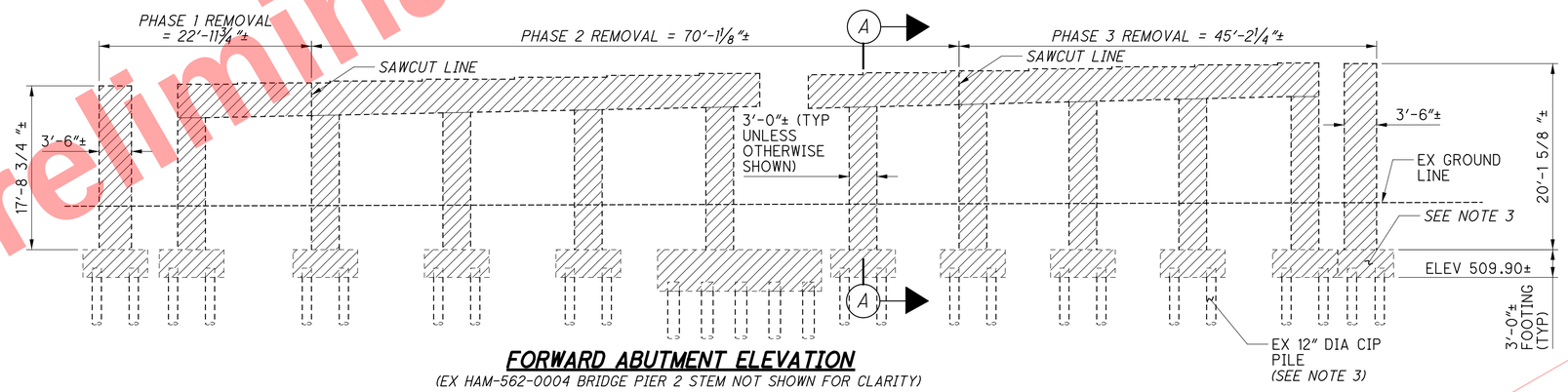

FORWARD ABUTMENT ELEVATION

(EX HAM-562-0004 BRIDGE PIER 2 STEM NOT SHOWN FOR CLARITY)

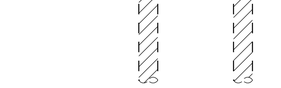

SECTION A-A

LEGEND

- DENOTES AREAS TO BE REMOVED PER ITEM 202 - STRUCTURE REMOVED, OVER 20' SPAN, AS PER PLAN (REMOVAL TO FACILITATE PROPOSED HAM-75-0791 BRIDGE CONSTRUCTION)

NOTES

1. SEE GENERAL NOTES FOR ABBREVIATION LEGEND.
2. REMOVE EXISTING REAR PIER PILES DOWN TO THE BOTTOM OF MSE WALL UNDERCUT ELEVATION.
3. REMOVE EXISTING FORWARD PIER FOOTINGS DOWN TO THE BOTTOM OF SUBGRADE ELEVATION OF PROPOSED RAMP J AT A MINIMUM.

Preliminary Plans - For Reference Only

DESIGN AGENCY
EMH&T
Engineers • Surveyors • Planners • Scientists
5500 New Albany Road, Columbus, OH 43054
Phone: 614.775.4500

DESIGNED	DRAWN	REVIEWED	DATE
RJE	RJE	CAS	5-22-26
CHECKED	REVISED	STRUCTURE FILE NUMBER	
TDA	-	3110044	

PIER REMOVAL DETAILS
BRIDGE NO. HAM-75-0791
I.R. 75 OVER RAMP J

HAM-75-7.85
PID No. 121447

12 / 65

876
1047

J:\20110903\ODOT\HAM\7889\structures\HAM075_0791C\sheets\075_0791CRE002.dgn 5/22/2026 10:45:47 AM hbrendlinger

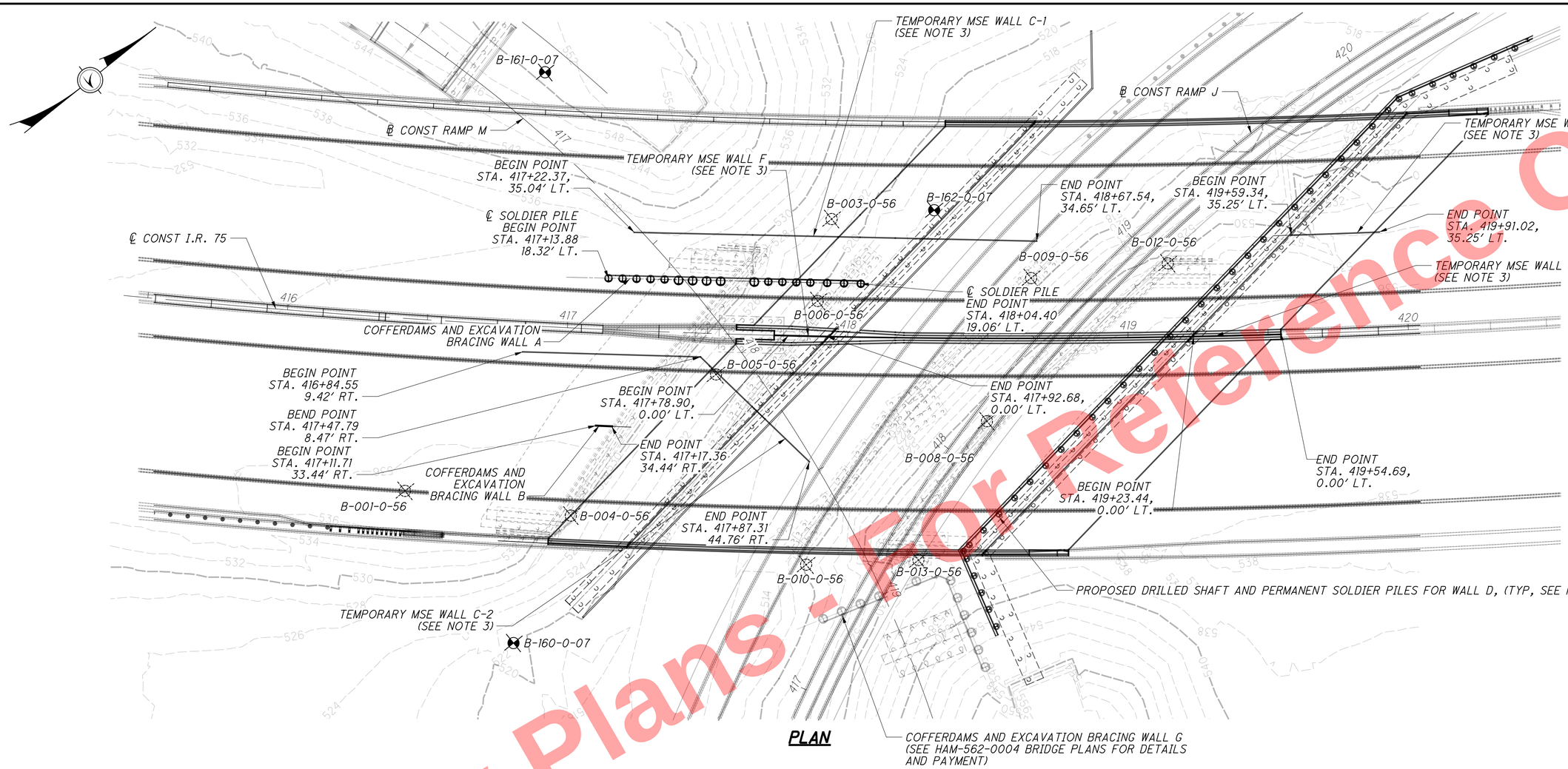

PLAN

NOTES:

1. ALL STATIONS AND OFFSETS SHOWN ARE AT THE CENTERLINE OF SOLDIER PILES AND ALL STATIONS AND OFFSETS ARE BASED ON THE ℄ CONST I.R. 75 UNLESS NOTED OTHERWISE.
2. FOR TEMPORARY SOLDIER PILE WALL ELEVATION VIEW AND DETAILS, SEE SHEETS 14/65 & 15/65 .
3. FOR TEMPORARY MSE WALL C-1 AND C-2 DETAILS, SEE SHEET 637 AND FOR TEMPORARY MSE WALL DETAILS D, E, & F DETAILS, SEE SHEET 16/65.
4. SEE PERMANENT SOLDIER PILE DETAILS ON WALL D PLAN SHEETS 590 THROUGH 595 .
5. SEE GENERAL NOTES FOR ABBREVIATION LEGEND.

Preliminary Plans - For Reference Only

DESIGN AGENCY: EMH&T

DESIGNED	DRAWN	REVIEWED	DATE
RJE	RJE	CAS	5-22-26
CHECKED	REVISED	STRUCTURE FILE NUMBER	
TDA	-	3110044	

TEMPORARY SHORING PLAN
BRIDGE NO. HAM-75-0791
I.R. 75 OVER RAMP J

HAM-75-7.85
PID No. 121447

13/65

877/1047

J:\20110903\ODOT\HAM\7889\structures\HAM075_0791C\sheets\075_0791CSH001.dgn 5/22/2026 10:45:50 AM hbrendlinger

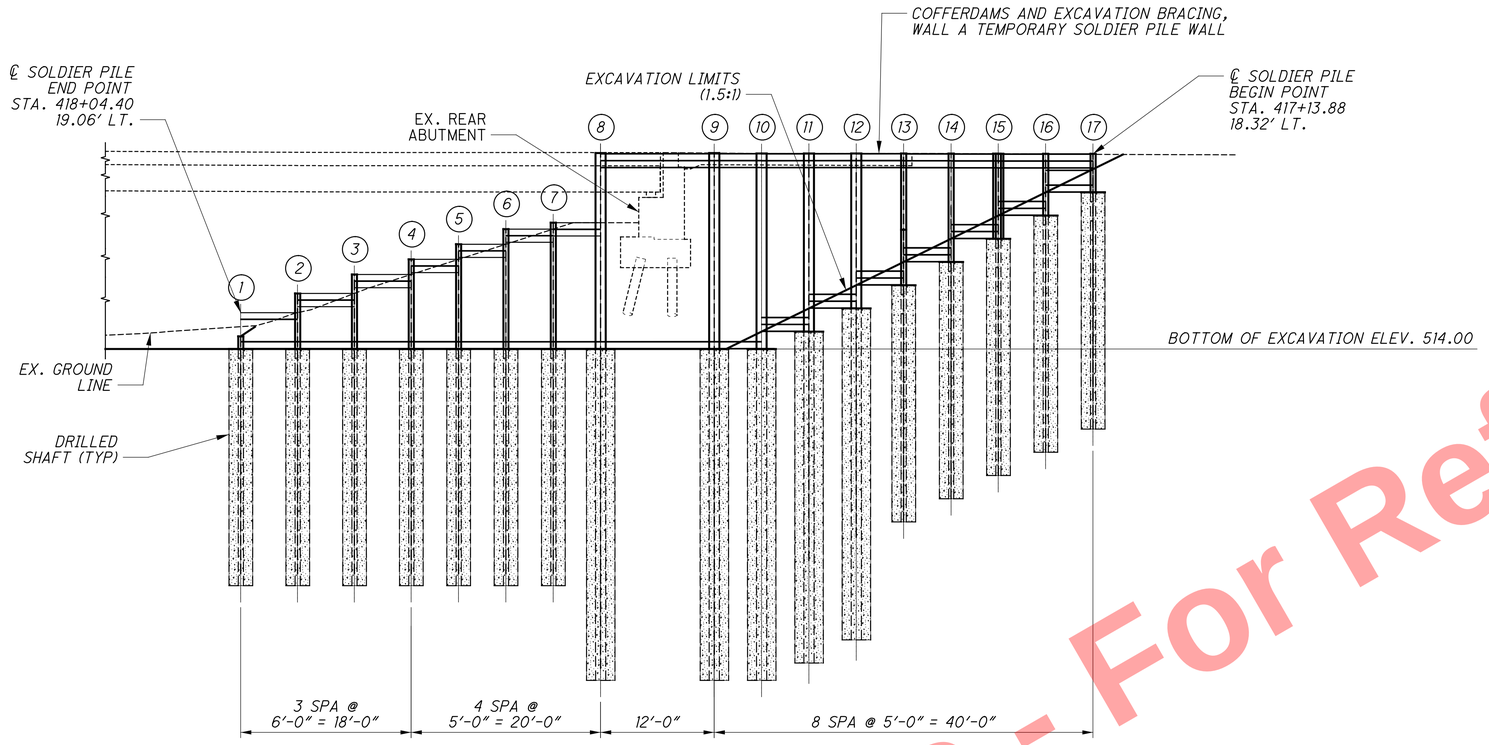

TEMPORARY SOLDIER PILE WALL A ELEVATION

(LOW STRENGTH MORTAR BACKFILL IN EXPOSED WALL SURFACE NOT SHOWN FOR CLARITY)

NOTES:

1. SEE SHEET 13/65 FOR TEMPORARY SOLDIER PILE WALL A PLAN VIEW.
2. SOLDIER PILES, ATTACHED PLATES SHALL BE ASTM A709 GRADE 50 (MINIMUM YIELD STRENGTH = 50 KSI) STEEL. THREADED STUDS SHALL BE ASTM F1554, GRADE 55.
3. PAYMENT FOR SOLDIER PILES, DRILLED SHAFT, LAGGING, STRUCTURAL CONCRETE FILL AND REMOVAL OF ALL COMPONENTS AFTER NO LONGER NECESSARY FOR SPECIFIC CONSTRUCTION PHASE, AND ALL OTHER ITEMS ASSOCIATED WITH TEMPORARY SHORING WILL BE INCLUDING IN THE CONTRACT LUMP SUM PRICE FOR "COFFERDAMS AND EXCAVATION BRACING, AS PER PLAN (WALL A)".
4. SEE GENERAL NOTES FOR ABBREVIATION LEGEND.
5. DRILL ALL SOLDIER PILES PER ITEM 524 FROM THE EXISTING GROUND SURFACE TO THE DESIGN TIP ELEVATION. PLACE THE SOLDIER PILE IN THE EXCAVATED HOLE AND FILL THE DRILLED HOLE TO THE GROUND SURFACE WITH ITEM 613 LOW STRENGTH MORTAR.
6. EXCAVATE THE LOW STRENGTH MORTAR IN A TOP-DOWN MANNER TO PERMIT LAGGING INSTALLATION. PERFORM EXCAVATION WITH A SMOOTH PLATE BUCKET TO MINIMIZE OVER EXCAVATION.
7. INSTALL WOOD LAGGING IN TOP-DOWN MANNER, ATTACHING THE LAGGING TO THE FRONT FLANGE OF THE SOLIDER PILE. NO MORE THAN 5 FT. OF UNSUPPORTED EXCAVATION SHALL BE EXPOSED AT ANY GIVEN TIME. REDUCE EXPOSED EXCAVATION AS NECESSARY DUE TO WATER OR WEAK SOIL CONDITIONS.
8. LAGGING SHALL BE HARDWOOD WITH A MINIMUM THICKNESS DIMENSION AS SPECIFIED IN THE TIMBER LAGGING ATTACHMENT DETAIL.
9. WELDED STUDS SHALL BE INSTALLED IN ACCORDANCE WITH C&MS 513.22 AND AS SHOWN ON THESE PLANS.

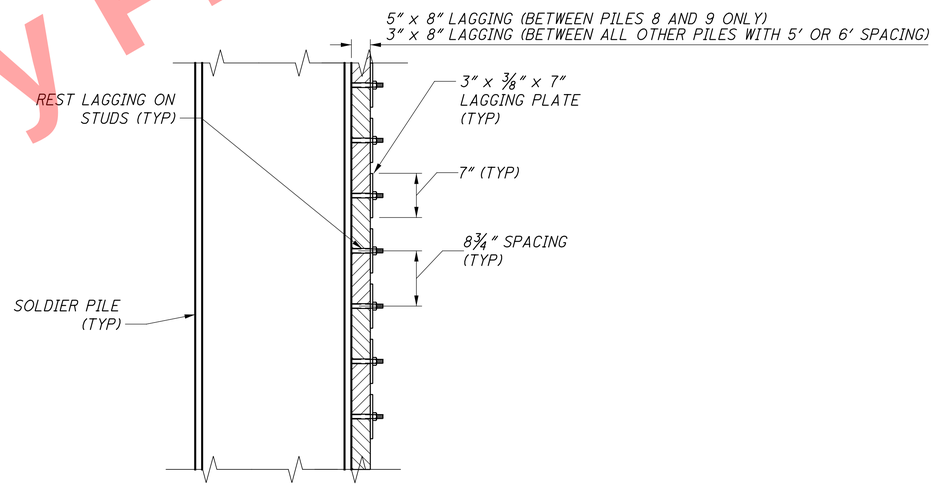

TIMBER LAGGING ATTACHMENT DETAIL

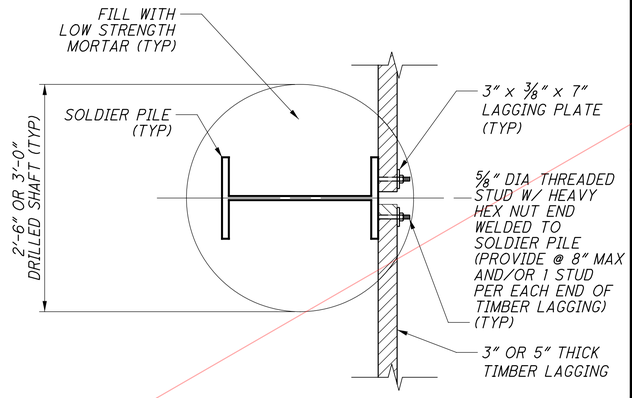

TYPICAL SECTION TEMPORARY SOLDIER PILE WALL

DESIGN AGENCY
EMH&T
Engineers • Surveyors • Planners • Scientists
5500 New Albany Road, Columbus, Ohio 43054
Phone: 614.775.4500

DESIGNED	DRAWN	REVIEWED	DATE
RJE	RJE	CAS	5-22-26
CHECKED	REVISED	STRUCTURE FILE NUMBER	
TDA	-	3110044	

REAR ABUTMENT TEMPORARY SHORING DETAILS
BRIDGE NO. HAM-75-0791
I.R. 75 OVER RAMP J

HAM-75-7.85
PID No. 121447

14/65

878
1047

Preliminary Plans - For Reference Only

J:\20110903\ODOT\HAM\77889\structures\HAM075_0791C\sheets\075_0791CSH002.dgn 5/22/2026 10:45:51 AM hbrendlinger

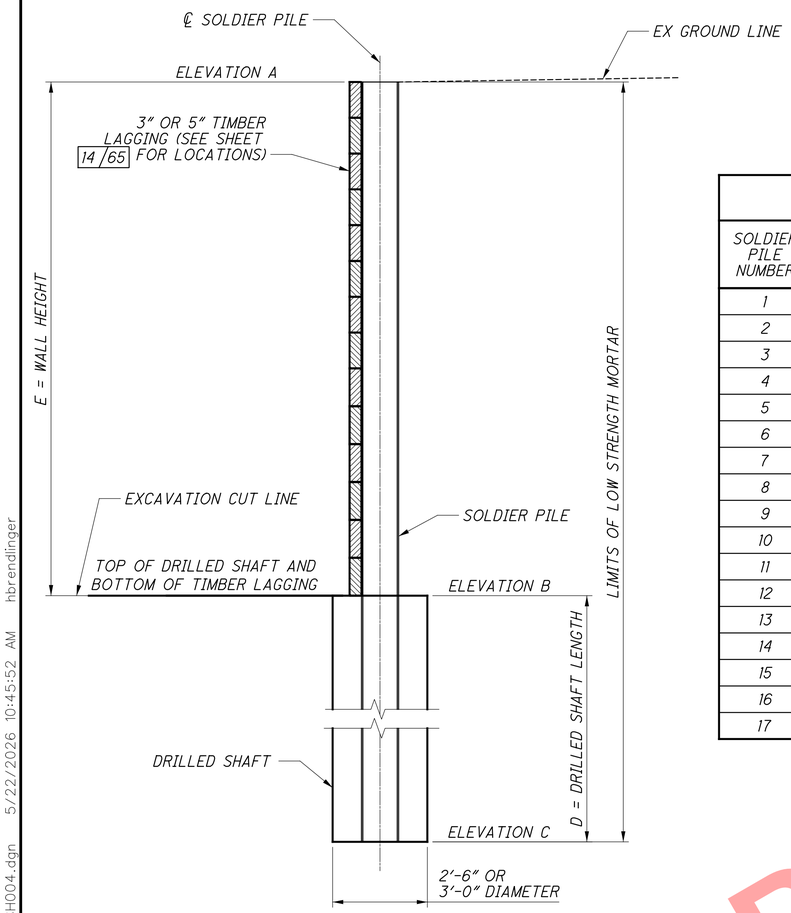

TEMPORARY SOLDIER PILE WALL A LOCATION AND ELEVATION DATA TABLE

SOLDIER PILE NUMBER	SOLDIER PILE STATION (ALONG ℄ CONST I.R. 75	SOLDIER PILE OFFSET (ALONG ℄ CONST I.R. 75	TOP OF SOLDIER PILE ELEVATION A	TOP OF DRILLED SHAFT ELEVATION B	PILE TIP ELEVATION C	LENGTH OF DRILLED SHAFT D	WALL HEIGHT E	SOLDIER PILE SIZE	DRILLED SHAFT DIAMETER
1	418+04.40	19.06' LT	515.33	514.00	489.00	25'	1.33'	W21X68	2'-6"
2	417+98.37	19.09' LT	519.86	514.00	489.00	25'	5.86'	W21X68	2'-6"
3	417+92.33	19.11' LT	521.87	514.00	489.00	25'	7.87'	W21X68	2'-6"
4	417+86.29	19.12' LT	523.46	514.00	489.00	25'	9.46'	W21X68	2'-6"
5	417+81.27	19.11' LT	525.06	514.00	489.00	25'	11.06'	W21X68	2'-6"
6	417+76.24	19.10' LT	526.66	514.00	489.00	25'	12.66'	W21X68	2'-6"
7	417+71.21	19.08' LT	527.33	514.00	489.00	25'	13.33'	W21X68	2'-6"
8	417+66.18	18.85' LT	534.27	514.00	479.00	35'	20.27'	W24X176	3'-0"
9	417+54.11	18.75' LT	534.65	514.00	479.00	35'	20.65'	W24X176	3'-0"
10	417+49.08	18.70' LT	534.61	514.00	479.00	35'	20.61'	W24X176	3'-0"
11	417+44.05	18.64' LT	534.58	515.83	480.83	35'	18.75'	W24X176	3'-0"
12	417+39.03	18.57' LT	534.58	518.28	483.28	35'	16.30'	W24X176	3'-0"
13	417+33.99	18.70' LT	534.58	520.73	495.73	25'	13.85'	W21X68	2'-6"
14	417+28.97	18.62' LT	534.58	523.19	498.19	25'	11.39'	W21X68	2'-6"
15	417+23.94	18.53' LT	534.57	525.64	500.64	25'	8.73'	W21X68	2'-6"
16	417+18.91	18.43' LT	534.56	528.09	503.09	25'	6.47'	W21X68	2'-6"
17	417+13.88	18.32' LT	534.50	530.54	505.54	25'	3.96'	W21X68	2'-6"

Preliminary Plans - For Reference Only

DESIGN AGENCY EMH&T

DESIGNED RJE | CHECKED RMW | DRAWN GB | REVISED - | REVIEWED CAS | DATE 5-22-26 | STRUCTURE FILE NUMBER 3110044

TEMPORARY SHORING DETAILS
BRIDGE NO. HAM-75-0791
I.R. 75 OVER RAMP J

HAM-75-7.85
PID No. 121447

J:\20110903\ODOT\HAM\77889\structures\HAM075_0791C\sheets\075_0791CSH004.dgn 5/22/2026 10:45:52 AM hbrendlinger

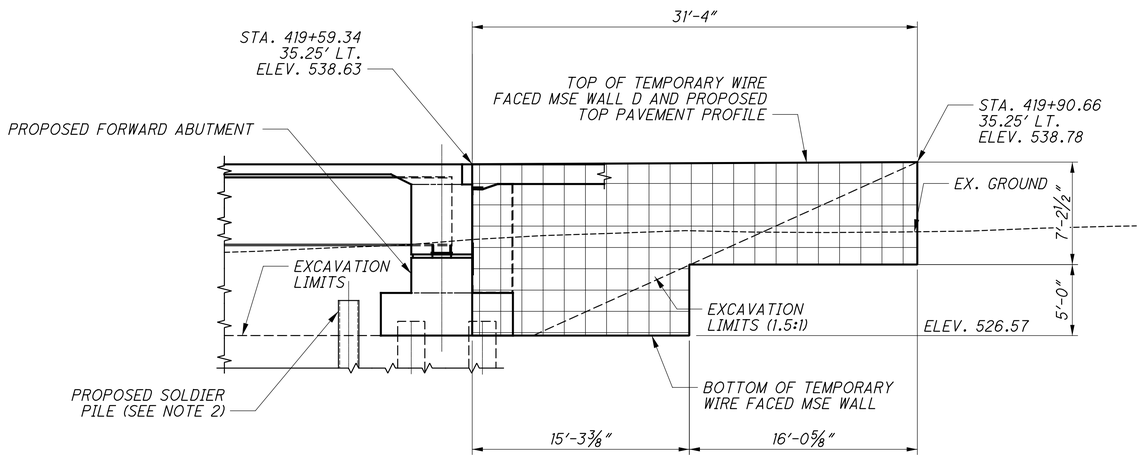

TEMPORARY WIRE FACED MSE WALL D ELEVATION

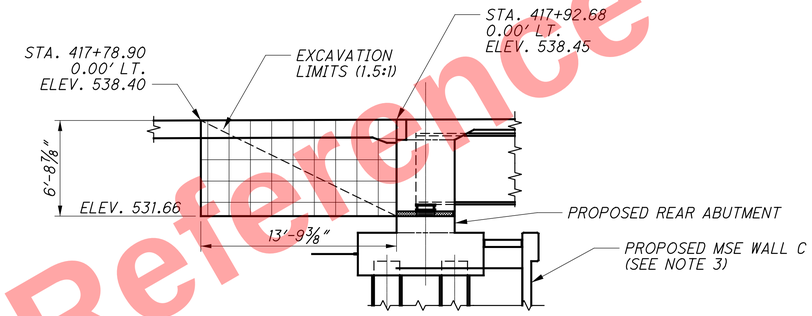

TEMPORARY WIRE FACED MSE WALL F ELEVATION

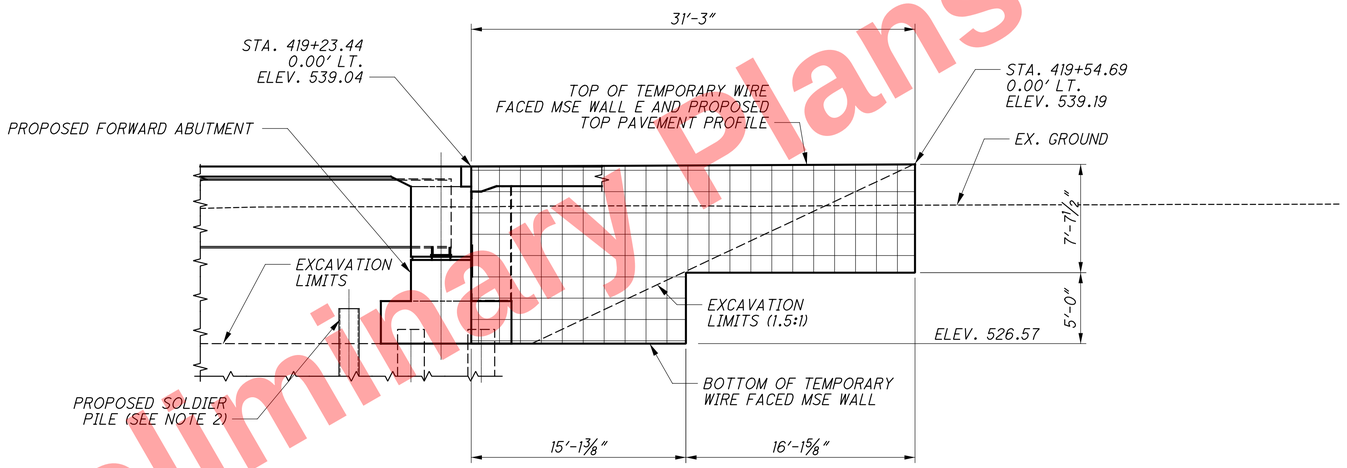

TEMPORARY WIRE FACED MSE WALL E ELEVATION

LEGEND

- TEMPORARY MSE WALL FACE

NOTES

1. TOP OF THE TEMPORARY WIRE FACED MSE WALL TO MATCH THE PROPOSED PAVEMENT ELEVATION OF IR 75 OR TOP OF THE APPROACH SLAB OF HAM-75-0791 BRIDGE.
2. SEE SOLDIER PILE WALL D SUBSET FOR DETAILS.
3. SEE MSE WALL C SUBSET FOR TEMPORARY WIRE FACED MSE WALL NOTES.
4. SEE GENERAL NOTES FOR ABBREVIATION LEGEND.

Preliminary Plans - For Reference Only

DESIGN AGENCY
EMH&T
Engineers • Surveyors • Planners • Scientists
5500 New Albany Road, Columbus, Ohio 43054
Phone: 614.775.4500

DESIGNED	DRAWN	REVIEWED	DATE
RJE	RJE	CAS	5-22-26
CHECKED	REVISED	STRUCTURE FILE NUMBER	
TDA	-	3110044	

TEMPORARY MSE WALL DETAILS
BRIDGE NO. HAM-75-0791
I.R. 75 OVER RAMP J

HAM-75-7.85
PID No. 121447

16 / 65

880
1047

J:\2011\0903\ODOT\HAM\17889\structures\HAM075_0791C\sheets\075_0791CSH005.dgn 5/22/2026 10:45:52 AM hbrendlinger

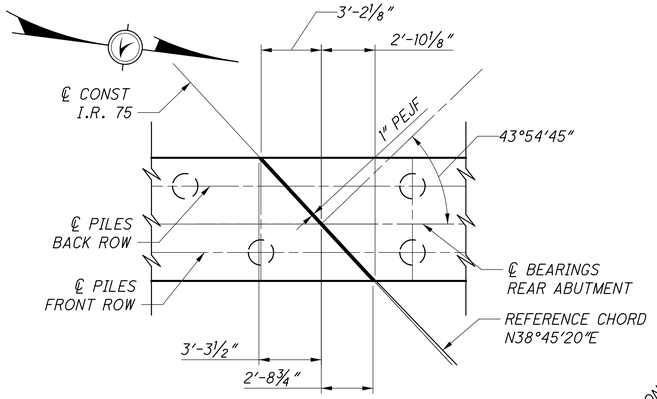

DETAIL A

DETAIL B

LEGEND

- ○ - PROPOSED 16" DIA CIP VERTICAL PILE
- ◔ - PROPOSED 16" DIA CIP PILE BATTERED AT 1:4
- ◌ - EXISTING 12" DIA CIP VERTICAL PILE
- ◔ - EXISTING 12" DIA CIP BATTERED PILE
- (XX) - PILE NUMBER
- ◆ - MEASURED TO ℄ CONST I.R. 75

FOUNDATION PLAN - LEFT BRIDGE

NOTES

1. REMOVE EXISTING FOUNDATIONS AND PORTIONS OF EXISTING FOUNDATIONS THAT INTERFERE WITH PROPOSED FOUNDATIONS PER 202.03.
2. SEE GENERAL NOTES FOR ABBREVIATION LEGEND.

Preliminary Plans - Not For Reference Only

DESIGN AGENCY: EMH&T
DESIGNED: RJE | CHECKED: TDA/RMW
DRAWN: GB | REVISED: -
REVIEWED: CAS | DATE: 5-22-26
STRUCTURE FILE NUMBER: 3110044

FOUNDATION PLAN - 1
BRIDGE NO. HAM-75-0791
I.R. 75 OVER RAMP J

HAM-75-7.85
PID No. 121447

17 / 65

881
1047

J:\2011093\ODOT\HAM\77889\structures\HAM075_0791C\sheets\075_0791CFP001.dgn 5/22/2026 10:45:53 AM hbrendlinger

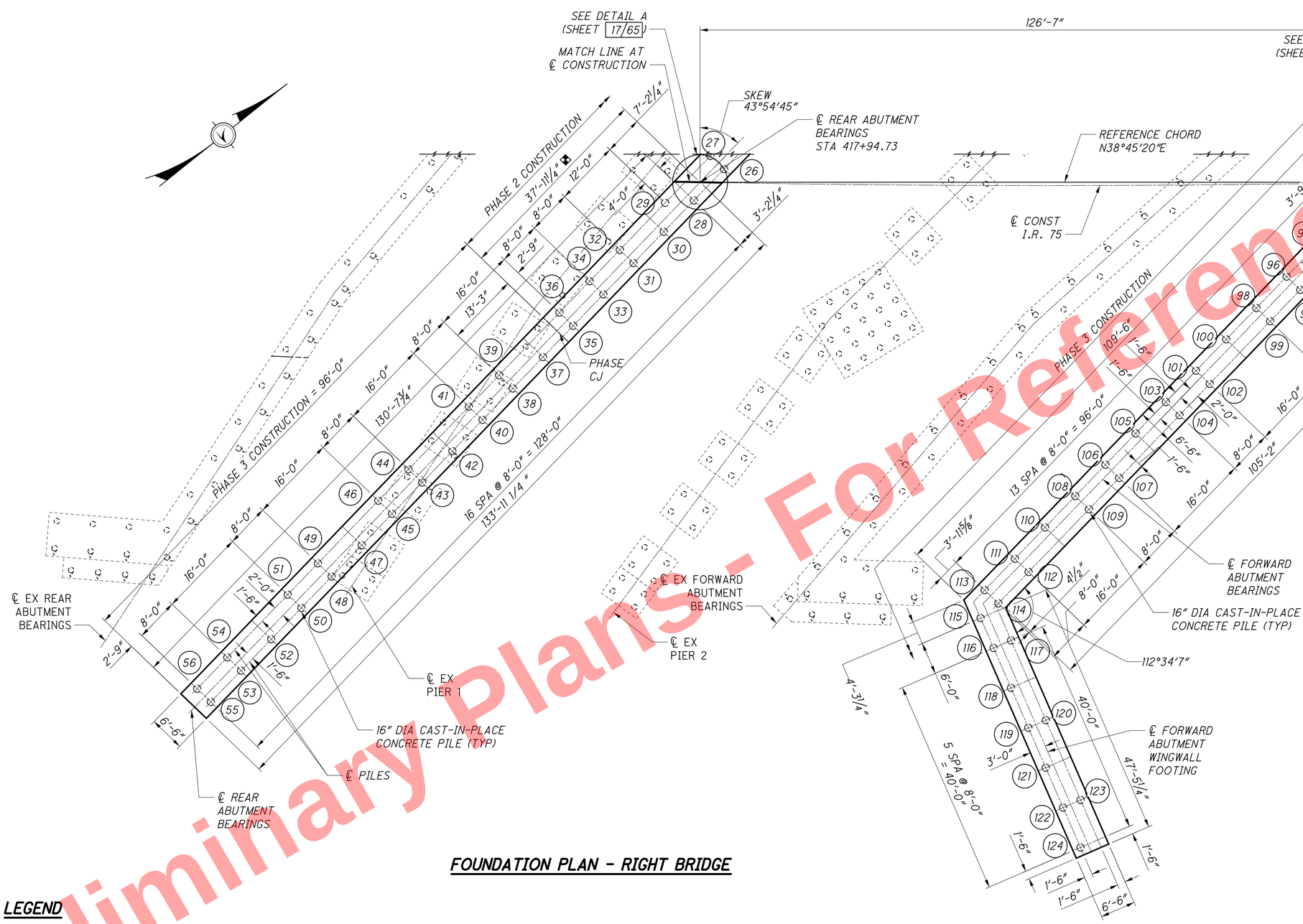

FOUNDATION PLAN - RIGHT BRIDGE

LEGEND

- ○ - PROPOSED 16" DIA CIP VERTICAL PILE
- ○ - PROPOSED 16" DIA CIP PILE BATTERED AT 1:4
- ○ - EXISTING 12" DIA CIP VERTICAL PILE
- ○ - EXISTING 12" DIA CIP BATTERED PILE
- (XX) - PILE NUMBER
- ■ - MEASURED TO ℄ CONST I.R. 75

NOTES

1. REMOVE EXISTING FOUNDATIONS AND PORTIONS OF EXISTING FOUNDATIONS THAT INTERFERE WITH PROPOSED FOUNDATIONS PER 202.03.
2. SEE GENERAL NOTES FOR ABBREVIATION LEGEND.

Preliminary Plans - For Reference Only

DESIGN AGENCY EMH&T

DESIGNED	DRAWN	REVIEWED	DATE
RJE	GB	CAS	5-22-26
CHECKED	REVISED	STRUCTURE FILE NUMBER	
TDA/RMW	-	3110044	

FOUNDATION PLAN - 2
BRIDGE NO. HAM-75-0791
I.R. 75 OVER RAMP J

HAM-75-7.85
PID No. 121447

J:\20110903\ODOT\HAM\7889\structures\HAM075_0791C\sheets\075_0791CFP002.dgn 5/22/2026 10:45:54 AM hbrendlinger

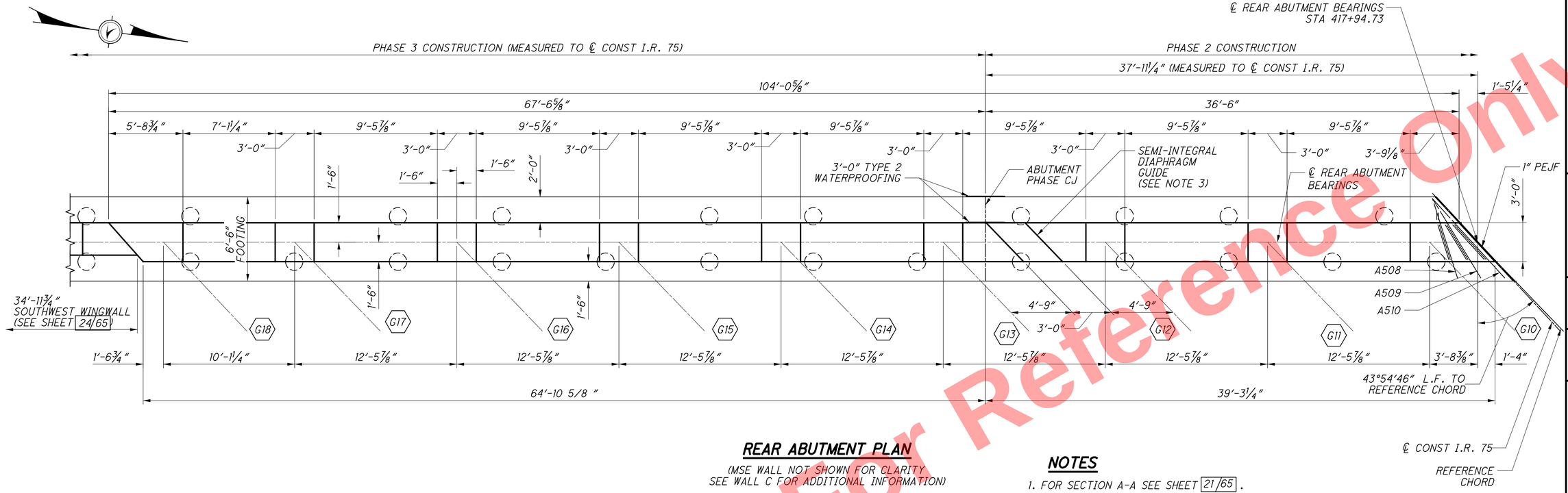

REAR ABUTMENT PLAN

(MSE WALL NOT SHOWN FOR CLARITY
SEE WALL C FOR ADDITIONAL INFORMATION)

NOTES

1. FOR SECTION A-A SEE SHEET 21/65 .
2. SEE GENERAL NOTES FOR ABBREVIATION LEGEND.
3. SEE STANDARD DRAWING SICD-2-14 FOR ADDITIONAL SEMI-INTEGRAL DIAPHRAGM DETAILS NOT SHOWN, INCLUDING REINFORCING AND RUB PLATE DETAILS.

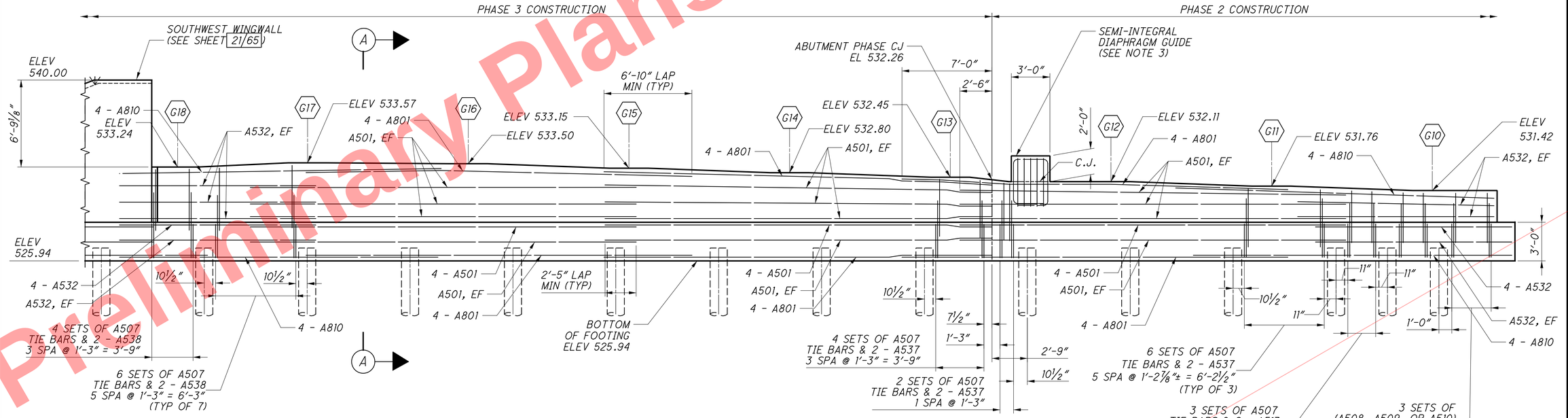

REAR ABUTMENT ELEVATION

(DIMENSIONS MEASURED ALONG FRONT FACE OF ABUTMENT)

Preliminary Plans - For Reference Only

DESIGN AGENCY: EMH&T
DESIGNED: RJE
DRAWN: GB
CHECKED: TDA/RMW
REVIEWED: CAS
DATE: 5-22-26
REVISED: -
STRUCTURE FILE NUMBER: 3110044

REAR ABUTMENT RIGHT BRIDGE
BRIDGE NO. HAM-75-0791
I.R. 75 OVER RAMP J

HAM-75-7.85
PID No. 121447

19 / 65

883
1047

J:\20110903\ODOT\HAM\7889\structures\HAM075_0791C\sheets\075_0791CAR002.dgn 5/22/2026 10:45:55 AM hbrendlinger

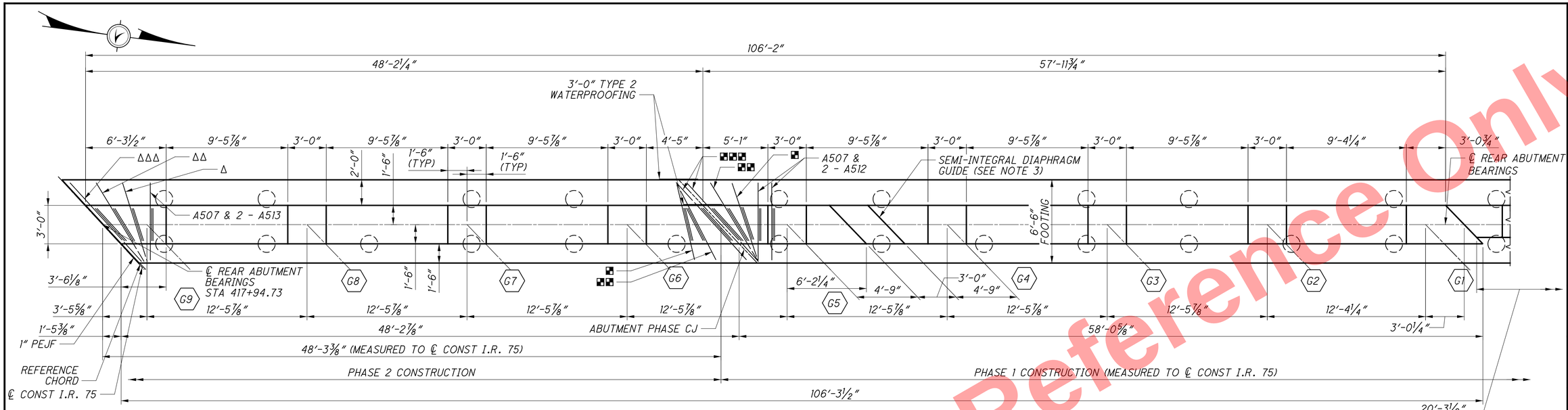

REAR ABUTMENT PLAN

(MSE WALL NOT SHOWN FOR CLARITY, SEE WALL C FOR ADDITIONAL INFORMATION)

LEGEND

▪ - A508 & 2 - A512
▪▪ - A509 & 2 - A549
▪▪▪ - A510 & 2 - A550
Δ - A508 & 2 - A513
ΔΔ - A509 & 2 - A551
ΔΔΔ - A510 & 2 - A552

NOTES

1. FOR SECTION A-A SEE SHEET 21/65
2. SEE GENERAL NOTES FOR ABBREVIATION LEGEND.
3. SEE STANDARD DRAWING SICD-2-14 FOR ADDITIONAL SEMI-INTEGRAL DIAPHRAGM DETAILS NOT SHOWN, INCLUDING REINFORCING AND RUB PLATE DETAILS.

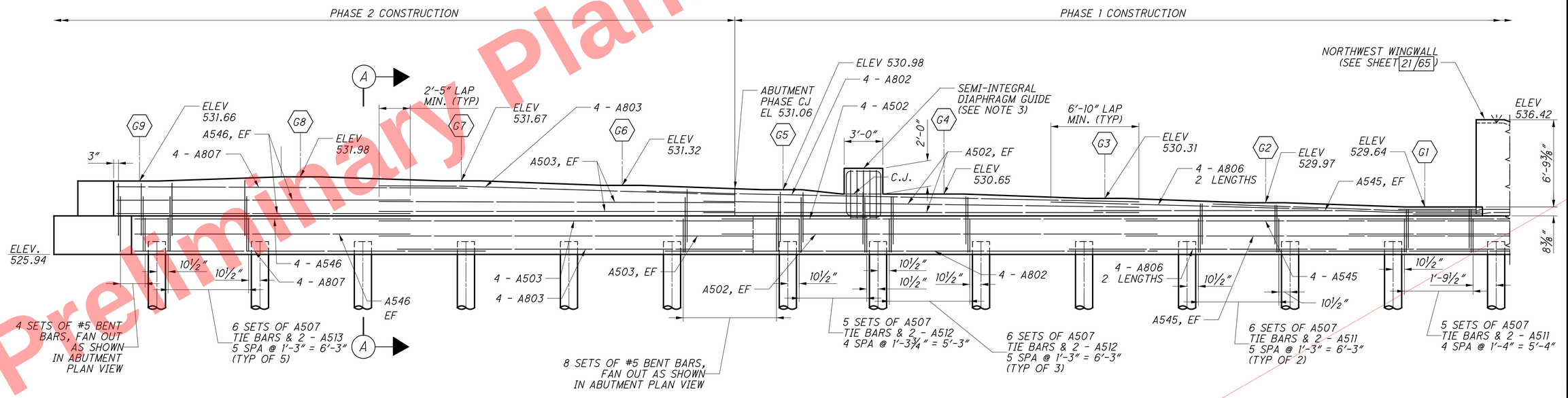

REAR ABUTMENT ELEVATION

(DIMENSIONS MEASURED ALONG FRONT FACE OF ABUTMENT)

Preliminary Plans - For Reference Only

DESIGN AGENCY
EMH&T
Engineers • Surveyors • Planners • Scientists
5500 New Albany Road, Columbus, OH 43054
Phone: 614.775.4500

DESIGNED	DRAWN	REVIEWED	DATE
RJE	GB	CAS	5-22-26
CHECKED	REVISED	STRUCTURE FILE NUMBER	
TDA/RMW	-	3110044	

REAR ABUTMENT LEFT BRIDGE
BRIDGE NO. HAM-75-0791
I.R. 75 OVER RAMP J

HAM-75-7.85
PID No. 121447

20/65

884/1047

J:\20110903\ODOT\HAM\7889\structures\HAM075_0791C\sheets\075_0791CAR001.dgn 5/22/2026 10:45:55 AM hbrendlinger

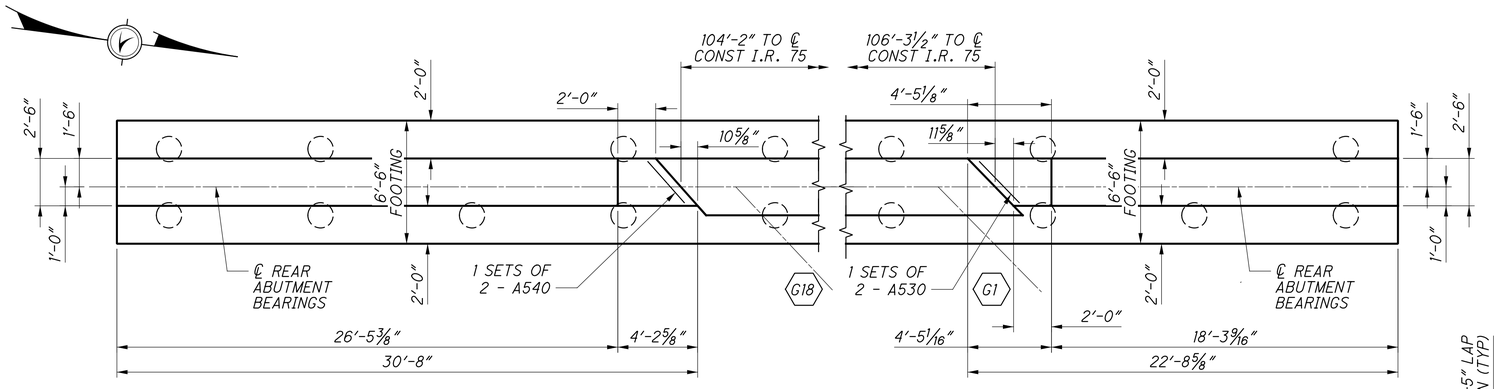

SOUTHWEST WINGWALL PLAN

NORTHWEST WINGWALL PLAN

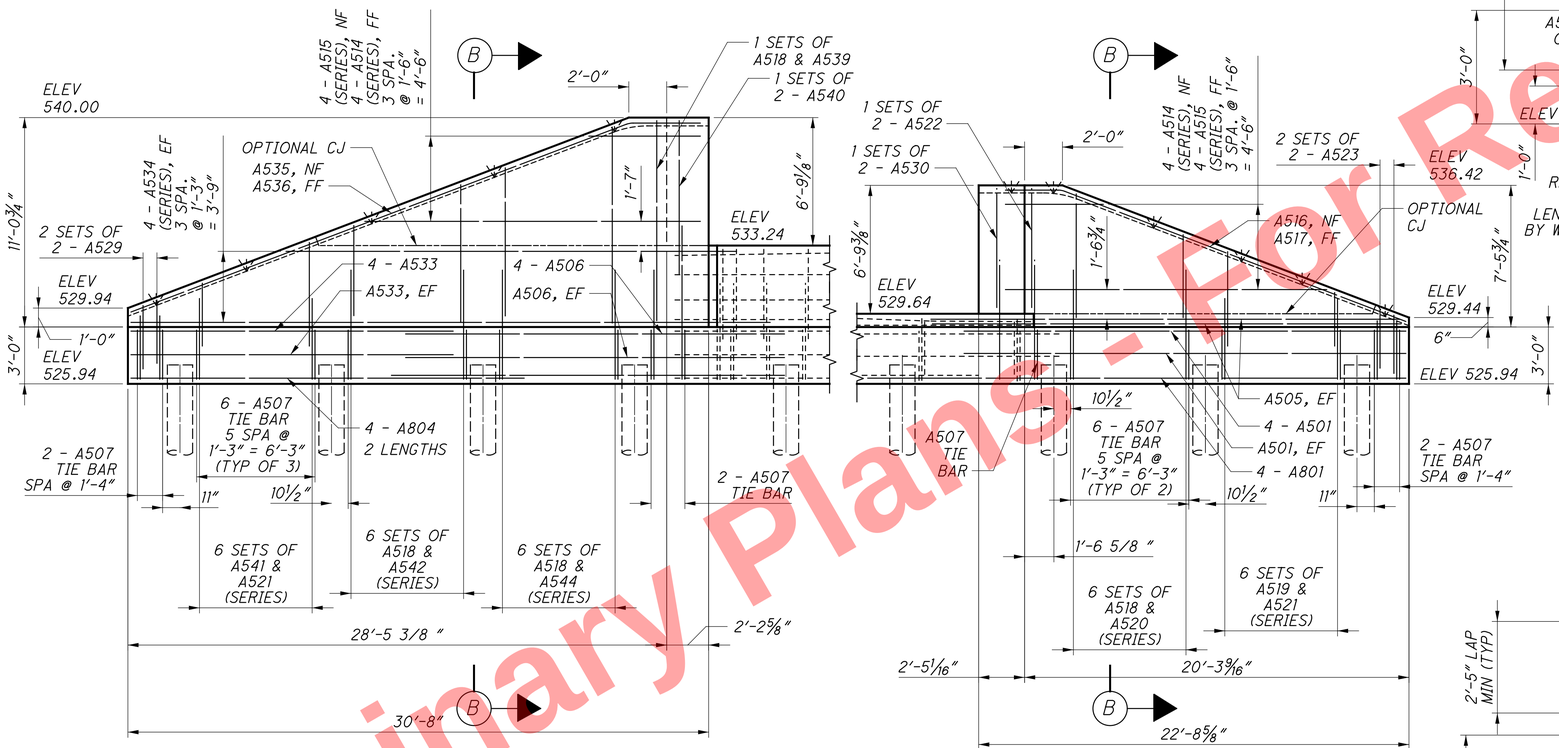

SOUTHWEST WINGWALL ELEVATION

(PHASE 3 CONSTRUCTION)

NORTHWEST WINGWALL ELEVATION

(PHASE 1 CONSTRUCTION)

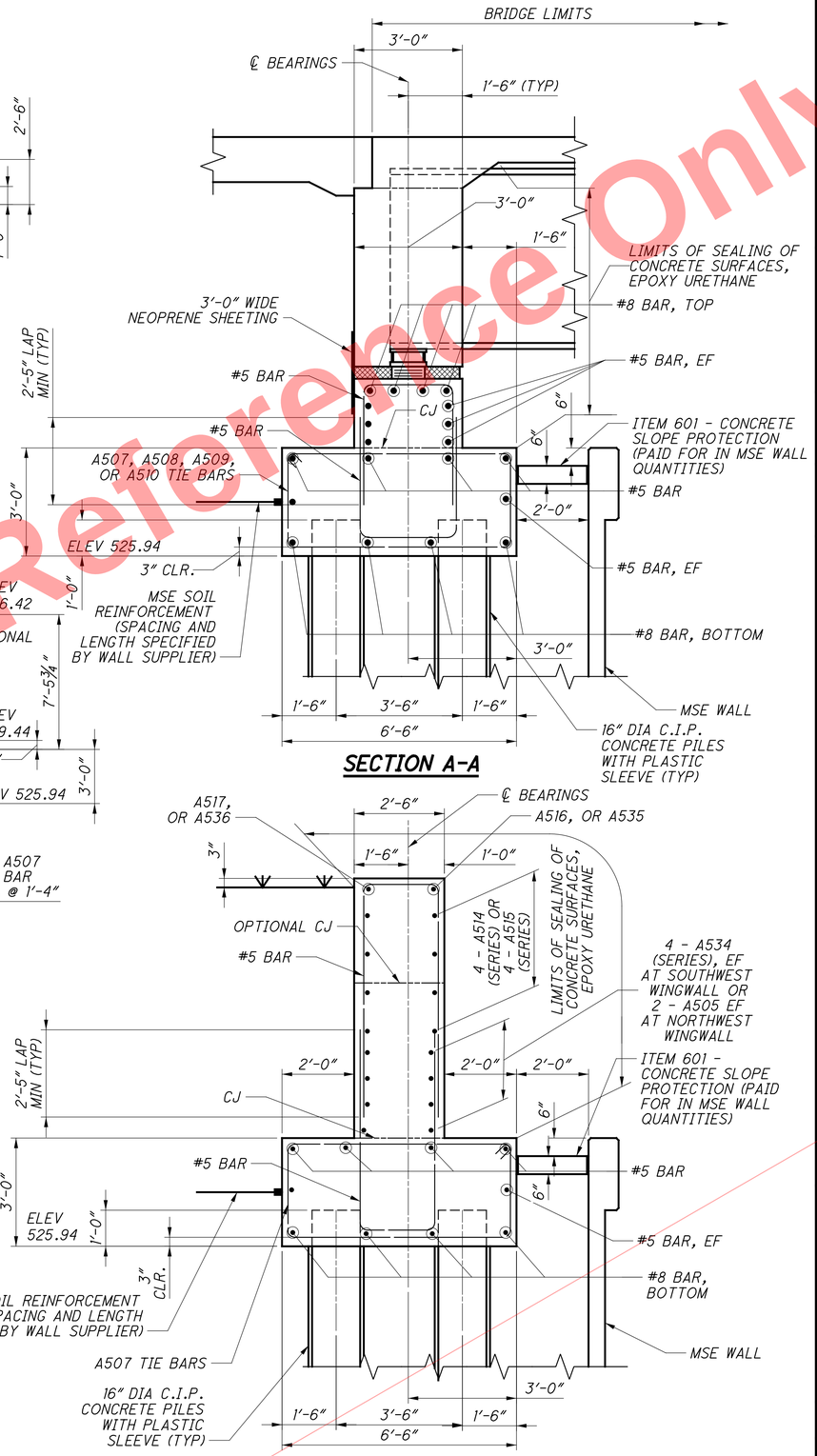

SECTION A-A

SECTION B-B

NOTES

1. FOR LOCATIONS OF SECTION A-A SEE SHEETS 19/65 AND 20/65
2. SEE GENERAL NOTES FOR ABBREVIATION LEGEND.

Preliminary Plans - For Reference Only

DESIGN AGENCY EMH&T

DESIGNED	DRAWN	REVIEWED	DATE
RJE	GB	CAS	5-22-26
CHECKED	REVISED	STRUCTURE FILE NUMBER	
TDA/RMW	-	3110044	

REAR ABUTMENT WINGWALLS AND DETAILS
BRIDGE NO. HAM-75-0791
I.R. 75 OVER RAMP J

HAM-75-7.85
PID No. 121447

21/65

885/1047

J:\20110903\ODOT\HAM\7889\structures\HAM075_0791C\sheets\075_0791CAR003.dgn 5/22/2026 10:45:56 AM hbrendlinger

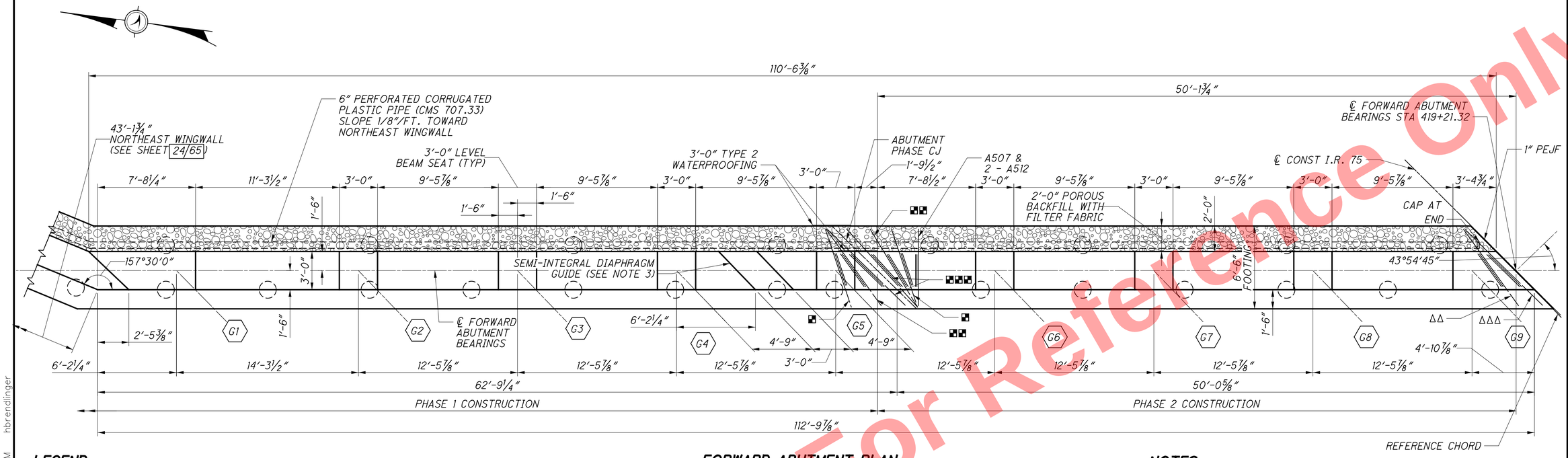

FORWARD ABUTMENT PLAN

(SOLDIER PILE WALL NOT SHOWN FOR CLARITY SEE WALL D FOR ADDITIONAL INFORMATION)

LEGEND

■ - A508 & 2 - A512
■■ - A509 & 2 - A549
■■■ - A510 & 2 - A550
ΔΔ - A509 & 2 - A551
ΔΔΔ - A510 & 2 - A552

NOTES

1. FOR SECTION C-C SEE SHEET 24/65.
2. SEE GENERAL NOTES FOR ABBREVIATION LEGEND.
3. SEE STANDARD DRAWING SICD-2-14 FOR ADDITIONAL SEMI-INTEGRAL DIAPHRAGM DETAILS NOT SHOWN, INCLUDING REINFORCING AND RUB PLATE DETAILS.

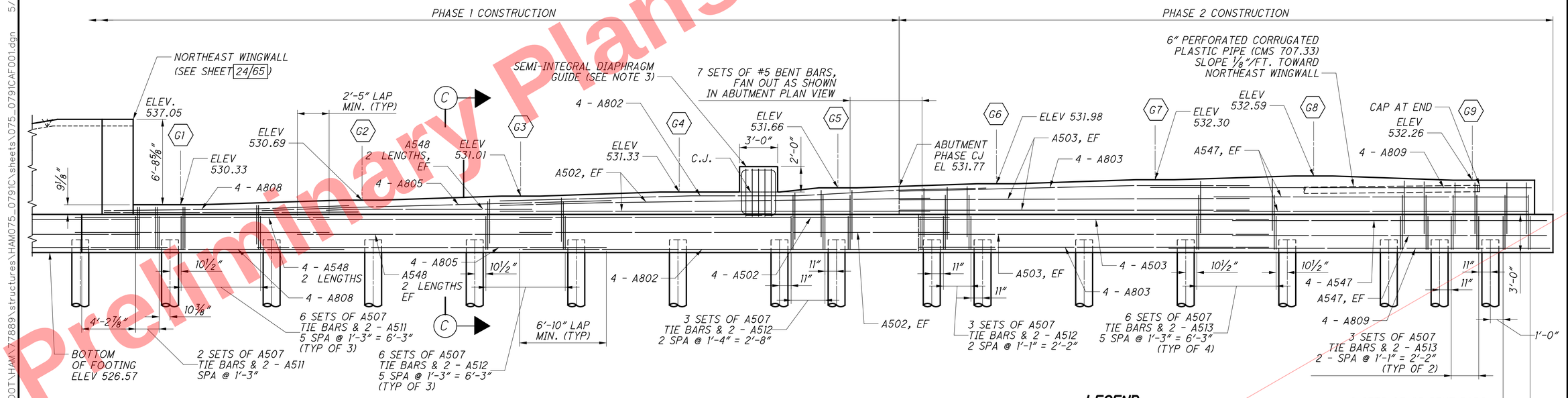

FORWARD ABUTMENT ELEVATION

(DIMENSIONS MEASURED ALONG FRONT FACE OF ABUTMENT)

LEGEND

Δ - INCLUDES MECHANICAL CONNECTOR ON ONE END
□ - PLUS EXTENSION FOR MECHANICAL CONNECTOR

DESIGN AGENCY EMH&T

DESIGNED	DRAWN	REVIEWED	DATE
RJE	GB	CAS	5-22-26
CHECKED	REVISED	STRUCTURE FILE NUMBER	
TDA/RMW	-	3110044	

FORWARD ABUTMENT LEFT BRIDGE
BRIDGE NO. HAM-75-0791
I.R. 75 OVER RAMP J

HAM-75-7.85
PID No. 121447

22 / 65

886
1047

Preliminary Plans - For Reference Only

J:\20110903\ODOT\HAM\7889\structures\HAM075_0791C\sheets\075_0791CAF001.dgn 5/22/2026 10:45:57 AM hbrendlinger

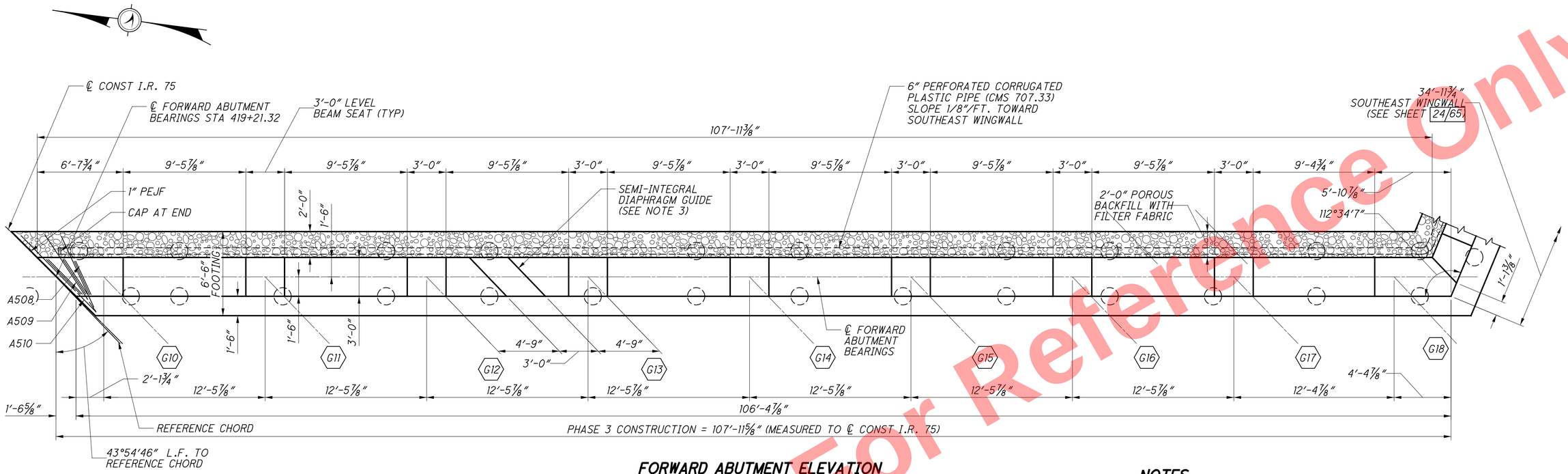

FORWARD ABUTMENT ELEVATION

(SOLDIER PILE WALL NOT SHOWN FOR CLARITY SEE WALL D FOR ADDITIONAL INFORMATION)

NOTES

1. FOR SECTION C-C SEE SHEET 24/65.
2. SEE GENERAL NOTES FOR ABBREVIATION LEGEND.
3. SEE STANDARD DRAWING SICD-2-14 FOR ADDITIONAL SEMI-INTEGRAL DIAPHRAGM DETAILS NOT SHOWN, INCLUDING REINFORCING AND RUB PLATE DETAILS.

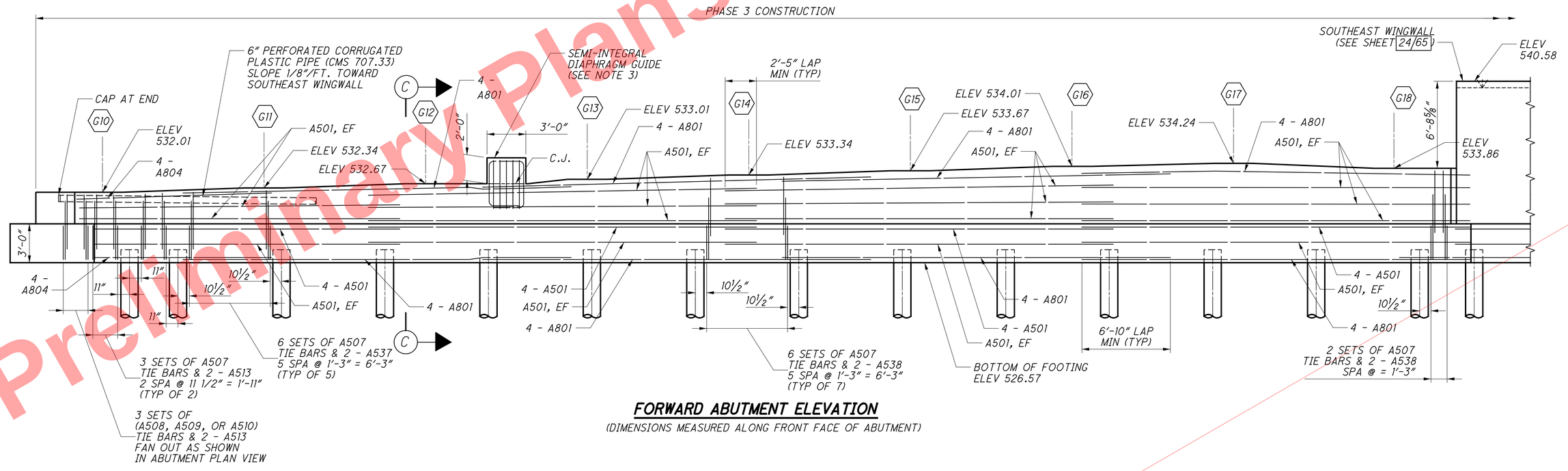

FORWARD ABUTMENT ELEVATION

(DIMENSIONS MEASURED ALONG FRONT FACE OF ABUTMENT)

Preliminary Plans - For Reference Only

DESIGN AGENCY EMH&T

DESIGNED	DRAWN	REVIEWED	DATE
RJE	GB	CAS	5-22-26
CHECKED	REVISED	STRUCTURE FILE NUMBER	
TDA/RMW	-	3110044	

FORWARD ABUTMENT RIGHT BRIDGE
BRIDGE NO. HAM-75-0791
I.R. 75 OVER RAMP J

HAM-75-7.85
PID No. 121447

J:\20110903\ODOT\HAM\77889\structures\HAM075_0791C\sheets\075_0791CAF002.dgn 5/22/2026 10:45:58 AM hbrendlinger

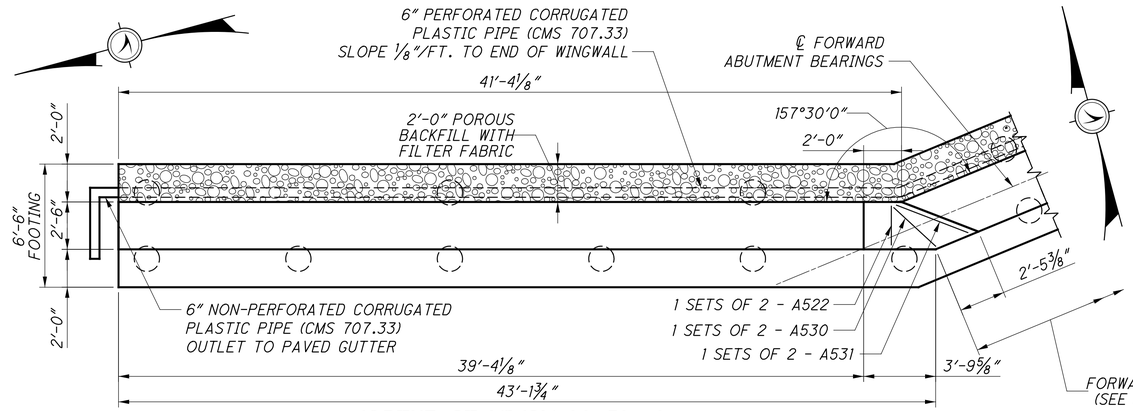

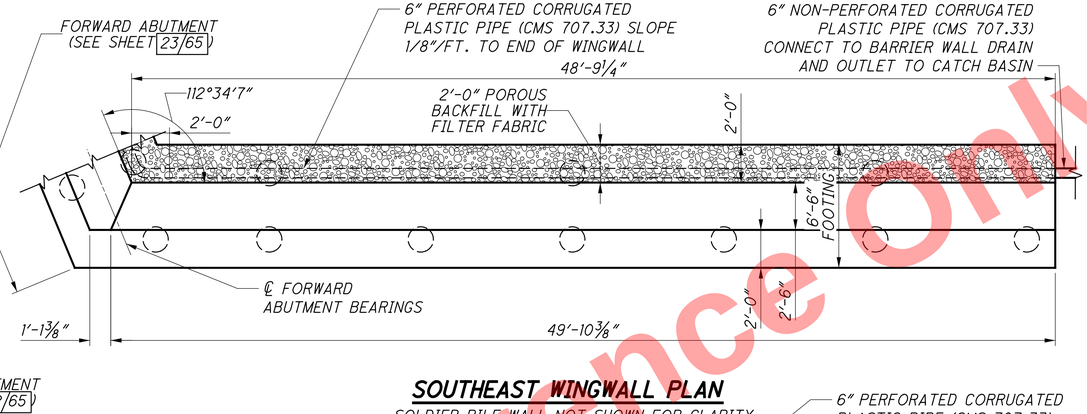

NORTHEAST WINGWALL PLAN

SOLDIER PILE WALL NOT SHOWN FOR CLARITY
SEE WALL D FOR ADDITIONAL INFORMATION

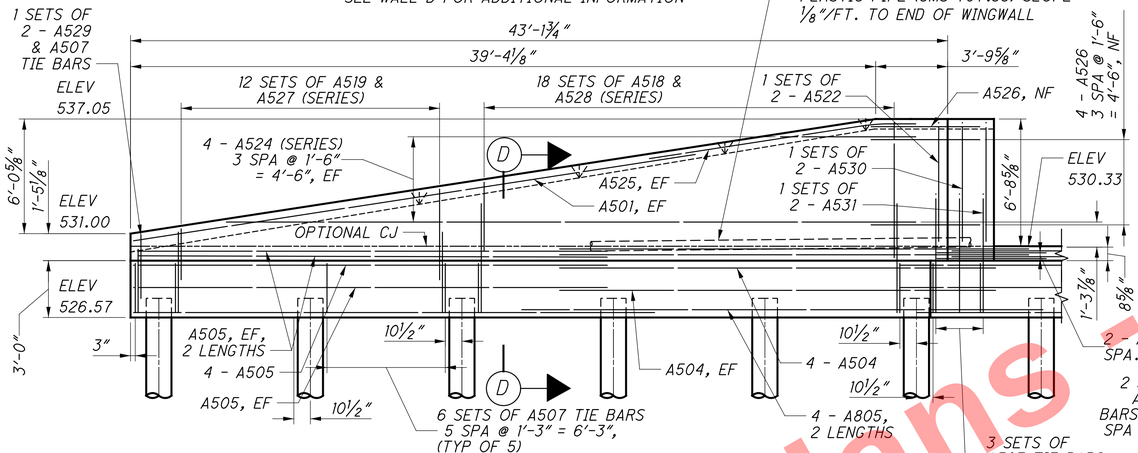

SOUTHEAST WINGWALL PLAN

SOLDIER PILE WALL NOT SHOWN FOR CLARITY
SEE WALL D FOR ADDITIONAL INFORMATION

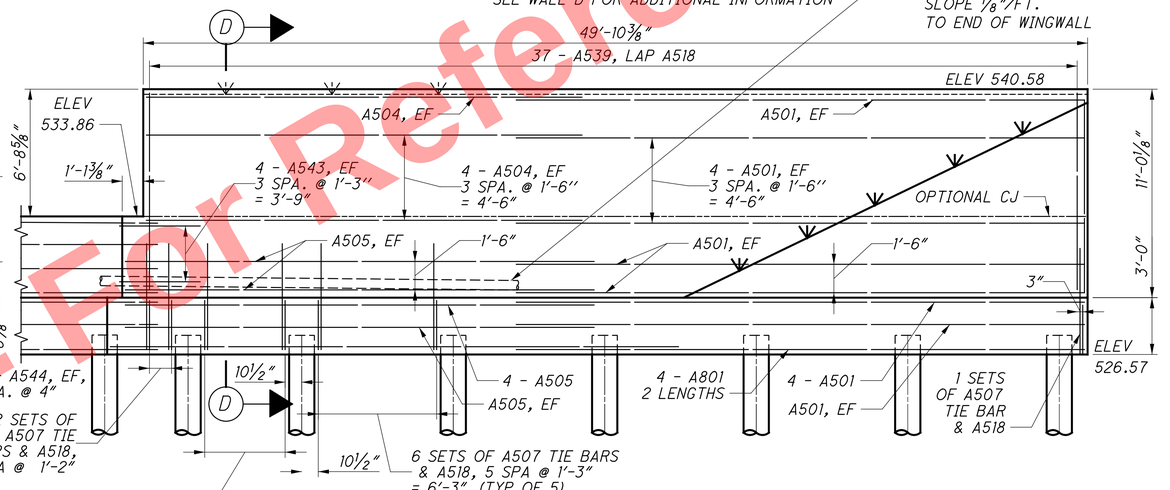

NORTHEAST WINGWALL ELEVATION

(PHASE 1 CONSTRUCTION)

SOUTHEAST WINGWALL ELEVATION

(PHASE 3 CONSTRUCTION)

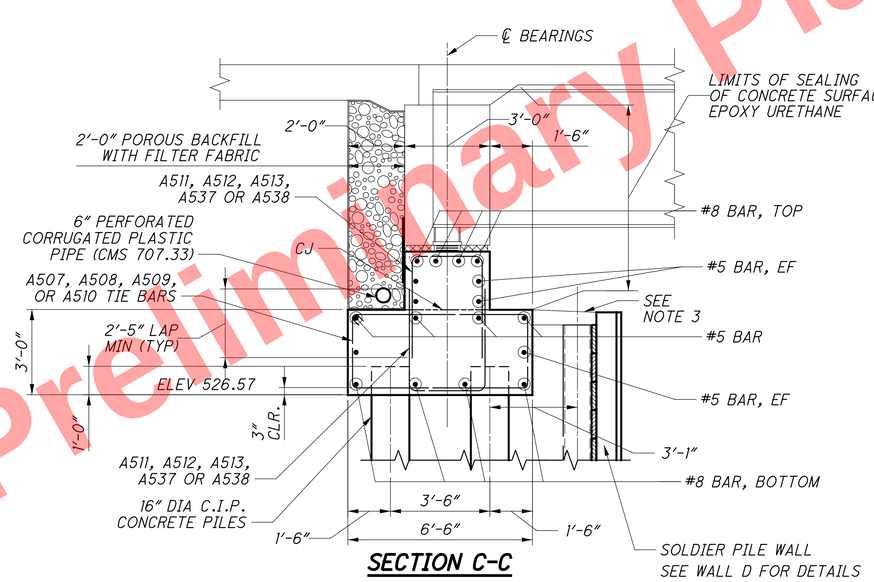

SECTION C-C

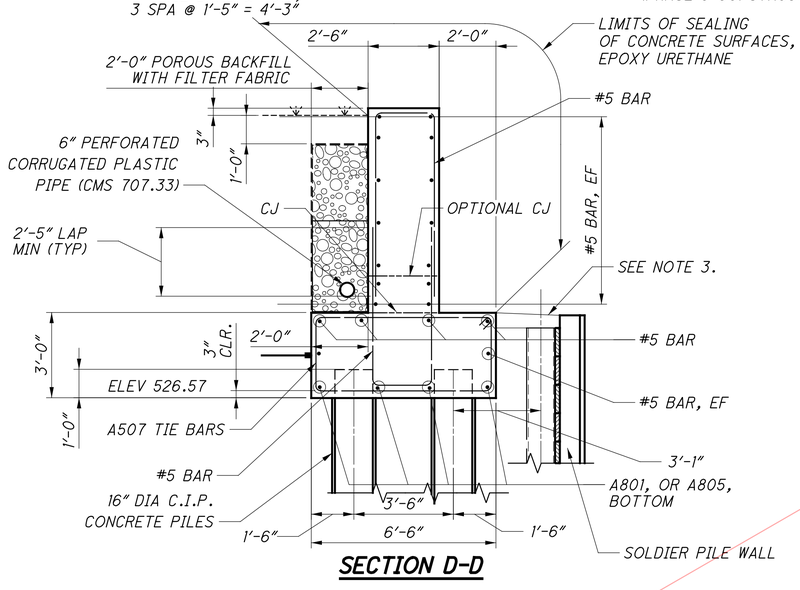

SECTION D-D

NOTES

1. FOR LOCATIONS OF SECTION C-C SEE SHEETS 22/65 AND 23/65.
2. SEE GENERAL NOTES FOR ABBREVIATION LEGEND.
3. ITEM 601 - CONCRETE SLOPE PROTECTION, AS PER PLAN (PAID FOR IN WALL D QUANTITIES)

Preliminary Plans - Not For Construction
For Reference Only

DESIGN AGENCY
EMH&T
Engineers • Surveyors • Planners • Scientists
5500 New Albany Road, Columbus, OH 43054
Phone: 614.775.4500

DESIGNED	DRAWN	REVIEWED	DATE
RJE	GB	CAS	5-22-26
CHECKED	REVISED	STRUCTURE FILE NUMBER	
TDA/RMW	-	3110044	

FORWARD ABUTMENT WINGWALLS AND DETAILS
BRIDGE NO. HAM-75-0791
I.R. 75 OVER RAMP J

HAM-75-7.85
PID No. 121447

24 / 65

888
1047

J:\20110903\ODOT\HAM\77889\structures\HAM075_0791C\sheets\075_0791CAF003.dgn 5/22/2026 10:45:59 AM hbrendlinger

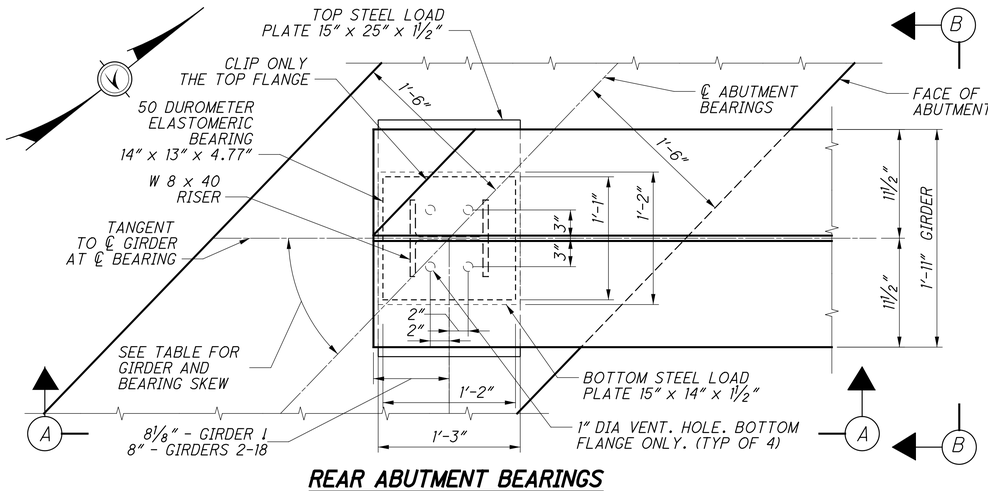

REAR ABUTMENT BEARINGS

REAR ABUTMENT SHOWN
FORWARD ABUTMENT OPPOSITE HAND

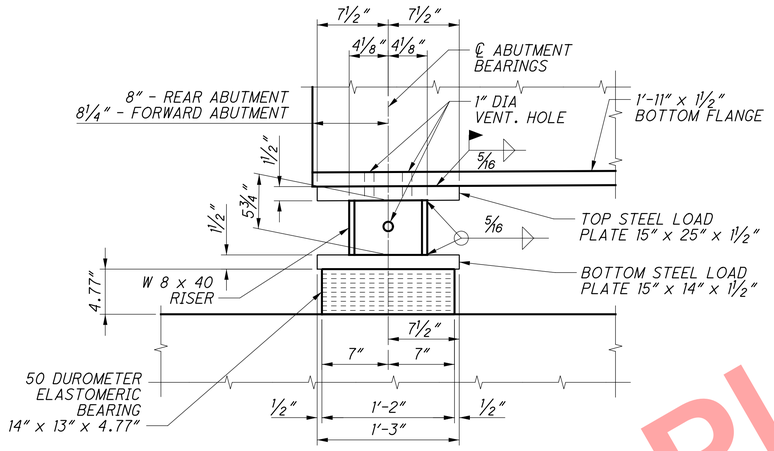

VIEW A-A

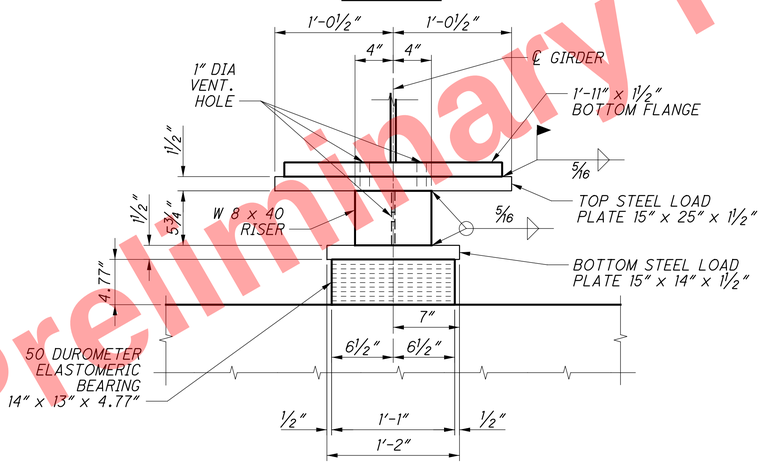

VIEW B-B

GIRDER/BEARING SKEW	
GIRDER	SKEW
1	45°27'51"
2-17	46°5'14"
18	46°50'40"

ABUTMENT BEARINGS		EXPANSION BEARING 50 DUROMETER	
INTERIOR ELASTOMERIC LAYERS	12 @ 0.308" = 3.696"	UNFACTORED DEAD LOAD	150.33 KIPS
STEEL PLATE LAMINATES	12 @ 0.074" = 0.888"	UNFACTORED FUTURE WEARING SURFACE	49.42 KIPS
EXTERIOR ELASTOMERIC LAYERS	1 @ 0.1875" = 0.1875"	UNFACTORED LIVE LOAD	118.41 KIPS
TOTAL THICKNESS	T = 4.77"	MAXIMUM DESIGN LOAD	318.16 KIPS

ELASTOMERIC BEARINGS

ELASTOMERIC BEARINGS: THE ELASTOMER SHALL HAVE A HARDNESS OF 50 DUROMETER. THE BEARINGS WERE DESIGNED IN ACCORDANCE WITH SECTION 14.7.5 (METHOD B) OF THE AASHTO LRFD BRIDGE DESIGN SPECIFICATIONS. PERFORM THE LONG-TERM COMPRESSION PROOF LOAD TEST IN ACCORDANCE WITH THE AASHTO STANDARD SPECIFICATIONS FOR HIGHWAY BRIDGES, DIVISION II, SECTION 18.7.2.6 AND 18.7.4.5.

THE STEEL LOAD PLATE SHALL BE BONDED BY VULCANIZATION TO THE ELASTOMER DURING THE MOLDING PROCESS.

WELDING: CONTROL WELDING SO THAT THE PLATE TEMPERATURE AT THE ELASTOMER BONDED SURFACE DOES NOT EXCEED 300°F AS DETERMINED BY USE OF PYROMETRIC STICKS OR OTHER TEMPERATURE MONITORING DEVICES.

LOAD PLATES: SHOP MARK THE LOAD PLATES WITH THE FOLLOWING INFORMATION: TOP, UPSTATION DIRECTION AND LOCATION (REAR ABUTMENT OR FORWARD ABUTMENT). THE STEEL LOAD PLATES AND RISERS ARE ASTM A709 GRADE 50W STRUCTURAL STEEL.

BEARING REPOSITIONING: IF THE STEEL BEAMS ARE ERECTED AT AN AMBIENT TEMPERATURE HIGHER THAN 80°F OR LOWER THAN 40°F AND THE BEARING SHEAR DEFLECTION EXCEEDS 1/6 OF THE BEARING HEIGHT AT 60°F (±) 10°F, RAISE THE BEAMS TO ALLOW THE BEARINGS TO RETURN TO THEIR UNDEFORMED SHAPE AT 60°F (±) 10°F.

NOTE

1. SEE GENERAL NOTES FOR ABBREVIATION LEGEND.

Preliminary Plans - For Reference Only

DESIGN AGENCY
EMH&T
Engineers • Surveyors • Planners • Scientists
5500 New Albany Road, Columbus, OH 43054
Phone: 614.775.4500

DESIGNED	DRAWN	REVIEWED	DATE
RJE	GB	CAS	5-22-26
CHECKED	REVISED	STRUCTURE FILE NUMBER	
TDA/RMW	-	3110044	

ELASTOMERIC BEARING DETAILS
BRIDGE NO. HAM-75-0791
I.R. 75 OVER RAMP J

HAM-75-7.85
PID No. 121447

25 / 65

889
1047

J:\2011093\ODOT\HAM\7889\structures\HAM075_0791C\sheets\075_0791CBR001.dgn 5/22/2026 10:46:00 AM hbrendlinger

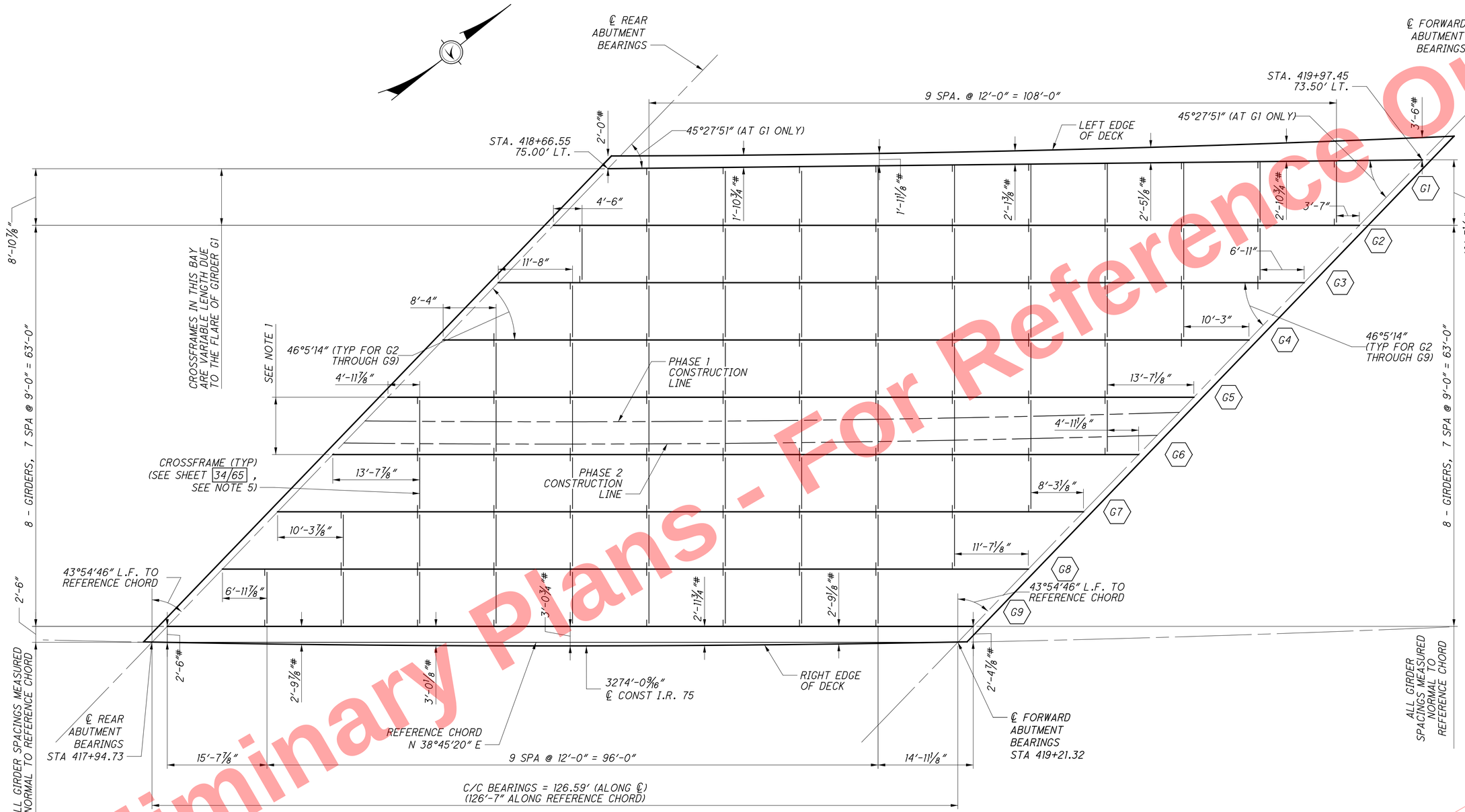

FRAMING PLAN (LEFT BRIDGE SOUTHBOUND)

- DECK OVERHANG WIDTH AT 1/6TH POINTS OF FACIA GIRDER

NOTES

1. CROSSFRAMES IN THIS BAY SHALL BE INSTALLED AFTER THE PHASE 2 DECK POUR AND PRIOR TO THE PHASE 2 CLOSURE POUR.
2. SEE SHEET 28/65 FOR GIRDER ELEVATIONS.
3. ALL CROSSFRAMES ARE ORIENTED NORMAL TO REFERENCE CHORD.
4. SEE GENERAL NOTES FOR ABBREVIATION LEGEND.

Preliminary Plans - For Reference Only

DESIGN AGENCY
EMH&T
Engineers • Surveyors • Planners • Scientists
5500 New Albany Road, Columbus, Ohio 43054
Phone: 614.775.4500

DESIGNED	DRAWN	REVIEWED	DATE
RJE	GB	CAS	5-22-26
CHECKED	REVISED	STRUCTURE FILE NUMBER	
RMW	-	3110044	

FRAMING PLAN (LEFT BRIDGE SOUTHBOUND)
BRIDGE NO. HAM-75-0791
I.R. 75 OVER RAMP J

HAM-75-7.85
PID No. 121447

890/1047

J:\20110903\ODOT\HAM\27889\structures\HAM075_0791C\sheets\075_0791CSD005.dgn 5/22/2026 10:46:01 AM hbrendlinger

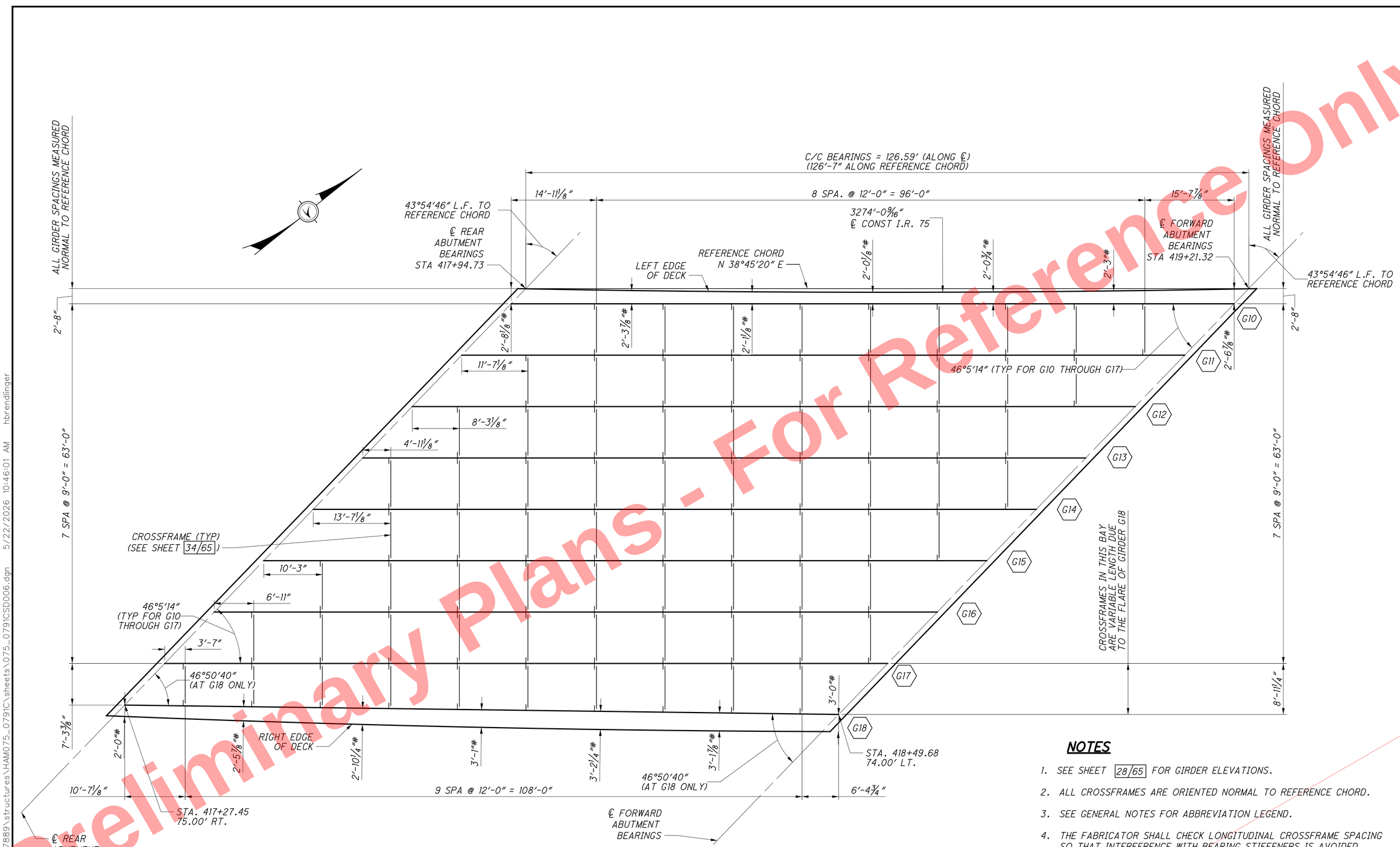

FRAMING PLAN
(RIGHT BRIDGE NORTHBOUND)

- DECK OVERHANG WIDTH AT 1/6TH POINTS OF FACIA GIRDER

NOTES

1. SEE SHEET 28/65 FOR GIRDER ELEVATIONS.
2. ALL CROSSFRAMES ARE ORIENTED NORMAL TO REFERENCE CHORD.
3. SEE GENERAL NOTES FOR ABBREVIATION LEGEND.
4. THE FABRICATOR SHALL CHECK LONGITUDINAL CROSSFRAME SPACING SO THAT INTERFERENCE WITH BEARING STIFFENERS IS AVOIDED. SPACING SHALL BE ADJUSTED TO PROVIDE AT LEAST SIX (6) INCHES OF LONGITUDINAL CLEARANCE.

Preliminary Plans - Not For Reference Only

DESIGN AGENCY: EMH&T
DESIGNED: RJE | DRAWN: GB | REVIEWED: CAS | DATE: 5-22-26
CHECKED: RMW | REVISED: - | STRUCTURE FILE NUMBER: 3110044

FRAMING PLAN (RIGHT BRIDGE NORTHBOUND)
BRIDGE NO. HAM-75-0791
I.R. 75 OVER RAMP J

HAM-75-7.85
PID No. 121447

27/65

891/1047

J:\2011093\ODOT\HAM\7889\structures\HAM075_0791C\sheets\075_0791CSD006.dgn 5/22/2026 10:46:01 AM hbrendlinger

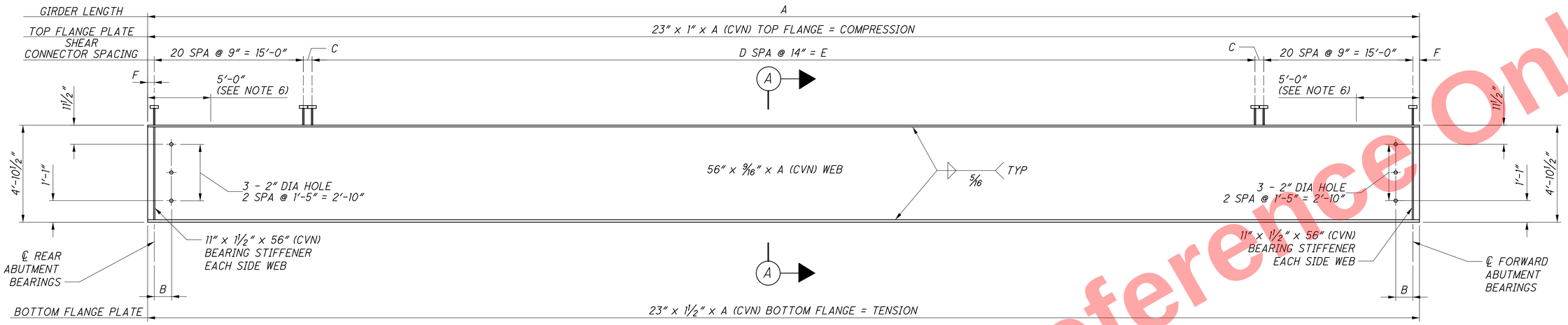

GIRDER ELEVATION

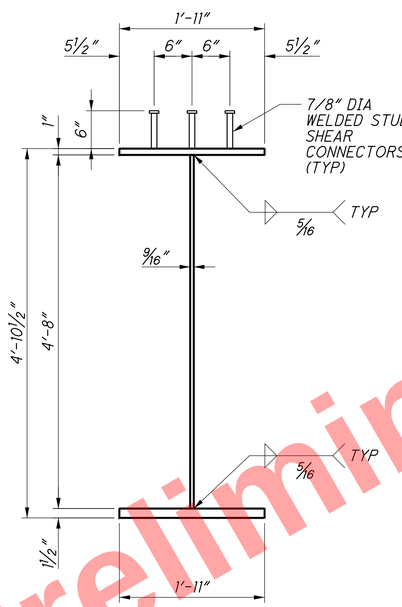

SECTION A-A

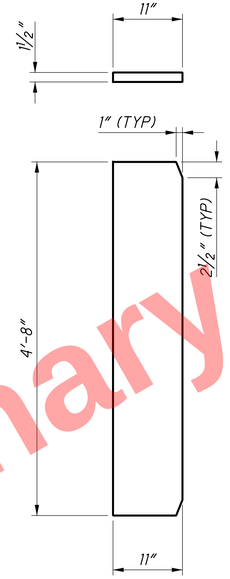

BEARING STIFFENER DETAIL

GIRDER DIMENSIONS

GIRDER NUMBER	GIRDER LENGTH A	B	C	D	E	F
GIRDER G1	129'-3½"	1'-8⅛"	13¾"	82	95'-8"	8⅛"
GIRDERS G2-G17	127'-11"	1'-8⅝"	12⅝"	81	94'-6"	8"
GIRDER G18	126'-4"	1'-8⅝"	10"	80	93'-4"	8"

NOTES

1. CVN: WHERE A SHAPE OR PLATE IS DESIGNATED (CVN), FURNISH MATERIAL THAT MEETS THE MINIMUM NOTCH TOUGHNESS REQUIREMENTS AS SPECIFIED IN 711.01.
2. WELD ATTACHMENT OF SUPPORTS FOR CONCRETE DECK FINISHING MACHINE TO AREAS OF THE FASCIA STRINGER FLANGES DESIGNATED "COMPRESSION". DO NOT WELD ATTACHMENTS TO AREAS DESIGNATED "TENSION". FILLET WELDS TO COMPRESSION FLANGES SHALL BE AT LEAST 1" FROM EDGE OF FLANGE, BE NO MORE THAN 2" LONG, AND BE AT LEAST ¼" FOR THICKNESSES UP TO ¾" OR 5/16" FOR GREATER THAN ¾" THICK.
3. ALL DIMENSIONS MEASURED ALONG CENTERLINE OF BEAM.
4. MILL STIFFENERS FOR SNUG FIT PRIOR TO WELDING.
5. SEE GENERAL NOTES FOR ABBREVIATION LEGEND.
6. PARTIAL PAINTING OF A709 GRADE 50W STEEL: APPLY AN INORGANIC ZINC PRIME COAT TO THE FULL PERIMETER OF THE LAST 5 FT OF EACH BEAM/GIRDER END ADJACENT TO THE ABUTMENTS INCLUDING BEARING STIFFENERS. INCLUDE FOR PAYMENT WITH ITEM 513 - STRUCTURAL STEEL MEMBERS, LEVEL 4.

Preliminary Plans - For Reference Only

DESIGN AGENCY: EMH&T
DESIGNED: RJE | DRAWN: GB | REVIEWED: CAS | DATE: 5-22-26
CHECKED: RMW | REVISED: - | STRUCTURE FILE NUMBER: 3110044

GIRDER ELEVATION
BRIDGE NO. HAM-75-0791
I.R. 75 OVER RAMP J

HAM-75-7.85
PID No. 121447

J:\20110903\ODOT\HAM\7889\structures\HAM075_0791C\sheets\075_0791CSD007.dgn 5/22/2026 10:46:02 AM hbrendlinger

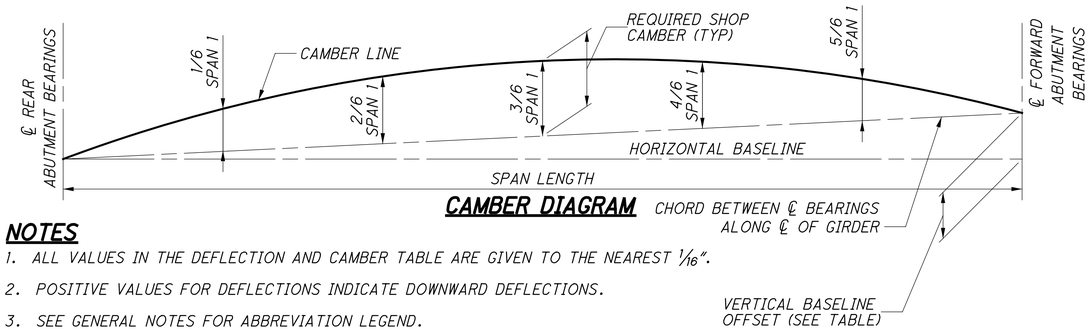

CAMBER DIAGRAM

NOTES

1. ALL VALUES IN THE DEFLECTION AND CAMBER TABLE ARE GIVEN TO THE NEAREST 1/16".
2. POSITIVE VALUES FOR DEFLECTIONS INDICATE DOWNWARD DEFLECTIONS.
3. SEE GENERAL NOTES FOR ABBREVIATION LEGEND.

SPAN LENGTH	
GIRDER 1	127'-11 1/8"
GIRDERS 2-17	126'-7"
GIRDER 18	125'-0"

VERTICAL BASELINE OFFSET (IN.)			
GIRDER 1	8 1/4 "	GIRDER 10	7 3/16 "
GIRDER 2	8 5/8 "	GIRDER 11	7 "
GIRDER 3	8 7/16 "	GIRDER 12	6 13/16 "
GIRDER 4	8 1/4 "	GIRDER 13	6 5/8 "
GIRDER 5	8 1/16 "	GIRDER 14	6 7/16 "
GIRDER 6	7 7/8 "	GIRDER 15	6 1/4 "
GIRDER 7	7 11/16 "	GIRDER 16	6 1/16 "
GIRDER 8	7 5/16 "	GIRDER 17	8 1/16 "
GIRDER 9	7 3/16 "	GIRDER 18	7 1/2 "

LEGEND

* - DEFLECTIONS DUE TO REMAINING DEAD LOAD ARE IN THE UPWARD DIRECTION DUE TO BEAM REBOUND FROM PARTIAL BARRIER REMOVAL.

CAMBER TABLE (LEFT BRIDGE)

		SPAN 1					
GIRDER 1	REAR ABUT.	1/6 SPAN	2/6 SPAN	3/6 SPAN	4/6 SPAN	5/6 SPAN	FWD. ABUT.
DEFLECTION DUE TO WEIGHT OF STEEL	0"	11/16"	1 3/16"	1 3/8"	1 3/16"	11/16"	0"
DEFLECTION DUE TO STAGED DECK PLACEMENT	0"	2 1/8"	3 11/16"	4 1/4"	3 11/16"	2 1/8"	0"
DEFLECTION DUE TO REMAINING DEAD LOAD *	0"	0"	-1/16"	-1/16"	-1/16"	0"	0"
ADJUSTMENT REQUIRED FOR VERTICAL CURVE	0"	-3/16"	-5/16"	-5/16"	-5/16"	-3/16"	0"
REQUIRED SHOP CAMBER	0"	2 5/8"	4 9/16"	5 1/4"	4 9/16"	2 5/8"	0"
GIRDER 2							
DEFLECTION DUE TO WEIGHT OF STEEL	0"	5/8"	1 1/8"	1 5/16"	1 1/8"	11/16"	0"
DEFLECTION DUE TO STAGED DECK PLACEMENT	0"	2"	3 7/16"	4"	3 1/2"	2 1/16"	0"
DEFLECTION DUE TO REMAINING DEAD LOAD *	0"	0"	0"	-1/16"	-1/16"	0"	0"
ADJUSTMENT REQUIRED FOR VERTICAL CURVE	0"	-3/16"	-1/4"	-5/16"	-1/4"	-3/16"	0"
REQUIRED SHOP CAMBER	0"	2 7/16"	4 1/4"	4 15/16"	4 5/16"	2 1/2"	0"
GIRDER 3							
DEFLECTION DUE TO WEIGHT OF STEEL	0"	5/8"	1 1/16"	1 1/4"	1 1/16"	5/8"	0"
DEFLECTION DUE TO STAGED DECK PLACEMENT	0"	2"	3 3/8"	3 7/8"	3 3/8"	2"	0"
DEFLECTION DUE TO REMAINING DEAD LOAD	0"	0"	0"	0"	0"	0"	0"
ADJUSTMENT REQUIRED FOR VERTICAL CURVE	0"	-3/16"	-1/4"	-5/16"	-1/4"	-3/16"	0"
REQUIRED SHOP CAMBER	0"	2 7/16"	4 3/16"	4 13/16"	4 3/16"	2 7/16"	0"
GIRDER 4							
DEFLECTION DUE TO WEIGHT OF STEEL	0"	5/8"	1 1/8"	1 1/4"	1 1/8"	5/8"	0"
DEFLECTION DUE TO STAGED DECK PLACEMENT	0"	2 1/16"	3 1/2"	4"	3 7/16"	2"	0"
DEFLECTION DUE TO REMAINING DEAD LOAD	0"	0"	0"	0"	0"	0"	0"
ADJUSTMENT REQUIRED FOR VERTICAL CURVE	0"	-3/16"	-1/4"	-5/16"	-1/4"	-3/16"	0"
REQUIRED SHOP CAMBER	0"	2 1/2"	4 5/16"	4 15/16"	4 1/4"	2 7/16"	0"
GIRDER 5							
DEFLECTION DUE TO WEIGHT OF STEEL	0"	11/16"	1 3/16"	1 3/8"	1 3/16"	11/16"	0"
DEFLECTION DUE TO STAGED DECK PLACEMENT	0"	2 1/8"	3 11/16"	4 1/4"	3 11/16"	2 1/8"	0"
DEFLECTION DUE TO REMAINING DEAD LOAD	0"	0"	0"	0"	0"	0"	0"
ADJUSTMENT REQUIRED FOR VERTICAL CURVE	0"	-3/16"	-1/4"	-5/16"	-1/4"	-3/16"	0"
REQUIRED SHOP CAMBER	0"	2 11/16"	4 9/16"	5 5/16"	4 5/8"	2 11/16"	0"
GIRDER 6							
DEFLECTION DUE TO WEIGHT OF STEEL	0"	11/16"	1 1/8"	1 5/16"	1 1/8"	11/16"	0"
DEFLECTION DUE TO STAGED DECK PLACEMENT	0"	1 7/8"	3 3/16"	3 11/16"	3 1/4"	1 7/8"	0"
DEFLECTION DUE TO REMAINING DEAD LOAD	0"	0"	0"	0"	0"	0"	0"
ADJUSTMENT REQUIRED FOR VERTICAL CURVE	0"	-3/16"	-1/4"	-5/16"	-1/4"	-3/16"	0"
REQUIRED SHOP CAMBER	0"	2 3/8"	4 1/8"	4 3/4"	4 1/8"	2 3/8"	0"
GIRDER 7							
DEFLECTION DUE TO WEIGHT OF STEEL	0"	5/8"	1 1/8"	1 1/4"	1 1/8"	5/8"	0"
DEFLECTION DUE TO STAGED DECK PLACEMENT	0"	1 7/8"	3 1/4"	3 11/16"	3 3/16"	1 7/8"	0"
DEFLECTION DUE TO REMAINING DEAD LOAD	0"	0"	0"	0"	0"	0"	0"
ADJUSTMENT REQUIRED FOR VERTICAL CURVE	0"	-3/16"	-1/4"	-5/16"	-1/4"	-3/16"	0"
REQUIRED SHOP CAMBER	0"	2 3/8"	4 1/16"	4 11/16"	4 1/16"	2 3/8"	0"
GIRDER 8							
DEFLECTION DUE TO WEIGHT OF STEEL	0"	5/8"	1 1/8"	1 1/4"	1 1/8"	5/8"	0"
DEFLECTION DUE TO STAGED DECK PLACEMENT	0"	2"	3 3/8"	3 7/8"	3 5/16"	1 15/16"	0"
DEFLECTION DUE TO REMAINING DEAD LOAD	0"	0"	0"	0"	0"	0"	0"
ADJUSTMENT REQUIRED FOR VERTICAL CURVE	0"	-1/16"	-1/16"	-1/8"	-1/16"	-1/16"	0"
REQUIRED SHOP CAMBER	0"	2 9/16"	4 3/8"	5 1/16"	4 3/8"	2 9/16"	0"
GIRDER 9							
DEFLECTION DUE TO WEIGHT OF STEEL	0"	11/16"	1 1/8"	1 5/16"	1 1/8"	11/16"	0"
DEFLECTION DUE TO STAGED DECK PLACEMENT	0"	2 1/8"	3 5/8"	4 3/16"	3 5/8"	2 1/8"	0"
DEFLECTION DUE TO REMAINING DEAD LOAD	0"	0"	0"	0"	0"	0"	0"
ADJUSTMENT REQUIRED FOR VERTICAL CURVE	0"	3/16"	1/4"	5/16"	1/4"	3/16"	0"
REQUIRED SHOP CAMBER	0"	2 15/16"	5"	5 13/16"	5 1/16"	3"	0"

CAMBER TABLE (RIGHT BRIDGE)

		SPAN 1					
GIRDER 10	REAR ABUT.	1/6 SPAN	2/6 SPAN	3/6 SPAN	4/6 SPAN	5/6 SPAN	FWD. ABUT.
DEFLECTION DUE TO WEIGHT OF STEEL	0"	3/4"	1 5/16"	1 7/16"	1 1/4"	3/4"	0"
DEFLECTION DUE TO WEIGHT OF SLAB	0"	2 1/16"	3 1/2"	4"	3 7/16"	2"	0"
DEFLECTION DUE TO REMAINING DEAD LOAD	0"	3/16"	5/16"	3/8"	5/16"	3/16"	0"
ADJUSTMENT REQUIRED FOR VERTICAL CURVE	0"	-3/16"	-1/4"	-5/16"	-1/4"	-3/16"	0"
REQUIRED SHOP CAMBER	0"	2 13/16"	4 13/16"	5 1/2"	4 11/16"	2 11/16"	0"
GIRDER 11							
DEFLECTION DUE TO WEIGHT OF STEEL	0"	11/16"	1 1/8"	1 5/16"	1 3/16"	11/16"	0"
DEFLECTION DUE TO WEIGHT OF SLAB	0"	1 7/8"	3 3/16"	3 11/16"	3 3/16"	1 7/8"	0"
DEFLECTION DUE TO REMAINING DEAD LOAD	0"	1/8"	1/4"	5/16"	1/4"	3/16"	0"
ADJUSTMENT REQUIRED FOR VERTICAL CURVE	0"	-3/16"	-1/4"	-5/16"	-1/4"	-3/16"	0"
REQUIRED SHOP CAMBER	0"	2 1/2"	4 5/16"	5"	4 3/8"	2 9/16"	0"
GIRDER 12							
DEFLECTION DUE TO WEIGHT OF STEEL	0"	5/8"	1 1/16"	1 1/4"	1 1/16"	5/8"	0"
DEFLECTION DUE TO WEIGHT OF SLAB	0"	1 3/4"	3"	3 1/2"	3 1/16"	1 3/4"	0"
DEFLECTION DUE TO REMAINING DEAD LOAD	0"	1/8"	1/4"	5/16"	1/4"	1/8"	0"
ADJUSTMENT REQUIRED FOR VERTICAL CURVE	0"	-3/16"	-1/4"	-5/16"	-1/4"	-3/16"	0"
REQUIRED SHOP CAMBER	0"	2 5/16"	4 1/16"	4 11/16"	4 1/8"	2 3/8"	0"
GIRDER 13							
DEFLECTION DUE TO WEIGHT OF STEEL	0"	5/8"	1 1/16"	1 3/16"	1 1/16"	5/8"	0"
DEFLECTION DUE TO WEIGHT OF SLAB	0"	1 11/16"	2 15/16"	3 3/8"	2 15/16"	1 3/4"	0"
DEFLECTION DUE TO REMAINING DEAD LOAD	0"	1/8"	1/4"	1/4"	1/4"	1/8"	0"
ADJUSTMENT REQUIRED FOR VERTICAL CURVE	0"	-3/16"	-1/4"	-5/16"	-1/4"	-3/16"	0"
REQUIRED SHOP CAMBER	0"	2 1/4"	3 15/16"	4 9/16"	3 15/16"	2 5/16"	0"
GIRDER 14							
DEFLECTION DUE TO WEIGHT OF STEEL	0"	5/8"	1"	1 3/16"	1"	5/8"	0"
DEFLECTION DUE TO WEIGHT OF SLAB	0"	1 11/16"	2 7/8"	3 5/16"	2 15/16"	1 11/16"	0"
DEFLECTION DUE TO REMAINING DEAD LOAD	0"	1/8"	1/4"	1/4"	1/4"	1/8"	0"
ADJUSTMENT REQUIRED FOR VERTICAL CURVE	0"	-3/16"	-1/4"	-5/16"	-1/4"	-3/16"	0"
REQUIRED SHOP CAMBER	0"	2 1/4"	3 7/8"	4 1/2"	3 7/8"	2 1/4"	0"
GIRDER 15							
DEFLECTION DUE TO WEIGHT OF STEEL	0"	5/8"	1 1/16"	1 3/16"	1 1/16"	5/8"	0"
DEFLECTION DUE TO WEIGHT OF SLAB	0"	1 11/16"	2 15/16"	3 3/8"	2 15/16"	1 11/16"	0"
DEFLECTION DUE TO REMAINING DEAD LOAD	0"	1/8"	1/4"	1/4"	1/4"	1/8"	0"
ADJUSTMENT REQUIRED FOR VERTICAL CURVE	0"	-3/16"	-1/4"	-5/16"	-1/4"	-3/16"	0"
REQUIRED SHOP CAMBER	0"	2 5/16"	3 15/16"	4 1/2"	3 15/16"	2 1/4"	0"
GIRDER 16							
DEFLECTION DUE TO WEIGHT OF STEEL	0"	5/8"	1 1/16"	1 1/4"	1 1/16"	5/8"	0"
DEFLECTION DUE TO WEIGHT OF SLAB	0"	1 3/4"	3"	3 7/16"	3"	1 3/4"	0"
DEFLECTION DUE TO REMAINING DEAD LOAD	0"	1/8"	1/4"	5/16"	1/4"	1/8"	0"
ADJUSTMENT REQUIRED FOR VERTICAL CURVE	0"	-3/16"	-1/4"	-5/16"	-1/4"	-3/16"	0"
REQUIRED SHOP CAMBER	0"	2 3/8"	4 1/16"	4 5/8"	4"	2 5/16"	0"
GIRDER 17							
DEFLECTION DUE TO WEIGHT OF STEEL	0"	11/16"	1 1/8"	1 5/16"	1 1/8"	5/8"	0"
DEFLECTION DUE TO WEIGHT OF SLAB	0"	1 7/8"	3 3/16"	3 5/8"	3 1/8"	1 13/16"	0"
DEFLECTION DUE TO REMAINING DEAD LOAD	0"	3/16"	1/4"	5/16"	1/4"	1/8"	0"
ADJUSTMENT REQUIRED FOR VERTICAL CURVE	0"	3/16"	5/16"	5/16"	1/4"	1/8"	0"
REQUIRED SHOP CAMBER	0"	2 7/8"	4 7/8"	5 9/16"	4 13/16"	2 3/4"	0"
GIRDER 18							
DEFLECTION DUE TO WEIGHT OF STEEL	0"	11/16"	1 3/16"	1 7/16"	1 1/4"	3/4"	0"
DEFLECTION DUE TO WEIGHT OF SLAB	0"	1 15/16"	3 3/8"	3 15/16"	3 7/16"	2 1/16"	0"
DEFLECTION DUE TO REMAINING DEAD LOAD	0"	3/16"	5/16"	5/16"	5/16"	3/16"	0"
ADJUSTMENT REQUIRED FOR VERTICAL CURVE	0"	1/8"	1/4"	1/4"	1/4"	3/16"	0"
REQUIRED SHOP CAMBER	0"	2 15/16"	5 1/8"	5 15/16"	5 1/4"	3 1/8"	0"

Preliminary Plans - Not Reference Only

DESIGN AGENCY EMH&T
DATE 5-22-26
REVIEWED CAS
STRUCTURE FILE NUMBER 3110044
DRAWN TDA
REVISED -
DESIGNED TDA
CHECKED RMW

CAMBER DIAGRAM AND DEFLECTION
BRIDGE NO. HAM-75-0791
I.R. 75 OVER RAMP J

HAM-75-7.85
PID No. 121447

J:\20110903\ODOT\HAM\77889\structures\HAM075_0791C\sheets\075_0791CSD008.dgn 5/22/2026 10:46:02 AM hbrendlinger

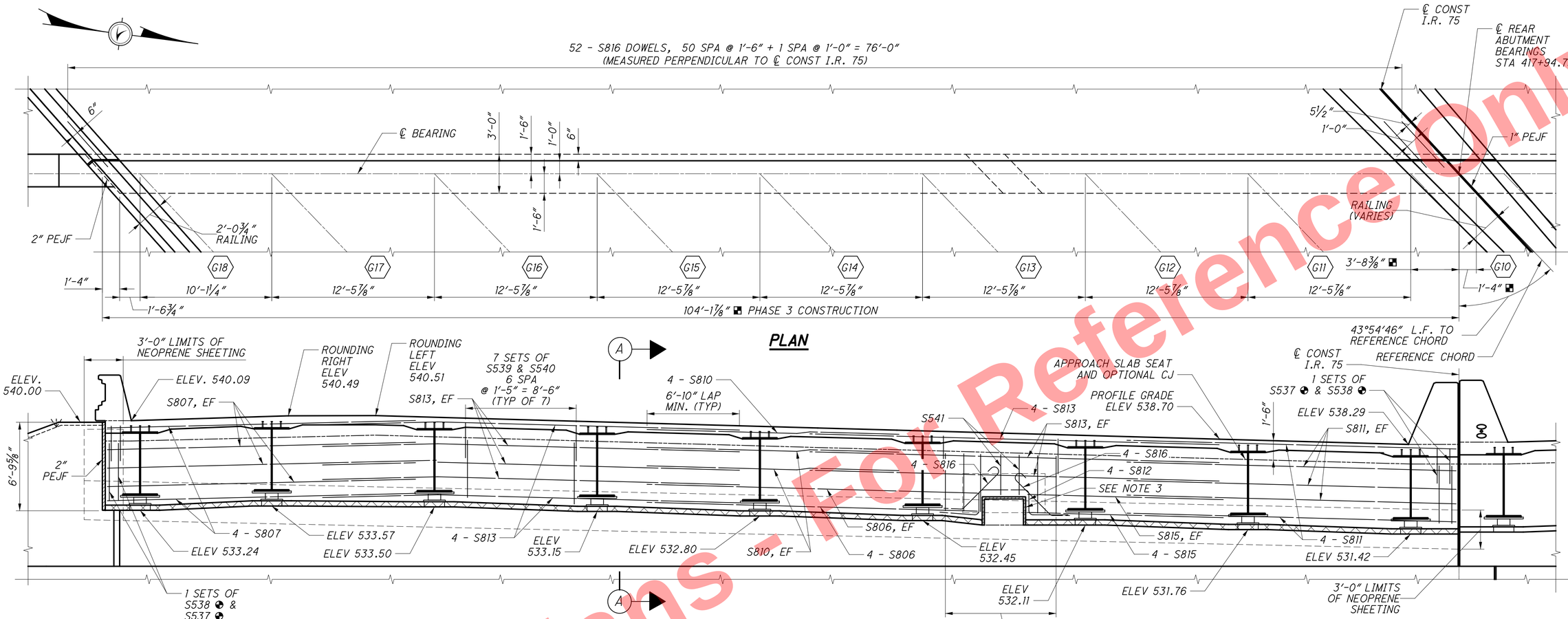

PLAN

ELEVATION

ELEVATIONS GIVEN AT ℄ ABUTMENT BEARINGS

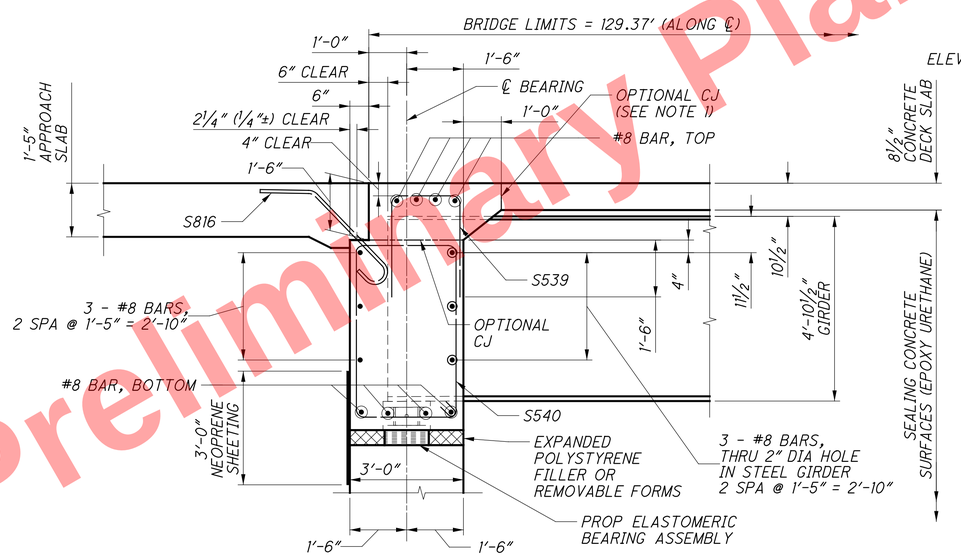

SECTION A-A

SHEAR STUDS NOT SHOWN FOR CLARITY

LEGEND

- ⬛ - MEASURED TO ℄ CONST I.R. 75
- ◓ - BARS SHALL BE PLACED PARALLEL TO BEAMS

NOTES

1. ABUTMENT DIAPHRAGM CONCRETE: PLACE THE DIAPHRAGM CONCRETE ENCASING THE STRUCTURAL MEMBER ENDS AFTER THE DECK PLACEMENT IN THE ADJACENT SPAN IS COMPLETE. PROCEDURES THAT PLACE THE ABUTMENT DIAPHRAGM WITH THE DECK CONCRETE MAY BE APPROVED BY THE ENGINEER IF THE PLACEMENT SUBMITTAL CAN ASSURE THAT THE DECK CONCRETE IN THE ADJACENT SPAN WILL BE PLACED BEFORE CONCRETE IN THE DIAPHRAGM HAS REACHED ITS INITIAL SET.
2. SEE GENERAL NOTES FOR ABBREVIATION LEGEND.
3. SEE STANDARD DRAWING SICD-2-14 AND REAR ABUTMENT DETAILS SHEET FOR ADDITIONAL SEMI-INTEGRAL DIAPHRAGM GUIDE DETAILS NOT SHOWN ON THIS SHEET, INCLUDING PEJF AND RUB PLATE DETAILS.

Preliminary Plans - For Reference Only

DESIGN AGENCY: EMH&T
DESIGNED: RJE
DRAWN: GB
CHECKED: TDA/RMW
REVIEWED: CAS
DATE: 5-22-26
REVISED: -
STRUCTURE FILE NUMBER: 3110044

REAR ABUTMENT DIAPHRAGM RIGHT BRIDGE
BRIDGE NO. HAM-75-0791
I.R. 75 OVER RAMP J

HAM-75-7.85
PID No. 121447

30 / 65

894
1047

J:\2011093\ODOT\HAM\7889\structures\HAM075_0791C\sheets\075_0791CSD013.dgn 5/22/2026 10:46:03 AM hbrendlinger

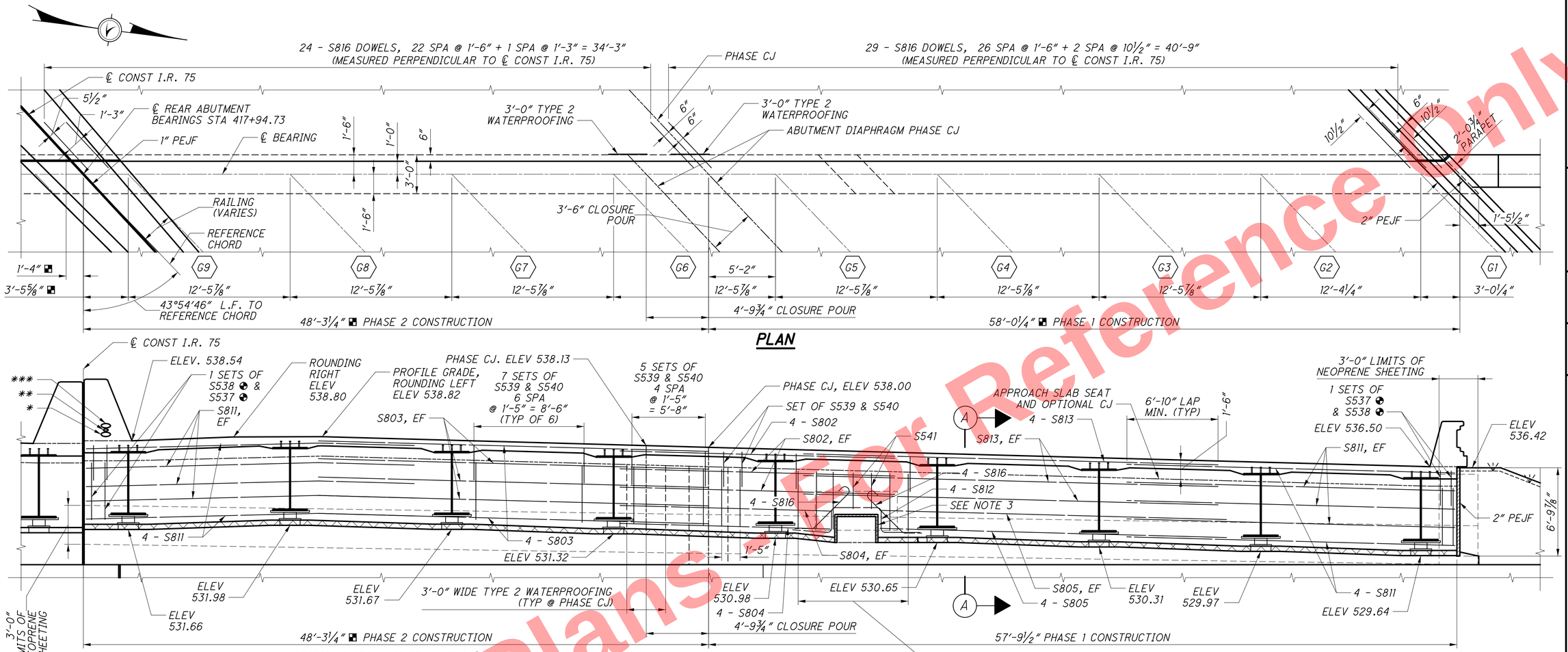

PLAN

ELEVATION

ELEVATIONS GIVEN AT ℄ ABUTMENT BEARINGS

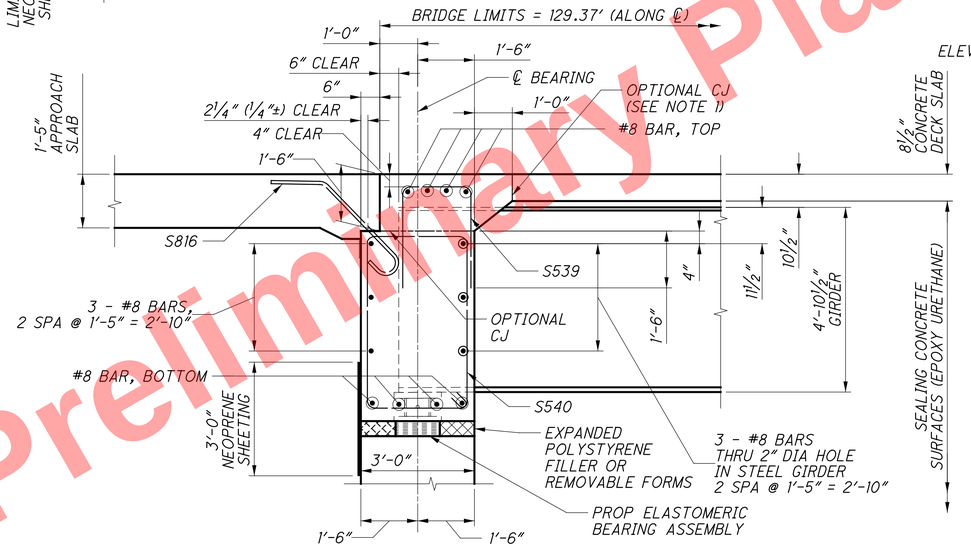

SECTION A-A

SHEAR STUDS NOT SHOWN FOR CLARITY

LEGEND

■ - MEASURED TO ℄ CONST I.R. 75

◕ - BARS SHALL BE PLACED PARALLEL TO BEAMS

* - 4" DIA CONDUIT FOR MEDIAN LIGHTING

** - 2" DIA ITS CONDUIT

*** - 4" DIA ITS CONDUIT

NOTES

1. ABUTMENT DIAPHRAGM CONCRETE, PHASED CONSTRUCTION: PLACE THE DIAPHRAGM CONCRETE ENCASING THE STRUCTURAL MEMBER ENDS OF AN INDIVIDUAL PHASE AFTER THE DECK PLACEMENT IN THE ADJACENT SPAN IS COMPLETE. PROCEDURES THAT PLACE THE ABUTMENT DIAPHRAGM WITH THE DECK CONCRETE MAY BE APPROVED BY THE ENGINEER IF THE PLACEMENT SUBMITTAL CAN ASSURE THAT THE DECK CONCRETE IN THE ADJACENT SPAN WILL BE PLACED BEFORE CONCRETE IN THE DIAPHRAGM HAS REACHED ITS INITIAL SET. PLACE CLOSURE POUR CONCRETE IN THE DIAPHRAGM AND DECK CONCURRENTLY.

2. SEE GENERAL NOTES FOR ABBREVIATION LEGEND.

3. SEE STANDARD DRAWING SICD-2-14 AND REAR ABUTMENT DETAILS SHEET FOR ADDITIONAL SEMI-INTEGRAL DIAPHRAGM GUIDE DETAILS NOT SHOWN ON THIS SHEET, INCLUDING PEJF AND RUB PLATE DETAILS.

Preliminary Plans
Plans For Reference Only

DESIGN AGENCY EMH&T
DESIGNED RJE | DRAWN GB | REVIEWED CAS | DATE 5-22-26
CHECKED TDA/RMW | REVISED - | STRUCTURE FILE NUMBER 3110044

REAR ABUTMENT DIAPHRAGM LEFT BRIDGE
BRIDGE NO. HAM-75-0791
I.R. 75 OVER RAMP J

HAM-75-7.85
PID No. 121447

31 / 65

895 / 1047

J:\20110903\ODOT\HAM\7889\structures\HAM075_0791C\sheets\075_0791CSD014.dgn 5/22/2026 10:46:04 AM hbrendlinger

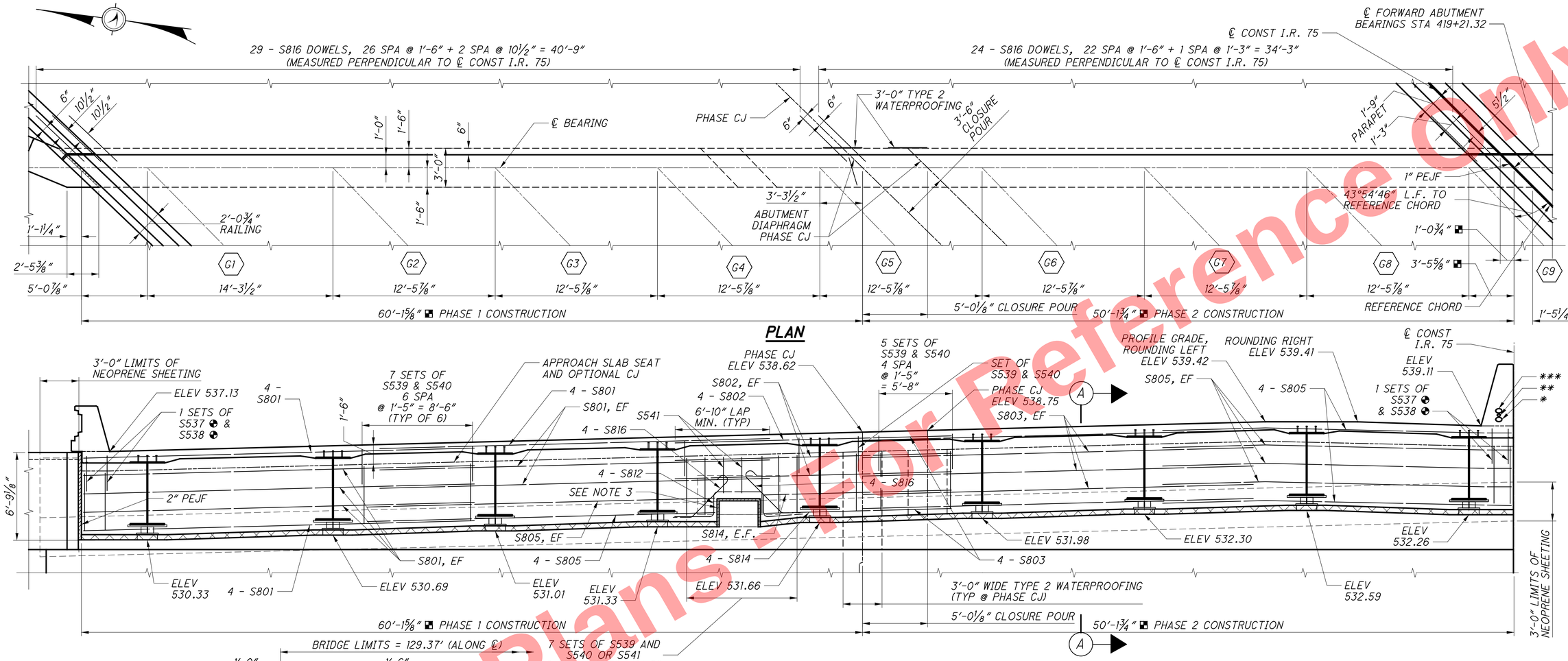

PLAN

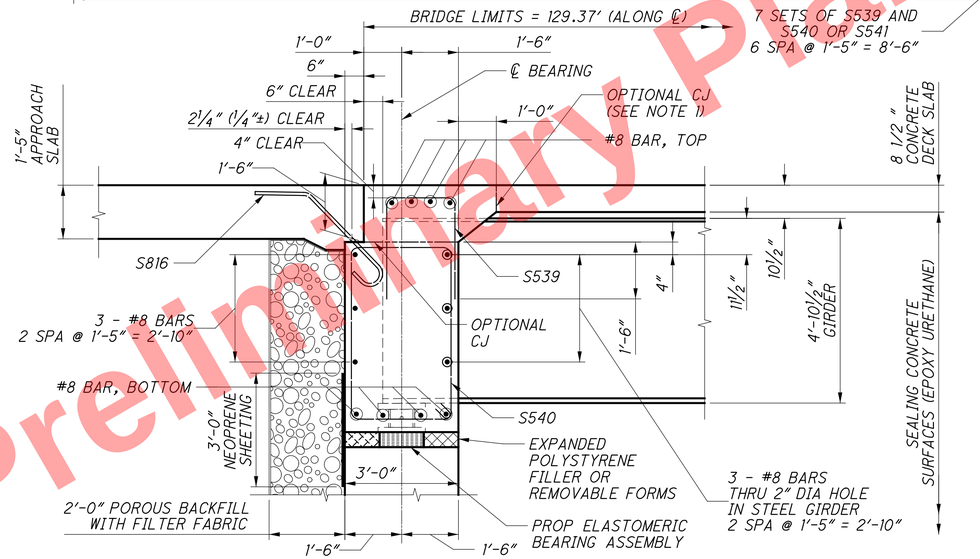

SECTION A-A

SHEAR STUDS NOT SHOWN FOR CLARITY

ELEVATION

ELEVATIONS GIVEN AT ℄ ABUTMENT BEARINGS

LEGEND

■ - MEASURED TO ℄ CONST I.R. 75

◔ - BARS SHALL BE PLACED PARALLEL TO BEAMS

* - 4" DIA CONDUIT FOR MEDIAN LIGHTING

** - 2" DIA ITS CONDUIT

*** - 4" DIA ITS CONDUIT

NOTES

1. ABUTMENT DIAPHRAGM CONCRETE, PHASED CONSTRUCTION: PLACE THE DIAPHRAGM CONCRETE ENCASING THE STRUCTURAL MEMBER ENDS OF AN INDIVIDUAL PHASE AFTER THE DECK PLACEMENT IN THE ADJACENT SPAN IS COMPLETE. PROCEDURES THAT PLACE THE ABUTMENT DIAPHRAGM WITH THE DECK CONCRETE MAY BE APPROVED BY THE ENGINEER IF THE PLACEMENT SUBMITTAL CAN ASSURE THAT THE DECK CONCRETE IN THE ADJACENT SPAN WILL BE PLACED BEFORE CONCRETE IN THE DIAPHRAGM HAS REACHED ITS INITIAL SET. PLACE CLOSURE POUR CONCRETE IN THE DIAPHRAGM AND DECK CONCURRENTLY.

2. SEE GENERAL NOTES FOR ABBREVIATION LEGEND.

3. SEE STANDARD DRAWING SICD-2-14 AND FORWARD ABUTMENT DETAILS SHEET FOR ADDITIONAL SEMI-INTEGRAL DIAPHRAGM GUIDE DETAILS NOT SHOWN ON THIS SHEET, INCLUDING PEJF AND RUB PLATE DETAILS.

Preliminary Plans - Not For Construction
Preliminary Plans - Not For Reference Only

DESIGN AGENCY: EMH&T
DESIGNED: RJE | DRAWN: GB | CHECKED: TDA/RMW | REVIEWED: CAS | DATE: 5-22-26 | REVISED: - | STRUCTURE FILE NUMBER: 3110044

FORWARD ABUTMENT DIAPHRAGM LEFT BRIDGE
BRIDGE NO. HAM-75-0791
I.R. 75 OVER RAMP J

HAM-75-7.85
PID No. 121447

32 / 65

896
1047

J:\2010903\ODOT\HAM\7889\structures\HAM075_0791C\sheets\075_0791CSD011.dgn 5/22/2026 10:46:05 AM hbrendlinger

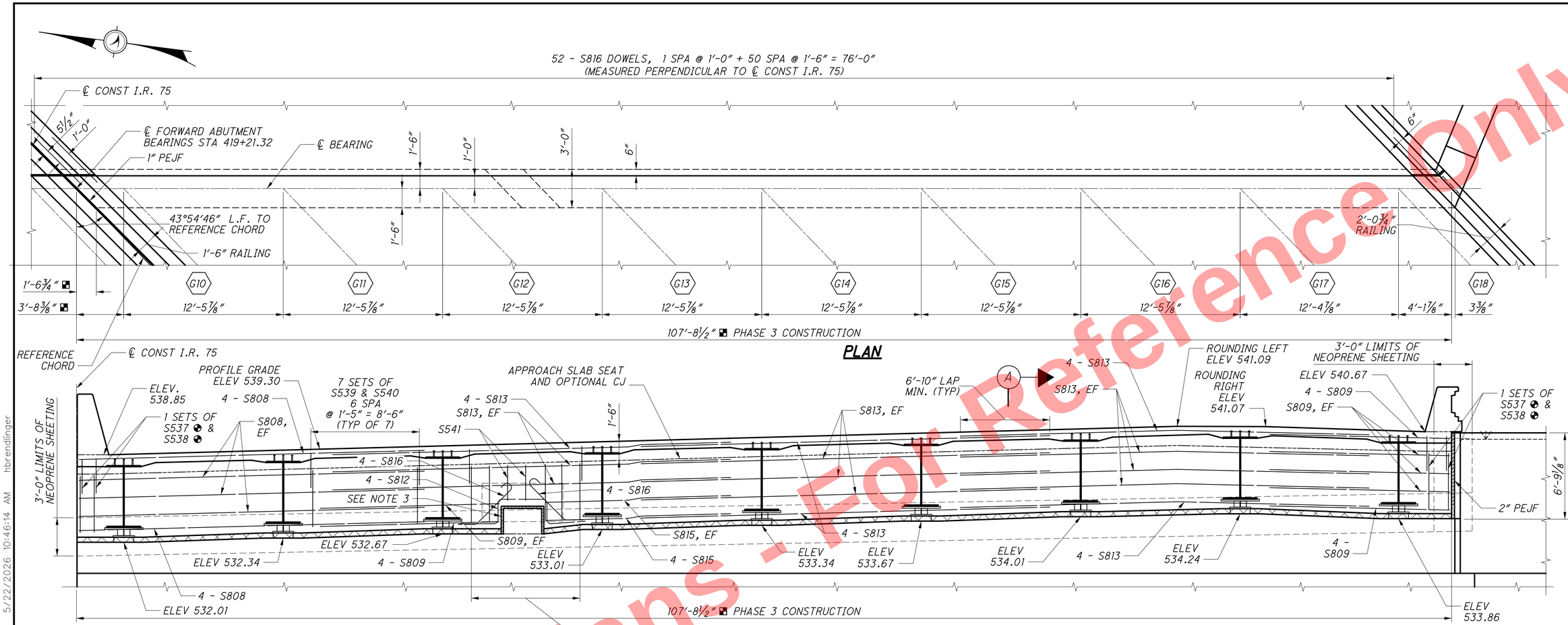

PLAN

ELEVATION

ELEVATIONS GIVEN AT ℄ ABUTMENT BEARINGS

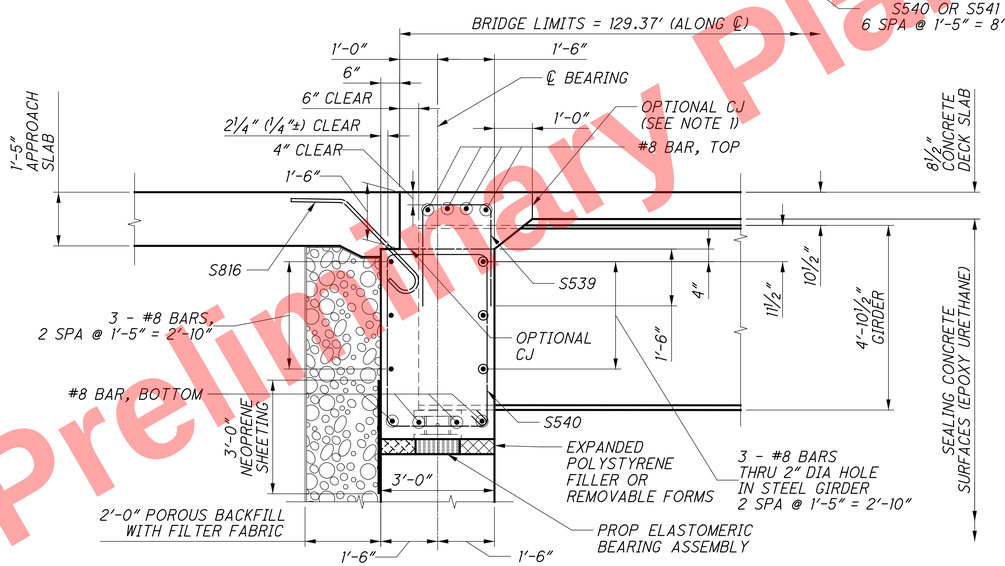

SECTION A-A

SHEAR STUDS NOT SHOWN FOR CLARITY

LEGEND

◪ - MEASURED TO ℄ CONST I.R. 75

◔ - BARS SHALL BE PLACED PARALLEL TO BEAMS

NOTES

1. ABUTMENT DIAPHRAGM CONCRETE: PLACE THE DIAPHRAGM CONCRETE ENCASING THE STRUCTURAL MEMBER ENDS AFTER THE DECK PLACEMENT IN THE ADJACENT SPAN IS COMPLETE. PROCEDURES THAT PLACE THE ABUTMENT DIAPHRAGM WITH THE DECK CONCRETE MAY BE APPROVED BY THE ENGINEER IF THE PLACEMENT SUBMITTAL CAN ASSURE THAT THE DECK CONCRETE IN THE ADJACENT SPAN WILL BE PLACED BEFORE CONCRETE IN THE DIAPHRAGM HAS REACHED ITS INITIAL SET.

2. SEE GENERAL NOTES FOR ABBREVIATION LEGEND.

3. SEE STANDARD DRAWING SICD-2-14 AND FORWARD ABUTMENT DETAILS SHEET FOR ADDITIONAL SEMI-INTEGRAL DIAPHRAGM GUIDE DETAILS NOT SHOWN ON THIS SHEET, INCLUDING PEJF AND RUB PLATE DETAILS.

Preliminary Plans - For Reference Only

DESIGN AGENCY: EMH&T
DESIGNED: RJE
DRAWN: GB
CHECKED: TDA/RMW
REVIEWED: CAS
DATE: 5-22-26
REVISED: -
STRUCTURE FILE NUMBER: 3110044

FORWARD ABUTMENT DIAPHRAGM RIGHT BRIDGE
BRIDGE NO. HAM-75-0791
I.R. 75 OVER RAMP J

HAM-75-7.85
PID No. 121447

33 / 65

897
1047

J:\2011090\3\ODOT\HAM\77889\structures\HAM075_0791C\sheets\075_0791CSD012.dgn 5/22/2026 10:46:14 AM hbrendlinger

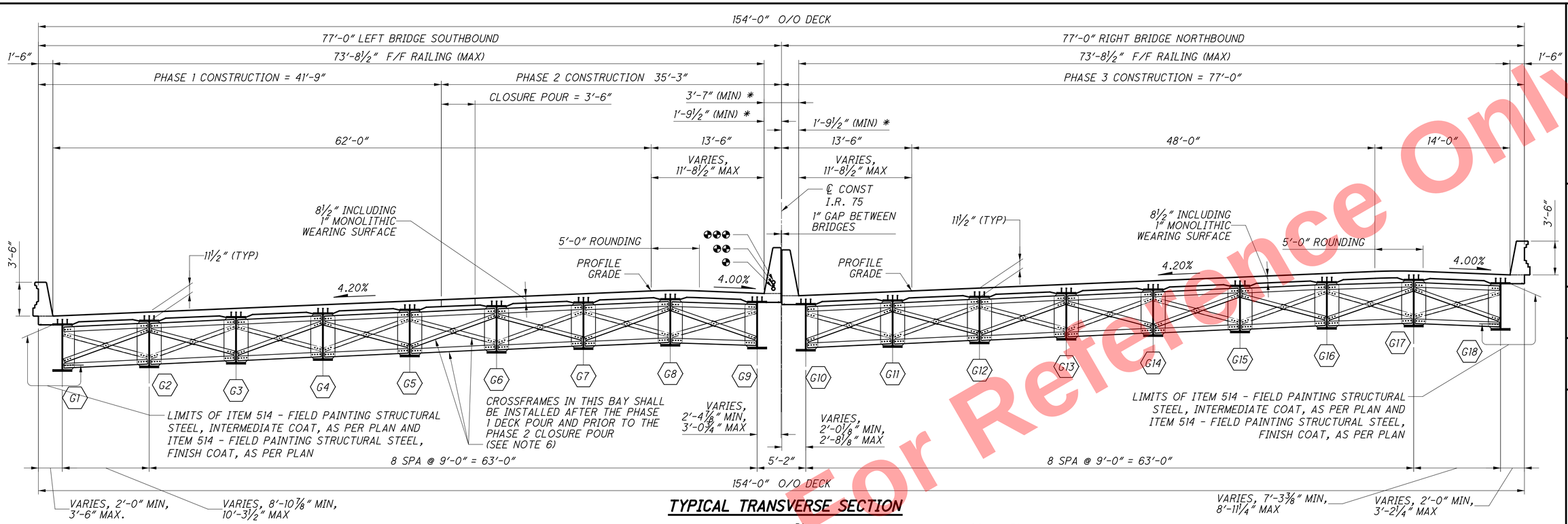

TYPICAL TRANSVERSE SECTION

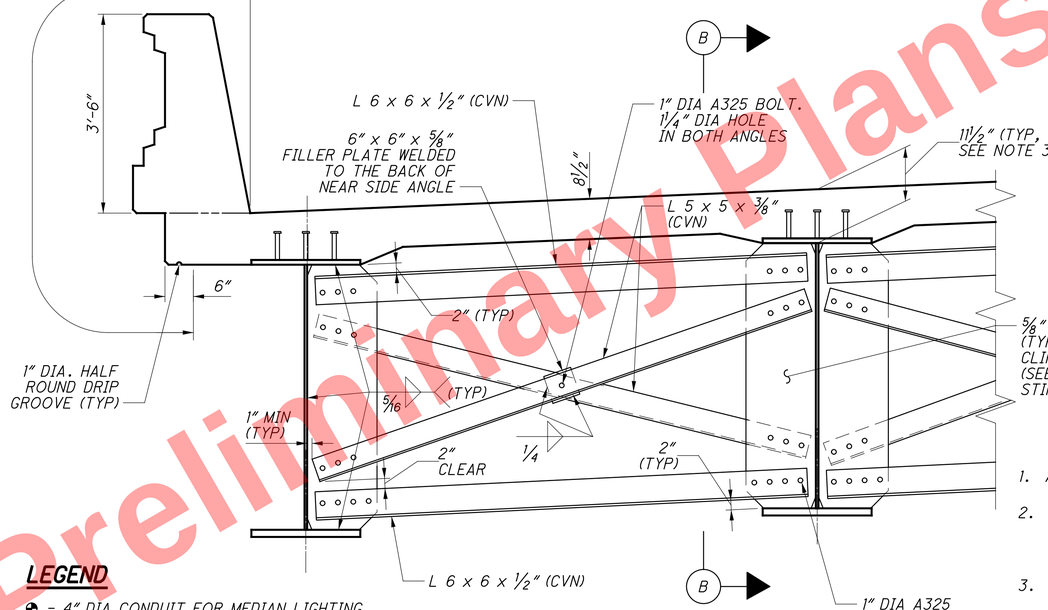

CROSSFRAME DETAILS

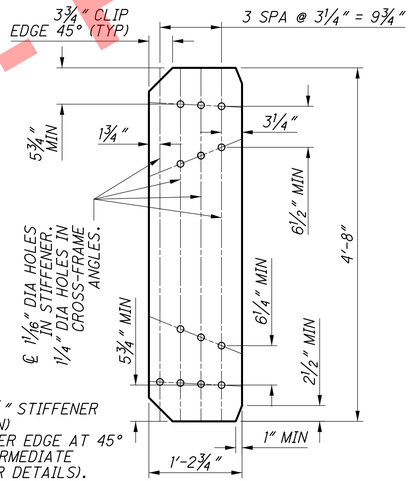

INTERMEDIATE STIFFENER DETAILS

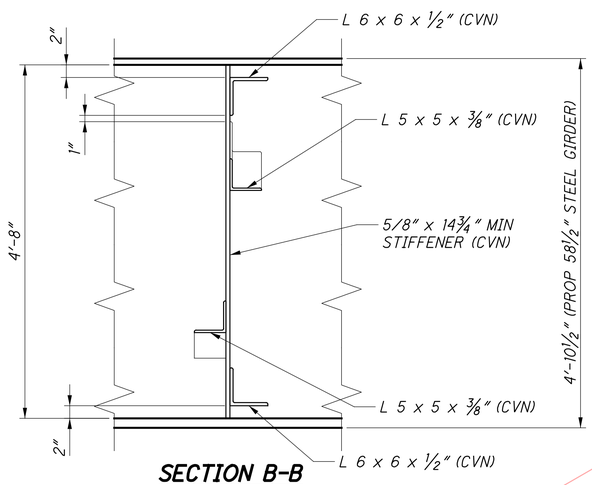

SECTION B-B

LEGEND

◒ - 4" DIA CONDUIT FOR MEDIAN LIGHTING

◒◒ - 2" DIA ITS CONDUIT

◒◒◒ - 4" DIA ITS CONDUIT

* - FOR MEDIAN RAILING TRANSITION DETAILS, SEE SHEET 48/65

NOTES

1. ALL INTERMEDIATE CROSSFRAME MATERIAL SHALL BE A709 GRADE 50W.
2. CVN: WHERE A SHAPE OR PLATE IS DESIGNATED (CVN), FURNISH MATERIAL THAT MEETS THE MINIMUM NOTCH TOUGHNESS REQUIREMENTS AS SPECIFIED IN C&MS 711.01.
3. DECK SLAB CONCRETE QUANTITY: THE ESTIMATED QUANTITY OF DECK SLAB CONCRETE IS BASED ON THE CONSTANT DECK SLAB THICKNESS, AS SHOWN, PLUS THE QUANTITY OF CONCRETE THAT FORMS EACH GIRDER HAUNCH. THE ESTIMATE ASSUMES A CONSTANT HAUNCH THICKNESS OF 3 INCHES AND A CONSTANT HAUNCH WIDTH OUTSIDE THE EDGE OF EACH BEAM FLANGE OF 9 INCHES. DEVIATE FROM THIS HAUNCH THICKNESS AS NECESSARY TO PLACE THE DECK SURFACE AT THE FINISHED GRADE. THE ALLOWABLE TOLERANCE FOR THE HAUNCH WIDTH OUTSIDE THE EDGE OF EACH BEAM FLANGE IS ±3 INCHES. THE HAUNCH THICKNESS WAS MEASURED AT THE CENTERLINE OF THE GIRDER, FROM THE SURFACE OF THE DECK TO THE BOTTOM OF THE TOP FLANGE MINUS THE DECK SLAB THICKNESS. THE AREA OF ALL EMBEDDED TOP FLANGE SPLICE PLATES HAS BEEN DEDUCTED FROM THE HAUNCH QUANTITY IN ACCORDANCE WITH 511.24.
4. SEE GENERAL NOTES FOR ABBREVIATION LEGEND.
5. ALL INTERMEDIATE CROSSFRAME BOLTS SHALL BE ASTM F3125, GRADE 325, WITH THREADS EXCLUDED FROM THE SHEAR PLANE. ALL BOLTS SHALL BE TYPE 3 BOLTS. EACH ANCHOR ASSEMBLY SHALL INCLUDE A BOLT, NUT, AND TWO (2) WASHERS, TIGHTENED ACCORDING TO CMS 513 PRIOR TO DECK PLACEMENT. MINIMUM EDGE DISTANCES FOR BOLTS SHALL BE 1½"
6. BOLT HOLES MUST BE DRILLED FULL SIZE. FIELD DRILL BOLT LINES FOR GIRDER 6 STIFFENER PLATES WITHIN THE CLOSURE POUR BAY ONLY. ALL OTHER STIFFENER PLATE LOCATIONS SHALL BE SHOP DRILLED.

Preliminary Plans - Not For Construction
For Reference Only

DESIGN AGENCY: EMH&T
DESIGNED RJE | DRAWN GB | CHECKED RMW | REVIEWED CAS | DATE 5-22-26 | REVISED - | STRUCTURE FILE NUMBER 3110044

TYPICAL TRANSVERSE SECTION
BRIDGE NO. HAM-75-0791
I.R. 75 OVER RAMP J

HAM-75-7.85
PID No. 121447

34/65

898/1047

J:\2011093\ODOT\HAM\7889\structures\HAM075_0791C\sheets\075_0791CTS001.dgn 5/22/2026 10:46:15 AM hbrendlinger

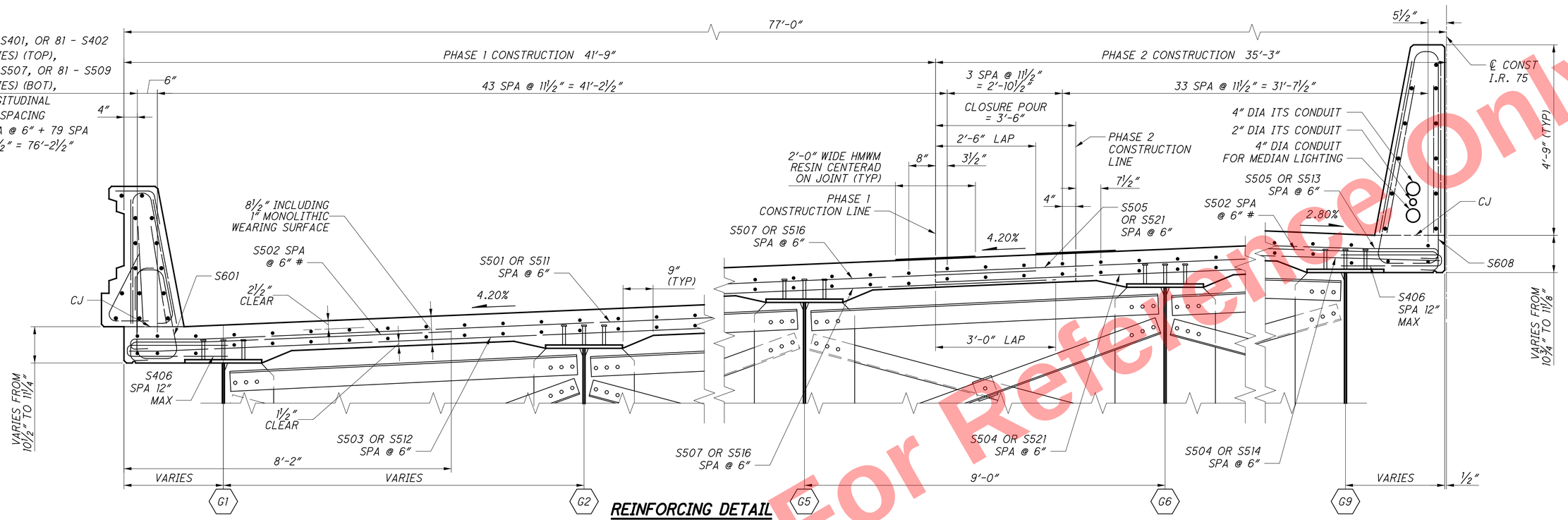

REINFORCING DETAIL LEFT BRIDGE SOUTHBOUND

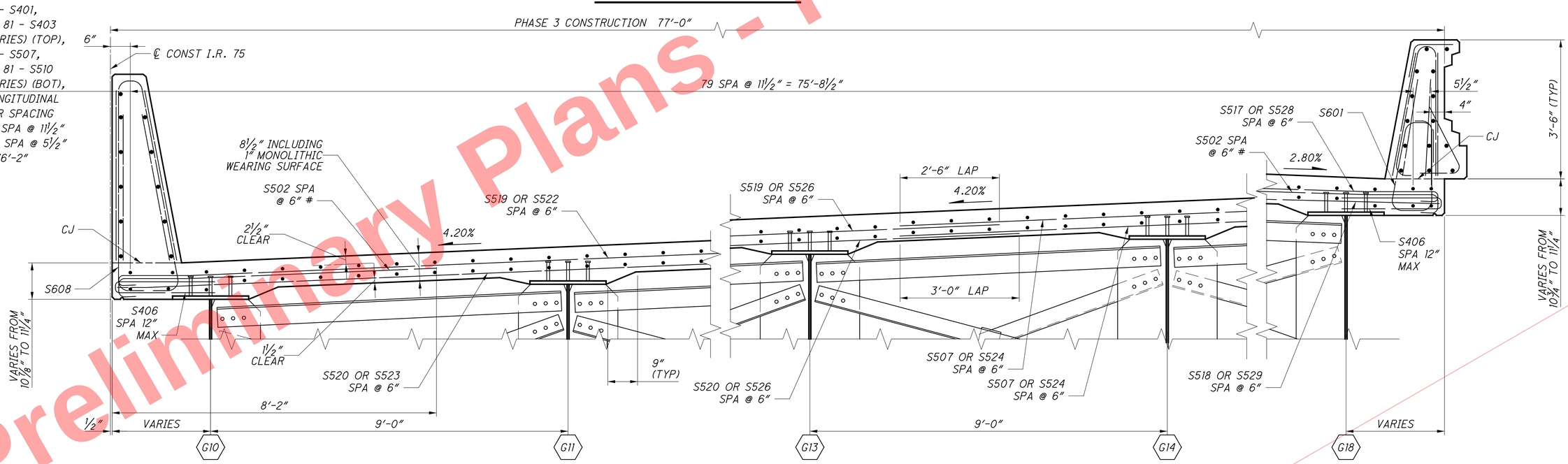

REINFORCING DETAIL RIGHT BRIDGE NORTHBOUND

LEGEND

- ADDITIONAL OVERHANG BARS (S502 BENT BAR, 8'-0" LONG) ARE TO BE BUNDLED WITH EACH TOP TRANSVERSE BARS.

NOTES

1. SEE RAILING DETAILS SHEETS FOR RAILING REINFORCING CALLOUTS.
2. SEE GENERAL NOTES FOR ABBREVIATION LEGEND.

Preliminary Plans - Not For Reference Only

DESIGN AGENCY EMH&T

DESIGNED	DRAWN	REVIEWED	DATE
RJE	GB	CAS	5-22-26
CHECKED	REVISED	STRUCTURE FILE NUMBER	
RMW	-	3110044	

REINFORCING DETAIL TRANSVERSE SECTION
BRIDGE NO. HAM-75-0791
I.R. 75 OVER RAMP J

HAM-75-7.85
PID No. 121447

J:\2011093\ODOT\HAM\7889\structures\HAM075_0791C\sheets\075_0791CTS002.dgn 5/22/2026 10:46:16 AM hbrendlinger

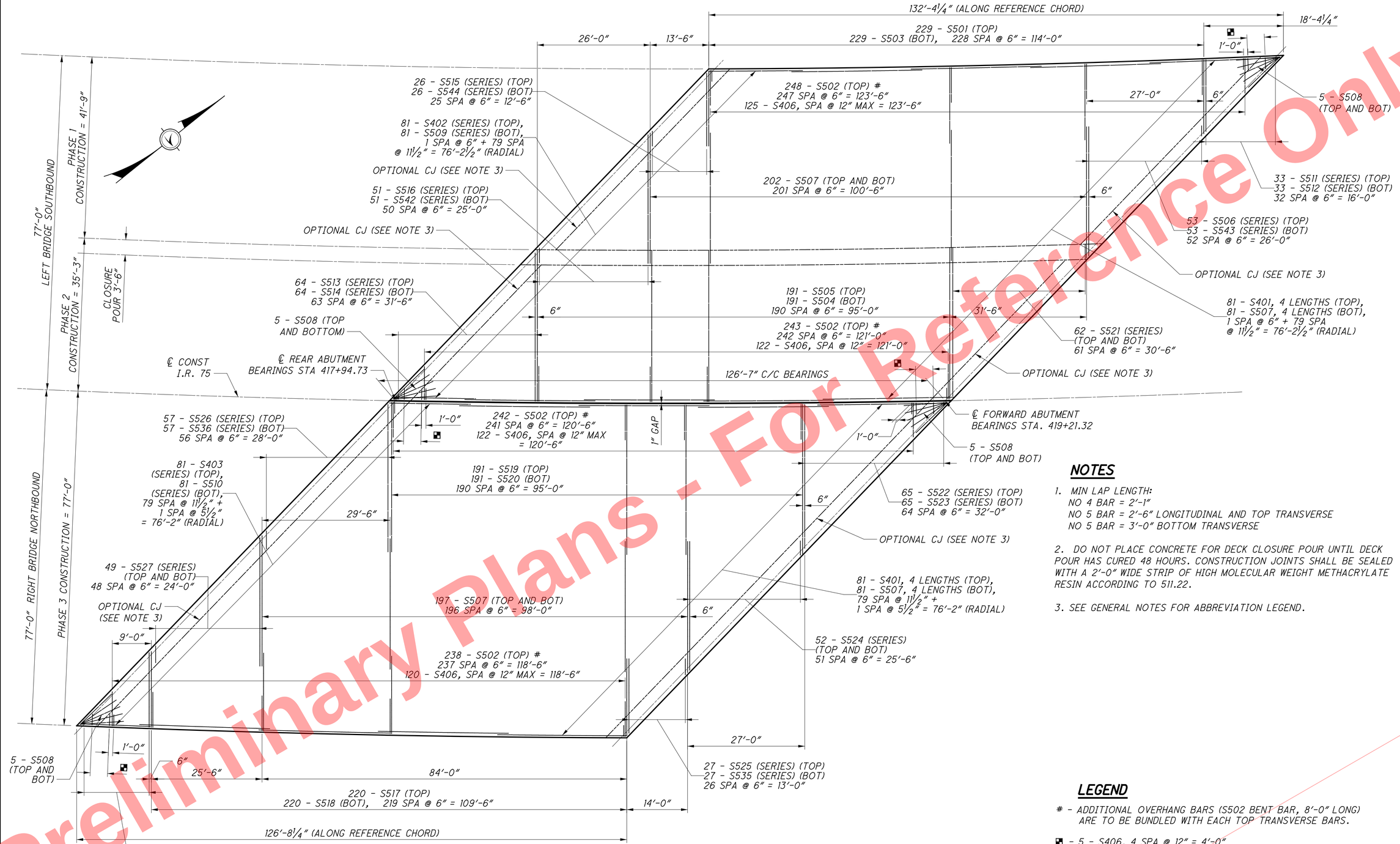

DECK PLAN

NOTES

1. MIN LAP LENGTH:
   NO 4 BAR = 2'-1"
   NO 5 BAR = 2'-6" LONGITUDINAL AND TOP TRANSVERSE
   NO 5 BAR = 3'-0" BOTTOM TRANSVERSE
2. DO NOT PLACE CONCRETE FOR DECK CLOSURE POUR UNTIL DECK POUR HAS CURED 48 HOURS. CONSTRUCTION JOINTS SHALL BE SEALED WITH A 2'-0" WIDE STRIP OF HIGH MOLECULAR WEIGHT METHACRYLATE RESIN ACCORDING TO 511.22.
3. SEE GENERAL NOTES FOR ABBREVIATION LEGEND.

LEGEND

- ADDITIONAL OVERHANG BARS (S502 BENT BAR, 8'-0" LONG) ARE TO BE BUNDLED WITH EACH TOP TRANSVERSE BARS.

■ - 5 - S406, 4 SPA @ 12" = 4'-0"

Preliminary Plans - For Reference Only

DESIGN AGENCY EMH&T
DESIGNED RJE | DRAWN GB | CHECKED RMW | REVIEWED CAS | DATE 5-22-26 | REVISED - | STRUCTURE FILE NUMBER 3110044

DECK PLAN
BRIDGE NO. HAM-75-07.85 & HAM-75-0791
I.R. 75 OVER RAMP J

HAM-75-7.85
PID No. 121447

36 / 65

900 / 1047

J:\2011093\ODOT\HAM\77889\structures\HAM075_0791C\sheets\075_0791CDP001.dgn 5/22/2026 10:46:16 AM hbrendlinger

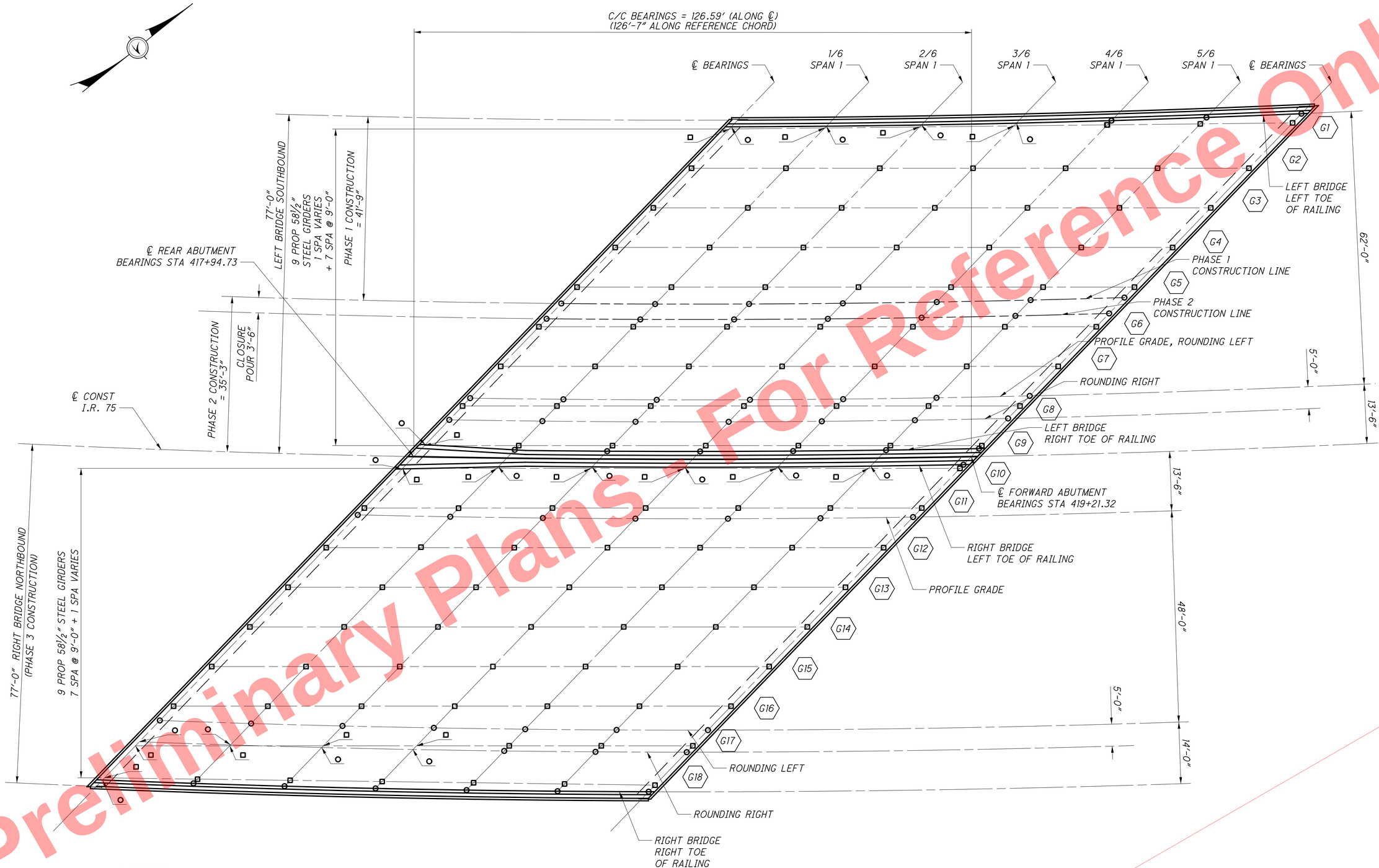

Preliminary Plans - For Reference Only

LEGEND

- ○ - SCREED ELEVATIONS AND FINAL DECK ELEVATIONS.
- □ - TOP OF HAUNCH ELEVATIONS AND FINAL DECK ELEVATIONS.

DECK PLAN

NOTES

1. SEE GENERAL NOTES FOR ABBREVIATION LEGEND.

DESIGN AGENCY
EMH&T
Engineers • Surveyors • Planners • Scientists
5500 New Albany Road, Columbus, Ohio 43054
Phone: 614.775.4500

DESIGNED	DRAWN	REVIEWED	DATE
RJE	GB	CAS	5-22-26
CHECKED	REVISED	STRUCTURE FILE NUMBER	
RMW	-	3110044	

DECK ELEVATION LOCATION PLAN
BRIDGE NO. HAM-75-0791
I.R. 75 OVER RAMP J

HAM-75-7.85
PID No. 121447

37 / 65

901
1047

J:\20110903\ODOT\HAM\27889\structures\HAM075_0791C\sheets\075_0791CSD001.dgn 5/22/2026 10:46:17 AM hbrendlinger

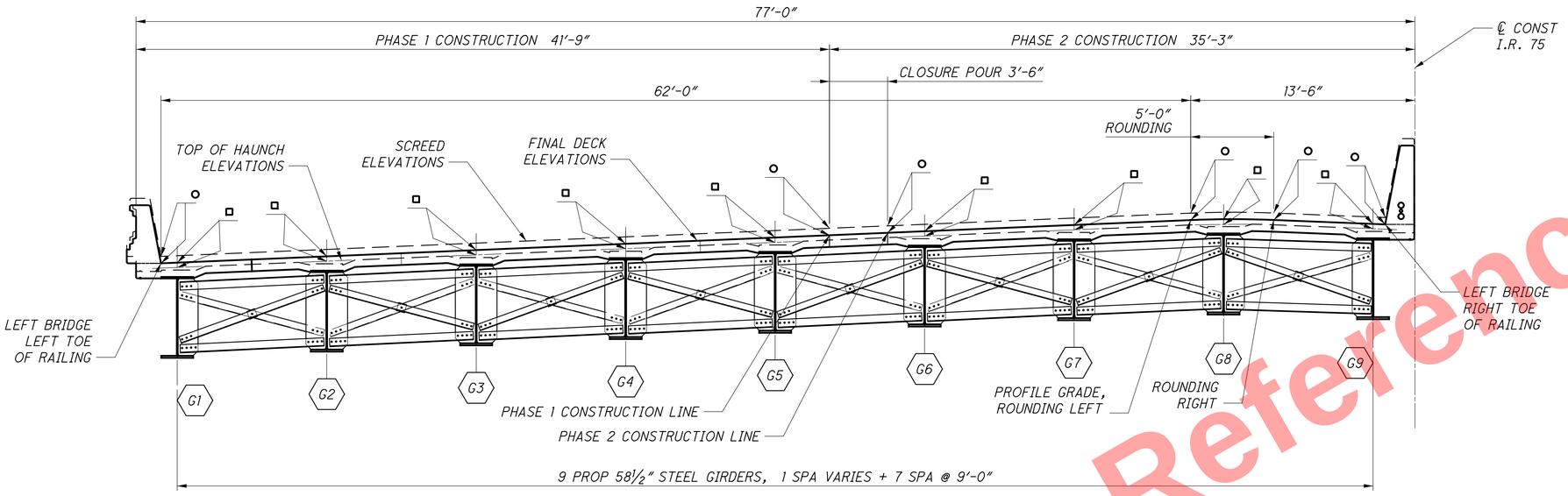

TYPICAL TRANSVERSE SECTION
LEFT BRIDGE SOUTHBOUND

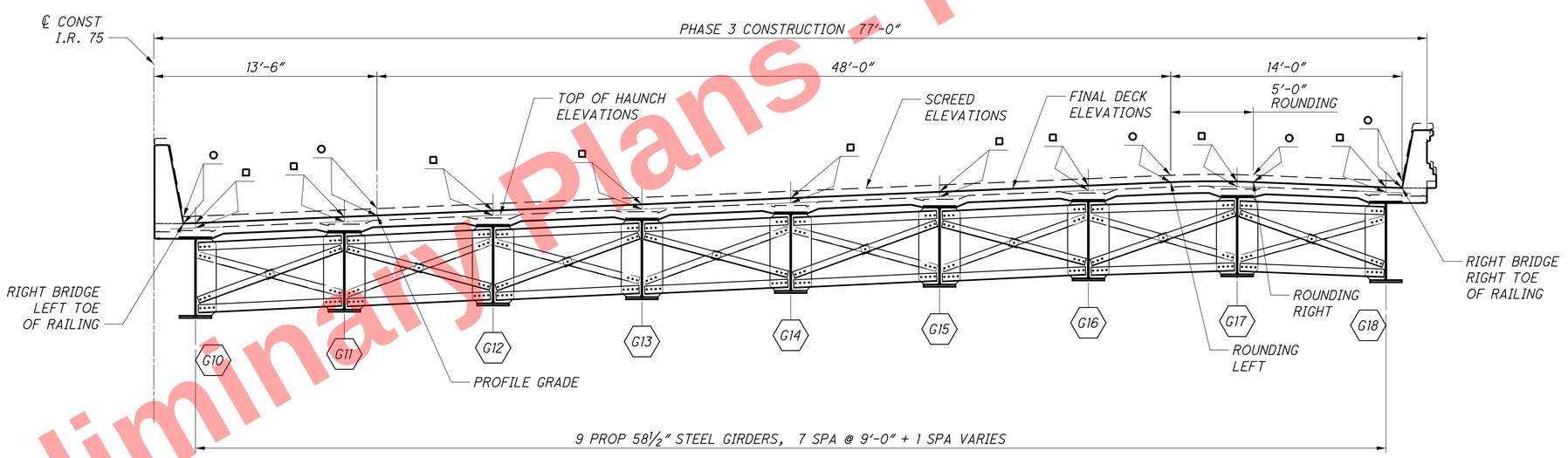

TYPICAL TRANSVERSE SECTION
RIGHT BRIDGE NORTHBOUND

NOTES

1. SEE GENERAL NOTES FOR ABBREVIATION LEGEND.

LEGEND

- o - SCREED ELEVATIONS AND FINAL DECK ELEVATIONS.
- □ - TOP OF HAUNCH ELEVATIONS AND FINAL DECK ELEVATIONS.

Preliminary Plans - For Reference Only

DESIGN AGENCY
EMH&T
Engineers • Surveyors • Planners • Scientists
5500 New Albany Road, Columbus, Ohio 43054
Phone: 614.775.4500

DESIGNED	DRAWN	REVIEWED	DATE
RJE	GB	CAS	5-22-26
CHECKED	REVISED	STRUCTURE FILE NUMBER	
RMW	-	3110044	

DECK ELEVATION LOCATION TRANSVERSE
BRIDGE NO. HAM-75-0791
I.R. 75 OVER RAMP J

HAM-75-7.85
PID No. 121447

38 / 65

902
1047

J:\2011090\3\ODOT\HAM\7889\structures\HAM075_0791C\sheets\075_0791CSD002.dgn 5/22/2026 10:46:17 AM hbrendlinger

SCREED ELEVATIONS LEFT BRIDGE

LOCATION	LEFT TOE OF PARAPET		GIRDER 1		GIRDER 2		GIRDER 3		GIRDER 4		GIRDER 5		PHASE 1 CONST LINE		PHASE 2 CONST LINE	
	STATION	ELEVATION	STATION	ELEVATION	STATION	ELEVATION	STATION	ELEVATION	STATION	ELEVATION	STATION	ELEVATION	STATION	ELEVATION	STATION	ELEVATION
℄ BEARING REAR ABUTMENT	418+67.05	536.50	418+66.55	536.52	418+57.78	536.85	418+48.96	537.18	418+40.20	537.52	418+31.48	537.86	418+27.89	538.00	418+24.55	538.13
1/6 SPAN	418+89.14	536.78	418+88.37	536.79	418+79.31	537.12	418+70.44	537.45	418+61.61	537.79	418+52.83	538.14	418+49.44	538.28	418+46.05	538.39
2/6 SPAN	419+11.23	537.01	419+10.20	537.03	419+00.84	537.35	418+91.91	537.68	418+83.02	538.02	418+74.18	538.37	418+70.98	538.51	418+67.55	538.61
3/6 SPAN	419+33.32	537.16	419+32.02	537.18	419+22.37	537.51	419+13.37	537.83	419+04.43	538.17	418+95.53	538.52	418+92.53	538.66	418+89.05	538.75
4/6 SPAN	419+55.42	537.22	419+53.84	537.25	419+43.89	537.59	419+34.84	537.91	419+25.83	538.24	419+16.88	538.59	419+14.08	538.72	419+10.56	538.81
5/6 SPAN	419+77.51	537.20	419+75.65	537.25	419+65.40	537.60	419+56.29	537.92	419+47.23	538.25	419+38.22	538.59	419+35.62	538.69	419+32.06	538.80
℄ BEARING FORWARD ABUTMENT	419+99.60	537.13	419+97.45	537.20	419+86.91	537.57	419+77.74	537.89	419+68.62	538.21	419+59.56	538.53	419+57.17	538.62	419+53.56	538.75

SCREED ELEVATIONS LEFT BRIDGE

LOCATION	GIRDER 6		GIRDER 7		PROFILE GRADE, ROUNDING LEFT		GIRDER 8		ROUNDING RIGHT		GIRDER 9		RIGHT TOE OF PARAPET	
	STATION	ELEVATION	STATION	ELEVATION	STATION	ELEVATION	STATION	ELEVATION	STATION	ELEVATION	STATION	ELEVATION	STATION	ELEVATION
℄ BEARING REAR ABUTMENT	418+22.81	538.20	418+14.18	538.54	418+07.30	538.82	418+05.61	538.86	418+02.63	538.80	417+97.08	538.53	417+97.28	538.54
1/6 SPAN	418+44.10	538.45	418+35.41	538.79	418+28.57	539.08	418+26.78	539.12	418+23.84	539.07	418+18.19	538.82	418+17.61	538.78
2/6 SPAN	418+65.39	538.67	418+56.65	539.00	418+49.84	539.30	418+47.96	539.33	418+45.04	539.28	418+39.31	539.06	418+38.63	539.00
3/6 SPAN	418+86.68	538.81	418+77.88	539.15	418+71.11	539.44	418+69.13	539.48	418+66.25	539.42	418+60.43	539.21	418+59.75	539.15
4/6 SPAN	419+07.97	538.89	418+99.11	539.21	418+92.37	539.50	418+90.31	539.54	418+87.45	539.48	418+81.54	539.26	418+80.87	539.21
5/6 SPAN	419+29.26	538.89	419+20.34	539.22	419+13.64	539.49	419+11.48	539.52	419+08.66	539.47	419+02.66	539.23	419+01.99	539.18
℄ BEARING FORWARD ABUTMENT	419+50.54	538.86	419+41.57	539.18	419+34.91	539.42	419+32.64	539.47	419+29.86	539.41	419+23.77	539.13	419+23.11	539.11

SCREED ELEVATIONS RIGHT BRIDGE

LOCATION	LEFT TOE OF PARAPET		GIRDER 10		GIRDER 11		PROFILE GRADE RIGHT		GIRDER 12		GIRDER 13	
	STATION	ELEVATION	STATION	ELEVATION	STATION	ELEVATION	STATION	ELEVATION	STATION	ELEVATION	STATION	ELEVATION
℄ BEARING REAR ABUTMENT	417+92.09	538.30	417+92.21	538.29	417+83.76	538.64	417+82.30	538.70	417+75.36	538.98	417+67.00	539.33
1/6 SPAN	418+13.95	538.55	418+13.29	538.56	418+04.78	538.89	418+03.23	538.96	417+96.32	539.22	417+87.90	539.56
2/6 SPAN	418+35.22	538.78	418+34.37	538.79	418+25.80	539.10	418+24.16	539.18	418+17.28	539.42	418+08.80	539.76
3/6 SPAN	418+56.30	538.92	418+55.46	538.93	418+46.83	539.23	418+45.09	539.33	418+38.25	539.56	418+29.71	539.89
4/6 SPAN	418+77.37	538.97	418+76.54	538.98	418+67.85	539.29	418+66.03	539.39	418+59.21	539.61	418+50.62	539.94
5/6 SPAN	418+98.45	538.94	418+97.62	538.96	418+88.88	539.28	418+86.96	539.37	418+80.18	539.60	418+71.53	539.93
℄ BEARING FORWARD ABUTMENT	419+19.53	538.86	419+18.70	538.89	419+09.90	539.22	419+07.89	539.30	419+01.15	539.55	418+92.44	539.88

SCREED ELEVATIONS RIGHT BRIDGE

LOCATION	GIRDER 14		GIRDER 15		GIRDER 16		ROUNDING LEFT		GIRDER 17		ROUNDING RIGHT		GIRDER 18		RIGHT TOE OF PARAPET	
	STATION	ELEVATION	STATION	ELEVATION	STATION	ELEVATION	STATION	ELEVATION	STATION	ELEVATION	STATION	ELEVATION	STATION	ELEVATION	STATION	ELEVATION
℄ BEARING REAR ABUTMENT	417+58.69	539.68	417+50.42	540.03	417+42.21	540.38	417+39.25	540.51	417+34.03	540.45	417+34.86	540.49	417+27.45	540.12	417+27.02	540.09
1/6 SPAN	417+79.53	539.91	417+71.20	540.26	417+62.93	540.61	417+59.62	540.77	417+54.69	540.75	417+55.17	540.76	417+47.82	540.41	417+47.23	540.37
2/6 SPAN	418+00.37	540.10	417+91.99	540.44	417+83.65	540.80	417+79.98	540.99	417+75.36	540.99	417+75.48	540.97	417+68.19	540.65	417+67.44	540.59
3/6 SPAN	418+21.22	540.22	418+12.78	540.57	418+04.39	540.92	418+00.35	541.13	417+96.04	541.14	417+95.80	541.11	417+88.56	540.81	417+87.65	540.74
4/6 SPAN	418+42.08	540.28	418+33.58	540.62	418+25.13	540.96	418+20.72	541.18	418+16.72	541.20	418+16.11	541.16	418+08.93	540.86	418+07.86	540.79
5/6 SPAN	418+62.93	540.27	418+54.38	540.60	418+45.87	540.95	418+41.08	541.16	418+37.40	541.19	418+36.42	541.14	418+29.31	540.83	418+28.07	540.76
℄ BEARING FORWARD ABUTMENT	418+83.79	540.22	418+75.18	540.55	418+66.61	540.89	418+61.45	541.09	418+58.09	541.12	418+56.73	541.07	418+49.68	540.74	418+48.28	540.67

Preliminary Plans - FOR Reference Only

NOTES

1. SCREED ELEVATIONS SHOWN REPRESENT THE THEORETICAL DECK SURFACE LOCATION PRIOR TO DEFLECTIONS CAUSED BY DECK PLACEMENT AND OTHER ANTICIPATED DEAD LOADS.

2. SEE GENERAL NOTES FOR ABBREVIATION LEGEND.

DESIGN AGENCY EMH&T

REVIEWED CAS DATE 5-22-26

DRAWN TDA REVISED -

DESIGNED TDA CHECKED RMW

STRUCTURE FILE NUMBER 3110044

SCREED ELEVATIONS
BRIDGE NO. HAM-75-0791
I.R. 75 OVER RAMP J

HAM-75-7.85
PID No. 121447

J:\2011090\3\ODOT\HAM\17889\structures\HAM075_0791C\sheets\075_0791CSD009.dgn 5/22/2026 10:46:18 AM hbrendlinger

FINAL DECK SURFACE ELEVATIONS LEFT BRIDGE

LOCATION	LEFT TOE OF PARAPET		GIRDER 1		GIRDER 2		GIRDER 3		GIRDER 4		GIRDER 5		PHASE 1 CONST LINE		PHASE 2 CONST LINE	
	STATION	ELEVATION	STATION	ELEVATION	STATION	ELEVATION	STATION	ELEVATION	STATION	ELEVATION	STATION	ELEVATION	STATION	ELEVATION	STATION	ELEVATION
℄ BEARING REAR ABUTMENT	418+67.05	536.50	418+66.55	536.52	418+57.78	536.85	418+48.96	537.18	418+40.20	537.52	418+31.48	537.86	418+27.89	538.00	418+24.55	538.13
1/6 SPAN	418+89.14	536.60	418+88.37	536.62	418+79.31	536.95	418+70.44	537.29	418+61.61	537.62	418+52.83	537.96	418+49.44	538.10	418+46.05	538.23
2/6 SPAN	419+11.23	536.71	419+10.20	536.72	419+00.84	537.06	418+91.91	537.40	418+83.02	537.73	418+74.18	538.06	418+70.98	538.21	418+67.55	538.34
3/6 SPAN	419+33.32	536.81	419+32.02	536.83	419+22.37	537.18	419+13.37	537.51	419+04.43	537.84	418+95.53	538.17	418+92.53	538.31	418+89.05	538.44
4/6 SPAN	419+55.42	536.92	419+53.84	536.95	419+43.89	537.30	419+34.84	537.63	419+25.83	537.96	419+16.88	538.29	419+14.08	538.41	419+10.56	538.54
5/6 SPAN	419+77.51	537.02	419+75.65	537.07	419+65.40	537.43	419+56.29	537.76	419+47.23	538.08	419+38.22	538.41	419+35.62	538.51	419+32.06	538.64
℄ BEARING FORWARD ABUTMENT	419+99.60	537.13	419+97.45	537.20	419+86.91	537.57	419+77.74	537.89	419+68.62	538.21	419+59.56	538.53	419+57.17	538.62	419+53.56	538.75

FINAL DECK SURFACE ELEVATIONS LEFT BRIDGE

LOCATION	GIRDER 6		GIRDER 7		PROFILE GRADE, ROUNDING LEFT		GIRDER 8		ROUNDING RIGHT		GIRDER 9		RIGHT TOE OF PARAPET	
	STATION	ELEVATION	STATION	ELEVATION	STATION	ELEVATION	STATION	ELEVATION	STATION	ELEVATION	STATION	ELEVATION	STATION	ELEVATION
℄ BEARING REAR ABUTMENT	418+22.81	538.20	418+14.18	538.54	418+07.30	538.82	418+05.61	538.86	418+02.63	538.80	417+97.08	538.53	417+97.28	538.54
1/6 SPAN	418+44.10	538.30	418+35.41	538.63	418+28.57	538.92	418+26.78	538.95	418+23.84	538.90	418+18.19	538.65	418+17.61	538.61
2/6 SPAN	418+65.39	538.40	418+56.65	538.73	418+49.84	539.02	418+47.96	539.05	418+45.04	539.00	418+39.31	538.76	418+38.63	538.70
3/6 SPAN	418+86.68	538.50	418+77.88	538.84	418+71.11	539.12	418+69.13	539.15	418+66.25	539.10	418+60.43	538.86	418+59.75	538.80
4/6 SPAN	419+07.97	538.61	418+99.11	538.95	418+92.37	539.22	418+90.31	539.26	418+87.45	539.20	418+81.54	538.96	418+80.87	538.90
5/6 SPAN	419+29.26	538.73	419+20.34	539.06	419+13.64	539.32	419+11.48	539.36	419+08.66	539.30	419+02.66	539.05	419+01.99	539.00
℄ BEARING FORWARD ABUTMENT	419+50.54	538.86	419+41.57	539.18	419+34.91	539.42	419+32.64	539.47	419+29.86	539.41	419+23.77	539.13	419+23.11	539.11

FINAL DECK SURFACE ELEVATIONS RIGHT BRIDGE

LOCATION	LEFT TOE OF PARAPET		GIRDER 10		GIRDER 11		PROFILE GRADE RIGHT		GIRDER 12		GIRDER 13	
	STATION	ELEVATION	STATION	ELEVATION	STATION	ELEVATION	STATION	ELEVATION	STATION	ELEVATION	STATION	ELEVATION
℄ BEARING REAR ABUTMENT	417+92.09	538.30	417+92.21	538.29	417+83.76	538.64	417+82.30	538.70	417+75.36	538.98	417+67.00	539.33
1/6 SPAN	418+13.95	538.37	418+13.29	538.38	418+04.78	538.72	418+03.23	538.80	417+96.32	539.06	417+87.90	539.41
2/6 SPAN	418+35.22	538.46	418+34.37	538.47	418+25.80	538.81	418+24.16	538.90	418+17.28	539.15	418+08.80	539.49
3/6 SPAN	418+56.30	538.56	418+55.46	538.57	418+46.83	538.90	418+45.09	539.00	418+38.25	539.24	418+29.71	539.58
4/6 SPAN	418+77.37	538.66	418+76.54	538.67	418+67.85	539.00	418+66.03	539.10	418+59.21	539.34	418+50.62	539.68
5/6 SPAN	418+98.45	538.76	418+97.62	538.78	418+88.88	539.11	418+86.96	539.20	418+80.18	539.44	418+71.53	539.78
℄ BEARING FORWARD ABUTMENT	419+19.53	538.86	419+18.70	538.89	419+09.90	539.22	419+07.89	539.30	419+01.15	539.55	418+92.44	539.88

FINAL DECK SURFACE ELEVATIONS RIGHT BRIDGE

LOCATION	GIRDER 14		GIRDER 15		GIRDER 16		ROUNDING LEFT		GIRDER 17		ROUNDING RIGHT		GIRDER 18		RIGHT TOE OF PARAPET	
	STATION	ELEVATION	STATION	ELEVATION	STATION	ELEVATION	STATION	ELEVATION	STATION	ELEVATION	STATION	ELEVATION	STATION	ELEVATION	STATION	ELEVATION
℄ BEARING REAR ABUTMENT	417+58.69	539.68	417+50.42	540.03	417+42.21	540.38	417+39.25	540.51	417+34.03	540.45	417+34.86	540.49	417+27.45	540.12	417+27.02	540.09
1/6 SPAN	417+79.53	539.76	417+71.20	540.10	417+62.93	540.45	417+59.62	540.61	417+54.69	540.58	417+55.17	540.59	417+47.82	540.23	417+47.23	540.19
2/6 SPAN	418+00.37	539.84	417+91.99	540.18	417+83.65	540.53	417+79.98	540.70	417+75.36	540.70	417+75.48	540.69	417+68.19	540.35	417+67.44	540.29
3/6 SPAN	418+21.22	539.92	418+12.78	540.27	418+04.39	540.61	418+00.35	540.80	417+96.04	540.81	417+95.80	540.78	417+88.56	540.45	417+87.65	540.38
4/6 SPAN	418+42.08	540.02	418+33.58	540.36	418+25.13	540.70	418+20.72	540.90	418+16.72	540.92	418+16.11	540.88	418+08.93	540.55	418+07.86	540.48
5/6 SPAN	418+62.93	540.11	418+54.38	540.45	418+45.87	540.79	418+41.08	540.99	418+37.40	541.02	418+36.42	540.98	418+29.31	540.65	418+28.07	540.58
℄ BEARING FORWARD ABUTMENT	418+83.79	540.22	418+75.18	540.55	418+66.61	540.89	418+61.45	541.09	418+58.09	541.12	418+56.73	541.07	418+49.68	540.74	418+48.28	540.67

TOP OF HAUNCH ELEVATIONS LEFT BRIDGE

LOCATION	GIRDER 1		GIRDER 2		GIRDER 3		GIRDER 4		GIRDER 5		GIRDER 6		GIRDER 7		GIRDER 8		GIRDER 9	
	STATION	ELEVATION	STATION	ELEVATION	STATION	ELEVATION	STATION	ELEVATION	STATION	ELEVATION	STATION	ELEVATION	STATION	ELEVATION	STATION	ELEVATION	STATION	ELEVATION
℄ BEARING REAR ABUTMENT	418+66.55	535.81	418+57.78	536.14	418+48.96	536.48	418+40.20	536.81	418+31.48	537.15	418+22.81	537.49	418+14.18	537.83	418+05.61	538.15	417+97.08	537.83
1/6 SPAN	418+88.37	536.08	418+79.31	536.41	418+70.44	536.74	418+61.61	537.08	418+52.83	537.43	418+44.10	537.74	418+35.41	538.08	418+26.78	538.41	418+18.19	538.11
2/6 SPAN	419+10.20	536.32	419+00.84	536.64	418+91.91	536.97	418+83.02	537.31	418+74.18	537.66	418+65.39	537.96	418+56.65	538.29	418+47.96	538.63	418+39.31	538.35
3/6 SPAN	419+32.02	536.47	419+22.37	536.80	419+13.37	537.12	419+04.43	537.46	418+95.53	537.82	418+86.68	538.11	418+77.88	538.44	418+69.13	538.77	418+60.43	538.50
4/6 SPAN	419+53.84	536.55	419+43.89	536.88	419+34.84	537.20	419+25.83	537.54	419+16.88	537.88	419+07.97	538.18	418+99.11	538.51	418+90.31	538.83	418+81.54	538.55
5/6 SPAN	419+75.65	536.54	419+65.40	536.89	419+56.29	537.21	419+47.23	537.54	419+38.22	537.88	419+29.26	538.18	419+20.34	538.51	419+11.48	538.82	419+02.66	538.52
℄ BEARING FORWARD ABUTMENT	419+97.45	536.49	419+86.91	536.86	419+77.74	537.18	419+68.62	537.50	419+59.56	537.82	419+50.54	538.15	419+41.57	538.47	419+32.64	538.76	419+23.77	538.43

TOP OF HAUNCH ELEVATIONS RIGHT BRIDGE

LOCATION	GIRDER 10		GIRDER 11		GIRDER 12		GIRDER 13		GIRDER 14		GIRDER 15		GIRDER 16		GIRDER 17		GIRDER 18	
	STATION	ELEVATION	STATION	ELEVATION	STATION	ELEVATION	STATION	ELEVATION	STATION	ELEVATION	STATION	ELEVATION	STATION	ELEVATION	STATION	ELEVATION	STATION	ELEVATION
℄ BEARING REAR ABUTMENT	417+92.21	537.58	417+83.76	537.93	417+75.36	538.28	417+67.00	538.62	417+58.69	538.97	417+50.42	539.32	417+42.21	539.67	417+34.03	539.74	417+27.45	539.41
1/6 SPAN	418+13.29	537.86	418+04.78	538.18	417+96.32	538.51	417+87.90	538.85	417+79.53	539.20	417+71.20	539.55	417+62.93	539.90	417+54.69	540.04	417+47.82	539.70
2/6 SPAN	418+34.37	538.08	418+25.80	538.39	418+17.28	538.71	418+08.80	539.05	418+00.37	539.39	417+91.99	539.74	417+83.65	540.09	417+75.36	540.28	417+68.19	539.94
3/6 SPAN	418+55.46	538.22	418+46.83	538.53	418+38.25	538.85	418+29.71	539.18	418+21.22	539.52	418+12.78	539.86	418+04.39	540.21	417+96.04	540.43	417+88.56	540.10
4/6 SPAN	418+76.54	538.27	418+67.85	538.58	418+59.21	538.91	418+50.62	539.23	418+42.08	539.57	418+33.58	539.91	418+25.13	540.26	418+16.72	540.49	418+08.93	540.16
5/6 SPAN	418+97.62	538.25	418+88.88	538.57	418+80.18	538.89	418+71.53	539.22	418+62.93	539.56	418+54.38	539.90	418+45.87	540.24	418+37.40	540.48	418+29.31	540.12
℄ BEARING FORWARD ABUTMENT	419+18.70	538.18	419+09.90	538.51	419+01.15	538.84	418+92.44	539.18	418+83.79	539.51	418+75.18	539.84	418+66.61	540.18	418+58.09	540.41	418+49.68	540.03

NOTES

1. TOP OF HAUNCH ELEVATIONS SHOWN REPRESENT THE THEORETICAL LOCATION OF THE BOTTOM OF THE DECK ABOVE THE BEAM HAUNCH PRIOR TO DEFLECTIONS CAUSED BY DECK PLACEMENT AND OTHER ANTICIPATED DEAD LOADS.

2. FINAL DECK SURFACE ELEVATIONS SHOWN REPRESENT THE DECK SURFACE LOCATION AFTER ALL ANTICIPATED DEAD LOAD DEFLECTIONS HAVE OCCURRED.

3. SEE GENERAL NOTES FOR ABBREVIATION LEGEND.

Preliminary Plans For Reference Only

DESIGN AGENCY EMH&T

DESIGNED	DRAWN	REVIEWED	DATE
TDA	TDA	CAS	5-22-26
CHECKED	REVISED	STRUCTURE FILE NUMBER	
RMW	-	3110044	

FINAL DECK AND TOP OF HAUNCH ELEVATIONS
BRIDGE NO. HAM-75-0791
I.R. 75 OVER RAMP J

HAM-75-7.85
PID No. 121447

J:\2011090\ODOT\HAM\77889\structures\HAM075_0791C\sheets\075_0791CSD010.dgn 5/22/2026 10:46:18 AM hbrendlinger

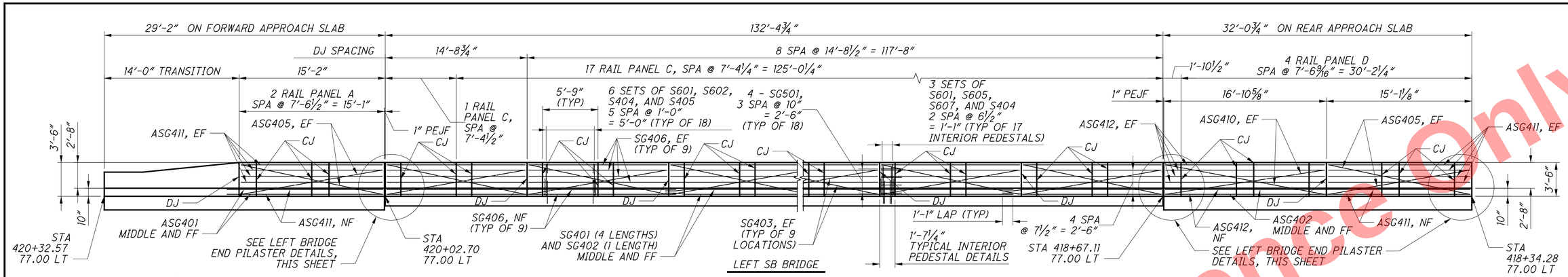

EXTERIOR RAILING DETAIL

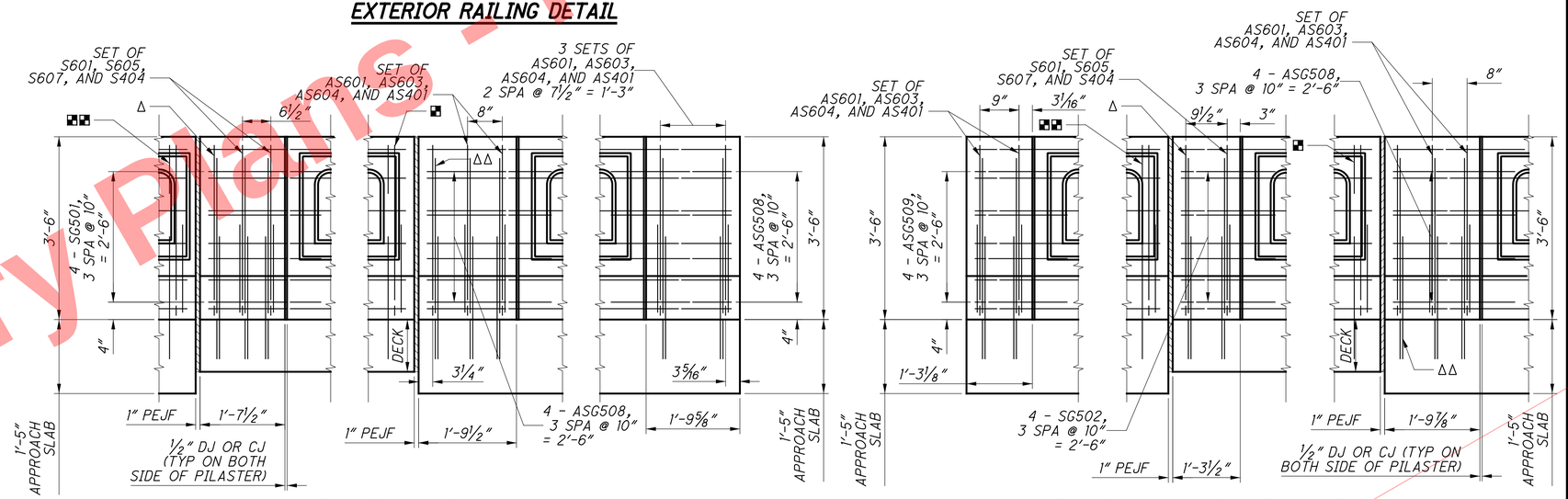

LEFT BRIDGE END PILASTER DETAILS

SEE PANELS A, C, D FOR ADDITIONAL RAILING DETAILS

RIGHT BRIDGE END PILASTER DETAILS

SEE PANELS B, E, F FOR ADDITIONAL RAILING DETAILS

LEGEND

DJ - DEFLECTION JOINT, DETAILS SEE SHEET 42/65

CJ - CONTRACTION JOINT, DETAILS SEE SHEET 58/65

■ - SET OF S614, S615, S407, & S408 PLACED PARALLEL TO SKEWED EDGE OF PARAPET

■■ - SET OF AS618, AS619, AS403, & AS404 PLACED PARALLEL TO SKEWED EDGE OF PARAPET

Δ - SET OF S614, S607, & S616 PLACED PARALLEL TO SKEWED EDGE OF PARAPET

ΔΔ - SET OF AS618, AS604, & AS620 PLACED PARALLEL TO SKEWED EDGE OF PARAPET

NOTE

1. DIMENSIONS SHOWN ARE ALONG EXTERIOR FACE OF RAILING.
2. ELEVATION VIEW LOOKING AT EXTERIOR FACE OF RAILING.
3. FOR RAILING TRANSITION DETAILS SEE SHEET 59/65
4. SEE GENERAL NOTES FOR ABBREVIATION LEGEND.
5. FOR ADDITIONAL RAILING DETAILS NOT SHOWN ON THIS SHEET, REFER TO ODOT STANDARD DRAWING SBR-1-20.

Preliminary Plans - For Reference Only

DESIGN AGENCY: EMH&T

DESIGNED	DRAWN	REVIEWED	DATE
RJE/GB	GB	CAS	5-22-26

CHECKED	REVISED	STRUCTURE FILE NUMBER
RJE/RMW	-	3110044

EXTERIOR RAILING DETAILS
BRIDGE NO. HAM-75-0791
I.R. 75 OVER RAMP J

HAM-75-7.85
PID No. 121447

41 / 65

905
1047

J:\2011090\3\ODOT\HAM\7889\structures\HAM075_0791C\sheets\075_0791CRA001.dgn 5/22/2026 10:46:19 AM hbrendlinger

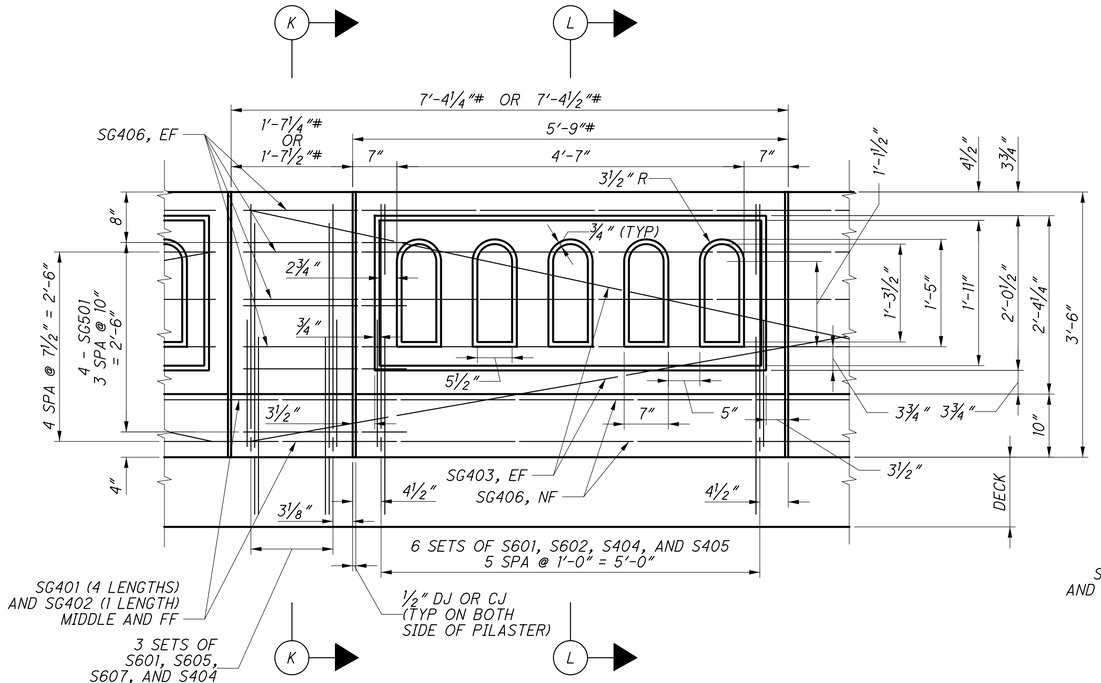

RAIL PANEL C (TYP OF 18)

SEE SHEET 41/65 FOR PANEL LOCATIONS

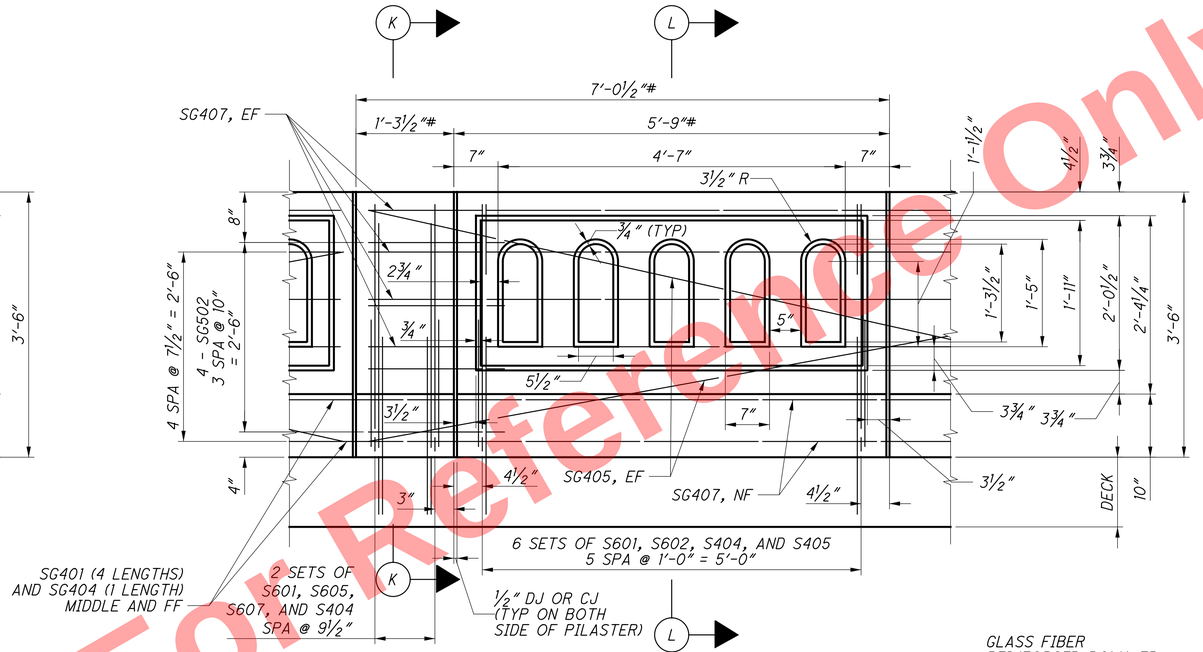

RAIL PANEL B (TYP OF 18)

SEE SHEET 41/65 FOR PANEL LOCATIONS

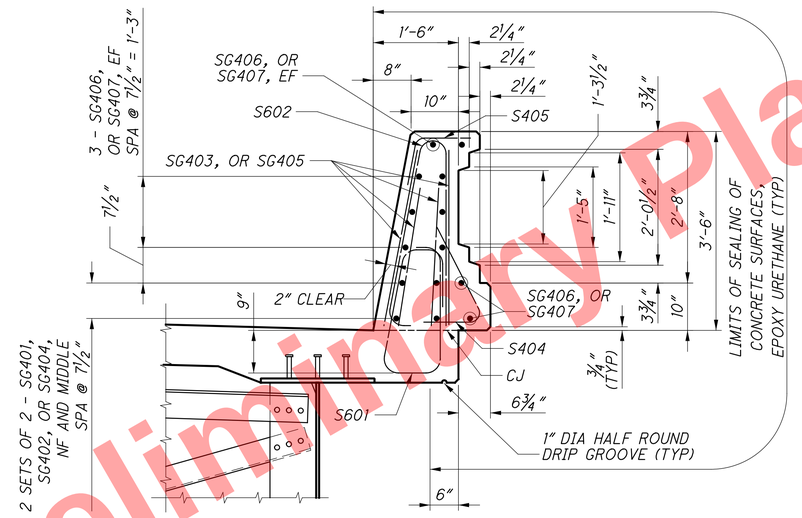

SECTION L-L

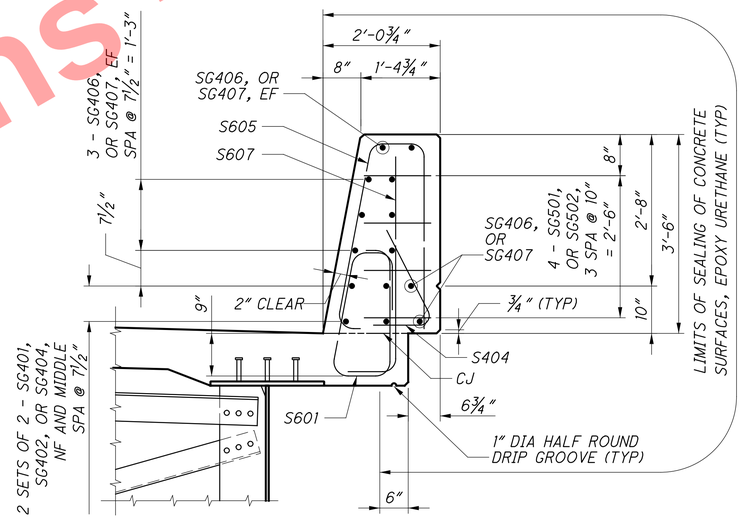

SECTION K-K

NOTES

1. ELEVATION VIEW LOOKING AT EXTERIOR FACE OF RAILING.
2. SEE GENERAL NOTES FOR ABBREVIATION LEGEND.
3. FOR ADDITIONAL RAILING DETAILS NOT SHOWN ON THIS SHEET, REFER TO ODOT STANDARD DRAWING SBR-1-20.
4. DEFLECTION JOINTS AND CONTRACTION JOINTS ARE TO BE CAST INTO THE RAILINGS AND HELD IN WITH CHAMFER STRIPS. THE EXCESS MATERIAL WILL BE TRIMMED TO THE BASE OF THE CHAMFER. THE MATERIAL THAT WILL BE USED NEEDS TO NOT ABSORB WATER AND AS SUFFICIENT RIGIDITY TO NOT SIGNIFICANTLY MOVE DURING THE CASTING OF THE RAILING. THE JOINT MATERIAL IS TO BE 0.5" IN THICKNESS AND WILL BE NOMAFLEX BY NOMACO OR FIBER LITE BY W.R. MEADOWS OR SIMILAR PRODUCT APPROVED BY THE ENGINEER.

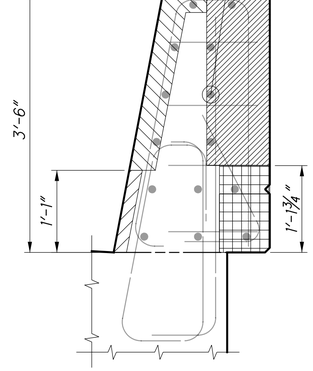

DEFLECTION JOINT

(SEE NOTE 4)

LEGEND

- DIMENSIONS PROVIDED ARE ALONG OUTSIDE FACE OF RAILING

- 10" WIDE PREFORMED JOINT MATERIAL
- 8" WIDE PREFORMED JOINT MATERIAL
- 4" WIDE PREFORMED JOINT MATERIAL
- 2" WIDE PREFORMED JOINT MATERIAL

DJ - DEFLECTION JOINT (SEE THIS SHEET FOR DETAILS)

CJ - CONTRACTION JOINT (SEE SHEET 58/65 FOR DETAILS)

Preliminary Plans - For Reference Only

DESIGN AGENCY
EMH&T
Engineers • Surveyors • Planners • Scientists
5500 New Albany Road, Columbus, Ohio 43054
Phone: 614.775.4500

DESIGNED	DRAWN	REVIEWED	DATE
RJE/GB	GB	CAS	5-22-26
CHECKED	REVISED	STRUCTURE FILE NUMBER	
RJE/RMW	-	3110044	

EXTERIOR RAILING DETAILS
BRIDGE NO. HAM-75-0791
I.R. 75 OVER RAMP J

HAM-75-7.85
PID No. 121447

42/65

906
1047

J:\20110903\ODOT\HAM\7889\structures\HAM075_0791C\sheets\075_0791CRA002.dgn 5/22/2026 10:46:20 AM hbrendlinger

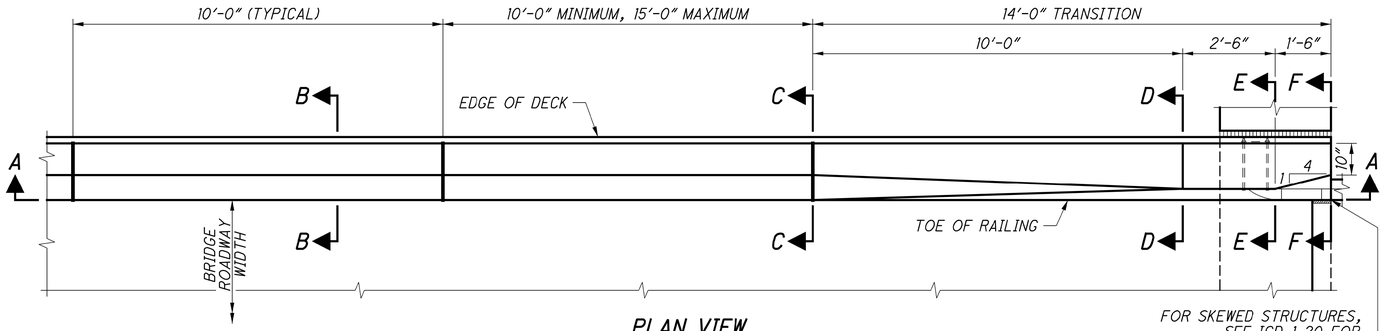

PLAN VIEW

42" SBR-1 TRANSITION MOUNTED ON BRIDGE SHOWN WITH SEMI-INTEGRAL ABUTMENT (INTEGRAL ABUTMENT AND CAPPED PILE ABUTMENT SIMILAR)

FOR SKEWED STRUCTURES, SEE ICD-1-20 FOR ADDITIONAL DETAILS

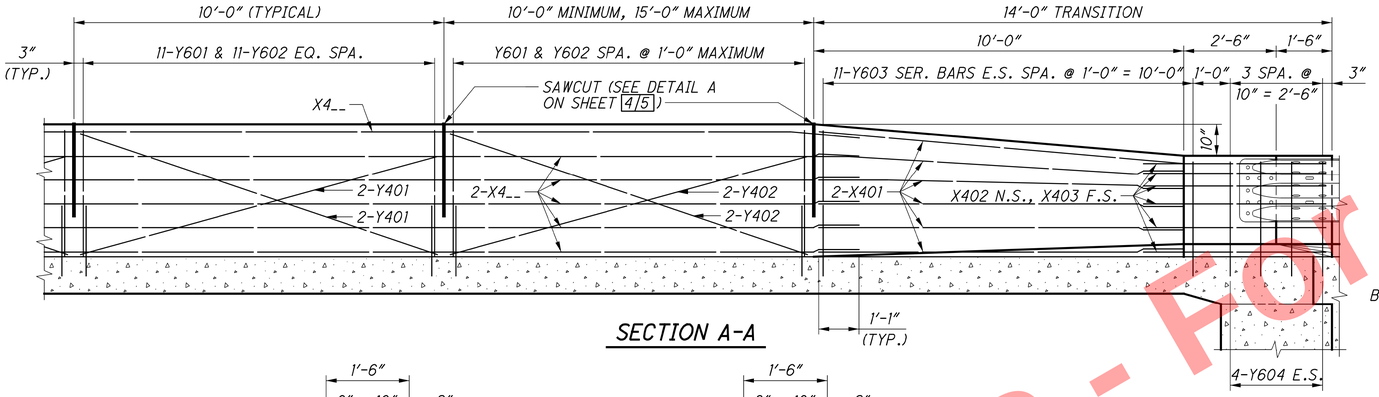

SECTION A-A

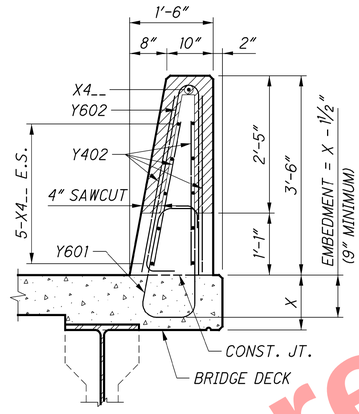

SECTION C-C

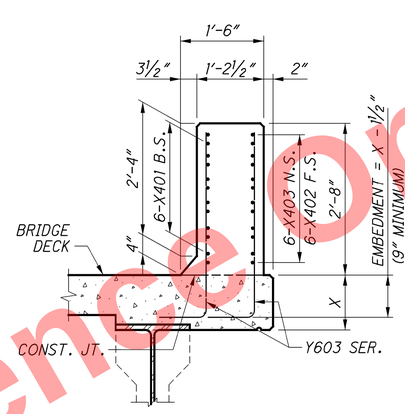

SECTION D-D

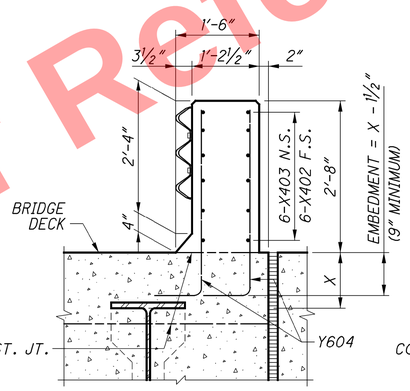

SECTION E-E

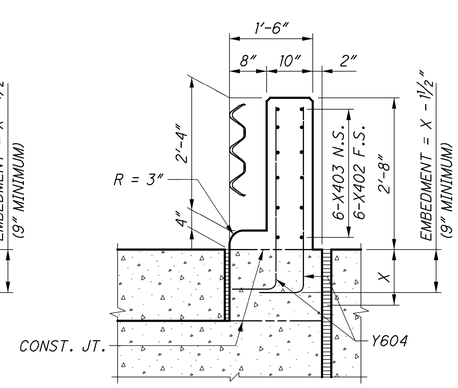

SECTION F-F

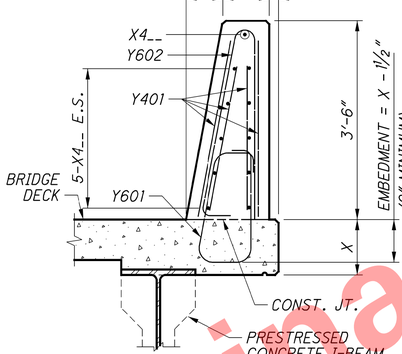

SECTION B-B

REINFORCED CONCRETE DECK ON STEEL OR PRESTRESSED CONCRETE I-BEAMS/GIRDERS (SAWCUT NOT SHOWN)

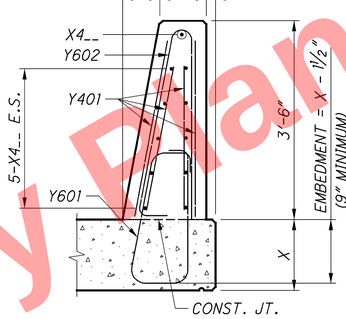

SECTION B-B

CONTINUOUS OR SINGLE SPAN REINFORCED CONCRETE SLAB BRIDGE (SAWCUT NOT SHOWN)

LEGEND:

E.S. = EACH SIDE
F.S = FAR SIDE
N.S. = NEAR SIDE

NOTES:

1. FOR ALL SINGLE SLOPE CONCRETE BRIDGE RAILINGS INCLUDING THE 14'-0" TRANSITIONS, PROJECT PLANS SHALL INCLUDE PLAN VIEW, ELEVATION VIEW, SECTIONS, REINFORCING MARKS, REINFORCING BENDING DIAGRAMS, AND REINFORCING QUANTITIES.
2. SEE APPROPRIATE STANDARD BRIDGE DRAWING FOR ABUTMENT DETAILS.
3. FOR BRIDGE TERMINAL ASSEMBLY, SEE STD. CONSTR. DWGS. MGS-3.1 AND MGS-3.2.
4. FOR SAWCUT PERIMETER LENGTH, SEE DETAIL A ON SHEET 4/5.
5. FOR DEFLECTION JOINT DETAILS AND ADDITIONAL NOTES, SEE SHEET 5/5.
6. USE GLASS FIBER REINFORCED POLYMER (GFRP) FOR ALL HORIZONTAL X4__ BARS AND STIFFENING BARS (Y401 & Y402 BARS).
7. TIE Y401 & Y402 STIFFENING BARS LOCATED INSIDE THE VERTICAL REINFORCEMENT AT EACH HORIZONTAL BAR. TIE Y401 & Y402 STIFFENING BARS LOCATED OUTSIDE OF THE VERTICAL REINFORCEMENT AT EACH VERTICAL BAR.
8. PLACE STIFFENING BARS IN ALL SAWCUT PANELS 10'-0" AND GREATER. DO NOT ADD STIFFENING BARS TO 14'-0" TRANSITIONS. DO NOT SLIPFORM UNSTIFFENED SAWCUT PANELS. DO NOT OMIT STIFFENING BARS FOR CONVENTIONALLY FORMED CONSTRUCTION.
9. X402 BAR MAY BE PROVIDED AS EPOXY COATED STEEL REINFORCEMENT IF A GFRP FABRICATED SHAPE IS NOT AVAILABLE.

REINFORCEMENT FOR 42" SBR-1 TRANSITION MOUNTED ON BRIDGE OR APPROACH SLAB

MARK	LENGTH	TYPE	MATERIAL	INCRE.	BENDING DIAGRAMS
X401	10'-0"	STR	GFRP		
X402	6'-4"	BENT	GFRP		
X403	5'-1"	STR	GFRP		
X4__	⊕	STR	GFRP		
Y401	10'-0"	STR	GFRP		
Y402	⊕	STR	GFRP		
Y601	5'-5"+2.25A	BENT	STEEL		
Y602	7'-0"	BENT	STEEL		
Y603 SER. OF 11	A + B + 10"	BENT	STEEL	3'-4" TO (11") 2'-6"	
Y604	A + 3'-4"	BENT	STEEL		

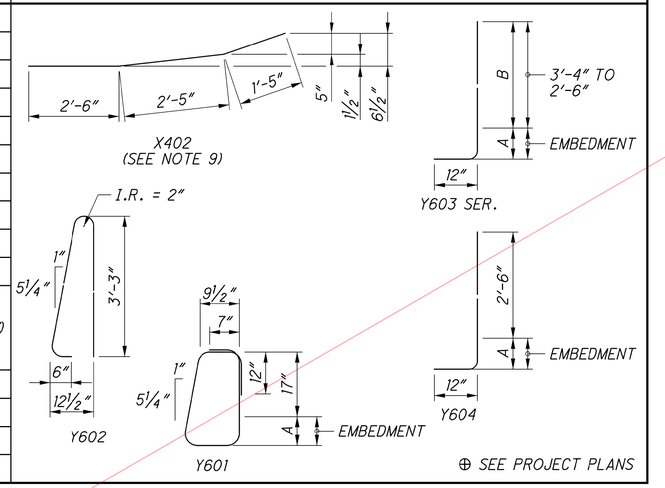

OFFICE OF STRUCTURAL ENGINEERING

REVISION
07-17-2020
01-20-2023

STDS ENGINEER

STANDARD BRIDGE DRAWING
42" SINGLE SLOPE CONCRETE BRIDGE RAILING

DESIGN AGENCY

STATE OF OHIO DEPARTMENT OF TRANSPORTATION

SCD NUMBER
SBR-1-20

1 / 5
43 / 65
907 / 1047

Preliminary Plans - For Reference Only

J:\2011\0903\ODOT\HAM\77889\structures\HAM075_079IC\sheets\075_079ICRA007.dgn 5/22/2026 10:46:21 AM hbrendlinger

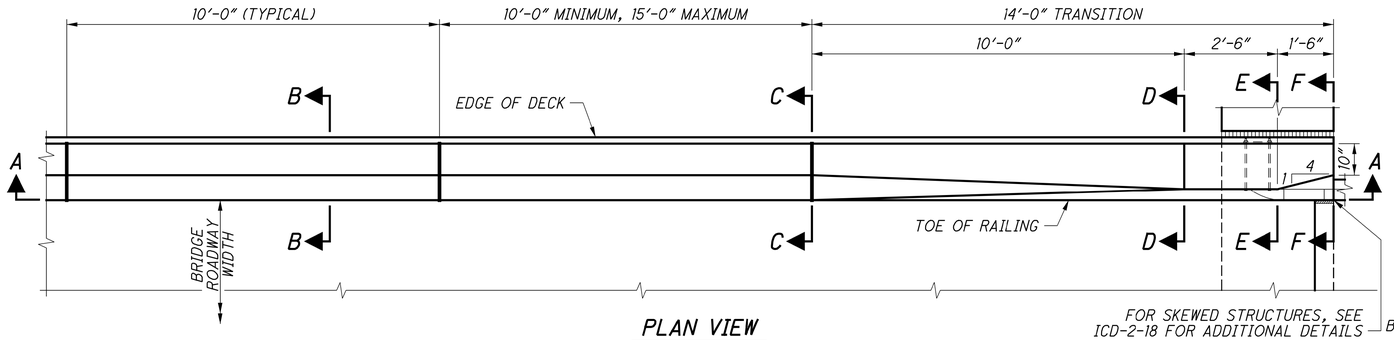

PLAN VIEW

42" SBR-1 TRANSITION MOUNTED ON BRIDGE SHOWN WITH INTEGRAL ABUTMENT AND ADJACENT BOX BEAM SUPERSTRUCTURE

FOR SKEWED STRUCTURES, SEE ICD-2-18 FOR ADDITIONAL DETAILS

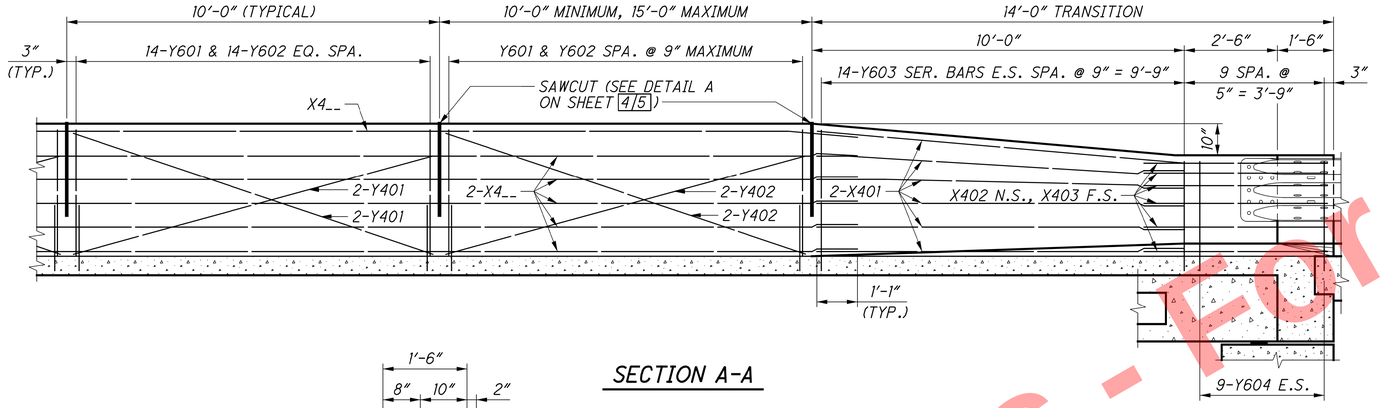

SECTION A-A

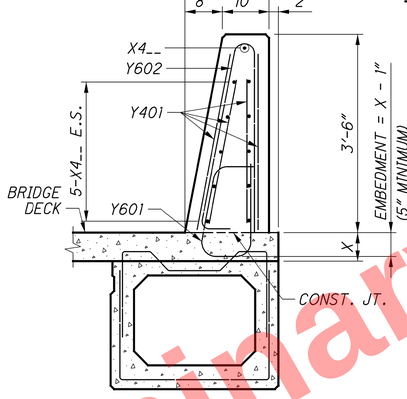

SECTION B-B

COMPOSITE PRESTRESSED CONCRETE BOX BEAMS (SAWCUT NOT SHOWN)

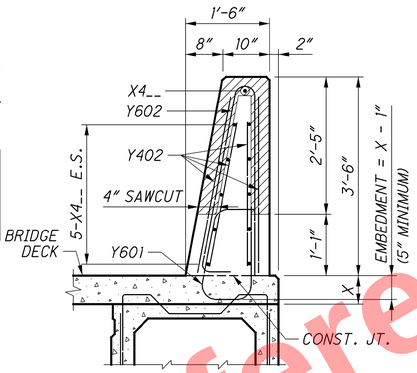

SECTION C-C

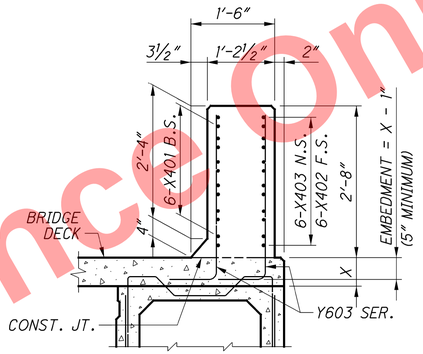

SECTION D-D

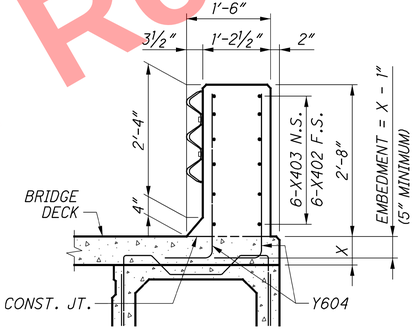

SECTION E-E

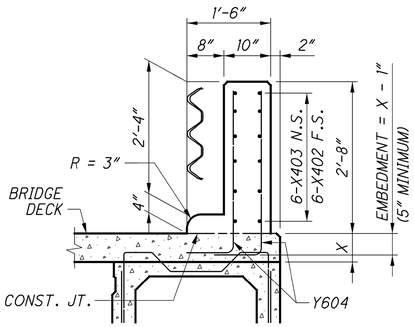

SECTION F-F

LEGEND:

E.S. = EACH SIDE
F.S = FAR SIDE
N.S. = NEAR SIDE

NOTES:

1. FOR ALL SINGLE SLOPE CONCRETE BRIDGE RAILINGS INCLUDING THE 14'-0" TRANSITIONS, PROJECT PLANS SHALL INCLUDE PLAN VIEW, ELEVATION VIEW, SECTIONS, REINFORCING MARKS, REINFORCING BENDING DIAGRAMS, AND REINFORCING QUANTITIES.
2. SEE APPROPRIATE STANDARD BRIDGE DRAWING FOR ABUTMENT DETAILS.
3. FOR BRIDGE TERMINAL ASSEMBLY, SEE STD. CONSTR. DWGS. MGS-3.1 AND MGS-3.2.
4. FOR SAWCUT PERIMETER LENGTH, SEE DETAIL A ON SHEET 4/5.
5. FOR DEFLECTION JOINT DETAILS AND ADDITIONAL NOTES, SEE SHEET 5/5.
6. THE HORIZONTAL LEGS OF THE Y615 BARS ARE INTENDED TO LAP WITH THE BOTTOM TRANSVERSE STEEL IN THE DECK. THE SPACING MAY BE ADJUSTED THE MINIMUM DISTANCE NECESSARY TO AVOID INTERFERENCE WITH THE TRANSVERSE DECK REINFORCEMENT.
7. USE GLASS FIBER REINFORCED POLYMER (GFRP) FOR ALL HORIZONTAL X4__ BARS AND STIFFENING BARS (Y401 & Y402 BARS).
8. TIE Y401 & Y402 STIFFENING BARS LOCATED INSIDE THE VERTICAL REINFORCEMENT AT EACH HORIZONTAL BAR. TIE Y401 & Y402 STIFFENING BARS LOCATED OUTSIDE OF THE VERTICAL REINFORCEMENT AT EACH VERTICAL BAR.
9. PLACE STIFFENING BARS IN ALL SAWCUT PANELS 10'-0" AND GREATER. DO NOT ADD STIFFENING BARS TO 14'-0" TRANSITIONS. DO NOT SLIPFORM UNSTIFFENED SAWCUT PANELS. DO NOT OMIT STIFFENING BARS FOR CONVENTIONALLY FORMED CONSTRUCTION.
10. X402 BAR MAY BE PROVIDED AS EPOXY COATED STEEL REINFORCEMENT IF A GFRP FABRICATED SHAPE IS NOT AVAILABLE.

REINFORCEMENT FOR 42" SBR-1 TRANSITION MOUNTED ON COMPOSITE BOX BEAM BRIDGE

MARK	LENGTH	TYPE	MATERIAL	INCRE.	BENDING DIAGRAMS
X401	10'-0"	STR	GFRP		
X402	6'-4"	BENT	GFRP		
X403	5'-1"	STR	GFRP		
X4__	⊕	STR	GFRP		
Y401	10'-0"	STR	GFRP		
Y402	⊕	STR	GFRP		
Y601	5'-5"+2.25A	BENT	STEEL		
Y602	7'-0"	BENT	STEEL		
Y603 SER. OF 14	A + B + 10"	BENT	STEEL	3'-4" TO (3¼") 2'-6"	
Y604	A + 3'-4"	BENT	STEEL		

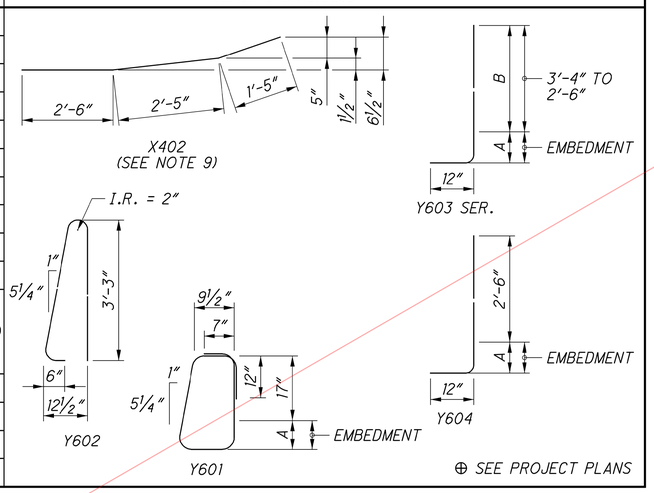

OFFICE OF STRUCTURAL ENGINEERING

REVISION
07-17-2020
01-20-2023

STDS ENGINEER

STANDARD BRIDGE DRAWING
42" SINGLE SLOPE CONCRETE BRIDGE RAILING

DESIGN AGENCY

STATE OF OHIO DEPARTMENT OF TRANSPORTATION

SCD NUMBER
SBR-1-20

2 / 5
44 / 65
908 / 1047

Preliminary Plans - For Reference Only

J:\2010903\ODOT\HAM\77889\structures\HAM075_079IC\sheets\075_079ICRA008.dgn 5/22/2026 10:47:38 AM hbrendlinger

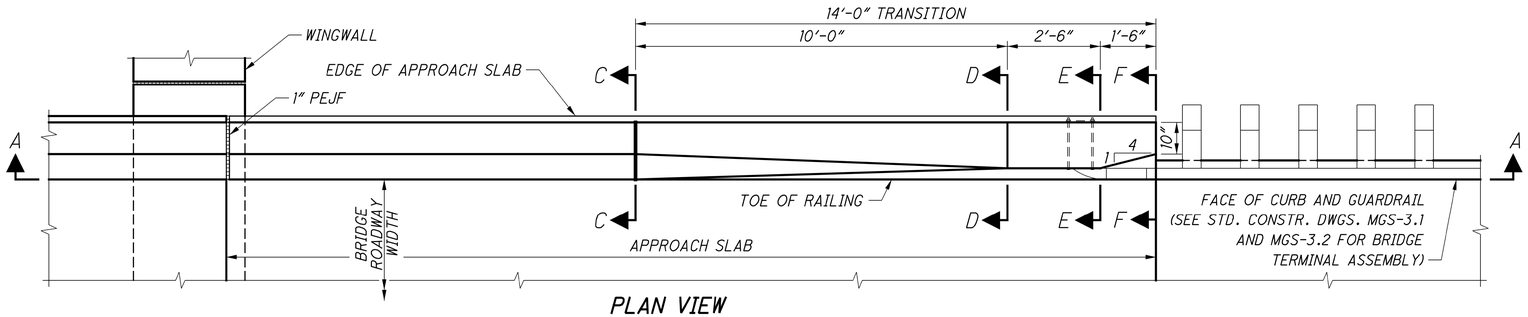

PLAN VIEW

42" SBR-1 TRANSITION MOUNTED ON APPROACH SLAB WITH SEMI-INTEGRAL ABUTMENT SHOWN (INTEGRAL ABUTMENT AND CAPPED PILE ABUTMENT SIMILAR)

LEGEND:

E.S. = EACH SIDE
F.S. = FAR SIDE
N.S. = NEAR SIDE
PEJF = PREFORMED EXPANSION JOINT FILLER

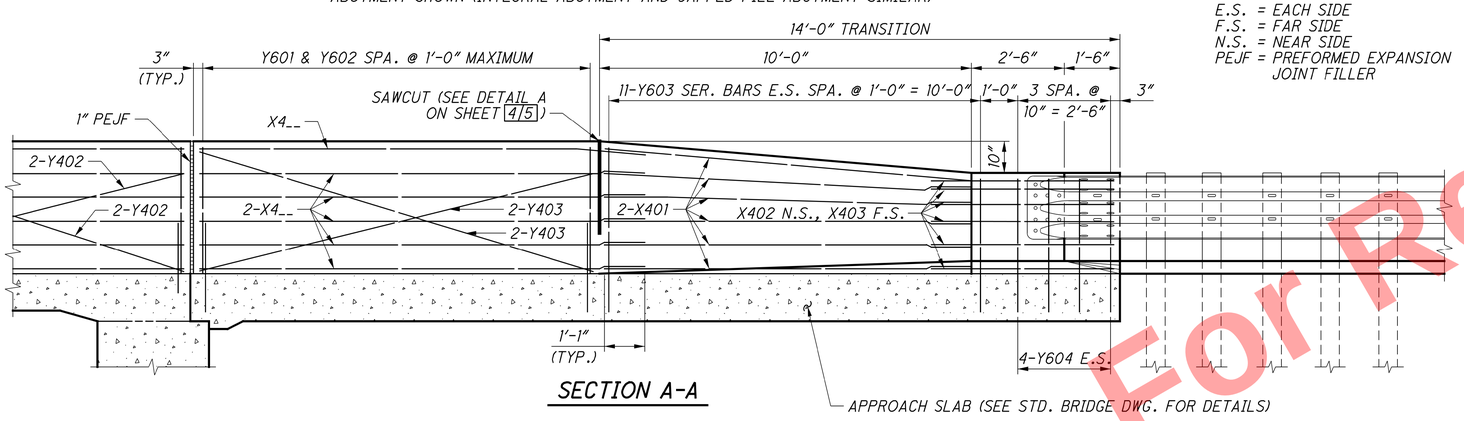

SECTION A-A

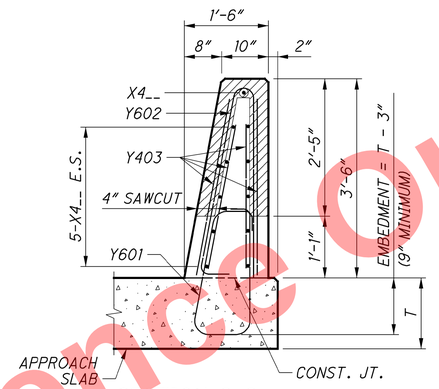

SECTION C-C

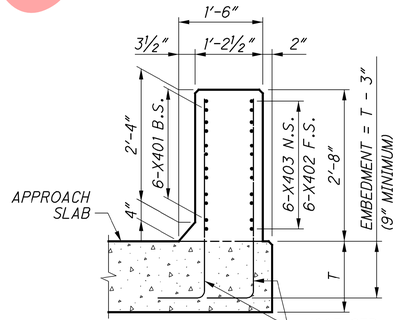

SECTION D-D

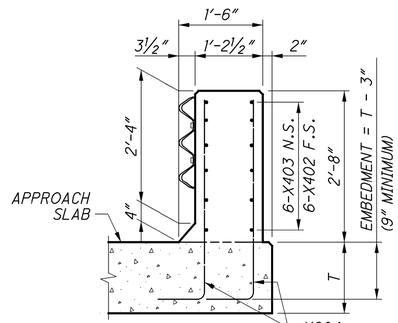

SECTION E-E

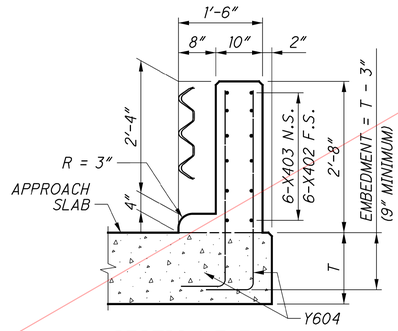

SECTION F-F

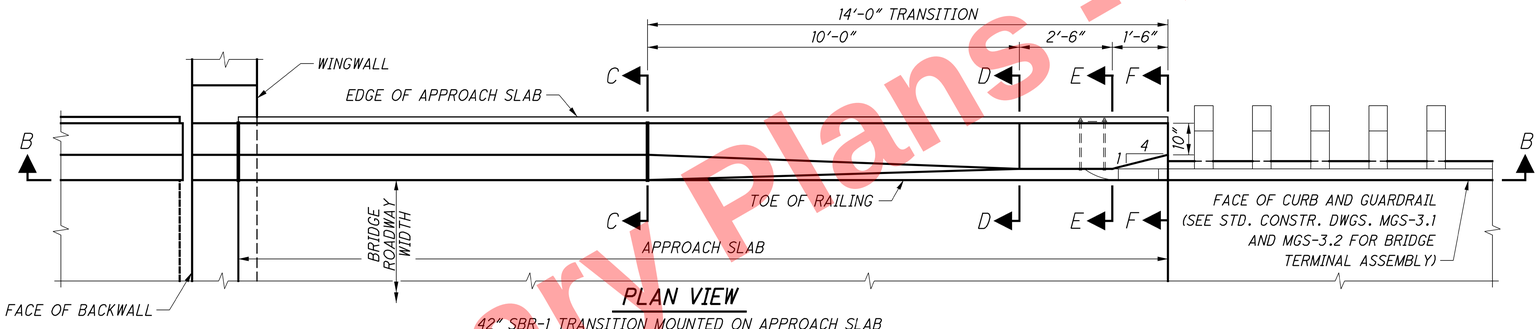

PLAN VIEW

42" SBR-1 TRANSITION MOUNTED ON APPROACH SLAB WITH TYPICAL ABUTMENT SHOWN

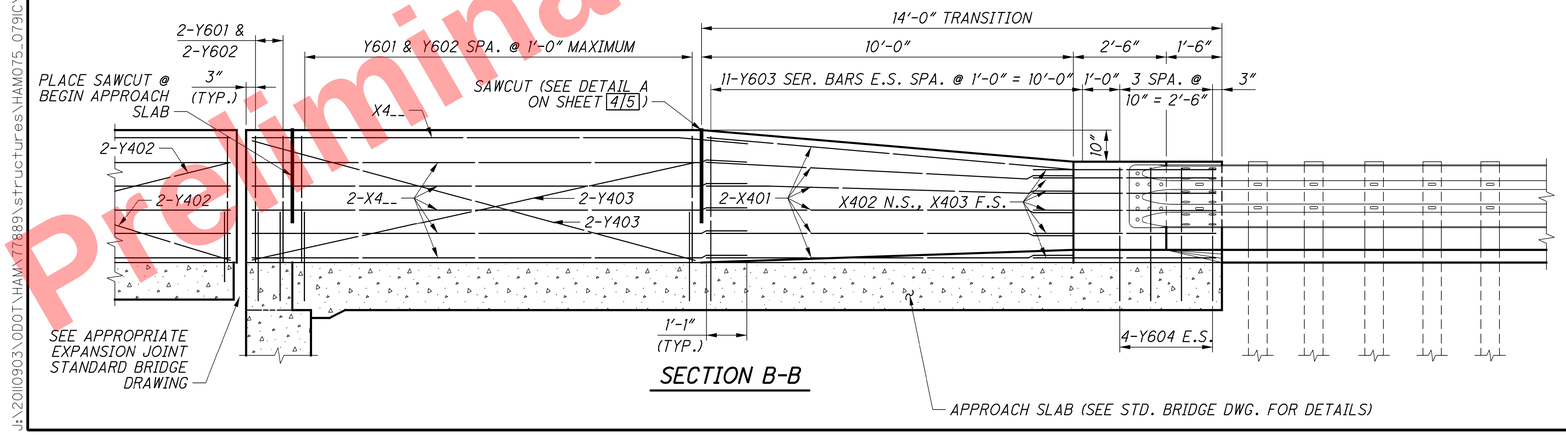

SECTION B-B

Preliminary Plans - Not For Reference Only

OFFICE OF STRUCTURAL ENGINEERING

REVISION
07-17-2020
01-20-2023

STDS ENGINEER

STANDARD BRIDGE DRAWING
42" SINGLE SLOPE CONCRETE BRIDGE RAILING

DESIGN AGENCY

STATE OF OHIO DEPARTMENT OF TRANSPORTATION

SCD NUMBER
SBR-1-20

3 / 5
45 / 65

909
1047

J:\2011093\ODOT\HAM\71889\structures\HAM075_079IC\sheets\075_079ICRA009.dgn 5/22/2026 10:48:54 AM hbrendlinger

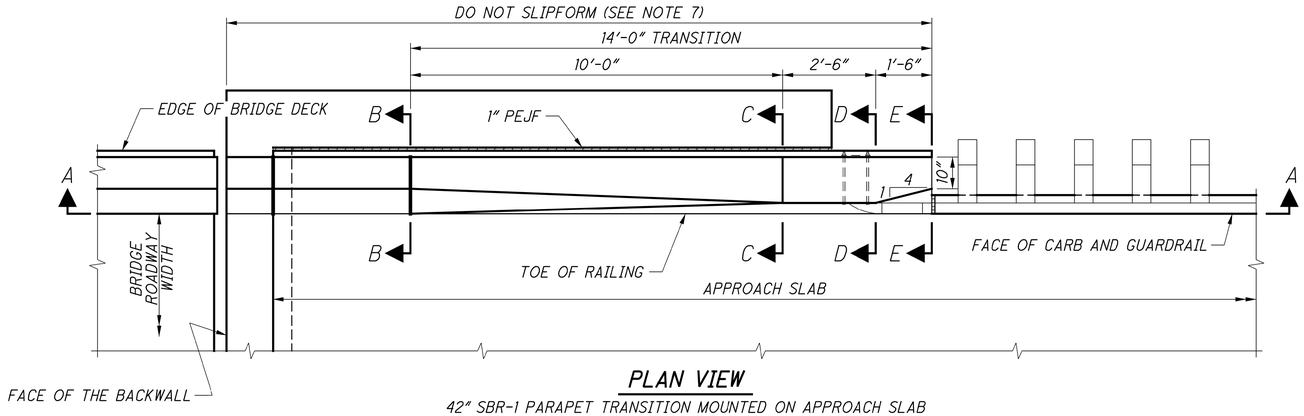

PLAN VIEW

42" SBR-1 PARAPET TRANSITION MOUNTED ON APPROACH SLAB
SHOWN WITH TYPICAL ABUTMENT AND TURNBACK WINGWALL

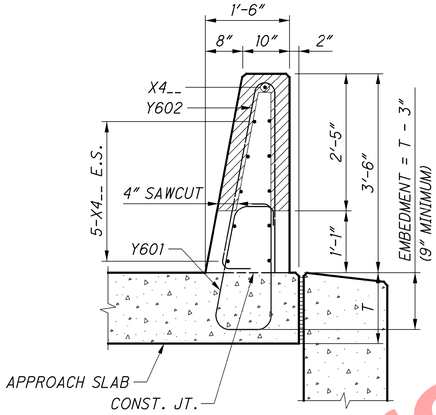

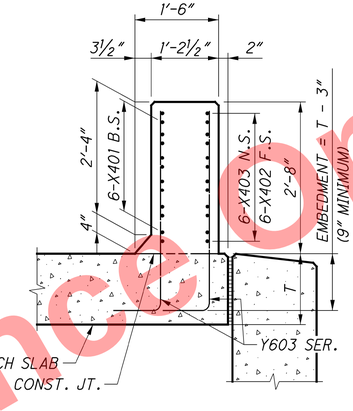

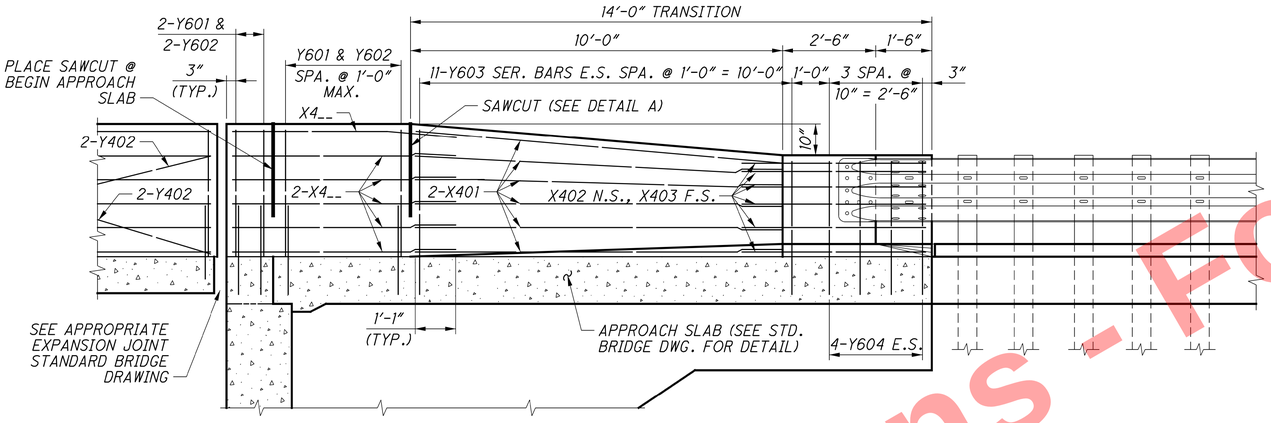

SECTION A-A

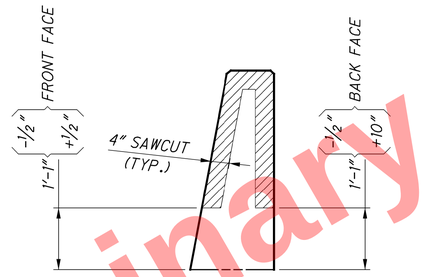

SECTION C-C

SECTION THROUGH SAWCUT
SAWCUT PERIMETER = 5'-9"

SECTION B-B



SECTION C-C



SECTION D-D

SECTION E-E

LEGEND:

E.S. = EACH SIDE
F.S = FAR SIDE
N.S. = NEAR SIDE
PEJF = PREFORMED EXPANSION JOINT FILLER

NOTES:

1. FOR ALL SINGLE SLOPE CONCRETE BRIDGE RAILINGS INCLUDING THE 14'-0" TRANSITIONS, PROJECT PLANS SHALL INCLUDE PLAN VIEW, ELEVATION VIEW, SECTIONS, REINFORCING MARKS, REINFORCING BENDING DIAGRAMS, AND REINFORCING QUANTITIES.
2. SEE APPROPRIATE STANDARD BRIDGE DRAWING FOR ABUTMENT DETAILS.
3. FOR BRIDGE TERMINAL ASSEMBLY, SEE STD. CONSTR. DWGS. MGS-3.1 AND MGS-3.2.
4. FOR SAWCUT PERIMETER LENGTH, SEE DETAIL A ON SHEET 4/5.
5. FOR DEFLECTION JOINT DETAILS AND ADDITIONAL NOTES, SEE SHEET 5/5.
6. USE GLASS FIBER REINFORCED POLYMER (GFRP) FOR ALL HORIZONTAL X4__ BARS AND STIFFENING BARS (Y401 & Y402 BARS).
7. TIE Y401 & Y402 STIFFENING BARS LOCATED INSIDE THE VERTICAL REINFORCEMENT AT EACH HORIZONTAL BAR. TIE Y401 & Y402 STIFFENING BARS LOCATED OUTSIDE OF THE VERTICAL REINFORCEMENT AT EACH VERTICAL BAR.
8. PLACE STIFFENING BARS IN ALL SAWCUT PANELS 10'-0" AND GREATER. DO NOT ADD STIFFENING BARS TO 14'-0" TRANSITIONS. DO NOT SLIPFORM UNSTIFFENED SAWCUT PANELS. DO NOT OMIT STIFFENING BARS FOR CONVENTIONALLY FORMED CONSTRUCTION.
9. X402 BAR MAY BE PROVIDED AS EPOXY COATED STEEL REINFORCEMENT IF A GFRP FABRICATED SHAPE IS NOT AVAILABLE.

REINFORCEMENT FOR 42" SBR-1 TRANSITION MOUNTED ON APPROACH SLAB

MARK	LENGTH	TYPE	MATERIAL	INCRE.	BENDING DIAGRAMS
X401	10'-0"	STR	GFRP		
X402	6'-4"	BENT	GFRP		
X403	5'-1"	STR	GFRP		
X4__	⊕	STR	GFRP		
Y401	10'-0"	STR	GFRP		
Y402	⊕	STR	GFRP		
Y601	5'-5"+2.25A	BENT	STEEL		
Y602	7'-0"	BENT	STEEL		
Y603 SER. OF 11	A + B + 10"	BENT	STEEL	3'-4" TO (1") 2'-6"	
Y604	A + 3'-4"	BENT	STEEL		

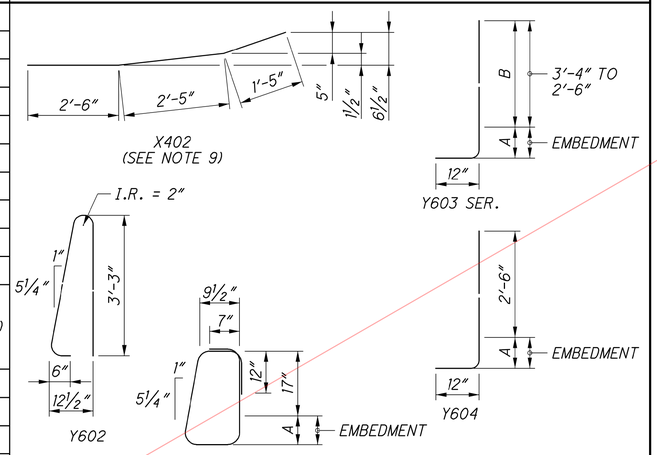

⊕ SEE PROJECT PLANS

OFFICE OF STRUCTURAL ENGINEERING

REVISION
07-17-2020
01-20-2023

STDS ENGINEER

STANDARD BRIDGE DRAWING
42" SINGLE SLOPE CONCRETE BRIDGE RAILING

DESIGN AGENCY

STATE OF OHIO DEPARTMENT OF TRANSPORTATION

SCD NUMBER
SBR-1-20

4 / 5
46 / 65

910
1047

Preliminary Plans - For Reference Only

J:\2011\0903\ODOT\HAM\77889\structures\HAM075_079IC\sheets\075_079ICRA010.dgn 5/22/2026 10:50:07 AM hbrendlinger

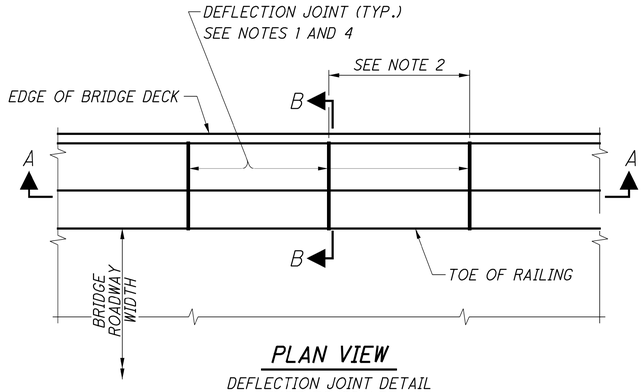

PLAN VIEW

DEFLECTION JOINT DETAIL
(NOT TO SCALE)

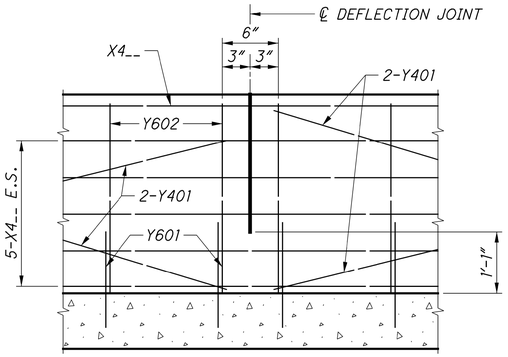

SECTION A-A

DETAIL AT DEFLECTION JOINTS
FOR SINGLE SLOPE CONCRETE BRIDGE RAILING
(NOT TO SCALE)

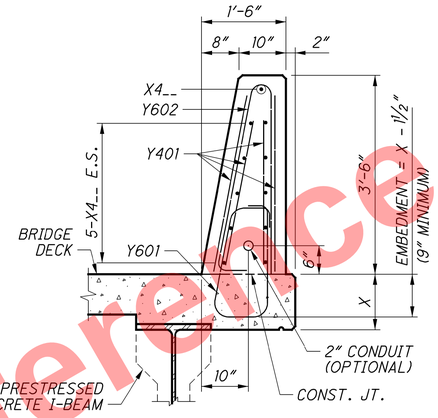

SECTION B-B

REINFORCED CONCRETE DECK ON STEEL OR
PRESTRESSED CONCRETE I-BEAMS/GIRDERS SHOWN

NOTES:

1. FOR THE ENTIRE LENGTH OF SINGLE SLOPE CONCRETE BRIDGE RAILINGS, PROJECT PLANS SHALL SHOW THE LOCATIONS OF DEFLECTION JOINTS.
2. DEFLECTION JOINT SPACING SHALL BE 10′-0″ EXCEPT FOR THE LAST JOINT SPACING ADJACENT TO EITHER A 14′-0″ TRANSITION OR AN OPEN JOINT. EXCEPTION PANELS MAY VARY IN LENGTH BETWEEN 10′-0″ AND 15′-0″.
3. PAYMENT FOR GLASS FIBER REINFORCED POLYMER (GFRP) STIFFENING REINFORCEMENT SHALL BE INCLUDED WITH CONTRACT PRICE FOR ITEM 509 - NO._ GFRP DEFORMED BARS.
4. LIMITS OF SAWCUT IS SHOWN IN DETAIL A, SHEET 4/5. THE 4″ SAWCUT DEPTH SHOWN IN DETAIL A IS THE MINIMUM REQUIRED. HOWEVER, THE CONTRACTOR HAS AN OPTION TO PERFORM FULL DEPTH SAWCUT.

DESIGN CRITERIA:

42″ SINGLE SLOPE CONCRETE BRIDGE RAILINGS MEET THE REQUIREMENTS OF NCHRP 350 & MASH TEST LEVEL 5 AND "AASHTO LRFD BRIDGE DESIGN SPECIFICATIONS, 9TH EDITION".

DESIGN DATA:

CONCRETE - COMPRESSIVE STRENGTH = 4.5 KSI
REINFORCING STEEL - MINIMUM YIELD STRENGTH = 60 KSI
GFRP - C&MS 705.28 (MODULUS = 8700 KSI)
AREA OF STANDARD 42″ SBR-1 CROSS SECTION = 588.0 SQ. IN.
VOLUME OF 42″ SBR-1 14′-0″ TRANSITION SECTION = 1.82 CU. YD.

DEFLECTION JOINTS FOR CONCRETE RAILING:
FOR SLIPFORMED CONSTRUCTION:

AS SOON AS CUTTING OPERATIONS CAN BEGIN WITHOUT DAMAGING THE CONCRETE, SAWCUT 1 ¼ INCH DEEP DEFLECTION CONTROL JOINTS ALONG THE PERIMETER OF THE RAILING.

AFTER THE CURING PERIOD AND BEFORE APPLYING LOAD TO THE RAILING, PERFORM 4 INCH SAWCUT AS SHOWN IN DETAIL A, SHEET 3/4. APPLIED RAILING LOAD INCLUDES: CONSTRUCTION LOADS ON THE DECK (EXCLUDING PERSONNEL; HAND OPERATED EQUIPMENT AND MANUALLY POWERED VEHICLES); AND VEHICLE TRAFFIC IN THE LANE IMMEDIATELY ADJACENT TO THE RAILING AFTER REMOVAL OF TRAFFIC CONTROL DEVICES.

FOR CONVENTIONALLY FORMED CONSTRUCTION:
REMOVE THE FORMS BEFORE APPLYING LOAD TO THE RAILING. AS SOON AS THE FORMS ARE REMOVED, PERFORM 4-INCH SAWCUT AS SHOWN IN DETAIL A, SHEET 4/5. THE 1¼ INCH SAWCUTS ARE NOT REQUIRED.

THE CONTRACTOR HAS AN OPTION TO PERFORM FULL DEPTH SAWCUT. HOWEVER, THE SAWCUT SHALL NOT BE LESS THAN 1′-0½″ FROM THE TOP OF THE CONCRETE DECK SLAB.

USE AN EDGE GUIDE, FENCE, OR JIG TO ENSURE THAT THE CUT JOINT IS STRAIGHT, TRUE, AND ALIGNED ON ALL FACES OF THE RAILING. THE JOINT WIDTH SHALL BE THE WIDTH OF THE SAW BLADE, A NOMINAL WIDTH OF ¼ INCH.

SEAL THE PERIMETER OF THE DEFLECTION JOINTS TO A MINIMUM DEPTH OF ONE INCH WITH A POLYURETHANE OR POLYMERIC MATERIAL CONFORMING TO ASTM C920, TYPE S. LEAVE THE BOTTOM ½ INCH OF BOTH THE INSIDE AND OUTSIDE FACES OF THE RAILING UNSEALED TO ALLOW ANY WATER WHICH MAY ENTER THE JOINT TO ESCAPE.

FOR TRANSITION SECTION, PLACE A DEFLECTION JOINT AT THE BEGINNING OF THE 14′-0″ TRANSITION. DEFLECTION JOINTS ARE NOT REQUIRED WITHIN THE 14′-0″ TRANSITION SECTION.

MAXIMUM SPACING OF VERTICAL REINFORCING BARS FOR STANDARD 42″ SBR-1 CONCRETE RAILING:

THE MAXIMUM SPACING OF VERTICAL REINFORCING BARS FOR THE STANDARD 42″ SBR-1 CONCRETE RAILING SHALL BE 12″, UNLESS NOTED OTHERWISE.

MAXIMUM SPACING OF VERTICAL REINFORCING BARS FOR 42″ SBR-1 TRANSITIONS:

THE MAXIMUM SPACING OF VERTICAL REINFORCING BARS FOR THE 42″ SBR-1 TRANSITION SECTION SHALL BE AS SHOWN ON SHEETS 1/5, 2/5, 3/5, OR 4/5.

MINIMUM EMBEDMENT OF VERTICAL REINFORCING BARS:

THE MINIMUM EMBEDMENT IS 9″. IF THE MINIMUM EMBEDMENT FOR THE VERTICAL REINFORCING BARS INTO THE BRIDGE DECK OR APPROACH SLAB IS NOT MET, THEN THE DESIGNER SHALL CALCULATE THE REQUIRED REINFORCEMENT ACCORDING TO SECTION 13 OF THE "AASHTO LRFD BRIDGE DESIGN SPECIFICATIONS" ADOPTED BY THE AMERICAN ASSOCIATION OF STATE HIGHWAY AND TRANSPORTATION OFFICIALS.

Preliminary Plans - For Reference Only

OFFICE OF STRUCTURAL ENGINEERING

REVISION
07-17-2020
01-20-2023

STDS ENGINEER

STANDARD BRIDGE DRAWING
42″ SINGLE SLOPE CONCRETE BRIDGE RAILING

DESIGN AGENCY
STATE OF OHIO DEPARTMENT OF TRANSPORTATION

SCD NUMBER
SBR-1-20

5 / 5
47 / 65
911 / 1047

J:\2011093\ODOT\HAM\77889\structures\HAM075_079IC\sheets\075_079ICRA01.dgn 5/22/2026 10:51:20 AM hbrendlinger

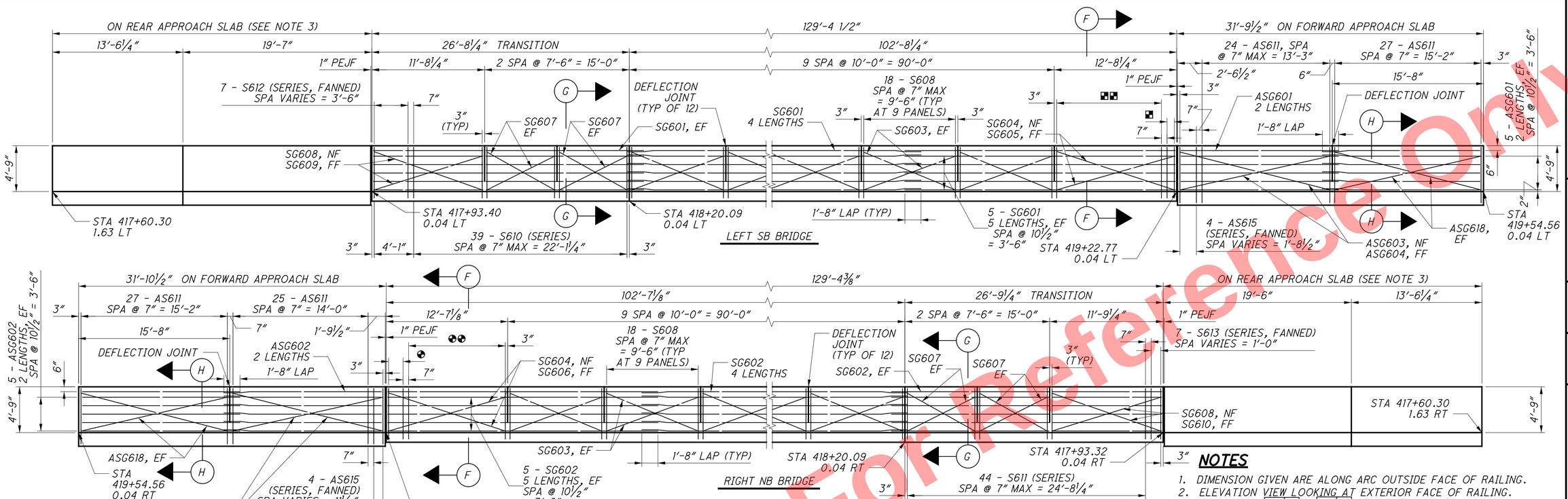

MEDIAN RAILING ELEVATION

LEGEND

- ▪ - 4 - S609 (FANNED), SPA VARIES = 9"
- ▪▪ - 20 - S608, SPA @ 7" MAX = 10'-10¼"
- ◕ - 4 - S609 (FANNED), SPA VARIES = 1'-6"
- ◕◕ - 19 - S608, SPA @ 7" MAX = 10'-0⅛"

NOTES

1. DIMENSION GIVEN ARE ALONG ARC OUTSIDE FACE OF RAILING.
2. ELEVATION VIEW LOOKING AT EXTERIOR FACE OF RAILING.
3. SEE SHEETS 54/65 & 55/65 FOR CONTROL JOINT DETAIL AND MEDIAN RAILING DETAILS ON REAR APPROACH SLAB.
4. SEE GENERAL NOTES FOR ABBREVIATION LEGEND.
5. FOR ADDITIONAL RAILING DETAILS NOT SHOWN ON THIS SHEET, REFER TO ODOT STANDARD DRAWING SBR-2-20.
6. DECK AND APPROACH SLAB REINFORCING NOT SHOWN FOR CLARITY.

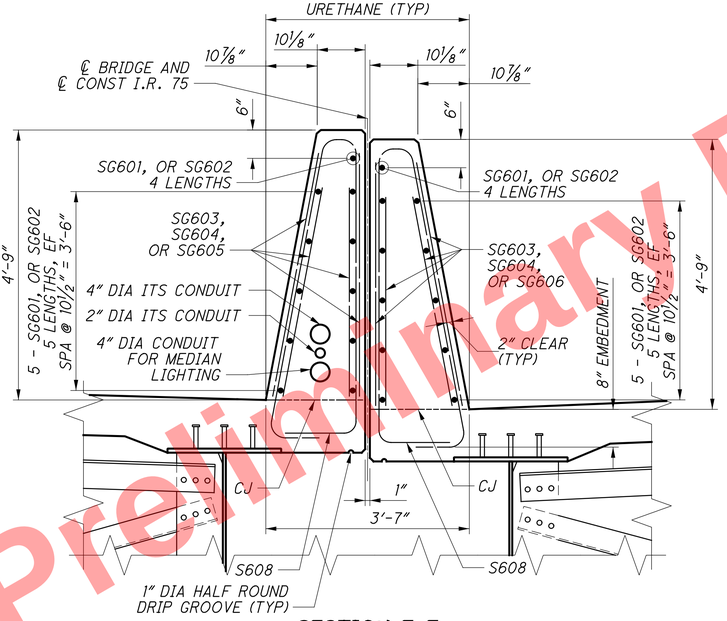

SECTION F-F

FROM STA 418+20.09 TO STA 419+22.77

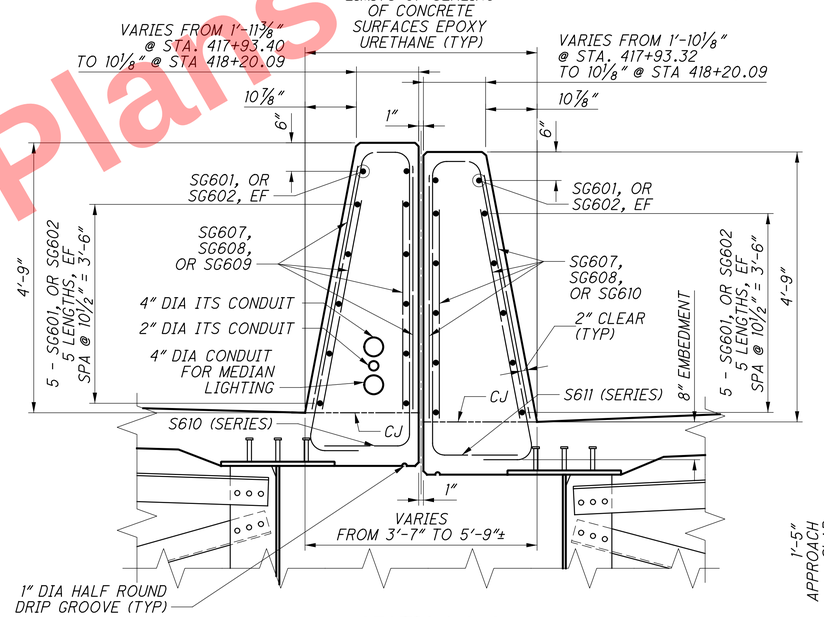

SECTION G-G

FROM STA 417+93.32 TO STA 418+20.09

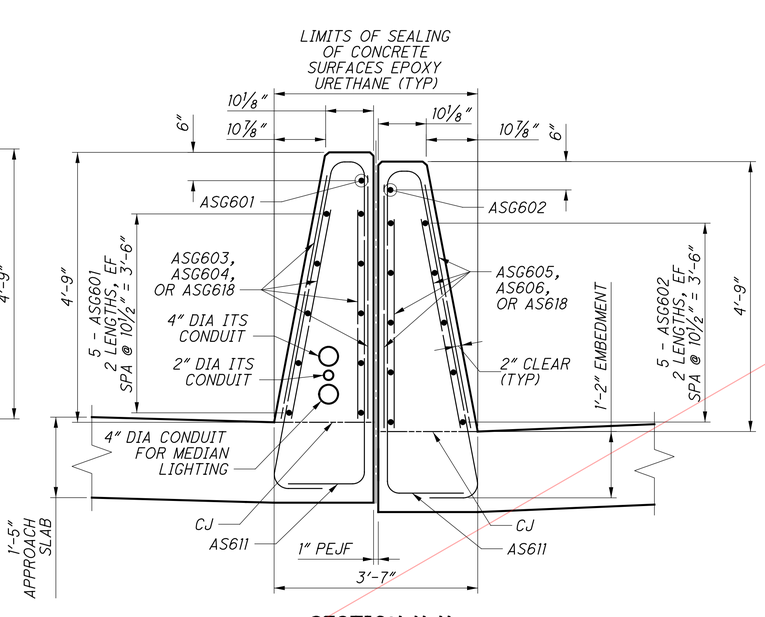

SECTION H-H

FROM STA 419+22.69 TO STA 419+54.56 ON FORWARD ABUTMENT APPROACH SLAB

Preliminary Plans - For Reference Only

DESIGN AGENCY: EMH&T
DESIGNED: RJE | DRAWN: GB | CHECKED: RMW | REVIEWED: CAS | REVISED: - | DATE: 5-22-26
STRUCTURE FILE NUMBER: 3110044

MEDIAN RAILING DETAILS
BRIDGE NO. HAM-75-0791
I.R. 75 OVER RAMP J

HAM-75-7.85
PID No. 121447

48 / 65

912 / 1047

J:\20110903\ODOT\HAM\77889\structures\HAM075_0791C\sheets\075_0791CRA003.dgn 5/22/2026 10:52:46 AM hbrendlinger

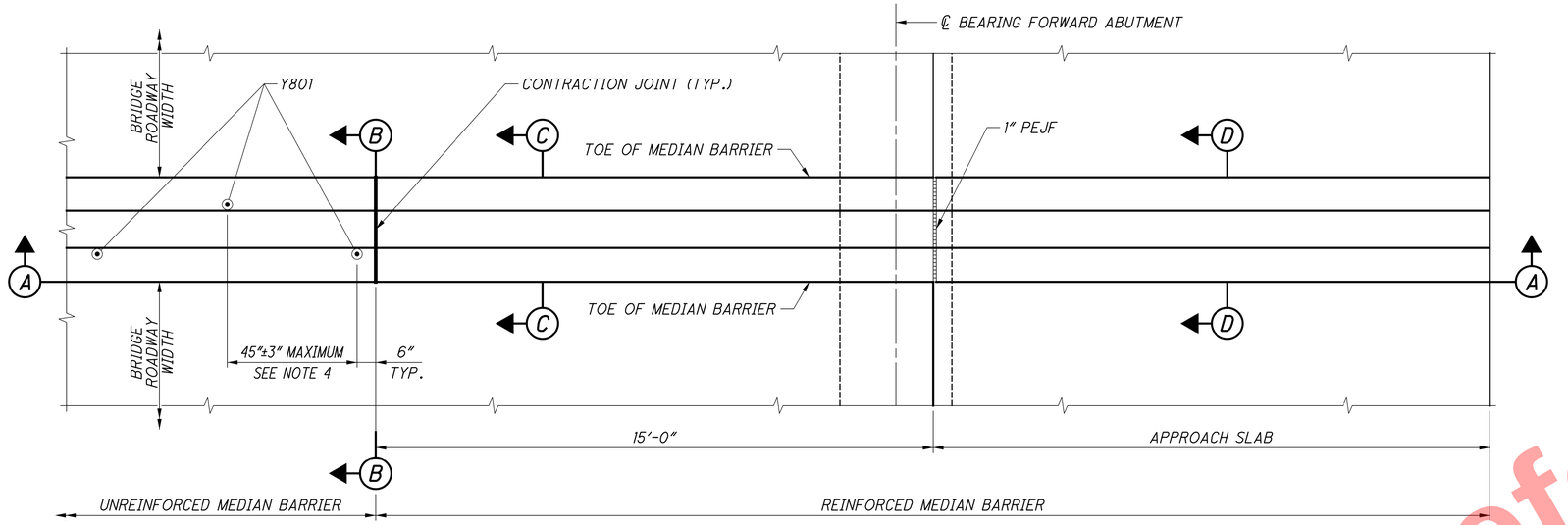

PLAN VIEW

57" SINGLE SLOPE MEDIAN BRIDGE RAILING TYPE B1 SHOWN WITH SEMI-INTEGRAL ABUTMENT, INTEGRAL ABUTMENT AND CAPPED PILE ABUTMENTS SIMILAR. FORWARD ABUTMENT SHOWN, REAR ABUTMENT SIMILAR BUT OPPOSITE

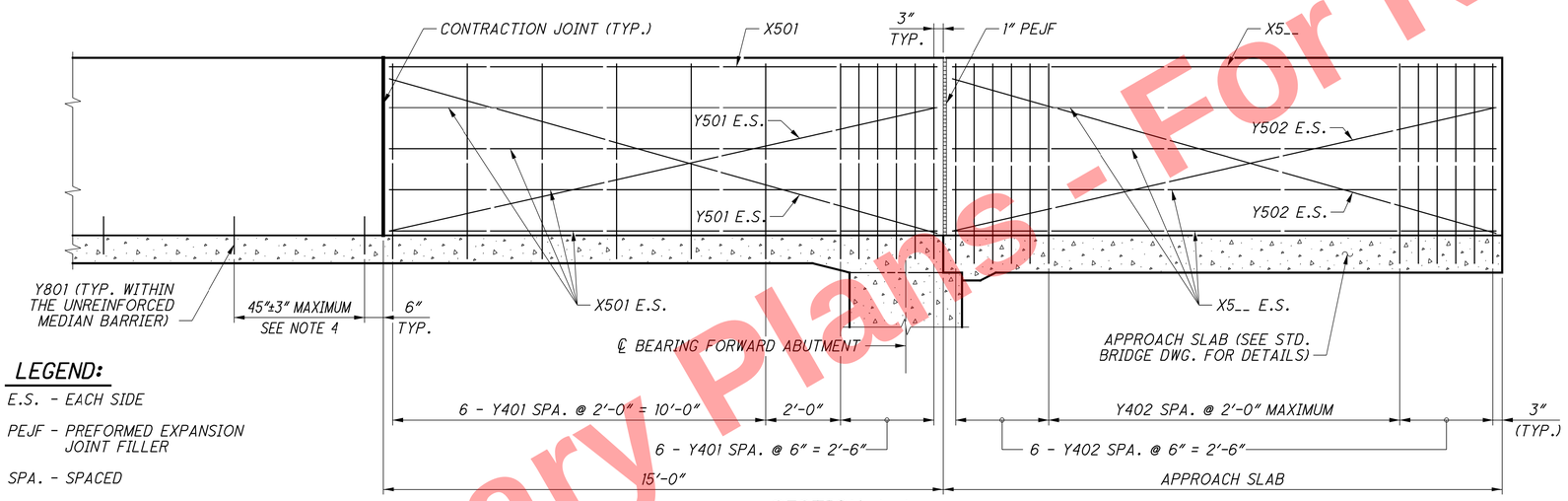

SECTION A-A

LEGEND:

E.S. - EACH SIDE

PEJF - PREFORMED EXPANSION JOINT FILLER

SPA. - SPACED

NOTES:

1. FOR 57" SINGLE SLOPE CONCRETE MEDIAN BRIDGE RAILING, INCLUDE PLAN VIEW, ELEVATION VIEW, SECTIONS, REINFORCING MARKS, REINFORCING BENDING DIAGRAMS, AND REINFORCING QUANTITIES IN THE PROJECT PLANS.
2. FOR THE ENTIRE LENGTH OF SINGLE SLOPE CONCRETE MEDIAN BRIDGE RAILINGS, SHOW THE LOCATION OF CONTRACTION JOINTS, SPACED AT 20'-0" MAX IN THE PROJECT PLANS. CONTRACTION JOINT IS NOT REQUIRED WITHIN THE APPROACH SLAB MEDIAN BARRIER SECTIONS.
3. PLACE #8 EPOXY COATED DOWEL BARS (Y801 BARS), 12" LONG, SPACED AT 45" ± 3" MAXIMUM, AT STAGGERED LOCATIONS WITHIN THE UNREINFORCED MEDIAN BARRIER. INCLUDE Y801 BARS WITH ITEM 509 FOR PAYMENT.
4. SEE APPROPRIATE STANDARD BRIDGE DRAWING FOR ABUTMENT DETAILS.
5. FOR ROADWAY SINGLE SLOPE BARRIER, SEE STD. ROADWAY CONSTR. DWG. RM-4.3 THROUGH RM-4.5.
6. REFER TO AS-2-15 FOR APPLICABLE DETAILS FOR APPROACH SLAB JOINTS USED WITH SEMI-INTEGRAL AND INTEGRAL ABUTMENTS.
7. GLASS FIBER REINFORCED POLYMER (GFRP) MAY BE USED FOR THE HORIZONTAL BARS OR STIFFENING BARS AT NO ADDITIONAL COST TO THE DEPARTMENT.
8. FOR GENERAL NOTES, SEE SHEET 5/5.

REINFORCEMENT LIST

MARK	LENGTH	TYPE	MATERIAL	BENDING DIAGRAMS
X501	14'-8"	STR	STEEL	
X5__	⊕	STR	STEEL	
Y401	2A + 12'-10"	BENT	STEEL	
Y402	2B + 12'-10"	BENT	STEEL	
Y501	15'-0"	STR	STEEL	
Y502	⊕	STR	STEEL	
Y801	1'-0"	STR	STEEL	

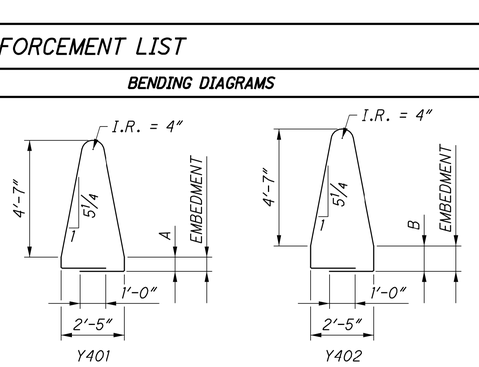

⊕ SEE PROJECT PLANS

A = 7½" MINIMUM EMBEDMENT

B = APPROACH SLAB THICKNESS MINUS 3"

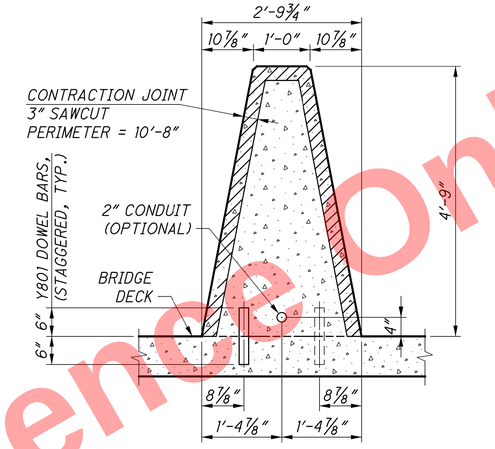

SECTION B-B

(AREA = 9.05 SQ. FT.)

REINFORCED CONCRETE DECK ON STEEL OR PRESTRESSED CONCRETE I-BEAMS/GIRDERS (BEAMS/GIRDERS NOT SHOWN)

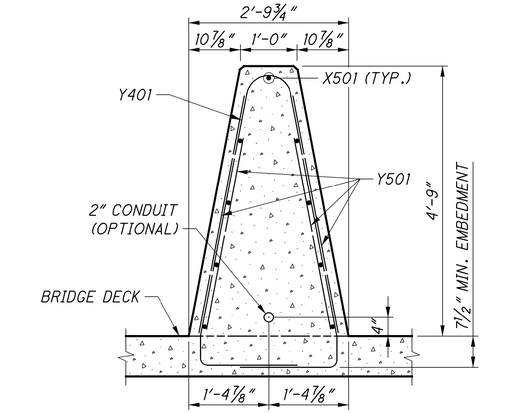

SECTION C-C

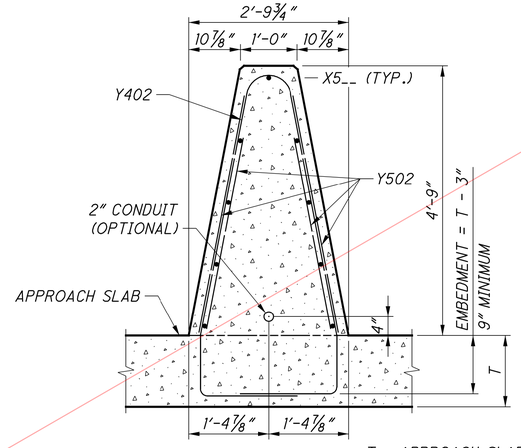

SECTION D-D

T = APPROACH SLAB THICKNESS

Preliminary Plans - For Reference Only

DESIGN AGENCY
OFFICE OF STRUCTURAL ENGINEERING

REVISION 11-12-93

SBR-2-20

STANDARD BRIDGE DRAWING
57" SINGLE SLOPE CONCRETE MEDIAN BRIDGE RAILING

1 / 5

49 / 65

913 / 1047

J:\2011\0903\ODOT\HAM\77889\structures\HAM075_079IC\sheets\075_079ICRA012.dgn 5/22/2026 10:52:47 AM hbrendlinger

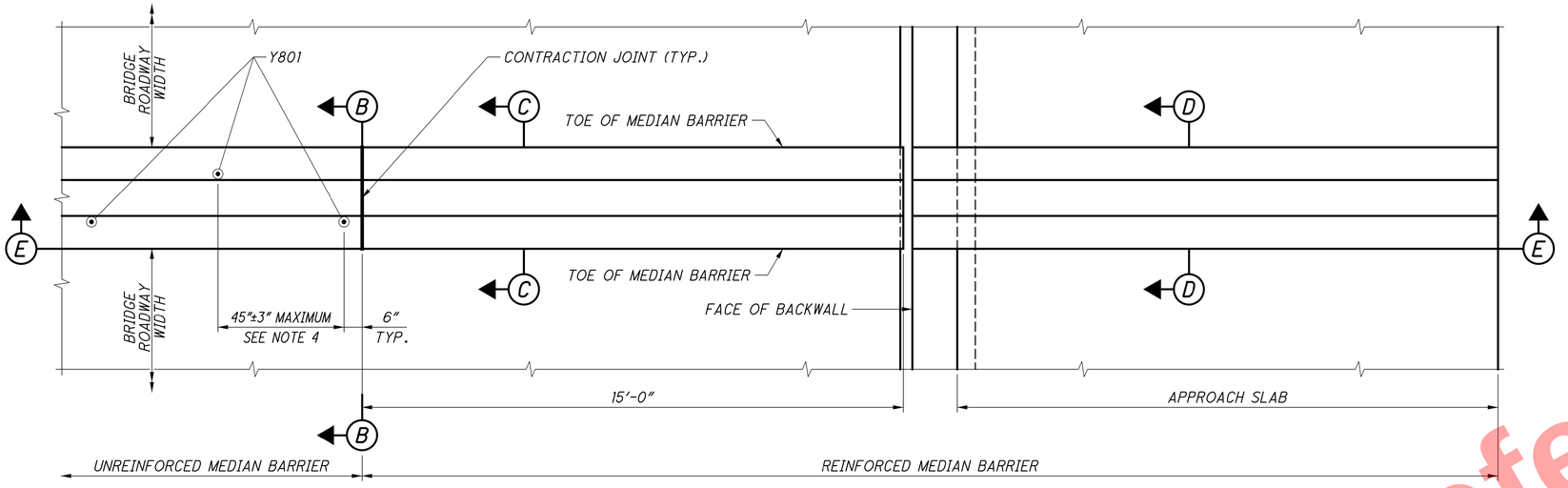

PLAN VIEW

57" SINGLE SLOPE MEDIAN BRIDGE RAILING TYPE B1 SHOWN WITH TYPICAL ABUTMENT.
FORWARD ABUTMENT SHOWN, REAR ABUTMENT SIMILAR BUT OPPOSITE

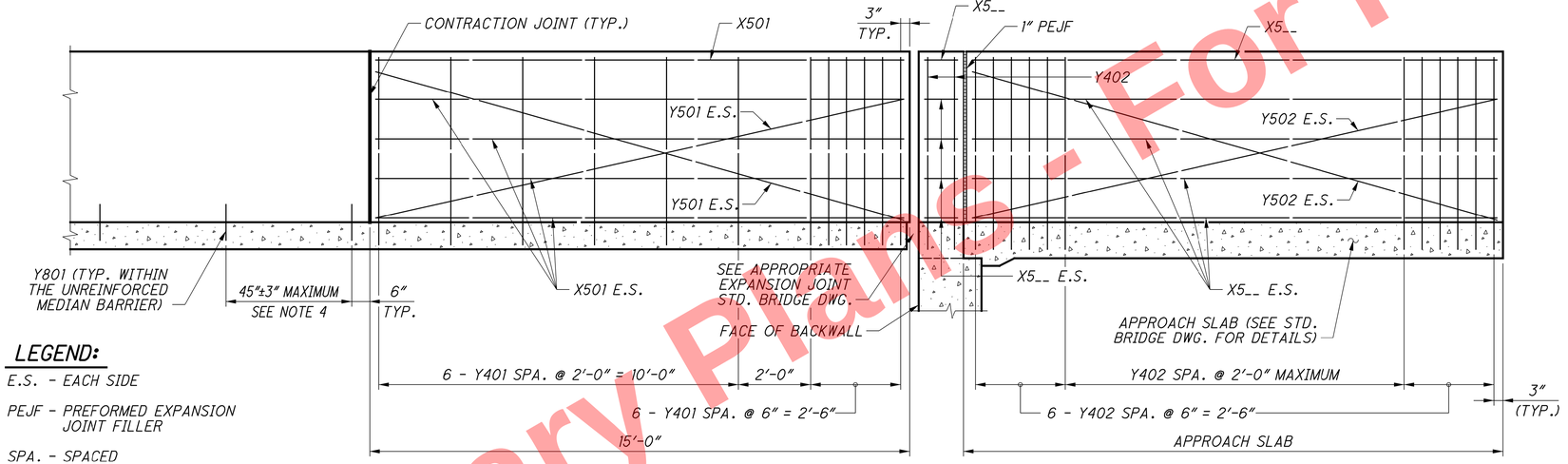

SECTION E-E

LEGEND:

E.S. - EACH SIDE

PEJF - PREFORMED EXPANSION JOINT FILLER

SPA. - SPACED

NOTES:

1. FOR 57" SINGLE SLOPE CONCRETE MEDIAN BRIDGE RAILING, INCLUDE PLAN VIEW, ELEVATION VIEW, SECTIONS, REINFORCING MARKS, REINFORCING BENDING DIAGRAMS, AND REINFORCING QUANTITIES IN THE PROJECT PLANS.
2. FOR THE ENTIRE LENGTH OF SINGLE SLOPE CONCRETE MEDIAN BRIDGE RAILINGS, SHOW THE LOCATION OF CONTRACTION JOINTS, SPACED AT 20'-0" MAX IN THE PROJECT PLANS. CONTRACTION JOINT IS NOT REQUIRED WITHIN THE APPROACH SLAB MEDIAN BARRIER SECTIONS.
3. PLACE #8 EPOXY COATED DOWEL BARS (Y801 BARS), 12" LONG, SPACED AT 45" ± 3" MAXIMUM, AT STAGGERED LOCATIONS WITHIN THE UNREINFORCED MEDIAN BARRIER. INCLUDE Y801 BARS WITH ITEM 509 FOR PAYMENT.
4. SEE APPROPRIATE STANDARD BRIDGE DRAWING FOR ABUTMENT DETAILS.
5. FOR ROADWAY SINGLE SLOPE BARRIER, SEE STD. ROADWAY CONSTR. DWG. RM-4.3 THROUGH RM-4.5.
6. GLASS FIBER REINFORCED POLYMER (GFRP) MAY BE USED FOR THE HORIZONTAL BARS OR STIFFENING BARS AT NO ADDITIONAL COST TO THE DEPARTMENT.
7. FOR GENERAL NOTES, SEE SHEET 5/5.

REINFORCEMENT LIST

MARK	LENGTH	TYPE	MATERIAL	BENDING DIAGRAMS
X501	14'-8"	STR	STEEL	
X5__	⊕	STR	STEEL	
Y401	2A + 12'-10"	BENT	STEEL	
Y402	2B + 12'-10"	BENT	STEEL	
Y501	15'-0"	STR	STEEL	
Y502	⊕	STR	STEEL	
Y801	1'-0"	STR	STEEL	

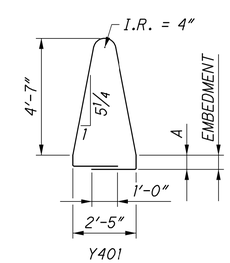

⊕ SEE PROJECT PLANS

A = 7½" MINIMUM EMBEDMENT

B = APPROACH SLAB THICKNESS MINUS 3"

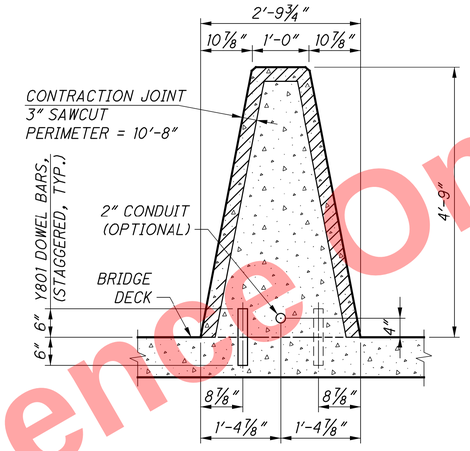

SECTION B-B

(AREA = 9.05 SQ. FT.)

REINFORCED CONCRETE DECK ON STEEL OR PRESTRESSED CONCRETE I-BEAMS/GIRDERS (BEAMS/GIRDERS NOT SHOWN)

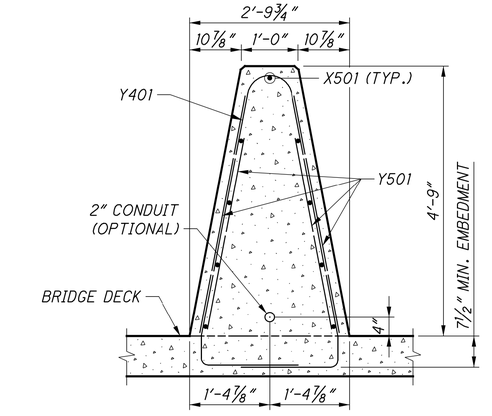

SECTION C-C

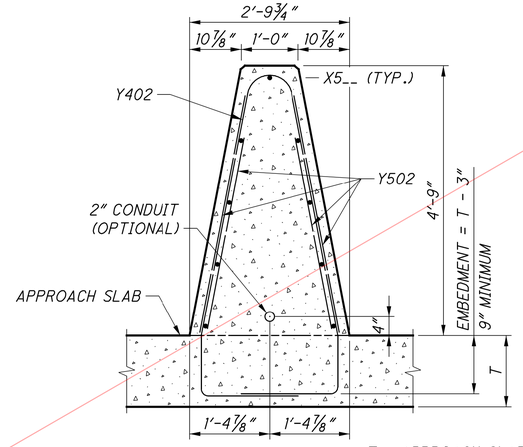

SECTION D-D

T = APPROACH SLAB THICKNESS

Preliminary Plans - For Reference Only

DESIGN AGENCY
OFFICE OF
STRUCTURAL ENGINEERING

REVISION
11-12-93

SBR-2-20

STANDARD BRIDGE DRAWING
57" SINGLE SLOPE CONCRETE MEDIAN BRIDGE RAILING

2 / 5

50 / 65

914
1047

J:\2011\0903\ODOT\HAM\77889\structures\HAM075_079C\sheets\075_079CRA013.dgn 5/22/2026 10:54:18 AM hbrendlinger

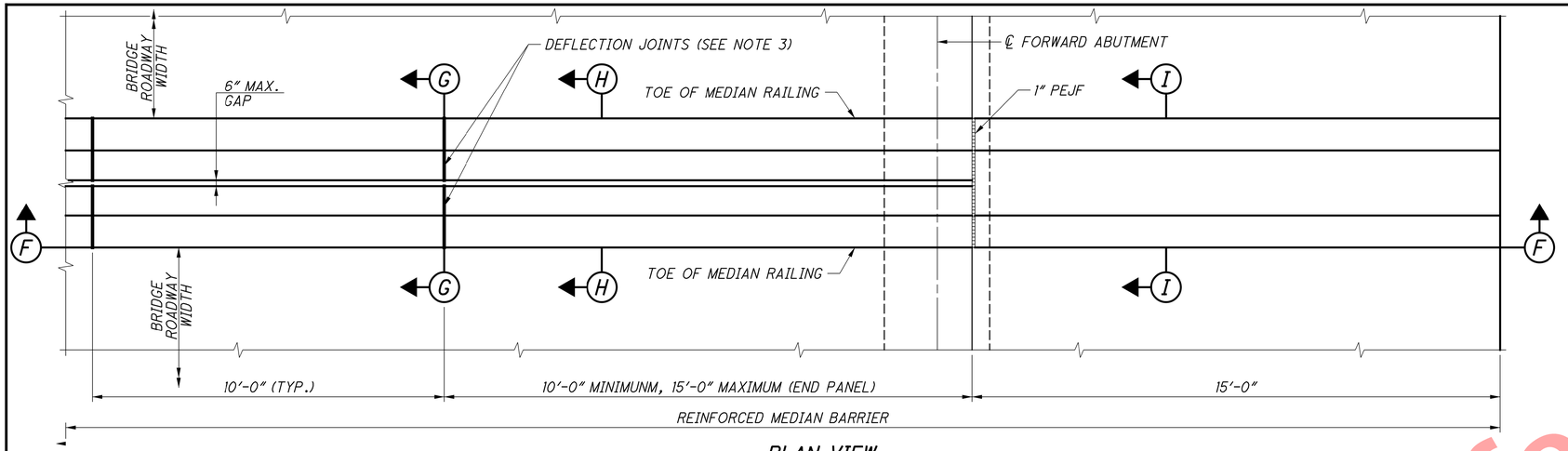

PLAN VIEW

57" SINGLE SLOPE BACK-TO BACK MEDIAN BRIDGE RAILINGS SHOWN WITH SEMI-INTEGRAL ABUTMENT, INTEGRAL ABUTMENT AND CAPPED PILE ABUTMENTS SIMILAR. FORWARD ABUTMENT SHOWN, REAR ABUTMENT SIMILAR BUT OPPOSITE

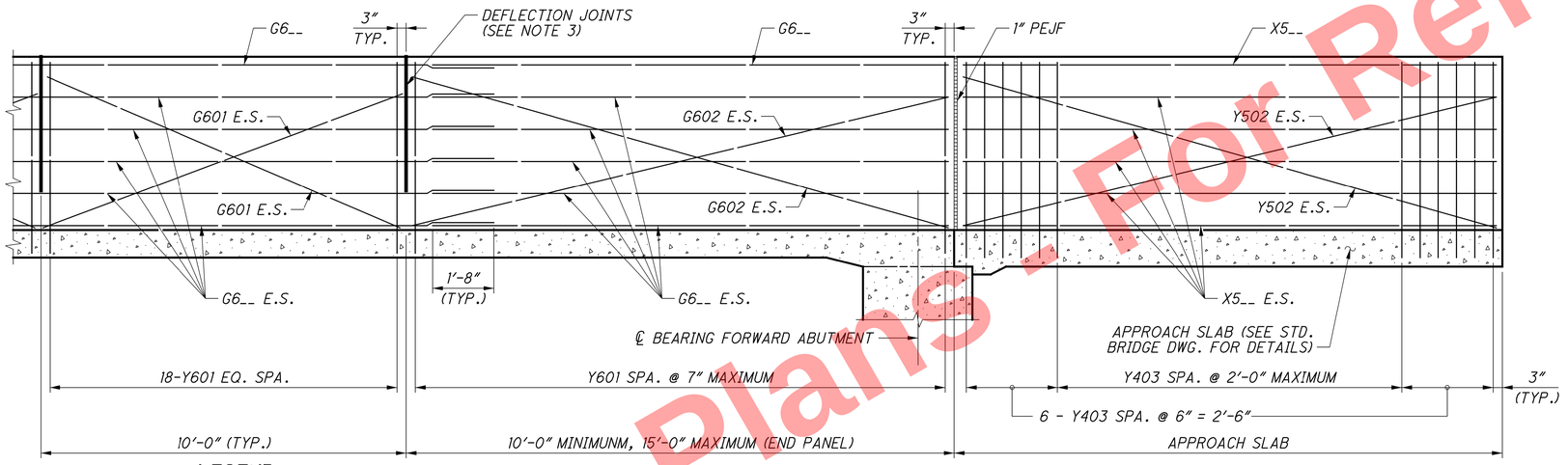

SECTION F-F

REINFORCEMENT SHOWN IS ONLY FOR ONE SIDE OF THE BACK-TO-BACK MEDIAN BARRIERS

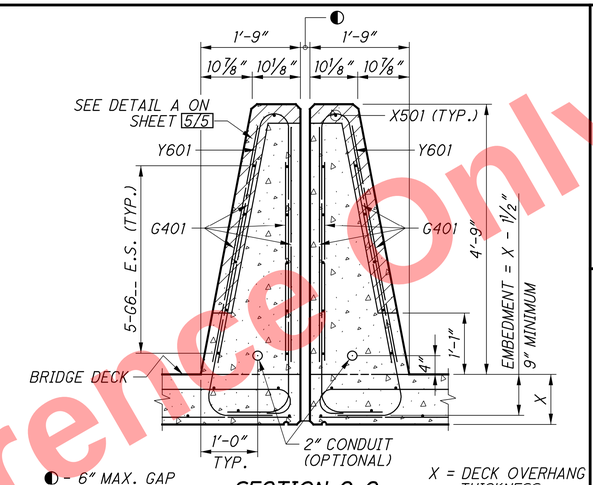

◐ - 6" MAX. GAP

X = DECK OVERHANG THICKNESS

SECTION G-G

AREA =12.32 SQ. FT. (TOTAL BOTH SIDES)
REINFORCED CONCRETE DECK ON STEEL OR PRESTRESSED CONCRETE I-BEAMS/GIRDERS (BEAMS/GIRDERS NOT SHOWN)

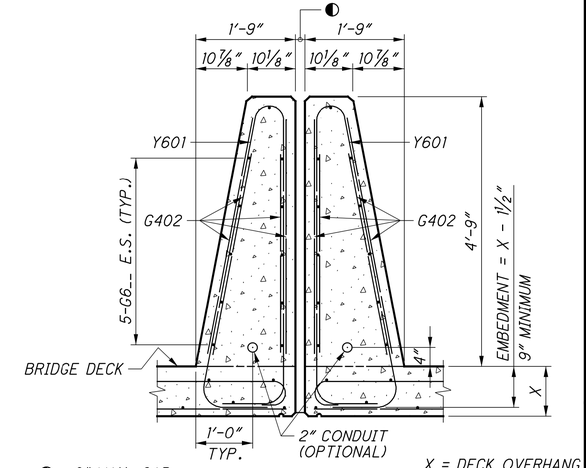

◐ - 6" MAX. GAP

X = DECK OVERHANG THICKNESS

SECTION H-H

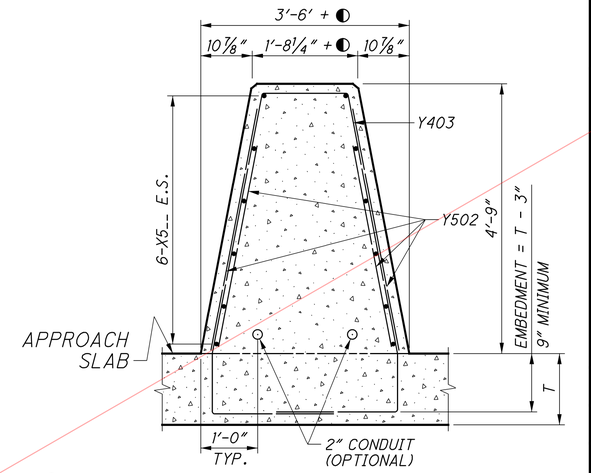

◐ - 6" MAX. GAP

T = APPROACH SLAB THICKNESS

SECTION I-I

LEGEND:

E.S. - EACH SIDE

PEJF - PREFORMED EXPANSION JOINT FILLER

SPA. - SPACED

EQ. - EQUALLY

MAX. - MAXIMUM

NOTES:

1. FOR 57" SINGLE SLOPE CONCRETE MEDIAN BRIDGE RAILING, INCLUDE PLAN VIEW, ELEVATION VIEW, SECTIONS, REINFORCING MARKS, REINFORCING BENDING DIAGRAMS, AND REINFORCING QUANTITIES IN THE PROJECT PLANS.
2. FOR THE ENTIRE LENGTH OF SINGLE SLOPE CONCRETE MEDIAN BRIDGE RAILINGS, SHOW THE LOCATIONS OF DEFLECTION JOINTS IN THE PROJECT PLANS. DEFLECTION JOINT IS NOT REQUIRED WITHIN THE APPROACH SLAB MEDIAN BARRIER SECTIONS.
3. SEE APPROPRIATE STANDARD BRIDGE DRAWING FOR ABUTMENT DETAILS.
4. FOR SINGLE SLOPE BARRIER BEYOND THE STRUCTURE (ROADWAY BARRIER), SEE STD. ROADWAY CONSTR. DWG. RM-4.3 THROUGH RM-4.5.
5. REFER TO AS-2-15 FOR APPLICABLE DETAILS FOR APPROACH SLAB JOINTS USED WITH SEMI-INTEGRAL AND INTEGRAL ABUTMENTS.
6. USE GLASS FIBER REINFORCED POLYMER (GFRP) FOR HORIZONTAL BARS (G6__) AND STIFFENING BARS (G601 & G602).
7. GLASS FIBER REINFORCED POLYMER (GFRP) MAY BE USED FOR THE HORIZONTAL BARS OR STIFFENING BARS FOR THE APPROACH SLAB BARRIER AT NO ADDITIONAL COST TO THE DEPARTMENT.
8. FOR DEFLECTION JOINT DETAILS AND ADDITIONAL NOTES, SEE SHEET 5/5.

REINFORCEMENT LIST

MARK	LENGTH	TYPE	MATERIAL	BENDING DIAGRAMS
X5__	⊕	STR	STEEL	
Y403	2B + C + D + 9'-10"	BENT	STEEL	
Y502	⊕	STR	STEEL	
Y601	2E + 11'-6"	BENT	STEEL	
G601	10'-6'	STR	GFRP	
G602	⊕	STR	GFRP	
G6__	⊕	STR	GFRP	

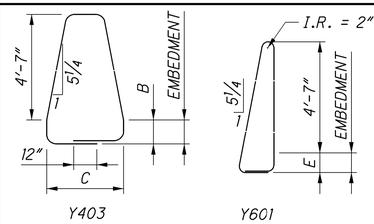

⊕ SEE PROJECT PLANS

B = APPROACH SLAB THICKNESS MINUS 3"

C = 3'-2" + ◐

D = 1'-4" + ◐

E = DECK OVERHANG THICKNESS MINUS 1½"

Preliminary Plans - For Reference Only

DESIGN AGENCY
OFFICE OF STRUCTURAL ENGINEERING

REVISION 11-12-93

SBR-2-20

STANDARD BRIDGE DRAWING
57" SINGLE SLOPE CONCRETE MEDIAN BRIDGE RAILING

3 / 5

51 / 65

915 / 1047

J:\2010903\ODOT\HAM\77889\structures\HAM075_0791C\sheets\075_0791CRA014.dgn 5/22/2026 10:55:28 AM hbrendlinger

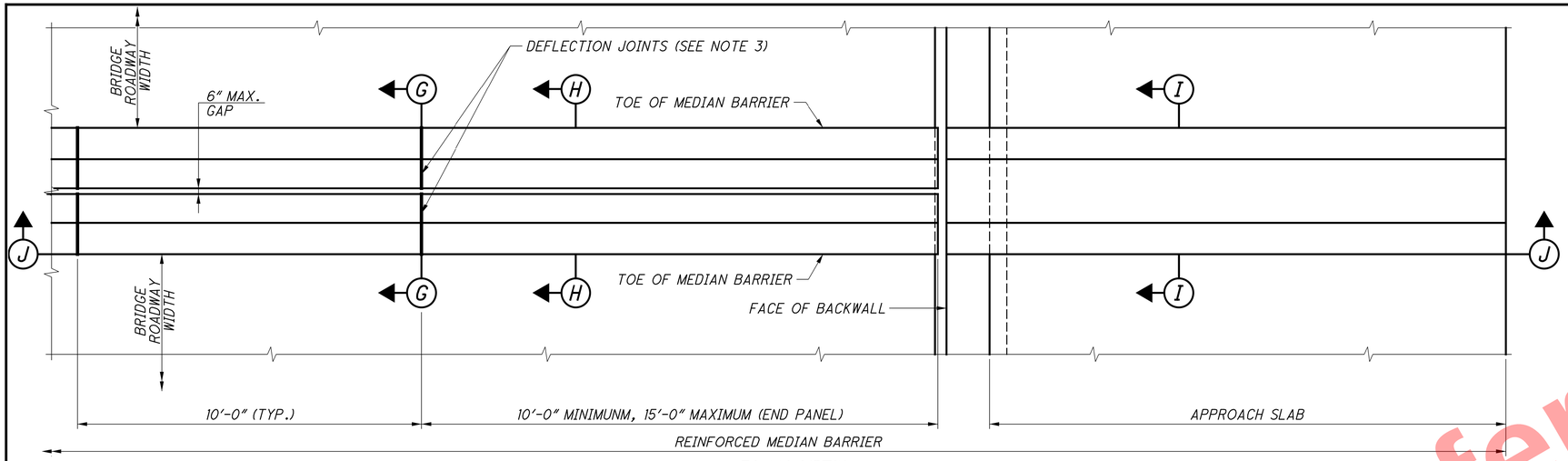

PLAN VIEW

57" SINGLE SLOPE BACK-TO BACK MEDIAN BRIDGE RAILINGS SHOWN WITH TYPICAL ABUTMENT.
FORWARD ABUTMENT SHOWN, REAR ABUTMENT SIMILAR BUT OPPOSITE

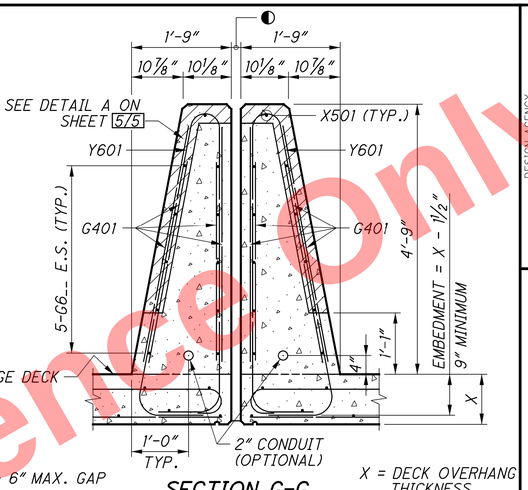

◐ - 6" MAX. GAP

SECTION G-G

X = DECK OVERHANG THICKNESS

AREA =12.32 SQ. FT. (TOTAL BOTH SIDES)
REINFORCED CONCRETE DECK ON STEEL OR PRESTRESSED CONCRETE I-BEAMS/GIRDERS (BEAMS/GIRDERS NOT SHOWN)

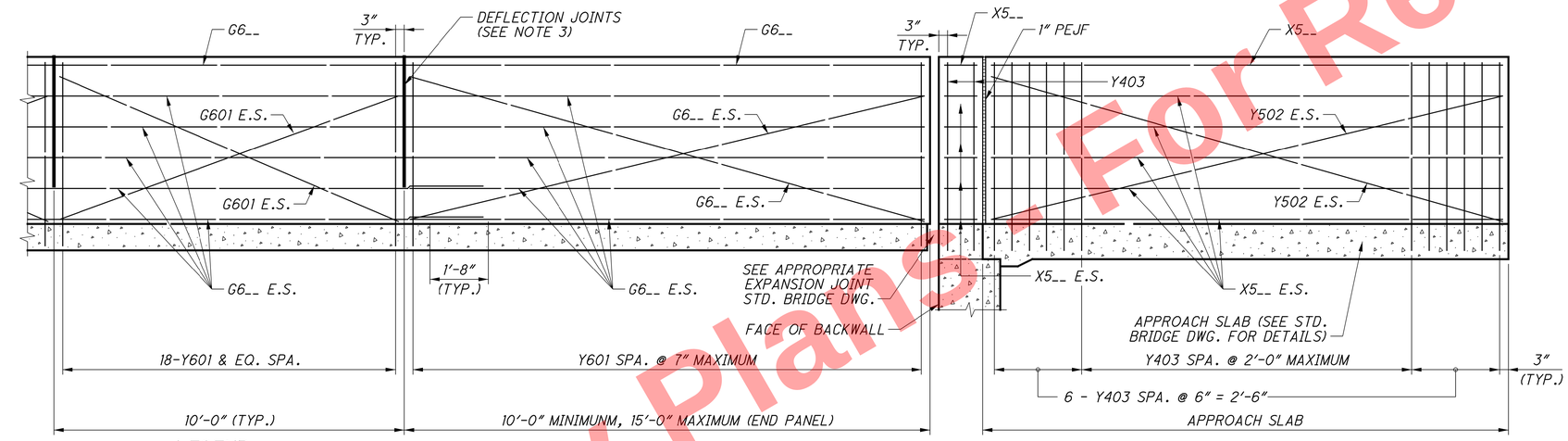

SECTION J-J

REINFORCEMENT SHOWN IS ONLY FOR ONE SIDE OF THE BACK-TO-BACK MEDIAN BARRIERS

LEGEND:

E.S. - EACH SIDE

PEJF - PREFORMED EXPANSION JOINT FILLER

SPA. - SPACED

EQ. - EQUALLY

MAX. - MAXIMUM

NOTES:

1. FOR 57" SINGLE SLOPE CONCRETE MEDIAN BRIDGE RAILING, INCLUDE PLAN VIEW, ELEVATION VIEW, SECTIONS, REINFORCING MARKS, REINFORCING BENDING DIAGRAMS, AND REINFORCING QUANTITIES IN THE PROJECT PLANS.
2. FOR THE ENTIRE LENGTH OF SINGLE SLOPE CONCRETE MEDIAN BRIDGE RAILINGS, SHOW THE LOCATIONS OF DEFLECTION JOINTS IN THE PROJECT PLANS. DEFLECTION JOINT IS NOT REQUIRED WITHIN THE APPROACH SLAB MEDIAN BARRIER SECTIONS.
3. SEE APPROPRIATE STANDARD BRIDGE DRAWING FOR ABUTMENT DETAILS.
4. FOR SINGLE SLOPE BARRIER BEYOND THE STRUCTURE (ROADWAY BARRIER), SEE STD. ROADWAY CONSTR. DWG. RM-4.3 THROUGH RM-4.5.
5. USE GLASS FIBER REINFORCED POLYMER (GFRP) FOR HORIZONTAL BARS (G6__) AND STIFFENING BARS (G601 & G602).
6. GLASS FIBER REINFORCED POLYMER (GFRP) MAY BE USED FOR THE HORIZONTAL BARS OR STIFFENING BARS FOR THE APPROACH SLAB BARRIER AT NO ADDITIONAL COST TO THE DEPARTMENT.
7. FOR DEFLECTION JOINT DETAILS AND ADDITIONAL NOTES, SEE SHEET 5/5 .

REINFORCEMENT LIST

MARK	LENGTH	TYPE	MATERIAL	BENDING DIAGRAMS
X5__	⊕	STR	STEEL	
Y403	2B + C + D + 9'-10"	BENT	STEEL	
Y502	⊕	STR	STEEL	
Y601	2E + 11'-6"	BENT	STEEL	
G601	10'-6'	STR	GFRP	
G602	⊕	STR	GFRP	
G6__	⊕	STR	GFRP	

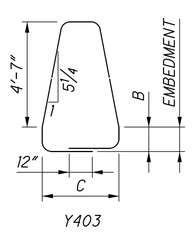

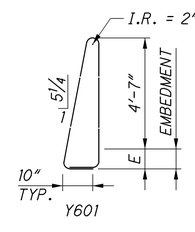

⊕ SEE PROJECT PLANS

B = APPROACH SLAB THICKNESS MINUS 3"

C = 3'-0" + ◐

D = 1'-3" + ◐

E = DECK OVERHANG THICKNESS MINUS 1½"

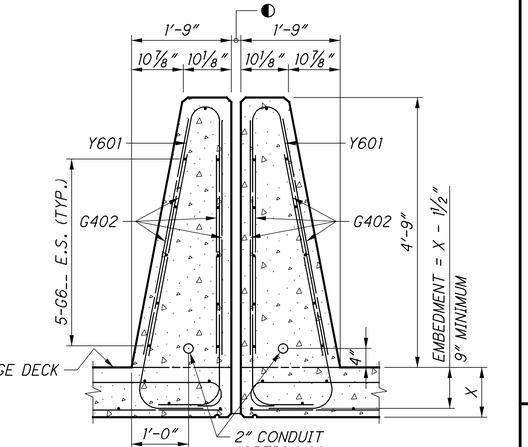

◐ - 6" MAX. GAP

X = DECK OVERHANG THICKNESS

SECTION H-H

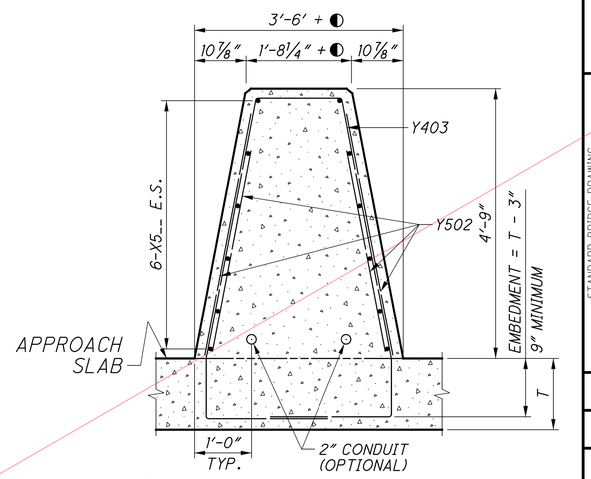

◐ - 6" MAX. GAP

T = APPROACH SLAB THICKNESS

SECTION I-I

DESIGN AGENCY
OFFICE OF STRUCTURAL ENGINEERING

REVISION
11-12-93

SBR-2-20

STANDARD BRIDGE DRAWING
57" SINGLE SLOPE CONCRETE MEDIAN BRIDGE RAILING

4 / 5
52 / 65
916 / 1047

Preliminary Plans - For Reference Only

J:\2011\0903\ODOT\HAM\77889\structures\HAM075_079IC\sheets\075_079ICRA015.dgn 5/22/2026 10:57:07 AM hbrendlinger

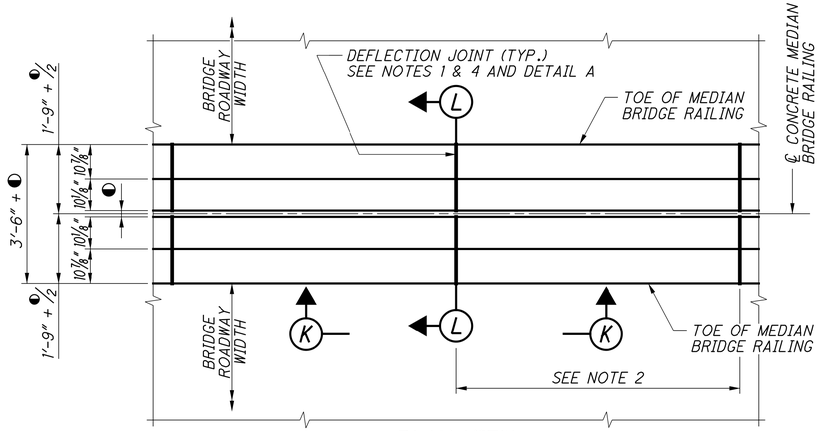

◐ - 6" MAX. GAP

PLAN VIEW

DEFLECTION JOINT DETAIL FOR 57" SINGLE SLOPE BACK-TO-BACK CONCRETE MEDIAN BRIDGE RAILINGS (SEE SHEETS 3/5 AND 4/5)

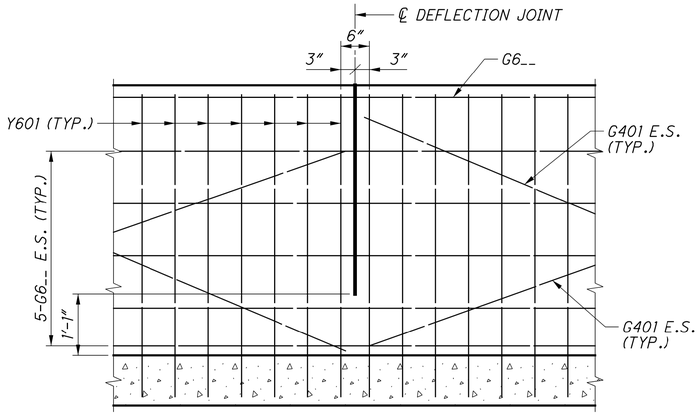

SECTION K-K

REINFORCEMENT SHOWN IS ONLY FOR ONE SIDE OF THE BACK-TO-BACK MEDIAN BARRIERS
REINFORCED CONCRETE DECK ON STEEL OR PRESTRESSED CONCRETE I-BEAMS/GIRDERS (BEAMS/GIRDERS NOT SHOWN)

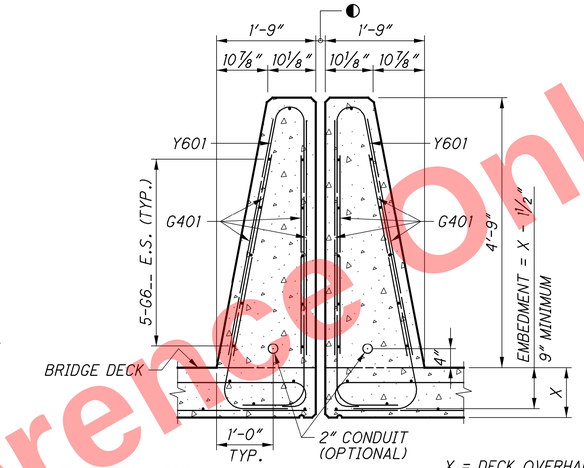

◐ - 6" MAX. GAP

SECTION L-L

X = DECK OVERHANG THICKNESS

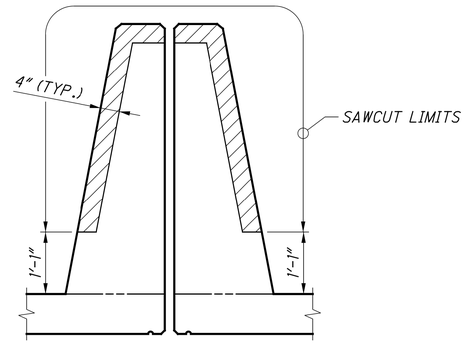

DETAIL A

NOTES:

1. FOR THE ENTIRE LENGTH OF SINGLE SLOPE CONCRETE MEDIAN BRIDGE RAILINGS, PROJECT PLANS SHALL SHOW THE LOCATIONS OF DEFLECTION JOINTS.
2. DEFLECTION JOINT SPACING SHALL BE 10'-0" ON CENTERS EXCEPT FOR THE FIRST AND LAST BARRIER PANEL WITHIN THE BRIDGE LIMITS. THE FIRST AND LAST PANELS SHALL BE 10'-0" MINIMUM, 15'-0" MAXIMUM.
3. PAYMENT FOR GLASS FIBER REINFORCED POLYMER (GFRP) STIFFENING REINFORCEMENT SHALL BE INCLUDED WITH CONTRACT PRICE FOR ITEM 509 - NO._ GFRP DEFORMED BARS.
4. LIMITS OF SAWCUT IS SHOWN IN DETAIL A. THE 4" SAWCUT DEPTH SHOWN IN DETAIL A IS THE MINIMUM REQUIRED. HOWEVER, THE CONTRACTOR HAS AN OPTION TO PERFORM FULL DEPTH SAWCUT.

DESIGN CRITERIA:

57" SINGLE SLOPE CONCRETE MEDIAN BRIDGE RAILING TYPE B1 MEET THE REQUIREMENTS OF NCHRP 350 & MASH TEST LEVEL 3 AND "AASHTO LRFD BRIDGE DESIGN SPECIFICATIONS, 9TH EDITION".

57" SINGLE SLOPE BACK-TO-BACK CONCRETE MEDIAN BRIDGE RAILINGS MEET THE REQUIREMENTS OF NCHRP 350 & MASH TEST LEVEL 5 AND "AASHTO LRFD BRIDGE DESIGN SPECIFICATIONS, 9TH EDITION".

DESIGN DATA:

CONCRETE - COMPRESSIVE STRENGTH = 4.5 KSI
REINFORCING STEEL - MINIMUM YIELD STRENGTH = 60 KSI
GFRP - C&MS 705.28 (MODULUS = 8700 KSI)

AREA OF 57" SINGLE SLOPE CONCRETE MEDIAN BRIDGE RAILING IS SHOWN ON SHEETS 1/5 THROUGH 4/5.

MAXIMUM SPACING OF VERTICAL REINFORCING BARS:

THE MAXIMUM SPACING OF VERTICAL REINFORCING BARS FOR THE 57" SINGLE SLOPE CONCRETE MEDIAN BRIDGE RAILING TYPE B1 SHALL BE 2'-0".

THE MAXIMUM SPACING OF VERTICAL REINFORCING BARS FOR THE 57" SINGLE SLOPE BACK-TO-BACK CONCRETE MEDIAN BRIDGE RAILING SHALL BE 7".

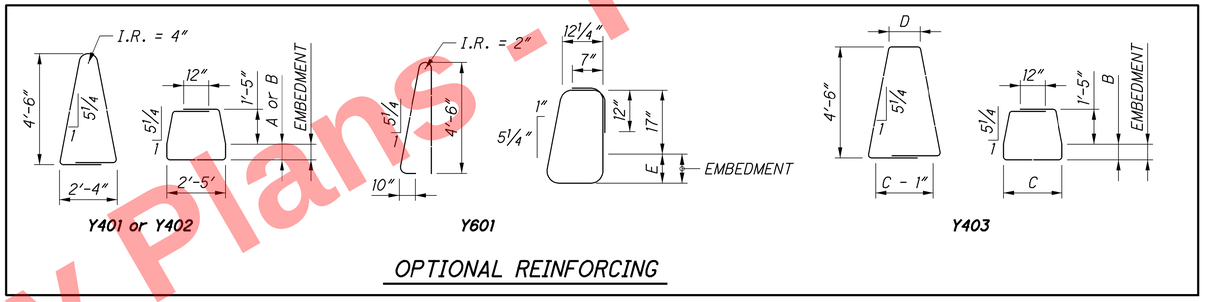

OPTIONAL REINFORCING

MINIMUM EMBEDMENT OF VERTICAL REINFORCING BARS:

THE MINIMUM EMBEDMENT IS 9". IF THE MINIMUM EMBEDMENT SHOWN FOR THE VERTICAL REINFORCING BARS INTO THE BRIDGE DECK IS NOT MET, THEN THE DESIGNER SHALL CALCULATE THE REQUIRED REINFORCEMENT ACCORDING TO SECTION 13 OF THE "AASHTO LRFD BRIDGE DESIGN SPECIFICATIONS".

OPTIONAL REINFORCING STEEL:

SHOW A SINGLE VERTICAL IN THE PROJECT PLANS. IN LIEU OF THE SINGLE VERTICAL BAR, THE CONTRACTOR MAY USE THE OPTIONAL VERTICAL REINFORCEMENT SHOWN ABOVE IN THE FORM OF LAPPED BARS AT THE VERTICAL BAR SPACING AND SIZE SHOWN IN THIS DRAWING.

THE DEPARTMENT WILL NOT ADJUST THE TOTAL QUANTITY OF REINFORCING STEEL TO ACCOMMODATE THIS OPTIONAL REINFORCEMENT. THE DEPARTMENT WILL CONSIDER DELAYS RESULTING FROM THIS OPTIONAL REINFORCEMENT AS NON-EXCUSABLE DELAYS.

CONTRACTION JOINTS FOR 57" SINGLE SLOPE UNREINFORCED CONCRETE MEDIAN BRIDGE RAILINGS TYPE B1 (SHEETS 1/5 AND 2/5):

SEE STD. ROADWAY CONSTR. DWG. RM-4.3 THROUGH RM-4.5 FOR NOTES.

DEFLECTION JOINTS FOR 57" SINGLE SLOPE BACK-TO-BACK REINFORCED CONCRETE MEDIAN BRIDGE RAILINGS (SHEETS 3/5 AND 4/5):

FOR SLIPFORMED CONSTRUCTION:
AS SOON AS CUTTING OPERATIONS CAN BEGIN WITHOUT DAMAGING THE CONCRETE, SAWCUT 1 ¼ INCH DEEP DEFLECTION CONTROL JOINTS ALONG THE PERIMETER OF THE MEDIAN BRIDGE RAILING.

AFTER THE CURING PERIOD AND BEFORE APPLYING LOAD TO THE MEDIAN BRIDGE RAILING, PERFORM 4 INCH SAWCUT AS SHOWN IN DETAIL A. APPLIED BRIDGE RAILING LOAD INCLUDES: CONSTRUCTION LOADS ON THE DECK (EXCLUDING PERSONNEL; HAND OPERATED EQUIPMENT AND MANUALLY POWERED VEHICLES); AND VEHICLE TRAFFIC IN THE LANE IMMEDIATELY ADJACENT TO MEDIAN BRIDGE RAILING AFTER REMOVAL OF TRAFFIC CONTROL DEVICES.

FOR CONVENTIONALLY FORMED CONSTRUCTION:
REMOVE THE FORMS BEFORE APPLYING LOAD TO THE MEDIAN BRIDGE RAILING. AS SOON AS THE FORMS ARE REMOVED, PERFORM 4-INCH SAWCUT AS SHOWN IN DETAIL A. THE 1 ¼ INCH SAWCUTS ARE NOT REQUIRED.

THE CONTRACTOR HAS AN OPTION TO PERFORM FULL DEPTH SAWCUT. HOWEVER, THE SAWCUT SHALL NOT BE LESS THAN 1'-1" FROM THE TOP OF THE CONCRETE DECK SLAB.

USE AN EDGE GUIDE, FENCE, OR JIG TO ENSURE THAT THE CUT JOINT IS STRAIGHT, TRUE, AND ALIGNED ON ALL FACES OF THE MEDIAN BRIDGE RAILING. THE JOINT WIDTH SHALL BE THE WIDTH OF THE SAW BLADE, A NOMINAL WIDTH OF ¼ INCH.

SEAL THE PERIMETER OF THE DEFLECTION JOINTS TO A MINIMUM DEPTH OF ONE INCH WITH A POLYURETHANE OR POLYMERIC MATERIAL CONFORMING TO ASTM C920, TYPE S. LEAVE THE BOTTOM ½ INCH OF BOTH FRONT FACES OF THE MEDIAN BRIDGE RAILINGS UNSEALED TO ALLOW ANY WATER WHICH MAY ENTER THE JOINT TO ESCAPE.

DEFLECTION JOINT IS NOT REQUIRED WITHIN THE APPROACH SLAB MEDIAN BARRIER SECTIONS.

Preliminary Plans - For Reference Only

DESIGN AGENCY
OFFICE OF STRUCTURAL ENGINEERING

REVISION 11-12-93

STANDARD BRIDGE DRAWING
57" SINGLE SLOPE CONCRETE MEDIAN BRIDGE RAILING

SBR-2-20

5 / 5
53 / 65
917 / 1047

J:\2010903\ODOT\HAM\77889\structures\HAM075_079IC\sheets\075_079ICRA016.dgn 5/22/2026 10:58:51 AM hbrendlinger

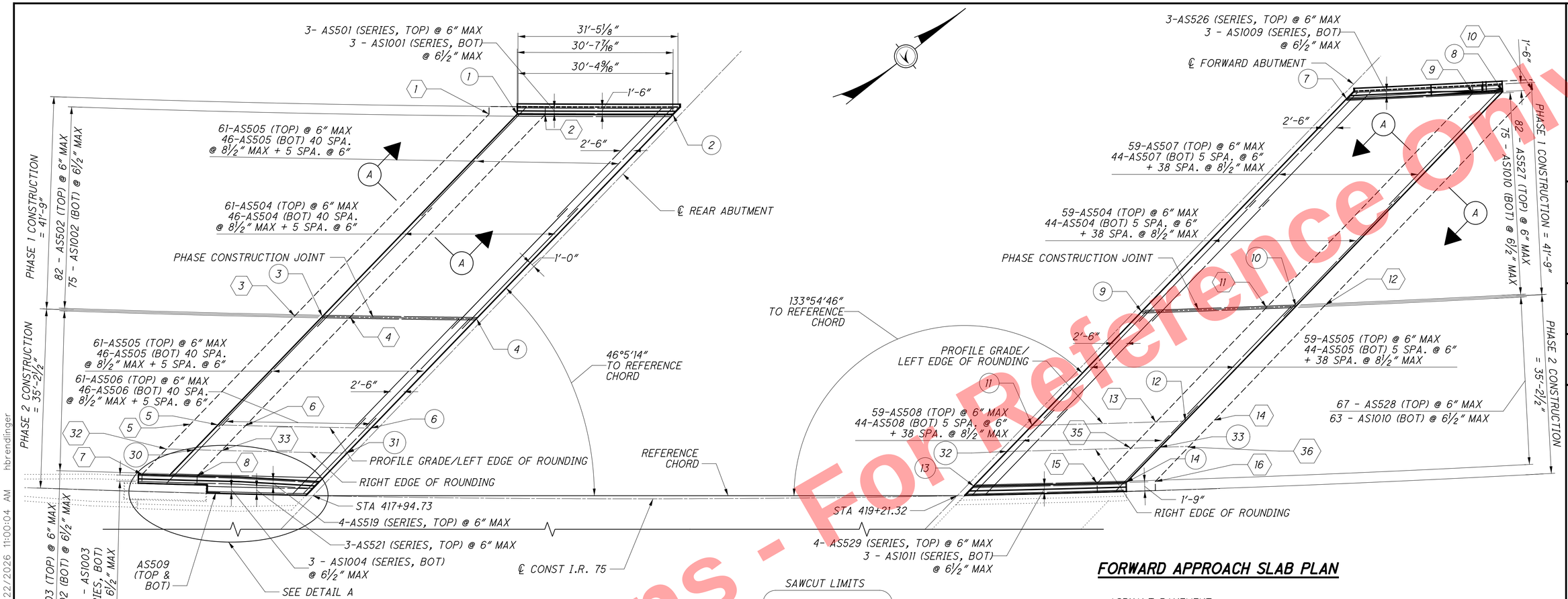

REAR APPROACH SLAB PLAN

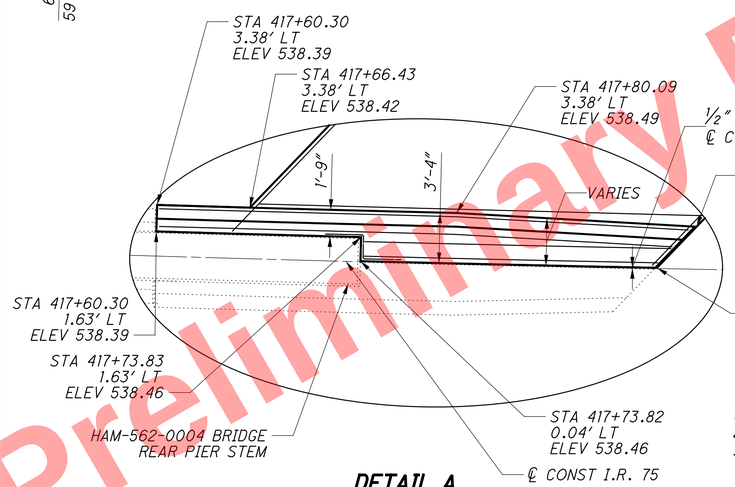

DETAIL A

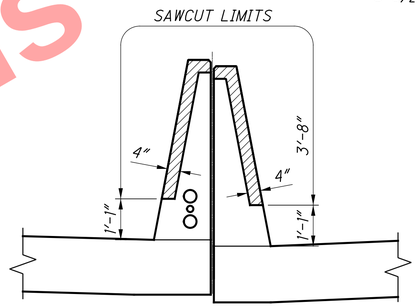

MEDIAN RAILING SAWCUT/DEFLECTION JOINT LIMITS

(SECTION THROUGH SAWCUT)

NOTES

1. ALL ELEVATIONS SHOWN REPRESENT TOP OF APPROACH SLAB ELEVATIONS.
2. SEE GENERAL NOTES FOR ABBREVIATION LEGEND.
3. 6" DIAMETER PERFORATED PIPE AT THE FORWARD ABUTMENT RUNNING FROM THE CROWN TO THE MEDIAN SHALL TEE INTO TO THE NON-PERFORATED UNDERDRAIN PIPE RUNNING ALONG THE APPROACH SLAB. THE PORTION OF 6" DIAMETER PERFORATED PIPE FROM THE CROWN TO THE OUTSIDE EDGES OF THE BRIDGE SHALL OUTLET TO THE SLOPE PER STANDARD DRAWING AS-2-15. 6" DIAMETER PERFORATED PIPE AT THE REAR ABUTMENT RUNNING FROM THE CROWN TO THE MEDIAN SHALL TIE INTO THE ROADWAY UNDERDRAIN AT THE MEDIAN. THE PORTION OF THE 6" DIAMETER PERFORATED PIPE FROM THE CROWN TO THE OUTSIDE EDGES OF BRIDGE SHALL OUTLET TO THE SLOPE PER STANDARD DRAWING AS-2-15. ALL SLEEPER SLAB DRAINAGE SHALL BE INCLUDED FOR PAYMENT WITH ITEM 526 - TYPE A INSTALLATION.

FORWARD APPROACH SLAB PLAN

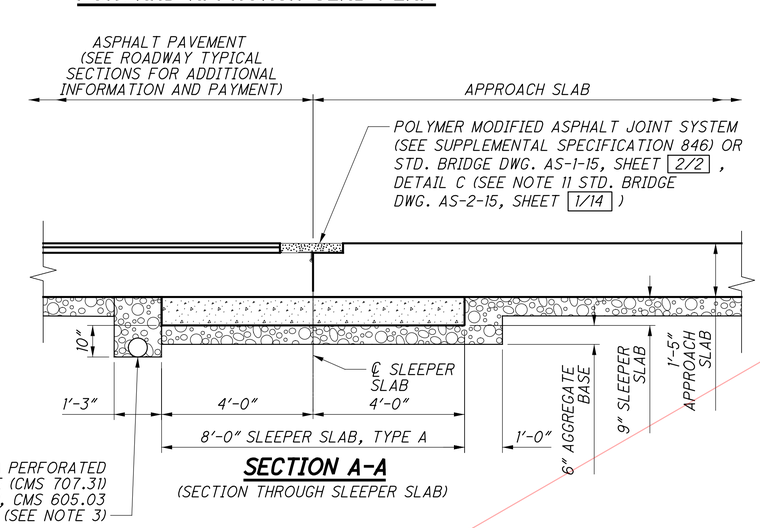

SECTION A-A

(SECTION THROUGH SLEEPER SLAB)

LEGEND

(X) - APPROACH SLAB SURFACE ELEVATION LOCATION NO. "X"

⬡X⬡ - SLEEPER SLAB SURFACE ELEVATION LOCATION NO.

Preliminary Plans - For Reference Only

DESIGN AGENCY: EMH&T
DESIGNED: RJE
DRAWN: GB
CHECKED: RMW
REVIEWED: CAS
DATE: 5-22-26
REVISED: -
STRUCTURE FILE NUMBER: 3110044

APPROACH SLAB - LEFT BRIDGE
BRIDGE NO. HAM-75-0791
I.R. 75 OVER RAMP J

HAM-75-7.85
PID No. 121447

54 / 65

918
1047

J:\2011093\ODOT\HAM\7889\structures\HAM075_0791C\sheets\075_0791CMD001.dgn 5/22/2026 11:00:04 AM hbrendlinger

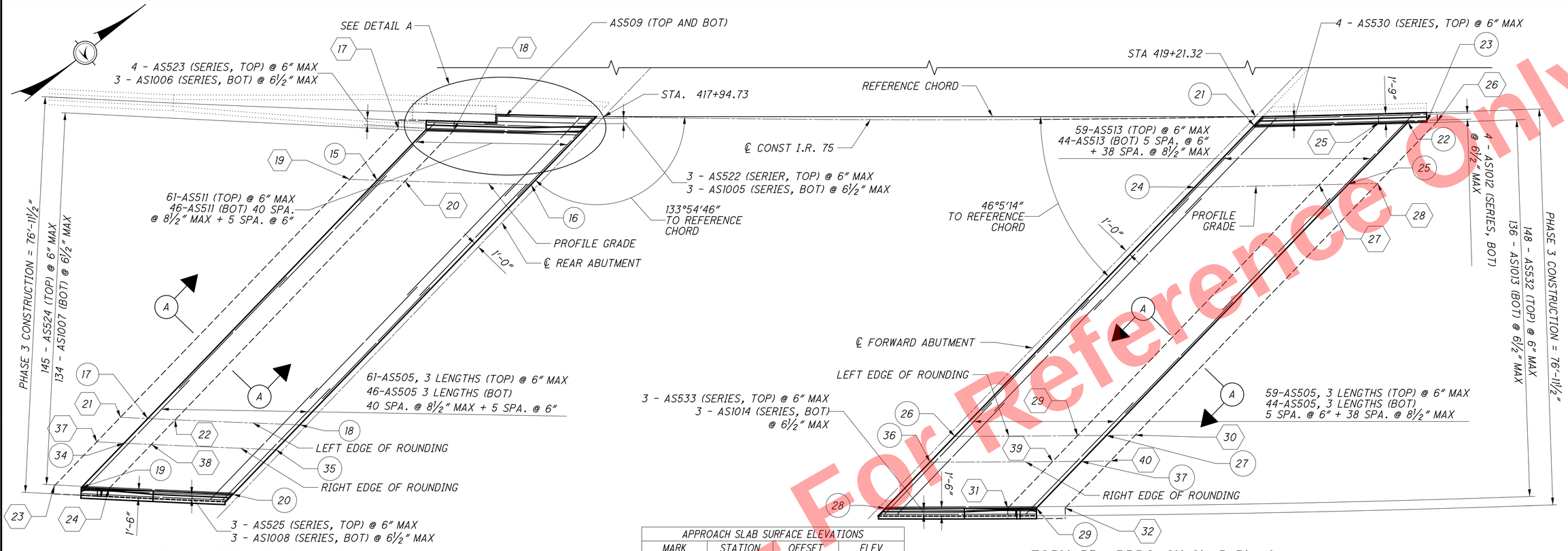

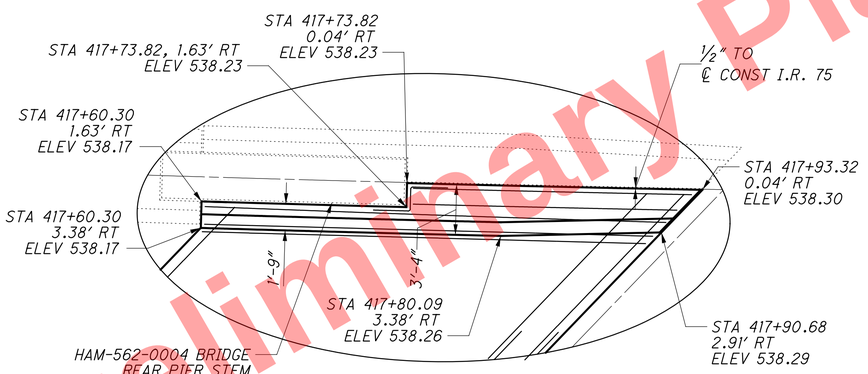

DETAIL A

APPROACH SLAB SURFACE ELEVATIONS			
MARK	STATION	OFFSET	ELEV
1	418+34.28	75.5' LT	536.34
2	418+65.62	75.5' LT	536.49
3	417+95.88	35.25' LT	537.85
4	418+26.49	35.25' LT	537.99
5	417+75.70	13.5' LT	538.67
6	418+05.93	13.5' LT	538.81
7	420+01.08	75.5' LT	537.14
8	420+32.57	75.5' LT	537.29
9	419+58.62	35.25' LT	538.62
10	419+89.29	35.25' LT	538.77
11	419+36.34	13.5' LT	539.43
12	419+66.59	13.5' LT	539.58
13	419+24.53	1.79' LT	539.11
14	419+54.56	1.79' LT	539.26
15	417+51.17	13.5' RT	538.55
16	417+80.94	13.5' RT	538.69
17	417+08.93	61.5' RT	540.36
18	417+37.93	61.5' RT	540.50
19	416+96.92	75.5' RT	539.95
20	417+25.71	75.5' RT	540.09
21	419+20.94	1.79' RT	538.87
22	419+50.91	1.79' RT	539.01
23	419+54.56	1.79' RT	539.03
24	419+09.29	13.5' RT	539.30
25	419+39.05	13.5' RT	539.44
26	418+62.82	61.5' RT	541.10
27	418+91.73	61.5' RT	541.24
28	418+49.63	75.5' RT	540.68
29	418+78.31	75.5' RT	540.82
30	417+71.11	8.5' LT	538.65
31	418+01.26	8.5' LT	538.79
32	419+31.28	8.5' LT	539.41
33	419+61.44	8.5' LT	539.56
34	417+04.62	66.5' RT	540.35
35	417+33.55	66.5' RT	540.49
36	418+58.09	66.5' RT	541.08
37	418+86.92	66.5' RT	541.22

SLEEPER SLAB SURFACE ELEVATIONS			
MARK	STATION	OFFSET	ELEV
1	418+28.63	75.5' LT	534.90
2	418+39.93	75.5' LT	534.95
3	417+90.38	35.25' LT	536.41
4	418+01.40	35.25' LT	536.46
5	417+70.26	13.5' LT	537.22
6	417+81.15	13.5' LT	537.28
7	417+61.02	3.37' LT	536.98
8	417+71.85	3.38' LT	537.03
9	420+26.58	75.5' LT	535.84
10	420+38.56	75.5' LT	535.90
11	419+83.45	35.25' LT	537.33
12	419+95.14	35.25' LT	537.38
13	419+60.83	13.5' LT	538.13
14	419+72.36	13.5' LT	538.19
15	419+24.53	1.79' LT	537.70
16	419+54.56	1.79' LT	537.84
17	417+54.90	3.38' RT	536.72
18	417+65.70	3.37' RT	536.78
19	417+45.81	13.5' RT	537.11
20	417+56.54	13.5' RT	537.16

SLEEPER SLAB SURFACE ELEVATIONS (CONT)			
MARK	STATION	OFFSET	ELEV
21	417+03.70	61.5' RT	538.92
22	417+14.16	61.5' RT	538.97
23	416+91.73	75.5' RT	538.51
24	417+02.11	75.5' RT	538.56
25	419+45.20	1.79' RT	537.57
26	419+56.61	1.8' RT	537.62
27	419+33.38	13.5' RT	538.00
28	419+44.72	13.5' RT	538.06
29	418+86.23	61.5' RT	539.79
30	418+97.24	61.5' RT	539.84
31	418+73.85	75.5' RT	539.38
32	418+83.76	75.5' RT	539.43
33	417+65.69	8.5' LT	537.21
34	417+76.55	8.5' LT	537.26
35	419+55.70	8.5' LT	538.11
36	419+67.19	8.5' LT	538.17
37	416+99.41	66.5' RT	538.91
38	417+09.84	66.5' RT	538.96
39	418+81.43	66.5' RT	539.77
40	418+92.41	66.5' RT	539.83

NOTES

1. SEE SHEET 54/65 SECTION A-A.
2. SEE GENERAL NOTES FOR ABBREVIATION LEGEND.

LEGEND

(X) - APPROACH SLAB SURFACE ELEVATION LOCATION NO. "X"

⬡X⬡ - SLEEPER SLAB SURFACE ELEVATION LOCATION NO. "X"

Preliminary Plans
Not For Reference Only

DESIGN AGENCY: EMH&T
DESIGNED: RJE
DRAWN: GB
CHECKED: RMW
REVIEWED: CAS
DATE: 5-22-26
REVISED: -
STRUCTURE FILE NUMBER: 3110044

APPROACH SLAB - RIGHT BRIDGE
BRIDGE NO. HAM-75-0791
I.R. 75 OVER RAMP J

HAM-75-7.85
PID No. 121447

55/65

919/1047

J:\2011090\3\ODOT\HAM\77889\structures\HAM075_0791C\sheets\075_0791CD002.dgn 5/22/2026 11:00:05 AM hbrendlinger

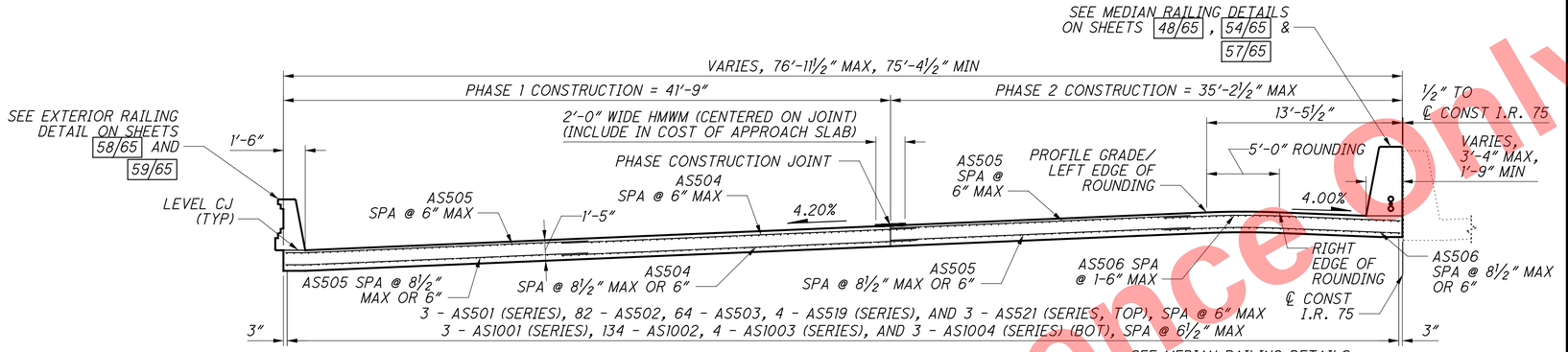

REAR APPROACH SLAB SECTION - LEFT BRIDGE

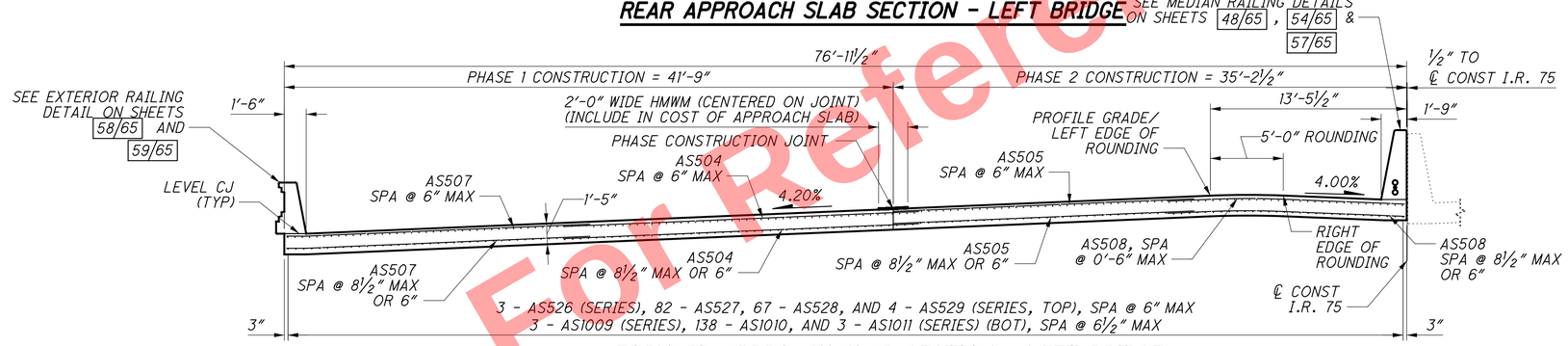

FORWARD APPROACH SLAB SECTION - LEFT BRIDGE

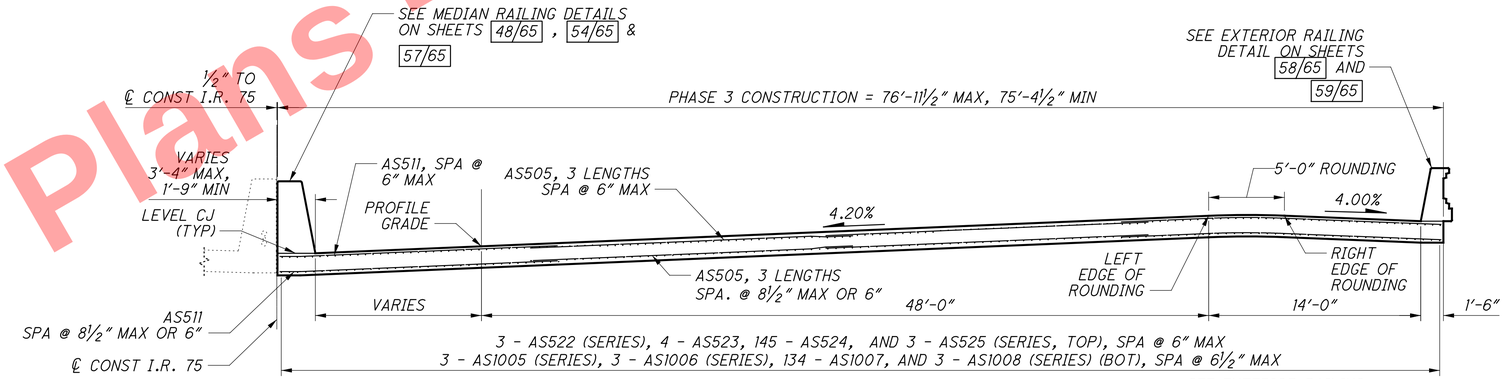

REAR APPROACH SLAB SECTION - RIGHT BRIDGE

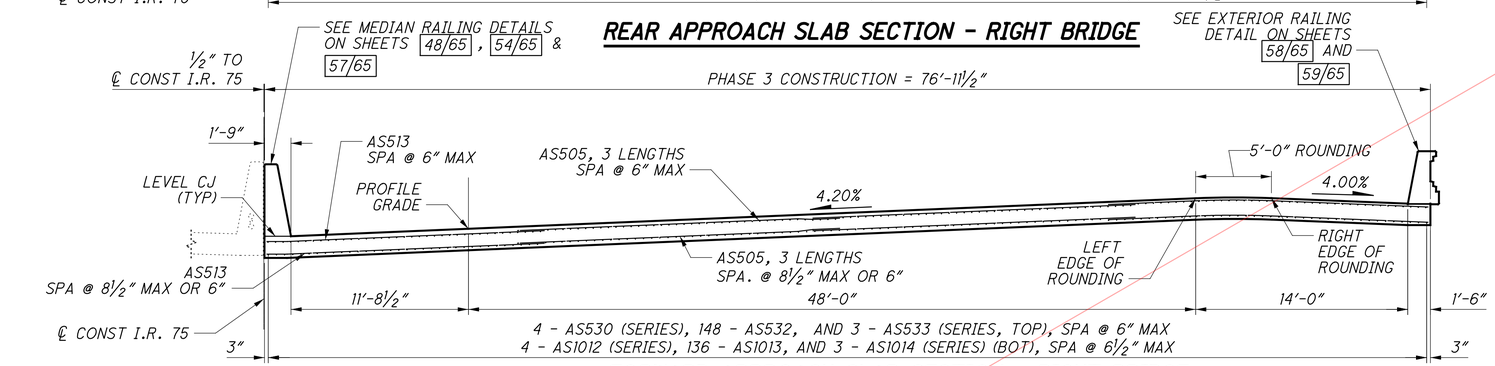

FORWARD APPROACH SLAB SECTION - RIGHT BRIDGE

NOTES

1. SEE GENERAL NOTES FOR ABBREVIATION LEGEND.

Preliminary Plans - For Reference Only

DESIGN AGENCY: EMH&T
DESIGNED: RJE | DRAWN: GB | CHECKED: RMW | REVIEWED: CAS | DATE: 5-22-26 | REVISED: - | STRUCTURE FILE NUMBER: 3110044

APPROACH SLAB SECTIONS
BRIDGE NO. HAM-75-0791
I.R. 75 OVER RAMP J

HAM-75-7.85
PID No. 121447

56 / 65

920
1047

J:\20110903\ODOT\HAM\7889\structures\HAM075_0791C\sheets\075_0791CMD003.dgn 5/22/2026 11:00:06 AM hbrendlinger

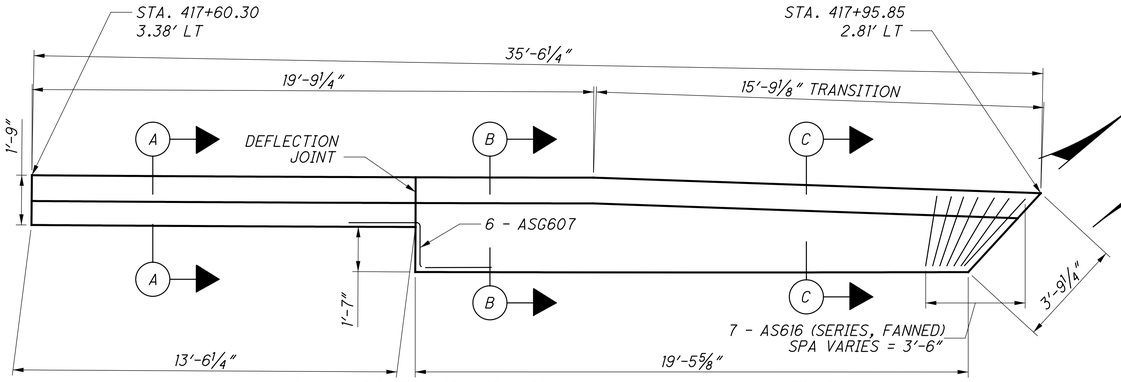

LEFT BRIDGE REAR ABUTMENT MEDIAN RAILING PLAN

SEE SHEETS 54/65 & 55/65 FOR ADDITIONAL DETAILS

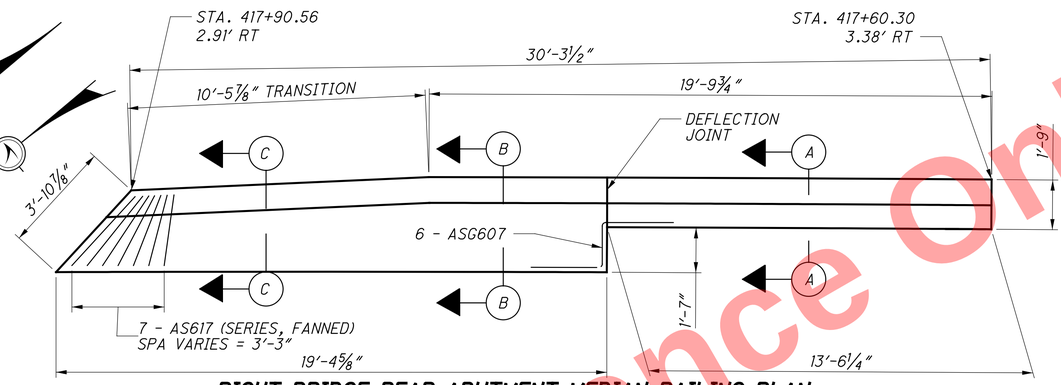

RIGHT BRIDGE REAR ABUTMENT MEDIAN RAILING PLAN

SEE SHEETS 54/65 & 55/65 FOR ADDITIONAL DETAILS

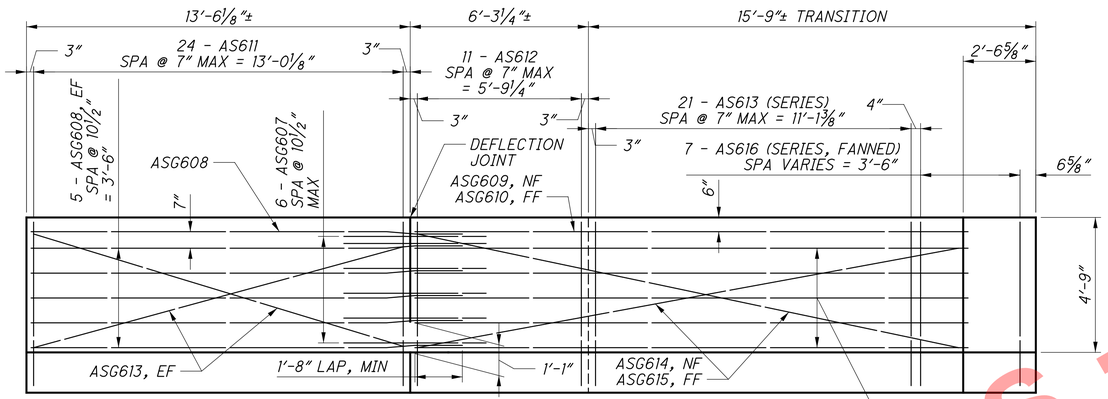

LEFT BRIDGE REAR ABUTMENT MEDIAN RAILING ELEVATION

ELEVATION VIEW LOOKING AT EXTERIOR FACE OF RAILING

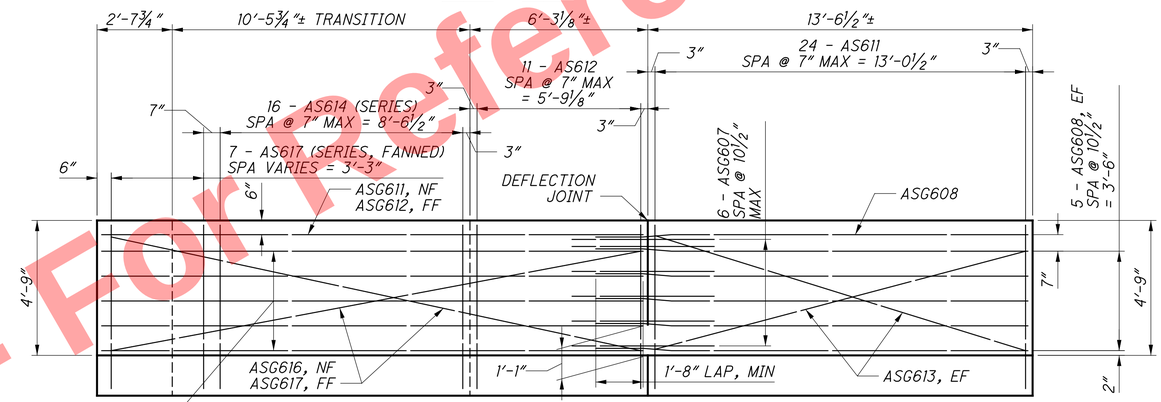

RIGHT BRIDGE REAR ABUTMENT MEDIAN RAILING ELEVATION

ELEVATION VIEW LOOKING AT EXTERIOR FACE OF RAILING

NOTES

1. SEE GENERAL NOTES FOR ABBREVIATION LEGEND.
2. DEFLECTION JOINT RADIAL TO ℄ CONST I.R. 75.
3. FOR ADDITIONAL RAILING DETAILS NOT SHOWN ON THIS SHEET, REFER TO ODOT STANDARD DRAWING SBR-2-20.
4. APPROACH SLAB REINFORCING NOT SHOWN FOR CLARITY.

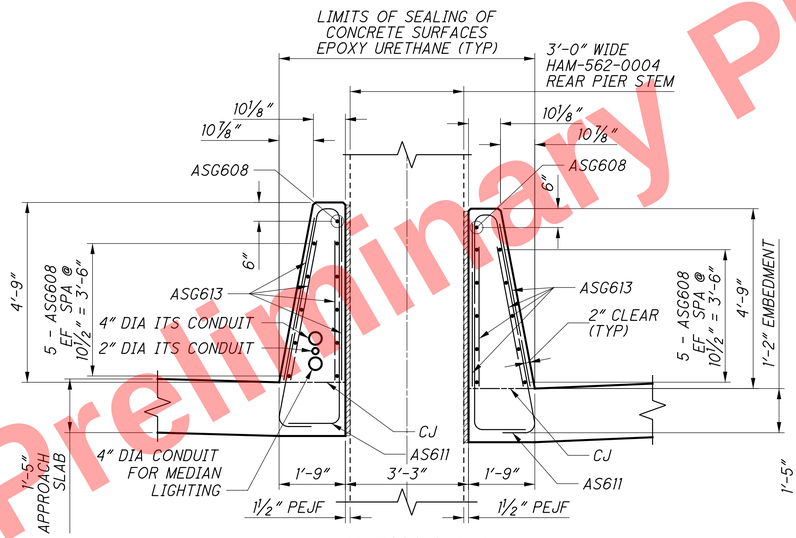

SECTION A-A

FROM STA 417+60.30 TO STA 417+73.82 LEFT BRIDGE
FROM STA 417+60.30 TO STA 417+73.82 RIGHT BRIDGE

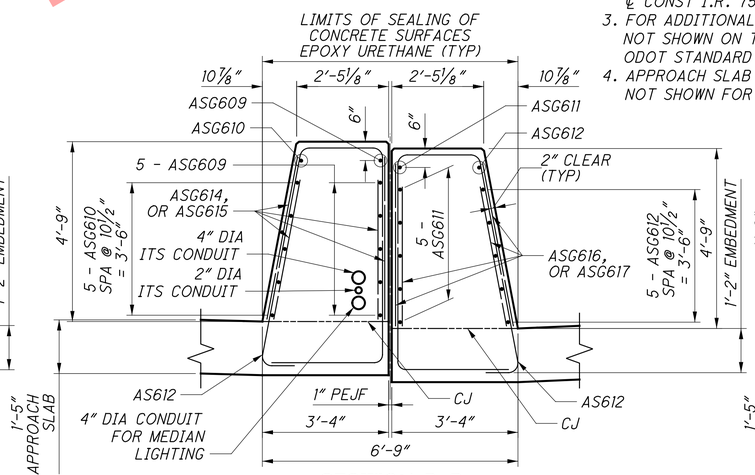

SECTION B-B

FROM STA 417+73.82 TO STA 417+80.09 LEFT BRIDGE
FROM STA 417+73.82 TO STA 417+80.09 RIGHT BRIDGE

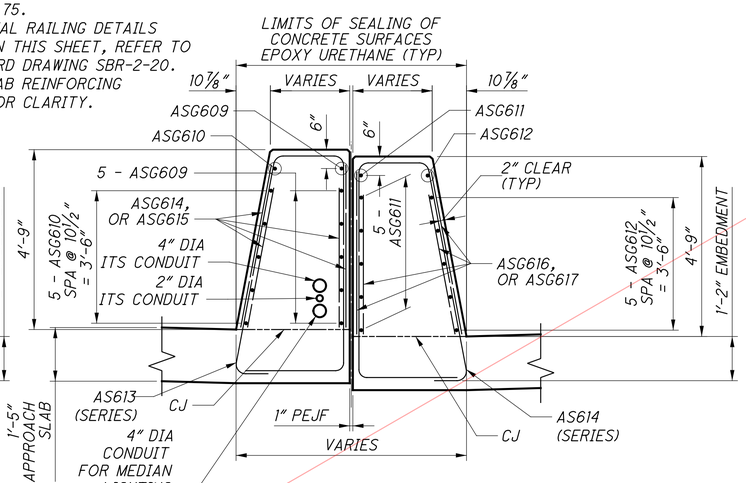

SECTION C-C

FROM STA 417+80.09 TO STA 417+95.96 LEFT BRIDGE
FROM STA 417+80.09 TO STA 417+93.32 RIGHT BRIDGE

Preliminary Plans - For Reference Only

DESIGN AGENCY: EMH&T
DESIGNED: RJE
DRAWN: GB
CHECKED: RMW
REVIEWED: CAS
DATE: 5-22-26
REVISED: -
STRUCTURE FILE NUMBER: 3110044

REAR APPROACH SLAB MEDIAN RAILING DETAILS
BRIDGE NO. HAM-75-0791
I.R. 75 OVER RAMP J

HAM-75-7.85
PID No. 121447

57 / 65

921
1047

J:\20110903\ODOT\HAM\77889\structures\HAM075_0791C\sheets\075_0791CRA005.dgn 5/22/2026 11:00:07 AM hbrendlinger

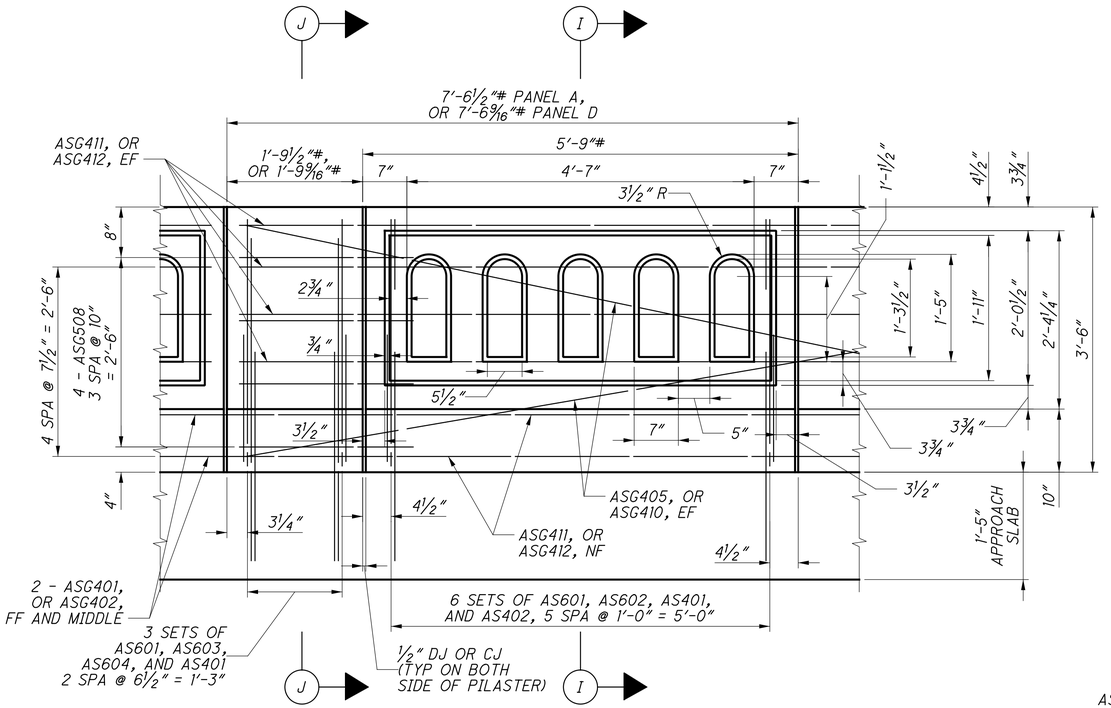

RAIL PANEL A (TYP OF 2), RAIL PANEL D (TYP OF 4)

SEE SHEET 41/65 FOR PANEL LOCATIONS

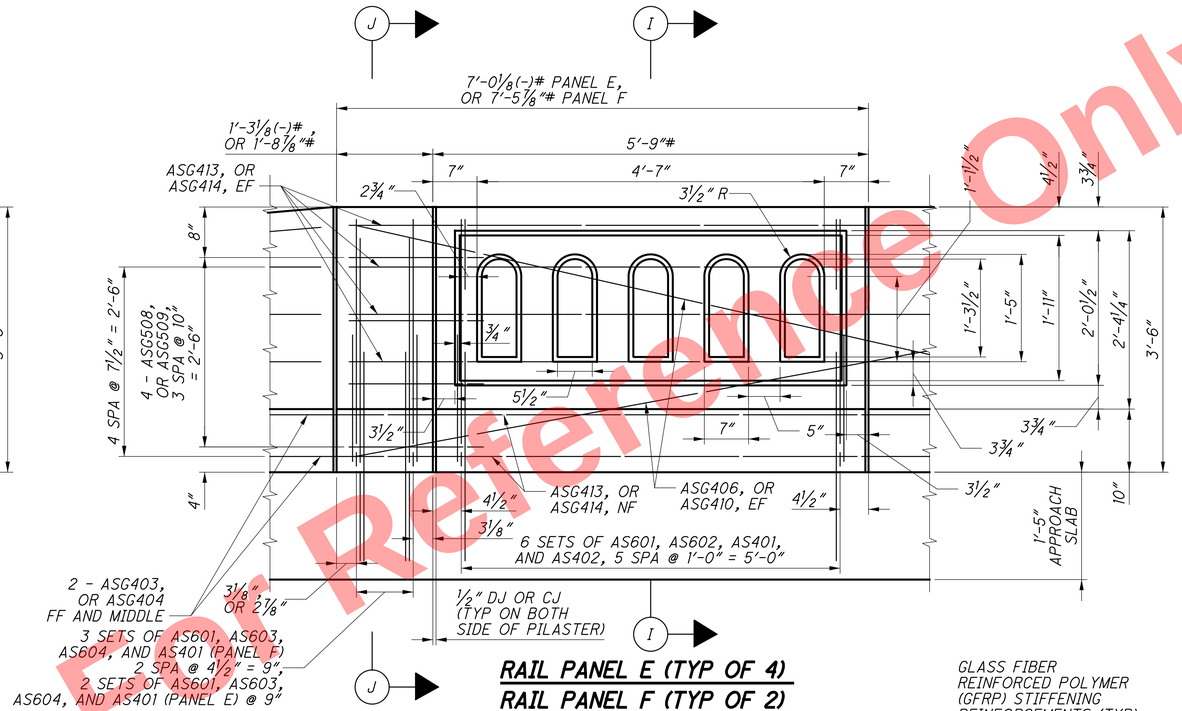

RAIL PANEL E (TYP OF 4)
RAIL PANEL F (TYP OF 2)

SEE SHEET 41/65 FOR PANEL LOCATIONS

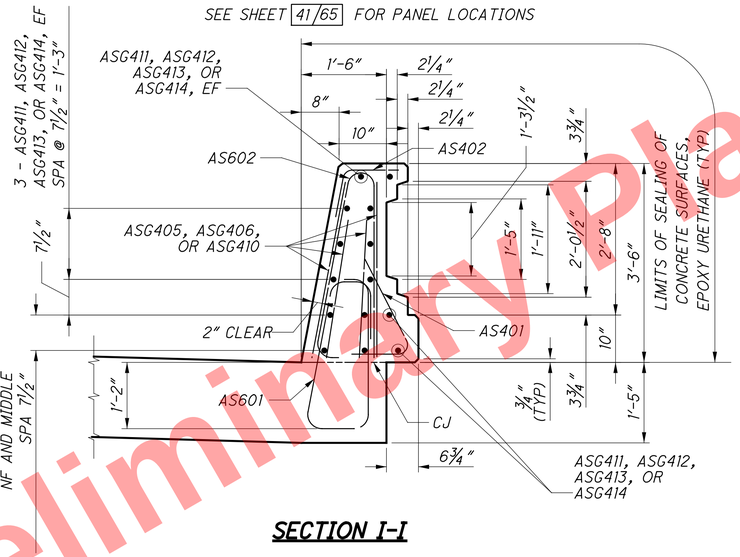

SECTION I-I

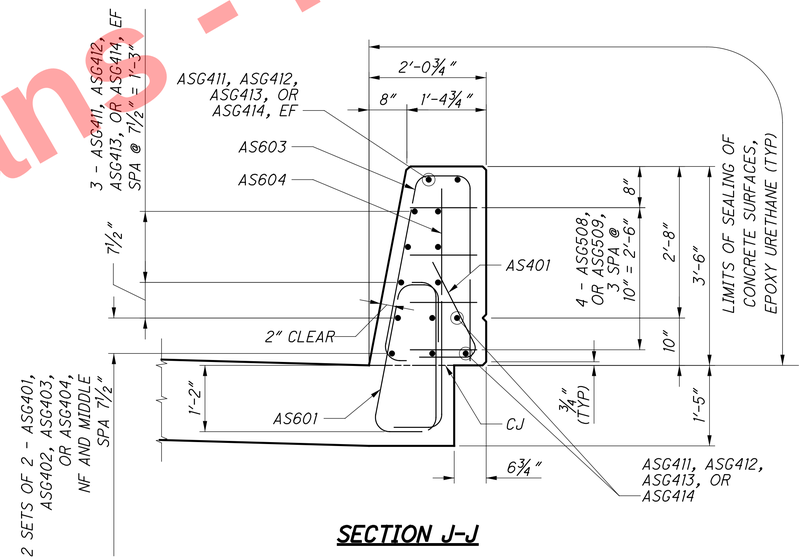

SECTION J-J

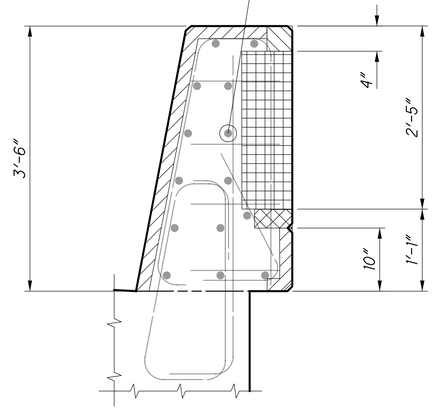

CONTRACTION JOINT

(SEE NOTE 4)

NOTES

1. ELEVATION VIEW LOOKING AT EXTERIOR FACE OF RAILING.
2. SEE GENERAL NOTES FOR ABBREVIATION LEGEND.
3. FOR ADDITIONAL RAILING DETAILS NOT SHOWN ON THIS SHEET, REFER TO ODOT STANDARD DRAWING SBR-1-20.
4. DEFLECTION JOINTS AND CONTRACTION JOINTS ARE TO BE CAST INTO THE RAILINGS AND HELD IN WITH CHAMFER STRIPS. THE EXCESS MATERIAL WILL BE TRIMMED TO THE BASE OF THE CHAMFER. THE MATERIAL THAT WILL BE USED NEEDS TO NOT ABSORB WATER AND AS SUFFICIENT RIGIDITY TO NOT SIGNIFICANTLY MOVE DURING THE CASTING OF THE RAILING. THE JOINT MATERIAL IS TO BE 0.5" IN THICKNESS AND WILL BE NOMAFLEX BY NOMACO OR FIBER LITE BY W.R. MEADOWS OR SIMILAR PRODUCT APPROVED BY THE ENGINEER.

LEGEND

- DIMENSION GIVEN ARE ALONG ARC OUTSIDE FACE OF RAILING.

- 8" WIDE PREFORMED JOINT MATERIAL
- 6" WIDE PREFORMED JOINT MATERIAL
- 4" WIDE PREFORMED JOINT MATERIAL
- 2" WIDE PREFORMED JOINT MATERIAL

DJ - DEFLECTION JOINT (SEE SHEET 42/65 FOR DETAILS)

CJ - CONTRACTION JOINT (SEE THIS SHEET FOR DETAILS)

Preliminary Plans - For Reference Only

DESIGN AGENCY: EMH&T
DESIGNED: RJE | DRAWN: GB | REVIEWED: CAS | DATE: 5-22-26
CHECKED: RMW | REVISED: - | STRUCTURE FILE NUMBER: 3110044

APPROACH SLAB EXTERIOR RAILING DETAILS

BRIDGE NO. HAM-75-0791
I.R. 75 OVER RAMP J

HAM-75-7.85
PID No. 121447

58/65

922/1047

J:\2011093\ODOT\HAM\7889\structures\HAM075_0791C\sheets\075_0791CRA006.dgn 5/22/2026 11:00:07 AM hbrendlinger

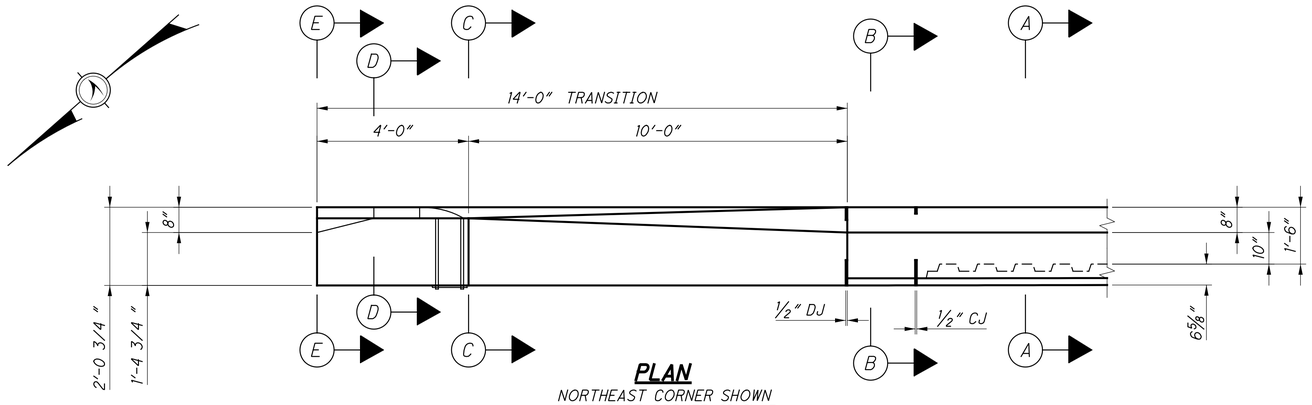

PLAN

NORTHEAST CORNER SHOWN
SOUTHEAST CORNER SIMILAR

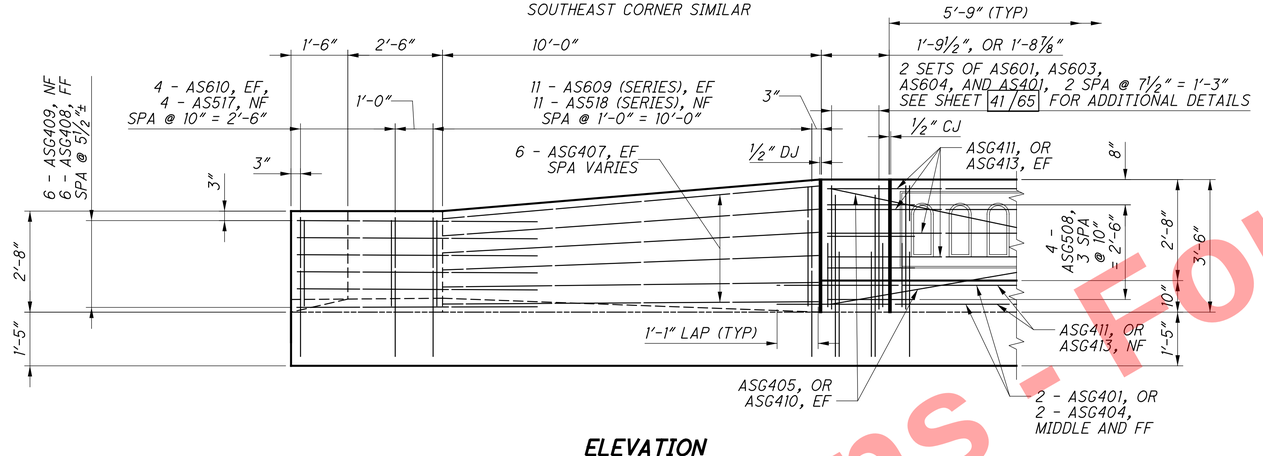

ELEVATION

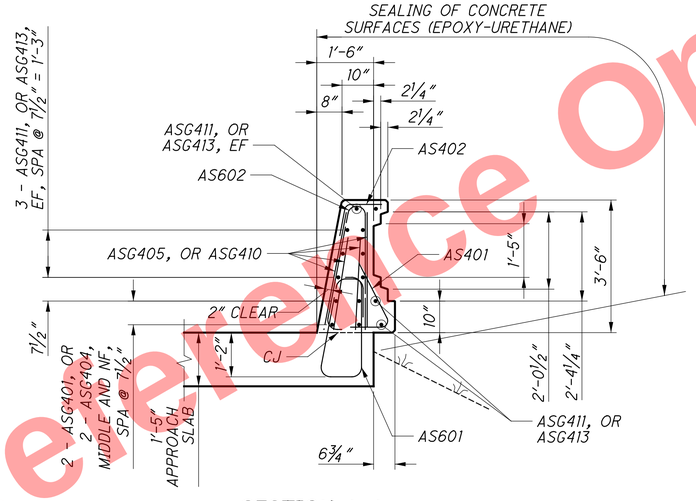

SECTION A-A

LEGEND

DJ - DEFLECTION JOINT (SEE SHEET 42/65 FOR DETAILS)

CJ - CONTRACTION JOINT (SEE SHEET 58/65 FOR DETAILS)

NOTE

1. FOR ADDITIONAL RAILING DETAILS NOT SHOWN ON THIS SHEET, REFER TO ODOT STANDARD DRAWINGS SBR-1-20, REVISIONS 07/17/20.
2. DIMENSIONS PROVIDED ARE ALONG THE TOE OF RAILING.
3. ELEVATION VIEW LOOKING AT EXTERIOR FACE OF RAILING.
4. SEE SHEET 41/65 FOR RAILING TRANSITION LOCATIONS.
5. SEE GENERAL NOTES FOR ABBREVIATION LEGEND.

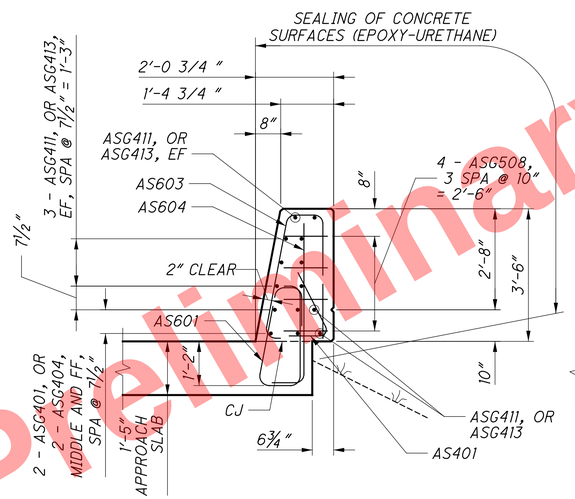

SECTION B-B

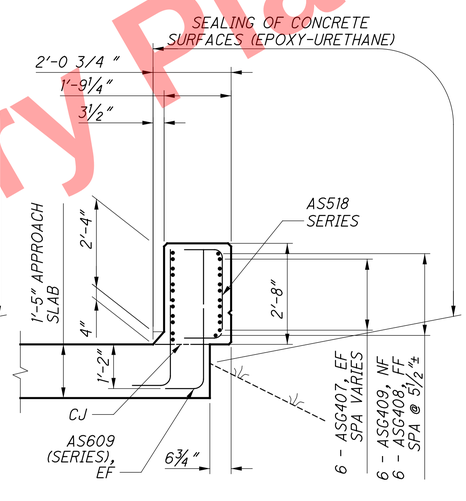

SECTION C-C

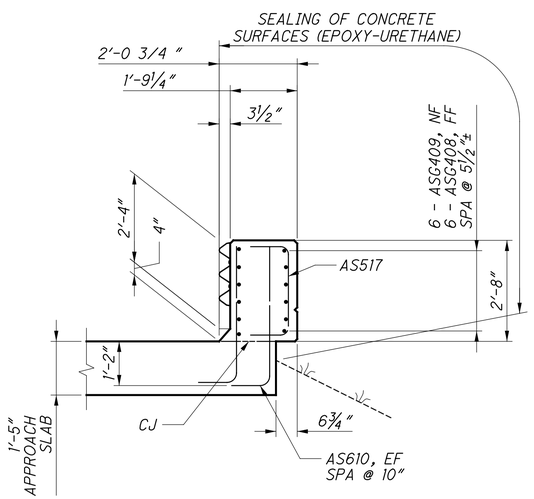

SECTION D-D

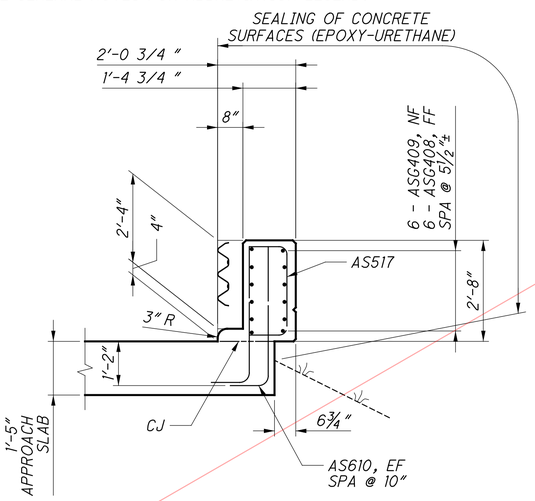

SECTION E-E

Preliminary Plans - For Reference Only

DESIGN AGENCY: EMH&T

DESIGNED	DRAWN	REVIEWED	DATE
RJE	GB	CAS	5-22-26
CHECKED	REVISED	STRUCTURE FILE NUMBER	
RMW	-	3110044	

APPROACH SLAB RAILING TRANSITION DETAILS
BRIDGE NO. HAM-75-0791
I.R. 75 OVER RAMP J

HAM-75-7.85
PID No. 121447

59/65

923/1047

J:\20110903\ODOT\HAM\7889\structures\HAM075_0791C\sheets\075_0791CRA004.dgn 5/22/2026 11:00:08 AM hbrendlinger

ABUTMENTS REINFORCING STEEL LIST (LEFT BRIDGE)

MARK	NUMBER REAR ABUT	NUMBER FORWARD ABUT	NUMBER TOTAL	LENGTH	WEIGHT	TYPE	DIMENSIONS A	B	C	D	E	R	INC
A501	6	2	8	30′-0″	250	STR							
A502	10	10	20	32′-6″	678	STR							
A503	10	10	20	29′-0″	605	STR							
A504		6	6	23′-0″	144	STR							
A505	4	14	18	25′-0″	469	STR							
A506	NOT USED												
A507	88	109	197	18′-2″	3733	3	6′-2″	2′-7″					
A508	3	2	5	18′-7″	97	3	6′-4½″	2′-7″					
A509	3	3	6	20′-1″	126	3	7′-1½″	2′-7″					
A510	3	3	6	23′-0″	144	3	8′-7″	2′-7″					
A511	34	40	74	8′-9″	675	2	3′-2″	2′-8″	3′-2″				
A512	54	54	108	9′-9″	1098	2	3′-8″	2′-8″	3′-8″				
A513	64	60	124	10′-5″	1347	2	4′-0″	2′-8″	4′-0″				
A514	1 SR OF 4		1 SR OF 4	4′-3″ TO 16′-0″	42	STR							3′-11″
A515	1 SR OF 4		1 SR OF 4	6′-2″ TO 17′-11″	50	STR							3′-11″
A516	1		1	21′-5″	22	19	1′-11 ½″	18′-2″	6′-11″				
A517	1		1	23′-4″	24	19	3′-11″	18′-2″	6′-11″				
A518	6	18	24	13′-3″	332	2	5′-8″	2′-2″	5′-8″				
A519	6	12	18	10′-3″	192	2	4′-2″	2′-2″	4′-2″				
A520	1 SR OF 6		1 SR OF 6	10′-5″ TO 15′-5″	81	2	4′-3″ TO 6′-9″	2′-2″	4′-3″ TO 6′-9″				0′-6″
A521	1 SR OF 6		1 SR OF 6	7′-3″ TO 12′-3″	61	2	2′-8″ TO 5′-2″	2′-2″	2′-8″ TO 5′-2″				0′-6″
A522	2	2	4	14′-5″	60	2	6′-3″	2′-2″	6′-3″				
A523	4		4	8′-1″	34	2	3′-1″	2′-2″	3′-1″				
A524		2 SR OF 4	2 SR OF 4	7′-2″ TO 36′-5″	182	STR							9′-9″
A525		2	2	14′-4″	30	19	2′-2″	12′-0″	1′-10″				
A526		5	5	6′-0″	31	19	4′-1″	1′-9″	0′-8 ½″				
A527		1 SR OF 12	1 SR OF 12	7′-3″ TO 11′-10″	119	2	2′-8″ TO 4′-11 ½″	2′-2″	2′-8″ TO 4′-11 ½″				0′-2 ½″
A528		1 SR OF 18	1 SR OF 18	9′-1″ TO 16′-2″	236	2	3′-7″ TO 7′-1 ½″	2′-2″	3′-7″ TO 7′-1 ½″				0′-2 ½″
A529		2	2	8′-7″	18	2	3′-4″	2′-2″	3′-4″				
A530	2	2	4	15′-3″	64	2	6′-3″	3′-0″	6′-3″				
A531		2	2	16′-3″	34	2	6′-3″	4′-0″	6′-3″				
FROM A532 THRU A543 NOT USED													
A544		4	4	6′-0″	25	19	3′-0″	2′-9″	1′-2″				
A545	8		8	31′-6″	263	STR							
A546	10		10	21′-9″	227	STR							
A547		10	10	23′-8″	247	STR							
A548		16	16	20′-9″	346	STR							
A549	4	4	8	10′-1″	84	2	3′-8″	3′-0″	3′-8″				
A550	4	4	8	10′-8″	89	2	3′-8″	3′-7″	3′-8″				
A551	2	2	4	10′-9″	45	2	4′-0″	3′-0″	4′-0″				
A552	2	2	4	11′-4″	47	2	4′-0″	3′-7″	4′-0″				
A801	4		4	30′-0″	320	STR							
A802	8	8	16	36′-10″	1574	STR							
A803	8	8	16	29′-0″	1239	STR							
A804	NOT USED												
A805		16	16	27′-6″	1175	STR							
A806	16		16	21′-6″	918	STR							
A807	8		8	26′-6″	566	STR							
A808		8	8	22′-3″	475	STR							
A809		8	8	28′-8″	612	STR							
				TOTAL	19,230								

ABUTMENTS REINFORCING STEEL LIST (RIGHT BRIDGE)

MARK	NUMBER REAR ABUT	NUMBER FORWARD ABUT	NUMBER TOTAL	LENGTH	WEIGHT	TYPE	DIMENSIONS A	B	C	D	E	R	INC
A501	36	66	102	30′-0″	3192	STR							
A502	NOT USED												
A503	NOT USED												
A504		10	10	23′-0″	240	STR							
A505		10	10	25′-0″	261	STR							
A506	6		6	20′-0″	125	STR							
A507	98	117	215	18′-2″	4074	3	6′-2″	2′-7″					
A508	1	1	2	18′-7″	39	3	6′-4½″	2′-7″					
A509	1	1	2	20′-1″	42	3	7′-1½″	2′-7″					
A510	1	1	2	23′-0″	48	3	8′-7″	2′-7″					
A511	NOT USED												
A512	NOT USED												
A513	18	18	36	10′-5″	391	2	4′-0″	2′-8″	4′-0″				
A514	1 SR OF 4		1 SR OF 4	4′-3″ TO 16′-0″	42	STR							3′-11″
A515	1 SR OF 4		1 SR OF 4	6′-2″ TO 17′-11″	50	STR							3′-11″
A516	NOT USED												
A517	NOT USED												
A518	13	37	50	13′-3″	691	2	5′-8″	2′-2″	5′-8″				
A519	NOT USED												
A520	NOT USED												
A521	1 SR OF 6		1 SR OF 6	7′-3″ TO 12′-3″	61	2	2′-8″ TO 5′-2″	2′-2″	2′-8″ TO 5′-2″				0′-6″
FROM A522 THRU A528 NOT USED													
A529	4		4	8′-7″	36	2	3′-4″	2′-2″	3′-4″				
A530	NOT USED												
A531	NOT USED												
A532	22		22	15′-3″	350	STR							
A533	6		6	17′-0″	106	STR							
A534	2 SR OF 4		2 SR OF 4	24′-0″ TO 34′-6″	244	STR							3′-6″
A535	1		1	31′-11″	33	19	3′-9″	26′-4″	10′-0″				
A536	1		1	30′-2″	31	19	2′-0″	26′-4″	10′-0″				
A537	48	60	108	11′-3″	1267	2	4′-5″	2′-8″	4′-5″				
A538	92	88	180	12′-1″	2269	2	4′-10″	2′-8″	4′-10″				
A539	1	37	38	22′-11″	908	2	10′-6″	2′-2″	10′-6″				
A540	2		2	18′-10″	39	2	8′-1″	2′-11″	8′-1″				
A541	6		6	11′-5″	71	2	4′-9″	2′-2″	4′-9″				
A542	1 SR OF 6		1 SR OF 6	11′-5″ TO 16′-5″	87	2	4′-9″ TO 7′-3″	2′-2″	4′-9″ TO 7′-3″				0′-6″
A543		8	8	5′-11″	49	19	3′-0″	1′-2″	2′-9″				
A544	1 SR OF 6		1 SR OF 6	17′-7″ TO 22′-7″	126	2	7′-10″ TO 10′-4″	2′-2″	7′-10″ TO 10′-4″				0′-6″
A801	24	40	64	30′-0″	5126	STR							
A802	NOT USED												
A803	NOT USED												
A804	8	8	16	20′-9″	886	STR							
FROM A805 THRU A809 NOT USED													
A810	16		16	24′-6″	1047	STR							
				TOTAL	21,931								

Preliminary Plans - For Reference Only

J:\20110903\ODOT\HAM\7889\structures\HAM075_0791C\sheets\075_0791CRL004.dgn 5/22/2026 11:00:09 AM hbrendlinger

DESIGN AGENCY
EMH&T
Engineers • Surveyors • Planners • Scientists
5500 New Albany Road, Columbus, Ohio 43054
Phone: 614.775.4500

DESIGNED RJE | DRAWN GB | REVIEWED CAS | DATE 5-22-26
CHECKED RMW | REVISED - | STRUCTURE FILE NUMBER 3110044

REINFORCING STEEL LIST
BRIDGE NO. HAM-75-0791
I.R. 75 OVER RAMP J

HAM-75-7.85
PID No. 121447

924
1047

SUPERSTRUCTURE REINFORCING STEEL LIST (LEFT BRIDGE)

MARK	NUMBER TOTAL	LENGTH	WEIGHT	TYPE	DIMENSIONS A	B	C	D	E	R	INC
S401	324	30'-0"	6493	STR							
S402	1 SR OF 81	17'-6" TO 20'-10"	1037	STR							0'-0½"
S403	NOT USED										
S404	161	2'-8"	287	11	0'-9"	1'-8"	1'-1"				
S405	108	1'-9"	126	19	0'-11"	0'-2"	0'-11"				
S406	257	5'-3"	901	2	2'-6"	0'-5"	2'-6"				
S407	1	3'-1"	2	11	1'-0"	1'-8"	1'-5"				
S408	1	2'-2"	1	19	1'-3"	0'-3"	0'-11"				
S501	229	17'-3"	4120	16	16'-8"						
S502	491	8'-7"	4396	16	8'-0"						
S503	229	17'-8"	4220	STR							
S504	191	35'-0"	6972	STR							
S505	191	35'-7"	7089	16	35'-0"						
S506	1 SR OF 53	3'-4" TO 29'-5"	905	STR							0'-6"
S507	728	30'-0"	22779	STR							
S508	20	10'-0"	209	STR							
S509	1 SR OF 81	19'-3" TO 22'-7"	1767	STR							0'-0½"
S510	NOT USED										
S511	1 SR OF 33	2'-0" TO 18'-0"	344	16	1'-5" TO 17'-5"						0'-6"
S512	1 SR OF 33	1'-5" TO 17'-5"	324	STR							0'-6"
S513	1 SR OF 64	2'-3" TO 35'-5"	1257	16	1'-8" TO 34'-10"						0'-6⅜"
S514	1 SR OF 64	1'-8" TO 34'-10"	1218	STR							0'-6⅜"
S515	1 SR OF 26	3'-0" TO 16'-0"	258	STR							0'-6¼"
S516	1 SR OF 51	3'-4" TO 29'-6"	873	STR							0'-6¼"
FROM S517 THRU S520 NOT USED											
S521	2 SR OF 62	3'-11" TO 34'-10"	2506	STR							0'-6⅛"
FROM S522 THRU S536 NOT USED											
S537	8	7'-7"	63	2	2'-8"	2'-6"	2'-8"				
S538	8	17'-4"	145	3	3'-8"	4'-8"					
S539	111	6'-11"	801	2	2'-8"	1'-10"	2'-8"				
S540	106	15'-4"	1695	3	2'-8"	4'-8"					
S541	4	11'-8"	49	3	2'-8"	2'-10"					
S542	1 SR OF 51	3'-10" TO 30'-0"	900	STR							0'-6¼"
S543	1 SR OF 53	3'-10" TO 29'-11"	933	STR							0'-6"
S544	1 SR OF 26	4'-0" TO 17'-0"	285	STR							0'-6 ¼"
SUB-TOTAL			72,955								

SUPERSTRUCTURE REINFORCING STEEL LIST (RIGHT BRIDGE)

MARK	NUMBER TOTAL	LENGTH	WEIGHT	TYPE	DIMENSIONS A	B	C	D	E	R	INC
S401	324	30'-0"	6493	STR							
S402	NOT USED										
S403	1 SR OF 81	15'-0" TO 18'-4"	902	STR							0'-0½"
S404	143	2'-8"	255	11	0'-9"	1'-8"	1'-1"				
S405	108	1'-9"	126	19	0'-11"	0'-2"	0'-11"				
S406	252	5'-3"	884	2	2'-6"	0'-5"	2'-6"				
S407	1	3'-1"	2	11	1'-0"	1'-8"	1'-5"				
S408	1	2'-2"	1	19	1'-3"	0'-3"	0'-11"				
S501	NOT USED										
S502	480	8'-7"	4297	16	8'-0"						
FROM S503 THRU S506 NOT USED											
S507	718	30'-0"	22466	STR							
S508	20	10'-0"	209	STR							
S509	NOT USED										
S510	1 SR OF 81	16'-8" TO 20'-0"	1549	STR							0'-0½"
FROM S511 THRU S516 NOT USED											
S517	220	18'-2"	4169	16	17'-7"						
S518	220	18'-1"	4149	STR							
S519	191	34'-8"	6906	16	34'-1"						
S520	191	34'-7"	6889	STR							
S521	NOT USED										
S522	1 SR OF 65	1'-11" TO 34'-8"	1237	16	1'-4" TO 34'-1"						0'-6⅛"
S523	1 SR OF 65	1'-4" TO 34'-1"	1200	STR							0'-6⅛"
S524	2 SR OF 52	3'-6" TO 29'-10"	1806	STR							0'-6³⁄₁₆"
S525	1 SR OF 27	3'-5" TO 16'-11"	286	STR							0'-6¼"
S526	1 SR OF 57	3'-11" TO 33'-8"	1117	STR							0'-6⅜"
S527	2 SR OF 49	4'-6" TO 30'-0"	1763	STR							0'-6⅜"
S528	1 SR OF 31	1'-11" TO 18'-2"	323	16	1'-4" TO 17'-7"						0'-6½"
S529	1 SR OF 31	1'-4" TO 17'-7"	306	STR							0'-6½"
FROM S530 THRU S534 NOT USED											
S535	1 SR OF 27	3'-11" TO 17'-5"	300	STR							0'-6¼"
S536	1 SR OF 57	4'-5" TO 34'-2"	1147	STR							0'-6⅜"
S537	8	7'-7"	63	2	2'-8"	2'-6"	2'-8"				
S538	8	17'-4"	145	3	3'-8"	4'-8"					
S539	112	6'-11"	808	2	2'-8"	1'-10"	2'-8"				
S540	108	15'-4"	1727	3	2'-8"	4'-8"					
S541	4	11'-8"	49	3	2'-8"	2'-10"					
SUB-TOTAL			71,574								

NOTES

1. SEE GENERAL NOTES FOR ABBREVIATION LEGEND.

Preliminary Plans - For Reference Only

DESIGN AGENCY: EMH&T
DESIGNED: RJE
DRAWN: GB
CHECKED: RMW
REVIEWED: CAS
DATE: 5-22-26
REVISED: -
STRUCTURE FILE NUMBER: 3110044

REINFORCING STEEL LIST
BRIDGE NO. HAM-75-0791
I.R. 75 OVER RAMP

HAM-75-7.85
PID No. 121447

61 / 65

925
1047

J:\20110903\ODOT\HAM\7889\structures\HAM075_0791C\sheets\075_0791CRL001.dgn 5/22/2026 11:00:09 AM hbrendlinger

MARK	NUMBER TOTAL	LENGTH	WEIGHT	TYPE	DIMENSIONS A	B	C	D	E	R	INC
SUPERSTRUCTURE REINFORCING STEEL LIST (CONTINUED, LEFT BRIDGE)											
S601	161	7′-5″	1794	41	0′-9½″	0′-7″	1′-0″	2′-4″	1′-2½″		
S602	108	7′-0″	1136	39	0′-6″	3′-3″	3′-3″	1′-0½″		0′-2″	
S603	NOT USED										
S604	NOT USED										
S605	53	7′-6″	597	40	0′-6″	3′-3″	3′-3″	1′-6½″	11″		
S606	NOT USED										
S607	54	4′-8″	379	1	1′-0″	3′-10″					
S608	182	12′-10″	3508	35	0′-8″	4′-7″	0′-10″			0′-2¾″	
S609	4	13′-1″	79	42	0′-8″	1′-6½″	0′-10″	4′-7″	0′-6½″		
S610	1 SR OF 39	12′-10″ TO 14′-9″	808	42	0′-8″	1′-5″ TO 2′-4½″	0′-10″	4′-7″	0′-5″ TO 1′-4½″		B & E = 0′-0¼″
S611	NOT USED										
S612	1 SR OF 7	14′-11 TO 16′-2″	163	42	0′-8″	2′-5½″ TO 3-1″	0′-10″	4′-7″	1′-5½″ TO 2-1″		B & E = 0′-1¼″
S613	NOT USED										
S614	2	8′-3″	25	41	1′-1″	0′-7″	1′-0″	2′-4″	1′-8½″		
S615	1	7′-5″	11	39	0′-6″	3′-3″	3′-3″	1′-5″		0′-2¾″	
S616	1	8′-6″	13	40	0′-6″	3′-3″	3′-3″	2′-2″	1′-3″		
S801	22	30′-0″	1762	STR							
S802	16	21′-3″	908	STR							
S803	28	30′-2″	2255	STR							
S804	6	16′-5″	263	STR							
S805	26	26′-9″	1857	STR							
S806 THRU S810	NOT USED										
S811	28	25′-3″	1888	STR							
S812	8	12′-10″	274	6	3′-10″	1′-11″	3′-0″				
S813	8	32′-0″	684	STR							
S814	6	14′-6″	232	STR							
S815	NOT USED										
S816	122	6′-3″	2036	18	4′-1″	1′-0″	1′-0″				
SUB-TOTAL			20,672								
TOTAL SUPERSTRUCTURE			93,627								

MARK	NUMBER TOTAL	LENGTH	WEIGHT	TYPE	DIMENSIONS A	B	C	D	E	R	INC
SUPERSTRUCTURE REINFORCING STEEL LIST (CONTINUED, RIGHT BRIDGE)											
S601	143	7′-5″	1593	41	0′-9½″	0′-7″	1′-0″	2′-4″	1′-2½″		
S602	108	7′-0″	1136	39	0′-6″	3′-3″	3′-3″	1′-0½″		0′-2″	
S603	NOT USED										
S604											
S605	35	7′-6″	394	40	0′-6″	3′-3″	3′-3″	1′-6½″			
S606	NOT USED										
S607	36	4′-8″	252	1	1′-0″	3′-10″					
S608	181	12′-10″	3489	35	0′-8″	4′-7″	0′-10″			0′-2¾″	
S609	4	13′-1″	79	42	0′-8″	1′-6½″	0′-10″	4′-7″	0′-6½″		
S610	NOT USED										
S611	1 SR OF 44	12′-10″ TO 14′-8″	909	42	0′-8″	1′-5″ TO 2′-4	0′-10″	4′-7″	0′-5″ TO 1′-4″		B & E = 0′-0¼″
S612	NOT USED										
S613	1 SR OF 7	14′-11″ TO 16′-6″	165	42	0′-8″	2′-5½″ TO 3′-3″	0′-10″	4′-7″	1′-5½″ TO 2′-3″		B & E = 0′-1⁹⁄₁₆″
S614	2	8′-3″	25	41	1′-1″	0′-7″	1′-0″	2′-4″	1′-8½″		
S615	1	7′-5″	11	39	0′-6″	3′-3″	3′-3″	1′-5″		0′-2¾″	
S616	1	8′-6″	13	40	0′-6″	3′-3″	3′-3″	2′-2″	1′-3″		
S801	NOT USED										
S802	NOT USED										
S803	NOT USED										
S804	NOT USED										
S805	NOT USED										
S806	6	25′-5″	407	STR							
S807	14	23′-6″	878	STR							
S808	14	27′-0″	1009	STR							
S809	20	14′-0″	748	STR							
S810	8	19′-4″	413	STR							
S811	14	25′-3″	944	STR							
S812	8	12′-10″	274	6	3′-10″	1′-11″	3′-0″				
S813	58	32′-0″	4956	STR							
S814	NOT USED										
S815	12	15′-0″	481	STR							
S816	120	6′-3″	2002	18	4′-1″	1′-0″	1′-0″				
SUB-TOTAL			20,178								
TOTAL SUPERSTRUCTURE			91,752								

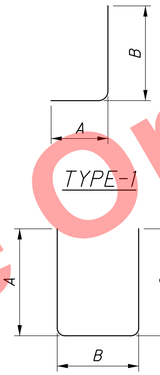

TYPE-1 TYPE-2

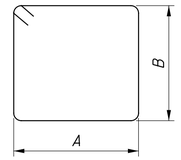

TYPE-3

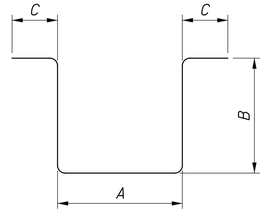

TYPE-6

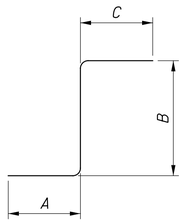

TYPE-8

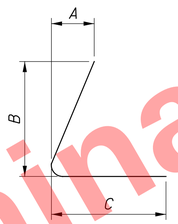

TYPE-11

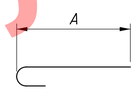

TYPE-16

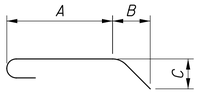

TYPE-18

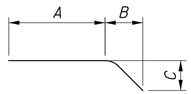

TYPE-19

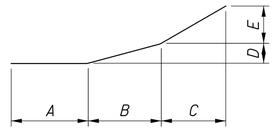

TYPE-25

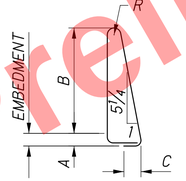

TYPE-35

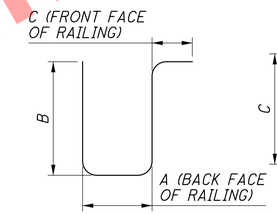

TYPE-36

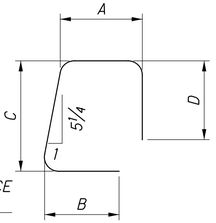

TYPE-37

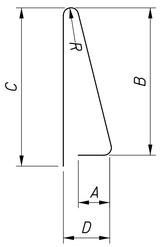

TYPE-39

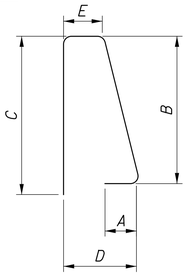

TYPE-40

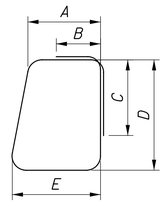

TYPE-41

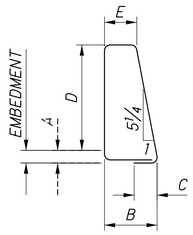

TYPE-42

NOTES

1. THE BAR SIZE NUMBER IS SPECIFIED ON THE PLANS IN THE BAR MARK COLUMN. THE FIRST DIGIT WHERE THREE DIGITS ARE USED, AND THE FIRST TWO DIGITS WHERE FOUR ARE USED, INDICATES THE BAR SIZE NUMBER. FOR EXAMPLE S601 IS A NO. 6 BAR. BAR DIMENSIONS SHOWN ARE OUT TO OUT, UNLESS OTHERWISE INDICATED. R INDICATES INSIDE RADIUS, UNLESS OTHERWISE NOTED. "STD" WRITTEN IN PLACE OF A DIMENSION INDICATES A STANDARD BEND AT THE END OF THE BAR.

2. ALL REINFORCING STEEL TO BE EPOXY COATED.

3. UNLESS OTHERWISE NOTED, THE FOLLOWING LAP LENGTHS SHALL APPLY:
   #4 BARS: 1′-11″, #5 BARS: 2′-5″, #6 BARS: 2′-11″

4. SEE GENERAL NOTES FOR ABBREVIATION LEGEND.

Preliminary Plans - For Reference Only

DESIGN AGENCY EMH&T
DESIGNED RJE | DRAWN GB | CHECKED RMW | REVIEWED CAS | REVISED - | DATE 5-22-26
STRUCTURE FILE NUMBER 3110044

REINFORCING STEEL LIST
BRIDGE NO. HAM-75-0791
I.R. 75 OVER RAMP J

HAM-75-7.85
PID No. 121447

62 / 65

926 / 1047

J:\20110903\ODOT\HAM\17889\structures\HAM075_0791C\sheets\075_0791CRL002.dgn 5/22/2026 11:00:10 AM hbrendlinger

APPROACH SLAB REINFORCING STEEL LIST (LEFT BRIDGE)*

MARK	NUMBER TOTAL	LENGTH	WEIGHT	TYPE	DIMENSIONS A	B	C	D	E	R	INC
AS401	56	2'-8"	100	11	0'-9"	1'-8"	1'-1"				
AS402	36	1'-9"	42	19	0'-11"	0'-2"	0'-11"				
AS403	1	3'-1"	2	11	1'-0"	1'-8"	1'-5"				
AS404	1	2'-2"	1	19	1'-3"	0'-3"	0'-11"				
AS501	1 SR OF 3	30'-4" TO 31'-5"	97	STR							0'-6 ½"
AS502	164	29'-10"	5104	STR							
AS503	64	29'-7"	1975	STR							
AS504	210	32'-6"	7119	STR							
AS505	317	30'-0"	9919	STR							
AS506	107	20'-6"	2288	STR							
AS507	103	33'-0"	3546	STR							
AS508	103	22'-10"	2453	STR							
AS509	2	6'-4"	13	8	2'-6"	1'-7"	2'-6"				
FROM AS510 THRU AS516 NOT USED											
AS517	4	4'-1"	17	2	1'-0"	2'-4"	1'-0"				
AS518	1 SR OF 11	4'-1" TO 4'-11"	52	2	1'-0"	2'-4" TO 3'-2"	1'-0"				0'-1"
AS519	1 SR OF 4	33'-10" TO 34'-11"	144	STR							0'-4 ½"
AS520	NOT USED										
AS521	1 SR OF 3	19'-5" TO 20'-4"	63	STR							0'-5 ½"
FROM AS522 THRU AS525 NOT USED											
AS526	1 SR OF 3	28'-9" TO 29'-11"	92	STR							0'-7"
AS527 NOT USED											
AS528	67	29'-6"	2061	STR							
AS529	1 SR OF 4	29'-9" TO 31'-0"	95	STR							0'-5"
AS601	56	8'-3"	694	41	0'-9½"	0'-7"	1'-0"	2'-9"	1'-3½"		
AS602	36	7'-0"	379	39	0'-6"	3'-3"	3'-3"	1'-0½"		0'-2"	
AS603	20	7'-6"	225	40	0'-6"	3'-3"	3'-3"	1'-6½"			
AS604	21	5'-1"	160	1	1'-0"	4'-3"					
AS609	2 SR OF 11	4'-6" TO 5'-4"	162	1	1'-0"	3'-8" TO 4'-6"					0'-1"
AS610	8	4'-6"	54	1	1'-0"	3'-8"					
AS611	75	13'-10"	1558	35	1'-2"	4'-7"	0'-10"			0'-2¾"	
AS612	11	17'-0"	281	42	1'-2"	3'-0½"	0'-10"	4'-7"	2'-0½"		
AS613	1 SR OF 21	16'-1" TO 16'-11"	520	42	1'-2"	2'-7" TO 3'-0"	0'-10"	4'-7"	1'-7" TO 2'-0"		B & E = 0'-0¼"
AS614	NOT USED										
AS615	1 SR OF 4	13'-10" TO 14'-7"	85	42	1'-2"	1'-4" TO 1'-10"	0'-10"	4'-7"	0'-6" TO 0'-9"		B= 0'-2" E= 0'-1"
AS616	1 SR OF 7	16'-1" TO 17'-4"	175	42	1'-2"	2'-7½" TO 3'-3"	0'-10"	4'-7"	1'-6½" TO 2'-2"		B & E = 0'-1¼"
AS618	2	8'-3"	25	41	1'-1"	0'-7"	1'-0"	2'-4"	1'-8½"		
AS619	1	7'-5"	11	39	0'-6"	3'-3"	3'-3"	1'-5"		0'-2¾"	
AS620	1	8'-6"	13	40	0'-6"	3'-3"	3'-3"	2'-2"	1'-3"		
FROM AS605 THRU AS608, AND AS617 NOT USED											
SUB-TOTAL			39,525								

* - INCLUDED FOR PAYMENT WITH ITEM 526 - REINFORCED CONCRETE APPROACH SLABS (T=17"), AS PER PLAN

APPROACH SLAB REINFORCING STEEL LIST (RIGHT BRIDGE)*

MARK	NUMBER TOTAL	LENGTH	WEIGHT	TYPE	DIMENSIONS A	B	C	D	E	R	INC
AS401	57	2'-8"	61	11	0'-9"	1'-8"	1'-1"				
AS402	36	1'-9"	42	19	0'-11"	0'-2"	0'-11"				
AS403	1	3'-1"	2	11	1'-0"	1'-8"	1'-5"				
AS404	1	2'-2"	1	19	1'-3"	0'-3"	0'-11"				
FROM AS501 THRU AS504 NOT USED											
AS505	627	30'-0"	19619	STR							
FROM AS506 THRU AS508 NOT USED											
AS509	2	6'-4"	13	8	2'-6"	1'-7"	2'-6"				
AS510	NOT USED										
AS511	107	21'-0"	2344	STR							
AS512	NOT USED										
AS513	103	25'-6"	2740	STR							
FROM AS514 THRU AS516 NOT USED											
AS517	4	4'-1"	17	2	1'-0"	2'-4"	1'-0"				
AS518	1 SR OF 11	4'-1" TO 4'-11"	52	2	1'-0"	2'-4" TO 3'-2"	1'-0"				0'-1"
FROM AS519 THRU AS521 NOT USED											
AS522	1 SR OF 3	17'-11" TO 18'-9"	58	STR							0'-5"
AS523	1 SR OF 4	29'-8" TO 30'-6"	125	STR							0'-3 ½"
AS524	145	29'-0"	4386	STR							
AS525	1	27'-11"	29	STR							
FROM AS526 THRU AS529 NOT USED											
AS530	1 SR OF 4	31'-7" TO 32'-9"	135	STR							0'-4 ½"
AS531 NOT USED											
AS532	148	28'-10"	4453	STR							
AS533	1 SR OF 3	29'-0" TO 29'-11"	93	STR							0'-5 ½"
AS601	52	8'-3"	644	41	0'-9½"	0'-7"	1'-0"	2'-9"	1'-3½"		
AS602	36	7'-0"	379	39	0'-6"	3'-3"	3'-3"	1'-0½"		0'-2"	
AS603	16	7'-6"	180	40	0'-6"	3'-3"	3'-3"	1'-6½"			
AS604	17	5'-1"	130	1	1'-0"	4'-3"					
FROM AS605 THRU AS608 NOT USED											
AS609	2 SR OF 11	4'-6" TO 5'-4"	162	1	1'-0"	3'-8" TO 4'-6"					0'-1"
AS610	8	4'-6"	54	1	1'-0"	3'-8"					
AS611	76	13'-10"	1579	35	1'-2"	4'-7"	0'-10"			0'-2¾"	
AS612	11	17'-0"	281	42	1'-2"	3'-0½"	0'-10"	4'-7"	2'-0½"		
AS613	NOT USED										
AS614	1 SR OF 16	16'-3½" TO 16'-11"	399	42	1'-2"	2'-8¼" TO 3'-0"	0'-10"	4'-7"	1'-8¼" TO 2'-0"		B & E = 0'-0¼"
AS615	1 SR OF 4	13'-10" TO 14'-7"	85	42	1'-2"	1'-4" TO 1'-10"	0'-10"	4'-7"	0'-6" TO 0'-9"		B= 0'-2" E= 0'-1"
AS616	NOT USED										
AS617	1 SR OF 7	16'-3" TO 17'-6"	178	42	1'-2"	2'-8½" TO 3'-4"	0'-10"	4'-7"	1'-7½" TO 2'-3"		B & E = 0'-1¼"
AS618	2	8'-3"	25	41	1'-1"	0'-7"	1'-0"	2'-4"	1'-8½"		
AS619	1	7'-5"	11	39	0'-6"	3'-3"	3'-3"	1'-5"		0'-2¾"	
AS620	1	8'-6"	13	40	0'-6"	3'-3"	3'-3"	2'-2"	1'-3"		
SUB-TOTAL			38,290								

* - INCLUDED FOR PAYMENT WITH ITEM 526 - REINFORCED CONCRETE APPROACH SLABS (T=17"), AS PER PLAN

NOTES

1. SEE GENERAL NOTES FOR ABBREVIATION LEGEND.

Preliminary Plans - Not For Reference Only

DESIGN AGENCY EMH&T
Engineers & Surveyors • Planners & Scientists
5500 New Albany Road, Columbus, Ohio 43054
Phone: 614.775.4500

DESIGNED RJE | DRAWN GB | CHECKED RMW | REVIEWED CAS | DATE 5-22-26 | REVISED - | STRUCTURE FILE NUMBER 3110044

REINFORCING STEEL LIST
BRIDGE NO. HAM-75-0791
I.R. 75 OVER RAMP J

HAM-75-7.85
PID No. 121447

63 / 65

927
1047

J:\2011\0903\ODOT\HAM\77869\structures\HAM075_0791C\sheets\075_0791CRL003.dgn 5/22/2026 11:00:11 AM hbrendlinger

MARK	NUMBER TOTAL	LENGTH	WEIGHT	TYPE	DIMENSIONS A	B	C	D	E	R	INC
APPROACH SLAB REINFORCING STEEL LIST (CONTINUED, LEFT BRIDGE)*											
AS1001	1 SR OF 3	31'-9" TO 32'-10"	416	16	30'-4" TO 31'-5"						0'-6½"
AS1002	134	31'-0"	17875	16	29'-7"						
AS1003	1 SR OF 4	35'-3" TO 36'-4"	615	16	33'-10" TO 34'-11"						0'-4½"
AS1004	1 SR OF 3	20'-10" TO 21'-9"	275	16	19'-5" TO 20'-4"						0'-5½"
FROM AS1005 THRU AS1008 NOT USED											
AS1009	1 SR OF 3	30'-2" TO 31'-4"	397	16	28'-9" TO 29'-11"						0'-7"
AS1010	138	30'-11"	18359	16	29'-6"						
AS1011	1 SR OF 4	31'-2" TO 32'-5"	548	16	29'-9" TO 31'-0"						0'-5"
SUB-TOTAL			38,485								
TOTAL APPROACH SLAB			78,010								

* - INCLUDED FOR PAYMENT WITH ITEM 526 - REINFORCED CONCRETE APPROACH SLABS (T=17"), AS PER PLAN

MARK	NUMBER TOTAL	LENGTH	WEIGHT	TYPE	DIMENSIONS A	B	C	D	E	R	INC
APPROACH SLAB REINFORCING STEEL LIST (CONTINUED, RIGHT BRIDGE)*											
FROM AS1001 THRU AS1004 NOT USED											
AS1005	1 SR OF 3	19'-2" TO 20'-2"	255	16	17'-11" TO 18'-9"						0'-5"
AS1006	1 SR OF 4	31'-1" TO 31'-11"	542	16	29'-8" TO 30'-6"						0'-3¼"
AS1007	134	30'-5"	17538	16	29'-0"						
AS1008	1 SR OF 3	29'-4" TO 30'-4"	385	16	27'-11" TO 28'-11"						0'-6"
FROM AS1009 THRU AS1011 NOT USED											
AS1012	1 SR OF 4	33'-0" TO 34'-2"	578	16	31'-7" TO 32'-9"						0'-4¾"
AS1013	136	30'-3"	17703	16	28'-10"						
AS1014	1 SR OF 3	30'-5" TO 31'-4	398	16	29'-0" TO 29'-11"						0'-5½"
SUB-TOTAL			37,399								
TOTAL APPROACH SLAB			75,689								

* - INCLUDED FOR PAYMENT WITH ITEM 526 - REINFORCED CONCRETE APPROACH SLABS (T=17"), AS PER PLAN

Preliminary Plans - For Reference Only

NOTES

1. SEE GENERAL NOTES FOR ABBREVIATION LEGEND.

DESIGN AGENCY EMH&T
DESIGNED RJE | DRAWN GB | REVIEWED CAS | DATE 5-22-26
CHECKED RMW | REVISED - | STRUCTURE FILE NUMBER 3110044

REINFORCING STEEL LIST
BRIDGE NO. HAM-75-0791
I.R. 75 OVER RAMP J

HAM-75-7.85
PID No. 121447

64/65

928/1047

J:\20110903\ODOT\HAM\7869\structures\HAM075_0791C\sheets\075_0791CRL006.dgn 5/22/2026 11:00:11 AM hbrendlinger

MARK	NUMBER TOTAL (LEFT BRIDGE)	NUMBER TOTAL (RIGHT BRIDGE)	LENGTH PER BAR (FEET)	TOTAL LENGTH (FEET) (LEFT BRIDGE)	TOTAL LENGTH (FEET) (RIGHT BRIDGE)	TYPE	DIMENSIONS A	B	C	D	E	R	INC
SUPERSTRUCTURE AND APPROACH SLAB GFRP #4 ◕													
SG401	16	16	30′-0″	480	480	STR							
SG402	4		16′-6″	66		STR							
SG403	36		14′-8″	528		STR							
SG404		4	11′-0″		44	STR							
SG405		36	14′-0″		504	STR							
SG406	90		14′-4″	1290		STR							
SG407		90	13′-8″		1230	STR							
TOTAL SUPERSTRUCTURE				2,364	2,258								
ASG401	4		16′-2″	65		STR							
ASG402	4		31′-8″	127		STR							
ASG403		4	27′-8″		111	STR							
ASG404		4	17′-10″		71	STR							
ASG405	8		15′-1″	121		STR							
ASG406		8	14′-0″		112	STR							
ASG407	12	12	10′-0″	120	120	STR							
ASG408	6	6	6′-4″	38	38	25	2′-6″	2′-5″	1′-4¼″	0′-1½″	0′-5″		
ASG409	6	6	5′-1″	31	31	STR							
ASG410	4	4	16′-9″	67	67	STR							
ASG411	20		14′-8″	293		STR							
ASG412	10		16′-6″	165		STR							
ASG413		10	16′-4″		163	STR							
ASG414		20	13′-8″		273	STR							
TOTAL APPROACH SLAB				1,027	986								

MARK	NUMBER TOTAL (LEFT BRIDGE)	NUMBER TOTAL (RIGHT BRIDGE)	LENGTH PER BAR (FEET)	TOTAL LENGTH (FEET) (LEFT BRIDGE)	TOTAL LENGTH (FEET) (RIGHT BRIDGE)	TYPE	DIMENSIONS A	B	C	D	E	R	INC
SUPERSTRUCTURE AND APPROACH SLAB GFRP #5 ◕													
SG501	72		4′-1″	294		36	1′-3″	1′-2″	0′-10″				
SG502		72	3′-10″		276	36	11½″	1′-2″	0′-10″				
TOTAL SUPERSTRUCTURE				294	276								
FROM ASG501 THRU ASG507 NOT USED													
ASG508	28	12	4′-3″	119	51	36	1′-5″	1′-2″	0′-10″				
ASG509		16	3′-9″		60	36	0′-11″	1′-2″	0′-10″				
TOTAL APPROACH SLAB				119	111								

MARK	NUMBER TOTAL (LEFT BRIDGE)	NUMBER TOTAL (RIGHT BRIDGE)	LENGTH PER BAR (FEET)	TOTAL LENGTH (FEET) (LEFT BRIDGE)	TOTAL LENGTH (FEET) (RIGHT BRIDGE)	TYPE	DIMENSIONS A	B	C	D	E	R	INC
SUPERSTRUCTURE AND APPROACH SLAB GFRP #6 ◕													
SG601	56		27′-3″	1526		STR							
SG602		56	27′-6″		1540	STR							
SG603	36	36	10′-4″	372	372	STR							
SG604	2	2	12′-9″	26	26	STR							
SG605	2		14′-2″	28		STR							
SG606		2	11′-3″		23	STR							
SG607	8	8	8′-1″	65	65	STR							
SG608	2	2	11′-10″	24	24	STR							
SG609	2		9′-11″	20		STR							
SG610		2	14′-3″		29	STR							
TOTAL SUPERSTRUCTURE				2,061	2,079								
ASG601	22		16′-5″	361		STR							
ASG602		22	17′-4″		381	STR							
ASG603	2		15′-5″	31		STR							
ASG604	2		14′-3″	29		STR							
ASG605		2	16′-1″		32	STR							
ASG606		2	17′-3″		35	STR							
ASG607	6	6	6′-3″	38	38	8	2′-6″	1′-7″	2′-6″				
ASG608	11	11	15′-2″	167	167	STR							
ASG609	6		19′-4″	116		STR							
ASG610	6		20′-10″	125		STR							
ASG611		6	18′-8″		112	STR							
ASG612		6	16′-8″		100	STR							
ASG613	4	4	13′-7″	54	54	STR							
ASG614	2		19′-8″	39		STR							
ASG615	2		21′-1″	42		STR							
ASG616		2	19′-0″		38	STR							
ASG617		2	16′-11″		34	STR							
ASG618	4	4	15′-8″	63	63	STR							
TOTAL APPROACH SLAB				1,065	1,054								

LEGEND

◕ - SG4XX, SG5XX, SG6XX ASG4XX, ASG5XX OR ASG6XX - GLASS FIBER REINFORCED POLYMER (GFRP) BAR.

Preliminary Plans - For Reference Only

DESIGN AGENCY EMH&T

DESIGNED RJE | DRAWN GB | CHECKED RMW | REVIEWED CAS | DATE 5-22-26 | REVISED - | STRUCTURE FILE NUMBER 3110044

REINFORCING STEEL LIST
BRIDGE NO. HAM-75-0791
I.R. 75 OVER RAMP J

HAM-75-7.85
PID No. 121447

65 / 65

929
1047

J:\2011093\ODOT\HAM\77889\structures\HAM075_0791C\sheets\075_0791CRL005.dgn 5/22/2026 11:00:12 AM hbrendlinger

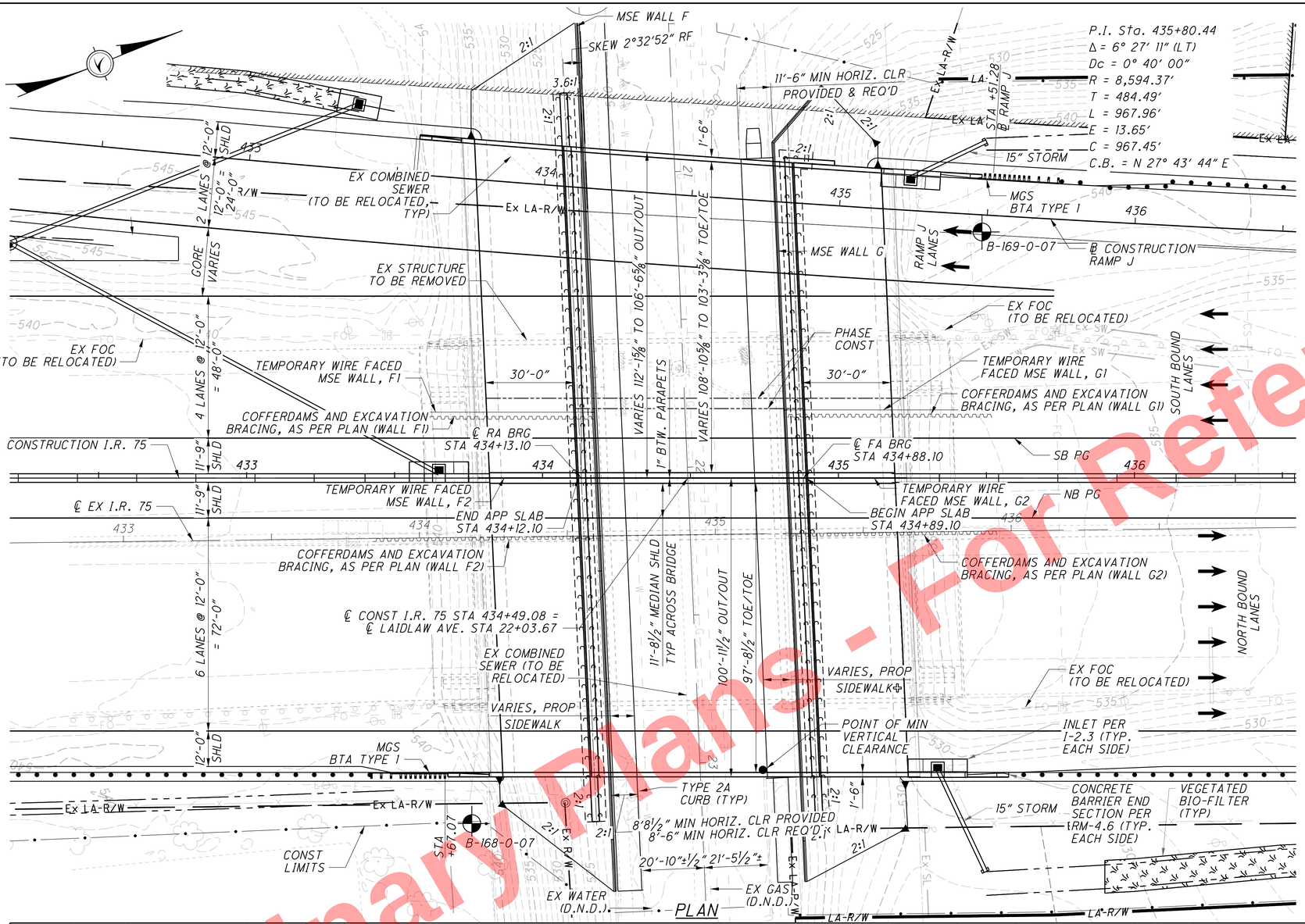

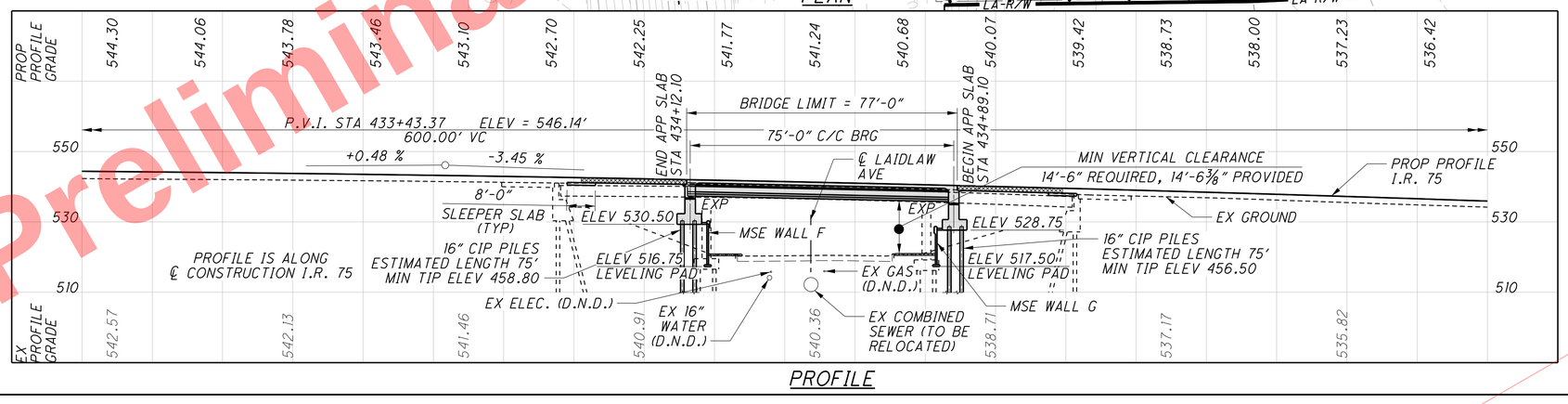

BENCHMARK DATA

BM #404 STA.434+88.14, ELEV 523.26 , OFFSET 312.54, RIGHT
BM #405 STA.434+03.68, ELEV 521.92 , OFFSET 388.27, LEFT

FOR ADDITIONAL BENCHMARK INFORMATION. SEE ROADWAY PLAN SHEET 10/1047

NOTES:

1. EARTHWORK LIMITS SHOWN ARE APPROXIMATE. ACTUAL SLOPES SHALL CONFORM TO PLAN CROSS SECTIONS.
2. SEE SHEET 2/64 FOR PHASE CONSTRUCTION DIMENSIONS.
3. SEE SHEET 5/64 FOR A LIST OF ABBREVIATIONS.

DESIGN TRAFFIC:
2010 ADT = 173,800 2010 ADTT = 24,332
2030 ADT = 203,000 2030 ADTT = 28,420
DIRECTIONAL DISTRIBUTION = 0.53

LEGEND

- BORING LOCATION
- 14'-6" REQUIRED MINIMUM VERTICAL CLEARANCE
  14'-6⅜" ACTUAL MINIMUM VERTICAL CLEARANCE
- SEE MSE WALL F AND WALL G PLANS FOR LIMITS OF PROPOSED SIDEWALK AND TYPE 2A CURB.

EXISTING STRUCTURE

TYPE: CONTINUOUS STEEL BEAMS, WITH CONCRETE DECK AND CONCRETE SUBSTRUCTURE
SPANS: 41'-0", 62'-7", 41'-0" C/C BRGS.
ROADWAY: 63'-6" (SB), 54'-6" (NB) TOE/TOE PARAPET
LOADING: CR 2000-51
SKEW: 1°44'00" RF
APPROACH SLABS: AS-1-54 (15'-0" LONG)
WEARING SURFACE: 1.2" MICROSILICA MODIFIED CONCRETE OVERLAY
ALIGNMENT: TANGENT
CROWN: 0.016 FT/FT
STRUCTURE FILE NUMBER: 3110087
DATE BUILT: 1959
DISPOSITION: TO BE REMOVED

PROPOSED STRUCTURE

TYPE: SINGLE SPAN, AASHTO TYPE 3 PRESTRESSED I-BEAMS WITH COMPOSITE REINFORCED CONCRETE DECK SUPPORTED ON SEMI-INTEGRAL ABUTMENTS FOUNDED ON PILES AND MSE WALL EMBANKMENTS
SPANS: 75'-0" C/C BRGS. (ALONG ℄ CONSTRUCTION I.R. 75)
ROADWAY: VARIES (SB), 97'-8½" (NB) TOE/TOE PARAPET
LOADING: HL-93 AND FWS 0.060 KSF
SKEW: 2°32'52" RF
WEARING SURFACE: MONOLITHIC CONCRETE (MACRO-FIBERS)
APPROACH SLABS: 30'-0" LONG (AS-1-15)
TYPE A INSTALLATION (AS-2-15)
ALIGNMENT: TANGENT
CROWN: VARIES 0.016 TO 0.02
COORDINATES: LATITUDE N 39°10'44"
LONGITUDE W 84°29'10"

Preliminary Plans - For Reference Only

DESIGN AGENCY
ODOT
4planning Inc. 2018

DESIGNED	DRAWN	REVIEWED	DATE
JAD	SBH	NCM	5-22-26
CHECKED	REVISED	STRUCTURE FILE NUMBER	
JWE		3110095	

HAMILTON COUNTY
STA. 434+12.10
STA. 434+89.10

SITE PLAN
BRIDGE NO. HAM-75-0823
I.R. 75 OVER LAIDLAW AVENUE (C.R. 690)

HAM-75-7.85
PID No. 121447

1/64

930/1047

F:\HAM\121447\structures\HAM075_0823\sheets\075_0823CSP601.dgn 5/11/2026 10:32:19 AM PAntonelli

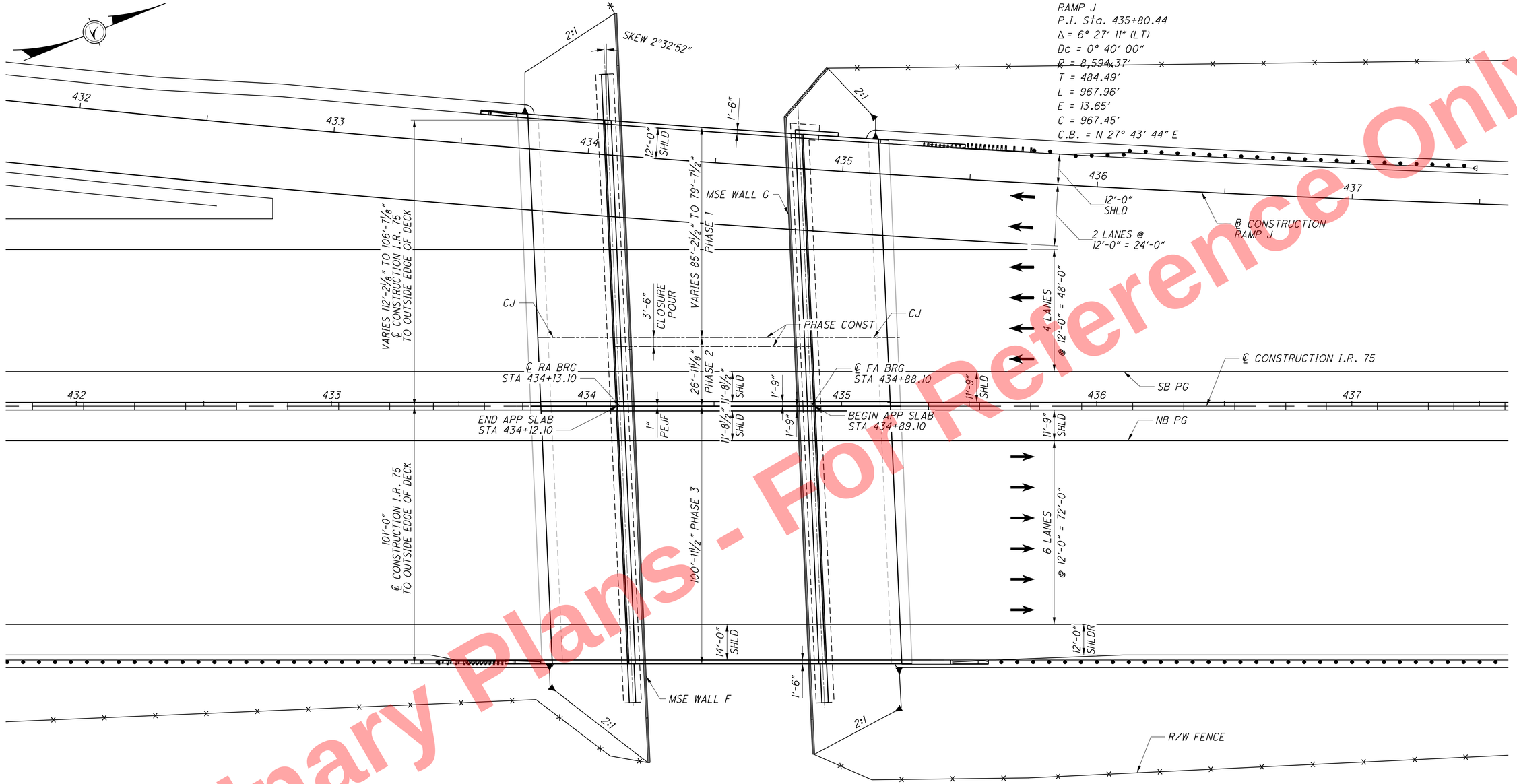

GENERAL PLAN
(MEASURED PERPENDICULAR TO ℄ CONSTRUCTION I.R. 75 ALONG EDGE OF DECK)

Preliminary Plans - For Reference Only

DESIGN AGENCY
4215 North Avenue, Suite 200, Columbus, OH 43219

DESIGNED	DRAWN	REVIEWED	DATE
SBH	SBH	NCM	5-22-26
CHECKED	REVISED	STRUCTURE FILE NUMBER	
JAD		3110095	

GENERAL PLAN
BRIDGE NO. HAM-75-0823
I.R. 75 OVER LAIDLAW AVENUE (C.R. 690)

HAM-75-7.85
PID No. 121447

F:\HAM\121447\structures\HAM075_0823\sheets\075_0823CGP601.dgn 5/11/2026 10:33:12 AM PAntonelli

REFER TO THE FOLLOWING STANDARD BRIDGE DRAWING(S):

AS-1-15	DATED (REVISED)	01-20-23
AS-2-15	DATED (REVISED)	01-20-23
SBR-1-20	DATED (REVISED)	01-20-23
SBR-2-20	DATED (REVISED)	01-15-21
SICD-1-96	DATED (REVISED)	07-18-14
SICD-2-14	DATED (REVISED)	01-15-21

AND TO THE FOLLOWING SUPPLEMENTAL SPECIFICATION(S):

840	DATED	04-15-22
866	DATED	04-21-17
867	DATED	04-15-22

DESIGN SPECIFICATIONS:
THIS STRUCTURE CONFORMS TO THE 9TH EDITION OF THE "LRFD BRIDGE DESIGN SPECIFICATIONS" ADOPTED BY THE AMERICAN ASSOCIATION OF STATE HIGHWAY AND TRANSPORTATION OFFICIALS, 2020, AND THE ODOT BRIDGE DESIGN MANUAL, 2020.

DESIGN DATA:
OPERATIONAL IMPORTANCE: A LOAD MODIFIER OF 1.05 HAS BEEN ASSUMED FOR THE DESIGN OF THIS STRUCTURE IN ACCORDANCE WITH THE AASHTO LRFD BRIDGE DESIGN SPECIFICATIONS, ARTICLE 1.3.5 AND THE ODOT BRIDGE DESIGN MANUAL, 2007.

DESIGN LOADING:
HL-93
FUTURE WEARING SURFACE (FWS) OF 0.060 KSF.

DESIGN STRESSES

CONCRETE CLASS QC3	COMPRESSIVE STRENGTH 4.5 KSI (SUPERSTRUCTURE AND APPROACH SLABS)
CONCRETE CLASS SCC	COMPRESSIVE STRENGTH 4.5 KSI (SUPERSTRUCTURE)
CONCRETE CLASS QC1/QC3	COMPRESSIVE STRENGTH 4.0 KSI (SUBSTRUCTURE)
PRESTRESSED CONCRETE I-BEAMS	COMPRESSIVE STRENGTH 7.0 KSI (FINAL) 5.5 KSI (RELEASE)
PRESTRESSING STRANDS	AREA = 0.167 SQ. IN. ULTIMATE STRENGTH = 270 KSI INITIAL STRESS = 202.5 KSI (LOW RELAXATION STRANDS)
STEEL PLATES	A709, GRADE 36 (FOR BEARINGS)
CONCRETE REINFORCEMENT:	
EPOXY COATED STEEL REINFORCEMENT	MINIMUM YIELD STRENGTH 60 KSI (DECK, PARAPETS, AND ABUTMENTS)
GFRP REINFORCEMENT (PARAPET)	
GALVANIZED STEEL REINFORCEMENT	MINIMUM YIELD STRENGTH 60 KSI (APPROACH SLAB AND PARAPETS)

DECK PROTECTION METHOD:
EPOXY COATED REINFORCING STEEL AND 2½" CONCRETE COVER.

MONOLITHIC WEARING SURFACE
MONOLITHIC WEARING SURFACE IS ASSUMED, FOR DESIGN PURPOSES, TO BE 1" THICK.

EXISTING STRUCTURE VERIFICATION:
DETAILS AND DIMENSIONS SHOWN ON THESE PLANS PERTAINING TO THE EXISTING STRUCTURE HAVE BEEN OBTAINED FROM PLANS OF THE EXISTING STRUCTURE AND FROM FIELD OBSERVATIONS AND MEASUREMENTS. CONSEQUENTLY, THEY ARE INDICATIVE OF THE EXISTING STRUCTURE AND THE PROPOSED WORK BUT THEY SHALL BE CONSIDERED TENTATIVE AND APPROXIMATE. THE CONTRACTOR IS REFERRED TO CMS SECTIONS 102.05, 105.02 AND 513.04.

BASE CONTRACT BID PRICES UPON A RECOGNITION OF THE UNCERTAINTIES DESCRIBED ABOVE AND UPON A PREBID EXAMINATION OF THE EXISTING STRUCTURE. HOWEVER, THE DEPARTMENT WILL PAY FOR ALL PROJECT WORK BASED UPON ACTUAL DETAILS AND DIMENSIONS THAT HAVE BEEN VERIFIED IN THE FIELD.

DECK PLACEMENT DESIGN ASSUMPTIONS:
THE FOLLOWING ASSUMPTIONS OF CONSTRUCTION MEANS AND METHODS WERE MADE FOR THE ANALYSIS AND DESIGN OF THE SUPERSTRUCTURE. THE CONTRACTOR IS RESPONSIBLE FOR THE DESIGN OF THE FALSEWORK SUPPORT SYSTEM WITHIN THESE PARAMETERS AND WILL ASSUME RESPONSIBILITY FOR SUPERSTRUCTURE ANALYSIS FOR DEVIATION FROM THESE DESIGN ASSUMPTIONS.

AN EIGHT WHEEL FINISHING MACHINE WITH A MAXIMUM WHEEL LOAD OF 1.81 KIPS FOR A TOTAL MACHINE LOAD OF 14.44 KIPS (LEFT BRIDGE).

AN EIGHT WHEEL FINISHING MACHINE WITH A MAXIMUM WHEEL LOAD OF 1.68 KIPS FOR A TOTAL MACHINE LOAD OF 13.45 KIPS (RIGHT BRIDGE).

A MINIMUM OUT-TO-OUT WHEEL SPACING AT EACH END OF THE MACHINE OF 103".

A MAXIMUM SPACING OF OVERHANG FALSEWORK BRACKETS OF 48 IN.

A MAXIMUM DISTANCE FROM THE CENTERLINE OF THE FASCIA GIRDER TO THE FACE OF THE SAFETY HANDRAIL OF 65".

ITEM 202, STRUCTURE REMOVED, OVER 20 FOOT SPAN, AS PER PLAN:
THIS ITEM INCLUDES ALL LABOR AND MATERIALS TO REMOVE THE EXISTING STRUCTURE IN STAGES AS INDICATED IN THE PLANS. PAYMENT FOR ALL LABOR AND MATERIAL INCLUDED WITH ITEM 202 - STRUCTURE REMOVED, OVER 20 FOOT SPAN, AS PER PLAN.

THE CONTRACTOR MUST REVIEW THE STRUCTURE WHEN PREPARING HIS BID. THE CONTRACTOR WILL REVIEW THE CONDITION OF THE STRUCTURE TO DETERMINE WHAT DEBRIS WILL FALL FROM THE STRUCTURE DURING REMOVAL. THE CONTRACTOR WILL DETERMINE THE CORRESPONDING COST TO CLEAN-UP ANY AND ALL DEBRIS WHICH FALLS FROM THESTRUCTURE DURING ANY REMOVAL OPERATION. THE COST TO CLEAR AND CLEAN-UP ALL DEBRIS DURING REMOVAL SHALL BE INCLUDED WITH THE BID FOR THIS ITEM OF WORK. NO ADDITIONAL COST WILL BE RECOGNIZED TO CLEAN DEBRIS RESULTING FROM THE STRUCTURE REMOVAL OPERATION.

ITEM 503, COFFERDAMS AND EXCAVATION BRACING, AS PER PLAN:
THE DESIGNS SHOWN ON THE PLANS FOR TEMPORARY SUPPORT OF EXCAVATION IS ONE REPRESENTATIVE DESIGN THAT MAY BE USED TO CONSTRUCT THE PROJECT. THE CONTRACTOR MAY CONSTRUCT THE DESIGN SHOWN ON THE PLANS OR PREPARE AN ALTERNATE DESIGN TO SUPPORT THE SIDES OF EXCAVATIONS. IF CONSTRUCTING AN ALTERNATE DESIGN FOR TEMPORARY SUPPORT OF EXCAVATION, PREPARE AND PROVIDE PLANS IN ACCORDANCE WITH C&MS 501.05. THE DEPARTMENT WILL PAY FOR THE TEMPORARY SUPPORT OF EXCAVATION AT THE CONTRACT LUMP SUM PRICE FOR COFFERDAMS AND EXCAVATION BRACING. NO ADDITIONAL PAYMENT WILL BE MADE FOR PROVIDING AN ALTERNATE DESIGN. INDIVIDUAL PAY ITEMS ARE PROVIDED FOR EACH SHORING LOCATION DUE TO THE COMPLICATED NATURE AND VARYING TYPES OF SHORING NEEDED FOR THIS STRUCTURE.

PILES DRIVEN TO TIP ELEVATION FOR PILE/SOIL SETUP:
THE FOLLOWING ARE ULTIMATE BEARING VALUES (UBV) PER PILE AT THE SUBSTRUCTURE UNITS:

REAR ABUTMENT: 355 KIPS/PILE
FORWARD ABUTMENT: 329 KIPS/PILE

PART OF THE ULTIMATE BEARING VALUE WILL BE ACHIEVED THROUGH PILE/SOIL SETUP, WHICH IS A TIME-DEPENDENT INCREASE IN RESISTANCE THAT OCCURS IN SOME SOILS.

NOTIFY THE ENGINEER AT LEAST 5 DAYS BEFORE DRIVING PILES SO THAT THE ENGINEER CAN NOTIFY THE DISTRICT GEOTECHNICAL ENGINEER, THE OFFICE OF CONSTRUCTION ADMINISTRATION, AND THE OFFICE OF GEOTECHNICAL ENGINEERING.

DRIVE THE FIRST TWO PILES IN EACH SUBSTRUCTURE TO THE TIP ELEVATION GIVEN BELOW FOR THE SUBSTRUCTURE. DRIVE THE THIRD AND FOURTH PILES TO 75% AND 85% OF THE LENGTH OF THE FIRST TWO PILES. PERFORM DYNAMIC LOAD TESTING ON ALL FOUR PILES WHILE DRIVING. AFTER DRIVING THE FOUR PILES, CEASE ALL DRIVING OPERATIONS AT THE SUBSTRUCTURE FOR A MINIMUM OF 10 DAYS. INCLUDE THE WAITING PERIOD AS A SEPARATE ACTIVITY IN THE PROGRESS SCHEDULE. AFTER THE WAITING PERIOD, PERFORM PILE RESTRIKES ON THE FOUR PILES (TWO RESTRIKE ITEMS). PERFORM A CAPWAP ANALYSIS ON EACH PILE TESTED FOR EVERY DYNAMIC LOAD TEST AND EVERY RESTRIKE TEST.

SUBMIT ALL TEST RESULTS TO THE ENGINEER. THE ENGINEER WILL REVIEW THE TEST RESULTS AND ESTABLISH DRIVING CRITERIA FOR THE PILING IN THE SUBSTRUCTURE WITH THE ASSISTANCE OF THE DISTRICT GEOTECHNICAL ENGINEER, THE OFFICE OF CONSTRUCTION ADMINISTRATION, AND THE OFFICE OF GEOTECHNICAL ENGINEERING. PERFORM THE DRIVING CRITERIA WITH THE PILE SETUP FOR THE FIRST STAGE OF BRIDGE CONSTRUCTION. DO NOT ORDER PILES FOR SUBSEQUENT PHASES UNTIL AFTER THE DRIVING CRITERIA HAS BEEN ESTABLISHED WITH SETUP. THE DEPARTMENT WILL ADJUST THE FURNISHED PILE QUANTITIES BASED ON THE RESTRIKE TEST RESULTS.

IF THE DYNAMIC LOAD TESTING INDICATES A PILE HAS ACHIEVED THE ULTIMATE BEARING VALUE ABOVE THE TIP ELEVATION DURING THE INITIAL DRIVING (BEFORE THE WAITING PERIOD), STOP DRIVING AND NOTIFY THE ENGINEER. IF THE RESTRIKE TEST RESULTS ON THE FOUR PILES INDICATE THAT A PILE DID NOT ACHIEVE THE REQUIRED ULTIMATE BEARING VALUE, DRIVE THE PILE TO THE ESTABLISHED DRIVING CRITERIA.

LEFT BRIDGE:
REAR ABUTMENT
42 PILES 80 FEET LONG, ORDER LENGTH
TIP ELEVATION, 458.80 FEET
2 DYNAMIC LOAD TESTING ITEMS
2 RESTRIKE

FORWARD ABUTMENT
37 PILES 80 FEET LONG, ORDER LENGTH
TIP ELEVATION, 456.50 FEET
2 DYNAMIC LOAD TESTING ITEMS
2 RESTRIKE

RIGHT BRIDGE:
REAR ABUTMENT
38 PILES 80 FEET LONG, ORDER LENGTH
TIP ELEVATION, 458.80 FEET
2 DYNAMIC LOAD TESTING ITEMS
2 RESTRIKE

FORWARD ABUTMENT
38 PILES 80 FEET LONG, ORDER LENGTH
TIP ELEVATION, 456.50 FEET
2 DYNAMIC LOAD TESTING ITEMS
2 RESTRIKE

PILE DRIVING CONSTRAINTS
PILE DRIVING MAY NOT BEGIN UNTIL SUFFICIENT EMBANKMENT AND MSE WALL SETTLEMENT HAS OCCURRED AS DOCUMENTED BY THE SETTLEMENT PLATFORMS. THE ANTICIPATED WAITING PERIOD TO PERMIT SUFFICIENT EMBANKMENT SETTLEMENT IS 30 DAYS. THE DISTRICT GEOTECHNICAL ENGINEER MAY REDUCE OR EXTEND THE WAITING PERIOD BASED ON THE MAGNITUDE AND RATE OF THE EMBANKMENT SETTLEMENT AS DETERMINED BY THE SETTLEMENT PLATFORMS. THE SETTLEMENT WAITING PERIOD BEGINS ONCE THE APPROACH EMBANKMENT REACHES THE DESIGN SUBGRADE LEVEL FOR A MINIMUM DISTANCE OF 100 FT. BEHIND EACH ABUTMENT. THE PLANS HAVE PROVISIONS FOR A TEMPORARY WALL AT THE ABUTMENT LOCATION TO PERMIT PLACEMENT OF EMBANKMENT TO THE DESIGN SUBGRADE LEVEL. BEGIN PILE DRIVING ONLY FOLLOWING TERMINATION OF THE SETTLEMENT MONITORING WAITING PERIOD BY THE DISTRICT GEOTECHNICAL ENGINEER.

DRIVING OF PILES TO THE DESIGN ULTIMATE BEARING VALUE PRIOR TO MSE WALL CONSTRUCTION, SURCHARGE PLACEMENT AND SETTLEMENT WAITING PERIOD TERMINATION IS AN ALTERNATIVE TO DRIVING THE PILES FOLLOWING THE SETTLEMENT WAITING PERIOD. PILES DRIVEN PRIOR TO THE WAITING PERIOD ARE TO BE INSTALLED AS PER THE PILES DRIVEN TO TIP ELEVATION FOR PILE/SOIL SETUP REQUIREMENTS. ALL PILES DRIVEN TO THE UBV PRIOR TO THE WAITING PERIOD TERMINATION REQUIRE RESTRIKING FOLLOWING THE END OF THE SETTLEMENT WAITING PERIOD. RESTRIKE AND MOBILIZED EACH PILE A MINIMUM OF 0.5 INCHES. SELECT THE APPROPRIATE PILE DRIVING EQUIPMENT TO ENSURE EACH PILE MOVES 0.5 INCHES UPON RESTRIKE. ADDITIONAL COMPENSATION WILL NOT BE CONSIDERED FOR PILE RESTRIKING WHEN PILES ARE DRIVEN PRIOR TO THE SETTLEMENT WAITING PERIOD. THE CONTRACTOR IS TO SURVEY EACH PILE DRIVEN PRIOR TO CONSTRUCTION OF THE MSE WALL AND PROVIDE THE ENGINEER A RECORD OF THE PILE PLUMBNESS AND TOP OF LOCATION RELATIVE TO THE PLAN LOCATION. CORRECT ANY PILE ALIGNMENT ISSUES THAT ARE IDENTIFIED IN THE PILE SURVEY PRIOR TO MSE WALL CONSTRUCTION AT NO ADDITIONAL COST TO THE DEPARTMENT. ANY PILE CORRECTIONS ARE TO BE ACCEPTED BY THE ENGINEER PRIOR TO IMPLEMENTATION.

Preliminary Plans - Not For Construction
For Reference Only

F:\HAM\121447\structures\HAM075_0823\sheets\075_0823GGN601.dgn 5/11/2026 10:33:21 AM PAntonelli

DESIGN AGENCY
ODOT
400 West Nintth Street, Suite 200, Columbus, OH 43215
DESIGNED TML | DRAWN TML | CHECKED JAD | REVIEWED NCM | DATE 5-22-26
STRUCTURE FILE NUMBER 3110095

GENERAL NOTES
BRIDGE NO. HAM-75-0823
I.R. 75 OVER LAIDLAW AVENUE (C.R. 690)

HAM-75-7.85
PID No. 121447

ITEM 511 - CLASS OC3 CONCRETE, MISC.: CONCRETE WITH OC/OA, BRIDGE DECK, AS PER PLAN
ITEM 511 - CLASS OC3 CONCRETE, MISC.: CONCRETE WITH OC/OA, BRIDGE DECK (MEDIAN PARAPET), AS PER PLAN

THIS ITEM APPLIES TO THE CONCRETE IN THE BRIDGE DECK AND MEDIAN PARAPET. THIS ITEM MODIFIES THE STANDARD 511 CONCRETE FOR STRUCTURES SPECIFICATION TO INCLUDE MACRO-SYNTHETIC, AND CORROSION INHIBITORS INTO THE SUPERSTRUCTURE CONCRETE. THIS ITEM SHALL CONFORM TO CMS 511 WITH THE FOLLOWING CONDITIONS AND REVISIONS:

PROVIDE MATERIALS CONFORMING TO 511.02 EXCEPT AS MODIFIED BELOW:

PORTLAND CEMENT CONCRETE	499.03, CLASS C3 MEETING A DESIGN STRENGTH OF 4,500 PSI, WITH MACRO-SYNTHETIC FIBERS WITH MODIFICATION PER 511.02
FIBERS FOR CONCRETE	ASTM C 1116, TYPE III
CORROSION INHIBITOR	515.15

THE CLASS OC3 CONCRETE FOR THE SUPERSTRUCTURE SHALL MEET THE FOLLOWING CRITERIA:
WATER/CEMENT RATIO = 0.40 MAXIMUM; MINIMUM 4 LBS/CY MACRO-SYNTHETIC FIBERS (1.5 IN. MIN. TO 2.5 IN. MAX.) MEETING ASTM C1116 TYPE III SHALL BE ADDED TO THE MIX.

MIX SHALL INCLUDE A MIGRATING CORROSION INHIBITOR AS MANUFACTURED BY AN APPROVED SUPPLIER LISTED ON ODOT'S QUALIFIED APPROVED SUPPLIERS, ITEM 515.15. THE DOSAGE RATE LISTED ON THE ODOT QUALIFIED APPROVED SUPPLIERS LIST WILL APPLY.

THE MACRO- SYNTHETIC FIBERS SHALL BE INCORPORATED INTO THE MIX IN SUCH A WAY THAT NO "BALLING" OCCURS. UPON INSPECTION OF THE MIX AT THE TIME OF PLACEMENT, IF ANY "BALLING" OCCURS, THE ENGINEER SHALL REJECT THE REMAINDER OF THE LOAD AT ANY TIME DURING THE POUR. IT IS IMPORTANT TO FOLLOW INDUSTRY STANDARDS AND ASTM SPECIFICATIONS ON THE PREMIXING OF THE CEMENT, AGGREGATE, AND MACRO-SYNTHETIC FIBERS PRIOR TO THE ADDITION OF WATER AND ADMIXTURES. PROVIDE MACRO-SYNTHETIC FIBERS THAT ARE MONOFILAMENT FIBERS MADE FROM VIRGIN POLYPROPYLENE, OR CO-POLYMERS THAT ARE INERT TO ALKALI ATTACK. ENSURE THE MACRO-SYNTHETIC FIBERS HAVE A MINIMUM TENSILE STRENGTH OF 70 KSI, A MINIMUM MODULUS OF ELASTICITY OF 800 KSI, A MINIMUM FILAMENT DIAMETER OF 0.012 INCHES, AND ASPECT RATIO BETWEEN 60 AND 100, AND ARE BETWEEN 1.0 AND 2.5 INCHES IN LENGTH. STORE THE MACRO-SYNTHETIC FIBERS ACCORDING TO THE MANUFACTURE'S RECOMMENDATION AND KEEP THE MATERIAL FREE FROM DUST, DIRT AND MOISTURE.

USE A MINIMUM DOSAGE RATE OF MACRO-SYNTHETIC FIBERS OF 4.0 LBS/CY OF CONCRETE. DETERMINE THE FINAL PROPOSED DOSAGE RATE THROUGH THE MIX TESTING. ENSURE THE FIBER REINFORCED CONCRETE MEETS OR EXCEEDS A MINIMUM EQUIVALENT FLEXURAL STRENGTH RATIO OF 25% ACCORDING TO ASTM C 1609. ENSURE THE FINAL PROPOSED MIX IS WORKABLE AND ABLE TO BE PRODUCED SUCH THAT BALLING OR CLUMPING OF THE FIBERS IS NOT A PROBLEM AS DETERMINED BY THE ENGINEER. UTILIZE A LABORATORY REGULARLY INSPECTED BY THE CEMENT AND CONCRETE REFERENCE LABORATORY (CCRL) OF THE NATIONAL INSTITUTE OF STANDARDS AND TECHNOLOGY, OR OTHER APPROVED REFERENCE LABORATORY, TO PERFORM THE TESTING. BEFORE USE, SUBMIT DOCUMENTATION TO THE PROJECT ENGINEER CERTIFYING BOTH THE MACRO-SYNTHETIC FIBERS AND THE MIX MEET OR EXCEED THE REQUIRED PROPERTIES. SAMPLING WILL BE ALLOWED FOR TESTING PURPOSES. A DEMONSTRATION OF THE MIX PRODUCTION OR TRIAL MIX, MAY BE REQUIRED BY THE ENGINEER PRIOR TO PLACING ANY OF THE MIX ON THE PROJECT.

ITEM 511 - CLASS OC3 CONCRETE, MISC.: CONCRETE WITH OC/OA, BRIDGE DECK, AS PER PLAN (CONT.):
ITEM 511 - CLASS OC3 CONCRETE, MISC.: CONCRETE WITH OC/OA, BRIDGE DECK (MEDIAN PARAPET), AS PER PLAN (CONT.):

THE BATCH WEIGHTS SHALL BE CORRECTED TO COMPENSATE FOR THE MOISTURE CONTAINED IN THE AGGREGATE AT THE TIME OF USE. A CHEMICAL ADMIXTURE (705.12, TYPE A OR D) SHALL BE USED.

THE TRANSIT MIXER CHARGE SHALL BE LIMITED TO ¾ OF ITS RATED CAPACITY OR 6 CUBIC YARDS, WHICHEVER IS SMALLER. THE FIRST THREE TRANSIT MIXER LOADS ARE REQUIRED TO BE AT THE MINIMUM YARDAGE LISTED ABOVE TO SHOW PROOF OF THE SUCCESSFUL BATCHING OPERATION. AFTER CONSISTENCY IN THE DELIVERED MATERIAL HAS BEEN ESTABLISHED, THE CONCRETE SUPPLIER MAY INCREASE THE BATCH DELIVERED QUANTITIES AS LONG AS THE QUALITY REMAINS ACCEPTABLE TO THE ENGINEER. THE ENGINEER CAN REDUCE THE BATCH LOAD SIZE AT ANY TIME AS NEEDED TO CORRECT/IMPROVE CONCRETE QUALITY.

CONCRETE SUPPLIERS SHOULD RECOGNIZE THAT THE CORROSION INHIBITOR AND ADMIXTURES MAY HAVE AN EFFECT ON STRENGTH, ENTRAINED AIR CONTENT, WORKABILITY, ETC. OF THEIR CONCRETE MIXES. THE CORROSION INHIBITOR IS SUGGESTED TO BE A MCI PRODUCT BY CORTEC OR AN APPROVED EQUAL FROM THE QUALIFIED PRODUCTS LIST. THE CONCRETE SUPPLIERS CHOICE OF ONE OF THESE CORROSION INHIBITORS DOES NOT ALLEVIATE MEETING DESIGN REQUIREMENTS. PLEASE BE ADVISED THAT SOME PRODUCTS ON THE LIST EFFECT THE DELIVERED MIX PROPERTIES GREATLY WHILE OTHER PRODUCTS DO NOT.

APPROACH SLABS, DIAPHRAGMS, AND MEDIAN PARAPET CONCRETE ARE TO USE THE SAME MIX DESIGN AS THE BRIDGE DECK. THE CONTRACTOR SHOULD BE ADVISED THAT CONCRETE RETARDING AGENTS MAY NEED TO BE ADDED TO OFFSET THE EFFECTS OF THE MIGRATING CORROSION INHIBITOR SELECTED. USE SELF-COMPACTING CONCRETE ON DECORATIVE RAILING SIMILAR TO TEXAS RAILING AND MACRO-SYNTHETIC CONCRETE PER THIS SPECIFICATION ON TRADITIONAL CONCRETE RAILING WHEN APPLICABLE.

THE CONTRACTOR SHALL PROVIDE TRADITIONAL BRIDGE DECK FORMS CONFORMING TO CMS 508. PERMANENT STAY-IN-PLACE (SIP) FORMS ARE NOT ALLOWED. THE PLACING OF THE DECK AND THE APPROACH SLABS IN THE SAME CONCRETE POUR IS NOT PERMITTED.

ITEM 511 - CLASS OC SCC CONCRETE WITH OC/OA, BRIDGE DECK (PARAPET), AS PER PLAN:

THIS WORK SHALL CONSIST OF CONSTRUCTING THE EXTERIOR BRIDGE PARAPETS WITH A FORM LINER PATTERN APPLIED TO THE EXTERIOR FACE THAT MATCHES THE ARCHITECTURAL "TEXAS RAIL" DETAILS SHOWN IN THE PLANS USING CLASS SCC CONCRETE. THIS ITEM SHALL INCLUDE ALL MATERIALS, EQUIPMENT AND LABOR REQUIRED TO CONSTRUCT THE "TEXAS" TYPE BRIDGE RAILING. QUANTITY SHALL INCLUDE SAW CUTTING, JOINT SEALER, FORM LINERS AND ANY OTHER MISCELLANEOUS ITEMS REQUIRED TO FULLY CONSTRUCT THE RAILING. THIS ITEM SHALL ONLY INCLUDE THE EXTERIOR PARAPET ON THE BRIDGE. EXTERIOR PARAPET ON APPROACH SLABS SHALL BE PAID FOR UNDER ITEM 526 - REINFORCED CONCRETE APPROACH SLABS (T=17"), AS PER PLAN.

PAYMENT FOR THIS WORK SHALL INCLUDE ALL NECESSARY MATERIAL, LABOR, AND EQUIPMENT TO COMPLETE THIS TASK. PAYMENT SHALL BE MADE UNDER ITEM 511 - CLASS OC SCC CONCRETE WITH OC/OA, BRIDGE DECK (PARAPET), AS PER PLAN.

ITEM 511 - SEMI-INTEGRAL DIAPHRAGM GUIDE, AS PER PLAN
ITEM 511 - CLASS OC3 CONCRETE, MISC: CONCRERETE WITH OC/OA, ABUTMENT NOT INCLUDING FOOTING, AS PER PLAN

THIS ITEM MODIFIES THE STANDARD 511 CONCRETE FOR STRUCTURES SPECIFICATION TO INCLUDE MACRO-SYNTHETIC, AND CORROSION INHIBITORS INTO THE SUBSTRUCTURE CONCRETE. THIS ITEM SHALL CONFORM TO CMS 511 WITH THE FOLLOWING CONDITIONS AND REVISIONS:

PROVIDE MATERIALS CONFORMING TO 511.02 EXCEPT AS MODIFIED BELOW:

PORTLAND CEMENT CONCRETE	499.03, CLASS OC3 MEETING A DESIGN STRENGTH OF 4,000 PSI, WITH MACRO-SYNTHETIC FIBERS WITH MODIFICATION PER 511.02
FIBERS FOR CONCRETE	ASTM C 1116, TYPE III
CORROSION INHIBITOR	515.15

THE CLASS OC3 CONCRETE FOR THE SUBSTRUCTURE SHALL MEET THE FOLLOWING CRITERIA:
WATER/CEMENT RATIO = 0.40 MAXIMUM; MINIMUM 4 LBS/CY MACRO-SYNTHETIC FIBERS (1.0 IN. MIN. TO 2.5 IN. MAX.) MEETING ASTM C1116 TYPE III SHALL BE ADDED TO THE MIX.

MIX SHALL INCLUDE A MIGRATING CORROSION INHIBITOR AS MANUFACTURED BY AN APPROVED SUPPLIER LISTED ON ODOT'S QUALIFIED APPROVED SUPPLIERS, ITEM 515.15. THE DOSAGE RATE LISTED ON THE ODOT QUALIFIED APPROVED SUPPLIERS LIST WILL APPLY.

THE MACRO-SYNTHETIC FIBERS SHALL BE INCORPORATED INTO THE MIX IN SUCH A WAY THAT NO "BALLING" OCCURS. UPON INSPECTION OF THE MIX AT THE TIME OF PLACEMENT, IF ANY "BALLING" OCCURS, THE ENGINEER SHALL REJECT THE REMAINDER OF THE LOAD AT ANY TIME DURING THE POUR. IT IS IMPORTANT TO FOLLOW INDUSTRY STANDARDS AND ASTM SPECIFICATIONS ON THE PREMIXING OF THE CEMENT, AGGREGATE, AND MACRO-SYNTHETIC FIBERS PRIOR TO THE ADDITION OF WATER AND ADMIXTURES. PROVIDE MACRO-SYNTHETIC FIBERS THAT ARE MONOFILAMENT FIBERS MADE FROM VIRGIN POLYPROPYLENE, POLYETHYLENE, OR CO-POLYMERS THAT ARE INERT TO ALKALI ATTACK. ENSURE THE MACRO-SYNTHETIC FIBERS HAVE A MINIMUM TENSILE STRENGTH OF 70 KSI, A MINIMUM MODULUS OF ELASTICITY OF 800 KSI, A MINIMUM FILAMENT DIAMETER OF 0.012 INCHES, AND ASPECT RATIO BETWEEN 60 AND 100, AND ARE BETWEEN 1.0 AND 2.5 INCHES IN LENGTH. STORE THE MACRO-SYNTHETIC FIBERS ACCORDING TO THE MANUFACTURE'S RECOMMENDATION AND KEEP THE MATERIAL FREE FROM DUST, DIRT AND MOISTURE.

USE A MINIMUM DOSAGE RATE OF MACRO-SYNTHETIC FIBERS OF 4.0 LBS/CY OF CONCRETE. DETERMINE THE FINAL PROPOSED DOSAGE RATE THROUGH THE MIX TESTING. ENSURE THE FIBER REINFORCED CONCRETE MEETS OR EXCEEDS A MINIMUM EQUIVALENT FLEXURAL STRENGTH RATIO OF 25% ACCORDING TO ASTM C 1609. ENSURE THE FINAL PROPOSED MIX IS WORKABLE AND ABLE TO BE PRODUCED SUCH THAT BALLING OR CLUMPING OF THE FIBERS IS NOT A PROBLEM AS DETERMINED BY THE ENGINEER. UTILIZE A LABORATORY REGULARLY INSPECTED BY THE CEMENT AND CONCRETE REFERENCE LABORATORY (CCRL) OF THE NATIONAL INSTITUTE OF STANDARDS AND TECHNOLOGY, OR OTHER APPROVED REFERENCE LABORATORY, TO PERFORM THE TESTING. BEFORE USE, SUBMIT DOCUMENTATION TO THE PROJECT ENGINEER CERTIFYING BOTH THE MACRO-SYNTHETIC FIBERS AND THE MIX MEET OR EXCEED THE REQUIRED PROPERTIES. SAMPLING WILL BE ALLOWED FOR TESTING PURPOSES. A DEMONSTRATION OF THE MIX PRODUCTION OR TRIAL MIX, MAY BE REQUIRED BY THE ENGINEER PRIOR TO PLACING ANY OF THE MIX ON THE PROJECT.

ITEM 511 - SEMI-INTEGRAL DIAPHRAGM GUIDE, AS PER PLAN (CONT.)
ITEM 511 - CLASS OC3 CONCRETE, MISC: CONCRERETE WITH OC/OA, ABUTMENT NOT INCLUDING FOOTING, AS PER PLAN (CONT.)

THE BATCH WEIGHTS SHALL BE CORRECTED TO COMPENSATE FOR THE MOISTURE CONTAINED IN THE AGGREGATE AT THE TIME OF USE. A CHEMICAL ADMIXTURE (705.12, TYPE A OR D) SHALL BE USED. THE ENGINEER CAN REDUCE THE BATCH LOAD SIZE AT ANY TIME AS NEEDED TO CORRECT/IMPROVE CONCRETE QUALITY.

CONCRETE SUPPLIERS SHOULD RECOGNIZE THAT THE CORROSION INHIBITOR AND ADMIXTURES MAY HAVE AN EFFECT ON STRENGTH, ENTRAINED AIR CONTENT, WORKABILITY, ETC. OF THEIR CONCRETE MIXES. THE CORROSION INHIBITOR IS SUGGESTED TO BE A MCI PRODUCT BY CORTEC OR AN APPROVED EQUAL FROM THE QUALIFIED PRODUCTS LIST. THE CONCRETE SUPPLIER'S CHOICE OF ONE OF THESE CORROSION INHIBITORS DOES NOT ALLEVIATE MEETING DESIGN REQUIREMENTS. PLEASE BE ADVISED THAT SOME PRODUCTS ON THE LIST EFFECT THE DELIVERED MIX PROPERTIES GREATLY WHILE OTHER PRODUCTS DO NOT.

THE CONTRACTOR SHOULD BE ADVISED THAT CONCRETE RETARDING AGENTS MAY NEED TO BE ADDED TO OFFSET THE EFFECTS OF THE MIGRATING CORROSION INHIBITOR SELECTED.

ITEM 523, DYNAMIC LOAD TESTS

PERFORM DYNAMIC LOAD TESTS PER ITEM 523 AT LOCATIONS AND FREQUENCY OUTLINED IN THE PLANS. EACH UNIT OF PAYMENT FOR THE DYNAMIC LOAD TEST INCLUDES TESTING OF TWO PILES WITH SIGNAL MATCHING ON ONE OF THE TWO PILES TESTED.

ITEM 526, REINFORCED CONCRETE APPROACH SLABS (T=17"), AS PER PLAN

THIS ITEM SHALL INCLUDE THE COST OF ALL CONCRETE AND GALVANIZED REINFORCING STEEL FOR THE APPROACH SLABS AND PARAPETS ON APPROACH SLABS. SEALING OF THE PARAPETS SHALL BE PAID FOR UNDER ITEM 512 - SEALING OF CONCRETE SURFACES (EPOXY-URETHANE)

ITEM 622, CONCRETE BARRIER END SECTION, TYPE D, AS PER PLAN:

THIS ITEM SHALL INCLUDE ALL THE COST OF ALL LABOR, MATERIALS AND REINFORCING STEEL FOR THE BARRIER TRANSITIONS. SEALING OF THE PARAPETS SHALL BE PAID FOR UNDER ITEM 512 - SEALING OF CONCRETE SURFACES (EPOXY-URETHANE)

Preliminary Plans - Not For Reference Only

F:\HAM\121447\structures\HAM075_0823\sheets\075_0823CGN602.dgn 5/11/2026 10:33:30 AM PAntonelli

DESIGN AGENCY
ODOT
4295 Warrensville Center Rd., Suite 200, Warrensville OH 44128

DESIGNED	DRAWN	REVIEWED	DATE
TML	TML	NCM	5-22-26
CHECKED	REVISED		STRUCTURE FILE NUMBER
JAD			3110095

GENERAL NOTES
BRIDGE NO. HAM-75-0823
I.R. 75 OVER LAIDLAW AVENUE (C.R. 690)

HAM-75-7.85
PID No. 121447

ABBREVIATIONS

ABUT. - ABUTMENT
ADT - AVERAGE DAILY TRAFFIC
ADTT - AVERAGE DAILY TRUCK TRAFFIC
APP SLAB - APPROACH SLAB
AVE. - AVENUE
℄ - BASELINE
BM - BENCH MARK
BOT. - BOTTOM
BTW. - BETWEEN
BRG - BEARING
BTA - BRIDGE TERMINAL ASSEMBLY
C/C - CENTER TO CENTER
CB - CATCH BASIN
CIP - CAST IN PLACE
CJ - CONSTRUCTION JOINT
℄ - CENTERLINE
CLR - CLEARANCE
CONST - CONSTRUCTION
DIA - DIAMETER
DND - DO NOT DISTURB
EB - EAST BOUND
EF - EACH FACE
ELEV - ELEVATION
E/P - EDGE OF PAVEMENT
E/S - EDGE OF SHOULDER
EQ. - EQUAL
EST. - ESTIMATED
EX - EXISTING
EXP - EXPANSION
FA - FORWARD ABUTMENT
F/F - FACE TO FACE
FF - FAR FACE
FOC - FIBER OPTIC CABLE
FTG - FOOTING
FWD - FORWARD
GEN - GENERAL
GR - GUARD RAIL
HMWM - HIGH MOLECULAR WEIGHT METHACRYLATE
INCR. - INCREMENT
INT. - INTEGRAL
I.R. - INTERSTATE ROUTE
LT - LEFT
MAX - MAXIMUM
MECH. CONN. - MECHANICAL CONNECTOR
MIN - MINIMUM
MISC - MISCELLANEOUS
M.O.T. - MAINTENANCE OF TRAFFIC
MSE - MECHANICALLY STABALIZED EARTH
N/A - NOT APPLICABLE
NB - NORTHBOUND
NF - NEAR FACE
NO - NUMBER
NPCPP - NON-PERFORATED CORRUGATED PLASTIC PIPE
O/O - OUT TO OUT
O.C. - ON CENTER
OD - OUTSIDE DIAMETER
PC - POINT OF CURVE
PT - POINT OF TANGENT
P.V.I. - POINT OF VERTICAL INTERSECTION
PCB - PORTABLE CONCRETE BARRIER
PCPP - PERFORATED CORRUGATED PLASTIC PIPE
PVMT - PAVEMENT
PEJF - PREFORMED EXPANSION JOINT FILLER
PERP. - PERPENDICULAR
PG - PROFILE GRADE
PROP - PROPOSED
PT. - POINT
PVMT. - PAVEMENT
RA - REAR ABUTMENT
RD - ROAD
REF. - REFERENCE
REQ'D - REQUIRED
RT - RIGHT
SB - SOUTHBOUND
SER. - SERIES
SHLD - SHOULDER
SPA - SPACES OR SPACED
S.R. - STATE ROUTE
ST - STREET
STA - STATION
SCD - STANDARD CONSTRUCTION DRAWING
STD - STANDARD
SUPER. - SUPERSTRUCTURE
TEMP - TEMPORARY
TOW - TOP OF WALL
T/S - TOE OF SLOPE
T/T - TOP TO TOE
TYP - TYPICAL
UNO - UNLESS NOTED OTHERWISE
VC - VERTIAL CURVE
VERT - VERTICAL
W/ - WITH
WB - WEST BOUND

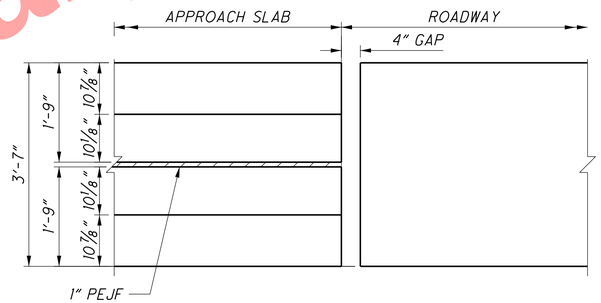

MEDIAN PARAPET PLAN
(TYPICAL BOTH ENDS)

Preliminary Plans - For Reference Only

F:\HAM\121447\structures\HAM075_0823\sheets\075_0823CGN603.dgn 5/11/2026 10:33:39 AM PAntonelli

DESIGN AGENCY
4215 North Avenue, Suite 200, Columbus, OH 43219

DESIGNED	DRAWN	REVIEWED	DATE
TML	TML	NCM	5-22-26
CHECKED	REVISED	STRUCTURE FILE NUMBER	
JAD		3110095	

GENERAL NOTES
BRIDGE NO. HAM-75-0823
I.R. 75 OVER LAIDLAW AVENUE (C.R. 690)

HAM-75-7.85
PID No. 121447

ESTIMATED QUANTITIES

CALC BY: CBY
CHECKED BY: PPA
DATE: 6/14/2023
DATE: 6/18/2023

ITEM	EXT.	PARTICIPATION 03/IMS/10	TOTAL	UNIT	DESCRIPTION	ABUTMENTS	SUPER	GENERAL	SHEET REF
202	11003	LUMP	LUMP		STRUCTURE REMOVED, OVER 20 FOOT SPAN, AS PER PLAN				3 / 64
202	22900	407	407	SY	APPROACH SLAB REMOVED			407	
503	11101	LUMP	LUMP		COFFERDAMS AND EXCAVATION BRACING, AS PER PLAN (WALL F1)				3 / 64
503	11101	LUMP	LUMP		COFFERDAMS AND EXCAVATION BRACING, AS PER PLAN (WALL F2)				3 / 64
503	11101	LUMP	LUMP		COFFERDAMS AND EXCAVATION BRACING, AS PER PLAN (WALL G1)				3 / 64
503	11101	LUMP	LUMP		COFFERDAMS AND EXCAVATION BRACING, AS PER PLAN (WALL G2)				3 / 64
503	21300	LUMP	LUMP		UNCLASSIFIED EXCAVATION				
505	11100	LUMP	LUMP		PILE DRIVING EQUIPMENT MOBILIZATION				
507	00700	11,625	11,625	FT	16" CAST-IN-PLACE REINFORCED CONCRETE PILES, DRIVEN	11,625			
507	00750	12,400	12,400	FT	16" CAST-IN-PLACE REINFORCED CONCRETE PILES, FURNISHED	12,400			
509	10000	207,660	207,660	LB	EPOXY COATED REINFORCING STEEL	42,493	165,167		
509	30020	4,288	4,288	FT	NO. 4 GFRP DEFORMED BARS		2757	1531	
509	30030	627	627	FT	NO. 5 GFRP DEFORMED BARS		357	270	
509	30040	4,168	4,168	FT	NO. 6 GFRP DEFORMED BARS		2388	1780	
511	33501	4	4	EACH	SEMI-INTEGRAL DIAPHRAGM GUIDE, AS PER PLAN		4		4 / 64
511	34463	30	30	CY	CLASS QC SCC CONCRETE WITH QC/QA, BRIDGE DECK (PARAPET), AS PER PLAN		30		4 / 64
511	46512	372	372	CY	CLASS QC1 CONCRETE WITH QC/QA, FOOTING	372			
511	53014	689	689	CY	CLASS QC3 CONCRETE, MISC.: CONCRETE WITH QC/QA, BRIDGE DECK, AS PER PLAN		689		4 / 64
511	53014	36	36	CY	CLASS QC3 CONCRETE, MISC.: CONCRETE WITH QC/QA, BRIDGE DECK (MEDIAN PARAPET), AS PER PLAN		36		4 / 64
511	53014	148	148	CY	CLASS QC3 CONCRETE, MISC.: CONCRETE WITH QC/QA, ABUTMENT NOT INCLUDING FOOTING, AS PER PLAN	148			4 / 64
512	10100	1,434	1,434	SY	SEALING OF CONCRETE SURFACES (EPOXY-URETHANE)	442	992		
512	33000	9	9	SY	TYPE 2 WATERPROOFING	9			
515	15010	24	24	EACH	DRAPED STRAND PRESTRESSED CONCRETE BRIDGE I-BEAM MEMBERS, LEVEL 3, TYPE 3 (LENGTH = 76'-8")		24		
515	15010	1	1	EACH	DRAPED STRAND PRESTRESSED CONCRETE BRIDGE I-BEAM MEMBERS, LEVEL 3, TYPE 3 (LENGTH = 77'-1 1/4")		1		
515	20000	23	23	EACH	INTERMEDIATE DIAPHRAGMS		23		
516	13600	41	41	SF	1" PREFORMED EXPANSION JOINT FILLER			41	
516	13900	91	91	SF	2" PREFORMED EXPANSION JOINT FILLER	91			
516	14020	454	454	FT	SEMI-INTEGRAL ABUTMENT EXPANSION JOINT SEAL	454			
516	44200	50	50	EACH	ELASTOMERIC BEARING WITH INTERNAL LAMINATES AND LOAD PLATE (NEOPRENE), (1'-1" x 1'-8" x 3 13/16")		50		
523	20000	4	4	EACH	DYNAMIC LOAD TESTING	4			4 / 64
523	20500	4	4	EACH	RESTRIKE	4			
526	30001	1,404	1,404	SY	REINFORCED CONCRETE APPROACH SLABS (T=17"), AS PER PLAN			1,404	4 / 64
526	90010	422	422	FT	TYPE A INSTALLATION			422	
622	25001	2	2	EACH	CONCRETE BARRIER END SECTION, TYPE D, AS PER PLAN			2	4 / 64
846	00110	176	176	CF	POLYMER MODIFIED ASPHALT EXPANSION JOINT SYSTEM			176	

For Reference Only
Preliminary Plans - Not for Construction

F:\HAM\121447\structures\HAM075_0823\sheets\075_0823CED001.dgn 5/11/2026 10:33:46 AM PAntonelli

DESIGN AGENCY
ODOT
400 West Nintth Street, Suite 200, Columbus, OH 43215

DESIGNED JAD | DRAWN TML | REVIEWED NCM | DATE 5-22-26
CHECKED PPA | REVISED | STRUCTURE FILE NUMBER 3110095

ESTIMATED QUANTITIES
BRIDGE NO. HAM-75-0823
I.R. 75 OVER LAIDLAW AVENUE (C.R. 690)

HAM-75-7.85
PID No. 121447

6 / 64

935
1047

SUGGESTED SEQUENCE OF CONSTRUCTION:

PHASE 1 - REMOVAL:

1. INSTALL PCB AND SHIFT TRAFFIC AS SHOWN.
2. REMOVE EXISTING DECK, PIER, COLUMNS AND FOUNDATION AS SHOWN.

PHASE 1 - CONSTRUCTION:

1. CONSTRUCT MSE WALL G AND WALL F AS SHOWN IN THE MSE WALL PLANS AND ABUTMENTS AS SHOWN ON SHEET 16/64 THROUGH 21/64.
2. INSTALL BEAMS AS SHOWN.
3. CONSTRUCT THE DECK, APPROACH SLABS & PARAPET AS SHOWN.

PHASE 2 - REMOVAL:

1. INSTALL PCB AND SHIFT TRAFFIC AS SHOWN.

PHASE 2 - CONSTRUCTION:

1. CONSTRUCT MSE WALL G AND WALL F AS SHOWN IN THE MSE WALL PLANS AND ABUTMENTS AS SHOWN ON SHEET 16/64 THROUGH 21/64.
2. INSTALL BEAMS AS SHOWN.
3. CONSTRUCT THE DECK, APPROACH SLABS & PARAPET AS SHOWN.
4. POUR DIAPHRAGM IN CLOSURE POUR.
5. CONSTRUCT CLOSURE POUR.

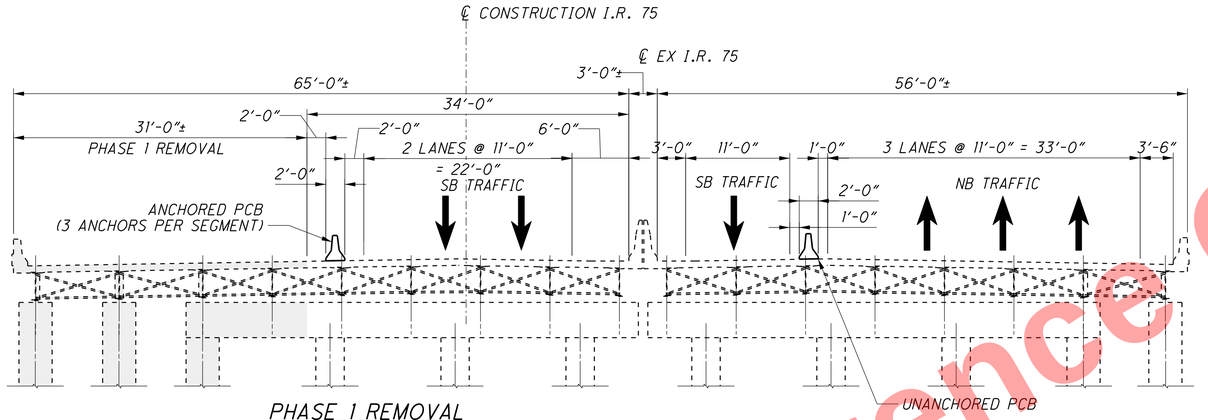

PHASE 1 REMOVAL

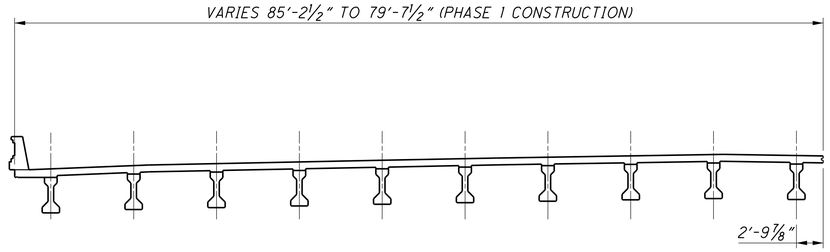

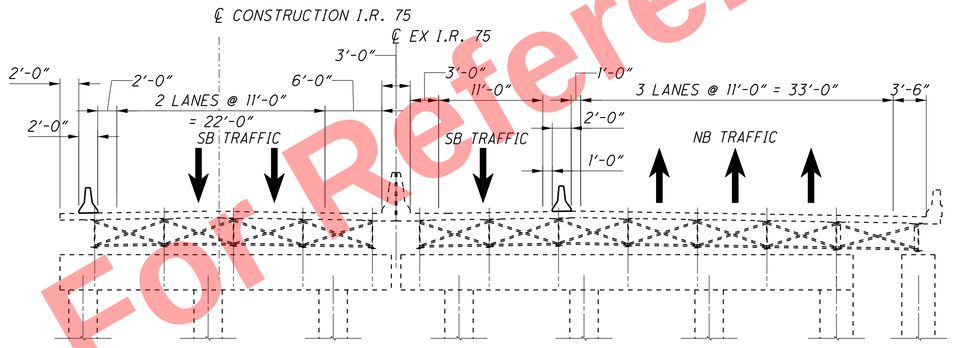

PHASE 1 CONSTRUCTION

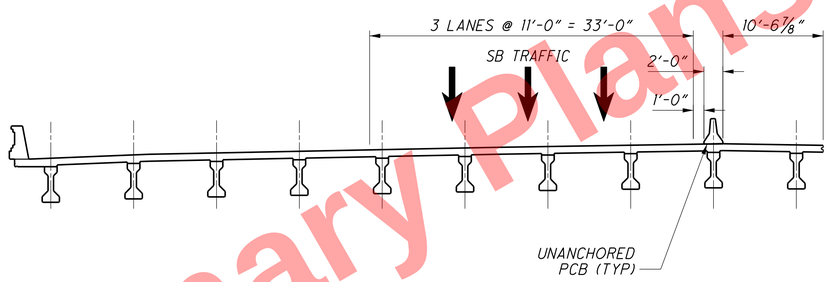

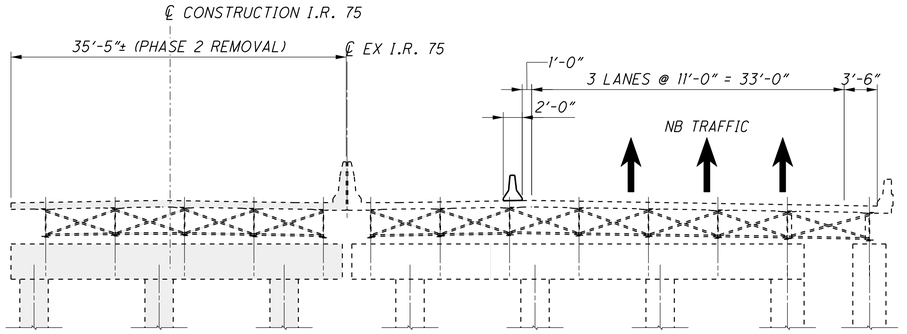

PHASE 2 REMOVAL

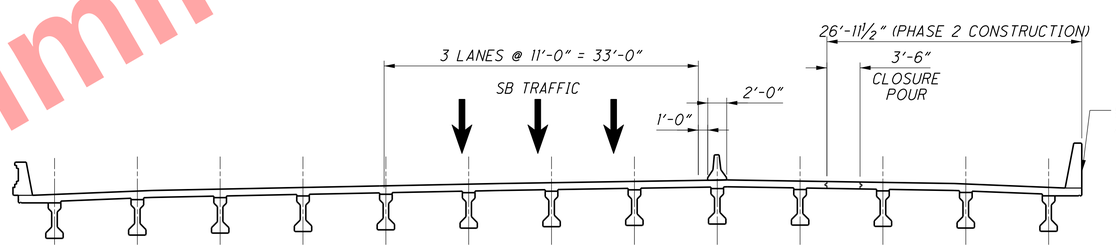

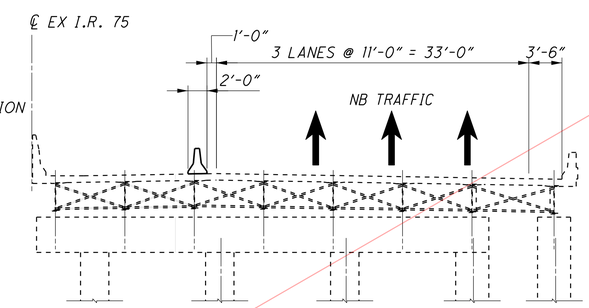

PHASE 2 CONSTRUCTION

NOTES:

1. MAINTENANCE OF TRAFFIC SPEED WILL BE POSTED AT 45 MPH.
2. ALL EXISTING DIMENSIONS ARE ±.
3. SEE GENERAL NOTES FOR ABBREVIATION LEGEND.
4. ALL EXISTING DIMENSIONS ARE MEASURED PERPENDICULAR TO ℄ EX I.R. 75.
5. ALL PROPOSED DIMENSIONS ARE MEASURED PERPENDICULAR TO ℄ CONSTRUCTION I.R. 75.

Preliminary Plans - For Reference Only

DESIGN AGENCY: JMT, 4215 North Avenue, Suite 200, Columbus, OH 43219

DESIGNED	DRAWN	REVIEWED	DATE
JAD	SBH	NCM	5-22-26
CHECKED	REVISED	STRUCTURE FILE NUMBER	
JWE		3110095	

PHASE CONSTRUCTION DETAILS
BRIDGE NO. HAM-75-0823
I.R. 75 OVER LAIDLAW AVENUE (C.R. 690)

HAM-75-7.85
PID No. 121447

F:\HAM\121447\structures\HAM075_0823\sheets\075_0823CPC601.dgn 5/11/2026 10:34:05 AM PAntonelli

SUGGESTED SEQUENCE OF CONSTRUCTION:

PHASE 3 - REMOVAL:

1. REMOVE NORTHBOUND BRIDGE AND SHIFT TRAFFIC AS SHOWN.

PHASE 3 - CONSTRUCTION:

1. CONSTRUCT MSE WALL F AND WALL G AS SHOWN ON THE MSE WALL PLANS AND ABUTMENTS AS SHOWN ON SHEET 16/64 THROUGH 21/64.
2. INSTALL BEAMS AS SHOWN.
3. CONSTRUCT THE DECK, APPROACH SLABS & PARAPET AS SHOWN.

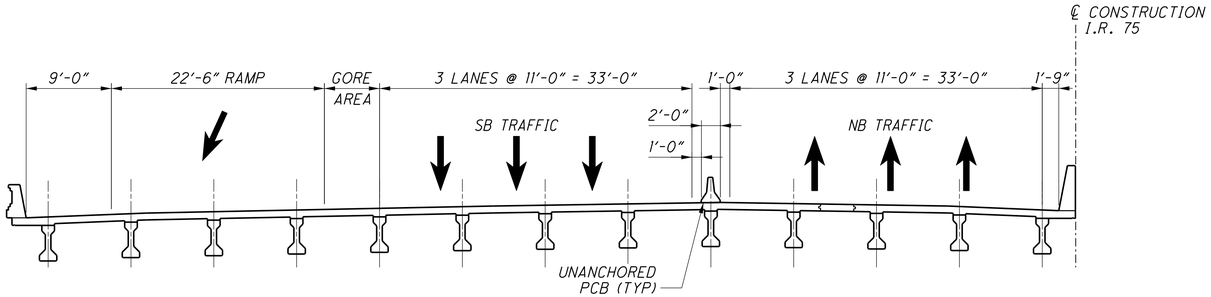

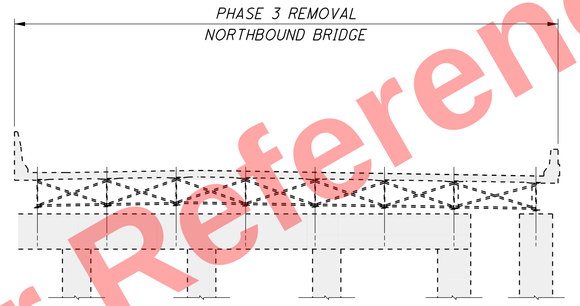

PHASE 3 REMOVAL

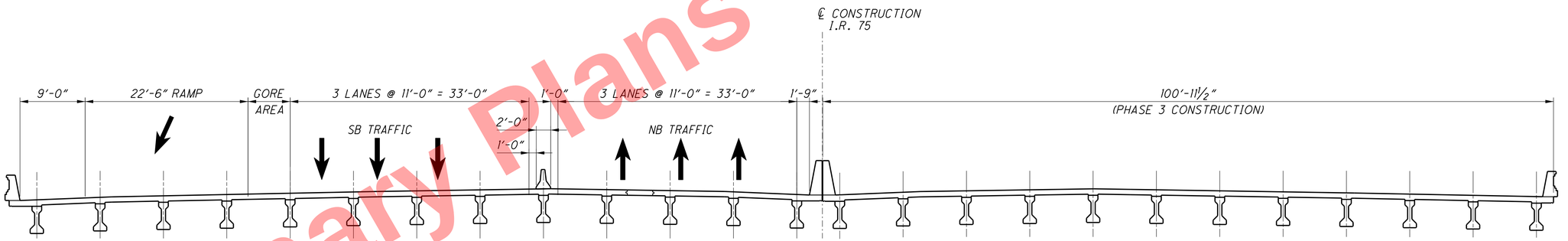

PHASE 3 CONSTRUCTION

NOTES:

1. MAINTENANCE OF TRAFFIC SPEED WILL BE POSTED AT 45 MPH.
2. ALL EXISTING DIMENSIONS ARE ±.
3. SEE GENERAL NOTES FOR ABBREVIATION LEGEND.
4. ALL EXISTING DIMENSIONS ARE MEASURED PERPENDICULAR TO ℄ EX I.R. 75.
5. ALL PROPOSED DIMENSIONS ARE MEASURED PERPENDICULAR TO ℄ CONSTRUCTION I.R. 75.

Preliminary Plans - For Reference Only

DESIGN AGENCY: JMT, 4215 North Avenue, Suite 200, Columbus, OH 43219

DESIGNED	DRAWN	REVIEWED	DATE
JAD	SBH	NCM	5-22-26
CHECKED	REVISED	STRUCTURE FILE NUMBER	
JWE		3110095	

PHASE CONSTRUCTION DETAILS
BRIDGE NO. HAM-75-0823
I.R. 75 OVER LAIDLAW AVENUE (C.R. 690)

HAM-75-7.85
PID No. 121447

F:\HAM\121447\structures\HAM075_0823\sheets\075_0823CPC602.dgn 5/11/2026 10:34:23 AM PAntonelli

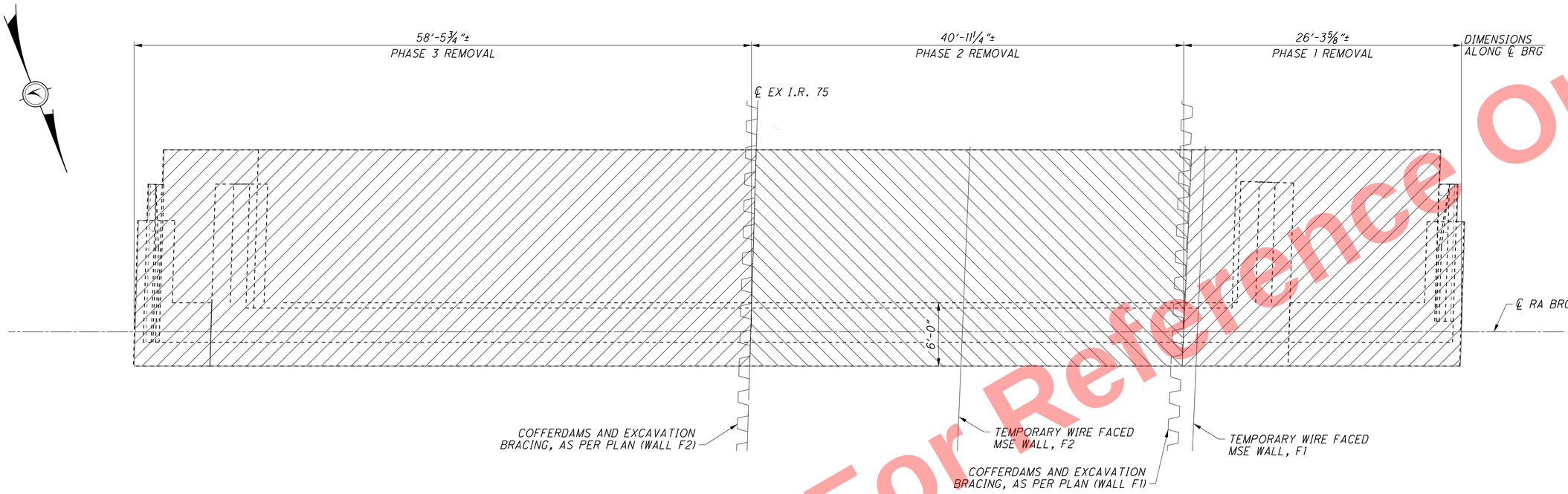

REAR ABUTMENT REMOVAL PLAN

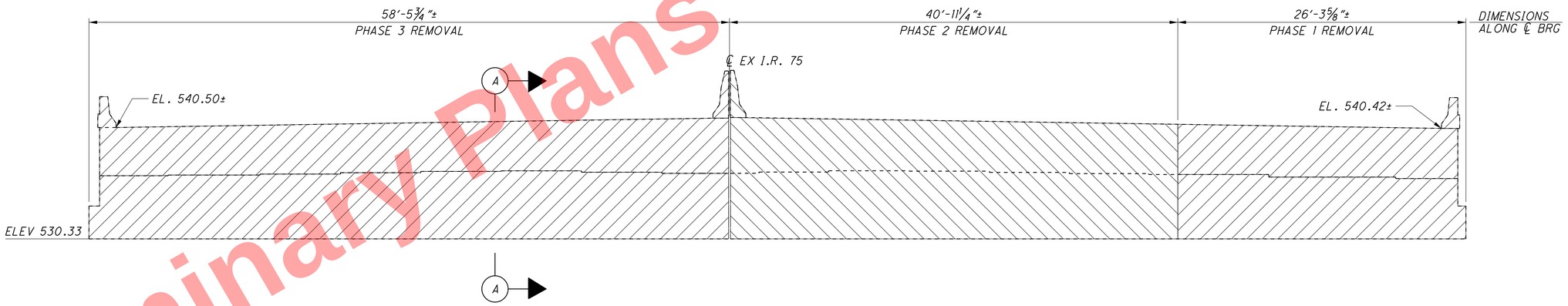

ELEVATION VIEW

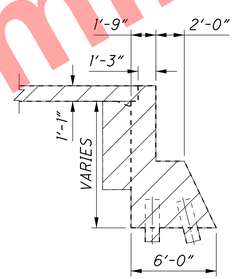

SECTION A-A

LEGEND

LIMITS OF REMOVAL

NOTES:

1. FOR EXISTING STRUCTURE VERIFICATION NOTE, SEE STRUCTURE GENERAL NOTE SHEET 3/64.
2. TEMPORARY SHEETING SHALL BE PAID FOR UNDER ITEM 503 COFFERDAMS AND EXCAVATION BRACING, AS PER PLAN. SEE SHEET 11/64 TO 13/64 FOR DETAILS.
3. SEE GENERAL NOTES FOR ABBREVIATION LEGEND.

Preliminary Plans - For Reference Only

DESIGN AGENCY
4215 North Avenue, Suite 200, Columbus, OH 43219

DESIGNED	DRAWN	REVIEWED	DATE
RT	RT	NCM	5-22-26
CHECKED	REVISED	STRUCTURE FILE NUMBER	
JAD		3110095	

REAR ABUTMENT REMOVAL DETAILS
BRIDGE NO. HAM-75-0823
I.R. 75 OVER LAIDLAW AVENUE (C.R. 690)

HAM-75-7.85
PID No. 121447

F:\HAM\121447\structures\HAM075_0823\sheets\075_0823CRE602.dgn 5/11/2026 10:35:09 AM PAntonelli

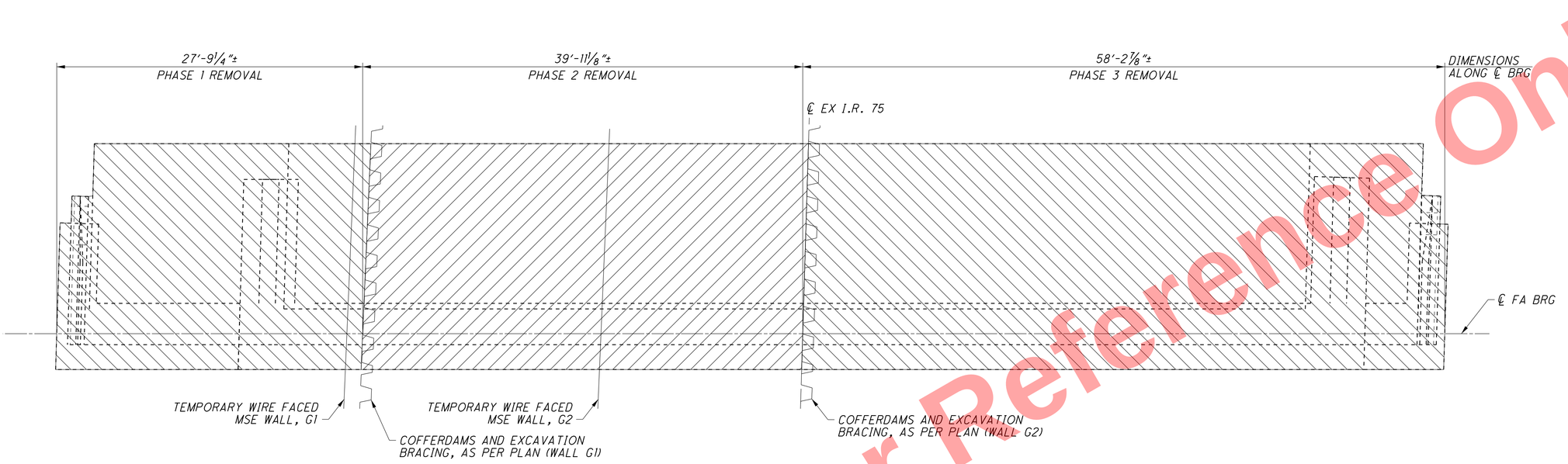

FORWARD ABUTMENT REMOVAL PLAN

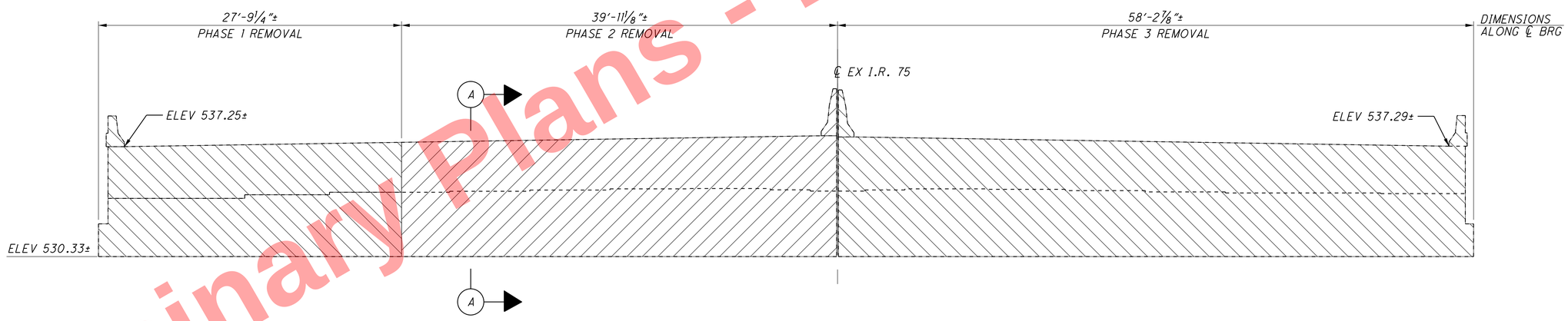

ELEVATION VIEW

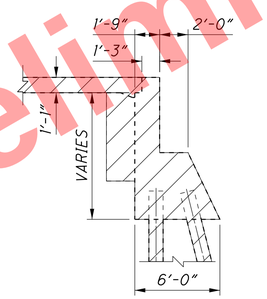

SECTION A-A

LEGEND

LIMITS OF REMOVAL

NOTES:

1. FOR EXISTING STRUCTURE VERIFICATION NOTE, SEE STRUCTURE GENERAL NOTE SHEET 3/64.
2. TEMPORARY SHEETING SHALL BE PAID FOR UNDER ITEM 503 COFFERDAMS AND EXCAVATION BRACING, AS PER PLAN. SEE SHEET 11/64 TO 13/64 FOR DETAILS.
3. SEE GENERAL NOTES FOR ABBREVIATION LEGEND.

Preliminary Plans - For Reference Only

DESIGN AGENCY
4215 North Avenue, Suite 230, Columbus, OH 43219

DESIGNED	DRAWN	REVIEWED	DATE
RT	RT	NCM	5-22-26
CHECKED	REVISED	STRUCTURE FILE NUMBER	
JAD		3110095	

FORWARD ABUTMENT REMOVAL DETAILS
BRIDGE NO. HAM-75-0823
I.R. 75 OVER LAIDLAW AVENUE (C.R. 690)

HAM-75-7.85
PID No. 121447

F:\HAM\121447\structures\HAM075_0823\sheets\075_0823CRE603.dgn 5/11/2026 10:35:26 AM PAntonelli

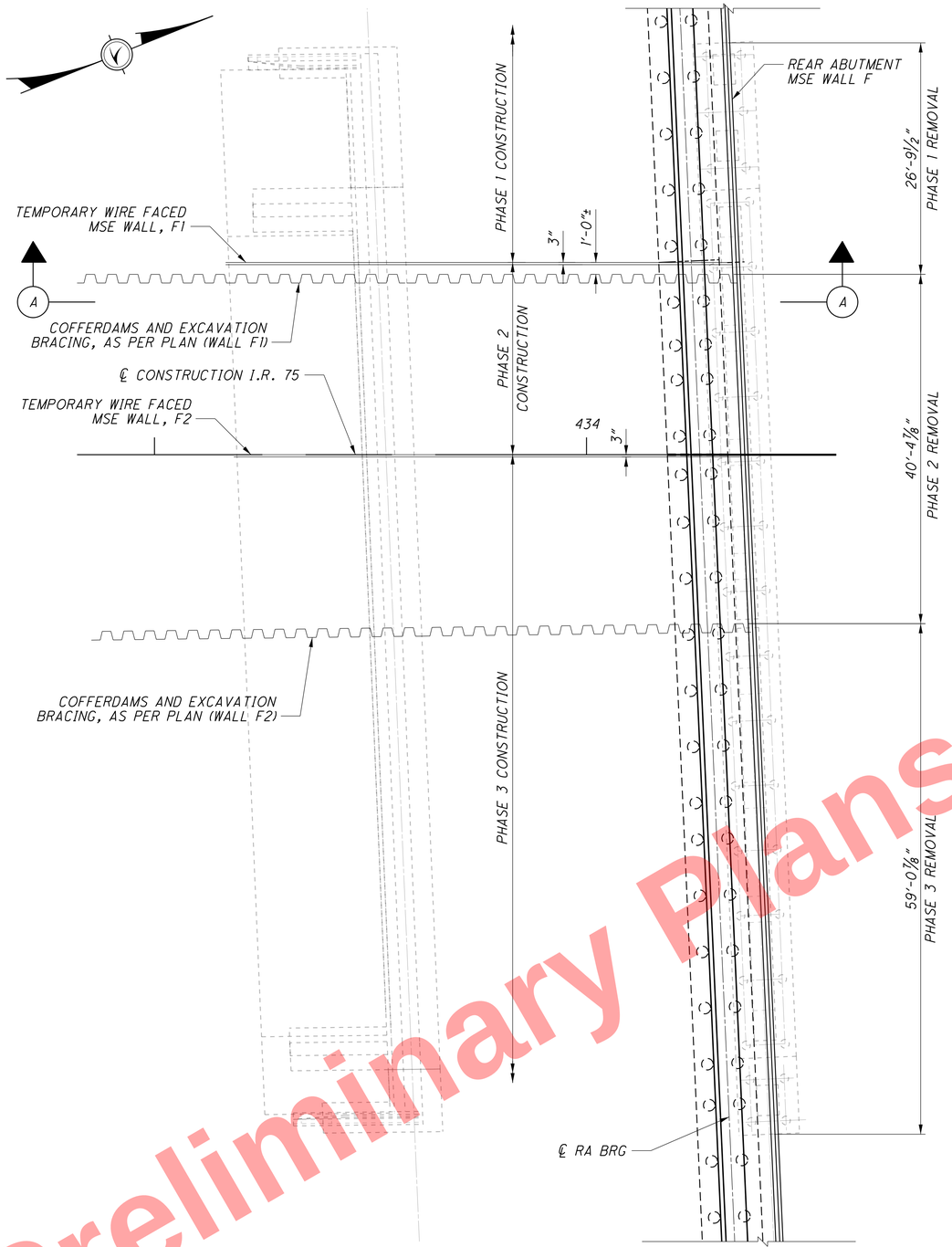

SHORING PLAN
REAR ABUTMENT

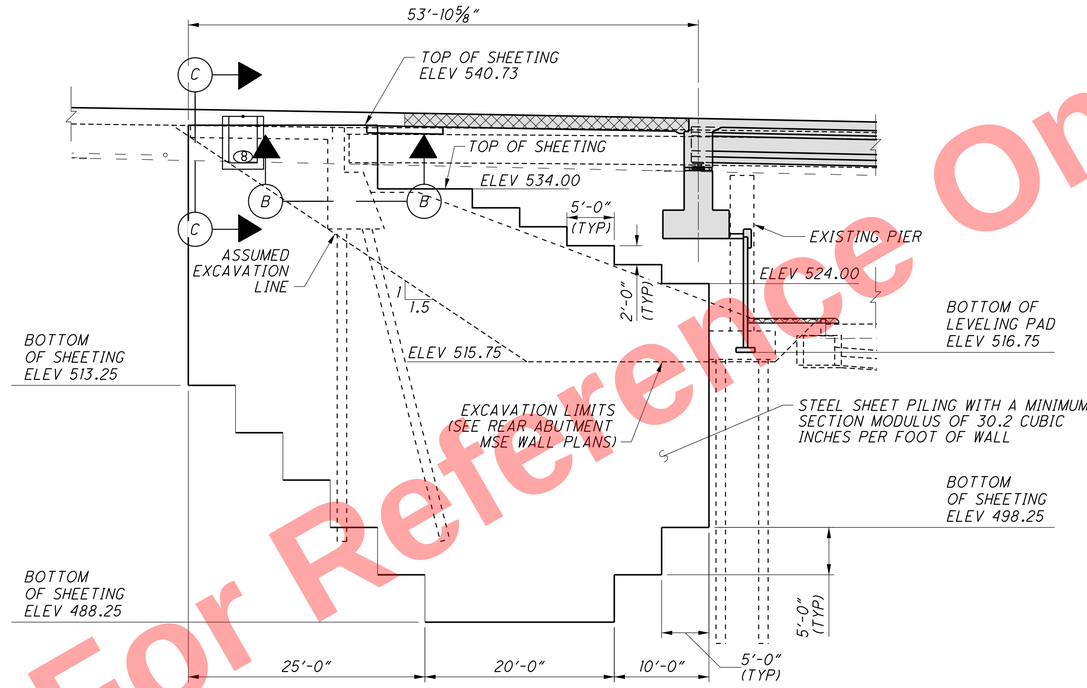

SECTION A-A
REAR ABUTMENT

SHORING SEQUENCE:

REAR ABUTMENT

1. REMOVE PORTIONS OF EXISTING APPROACH SLABS, PAVEMENT AND DECK TO ALLOW INSTALLATION OF SHORING.
2. INSTALL SHORING BEHIND ABUTMENT.
3. ATTACH EXPANSION ANCHORS TO EXISTING APPROACH SLABS.
4. INSTALL REMAINING SHORING ADJACENT TO AND IN FRONT OF ABUTMENT.
5. ATTACH EXPANSION ANCHORS TO EXISTING FOOTINGS.
6. COMPLETE PHASE CONSTRUCTION OF THE BRIDGE AND APPROACHES.

NOTES:

1. FOR ABUTMENT REMOVAL DETAILS SEE SHEETS 9/64 AND 10/64 .
2. FOR ABUTMENT DETAILS SEE SHEETS 16/64 TO 21/64.
3. FOR ADDITIONAL TEMPORARY SHORING NOTES AND SECTIONS B-B & C-C SEE SHEET 13/64 .
4. FOR TEMPORARY WIRE FACED MSE WALL DETAILS SEE MSE WALL F AND WALL G PLANS.
5. SEE GENERAL NOTES FOR ABBREVIATION LEGEND.
6. INSTALL ALL ANCHORS PER SS 866.

Preliminary Plans - For Reference Only

DESIGN AGENCY
ODOT
420 Mount Vernon Ave, Ste 200, Columbus, OH 43203

DESIGNED	DRAWN	REVIEWED	DATE
CMH	SBH	NCM	5-22-26
CHECKED	REVISED	STRUCTURE FILE NUMBER	
JAD		3110095	

SHORING DETAILS REAR ABUTMENT
BRIDGE NO. HAM-75-0823
I.R. 75 OVER LAIDLAW AVENUE (C.R. 690)

HAM-75-7.85
PID No. 121447

11 / 64

940
1047

F:\HAM\121447\structures\HAM075_0823\sheets\075_0823CMD603.dgn 5/11/2026 10:36:42 AM PAntonelli

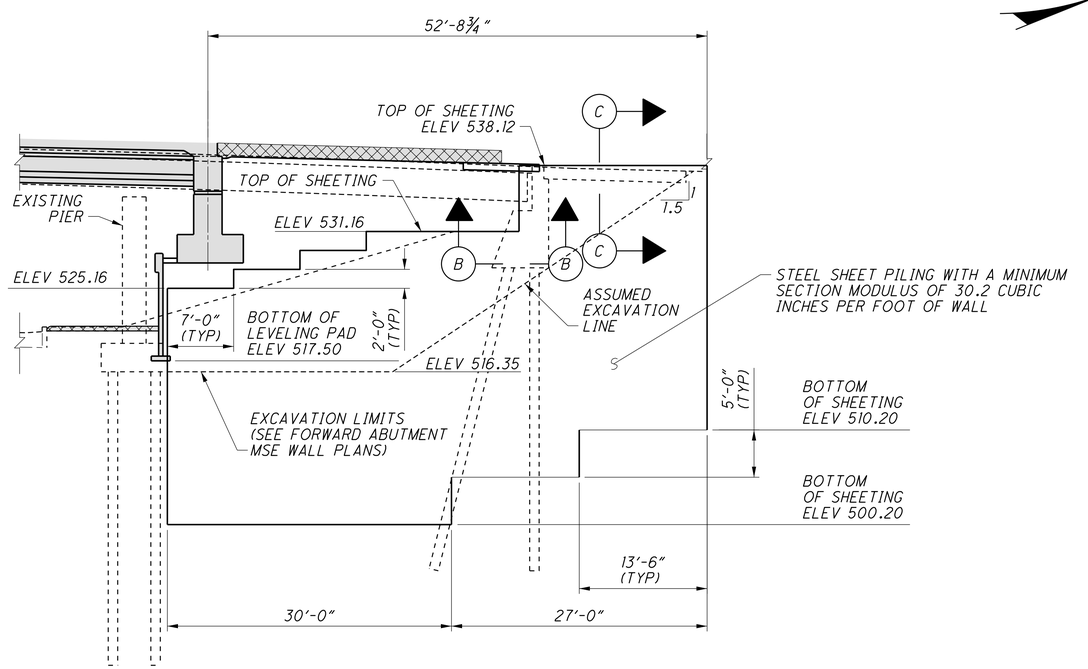

SECTION A-A
FORWARD ABUTMENT

SHORING SEQUENCE:

FORWARD ABUTMENT

1. REMOVE PORTIONS OF EXISTING APPROACH SLABS, PAVEMENT AND DECK TO ALLOW INSTALLATION OF SHORING.
2. INSTALL SHORING BEHIND ABUTMENT.
3. ATTACH EXPANSION ANCHORS TO EXISTING APPROACH SLABS.
4. INSTALL REMAINING SHORING ADJACENT TO AND IN FRONT OF ABUTMENT.
5. COMPLETE PHASE CONSTRUCTION OF THE BRIDGE AND APPROACHES.

NOTES:

1. FOR ABUTMENT REMOVAL DETAILS SEE SHEETS 9/64 AND 10/64.
2. FOR ABUTMENT DETAILS SEE SHEETS 16/64 TO 21/64.
3. FOR ADDITIONAL TEMPORARY SHORING NOTES AND SECTIONS B-B & C-C SEE SHEET 13/64.
4. FOR TEMPORARY WIRE FACED MSE WALL DETAILS SEE MSE WALL F AND WALL G PLANS.
5. SEE GENERAL NOTES FOR ABBREVIATION LEGEND.
6. INSTALL ALL ANCHORS PER SS 866.

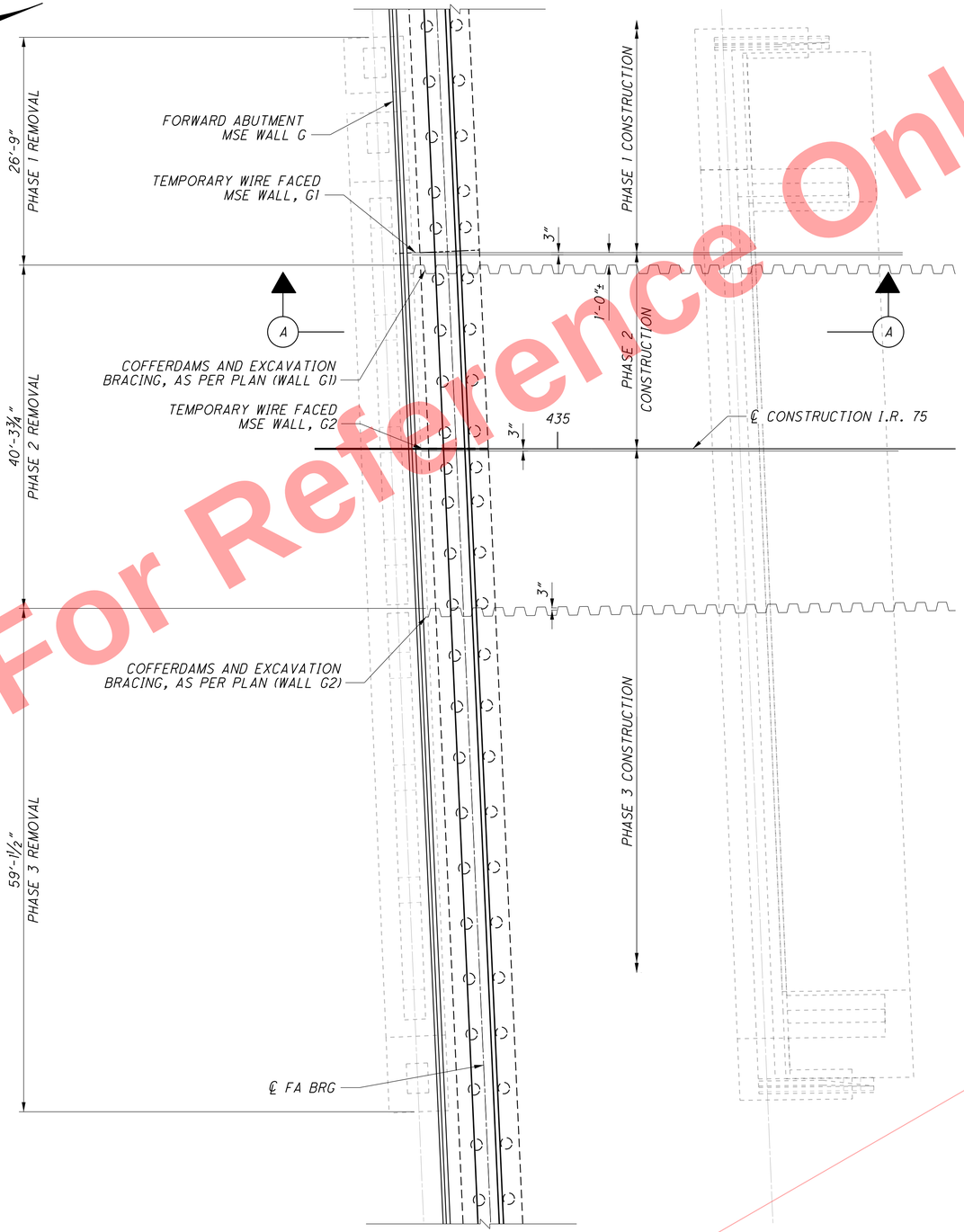

SHORING PLAN
FORWARD ABUTMENT

Preliminary Plans - Not For Reference Only

DESIGN AGENCY
ODOT
4295 Warrensville Center Rd., Columbus, OH 44128

DESIGNED	DRAWN	REVIEWED	DATE
CMH	SBH	NCM	5-22-26
CHECKED	REVISED	STRUCTURE FILE NUMBER	
JAD		3110095	

SHORING DETAILS FORWARD ABUTMENT
BRIDGE NO. HAM-75-0823
I.R. 75 OVER LAIDLAW AVENUE (C.R. 690)

HAM-75-7.85
PID No. 121447

12 / 64

941
1047

F:\HAM\121447\structures\HAM075_0823\sheets\075_0823CMD604.dgn 5/11/2026 10:37:19 AM PAntonelli

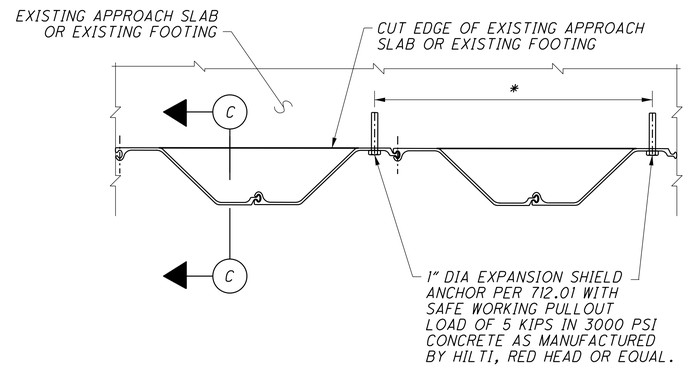

SECTION B-B

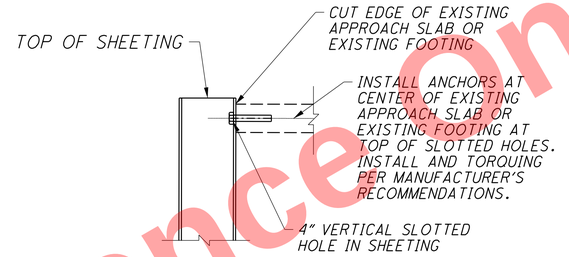

SECTION C-C

NOTES:

1. SHEET PILING SHALL BE ASTM A328 MATERIAL AND MEET THE REQUIREMENTS OF CMS 711.03. MINIMUM YIELD STRENGTH SHALL BE 39 KSI.

2. SHEET PILES USED FOR CONSTRUCTION SHALL INCLUDE END PROTECTORS TO FACILITATE DRIVING THE SHEET PILES. THE END PROTECTORS SHALL BE A ONE-PIECE ATTACHMENT SPECIFICALLY MADE FOR SHEET PILE SECTIONS AND COMPLETELY COVER THE TIPS OF THE SHEET PILES. END PROTECTORS SHALL BE ATTACHED TO THE SHEET PILES IN ACCORDANCE WITH THE MANUFACTURERS INSTRUCTIONS.

3. PAYMENT FOR SHEET PILING, EXPANSION ANCHORS, REMOVAL OF ALL COMPONENTS AFTER NO LONGER NECESSARY FOR SPECIFIC CONSTRUCTION PHASE, AND ALL OTHER ITEMS ASSOCIATED WITH TEMPORARY SHORING WILL BE INCLUDED IN THE CONTRACT LUMP SUM PRICE FOR COFFERDAMS AND EXCAVATION BRACING, AS PER PLAN.

6. FIELD VERIFY THE LOCATION AND ELEVATIONS OF THE EXISTING CONCRETE SLABS, SEE GENERAL NOTES FOR MORE DETAILS.

7. ALL STEEL SHALL BE A36. ALL BOLTS SHALL BE 5/8" DIA. HIGH STRENGTH BOLTS ASTM A325.

8. SEE GENERAL NOTES FOR ABBREVIATION LEGEND.

9. SEE SHEETS 11/64 AND 12/64 FOR LOCATION OF SECTION B-B & SECTION C-C.

Preliminary Plans - For Reference Only

DESIGN AGENCY: JMT, 4215 North Avenue, Suite 200, Columbus, OH 43219

DESIGNED	DRAWN	REVIEWED	DATE
CMH	SBH	NCM	5-22-26
CHECKED	REVISED	STRUCTURE FILE NUMBER	
JAD		3110095	

TEMPOARY SHORING DETAILS
BRIDGE NO. HAM-75-0823
I.R. 75 OVER LAIDLAW AVENUE (C.R. 690)

HAM-75-7.85
PID No. 121447

F:\HAM\121447\structures\HAM075_0823\sheets\075_0823CMD605.dgn 5/11/2026 10:37:29 AM PAntonelli

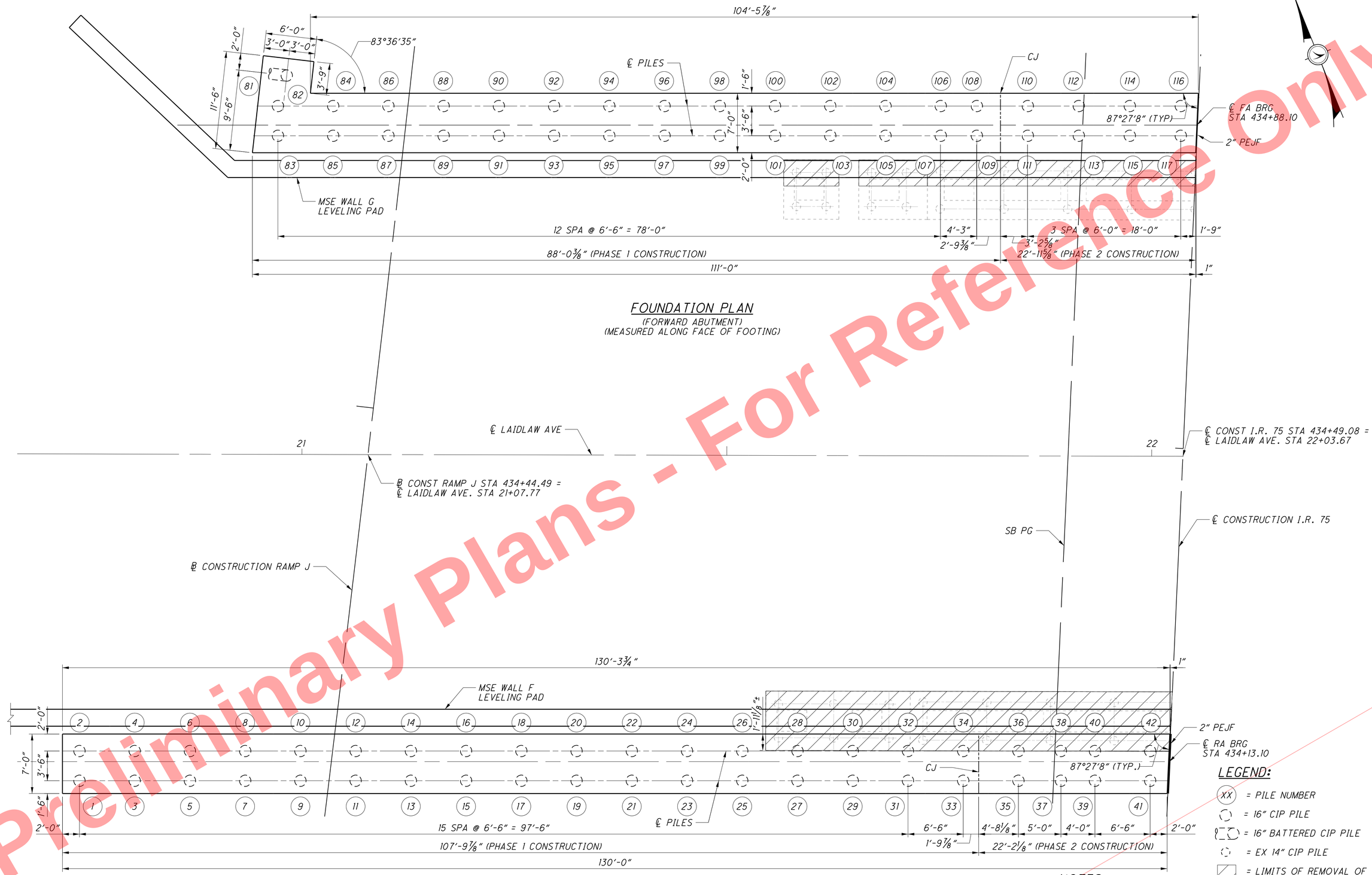

FOUNDATION PLAN
(FORWARD ABUTMENT)
(MEASURED ALONG FACE OF FOOTING)

FOUNDATION PLAN
(REAR ABUTMENT)
(MEASURED ALONG FACE OF FOOTING)

LEGEND:

- XX = PILE NUMBER
- = 16" CIP PILE
- = 16" BATTERED CIP PILE
- = EX 14" CIP PILE
- = LIMITS OF REMOVAL OF EX FOOTING

NOTES:

1. SEE SHEET 20/64 FOR ABUTMENT SECTION.
2. SEE SHEET MSE WALL F AND WALL G PLANS FOR EXISTING FOOTING REMOVAL SECTION.
3. SEE GENERAL NOTES FOR ABBREVIATION LEGEND.

Preliminary Plans - For Reference Only

DESIGN AGENCY: JMT, 4215 North Avenue, Suite 200, Columbus, OH 43219

DESIGNED	DRAWN	REVIEWED	DATE
TML	TML	NCM	5-22-26
CHECKED	REVISED	STRUCTURE FILE NUMBER	
JAD		3110095	

LEFT BRIDGE FOUNDATION PLAN
BRIDGE NO. HAM-75-0823
I.R. 75 OVER LAIDLAW AVENUE (C.R. 690)

HAM-75-7.85
PID No. 121447

F:\HAM\121447\structures\HAM075_0823\sheets\075_0823CFP601.dgn 5/11/2026 10:38:43 AM PAntonelli

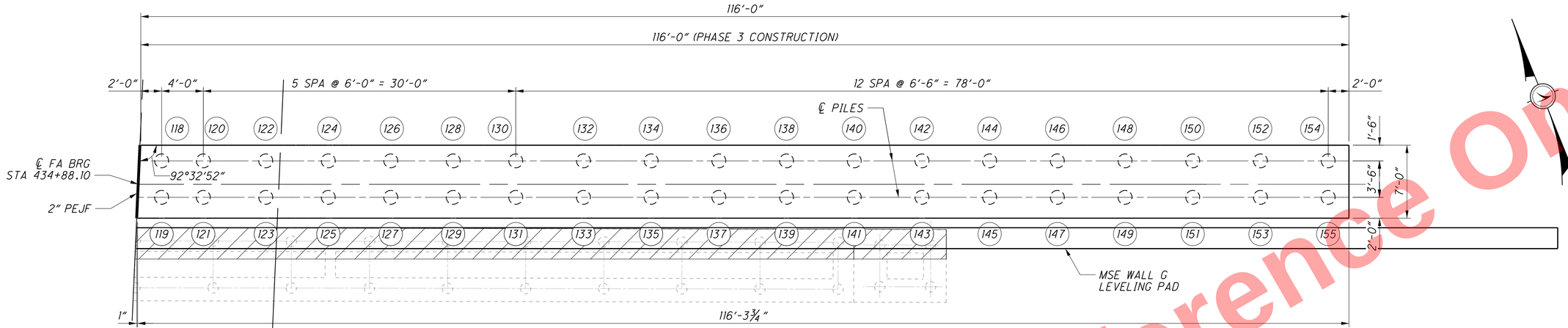

FOUNDATION PLAN
(FORWARD ABUTMENT)
(MEASURED ALONG FACE OF FOOTING)

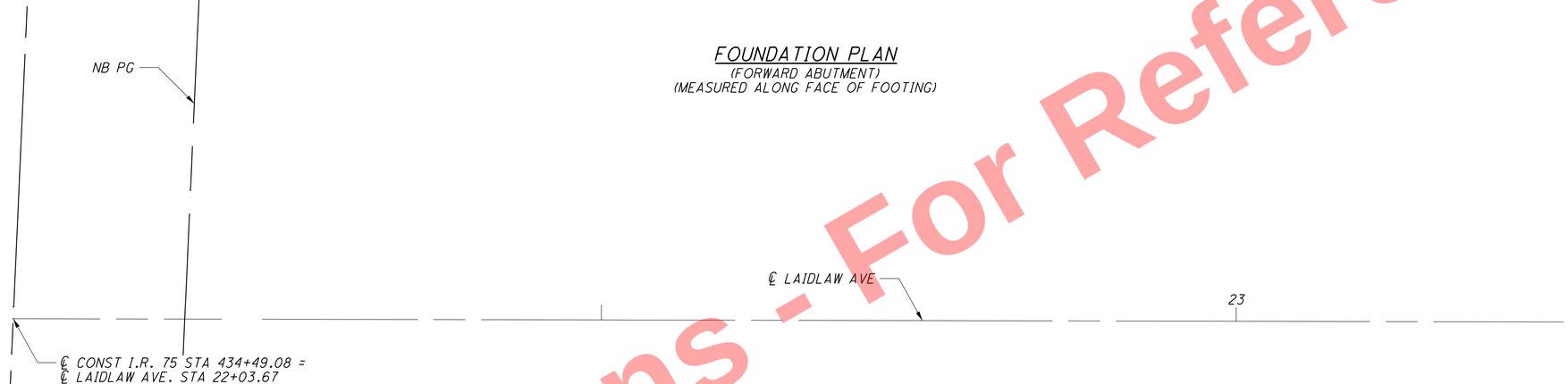

NOTES:

1. SEE SHEET 20/64 FOR ABUTMENT SECTION.
2. SEE SHEET MSE WALL F AND WALL G PLAN FOR EXISTING FOOTING REMOVAL SECTION.
3. SEE GENERAL NOTES FOR ABBREVIATION LEGEND.

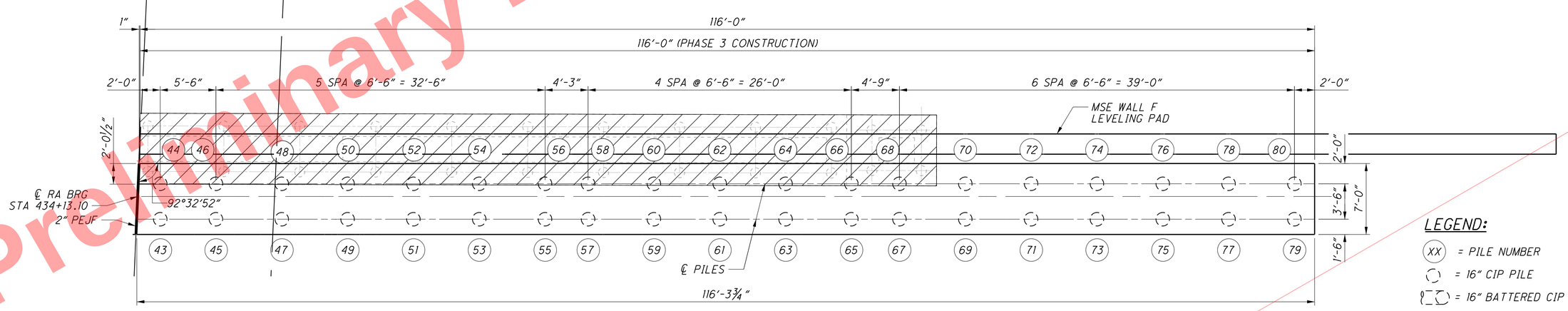

FOUNDATION PLAN
(REAR ABUTMENT)
(MEASURED ALONG FACE OF FOOTING)

LEGEND:

- XX = PILE NUMBER
- = 16" CIP PILE
- = 16" BATTERED CIP PILE
- = EX 14" CIP PILE
- = LIMITS OF REMOVAL OF EX FOOTING

Preliminary Plans - For Reference Only

DESIGN AGENCY: JMT, 4215 North Avenue, Suite 200, Columbus, OH 43219

DESIGNED	DRAWN	REVIEWED	DATE
TML	TML	NCM	5-22-26
CHECKED	REVISED	STRUCTURE FILE NUMBER	
JAD		3110095	

RIGHT BRIDGE FOUNDATION PLAN
BRIDGE NO. HAM-75-0823
I.R. 75 OVER LAIDLAW AVENUE (C.R. 690)

HAM-75-7.85
PID No. 121447

F:\HAM\121447\structures\HAM075_0823\sheets\075_0823CFP602.dgn 5/11/2026 10:39:16 AM PAntonelli

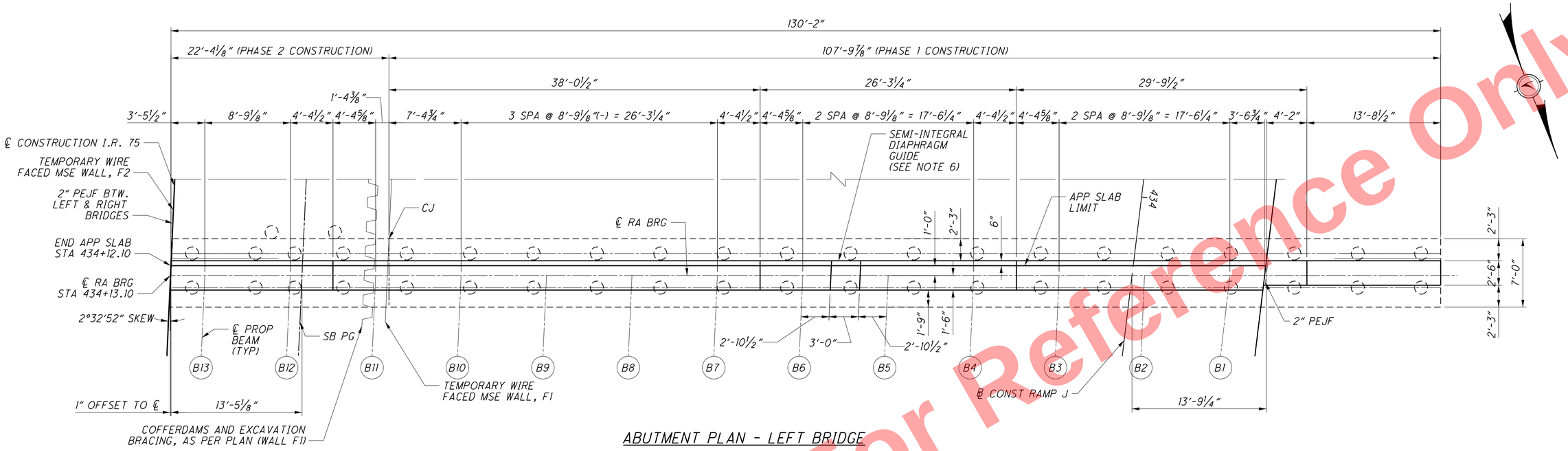

ABUTMENT PLAN - LEFT BRIDGE

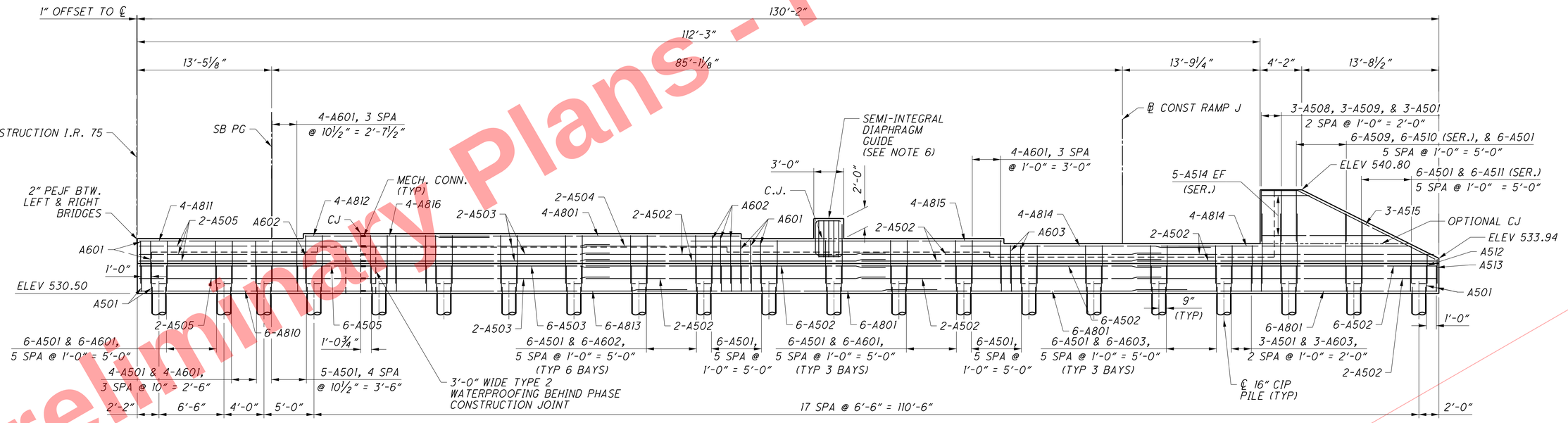

ABUTMENT ELEVATION - LEFT BRIDGE

(ELEVATIONS SHOWN ALONG ℄ BRG)

LEGEND:

◯ = 16" DIA CIP PILE

(BXX) = BEAM NUMBER

REAR ABUTMENT LEFT BRIDGE BEAM SEAT ELEVATIONS

BEAM	1	2	3	4	5	6	7	8	9	10	11	12	13
ELEV	535.50	535.50	535.50	536.00	536.00	536.00	536.50	536.50	536.50	536.50	536.50	536.00	536.00

NOTES:

1. SEE SHEET 20/64 FOR TYPICAL ABUTMENT AND WINGWALL SECTIONS.
2. SEE SHEET 35/64 FOR DIAPHRAGM REINFORCING DETAILS.
3. SEE SHEET 44/64 FOR RAILING DETAILS AND SCD SBR-1-20 AND SBR-2-20 FOR ADDITIONAL DETAILS.
4. SEE SHEET 14/64 FOR PILE LAYOUT.
5. SEE GENERAL NOTES FOR ABBREVIATION LEGEND.
6. SEE STANDARD DRAWING SICD-2-14 FOR ADDITIONAL SEMI-INTEGRAL DIAPHRAGM DETAILS NOT SHOWN, INCLUDING REINFORCING AND RUB PLATE DETAILS.
7. MINIMUM LAP LENGTHS: #5 BARS = 2'-5". #8 BARS = 5'-0"

Preliminary Plans - For Reference Only

DESIGN AGENCY
470 North Avenue, Suite 200, Cuyahoga Falls, OH 44221

DATE 5-22-26
REVIEWED NCM
STRUCTURE FILE NUMBER 3110095
DRAWN TML
REVISED
DESIGNED TML
CHECKED JAD

REAR ABUTMENT DETAILS
BRIDGE NO. HAM-75-0823
I.R. 75 OVER LAIDLAW AVENUE (C.R. 690)

HAM-75-7.85
PID No. 121447

16 / 64

945
1047

F:\HAM\121447\structures\HAM075_0823\sheets\075_0823CAR603.dgn 5/11/2026 10:39:38 AM PAntonelli

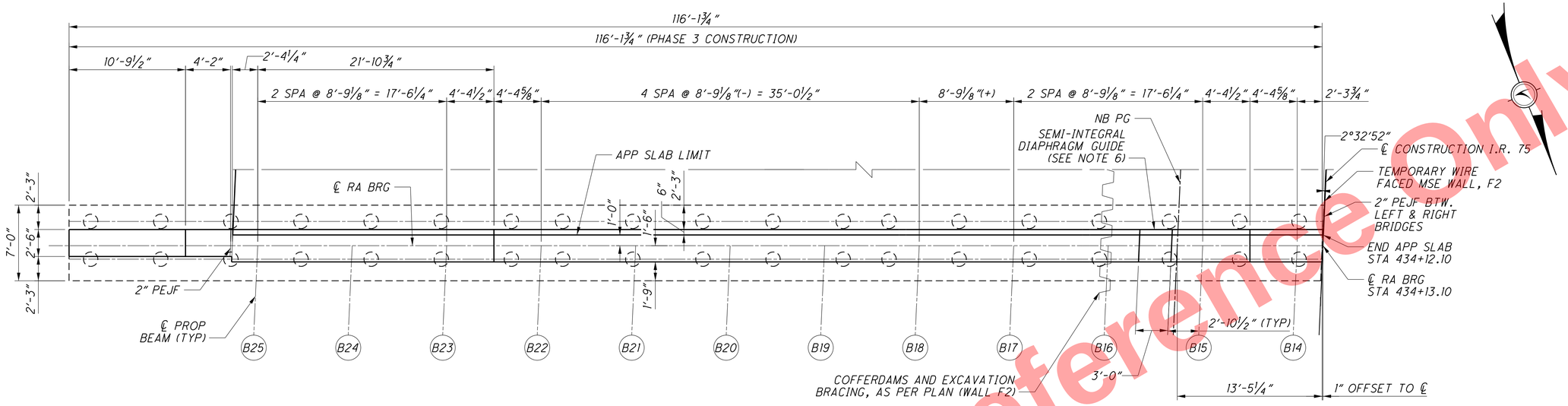

ABUTMENT PLAN - RIGHT BRIDGE

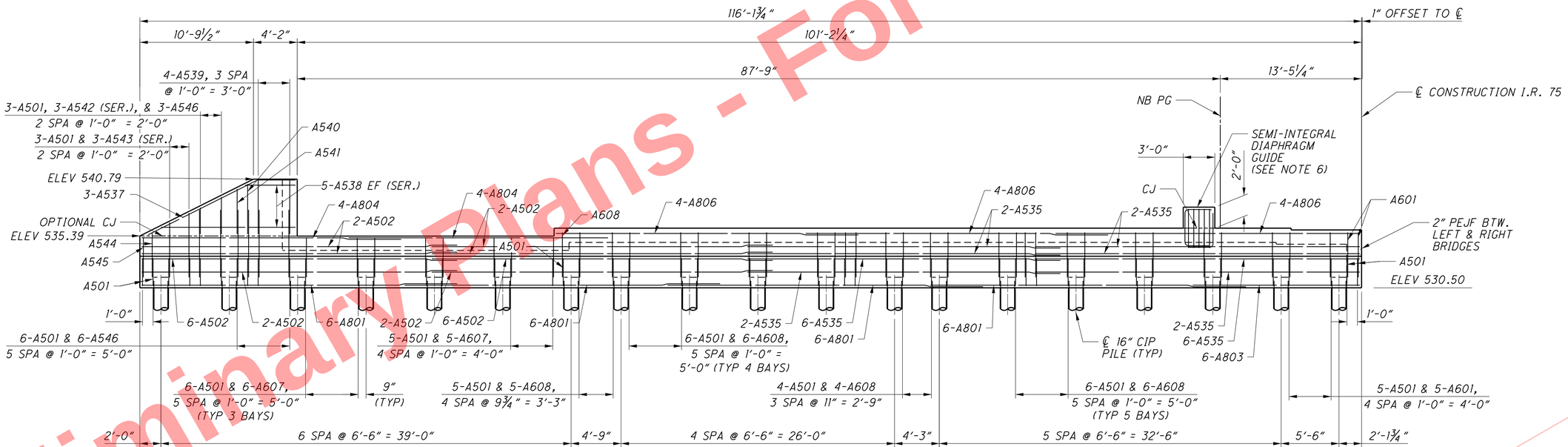

ABUTMENT ELEVATION - RIGHT BRIDGE

(ELEVATIONS SHOWN ALONG ℄ BRG)

REAR ABUTMENT RIGHT BRIDGE BEAM SEAT ELEVATIONS												
BEAM	14	15	16	17	18	19	20	21	22	23	24	25
ELEV	536.00	536.17	536.17	536.17	536.17	536.17	536.17	536.17	536.17	535.42	535.42	535.42

LEGEND:

○ = 16" DIA CIP PILE

(BXX) = BEAM NUMBER

NOTES:

1. SEE SHEET 20/64 FOR TYPICAL ABUTMENT AND WINGWALL SECTIONS.
2. SEE SHEET 35/64 FOR DIAPHRAGM REINFORCING DETAILS.
3. SEE SHEET 45/64 FOR RAILING DETAILS AND SCD SBR-1-20 AND SBR-2-20 FOR ADDITIONAL DETAILS.
4. SEE SHEET 15/64 FOR PILE LAYOUT.
5. SEE GENERAL NOTES FOR ABBREVIATION LEGEND.
6. SEE STANDARD DRAWING SICD-2-14 FOR ADDITIONAL SEMI-INTEGRAL DIAPHRAGM DETAILS NOT SHOWN, INCLUDING REINFORCING AND RUB PLATE DETAILS.
7. MINIMUM LAP LENGTHS: #5 BARS = 2'-5". #8 BARS = 5'-0"

Preliminary Plans - For Reference Only

DESIGN AGENCY: STRAND ASSOCIATES, 400 Wilshire Avenue, Suite 200, Cincinnati, OH 45203

DESIGNED TML | DRAWN TML | CHECKED JAD | REVIEWED NCM | DATE 5-22-26 | STRUCTURE FILE NUMBER 3110095 | REVISED

REAR ABUTMENT DETAILS
BRIDGE NO. HAM-75-0823
I.R. 75 OVER LAIDLAW AVENUE (C.R. 690)

HAM-75-7.85
PID No. 121447

17 / 64

946
1047

F:\HAM\121447\structures\HAM075_0823\sheets\075_0823CAR602.dgn 5/11/2026 10:40:05 AM PAntonelli

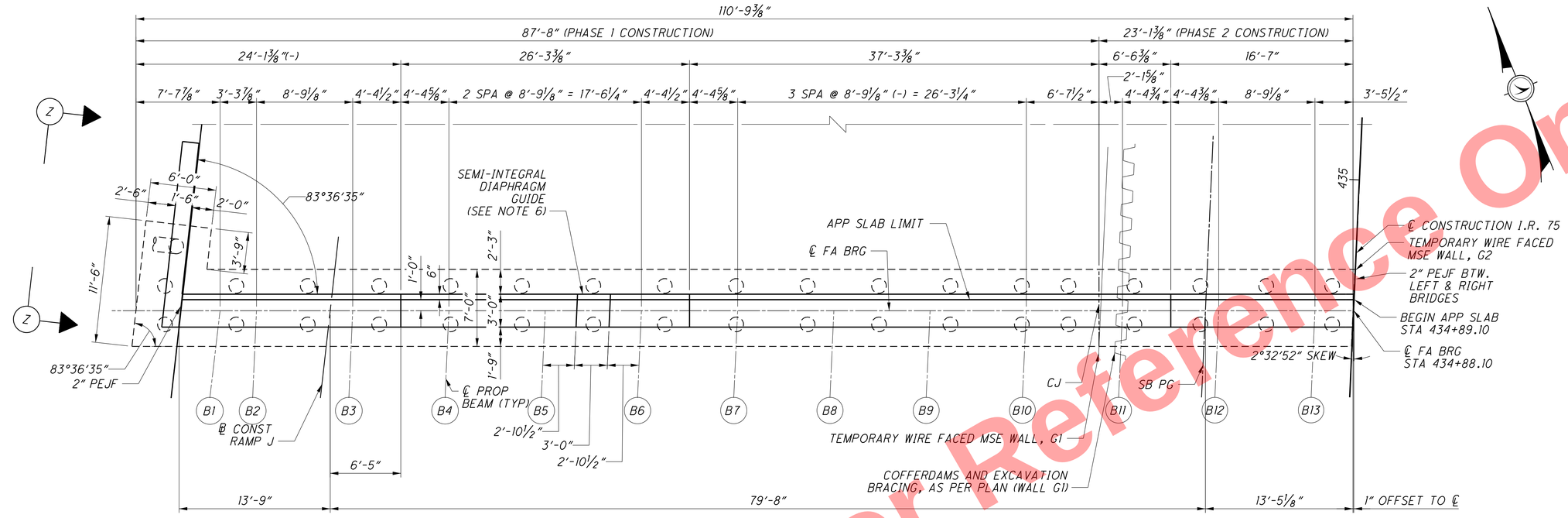

ABUTMENT PLAN - LEFT BRIDGE

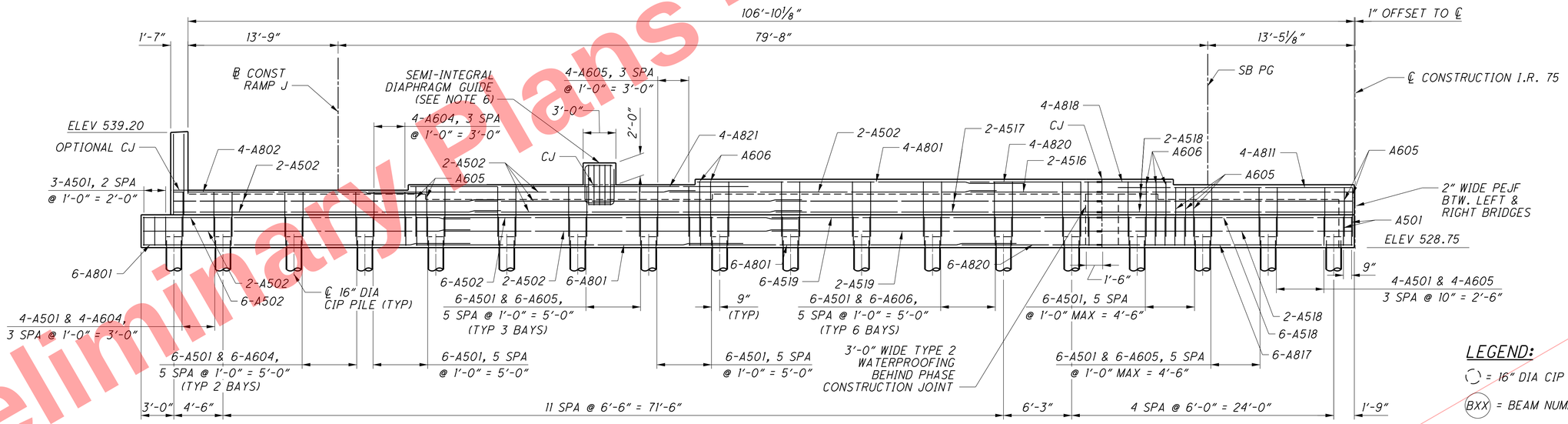

ABUTMENT ELEVATION - LEFT BRIDGE
(ELEVATIONS SHOWN ALONG ℄ BRG)

FORWARD ABUTMENT LEFT BRIDGE BEAM SEAT ELEVATIONS													
BEAM	1	2	3	4	5	6	7	8	9	10	11	12	13
ELEV	534.00	534.00	534.00	534.50	534.50	534.50	535.00	535.00	535.00	535.00	535.00	534.50	534.50

NOTES:

1. SEE SHEET 20/64 FOR TYPICAL ABUTMENT AND WINGWALL SECTIONS.
2. SEE SHEET 36/64 FOR DIAPHRAGM REINFORCING DETAILS.
3. SEE SHEET 44/64 FOR RAILING DETAILS AND SCD SBR-1-20 AND SBR-2-20 FOR ADDITIONAL DETAILS.
4. SEE SHEET 14/64 FOR PILE LAYOUT.
5. SEE GENERAL NOTES FOR ABBREVIATION LEGEND.
6. SEE STANDARD DRAWING SICD-2-14 FOR ADDITIONAL SEMI-INTEGRAL DIAPHRAGM DETAILS NOT SHOWN, INCLUDING REINFORCING AND RUB PLATE DETAILS.
7. SEE SHEET 21/64 FOR VIEW Z-Z.
8. MINIMUM LAP LENGTHS: #5 BARS = 2'-5". #8 BARS = 5'-0"

LEGEND:

◯ = 16" DIA CIP PILE

(BXX) = BEAM NUMBER

Preliminary Plans - For Reference Only

DESIGN AGENCY
ODOT
400 West Nintth Street, Suite 200, Columbus, OH 43215

DESIGNED	DRAWN	REVIEWED	DATE
TML	TML	NCM	5-22-26
CHECKED	REVISED	STRUCTURE FILE NUMBER	
JAD		3110095	

FORWARD ABUTMENT DETAILS
BRIDGE NO. HAM-75-0823
I.R. 75 OVER LAIDLAW AVENUE (C.R. 690)

HAM-75-7.85
PID No. 121447

F:\HAM\121447\structures\HAM075_0823\sheets\075_0823CAF601.dgn 5/11/2026 10:40:29 AM PAntonelli

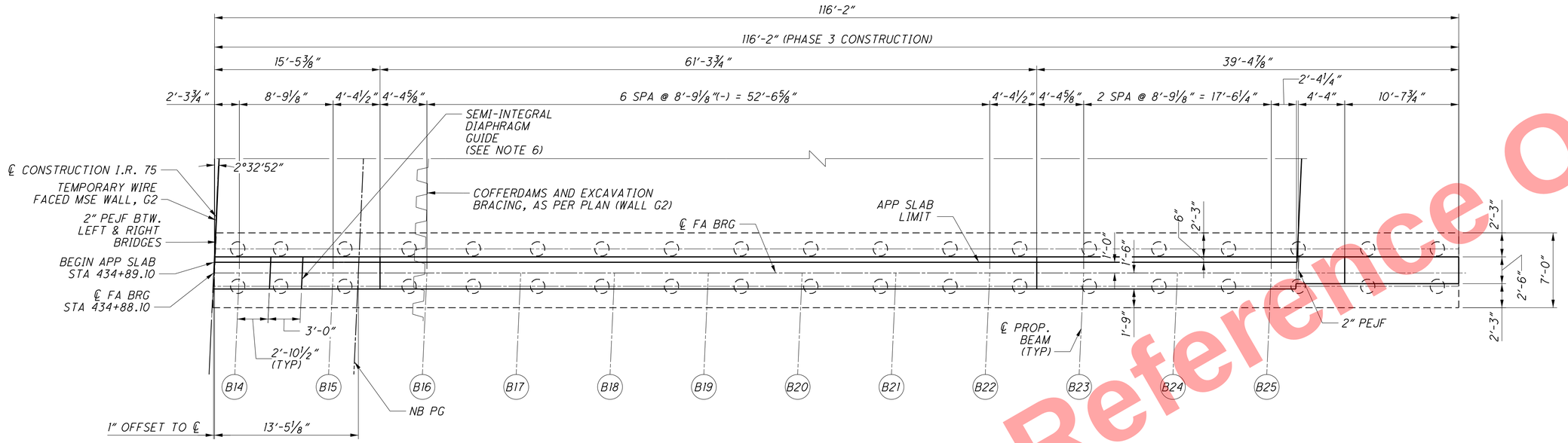

ABUTMENT PLAN - RIGHT BRIDGE

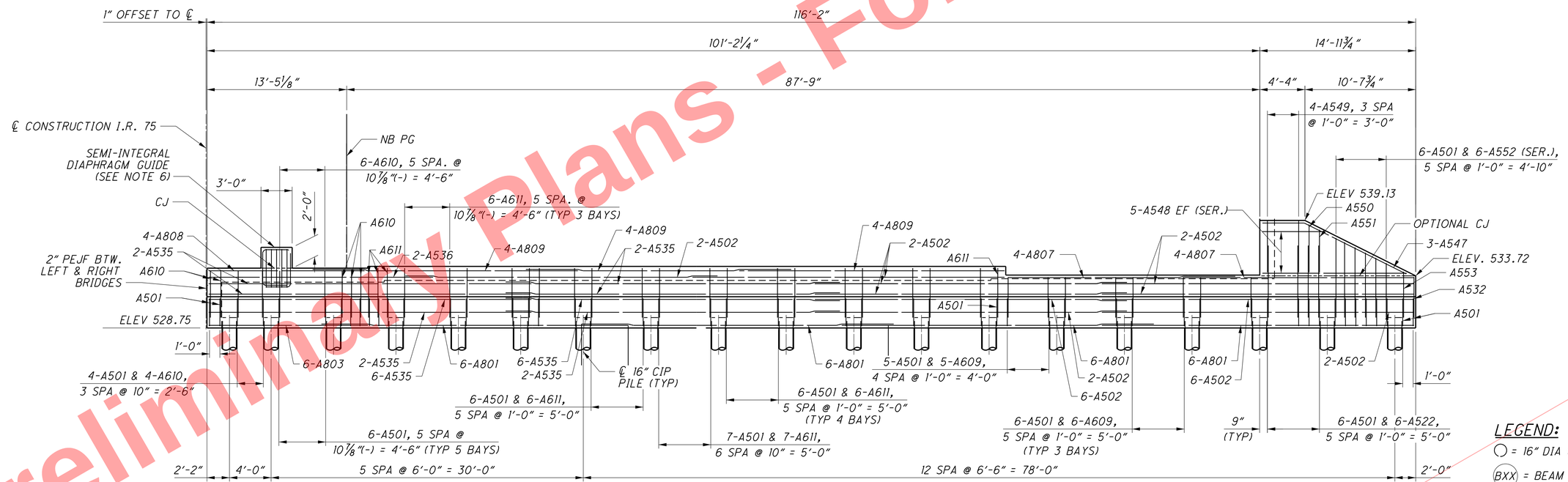

ABUTMENT ELEVATION - RIGHT BRIDGE

(ELEVATIONS SHOWN ALONG ℄ BRG)

LEGEND:

○ = 16" DIA CIP PILE

(BXX) = BEAM NUMBER

FORWARD ABUTMENT RIGHT BRIDGE BEAM SEAT ELEVATIONS												
BEAM	14	15	16	17	18	19	20	21	22	23	24	25
ELEV	534.50	534.50	534.67	534.67	534.67	534.67	534.67	534.67	534.67	533.83	533.83	533.83

NOTES:

1. SEE SHEET 20/64 FOR TYPICAL ABUTMENT AND WINGWALL SECTIONS.
2. SEE SHEET 36/64 FOR DIAPHRAGM REINFORCING DETAILS.
3. SEE SHEET 45/64 FOR RAILINGDETAILS AND SCD SBR-1-20 AND SBR-2-20 FOR ADDITIONAL DETAILS.
4. SEE SHEET 15/64 FOR PILE LAYOUT.
5. SEE GENERAL NOTES FOR ABBREVIATION LEGEND.
6. SEE STANDARD DRAWING SICD-2-14 FOR ADDITIONAL SEMI-INTEGRAL DIAPHRAGM DETAILS NOT SHOWN, INCLUDING REINFORCING AND RUB PLATE DETAILS.
7. MINIMUM LAP LENGTHS: #5 BARS = 2'-5". #8 BARS = 5'-0"

Preliminary Plans - For Reference Only

DESIGN AGENCY
ODOT
4295 Warrensville Center Rd., Columbus, OH 44128

DESIGNED TML | DRAWN TML | REVIEWED NCM | DATE 5-22-26
CHECKED JAD | REVISED | STRUCTURE FILE NUMBER 3110095

FORWARD ABUTMENT DETAILS
BRIDGE NO. HAM-75-0823
I.R. 75 OVER LAIDLAW AVENUE (C.R. 690)

HAM-75-7.85
PID No. 121447

19 / 64

948
1047

F:\HAM\121447\structures\HAM075_0823\sheets\075_0823CAF602.dgn 5/11/2026 10:40:57 AM PAntonelli

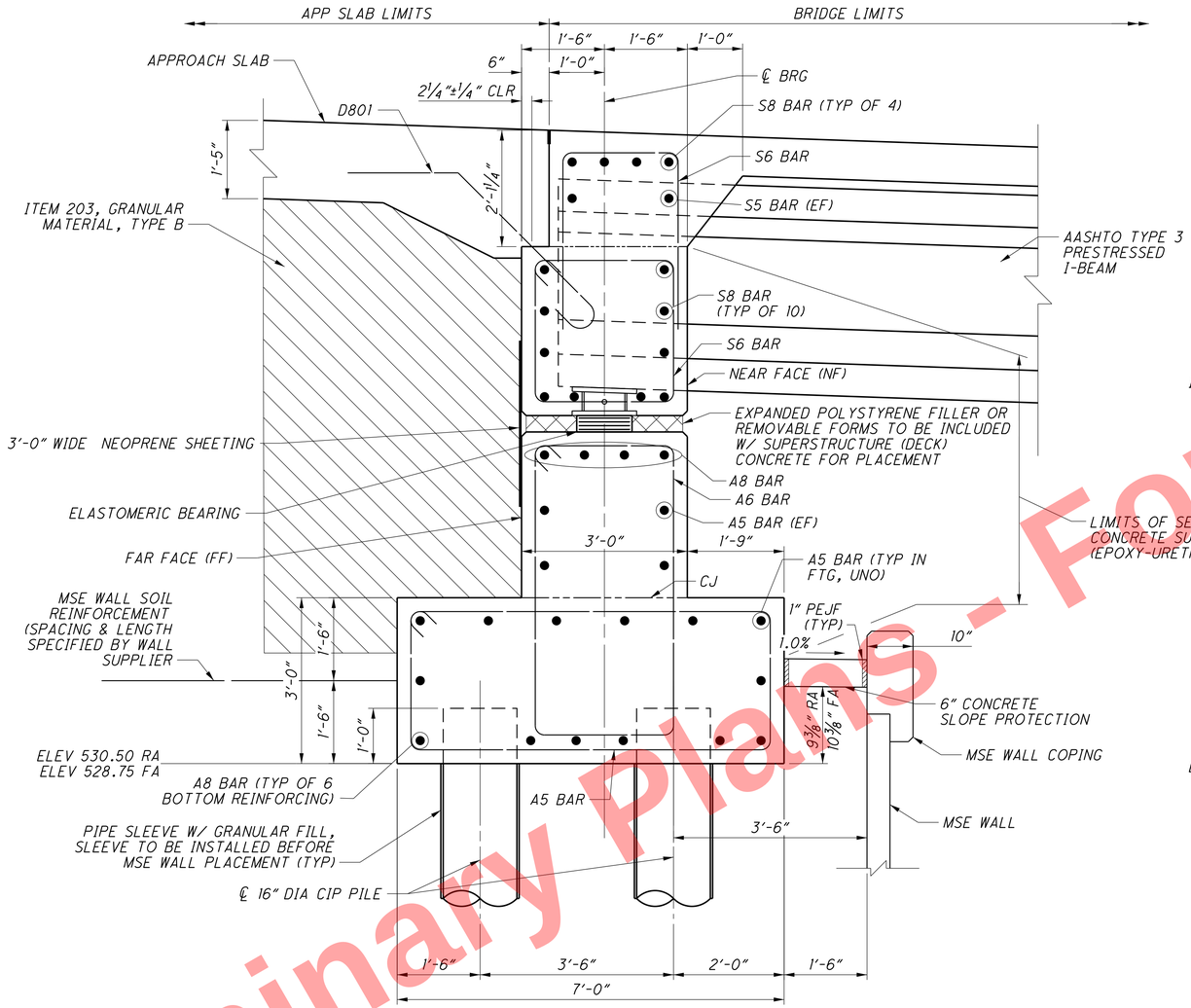

TYPICAL ABUTMENT SECTION

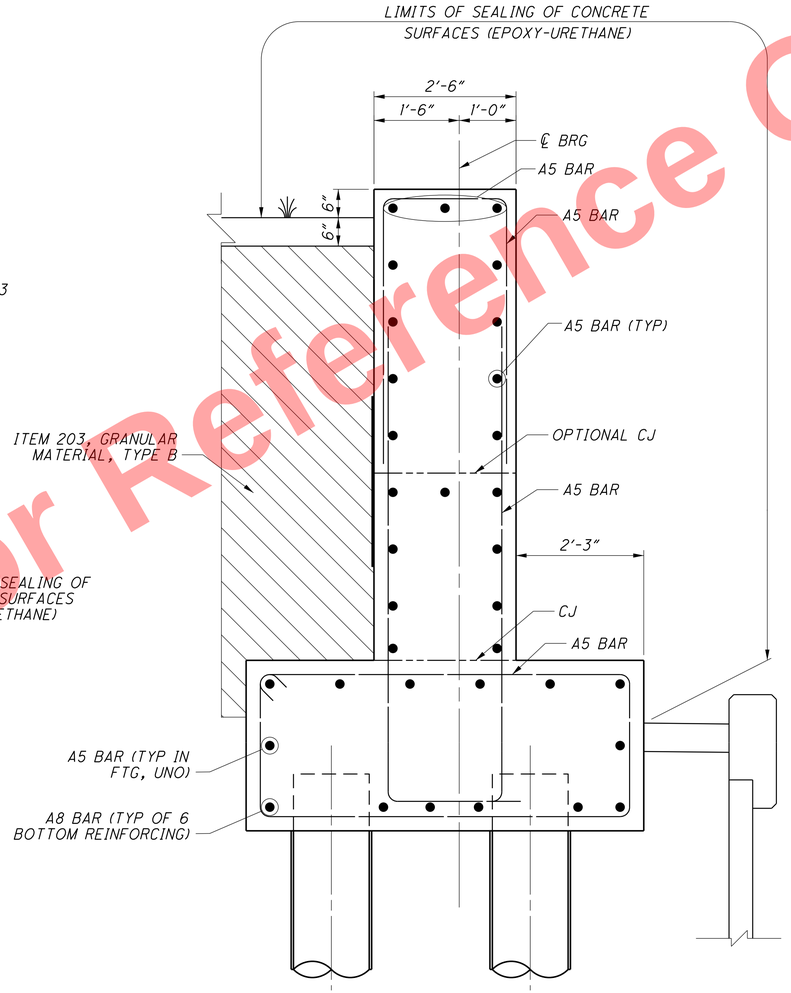

TYPICAL WINGWALL SECTION

(DETAILS SIMILAR TO ABUTMENT SECTION, EXCEPT AS NOTED)

NOTES:

1. SEE MSE WALL PLAN SHEETS FOR MSE WALL DETAILS.
2. SEE SHEETS 16/64 AND 17/64 FOR REAR ABUTMENT DETAILS.
3. SEE SHEETS 18/64 AND 19/64 FOR FORWARD ABUTMENT DETAILS.
4. SEE SHEETS 35/64 AND 36/64 FOR DIAPHRAGM DETAILS.
5. SEE GENERAL NOTES FOR ABBREVIATION LEGEND.

Preliminary Plans - For Reference Only

DESIGN AGENCY
4215 North Avenue, Suite 200, Columbus, OH 43219

DESIGNED	DRAWN	REVIEWED	DATE
TML	TML	NCM	5-22-26
CHECKED	REVISED	STRUCTURE FILE NUMBER	
JAD		3110095	

BRIDGE ABUTMENT DETAILS
BRIDGE NO. HAM-75-0823
I.R. 75 OVER LAIDLAW AVENUE (C.R. 690)

HAM-75-7.85
PID No. 121447

F:\HAM\121447\structures\HAM075_0823\sheets\075_0823CAR601.dgn 5/11/2026 10:41:07 AM PAntonelli

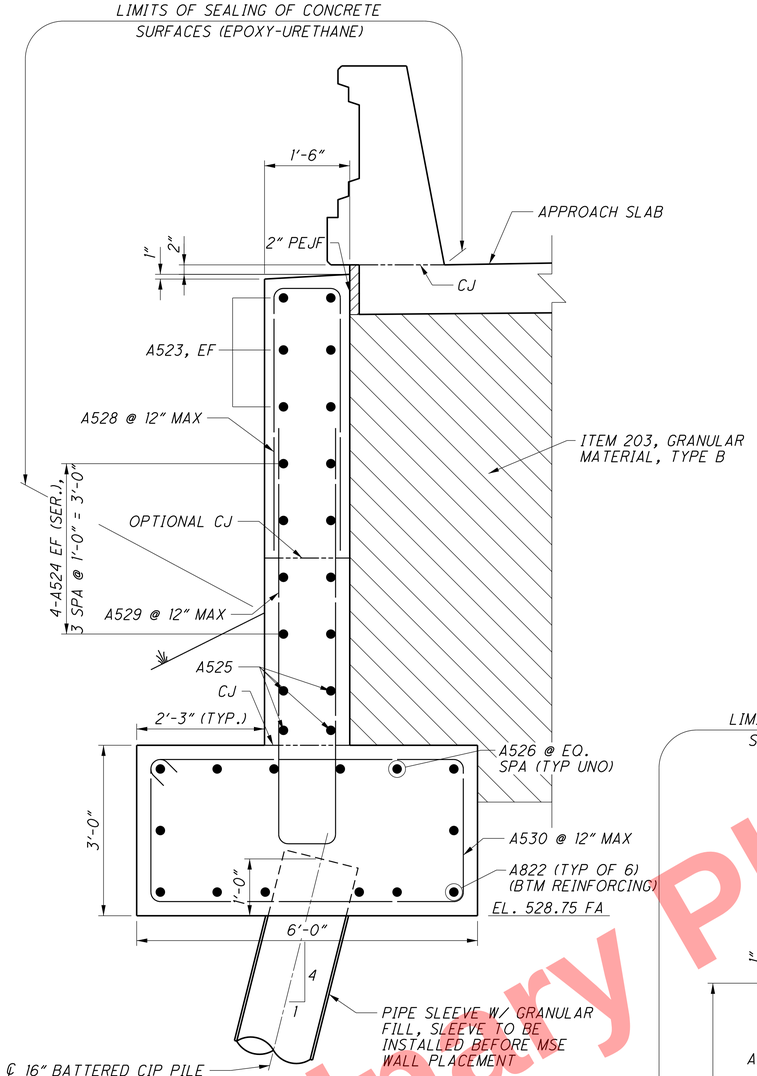

SECTION C-C
(A531 NOT SHOWN FOR CLARITY)

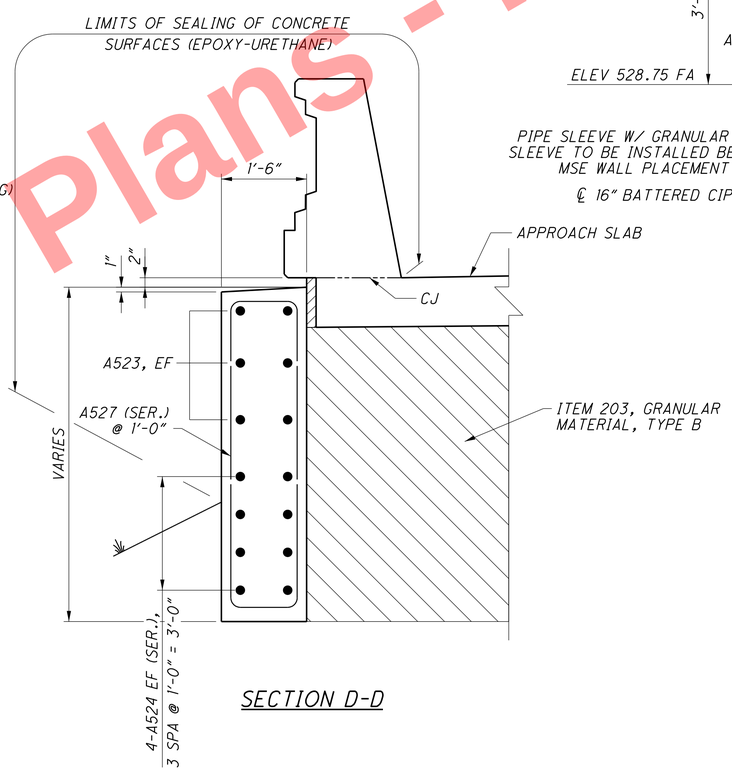

SECTION D-D

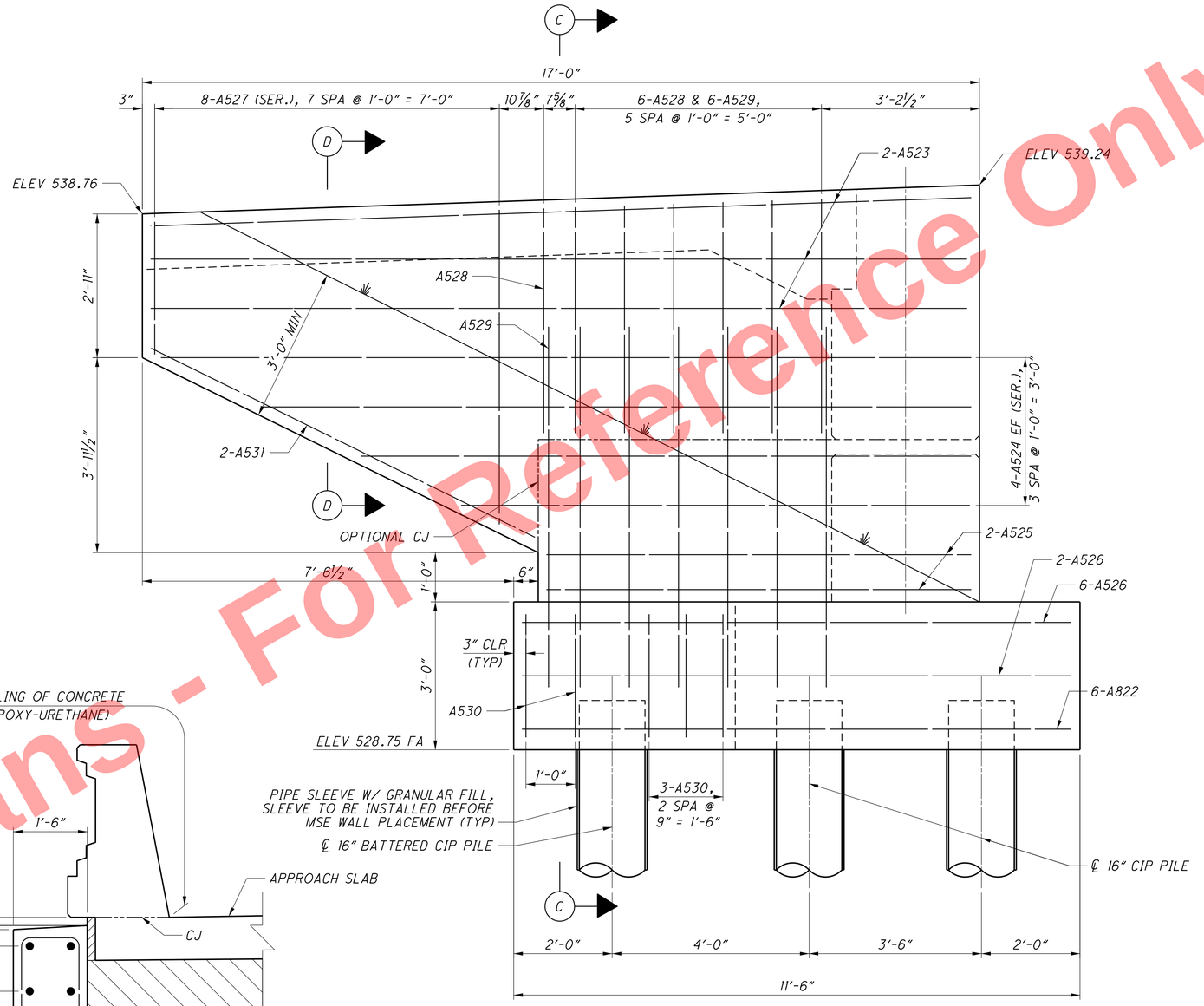

VIEW Z-Z

NOTES:
1. SEE MSE WALL PLAN SHEETS FOR MSE WALL DETAILS.
2. SEE SHEETS 18/64 AND 19/64 FOR FORWARD ABUTMENT DETAILS.
3. SEE GENERAL NOTES FOR ABBREVIATION LEGEND.
4. SEE SHEET 18/64 FOR LOCATION OF Z-Z.

Preliminary Plans - For Reference Only

DESIGN AGENCY
4215 North Avenue, Suite 200, Columbus, OH 43219

DESIGNED	DRAWN	REVIEWED	DATE
TML	TML	NCM	5-22-26
CHECKED	REVISED	STRUCTURE FILE NUMBER	
JAD		3110095	

BRIDGE ABUTMENT DETAILS
BRIDGE NO. HAM-75-0823
I.R. 75 OVER LAIDLAW AVENUE (C.R. 690)

HAM-75-7.85
PID No. 121447

F:\HAM\121447\structures\HAM075_0823\sheets\075_0823CAF603.dgn 5/11/2026 10:41:16 AM PAntonelli

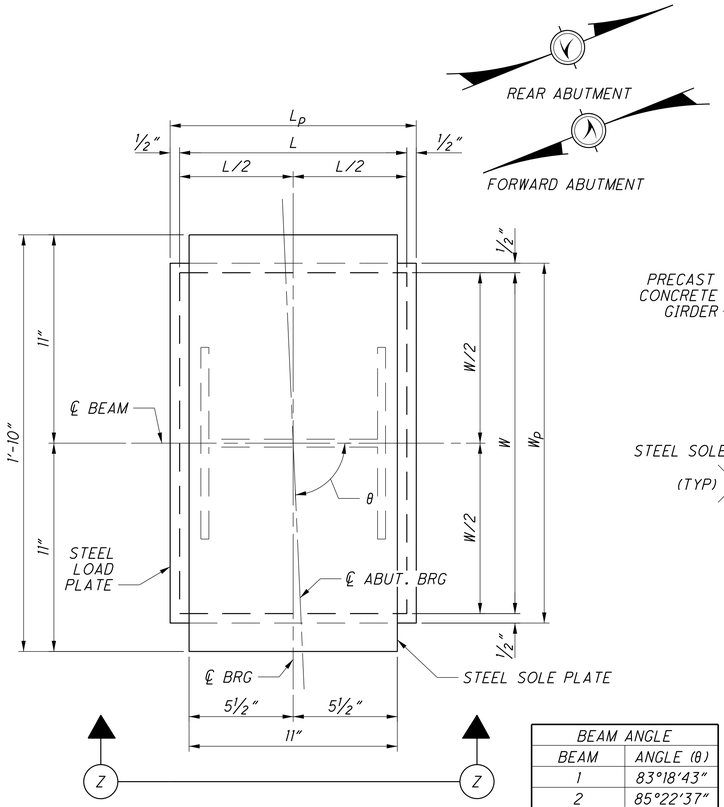

BEARING PAD PLAN

BEAM ANGLE	
BEAM	ANGLE (θ)
1	83°18'43"
2	85°22'37"
3 THRU 18	87°27'8"

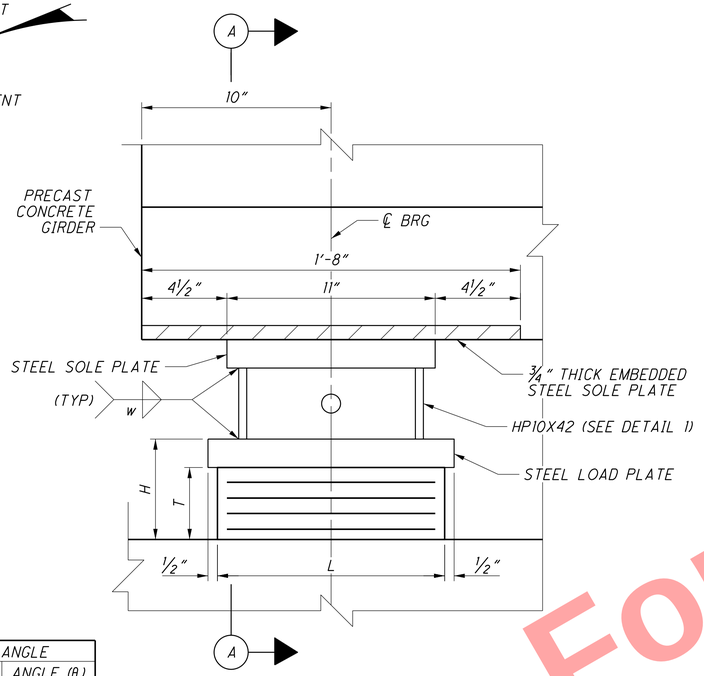

VIEW Z-Z BEARING ELEVATION

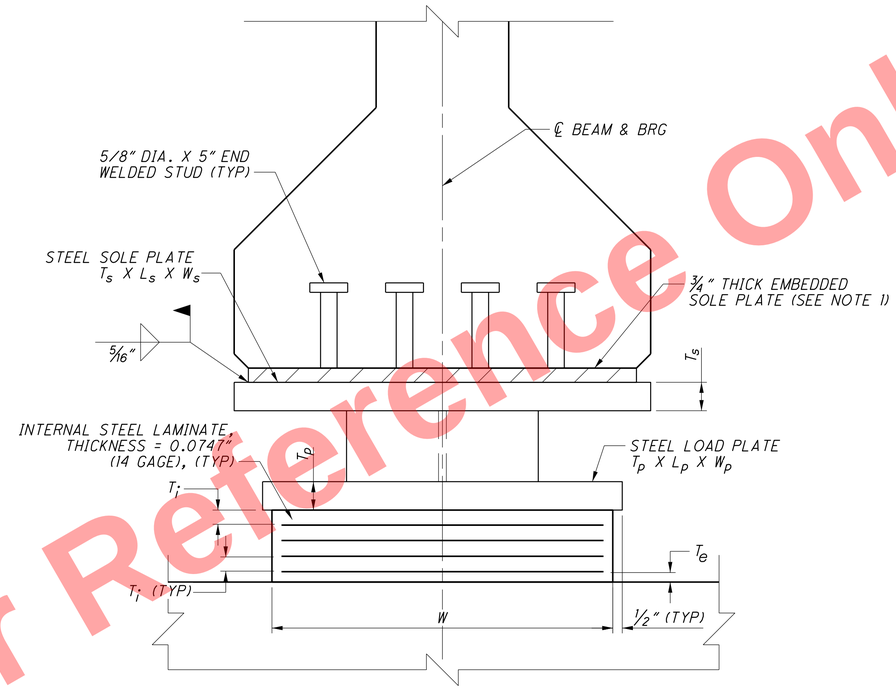

SECTION A-A

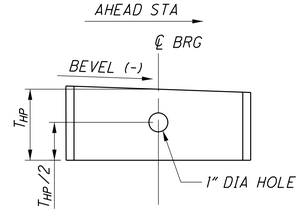

DETAIL 1 - BEVELED HP POST

LAMINATED ELASTOMERIC BEARING DETAILS

SUBSTRUCTURE UNIT	TYPE	BEARING L	W	T	T	N	T	H	SOLE PLATE T	L	W	w	LOAD PLATE T	L	W	w	SERVICE REACTIONS R_{DL} (KIPS)	R_{LL}^{MIN} (KIPS)	R_{LL}^{MAX} (KIPS)	LIVE LOAD ROTATION (RAD.)
LEFT REAR ABUTMENT	EXP	1'-1"	1'-8"	1/2"	3/4"	3	3 13/16"	5 5/16"	1 1/2"	11"	1'-10"	5/16"	1 1/2"	1'-2"	1'-9"	5/16"	83.00	0.00	46.90	0.001620
RIGHT REAR ABUTMENT	EXP	1'-1"	1'-8"	1/2"	3/4"	3	3 13/16"	5 5/16"	1 1/2"	11"	1'-10"	5/16"	1 1/2"	1'-2"	1'-9"	5/16"	85.80	0.00	55.40	0.001611
LEFT FORWARD ABUTMENT	EXP	1'-1"	1'-8"	1/2"	3/4"	3	3 13/16"	5 5/16"	1 1/2"	11"	1'-10"	5/16"	1 1/2"	1'-2"	1'-9"	5/16"	83.00	0.00	46.90	0.001620
RIGHT FORWARD ABUTMENT	EXP	1'-1"	1'-8"	1/2"	3/4"	3	3 13/16"	5 5/16"	1 1/2"	11"	1'-10"	5/16"	1 1/2"	1'-2"	1'-9"	5/16"	85.80	0.00	55.40	0.001611

HP POST HEIGHTS (T_{HP})

SUBSTRUCTURE UNIT	BEAM NUMBER LEFT BRIDGE 1	2	3	4	5	6	7	8	9	10	11	12	13	RIGHT BRIDGE 14	15	16	17	18	19	20	21	22	23	24	25	BEVEL
REAR ABUTMENT	1 3/4"	5 11/16"	7 15/16"	3 13/16"	6 3/4"	7 9/16"	3 15/16"	5 1/2"	7 1/8"	5 3/4"	3 15/16"	7 7/8"	3 5/8"	2 7/8"	5 1/16"	7 5/16"	8 15/16"	10 1/2"	8 13/16"	7"	5 1/8"	2 15/16"	9 3/4"	6 1/2"	2 1/8"	-2.00%
FORWARD ABUTMENT	1 5/8"	3 1/16"	6 5/8"	2 7/16"	4 1/4"	6 1/16"	2 3/8"	3 15/16"	5 1/2"	4 1/8"	2 5/16"	6 3/16"	1 15/16"	1 3/16"	5 3/8"	5 5/8"	7 3/16"	8 3/4"	7"	5 3/16"	3 5/16"	1 1/16"	8 15/16"	5 11/16"	1 1/4"	-2.50%

LEGEND:

T_e = THICKNESS OF EXTERNAL ELASTOMER LAYER

T_i = THICKNESS OF INTERNAL ELASTOMER LAYER

N = NUMBER OF INTERNAL ELASTOMER LAYERS BETWEEN STEEL LAMINATES

NOTES:

1. SEE STANDARD DRAWINGS PSID-1-99 AND SICD-1-96 FOR ADDITIONAL DETAILS NOT SHOWN.
2. THE ELASTOMER SHALL HAVE A HARDNESS OF 60 DUROMETER. THE BEARINGS WERE DESIGNED IN ACCORDANCE WITH SECTION 14.7.6 (METHOD A) OF THE 2012 AASHTO LRFD BRIDGE DESIGN SPECIFICATIONS. THE LONG TERM COMPRESSION PROOF LOAD TEST (AASHTO STANDARD SPECIFICATIONS FOR HIGHWAY BRIDGES, DIVISION II, SECTION 18.7.2.6) IS NOT REQUIRED.
3. SHOP FABRICATE THE LOAD PLATES AND HP SHAPES USING ASTM A709 GRADE 50 AND GALVANIZE THE STEEL LOAD PLATES.
4. BOND THE GALVANIZED STEEL LOAD PLATES TO THE ELASTOMERIC BEARING BY VULCANIZING DURING THE MOLDING PROCESS.
5. CONTROL THE WELDING SO THAT THE PLATE TEMPERATURE AT THE ELASTOMER BONDED SURFACE DOES NOT EXCEED 300°F AS DETERMINED BY PYROMETRIC STICKS OR OTHER TEMPERATURE MONITORING DEVICES.
6. BEARINGS SHALL BE CLEARLY MARKED BY THE FABRICATOR WITH THE FOLLOWING INFORMATION TO FACILITATE PROPER PLACEMENT: SUBSTRUCTURE UNIT, BEAM NUMBER, TOP, AND FORWARD STATION DIRECTION.
7. SEE GENERAL NOTES FOR ABBREVIATION LEGEND.

Preliminary Plans - For Reference Only

DESIGN AGENCY: DLZ, 6121 Huntley Road, Suite J, Columbus, OH 43229

DESIGNED TML | DRAWN TML | REVIEWED NCM | DATE 5-22-26

CHECKED JAD | REVISED | STRUCTURE FILE NUMBER 3110095

BEARING DETAILS

BRIDGE NO. HAM-75-0823

I.R. 75 OVER LAIDLAW AVENUE (C.R. 690)

HAM-75-7.85

PID No. 121447

22 / 64

951 / 1047

F:\HAM\121447\structures\HAM075_0823\sheets\075_0823CBR601.dgn 5/11/2026 10:41:25 AM PAntonelli

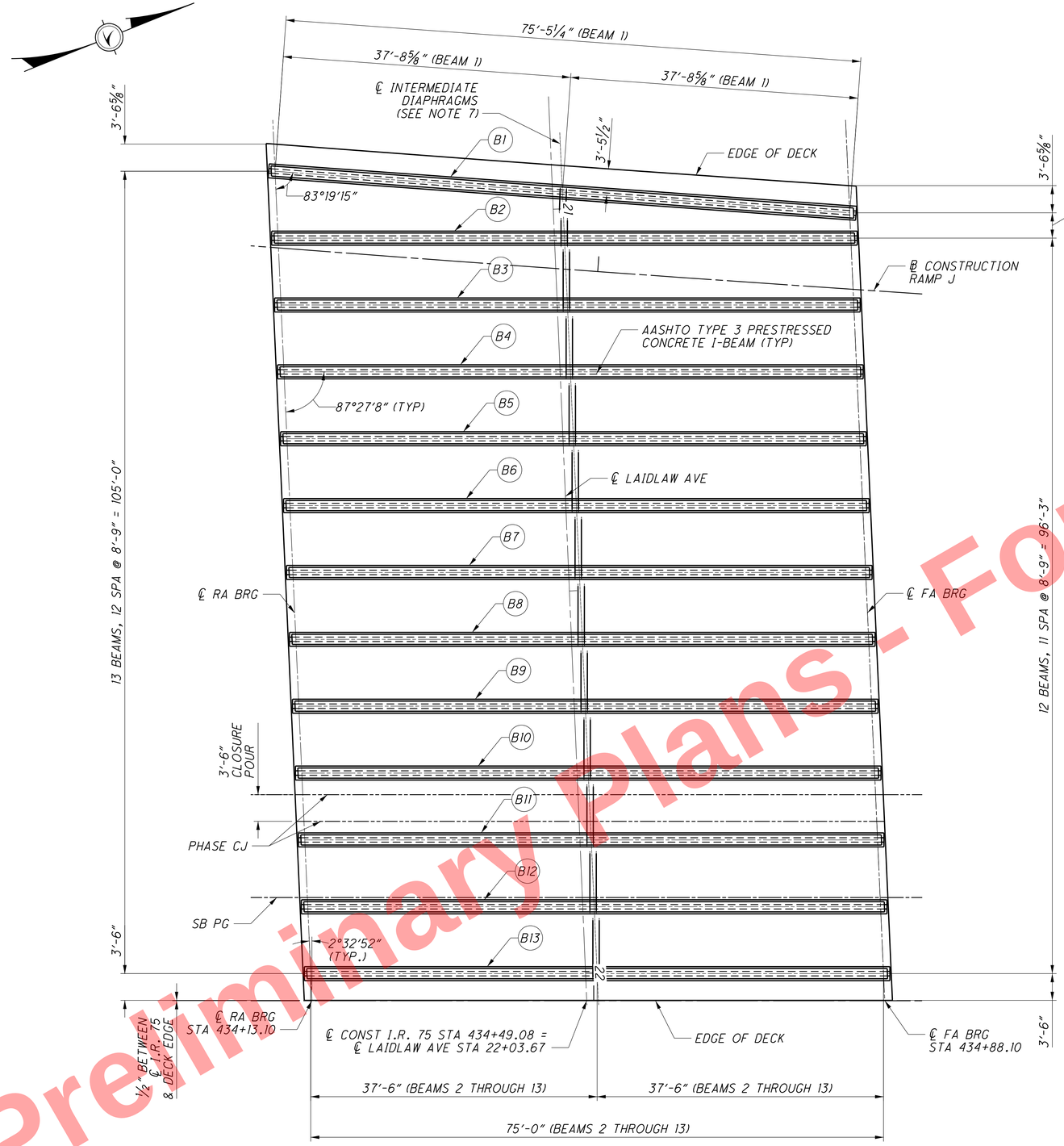

FRAMING PLAN

(MEASURED ALONG ℄ BRG PERPENDICULAR TO ℄ CONST I.R. 75)

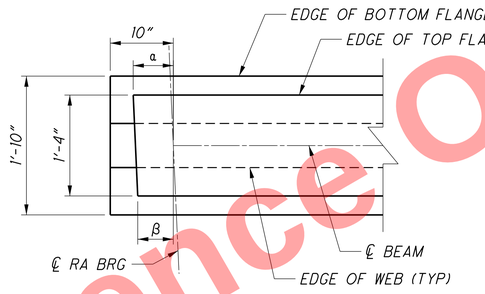

BEAM CLIP DETAIL (REAR ABUTMENT)

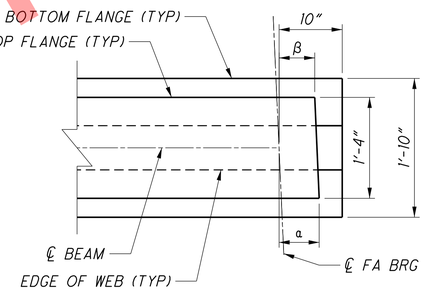

BEAM CLIP DETAIL (FORWARD ABUTMENT)

CLIP DIMENSIONS		
BEAM	α	β
1	7"	5⅛"
2 THRU 13	6⅜"	5⅝"

LEGEND:

(BXX) = BEAM NUMBER

NOTES:

1. SEE PLAN INSERT SHEETS 26/64 THROUGH 33/64 WHICH CONTAINS ARCHIVED STANDARD DRAWING PSID-1-99 FOR ADDITIONAL DETAILS NOT SHOWN.
2. SEE SHEET 25/64 FOR BEAM DETAILS.
3. SEE SHEET 22/64 FOR BEARING DETAILS.
4. SEE SHEET 42/64 FOR BEAM DEFLECTION AND CAMBER.
5. SEE GENERAL NOTES FOR ABBREVIATION LEGEND.
6. DIAPHRAGMS IN CLOSURE POUR TO BE POURED PRIOR TO THE CLOSURE POUR BUT AFTER THE ADJACENT DECK POURS.
7. INTERMEDIATE DIAPHRAGMS SHALL BE CAST-IN-PLACE CONCRETE DIAPHRAGMS ONLY. SEE SHEET 34/64 FOR DETAILS.

Preliminary Plans - For Reference Only

DESIGN AGENCY
ODOT
4295 Warner Road, Suite 201, Columbus, OH 43230

DESIGNED	DRAWN	REVIEWED	DATE
TML	TML	NCM	5-22-26
CHECKED	REVISED	STRUCTURE FILE NUMBER	
PPA		3110095	

LEFT BRIDGE FRAMING PLAN
BRIDGE NO. HAM-75-0823
I.R. 75 OVER LAIDLAW AVENUE (C.R. 690)

HAM-75-7.85
PID No. 121447

23/64

952/1047

F:\HAM\121447\structures\HAM075_0823\sheets\075_0823CSD601.dgn 5/11/2026 10:42:12 AM PAntonelli

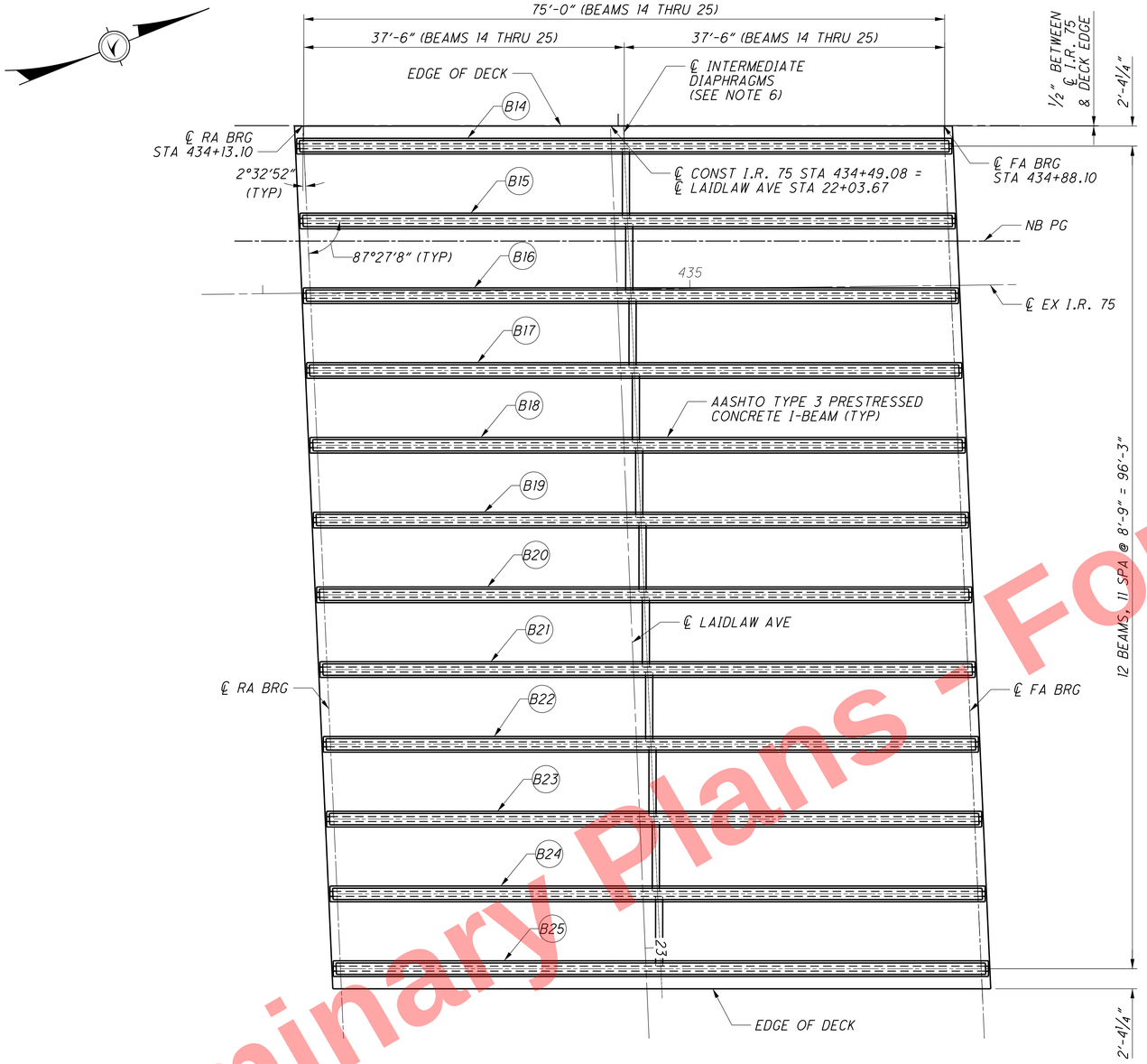

FRAMING PLAN

(MEASURED ALONG ℄ BRG PERPENDICULAR TO ℄ CONST I.R. 75)

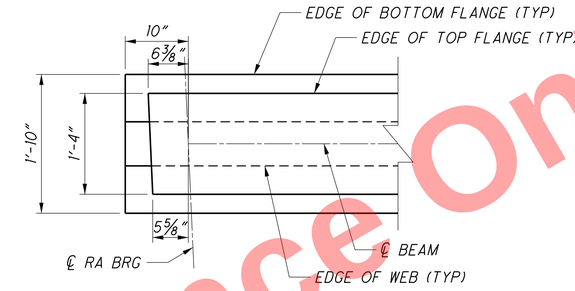

BEAM CLIP DETAIL (REAR ABUTMENT)

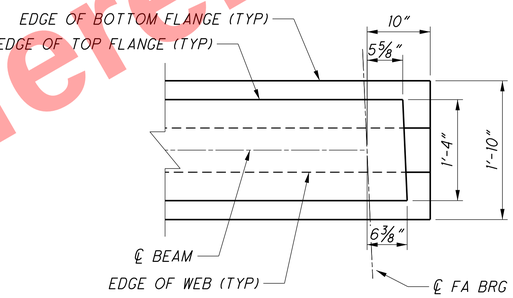

BEAM CLIP DETAIL (FORWARD ABUTMENT)

LEGEND:

BXX = BEAM NUMBER

NOTES:

1. SEE PLAN INSERT SHEETS 26/64 THROUGH 33/64 WHICH CONTAINS ARCHIVED STANDARD DRAWING PSID-1-99 FOR ADDITIONAL DETAILS NOT SHOWN.
2. SEE SHEET 25/64 FOR BEAM DETAILS.
3. SEE SHEET 22/64 FOR BEARING DETAILS.
4. SEE SHEET 43/64 FOR BEAM DEFLECTION AND CAMBER.
5. SEE GENERAL NOTES FOR ABBREVIATION LEGEND.
6. INTERMEDIATE DIAPHRAGMS SHALL BE CAST-IN-PLACE CONCRETE DIAPHRAGMS ONLY. SEE SHEET 34/64 FOR DETAILS.

Preliminary Plans - For Reference Only

DESIGN AGENCY: JMT, 4215 North Avenue, Suite 200, Columbus, OH 43219

DESIGNED	DRAWN	REVIEWED	DATE
TML	TML	NCM	5-22-26
CHECKED	REVISED	STRUCTURE FILE NUMBER	
PPA		3110095	

RIGHT BRIDGE FRAMING PLAN

BRIDGE NO. HAM-75-0823

I.R. 75 OVER LAIDLAW AVENUE (C.R. 690)

HAM-75-7.85

PID No. 121447

F:\HAM\121447\structures\HAM075_0823\sheets\075_0823CSD604.dgn 5/11/2026 10:42:34 AM PAntonelli

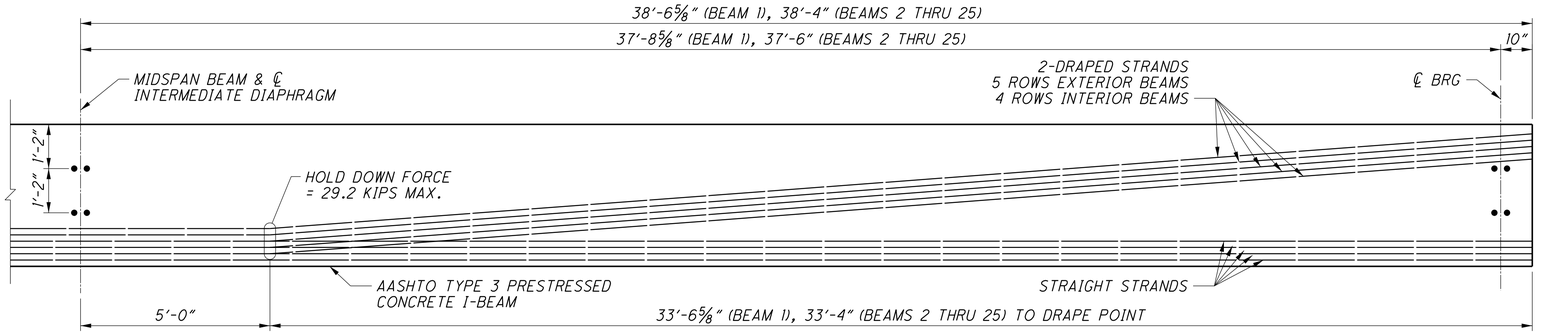

ELEVATION - STRAND DETAILS
(SYMMETRIC ABOUT MIDSPAN BEAM)

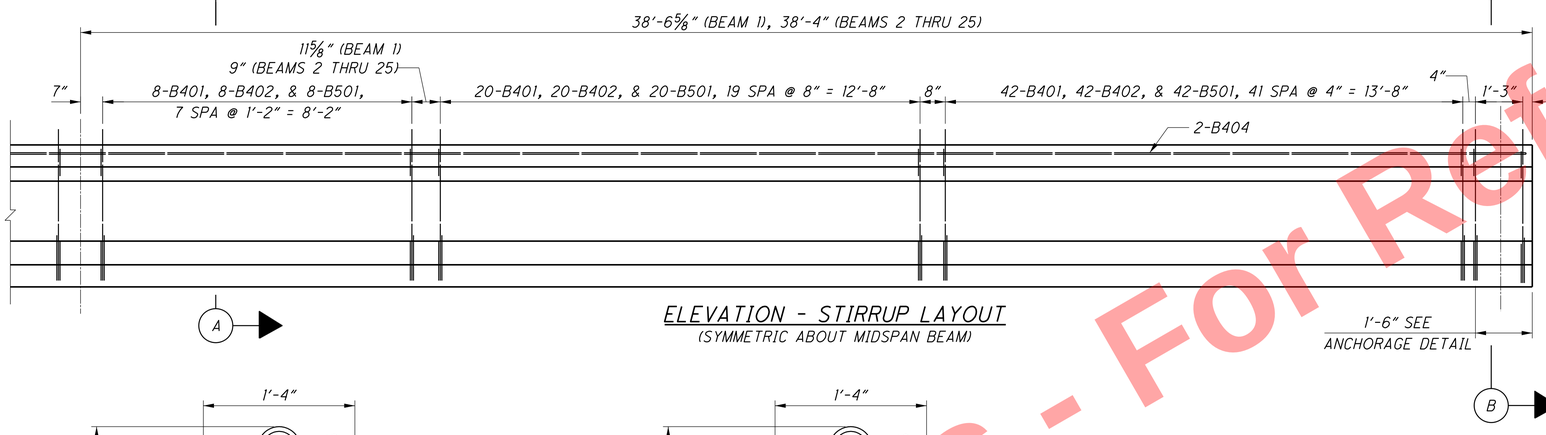

ELEVATION - STIRRUP LAYOUT
(SYMMETRIC ABOUT MIDSPAN BEAM)

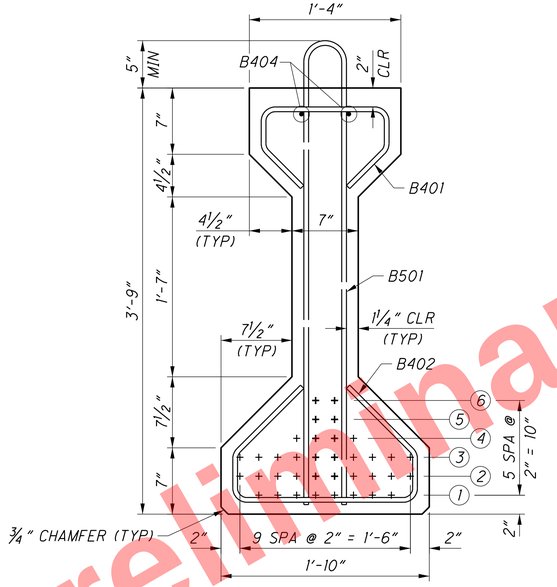

SECTION A-A AASHTO TYPE 3
(AT MIDSPAN)

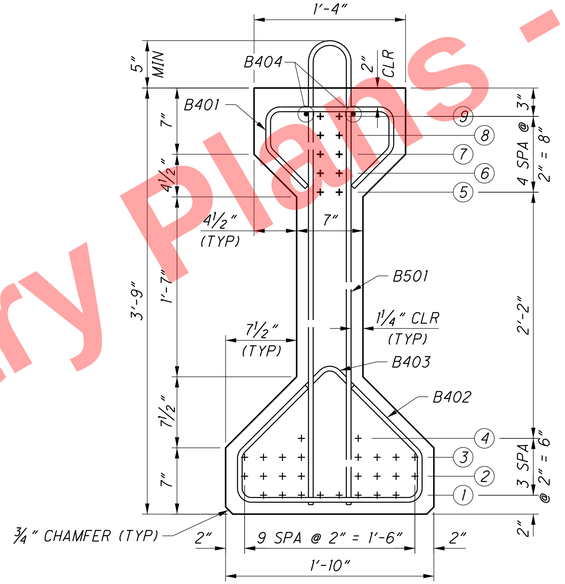

SECTION B-B AASHTO TYPE 3
(AT BEAM ENDS)

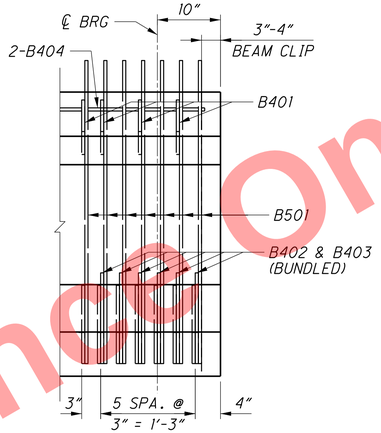

ANCHORAGE DETAIL
(STRANDS NOT SHOWN FOR CLARITY)

REINFORCING LIST (TOTAL)

MARK	TYPE	NUMBER	BAR LENGTH	TOTAL WEIGHT (LBS)
B401	4	3650	2'-7"	6315
B402	2	3800	3'-11"	9956
B403	3	300	3'-1"	618
B404	ST.	150	26'-11"	2697
B501	1	3800	8'-6"	33706

BAR BENDING DIAGRAMS

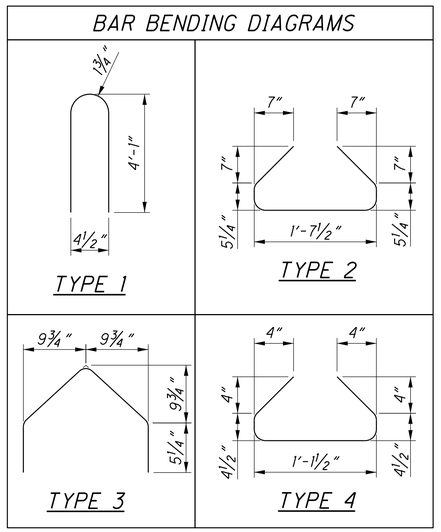

NOTES:

1. SEE PLAN INSERT SHEETS 26/64 THROUGH 33/64 WHICH CONTAINS ARCHIVED STANDARD DRAWING PSID-1-99 FOR ADDITIONAL DETAILS NOT SHOWN.
2. BAR SIZE IS INDICATED IN THE BAR MARK. THE FIRST DIGIT IDENTIFIES THE BAR LOCATION, THE NEXT DIGIT INCH-POUND BAR SIZE, AND THE REMAINING DIGIT ITS SEQUENCE NUMBER. FOR INSTANCE, B401 INDICATES A NO. 4 BAR.
3. BAR DIMENSIONS SHOWN ARE OUT-TO-OUT.
4. ALL REINFORCING STEEL SHALL BE EPOXY COATED.
5. MIN. SPLICE LENGTH FOR #4 BARS SHALL BE 1'-11".
6. IF SHIPPING STRANDS ARE USED THE FABRICATOR SHALL PROVIDE A DE-TENSIONING PROCEDURE FOR THE SHIPPING STRANDS, AND THE CONTRACTOR SHALL HAVE A PROFESSIONAL ENGINEER WHO IS REGISTERED IN OHIO REVIEW AND APPROVE THE PROCEDURE. THE CONTRACTOR IS RESPONSIBLE FOR ANY DAMAGE TO THE BEAMS CAUSED BY THE SHIPPING STRAND DE-TENSIONING. DAMAGED BEAMS SHALL BE REPAIRED TO THE SATISFACTION OF THE ENGINEER OR THE BEAMS SHALL BE REJECTED.
7. SEE SHEETS 23/64 AND 24/64 FOR FRAMING PLAN.
8. SEE SHEETS 42/64 AND 43/64 FOR BEAM CAMBER INFORMATION.
9. SEE GENERAL NOTES FOR ABBREVIATION LEGEND.
10. INTERMEDIATE DIAPHRAGMS SHALL BE CAST-IN-PLACE CONCRETE DIAPHRAGMS ONLY.
11. SHIPPING STRANDS: THE FABRICATOR MAY ADD SHIPPING STRANDS AT THE LOCATIONS SHOWN ON THIS STANDARD. THESE SHIPPING STRANDS SHALL BE DEBONDED FOR THE ENTIRE LENGTH OF THE BEAM EXCEPT FOR THE LAST 10'-0" AT EACH END. ADDITIONAL REINFORCING STEEL SHALL BE PLACED IN THE TOP FLANGE AT SHIPPING STRAND LOCATIONS TO MEET AASHTO 5.10.10.1 AT EACH END OF THE 10'-0" OF BONDED STRAND AND 5.10.10.2 ALONG THE ENTIRE BONDED LENGTH OF THE SHIPPING STRAND. THE STRANDS SHALL BE CUT ACCORDING TO CMS 515.16 AFTER ALL HANDLING OPERATIONS ARE COMPLETE.

BEAM STRAND INFORMATION

BEAM LOCATION	NUMBER OF STRANDS PER ROW (MIDSPAN)						NUMBER OF STRANDS PER ROW (BEAM ENDS)									TOTAL STRANDS	CONCRETE STRENGTHS (KSI)		B401 BARS REQ'D	B402 BARS REQ'D	B403 BARS REQ'D	B404 BARS REQ'D	B501 BARS REQ'D
	ROW 1	2	3	4	5	6	ROW 1	2	3	4	5	6	7	8	9		fci'	fc'					
B1, B13, B14, B25	8	10	10	2	2	2	8	8	8	-	2	2	2	2	2	34	5.5	7.0	146	152	12	6	152
B2 THRU B12, B15 THRU B24	8	10	10	4	2	-	8	8	8	2	-	2	2	2	2	34	5.5	7.0	146	152	12	6	152

Preliminary Plans - For Reference Only

DESIGN AGENCY
ODOT
1600 West Broad Street, Columbus, OH 43223

DESIGNED	DRAWN	REVIEWED	DATE
TML	TML	NCM	5-22-26
CHECKED	REVISED	STRUCTURE FILE NUMBER	
PPA		3110095	

BEAM DETAILS
BRIDGE NO. HAM-75-0823
I.R. 75 OVER LAIDLAW AVENUE (C.R. 690)

HAM-75-7.85
PID No. 121447

25 / 64

954
1047

F:\HAM\121447\structures\HAM075_0823\sheets\075_0823CSD607.dgn 5/11/2026 10:42:45 AM PAntonelli

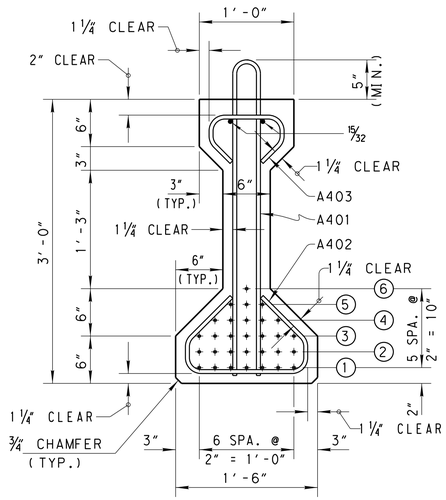

AASHTO TYPE 2

(30 STRANDS MAXIMUM)

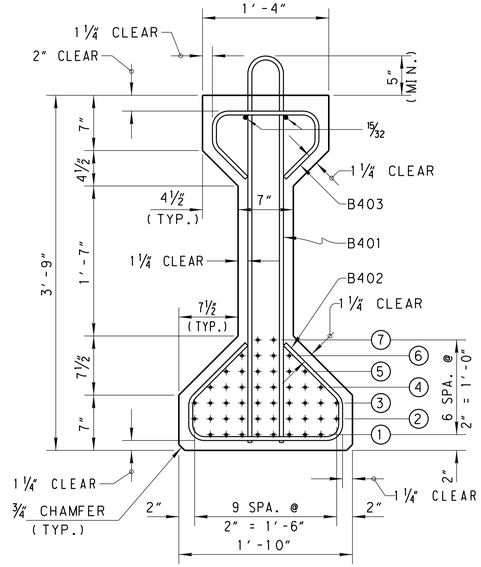

AASHTO TYPE 3

(48 STRANDS MAXIMUM)

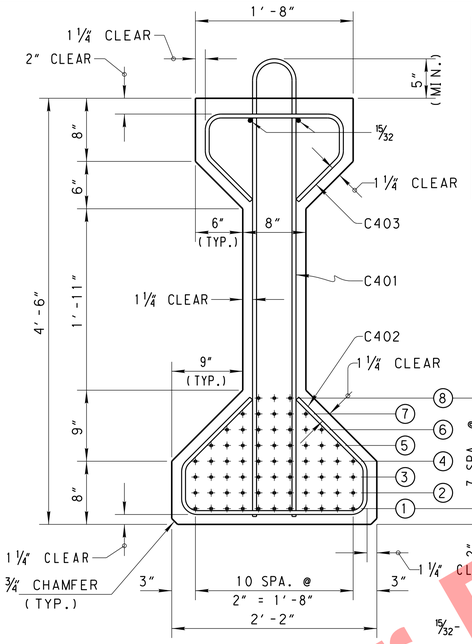

AASHTO TYPE 4

(68 STRANDS MAXIMUM)

15/32 - THE NUMBER OF BARS SHALL BE PROVIDED AS SHOWN. BAR SIZE SHALL BE DETERMINED BY ANALYSIS.

SECTION PROPERTIES

SECTION	AREA (in²)	WEIGHT (lb/ft)	Yb (in)	Yt (in)	I (in⁴)	Sb (in³)	St (in³)	Vol/Sur (in)
AASHTO TYPE 2	369	384	15.83	20.17	50,979	3,221	2,527	3.371
AASHTO TYPE 3	560	583	20.27	24.73	125,390	6,185	5,071	4.056
AASHTO TYPE 4	789	822	24.73	29.27	260,741	10,542	8,909	4.741
MODIFIED AASHTO TYPE 4 (60")	860	896	28.74	31.26	384,705	13,385	12,307	4.089
MODIFIED AASHTO TYPE 4 (66")	908	946	31.58	34.42	492,212	15,588	14,299	4.085
MODIFIED AASHTO TYPE 4 (72")	1015	1058	36.52	35.48	684,726	18,749	19,299	3.947

BEAM MARK	NUMBER OF STRANDS PER ROW: ROW NUMBER ①	②	③	④	⑤	⑥	⑦	⑧	TOTAL STRANDS	CONCRETE STRENGTHS f'ci	f'c	401 BARS REQ'D	402 BARS REQ'D	403 BARS REQ'D	404 BARS REQ'D

(THIS TABLE SHALL BE REPRODUCED IN THE PROJECT PLANS.)

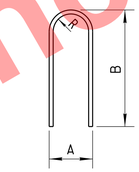

TYPE 1

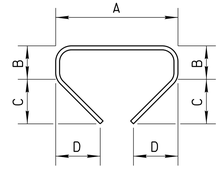

TYPE 2

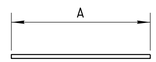

TYPE 3

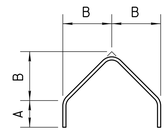

TYPE 4

BENDING DIAGRAMS

(ALL DIMENSIONS ARE OUT-TO-OUT)

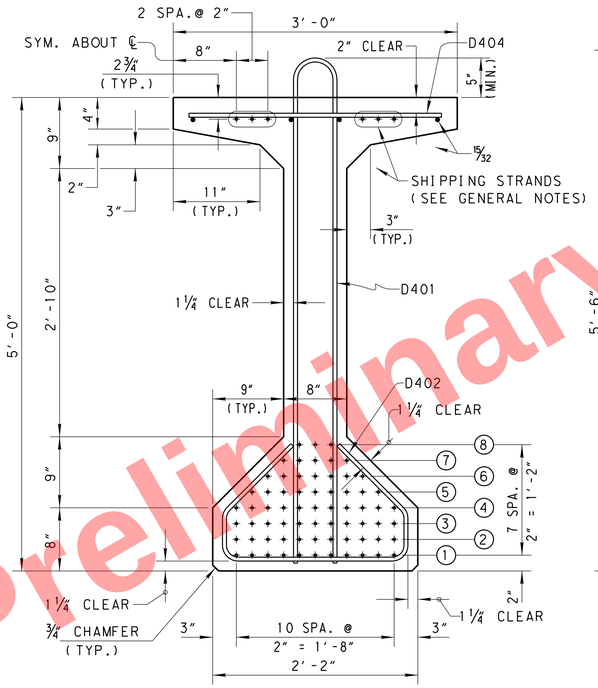

MODIFIED AASHTO TYPE 4 (60")

(68 STRANDS MAXIMUM)

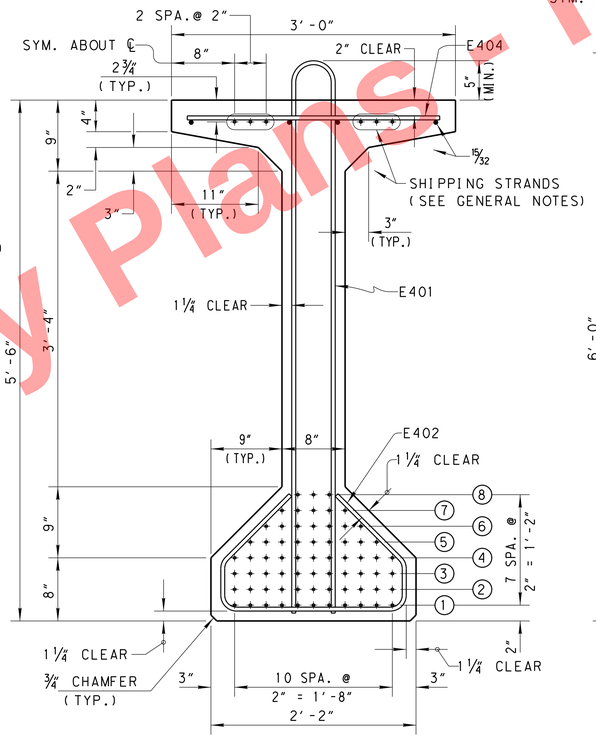

MODIFIED AASHTO TYPE 4 (66")

(68 STRANDS MAXIMUM)

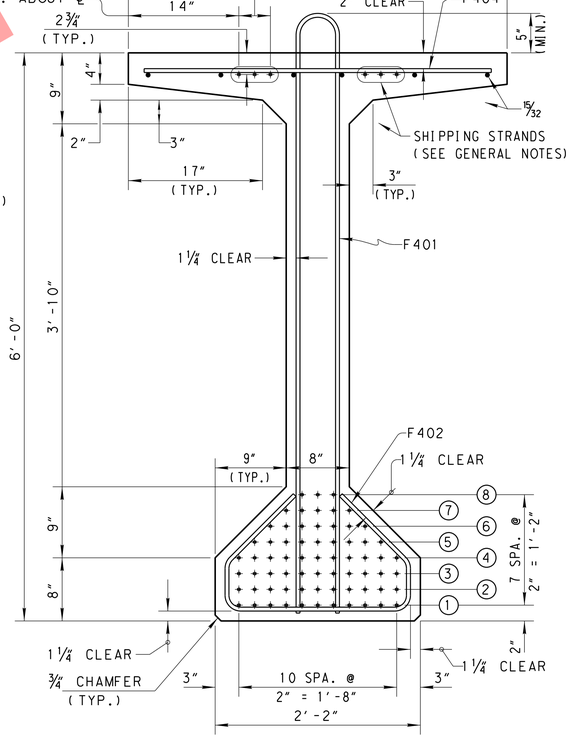

MODIFIED AASHTO TYPE 4 (72")

(68 STRANDS MAXIMUM)

MARK	TYPE	DIMENSIONS A	B	C	D	R
AASHTO TYPE 2						
A401	1	3½"	3'-4"			1¼"
A402	2	1'-3½"	4¼"	5½"	5½"	
A403	2	9½"	3½"	2½"	2½"	
A405	4	4¼"	7¾"			
AASHTO TYPE 3						
B401	1	4½"	4'-1"			1¾"
B402	2	1'-7½"	5¼"	7"	7"	
B403	2	1'-1½"	4½"	4"	4"	
B405	4	5¼"	9¾"			
AASHTO TYPE 4						
C401	1	5½"	4'-10"			2¼"
C402	2	1'-11½"	6¼"	8½"	8½"	
C403	2	1'-5½"	5½"	5½"	5½"	
C405	4	6¼"	11¾"			
MODIFIED AASHTO TYPE 4 (60")						
D401	1	5½"	5'-4"			2¼"
D402	2	1'-11½"	6¼"	8½"	8½"	
D404	3	2'-8"				
D405	4	6¼"	11¾"			
MODIFIED AASHTO TYPE 4 (66")						
E401	1	5½"	5'-10"			2¼"
E402	2	1'-11½"	6¼"	8½"	8½"	
E404	3	2'-8"				
E405	4	6¼"	11¾"			
MODIFIED AASHTO TYPE 4 (72")						
F401	1	5½"	6'-4"			2¼"
F402	2	1'-11½"	6¼"	8½"	8½"	
F404	3	3'-8"				
F405	4	6¼"	11¾"			

BAR SIZE IS INDICATED IN THE BAR MARK. THE FIRST LETTER IDENTIFIES THE BAR LOCATION, THE NEXT DIGIT INDICATES THE INCH-POUND BAR SIZE AND THE REMAINING DIGITS ITS SEQUENCE NUMBER. ALL STEEL SHALL BE EPOXY COATED.

Preliminary Plans - For Reference ONLY

$USERNAME$ $DATE$ $TIME$ $FILE$

DESIGN AGENCY
OFFICE OF STRUCTURAL ENGINEERING

STATE OF OHIO DEPARTMENT OF TRANSPORTATION
Brad Fogwell
ADMINISTRATOR
09-07-99
DATE

REVISIONS
10-20-00
07-19-02
07-18-03
04-20-07
07-18-08

REVIEWED LMW
CHECKED JS/WTL
DESIGNED SAM
DRAWN SAM

PSID-1-99

STANDARD
PRESTRESSED CONCRETE
I-BEAM BRIDGE DETAILS

1/8
26/64
955
1047

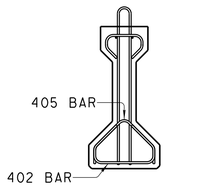

SECTION (14)–(14)

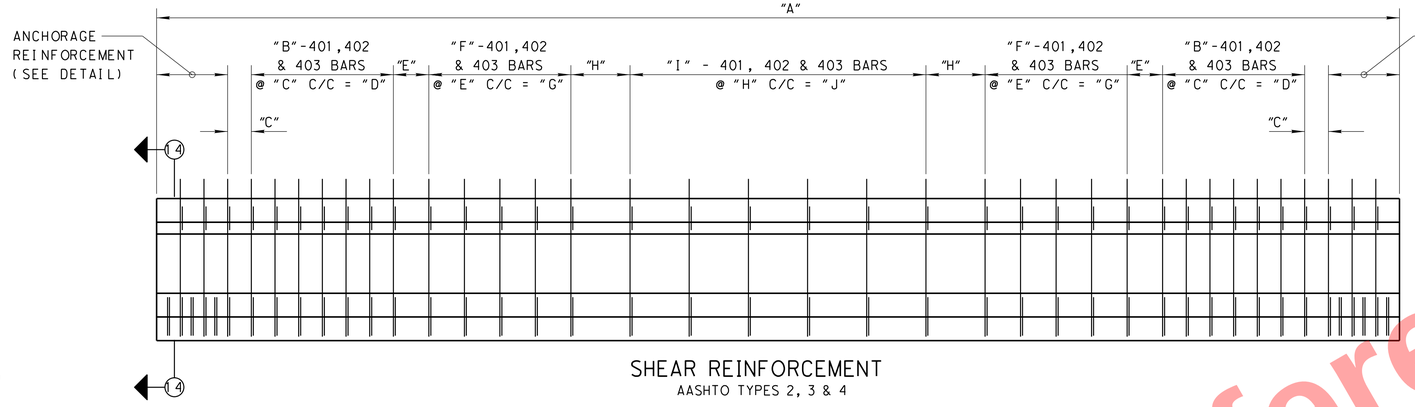

SHEAR REINFORCEMENT
AASHTO TYPES 2, 3 & 4

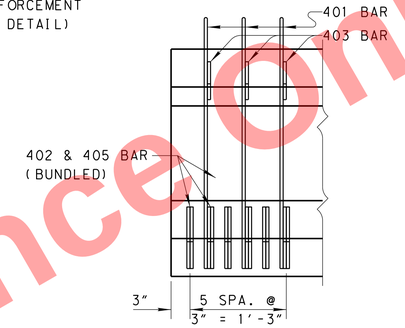

ANCHORAGE REINFORCEMENT
AASHTO TYPES 2, 3 & 4

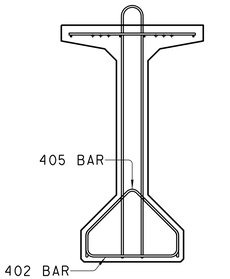

SECTION (15)–(15)

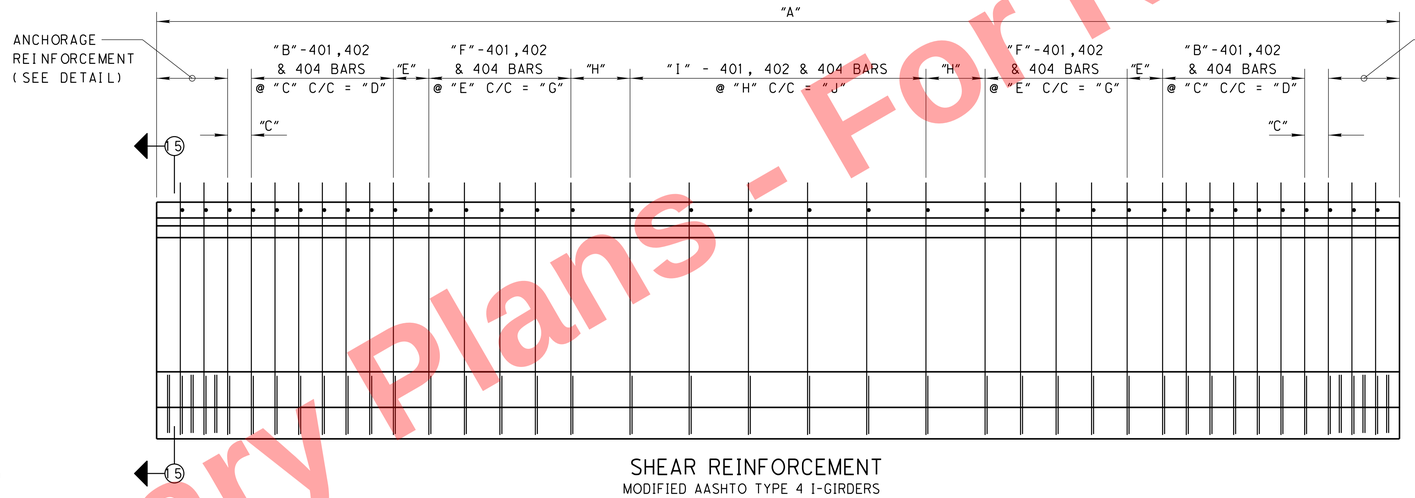

SHEAR REINFORCEMENT
MODIFIED AASHTO TYPE 4 I-GIRDERS

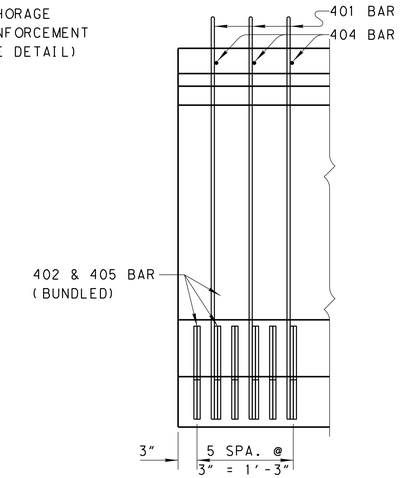

ANCHORAGE REINFORCEMENT
MODIFIED AASHTO TYPE 4 I-GIRDERS

STIRRUP SPACING: A SUGGESTED ARRANGEMENT FOR STIRRUP SPACING IS SHOWN. THE DESIGNER HAS THE OPTION OF USING AN ALTERNATE ARRANGEMENT IF IT IS MORE EFFICIENT.

BEAM DIMENSIONS

BEAM MARK	NO. REQ'D	DIMENSIONS										APPROXIMATE WEIGHT (LBS)
		A	B	C	D	E	F	G	H	I	J	

(COMPLETED TABLE SHALL BE REPRODUCED IN THE PROJECT PLANS.)

ANCHORAGE ZONE REINFORCEMENT: THE REINFORCEMENT SHOWN IS DESIGNED TO RESIST 4 PERCENT OF A PRESTRESSING FORCE GENERATED BY THE MAXIMUM NUMBER OF ½" DIA. OVERSIZED STRANDS ALLOWED PER SECTION LOCATED IN THE BOTTOM FLANGE. THE REINFORCEMENT IS ACTING AT A UNIT STRESS EQUAL TO 20 KSI.

Preliminary Plans - For Reference Only

DESIGN AGENCY
OFFICE OF STRUCTURAL ENGINEERING

STATE OF OHIO DEPARTMENT OF TRANSPORTATION
Brad Fogel
ADMINISTRATOR
09-07-99
DATE

REVISIONS
10-20-00
07-19-02
07-18-03
04-20-07
07-18-08

STANDARD
PRESTRESSED CONCRETE I-BEAM BRIDGE DETAILS

DESIGNED SAM
DRAWN SAM
CHECKED JS/WTL
REVIEWED LMW
PSID-1-99

2 / 8
27 / 64
956 / 1047

$USERNAME$ $FILE$ $TIME$ $DATE$

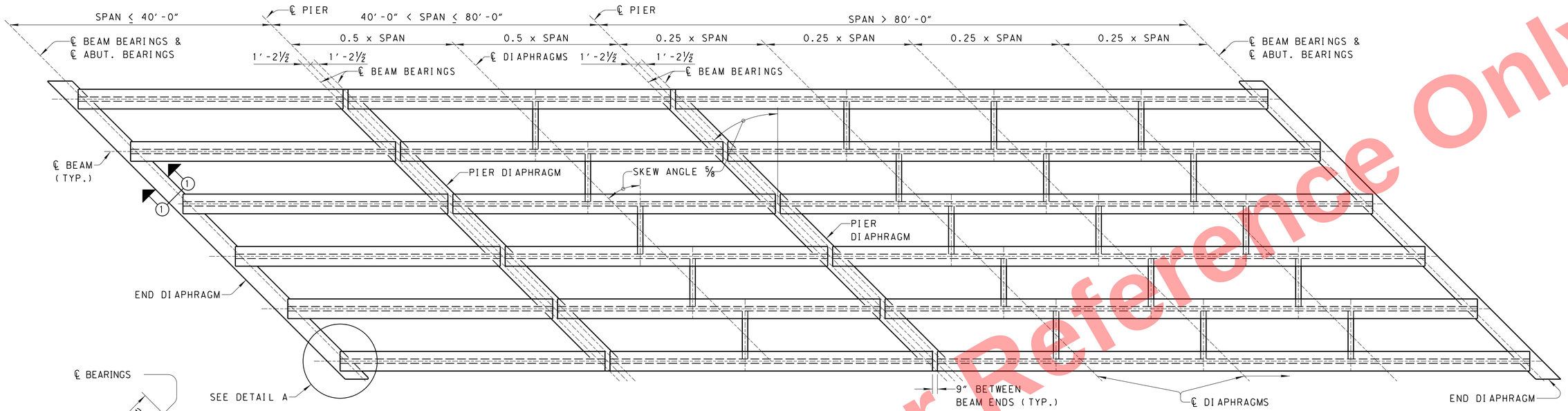

TYPICAL FRAMING PLAN
S = BEAM SPACING

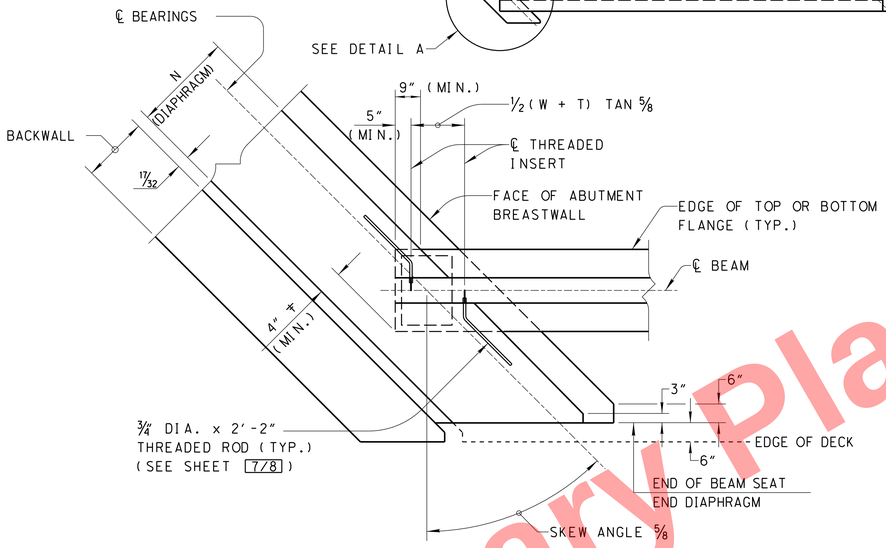

DETAIL A

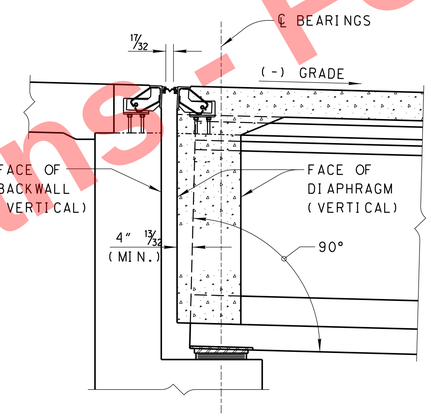

SECTION 1-1
(POSITIVE GRADE IS SIMILAR)

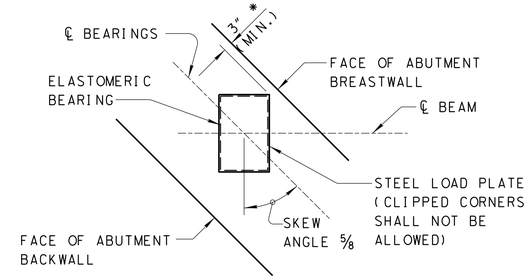

BEARING ORIENTATION AT ABUTMENTS

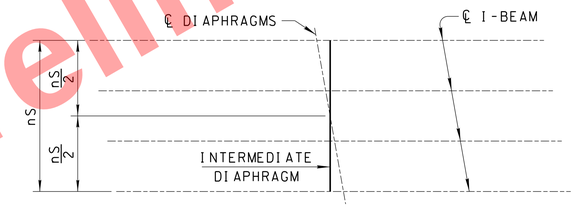

PLAN FOR SKEW ANGLES ≤ 10°
n= NO. OF BEAM SPACES

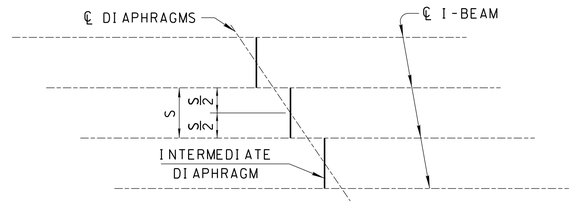

PLAN FOR SKEW ANGLES > 10°

LEGEND

∓ - DISTANCE SHALL BE MEASURED FROM THE LARGER OF THE TOP OR BOTTOM FLANGE WIDTH.

17/32 - SEE STANDARD DRAWING EXJ-6-06 FOR DIMENSION DEFINITION.

N = LARGER OF { 4" + W SIN 5/8 + 9" COS 5/8 ; 18" }

W = LARGER OF THE TOP OR BOTTOM FLANGE WIDTH

T = THICKNESS OF WEB

13/32 - THIS DIMENSION IS MEASURED FROM THE VERTICAL FACE OF THE END DIAPHRAGM TO THE NEAREST POINT ON THE END OF THE BEAM.

* - MEASURED TO STEEL LOAD PLATE, IF STEEL LOAD PLATE IS USED, OTHERWISE MEASURED TO ELASTOMERIC BEARING.

SEE SHEET 4/8 FOR BEARING DETAILS.
SEE SHEET 5/8 FOR CAST-IN-PLACE CONCRETE DIAPHRAGMS
SEE SHEET 6/8 FOR STEEL INTERMEDIATE DIAPHRAGMS.

Preliminary Plans - For Reference Only

DESIGN AGENCY
OFFICE OF STRUCTURAL ENGINEERING

STATE OF OHIO DEPARTMENT OF TRANSPORTATION
Brad Fogel — ADMINISTRATOR
09-07-99 — DATE

REVISIONS
10-20-00 04-20-07
07-19-02 07-18-08
07-18-03

STANDARD
PRESTRESSED CONCRETE I-BEAM BRIDGE DETAILS

REVIEWED LMW
CHECKED JS/WTL
PSID-1-99
DESIGNED SAM
DRAWN SAM

3/8
28/64
957/1047

$USERNAME$ $DATE$ $TIME$ $FILE$

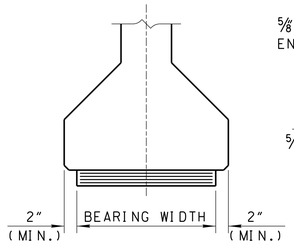

END VIEW
(BEARING WITH NO LOAD PLATE)

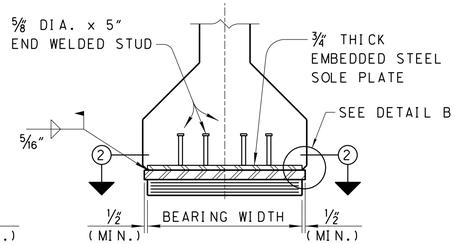

END VIEW
(BEARING WITH LOAD PLATE)

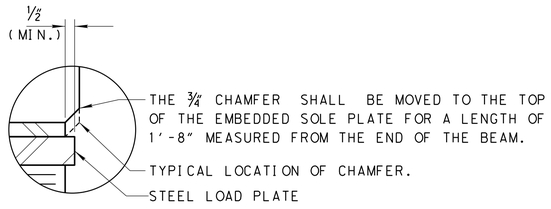

DETAIL B

STEEL LOAD PLATES: A LAMINATED ELASTOMERIC BEARING WITHOUT A LOAD PLATE SHOULD BE THE FIRST OPTION UNLESS ROTATIONAL AND/OR GRADE REQUIREMENTS DICTATE THE USE OF A LOAD PLATE. A VULCANIZED BEVELED LOAD PLATE IS REQUIRED WHEN THE ROTATIONAL CAPACITY OF A BEARING IS EXCEEDED UNDER ANY LOADING CONDITION. WHEN A LOAD PLATE IS REQUIRED, THE FABRICATOR SHALL INSTALL THE EMBEDDED SOLE PLATE TO ALLOW FOR FIELD INSTALLATION OF THE BEARING. DURING FIELD WELDING, CONTROL THE TEMPERATURE AT THE ELASTOMER BONDED SURFACE TO A MAXIMUM OF 300° F AS DETERMINED BY THE USE OF PYROMETRIC STICKS OR OTHER TEMPERATURE MONITORING DEVICES.

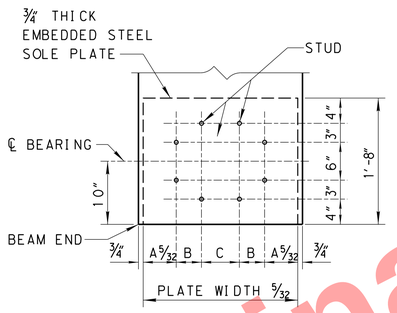

SECTION ②–②
(BEARING AND LOAD PLATE NOT SHOWN)

BOTTOM FLANGE WIDTH	PLATE WIDTH	A 5/32	B	C
1'-6"	1'-4½"	3¼"	2"	6"
1'-10"	1'-8½"	4¼"	4"	4"
2'-2"	2'-0½"	5¼"	4"	6"

NOTE - END WELDED STUDS MAY BE MOVED SLIGHTLY IN ORDER TO AVOID REINFORCING STEEL AND PRESTRESSING STRANDS.

5/32- IN ORDER TO ALLOW FOR FIT-UP, THE PLATE WIDTH MAY BE DECREASED BY 3/8". DIMENSION "A" SHALL BE CORRECTED ACCORDINGLY.

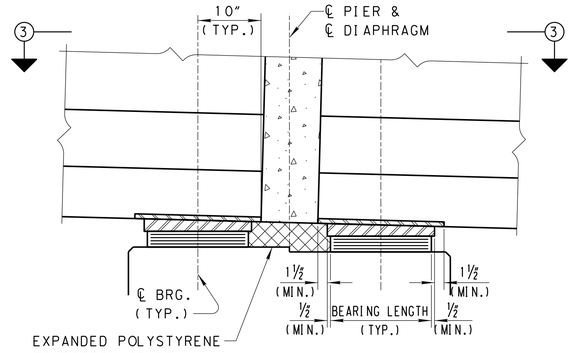

EXPANSION PIER DETAIL
(BEARING WITH LOAD PLATE)

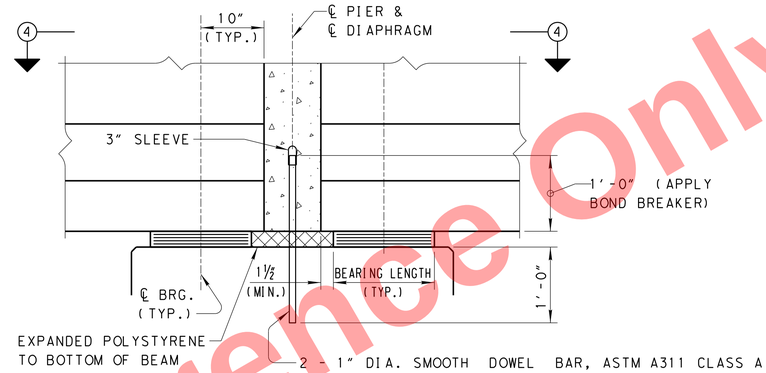

FIXED PIER DETAIL
(BEARING WITH NO LOAD PLATE)

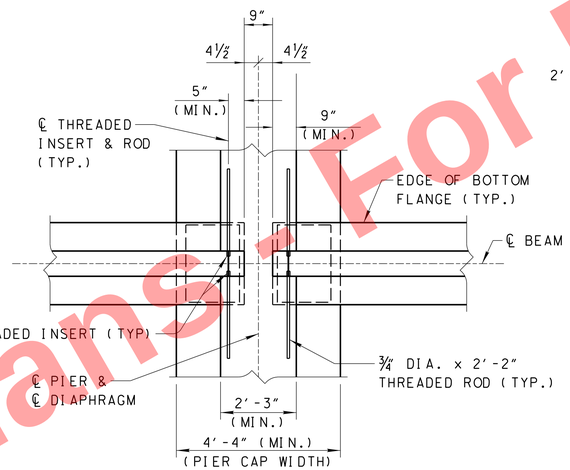

VIEW ③–③
(NO SKEW)

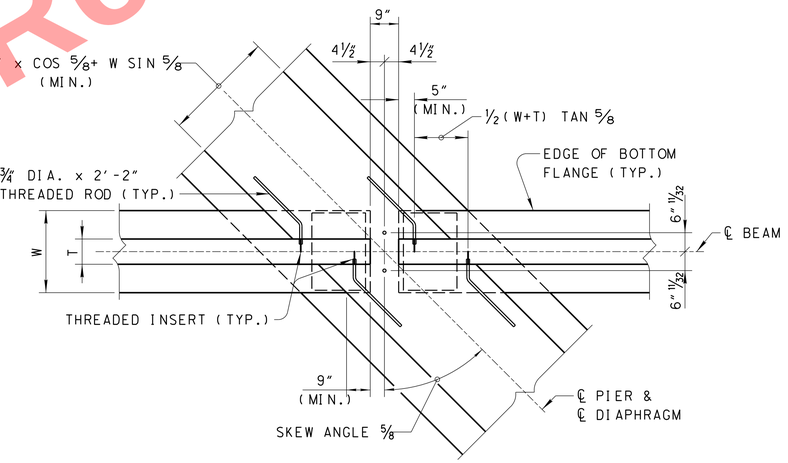

VIEW ④–④
(AT SKEWED PIER)

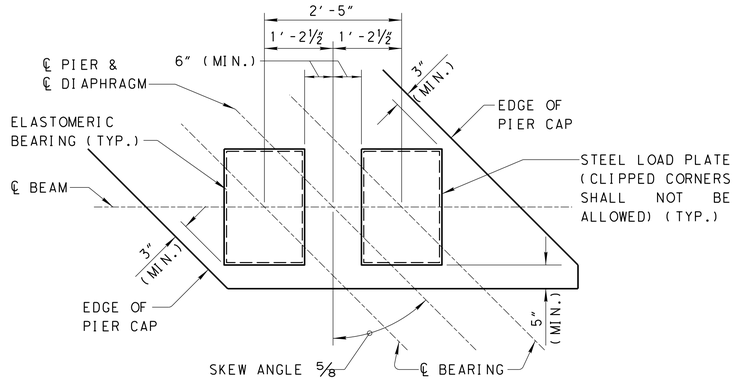

BEARING ORIENTATION AT PIERS
(BEAM NOT SHOWN)

11/32- MEASURED TO CENTER OF 1" DIA. SMOOTH DOWEL BARS. DOWEL BARS SHALL BE OMITTED AT EXPANSION PIERS.
W = LARGER OF TOP OR BOTTOM FLANGE WIDTH
T = THICKNESS OF WEB

SEE SHEET 5 / 8 FOR PIER DIAPHRAGM DETAILS.

SEE SHEET 7 / 8 FOR THREADED INSERT AND ROD DETAILS.

Preliminary Plans - For Reference Only

DESIGN AGENCY
OFFICE OF STRUCTURAL ENGINEERING

STATE OF OHIO DEPARTMENT OF TRANSPORTATION
Brad Fogel — ADMINISTRATOR
09-07-99 — DATE

REVISIONS
10-20-00
07-19-02
07-18-03
04-20-07
07-18-08

STANDARD
PRESTRESSED CONCRETE
I-BEAM BRIDGE DETAILS

DESIGNED SAM
DRAWN SAM
CHECKED JS/WTL
REVIEWED LMW
PSID-1-99

4 / 8
29 / 64
958
1047

$USERNAME$ $DATE$ $TIME$ $FILE$

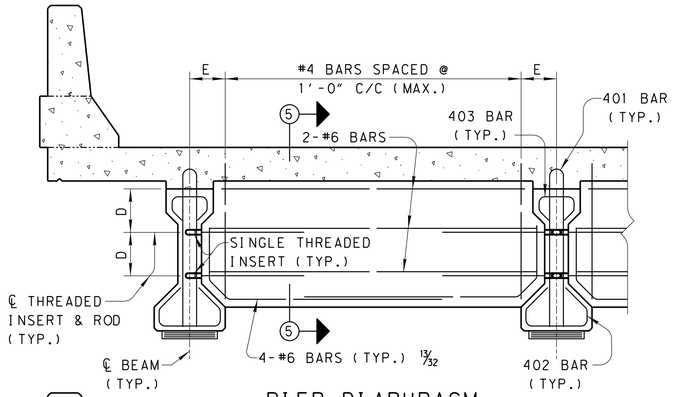

PIER DIAPHRAGM
(AASHTO TYPES 2, 3 AND 4)

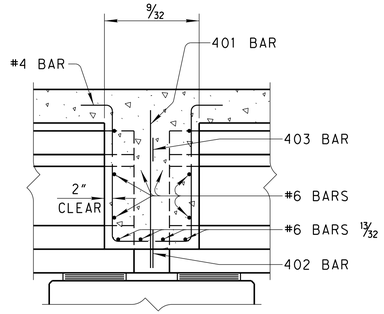

SECTION 5-5
(PARTIAL PIER SHOWN)

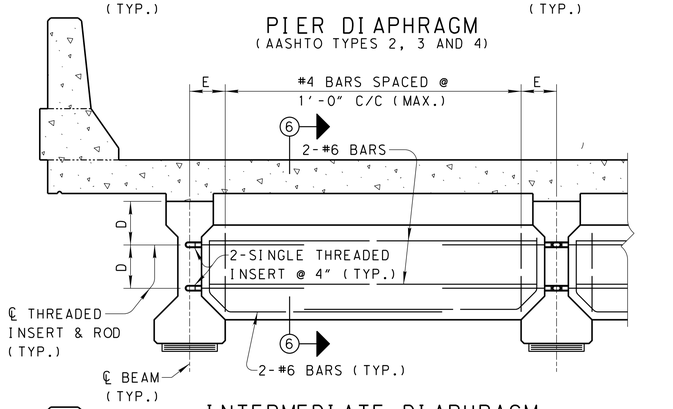

INTERMEDIATE DIAPHRAGM
(AASHTO TYPES 2, 3 AND 4)

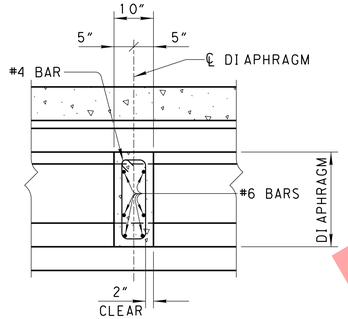

SECTION 6-6

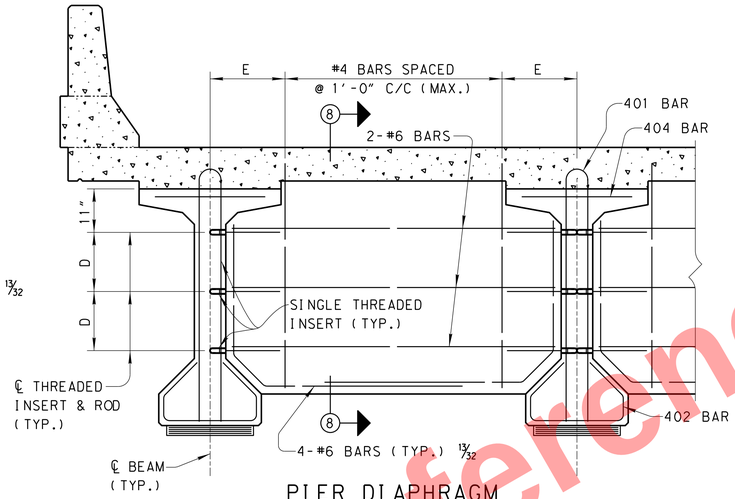

PIER DIAPHRAGM
(MODIFIED AASHTO TYPE 4 BEAMS)

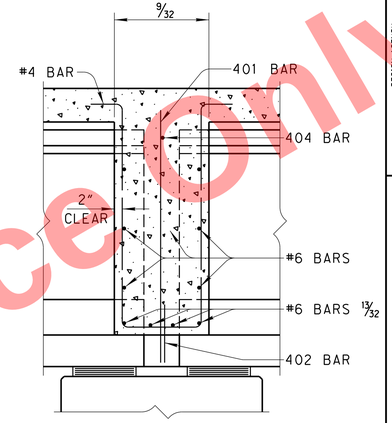

SECTION 8-8
(PARTIAL PIER SHOWN)

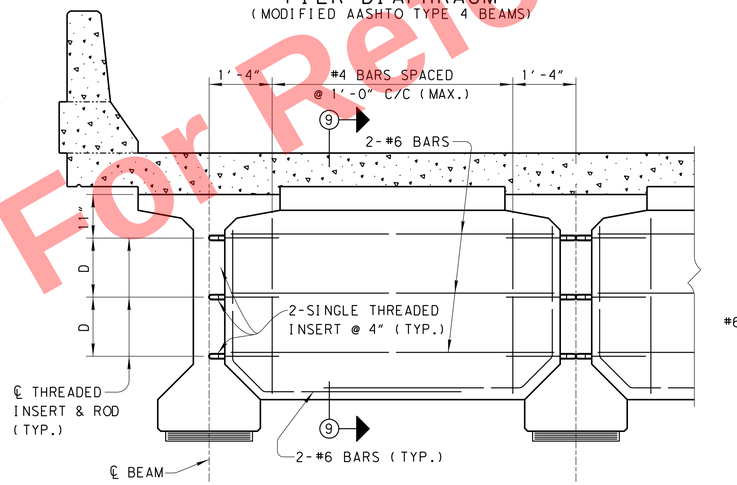

INTERMEDIATE DIAPHRAGM
(MODIFIED AASHTO TYPE 4 BEAMS)

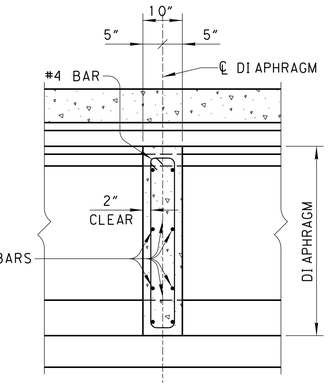

SECTION 9-9

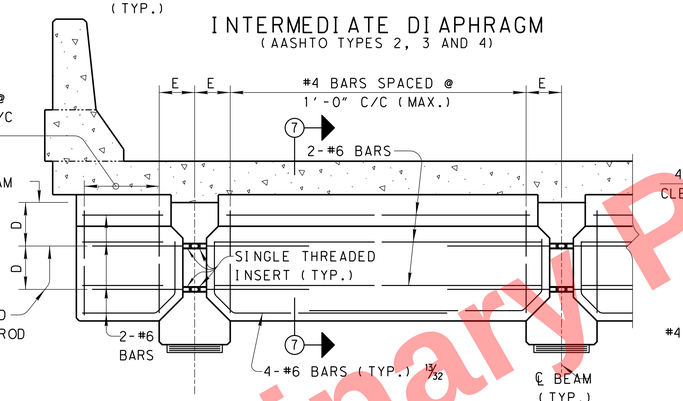

END DIAPHRAGM
(AASHTO TYPES 2, 3 AND 4)

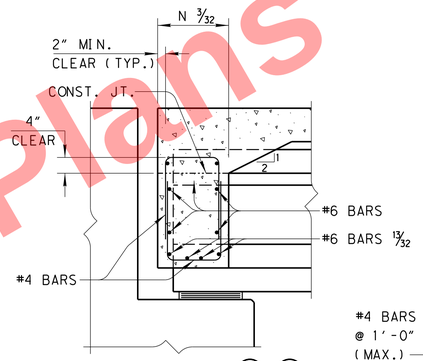

SECTION 7-7
(PARTIAL ABUTMENT SHOWN)

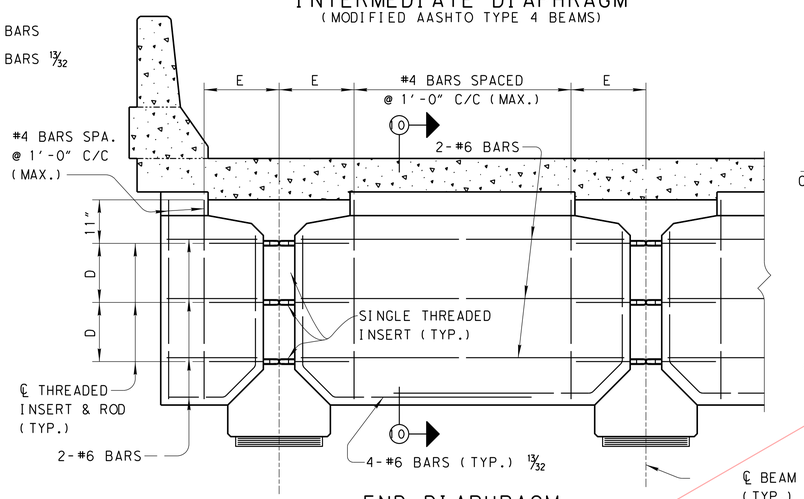

END DIAPHRAGM
(MODIFIED AASHTO TYPE 4 BEAMS)

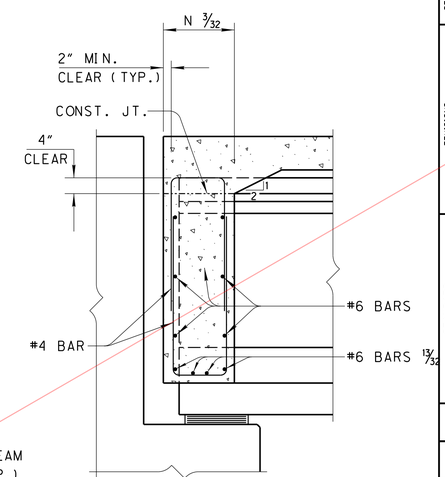

SECTION 10-10
(PARTIAL ABUTMENT SHOWN)

SECTION	DIM. D	DIM. E
AASHTO TYPE 2	11"	9"
AASHTO TYPE 3	1'-2"	11"
AASHTO TYPE 4	1'-5"	1'-1"
MODIFIED AASHTO TYPE 4 (60")	1'-3"	1'-8"
MODIFIED AASHTO TYPE 4 (66")	1'-6"	1'-8"
MODIFIED AASHTO TYPE 4 (72")	1'-9"	2'-2"

ALL VERTICAL BARS SHALL BE PLACED PARALLEL TO BEAMS.

9/32- REFER TO SHEET 4 / 8 FOR DIMENSION DEFINITION.

3/32- REFER TO SHEET 3 / 8 FOR DIMENSION DEFINITION.

13/32- FOR BEAM SPACINGS EXCEEDING 9'-0", USE 4-#8 BARS.

REFER TO SHEET 7 / 8 FOR THREADED INSERT AND STRAND EXTENSION DETAILS.

REFER TO SHEET 1 / 8 FOR 401, 402, 403 & 404 BENDING DIAGRAMS.

Preliminary Plans - Not For Reference Only

DESIGN AGENCY
OFFICE OF STRUCTURAL ENGINEERING

STATE OF OHIO DEPARTMENT OF TRANSPORTATION
Brad Fogel
ADMINISTRATOR
09-07-99
DATE

REVIEWED LMW
CHECKED JS/WTL
DESIGNED SAM
DRAWN SAM

PSID-1-99

REVISIONS
10-20-00
07-19-02
07-18-03
04-20-07
07-18-08

STANDARD
PRESTRESSED CONCRETE
I-BEAM BRIDGE DETAILS

5 / 8
30 / 64
959
1047

$USERNAME$ $DATE$ $TIME$ $FILE$

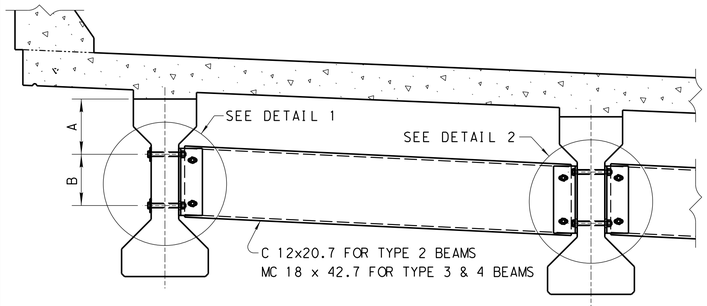

INTERMEDIATE DIAPHRAGM
(AASHTO TYPES 2, 3 AND 4)

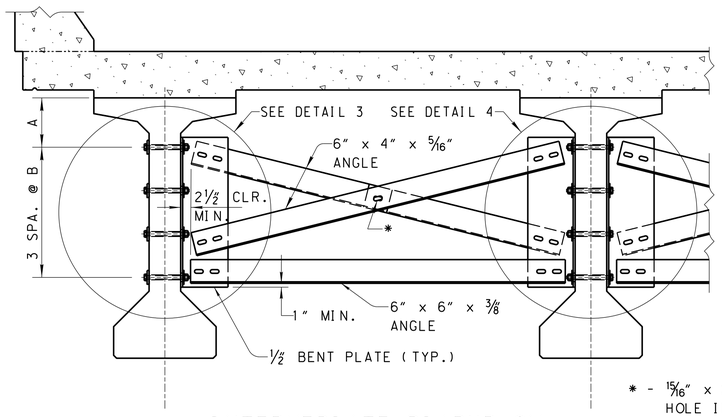

INTERMEDIATE DIAPHRAGM
(MODIFIED AASHTO TYPE 4 BEAMS)

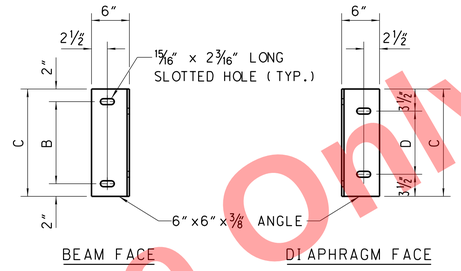

DIAPHRAGM SUPPORT
(FOR 36", 45" & 54" BEAMS)

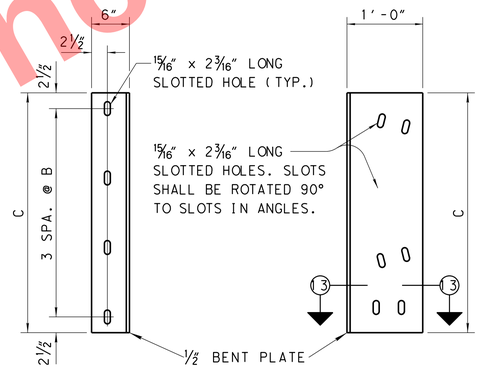

DIAPHRAGM SUPPORT
(FOR 60", 66" & 72" BEAMS)

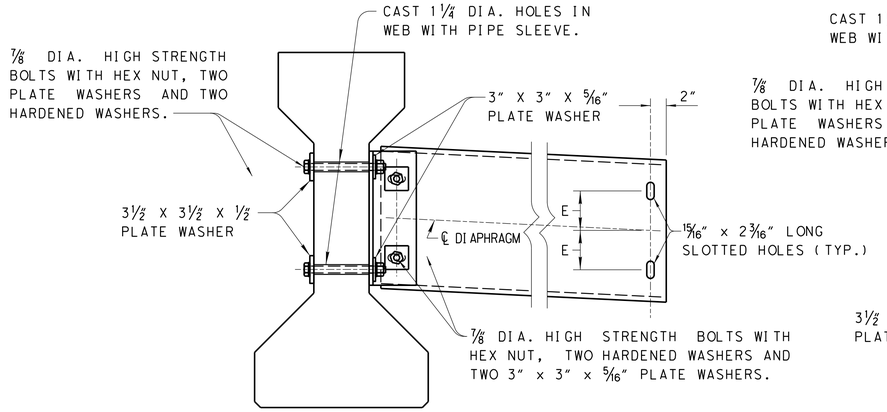

DETAIL 1

DETAIL 1 SHALL BE USED AT THE FASCIA BEAM AND ALL INTERIOR BEAMS WHEN THE SKEW ANGLE EXCEEDS 10°.

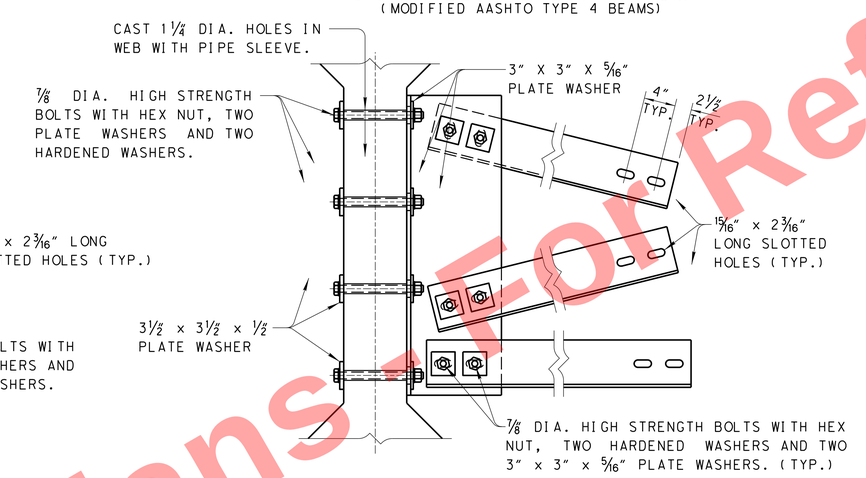

DETAIL 3

DETAIL 3 SHALL BE USED AT THE FASCIA BEAM AND ALL INTERIOR BEAMS WHEN THE SKEW ANGLE EXCEEDS 10°.

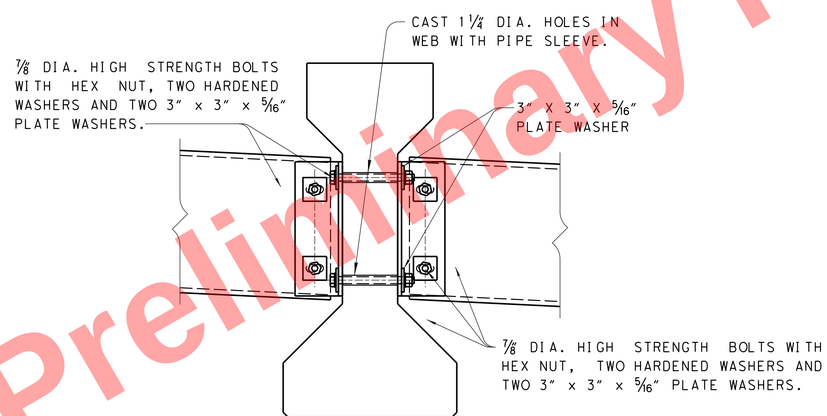

DETAIL 2

DETAIL 2 SHALL BE USED AT INTERIOR BEAMS WHEN THE SKEW ANGLE IS 10° OR LESS.

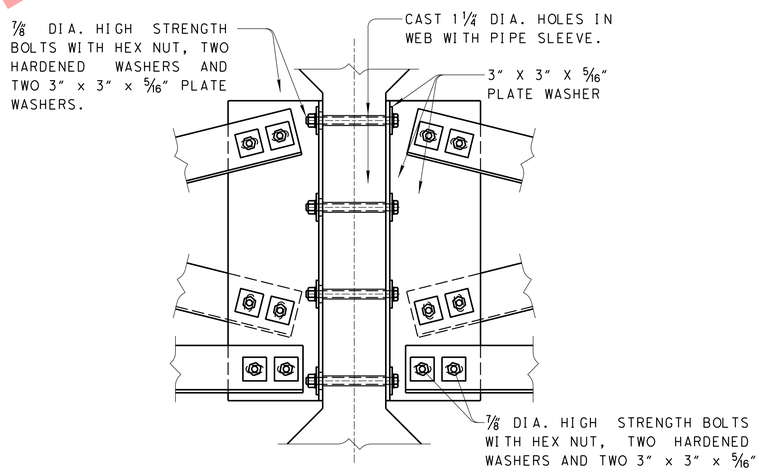

DETAIL 4

DETAIL 4 SHALL BE USED AT INTERIOR BEAMS WHEN THE SKEW ANGLE IS 10° OR LESS.

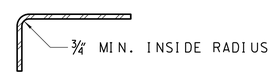

SECTION (13)-(13)

DIMENSIONS

BEAM HEIGHT	A	B	C	D	E
36"	1'-0½"	8"	1'-0"	5"	2½"
45"	1'-2½"	1'-1"	1'-5"	10"	5"
54"	1'-7"	1'-1"	1'-5"	10"	5"
60"	1'-0½"	9"	2'-8"	-	-
66"	1'-0½"	11"	3'-2"	-	-
72"	1'-0½"	1'-1"	3'-8"	-	-

NOTES

ALL STRUCTURAL STEEL, INCLUDING BOLTS, NUTS AND WASHERS, SHALL MEET THE FABRICATION AND ERECTION REQUIREMENTS SPECIFIED IN 513. THE DEPARTMENT WILL CONSIDER THESE COSTS TO BE INCIDENTAL TO ITEM 515, INTERMEDIATE DIAPHRAGMS.

ALL STRUCTURAL STEEL SHALL BE ASTM A709, GRADE 36 OR 50, GALVANIZED ACCORDING TO 711.02.

ALL BOLTS ARE 7/8" DIA. ASTM A325, TYPE 1. ALL BOLTS, NUTS AND WASHERS SHALL BE GALVANIZED ACCORDING TO 711.02.

LOCATE BOLT HOLES IN THE I-BEAM WEBS TO AVOID PRESTRESS PRESTRESSING STRANDS.

Preliminary Plans - Not For Construction
Reference Only

DESIGN AGENCY
OFFICE OF STRUCTURAL ENGINEERING

STATE OF OHIO DEPARTMENT OF TRANSPORTATION
Brad Fogel
ADMINISTRATOR
09-07-99
DATE

REVISIONS
10-20-00 04-20-07
07-19-02 07-18-08
07-18-03

DESIGNED SAM
DRAWN SAM
CHECKED LMW
REVIEWED WTL

STANDARD
PRESTRESSED CONCRETE I-BEAM BRIDGE DETAILS

PSID-1-99

6 / 8
31 / 64
960 / 1047

$USERNAME$ $DATE$ $TIME$ $FILE$

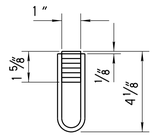

SINGLE THREADED INSERT
(3,000 LB PROOF LOAD)

NOTE - THE GIRDER FABRICATOR MAY USE DOUBLE THREADED INSERTS IN LIEU OF TWO SINGLE INSERTS SPACED AT 4" ON CENTER AT THE CONCRETE INTERMEDIATE DIAPHRAGM LOCATIONS.

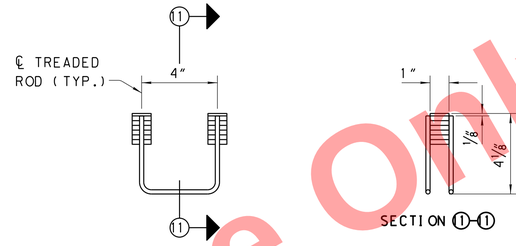

DOUBLE THREADED INSERT
(6,000 LB PROOF LOAD)

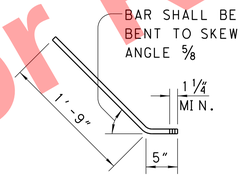

3/4" DIA. x 2'-2" THREADED ROD

SHALL CONFORM TO 709.01, 709.03 OR 709.05 WITH THREADS FORMED PRIOR TO GALVANIZING.

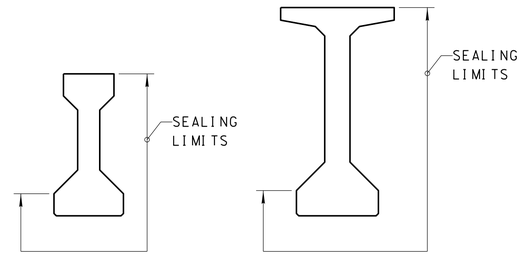

SEALING OF FASCIA BEAMS

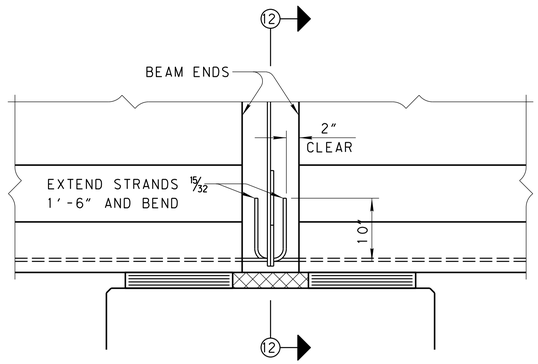

EXTENDED STRAND DETAIL

15/32- THE NUMBER OF STRANDS TO BE BENT SHALL BE THE LARGER OF ONE HALF THE NUMBER OF ROW 1 STRANDS OR THE NUMBER OF STRANDS SUFFICIENT TO RESIST THE POSITIVE LIVE LOAD MOMENT AT THE PIER. ALTERNATE STRANDS IN ABUTTING BEAMS TO AVOID INTERFERENCE.

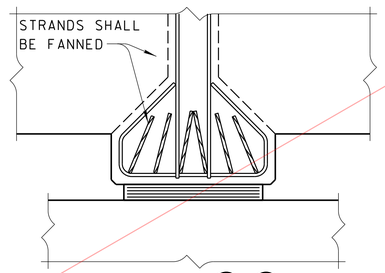

SECTION 12-12
(PARTIAL PIER AND DIAPHRAGM SHOWN)

Preliminary Plans - For Reference Only

DESIGN AGENCY
OFFICE OF STRUCTURAL ENGINEERING

STATE OF OHIO DEPARTMENT OF TRANSPORTATION
Brad Fogel — ADMINISTRATOR
09-07-99 — DATE

REVISIONS
10-20-00
04-20-07
07-19-02
07-18-08
07-18-03

STANDARD
PRESTRESSED CONCRETE
I-BEAM BRIDGE DETAILS

REVIEWED LMW
CHECKED JS/WTL
PSID-1-99
DESIGNED SAM
DRAWN SAM

7 / 8
32 / 64
961
1047

$USERNAME$ $DATE$ $TIME$ $FILE$

GENERAL: THIS STANDARD DRAWING PROVIDES DESIGN AND GENERAL CONSTRUCTION DETAILS FOR PRESTRESSED CONCRETE I-BEAM BRIDGES. THE DETAILS IN THIS STANDARD ARE APPLICABLE TO STRUCTURES WITH BEAM SPACINGS LESS THAN 14'-0" AND SKEWS LESS THAN 45°. THE PROJECT PLANS FOR EACH STRUCTURE SHALL INCLUDE THE FOLLOWING DETAILS:

1. THE DESIGNER SHALL CHOOSE A 28-DAY CONCRETE STRENGTH BETWEEN 5500 PSI AND 7000 PSI, A RELEASE STRENGTH BETWEEN 4000 PSI AND 5000 PSI AND A NOMINAL STRAND AREA OF 0.153 IN^2 OR 0.167 IN^2. THE VALUES CHOSEN BY THE DESIGNER SHALL BE LISTED IN THE STRUCTURE GENERAL NOTES.
2. A TRANSVERSE CROSS-SECTION THROUGH THE DECK, DETAILING (AT A MINIMUM) THE I-BEAM SPACING, DECK THICKNESS, HAUNCH DIMENSIONS, DECK REINFORCING AND COVER.
3. FRAMING PLAN SHOWING (AT A MINIMUM) SPAN LENGTHS, BEAM SPACINGS, SKEW ANGLE, DIAPHRAGM LOCATIONS, AND CENTERLINES OF BEARINGS.
4. BEAM ELEVATION AND SECTION VIEWS FOR EACH BEAM DETAILING BEAM LENGTHS, BEAM HEIGHT, STRAND LOCATIONS AND NUMBER, STRAND DEBONDING LENGTHS, CROSS SECTION OF I-BEAM ENDS SHOWING NUMBER AND LOCATION OF BENT UP ANCHOR STRANDS, REINFORCING STEEL, INSERT LOCATIONS AND EMBEDDED STEEL PLATES (IF ANY).
5. VARIABLE HAUNCH THICKNESSES AND SCREED ELEVATIONS.
6. LAMINATED ELASTOMERIC BEARING DETAILS, INCLUDING DIMENSIONS, DUROMETER AND LOAD PLATE (IF ANY).
7. DETAILS OF END AND PIER DIAPHRAGMS, INCLUDING DIMENSIONS, REINFORCING STEEL SIZE AND SPACING.
8. EXPANSION JOINT DETAILS.
9. DETAILS OF ABUTMENTS AND PIERS, INCLUDING DOWEL ROD POSITIONS, CENTERLINE OF BEAM BEARINGS, ORIENTATION OF BEARINGS AND FIXED DOWEL REQUIREMENTS.
10. ALL PLAN QUANTITY ITEMS REQUIRED TO PROPERLY COVER THE COST OF FABRICATION, ERECTION AND CONSTRUCTION OF THE BEAMS.
11. PLAN NOTES, INCLUDING BUT NOT LIMITED TO, CONCRETE PLACEMENT SEQUENCE.
12. ALL OTHER DETAILS AND INFORMATION NECESSARY TO COMPLETE THE PLANS.

IT IS NOT INTENDED THAT DETAILS SHOWN ON THIS STANDARD DRAWING BE REPEATED ON THE PROJECT PLANS EXCEPT AS MAY BE REQUIRED FOR CLARITY.

DESIGN CRITERIA:

DESIGN SPECIFICATIONS: THIS STANDARD DRAWING CONFORMS TO "STANDARD SPECIFICATIONS FOR HIGHWAY BRIDGES" ADOPTED BY THE AMERICAN ASSOCIATION OF STATE HIGHWAY AND TRANSPORTATION OFFICIALS, 1996, INCLUDING THE 1997, 1998, 1999 AND 2000 INTERIM SPECIFICATIONS AND THE ODOT BRIDGE DESIGN MANUAL.

DESIGN LOADING:
DEAD LOAD - 60 LB/FT (FUTURE WEARING SURFACE)
LIVE LOAD - HS-25 AND THE ALTERNATE MILITARY LOADING

DESIGN STRESSES:
PRESTRESSED CONCRETE - F'C = * (28-DAY)
F'CI = ** (RELEASE)

DIAPHRAGM CONCRETE - F'C = 4500 PSI

REINFORCING STEEL - MIN. YIELD STRENGTH = 60 KSI.

PRESTRESSING STRAND - FURNISH MATERIAL CONFORMING TO 711.27 (ASTM A416), GRADE 270, LOW RELAXATION, UNCOATED, SEVEN WIRE STRAND. STRANDS SHALL BE ½ INCH DIAMETER WITH A TOTAL CROSS-SECTIONAL AREA OF EITHER 0.153 IN OR 0.167 IN .*** ½

STRUCTURAL STEEL - ASTM A709, GRADE 36 OR 50

* - THE DESIGNER SHALL SPECIFY A 28-DAY COMPRESSIVE STRENGTH IN THE RANGE OF 5500 PSI MINIMUM TO 7000 PSI MAXIMUM AND LIST THE VALUE IN THE STRUCTURE'S GENERAL NOTES.

** - THE DESIGNER SHALL SPECIFY A RELEASE STRENGTH IN THE RANGE OF 4000 PSI MINIMUM TO 5000 PSI MAXIMUM AND LIST THE VALUE IN THE STRUCTURE'S GENERAL NOTES.

*** - THE DESIGNER SHALL SPECIFY ONLY THE STRAND AREA USED IN THE DESIGN IN THE STRUCTURE'S GENERAL NOTES.

THE DESIGNER SHALL NOT SPECIFY MORE THAN ONE STRAND SIZE, ONE RELEASE STRENGTH AND ONE 28-DAY STRENGTH IN A SINGLE STRUCTURE.

DECK REINFORCING: THE DESIGNER SHALL DESIGN THE DECK REINFORCING OVER THE PIERS TO RESIST THE NEGATIVE MOMENTS INDUCED BY ANY SUPERIMPOSED DEAD LOADS AND LIVE LOADS.

LAP SPLICES FOR REINFORCING STEEL IN I-BEAMS AND DIAPHRAGMS SHALL BE:
2'-0" IN LENGTH FOR #4 BARS
2'-6" IN LENGTH FOR #5 BARS
3'-0" IN LENGTH FOR #6 BARS
5'-0" IN LENGTH FOR #8 BARS

FABRICATION AND CONSTRUCTION REQUIREMENTS:

ERECTION PROCEDURE:THE CONTRACTOR SHALL SUBMIT PLANS FOR ERECTION AND HANDLING PROCEDURES ACCORDING TO 501.05.

ERECTION AND LIFTING DEVICES: THE GIRDER FABRICATOR IS RESPONSIBLE FOR THE DESIGN OF A LIFTING SYSTEM FOR HANDLING I-BEAMS. AS A MINIMUM, THE FABRICATOR SHALL USE TWO LIFT POINTS; ONE WITHIN 5 FEET OF EACH END. THE FABRICATOR SHALL SHOW THE LIFTING SYSTEM ON THE SHOP DRAWINGS AND USE A FACTOR OF SAFETY OF FOUR IN THE DESIGN. REFER TO PART 5 OF THE PCI HANDBOOK.

TEMPORARY STABILITY FOR DECK PLACEMENT: THE ERECTION PROCEDURE SHALL INCLUDE ANY ADDITIONAL TEMPORARY DIAPHRAGMS OR SUPPORTS NEEDED TO ASSURE THE I-BEAMS WILL REMAIN STABLE BEFORE, DURING AND THROUGH COMPLETION OF THE PLACEMENT OF THE CONCRETE DECK.

THE PLACEMENT OF DECK CONCRETE SHALL NOT PROCEED UNTIL ALL INTERMEDIATE DIAPHRAGMS HAVE BEEN PROPERLY INSTALLED. CONCRETE INTERMEDIATE DIAPHRAGMS SHALL BE COMPLETED AT LEAST 48 HOURS BEFORE DECK PLACEMENT BEGINS.

CAST-IN-PLACE DECK CONCRETE: THOROUGHLY CLEAN THE TOP SURFACE OF THE BEAMS OF ALL DIRT, DUST, LAITANCE OR OTHER FOREIGN MATERIALS WITH WATER, AIR UNDER PRESSURE OR ANY OTHER METHOD THAT PRODUCES SATISFACTORY RESULTS. THOROUGHLY DRENCH THE SURFACE WITH CLEAN WATER. BEFORE PLACING THE CONCRETE, ALLOW THE SURFACE TO DRY TO A DAMP CONDITION.

THE DESIGNER SHALL INCLUDE A DECK POUR SEQUENCE IN THE PLANS FOR MULTI-SPAN, CONTINUOUS BRIDGES. TWO CONSTRUCTION JOINTS SPACED AT 8'-0", PARALLEL TO AND CENTERED ABOUT THE PIERS ARE REQUIRED. DO NOT PLACE CONCRETE BETWEEN THESE CONSTRUCTION JOINTS PRIOR TO THE PLACEMENT OF CONCRETE IN EACH ADJACENT SPAN. UPON COMPLETION OF THE CONCRETE PLACEMENT IN THE ADJACENT SPANS, PLACE THE DIAPHRAGM AND DECK CONCRETE BETWEEN THE CONSTRUCTION JOINTS. SEAL THE JOINTS WITH A 2'-0" WIDE STRIP OF HIGH MOLECULAR WEIGHT METHACRYLATE RESIN ACCORDING TO 511.22.

CONTINUOUS DECK POUR PROCEDURES, WHICH PROCEED FROM END TO END OF THE BRIDGE AND PLACE THE PIER DIAPHRAGM CONCRETE CONCURRENTLY WITH THE DECK CONCRETE, MAYBE APPROVED BY THE DIRECTOR IF THE PLACEMENT SUBMITTAL CAN ASSURE THAT THE DECK CONCRETE IN ADJACENT SPANS WILL BE PLACED BEFORE THE PIER DIAPHRAGM CONCRETE HAS REACHED ITS INITIAL SET.

THE FABRICATOR SHALL INTENTIONALLY ROUGHEN THE SURFACE OF THE I-BEAM TOP FLANGES TO BE INCORPORATED INTO THE DECK CONCRETE TO A DEPTH OF APPROXIMATELY ¼" BEFORE THE CONCRETE HAS REACHED ITS INITIAL SET.

GALVANIZING: GALVANIZE ALL STRUCTURAL STEEL, DOWEL BARS, PIPE SLEEVES, BOLTS, STUDS, INSERTS, THREADED RODS, NUTS AND WASHERS, EMBEDDED SOLE PLATES AND BEARING LOAD PLATES (IF ANY) ACCORDING TO 711.02.

SEALING OF FASCIA BEAMS: SEAL THE FASCIA I-BEAM WITH AN EPOXY-URETHANE SEALER AS SHOWN ON SHEET 7 OF 8. THE DEPARTMENT WILL PAY FOR ACCEPTED QUANTITIES SEPARATELY UNDER SEALING OF CONCRETE SURFACES.

DIAPHRAGMS: ALL END AND PIER DIAPHRAGMS SHALL BE CAST-IN-PLACE. THE INTERMEDIATE DIAPHRAGMS MAY BE CAST-IN-PLACE AS SHOWN ON SHEET 5 OF 8 OR GALVANIZED STEEL AS SHOWN ON SHEET 6 OF 8. ONLY ONE TYPE OF INTERMEDIATE DIAPHRAGM MAY BE USED PER STRUCTURE. DIAPHRAGMS ARE NOT REQUIRED IN SPANS UP TO, AND INCLUDING, 40 FEET. DIAPHRAGMS ARE REQUIRED AT MID-SPAN FOR SPANS 40-80 FEET AND AT QUARTER POINTS FOR SPANS GREATER THAN 80 FEET. THE DESIGN PLANS SHALL SHOW THE CENTERLINE LOCATION OF EACH INTERMEDIATE DIAPHRAGM. THE FABRICATOR SHALL SHOW LOCATIONS OF INSERTS OR HOLES IN THE I-BEAMS FOR ALL DIAPHRAGM CONNECTIONS AND DETAILS FOR GALVANIZED STEEL DIAPHRAGMS IN THE SHOP DRAWINGS.

ALL STRUCTURAL STEEL, INCLUDING BOLTS, NUTS, WASHERS AND PLATE WASHERS FOR INTERMEDIATE DIAPHRAGMS SHALL CONFORM TO THE REQUIREMENTS OF 513.

CONCRETE FOR INTERMEDIATE DIAPHRAGMS SHALL CONFORM TO THE REQUIREMENTS OF 511. UNLESS OTHERWISE SPECIFIED, CONCRETE SHALL BE CLASS S.

ALTERNATE DESIGNS: AT NO EXPENSE TO THE PROJECT AND UPON WRITTEN ACCEPTANCE AND APPROVAL OF THE DIRECTOR, THE CONTRACTOR MAY SUBSTITUTE ALTERNATE DESIGNS FOR DETAILS AND I-BEAM SECTIONS TO THOSE SHOWN IN THE PLANS. IF AN ALTERNATE DESIGN IS APPROVED, THE CONTRACTOR SHALL ASSUME RESPONSIBILITY FOR THE REVISION OF THE PROJECT PLANS. THE DEPARTMENT WILL NOT PAY FOR DESIGN COSTS OR COSTS ASSOCIATED WITH PLAN MODIFICATIONS. THE CONTRACTOR SHALL SUBMIT THE ALTERNATE DESIGN TO THE DIRECTOR FOR ACCEPTANCE AT LEAST 30 DAYS BEFORE CONSTRUCTION BEGINS.

SHIPPING STRANDS:
THE FABRICATOR MAY ADD SHIPPING STRANDS AT THE LOCATIONS SHOWN ON SHEET 1 OF 8. THESE SHIPPING STRANDS SHALL BE DEBONDED FOR THE ENTIRE LENGTH OF THE BEAM EXCEPT FOR THE LAST 10'-0" AT EACH END. THE STRANDS SHALL BE CUT AFTER ALL HANDLING OPERATIONS ARE COMPLETE.

BASIS OF PAYMENT: IN ADDITION TO THE ITEMS LISTED IN 515.18, THE DEPARTMENT WILL CONSIDER ALL COSTS ASSOCIATED WITH FOLLOWING ITEMS TO BE INCIDENTAL TO THE COST OF THE I-BEAMS: THREADED RODS; BEARING SOLE PLATES; TEMPORARY BRACING; AND FIXED ANCHOR DOWELS.

THE DEPARTMENT WILL PAY FOR PIER AND ABUTMENT DIAPHRAGMS SEPARATELY UNDER ITEM 511, CONCRETE FOR STRUCTURES.

Preliminary Plans - For Reference Only

DESIGN AGENCY
OFFICE OF STRUCTURAL ENGINEERING

STATE OF OHIO DEPARTMENT OF TRANSPORTATION
Brad Fogell
ADMINISTRATOR
09-07-99
DATE

REVISIONS
10-20-00 04-20-07
07-19-02 07-18-08
07-18-03

STANDARD
PRESTRESSED CONCRETE I-BEAM BRIDGE DETAILS

DESIGNED SAM
DRAWN SAM
CHECKED JS/WTL
REVIEWED LMW
PSID-1-99

8 / 8
33 / 64
962 / 1047

$USERNAME$ $DATE$ $TIME$ $FILE$

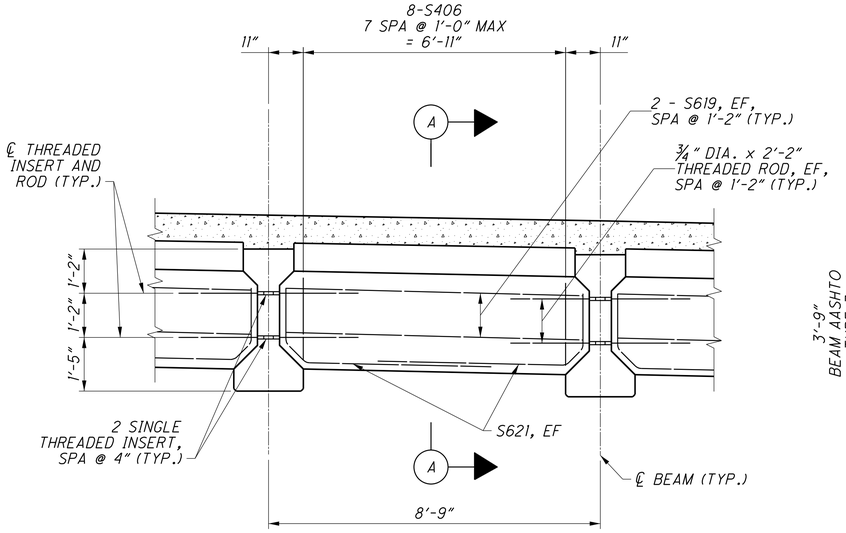

CONCRETE INTERMEDIATE DIAPHRAGM TYPE-1
(TYP OF 22)

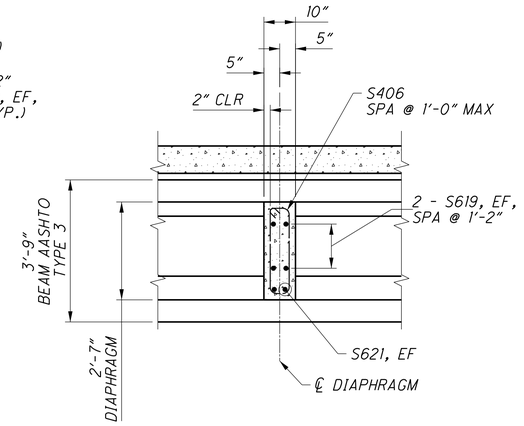

SECTION A-A

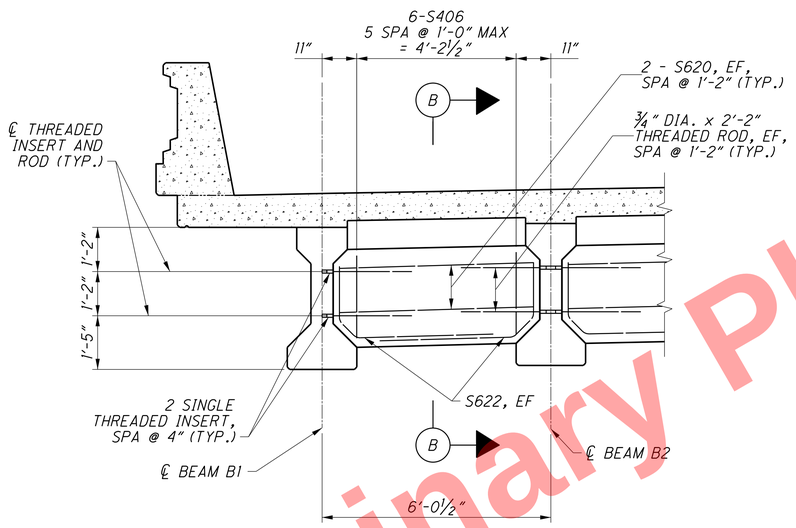

CONCRETE INTERMEDIATE DIAPHRAGM TYPE-2
(TYP OF 1)

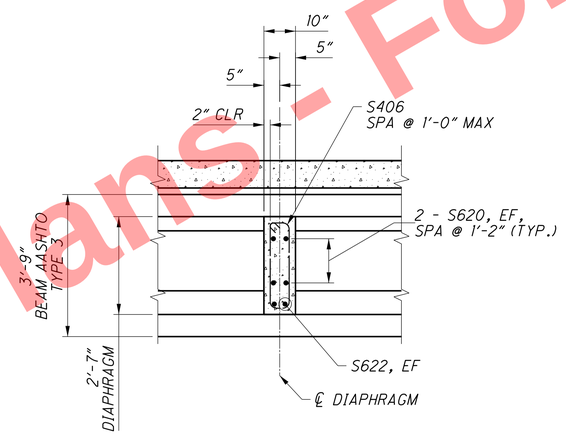

SECTION B-B

NOTES:

1. SEE PLAN INSERT SHEETS 26/64 THROUGH 33/64 WHICH CONTAIN ARCHIVED STANDARD DRAWING PSID-1-99 FOR ADDITIONAL DETAILS NOT SHOWN.
2. SEE GENERAL NOTES FOR ABBREVIATION LEGEND.
3. INTERMEDIATE DIAPHRAGMS SHALL BE CAST-IN-PLACE CONCRETE DIAPHRAGMS ONLY.
4. MINIMUM LAP LENGTH FOR #6 BARS - 3'-0".
5. SEE SHEETS 23/64 AND 24/64 FOR FRAMING PLAN DETAILS.

Preliminary Plans - For Reference Only

DESIGN AGENCY
4215 North Avenue, Suite 200, Columbus, OH 43219

DESIGNED	DRAWN	REVIEWED	DATE
TML	JBM	NCM	5-22-26
CHECKED	REVISED	STRUCTURE FILE NUMBER	
PPA		3110095	

INTERMEDIATE DIAPHRAGM
BRIDGE NO. HAM-75-0823
I.R. 75 OVER LAIDLAW AVENUE (C.R. 690)

HAM-75-7.85
PID No. 121447

F:\HAM\121447\structures\HAM075_0823\sheets\075_0823CSD610.dgn 5/11/2026 10:43:26 AM PAntonelli

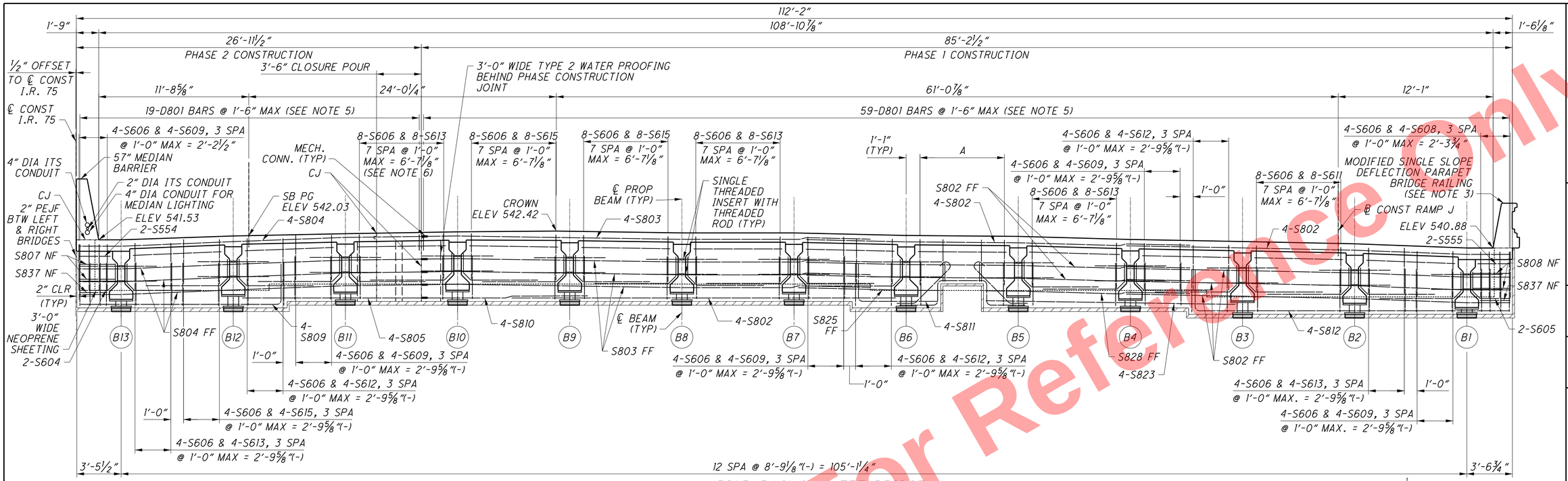

DIAPHRAGMS - LEFT BRIDGE

(MEASURED ALONG ℄ RA BRG)

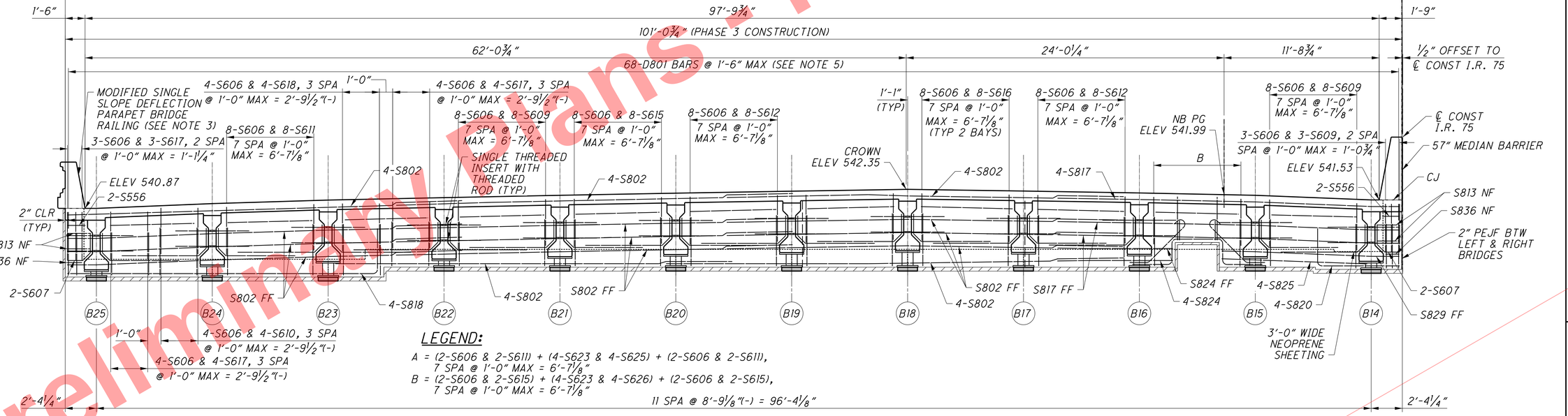

DIAPHRAGMS - RIGHT BRIDGE

(MEASURED ALONG ℄ RA BRG)

LEGEND:

A = (2-S606 & 2-S611) + (4-S623 & 4-S625) + (2-S606 & 2-S611), 7 SPA @ 1'-0" MAX = 6'-7⅛"

B = (2-S606 & 2-S615) + (4-S623 & 4-S626) + (2-S606 & 2-S615), 7 SPA @ 1'-0" MAX = 6'-7⅛"

MINIMUM LAP	
#8	5'-0"

LEGEND:

(BXX) = BEAM NUMBER

NOTES:

1. SEE SHEETS 16/64 AND 17/64 FOR ABUTMENT DETAILS
2. SEE SHEET 20/64 FOR ABUTMENT SECTION.
3. PLACE THE DIAPHRAGM CONCRETE ENCASING THE STRUCTURAL MEMBER ENDS OF AN INDIVIDUAL PHASE WITH THE DECK CONCRETE OR AT LEAST 48 HOURS BEFORE PLACEMENT OF THE DECK CONCRETE. IF PLACED SEPARATELY, LOCATE THE HORIZONTAL CONSTRUCTION JOINT BETWEEN THE DIAPHRAGM AND DECK CONCRETE AT THE APPROACH SLAB SEAT. PLACE CLOSURE POUR CONCRETE IN THE DIAPHRAGM AND DECK CONCURRENTLY.
4. SEE GENERAL NOTES FOR ABBREVIATION LEGEND.
5. SPACE BETWEEN D801 BARS MEASURED PERPENDICULAR TO ℄ CONSTRUCTION I.R. 75.
6. THE VERTICAL BARS IN THE CLOSURE POUR SHALL BE PLACED AS FOLLOWS: 2-S606 & 2-S613 BARS PLACED IN PHASE 1, 4-S606 & 4-S613 BARS PLACED IN PHASE 2 CLOSURE POUR AND 2-S606 & 2-S613 BARS PLACED IN PHASE 2 DECK POUR.
7. SEE PLAN SHEET 37/64 FOR ADDITIONAL DIAPHRAGM DETAILS NOT SHOWN.

Preliminary Plans - For Reference Only

DESIGN AGENCY
ODOT
400 West Nintth Street, Suite 200, Columbus, OH 43215

DESIGNED	DRAWN	REVIEWED	DATE
TML	JBM	NCM	5-22-26
CHECKED	REVISED	STRUCTURE FILE NUMBER	
PPA		3110095	

REAR ABUTMENT DIAPHRAGMS
BRIDGE NO. HAM-75-0823
I.R. 75 OVER LAIDLAW AVENUE (C.R. 690)

HAM-75-7.85
PID No. 121447

35/64

964/1047

F:\HAM\121447\structures\HAM075_0823\sheets\075_0823CSD608.dgn 5/11/2026 10:43:38 AM PAntonelli

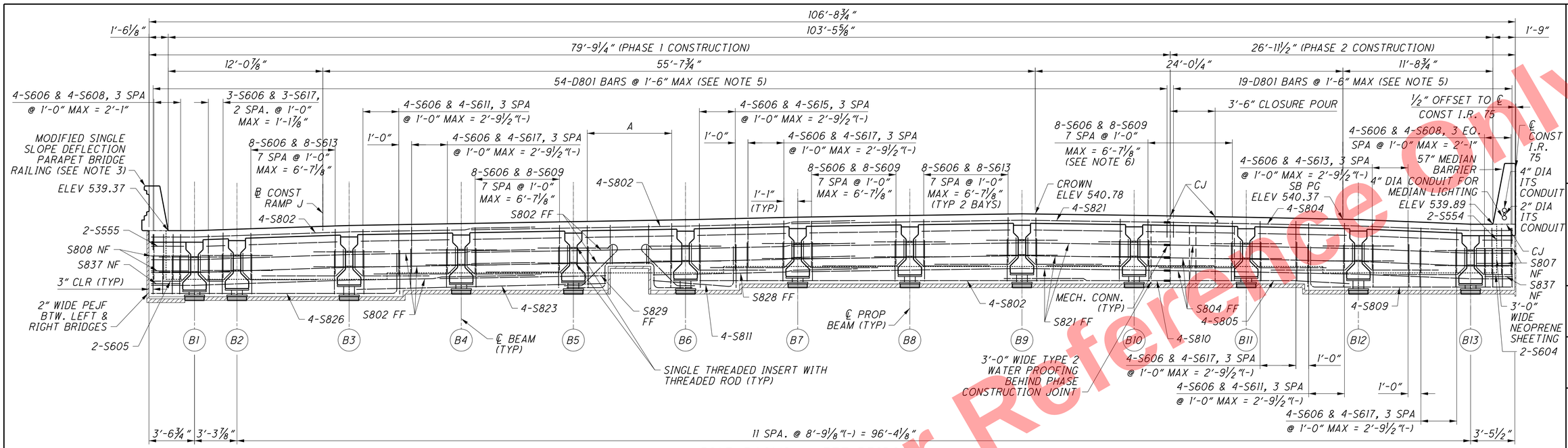

DIAPHRAGMS - LEFT BRIDGE

(MEASURED ALONG ℄ FA BRG)

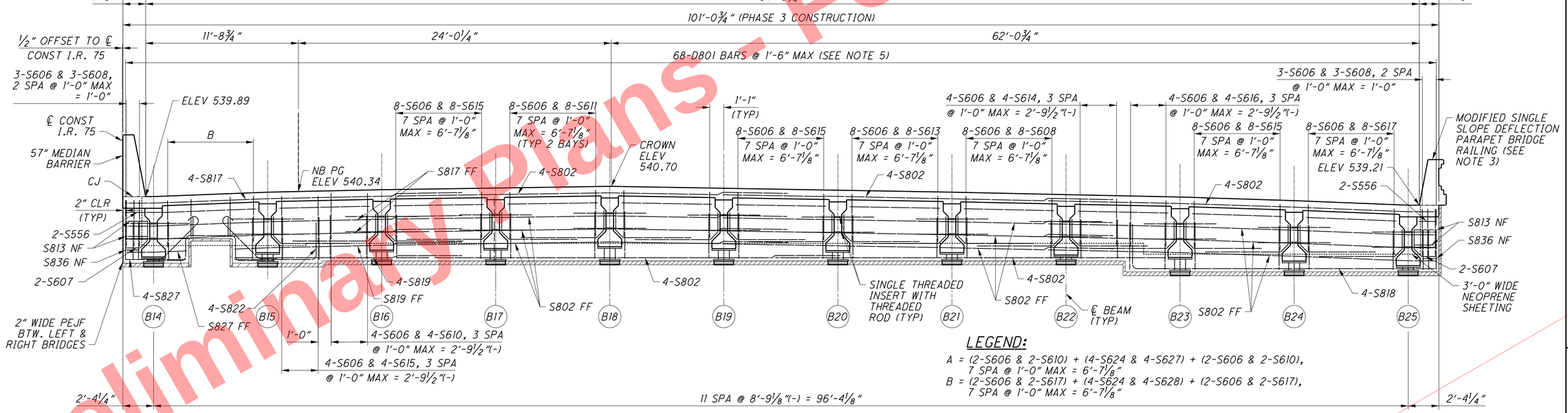

DIAPHRAGMS - RIGHT BRIDGE

(MEASURED ALONG ℄ FA BRG)

MINIMUM LAP	
#8	5'-0"

LEGEND:

(BXX) = BEAM NUMBER

LEGEND:

A = (2-S606 & 2-S610) + (4-S624 & 4-S627) + (2-S606 & 2-S610), 7 SPA @ 1'-0" MAX = 6'-7⅛"

B = (2-S606 & 2-S617) + (4-S624 & 4-S628) + (2-S606 & 2-S617), 7 SPA @ 1'-0" MAX = 6'-7⅛"

NOTES:

1. SEE SHEETS 18/64 AND 19/64 FOR ABUTMENT DETAILS.
2. SEE SHEET 20/64 FOR ABUTMENT SECTION.
3. PLACE THE DIAPHRAGM CONCRETE ENCASING THE STRUCTURAL MEMBER ENDS OF AN INDIVIDUAL PHASE WITH THE DECK CONCRETE OR AT LEAST 48 HOURS BEFORE PLACEMENT OF THE DECK CONCRETE. IF PLACED SEPARATELY, LOCATE THE HORIZONTAL CONSTRUCTION JOINT BETWEEN THE DIAPHRAGM AND DECK CONCRETE AT THE APPROACH SLAB SEAT. PLACE CLOSURE POUR CONCRETE IN THE DIAPHRAGM AND DECK CONCURRENTLY.
4. SEE GENERAL NOTES FOR ABBREVIATION LEGEND.
5. SPACE BETWEEN D801 BARS MEASURED PERPENDICULAR TO ℄ CONSTRUCTION I.R. 75.
6. THE VERTICAL BARS IN THE CLOSURE POUR SHALL BE PLACED AS FOLLOWS: 2-S606 & 2-S609 BARS PLACED IN PHASE 1, 4-S606 & 4-S609 BARS PLACED IN PHASE 2 CLOSURE POUR AND 2-S606 & 2-S609 BARS PLACED IN PHASE 2 DECK POUR.
7. SEE PLAN SHEET 38/64 FOR ADDITIONAL DIAPHRAGM DETAILS NOT SHOWN.

Preliminary Plans - Not For Reference Only

DESIGN AGENCY: 400 High Avenue, Suite 201, Columbus, OH 43215

DESIGNED TML | DRAWN JBM | REVIEWED NCM | DATE 5-22-26 | STRUCTURE FILE NUMBER 3110095 | CHECKED PPA | REVISED

FORWARD ABUTMENT DIAPHRAGMS
BRIDGE NO. HAM-75-0823
I.R. 75 OVER LAIDLAW AVENUE (C.R. 690)

HAM-75-7.85
PID No. 121447

36/64

965/1047

F:\HAM\121447\structures\HAM075_0823\sheets\075_0823CSD609.dgn 5/11/2026 10:43:50 AM PAntonelli

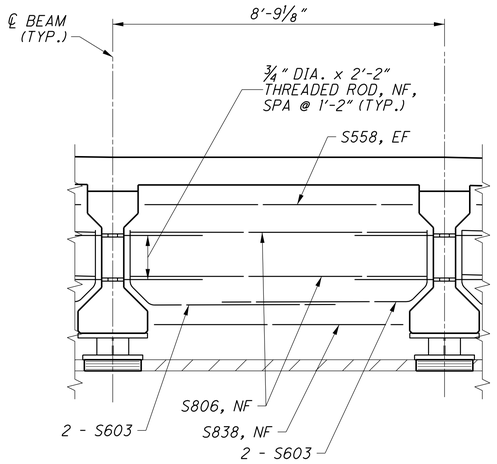

DIAPHRAGM TYPICAL
(TYP OF 20)

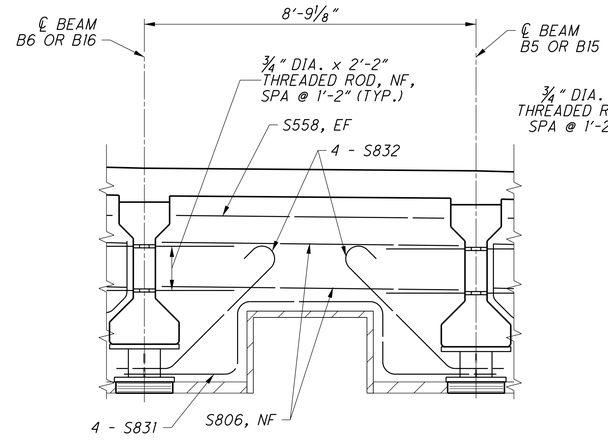

DIAPHRAGM BETWEEN BEAM
B6 AND B5, B16 AND B15

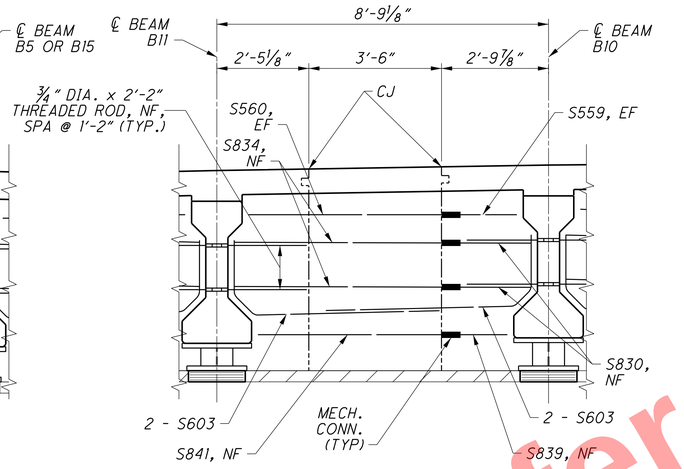

DIAPHRAGM BETWEEN BEAM
B11 AND B10

NOTES:

1. SEE PLAN INSERT SHEETS 26/64 THROUGH 33/64 WHICH CONTAIN ARCHIVED STANDARD DRAWING PSID-1-99 FOR ADDITIONAL DETAILS NOT SHOWN.

2. SEE GENERAL NOTES FOR ABBREVIATION LEGEND.

Preliminary Plans - For Reference Only

DESIGN AGENCY
4215 North Avenue, Suite 200, Columbus, OH 43219

DESIGNED	DRAWN	REVIEWED	DATE
TML	JBM	NCM	5-22-26
CHECKED	REVISED	STRUCTURE FILE NUMBER	
PPA		3110095	

REAR ABUTMENT DIAPHRAGM DETAILS
BRIDGE NO. HAM-75-0823
I.R. 75 OVER LAIDLAW AVENUE (C.R. 690)

HAM-75-7.85
PID No. 121447

F:\HAM\121447\structures\HAM075_0823\sheets\075_0823CSD611.dgn 5/11/2026 10:44:02 AM PAntonelli

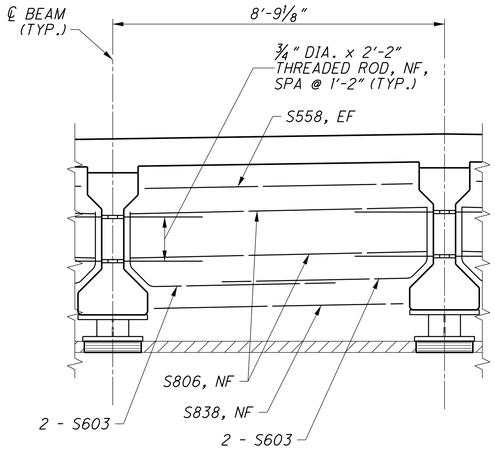

DIAPHRAGM TYPICAL
(TYP OF 19)

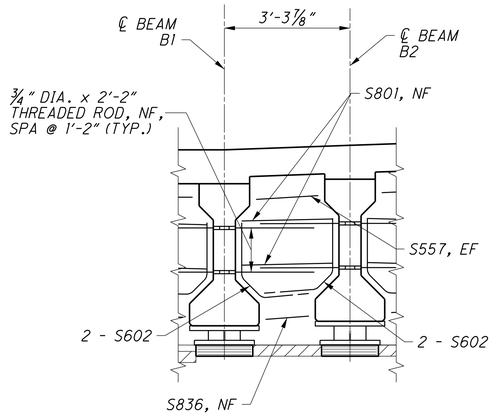

DIAPHRAGM BETWEEN BEAM
B1 AND B2

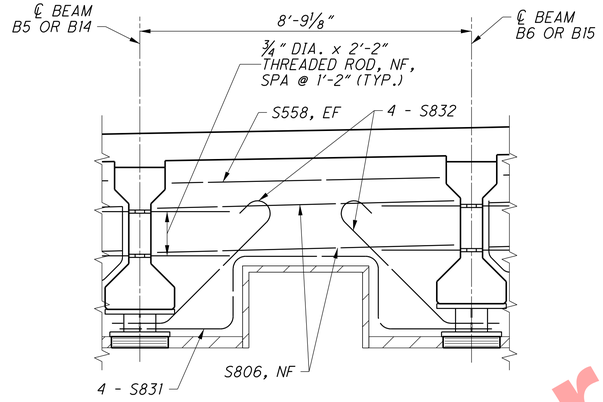

DIAPHRAGM BETWEEN BEAM
B5 AND B6, B14 AND B15

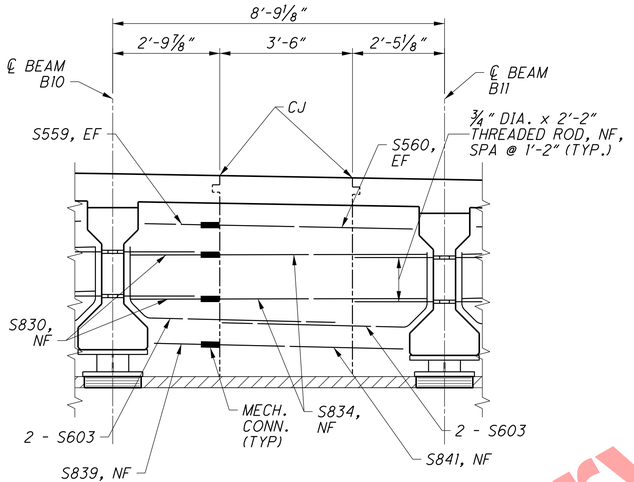

DIAPHRAGM BETWEEN BEAM
B10 AND B11

NOTES:

1. SEE PLAN INSERT SHEETS 26/64 THROUGH 33/64 WHICH CONTAIN ARCHIVED STANDARD DRAWING PSID-1-99 FOR ADDITIONAL DETAILS NOT SHOWN.
2. SEE GENERAL NOTES FOR ABBREVIATION LEGEND.

Preliminary Plans - For Reference Only

DESIGN AGENCY
ODOT
4295 Warren Sheboldt Road, Columbus, OH 43228

DESIGNED	DRAWN	REVIEWED	DATE
TML	JBM	NCM	5-22-26
CHECKED	REVISED	STRUCTURE FILE NUMBER	
PPA		3110095	

FORWARD ABUTMENT DIAPHRAGM DETAILS
BRIDGE NO. HAM-75-0823
I.R. 75 OVER LAIDLAW AVENUE (C.R. 690)

HAM-75-7.85
PID No. 121447

38/64

967/1047

F:\HAM\121447\structures\HAM075_0823\sheets\075_0823CSD612.dgn 5/11/2026 10:44:11 AM PAntonelli

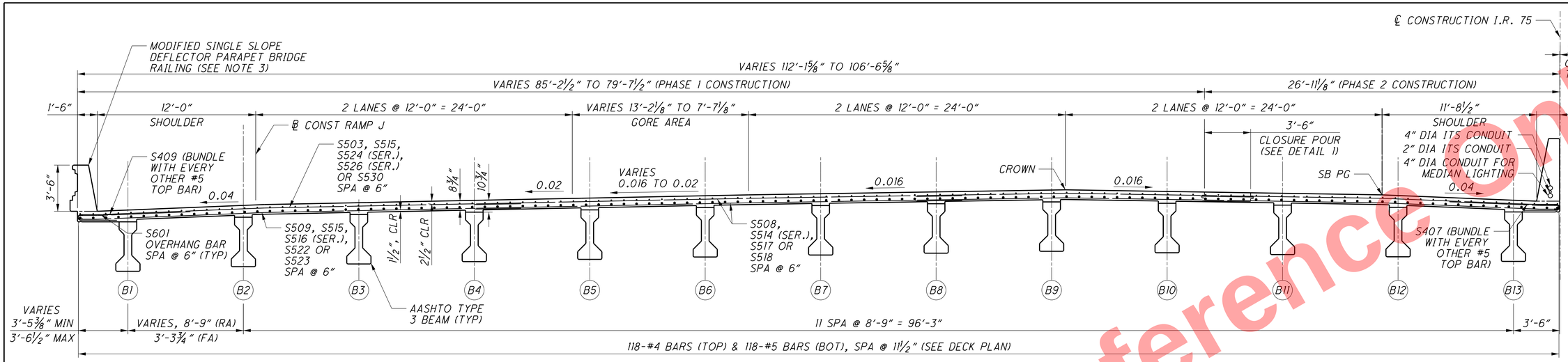

TRANSVERSE SECTION - LEFT BRIDGE

(MEASURED PERPENDICULAR TO ℄ CONST I.R. 75)

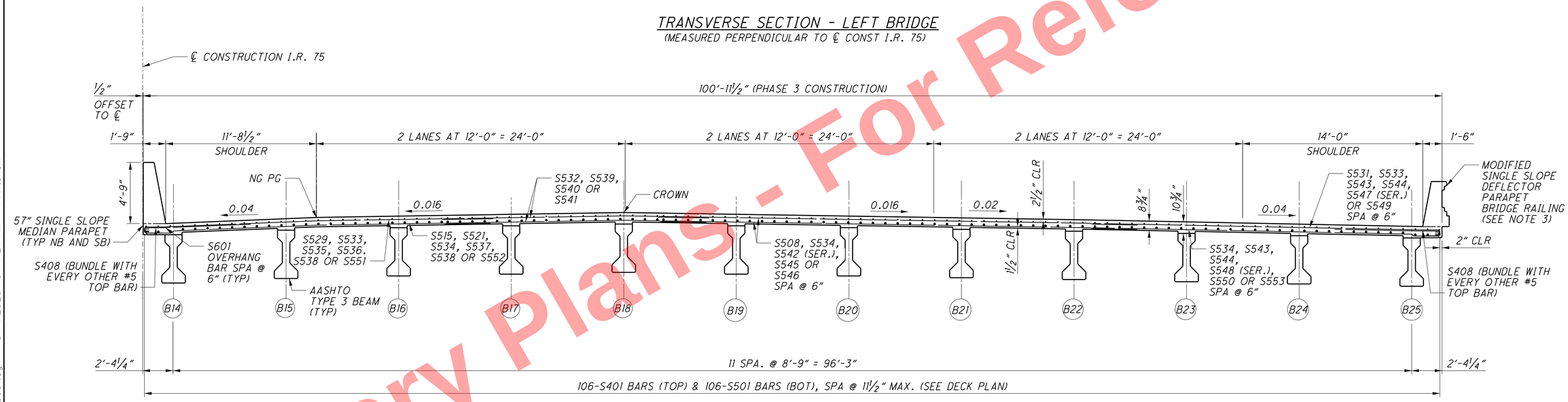

TRANSVERSE SECTION - RIGHT BRIDGE

(MEASURED PERPENDICULAR TO ℄ CONST I.R. 75)

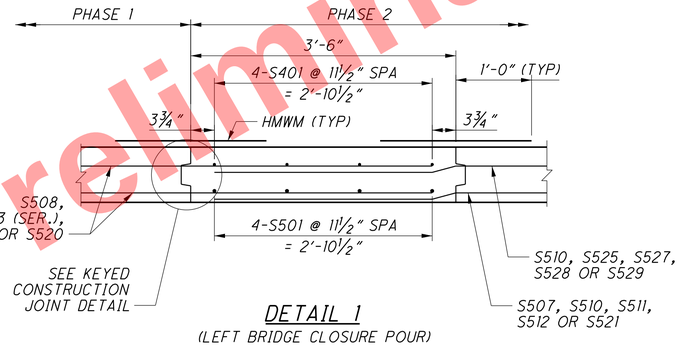

DETAIL 1

(LEFT BRIDGE CLOSURE POUR)

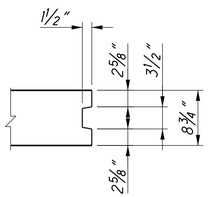

KEYED CONSTRUCTION JOINT DETAIL

LEGEND:

(BXX) = BEAM NUMBER

NOTES:

1. LAP #4 BAR = 1'-11"
   LAP #5 BAR = 3'-2"
2. FOR DECK PLANS SEE SHEETS 40/64 AND 41/64
3. SEE STD. DWG SBR-1-20 AND SBR-2-20 FOR ADDITIONAL DETAILS.
4. FOR RAILING DETAILS AND SEALING LIMITS SEE SHEET 44/64 THROUGH 46/64
5. SEE GENERAL NOTES FOR ABBREVIATION LEGEND.

DESIGN AGENCY
ODOT
4295 North Avenue, Suite 200, Columbus, OH 43219

DESIGNED	DRAWN	REVIEWED	DATE
JAD	SBH	NCM	5-22-26
CHECKED	REVISED	STRUCTURE FILE NUMBER	
JWE		3110095	

TRANSVERSE SECTION
BRIDGE NO. HAM-75-0823
I.R. 75 OVER LAIDLAW AVENUE (C.R. 690)

HAM-75-7.85
PID No. 121447

39/64

968/1047

Preliminary Plans - For Reference Only

F:\HAM\121447\structures\HAM075_0823\sheets\075_0823CTS601.dgn 5/11/2026 10:44:21 AM PAntonelli

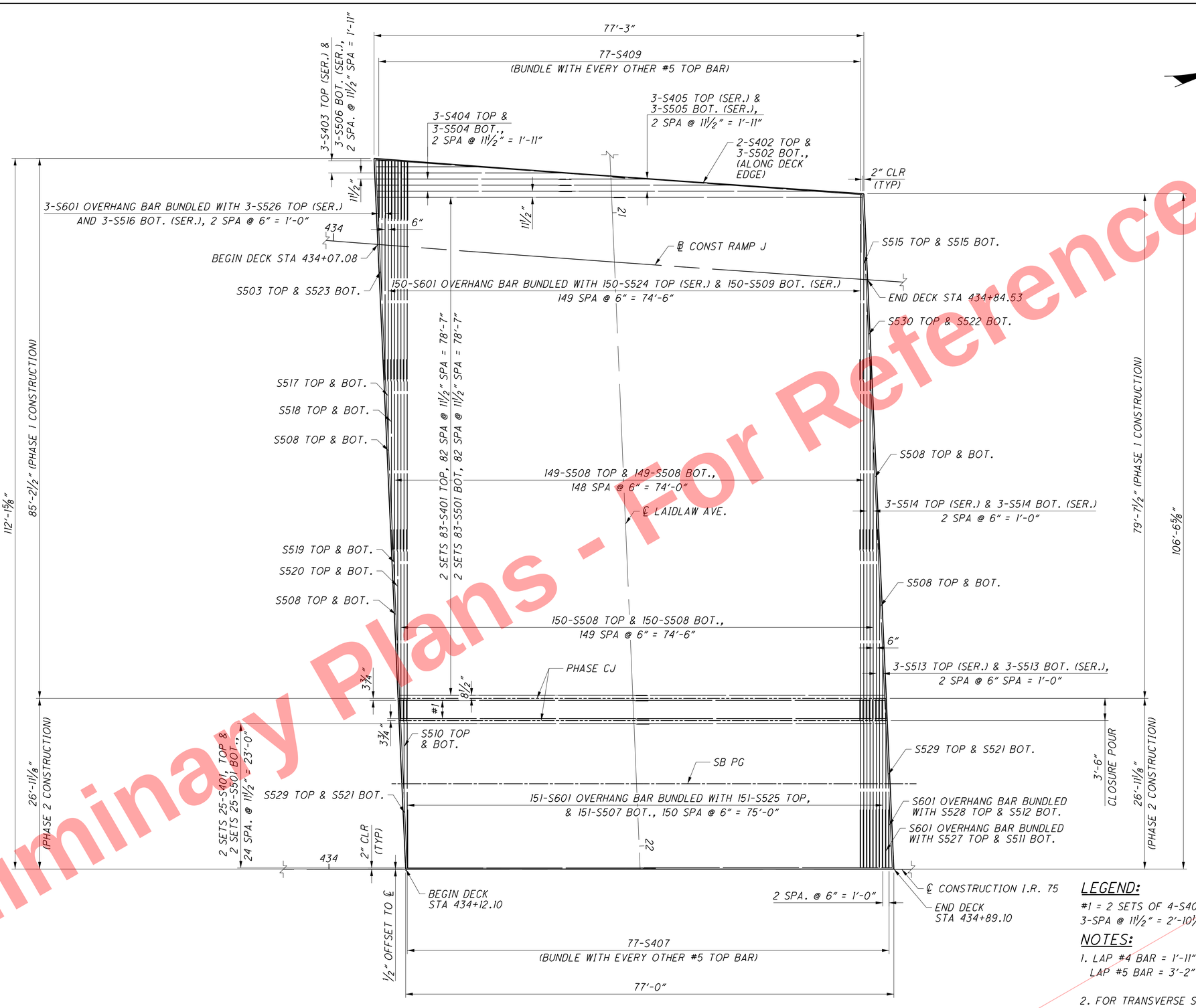

DECK PLAN - LEFT BRIDGE
(MEASURED PERPENDICULAR TO ℄ CONST I.R. 75)

LEGEND:

#1 = 2 SETS OF 4-S401 TOP & 4-S501 BOT., 3-SPA @ 11½" = 2'-10½"

NOTES:

1. LAP #4 BAR = 1'-11"
   LAP #5 BAR = 3'-2"
2. FOR TRANSVERSE SECTION SEE SHEET 39/64
3. FOR FRAMING PLAN SEE SHEET 23/64
4. SEE GENERAL NOTES FOR ABBREVIATION LEGENDS.

Preliminary Plans - For Reference Only

DESIGN AGENCY: JMT, 4215 North Avenue, Suite 200, Columbus, OH 43219

DESIGNED	DRAWN	REVIEWED	DATE
JAD	RT	NCM	5-22-26
CHECKED	REVISED	STRUCTURE FILE NUMBER	
JWE		3110095	

BRIDGE DECK PLAN
BRIDGE NO. HAM-75-0823
I.R. 75 OVER LAIDLAW AVENUE (C.R. 690)

HAM-75-7.85
PID No. 121447

F:\HAM\121447\structures\HAM075_0823\sheets\075_0823CDP601.dgn 5/11/2026 10:45:23 AM PAntonelli

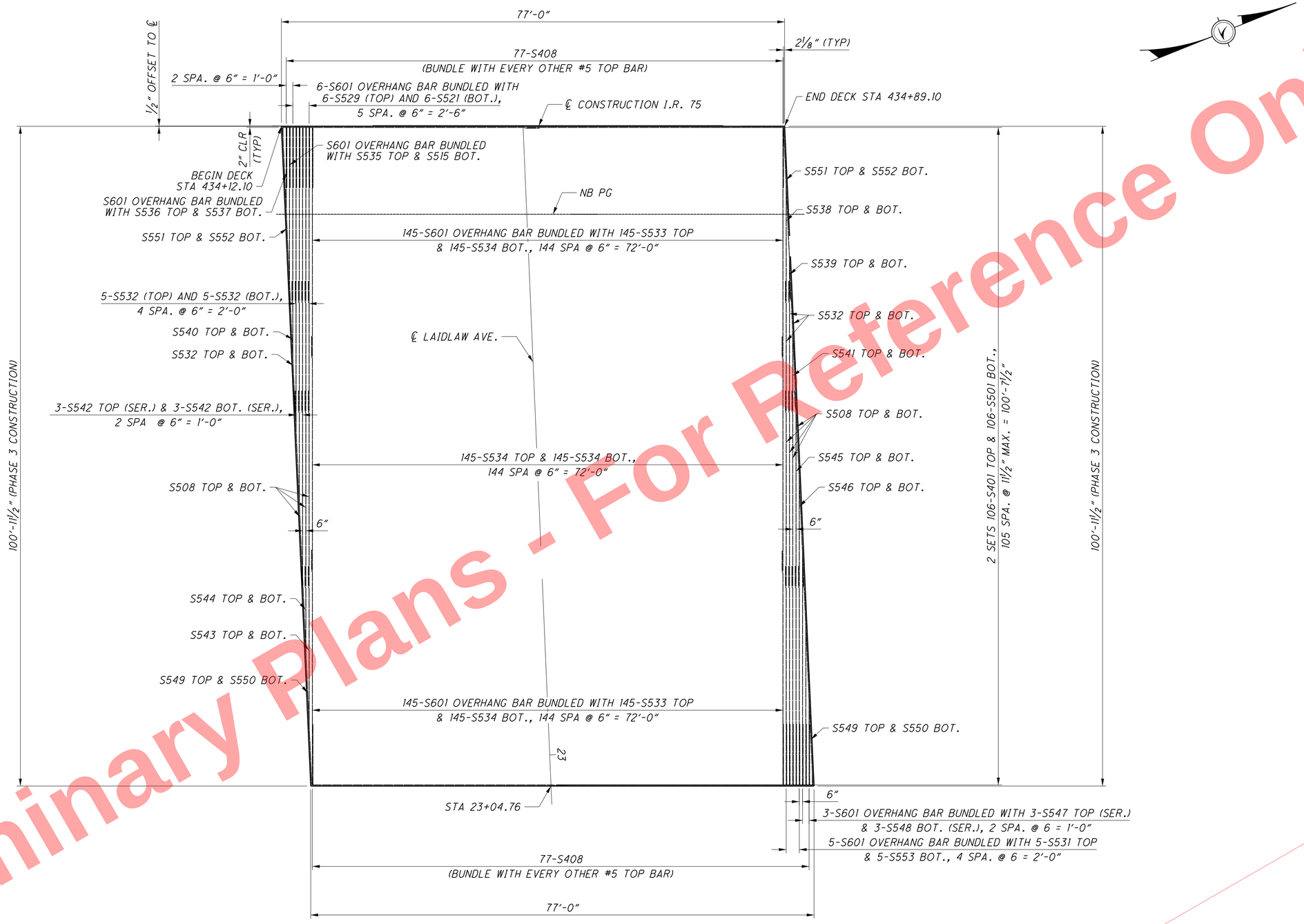

DECK PLAN - RIGHT BRIDGE

(MEASURED PERPENDICULAR TO ℄ CONST I.R. 75)

NOTES:

1. LAP #4 BAR = 1'-11"
   LAP #5 BAR = 3'-2"
2. FOR TRANSVERSE SECTION SEE SHEET 39/64
3. FOR FRAMING PLAN SEE SHEET 24/64
4. SEE GENERAL NOTES FOR ABBREVIATION LEGEND.

Preliminary Plans - For Reference Only

DESIGN AGENCY
4215 North Avenue, Suite 200, Columbus, OH 43219

DESIGNED	DRAWN	REVIEWED	DATE
JAD	RT	NCM	5-22-26
CHECKED	REVISED	STRUCTURE FILE NUMBER	
JWE		3110095	

BRIDGE DECK PLAN
BRIDGE NO. HAM-75-0823
I.R. 75 OVER LAIDLAW AVENUE (C.R. 690)

HAM-75-7.85
PID No. 121447

F:\HAM\121447\structures\HAM075_0823\sheets\075_0823CDP602.dgn 5/11/2026 10:45:51 AM PAntonelli

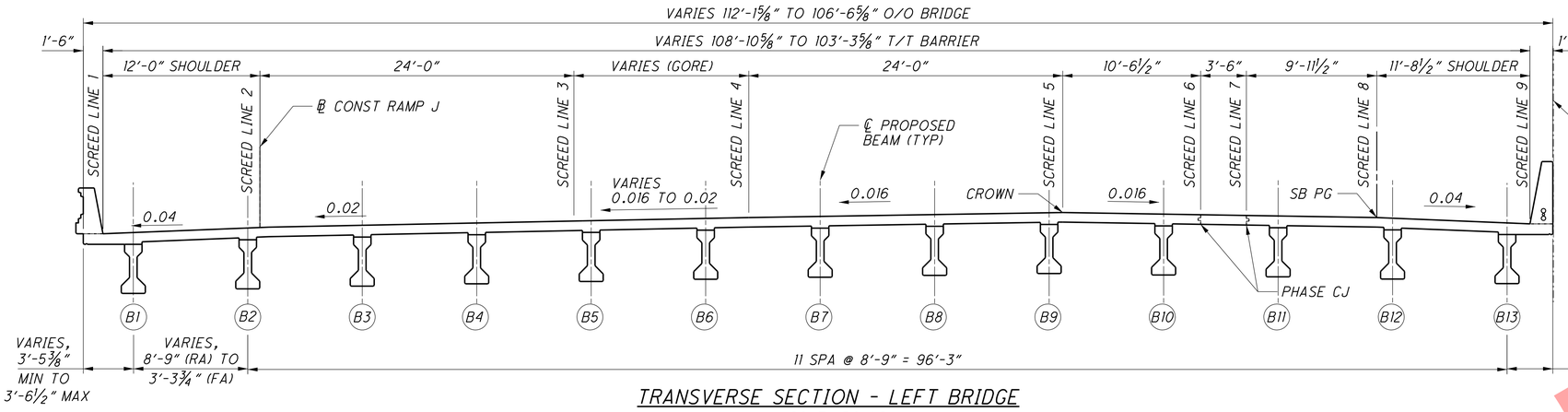

TRANSVERSE SECTION - LEFT BRIDGE

(SOUTH BOUND)

LEFT BRIDGE BEAM CAMBER				
BEAM NUMBER	1	2	3 THRU 12	13
TOPPING THICKNESS, "A"	10 3/4"	10 3/4"	10 3/4"	10 3/4"
DIMENSION "B"	11 15/16"	1'-0"	11 7/8"	11 13/16"
CALCULATED CAMBER AT TIME OF RELEASE, "C"	1 1/2"	1 5/8"	1 5/8"	1 1/2"
LONG TERM CAMBER, "C"	3 3/4"	4"	4"	3 3/4"

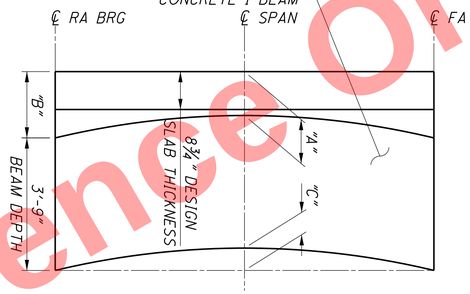

BEAM CAMBER DIAGRAM

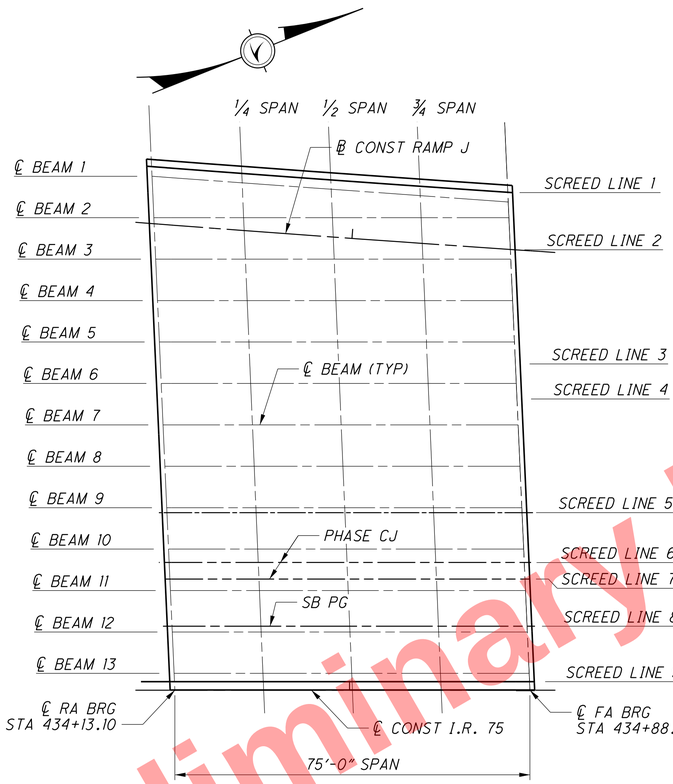

PLAN SCHEMATIC - LEFT BRIDGE

(SOUTH BOUND)

TOP OF HAUNCH AND FINAL DECK ELEVATION TABLE - LEFT BRIDGE						
LOCATION		℄ BRG RA	1/4 SPAN	1/2 SPAN	3/4 SPAN	℄ BRG FA
BEAM 1	STATION	434+08.27	434+27.08	434+45.90	434+64.71	434+83.52
	TOP/HAUNCH ELEV	540.23	539.94	539.59	539.18	538.72
	FINAL DECK ELEV	540.96	540.62	540.25	539.86	539.45
BEAM 2	STATION	434+08.66	434+27.41	434+46.16	434+64.91	434+83.66
	TOP/HAUNCH ELEV	540.56	540.23	539.83	539.37	538.84
	FINAL DECK ELEV	541.29	540.90	540.48	540.04	539.57
BEAM 3	STATION	434+09.05	434+27.80	434+46.55	434+65.30	434+84.05
	TOP/HAUNCH ELEV	540.74	540.45	540.08	539.64	539.13
	FINAL DECK ELEV	541.47	541.11	540.71	540.30	539.86
BEAM 4	STATION	434+09.44	434+28.19	434+46.94	434+65.69	434+84.44
	TOP/HAUNCH ELEV	540.90	540.60	540.24	539.79	539.28
	FINAL DECK ELEV	541.63	541.26	540.87	540.45	540.01
BEAM 5	STATION	434+09.93	434+28.58	434+47.33	434+66.08	434+84.83
	TOP/HAUNCH ELEV	541.14	540.76	540.39	539.94	539.43
	FINAL DECK ELEV	541.87	541.42	541.02	540.60	540.16
BEAM 6	STATION	434+10.22	434+28.97	434+47.72	434+66.47	434+85.22
	TOP/HAUNCH ELEV	541.21	540.91	540.55	540.10	539.58
	FINAL DECK ELEV	541.94	541.57	541.18	540.76	540.31
BEAM 7	STATION	434+10.61	434+29.36	434+48.11	434+66.86	434+85.61
	TOP/HAUNCH ELEV	541.41	541.10	540.74	540.29	539.78
	FINAL DECK ELEV	542.14	541.76	541.37	540.95	540.51
BEAM 8	STATION	434+11.00	434+29.75	434+48.50	434+67.25	434+86.00
	TOP/HAUNCH ELEV	541.54	541.23	540.87	540.42	539.91
	FINAL DECK ELEV	542.27	541.89	541.50	541.08	540.64
BEAM 9	STATION	434+11.39	434+30.14	434+48.89	434+67.64	434+86.39
	TOP/HAUNCH ELEV	541.67	541.37	541.00	540.55	540.04
	FINAL DECK ELEV	542.40	542.03	541.63	541.21	540.77
BEAM 10	STATION	434+11.78	434+30.53	434+49.28	434+68.03	434+86.78
	TOP/HAUNCH ELEV	541.56	541.25	540.88	540.43	539.92
	FINAL DECK ELEV	542.29	541.91	541.51	541.09	540.65
BEAM 11	STATION	434+12.17	434+30.92	434+49.67	434+68.42	434+87.17
	TOP/HAUNCH ELEV	541.41	541.10	540.74	540.29	539.77
	FINAL DECK ELEV	542.14	541.76	541.37	540.95	540.50
BEAM 12	STATION	434+12.56	434+31.31	434+50.06	434+68.81	434+87.56
	TOP/HAUNCH ELEV	541.23	540.93	540.56	540.11	539.59
	FINAL DECK ELEV	541.96	541.59	541.19	540.77	540.32
BEAM 13	STATION	434+12.95	434+31.70	434+50.45	434+69.20	434+87.95
	TOP/HAUNCH ELEV	540.87	540.56	540.19	539.74	539.23
	FINAL DECK ELEV	541.60	541.23	540.83	540.41	539.96

SCREED AND FINAL DECK ELEVATION TABLE - LEFT BRIDGE						
LOCATION		℄ BRG RA	1/4 SPAN	1/2 SPAN	3/4 SPAN	℄ BRG FA
LEFT TOE OF PARAPET SCREED LINE 1	STATION	434+08.18	434+27.00	434+45.81	434+64.62	434+83.43
	SCREED ELEV	540.88	540.60	540.25	539.84	539.37
	DL DEFLECTION	0.00	0.05	0.07	0.05	0.00
	FINAL DECK ELEV	540.88	540.55	540.18	539.79	539.37
℄ CONST RAMP J SCREED LINE 2	STATION	434+08.72	434+27.53	434+46.35	434+65.15	434+83.96
	SCREED ELEV	541.34	541.07	540.73	540.31	539.82
	DL DEFLECTION	0.00	0.07	0.10	0.07	0.00
	FINAL DECK ELEV	541.34	541.00	540.63	540.24	539.82
LEFT GORE EDGE SCREED LINE 3	STATION	434+09.72	434+28.25	434+47.06	434+65.87	434+85.03
	SCREED ELEV	541.62	541.36	541.02	540.59	540.10
	DL DEFLECTION	0.00	0.07	0.10	0.07	0.00
	FINAL DECK ELEV	541.62	541.29	540.92	540.52	540.10
RIGHT GORE EDGE SCREED LINE 4	STATION	434+10.37	434+29.12	434+47.87	434+66.62	434+85.37
	SCREED ELEV	542.00	541.70	541.34	540.88	540.37
	DL DEFLECTION	0.00	0.07	0.10	0.07	0.00
	FINAL DECK ELEV	542.00	541.63	541.24	540.81	540.37
CROWN SCREED LINE 5	STATION	434+11.43	434+30.18	434+48.94	434+67.69	434+86.44
	SCREED ELEV	542.42	542.11	541.75	541.30	540.78
	DL DEFLECTION	0.00	0.07	0.10	0.07	0.00
	FINAL DECK ELEV	542.42	542.04	541.65	541.23	540.78
LEFT PHASE CJ SCREED LINE 6	STATION	434+11.90	434+30.65	434+49.40	434+68.16	434+86.91
	SCREED ELEV	542.24	541.93	541.57	541.12	540.60
	DL DEFLECTION	0.00	0.07	0.10	0.07	0.00
	FINAL DECK ELEV	542.24	541.86	541.47	541.05	540.60
RIGHT PHASE CJ SCREED LINE 7	STATION	434+12.06	434+30.81	434+49.56	434+68.31	434+87.06
	SCREED ELEV	542.20	541.87	541.51	541.06	540.54
	DL DEFLECTION	0.00	0.07	0.10	0.07	0.00
	FINAL DECK ELEV	542.20	541.80	541.41	540.99	540.54
SB PG SCREED LINE 8	STATION	434+12.50	434+31.25	434+50.00	434+68.75	434+87.50
	SCREED ELEV	542.03	541.71	541.34	540.89	540.37
	DL DEFLECTION	0.00	0.07	0.10	0.07	0.00
	FINAL DECK ELEV	542.03	541.64	541.24	540.82	540.37
RIGHT TOE OF PARAPET SCREED LINE 9	STATION	434+13.02	434+31.77	434+50.52	434+69.27	434+88.02
	SCREED ELEV	541.53	541.22	540.85	540.40	539.89
	DL DEFLECTION	0.00	0.06	0.09	0.06	0.00
	FINAL DECK ELEV	541.53	541.16	540.76	540.34	539.89

NOTES:

1. THE TOPPING THICKNESSES SHOWN FROM THE TOP OF THE DECK SLAB TO THE TOP OF THE TOP FLANGE ALONG THE CENTERLINE OF THE I-BEAM ARE THEORETICAL DIMENSIONS. THE HAUNCH DEPTH IS THE TOPPING THICKNESS MINUS THE DESIGN SLAB THICKNESS. THE DEPARTMENT WILL PAY FOR SUPERSTRUCTURE CONCRETE BASED ON THE DESIGN SLAB THICKNESS AND THE AVERAGE OF THE THEORETICAL HAUNCH DEPTHS AT MID-SPAN AND AT EACH BEAM BEARING EVEN THOUGH DEVIATION FROM THE DIMENSIONS SHOWN MAY BE NECESSARY TO PLACE THE DECK SURFACE AT THE FINISHED GRADE. ONCE ALL BEAMS ARE SET IN THEIR FINAL POSITION, THE ACTUAL CAMBER FOR EACH MEMBER WILL BE THE TOP OF BEAM ELEVATION AT MID-SPAN MINUS THE AVERAGE TOP OF BEAM ELEVATION AT EACH BEARING. THE ACTUAL TOPPING THICKNESS AT MID-SPAN WILL BE THE THEORETICAL DIMENSION PLUS OR MINUS THE DIFFERENCE BETWEEN THE ACTUAL AND ANTICIPATED CAMBER.
2. SCREED LINES SHOWN REPRESENT THE THEORETICAL DECK SURFACE LOCATION PRIOR TO DEFLECTIONS CAUSED BY DECK PLACEMENT AND OTHER ANTICIPATED DEAD LOADS.
3. TOP OF HAUNCH ELEVATIONS SHOWN REPRESENT THE THEORETICAL LOCATION OF THE BOTTOM OF THE DECK ABOVE THE BEAM/GIRDER HAUNCH PRIOR TO DEFLECTIONS CAUSED BY DECK PLACEMENT AND OTHER ANTICIPATED DEAD LOADS.
4. FINAL DECK SURFACE ELEVATIONS SHOWN REPRESENT THE DECK SURFACE LOCATION AFTER ALL ANTICIPATED DEAD LOAD DEFLECTIONS HAVE OCCURRED.
5. SEE GENERAL NOTES FOR ABBREVIATION LEGEND.

LEGEND:

(BXX) = BEAM NUMBER

Preliminary Plans
For Reference Only

DESIGN AGENCY
ODOT
4576 North Avenue, Suite 201, Zanesville, OH 43701

DESIGNED TML | DRAWN TML | CHECKED PPA | REVIEWED NCM | DATE 5-22-26 | STRUCTURE FILE NUMBER 3110095 | REVISED

SCREED, TOP OF HAUNCH & FINAL DECK ELEVATIONS
BRIDGE NO. HAM-75-0823
I.R. 75 OVER LAIDLAW AVENUE (C.R. 690)

HAM-75-7.85
PID No. 121447

42 / 64

971 / 1047

F:\HAM\121447\structures\HAM075_0823\sheets\075_0823CSD605.dgn 5/11/2026 10:46:14 AM PAntonelli

RIGHT BRIDGE BEAM CAMBER			
BEAM NUMBER	14	15 THRU 24	25
TOPPING THICKNESS, "A"	10 3/4"	10 3/4"	10 3/4"
DIMENSION "B"	11 15/16"	11 13/16"	11 15/16"
CALCULATED CAMBER AT TIME OF RELEASE, "C"	1 1/2"	1 5/8"	1 1/2"
LONG TERM CAMBER, "C"	3 3/4"	4"	3 3/4"

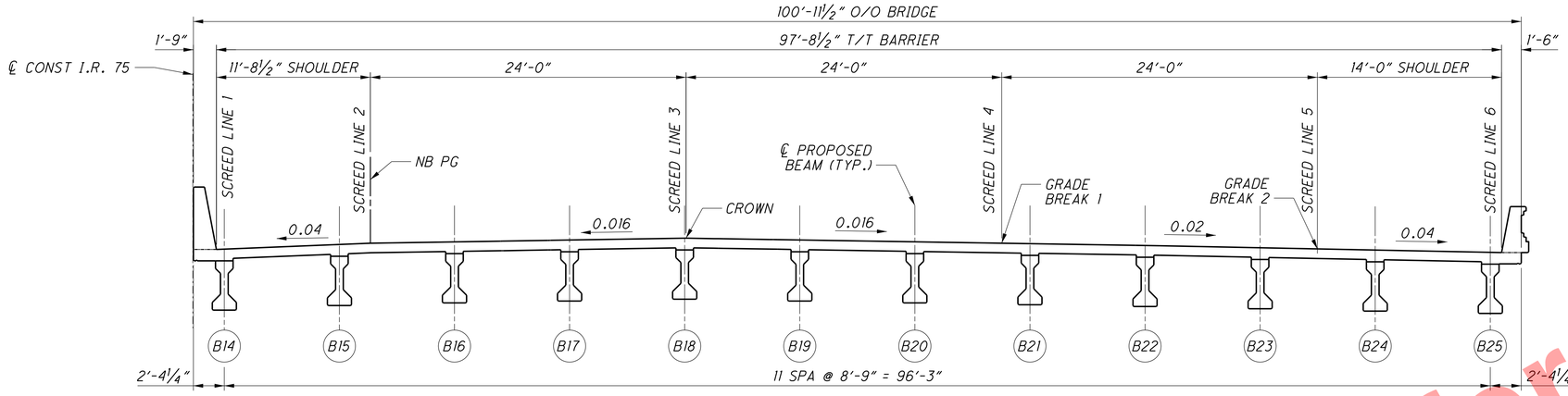

TRANSVERSE SECTION - RIGHT BRIDGE

(NORTH BOUND)

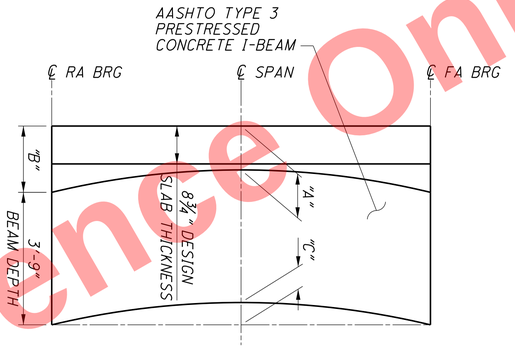

BEAM CAMBER DIAGRAM

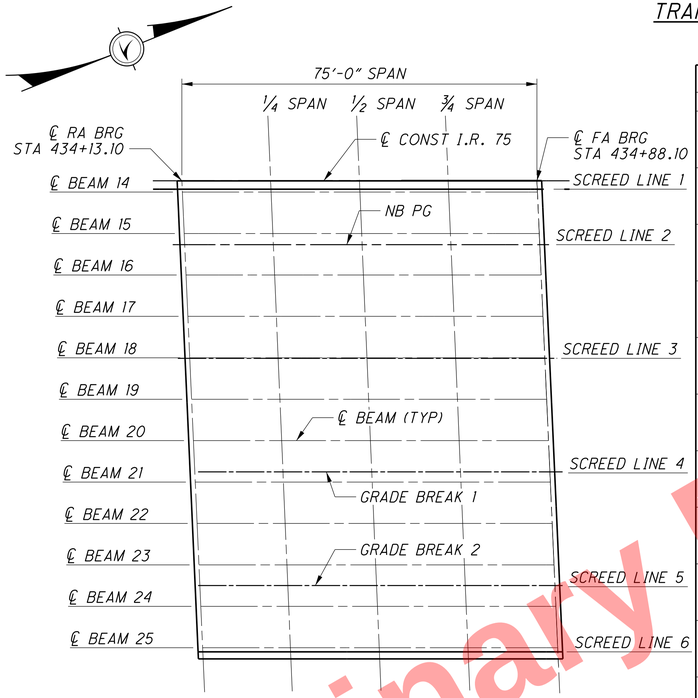

PLAN SCHEMATIC - RIGHT BRIDGE

(NORTH BOUND)

TOP OF HAUNCH AND FINAL DECK ELEVATION TABLE - RIGHT BRIDGE

LOCATION		℄ BRG RA	1/4 SPAN	1/2 SPAN	3/4 SPAN	℄ BRG FA
BEAM 14	STATION	434+13.21	434+31.96	434+50.71	434+69.46	434+88.21
	TOP/HAUNCH ELEV	540.82	540.50	540.13	539.68	539.18
	FINAL DECK ELEV	541.55	541.18	540.78	540.36	539.91
BEAM 15	STATION	434+13.60	434+32.35	434+51.10	434+69.85	434+88.60
	TOP/HAUNCH ELEV	541.17	540.86	540.49	540.04	539.52
	FINAL DECK ELEV	541.90	541.52	541.12	540.70	540.25
BEAM 16	STATION	434+13.99	434+32.74	434+51.49	434+70.24	434+88.99
	TOP/HAUNCH ELEV	541.35	541.05	540.68	540.23	539.71
	FINAL DECK ELEV	542.08	541.71	541.31	540.89	540.44
BEAM 17	STATION	434+14.38	434+33.13	434+51.88	434+70.63	464+89.38
	TOP/HAUNCH ELEV	541.49	541.18	540.81	540.36	539.84
	FINAL DECK ELEV	542.22	541.84	541.44	541.02	540.57
BEAM 18	STATION	434+14.77	434+33.52	434+52.27	434+71.02	434+89.77
	TOP/HAUNCH ELEV	541.62	541.31	540.94	540.49	539.97
	FINAL DECK ELEV	542.35	541.97	541.57	541.15	540.70
BEAM 19	STATION	434+15.16	434+33.91	434+52.66	434+71.41	434+90.16
	TOP/HAUNCH ELEV	541.48	541.17	540.80	540.34	539.82
	FINAL DECK ELEV	542.21	541.83	541.43	541.00	540.55
BEAM 20	STATION	434+15.55	434+34.30	434+53.05	434+71.80	434+90.55
	TOP/HAUNCH ELEV	541.33	541.02	540.65	540.19	539.67
	FINAL DECK ELEV	542.06	541.68	541.28	540.85	540.40
BEAM 21	STATION	434+15.94	434+34.69	434+53.44	434+72.19	434+90.94
	TOP/HAUNCH ELEV	541.17	540.86	540.49	540.03	539.52
	FINAL DECK ELEV	541.90	541.52	541.12	540.69	540.25
BEAM 22	STATION	434+16.32	434+35.07	434+53.83	434+72.58	434+91.32
	TOP/HAUNCH ELEV	540.99	540.68	540.31	539.85	539.33
	FINAL DECK ELEV	541.72	541.34	540.94	540.51	540.06
BEAM 23	STATION	434+16.71	434+35.46	434+54.21	434+72.97	434+91.71
	TOP/HAUNCH ELEV	540.81	540.50	540.12	539.67	539.15
	FINAL DECK ELEV	541.54	541.16	540.75	540.33	539.88
BEAM 24	STATION	434+17.11	434+35.85	434+54.60	434+73.35	434+92.11
	TOP/HAUNCH ELEV	540.54	540.23	539.85	539.39	538.87
	FINAL DECK ELEV	541.27	540.89	540.48	540.05	539.60
BEAM 25	STATION	434+17.49	434+36.24	434+54.99	434+73.74	434+92.49
	TOP/HAUNCH ELEV	540.18	539.85	539.47	539.02	538.52
	FINAL DECK ELEV	540.91	540.53	540.12	539.70	539.25

SCREED AND FINAL DECK ELEVATION TABLE - RIGHT BRIDGE

LOCATION		℄ BRG RA	1/4 SPAN	1/2 SPAN	3/4 SPAN	℄ BRG FA
LEFT TOE OF PARAPET SCREED LINE 1	STATION	434+13.18	434+31.93	434+50.68	434+69.43	434+88.18
	SCREED ELEV	541.53	541.20	540.83	540.38	539.89
	DL DEFLECTION	0.00	0.05	0.08	0.05	0.00
	FINAL DECK ELEV	541.53	541.15	540.75	540.33	539.89
NB PG SCREED LINE 2	STATION	434+13.70	434+32.45	434+51.20	434+69.96	434+88.71
	SCREED ELEV	541.99	541.68	541.31	540.86	540.34
	DL DEFLECTION	0.00	0.07	0.10	0.07	0.00
	FINAL DECK ELEV	541.99	541.61	541.21	540.79	540.34
CROWN SCREED LINE 3	STATION	434+14.77	434+22.52	434+52.27	434+71.02	434+89.77
	SCREED ELEV	542.35	542.04	541.67	541.22	540.70
	DL DEFLECTION	0.00	0.07	0.10	0.07	0.00
	FINAL DECK ELEV	542.35	541.97	541.57	541.15	540.70
GRADE BREAK 1 SCREED LINE 4	STATION	434+15.84	434+34.59	434+53.34	434+72.09	434+90.84
	SCREED ELEV	541.94	541.64	541.26	540.81	540.29
	DL DEFLECTION	0.00	0.07	0.10	0.07	0.00
	FINAL DECK ELEV	541.94	541.57	541.16	540.74	540.29
GREAT BREAK 2 SCREED LINE 5	STATION	434+16.91	434+35.66	434+54.41	434+73.16	434+91.91
	SCREED ELEV	541.44	541.13	540.76	540.30	539.78
	DL DEFLECTION	0.00	0.07	0.10	0.07	0.00
	FINAL DECK ELEV	541.44	541.06	540.66	540.23	539.78
RIGHT TOE OF PARAPET SCREED LINE 6	STATION	434+17.53	434+36.28	434+55.03	434+73.78	434+92.53
	SCREED ELEV	540.87	540.54	540.17	539.71	539.21
	DL DEFLECTION	0.00	0.05	0.08	0.05	0.00
	FINAL DECK ELEV	540.87	540.49	540.09	539.66	539.21

LEGEND:

(BXX) = BEAM NUMBER

NOTES:

1. THE TOPPING THICKNESSES SHOWN FROM THE TOP OF THE DECK SLAB TO THE TOP OF THE TOP FLANGE ALONG THE CENTERLINE OF THE I-BEAM ARE THEORETICAL DIMENSIONS. THE HAUNCH DEPTH IS THE TOPPING THICKNESS MINUS THE DESIGN SLAB THICKNESS. THE DEPARTMENT WILL PAY FOR SUPERSTRUCTURE CONCRETE BASED ON THE DESIGN SLAB THICKNESS AND THE AVERAGE OF THE THEORETICAL HAUNCH DEPTHS AT MID-SPAN AND AT EACH BEAM BEARING EVEN THOUGH DEVIATION FROM THE DIMENSIONS SHOWN MAY BE NECESSARY TO PLACE THE DECK SURFACE AT THE FINISHED GRADE. ONCE ALL BEAMS ARE SET IN THEIR FINAL POSITION, THE ACTUAL CAMBER FOR EACH MEMBER WILL BE THE TOP OF BEAM ELEVATION AT MID-SPAN MINUS THE AVERAGE TOP OF BEAM ELEVATION AT EACH BEARING. THE ACTUAL TOPPING THICKNESS AT MID-SPAN WILL BE THE THEORETICAL DIMENSION PLUS OR MINUS THE DIFFERENCE BETWEEN THE ACTUAL AND ANTICIPATED CAMBER.
2. SCREED LINES SHOWN REPRESENT THE THEORETICAL DECK SURFACE LOCATION PRIOR TO DEFLECTIONS CAUSED BY DECK PLACEMENT AND OTHER ANTICIPATED DEAD LOADS.
3. TOP OF HAUNCH ELEVATIONS SHOWN REPRESENT THE THEORETICAL LOCATION OF THE BOTTOM OF THE DECK ABOVE THE BEAM/GIRDER HAUNCH PRIOR TO DEFLECTIONS CAUSED BY DECK PLACEMENT AND OTHER ANTICIPATED DEAD LOADS.
4. FINAL DECK SURFACE ELEVATIONS SHOWN REPRESENT THE DECK SURFACE LOCATION AFTER ALL ANTICIPATED DEAD LOAD DEFLECTIONS HAVE OCCURRED.
5. SEE GENERAL NOTES FOR ABBREVIATION LEGEND.

Preliminary Plans - Not for Construction
Reference Only

DESIGN AGENCY
OHIO DEPARTMENT OF TRANSPORTATION
4596 North Arlington Road, P.O. Box 4508, Columbus, OH 43228

DESIGNED TML | DRAWN TML | CHECKED PPA | REVIEWED NCM | DATE 5-22-26
REVISED | STRUCTURE FILE NUMBER 3110095

SCREED, TOP OF HAUNCH & FINAL DECK ELEVATIONS
BRIDGE NO. HAM-75-0823
I.R. 75 OVER LAIDLAW AVENUE (C.R. 690)

HAM-75-7.85
PID No. 121447

43 / 64

972 / 1047

F:\HAM\121447\structures\HAM075_0823\sheets\075_0823CSD606.dgn 5/11/2026 10:46:42 AM PAntonelli

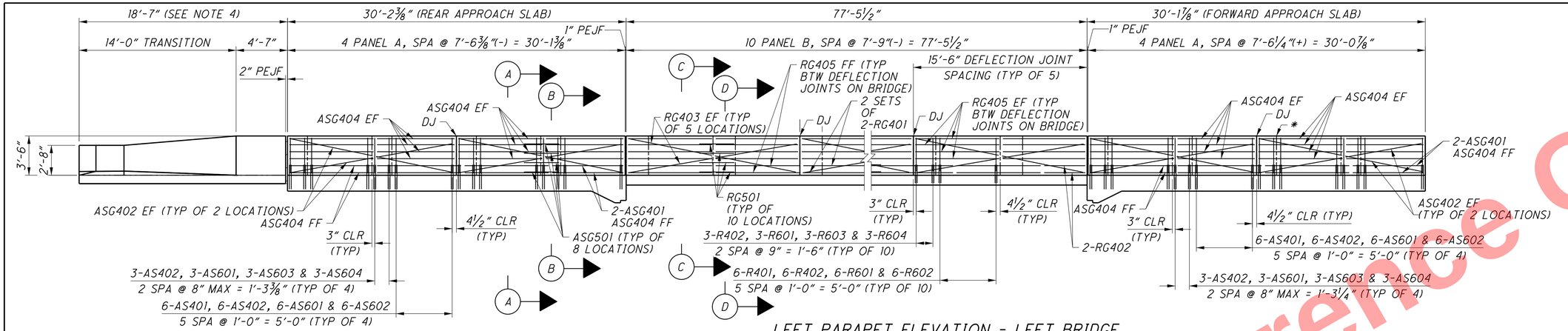

LEFT PARAPET ELEVATION - LEFT BRIDGE

(MEASURED ALONG THE LEFT EDGE TOE OF PARAPET)
* (CONTRACTION JOINT, ADJACENT TO ALL PILASTERS UNLESS NOTED AS A DEFLECTION JOINT)
DJ (DEFLECTION JOINT)

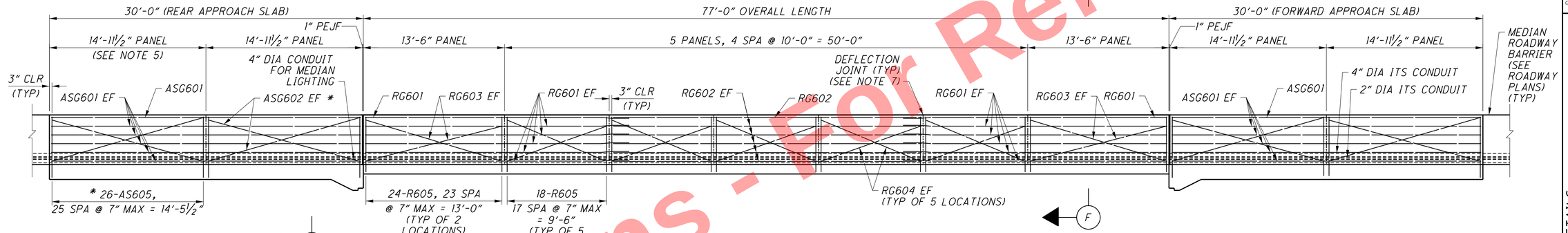

RIGHT PARAPET ELEVATION - LEFT BRIDGE

(MEASURED ALONG THE RIGHT EDGE TOE OF PARAPET)
* (TYP OF 4 APPROACH SLAB LOCATIONS)

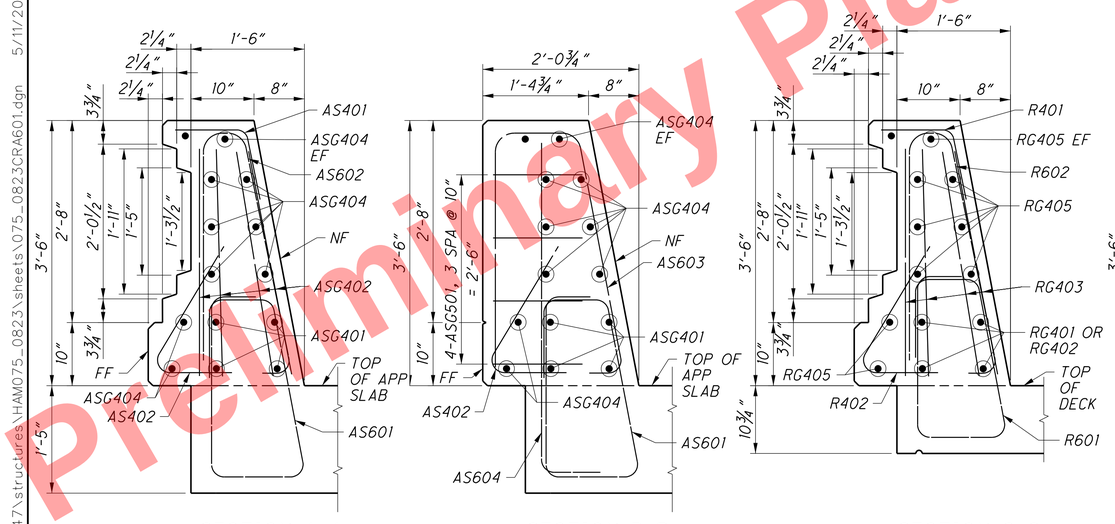

NOTES:

1. SEE SCD SBR-1-20 AND SBR-2-20 FOR ADDITIONAL PARAPET DETAILS.
2. MINIMUM LAP LENGTHS SHALL BE AS FOLLOWS:
   #4 = 1'-1"
   #6 = 1'-8"
3. SEE SHEET 46/64 FOR AESTHETIC RAIL, DEFLECTION, AND CONTRACTION JOINT DETAILS.
4. SEE SHEET 47/64 FOR PARAPET TRANSITION DETAILS.
5. PARAPET ON THE APPROACH SLAB WILL BE PAID WITH ITEM 526 - REINFORCED CONCRETE APPROACH SLABS (T=17"), AS PER PLAN.
6. SEE GENERAL NOTES FOR ABBREVIATION LEGEND.
7. SEE GENERAL SCD SBR-2-20 FOR DEFLECTION JOINT DETAILS.

Preliminary Plans - Not For Construction
For Reference Only

DESIGN AGENCY
ODOT
400 West Nintth Street, Suite 200, Columbus, OH 43215

DESIGNED	DRAWN	REVIEWED	DATE
TML	TML	NCM	5-22-26
CHECKED	REVISED	STRUCTURE FILE NUMBER	
JWE		3110095	

PARAPET DETAILS
BRIDGE NO. HAM-75-0823
I.R. 75 OVER LAIDLAW AVENUE (C.R. 690)

HAM-75-7.85
PID No. 121447

44 / 64

973
1047

F:\HAM\121447\structures\HAM075_0823\sheets\075_0823CRA601.dgn 5/11/2026 10:46:56 AM PAntonelli

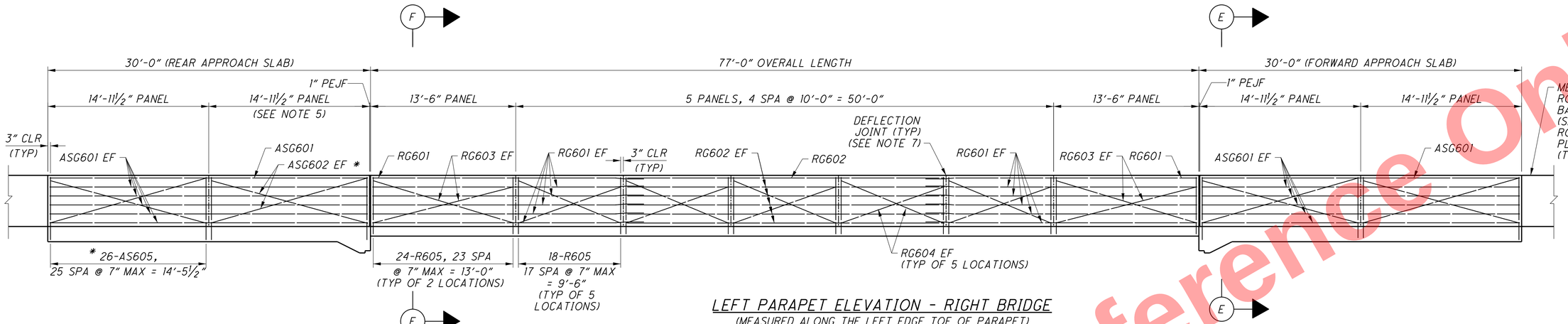

LEFT PARAPET ELEVATION - RIGHT BRIDGE

(MEASURED ALONG THE LEFT EDGE TOE OF PARAPET)
* (TYP OF 4 APPROACH SLAB LOCATIONS)

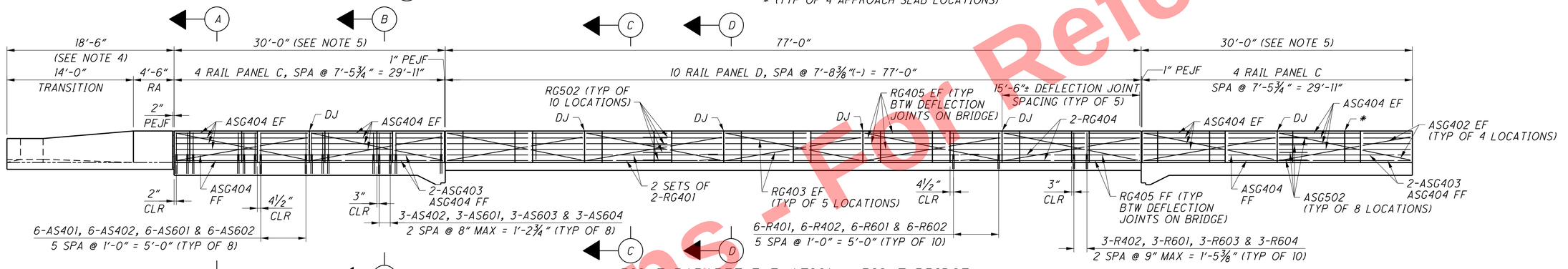

RIGHT PARAPET ELEVATION - RIGHT BRIDGE

(MEASURED ALONG THE RIGHT EDGE TOE OF PARAPET)
* (CONTRACTION JOINT, ADJACENT TO ALL PILASTERS UNLESS NOTED AS A DEFLECTION JOINT)
DJ (DEFLECTION JOINT)

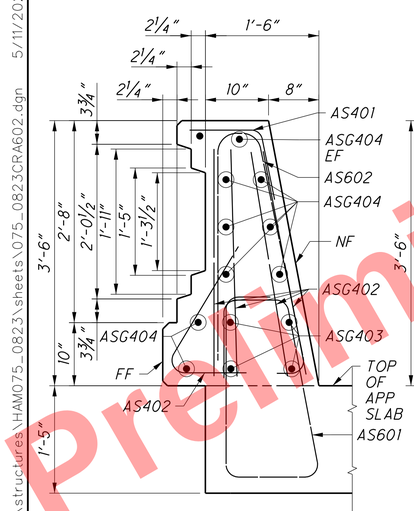

SECTION A-A
(AESTHETIC RAILING)

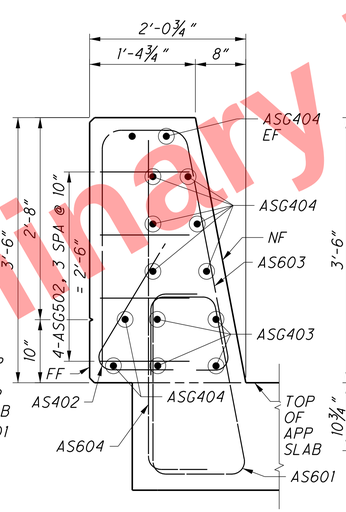

SECTION B-B
(AESTHETIC RAILING)

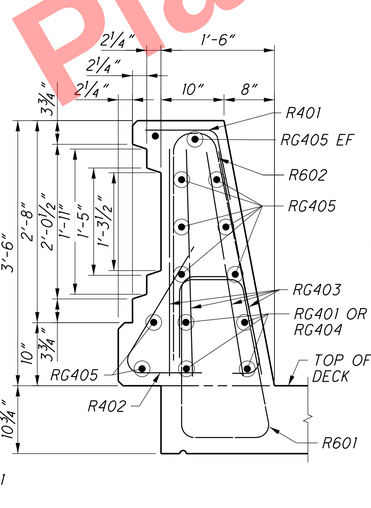

SECTION C-C
(AESTHETIC RAILING)

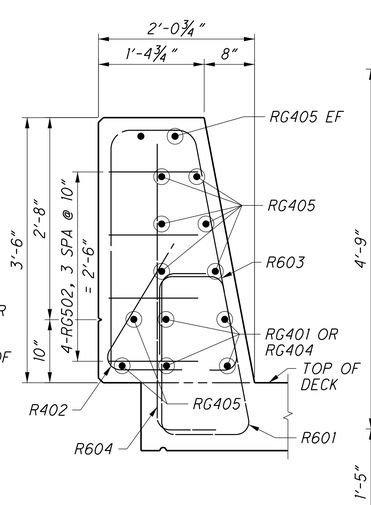

SECTION D-D
(AESTHETIC RAILING)

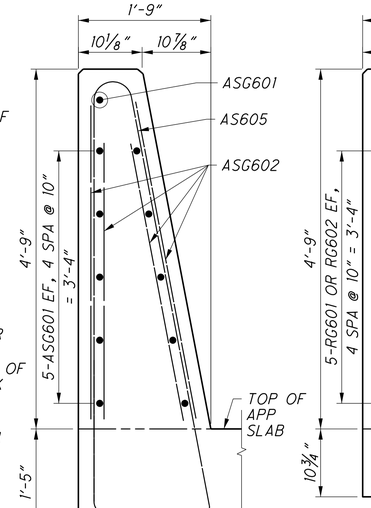

SECTION E-E
(MEDIAN RAILING)

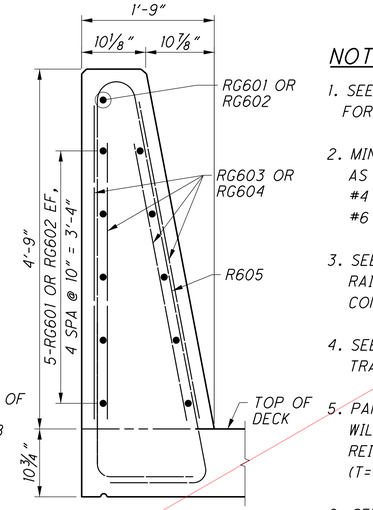

SECTION F-F
(MEDIAN RAILING)

NOTES:

1. SEE SCD SBR-1-20 AND SBR-2-20 FOR ADDITIONAL PARAPET DETAILS.
2. MINIMUM LAP LENGTHS SHALL BE AS FOLLOWS:
   #4 = 1'-1"
   #6 = 1'-8"
3. SEE SHEET 46/64 FOR AESTHETIC RAIL, DEFLECTION, AND CONTRACTION JOINT DETAILS.
4. SEE SHEET 47/64 FOR PARAPET TRANSITION DETAILS.
5. PARAPET OF THE APPROACH SLAB WILL BE PAID WITH ITEM 526 - REINFORCED APPROACH SLABS (T=17"), AS PER PLAN.
6. SEE GENERAL NOTES FOR ABBREVIATION LEGEND.
7. SEE STD DWG SBR-2-20 FOR ADDITIONAL DETAILS.

Preliminary Plans - For Reference Only

DESIGN AGENCY
ODOT
4295 Warrensville Center Rd., Suite 200, Columbus, OH 44128

DESIGNED	DRAWN	REVIEWED	DATE
TML	TML	NCM	5-22-26
CHECKED	REVISED	STRUCTURE FILE NUMBER	
JWE		3110095	

PARAPET DETAILS
BRIDGE NO. HAM-75-0823
I.R. 75 OVER LAIDLAW AVENUE (C.R. 690)

HAM-75-7.85
PID No. 121447

45/64

974/1047

F:\HAM\121447\structures\HAM075_0823\sheets\075_0823CRA602.dgn 5/11/2026 10:47:07 AM PAntonelli

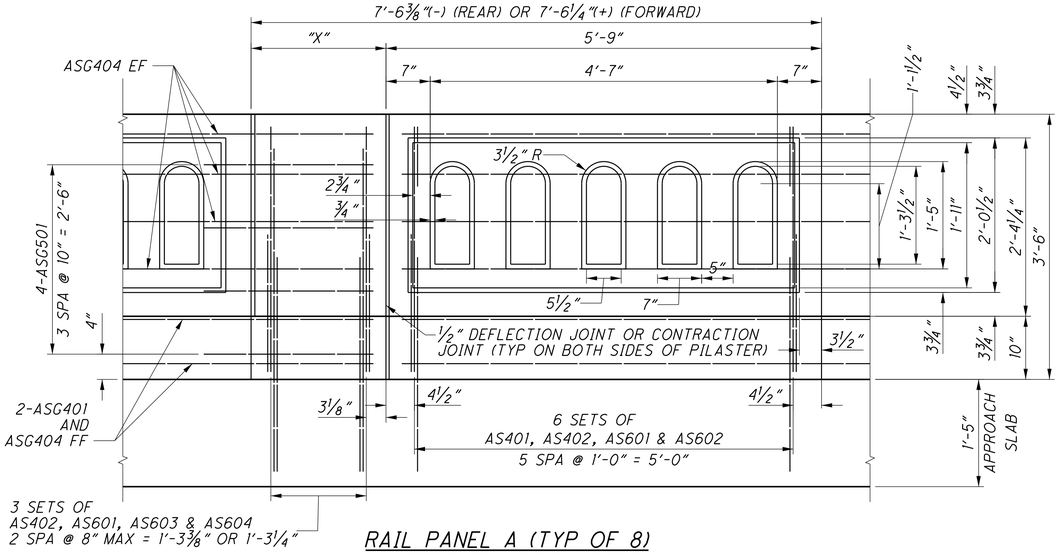

RAIL PANEL A (TYP OF 8)
(DIAGONAL GFRP BARS NOT SHOWN FOR CLARITY)

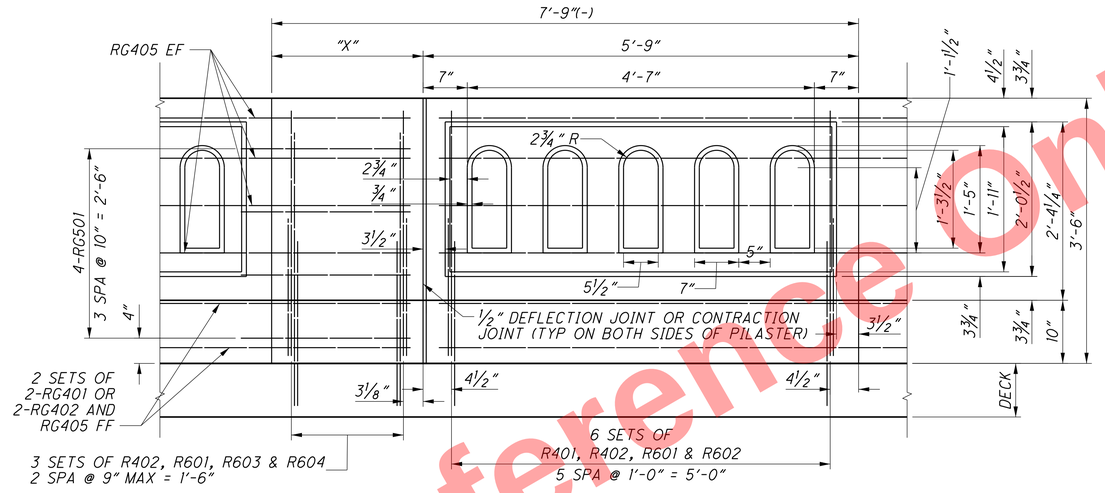

RAIL PANEL B (TYP OF 10)
(DIAGONAL GFRP BARS NOT SHOWN FOR CLARITY)

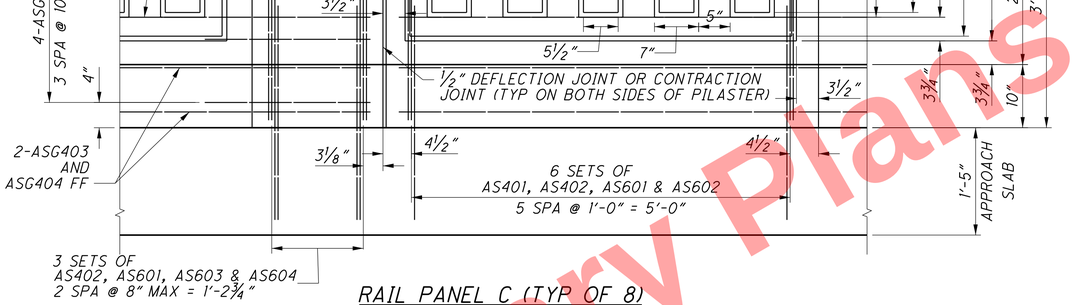

RAIL PANEL C (TYP OF 8)
(DIAGONAL GFRP BARS NOT SHOWN FOR CLARITY)

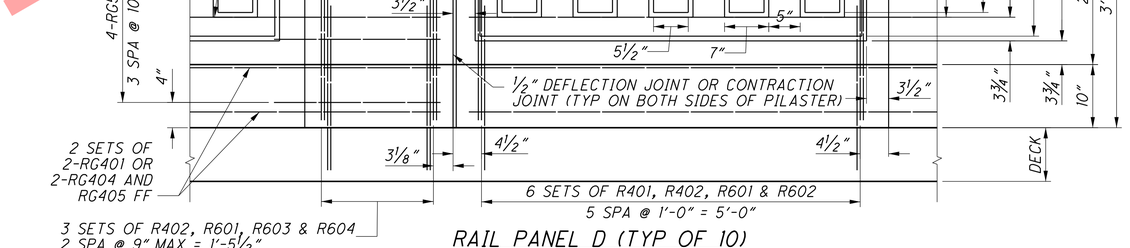

RAIL PANEL D (TYP OF 10)
(DIAGONAL GFRP BARS NOT SHOWN FOR CLARITY)

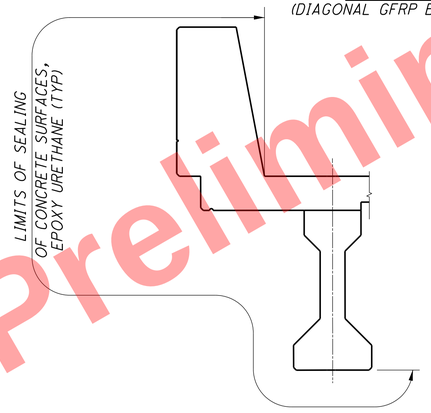

SEALING DETAIL
(EXTERIOR PARAPET, SEE NOTE 3)

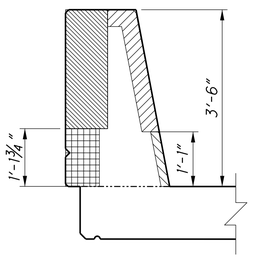

DEFLECTION JOINT
(SEE NOTE 4)

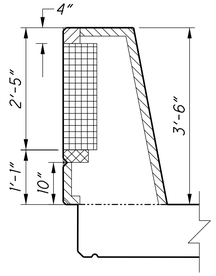

CONTRACTION JOINT
(SEE NOTE 4)
(OPPOSITE SIDE OF PILASTER FROM DEFLECTION JOINT WHERE THE BARS ARE CONTINUOUS)

DEFLECTION AND CONTRACTION JOINT LEGEND:

- 10" WIDE PREFORMED JOINT MATERIAL
- 8" WIDE PREFORMED JOINT MATERIAL
- 6" WIDE PREFORMED JOINT MATERIAL
- 4" WIDE PREFORMED JOINT MATERIAL
- 2" WIDE PREFORMED JOINT MATERIAL

LEFT BRIDGE PANEL DIMENSIONS				
SIDE	PARAPET	PANEL	PANEL LENGTH	"X"
LEFT	REAR APP SLAB	A	7'-6 3/8"(-)	1'-9 3/8"(-)
	BRIDGE	B	7'-9"(-)	2'-0"(-)
	FORWARD APP SLAB	A	7'-6 1/4"(+)	1'-9 1/4"(+)
RIGHT BRIDGE PANEL DIMENSIONS				
SIDE	PARAPET	PANEL	PANEL LENGTH	"X"
RIGHT	REAR APP SLAB	C	7'-5 3/4"	1'-8 3/4"
	BRIDGE	D	7'-8 3/8"(-)	1'-11 3/8"(-)
	FORWARD APP SLAB	C	7'-5 3/4"	1'-8 3/4"

NOTES:

1. SEE SHEETS 44/64 AND 45/64 FOR RAILING PANEL LAYOUT.
2. SEE GENERAL NOTES FOR ABBREVIATION LEGEND.
3. FOR PARAPET ON APPROACH SLAB, SEAL TO GROUND ELEVATION.
4. DEFLECTION JOINTS AND CONTRACTION JOINTS ARE TO BE CAST INTO THE PARAPETS AND HELD IN WITH CHAMFER STRIPS. THE EXCESS MATERIAL WILL BE TRIMMED TO THE BASE OF THE CHAMFER. THE MATERIAL THAT WILL BE USED NEEDS TO NOT ABSORB WATER AND AS SUFFICIENT RIGIDITY TO NOT SIGNIFICANTLY MOVE DURING THE CASTING OF THE PARAPET. THE JOINT MATERIAL IS TO BE 0.5" IN THICKNESS AND WILL BE NOMAFLEX BY NOMACO OR FIBER LITE BY W.R. MEADOWS OR SIMILAR PRODUCT APPROVED BY THE ENGINEER. THE GFRP FIBER SPLICE BARS THAT WERE SHOWN IN THE AS BID PLANS AND ARE INTENDED TO HOLD THE LONGITUIDINAL BARS TOGETHER DURNG SLIP FORMING ARE TO BE NON-PERFORMED.

Preliminary Plans - For Reference Only

DESIGN AGENCY
ODOT
4295 Warren Sharon Rd. SW, Vienna, OH 44473

DESIGNED	DRAWN	REVIEWED	DATE
TML	TML	NCM	5-22-26
CHECKED	REVISED	STRUCTURE FILE NUMBER	
JWE		3110095	

PARAPET AESTHETIC DETAILS
BRIDGE NO. HAM-75-0823
I.R. 75 OVER LAIDLAW AVENUE (C.R. 690)

HAM-75-7.85
PID No. 121447

46/64

975/1047

F:\HAM\121447\structures\HAM075_0823\sheets\075_0823CRA603.dgn 5/11/2026 10:47:19 AM PAntonelli

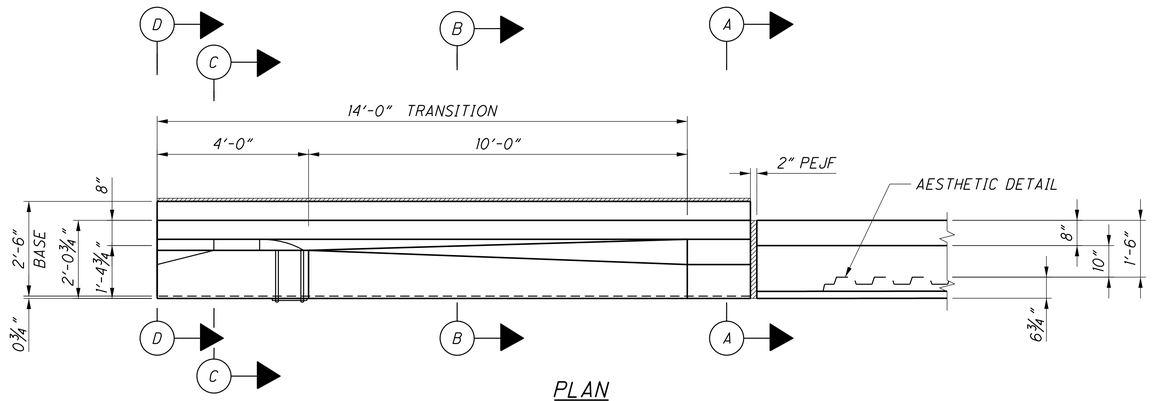

PLAN

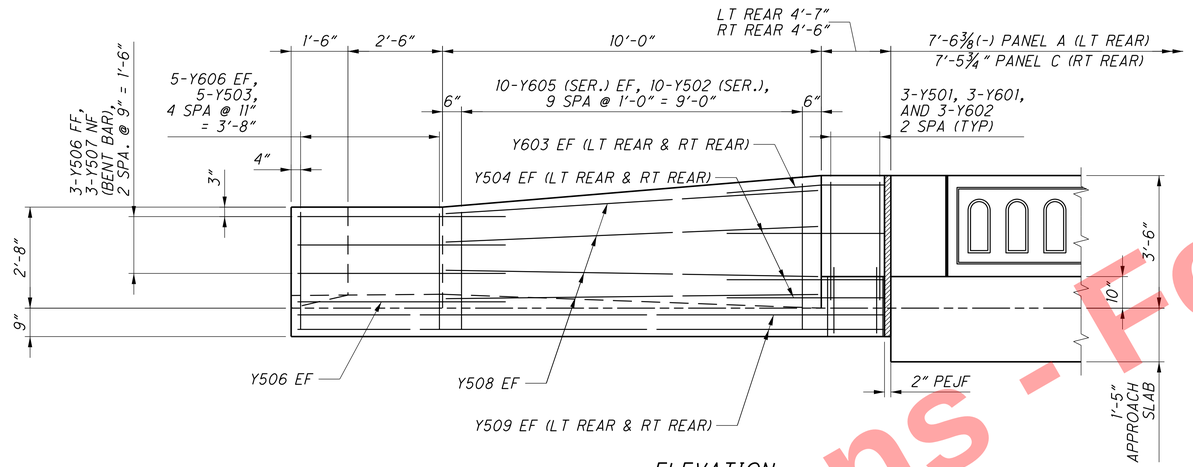

ELEVATION

(DIMENSION AND VIEW SHOWN AT FAR FACE OF BARRIER)

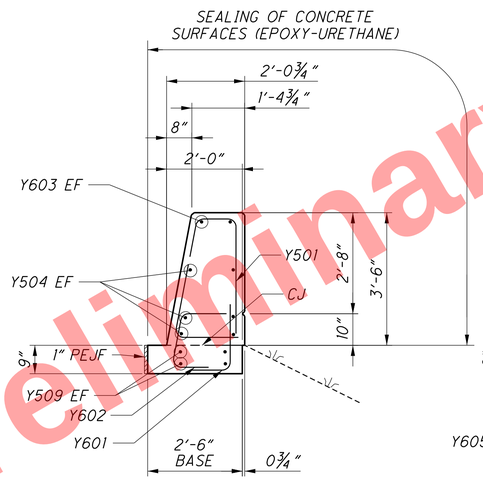

SECTION A-A

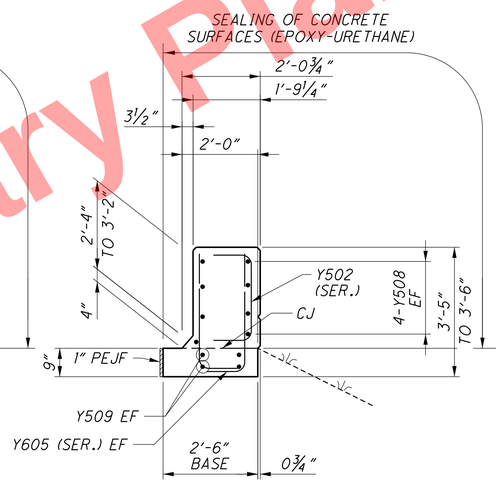

SECTION B-B

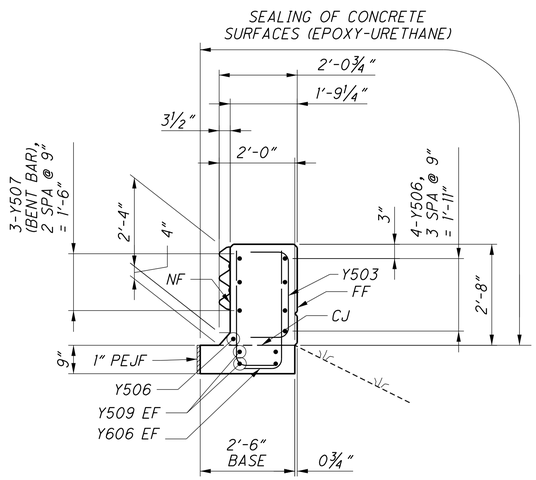

SECTION C-C

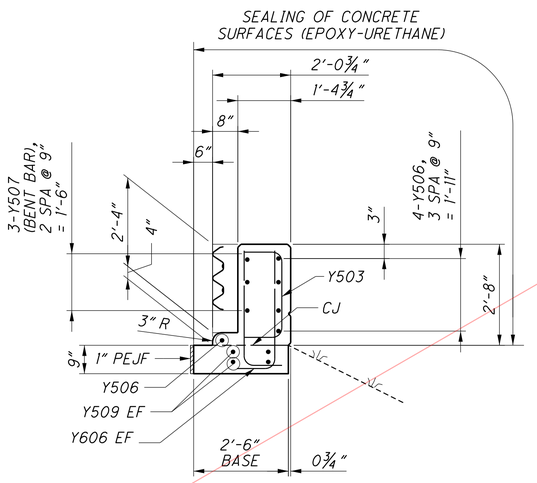

SECTION D-D

MARK	TOTAL	LENGTH	WEIGHT (LBS)	TYPE	DIMENSIONS A	B	C	D	E	INC.
TRANSITIONS (FOR INFORMATION ONLY)										
Y501	6	8'-6"	54	37	1'-0"	1'-8"	3'-2"	3'-0"		
	2	4'-1"				2'-4"				
Y502	SER. OF	TO	94	2	1'-0"	TO	1'-0"			1"
	10	4'-10"				3'-1"				
Y503	10	4'-1"	43	2	1'-0"	2'-4"	1'-0"			
Y504	12	6'-10"	86	ST.						
Y505	NOT USED									
Y506	10	5'-6"	58	ST.						
Y507	6	5'-6"	35	25	1'-8"	2'-5"	1'-4"	0'-1 1/2"	0'-5"	
Y508	16	10'-0"	167	ST.						
Y509	8	18'-2"	152	ST.						
Y601	6	3'-2"	29	1	1'-7"	1'-9"				
Y602	6	3'-7"	33	28	1'-9"	1'-1"				
Y603	4	6'-10"	42	19	4'-4"	2'-6"	0'-2 1/2"			
Y604	NOT USED									
	4	4'-0"				3'-1"				
Y605	SER. OF	TO	263	1	1'-1"	TO				1"
	10	4'-9"				3'-10"				
Y606	20	4'-0"	121	1	1'-1"	3'-1"				
		TOTAL =	1177							

NOTES:

1. ALL LABOR, MATERIALS AND REINFORCING STEEL TO CONSTRUCT THE TRANSITIONS INCLUDING THE 9" CONCRETE BASE WILL BE PAID FOR UNDER ITEM 622 - CONCRETE BARRIER END SECTION, TYPE D, AS PER PLAN.
2. SEE GENERAL NOTES FOR ABBREVIATION LEGEND.

Preliminary Plans - Not For Reference Only

DESIGN AGENCY
ODOT
400 West Nintth Street, Suite 501, Columbus, OH 43215

DESIGNED TML | DRAWN TML | REVIEWED NCM | DATE 5-22-26
CHECKED JAD | REVISED | STRUCTURE FILE NUMBER 3110095

PARAPET TRANSITION DETAILS
BRIDGE NO. HAM-75-0823
I.R. 75 OVER LAIDLAW AVENUE (C.R. 690)

HAM-75-7.85
PID No. 121447

47 / 64

976
1047

F:\HAM\121447\structures\HAM075_0823\sheets\075_0823CRA604.dgn 5/11/2026 10:47:28 AM PAntonelli

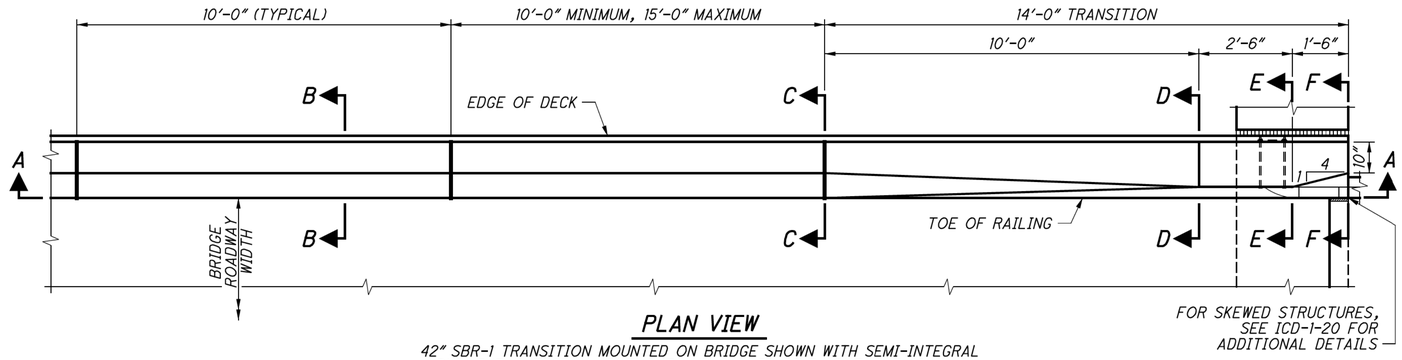

PLAN VIEW

42" SBR-1 TRANSITION MOUNTED ON BRIDGE SHOWN WITH SEMI-INTEGRAL ABUTMENT (INTEGRAL ABUTMENT AND CAPPED PILE ABUTMENT SIMILAR)

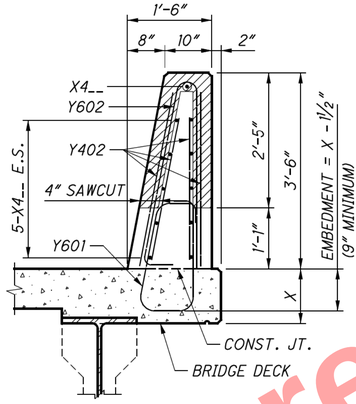

SECTION C-C

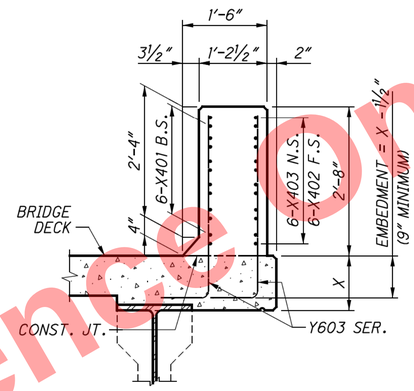

SECTION D-D

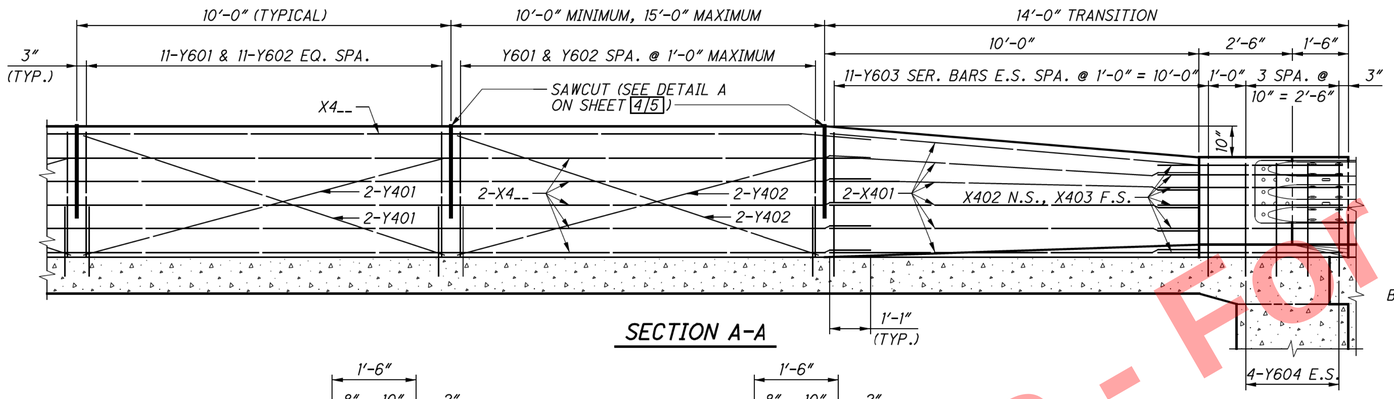

SECTION A-A

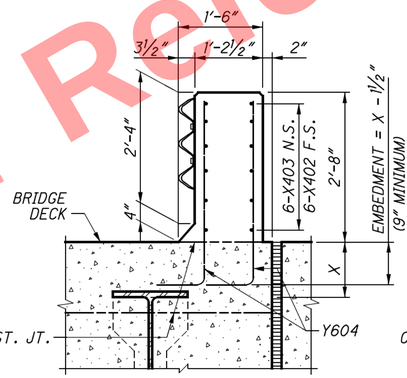

SECTION E-E

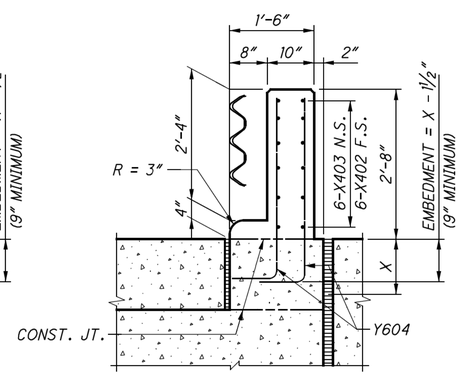

SECTION F-F

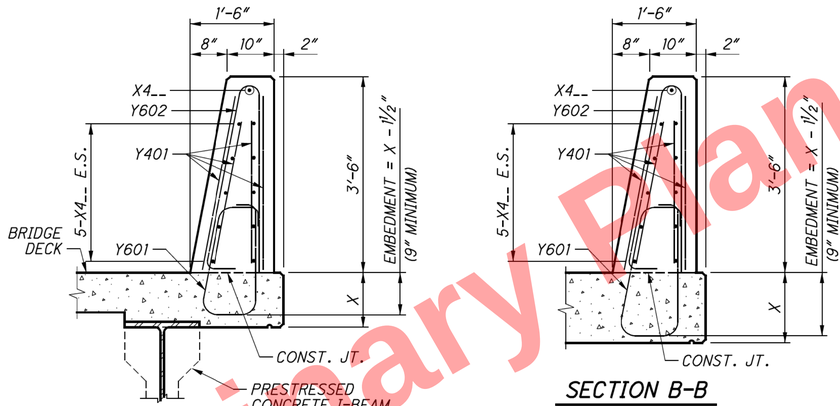

SECTION B-B

REINFORCED CONCRETE DECK ON STEEL OR PRESTRESSED CONCRETE I-BEAMS/GIRDERS (SAWCUT NOT SHOWN)

SECTION B-B

CONTINUOUS OR SINGLE SPAN REINFORCED CONCRETE SLAB BRIDGE (SAWCUT NOT SHOWN)

LEGEND:

E.S. = EACH SIDE
F.S = FAR SIDE
N.S. = NEAR SIDE

NOTES:

1. FOR ALL SINGLE SLOPE CONCRETE BRIDGE RAILINGS INCLUDING THE 14'-0" TRANSITIONS, PROJECT PLANS SHALL INCLUDE PLAN VIEW, ELEVATION VIEW, SECTIONS, REINFORCING MARKS, REINFORCING BENDING DIAGRAMS, AND REINFORCING QUANTITIES.
2. SEE APPROPRIATE STANDARD BRIDGE DRAWING FOR ABUTMENT DETAILS.
3. FOR BRIDGE TERMINAL ASSEMBLY, SEE STD. CONSTR. DWGS. MGS-3.1 AND MGS-3.2.
4. FOR SAWCUT PERIMETER LENGTH, SEE DETAIL A ON SHEET 4/5.
5. FOR DEFLECTION JOINT DETAILS AND ADDITIONAL NOTES, SEE SHEET 5/5.
6. USE GLASS FIBER REINFORCED POLYMER (GFRP) FOR ALL HORIZONTAL X4__ BARS AND STIFFENING BARS (Y401 & Y402 BARS).
7. TIE Y401 & Y402 STIFFENING BARS LOCATED INSIDE THE VERTICAL REINFORCEMENT AT EACH HORIZONTAL BAR. TIE Y401 & Y402 STIFFENING BARS LOCATED OUTSIDE OF THE VERTICAL REINFORCEMENT AT EACH VERTICAL BAR.
8. PLACE STIFFENING BARS IN ALL SAWCUT PANELS 10'-0" AND GREATER. DO NOT ADD STIFFENING BARS TO 14'-0" TRANSITIONS. DO NOT SLIPFORM UNSTIFFENED SAWCUT PANELS. DO NOT OMIT STIFFENING BARS FOR CONVENTIONALLY FORMED CONSTRUCTION.
9. X402 BAR MAY BE PROVIDED AS EPOXY COATED STEEL REINFORCEMENT IF A GFRP FABRICATED SHAPE IS NOT AVAILABLE.

REINFORCEMENT FOR 42" SBR-1 TRANSITION MOUNTED ON BRIDGE OR APPROACH SLAB

MARK	LENGTH	TYPE	MATERIAL	INCRE.	BENDING DIAGRAMS
X401	10'-0"	STR	GFRP		
X402	6'-4"	BENT	GFRP		
X403	5'-1"	STR	GFRP		
X4__	⊕	STR	GFRP		
Y401	10'-0"	STR	GFRP		
Y402	⊕	STR	GFRP		
Y601	5'-5"+2.25A	BENT	STEEL		
Y602	7'-0"	BENT	STEEL		
Y603 SER. OF 11	A + B + 10"	BENT	STEEL	3'-4" TO (1") 2'-6"	
Y604	A + 3'-4"	BENT	STEEL		

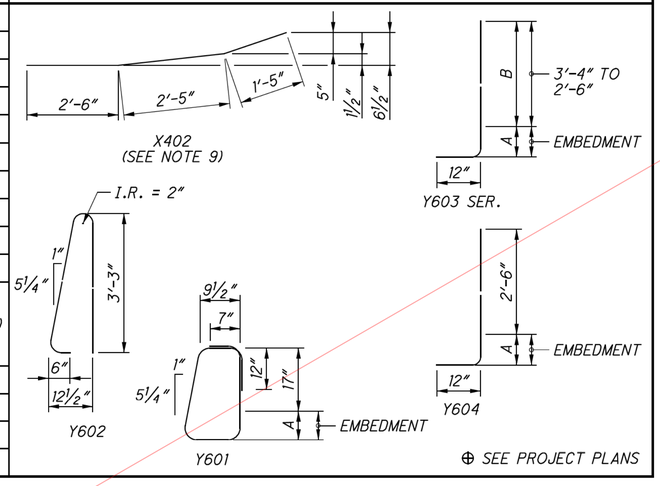

⊕ SEE PROJECT PLANS

OFFICE OF STRUCTURAL ENGINEERING

REVISION
07-17-2020
01-20-2023

STDS ENGINEER

STATE OF OHIO OFFICE OF ROADWAY ENGINEERING ADMINISTRATOR
07-18-08

STANDARD BRIDGE DRAWING
42" SINGLE SLOPE CONCRETE BRIDGE RAILING

DESIGN AGENCY
STATE OF OHIO DEPARTMENT OF TRANSPORTATION

SCD NUMBER
SBR-1-20

1 / 5
48 / 64
977 / 1047

5/11/2026 10:47:47 AM Pantonelli
F:\HAM\2I447\structures\HAM075_0823\sheets\SBR-1-20_2023-I-20\SBR-I-20_2023-I-20_sheet 1.dgn

Preliminary Plans - For Reference Only

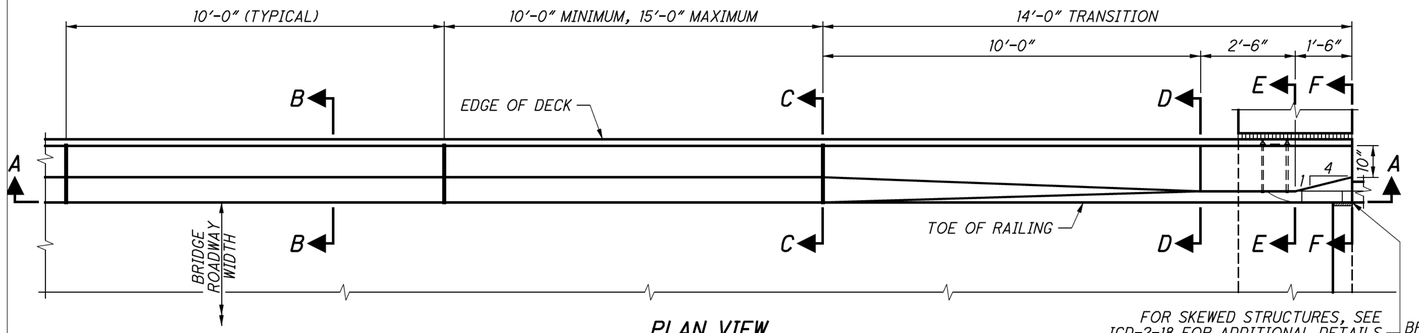

PLAN VIEW

42″ SBR-1 TRANSITION MOUNTED ON BRIDGE SHOWN WITH INTEGRAL ABUTMENT AND ADJACENT BOX BEAM SUPERSTRUCTURE

FOR SKEWED STRUCTURES, SEE ICD-2-18 FOR ADDITIONAL DETAILS

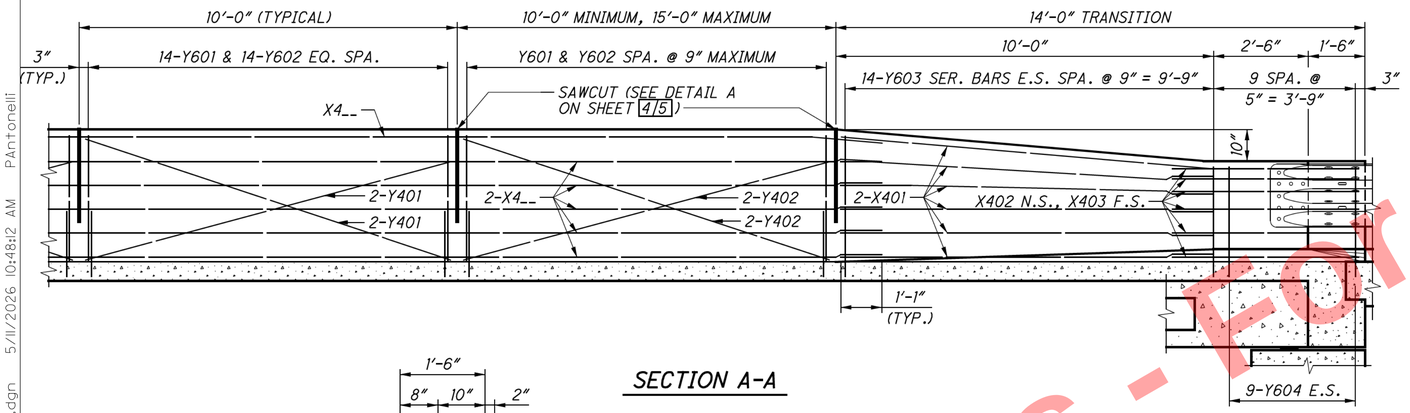

SECTION A-A

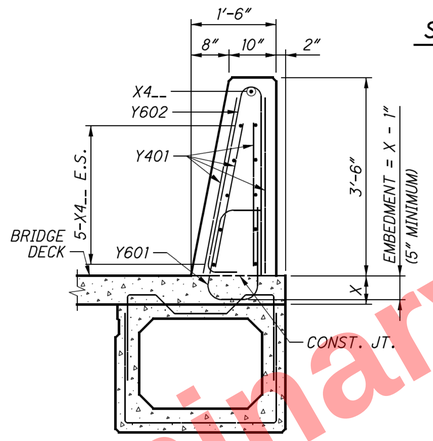

SECTION B-B

COMPOSITE PRESTRESSED CONCRETE BOX BEAMS (SAWCUT NOT SHOWN)

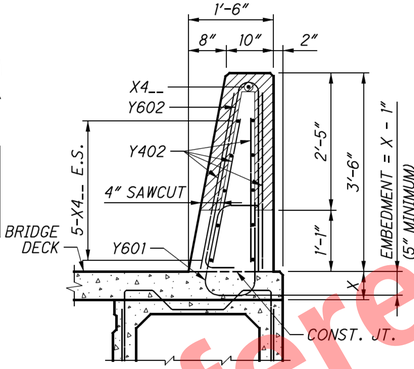

SECTION C-C

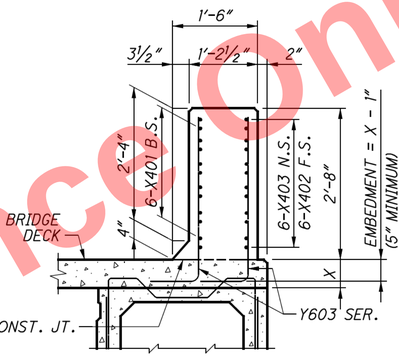

SECTION D-D

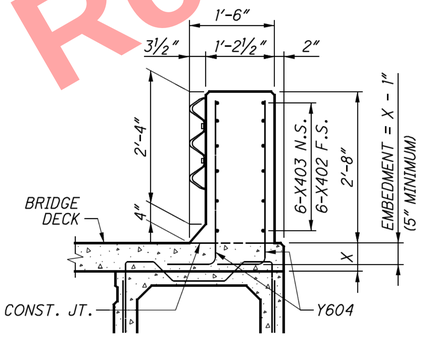

SECTION E-E

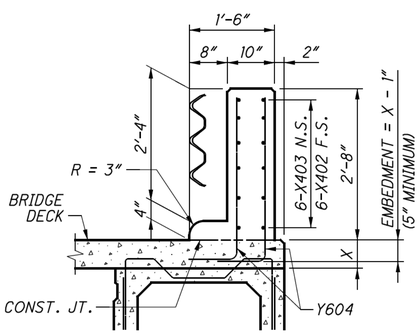

SECTION F-F

LEGEND:

E.S. = EACH SIDE
F.S. = FAR SIDE
N.S. = NEAR SIDE

REINFORCEMENT FOR 42″ SBR-1 TRANSITION MOUNTED ON COMPOSITE BOX BEAM BRIDGE

MARK	LENGTH	TYPE	MATERIAL	INCRE.
X401	10′-0″	STR	GFRP	
X402	6′-4″	BENT	GFRP	
X403	5′-1″	STR	GFRP	
X4__	⊕	STR	GFRP	
Y401	10′-0″	STR	GFRP	
Y402	⊕	STR	GFRP	
Y601	5′-5″+2.25A	BENT	STEEL	
Y602	7′-0″	BENT	STEEL	
Y603 SER. OF 14	A + B + 10″	BENT	STEEL	3′-4″ TO (¾″) 2′-6″
Y604	A + 3′-4″	BENT	STEEL	

BENDING DIAGRAMS

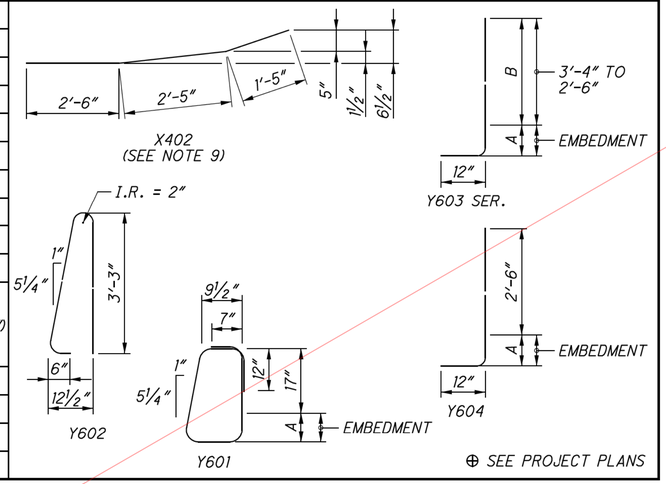

⊕ SEE PROJECT PLANS

NOTES:

1. FOR ALL SINGLE SLOPE CONCRETE BRIDGE RAILINGS INCLUDING THE 14′-0″ TRANSITIONS, PROJECT PLANS SHALL INCLUDE PLAN VIEW, ELEVATION VIEW, SECTIONS, REINFORCING MARKS, REINFORCING BENDING DIAGRAMS, AND REINFORCING QUANTITIES.
2. SEE APPROPRIATE STANDARD BRIDGE DRAWING FOR ABUTMENT DETAILS.
3. FOR BRIDGE TERMINAL ASSEMBLY, SEE STD. CONSTR. DWGS. MGS-3.1 AND MGS-3.2.
4. FOR SAWCUT PERIMETER LENGTH, SEE DETAIL A ON SHEET 4/5.
5. FOR DEFLECTION JOINT DETAILS AND ADDITIONAL NOTES, SEE SHEET 5/5.
6. THE HORIZONTAL LEGS OF THE Y615 BARS ARE INTENDED TO LAP WITH THE BOTTOM TRANSVERSE STEEL IN THE DECK. THE SPACING MAY BE ADJUSTED THE MINIMUM DISTANCE NECESSARY TO AVOID INTERFERENCE WITH THE TRANSVERSE DECK REINFORCEMENT.
7. USE GLASS FIBER REINFORCED POLYMER (GFRP) FOR ALL HORIZONTAL X4__ BARS AND STIFFENING BARS (Y401 & Y402 BARS).
8. TIE Y401 & Y402 STIFFENING BARS LOCATED INSIDE THE VERTICAL REINFORCEMENT AT EACH HORIZONTAL BAR. TIE Y401 & Y402 STIFFENING BARS LOCATED OUTSIDE OF THE VERTICAL REINFORCEMENT AT EACH VERTICAL BAR.
9. PLACE STIFFENING BARS IN ALL SAWCUT PANELS 10′-0″ AND GREATER. DO NOT ADD STIFFENING BARS TO 14′-0″ TRANSITIONS. DO NOT SLIPFORM UNSTIFFENED SAWCUT PANELS. DO NOT OMIT STIFFENING BARS FOR CONVENTIONALLY FORMED CONSTRUCTION.
10. X402 BAR MAY BE PROVIDED AS EPOXY COATED STEEL REINFORCEMENT IF A GFRP FABRICATED SHAPE IS NOT AVAILABLE.

Preliminary Plans - For Reference Only

OFFICE OF STRUCTURAL ENGINEERING

REVISION
07-17-2020
01-20-2023

STDS ENGINEER

STATE OF OHIO OFFICE OF ROADWAY ENGINEERING ADMINISTRATOR
07-18-08

STANDARD BRIDGE DRAWING
42″ SINGLE SLOPE CONCRETE BRIDGE RAILING

DESIGN AGENCY
STATE OF OHIO DEPARTMENT OF TRANSPORTATION

SCD NUMBER
SBR-1-20

2 / 5
49 / 64
978 / 1047

F:\HAM\21447\structures\HAM075_0823\sheets\SBR-1-20_2023-1-20\SBR-1-20_2023-1-20_sheet 2.dgn 5/11/2026 10:48:12 AM PAntonelli

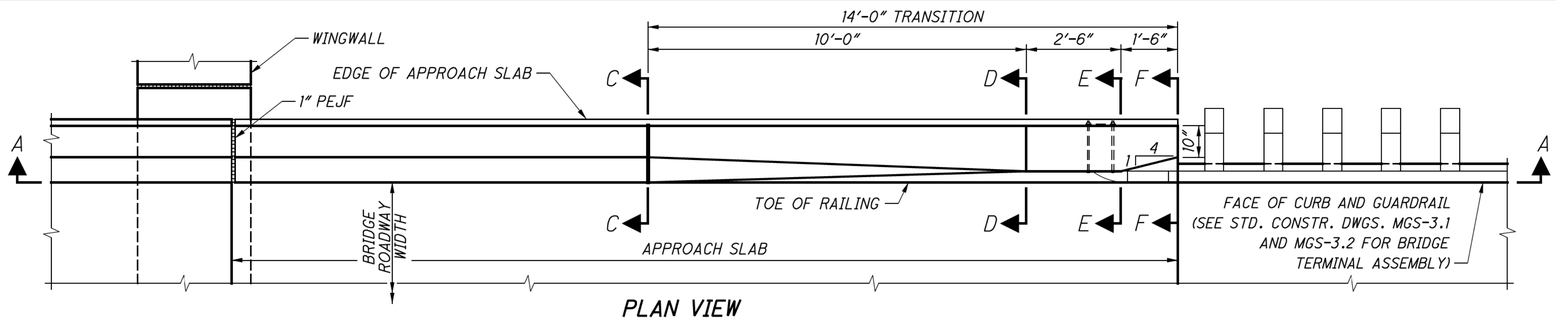

PLAN VIEW

42" SBR-1 TRANSITION MOUNTED ON APPROACH SLAB WITH SEMI-INTEGRAL ABUTMENT SHOWN (INTEGRAL ABUTMENT AND CAPPED PILE ABUTMENT SIMILAR)

LEGEND:

E.S. = EACH SIDE
F.S. = FAR SIDE
N.S. = NEAR SIDE
PEJF = PREFORMED EXPANSION JOINT FILLER

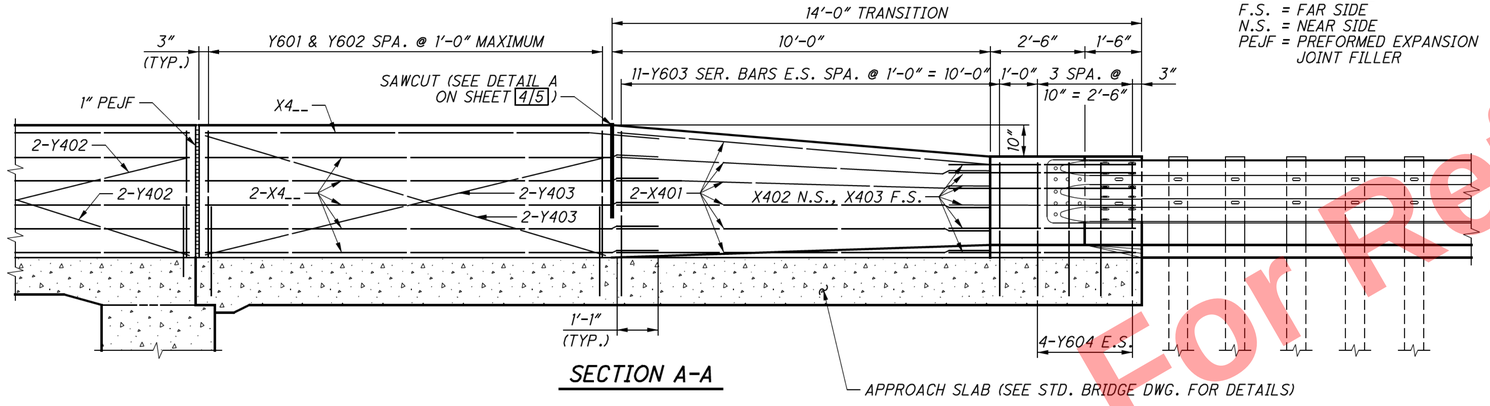

SECTION A-A

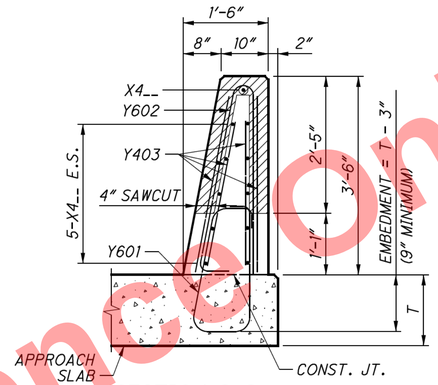

SECTION C-C

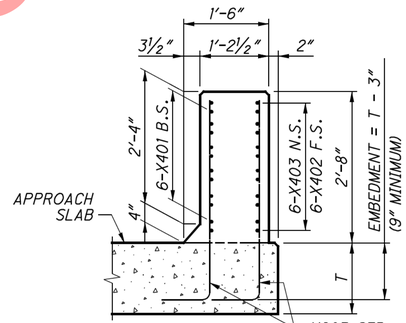

SECTION D-D

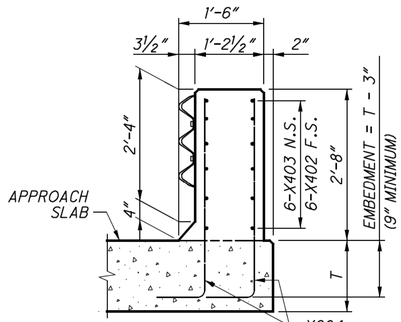

SECTION E-E

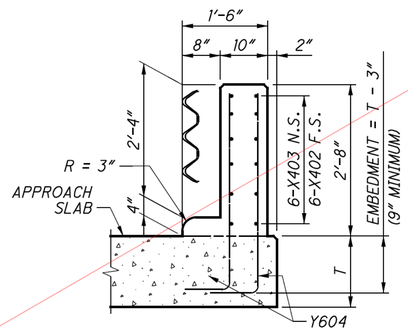

SECTION F-F

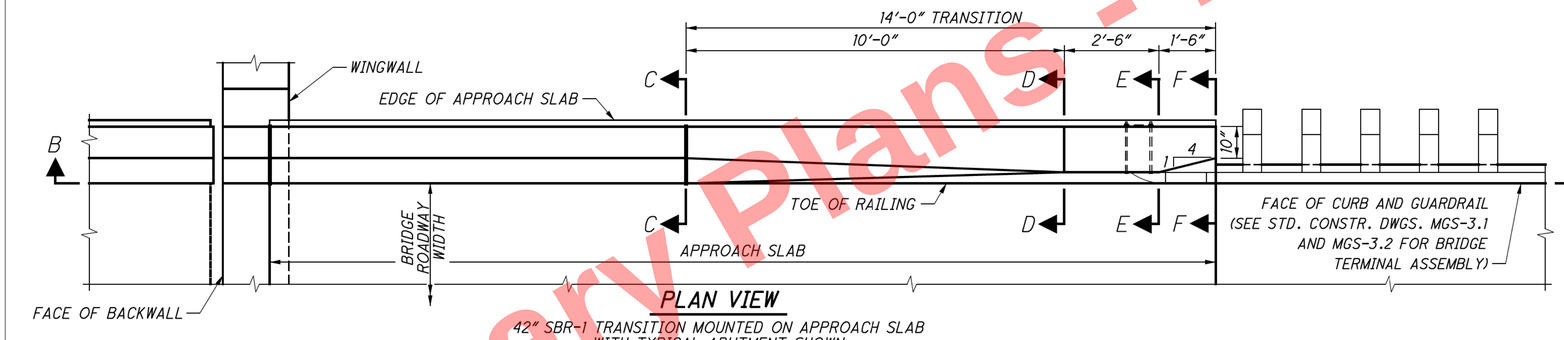

PLAN VIEW

42" SBR-1 TRANSITION MOUNTED ON APPROACH SLAB WITH TYPICAL ABUTMENT SHOWN

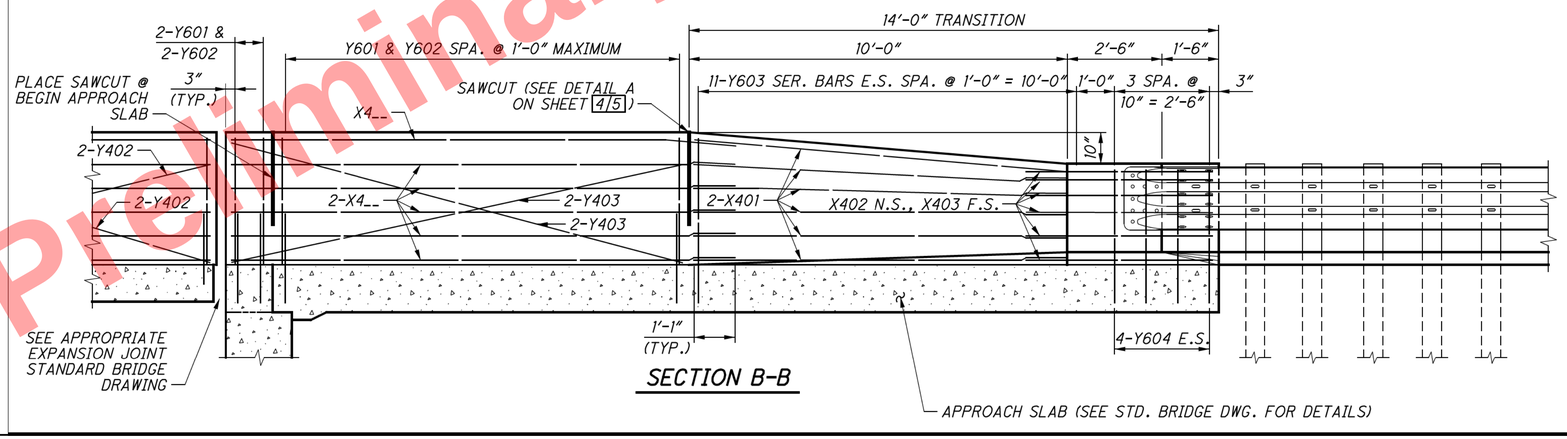

SECTION B-B

Preliminary Plans - Not For Reference Only

OFFICE OF STRUCTURAL ENGINEERING

REVISION
07-17-2020
01-20-2023

STDS ENGINEER

STATE OF OHIO OFFICE OF ROADWAY ENGINEERING ADMINISTRATOR
07-18-08

STANDARD BRIDGE DRAWING
42" SINGLE SLOPE CONCRETE BRIDGE RAILING

DESIGN AGENCY
STATE OF OHIO DEPARTMENT OF TRANSPORTATION

SCD NUMBER
SBR-1-20

3 / 5

50 / 64

979
1047

F:\HAM\21447\structures\HAM075_0823\sheets\SBR-1-20_2023-I-20\SBR-I-20_2023-I-20_sheet 3.dgn 5/11/2026 10:48:34 AM PAntonelli

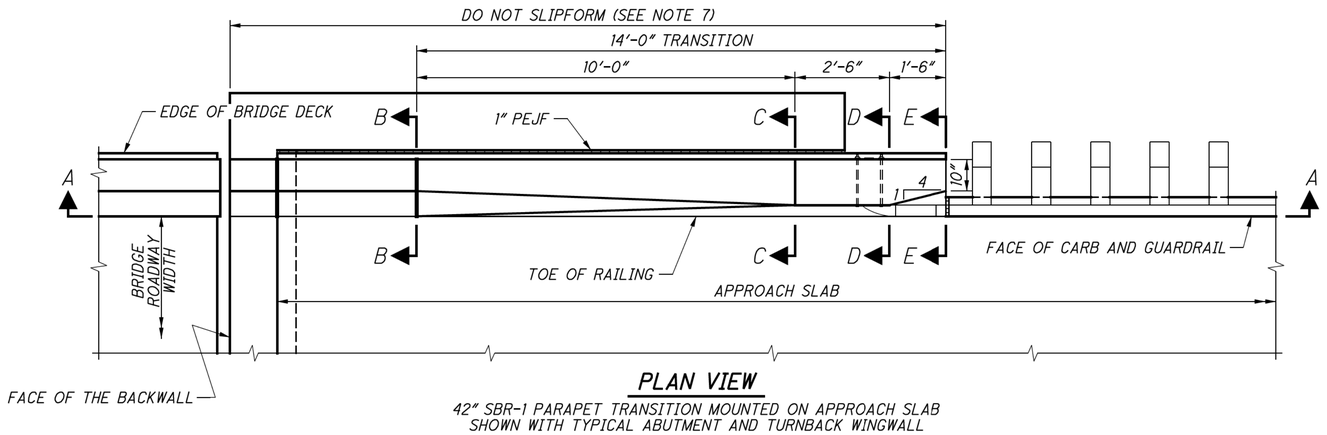

PLAN VIEW

42" SBR-1 PARAPET TRANSITION MOUNTED ON APPROACH SLAB SHOWN WITH TYPICAL ABUTMENT AND TURNBACK WINGWALL

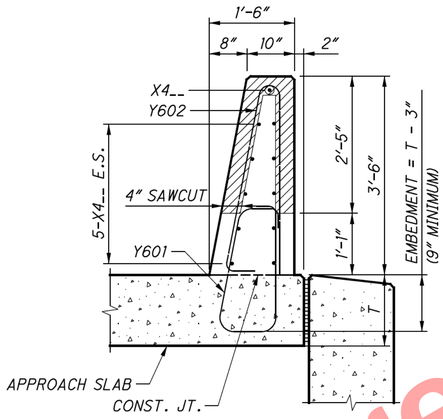

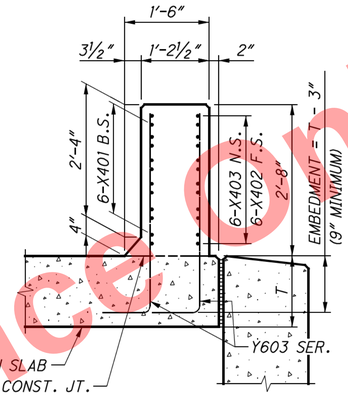

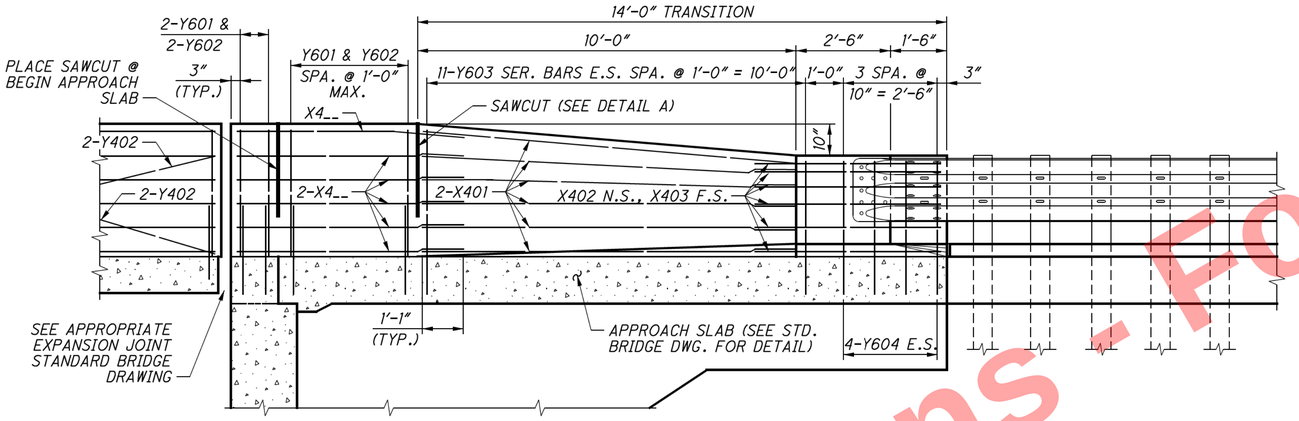

SECTION A-A

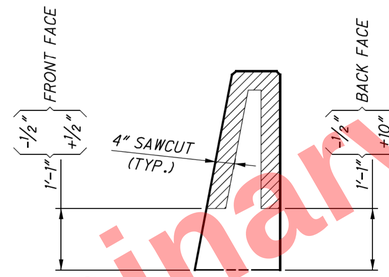

SECTION C-C

SECTION THROUGH SAWCUT
SAWCUT PERIMETER = 5'-9"

SECTION B-B

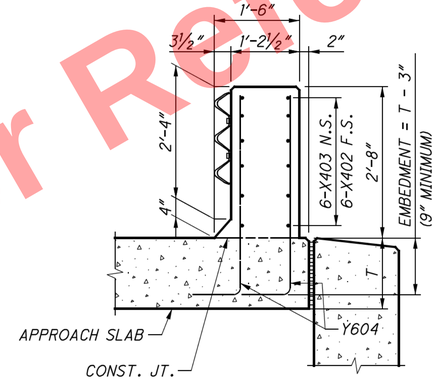

SECTION C-C

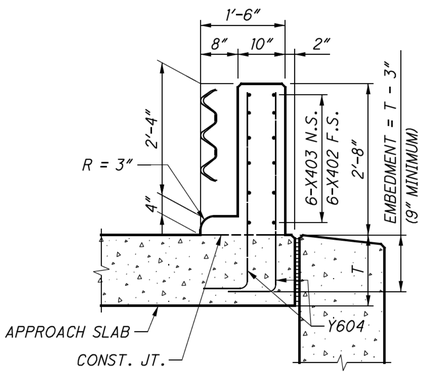

SECTION D-D

SECTION E-E

LEGEND:

E.S. = EACH SIDE
F.S = FAR SIDE
N.S. = NEAR SIDE
PEJF = PREFORMED EXPANSION JOINT FILLER

NOTES:

1. FOR ALL SINGLE SLOPE CONCRETE BRIDGE RAILINGS INCLUDING THE 14'-0" TRANSITIONS, PROJECT PLANS SHALL INCLUDE PLAN VIEW, ELEVATION VIEW, SECTIONS, REINFORCING MARKS, REINFORCING BENDING DIAGRAMS, AND REINFORCING QUANTITIES.
2. SEE APPROPRIATE STANDARD BRIDGE DRAWING FOR ABUTMENT DETAILS.
3. FOR BRIDGE TERMINAL ASSEMBLY, SEE STD. CONSTR. DWGS. MGS-3.1 AND MGS-3.2.
4. FOR SAWCUT PERIMETER LENGTH, SEE DETAIL A ON SHEET 4/5.
5. FOR DEFLECTION JOINT DETAILS AND ADDITIONAL NOTES, SEE SHEET 5/5.
6. USE GLASS FIBER REINFORCED POLYMER (GFRP) FOR ALL HORIZONTAL X4__ BARS AND STIFFENING BARS (Y401 & Y402 BARS).
7. TIE Y401 & Y402 STIFFENING BARS LOCATED INSIDE THE VERTICAL REINFORCEMENT AT EACH HORIZONTAL BAR. TIE Y401 & Y402 STIFFENING BARS LOCATED OUTSIDE OF THE VERTICAL REINFORCEMENT AT EACH VERTICAL BAR.
8. PLACE STIFFENING BARS IN ALL SAWCUT PANELS 10'-0" AND GREATER. DO NOT ADD STIFFENING BARS TO 14'-0" TRANSITIONS. DO NOT SLIPFORM UNSTIFFENED SAWCUT PANELS. DO NOT OMIT STIFFENING BARS FOR CONVENTIONALLY FORMED CONSTRUCTION.
9. X402 BAR MAY BE PROVIDED AS EPOXY COATED STEEL REINFORCEMENT IF A GFRP FABRICATED SHAPE IS NOT AVAILABLE.

REINFORCEMENT FOR 42" SBR-1 TRANSITION MOUNTED ON APPROACH SLAB

MARK	LENGTH	TYPE	MATERIAL	INCRE.	BENDING DIAGRAMS
X401	10'-0"	STR	GFRP		
X402	6'-4"	BENT	GFRP		
X403	5'-1"	STR	GFRP		
X4__	⊕	STR	GFRP		
Y401	10'-0"	STR	GFRP		
Y402	⊕	STR	GFRP		
Y601	5'-5"+2.25A	BENT	STEEL		
Y602	7'-0"	BENT	STEEL		
Y603 SER. OF 11	A + B + 10"	BENT	STEEL	3'-4" TO (11) 2'-6"	
Y604	A + 3'-4"	BENT	STEEL		

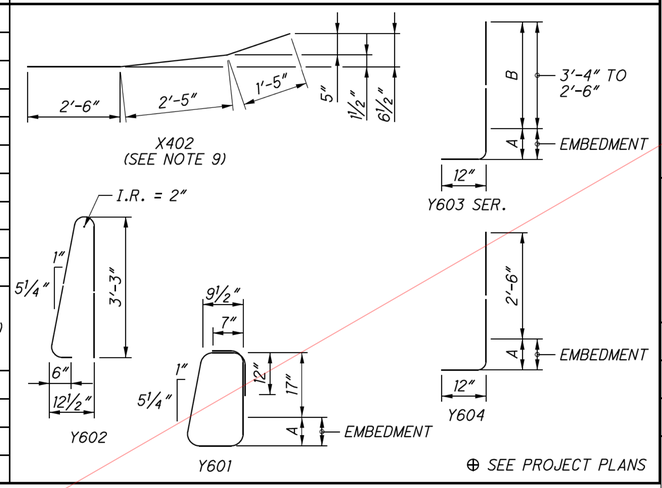

⊕ SEE PROJECT PLANS

OFFICE OF STRUCTURAL ENGINEERING

REVISION
07-17-2020
01-20-2023

STDS ENGINEER

STATE OF OHIO OFFICE OF ROADWAY ENGINEERING ADMINISTRATOR
07-18-08

STANDARD BRIDGE DRAWING
42" SINGLE SLOPE CONCRETE BRIDGE RAILING

DESIGN AGENCY
STATE OF OHIO DEPARTMENT OF TRANSPORTATION

SCD NUMBER
SBR-1-20

4 / 5
51 / 64

980
1047

Preliminary Plans - Not For Reference Only

F:\HAM\12447\structures\HAM075_0823\sheets\SBR-1-20_2023-I-20\SBR-I-20_2023-I-20_sheet 4.dgn 5/11/2026 10:48:56 AM PAntonelli

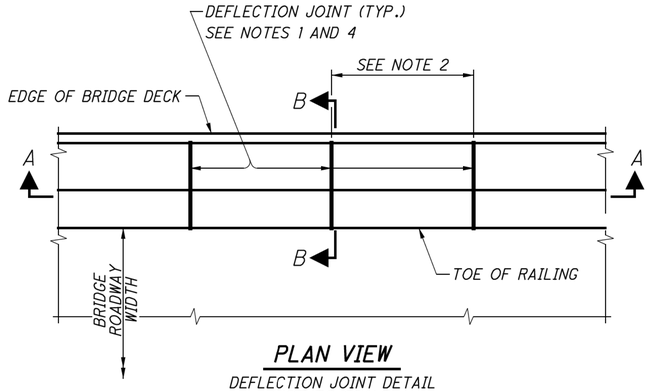

PLAN VIEW

DEFLECTION JOINT DETAIL
(NOT TO SCALE)

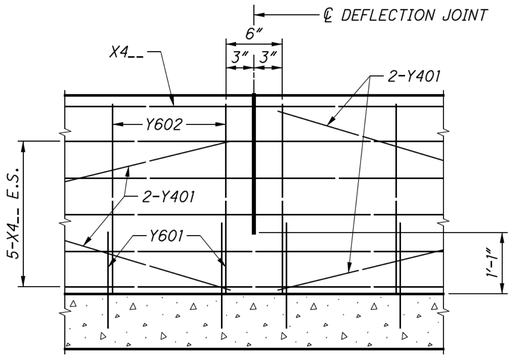

SECTION A-A

DETAIL AT DEFLECTION JOINTS
FOR SINGLE SLOPE CONCRETE BRIDGE RAILING
(NOT TO SCALE)

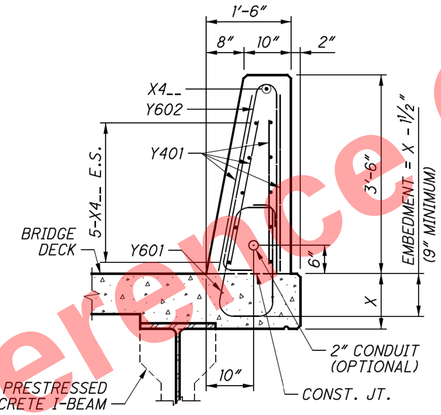

SECTION B-B

REINFORCED CONCRETE DECK ON STEEL OR
PRESTRESSED CONCRETE I-BEAMS/GIRDERS SHOWN

NOTES:

1. FOR THE ENTIRE LENGTH OF SINGLE SLOPE CONCRETE BRIDGE RAILINGS, PROJECT PLANS SHALL SHOW THE LOCATIONS OF DEFLECTION JOINTS.
2. DEFLECTION JOINT SPACING SHALL BE 10′-0″ EXCEPT FOR THE LAST JOINT SPACING ADJACENT TO EITHER A 14′-0″ TRANSITION OR AN OPEN JOINT. EXCEPTION PANELS MAY VARY IN LENGTH BETWEEN 10′-0″ AND 15′-0″.
3. PAYMENT FOR GLASS FIBER REINFORCED POLYMER (GFRP) STIFFENING REINFORCEMENT SHALL BE INCLUDED WITH CONTRACT PRICE FOR ITEM 509 - NO._ GFRP DEFORMED BARS.
4. LIMITS OF SAWCUT IS SHOWN IN DETAIL A, SHEET 4/5. THE 4″ SAWCUT DEPTH SHOWN IN DETAIL A IS THE MINIMUM REQUIRED. HOWEVER, THE CONTRACTOR HAS AN OPTION TO PERFORM FULL DEPTH SAWCUT.

DESIGN CRITERIA:

42″ SINGLE SLOPE CONCRETE BRIDGE RAILINGS MEET THE REQUIREMENTS OF NCHRP 350 & MASH TEST LEVEL 5 AND "AASHTO LRFD BRIDGE DESIGN SPECIFICATIONS, 9TH EDITION".

DESIGN DATA:

CONCRETE - COMPRESSIVE STRENGTH = 4.5 KSI
REINFORCING STEEL - MINIMUM YIELD STRENGTH = 60 KSI
GFRP - C&MS 705.28 (MODULUS = 8700 KSI)
AREA OF STANDARD 42″ SBR-1 CROSS SECTION = 588.0 SQ. IN.
VOLUME OF 42″ SBR-1 14′-0″ TRANSITION SECTION = 1.82 CU. YD.

DEFLECTION JOINTS FOR CONCRETE RAILING:
FOR SLIPFORMED CONSTRUCTION:

AS SOON AS CUTTING OPERATIONS CAN BEGIN WITHOUT DAMAGING THE CONCRETE, SAWCUT 1 ¼ INCH DEEP DEFLECTION CONTROL JOINTS ALONG THE PERIMETER OF THE RAILING.

AFTER THE CURING PERIOD AND BEFORE APPLYING LOAD TO THE RAILING, PERFORM 4 INCH SAWCUT AS SHOWN IN DETAIL A, SHEET 3/4. APPLIED RAILING LOAD INCLUDES: CONSTRUCTION LOADS ON THE DECK (EXCLUDING PERSONNEL; HAND OPERATED EQUIPMENT AND MANUALLY POWERED VEHICLES); AND VEHICLE TRAFFIC IN THE LANE IMMEDIATELY ADJACENT TO THE RAILING AFTER REMOVAL OF TRAFFIC CONTROL DEVICES.

FOR CONVENTIONALLY FORMED CONSTRUCTION:
REMOVE THE FORMS BEFORE APPLYING LOAD TO THE RAILING. AS SOON AS THE FORMS ARE REMOVED, PERFORM 4-INCH SAWCUT AS SHOWN IN DETAIL A, SHEET 4/5. THE 1¼ INCH SAWCUTS ARE NOT REQUIRED.

THE CONTRACTOR HAS AN OPTION TO PERFORM FULL DEPTH SAWCUT. HOWEVER, THE SAWCUT SHALL NOT BE LESS THAN 1′-0½″ FROM THE TOP OF THE CONCRETE DECK SLAB.

USE AN EDGE GUIDE, FENCE, OR JIG TO ENSURE THAT THE CUT JOINT IS STRAIGHT, TRUE, AND ALIGNED ON ALL FACES OF THE RAILING. THE JOINT WIDTH SHALL BE THE WIDTH OF THE SAW BLADE, A NOMINAL WIDTH OF ¼ INCH.

SEAL THE PERIMETER OF THE DEFLECTION JOINTS TO A MINIMUM DEPTH OF ONE INCH WITH A POLYURETHANE OR POLYMERIC MATERIAL CONFORMING TO ASTM C920, TYPE S. LEAVE THE BOTTOM ½ INCH OF BOTH THE INSIDE AND OUTSIDE FACES OF THE RAILING UNSEALED TO ALLOW ANY WATER WHICH MAY ENTER THE JOINT TO ESCAPE.

FOR TRANSITION SECTION, PLACE A DEFLECTION JOINT AT THE BEGINNING OF THE 14′-0″ TRANSITION. DEFLECTION JOINTS ARE NOT REQUIRED WITHIN THE 14′-0″ TRANSITION SECTION.

MAXIMUM SPACING OF VERTICAL REINFORCING BARS FOR STANDARD 42″ SBR-1 CONCRETE RAILING:

THE MAXIMUM SPACING OF VERTICAL REINFORCING BARS FOR THE STANDARD 42″ SBR-1 CONCRETE RAILING SHALL BE 12″, UNLESS NOTED OTHERWISE.

MAXIMUM SPACING OF VERTICAL REINFORCING BARS FOR 42″ SBR-1 TRANSITIONS:

THE MAXIMUM SPACING OF VERTICAL REINFORCING BARS FOR THE 42″ SBR-1 TRANSITION SECTION SHALL BE AS SHOWN ON SHEETS 1/5, 2/5, 3/5, OR 4/5.

MINIMUM EMBEDMENT OF VERTICAL REINFORCING BARS:

THE MINIMUM EMBEDMENT IS 9″. IF THE MINIMUM EMBEDMENT FOR THE VERTICAL REINFORCING BARS INTO THE BRIDGE DECK OR APPROACH SLAB IS NOT MET, THEN THE DESIGNER SHALL CALCULATE THE REQUIRED REINFORCEMENT ACCORDING TO SECTION 13 OF THE "AASHTO LRFD BRIDGE DESIGN SPECIFICATIONS" ADOPTED BY THE AMERICAN ASSOCIATION OF STATE HIGHWAY AND TRANSPORTATION OFFICIALS.

OFFICE OF STRUCTURAL ENGINEERING

REVISION
07-17-2020
01-20-2023

STDS ENGINEER

STATE OF OHIO OFFICE OF ROADWAY ENGINEERING ADMINISTRATOR
07-18-08

STANDARD BRIDGE DRAWING
42″ SINGLE SLOPE CONCRETE BRIDGE RAILING

DESIGN AGENCY
STATE OF OHIO DEPARTMENT OF TRANSPORTATION

SCD NUMBER
SBR-1-20

5 / 5
52 / 64
981
1047

Preliminary Plans - For Reference Only

F:\HAM\21447\structures\HAM075-0823\sheets\SBR-1-20_2023-1-20\SBR-1-20_2023-1-20_sheet 5.dgn 5/11/2026 10:49:22 AM PAntonelli

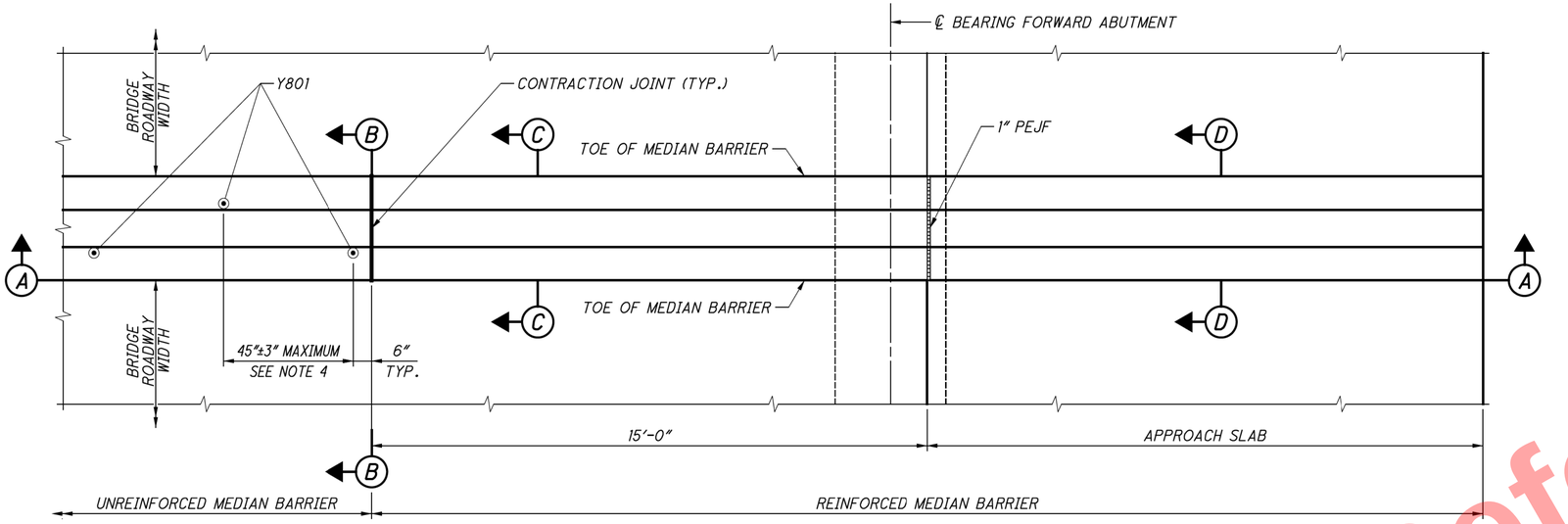

PLAN VIEW

57" SINGLE SLOPE MEDIAN BRIDGE RAILING TYPE B1 SHOWN WITH SEMI-INTEGRAL ABUTMENT, INTEGRAL ABUTMENT AND CAPPED PILE ABUTMENTS SIMILAR. FORWARD ABUTMENT SHOWN, REAR ABUTMENT SIMILAR BUT OPPOSITE

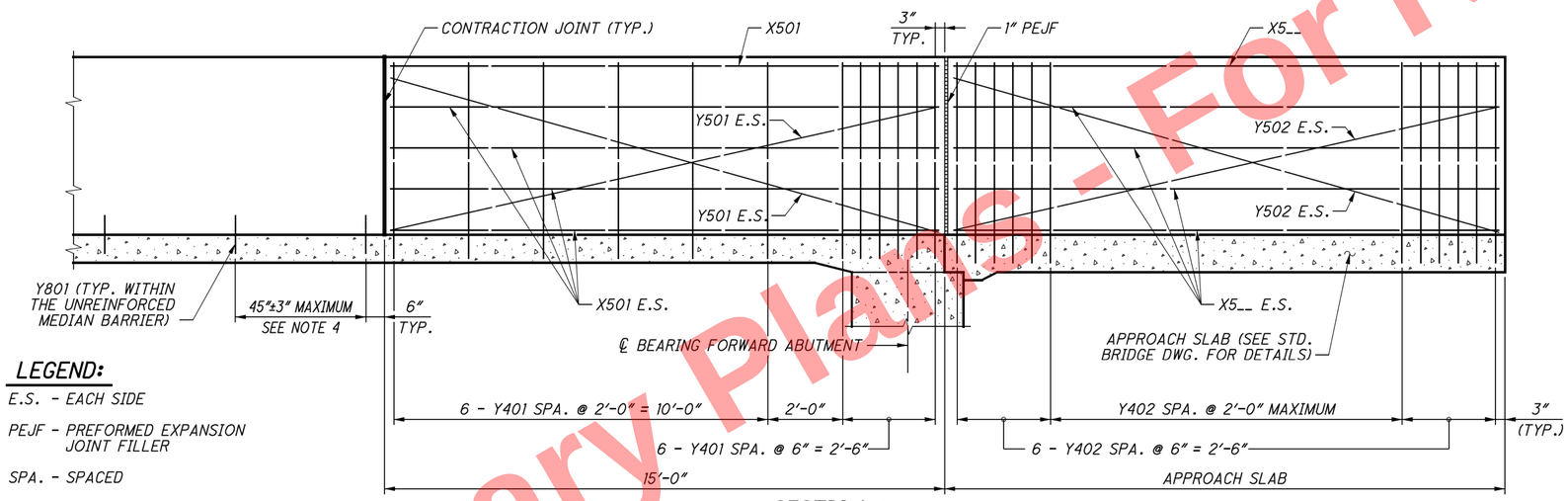

SECTION A-A

LEGEND:

E.S. - EACH SIDE

PEJF - PREFORMED EXPANSION JOINT FILLER

SPA. - SPACED

NOTES:

1. FOR 57" SINGLE SLOPE CONCRETE MEDIAN BRIDGE RAILING, INCLUDE PLAN VIEW, ELEVATION VIEW, SECTIONS, REINFORCING MARKS, REINFORCING BENDING DIAGRAMS, AND REINFORCING QUANTITIES IN THE PROJECT PLANS.
2. FOR THE ENTIRE LENGTH OF SINGLE SLOPE CONCRETE MEDIAN BRIDGE RAILINGS, SHOW THE LOCATION OF CONTRACTION JOINTS, SPACED AT 20'-0" MAX IN THE PROJECT PLANS. CONTRACTION JOINT IS NOT REQUIRED WITHIN THE APPROACH SLAB MEDIAN BARRIER SECTIONS.
3. PLACE #8 EPOXY COATED DOWEL BARS (Y801 BARS), 12" LONG, SPACED AT 45" ± 3" MAXIMUM, AT STAGGERED LOCATIONS WITHIN THE UNREINFORCED MEDIAN BARRIER. INCLUDE Y801 BARS WITH ITEM 509 FOR PAYMENT.
4. SEE APPROPRIATE STANDARD BRIDGE DRAWING FOR ABUTMENT DETAILS.
5. FOR ROADWAY SINGLE SLOPE BARRIER, SEE STD. ROADWAY CONSTR. DWG. RM-4.3 THROUGH RM-4.5.
6. REFER TO AS-2-15 FOR APPLICABLE DETAILS FOR APPROACH SLAB JOINTS USED WITH SEMI-INTEGRAL AND INTEGRAL ABUTMENTS.
7. GLASS FIBER REINFORCED POLYMER (GFRP) MAY BE USED FOR THE HORIZONTAL BARS OR STIFFENING BARS AT NO ADDITIONAL COST TO THE DEPARTMENT.
8. FOR GENERAL NOTES, SEE SHEET 5/5.

REINFORCEMENT LIST

MARK	LENGTH	TYPE	MATERIAL	BENDING DIAGRAMS
X501	14'-8"	STR	STEEL	
X5__	⊕	STR	STEEL	
Y401	2A + 12'-10"	BENT	STEEL	
Y402	2B + 12'-10"	BENT	STEEL	
Y501	15'-0"	STR	STEEL	
Y502	⊕	STR	STEEL	
Y801	1'-0"	STR	STEEL	

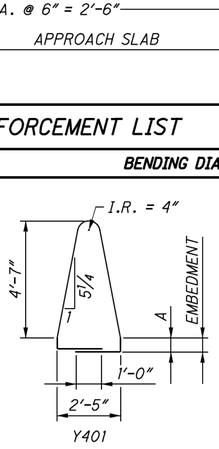

⊕ SEE PROJECT PLANS

A = 7½" MINIMUM EMBEDMENT

B = APPROACH SLAB THICKNESS MINUS 3"

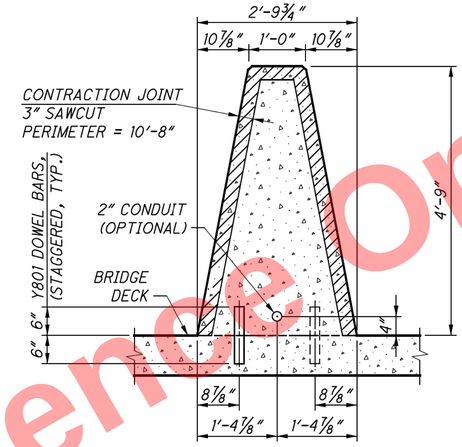

SECTION B-B

(AREA = 9.05 SQ. FT.)

REINFORCED CONCRETE DECK ON STEEL OR PRESTRESSED CONCRETE I-BEAMS/GIRDERS (BEAMS/GIRDERS NOT SHOWN)

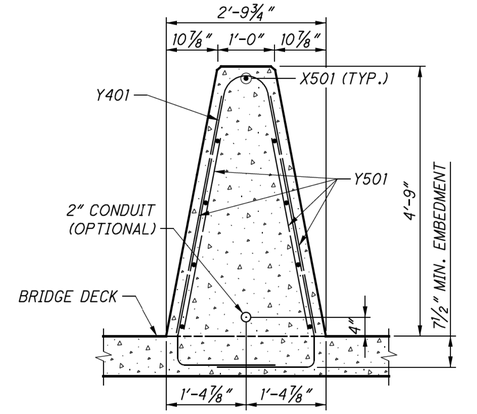

SECTION C-C

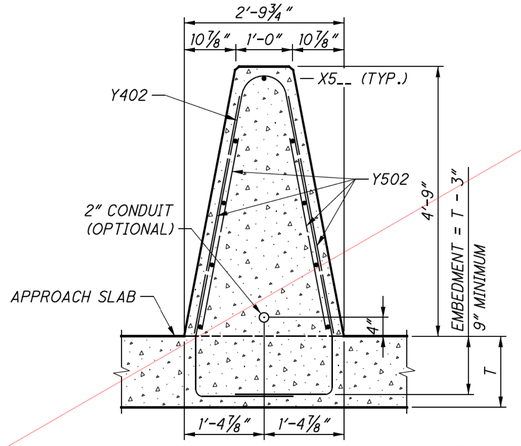

SECTION D-D

T = APPROACH SLAB THICKNESS

Preliminary Plans - For Reference Only

DESIGN AGENCY
OFFICE OF STRUCTURAL ENGINEERING

STATE OF OHIO DEPARTMENT OF TRANSPORTATION
Jon Kull
ADMINISTRATOR
07-17-2020
DATE

REVISION
11-12-93

SBR-2-20

STANDARD BRIDGE DRAWING
57" SINGLE SLOPE CONCRETE MEDIAN BRIDGE RAILING

1 / 5
53 / 64
982 / 1047

5/11/2026 10:49:45 AM PAntonelli

F:\HAM\21447\structures\HAM075-0823\sheets\SBR-2-20_2021-I-I5\SBR-2-20_2021-I-I5_sheet 1.dgn

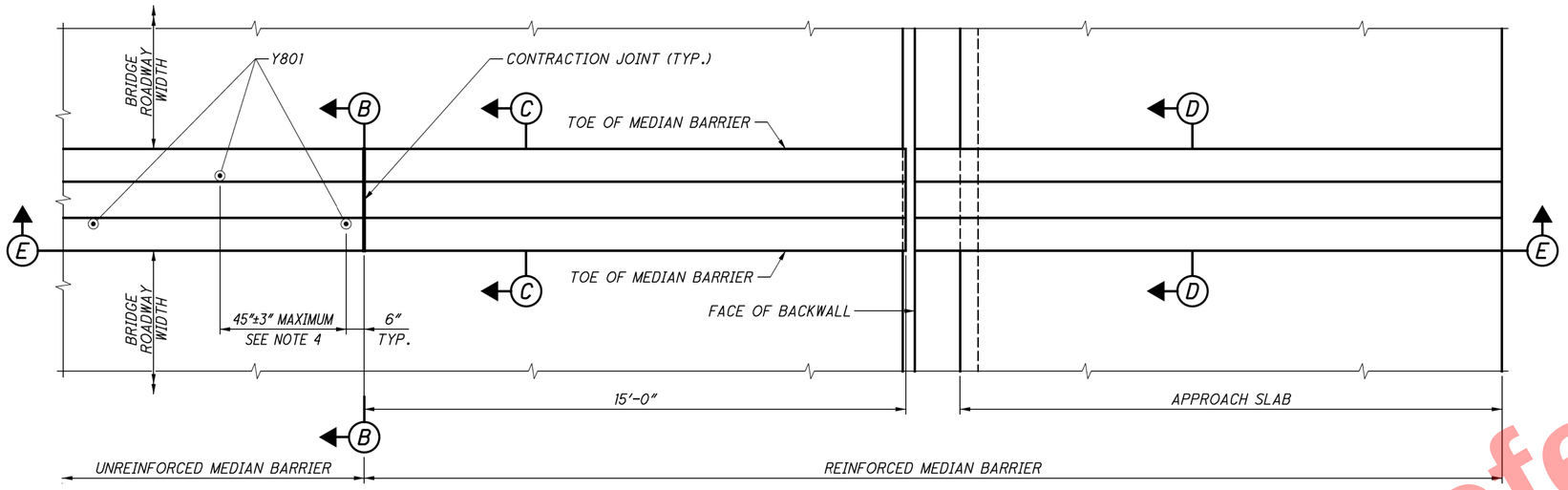

PLAN VIEW

57" SINGLE SLOPE MEDIAN BRIDGE RAILING TYPE B1 SHOWN WITH TYPICAL ABUTMENT.
FORWARD ABUTMENT SHOWN, REAR ABUTMENT SIMILAR BUT OPPOSITE

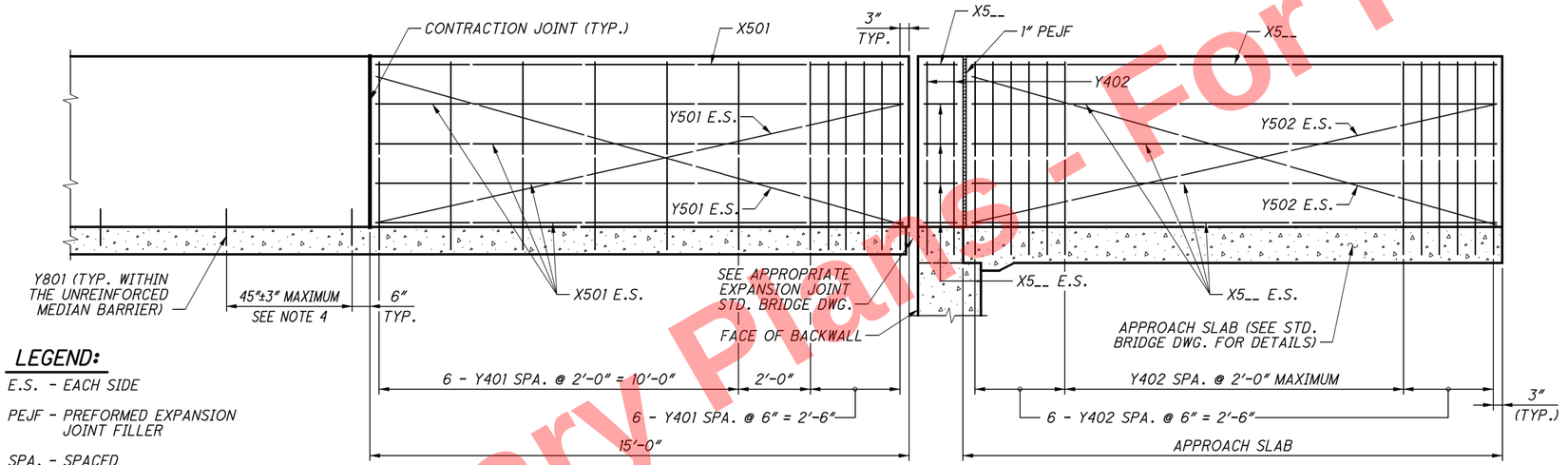

SECTION E-E

LEGEND:

E.S. - EACH SIDE

PEJF - PREFORMED EXPANSION JOINT FILLER

SPA. - SPACED

NOTES:

1. FOR 57" SINGLE SLOPE CONCRETE MEDIAN BRIDGE RAILING, INCLUDE PLAN VIEW, ELEVATION VIEW, SECTIONS, REINFORCING MARKS, REINFORCING BENDING DIAGRAMS, AND REINFORCING QUANTITIES IN THE PROJECT PLANS.
2. FOR THE ENTIRE LENGTH OF SINGLE SLOPE CONCRETE MEDIAN BRIDGE RAILINGS, SHOW THE LOCATION OF CONTRACTION JOINTS, SPACED AT 20'-0" MAX IN THE PROJECT PLANS. CONTRACTION JOINT IS NOT REQUIRED WITHIN THE APPROACH SLAB MEDIAN BARRIER SECTIONS.
3. PLACE #8 EPOXY COATED DOWEL BARS (Y801 BARS), 12" LONG, SPACED AT 45" ± 3" MAXIMUM, AT STAGGERED LOCATIONS WITHIN THE UNREINFORCED MEDIAN BARRIER. INCLUDE Y801 BARS WITH ITEM 509 FOR PAYMENT.
4. SEE APPROPRIATE STANDARD BRIDGE DRAWING FOR ABUTMENT DETAILS.
5. FOR ROADWAY SINGLE SLOPE BARRIER, SEE STD. ROADWAY CONSTR. DWG. RM-4.3 THROUGH RM-4.5.
6. GLASS FIBER REINFORCED POLYMER (GFRP) MAY BE USED FOR THE HORIZONTAL BARS OR STIFFENING BARS AT NO ADDITIONAL COST TO THE DEPARTMENT.
7. FOR GENERAL NOTES, SEE SHEET 5/5.

REINFORCEMENT LIST

MARK	LENGTH	TYPE	MATERIAL	BENDING DIAGRAMS
X501	14'-8"	STR	STEEL	
X5__	⊕	STR	STEEL	
Y401	2A + 12'-10"	BENT	STEEL	
Y402	2B + 12'-10"	BENT	STEEL	
Y501	15'-0"	STR	STEEL	
Y502	⊕	STR	STEEL	
Y801	1'-0"	STR	STEEL	

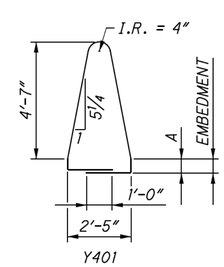

⊕ SEE PROJECT PLANS

A = 7½" MINIMUM EMBEDMENT

B = APPROACH SLAB THICKNESS MINUS 3"

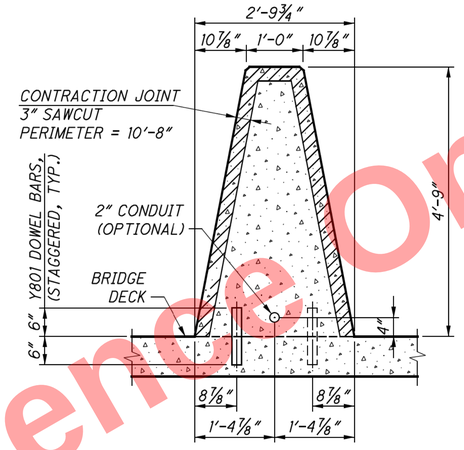

SECTION B-B

(AREA = 9.05 SQ. FT.)

REINFORCED CONCRETE DECK ON STEEL OR PRESTRESSED CONCRETE I-BEAMS/GIRDERS (BEAMS/GIRDERS NOT SHOWN)

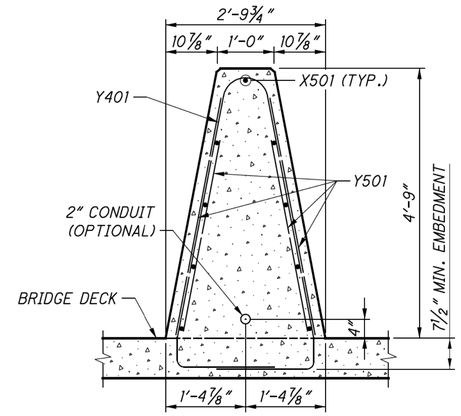

SECTION C-C

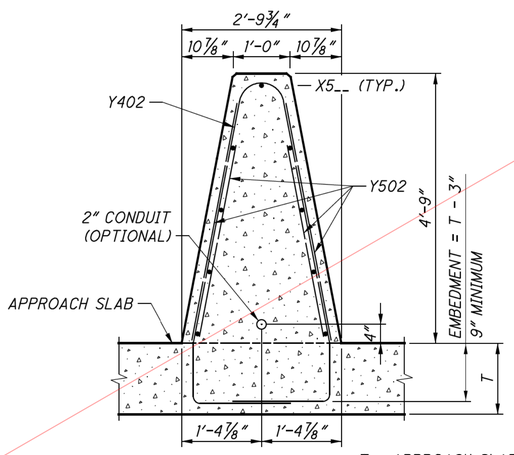

SECTION D-D

T = APPROACH SLAB THICKNESS

Preliminary Plans - Not For Reference Only

DESIGN AGENCY
OFFICE OF STRUCTURAL ENGINEERING

STATE OF OHIO DEPARTMENT OF TRANSPORTATION
07-17-2020 DATE
ADMINISTRATOR

REVISION 11-12-93

SBR-2-20

STANDARD BRIDGE DRAWING
57" SINGLE SLOPE CONCRETE MEDIAN BRIDGE RAILING

2 / 5
54 / 64
983 / 1047

F:\HAM\21447\structures\HAM075_0823\sheets\SBR-2-20_2021-I-5\SBR-2-20_2021-I-5_sheet 2.dgn 5/11/2026 10:50:09 AM PAntonelli

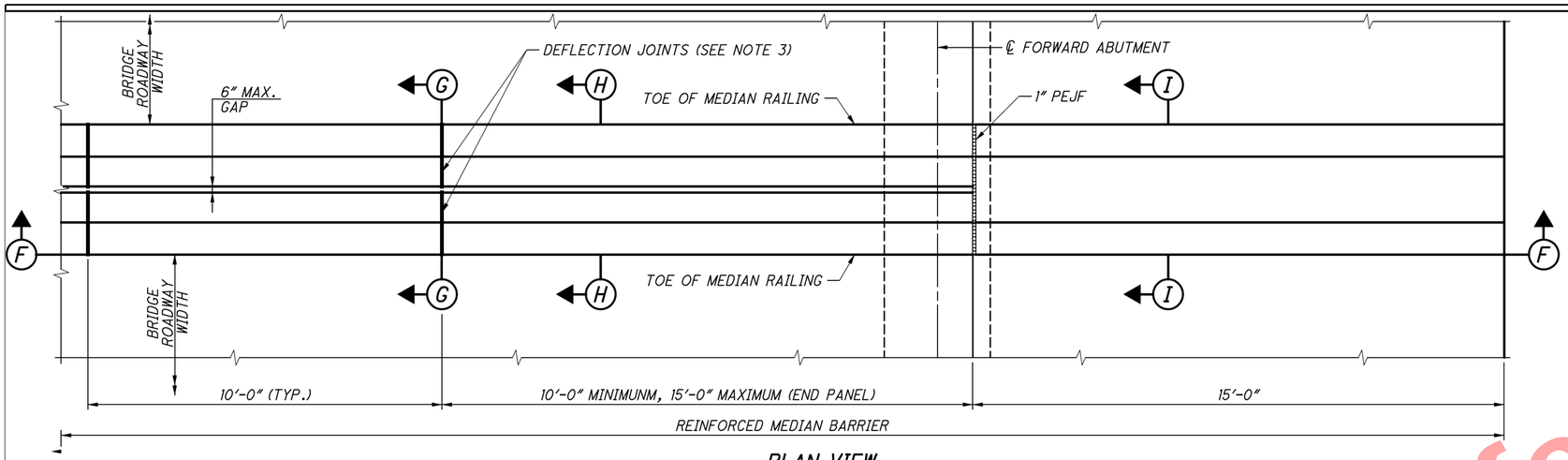

PLAN VIEW

57" SINGLE SLOPE BACK-TO BACK MEDIAN BRIDGE RAILINGS SHOWN WITH SEMI-INTEGRAL ABUTMENT, INTEGRAL ABUTMENT AND CAPPED PILE ABUTMENTS SIMILAR. FORWARD ABUTMENT SHOWN, REAR ABUTMENT SIMILAR BUT OPPOSITE

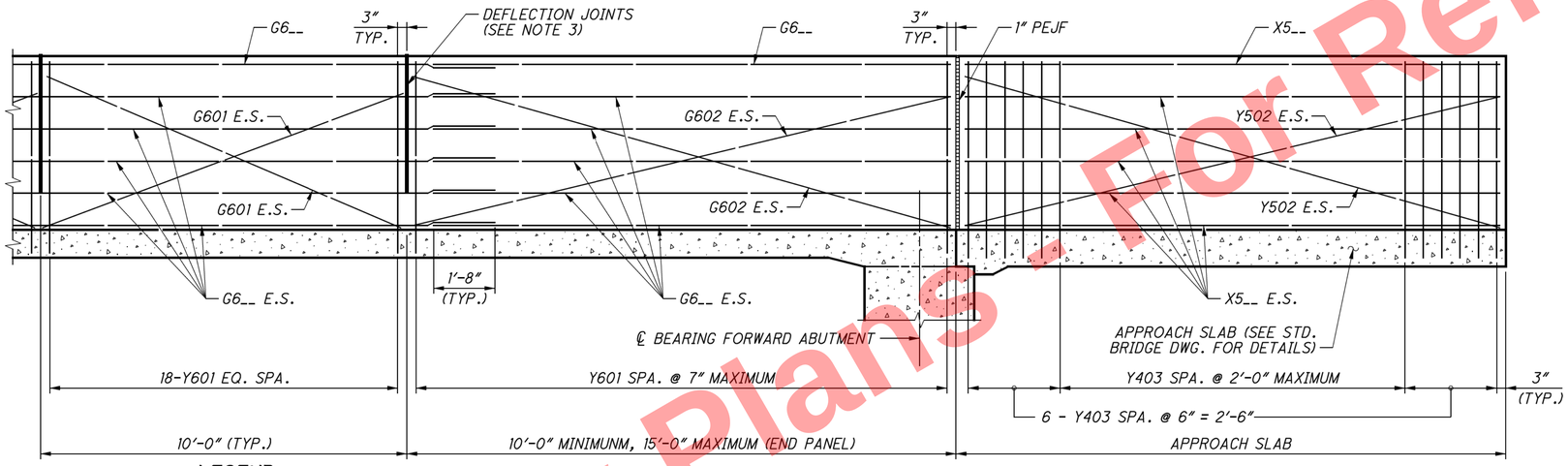

SECTION F-F

REINFORCEMENT SHOWN IS ONLY FOR ONE SIDE OF THE BACK-TO-BACK MEDIAN BARRIERS

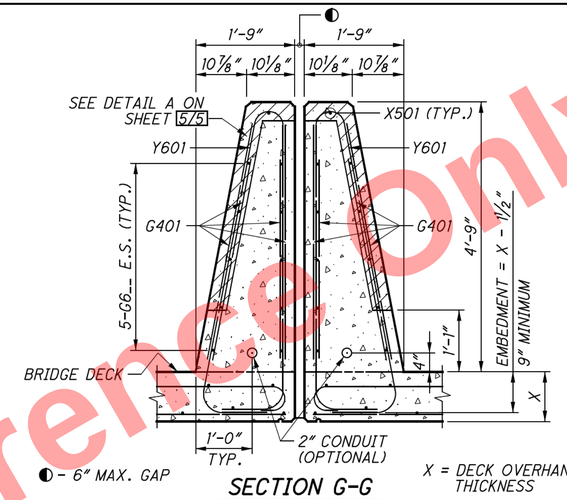

◐ - 6" MAX. GAP

X = DECK OVERHANG THICKNESS

SECTION G-G

AREA =12.32 SQ. FT. (TOTAL BOTH SIDES)
REINFORCED CONCRETE DECK ON STEEL OR PRESTRESSED CONCRETE I-BEAMS/GIRDERS (BEAMS/GIRDERS NOT SHOWN)

◐ - 6" MAX. GAP

X = DECK OVERHANG THICKNESS

SECTION H-H

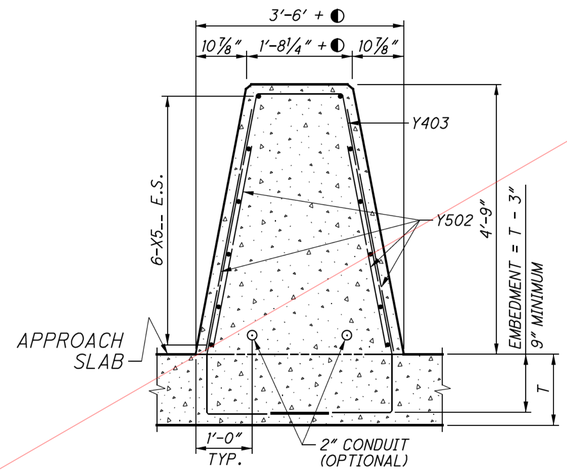

◐ - 6" MAX. GAP

T = APPROACH SLAB THICKNESS

SECTION I-I

LEGEND:

E.S. - EACH SIDE

PEJF - PREFORMED EXPANSION JOINT FILLER

SPA. - SPACED

EQ. - EQUALLY

MAX. - MAXIMUM

NOTES:

1. FOR 57" SINGLE SLOPE CONCRETE MEDIAN BRIDGE RAILING, INCLUDE PLAN VIEW, ELEVATION VIEW, SECTIONS, REINFORCING MARKS, REINFORCING BENDING DIAGRAMS, AND REINFORCING QUANTITIES IN THE PROJECT PLANS.
2. FOR THE ENTIRE LENGTH OF SINGLE SLOPE CONCRETE MEDIAN BRIDGE RAILINGS, SHOW THE LOCATIONS OF DEFLECTION JOINTS IN THE PROJECT PLANS. DEFLECTION JOINT IS NOT REQUIRED WITHIN THE APPROACH SLAB MEDIAN BARRIER SECTIONS.
3. SEE APPROPRIATE STANDARD BRIDGE DRAWING FOR ABUTMENT DETAILS.
4. FOR SINGLE SLOPE BARRIER BEYOND THE STRUCTURE (ROADWAY BARRIER), SEE STD. ROADWAY CONSTR. DWG. RM-4.3 THROUGH RM-4.5.
5. REFER TO AS-2-15 FOR APPLICABLE DETAILS FOR APPROACH SLAB JOINTS USED WITH SEMI-INTEGRAL AND INTEGRAL ABUTMENTS.
6. USE GLASS FIBER REINFORCED POLYMER (GFRP) FOR HORIZONTAL BARS (G6__) AND STIFFENING BARS (G601 & G602).
7. GLASS FIBER REINFORCED POLYMER (GFRP) MAY BE USED FOR THE HORIZONTAL BARS OR STIFFENING BARS FOR THE APPROACH SLAB BARRIER AT NO ADDITIONAL COST TO THE DEPARTMENT.
8. FOR DEFLECTION JOINT DETAILS AND ADDITIONAL NOTES, SEE SHEET 5/5.

REINFORCEMENT LIST

MARK	LENGTH	TYPE	MATERIAL	BENDING DIAGRAMS
X5__	⊕	STR	STEEL	
Y403	2B + C + D + 9'-10"	BENT	STEEL	
Y502	⊕	STR	STEEL	
Y601	2E + 11'-6"	BENT	STEEL	
G601	10'-6'	STR	GFRP	
G602	⊕	STR	GFRP	
G6__	⊕	STR	GFRP	

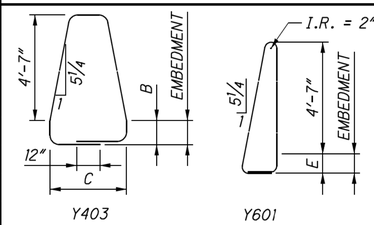

⊕ SEE PROJECT PLANS

B = APPROACH SLAB THICKNESS MINUS 3"

C = 3'-2" + ◐

D = 1'-4" + ◐

E = DECK OVERHANG THICKNESS MINUS 1½"

Preliminary Plans - For Reference Only

DESIGN AGENCY
OFFICE OF STRUCTURAL ENGINEERING

STATE OF OHIO DEPARTMENT OF TRANSPORTATION

07-17-2020 DATE

ADMINISTRATOR

REVISION 11-12-93

SBR-2-20

STANDARD BRIDGE DRAWING
57" SINGLE SLOPE CONCRETE MEDIAN BRIDGE RAILING

3 / 5

55 / 64

984 / 1047

F:\HAM\2\44\structures\HAM075_0823\sheets\SBR-2-20_2021-I-I5\SBR-2-20_2021-I-I5_sheet 3.dgn 5/11/2026 10:50:31 AM PAntonelli

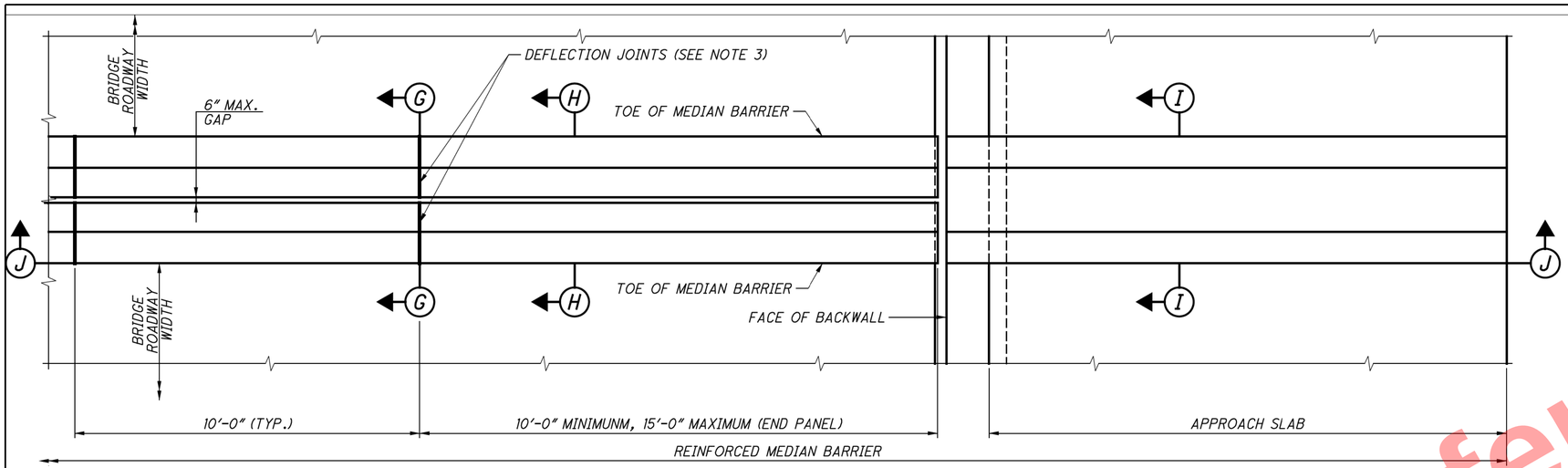

PLAN VIEW

57" SINGLE SLOPE BACK-TO BACK MEDIAN BRIDGE RAILINGS SHOWN WITH TYPICAL ABUTMENT.
FORWARD ABUTMENT SHOWN, REAR ABUTMENT SIMILAR BUT OPPOSITE

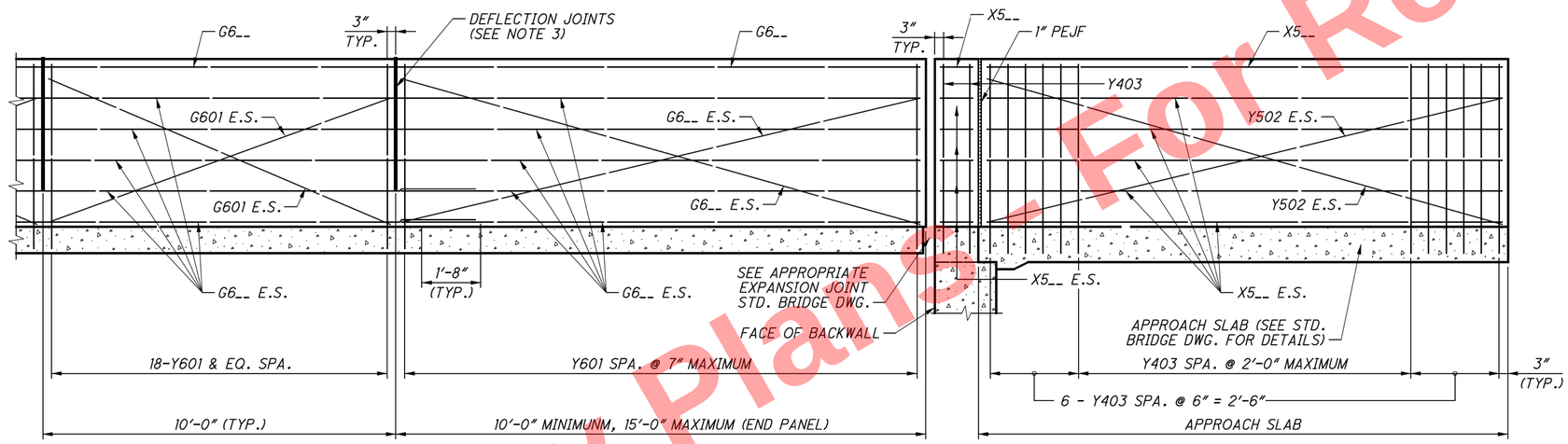

LEGEND:

E.S. - EACH SIDE

PEJF - PREFORMED EXPANSION JOINT FILLER

SPA. - SPACED

EQ. - EQUALLY

MAX. - MAXIMUM

NOTES:

1. FOR 57" SINGLE SLOPE CONCRETE MEDIAN BRIDGE RAILING, INCLUDE PLAN VIEW, ELEVATION VIEW, SECTIONS, REINFORCING MARKS, REINFORCING BENDING DIAGRAMS, AND REINFORCING QUANTITIES IN THE PROJECT PLANS.
2. FOR THE ENTIRE LENGTH OF SINGLE SLOPE CONCRETE MEDIAN BRIDGE RAILINGS, SHOW THE LOCATIONS OF DEFLECTION JOINTS IN THE PROJECT PLANS. DEFLECTION JOINT IS NOT REQUIRED WITHIN THE APPROACH SLAB MEDIAN BARRIER SECTIONS.
3. SEE APPROPRIATE STANDARD BRIDGE DRAWING FOR ABUTMENT DETAILS.
4. FOR SINGLE SLOPE BARRIER BEYOND THE STRUCTURE (ROADWAY BARRIER), SEE STD. ROADWAY CONSTR. DWG. RM-4.3 THROUGH RM-4.5.
5. USE GLASS FIBER REINFORCED POLYMER (GFRP) FOR HORIZONTAL BARS (G6__) AND STIFFENING BARS (G601 & G602).
6. GLASS FIBER REINFORCED POLYMER (GFRP) MAY BE USED FOR THE HORIZONTAL BARS OR STIFFENING BARS FOR THE APPROACH SLAB BARRIER AT NO ADDITIONAL COST TO THE DEPARTMENT.
7. FOR DEFLECTION JOINT DETAILS AND ADDITIONAL NOTES, SEE SHEET 5/5.

REINFORCEMENT LIST

MARK	LENGTH	TYPE	MATERIAL	BENDING DIAGRAMS
X5__	⊕	STR	STEEL	
Y403	2B + C + D + 9'-10"	BENT	STEEL	
Y502	⊕	STR	STEEL	
Y601	2E + 11'-6"	BENT	STEEL	
G601	10'-6'	STR	GFRP	
G602	⊕	STR	GFRP	
G6__	⊕	STR	GFRP	

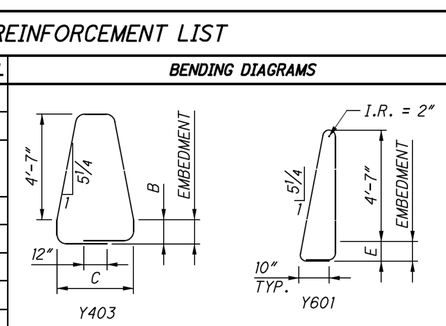

⊕ SEE PROJECT PLANS

B = APPROACH SLAB THICKNESS MINUS 3"

C = 3'-0" + ◐ D = 1'-3" + ◐

E = DECK OVERHANG THICKNESS MINUS 1½"

SECTION J-J

REINFORCEMENT SHOWN IS ONLY FOR ONE SIDE OF THE BACK-TO-BACK MEDIAN BARRIERS

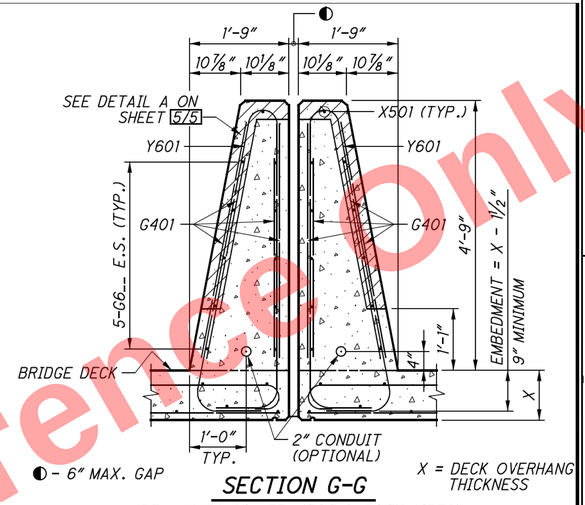

◐ - 6" MAX. GAP

X = DECK OVERHANG THICKNESS

SECTION G-G

AREA =12.32 SQ. FT. (TOTAL BOTH SIDES)
REINFORCED CONCRETE DECK ON STEEL OR PRESTRESSED CONCRETE I-BEAMS/GIRDERS (BEAMS/GIRDERS NOT SHOWN)

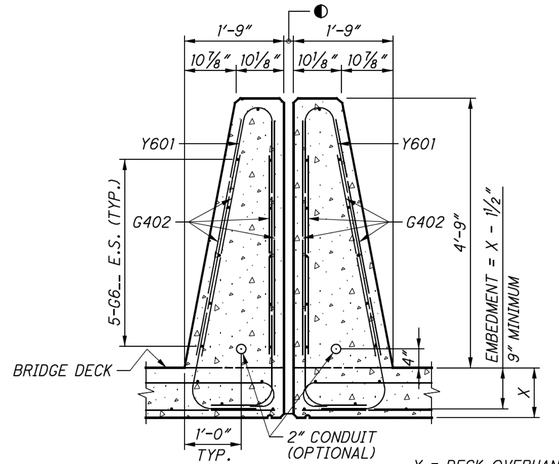

◐ - 6" MAX. GAP

X = DECK OVERHANG THICKNESS

SECTION H-H

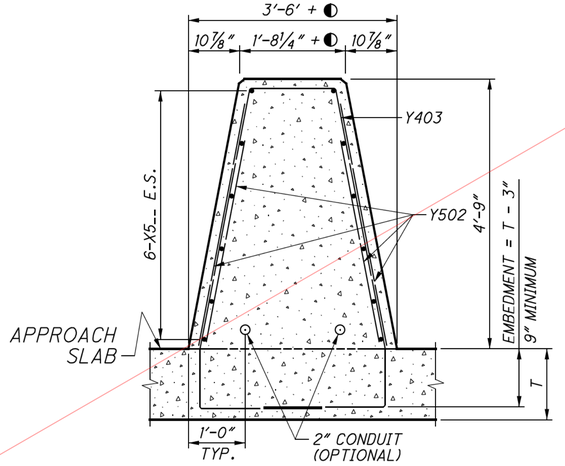

◐ - 6" MAX. GAP

T = APPROACH SLAB THICKNESS

SECTION I-I

STATE OF OHIO DEPARTMENT OF TRANSPORTATION
Jim Kell
ADMINISTRATOR
07-17-2020
DATE

DESIGN AGENCY
OFFICE OF
STRUCTURAL ENGINEERING

REVISION
11-12-93

SBR-2-20

STANDARD BRIDGE DRAWING
57" SINGLE SLOPE CONCRETE MEDIAN BRIDGE RAILING

4 / 5
56 / 64
985 / 1047

Preliminary Plans - For Reference Only

F:\HAM\2\447\structures\HAM075-0823\sheets\SBR-2-20_2021-I-75_SBR-2-20_2021-I-75_sheet 4.dgn 5/11/2026 10:50:52 AM PAntonelli

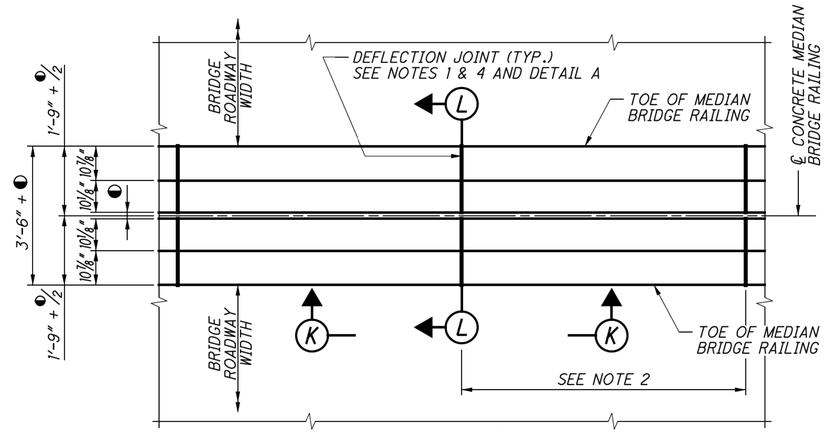

PLAN VIEW

DEFLECTION JOINT DETAIL FOR 57" SINGLE SLOPE BACK-TO-BACK CONCRETE MEDIAN BRIDGE RAILINGS (SEE SHEETS 3/5 AND 4/5)

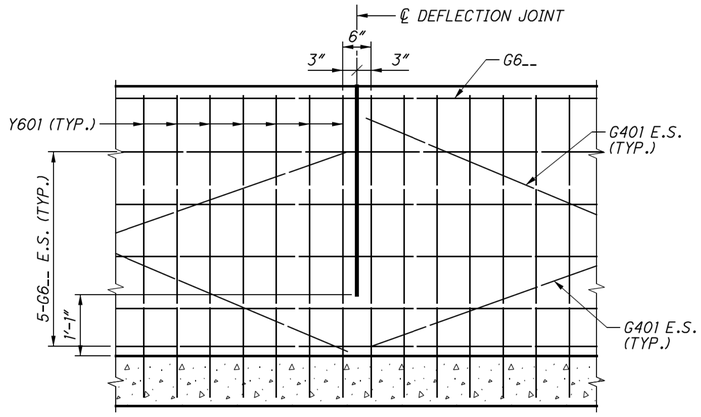

SECTION K-K

REINFORCEMENT SHOWN IS ONLY FOR ONE SIDE OF THE BACK-TO-BACK MEDIAN BARRIERS REINFORCED CONCRETE DECK ON STEEL OR PRESTRESSED CONCRETE I-BEAMS/GIRDERS (BEAMS/GIRDERS NOT SHOWN)

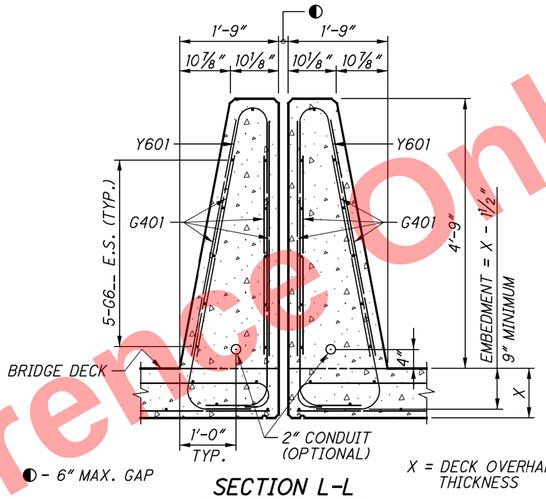

SECTION L-L

X = DECK OVERHANG THICKNESS

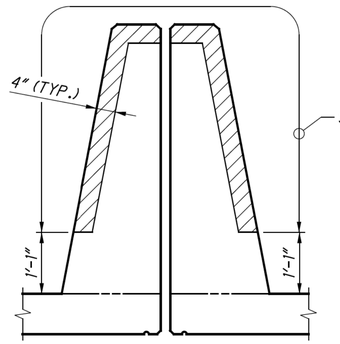

DETAIL A

NOTES:

1. FOR THE ENTIRE LENGTH OF SINGLE SLOPE CONCRETE MEDIAN BRIDGE RAILINGS, PROJECT PLANS SHALL SHOW THE LOCATIONS OF DEFLECTION JOINTS.
2. DEFLECTION JOINT SPACING SHALL BE 10'-0" ON CENTERS EXCEPT FOR THE FIRST AND LAST BARRIER PANEL WITHIN THE BRIDGE LIMITS. THE FIRST AND LAST PANELS SHALL BE 10'-0" MINIMUM, 15'-0" MAXIMUM.
3. PAYMENT FOR GLASS FIBER REINFORCED POLYMER (GFRP) STIFFENING REINFORCEMENT SHALL BE INCLUDED WITH CONTRACT PRICE FOR ITEM 509 - NO._ GFRP DEFORMED BARS.
4. LIMITS OF SAWCUT IS SHOWN IN DETAIL A. THE 4" SAWCUT DEPTH SHOWN IN DETAIL A IS THE MINIMUM REQUIRED. HOWEVER, THE CONTRACTOR HAS AN OPTION TO PERFORM FULL DEPTH SAWCUT.

DESIGN CRITERIA:

57" SINGLE SLOPE CONCRETE MEDIAN BRIDGE RAILING TYPE B1 MEET THE REQUIREMENTS OF NCHRP 350 & MASH TEST LEVEL 3 AND "AASHTO LRFD BRIDGE DESIGN SPECIFICATIONS, 9TH EDITION".

57" SINGLE SLOPE BACK-TO-BACK CONCRETE MEDIAN BRIDGE RAILINGS MEET THE REQUIREMENTS OF NCHRP 350 & MASH TEST LEVEL 5 AND "AASHTO LRFD BRIDGE DESIGN SPECIFICATIONS, 9TH EDITION".

DESIGN DATA:

CONCRETE - COMPRESSIVE STRENGTH = 4.5 KSI
REINFORCING STEEL - MINIMUM YIELD STRENGTH = 60 KSI
GFRP - C&MS 705.28 (MODULUS = 8700 KSI)

AREA OF 57" SINGLE SLOPE CONCRETE MEDIAN BRIDGE RAILING IS SHOWN ON SHEETS 1/5 THROUGH 4/5 .

MAXIMUM SPACING OF VERTICAL REINFORCING BARS:

THE MAXIMUM SPACING OF VERTICAL REINFORCING BARS FOR THE 57" SINGLE SLOPE CONCRETE MEDIAN BRIDGE RAILING TYPE B1 SHALL BE 2'-0".

THE MAXIMUM SPACING OF VERTICAL REINFORCING BARS FOR THE 57" SINGLE SLOPE BACK-TO-BACK CONCRETE MEDIAN BRIDGE RAILING SHALL BE 7".

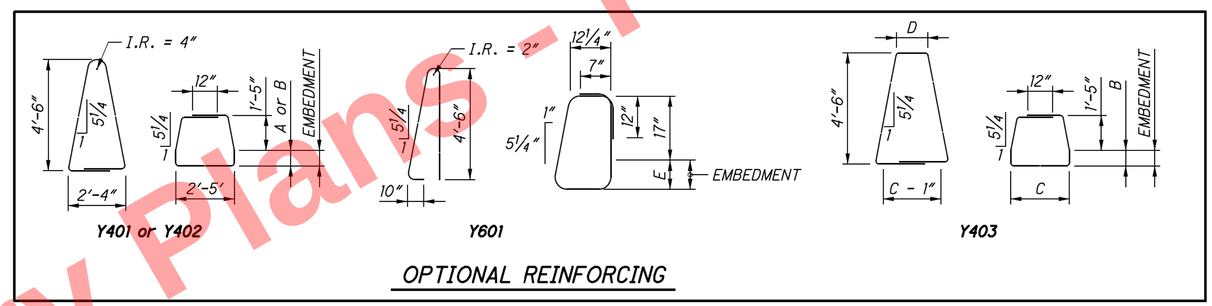

OPTIONAL REINFORCING

MINIMUM EMBEDMENT OF VERTICAL REINFORCING BARS:

THE MINIMUM EMBEDMENT IS 9". IF THE MINIMUM EMBEDMENT SHOWN FOR THE VERTICAL REINFORCING BARS INTO THE BRIDGE DECK IS NOT MET, THEN THE DESIGNER SHALL CALCULATE THE REQUIRED REINFORCEMENT ACCORDING TO SECTION 13 OF THE "AASHTO LRFD BRIDGE DESIGN SPECIFICATIONS".

OPTIONAL REINFORCING STEEL:

SHOW A SINGLE VERTICAL IN THE PROJECT PLANS. IN LIEU OF THE SINGLE VERTICAL BAR, THE CONTRACTOR MAY USE THE OPTIONAL VERTICAL REINFORCEMENT SHOWN ABOVE IN THE FORM OF LAPPED BARS AT THE VERTICAL BAR SPACING AND SIZE SHOWN IN THIS DRAWING.

THE DEPARTMENT WILL NOT ADJUST THE TOTAL QUANTITY OF REINFORCING STEEL TO ACCOMMODATE THIS OPTIONAL REINFORCEMENT. THE DEPARTMENT WILL CONSIDER DELAYS RESULTING FROM THIS OPTIONAL REINFORCEMENT AS NON-EXCUSABLE DELAYS.

CONTRACTION JOINTS FOR 57" SINGLE SLOPE UNREINFORCED CONCRETE MEDIAN BRIDGE RAILINGS TYPE B1 (SHEETS 1/5 AND 2/5):

SEE STD. ROADWAY CONSTR. DWG. RM-4.3 THROUGH RM-4.5 FOR NOTES.

DEFLECTION JOINTS FOR 57" SINGLE SLOPE BACK-TO-BACK REINFORCED CONCRETE MEDIAN BRIDGE RAILINGS (SHEETS 3/5 AND 4/5):

FOR SLIPFORMED CONSTRUCTION:
AS SOON AS CUTTING OPERATIONS CAN BEGIN WITHOUT DAMAGING THE CONCRETE, SAWCUT 1 ¼ INCH DEEP DEFLECTION CONTROL JOINTS ALONG THE PERIMETER OF THE MEDIAN BRIDGE RAILING.

AFTER THE CURING PERIOD AND BEFORE APPLYING LOAD TO THE MEDIAN BRIDGE RAILING, PERFORM 4 INCH SAWCUT AS SHOWN IN DETAIL A. APPLIED BRIDGE RAILING LOAD INCLUDES: CONSTRUCTION LOADS ON THE DECK (EXCLUDING PERSONNEL; HAND OPERATED EQUIPMENT AND MANUALLY POWERED VEHICLES); AND VEHICLE TRAFFIC IN THE LANE IMMEDIATELY ADJACENT TO MEDIAN BRIDGE RAILING AFTER REMOVAL OF TRAFFIC CONTROL DEVICES.

FOR CONVENTIONALLY FORMED CONSTRUCTION:
REMOVE THE FORMS BEFORE APPLYING LOAD TO THE MEDIAN BRIDGE RAILING. AS SOON AS THE FORMS ARE REMOVED, PERFORM 4-INCH SAWCUT AS SHOWN IN DETAIL A. THE 1 ¼ INCH SAWCUTS ARE NOT REQUIRED.

THE CONTRACTOR HAS AN OPTION TO PERFORM FULL DEPTH SAWCUT. HOWEVER, THE SAWCUT SHALL NOT BE LESS THAN 1'-1" FROM THE TOP OF THE CONCRETE DECK SLAB.

USE AN EDGE GUIDE, FENCE, OR JIG TO ENSURE THAT THE CUT JOINT IS STRAIGHT, TRUE, AND ALIGNED ON ALL FACES OF THE MEDIAN BRIDGE RAILING. THE JOINT WIDTH SHALL BE THE WIDTH OF THE SAW BLADE, A NOMINAL WIDTH OF ¼ INCH.

SEAL THE PERIMETER OF THE DEFLECTION JOINTS TO A MINIMUM DEPTH OF ONE INCH WITH A POLYURETHANE OR POLYMERIC MATERIAL CONFORMING TO ASTM C920, TYPE S. LEAVE THE BOTTOM ½ INCH OF BOTH FRONT FACES OF THE MEDIAN BRIDGE RAILINGS UNSEALED TO ALLOW ANY WATER WHICH MAY ENTER THE JOINT TO ESCAPE.

DEFLECTION JOINT IS NOT REQUIRED WITHIN THE APPROACH SLAB MEDIAN BARRIER SECTIONS.

DESIGN AGENCY
OFFICE OF STRUCTURAL ENGINEERING

STATE OF OHIO DEPARTMENT OF TRANSPORTATION
Jerry Wray
ADMINISTRATOR

07-17-2020
DATE

REVISION
11-12-93

SBR-2-20

STANDARD BRIDGE DRAWING
57" SINGLE SLOPE CONCRETE MEDIAN BRIDGE RAILING

5 / 5
57 / 64
986 / 1047

Preliminary Plans - For Reference Only

5/11/2026 10:5:45 AM PAntonelli
F:\HAM\21447\structures\HAM075_0823\sheets\SBR-2-20_2021-I-I5\SBR-2-20_2021-I-I5_sheet 5.dgn

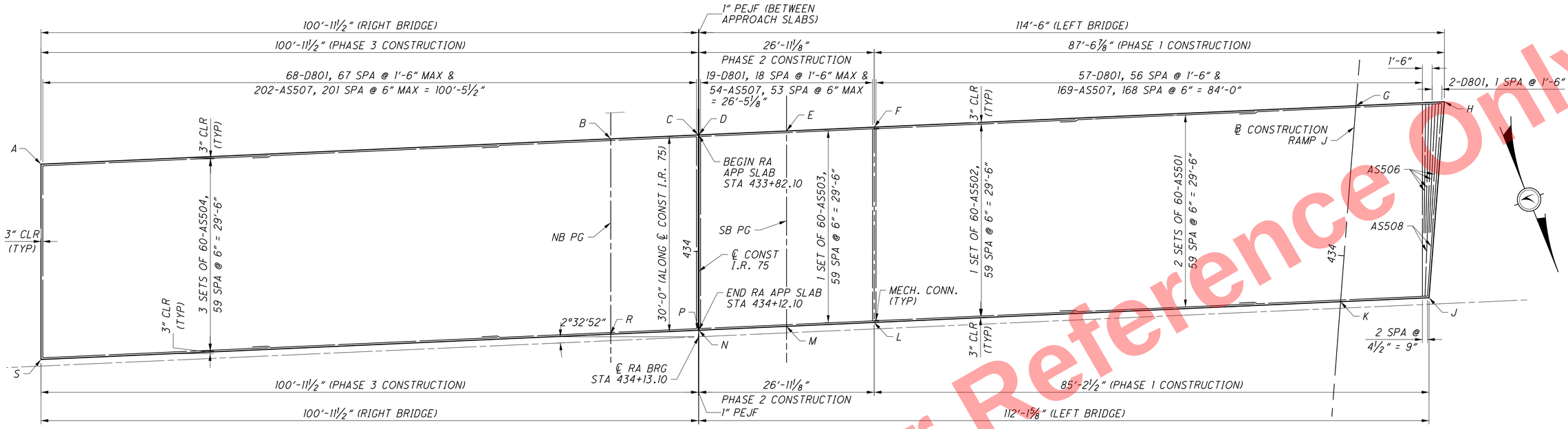

REAR APPROACH SLAB ELEVATIONS								
POINT	A	B	C	D	E	F	G	H
ELEVATION	541.45	542.56	542.09	542.09	542.58	542.81	541.86	541.41
POINT	J	K	L	M	N	P	R	S
ELEVATION	540.90	541.36	542.26	542.03	541.54	541.54	542.01	540.89

REAR APROACH SLAB

(TOP REINFORCING LAYOUT)
(MEASURED PERPENDICULAR TO ℄ CONST I.R. 75)

NOTES:

1. SEE ODOT SCD AS-1-15 FOR ADDITIONAL DETAILS NOT SHOWN.
2. SEE GENERAL NOTES FOR ABBREVIATION LEGEND.
3. MINIMUM LAP LENGTHS: #5 BARS = 2'-5"
4. SEE SHEET 60/64 FOR REAR SLEEPER SLAB DETAILS.

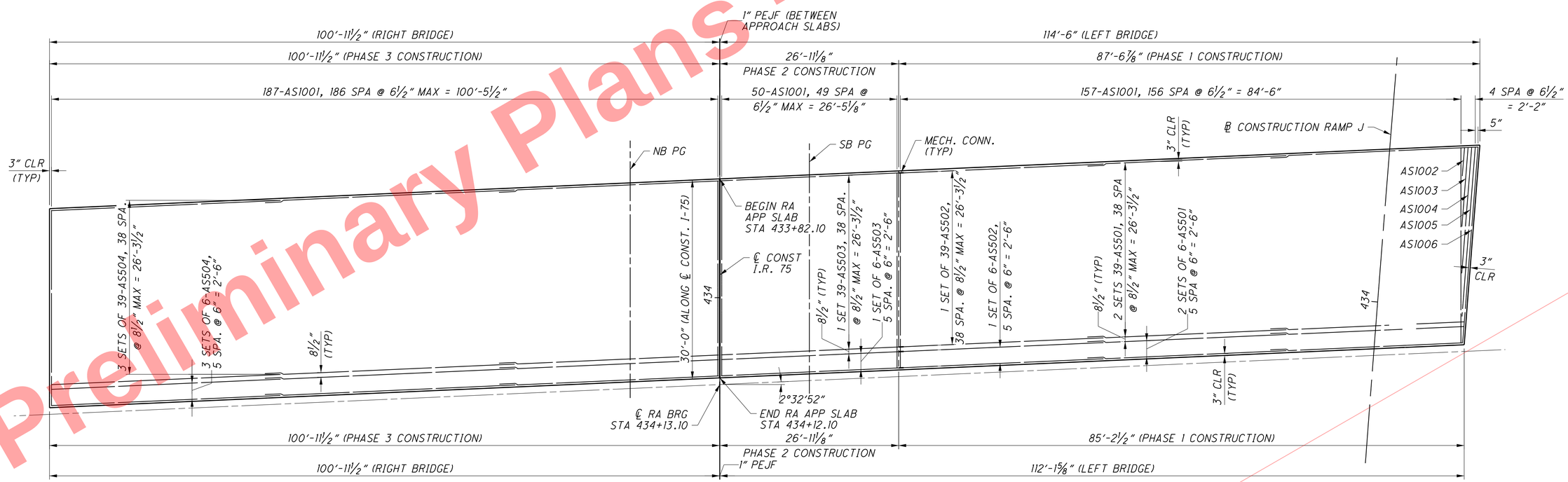

REAR APROACH SLAB

(BOTTOM REINFORCING LAYOUT)
(MEASURED PERPENDICULAR TO ℄ CONST I.R. 75)

Preliminary Plans - For Reference Only

DESIGN AGENCY: ODOT, 4679 North Avenue, Suite 201, Columbus, OH 43229
DESIGNED: TML | DRAWN: TML/SBH | REVIEWED: NCM | DATE: 5-22-26
CHECKED: JWE | REVISED: | STRUCTURE FILE NUMBER: 3110095

REAR APPROACH SLAB
BRIDGE NO. HAM-75-0823
I.R. 75 OVER LAIDLAW AVENUE (C.R. 690)

HAM-75-7.85
PID No. 121447

58 / 64

987 / 1047

F:\HAM\121447\structures\HAM075_0823\sheets\075_0823CSD602.dgn 5/11/2026 10:52:08 AM PAntonelli

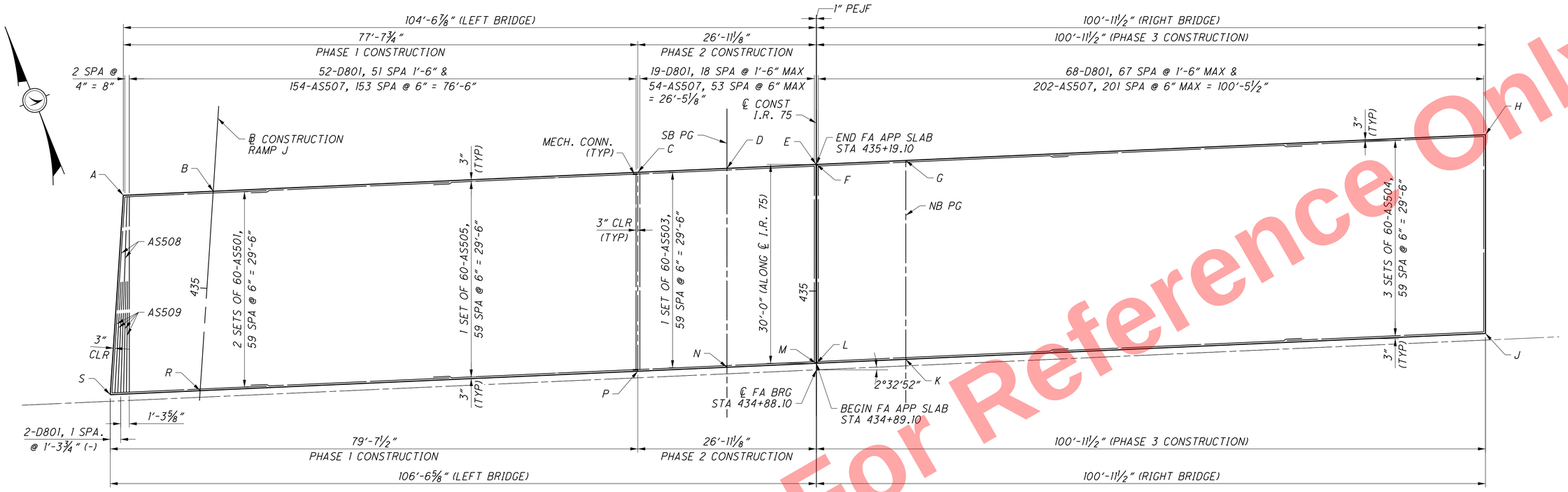

FORWARD APPROACH SLAB

(TOP REINFORCING LAYOUT)
(MEASURED PERPENDICULAR TO ℄ CONST I.R. 75)

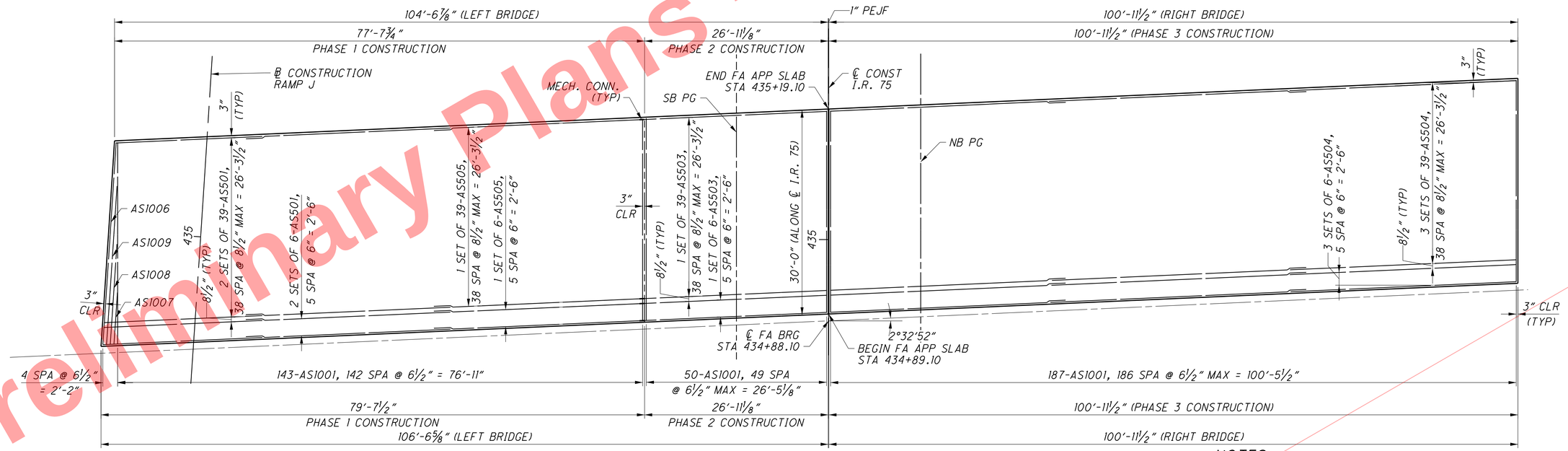

FORWARD APPROACH SLAB

(BOTTOM REINFORCING LAYOUT)
(MEASURED PERPENDICULAR TO ℄ CONST I.R. 75)

FORWARD APPROACH SLAB ELEVATIONS								
POINT	A	B	C	D	E	F	G	H
ELEVATION	538.64	539.08	539.82	539.59	539.09	539.09	539.56	538.41
POINT	J	K	L	M	N	P	R	S
ELEVATION	539.18	540.32	539.85	539.86	540.35	540.58	539.80	539.35

NOTES:

1. SEE ODOT SCD AS-1-15 FOR ADDITIONAL DETAILS NOT SHOWN.
2. SEE GENERAL NOTES FOR ABBREVIATION LEGEND.
3. MINIMUM LAP LENGTHS: #5 BARS = 2'-5"
4. SEE SHEET 61/64 FOR FORWARD SLEEPER SLAB DETAILS.

Preliminary Plans - For Reference Only

DESIGN AGENCY: JMT, 4215 North Avenue, Suite 200, Columbus, OH 43219

DESIGNED	DRAWN	REVIEWED	DATE
TML	TML/SBH	NCM	5-22-26
CHECKED	REVISED	STRUCTURE FILE NUMBER	
JWE		3110095	

FORWARD APPROACH SLAB
BRIDGE NO. HAM-75-0823
I.R. 75 OVER LAIDLAW AVENUE (C.R. 690)

HAM-75-7.85
PID No. 121447

F:\HAM\121447\structures\HAM075_0823\sheets\075_0823CSD603.dgn 5/11/2026 10:52:25 AM PAntonelli

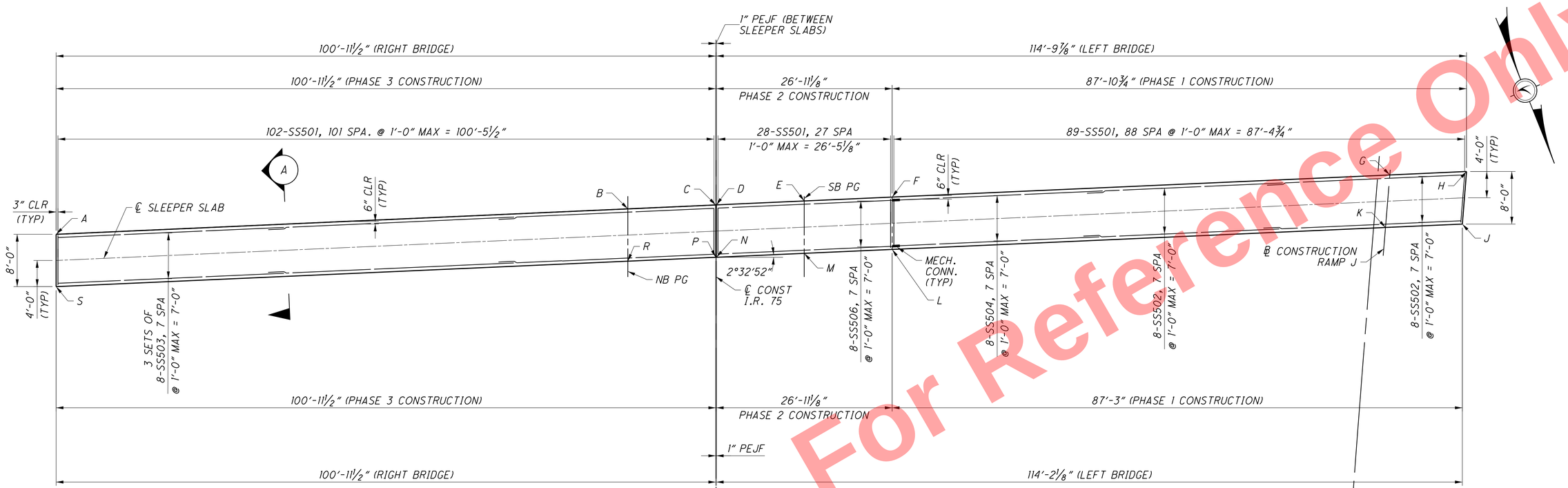

PLAN OF REAR SLEEPER SLAB

(MEASURED PERPENDICULAR TO ℄ CONST I.R. 75)

REAR SLEEPER SLAB LOCATION		
POINT	STATION	ELEVATION
A	433+82.59	540.10
B	433+78.70	541.21
C	433+78.10	540.75
D	433+78.10	540.75
E	433+77.50	541.23
F	433+76.90	541.46
G	433+73.59	540.50
H	433+72.99	540.03
J	433+81.02	539.91
K	433+81.63	540.38
L	433+84.90	541.32
M	433+85.50	541.09
N	433+86.10	540.62
P	433+86.10	540.62
R	433+86.70	541.07
S	433+90.59	539.96

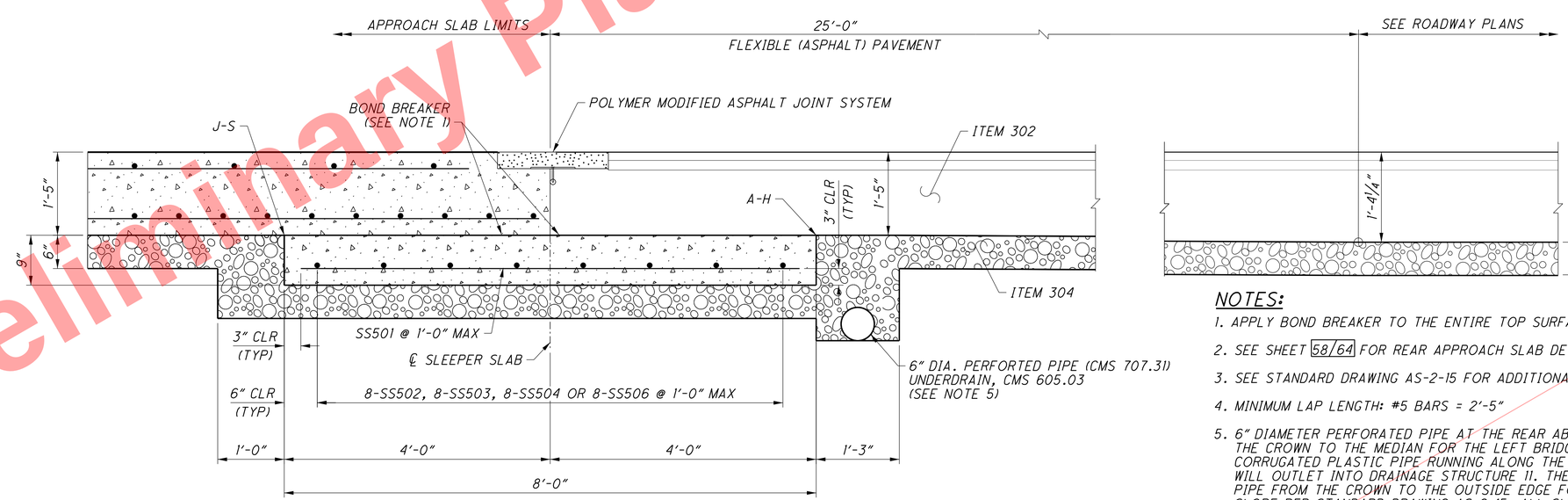

SECTION A

NOTES:

1. APPLY BOND BREAKER TO THE ENTIRE TOP SURFACE OF THE CONCRETE SLEEPER SLAB.
2. SEE SHEET 58/64 FOR REAR APPROACH SLAB DETAILS.
3. SEE STANDARD DRAWING AS-2-15 FOR ADDITIONAL DETAILS NOT SHOWN.
4. MINIMUM LAP LENGTH: #5 BARS = 2'-5"
5. 6" DIAMETER PERFORATED PIPE AT THE REAR ABUTMENT FOR THE RIGHT BRIDGE AND FROM THE CROWN TO THE MEDIAN FOR THE LEFT BRIDGE SHALL TIE INTO A NON-PERFORATED CORRUGATED PLASTIC PIPE RUNNING ALONG THE CENTERLINE OF CONSTRUCTION WHICH WILL OUTLET INTO DRAINAGE STRUCTURE 11. THE PORTION OF THE 6" DIAMETER PERFORATED PIPE FROM THE CROWN TO THE OUTSIDE EDGE FOR THE LEFT BRIDGE SHALL OUTLET TO THE SLOPE PER STANDARD DRAWING AS-2-15. ALL SLEEPER SLAB DRAINAGE SHALL BE INCLUDED FOR PAYMENT WITH ITEM 526 - TYPE A INSTALLATION.

Preliminary Plans - For Reference Only

DESIGN AGENCY
STRAND ASSOCIATES, INC.
401 North Wilkinson, Suite 201, Dallas, OH 43215

DESIGNED	DRAWN	REVIEWED	DATE
CBY	CBY	RPM	5-22-26
CHECKED	REVISED	STRUCTURE FILE NUMBER	
PPA		3110095	

REAR SLEEPER SLAB
BRIDGE NO. HAM-75-0823
I.R. 75 OVER LAIDLAW AVENUE (C.R. 690)

HAM-75-7.85
PID No. 121447

60/64

989/1047

F:\HAM\121447\structures\HAM075_0823\sheets\075_0823CSD613.dgn 5/11/2026 10:52:54 AM PAntonelli

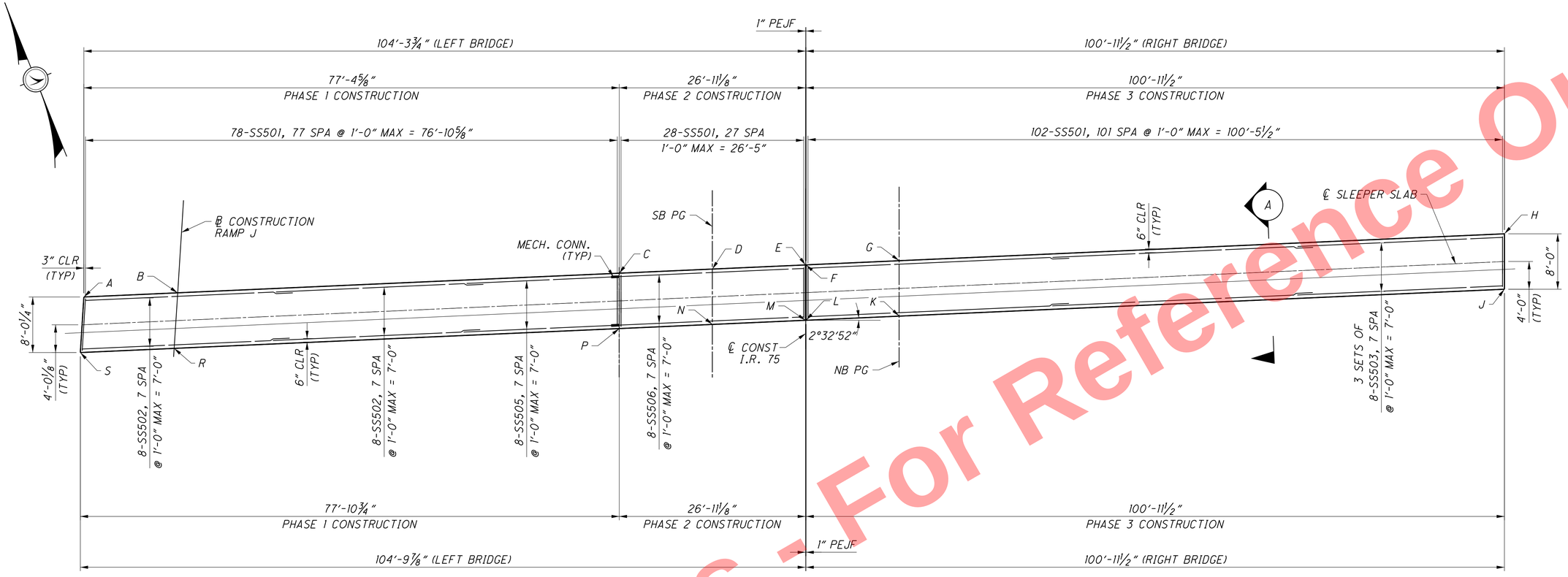

PLAN OF FORWARD SLEEPER SLAB
(MEASURED PERPENDICULAR TO ℄ CONST I.R. 75)

FORWARD SLEEPER SLAB LOCATION		
POINT	STATION	ELEVATION
A	435+18.47	537.10
B	435+19.07	537.57
C	435+21.90	538.30
D	435+22.50	538.07
E	435+23.10	537.58
F	435+23.10	537.58
G	435+23.70	538.03
H	435+27.59	536.89
J	435+19.59	537.10
K	435+15.70	538.24
L	435+15.10	537.79
M	435+15.10	537.79
N	435+14.50	538.28
P	435+13.90	538.51
R	435+11.04	537.77
S	435+10.43	537.30

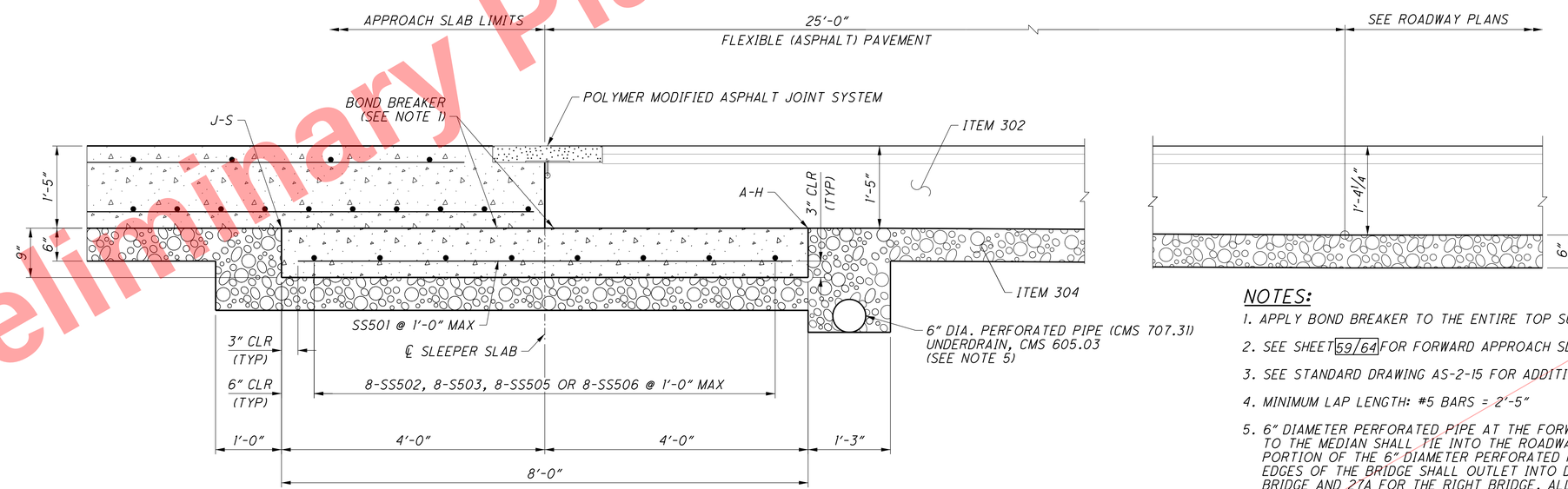

SECTION A

NOTES:

1. APPLY BOND BREAKER TO THE ENTIRE TOP SURFACE OF THE CONCRETE SLEEPER SLAB.
2. SEE SHEET 59/64 FOR FORWARD APPROACH SLAB DETAILS.
3. SEE STANDARD DRAWING AS-2-15 FOR ADDITIONAL DETAILS NOT SHOWN.
4. MINIMUM LAP LENGTH: #5 BARS = 2'-5"
5. 6" DIAMETER PERFORATED PIPE AT THE FORWARD ABUTMENT RUNNING FROM THE CROWN TO THE MEDIAN SHALL TIE INTO THE ROADWAY UNDERDRAIN AT THE MEDIAN. THE PORTION OF THE 6" DIAMETER PERFORATED PIPE FROM THE CROWN TO THE OUTSIDE EDGES OF THE BRIDGE SHALL OUTLET INTO DRAINAGE STRUCTURES 27B FOR THE LEFT BRIDGE AND 27A FOR THE RIGHT BRIDGE. ALL SLEEPER SLAB DRAINAGE SHALL BE INCLUDED FOR PAYMENT WITH ITEM 526 - TYPE A INSTALLATION.

Preliminary Plans - For Reference Only

DESIGN AGENCY: JMT, 4215 North Avenue, Suite 200, Columbus, OH 43219

DESIGNED	DRAWN	REVIEWED	DATE
CBY	CBY	RPM	5-22-26
CHECKED	REVISED	STRUCTURE FILE NUMBER	
PPA		3110095	

FORWARD SLEEPER SLAB
BRIDGE NO. HAM-75-0823
I.R. 75 OVER LAIDLAW AVENUE (C.R. 690)

HAM-75-7.85
PID No. 121447

F:\HAM\121447\structures\HAM075_0823\sheets\075_0823CSD614.dgn 5/11/2026 10:53:23 AM PAntonelli

	MARK	NUMBER REAR	NUMBER FORWARD	NUMBER TOTAL	LENGTH	WEIGHT (LBS)	TYPE	DIMENSIONS A	DIMENSIONS B	DIMENSIONS C	DIMENSIONS INC.
	ABUTMENTS										
	A501	229	214	443	19'-2"	8856	3	6'-8"	2'-7"		
	A502	60	56	116	30'-0"	3630	ST.				
*	A503	14		14	24'-11"	364	ST.				
	A504	2		2	18'-0"	38	ST.				
**	A505	14		14	22'-2"	324	ST.				
	A506	NOT USED									
	A507	NOT USED									
	A508	3		3	11'-11"	38	2	5'-0"	2'-2"	5'-0"	
	A509	9		9	16'-7"	156	2	7'-4"	2'-2"	7'-4"	
		1		1	7'-5"			2'-9"		2'-9"	
	A510	SER. OF		SER. OF	TO	61	2	TO	2'-2"	TO	5 1/2"
		6		6	11'-11"			5'-0"		5'-0"	
		1		1	13'-10"				4'-5"		
	A511	SER. OF		SER. OF	TO	102	3	2'-2"	TO		5 3/4"
		6		6	18'-8"				6'-10"		
	A512	1		1	12'-2"	13	3	2'-2"	3'-7"		
	A513	1		1	11'-0"	12	3	2'-2"	3'-0"		
		2		2	5'-2"						
	A514	SER. OF		SER. OF	TO	96	ST.				2'-0"
		5		5	13'-2"						
	A515	3		3	18'-9"	59	19	3'-10"	13'-4"	6'-8"	
*	A516		2	2	10'-10"	23	ST.				
*	A517		4	4	29'-11"	125	ST.				
**	A518		14	14	22'-11"	335	ST.				
*	A519		8	8	32'-11"	275	ST.				
	A520	NOT USED									
	A521	NOT USED									
	A522		6	6	16'-9"	105	2	7'-5"	2'-2"	7'-5"	
	A523		6	6	16'-8"	105	ST.				
			2	2	10'-4"						
	A524		SER. OF	SER. OF	TO	112	ST.				2'-0"
			4	4	16'-4"						
	A525		4	4	8'-7"	36	ST.				
	A526		8	8	11'-2"	94	ST.				
			1	1	8'-6"				2'-9"		
	A527		SER. OF	SER. OF	TO	102	3	1'-2"	TO		6 1/4"
			8	8	15'-10"				6'-5"		
	A528		7	7	10'-1"	74	2	4'-7"	1'-2"	4'-7"	
	A529		7	7	14'-11"	109	2	7'-0"	1'-2"	7'-0"	
	A530		5	5	17'-2"	90	3	5'-8"	2'-7"		
	A531		2	2	8'-7"	18	ST.				
	A532		1	1	14'-2"	15	3	2'-2"	4'-7"		
	A533	NOT USED									
	A534	NOT USED									
	A535	24	24	48	31'-7"	1582	ST.				
	A536		2	2	23'-11"	50	ST.				
	A537	3		3	15'-6"	49	19	3'-10"	10'-5"	5'-4"	
		2		2	5'-0"						
	A538	SER. OF		SER. OF	TO	94	ST.				2'-0"
		5		5	13'-0"						
	A539	4		4	12'-1"	51	2	5'-1"	2'-2"	5'-1"	
	A540	1		1	11'-5"	12	2	4'-9"	2'-2"	4'-9"	
	A541	1		1	10'-5"	11	2	4'-3"	2'-2"	4'-3"	
		1		1	6'-11"			2'-6"		2'-6"	
	A542	SER. OF		SER. OF	TO	25	2	TO	2'-2"	TO	6"
		3		3	8'-11"			3'-6"		3'-6"	
		1		1	16'-10"				5'-11"		
	A543	SER. OF		SER. OF	TO	56	3	2'-2"	TO		6"
		3		3	18'-10"				6'-11"		
	A544	1		1	15'-0"	16	3	2'-2"	5'-0"		
	A545	1		1	14'-0"	15	3	2'-2"	4'-6"		
	A546	9		9	16'-5"	155	2	7'-3"	2'-2"	7'-3"	
	A547		3	3	15'-7"	49	19	4'-0"	10'-4"	5'-3"	
			2	2	5'-2"						
	A548		SER. OF	SER. OF	TO	96	ST.				2'-0"
			5	5	13'-2"						
	A549		4	4	11'-11"	50	2	5'-0"	2'-2"	5'-0"	
	A550		1	1	11'-7"	13	2	4'-10"	2'-2"	4'-10"	
	A551		1	1	10'-5"	11	2	4'-3"	2'-2"	4'-3"	
			1	1	17'-0"				6'-0"		
	A552		SER. OF	SER. OF	TO	122	3	2'-2"	TO		5 3/4"
			6	6	21'-10"				8'-5"		
	A553		1	1	15'-4"	16	3	2'-2"	5'-2"		
					SUBTOTAL =	17840					

	MARK	NUMBER REAR	NUMBER FORWARD	NUMBER TOTAL	LENGTH	WEIGHT (LBS)	TYPE	DIMENSIONS A	DIMENSIONS B	DIMENSIONS C	DIMENSIONS INC.
	ABUTMENTS (CONTINUED)										
	A601	48		48	16'-4"	1178	3	2'-8"	5'-1"		
	A602	40		40	17'-4"	1042	3	2'-8"	5'-7"		
	A603	23		23	15'-4"	530	3	2'-8"	4'-7"		
	A604		20	20	15'-10"	476	3	2'-8"	4'-10"		
	A605		39	39	16'-10"	987	3	2'-8"	5'-4"		
	A606		41	41	17'-10"	1099	3	2'-8"	5'-10"		
	A607	23		23	15'-2"	524	3	2'-8"	4'-6"		
	A608	64		64	16'-8"	1603	3	2'-8"	5'-3"		
	A609		23	23	15'-6"	536	3	2'-8"	4'-8"		
	A610		15	15	16'-10"	380	3	2'-8"	5'-4"		
	A611		59	59	17'-2"	1522	3	2'-8"	5'-6"		
	A801	46	46	92	30'-0"	7370	ST.				
	A802		4	4	22'-10"	244	ST.				
	A803	6	6	12	15'-11"	510	ST.				
	A804	8		8	24'-8"	527	ST.				
	A805	NOT USED									
	A806	12		12	28'-11"	927	ST.				
	A807		8	8	22'-2"	474	ST.				
	A808		4	4	20'-4"	218	ST.				
	A809		12	12	25'-6"	818	ST.				
**	A810	6		6	22'-2"	356	ST.				
	A811	4	4	8	21'-6"	460	ST.				
**	A812	4		4	5'-7"	60	ST.				
*	A813	6		6	32'-8"	524	ST.				
	A814	8		8	25'-2"	538	ST.				
	A815	4		4	31'-2"	333	ST.				
*	A816	4		4	12'-10"	138	ST.				
**	A817		6	6	22'-11"	368	ST.				
**	A818		4	4	6'-4"	68	ST.				
	A819	NOT USED									
*	A820		10	10	12'-5"	332	ST.				
	A821		4	4	31'-0"	332	ST.				
	A822		6	6	11'-2"	179	ST.				
					SUBTOTAL =	24653					
					TOTAL =	42493					

	MARK	NUMBER REAR	NUMBER FORWARD	NUMBER TOTAL	LENGTH	WEIGHT (LBS)	TYPE	DIMENSIONS A	DIMENSIONS B	DIMENSIONS C	DIMENSIONS D	DIMENSIONS INC.
	SLEEPER SLAB (FOR INFORMATION ONLY)											
	SS501	219	208	427	7'-6"	3341	ST.					
	SS502	16	16	32	30'-0"	1002	ST.					
	SS503	24	24	48	35'-3"	1765	ST.					
*	SS504	8		8	32'-6"	272	ST.					
*	SS505		8	8	22'-10"	191	ST.					
**	SS506	8	8	16	26'-8"	446	ST.					
					TOTAL =	7017						

NOTES:

1. THE BAR SIZE NUMBER IS SPECIFIED ON THE PLANS IN THE BAR MARK COLUMN. THE FIRST DIGIT WHERE THREE DIGITS ARE USED, AND THE THE FIRST TWO DIGITS WHERE FOUR ARE USED, INDICATES THE BAR SIZE NUMBER. FOR EXAMPLE, A601 IS A NO. 6 BAR.

2. BAR DIMENSIONS SHOWN ARE OUT TO OUT UNLESS OTHERWISE INDICATED. R INDICATES INSIDE RADIUS, UNLESS OTHERWISE NOTED.

3. "ST." INDICATES A STRAIGHT BAR.

4. ALL REINFORCING TO BE EPOXY COATED.

LEGEND:

* - BAR WITH MECHANICAL CONNECTOR

** - BAR WITH THREADED END

BAR BENDING DIAGRAMS

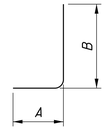

TYPE-1

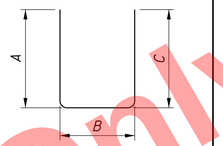

TYPE-2

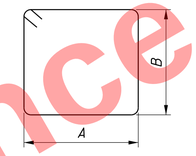

TYPE-3

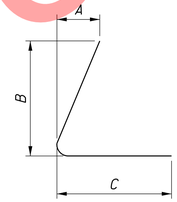

TYPE-11

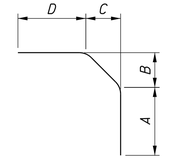

TYPE-13

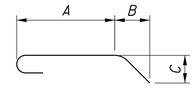

TYPE-18

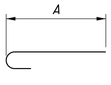

TYPE-16

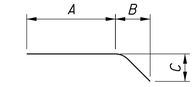

TYPE-19

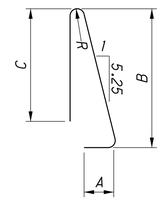

TYPE-23

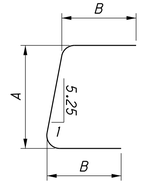

TYPE-28

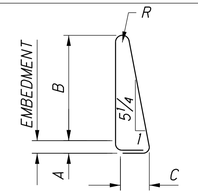

TYPE-35

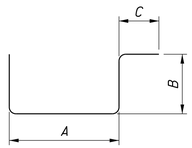

TYPE-36

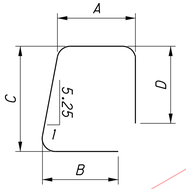

TYPE-37

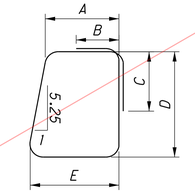

TYPE-41

Preliminary Plans - For Reference Only

DESIGN AGENCY
ODOT
4295 North Arlington Road, Columbus, OH 43228

DESIGNED KK | DRAWN JBM | REVIEWED NCM | DATE 5-22-26
CHECKED PPA | REVISED | STRUCTURE FILE NUMBER 3110095

REINFORCING LIST
BRIDGE NO. HAM-75-0823
I.R. 75 OVER LAIDLAW AVENUE (C.R. 690)

HAM-75-7.85
PID No. 121447

62 / 64

991
1047

F:\HAM\121447\structures\HAM075_0823\sheets\075_0823CRL601.dgn 5/11/2026 10:53:32 AM PAntonelli

MARK	NUMBER LEFT	NUMBER RIGHT	NUMBER TOTAL	LENGTH	WEIGHT (LBS)	TYPE	DIMENSIONS A	B	C	D	R	INC.
SUPERSTRUCTURE												
S401	224	212	436	39'-4"	11456	ST.						
S402	2		2	39'-6"	53	ST.						
	1		1	2'-7"								
S403	SER. OF		SER. OF	TO	32	ST.						13'-3 1/2"
	3		3	29'-2"								
S404	3		3	32'-9"	66	ST.						
	1		1	13'-6"								
S405	SER. OF		SER. OF	TO	54	ST.						13'-3"
	3		3	40'-0"								
S406	SEE DIAPHRAGM REINFORCING TABLE											
S407	77		77	5'-5"	279	2	2'-6"	0'-7"	2'-6"			
S408		154	154	3'-1"	318	2	1'-4"	0'-7"	1'-4"			
S409	77		77	5'-3"	271	2	2'-5"	0'-7"	2'-5"			
S501	224	212	436	39'-11"	18153	ST.						
S502	3		3	27'-9"	87	ST.						
S503	1		1	35'-5"	37	16	34'-10"					
S504	3		3	33'-11"	107	ST.						
	1		1	13'-6"								
S505	SER. OF		SER. OF	TO	84	ST.						13'-3"
	3		3	40'-0"								
	1		1	2'-7"								
S506	SER. OF		SER. OF	TO	50	ST.						13'-3 1/2"
	3		3	29'-2"								
S507	151		151	26'-7"	4187	ST.						
S508	606	14	620	30'-0"	19400	ST.						
	1		1	29'-2"								
S509	SER. OF		SER. OF	TO	5000	ST.						1/2"
	150		150	34'-9"								
S510	2		2	15'-6"	33	ST.						
S511	1		1	22'-4"	24	ST.						
S512	1		1	11'-2"	12	ST.						
	2		2	10'-3"								
S513	SER. OF		SER. OF	TO	135	ST.						11'-2 1/2"
	3		3	32'-8"								
	2		2	17'-1"								
S514	SER. OF		SER. OF	TO	178	ST.						11'-3"
	3		3	39'-7"								
S515	2	1	3	24'-0"	76	ST.						
	1		1	10'-9"								
S516	SER. OF		SER. OF	TO	69	ST.						11'-2 1/2"
	3		3	33'-2"								
S517	2		2	13'-0"	28	ST.						
S518	2		2	24'-3"	51	ST.						
S519	2		2	8'-8"	19	ST.						
S520	2		2	19'-10"	42	ST.						
S521	2	6	8	26'-8"	223	ST.						
S522	1		1	29'-3"	31	ST.						
S523	1		1	34'-10"	37	ST.						
	1		1	29'-9"			29'-2"					
S524	SER. OF		SER. OF	TO	5092	16						1/2"
	150		150	35'-4"			34'-9"					
S525	151		151	27'-2"	4279	16	26'-7"					
	1		1	11'-4"			10'-9"					
S526	SER. OF		SER. OF	TO	71	16						11'-2 1/2"
	3		3	33'-9"			33'-2"					
S527	1		1	22'-11"	24	16	22'-4"					
S528	1		1	11'-9"	13	16	11'-2"					
S529	2	6	8	27'-3"	228	16	26'-8"					
S530	1		1	29'-10"	32	16	29'-3"					
S531		5	5	34'-1"	178	16	33'-6"					
S532		18	18	20'-0"	376	ST.						
S533		290	290	35'-9"	10814	16	35'-2"					
S534		580	580	35'-2"	21274	ST.						
S535		1	1	24'-7"	26	16	24'-0"					
S536		1	1	13'-4"	14	16	12'-9"					
S537		1	1	12'-9"	14	ST.						
S538		2	2	17'-9"	38	ST.						
S539		2	2	6'-6"	14	ST.						
S540		2	2	11'-9"	25	ST.						
S541		2	2	12'-1"	26	ST.						
		2	2	6'-2"								
S542		SER. OF	SER. OF	TO	109	ST.						11'-3"
		3	3	28'-8"								
S543		2	2	24'-4"	51	ST.						
S544		2	2	13'-1"	28	ST.						
S545		2	2	26'-11"	57	ST.						
S546		2	2	16'-5"	35	ST.						
		1	1	13'-7"			13'-0"					
S547		SER. OF	SER. OF	TO	80	16						11'-9"
		3	3	37'-1"			36'-6"					
		1	1	13'-0"								
S548		SER. OF	SER. OF	TO	78	ST.						11'-9"
		3	3	36'-6"								
S549		2	2	34'-2"	72	16	33'-7"					
S550		2	2	33'-7"	71	ST.						
S551		2	2	27'-7"	58	16	27'-0"					
S552		2	2	27'-0"	57	ST.						
S553		5	5	33'-6"	175	ST.						
S601	306	306	612	10'-1"	9269	16	9'-5"					
				TOTAL =	113270							

MARK	NUMBER REAR	NUMBER FORWARD	NUMBER TOTAL	LENGTH	LENGTH (FT)	TYPE	DIMENSIONS A	B	C	D	E	R	INC.
GLASS FIBER REINFORCED POLYMER (GFRP) REINFORCING STEEL													
RG401			16	30'-0"	480	ST.							
RG402			4	19'-4"	78	ST.							
RG403			40	15'-4"	614	ST.							
RG404			4	18'-10"	76	ST.							
RG405			100	15'-1"	1509	ST.							
				SUB-TOTAL RAILING =	2757								
RG501			40	4'-6"	180	36	1'-8"	1'-2"	0'-10"				
RG502			40	4'-5"	177	36	1'-7 1/2"	1'-2"	0'-10"				
				SUB-TOTAL RAILING =	357								
RG601			44	25'-3"	1111	ST							
RG602			22	29'-6"	649	ST							
RG603			16	13'-7"	218	ST							
RG604			40	10'-3"	410	ST							
				SUB-TOTAL RAILING =	2388								
ASG401	4	4	8	29'-9"	238	ST.							
ASG402	16	16	32	14'-9"	472	ST.							
ASG403	4	4	8	29'-7"	237	ST.							
ASG404	20	20	40	14'-7"	584	ST.							
				SUB-TOTAL APPROACH SLAB =	1531								
ASG501	16	16	32	4'-3"	136	36	1'-5"	1'-2"	0'-10"				
ASG502	16	16	32	4'-2"	134	36	1'-4 1/2"	1'-2"	0'-10"				
				SUB-TOTAL APPROACH SLAB =	270								
ASG601	22	22	44	29'-7"	1302	ST							
ASG602	16	16	32	14'-11"	478	ST							
				SUB-TOTAL APPROACH SLAB =	1780								

MARK	NUMBER REAR	NUMBER FORWARD	NUMBER TOTAL	LENGTH	WEIGHT (LBS)	TYPE	DIMENSIONS A	B	C	D	E	R	INC.
RAILING													
R401			120	1'-9"	141	19	0'-11"	0'-2"	0'-11"				
R402			180	2'-8"	321	11	0'-9"	1'-8"	1'-1"				
R601			180	6'-11"	1870	41	0'-9 1/2"	0'-7"	1'-0"	2'-1"	1'-1 3/4"		
R602			120	7'-0"	1262	23	0'-6"	3'-3"	3'-3"			2"	
R603			60	7'-8"	691	37	1'-1 1/2"	0'-6"	3'-3"	3'-3"			
R604			60	4'-8"	421	1	1'-0"	3'-10"					
R605			276	12'-9"	5286	35	0'-9"	4'-7"	0'-10"			2 3/4"	
				TOTAL =	9992								

MARK	NUMBER REAR	NUMBER FORWARD	NUMBER TOTAL	LENGTH	WEIGHT (LBS)	TYPE	DIMENSIONS A	B	C	D	E	R	INC.
APPROACH SLABS (FOR INFORMATION ONLY)													
AS401	48	48	96	1'-9"	113	19	0'-11"	0'-2"	0'-11"				
AS402	72	72	144	2'-8"	257	11	0'-9"	1'-8"	1'-1"				
AS501	210	210	420	30'-0"	13142	ST							
* AS502	105		105	32'-3"	3532	ST							
** AS503	105	105	210	26'-8"	5841	ST							
AS504	315	315	630	35'-3"	23163	ST							
* AS505		105	105	24'-3"	2656	ST							
AS506	4		4	19'-10"	83	ST							
AS507	425	410	835	29'-6"	25692	ST							
AS508	2	2	4	29'-7"	124	ST							
AS509		4	4	16'-9"	70	ST							
AS601	72	72	144	7'-5"	1605	41	0'-9 1/2"	0'-7"	1'-0"	2'-4"	1'-2 1/2"		
AS602	48	48	96	7'-0"	1010	23	0'-6"	3'-3"	3'-3"			2"	
AS603	24	24	48	7'-8"	553	37	1'-1 1/2"	0'-6"	3'-3"	3'-3"			
AS604	24	24	48	5'-3"	379	1	1'-0"	4'-5"					
AS605	104	104	208	14'-1"	4400	35	1'-4"	4'-7"	0'-11"			2 3/4"	
AS1001	394	380	774	30'-11"	102969	16	29'-6"						
AS1002	1		1	5'-9"	25	16	4'-4"						
AS1003	1		1	13'-8"	59	16	12'-3"						
AS1004	1		1	20'-6"	89	16	19'-1"						
AS1005	1		1	27'-1"	117	16	25'-8"						
AS1006	1	1	2	31'-0"	267	16	29'-7"						
AS1007		1	1	9'-0"	39	16	7'-7"						
AS1008		1	1	16'-1"	70	16	14'-8"						
AS1009		1	1	24'-8"	107	16	23'-3"						
				TOTAL =	186362								

NOTES:

1. REFER TO SHEET 62/64 FOR LEGEND, NOTES AND ADDITIONAL DETAILS.

Preliminary Plans - For Reference Only

DESIGN AGENCY
OHM
400 North Ashley Drive, Suite 200, Tampa, FL 33602

DATE 5-22-26
REVIEWED NCM
STRUCTURE FILE NUMBER 3110095
DRAWN JBM
REVISED
DESIGNED JBM
CHECKED PPA

REINFORCING LIST
BRIDGE NO. HAM-75-0823
I.R. 75 OVER LAIDLAW AVENUE (C.R. 690)

HAM-75-7.85
PID No. 121447

63/64

992
1047

F:\HAM\121447\structures\HAM075_0823\sheets\075_0823CRL602.dgn 5/11/2026 10:53:41 AM PAntonelli

	MARK	NUMBER REAR	NUMBER FORWARD	NUMBER TOTAL	LENGTH	WEIGHT (LBS)	TYPE	DIMENSIONS A	B	C	D	INC.
	DIAPHRAGMS											
	S406			182	5'-11"	720	3	0'-6"	2'-3"			
	S554	2	2	4	2'-5"	11	ST.					
	S555	2	2	4	2'-7"	11	ST.					
	S556	4	4	8	1'-4"	12	ST.					
	S557		2	2	1'-9"	4	ST.					
	S558	44	42	86	7'-1"	636	ST.					
*	S559	2	2	4	2'-0"	9	ST.					
**	S560	2	2	4	5'-1"	22	ST.					
	S602		4	4	3'-7"	22	13	1'-3"	0'-7"	0'-7"	1'-7"	
	S603	84	80	164	7'-2"	1766	13	4'-10"	0'-7"	0'-7"	1'-7"	
	S604	2	2	4	4'-7"	28	13	2'-3"	0'-7"	0'-7"	1'-7"	
	S605	2	2	4	4'-8"	29	13	2'-4"	0'-7"	0'-7"	1'-7"	
	S606	190	185	375	11'-6"	6478	2	4'-10"	2'-2"	4'-10"		
	S607	4	4	8	3'-5"	42	13	1'-1"	0'-7"	0'-7"	1'-7"	
	S608	4	22	26	11'-4"	443	3	2'-8"	2'-7"			
	S609	39	24	63	11'-8"	1104	3	2'-8"	2'-9"			
	S610	4	8	12	12'-0"	217	3	2'-8"	2'-11"			
	S611	20	24	44	12'-4"	816	3	2'-8"	3'-1"			
	S612	28		28	12'-6"	526	3	2'-8"	3'-2"			
	S613	32	36	68	11'-10"	1209	3	2'-8"	2'-10"			
	S614		4	4	11'-2"	68	3	2'-8"	2'-6"			
	S615	32	32	64	12'-2"	1170	3	2'-8"	3'-0"			
	S616	16	4	20	12'-8"	381	3	2'-8"	3'-3"			
	S617	11	31	42	11'-6"	726	3	2'-8"	2'-8"			
	S618	4		4	12'-10"	78	3	2'-8"	3'-4"			
	S619			88	7'-10"	1036	ST.					
	S620			4	5'-2"	32	ST.					
	S621			88	7'-6"	992	13	5'-0"	0'-7"	0'-7"	1'-5"	
	S622			4	6'-3"	38	13	3'-9"	0'-7"	0'-7"	1'-5"	
	S623	8		8	11'-4"	137	3	2'-2"	3'-1"			
	S624		8	8	10'-10"	131	3	2'-2"	2'-10"			
	S625	4		4	8'-8"	53	3	2'-8"	1'-3"			
	S626	4		4	8'-6"	52	3	2'-8"	1'-2"			
	S627		4	4	8'-4"	51	3	2'-8"	1'-1"			
	S628		4	4	7'-10"	48	3	2'-8"	0'-10"			
	D801	146	141	287	6'-3"	4790	18	3'-11"	1'-0"	1'-0"		
					SUBTOTAL	23888						

	MARK	NUMBER REAR	NUMBER FORWARD	NUMBER TOTAL	LENGTH	WEIGHT (LBS)	TYPE	DIMENSIONS A	B	C	D	INC.
	DIAPHRAGMS (CONTINUED)											
	S801		2	2	2'-5"	13	ST.					
	S802	46	46	92	30'-0"	7370	ST.					
*	S803	7		7	35'-1"	656	ST.					
**	S804	7	7	14	26'-9"	1000	ST.					
**	S805	4	4	8	14'-0"	300	ST.					
	S806	44	42	86	7'-10"	1799	ST.					
	S807	2	2	4	2'-10"	31	ST.					
	S808	2	2	4	2'-11"	32	ST.					
	S809	4	4	8	19'-2"	410	1	16'-2"	3'-2"			
*	S810	4	4	8	13'-0"	278	ST.					
	S811	4	4	8	9'-6"	203	1	6'-6"	3'-2"			
	S812	4		4	28'-2"	301	1	25'-2"	3'-2"			
	S813	4	4	8	1'-8"	36	ST.					
	S814	NOT USED										
	S815	NOT USED										
	S816	NOT USED										
	S817	6	6	12	25'-9"	826	ST.					
	S818	4	4	8	27'-1"	579	1	23'-10"	3'-5"			
	S819		5	5	23'-5"	313	ST.					
	S820	4		4	8'-11"	96	1	6'-3"	2'-10"			
*	S821		7	7	29'-7"	553	ST.					
	S822		4	4	9'-3"	99	1	6'-7"	2'-10"			
	S823	4	4	8	19'-6"	417	ST.					
	S824	5		5	13'-6"	181	ST.					
	S825	5		5	11'-0"	147	ST.					
	S826		4	4	22'-5"	240	1	19'-6"	3'-2"			
	S827		5	5	4'-8"	63	ST.					
	S828	1	1	2	16'-0"	86	ST.					
	S829	1	1	2	13'-6"	73	ST.					
*	S830	2	2	4	2'-5"	26	ST.					
	S831	8	8	16	12'-10"	549	6	3'-10"	1'-11"	3'-0"		
	S832	16	16	32	6'-1"	520	18	4'-1"	1'-0"	1'-0"		
	S833	NOT USED										
**	S834	2	2	4	5'-5"	58	ST.					
	S835	NOT USED										
	S836	2	3	5	1'-1"	15	ST.					
	S837	2	2	4	2'-3"	25	ST.					
	S838	20	19	39	6'-7"	686	ST.					
*	S839	1	1	2	1'-9"	10	ST.					
	S840	NOT USED										
**	S841	1	1	2	4'-10"	26	ST.					
					SUBTOTAL	18017						
					TOTAL =	41905						

Preliminary Plans - For Reference Only

NOTES:

1. REFER TO SHEET 62/64 FOR LEGEND, NOTES AND ADDITIONAL DETAILS.

DESIGN AGENCY
2000 Corporate Exchange Drive, Suite 200, Columbus, OH 43231

DESIGNED KK | DRAWN JBM | REVIEWED NCM | DATE 5-22-26
CHECKED PPA | REVISED | STRUCTURE FILE NUMBER 3110095

REINFORCING LIST
BRIDGE NO. HAM-75-0823
I.R. 75 OVER LAIDLAW AVENUE (C.R. 690)

HAM-75-7.85
PID No. 121447

64/64

993/1047

F:\HAM\121447\structures\HAM075_0823\sheets\075_0823CRL603.dgn 5/11/2026 10:53:49 AM PAntonelli

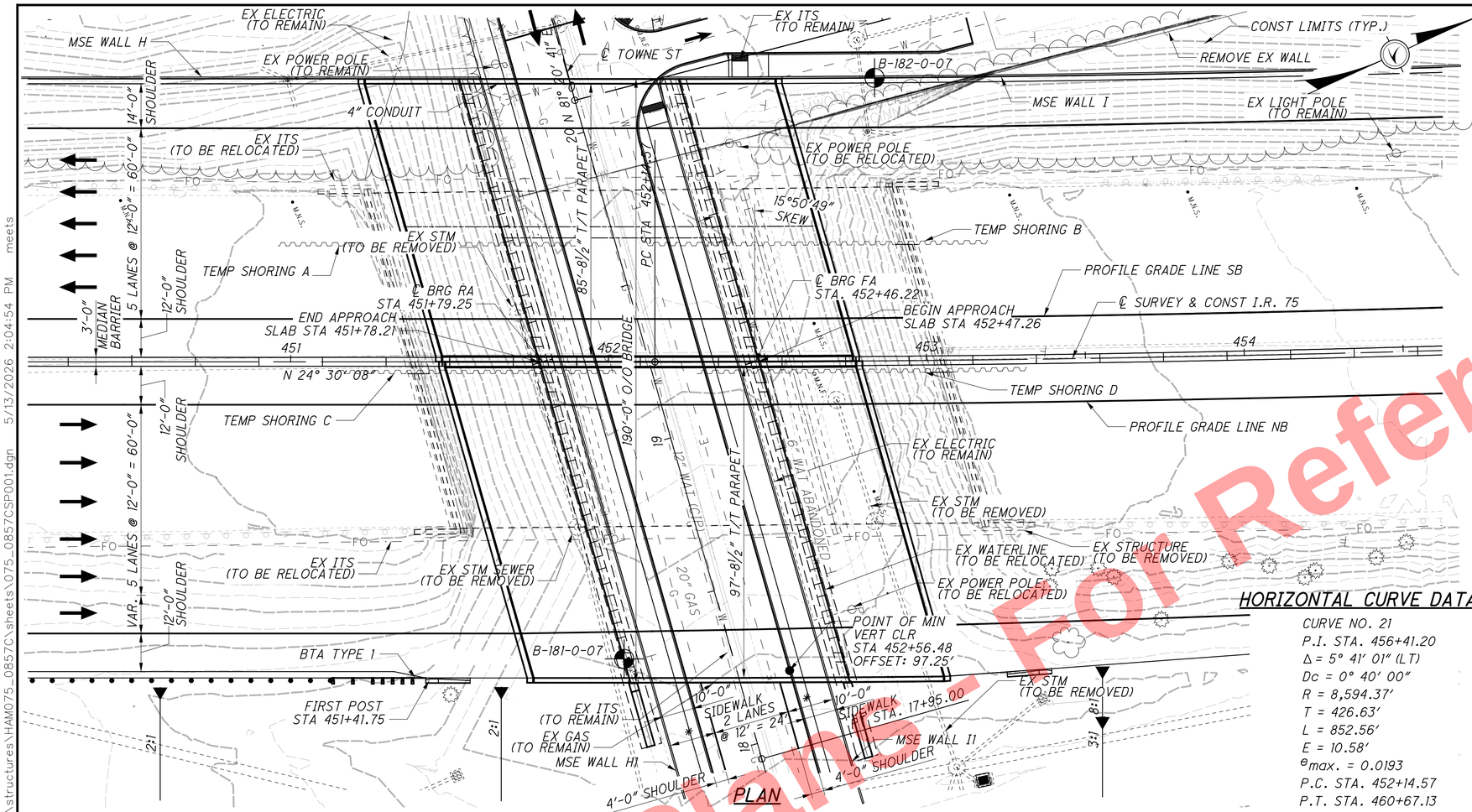

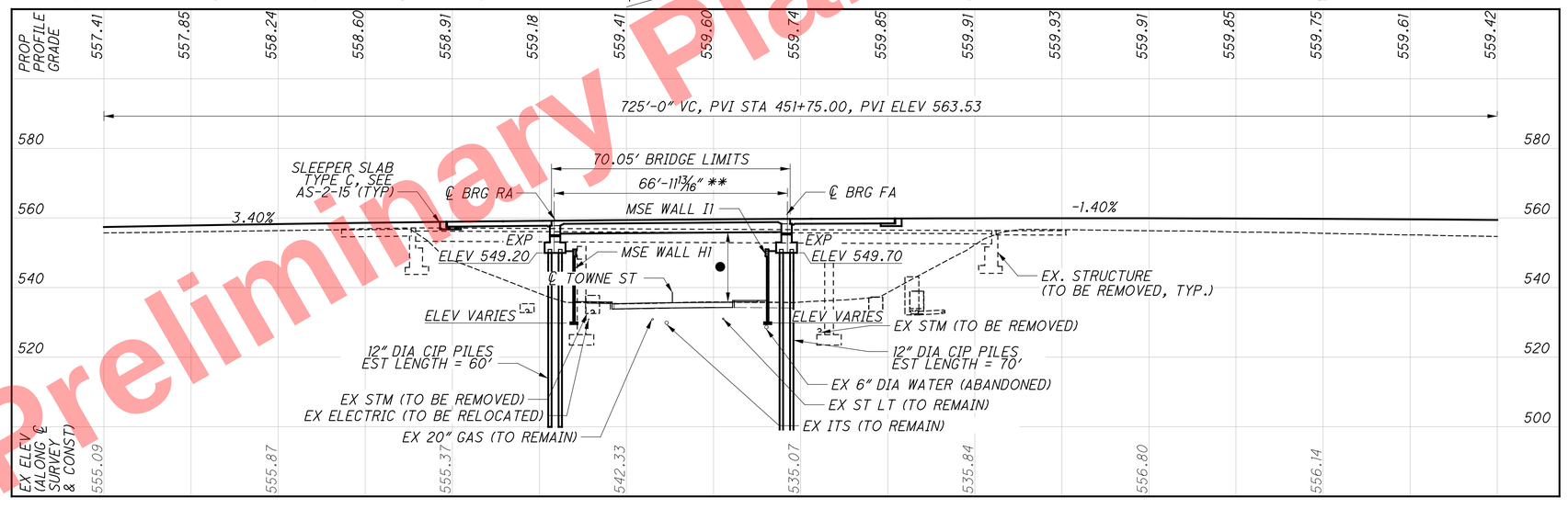

PROFILE ALONG RIGHT BRIDGE PROFILE GRADE LINE I.R. 75

HORIZONTAL CURVE DATA

CURVE NO. 21
P.I. STA. 456+41.20
Δ = 5° 41' 01" (LT)
Dc = 0° 40' 00"
R = 8,594.37'
T = 426.63'
L = 852.56'
E = 10.58'
^{e}max. = 0.0193
P.C. STA. 452+14.57
P.T. STA. 460+67.13

BENCHMARK DATA

BM #409 STA. 453+17.42, EL. 564.07, OFFSET 509.11' RT.
BM #410 STA. 456+03.19, EL. 541.01 , OFFSET 1838.09' RT.

FOR ADDITIONAL BENCHMARK INFORMATION. SEE ROADWAY PLAN SHEET (10/1047)

NOTES

1. EARTHWORK LIMITS SHOWN ARE APPROXIMATE. ACTUAL SLOPES SHALL CONFORM TO PLAN CROSS SECTIONS.
2. SEE GENERAL PLAN SHEET 2 / 46 FOR PHASE CONSTRUCTION DIMENSIONS.

DESIGN TRAFFIC:
2010 ADT =173,800 2010 ADTT =24,332
2030 ADT =203,000 2030 ADTT =28,420
DIRECTIONAL DISTRIBUTION = 0.53

LEGEND

- ⌖ BORING LOCATION
- ⊕ SURVEY BENCHMARK
- ● 15'-6" REQUIRED MINIMUM VERTICAL CLEARANCE
  16'-8" PROVIDED MINIMUM VERTICAL CLEARANCE
- * 14'-6" PROVIDED, 14'-6" REQUIRED
- ** MEASURED ALONG REFERENCE TANGENT

EXISTING STRUCTURE

TYPE: CONTINUOUS STEEL BEAMS, WITH CONCRETE DECK AND CONCRETE SUBSTRUCTURE

SPANS: 46'-0", 71'-0", 46'-0" C/C BRGS.
ROADWAY: 2 @ 51'-6" TOE/TOE PARAPET
LOADING: CF 2000-51
SKEW: 14°45'00" RF.
APPROACH SLABS: AS-1-81 (20'-0" LONG)
WEARING SURFACE: 1¼" MICROSILICA MODIFIED CONCRETE OVERLAY
ALIGNMENT: TANGENT
CROWN: 0.016 FT/FT
STRUCTURAL FILE NUMBER: 3110176
DATE BUILT: 1958
DISPOSITION: TO BE REMOVED

PROPOSED STRUCTURE

TYPE: SINGLE SPAN, STEEL BEAM BRIDGE WITH COMPOSITE REINFORCED DECK SUPPORTED BY SEMI-INTEGRAL ABUTMENTS FOUNDED ON PILES AND MSE WALL EMBANKMENTS
SPANS: 66'-11 13/16" C/C BEARINGS (MEASURED ALONG REFERENCE TANGENT)
ROADWAY: 85'-8½" (SB), 97'-8½" (NB) TOE/TOE PARAPET
LOADING: HL-93
FWS = 0.060 KSF

SKEW: 15°50'49" RF.
WEARING SURFACE: 1" MONOLITHIC CONCRETE
APPROACH SLABS: 30'-0" LONG (AS-1-81)
ALIGNMENT: TANGENT AND 0°40' CURVE TO THE LEFT
CROWN: VARIES
COORDINATES: LATITUDE 39°11'01" N
LONGITUDE 84°29'02" W

Preliminary Plans - Not For Reference Only

RESOURCE INTERNATIONAL INC.
8350 PRESIDENTIAL GATEWAY
COLUMBUS, OHIO 43231
(614) 823-4949

DESIGNED MMS | DRAWN MMS | REVIEWED SSK | DATE 3-18-26
CHECKED JWE | REVISED | STRUCTURE FILE NUMBER 3110184

HAMILTON COUNTY
STA. 451+77.21
STA. 452+47.26

SITE PLAN
BRIDGE NO. HAM-75-0857
I.R. 75 OVER TOWNE STREET (CR603)

HAM-75-7.85
PID No. 121447

\\san1.resourceinternational.com\two\projects\2010\B-10-020 HAM-75-7.85\77889\structures\HAM075_0857C\sheets\075_0857CSP001.dgn 5/13/2026 2:04:54 PM meets

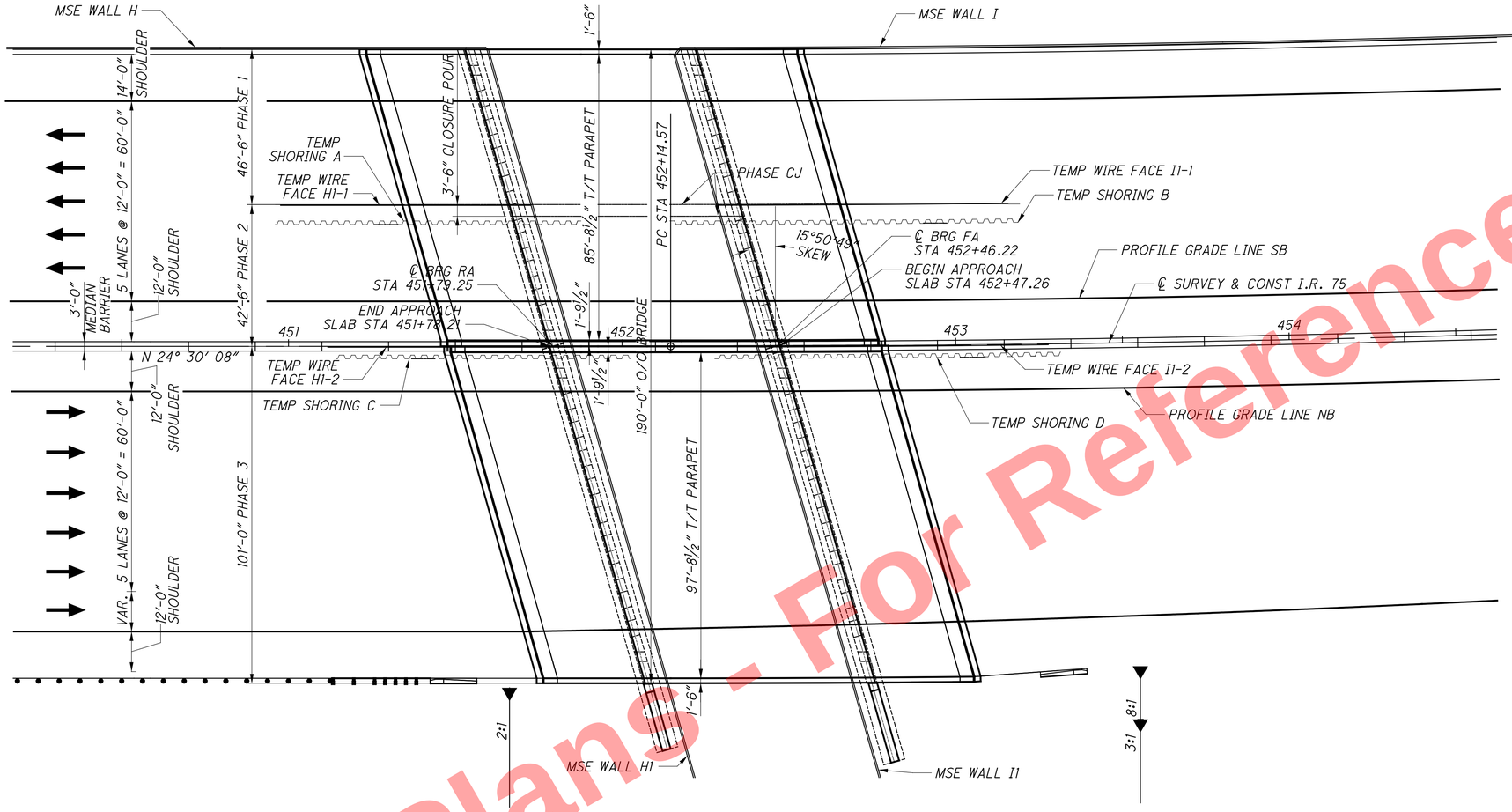

GENERAL PLAN

HORIZONTAL CURVE DATA

CURVE NO. 21
P.I. STA. 456+41.20
Δ = 5° 41' 01" (LT)
Dc = 0° 40' 00"
R = 8,594.37'
T = 426.63'
L = 852.56'
E = 10.58'
$e_{max.}$ = 0.0193
P.C. STA. 452+14.57
P.T. STA. 460+67.13

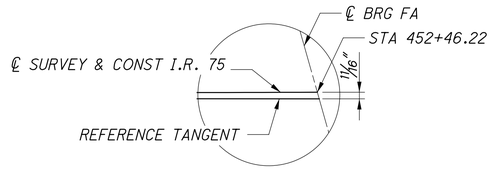

DETAIL A

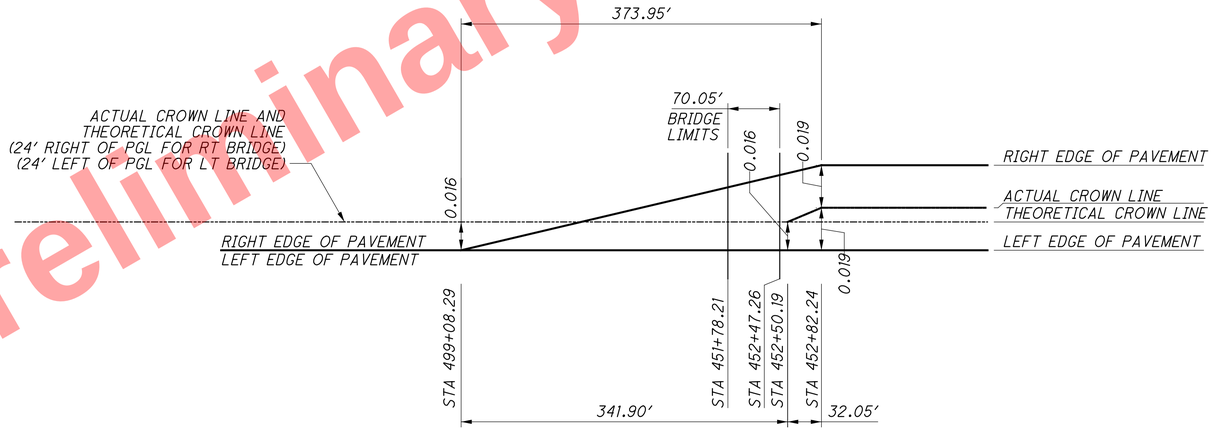

SUPERELEVATION DIAGRAM

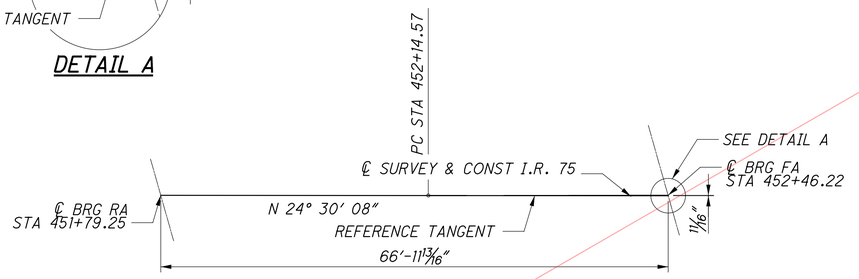

REFERENCE TANGENT DIAGRAM

Preliminary Plans - For Reference Only

RESOURCE INTERNATIONAL INC.
8350 PRESIDENTIAL GATEWAY
COLUMBUS, OHIO 43231
(614) 823-4949

DESIGNED MMS | DRAWN MMS | REVIEWED SSK | DATE 3-18-26
CHECKED JWE | REVISED | STRUCTURE FILE NUMBER 3110184

GENERAL PLAN
BRIDGE NO. HAM-75-0857
I.R. 75 OVER TOWNE STREET (CR603)

HAM-75-7.85
PID No. 121447

2 / 46

995
1047

\\son1.resourceinternational.com\two\projects\2010\B-10-020 HAM-75-7.85\77889\structures\HAM075_0857C\sheets\075_0857CGP001.dgn 5/13/2026 2:04:57 PM meets

REFER TO THE FOLLOWING STANDARD BRIDGE DRAWING(S):

AS-1-15	REVISED	01-20-23
AS-2-15	REVISED	01-20-23
GSD-1-19	REVISED	01-15-21
NBS-1-09	REVISED	07-15-22
PCB-91	REVISED	07-17-20
SBR-1-20	REVISED	01-20-23
SBR-2-20	REVISED	01-15-21
SICD-1-96	REVISED	07-18-14
SICD-2-14	DATED	01-15-21

AND TO THE FOLLOWING SUPPLEMENTAL SPECIFATIONS:

840 DATED 04-15-22

DESIGN SPECIFICATIONS:

THIS STRUCTURE CONFORMS TO THE 9TH EDITION OF THE "LRFD BRIDGE DESIGN SPECIFICATIONS" ADOPTED BY THE AMERICAN ASSOCIATION OF STATE HIGHWAY AND TRANSPORTATION OFFICIALS, 2020, AND THE ODOT BRIDGE DESIGN MANUAL, 2020.

OPERATIONAL IMPORTANCE:

A LOAD MODIFIER OF 1.05 HAS BEEN ASSUMED FOR THE DESIGN OF THIS STRUCTURE IN ACCORDANCE WITH THE AASHTO LRFD BRIDGE DESIGN SPECIFICATIONS, ARTICLE 1.3.5 AND THE ODOT BRIDGE DESIGN MANUAL, 2020.

DESIGN LOADING:

HL-93 AND FUTURE WEARING SURFACE (FWS) 0.060 KSF

DESIGN DATA:

CONCRETE CLASS QC3 - COMPRESSIVE STRENGTH 4.5 KSI (SUPERSTRUCTURE)

CONCRETE CLASS SCC - COMPRESSIVE STRENGTH 4.5 KSI

CONCRETE CLASS QC1/QC3 - COMPRESSIVE STRENGTH 4.0 KSI (SUBSTRUCTURE)

REINFORCING STEEL - MINIMUM YIELD STRENGTH 60 KSI

STRUCTURAL STEEL - ASTM A709 GRADE 50W - YIELD STRENGTH 50 KSI

GALVENIZED STEEL - MINIMUM YIELD STRENGTH 60 KSI (APPROACH SLAB AND RAILING)

DECK PROTECTION METHOD:

EPOXY COATED REINFORCING STEEL
2½" CONCRETE COVER

MONOLITHIC WEARING SURFACE:

MONOLITHIC WEARING SURFACE IS ASSUMED, FOR DESIGN PURPOSES, TO BE 1 INCH THICK.

EXISTING STRUCTURE PLANS:

CONSTRUCTION PLANS FOR THE EXISTING BRIDGE ARE ON FILE AT THE DEPARTMENT OF TRANSPORTATION, DISTRICT 8 OFFICE, 505 SOUTH STATE ROUTE 741, LEBANON, OHIO AND ARE AVAILABLE FOR REFERENCE.

EXISTING STRUCTURE VERIFICATION:

EXISTING STRUCTURE VERIFICATION: DETAILS AND DIMENSIONS SHOWN ON THESE PLANS PERTAINING TO THE EXISTING STRUCTURE HAVE BEEN OBTAINED FROM PLANS OF THE EXISTING STRUTURE AND FROM FIELD OBSERVATIONS AND MEASUREMENTS. CONSEQUENTLY, THEY ARE INDICATINVE OF THE EXISTING STRUCTURE AND THE PROPOSED WORK BUT THEY SHALL BE CONSIDERED TENTATIVE AND APPROXIMATE. THE CONTRACTOR IS REFERRED TO CMS SECTION 102.05, 105.02 AND 513.04.

BASE CONTRACT BID PRICES UPON A RECOGNITION OF THE UNCERTAINTIES DESCRIBED ABOVE AND UPON A PREBID EXAMINATION OF THE EXISTING STRUCTURE. HOWEVER, THE DEPARTMENT WILL PAY FOR ALL PROJECT WORK BASED UPON ACTUAL DETAILS AND DIMENSIONS WHICH HAVE BEEN VERIFIED IN THE FIELD.

ITEM 503, COFFERDAMS AND EXCAVATION BRACING, AS PER PLAN:

THE DESIGN SHOWN ON THE PLANS FOR TEMPORARY SUPPORT OF THE EXCAVATION IS ONE REPRESENTATIVE DESIGN THAT MAY BE USED TO CONSTRUCT THE PROJECT. THE CONTRACTOR MAY CONSTRUCT THE DESIGN SHOWN ON THE PLANS OR PREPARE AN ALTERNATE DESIGN FOR TEMPORARY SUPPORT OF EXCAVATION, PREPARE AND PROVIDE PLANS IN ACCORDANCE WITH C&MS 501.05. THE DEPARTMENT WILL PAY FOR THE TEMPORARY SUPPORT OF EXCAVATION AT THE CONTRACT LUMP SUM PRICE FOR COFFERDAMS AND EXCAVATION BRACING. NO ADDITIONAL PAYMENT WILL BE MADE FOR PROVIDING AN ALTERNATE DESIGN.

PILES DRIVEN TO TIP ELEVATION FOR PILE/SOIL SETUP:

THE ULTIMATE BEARING VALUE IS 215 KIPS PER PILE FOR THE ABUTMENT PILES. PART OF THE ULTIMATE BEARING VALUE WILL BE ACHIEVED THROUGH PILE/SOIL SETUP, WHICH IS A TIME-DEPENDENT INCREASE IN RESISTANCE THAT OCCURS IN SOME SOILS.

NOTIFY THE ENGINEER AT LEAST 5 DAYS BEFORE DRIVING PILES SO THAT THE ENGINEER CAN NOTIFY THE DISTRICT GEOTECHNICAL ENGINEER, THE OFFICER OF CONSTRUCTION ADMINISTRATION, AND THE OFFICE OF STRUCTURAL ENGINEERING.

DRIVE THE FIRST TWO PILES IN EACH SUBSTRUCTURE TO THE TIP ELEVATION GIVEN BELOW FOR THE SUBSTRUCTURE. DRIVE THE THIRD AND FOURTH PILES TO 75% AND 85% OF THE LENGTH OF THE FIRST TWO PILES. PERFORM DYNAMIC LOAD TESTING ON ALL FOUR PILES WHILE DRIVING. AFTER DRIVING THE FOUR PILES, CEASE ALL DRIVING OPERATIONS AT THE SUBSTRUCTURE FOR A MINIMUM OF 7 DAYS. INCLUDE THE WAITING PERIOD AS A SEPARATE ACTIVITY IN THE PROGRESS SCHEDULE. AFTER THE WAITING PERIOD, PERFORM PILE RESTRIKES ON THE FOUR PILES (TWO RESTRIKE ITEMS). SUBMIT ALL TEST RESULTS TO THE ENGINEER. THE ENGINEER WILL REVIEW THE TEST RESULTS AND ESTABLISH DRIVING CRITERIA FOR THE PILING IN THE SUBSTRUCTURE WITH THE ASSISTANCE OF THE DISTRICT GEOTECHNICAL ENGINEER, THE OFFICE OF CONSTRUCTION ADMINISTRATION, AND THE OFFICE OF STRUCTURAL ENGINEERING. THE DRIVING CRITERIA WITH PILE SETUP SHALL BE PEFORMED FOR THE FIRST STAGE OF BRIDGE CONSTRUCTION. THE CONTRACTOR SHALL NOT ORDER PILES FOR SUBSEQUENT PHASES UNTIL AFTER THE DRIVING CRITERIA HAS BEEN ESTABLISHED WITH SETUP. THE DEPARTMENT WILL ADJUST THE FURNISHED PILE QUANTITES BASED ON THE RESTRIKE TEST RESULTS.

IF THE DYNAMIC LOAD TESTING INDICATES A PILE HAS ACHIEVED THE ULTIMATE BEARING VALUE ABOVE THE TIP ELEVATION DURING THE INITIAL DRIVING (BEFORE THE WAITING PERIOD), STOP DRIVING AND NOTIFY THE ENGINEER. IF THE RESTRIKE TEST RESULTS ON THE FOUR PILES INDICATE THAT A PILE DID NOT ACHIEVE THE REQUIRED ULTIMATE BEARING VALUE, DRIVE THE PILE TO THE ESTABLISHED DRIVING CRITERIA. SPLICING OF THE PILES BEYOND THE ESTIMATED LENGTH PROVIDED IN THE PLANS WILL BE PAID BY THE DEPARTMENT UNDER CMS 109.05 WITH A NEGIOTATED PRICE PER SPLICE.

REAR ABUTMENT
60 PILES 65 FEET LONG, ORDER LENGTH
TIP ELEVATION, 493.00 FEET
2 DYNAMIC LOAD TESTING ITEM
2 RESTRIKE

FORWARD ABUTMENT
62 PILES 75 FEET LONG, ORDER LENGTH
TIP ELEVATION, 484.60 FEET
2 DYNAMIC LOAD TESTING ITEM
2 RESTRIKE

DECK PLACEMENT DESIGN ASSUMPTIONS:

THE FOLLOWING ASSUMPTIONS OF CONSTRUCTION MEANS AND METHODS WERE MADE FOR THE ANALYSIS AND DESIGN OF THE SUPERSTRUCTURE. THE CONTRACTOR IS RESPONSIBLE FOR THE DESIGN OF THE FALSEWORK SUPPORT SYSTEM WITHIN THESE PARAMETERS AND WILL ASSUME RESPONSIBILITY FOR SUPERSTRUCTURE ANALYSIS FOR DEVIATION FROM THESE DESIGN ASSUMPTIONS.

AN EIGHT WHEEL FINISHING MACHINE WITH A MAXIMUM LOAD OF 1.75 KIPS FOR A TOTAL MACHINE LOAD OF 14 KIPS.

A MINIMUM OUT-TO-OUT WHEEL SPACING AT EACH END OF THE MACHINE OF 103".

A MAXIMUM SPACING OF OVERHANG FALSEWORK BRACKETS OF 48 IN.

A MAXIMUM DISTANCE FROM THE CENTERLINE OF THE FASCIA GIRDER TO THE FACE OF THE SAFETY HANDRAIL OF 65".

ITEM 202 - STRUCTURE REMOVED, OVER 20 FOOT SPAN, AS PER PLAN:

THE CONTRACTOR MUST REVIEW THE STRUCTURE WHEN PREPARING HIS BID. THE CONTRACTOR WILL REVIEW THE CONDITION OF THE STRUCTURE TO DETERMINE WHAT DEBRIS WILL FALL FROM THE STRUCTURE DURING REMOVAL. THE CONTRACTOR WILL DETERMINE THE CORRESPONDING COST TO CLEAN-UP ANY AND ALL DEBRIS WHICH FALLS FROM THE STRUCTURE DURING ANY REMOVAL OPERATION. THE COST TO CLEAR AND CLEAN-UP ALL DEBRIS DURING REMOVAL SHALL BE INCLUDED WITH THE BID FOR THIS ITEM OF WORK. NO ADDITIONAL COST WILL BE RECOGNIZED TO CLEAN DEBRIS RESULTING FROM THE STRUCTURE REMOVAL OPERATION.

ITEM 511 - CLASS QC3 CONCRETE MISC.: CONCRETE WITH QC/QA, BRIDGE DECK, AS PER PLAN:
ITEM 511 - CLASS QC3 CONCRETE MISC.: CONCRETE WITH QC/QA, BRIDGE DECK (MEDIAN PARAPET), AS PER PLAN:

THIS ITEM APPLIED TO THE CONCRETE IN THE BRIDGE DECK AND MEDIAN PARPAET. THIS ITEM MODIFIES THE STANDARD 511 CONCRETE FOR STRUCTURES SPECIFICATION TO INCLUDE MACRO-SYNTHETIC, AND CORROSION INHIBITORS INTO THE SUPERSTRUCTURE CONCRETE. THIS ITEM SHALL CONFORM TO CMS 511 WITH THE FOLLOWING CONDITIONS AND REVISIONS:

PROVIDE MATERIALS CONFORMING TO 511.02 EXCEPT AS MODIFIED BELOW:

PORTLAND CEMENT CONCRETE
499.03, CLASS QC 3 MEETING A DESIGN STRENGTH OF 4,500 PSI, WITH MACRO-SYNTHETIC FIBERS WITH MODIFICATION PER 511.02

FIBERS FOR CONCRETE	ASTM C 1116, TYPE III
CORROSION INHIBITOR	515.15

THE CLASS QC3 CONCRETE FOR THE SUPERSTRUCTURE SHALL MEET THE FOLLOWING CRITERIA: WATER/CEMENT RATIO = 0.40 MAXIMUM; MINIMUM 4 LBS/CY MACRO-SYNTHETIC FIBERS (1.5 IN. MIN. TO 2.5 IN. MAX.) MEETING ASTM C1116 TYPE III SHALL BE ADDED TO THE MIX.

MIX SHALL INCLUDE A MIGRATING CORROSION INHIBITOR AS MANUFACTURED BY AN APPROVED SUPPLIER LISTED ON ODOT'S QUALIFIED APPROVED SUPPLIERS, ITEM 515.15. THE DOSAGE RATE LISTED ON THE ODOT QUALIFIED APPROVED SUPPLIERS LIST WILL APPLY.

THE MACRO-SYNTHETIC FIBERS SHALL BE INCORPORATED INTO THE MIX IN SUCH A WAY THAT NO 'BALLING' OCCURS. UPON INSPECTION OF THE MIX AT THE TIME OF PLACEMENT, IF ANY 'BALLING' OCCURS, THE ENGINEER SHALL REJECT THE REMAINDER OF THE LOAD AT ANY TIME DURING THE POUR. IT IS IMPORTANT TO FOLLOW INDUSTRY STANDARDS AND ASTM SPECIFICATIONS ON THE PREMIXING OF THE CEMENT, AGGREGATE, AND MACRO-SYNTHETIC FIBERS PRIOR TO THE ADDITION OF WATER AND ADMIXTURES. PROVIDE MACRO-SYNTHETIC - FIBERS THAT ARE MONOFILAMENT FIBERS MADE FROM VIRGIN POLYPROPYLENE, POLYETHYLENE, OR CO-POLYMERS THAT ARE INERT TO ALKALI ATTACK. ENSURE THE MACRO-SYNTHETIC FIBERS HAVE A MINIMUM TENSILE STRENGTH OF 70 KSI, A MINIMUM MODULUS OF ELASTICITY OF 800 KSI, A MINIMUM FILAMENT DIAMETER OF 0.012 INCHES, AND ASPECT RATIO BETWEEN 60 AND 100, AND ARE BETWEEN 1.0 AND 2.5 INCHES IN LENGTH. STORE THE MACRO-SYNTHETIC FIBERS ACCORDING TO THE MANUFACTUR'S RECOMMENDATION AND KEEP THE MATERIAL FREE FROM DUST, DIRT AND MOISTURE.

USE A MINIMUM DOSAGE RATE OF MACRO-SYNTHETIC FIBERS OF 4.0 LBS/CY OF CONCRETE. DETERMINE THE FINAL PROPOSED DOSAGE RATE THROUGH MIX TESTING. ENSURE THE FIBER REINFORCED CONCRETE MEETS OR EXCEEDS A MINIMUM EQUIVALENT FLEXURAL STRENGTH RATIO OF 25% ACCORDING TO ASTM C 1609. ENSURE THE FINAL PROPOSED MIX IS WORKABLE AND ABLE TO BE PRODUCED SUCH THAT BALLING OR CLUMPING OF THE FIBERS IS NOT A PROBLEM AS DETERMINED BY THE ENGINEER. UTILIZE A LABORATORY REGULARLY INSPECTED BY THE CEMENT AND CONCRETE REFERENCE LABORATORY (CCRL) OF THE NATIONAL INSTITUTE OF STANDARDS AND TECHNOLOGY, OR OTHER APPROVED REFERENCE LABORATORY, TO PERFORM THE TESTING. BEFORE USE, SUBMIT DOCUMENTATION TO THE PROJECT ENGINEER CERTIFYING BOTH THE MACRO-SYNTHETIC FIBERS AND THE MIX MEET OR EXCEED THE REQUIRED PROPERTIES. SAMPLING WILL BE ALLOWED FOR TESTING PURPOSES. A DEMONSTRATION OF THE MIX PRODUCTION OR TRIAL MIX, MAY BE REQUIRED BY THE ENGINEER PRIOR TO PLACING ANY OF THE MIX ON THE PROJECT.

THE BATCH WEIGHTS SHALL BE CORRECTED TO COMPENSATE FOR THE MOISTURE CONTAINED IN THE AGGREGATE AT THE TIME OF USE. A CHEMICAL ADMIXTURE (705.12, TYPE A OR D) SHALL BE USED.

ITEM 511 - CLASS QC3 CONCRETE MISC.: CONCRETE WITH QC/QA, BRIDGE DECK, AS PER PLAN: (CONTINUED)
ITEM 511 - CLASS QC3 CONCRETE MISC.: CONCRETE WITH QC/QA, BRIDGE DECK (MEDIAN PARAPET), AS PER PLAN: (CONTINUED)

THE TRANSIT MIXER CHARGE SHALL BE LIMITED TO 3/4 OF ITS RATED CAPACITY OR 6 CUBIC YARDS, WHICHEVER IS SMALLER. THE FIRST THREE TRANSIT MIXER LOADS ARE REQUIRED TO BE AT THE MINIMUM YARDAGE LISTED ABOVE TO SHOW PROOF OF THE SUCCESSFUL BATCHING OPERATION. AFTER CONSISTENCY IN THE DELIVERED MATERIAL HAS BEEN ESTABLISHED, THE CONCRETE SUPPLIER MAY INCREASE THE BATCH DELIVERED QUANTITIES AS LONG AS THE QUALITY REMAINS ACCEPTABLE TO THE ENGINEER. THE ENGINEER CAN REDUCE THE BATCH LOAD SIZE AT ANY TIME AS NEEDED TO CORRECT/IMPROVE CONCRETE QUALITY.

CONCRETE SUPPLIERS SHOULD RECOGNIZE THAT THE CORROSION INHIBITOR AND ADMIXTURES MAY HAVE AN EFFECT ON STRENGTH, ENTRAINED AIR CONTENT, WORKABILITY, ETC. OF THEIR CONCRETE MIXES. THE CORROSION INHIBITOR IS SUGGESTED TO BE A MCI PRODUCT BY CORTEC OR AN APPROVED EQUAL FROM THE QUALIFIED PRODUCTS LIST. THE CONCRETE SUPPLIER'S CHOICE OF ONE OF THESE CORROSION INHIBITORS DOES NOT ALLEVIATE MEETING DESIGN REQUIREMENTS. PLEASE BE ADVISED THAT SOME PRODUCTS ON THE LIST EFFECT THE DELIVERED MIX PROPERTIES GREATLY WHILE OTHER PRODUCTS DO NOT.

APPROACH SLABS, DIAPHRAGMS, AND MEDIAN PARAPET CONCRETE (WHEN APPLICABLE) ARE TO USE THE SAME MIX DESIGN AS THE BRIDGE DECK. THE CONTRACTOR SHOULD BE ADVISED THAT CONCRETE RETARDING AGENTS MAY NEED TO BE ADDED TO OFFSET THE EFFECTS OF THE MIGRATING CORROSION INHIBITOR SELECTED.

THE CONTRACTOR SHALL PROVIDE TRADITIONAL BRIDGE DECK FORMS CONFORMING TO CMS 508. PERMANENT STAY-IN-PLACE (SIP) FORMS ARE NOT ALLOWED. THE PLACING OF THE DECK AND THE APPROACH SLABS IN THE SAME CONCRETE POUR IS NOT PERMITTED.

PILE DRIVING CONSTRAINTS:

PILE DRIVING MAY NOT BEGIN UNTIL SUFFICIENT EMBANKMENT AND MSE WALL SETTLEMENT HAS OCCURRED AS DOCUMENTED BY THE SETTLEMENT PLATFORMS. THE ANTICIPATED WAITING PERIOD TO PERMIT SUFFICIENT EMBANKMENT SETTLEMENT IS 30 DAYS. THE DISTRICT GEOTECHNICAL ENGINEER MAY REDUCE OR EXTEND THE WAITING PERIOD BASED ON THE MAGNITUDE AND RATE OF THE EMBANKMENT SETTLEMENT AS DETERMINED BY THE SETTLEMENT PLATFORMS. THE SETTLEMENT WAITING PERIOD BEGINS ONCE THE APPROACH EMBANKMENT REACHES THE DESIGN SUBGRADE LEVEL FOR A MINIMUM DISTANCE OF 100 FT. BEHIND EACH ABUTMENT. THE PLANS HAVE PROVISIONS FOR A TEMPORARY WALL AT THE ABUTMENT LOCATION TO PERMIT PLACEMENT OF EMBANKMENT TO THE DESIGN SUBGRADE LEVEL. BEGIN PILE DRIVING ONLY FOLLOWING TERMINATION OF THE SETTLEMENT MONITORING WAITING PERIOD BY THE DISTRICT GEOTECHNICAL ENGINEER.

DRIVING OF PILES TO THE DESIGN ULTIMATE BEARING VALUE PRIOR TO MSE WALL CONSTRUCTION, SURCHARGE PLACEMENT AND SETTLEMENT WAITING PERIOD TERMINATION IS AN ALTERNATIVE TO DRIVING THE PILES FOLLOWING THE SETTLEMENT WAITING PERIOD. PILES DRIVEN PRIOR TO THE WAITING PERIOD ARE TO BE INSTALLED AS PER THE PILES DRIVEN TO TIP ELEVATION FOR PILE/SOIL SETUP REQUIREMENTS. ALL PILES DRIVEN TO THE UBV PRIOR TO THE WAITING PERIOD TERMINATION REQUIRE RESTRIKING FOLLOWING THE END OF THE SETTLEMENT WAITING PERIOD. RESTRIKE AND MOBILIZED EACH PILE A MINIMUM OF 0.5 INCHES. SELECT THE APPROPRIATE PILE DRIVING EQUIPMENT TO ENSURE EACH PILE MOVES 0.5 INCHES UPON RESTRIKE. ADDITIONAL COMPENSATION WILL NOT BE CONSIDERED FOR PILE RESTRIKING WHEN PILES ARE DRIVEN PRIOR TO THE SETTLEMENT WAITING PERIOD. THE CONTRACTOR IS TO SURVEY EACH PILE DRIVEN PRIOR TO CONSTRUCTION OF THE MSE WALL AND PROVIDE THE ENGINEER A RECORD OF THE PILE PLUMBNESS AND TOP OF LOCATION RELATIVE TO THE PLAN LOCATION. CORRECT ANY PILE ALIGNMENT ISSUES THAT ARE IDENTIFIED IN THE PILE SURVEY PRIOR TO MSE WALL CONSTRUCTION AT NO ADDITIONAL COST TO THE DEPARTMENT. ANY PILE CORRECTIONS ARE TO BE ACCEPTED BY THE ENGINEER PRIOR TO IMPLEMENTATION.

Preliminary Plans - For Reference Only

\\san1.resourceinternational.com\two\projects\2010\B-10-020 HAM-75-7.85\77889\structures\HAM075_0857C\sheets\HAM075_0857CGN001.dgn 5/13/2026 2:04:57 PM meets

RESOURCE INTERNATIONAL INC.
8350 PRESIDENTIAL GATEWAY
COLUMBUS, OHIO 43231
(614) 823-4949

DESIGNED	DRAWN	REVIEWED	DATE
MMS	MMS	SSK	3-18-26
CHECKED	REVISED	STRUCTURE FILE NUMBER	
JWE		3110184	

GENERAL NOTES
BRIDGE NO. HAM-75-0857
I.R. 75 OVER TOWNE STREET (CR603)

HAM-75-7.85
PID No. 121447

ITEM 511 - CLASS QC SCC CONCRETE WITH QC/QA, BRIDGE DECK (PARAPET), AS PER PLAN

THIS WORK SHALL INCLUDE THE CONSTRUCTION OF THE EXTERIOR BRIDGE PARAPETS WITH A FORM LINER PATTERN APPLIED TO THE EXTERIOR FACE THAT MATCHES THE ARCHITECTURAL "TEXAS RAIL" DETAILS SHOWN IN THE PLANS USING CLASS SCC CONCRETE. THIS ITEM SHALL INCLUDE ALL MATERIALS, EQUIPMENT AND LABOR REQUIRED TO CONSTRUCT THE "TEXAS" TYPE BRIDGE RAILING. QUANTITY SHALL INCLUDE SAW CUTTING, JOINT SEALER, FORM LINERS AND ANY OTHER MISCELLANEOUS ITEMS REQUIRED TO FULLY CONSTRUCT THE RAILING. THIS ITEM SHALL ONLY INCLUDE THE EXTERIOR PARAPET ON THE BRIDGE. EXTERIOR PARAPET ON APPROACH SLABS SHALL BE PAID FOR UNDER ITEM 526 - REINFORCED CONCRETE APPROACH SLABS (T=17"), AS PER PLAN.

PAYMENT FOR THIS WORK SHALL INCLUDE ALL NECESSARY MATERIAL, LABOR, AND EQUIPMENT TO COMPLETE THIS TASK. PAYMENT SHALL BE MADE UNDER ITEM 511 - CLASS QC SCC CONCRETE WITH QC/QA, BRIDGE DECK (PARAPET), AS PER PLAN

ITEM 514 - FIELD PAINTING STRUCTURAL STEEL, INTERMEDIATE COAT, AS PER PLAN
ITEM 514 - FIELD PAINTING STRUCTURAL STEEL, FINISH COAT, AS PER PLAN:

THE FASCIA GIRDER OUTSIDE SURFACES AND LOWER FLANGE SHALL HAVE A THREE COAT IZEU PAINT SYSTEM APPLIED. THE PRIME COAT SHALL BE SHOP APPLIED. THE APPLICATION OF THE PRIME COAT SHALL BE PAID FOR UNDER ITEM 513, STRUCTURAL STEEL MEMBERS, LEVEL 1. THE INTERMEDIATE AND FINISH COATS SHALL BE FIELD APPLIED PER ITEM 514. SEE TRANSVERSE DECK SECTION ON SHEET 25/46 FOR EXACT LIMITS OF PAINTING OF THE FACIA GIRDERS. THE COLOR OF THE FINISH COAT SHALL BE FEDERAL COLOR NUMBER 14277 (GREEN).

ITEM 526 - REINFORCED CONCRETE APPROACH SLABS (T=17"), AS PER PLAN:

THIS ITEM SHALL INCLUDE ALL THE COST OF ALL CONCRETE AND GALVANIZED REINFORCING STEEL FOR THE APPROACH SLABS AND PARAPETS ON APPROACH SLABS. SEALING OF THE PARAPETS SHALL BE PAID FOR UNDER ITEM 512 - SEALING OF CONCRETE SURFACES (EPOXY-URETHANE).

ITEM 511 - CLASS QC3 CONCRETE, MISC.: CONCRETE WITH QC/QA, ABUTMENT, AS PER PLAN & SEMI-INTEGRAL DIAPHRAGM GUIDE, AS PER PLAN:

THIS ITEM MODIFIES THE STANDARD 511 CONCRETE FOR STRUCTURES SPECIFICATION TO INCLUDE MACRO-SYNTHETIC, AND CORROSION INHIBITORS INTO THE SUBSTRUCTURE CONCRETE. THIS ITEM SHALL CONFORM TO CMS 511 WITH THE FOLLOWING CONDITIONS AND REVISIONS:

PROVIDE MATERIALS CONFORMING TO 511.02 EXCEPT AS MODIFIED BELOW:

PORTLAND CEMENT CONCRETE
499.03, CLASS QC 3 MEETING A DESIGN STRENGTH OF 4,000 PSI, WITH MACRO-SYNTHETIC FIBERS WITH MODIFICATION PER 511.02

FIBERS FOR CONCRETE	ASTM C 1116, TYPE III
CORROSION INHIBITOR	515.15

THE CLASS QC3 CONCRETE FOR THE SUBSTRUCTURE SHALL MEET THE FOLLOWING CRITERIA: WATER/CEMENT RATIO = 0.40 MAXIMUM; MINIMUM 4 LBS/CY MACRO-SYNTHETIC FIBERS (1.0 IN. MIN. TO 2.5 IN. MAX.) MEETING ASTM C1116 TYPE III SHALL BE ADDED TO THE MIX.

MIX SHALL INCLUDE A MIGRATING CORROSION INHIBITOR AS MANUFACTURED BY AN APPROVED SUPPLIER LISTED ON ODOT'S QUALIFIED APPROVED SUPPLIERS, ITEM 515.15. THE DOSAGE RATE LISTED ON THE ODOT QUALIFIED APPROVED SUPPLIERS LIST WILL APPLY.

THE MACRO-SYNTHETIC FIBERS SHALL BE INCORPORATED INTO THE MIX IN SUCH A WAY THAT NO 'BALLING' OCCURS. UPON INSPECTION OF THE MIX AT THE TIME OF PLACEMENT, IF ANY 'BALLING' OCCURS, THE ENGINEER SHALL REJECT THE REMAINDER OF THE LOAD AT ANY TIME DURING THE POUR. IT IS IMPORTANT TO FOLLOW INDUSTRY STANDARDS AND ASTM SPECIFICATIONS ON THE PREMIXING OF THE CEMENT, AGGREGATE, AND MACRO-SYNTHETIC FIBERS PRIOR TO THE ADDITION OF WATER AND ADMIXTURES. PROVIDE MACRO-SYNTHETIC - FIBERS THAT ARE MONOFILAMENT FIBERS MADE FROM VIRGIN POLYPROPYLENE, POLYETHYLENE, OR CO-POLYMERS THAT ARE INERT TO ALKALI ATTACK. ENSURE THE MACRO-SYNTHETIC FIBERS HAVE A MINIMUM TENSILE STRENGTH OF 70 KSI, A MINIMUM MODULUS OF ELASTICITY OF 800 KSI, A MINIMUM FILAMENT DIAMETER OF 0.012 INCHES, AND ASPECT RATIO BETWEEN 60 AND 100, AND ARE BETWEEN 1.0 AND 2.5 INCHES IN LENGTH. STORE THE MACRO-SYNTHETIC FIBERS ACCORDING TO THE MANUFACTURE'S RECOMMENDATION AND KEEP THE MATERIAL FREE FROM DUST, DIRT AND MOISTURE.

USE A MINIMUM DOSAGE RATE OF MACRO-SYNTHETIC FIBERS OF 4.0 LBS/CY OF CONCRETE. DETERMINE THE FINAL PROPOSED DOSAGE RATE THROUGH MIX TESTING. ENSURE THE FIBER REINFORCED CONCRETE MEETS OR EXCEEDS A MINIMUM EQUIVALENT FLEXURAL STRENGTH RATIO OF 25% ACCORDING TO ASTM C 1609. ENSURE THE FINAL PROPOSED MIX IS WORKABLE AND ABLE TO BE PRODUCED SUCH THAT BALLING OR CLUMPING OF THE FIBERS IS NOT A PROBLEM AS DETERMINED BY THE ENGINEER. UTILIZE A LABORATORY REGULARLY INSPECTED BY THE CEMENT AND CONCRETE REFERENCE LABORATORY (CCRL) OF THE NATIONAL INSTITUTE OF STANDARDS AND TECHNOLOGY, OR OTHER APPROVED REFERENCE LABORATORY, TO PERFORM THE TESTING. BEFORE USE, SUBMIT DOCUMENTATION TO THE PROJECT ENGINEER CERTIFYING BOTH THE MACRO-SYNTHETIC FIBERS AND THE MIX MEET OR EXCEED THE REQUIRED PROPERTIES. SAMPLING WILL BE ALLOWED FOR TESTING PURPOSES. A DEMONSTRATION OF THE MIX PRODUCTION OR TRIAL MIX, MAY BE REQUIRED BY THE ENGINEER PRIOR TO PLACING ANY OF THE MIX ON THE PROJECT.

THE BATCH WEIGHTS SHALL BE CORRECTED TO COMPENSATE FOR THE MOISTURE CONTAINED IN THE AGGREGATE AT THE TIME OF USE. A CHEMICAL ADMIXTURE (705.12, TYPE A OR D) SHALL BE USED.

ITEM 511 - CLASS QC3 CONCRETE, MISC.: CONCRETE WITH QC/QA, ABUTMENT, AS PER PLAN & SEMI-INTEGRAL DIAPHRAGM GUIDE, AS PER PLAN: (CONTINUED)

CONCRETE SUPPLIERS SHOULD RECOGNIZE THAT THE CORROSION INHIBITOR AND ADMIXTURES MAY HAVE AN EFFECT ON STRENGTH, ENTRAINED AIR CONTENT, WORKABILITY, ETC. OF THEIR CONCRETE MIXES. THE CORROSION INHIBITOR IS SUGGESTED TO BE A MCI PRODUCT BY CORTEC OR AN APPROVED EQUAL FROM THE QUALIFIED PRODUCTS LIST. THE CONCRETE SUPPLIERS CHOICE OF ONE OF THESE CORROSION INHIBITORS DOES NOT ALLEVIATE MEETING DESIGN REQUIREMENTS. PLEASE BE ADVISED THAT SOME PRODUCTS ON THE LIST EFFECT THE DELIVERED MIX PROPERTIES GREATLY WHILE OTHER PRODUCTS DO NOT.

THE CONTRACTOR SHOULD BE ADVISED THAT CONCRETE RETARDING AGENTS MAY NEED TO BE ADDED TO OFFSET THE EFFECTS OF THE MIGRATING CORROSION INHIBITOR SELECTED.

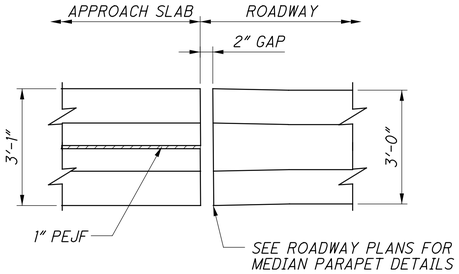

MEDIAN PARAPET PLAN
TYPICAL BOTH ENDS

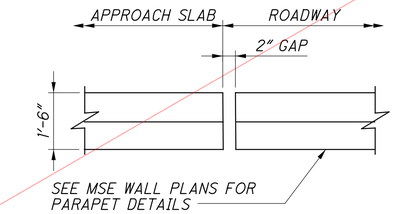

EXTERIOR PARAPET PLAN
FORWARD APPROACH SLAB
LEFT BRIDGE ONLY

ABBREVIATIONS:

ABUT - ABUTMENT
AS - APPROACH SLAB
BRG - BEARING
C/C - CENTER TO CENTER
CJ - CONSTRUCTION JOINT
CIP - CAST-IN-PLACE
CONC - CONCRETE
CONST - CONSTRUCTION
DG - DIAPHRAGM GUIDE
DIA - DIAMETER
ELEV - ELEVATION
EX - EXISTING
EXP - EXPANSION
FA - FORWARD ABUTMENT
F/F - FACE TO FACE
FWD - FORWARD
LF - LEFT FORWARD
LT - LEFT
MIN - MINIMUM
NB - NORTHBOUND
NO - NUMBER
NPCPP - NON-PERFORATED CORRUGATED PLASTIC PIPE
PCB - PORTABLE CONCRETE BARRIER
PCPP - PERFORATED CORRUGATED PLASTIC PIPE
PEJF - PREFORMED EXPANSION JOINT FILLER
PG - PROFILE GRADE
PROP - PROPOSED
RA - REAR ABUTMENT
REQ'D - REQUIRED
RT - RIGHT
SB - SOUTHBOUND
SPA - SPACES
STA - STATION
ST - STRAIGHT
SUPER - SUPERSTRUCTURE
T/T - TOE TO TOE
TYP - TYPICAL
VERT - VERTICAL
W/ - WITH
CLR - CLEAR
RD - ROAD

Preliminary Plans - For Reference Only

$USERNAME$ $DATE$ $TIME$ $FILE$

RESOURCE INTERNATIONAL INC.
8350 PRESIDENTIAL GATEWAY
COLUMBUS, OHIO 43231
(614) 823-4949

DESIGNED	DRAWN	REVIEWED	DATE
JGM	JGM	NCK	3-18-26
CHECKED	REVISED	STRUCTURE FILE NUMBER	
JLM		3110184	

GENERAL NOTES
BRIDGE NO. HAM-75-0857
I.R. 75 OVER TOWNE STREET (CR603)

HAM-75-7.85
PID No. 121447

ESTIMATED QUANTITIES

ITEM	EXTENSION	PARTICIPATION 03/IMS/10	TOTAL	UNIT	DESCRIPTION	ABUT.	SUPER.	GEN.	SHEET #
202	11003	LUMP	LUMP		STRUCTURE REMOVED, OVER 20 FOOT SPAN, AS PER PLAN			LUMP	3/41
202	22900	473	473	SQ YD	APPROACH SLAB REMOVED			473	
503	11101	LUMP	LUMP		COFFERDAMS AND EXCAVATION BRACING, AS PER PLAN (WALL A)			LUMP	3/41, 12/41, 13/41
503	11101	LUMP	LUMP		COFFERDAMS AND EXCAVATION BRACING, AS PER PLAN (WALL B)			LUMP	3/41, 12/41, 13/41
503	11101	LUMP	LUMP		COFFERDAMS AND EXCAVATION BRACING, AS PER PLAN (WALL C)			LUMP	3/41, 12/41, 13/41
503	11101	LUMP	LUMP		COFFERDAMS AND EXCAVATION BRACING, AS PER PLAN (WALL D)			LUMP	3/41, 12/41, 13/41
503	21300	LUMP	LUMP		UNCLASSIFIED EXCAVATION			LUMP	
505	11100	LUMP	LUMP		PILE DRIVING EQUIPMENT MOBILIZATION			LUMP	
507	00500	7940	7940	FT	12" CAST-IN-PLACE REINFORCED CONCRETE PILES, DRIVEN	7940			
507	00500	8550	8550	FT	12" CAST-IN-PLACE REINFORCED CONCRETE PILES, FURNISHED	8550			
509	10000	146,644	146,644	POUND	EPOXY COATED REINFORCING STEEL	47,509	99,135		
509	30020	3318	3318	FT	NO. 4 GFRP DEFORMED BARS		3318		
509	30030	1251	1251	FT	NO. 5 GFRP DEFORMED BARS		1251		
509	30040	2170	2170	FT	NO. 6 GFRP DEFORMED BARS		2170		
511	33501	8	8	EACH	SEMI-INTEGRAL DIAPHRAGM GUIDE, AS PER PLAN	8			4/41
511	34463	26	26	CU YD	CLASS QC SCC CONCRETE WITH QC/QA, BRIDGE DECK (PARAPET), AS PER PLAN		26		4/41
511	46513	316	316	CU YD	CLASS QC1 CONCRETE WITH QC/QA, FOOTING, AS PER PLAN	316			4/41
511	53014	540	540	CU YD	CLASS QC3 CONCRETE, MISC.: CONCRETE WITH QC/QA, BRIDGE DECK, AS PER PLAN		540		3/41
511	53014	32	32	CU YD	CLASS QC3 CONCRETE, MISC.: CONCRETE WITH QC/QA, BRIDGE DECK (MEDIAN PARAPET), AS PER PLAN		32		3/41
511	53014	152	152	CU YD	CLASS QC3 CONCRETE, MISC.: CONCRETE WITH QC/QA, ABUTMENT, AS PER PLAN	152			4/41
512	10100	1010	1010	SQ YD	SEALING OF CONCRETE SURFACES (EPOXY-URETHANE)	275	735		
512	33000	7	7	SQ YD	TYPE 2 WATERPROOFING	7			
513	10220	328,782	328,782	POUND	STRUCTURAL STEEL MEMBERS, LEVEL 1		328,782		
513	20000	7383	7383	EACH	WELDED STUD SHEAR CONNECTORS		7383		
514	00061	18231	18,231	SQ FT	FIELD PAINTING STRUCTURAL STEEL, INTERMEDIATE COAT, AS PER PLAN		18,231		3/41
514	00067	18231	18,231	SQ FT	FIELD PAINTING STRUCTURAL STEEL, FINISH COAT, AS PER PLAN		18,231		3/41
514	10000	10	10	EACH	FINAL INSPECTION REPAIR		10		
516	10010	396	396	FT	ARMORLESS PREFORMED JOINT SEAL	396			
516	13600	353	353	SQ FT	1" PREFORMED EXPANSION JOINT FILLER	54	299		
516	13900	44	44	SQ FT	2" PREFORMED EXPANSION JOINT FILLER	44			
516	14020	414	414	FT	SEMI-INTEGRAL ABUTMENT EXPANSION JOINT SEAL	414			
516	44101	46	46	EACH	ELASTOMERIC BEARING WITH INTERNAL LAMINATES AND LOAD PLATE (NEOPRENE), AS PER PLAN 12"X12"X3.12" WITH 13"X13"X1 ½" LOAD PLATE			46	
523	20000	2	2	EACH	DYNAMIC LOAD TESTING			2	
523	20500	2	2	EACH	RESTRIKE			2	
526	30001	1267	1267	SQ YD	REINFORCED CONCRETE APPROACH SLABS (T=17"), AS PER PLAN		1267		3/41
526	90030	396	396	FT	TYPE C INSTALLATION		396		

Preliminary Plans - For Reference Only

\\san1.resourceinternational.com\two\projects\2010\B-10-020 HAM-75-7.85\77889\structures\HAM075_0857C\sheets\HAM075_0857CEQ001.dgn 5/13/2026 2:04:58 PM meets

RESOURCE INTERNATIONAL INC.
8350 PRESIDENTIAL GATEWAY
COLUMBUS, OHIO 43231
(614) 823-4949

DESIGNED MMS | DRAWN MMS | REVIEWED SSK | DATE 3-18-26
CHECKED JWE | REVISED --- | STRUCTURE FILE NUMBER 3110184

ESTIMATED QUANTITIES
BRIDGE NO. HAM-75-0857
I.R. 75 OVER TOWNE STREET (CR603)

HAM-75-7.85
PID No. 121447

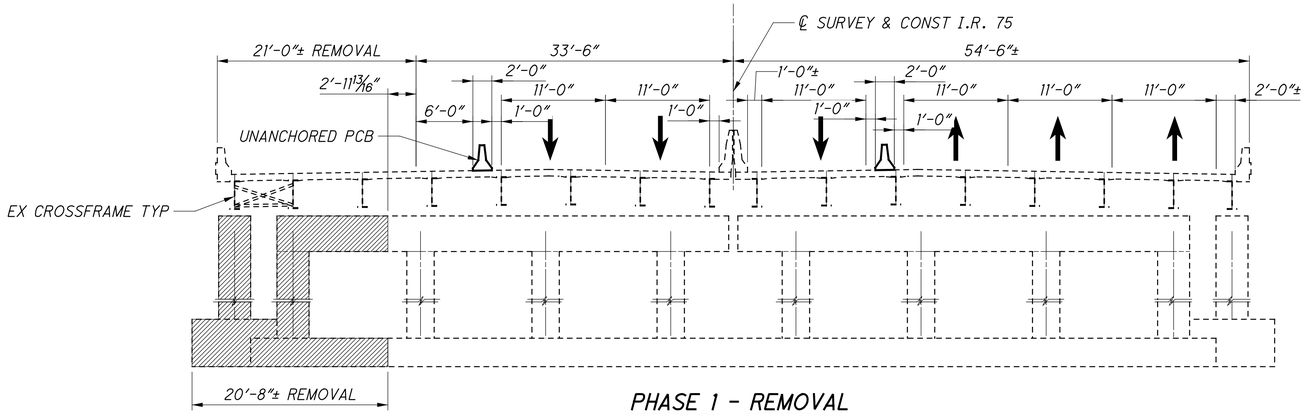

PHASE 1 - REMOVAL

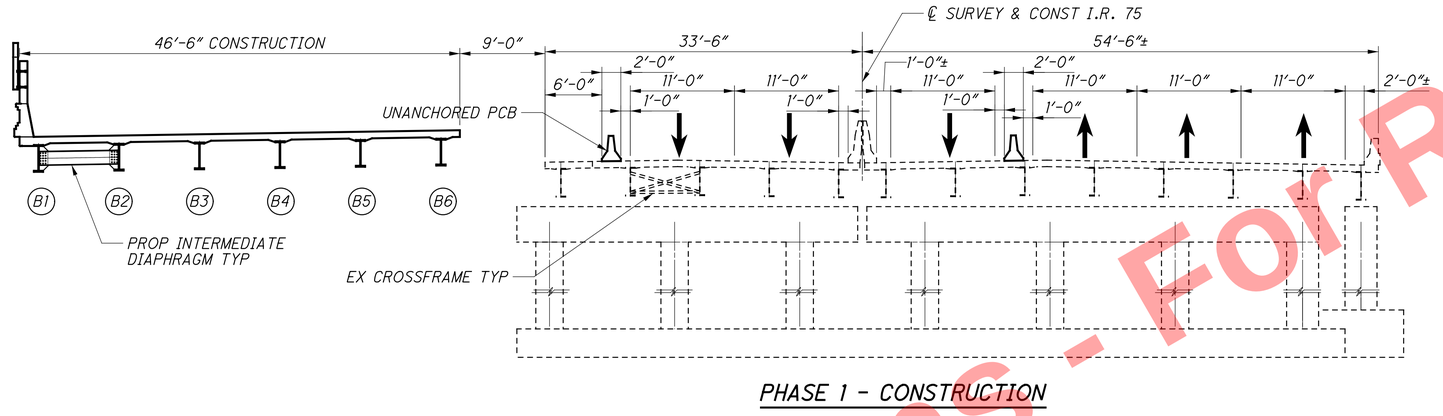

PHASE 1 - CONSTRUCTION

NOTES:

1. STRUCTURAL STEEL - ASTM A709 GRADE 50 - YIELD STRENGTH 50 KSI.

SUGGESTED SEQUENCE OF CONSTRUCTION:

PHASE 1 - SHORING AND REMOVAL:

1. INSTALL PCB AND SHIFT TRAFFIC AS SHOWN.
2. EXCAVATE DOWN TO EXPOSE THE EXISTING PIER FOOTING IN-BETWEEN THE SECOND AND THIRD COLUMNS.
3. REMOVE 21'-0"± OF EXISTING DECK, AND 20'-8"± PIER CAP, 2 COLUMNS AND FOUNDATION.
9. INSTALL SHEET PILING.

PHASE 1 - CONSTRUCTION:

1. CONSTRUCT MSE WALL AND ABUTMENT AS SHOWN ON WALL H1 & I1 PLANS & SHEETS 16/46 17/46 18/46 19/46 20/46
2. INSTALL BEAMS B1 - B6, INTERMEDIATE DIAPHRAGMS & SHEAR CONNECTORS.
3. INSTALL 46'-6" OF DECK, APPROACH SLABS & PARAPET.
4. INSTALL PCB AND SHIFT TRAFFIC AS SHOWN.

Preliminary Plans - For Reference Only

RESOURCE INTERNATIONAL INC.
8350 PRESIDENTIAL GATEWAY
COLUMBUS, OHIO 43231
(614) 823-4949

DESIGNED	DRAWN	REVIEWED	DATE
MMS	MMS	SSK	3-18-26
CHECKED	REVISED	STRUCTURE FILE NUMBER	
JWE		3110184	

PHASE CONSTRUCTION DETAILS
BRIDGE NO. HAM-75-0857
I.R. 75 OVER TOWNE STREET (CR603)

HAM-75-7.85
PID No. 121447

6 / 46

999
1047

\\son1.resourceinternational.com\two\projects\2010\B-10-020 HAM-75-7.85\77889\structures\HAM075_0857C\sheets\075_0857CPC001.dgn 5/13/2026 2:04:58 PM meets

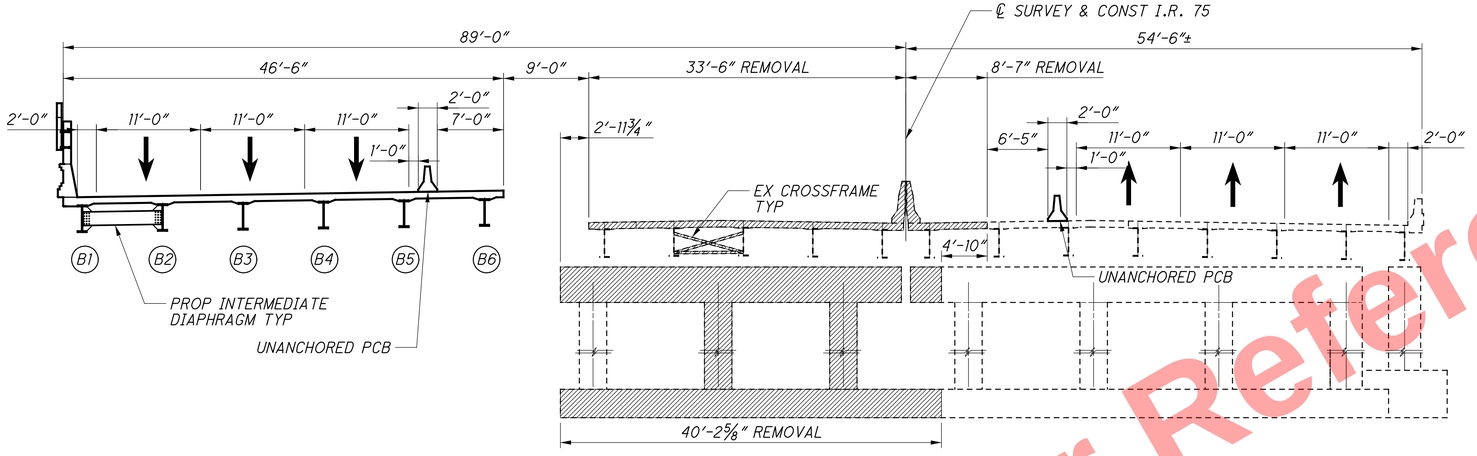

PHASE 2 - REMOVAL

SUGGESTED SEQUENCE OF CONSTRUCTION:

PHASE 2 - REMOVAL:

1. INSTALL PCB AND SHIFT TRAFFIC AS SHOWN.
2. EXCAVATE DOWN TO EXPOSE THE EXISTING PIER FOOTING IN-BETWEEN THE FIFTH AND SIXTH COLUMNS.
3. REMOVE 42'-1"± OF EXISTING DECK, 40'-2⅝" PIER, 3 COLUMNS AND FOUNDATION.

PHASE 2 - CONSTRUCTION:

1. CONSTRUCT MSE WALL AND ABUTMENT AS SHOWN ON MSE WALL H1 & I1 PLANS AND SHEETS 16/46 17/46 18/46 19/46 20/46
2. INSTALL BEAMS B7 - B11, INTERMEDIATE DIAPHRAGMS & SHEAR CONNECTORS.
3. INSTALL 39'-6" OF DECK, APPROACH SLABS & PARAPET.
4. INSTALL INTERMEDIATE DIAPHRAGM BETWEEN BEAM 6 AND BEAM 7. CONSTRUCT 3'-0" CLOSURE POUR.

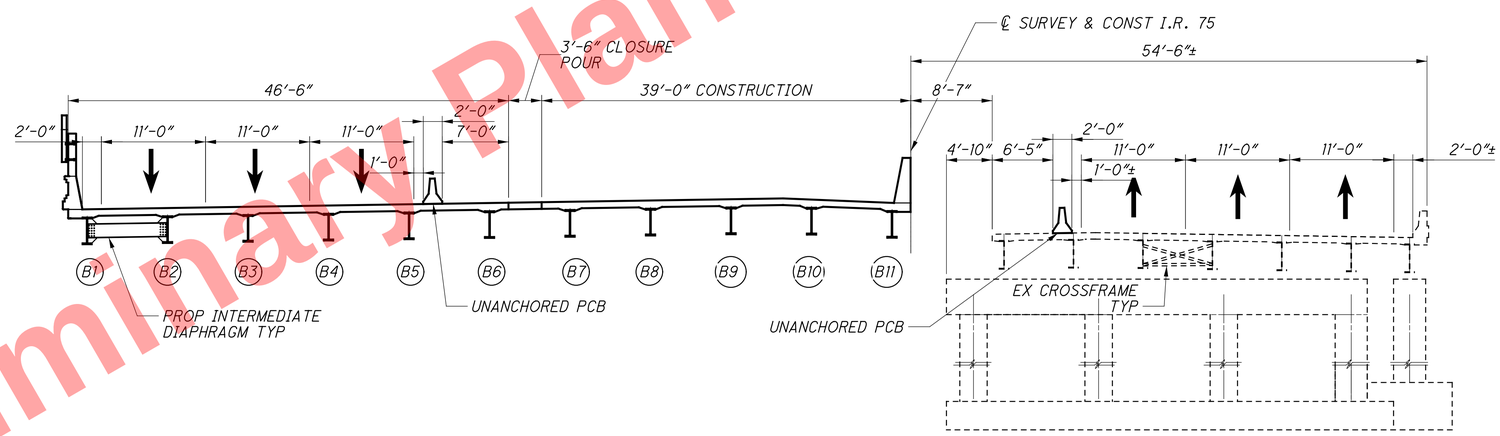

PHASE 2 - CONSTRUCTION

Preliminary Plans - For Reference Only

RESOURCE INTERNATIONAL INC.
6350 PRESIDENTIAL GATEWAY
COLUMBUS, OHIO 43231
(614) 823-4949

DESIGNED	DRAWN	REVIEWED	DATE
MMS	MMS	SSK	3-18-26
CHECKED	REVISED	STRUCTURE FILE NUMBER	
JWE		3110184	

PHASE CONSTRUCTION DETAILS
BRIDGE NO. HAM-75-0857
I.R. 75 OVER TOWNE STREET (CR603)

HAM-75-7.85
PID No. 121447

\\san1.resourceinternational.com\two\projects\2010\B-10-020 HAM-75-7.85\77889\structures\HAM075_0857C\sheets\075_0857CPC002.dgn 5/13/2026 2:04:59 PM meets

SUGGESTED SEQUENCE OF CONSTRUCTION:

PHASE 3 - REMOVAL:

1. INSTALL PCB AND SHIFT TRAFFIC AS SHOWN.
2. REMOVE 41'-11"± OF EXISTING DECK, PIER, 5 COLUMNS AND FOUNDATION.

PHASE 3 - CONSTRUCTION:

1. CONSTRUCT MSE WALL AND ABUTMENT AS SHOWN ON WALL H1 & I1 PLANS AND SHEETS 16/46 17/46 18/46 19/46 20/46
2. INSTALL BEAMS B12 - B23, INTERMEDIATE DIAPHRAGMS & SHEAR CONNECTORS.
3. INSTALL 100'-11½" OF DECK, APPROACH SLABS & PARAPET.
4. INSTALL INTERMEDIATE DIAPHRAGM BETWEEN BEAM 11 & BEAM 12.

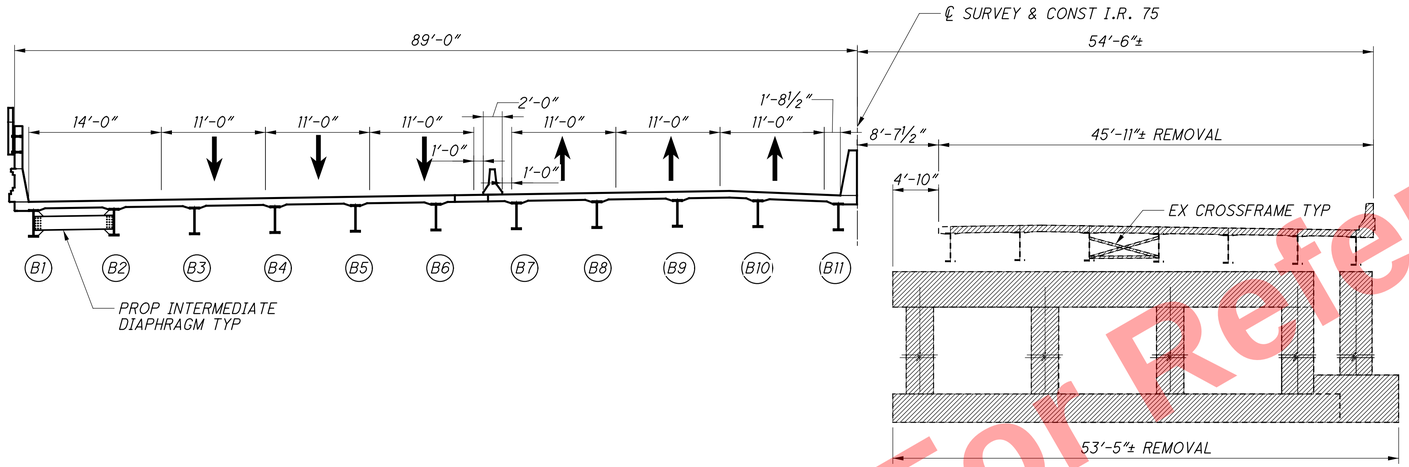

PHASE 3 - REMOVAL

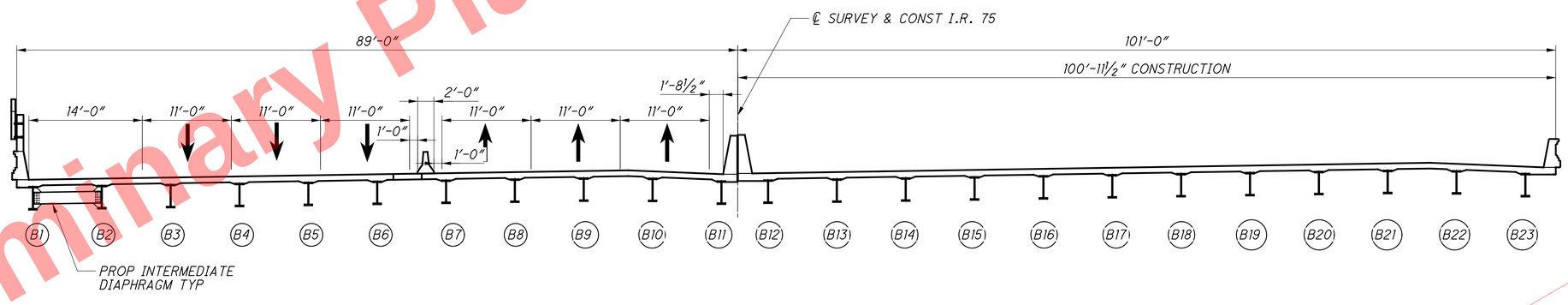

PHASE 3 - CONSTRUCTION

Preliminary Plans - For Reference Only

RESOURCE INTERNATIONAL INC.
6350 PRESIDENTIAL GATEWAY
COLUMBUS, OHIO 43231
(614) 823-4949

DESIGNED	DRAWN	REVIEWED	DATE
MMS	MMS	SSK	3-18-26
CHECKED	REVISED	STRUCTURE FILE NUMBER	
JWE		3110184	

PHASE CONSTRUCTION DETAILS
BRIDGE NO. HAM-75-0857
I.R. 75 OVER TOWNE STREET (CR603)

HAM-75-7.85
PID No. 121447

\\san1.resourceinternational.com\two\projects\2010\B-10-020 HAM-75-7.85\77889\structures\HAM075_0857C\sheets\075_0857CPC003.dgn 5/13/2026 2:04:59 PM meets

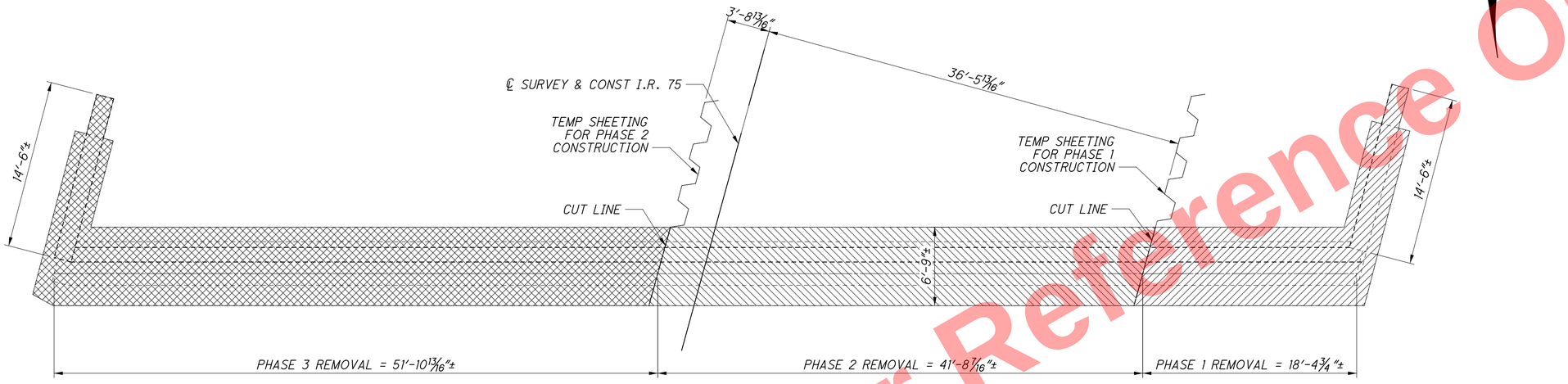

PLAN

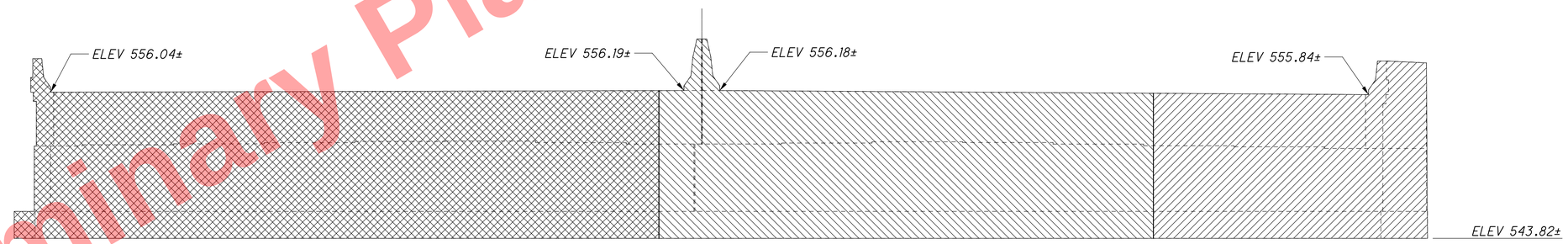

ELEVATION

LEGEND:

- PHASE 1 REMOVAL
- PHASE 2 REMOVAL
- PHASE 3 REMOVAL

Preliminary Plans - For Reference Only

\\son1.resourceinternational.com\two\projects\2010\B-10-020 HAM-75-7.85\77889\structures\HAM075_0857C\sheets\075_0857CRE001.dgn 5/13/2026 2:05:00 PM meets

RESOURCE INTERNATIONAL INC.
8350 PRESIDENTIAL GATEWAY
COLUMBUS, OHIO 43231
(614) 823-4949

DESIGNED	DRAWN	REVIEWED	DATE
MMS	MMS	SSK	3-18-26
CHECKED	REVISED	STRUCTURE FILE NUMBER	
JWE		3110184	

REAR ABUTMENT REMOVAL DETAILS

BRIDGE NO. HAM-75-0857
I.R. 75 OVER TOWNE STREET (CR603)

HAM-75-7.85
PID No. 121447

1002
1047

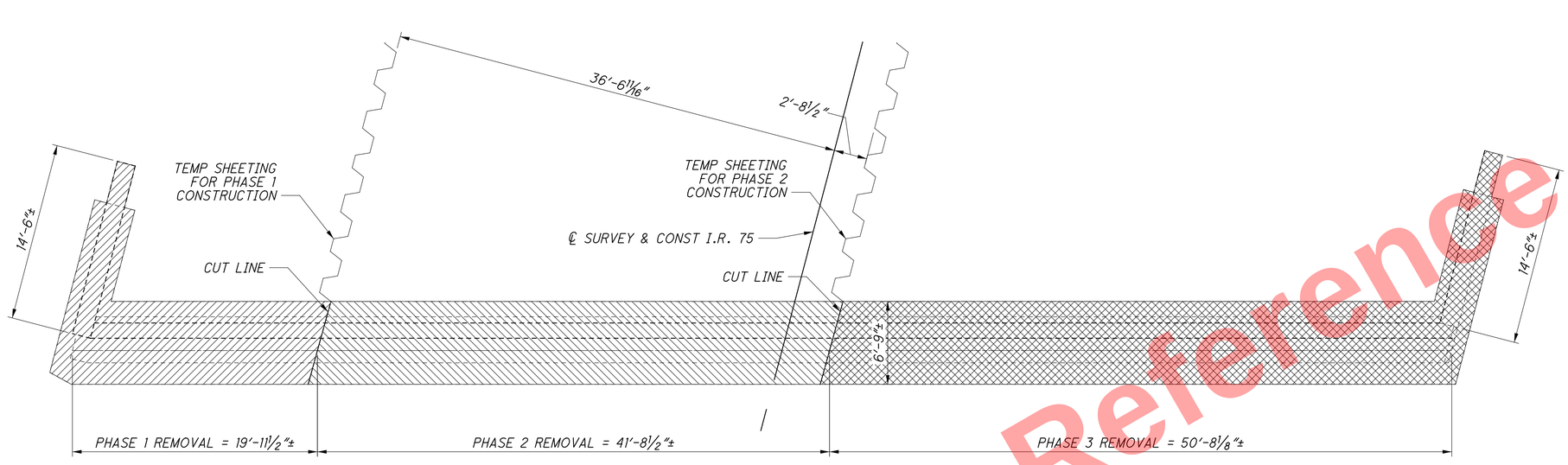

PLAN

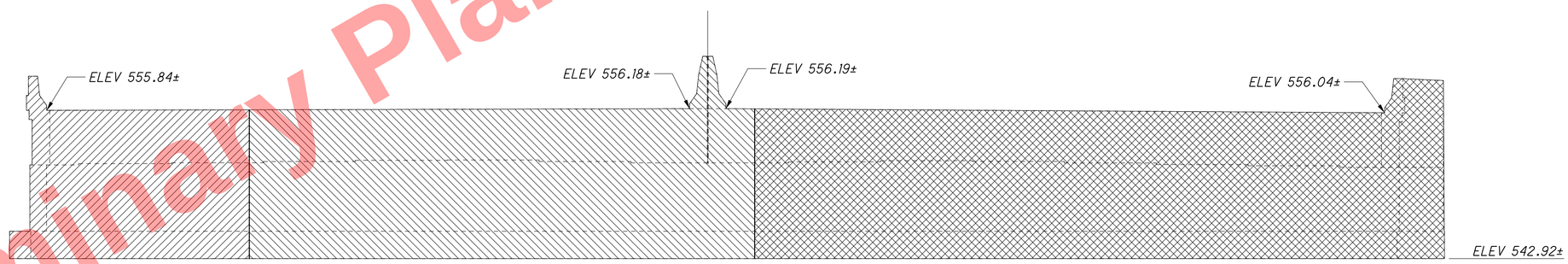

ELEVATION

LEGEND:

- PHASE 1 REMOVAL
- PHASE 2 REMOVAL
- PHASE 3 REMOVAL

Preliminary Plans - For Reference Only

RESOURCE INTERNATIONAL INC.
8350 PRESIDENTIAL GATEWAY
COLUMBUS, OHIO 43231
(614) 823-4949

DESIGNED	DRAWN	REVIEWED	DATE
MMS	MMS	SSK	3-18-26
CHECKED	REVISED	STRUCTURE FILE NUMBER	
JWE		3110184	

FORWARD ABUTMENT REMOVAL DETAILS

BRIDGE NO. HAM-75-0857
I.R. 75 OVER TOWNE STREET (CR603)

HAM-75-7.85
PID No. 121447

\\san1.resourceinternational.com\two\projects\2010\B-10-020 HAM-75-7.85\77889\structures\HAM075_0857C\sheets\075_0857CRE002.dgn 5/13/2026 2:05:00 PM meets

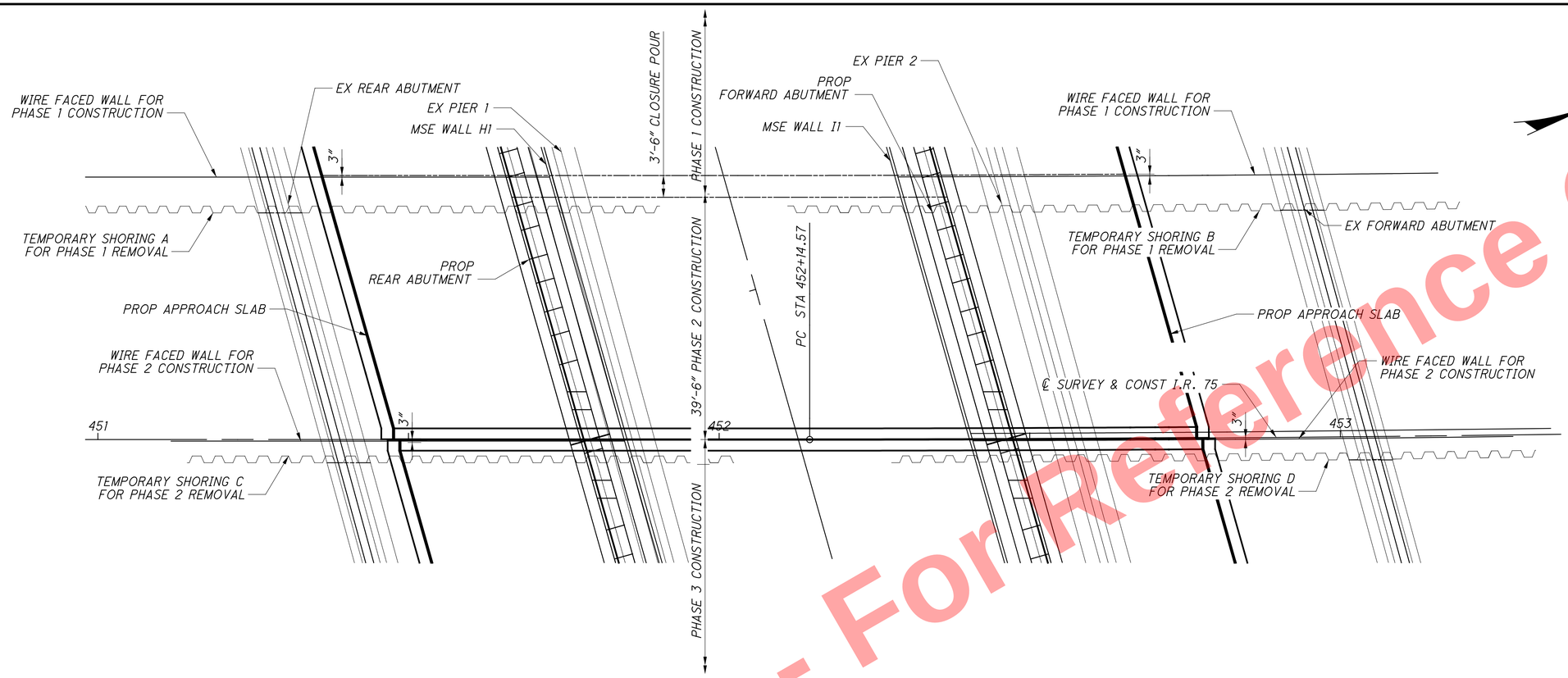

SHORING PLAN

NOTES:

1. SHEET PILING SHALL BE ASTM A328 MATERIAL AND MEET THE REQUIREMENTS OF CMS 711.03.
2. THE MAXIMUM SPACING OF THE SOIL ANCHORS IS 7'-0" AND A MINIMUM OF 2 ANCHORS PER WALER IS REQUIRED.
3. ADJUST THE VERTICAL AND HORIZONTAL ANGLES OF THE SOIL ANCHORS TO ACCOMMODATE THE PROPOSED METHOD OF THE INSTALLATION AND TO AVOID ANY OBSTRUCTION. HOWEVER, AS THE VERTICAL AND HORIZONTAL ANGLES OF THE SOIL ANCHORS INCREASE, THE COMPONENT OF THE SOIL ANCHOR DESIGN LOAD PERPENDICULAR TO THE WALL WILL DECREASE. THE COMPONENT OF THE DESIGN LOAD PERPENDICULAR TO THE WALL MUST BE EQUAL TO OR GREATER THAN THE HORIZONTAL DESIGN LOAD FOR EACH WALER MULTIPLIED BY THE SOIL ANCHOR SPACING ALONG THE WALER.
4. TEMPORARY SOIL ANCHORS DO NOT REQUIRE CORROSION PROTECTION.
5. FILL THE VOID BETWEEN THE DRILL HOLE AND THE SHEATHING OF THE UNBONDED LENGTH WITH GROUT.
6. BACKFILL THE AREA WITH LOW STRENGTH MORTAR BACKFILL IMMEDIATELY FOLLOWING ANCHOR DE-TENSIONING AND TO DE-TENSION THE ANCHORS ONLY AS THE LOW STRENGTH MORTAR BACKFILL IS PLACED VERTICALLY.
7. PAYMENT FOR SHEET PILING, SOIL ANCHORS, WALERS, EXPANSION ANCHORS, LOW STRENGTH MORTAR BACKFILL, REMOVAL OF ALL COMPONENTS AFTER NO LONGER NECESARY FOR SPECIFIC CONSTRUCTION PHASE, AND ALL OTHER ITEMS ASSOCIATED WITH TEMPORARY SHORING WILL BE INCLUDED IN THE CONTRACT LUMP SUM PRICE FOR "COFFERDAMS AND EXCAVATION BRACING, AS PER PLAN".
8. SEE SHEET 12/46 FOR ELEVATION VIEWS.

Preliminary Plans - For Reference Only

RESOURCE INTERNATIONAL INC.
8350 PRESIDENTIAL GATEWAY
COLUMBUS, OHIO 43231
(614) 823-4949

DESIGNED MMS | DRAWN MMS | REVIEWED SSK | DATE 3-18-26
CHECKED JWE | REVISED | STRUCTURE FILE NUMBER 3110184

TEMPORARY SHORING DETAILS
BRIDGE NO. HAM-75-0857
I.R. 75 OVER TOWNE STREET (CR603)

HAM-75-7.85
PID No. 121447

11 / 46

1004
1047

\\san1.resourceinternational.com\two\projects\2010\B-10-020 HAM-75-7.85\77889\structures\HAM075_0857C\sheets\075_0857CMD001.dgn 5/13/2026 2:05:01 PM meets

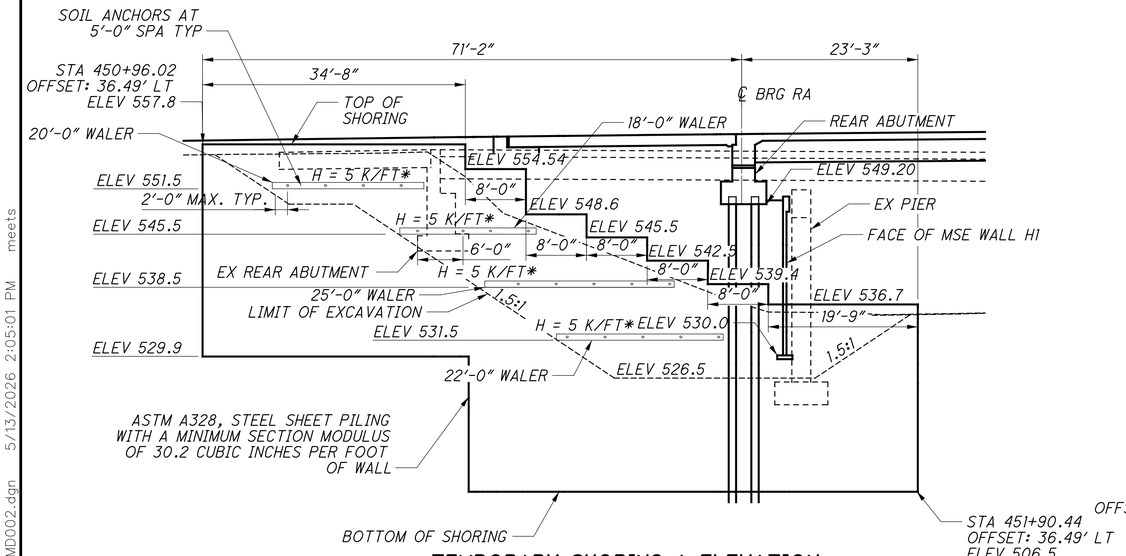

TEMPORARY SHORING A ELEVATION

REAR ABUTMENT PHASE 1

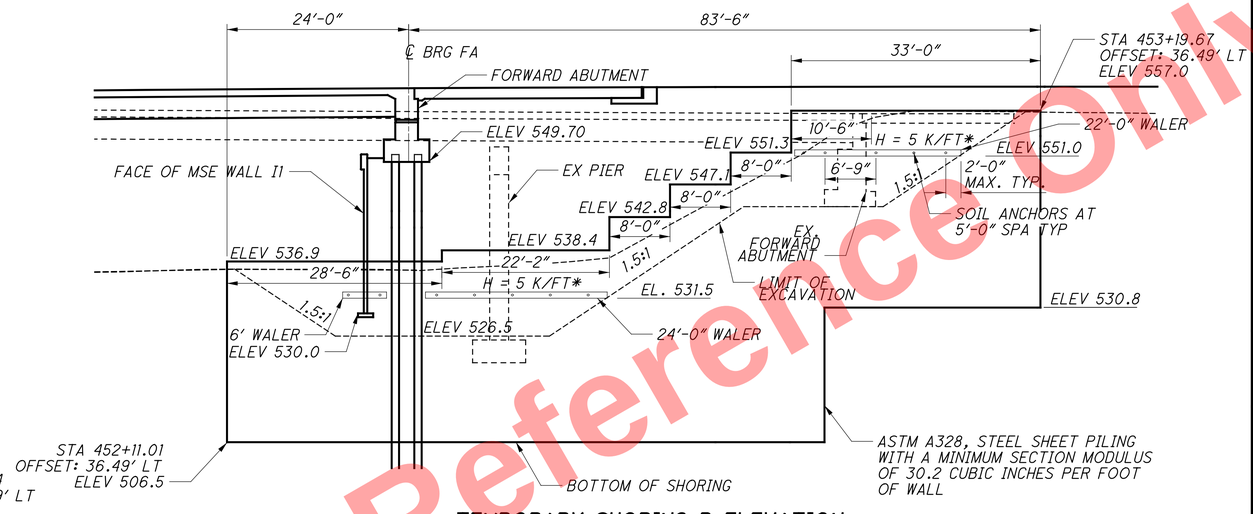

TEMPORARY SHORING B ELEVATION

FORWARD ABUTMENT PHASE 1

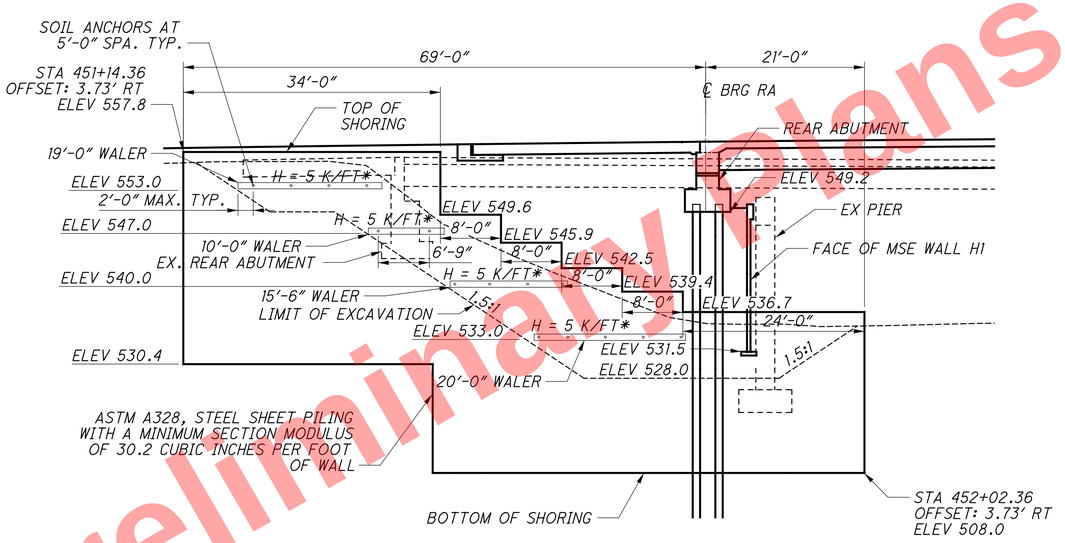

TEMPORARY SHORING C ELEVATION

REAR ABUTMENT PHASE 2

(PARAPET NOT SHOWN FOR CLARITY)

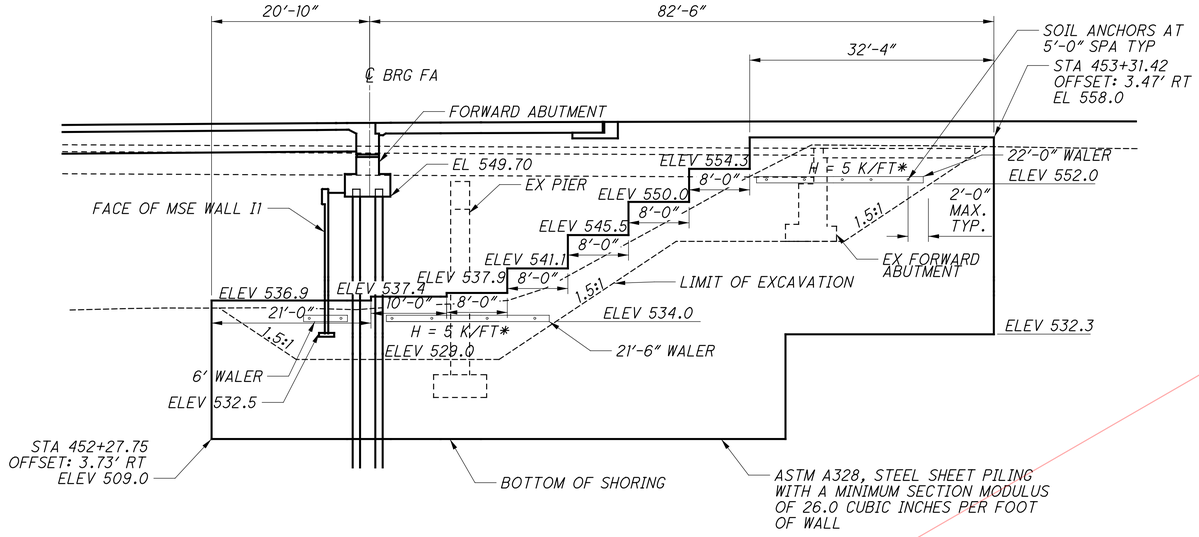

TEMPORARY SHORING D ELEVATION

FORWARD ABUTMENT PHASE 2

(PARAPET NOT SHOWN FOR CLARITY)

NOTES:

1. SEE SHEET 11/46 FOR PLAN VIEW.
2. INSTALL ALL ANCHORS PER SUPPLEMENTAL SPECIFICATION 866.

LEGEND:

* - BOND LENGTH OF SOIL ANCHORS TO BE DETERMINED BY CONTRACTOR.

H - HORIZONTAL COMPONENT OF REQUIRED SOIL ANCHOR FORCE PER FOOT OF WALER.

Preliminary Plans - For Reference Only

RESOURCE INTERNATIONAL INC.
8350 PRESIDENTIAL GATEWAY
COLUMBUS, OHIO 43231
(614) 823-4949

DESIGNED MMS | DRAWN MMS | REVIEWED SSK | DATE 3-18-26
CHECKED JWE | REVISED | STRUCTURE FILE NUMBER 3110184

TEMPORARY SHORING DETAILS
BRIDGE NO. HAM-75-0857
I.R. 75 OVER TOWNE STREET (CR603)

HAM-75-7.85
PID No. 121447

12 / 46

1005
1047

\\san1.resourceinternational.com\two\projects\2010\B-10-020 HAM-75-7.85\77889\structures\HAM075_0857\sheets\075_0857CMD002.dgn 5/13/2026 2:05:01 PM meets

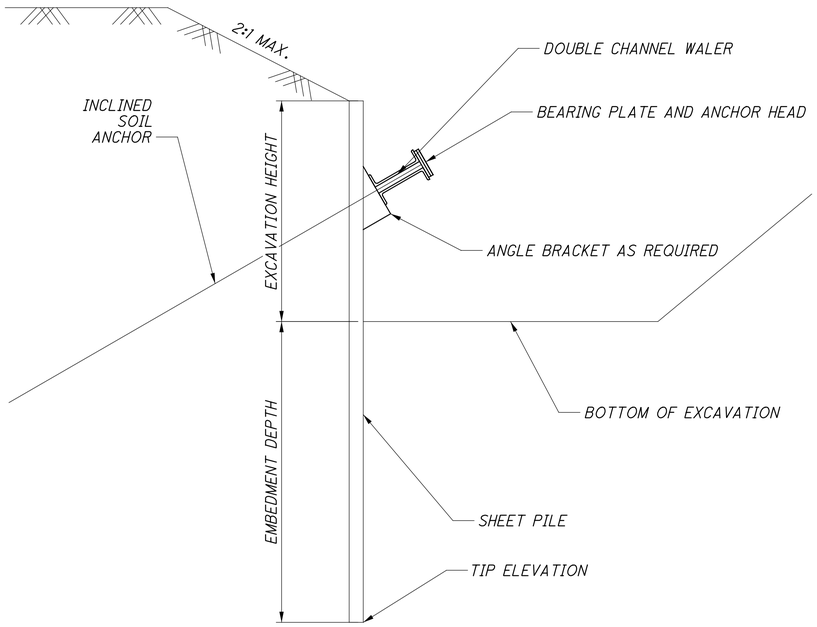

TYPICAL SINGLE TIE SECTION WITH EXTERNAL WALER

EXCAVATION HEIGHT	SECTION MODULUS IN^3/FT	EMBEDMENT DEPTH (FT)	HORIZONTAL WALER FORCE (K/FT)	LOCATION FROM TOP	UNBONDED LENGTH *
10' OR LESS	30.2	20	-	-	-
10' TO 15'	30.2	10	5.0	6	15 FT.

* UNBONDED LENGTH IS CALCULATED BASED ON:

- MIN. 15 FEET OVER BURDEN AT END OF UNBONDED LENGTH
- MIN 5 FEET BEYOND ACTIVE WEDGE
- MIN. 15 FEET LONG

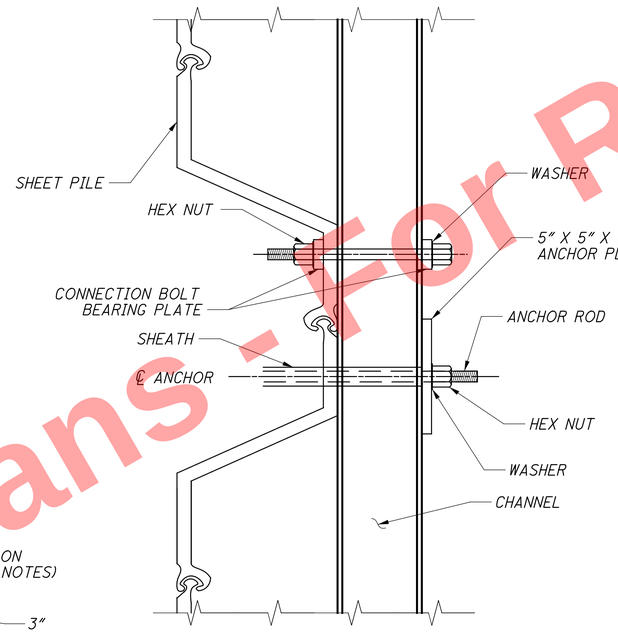

TYPICAL WALER PLAN

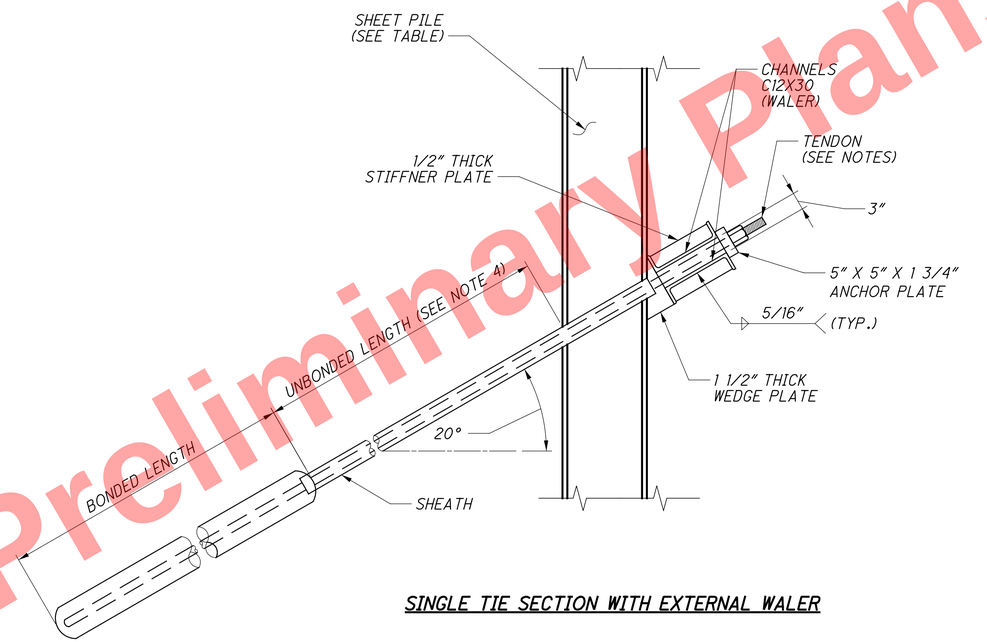

SINGLE TIE SECTION WITH EXTERNAL WALER

NOTES:

1. ALL GROUND ANCHOR SHOULD BE PER SS 866 04-21-17.

2. TENDON SHALL BE EITHER A 1 3/8" DIAMETER THREADED BAR (ASTM A722 GRADE 150) OR A LOW RELAXATION FOUR-STRAND (ASTM A416 GRADE 270) SEVEN-WIRE UNCOATED STRAND.

3. THE CEMENT FOR THE GROUT SHALL BE TYPE I, TYPE II, OR TYPE III CONFORMING TO ASTM C150. THE GROUT SHALL CONFORM TO ALL APPLICABLE REQUIREMENTS OF ITEM 499. GROUT ADDITIVES SHOULD BE AVOIDED. CHEMICAL ADDITIVES WHICH CAN CONTROL BLEED AND/OR RETARD SET MAY BE USED IN THE ANCHOR GROUT AS DIRECTED BY THE ENGINEER.

4. THE SHEATH (BOND BREAKER) SHALL BE EITHER A POLYVINYL CHLORIDE (PVC), POLYETHYLENE, OR PROPYLENE PIPE OR TUBE. THE MATERIAL SHALL BE CAPABLE OF WITHSTANDING DAMAGE DURING SHIPPING, HANDLING, AND INSTALLATION. THE SHEATH SHALL HAVE A MINIMUM WALL THICKNESS OF 0.04 INCH. THE MATERIAL IS SUBJECT TO THE APPROVAL OF THE ENGINEER.

THE MATERIALS SHALL CONFORM TO THE FOLLOWING:

PVC	ASTM D1785
POLYETHYLENE	ASTM D1248
PROPYLENE	ASTM D4101

THE INSTALLED SHEATHING SHALL PERMIT AT LEAST 95 PERCENT OF THE TENDON FORCE TO BE TRANSMITTED TO THE ANCHOR LENGTH. THE SHEATHING SHALL HAVE A TENSILE STRENGTH EXCEEDING 3,000 POUNDS PER SQUARE INCH (PSI) AS DETERMINED BY ASTM D638 AND AN IZOD IMPACT STRENGTH EXCEEDING 4 FOOT-POUNDS PER INCH AS DETERMINED BY ASTM D256A.

5. SHEETING SHALL BE LEFT IN-PLACE FOLLOWING CONSTRUCTION OF MSE WALL. DISCONNECT THE ANCHOR HEADS AND REMOVE THE WALERS WHEN THE SGB ELEVATION IS FILLED TO WITHIN 1 FT. OF THE BOTTOM OF THE WALER.

6. ALL STEEL SHALL BE GRADE 50. ALL BOLTS SHALL BE 5/8" DIA. HIGH STRENGTH BOLTS ASTM A325.

Preliminary Plans - For Reference Only

RESOURCE INTERNATIONAL INC.
8550 PRESIDENTIAL GATEWAY
COLUMBUS, OHIO 43231
(614) 823-4949

DESIGNED MMS | DRAWN MMS | REVIEWED SSK | DATE 3-18-26
CHECKED JWE | REVISED | STRUCTURE FILE NUMBER 3110184

TEMPORARY SHORING DETAILS

BRIDGE NO. HAM-75-0857
I.R. 75 OVER TOWNE STREET (CR603)

HAM-75-7.85
PID No. 121447

1006
1047

\\san1.resourceinternational.com\two\projects\2010\B-10-020 HAM-75-7.85\77889\structures\HAM075_0857\CMD008.dgn 5/13/2026 2:05:02 PM meets

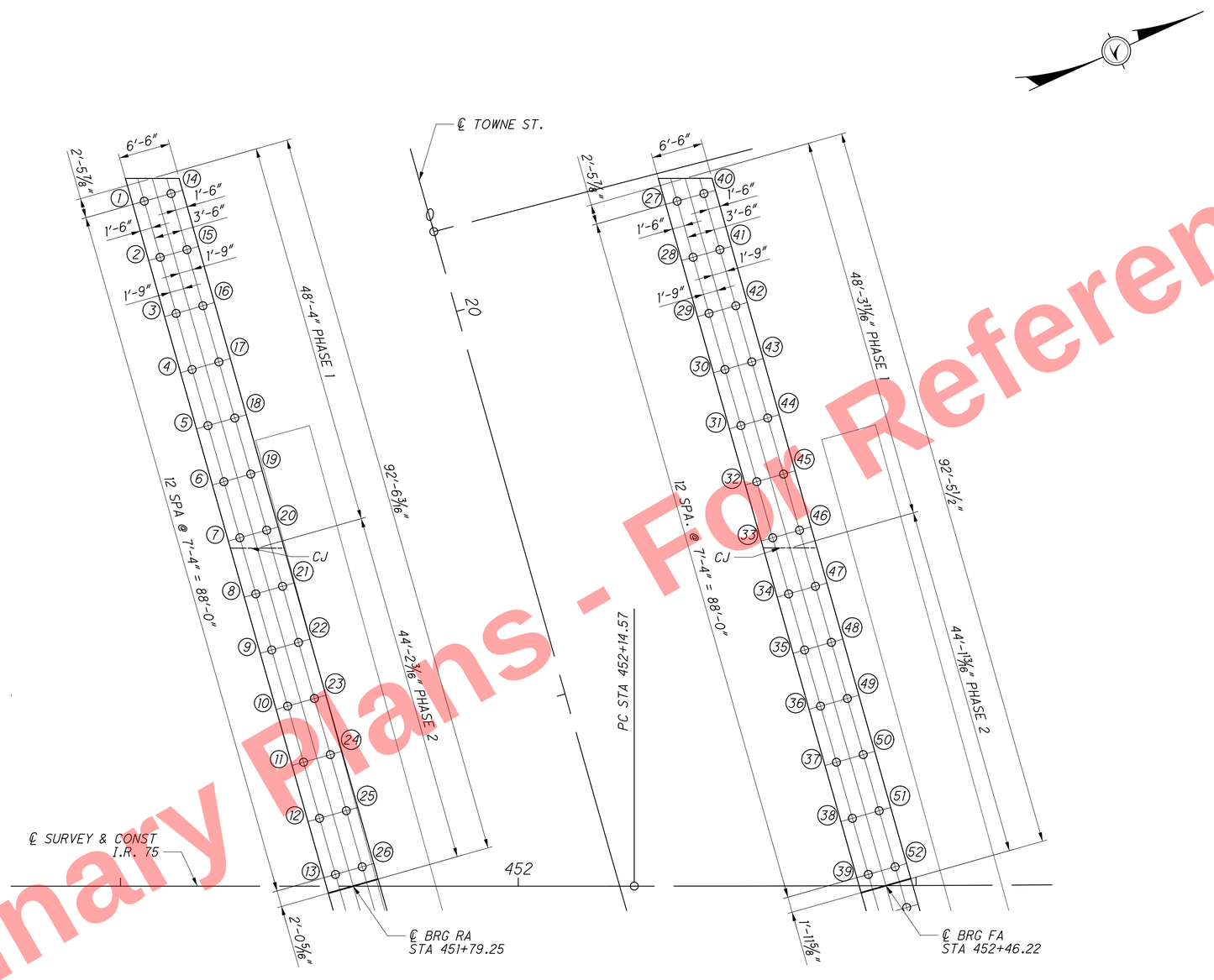

REAR ABUTMENT

FORWARD ABUTMENT

FOUNDATION PLAN

Preliminary Plans - For Reference Only

RESOURCE INTERNATIONAL INC.
8350 PRESIDENTIAL GATEWAY
COLUMBUS, OHIO 43231
(614) 823-4949

DESIGNED	DRAWN	REVIEWED	DATE
MMS	MMS	SSK	3-18-26
CHECKED	REVISED	STRUCTURE FILE NUMBER	
JWE		3110184	

FOUNDATION PLAN
BRIDGE NO. HAM-75-0857
I.R. 75 OVER TOWNE STREET (CR603)

HAM-75-7.85
PID No. 121447

1007
1047

\\san1.resourceinternational.com\two\projects\2010\B-10-020 HAM-75-7.85\77889\structures\HAM075_0857C\sheets\075_0857CFP001.dgn 5/13/2026 2:05:02 PM meets

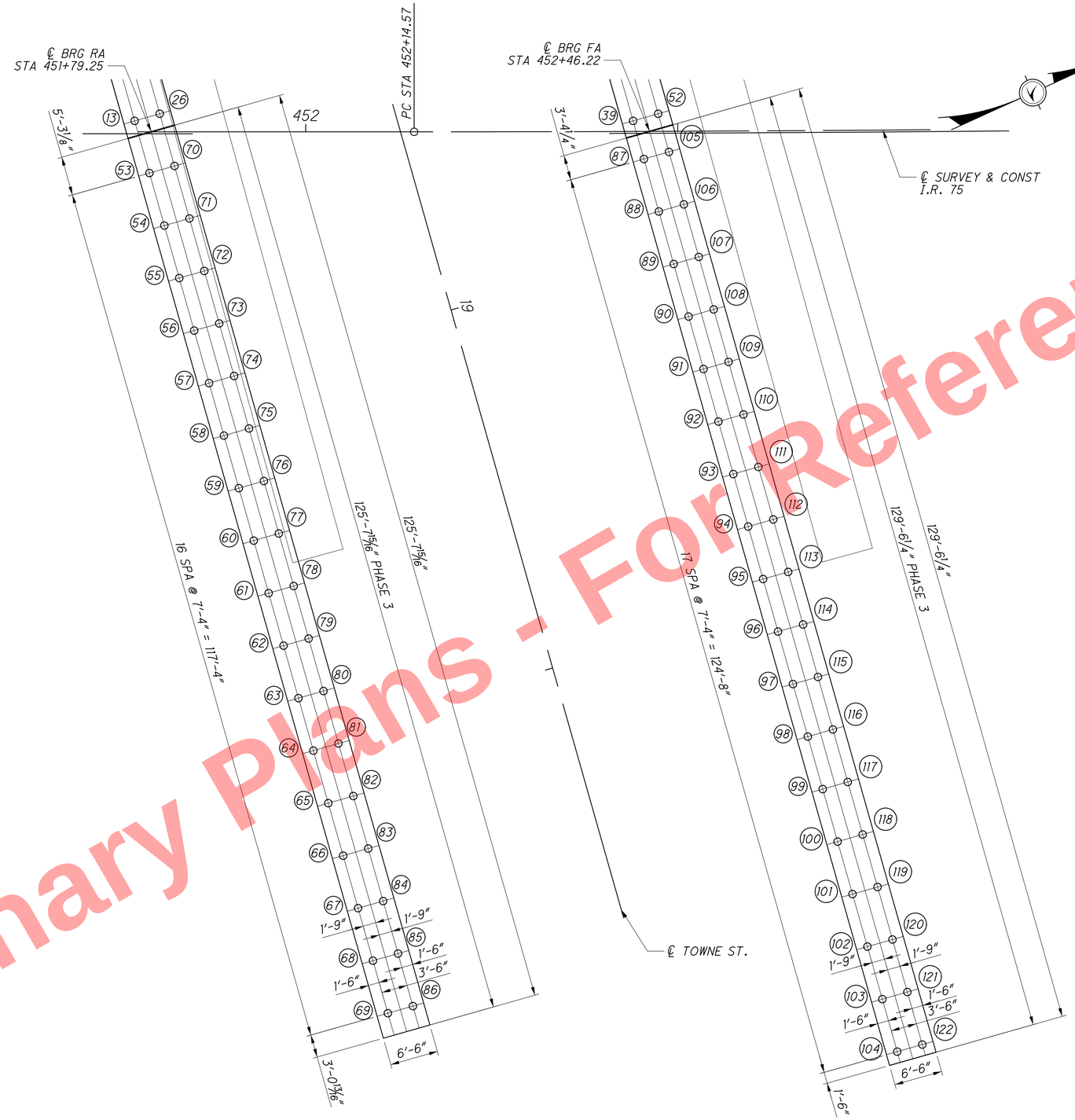

REAR ABUTMENT

FORWARD ABUTMENT

FOUNDATION PLAN

Preliminary Plans - For Reference Only

RESOURCE INTERNATIONAL INC.
8350 PRESIDENTIAL GATEWAY
COLUMBUS, OHIO 43231
(614) 823-4949

DESIGNED	DRAWN	REVIEWED	DATE
MMS	MMS	SSK	3-18-26
CHECKED	REVISED	STRUCTURE FILE NUMBER	
JWE		3110184	

FOUNDATION PLAN
BRIDGE NO. HAM-75-0857
I.R. 75 OVER TOWNE STREET (CR603)

HAM-75-7.85
PID No. 121447

15 / 46

1008
1047

\\san1.resourceinternational.com\two\projects\2010\B-10-020 HAM-75-7.85\77889\structures\HAM075_0857C\sheets\075_0857CFP002.dgn 5/13/2026 2:05:02 PM meets

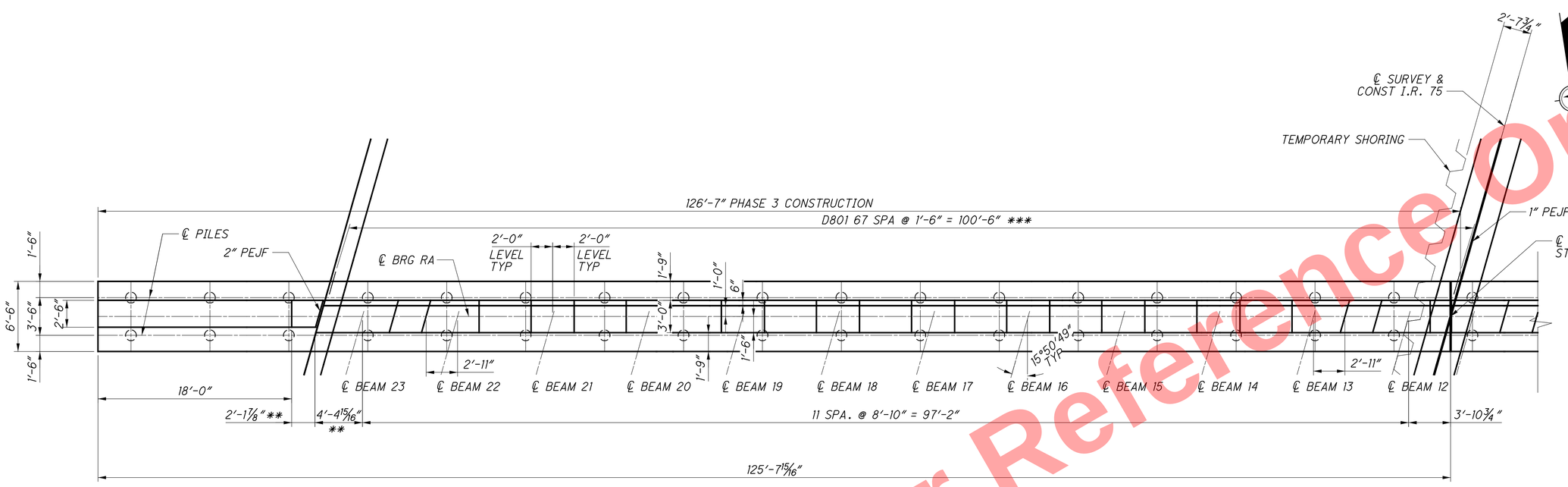

REAR ABUTMENT PLAN

(MSE WALL NOT SHOWN FOR CLARITY, SEE MSE WALL PLANS FOR ADDITIONAL INFORMATION)

BEAM SEAT ELEVATIONS (REAR ABUTMENT)											
BEAM 12	BEAM 13	BEAM 14	BEAM 15	BEAM 16	BEAM 17	BEAM 18	BEAM 19	BEAM 20	BEAM 21	BEAM 22	BEAM 23
554.62	554.78	554.94	555.10	555.25	555.36	555.48	555.60	555.72	555.84	555.81	555.50

NOTE:

ABUTMENT DIAPHRAGM CONCRETE:
PLACE THE DIAPHRAGM CONCRETE ENCASING THE STRUCTURAL MEMBER ENDS WITH THE DECK CONCRETE OR AT LEAST 48 HOURS BEFORE PLACEMENT OF THE DECK CONCRETE. IF PLACED SEPARATELY, LOCATE A HORIZONTAL CONSTRUCTION JOINT IN THE DIAPHRAGM AS SHOWN ON SICD-1-96 FOR STEEL SUPERSTRUCTURES AND PLACE REMAINING DIAPHRAGM CONCRETE WITH THE DECK.

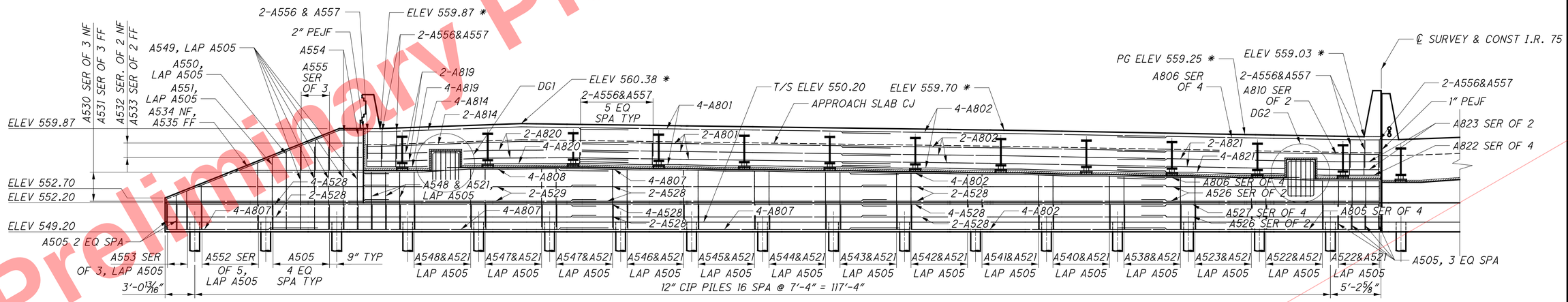

REAR ABUTMENT ELEVATION

(MSE WALL NOT SHOWN FOR CLARITY, SEE MSE WALL PLANS FOR ADDITIONAL INFORMATION)

NOTES:

1. LAP #5 BAR: 2'-5"
   LAP #8 BAR: 4'-11"
2. APPLY ITEM 512, TYPE 2 WATERPROOFING, 2'-0" WIDE CENTERED ON THE JOINT.
3. SEE SHEET 20/46 FOR DIAPHRAGM GUIDE DETAIL.

LEGEND:

* - ELEVATIONS GIVEN AT CENTERLINE OF BEARING

** - MEASURED TO CENTERLINE OF JOINT

*** - MEASURED PERPENDICULAR TO CENTERLINE

Preliminary Plans - For Reference Only

RESOURCE INTERNATIONAL INC.
8350 PRESIDENTIAL GATEWAY
COLUMBUS, OHIO 43231
(614) 823-4949

DESIGNED MMS | DRAWN MMS | REVIEWED SSK | DATE 3-18-26
CHECKED JWE | REVISED | STRUCTURE FILE NUMBER 3110184

REAR ABUTMENT PLAN AND ELEVATION 1 OF 2
BRIDGE NO. HAM-75-0857
I.R. 75 OVER TOWNE STREET (CR603)

HAM-75-7.85
PID No. 121447

16 / 46

1009
1047

\\sont.resourceinternational.com\two\projects\2010\B-10-020 HAM-75-7.85\77689\structures\HAM075_0857C\sheets\075_0857CAR001.dgn 5/13/2026 2:05:03 PM meets

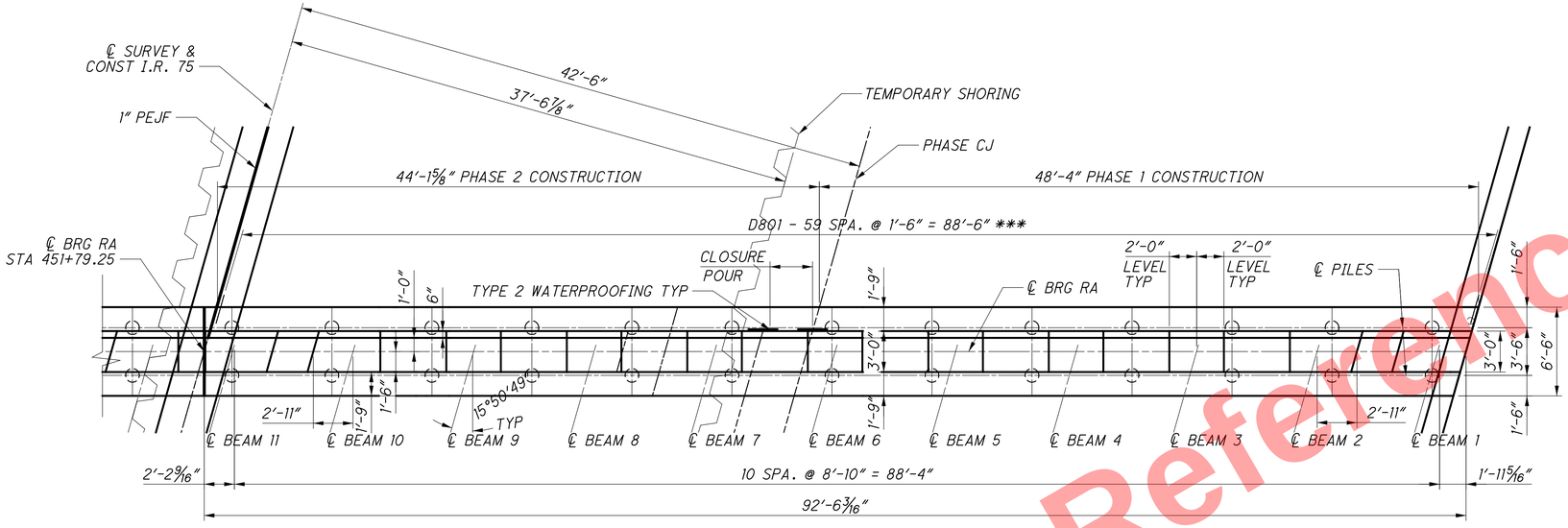

REAR ABUTMENT PLAN

(MSE WALL NOT SHOWN FOR CLARITY, SEE MSE WALL PLANS FOR ADDITIONAL INFORMATION)

BEAM SEAT ELEVATIONS (REAR ABUTMENT)										
BEAM 1	BEAM 2	BEAM 3	BEAM 4	BEAM 5	BEAM 6	BEAM 7	BEAM 8	BEAM 9	BEAM 10	BEAM 11
553.44	553.63	553.83	554.02	554.17	554.33	554.47	554.57	554.66	554.62	554.30

NOTE:

ABUTMENT DIAPHRAGM CONCRETE, PHASED CONSTRUCTION: PLACE THE DIAPHRAGM CONCRETE ENCASING THE STRUCTURAL MEMBER ENDS OF AN INDIVIDUAL PHASE WITH THE DECK CONCRETE OR AT LEAST 48 HOURS BEFORE PLACEMENT OF THE DECK CONCRETE. IF PLACED SEPARATELY, LOCATE THE HORIZONTAL CONSTRUCTION JOINT BETWEEN THE DIAPHRAGM AND DECK CONCRETE AT THE APPROACH SLAB SEAT. PLACE CLOSURE POUR CONCRETE IN THE DIAPHRAGM AND DECK CONCURRENTLY.

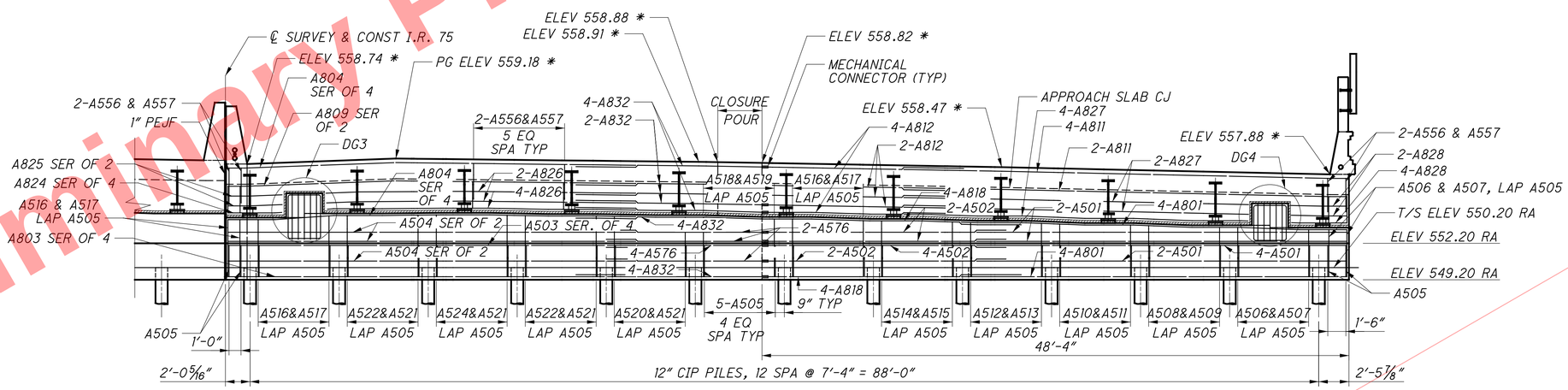

REAR ABUTMENT ELEVATION

(MSE WALL NOT SHOWN FOR CLARITY, SEE MSE WALL PLANS FOR ADDITIONAL INFORMATION)

NOTES:

1. LAP #5 BAR: 2'-5"
   LAP #8 BAR: 4'-11"
2. APPLY ITEM 512, TYPE 2 WATERPROOFING, 2'-0" WIDE CENTERED ON THE JOINT.
3. SEE SHEET 20/46 FOR DIAPHRAGM GUIDE DETAIL.

LEGEND:

* - ELEVATIONS GIVEN AT CENTERLINE OF BEARING

*** - MEASURED PERPENDICULAR TO CENTERLINE

Preliminary Plans - For Reference Only

RESOURCE INTERNATIONAL INC.
8350 PRESIDENTIAL GATEWAY
COLUMBUS, OHIO 43231
(614) 823-4949

DESIGNED MMS | DRAWN MMS | REVIEWED SSK | DATE 3-18-26
CHECKED JWE | REVISED | STRUCTURE FILE NUMBER 3110184

REAR ABUTMENT PLAN AND ELEVATION
BRIDGE NO. HAM-75-0857
I.R. 75 OVER TOWNE STREET (CR603)

HAM-75-7.85
PID No. 121447

17 / 46

1010
1047

\\san1.resourceinternational.com\two\projects\2010\B-10-020 HAM-75-7.85\77889\structures\HAM075_0857C\sheets\075_0857CAR002.dgn 5/13/2026 2:05:03 PM meets

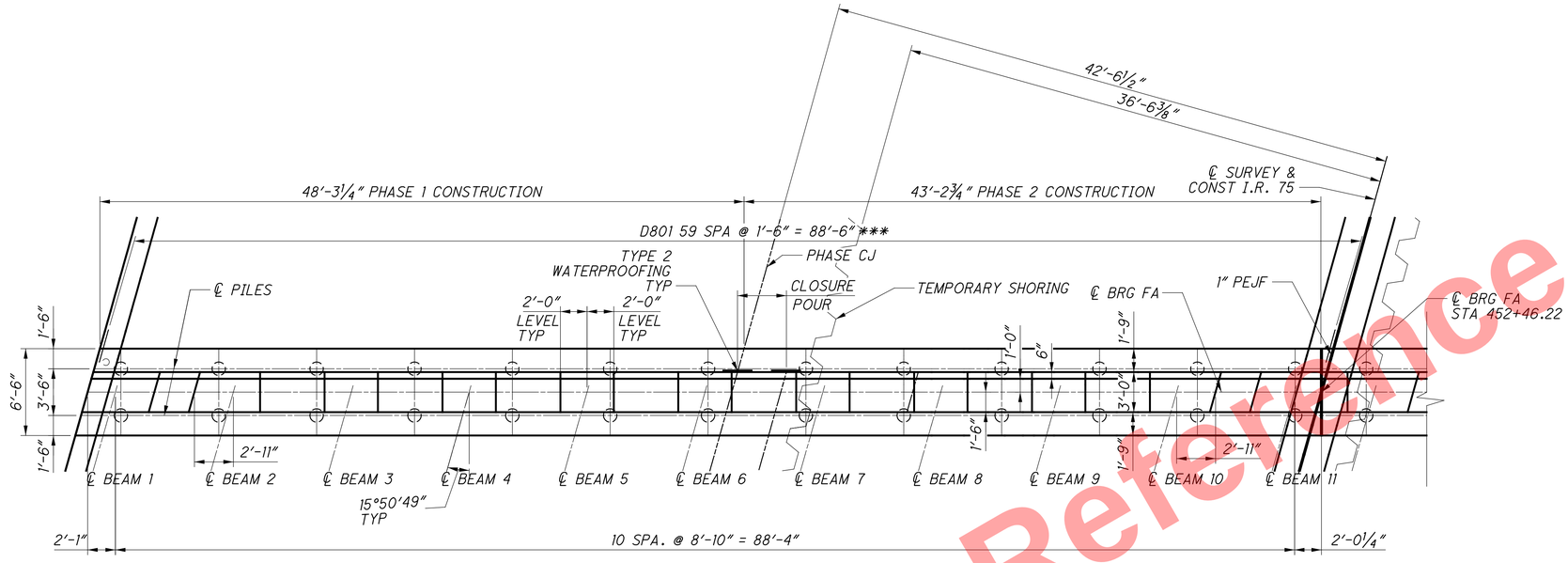

FORWARD ABUTMENT PLAN

(MSE WALL NOT SHOWN FOR CLARITY, SEE MSE WALL PLANS FOR ADDITIONAL INFORMATION)

BEAM SEAT ELEVATIONS (FORWARD ABUTMENT)										
BEAM 1	BEAM 2	BEAM 3	BEAM 4	BEAM 5	BEAM 6	BEAM 7	BEAM 8	BEAM 9	BEAM 10	BEAM 11
553.90	554.08	554.27	554.45	554.59	554.74	554.88	555.02	555.16	555.13	554.80

NOTE:

ABUTMENT DIAPHRAGM CONCRETE, PHASED CONSTRUCTION: PLACE THE DIAPHRAGM CONCRETE ENCASING THE STRUCTURAL MEMBER ENDS OF AN INDIVIDUAL PHASE WITH THE DECK CONCRETE OR AT LEAST 48 HOURS BEFORE PLACEMENT OF THE DECK CONCRETE. IF PLACED SEPARATELY, LOCATE THE HORIZONTAL CONSTRUCTION JOINT BETWEEN THE DIAPHRAGM AND DECK CONCRETE AT THE APPROACH SLAB SEAT. PLACE CLOSURE POUR CONCRETE IN THE DIAPHRAGM AND DECK CONCURRENTLY.

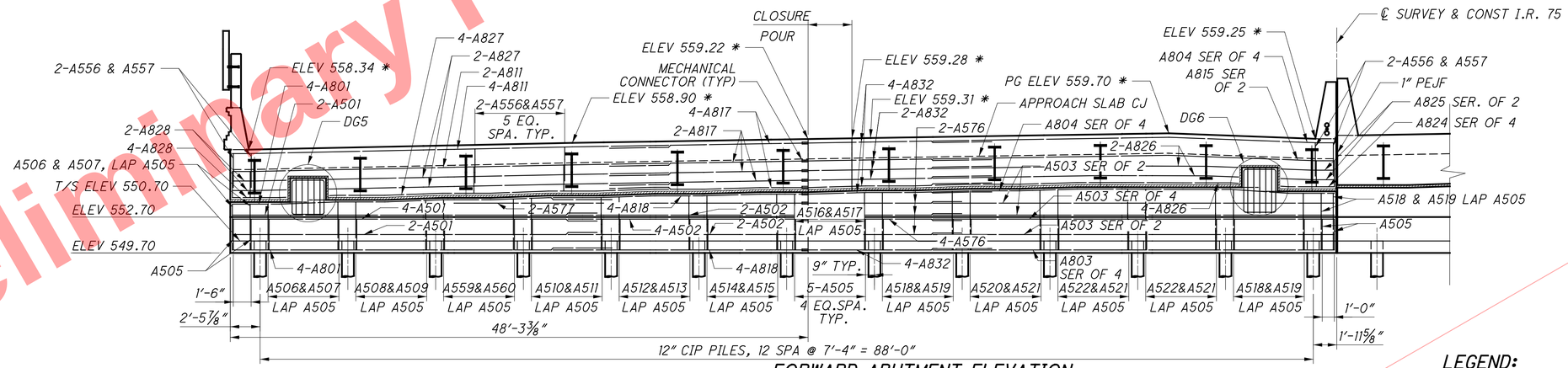

FORWARD ABUTMENT ELEVATION

(MSE WALL NOT SHOWN FOR CLARITY, SEE MSE WALL PLANS FOR ADDITIONAL INFORMATION)

NOTES:

1. LAP #5 BAR: 2'-5"
   LAP #8 BAR: 4'-11"
2. APPLY ITEM 512, TYPE 2 WATERPROOFING, 2'-0" WIDE CENTERED ON THE JOINT.
3. SEE SHEET 20/46 FOR DIAPHRAGM GUIDE DETAIL.

LEGEND:

* - ELEVATIONS GIVEN AT CENTERLINE OF BEARING

** - MEASURED TO CENTERLINE OF JOINT

*** - MEASURED PERPENDICULAR TO CENTERLINE

Preliminary Plans - For Reference Only

RESOURCE INTERNATIONAL INC.
8350 PRESIDENTIAL GATEWAY
COLUMBUS, OHIO 43231
(614) 823-4949

DESIGNED MMS | DRAWN MMS | REVIEWED SSK | DATE 3-18-26
CHECKED JWE | REVISED | STRUCTURE FILE NUMBER 3110184

FORWARD ABUTMENT PLAN AND ELEVATION 1 OF 2
BRIDGE NO. HAM-75-0857
I.R. 75 OVER TOWNE STREET (CR603)

HAM-75-7.85
PID No. 121447

18 / 46

1011 / 1047

\\sont.resourceinternational.com\two\projects\2010\B-10-020 HAM-75-7.85\77689\structures\HAM075_0857C\sheets\075_0857CAF001.dgn 5/13/2026 2:05:04 PM meets

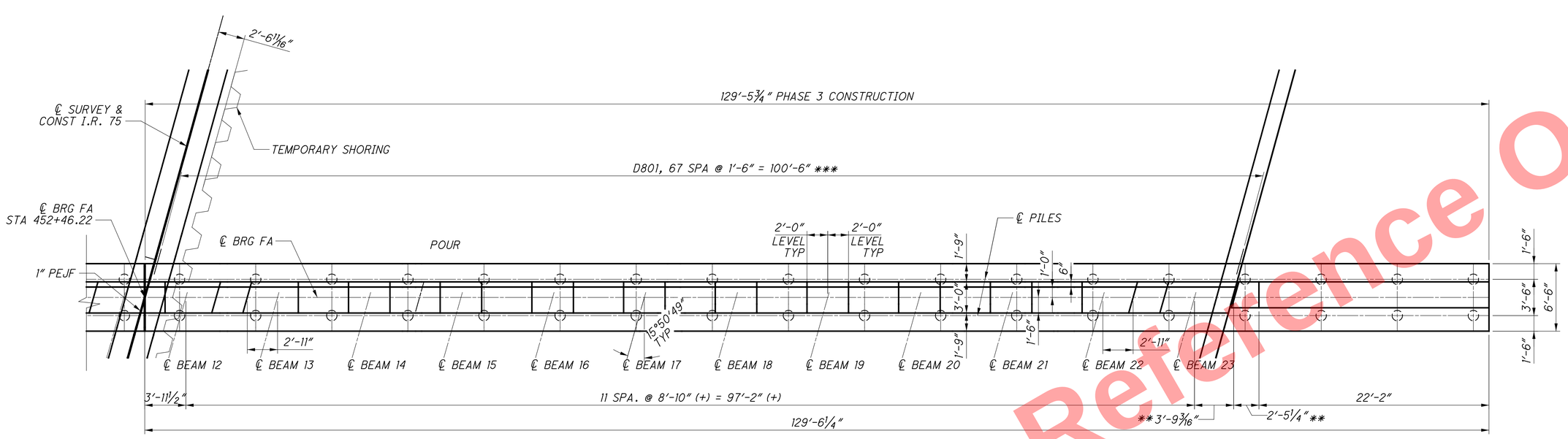

FORWARD ABUTMENT PLAN

(MSE WALL NOT SHOWN FOR CLARITY, SEE MSE WALL PLANS FOR ADDITIONAL INFORMATION)

BEAM SEAT ELEVATIONS (FORWARD ABUTMENT)

BEAM 12	BEAM 13	BEAM 14	BEAM 15	BEAM 16	BEAM 17	BEAM 18	BEAM 19	BEAM 20	BEAM 21	BEAM 22	BEAM 23
555.12	555.27	555.41	555.56	555.71	555.86	556.02	556.18	556.34	556.51	556.49	556.17

NOTE:

ABUTMENT DIAPHRAGM CONCRETE:
PLACE THE DIAPHRAGM CONCRETE ENCASING THE STRUCTURAL MEMBER ENDS WITH THE DECK CONCRETE OR AT LEAST 48 HOURS BEFORE PLACEMENT OF THE DECK CONCRETE. IF PLACED SEPARATELY, LOCATE A HORIZONTAL CONSTRUCTION JOINT IN THE DIAPHRAGM AS SHOWN ON SICD-1-96 FOR STEEL SUPERSTRUCTURES AND PLACE REMAINING DIAPHRAGM CONCRETE WITH THE DECK.

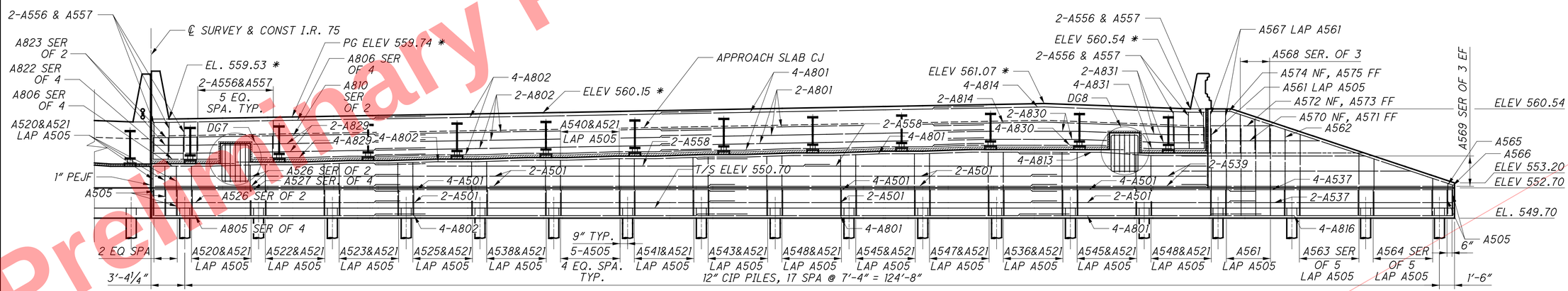

NOTES:

1. LAP #5 BAR: 2'-5" LAP #8 BAR: 4'-11"
2. APPLY ITEM 512, TYPE 2 WATERPROOFING, 2'-0" WIDE CENTERED ON THE JOINT.
3. SEE SHEET 20/46 FOR DIAPHRAGM GUIDE DETAIL.

FORWARD ABUTMENT ELEVATION

(MSE WALL NOT SHOWN FOR CLARITY, SEE MSE WALL PLANS FOR ADDITIONAL INFORMATION)

LEGEND:

* - ELEVATIONS GIVEN AT CENTERLINE OF BEARING

** - MEASURED TO CENTERLINE OF JOINT

*** - MEASURED PERPENDICULAR TO CENTERLINE

Preliminary Plans - For Reference Only

RESOURCE INTERNATIONAL INC.
8350 PRESIDENTIAL GATEWAY
COLUMBUS, OHIO 43231
(614) 823-4949

DESIGNED MMS | DRAWN MMS | REVIEWED SSK | DATE 3-18-26
CHECKED JWE | REVISED | STRUCTURE FILE NUMBER 3110184

FORWARD ABUTMENT PLAN AND ELEVATION 2 OF 2
BRIDGE NO. HAM-75-0857
I.R. 75 OVER TOWNE STREET (CR603)

HAM-75-7.85
PID No. 121447

19 / 46

1012
1047

\\san1.resourceinternational.com\two\projects\2010\B-10-020 HAM-75-7.85\77889\structures\HAM075_0857C\sheets\075_0857CAF002.dgn 5/13/2026 2:05:04 PM meets

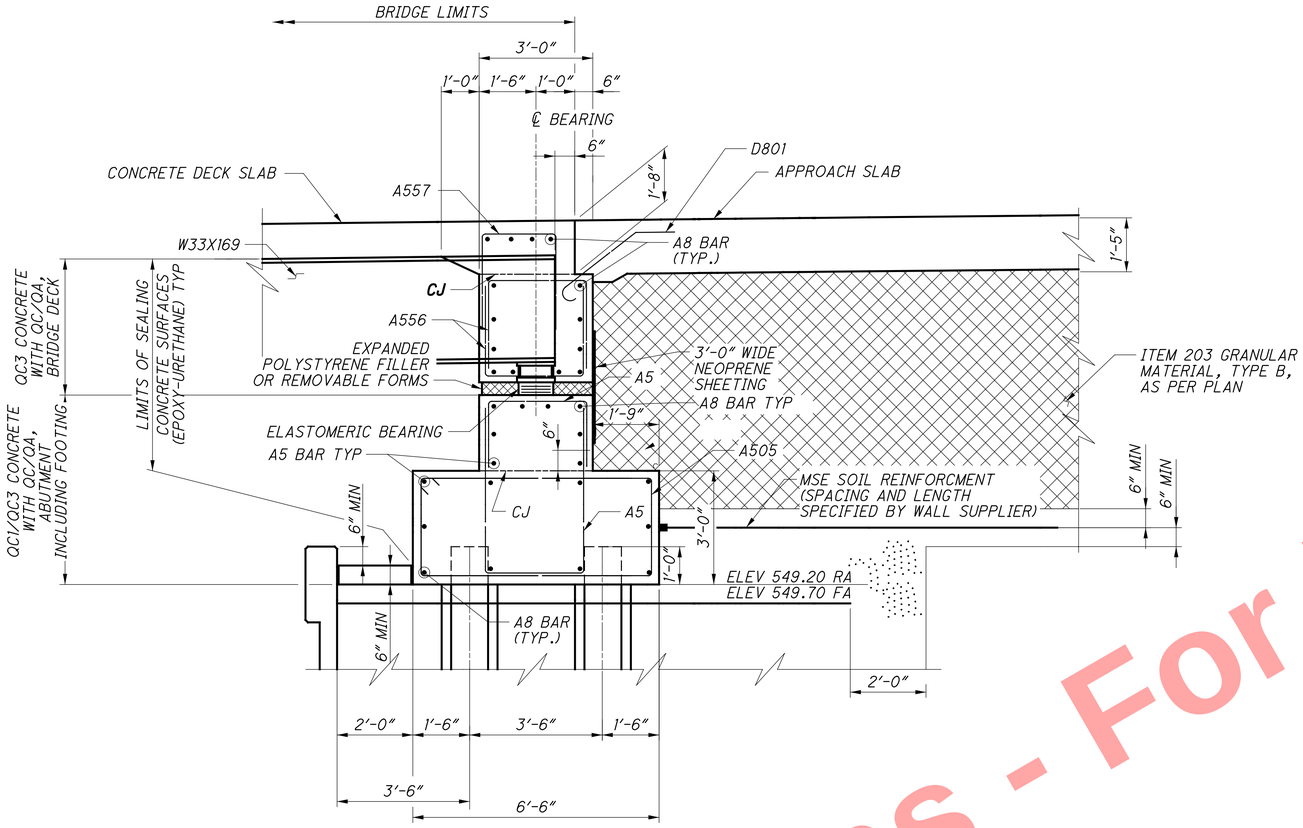

TYPICAL ABUTMENT SECTION

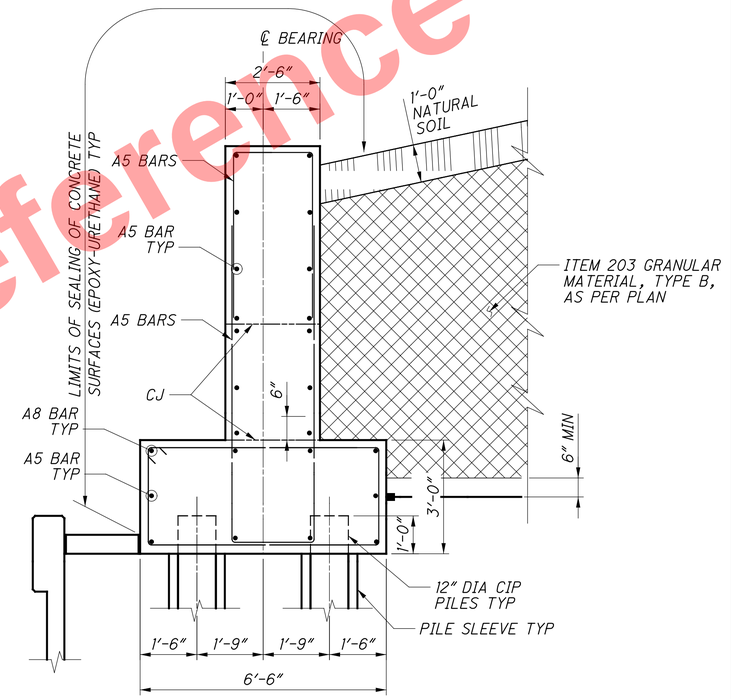

WINGWALL SECTION

LOCATION		DIMENSIONS A	DIMENSIONS B	BARS	
DG1	RA	2'-0"	1'-8 1/4"	DG601	DG801
DG2	RA	1'-10"	2'-0"	DG601	DG801
DG3	RA	2'-0"	1'-8"	DG601	DG801
DG4	RA	1'-9 3/4"	2'-0"	DG602	DG802
DG5	FA	2'-0"	1'-9 7/8"	DG602	DG802
DG6	FA	1'-8"	2'-0"	DG601	DG801
DG7	FA	2'-0"	1'-10 3/16"	DG601	DG801
DG8	FA	1'-8"	2'-0"	DG601	DG801

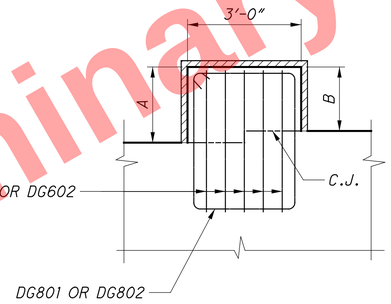

DIAPHRAGM GUIDE

DIAPHRAGM GUIDE - FOR INFO ONLY

MARK	TOTAL	LENGTH	WEIGHT (LB)	TYPE	DIMENSIONS A	DIMENSIONS B	DIMENSIONS C
DG601	35	13'-10"	728	3	2'-9 5/16"	3'-8 1/2"	
DG602	5	12'-3"	92	3	2'-9 5/16"	2'-11"	
DG801	49	13'-8"	1789	5	2'-8"	3'-7"	2'-4"
DG802	7	12'-1"	226	5	2'-8"	2'-9 1/2"	2'-4"

NOTES:

1. SEE WALL H1 & I1 PLANS FOR LEVELING PAD ELEVATIONS.
2. REFER TO ODOT SCD SICD-2-14 FOR ADDITIONAL DIAPHRAGM GUIDE DETAILS.

Preliminary Plans - For Reference Only

RESOURCE INTERNATIONAL INC.
8350 PRESIDENTIAL GATEWAY
COLUMBUS, OHIO 43231
(614) 823-4949

DESIGNED MMS | DRAWN MMS | REVIEWED SSK | DATE 3-18-26
CHECKED JWE | REVISED | STRUCTURE FILE NUMBER 3110184

ABUTMENT DETAILS
BRIDGE NO. HAM-75-0857
I.R. 75 OVER TOWNE STREET (CR603)

HAM-75-7.85
PID No. 121447

20 / 46

1013
1047

\\son1.resourceinternational.com\two\projects\2010\B-10-020 HAM-75-7.85\77889\structures\HAM075_0857\sheets\075_0857CAR003.dgn 5/13/2026 2:05:05 PM meets

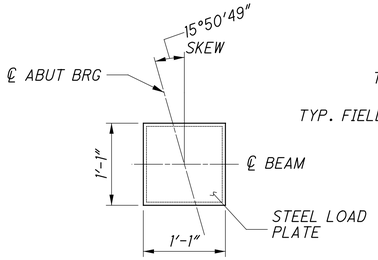

BEARING ORIENTATION PLAN

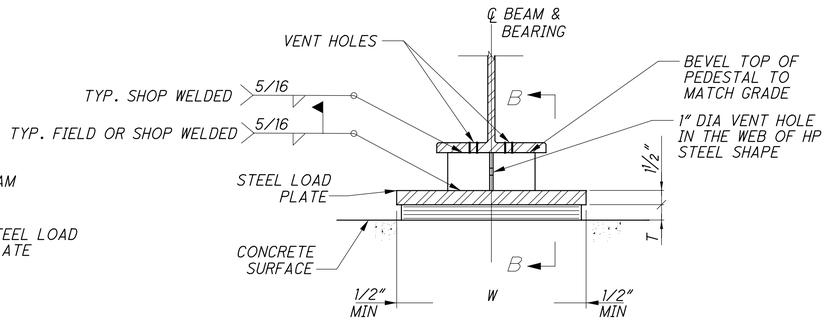

LAMINATED ELASTOMERIC BEARING EXPANSION AT PIERS

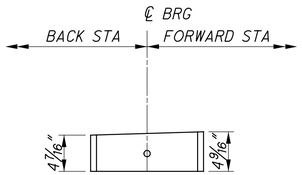

BEVELED HP8X36

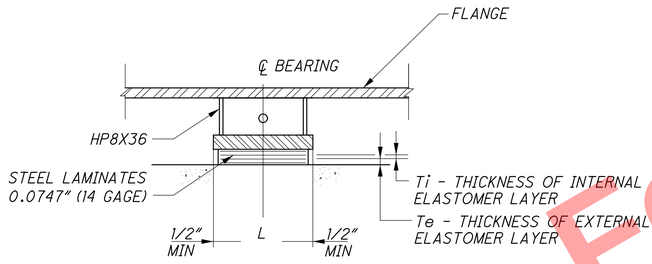

SECTION B-B

TABLE OF ELASTOMERIC BEARING DATA

LOCATION	BEARING TYPE	NO. REQ'D.	L (INCHES)	W (INCHES)	T (INCHES)	Te (INCHES)	Ti (INCHES)	NUMBER OF INTERNAL ELASTOMER LAYERS	LOAD PLATE SIZE
REAR ABUTMENT	EXPANSION	23	12"	12"	3.12"	0.25"	0.35"	6	13" x 13" x 1½"
FORWARD ABUTMENT	EXPANSION	23	12"	12"	3.12"	0.25"	0.35"	6	13" X 13" X 1½"

* - SEE BEVELED LOAD PLATE DETAIL

ELASTOMERIC BEARING NOTES:

1. CONTROL WELDING SO THAT THE PLATE TEMPERATURE AT THE ELASTOMER BONDED SURFACE DOES NOT EXCEED 300° F AS DETERMINED BY USE OF PYROMETRIC STICKS OR OTHER TEMPERATURE MONITORING DEVICES.

2. FOLLOWING ARE THE BEARING DESIGN LOADS:

	ABUTMENTS
MAX DEAD LOAD	70 KIPS
MAX LIVE LOAD	75 KIPS
TOTAL DESIGN LOAD	145 KIPS

3. STEEL LOAD PLATE AND PEDESTAL SHALL MEET THE REQUIREMENTS OF ASTM-A709, GRADE 50 STEEL.

4. THE ELASTOMER SHALL HAVE A HARDNESS OF 50 DUROMETER. THE BEARINGS WERE DESIGNED IN ACCORDANCE WITH SECTION 14.7.6 (METHOD A) OF THE AASHTO LRFD BRIDGE DESIGN SPECIFICATIONS. THE LONG TERM COMPRESSION PROOF LOAD TEST (AASHTO STANDARD SPECIFICATIONS FOR HIGHWAY BRIDGES, DIVISION II, SECTION 18.7.2.6) IS NOT REQUIRED.

5. BEARING STEEL LOAD PLATES SHALL BE VULCANIZED BONDED UNDER HEAT AND PRESSURE TO THE ELASTOMER DURING THE MOLDING PROCESS.

6. IF THE STEEL IS ERECTED AT AN AMBIENT TEMPERATURE HIGHER THAN 80° F OR LOWER THAN 40° F AND THE BEARING SHEAR DEFLECTION EXCEEDS 1/6 OF THE BEARING HEIGHT AT 60° F (+/-) 10° F, RAISE THE BEAMS OR GIRDERS TO ALLOW THE BEARINGS TO RETURN TO THEIR UNDEFORMED SHAPE AT 60° F (+/-) 10° F.

Preliminary Plans - For Reference Only

\\san1.resourceinternational.com\two\projects\2010\B-10-020 HAM-75-7.85\77889\structures\HAM075_0857C\sheets\075_0857CSD001.dgn 5/13/2026 2:05:05 PM meets

RESOURCE INTERNATIONAL INC.
8350 PRESIDENTIAL GATEWAY
COLUMBUS, OHIO 43231
(614) 823-4949

DESIGNED JGM | DRAWN JGM | REVIEWED NCK | DATE 3-18-26
CHECKED MMS | REVISED | STRUCTURE FILE NUMBER 3110184

SUPERSTRUCTURE DETAILS
BRIDGE NO. HAM-75-0857
I.R. 75 OVER TOWNE STREET (CR603)

HAM-75-7.85
PID No. 121447

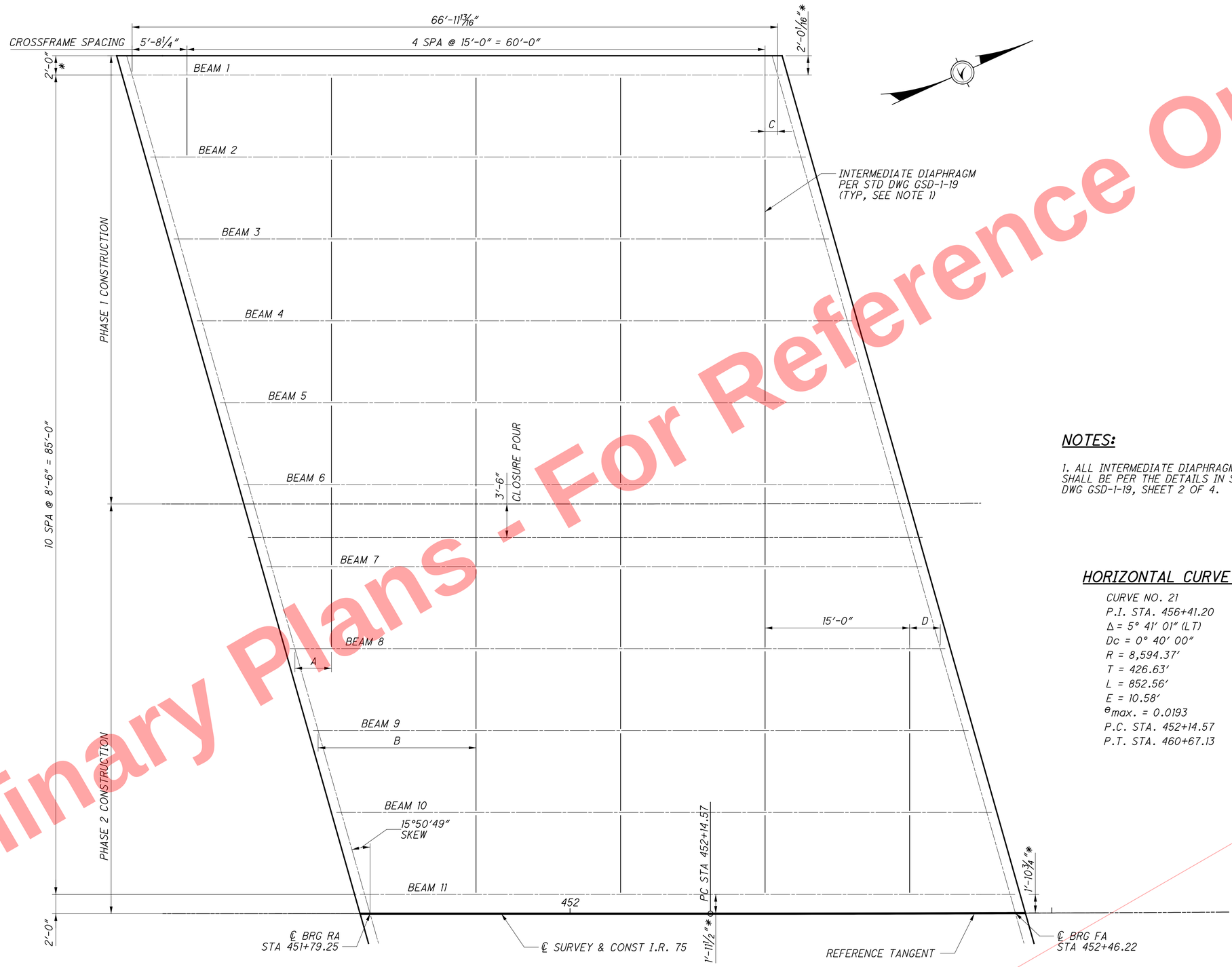

	BEAM 1	BEAM 2	BEAM 3	BEAM 4	BEAM 5	BEAM 6	BEAM 7	BEAM 8	BEAM 9	BEAM 10	BEAM 11
A	–	18′-3 5/16″	15′-10 3/8″	13′-5 3/8″	11′-0 7/16″	8′-7 1/2″	6′-2 9/16″	3′-9 9/16″	–	–	–
B	–	–	–	–	–	–	–	–	16′-4 5/8″	13′-11 11/16″	11′-6 3/4″
C	–	3′-8 1/2″	6′-1 1/2″	8′-6 7/16″	10′-11 3/8″	13′-4 5/16″	15′-9 5/16″	–	–	–	–
D	–	–	–	–	–	–	–	3′-2 1/4″	5′-7 3/16″	8′-0 1/8″	10′-5 1/8″

NOTES:

1. ALL INTERMEDIATE DIAPHRAGMS SHALL BE PER THE DETAILS IN STD DWG GSD-1-19, SHEET 2 OF 4.

HORIZONTAL CURVE DATA

CURVE NO. 21
P.I. STA. 456+41.20
Δ = 5° 41′ 01″ (LT)
Dc = 0° 40′ 00″
R = 8,594.37′
T = 426.63′
L = 852.56′
E = 10.58′
$e_{max.}$ = 0.0193
P.C. STA. 452+14.57
P.T. STA. 460+67.13

FRAMING PLAN - LEFT BRIDGE

LEGEND:

* - MEASURED TO EDGE OF DECK

Preliminary Plans - Not For Reference Only

RESOURCE INTERNATIONAL INC.
8350 PRESIDENTIAL GATEWAY
COLUMBUS, OHIO 43231
(614) 823-4949

DESIGNED MMS | DRAWN MMS | REVIEWED SSK | DATE 3-18-26
CHECKED JWE | REVISED | STRUCTURE FILE NUMBER 3110184

FRAMING PLAN
BRIDGE NO. HAM-75-0857
I.R. 75 OVER TOWNE STREET (CR603)

HAM-75-7.85
PID No. 121447

\\san1.resourceinternational.com\two\projects\2010\B-10-020 HAM-75-7.85\77889\structures\HAM075_0857C\sheets\075_0857CSD002.dgn 5/13/2026 2:05:06 PM meets

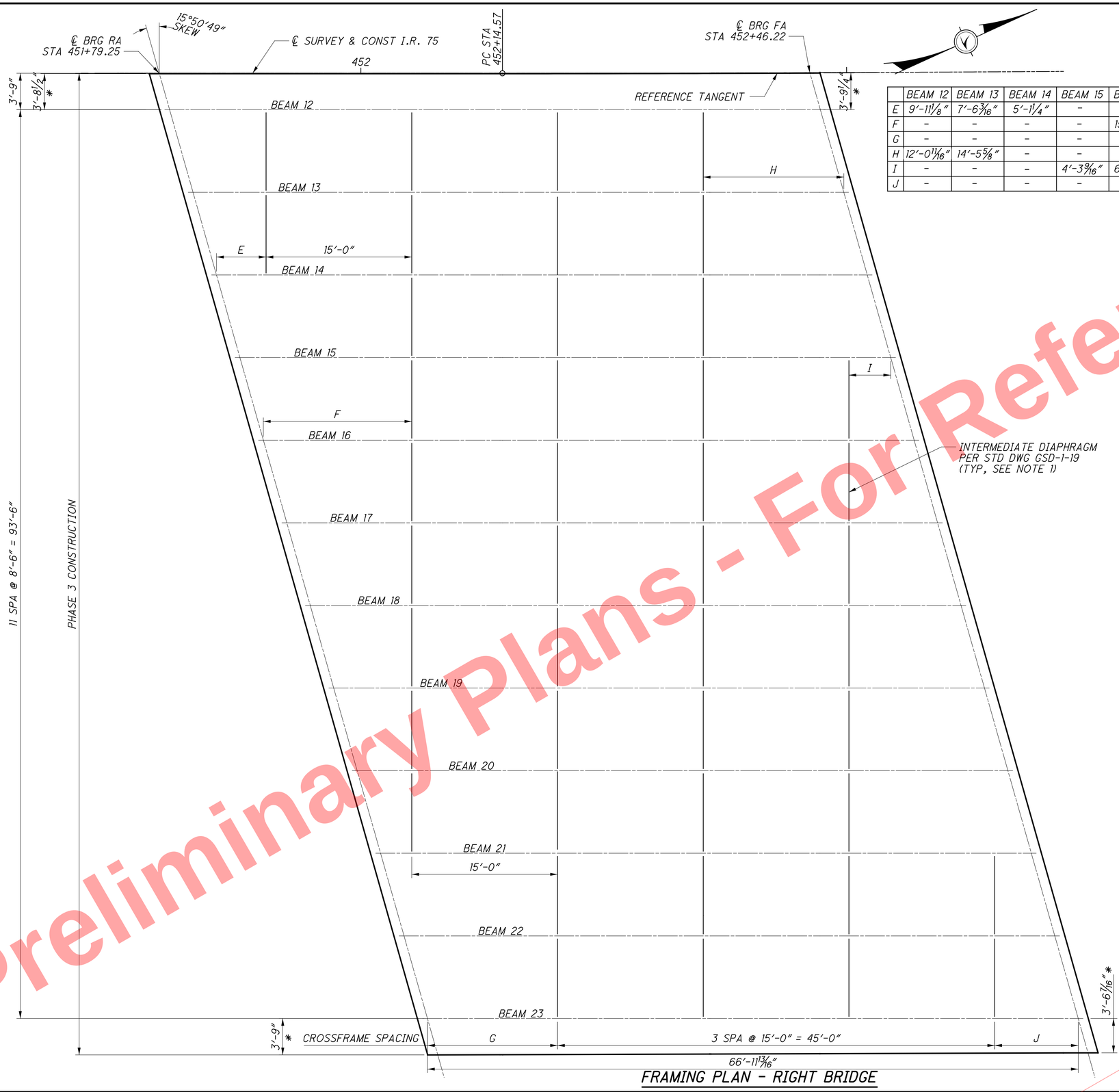

	BEAM 12	BEAM 13	BEAM 14	BEAM 15	BEAM 16	BEAM 17	BEAM 18	BEAM 19	BEAM 20	BEAM 21	BEAM 22	BEAM 23
E	9'-11⅛"	7'-6³⁄₁₆"	5'-1¼"	–	–	–	–	–	–	–	–	–
F	–	–	–	–	15'-3⁵⁄₁₆"	12'-10⅜"	10'-5⁷⁄₁₆"	8'-0⅞"	5'-7½"	3'-2⁹⁄₁₆"	–	–
G	–	–	–	–	–	–	–	–	–	–	15'-9⅝"	13'-4⅝"
H	12'-0¹¹⁄₁₆"	14'-5⅝"	–	–	–	–	–	–	–	–	–	–
I	–	–	–	4'-3⁹⁄₁₆"	6'-8½"	9'-1⁷⁄₁₆"	11'-6⁷⁄₁₆"	13'-11⅜"	16'-4⁵⁄₁₆"	–	–	–
J	–	–	–	–	–	–	–	–	–	3'-9¼"	6'-2¼"	8'-7³⁄₁₆"

NOTES:

1. ALL INTERMEDIATE DIAPHRAGMS SHALL BE PER THE DETAILS IN STD DWG GSD-1-19, SHEET 2 OF 4.

HORIZONTAL CURVE DATA

CURVE NO. 21
P.I. STA. 456+41.20
Δ = 5° 41' 01" (LT)
Dc = 0° 40' 00"
R = 8,594.37'
T = 426.63'
L = 852.56'
E = 10.58'
$e_{max.}$ = 0.0193
P.C. STA. 452+14.57
P.T. STA. 460+67.13

LEGEND:

* - MEASURED TO EDGE OF DECK

FRAMING PLAN - RIGHT BRIDGE

Preliminary Plans - For Reference Only

RESOURCE INTERNATIONAL INC.
8350 PRESIDENTIAL GATEWAY
COLUMBUS, OHIO 43231
(614) 823-4949

DESIGNED MMS | CHECKED JWE
DRAWN MMS | REVISED
REVIEWED SSK | DATE 3-18-26
STRUCTURE FILE NUMBER 3110184

FRAMING PLAN
BRIDGE NO. HAM-75-0857
I.R. 75 OVER TOWNE STREET (CR603)

HAM-75-7.85
PID No. 121447

23 / 46

1016
1047

\\sant.resourceinternational.com\two\projects\2010\B-10-020 HAM-75-7.85\77889\structures\HAM075_0857C\sheets\075_0857CSD003.dgn 5/13/2026 2:05:06 PM meets

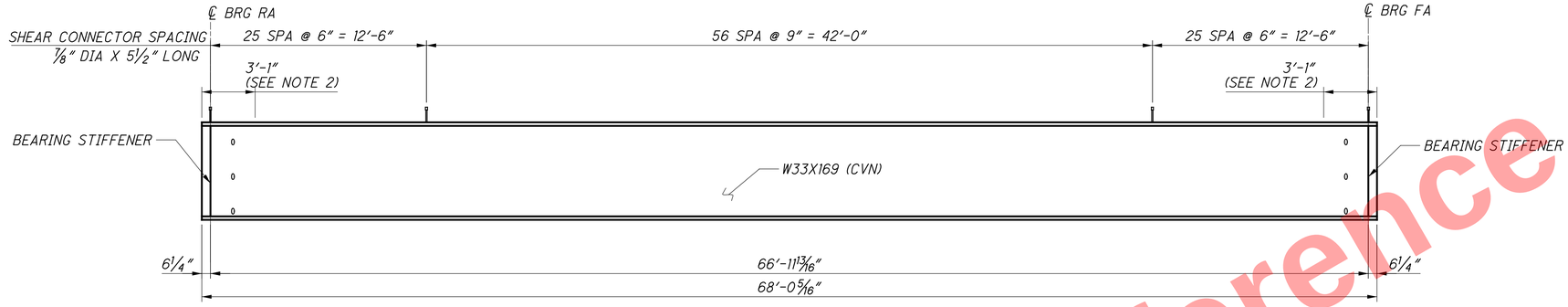

BEAM ELEVATION

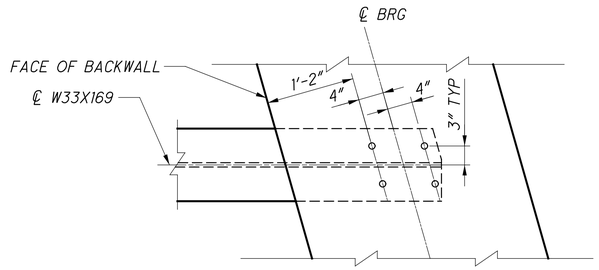

BEAM END DETAIL- PLAN

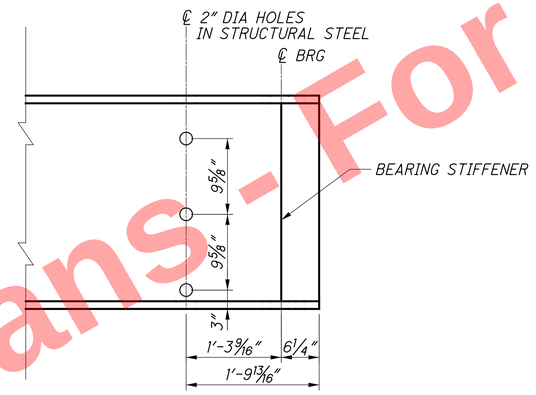

BEAM END DETAIL - ELEVATION

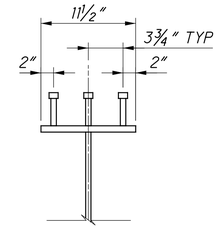

SHEAR CONNECTOR DETAIL

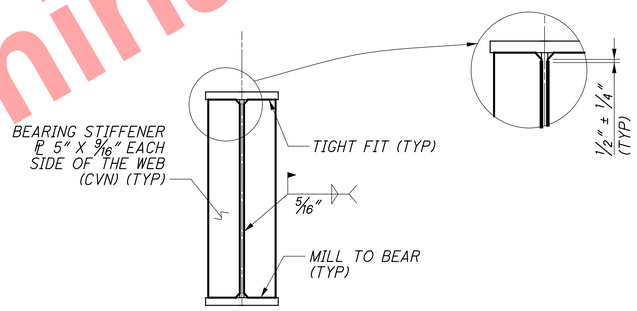

BEARING STIFFENER DETAIL

NOTE:

1. CVN: WHERE A SHAPE OR PLATE IS DESIGNATED (CVN), FURNISH MATERIAL THAT MEETS THE MINIMUM NOTCH TOUGHNESS REQUIREMENTS AS SPECIFIED IN 711.01.
2. PARTIAL PAINTING OF A709 GRADE 50W STEEL: APPLY AN INORGANIC ZINC PRIME COAT TO THE FULL PERIMETER OF THE LAST 3'-1" OF EACH BEAM/GIRDER END ADJACENT TO THE ABUTMENTS INCLUDING BEARING STIFFENERS. INCLUDE FOR PAYMENT WITH ITEM 513 - STRUCTURAL STEEL MEMBERS, LEVEL 1.

Preliminary Plans - For Reference Only

RESOURCE INTERNATIONAL INC.
8350 PRESIDENTIAL GATEWAY
COLUMBUS, OHIO 43231
(614) 823-4949

DESIGNED JGM | DRAWN JGM | REVIEWED NCK | DATE 3-18-26
CHECKED JLM | REVISED | STRUCTURE FILE NUMBER 3110184

BEAM ELEVATION
BRIDGE NO. HAM-75-0857
I.R. 75 OVER TOWNE STREET (CR603)

HAM-75-7.85
PID No. 121447

\\san1.resourceinternational.com\two\projects\2010\B-10-020 HAM-75-7.85\77889\structures\HAM075_0857C\sheets\075_0857CSD004.dgn 5/13/2026 2:05:06 PM rmeets

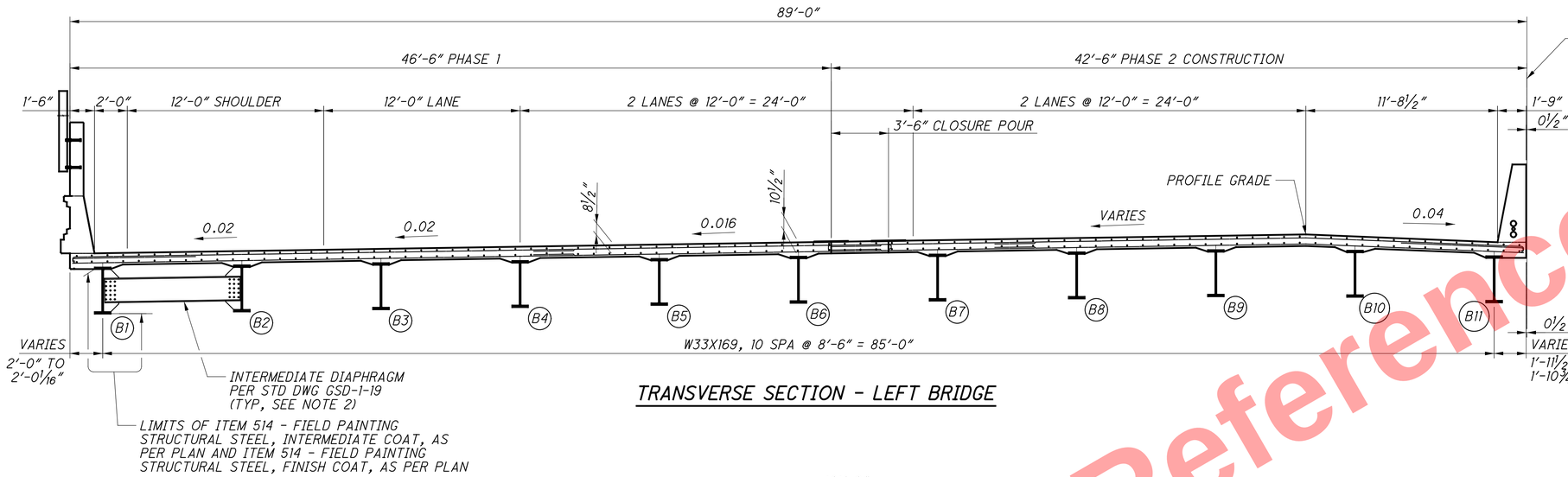

TRANSVERSE SECTION - LEFT BRIDGE

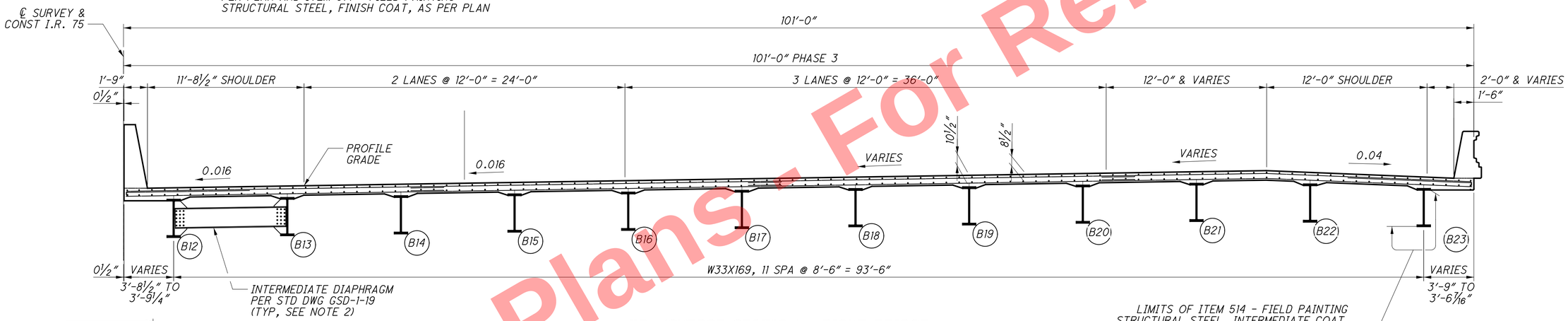

TRANSVERSE SECTION - RIGHT BRIDGE

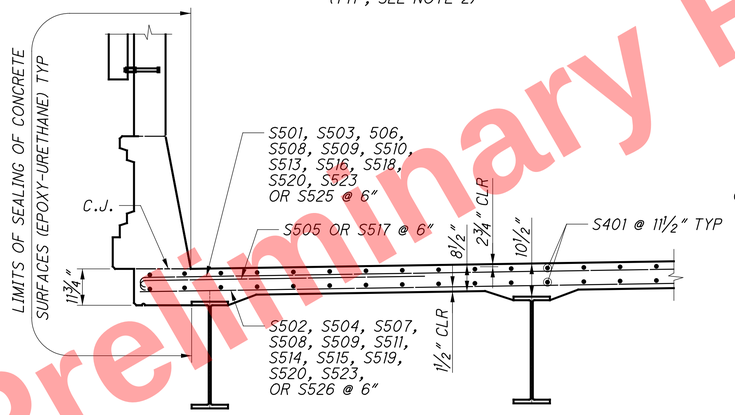

TYPICAL DECK REINFORCEMENT

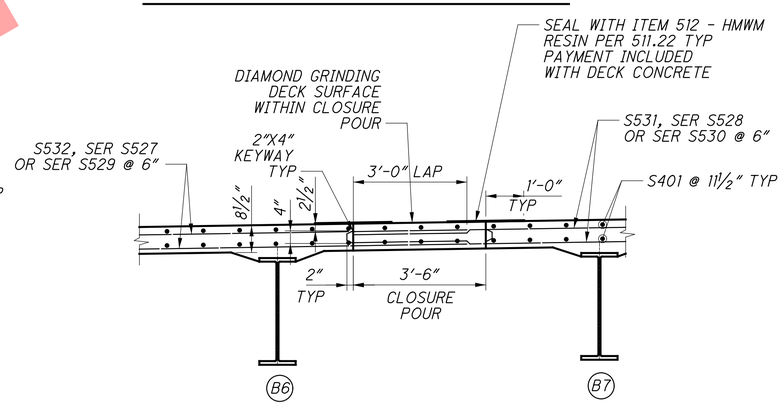

CLOSURE POUR DETAILS

NOTES:

1. DECK SLAB CONCRETE QUANTITY:
THE ESTIMATED QUANTITY OF DECK SLAB CONCRETE IS BASED ON THE CONSTANT DECK SLAB THICKNESS, AS SHOWN, PLUS THE QUANTITY OF CONCRETE THAT FORMS EACH BEAM/GIRDER HAUNCH. THE ESTIMATE ASSUMES A CONSTANT HAUNCH THICKNESS OF 8½ INCHES AND A CONSTANT HAUNCH WIDTH OUTSIDE THE EDGE OF EACH BEAM/GIRDER FLANGE OF 11¾ INCHES. DEVIATE FROM THIS HAUNCH THICKNESS AS NECESSARY TO PLACE THE DECK SURFACE AT THE FINISHED GRADE. THE ALLOWABLE TOLERANCE FOR THE HAUNCH WIDTH OUTSIDE THE EDGE OF EACH BEAM/GIRDER FLANGE IS ± 3 INCHES.

2. ALL INTERMEDIATE DIAPHRAGMS SHALL BE PER THE DETAILS IN GSD-1-19, SHEET 2 OF 4.

For Reference Only
Preliminary Plans - For

RESOURCE INTERNATIONAL INC.
8350 PRESIDENTIAL GATEWAY
COLUMBUS, OHIO 43231
(614) 823-4949

DESIGNED MMS | DRAWN MMS | REVIEWED SSK | DATE 3-18-26
CHECKED JWE | REVISED | STRUCTURE FILE NUMBER 3110184

TRANSVERSE SECTION
BRIDGE NO. HAM-75-0857
I.R. 75 OVER TOWNE STREET (CR603)

HAM-75-7.85
PID No. 121447

\\san1.resourceinternational.com\two\projects\2010\B-10-020 HAM-75-7.85\77889\structures\HAM075_0857C\sheets\HAM075_0857CTS001.dgn 5/13/2026 2:05:07 PM meets

LOCATION	SCREED ELEVATIONS									
	BRG RA		¼ SPAN		½ SPAN		¾ SPAN		BRG FA	
	STATION	ELEV	STATION	ELEV	STATION	ELEV	STATION	ELEV	STATION	ELEV
TOE OF PARAPET	451+54.41	557.88	451+71.16	558.13	451+87.91	558.30	452+04.66	558.36	452+21.47	558.34
GRADE BREAK	451+61.79	558.47	451+78.54	558.71	451+95.29	558.87	452+12.04	558.93	452+28.88	558.90
PHASE C.J.	451+67.19	558.82	451+83.93	559.05	452+00.68	559.21	452+17.44	559.26	452+34.25	559.22
PHASE C.J.	451+68.18	558.88	451+84.93	559.12	452+01.67	559.27	452+18.44	559.32	452+35.25	559.28
GRADE BREAK	451+68.61	558.91	451+85.35	559.14	452+02.10	559.30	452+35.68	559.34	452+35.68	559.31
PROFILE GRADE	451+75.42	559.18	451+92.17	559.44	452+08.91	559.63	452+25.68	559.70	452+42.44	559.70
TOE OF PARAPET	451+78.74	558.74	451+95.49	559.01	452+12.23	559.18	452+28.98	559.26	452+45.72	559.25
TOE OF PARAPET	451+79.76	559.03	451+96.50	559.30	452+13.24	559.47	452+29.98	559.55	452+46.72	559.53
PROFILE GRADE	451+83.08	559.25	451+99.83	559.51	452+16.57	559.68	452+33.29	559.75	452+49.99	559.74
GRADE BREAK	451+89.89	559.70	452+06.64	559.95	452+23.35	560.12	452+40.02	560.18	452+56.67	560.15
GRADE BREAK	452+03.52	560.38	452+20.21	560.68	452+36.97	560.91	452+53.35	561.03	452+69.90	561.07
TOE OF PARAPET	452+07.49	559.87	452+24.13	560.17	452+40.68	560.39	452+57.21	560.50	452+73.74	560.54

LOCATION	TOP OF HAUNCH ELEVATIONS									
	BRG RA		¼ SPAN		½ SPAN		¾ SPAN		BRG FA	
	STATION	ELEV	STATION	ELEV	STATION	ELEV	STATION	ELEV	STATION	ELEV
BEAM 1	451+54.55	557.19	451+71.30	557.33	451+88.05	557.45	452+04.80	557.56	452+21.61	557.65
BEAM 2	451+56.97	557.38	451+73.71	557.52	451+90.46	557.64	452+07.21	557.74	452+24.04	557.83
BEAM 3	451+59.38	557.57	451+76.13	557.71	451+92.88	557.83	452+09.62	557.93	452+26.46	558.01
BEAM 4	451+61.79	557.76	451+78.54	557.89	451+95.29	558.01	452+12.04	558.11	452+28.88	558.19
BEAM 5	451+64.21	557.92	451+80.95	558.05	451+97.70	558.16	452+14.45	558.26	452+31.29	558.34
BEAM 6	451+66.62	558.07	451+83.37	558.20	452+00.11	558.31	452+16.87	558.41	452+33.70	558.48
BEAM 7	451+69.03	558.22	451+85.78	558.35	452+02.53	558.46	452+19.29	558.55	452+36.11	558.62
BEAM 8	451+71.44	558.31	451+88.19	558.45	452+04.94	558.57	452+21.71	558.67	452+38.51	558.76
BEAM 9	451+73.86	558.41	451+90.60	558.56	452+07.35	558.69	452+24.12	558.80	452+40.90	558.90
BEAM 10	451+76.27	558.36	451+93.02	558.52	452+09.76	558.65	452+26.53	558.77	452+43.29	558.88
BEAM 11	451+78.68	558.04	451+95.43	558.20	452+12.18	558.33	452+28.93	558.45	452+45.68	558.55
BEAM 12	451+80.31	558.36	451+97.06	558.52	452+13.81	558.65	452+30.55	558.76	452+47.29	558.86
BEAM 13	451+82.73	558.52	451+99.47	558.67	452+16.22	558.80	452+32.94	558.92	452+49.66	559.01
BEAM 14	451+85.14	558.68	452+01.89	558.83	452+18.63	558.96	452+35.33	559.07	452+52.04	559.16
BEAM 15	451+87.55	558.84	452+04.30	558.98	452+21.03	559.11	452+37.72	559.22	452+54.40	559.30
BEAM 16	451+89.97	559.00	452+06.71	559.14	452+23.42	559.26	452+40.10	559.37	452+56.77	559.45
BEAM 17	451+92.38	559.11	452+09.13	559.26	452+25.81	559.39	452+42.47	559.51	452+59.12	559.60
BEAM 18	451+94.79	559.22	452+11.54	559.39	452+28.20	559.53	452+44.84	559.66	452+61.48	559.76
BEAM 19	451+97.20	559.34	452+13.95	559.51	452+30.58	559.67	452+47.21	559.81	452+63.83	559.92
BEAM 20	451+99.62	559.46	452+16.35	559.65	452+32.96	559.81	452+49.57	559.96	452+66.17	560.09
BEAM 21	452+02.03	559.59	452+18.74	559.78	452+35.33	559.96	452+51.92	560.12	452+68.51	560.25
BEAM 22	452+04.44	559.55	452+21.12	559.75	452+37.70	559.93	452+54.27	560.09	452+70.85	560.24
BEAM 23	452+06.86	559.24	452+23.50	559.44	452+40.06	559.61	452+56.62	559.77	452+73.18	559.91

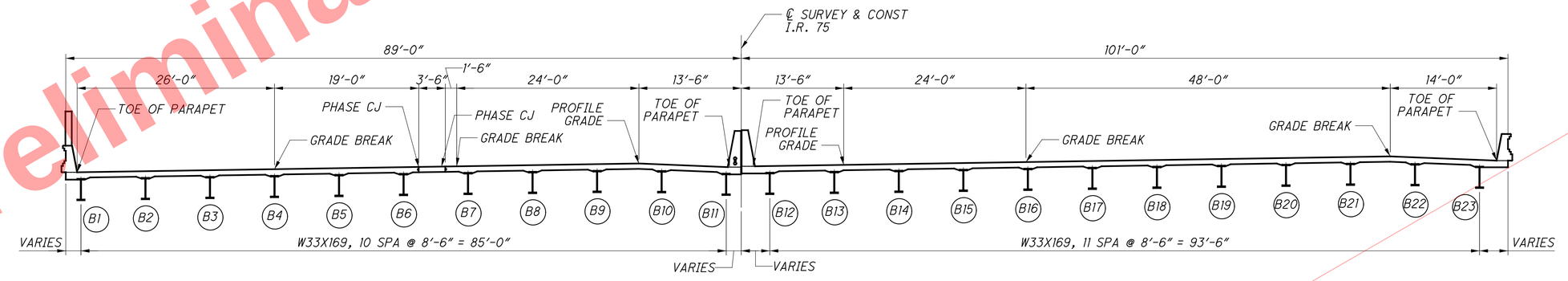

DECK SECTION

SCREED ELEVATIONS:

SCREED ELEVATIONS SHOWN REPRESENT THE THEORETICAL DECK SURFACE LOCATION PRIOR TO DEFELCTIONS CAUSED BY DECK PLACEMENT AND OTHER ANTICIPATED DEAD LOADS.

TOP OF HAUNCH ELEVATIONS:

TOP OF HAUNCH ELEVATIONS SHOWN REPRESENT THE THEORETICAL LOCATION OF THE BOTTOM OF DECK ABOVE THE BEAM/GIRDER HAUNCH PRIOR TO DEFLECTIONS CAUSED BY DECK PLACEMENT AND OTHER ANTICIPATED DEAD LOADS.

Preliminary Plans - For Reference Only

RESOURCE INTERNATIONAL INC.
8350 PRESIDENTIAL GATEWAY
COLUMBUS, OHIO 43231
(614) 823-4949

DESIGNED MMS | DRAWN MMS | REVIEWED SSK | DATE 3-18-26
CHECKED JWE | REVISED --- | STRUCTURE FILE NUMBER 3110184

DECK SCREED & TOP OF HAUNCH ELEVATIONS
BRIDGE NO. HAM-75-0857
I.R. 75 OVER TOWNE STREET (CR603)

HAM-75-7.85
PID No. 121447

\\san1.resourceinternational.com\two\projects\2010\B-10-020 HAM-75-7.85\7889\structures\HAM075_0857\CSD005.dgn 5/13/2026 2:05:07 PM meets

LOCATION	FINAL DECK ELEVATIONS									
	BRG RA		¼ SPAN		½ SPAN		¾ SPAN		BRG FA	
	STATION	ELEV	STATION	ELEV	STATION	ELEV	STATION	ELEV	STATION	ELEV
TOE OF PARAPET	451+54.41	557.88	451+71.16	558.03	451+87.91	558.15	452+04.66	558.26	452+21.47	558.34
BEAM 1	451+54.55	557.89	451+71.30	558.04	451+88.05	558.16	452+04.80	558.27	452+21.61	558.36
BEAM 2	451+56.97	558.09	451+73.71	558.23	451+90.46	558.35	452+07.21	558.45	452+24.04	558.54
BEAM 3	451+59.38	558.28	451+76.13	558.41	451+92.88	558.53	452+09.62	558.63	452+26.46	558.72
GRADE BREAK	451+61.79	558.47	451+78.54	558.60	451+95.29	558.72	452+12.04	558.82	452+28.88	558.90
BEAM 4	451+61.79	558.47	451+78.54	558.60	451+95.29	558.72	452+12.04	558.82	452+28.88	558.90
BEAM 5	451+64.21	558.62	451+80.95	558.76	451+97.70	558.87	452+14.45	558.97	452+31.29	559.04
BEAM 6	451+66.62	558.78	451+83.37	558.91	452+00.11	559.02	452+16.87	559.11	452+33.70	559.19
PHASE C.J.	451+67.19	558.82	451+83.93	558.95	452+00.68	559.06	452+17.44	559.15	452+34.25	559.22
PHASE C.J.	451+68.18	558.88	451+84.93	559.01	452+01.67	559.12	452+18.44	559.21	452+35.25	559.28
GRADE BREAK	451+68.61	558.91	451+85.35	559.04	452+02.10	559.15	452+18.87	559.24	452+35.68	559.31
BEAM 7	451+69.03	558.93	451+85.78	559.05	452+02.53	559.17	452+19.29	559.26	452+36.11	559.33
BEAM 8	451+71.44	559.02	451+88.19	559.16	452+04.94	559.28	452+21.71	559.38	452+38.51	559.47
BEAM 9	451+73.86	559.11	451+90.60	559.27	452+07.35	559.40	452+24.12	559.51	452+40.90	559.61
PROFILE GRADE	451+75.42	559.18	451+92.17	559.34	452+08.91	559.48	452+25.68	559.60	452+42.44	559.70
BEAM 10	451+76.27	559.07	451+93.02	559.22	452+09.76	559.36	452+26.53	559.48	452+43.29	559.58
BEAM 11	451+78.68	558.75	451+95.43	558.91	452+12.18	559.04	452+28.93	559.16	452+45.68	559.26
TOE OF PARAPET	451+78.74	558.74	451+95.49	558.90	452+12.23	559.03	452+28.98	559.15	452+45.72	559.25
TOE OF PARAPET	451+79.76	559.03	451+96.50	559.19	452+13.24	559.32	452+29.98	559.44	452+46.72	559.53
BEAM 12	451+80.31	559.07	451+97.06	559.22	452+13.81	559.36	452+30.55	559.47	452+47.29	559.57
BEAM 13	451+82.73	559.23	451+99.47	559.38	452+16.22	559.51	452+32.94	559.62	452+49.66	559.72
PROFILE GRADE	451+83.08	559.25	451+99.83	559.40	452+16.57	559.53	452+33.29	559.65	452+49.99	559.74
BEAM 14	451+85.14	559.39	452+01.89	559.54	452+18.63	559.66	452+35.33	559.77	452+52.04	559.86
BEAM 15	451+87.55	559.55	452+04.30	559.69	452+21.03	559.82	452+37.72	559.92	452+54.40	560.01
GRADE BREAK	451+89.89	559.70	452+06.64	559.84	452+23.35	559.97	452+40.02	560.07	452+56.67	560.15
BEAM 16	451+89.97	559.70	452+06.71	559.85	452+23.42	559.97	452+40.10	560.07	452+56.77	560.16
BEAM 17	451+92.38	559.82	452+09.13	559.97	452+25.81	560.10	452+42.47	560.22	452+59.12	560.31
BEAM 18	451+94.79	559.93	452+11.54	560.09	452+28.20	560.24	452+44.84	560.36	452+61.48	560.47
BEAM 19	451+97.20	560.05	452+13.95	560.22	452+30.58	560.38	452+47.21	560.51	452+63.83	560.63
BEAM 20	451+99.62	560.17	452+16.35	560.36	452+32.96	560.52	452+49.57	560.67	452+66.17	560.79
BEAM 21	452+02.03	560.30	452+18.74	560.49	452+35.33	560.67	452+51.92	560.82	452+68.51	560.96
GRADE BREAK	452+03.52	560.38	452+20.21	560.58	452+36.97	560.76	452+53.35	560.92	452+69.90	561.07
BEAM 22	452+04.44	560.26	452+21.12	560.46	452+37.70	560.64	452+54.27	560.80	452+70.85	560.94
BEAM 23	452+06.86	559.95	452+23.50	560.14	452+40.06	560.32	452+56.62	560.48	452+73.18	560.62
TOE OF PARAPET	452+07.49	559.87	452+24.13	560.06	452+40.68	560.24	452+57.21	560.40	452+73.74	560.54

FINAL DECK SURFACE ELEVATIONS:

FINAL DECK SURFACE ELEVATIONS SHOWN REPRESENT THE DECK SURFACE LOCATION AFTER ALL ANTICIPATED DEAD LOAD DEFLECTIONS HAVE OCCURRED.

BEAM 6	CAMBER (ALL DIMENSIONS IN INCHES)				
	BRG R.A.	¼ SPAN	½ SPAN	¾ SPAN	BRG F.A.
DEFLECTION DUE TO WEIGHT OF STEEL	0	1/4	5/16	1/4	0
DEFLECTION DUE TO REMAINING DEAD LOAD	0	1 5/16	1 13/16	1 5/16	0
ADJUSTMENT REQUIRED FOR VERTICAL CURVE	0	0	1/16	0	0
REQUIRED SHOP CAMBER (IN)=	0	1 9/16	2 3/16	1 9/16	0

BEAM 17	CAMBER (ALL DIMENSIONS IN INCHES)				
	BRG R.A.	¼ SPAN	½ SPAN	¾ SPAN	BRG F.A.
DEFLECTION DUE TO WEIGHT OF STEEL	0	1/4	5/16	1/4	0
DEFLECTION DUE TO REMAINING DEAD LOAD	0	1 5/16	1 13/16	1 5/16	0
ADJUSTMENT REQUIRED FOR VERTICAL CURVE	0	0	1/16	0	0
REQUIRED SHOP CAMBER (IN)=	0	1 9/16	2 3/16	1 9/16	0

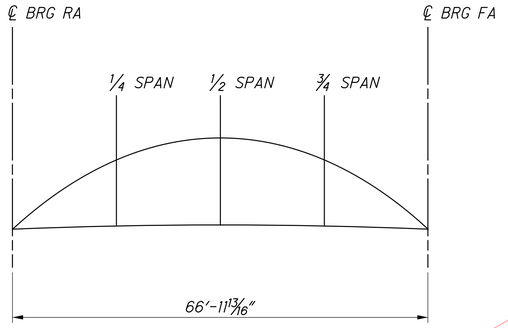

Preliminary Plans - Not for Construction
For Reference Only

RESOURCE INTERNATIONAL INC.
8350 PRESIDENTIAL GATEWAY
COLUMBUS, OHIO 43231
(614) 823-4949

DESIGNED MMS | DRAWN MMS | REVIEWED SSK | DATE 3-18-26
CHECKED JWE | REVISED --- | STRUCTURE FILE NUMBER 3110184

FINAL DECK ELEVATIONS & CAMBER
BRIDGE NO. HAM-75-0857
I.R. 75 OVER TOWNE STREET (CR603)

HAM-75-7.85
PID No. 121447

27 / 46

1020
1047

\\san1.resourceinternational.com\two\projects\2010\B-10-020 HAM-75-7.85\77889\structures\HAM075_0857C\sheets\HAM075_0857CSD006.dgn 5/13/2026 2:05:08 PM meets

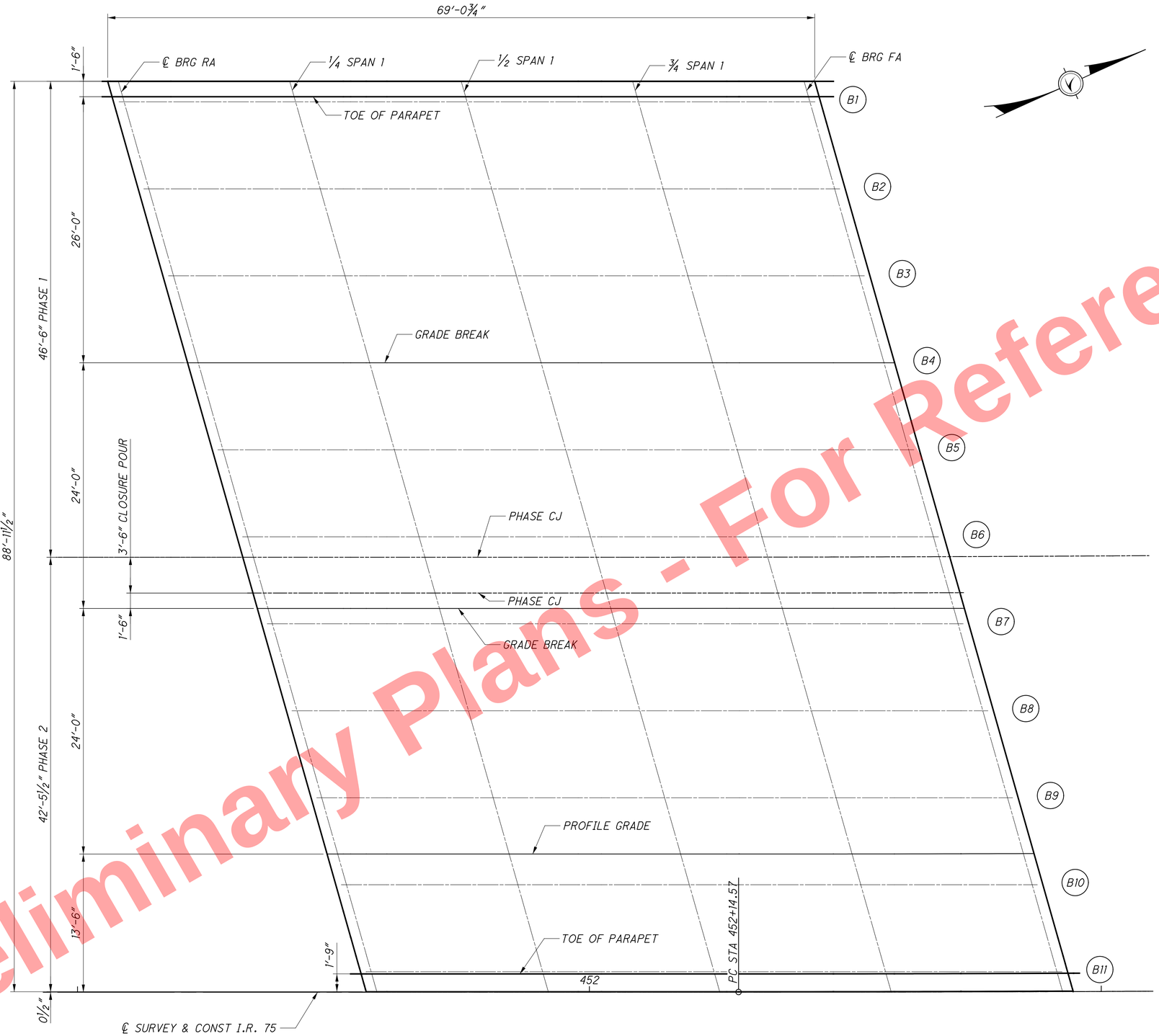

DECK PLAN - LEFT BRIDGE

Preliminary Plans - For Reference Only

\\san1.resourceinternational.com\two\projects\2010\B-10-020 HAM-75-7.85\77889\structures\HAM075_0857C\sheets\075_0857CSD007.dgn 5/13/2026 2:05:09 PM meets

RESOURCE INTERNATIONAL INC.
8350 PRESIDENTIAL GATEWAY
COLUMBUS, OHIO 43231
(614) 823-4949

DESIGNED	DRAWN	REVIEWED	DATE
MMS	MMS	SSK	3-18-26
CHECKED	REVISED	STRUCTURE FILE NUMBER	
JWE		3110184	

DECK ELEVATION LOCATION PLAN
BRIDGE NO. HAM-75-0857
I.R. 75 OVER TOWNE STREET (CR603)

HAM-75-7.85
PID No. 121447

1021
1047

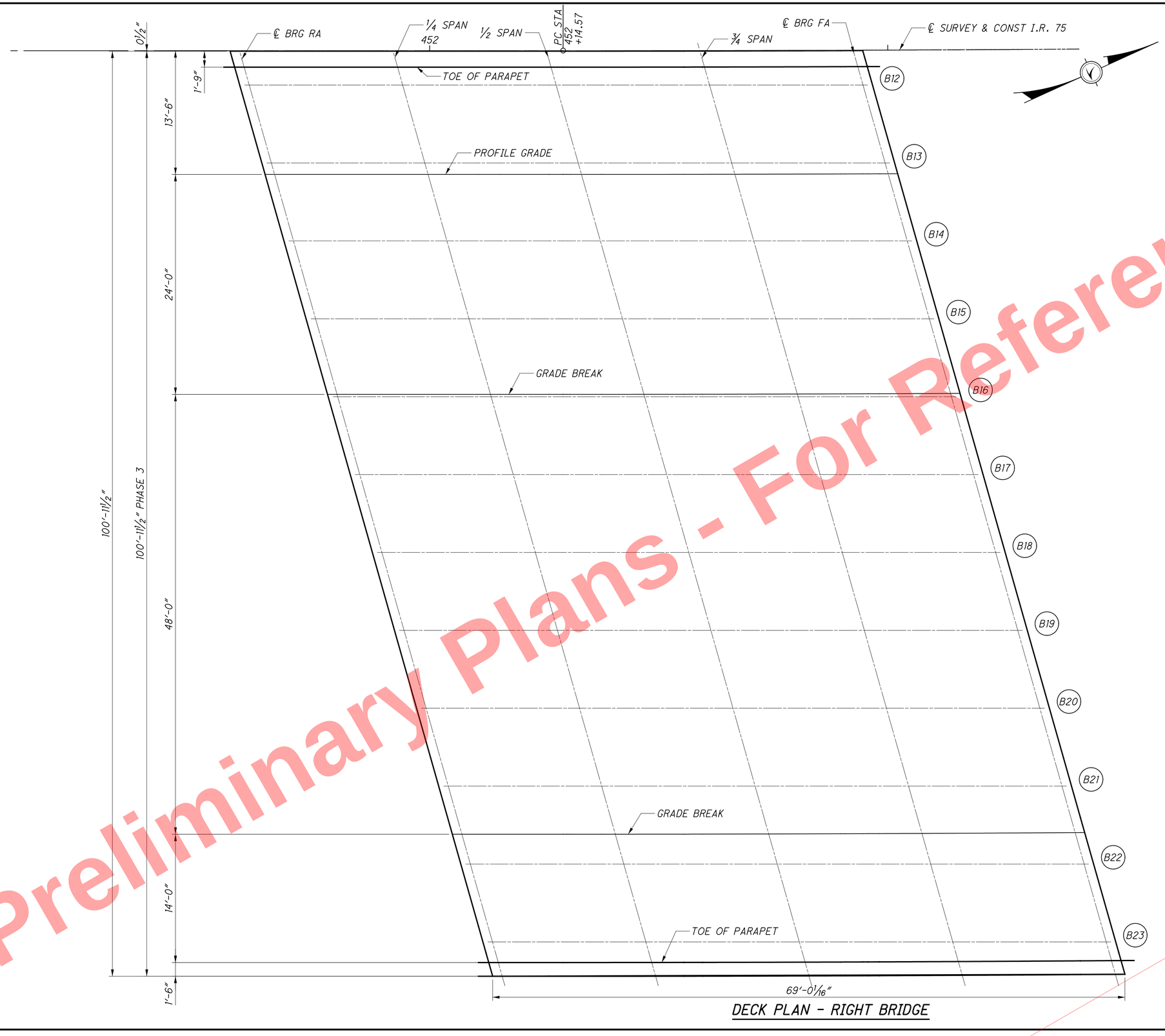

DECK PLAN - RIGHT BRIDGE

Preliminary Plans - For Reference Only

\\san1.resourceinternational.com\two\projects\2010\B-10-020 HAM-75-7.85\77889\structures\HAM075_0857C\sheets\075_0857CSD010.dgn 5/13/2026 2:05:09 PM meets

RESOURCE INTERNATIONAL INC.
8350 PRESIDENTIAL GATEWAY
COLUMBUS, OHIO 43231
(614) 823-4949

DESIGNED	DRAWN	REVIEWED	DATE
MMS	MMS	SSK	3-18-26
CHECKED	REVISED	STRUCTURE FILE NUMBER	
JWE		3110184	

DECK ELEVATION LOCATION PLAN
BRIDGE NO. HAM-75-0857
I.R. 75 OVER TOWNE STREET (CR603)

HAM-75-7.85
PID No. 121447

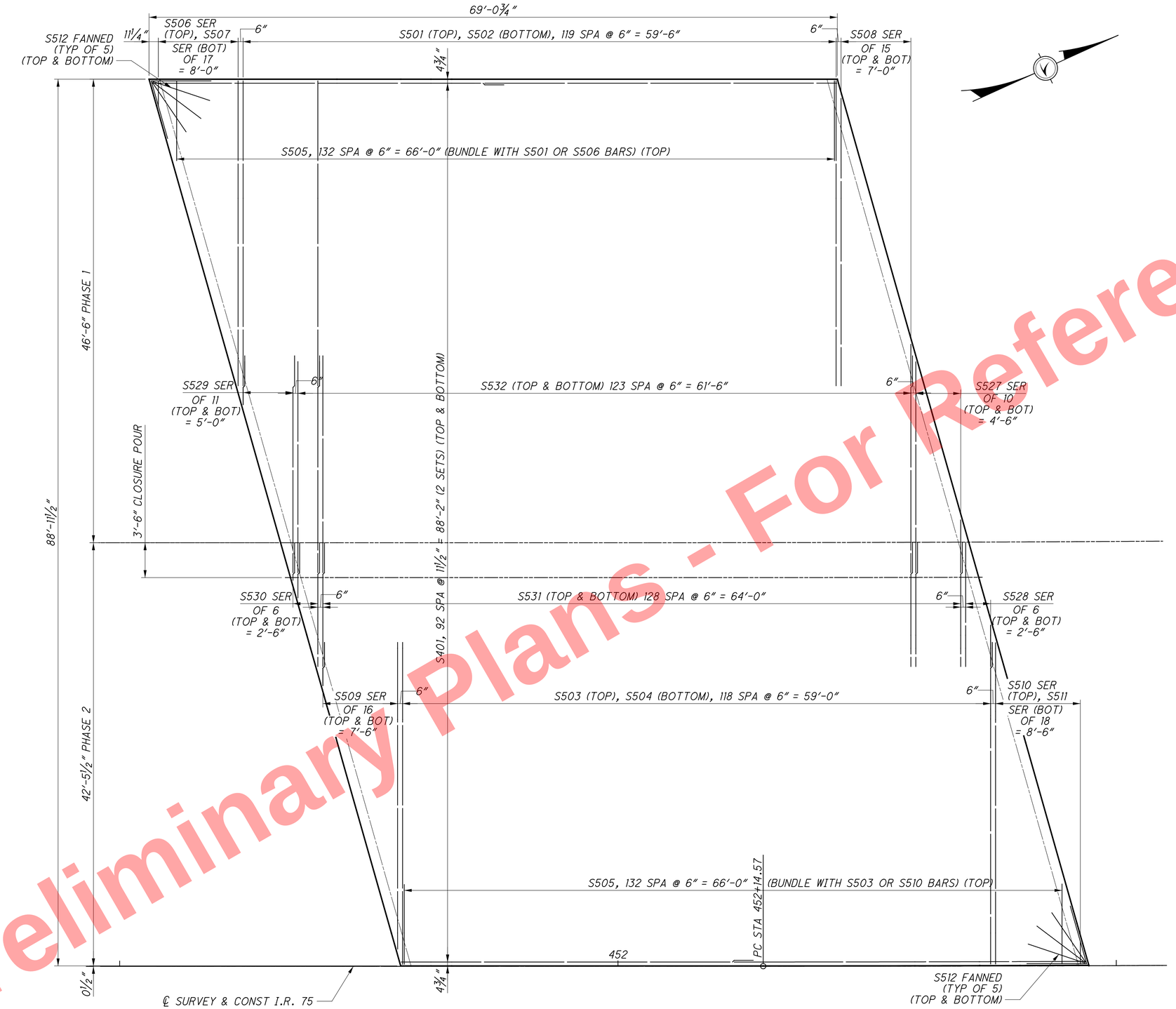

DECK PLAN - LEFT BRIDGE

NOTES:

1. MINIMUM LAP LENGTHS:
   LAP NO. 4 BAR: 1'-11"
   LAP NO. 5 BAR: 3'-0"

2. DO NOT PLACE CONCRETE FOR DECK CLOSURE POUR UNTIL DECK POUR HAS CURED 48 HOURS. SEAL ALL DECK JOINTS WITH 2'-0" WIDE STRIP OF ITEM 512 - HMWM RESIN.

Preliminary Plans - For Reference Only

RESOURCE INTERNATIONAL INC.
8350 PRESIDENTIAL GATEWAY
COLUMBUS, OHIO 43231
(614) 823-4949

DESIGNED	DRAWN	REVIEWED	DATE
MMS	MMS	SSK	3-18-26
CHECKED	REVISED	STRUCTURE FILE NUMBER	
JWE		3110184	

DECK PLAN
BRIDGE NO. HAM-75-0857
I.R. 75 OVER TOWNE STREET (CR603)

HAM-75-7.85
PID No. 121447

\\san1.resourceinternational.com\two\projects\2010\B-10-020 HAM-75-7.85\77889\structures\HAM075_0857C\sheets\075_0857CDP001.dgn 5/13/2026 2:05:09 PM meets

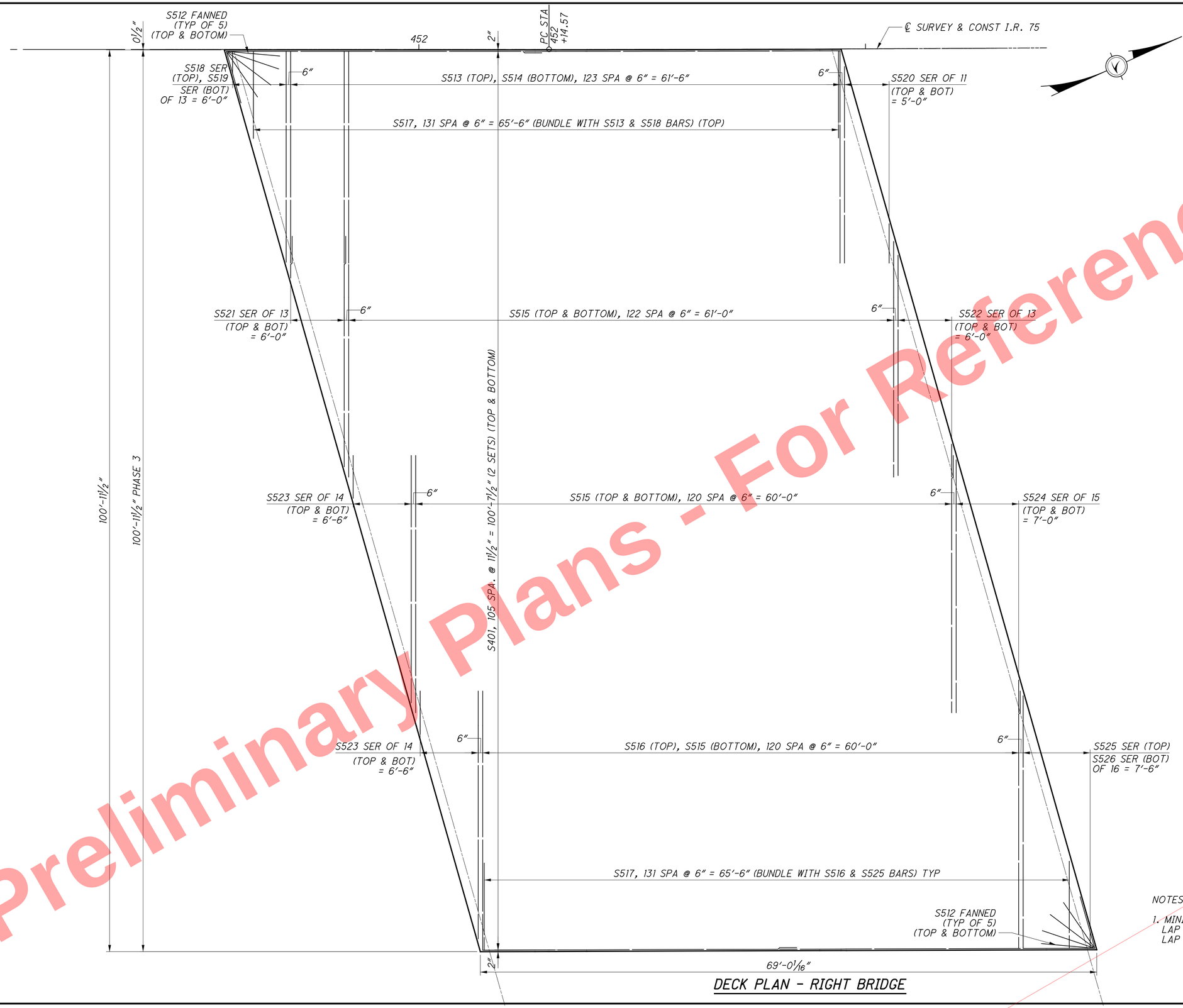

DECK PLAN - RIGHT BRIDGE

NOTES:

1. MINIMUM LAP LENGTHS:
   LAP NO. 4 BAR: 1'-11"
   LAP NO. 5 BAR: 3'-0"

Preliminary Plans - For Reference Only

RESOURCE INTERNATIONAL INC.
8350 PRESIDENTIAL GATEWAY
COLUMBUS, OHIO 43231
(614) 823-4949

DESIGNED	DRAWN	REVIEWED	DATE
MMS	MMS	SSK	3-18-26
CHECKED	REVISED	STRUCTURE FILE NUMBER	
JWE		3110184	

DECK PLAN
BRIDGE NO. HAM-75-0857
I.R. 75 OVER TOWNE STREET (CR603)

HAM-75-7.85
PID No. 121447

\\san1.resourceinternational.com\two\projects\2010\B-10-020 HAM-75-7.85\77889\structures\HAM075_0857C\sheets\075_0857CDP002.dgn 5/13/2026 2:05:10 PM meets

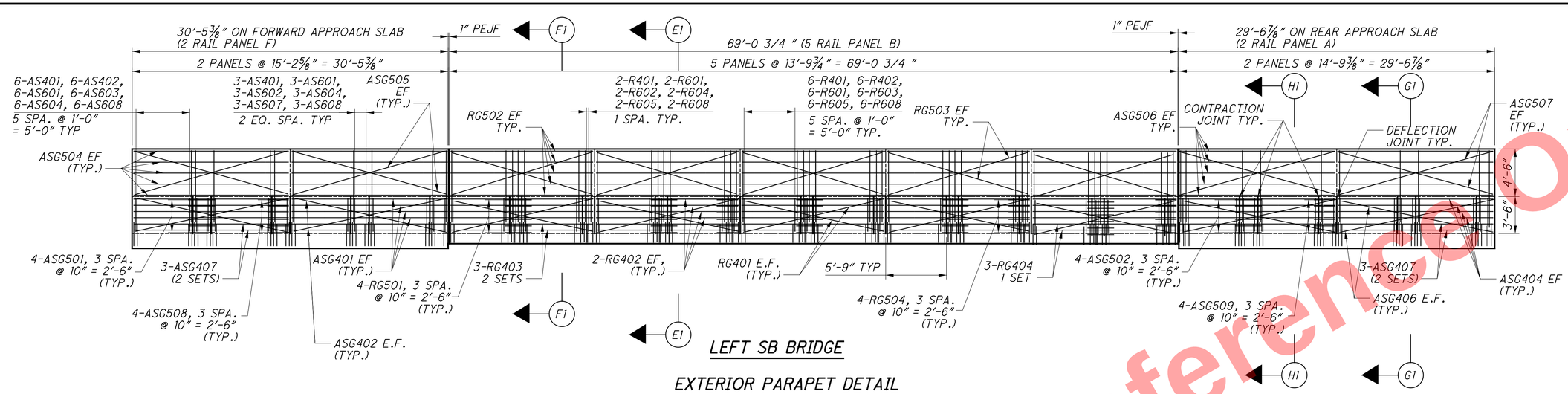

LEFT SB BRIDGE

EXTERIOR PARAPET DETAIL

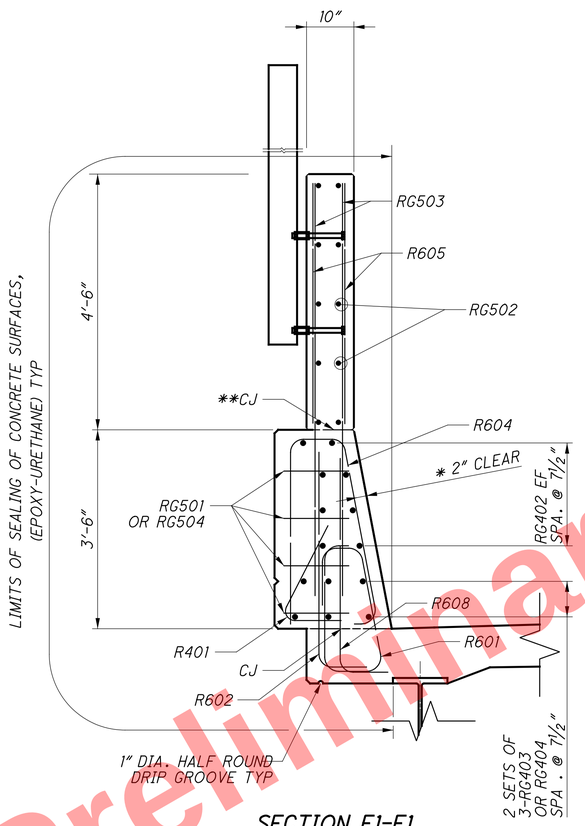

SECTION E1-E1

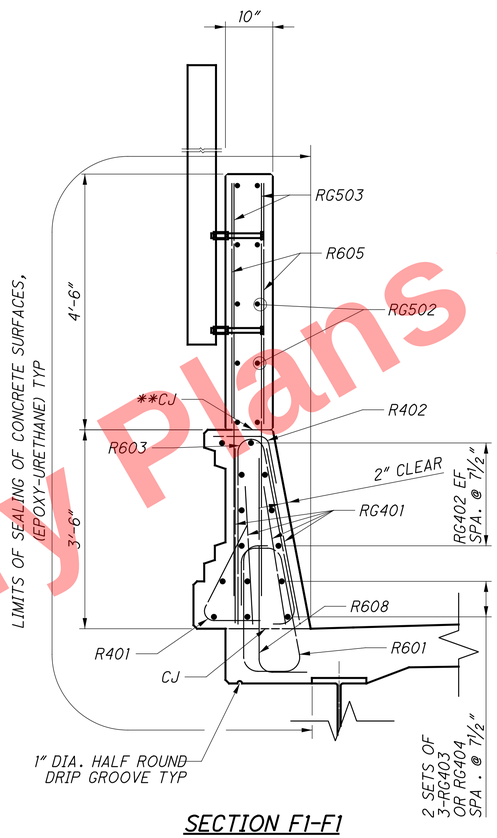

SECTION F1-F1

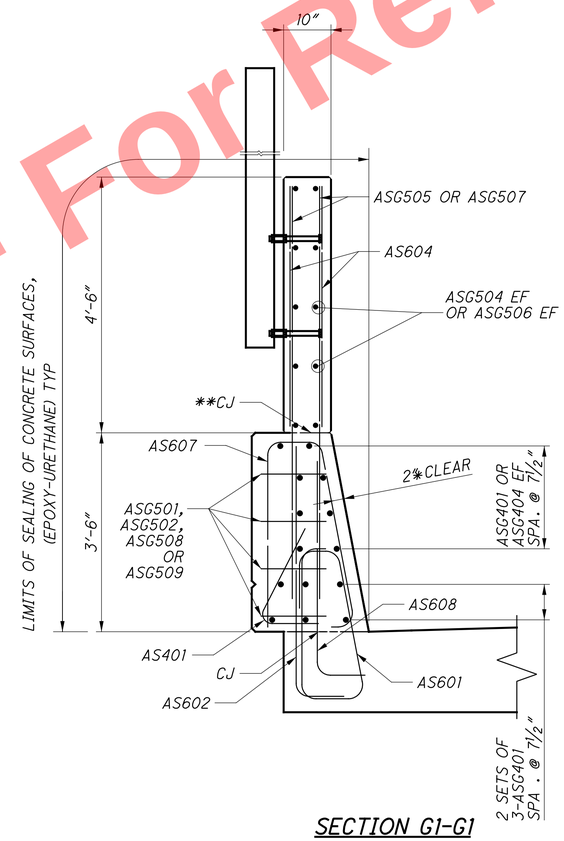

SECTION G1-G1

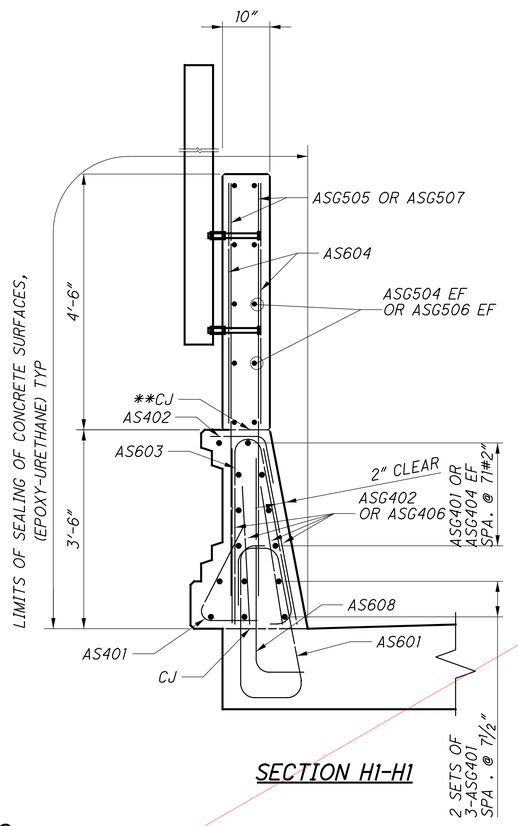

SECTION H1-H1

LEGEND:

* TYPICAL DIMENSION

** CONCRETE ABOVE CJ IS INCLUDED WITH ITEM 511 CLASS QC3 CONCRETE WITH QC/QA, BRIDGE DECK, AS PER PLAN. CONCRETE BELOW CJ IS INCLUDED WITH ITEM 511 CLASS QC SCC CONCRETE WITH QC/QA, BRIDGE DECK (PARAPET), AS PER PLAN.

MINIMUM LAP LENGTH
#5 BAR = 2'-5"
#6 BAR = 2'-11"

NOTES:

1. DIMENSION GIVEN ARE ALONG ARC OUTSIDE FACE OF BARRIER.
2. ELEVATION VIEW LOOKING AT EXTERIOR FACE OF PARAPET.
3. FOR ADDITIONAL APPROACH SLAB DETAILS SEE SHEET 41/46 & 42/46
4. PAYMENT FOR APPROACH SLAB PARAPETS SHALL BE INLCUDED WITH ITEM 526 REINFORCED CONCRETE APPROACH SLABS.

Preliminary Plans - For Reference Only

RESOURCE INTERNATIONAL INC.
8350 PRESIDENTIAL GATEWAY
COLUMBUS, OHIO 43231
(614) 823-4949

DESIGNED	DRAWN	REVIEWED	DATE
MMS	MMS	SSK	3-18-26
CHECKED	REVISED	STRUCTURE FILE NUMBER	
JWE		3110184	

PARAPET DETAILS
BRIDGE NO. HAM-75-0857
I.R. 75 OVER TOWNE STREET (CR603)

HAM-75-7.85
PID No. 121447

\\son1.resourceinternational.com\two\projects\2010\B-10-020 HAM-75-7.85\77889\structures\HAM075_0857CMD004.dgn 5/13/2026 2:05:10 PM meets
C:\sheets\075_0857C\

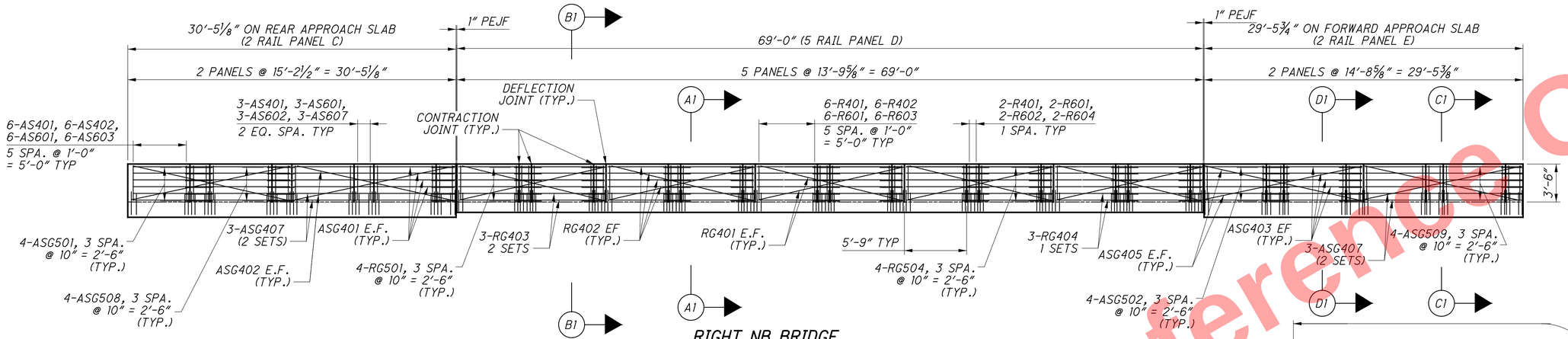

RIGHT NB BRIDGE

EXTERIOR PARAPET DETAIL

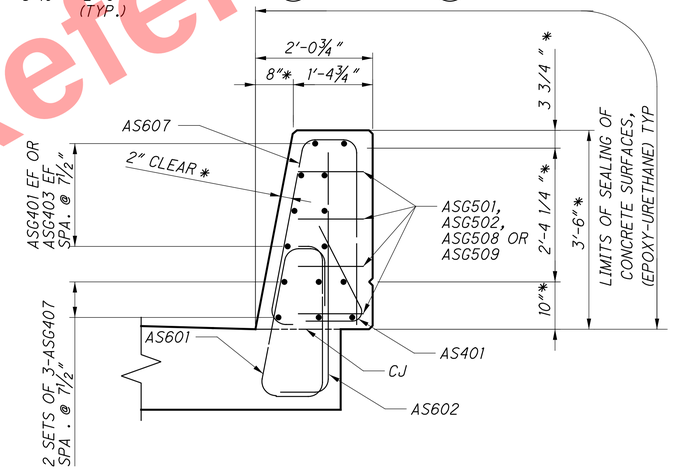

SECTION C1-C1

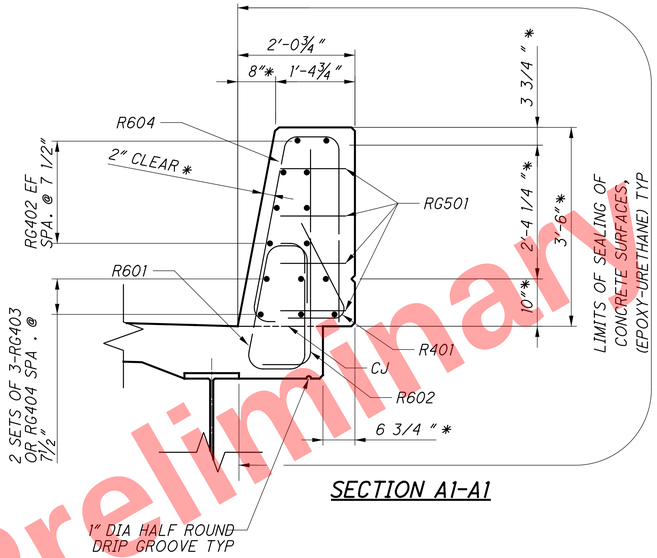

SECTION A1-A1

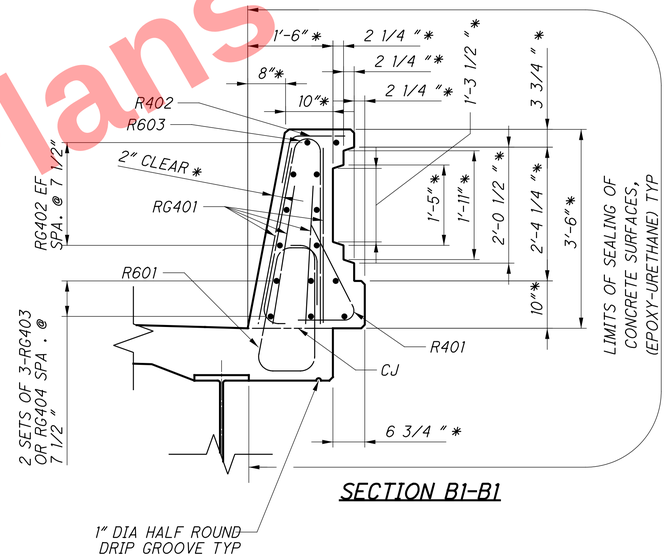

SECTION B1-B1

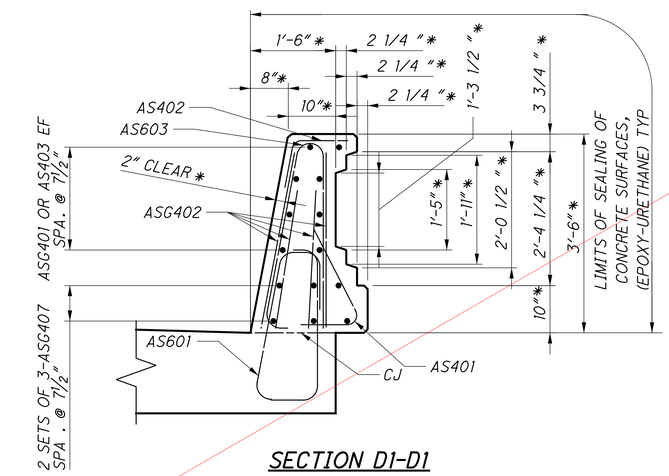

SECTION D1-D1

LEGEND:

* TYPICAL DIMENSION

** CONCRETE ABOVE CJ IS INCLUDED WITH ITEM 511 CLASS QC3 CONCRETE WITH QC/QA, BRIDGE DECK, AS PER PLAN. CONCRETE BELOW CJ IS INCLUDED WITH ITEM 511 CLASS QC SCC CONCRETE WITH QC/QA, BRIDGE DECK (PARAPET), AS PER PLAN.

NOTES:

1. DIMENSION GIVEN ARE ALONG ARC OUTSIDE FACE OF BARRIER.
2. ELEVATION VIEW LOOKING AT EXTERIOR FACE OF PARAPET.
3. FOR ADDITIONAL APPROACH SLAB DETAILS SEE SHEET 41/46 & 42/46
4. PAYMENT FOR APPROACH SLAB PARAPETS SHALL BE INLCUDED WITH ITEM 526 REINFORCED CONCRETE APPROACH SLABS.

MINIMUM LAP LENGTH
#4 BAR = 1'-11"
#5 BAR = 2'-5"
#6 BAR = 2'-11"

Preliminary Plans - For Reference Only

RESOURCE INTERNATIONAL INC.
8350 PRESIDENTIAL GATEWAY
COLUMBUS, OHIO 43231
(614) 823-4949

DESIGNED	DRAWN	REVIEWED	DATE
MMS	MMS	SSK	3-18-26
CHECKED	REVISED	STRUCTURE FILE NUMBER	
JWE		3110184	

PARAPET DETAILS
BRIDGE NO. HAM-75-0857
I.R. 75 OVER TOWNE STREET (CR603)

HAM-75-7.85
PID No. 121447

33 / 46

1026
1047

\\sont.resourceinternational.com\two\projects\2010\B-10-020 HAM-75-7.85\77889\structures\HAM075_0857C\sheets\075_0857CMD007.dgn 5/13/2026 2:05:11 PM meets

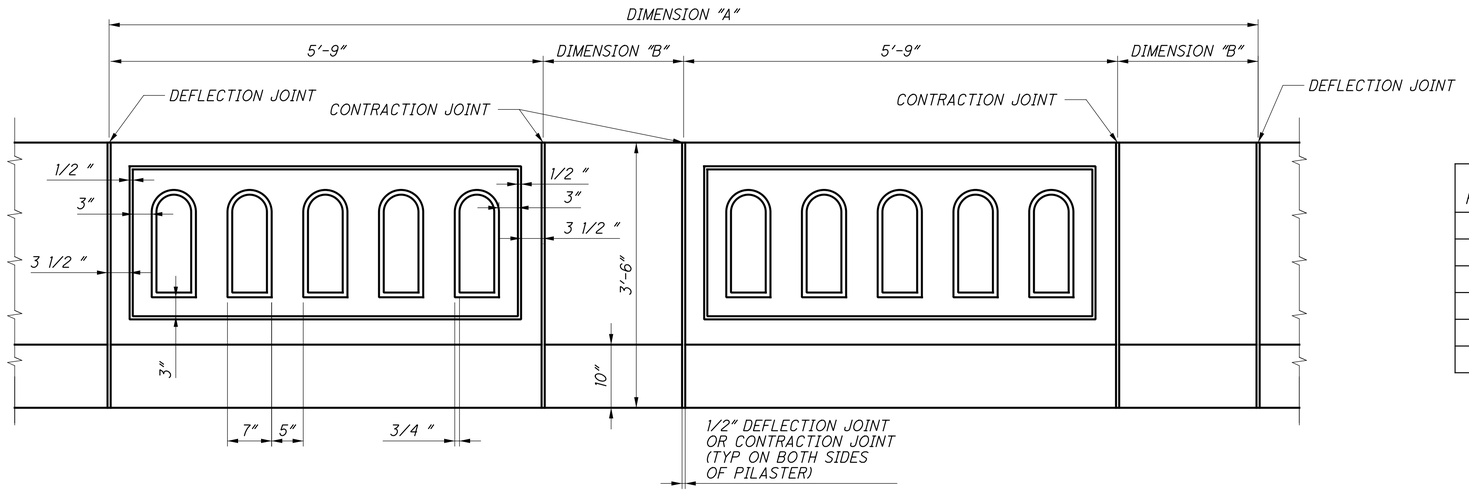

PANEL	NO. OF PANELS	DIMENSION "A"	DIMENSION "B"
A	2	14'-9 3/8"	1'-7 5/8"
B	5	13'-9 3/4"	1'-1 3/4"
C	2	15'-2 1/2"	1'-10 1/4"
D	5	13'-9 5/8"	1'-1 3/4"
E	2	14'-8 5/8"	1'-7 3/8"
F	2	15'-2 5/8"	1'-10 3/8"

TYPICAL RAIL PANEL

(APPROACH SLAB NOT SHOWN)

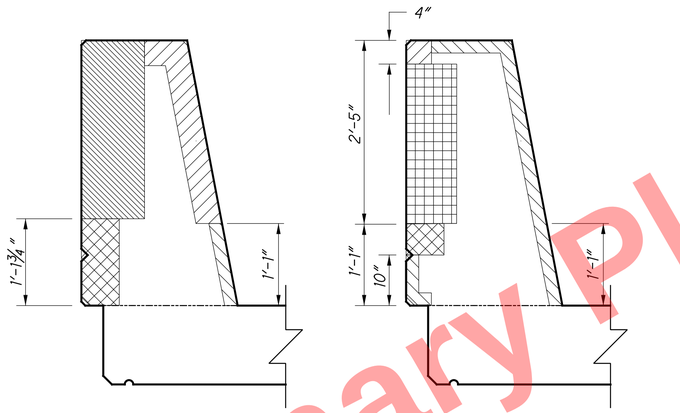

DEFLECTION JOINT

(SEE NOTE 3)

CONTRACTION JOINT

(OPPOSITE SIDE OF PILASTER FROM DEFLECTION JOINT WHERE THE BARS ARE CONTINIOUS)

- 10" WIDE PREFORMED JOINT MATERIAL
- 8" WIDE PREFORMED JOINT MATERIAL
- 6" WIDE PREFORMED JOINT MATERIAL
- 4" WIDE PREFORMED JOINT MATERIAL
- 2" WIDE PREFORMED JOINT MATERIAL

NOTES:

1. DIMENSIONS GIVEN ARE ALONG ARC OUTSIDE FACE OF BARRIER.
2. ELEVATION VIEW LOOKING AT EXTERIOR FACE OF PARAPET.
3. DEFLECTION JOINTS AND CONTRACTION JOINTS ARE TO BE CAST INTO THE PARAPETS AND HELD IN WITH CHAMFER STRIPS. THE EXCESS MATERIAL WILL BE TRIMMED TO THE BASE OF THE CHAMFER. THE MATERIAL THAT WILL BE USED NEEDS TO NOT ABSORB WATER AND AS SUFFICIENT RIGIDITY TO NOT SIGNIFICANTLY MOVE DURING THE CASTING OF THE PARAPET. THE JOINT MATERIAL IS TO BE 0.5" IN THICKNESS AND WILL BE NOMAFLEX BY NOMACO OR FIBER LITE BY W.R. MEADOWS OR SIMILAR PRODUCT APPROVED BY THE ENGINEER. THE GFRP FIBER SPLICE BARS THAT WERE SHOWN IN THE AS BID PLANS AND ARE INTENDED TO HOLD THE LONGITUDINAL BARS TOGETHER DURING SLIP FORMING ARE TO BE NON-PERFORMED.

Preliminary Plans - Not For Reference Only

RESOURCE INTERNATIONAL INC.
8350 PRESIDENTIAL GATEWAY
COLUMBUS, OHIO 43231
(614) 823-4949

DESIGNED MMS | DRAWN MMS | REVIEWED SSK | DATE 3-18-26
CHECKED JWE | REVISED | STRUCTURE FILE NUMBER 3110184

PARAPET DETAILS
BRIDGE NO. HAM-75-0857
I.R. 75 OVER TOWNE STREET (CR603)

HAM-75-7.85
PID No. 121447

34 / 46

1027
1047

$USERNAME$ $DATE$ $TIME$ $FILE$

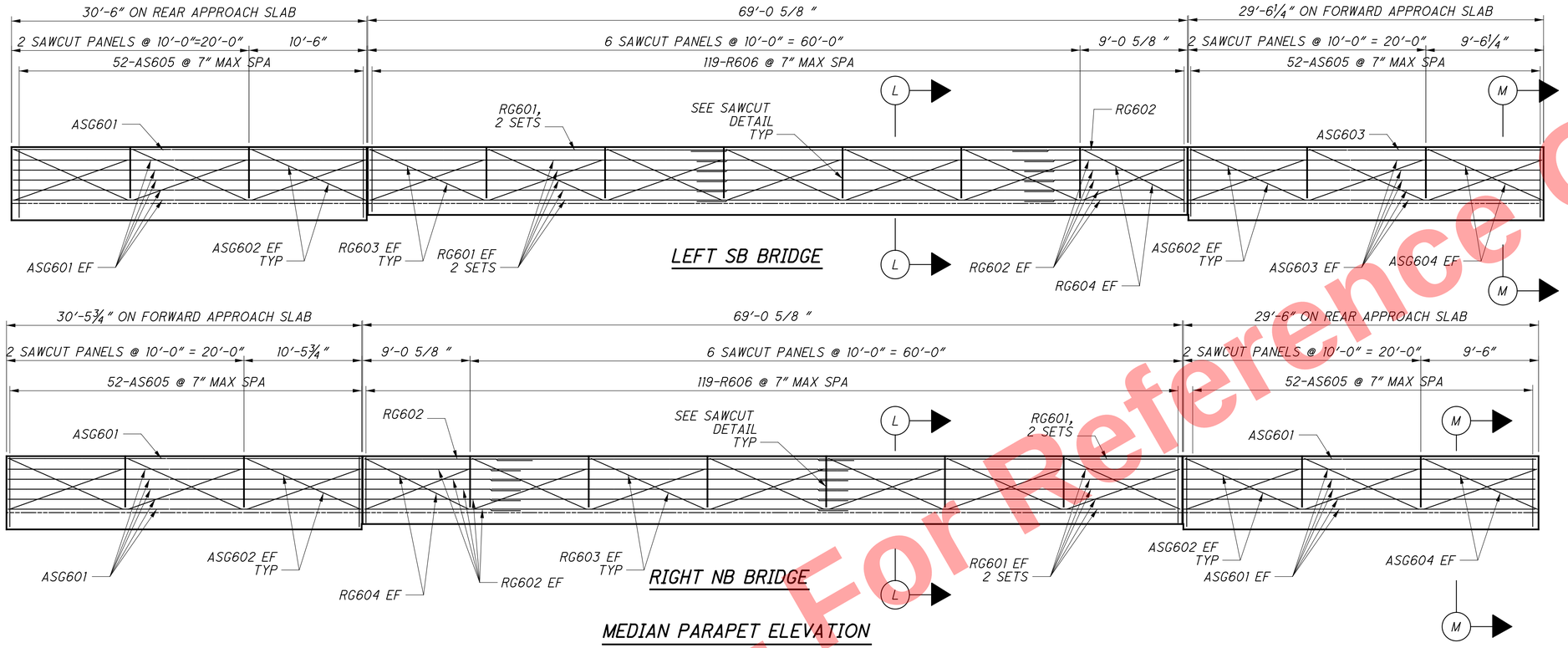

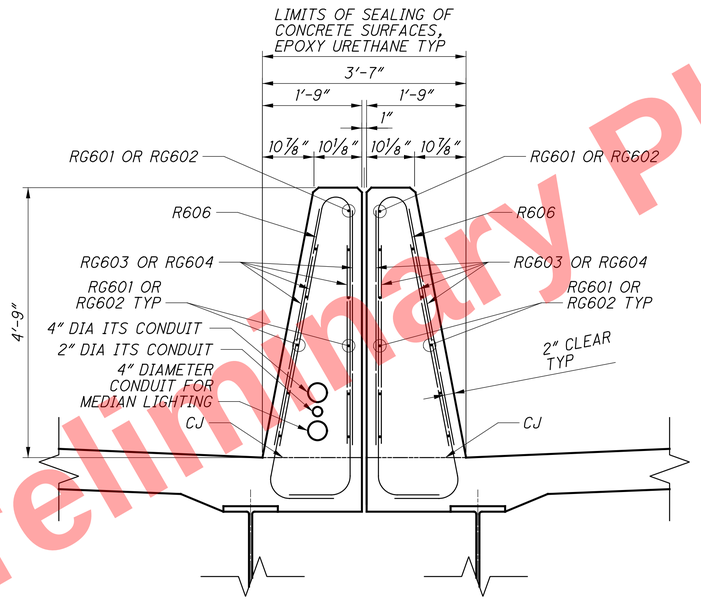

SECTION L-L

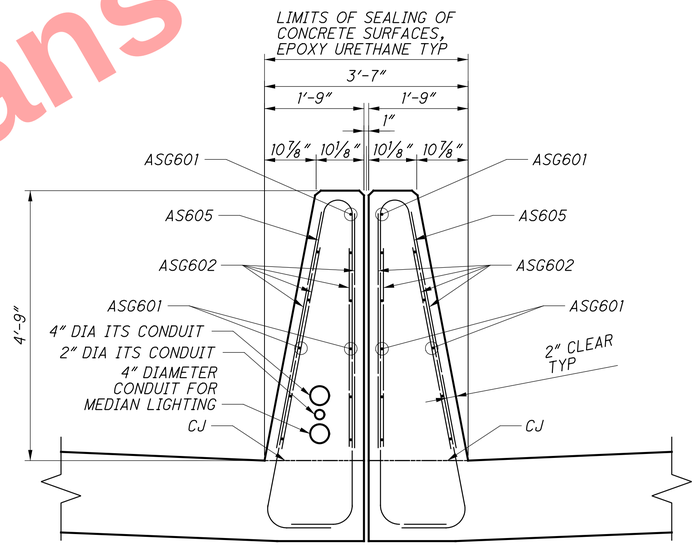

SECTION M-M

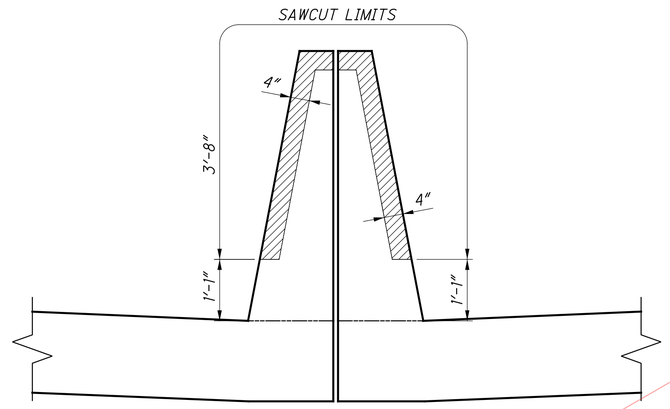

SAWCUT DETAILS

NOTES:

1. DIMENSION GIVEN ARE ALONG ARC OUTSIDE FACE OF BARRIER.
2. ELEVATION VIEW LOOKING AT EXTERIOR FACE OF PARAPET.
3. SEE SHEET 41/46 & 42/46 FOR ADDITIONAL APPROACH SLAB DETAILS.
4. PAYMENT FOR APPROACH SLAB PARAPETS SHALL BE INCLUDED WITH ITEM 526 REINFORCED CONCRETE APPROACH SLABS.

MINIMUM LAP LENGTHS

#6 BAR = 2'-11"

Preliminary Plans - For Reference Only

RESOURCE INTERNATIONAL INC.
8350 PRESIDENTIAL GATEWAY
COLUMBUS, OHIO 43231
(614) 823-4949

DESIGNED JLM
DRAWN JLM
CHECKED MMS
REVIEWED SSK
DATE 3-18-26
REVISED
STRUCTURE FILE NUMBER 3110184

PARAPET DETAILS
BRIDGE NO. HAM-75-0857
I.R. 75 OVER TOWNE STREET (CR603)

HAM-75-7.85
PID No. 121447

35/46

1028
1047

\\san1.resourceinternational.com\two\projects\2010\B-10-020 HAM-75-7.85\77889\structures\HAM075_0857C\sheets\075_0857CMD006.dgn 5/13/2026 2:05:12 PM meets

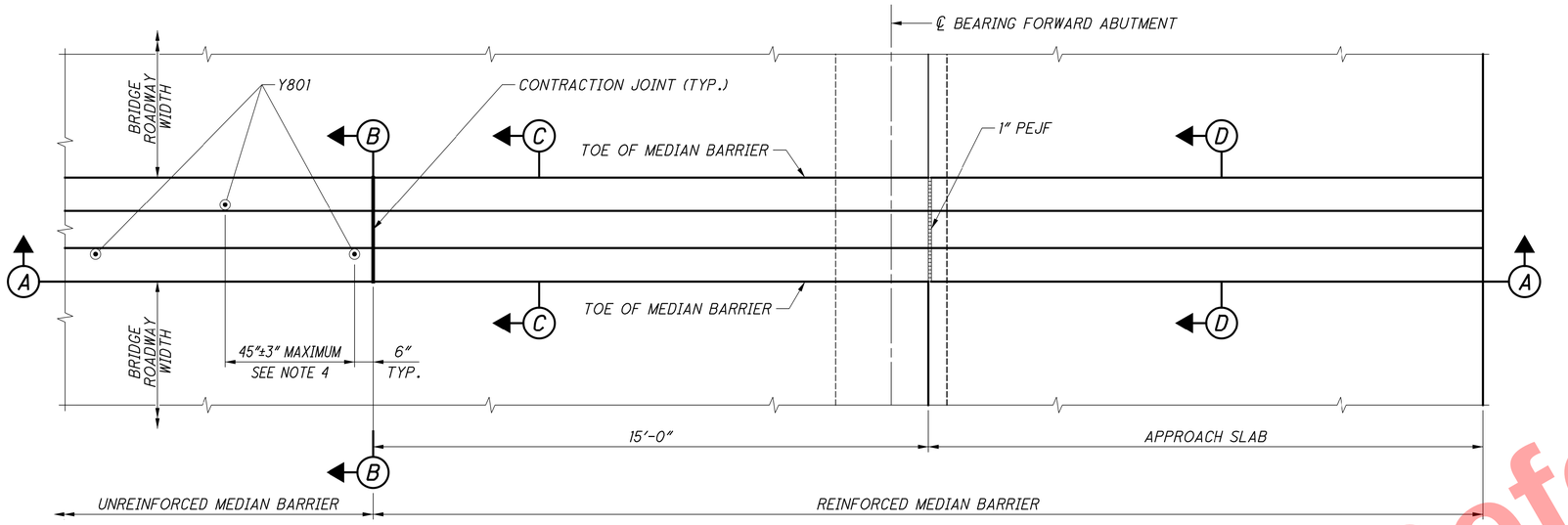

PLAN VIEW

57" SINGLE SLOPE MEDIAN BRIDGE RAILING TYPE B1 SHOWN WITH SEMI-INTEGRAL ABUTMENT, INTEGRAL ABUTMENT AND CAPPED PILE ABUTMENTS SIMILAR. FORWARD ABUTMENT SHOWN, REAR ABUTMENT SIMILAR BUT OPPOSITE

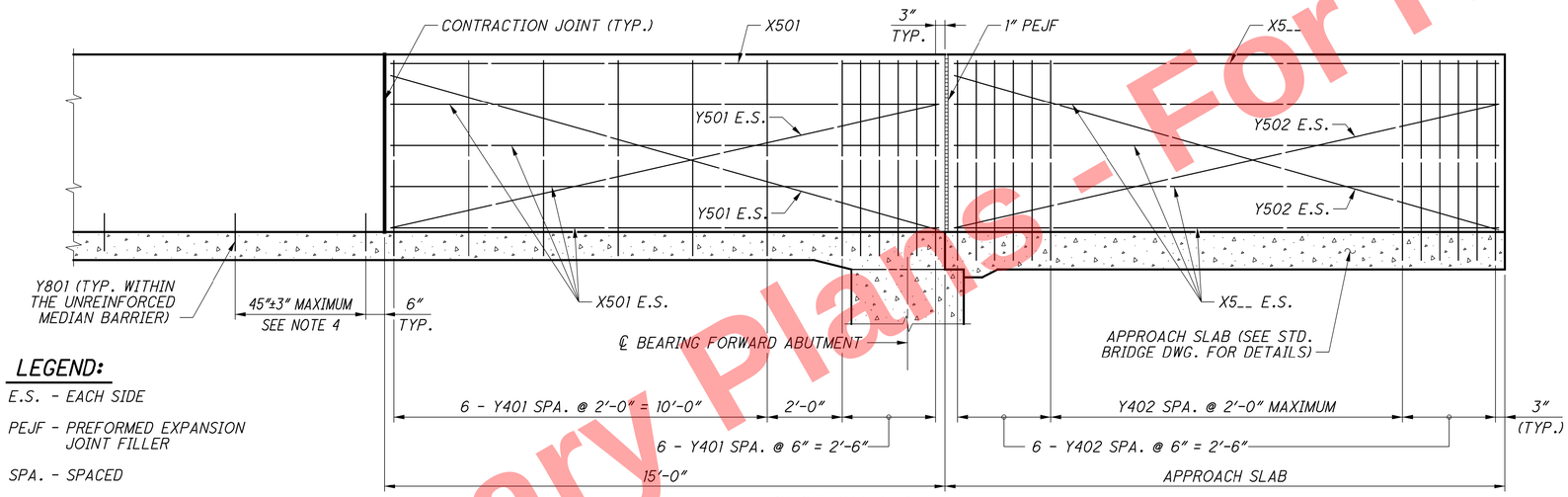

SECTION A-A

LEGEND:

E.S. - EACH SIDE

PEJF - PREFORMED EXPANSION JOINT FILLER

SPA. - SPACED

NOTES:

1. FOR 57" SINGLE SLOPE CONCRETE MEDIAN BRIDGE RAILING, INCLUDE PLAN VIEW, ELEVATION VIEW, SECTIONS, REINFORCING MARKS, REINFORCING BENDING DIAGRAMS, AND REINFORCING QUANTITIES IN THE PROJECT PLANS.
2. FOR THE ENTIRE LENGTH OF SINGLE SLOPE CONCRETE MEDIAN BRIDGE RAILINGS, SHOW THE LOCATION OF CONTRACTION JOINTS, SPACED AT 20'-0" MAX IN THE PROJECT PLANS. CONTRACTION JOINT IS NOT REQUIRED WITHIN THE APPROACH SLAB MEDIAN BARRIER SECTIONS.
3. PLACE #8 EPOXY COATED DOWEL BARS (Y801 BARS), 12" LONG, SPACED AT 45" ± 3" MAXIMUM, AT STAGGERED LOCATIONS WITHIN THE UNREINFORCED MEDIAN BARRIER. INCLUDE Y801 BARS WITH ITEM 509 FOR PAYMENT.
4. SEE APPROPRIATE STANDARD BRIDGE DRAWING FOR ABUTMENT DETAILS.
5. FOR ROADWAY SINGLE SLOPE BARRIER, SEE STD. ROADWAY CONSTR. DWG. RM-4.3 THROUGH RM-4.5.
6. REFER TO AS-2-15 FOR APPLICABLE DETAILS FOR APPROACH SLAB JOINTS USED WITH SEMI-INTEGRAL AND INTEGRAL ABUTMENTS.
7. GLASS FIBER REINFORCED POLYMER (GFRP) MAY BE USED FOR THE HORIZONTAL BARS OR STIFFENING BARS AT NO ADDITIONAL COST TO THE DEPARTMENT.
8. FOR GENERAL NOTES, SEE SHEET 5/5.

REINFORCEMENT LIST

MARK	LENGTH	TYPE	MATERIAL	BENDING DIAGRAMS
X501	14'-8"	STR	STEEL	
X5__	⊕	STR	STEEL	
Y401	2A + 12'-10"	BENT	STEEL	
Y402	2B + 12'-10"	BENT	STEEL	
Y501	15'-0"	STR	STEEL	
Y502	⊕	STR	STEEL	
Y801	1'-0"	STR	STEEL	

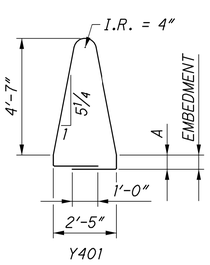

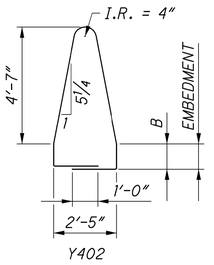

⊕ SEE PROJECT PLANS

A = 7½" MINIMUM EMBEDMENT

B = APPROACH SLAB THICKNESS MINUS 3"

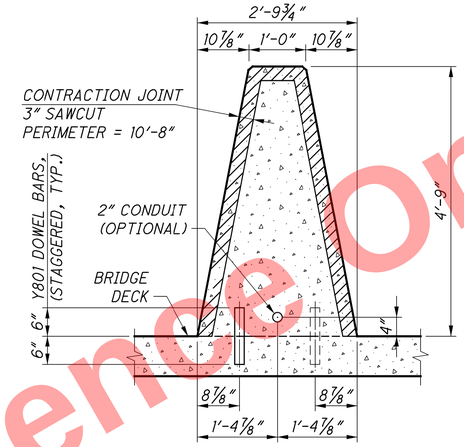

SECTION B-B

(AREA = 9.05 SQ. FT.)

REINFORCED CONCRETE DECK ON STEEL OR PRESTRESSED CONCRETE I-BEAMS/GIRDERS (BEAMS/GIRDERS NOT SHOWN)

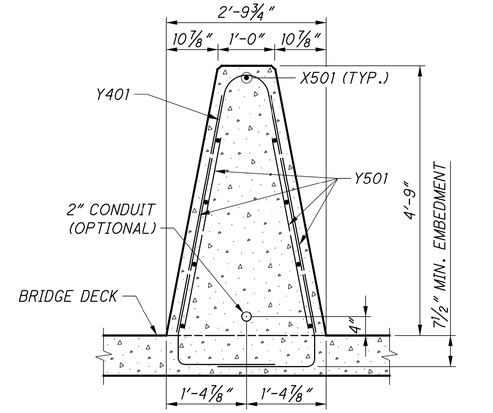

SECTION C-C

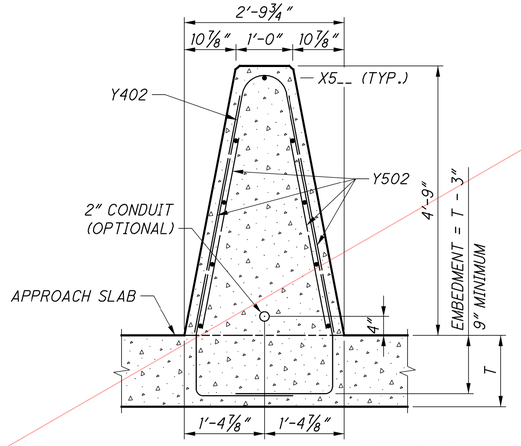

SECTION D-D

T = APPROACH SLAB THICKNESS

Preliminary Plans - For Reference Only

STATE OF OHIO DEPARTMENT OF TRANSPORTATION
07-17-2020 DATE
ADMINISTRATOR

DESIGN AGENCY
OFFICE OF STRUCTURAL ENGINEERING

REVISION 11-12-93

SBR-2-20

STANDARD BRIDGE DRAWING
57" SINGLE SLOPE CONCRETE MEDIAN BRIDGE RAILING

36 / 46

1029
1047

G:\projects\2010\18-10-020 HAM-75-7.85\178891\structures\HAM075_0852IC\sheets\SBR-2-20_2021-1-15\SBR-2-20_2021-1-15_sheet 1.dgn 5/19/2026 2:12:24 PM meets

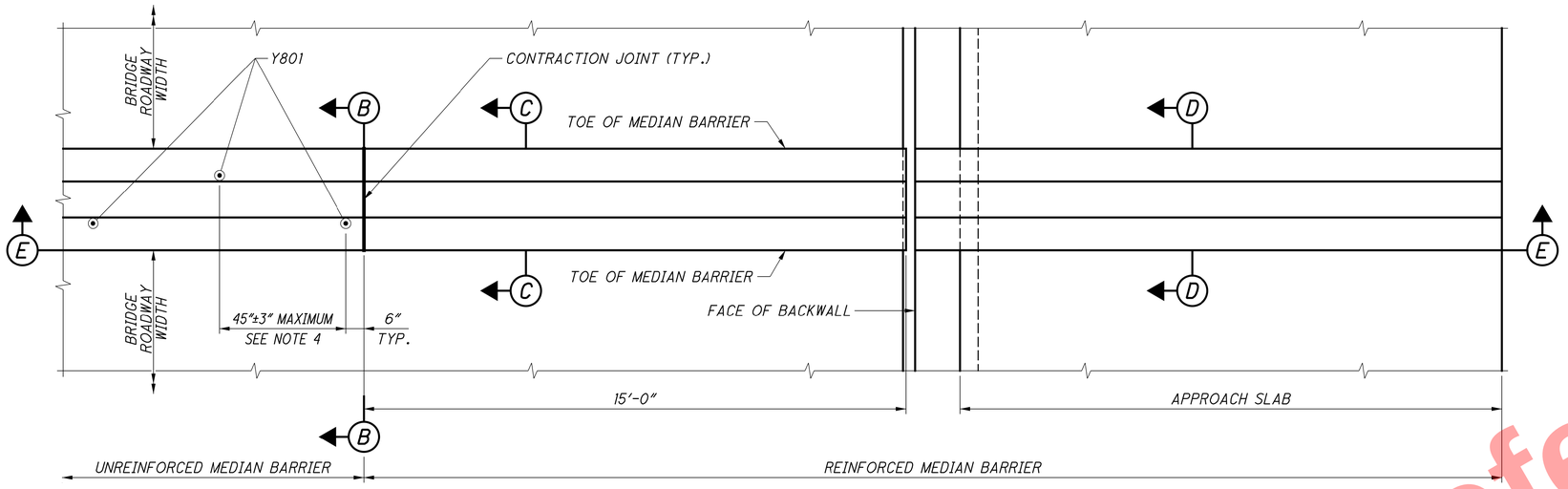

PLAN VIEW

57" SINGLE SLOPE MEDIAN BRIDGE RAILING TYPE B1 SHOWN WITH TYPICAL ABUTMENT.
FORWARD ABUTMENT SHOWN, REAR ABUTMENT SIMILAR BUT OPPOSITE

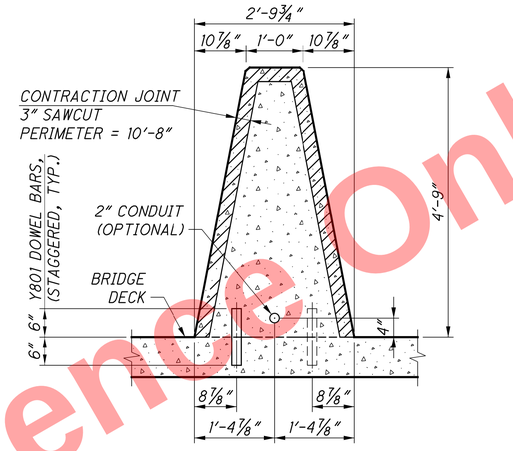

SECTION B-B

(AREA = 9.05 SQ. FT.)
REINFORCED CONCRETE DECK ON STEEL OR PRESTRESSED CONCRETE I-BEAMS/GIRDERS (BEAMS/GIRDERS NOT SHOWN)

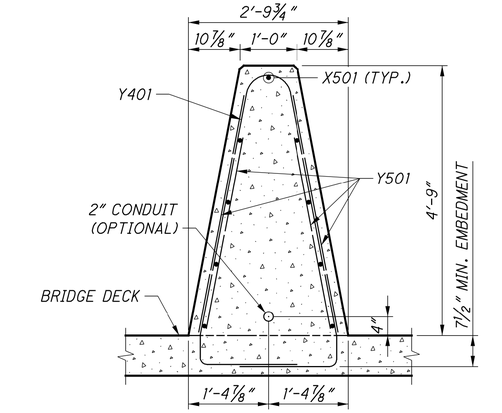

SECTION C-C

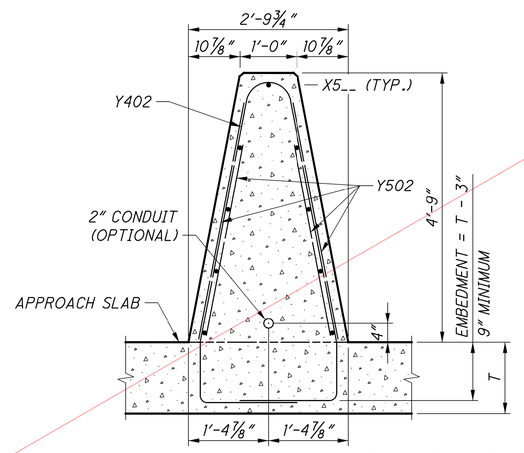

SECTION D-D

T = APPROACH SLAB THICKNESS

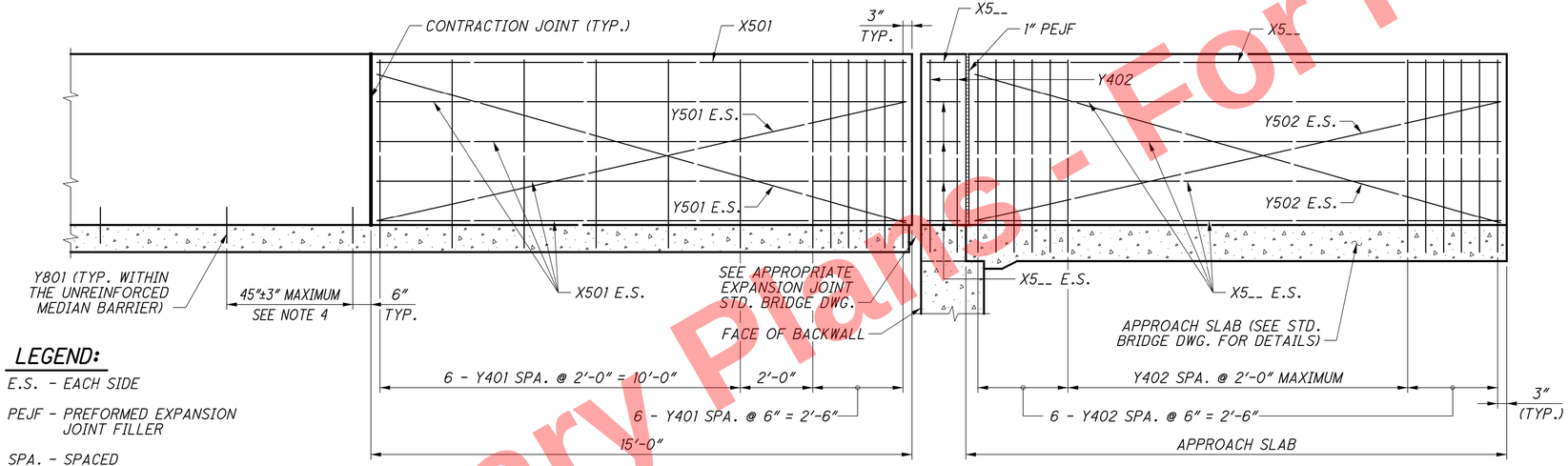

SECTION E-E

LEGEND:

E.S. - EACH SIDE

PEJF - PREFORMED EXPANSION JOINT FILLER

SPA. - SPACED

NOTES:

1. FOR 57" SINGLE SLOPE CONCRETE MEDIAN BRIDGE RAILING, INCLUDE PLAN VIEW, ELEVATION VIEW, SECTIONS, REINFORCING MARKS, REINFORCING BENDING DIAGRAMS, AND REINFORCING QUANTITIES IN THE PROJECT PLANS.
2. FOR THE ENTIRE LENGTH OF SINGLE SLOPE CONCRETE MEDIAN BRIDGE RAILINGS, SHOW THE LOCATION OF CONTRACTION JOINTS, SPACED AT 20'-0" MAX IN THE PROJECT PLANS. CONTRACTION JOINT IS NOT REQUIRED WITHIN THE APPROACH SLAB MEDIAN BARRIER SECTIONS.
3. PLACE #8 EPOXY COATED DOWEL BARS (Y801 BARS), 12" LONG, SPACED AT 45" ± 3" MAXIMUM, AT STAGGERED LOCATIONS WITHIN THE UNREINFORCED MEDIAN BARRIER. INCLUDE Y801 BARS WITH ITEM 509 FOR PAYMENT.
4. SEE APPROPRIATE STANDARD BRIDGE DRAWING FOR ABUTMENT DETAILS.
5. FOR ROADWAY SINGLE SLOPE BARRIER, SEE STD. ROADWAY CONSTR. DWG. RM-4.3 THROUGH RM-4.5.
6. GLASS FIBER REINFORCED POLYMER (GFRP) MAY BE USED FOR THE HORIZONTAL BARS OR STIFFENING BARS AT NO ADDITIONAL COST TO THE DEPARTMENT.
7. FOR GENERAL NOTES, SEE SHEET 5/5.

REINFORCEMENT LIST

MARK	LENGTH	TYPE	MATERIAL	BENDING DIAGRAMS
X501	14'-8"	STR	STEEL	
X5__	⊕	STR	STEEL	
Y401	2A + 12'-10"	BENT	STEEL	
Y402	2B + 12'-10"	BENT	STEEL	
Y501	15'-0"	STR	STEEL	
Y502	⊕	STR	STEEL	
Y801	1'-0"	STR	STEEL	

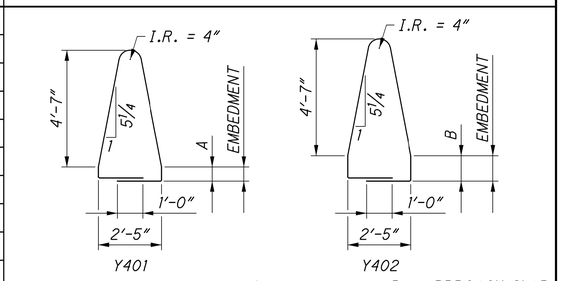

⊕ SEE PROJECT PLANS

A = 7½" MINIMUM EMBEDMENT

B = APPROACH SLAB THICKNESS MINUS 3"

DESIGN AGENCY
OFFICE OF STRUCTURAL ENGINEERING

STATE OF OHIO DEPARTMENT OF TRANSPORTATION
Jim Hall
ADMINISTRATOR
07-17-2020
DATE

REVISION
11-12-93

SBR-2-20

STANDARD BRIDGE DRAWING
57" SINGLE SLOPE CONCRETE MEDIAN BRIDGE RAILING

37 / 46

1030
1047

Preliminary Plans - For Reference Only

G:\projects\2010\8-10-020 HAM-75-7.85\17889\structures\HAM075_0857\C\sheets\SBR-2-20_2021-1-15\SBR-2-20_2021-1-15_sheet 2.dgn 5/13/2026 2:12:58 PM meets

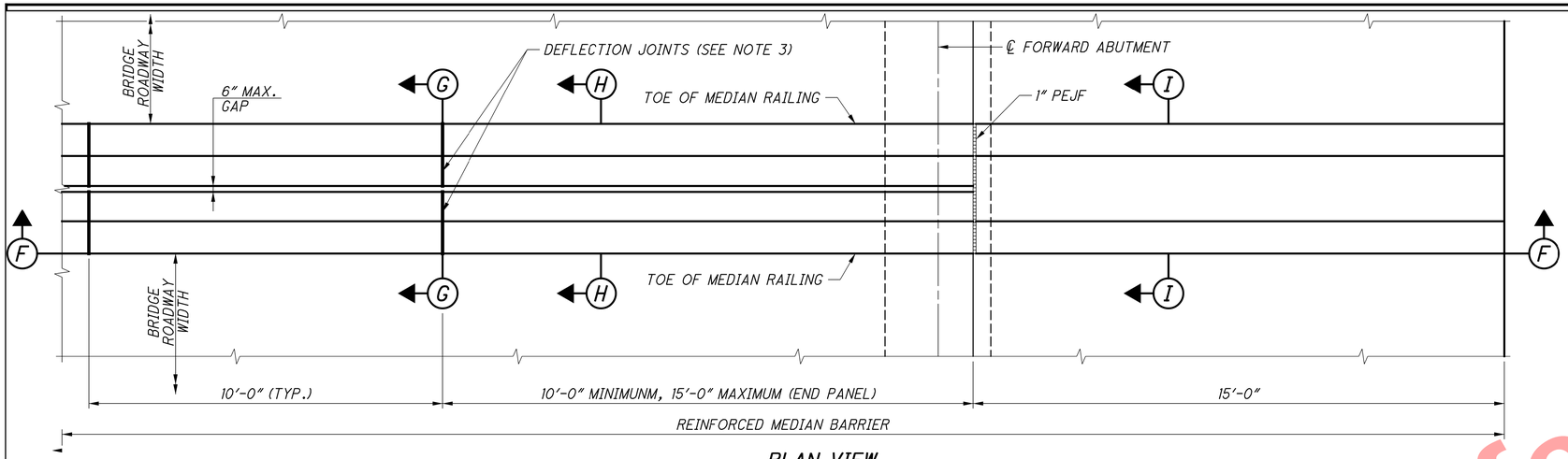

PLAN VIEW

57" SINGLE SLOPE BACK-TO BACK MEDIAN BRIDGE RAILINGS SHOWN WITH SEMI-INTEGRAL ABUTMENT, INTEGRAL ABUTMENT AND CAPPED PILE ABUTMENTS SIMILAR. FORWARD ABUTMENT SHOWN, REAR ABUTMENT SIMILAR BUT OPPOSITE

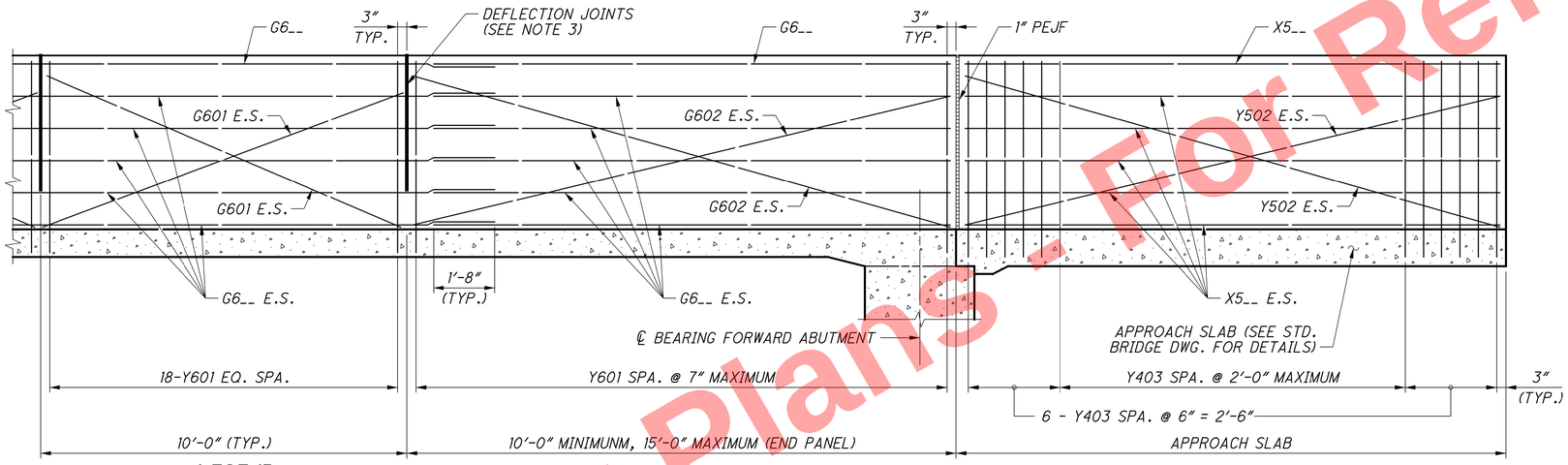

SECTION F-F

REINFORCEMENT SHOWN IS ONLY FOR ONE SIDE OF THE BACK-TO-BACK MEDIAN BARRIERS

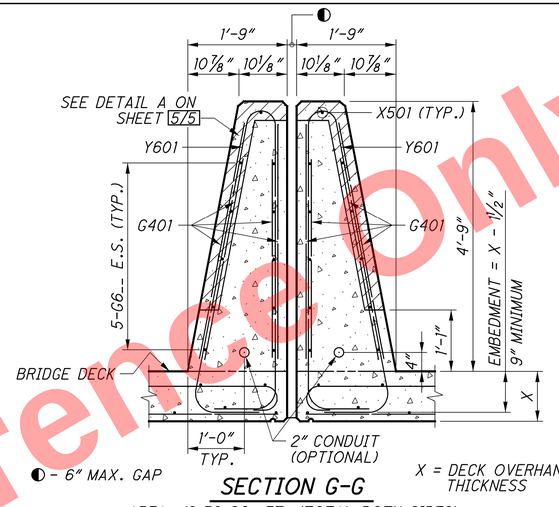

◐ - 6" MAX. GAP

X = DECK OVERHANG THICKNESS

SECTION G-G

AREA =12.32 SQ. FT. (TOTAL BOTH SIDES)
REINFORCED CONCRETE DECK ON STEEL OR PRESTRESSED CONCRETE I-BEAMS/GIRDERS (BEAMS/GIRDERS NOT SHOWN)

◐ - 6" MAX. GAP

X = DECK OVERHANG THICKNESS

SECTION H-H

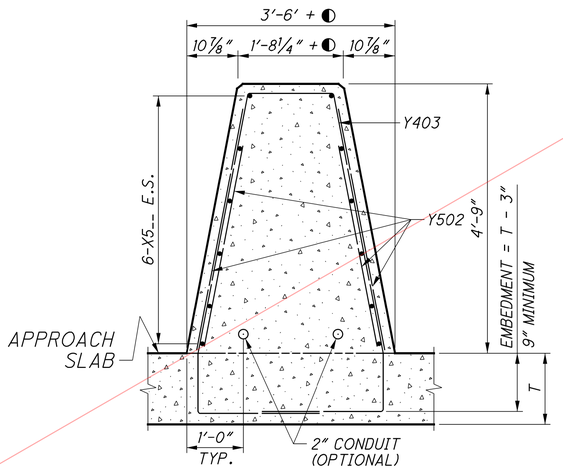

◐ - 6" MAX. GAP

T = APPROACH SLAB THICKNESS

SECTION I-I

LEGEND:

E.S. - EACH SIDE

PEJF - PREFORMED EXPANSION JOINT FILLER

SPA. - SPACED

EQ. - EQUALLY

MAX. - MAXIMUM

NOTES:

1. FOR 57" SINGLE SLOPE CONCRETE MEDIAN BRIDGE RAILING, INCLUDE PLAN VIEW, ELEVATION VIEW, SECTIONS, REINFORCING MARKS, REINFORCING BENDING DIAGRAMS, AND REINFORCING QUANTITIES IN THE PROJECT PLANS.
2. FOR THE ENTIRE LENGTH OF SINGLE SLOPE CONCRETE MEDIAN BRIDGE RAILINGS, SHOW THE LOCATIONS OF DEFLECTION JOINTS IN THE PROJECT PLANS. DEFLECTION JOINT IS NOT REQUIRED WITHIN THE APPROACH SLAB MEDIAN BARRIER SECTIONS.
3. SEE APPROPRIATE STANDARD BRIDGE DRAWING FOR ABUTMENT DETAILS.
4. FOR SINGLE SLOPE BARRIER BEYOND THE STRUCTURE (ROADWAY BARRIER), SEE STD. ROADWAY CONSTR. DWG. RM-4.3 THROUGH RM-4.5.
5. REFER TO AS-2-15 FOR APPLICABLE DETAILS FOR APPROACH SLAB JOINTS USED WITH SEMI-INTEGRAL AND INTEGRAL ABUTMENTS.
6. USE GLASS FIBER REINFORCED POLYMER (GFRP) FOR HORIZONTAL BARS (G6__) AND STIFFENING BARS (G601 & G602).
7. GLASS FIBER REINFORCED POLYMER (GFRP) MAY BE USED FOR THE HORIZONTAL BARS OR STIFFENING BARS FOR THE APPROACH SLAB BARRIER AT NO ADDITIONAL COST TO THE DEPARTMENT.
8. FOR DEFLECTION JOINT DETAILS AND ADDITIONAL NOTES, SEE SHEET 5/5.

REINFORCEMENT LIST

MARK	LENGTH	TYPE	MATERIAL	BENDING DIAGRAMS
X5__	⊕	STR	STEEL	
Y403	2B + C + D + 9'-10"	BENT	STEEL	
Y502	⊕	STR	STEEL	
Y601	2E + 11'-6"	BENT	STEEL	
G601	10'-6'	STR	GFRP	
G602	⊕	STR	GFRP	
G6__	⊕	STR	GFRP	

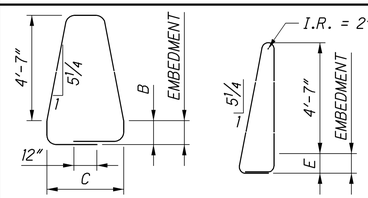

⊕ SEE PROJECT PLANS

B = APPROACH SLAB THICKNESS MINUS 3"

C = 3'-2" + ◐

D = 1'-4" + ◐

E = DECK OVERHANG THICKNESS MINUS 1½"

Preliminary Plans - For Reference Only

STATE OF OHIO DEPARTMENT OF TRANSPORTATION
OFFICE OF STRUCTURAL ENGINEERING
DESIGN AGENCY

Jon Kerr
ADMINISTRATOR

07-17-2020
DATE

REVISION 11-12-93

SBR-2-20

STANDARD BRIDGE DRAWING
57" SINGLE SLOPE CONCRETE MEDIAN BRIDGE RAILING

38 / 46

1031 / 1047

G:\projects\10100\8-10-020 HAM-75-7.85\17889\structures\HAM075_0857(C)sheets\SBR-2-20_2021-1-15\SBR-2-20_2021-1-15_sheet 3.dgn 5/13/2026 2:13:37 PM meets

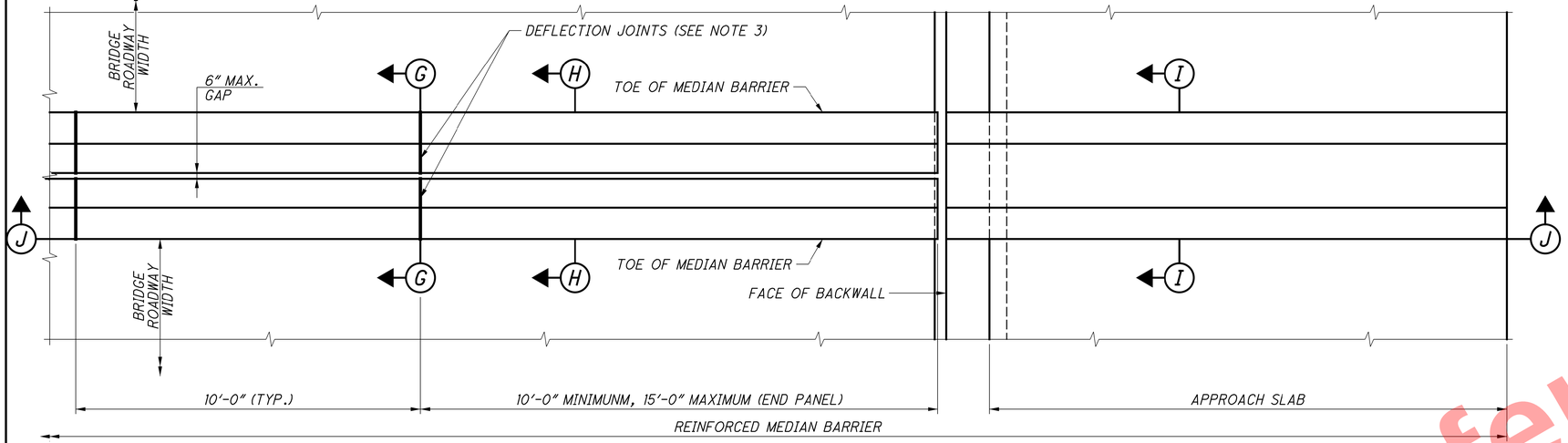

PLAN VIEW

57" SINGLE SLOPE BACK-TO BACK MEDIAN BRIDGE RAILINGS SHOWN WITH TYPICAL ABUTMENT.
FORWARD ABUTMENT SHOWN, REAR ABUTMENT SIMILAR BUT OPPOSITE

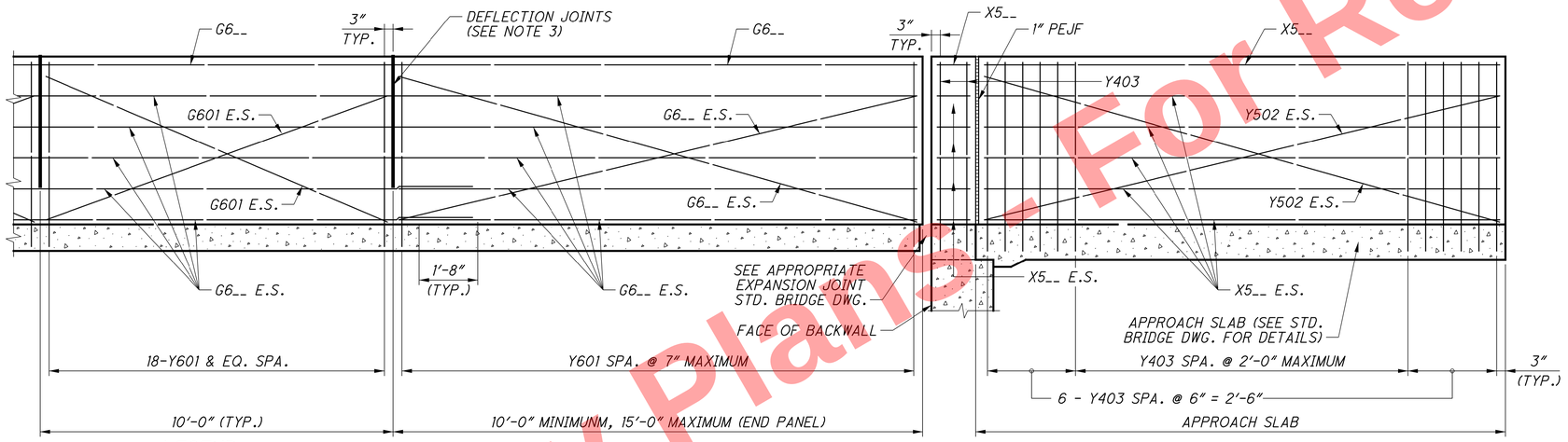

SECTION J-J

REINFORCEMENT SHOWN IS ONLY FOR ONE SIDE OF THE BACK-TO-BACK MEDIAN BARRIERS

LEGEND:

E.S. - EACH SIDE

PEJF - PREFORMED EXPANSION JOINT FILLER

SPA. - SPACED

EQ. - EQUALLY

MAX. - MAXIMUM

NOTES:

1. FOR 57" SINGLE SLOPE CONCRETE MEDIAN BRIDGE RAILING, INCLUDE PLAN VIEW, ELEVATION VIEW, SECTIONS, REINFORCING MARKS, REINFORCING BENDING DIAGRAMS, AND REINFORCING QUANTITIES IN THE PROJECT PLANS.
2. FOR THE ENTIRE LENGTH OF SINGLE SLOPE CONCRETE MEDIAN BRIDGE RAILINGS, SHOW THE LOCATIONS OF DEFLECTION JOINTS IN THE PROJECT PLANS. DEFLECTION JOINT IS NOT REQUIRED WITHIN THE APPROACH SLAB MEDIAN BARRIER SECTIONS.
3. SEE APPROPRIATE STANDARD BRIDGE DRAWING FOR ABUTMENT DETAILS.
4. FOR SINGLE SLOPE BARRIER BEYOND THE STRUCTURE (ROADWAY BARRIER), SEE STD. ROADWAY CONSTR. DWG. RM-4.3 THROUGH RM-4.5.
5. USE GLASS FIBER REINFORCED POLYMER (GFRP) FOR HORIZONTAL BARS (G6__) AND STIFFENING BARS (G601 & G602).
6. GLASS FIBER REINFORCED POLYMER (GFRP) MAY BE USED FOR THE HORIZONTAL BARS OR STIFFENING BARS FOR THE APPROACH SLAB BARRIER AT NO ADDITIONAL COST TO THE DEPARTMENT.
7. FOR DEFLECTION JOINT DETAILS AND ADDITIONAL NOTES, SEE SHEET 5/5.

REINFORCEMENT LIST

MARK	LENGTH	TYPE	MATERIAL	BENDING DIAGRAMS
X5__	⊕	STR	STEEL	
Y403	2B + C + D + 9'-10"	BENT	STEEL	
Y502	⊕	STR	STEEL	
Y601	2E + 11'-6"	BENT	STEEL	
G601	10'-6'	STR	GFRP	
G602	⊕	STR	GFRP	
G6__	⊕	STR	GFRP	

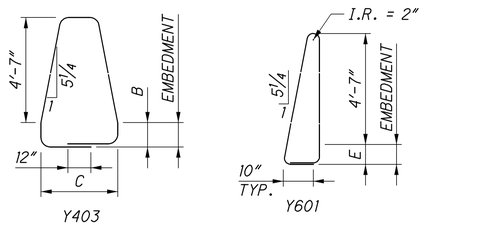

⊕ SEE PROJECT PLANS

B = APPROACH SLAB THICKNESS MINUS 3"

C = 3'-0" + ◐

D = 1'-3" + ◐

E = DECK OVERHANG THICKNESS MINUS 1½"

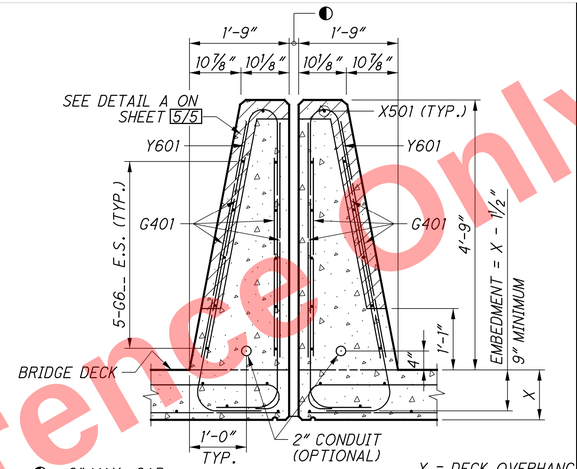

◐ - 6" MAX. GAP

X = DECK OVERHANG THICKNESS

SECTION G-G

AREA =12.32 SQ. FT. (TOTAL BOTH SIDES)
REINFORCED CONCRETE DECK ON STEEL OR PRESTRESSED CONCRETE I-BEAMS/GIRDERS (BEAMS/GIRDERS NOT SHOWN)

◐ - 6" MAX. GAP

X = DECK OVERHANG THICKNESS

SECTION H-H

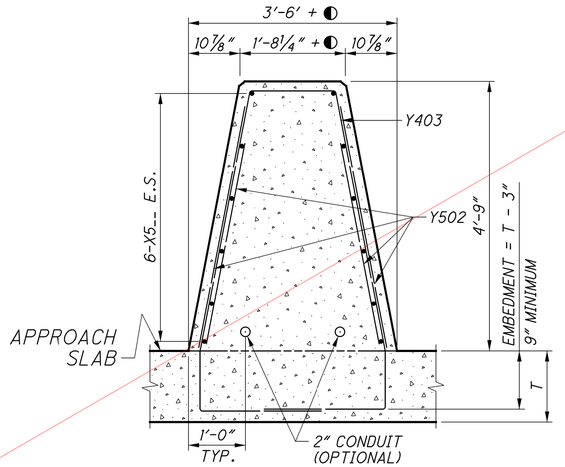

◐ - 6" MAX. GAP

T = APPROACH SLAB THICKNESS

SECTION I-I

STATE OF OHIO DEPARTMENT OF TRANSPORTATION
OFFICE OF STRUCTURAL ENGINEERING
DESIGN AGENCY

Jon Kull
ADMINISTRATOR

07-17-2020
DATE

REVISION
11-12-93

SBR-2-20

STANDARD BRIDGE DRAWING
57" SINGLE SLOPE CONCRETE MEDIAN BRIDGE RAILING

39 / 46

1032
1047

For Reference Only
Preliminary Plans - For

G:\projects\2010\B-10-020 HAM-75-7.85\17889\structures\HAM075_0857C\sheets\SBR-2-20_2021-1-15\SBR-2-20_2021-1-15_Sheet 4.dgn 5/13/2026 2:14:16 PM meets

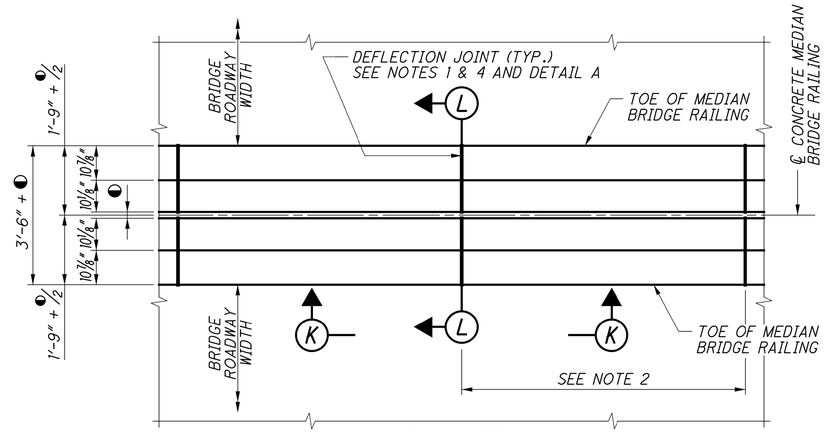

PLAN VIEW

DEFLECTION JOINT DETAIL FOR 57" SINGLE SLOPE BACK-TO-BACK CONCRETE MEDIAN BRIDGE RAILINGS (SEE SHEETS 3/5 AND 4/5)

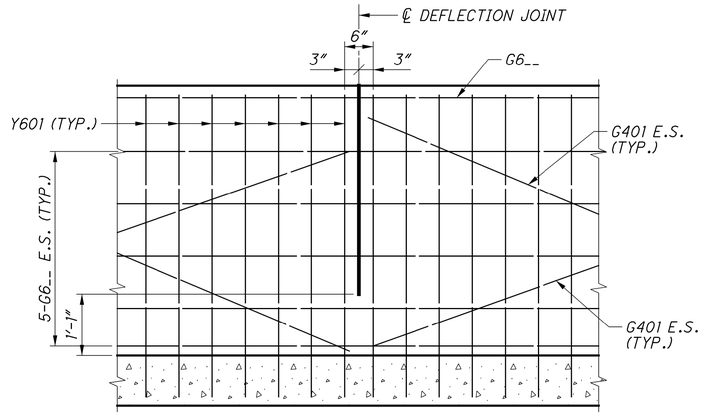

SECTION K-K

REINFORCEMENT SHOWN IS ONLY FOR ONE SIDE OF THE BACK-TO-BACK MEDIAN BARRIERS REINFORCED CONCRETE DECK ON STEEL OR PRESTRESSED CONCRETE I-BEAMS/GIRDERS (BEAMS/GIRDERS NOT SHOWN)

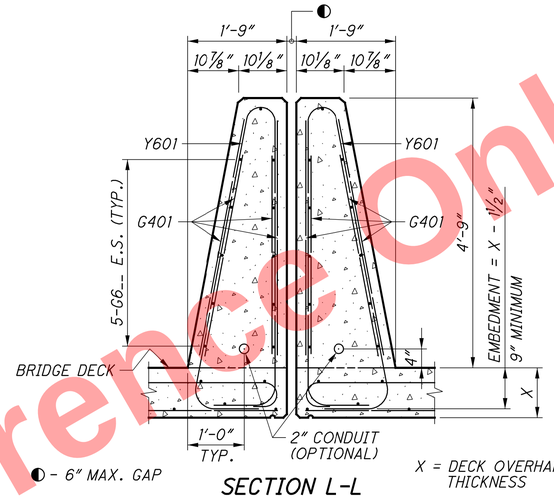

SECTION L-L

X = DECK OVERHANG THICKNESS

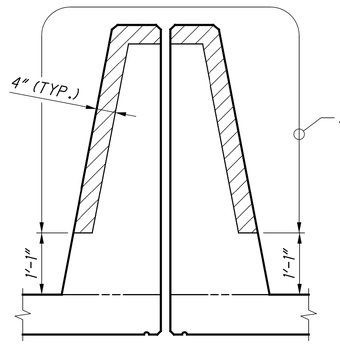

DETAIL A

NOTES:

1. FOR THE ENTIRE LENGTH OF SINGLE SLOPE CONCRETE MEDIAN BRIDGE RAILINGS, PROJECT PLANS SHALL SHOW THE LOCATIONS OF DEFLECTION JOINTS.
2. DEFLECTION JOINT SPACING SHALL BE 10'-0" ON CENTERS EXCEPT FOR THE FIRST AND LAST BARRIER PANEL WITHIN THE BRIDGE LIMITS. THE FIRST AND LAST PANELS SHALL BE 10'-0" MINIMUM, 15'-0" MAXIMUM.
3. PAYMENT FOR GLASS FIBER REINFORCED POLYMER (GFRP) STIFFENING REINFORCEMENT SHALL BE INCLUDED WITH CONTRACT PRICE FOR ITEM 509 - NO._ GFRP DEFORMED BARS.
4. LIMITS OF SAWCUT IS SHOWN IN DETAIL A. THE 4" SAWCUT DEPTH SHOWN IN DETAIL A IS THE MINIMUM REQUIRED. HOWEVER, THE CONTRACTOR HAS AN OPTION TO PERFORM FULL DEPTH SAWCUT.

DESIGN CRITERIA:

57" SINGLE SLOPE CONCRETE MEDIAN BRIDGE RAILING TYPE B1 MEET THE REQUIREMENTS OF NCHRP 350 & MASH TEST LEVEL 3 AND "AASHTO LRFD BRIDGE DESIGN SPECIFICATIONS, 9TH EDITION".

57" SINGLE SLOPE BACK-TO-BACK CONCRETE MEDIAN BRIDGE RAILINGS MEET THE REQUIREMENTS OF NCHRP 350 & MASH TEST LEVEL 5 AND "AASHTO LRFD BRIDGE DESIGN SPECIFICATIONS, 9TH EDITION".

DESIGN DATA:

CONCRETE - COMPRESSIVE STRENGTH = 4.5 KSI
REINFORCING STEEL - MINIMUM YIELD STRENGTH = 60 KSI
GFRP - C&MS 705.28 (MODULUS = 8700 KSI)

AREA OF 57" SINGLE SLOPE CONCRETE MEDIAN BRIDGE RAILING IS SHOWN ON SHEETS 1/5 THROUGH 4/5 .

MAXIMUM SPACING OF VERTICAL REINFORCING BARS:

THE MAXIMUM SPACING OF VERTICAL REINFORCING BARS FOR THE 57" SINGLE SLOPE CONCRETE MEDIAN BRIDGE RAILING TYPE B1 SHALL BE 2'-0".

THE MAXIMUM SPACING OF VERTICAL REINFORCING BARS FOR THE 57" SINGLE SLOPE BACK-TO-BACK CONCRETE MEDIAN BRIDGE RAILING SHALL BE 7".

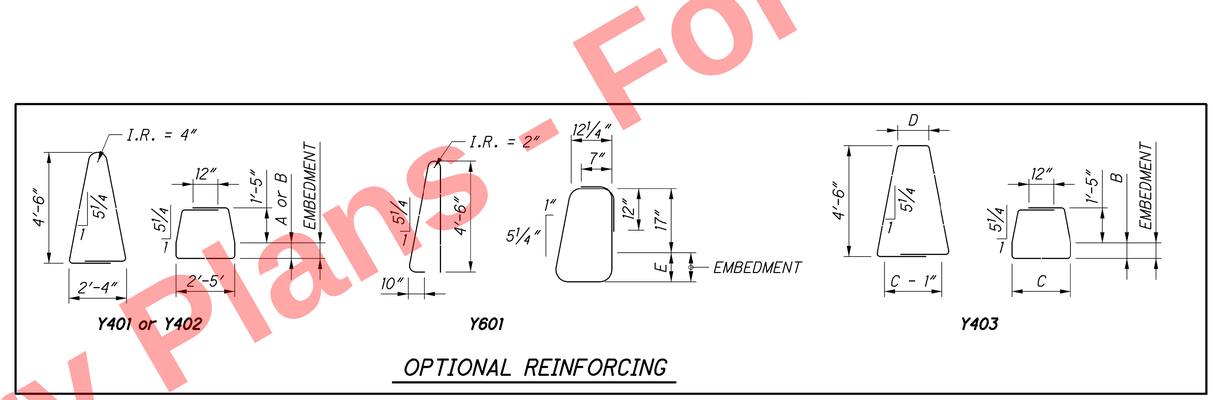

OPTIONAL REINFORCING

MINIMUM EMBEDMENT OF VERTICAL REINFORCING BARS:

THE MINIMUM EMBEDMENT IS 9". IF THE MINIMUM EMBEDMENT SHOWN FOR THE VERTICAL REINFORCING BARS INTO THE BRIDGE DECK IS NOT MET, THEN THE DESIGNER SHALL CALCULATE THE REQUIRED REINFORCEMENT ACCORDING TO SECTION 13 OF THE "AASHTO LRFD BRIDGE DESIGN SPECIFICATIONS".

OPTIONAL REINFORCING STEEL:

SHOW A SINGLE VERTICAL IN THE PROJECT PLANS. IN LIEU OF THE SINGLE VERTICAL BAR, THE CONTRACTOR MAY USE THE OPTIONAL VERTICAL REINFORCEMENT SHOWN ABOVE IN THE FORM OF LAPPED BARS AT THE VERTICAL BAR SPACING AND SIZE SHOWN IN THIS DRAWING.

THE DEPARTMENT WILL NOT ADJUST THE TOTAL QUANTITY OF REINFORCING STEEL TO ACCOMMODATE THIS OPTIONAL REINFORCEMENT. THE DEPARTMENT WILL CONSIDER DELAYS RESULTING FROM THIS OPTIONAL REINFORCEMENT AS NON-EXCUSABLE DELAYS.

CONTRACTION JOINTS FOR 57" SINGLE SLOPE UNREINFORCED CONCRETE MEDIAN BRIDGE RAILINGS TYPE B1 (SHEETS 1/5 AND 2/5):

SEE STD. ROADWAY CONSTR. DWG. RM-4.3 THROUGH RM-4.5 FOR NOTES.

DEFLECTION JOINTS FOR 57" SINGLE SLOPE BACK-TO-BACK REINFORCED CONCRETE MEDIAN BRIDGE RAILINGS (SHEETS 3/5 AND 4/5):

FOR SLIPFORMED CONSTRUCTION:
AS SOON AS CUTTING OPERATIONS CAN BEGIN WITHOUT DAMAGING THE CONCRETE, SAWCUT 1 ¼ INCH DEEP DEFLECTION CONTROL JOINTS ALONG THE PERIMETER OF THE MEDIAN BRIDGE RAILING.

AFTER THE CURING PERIOD AND BEFORE APPLYING LOAD TO THE MEDIAN BRIDGE RAILING, PERFORM 4 INCH SAWCUT AS SHOWN IN DETAIL A. APPLIED BRIDGE RAILING LOAD INCLUDES: CONSTRUCTION LOADS ON THE DECK (EXCLUDING PERSONNEL; HAND OPERATED EQUIPMENT AND MANUALLY POWERED VEHICLES); AND VEHICLE TRAFFIC IN THE LANE IMMEDIATELY ADJACENT TO MEDIAN BRIDGE RAILING AFTER REMOVAL OF TRAFFIC CONTROL DEVICES.

FOR CONVENTIONALLY FORMED CONSTRUCTION:
REMOVE THE FORMS BEFORE APPLYING LOAD TO THE MEDIAN BRIDGE RAILING. AS SOON AS THE FORMS ARE REMOVED, PERFORM 4-INCH SAWCUT AS SHOWN IN DETAIL A. THE 1 ¼ INCH SAWCUTS ARE NOT REQUIRED.

THE CONTRACTOR HAS AN OPTION TO PERFORM FULL DEPTH SAWCUT. HOWEVER, THE SAWCUT SHALL NOT BE LESS THAN 1'-1" FROM THE TOP OF THE CONCRETE DECK SLAB.

USE AN EDGE GUIDE, FENCE, OR JIG TO ENSURE THAT THE CUT JOINT IS STRAIGHT, TRUE, AND ALIGNED ON ALL FACES OF THE MEDIAN BRIDGE RAILING. THE JOINT WIDTH SHALL BE THE WIDTH OF THE SAW BLADE, A NOMINAL WIDTH OF ¼ INCH.

SEAL THE PERIMETER OF THE DEFLECTION JOINTS TO A MINIMUM DEPTH OF ONE INCH WITH A POLYURETHANE OR POLYMERIC MATERIAL CONFORMING TO ASTM C920, TYPE S. LEAVE THE BOTTOM ½ INCH OF BOTH FRONT FACES OF THE MEDIAN BRIDGE RAILINGS UNSEALED TO ALLOW ANY WATER WHICH MAY ENTER THE JOINT TO ESCAPE.

DEFLECTION JOINT IS NOT REQUIRED WITHIN THE APPROACH SLAB MEDIAN BARRIER SECTIONS.

DESIGN AGENCY
OFFICE OF STRUCTURAL ENGINEERING

STATE OF OHIO DEPARTMENT OF TRANSPORTATION
07-17-2020 DATE
ADMINISTRATOR

REVISION 11-12-93

STANDARD BRIDGE DRAWING
SBR-2-20

57" SINGLE SLOPE CONCRETE MEDIAN BRIDGE RAILING

40/46

1033
1047

Preliminary Plans - For Reference Only

G:\projects\2010\B-10-020 HAM-75-1.86\17889\structures\HAM075_0857C\sheets\SBR-2-20_2021-1-15\SBR-2-20_2021-1-15_sheet 5.dgn 5/13/2026 2:14:55 PM meets

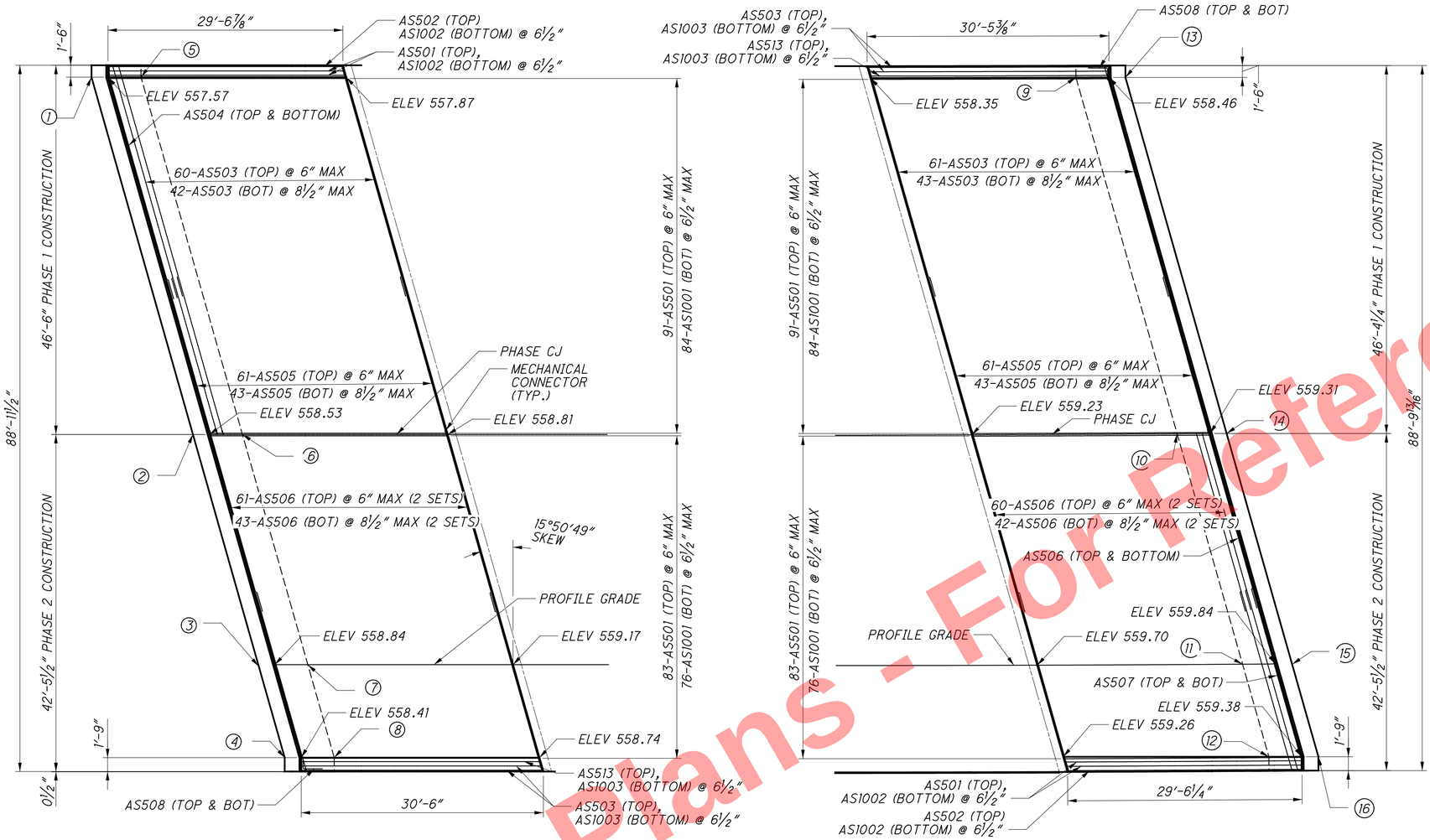

APPROACH SLAB - LEFT BRIDGE

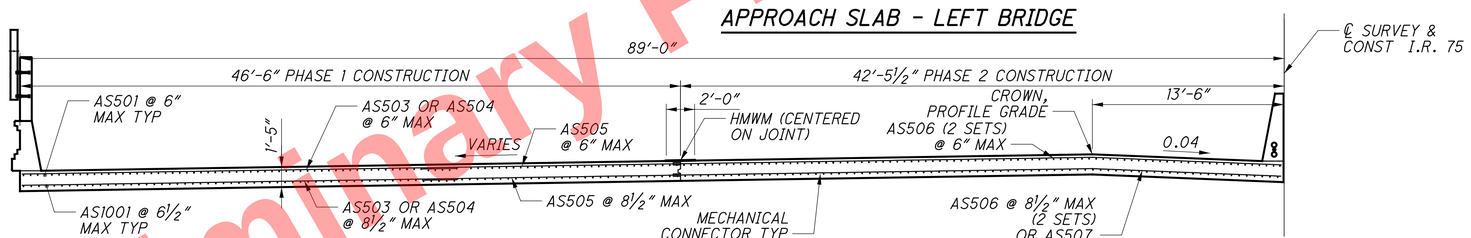

REAR APPROACH SLAB SECTION - LEFT BRIDGE

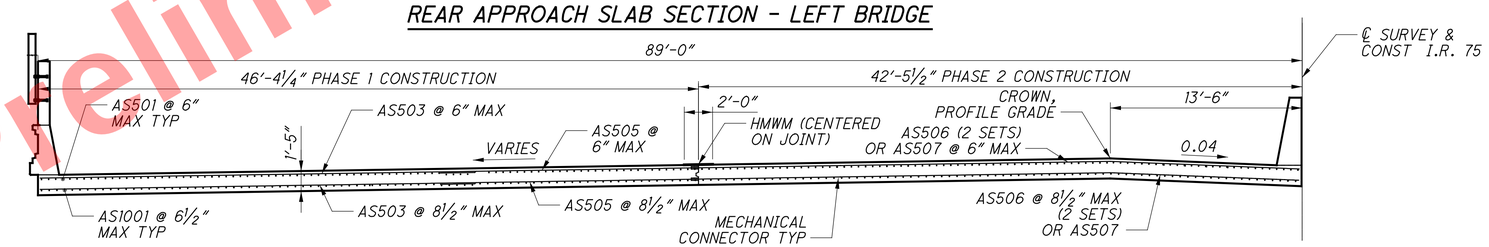

FORWARD APPROACH SLAB SECTION - LEFT BRIDGE

	STATION	OFFSET	ELEVATION
1	451+21.29	87.50	557.55
2	451+34.07	42.50	558.51
3	451+42.30	13.50	558.82
4	451+45.62	1.79	558.39
5	451+27.53	87.50	557.62
6	451+40.30	42.50	558.57
7	451+48.54	13.50	558.89
8	451+51.86	1.79	558.46
9	452+48.66	87.50	558.44
10	452+61.28	42.57	559.30
11	452+69.37	13.50	559.83
12	452+72.61	1.79	559.37
13	452+54.95	87.50	558.47
14	452+67.54	42.56	559.31
15	452+75.60	13.50	559.85
16	452+78.83	1.79	559.39

NOTE:

1. SEE STANDARD DRAWING AS-1-15 FOR ADDITIONAL NOTES AND DETAILS.
2. SEE STANDARD DRAWING AS-2-15 FOR ADDITIONAL SLEEPER SLAB DETAILS.

Preliminary Plans - For Reference Only

RESOURCE INTERNATIONAL INC.
8350 PRESIDENTIAL GATEWAY
COLUMBUS, OHIO 43231
(614) 823-4949

DESIGNED MMS | DRAWN MMS | REVIEWED SSK | DATE 3-18-26
CHECKED JWE | REVISED | STRUCTURE FILE NUMBER 3110184

APPROACH SLAB DETAILS
BRIDGE NO. HAM-75-0857
I.R. 75 OVER TOWNE STREET (CR603)

HAM-75-7.85
PID No. 121447

41 / 46

1034
1047

\\san1.resourceinternational.com\two\projects\2010\B-10-020 HAM-75-7.85\77889\structures\HAM075_0857C\sheets\075_0857CSD008.dgn 5/13/2026 2:07:48 PM meets

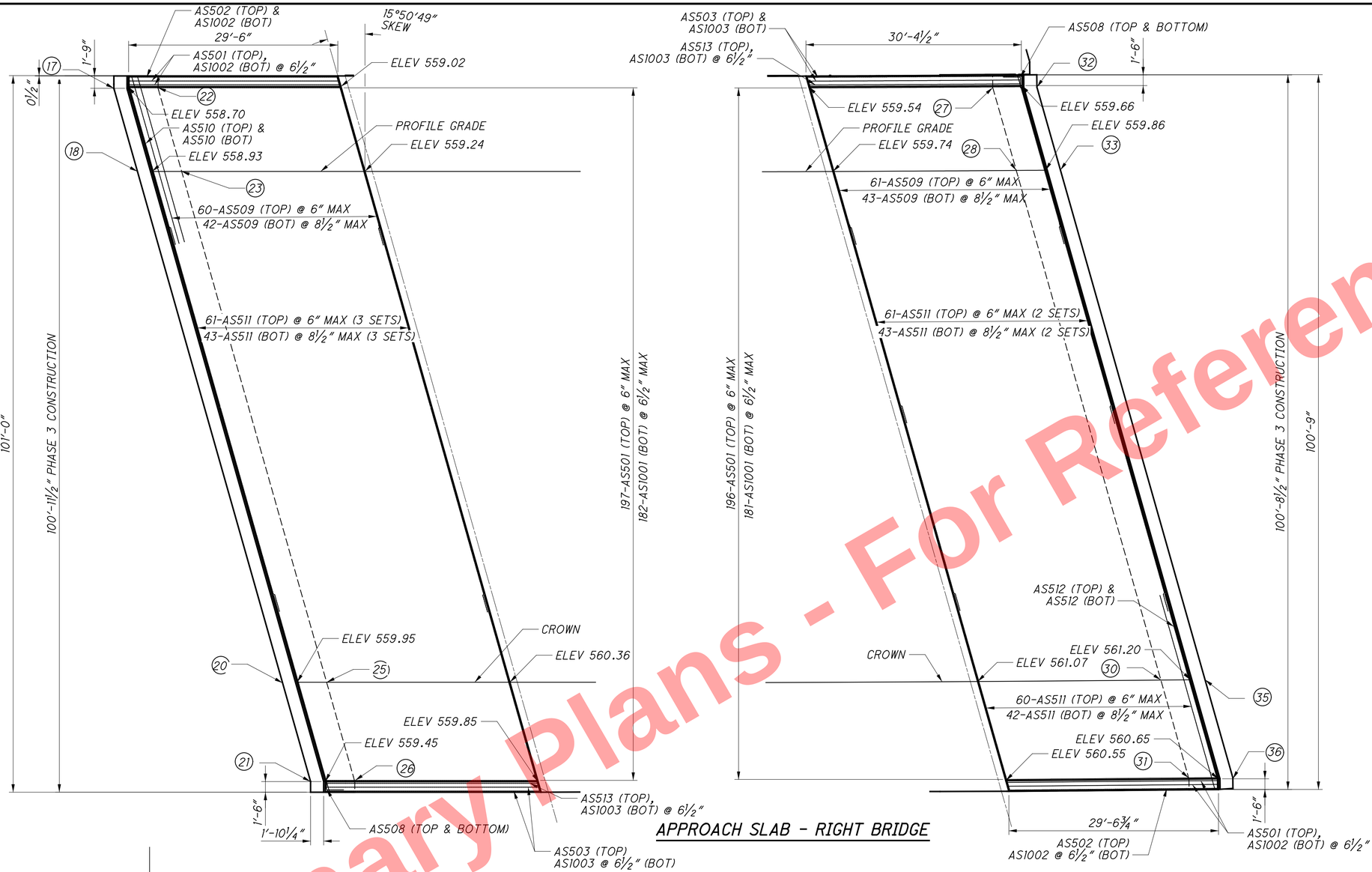

APPROACH SLAB - RIGHT BRIDGE

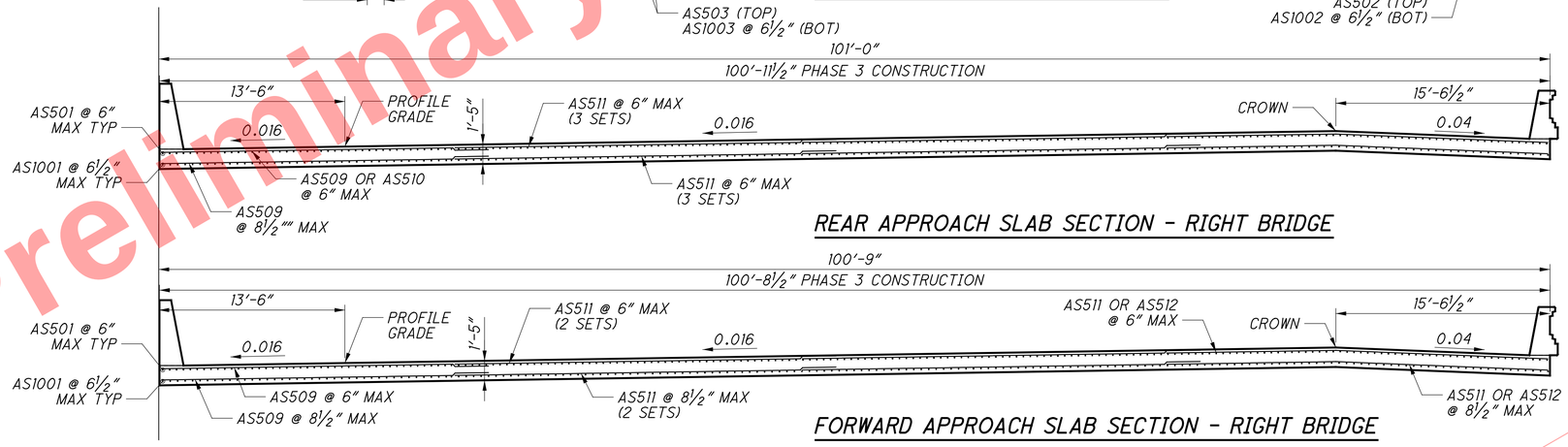

REAR APPROACH SLAB SECTION - RIGHT BRIDGE

FORWARD APPROACH SLAB SECTION - RIGHT BRIDGE

	STATION	OFFSET	ELEVATION
17	451+46.64	1.79	558.68
18	451+49.96	13.50	558.91
19	-	-	-
20	451+70.39	85.46	559.92
21	451+74.38	99.50	559.42
22	451+52.88	1.79	558.76
23	451+56.20	13.50	558.98
24	-	-	-
25	451+76.63	85.46	560.02
26	451+80.61	99.50	559.52
27	452+73.60	1.79	559.66
28	452+76.84	13.50	559.86
29	-	-	-
30	452+96.50	85.46	561.18
31	453+00.29	99.50	560.63
32	452+79.83	1.79	559.68
33	452+83.05	13.50	559.87
34	-	-	-
35	453+02.66	85.46	561.21
36	453+06.41	99.37	560.66

NOTES:

1. SEE STANDARD DRAWING AS-1-15 FOR ADDITIONAL NOTES AND DETAILS.
2. SEE STANDARD DRAWING AS-2-15 FOR ADDITIONAL NOTES AND DETAILS.

Preliminary Plans - For Reference Only

RESOURCE INTERNATIONAL INC.
8350 PRESIDENTIAL GATEWAY
COLUMBUS, OHIO 43231
(614) 823-4949

DESIGNED	DRAWN	REVIEWED	DATE
MMS	MMS	SSK	3-18-26
CHECKED	REVISED	STRUCTURE FILE NUMBER	
JWE		3110184	

APPROACH SLAB DETAILS
BRIDGE NO. HAM-75-0857
I.R. 75 OVER TOWNE STREET (CR603)

HAM-75-7.85
PID No. 121447

\\son1.resourceinternational.com\two\projects\2010\B-10-020 HAM-75-7.85\77889\structures\HAM075_0857CSD009.dgn 5/13/2026 2:07:48 PM meets
\\son1.resourceinternational.com\two\projects\2010\B-10-020 HAM-75-7.85\77889\structures\HAM075_0857CSD009.dgn 5/13/2026 2:07:48 PM meets

MARK	NUMBER R.A	NUMBER F.A	NUMBER TOTAL	LENGTH	WEIGHT (LBS.)	TYPE	DIMENSIONS A	B	C	D	E	R	INC
ABUTMENTS													
A501	10	34	44	30'-6"	1400	ST							
A502*	10	8	18	20'-2"	379	ST							
A503	1 SER OF 4	1 SER OF 4	2 SER OF 4	32'-7" TO 34'-4"	279	ST							7"
A504	3 SER OF 2	3 SER OF 2	6 SER OF 2	33'-1" TO 33'-10"	419	ST							9"
A505	151	154	305	18'-2"	5777	3	6'-2"	2'-7"					
A506	7	7	14	10'-1"	147	2	3'-10"	2'-8"	3'-10"				
A507	7	7	14	4'-3"	62	2	11"	2'-8"	11"				
A508	5	5	10	10'-5"	109	2	4'-0"	2'-8"	4'-0"				
A509	5	5	10	4'-9"	50	2	1'-2"	2'-8"	1'-2"				
A510	5	5	10	10'-11"	114	2	4'-3"	2'-8"	4'-3"				
A511	5	5	10	5'-1"	53	2	1'-4"	2'-8"	1'-4"				
A512	5	5	10	11'-1"	116	2	4'-4"	2'-8"	4'-4"				
A513	5	5	10	5'-5"	57	2	1'-6"	2'-8"	1'-6"				
A514	5	5	10	11'-5"	119	2	4'-6"	2'-8"	4'-6"				
A515	5	5	10	5'-7"	58	2	1'-7"	2'-8"	1'-7"				
A516	12	5	17	11'-7"	205	2	4'-7"	2'-8"	4'-7"				
A517	12	5	17	5'-9"	102	2	1'-8"	2'-8"	1'-8"				
A518	5	12	17	11'-11"	211	2	4'-9"	2'-8"	4'-9"				
A519	5	12	17	6'-1"	108	2	1'-10"	2'-8"	1'-10"				
A520	5	13	18	12'-1"	227	2	4'-10"	2'-8"	4'-10"				
A521	92	87	179	6'-5"	1199	2	2'-0"	2'-8"	2'-0"				
A522	19	10	29	12'-5"	376	2	5'-0"	2'-8"	5'-0"				
A523	5	5	10	12'-9"	133	2	5'-2"	2'-8"	5'-2"				
A524	5		5	12'-7"	66	2	5'-1"	2'-8"	5'-1"				
A525		5	5	12'-11"	67	2	5'-3"	2'-8"	5'-3"				
A526	3 SER OF 2	3 SER OF 2	6 SER OF 2	24'-2" TO 24'-11"	307	ST							9"
A527	1 SER OF 4	1 SER OF 4	2 SER OF 4	23'-7" TO 25'-4"	204	ST							7"
A528	26			36'-10"	999	ST							
A529	4		4	14'-10"	62	ST							
A530	1 SER OF 3		1 SER OF 3	15'-9" TO 22'-9"	60	ST							3'-6"
A531	1 SER OF 3		1 SER OF 3	16'-5" TO 23'-5"	62	ST							3'-6"
A532	1 SER. OF 2		1 SER. OF 2	5'-4" TO 9'-2"	15	ST							1'-11"
A533	1 SER. OF 2		1 SER. OF 2	6'-0" TO 9'-9"	16	ST							1'-10 ½"
A534	1		1	21'-3"	22	19	19'-3"	1'-11"	9"				
A535	1		1	21'-11"	23	19	19'-3"	2'-6"	1'-0"				
A536		5	5	14'-11"	78	2	6'-3"	2'-8"	6'-3"				
A537		6	6	28'-6"	178	ST							
A538	5	5	10	13'-1"	136	2	5'-4"	2'-8"	5'-4"				
A539		4	4	28'-9"	120	ST							
A540	5	5	10	13'-5"	140	2	5'-6"	2'-8"	5'-6"				
A541	5	5	10	13'-7"	142	2	5'-7"	2'-8"	5'-7"				
A542	5		5	13'-9"	72	2	5'-8"	2'-8"	5'-8"				
A543	5	5	10	13'-11"	145	2	5'-9"	2'-8"	5'-9"				
A544	5		5	14'-1"	73	2	5'-10"	2'-8"	5'-10"				
A545	5	10	15	14'-5"	226	2	6'-0"	2'-8"	6'-0"				
A546	5		5	14'-7"	76	2	6'-1"	2'-8"	6'-1"				
A547	10	5	15	14'-9"	231	2	6'-2"	2'-8"	6'-2"				
A548	8	10	18	14'-3"	268	2	5'-11"	2'-8"	5'-11"				
A549	5		5	18'-11"	99	2	8'-6"	2'-2"	8'-6"				

MARK	NUMBER R.A	NUMBER F.A	NUMBER TOTAL	LENGTH	WEIGHT (LBS.)	TYPE	DIMENSIONS A	B	C	D	E	R	INC
ABUTMENTS													
A550	1		1	21'-0"	22	3	2'-2"	8'-0"					
A551	1		1	19'-10"	21	3	2'-2"	7'-5"					
A552	1 SER. OF 5		1 SER. OF 5	14'-0" TO 18'-8"	85	3	2'-2"	4'-6" TO 6'-10"					7"
A553	1 SER. OF 3		1 SER. OF 3	11'-0" TO 12'-8"	37	3	2'-2"	3'-0" TO 3'-10"					5"
A554	2		2	10'-3"	21	2	4'-2"	2'-2"	4'-2"				
A555	1 SER. OF 3		1 SER. OF 3	7'-1" TO 9'-5"	26	2	2'-7" TO 3'-9"	2'-2" 0	2'-7" TO 3'-9"				7"
A556	62		62	6'-5"	415	2	2'-0"	2'-8"	2'-0"				
A557	31		31	7'-3"	234	2	2'-10"	1'-10"	2'-10"				
A558		4	4	40'-0"	167	ST							
A559		5	5	10'-9"	56	2	4'-2"	2'-8"	4'-2"				
A560		5	5	4'-11"	26	2	1'-3"	2'-8"	1'-3"				
A561		5	5	19'-3"	100	2	8'-8"	2'-2"	8'-8"				
A562		1	1	22'-0"	23	3	2'-2"	8'-6"					
A563		1 SER. OF 5	1 SER. OF 5	17'-2" TO 20'-11"	99	3	2'-2"	6'-1" TO 7'-11 ½"					5 ⅝"
A564		1 SER. OF 5	1 SER. OF 5	12'-4" TO 18'-2"	74	3	2'-2"	3'-8" TO 5'-7"					5 ¾"
A565		1	1	11'-4"	12	3	2'-2"	3'-2"					
A566		1	1	11'-0"	11	3	2'-2"	3'-0"					
A567		2	2	10'-1"	21	2	4'-1"	2'-2"	4'-1"				
A568		1 SER. OF 3	1 SER. OF 3	7'-7" TO 9'-6"	27	2	2'-10" TO 3'-9 ½"	2'-2"	2'-10" TO 3'-9 ½"				5 ¾"
A569		2 SER. OF 3	2 SER. OF 3	18'-6" TO 27'-2"	143	ST							4'-4"
A570		1	1	11'-2"	12	ST							
A571		1	1	10'-6"	11	ST							
A572		1	1	6'-7"	7	ST							
A573		1	1	6'-0"	6	ST							
A574		1	1	25'-5"	27	19	23'-2"	2'-1 ½"	8 ½"				
A575		1	1	24'-9"	26	19	23'-2"	1'-6"	6"				
A576*	10	10	20	15'-4"	320	ST							
A577*		2	2	29'-7"	62	ST							

BENDING DIAGRAMS

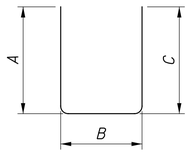

TYPE-2

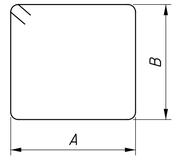

TYPE-3

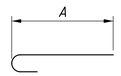

TYPE-19

LEGEND:

* - REINFORCING BAR UTILIZES A MECHANICAL CONNECTOR. BAR LENGTH IS MEASURED TO THE CENTER OF THE MECHANICAL CONNECTOR. EXTRA BAR LENGTH AND/OR BAR END PREPARATION MAY BE NECESSARY DEPENDING UPON THE TYPE OF MECHANICAL CONNECTOR FURNISHED.

NOTES:

1. THE BAR SIZE NUMBER IS SPECIFIED ON THE PLANS IN THE BAR MARK COLUMN. THE FIRST DIGIT WHERE 3 DIGITS ARE USED, AND THE FIRST 2 DIGITS WHERE FOUR DIGITS ARE USED, INDICATES THE BAR SIZE NUMBER. FOR EXAMPLE, P601 IS A NO. 6 BAR. BAR DIMENSIONS SHOWN ARE OUT TO OUT UNLESS OTHERWISE INDICATED. "R" INDICATES INSIDE RADIUS, UNLESS OTHERWISE NOTED. "STD." WRITTEN IN PLACE OF A DIMENSION INDICATES A STANDARD BEND AT THE END OF THE BAR.

2. ALL REINFORCING STEEL TO BE EPOXY COATED.

Preliminary Plans - For Reference Only

RESOURCE INTERNATIONAL INC.
8350 PRESIDENTIAL GATEWAY
COLUMBUS, OHIO 43231
(614) 823-4949

DESIGNED MMS | DRAWN MMS | REVIEWED SSK | DATE 3-18-26
CHECKED JWE | REVISED --- | STRUCTURE FILE NUMBER 3110184

REINFORCING STEEL LIST
BRIDGE NO. HAM-75-0857
I.R. 75 OVER TOWNE STREET (CR603)

HAM-75-7.85
PID No. 121447

\\san1.resourceinternational.com\two\projects\2010\B-10-020 HAM-75-7.85\77889\structures\HAM075_0857C\sheets\HAM075_0857C\sheet_RL001.dgn 5/13/2026 2:07:49 PM meets

MARK	NUMBER R.A	NUMBER F.A	NUMBER TOTAL	LENGTH	WEIGHT (LBS.)	TYPE	DIMENSIONS A	B	C	D	E	R	INC
ABUTMENTS													
A801	22	34	56	31'-9"	4747	ST							
A802	22	22	44	31'-9"	3730	ST							
A803	1 SER. OF 4	1 SER. OF 4	2 SER. OF 4	32'-7" TO 34'-4"	715	ST							7"
A804	2 SER. OF 4	2 SER. OF 4	4 SER. OF 4	33'-1" TO 33'-10"	1429	ST							3"
A805	1 SER. OF 4	1 SER. OF 4	2 SER. OF 4	26'-2" TO 27'-10"	576	ST							6 ½"
A806	2 SER. OF 4	2 SER. OF 4	4 SER. OF 4	26'-8" TO 27'-5"	1155	ST							3"
A807	12		12	39'-10"	1276	ST							
A808	4		4	16'-1"	172	ST							
A809	1 SER. OF 2		1 SER. OF 2	33'-1" TO 33'-10"	179	ST							9"
A810	1 SER. OF 2	1 SER. OF 2	2 SER. OF 2	26'-8" TO 27'-5"	289	ST							9"
A811	6	6	12	34'-6"	1105	ST							
A812*	14		14	18'-8"	698	ST							
A813		4	4	33'-9"	360	ST							
A814	6	6	12	29'-0"	929	ST							
A815*		1 SER OF 2	1 SER OF 2	33'-1" TO 33'-10"	179	ST							9"
A816		4	4	37'-6"	401	ST							
A817*		14	14	18'-11"	707	ST							
A818*	8	8	16	21'-5"	915	ST							
A819	8		8	6'-6"	139	ST							
A820	8		8	19'-0"	406	ST							
A821	8		8	17'-3"	368	ST							
A822	1 SER. OF 4	1 SER. OF 4	2 SER. OF 4	6'-0" TO 6'-9"	136	ST							3"
A823	2 SER. OF 2	2 SER. OF 2	4 SER. OF 2	6'-0" TO 6'-9"	136	ST							9"
A824	1 SER. OF 4	1 SER. OF 4	2 SER. OF 4	4'-2" TO 4'-11"	97	ST							3"
A825	2 SER. OF 2	2 SER. OF 2	4 SER. OF 2	4'-2" TO 4'-11"	97	ST							9"
A826	8	8	16	25'-7"	1093	ST							
A827	8	8	16	26'-6"	1132	ST							
A828	8	8	16	4'-7"	196	ST							
A829		8	8	17'-2"	367	ST							
A830		8	8	19'-3"	411	ST							
A831		8	8	6'-3"	134	ST							
A832	22	22	44	15'-4"	1801	ST							
D801	128	128	256	5'-6"	3759	18	3'-4"	1'-0"	1'-0"				
SUB-TOTAL 47509													

MARK	TOTAL	LENGTH	WEIGHT (LBS.)	TYPE	DIMENSIONS A	B	C	D	E	R	INC
SUPERSTRUCTURE											
S401	796	35'-4"	18786	ST.							
S501	120	31'-1"	3890	16	30'-7"						
S502	120	30'-7"	3828	ST.							
S503	119	32'-9"	4065	16	32'-3"						
S504	119	32'-3"	4003	ST.							
S505	266	8'-0"	2220	16	7'-6"						
S506	1 SER. OF 17	3'-0" TO 31'-0"	301	16	2'-6" TO 30'-7"						1'-9"
S507	1 SER. OF 17	2'-6" TO 30'-7"	293	ST.							1'-9"
S508	2 SER. OF 15	4'-2" TO 28'-8"	514	ST.							1'-9"
S509	2 SER. OF 16	4'-4" TO 30'-7"	583	ST.							1'-9"
S510	1 SER. OF 18	2'-9" TO 32'-6"	331	16	2'-3" TO 32'-0"						1'-9"
S511	1 SER. OF 18	2'-3" TO 32'-0"	322	ST.							1'-9"
S512	40	6'-0"	250	ST.							
S513	124	24'-2"	3126	16	23'-8"						
S514	124	23'-8"	3061	ST.							
S515	609	27'-0"	17150	ST.							
S516	121	27'-5"	3460	16	27'-0"						
S517	264	9'-9"	2685	16	9'-3"						
S518	1 SER. OF 13	2'-11" TO 23'-11"	182	16	2'-5" TO 23'-5"						1'-9"
S519	1 SER. OF 13	2'-5" TO 23'-5"	175	ST.							1'-9"
S520	2 SER. OF 11	4'-4" TO 21'-10"	300	ST.							1'-9"
S521	2 SER. OF 13	4'-8" TO 25'-8"	411	ST.							1'-9"
S522	2 SER. OF 13	3'-8" TO 24'-8"	384	ST.							1'-9"
S523	4 SER. OF 14	5'-5" TO 28'-2"	981	ST.							1'-9"
S524	2 SER. OF 15	3'-7" TO 28'-1"	495	ST.							1'-9"
S525	1 SER. OF 16	2'-4" TO 28'-7"	258	16	1'-10" TO 28'-1"						1'-9"
S526	1 SER. OF 16	1'-10" TO 28'-1"	250	ST.							1'-9"

BENDING DIAGRAMS

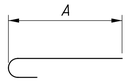

TYPE-16

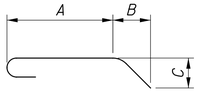

TYPE-18

NOTES:

1. THE BAR SIZE NUMBER IS SPECIFIED ON THE PLANS IN THE BAR MARK COLUMN. THE FIRST DIGIT WHERE 3 DIGITS ARE USED, AND THE FIRST 2 DIGITS WHERE FOUR DIGITS ARE USED, INDICATES THE BAR SIZE NUMBER. FOR EXAMPLE, P601 IS A NO. 6 BAR. BAR DIMENSIONS SHOWN ARE OUT TO OUT UNLESS OTHERWISE INDICATED. "R" INDICATES INSIDE RADIUS, UNLESS OTHERWISE NOTED. "STD." WRITTEN IN PLACE OF A DIMENSION INDICATES A STANDARD BEND AT THE END OF THE BAR.

2. ALL REINFORCING STEEL TO BE EPOXY COATED.

LEGEND:

* - REINFORCING BAR UTILIZES A MECHANICAL CONNECTOR. BAR LENGTH IS MEASURED TO THE CENTER OF THE MECHANICAL CONNECTOR. EXTRA BAR LENGTH AND/OR BAR END PREPARATION MAY BE NECESSARY DEPENDING UPON THE TYPE OF MECHANICAL CONNECTOR FURNISHED.

Preliminary Plans - For Reference Only

RESOURCE INTERNATIONAL INC.
8350 PRESIDENTIAL GATEWAY
COLUMBUS, OHIO 43231
(614) 823-4949

DESIGNED MMS | DRAWN MMS | REVIEWED SSK | DATE 3-18-26
CHECKED JWE | REVISED --- | STRUCTURE FILE NUMBER 3110184

REINFORCING STEEL LIST

BRIDGE NO. HAM-75-0857
I.R. 75 OVER TOWNE STREET (CR603)

HAM-75-7.85
PID No. 121447

44 / 46

1037
1047

\\san1.resourceinternational.com\two\projects\2010\B-10-020 HAM-75-7.85\77889\structures\HAM075_0857CV\sheets\075_0857CRL002.dgn 5/13/2026 2:07:49 PM meets

MARK	TOTAL	LENGTH	WEIGHT (LBS.)	TYPE	DIMENSIONS						
					A	B	C	D	E	R	INC
SUPERSTRUCTURE (CONT.)											
S527	2 SER. OF 10	5'-4" TO 21'-2"	276	ST.							1'-9"
S528	2 SER. OF 6	4'-9" TO 13'-0"	111	ST.							1'-9"
S529	2 SER. OF 11	5'-6" TO 21'-9"	313	ST.							1'-9"
S530	2 SER. OF 6	3'-10" TO 12'-5"	102	ST.							1'-9"
S531	258	13'-0"	3498	ST.							
S532	248	21'-9"	11020	ST.							
SUB-TOTAL 87624											

NOTES:

1. THE BAR SIZE NUMBER IS SPECIFIED ON THE PLANS IN THE BAR MARK COLUMN. THE FIRST DIGIT WHERE 3 DIGITS ARE USED, AND THE FIRST 2 DIGITS WHERE FOUR DIGITS ARE USED, INDICATES THE BAR SIZE NUMBER. FOR EXAMPLE, P601 IS A NO. 6 BAR. BAR DIMENSIONS SHOWN ARE OUT TO OUT UNLESS OTHERWISE INDICATED. "R" INDICATES INSIDE RADIUS, UNLESS OTHERWISE NOTED. "STD." WRITTEN IN PLACE OF A DIMENSION INDICATES A STANDARD BEND AT THE END OF THE BAR.

2. ALL REINFORCING STEEL TO BE EPOXY COATED.

LEGEND:

* - REINFORCING BAR UTILIZES A MECHANICAL CONNECTOR. BAR LENGTH IS MEASURED TO THE CENTER OF THE MECHANICAL CONNECTOR. EXTRA BAR LENGTH AND/OR BAR END PREPARATION MAY BE NECESSARY DEPENDING UPON THE TYPE OF MECHANICAL CONNECTOR FURNISHED.

Preliminary Plans - For Reference Only

RESOURCE INTERNATIONAL INC.
6350 PRESIDENTIAL GATEWAY
COLUMBUS, OHIO 43231
(614) 823-4949

DESIGNED	DRAWN	REVIEWED	DATE
MMS	MMS	SSK	3-18-26
CHECKED	REVISED	STRUCTURE FILE NUMBER	
JWE	---	3110184	

REINFORCING STEEL LIST
BRIDGE NO. HAM-75-0857
I.R. 75 OVER TOWNE STREET (CR603)

HAM-75-7.85
PID No. 121447

\\san1.resourceinternational.com\two\projects\2010\B-10-020 HAM-75-7.85\77889\structures\HAM075_0857C\sheets\075_0857CRL003.dgn 5/13/2026 2:07:49 PM meets

MARK	TOTAL	LENGTH	WEIGHT (LBS.)	TYPE	DIMENSIONS						
					A	B	C	D	E	R	INC
PARAPET											
R401	160	2'-8"	284	11	9"	1'-8"	1'-1"				
R402	120	1'-9"	140	19	11"	2"	11"				
R601	160	7'-5"	1783	41	9 ½"	7"	1'-0"	2'-4"	1'-2 ½"		
R602	40	4'-8"	281	1	1'-0"	3'-10"					
R603	120	7'-0"	1262	39	6"	3'-3"	3'-3"	1'-0 ½"		2"	
R604	40	7'-6"	451	40	6"	3'-3"	3'-3"	1'-6 ½"			
R605	160	7'-3"	1742	ST.							
R606	238	13'-0"	4647	35	9"	4'-7"	1'-5"			2 ¾"	
R607	NOT	USED									
R608	160	3'-10"	920	1	1'-0"	3'-0"					
SUB-TOTAL			11511								
TOTAL			146644								

MARK	TOTAL	LENGTH	TYPE	DIMENSIONS						
				A	B	C	D	E	R	INC
GLASS FIBER REINFORCED POLYMER (GFRP) REINFORCING STEEL										
RG401	40	13'-9"	ST							
RG402	140	13'-5"	ST							
RG403	24	30'-0"	ST							
RG404	12	13'-0"	ST							
	TOTAL	3318	FT							
RG501	40	4'-2"	6	9"	1'-2"	10"				
RG502	50	13'-5"	ST							
RG503	20	13'-9"	ST							
RG504	40	3'-4"	37	9"	1'-2"	10"				
	TOTAL	1251	FT							
RG601	44	30'-0"	ST							
RG602	22	13'-6"	ST							
RG603	48	10'-0"	ST							
RG604	8	9'-2"	ST							
	TOTAL	2170	FT							
APPROACH SLAB (FOR INFO ONLY)										
ASG401	32	14'-10"	ST							
ASG402	16	15'-2"	ST							
ASG403	16	14'-4"	ST							
ASG404	16	14'-5"	ST							
ASG405	8	14'-8"	ST							
ASG406	8	14'-9"	ST							
ASG407	48	16'-0"	ST							
	TOTAL	2180	FT							
ASG501	16	4'-11"	6	1'-6"	1'-2"	10"				
ASG502	16	4'-8"	6	1'-3"	1'-2"	10"				
ASG503	NOT	USED								
ASG504	20	14'-10"	ST							
ASG505	8	15'-2"	ST							
ASG506	20	14'-5"	ST							
ASG507	8	14'-9"	ST							
ASG508	16	4'-1"	37	1'-6"	1'-2"	10"				
ASG509	16	3'-10"	37	1'-3"	1'-2"	10"				
	TOTAL	1101	FT							
ASG601	11	30'-0"	ST							
ASG602	40	10'-0"	ST							
ASG603	11	29'-0"	ST							
ASG604	8	9'-6"	ST							
	TOTAL	1125	FT							

MARK	TOTAL	LENGTH	WEIGHT (LBS.)	TYPE	DIMENSIONS						
					A	B	C	D	E	R	INC
APPROACH SLABS - INFO ONLY											
AS401	144	2'-8"	256	11	9"	1'-8"	1'-1"				
AS402	96	1'-9"	112	19	11"	2"	11"				
AS501	749	29'-6"	23046	ST							
AS502	4	29'-3"	122	ST							
AS503	213	30'-0"	6665	ST							
AS504	2	30'-3"	63	19	29'-0"	1'-3"	4"				
AS505*	208	20'-7"	4465	ST							
AS506	414	23'-3"	10039	ST							
AS507	2	23'-4"	49	19	22'-1"	1'-3"	4"				
AS508	8	3'-10"	32	1	2'-5"	1'-6"					
AS509	206	24'-6"	5264	ST							
AS510	2	24'-5"	51	19	23'-2"	1'-3"	4"				
AS511	622	28'-8"	18600	ST							
AS512	2	28'-4"	59	19	27'-1"	1'-3"	4"				
AS513	4	29'-9"	124	ST							
AS514	NOT	USED									
AS515	120	9'-9"	1220	34	1'-1"	4'-5"	4'-3"	10"		2"	
AS601	144	7'-9"	1676	41	9 ½"	7"	1'-0"	2'-6 ½"	1'-4"		
AS602	48	4'-5"	318	1	1'-0"	3'-7"					
AS603	96	7'-0"	1009	39	6"	3'-3"	3'-3"	1'-0 ½"		2"	
AS604	288	7'-3"	3136	ST							
AS605	208	14'-0"	4374	35	1'-3"	4'-7"	1'-6"			2 ¾"	
AS606	120	2'-9"	496	1	1'-3"	1'-8"					
AS607	48	7'-6"	541	40	6"	3'-3"	3'-3"	1'-6 ½"			
AS608	162	3'-10"	932	1	1'-0"	3'-0"					
AS1001	683	31'-0"	91107	16	29'-7"						
AS1002	12	30'-8"	1579	16	29'-3"						
AS1003	12	31'-2"	1609	16	29'-9"						
SUB-TOTAL			176945								

BENDING DIAGRAMS

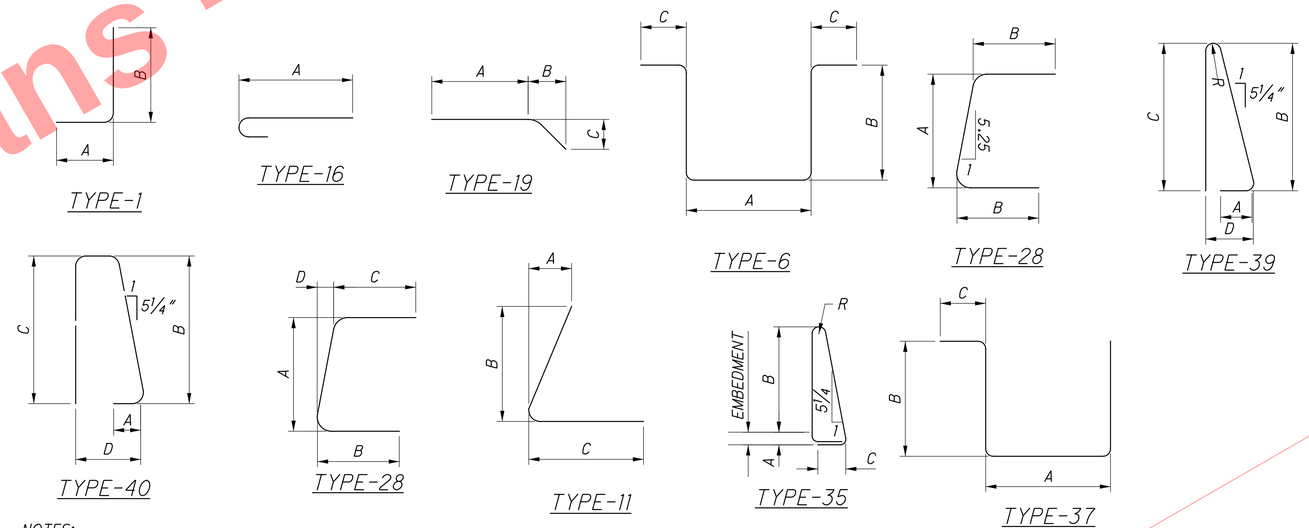

NOTES:

1. THE BAR SIZE NUMBER IS SPECIFIED ON THE PLANS IN THE BAR MARK COLUMN. THE FIRST DIGIT WHERE 3 DIGITS ARE USED, AND THE FIRST 2 DIGITS WHERE FOUR DIGITS ARE USED, INDICATES THE BAR SIZE NUMBER. FOR EXAMPLE, P601 IS A NO. 6 BAR. BAR DIMENSIONS SHOWN ARE OUT TO OUT UNLESS OTHERWISE INDICATED. "R" INDICATES INSIDE RADIUS, UNLESS OTHERWISE NOTED. "STD." WRITTEN IN PLACE OF A DIMENSION INDICATES A STANDARD BEND AT THE END OF THE BAR.

2. ALL REINFORCING STEEL TO BE EPOXY COATED UNLESS NOTED OTHERWISE.

LEGEND:

* - REINFORCING BAR UTILIZES A MECHANICAL CONNECTOR. BAR LENGTH IS MEASURED TO THE CONSTRUCTION JOINT. EXTRA BAR LENGTH AND/OR BAR END PREPARATION MAY BE NECESSARY DEPENDING UPON THE TYPE OF MECHANICAL CONNECTOR FURNISHED.

** - INCLUDED FOR PAYMENT WITH ITEM 511 - CLASS QC3 CONCRETE WITH QC/QA, BRIDGE DECK (PARAPET), AS PER PLAN. SEE "GFRP REINFORCING" SPECIAL PROVISION FOR SPECIFICATIONS PERTAINING TO GFRP REINFORCING STEEL.

Preliminary Plans - For Reference Only

RESOURCE INTERNATIONAL INC.
8350 PRESIDENTIAL GATEWAY
COLUMBUS, OHIO 43231
(614) 823-4949

DESIGNED MMS | DRAWN MMS | REVIEWED SSK | DATE 3-18-26
CHECKED JWE | REVISED --- | STRUCTURE FILE NUMBER 3110184

REINFORCING STEEL LIST
BRIDGE NO. HAM-75-0857
I.R. 75 OVER TOWNE STREET (CR603)

HAM-75-7.85
PID No. 121447

46 / 46

1039
1047

G:\projects\2010\B-10-020 HAM-75-7.85\77889\structures\HAM075_0857C\sheets\075_0857CRL004.dgn 5/13/2026 2:07:50 PM meets

FENCING PLAN - I.R. 75
STA 408+00 TO STA 421+00

HORIZONTAL SCALE IN FEET
0 25 50 100

CALCULATED SEA
CHECKED DLR

HAM-75-7.85

1040
1047

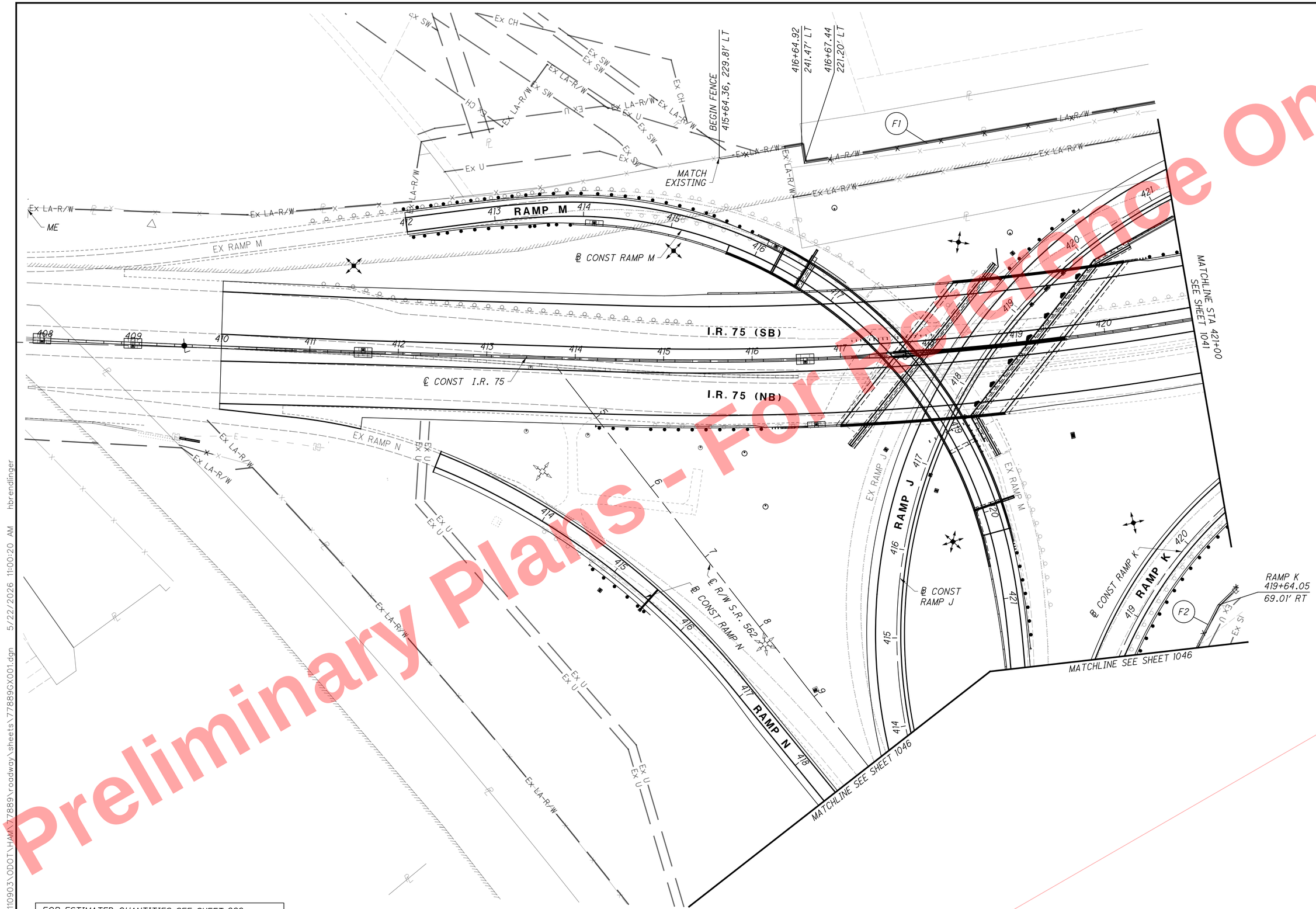

FOR ESTIMATED QUANTITIES SEE SHEET 262

Preliminary Plans - For Reference Only

J:\20110903\ODOT\HAM\77889\roadway\sheets\77889GX001.dgn 5/22/2026 11:00:20 AM htrendlinger

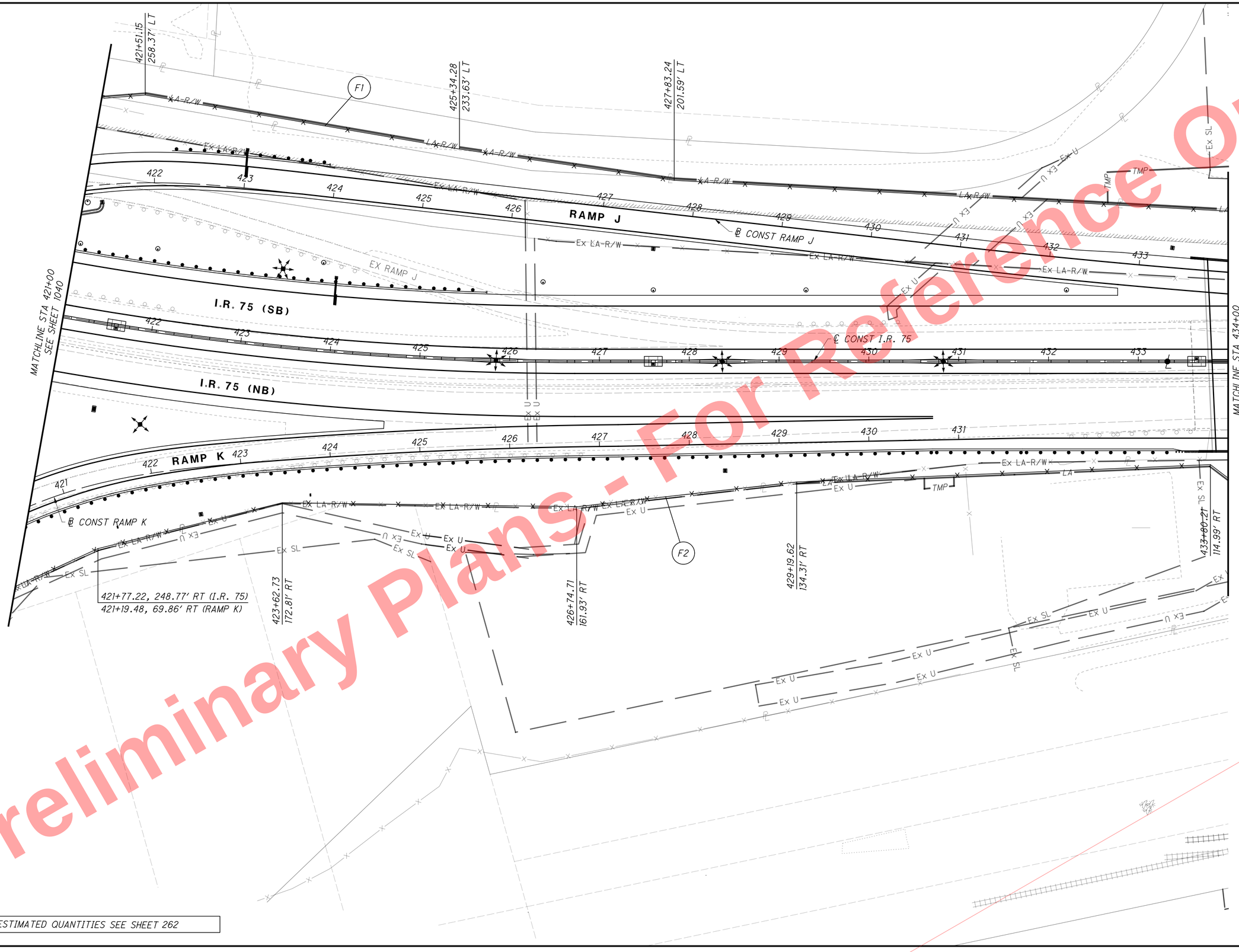

FOR ESTIMATED QUANTITIES SEE SHEET 262

Preliminary Plans - For Reference Only

HORIZONTAL SCALE IN FEET
0 25 50 100

CALCULATED SEA
CHECKED DLR

FENCING PLAN - I.R. 75
STA 421+00 TO STA 434+00

HAM-75-7.85

1041
1047

J:\20110903\ODOT\HAM\77889\roadway\sheets\77889GX002.dgn 5/22/2026 11:00:22 AM hbrendlinger

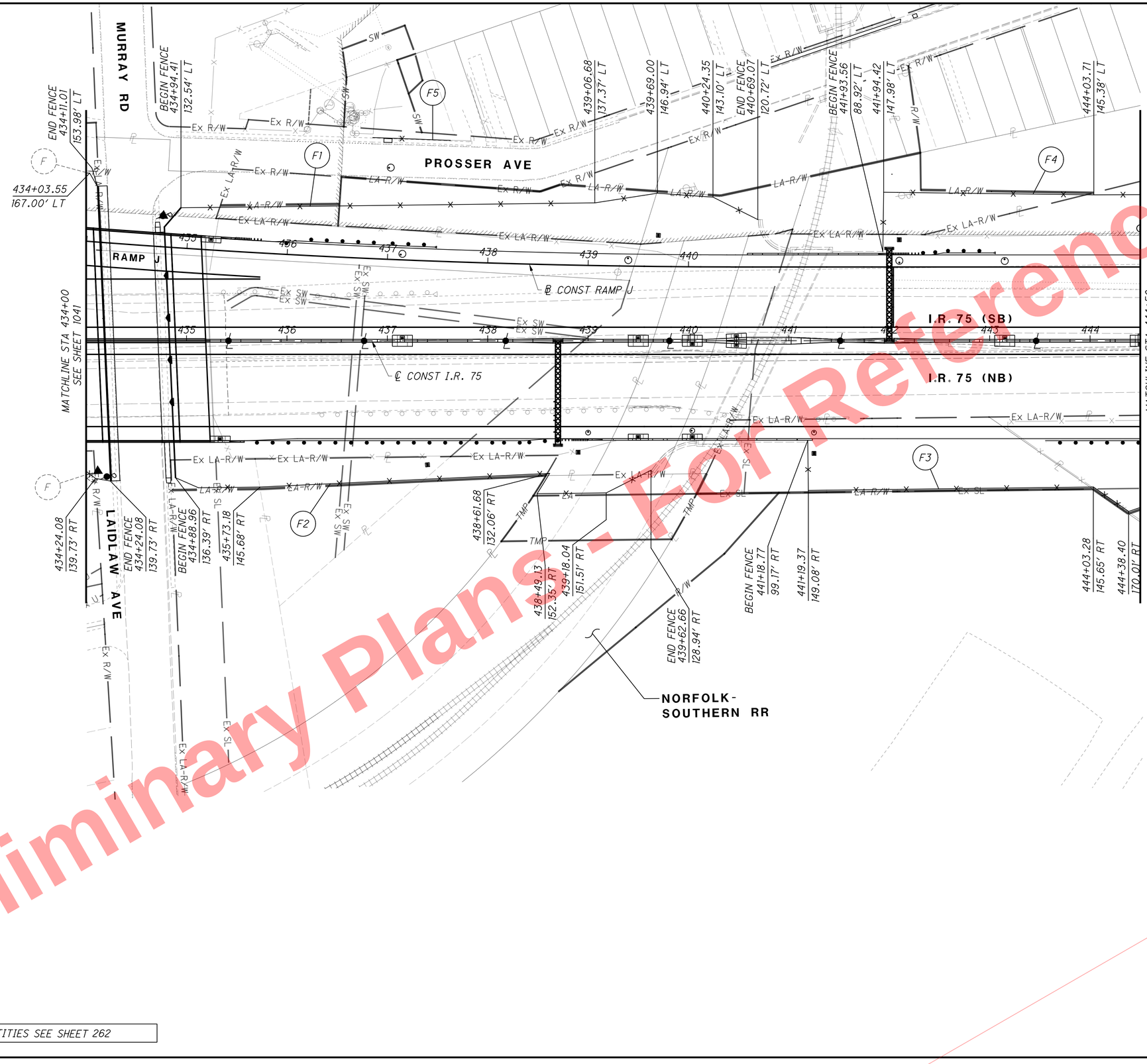

Preliminary Plans - Not For Reference Only

FOR ESTIMATED QUANTITIES SEE SHEET 262

HORIZONTAL SCALE IN FEET
0 25 50 100

CALCULATED SEA
CHECKED DLR

FENCING PLAN - I.R. 75
STA 434+00 TO STA 444+50

HAM-75-7.85

1042
1047

J:\20110903\ODOT\HAM\77889\roadway\sheets\77889GX003.dgn 5/22/2026 11:00:26 AM hbrendlinger

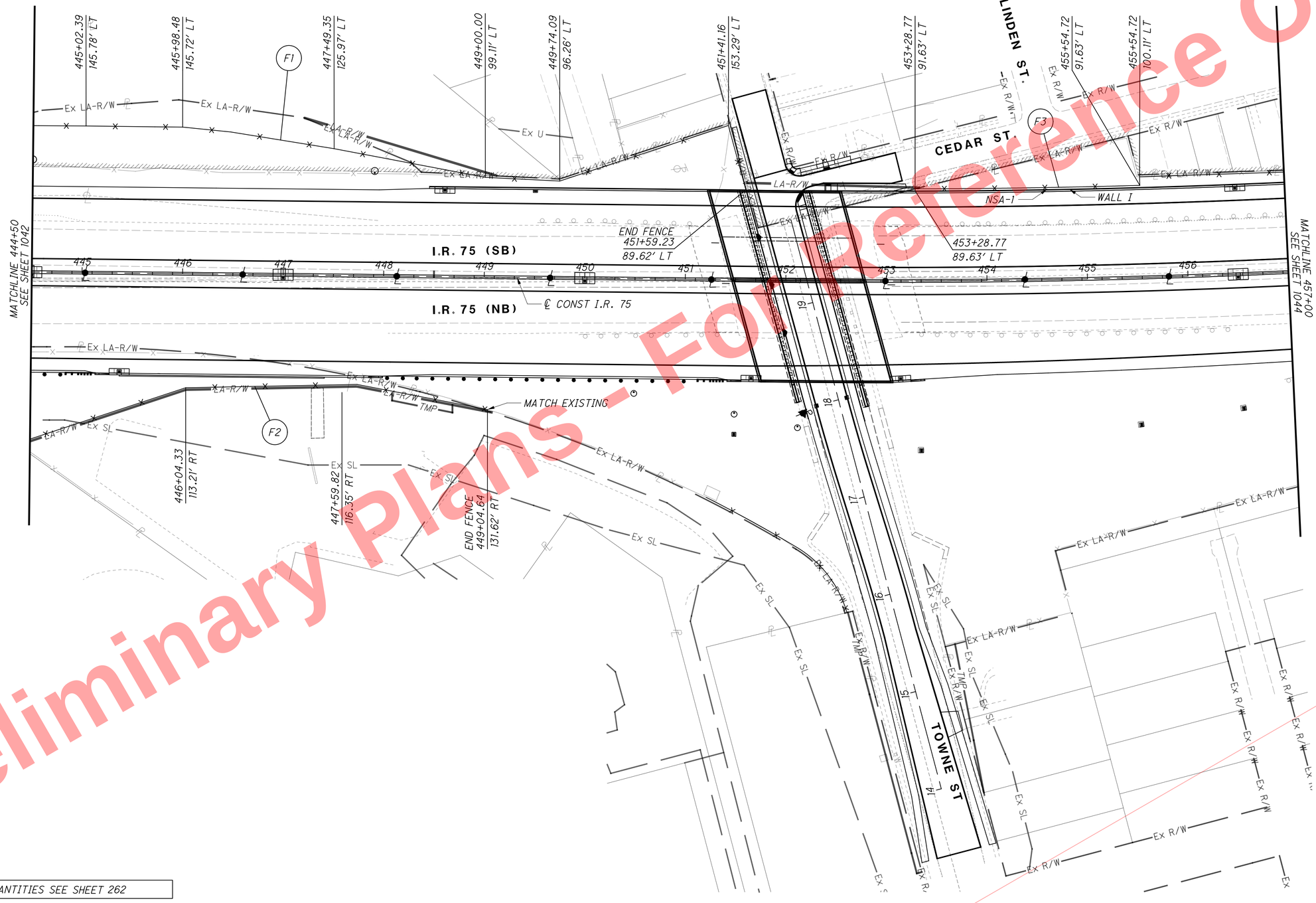

Preliminary Plans – For Reference Only

FOR ESTIMATED QUANTITIES SEE SHEET 262

HORIZONTAL SCALE IN FEET
0 25 50 100

CALCULATED SEA
CHECKED DLR

FENCING PLAN - I.R. 75
STA 444+50 TO STA 457+00

HAM-75-7.85

1043
1047

J:\20110903\ODOT\HAM\77889\roadway\sheets\77889GX006.dgn 5/22/2026 11:00:29 AM hbrendlinger

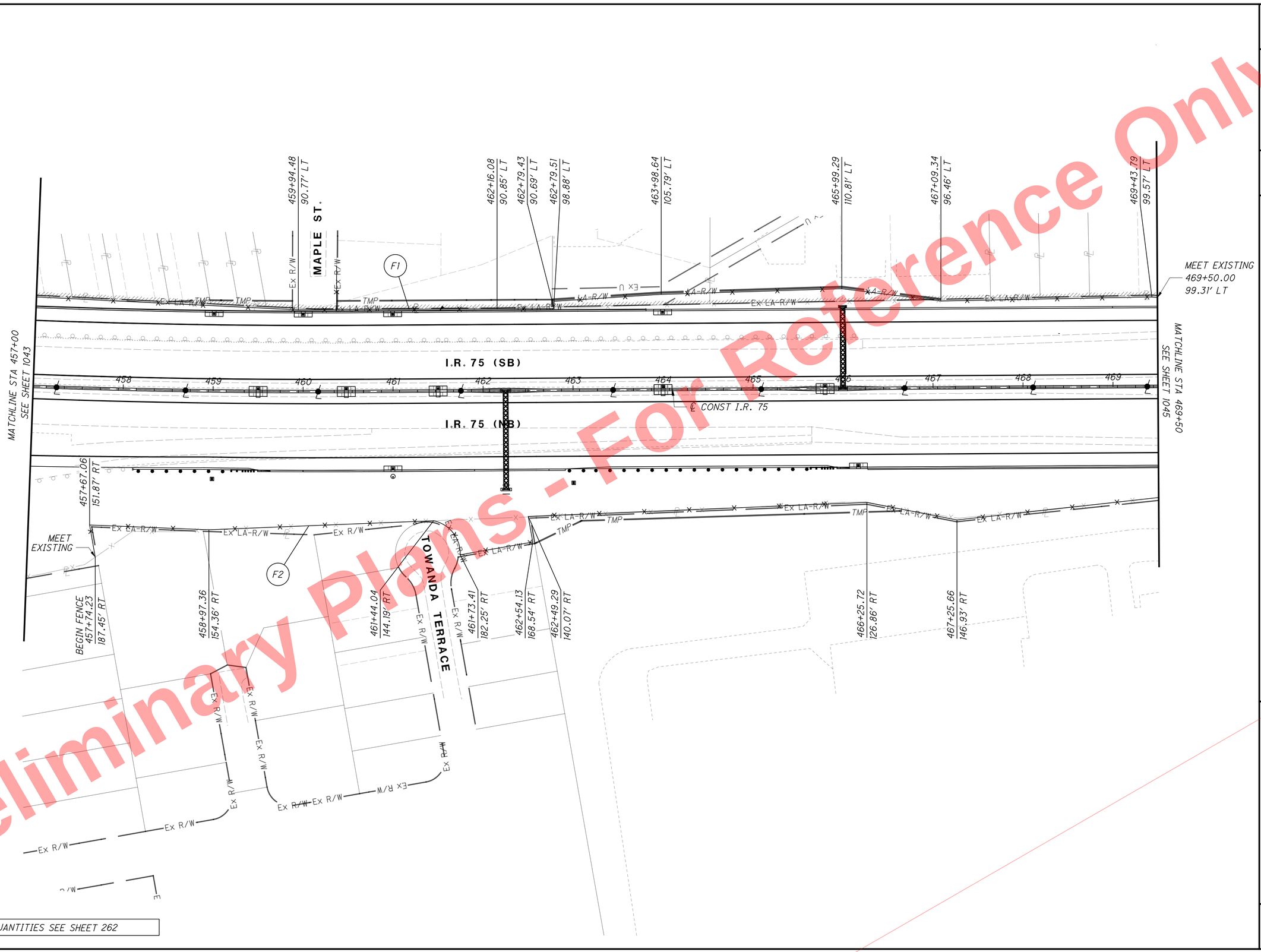

Preliminary Plans - For Reference Only

HORIZONTAL SCALE IN FEET
0 25 50 100

CALCULATED SEA
CHECKED DLR

FENCING PLAN - I.R. 75
STA 457+00 TO STA 469+50

HAM-75-7.85

1044
1047

J:\20110903\ODOT\HAM\77889\roadway\sheets\77889GX007.dgn 5/22/2026 11:00:32 AM hbrendlinger

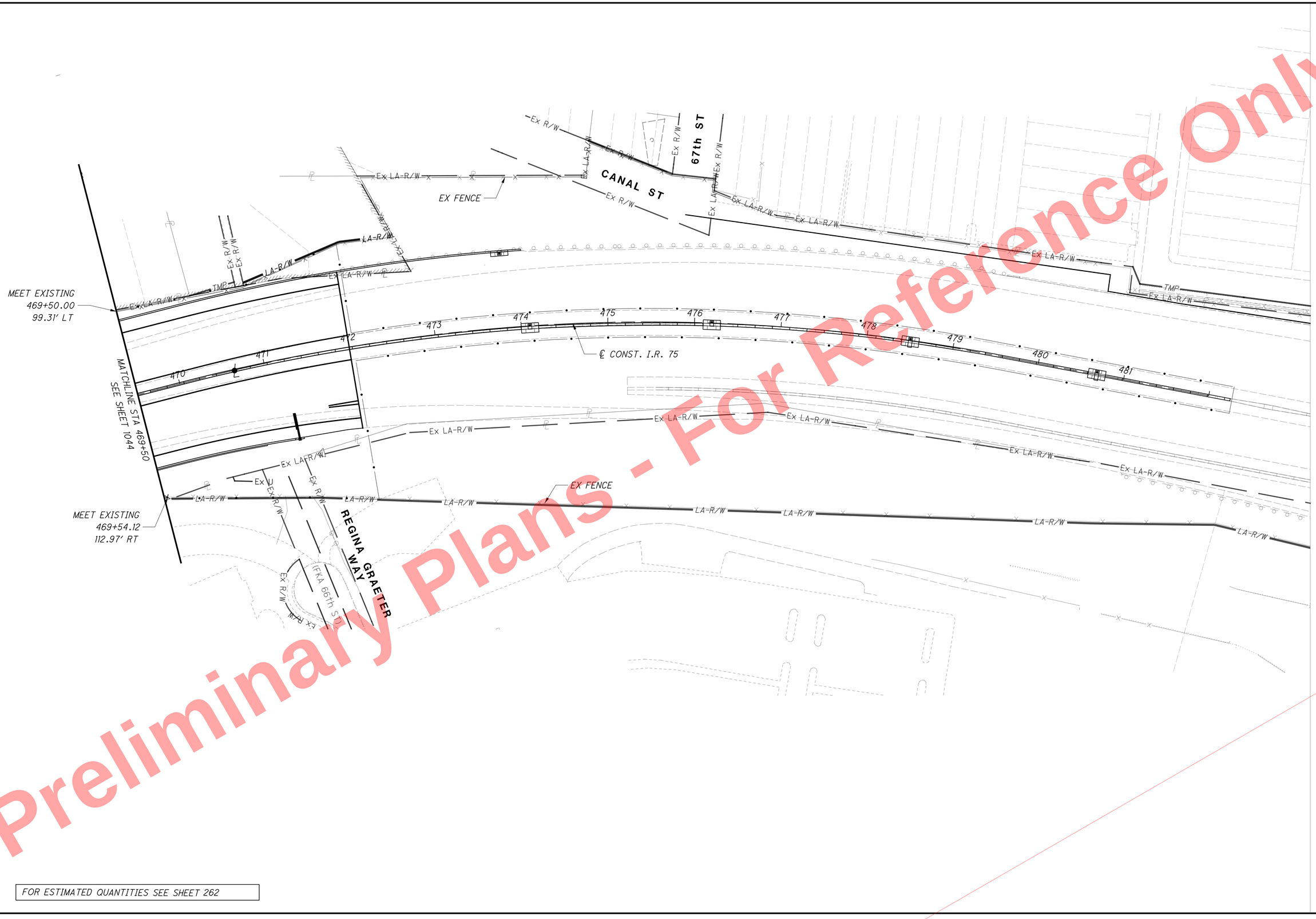

FOR ESTIMATED QUANTITIES SEE SHEET 262

Preliminary Plans - For Reference Only

HORIZONTAL SCALE IN FEET
0 25 50 100

CALCULATED SEA
CHECKED DLR

FENCING PLAN - I.R. 75
STA 469+50 TO STA 482+00

HAM-75-7.85

1045
1047

J:\20110903\ODOT\HAM\77889\roadway\sheets\77889GX008.dgn 5/22/2026 11:00:35 AM hbrendlinger

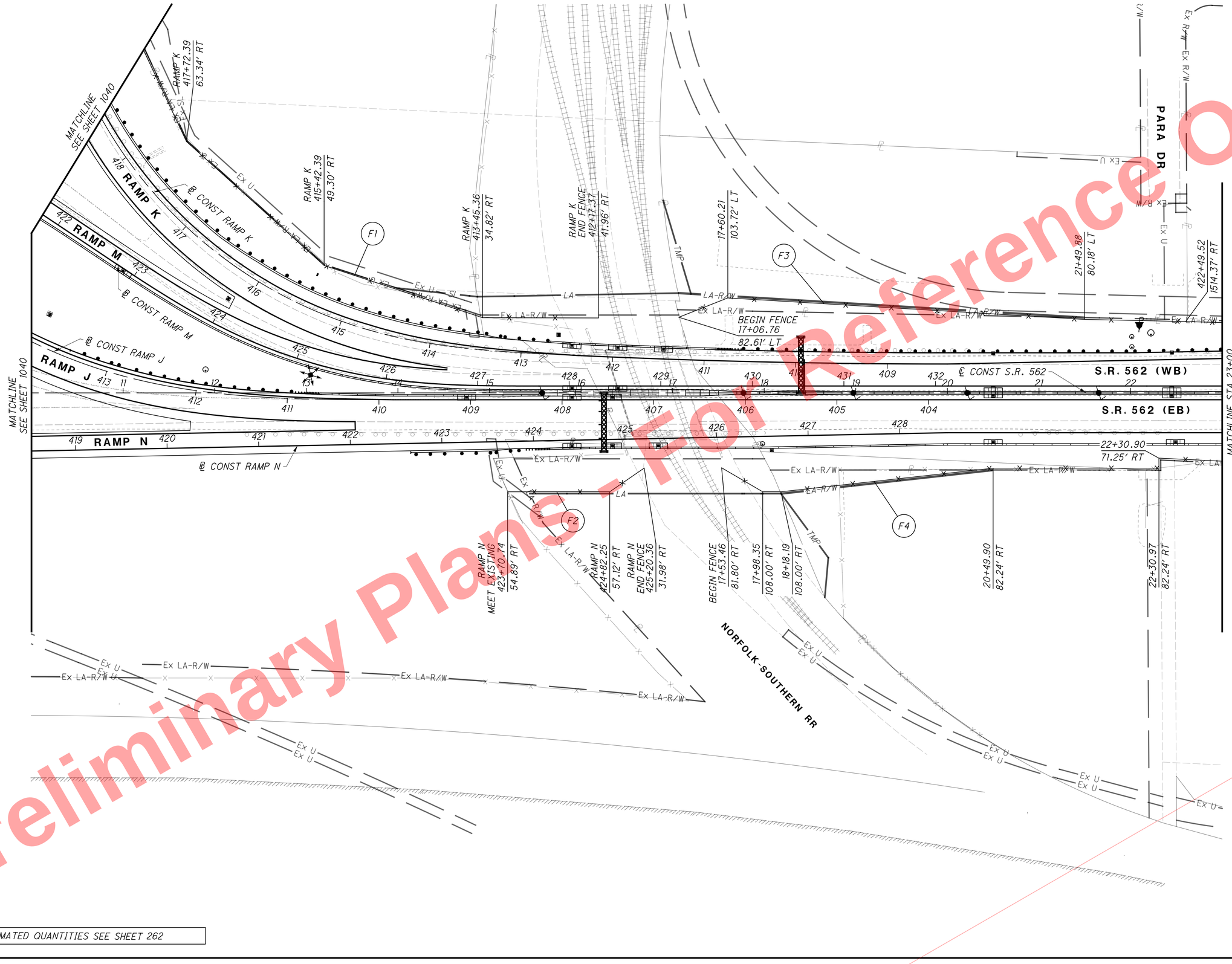

FOR ESTIMATED QUANTITIES SEE SHEET 262

Preliminary Plans - Not For Reference Only

HORIZONTAL SCALE IN FEET
0 25 50 100

CALCULATED SEA
CHECKED DLR

FENCING PLAN - S.R. 562
STA 10+00 TO STA 23+00

HAM-75-7.85

1046
1047

J:\20110903\ODOT\HAM\77889\roadway\sheets\77889GX004.dgn 5/22/2026 11:00:38 AM hbrendlinger

Preliminary Plans - For Reference Only

META DR

FRANKLIN AVE

CORINTH AVE

S.R. 4 (PADDOCK RD)

S.R. 562 (WB)

S.R. 562 (EB)

℄ CONST S.R. 562

RAMP P

RAMP Q

℄ CONST RAMP Q

MATCHLINE STA 23+00
SEE SHEET 1046

26+02.39
69.29' LT

28+01.33
91.14' LT

30+47.11
79.75' LT

30+47.02
93.00' LT

31+94.85
93.00' LT

33+50.43
124.11' LT

MEET EXISTING
33+89.21
124.29' LT

27+83.19
97.97' RT

31+65.49
117.02' RT

31+64.79
132.18' RT

34+78.25
178.02' RT

36+78.96
218.13' RT

END FENCE
37+62.07
281.32' RT

F1

F2

FOR ESTIMATED QUANTITIES SEE SHEET 262

HORIZONTAL SCALE IN FEET
0 25 50 100

CALCULATED SEA
CHECKED DLR

FENCING PLAN - S.R. 562
STA 23+00 TO STA 35+00

HAM-75-7.85

1047
1047

J:\20110903\ODOT\HAM\77889\roadway\sheets\77889GX005.dgn 5/22/2026 11:00:41 AM hbrendlinger