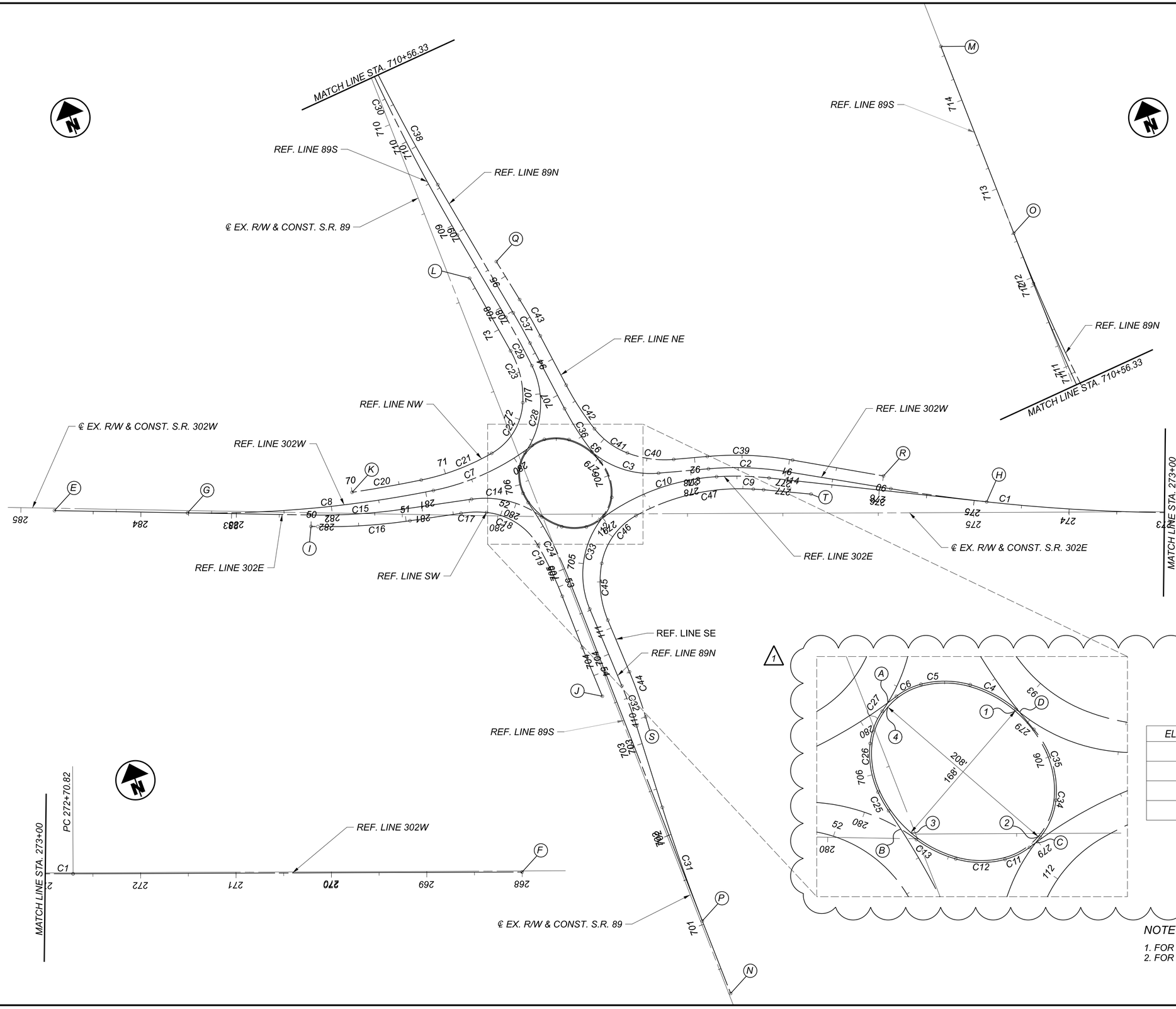

ELLIPSE KEY POINTS	NORTHING	EASTING
1	457038.58	2047702.43
2	456972.73	2047691.00
3	456997.76	2047629.02
4	457063.62	2047640.46

NOTES:

1. FOR REFERENCE LINE GEOMETRY DATA, SEE SHEET P.4
2. FOR MAINLINE GEOMETRY, SEE SHEET P.2

HORIZONTAL SCALE IN FEET
0 25 50 100

ROUNDABOUT GEOMETRIC LAYOUT

DESIGN AGENCY
Kimley»Horn

DESIGNER
KCS

REVIEWER
GDK 09/22/23

PROJECT ID
114149

SHEET P.3 TOTAL 130

ASD-89-13.36

MODEL: Dummy Alignment - Plan 3 [Sheet] PAPERSIZE: 34x22 (in.) DATE: 1/24/2024 TIME: 6:11:15 PM USER: dan.rinehart
K:\CLB_Civil\State\ODOT\1190093002_ASD-89 Roundabout\2 Design\114149\400-Engineering\Roadway\Sheets\114149_GB004.dgn

LEGEND

1. ITEM 204 - PROOF ROLLING
2. ITEM 304 - 6" AGGREGATE BASE
3. ITEM 301 - 6" ASPHALT CONCRETE BASE, PG64-22, (449)
4. ITEM 407 - NON-TRACKING TACK COAT (0.075 GAL/SY)
5. ITEM 442 - 1½" ASPHALT CONCRETE INTERMEDIATE COURSE, 12.5MM, TYPE A (448)
6. ITEM 442 - 1½" ASPHALT CONCRETE SURFACE COURSE, 9.5MM, TYPE A (446)
7. ITEM 605 - 6" BASE PIPE UNDERDRAINS WITH GEOTEXTILE FABRIC
8. ITEM 659 - SEEDING AND MULCHING
9. ITEM 609 - 6" CONCRETE TRAFFIC ISLAND, AS PER PLAN, TOOLED AND STAINED
10. ITEM 609 - CURB, TYPE 6, AS PER PLAN
11. ITEM 609 - COMBINATION CURB AND GUTTER, TYPE 2
12. ITEM 609 - CURB, TYPE 3-B, AS PER PLAN
13. ITEM 452 - 8" NON-REINFORCED CONCRETE PAVEMENT, MISC: 8" TRUCK APRON, STAINED
14. ITEM 609 - CURB, TYPE 4-C, AS PER PLAN
15. ITEM 206 - CEMENT STABILIZED SUBGRADE, 12" DEEP
16. ITEM 304 - 15" AGGREGATE BASE
17. ITEM 657 - RIPRAP FOR TREE PROTECTION, AS PER PLAN
18. ITEM 206 - CURING COAT

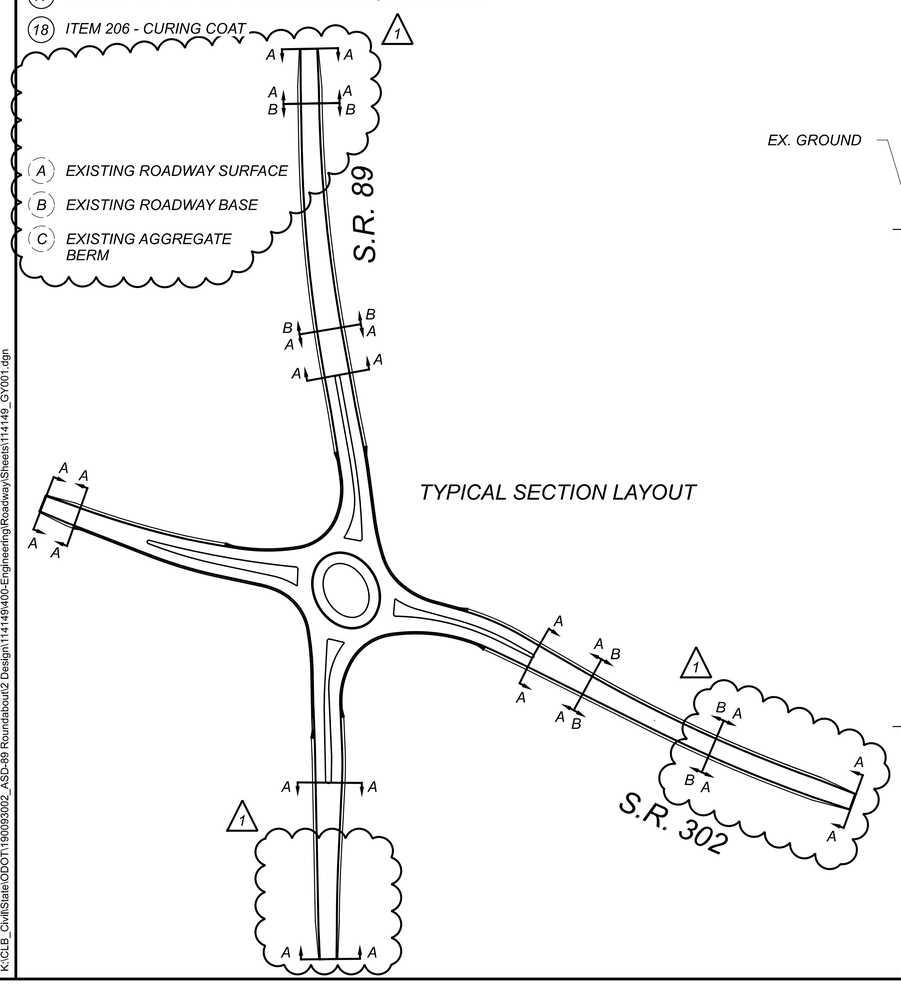

TYPICAL SECTION LAYOUT

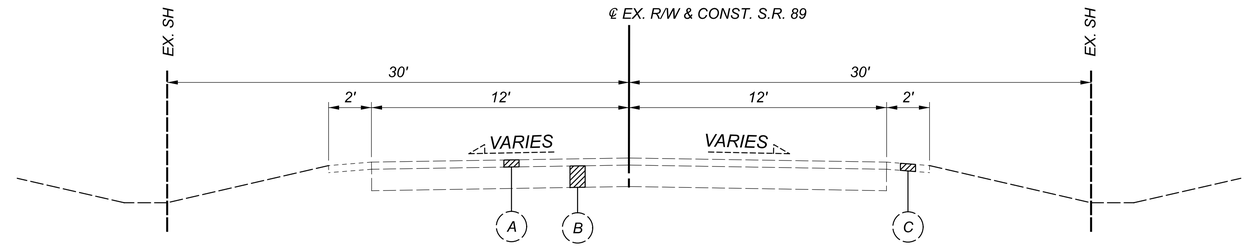

EXISTING TYPICAL SECTION - S.R. 89

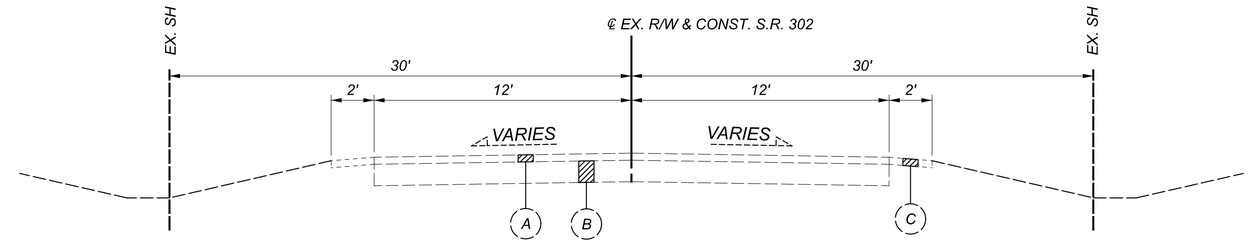

EXISTING TYPICAL SECTION - S.R. 302

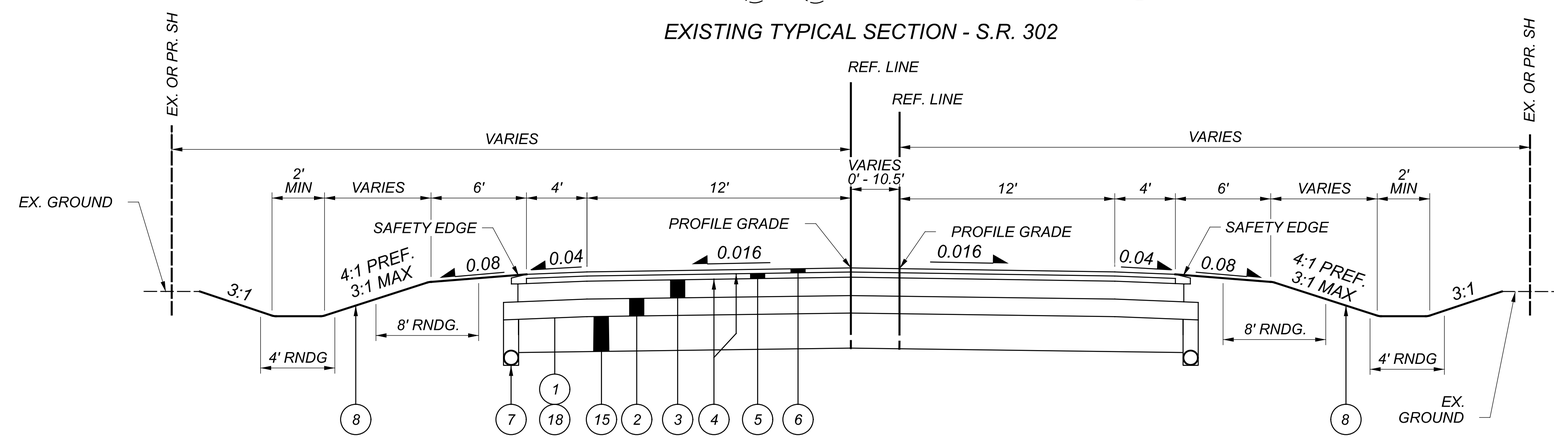

A - A, NORMAL SECTION - S.R. 89 & S.R. 302

STA. 279+04.62 TO STA. 273+48.62 (REF. LINE 302W)
STA. 275+41.13 TO STA. 276+66.72 (REF. LINE 302W)
STA. 283+21.43 TO STA. 283+70.62 (REF. LINE 302W)
STA. 700+79.13 TO STA. 703+28.82 (REF . LINE 89S)
STA. 708+88.67 TO STA. 709+78.63 (REF . LINE 89S)
STA. 711+82.02 TO STA. 713+22.13 (REF . LINE 89S)

1

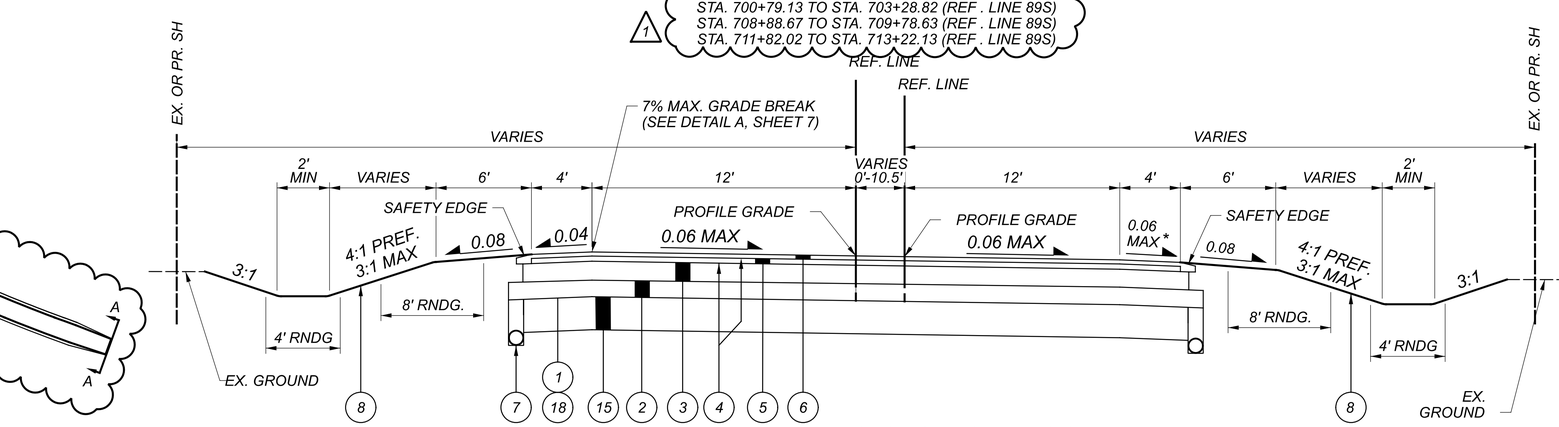

B - B, SUPERELEVATED SECTION - S.R. 89 & S.R. 302

STA. 273+48.92 TO STA. 275+41.13 (REF . LINE 302W)
STA. 709+78.63 TO STA. 711+07.79 (REF . LINE 89N)
STA. 709+98.21 TO STA. 711+82.02 (REF . LINE 89S)

1

* SEE DETAIL A, SHEET P.7

TYPICAL SECTIONS

DESIGN AGENCY
Kimley»Horn
Expect More. Experience Better.

DESIGNER	ZTW
REVIEWER	GDK 09/22/23
PROJECT ID	114149
SHEET	P.5
TOTAL	130

ASD-89-13.36

MODEL: Sheet PAPERSIZE: 34x22 (in.) DATE: 1/24/2024 TIME: 4:41:16 PM USER: dan.rinehart
K:\CLB_Civil\State\ODOT\190093002_ASD-89 Roundabout\2 Design\114149\400-Engineering\Roadway\Sheets\114149_GY001.dgn

LEGEND

1. ITEM 204 - PROOF ROLLING
2. ITEM 304 - 6" AGGREGATE BASE
3. ITEM 301 - 6" ASPHALT CONCRETE BASE, PG64-22, (449)
4. ITEM 407 - NON-TRACKING TACK COAT (0.075 GAL/SY)
5. ITEM 442 - 1½" ASPHALT CONCRETE INTERMEDIATE COURSE, 12.5MM, TYPE A (448)
6. ITEM 442 - 1½" ASPHALT CONCRETE SURFACE COURSE, 9.5MM, TYPE A (446)
7. ITEM 605 - 6" BASE PIPE UNDERDRAINS WITH GEOTEXTILE FABRIC
8. ITEM 659 - SEEDING AND MULCHING
9. ITEM 609 - 6" CONCRETE TRAFFIC ISLAND, AS PER PLAN, TOOLED AND STAINED
10. ITEM 609 - CURB, TYPE 6, AS PER PLAN
11. ITEM 609 - COMBINATION CURB AND GUTTER, TYPE 2
12. ITEM 609 - CURB, TYPE 3-B, AS PER PLAN
13. ITEM 452 - 8" NON-REINFORCED CONCRETE PAVEMENT, MISC: 8" TRUCK APRON, STAINED
14. ITEM 609 - CURB, TYPE 4-C, AS PER PLAN
15. ITEM 206 - CEMENT STABILIZED SUBGRADE, 12" DEEP
16. ITEM 304 - 15" AGGREGATE BASE
17. ITEM 657 - RIPRAP FOR TREE PROTECTION, AS PER PLAN
18. ITEM 206 - CURING COAT

- A EXISTING ROADWAY SURFACE
- B EXISTING ROADWAY BASE
- C EXISTING AGGREGATE BERM

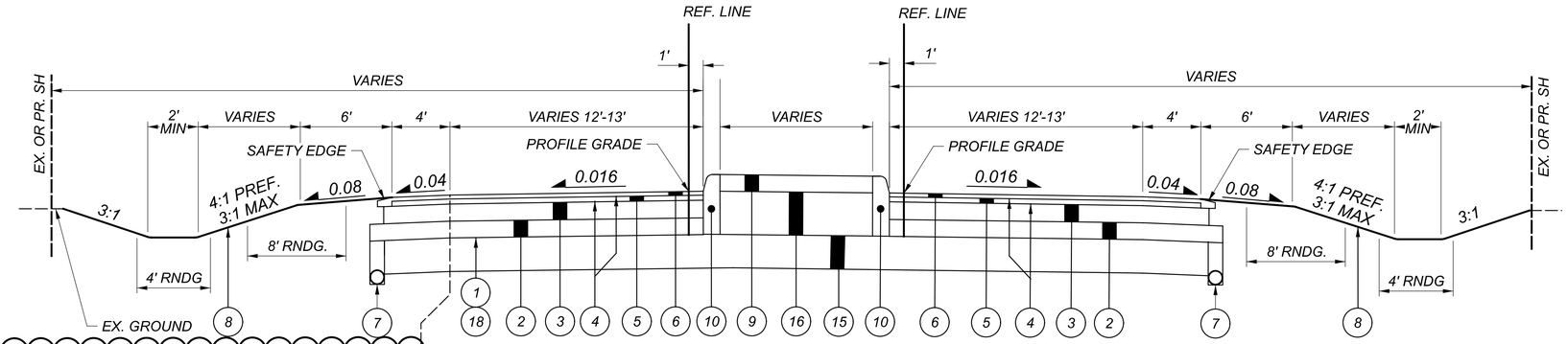

C - C FULL DEPTH SECTION WITH TRAFFIC ISLAND - S.R. 89 & S.R. 302

STA. 277+66.72 TO STA. 277+71.59 (REF . LINE 302W)
STA. 703+28.62 TO STA. 704+17.01 (REF. LINE 89S)
STA. 707+88.13 TO STA. 708+88.67 (REF. LINE 89S)

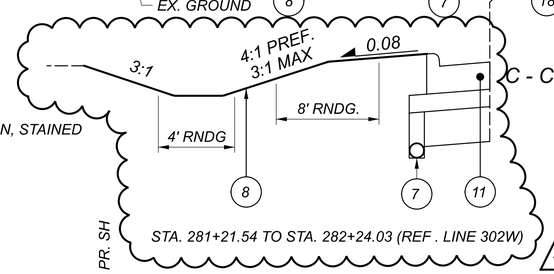

STA. 281+21.54 TO STA. 282+24.03 (REF . LINE 302W)

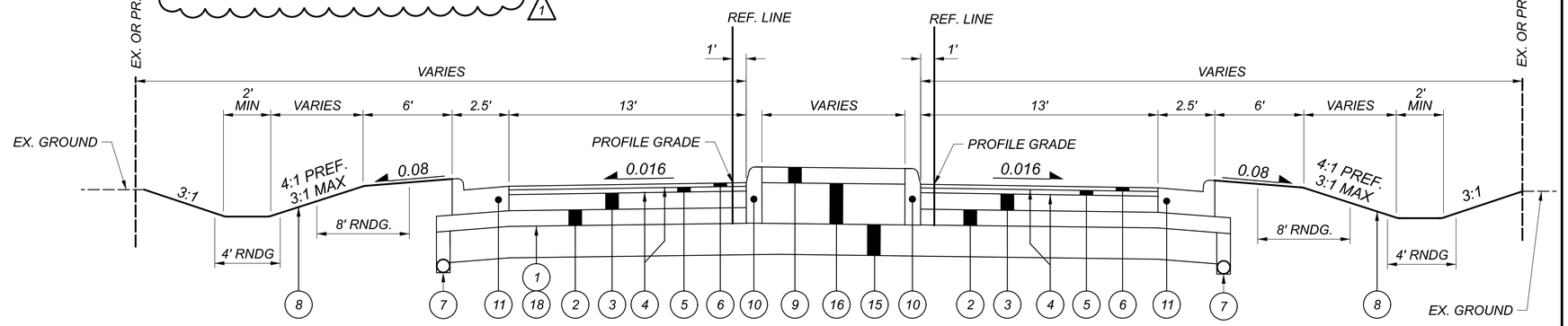

D - D CURBED SECTION WITH TRAFFIC ISLAND - S.R. 89 & S.R. 302

STA. 277+71.59 TO STA. 278+62.42 (REF . LINE 302W)
STA. 280+25.26 TO STA. 281+21.54 (REF . LINE 302W)
STA. 706+74.23 TO STA. 707+88.13 (REF . LINE 89S)

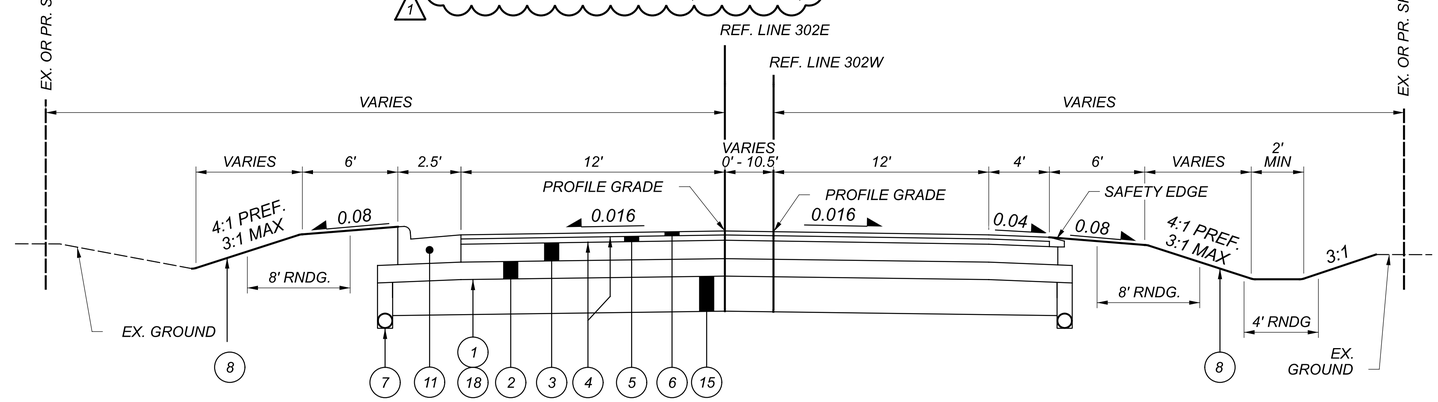

E - E CURBED SECTION - S.R. 302

STA. 282+24.03 TO STA. 283+21.43 (REF . LINE 302W)

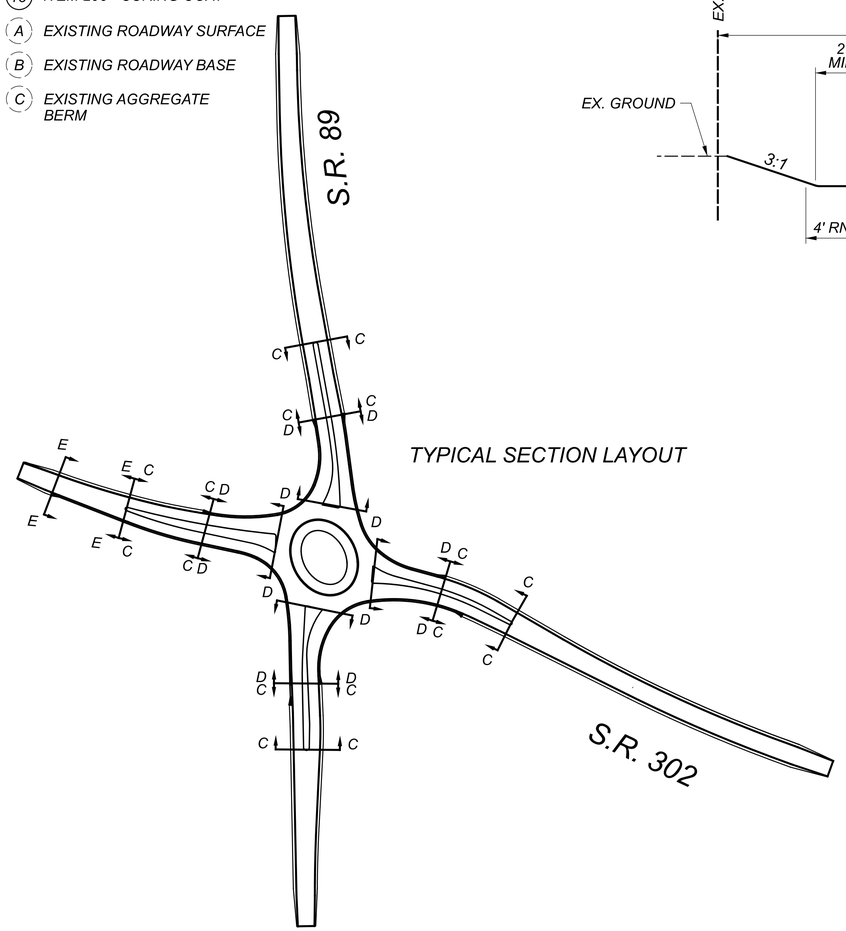

TYPICAL SECTION LAYOUT

TYPICAL SECTIONS

ASD-89-13.36

MODEL: Sheet PAPERSIZE: 34x22 (in.) DATE: 1/24/2024 TIME: 4:41:19 PM USER: dan.rinehart
K:\CLB_CivilState\ODOT\190093002_ASD-89 Roundabout\2 Design\114149\400-Engineering\Roadway\Sheets\114149_GY002.dgn

DESIGN AGENCY
Kimley»Horn
Expect More. Experience Better.

DESIGNER	ZTW
REVIEWER	GDK 09/22/23
PROJECT ID	114149
SHEET	P.6
TOTAL	130

ROUNDING

THE ROUNDING AT SLOPE BREAKPOINTS SHOWN ON THE TYPICAL SECTIONS APPLIES TO ALL CROSS-SECTIONS, EVEN THOUGH OTHERWISE SHOWN.

UTILITIES

LISTED BELOW ARE ALL UTILITIES LOCATED WITHIN THE PROJECT CONSTRUCTION LIMITS TOGETHER WITH THEIR RESPECTIVE OWNERS:

ELECTRIC:
OHIO EDISON COMPANY
1717 ASHLAND ROAD
MANSFIELD, OHIO 44905
CONTACT: TRAVIS BALLOG
EMAIL: BALLOGT@FIRSTENERGYCORP.COM
TELEPHONE: 419-521-6214

GAS:
ASPIRE ENERGY
300 TRACY BRIDGE ROAD
ORRVILLE, OHIO 44667
CONTACT: ANTHONY D'EGIDIO
EMAIL: ADEGIDIO@CHPK.COM
TELEPHONE: OFFICE: 330-682-1642

TELEPHONE AND CABLE:
FRONTIER COMMUNICATIONS
1534 SR 511 SOUTH
ASHLAND, OHIO 44805
CONTACT: GIOVANNI (GIO) LORETI
EMAIL: GIOVANNI.LORETI@FTR.COM
TELEPHONE: OFFICE: 419-282-6551

CHARTER COMMUNICATIONS
1575 LEXINGTON AVENUE
MANSFIELD, OHIO 44907
CONTACT: SEAN BEAVIS
EMAIL: SEAN.BEAVIS@CHARTER.COM
TELEPHONE: 419-632-6723

AEP (AMERICAN ELECTRIC POWER)
8100 WALTON PARKWAY
NEW ALBANY, OHIO 43054
CONTACT: STEPHEN BELLOMY
EMAIL: SGBELLOMY@AEP.COM
TELEPHONE: OFFICE: 937-594-9380

THE LOCATION OF THE UNDERGROUND UTILITIES SHOWN ON THE PLANS ARE AS OBTAINED FROM THE OWNERS AS REQUIRED BY SECTION 153.64 O.R.C.

COORDINATION OF WORK WITH UTILITY COMPANIES

RELOCATION OF EXISTING OVERHEAD AND UNDERGROUND FACILITIES BY THE AFFECTED UTILITY OWNERS IS REQUIRED FOR COMPLETION OF THE WORK. IF EXISTING UTILITY FACILITIES ARE NOT CLEARED FROM THE CONSTRUCTION AREA AT THE TIME OF CONTRACT AWARD AND NOTICE TO PROCEED, THE CONTRACTOR WILL BE REQUIRED TO COORDINATE THIS WORK WITH THAT OF THE AFFECTED UTILITY OWNERS AND SHALL REFLECT THIS IN THE SCHEDULE, MAINTENANCE OF TRAFFIC PLANS, AND UNIT COSTS.

WORK LIMITS

THE WORK LIMITS SHOWN ON THESE PLANS ARE FOR PHYSICAL CONSTRUCTION ONLY. PROVIDE THE INSTALLATION AND OPERATION OF ALL WORK ZONE TRAFFIC CONTROL AND WORK ZONE TRAFFIC CONTROL DEVICES REQUIRED BY THESE PLANS WHETHER INSIDE OR OUTSIDE THESE WORK LIMITS.

1

MONUMENT ASSEMBLIES

CONSTRUCT MONUMENT ASSEMBLIES IN ACCORDANCE WITH THE DETAILS SHOWN ON THE STANDARD CONSTRUCTION DRAWINGS AND AT THE LOCATIONS SHOWN ON SHEET NO. 4 OF THE RIGHT OF WAY PLANS.

SURVEYING PARAMETERS

PRIMARY PROJECT CONTROL MONUMENTS GOVERN ALL POSITIONING ON ODOT PROJECTS. SEE SHEET P.2 OF THE PLANS FOR A TABLE CONTAINING PROJECT CONTROL INFORMATION.

USE THE FOLLOWING PROJECT CONTROL, VERTICAL POSITIONING, AND HORIZONTAL POSITIONING PARAMETERS FOR ALL SURVEYING:

PROJECT CONTROL

POSITIONING METHOD: ODOT VRS
MONUMENT TYPE: TYPE B

VERTICAL POSITIONING

ORTHOMETRIC HEIGHT DATUM: NAVD 88
GEOID: 18

HORIZONTAL POSITIONING

REFERENCE FRAME: NAD 83 (2011)
ELLIPSOID: GRS-80
MAP PROJECTION: LAMBERT CONFORMAL CONIC
COORDINATE SYSTEM: OHIO STATE PLANE NORTH ZONE
COMBINED SCALE FACTOR: 1.00010934

ORIGIN OF COORDINATE SYSTEM: 0,0,0

USE THE POSITIONING METHODS AND MONUMENT TYPE USED IN THE ORIGINAL SURVEY TO RESTORE ALL MONUMENTS RELATED TO PRIMARY PROJECT CONTROL THAT ARE DAMAGED OR DESTROYED BY CONSTRUCTION ACTIVITIES. RESTORE THE DAMAGED OR DESTROYED MONUMENTS IN ACCORDANCE WITH SUPPLEMENTAL SPECIFICATIONS 623.
UNITS ARE IN U.S. SURVEY FEET.

1

USE THE POSITIONING METHODS AND MONUMENT TYPE USED IN THE ORIGINAL SURVEY TO RESTORE ALL MONUMENTS RELATED TO PRIMARY PROJECT CONTROL THAT ARE DAMAGED OR DESTROYED BY CONSTRUCTION ACTIVITIES. RESTORE THE DAMAGED OR DESTROYED MONUMENTS IN ACCORDANCE WITH CMS 623.

ODOT CONSTRUCTION AND MATERIAL SPECIFICATIONS ITEM 623 WILL GOVERN CONSTRUCTION SURVEYING ACTIVITY.

THE FOLLOWING MONUMENT VERIFICATION REPORT(S) WILL BE REQUIRED:

623.04a PRECONSTRUCTION MONUMENT VERIFICATION AND REPORT

623.04b POST CONSTRUCTION MONUMENT VERIFICATION AND REPORT

AIRPORT CLEARANCE MAXIMUM HEIGHT

THIS PROJECT HAS BEEN IDENTIFIED AS BEING WITHIN THE INFLUENCE AREA OF A PUBLIC USE AIRPORT OR HELIPORT. NO TEMPORARY STRUCTURES OR CONSTRUCTION EQUIPMENT AT MAXIMUM OPERATING HEIGHT SHALL EXCEED A HEIGHT OF 111 FT. IF ANY TEMPORARY STRUCTURES OR CONSTRUCTION EQUIPMENT WILL EXCEED THIS HEIGHT, FURTHER COORDINATION WITH THE FEDERAL AVIATION ADMINISTRATION (FAA), AND ODOT OFFICE OF AVIATION, WILL BE NECESSARY PRIOR TO ERECTING SUCH TEMPORARY STRUCTURES OR OPERATING SUCH EQUIPMENT ON THE PROJECT. THE CONTRACTOR WILL BE REQUIRED TO SUBMIT FORM 7460-1 TO THE FAA. NOTIFY THE ODOT OFFICE OF AVIATION WHEN SUBMITTING FAA FORM 7460-1.

NO TEMPORARY STRUCTURES OR CONSTRUCTION EQUIPMENT SHALL EXCEED THE PERMISSIBLE HEIGHT, UNTIL A COPY OF THE FAA APPROVAL AND THE ODOT OFFICE OF AVIATION PERMIT HAS BEEN FURNISHED TO THE PROJECT ENGINEER.

FEDERAL AVIATION ADMINISTRATION
SOUTHWEST REGIONAL OFFICE
OBSTRUCTION EVALUATION GROUP
10101 HILLWOOD PARKWAY
FORT WORTH, TX 76177
FAX: (817) 222-5920
HTTP://CEAAA.FAA.GOV

OHIO DEPARTMENT OF TRANSPORTATION
OFFICE OF AVIATION
2829 WEST DUBLIN-GRANVILLE ROAD
COLUMBUS, OH 43235
OHIO.AIRPORT.PROTECTION@OHIO.GOV

ITEM 407 - NON-TRACKING TACK COAT

THE ENGINEER SHALL ADJUST THE RATE OF APPLICATION IN THE FIELD OF THE 407 NON-TRACKING TACK COAT AS NEEDED. FOR ESTIMATING PURPOSES ONLY, THE PLAN QUANTITIES INDICATE AN AVERAGE APPLICATION RATE FOR THESE ITEMS. DO NOT ORDER MATERIALS FOR THESE ITEMS UNLESS AUTHORIZED BY THE ENGINEER.

ITEM 659 - TOPSOIL, AS PER PLAN

PROVIDE PULVERIZED TOPSOIL THAT IS FERTILE, LOOSE, FRIABLE AND LOAMY AT LOCATIONS SHOWN IN THE PLAN OR AS DIRECTED BY THE ENGINEER. TOPSOIL SHALL BE FURNISHED FROM COMMERCIAL SORCES (TOPSOIL SUPPLIERS) OR SHALL BY FURNISHED FROM STOCKPILES THAT ARE APPROVED BY THE DEPARTMENT.

IN ADDITION TO THE REQUIREMNTS OF 659, TOPSOIL SHALL CONTAIN BETWEEN 6 PECENT AND 20 PERCENT ORGANIC MATERIAL. TOPSOIL SHALL NOT CONTAIN MORE THAN 18% MOISTURE AND SHALL BE FREE OF WEEDS AND OTHER DELETERIOUS MATERIAL. TOPSOIL SHALL NOT CONTAIN MORE THAN 5 PERCENT OF MATERIAL NOT PASSING THE ½-INCH SIEVE, OR ANY MATERIAL 1-INCH OR LARGER IN ANY DIMENSION. FOR TOPSOIL TO BE CONSIDERED LOAMY, ENSURE THAT THE FRACTION PASSING THE NO. 10 SIEVE DOES NOT CONTAIN MORE THAN 40 PERCENT CLAY. TEST FOR ACIDITY OR ALKALINITY AD ENSURE THAT PH IS BETWEEN 6 AND 7. TEST TOPSOIL ACCORDING TO SUPPLEMENT 1016.

ITEM 659 - SEEDING AND MULCHING

THE FOLLOWING QUANTITIES ARE PROVIDED TO PROMOTE GROWTH AND CARE OF PERMANENT SEEDED AREAS AND CARRIED TO THE GENERAL SUMMARY:

ITEM 659, REPAIR SEEDING AND MULCHING	605 SY
ITEM 659, INTER-SEEDING	605 SY
ITEM 659, COMMERCIAL FERTILIZER	1.69 TON
ITEM 659, LIME	2.50 ACRE
ITEM 659, WATER	67 MGAL
ITEM 659, SOIL ANALYSIS TEST	2 EACH
ITEM 659, TOPSOIL	1,286 CY
ITEM 659, SEEDING AND MULCHING	11,584 SY
ITEM 659, MOWING	27 MSF

SEEDING AND MULCHING SHALL BE APPLIED TO ALL AREAS OF EXPOSED SOIL BETWEEN THE RIGHT-OF-WAY LINES, AND WITHIN THE CONSTRUCTION LIMITS FOR AREAS OUTSIDE THE RIGHT-OF-WAY LINES COVERED BY WORK AGREEMENT OR SLOPE EASEMENT. QUANTITIES ARE BASED ON THESE LIMITS.

ITEM 201 - CLEARING AND GRUBBING

FOR TREES OR STUMPS 12" IN DIAMETER OR LESS, A LUMP SUM QUANTITY IS INCLUDED IN THE GENERAL SUMMARY. ALL PROVISIONS AS SET FORTH IN THE SPECIFICATIONS UNDER THIS ITEM ARE INCLUDED IN THE LUMP SUM PRICE BID FOR ITEM 201, CLEARING AND GRUBBING.

1

ITEM 611 - FARM DRAINS

ALL FARM DRAINS, WHICH ARE ENCOUTNERED DURING CONSTRUCTION, SHALL BE PROVIDED WITH UNOBSTRUCTED OUTLETS. EXISTING COLLECTORS WHICH ARE LOCATED BELOW THE ROADWAY DITCH ELEVATIONS, AND WHICH CROSS THE ROADWAY, SHALL BE REPLACED WITHIN THE (RIGHT OF WAY) (CONSTRUCTION) LIMITS BY ITEM 611 CONDUIT, TYPE B, ONE COMMERCIAL SIZE LARGER THAN THE EXISTING CONDUIT.

EXISTING COLLECTORS AND ISOLATED FARM DRAINS, WHICH ARE ENCOUNTERED ABOVE THE ELEVATION OF ROADWAY DITCHES, SHALL BE OUTLETTED INTO THE ROADWAY DITCH BY 611 TYPE F CONDUIT. THE OPTIMUM OUTLET ELEVATION SHALL BE ONE FOOT ABOVE THE FLOWLINE ELEVATION OF THE DITCH. LATERAL FIELD TILES WHICH CROSS THE ROADWAY SHALL BE INTERCEPTED BY 611, TYPE E CONDUIT, AND CARRIED IN A LONGITUTINAL DIRECTION TO AN ADEQUATE OUTLET OR ROADWAY CROSSING.

THE LOCATION, TYPE, SIZE, AND GRADE OF REPLACEMENT SHALL BE DETERMINED BY THE ENGINEER AND PAYMENT SHALL BE MADE ON FINAL MEASUREMENTS.

EROSION CONTROL PADS SHAL BE PROVED AT THE OUTLET END OF ALL FARM DRAINS AS PER STANDARD CONSTRUCTION DRAWING DM-1.1, EXCEPT WHEN THEY OUTLET INTO A DRAINAGE STRUCTURE. PAYMENT FOR THE EROSION CONTROL PADS AND ANY NECESSARY BENDS OR BRANCHES SHALL BE INCLUDED FOR PAYMENT IN THE PERTINENT CONDUIT ITEMS.

PAYMENT FOR ALL LABOR AND MATERIALS WILL BE PERFORMED BY CHANGE ORDER.

ITEM 611 - RESIDENTIAL AND COMMERCIAL DRAINAGE CONNECTIONS

EXISTING ROOF DRAINS, FOOTER DRAINS, OR YARD DRAINS, DISTURBED BY THE WORK, SHALL BE PROVIDED WITH UNOBSTRUCTED OUTLETS BY CONNECTING A CONDUIT THROUGH THE CURB OR INTO A DRAINAGE STRUCTURE. THE LOCATION, TYPE, SIZE, AND GRADE OF THE NEW CONDUIT REQUIRED TO REPLACE OR EXTEND THE EXISTING DRAIN WILL BE DETERMINED BY THE ENGINEER.

THE FOLLOWING CONDUIT TYPES MAY BE USED: 707.33, 707.41 NON-PERFORATED, 707.42, 707.43, 707.45, 707.46, 707.47, 707.51, 707.52 SDR35.

PAYMENT FOR ALL LABOR AND MATERIALS WILL BE PERFORMED BY CHANGE ORDER.

GENERAL NOTES

DESIGN AGENCY
Kimley»Horn
Expect More. Experience Better.

DESIGNER ZTW
REVIEWER GDK 09/22/23
PROJECT ID 114149
SHEET P.8 TOTAL 130

ITEM 452 - 8" NON-REINFORCED CONCRETE PAVEMENT, MISC.: 8" TRUCK APRON, STAINED

THIS WORK SHALL CONSIST OF CONSTRUCTING THE CONCRETE INCLUDING A STAIN COLORING FOR THE ROUNDABOUT TRUCK APRON.

MATERIALS:

A. CONCRETE SHALL BE IN ACCORDANCE WITH THE PLANS AND SECTION 452 OF THE ODOT STANDARD SPECIFICATIONS. DO NOT COMPLY WITH THE REQUIREMENTS OF 451.14. CONCRETE SHALL BE CLASS QC1 WITH QC/QA.

B. THE CONCRETE COLOR SHALL BE "BRICK RED" AS MANUFACTURED BY BOMANITE OR APPROVED EQUAL; PHONE 303-369-1115, E-MAIL INFO@BOMANITE.COM, OR INTERNET WWW.BOMANITE.COM.

C. COLORED CONCRETE WILL BE AN INTEGRAL COLORING APPLICATION, WITH COLORING ADDITIVES MIXED IN ACCORDANCE WITH MANUFACTURER'S INSTRUCTIONS. MIX UNTIL COLOR ADDITIVES ARE UNIFORMLY DISPERSED THROUGHOUT MIXTURE. COLOR SHALL BE UNIFORM THROUGHOUT THE CONCRETE.

D. CURING COMPOUND FOR COLORED CONCRETE: CURING COMPOUND SHALL COMPLY WITH ASTM C309 AND BE APPROVED BY COLOR ADDITIVE MANUFACTURER FOR USE WITH COLORED CONCRETE. PROVIDE JS CLEAR COAT SEALER OR APPROVED EQUAL ON ALL SURFACES.

E. ADMIXTURES: DO NOT USE CALCIUM CHLORIDE ADMIXTURES.

CONSTRUCTION REQUIREMENTS:

A. PREPARE SUBGRADE AND INSTALL COLORED CONCRETE IN ACCORDANCE WITH THE PLANS AND SECTION 452 OF THE ODOT STANDARD SPECIFICATIONS, EXCEPT AS NOTED HEREIN.

B. FINISH: RADIAL JOINTS HAVING A DEPTH OF 3 INCHES SHALL BE SAWED AT 20 FOOT MAXIMUM SPACING WITHIN 24 HOURS OF CONCRETE PLACEMENT.

C. CURING: APPLY CURING COMPOUND FOR COLORED CONCRETE IN ACCORDANCE WITH THE MANUFACTURER'S INSTRUCTIONS. APPLY CURING COMPOUND AT CONSISTENT TIME FOR EACH POUR TO MAINTAIN CLOSE COLOR CONSISTENCY.

D. PROTECT ADJACENT FINISHED SURFACES FROM SPLATTERS.

E. DO NOT ADD WATER TO CONCRETE AT JOB SITE, FOG OR SPRAY SURFACE WITH WATER, OR PUT INTO PUMPS OR ONTO TOOLS OR BROOMS.

F. DO NOT APPLY COLOR ADDITIVES MEANT FOR INTEGRAL COLORING TO SURFACE OF CONCRETE.

PAYMENT WILL INCLUDE THE COST OF FURNISHING AND PLACING ALL OF THE MATERIALS, FINISHING, AND TESTING. THE DEPARTMENT WILL PAY FOR ACCEPTED QUANTITIES AT THE CONTRACT PRICE PER SQUARE YARD FOR ITEM 452- NON-REINFORCED CONCRETE PAVEMENT, MISC.: 8 TRUCK APRON STAINED.

ITEM 609 - 6" CONCRETE TRAFFIC ISLAND, AS PER PLAN, TOOLED AND STAINED

THIS WORK SHALL CONSIST OF CONSTRUCTING THE COLORING AND JOINTING OF CONCRETE FOR THE SPLITTER ISLANDS.

MATERIALS:

A. CONCRETE SHALL BE IN ACCORDANCE WITH THE PLANS AND SECTION 609 OF THE ODOT STANDARD SPECIFICATIONS.

B. THE CONCRETE COLOR IS TO MATCH THE TRUCK APRON AND SHALL BE "BRICK RED" AS MANUFACTURED BY BOMANITE OR APPROVED EQUAL; PHONE 303-369-1115, EMAIL INFO@BOMANITE.COM, OR INTERNET WWW.BOMANITE.COM

C. COLORED CONCRETE WILL BE AN INTEGRAL COLORING APPLICATION, WITH COLORING ADDITIVES MIXED IN ACCORDANCE WITH MANUFACTURER'S INSTRUCTIONS. MIX UNTIL COLOR ADDITIVES ARE UNIFORMLY DISPERSED THROUGHOUT MIXTURE. COLOR SHALL BE UNIFORM THROUGHOUT THE CONCRETE.

D. CURING COMPOUND FOR COLORED CONCRETE; CURING COMPOUND SHALL COMPLY WITH ASTM C309 AND BE APPROVED BY COLOR ADDITIVE MANUFACTURER FOR USE WITH COLORED CONCRETE. PROVIDE JS CLEAR COAT SEALER OR APPROVED EQUAL ON ALL SURFACES.

E. ADMIXTURES: DO NOT USE CALCIUM CHLORIDE ADMIXTURES.

CONSTRUCTION REQUIREMENTS:

A. PREPARE SUBGRADE AND INSTALL COLORED CONCRETE IN ACCORDANCE WITH THE PLANS AND SECTION 609 OF THE ODOT STANDARD SPECIFICATIONS, EXCEPT AS NOTED HEREIN.

B. JOINTS SHALL BE TOOLED IN PATTERNS INDICATED ON PLANS, OR AS NOTED HEREIN (PATTERN: BRICK RUNNING BOND). THE SPLITTER ISLANDS SHALL BE SCORED IN A 24-INCH RUNNING BOND PATTERN PERPENDICULAR TO THE REFERENCE LINE THAT THE SPLITTER ISLAND IS CONSTRUCTED.

C. TOLLED JOINTS: FORM JOINTS AFTER INITIAL FLOATING BY GROOVING AND FINISHING EACH EDGE OF JOINT WITH GROOVING TOOL TO A 1/4-INCH RADIUS. REPEAT GROOVING OF CONSTRUCTION JOINTS AFTER APPLYING SURFACE FINISHES. ELIMINATE TOOL MARKS ON CONCRETE SURFACES. EDGES OF COLORED CONCRETE NOT CONTAINED BY STANDARD CONCRETE SHALL BE TOOLED IN THE SAME MANNER.

D. FINISH: COLORED CONCRETE SHALL BE STAMPED WITH A HERRINGBONE USED BRICK PATTERN, OR APPROVED EQUAL. CONTRACTOR TO GET APPROVAL OF PATTERN FROM THE ENGINEER PRIOR TO PLACEMENT OF CONCRETE.

E. CURING: APPLY CURING COMPOUND FOR COLORED CONCRETE IN ACCORDANCE WITH THE MANUFACTURER'S INSTRUCTIONS. APPLY CURING COMPOUND AT CONSISTENT TIME FOR EACH POUR TO MAINTAIN CLOSE COLOR CONSISTENCY.

F. PROTECT ADJACENT FINISHED SURFACES FROM SPLATTERS.

G. DO NOT ADD WATER TO CONCRETE AT JOB SITE, FOG OR SPRAY SURFACE WITH WATER, OR PUT INTO PUMPS OR ONTO TOOLS OR BROOMS.

PAYMENT WILL INCLUDE THE COST OF FURNISHING AND PLACING ALL OF THE MATERIALS, FINISHING, AND TESTING. THE DEPARTMENT WILL PAY FOR ACCEPTED QUANTITIES AT THE CONTRACT PRICE PER SQUARE YARD FOR ITEM 609 - 6" CONCRETE TRAFFIC ISLAND, AS PER PLAN, TOOLED AND STAINED

ITEM SPECIAL - MAILBOX SUPPORT

THIS WORK SHALL CONSIST OF FURNISHING AND ERECTING MAILBOX SUPPORTS AND ANY ASSOCIATED MOUNTING HARDWARE IN ACCORDANCE WITH PLAN DETAILS, AND ATTACHING AN OWNER-SUPPLIED MAILBOX AT LOCATIONS SPECIFIED IN THE PLAN, OR OTHERWISE ESTABLISHED BY THE ENGINEER.

WOOD POSTS SHALL BE NOMINAL 4 INCHES BY 4 INCHES SQUARE OR 4.5 INCHES DIAMETER ROUND, AND CONFORM TO 710.14.

STEEL POSTS SHALL BE NOMINAL PIPE SIZE 2 INCHES I.D., AND CONFORM TO AASHTO M 181.

ALL HARDWARE INCLUDING BUT NOT LIMITED TO PLATES, SCREWS, BOLTS, AND ETC. SHALL BE COMMERCIAL-GRADE GALVANIZED STEEL.

POSTS SHALL BE SET PER THE FIRST PARAGRAPH OF 606.03, AND SHALL IN NO INSTANCE BE ENCASED IN CONCRETE.

SUPPORT HARDWARE SHALL ACCOMMODATE EITHER A SINGLE OR A DOUBLE MAILBOX INSTALLATION, AND NO MORE THAN TWO BOXES MAY BE MOUNTED ON A SINGLE POST.

THE MAILBOX SHALL BE SECURELY AND NEATLY ATTACHED BY THE CONTRACTOR TO THE NEW SUPPORT. THE CONTRACTOR SHALL FURNISH ALL NECESSARY ATTACHMENT HARDWARE (NUTS, BOLTS, PLATES, SPACERS, AND WASHERS) AS NECESSARY TO ACCOMMODATE THE COMPLETE INSTALLATION.

IN THE ABSENCE OF A NEW BOX SUPPLIED BY THE OWNER, THE CONTRACTOR SHALL SALVAGE THE EXISTING BOX AND PLACE IT ON THE NEW SUPPORT. DUE CARE SHALL BE EXERCISED IN SUCH AN OPERATION, AND THE CONTRACTOR SHALL BE RESPONSIBLE FOR REPAIRING OR REPLACING ANY BOX DAMAGED BY IMPROPER HANDLING ON HIS PART, AS JUDGED AND DIRECTED BY THE ENGINEER.

THE CONTRACTOR SHALL BE RESPONSIBLE FOR COORDINATING WITH THE LOCAL POST MASTER REGARDING THE TIMING OF THE MOVEMENT OF ANY MAILBOX TO A NEW LOCATION.

PAYMENT UNDER THIS ITEM SHALL BE LIMITED TO FINAL PERMANENT INSTALLATIONS. TEMPORARY INSTALLATIONS SHALL BE IN ACCORDANCE WITH 107.10. HOWEVER, THE SAME MATERIAL AND SIZE LIMITATIONS AS FOR PERMANENT INSTALLATIONS SHALL APPLY.

MAILBOX SUPPORTS, COMPLETE IN PLACE, WILL BE PAID FOR AT THE CONTRACT UNIT PRICE PER EACH, FOR ITEM SPECIAL MAILBOX SUPPORT SYSTEM, (SINGLE).

ITEM 609 - CURB, TYPE 3-B, AS PER PLAN

CURB SHALL BE IN ACCORDANCE WITH THE PLANS AND SECTION 609 OF THE ODOT STANDARD SPECIFICATIONS AND STANDARD CONSTRUCTION DRAWING BP-5.1, AND AS SHOWN ON THE DETAIL IN THIS PLAN. CURB HEIGHT, FOR THE PORTION ABOVE PAVEMENT, VARIES FROM STANDARD DRAWING, AND SHALL BE 3". CURB SHALL BE 12" IN TOTAL.

VEGETATED FILTER STRIP

THIS PLAN UTILIZES VEGETATED FILTER STRIP(S) FOR POST CONSTRUCTION STORM WATER TREATMENT. PLACE EITHER ITEM 660 SODDING OR ITEM 659 SEEDING AND MULCHING WITH A 4-INCH LIFT OF TOPSOIL AND ITEM 670, SLOPE EROSION PROTECTION TO ALL DISTURBED AREAS DESIGNATED AS VEGETATED FILTER STRIPS, THE EDGE OF SHOULDER, AND THE FORESLOPE AS SPECIFIED IN THE PLANS.

VEGETATED BIOFILTER

THIS PLAN UTILIZES VEGETATED BIOFILTER(S) FOR POST CONSTRUCTION STORM WATER TREATMENT. PLACE EITHER ITEM 660 SODDING OR ITEM 659 SEEDING AND MULCHING WITH A 4-INCH LIFT OF TOPSOIL AS SHOWN IN THE PLANS TO ANY DISTURBED AREA ON THE SHOULDER AND FORESLOPE DRAINING TO A VEGETATED BIOFILTER. THE DITCH FOR EACH VEGETATED BIOFILTER SHALL BE TRAPEZOIDAL, AS SHOWN IN THE PLAN CROSS SECTIONS. PROVIDE ITEM 670 AS SPECIFIED IN THE PLANS.

ENVIRONMENTAL COMMITMENT

THE PROJECT IS LOCATED WITHIN THE KNOWN HABITAT RANGES OF THE FEDERALLY LISTED AND PROTECTED INDIANA BAT AND NORTHERN LONG-EARED BAT. THE CONTRACTOR SHALL NOT REMOVE TREES UNDER THIS PROJECT FROM APRIL 1 THROUGH SEPTEMBER 30. ALL NECESSARY TREE REMOVAL SHALL OCCUR FROM OCTOBER 1 THROUGH MARCH 31. THE CONTRACTOR SHALL DEMARCATE CLEARING LIMITS IN THE FIELD TO AVOID ANY UNAUTHORIZED TREE CLEARING. THIS REQUIREMENT IS NECESSARY TO AVOID AND MINIMIZE IMPACTS TO THESE SPECIES AS REQUIRED BY THE ENDANGERED SPECIES ACT. FOR THE PURPOSES OF THIS NOTE, A TREE IS DEFINED AS A LIVE, DYING, OR DEAD WOODY PLANT, WITH A TRUNK THREE INCHES OR GREATER IN DIAMETER AT A HEIGHT OF 4.5 FEET ABOVE THE GROUND SURFACE, AND WITH A MINIMUM HEIGHT OF 13 FEET.

1 **REVIEW OF DRAINAGE FACILITIES**

PRIOR TO THE START OF WORK AND AGAIN BEFORE FINAL ACCEPTANCE, PERFORM AN INSPECTION WITH REPRESENTATIVES OF THE DEPARTMENT, CONTRACTOR AND LOCALS OF ALL EXISTING DRAINAGE FACILITIES THAT ARE TO REMAIN IN SERVICE WHICH MAY BE AFFECTED BY THE WORK. THE CONDITION OF THE EXISTING CONDUITS AND THEIR APPURTENANCES IS DETERMINED FROM FIELD OBSERVATIONS. RECORDS OF THE INSPECTION ARE MAINTAINED BY THE DEPARTMENT.

CONFIRM ALL EXISTING SEWERS INSPECTED INITIALLY BY THE ABOVE-MENTIONED PARTIES ARE MAINTAINED AND LEFT IN A CONDITION COMPARABLE TO THAT DETERMINED BY THE ORIGINAL INSPECTION. THE CONTRACTOR IS RESPONSIBLE TO CORRECT ANY CHANGE IN THE CONDITION RESULTING FROM THEIR OPERATIONS AS DIRECTED AND APPROVED BY THE ENGINEER.

PAYMENT FOR ALL OPERATIONS DESCRIBED ABOVE IS INCLUDED IN THE CONTRACT PRICE FOR THE PERTINENT 611 CONDUIT ITEMS.

GENERAL NOTES

DESIGN AGENCY
Kimley»Horn
Expect More. Experience Better.

DESIGNER
ZTW

REVIEWER
GDK 09/22/23

PROJECT ID
114149

SHEET P.9 TOTAL 130

MODEL: Sheet PAPERSIZE: 34x22 (in.) DATE: 1/25/2024 TIME: 1:13:19 PM USER: dan.rinehart
K:\CLB_Civil\State\ODOT\190093002_ASD-89 Roundabout\2 Design\114149\400-Engineering\Roadway\Sheets\114149_GN002.dgn

DRIVEWAYS/PROPERTY ACCESS

VEHICULAR ACCESS TO ALL PROPERTY PARCELS SHALL BE MAINTAINED AT ALL TIMES. WHERE A PARCEL IS SERVED BY ONLY ONE DRIVEWAY, THE AFFECTED DRIVEWAY MUST BE CONSTRUCTED IN STAGES AND/OR SUPPLEMENTED WITH ITEM 410 TRAFFIC COMPACTED SURFACE, SO THAT ACCESS IS NOT DISRUPTED. WHEN TYING INTO A DRIVE WITH TEMPORARY PAVEMENT, THE CONTRACTOR SHALL STAY WITHIN THE PROPOSED DRIVE LIMITS. RESIDENTIAL DRIVES SHALL HAVE A MAXIMUM SLOPE OF 12%.

SHORT-TERM CLOSURE OF DRIVEWAYS WILL BE PERMITTED IN ACCORDANCE WITH THE SPECIFICATION REQUIREMENTS FOR THE PROTECTIONS OF COMPLETED ASPHALT COURSES. IT SHALL BE THE RESPONSIBILITY OF THE CONTRACTOR TO COORDINATE CONSTRUCTION ACTIVITIES WITH THE ENGINEER AND WITH THE OWNERS AND TENANTS OF ABUTTING PROPERTIES IN ADVANCE OF ANY OPERATIONS WHICH AFFECT ACCESS.

PRIOR TO ANY DRIVEWAY CLOSURES FOR EXCAVATIONS, THE CONTRACTOR SHALL COORDINATE WITH THE PRIVATE PROPERTY OWNERS AND TENANTS. THE CONTRACTOR SHALL SUBMIT IN WRITING A SCHEDULE TO THE PROPERTY OWNERS AND TENANTS AFFECTED BY THE WORK ONE WEEK PRIOR TO DRIVEWAY REPLACEMENT. THIS COPY OF THE LETTER SHALL BE PROVIDED TO THE ENGINEER.

COORDINATION WITH ADJACENT PROJECTS

THE CONTRACTOR SHALL COORDINATE WORK WITH ODOT AND THE CONTRACTORS ON THE ADJACENT PROJECTS.

ASD-108029 (ASD-042-03.25)
ASD-114065 (ASD-042-14.77)
ASD-116945 (ASD-604-00.00)
MED-108029 (MED-224-06.30)
ASD/WAY-113281 (ASD/WAY US 42/SR 301-01.90/05.54)

COORDINATION SHALL BE MADE TO PREVENT CONFLICTING ADVANCE WARNING SIGNS, CONFLICTING DETOUR ROUTES, OVERLAPING/CONFLICTING LANE CLOSURES, AND TO ENSURE THAT A MINIMUM DISTANCE OF 2 MILES BETWEEN ADJACENT LANE CLOSURES IS MAINTAINED. THIS IS NOT AN EXHAUSTIVE LIST OF COORDINATION ITEMS THAT MAY NEED TO BE RESOLVED BETWEEN PROJECTS. THE DEPARTMENT RESERVES THE RIGHT TO DECIDE WHICH PROJECT'S ACTIVITIES TAKE PRECEDENCE. PROJECTS THAT HAVE ACTIVITIES DELAYED DUE TO CONFLICTS WILL CONSIDER THIS AN EXCUSABLE, NON-COMPENSABLE DELAY PER 108.06.B. ON PROJECTS THAT HAVE ACTIVITIES DELAYED DUE TO CONFLICTS WHERE THE CONTRACTOR FAILED TO MEET THE NOTIFICATION REQUIREMENTS, THE DELAYS SHALL NOT BE CONSIDERED EXCUSABLE OR COMPENSABLE.

ATTENDANCE AT DEPARTMENT ORDERED TRAFFIC COORDINATION MEETINGS BETWEEN ADJACENT PROJECTS SHALL BE CONSIDERED MANDATORY FOR EACH PROJECT'S SUPERINTENDENT AND WORKSITE TRAFFIC SUPERVISOR (WTS), AND INCIDENTAL TO THE LUMP SUM MAINTENANCE OF TRAFFIC PAYMENT ITEM.

COORDINATION WITH THE U.S. 42/S.R. 302 (PID 114065) IS EXTREMELY IMPORTANT. THE EAST LEG OF U.S. 42/S.R. 302 AND S.R. 89/S.R. 302 ARE BOTH TO BE CLOSED APRIL 2024. THE ENTIRE INTERSECTION OF S.R. 302 AND S.R. 89 IS TO BE CLOSED JUNE 2024 TO JULY 2024. WHEN S.R. 302 AND S.R. 89 ARE OPENED, THE U.S. 42/S.R. 302 INTERSECTION CAN THEN BE CLOSED.

SEQUENCE OF CONSTRUCTION

THE FIRST PHASE OF CONSTRUCTION WILL BE CONSTRUCTING THE NORTHEAST QUADRANT OF THE ROUNDABOUT AND ENTIRE EAST LEG OF S.R. 302. S.R. 302 TRAFFIC IS TO BE DETOURED AS SHOWN IN THE PART 1 PLAN SET. THE WEST LEG OF S.R. 302 AND THE NORTH AND SOUTH LEGS OF S.R. 89 ARE TO REMAIN FULLY OPEN AND UNAFFECTED DURING THIS PHASE OF CONSTRUCTION. THE WORK TO BE PERFORMED DURING THIS PHASE WILL INCLUDE THE FOLLOWING: THE CONSTRUCTION UP TO AND INCLUDING THE INTERMEDIATE COURSE, CURB ITEMS, AND DRAINAGE ITEMS. 1

THE SECOND PHASE OF CONSTRUCTION WILL CLOSE THE ENTIRE INTERSECTION OF S.R. 302 AND S.R. 89. S.R. 302 TRAFFIC IS TO BE DETOURED AS SHOWN IN THE PART 1 PLAN SET. S.R. 89 TRAFFIC IS TO BE DETOURED AS SHOWN ON SHEET P.14. THE WORK TO BE PERFORMED DURING THIS PHASE WILL INCLUDE THE FOLLOWING: THE CONSTRUCTION OF THE REMAINING PAVEMENT UP TO AND INCLUDING THE SURFACE COURSE, CURB ITEMS, AND DRAINAGE ITEMS. AT A MINIMUM THE PAVEMENT MARKING, RAISED PAVEMENT MARKERS, CURBING, SIGNAGE, LIGHTING, AND LANDSCAPING WILL BE IN PLACE AND FUNCTIONAL PRIOR TO THE OPENING OF LANES TO TRAFFIC. 1

1

ITEM 625, TEMPORARY LIGHTING

INSTALL ALL PERMANENT LIGHTING PRIOR TO OPENING THE PROPOSED FACILITY TO TRAFFIC. IF THE PERMANENT LIGHTING IS NOT ABLE TO BE COMPLETED PRIOR TO OPENING, SUPPLY TEMPORARY LIGHTING MEETING THE PHOTOMETRIC PROPERTIES OF THE PERMANENT LIGHTING PLAN PRIOR TO OPENING THE FACILITY TO TRAFFIC. A MINIMUM OF 14 DAYS PRIOR TO THE INSTALLATION OF ANY SUCH TEMPORARY LIGHTING, SUPPLY A TEMPORARY LIGHTING PLAN TO THE ENGINEER FOR APPROVAL. THIS LIGHTING PLAN MUST ALSO BE APPROVED BY THE DISTRICT TRAFFIC ENGINEER. THE CONTRACTOR IS PROHIBITED FROM INSTALLING ANY SUCH TEMPORARY LIGHTING UNTIL THE TEMPORARY LIGHTING PLAN IS APPROVED BY THE PROJECT AND DISTRICT TRAFFIC ENGINEERS.

AT A MINIMUM, THE TEMPORARY LIGHTING SHALL PROVIDE AN AVERAGE INITIAL INTENSITY OF 0.8 FOOT-CANDLES WITH AN AVERAGE-TO-MINIMUM UNIFORMITY NOT TO EXCEED 3:1. THE MOUNTING HEIGHT OF TEMPORARY LUMINAIRES SHALL NOT BE LESS THAN 30 FEET AND THE MINIMUM OVERHEAD CONDUCTOR CLEARANCE SHALL BE 20 FEET. TEMPORARY OVERHEAD CONSTRUCTION SHALL NOT BE LESS THAN GRADE "B" FOR STRENGTH REQUIREMENTS AS DEFINED BY THE NATIONAL ELECTRIC SAFETY CODE. WOOD POLES WITH OVERHEAD WIRING MAY BE USED. HOWEVER, TEMPORARY LIGHTING SHALL MEET FEDERAL AND STATE SAFETY CRITERIA. IF BREAKAWAY POLES ARE USED TO MEET THESE CRITERIA, THEN UNDERGROUND WIRING SHALL BE USED. RECONDITIONED OR USED MATERIALS MAY BE FURNISHED FOR TEMPORARY LIGHTING. WHEN POSSIBLE, THE TEMPORARY LIGHTING SHALL UTILIZE A PERMANENT POWER SOURCE (i.e. A POWER DROP FROM AN EXISTING OR PROPOSED TRANSMISSION OR DISTRIBUTION ELECTRIC LINE) RATHER THAN A TEMPORARY SOURCE (i.e. PORTABLE GENERATORS). TEMPORARY SOURCES OF ELECTRICITY MAY ONLY BE USED WHEN NO PERMANENT SOURCES ARE AVAILABLE.

AFTER THE INSTALLATION, INSPECTION, AND ACCEPTANCE OF THE FINAL PERMANENT LIGHTING, AND WHEN THE TEMPORARY LIGHTING IS NO LONGER NEEDED, REMOVE AND PROPERLY DISPOSE OF THE TEMPORARY LIGHTING EQUIPMENT AND MATERIALS.

IN ACCORDANCE WITH C&MS 105, THE CONTRACTOR IS ALSO RESPONSIBLE FOR MAINTAINING EXISTING LIGHTING PRIOR TO CLOSURE OF THE PROJECT AREA TO TRAFFIC.

PAYMENT FOR THE ABOVE DETAILED TEMPORARY LIGHTING, IF NEEDED, WILL BE CONSIDERED INCIDENTAL TO THE LUMP SUM BID PRICE FOR MAINTENANCE OF TRAFFIC AND WILL INCLUDE ALL MATERIAL, EQUIPMENT, LABOR, AND OTHER INCIDENTALS NEEDED TO COMPLETE THE WORK. 1

MAINTAINING ACCESS TO PRIVATE RESIDENCES

THE CONTRACTOR MUST SUBMIT A PLAN FOR REVIEW AND APPROVAL TO ODOT IN ORDER TO MAINTAIN ACCESS TO THE PRIVATE PROPERTIES ON THE ROADWAY SECTION BETWEEN SR-89/SR-302 AND US-42/SR-302 INTERSECTIONS. FULL ACCESS MUST BE MAINTAINED THROUGHOUT CONSTRUCTION OF BOTH INTERSECTIONS.

THE FOLLOWING ESTIMATED QUANTITIES HAVE BEEN INCLUDED IN THE GENERAL SUMMARY FOR USE AS DETERMINED BY THE ENGINEER FOR THE MAINTENANCE OF TRAFFIC.

1

ITEM 615 - ROADS FOR MAINTAINING TRAFFIC	LS
ITEM 410 - TRAFFIC COMPACTED SURFACE, CLASS B	159 CY

1

MAINTENANCE OF TRAFFIC GENERAL NOTES

DESIGN AGENCY
ARCADIS
7575 HUNTINGTON PARK DR, STE 130
COLUMBUS, OHIO 43235
(614) 895-3700
www.arcadis.com

DESIGNER
EJT

REVIEWER
TR 02-23-23

PROJECT ID
114065

SHEET P.11 TOTAL 130

MODEL: Sheet 2 PAPERSIZE: 34x22 (in.) DATE: 1/25/2024 TIME: 9:07:04 AM USER: ETheller
pw:\\arcadis-us-pw.bentley.com:arcadis-us-01\Documents\01 Active Projects\30108054\400_CAD\400-Engineering\MOT\Sheets\114149_MN001.dgn

SHEET NUM.												PART.		ITEM	ITEM EXT	GRAND TOTAL	UNIT	DESCRIPTION	SEE SHEET NO.
OFFICE CALCS		8	18	19	20	108						01/SAF/21	02/SAE/21						
																		ROADWAY - PART 2	
													LS	201	11000	LS		CLEARING AND GRUBBING	
1			2										2	202	20010	2	EACH	HEADWALL REMOVED	
5,730													5,730	202	23000	5,730	SY	PAVEMENT REMOVED	
			87										87	202	35100	87	FT	PIPE REMOVED, 24" AND UNDER	
			2										2	202	53100	2	EACH	MAILBOX REMOVED	
			1										1	202	58100	1	EACH	CATCH BASIN REMOVED	
			591										591	202	75000	591	FT	FENCE REMOVED	
													7,170	203	10000	7,170	CY	EXCAVATION	
													2,370	203	20000	2,370	CY	EMBANKMENT	
11,162													11,162	204	10000	11,162	SY	SUBGRADE COMPACTION	
4													4	204	45000	4	HOUR	PROOF ROLLING	
289													289	206	10500	289	TON	CEMENT	
11,162													11,162	206	11000	11,162	SY	CURING COAT	
11,162													11,162	206	15010	11,162	SY	CEMENT STABILIZED SUBGRADE, 12 INCHES DEEP	
			2										2	SPECIAL	69050100	2	EACH	MAILBOX SUPPORT SYSTEM, SINGLE	18
													4	623	38500	4	EACH	MONUMENT ASSEMBLY, TYPE C	
												1	1	623	40520	1	EACH	RIGHT-OF-WAY MONUMENT, TYPE B	
													LS	623	50000	LS		PRECONSTRUCTION SURVEY MONUMENT VERIFICATION AND REPORT	
													LS	623	51000	LS		POST CONSTRUCTION SURVEY MONUMENT VERIFICATION AND REPORT	
																		EROSION CONTROL - PART 2	
2													2	659	00100	2	EACH	SOIL ANALYSIS TEST	
1,286													1,286	659	00300	1,286	CY	TOPSOIL	
11,584													11,584	659	10000	11,584	SY	SEEDING AND MULCHING	
580													580	659	14000	580	SY	REPAIR SEEDING AND MULCHING	
1 580				1									580	659	15000	580	SY	INTER-SEEDING	
1.62													1.62	659	20000	1.62	TON	COMMERCIAL FERTILIZER	
2.4													2.4	659	31000	2.4	ACRE	LIME	
65													65	659	35000	65	MGAL	WATER	
27													27	659	40000	27	MSF	MOWING	
													50,000	832	30000	50,000	EACH	EROSION CONTROL	
													LS	832	15000	LS		STORM WATER POLLUTION PREVENTION PLAN	21
													LS	832	15002	LS		STORM WATER POLLUTION PREVENTION INSPECTIONS	21
													LS	832	15010	LS		STORM WATER POLLUTION PREVENTION INSPECTION SOFTWARE	21
																		DRAINAGE - PART 2	
				2									2	601	32200	2	CY	ROCK CHANNEL PROTECTION, TYPE C WITH FILTER	
				2.22									2.22	602	20000	2.22	CY	CONCRETE MASONRY	
				3,827									3,827	605	14020	3,827	FT	6" BASE PIPE UNDERDRAINS WITH GEOTEXTILE FABRIC	
				180									180	611	00510	180	FT	6" CONDUIT, TYPE F FOR UNDERDRAIN OUTLETS	
				61									61	611	04400	61	FT	12" CONDUIT, TYPE B	
				104									104	611	04600	104	FT	12" CONDUIT, TYPE C	
				388									388	611	05900	388	FT	15" CONDUIT, TYPE B	
				110									110	611	06100	110	FT	15" CONDUIT, TYPE C	
				95									95	611	06400	95	FT	15" CONDUIT, TYPE D	
				101									101	611	07200	101	FT	18" CONDUIT, TYPE A	
				4									4	611	98150	4	EACH	CATCH BASIN, NO. 3	
				2									2	611	98180	2	EACH	CATCH BASIN, NO. 3A	
				4									4	611	98470	4	EACH	CATCH BASIN, NO. 2-2B	
				1									1	611	98630	1	EACH	CATCH BASIN ADJUSTED TO GRADE	
				1									1	611	99574	1	EACH	MANHOLE, NO. 3	
				6									6	611	99710	6	EACH	PRECAST REINFORCED CONCRETE OUTLET	
																		PAVEMENT - PART 2	
1,387													1,387	301	56000	1,387	CY	ASPHALT CONCRETE BASE, PG64-22, (449)	
1,852					36								1,888	304	20000	1,888	CY	AGGREGATE BASE	
1,226				1									1,226	407	20000	1,226	GAL	NON-TRACKING TACK COAT	
					40								40	411	10000	40	CY	STABILIZED CRUSHED AGGREGATE	
					12								12	441	70500	12	CY	ASPHALT CONCRETE SURFACE COURSE, TYPE 1, (449), (DRIVEWAYS)	
348													348	442	00200	348	CY	ASPHALT CONCRETE SURFACE COURSE, 9.5 MM, TYPE A (446)	
348													348	442	20170	348	CY	ASPHALT CONCRETE INTERMEDIATE COURSE, 12.5 MM, TYPE A (448)	
360													360	452	19200	360	SY	NON-REINFORCED CONCRETE PAVEMENT, MISC.: 8" TRUCK APRON, STAINED	

GENERAL SUMMARY

DESIGN AGENCY
Kimley»Horn
Expect More. Experience Better.

DESIGNER
KCS

REVIEWER
GDK 09/22/23

PROJECT ID
114149

SHEET P.16 TOTAL 130

ASD-89-13.36

MODEL: Sheet PAPERSIZE: 34x22 (in.) DATE: 1/24/2024 TIME: 4:41:34 PM USER: dan.rinehart
K:\CLB_Civil\State\ODOT\190093002_ASD-89 Roundabout\2 Design\114149\400-Engineering\Roadway\Sheets\114149_GG001.dgn

SHEET NUM.												PART.		ITEM	ITEM EXT	GRAND TOTAL	UNIT	DESCRIPTION	SEE SHEET NO.
OFFICE CALCS		10	11	18	95	97	104	105				01/SAF/21	02/SAE/21						
																		PAVEMENT - PART 2	
				1,291									1,291	609	12000	1,291	FT	COMBINATION CURB AND GUTTER, TYPE 2	
				290									290	609	22001	290	FT	CURB, TYPE 3-B, AS PER PLAN	7
				209									209	609	24511	209	FT	CURB, TYPE 4-C, AS PER PLAN	7
				1,720									1,720	609	26001	1,720	FT	CURB, TYPE 6, AS PER PLAN	7
837													837	609	54001	837	SY	6" CONCRETE TRAFFIC ISLAND, AS PER PLAN, TOOLED AND STAINED	9
																		LIGHTING - PART 2	
							100						100	611	00407	100	FT	4" CONDUIT, TYPE F, AS PER PLAN	104
								22					22	625	00450	22	EACH	CONNECTION, FUSED PULL APART	
								11					11	625	00460	11	EACH	CONNECTION, UNFUSED PULL APART	
								12					12	625	00480	12	EACH	CONNECTION, UNFUSED PERMANENT	
								1					1	625	10490	1	EACH	LIGHT POLE, CONVENTIONAL, AT10B40	
								1					1	625	10490	1	EACH	LIGHT POLE, CONVENTIONAL, AT6B40	
								2					2	625	10490	2	EACH	LIGHT POLE, CONVENTIONAL, AT8B30	
								7					7	625	10490	7	EACH	LIGHT POLE, CONVENTIONAL, AT8B40	
								11					11	625	14100	11	EACH	LIGHT POLE FOUNDATION, 24" X 8' DEEP	
								651					651	625	23302	651	FT	NO. 6 AWG 2400 VOLT DISTRIBUTION CABLE	
								1,016					1,016	625	23400	1,016	FT	NO. 10 AWG POLE AND BRACKET CABLE	
								1,086					1,086	625	24324	1,086	FT	1-1/2" DUCT CABLE WITH THREE NO. 6 AWG 2400 VOLT CABLES	
								200					200	625	25500	200	FT	CONDUIT, 3", 725.04	
								2					2	625	26253	2	EACH	LUMINAIRE, CONVENTIONAL, SOLID STATE (LED), AS PER PLAN, TYPE II	104
								9					9	625	26253	9	EACH	LUMINAIRE, CONVENTIONAL, SOLID STATE (LED), AS PER PLAN, TYPE III	104
								1,146					1,146	625	29002	1,146	FT	TRENCH, 24" DEEP	
								3					3	625	30700	3	EACH	PULL BOX, 725.08, 18"	
								4					4	625	30706	4	EACH	PULL BOX, 725.08, 24"	
								11					11	625	32000	11	EACH	GROUND ROD	
								1					1	625	34001	1	EACH	POWER SERVICE, AS PER PLAN	104
								1,146					1,146	625	36010	1,146	FT	UNDERGROUND WARNING/MARKING TAPE	
							1						1	625	76000	1	EACH	ARC FLASH CALCULATIONS AND LABEL, CONTROL CENTER	
																		TRAFFIC CONTROL - PART 2	
					139								139	621	00100	139	EACH	RPM	
						341							341	630	03100	341	FT	GROUND MOUNTED SUPPORT, NO. 3 POST	
					1	4						1	4	630	08600	4	EACH	SIGN POST REFLECTOR	
						158.9							158.9	630	80100	158.9	SF	SIGN, FLAT SHEET	
						52							52	630	84900	52	EACH	REMOVAL OF GROUND MOUNTED SIGN AND DISPOSAL	
						44							44	630	86002	44	EACH	REMOVAL OF GROUND MOUNTED POST SUPPORT AND DISPOSAL	
				1	1.19							1	1.19	644	00100	1.19	MILE	EDGE LINE, 4"	
					0.42								0.42	644	00300	0.42	MILE	CENTER LINE	
					280								280	644	00700	280	FT	TRANSVERSE/DIAGONAL LINE	
					199								199	644	01500	199	FT	DOTTED LINE, 4"	
					76								76	644	20800	76	FT	YIELD LINE	
																		LANDSCAPING - PART 2	
													359	204	50000	359	SY	GEOTEXTILE FABRIC	
													359	657	10001	359	SY	RIPRAP FOR TREE PROTECTION, AS PER PLAN	8
													4	661	00500	4	CY	MULCH	
													22	661	19000	22	EACH	DECIDUOUS SHRUB, 12" HEIGHT, FRAGRANT SUMAC (3 GAL)	
													4	661	50040	4	EACH	EVERGREEN TREE, 2' HEIGHT, MUGO PINE (5 GAL)	
																		MAINTENANCE OF TRAFFIC - PART 2	
			953									1	159	410	11000	159	CY	TRAFFIC COMPACTED SURFACE, TYPE B	
		100											100	614	11110	100	HOUR	LAW ENFORCEMENT OFFICER WITH PATROL CAR FOR ASSISTANCE	
													LS	614	12420	LS		DETOUR SIGNING	
													LS	615	10000	LS		ROADS FOR MAINTAINING TRAFFIC	
		19											19	615	10006	19	MGAL	WATER	
												1						INCIDENTALS - PART 2	
													LS	614	11000	LS		MAINTAINING TRAFFIC	
													4	619	16010	4	MNTH	FIELD OFFICE, TYPE B	
													LS	623	10000	LS		CONSTRUCTION LAYOUT STAKES AND SURVEYING	
													1	624	15000	1	EACH	MOBILIZATION	

GENERAL SUMMARY

DESIGN AGENCY
Kimley»Horn
Expect More. Experience Better.

DESIGNER
KCS

REVIEWER
GDK 09/22/23

PROJECT ID
114149

SHEET P.17 TOTAL 130

ASD-89-13.36

MODEL: Sheet PAPERSIZE: 34x22 (in.) DATE: 1/25/2024 TIME: 1:13:20 PM USER: dan.rinehart
K:\CLB_Civil\State\ODOT\190093002_ASD-89 Roundabout\2 Design\114149\400-Engineering\Roadway\Sheets\114149_GG002.dgn

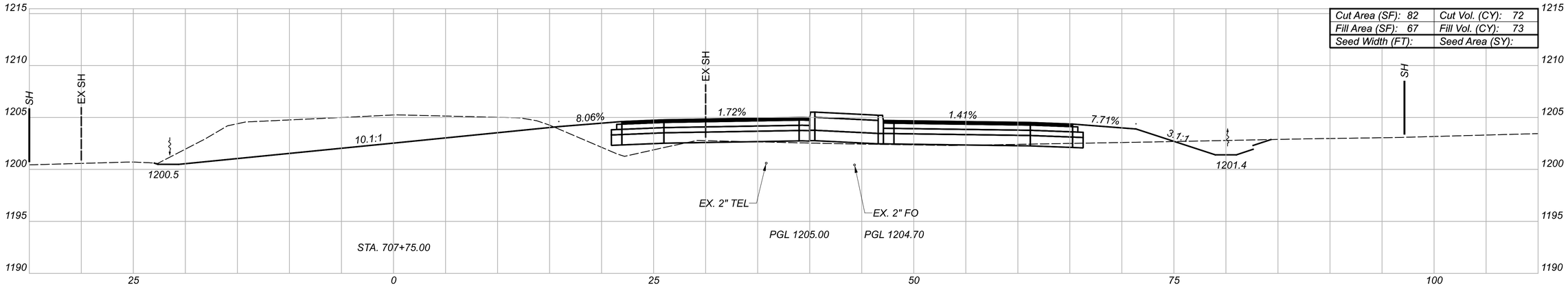

Cut Area (SF): 82	Cut Vol. (CY): 72
Fill Area (SF): 67	Fill Vol. (CY): 73
Seed Width (FT):	Seed Area (SY):

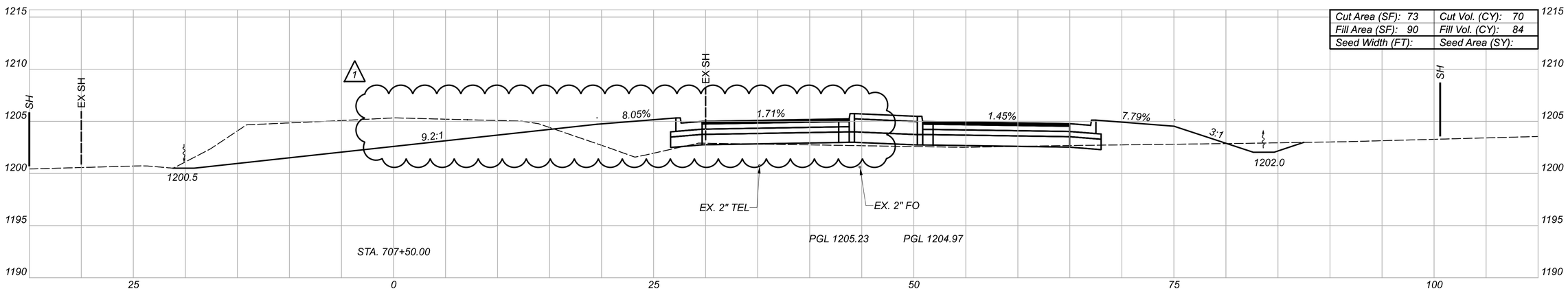

Cut Area (SF): 73	Cut Vol. (CY): 70
Fill Area (SF): 90	Fill Vol. (CY): 84
Seed Width (FT):	Seed Area (SY):

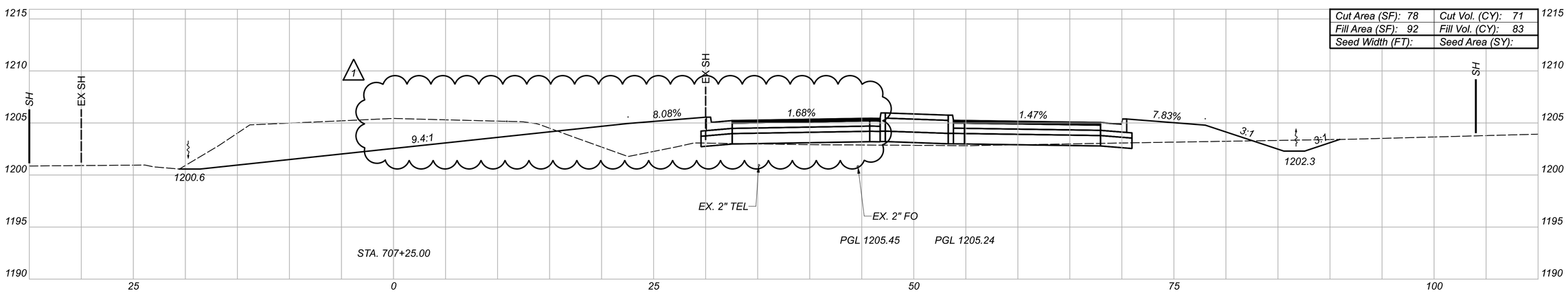

Cut Area (SF): 78	Cut Vol. (CY): 71
Fill Area (SF): 92	Fill Vol. (CY): 83
Seed Width (FT):	Seed Area (SY):

CROSS SECTIONS - SR-89
STA. 707+25.00 TO STA. 707+75.00

DESIGN AGENCY
Kimley»Horn

DESIGNER
KKH

REVIEWER
GDK 09/22/23

PROJECT ID
114149

Sheet Totals		
Seeding	Cut	Fill
-	213	240

SHEET	TOTAL
P.47	130

ASD-89-13.36

MODEL: CLX_RW_89 - 707+25.00 [Sheet] PAPERSIZE: 34x22 (in.) DATE: 1/24/2024 TIME: 4:53:37 PM USER: danrlnehart
K:\CLB_Civil\State\ODOT\90093002_ASD-89 Roundabout\2 Design\114149\400-Engineering\Roadway\Sheets\114149_XS100.dgn

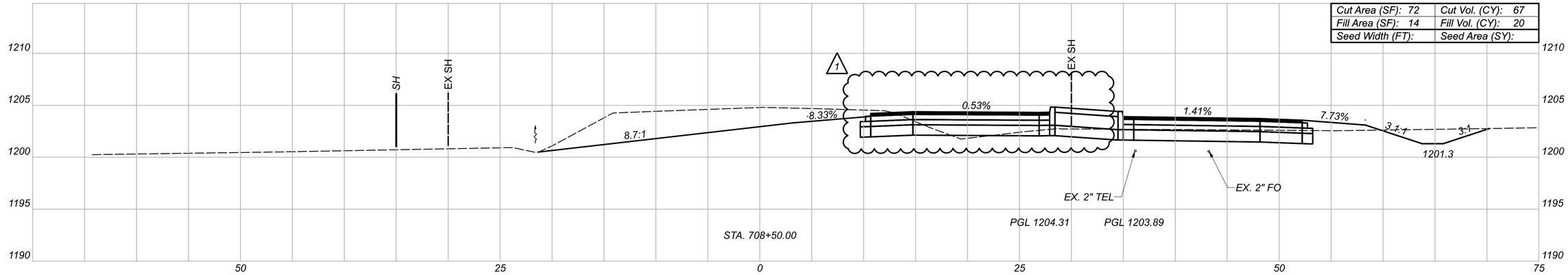

Cut Area (SF): 72	Cut Vol. (CY): 67
Fill Area (SF): 14	Fill Vol. (CY): 20
Seed Width (FT):	Seed Area (SY):

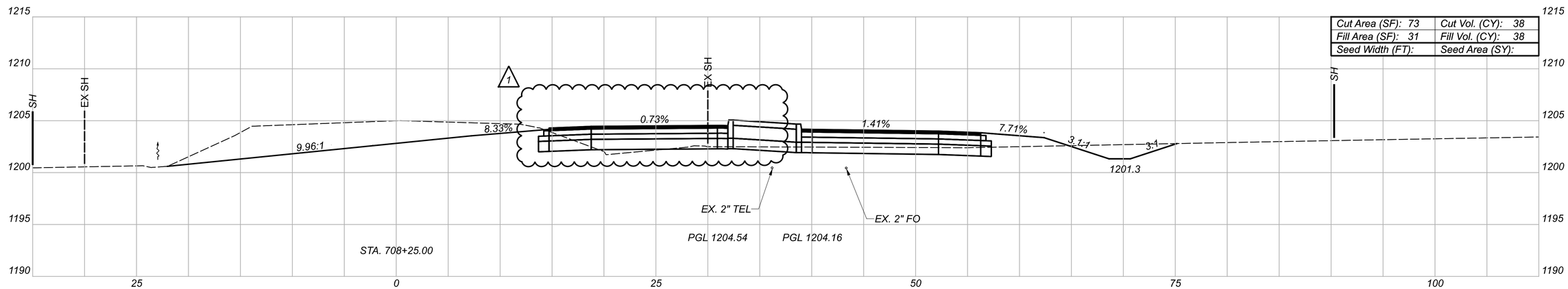

Cut Area (SF): 73	Cut Vol. (CY): 38
Fill Area (SF): 31	Fill Vol. (CY): 38
Seed Width (FT):	Seed Area (SY):

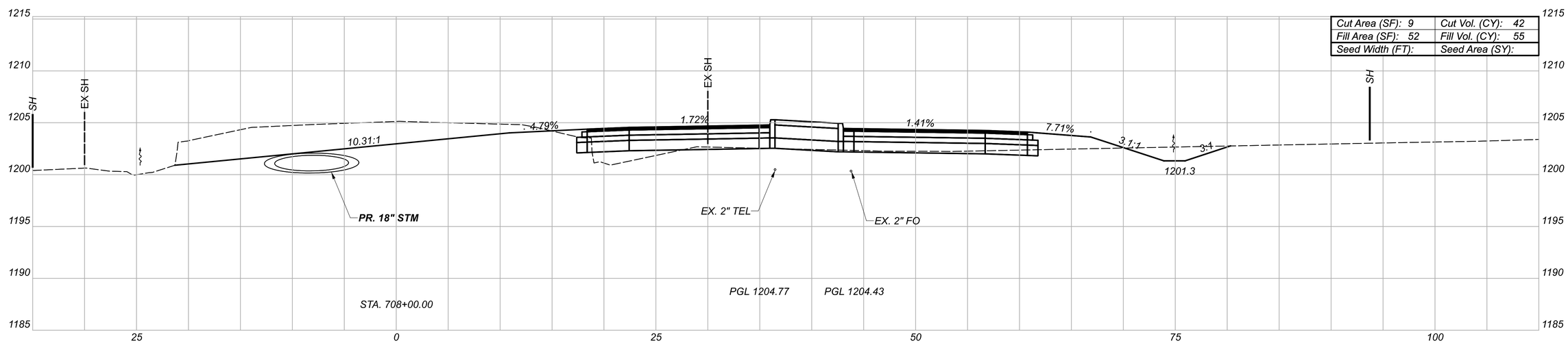

Cut Area (SF): 9	Cut Vol. (CY): 42
Fill Area (SF): 52	Fill Vol. (CY): 55
Seed Width (FT):	Seed Area (SY):

Sheet Totals		
Seeding	Cut	Fill
-	147	113

CROSS SECTIONS - SR-89
STA. 708+00.00 TO STA. 708+50.00

DESIGN AGENCY
Kimley»Horn
Expert Solutions. Experienced People.

DESIGNER
KKH

REVIEWER
GDK 09/22/23

PROJECT ID
114149

SHEET P.48 TOTAL 130

ASD-89-13.36

MODEL: CLX_RW_89 - 708+00.00 [Sheet] PAPERSIZE: 34x22 (in.) DATE: 1/24/2024 TIME: 4:55:06 PM USER: dan.rinehart
K:\CLB_Civil\State\ODOT\190093002_ASD-89 Roundabout\2 Design\114149\400-Engineering\Roadway\Sheets\114149_XS100.dgn

CROSS SECTIONS - SR-89
STA. 708+75.00 TO STA. 709+25.00

Cut Area (SF): 91	Cut Vol. (CY): 82
Fill Area (SF): 4	Fill Vol. (CY): 3
Seed Width (FT):	Seed Area (SY):

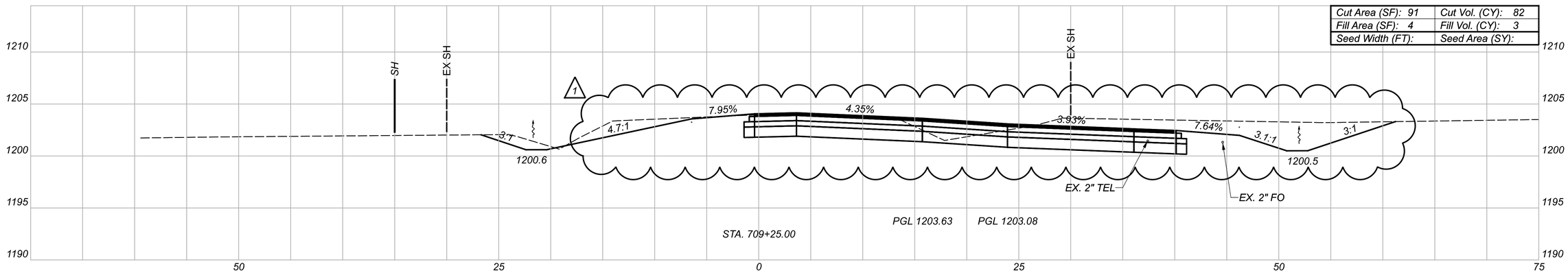

Cut Area (SF): 87	Cut Vol. (CY): 78
Fill Area (SF): 4	Fill Vol. (CY): 5
Seed Width (FT):	Seed Area (SY):

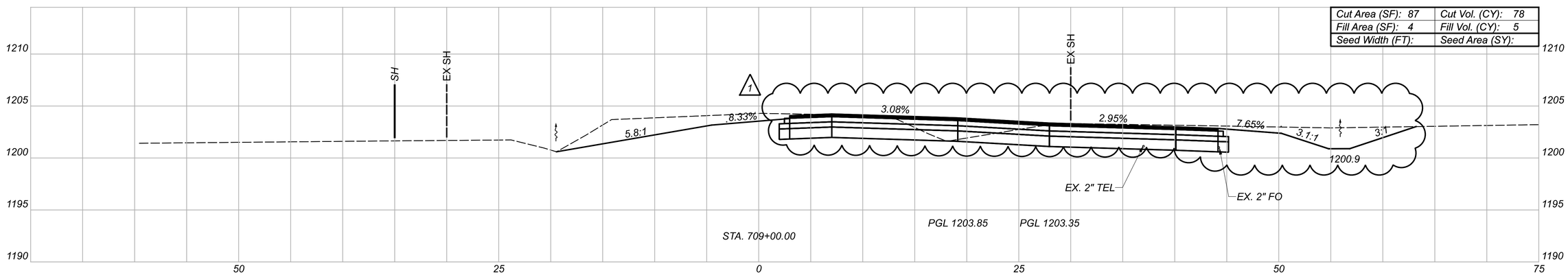

Cut Area (SF): 80	Cut Vol. (CY): 70
Fill Area (SF): 7	Fill Vol. (CY): 9
Seed Width (FT):	Seed Area (SY):

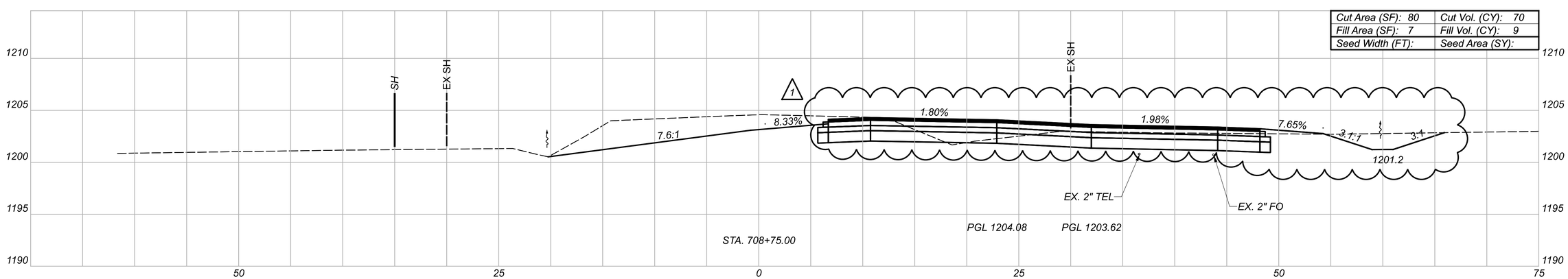

Sheet Totals		
Seeding	Cut	Fill
-	230	17

DESIGN AGENCY
Kimley»Horn

DESIGNER
KKH

REVIEWER
GDK 09/22/23

PROJECT ID
114149

SHEET P.49 TOTAL 130

ASD-89-13.36

MODEL: CLX_RW_89 - 708+75.00 [Sheet] PAPERSIZE: 34x22 (in.) DATE: 1/25/2024 TIME: 1:13:24 PM USER: dan.rinehart
K:\CLB_Civil\State\ODOT\19093002_ASD-89 Roundabout\2 Design\114149\400-Engineering\Roadway\Sheets\114149_XS100.dgn

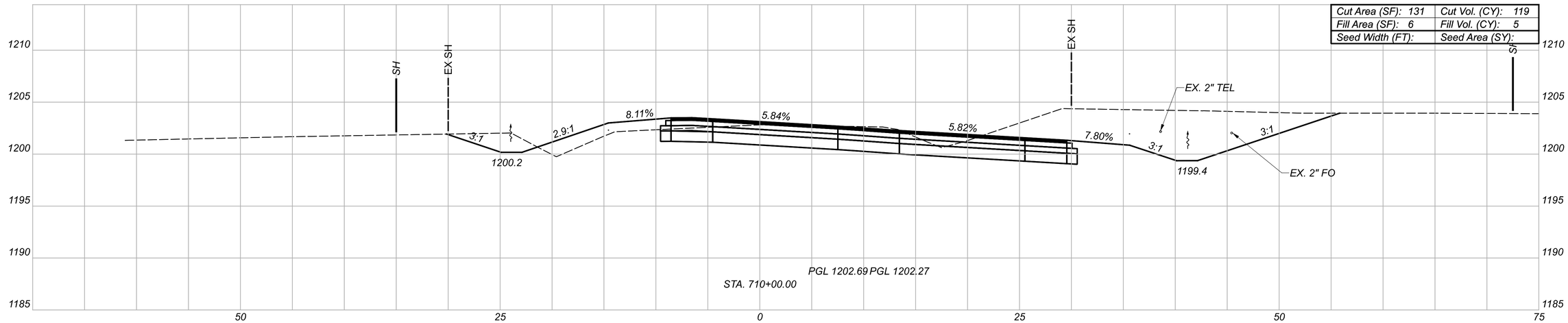

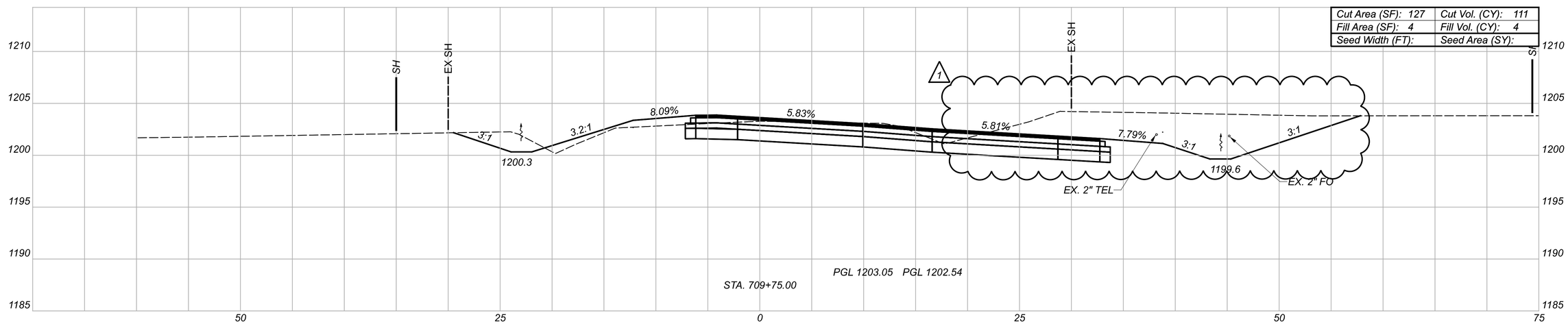

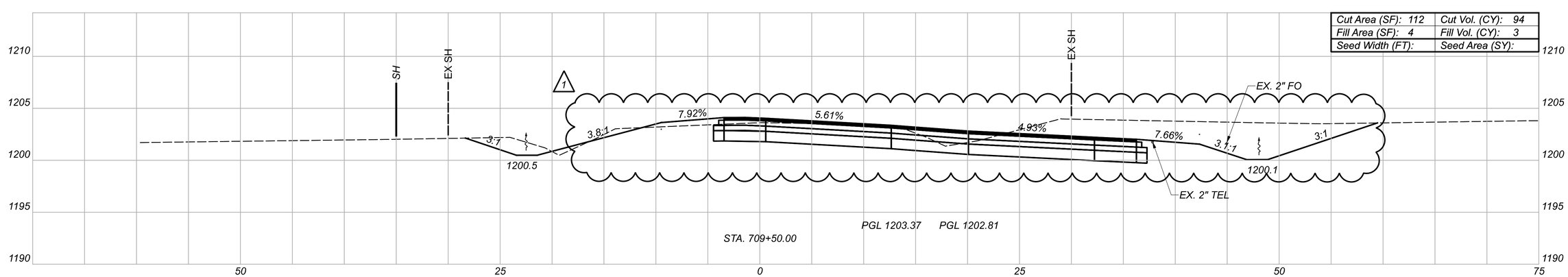

CROSS SECTIONS - SR-89
STA. 709+50.00 TO STA. 710+00.00

DESIGN AGENCY
Kimley»Horn

DESIGNER
KKH

REVIEWER
GDK 09/22/23

PROJECT ID
114149

Sheet Totals		
Seeding	Cut	Fill
-	324	12

SHEET P.50 TOTAL 130

ASD-89-13.36

MODEL: CLX_RW_89 - 709+50.00 [Sheet] PAPERSIZE: 34x22 (in.) DATE: 1/25/2024 TIME: 1:13:26 PM USER: dan.rinehart
K:\CLB_Civil\State\ODOT\190093002_ASD-89 Roundabout\2 Design\114149\400-Engineering\Roadway\Sheets\114149_XS100.dgn

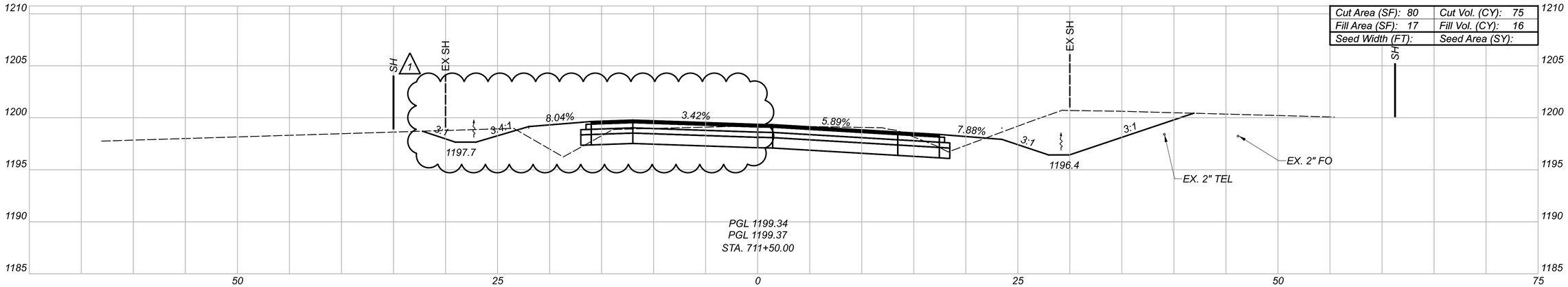

Cut Area (SF): 80	Cut Vol. (CY): 75
Fill Area (SF): 17	Fill Vol. (CY): 16
Seed Width (FT):	Seed Area (SY):

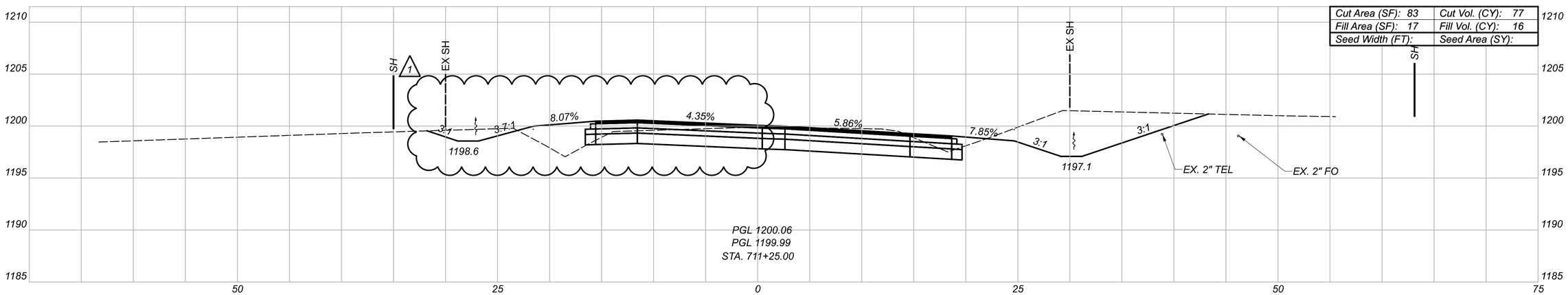

Cut Area (SF): 83	Cut Vol. (CY): 77
Fill Area (SF): 17	Fill Vol. (CY): 16
Seed Width (FT):	Seed Area (SY):

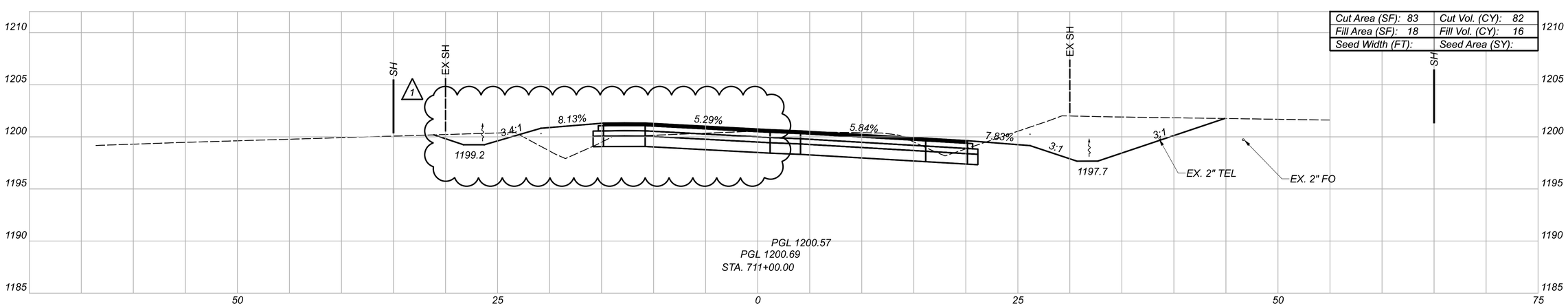

Cut Area (SF): 83	Cut Vol. (CY): 82
Fill Area (SF): 18	Fill Vol. (CY): 16
Seed Width (FT):	Seed Area (SY):

Sheet Totals		
Seeding	Cut	Fill
-	234	48

CROSS SECTIONS - SR-89
STA. 711+00.00 TO STA. 711+50.00

DESIGN AGENCY
Kimley»Horn
Expand the Possible. Experience More.

DESIGNER
KKH

REVIEWER
GDK 09/22/23

PROJECT ID
114149

SHEET P.52 TOTAL 130

ASD-89-13.36

MODEL: CLX_RW_89 - 711+00.00 [Sheet] PAPERSIZE: 34x22 (in.) DATE: 1/24/2024 TIME: 4:55:12 PM USER: dan.rinehart
K:\CLB_Civil\State\ODOT\190093002_ASD-89 Roundabout\2 Design\114149\400-Engineering\Roadway\Sheets\114149_XS100.dgn

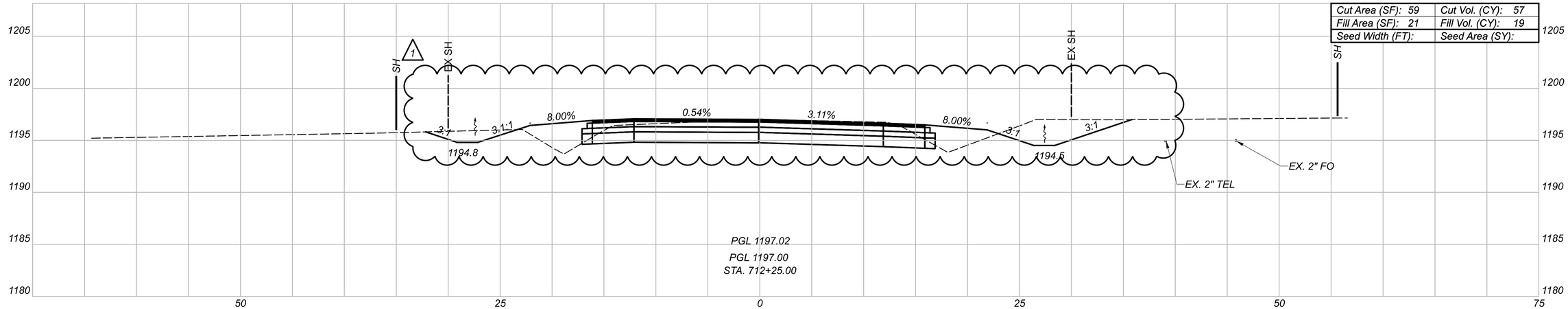

Cut Area (SF): 59	Cut Vol. (CY): 57
Fill Area (SF): 21	Fill Vol. (CY): 19
Seed Width (FT):	Seed Area (SY):

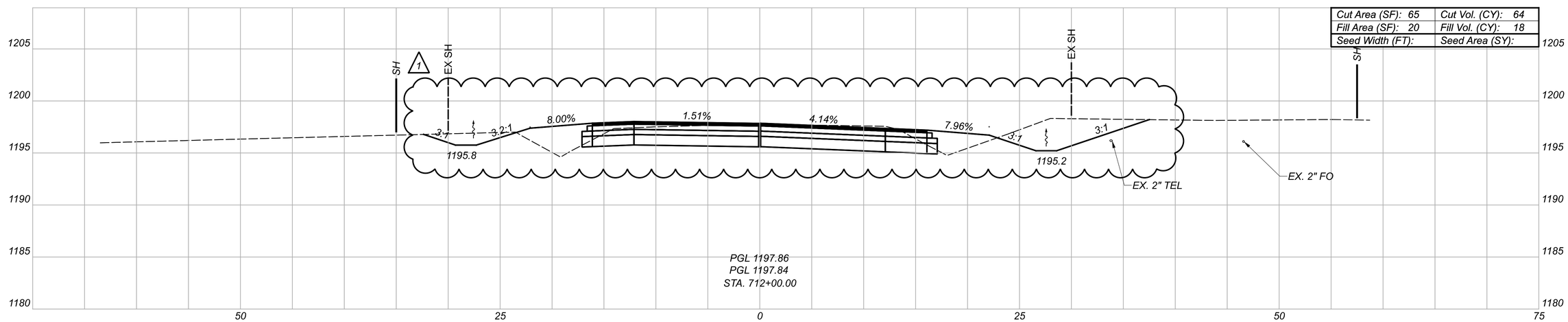

Cut Area (SF): 65	Cut Vol. (CY): 64
Fill Area (SF): 20	Fill Vol. (CY): 18
Seed Width (FT):	Seed Area (SY):

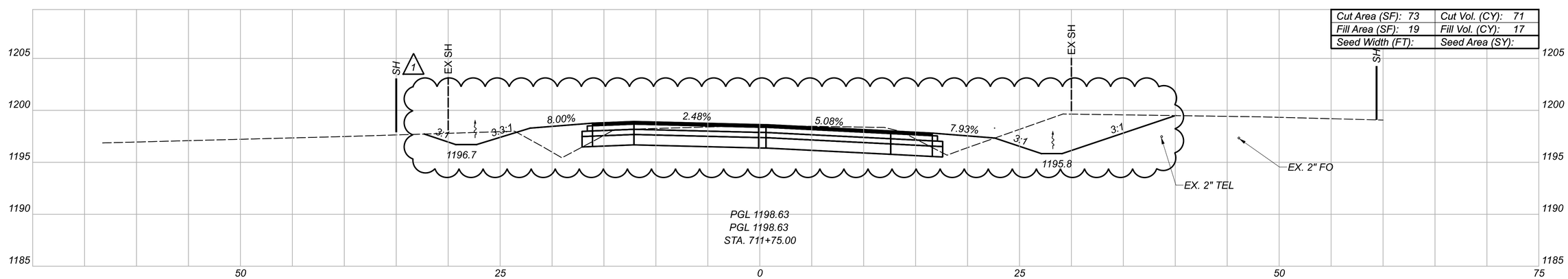

Cut Area (SF): 73	Cut Vol. (CY): 71
Fill Area (SF): 19	Fill Vol. (CY): 17
Seed Width (FT):	Seed Area (SY):

Sheet Totals		
Seeding	Cut	Fill
-	192	54

CROSS SECTIONS - SR-89
STA. 711+75.00 TO STA. 712+25.00

DESIGN AGENCY
Kimley»Horn

DESIGNER
KKH

REVIEWER
GDK 09/22/23

PROJECT ID
114149

SHEET P.53 TOTAL 130

ASD-89-13.36

MODEL: CLX_RW_89 - 711+75.00 [Sheet] PAPERSIZE: 34x22 (in.) DATE: 1/24/2024 TIME: 4:55:14 PM USER: dan.rinehart
K:\CLB_Civil\State\ODOT\190093002_ASD-89 Roundabout\2 Design\114149\400-Engineering\Roadway\Sheets\114149_XS100.dgn

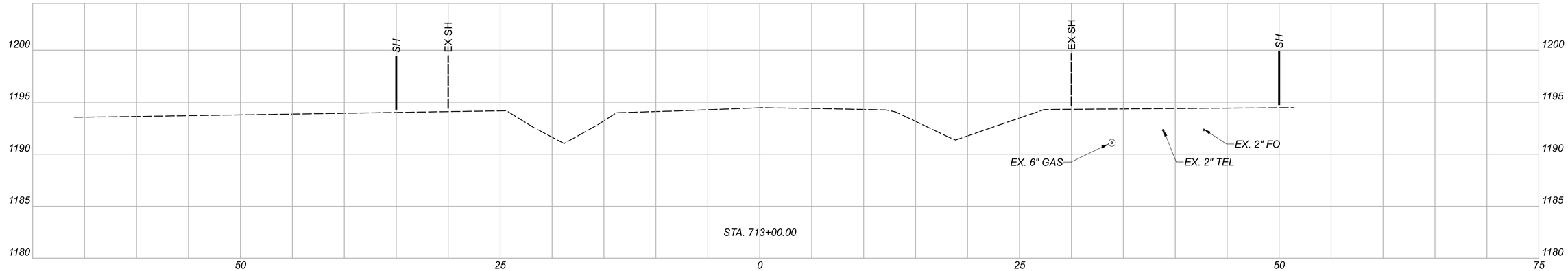

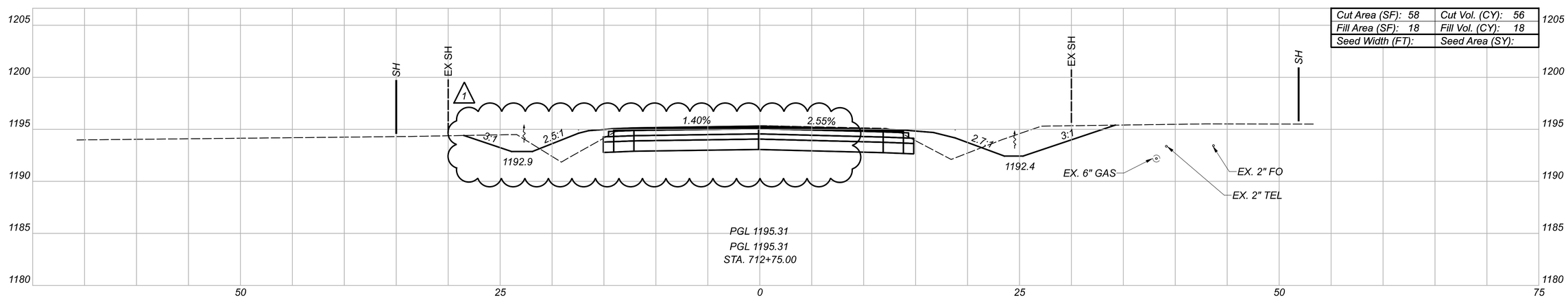

Cut Area (SF): 58	Cut Vol. (CY): 56
Fill Area (SF): 18	Fill Vol. (CY): 18
Seed Width (FT):	Seed Area (SY):

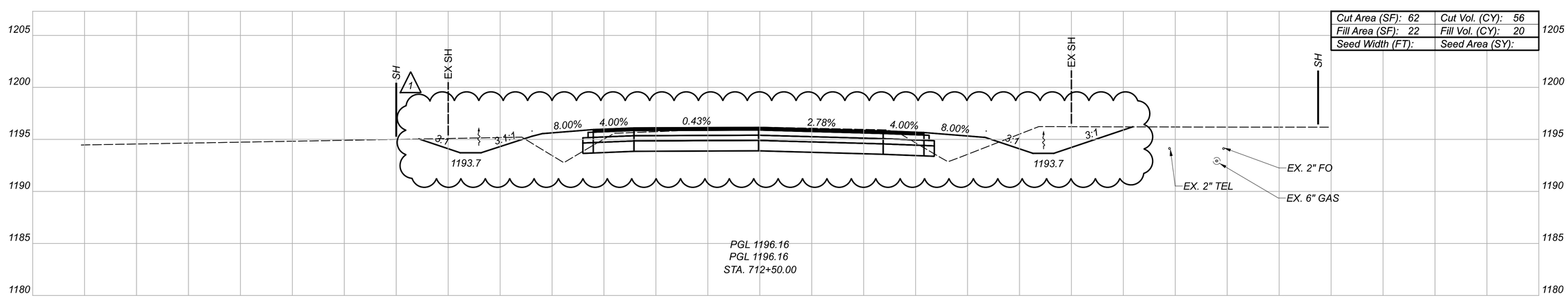

Cut Area (SF): 62	Cut Vol. (CY): 56
Fill Area (SF): 22	Fill Vol. (CY): 20
Seed Width (FT):	Seed Area (SY):

Sheet Totals		
Seeding	Cut	Fill
-	112	38

CROSS SECTIONS - SR-89
STA. 712+50.00 TO STA. 713+00.00

DESIGN AGENCY
Kimley»Horn

DESIGNER
KKH

REVIEWER
GDK 09/22/23

PROJECT ID
114149

SHEET P.54 TOTAL 130

ASD-89-13.36

MODEL: CLX_RW_89 - 712+50.00 [Sheet] PAPERSIZE: 34x22 (in.) DATE: 1/24/2024 TIME: 4:55:16 PM USER: danrinehart
K:\CLB_Civil\State\ODOT\190093002_ASD-89 Roundabout\2 Design\114149\400-Engineering\Roadway\Sheets\114149_XS100.dgn

SUPERELEVATION TABLE

REF. LINE 89S

P.I. STA. 710+41.46 — Dc = 02° 59' 59"

LEFT SIDE			CENTERLINE CONTROL				RIGHT SIDE					REMARKS
EDGE ELEVATION	TRANSITION RATE	*ELEVATION CORRECTION	CROSS SLOPE	WIDTH	STATION	PROFILE GRADE	WIDTH	CROSS SLOPE	*ELEVATION CORRECTION	TRANSITION RATE	EDGE ELEVATION	
1204.85		-0.21	-0.0160	12.99	707+88.63	1205.06						PT
1204.75		-0.20	-0.0160	12.78	708+00.00	1204.95						
1204.53		-0.20	-0.0160	12.33	708+25.00	1204.73						
1204.51		-0.18	-0.0150	12.28	708+28.63	1204.70						NC
1204.45		-0.05	-0.0043	12.00	708+50.00	1204.50						
1204.42		0.00	0.0000	12.00	708+58.63	1204.42						
1204.38		0.10	0.0082	12.00	708+75.00	1204.28						
1204.34		0.18	0.0150	12.00	708+88.63	1204.16						PC
1204.30	167:1	0.25	0.0207	12.00	709+00.00	1204.05						
1204.25		0.36	0.0300	12.00	709+18.63	1203.89						
1204.23		0.40	0.0332	12.00	709+25.00	1203.83						
1204.15		0.55	0.0457	12.00	709+50.00	1203.60						
1204.04		0.70	0.0582	12.00	709+75.00	1203.35						
1204.02		0.72	0.0600	12.00	709+78.63	1203.30						FS
1203.75		0.72	0.0600	12.00	710+00.00	1203.03						
1203.39		0.72	0.0600	12.00	710+25.00	1202.67						
1202.97		0.72	0.0600	12.00	710+50.00	1202.25						
1202.50		0.72	0.0600	12.00	710+75.00	1201.78						
1201.97		0.72	0.0600	12.00	711+00.00	1201.25						
1201.40		0.72	0.0600	12.00	711+07.79	1200.68						FS
1201.31		0.64	0.0533	12.00	711+25.00	1200.67						
1200.55		0.52	0.0436	12.00	711+50.00	1200.03						
1199.75		0.41	0.0339	12.00	711+75.00	1199.34						
1199.15		0.36	0.0301	12.00	711+84.79	1198.79						PT
1198.89		0.29	0.0242	12.00	712+00.00	1198.60						
1198.13		0.19	0.0161	12.00	712+20.79	1197.94						
1197.98	213:1	0.17	0.0145	12.00	712+25.00	1197.80						
1197.02		0.06	0.0048	12.00	712+50.00	1196.96						
1197.01		0.06	0.0046	12.00	712+50.34	1196.95	12.00	-0.0300	-0.36		1196.59	REF. LINE 89N POT STA. 712+59.02
		0.00	0.0000	12.00	712+61.79	1196.56	12.00	-0.0267	-0.32	213:1		
1196.05		-0.06	-0.0050	12.00	712+75.00	1196.11	12.00	-0.0229	-0.27		1195.83	
1194.34		-0.17	-0.0142	12.00	712+98.79	1194.51	12.00	-0.0160	-0.19		1194.32	NC

SUPERELEVATION TABLE

REF. LINE 89N

P.I. STA. 711+06.83 — Dc = 02° 59' 59"

CENTERLINE CONTROL		RIGHT SIDE					REMARKS
STATION	PROFILE GRADE	WIDTH	CROSS SLOPE	*ELEVATION CORRECTION	TRANSITION RATE	EDGE ELEVATION	
707+98.12	1204.75	12.99	-0.0160	-0.21		1204.54	PT
708+00.00	1204.73	12.97	-0.0160	-0.21		1204.52	
708+25.00	1204.46	12.52	-0.0160	-0.20		1204.26	
708+50.00	1204.20	12.06	-0.0160	-0.19		1204.01	
708+75.00	1203.93	12.00	-0.0160	-0.19		1203.74	
708+85.21	1203.82	12.00	-0.0160	-0.19		1203.63	NC
709+00.00	1203.67	12.00	-0.0218	-0.26		1203.41	
709+25.00	1203.40	12.00	-0.0315	-0.38		1203.03	
709+50.00	1203.14	12.00	-0.0412	-0.49	214:1	1202.64	
709+54.00	1203.09	12.00	-0.0428	-0.51		1202.58	PC
709+75.00	1202.87	12.00	-0.0510	-0.61		1202.26	
709+98.21	1202.63	12.00	-0.0600	-0.72		1201.91	FS
710+00.00	1202.61	12.00	-0.0600	-0.72		1201.89	
710+25.00	1202.34	12.00	-0.0600	-0.72		1201.62	
710+50.00	1202.03	12.00	-0.0600	-0.72		1201.31	
710+75.00	1201.66	12.00	-0.0600	-0.72		1200.94	
711+00.00	1201.22	12.00	-0.0600	-0.72		1200.50	
711+25.00	1200.72	12.00	-0.0600	-0.72		1200.00	
711+50.00	1200.16	12.00	-0.0600	-0.72		1199.44	
711+75.00	1199.53	12.00	-0.0600	-0.72		1198.81	
711+82.02	1198.84	12.00	-0.0600	-0.72		1198.12	FS
712+00.00	1198.84	12.00	-0.0530	-0.64		1198.20	
712+22.59	1198.16	12.00	-0.0442	-0.53		1197.63	
712+25.00	1198.09	12.00	-0.0433	-0.52		1197.57	
712+50.00	1197.27	12.00	-0.0335	-0.40	213:1	1196.86	
712+59.02	1196.96	12.00	-0.0300	-0.36		1196.60	POT = STA. 712+59.02 (REF. LINE 89S)

SEE SB SR-89 SUPERELVATION CURVE TABLE FOR CONTINUATION OF RIGHT SIDE TRANSITION

1

* - NEGATIVE CORRECTIONS MEANING BELOW PROFILE GRADE
POSITIVE CORRECTIONS MEANING ABOVE PROFILE GRADE.

SUPERELEVATION TABLE

DESIGN AGENCY
Kimley»Horn

DESIGNER
ZTW

REVIEWER
GDK 09/22/23

PROJECT ID
114149

SHEET P.77 TOTAL 130

ASD-89-13.36

MODEL: Sheet PAPERSIZE: 34x22 (in.) DATE: 1/24/2024 TIME: 4:42:30 PM USER: dan.rinehart
K:\CLB_Civil\State\ODOT\190093002_ASD-89 Roundabout\2 Design\114149\400-Engineering\Roadway\Sheets\114149_GE001.dgn

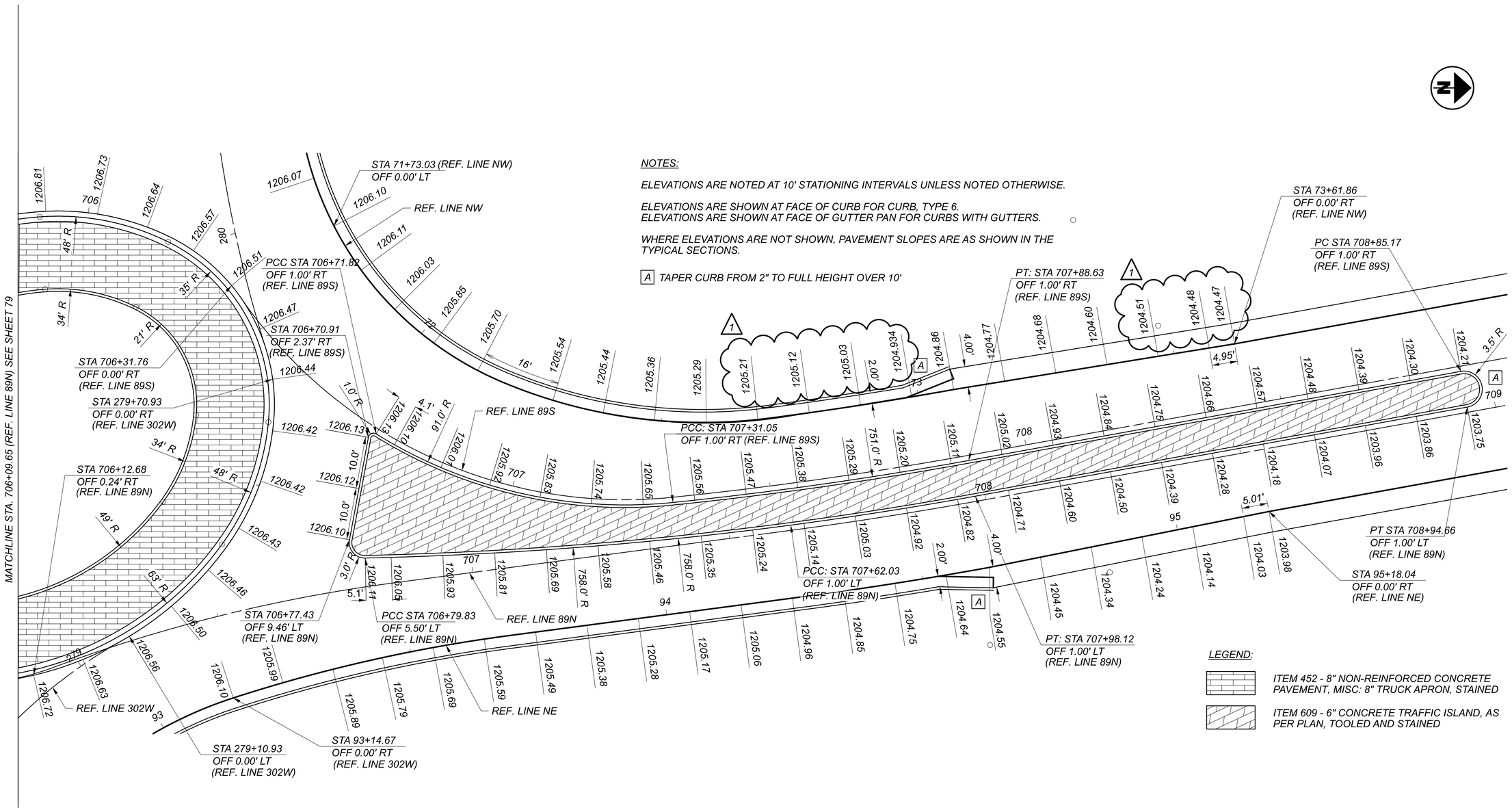

NOTES:

ELEVATIONS ARE NOTED AT 10' STATIONING INTERVALS UNLESS NOTED OTHERWISE.

ELEVATIONS ARE SHOWN AT FACE OF CURB FOR CURB, TYPE 6.
ELEVATIONS ARE SHOWN AT FACE OF GUTTER PAN FOR CURBS WITH GUTTERS.

WHERE ELEVATIONS ARE NOT SHOWN, PAVEMENT SLOPES ARE AS SHOWN IN THE TYPICAL SECTIONS.

A TAPER CURB FROM 2" TO FULL HEIGHT OVER 10'

LEGEND:

ITEM 452 - 8" NON-REINFORCED CONCRETE PAVEMENT, MISC: 8" TRUCK APRON, STAINED

ITEM 609 - 6" CONCRETE TRAFFIC ISLAND, AS PER PLAN, TOOLED AND STAINED

HORIZONTAL SCALE IN FEET
0 5 10 20

ROUNDABOUT DETAILS NORTH LEG

DESIGN AGENCY
Kimley»Horn

DESIGNER
ZTW

REVIEWER
GDK 09/22/23

PROJECT ID
114149

SHEET P.80 TOTAL 130

ASD-89-13.28

MODEL: NORTH LEG (Sheet) PAPERSIZE: 34x22 (in) DATE: 1/24/2024 TIME: 4:42:33 PM USER: dan.rinehart
K:\CLB_CIVIL\State\ODOT\90093002_ASD-89 Roundabout\2 Design\114149\400-Engineering\Roadway\Sheets\114149_GI002.dgn

PAVEMENT MARKING SUBSUMMARY

SHEET NO.	REFERENCE NO.	LOCATION	STATION FROM	STATION TO	SIDE	621 RPM	644 EDGE LINE, 4"	644 CENTER LINE	644 TRANSVERSE / DIAGONAL LINE	644 DOTTED LINE, 4"	644 YIELD LINE
						EACH	MILE	MILE	FT	FT	FT
P.98	CL-1	S.R. 302	282+10	283+45	LT./RT.	6		0.03			
P.98	CL-2	S.R. 302	282+10	283+45	LT.	5		0.03			
P.98	ELW-1	S.R. 302	282+10	283+45	RT.		0.03				
P.98	TLY-1	S.R. 302	282+10	283+45	LT./RT.				21		
P.98	ELW-2	S.R. 302	282+10	283+45	LT.		0.03				
P.98	CL-3	S.R. 302	272+05	276+40	LT./RT.	11		0.08			
P.98	ELW-3	S.R. 302	272+05	276+40	RT.		0.08				
P.98	ELW-4	S.R. 302	272+05	276+40	LT./RT.		0.08				
P.98	CL-4	S.R. 302	274+86	276+40	RT.	6		0.03			
P.98	TLY-2	S.R. 302	82+26	82+50	RT.				29		
P.99	ELY-1	S.R. 302	279+95	281+96	RT.	6	0.04				
P.99	ELY-2	S.R. 302	279+89	281+96	LT./RT.	6	0.04				
P.99	YL-1	S.R. 302	279+89		RT.						18
P.99	ELW-5	S.R. 302	1 707+80	282+10	LT./RT.		0.07 1				
P.99	CL-5	S.R. 302	281+96	282+10	RT.	1		0.01			
P.99	CL-6	S.R. 302	281+96	282+10	LT./RT.	1		0.01			
P.99	TLY-3	S.R. 302	281+96	282+10	LT./RT.				9		
P.99	ELW-13	S.R. 302	279+89	279+95	RT.	2	0.01				
P.99	DLW-1	S.R. 302	279+60	279+89	LT./RT.					50	
P.99	CL-7	S.R. 302	276+40	276+67	RT.	2	0.01				
P.99	CL-8	S.R. 302	276+40	276+68	RT.	2	0.01				
P.99	ELW-7	S.R. 302	276+40	707+80	LT./RT.		0.08				
P.99	ELW-8	S.R. 302	276+40	703+70	LT./RT.		0.08 1				
P.99	TLY-4	S.R. 302	276+60		RT.				10		
P.99	ELY-3	S.R. 302	276+67	278+66	RT.	5	0.04				
P.99	ELY-4	S.R. 302	276+68	278+63	RT.	5	0.04				
P.99	YL-3	S.R. 302	278+66		RT.						18
P.99	ELW-15	S.R. 302	278+63	278+66	RT.	2	0.01				
P.99	DLW-3	S.R. 302	278+66	278+93	RT.					42	
P.99	ELW-9	S.R. 89	703+70	282+10	LT./RT.		0.08 1				
P.99	ELY-5	S.R. 89	703+70	705+33	LT.	4	0.03				
P.99	ELY-6	S.R. 89	703+70	705+16	LT.	4	0.03				
P.99	YL-2	S.R. 89	705+16		RT.						20
P.99	ELW-14	S.R. 89	705+16	705+33	RT.	2	0.01				
P.99	DLW-2	S.R. 89	705+16	706+23	RT.					55	
P.99	ELW-16	S.R. 89	706+38	706+51	RT.	2	0.01				
P.99	DLW-4	S.R. 89	706+41	706+51	LT./RT.					52	
P.99	YL-4	S.R. 89	706+51		RT.						20
P.99	ELY-8	S.R. 89	706+38	707+80	RT.	3	0.03				
P.99	ELY-7	S.R. 89	706+51	707+80	RT.	3	0.02				
P.100	ELW-17	S.R. 89	700+97	703+70	LT.		0.05				
P.100	ELW-18	S.R. 89	700+97	703+70	RT.		0.05				
P.100	CL-9	S.R. 89	700+97	703+30	RT.	10		0.04			
P.100	CL-10	S.R. 89	701+04	703+30	RT.	9		0.04			
P.100	TLY-5	S.R. 89	701+04	703+30	RT.				92		
P.100	ELY-9	S.R. 89	703+30	703+70	RT.	1	0.01				
P.100	ELY-10	S.R. 89	703+30	703+70	RT.	1	0.01				
P.100	ELY-11	S.R. 89	707+80	708+67	RT.	2	0.02				
P.100	ELY-12	S.R. 89	707+80	708+68	RT.	2	0.02				
P.100	ELW-19	S.R. 89	707+80	712+99	LT./RT.		0.10				
P.100	ELW-20	S.R. 89	707+80	712+99	RT.		0.10				
P.100	CL-11	S.R. 89	708+67	712+99	RT.	19		0.08			
P.100	CL-12	S.R. 89	708+68	712+27	RT.	17		0.07			
P.100	TLY-6	S.R. 89	906+61	907+52	RT.				119		
TOTALS CARRIED TO GENERAL SUMMARY						139	1.19 1	0.42	280	199	76

ASD-89-13.36

MODEL: Sheet PAPERSIZE: 34x22 (in.) DATE: 1/23/2024 TIME: 11:00:24 AM USER: ETheller
pw:\\arcadis-us-pw.bentley.com:arcadis-us-01\Documents\01 Active Projects\301080541400_CAD\400-Engineering\Traffic\Sheets\114149_TS002.dgn

DESIGN AGENCY
ARCADIS
7575 HUNTINGTON PARK DR. STE 130
COLUMBUS, OHIO 43235
(614) 436-9100
www.arcadis.com

DESIGNER
EJT

REVIEWER
TR 02-23-23

PROJECT ID
114065

NOTES

1. STATIONING AND OFFSETS ARE BASED ON EX. ℄ R/W S.R. 302 OR EX. ℄ R/W S.R. 89.
2. SEE SHEET P.98 FOR LEGEND.

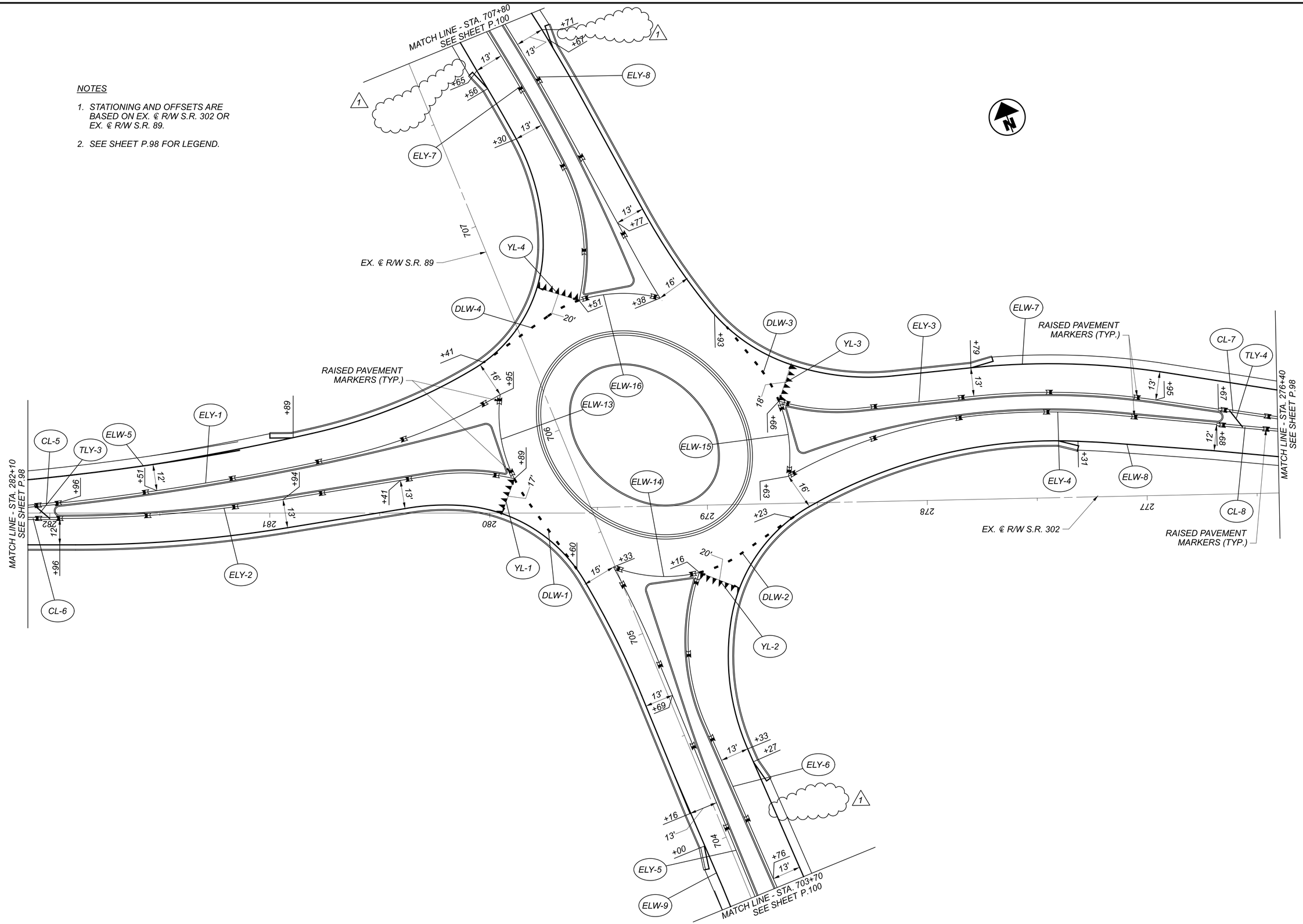

HORIZONTAL SCALE IN FEET
0 10 20 40

PAVEMENT MARKING PLAN SHEET
SR 302 - STA. 276+40 TO STA. 282+10

DESIGN AGENCY
ARCADIS
7575 HUNTINGTON PARK DR, STE 130
COLUMBUS, OHIO 43235
(614) 895-3700
www.arcadis.com

DESIGNER	EJT
REVIEWER	TR 02-23-23
PROJECT ID	114065
SHEET	P.99
TOTAL	130

ASD-89-13.36

MODEL: CLX_RW_3 - Plan (LSheet) PAPERSIZE: 34x22 (in.) DATE: 1/23/2024 TIME: 11:00:39 AM USER: ETheller
pw:\\arcadis-us-pw.bentley.com:arcadis-us-01\Documents\01 Active Projects\30108054\400_CAD\400-Engineering\Traffic\Sheets\114149_TP001.dgn