GENERAL

ROUNDING

THE ROUNDING AT SLOPE BREAKPOINTS SHOWN ON THE TYPICAL SECTIONS APPLIES TO ALL CROSS-SECTIONS EVEN THOUGH OTHERWISE SHOWN.

UTILITIES

LISTED BELOW ARE ALL UTILITIES LOCATED WITHIN THE PROJECT CONSTRUCTION LIMITS TOGETHER WITH THEIR RESPECTIVE OWNERS:

OHIO EDISON TRANSMISSION
ATTN: ALAN SCHEMPP
76 SOUTH MAIN STREET
AKRON, OHIO 44308
330-384-5489
ASCHEMPP@FIRSTENERGYCORP.COM

ARMSTRONG UTILITIES
ATTN: RON WHITED
1215 CLAREMONT AVENUE
ASHLAND, OHIO 44805
724-504-7052
RWHITED@AGOC.COM

FRONTIER COMMUNICATIONS
ATTN: GIOVANNI (GIO) LORETI
1534 SR 511 SOUTH
ASHLAND, OHIO 44805
419-282-6551 OFFICE
GIOVANNI.LORETI@FTR.COM

EVERSTREAM
ATTN: JOE VALA
1228 EUCLID AVENUE, SUITE 250
CLEVELAND, OHIO, 44115
216-440-7804 CELL
JVALA@EVERSTREAM.NET

OHIO EDISON COMPANY
ATTN: TRAVIS BALLOG
1717 ASHLAND ROAD
MANSFIELD, OHIO 44905
419-521-6213
BALLOGT@FIRSTENERGYCORP.COM

AEP
ATTN: STEPHEN BELLOMY
8100 WALTON PARKWAY
NEW ALBANY, OHIO, 43054
937-594-9380

THE LOCATION OF THE UNDERGROUND UTILITIES SHOWN ON THE PLANS ARE AS OBTAINED FROM THE OWNERS AS REQUIRED BY SECTION 153.64 O.R.C.

COORDINATION OF WORK WITH UTILITY COMPANIES

RELOCATION OF EXISTING OVERHEAD AND UNDERGROUND FACILITIES BY THE AFFECTED UTILITY OWNERS IS REQUIRED FOR COMPLETION OF THE WORK. IF EXISTING UTILITY FACILITIES ARE NOT CLEARED FROM THE CONSTRUCTION AREA AT THE TIME OF CONTRACT AWARD AND NOTICE TO PROCEED, THE CONTRACTOR WILL BE REQUIRED TO COORDINATE THIS WORK WITH THAT OF THE AFFECTED UTILITY OWNERS AND SHALL REFLECT THIS IN THE SCHEDULE, MAINTENANCE OF TRAFFIC PLANS, AND UNIT COSTS.

TRANSMISSION POLE SUPPORT

THE TRANSMISSION POLE LOCATED ON US 42 AT STA. 784+23 LT SHALL BE FULLY SUPPORTED DURING ADJACENT EXCAVATION FOR DRAINAGE STRUCTURES AND CONDUITS WITHIN A 15' RADIUS OF THE POLE. ALL WORK TO SUPPORT THE TRANSMISSION POLE SHALL BE PERFORMED BY A QUALIFIED CONTRACTOR APPROVED BY THE UTILITY COMPANY. COORDINATE THE WORK WITH THE UTILITY COMPANY. BACKFILL SHALL CONSIST OF ORIGINAL SOIL OR ENGINEERED FILL AND SHALL BE COMPACTED TO AT LEAST 98% OF THE MAXIMUM DRY DENSITY. ALL COSTS FOR THE ABOVE DESCRIBED WORK SHALL BE CONSIDERED INCIDENTAL TO THE DRAINAGE ITEMS.

CONSTRUCTION NOISE

ACTIVITIES AND LAND USE ADJACENT TO THIS PROJECT MAY BE AFFECTED BY CONSTRUCTION NOISE. IN ORDER TO MINIMIZE ANY ADVERSE CONSTRUCTION NOISE IMPACTS, DO NOT OPERATE POWER-OPERATED CONSTRUCTION-TYPE DEVICES BETWEEN THE HOURS OF 8 PM AND 7 AM EXCEPT AS DIRECTED BY THE ENGINEER. IN ADDITION, DO NOT OPERATE AT ANY TIME ANY DEVICE IN SUCH A MANNER THAT THE NOISE CREATED SUBSTANTIALLY EXCEEDS THE NOISE CUSTOMARILY AND NECESSARILY ATTENDANT TO THE REASONABLE AND EFFICIENT PERFORMANCE OF SUCH EQUIPMENT.

WORK LIMITS

THE WORK LIMITS SHOWN ON THESE PLANS ARE FOR PHYSICAL CONSTRUCTION ONLY. PROVIDE THE INSTALLATION AND OPERATION OF ALL WORK ZONE TRAFFIC CONTROL AND WORK ZONE TRAFFIC CONTROL DEVICES REQUIRED BY THESE PLANS WHETHER INSIDE OR OUTSIDE THESE WORK LIMITS.

SURVEYING PARAMETERS

PRIMARY PROJECT CONTROL MONUMENTS GOVERN ALL POSITIONING ON ODOT PROJECTS. SEE SHEET P.2 OF THE PLANS FOR A TABLE CONTAINING PROJECT CONTROL INFORMATION.

USE THE FOLLOWING PROJECT CONTROL, VERTICAL POSITIONING, AND HORIZONTAL POSITIONING PARAMETERS FOR ALL SURVEYING:

PROJECT CONTROL

POSITIONING METHOD:	ODOT VRS GNSS
MONUMENT TYPE:	TYPE A

VERTICAL POSITIONING

ORTHOMETRIC HEIGHT DATUM:	NAVD88
GEOID:	GEOID18

HORIZONTAL POSITIONING

REFERENCE FRAME:	NAD83 (2011)
ELLIPSOID:	GRS80
MAP PROJECTION:	LAMBERT CONFORMAL CONIC
COORDINATE SYSTEM:	OHIO STATE PLANE, NORTH ZONE
COMBINED SCALE FACTOR:	0.999888682
ORIGIN OF COORDINATE SYSTEM:	0,0,0

USE THE POSITIONING METHODS AND MONUMENT TYPE USED IN THE ORIGINAL SURVEY TO RESTORE ALL MONUMENTS RELATED TO PRIMARY PROJECT CONTROL THAT ARE DAMAGED OR DESTROYED BY CONSTRUCTION ACTIVITIES. RESTORE THE DAMAGED OR DESTROYED MONUMENTS IN ACCORDANCE WITH CMS 623.

UNITS ARE IN U.S. SURVEY FEET. USE THE FOLLOWING CONVERSION FACTOR: 1 METER = 3.280833333 U.S. SURVEY FEET.

THE FOLLOWING MONUMENT VERIFICATION REPORTS WILL BE REQUIRED:

623.04a - PRECONSTRUCTION MONUMENT VERIFICATION AND REPORT - LUMP SUM

623.04b - POST CONSTRUCTION MONUMENT VERIFICATION REPORT - LUMP SUM

CLEARING AND GRUBBING

REMOVE ALL TREES AND STUMPS SPECIFICALLY MARKED FOR REMOVAL WITHIN THE CONSTRUCTION LIMITS UNDER THE LUMP SUM BID FOR ITEM 201, CLEARING AND GRUBBING. THE FOLLOWING IS AN APPROXIMATE ESTIMATE OF THE NUMBER OF TREES AND STUMPS TO BE REMOVED. ODOT TO PERFORM TREE REMOVAL AHEAD OF PROJECT.

SIZES	NO. TREES	NO. STUMPS	TOTAL
8"	26	0	26
10"	14	1	15
12"	18	0	18
14"	2	0	2
18"	5	0	5
24"	4	0	4
30"	3	0	3
36"	2	0	2
48"	4	0	4
60"	1	0	1
72"	1	0	1

ITEM 204 - PROOF ROLLING

THE FOLLOWING QUANTITY IS PROVIDED IN THE GENERAL SUMMARY TO ADDRESS LOCATIONS REQUIRING PROOF ROLLING.

ITEM 204 - PROOF ROLLING 7 HOURS.

MONUMENT ASSEMBLIES

CONSTRUCT MONUMENT ASSEMBLIES IN ACCORDANCE WITH THE DETAILS SHOWN ON THE STANDARD CONSTRUCTION DRAWINGS AND AT THE LOCATIONS SHOWN ON SHEETS RW.3 AND RW.4

ROADWAY

ITEM SPECIAL - MAILBOX SUPPORT

THIS WORK SHALL CONSIST OF FURNISHING AND ERECTING MAILBOX SUPPORTS AND ANY ASSOCIATED MOUNTING HARDWARE IN ACCORDANCE WITH PLAN DETAILS, AND ATTACHING AN OWNER-SUPPLIED MAILBOX AT LOCATIONS SPECIFIED IN THE PLAN, OR OTHERWISE ESTABLISHED BY THE ENGINEER.

WOOD POSTS SHALL BE NOMINAL 4 INCHES BY 4 INCHES TREATED WOOD AS REQUIRED BY MANUFACTURER SPECIFICATIONS.

ALL HARDWARE INCLUDING BUT NOT LIMITED TO PLATES, SCREWS, BOLTS, AND ETC. SHALL BE COMMERCIAL-GRADE GALVANIZED STEEL.

POSTS SHALL BE SET PER THE FIRST PARAGRAPH OF 606.03, AND SHALL IN NO INSTANCE BE ENCASED IN CONCRETE.

SUPPORT HARDWARE SHALL ACCOMMODATE EITHER A SINGLE OR A DOUBLE MAILBOX INSTALLATION, AND NO MORE THAN TWO BOXES MAY BE MOUNTED ON A SINGLE POST.

THE MAILBOX SHALL BE SECURELY AND NEATLY ATTACHED BY THE CONTRACTOR TO THE NEW SUPPORT. THE CONTRACTOR SHALL FURNISH ALL NECESSARY ATTACHMENT HARDWARE (NUTS, BOLTS, PLATES, SPACERS, AND WASHERS) AS NECESSARY TO ACCOMMODATE THE COMPLETE INSTALLATION.

ITEM SPECIAL - MAILBOX SUPPORT (CONTINUED)

IN THE ABSENCE OF A NEW BOX SUPPLIED BY THE OWNER, THE CONTRACTOR SHALL SALVAGE THE EXISTING BOX AND PLACE IT ON THE NEW SUPPORT. DUE CARE SHALL BE EXERCISED IN SUCH AN OPERATION, AND THE CONTRACTOR SHALL BE RESPONSIBLE FOR REPAIRING OR REPLACING ANY BOX DAMAGED BY IMPROPER HANDLING ON HIS PART, AS JUDGED AND DIRECTED BY THE ENGINEER.

THE CONTRACTOR SHALL BE RESPONSIBLE FOR COORDINATING WITH THE LOCAL POST MASTER REGARDING THE TIMING OF THE MOVEMENT OF ANY MAILBOX TO A NEW LOCATION.

PAYMENT UNDER THIS ITEM SHALL BE LIMITED TO FINAL PERMANENT INSTALLATIONS. TEMPORARY INSTALLATIONS SHALL BE IN ACCORDANCE WITH 107.10. HOWEVER, THE SAME MATERIAL AND SIZE LIMITATIONS AS FOR PERMANENT INSTALLATIONS SHALL APPLY.

MAILBOX SUPPORTS, COMPLETE IN PLACE, WILL BE PAID FOR AT THE CONTRACT UNIT PRICE PER EACH, FOR ITEM SPECIAL

ITEM 202 - REMOVAL MISC.: CLEANOUT REMOVED

THIS ITEM SHALL INCLUDE THE REMOVAL OF THE CLEANOUT.

PAYMENT FOR THE WORK DESCRIBED ABOVE SHALL BE INCLUDED IN PRICE BID FOR ITEM 202 - REMOVAL MISC.: CLEANOUT REMOVED. PAYMENT SHALL INCLUDE ALL WORK NECESSARY TO COMPLETE THIS ITEM, INCLUDING BUT NOT LIMITED TO ALL LABOR, MATERIALS, EQUIPMENT, AND DISPOSAL COSTS IN ACCORDANCE WITH ITEM 202 OF THE SPECIFICATIONS, AND THE REQUIREMENTS ABOVE.

ITEM 202 - REMOVAL MISC.: CONCRETE PAD

THIS ITEM SHALL INCLUDE THE REMOVAL OF THE CONCRETE PAD.

PAYMENT FOR THE WORK DESCRIBED ABOVE SHALL BE INCLUDED IN PRICE BID FOR ITEM 202 - REMOVAL MISC.: CONCRETE PAD. PAYMENT SHALL INCLUDE ALL WORK NECESSARY TO COMPLETE THIS ITEM, INCLUDING BUT NOT LIMITED TO ALL LABOR, MATERIALS, EQUIPMENT, AND DISPOSAL COSTS IN ACCORDANCE WITH ITEM 202 OF THE SPECIFICATIONS, AND THE REQUIREMENTS ABOVE.

ITEM 609 - COMBINATION CURB AND GUTTER, TYPE 2, AS PER PLAN

THIS ITEM OF WORK IS INTENDED FOR USE IN SUPERELEVATED PAVEMENT SECTIONS. CONSTRUCT THE COMBINATION CURB AND GUTTER IN ACCORDANCE WITH ITEM 609 AND STANDARD CONSTRUCTION DRAWING BP-5.1 EXCEPT THAT THE SLOPE OF THE GUTTER PAN SHALL MATCH THE PAVEMENT SLOPE.

THE LIMITS OF THIS ITEM SHALL ALSO INCLUDE THE GUTTER SLOPE TRANSITION. VARY THE GUTTER SLOPE FROM 12:1 NORMAL TO 0% WITHIN THE SAME LIMITS THAT THE PAVEMENT SLOPE VARIES FROM NORMAL CROWN TO 0%. THE APPLICABLE STATION LIMITS ARE SHOWN IN THE SUPERELEVATION TRANSITION TABLE IN THE TYPICAL SECTIONS AND IN THE SUPERELEVATION TABLES.

PAYMENT SHALL INCLUDE THE ADDITIONAL COST NECESSARY TO CONSTRUCT THE GUTTER SLOPE AS DESCRIBED ABOVE.

ITEM 659 - SEEDING AND MULCHING CONTINGENCY

AN ADDITIONAL 2,000 SY OF SEEDING AND MULCHING HAS BEEN PROVIDED IN THE GENERAL SUMMARY FOR WORK OUTSIDE OF THE GRADING LIMITS AS SHOWN ON THE CROSS SECTIONS.

ASD-42-14.77
MODEL: Sheet_01 PAPERSIZE: 34x22 (in.) DATE: 2/2/2024 TIME: 11:17:38 AM USER: michael.j.thompson
pw:\\aecom-na-pw.bentley.com:AECOM_DS21_NA_2020\Documents\60657065-ASD-42-14.77\114065\400-Engineering\Roadway\Sheets\114065_GN001.dgn

ROADWAY CONTINUED

ITEM SPECIAL - DRILLED WATER WELL ABANDONED

THE EXISTING CONCRETE OR STONE SLAB WELL COVER AND PUMPING EQUIPMENT SHALL BE REMOVED AND DISPOSED OF. THE CASING SHALL BE CUT OFF AT LEAST 3 FEET BELOW THE PROPOSED FINISHED GRADE OUTSIDE PROPOSED PAVEMENT AREAS OR AT LEAST 3 FEET BELOW THE PROPOSED SUBGRADE ELEVATION INSIDE THE PROPOSED PAVEMENT AREAS. THE WELL SHALL BE FILLED FROM BOTTOM TO TOP WITH BENTONITE SLURRY PELLETS, CHIPS OR CONCRETE MEETING ASTM C 150 TYPE 1 PORTLAND CEMENT WITH NO AIR ENTRAINMENT, AND THEN CAPPED IN ACCORDANCE WITH THE DETAIL SHOWN ON THIS SHEET.

THE CONTRACTOR SHALL FILE WELL LOG AND ABANDONMENT FORMS WITH THE OHIO DEPARTMENT OF NATURAL RESOURCES (ODNR) AS REQUIRED BY THE OHIO REVISED CODE. ANY ADDITIONAL MATERIALS REQUIRED BY ODNR SHALL BE CONSIDERED INCIDENTAL. ODNR'S ADDRESS IS AS FOLLOWS:

OHIO DEPARTMENT OF NATURAL RESOURCES
DIVISION OF WATER
1939 FOUNTAIN SQUARE, BUILDING E
COLUMBUS, OHIO 43224
TELEPHONE (614) 265-6739

A COUNTY ISSUED PLUGGING PERMIT MAY ALSO BE REQUIRED.

THE CONTRACT UNIT PRICE FOR ITEM SPECIAL, DRILLED WATER WELL ABANDONED, SHALL INCLUDE PAYMENT FOR ALL LABOR, TOOLS, MATERIALS AND INCIDENTALS NECESSARY TO COMPLETE THIS ITEM DESCRIBED ABOVE.

WATER WELL CAP DETAIL
NOT TO SCALE

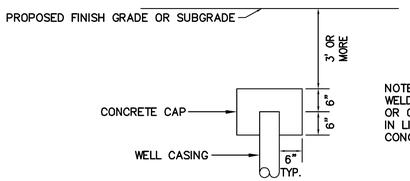

NOTE: THE CONTRACTOR MAY WELD A CAP ON THE CASING OR OTHER APPROVED METHOD IN LIEU OF USING THE CONCRETE CAP AS SHOWN.

GENERAL NOTES

DESIGN AGENCY
AECOM

DESIGNER
JNR

REVIEWER
MAW 03/11/22

PROJECT ID
114065

SHEET P.12A TOTAL P.133

ASD-42-14.77

MODEL: Sheet_04 PAPERSIZE: 34x22 (in.) DATE: 2/2/2024 TIME: 11:17:41 AM USER: michael.j.thompson
pw:\\aecom-na-pw.bentley.com:AECOM_DS21_NA_2020\Documents\60657065-ASD-42-14-77-114065\Design Engineering\Roadway\Sheets\114065_GN001.dgn

ITEM 614, MAINTAINING TRAFFIC

THE CONTRACTOR WILL BE RESPONSIBLE FOR ESTABLISHING, ERECTING, AND MAINTAINING THE DETOUR ROUTES AS SHOWN ON SHEETS P.17 - P.18 AND AS SHOWN IN PART 2. THE CONTRACTOR WILL COORDINATE THE DETOUR WITH ALL APPROPRIATE EMERGENCY SERVICES AND LOCAL OFFICIALS.

TWO WAY TRAFFIC SHALL BE MAINTAINED AT ALL TIMES USING FLAGGERS EXCEPT WHEN THE DETOURS ARE IN EFFECT.

DETOURS WILL BE ALLOWED BETWEEN APRIL OF 2024 TO SEPTEMBER 30, 2024.

THE PHASE I SR302 DETOUR SHALL BE IN PLACE FROM APRIL OF 2024 TO MAY 31, 2024. THE PHASE II SR89 DETOUR, AS SHOWN IN PART 2, SHALL BE IN PLACE FOR 60 DAYS DURING JUNE AND JULY OF 2024. THE PHASE III US42 DETOUR SHALL BE IN PLACE FOR 60 DAYS DURING AUGUST AND SEPTEMBER OF 2024.

AN INTERIM COMPLETION DATE OF SEPTEMBER 30, 2024 WILL BE IN EFFECT WHEN ALL LANES OF TRAFFIC ON ALL ROADWAYS SHALL BE OPEN TO TRAFFIC. THE FINAL CLEANUP, SEEDING AND MULCHING, AND OTHER WORK THAT DOES NOT IMPACT TRAFFIC, MAY BE COMPLETED AFTER SEPTEMBER 30, 2024 AND WILL HAVE A FINAL COMPLETION DATE OF NOVEMBER 1, 2024.

AT A MINIMUM THE PAVEMENT, PERMANENT PAVEMENT MARKINGS, CURBING, SIGNAGE, LIGHTING AND LANDSCAPING SHALL BE IN PLACE AND FUNCTIONAL PRIOR TO THE OPENING OF THE LANES TO TRAFFIC.

ALL WORK AND TRAFFIC CONTROL DEVICES SHALL BE IN ACCORDANCE WITH C&MS 614 AND OTHER APPLICABLE PORTIONS OF THE SPECIFICATIONS, AS WELL AS THE OHIO MANUAL OF UNIFORM TRAFFIC CONTROL DEVICES. PAYMENT FOR ALL LABOR, EQUIPMENT AND MATERIALS SHALL BE INCLUDED IN THE LUMP SUM CONTRACT PRICE FOR ITEM 614, MAINTAINING TRAFFIC, UNLESS SEPARATELY ITEMIZED IN THE PLAN.

ITEM 614, MAINTAINING TRAFFIC (NOTICE OF CLOSURE)

NOTICE OF CLOSURE SIGNS (W20-H13) SHALL BE ERECTED BY THE CONTRACTOR PRIOR TO THE SCHEDULED ROAD OR RAMP CLOSURE IN ACCORDANCE WITH THE NOTICE OF CLOSURE TIME TABLE BELOW. AT THE APPROVAL OF THE ENGINEER, PORTABLE CHANGEABLE MESSAGE SIGNS MAY BE USED IN LIEU OF THE STANDARD FLATSHEET SIGN FOR CLOSURE DURATIONS OF LESS THAN 1 WEEK.

THE SIGNS SHALL BE ERECTED ON THE RIGHT-HAND SIDE OF THE ROAD/RAMP FACING TRAFFIC. THEY SHALL BE PLACED SO AS NOT TO INTERFERE WITH THE VISIBILITY OF ANY OTHER TRAFFIC CONTROL SIGNS. ON ROADWAYS, THEY SHOULD BE ERECTED AT OR NEAR THE POINT OF CLOSURE. THE SIGNS MAY BE ERECTED ANYWHERE ON RAMPS AS LONG AS THEY ARE VISIBLE TO THE MOTORISTS USING THE RAMP. ON ENTRANCE RAMPS, THE SIGN SHALL BE ERECTED WELL IN ADVANCE OF THE MERGE AREA TO AVOID DISTRACTING MOTORISTS.

NOTICE OF CLOSURE SIGN TIME TABLE:

DURATION OF CLOSURE	SIGN DISPLAYED TO PUBLIC
>=2 WEEKS	14 CALENDAR DAYS PRIOR TO CLOSURE
> 12 HOURS & < 2 WEEKS	7 CALENDAR DAYS PRIOR TO CLOSURE
< 12 HOURS	2 BUSINESS DAYS PRIOR TO CLOSURE

THE SIGN SHALL DISPLAY THE DATE OF THE CLOSURE IN MM-DD FORMAT AND THE NUMBER OF DAYS OF THE CLOSURE. THE LAST LINE OF THE W20-H13 SIGN LISTS A PHONE NUMBER WHICH A MOTORIST MAY CALL FOR ADDITIONAL INFORMATION. THIS IS TO BE A SPECIFIC OFFICE WITHIN THE DISTRICT RATHER THAN THE GENERAL SWITCHBOARD NUMBER.

ITEM 614, MAINTAINING TRAFFIC (ESTIMATED QUANTITIES)

THE FOLLOWING ESTIMATED QUANTITIES HAVE BEEN INCLUDED IN THE GENERAL SUMMARY FOR USE AS DETERMINED BY THE ENGINEER FOR THE MAINTENANCE OF TRAFFIC.

410 - TRAFFIC COMPACTED SURFACE, TYPE A OR B 125 CU. YD.

614 - ASPHALT CONCRETE FOR MAINTAINING TRAFFIC 50 CU. YD.

616 - WATER 50 M. GAL.

ITEM 614, MAINTAINING TRAFFIC (ROAD CLOSED SIGN)

THE CONTRACTOR SHALL PROVIDE, ERECT AND MAINTAIN STANDARD 48 X 30 INCH ROAD CLOSED SIGNS, SIGN SUPPORTS, BARRICADES AND LIGHTS, AS DETAILED IN SCD MT-101.60 AT THE LOCATIONS SHOWN IN THE DETOUR PLANS DURING PERIODS IN WHICH THE AFFECTED ROADS ARE CLOSED TO TRAFFIC.

ITEM 614, MAINTAINING TRAFFIC (TIME LIMITATION ON A DETOUR)

A MINIMUM OF ONE LANE OF TRAFFIC IN EACH DIRECTION SHALL BE MAINTAINED AT ALL TIMES, EXCEPT AS NOTED UNDER THE NOTE FOR ITEM 614 - MAINTAINING TRAFFIC ABOVE, WHEN THROUGH TRAFFIC MAY BE DETOURED AS SHOWN ON SHEET P.17 - P.18 AND AS SHOWN IN PART 2. A DISINCENTIVE SHALL BE ASSESSED IN THE AMOUNT OF $ 10,000 PER DAY FOR EACH CALENDAR DAY THE ROADWAY REMAINS CLOSED TO TRAFFIC BEYOND THE SPECIFIED LIMIT.

ITEM 614, MAINTAINING TRAFFIC (TEMPORARY LIGHTING)

INSTALL ALL PERMANENT LIGHTING PRIOR TO OPENING PROPOSED FACILITY TO TRAFFIC. IF THE PERMANENT LIGHTING IS NOT ABLE TO BE COMPLETED PRIOR TO OPENING, SUPPLY TEMPORARY LIGHTING MEETING THE PHOTOMETRIC PROPERTIES OF THE PERMANENT LIGHTING PLAN PRIOR TO OPENING THE FACILITY TO TRAFFIC. A MINIMUM OF 14 DAYS PRIOR TO THE INSTALLATION OF ANY SUCH TEMPORARY LIGHTING, SUPPLY A TEMPORARY LIGHTING PLAN TO THE ENGINEER FOR APPROVAL. THIS LIGHTING PLAN MUST ALSO BE APPROVED BY THE DISTRICT TRAFFIC ENGINEER. THE CONTRACTOR IS PROHIBITED FROM INSTALLING ANY SUCH TEMPORARY LIGHTING UNTIL THE TEMPORARY LIGHTING PLAN IS APPROVED BY THE PROJECT AND THE DISTRICT TRAFFIC ENGINEERS.

AT A MINIMUM, THE TEMPORARY LIGHTING SHALL PROVIDE AN AVERAGE INITIAL INTENSITY OF 0.8 FOOT-CANDLES WITH AN AVERAGE-TO-MINIMUM UNIFORMITY NOT TO EXCEED 3:1. THE MOUNTING HEIGHT OF THE TEMPORARY LUMINAIRES SHALL NOT BE LESS THAN 30 FEET AND THE MINIMUM OVERHEAD CONDUCTOR CLEARANCE SHALL BE 20 FEET. TEMPORARY OVERHEAD CONSTRUCTION SHALL NOT BE LESS THAN GRADE "B" FOR STRENGTH REQUIREMENTS AS DEFINED BY THE NATIONAL ELECTRIC SAFETY CODE. WOOD POLES WITH OVERHEAD WIRING MAY BE USED. HOWEVER, TEMPORARY LIGHTING SHALL MEET FEDERAL AND STATE SAFETY CRITERIA. IF BREAKAWAY POLES ARE USED TO MEET THESE CRITERIA, THEN UNDERGROUND WIRING SHALL BE USED. RECONDITIONED OR USED MATERIALS MAY BE FURNISHED FOR TEMPORARY LIGHTING. WHEN POSSIBLE, THE TEMPORARY LIGHTING SHALL UTILIZE A PERMANENT POWER SOURCE (i.e. A POWER DROP FROM AN EXISTING OR PROPOSED TRANSMISSION OR DISTRIBUTION ELECTRIC LINE) RATHER THAN A TEMPORARY SOURCE (i.e. PORTABLE GENERATORS). TEMPORARY SOURCES OF ELECTRICITY MAY ONLY BE USED WHEN NO PERMANENT SOURCES ARE AVAILABLE.

AFTER THE INSTALLATION, INSPECTION, AND ACCEPTANCE OF THE FINAL PERMANENT LIGHTING, AND WHEN THE TEMPORARY LIGHTING IS NO LONGER NEEDED, REMOVE AND PROPERLY DISPOSE OF THE TEMPORARY LIGHTING EQUIPMENT AND MATERIALS.

IN ACCORDANCE WITH C&MS 105, THE CONTRACTOR IS ALSO RESPONSIBLE FOR MAINTAINING EXISTING LIGHTING PRIOR TO CLOSURE OF THE PROJECT AREA TO TRAFFIC.

PAYMENT FOR THE ABOVE DETAILED TEMPORARY LIGHTING, IF NEEDED, WILL BE CONSIDERED INCIDENTAL TO THE LUMP SUM BID PRICE FOR MAINTENANCE OF TRAFFIC AND WILL INCLUDE ALL MATERIAL, EQUIPMENT, LABOR, AND OTHER INCIDENTALS NEEDED TO COMPLETE THE WORK.

TEMPORARY RAMPING OF VERTICAL SURFACES AT DRIVEWAYS

IN ORDER TO PROVIDE FOR LOCAL ACCESS, LONGITUDINAL VERTICAL FACES ABUTTING DRIVES SHALL BE TEMPORARILY RAMPED AS DETAILED BELOW. TRANSVERSE VERTICAL FACES SHALL BE TEMPORARILY RAMPED A MINIMUM OF TEN FEET IN LENGTH AND TRAFFIC SHALL BE WARNED WITH WB-1 "BUMP" SIGNS IN ADVANCE OF THE RAMPED AREAS. THE GRADE BREAK SHALL NOT EXCEED A MAXIMUM OF 8% AT EITHER END OF THE WEDGE.

ALL TEMPORARY RAMPING SHALL BE INSTALLED, AT THE DIRECTION OF THE ENGINEER, USING ITEM 614 - ASPHALT CONCRETE FOR MAINTAINING TRAFFIC. THE FOLLOWING ESTIMATED QUANTITY HAS BEEN INCLUDED IN THE GENERAL SUMMARY:

614 - ASPHALT CONCRETE FOR MAINTAINING TRAFFIC 30 CU. YD.

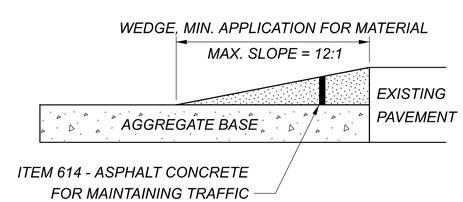

MAINTENANCE OF LOCAL DETOUR ROUTE

A LOCAL DETOUR ROUTE, OTHER THAN THE OFFICIAL SIGNED ODOT DETOUR ROUTE, AS NOTED IN THESE PLANS, WILL BE SELECTED BY AGREEMENT BETWEEN ODOT AND LOCAL GOVERNMENTAL AGENCIES PRIOR TO THE HIGHWAY CLOSURE. DURING THE TIME THAT TRAFFIC IS DETOURED, THE CONTRACTOR SHALL MAINTAIN THIS ROUTE IN A CONDITION WHICH IS REASONABLY SMOOTH AND FREE FROM HOLES, RUTS, RIDGES, BUMPS, DUST, AND STANDING WATER. ONCE THE DETOUR IS REMOVED AND TRAFFIC RETURNED TO ITS NORMAL PATTERN, THE DESIGNATED LOCAL DETOUR ROUTE SHALL BE RESTORED TO A CONDITION THAT IS EQUIVALENT TO THAT WHICH EXISTED PRIOR TO ITS USE FOR THIS PURPOSE. ALL SUCH WORK SHALL BE PERFORMED WHEN AND AS DIRECTED BY THE ENGINEER. THE DESIGNATED LOCAL DETOUR ROUTE IS TO BE REVIEWED AND REPAIRED PRIOR TO THE ASPHALT CONTRACTOR OR SUBCONTRACTOR LEAVING THE PROJECT.

PAYMENT FOR THE WORK NECESSARY TO REPAIR THESE LOCAL ROADS WILL BE PERFORMED BY CHANGE ORDER.

CONSTRUCTION ADJACENT TO DRIVES

ACCESS TO RESIDENTIAL PROPERTY SHALL BE MAINTAINED AT ALL TIMES AT THE APPROVAL/DIRECTION OF THE ENGINEER. THE CONTRACTOR SHALL SCHEDULE THE DRIVEWAY CONSTRUCTION SUCH THAT ACCESS IS MAINTAINED BY MEANS OF THE EXISTING DRIVE, A TEMPORARY DRIVE OF MATERIAL APPROVED BY THE PROJECT ENGINEER, OR THE PROPOSED DRIVE.

FOR PROPERTIES WITH TWO DRIVEWAYS WHERE INGRESS AND EGRESS IS AVAILABLE FOR BOTH OF THE DRIVEWAYS, THE CONTRACTOR SHALL PROVIDE ACCESS AT ALL TIMES TO ONE OF THE DRIVEWAYS WHILE THE OTHER DRIVEWAY IS RECONSTRUCTED. FOR PROPERTIES WITH ONE DRIVEWAY, THE CONTRACTOR SHALL PROVIDE ACCESS AT ALL TIMES BY USING PART-WIDTH CONSTRUCTION. FOR PROPERTIES WITH TWO DRIVEWAYS WHERE ONE OF THE DRIVES IS USED EXCLUSIVELY AS AN EXIT, THE CONTRACTOR SHALL PROVIDE ACCESS AT ALL TIMES FOR BOTH OF THE DRIVEWAYS BY USING PART-WIDTH CONSTRUCTION.

THE CONTRACTOR MAY REQUEST SHORT-TERM CLOSURE, NOT TO EXCEED ONE (1) CONSTRUCTION DAY AT A TIME, OF NARROW DRIVEWAYS AND DRIVEWAYS ADJACENT TO AREAS OF SIGNIFICANT GRADE CHANGES WHERE ACCESS WOULD BE DIFFICULT OR UNREALISTIC TO MAINTAIN. APPROVAL SHALL ONLY BE GRANTED BY THE ENGINEER FOLLOWING SEVEN (7) DAYS NOTICE TO THE PROPERTY OWNER PRIOR TO THE REQUESTED CLOSURE DATE.

THE CONTRACTOR SHALL PLAN/STAGE ALL WORK TO MAINTAIN SAFE ACCESS TO RESIDENTIAL PROPERTY AT ALL TIMES. PRIOR TO THE START OF CONSTRUCTION, THE CONTRACTOR SHALL SUBMIT A PLAN FOR THE APPROVAL OF THE ENGINEER WHICH OUTLINES THE STRATEGY FOR THE MAINTENANCE OF SAFE ACCESS TO RESIDENTIAL PROPERTY. THE PAYMENT FOR ALL LABOR, EQUIPMENT AND MATERIALS REQUIRED TO MAINTAIN RESIDENTIAL ACCESS SHALL BE INCLUDED IN THE LUMP SUM CONTRACT PRICE FOR ITEM 615 - ROADS AND PAVEMENTS FOR MAINTAINING TRAFFIC.

MAINTENANCE OF TRAFFIC NOTES

DESIGN AGENCY
AECOM

DESIGNER JPK
REVIEWER MAW 03/11/22
PROJECT ID 114065
SHEET P.15 TOTAL P.133

MODEL: Sheet_01 PAPERSIZE: 34x22 (in.) DATE: 2/2/2024 TIME: 1:12:37 PM USER: michael.j.thompson
pw:\\aecom-ma-pw.bentley.com:AECOM_DS21_NA_2020\Documents\60657065-ASD-42-14.77\114065\400-Engineering\MOT\Sheets\114065_MN001.dgn

NOTIFICATION OF TRAFFIC RESTRICTIONS

THROUGHOUT THE DURATION OF THE PROJECT, THE CONTRACTOR SHALL NOTIFY THE PROJECT ENGINEER IN WRITING OF ALL TRAFFIC RESTRICTIONS AND UPCOMING MAINTENANCE OF TRAFFIC CHANGES. THE CONTRACTOR SHALL ENSURE THE WRITING OF ALL TRAFFIC RESTRICTIONS AND UPCOMING MAINTENANCE OF TRAFFIC CHANGES. THE CONTRACTOR SHALL ENSURE THE WRITTEN NOTIFICATION IS SUBMITTED IN A TIMELY MANNER TO ALLOW THE PROJECT ENGINEER TO MEET THE REQUIRED TIME FRAMES SET FORTH IN THE TABLE BELOW TO INFORM THE SPECIAL HAULING PERMITS SECTION (HAULING.PERMITS@DOT.OHIO.GOV) AND THE DISTRICT PUBLIC INFORMATION OFFICE (PIO). THIS NOTIFICATION SHALL BE RECEIVED BY THE PROJECT ENGINEER PRIOR TO THE PHYSICAL SETUP OF ANY APPLICABLE SIGNS OR MESSAGE BOARDS.

INFORMATION SHOULD INCLUDE, BUT IS NOT LIMITED TO, ALL CONSTRUCTION ACTIVITIES THAT IMPACT OR INTERFERE WITH TRAFFIC AND SHALL LIST THE SPECIFIC LOCATION, TYPE OF WORK, ROAD STATUS, DATE AND TIME OF RESTRICTION, DURATION OF RESTRICTION, NUMBER OF LANES MAINTAINED, NUMBER OF LANES CLOSED, MINIMUM VERTICAL CLEARANCE, MINIMUM WIDTH OF DRIVABLE PAVEMENT, DETOUR ROUTES, IF APPLICABLE, AND ANY OTHER INFORMATION REQUESTED BY THE PROJECT ENGINEER.

NOTIFICATION OF TRAFFIC RESTRICTIONS TIME TABLE

ITEM	DURATION OF CLOSURE	NOTICE DUE TO PERMITS & PIO
RAMP & ROAD CLOSURES	>= 2 WEEKS	21 CALENDAR DAYS PRIOR TO CLOSURE
	> 12HOURS & < 2 WEEKS	14 CALENDAR DAYS PRIOR TO CLOSURE
	< 12 HOURS	4 CALENDAR DAYS PRIOR TO CLOSURE
LANE CLOSURES & RESTRICTIONS	>= 2 WEEKS	14 CALENDAR DAYS PRIOR TO CLOSURE
	< 2 WEEKS	5 BUSINESS DAYS PRIOR TO CLOSURE
START OF CONSTRUCTION & TRAFFIC PATTERN CHANGES	N/A	14 CALENDAR DAYS PRIOR TO IMPLEMENTATION

ANY UNFORESEEN CONDITIONS NOT SPECIFIED IN THE PLANS REQUIRING TRAFFIC RESTRICTIONS SHALL ALSO BE REPORTED TO THE PROJECT ENGINEER USING THE NOTIFICATION TIME TABLE.

DUST CONTROL

THE CONTRACTOR SHALL FURNISH AND APPLY WATER FOR DUST CONTROL AS DIRECTED BY THE ENGINEER. THE FOLLOWING ESTIMATED QUANTITIES HAVE BEEN INCLUDED FOR DUST CONTROL PURPOSES:

ITEM 616, WATER 33 M. GAL.

ITEM 614, PORTABLE CHANGEABLE MESSAGE SIGN, AS PER PLAN

THE CONTRACTOR SHALL FURNISH, INSTALL, MAINTAIN AND REMOVE, WHEN NO LONGER NEEDED, A CHANGEABLE MESSAGE SIGN. THE SIGN SHALL BE OF A TYPE SHOWN ON A LIST OF APPROVED PCMS UNITS AVAILABLE ON THE OFFICE OF MATERIALS MANAGEMENT WEB PAGE. THE LIST CONTAINS CLASS A AND B UNITS WITH MINIMUM LEGIBILITY DISTANCES OF 800 FEET AND 650 FEET, RESPECTIVELY.

EACH SIGN SHALL BE TRAILER-MOUNTED AND EQUIPPED WITH A FUNCTIONAL DIMMING MECHANISM, TO DIM THE SIGN DURING DARKNESS, AND A TAMPER AND VANDAL PROOF ENCLOSURE. EACH SIGN SHALL BE PROVIDED WITH APPROPRIATE TRAINING AND OPERATION INSTRUCTIONS TO ENABLE ON-SITE PERSONNEL TO OPERATE AND TROUBLESHOOT THE UNIT. THE SIGN SHALL ALSO BE CAPABLE OF BEING POWERED BY AN ELECTRICAL SERVICE DROP FROM A LOCAL UTILITY COMPANY. THE PCMS SHALL BE DELINEATED IN ACCORDANCE WITH C&MS 614.03.

THE PROBABLE PCMS LOCATIONS AND WORK LIMITS FOR THOSE LOCATIONS SHALL BE DESIGNATED BY THE PROJECT ENGINEER. PLACEMENT, OPERATION, MAINTENANCE AND ALL ACTIVATION OF THE SIGNS BY THE CONTRACTOR SHALL BE AS DIRECTED BY THE ENGINEER. THE PCMS SHALL BE LOCATED IN A HIGHLY VISIBLE POSITION YET PROTECTED FROM TRAFFIC. THE CONTRACTOR SHALL, AT THE DIRECTION OF THE ENGINEER, RELOCATE THE PCMS TO IMPROVE VISIBILITY OR ACCOMMODATE CHANGED CONDITIONS. WHEN NOT IN USE, THE PCMS SHALL BE TURNED OFF. ADDITIONALLY, WHEN NOT IN USE FOR EXTENDED PERIODS OF TIME, THE PCMS SHALL BE TURNED AWAY FROM ALL TRAFFIC.

THE ENGINEER SHALL BE PROVIDED ACCESS TO EACH SIGN UNIT AND SHALL BE PROVIDED WITH APPROPRIATE TRAINING AND OPERATION INSTRUCTIONS TO ENABLE ODOT PERSONNEL TO OPERATE AND TROUBLESHOOT THE UNIT, AND TO REVISE SIGN MESSAGES, IF NECESSARY.

ALL MESSAGES TO BE DISPLAYED ON THE SIGN WILL BE PROVIDED BY THE ENGINEER. A LIST OF ALL REQUIRED PRE-PROGRAMMED MESSAGES WILL BE GIVEN TO THE CONTRACTOR AT THE PROJECT PRECONSTRUCTION CONFERENCE. THE SIGN SHALL HAVE THE CAPABILITY TO STORE UP TO 99 MESSAGES. MESSAGE MEMORY OR PRE-PROGRAMMED DISPLAYS SHALL NOT BE LOST AS A RESULT OF POWER FAILURES TO THE ON-BOARD COMPUTER. THE SIGN LEGEND SHALL BE CAPABLE OF BEING CHANGED IN THE FIELD. THREE-LINE PRESENTATION FORMATS WITH UP TO SIX MESSAGE PHASES SHALL BE SUPPORTED. PCMS FORMAT SHALL PERMIT THE COMPLETE MESSAGE FOR EACH PHASE TO BE READ AT LEAST TWICE.

THE PCMS SHALL CONTAIN AN ACCURATE CLOCK AND PROGRAMMING LOGIC WHICH WILL ALLOW THE SIGN TO BE ACTIVATED, DEACTIVATED OR MESSAGES CHANGED AUTOMATICALLY AT DIFFERENT TIMES OF THE DAY FOR DIFFERENT DAYS OF THE WEEK.

THE CONTRACTOR SHALL BE RESPONSIBLE FOR 24-HOUR-PER-DAY OPERATION AND MAINTENANCE OF THESE SIGNS ON THE PROJECT FOR THE DURATION OF THE PHASES WHEN THE PLAN REQUIRES THEIR USE.

PAYMENT FOR THE ABOVE DESCRIBED ITEM SHALL BE AT THE CONTRACT UNIT PRICE. PAYMENT SHALL INCLUDE ALL LABOR, MATERIALS, EQUIPMENT, FUELS, LUBRICATING OILS, SOFTWARE, HARDWARE AND INCIDENTALS TO PERFORM THE ABOVE DESCRIBED WORK.

THE FOLLOWING ESTIMATED QUANTITIES HAVE BEEN CARRIED TO THE GENERAL SUMMARY.

ITEM 614 - PORTABLE CHANGEABLE MESSAGE SIGN,
AS PER PLAN 8 SIGN MONTHS

SEQUENCE OF CONSTRUCTION

NOTE: PHASING FOR PART 1 AND PART 2 SHALL BE COORDINATED TO MINIMIZE DETOUR INTERRUPTIONS AND PROVIDE ACCESS TO PROPERTIES.

PHASE I

CLOSE EAST LEG OF SR 302 AND DETOUR TRAFFIC AS SHOWN ON SHEET P.17. CONSTRUCT ROUNDABOUT, EAST LEG OF SR 302 AND PORTIONS OF US 42 OUTSIDE THE LIMITS OF THE EXISTING US 42 ROADWAY. SEE PART 2 FOR SIMILAR WORK ON SR 302 AT SR 89 DURING PHASE I.

PHASE II

CLOSE BOTH SR 302 AND SR 89 AND DETOUR TRAFFIC AS SHOWN IN PART 2. CONSTRUCT WEST LEG OF SR 302 AND ALL REMAINING PORTIONS OF ALL OTHER ROADWAYS AS SHOWN IN PART 2.

PHASE III

CLOSE BOTH SR 302 AND US 42 AND DETOUR TRAFFIC AS SHOWN ON SHEETS P.17 & P.18. CONSTRUCT WEST LEG OF SR 302 AND REMAINING PORTIONS OF ALL OTHER ROADWAYS IN PART 1.

ITEM 614, LAW ENFORCEMENT OFFICER (WITH PATROL CAR) FOR ASSISTANCE DURING CONSTRUCTION OPERATIONS

USE OF LAW ENFORCEMENT OFFICERS (LEOS) BY CONTRACTORS OTHER THAN THE USES SPECIFIED BELOW WILL NOT BE PERMITTED AT PROJECT COST. LEOS SHOULD NOT BE USED WHERE THE OMUTCD INTENDS THAT FLAGGERS BE USED.

IN ADDITION TO THE REQUIREMENTS OF C&MS 614 AND THE OMUTCD, A UNIFORMED LEO WITH AN OFFICIAL PATROL CAR (CAR WITH TOP-MOUNTED EMERGENCY FLASHING LIGHTS AND COMPLETE MARKINGS OF THE APPROPRIATE LAW ENFORCEMENT AGENCY) SHALL BE PROVIDED FOR THE FOLLOWING TRAFFIC CONTROL TASKS:

DURING THE ENTIRE ADVANCE PREPARATION AND CLOSURE SEQUENCE WHERE COMPLETE BLOCKAGE OF TRAFFIC IS REQUIRED.

DURING A TEMPORARY OR PERMANENT LIGHTING INSTALLATION WHEN IMPACTING THE NORMAL FUNCTION OF THE INTERSECTIONS OR THE FLOW OF TRAFFIC.

IN ADDITION TO THE REQUIREMENT OF C&MS 614 AND THE OMUTCD, A UNIFORMED LEO WITH AN OFFICIAL PATROL CAR (CAR WITH TOP-MOUNTED EMERGENCY FLASHING LIGHTS AND COMPLETE MARKINGS OF THE APPROPRIATE LAW ENFORCEMENT AGENCY) SHOULD BE PROVIDED FOR THE FOLLOWING TRAFFIC CONTROL TASKS AS APPROVED BY THE ENGINEER:

FOR LANE CLOSURES: DURING INITIAL SET-UP PERIODS, TEAR DOWN PERIODS, SUBSTANTIAL SHIFTS OF A CLOSURE POINT OR WHEN NEW LANE CLOSURE ARRANGEMENTS ARE INITIATED FOR LONG-TERM LANE CLOSURES/SHIFTS (FOR THE FIRST AND LAST DAY OF MAJOR CHANGES IN TRAFFIC CONTROL SETUP).

IN GENERAL, LEOS SHOULD BE POSITIONED IN ADVANCE OF AND ON THE SAME SIDE AS THE LANE RESTRICTION (OR AT THE POINT OF ROAD CLOSURE), AND TO MANUALLY CONTROL TRAFFIC MOVEMENTS THROUGH SIGNALIZED INTERSECTIONS IN WORK ZONES.

LEOS SHOULD NOT FORGO THEIR TRAFFIC CONTROL RESPONSIBILITIES TO APPREHEND MOTORISTS FOR ROUTINE TRAFFIC VIOLATIONS. HOWEVER, IF A MOTORIST'S ACTIONS ARE CONSIDERED TO BE RECKLESS, THEN PURSUIT OF THE MOTORIST IS APPROPRIATE.

THE LEOS WORK AT THE DIRECTION OF THE CONTRACTOR. THE CONTRACTOR IS RESPONSIBLE FOR SECURING THE SERVICES OF THE LEOS WITH THE APPROPRIATE AGENCIES AND COMMUNICATING THE INTENTIONS OF THE PLANS WITH RESPECT TO DUTIES OF THE LEOS. THE ENGINEER SHALL HAVE FINAL CONTROL OVER THE LEOS' DUTIES AND PLACEMENT, AND WILL RESOLVE ANY ISSUES THAT MAY ARISE BETWEEN THE TWO PARTIES.

ENSURE PROVIDED LEOS HAVE BEEN TRAINED APPROPRIATE TO THE JOB DECISIONS THEY ARE REQUIRED TO MAKE WHILE ON THE PROJECT, IN ACCORDANCE WITH C&MS 614.03.

THE LEO SHALL REPORT IN TO THE CONTRACTOR PRIOR TO THE START OF THE SHIFT, IN ORDER TO RECEIVE INSTRUCTIONS REGARDING SPECIFIC WORK ASSIGNMENTS DURING HIS/HER SHIFT. THE LEO IS EXPECTED TO STAY AT THE PROJECT SITE FOR THE ENTIRE DURATION OF HIS/HER SHIFT. THE LEO SHALL REPORT TO THE CONTRACTOR AT THE END OF HIS/HER SHIFT. SHOULD IT BE NECESSARY TO LEAVE THE PROJECT SITE, THE LEO SHALL NOTIFY THE ENGINEER. THE CONTRACTOR SHALL PROVIDE THE LEO WITH A TWO-WAY COMMUNICATION DEVICE THAT SHALL BE RETURNED TO THE CONTRACTOR AT THE END OF HIS/HER SHIFT.

LEOS (WITH PATROL CAR) REQUIRED BY THE TRAFFIC MAINTENANCE TASKS ABOVE SHALL BE PAID FOR ON A UNIT PRICE (HOURLY) BASIS UNDER ITEM 614, LAW ENFORCEMENT OFFICER (WITH PATROL CAR) FOR ASSISTANCE. THE FOLLOWING ESTIMATED QUANTITIES HAVE BEEN CARRIED TO THE GENERAL SUMMARY.

ITEM 614, LAW ENFORCEMENT OFFICER WITH PATROL CAR
FOR ASSISTANCE 40 HOURS

THE HOURS PAID SHALL INCLUDE ANY MINIMUM SHOW-UP TIME REQUIRED BY THE LAW ENFORCEMENT AGENCY INVOLVED. ANY ADDITIONAL COSTS (ADMINISTRATIVE OR OTHERWISE) INCURRED BY THE CONTRACTOR TO OBTAIN THE SERVICES OF A LEO ARE INCLUDED WITH THE BID UNIT PRICE FOR ITEM 614, LAW ENFORCEMENT OFFICER WITH PATROL CAR FOR ASSISTANCE.

MAINTENANCE OF TRAFFIC NOTES

DESIGN AGENCY
AECOM

DESIGNER
JPK

REVIEWER
MAW 03/11/22

PROJECT ID
114065

SHEET P.16 TOTAL P.133

ASD-42-14.77

MODEL: Sheet_02 PAPERSIZE: 34x22 (in.) DATE: 1/8/2024 TIME: 5:17:10 PM USER: jason.ramler
pw:\\aecom-ma-pw.bentley.com:AECOM_DS21_NA_2020\Documents\60657065-ASD-42-14.77\114065\400-Engineering\MOT\Sheets\114065_MN001.dgn

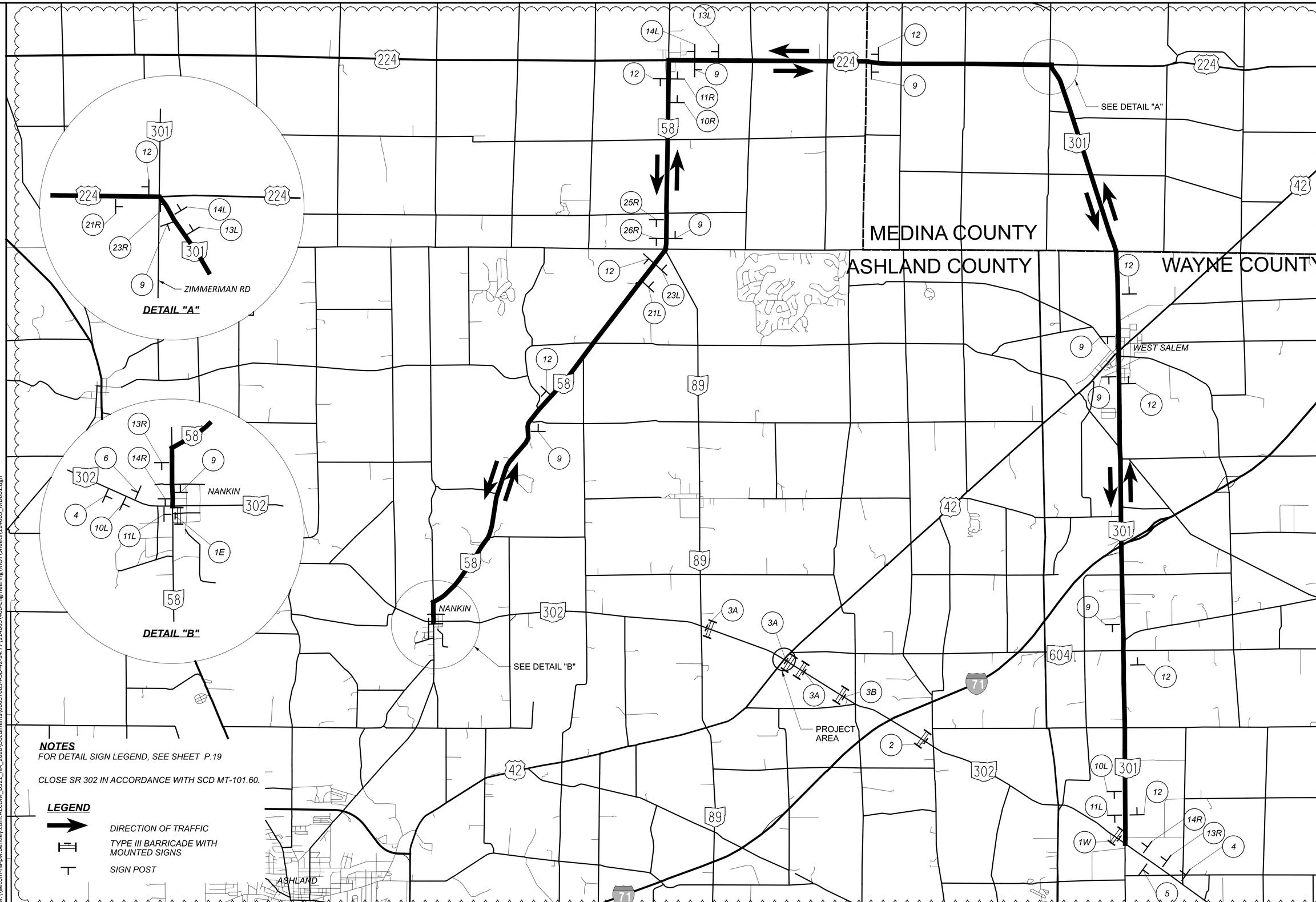

NOTES

FOR DETAIL SIGN LEGEND, SEE SHEET P.19

CLOSE SR 302 IN ACCORDANCE WITH SCD MT-101.60.

LEGEND

- DIRECTION OF TRAFFIC
- TYPE III BARRICADE WITH MOUNTED SIGNS
- SIGN POST

MAINTENANCE OF TRAFFIC
PHASES I - III - SR 302 DETOUR ROUTE

DESIGN AGENCY: AECOM

DESIGNER: JPK

REVIEWER: MAW 03/11/22

PROJECT ID: 114065

SHEET P.17 TOTAL P.133

ASD-42-14.77

MODEL: Phase I PAPERSIZE: 34x22 (in.) DATE: 1/9/2024 TIME: 7:42:07 AM USER: jason.ramler
pw:\\aecom-na-pw.bentley.com:AECOM_DS21_NA_2020\Documents\60657065-ASD-42-14.77\114065\400-Engineering\MOT\Sheets\114065_MD001.dgn

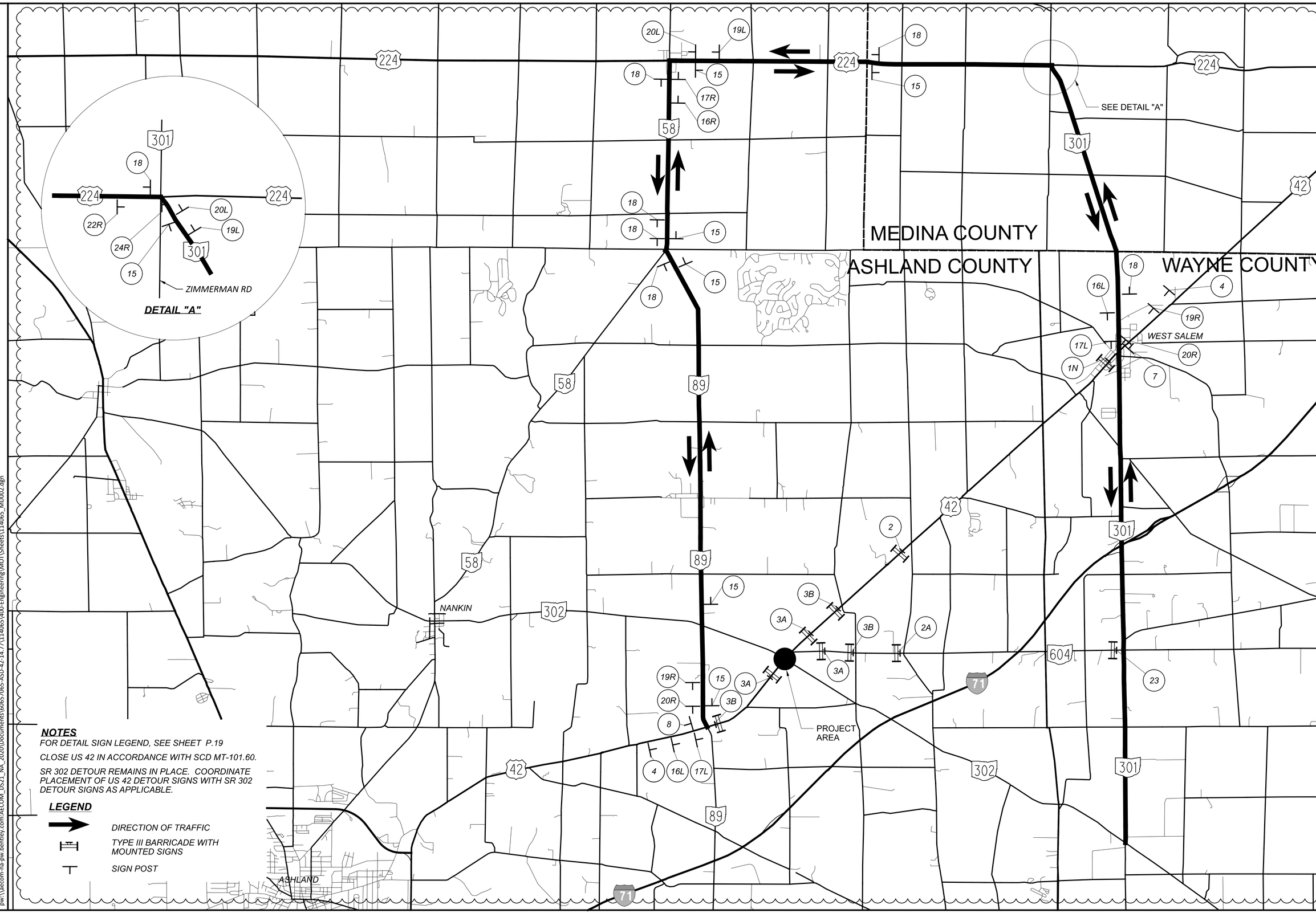

NOTES

FOR DETAIL SIGN LEGEND, SEE SHEET P.19

CLOSE US 42 IN ACCORDANCE WITH SCD MT-101.60.

SR 302 DETOUR REMAINS IN PLACE. COORDINATE PLACEMENT OF US 42 DETOUR SIGNS WITH SR 302 DETOUR SIGNS AS APPLICABLE.

LEGEND

- DIRECTION OF TRAFFIC
- TYPE III BARRICADE WITH MOUNTED SIGNS
- SIGN POST

MAINTENANCE OF TRAFFIC
PHASE III - US 42 DETOUR ROUTE

DESIGN AGENCY
AECOM

DESIGNER
JPK

REVIEWER
MAW 03/11/22

PROJECT ID
114065

SHEET P.18 TOTAL P.133

ASD-42-14.77

MODEL: Phase II PAPERSIZE: 34x22 (in.) DATE: 1/8/2024 TIME: 5:17:32 PM USER: jason.ramler
pw:\\aecom-na-pw.bentley.com:AECOM_DS21_NA_2020\Documents\60657065-ASD-42-14.77\114065\400-Engineering\MOT\Sheets\114065_MD002.dgn

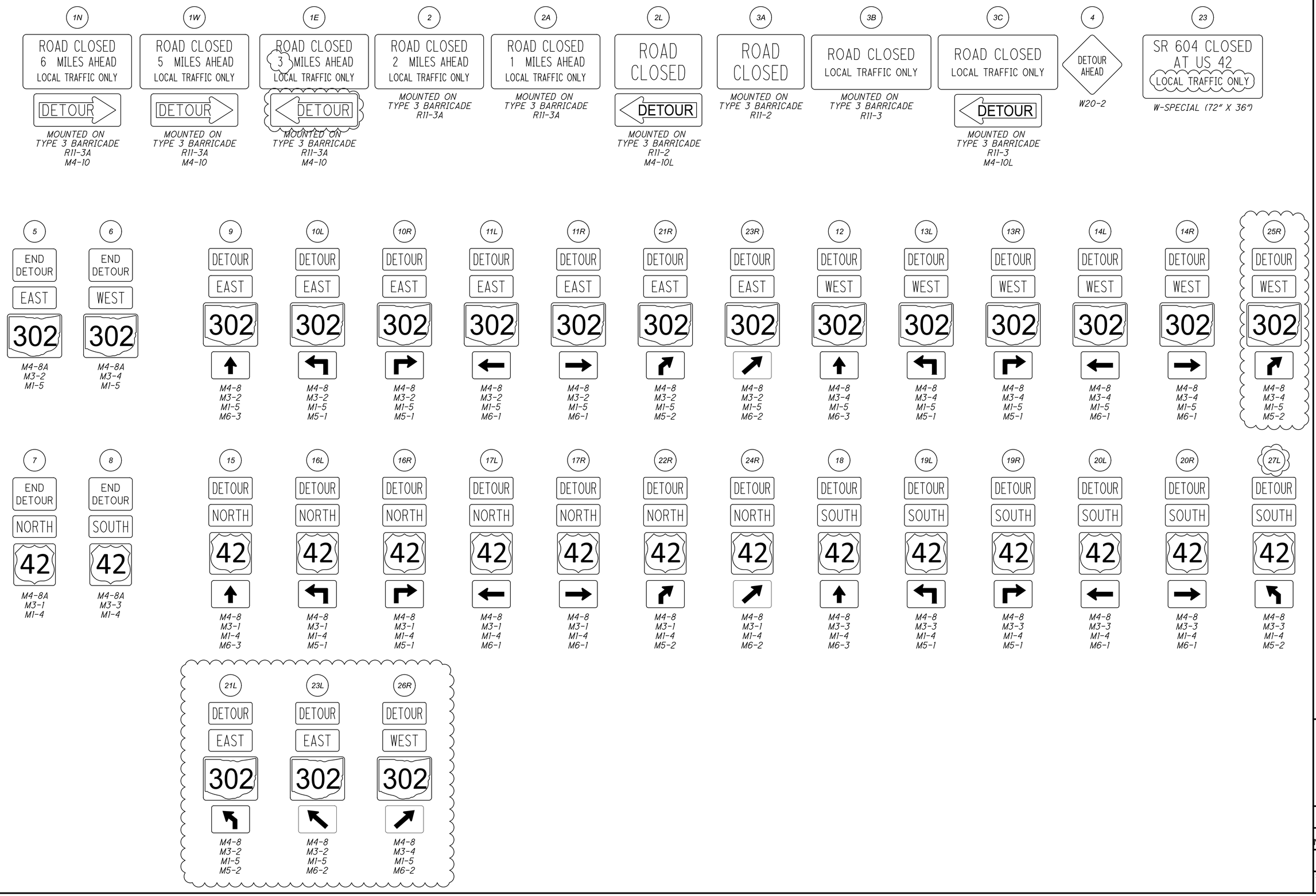

MAINTENANCE OF TRAFFIC
DETOUR SIGNING

DESIGN AGENCY
AECOM

DESIGNER
JPK

REVIEWER
MAW 03/11/22

PROJECT ID
114065

SHEET P.19 TOTAL P.133

ASD-42-14.77

MODEL: Sheet PAPERSIZE: 34x22 (in.) DATE: 1/8/2024 TIME: 5:17:41 PM USER: jason.ramler
pw:\\aecom-na-pw.bentley.com:AECOM_DS21_NA_2020\Documents\60657065-ASD-42-14.77\114065\400-Engineering\MOT\Sheets\114065_MD003.dgn

SHEET NUM. P.12	P.14	P.26	P.27	P.29	RW.3	RW.4	OFFICE CALCS	PART. 01/SAF/21	ITEM	ITEM EXT	GRAND TOTAL	UNIT	DESCRIPTION	SEE SHEET NO.
													ROADWAY - PART 1	
								LS	201	11000	LS		CLEARING AND GRUBBING	
		4,496						4,496	202	23000	4,496	SY	PAVEMENT REMOVED	
		1,328						1,328	202	35100	1,328	FT	PIPE REMOVED, 24" AND UNDER	
		4						4	202	38800	4	EACH	GUARD POST REMOVED	
		6						6	202	53100	6	EACH	MAILBOX REMOVED	
		9						9	202	58100	9	EACH	CATCH BASIN REMOVED	
		1						1	202	62700	1	EACH	SEPTIC TANK REMOVED	
		2						2	SPECIAL	20266000	2	EACH	DRILLED WATER WELL ABANDONED	P.12A
		401						401	202	75000	401	FT	FENCE REMOVED	
		1						1	202	98100	1	EACH	REMOVAL MISC.: CLEANOUT REMOVED	P.12A
		1						1	202	98100	1	EACH	REMOVAL MISC.: CONCRETE PAD	P.12A
			5,870					5,870	203	10000	5,870	CY	EXCAVATION	
			7,167					7,167	203	20000	7,167	CY	EMBANKMENT	
							1,261	1,261	204	10000	1,261	SY	SUBGRADE COMPACTION	
7								7	204	45000	7	HOUR	PROOF ROLLING	
							367	367	206	10500	367	TON	CEMENT	
							12,136	12,136	206	11000	12,136	SY	CURING COAT	
							12,136	12,136	206	15020	12,136	SY	CEMENT STABILIZED SUBGRADE, 14 INCHES DEEP	
					7			7	623	38500	7	EACH	MONUMENT ASSEMBLY, TYPE C	
					1			1	623	40500	1	EACH	REFERENCE MONUMENT, TYPE A	
						3		3	623	40520	3	EACH	RIGHT-OF-WAY MONUMENT, TYPE B	
LS								LS	623	50000	LS		PRECONSTRUCTION SURVEY MONUMENT VERIFICATION AND REPORT	
LS								LS	623	51000	LS		POST CONSTRUCTION SURVEY MONUMENT VERIFICATION AND REPORT	
			2					2	SPECIAL	69050100	2	EACH	MAILBOX SUPPORT SYSTEM, SINGLE	P.12
			4					4	SPECIAL	69050200	4	EACH	MAILBOX SUPPORT SYSTEM, DOUBLE	P.12
													EROSION CONTROL - PART 1	
	4			8				12	601	21050	12	SY	TIED CONCRETE BLOCK MAT WITH TYPE 1 UNDERLAYMENT	
				44				44	601	21060	44	SY	TIED CONCRETE BLOCK MAT WITH TYPE 2 UNDERLAYMENT	
	2							2	659	00100	2	EACH	SOIL ANALYSIS TEST	
							1,548	1,548	659	00300	1,548	CY	TOPSOIL	
2,000			12,296					14,296	659	10000	14,296	SY	SEEDING AND MULCHING	
	700							700	659	14000	700	SY	REPAIR SEEDING AND MULCHING	
	700							700	659	15000	700	SY	INTER-SEEDING	
	1.88							1.88	659	20000	1.88	TON	COMMERCIAL FERTILIZER	
	0.32							0.32	659	31000	0.32	ACRE	LIME	
	76							76	659	35000	76	MGAL	WATER	
				120				120	671	14000	120	SY	EROSION CONTROL MAT	
								LS	832	15000	LS		STORM WATER POLLUTION PREVENTION PLAN	
								LS	832	15002	LS		STORM WATER POLLUTION PREVENTION INSPECTIONS	
								LS	832	15010	LS		STORM WATER POLLUTION PREVENTION INSPECTION SOFTWARE	
								40,000	832	30000	40,000	EACH	EROSION CONTROL	
													ENVIRONMENTAL / REMEDIATION - PART 1	
	LS							LS	SPECIAL	69098400	LS		WORK INVOLVING ASBESTOS CONTAINING MATERIALS	P.14

GENERAL SUMMARY

DESIGN AGENCY

AECOM

DESIGNER
KB

REVIEWER
NSP 02/17/23

PROJECT ID
114065

SHEET P.22 TOTAL P.133

ASD-42-14.77

MODEL: Sheet 1 PAPERSIZE: 34x22 (in.) DATE: 2/2/2024 TIME: 11:20:04 AM USER: michael.j.thompson
pw:\\aecom-na-pw.bentley.com:AECOM_DS21_NA_2020\Documents\60657065-ASD-42-14.77\114065\400-Engineering\Roadway\Sheets\114065_GG001.dgn

SHEET NUM. P.15	P.16	P.26	P.27	P.111	P.112		P.114	P.129					PART. 01/SAF/21	ITEM	ITEM EXT	GRAND TOTAL	UNIT	DESCRIPTION	SEE SHEET NO.
																		TRAFFIC CONTROL - PART 1	
					174								174	621	00100	174	EACH	RPM	
							512						512	630	03100	512	FT	GROUND MOUNTED SUPPORT, NO. 3 POST	
							11						11	630	08600	11	EACH	SIGN POST REFLECTOR	
							281						281	630	80100	281	SF	SIGN, FLAT SHEET	
							63						63	630	84900	63	EACH	REMOVAL OF GROUND MOUNTED SIGN AND DISPOSAL	
							43						43	630	86002	43	EACH	REMOVAL OF GROUND MOUNTED POST SUPPORT AND DISPOSAL	
				4									4	630	84901	4	EACH	REMOVAL OF GROUND MOUNTED SIGN AND DISPOSAL, AS PER PLAN	P.111
				4									4	630	86003	4	EACH	REMOVAL OF GROUND MOUNTED POST SUPPORT AND DISPOSAL, AS PER PLAN	P.111
							24						24	630	97900	24	FT	SIGNING, MISC.: GROUND MOUNTED SUPPORT, 12" PVC	P.111
					1.26								1.26	644	00104	1.26	MILE	EDGE LINE, 6"	
					0.52								0.52	644	00300	0.52	MILE	CENTER LINE	
					32								32	644	00500	32	FT	STOP LINE	
					186								186	644	00700	186	FT	TRANSVERSE/DIAGONAL LINE	
					173								173	644	01520	173	FT	DOTTED LINE, 12"	
					68								68	644	20800	68	FT	YIELD LINE	
																		LANDSCAPING - PART 1	
								517					517	204	50000	517	SY	GEOTEXTILE FABRIC	
			4										4	657	10000	4	SY	RIPRAP FOR TREE PROTECTION	
								517					517	657	10001	517	SY	RIPRAP FOR TREE PROTECTION, AS PER PLAN	P.14
								3					3	661	00500	3	CY	MULCH	
								28					28	661	19000	28	EACH	DECIDUOUS SHRUB, 12" HEIGHT, FRAGRANT SUMAC (3 GAL)	
								5					5	661	50040	5	EACH	EVERGREEN TREE, 2' HEIGHT, MUGO PINE (5 GAL)	
																		BUILDING DEMOLITION - PART 1	
		LS											LS	202	56000	LS		BUILDING DEMOLISHED, PARCEL 3, ABANDONED BUILDING BRICK FOUNDATION, BLOCK FOUNDATION WITH ROOF, WOOD BARN, VINYL SHED, 2 WOOD SHEDS	
																		MAINTENANCE OF TRAFFIC - PART 1	
125													125	410	12000	125	CY	TRAFFIC COMPACTED SURFACE, TYPE A OR B	
	40												40	614	11110	40	HOUR	LAW ENFORCEMENT OFFICER WITH PATROL CAR FOR ASSISTANCE	
													LS	614	12420	LS		DETOUR SIGNING	
80													80	614	13000	80	CY	ASPHALT CONCRETE FOR MAINTAINING TRAFFIC	
	8												8	614	18601	8	SNMT	PORTABLE CHANGEABLE MESSAGE SIGN, AS PER PLAN	P.16
													LS	615	10000	LS		ROADS FOR MAINTAINING TRAFFIC	
50	33												83	616	10000	83	MGAL	WATER	
																		INCIDENTALS - PART 1	
													LS	614	11000	LS		MAINTAINING TRAFFIC	
													6	619	16010	6	MNTH	FIELD OFFICE, TYPE B	
													LS	623	10000	LS		CONSTRUCTION LAYOUT STAKES AND SURVEYING	
													LS	624	10000	LS		MOBILIZATION	

GENERAL SUMMARY

DESIGN AGENCY
AECOM

DESIGNER
KB

REVIEWER
NSP 02/17/23

PROJECT ID
114065

SHEET P.25 TOTAL P.133

ASD-42-14.77

MODEL: Sheet 4 PAPERSIZE: 34x22 (in.) DATE: 2/6/2024 TIME: 8:08:56 AM USER: michaelj,jthompson
pw:\\aecom-na-pw.bentley.com:AECOM_DS21_NA_2020\Documents\60657065-ASD-42-14.77\114065\400-Engineering\Roadway\Sheets\114065_GG001.dgn

REMOVAL SUBSUMMARY

REF NO.	SHEET NO.	STATION TO STATION					202 PAVEMENT REMOVED (SY)		202 PIPE REMOVED, 24" AND UNDER (FT)		202 GUARD POST REMOVED (EACH)	202 MAILBOX REMOVED (EACH)	202 BUILDING DEMOLISHED (LS)		202 CATCH BASIN REMOVED (EACH)	202 SEPTIC TANK REMOVED (EACH)	SPECIAL DRILLED WATER WELL ABANDONED (EACH)	202 FENCE REMOVED (FT)		202 REMOVAL MISC.:CLEANOUT REMOVED (EACH)	202 REMOVAL MISC.: CONCRETE PAD (EACH)	625 LIGHT POLE REMOVED (EACH)				
R1	P.32	776+62.61	LT												1											
R2	P.32, P.33	776+22.06	LT	TO	781+13.31	LT			488																	
R3	P.33	777+35.26	LT												1											
R4	P.33	777+65.92	LT												1											
R5	P.33	777+60.75	RT										3													
R6	P.33	777+77.61	RT	TO	778+32.14	RT												57								
R7	P.33	777+85.43	RT	TO	779+99.47	RT			212																	
R8	P.33	778+02.50	RT														1									
R9	P.33	778+39.30	RT		778+84.71	RT			50											1						
R10	P.33	778+43.37	RT										1													
R11	P.33	778+39.11	RT									4														
R12	P.33	778+67.69	RT										1													
R13	P.33	778+66.88	RT														1									
R14	P.33	778+79.52	RT								2															
R15	P.33	778+83.50	RT																			1				
R16	P.33	778+98.63	RT										1													
R17	P.33	779+21.38	RT								2															
R18	P.33	216+63.24	LT													1										
R19	P.33	216+09.95	LT	TO	216+67.74	LT			99						1											
R20	P.33	216+50.41	LT												1											
R21	P.33	216+83.16	LT	TO	217+20.84	LT			38																	
R22	P.33	217+20.84	LT												1											
R23	P.33	217+59.14	LT												1											
R24	P.33	217+59.14	LT		218+93.97	LT			134						1											
R25	P.33	217+56.42	RT	TO	218+52.20	RT			97																	
R26	P.33	217+56.42	RT												1											
R27	P.33, P.36	780+92.57	LT	TO	783+96.61	LT												344								
R28	P.36	784+28.14	LT	TO	784+66.66	LT			39																	
R29	P.68	219+58.17	RT	TO	219+83.32	RT			26																	
R30	P.68	220+08.70	LT	TO	220+27.84	LT			23																	
R31	P.68	220+42.52	RT	TO	221+63.97	RT			122																	
R32	P.33	217+69.94	LT																		1					
	P.68																									
MB2	P.68	219+56.10	RT									1														
MB3		221+31.23	RT									1														
		773+08.29		TO	785+99.91		4495.062																			
TOTALS CARRIED TO GENERAL SUMMARY							4496		1328		4	6	LS		9	1	2	401		1	1	1				

DESIGN AGENCY

AECOM

DESIGNER
KB

REVIEWER
NSP 02/17/23

PROJECT ID
114065

SHEET P.26 TOTAL P.133

ASD-42-14.77

MODEL: 1 - Removal Subsummary PAPERSIZE: 34x22 (in.) DATE: 2/2/2024 TIME: 11:20:43 AM USER: michael.j.thompson
pw:\\aecom-na-pw.bentley.com:AECOM_DS21_NA_2020\Documents\60657065-ASD-42-14.77\114065\400-Engineering\Roadway\Sheets\114065_GS001.dgn

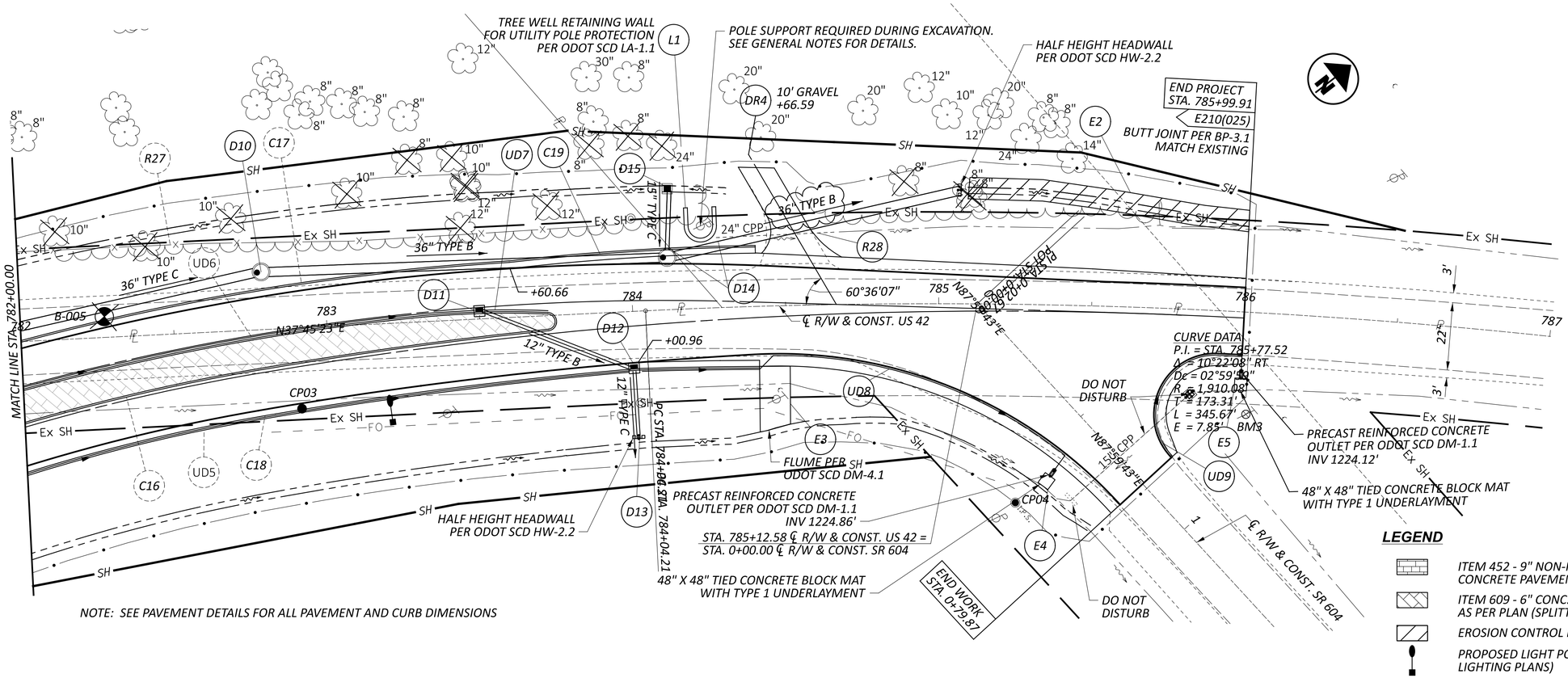

NOTE: SEE PAVEMENT DETAILS FOR ALL PAVEMENT AND CURB DIMENSIONS

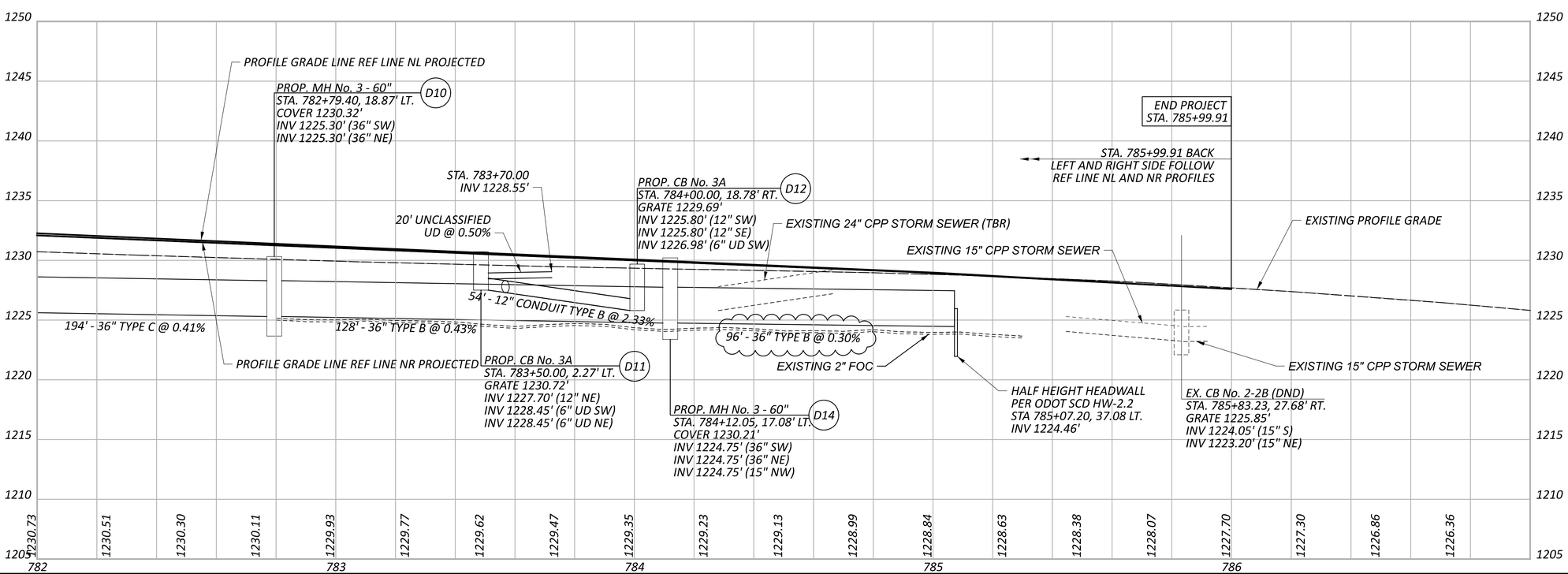

HORIZONTAL SCALE IN FEET
0 10 20 40

PLAN AND PROFILE - US 42
STA. 782+00 TO END

DESIGN AGENCY
AECOM

DESIGNER
JNR

REVIEWER
MAW 03/11/22

PROJECT ID
114065

SHEET P.36 TOTAL P.133

ASD-42-14.77

MODEL: CLX_042 - Plan Pro 2 [Sheet] PAPERSIZE: 34x22 (in.) DATE: 2/2/2024 TIME: 1:17:07 PM USER: michael.j.thompson
pw:\\aecom-na-pw.bentley.com:AECOM_DS21_NA_2020\Documents\60657065-ASD-42-14.77\114065\400-Engineering\Roadway\Sheets\114065_GP001.dgn

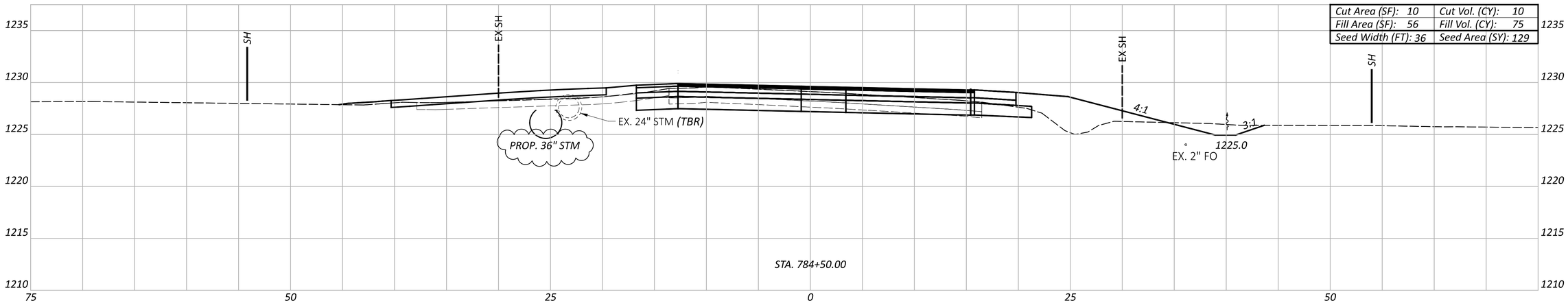

Cut Area (SF): 10	Cut Vol. (CY): 10
Fill Area (SF): 56	Fill Vol. (CY): 75
Seed Width (FT): 36	Seed Area (SY): 129

Cut Area (SF): 13	Cut Vol. (CY): 11
Fill Area (SF): 107	Fill Vol. (CY): 104
Seed Width (FT): 56	Seed Area (SY): 160

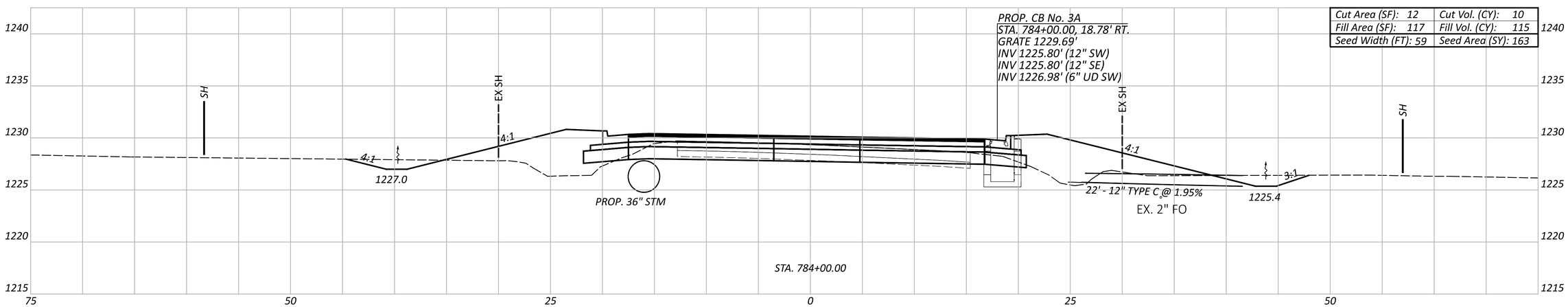

Cut Area (SF): 12	Cut Vol. (CY): 10
Fill Area (SF): 117	Fill Vol. (CY): 115
Seed Width (FT): 59	Seed Area (SY): 163

Sheet Totals		
Seeding	Cut	Fill
452	31	294

US 42 CROSS SECTIONS
STA. 784+00.00 TO STA. 784+50.00

DESIGN AGENCY
AECOM

DESIGNER
JNR

REVIEWER
MAW 03/11/22

PROJECT ID
114065

SHEET P.63 TOTAL P.133

ASD-42-14.77

MODEL: CLX_042 - 784+00.00 to 784+50.00 [Sheet] PAPERSIZE: 34x22 (in.) DATE: 2/2/2024 TIME: 11:23:28 AM USER: michael.j.thompson
pw:\\aecom-na-pw.bentley.com:AECOM_DS21_NA_2020\Documents\60657065-ASD-42-14.77\114065\400-Engineering\Roadway\Sheets\114065_XS001.dgn

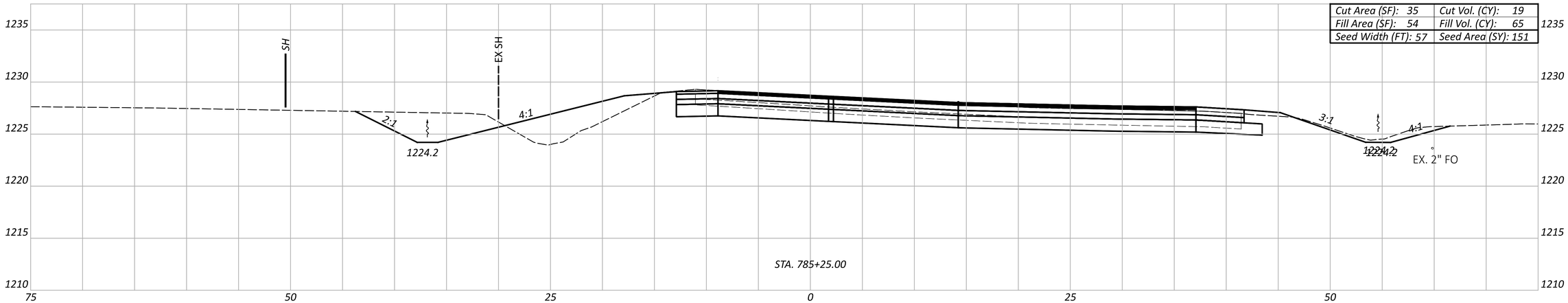

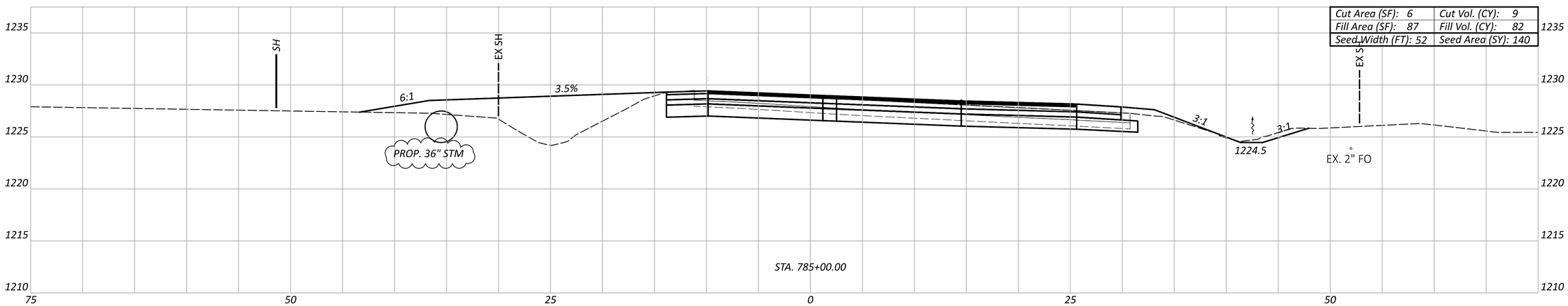

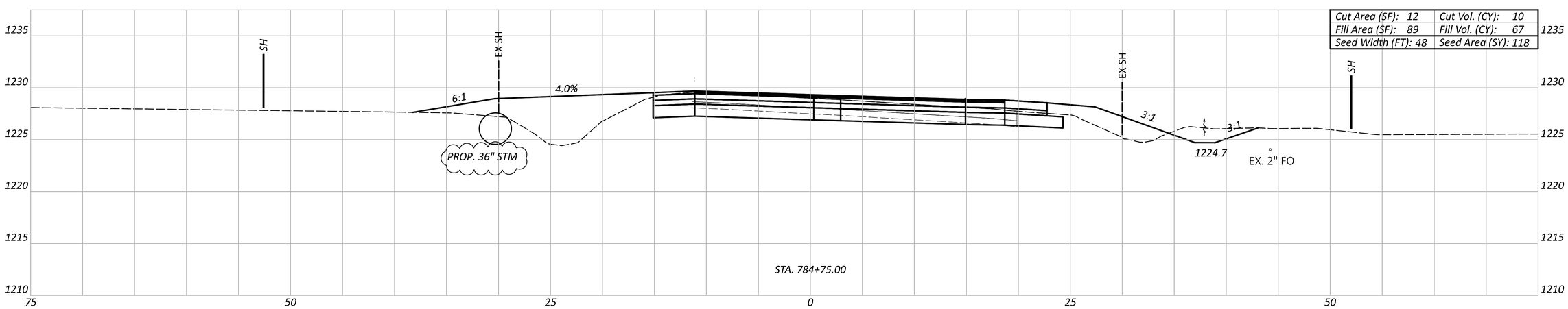

US 42 CROSS SECTIONS
STA. 784+75.00 TO STA. 785+25.00

DESIGN AGENCY
AECOM

DESIGNER
JNR

REVIEWER
MAW 03/11/22

PROJECT ID
114065

Sheet Totals		
Seeding	Cut	Fill
409	38	214

SHEET P.64 TOTAL P.133

ASD-42-14.77

MODEL: CLX_042 - 784+75.00 to 785+25.00 [Sheet] PAPERSIZE: 34x22 (in.) DATE: 2/2/2024 TIME: 11:23:34 AM USER: michael.j.thompson
pw:\\aecom-na-pw.bentley.com:AECOM_DS21_NA_2020\Documents\60657065-ASD-42-14.77\114065\400-Engineering\Roadway\Sheets\114065_XS001.dgn

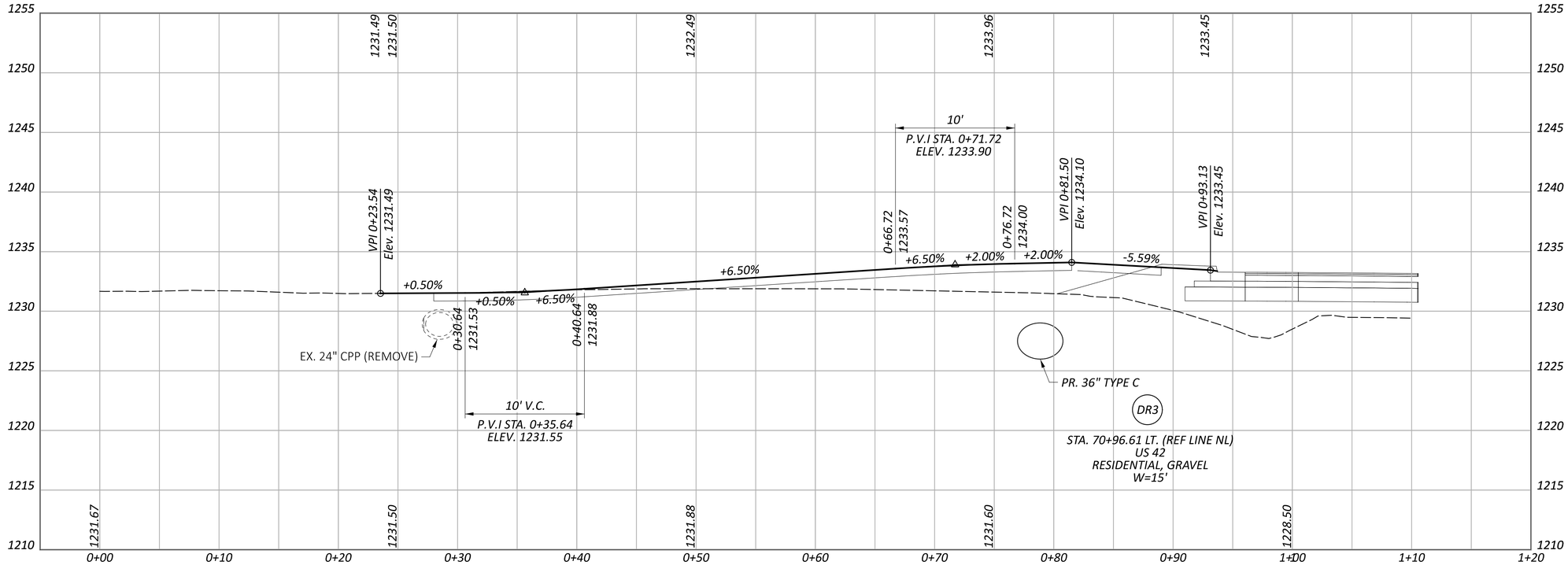

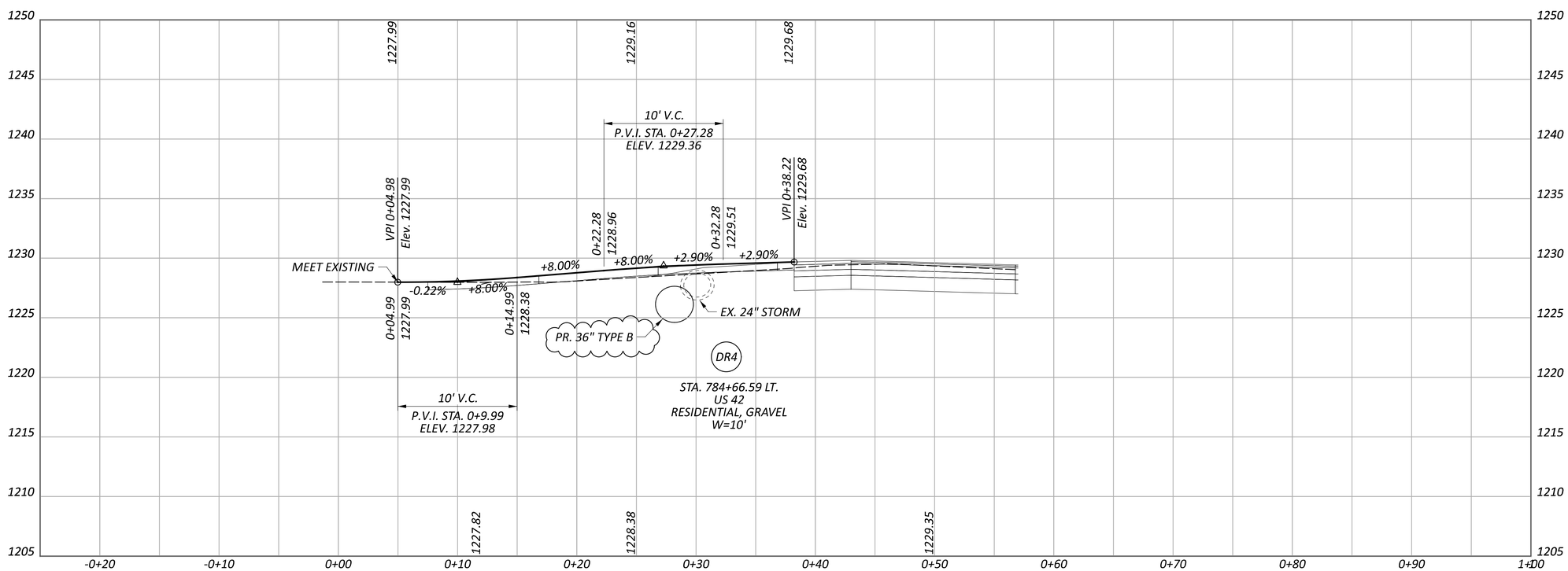

DRIVE PROFILES
DRIVE 3 AND DRIVE 4

DESIGN AGENCY
AECOM

DESIGNER
JNR

REVIEWER
MAW 03/11/22

PROJECT ID
114065

SHEET P.104 | TOTAL P.133

ASD-42-14.77

MODEL: CLP_Drive03 and Drive04 [Sheet] PAPERSIZE: 34x22 (in.) DATE: 2/2/2024 TIME: 11:24:29 AM USER: michael.j.thompson
pw:\\aecom-na-pw.bentley.com:AECOM_DS21_NA_2020\Documents\60657065-ASD-42-14.77\114065\400-Engineering\Roadway\Sheets\114065_GF002.dgn

PAVEMENT MARKING SUBSUMMARY

REF NO.	SHEET NO.	STATION TO STATION			621 RPM (YELLOW/YELLOW)	621 RPM (YELLOW/RED)	621 RPM (WHITE/RED)	644 EDGE LINE, 6" (YELLOW)	644 EDGE LINE, 6" (WHITE)	644 CENTER LINE (DOUBLE SOLID)	644 STOP LINE	644 TRANSVERSE/DIAGONAL LINE	644 DOTTED LINE, 12"	644 YIELD LINE
					EACH	EACH	EACH	MILE	MILE	MILE	FT	FT	FT	FT
YEL	P.115	776+41.00	TO	779+01.00				0.05						
RPM	P.115	776+41.00	TO	779+01.00		7								
YEL	P.115	776+43.00	TO	779+12.00				0.05						
RPM	P.115	776+43.00	TO	779+12.00		7								
YEL	P.116	215+46.00	TO	216+05.00				0.01						
RPM	P.116	215+46.00	TO	216+05.00		2								
YEL	P.116	215+47.00	TO	215+99.00				0.01						
RPM	P.116	215+47.00	TO	215+99.00		2								
YEL	P.116	779+18.00	TO	780+24.00				0.06						
RPM	P.116	779+18.00	TO	780+24.00		9								
YEL	P.116	217+39.00	TO	217+82.00				0.01						
RPM	P.116	217+39.00	TO	217+82.00		2								
YEL	P.116	217+30.00	TO	217+82.00				0.01						
RPM	P.116	217+30.00	TO	217+82.00		2								
YEL	P.116	780+38.00	TO	783+75.00				0.07						
RPM	P.116	780+38.00	TO	783+75.00		9								
YEL	P.116	780+38.00	TO	783+75.00				0.07						
RPM	P.116	780+38.00	TO	783+75.00		9								
WEL	P.115	773+08.00	TO	211+13.00					0.22					
WEL	P.115	773+08.00	TO	222+75.00					0.22					
WEL	P.116	779+01.00	TO	779+12.00					0.01					
WEL	P.116	215+99.00	TO	216+05.00					0.01					
WEL	P.116	780+38.00	TO	780+38.00					0.01					
WEL	P.116	217+30.00	TO	217+39.00					0.01					
RPM	P.116	779+01.00	TO	779+12.00			8							
WEL	P.117	0+80.00	TO	786+00.00					0.01					
WEL	P.118	211+13.00	TO	0+80.00					0.21					
WEL	P.119	222+75.00	TO	786+00.00					0.22					
DCL	P.115	773+08.00	TO	776+41.00						0.10				
RPM	P.115	773+08.00	TO	776+41.00	2	19								
DCL	P.116	217+82.00	TO	222+75.00						0.17				
RPM	P.116	217+82.00	TO	222+75.00	1	40								
DCL	P.117	783+75.00	TO	786+00.00						0.08				
RPM	P.117	783+75.00	TO	786+00.00	1	17								
DCL	P.117	0+37.00	TO	0+80.00						0.01				
DCL	P.118	211+13.00	TO	215+47.00						0.16				
RPM	P.118	211+13.00	TO	215+47.00	1	36								
SL	P.118	0+37.00	TO	0+59.00							32			
TDL	P.115	775+22.00	TO	776+10.00								24		
TDL	P.117	784+04.00	TO	784+94.00								24		
TDL	P.118	212+28.00	TO	215+10.00								65		
TDL	P.119	218+23.00	TO	221+52.00								73		
DL	P.116	779+01.00	TO	779+13.00									45	
DL	P.116	780+19.00	TO	780+38.00									44	
DL	P.116	215+99.00	TO	216+11.00									38	
DL	P.116	217+31.00	TO	217+39.00									46	
YL	P.116	778+90.00	TO	779+01.00										17
YL	P.116	780+38.00	TO	780+44.00										17
YL	P.116	215+90.00	TO	215+99.00										16
YL	P.116	217+39.00	TO	217+50.00										17
TOTALS CARRIED TO GENERAL SUMMARY					5	161	8	0.34	0.92	0.52	32	186	173	68
						174		1.26						

DESIGN AGENCY

AECOM

DESIGNER
MJR

REVIEWER
GM MM-DD-YY

PROJECT ID
114065

SHEET P.112 TOTAL P.133

ASD-42-14.77

MODEL: Sheet PAPERSIZE: 34x22 (in.) DATE: 2/6/2024 TIME: 7:51:43 AM USER: michaelj.jthompson
pw:\\aecom-na-pw.bentley.com:AECOM_DS21_NA_2020\Documents\60657065-ASD-42-14.77\114065400-Engineering\Traffic\Sheets\114065_TS001.dgn

REF NO.	SHEET NO.	LOCATION	STATION	SIDE	CODE	SIZE (INCHES)	630 GROUND MOUNTED SUPPORT, NO. 3 POST	630 SIGN, FLAT SHEET	630 REMOVAL OF GROUND MOUNTED SIGN AND DISPOSAL	630 REMOVAL OF GROUND MOUNTED POST SUPPORT AND DISPOSAL	630 SIGNING, MISC.: GROUND MOUNTED SUPPORT, 12" PVC	630 SIGN POST REFLECTOR
							FT	SF	EACH	EACH	FT	EACH
R1	P.120	US 42	772+42	LT					1	1		
R2	P.120	US 42	772+42	RT					1	1		
R3	P.120	US 42	774+54	RT					2	1		
R4	P.120	US 42	776+60	LT					2	2		
R5	P.121	US 42	777+62	LT					2	1		
R6	P.121	US 42	779+35	LT					2	1		
R7	P.121	SR 302	217+68	LT					2	2		
R8	P.121	SR 302	218+89	RT					2	1		
R9	P.121	SR 302	217+70	RT					1	1		
R10	P.121	SR 302	217+68	RT					2	1		
R11	P.121	US 42	779+91	RT					2	1		
R12	P.121	SR 302	217+10	LT					2	1		
R13	P.121	SR 302	215+65	LT					2	1		
R14	P.121	SR 302	217+07	LT					1	1		
R15	P.121	SR 302	217+05	RT					2	2		
R16	P.121	US 42	781+56	RT					2	1		
R17	P.122	US 42	783+02	LT					2	2		
R18	P.122	US 42	784+28	LT					2	1		
R19	P.122	US 42	785+11	LT					3	2		
R20	P.122	US 42	785+14	LT					3	1		
R21	P.122	US 42	784+62	RT					2	1		
R22	P.122	US 42	784+87	RT					2	2		
R23	P.122	SR 604	0+62	LT					1	1		
R24	P.122	SR 604	0+76	RT					1	1		
R25	P.122	US 42	785+85	RT					3	1		
R26	P.122	US 42	791+00	RT					1	1		
R27	P.122	US 42	791+00	LT					1	1		
R28	P.123	SR 302	209+46	LT					1	1		
R29	P.123	SR 302	209+45	RT					1	1		
R30	P.123	SR 302	212+35	RT					2	1		
R31	P.123	SR 302	214+33	RT					3	2		
R32	P.124	SR 302	221+48	LT					3	2		
R33	P.124	SR 302	223+17	LT					2	1		
R34	P.124	SR 302	225+00	LT					1	1		
R35	P.124	SR 302	225+00	RT					1	1		
S1	P.120	US 42	772+42	RT	W2-6	36 X 36	15.0	9.0				
					W13-1P	18 X 18		2.3				
S2	P.120	US 42	774+00	RT	M2-1	21 X 15	13.0	2.2				
					M1-5	30 X 24		5.0				
S3	P.120	US 42	776+00	RT	W3-2	36 X 36	13.5	9.0				
S4	P.120	US 42	776+50	CL	R4-7	24 X 30	12.0	5.0			1	
					OM1-3	18 X 18		2.3				
S5	P.121	US 42	779+00	CL	M3-3	24 X 12	11.5	2.0			1	
					M1-4	24 X 24		4.0				
					M6-2	21 X 15		2.2				
S6	P.121	SR 302	217+53	LT	R1-2	36 X 36	11.5	3.9			1	1
S7	P.121	SR 302	217+05	CL	R6-4a	48 X 24	20.0	8.0			2	
S8	P.121	SR 302	217+43	CL	R1-2	36 X 36	11.5	3.9			1	1
S9	P.121	SR 302	217+80	CL	R4-7	24 X 30	12.0	5.0			1	
					OM1-3	18 X 18		2.3				
S10	P.121	SR 302	217+41	CL	M3-4	24 X 12	12.5	2.0			1	
					M1-5	30 X 24		5.0				
					M6-2	21 X 15		2.2				
		TOTALS CARRIED TO NEXT SHEET					133	75	63	43	8	2

SIGNING SUBSUMMARY

DESIGN AGENCY

AECOM

DESIGNER
MJR

REVIEWER
GM MM-DD-YY

PROJECT ID
114065

SHEET P.113 TOTAL P.133

ASD-42-14.77

MODEL: Sheet PAPERSIZE: 34x22 (in.) DATE: 2/6/2024 TIME: 8:17:31 AM USER: michael.j.thompson
pw:\\aecom-ta-pw.bentley.com:AECOM_DS21_NA_2020\Documents\60657065-ASD-42-14.77\114065\400-Engineering\Traffic\Sheets\114065_TS002.dgn

REF NO.	SHEET NO.	LOCATION	STATION	SIDE	CODE	SIZE (INCHES)	630 GROUND MOUNTED SUPPORT, NO. 3 POST	630 SIGN, FLAT SHEET	630 REMOVAL OF GROUND MOUNTED SIGN AND DISPOSAL	630 REMOVAL OF GROUND MOUNTED POST SUPPORT AND DISPOSAL	630 SIGNING, MISC.: GROUND MOUNTED SUPPORT, 12" PVC	630 SIGN POST REFLECTOR
							FT	SF	EACH	EACH	FT	EACH
S11	P.121	US 42	780+02	CL	R6-4a	48 X 24	20.0	8.0			2	
S12	P.121	US 42	780+45	CL	R1-2	36 X 36	11.5	3.9			1	1
S13	P.121	US 42	780+46	LT	R1-2	36 X 36	11.5	3.9			1	1
S14	P.121	US 42	778+85	RT	R1-2	36 X 36	11.5	3.9			1	1
S15	P.121	US 42	778+98	CL	R1-2	36 X 36	11.5	3.9			1	1
S16	P.121	US 42	779+35	CL	R6-4a	48 X 24	20.0	4.0			2	
S17	P.121	SR 302	215+95	CL	M3-2	24 X 12	12.5	2.0			1	
					M1-5	30 X 24		5.0				
					M6-2	21 X 15		2.2				
S18	P.121	SR 302	215+50	CL	R4-7	24 X 30	12.0	5.0			1	
					OM1-3	18 X 18		2.3				
S19	P.121	SR 302	215+95	RT	R1-2	36 X 36	11.5	3.9			1	1
S20	P.121	SR 302	215+90	CL	R1-2	36 X 36	11.5	3.9			1	1
S21	P.121	SR 302	216+35	CL	R6-4a	48 X 24	20.0	8.0			2	
S22	P.121	US 42	780+47	CL	M3-1	24 X 12	12.5	2.0			1	
					M1-4	24 X 24		4.0				
					M6-2	21 X 15		2.2				
S23	P.122	US 42	782+75	LT	W3-2	36 X 36	16.5	9.0				
S24	P.122	US 42	783+50	LT	M2-1	21 X 15	17.0	2.2				
					M1-5	30 X 24		5.0				
S25	P.122	US 42	783+70	CL	R4-7	24 X 30	12.5	5.0			1	
					OM1-3	18 X 18		2.3				
S26	P.122	US 42	784+35	LT	W2-6	36 X 36	15.0	9.0				
					W13-1P	18 X 18		2.3				
S27	P.122	US 42	785+08	LT	M1-4	24 X 24	14.0	4.0				1
					M6-4	21 X 15		2.2				
					W1-7	48 X 24		8.0				
S28	P.122	US 42	785+20	LT	M3-2	24 X 12	15.0	2.0				
					M1-5	30 X 24		5.0				
					M6-1	21 X 15		2.2				
S29	P.122	SR 604	0+59	LT	R1-1	36 X 36	13.5	9.0				1
S30	P.122	SR 604	0+74	RT	R1-1	36 X 36	13.5	9.0				1
S31	P.122	US 42	785+85	RT	M3-2	24 X 12	14.0	2.0				
					M1-5	30 X 24		5.0				
					M6-1	21 X 15		2.2				
S32	P.123	SR 302	209+46	RT	W2-6	36 X 36	15.0	9.0				
					W13-1P	18 X 18		2.3				
S33	P.123	SR 302	211+50	RT	M2-1	21 X 15	13.0	2.2				
					M1-4	24 X 24		4.0				
S34	P.123	SR 302	213+50	RT	W3-2	36 X 36	13.0	9.0				
S35	P.124	SR 302	221+50	LT	W3-2	36 X 36	12.5	9.0				
S36	P.124	SR 302	223+20	LT	M2-1	21 X 15	13.0	2.2				
					M1-4	24 X 24		4.0				
S37	P.124	SR 302	225+00	LT	W2-6	36 X 36	15.0	9.0				
					W13-1P	18 X 18		2.3				
TOTALS THIS SHEET							379	206			16	9
TOTALS FROM PREVIOUS SHEET							133	75	63	43	8	2
TOTALS CARRIED TO GENERAL SUMMARY							512	281	63	43	24	11

SIGNING SUBSUMMARY

DESIGN AGENCY
AECOM

DESIGNER
MJR

REVIEWER
GM MM-DD-YY

PROJECT ID
114065

SHEET P.114 TOTAL P.133

ASD-42-14.77

MODEL: Sheet PAPERSIZE: 34x22 (in.) DATE: 2/2/2024 TIME: 11:25:35 AM USER: michael.j.thompson
pw:\\aecom-na-pw.bentley.com:AECOM_DS21_NA_2020\Documents\60657065-ASD-42-14.77\114065400-Engineering\Traffic\Sheets\114065_TS003.dgn

PAVEMENT MARKING LEGEND:

DCL: ITEM 644 - CENTER LINE (DOUBLE SOLID)
YEL: ITEM 644 - EDGE LINE, 6" (YELLOW)
WEL: ITEM 644 - EDGE LINE, 6" (WHITE)
DL: ITEM 644 - DOTTED LINE, 12" (2' LONG, 2' GAP)
TDL: ITEM 644 - TRANSVERSE/DIAGONAL LINE
YL: ITEM 644 - YIELD LINE
SL: ITEM 644 - STOP LINE

HORIZONTAL SCALE IN FEET
0 10 20 40

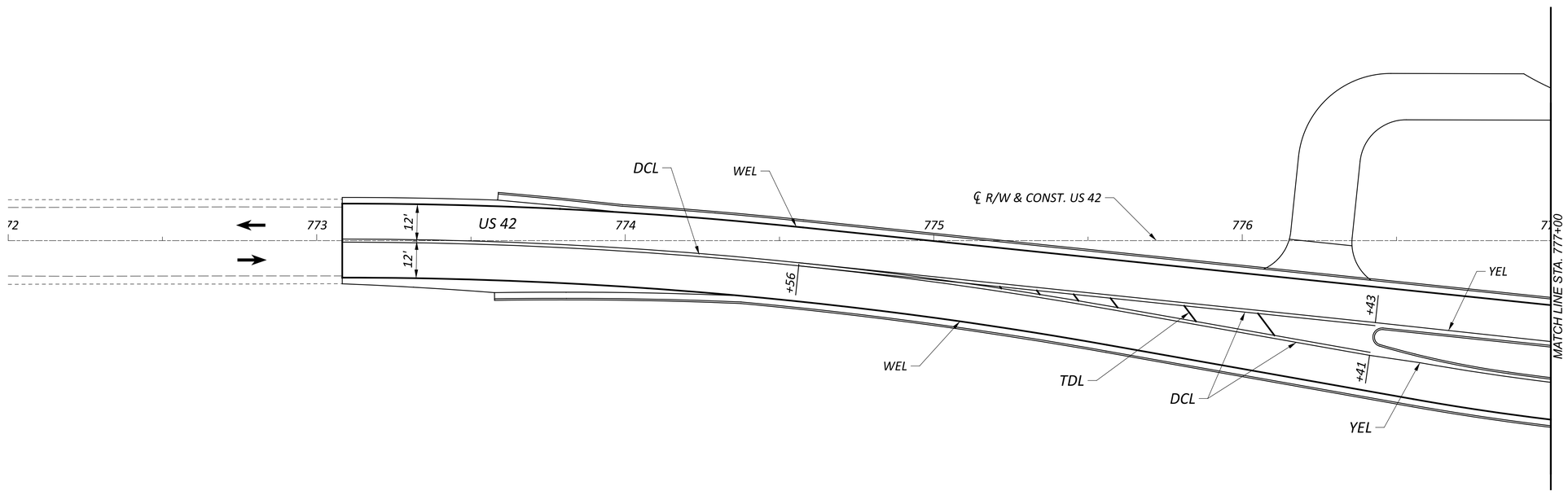

PAVEMENT MARKING PLAN
BEGIN TO STA. 777+00

DESIGN AGENCY
AECOM

DESIGNER
SJK

REVIEWER
GM 02/17/22

PROJECT ID
114065

SHEET P.115 TOTAL P.133

ASD-42-14.77

MODEL: BLP_SR - Plan 1 PAPERSIZE: 34x22 (in.) DATE: 2/6/2024 TIME: 7:55:11 AM USER: michael.j.thompson
pw:\\aecom-na-pw.bentley.com:AECOM_DS21_NA_2020\Documents\60657065-ASD-42-14.77\114065\400-Engineering\Traffic\Sheets\114065_TP101.dgn

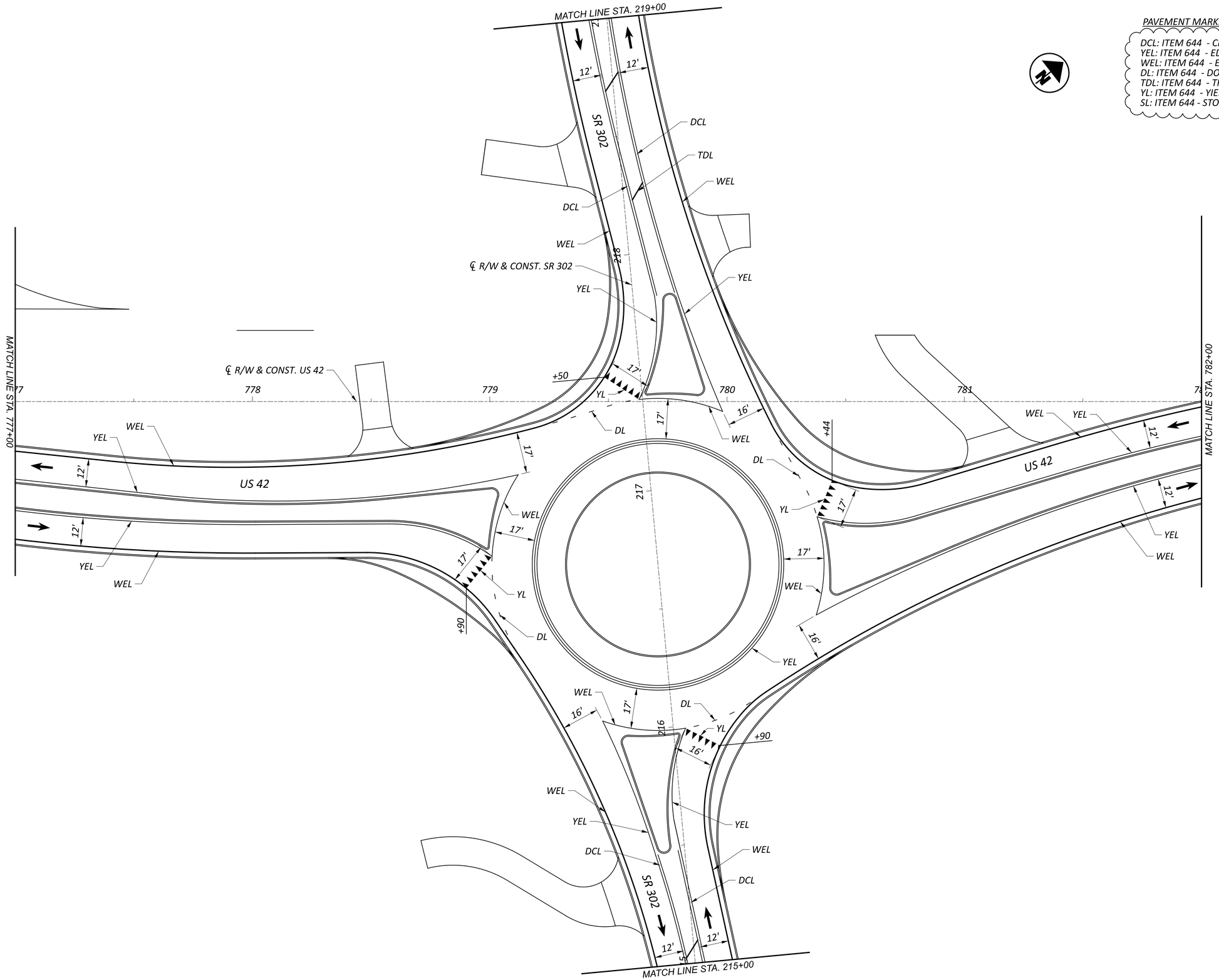

PAVEMENT MARKING LEGEND:

DCL: ITEM 644 - CENTER LINE (DOUBLE SOLID)
YEL: ITEM 644 - EDGE LINE, 6" (YELLOW)
WEL: ITEM 644 - EDGE LINE, 6" (WHITE)
DL: ITEM 644 - DOTTED LINE, 12" (2' LONG, 2' GAP)
TDL: ITEM 644 - TRANSVERSE/DIAGONAL LINE
YL: ITEM 644 - YIELD LINE
SL: ITEM 644 - STOP LINE

HORIZONTAL SCALE IN FEET
0 10 20 40

PAVEMENT MARKING PLAN STA. 777+00 TO STA. 782+00

DESIGN AGENCY
AECOM

DESIGNER
SJK

REVIEWER
GM 02/17/22

PROJECT ID
114065

SHEET P.116 TOTAL P.133

ASD-42-14.77

MODEL: BLP_SR - Plan 2 PAPERSIZE: 34x22 (in.) DATE: 2/6/2024 TIME: 7:55:32 AM USER: michael.j.thompson
pw:\\aecom-na-pw.bentley.com:AECOM_DS21_NA_2020\Documents\60657065-ASD-42-14.77\114065\400-Engineering\Traffic\Sheets\114065_TP102.dgn

PAVEMENT MARKING LEGEND:

DCL: ITEM 644 - CENTER LINE (DOUBLE SOLID)
YEL: ITEM 644 - EDGE LINE, 6" (YELLOW)
WEL: ITEM 644 - EDGE LINE, 6" (WHITE)
DL: ITEM 644 - DOTTED LINE, 12" (2' LONG, 2' GAP)
TDL: ITEM 644 - TRANSVERSE/DIAGONAL LINE
YL: ITEM 644 - YIELD LINE
SL: ITEM 644 - STOP LINE

HORIZONTAL SCALE IN FEET
0 10 20 40

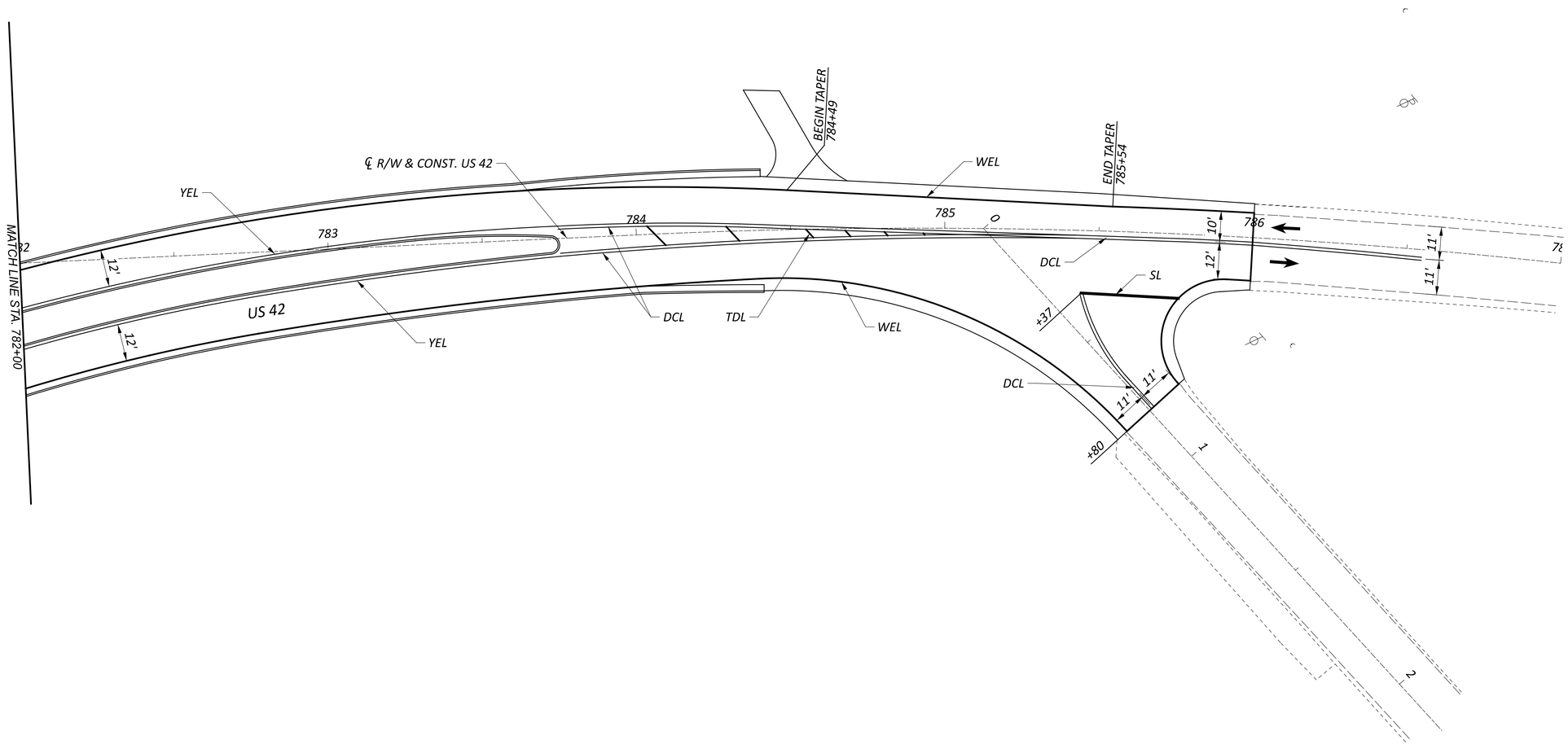

PAVEMENT MARKING PLAN
STA. 782+00 TO END

DESIGN AGENCY
AECOM

DESIGNER
SJK

REVIEWER
GM 02/17/22

PROJECT ID
114065

SHEET P.117 TOTAL P.133

ASD-42-14.77

MODEL: BLP_NL - Plan 5 PAPERSIZE: 34x22 (in.) DATE: 2/6/2024 TIME: 7:55:43 AM USER: michael.j.thompson
pw:\\aecom-na-pw.bentley.com:AECOM_DS21_NA_2020\Documents\60657065-ASD-42-14.77\114065\400-Engineering\Traffic\Sheets\114065_TP103.dgn

PAVEMENT MARKING LEGEND:

DCL: ITEM 644 - CENTER LINE (DOUBLE SOLID)
YEL: ITEM 644 - EDGE LINE, 6" (YELLOW)
WEL: ITEM 644 - EDGE LINE, 6" (WHITE)
DL: ITEM 644 - DOTTED LINE, 12" (2' LONG, 2' GAP)
TDL: ITEM 644 - TRANSVERSE/DIAGONAL LINE
YL: ITEM 644 - YIELD LINE
SL: ITEM 644 - STOP LINE

HORIZONTAL SCALE IN FEET
0 10 20 40

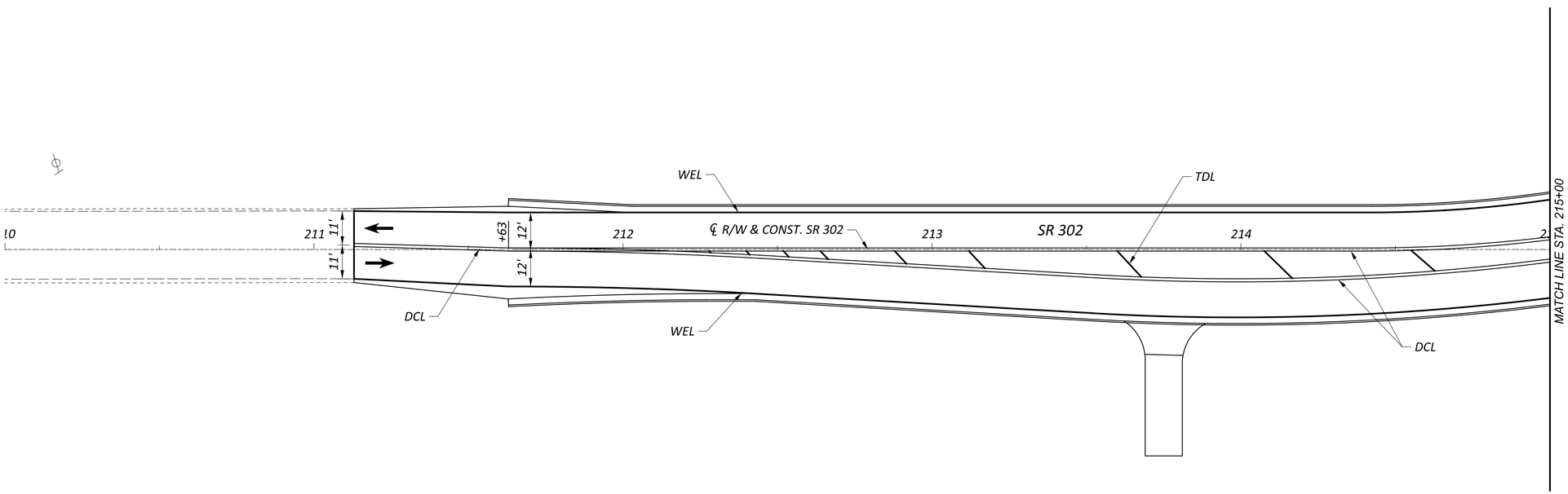

PAVEMENT MARKING PLAN
BEGIN TO STA. 215+00

DESIGN AGENCY
AECOM

DESIGNER
SJK

REVIEWER
GM 02/17/22

PROJECT ID
114065

SHEET P.118 TOTAL P.133

ASD-42-14.77

MODEL: BLP_EL - Plan 4 PAPERSIZE: 34x22 (in.) DATE: 2/6/2024 TIME: 7:55:55 AM USER: michael.j.thompson
pw:\\aecom-na-pw.bentley.com:AECOM_DS21_NA_2020\Documents\60657065-ASD-42-14.77\114065\400-Engineering\Traffic\Sheets\114065_TP104.dgn

PAVEMENT MARKING LEGEND:

DCL: ITEM 644 - CENTER LINE (DOUBLE SOLID)
YEL: ITEM 644 - EDGE LINE, 6" (YELLOW)
WEL: ITEM 644 - EDGE LINE, 6" (WHITE)
DL: ITEM 644 - DOTTED LINE, 12" (2' LONG, 2' GAP)
TDL: ITEM 644 - TRANSVERSE/DIAGONAL LINE
YL: ITEM 644 - YIELD LINE
SL: ITEM 644 - STOP LINE

HORIZONTAL SCALE IN FEET
0 10 20 40

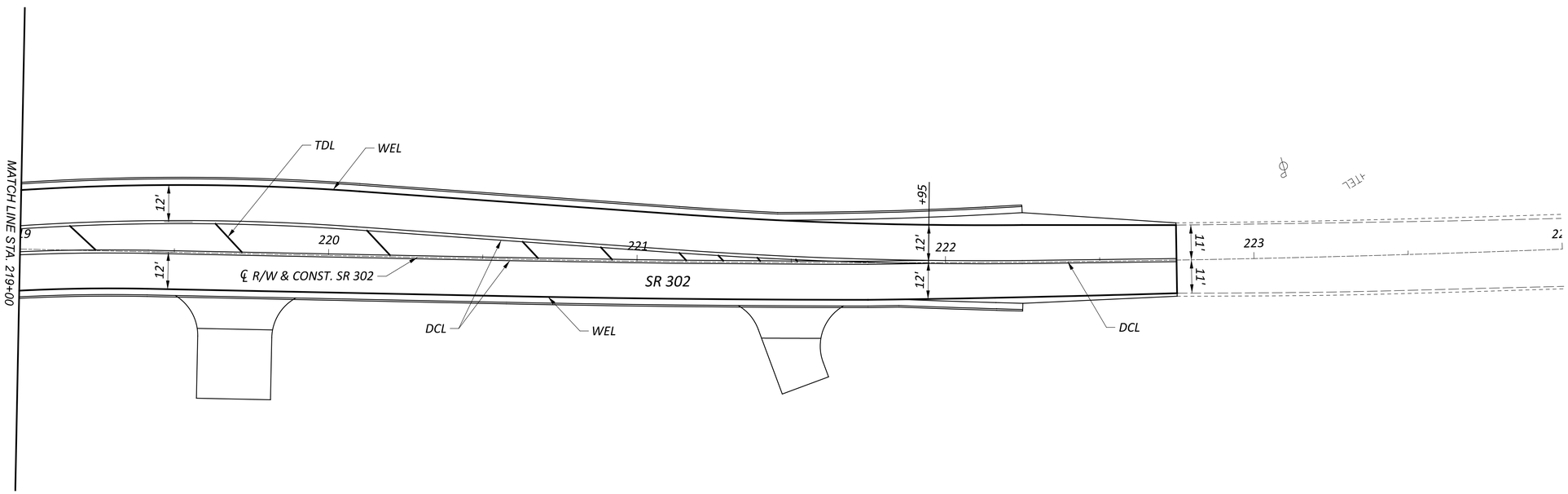

PAVEMENT MARKING PLAN
STA. 219+00 TO END

DESIGN AGENCY
AECOM

DESIGNER
SJK

REVIEWER
GM 02/17/22

PROJECT ID
114065

SHEET P.119 TOTAL P.133

ASD-42-14.77

MODEL: BLP_WR - Plan 3 PAPERSIZE: 34x22 (in.) DATE: 2/6/2024 TIME: 7:56:06 AM USER: michael.j.thompson
pw:\\aecom-na-pw.bentley.com:AECOM_DS21_NA_2020\Documents\60657065-ASD-42-14.77\114065\400-Engineering\Traffic\Sheets\114065_TP105.dgn